KEBP0356-17
September 2013

RUTHZIL TRATOR COMERCIAL DE PEÇAS LTDA 11 97083-6812 ROLANDO CITRANGULO

Parts Manual

CS-533E Soil Compactor

TJL1-Up (Machine)
CRS1-Up (Engine)
CST1-Up (Engine)

Powered By 3054C Engine

Product and Dealer Information

Note: For product identification plate locations, see the section “Product Identification Information” in the Operation and Maintenance Manual.

Delivery Date: _____

Product Information

Model: _____

Product Identification Number: _____

Engine Serial Number: _____

Transmission Serial Number: _____

Generator Serial Number: _____

Attachment Serial Numbers: _____

Attachment Information: _____

Customer Equipment Number: _____

Dealer Equipment Number: _____

Dealer Information

Name: _____ Branch: _____

Address: _____

_____

_____

	Dealer Contact	Phone Number	Hours
Sales:	_____	_____	_____
Parts:	_____	_____	_____
Service:	_____	_____	_____

MEMORANDA

TABLE OF CONTENTS

NAME	PAGE
GENERAL INFORMATION	**A4**
REPAIR ALTERNATIVES	**A7**
SUPPLEMENTAL COOLANT ADDITIVES	A8
MAINTENANCE PARTS	**A9**
INDEX	**A13**
MACHINE ARRANGEMENT	**1**
CHASSIS AR	1
DISTRIBUTION AR	2
GENERAL AR	4
OPTION AR-MACHINE	4
ENGINE ARRANGEMENT	**5**
ENGINE AR	5
ENGINE AR-PRIMARY	5
INSTALLATION AR-ENGINE	7
BASIC ENGINE	**8**
CAMSHAFT GP	8
COVER GP-FRONT HOUSING	9
COVER GP-VALVE MECHANISM	10
CRANKSHAFT GP	13
CYLINDER BLOCK GP	19
CYLINDER HEAD GP	25
DRIVE GP-FAN	28
DRIVE GP-PUMP	29
FLYWHEEL GP	30
HOUSING GP-FLYWHEEL	31
HOUSING GP-FRONT	32
LIFTING GP-ENGINE	34
MOUNTING GP-ENGINE	35
MOUNTING GP-ENGINE FLEXIBLE	37
PAN GP-OIL	38
PISTON & ROD GP	40
PLUG GP-ENGINE	45
PULLEY GP-CRANKSHAFT	48
ROCKER ARM GP	50
SERVICE GP-ENGINE	51
VALVE MECHANISM GP	53
LUBRICATION SYSTEM	**55**
FILTER GP-ENGINE OIL	55
PUMP GP-ENGINE OIL	56
COOLING SYSTEM	**57**
CONNECTION GP-WATER	57
COOLER GP-ENGINE OIL	58
COOLER GP-FLTR BASE & ENG OIL	59
FAN GP-SUCTION	60
PUMP GP-WATER	64
RADIATOR & HYD OIL COOLER GP	66
RECOVERY GP-COOLANT	74
AIR INLET AND EXHAUST SYSTEM	**76**
AIR CLEANER GP	76
ELBOW GP-AIR INLET	79
LINES GP-AIR	81
MUFFLER GP	82
TURBOCHARGER GP	84
FUEL SYSTEM	**86**
FILTER AS-FUEL	86
FILTER GP-WATER SEP & FUEL	87
GOVERNOR GP	90
KIT-FUEL SYSTEM PARTS	94
LINES GP-FUEL	96
PUMP GP-FUEL INJECTION	100
PUMP GP-FUEL PRM & PRIM FILTER	111
PUMP GP-FUEL TRANSFER	113
SEPARATOR GP-WATER	115
TANK & MTG GP-FUEL	117
TANK GP-FUEL	118
ELECTRICAL AND STARTING SYSTEM	120
ALARM GP	120
ALTERNATOR GP-CHARGING	122
BATTERY & WIRING GP	123
CONVERTER GP-ELECTRICAL	125
ELECTRICAL AR	126
GLOW PLUG GP	127
HARNESS AS-HEATER & AIR COND	128
HARNESS AS-PANEL	128
HARNESS AS-SENSOR	129
HARNESS AS-WIRING	129
LAMP GP-FLOOD	130
LAMP GP-HEAD & SIGNAL	136
LAMP GP-REGISTRATION PLATE	144
LAMP GP-STOP & TAIL	145
LAMP GP-WARNING BEACON	146
LIGHTING GP-FLOOD	147
LIGHTING GP-SIGNAL	152
LIGHTING GP-WARNING	158
SENSOR GP-LIQUID LEVEL	160
SOLENOID GP-THROTTLE	161
STARTING MOTOR GP-ELECTRIC	162
SWITCH GP-DISCONNECT	163
SWITCH GP-MAGNETIC	164
WARNING GP-BACKUP	170
WIRING GP-AIR CONDITIONER	171
WIRING GP-CAB	172
WIRING GP-MACHINE	173
POWER TRAIN	**184**

TABLE OF CONTENTS

NAME	PAGE
AXLE & MTG GP-DRIVE	184
AXLE AR-DRIVE	187
AXLE GP-DRIVE	188
DIFFERENTIAL GP	194
DRIVE GP-DRUM	196
DRIVE GP-FINAL	204
DRUM GP-DRIVE & VIBRATORY	206
DRUM GP-SMOOTH	208
FLANGE GP-WHEEL	209
HOUSING GP-AXLE	211
HYDRAULIC AR-PROPEL	215
INSTALLATION GP-DRUM	216
LINES GP-PROPEL	218
LINES GP-SHIFT	220
MOTOR & MTG GP-PROPEL	222
MOUNTING GP-WHEEL	225
PLANETARY GP-FINAL DRIVE	228
PUMP & MTG GP-PROPEL	234
SHELL GP-PADDED	237
WHEEL & MTG GP-DRIVE	240
WHEEL & TIRE GP	243
FRAME AND BODY	**251**
BUMPER AR	251
BUMPER GP-FRONT	252
ENCLOSURE GP-ENGINE	256
FRAME GP-FRONT	258
FRAME GP-REAR	260
GUARD GP-LINES	262
GUARD GP-TRANSMISSION	263
HANDRAIL GP	264
HITCH GP-ARTICULATING & OSC	265
HOOD GP	268
SCRAPER GP-PADDED DRUM	273
SCRAPER GP-SMOOTH DRUM	274
STEP GP	278
BRAKING SYSTEM	**279**
CONTROL GP-PARKING BRAKE	279
CYLINDER GP-BRAKE	281
LINES GP-BRAKE	282
LINES GP-BRAKE & SHIFT	283
STEERING SYSTEM	**285**
CYLINDER & MTG GP-STEERING	285
KNOB GP-STEERING	287
LINES GP-STEERING	288
LINES GP-STEERING CYLINDER	290
PUMP & MTG GP-STEERING	291
HYDRAULIC SYSTEM	**293**
ACTUATOR GP-PUMP	293
CLAMP GP-HYDRAULIC LINES	295
COOLER GP-HYDRAULIC OIL	296
CYLINDER GP-HYDRAULIC	297
FILTER & MTG GP-HYDRAULIC	300
HEAD GP-PUMP	302
HYDRAULIC AR-AUXILIARY	307
LINES GP-FILTER	308
LINES GP-HYDRAULIC OIL COOLER	311
MANIFOLD & VALVE GP	312
MOTOR GP-PISTON	316
PUMP GP-GEAR	322
PUMP GP-PISTON	323
ROTATING GP-MOTOR	330
ROTATING GP-PUMP	331
TANK & MTG GP-HYDRAULIC	335
TANK GP-HYDRAULIC	336
VALVE & MTG GP-CONTROL	338
VALVE GP-BYPASS	339
VALVE GP-CONTROL	340
VALVE GP-PUMP CONTROL	342
VALVE GP-RELIEF	346
VALVE GP-SOLENOID	348
VIBRATORY SYSTEM	**349**
DRIVE GP-SUPPORT & VIBRATORY	349
HOUSING GP-ECCENTRIC WEIGHT	353
HYDRAULIC AR-VIBRATORY	356
LINES GP-VIBRATORY	357
MOTOR & MTG GP-VIBRATORY	359
PUMP & MTG GP-VIBRATORY	360
SHAFT GP-ECCENTRIC WEIGHT	364
SUPPORT GP-VIBRATORY	365
OPERATOR STATION	**366**
ACCUMULATOR GP-REFRIGERANT	366
AIR CONDITIONER GP	368
ARM GP-WINDOW WIPER	375
CAB AR	376
CAB GP-ENCLOSED ROPS	377
CANOPY GP	381
COMPRESSOR GP-REFRIGERANT	383
CONDENSER & MTG GP-REFRIGERANT	386
CONTROL GP-DIRECTION & SPEED	387
CONTROL GP-HANDLE	389
CONTROL GP-PROPEL	390
CONTROL GP-STEERING	392
CYLINDER & MTG GP-TILT	398
DOOR GP-CAB	400
DUCT GP-CAB AIR	404
FILTER GP-CAB AIR	406
FLOOR MAT GP-CAB	407
GAUGE GP-FUEL LEVEL	409
GAUGE GP-VIBRATORY	410
GUARD GP-VANDALISM	419
HEATER & MTG GP-CAB	420
HEATER GP-CAB	421
KIT-FLOW CONTROL VALVE	423

TABLE OF CONTENTS

NAME	PAGE
LINER GP-CAB	424
LINES GP-AIR CONDITIONER	426
LINES GP-CAB HEATER	430
LINKAGE GP	432
METER GP-VIBRATORY	433
MIRROR GP-REAR VIEW	435
MODULE GP-WARNING INDICATOR	439
MOTOR GP-WINDOW WIPER	440
MOUNTING GP-CAB	443
OPERATOR AR	444
OPERATOR AR-OPEN ROPS	446
PANEL GP-INSTRUMENT	448
PLATFORM GP-OPERATOR	468
ROPS GP	470
ROPS GP-ENCLOSED	471
SCREEN GP-SUN	475
SEAT & MOUNTING GP	478
SEAT GP-SUSPENSION	481
SPEEDOMETER GP	486
TANK GP-WINDOW WASHER	488
TILT AR-CAB	489
VISOR GP-CAB	490
WINDOW GP-CAB	491
WINDOW GP-DOOR	495
WIPER & WASHER GP-WINDOW	497
SERVICE EQUIPMENT AND SUPPLIES	501
FILM GP	501
PLATE & FILM GP	504
PART NUMBER INDEX	**B1**

GENERAL INFORMATION

1. MACHINE IDENTIFICATION

Cat machines are identified by Product Identification Numbers (PIN). Some components included in a machine may be identified by Serial Numbers (S/N). Typical components that will be serialized include engines, transmissions, bulldozers, and rippers. The machine and engine are further identified by arrangement numbers and in some cases modification numbers. These numbers are shown on the product identification plate(s) and on the master plate in the operator's compartment.

Cat dealers need all of these numbers to determine accurate parts identification.

Effective First Quarter 2001 the Cat Product Identification Number (PIN) changed from 8 to 17 characters. In an effort to provide uniform equipment identification, Caterpillar and other construction equipment manufacturers are moving to comply with the latest version of the product identification numbering standard. Non-road machine PINs are defined by ISO 10261. The new PIN format will apply to all Cat machines and generator sets. The PIN plates and frame marking will display the 17 character PIN. The new format will look like the following:

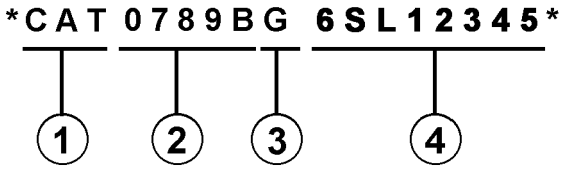

Where:

1. Caterpillar's World Manufacturing Code (characters 1-3)

2. Machine Descriptor (characters 4-8)

3. Check Character (character 9)

4. Machine Indicator Section (MIS) or Product Sequence Number (characters 10-17). These were previously referred to as the Serial Number.

Machines and generator sets produced before First Quarter 2001 will maintain their 8 character PIN format.

Components such as engines, transmissions, axles, etc. and work tools will continue to use an 8 character Serial Number (S/N).

2. ORDERING PARTS

⚠ WARNING

When replacement parts are required for this product Caterpillar recommends using Caterpillar replacement parts or parts with equivalent specifications including, but not limited to, physical dimensions, type, strength and material.

Failure to heed this warning can lead to premature failures, product damage, personal injury or death.

Quality Cat replacement parts are available from Cat dealers throughout the world. Their parts inventories are up to date and include all parts normally required to protect your investment in Cat machines. Dealers may offer repair kits or remanufactured parts to allow selection of the most effective repair alternative for a particular situation. When ordering parts, your order should specify the quantity, part number, part name, and the serial number/product identification number of the machine for which the parts are needed.

3. PARTS MANUAL ORGANIZATION

Product information in this manual is presented as "information elements" that represent all of the components for the specific model. Engine Arrangement and Seat Group are examples of information elements. The information elements are organized alphabetically by part name and secondarily by part number within each major section of the manual.

4. TABLE OF CONTENTS

A table of contents (TOC) is found at the beginning of the manual. The TOC lists each section of the manual with a complete list of all information elements organized as they appear in the manual. Page numbers are provided for quick reference to detailed parts identification illustrations and serviceable consist lists.

5. MAINTENANCE PARTS INDEX

The Maintenance Parts Index, located near the beginning of the manual, references most frequently used maintenance part numbers, providing description, quantity, usage and page number. This information is organized alphabetically by part description.

6. INDEX

The index located near the front of the manual is an alphabetical listing of all information elements included in the manual. Page numbers are provided for quick reference to detailed parts identification illustrations and serviceable consist lists.

7. PART NUMBER INDEX

A numerical index listing all part numbers and the corresponding page number(s) appears at the back of the manual.

8. CAPTIONS

Captions located at the beginning of each information element identify the part number and part name along with additional descriptive information. PIN and S/N information found in each caption should be used to select correct information for a specific machine. Field replacement options, identification of optional attachment components, and where used ("part of") information is also provided.

The first line of a caption is shown in larger type font to indicate the beginning of an information element. Captions for additional pages that may be required to illustrate an information element will be shown in standard type font and will include the term *(contd.)* .

9. NON-SERVICED PARTS

In some instances it is necessary to display non-serviced parts that are a link to a lower level serviceable consist lists. These non-serviced part numbers are shown in *italic* type indicating that they are not available.

10. PARTS LIST REFERENCE NUMBERS

Numbers shown in the Ref No column correspond to numbers used in the associated graphic(s). An alphabetic suffix may be added to a reference number to identify lower level consist items. Numbers shown in the Graphic Ref column refer to the graphic number identifier displayed in the lower left corner of each illustration. The Graphic Ref number may be used in combination with the item Ref No to determine the correct part number. There may be intentional omission of a Ref No in a consist list as information is updated to reflect the latest serviceable part numbers.

11. INDENTED PART NAMES

When a part name is indented in a parts list, it is part of (included in) the group or assembly under which it is indented.

12. ILLUSTRATION REFERENCE LETTERS

When necessary, illustrations contain reference letters (A, B, C etc.) that are intended to track lines and harnesses from one point to another. They are also used to show where to reconnect illustrations that have been separated.

13. ABBREVIATIONS AND SYMBOLS

O.D. – Outside Diameter
I.D. – Inside Diameter
A – Not Part Of This Group
B – Use As Required
C – Change From Previous Type
D – Order By The Meter
E – Order By The Centimeter
F – Not Shown
G – Order By The Inch
I – Refer To Hydraulic Information System
M – Metric Part
R – Remfg Part May Be Available
Y – Separate Illustration
Z – Not Serviced Separately

14. DESCRIPTION OF TYPE CHANGES

Type - A type is defined as any configuration change that requires an additional Information Element for an Arrangement, Group, or Assembly. If serial number breaks for types are not available, a type # (Type 1, Type 2, etc.) will be displayed in the caption. These "type" changes are identified with a "C" note (change from previous type) in the Parts List. Only the "types" that apply to this Parts Manual will be included. Additional types may exist causing "C" notes to appear on an Information Element when no other types are shown.

15.<END>

This symbol indicates the end of an information element.

NOTE:

Continuing improvement and advancement of product design may cause changes to your machine which may not be included in this publication. Whenever a question arises regarding your Cat product or this publication, please consult your Cat dealer for the latest available information.

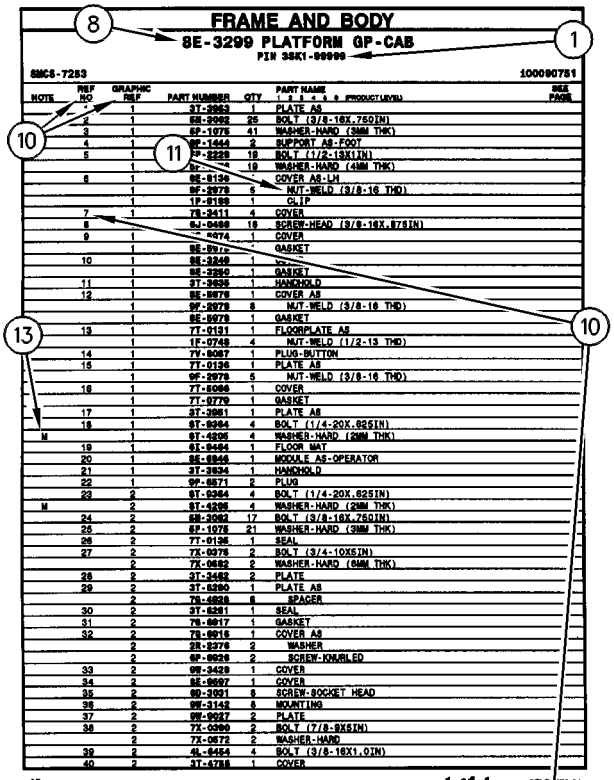

FRAME AND BODY

8E-3299 PLATFORM GP-CAB

PIN 3SK1-00999

SMCS-7283 100090751

NOTE	REF NO	GRAPHIC REF	PART NUMBER	QTY	PART NAME (1 2 3 4 5 6 PRODUCT LEVEL)	SEE PAGE
	1	1	3T-3963	1	PLATE AS	
	2	1	6M-3982	25	BOLT (3/8-16X.75DIN)	
	3	1	5P-1078	41	WASHER-HARD (3MM THK)	
	4	1	9F-1444	2	SUPPORT AS-FOOT	
	5	1	7P-2229	18	BOLT (1/2-13X1IN)	
		1	9x-[illegible]	18	WASHER-HARD (4MM THK)	
	6	1	8E-8136	1	COVER AS-LH	
		1	9F-2979	6	NUT-WELD (3/8-16 THD)	
		1	1F-8188	1	CLIP	
	7	1	7S-3411	4	COVER	
	8		6J-0488	18	SCREW-HEAD (3/8-16X.875IN)	
	9	1	[illegible]-0474	1	COVER	
		1	8E-8976	1	GASKET	
	10	1	8E-3249	1	[illegible]	
		1	8E-3250	1	GASKET	
	11	1	3T-3935	1	HANDHOLD	
	12	1	8E-8978	1	COVER AS	
		1	9F-2979	6	NUT-WELD (3/8-16 THD)	
		1	8E-8979	1	GASKET	
	13	1	7T-0131	1	FLOORPLATE AS	
		1	1F-0748	4	NUT-WELD (1/2-13 THD)	
	14	1	7V-8067	1	PLUG-BUTTON	
	15	1	7T-0136	1	PLATE AS	
		1	9F-2979	5	NUT-WELD (3/8-16 THD)	
	16	1	7T-8068	1	COVER	
		1	7T-0779	1	GASKET	
	17	1	3T-3951	1	PLATE AS	
	18	1	6T-9364	4	BOLT (1/4-20X.625IN)	
M		1	6T-4236	4	WASHER-HARD (2MM THK)	
	19	1	6T-8464	1	FLOOR MAT	
	20	1	8E-8946	1	MODULE AS-OPERATOR	
	21	1	3T-3934	1	HANDHOLD	
	22	1	9F-8571	2	PLUG	
	23	2	6T-9364	4	BOLT (1/4-20X.625IN)	
M		2	6T-4236	4	WASHER-HARD (2MM THK)	
	24	2	6M-3982	17	BOLT (3/8-16X.75DIN)	
	25	2	5P-1078	21	WASHER-HARD (3MM THK)	
	26	2	7T-0136	1	SEAL	
	27	2	7X-0378	2	BOLT (3/4-10X5IN)	
		2	7X-0682	2	WASHER-HARD (6MM THK)	
	28	2	3T-3462	2	PLATE	
	29	2	3T-8280	1	PLATE AS	
		2	7S-4828	6	SPACER	
	30	2	3T-8281	1	SEAL	
	31	2	7S-8917	1	GASKET	
	32	2	7S-8916	1	COVER AS	
		2	2S-2376	2	WASHER	
		2	9F-8628	2	SCREW-KNURLED	
	33	2	9W-3429	1	COVER	
	34	2	8E-8697	1	COVER	
	35	2	9D-3931	8	SCREW-SOCKET HEAD	
	36	2	9W-3142	8	MOUNTING	
	37	2	9W-9927	2	PLATE	
	38	2	7X-0290	2	BOLT (7/8-9X5IN)	
		2	7X-0572	2	WASHER-HARD	
	39	2	4L-6454	4	BOLT (3/8-16X1.0IN)	
	40	2	3T-4788	1	COVER	

12 FRAME AND BODY 1 of 4 SELP4570-01

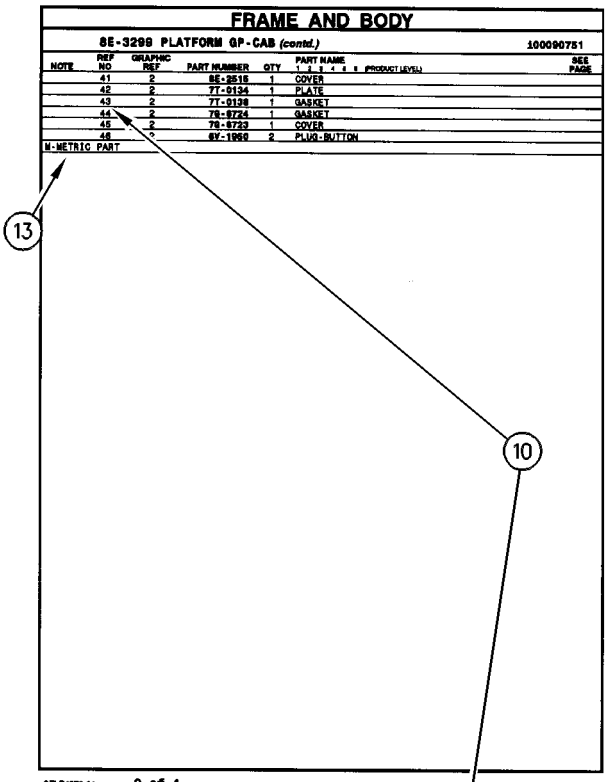

FRAME AND BODY

8E-3299 PLATFORM GP-CAB (contd.) 100090751

NOTE	REF NO	GRAPHIC REF	PART NUMBER	QTY	PART NAME (1 2 3 4 5 6 PRODUCT LEVEL)	SEE PAGE
	41	2	8E-2516	1	COVER	
	42	2	7T-0134	1	PLATE	
	43	2	7T-0138	1	GASKET	
	44	2	7S-8724	1	GASKET	
	45	2	7S-8723	1	COVER	
	46	2	6V-1960	2	PLUG-BUTTON	

M-METRIC PART

SELP4570-01 2 of 4 FRAME AND BODY 13

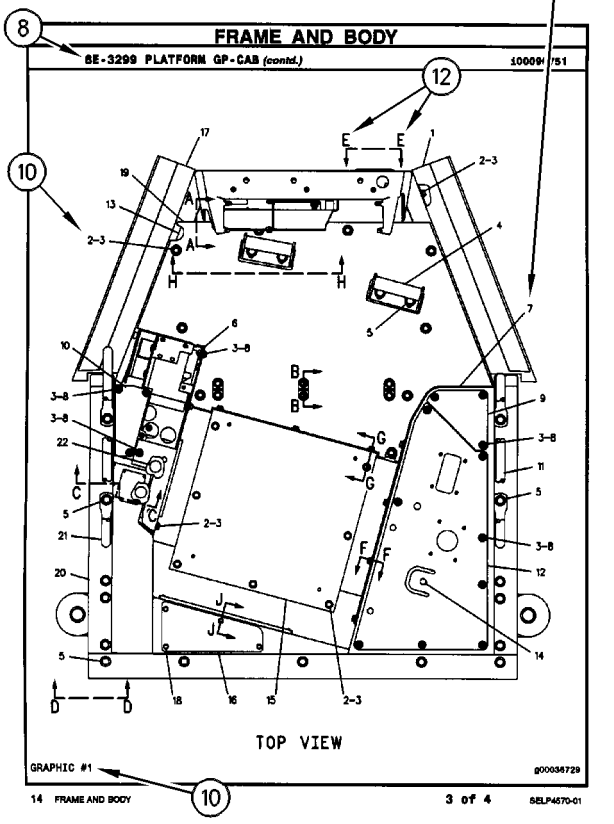

FRAME AND BODY

8E-3299 PLATFORM GP-CAB (contd.) 100090751

TOP VIEW

GRAPHIC #1 g00036729

14 FRAME AND BODY 3 of 4 SELP4570-01

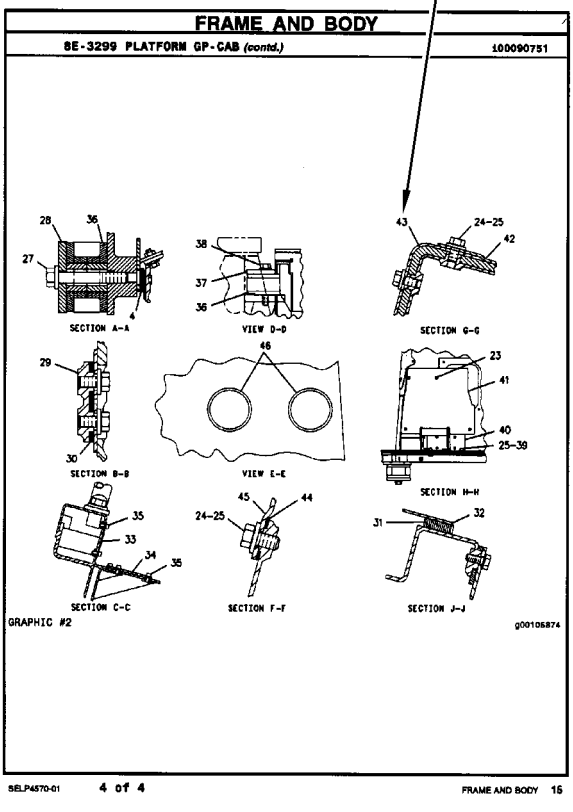

FRAME AND BODY

8E-3299 PLATFORM GP-CAB (contd.) 100090751

SECTION A-A

VIEW D-D

SECTION G-G

SECTION B-B

VIEW E-E

SECTION H-H

SECTION C-C

SECTION F-F

SECTION J-J

GRAPHIC #2 g00105874

SELP4570-01 4 of 4 FRAME AND BODY 15

REMANUFACTURED COMPONENTS

As an option when making repairs consider Cat Remanufactured Components. Components that are available through the Cat Remanufactured Program are identified three ways in the parts book:

- with the letter R in the note field of the parts list
- with an R* at the beginning of the first line of the caption
- with an *R at the end of the first line of the caption

Typical components included in the Remanufacturing Program include:

ALTERNATORS
CONNECTING RODS
CRANKSHAFTS - UNDERSIZE
CRANKSHAFTS - UPGRADE TO NEW
CYLINDER HEADS
ELECTRONIC CONTROL MODULES (ECM)
ELECTRONIC SENSORS
FUEL INJECTORS
FUEL NOZZLES
FUEL PUMPS
GOVERNORS
OIL PUMPS
PISTONS
SHORT BLOCKS
STARTERS
TURBOCHARGERS - COMPLETE
TURBOCHARGER CARTRIDGES
WATER PUMPS

Cat Remanufactured engines for many engine arrangements are also available.

SUPPLEMENTAL COOLANT ADDITIVES

CUSTOMER BENEFITS:

Protects against cavitation, foam, erosion, corrosion, and scale buildup in cooling systems.

- Provides measured coolant conditioner.

DESCRIPTION:

Additives deplete from the coolant with normal operation. For this reason, Supplemental Coolant Additives (SCA) must be added to all heavy duty coolants at regular intervals. In addition, when not using a fully formulated, pre-charged antifreeze, like Cat DEAC, an initial charge of SCA must be added to the cooling system. The amount of SCA added to the system is dependent on the capacity of the system.

The SCA for initial fill is provided as a liquid. SCA's for maintenance intervals are available in liquid form and as a spin-on element. (No Spin-on available for 3600 Family of Engines)

NOTE:

The amount of SCA added at initial fill is not the same as the amount added at maintenance intervals.

The coolant additive elements can be used with any ethylene or propylene glycol type antifreeze which meets ASTM D4985 or ASTM D5345 Specifications.

NOTE:

For use with standard heavy duty coolant only, not for use with Extended Life Coolant.

PARTS NEEDED:

Cooling System Capacity		Liquid SCA at Initial Fill	Liquid SCA at Maintenance*	Spin-on SCA Maintenance Element*
Liters	Gallons			
22-30	(6-8)	3P-2044 (1)	6V-3542 (1)	111-2370 (1)
30-38	(8-10)	3P-2044 (1) 6V-3542 (1)	111-2372 (1)	111-2369 (1)
38-49	(10-13)	3P-2044 (1) 8T-1589 (1)	111-2372 (1)	111-2369 (1)
49-64	(13-17)	3P-2044 (2)	8T-1589 (1)	9N-3368 (1)
64-83	(17-22)	3P-2044 (2) 8T-1589 (1)	111-2372 (1) 6V-3542 (1)	111-2371 (1)
83-114	(22-30)	3P-2044 (3) 8T-1589 (1)	3P-2044 (1)	9N-3718 (1)
114-163	(30-43)	3P-2044 (5)	3P-2044 (1) 6V-3542 (1)	111-2371 (2)
163-242	(43-64)	3P-2044 (8)	3P-2044 (2)	9N-3718 (2)

** Normal maintenance period is 250 hrs. See your Operation and Maintenance Manual for complete coolant maintenance instructions.*

( ) Indicates quantity required.

MAINTENANCE PARTS

DESCRIPTION	PART NUMBER	QTY	WHERE USED	PAGE
AIR INLET AND EXHAUST SYSTEM				
FILTER ELEMENT AS-AIR (PRIMARY)	206-5234	1	AIR CLEANER GP	78
FILTER ELEMENT AS-AIR (SECONDARY)	206-5235	1	AIR CLEANER GP	78
BASIC ENGINE				
CAP AS (ENGINE OIL FILLER)	136-3608	1	COVER GP-VALVE MECHANISM	12
CAP-OIL FILLER (ENGINE)	130-9888	1	COVER GP-VALVE MECHANISM	10
GASKET (VALVE COVER)	225-6451	1	COVER GP-VALVE MECHANISM	12
PLUG-DRAIN (ENGINE OIL)	7C-0351	2	PAN GP-OIL	38
SEAL (VALVE COVER)	124-0506	1	COVER GP-VALVE MECHANISM	12
V-BELT SET (INCLUDES 2-BELTS) (FAN DRIVE)	5L-4995	1	DRIVE GP-FAN	28
COOLING SYSTEM				
CAP AS-VENTED (COOLANT RECOVERY)	229-3469	1	RECOVERY GP-COOLANT	74
		1	RECOVERY GP-COOLANT	75
CAP-RADIATOR (16-PSI)	211-6574	1	RADIATOR & HYD OIL COOLER GP	68
CONNECTION GP-WATER (TEMPERATURE REGULATOR)	254-2269	1	CONNECTION GP-WATER	57
HOSE (LOWER)	217-2733	1	RADIATOR & HYD OIL COOLER GP	66
		1	RADIATOR & HYD OIL COOLER GP	72
HOSE-RADIATOR (UPPER)	216-7956	1	RADIATOR & HYD OIL COOLER GP	66
		1	RADIATOR & HYD OIL COOLER GP	72
ELECTRICAL AND STARTING SYSTEM				
BELT-DRIVE	9X-8139	1	LAMP GP-WARNING BEACON	146
CIRCUIT BREAKER AS (60-AMPERE) (ALTERNATOR)	171-2208	1	WIRING GP-MACHINE	173
		1	WIRING GP-MACHINE	178
CIRCUIT BREAKER AS (60-AMPERE) (GLOW PLUG)	171-2208	1	WIRING GP-MACHINE	173
		1	WIRING GP-MACHINE	178
CIRCUIT BREAKER AS (60-AMPERE) (MAIN)	171-2208	1	WIRING GP-MACHINE	173
		1	WIRING GP-MACHINE	178
FLASHER AS (24-VOLT)	108-0358	1	LIGHTING GP-SIGNAL	152
FUSE (10-AMPERE)	113-8490	1	HARNESS AS-WIRING	129
GLOW PLUG (24-VOLT)	226-8770	4	GLOW PLUG GP	127
KEY (BATTERY DISCONNECT)	8H-5306	1	SWITCH GP-DISCONNECT	163
LAMP (24-VOLT, 21-WATT) (DIRECTION)	9X-4493	1	LAMP GP-STOP & TAIL	145
LAMP (24-VOLT, 21-WATT) (REVERSE)	9X-4493	1	LAMP GP-STOP & TAIL	145
LAMP (24-VOLT, 21-WATT) (SIGNAL)	9X-4493	1	LAMP GP-HEAD & SIGNAL	136
		1	LAMP GP-HEAD & SIGNAL	138
LAMP (24-VOLT, 21-WATT) (TURN SIGNAL)	9X-4493	1	LAMP GP-HEAD & SIGNAL	140

MAINTENANCE PARTS

DESCRIPTION	PART NUMBER	QTY	WHERE USED	PAGE
		1	LAMP GP-HEAD & SIGNAL	142
LAMP (24-VOLT, 5-WATT)	5C-9583	1	LAMP GP-REGISTRATION PLATE	144
LAMP (24-VOLT, 5-WATT) (STOP, TAIL)	9X-4492	1	LAMP GP-STOP & TAIL	145
LAMP (24-VOLT, 70-WATT) (WARNING BEACON)	9X-7849	1	LAMP GP-WARNING BEACON	146
LAMP (24-VOLT, 75/70-WATT)	9X-3465	1	LAMP GP-HEAD & SIGNAL	136
LAMP (24-VOLT, 75/70-WATT) (HEAD)	9X-3465	1	LAMP GP-HEAD & SIGNAL	138
LAMP (24-VOLT, 75/70-WATT) (HIGH/ LOW BEAM)	9X-3465	1	LAMP GP-HEAD & SIGNAL	140
		1	LAMP GP-HEAD & SIGNAL	142
LAMP (24-VOLT)	100-3245	2	LAMP GP-HEAD & SIGNAL	136
LAMP (24-VOLT) (RUNNING LIGHTS)	100-3245	1	LAMP GP-HEAD & SIGNAL	140
		1	LAMP GP-HEAD & SIGNAL	142
LAMP (24-VOLT) (SIGNAL)	100-3245	2	LAMP GP-HEAD & SIGNAL	138
LAMP (24-VOLT) (TURN SIGNAL)	100-3245	1	LAMP GP-HEAD & SIGNAL	140
		1	LAMP GP-HEAD & SIGNAL	142
LAMP AS-INDICATOR (RED)	2N-2371	3	LIGHTING GP-SIGNAL	152
LAMP-HALOGEN (24-VOLT, 70-WATT)	351-9918	1	LAMP GP-FLOOD	130
		1	LAMP GP-FLOOD	132
		1	LAMP GP-FLOOD	135
LAMP-HALOGEN (24-VOLT, 70-WATT) (FLOODLIGHT)	9X-3463	1	LAMP GP-FLOOD	131
		1	LAMP GP-FLOOD	133
		1	LAMP GP-FLOOD	134
FUEL SYSTEM				
CAP-FUEL FILLER (LOCKABLE)	276-1243	1	TANK GP-FUEL	118
DRAIN AS	222-6617	1	FILTER AS-FUEL	86
ELEMENT-WATER SEPARATOR	360-8959	1	FILTER GP-WATER SEP & FUEL	88
FILTER ELEMENT-BREATHER (FUEL CAP)	279-9876	1	TANK GP-FUEL	118
FILTER ELEMENT-WTR SEP & FUEL	1R-1804	1	FILTER AS-FUEL	86
	252-6338	1	FILTER GP-WATER SEP & FUEL	87
LAMP (24-VOLT, 0.2-AMPERE)	7N-5876	1	KIT-FUEL SYSTEM PARTS	94
STRAINER-FUEL (TANK)	9P-7121	1	TANK GP-FUEL	118
HYDRAULIC SYSTEM				
BREATHER (HYDRAULIC TANK)	183-3873	1	TANK & MTG GP-HYDRAULIC	335
CAP AS-FILLER (HYDRAULIC TANK)	142-8937	1	TANK GP-HYDRAULIC	336
FILTER-OIL (ADVANCED EFFICIENCY) (HYDRAULIC)	1G-8878	1	FILTER & MTG GP-HYDRAULIC	300
PLUG-DRAIN	273-2225	1	TANK GP-HYDRAULIC	336
STRAINER AS (HYDRAULIC TANK)	1G-7663	1	TANK GP-HYDRAULIC	336
LUBRICATION SYSTEM				
FILTER AS-ENGINE OIL	7W-2326	1	FILTER GP-ENGINE OIL	55

MAINTENANCE PARTS

DESCRIPTION	PART NUMBER	QTY	WHERE USED	PAGE
OPERATOR STATION				
BLADE AS-WIPER (500-MM) (REAR WINDOW)	5C-8811	1	WIPER & WASHER GP-WINDOW	497
BLADE AS-WIPER (500-MM) (REAR)	5C-8811	1	WIPER & WASHER GP-WINDOW	499
BLADE AS-WIPER (700-MM) (FRONT WINDOW)	6V-7419	1	WIPER & WASHER GP-WINDOW	497
BLADE AS-WIPER (700-MM) (FRONT)	6V-7419	1	WIPER & WASHER GP-WINDOW	499
CAP-VENTED (WINDOW WASHER TANK)	322-4964	1	TANK GP-WINDOW WASHER	488
CIRCUIT BREAKER AS (15-AMPERE) (KEY SWITCH)	6T-3643	1	PANEL GP-INSTRUMENT	457
CIRCUIT BREAKER AS (15-AMPERE) (MAIN POWER RELAY)	6T-3643	1	PANEL GP-INSTRUMENT	452
FILTER ELEMENT-CAB AIR	180-7487	1	FILTER GP-CAB AIR	406
FILTER ELEMENT-CAB AIR (ACTIVATED CHARCOAL)	282-5340	1	FILTER GP-CAB AIR	406
FUSE (10-AMPERE)	113-8490	16	PANEL GP-INSTRUMENT	451
		15	PANEL GP-INSTRUMENT	455
FUSE (15-AMPERE)	113-8491	1	PANEL GP-INSTRUMENT	457
LAMP (24-VOLT, 0.2-AMPERE)	7N-5876	2	PANEL GP-INSTRUMENT	464
LAMP (24-VOLT, 0.2-AMPERE) (ALTERNATOR INDICATOR)	7N-5876	1	PANEL GP-INSTRUMENT	448
		1	PANEL GP-INSTRUMENT	460
LAMP (24-VOLT, 10-WATT)	112-5219	1	LINER GP-CAB	424
LAMP (24-VOLT, 3-WATT) (CLEAR)(FUEL LEVEL GAUGE)	115-1748	1	GAUGE GP-FUEL LEVEL	409
LAMP (24-VOLT) (ENGINE TEMPERATURE)	110-2079	1	MODULE GP-WARNING INDICATOR	439
LAMP (24-VOLT) (HYD OIL TEMP)	110-2079	1	MODULE GP-WARNING INDICATOR	439
LAMP (24-VOLT) (HYDRAULIC PRESSURE)	110-2079	1	MODULE GP-WARNING INDICATOR	439
LAMP (24-VOLT) (OIL PRESSURE)	110-2079	1	MODULE GP-WARNING INDICATOR	439
LAMP (24-VOLT) (PARKING BRAKE)	116-5270	1	PANEL GP-INSTRUMENT	451
LAMP (24-VOLT) (RED)	116-5270	1	PANEL GP-INSTRUMENT	455
LAMP AS-INDICATOR (RED) (ALTERNATOR)	2N-2371	1	PANEL GP-INSTRUMENT	448
		1	PANEL GP-INSTRUMENT	460
LAMP-LED (24-VOLT, WHITE) (FUEL LEVEL GAUGE)	163-6508	1	GAUGE GP-FUEL LEVEL	409
SCREEN-FILTER (WINDOW WASHER PUMP)	8T-5913	2	TANK GP-WINDOW WASHER	488
SEAT BELT GP (RETRACTABLE, 76-MM)	230-6367	1	SEAT & MOUNTING GP	478
		1	SEAT & MOUNTING GP	479
		1	SEAT & MOUNTING GP	480
		1	SEAT GP-SUSPENSION	483
V-BELT (COMPRESSOR)	4N-9891	1	COMPRESSOR GP-REFRIGERANT	384
POWER TRAIN				
BREATHER (AXLE, REAR)	197-9155	1	AXLE GP-DRIVE	192
BREATHER (DRIVE AXLE)	197-9155	1	AXLE GP-DRIVE	188

MAINTENANCE PARTS

DESCRIPTION	PART NUMBER	QTY	WHERE USED	PAGE
		1	AXLE GP-DRIVE	190
PLUG AS-DRAIN (MAGNETIC)	152-6144	5	AXLE GP-DRIVE	192
PLUG AS-DRAIN (MAGNETIC) (DRIVE AXLE)	152-6144	4	AXLE GP-DRIVE	188
		5	AXLE GP-DRIVE	190
PLUG-DRAIN (FINAL DRIVE PLANETARY)	151-7516	1	PLANETARY GP-FINAL DRIVE	228
		1	PLANETARY GP-FINAL DRIVE	231
PLUG-DRAIN (FINAL DRIVE)	151-7516	1	DRIVE GP-FINAL	204
PLUG-MAGNETIC (SMOOTH DRUM)	5P-4484	1	DRUM GP-SMOOTH	208
VIBRATORY SYSTEM				
PLUG-MAGNETIC (ECCENTRIC WEIGHT)	5P-4484	2	HOUSING GP-ECCENTRIC WEIGHT	353
		2	HOUSING GP-ECCENTRIC WEIGHT	354
PLUG-MAGNETIC (FINAL DRIVE PLANETARY)	222-2785	1	SUPPORT GP-VIBRATORY	365

INDEX

NAME PAGE

A

ACCUMULATOR GP-REFRIGERANT–UNCHARGED 366
ACCUMULATOR GP-REFRIGERANT–WITH DESICCANT. 367
ACTUATOR GP-PUMP 293, 294
ADJUSTER GP-HEIGHT (SUSPENSION SEAT) 481, 484
AIR CLEANER GP 76, 78
AIR CONDITIONER GP 368, 372
AIR CONDITIONER GP–WITH CONTROL 371
ALARM GP 120, 121, 170
ALTERNATOR GP-CHARGING 122
ARM GP-WINDOW WIPER–FRONT 375
AXLE & MTG GP-DRIVE–WITH BRAKES 186
AXLE & MTG GP-DRIVE–WITHOUT BRAKES 184, 185
AXLE AR-DRIVE 187
AXLE GP-DRIVE 192
AXLE GP-DRIVE–WITH BRAKES 188
AXLE GP-DRIVE–WITHOUT BRAKES 190

B

BATTERY & WIRING GP 123
BATTERY GP (12-VOLT, 750-CCA) 123
BELT-DRIVE 146
BLADE AS-WIPER (500-MM) (REAR WINDOW). 497
BLADE AS-WIPER (500-MM) (REAR) 499
BLADE AS-WIPER (700-MM) (FRONT WINDOW). 497
BLADE AS-WIPER (700-MM) (FRONT) 499
BLOWER GP-CAB (24-VOLT, A/C, HEATER) . . . 372
BREATHER (AXLE, REAR). 192
BREATHER (DRIVE AXLE). 188, 190
BREATHER (HYDRAULIC TANK) 335
BUMPER AR–INDIA ROADING 251
BUMPER AR–PADDED SHELL, ADDED WEIGHT 251
BUMPER AR–PADDED SHELL, STANDARD WEIGHT 251
BUMPER AR–PADDED SHELL, WITHOUT BLADE. 251
BUMPER GP-FRONT 252, 253, 254, 255
BUS BAR GP 127

C

CAB AR 376
CAB GP-ENCLOSED ROPS 377, 379
CAMSHAFT GP 8
CANOPY GP 381, 382
CAP AS (ENGINE OIL FILLER) 12
CAP AS-FILLER (HYDRAULIC TANK) 336
CAP AS-VENTED (COOLANT RECOVERY) 74, 75
CAP GP-FUEL FILLER (LOCKABLE, VENTED) 118
CAP-FUEL FILLER (LOCKABLE). 118
CAP-OIL FILLER (ENGINE) 10
CAP-RADIATOR (16-PSI). 68
CAP-SEAL (HIGH SIDE CHARGE PORT) 384
CAP-SEAL (LOW SIDE CHARGE PORT). 384
CAP-VENTED (WINDOW WASHER TANK) 488
CHASSIS AR. 1
CIRCUIT BREAKER AS (15-AMPERE) (KEY SWITCH). 457
CIRCUIT BREAKER AS (15-AMPERE) (MAIN POWER RELAY) 452
CIRCUIT BREAKER AS (60-AMPERE) (ALTERNATOR) 173, 178
CIRCUIT BREAKER AS (60-AMPERE) (GLOW PLUG) 173, 178
CIRCUIT BREAKER AS (60-AMPERE) (MAIN) 173, 178
CLAMP GP-HYDRAULIC LINES 295
COMPRESSOR GP-REFRIGERANT 383, 384
CONDENSER & MTG GP-REFRIGERANT 386
CONNECTION GP-WATER 57
CONNECTION GP-WATER (TEMPERATURE REGULATOR) 57
CONNECTOR 222
CONTROL GP-DIRECTION & SPEED 387
CONTROL GP-HANDLE. 389
CONTROL GP-PARKING BRAKE–MANUAL 279
CONTROL GP-PROPEL. 390
CONTROL GP-STEERING. 392, 394, 396
CONVERTER GP-ELECTRICAL. 125
COOLANT HEATER LINES. 430
COOLER GP-ENGINE OIL 58
COOLER GP-FLTR BASE & ENG OIL 59
COOLER GP-HYDRAULIC OIL 68, 296
CORE AS-AFTERCOOLER 70
CORE AS-OIL COOLER (RADIATOR). 70
COUPLING GP-PUMP 234
COVER GP-FRONT HOUSING 9
COVER GP-VALVE MECHANISM. 10, 12

INDEX

NAME PAGE

CRANKSHAFT GP. 13
15
16
17
18
CYLINDER & MTG GP-STEERING. 285
CYLINDER & MTG GP-TILT–CAB. 398
CYLINDER BLOCK GP 19
21
22
23
24
CYLINDER GP-BRAKE. 281
CYLINDER GP-HYDRAULIC 299
CYLINDER GP-HYDRAULIC–STEERING. 297
298
CYLINDER HEAD GP. 25
26
27

D

DIFFERENTIAL GP 194
DIODE GP 464
DISTRIBUTION AR 2
3
4
DOOR GP-CAB–LH 402
DOOR GP-CAB–SLIDING WINDOW, LH. 400
DRAIN AS 86
DRIVE GP-DRUM 196
198
200
202
DRIVE GP-FAN 28
DRIVE GP-FINAL. 204
DRIVE GP-PUMP. 29
DRIVE GP-SUPPORT & VIBRATORY 349
350
352
DRUM GP-DRIVE & VIBRATORY. 206
207
DRUM GP-SMOOTH. 208
DUCT GP-CAB AIR. 404

E

ELBOW GP-AIR INLET 79
80
ELECTRICAL AR 126
ELEMENT-WATER SEPARATOR. 88
ENCLOSURE GP-ENGINE 256
ENGINE AR. 5
ENGINE AR-PRIMARY 5
6

NAME PAGE

F

FAN GP-SUCTION. 60
61
FAN GP-SUCTION–WITH AIR CONDITIONER . . . 63
FAN GP-SUCTION–WITHOUT AIR CONDITIONER 62
FASTENER GP-SEAT. 478
483
FASTENER GP-SEAT (CLOTH). 480
FASTENER GP-SEAT (VINYL). 479
FILLER GP-ENGINE OIL 10
FILM (INSTRUMENTS) 451
FILM (TURN SIGNAL) 152
FILM GP. 254
FILM GP–KOREAN 502
FILM GP–STRIPE 501
FILM-CONTROL 94
98
FILM-FUSE/RELAY. 452
456
FILM-IDENTIFICATION (CIRCUIT PANEL) 174
179
FILM-IDENTIFICATION (HYDRAULIC OIL) 504
FILM-IDENTIFICATION (INSTRUMENT PANEL) 448
461
464
FILM-IDENTIFICATION (MOISTURE IN FUEL) . . . 94
98
464
FILM-IDENTIFICATION (OPERATOR CONTROLS) 387
FILM-IDENTIFICATION (XT) 254
FILM-INSTRUCTION (ENGINE START) 448
460
464
FILM-INSTRUCTION (UNLOCK, RELEASE) 471
473
FILM-INSTRUMENT (PANEL) 456
FILM-WARNING (JUMP START, READ OMM). 508
511
513
FILM-WARNING (NO WELD, NO DRILL, READ OMM). 506
508
510
511
513
FILM-WARNING (OPERATING INSTRUCTIONS). 508
510
511
513
FILTER & MTG GP-HYDRAULIC 300
FILTER AS-ENGINE OIL 55
FILTER AS-FUEL. 86
FILTER BASE & ENG OIL COOLER. 59
FILTER ELEMENT AS-AIR (PRIMARY). 78
FILTER ELEMENT AS-AIR (SECONDARY) 78

INDEX

NAME PAGE

FILTER ELEMENT-BREATHER (FUEL CAP).... 118
FILTER ELEMENT-CAB AIR..... 406
FILTER ELEMENT-CAB AIR (ACTIVATED CHARCOAL) 406
FILTER ELEMENT-WTR SEP & FUEL 86
87
FILTER GP-CAB AIR 406
FILTER GP-ENGINE OIL..... 55
FILTER GP-OIL (HYDRAULIC)..... 300
FILTER GP-WATER SEP & FUEL 87
88
89
FILTER-OIL (ADVANCED EFFICIENCY) (HYDRAULIC) 300
FINAL DRIVE GP 204
228
229
230
231
233
FLANGE GP-WHEEL 209
210
FLASHER AS (24-VOLT)..... 152
FLOOR MAT..... 468
FLOOR MAT GP-CAB 407
408
FLOOR MAT-CAB 407
408
FLYWHEEL GP 30
FRAME GP-FRONT..... 258
FRAME GP-FRONT–SMOOTH DRUM, ADDED WEIGHT 259
FRAME GP-REAR..... 260
FUSE (10-AMPERE) 129
451
455
FUSE (15-AMPERE) 457

G

GASKET (VALVE COVER) 12
GAUGE AS-OIL LEVEL (DIPSTICK) (ENGINE)... 38
GAUGE AS-TACHOMETER (VIBRATORY)..... 410
GAUGE GP-FUEL LEVEL 409
GAUGE GP-VIBRATORY..... 410
411
415
417
GAUGE-COMPACTION..... 433
GAUGE-SIGHT (HYDRAULIC OIL LEVEL)..... 336
GEAR GP-RING..... 188
190
192
GENERAL AR..... 4
GLOW PLUG (24-VOLT) 127
GLOW PLUG GP..... 127
GOVERNOR GP..... 90
92
GUARD GP-LINES..... 262
GUARD GP-TRANSMISSION 263
GUARD GP-VANDALISM..... 419

H

HANDRAIL GP 264
HARNESS AS-ALARM (BACKUP WARNING) ... 170
HARNESS AS-AUXILIARY..... 464
HARNESS AS-AUXILIARY (HORN)..... 461
HARNESS AS-CAB 172
456
HARNESS AS-CAB (SPEED SENSOR) 486
HARNESS AS-CHASSIS 152
173
178
HARNESS AS-CONSOLE 415
417
HARNESS AS-CONSOLE (SIDE, LIGHTING) ... 152
HARNESS AS-FRONT 153
HARNESS AS-HEATER & AIR COND 128
HARNESS AS-LIGHTING (FLOODLIGHT)..... 147
149
150
HARNESS AS-PANEL..... 94
128
464
HARNESS AS-PANEL (FRONT CONSOLE, LIGHTING) 153
HARNESS AS-PANEL (SIDE CONSOLE)..... 451
456
HARNESS AS-PANEL (VIBRATORY AMPLITUDE) 433
HARNESS AS-PUMP 180
HARNESS AS-SENSOR..... 417
HARNESS AS-SENSOR (COMPACTION)..... 415
HARNESS AS-SENSOR (PROPEL) 411
HARNESS AS-SENSOR (SPEED)..... 486
HARNESS AS-SENSOR (VIBRATORY)..... 410
HARNESS AS-SENSOR (VIBRATORY)..... 415
HARNESS AS-SENSOR–VIBRATORY 129
HARNESS AS-WIRING..... 129
HARNESS AS-WIRING (3-PIN, GAUGE)..... 128
460
HARNESS AS-WIRING (ACCELEROMETER INDICATOR)..... 433
HARNESS AS-WIRING (ACCELEROMETER) ... 411
HARNESS AS-WIRING (CAB HEATER) 368
372
421
HEAD GP-PUMP 306
HEAD GP-PUMP–PROPEL 302
304
HEAD GP-PUMP–VIBRATORY..... 303
HEATER & MTG GP-CAB..... 420
HEATER GP-CAB 421
HITCH GP-ARTICULATING & OSC 267
HITCH GP-ARTICULATING & OSC–SMOOTH DRUM 265
HOOD GP 268
269
271

INDEX

NAME PAGE

HOSE (LOWER) 66, 72
HOSE-RADIATOR (UPPER) 66, 72
HOUSING GP-AXLE 213
HOUSING GP-AXLE–WITH BRAKES 211
HOUSING GP-ECCENTRIC WEIGHT–LH 353
HOUSING GP-ECCENTRIC WEIGHT–RH 354
HOUSING GP-FLYWHEEL 31
HOUSING GP-FRONT 32
HYDRAULIC AR-AUXILIARY 307
HYDRAULIC AR-PROPEL 215
HYDRAULIC AR-VIBRATORY 356

I

INDICATOR (ACCELEROMETER) 433
INDICATOR-AIR FILTER SERVICE 76
INSTALLATION AR-ENGINE 7
INSTALLATION GP-DRUM 216, 217

K

KEY (BATTERY DISCONNECT) 163
KIT-FLOW CONTROL VALVE 423
KIT-FUEL SYSTEM PARTS 94
KIT-RECEPTACLE (2-PIN) 90
KNOB GP-STEERING 287

L

LAMP (24-VOLT, 0.2-AMPERE) 94, 464
LAMP (24-VOLT, 0.2-AMPERE) (ALTERNATOR INDICATOR) 448, 460
LAMP (24-VOLT, 10-WATT) 424
LAMP (24-VOLT, 21-WATT) (DIRECTION) 145
LAMP (24-VOLT, 21-WATT) (REVERSE) 145
LAMP (24-VOLT, 21-WATT) (SIGNAL) 136, 138
LAMP (24-VOLT, 21-WATT) (TURN SIGNAL) . . . 140, 142
LAMP (24-VOLT, 3-WATT) (CLEAR)(FUEL LEVEL GAUGE) 409
LAMP (24-VOLT, 5-WATT) 144
LAMP (24-VOLT, 5-WATT) (STOP, TAIL) 145
LAMP (24-VOLT, 70-WATT) (WARNING BEACON) 146
LAMP (24-VOLT, 75/70-WATT) 136
LAMP (24-VOLT, 75/70-WATT) (HEAD) 138
LAMP (24-VOLT, 75/70-WATT) (HIGH/LOW BEAM) 140, 142
LAMP (24-VOLT) 136
LAMP (24-VOLT) (ENGINE TEMPERATURE) . . . 439
LAMP (24-VOLT) (HYD OIL TEMP) 439
LAMP (24-VOLT) (HYDRAULIC PRESSURE) . . . 439
LAMP (24-VOLT) (OIL PRESSURE) 439
LAMP (24-VOLT) (PARKING BRAKE) 451
LAMP (24-VOLT) (RED) 455
LAMP (24-VOLT) (RUNNING LIGHTS) 140, 142
LAMP (24-VOLT) (SIGNAL) 138
LAMP (24-VOLT) (TURN SIGNAL) 140, 142
LAMP AS-INDICATOR (RED) 152
LAMP AS-INDICATOR (RED) (ALTERNATOR) 448, 460
LAMP GP-DOME (24-VOLT) 424
LAMP GP-FLOOD 133, 134
LAMP GP-FLOOD–24-VOLT 130
LAMP GP-FLOOD–CAB 135
LAMP GP-FLOOD–SUSPENDED 131, 132
LAMP GP-HEAD & SIGNAL 136, 138
LAMP GP-HEAD & SIGNAL–LH 140
LAMP GP-HEAD & SIGNAL–RH 142
LAMP GP-REGISTRATION PLATE 144
LAMP GP-STOP & TAIL 145
LAMP GP-WARNING BEACON–AMBER 146
LAMP-HALOGEN (24-VOLT, 70-WATT) 130, 132, 135
LAMP-HALOGEN (24-VOLT, 70-WATT) (FLOODLIGHT) 131, 133, 134
LAMP-LED (24-VOLT, WHITE) (FUEL LEVEL GAUGE) 409
LIFTING GP-ENGINE 34
LIGHTING GP-FLOOD–CAB 149
LIGHTING GP-FLOOD–OPEN ROPS 147, 150
LIGHTING GP-SIGNAL 152
LIGHTING GP-WARNING 158, 159
LINER GP-CAB 424
LINES GP-AIR 81
LINES GP-AIR CONDITIONER 426, 428
LINES GP-BRAKE 282
LINES GP-BRAKE & SHIFT 283
LINES GP-CAB HEATER 430
LINES GP-FILTER 308, 309, 310
LINES GP-FUEL 96, 98
LINES GP-HYDRAULIC OIL COOLER 311
LINES GP-PROPEL 218
LINES GP-SHIFT 220
LINES GP-STEERING 288, 289
LINES GP-STEERING CYLINDER 290

INDEX

NAME PAGE

LINES GP-VIBRATORY 357
LINKAGE GP. 432

M

MANIFOLD & VALVE GP–HYDRAULIC OIL COOLER BYPASS. 312 314
METER GP-VIBRATORY 415 417 433
MIRROR GP-REAR VIEW. 438
MIRROR GP-REAR VIEW–EXTERIOR. 437
MIRROR GP-REAR VIEW–INTERIOR 435
MIRROR GP-REAR VIEW–ROPS 436
MODULE GP-TIMER. 451 456
MODULE GP-WARNING INDICATOR 439
MOTOR & MTG GP-PROPEL–AXLE 222 224
MOTOR & MTG GP-VIBRATORY 359
MOTOR GP-PISTON. 318
MOTOR GP-PISTON–PROPEL. 320
MOTOR GP-PISTON–VIBRATORY 316
MOTOR GP-WINDOW WIPER. 441 442
MOTOR GP-WINDOW WIPER (24-VOLT, 2-SPEED). 440
MOTOR GP-WINDOW WIPER (24-VOLT) (REAR) 497
MOTOR GP-WINDOW WIPER–FRONT 440
MOUNTING GP-CAB. 443
MOUNTING GP-ENGINE 35
MOUNTING GP-ENGINE FLEXIBLE. 37
MOUNTING GP-WHEEL. 225 226 227
MUFFLER GP. 82

O

OPERATOR AR 444 445
OPERATOR AR-OPEN ROPS 446 447
OPERATOR AR–CAB WITH AIR CONDITIONER 445
OPERATOR AR–CAB WITHOUT AIR CONDITIONER 446
OPTION AR-MACHINE. 4
ORIFICE AS-AIR CONDITIONER 369 372

P

PADLOCK GP. 504
PADLOCK GP (VANDALISM GUARD). 419
PAN GP-OIL 38

NAME PAGE

PANEL GP-INSTRUMENT–CENTER CONSOLE 460 464
PANEL GP-INSTRUMENT–FRONT CONSOLE . . 448
PANEL GP-INSTRUMENT–SIDE CONSOLE. 451 455
PISTON & ROD GP 40 42 43
PLANETARY GP-FINAL DRIVE 228 229 231 233
PLANETARY GP-FINAL DRIVE–AXLE 230
PLATE & FILM GP 504 515
PLATE & FILM GP–ENGLISH 506
PLATE & FILM GP–FRENCH. 508
PLATE & FILM GP–PORTUGUESE 511
PLATE & FILM GP–RUSSIAN 513
PLATE & FILM GP–SPANISH 510
PLATE-WARNING (NO CLEARANCE) 508 510 511 513
PLATE-WARNING-ROPS/FOPS 508 510 511 513
PLATFORM GP-OPERATOR. 468
PLUG AS-DRAIN (MAGNETIC) 192
PLUG AS-DRAIN (MAGNETIC) (DRIVE AXLE) 188 190
PLUG GP-ENGINE 45 46 47
PLUG-DRAIN. 336
PLUG-DRAIN (ENGINE OIL). 38
PLUG-DRAIN (FINAL DRIVE PLANETARY). 228 231
PLUG-DRAIN (FINAL DRIVE). 204
PLUG-MAGNETIC (ECCENTRIC WEIGHT). 353 354
PLUG-MAGNETIC (FINAL DRIVE PLANETARY). 365
PLUG-MAGNETIC (SMOOTH DRUM). 208
PULLEY GP-CRANKSHAFT 48 49
PUMP & MTG GP-PROPEL. 234
PUMP & MTG GP-STEERING. 291 292
PUMP & MTG GP-VIBRATORY. 360
PUMP & MTG GP-VIBRATORY–VARIABLE DISPLACEMENT. 362
PUMP GP-ENGINE OIL. 56
PUMP GP-FUEL INJECTION 100 101 102 105 108

INDEX

NAME	PAGE
PUMP GP-FUEL PRM & PRIM FILTER	111
PUMP GP-FUEL TRANSFER	113
PUMP GP-GEAR (STEERING)	292
PUMP GP-GEAR–STEERING	322
PUMP GP-HAND	398
PUMP GP-METERING (HMU)	392 394 396 423
PUMP GP-PISTON–PROPEL, AXLE	323
PUMP GP-PISTON–PROPEL, DRUM	325
PUMP GP-PISTON–VIBRATORY	327
PUMP GP-PISTON–VIBRATORY, VARIABLE DISP	328
PUMP GP-WATER	64

R

NAME	PAGE
RADIATOR & HYD OIL COOLER GP	66 68 70 72
RADIATOR GP	68 70
RECOVERY GP-COOLANT	74 75
RELAY AS (24-VOLT)	94
RELAY AS (24-VOLT) (BACKUP ALARM)	152
RELAY AS (24-VOLT) (BRAKE ONE)	452 457
RELAY AS (24-VOLT) (BRAKE TWO)	452 457
RELAY AS (24-VOLT) (COOLANT TEMPERATURE)	452 457
RELAY AS (24-VOLT) (ENGINE OIL PRESSURE)	452 457
RELAY AS (24-VOLT) (FUNCTION LIGHT)	452
RELAY AS (24-VOLT) (FUNCTIONAL LIGHT)	457
RELAY AS (24-VOLT) (HYDRAULIC OIL PRESSURE)	452 457
RELAY AS (24-VOLT) (HYDRAULIC OIL TEMPERATURE)	452 457
RELAY AS (24-VOLT) (NEUTRAL START ONE)	452 457
RELAY AS (24-VOLT) (NEUTRAL START TWO)	452 457
RELAY AS (24-VOLT) (TURN SIGNAL)	152
RELAY AS (24-VOLT) (WARNING LIGHT)	452 457
RELAY AS (24-VOLT) (WATER SEPARATOR)	115
ROCKER ARM GP	50
ROPS GP	470
ROPS GP-ENCLOSED	471 473
ROTATING GP-MOTOR	330
ROTATING GP-PUMP	331 333 334

S

NAME	PAGE
SCRAPER GP-PADDED DRUM–WITH SHELL KIT	273
SCRAPER GP-SMOOTH DRUM	275 277
SCRAPER GP-SMOOTH DRUM–FRONT, STEEL	274
SCREEN GP-SUN	475 476
SCREEN GP-SUN–CAB	477
SCREEN-FILTER (WINDOW WASHER PUMP)	488
SEAL (VALVE COVER)	12
SEAL GP-DUO-CONE	204 231
SEAT & MOUNTING GP	478
SEAT & MOUNTING GP–CLOTH	480
SEAT & MOUNTING GP–VINYL	479
SEAT BELT GP (RETRACTABLE, 76-MM)	478 479 480 483
SEAT GP-SUSPENSION	479 480
SEAT GP-SUSPENSION–CLOTH	483 484
SEAT GP-SUSPENSION–VINYL	481
SENDER AS-FUEL LEVEL	118
SENSOR (VPM)	433
SENSOR AS (ACCELEROMETER)	433
SENSOR AS (COMPACTION)	417
SENSOR GP-LIQUID LEVEL (WATER IN FUEL)	89
SENSOR GP-LIQUID LEVEL–WATER IN FUEL	160
SENSOR GP-SPEED (VIBRATORY)	410
SENSOR-SPEED (PROPEL)	486
SEPARATOR GP-WATER	115
SERVICE GP-ENGINE	51
SHAFT GP-ECCENTRIC WEIGHT	364
SHELL GP-PADDED	237 238
SHELL GP-PADDED–SQUARE	239
SHROUD AS	66
SOLENOID (GOVERNOR)	92
SOLENOID GP-THROTTLE	90 161
SPEEDOMETER GP	486
SPRING AS-GAS (ENGINE HOOD)	256
STARTING MOTOR GP-ELECTRIC	162
STEP GP	278
STRAINER AS (HYDRAULIC TANK)	336

INDEX

NAME PAGE

STRAINER-FUEL (TANK). 118
SUN VISOR. 490
SUPPORT GP-VIBRATORY 365
SWITCH AS-MAGNETIC (STARTER RELAY) . . . 167
SWITCH AS-PRESSURE (COMPRESSOR) 384
SWITCH AS-PRESSURE (ENGINE OIL). 173
178
SWITCH AS-PRESSURE (HYDRAULIC OIL) 300
SWITCH AS-PUSH BUTTON (VIBRATORY CONTROL). 389
SWITCH AS-ROCKER (AIR CONDITIONER) 371
SWITCH AS-ROCKER (FLOOD LIGHTS) 455
SWITCH AS-ROCKER (FLOODLIGHT) 147
150
SWITCH AS-ROCKER (LIGHTING). 153
SWITCH AS-ROCKER (SPEED SELECT). 449
460
464
SWITCH AS-ROCKER (START AID) 449
464
SWITCH AS-ROCKER (STARTING AID). 461
SWITCH AS-ROCKER (THROTTLE). 449
SWITCH AS-ROCKER (VIBRATORY SELECT). 452
457
SWITCH AS-ROCKER (WARNING BEACON) . . . 158
159
SWITCH AS-ROTARY (24-VOLT) (FAN) 455
SWITCH AS-ROTARY (WIPER, WASHER) 455
SWITCH AS-START (KEY) 448
460
464
SWITCH AS-TEMPERATURE (COOLANT) 173
178
SWITCH AS-TEMPERATURE (HYDRAULIC ALERT INDICATOR). 336
SWITCH AS-TOGGLE. 94
SWITCH AS-TOGGLE (WATER SEPARATOR) 115
SWITCH GP-DISCONNECT (BATTERY) 123
SWITCH GP-DISCONNECT–BATTERY 163
SWITCH GP-MAGNETIC 164
166
167
SWITCH GP-MAGNETIC (24-VOLT) (MAIN POWER RELAY). 456
SWITCH GP-MAGNETIC (24-VOLT) (MAIN RELAY). 451
SWITCH GP-MAGNETIC–MAIN POWER RELAY. 165
SWITCH GP-MAGNETIC–MAIN RELAY. 168
SWITCH GP-MAGNETIC–MAIN RELAY–MAIN POWER RELAY 169
SWITCH GP-PUSH BUTTON (PARKING BRAKE). 451
455
SWITCH GP-ROTARY (TURN SIGNAL, HAZARD) 152
SWITCH GP-ROTARY (WIPER, WASHER) 455
SWITCH-LIMIT. 342

NAME PAGE

SWITCH-MICRO (NEUTRAL POSITION) 390
SWITCH-TEMPERATURE (ENGINE COOLANT). 102
105
108
SWITCH-TEMPERATURE (HVAC). 368

T

TANK & MTG GP-FUEL 117
TANK & MTG GP-HYDRAULIC 335
TANK GP-COOLANT. 74
TANK GP-COOLANT (RECOVERY) 75
TANK GP-FUEL 118
TANK GP-HYDRAULIC. 336
TANK GP-WINDOW WASHER. 488
TILT AR-CAB 489
TURBOCHARGER GP 84

V

V-BELT (COMPRESSOR) 384
V-BELT SET (INCLUDES 2-BELTS) (FAN DRIVE) 28
VALVE & MTG GP-CONTROL. 338
VALVE AS (REFRIGERANT, HIGH SIDE) 384
VALVE AS (REFRIGERANT, LOW SIDE). 384
VALVE AS-PRESSURE RELIEF (REFRIGERANT COMPRESSOR) 383
VALVE AS-RELIEF (FUEL) 94
98
VALVE GP-BYPASS–HYDRAULIC OIL COOLER. 339
VALVE GP-CONTROL 340
341
VALVE GP-PUMP CONTROL. 342
343
344
345
VALVE GP-RELIEF 346
VALVE GP-RELIEF (COMBINATION). 302
304
VALVE GP-RELIEF (CROSSOVER) 303
306
VALVE GP-RELIEF (PROPEL PUMP) 302
VALVE GP-RELIEF–CHARGE PRESSURE, VIBRATORY. 347
VALVE GP-SHUTOFF (ENGINE OIL DRAIN) 51
VALVE GP-SHUTOFF (FUEL DRAIN) 118
VALVE GP-SOLENOID (24-VOLT) (FUEL SHUTOFF) 100
VALVE GP-SOLENOID (PROPEL PUMP). 302
304
VALVE GP-SOLENOID (SHIFT). 340
VALVE GP-SOLENOID–SHIFT 348
VALVE MECHANISM GP. 53
54
VISOR GP-CAB 490

INDEX

NAME	PAGE

W

WARNING GP-BACKUP 170
WHEEL & MTG GP-DRIVE 240
241
242
WHEEL & TIRE GP 243
244
247
248
WHEEL & TIRE GP–LH 246
250
WHEEL & TIRE GP–RH 245
249
WINDOW GP-CAB 491
494
WINDOW GP-CAB–RH 492
WINDOW GP-DOOR–SLIDING 495
WIPER & WASHER GP-WINDOW 497
499
WIRING GP-AIR CONDITIONER 171
WIRING GP-CAB 172
WIRING GP-MACHINE 173
178

MACHINE ARRANGEMENT

239-0794 CHASSIS AR

S/N: TJL1-UP

PART OF 316-9934 GENERAL AR

SMCS-7000 **i03034961**

NOTE	PART NUMBER	QTY	PART NAME 1 2 3 4 5 6 (PRODUCT LEVEL)	SEE PAGE
Y	*296-0023*	1	ENCLOSURE GP-ENGINE	256
Y	*239-1496*	1	FRAME GP-REAR	260
Y	*220-8539*	1	PLATE & FILM GP	504
Y	*220-8703*	1	STEP GP	278
Y	*239-0641*	1	TANK & MTG GP-FUEL	117
Y	*218-2751*	1	TANK & MTG GP-HYDRAULIC	335

Y - SEPARATE ILLUSTRATION

<END>

327-7069 CHASSIS AR

S/N: TJL1-UP

PART OF 357-7421, 368-9181, 368-9182, 369-9031, 376-1389, 376-1392, 376-1393 DISTRIBUTION AR

AN ATTACHMENT

SMCS-7000 **i03057311**

NOTE	PART NUMBER	QTY	PART NAME 1 2 3 4 5 6 (PRODUCT LEVEL)	SEE PAGE
Y	*220-4051*	1	DRUM GP-DRIVE & VIBRATORY	206
Y	*217-2945*	1	FRAME GP-FRONT	258
Y	*148-6790*	1	INSTALLATION GP-DRUM	216

Y - SEPARATE ILLUSTRATION

<END>

327-7071 CHASSIS AR

S/N: TJL1-UP

AN ATTACHMENT

SMCS-7000 **i03064100**

NOTE	PART NUMBER	QTY	PART NAME 1 2 3 4 5 6 (PRODUCT LEVEL)	SEE PAGE
Y	*326-3592*	1	CLAMP GP-HYDRAULIC LINES	295
Y	*242-3497*	1	DRUM GP-DRIVE & VIBRATORY	207
Y	*242-3468*	1	FRAME GP-FRONT (SMOOTH DRUM, ADDED WEIGHT)	259
Y	*242-5116*	1	INSTALLATION GP-DRUM	217

Y - SEPARATE ILLUSTRATION

<END>

MACHINE ARRANGEMENT

357-7421 DISTRIBUTION AR

S/N: TJL1-UP

AN ATTACHMENT

SMCS-7000 **i04787083**

NOTE	PART NUMBER	QTY	PART NAME 1 2 3 4 5 6 (PRODUCT LEVEL)	SEE PAGE
Y	*327-7076*	1	BUMPER AR (PADDED SHELL, WITHOUT BLADE)	251
Y	*327-7069*	1	CHASSIS AR	1
Y	*204-1328*	1	GAUGE GP-VIBRATORY	410
Y	*241-3783*	1	GUARD GP-LINES	262
Y	*348-5643*	1	OPERATOR AR-OPEN ROPS	447
Y	*213-3152*	1	SCRAPER GP-PADDED DRUM (WITH SHELL KIT)	273
Y	*358-1226*	1	SEAT & MOUNTING GP (VINYL)	479
Y	*268-4040*	1	WHEEL & MTG GP-DRIVE	241

Y - SEPARATE ILLUSTRATION

<END>

368-9181 DISTRIBUTION AR

S/N: TJL1-UP

AN ATTACHMENT

SMCS-7000 **i04371158**

NOTE	PART NUMBER	QTY	PART NAME 1 2 3 4 5 6 (PRODUCT LEVEL)	SEE PAGE
Y	*327-7077*	1	BUMPER AR (PADDED SHELL, STANDARD WEIGHT)	251
Y	*327-7069*	1	CHASSIS AR	1
Y	*204-1328*	1	GAUGE GP-VIBRATORY	410
Y	*241-3783*	1	GUARD GP-LINES	262
Y	*220-8754*	1	GUARD GP-TRANSMISSION	263
Y	*324-9217*	1	MOUNTING GP-WHEEL	227
Y	*348-5641*	1	OPERATOR AR	446
Y	*224-0857*	1	PLATE & FILM GP	506
Y	*146-3165*	1	SCRAPER GP-SMOOTH DRUM	274
Y	*358-1227*	1	SEAT & MOUNTING GP (CLOTH)	480
Y	*212-1559*	1	TILT AR-CAB	489

Y - SEPARATE ILLUSTRATION

<END>

368-9182 DISTRIBUTION AR

S/N: TJL1-UP

AN ATTACHMENT

SMCS-7000 **i04371159**

NOTE	PART NUMBER	QTY	PART NAME 1 2 3 4 5 6 (PRODUCT LEVEL)	SEE PAGE
Y	*327-7077*	1	BUMPER AR (PADDED SHELL, STANDARD WEIGHT)	251
Y	*327-7069*	1	CHASSIS AR	1
Y	*204-1328*	1	GAUGE GP-VIBRATORY	410
Y	*324-9217*	1	MOUNTING GP-WHEEL	227
Y	*348-5642*	1	OPERATOR AR-OPEN ROPS	446
Y	*224-0857*	1	PLATE & FILM GP	506
Y	*146-3165*	1	SCRAPER GP-SMOOTH DRUM	274
Y	*358-1226*	1	SEAT & MOUNTING GP	479

Y - SEPARATE ILLUSTRATION

<END>

MACHINE ARRANGEMENT

369-9031 DISTRIBUTION AR

S/N: TJL1-UP

AN ATTACHMENT

SMCS-7000 **i04372739**

NOTE	PART NUMBER	QTY	PART NAME 1 2 3 4 5 6 (PRODUCT LEVEL)	SEE PAGE
Y	*327-7077*	1	BUMPER AR (PADDED SHELL, STANDARD WEIGHT)	251
Y	*327-7069*	1	CHASSIS AR	1
Y	*204-1328*	1	GAUGE GP-VIBRATORY	410
Y	*241-3783*	1	GUARD GP-LINES	262
Y	*220-8754*	1	GUARD GP-TRANSMISSION	263
Y	*107-4643*	1	MIRROR GP-REAR VIEW (INTERIOR)	435
Y	*324-9217*	1	MOUNTING GP-WHEEL	227
Y	*348-5640*	1	OPERATOR AR (CAB WITH AIR CONDITIONER)	445
Y	*146-3165*	1	SCRAPER GP-SMOOTH DRUM	274
Y	*358-1227*	1	SEAT & MOUNTING GP (CLOTH)	480

Y - SEPARATE ILLUSTRATION

<END>

376-1389 DISTRIBUTION AR

S/N: TJL1-UP

AN ATTACHMENT

SMCS-7000 **i04658813**

NOTE	PART NUMBER	QTY	PART NAME 1 2 3 4 5 6 (PRODUCT LEVEL)	SEE PAGE
Y	*327-7077*	1	BUMPER AR (PADDED SHELL, STANDARD WEIGHT)	251
Y	*327-7069*	1	CHASSIS AR	1
Y	*204-1328*	1	GAUGE GP-VIBRATORY	410
Y	*241-3783*	1	GUARD GP-LINES	262
Y	*324-9216*	1	MOUNTING GP-WHEEL	226
Y	*348-5643*	1	OPERATOR AR-OPEN ROPS	447
Y	*146-3165*	1	SCRAPER GP-SMOOTH DRUM	274
Y	*358-1226*	1	SEAT & MOUNTING GP (VINYL)	479

Y - SEPARATE ILLUSTRATION

<END>

376-1392 DISTRIBUTION AR

S/N: TJL1-UP

AN ATTACHMENT

SMCS-7000 **i04659192**

NOTE	PART NUMBER	QTY	PART NAME 1 2 3 4 5 6 (PRODUCT LEVEL)	SEE PAGE
Y	*327-7077*	1	BUMPER AR (PADDED SHELL, STANDARD WEIGHT)	251
Y	*327-7069*	1	CHASSIS AR	1
Y	*204-1328*	1	GAUGE GP-VIBRATORY	410
Y	*324-9216*	1	MOUNTING GP-WHEEL	226
Y	*348-5642*	1	OPERATOR AR-OPEN ROPS	446
Y	*224-0857*	1	PLATE & FILM GP	506
Y	*146-3165*	1	SCRAPER GP-SMOOTH DRUM	274
Y	*358-1226*	1	SEAT & MOUNTING GP (VINYL)	479

Y - SEPARATE ILLUSTRATION

<END>

MACHINE ARRANGEMENT

376-1393 DISTRIBUTION AR

S/N: TJL1-UP

AN ATTACHMENT

SMCS-7000 **i04403793**

NOTE	PART NUMBER	QTY	PART NAME 1 2 3 4 5 6 (PRODUCT LEVEL)	SEE PAGE
Y	*327-7077*	1	BUMPER AR (PADDED SHELL, STANDARD WEIGHT)	251
Y	*327-7069*	1	CHASSIS AR	1
Y	*204-1328*	1	GAUGE GP-VIBRATORY	410
Y	*241-3783*	1	GUARD GP-LINES	262
Y	*220-8754*	1	GUARD GP-TRANSMISSION	263
Y	*107-4643*	1	MIRROR GP-REAR VIEW (INTERIOR)	435
Y	*324-9216*	1	MOUNTING GP-WHEEL	226
Y	*348-5640*	1	OPERATOR AR (CAB WITH AIR CONDITIONER)	445
Y	*146-3165*	1	SCRAPER GP-SMOOTH DRUM (FRONT, STEEL)	274
Y	*358-1227*	1	SEAT & MOUNTING GP (CLOTH)	480

Y - SEPARATE ILLUSTRATION

<END>

316-9934 GENERAL AR

S/N: TJL1-UP

SMCS-7000 **i04015226**

NOTE	PART NUMBER	QTY	PART NAME 1 2 3 4 5 6 (PRODUCT LEVEL)	SEE PAGE
Y	*227-4257*	1	AXLE AR-DRIVE (WITHOUT BRAKES)	187
Y	*239-0794*	1	CHASSIS AR	1
Y	*238-8680*	1	ELECTRICAL AR	126
Y	*304-6910*	1	ENGINE AR	5
Y	*291-5081*	1	HYDRAULIC AR-AUXILIARY	307
Y	*224-4336*	1	HYDRAULIC AR-PROPEL	215
Y	*219-4168*	1	HYDRAULIC AR-VIBRATORY	356
Y	*219-4162*	1	INSTALLATION AR-ENGINE	7
			S/N: TJL1-623	
Y	*348-5645*	1	INSTALLATION AR-ENGINE	7
			S/N: TJL624-UP	

Y - SEPARATE ILLUSTRATION

<END>

357-7423 OPTION AR-MACHINE

S/N: TJL1-UP

AN ATTACHMENT

SMCS-7000 **i04787080**

NOTE	PART NUMBER	QTY	PART NAME 1 2 3 4 5 6 (PRODUCT LEVEL)	SEE PAGE
Y	*348-5643*	1	OPERATOR AR-OPEN ROPS	447
Y	*358-1226*	1	SEAT & MOUNTING GP (VINYL)	479

Y - SEPARATE ILLUSTRATION

<END>

ENGINE ARRANGEMENT

304-6910 ENGINE AR

S/N: TJL1-UP

PART OF 316-9934 GENERAL AR

SMCS-1000 **i05357689**

NOTE	PART NUMBER	QTY	PART NAME 1 2 3 4 5 6 (PRODUCT LEVEL)	SEE PAGE
CY	**390-5113**	1	ENGINE AR-PRIMARY	6

C - CHANGE FROM PREVIOUS TYPE
Y - SEPARATE ILLUSTRATION

<END>

297-4055 ENGINE AR-PRIMARY*R

S/N: CRS1-UP; CST1-UP

97 BRAKE KW (129 BHP) AT 2200 RPM

PART OF 304-6910 ENGINE AR

SMCS-1000 **i04400670**

NOTE	PART NUMBER	QTY	PART NAME 1 2 3 4 5 6 (PRODUCT LEVEL)	SEE PAGE
Y	*233-9533*	1	ALTERNATOR GP-CHARGING	122
Y	*231-0038*	1	CONNECTION GP-WATER	57
Y	*240-5535*	1	CONVERTER GP-ELECTRICAL	125
Y	*238-2799*	1	COOLER GP-FLTR BASE & ENG OIL	59
Y	*230-9196*	1	COVER GP-FRONT HOUSING	9
Y	*269-3101*	1	COVER GP-VALVE MECHANISM	10
Y	*308-4729*	1	CRANKSHAFT GP	16
Y	*308-4728*	1	CYLINDER BLOCK GP	22
Y	*308-4731*	1	CYLINDER HEAD GP	27
Y	*234-9680*	1	DRIVE GP-FAN	28
Y	*270-4374*	1	ELBOW GP-AIR INLET	80
Y	*232-7378*	1	FILTER GP-ENGINE OIL	55
Y	*245-9831*	1	FLYWHEEL GP	30
Y	*233-9834*	1	GLOW PLUG GP	127
Y	*223-7825*	1	HOUSING GP-FLYWHEEL	31
Y	*308-4764*	1	HOUSING GP-FRONT	32
Y	*232-3713*	1	LIFTING GP-ENGINE	34
Y	*252-6456*	1	MOUNTING GP-ENGINE	35
Y	*232-2565*	1	PAN GP-OIL	38
Y	*308-4730*	1	PISTON & ROD GP	42
Y	*225-4317*	1	PLUG GP-ENGINE	45
Y	*232-6204*	1	PLUG GP-ENGINE	46
Y	*253-2479*	1	PLUG GP-ENGINE	47
Y	*230-7353*	1	PULLEY GP-CRANKSHAFT	48
			S/N: CRS1-59947	
Y	*360-7351*	1	PULLEY GP-CRANKSHAFT	49
			S/N: CRS59948-UP	
Y	*230-7578*	1	PUMP GP-ENGINE OIL	56
Y	*308-4733*	1	PUMP GP-FUEL INJECTION	102
Y	*233-9417*	1	PUMP GP-FUEL PRM & PRIM FILTER	111
Y	*230-7355*	1	PUMP GP-WATER	64
Y	*230-7304*	1	STARTING MOTOR GP-ELECTRIC	162
Y	*233-9539*	1	TURBOCHARGER GP	84
Y	*308-4732*	1	VALVE MECHANISM GP	54
	359-0734	1	CYLINDER BLOCK GP-SHORT	
			AVAILABLE GASKET KIT(S):	
	272-0494	1	KIT-GASKET (BOTTOM)	
			(INCLUDES GASKETS AND SEALS)	
	277-5156	1	KIT-GASKET (TOP)	
			(INCLUDES GASKETS, SEALS, AND WASHER)	

Y - SEPARATE ILLUSTRATION

<END>

ENGINE ARRANGEMENT

390-5113 ENGINE AR-PRIMARY

S/N: CRS1-UP; CST1-UP
97 BRAKE KW (130 BHP) AT 2200 RPM
PART OF 304-6910 ENGINE AR

SMCS-1000 **i05009952**

NOTE	PART NUMBER	QTY	PART NAME 1 2 3 4 5 6 (PRODUCT LEVEL)	SEE PAGE
Y	*233-9533*	1	ALTERNATOR GP-CHARGING	122
Y	*232-7528*	1	CAMSHAFT GP	8
Y	*231-0038*	1	CONNECTION GP-WATER	57
Y	*238-2799*	1	COOLER GP-FLTR BASE & ENG OIL	59
Y	*230-9196*	1	COVER GP-FRONT HOUSING	9
Y	*269-3101*	1	COVER GP-VALVE MECHANISM	10
Y	*232-7439*	1	CRANKSHAFT GP	15
Y	*232-7606*	1	CYLINDER BLOCK GP	21
Y	*232-7524*	1	CYLINDER HEAD GP	26
Y	*234-9680*	1	DRIVE GP-FAN	28
Y	*256-4438*	1	ELBOW GP-AIR INLET	79
Y	*232-7378*	1	FILTER GP-ENGINE OIL	55
Y	*245-9831*	1	FLYWHEEL GP	30
Y	*233-9834*	1	GLOW PLUG GP	127
Y	*223-7825*	1	HOUSING GP-FLYWHEEL	31
Y	*308-4764*	1	HOUSING GP-FRONT	32
Y	*232-3713*	1	LIFTING GP-ENGINE	34
Y	*252-6456*	1	MOUNTING GP-ENGINE	35
Y	*232-2565*	1	PAN GP-OIL	38
Y	*232-7442*	1	PISTON & ROD GP	40
Y	*225-4317*	1	PLUG GP-ENGINE	45
Y	*232-6204*	1	PLUG GP-ENGINE	46
Y	*253-2479*	1	PLUG GP-ENGINE	47
Y	*360-7351*	1	PULLEY GP-CRANKSHAFT	49
Y	*230-7578*	1	PUMP GP-ENGINE OIL	56
Y	*308-4733*	1	PUMP GP-FUEL INJECTION	102
Y	*391-2704*	1	PUMP GP-FUEL TRANSFER	113
Y	*230-7355*	1	PUMP GP-WATER	64
Y	*230-7304*	1	STARTING MOTOR GP-ELECTRIC	162
Y	*233-9539*	1	TURBOCHARGER GP	84
Y	*232-7526*	1	VALVE MECHANISM GP	53
			AVAILABLE GASKET KIT(S):	
	272-0494	1	KIT-GASKET (BOTTOM)	
	277-5156	1	KIT-GASKET (TOP)	

Y - SEPARATE ILLUSTRATION

<END>

219-4162 INSTALLATION AR-ENGINE

S/N: TJL1-623

PART OF 316-9934 GENERAL AR

SMCS-1000 **i03029109**

NOTE	PART NUMBER	QTY	PART NAME 1 2 3 4 5 6 (PRODUCT LEVEL)	SEE PAGE
Y	*217-0747*	1	AIR CLEANER GP	76
Y	*153-4980*	1	DRIVE GP-PUMP	29
Y	*227-4799*	1	GOVERNOR GP	90
Y	*216-7940*	1	LINES GP-AIR	81
Y	*222-3102*	1	LINES GP-FUEL	96
Y	*220-8779*	1	MOUNTING GP-ENGINE FLEXIBLE	37
Y	*216-8158*	1	MUFFLER GP	82
Y	*217-8225*	1	RADIATOR & HYD OIL COOLER GP	66
Y	*201-7671*	1	RECOVERY GP-COOLANT	74
Y	*220-1960*	1	SERVICE GP-ENGINE (FLUID SAMPLING, DRAIN)	51

Y - SEPARATE ILLUSTRATION

<END>

348-5645 INSTALLATION AR-ENGINE

S/N: TJL624-UP

PART OF 316-9934 GENERAL AR

SMCS-1000 **i05082450**

NOTE	PART NUMBER	QTY	PART NAME 1 2 3 4 5 6 (PRODUCT LEVEL)	SEE PAGE
Y	*217-0747*	1	AIR CLEANER GP	76
Y	*153-4980*	1	DRIVE GP-PUMP	29
Y	*227-4799*	1	GOVERNOR GP	90
Y	*216-7940*	1	LINES GP-AIR	81
Y	*389-7292*	1	LINES GP-FUEL	98
Y	*220-8779*	1	MOUNTING GP-ENGINE FLEXIBLE	37
Y	*216-8158*	1	MUFFLER GP	82
Y	*348-5644*	1	RADIATOR & HYD OIL COOLER GP	72
Y	*348-5646*	1	RECOVERY GP-COOLANT	75
Y	*220-1960*	1	SERVICE GP-ENGINE (FLUID SAMPLING, DRAIN)	51

Y - SEPARATE ILLUSTRATION

<END>

232-7528 CAMSHAFT GP

S/N: CRS1-UP; CST1-UP

PART OF 390-5113 ENGINE AR-PRIMARY

SMCS-1210 **i02560966**

NOTE	REF NO	GRAPHIC REF	PART NUMBER	QTY	PART NAME 1 2 3 4 5 6 (PRODUCT LEVEL)	SEE PAGE
	1	1	**1B-8736**	1	KEY-WOODRUFF	
	2	1	**225-5967**	1	CAMSHAFT	

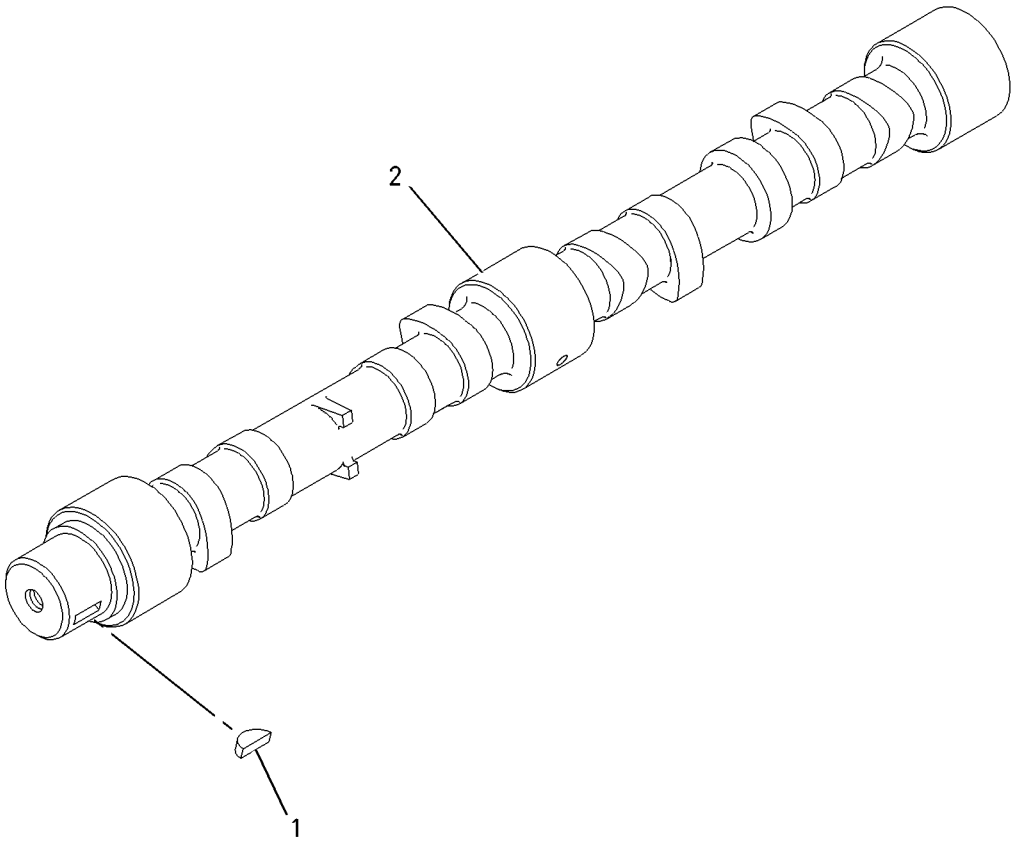

GRAPHIC #1 **<END>** g00911297

230-9196 COVER GP-FRONT HOUSING

S/N: CRS1-UP; CST1-UP

PART OF 297-4055, 390-5113 ENGINE AR-PRIMARY

SMCS-1151, 1166 **i03257700**

NOTE	REF NO	GRAPHIC REF	PART NUMBER	QTY	PART NAME 1 2 3 4 5 6 (PRODUCT LEVEL)	SEE PAGE
	1	1	**6I-0646**	1	BOLT (M10X1.5X14-MM)	
M	2	1	**100-4830**	1	BOLT (M10X1.5X20-MM)	
	3	1	**111-8222**	5	BOLT (M8X16-MM)	
	4	1	**214-3203**	1	WASHER (SEALING)	
C	5	1	**329-7854**	1	PLATE AS	
	5A	1	**329-7856**	1	SEAL-O-RING	

C - CHANGE FROM PREVIOUS TYPE
M - METRIC PART

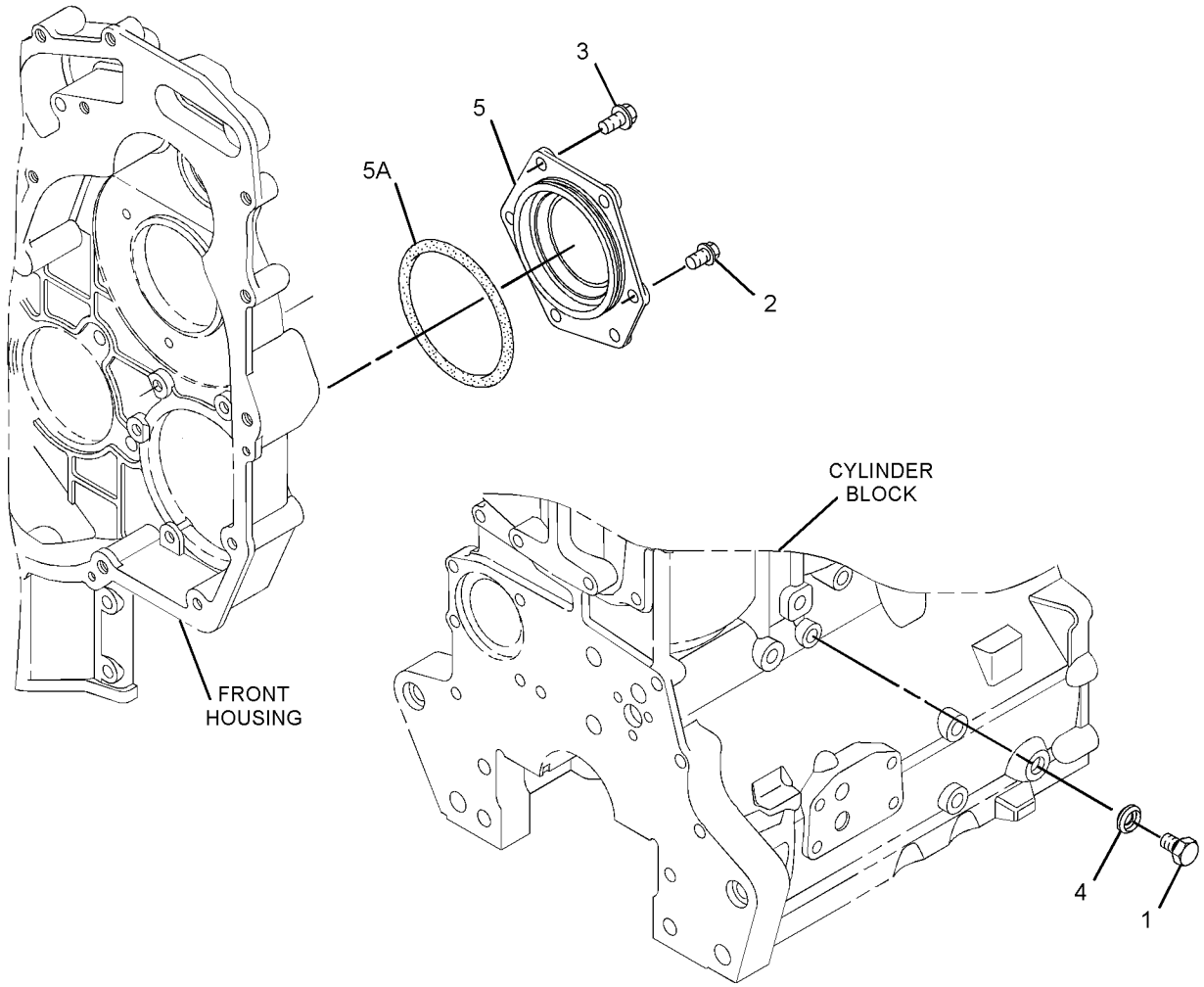

GRAPHIC #1 **<END>** g01649494

269-3101 COVER GP-VALVE MECHANISM

S/N: CRS1-UP; CST1-UP

PART OF 297-4055, 390-5113 ENGINE AR-PRIMARY

SMCS-1107, 1120 **i04952730**

NOTE	REF NO	GRAPHIC REF	PART NUMBER	QTY	PART NAME 1 2 3 4 5 6 (PRODUCT LEVEL)	SEE PAGE
	1	1	**5D-1026**	1	CLAMP-BAND	
M	2	1	**6I-0254**	1	BOLT (M8X1.25X30-MM)	
	3	1	**162-1565**	1	SPRING (CRANKCASE BREATHER HOSE)	
	4	1	**6I-0846**	3	BOLT (M6X1X14-MM)	
	5	1	**6I-4374**	1	BOLT (M8X1.25X60-MM)	
	6	1	**7C-1281**	1	BRACKET	
	7	1	**198-9169**	1	HOSE (CRANKCASE BREATHER)	
	8	1	**230-9127**	1	COVER	
	9	1	**287-8573**	1	PIPE-BREATHER	
C	10	1	**321-2383**	1	FILLER GP-ENGINE OIL	
	10A	1	**306-2337**	1	SEAL-O-RING	
	10B	1	**130-9888**	1	CAP-OIL FILLER (ENGINE)	
	10C	1	**113-1504**	1	SEAL-O-RING	
Y	11	1	**308-1393**	1	COVER GP-VALVE MECHANISM	12
	12	1	**100-4838**	2	BOLT (M6X20-MM)	
	13	1	**217-9039**	1	STRAP-CABLE	

C - CHANGE FROM PREVIOUS TYPE
M - METRIC PART
Y - SEPARATE ILLUSTRATION

269-3101 **COVER GP-VALVE MECHANISM (*contd.*)** **i04952730**

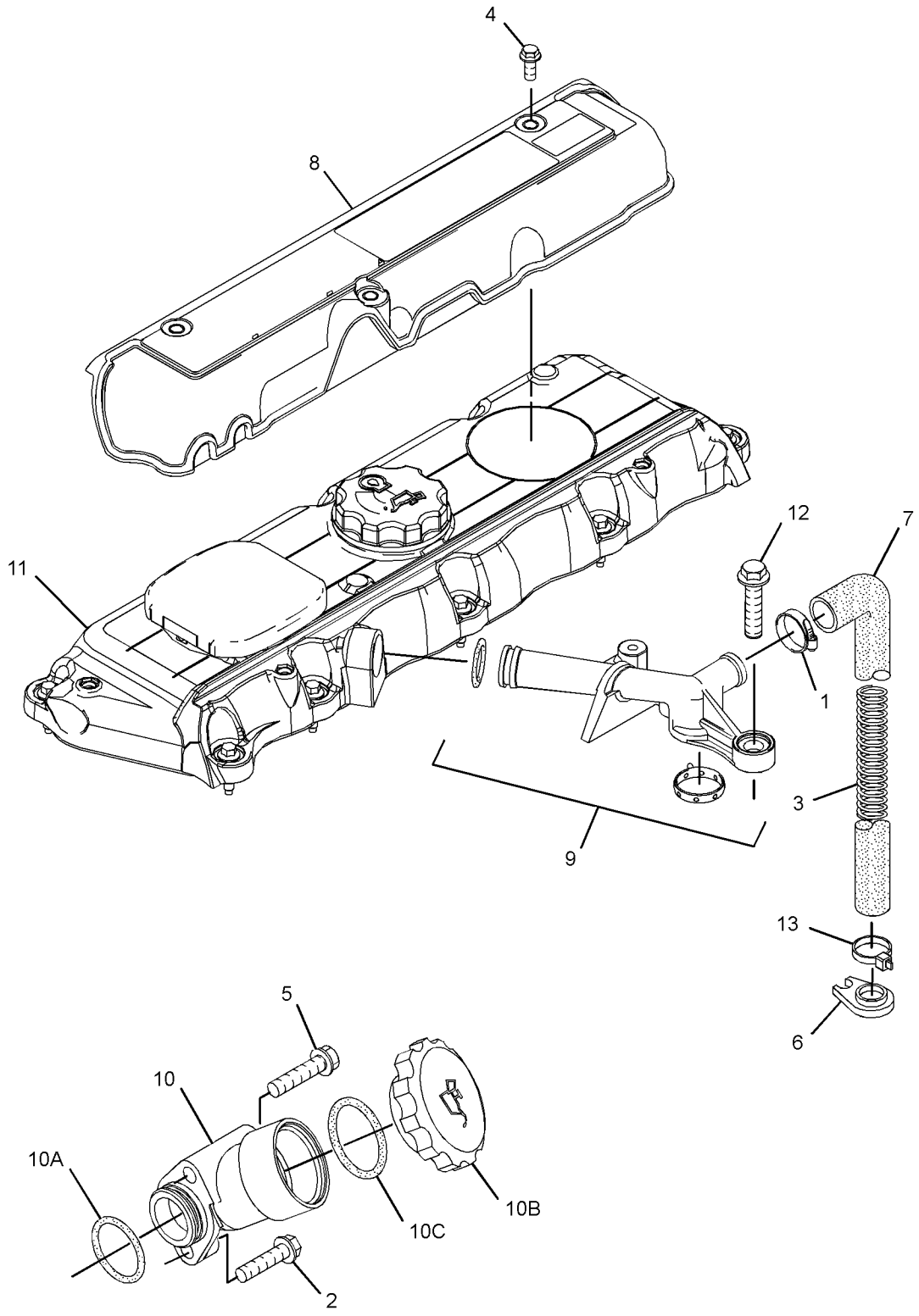

GRAPHIC #1 **<END>** g03164176

308-1393 COVER GP-VALVE MECHANISM

S/N: CRS1-UP; CST1-UP

PART OF 269-3101 COVER GP-VALVE MECHANISM

SMCS-1107, 1120

i04952349

NOTE	REF NO	GRAPHIC REF	PART NUMBER	QTY	PART NAME 1 2 3 4 5 6 (PRODUCT LEVEL)	SEE PAGE
	1	1	**136-3608**	1	CAP AS (ENGINE OIL FILLER)	
	1A	1	**124-0506**	1	SEAL (VALVE COVER)	
	2	1	**225-6451**	1	GASKET (VALVE COVER)	
	3	1	**225-6456**	1	SPRING	
	4	1	**225-6461**	1	CAP	
	5	1	**225-6464**	1	DIAPHRAGM (CRANKCASE PRESSURE CONTACTOR)	
	6	1	**225-6477**	1	PLATE	
	7	1	**225-6478**	4	SCREW-MACHINE	
	8	1	**225-6479**	1	CAP	
	9	1	**349-2746**	1	BOLT	

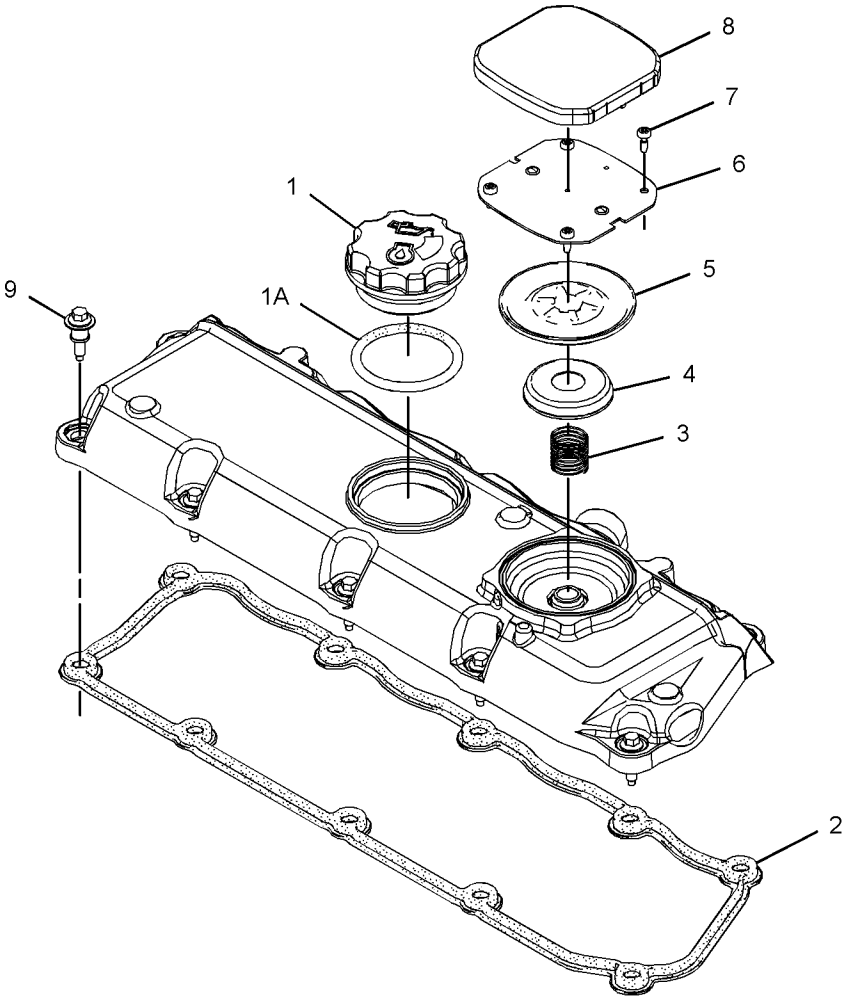

GRAPHIC #1

<END>

g03139884

232-7400 CRANKSHAFT GP

S/N: CRS1-59947; CST1-UP

WITH SPLINE

PART OF 308-4729 CRANKSHAFT GP

SMCS-1202 **i03775490**

NOTE	REF NO	GRAPHIC REF	PART NUMBER	QTY	PART NAME 1 2 3 4 5 6 (PRODUCT LEVEL)	SEE PAGE
	1	1	**1B-8736**	1	KEY-WOODRUFF	
	2	1	**225-7772**	1	BEARING SET-MAIN (STANDARD)	
AB		1	**233-3785**		KIT-CRANKSHAFT BEARING (0.020-IN US)	
AB		1	**233-3784**		KIT-CRANKSHAFT BEARING (0.010-IN US)	
AB		1	**233-3786**		KIT-CRANKSHAFT BEARING (0.030-IN US)	
	3	1	**032-9090**	2	WASHER-THRUST (STANDARD-UPPER)	
AB		1	**067-6873**		WASHER-THRUST (0.18-MM OS)	
	4	1	**032-9091**	2	WASHER-THRUST (STANDARD-LOWER)	
AB		1	**067-6874**		WASHER-THRUST (0.18-MM OS)	
	5	1	**353-2205**	1	KIT-ROD BEARING	
AB		1	**353-2206**		KIT-ROD BEARING (0.25-MM US)	
AB		1	**353-2207**		KIT-ROD BEARING (0.5-MM US)	
AB		1	**353-2208**		KIT-ROD BEARING (0.75-MM US)	

A - NOT PART OF THIS GROUP
B - USE AS REQUIRED

232-7400 **CRANKSHAFT GP (*contd.*)** **i03775490**

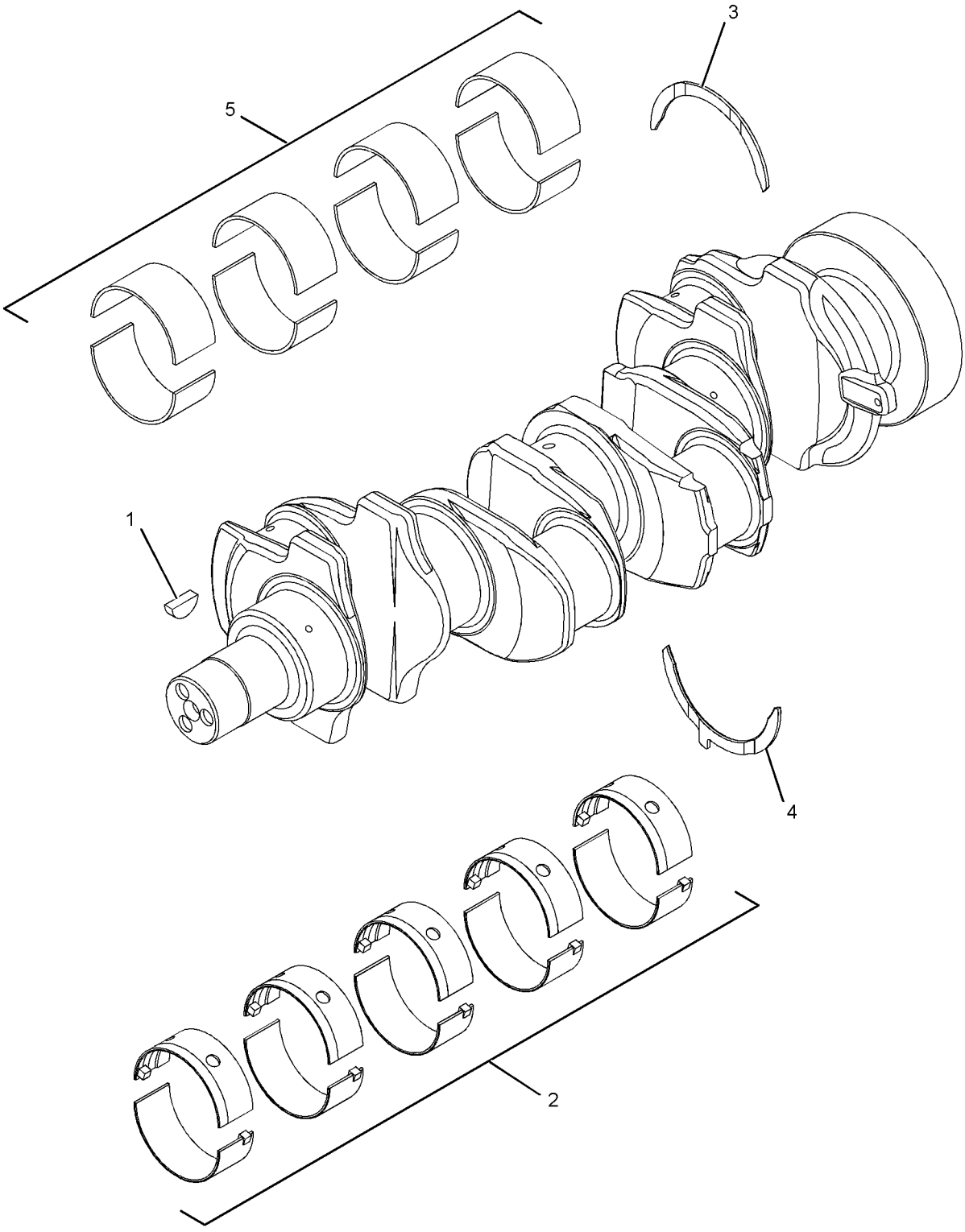

GRAPHIC #1 **<END>** g01369317

232-7439 CRANKSHAFT GP

S/N: CRS1-UP; CST1-UP

PART OF 390-5113 ENGINE AR-PRIMARY

SMCS-1202 **i05165343**

NOTE	REF NO	GRAPHIC REF	PART NUMBER	QTY	PART NAME 1 2 3 4 5 6 (PRODUCT LEVEL)	SEE PAGE
C	1	1	**067-6135**	1	KEY-WOODRUFF	
	2	1	**216-8314**	1	GEAR-CRANKSHAFT (34-TEETH)	
CJY	3	1	**359-0715**	1	CRANKSHAFT GP (W/O SPLINE) (CONNECTING ROD, 68-MM DIA)	18

C - CHANGE FROM PREVIOUS TYPE
J - CHECK CONNECTING ROD JOURNALS TO ENSURE THIS IS CORRECT CRANKSHAFT
Y - SEPARATE ILLUSTRATION

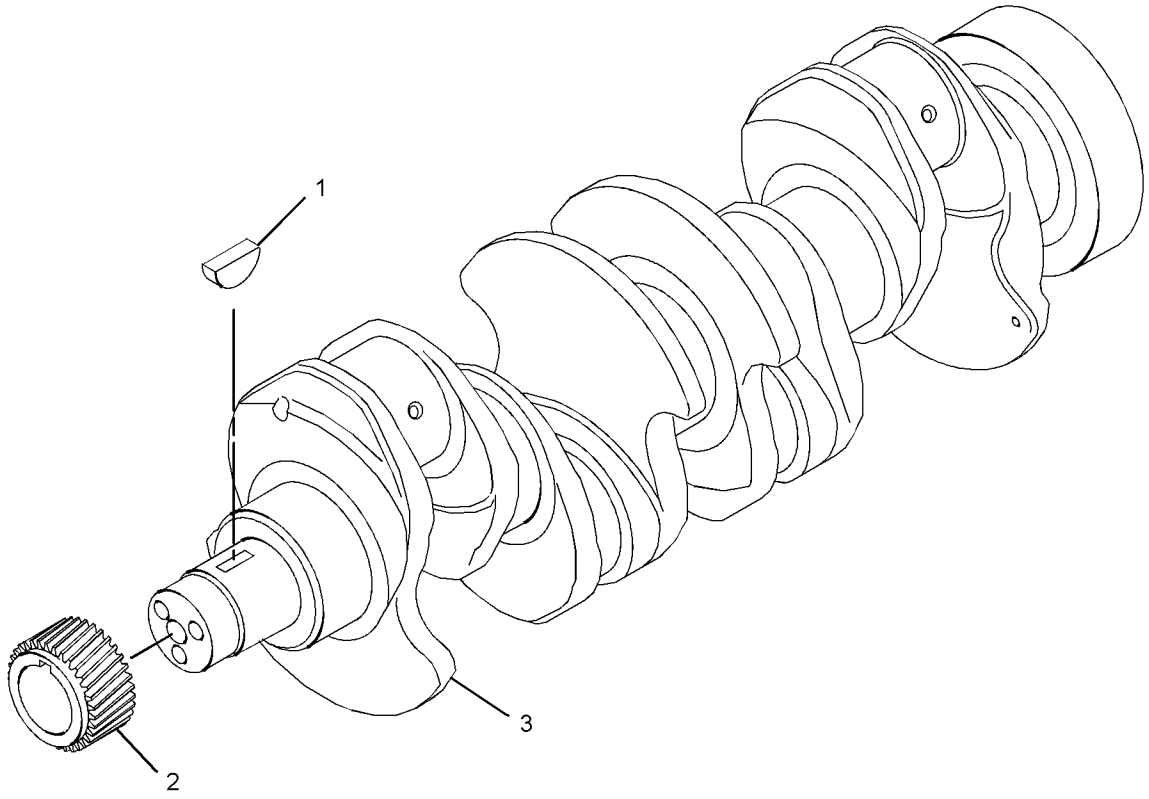

GRAPHIC #1 **<END>** g02177264

308-4729 CRANKSHAFT GP

S/N: CRS1-59947; CST1-UP

PART OF 297-4055 ENGINE AR-PRIMARY

SMCS-1202 **i05165313**

NOTE	REF NO	GRAPHIC REF	PART NUMBER	QTY	PART NAME 1 2 3 4 5 6 (PRODUCT LEVEL)	SEE PAGE
	1	1	**216-8314**	1	GEAR-CRANKSHAFT (34-TEETH)	
JY	2	1	**232-7400**	1	CRANKSHAFT GP (WITH SPLINE) (CONNECTING ROD, 63.48-MM DIA)	13

J - CHECK CONNECTING ROD JOURNAL TO ENSURE THIS IS THE CORRECT CRANKSHAFT
Y - SEPARATE ILLUSTRATION

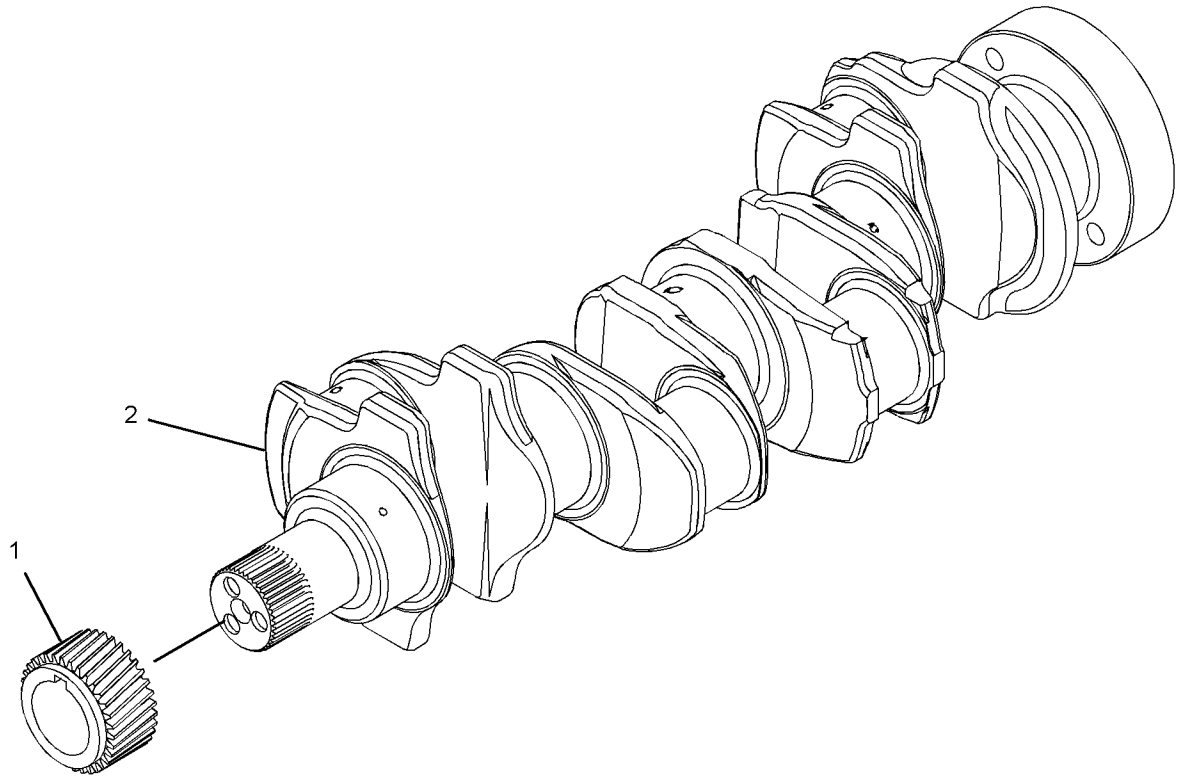

GRAPHIC #1 **<END>** g01376252

308-4729 CRANKSHAFT GP

S/N: CRS59948-UP; CST1-UP

PART OF 297-4055 ENGINE AR-PRIMARY

SMCS-1202 **i05261315**

NOTE	REF NO	GRAPHIC REF	PART NUMBER	QTY	PART NAME 1 2 3 4 5 6 (PRODUCT LEVEL)	SEE PAGE
	1	1	**216-8314**	1	GEAR-CRANKSHAFT (34-TEETH)	
CJY	2	1	**359-0715**	1	CRANKSHAFT GP (W/O SPLINE) (CONNECTING ROD, 68-MM DIA)	18
C	3	1	**067-6135**	1	KEY-WOODRUFF	

C - CHANGE FROM PREVIOUS TYPE
J - CHECK CONNECTING ROD JOURNAL TO ENSURE THIS IS THE CORRECT CRANKSHAFT
Y - SEPARATE ILLUSTRATION

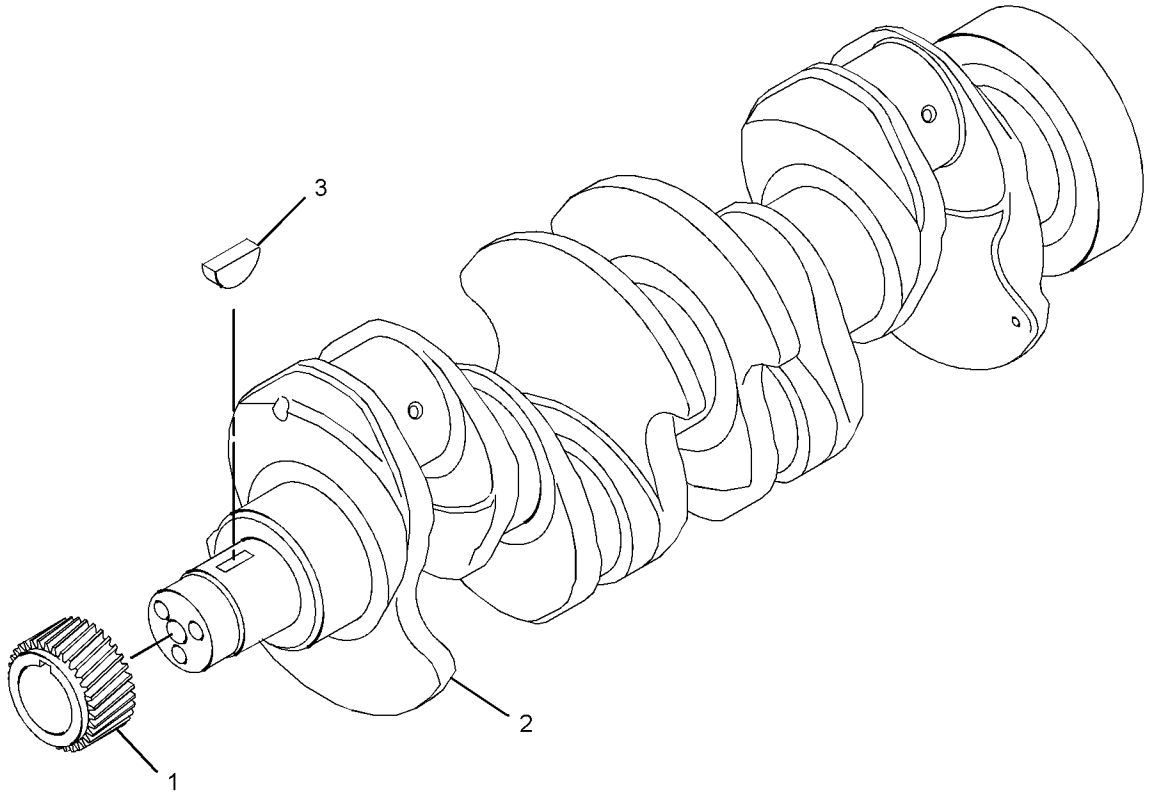

GRAPHIC #1 **<END>** g02163313

359-0715 CRANKSHAFT GP

S/N: CRS1-UP; CST1-UP

PART OF 232-7439, 308-4729 CRANKSHAFT GP

SMCS-1202 **i05294626**

NOTE	REF NO	GRAPHIC REF	PART NUMBER	QTY	PART NAME 1 2 3 4 5 6 (PRODUCT LEVEL)	SEE PAGE
	1	1	**032-9090**	2	WASHER-THRUST (STANDARD-UPPER)	
AB		1	**067-6873**		WASHER-THRUST (0.18-MM OS)	
	2	1	**032-9091**	2	WASHER-THRUST (STANDARD-LOWER)	
AB		1	**067-6874**		WASHER-THRUST (0.18-MM OS)	
	3	1	**353-7423**	1	KIT-BEARING (MAIN)	
AB		1	**233-3786**		KIT-CRANKSHAFT BEARING (0.030-IN US)	
AB		1	**353-7424**		KIT-BEARING (0.25-MM US)	
AB		1	**353-7425**		KIT-BEARING (0.50-MM US)	
AB		1	**353-7426**		KIT-BEARING (0.75-MM US)	
	4	1	**360-3986**	1	KIT-BEARING (STANDARD)	

A - NOT PART OF THIS GROUP
B - USE AS REQUIRED

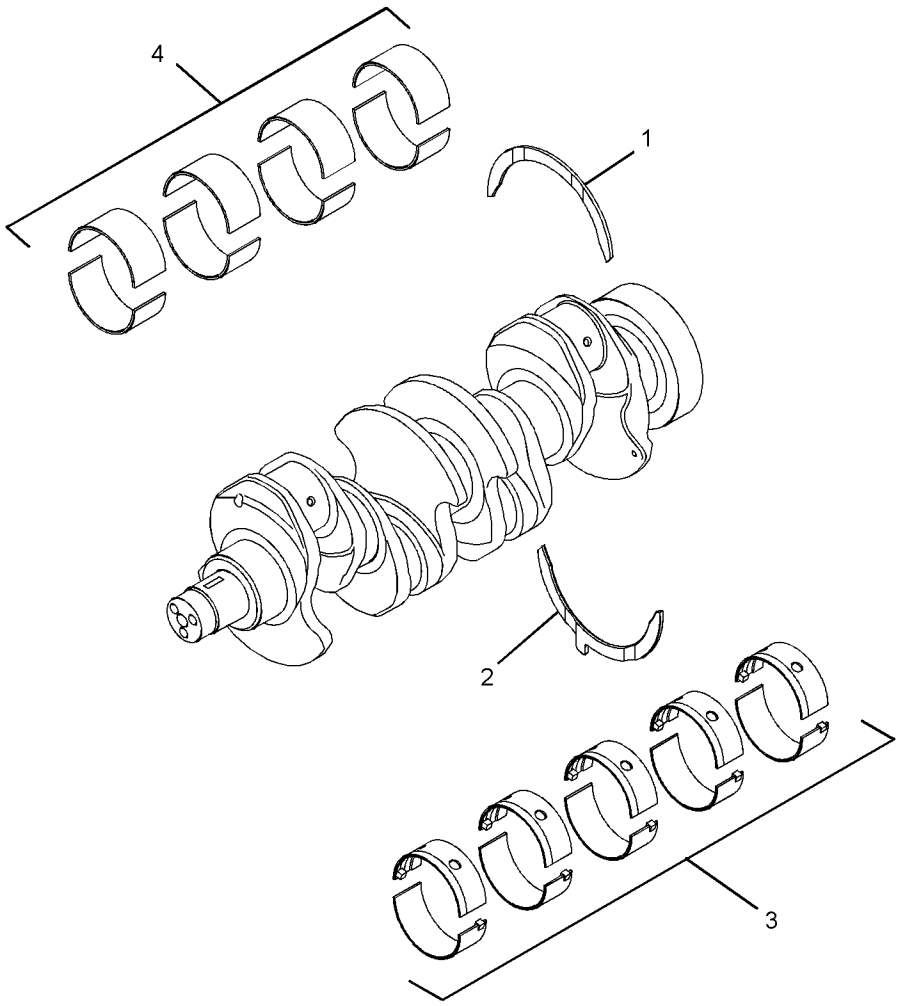

GRAPHIC #1

<END>

g02174712

232-7604 CYLINDER BLOCK GP

S/N: CRS1-UP; CST1-UP

PART OF 308-4728 CYLINDER BLOCK GP

SMCS-1201 **i03251701**

NOTE	REF NO	GRAPHIC REF	PART NUMBER	QTY	PART NAME 1 2 3 4 5 6 (PRODUCT LEVEL)	SEE PAGE
	1	1	**6I-0572**	4	BOLT (M8X1.25X20-MM)	
	2	1	**035-8068**	10	BOLT (5/8-18X3.75-IN)	
	3	1	**067-6002**	10	DOWEL	
	4	1	**067-6006**	1	PLUG	
	5	1	**067-6043**	1	PLUG-SIDE	
M	6	1	**100-4841**	4	BOLT (M6X1X10-MM)	
	7	1	**185-0884**	2	DOWEL	
	8	1	**225-7944**	1	GASKET	
	9	1	**225-8858**	2	PLUG	
	10	1	**232-3751**	1	PLATE	
	11	1	**232-7440**	1	BEARING	
	12	1	**276-5605**	4	JET AS-PISTON COOLING	
	13	1	**232-7596**	1	PLUG	
	14	1	**232-7597**	2	PLUG	
	15	1	**232-7599**	1	PLUG	
	16	1	**232-7600**	1	PLUG-CUP	
	17	1	**232-7603**	1	PLUG	

M - METRIC PART

232-7604 **CYLINDER BLOCK GP (*contd.*)** **i03251701**

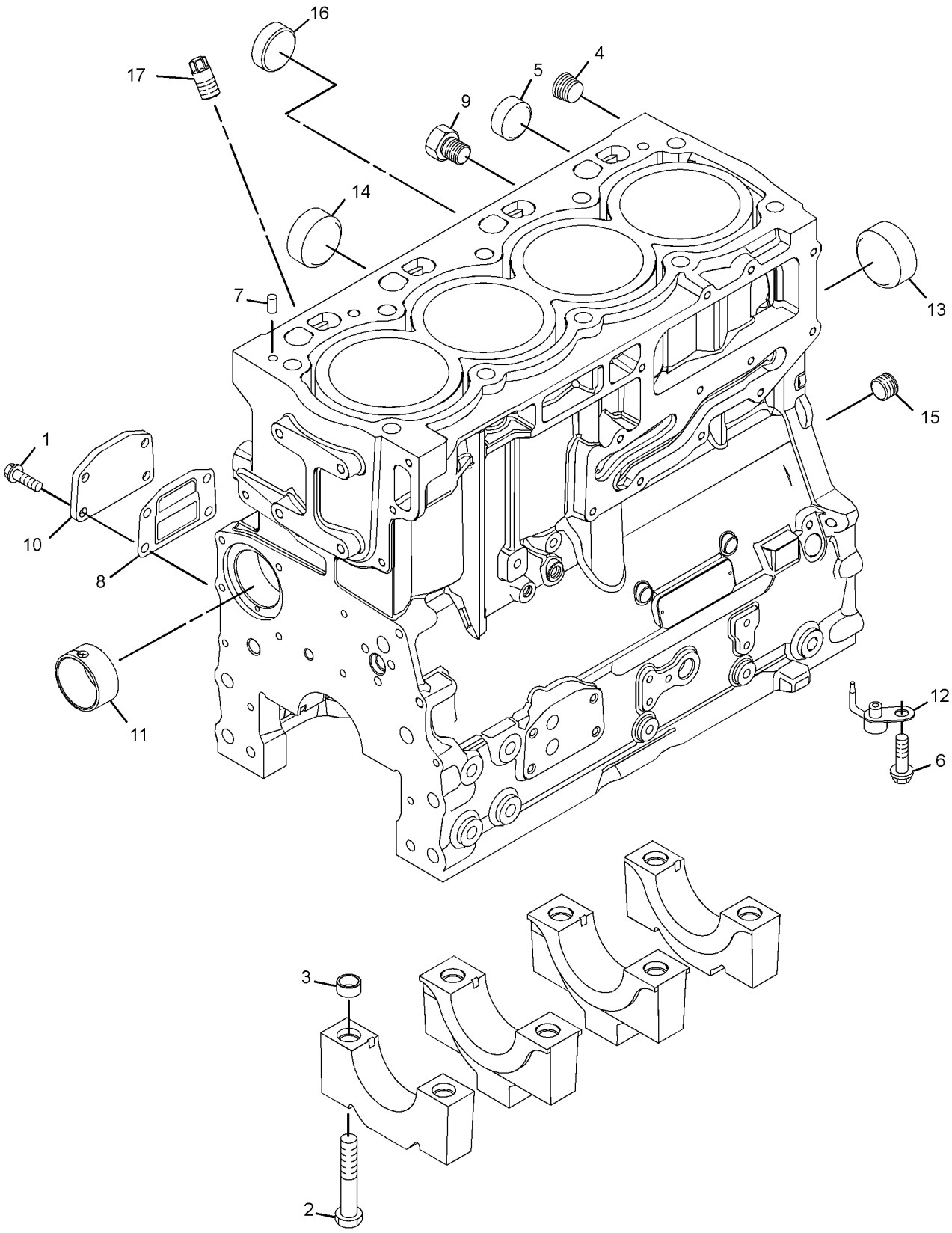

GRAPHIC #1 **<END>** g01652625

232-7606 CYLINDER BLOCK GP

S/N: CRS1-UP; CST1-UP

PART OF 390-5113 ENGINE AR-PRIMARY

SMCS-1201 **i04339174**

NOTE	REF NO	GRAPHIC REF	PART NUMBER	QTY	PART NAME 1 2 3 4 5 6 (PRODUCT LEVEL)	SEE PAGE
M	1	1	**209-9219**	10	BOLT (M8X1.25X16-MM)	
	2	1	**232-7449**	1	HOUSING AS	
CY	3	1	**362-2190**	1	CYLINDER BLOCK GP	24

C - CHANGE FROM PREVIOUS TYPE
M - METRIC PART
Y - SEPARATE ILLUSTRATION

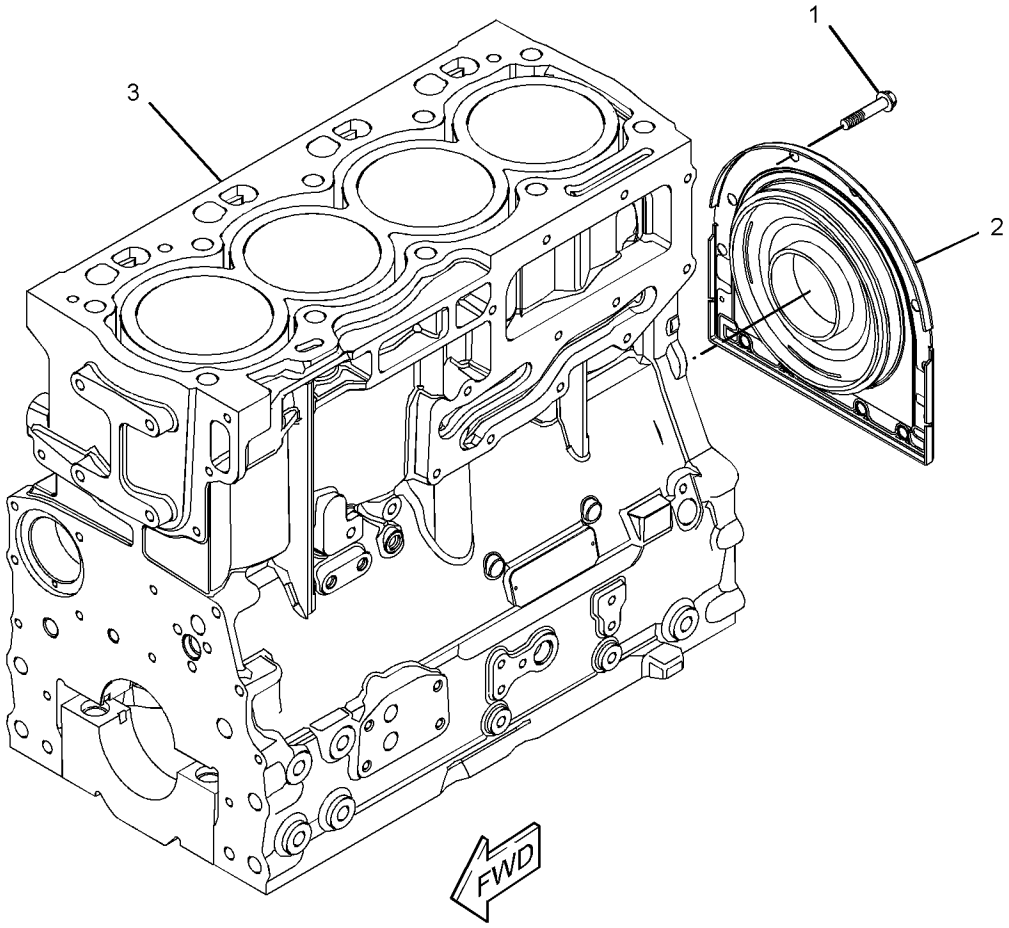

GRAPHIC #1 **<END>** g02500198

308-4728 CYLINDER BLOCK GP

S/N: CRS1-UP; CST1-UP
PART OF 297-4055 ENGINE AR-PRIMARY
TYPE 1

SMCS-1201 **i03047906**

NOTE	REF NO	GRAPHIC REF	PART NUMBER	QTY	PART NAME 1 2 3 4 5 6 (PRODUCT LEVEL)	SEE PAGE
M	1	1	**209-9219**	10	BOLT (M8X1.25X16-MM)	
	2	1	**232-7449**	1	HOUSING AS	
Y	3	1	**232-7604**	1	CYLINDER BLOCK GP	19

M - METRIC PART
Y - SEPARATE ILLUSTRATION

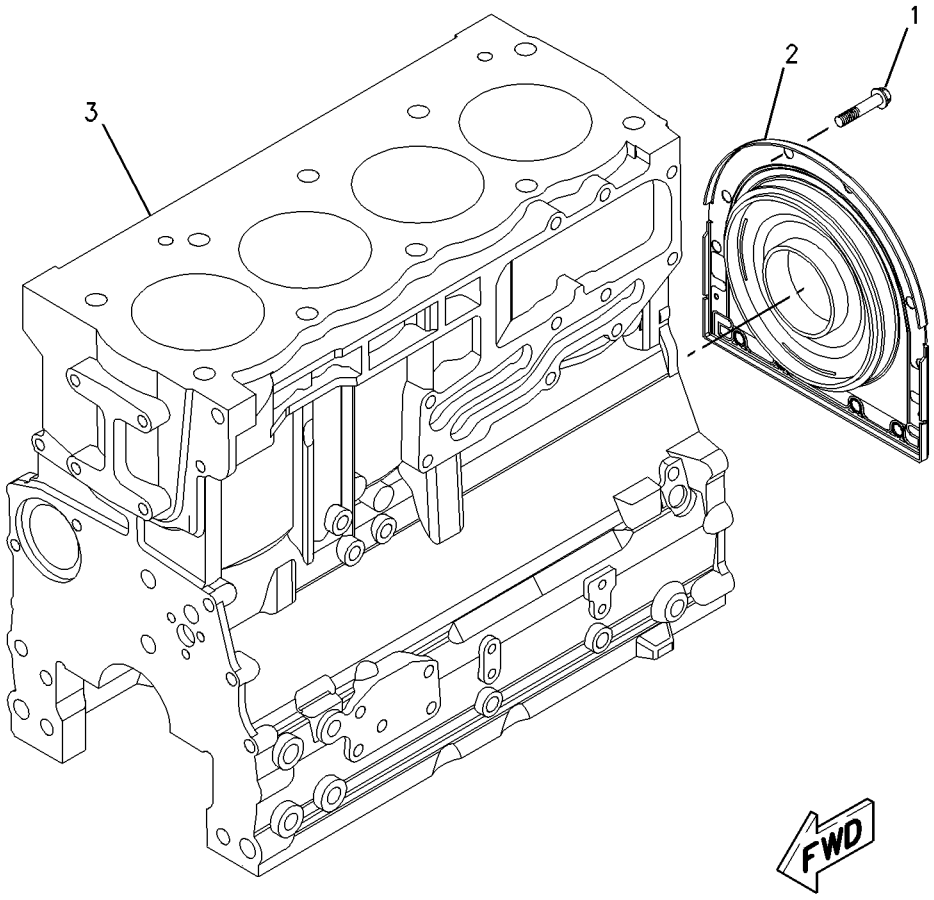

GRAPHIC #1 **<END>** g00952056

308-4728 CYLINDER BLOCK GP

S/N: CRS1-UP; CST1-UP
PART OF 297-4055 ENGINE AR-PRIMARY
TYPE 2

SMCS-1201 **i04905783**

NOTE	REF NO	GRAPHIC REF	PART NUMBER	QTY	PART NAME 1 2 3 4 5 6 (PRODUCT LEVEL)	SEE PAGE
M	1	1	**209-9219**	10	BOLT (M8X1.25X16-MM)	
	2	1	**232-7449**	1	HOUSING AS	
CY	3	1	**362-2190**	1	CYLINDER BLOCK GP	24

C - CHANGE FROM PREVIOUS TYPE
M - METRIC PART
Y - SEPARATE ILLUSTRATION

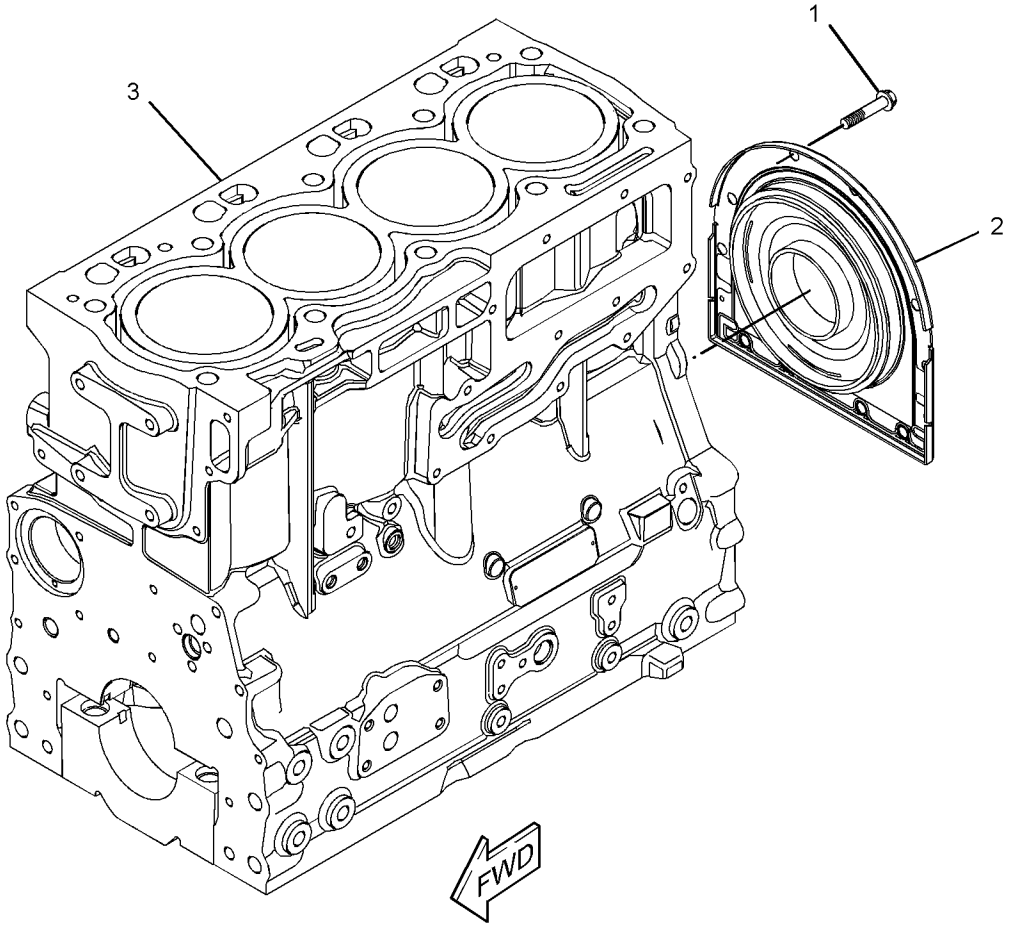

GRAPHIC #1 **<END>** g02500198

362-2190 CYLINDER BLOCK GP

S/N: CRS1-UP; CST1-UP

PART OF 232-7606, 308-4728 CYLINDER BLOCK GP

SMCS-1201 **i04340137**

NOTE	REF NO	GRAPHIC REF	PART NUMBER	QTY	PART NAME 1 2 3 4 5 6 (PRODUCT LEVEL)	SEE PAGE
	1	1	**6I-0572**	1	BOLT (M8X1.25X20-MM)	
	2	1	**6I-0646**	1	BOLT (M10X1.5X14-MM)	
	3	1	**035-8063**	1	PLUG	
M	4	1	**100-4841**	4	BOLT (M6X1X10-MM)	
	5	1	**214-3203**	1	WASHER (SEALING)	
	6	1	**225-7944**	1	GASKET	
	7	1	**232-3751**	1	PLATE	
	8	1	**232-7600**	1	PLUG-CUP	
	9	1	**232-7603**	1	PLUG	
	10	1	**276-5605**	4	JET AS-PISTON COOLING	

M - METRIC PART

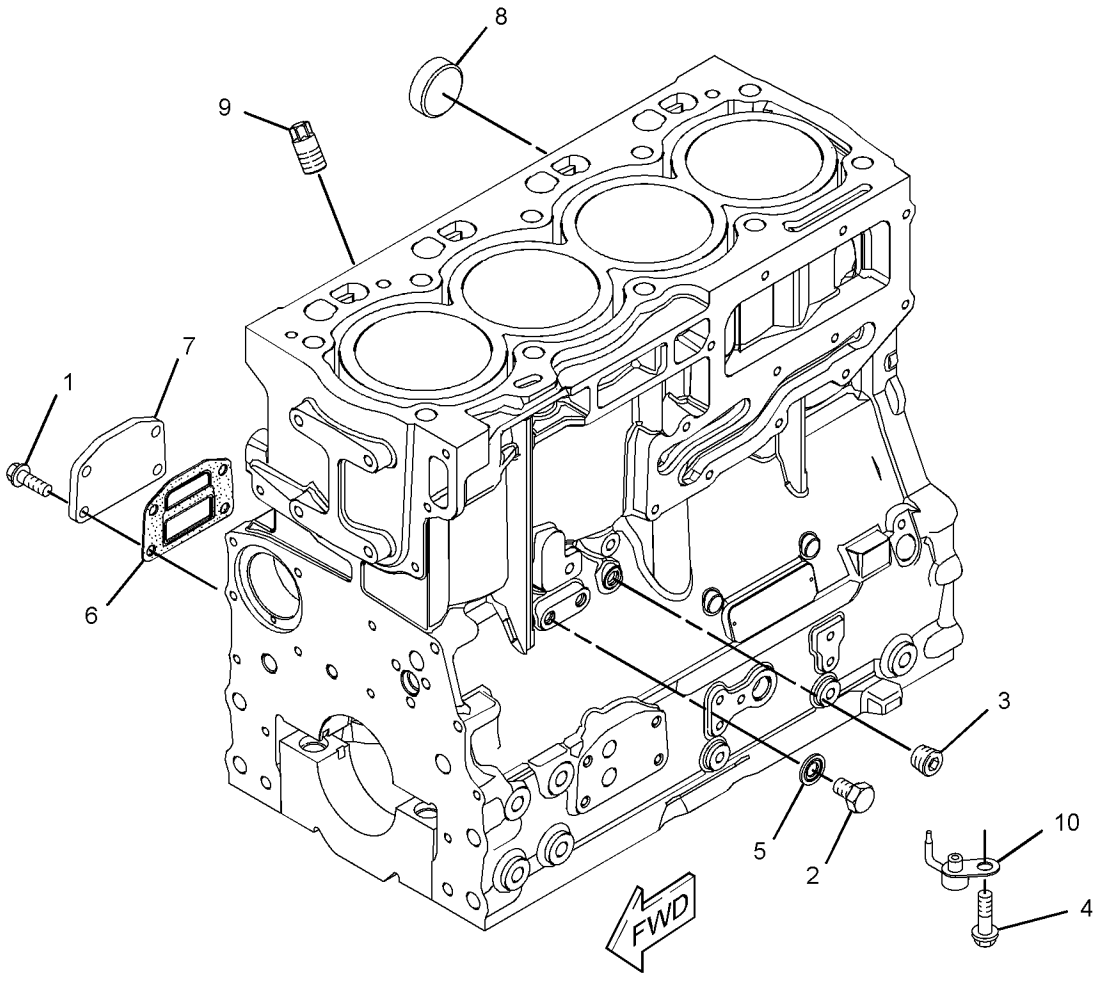

GRAPHIC #1 **<END>** g02500056

232-7519 CYLINDER HEAD GP

S/N: CRS1-UP; CST1-UP

PART OF 232-7524, 308-4731 CYLINDER HEAD GP

SMCS-1100 **i04921694**

NOTE	REF NO	GRAPHIC REF	PART NUMBER	QTY	PART NAME 1 2 3 4 5 6 (PRODUCT LEVEL)	SEE PAGE
	1	1	**2B-0858**	1	PLUG-PIPE	
	2	1	**9Y-5015**	2	PLUG-FREEZE	
	3	1	**067-6006**	4	PLUG	
	4	1	**147-1979**	16	RETAINER-VALVE SPRING	
	5	1	**185-0882**	8	GUIDE-VALVE	
	6	1	**199-9751**	1	SEAL-O-RING	
	7	1	**329-6655**	4	INSERT-VALVE SEAT (INLET)	
	8	1	**322-9663**	4	INSERT-VALVE SEAT (EXHAUST)	
	9	1	**225-5495**	4	VALVE-INLET	
	10	1	**225-5496**	8	SPRING-VALVE	
	11	1	**252-6438**	4	SEAL-INLET VALVE	
	12	1	**225-5498**	8	CAP	
	13	1	**225-5499**	4	VALVE-EXHAUST	
	14	1	**232-1322**	1	PLUG	
	15	1	**254-3954**	4	SEAL-EXHAUST VALVE	

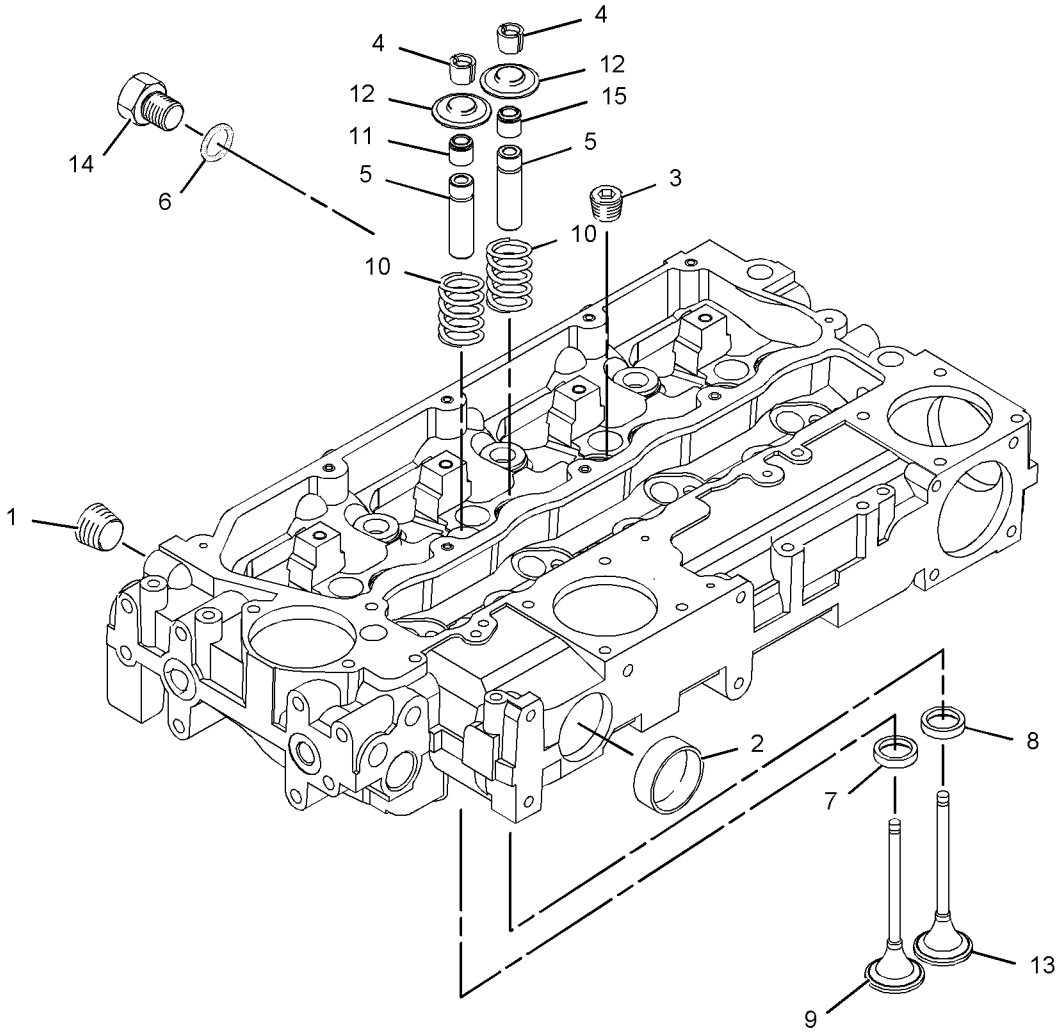

GRAPHIC #1 **<END>** g01095382

232-7524 CYLINDER HEAD GP

S/N: CRS1-UP; CST1-UP

PART OF 390-5113 ENGINE AR-PRIMARY

SMCS-1100 **i05295181**

NOTE	REF NO	GRAPHIC REF	PART NUMBER	QTY	PART NAME 1 2 3 4 5 6 (PRODUCT LEVEL)	SEE PAGE
	1	1	**225-5501**	7	BOLT (M15X1.5X137-MM)	
	2	1	**225-5502**	3	BOLT (M15X1.5X162-MM)	
	3	1	**258-4946**	1	GASKET-HEAD	
AB		1	**369-3705**	1	GASKET-CYLINDER HEAD (0.25-MM THK)	
Y	4	1	**232-7519**	1	CYLINDER HEAD GP	25

A - NOT PART OF THIS GROUP
B - USE AS REQUIRED
Y - SEPARATE ILLUSTRATION

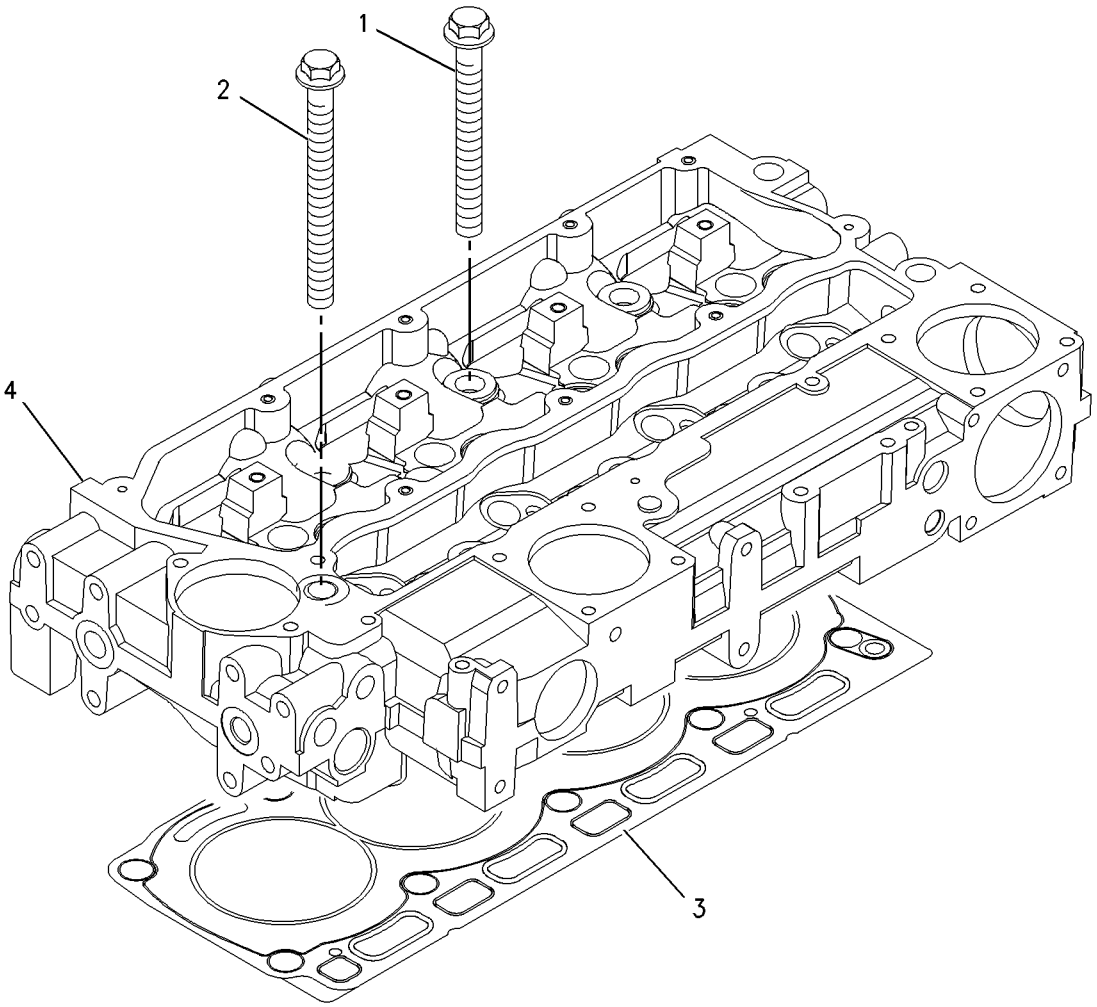

GRAPHIC #1 **<END>** g00909291

308-4731 CYLINDER HEAD GP

S/N: CRS1-UP; CST1-UP

PART OF 297-4055 ENGINE AR-PRIMARY

SMCS-1100 **i03047484**

NOTE	REF NO	GRAPHIC REF	PART NUMBER	QTY	PART NAME 1 2 3 4 5 6 (PRODUCT LEVEL)	SEE PAGE
	1	1	**225-5501**	7	BOLT (M15X1.5X137-MM)	
	2	1	**225-5502**	3	BOLT (M15X1.5X162-MM)	
Y	3	1	**232-7519**	1	CYLINDER HEAD GP	25
	4	1	**258-4946**	1	GASKET-HEAD	

Y - SEPARATE ILLUSTRATION

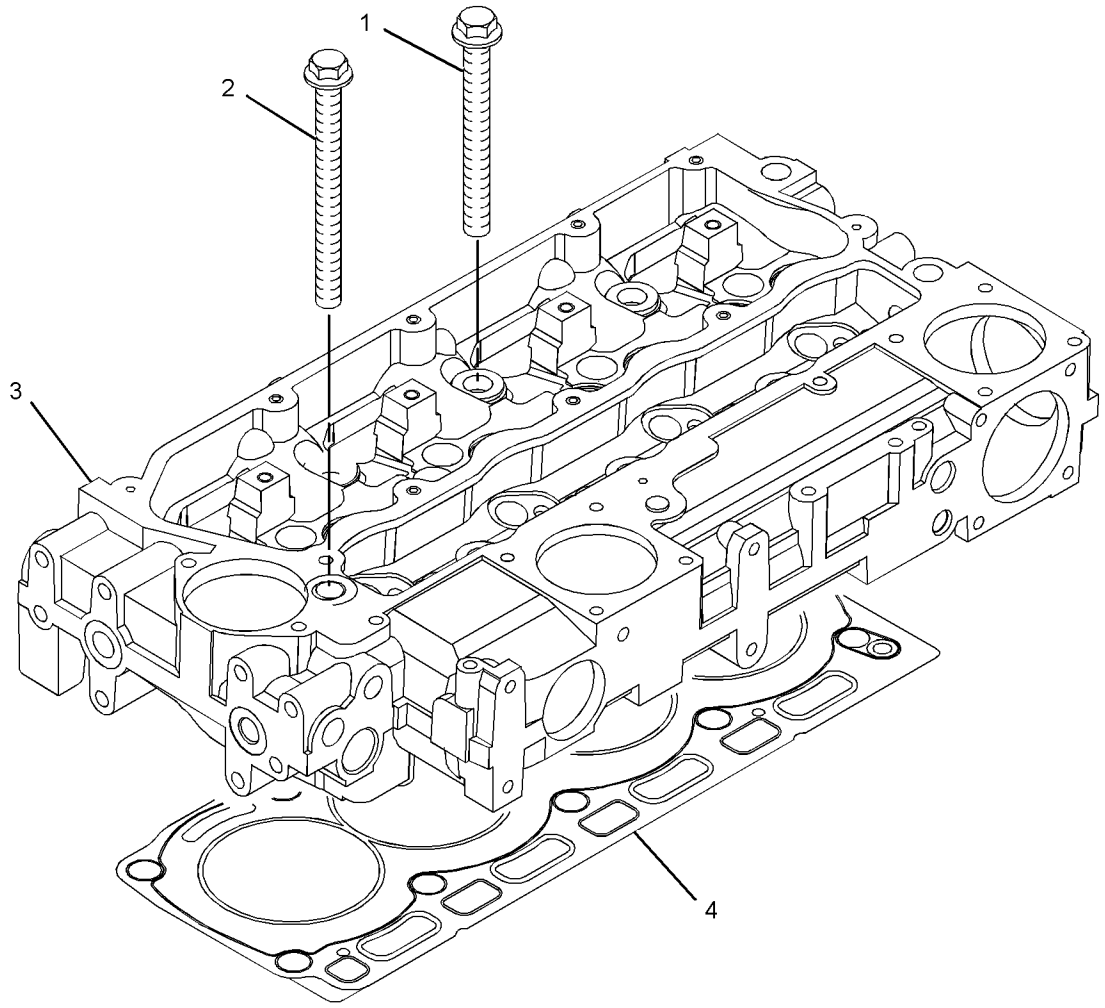

GRAPHIC #1 **<END>** g01367488

234-9680 DRIVE GP-FAN

S/N: CRS1-UP; CST1-UP

PART OF 297-4055, 390-5113 ENGINE AR-PRIMARY

SMCS-1359 **i05352511**

NOTE	REF NO	GRAPHIC REF	PART NUMBER	QTY	PART NAME 1 2 3 4 5 6 (PRODUCT LEVEL)	SEE PAGE
	1	1	**111-0859**	4	BOLT (M10X1.5X35-MM)	
	2	1	**130-3879**	1	PULLEY-FAN DRIVE	
	3	1	**230-8065**	1	HOUSING AS	
	4	1	**5L-4995**	1	V-BELT SET (INCLUDES 2-BELTS) (FAN DRIVE)	

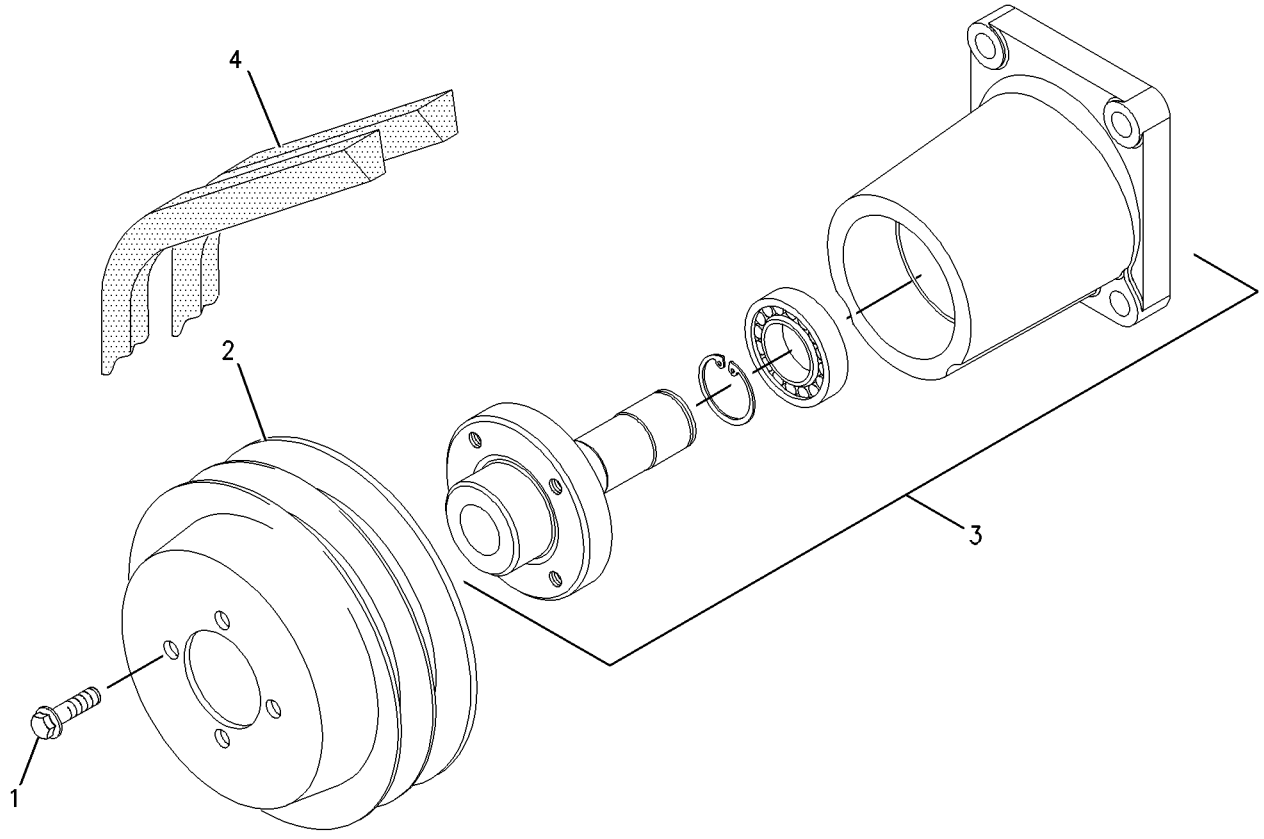

GRAPHIC #1 **<END>** g00956514

153-4980 DRIVE GP-PUMP

S/N: TJL1-UP

PART OF 219-4162, 348-5645 INSTALLATION AR-ENGINE

SMCS-3108 **i03029180**

NOTE	REF NO	GRAPHIC REF	PART NUMBER	QTY	PART NAME 1 2 3 4 5 6 (PRODUCT LEVEL)	SEE PAGE
	1	1	**102-1733**	1	FLANGE-NYLON	
	2	1	**0T-0924**	8	BOLT (3/8-24X1.5-IN)	

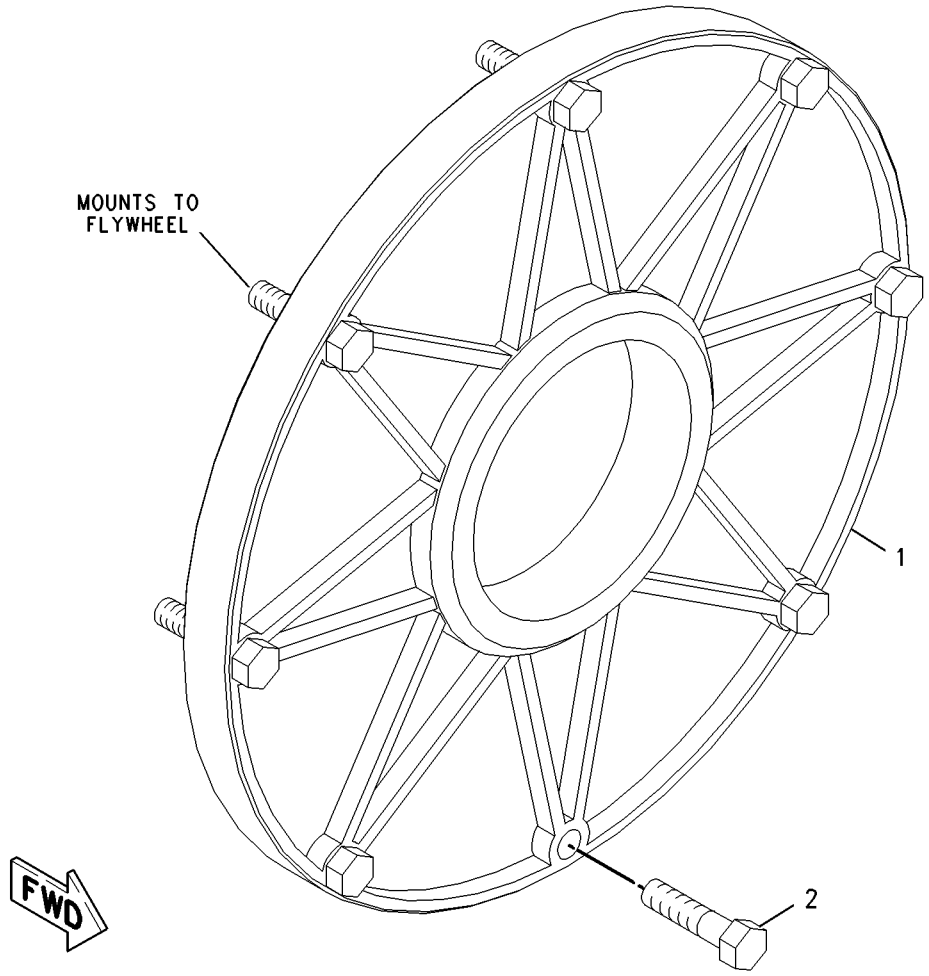

GRAPHIC #1 **<END>** g00847131

245-9831 FLYWHEEL GP

S/N: CRS1-UP; CST1-UP

PART OF 297-4055, 390-5113 ENGINE AR-PRIMARY

SMCS-1156 **i02560717**

NOTE	REF NO	GRAPHIC REF	PART NUMBER	QTY	PART NAME 1 2 3 4 5 6 (PRODUCT LEVEL)	SEE PAGE
	1	1	**0S-1603**	10	BOLT (1/2-20X1.5-IN)	
	2	1	**5P-8245**	10	WASHER-HARD (13.5X25.5X3-MM THK)	
	3	1	**165-6689**	1	FLYWHEEL AS	
	4	1	**033-7687**	1	RING-STARTING MOTOR (126-TEETH)	

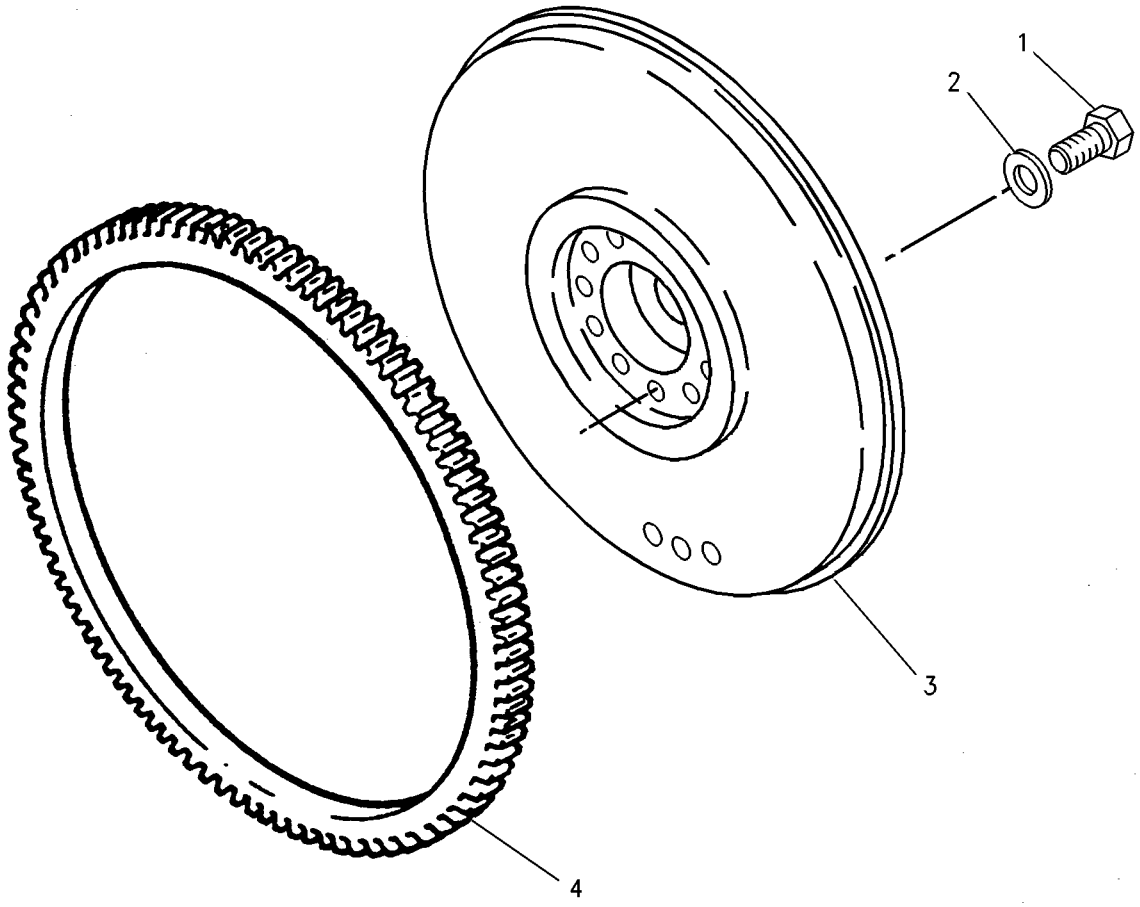

GRAPHIC #1 **<END>** g00931180

223-7825 HOUSING GP-FLYWHEEL

S/N: CRS1-UP; CST1-UP

PART OF 297-4055, 390-5113 ENGINE AR-PRIMARY

SMCS-1157 **i04939493**

NOTE	REF NO	GRAPHIC REF	PART NUMBER	QTY	PART NAME 1 2 3 4 5 6 (PRODUCT LEVEL)	SEE PAGE
M	1	1	**6I-0423**	2	BOLT (M12X1.75X30-MM)	
	2	1	**6I-0631**	2	BOLT (M6X1X12-MM)	
	3	1	**375-9272**	1	PLUG	
	4	1	**6I-4200**	3	BOLT (M10X1.5X16-MM)	
	5	1	**7W-4642**	1	SHIELD-DUST	
	6	1	**287-8597**	2	DOWEL	
	7	1	**102-1957**	1	PLATE	
M	8	1	**121-0883**	6	BOLT (M10X1.5X30-MM)	
	9	1	**149-9176**	1	HOUSING-FLYWHEEL	
	10	1	**199-3108**	1	PLUG	
	11	1	**199-3109**	1	PLUG	

M - METRIC PART

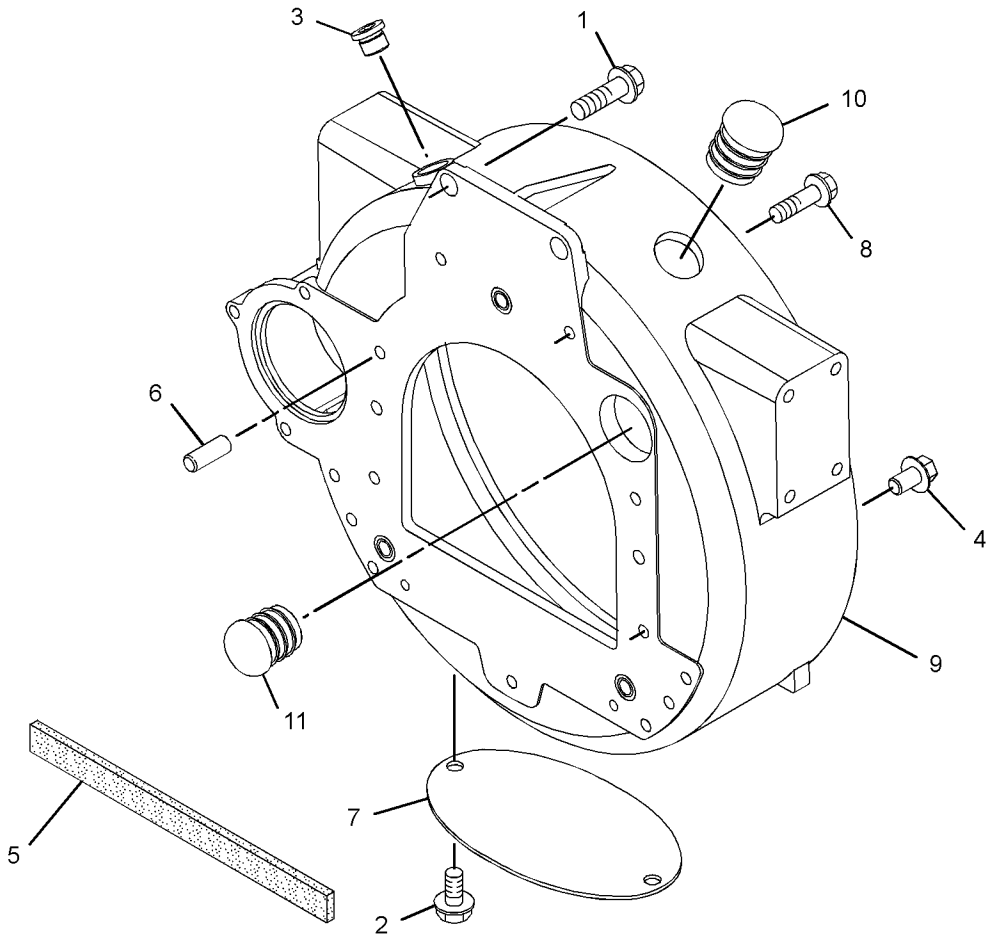

GRAPHIC #1 **<END>** g03123477

308-4764 HOUSING GP-FRONT

S/N: CRS1-UP; CST1-UP

PART OF 297-4055, 390-5113 ENGINE AR-PRIMARY

SMCS-1151, 1162

i04003811

NOTE	REF NO	GRAPHIC REF	PART NUMBER	QTY	PART NAME 1 2 3 4 5 6 (PRODUCT LEVEL)	SEE PAGE
	1	1	**295-1711**	1	PLATE-RETAINING	
M	2	1	**6I-0217**	6	BOLT (M8X1.25X20-MM)	
M	3	1	**6I-0645**	4	BOLT (M8X1.25X25-MM)	
M	4	1	**6I-0650**	3	BOLT (M10X1.5X65-MM)	
	5	1	**7C-4616**	1	BOLT (M12X1.75X45-MM)	
	6	1	**067-6179**	1	DOWEL	
M	7	1	**100-3751**	5	BOLT (M8X1.25X65-MM)	
M	8	1	**100-4830**	1	BOLT (M10X1.5X20-MM)	
M	9	1	**124-3815**	9	BOLT (M8X1.25X16-MM)	
	10	1	**133-1011**	1	WASHER	
	11	1	**216-8634**	1	GEAR-CAMSHAFT (68-TEETH)	
	12	1	**226-8767**	1	COVER AS-FRONT	
	12A	1	**226-8766**	1	GASKET-COVER	
	13	1	**232-3666**	1	WASHER-THRUST	
	14	1	**251-4336**	1	GEAR AS-IDLER (73-TEETH)	
	15	1	**277-3012**	1	GASKET-COVER	
	16	1	**324-0444**	1	HUB-IDLER GEAR	
	17	1	**288-0422**	1	SEAL-OIL	
	18	1	**323-3515**	1	HOUSING-FRONT	
M	19	1	**101-3895**	2	BOLT (M8X1.25X35-MM)	

M - METRIC PART

308-4764 **HOUSING GP-FRONT (*contd.*)** **i04003811**

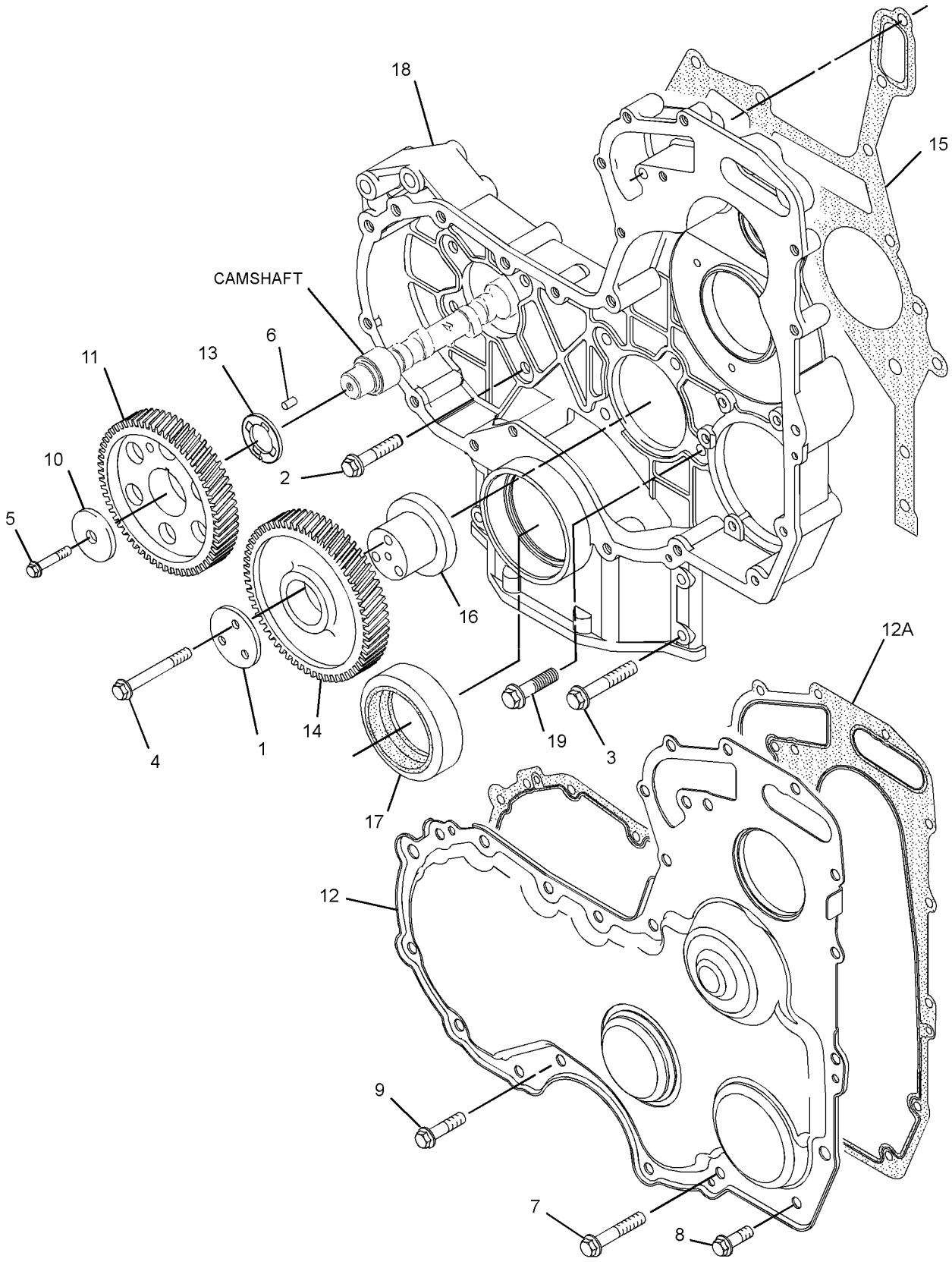

GRAPHIC #1 **<END>** g02204711

232-3713 LIFTING GP-ENGINE

S/N: CRS1-UP; CST1-UP

PART OF 297-4055, 390-5113 ENGINE AR-PRIMARY

SMCS-1122 **i02560646**

NOTE	REF NO	GRAPHIC REF	PART NUMBER	QTY	PART NAME 1 2 3 4 5 6 (PRODUCT LEVEL)	SEE PAGE
M	1	1	**100-4830**	4	BOLT (M10X1.5X20-MM)	
	2	1	**225-8848**	1	PLATE-LIFTING	
	3	1	**275-2452**	1	PLATE-LIFTING	

M - METRIC PART

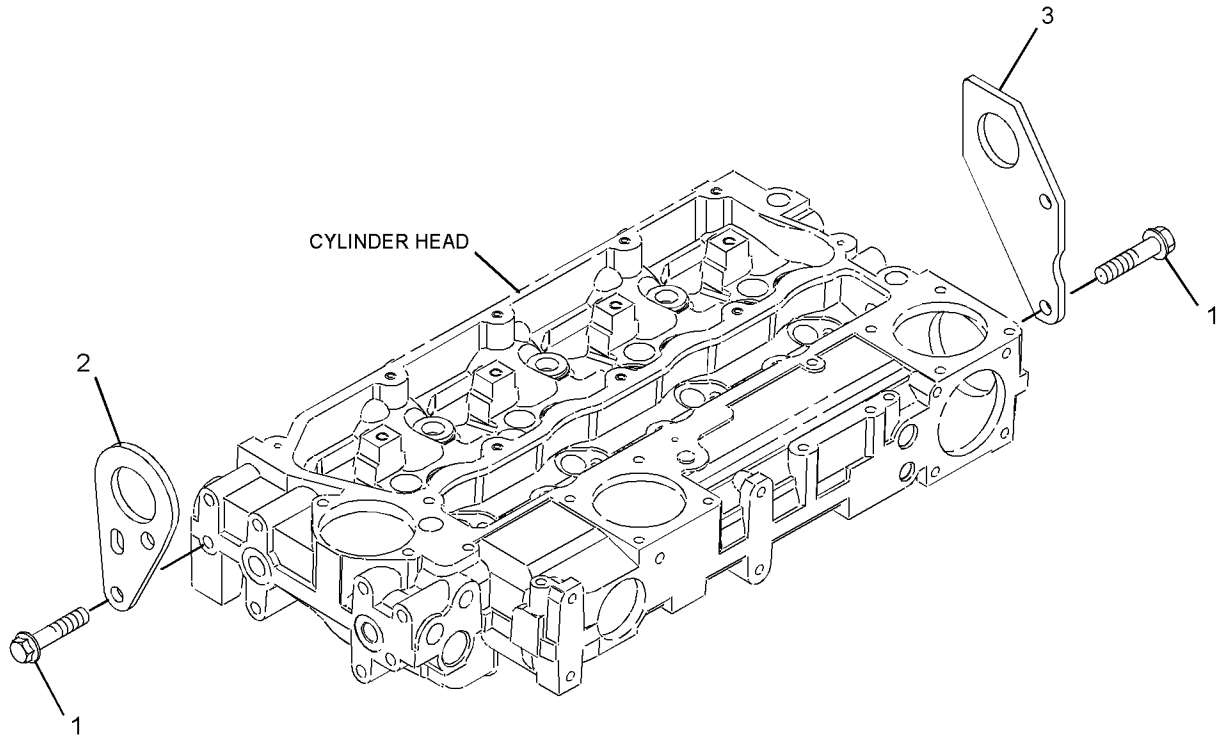

GRAPHIC #1 **<END>** g01210949

252-6456 MOUNTING GP-ENGINE

S/N: CRS1-UP; CST1-UP

PART OF 297-4055, 390-5113 ENGINE AR-PRIMARY

SMCS-1152 **i03047517**

NOTE	REF NO	GRAPHIC REF	PART NUMBER	QTY	PART NAME 1 2 3 4 5 6 (PRODUCT LEVEL)	SEE PAGE
	2	1	**6H-3616**	3	PLUG-PROTECTION	
	3	1	**195-2132**	1	SUPPORT-FRONT	
	4	1	**195-2134**	1	SUPPORT-FRONT	
	5	1	**195-2136**	8	STUD	
	6	1	**195-2221**	8	NUT (M12X1.75-THD)	

252-6456 **MOUNTING GP-ENGINE (*contd.*)** **i03047517**

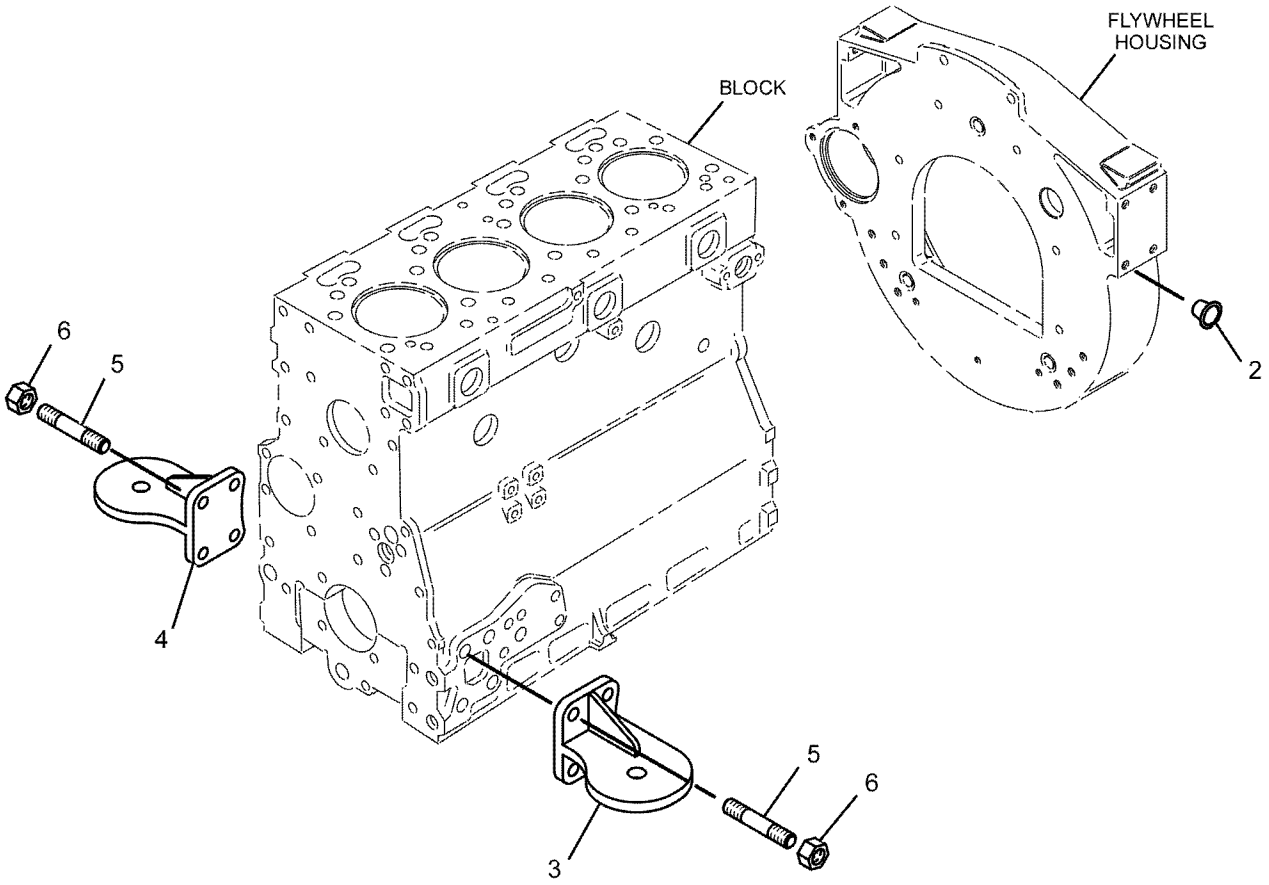

GRAPHIC #1 **<END>** g01062594

220-8779 MOUNTING GP-ENGINE FLEXIBLE

S/N: TJL1-UP

PART OF 219-4162, 348-5645 INSTALLATION AR-ENGINE

SMCS-1152 **i03030580**

NOTE	REF NO	GRAPHIC REF	PART NUMBER	QTY	PART NAME 1 2 3 4 5 6 (PRODUCT LEVEL)	SEE PAGE
	1	1	**6Y-9915**	4	MOUNT AS	
	2	1	**9W-9952**	4	WASHER (16.75X86.0X8.0-MM THK)	
	3	1	**9W-9953**	4	SLEEVE	
	4	1	**281-6366**	1	SUPPORT AS-ENGINE	
	5	1	**4P-7428**	1	CLIP	
	6	1	**8T-4121**	12	WASHER-HARD (11X21X2.5-MM THK)	
	7	1	**8T-4122**	8	WASHER-HARD (17.0X32.0X3.5-MM THK)	
M	8	1	**8T-4132**	4	NUT (M16X2-THD)	
M	9	1	**8T-4174**	4	BOLT (M16X2X120-MM)	
M	10	1	**8T-4186**	12	BOLT (M10X1.5X40-MM)	

M - METRIC PART

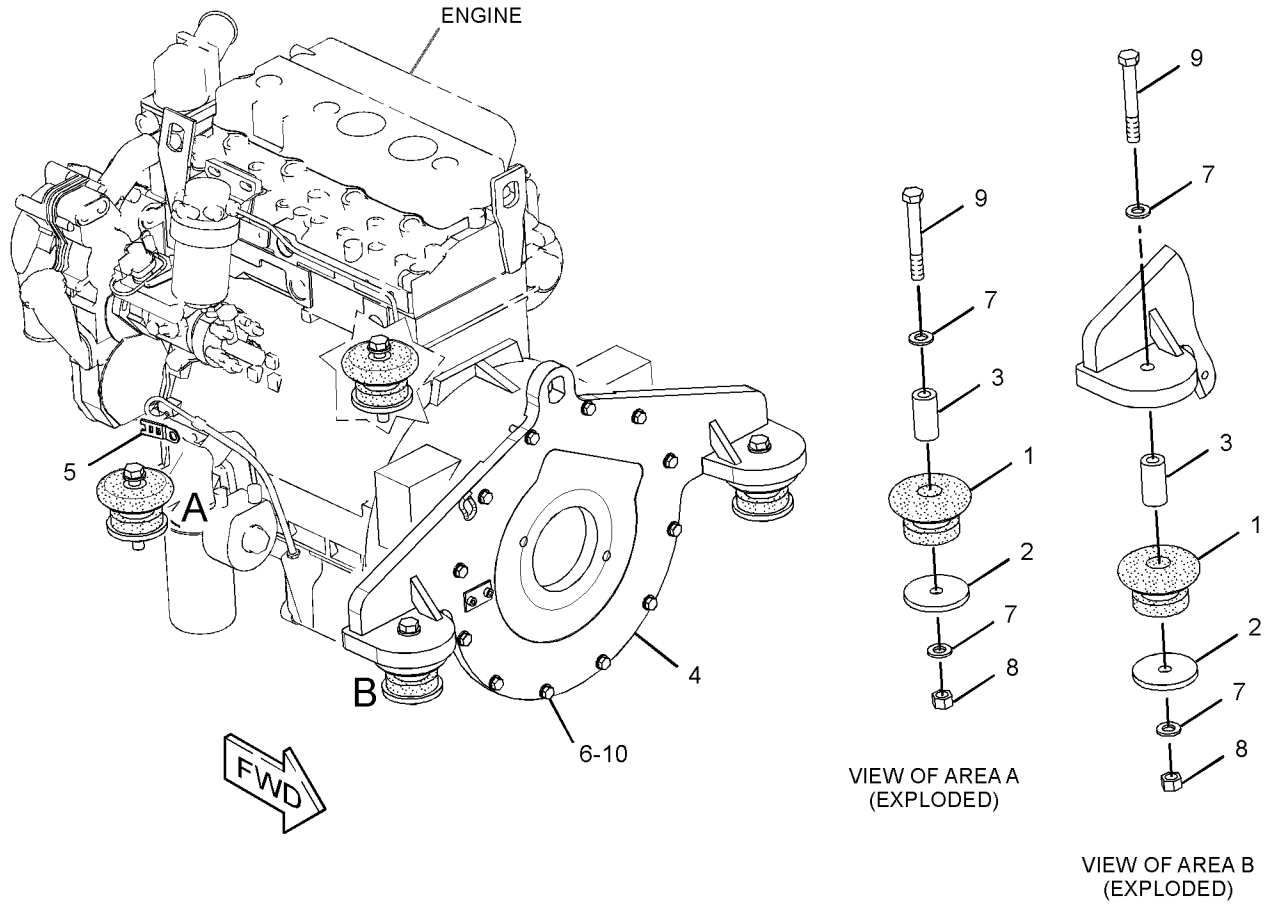

GRAPHIC #1 **<END>** g01536754

232-2565 PAN GP-OIL

S/N: CRS1-UP; CST1-UP

PART OF 297-4055, 390-5113 ENGINE AR-PRIMARY

SMCS-1302 **i04877317**

NOTE	REF NO	GRAPHIC REF	PART NUMBER	QTY	PART NAME 1 2 3 4 5 6 (PRODUCT LEVEL)	SEE PAGE
	1	1	**275-9883**	2	SEAL	
M	2	1	**6I-0217**	14	BOLT (M8X1.25X20-MM)	
M	3	1	**6I-0260**	2	BOLT (M8X1.25X25-MM)	
	4	1	**6I-0289**	1	PLUG	
M	5	1	**6I-0363**	2	BOLT (M6X1X20-MM)	
	6	1	**6I-0572**	2	BOLT (M8X1.25X20-MM)	
	7	1	**6I-1497**	1	SEAL	
	8	1	**7C-0351**	2	PLUG-DRAIN (ENGINE OIL)	
	9	1	**067-6213**	1	GASKET	
	10	1	**101-3771**	4	BOLT	
	11	1	**251-8338**	1	TUBE AS	
	11A	1	**6I-4079**	1	NUT	
	12	1	**225-6041**	1	TUBE	
	13	1	**263-2162**	1	GAUGE AS-OIL LEVEL (DIPSTICK) (ENGINE)	
	14	1	**353-5219**	1	PAN-OIL	
	15	1	**230-8094**	1	BRIDGE	
	16	1	**225-6005**	1	GASKET	

M - METRIC PART

232-2565 **PAN GP-OIL (*contd.*)** **i04877317**

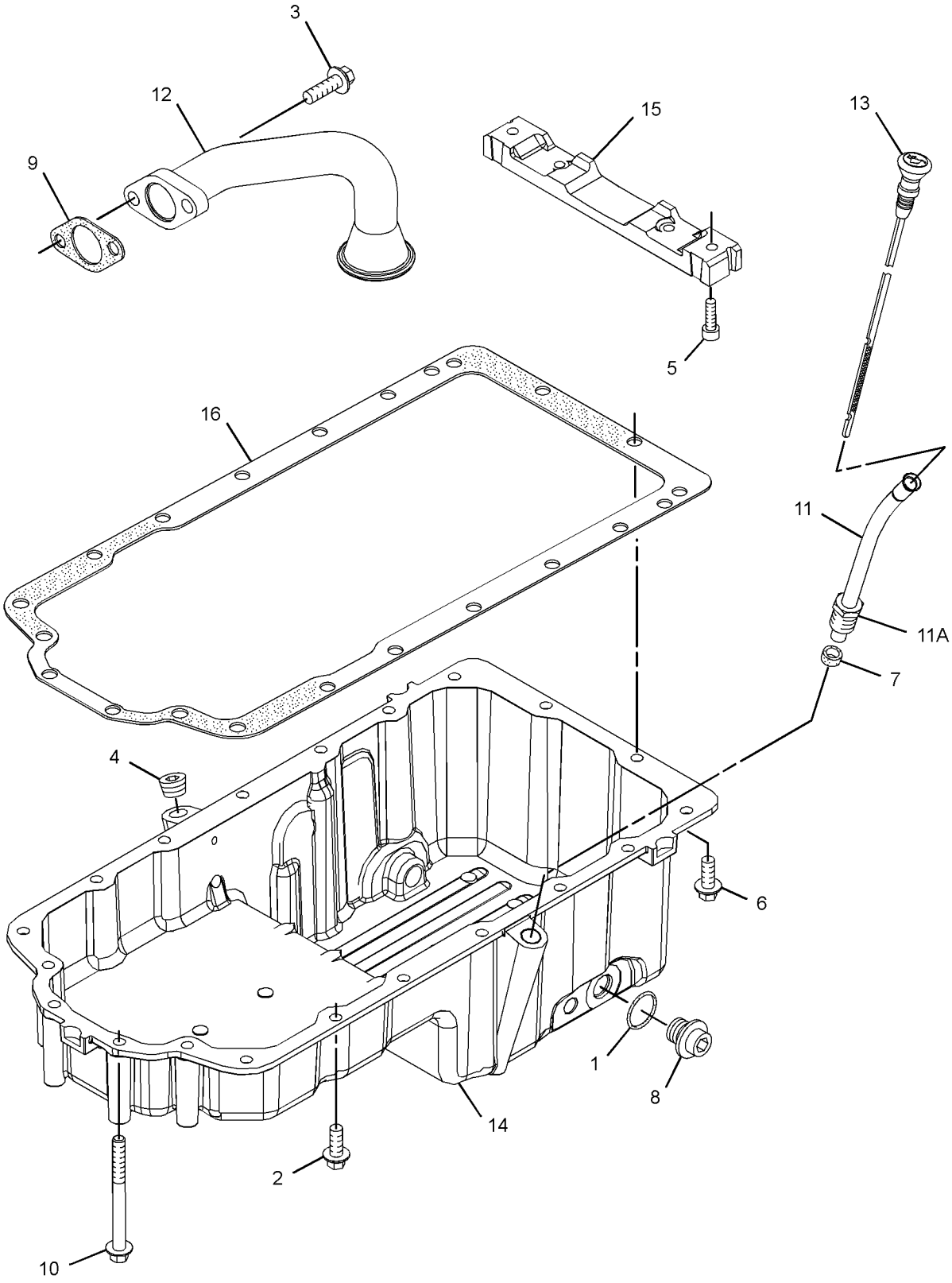

GRAPHIC #1 **<END>** g03012840

232-7442 PISTON & ROD GP

S/N: CRS1-UP; CST1-UP

PART OF 390-5113 ENGINE AR-PRIMARY

SMCS-1225 **i05296254**

NOTE	REF NO	GRAPHIC REF	PART NUMBER	QTY	PART NAME 1 2 3 4 5 6 (PRODUCT LEVEL)	SEE PAGE
	1	1	**225-5437**	4	PISTON AS	
					(EACH PISTON AS INCLUDES)	
	1A	1	**124-3536**	2	RING-RETAINING	
AB		1	**288-1394**		PISTON AS (0.5-MM OS)	
AB		1	**288-1395**		PISTON AS (1-MM OS)	
	1B	1	**225-5436**	1	KIT-PISTON RING	
AB		1	**334-2318**		KIT-PISTON RING (1-MM OS)	
AB		1	**334-2319**		KIT-PISTON RING (0.5-MM OS)	
BJ	2	1	**359-0724**	4	ROD AS-CONNECTING (LENGTH B)	
					—OR—	
BJ		1	**359-0723**	4	ROD AS-CONNECTING (LENGTH P)	
					—OR—	
BJ		1	**359-0722**	4	ROD AS-CONNECTING (LENGTH G)	
					—OR—	
BJ		1	**359-0721**	4	ROD AS-CONNECTING (LENGTH W)	
					—OR—	
BJ		1	**359-0720**	4	ROD AS-CONNECTING (LENGTH O)	
					—OR—	
BJ		1	**359-0719**	4	ROD AS-CONNECTING (LENGTH R)	
					(EACH ROD AS INCLUDES)	
	2A	1	**225-5438**	1	BUSHING	
	2B	1	**323-9312**	2	BOLT (M10X1X50-MM)	

A - NOT PART OF THIS GROUP
B - USE AS REQUIRED
J - ENSURE THAT CORRECT ROD LENGTH IS FITTED

232-7442 **PISTON & ROD GP (*contd.*)** **i05296254**

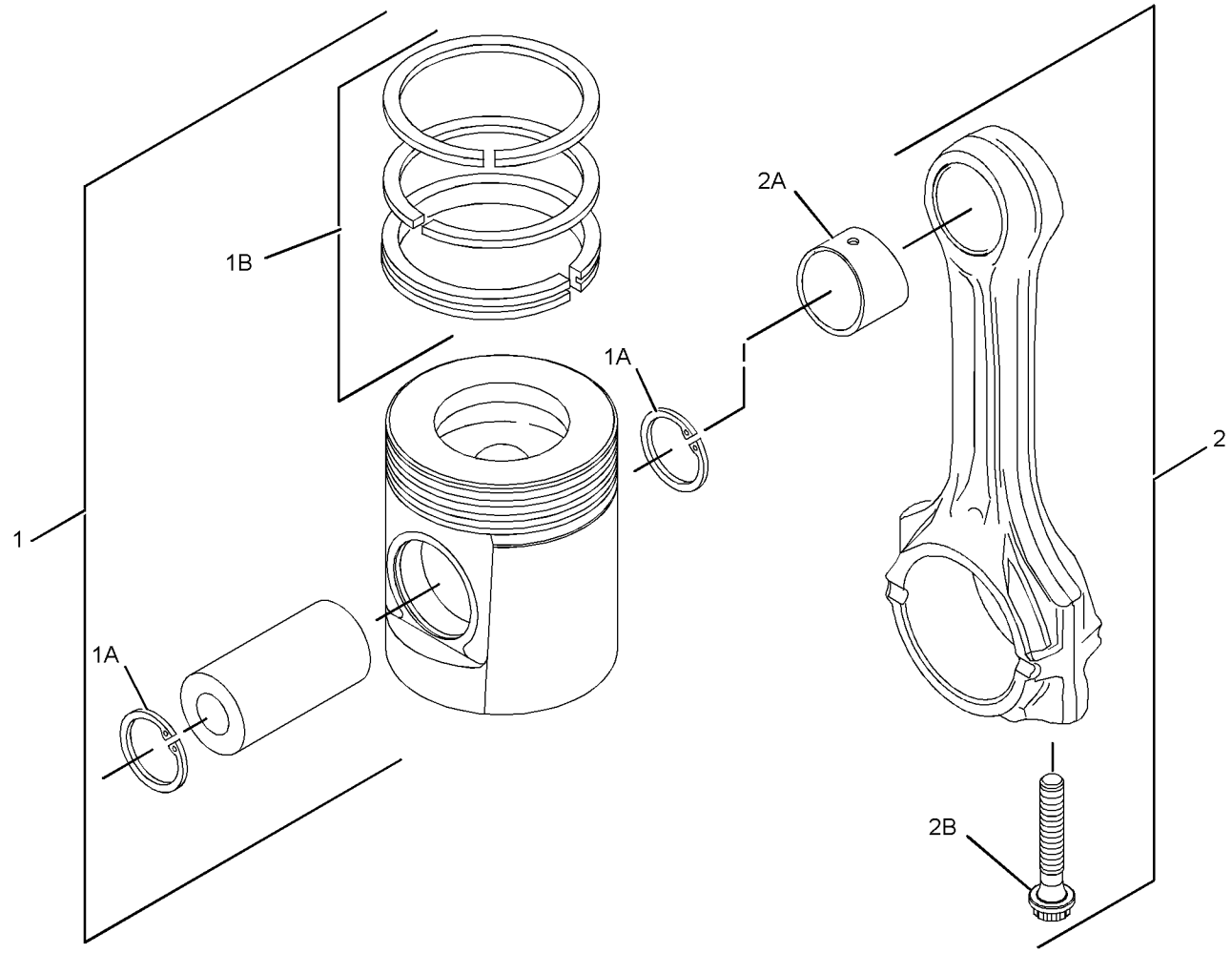

GRAPHIC #1 **<END>** g02188983

308-4730 PISTON & ROD GP

S/N: CRS1-59947; CST1-UP

PART OF 297-4055 ENGINE AR-PRIMARY

SMCS-1225 **i03047487**

NOTE	REF NO	GRAPHIC REF	PART NUMBER	QTY	PART NAME 1 2 3 4 5 6 (PRODUCT LEVEL)	SEE PAGE
	1	1	**225-5437**	4	PISTON AS	
					(EACH PISTON AS INCLUDES)	
	1A	1	**124-3536**	2	RING-RETAINING	
	1B	1	**225-5436**	1	KIT-PISTON RING	
BJ	2	1	**225-5441**	4	ROD AS-CONNECTING (L-GRADE)	
					—OR—	
BJ		1	**225-5451**	4	ROD AS-CONNECTING (GRADE K)	
					—OR—	
BJ		1	**225-5453**	4	ROD AS-CONNECTING (J-GRADE)	
					—OR—	
BJ		1	**225-5454**	4	ROD AS-CONNECTING (GRADE H)	
					—OR—	
BJ		1	**225-5458**	4	ROD AS-CONNECTING (GRADE G)	
					—OR—	
BJ		1	**225-5459**	4	ROD AS-CONNECTING (F-GRADE)	
					(EACH ROD AS INCLUDES)	
	2A	1	**225-5438**	1	BUSHING	
	2B	1	**225-5439**	2	BOLT-SPECIAL (CONNECTING ROD)	

B - USE AS REQUIRED
J - ENSURE THAT CORRECT ROD LENGTH IS FITTED

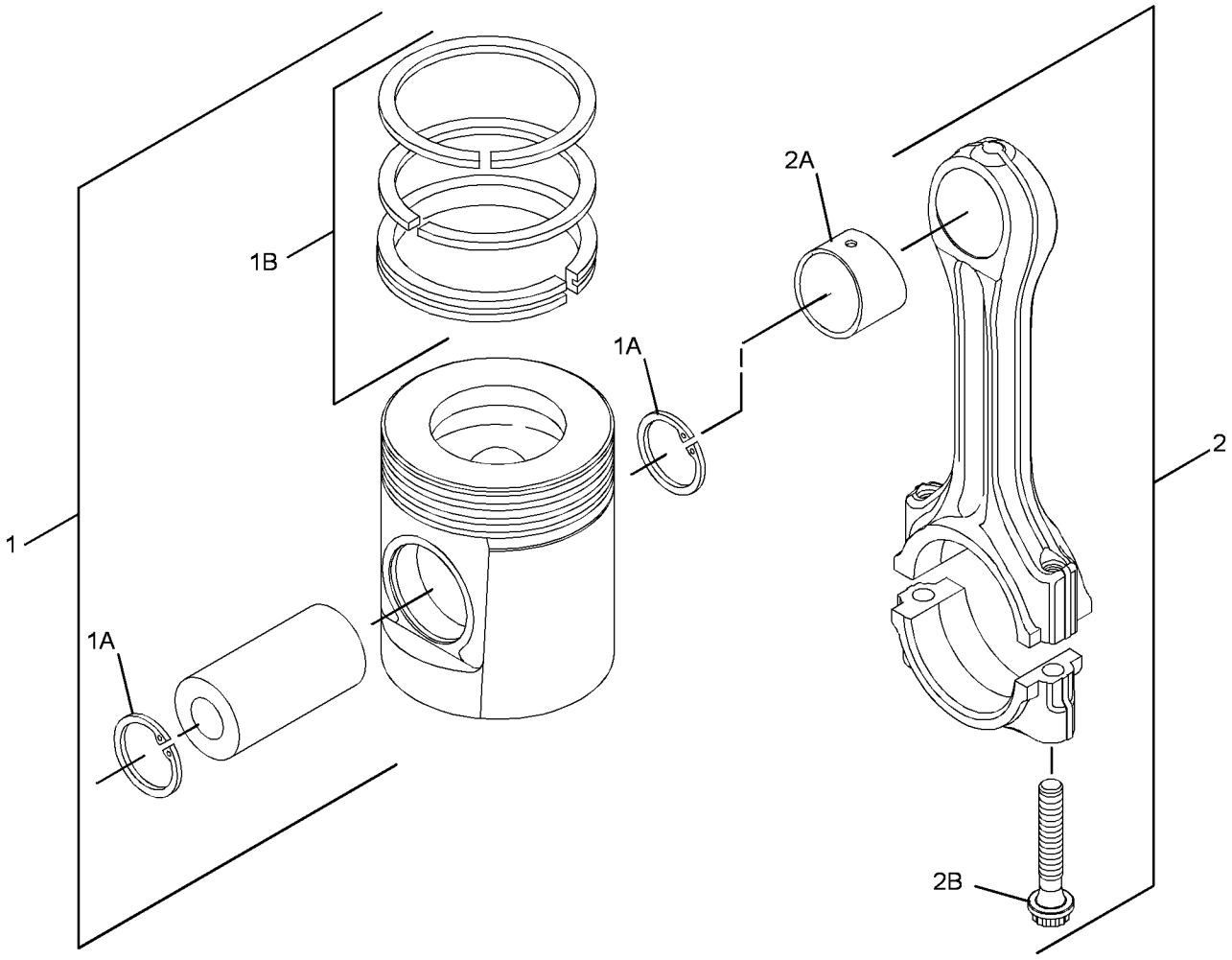

GRAPHIC #1 **<END>** g01374535

308-4730 PISTON & ROD GP

S/N: CRS59948-UP; CST1-UP

PART OF 297-4055 ENGINE AR-PRIMARY

SMCS-1225 **i05259732**

NOTE	REF NO	GRAPHIC REF	PART NUMBER	QTY	PART NAME 1 2 3 4 5 6 (PRODUCT LEVEL)	SEE PAGE
	1	1	**225-5437**	4	PISTON AS	
					(EACH PISTON AS INCLUDES)	
	1A	1	**124-3536**	2	RING-RETAINING	
	1B	1	**225-5436**	1	KIT-PISTON RING	
AB		1	**334-2318**		KIT-PISTON RING (1-MM OS)	
AB		1	**334-2319**		KIT-PISTON RING (0.5-MM OS)	
AB		1	**288-1394**		PISTON AS (0.5-MM OS)	
AB		1	**288-1395**		PISTON AS (1-MM OS)	
BCJ	2	1	**359-0724**	4	ROD AS-CONNECTING (LENGTH B)	
					—OR—	
BCJ		1	**359-0723**	4	ROD AS-CONNECTING (LENGTH P)	
					—OR—	
BCJ		1	**359-0722**	4	ROD AS-CONNECTING (LENGTH G)	
					—OR—	
BCJ		1	**359-0721**	4	ROD AS-CONNECTING (LENGTH W)	
					—OR—	
BCJ		1	**359-0720**	4	ROD AS-CONNECTING (LENGTH O)	
					—OR—	
BCJ		1	**359-0719**	4	ROD AS-CONNECTING (LENGTH R)	
					(EACH ROD AS INCLUDES)	
	2A	1	**225-5438**	1	BUSHING	
	2B	1	**323-9312**	2	BOLT (M10X1X50-MM)	

A - NOT PART OF THIS GROUP
B - USE AS REQUIRED
C - CHANGE FROM PREVIOUS TYPE
J - ENSURE THAT CORRECT ROD LENGTH IS FITTED

308-4730 **PISTON & ROD GP (*contd.*)** **i05259732**

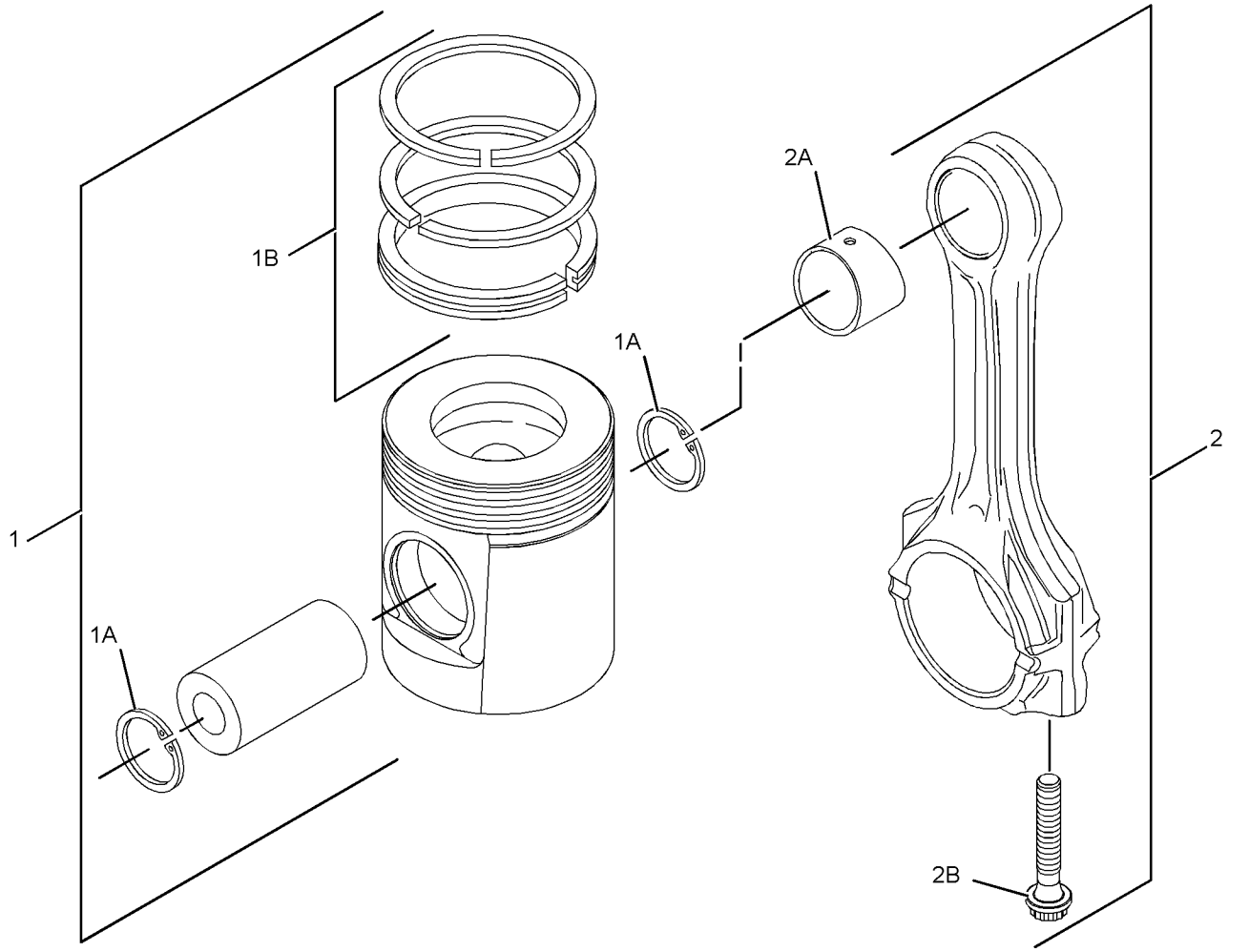

GRAPHIC #1 **<END>** g02201617

225-4317 PLUG GP-ENGINE

S/N: CRS1-UP; CST1-UP

PART OF 297-4055, 390-5113 ENGINE AR-PRIMARY

SMCS-1000 **i02564677**

NOTE	REF NO	GRAPHIC REF	PART NUMBER	QTY	PART NAME 1 2 3 4 5 6 (PRODUCT LEVEL)	SEE PAGE
	1	1	**2B-0858**	3	PLUG-PIPE	

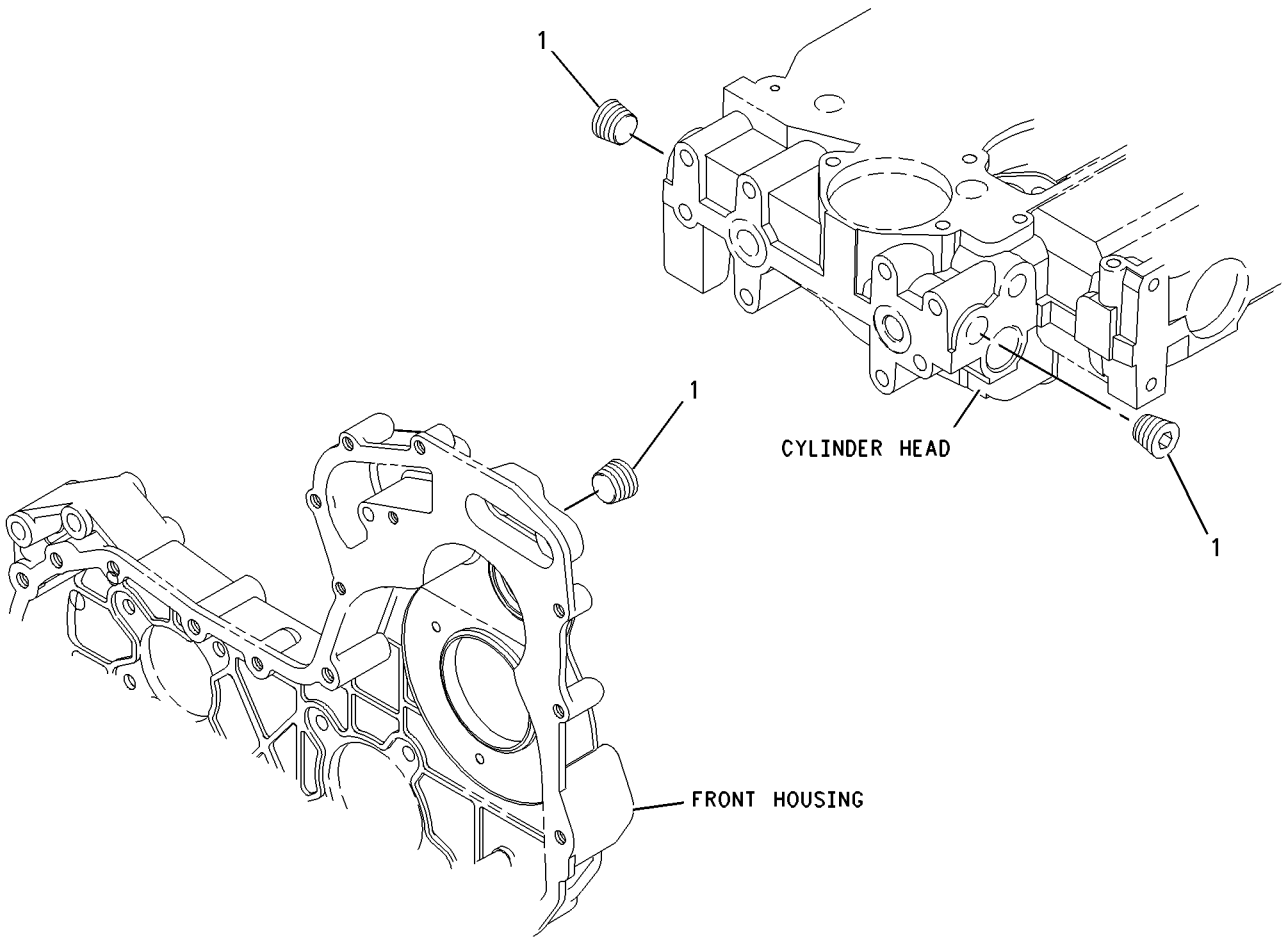

GRAPHIC #1 **<END>** g00911937

232-6204 PLUG GP-ENGINE

S/N: CRS1-UP; CST1-UP

PART OF 297-4055, 390-5113 ENGINE AR-PRIMARY

SMCS-1000 **i02564678**

NOTE	REF NO	GRAPHIC REF	PART NUMBER	QTY	PART NAME 1 2 3 4 5 6 (PRODUCT LEVEL)	SEE PAGE
	1	1	**199-9751**	1	SEAL-O-RING	
	2	1	**232-1322**	1	PLUG	

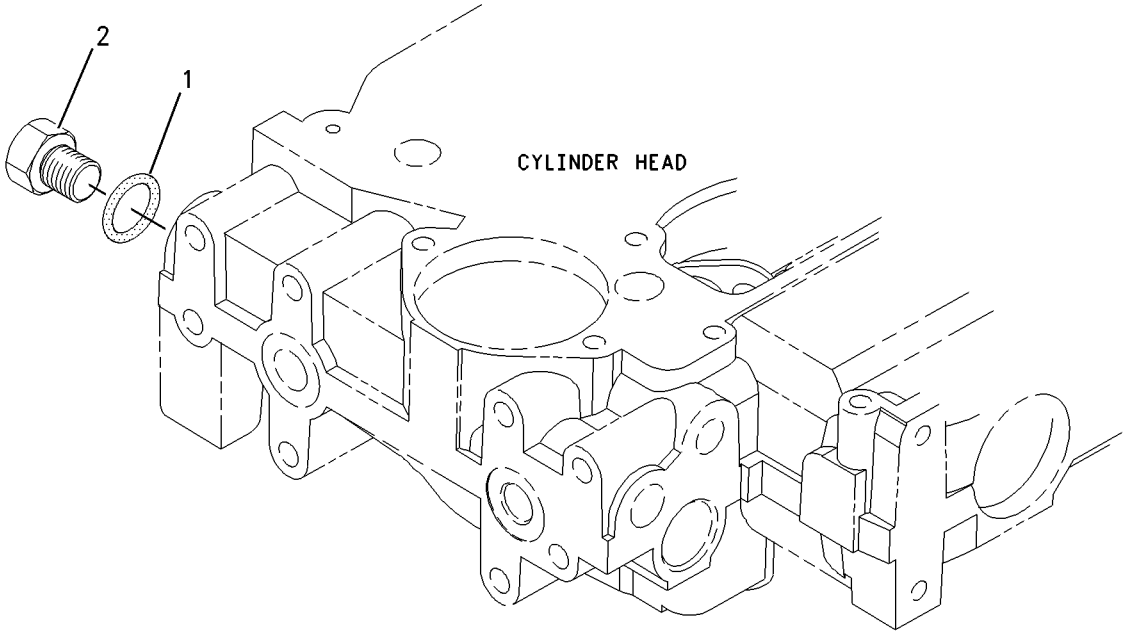

GRAPHIC #1 **<END>** g00950934

253-2479 PLUG GP-ENGINE

S/N: CRS1-UP; CST1-UP

PART OF 297-4055, 390-5113 ENGINE AR-PRIMARY

SMCS-1000 **i02564681**

NOTE	REF NO	GRAPHIC REF	PART NUMBER	QTY	PART NAME 1 2 3 4 5 6 (PRODUCT LEVEL)	SEE PAGE
	1	1	**035-8063**	1	PLUG	
	2	1	**199-9267**	1	SEAL-O-RING	
	3	1	**232-3861**	1	PLUG (BLANKING)	

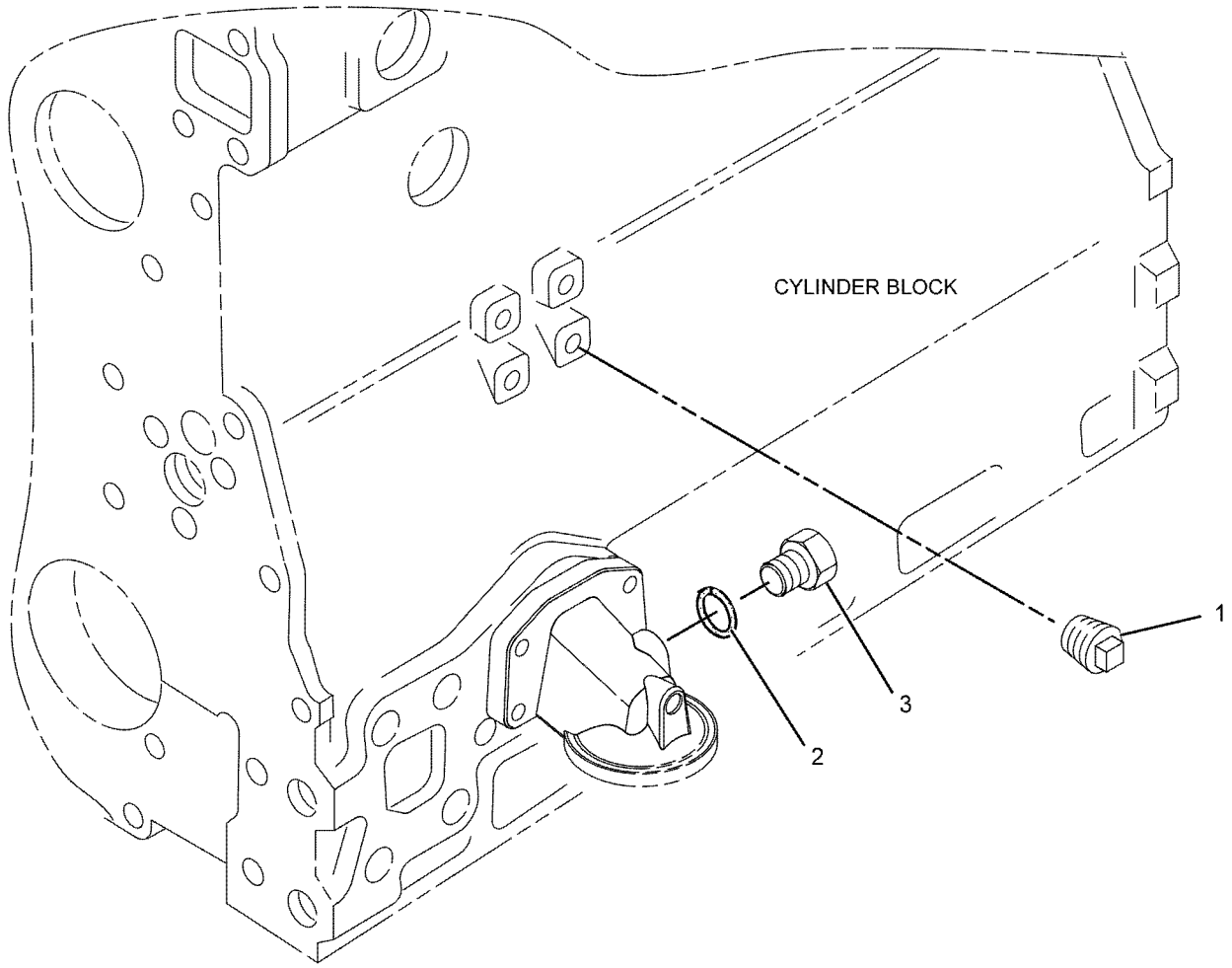

GRAPHIC #1 **<END>** g01079757

230-7353 PULLEY GP-CRANKSHAFT

S/N: CRS1-59947; CST1-UP

PART OF 297-4055 ENGINE AR-PRIMARY

SMCS-1205 **i02564671**

NOTE	REF NO	GRAPHIC REF	PART NUMBER	QTY	PART NAME 1 2 3 4 5 6 (PRODUCT LEVEL)	SEE PAGE
	1	1	**6I-0501**	1	BLOCK	
	2	1	**6I-0502**	1	PULLEY	
	3	1	**7W-4634**	3	BOLT (7/16-20X1.5-IN)	

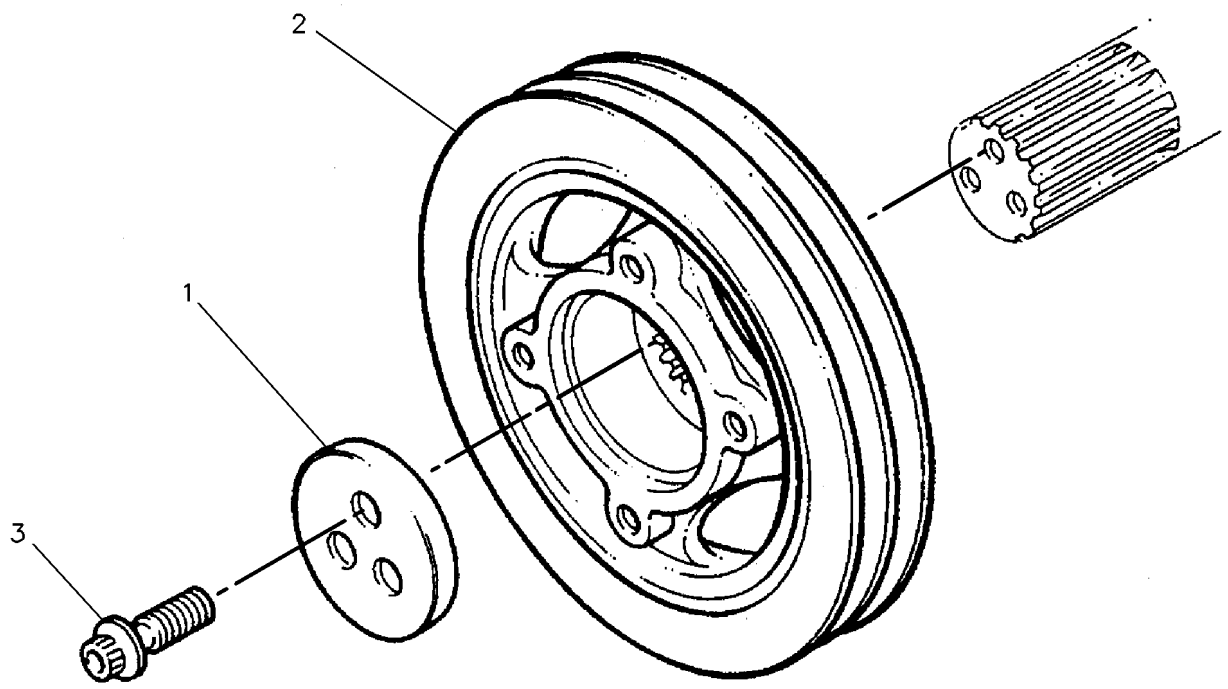

GRAPHIC #1 **<END>** g00130941

360-7351 PULLEY GP-CRANKSHAFT

S/N: CRS1-UP; CST1-UP

PART OF 297-4055, 390-5113 ENGINE AR-PRIMARY

SMCS-1205 **i04003650**

NOTE	REF NO	GRAPHIC REF	PART NUMBER	QTY	PART NAME 1 2 3 4 5 6 (PRODUCT LEVEL)	SEE PAGE
	1	1	**334-9334**	3	BOLT	
	2	1	**359-0747**	1	PULLEY-CRANKSHAFT	

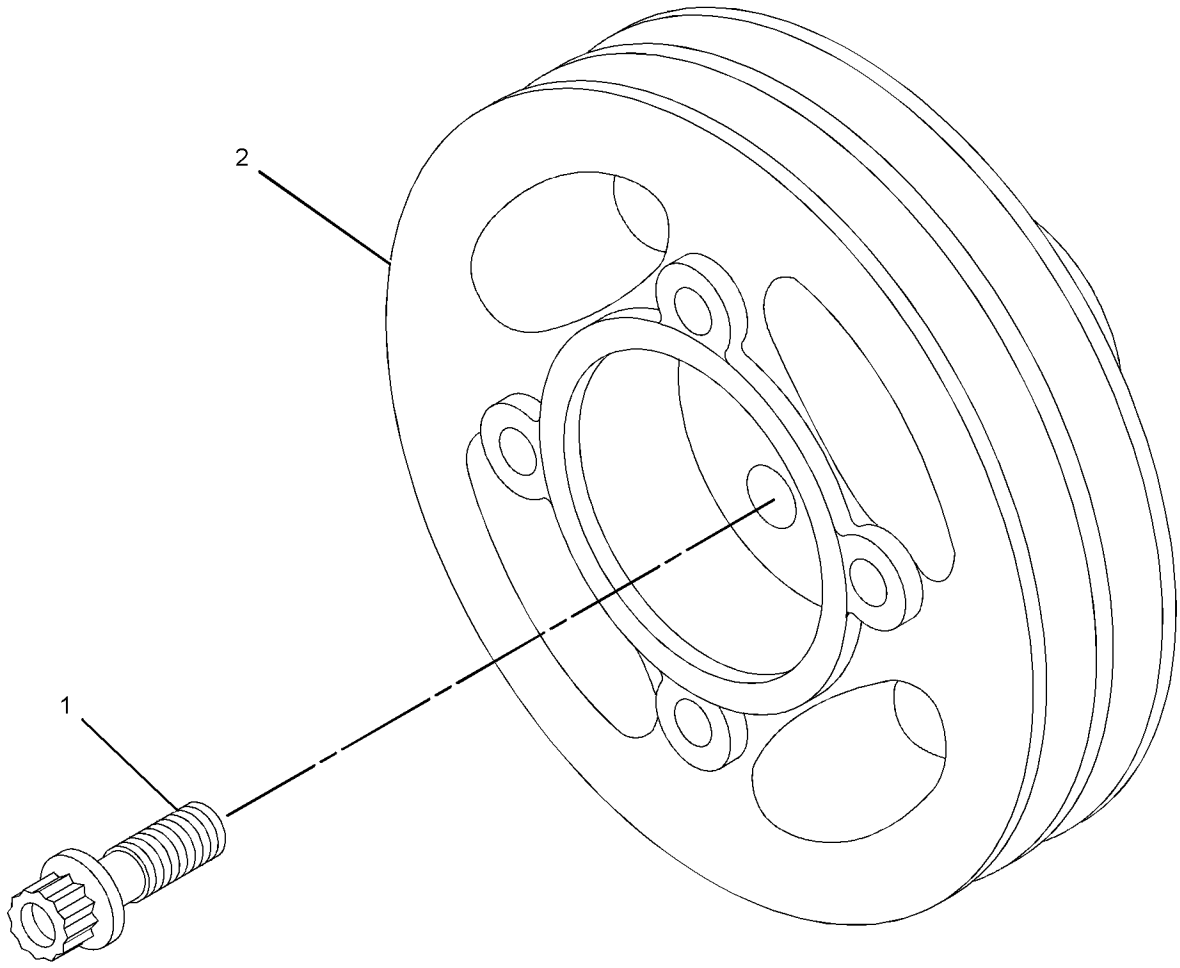

GRAPHIC #1 **<END>** g02154837

225-5963 ROCKER ARM GP

S/N: CRS1-UP; CST1-UP

PART OF 308-4732 VALVE MECHANISM GP

SMCS-1102, 1123 **i03469082**

NOTE	REF NO	GRAPHIC REF	PART NUMBER	QTY	PART NAME 1 2 3 4 5 6 (PRODUCT LEVEL)	SEE PAGE
	1	1	**225-5625**	4	LEVER AS (INLET)	
					(EACH INCLUDES)	
	1A	1	**5B-9079**	1	NUT-JAM (3/8-24-THD)	
	1B	1	**185-1546**	1	SCREW	
	2	1	**225-5634**	1	SHAFT AS	
	2A	1	**225-5629**	2	PLUG	
	3	1	**225-5638**	3	SPRING	
	4	1	**225-5640**	4	LEVER AS (EXHAUST)	
					(EACH INCLUDES)	
	4A	1	**5B-9079**	1	NUT-JAM (3/8-24-THD)	
	4B	1	**185-1546**	1	SCREW	
	5	1	**225-5959**	2	CLIP	
	6	1	**225-5960**	1	BOLT (M8X1.25X60-MM)	
	7	1	**225-5961**	2	WASHER (26.7X34.32X0.38-MM THK)	
	8	1	**225-5962**	3	BOLT (M8X1.25X30-MM)	

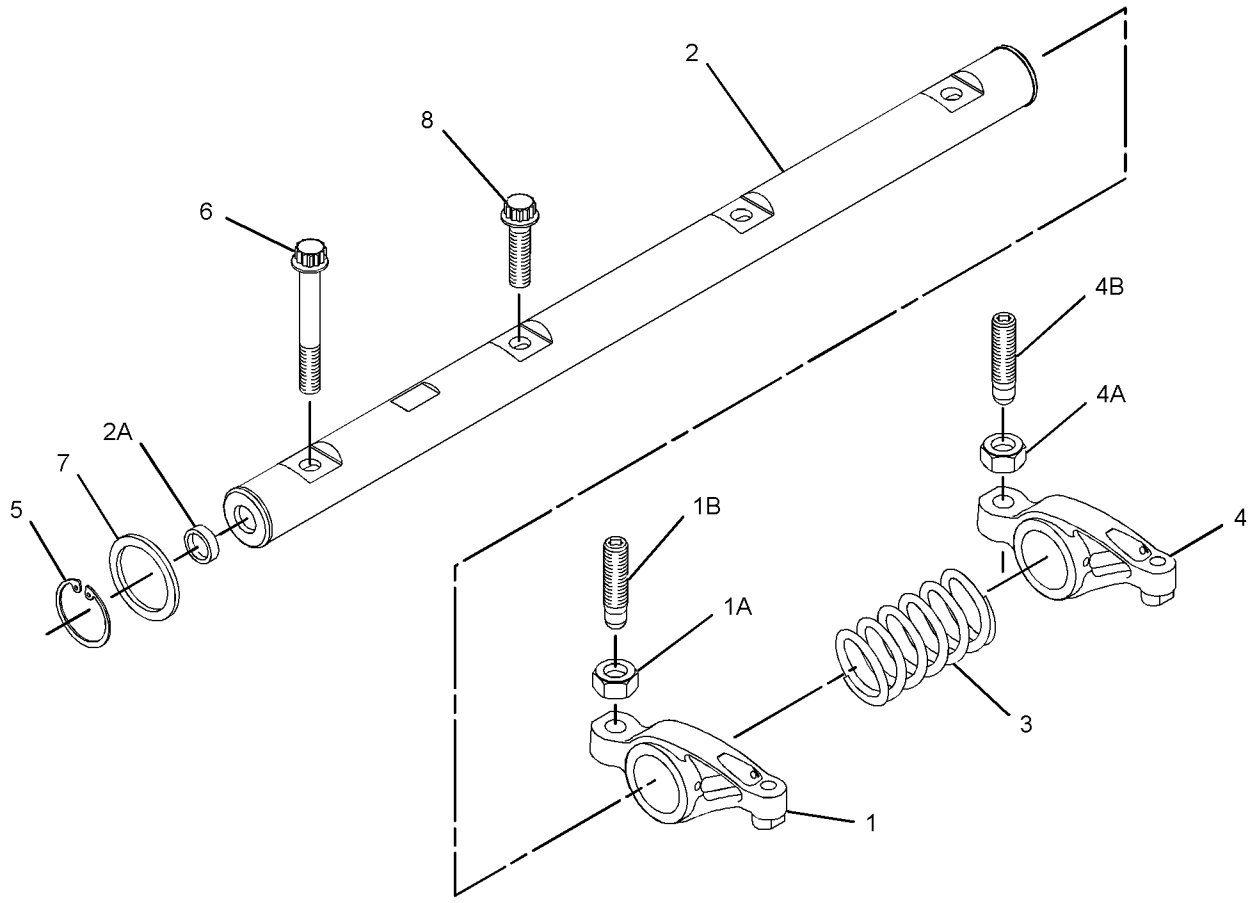

GRAPHIC #1 **<END>** g01368510

220-1960 SERVICE GP-ENGINE

S/N: TJL1-UP

FLUID SAMPLING, DRAIN

PART OF 219-4162, 348-5645 INSTALLATION AR-ENGINE

SMCS-1261, 1263, 1302, 7542 **i03431733**

NOTE	REF NO	GRAPHIC REF	PART NUMBER	QTY	PART NAME 1 2 3 4 5 6 (PRODUCT LEVEL)	SEE PAGE
	1	1	**1P-4278**	1	CLAMP-HOSE	
	2	1	**5D-1026**	1	CLAMP-BAND	
	3	1	**5P-7833**	1	VALVE-SHUTOFF (COOLANT)	
	4	1	**8C-3445**	1	CAP-DUST	
	5	1	**8T-7859**	1	CONNECTOR	
	6	1	**157-0670**	1	CAP-DUST	
	7	1	*165-2273*	1	VALVE GP-SHUTOFF (ENGINE OIL DRAIN)	
		1	**3K-0360**	1	SEAL-O-RING	
		1	**6V-7238**	1	VALVE-SHUTOFF (ENGINE OIL DRAIN)	
	8	1	**154-9025**	1	VALVE-FLUID SAMPLING (COOLANT)	
	9	1	**159-5255**	1	ADAPTER	
	10	1	*164-5590*	1	VALVE GP-FLUID SAMPLING (ENGINE OIL)	
		1	**3J-7354**	1	SEAL-O-RING	
		1	**8C-3446**	1	VALVE-FLUID SAMPLING (ENGINE OIL)	
	11	1	**3P-1823**	1	ADAPTER-PIPE	
	12	1	**5P-9186**	1	SEAL-O-RING	
	13	1	**7K-1181**	1	STRAP-CABLE	
	14	1	**8T-7876**	1	SEAL-O-RING	
E	15	1	**5P-0743**		HOSE (50-CM)	
E	16	1	**5P-1420**		HOSE (80-CM)	

E - ORDER BY THE CENTIMETER

220-1960 **SERVICE GP-ENGINE (*contd.*)** **i03431733**

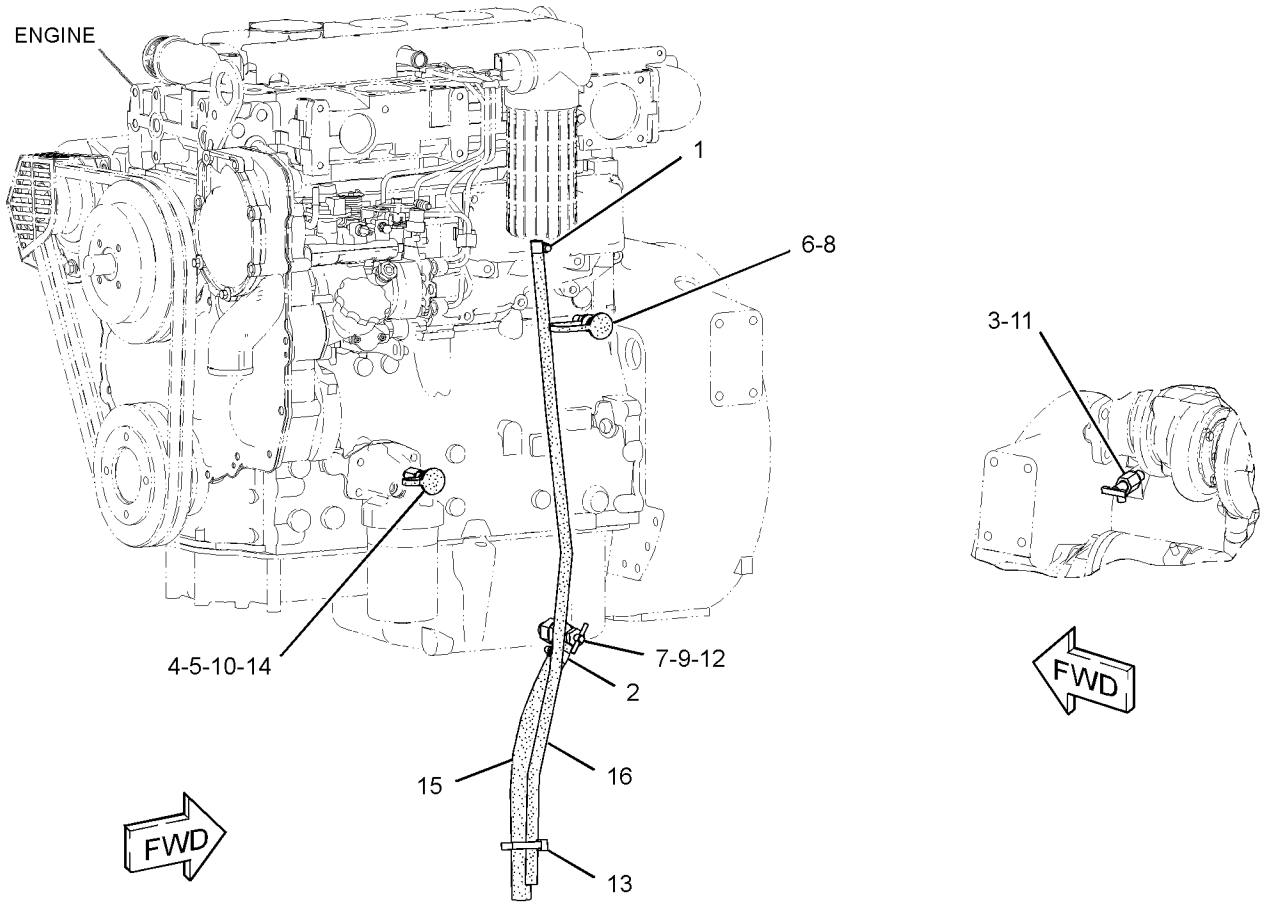

GRAPHIC #1 **<END>** g01537053

232-7526 VALVE MECHANISM GP

S/N: CRS1-UP; CST1-UP

PART OF 390-5113 ENGINE AR-PRIMARY

SMCS-1102, 1121, 1123

i02564695

NOTE	REF NO	GRAPHIC REF	PART NUMBER	QTY	PART NAME 1 2 3 4 5 6 (PRODUCT LEVEL)	SEE PAGE
	1	1	**067-6095**	8	ROD	
	2	1	**138-2053**	8	TAPPET	
	3	1	**225-5963**	1	ROCKER ARM GP	
	4	1	**225-5625**	4	LEVER AS	
					(EACH INCLUDES)	
	5	1	**5B-9079**	1	NUT-JAM (3/8-24-THD)	
	6	1	**185-1546**	1	SCREW	
	7	1	**225-5634**	1	SHAFT AS	
	8	1	**225-5629**	2	PLUG	
	9	1	**225-5638**	3	SPRING	
	10	1	**225-5640**	4	LEVER AS	
					(EACH INCLUDES)	
	11	1	**5B-9079**	1	NUT-JAM (3/8-24-THD)	
	12	1	**185-1546**	1	SCREW	
	13	1	**225-5959**	2	CLIP	
	14	1	**225-5960**	1	BOLT (M8X1.25X60-MM)	
	15	1	**225-5961**	2	WASHER (26.7X34.32X0.38-MM THK)	
	16	1	**225-5962**	3	BOLT (M8X1.25X30-MM)	

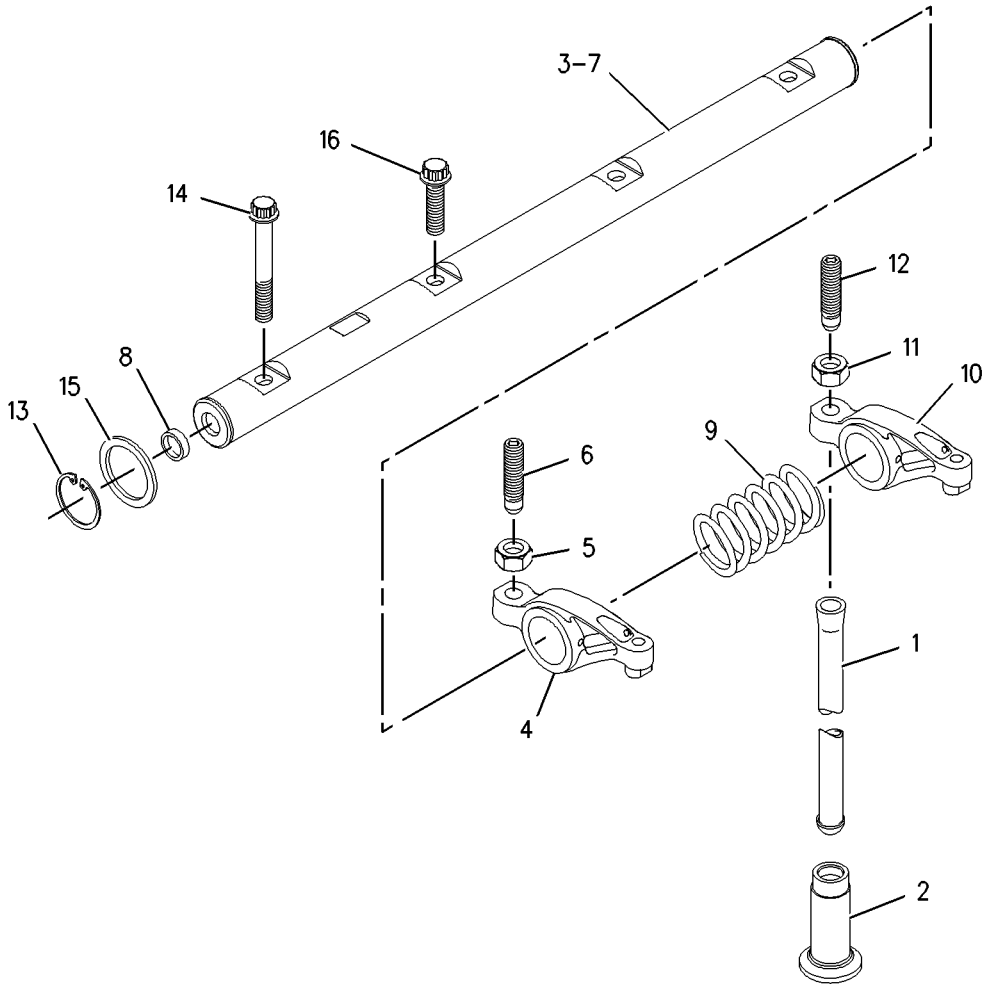

GRAPHIC #1

<END>

g00910253

308-4732 VALVE MECHANISM GP

S/N: CRS1-UP; CST1-UP

PART OF 297-4055 ENGINE AR-PRIMARY

SMCS-1102, 1121, 1123

i03796493

NOTE	REF NO	GRAPHIC REF	PART NUMBER	QTY	PART NAME 1 2 3 4 5 6 (PRODUCT LEVEL)	SEE PAGE
	1	1	**067-6095**	8	ROD	
	2	1	**138-2053**	8	TAPPET	
Y	3	1	**225-5963**	1	ROCKER ARM GP	50
	4	1	**350-2374**	1	CAMSHAFT AS	
	4A	1	**1B-8736**	1	KEY-WOODRUFF	

Y - SEPARATE ILLUSTRATION

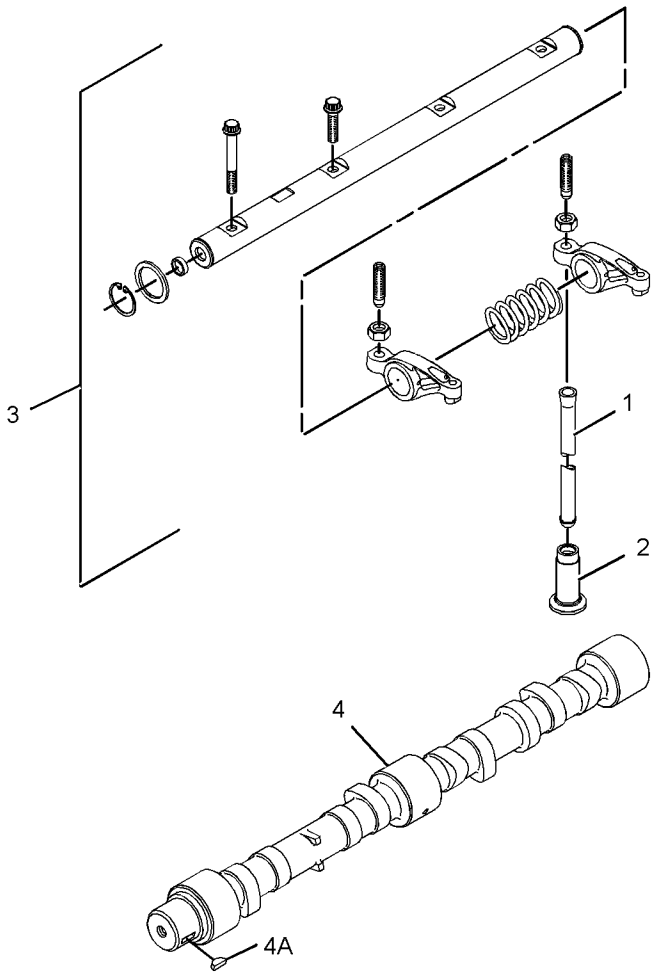

GRAPHIC #1

<END>

g02068355

232-7378 FILTER GP-ENGINE OIL

S/N: CRS1-UP; CST1-UP

PART OF 297-4055, 390-5113 ENGINE AR-PRIMARY

SMCS-1306, 1308 **i02560731**

NOTE	REF NO	GRAPHIC REF	PART NUMBER	QTY	PART NAME 1 2 3 4 5 6 (PRODUCT LEVEL)	SEE PAGE
	1	1	**7W-2326**	1	FILTER AS-ENGINE OIL	

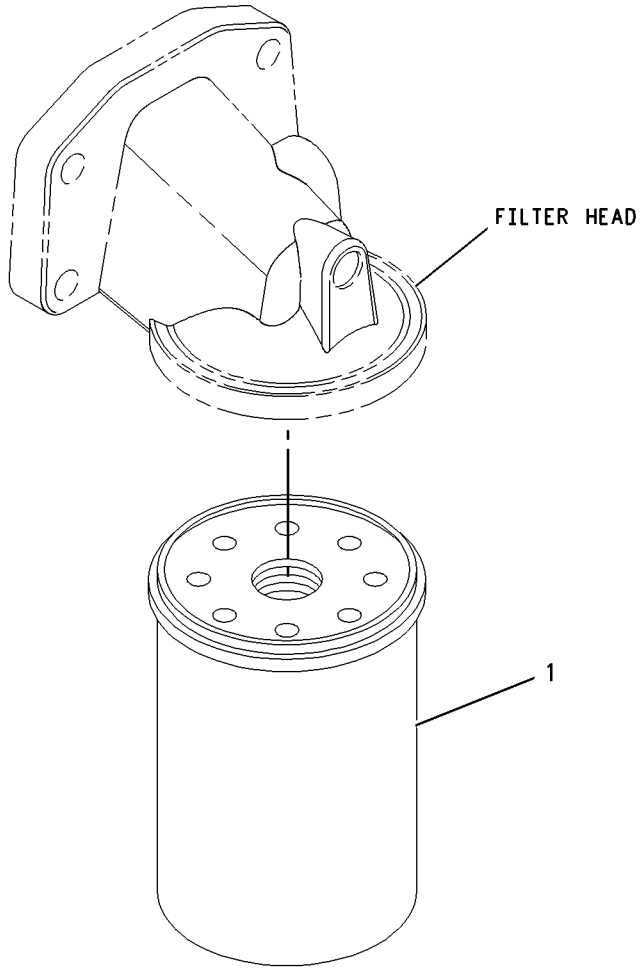

GRAPHIC #1 **<END>** g00950898

230-7578 PUMP GP-ENGINE OIL

S/N: CRS1-UP; CST1-UP

PART OF 297-4055, 390-5113 ENGINE AR-PRIMARY

SMCS-1304, 1315

i02564669

NOTE	REF NO	GRAPHIC REF	PART NUMBER	QTY	PART NAME 1 2 3 4 5 6 (PRODUCT LEVEL)	SEE PAGE
M	1	1	**100-4461**	5	BOLT (M10X1.50X50-MM)	
	2	1	**225-8329**	1	PUMP AS-ENGINE OIL	

M - METRIC PART

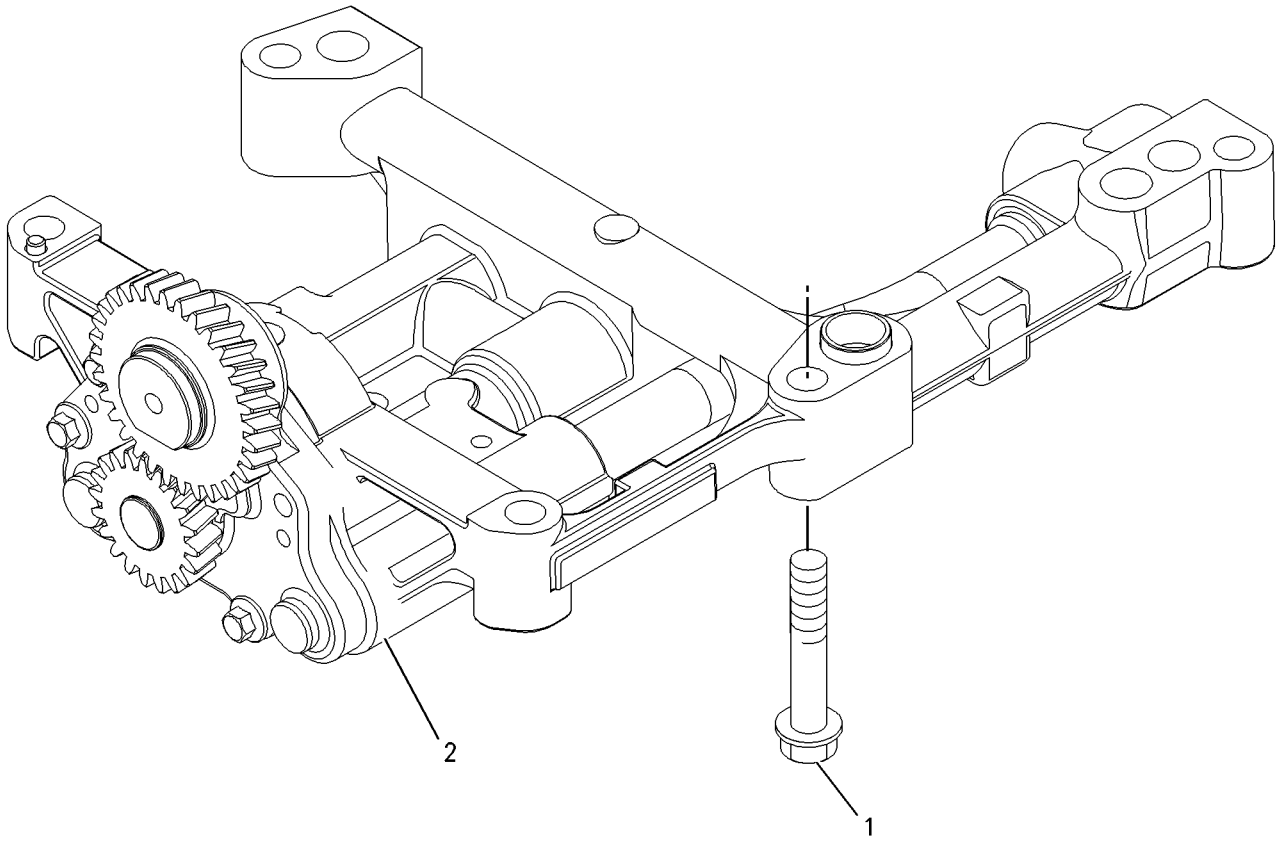

GRAPHIC #1 **<END>** g00911993

231-0038 CONNECTION GP-WATER

S/N: CRS1-UP; CST1-UP

PART OF 297-4055, 390-5113 ENGINE AR-PRIMARY

SMCS-1380 **i03080941**

NOTE	REF NO	GRAPHIC REF	PART NUMBER	QTY	PART NAME 1 2 3 4 5 6 (PRODUCT LEVEL)	SEE PAGE
M	1	1	**6I-0260**	1	BOLT (M8X1.25X25-MM)	
M	2	1	**100-3751**	1	BOLT (M8X1.25X65-MM)	
	3	1	**254-2269**	1	CONNECTION GP-WATER (TEMPERATURE REGULATOR)	
	4	1	**254-2270**	1	SEAL-O-RING	

M - METRIC PART

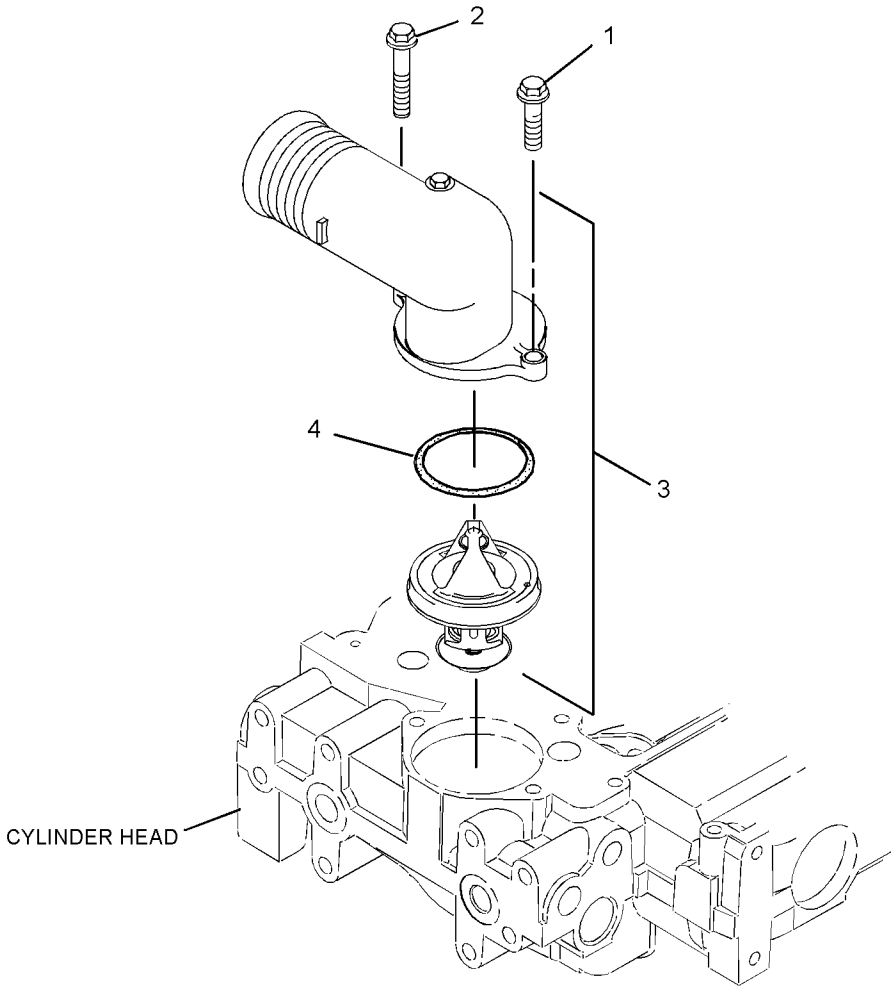

GRAPHIC #1 **<END>** g01156772

354-1274 COOLER GP-ENGINE OIL

S/N: CRS1-UP; CST1-UP

PART OF 238-2799 COOLER GP-FLTR BASE & ENG OIL

SMCS-1378 **i03894671**

NOTE	REF NO	GRAPHIC REF	PART NUMBER	QTY	PART NAME 1 2 3 4 5 6 (PRODUCT LEVEL)	SEE PAGE
M	1	1	**6I-0260**	10	BOLT (M8X1.25X25-MM)	
	2	1	**6I-4374**	3	BOLT (M8X1.25X60-MM)	
M	3	1	**101-3895**	4	BOLT (M8X1.25X35-MM)	
	4	1	**225-6817**	1	COOLER-OIL	
	5	1	**225-6818**	2	SEAL	
	6	1	**272-2265**	1	SEAL	

M - METRIC PART

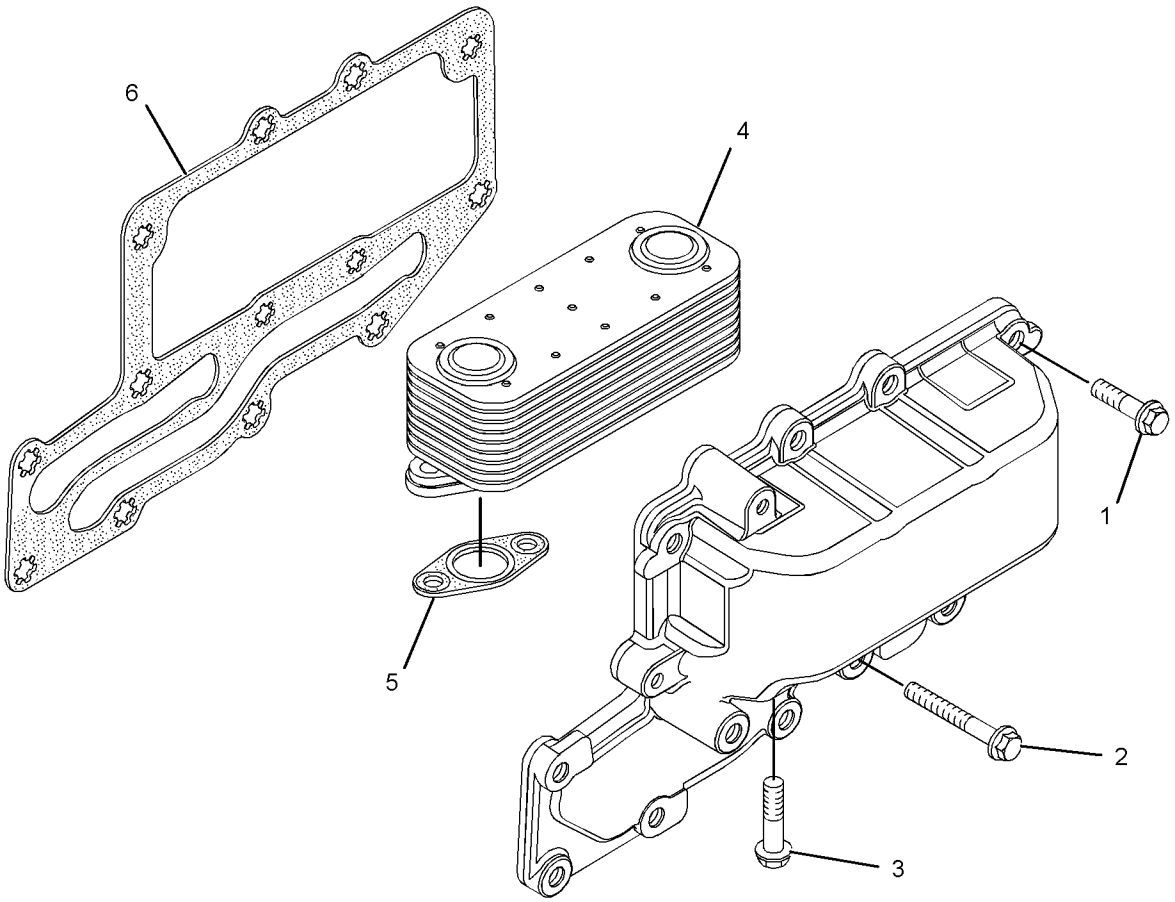

GRAPHIC #1 **<END>** g02140458

238-2799 COOLER GP-FLTR BASE & ENG OIL

S/N: CRS1-UP; CST1-UP

PART OF 297-4055, 390-5113 ENGINE AR-PRIMARY

SMCS-1306, 1378 **i03890787**

NOTE	REF NO	GRAPHIC REF	PART NUMBER	QTY	PART NAME 1 2 3 4 5 6 (PRODUCT LEVEL)	SEE PAGE
	1	1	**6I-0572**	4	BOLT (M8X1.25X20-MM)	
M	2	1	**6I-0645**	4	BOLT (M8X1.25X25-MM)	
	3	1	**8T-7876**	1	SEAL-O-RING	
	4	1	**225-7941**	1	PLUG	
	5	1	**225-7944**	2	GASKET	
	6	1	**249-0974**	1	HEAD AS-OIL FILTER	
CY	7	1	**354-1274**	1	COOLER GP-ENGINE OIL	58
	8	1	**232-3751**	1	PLATE	

C - CHANGE FROM PREVIOUS TYPE
M - METRIC PART
Y - SEPARATE ILLUSTRATION

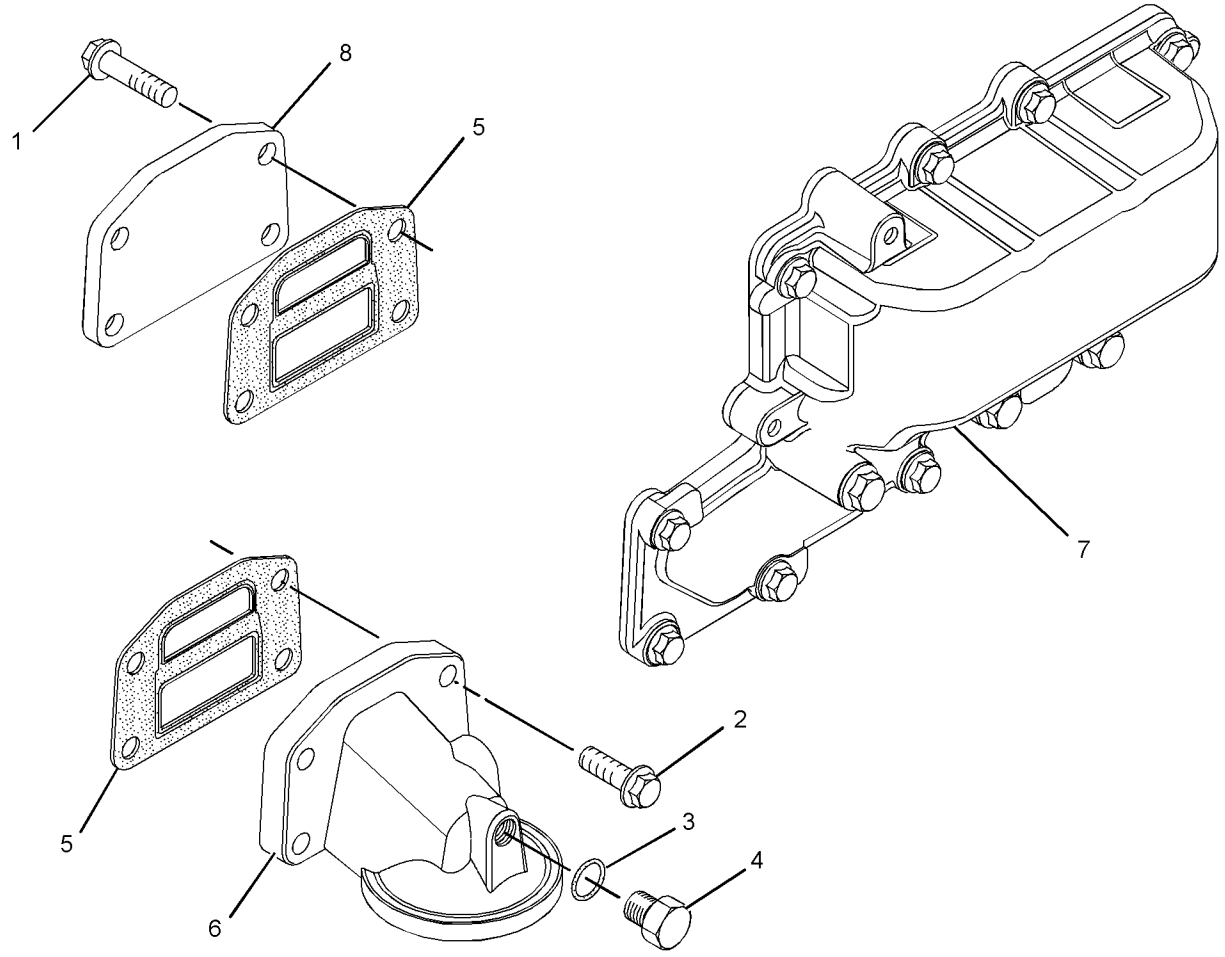

GRAPHIC #1 **<END>** g02140432

153-4982 FAN GP-SUCTION

S/N: TJL1-623
FOR USE WITH AIR CONDITIONER
PART OF 227-5595 OPERATOR AR
AN ATTACHMENT

SMCS-1356 **i03053783**

NOTE	REF NO	GRAPHIC REF	PART NUMBER	QTY	PART NAME 1 2 3 4 5 6 (PRODUCT LEVEL)	SEE PAGE
	1	1	**5P-4116**	4	WASHER-HARD (8.8X20.5X2-MM THK)	
	2	1	**274-7855**	2	GUARD AS-FAN	
					(EACH INCLUDES)	
M		1	**8T-3612**	1	NUT-WELD (M8X1.25-THD)	
	3	1	**130-3881**	1	PULLEY-FAN	
	4	1	**142-3388**	1	SPACER-FAN	
	5	1	**142-3391**	1	SPIDER AS (9-BLADE)	
M	6	1	**153-3061**	4	BOLT (M8X1.25X130-MM)	
	7	1	**8T-4224**	6	WASHER-HARD (8.8X16X2-MM THK)	
M	8	1	**8T-4908**	6	BOLT (M8X1.25X25-MM)	

M - METRIC PART

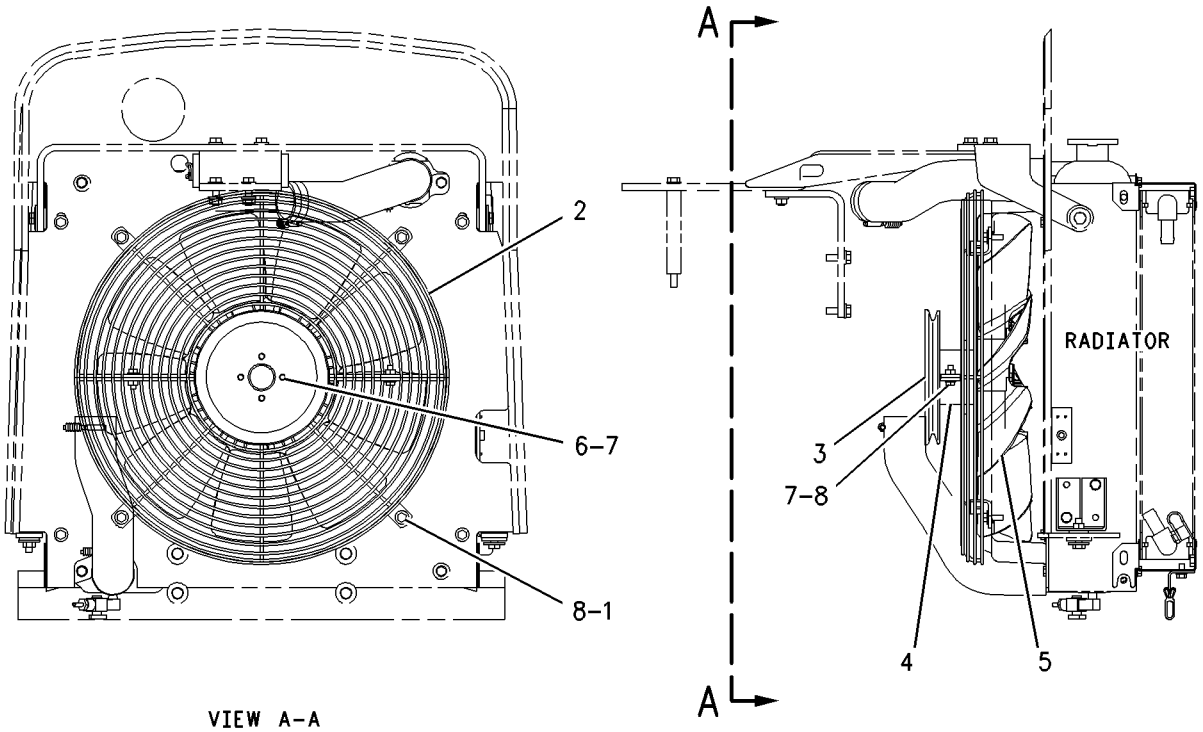

VIEW A–A

GRAPHIC #1 **<END>** g00897351

153-5030 FAN GP-SUCTION

S/N: TJL1-623
PART OF 219-4171, 224-1151, 227-5594 OPERATOR AR
AN ATTACHMENT

SMCS-1356 **i03045160**

NOTE	REF NO	GRAPHIC REF	PART NUMBER	QTY	PART NAME 1 2 3 4 5 6 (PRODUCT LEVEL)	SEE PAGE
	1	1	**5P-4116**	4	WASHER-HARD (8.8X20.5X2-MM THK)	
	2	1	**142-3388**	1	SPACER-FAN	
	3	1	**142-3391**	1	SPIDER AS (9-BLADE)	
M	4	1	**153-3061**	4	BOLT (M8X1.25X130-MM)	
	5	1	**274-7855**	2	GUARD AS-FAN	
					(EACH INCLUDES)	
M		1	**8T-3612**	1	NUT-WELD (M8X1.25-THD)	
	6	1	**8T-4224**	6	WASHER-HARD (8.8X16X2-MM THK)	
M	7	1	**8T-4908**	6	BOLT (M8X1.25X25-MM)	

M - METRIC PART

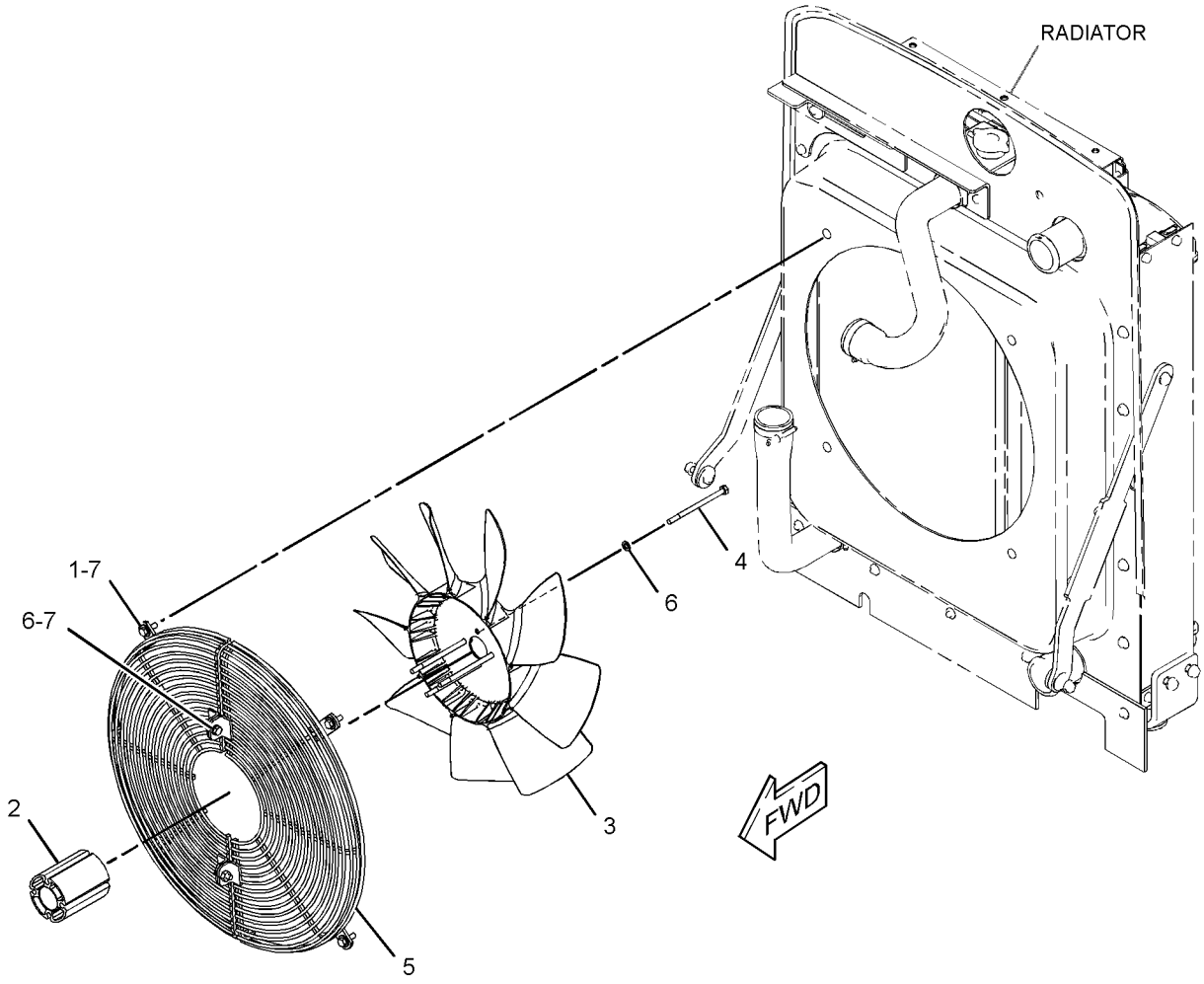

GRAPHIC #1 **<END>** g01555473

339-9774 FAN GP-SUCTION—WITHOUT AIR CONDITIONER

S/N: TJL1-UP

PART OF 348-5641 OPERATOR AR, 348-5642, 348-5643 OPERATOR AR-OPEN ROPS AN ATTACHMENT

SMCS-1356 **i03933833**

NOTE	REF NO	GRAPHIC REF	PART NUMBER	QTY	PART NAME 1 2 3 4 5 6 (PRODUCT LEVEL)	SEE PAGE
	1	1	**142-3388**	1	SPACER-FAN	
	2	1	**142-3391**	1	SPIDER AS (9-BLADE)	
M	3	1	**153-3061**	4	BOLT (M8X1.25X130-MM)	
	4	1	**8T-4224**	4	WASHER-HARD (8.8X16X2-MM THK)	

M - METRIC PART

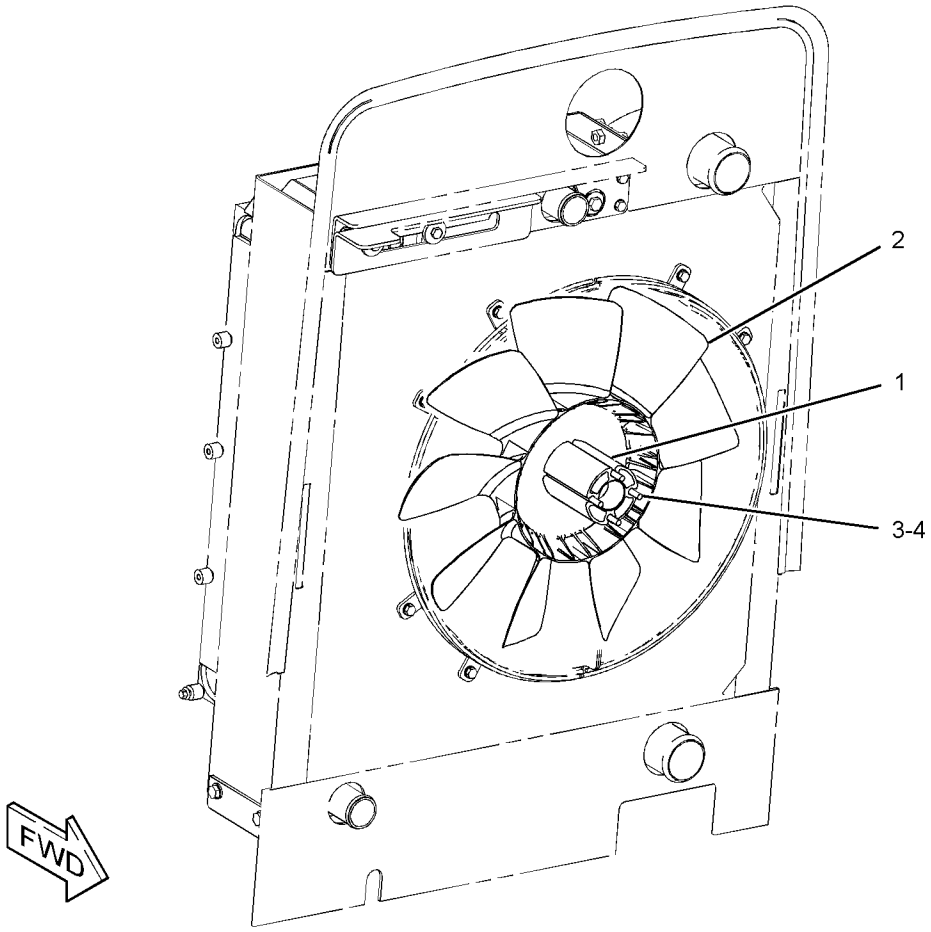

GRAPHIC #1 **<END>** g02212873

339-9775 FAN GP-SUCTION—WITH AIR CONDITIONER

S/N: TJL1-UP
PART OF 348-5640 OPERATOR AR
AN ATTACHMENT

SMCS-1356 **i03933834**

NOTE	REF NO	GRAPHIC REF	PART NUMBER	QTY	PART NAME 1 2 3 4 5 6 (PRODUCT LEVEL)	SEE PAGE
	1	1	**130-3881**	1	PULLEY-FAN	
	2	1	**142-3388**	1	SPACER-FAN	
	3	1	**142-3391**	1	SPIDER AS (9-BLADE)	
M	4	1	**153-3061**	4	BOLT (M8X1.25X130-MM)	
	5	1	**8T-4224**	4	WASHER-HARD (8.8X16X2-MM THK)	

M - METRIC PART

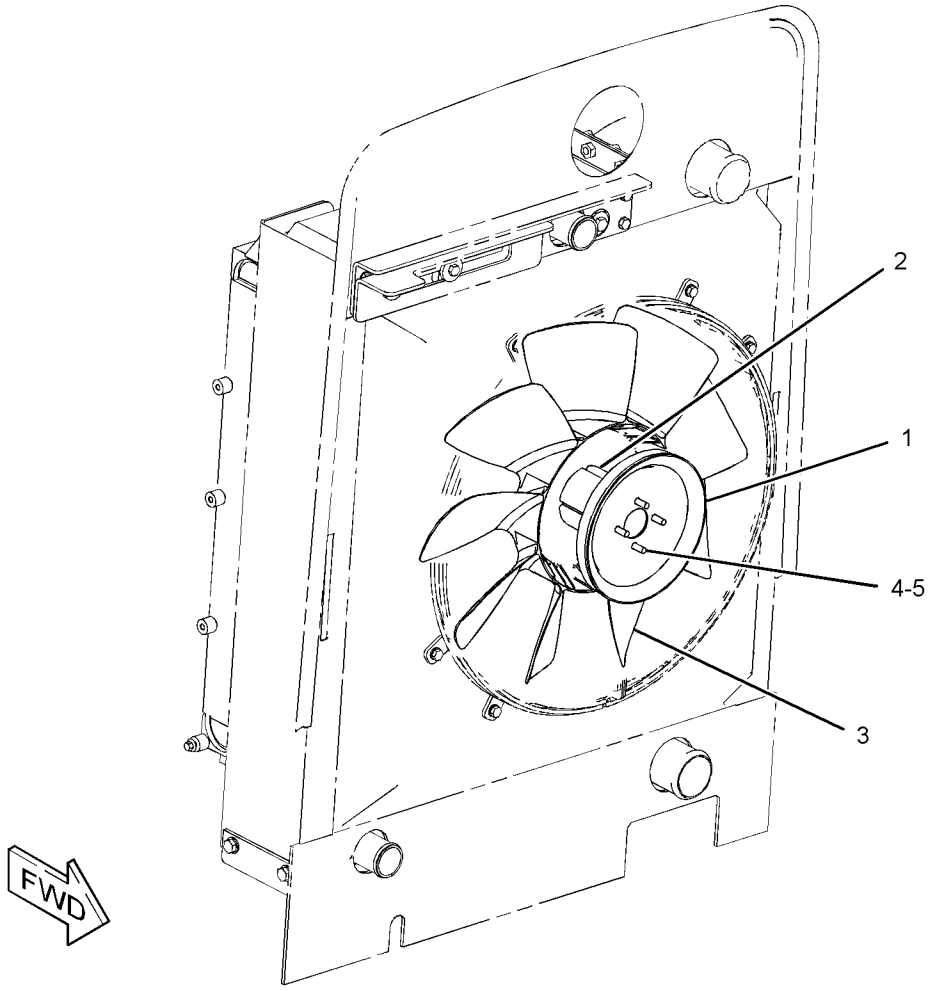

GRAPHIC #1 **<END>** g02211038

230-7355 PUMP GP-WATER

S/N: CRS1-UP; CST1-UP

PART OF 297-4055, 390-5113 ENGINE AR-PRIMARY

SMCS-1361 **i03568519**

NOTE	REF NO	GRAPHIC REF	PART NUMBER	QTY	PART NAME 1 2 3 4 5 6 (PRODUCT LEVEL)	SEE PAGE
M	1	1	**6I-0217**	2	BOLT (M8X1.25X20-MM)	
M	2	1	**6I-0254**	2	BOLT (M8X1.25X30-MM)	
M	3	1	**100-3751**	5	BOLT (M8X1.25X65-MM)	
	4	1	**113-8129**	2	BOLT (M8X1.25X75-MM)	
	5	1	**225-7741**	1	CONNECTION AS	
	6	1	**225-7738**	1	SEAL-O-RING	
	7	1	**225-7739**	1	SEAL-O-RING	
	8	1	**225-8016**	1	PUMP GP-WATER	
	8A	1	**225-8019**	1	GASKET	
	8B	1	**286-3592**	1	GEAR-WATER PUMP	
					AVAILABLE REPAIR KIT(S):	
			247-0144	1	KIT-WATER PUMP	
					(INCLUDES 2 DIFFERENT GASKETS)	

M - METRIC PART

230-7355 **PUMP GP-WATER (*contd.*)** **i03568519**

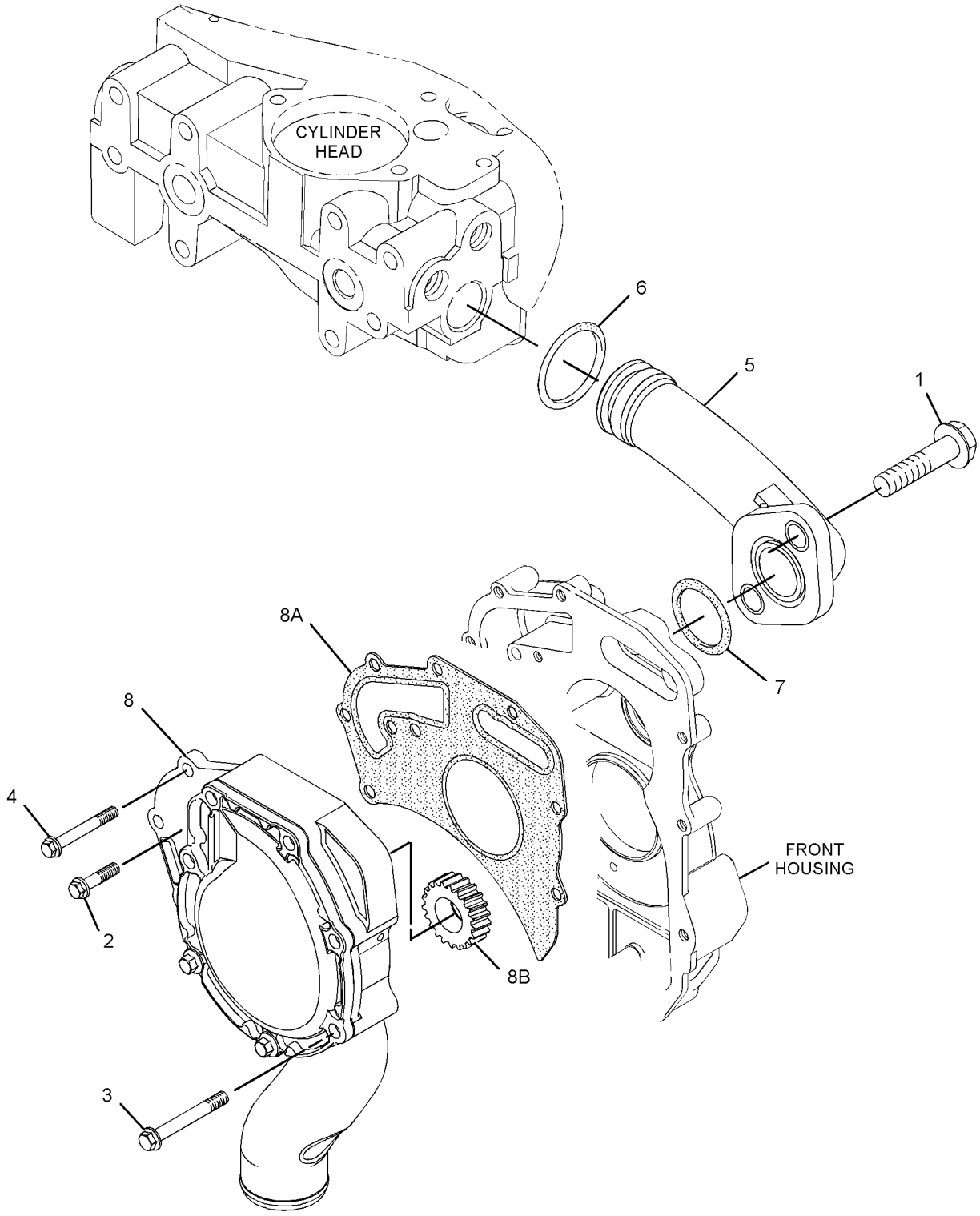

GRAPHIC #1 **<END>** g01897273

217-8225 RADIATOR & HYD OIL COOLER GP

S/N: TJL1-623

PART OF 219-4162 INSTALLATION AR-ENGINE

SMCS-1351, 1353, 1374 **i03640624**

NOTE	REF NO	GRAPHIC REF	PART NUMBER	QTY	PART NAME 1 2 3 4 5 6 (PRODUCT LEVEL)	SEE PAGE
	1	1	**1P-4278**	1	CLAMP-HOSE	
	2	1	**5R-5927**	2	WASHER (14X65X6-MM THK)	
	3	1	**7X-7655**	1	VALVE-DRAIN (RADIATOR)	
	4	1	**7X-7739**	2	WASHER (9.7X25.4 X4-MM THK)	
	5	1	**8E-9571**	1	WASHER-HARD (8.8X16X7-MM THK)	
	6	1	**8T-6703**	4	CLAMP-HOSE	
	7	1	**069-3686**	1	CONNECTOR	
	8	1	**112-4159**	2	MOUNTING AS	
	9	1	**122-8427**	2	SPACER (9X14X3.5-MM THK)	
	10	1	**301-9825**	2	MOUNT	
	11	1	**183-6121**	2	WASHER (10.31X38.1X4.78-MM THK)	
	12	1	**203-4231**	2	BRACKET AS	
					(EACH INCLUDES)	
M		1	**8T-3490**	2	NUT-WELD (M10X1.5-THD)	
	13	1	**216-7956**	1	HOSE-RADIATOR (UPPER)	
	14	1	**217-2733**	1	HOSE (LOWER)	
	15	1	**219-0617**	1	BAR	
	16	1	*220-3813*	1	SHROUD AS	
		1	**5P-4115**	5	WASHER-HARD (7.2X19X2-MM THK)	
		1	**162-2480**	5	RIVET	
		1	**220-3259**	1	SHROUD AS	
		1	**239-0649**	1	SEAL	
	17	1	**222-6445**	1	TETHER AS (RADIATOR, HYD OIL COOLING)	
		1	**5P-7958**	2	SLEEVE-CABLE SPLICE	
	18	1	**224-2264**	1	BRACE AS	
		1	**178-8505**	2	PLATE AS	
	19	1	**229-1538**	1	BRACKET	
	20	1	**229-1567**	1	BRACKET	
	21	1	**229-1641**	1	WASHER (9X35X5-MM THK)	
Y	22	1	**229-2588**	1	RADIATOR & HYD OIL COOLER GP	68
	23	1	**2N-1931**	1	ELBOW-PIPE	
	24	1	**5P-4116**	7	WASHER-HARD (8.8X20.5X2-MM THK)	
	25	1	**8T-4121**	8	WASHER-HARD (11X21X2.5-MM THK)	
M	26	1	**8T-4133**	2	NUT (M10X1.5-THD)	
M	27	1	**8T-4137**	2	BOLT (M10X1.5X20-MM)	
M	28	1	**8T-4182**	2	BOLT (M10X1.5X45-MM)	
M	29	1	**8T-4189**	2	BOLT (M8X1.25X20-MM)	
M	30	1	**8T-4196**	4	BOLT (M10X1.5X35-MM)	
M	31	1	**8T-4200**	9	BOLT (M8X1.25X16-MM)	
	32	1	**8T-4223**	2	WASHER-HARD (13.5X25.5X3-MM THK)	
	33	1	**8T-4224**	2	WASHER-HARD (8.8X16X2-MM THK)	
M	34	1	**8T-6868**	2	BOLT (M12X1.75X80-MM)	
M	35	1	**8T-7547**	1	BOLT (M8X1.25X30-MM)	
E	36	1	**5P-1420**		HOSE (50-CM)	
E	37	1	**201-1601**		SEAL (231-CM)	

E - ORDER BY THE CENTIMETER
M - METRIC PART
Y - SEPARATE ILLUSTRATION

217-8225 **RADIATOR & HYD OIL COOLER GP (*contd.*)** **i03640624**

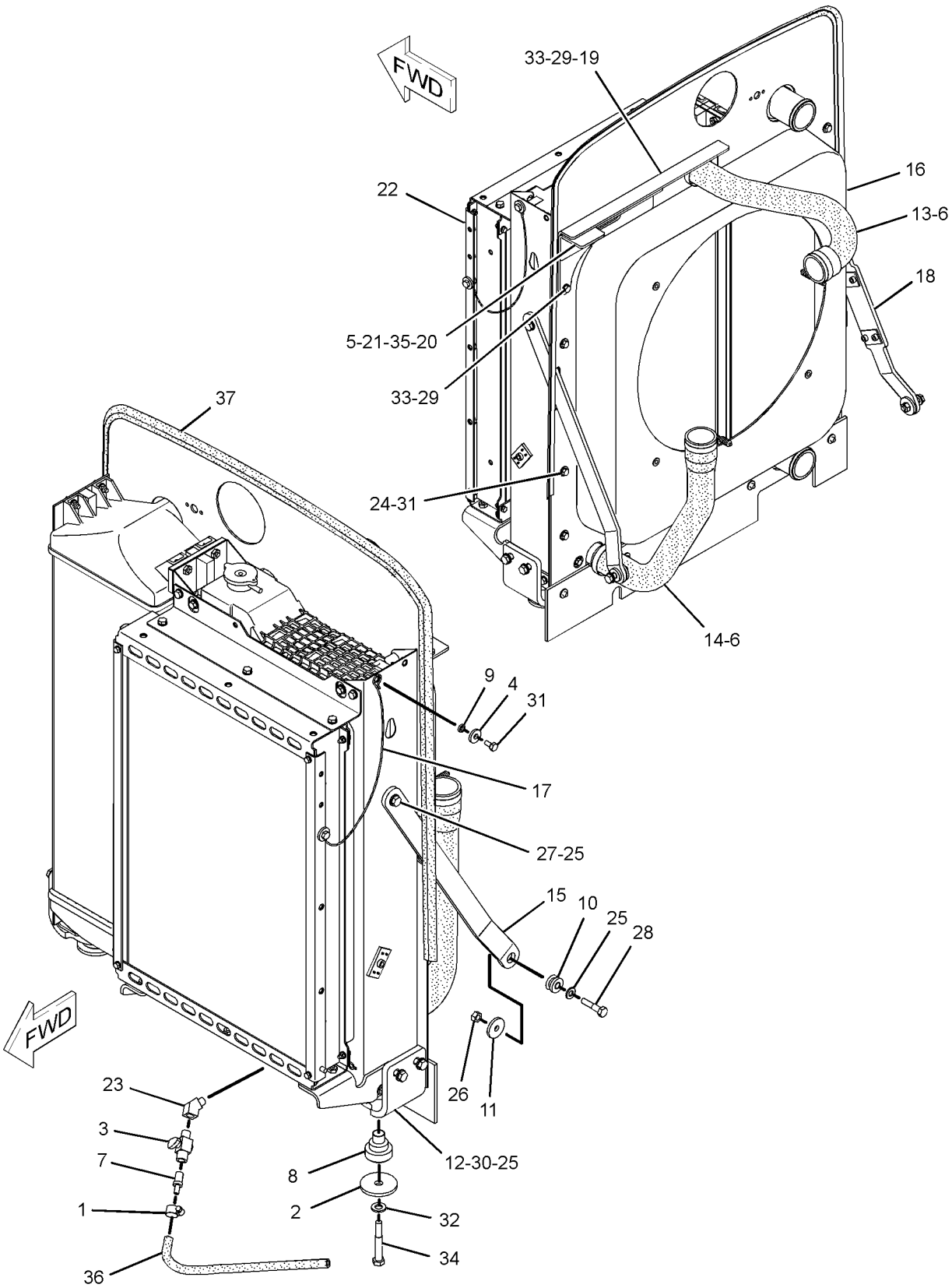

GRAPHIC #1 **<END>** g01275743

229-2588 RADIATOR & HYD OIL COOLER GP

S/N: TJL1-623

PART OF 217-8225 RADIATOR & HYD OIL COOLER GP

SMCS-1351, 1353, 1374 **i03030082**

NOTE	REF NO	GRAPHIC REF	PART NUMBER	QTY	PART NAME 1 2 3 4 5 6 (PRODUCT LEVEL)	SEE PAGE
M	1	1	**8T-7547**	4	BOLT (M8X1.25X30-MM)	
	2	1	**211-6574**	1	CAP-RADIATOR (16-PSI)	
	3	1	**217-4111**	1	AFTERCOOLER AS (HYDRAULIC OIL COOLER)	
Y	4	1	**217-4112**	1	COOLER GP-HYDRAULIC OIL	296
	5	1	**217-4113**	1	RADIATOR GP	
D	5A	1	**5P-5687**		SEAL (0.9-M EACH)	
	5B	1	**102-8704**	1	PLATE AS	
D	6	1	**5P-5687**		SEAL (0.9-M EACH)	
	7	1	**218-5014**	3	SPACER (8.2X18X7-MM THK)	
	8	1	**5P-4116**	1	WASHER-HARD (8.8X20.5X2-MM THK)	
M	9	1	**6V-9189**	4	LOCKNUT (M8X1.25-THD)	
M	10	1	**8T-4189**	6	BOLT (M8X1.25X20-MM)	
M	11	1	**8T-4200**	3	BOLT (M8X1.25X16-MM)	
	12	1	**8T-4224**	22	WASHER-HARD (8.8X16X2-MM THK)	
M	13	1	**8T-4908**	6	BOLT (M8X1.25X25-MM)	

D - ORDER BY THE METER
M - METRIC PART
Y - SEPARATE ILLUSTRATION

229-2588 **RADIATOR & HYD OIL COOLER GP (*contd.*)** **i03030082**

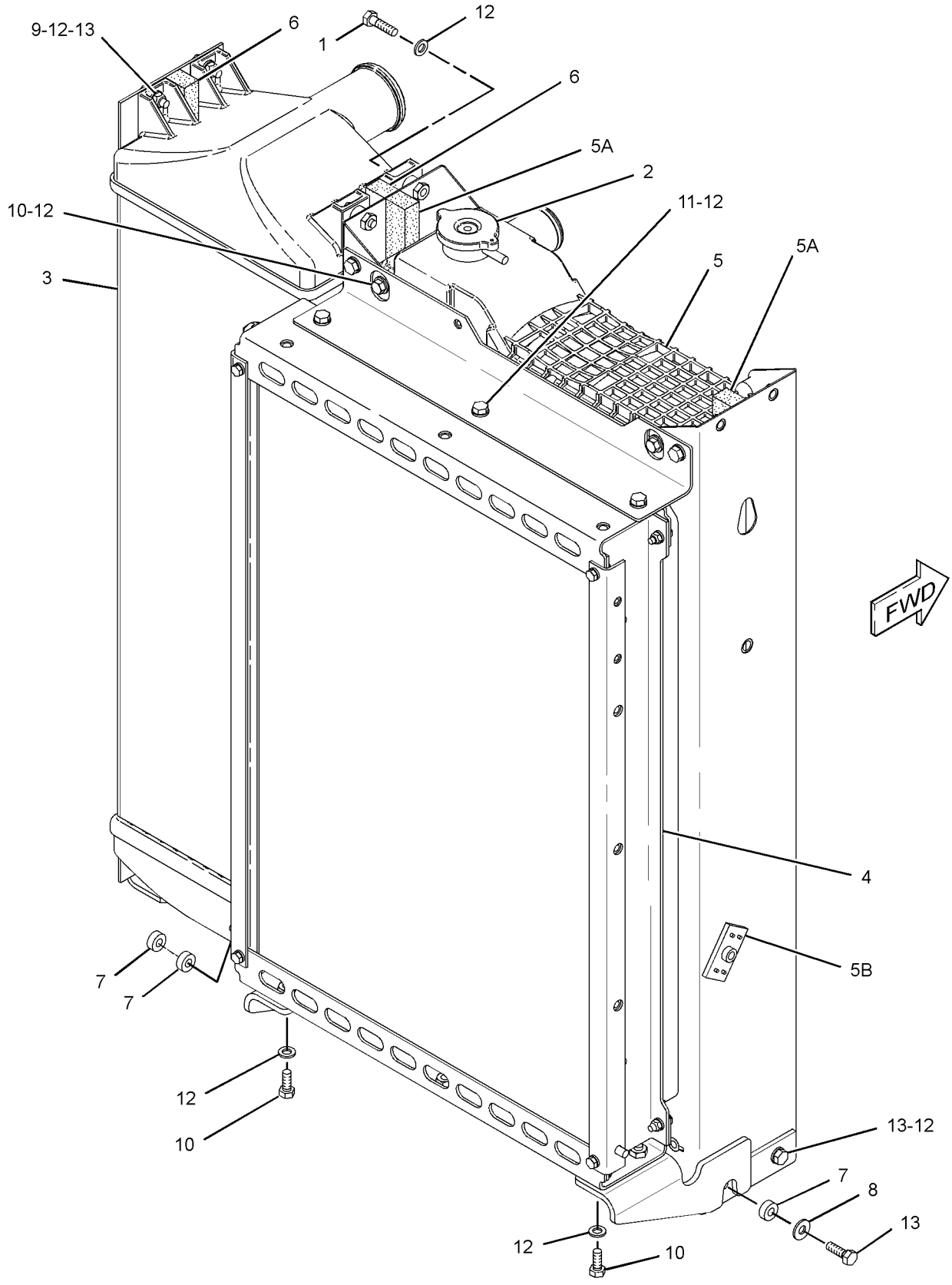

GRAPHIC #1 **<END>** g01536275

332-4187 RADIATOR & HYD OIL COOLER GP

S/N: TJL624-UP

PART OF 348-5644 RADIATOR & HYD OIL COOLER GP

SMCS-1351, 1353, 1374 **i04015314**

NOTE	REF NO	GRAPHIC REF	PART NUMBER	QTY	PART NAME 1 2 3 4 5 6 (PRODUCT LEVEL)	SEE PAGE
	1	1	**096-4035**	1	CLIP	
	2	1	**229-1641**	2	WASHER (9X35X5-MM THK)	
	3	1	**332-4175**	1	CAP AS-RADIATOR	
	4	1	**332-4182**	2	BRACKET AS	
	5	1	**332-4185**	1	RADIATOR GP	
		1	**332-4191**	1	PLUG	
		1	**332-4192**	1	SEAL-O-RING	
	6	1	**332-4186**	1	CORE AS-AFTERCOOLER	
	7	1	**332-4188**	1	CORE AS-OIL COOLER (RADIATOR)	
	8	1	**332-4189**	1	SHROUD AS	
M		1	**8T-3612**	8	NUT-WELD (M8X1.25-THD)	
	9	1	**332-4190**	2	GUARD AS-FAN	
					(EACH INCLUDES)	
M		1	**6V-9632**	2	NUT-WELD (M6X1-THD)	
	10	1	**332-4193**	1	FRAME AS	
	11	1	**332-4194**	2	BRACKET AS	
					(EACH INCLUDES)	
M		1	**8T-3597**	1	NUT-WELD (M12X1.75-THD)	
	12	1	**332-4195**	1	BRACKET AS	
	13	1	**332-4196**	1	BRACKET	
	14	1	**332-4199**	2	SEAL	
	15	1	**332-4200**	1	SEAL	
	16	1	**332-4201**	1	BAFFLE	
	17	1	**332-4202**	2	BAFFLE	
	18	1	**332-4203**	1	BAFFLE	
M	19	1	**5C-9553**	4	BOLT (M6X1X16-MM)	
	20	1	**5P-4116**	8	WASHER-HARD (8.8X20.5X2-MM THK)	
	21	1	**8E-9571**	2	WASHER-HARD (8.8X16X7-MM THK)	
	22	1	**8T-4121**	14	WASHER-HARD (11X21X2.5-MM THK)	
M	23	1	**8T-4136**	4	BOLT (M10X1.5X25-MM)	
M	24	1	**8T-4137**	10	BOLT (M10X1.5X20-MM)	
M	25	1	**8T-4189**	32	BOLT (M8X1.25X20-MM)	
	26	1	**8T-4224**	24	WASHER-HARD (8.8X16X2-MM THK)	
M	27	1	**8T-4908**	2	BOLT (M8X1.25X25-MM)	
	28	1	**9X-8256**	4	WASHER (6.6X12X2-MM THK)	
	29	1	**332-4197**	1	SEAL	
E	30	1	**201-1601**		SEAL (235-CM)	
E	31	1	**7Y-1976**		HOSE-WATER (50-CM)	

E - ORDER BY THE CENTIMETER
M - METRIC PART

332-4187 **RADIATOR & HYD OIL COOLER GP (*contd.*)** **i04015314**

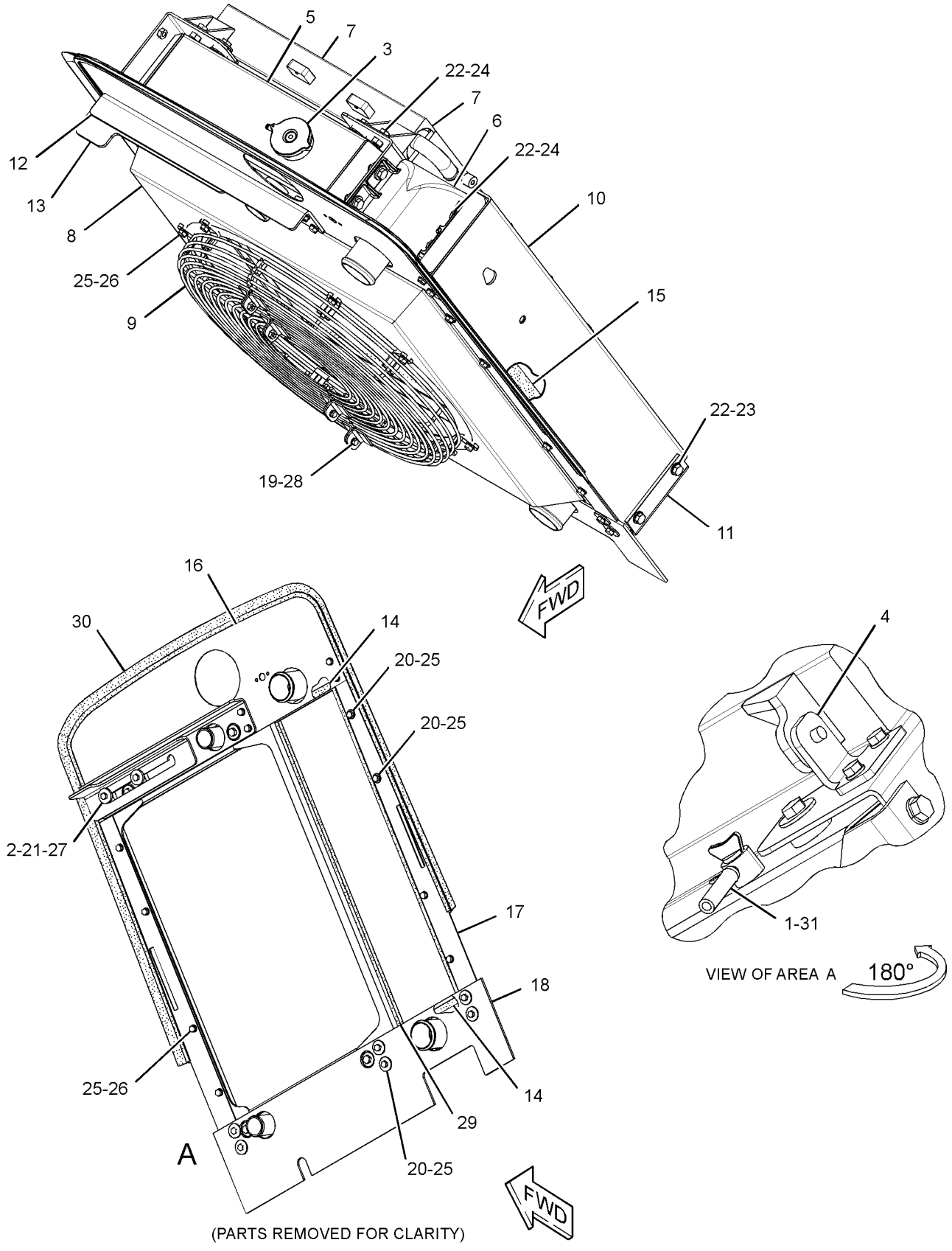

(PARTS REMOVED FOR CLARITY)

GRAPHIC #1 **<END>** g02590856

348-5644 RADIATOR & HYD OIL COOLER GP

S/N: TJL624-UP

PART OF 348-5645 INSTALLATION AR-ENGINE

SMCS-1351, 1353, 1374 **i05221652**

NOTE	REF NO	GRAPHIC REF	PART NUMBER	QTY	PART NAME 1 2 3 4 5 6 (PRODUCT LEVEL)	SEE PAGE
	1	1	**5R-5927**	2	WASHER (14X65X6-MM THK)	
	2	1	**8T-6703**	4	CLAMP-HOSE	
	3	1	**112-4159**	2	MOUNTING AS	
	4	1	**183-6121**	2	WASHER (10.31X38.1X4.78-MM THK)	
	5	1	**203-4231**	2	BRACKET AS	
					(EACH INCLUDES)	
M		1	**8T-3490**	2	NUT-WELD (M10X1.5-THD)	
	6	1	**216-7956**	1	HOSE-RADIATOR (UPPER)	
	7	1	**217-2733**	1	HOSE (LOWER)	
	8	1	**219-0617**	1	BAR	
	9	1	**222-6445**	1	TETHER AS (RADIATOR)	
		1	**5P-7958**	2	SLEEVE-CABLE SPLICE	
	10	1	**224-2264**	1	BRACE AS	
		1	**178-8505**	2	PLATE AS	
	11	1	**301-9825**	2	MOUNT	
Y	12	1	**332-4187**	1	RADIATOR & HYD OIL COOLER GP	70
	13	1	**122-8427**	2	SPACER (9X14X3.5-MM THK)	
	14	1	**7X-7729**	2	WASHER (11X25X3-MM THK)	
	15	1	**7X-7739**	2	WASHER (9.7X25.4 X4-MM THK)	
	16	1	**8T-4121**	6	WASHER-HARD (11X21X2.5-MM THK)	
M	17	1	**8T-4133**	2	NUT (M10X1.5-THD)	
M	18	1	**8T-4136**	2	BOLT (M10X1.5X25-MM)	
M	19	1	**8T-4182**	2	BOLT (M10X1.5X45-MM)	
M	20	1	**8T-4196**	4	BOLT (M10X1.5X35-MM)	
M	21	1	**8T-4189**	2	BOLT (M8X1.25X20-MM)	
	22	1	**8T-4223**	2	WASHER-HARD (13.5X25.5X3-MM THK)	
M	23	1	**8T-6868**	2	BOLT (M12X1.75X80-MM)	

M - METRIC PART
Y - SEPARATE ILLUSTRATION

348-5644 **RADIATOR & HYD OIL COOLER GP (*contd.*)** **i05221652**

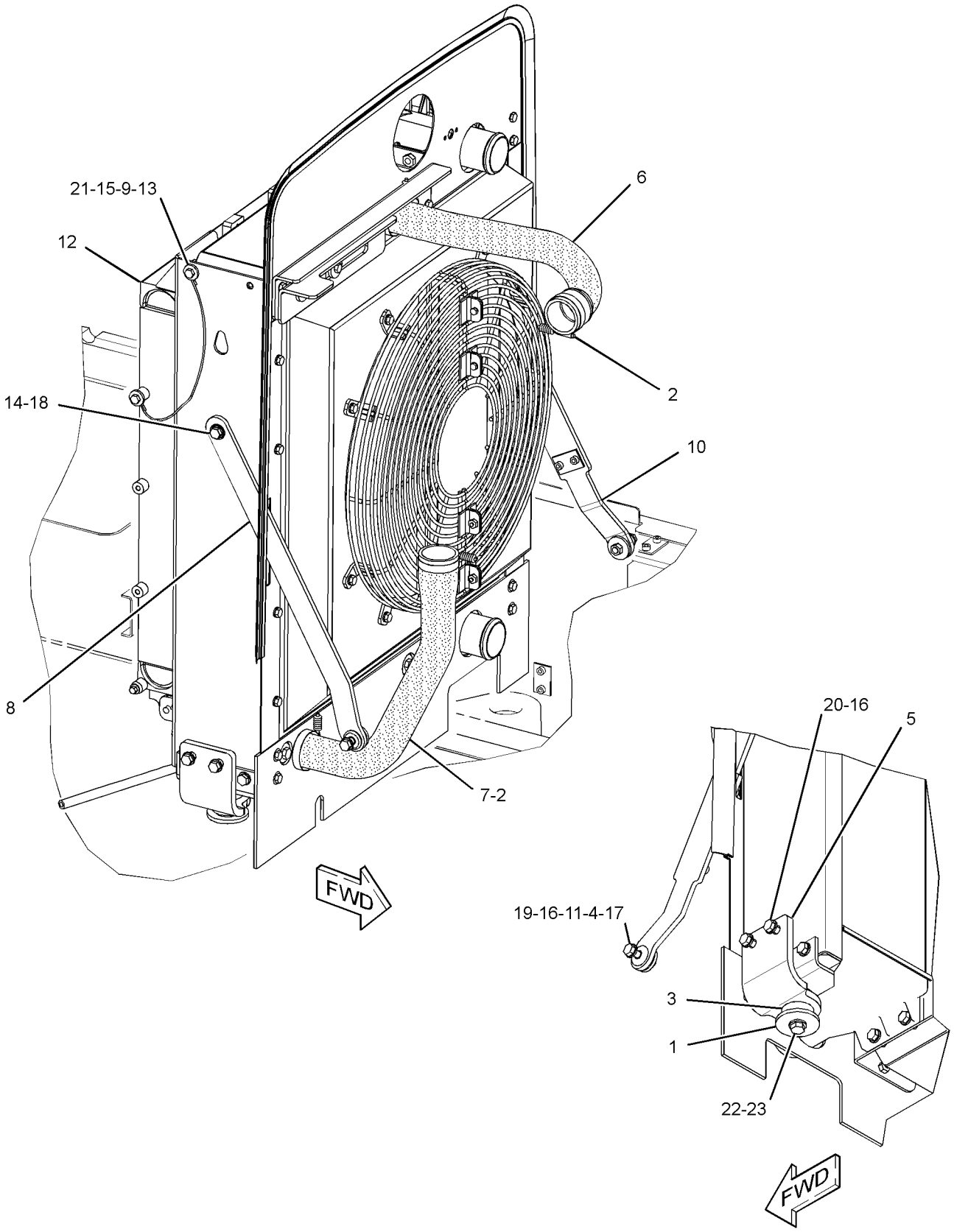

GRAPHIC #1 **<END>** g02350783

201-7671 RECOVERY GP-COOLANT

S/N: TJL1-623

PART OF 219-4162 INSTALLATION AR-ENGINE

SMCS-1354 **i03029261**

NOTE	REF NO	GRAPHIC REF	PART NUMBER	QTY	PART NAME 1 2 3 4 5 6 (PRODUCT LEVEL)	SEE PAGE
	1	1	**1P-4278**	2	CLAMP-HOSE	
	2	1	**178-3620**	2	STRAP-DUAL CLAMP	
	3	1	**195-4973**	1	BRACKET	
	4	1	**202-1206**	1	BRACKET AS	
	5	1	**228-5108**	1	TANK GP-COOLANT	
		1	**229-3469**	1	CAP AS-VENTED (COOLANT RECOVERY)	
M	6	1	**131-3540**	4	LOCKNUT (M8X1.25-THD)	
M	7	1	**5C-7261**	5	NUT (M8X1.25-THD)	
	8	1	**5P-4116**	2	WASHER-HARD (8.8X20.5X2-MM THK)	
	9	1	**6D-3479**	1	CLIP	
M	10	1	**8T-4189**	1	BOLT (M8X1.25X20-MM)	
	11	1	**8T-4224**	16	WASHER-HARD (8.8X16X2-MM THK)	
M	12	1	**8T-4908**	4	BOLT (M8X1.25X25-MM)	
M	13	1	**8T-7547**	4	BOLT (M8X1.25X30-MM)	
E	14	1	**5P-1420**		HOSE (120-CM)	

E - ORDER BY THE CENTIMETER
M - METRIC PART

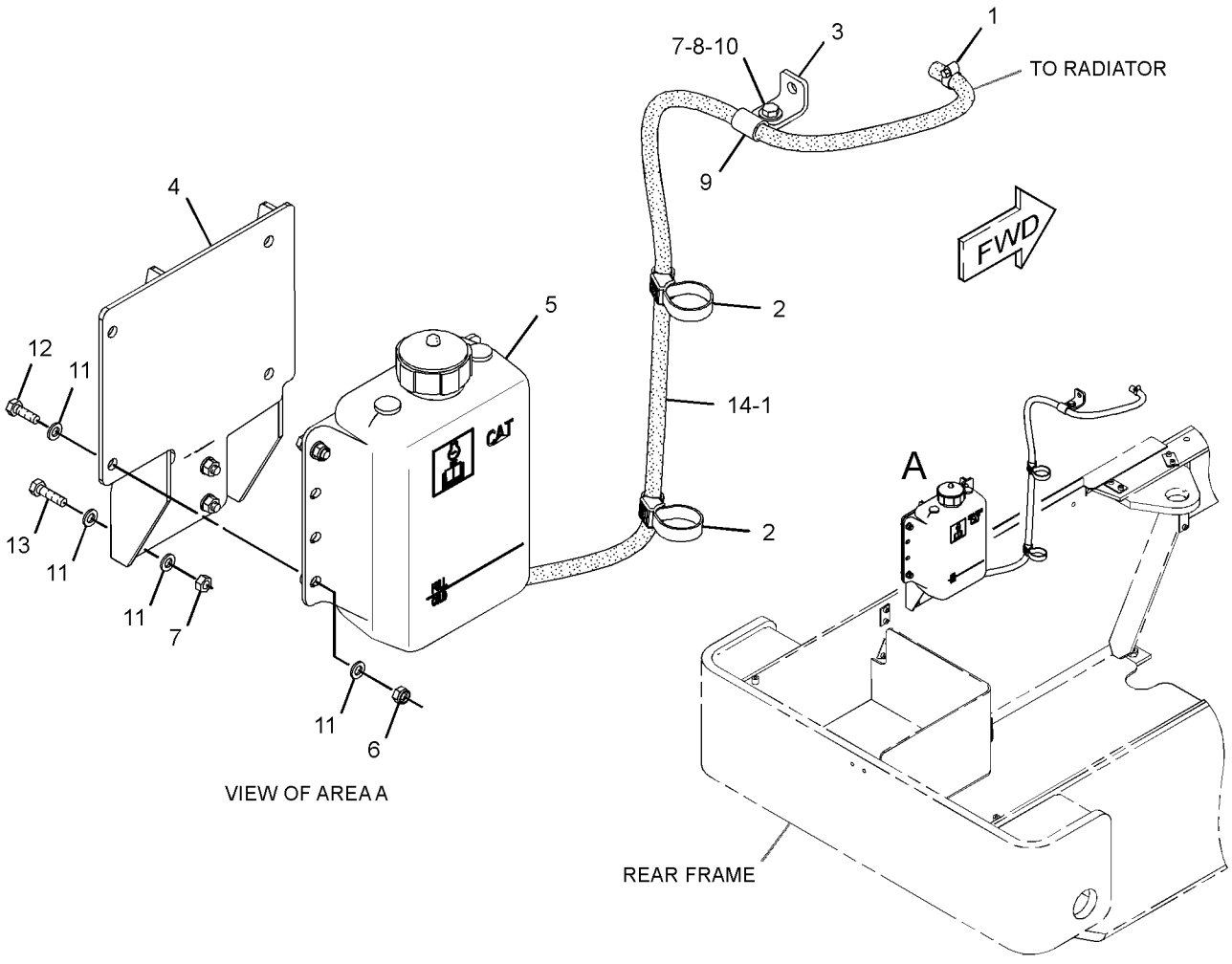

GRAPHIC #1 **<END>** g01540293

348-5646 RECOVERY GP-COOLANT

S/N: TJL624-UP

PART OF 348-5645 INSTALLATION AR-ENGINE

SMCS-1354 **i04015290**

NOTE	REF NO	GRAPHIC REF	PART NUMBER	QTY	PART NAME 1 2 3 4 5 6 (PRODUCT LEVEL)	SEE PAGE
	1	1	**1P-4278**	2	CLAMP-HOSE	
	2	1	**178-3620**	2	STRAP-DUAL CLAMP	
	3	1	**202-1206**	1	BRACKET AS	
	4	1	**228-5108**	1	TANK GP-COOLANT (RECOVERY)	
		1	**229-3469**	1	CAP AS-VENTED (COOLANT RECOVERY)	
M	5	1	**131-3540**	4	LOCKNUT (M8X1.25-THD)	
M	6	1	**5C-7261**	4	NUT (M8X1.25-THD)	
	7	1	**5P-4116**	1	WASHER-HARD (8.8X20.5X2-MM THK)	
	8	1	**6D-3479**	1	CLIP	
M	9	1	**8T-4189**	1	BOLT (M8X1.25X20-MM)	
	10	1	**8T-4224**	16	WASHER-HARD (8.8X16X2-MM THK)	
M	11	1	**8T-4908**	4	BOLT (M8X1.25X25-MM)	
M	12	1	**8T-7547**	4	BOLT (M8X1.25X30-MM)	
E	13	1	**5P-1420**		HOSE (120-CM)	

E - ORDER BY THE CENTIMETER
M - METRIC PART

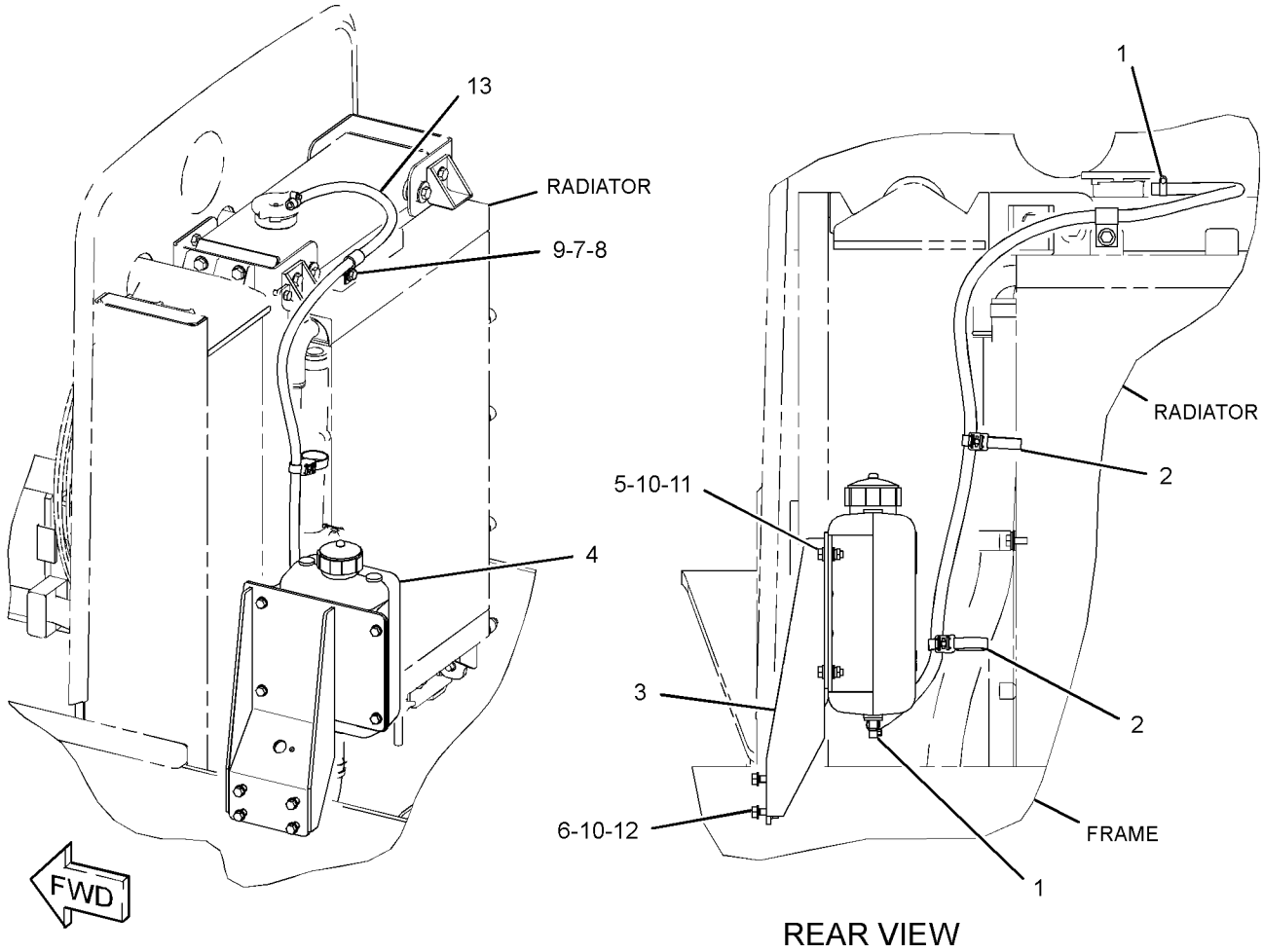

GRAPHIC #1 **<END>** g02249873

217-0747 AIR CLEANER GP

S/N: TJL1-UP

PART OF 219-4162, 348-5645 INSTALLATION AR-ENGINE

SMCS-1051, 1054 **i03436340**

NOTE	REF NO	GRAPHIC REF	PART NUMBER	QTY	PART NAME 1 2 3 4 5 6 (PRODUCT LEVEL)	SEE PAGE
	1	1	**1P-6886**	1	ADAPTER	
	2	1	**5P-2948**	2	FITTING AS	
					(EACH INCLUDES)	
		1	**4K-9821**	1	SLEEVE	
		1	**4K-9822**	1	NUT (5/16-24-THD)	
	3	1	**6I-2933**	1	INDICATOR-AIR FILTER SERVICE	
	4	1	**7W-0629**	1	ADAPTER AS-FILTER	
Y	5	1	**220-5746**	1	AIR CLEANER GP	78
	6	1	**228-4841**	1	BRACKET	
	7	1	**3B-6487**	1	COUPLING (PIPE)	
M	8	1	**5C-2890**	2	NUT (M6X1-THD)	
M	9	1	**5C-7261**	4	NUT (M8X1.25-THD)	
	10	1	**5P-4116**	8	WASHER-HARD (8.8X20.5X2-MM THK)	
M	11	1	**7X-2537**	4	BOLT (M8X1.25X35-MM)	
	12	1	**8T-4121**	4	WASHER-HARD (11X21X2.5-MM THK)	
M	13	1	**8T-4136**	4	BOLT (M10X1.5X25-MM)	
M	14	1	**8T-4138**	2	BOLT (M6X1X20-MM)	
	15	1	**8T-4205**	4	WASHER-HARD (7.2X14.5X2-MM THK)	
D	16	1	**5P-5630**		TUBE (0.30-M)	

D - ORDER BY THE METER
M - METRIC PART
Y - SEPARATE ILLUSTRATION

217-0747 **AIR CLEANER GP (*contd.*)** **i03436340**

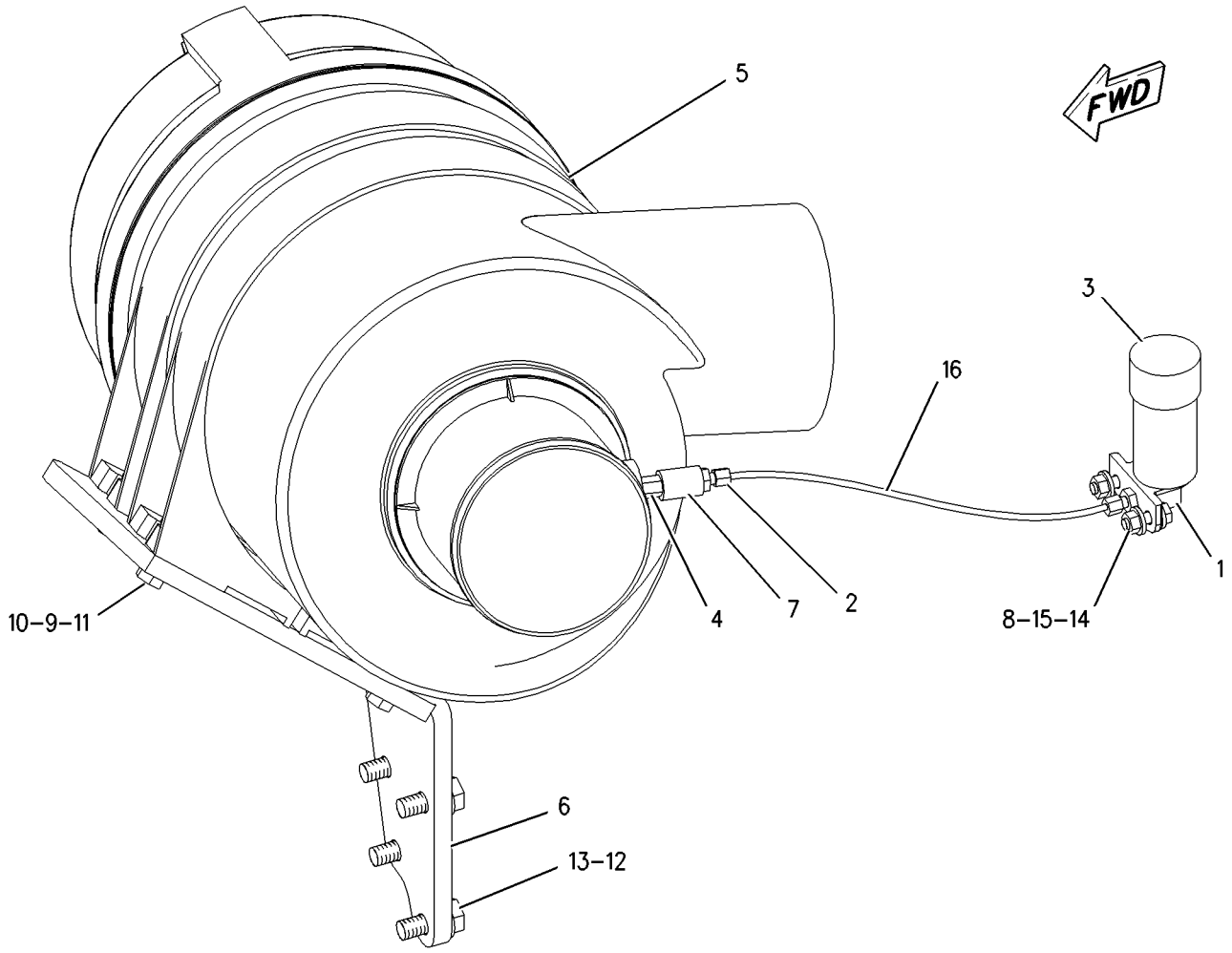

GRAPHIC #1 **<END>** g01002332

AIR INLET AND EXHAUST SYSTEM

220-5746 AIR CLEANER GP

S/N: TJL1-UP

PART OF 217-0747 AIR CLEANER GP

SMCS-1051, 1054 **i03033621**

NOTE	REF NO	GRAPHIC REF	PART NUMBER	QTY	PART NAME 1 2 3 4 5 6 (PRODUCT LEVEL)	SEE PAGE
	1	1	**206-5234**	1	FILTER ELEMENT AS-AIR (PRIMARY)	
	2	1	**206-5235**	1	FILTER ELEMENT AS-AIR (SECONDARY)	
	3	1	**131-8829**	1	VALVE-DUST (AIR CLEANER)	
	4	1	**245-3556**	2	BRACKET	
	5	1	**206-5237**	1	COVER AS	

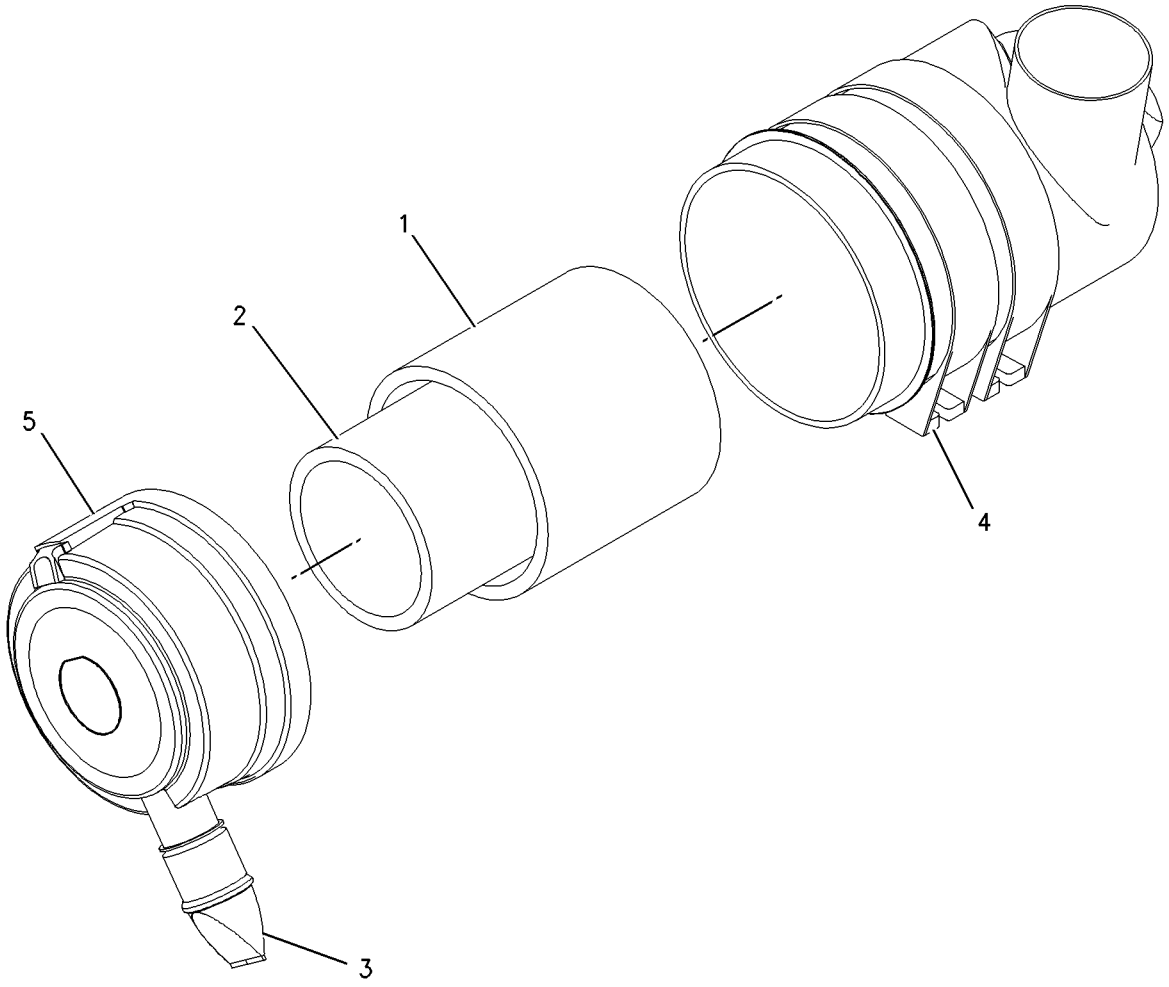

GRAPHIC #1 **<END>** g00948052

256-4438 ELBOW GP-AIR INLET

S/N: CRS1-UP; CST1-UP

PART OF 390-5113 ENGINE AR-PRIMARY

SMCS-1087 **i05022153**

NOTE	REF NO	GRAPHIC REF	PART NUMBER	QTY	PART NAME 1 2 3 4 5 6 (PRODUCT LEVEL)	SEE PAGE
	1	1	**6I-0572**	2	BOLT (M8X1.25X20-MM)	
	2	1	**114-2579**	1	GASKET	
	3	1	**185-6627**	3	PLATE	
	4	1	**233-7489**	2	BOLT (M8X1.25-THD)	
	5	1	**256-4447**	1	ELBOW AS-AIR INLET	
	5A	1	**238-8288**	1	GASKET-INLET	
	6	1	**111-8222**	12	BOLT (M8X16-MM)	

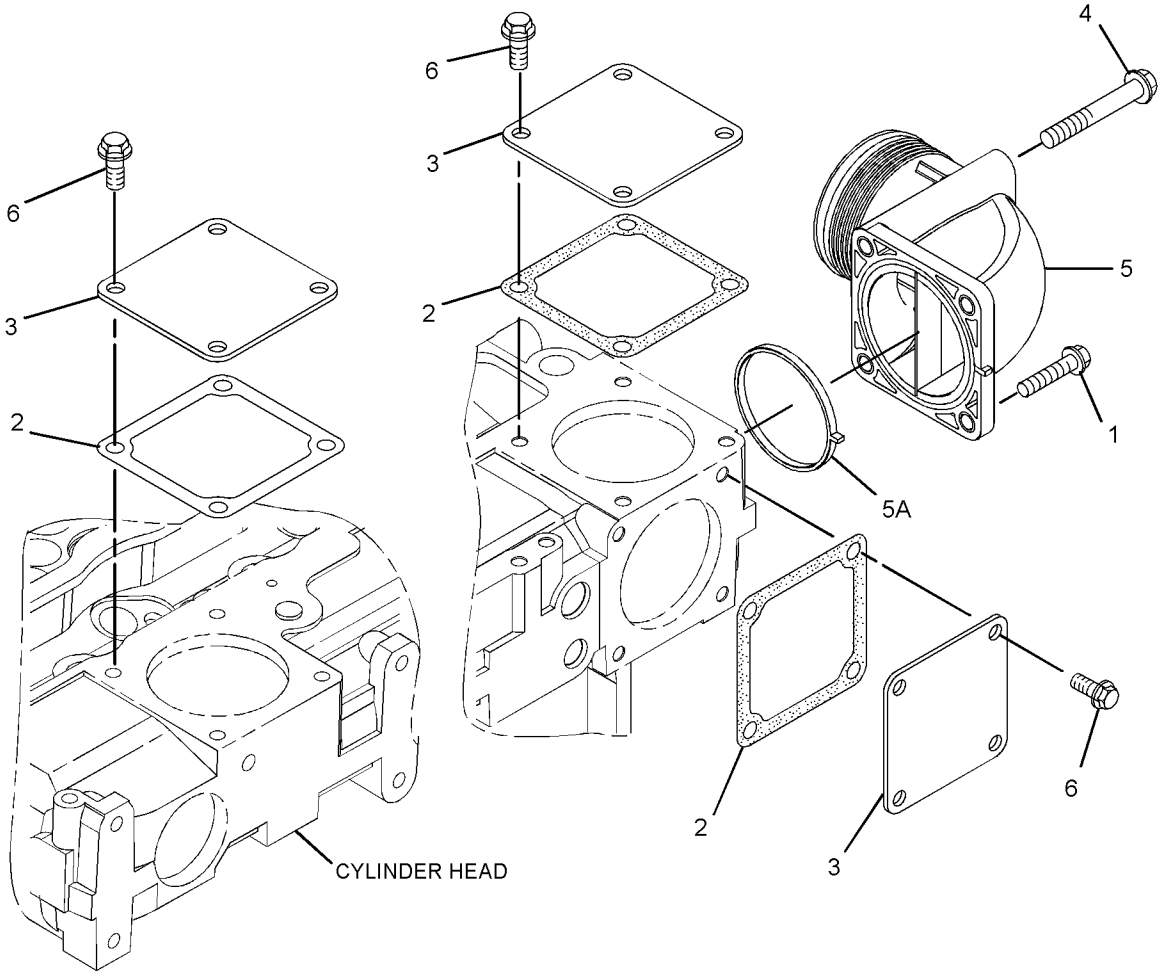

GRAPHIC #1 **<END>** g02094495

270-4374 ELBOW GP-AIR INLET

S/N: CRS1-UP; CST1-UP

PART OF 297-4055 ENGINE AR-PRIMARY

SMCS-1087 **i03819770**

NOTE	REF NO	GRAPHIC REF	PART NUMBER	QTY	PART NAME 1 2 3 4 5 6 (PRODUCT LEVEL)	SEE PAGE
	1	1	**6I-0572**	2	BOLT (M8X1.25X20-MM)	
	2	1	**114-2579**	3	GASKET	
	3	1	**185-6627**	3	PLATE	
	4	1	**233-7489**	2	BOLT (M8X1.25-THD)	
	5	1	**251-6241**	4	BOLT-SPECIAL (M8X1.25X20-MM)	
	6	1	**256-4447**	1	ELBOW AS-AIR INLET	
	6A	1	**238-8288**	1	GASKET-INLET	
	7	1	**111-8222**	8	BOLT (M8X16-MM)	

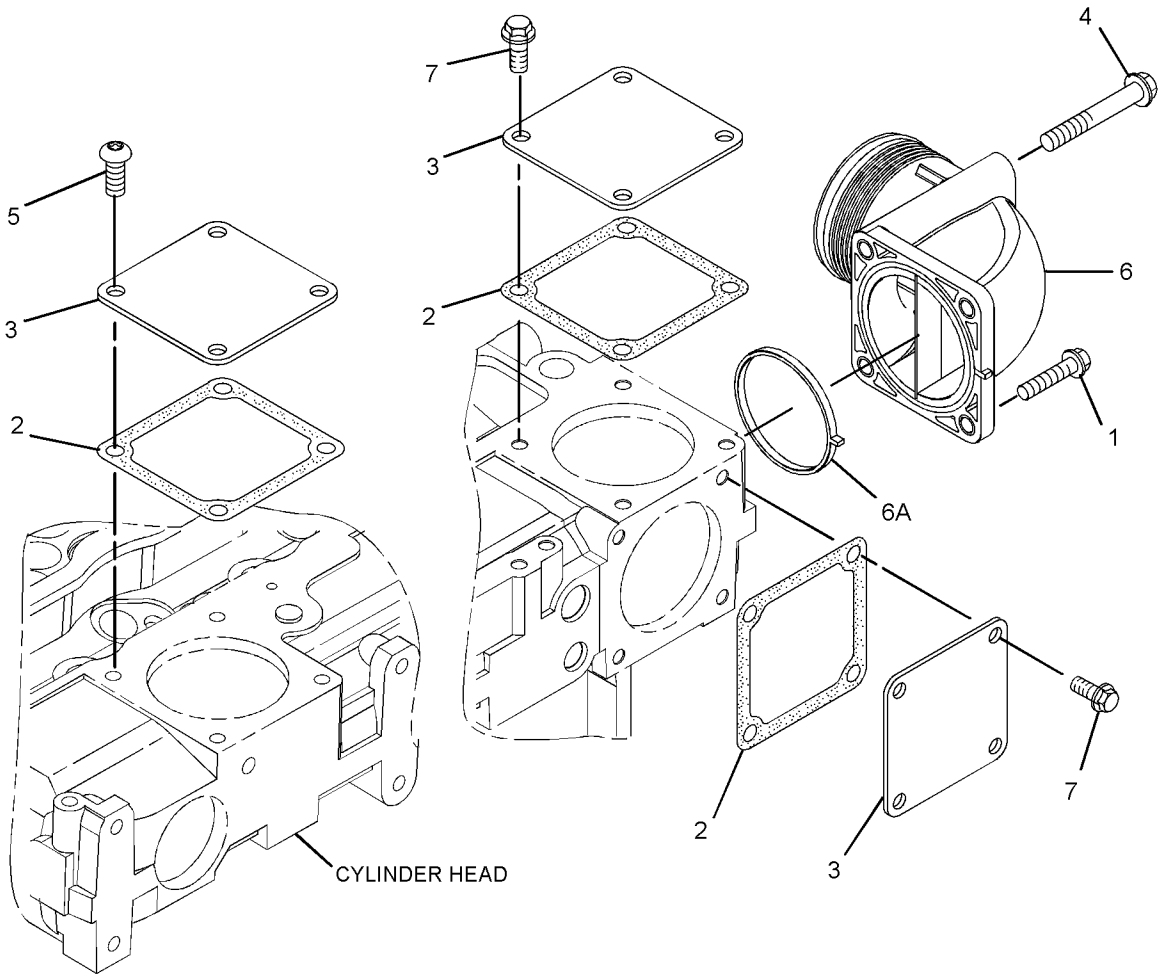

GRAPHIC #1 **<END>** g02094638

216-7940 LINES GP-AIR

S/N: TJL1-UP

PART OF 219-4162, 348-5645 INSTALLATION AR-ENGINE

SMCS-1071 **i03029266**

NOTE	REF NO	GRAPHIC REF	PART NUMBER	QTY	PART NAME 1 2 3 4 5 6 (PRODUCT LEVEL)	SEE PAGE
	1	1	**8T-4984**	3	CLAMP-HOSE (LINEAR)	
	2	1	**8T-4985**	1	CLAMP-HOSE (INTAKE AIR)	
	3	1	**291-3957**	1	CLAMP-HOSE (AIR CLEANER)	
	4	1	**122-3608**	1	CLIP (LOOP)	
	5	1	**216-7953**	1	HOSE (LINEAR)	
	6	1	**291-2619**	1	HOSE (TURBO)	
	7	1	**220-4120**	1	HOSE (AIR CLEANER)	
	8	1	**228-7704**	1	HOSE (INTAKE AIR)	
	9	1	**8T-4121**	2	WASHER-HARD (11X21X2.5-MM THK)	
M	10	1	**8T-4133**	1	NUT (M10X1.5-THD)	
M	11	1	**8T-4136**	1	BOLT (M10X1.5X25-MM)	
	12	1	**291-3961**	1	CLAMP-HOSE (TURBO)	
	13	1	**291-3959**	1	CLAMP-HOSE	

M - METRIC PART

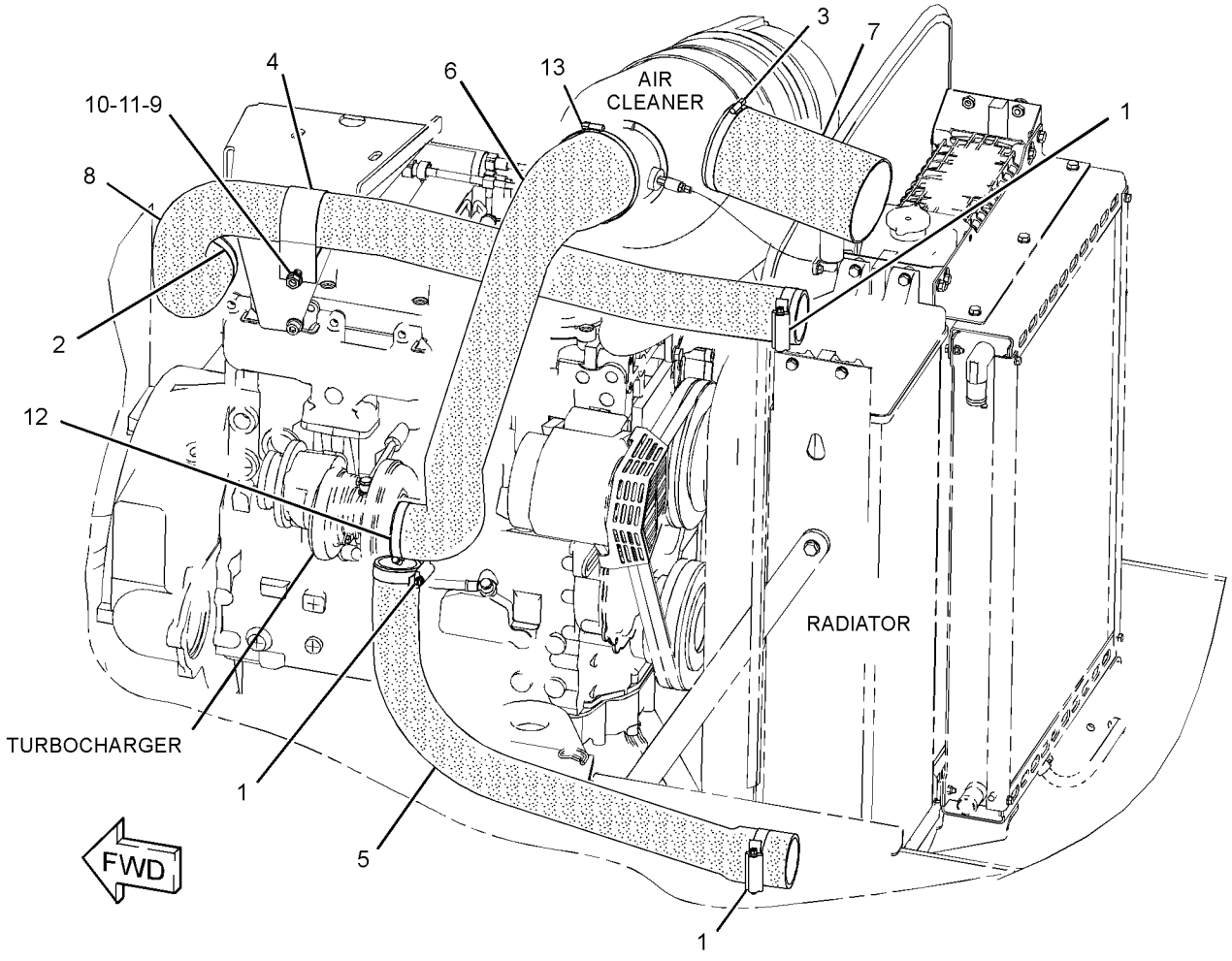

GRAPHIC #1 **<END>** g01339874

216-8158 MUFFLER GP

S/N: TJL1-UP

PART OF 219-4162, 348-5645 INSTALLATION AR-ENGINE

SMCS-1062 **i03029275**

NOTE	REF NO	GRAPHIC REF	PART NUMBER	QTY	PART NAME 1 2 3 4 5 6 (PRODUCT LEVEL)	SEE PAGE
	1	1	**6I-4039**	1	GASKET	
	2	1	**216-8163**	1	TUBE AS	
	3	1	**217-2728**	1	MUFFLER	
	4	1	**231-3310**	1	BRACKET	
	5	1	**5P-4116**	1	WASHER-HARD (8.8X20.5X2-MM THK)	
	6	1	**7X-7729**	3	WASHER (11X25X3-MM THK)	
	7	1	**8M-3121**	1	CLAMP	
M	8	1	**8T-1159**	1	BOLT-SOCKET HEAD (M10X1.5X25-MM)	
	9	1	**8T-4121**	6	WASHER-HARD (11X21X2.5-MM THK)	
M	10	1	**8T-4133**	1	NUT (M10X1.5-THD)	
M	11	1	**8T-4136**	2	BOLT (M10X1.5X25-MM)	
M	12	1	**8T-4137**	1	BOLT (M10X1.5X20-MM)	
M	13	1	**8T-4186**	1	BOLT (M10X1.5X40-MM)	
M	14	1	**8T-4189**	1	BOLT (M8X1.25X20-MM)	
M	15	1	**8T-4195**	3	BOLT (M10X1.5X30-MM)	

M - METRIC PART

216-8158 **MUFFLER GP (*contd.*)** **i03029275**

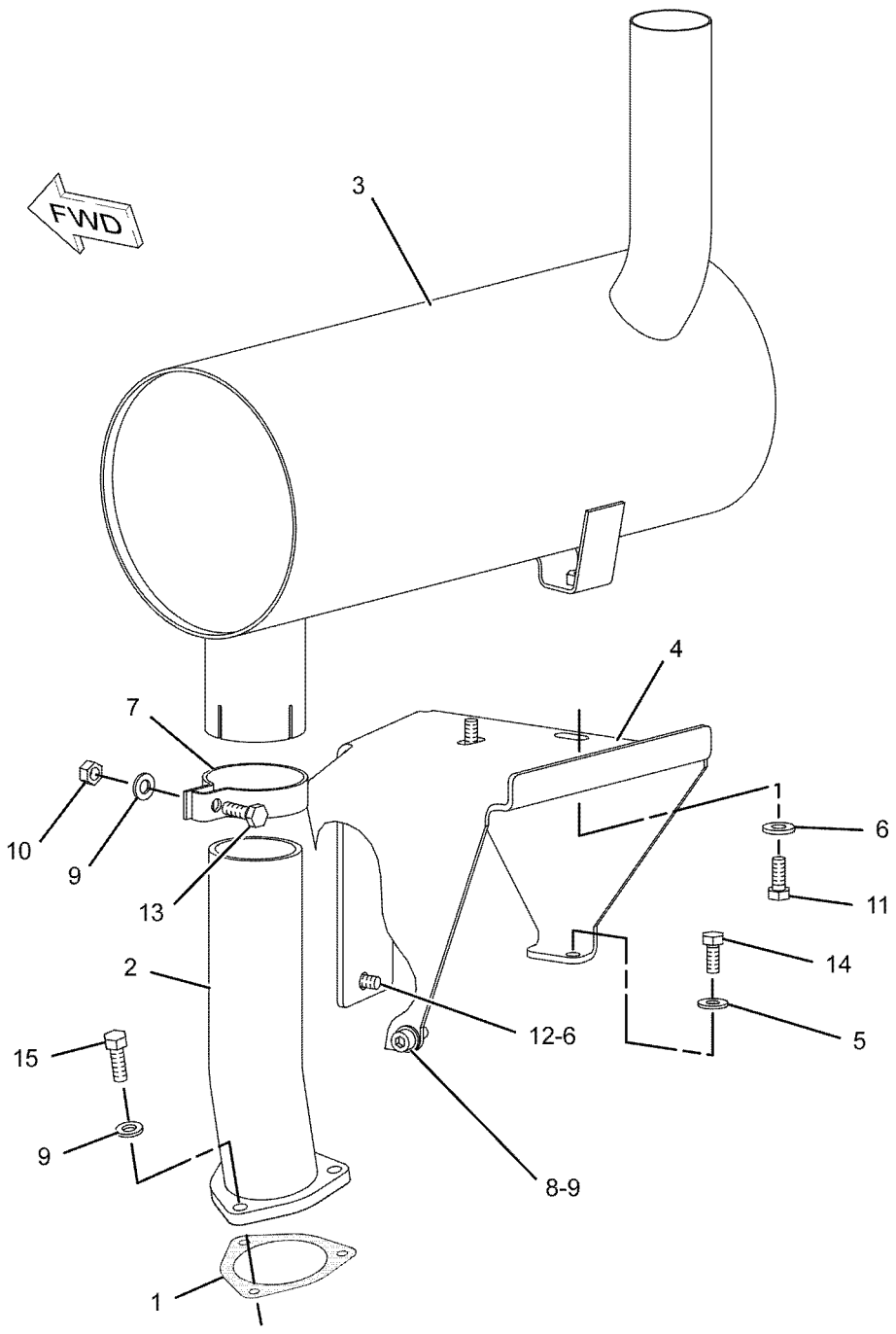

GRAPHIC #1 **<END>** g01049932

AIR INLET AND EXHAUST SYSTEM

233-9539 TURBOCHARGER GP

S/N: CRS1-UP; CST1-UP

PART OF 297-4055, 390-5113 ENGINE AR-PRIMARY

SMCS-1052, 1053 **i05171157**

NOTE	REF NO	GRAPHIC REF	PART NUMBER	QTY	PART NAME 1 2 3 4 5 6 (PRODUCT LEVEL)	SEE PAGE
M	1	1	**6I-0217**	2	BOLT (M8X1.25X20-MM)	
	2	1	**6I-0563**	7	NUT (M10X1.5-THD)	
M	3	1	**6I-0593**	2	BOLT (M10X1.5X30-MM)	
M	4	1	**6I-0654**	3	BOLT (M10X1.5X25-MM)	
	5	1	**147-5553**	7	STUD	
	6	1	**174-9638**	8	BOLT	
	7	1	**194-5390**	1	GASKET-MANIFOLD	
	8	1	**353-3477**	1	GASKET-TURBOCHARGER	
	9	1	**353-3478**	1	GASKET-TURBOCHARGER	
	10	1	**225-8536**	1	GASKET	
	11	1	**227-4562**	1	ELBOW-EXHAUST	
	12	1	**302-0581**	1	ADAPTER-EXHAUST	
	13	1	**106-8916**	2	BOLT (M6X16-MM)	
	14	1	**233-9534**	1	TURBOCHARGER GP	
	15	1	**233-9536**	1	TUBE AS	
		1	**225-8524**	3	BOLT-SPECIAL (BANJO)	
		1	**225-8526**	7	WASHER (10.4X13.75X1.37-MM THK)	
	16	1	**233-9537**	1	TUBE AS	
	17	1	**371-6116**	1	MANIFOLD-EXHAUST	
	18	1	**249-7106**	1	BRACKET	

M - METRIC PART

233-9539 **TURBOCHARGER GP (*contd.*)** **i05171157**

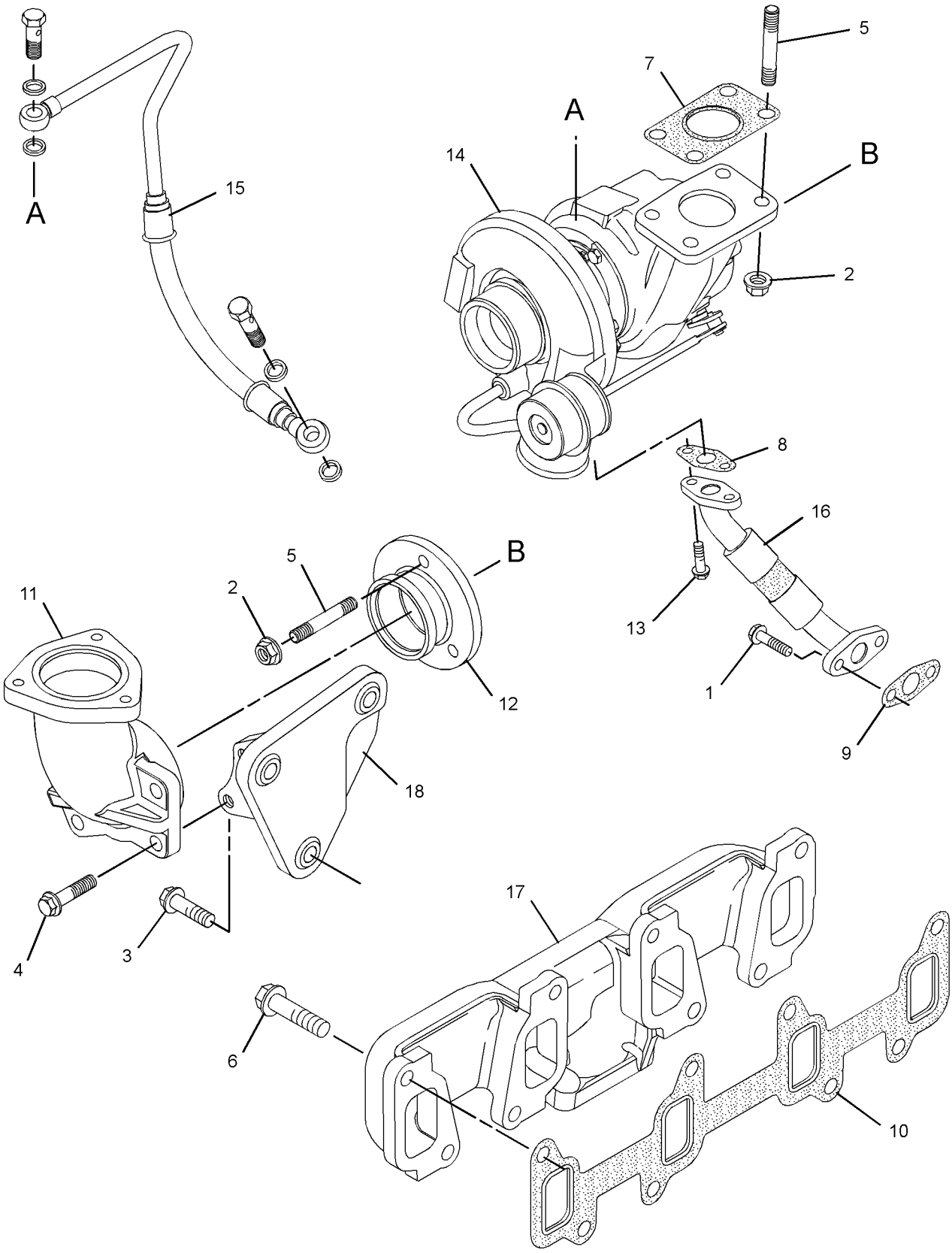

GRAPHIC #1 **<END>** g01734415

350-5171 FILTER AS-FUEL

PART OF 391-5551 KIT-FUEL SYSTEM PARTS, 391-2704 PUMP GP-FUEL TRANSFER

SMCS-1261 **i05350675**

NOTE	REF NO	GRAPHIC REF	PART NUMBER	QTY	PART NAME 1 2 3 4 5 6 (PRODUCT LEVEL)	SEE PAGE
	1	1	**1R-1804**	1	FILTER ELEMENT-WTR SEP & FUEL	
	1A	1	**207-2757**	1	SEAL	
	2	1	**221-2014**	1	BOWL AS	
	3	1	**222-6617**	1	DRAIN AS	

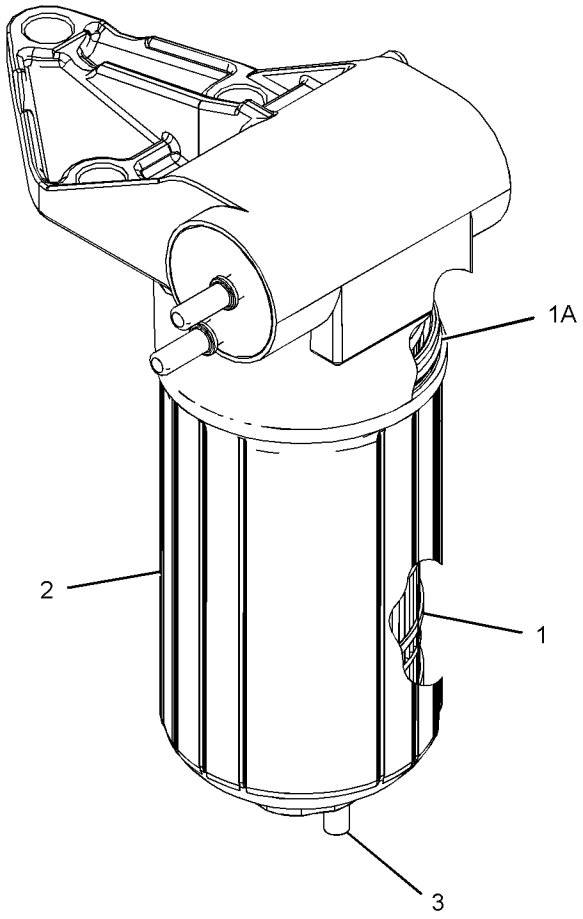

GRAPHIC #1 **<END>** g03390067

252-6334 FILTER GP-WATER SEP & FUEL

S/N: TJL1-2531

PART OF 222-3102 LINES GP-FUEL

SMCS-1261, 1263 **i03647028**

NOTE	REF NO	GRAPHIC REF	PART NUMBER	QTY	PART NAME 1 2 3 4 5 6 (PRODUCT LEVEL)	SEE PAGE
	1	1	**252-6338**	1	FILTER ELEMENT-WTR SEP & FUEL	

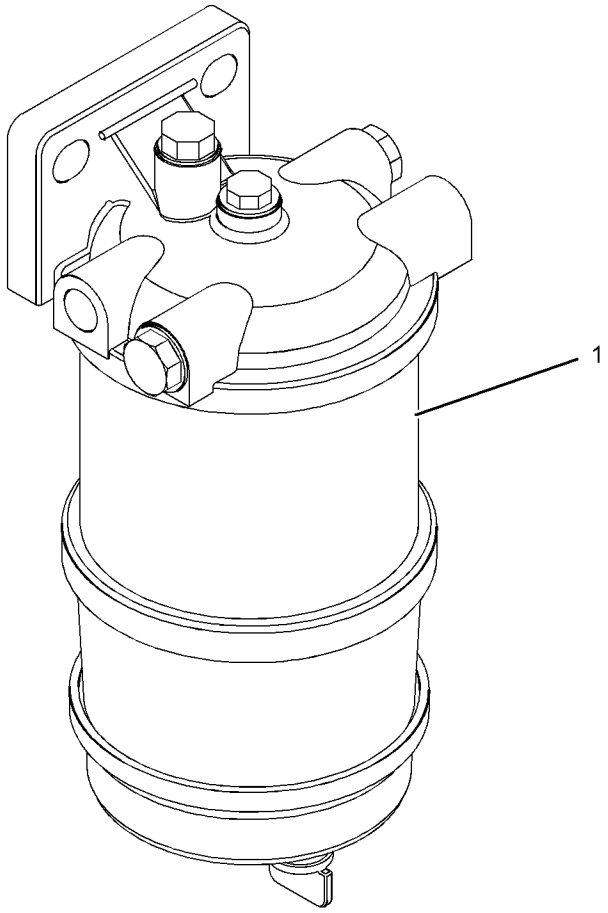

GRAPHIC #1 **<END>** g01159162

368-3976 FILTER GP-WATER SEP & FUEL

S/N: TJL2532-UP

PART OF 376-9229 FILTER GP-WATER SEP & FUEL

SMCS-1261, 1263 **i05076552**

NOTE	REF NO	GRAPHIC REF	PART NUMBER	QTY	PART NAME 1 2 3 4 5 6 (PRODUCT LEVEL)	SEE PAGE
	1	1	**360-8959**	1	ELEMENT-WATER SEPARATOR	
	2	1	**362-5412**	1	KIT-DRAIN	
					(INCLUDES DRAIN, KNOB & REPLACEMENT SEALS)	
	3	1	**3J-1907**	1	SEAL-O-RING	
	4	1	**9S-8004**	1	PLUG-O-RING	

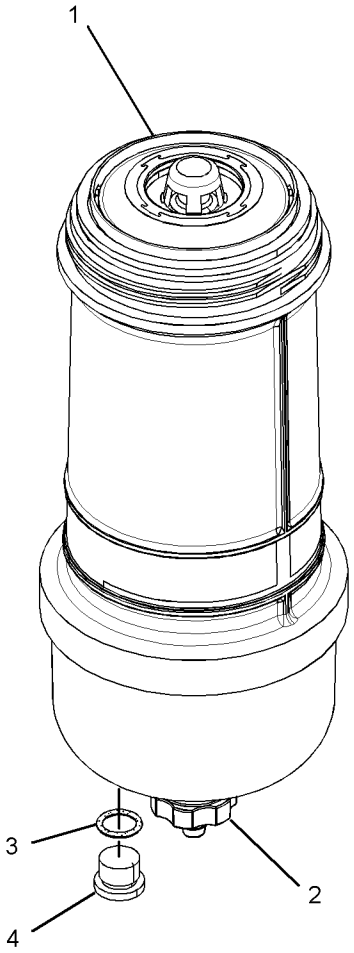

GRAPHIC #1 **<END>** g03173316

376-9229 FILTER GP-WATER SEP & FUEL

S/N: TJL2532-UP

PART OF 391-5551 KIT-FUEL SYSTEM PARTS, 389-7291 SEPARATOR GP-WATER

SMCS-1261, 1263 **i05074169**

NOTE	REF NO	GRAPHIC REF	PART NUMBER	QTY	PART NAME 1 2 3 4 5 6 (PRODUCT LEVEL)	SEE PAGE
Y	1	1	**363-5084**	1	SENSOR GP-LIQUID LEVEL (WATER IN FUEL)	160
	2	1	**367-6361**	1	CONNECTOR-HOSE	
	3	1	**367-6363**	1	CONNECTOR-HOSE	
	4	1	**367-6364**	5	PLUG-PORT	
	5	1	**362-8205**	1	SCREW-SPECIAL	
Y	6	1	**368-3976**	1	FILTER GP-WATER SEP & FUEL	88
					AVAILABLE REPAIR KIT(S):	
			362-5412	1	KIT-DRAIN	
					(INCLUDES DRAIN, KNOB & REPLACEMENT SEALS)	

Y - SEPARATE ILLUSTRATION

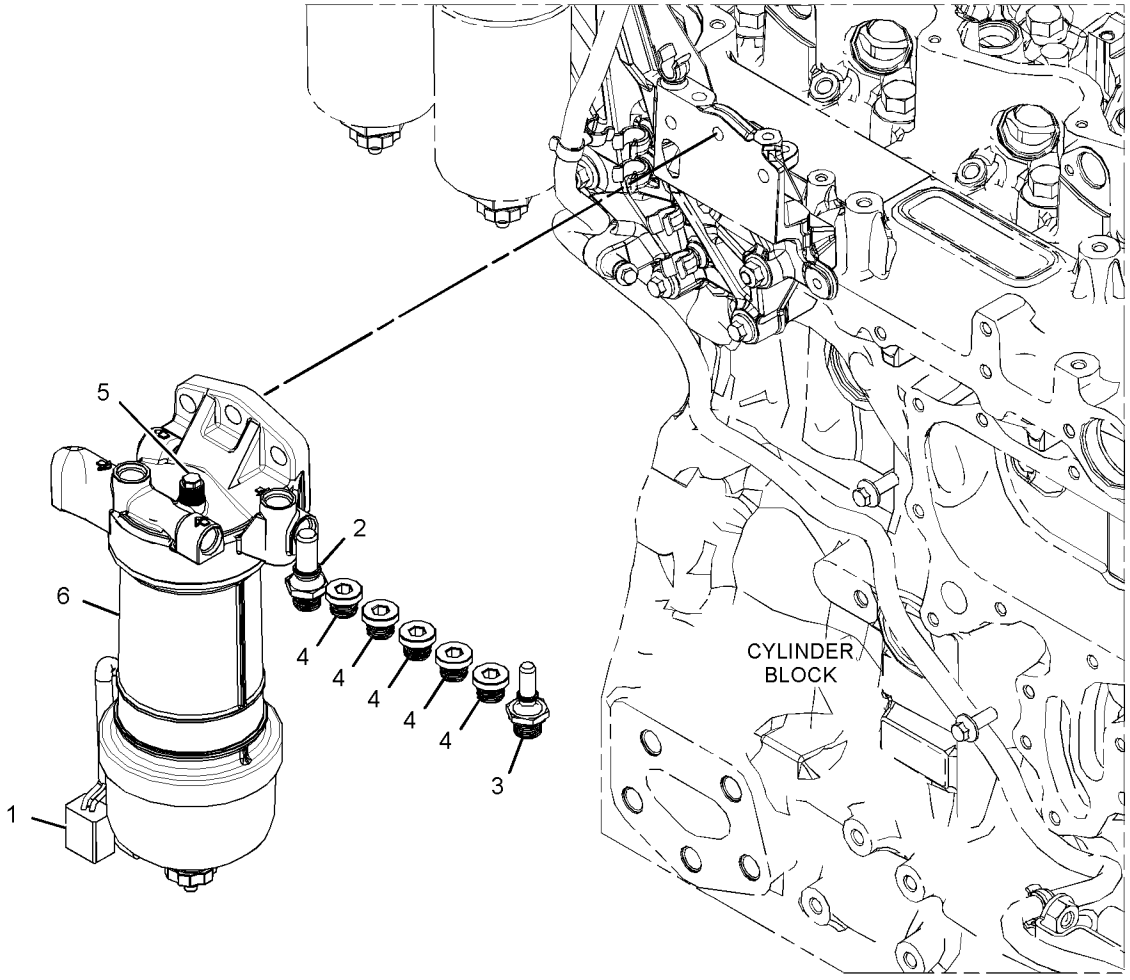

GRAPHIC #1 **<END>** g02423736

227-4799 GOVERNOR GP

S/N: TJL1-UP

PART OF 219-4162 INSTALLATION AR-ENGINE

TYPE 1

SMCS-1264, 1908 **i03030905**

NOTE	REF NO	GRAPHIC REF	PART NUMBER	QTY	PART NAME 1 2 3 4 5 6 (PRODUCT LEVEL)	SEE PAGE
	1	1	**3S-2093**	1	STRAP-CABLE	
	2	1	**6V-8187**	3	NUT (1/4-28-THD)	
	3	1	**8E-0853**	1	BALL JOINT AS	
	4	1	**9L-2685**	1	BALL JOINT AS	
	5	1	**116-0118**	2	CLIP	
Y	6	1	*120-4187*	1	SOLENOID GP-THROTTLE	161
	7	1	**148-1517**	1	RESISTOR AS	
		1	**102-8802**	1	KIT-RECEPTACLE (2-PIN)	
					(INCLUDES RECEPTACLE AS & WEDGE)	
D		1	**5P-5623**		WIRE-ELECTRICAL (16-GA, BLACK) (1-M)	
		1	**186-3735**	2	PIN-CONNECTOR (16-GA TO 18-GA)	
	8	1	**227-4794**	1	PLATE	
	9	1	**262-4947**	1	ROD	
M	10	1	**125-3295**	2	SCREW-PAN HEAD (M2.5X0.45X12-MM)	
	11	1	**4P-8134**	1	CLIP	
M	12	1	**5C-2890**	4	NUT (M6X1-THD)	
	13	1	**5P-4115**	1	WASHER-HARD (7.2X19X2-MM THK)	
	14	1	**5P-4116**	3	WASHER-HARD (8.8X20.5X2-MM THK)	
M	15	1	**6V-7357**	3	BOLT (M6X1X25-MM)	
M	16	1	**8T-4138**	1	BOLT (M6X1X20-MM)	
M	17	1	**8T-4908**	3	BOLT (M8X1.25X25-MM)	
M	18	1	**8T-6869**	1	BOLT (M8X1.25X60-MM)	
	19	1	**9X-8256**	8	WASHER (6.6X12X2-MM THK)	

D - ORDER BY THE METER
M - METRIC PART
Y - SEPARATE ILLUSTRATION

227-4799 **GOVERNOR GP (*contd.*)** **i03030905**

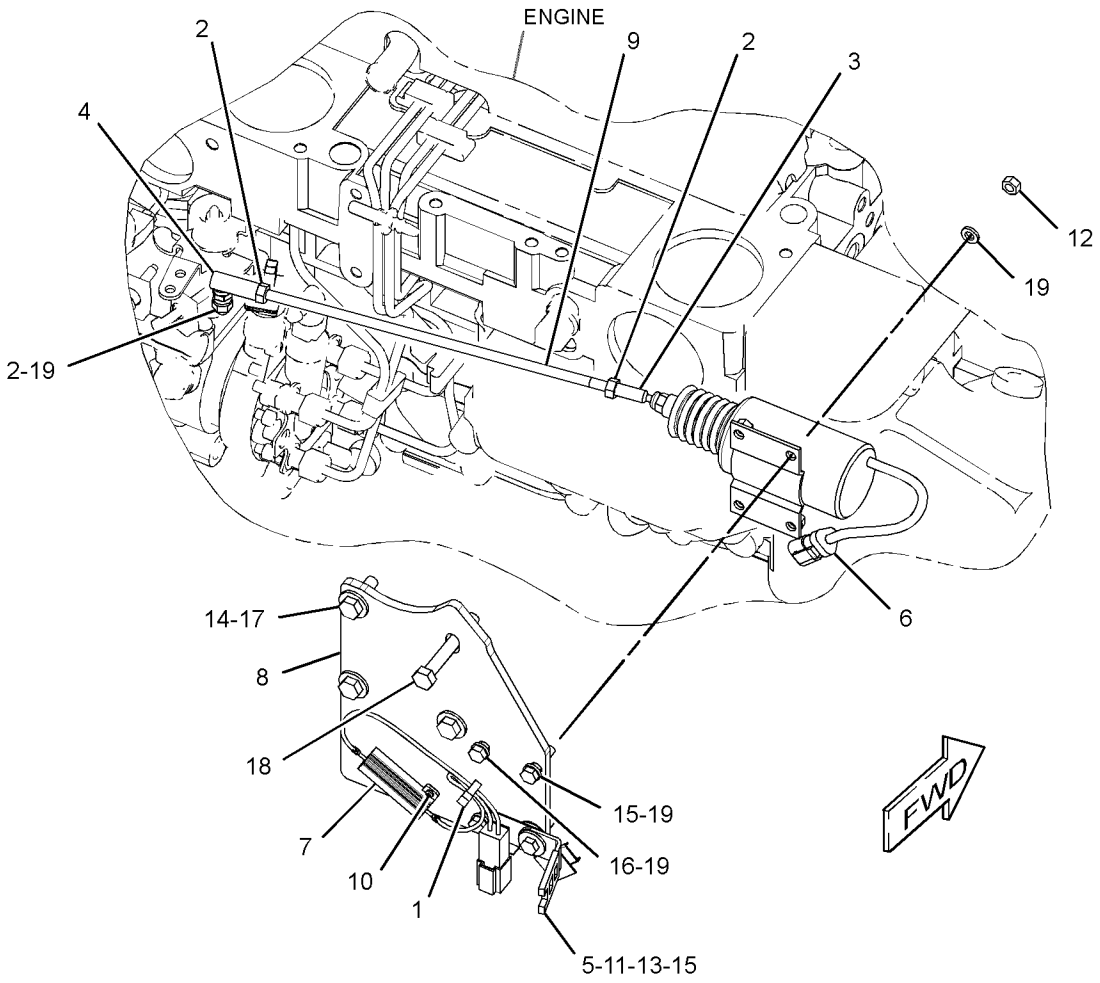

GRAPHIC #1 **<END>** g01536855

227-4799 GOVERNOR GP

S/N: TJL1-UP

PART OF 219-4162, 348-5645 INSTALLATION AR-ENGINE

TYPE 2

SMCS-1264, 1908 **i05209189**

NOTE	REF NO	GRAPHIC REF	PART NUMBER	QTY	PART NAME 1 2 3 4 5 6 (PRODUCT LEVEL)	SEE PAGE
	1	1	**3S-2093**	1	STRAP-CABLE	
	2	1	**6V-8187**	3	NUT (1/4-28-THD)	
	3	1	**8E-0853**	1	BALL JOINT AS	
	4	1	**9L-2685**	1	BALL JOINT AS	
	5	1	**116-0118**	2	CLIP	
	6	1	**148-1517**	1	RESISTOR AS	
BD		1	**5P-5623**		WIRE-ELECTRICAL (16-GA, BLACK)	
		1	**8T-8729**	2	PIN-CONNECTOR (16-GA TO 18-GA)	
		1	**102-8802**	1	KIT-RECEPTACLE (2-PIN)	
					(INCLUDES RECEPTACLE AS & WEDGE)	
C	7	1	**307-5598**	1	SOLENOID (GOVERNOR)	
	8	1	**227-4794**	1	PLATE	
C	9	1	**230-7881**	1	ROD	
M	10	1	**125-3295**	2	SCREW-PAN HEAD (M2.5X0.45X12-MM)	
	11	1	**4P-8134**	1	CLIP	
M	12	1	**5C-2890**	4	NUT (M6X1-THD)	
	13	1	**5P-4115**	1	WASHER-HARD (7.2X19X2-MM THK)	
	14	1	**5P-4116**	3	WASHER-HARD (8.8X20.5X2-MM THK)	
M	15	1	**6V-7357**	3	BOLT (M6X1X25-MM)	
M	17	1	**8T-4908**	3	BOLT (M8X1.25X25-MM)	
	18	1	**9X-8256**	8	WASHER (6.6X12X2-MM THK)	
M	19	1	**8T-4138**	1	BOLT (M6X1X20-MM)	

B - USE AS REQUIRED
C - CHANGE FROM PREVIOUS TYPE
D - ORDER BY THE METER
M - METRIC PART

227-4799 **GOVERNOR GP (*contd.*)** **i05209189**

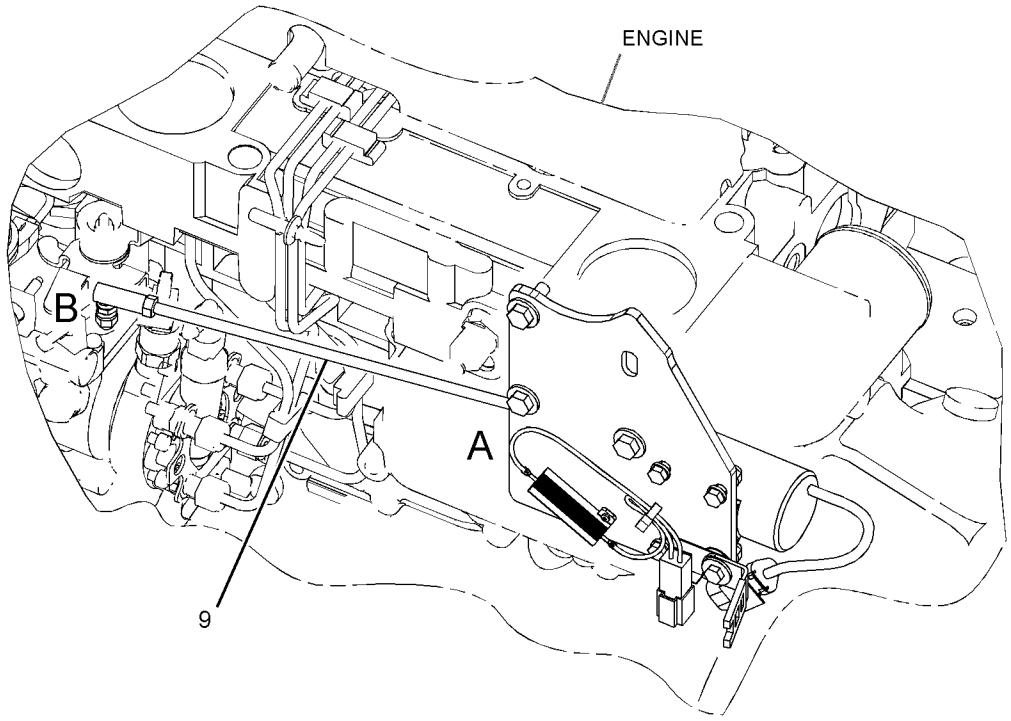

REAR VIEW
(UPPER RIGHT)

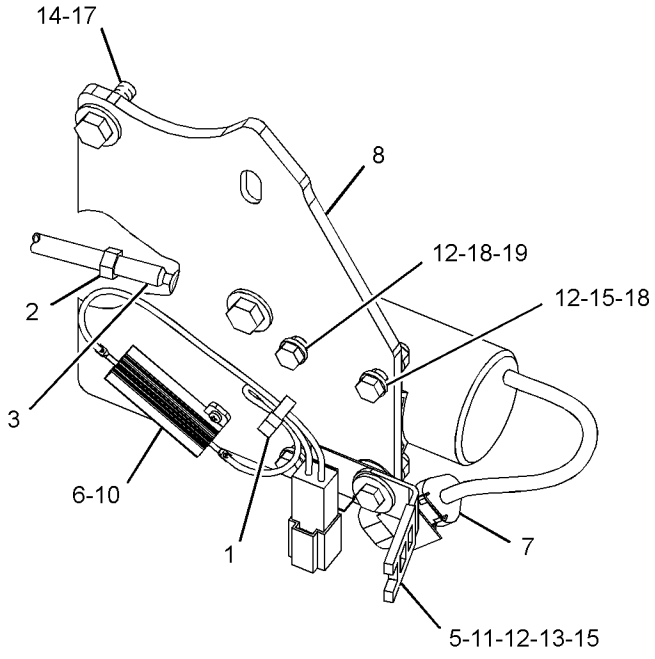

VIEW OF AREA A

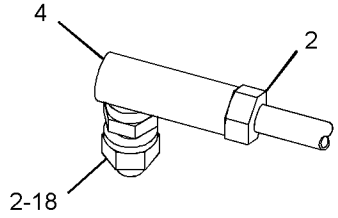

VIEW OF AREA B

GRAPHIC #1 **<END>** g03362116

391-5551 KIT-FUEL SYSTEM PARTS

S/N: TJL1-UP

FIELD INSTALLATION

SMCS-1250 **i05350682**

NOTE	PART NUMBER	QTY	PART NAME 1 2 3 4 5 6 (PRODUCT LEVEL)	SEE PAGE
Y	**350-5171**	1	FILTER AS-FUEL	86
Y	**376-9229**	1	FILTER GP-WATER SEP & FUEL	89
Y	**389-3746**	1	HARNESS AS-WIRING	129
	300-3282	1	BASE AS-LIGHT	
	389-3066	1	BRACKET AS	
	390-1766	1	HARNESS AS-PANEL	
	9X-3401	2	PIN-CONNECTOR (16-GA TO 18-GA)	
	102-8802	1	KIT-RECEPTACLE (2-PIN)	
			(INCLUDES RECEPTACLE AS & WEDGE)	
	162-4171	2	TERMINAL AS (18-GA TO 20-GA)	
			(EACH INCLUDES)	
	5P-1475	1	TERMINAL-FORK (14-GA TO 16-GA, NO. 8 SCREW)	
E	**125-7875**		TUBE-HEAT SHRINK (7.44-MM DIA) (4-CM)	
	3E-5239	1	RELAY AS (24-VOLT)	
	8N-0694	1	SWITCH AS-TOGGLE	
	3L-8187	3	LOCKWASHER	
	6T-3631	2	NUT-HEX (15/32-32-THD)	
	6T-3632	1	LOCKWASHER	
	6T-3633	1	RING-LOCKING	
	6V-8374	3	SCREW-MACHINE (6-32X0.25-IN)	
	388-3920	1	TUBE AS-FUEL	
	357-0664	1	VALVE AS-RELIEF (FUEL)	
M	**7X-2533**	2	BOLT (M6X1X35-MM)	
M	**7X-0818**	3	BOLT (M8X1.25X45-MM)	
M	**8T-4138**	1	BOLT (M6X1X20-MM)	
M	**8T-4195**	8	BOLT (M10X1.5X30-MM)	
M	**8T-6869**	1	BOLT (M8X1.25X60-MM)	
M	**8T-7547**	1	BOLT (M8X1.25X30-MM)	
	5D-1026	6	CLAMP-BAND	
	206-6410	8	CLAMP-HALF	
	206-6418	2	CLAMP-HALF	
	345-7772	2	CLAMP-HALF	
	5P-4961	11	CLAMP-HOSE	
	6K-8178	1	CLIP	
	367-6836	1	CONNECTOR-HOSE	
	224-5917	2	CONNECTOR-SPECIAL	
	332-8546	2	ELBOW	
	389-6369	1	FILM-CONTROL	
	389-6370	1	FILM-IDENTIFICATION (MOISTURE IN FUEL)	
	389-6371	1	FILM-IDENTIFICATION (MOISTURE IN FUEL)	
	215-9509	1	FITTING (QUICK DISCONNECT, FEMALE)	
	259-1044	1	FITTING-TEE	
	9R-7240	1	GASKET	
E	**5P-1420**		HOSE (410-CM)	
E	**5P-1442**		HOSE (7-CM)	
E	**5P-1505**		HOSE (114-CM)	
D	**5P-5991**		HOSE (0.3-M)	
	7N-5876	1	LAMP (24-VOLT, 0.2-AMPERE)	
	2V-7087	1	LENS-AMBER	
M	**5C-7261**	3	NUT (M8X1.25-THD)	
M	**5C-2890**	1	NUT (M6X1-THD)	
	4V-0612	1	PLATE	
	107-4749	1	PLATE	
	209-7659	1	PLATE-INFORMATION (FUEL PRIMING PUMP ON, OFF)	
	357-6475	1	PUMP AS-FUEL TRANSFER (24-VOLT)	

391-5551 **KIT-FUEL SYSTEM PARTS (*contd.*)** **i05350682**

NOTE	PART NUMBER	QTY	PART NAME 1 2 3 4 5 6 (PRODUCT LEVEL)	SEE PAGE
	228-7102	2	SEAL-O-RING	
	7K-1181	50	STRAP-CABLE	
	178-3620	1	STRAP-DUAL CLAMP	
	9X-8256	2	WASHER (6.6X12X2-MM THK)	
	8T-4224	7	WASHER-HARD (8.8X16X2-MM THK)	
	8T-4121	8	WASHER-HARD (11X21X2.5-MM THK)	

D - ORDER BY THE METER
E - ORDER BY THE CENTIMETER
M - METRIC PART
Y - SEPARATE ILLUSTRATION

<END>

222-3102 LINES GP-FUEL

S/N: TJL1-2531

PART OF 219-4162, 348-5645 INSTALLATION AR-ENGINE

SMCS-1274 **i04035844**

NOTE	REF NO	GRAPHIC REF	PART NUMBER	QTY	PART NAME 1 2 3 4 5 6 (PRODUCT LEVEL)	SEE PAGE
	1	1	**5P-4961**	6	CLAMP-HOSE	
	2	1	**102-8703**	7	PLATE-COVER	
	3	1	**177-2215**	1	STRAP-DUAL CLAMP	
	4	1	**228-5778**	1	PLATE AS	
		1	**102-8704**	1	PLATE AS	
	5	1	**6F-7062**	2	WASHER (12.7X19.05X1.83-MM THK)	
	6	1	**239-5433**	1	CONNECTOR-SPECIAL	
Y	7	1	**252-6334**	1	FILTER GP-WATER SEP & FUEL	87
	8	1	**277-2103**	2	COUPLING AS	
	9	1	**311-8367**	3	PLATE	
	10	1	**333-1936**	1	BRACKET AS	
	11	1	**156-3617**	14	CLAMP-HALF	
	13	1	**4P-7581**	1	CLIP	
M	14	1	**7X-2537**	3	BOLT (M8X1.25X35-MM)	
	15	1	**8T-4121**	3	WASHER-HARD (11X21X2.5-MM THK)	
M	16	1	**8T-4192**	1	BOLT (M12X1.75X25-MM)	
M	17	1	**8T-4195**	3	BOLT (M10X1.5X30-MM)	
	18	1	**8T-4223**	1	WASHER-HARD (13.5X25.5X3-MM THK)	
	19	1	**8T-4224**	2	WASHER-HARD (8.8X16X2-MM THK)	
M	20	1	**8T-6912**	3	BOLT (M8X1.25X50-MM)	
M	21	1	**8T-7547**	2	BOLT (M8X1.25X30-MM)	
E	22	1	**5P-1442**		HOSE (102-CM)	
E	22A	1	**5P-1442**		HOSE (173.5-CM)	
E	22B	1	**5P-1442**		HOSE (233.5-CM)	
	23	1	**8T-5043**	2	CONNECTOR	
	24	1	**8L-2779**	2	SEAL-O-RING	

E - ORDER BY THE CENTIMETER
M - METRIC PART
Y - SEPARATE ILLUSTRATION

222-3102 **LINES GP-FUEL (*contd.*)** **i04035844**

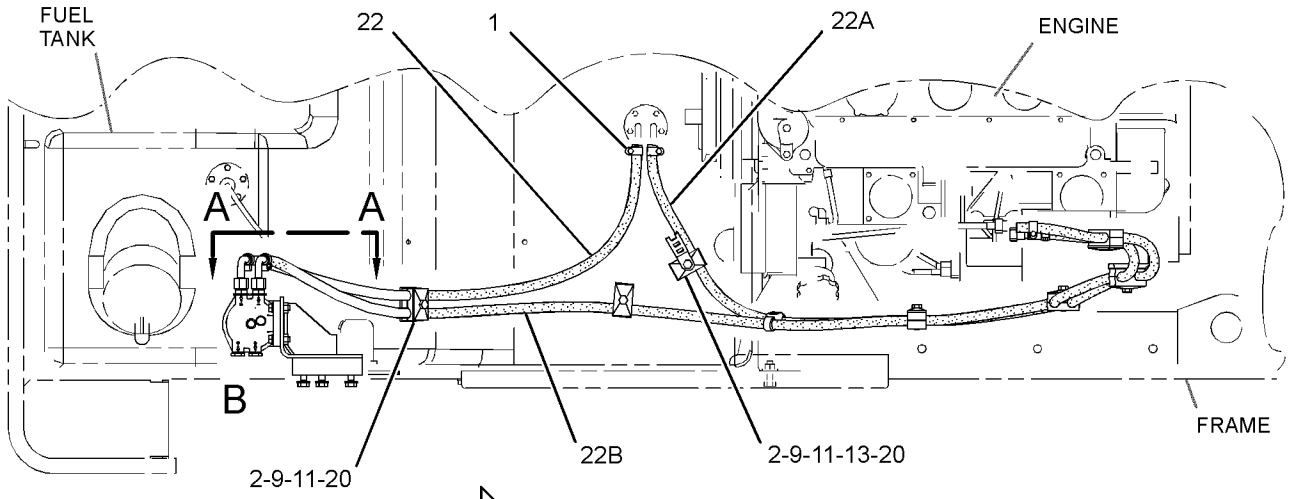

FWD TOP VIEW

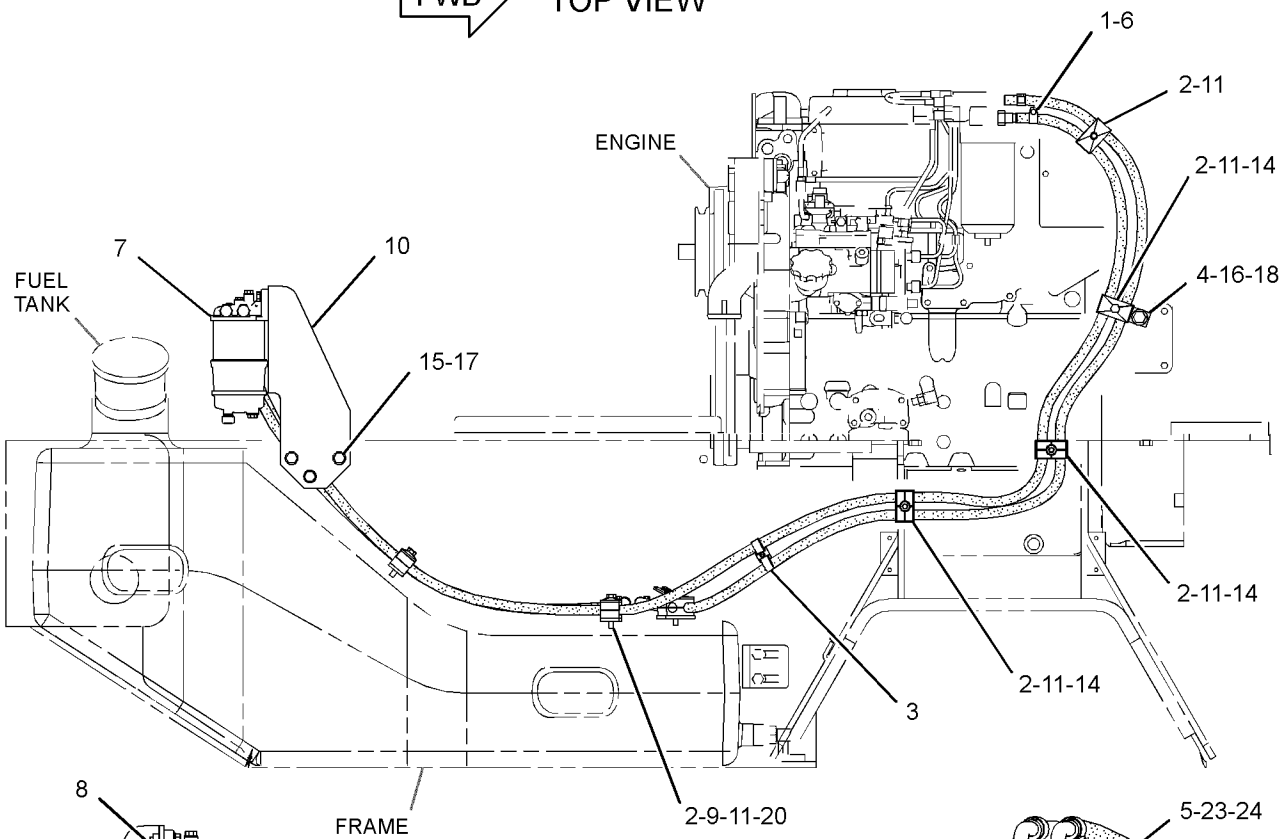

RIGHT SIDE VIEW

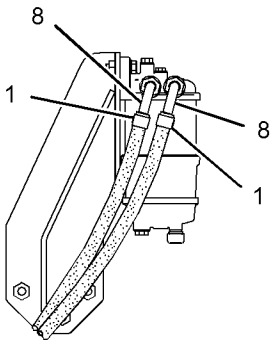

VIEW A-A

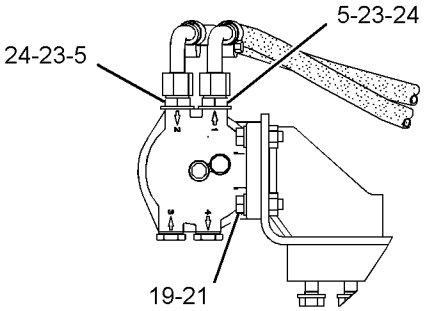

VIEW OF AREA B

GRAPHIC #1 **<END>** g02267473

389-7292 LINES GP-FUEL

S/N: TJL2532-UP

PART OF 348-5645 INSTALLATION AR-ENGINE

SMCS-1274 **i05141398**

NOTE	REF NO	GRAPHIC REF	PART NUMBER	QTY	PART NAME 1 2 3 4 5 6 (PRODUCT LEVEL)	SEE PAGE
	1	1	**5D-1026**	6	CLAMP-BAND	
	2	1	**5P-4961**	10	CLAMP-HOSE	
	3	1	**102-8703**	4	PLATE-COVER	
	4	1	**4V-0612**	1	PLATE	
	5	1	**107-4749**	1	PLATE	
	6	1	**209-7659**	1	PLATE-INFORMATION (FUEL PRIMING PUMP ON, OFF)	
	7	1	**224-5917**	1	CONNECTOR-SPECIAL	
	8	1	**228-5778**	1	PLATE AS	
		1	**102-8704**	1	PLATE AS	
	9	1	**259-1044**	1	FITTING-TEE	
	10	1	**311-8367**	2	PLATE	
	11	1	**345-7772**	2	CLAMP-HALF	
	12	1	**357-0664**	1	VALVE AS-RELIEF (FUEL)	
	13	1	**367-6836**	1	CONNECTOR-HOSE	
	14	1	**389-6369**	1	FILM-CONTROL	
	15	1	**389-6371**	1	FILM-IDENTIFICATION (MOISTURE IN FUEL)	
Y	16	1	*389-7291*	1	SEPARATOR GP-WATER	115
	17	1	**178-3620**	1	STRAP-DUAL CLAMP	
	18	1	**206-6410**	8	CLAMP-HALF	
	19	1	**206-6418**	2	CLAMP-HALF	
	20	1	**215-9509**	1	FITTING (QUICK DISCONNECT, FEMALE)	
	21	1	**6K-8178**	1	CLIP	
M	22	1	**7X-2533**	2	BOLT (M6X1X35-MM)	
M	23	1	**7X-2537**	3	BOLT (M8X1.25X35-MM)	
	24	1	**8T-4121**	5	WASHER-HARD (11X21X2.5-MM THK)	
M	25	1	**8T-4192**	1	BOLT (M12X1.75X25-MM)	
M	26	1	**8T-4195**	5	BOLT (M10X1.5X30-MM)	
	27	1	**8T-4223**	1	WASHER-HARD (13.5X25.5X3-MM THK)	
	28	1	**8T-4224**	1	WASHER-HARD (8.8X16X2-MM THK)	
M	29	1	**8T-6869**	1	BOLT (M8X1.25X60-MM)	
M	30	1	**8T-6912**	1	BOLT (M8X1.25X50-MM)	
M	31	1	**8T-7547**	1	BOLT (M8X1.25X30-MM)	
D	32	1	**5P-5991**		HOSE (0.3-M)	
E	33	1	**5P-1442**		HOSE (7-CM)	
E	34	1	**5P-1505**		HOSE (69.5-CM)	
E	34A	1	**5P-1505**		HOSE (12.6-CM)	
E	34B	1	**5P-1505**		HOSE (28.8-CM)	
E	35	1	**5P-1420**		HOSE (103-CM)	
E	35A	1	**5P-1420**		HOSE (9-CM)	
E	35B	1	**5P-1420**		HOSE (135.8-CM)	
E	35C	1	**5P-1420**		HOSE (159-CM)	
	36	1	**1P-4278**	1	CLAMP-HOSE	

D - ORDER BY THE METER
E - ORDER BY THE CENTIMETER
M - METRIC PART
Y - SEPARATE ILLUSTRATION

389-7292 **LINES GP-FUEL (*contd.*)** **i05141398**

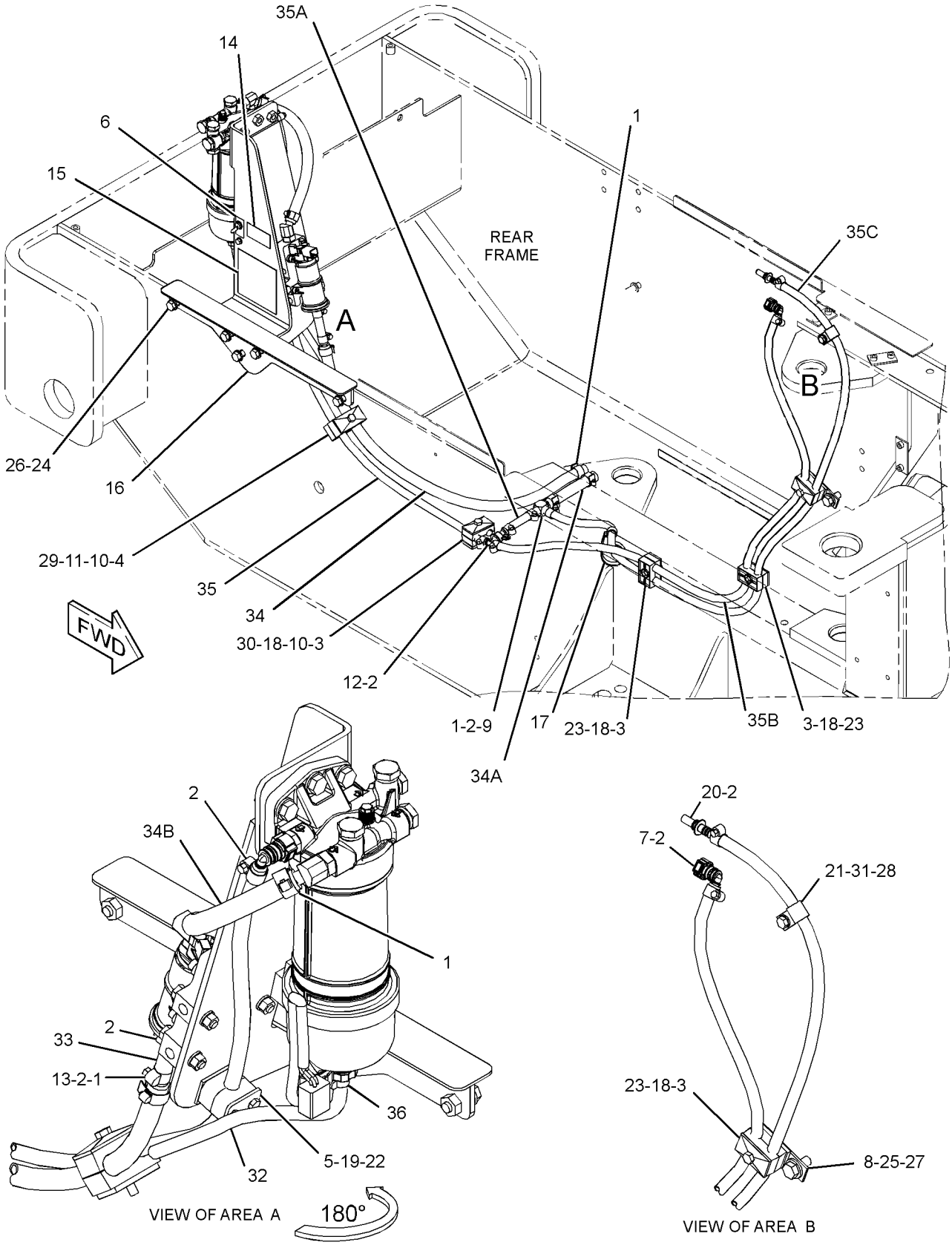

GRAPHIC #1

<END>

g03332295

284-4999 PUMP GP-FUEL INJECTION

S/N: CRS1-UP; CST1-UP
FIELD REPLACEMENT ORDER 284-5000—PAGE: 101
PART OF 308-4733 PUMP GP-FUEL INJECTION

SMCS-1251, 1290

i03055163

NOTE	REF NO	GRAPHIC REF	PART NUMBER	QTY	PART NAME 1 2 3 4 5 6 (PRODUCT LEVEL)	SEE PAGE
	1	1	**152-3968**	1	SEAL-O-RING	
	2	1	**147-2645**	1	VALVE GP-SOLENOID (24-VOLT) (FUEL SHUTOFF)	

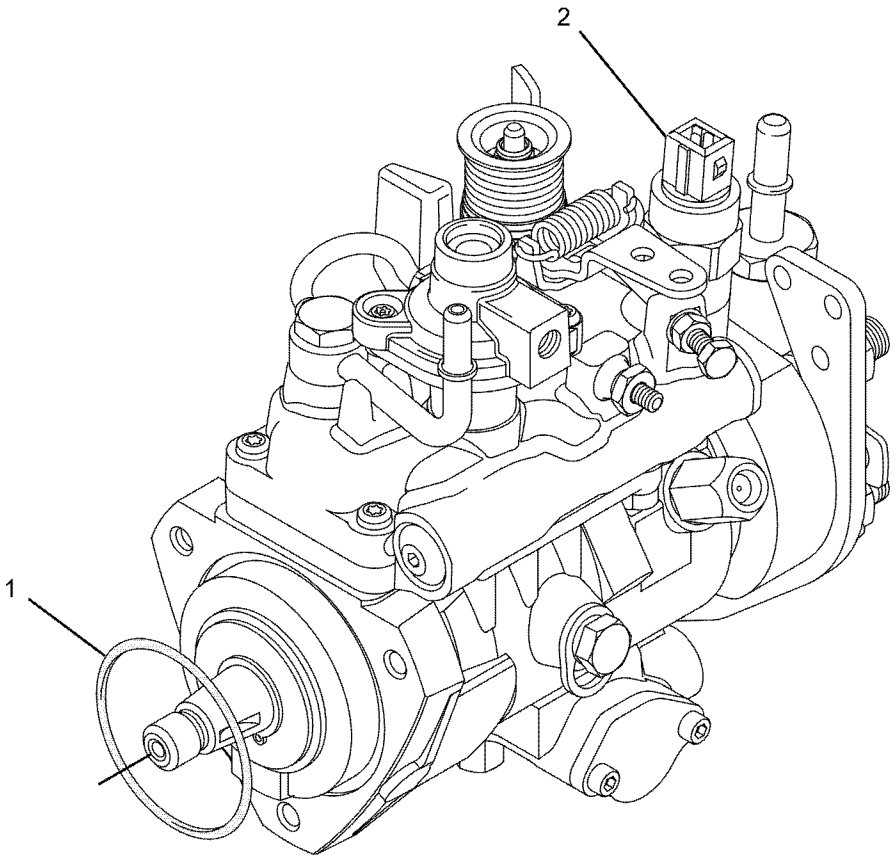

GRAPHIC #1

<END>

g01085467

284-5000 PUMP GP-FUEL INJECTION

S/N: CRS1-UP; CST1-UP

FIELD REPLACEMENT FOR 284-4999 PUMP GP-FUEL INJECTION

PART OF 308-4733 PUMP GP-FUEL INJECTION

SMCS-1251, 1290

i04891658

NOTE	PART NUMBER	QTY	PART NAME 1 2 3 4 5 6 (PRODUCT LEVEL)	SEE PAGE
			(NO SERVICED PARTS)	

<END>

308-4733 PUMP GP-FUEL INJECTION

S/N: CRS1-UP; CST1-UP

PART OF 297-4055 ENGINE AR-PRIMARY

SMCS-1251, 1290 **i04889195**

NOTE	REF NO	GRAPHIC REF	PART NUMBER	QTY	PART NAME 1 2 3 4 5 6 (PRODUCT LEVEL)	SEE PAGE
M	1	1	**6I-0217**	1	BOLT (M8X1.25X20-MM)	
M	2	1	**6I-0260**	3	BOLT (M8X1.25X25-MM)	
	3	1	**6I-0291**	1	NUT (M8X1.25-THD)	
	4	1	**035-8017**	1	UNION	
	5	1	**365-3308**	1	NUT-COMPRESSION	
	6	1	**067-6265**	1	FITTING-BRASS	
M	7	1	**100-4830**	1	BOLT (M10X1.5X20-MM)	
M	8	1	**124-3815**	1	BOLT (M8X1.25X16-MM)	
	9	1	**140-8714**	1	CLIP	
	10	1	**318-2365**	1	CLIP	
	11	1	**230-8989**	1	GEAR-FUEL PUMP (68-TEETH)	
	12	1	**230-8995**	1	TUBE AS (CYL NO. 1)	
	13	1	**230-8996**	1	TUBE AS (CYL NO. 2)	
	14	1	**230-8997**	1	TUBE AS (CYL NO. 3)	
	15	1	**230-8998**	1	TUBE AS (CYL NO. 4)	
	16	1	**230-8999**	4	INJECTOR AS-FUEL	
		1	**232-2724**	1	NOZZLE	
		1	**275-1038**	1	SEAL-O-RING	
	16A	1	**140-8718**	1	WASHER	
	17	2	**232-1323**	1	PLUG-CUP	
	18	1	**232-1328**	1	CAP	
	19	2	**232-1793**	1	CABLE	
	20	1	**232-1794**	3	HOSE	
	21	1	**232-2725**	2	CLIP	
	22	1	**232-2726**	1	CLIP	
	23	1	**232-3126**	1	CLIP	
	24	1	**232-3149**	3	WASHER (8.35X16.85X1.55-MM THK)	
	25	1	**232-3157**	1	BRACKET	
	26	1	**232-3274**	4	BOLT (M8X1.25X48.1-MM)	
	27	2	**235-1790**	1	SWITCH-TEMPERATURE (ENGINE COOLANT)	
	28	1	**236-2144**	1	TUBE AS	
	28A	1	**067-6999**	1	FERRULE	
	29	1	**238-8671**	4	CLAMP-INJECTOR	
	30	1	**240-5571**	1	BRACKET	
Y	31	1	*284-4999*	1	PUMP GP-FUEL INJECTION	100

M - METRIC PART
Y - SEPARATE ILLUSTRATION

308-4733 **PUMP GP-FUEL INJECTION (*contd.*)** **i04889195**

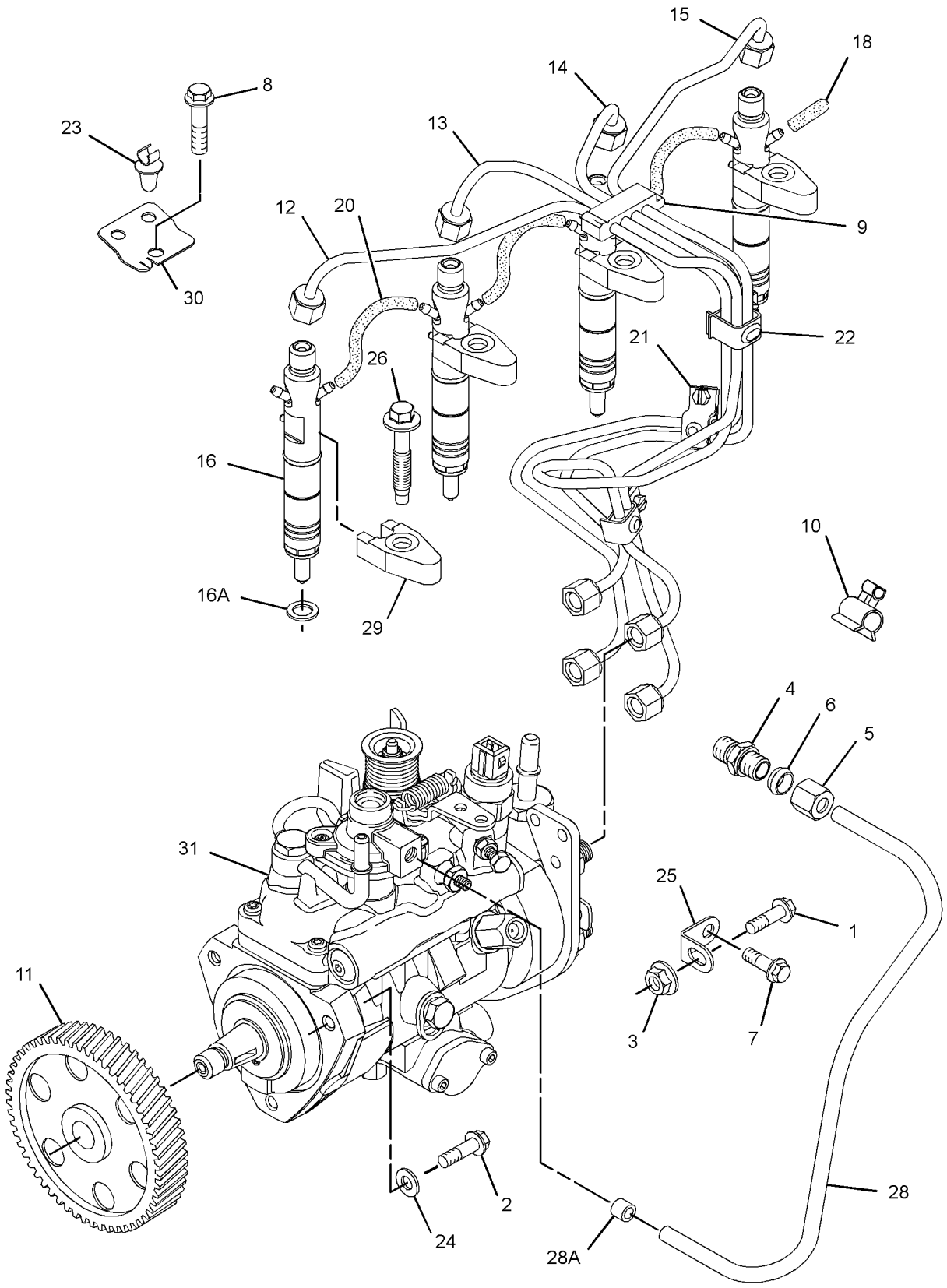

GRAPHIC #1 g01742134

308-4733 **PUMP GP-FUEL INJECTION (*contd.*)** **i04889195**

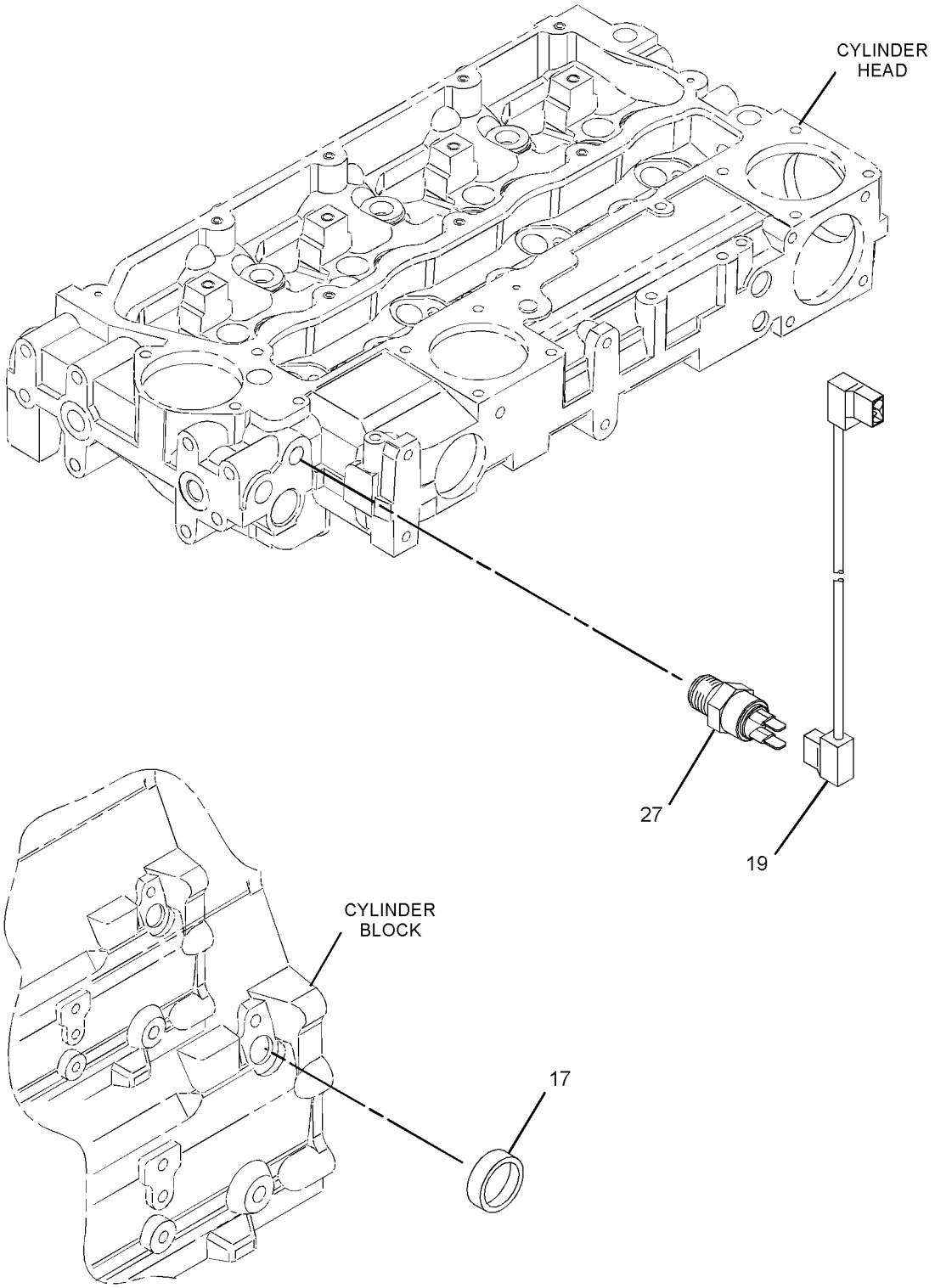

GRAPHIC #2 **<END>** g01375868

308-4733 PUMP GP-FUEL INJECTION

S/N: CRS1-UP

PART OF 297-4055, 390-5113 ENGINE AR-PRIMARY

SMCS-1251, 1290 **i04891635**

NOTE	REF NO	GRAPHIC REF	PART NUMBER	QTY	PART NAME 1 2 3 4 5 6 (PRODUCT LEVEL)	SEE PAGE
M	1	1	**6I-0217**	1	BOLT (M8X1.25X20-MM)	
M	2	1	**6I-0260**	3	BOLT (M8X1.25X25-MM)	
	3	1	**6I-0291**	1	NUT (M8X1.25-THD)	
	4	1	**035-8017**	1	UNION	
	5	1	**365-3308**	1	NUT-COMPRESSION	
	6	1	**067-6265**	1	FITTING-BRASS	
M	7	1	**100-4830**	1	BOLT (M10X1.5X20-MM)	
M	8	1	**124-3815**	1	BOLT (M8X1.25X16-MM)	
	9	1	**140-8714**	1	CLIP	
	10	1	**318-2365**	1	CLIP	
	11	1	**230-8989**	1	GEAR-FUEL PUMP (68-TEETH)	
	12	1	**230-8995**	1	TUBE AS (CYL NO. 1)	
	13	1	**230-8996**	1	TUBE AS (CYL NO. 2)	
	14	1	**230-8997**	1	TUBE AS (CYL NO. 3)	
	15	1	**230-8998**	1	TUBE AS (CYL NO. 4)	
	16	1	**230-8999**	4	INJECTOR AS-FUEL	
		1	**232-2724**	1	NOZZLE	
		1	**275-1038**	1	SEAL-O-RING	
	16A	1	**140-8718**	1	WASHER	
	17	2	**232-1323**	1	PLUG-CUP	
	18	1	**232-1328**	1	CAP	
	19	2	**232-1793**	1	CABLE	
	20	1	**232-1794**	3	HOSE	
	21	1	**232-2725**	2	CLIP	
	22	1	**232-2726**	1	CLIP	
	23	1	**232-3126**	1	CLIP	
	24	1	**232-3149**	3	WASHER (8.35X16.85X1.55-MM THK)	
	25	1	**232-3157**	1	BRACKET	
	26	1	**232-3274**	4	BOLT (M8X1.25X48.1-MM)	
	27	2	**235-1790**	1	SWITCH-TEMPERATURE (ENGINE COOLANT)	
	28	1	**236-2144**	1	TUBE AS	
	28A	1	**067-6999**	1	FERRULE	
	29	1	**238-8671**	4	CLAMP-INJECTOR	
	30	1	**240-5571**	1	BRACKET	
Y	31	1	**284-5000**	1	PUMP GP-FUEL INJECTION	101

M - METRIC PART
Y - SEPARATE ILLUSTRATION

308-4733 **PUMP GP-FUEL INJECTION (*contd.*)** **i04891635**

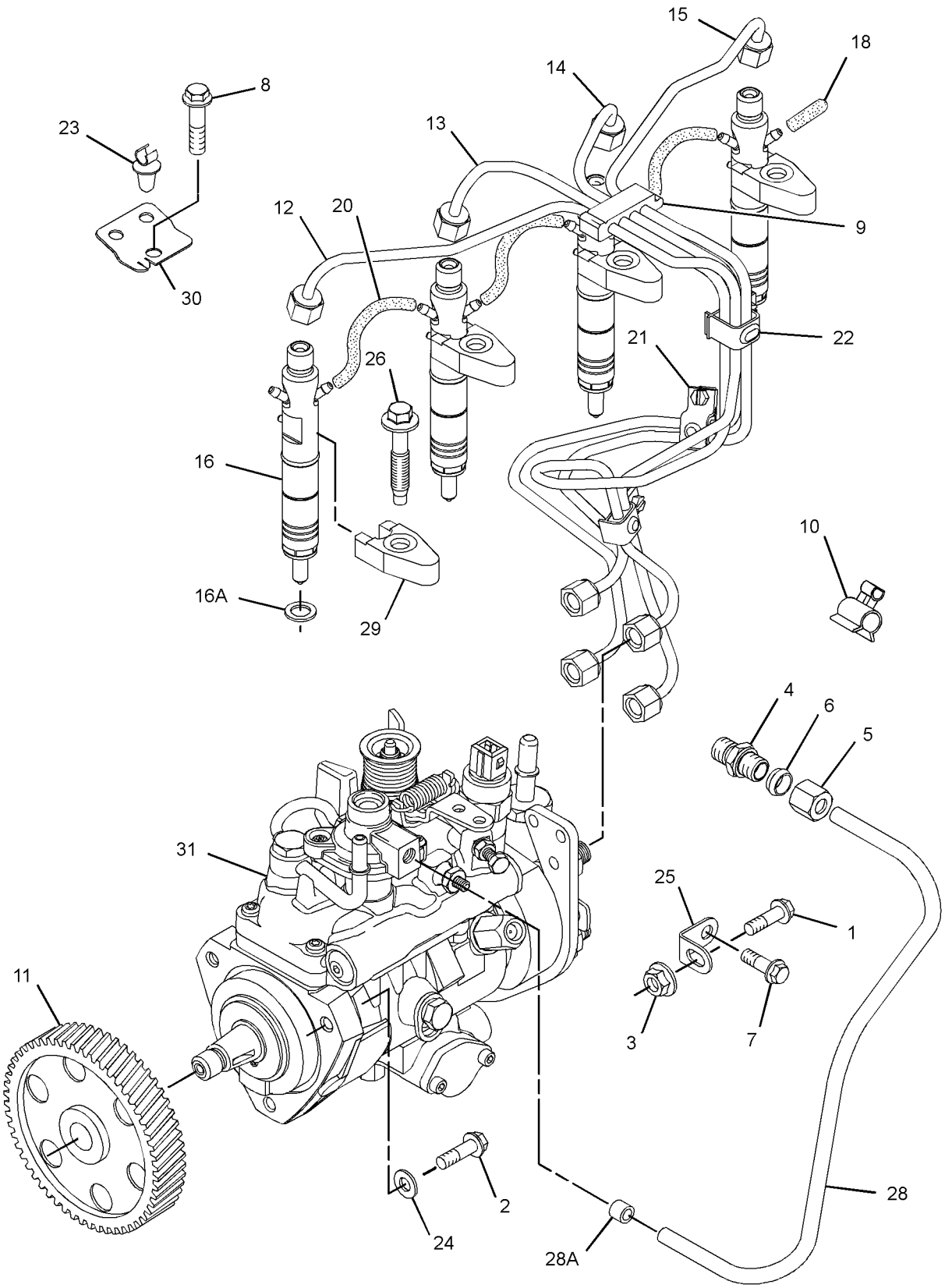

GRAPHIC #1 g01742134

308-4733 **PUMP GP-FUEL INJECTION (*contd.*)** **i04891635**

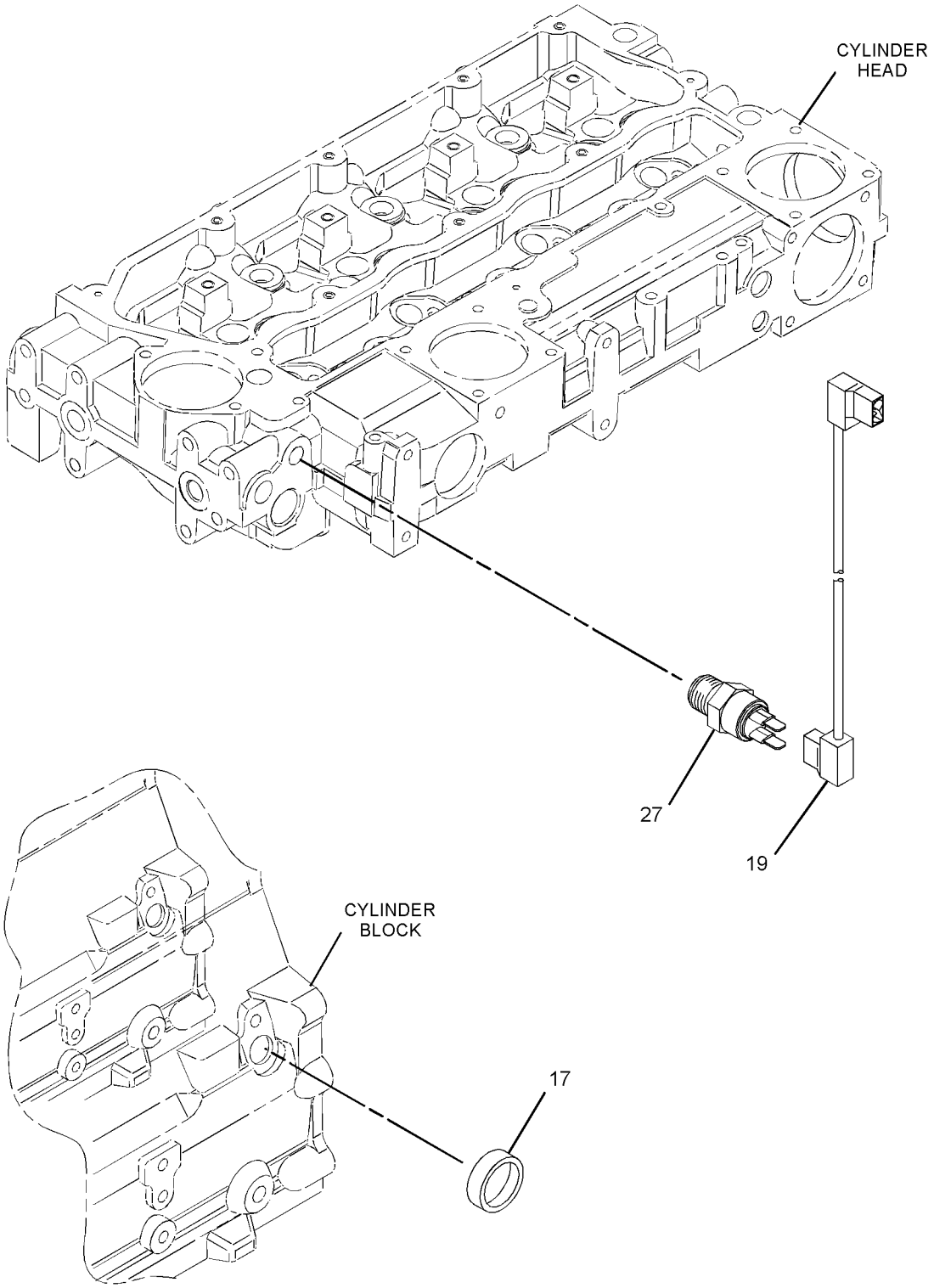

GRAPHIC #2 **<END>** g01375868

308-4733 PUMP GP-FUEL INJECTION

S/N: CRS1-UP; CST1-UP

PART OF 297-4055, 390-5113 ENGINE AR-PRIMARY

SMCS-1251, 1290 **i05059612**

NOTE	REF NO	GRAPHIC REF	PART NUMBER	QTY	PART NAME 1 2 3 4 5 6 (PRODUCT LEVEL)	SEE PAGE
M	1	1	**6I-0217**	1	BOLT (M8X1.25X20-MM)	
M	2	1	**6I-0260**	3	BOLT (M8X1.25X25-MM)	
	3	1	**6I-0291**	1	NUT (M8X1.25-THD)	
	4	1	**035-8017**	1	UNION	
	5	1	**365-3308**	1	NUT-COMPRESSION	
	6	1	**067-6265**	1	FITTING-BRASS	
M	7	1	**100-4830**	1	BOLT (M10X1.5X20-MM)	
M	8	1	**124-3815**	1	BOLT (M8X1.25X16-MM)	
	9	1	**140-8714**	1	CLIP	
	10	1	**318-2365**	1	CLIP	
	11	1	**230-8989**	1	GEAR-FUEL PUMP (68-TEETH)	
	12	1	**230-8995**	1	TUBE AS (CYL NO. 1)	
	13	1	**230-8996**	1	TUBE AS (CYL NO. 2)	
	14	1	**230-8997**	1	TUBE AS (CYL NO. 3)	
	15	1	**230-8998**	1	TUBE AS (CYL NO. 4)	
	16	1	**230-8999**	4	INJECTOR AS-FUEL	
		1	**232-2724**	1	NOZZLE	
		1	**275-1038**	1	SEAL-O-RING	
	16A	1	**140-8718**	1	WASHER	
	18	1	**232-1328**	1	CAP	
	19	2	**232-1793**	1	CABLE	
	20	1	**232-1794**	3	HOSE	
	21	1	**232-2725**	2	CLIP	
	22	1	**232-2726**	1	CLIP	
	23	1	**232-3126**	1	CLIP	
	24	1	**232-3149**	3	WASHER (8.35X16.85X1.55-MM THK)	
	25	1	**232-3157**	1	BRACKET	
	26	1	**232-3274**	4	BOLT (M8X1.25X48.1-MM)	
	27	2	**235-1790**	1	SWITCH-TEMPERATURE (ENGINE COOLANT)	
	28	1	**236-2144**	1	TUBE AS	
	28A	1	**067-6999**	1	FERRULE	
	29	1	**238-8671**	4	CLAMP-INJECTOR	
	30	1	**240-5571**	1	BRACKET	
Y	31	1	**284-5000**	1	PUMP GP-FUEL INJECTION	101

M - METRIC PART
Y - SEPARATE ILLUSTRATION

308-4733 **PUMP GP-FUEL INJECTION (*contd.*)** **i05059612**

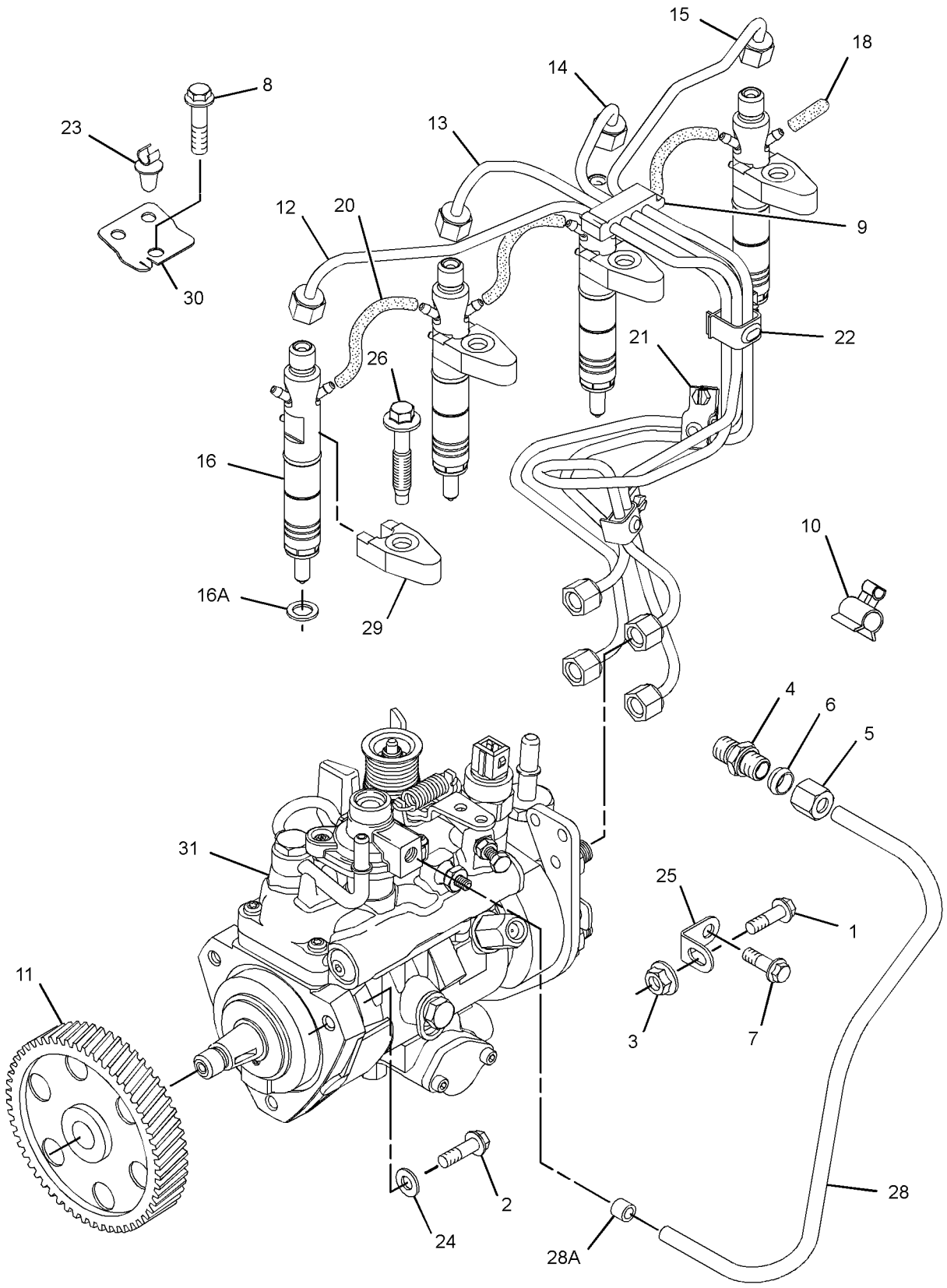

GRAPHIC #1 g01742134

308-4733 **PUMP GP-FUEL INJECTION (*contd.*)** **i05059612**

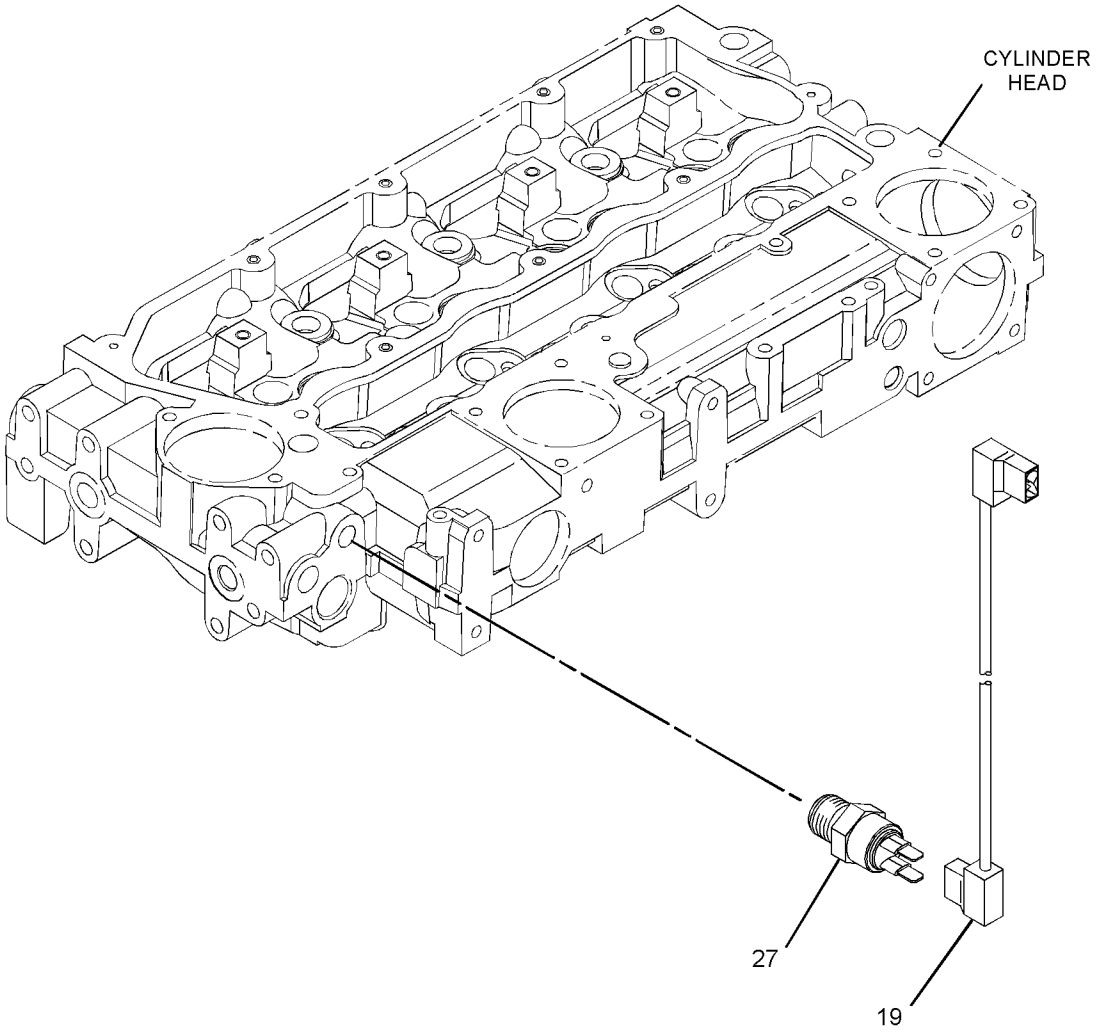

GRAPHIC #2 **<END>** g03272596

233-9417 PUMP GP-FUEL PRM & PRIM FILTER

S/N: CRS1-UP; CST1-UP

PART OF 297-4055 ENGINE AR-PRIMARY

SMCS-1258, 1260 **i04525103**

NOTE	REF NO	GRAPHIC REF	PART NUMBER	QTY	PART NAME 1 2 3 4 5 6 (PRODUCT LEVEL)	SEE PAGE
	1	1	**237-0285**	1	BRACKET	
	2	1	**240-9756**	1	KIT-MOUNTING (FUEL PRIMING PUMP)	
	2A	1	**232-9758**	3	WASHER (6.51X17.785X1.6-MM THK)	
		1	**120-6872**	3	BOLT	
					(KIT ALSO INCLUDES SPACERS & MOUNTS)	
	3	1	**311-6822**	1	CLIP-TUBE	
	4	1	**237-0286**	1	PLUG	
	5	1	**215-9508**	1	FITTING (QUICK DISCONNECT, MALE)	
	6	1	**215-9509**	1	FITTING (QUICK DISCONNECT, FEMALE)	
	7	1	**232-3126**	1	CLIP	
	8	1	**232-9759**	1	LINE AS-FUEL INJECTION (LOW PRESSURE FEED)	
	9	1	**237-0284**	1	LINE AS-FUEL (LOW PRESSURE RETURN)	
					AVAILABLE REPAIR KIT(S):	
			357-4187	1	KIT-PUMP (FUEL PRIMING)	
					(INCLUDES SPACERS & ISOLATORS)	

233-9417 **PUMP GP-FUEL PRM & PRIM FILTER (*contd.*)** **i04525103**

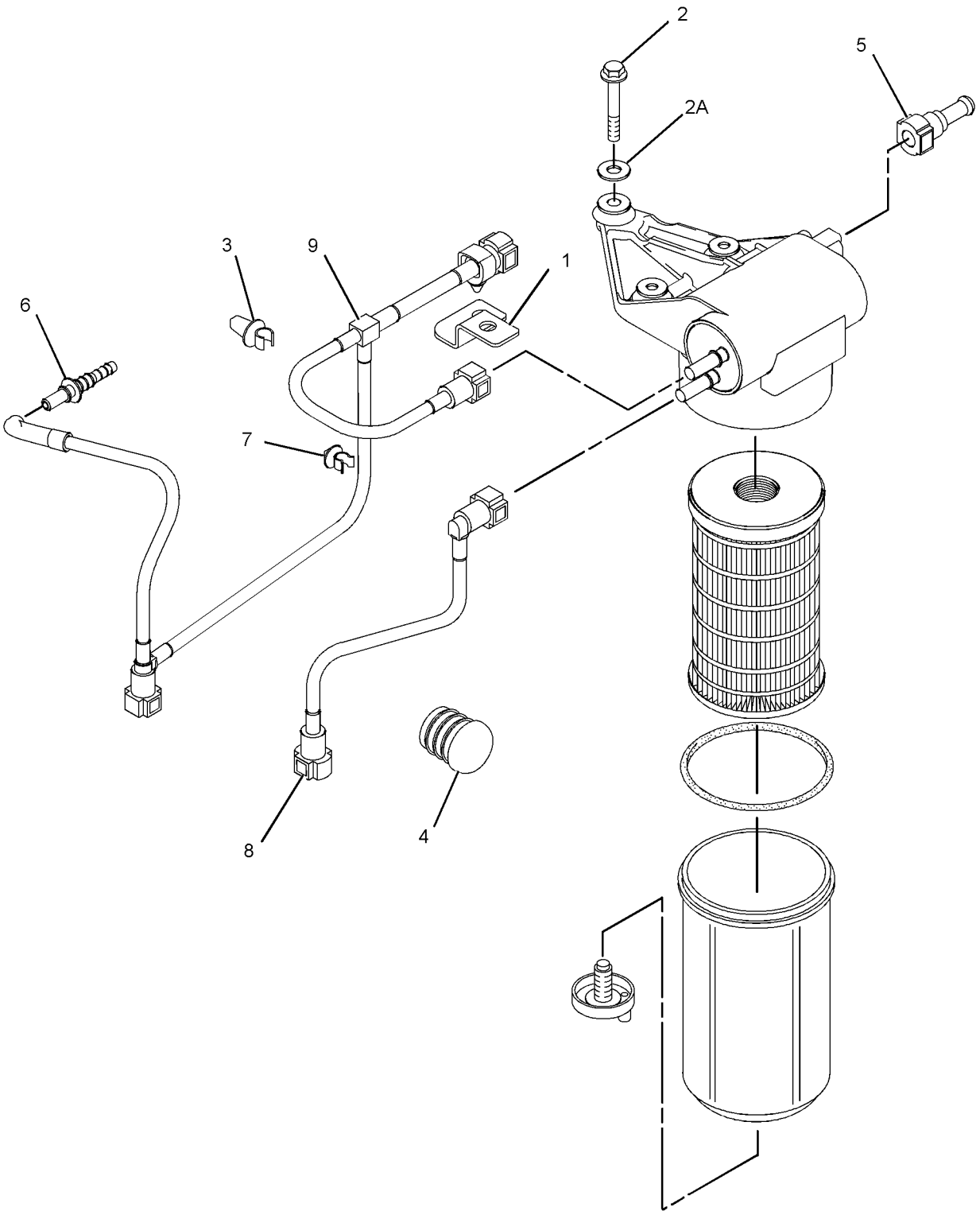

GRAPHIC #1 **<END>** g02709761

391-2704 PUMP GP-FUEL TRANSFER

S/N: CRS1-UP; CST1-UP

PART OF 390-5113 ENGINE AR-PRIMARY

SMCS-1256 **i05363042**

NOTE	REF NO	GRAPHIC REF	PART NUMBER	QTY	PART NAME 1 2 3 4 5 6 (PRODUCT LEVEL)	SEE PAGE
	1	1	**215-9508**	1	FITTING (QUICK DISCONNECT, MALE)	
	2	1	**215-9509**	1	FITTING (QUICK DISCONNECT, FEMALE)	
	3	1	**232-3126**	1	CLIP	
	4	1	**232-9759**	1	LINE AS-FUEL INJECTION (LOW PRESSURE FEED)	
	5	1	**237-0284**	1	LINE AS-FUEL (LOW PRESSURE RETURN)	
	6	1	**237-0285**	1	BRACKET	
	7	1	**237-0286**	1	PLUG	
	8	1	**311-6822**	1	CLIP-TUBE	
	9	1	**318-9512**	1	KIT-MOUNTING	
		1	**232-9758**	3	WASHER (6.51X17.785X1.6-MM THK)	
		1	**318-9511**	3	BOLT	
Y	10	1	**350-5171**	1	FILTER AS-FUEL	86

Y - SEPARATE ILLUSTRATION

391-2704 **PUMP GP-FUEL TRANSFER (*contd.*)** **i05363042**

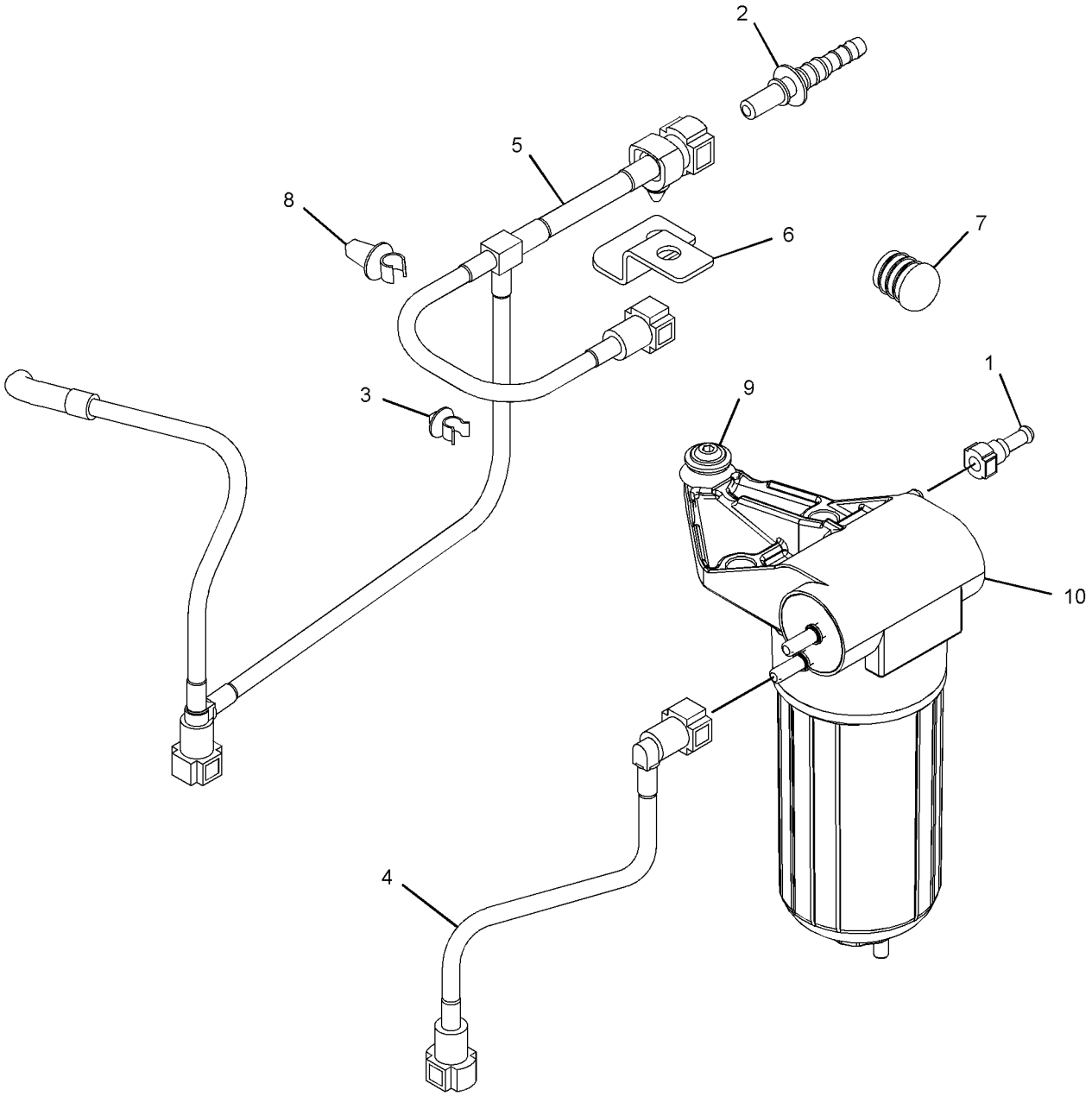

GRAPHIC #1 **<END>** g03395640

389-7291 SEPARATOR GP-WATER

S/N: TJL2532-UP

PART OF 389-7292 LINES GP-FUEL

SMCS-1263 **i05082629**

NOTE	REF NO	GRAPHIC REF	PART NUMBER	QTY	PART NAME 1 2 3 4 5 6 (PRODUCT LEVEL)	SEE PAGE
	1	1	**3E-5239**	1	RELAY AS (24-VOLT) (WATER SEPARATOR)	
	2	1	**224-5917**	1	CONNECTOR-SPECIAL	
	3	1	**357-6475**	1	PUMP AS-FUEL TRANSFER (24-VOLT)	
Y	4	1	**376-9229**	1	FILTER GP-WATER SEP & FUEL	89
	5	1	**389-3066**	1	BRACKET AS	
	6	1	**228-7102**	2	SEAL-O-RING	
	7	1	**332-8546**	2	ELBOW	
M	8	1	**5C-2890**	1	NUT (M6X1-THD)	
M	9	1	**5C-7261**	3	NUT (M8X1.25-THD)	
M	10	1	**7X-0818**	3	BOLT (M8X1.25X45-MM)	
	11	1	**8N-0694**	1	SWITCH AS-TOGGLE (WATER SEPARATOR)	
		1	**3L-8187**	3	LOCKWASHER	
		1	**6T-3631**	2	NUT-HEX (15/32-32-THD)	
		1	**6T-3632**	1	LOCKWASHER	
		1	**6T-3633**	1	RING-LOCKING	
		1	**6V-8374**	3	SCREW-MACHINE (6-32X0.25-IN)	
	12	1	**8T-4121**	3	WASHER-HARD (11X21X2.5-MM THK)	
M	13	1	**8T-4138**	1	BOLT (M6X1X20-MM)	
M	14	1	**8T-4195**	3	BOLT (M10X1.5X30-MM)	
	15	1	**8T-4224**	6	WASHER-HARD (8.8X16X2-MM THK)	
	16	1	**9X-8256**	2	WASHER (6.6X12X2-MM THK)	

M - METRIC PART
Y - SEPARATE ILLUSTRATION

389-7291 **SEPARATOR GP-WATER (*contd.*)** **i05082629**

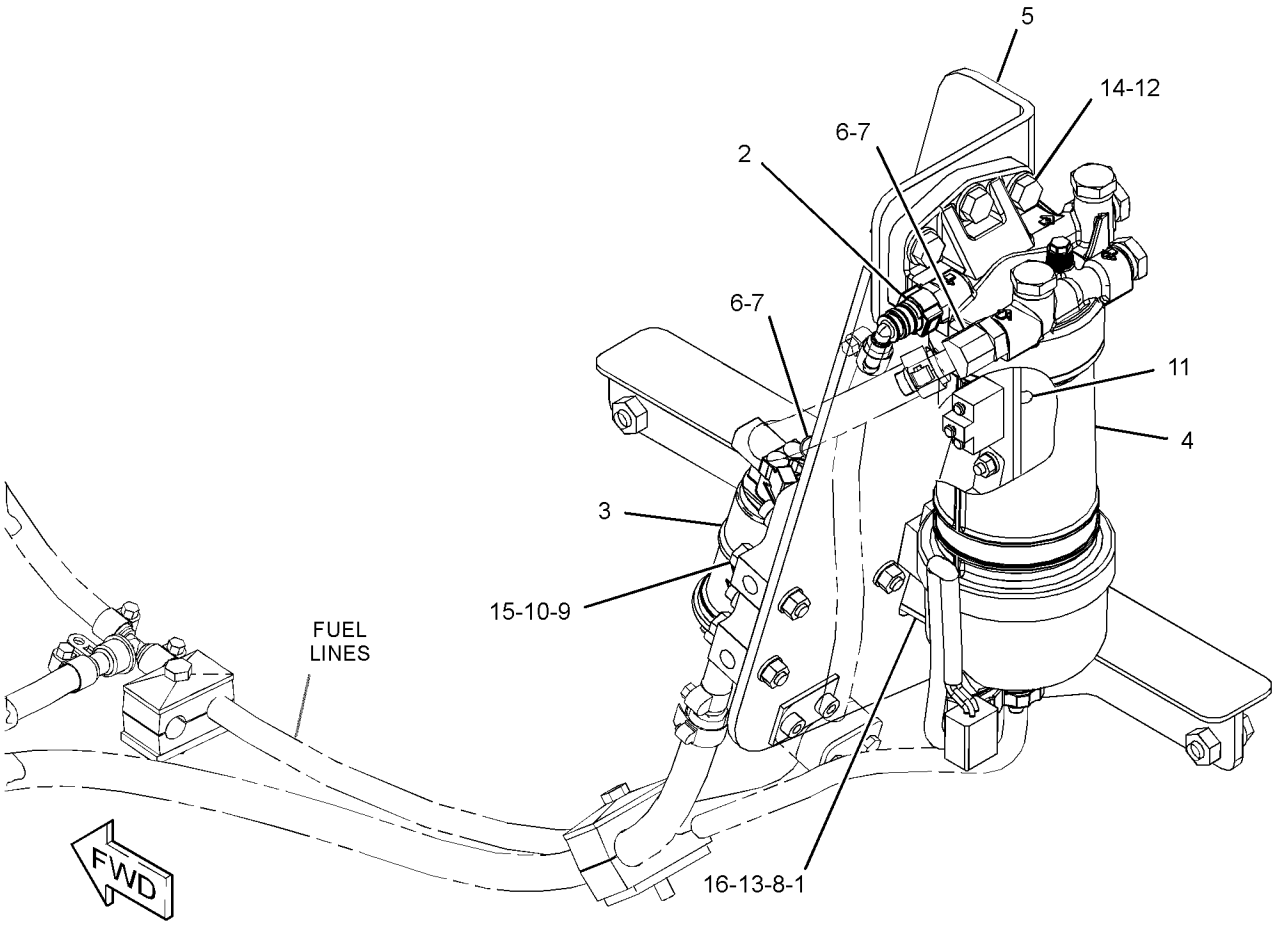

GRAPHIC #1 **<END>** g03251776

239-0641 TANK & MTG GP-FUEL

S/N: TJL1-UP

PART OF 239-0794 CHASSIS AR

SMCS-1273 **i03035161**

NOTE	REF NO	GRAPHIC REF	PART NUMBER	QTY	PART NAME 1 2 3 4 5 6 (PRODUCT LEVEL)	SEE PAGE
	1	1	**156-5114**	1	ANGLE	
	2	1	**213-9684**	3	ANGLE	
Y	3	1	**238-8563**	1	TANK GP-FUEL	118
	4	1	**7X-7729**	8	WASHER (11X25X3-MM THK)	
	5	1	**8T-4121**	8	WASHER-HARD (11X21X2.5-MM THK)	
M	6	1	**8T-4133**	8	NUT (M10X1.5-THD)	
M	7	1	**8T-4196**	8	BOLT (M10X1.5X35-MM)	

M - METRIC PART
Y - SEPARATE ILLUSTRATION

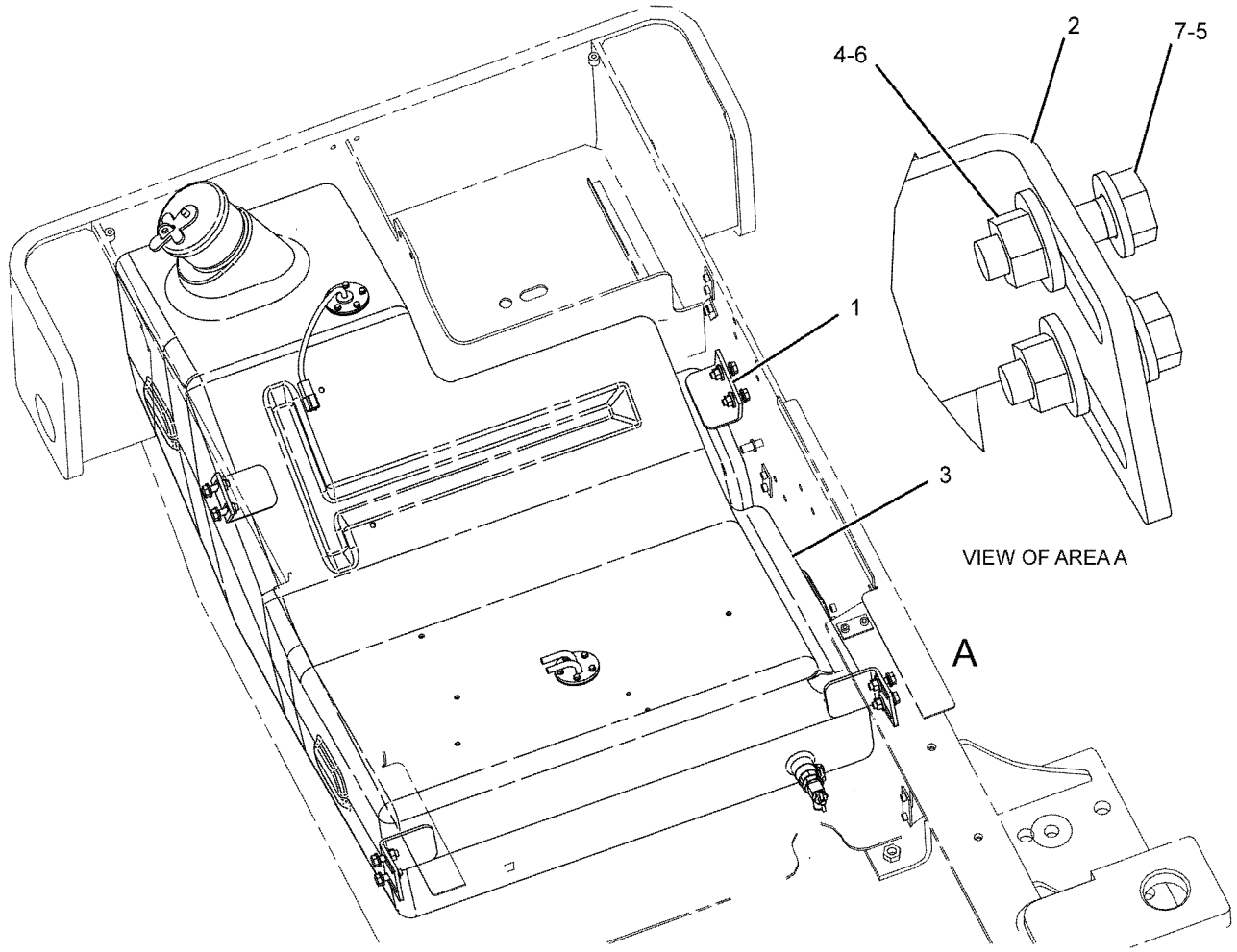

GRAPHIC #1 **<END>** g01038260

238-8563 TANK GP-FUEL

S/N: TJL1-UP

PART OF 239-0641 TANK & MTG GP-FUEL

SMCS-1273 **i03431738**

NOTE	REF NO	GRAPHIC REF	PART NUMBER	QTY	PART NAME 1 2 3 4 5 6 (PRODUCT LEVEL)	SEE PAGE
	1	1	**2S-3440**	1	CLAMP-HOSE	
	2	1	**9P-7121**	1	STRAINER-FUEL (TANK)	
	3	1	**9R-7240**	2	GASKET	
	4	1	**306-4998**	1	CAP GP-FUEL FILLER (LOCKABLE, VENTED)	
		1	**276-1243**	1	CAP-FUEL FILLER (LOCKABLE)	
		1	**278-5689**	1	BOOT-FUEL CAP	
		1	**279-9876**	1	FILTER ELEMENT-BREATHER (FUEL CAP)	
	5	1	*165-2273*	1	VALVE GP-SHUTOFF (FUEL DRAIN)	
		1	**6V-7238**	1	VALVE-SHUTOFF	
		1	**3K-0360**	1	SEAL-O-RING	
	6	1	**170-3528**	1	ADAPTER	
	7	1	**306-8127**	1	ADAPTER	
	8	1	**229-9291**	1	LINE AS-FUEL	
	9	1	**279-0122**	1	TANK-FUEL	
	10	1	**239-5812**	1	SENDER AS-FUEL LEVEL	
		1	**102-8802**	1	KIT-RECEPTACLE (2-PIN)	
					(INCLUDES RECEPTACLE AS & WEDGE)	
		1	**186-3735**	2	PIN-CONNECTOR (16-GA TO 18-GA)	
M	11	1	**8T-0289**	10	BOLT (M5X0.8X20-MM)	
	12	1	**8C-6438**	1	SCREW-PAN HEAD (6-20X12.7-MM)	
	13	1	**8T-0328**	10	WASHER-HARD (5.5X10X1-MM THK)	

M - METRIC PART

238-8563 **TANK GP-FUEL (*contd.*)** **i03431738**

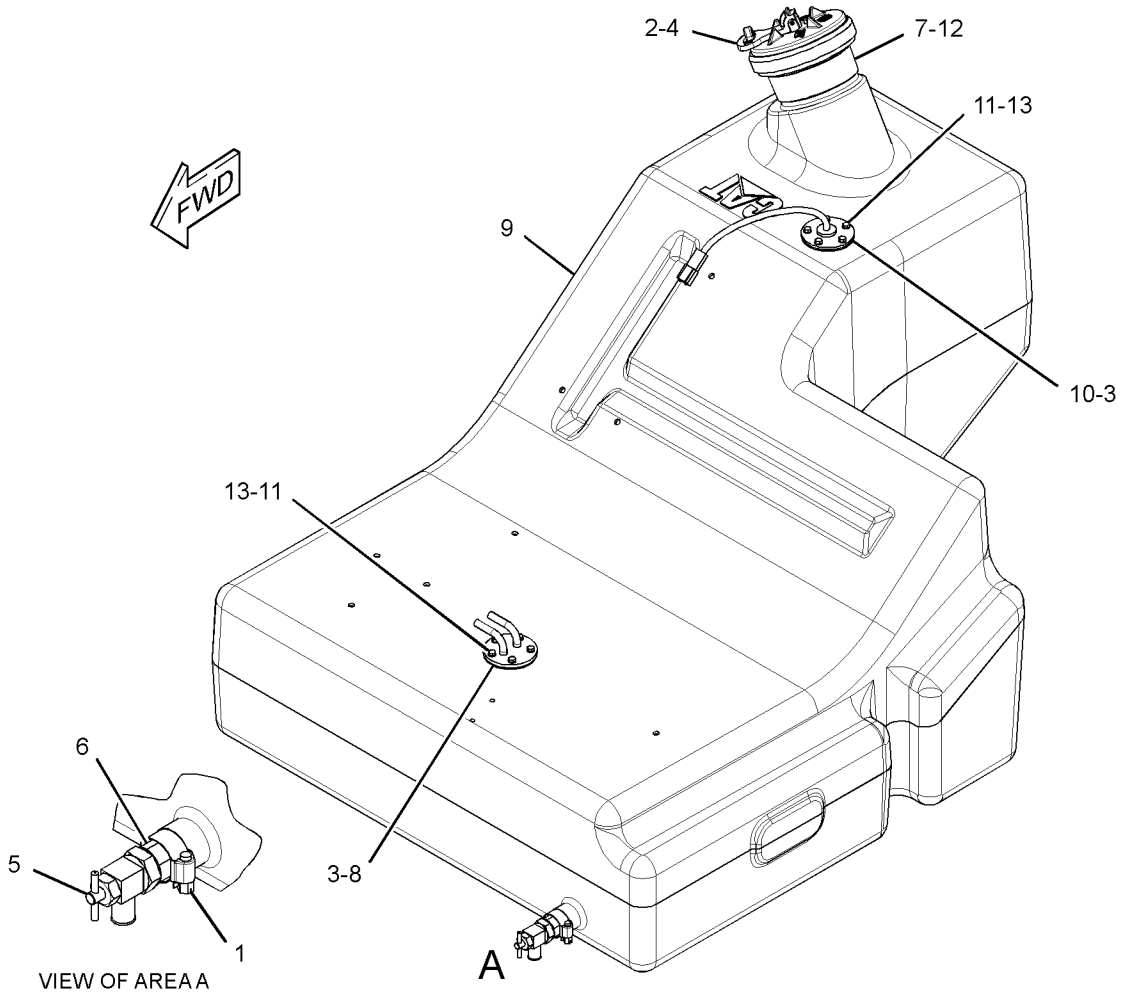

GRAPHIC #1 **<END>** g01455302

3E-6328 ALARM GP

S/N: TJL1-UP

PART OF 224-1152, 243-5693 PANEL GP-INSTRUMENT

AN ATTACHMENT

SMCS-7400, 7402, 7406, 7407, 7429 **i02528659**

NOTE	REF NO	GRAPHIC REF	PART NUMBER	QTY	PART NAME 1 2 3 4 5 6 (PRODUCT LEVEL)	SEE PAGE
	1	1	**102-8802**	1	KIT-RECEPTACLE (2-PIN)	
					(INCLUDES RECEPTACLE AS & WEDGE)	
	2	1	**186-3735**	2	PIN-CONNECTOR (16-GA TO 18-GA)	
	3	1	**3E-3365**	1	WEDGE-RECEPTACLE LOCK (2-PIN)	

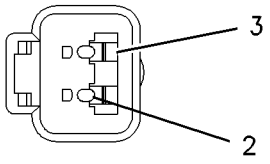

VIEW A–A

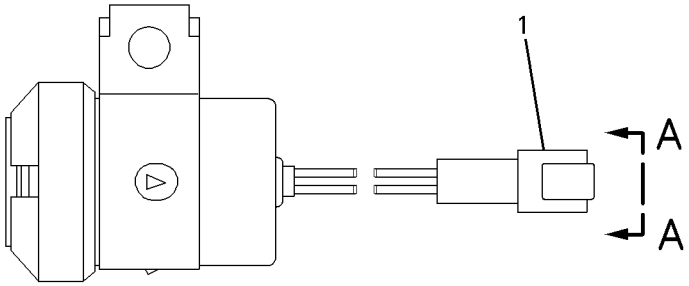

GRAPHIC #1 **<END>** g00826023

244-1090 ALARM GP

S/N: TJL1-UP

PART OF 220-8549 WARNING GP-BACKUP

SMCS-7400, 7402, 7406, 7407, 7429 **i03034287**

NOTE	REF NO	GRAPHIC REF	PART NUMBER	QTY	PART NAME 1 2 3 4 5 6 (PRODUCT LEVEL)	SEE PAGE
E	1	1	**9X-1813**		SLEEVE (31-CM)	
	2	1	**186-3735**	1	PIN-CONNECTOR (16-GA TO 18-GA)	
	3	1	**102-8802**	1	KIT-RECEPTACLE (2-PIN)	
	4	1	**102-8802**	1	KIT-RECEPTACLE (2-PIN)	
					(EACH INCLUDES RECEPTACLE AS & WEDGE)	
D	5	1	**5P-5623**		WIRE-ELECTRICAL (16-GA, BLACK) (0.4-M)	
D	6	1	**5P-5623**		WIRE-ELECTRICAL (16-GA, BLACK) (0.4-M)	

D - ORDER BY THE METER
E - ORDER BY THE CENTIMETER

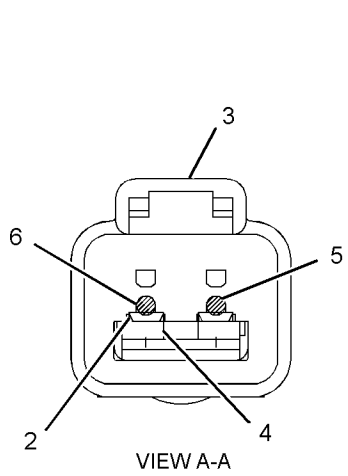

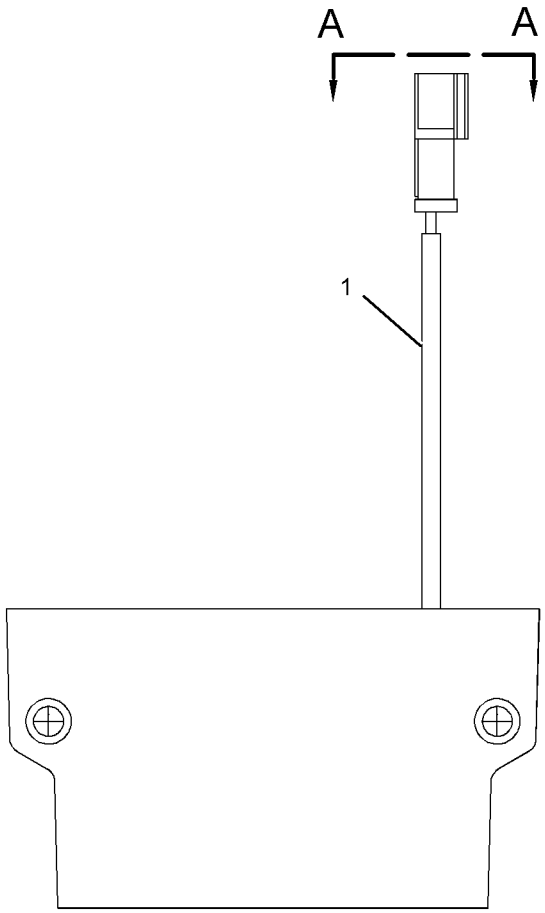

GRAPHIC #1 **<END>** g01213073

233-9533 ALTERNATOR GP-CHARGING

S/N: CRS1-UP; CST1-UP

PART OF 297-4055, 390-5113 ENGINE AR-PRIMARY

SMCS-1405 **i03948004**

NOTE	REF NO	GRAPHIC REF	PART NUMBER	QTY	PART NAME 1 2 3 4 5 6 (PRODUCT LEVEL)	SEE PAGE
	1	1	**6B-0933**	1	SPACER (10.31X19.05X6.35-MM THK)	
M	2	1	**6I-0260**	1	BOLT (M8X1.25X25-MM)	
M	3	1	**6I-0454**	1	BOLT (M10X1.5X70-MM)	
	4	1	**6I-0594**	1	NUT (M10X1.5-THD)	
	5	1	**067-6366**	1	WASHER	
	6	1	**359-9666**	1	BOLT-FLANGE HEAD	
	7	1	**113-6349**	1	NUT (M8X1.25-THD)	
M	8	1	**140-8783**	2	BOLT (M10X1.5X45-MM)	
	9	1	**346-9826**	1	ALTERNATOR GP-CHARGING	
	10	1	**233-9530**	1	BRACKET	
	11	1	**233-9531**	1	LEVER-ADJUSTING	
	12	1	**233-9532**	1	PULLEY-ALTERNATOR	

M - METRIC PART

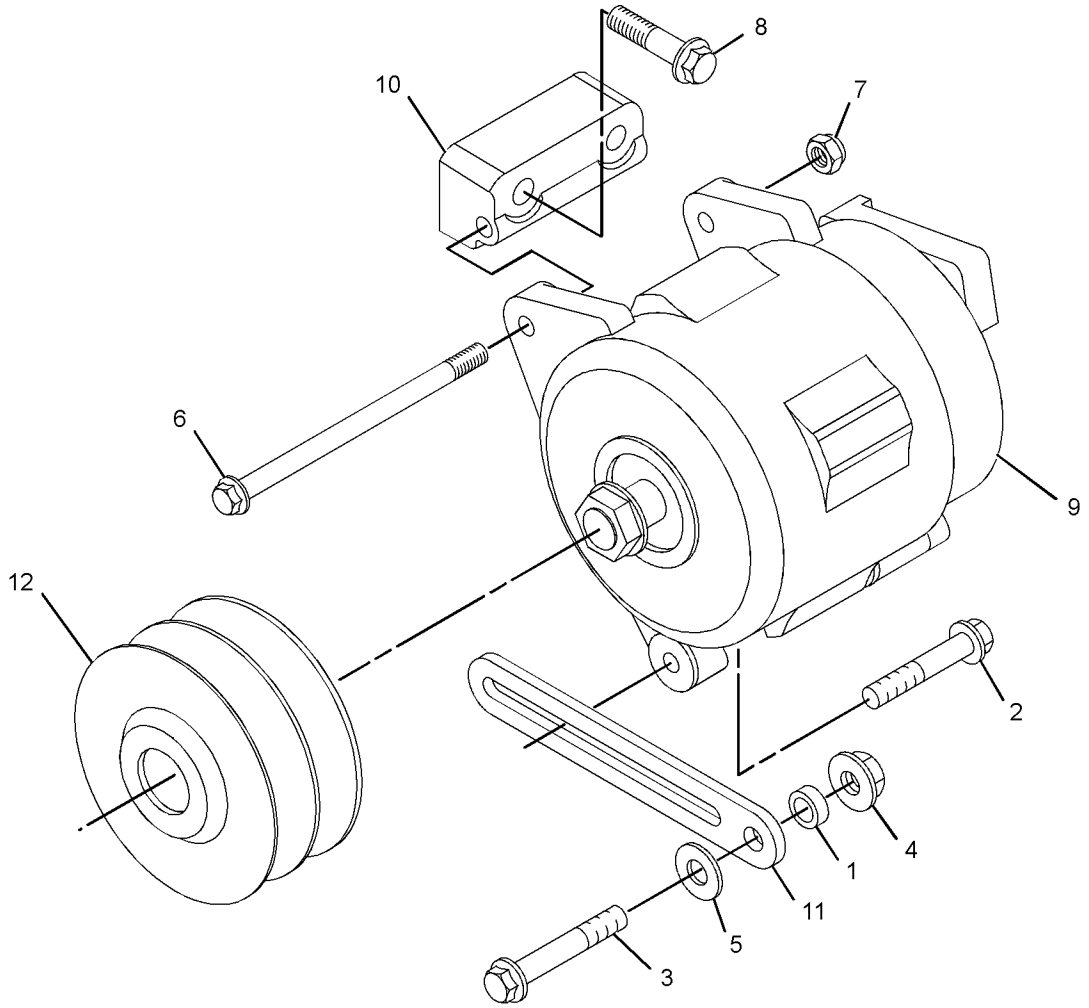

GRAPHIC #1 **<END>** g02066422

238-8682 BATTERY & WIRING GP

S/N: TJL1-UP

PART OF 238-8680 ELECTRICAL AR

SMCS-1401, 1402, 1408 **i03034294**

NOTE	REF NO	GRAPHIC REF	PART NUMBER	QTY	PART NAME 1 2 3 4 5 6 (PRODUCT LEVEL)	SEE PAGE
	1	1	**1G-9960**	12	CLAMP	
	2	1	**3E-8320**	1	PLATE-INSTRUCTION (BATTERY)	
	3	1	**3S-2093**	1	STRAP-CABLE	
	4	1	**5P-7177**	1	RETAINER	
	5	1	**6W-6005**	1	HOLD-DOWN-BATTERY	
	6	1	**7V-5628**	6	PLATE	
	7	1	**9G-8909**	1	COVER-TERMINAL (BLACK)	
	8	1	**038-9317**	2	TREAD-NONSKID	
	9	1	**111-7758**	1	ROD	
	10	1	**128-0314**	1	CABLE AS	
E		1	**5P-0761**		CABLE (00-GA, RED) (29-CM)	
		1	**9G-0002**	1	COVER AS-TERMINAL (RED)	
		1	**9G-0005**	1	COVER AS-TERMINAL (BLACK)	
		1	**8C-5918**	1	TERMINAL AS (NEGATIVE)	
		1	**8T-9756**	1	TERMINAL AS (POSITIVE)	
	11	1	**143-1646**	1	CABLE AS	
E		1	**5P-0747**		CABLE (00-GA, BLACK) (32-CM)	
		1	**1S-7252**	1	TERMINAL-CABLE (00-GA, 3/8-IN SCREW)	
		1	**7N-5274**	1	COVER AS-TERMINAL (BLACK)	
		1	**8L-8413**	1	STRAP-CABLE	
		1	**9G-8909**	1	COVER-TERMINAL (BLACK)	
		1	**3S-6050**	1	TERMINAL AS-BATTERY (NEGATIVE)	
		1	**1M-6119**	1	BOLT (5/16-18X1.375-IN)	
		1	**1M-6120**	1	NUT (5/16-18-THD)	
	12	1	**197-8932**	1	MAT	
	13	1	**9U-1950**	1	CABLE AS	
E		1	**5P-0761**		CABLE (00-GA, RED) (178-CM)	
		1	**1S-7251**	1	TERMINAL-CABLE (00-GA, 1/2-IN SCREW)	
		1	**8N-0869**	1	COVER-TERMINAL (RED)	
		1	**8N-1725**	1	COVER AS-TERMINAL (RED)	
		1	**8L-8413**	1	STRAP-CABLE	
		1	**3S-6049**	1	TERMINAL AS-BATTERY (POSITIVE)	
		1	**1M-6119**	1	BOLT (5/16-18X1.375-IN)	
		1	**1M-6120**	1	NUT (5/16-18-THD)	
	14	1	**217-3627**	1	PLATE	
	15	1	**227-5446**	1	CABLE AS	
E		1	**5P-0744**		CABLE (00-GA, BLACK) (17-CM)	
		1	**1S-7251**	1	TERMINAL-CABLE (00-GA, 1/2-IN SCREW)	
		1	**1S-7252**	1	TERMINAL-CABLE (00-GA, 3/8-IN SCREW)	
	16	1	**3T-5760**	2	BATTERY GP (12-VOLT, 750-CCA)	
	17	1	**5P-4115**	2	WASHER-HARD (7.2X19X2-MM THK)	
	18	1	**5P-4116**	3	WASHER-HARD (8.8X20.5X2-MM THK)	
M	19	1	**8T-4138**	2	BOLT (M6X1X20-MM)	
Y	20	1	**7N-0718**	1	SWITCH GP-DISCONNECT (BATTERY)	163
M	21	1	**8C-8451**	12	BOLT (M6X1X40-MM)	
M	22	1	**8T-0389**	1	LOCKNUT (M10X1.5-THD)	
	23	1	**8T-4222**	1	WASHER-PLATED (11X32X2.5-MM THK)	
	24	1	**8T-4223**	1	WASHER-HARD (13.5X25.5X3-MM THK)	
M	25	1	**8T-4244**	1	NUT (M12X1.75-THD)	
M	26	1	**9X-2616**	3	SCREW-SOCKET (M8X1.25X16-MM)	

E - ORDER BY THE CENTIMETER
M - METRIC PART
Y - SEPARATE ILLUSTRATION

238-8682 **BATTERY & WIRING GP (*contd.*)** **i03034294**

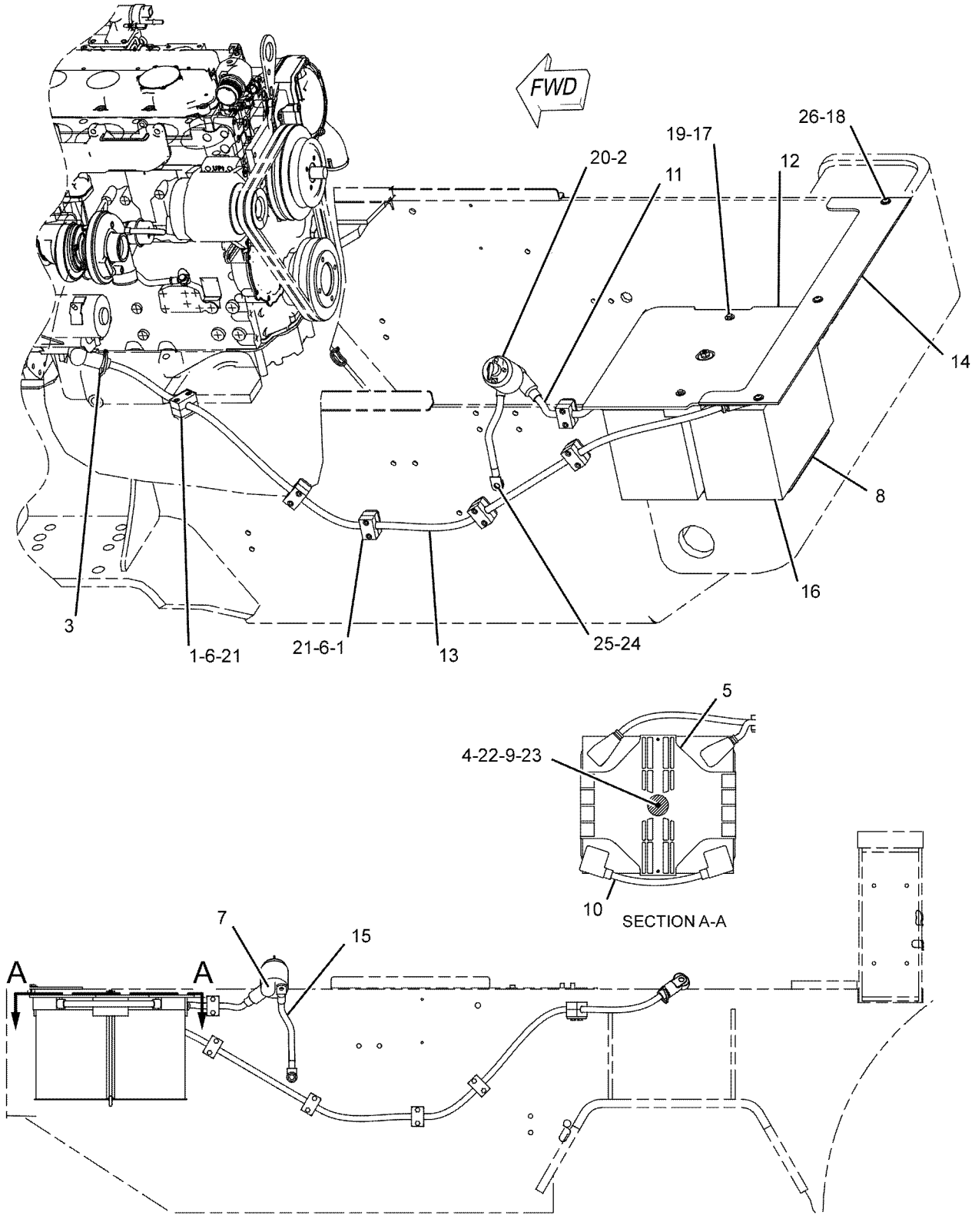

LEFT SIDE VIEW

GRAPHIC #1 **<END>** g01047680

240-5535 CONVERTER GP-ELECTRICAL

S/N: CRS1-UP; CST1-UP

PART OF 297-4055 ENGINE AR-PRIMARY

SMCS-1421 **i03047521**

NOTE	REF NO	GRAPHIC REF	PART NUMBER	QTY	PART NAME 1 2 3 4 5 6 (PRODUCT LEVEL)	SEE PAGE
	1	1	**300-5183**	1	RESISTOR AS (24-VOLT)	

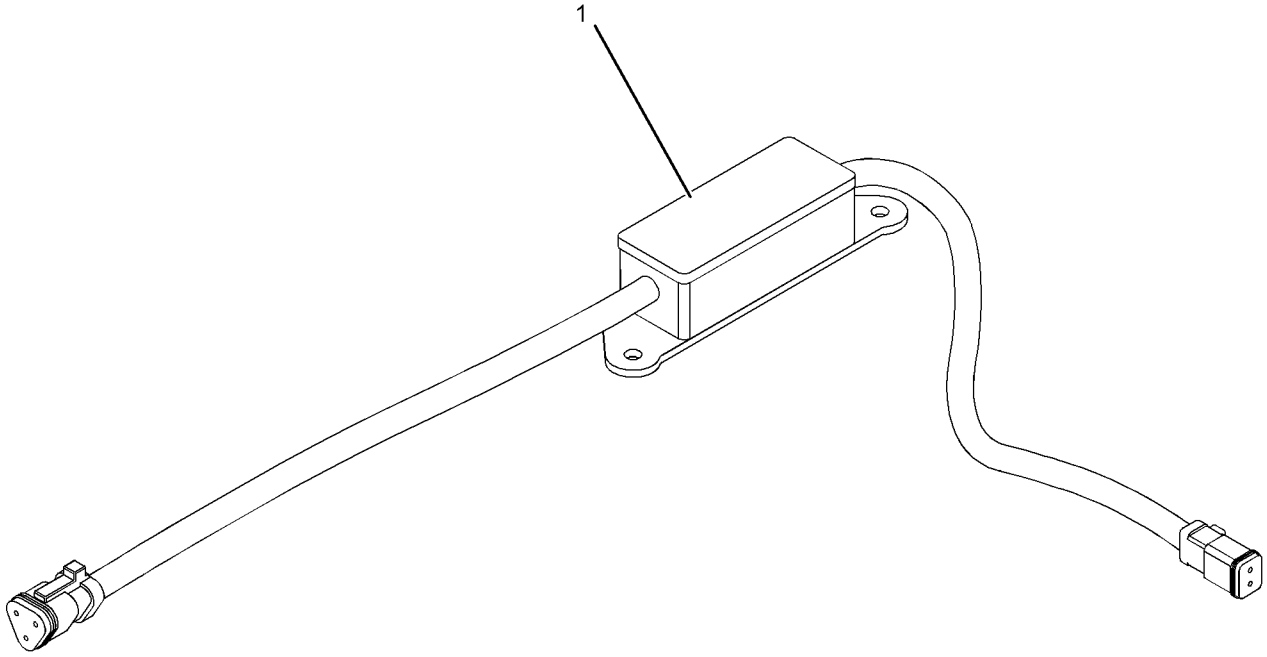

GRAPHIC #1

<END>

g01029709

238-8680 ELECTRICAL AR

S/N: TJL1-UP

PART OF 316-9934 GENERAL AR

SMCS-1408 **i03034202**

NOTE	PART NUMBER	QTY	PART NAME 1 2 3 4 5 6 (PRODUCT LEVEL)	SEE PAGE
Y	*238-8682*	1	BATTERY & WIRING GP	123
Y	*220-8549*	1	WARNING GP-BACKUP	170
Y	*222-4921*	1	WIRING GP-MACHINE	173

Y - SEPARATE ILLUSTRATION

<END>

233-9834 GLOW PLUG GP

S/N: CRS1-UP; CST1-UP

PART OF 297-4055, 390-5113 ENGINE AR-PRIMARY

SMCS-1412 **i04948453**

NOTE	REF NO	GRAPHIC REF	PART NUMBER	QTY	PART NAME 1 2 3 4 5 6 (PRODUCT LEVEL)	SEE PAGE
	1	1	**368-3151**	1	BUS BAR GP	
	1A	1	**369-2472**	1	SPACER	
	2	1	**226-8770**	4	GLOW PLUG (24-VOLT)	
	3	1	**232-3126**	1	CLIP	

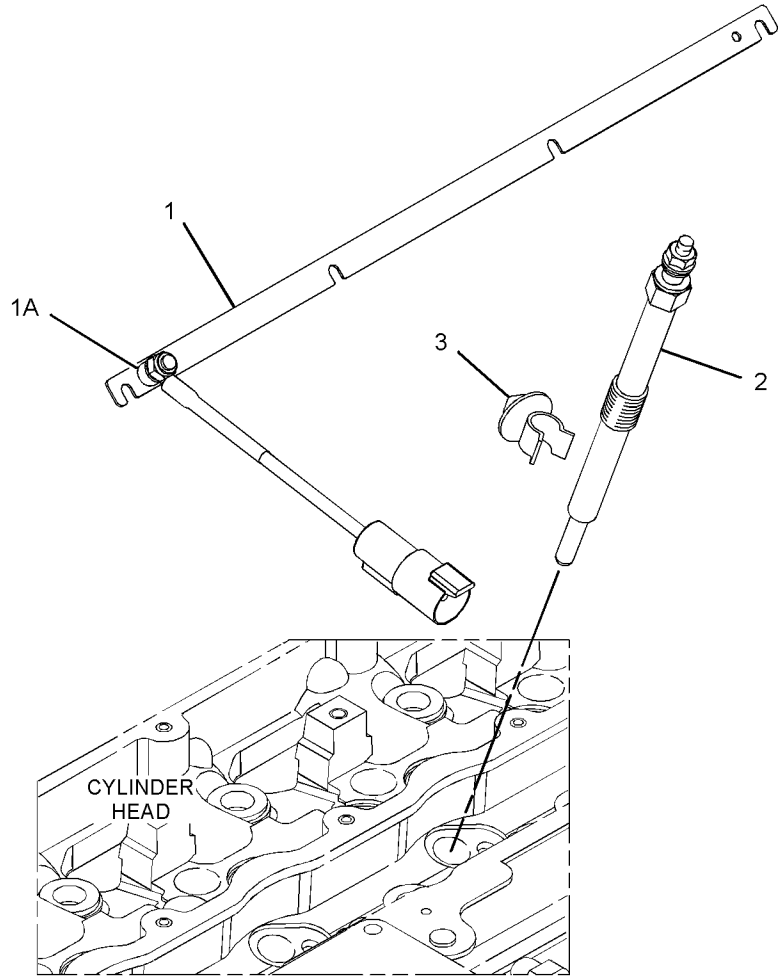

GRAPHIC #1 **<END>** g03139739

419-1800 HARNESS AS-HEATER & AIR COND

S/N: TJL1-UP
PART OF 227-0063 WIRING GP-AIR CONDITIONER
AN ATTACHMENT

SMCS-1408 **i05264593**

NOTE	PART NUMBER	QTY	PART NAME 1 2 3 4 5 6 (PRODUCT LEVEL)	SEE PAGE
	8T-8729	2	PIN-CONNECTOR (16-GA TO 18-GA)	
	155-2270	3	KIT-CONNECTING PLUG (2-PIN)	
			(EACH PLUG KIT INCLUDES PLUG AS, WEDGE & INTERFACE SEAL)	
	102-8802	1	KIT-RECEPTACLE (2-PIN)	
			(INCLUDES RECEPTACLE AS & WEDGE)	
	8T-8730	6	SOCKET-CONNECTOR (16-GA TO 18-GA)	
	7K-1181	1	STRAP-CABLE	

<END>

267-3060 HARNESS AS-PANEL

S/N: TJL2532-UP
PART OF 389-9450 PANEL GP-INSTRUMENT
AN ATTACHMENT

SMCS-1408, 7451 **i05371404**

NOTE	PART NUMBER	QTY	PART NAME 1 2 3 4 5 6 (PRODUCT LEVEL)	SEE PAGE
	117-2979	1	CONNECTOR-RECEPTACLE	
	117-2978	6	CONTACT-CONNECTION	
	9X-3401	26	PIN-CONNECTOR (16-GA TO 18-GA)	
			—OR—	
	126-1767	26	PIN-CONNECTOR (14-GA TO 16-GA)	
	155-2265	3	KIT-CONNECTING PLUG (8-PIN)	
	155-2270	1	KIT-CONNECTING PLUG (2-PIN)	
	155-2271	1	KIT-CONNECTING PLUG (4-PIN)	
			(EACH PLUG KIT INCLUDES PLUG AS, WEDGE & INTERFACE SEAL)	
	8T-8737	15	PLUG-SEAL	
	102-8806	2	KIT-RECEPTACLE (8-PIN)	
	102-8801	1	KIT-RECEPTACLE (12-PIN)	
			(EACH RECEPTACLE KIT INCLUDES RECEPTACLE AS & WEDGE)	
	200-2213	1	HARNESS AS-WIRING (3-PIN, GAUGE)	
	194-5226	17	WIRE AS (16-GA)	
			—OR—	
	194-5227	17	WIRE AS (14-GA)	
	5P-4571	5	TERMINAL-BLADE (14-GA TO 16-GA)	
	5P-2321	16	TERMINAL-FORK (14-GA TO 16-GA, NO. 6 SCREW)	

<END>

139-3280 HARNESS AS-SENSOR–VIBRATORY

S/N: TJL1-UP
PART OF 204-1328 GAUGE GP-VIBRATORY
AN ATTACHMENT

SMCS-1408 **i05136813**

NOTE	PART NUMBER	QTY	PART NAME 1 2 3 4 5 6 (PRODUCT LEVEL)	SEE PAGE
G	**122-6867**		HOSE (129-IN)	
	8T-8729	2	PIN-CONNECTOR (16-GA TO 18-GA)	
	102-8802	1	KIT-RECEPTACLE (2-PIN)	
			(INCLUDES RECEPTACLE AS & WEDGE)	
	2L-8076	2	TERMINAL-RING (14-GA TO 16-GA, NO. 10 SCREW)	
E	**8T-5346**		TUBE-HEAT SHRINK (19.1-MM DIA) (16-CM)	
D	**6V-2689**		TUBE-HEAT SHRINK (6.35-MM DIA) (0.1-M)	

D - ORDER BY THE METER
E - ORDER BY THE CENTIMETER
G - ORDER BY THE INCH

<END>

389-3746 HARNESS AS-WIRING

S/N: TJL1-UP
PART OF 391-5551 KIT-FUEL SYSTEM PARTS, 222-4921 WIRING GP-MACHINE

SMCS-1408 **i05076609**

NOTE	PART NUMBER	QTY	PART NAME 1 2 3 4 5 6 (PRODUCT LEVEL)	SEE PAGE
	113-8490	1	FUSE (10-AMPERE)	
	9X-3401	2	PIN-CONNECTOR (16-GA TO 18-GA)	
	9X-1054	1	PLUG AS-CONNECTOR (4-PIN)	
	155-2270	2	KIT-CONNECTING PLUG (2-PIN)	
			(EACH PLUG KIT INCLUDES PLUG AS, WEDGE & INTERFACE SEAL)	
	281-8803	1	PLUG AS-CONNECTOR (3-PIN)	
	264-7030	1	SEAL-CONNECTOR	
	8T-8737	1	PLUG-SEAL	
	102-8803	1	KIT-RECEPTACLE (3-PIN)	
			(INCLUDES RECEPTACLE AS & WEDGE)	
	194-5226	7	WIRE AS (16-GA)	
			–OR–	
	194-5227	7	WIRE AS (14-GA)	
	162-4171	3	TERMINAL AS (18-GA TO 20-GA)	
			(EACH INCLUDES)	
	5P-1475	1	TERMINAL-FORK (14-GA TO 16-GA, NO. 8 SCREW)	
E	**125-7875**		TUBE-HEAT SHRINK (7.44-MM DIA) (4-CM)	
	9X-1056	4	TERMINAL-RECEPTACLE (14-GA TO 16-GA)	
	2L-8077	1	TERMINAL-RING (14-GA TO 16-GA, 1/4-IN SCREW)	
E	**125-7874**		TUBE-HEAT SHRINK (5.72-MM DIA) (10-CM)	
E	**125-7875**		TUBE-HEAT SHRINK (7.44-MM DIA) (10-CM)	

E - ORDER BY THE CENTIMETER

<END>

9X-1439 LAMP GP-FLOOD–24-VOLT

S/N: TJL1-UP

SMCS-1434 **i04934482**

NOTE	REF NO	GRAPHIC REF	PART NUMBER	QTY	PART NAME 1 2 3 4 5 6 (PRODUCT LEVEL)	SEE PAGE
	1	1	**9X-4244**	4	SCREW-SPECIAL (M4X1.79X25-MM)	
	2	1	**386-1294**	1	LENS AS (FLOODLIGHT)	
	3	1	**9X-4243**	1	SEAL	
	4	1	**351-9918**	1	LAMP-HALOGEN (24-VOLT, 70-WATT)	
M	5	1	**8T-0337**	2	SCREW-MACHINE (M4X0.7X12-MM)	
FM			**8T-4133**	1	NUT (M10X1.5-THD)	
F			**8T-4121**	1	WASHER-HARD (11X21X2.5-MM THK)	

F - NOT SHOWN
M - METRIC PART

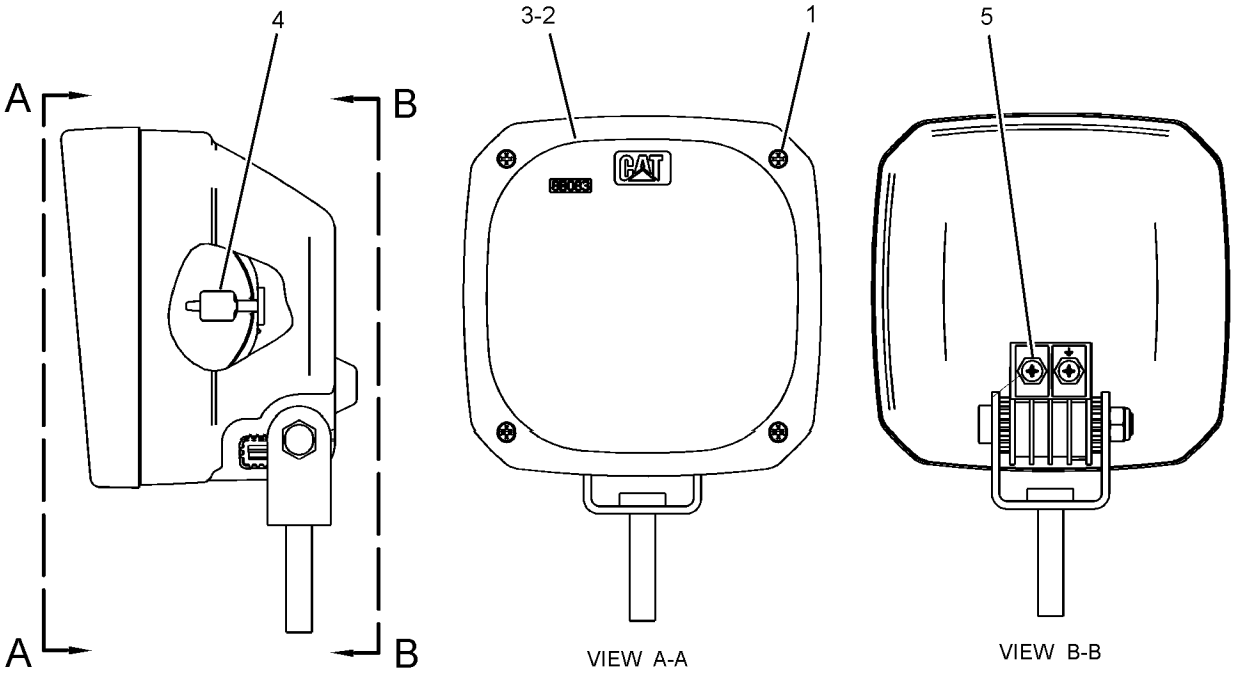

GRAPHIC #1 **<END>** g03112416

9X-4381 LAMP GP-FLOOD—SUSPENDED

S/N: TJL1-UP
24-VOLT
FIELD REPLACEMENT ORDER 9X-1439—PAGE: 130, 1- 8T-4133 NUT, 1- 8T-4121 WASHER-HARD
OPTIONAL FIELD REPLACEMENT ORDER 171-2065—PAGE: 134, 1-165-0699 KIT-MOUNTING BRACKET, 1-155-2270 KIT-CONNECTING PLUG, 2- 8T-8730 SOCKET-CONNECTOR
PART OF 226-7758 LIGHTING GP-FLOOD
AN ATTACHMENT
TYPE 1

SMCS-1434 **i03052515**

NOTE	REF NO	GRAPHIC REF	PART NUMBER	QTY	PART NAME 1 2 3 4 5 6 (PRODUCT LEVEL)	SEE PAGE
	1	1	**9X-4244**	4	SCREW-SPECIAL (M4X1.79X25-MM)	
	2	1	**9X-4174**	1	LENS AS (FLOODLIGHT)	
M	3	1	**8T-0337**	2	SCREW-MACHINE (M4X0.7X12-MM)	
	4	1	**9X-3455**	1	BODY AS-LAMP	
	5	1	**9X-3463**	1	LAMP-HALOGEN (24-VOLT, 70-WATT) (FLOODLIGHT)	
	6	1	**9X-4243**	1	SEAL	

M - METRIC PART

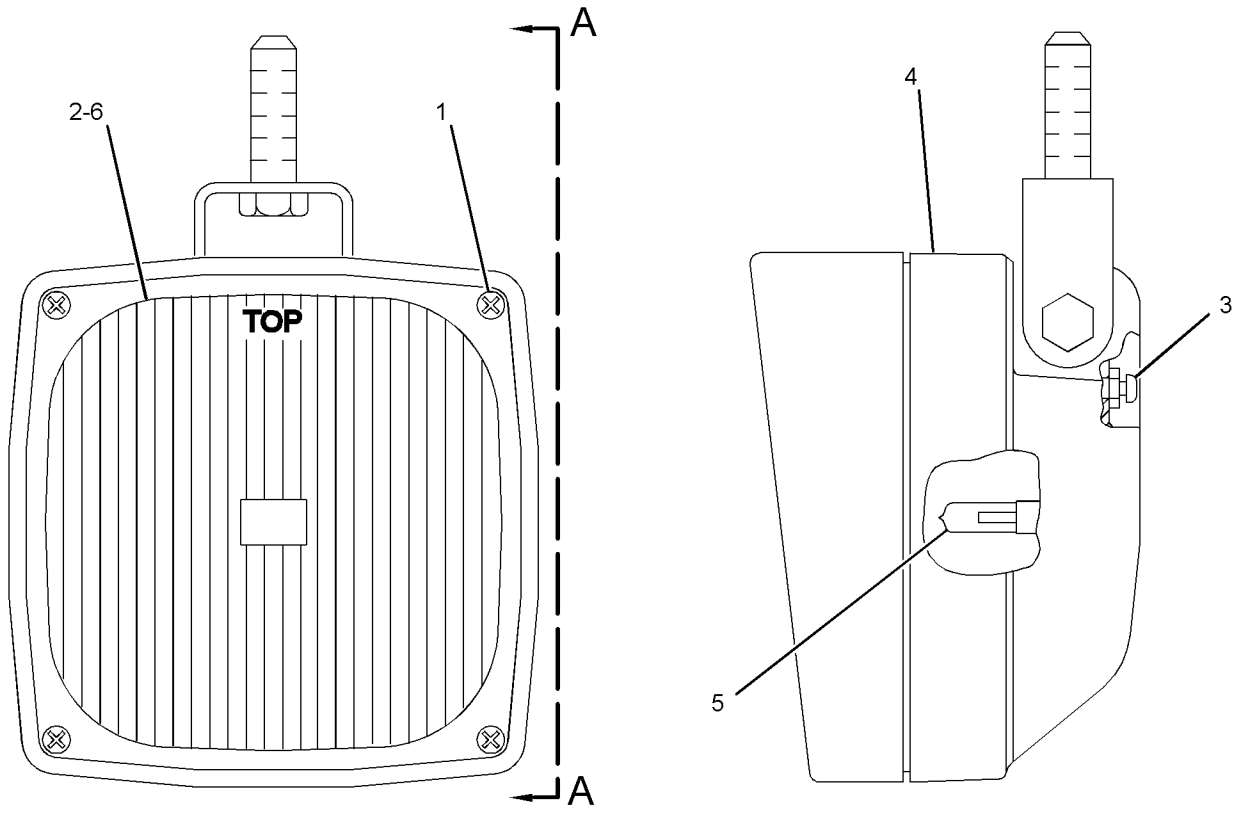

VIEW A-A

GRAPHIC #1 **<END>** g01552473

9X-4381 LAMP GP-FLOOD–SUSPENDED

S/N: TJL1-UP
24-VOLT
FIELD REPLACEMENT ORDER 9X-1439–PAGE: 130, 1- 8T-4133 NUT, 1- 8T-4121 WASHER-HARD
OPTIONAL FIELD REPLACEMENT ORDER 171-2065–PAGE: 134, 1-165-0699 KIT-MOUNTING BRACKET, 1-155-2270 KIT-CONNECTING PLUG, 2- 8T-8730 SOCKET-CONNECTOR
PART OF 226-7758 LIGHTING GP-FLOOD
AN ATTACHMENT
TYPE 2

SMCS-1434 **i05222155**

NOTE	REF NO	GRAPHIC REF	PART NUMBER	QTY	PART NAME 1 2 3 4 5 6 (PRODUCT LEVEL)	SEE PAGE
	1	1	**9X-4244**	4	SCREW-SPECIAL (M4X1.79X25-MM)	
	2	1	**9X-4243**	1	SEAL	
M	3	1	**8T-0337**	2	SCREW-MACHINE (M4X0.7X12-MM)	
C	4	1	**351-9918**	1	LAMP-HALOGEN (24-VOLT, 70-WATT)	
C	5	1	**386-1294**	1	LENS AS (FLOODLIGHT)	

C - CHANGE FROM PREVIOUS TYPE
M - METRIC PART

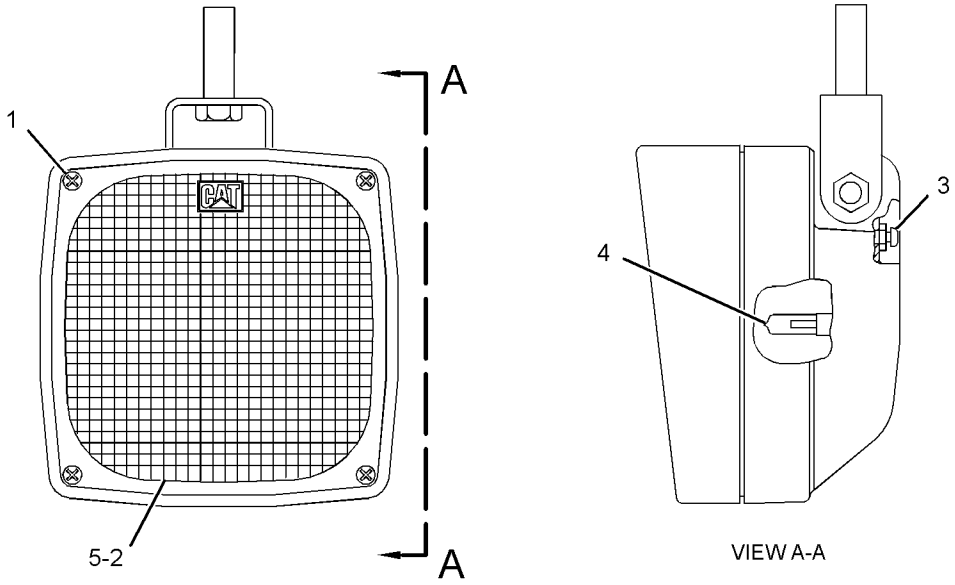

GRAPHIC #1 **<END>** g03350850

107-6689 LAMP GP-FLOOD

S/N: TJL1-UP
24-VOLT
PART OF 234-9980 LIGHTING GP-FLOOD
AN ATTACHMENT

SMCS-1434 **i03079362**

NOTE	REF NO	GRAPHIC REF	PART NUMBER	QTY	PART NAME 1 2 3 4 5 6 (PRODUCT LEVEL)	SEE PAGE
	1	1	**228-6056**	4	SCREW (4-32X1.26-IN)	
	2	1	**107-5853**	1	LENS AS (FLOODLIGHT)	
	3	1	**107-5852**	1	SEAL	
	4	1	**107-5854**	1	BODY AS-LAMP	
	5	1	**9X-3463**	1	LAMP-HALOGEN (24-VOLT, 70-WATT) (FLOODLIGHT)	
M	6	1	**8T-0337**	2	SCREW-MACHINE (M4X0.7X12-MM)	

M - METRIC PART

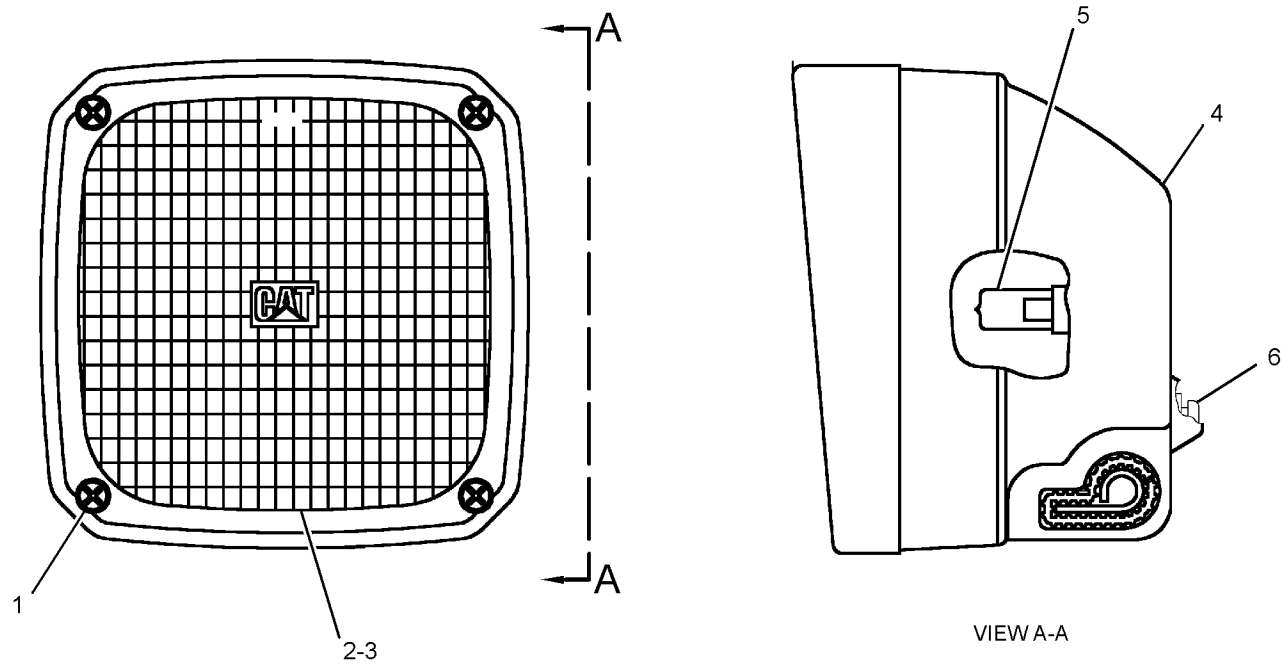

GRAPHIC #1 **<END>** g01554621

171-2065 LAMP GP-FLOOD

S/N: TJL1-UP
24-VOLT
FIELD REPLACEMENT FOR 9X-4381—PAGE: 131
PART OF 226-7758 LIGHTING GP-FLOOD

SMCS-1434 **i03640940**

NOTE	REF NO	GRAPHIC REF	PART NUMBER	QTY	PART NAME 1 2 3 4 5 6 (PRODUCT LEVEL)	SEE PAGE
	1	1	**9X-3463**	1	LAMP-HALOGEN (24-VOLT, 70-WATT) (FLOODLIGHT)	
	2	1	**162-5372**	1	BODY AS-LAMP	
	3	1	**336-7235**	1	LENS AS (FLOODLIGHT)	
	4	1	**158-0252**	1	BEZEL	
	5	1	**188-8849**	2	CLAMP	
	6	1	**186-3735**	2	PIN-CONNECTOR (16-GA TO 18-GA)	
	8	1	**102-8802**	1	KIT-RECEPTACLE (2-PIN)	
					(INCLUDES RECEPTACLE AS & WEDGE)	

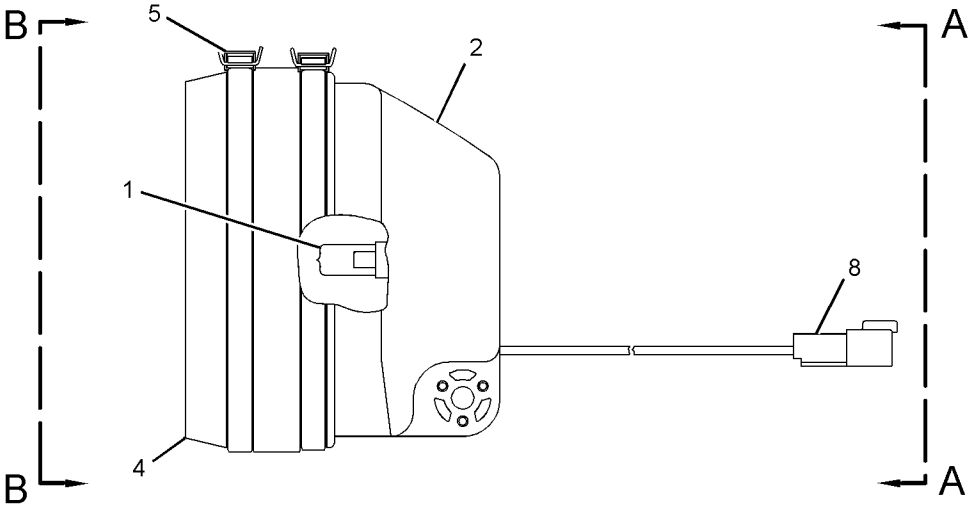

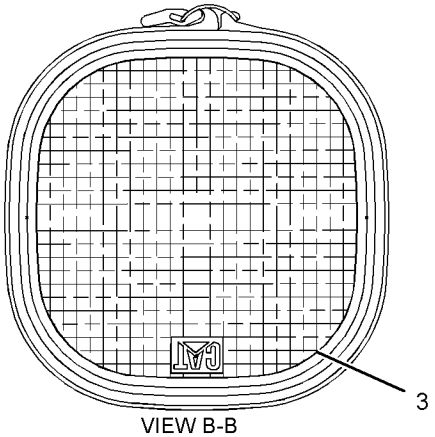

VIEW B-B

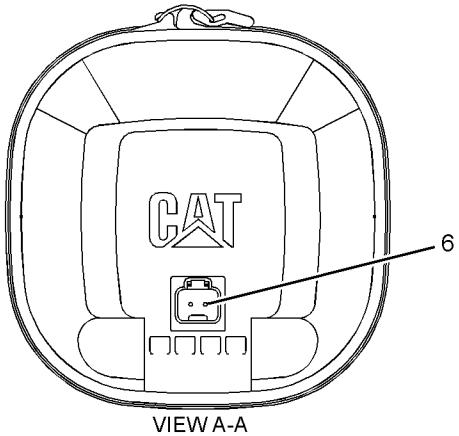

VIEW A-A

GRAPHIC #1 **<END>** g01838757

219-6487 LAMP GP-FLOOD–CAB

S/N: TJL1-UP
24-VOLT, 65-WATT
PART OF 204-1321 LIGHTING GP-FLOOD
AN ATTACHMENT

SMCS-1434 **i05287559**

NOTE	REF NO	GRAPHIC REF	PART NUMBER	QTY	PART NAME 1 2 3 4 5 6 (PRODUCT LEVEL)	SEE PAGE
	1	1	**351-9918**	1	LAMP-HALOGEN (24-VOLT, 70-WATT)	
M	2	1	**8T-6912**	1	BOLT (M8X1.25X50-MM)	
M	3	1	**6V-9189**	1	LOCKNUT (M8X1.25-THD)	
	4	1	**8T-4224**	2	WASHER-HARD (8.8X16X2-MM THK)	
	5	1	**9X-4244**	2	SCREW-SPECIAL (M4X1.79X25-MM)	
	6	1	**175-4291**	1	BRACKET AS	
	7	1	**202-6614**	1	LENS AS (FLOODLIGHT)	
	8	1	**175-4292**	1	BODY AS	
	9	1	**164-7556**	1	BRACKET (LAMP RETAINING)	

M - METRIC PART

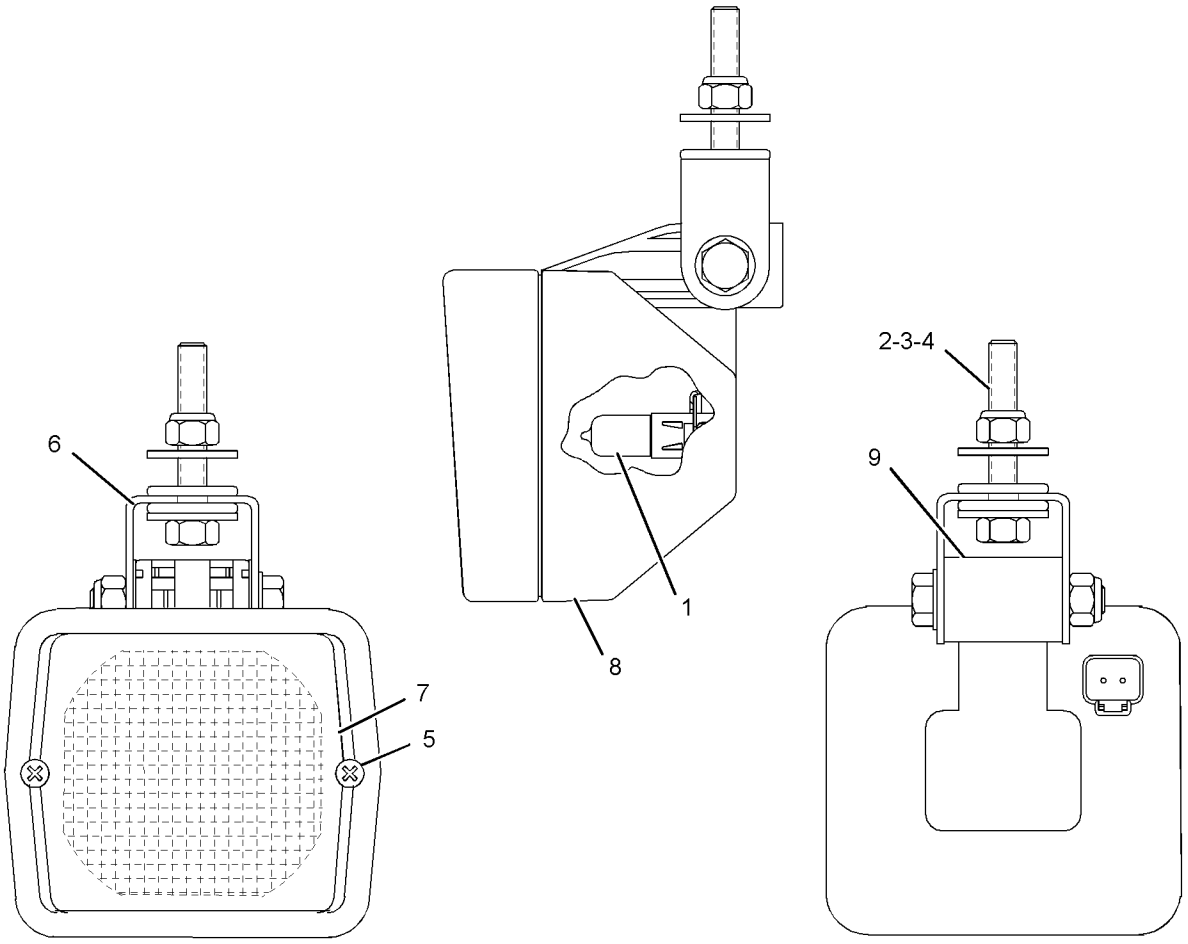

GRAPHIC #1 **<END>** g02167882

105-4849 LAMP GP-HEAD & SIGNAL

S/N: TJL1-UP

PART OF 322-3297 LIGHTING GP-SIGNAL

SMCS-1429, 1430 **i05126093**

NOTE	REF NO	GRAPHIC REF	PART NUMBER	QTY	PART NAME 1 2 3 4 5 6 (PRODUCT LEVEL)	SEE PAGE
	1	1	**9X-4244**	4	SCREW-SPECIAL (M4X1.79X25-MM)	
	2	1	**100-3251**	2	SCREW-LENS	
	3	1	**9X-9865**	1	SEAL	
	4	1	**100-3248**	1	LENS AS (HEADLIGHT)	
	5	1	**9X-3465**	1	LAMP (24-VOLT, 75/70-WATT)	
	6	1	**136-3848**	1	LENS AS (AMBER) (SIGNAL)	
M	7	1	**8T-5005**	1	BOLT (M10X1.5X70-MM)	
M	8	1	**8T-0389**	1	LOCKNUT (M10X1.5-THD)	
	9	1	**100-3253**	1	SPACER (SPHERICAL)	
	10	1	**100-3254**	1	SPACER (SPHERICAL)	
	11	1	**100-3255**	1	WASHER (SPHERICAL)	
	13	1	**8T-8729**	5	PIN-CONNECTOR (16-GA TO 18-GA)	
	14	1	**3E-3383**	1	WEDGE-RECEPTACLE LOCK (6-PIN)	
	15	1	**8T-8737**	1	PLUG-SEAL	
	16	1	**100-3245**	2	LAMP (24-VOLT)	
	17	1	**9X-4493**	1	LAMP (24-VOLT, 21-WATT) (SIGNAL)	
	18	1	**100-3250**	1	LENS (AMBER) (SIGNAL)	
	19	1	**136-3845**	1	BODY AS-LAMP	
	20	1	**102-8805**	1	KIT-RECEPTACLE (6-PIN)	
					(INCLUDES RECEPTACLE AS & WEDGE)	

M - METRIC PART

105-4849 **LAMP GP-HEAD & SIGNAL (*contd.*)** **i05126093**

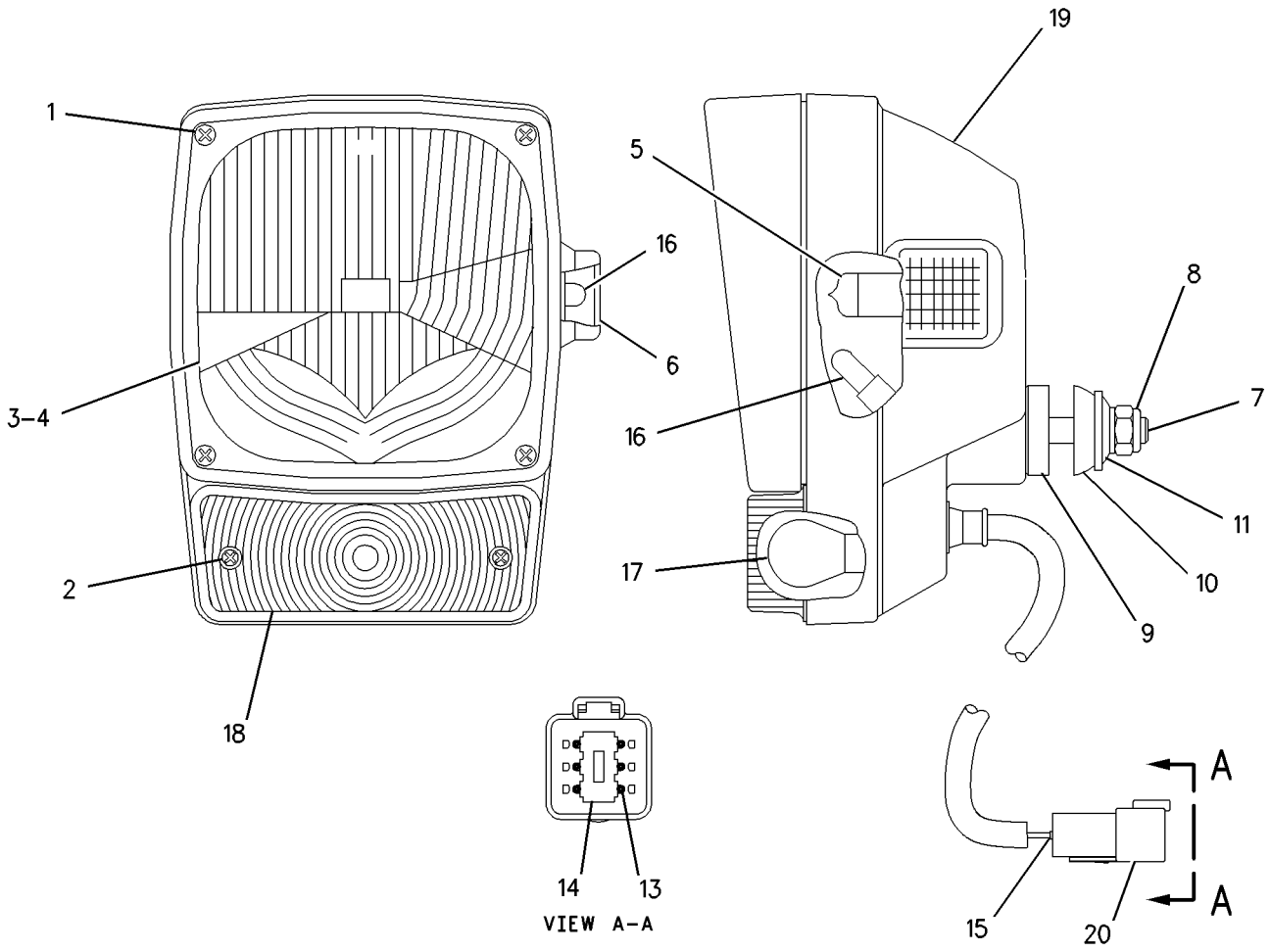

GRAPHIC #1 **<END>** g00661265

105-4850 LAMP GP-HEAD & SIGNAL

S/N: TJL1-UP

PART OF 322-3297 LIGHTING GP-SIGNAL

SMCS-1429, 1430

i05125871

NOTE	REF NO	GRAPHIC REF	PART NUMBER	QTY	PART NAME 1 2 3 4 5 6 (PRODUCT LEVEL)	SEE PAGE
	1	1	**9X-4244**	4	SCREW-SPECIAL (M4X1.79X25-MM)	
	2	1	**100-3251**	2	SCREW-LENS	
	3	1	**9X-9865**	1	SEAL	
	4	1	**100-3248**	1	LENS AS (HEADLIGHT)	
	5	1	**9X-3465**	1	LAMP (24-VOLT, 75/70-WATT) (HEAD)	
	6	1	**136-3848**	1	LENS AS (AMBER) (SIGNAL)	
M	7	1	**8T-5005**	1	BOLT (M10X1.5X70-MM)	
M	8	1	**8T-0389**	1	LOCKNUT (M10X1.5-THD)	
	9	1	**100-3253**	1	SPACER (SPHERICAL)	
	10	1	**100-3254**	1	SPACER (SPHERICAL)	
	11	1	**100-3255**	1	WASHER (SPHERICAL)	
	12	1	**102-8805**	1	KIT-RECEPTACLE (6-PIN)	
					(INCLUDES RECEPTACLE AS & WEDGE)	
	13	1	**186-3735**	5	PIN-CONNECTOR (16-GA TO 18-GA)	
	14	1	**3E-3383**	1	WEDGE-RECEPTACLE LOCK (6-PIN)	
	15	1	**8T-8737**	1	PLUG-SEAL	
	16	1	**100-3245**	2	LAMP (24-VOLT) (SIGNAL)	
	17	1	**9X-4493**	1	LAMP (24-VOLT, 21-WATT) (SIGNAL)	
	18	1	**100-3250**	1	LENS (AMBER) (SIGNAL)	
	19	1	**136-3846**	1	BODY AS-LAMP	

M - METRIC PART

105-4850 **LAMP GP-HEAD & SIGNAL (*contd.*)** **i05125871**

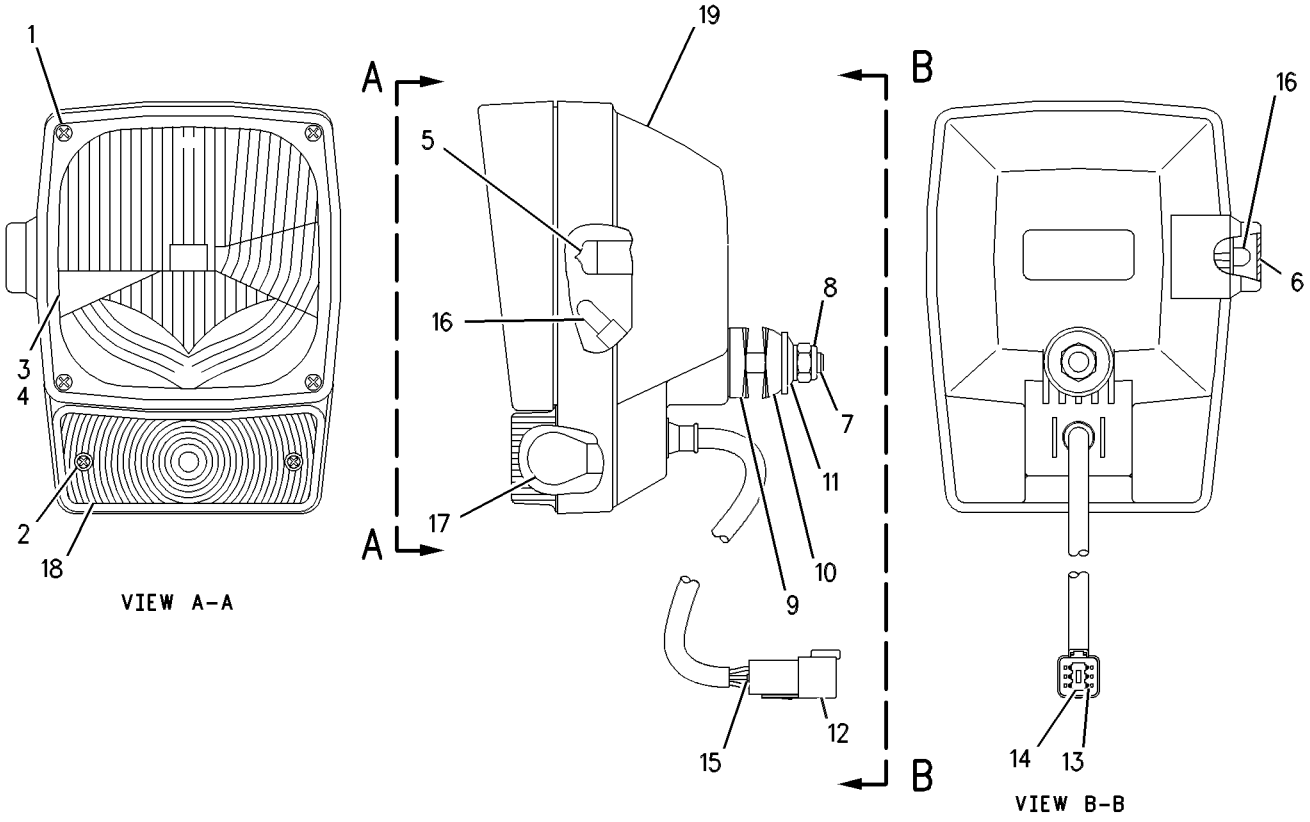

GRAPHIC #1 **<END>** g00610742

203-7625 LAMP GP-HEAD & SIGNAL—LH

S/N: TJL1-UP
24-VOLT
FIELD REPLACEMENT ORDER 105-4849—PAGE: 136
PART OF 322-3297 LIGHTING GP-SIGNAL
AN ATTACHMENT

SMCS-1429, 1430 **i05125899**

NOTE	REF NO	GRAPHIC REF	PART NUMBER	QTY	PART NAME 1 2 3 4 5 6 (PRODUCT LEVEL)	SEE PAGE
	1	1	**9X-4244**	4	SCREW-SPECIAL (M4X1.79X25-MM)	
	2	1	**100-3251**	2	SCREW-LENS	
	3	1	**9X-9865**	1	SEAL	
	4	1	**100-3249**	1	LENS AS (HIGH/LOW BEAM)	
	5	1	**9X-3465**	1	LAMP (24-VOLT, 75/70-WATT) (HIGH/LOW BEAM)	
	6	1	**136-3848**	1	LENS AS (AMBER) (TURN SIGNAL)	
M	7	1	**8T-5005**	1	BOLT (M10X1.5X70-MM)	
M	8	1	**8T-0389**	1	LOCKNUT (M10X1.5-THD)	
	9	1	**100-3253**	1	SPACER (SPHERICAL)	
	10	1	**100-3254**	1	SPACER (SPHERICAL)	
	11	1	**100-3255**	1	WASHER (SPHERICAL)	
	12	1	**102-8805**	1	KIT-RECEPTACLE (6-PIN) (HEADLAMP)	
					(INCLUDES RECEPTACLE AS & WEDGE)	
	13	1	**8T-8729**	5	PIN-CONNECTOR (16-GA TO 18-GA)	
	14	1	**3E-3383**	1	WEDGE-RECEPTACLE LOCK (6-PIN)	
	15	1	**8T-8737**	1	PLUG-SEAL	
	16	1	**100-3245**	1	LAMP (24-VOLT) (RUNNING LIGHTS)	
	16A	1	**100-3245**	1	LAMP (24-VOLT) (TURN SIGNAL)	
	17	1	**9X-4493**	1	LAMP (24-VOLT, 21-WATT) (TURN SIGNAL)	
	18	1	**100-3250**	1	LENS (AMBER) (TURN SIGNAL)	

M - METRIC PART

203-7625 **LAMP GP-HEAD & SIGNAL (*contd.*)** **i05125899**

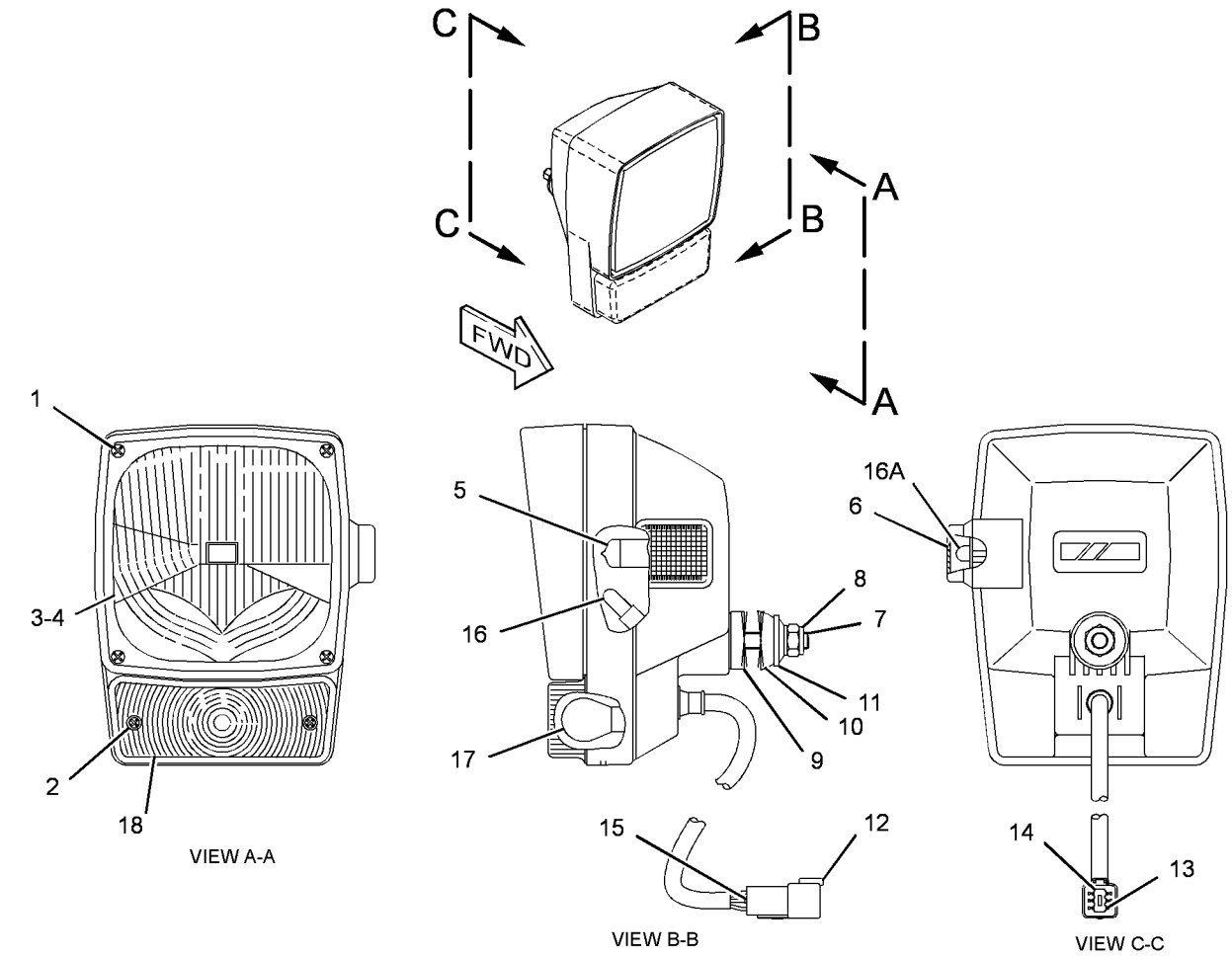

GRAPHIC #1 **<END>** g03295198

203-7626 LAMP GP-HEAD & SIGNAL—RH

S/N: TJL1-UP
24-VOLT
FIELD REPLACEMENT ORDER 105-4850—PAGE: 138
PART OF 322-3297 LIGHTING GP-SIGNAL
AN ATTACHMENT

SMCS-1429, 1430 **i05125813**

NOTE	REF NO	GRAPHIC REF	PART NUMBER	QTY	PART NAME 1 2 3 4 5 6 (PRODUCT LEVEL)	SEE PAGE
	1	1	**9X-4244**	4	SCREW-SPECIAL (M4X1.79X25-MM)	
	2	1	**100-3251**	2	SCREW-LENS	
	3	1	**9X-3465**	1	LAMP (24-VOLT, 75/70-WATT) (HIGH/LOW BEAM)	
	4	1	**100-3249**	1	LENS AS (HIGH/LOW BEAM)	
	5	1	**9X-9865**	1	SEAL	
	6	1	**136-3848**	1	LENS AS (AMBER) (TURN SIGNAL)	
M	7	1	**8T-5005**	1	BOLT (M10X1.5X70-MM)	
M	8	1	**8T-0389**	1	LOCKNUT (M10X1.5-THD)	
	9	1	**100-3253**	1	SPACER (SPHERICAL)	
	10	1	**100-3254**	1	SPACER (SPHERICAL)	
	11	1	**100-3255**	1	WASHER (SPHERICAL)	
	12	1	**102-8805**	1	KIT-RECEPTACLE (6-PIN) (HEADLAMP)	
					(INCLUDES RECEPTACLE AS & WEDGE)	
	13	1	**8T-8729**	5	PIN-CONNECTOR (16-GA TO 18-GA)	
	14	1	**3E-3383**	1	WEDGE-RECEPTACLE LOCK (6-PIN)	
	15	1	**8T-8737**	1	PLUG-SEAL	
	16	1	**100-3245**	1	LAMP (24-VOLT) (RUNNING LIGHTS)	
	16A	1	**100-3245**	1	LAMP (24-VOLT) (TURN SIGNAL)	
	17	1	**9X-4493**	1	LAMP (24-VOLT, 21-WATT) (TURN SIGNAL)	
	18	1	**100-3250**	1	LENS (AMBER) (TURN SIGNAL)	

M - METRIC PART

203-7626 **LAMP GP-HEAD & SIGNAL (*contd.*)** **i05125813**

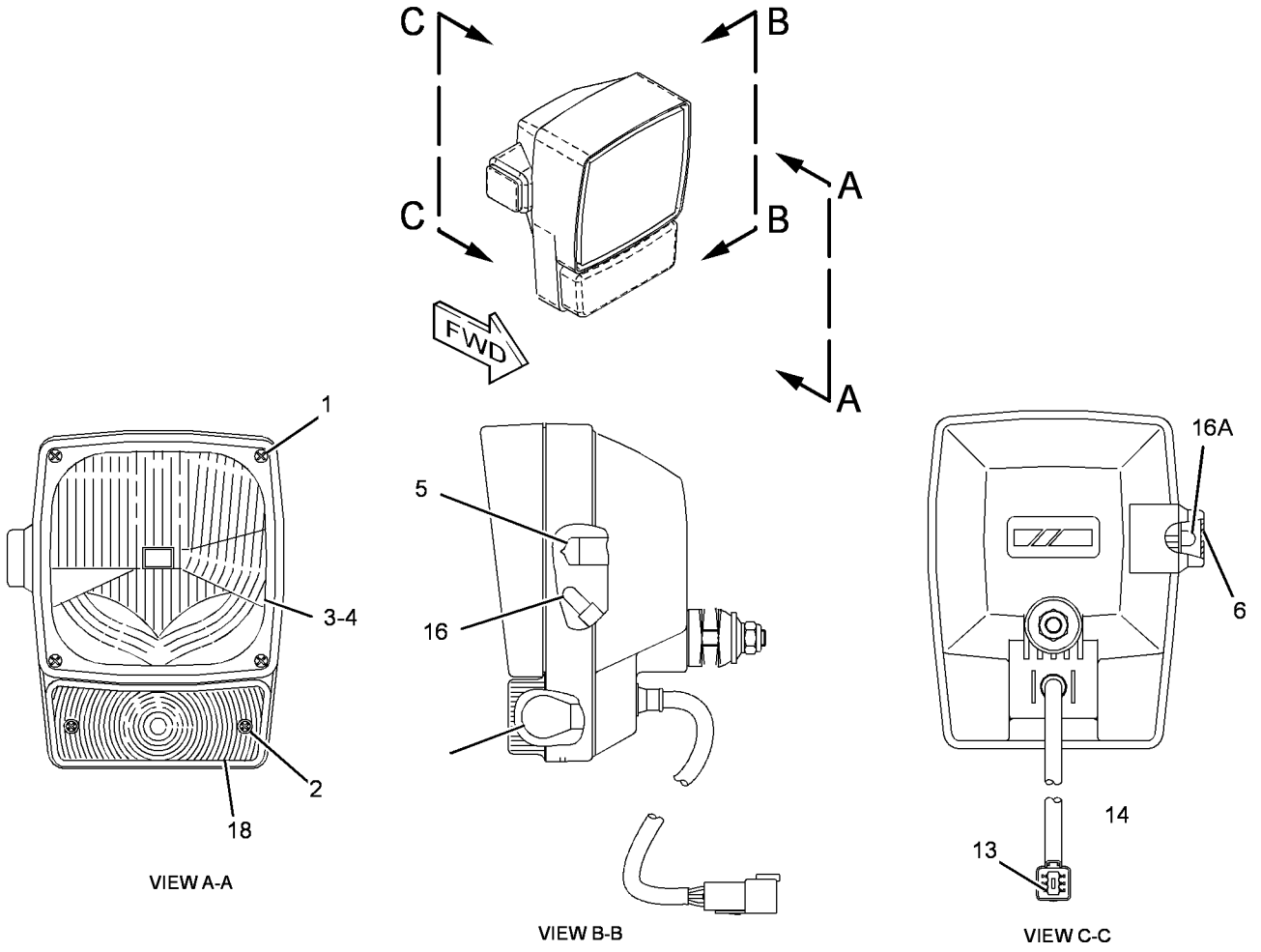

GRAPHIC #1

<END>

g03295280

259-0134 LAMP GP-REGISTRATION PLATE

S/N: TJL1-UP
24-VOLT
PART OF 322-3297 LIGHTING GP-SIGNAL
AN ATTACHMENT

SMCS-1429 **i03439782**

NOTE	REF NO	GRAPHIC REF	PART NUMBER	QTY	PART NAME 1 2 3 4 5 6 (PRODUCT LEVEL)	SEE PAGE
	1	1	**5C-9583**	1	LAMP (24-VOLT, 5-WATT)	
	2	1	**102-8802**	1	KIT-RECEPTACLE (2-PIN)	
					(INCLUDES RECEPTACLE AS & WEDGE)	
	3	1	**186-3735**	2	PIN-CONNECTOR (16-GA TO 18-GA)	

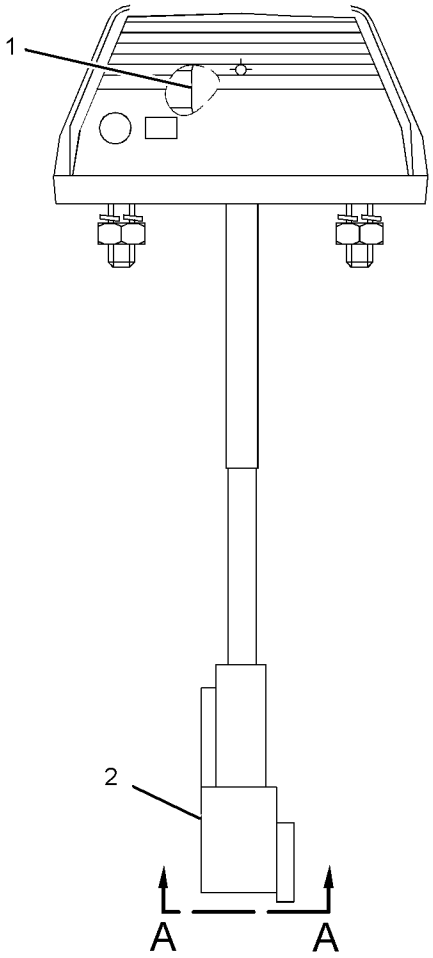

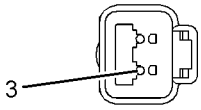

VIEW A-A

GRAPHIC #1 **<END>** g01201568

327-7104 LAMP GP-STOP & TAIL

S/N: TJL1-UP
24-VOLT
PART OF 322-3297 LIGHTING GP-SIGNAL
AN ATTACHMENT

SMCS-1432 **i03439762**

NOTE	REF NO	GRAPHIC REF	PART NUMBER	QTY	PART NAME 1 2 3 4 5 6 (PRODUCT LEVEL)	SEE PAGE
	1	1	**186-3735**	5	PIN-CONNECTOR (16-GA TO 18-GA)	
	2	1	**8T-8737**	1	PLUG-SEAL	
	3	1	**9X-4493**	1	LAMP (24-VOLT, 21-WATT) (DIRECTION)	
	3A	1	**9X-4493**	1	LAMP (24-VOLT, 21-WATT) (REVERSE)	
	4	1	**9X-4492**	1	LAMP (24-VOLT, 5-WATT) (STOP, TAIL)	
	5	1	**209-3090**	1	LENS (AMBER) (DIRECTION)	
	6	1	**209-3091**	1	LENS (WHITE) (REVERSE)	
	7	1	**209-3093**	1	LENS (RED) (STOP, TAIL)	
M	8	1	**5C-2890**	3	NUT (M6X1-THD)	
	9	1	**8T-0087**	3	LOCKWASHER	
	10	1	**102-8805**	1	KIT-RECEPTACLE (6-PIN)	
					(INCLUDES RECEPTACLE AS & WEDGE)	

M - METRIC PART

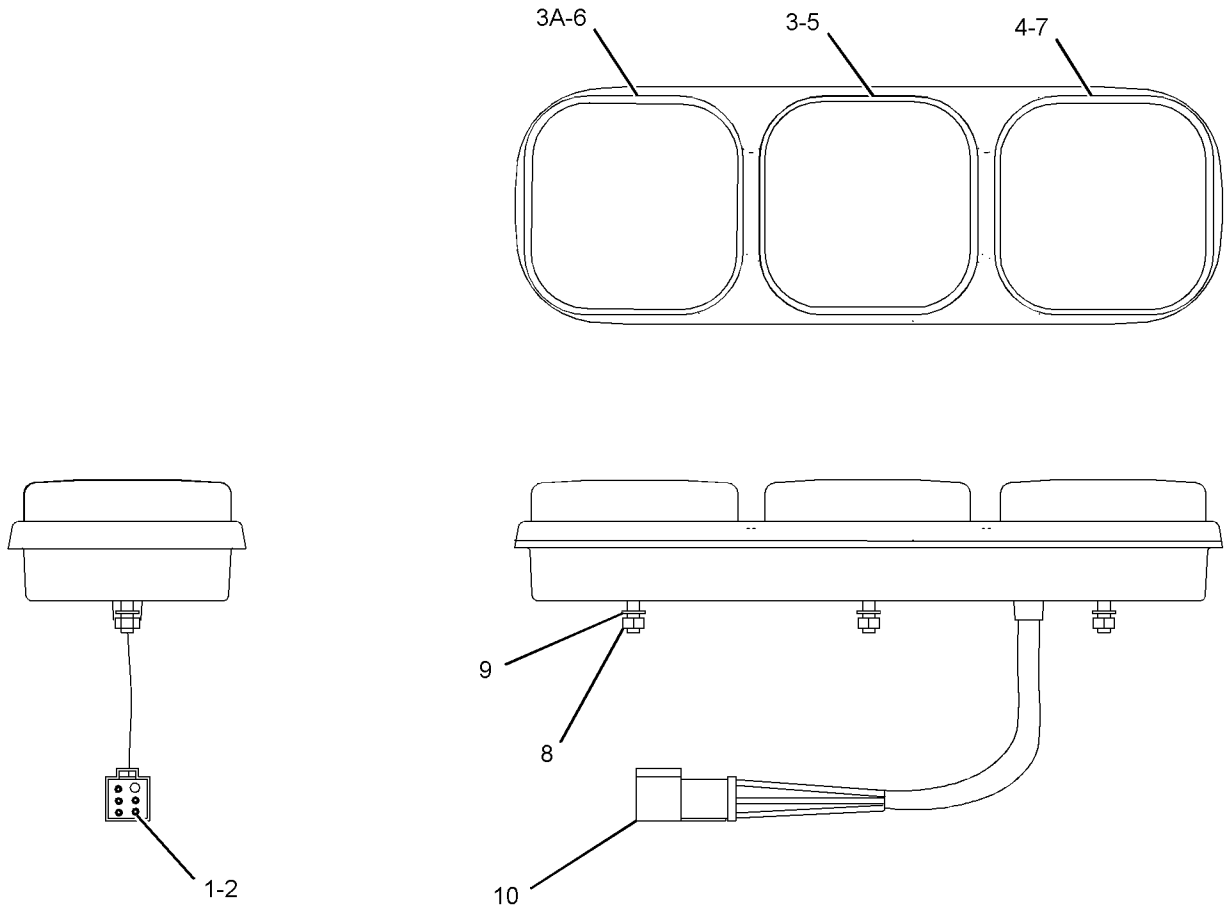

GRAPHIC #1 **<END>** g01789413

108-1029 LAMP GP-WARNING BEACON–AMBER

S/N: TJL1-UP
24-VOLT
PART OF 204-1304, 204-1305 LIGHTING GP-WARNING
AN ATTACHMENT

SMCS-1431 **i03043951**

NOTE	REF NO	GRAPHIC REF	PART NUMBER	QTY	PART NAME 1 2 3 4 5 6 (PRODUCT LEVEL)	SEE PAGE
	1	1	**272-9800**	1	LENS (AMBER)	
	2	1	**9X-7849**	1	LAMP (24-VOLT, 70-WATT) (WARNING BEACON)	
	3	1	**9X-8139**	1	BELT-DRIVE	
	4	1	**9R-7958**	1	CORD AS (WARNING BEACON)	
	4A	1	**9R-7942**	1	PLUG AS	

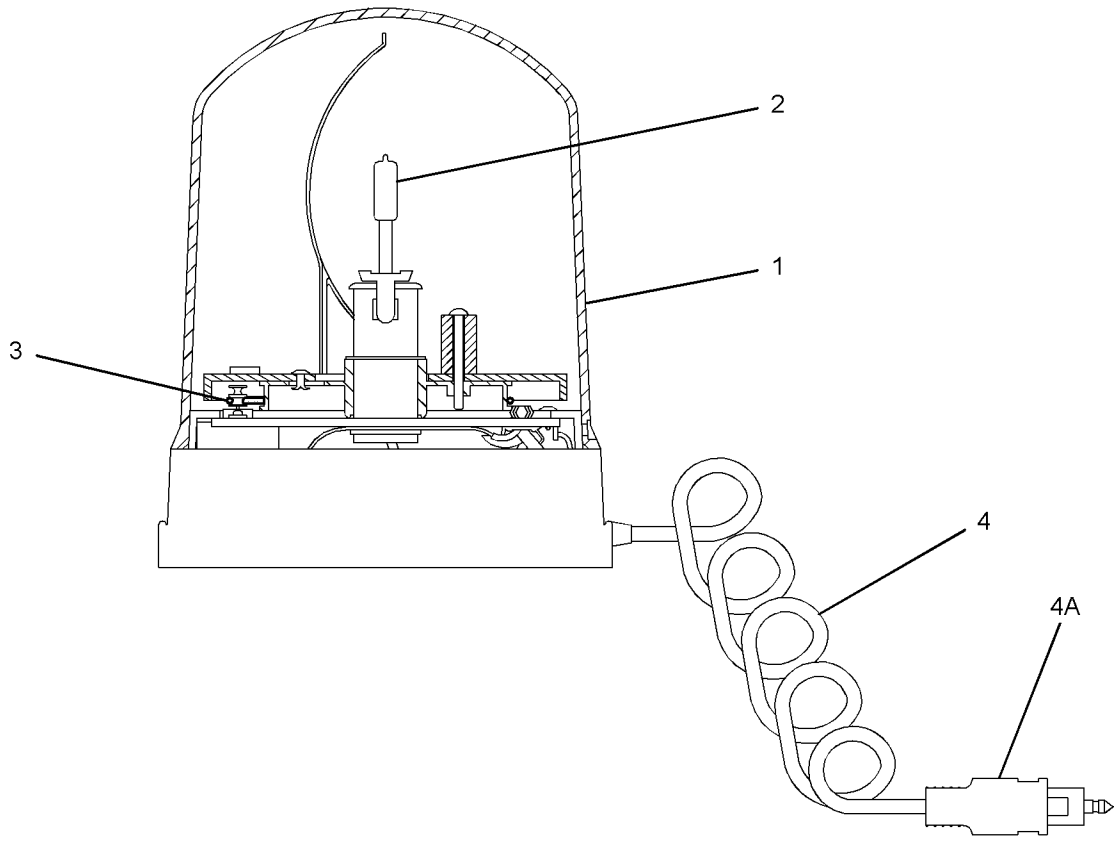

GRAPHIC #1 **<END>** g01251578

204-1321 LIGHTING GP-FLOOD—OPEN ROPS

S/N: TJL1-UP

PART OF 219-4171 OPERATOR AR, 348-5643 OPERATOR AR-OPEN ROPS AN ATTACHMENT

SMCS-1434 **i03649440**

NOTE	REF NO	GRAPHIC REF	PART NUMBER	QTY	PART NAME 1 2 3 4 5 6 (PRODUCT LEVEL)	SEE PAGE
	1	1	**3S-2093**	32	STRAP-CABLE	
	2	1	**6T-6329**	1	BEZEL	
	3	1	**6V-8927**	2	BOLT-SOCKET HEAD (6-32X0.5-IN)	
	4	1	**7T-3811**	1	SWITCH AS-ROCKER (FLOODLIGHT)	
		1	**3L-8187**	6	LOCKWASHER	
		1	**6V-8374**	6	SCREW-MACHINE (6-32X0.25-IN)	
	5	1	**281-0028**	1	HARNESS AS-LIGHTING (FLOODLIGHT)	
		1	**102-8804**	1	KIT-RECEPTACLE (4-PIN)	
					(INCLUDES RECEPTACLE AS & WEDGE)	
		1	**180-9339**	3	PIN-CONNECTOR (14-GA TO 18-GA)	
		1	**123-7615**	1	CONNECTOR	
		1	**126-1767**	1	PIN-CONNECTOR (14-GA TO 16-GA)	
		1	**155-2270**	4	KIT-CONNECTING PLUG (2-PIN)	
					(EACH INCLUDES PLUG AS, WEDGE & INTERFACE SEAL)	
		1	**155-2272**	1	PLUG AS-CONNECTOR (4-PIN)	
					(INCLUDES RECEPTACLE AS & WEDGE)	
		1	**180-9340**	8	SOCKET-CONNECTOR (14-GA TO 18-GA)	
		1	**6V-0491**	2	TERMINAL-BLADE (14-GA TO 18-GA)	
E		1	**125-7875**		TUBE-HEAT SHRINK (7.44-MM DIA) (20-CM)	
E		1	**125-7876**		TUBE-HEAT SHRINK (17.78-MM DIA) (5-CM)	
Y	6	1	**219-6487**	4	LAMP GP-FLOOD (24-VOLT, 70-WATT)	135

E - ORDER BY THE CENTIMETER
Y - SEPARATE ILLUSTRATION

204-1321 **LIGHTING GP-FLOOD (*contd.*)** **i03649440**

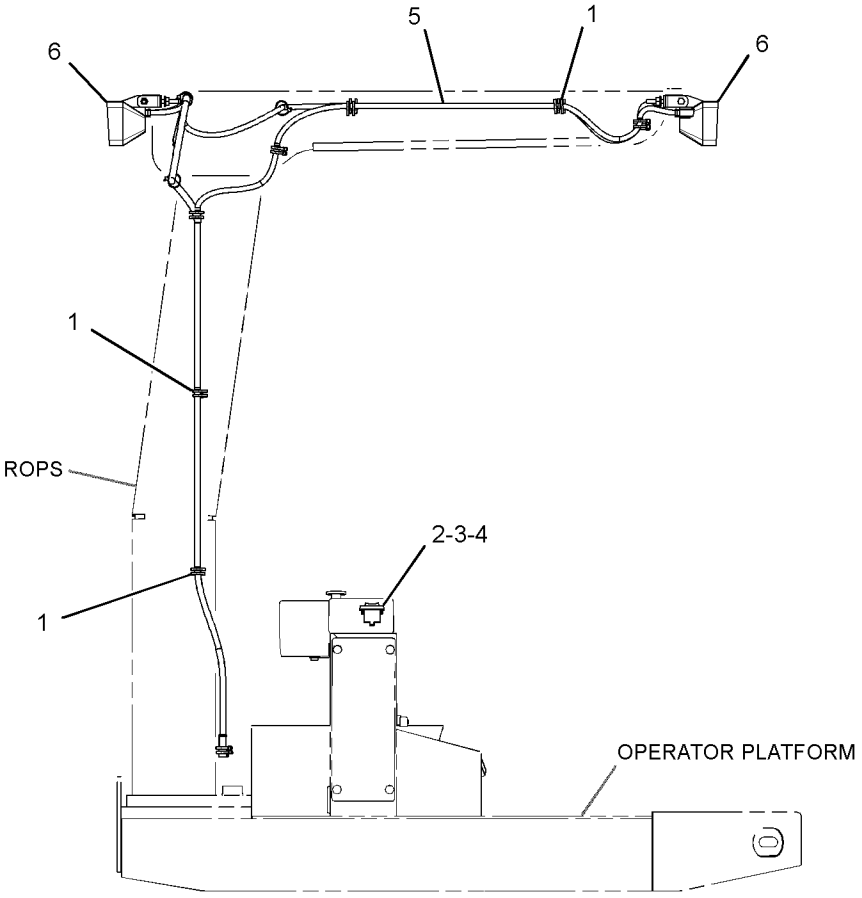

RIGHT SIDE VIEW

GRAPHIC #1 **<END>** g01427852

226-7758 LIGHTING GP-FLOOD–CAB

S/N: TJL1-UP
PART OF 259-4423, 339-6602 CAB AR
AN ATTACHMENT

SMCS-1434 **i03640089**

NOTE	REF NO	GRAPHIC REF	PART NUMBER	QTY	PART NAME 1 2 3 4 5 6 (PRODUCT LEVEL)	SEE PAGE
	1	1	**9R-7941**	1	SOCKET AS	
		1	**9R-7980**	1	COVER	
Y	2	1	*9X-4381*	4	LAMP GP-FLOOD (24-VOLT)	131
	3	1	**190-0360**	1	HARNESS AS-LIGHTING (FLOODLIGHT)	
		1	**8T-8729**	2	PIN-CONNECTOR (16-GA TO 18-GA)	
		1	**9W-0852**	2	PIN-CONNECTOR (14-GA TO 16-GA)	
		1	**102-8804**	1	KIT-RECEPTACLE (4-PIN)	
					(INCLUDES RECEPTACLE AS & WEDGE)	
		1	**5P-1476**	8	TERMINAL-FORK (14-GA TO 16-GA, NO. 10 SCREW)	
		1	**9X-0196**	1	TERMINAL AS	
	4	1	**8T-4121**	8	WASHER-HARD (11X21X2.5-MM THK)	
M	5	1	**8T-4133**	4	NUT (M10X1.5-THD)	
	6	1	**9R-2620**	4	PLUG	

M - METRIC PART
Y - SEPARATE ILLUSTRATION

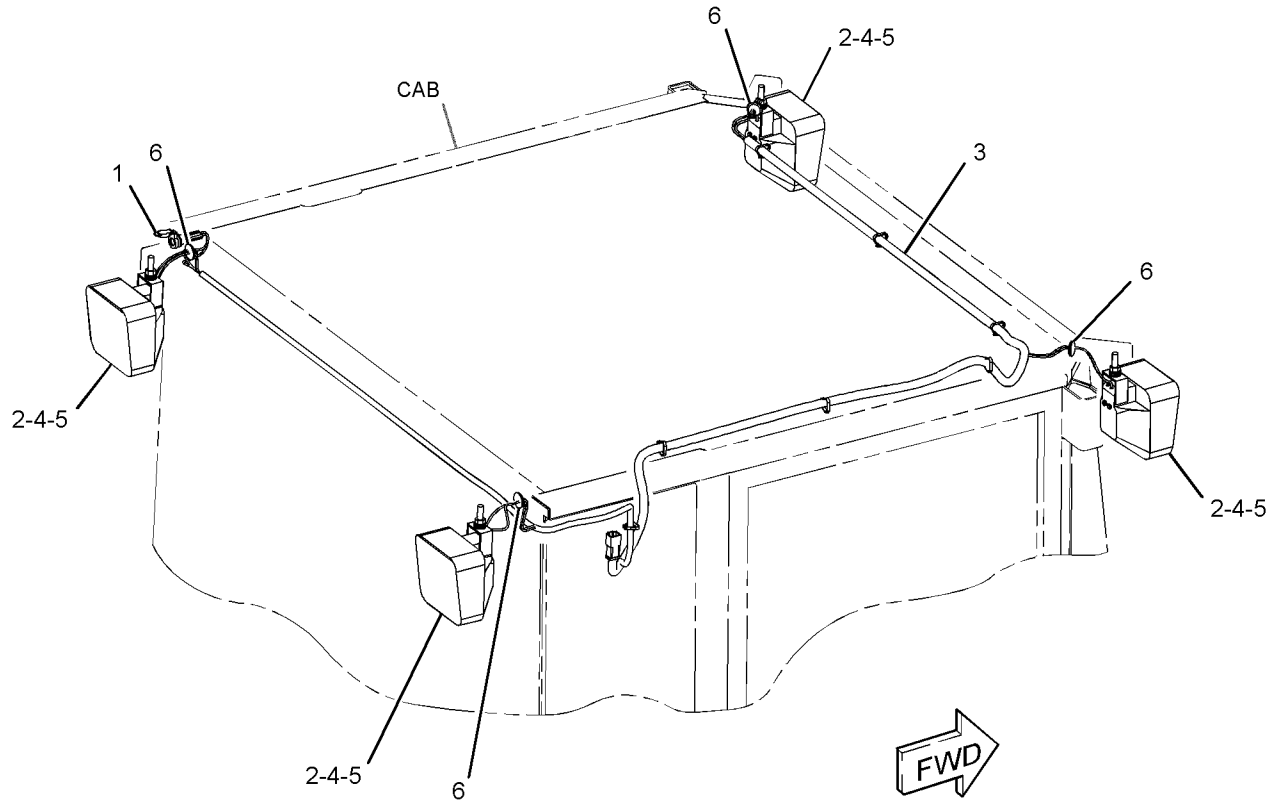

GRAPHIC #1 **<END>** g01559573

234-9980 LIGHTING GP-FLOOD—OPEN ROPS

S/N: TJL1-UP

PART OF 224-1151 OPERATOR AR, 348-5642 OPERATOR AR-OPEN ROPS

AN ATTACHMENT

SMCS-1434 **i03639902**

NOTE	REF NO	GRAPHIC REF	PART NUMBER	QTY	PART NAME 1 2 3 4 5 6 (PRODUCT LEVEL)	SEE PAGE
	1	1	**3S-2093**	7	STRAP-CABLE	
	2	1	**6T-6329**	1	BEZEL	
	3	1	**6V-8927**	2	BOLT-SOCKET HEAD (6-32X0.5-IN)	
	4	1	**7T-3811**	1	SWITCH AS-ROCKER (FLOODLIGHT)	
		1	**3L-8187**	6	LOCKWASHER	
		1	**6V-8374**	6	SCREW-MACHINE (6-32X0.25-IN)	
	5	1	**8Q-6744**	7	BASE-MOUNTING	
	6	1	**9N-1909**	2	BRACKET	
	7	1	**130-6469**	4	BRACKET AS	
					(EACH INCLUDES)	
M		1	**8T-3490**	1	NUT-WELD (M10X1.5-THD)	
		1	**115-0617**	1	BRACKET	
	8	1	**183-7413**	1	BRACKET	
	9	1	**215-6300**	1	HARNESS AS-LIGHTING (FLOODLIGHT)	
		1	**8T-8729**	3	PIN-CONNECTOR (16-GA TO 18-GA)	
		1	**8T-8737**	1	PLUG-SEAL	
		1	**102-8804**	1	KIT-RECEPTACLE (4-PIN)	
					(INCLUDES RECEPTACLE AS & WEDGE)	
		1	**2L-8075**	8	TERMINAL-RING (14-GA TO 16-GA, NO. 8 SCREW)	
Y	10	1	**107-6689**	4	LAMP GP-FLOOD (24-VOLT) (VERTICAL)	133
M	11	1	**5C-7261**	3	NUT (M8X1.25-THD)	
M	12	1	**6V-7744**	2	LOCKNUT (M10X1.5-THD)	
M	13	1	**6V-9189**	4	LOCKNUT (M8X1.25-THD)	
	14	1	**7K-1181**	9	STRAP-CABLE	
	15	1	**8T-4121**	8	WASHER-HARD (11X21X2.5-MM THK)	
M	16	1	**8T-4136**	4	BOLT (M10X1.5X25-MM)	
M	17	1	**8T-4137**	2	BOLT (M10X1.5X20-MM)	
M	18	1	**8T-4189**	3	BOLT (M8X1.25X20-MM)	
	19	1	**8T-4224**	14	WASHER-HARD (8.8X16X2-MM THK)	
M	20	1	**8T-6869**	4	BOLT (M8X1.25X60-MM)	
	21	1	**9X-7344**	1	GROMMET	

M - METRIC PART
Y - SEPARATE ILLUSTRATION

234-9980 **LIGHTING GP-FLOOD (*contd.*)** **i03639902**

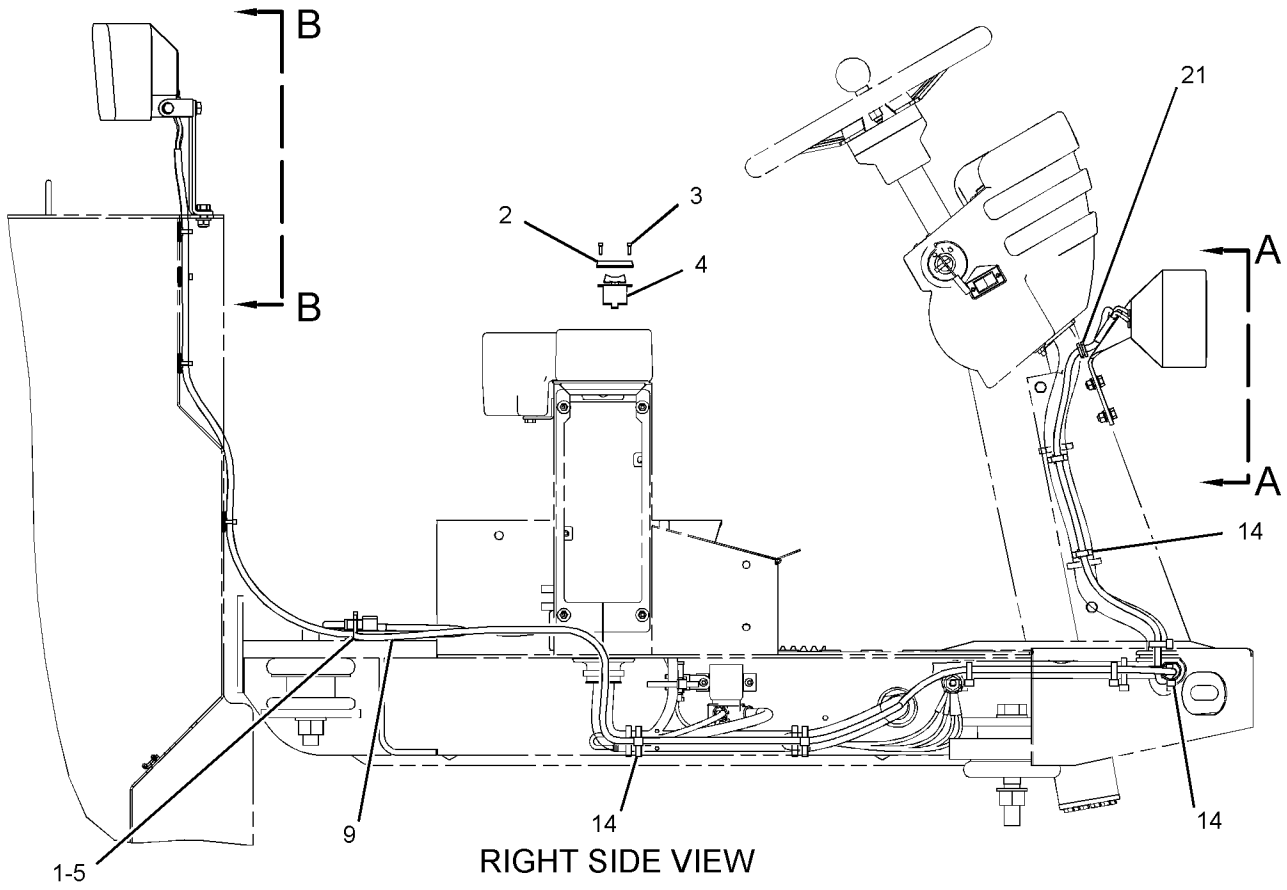

RIGHT SIDE VIEW

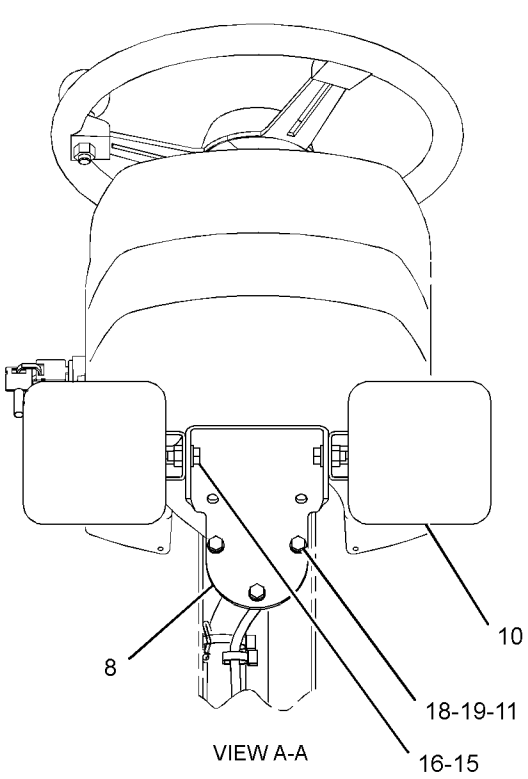

VIEW A-A

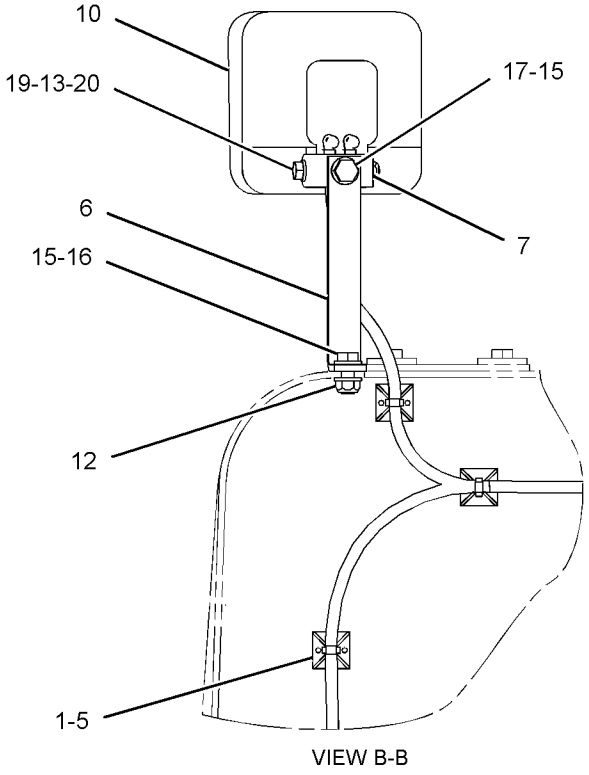

VIEW B-B

GRAPHIC #1 **<END>** g01854093

322-3297 LIGHTING GP-SIGNAL

S/N: TJL1-UP

AN ATTACHMENT

SMCS-1430 **i03649825**

NOTE	REF NO	GRAPHIC REF	PART NUMBER	QTY	PART NAME 1 2 3 4 5 6 (PRODUCT LEVEL)	SEE PAGE
	1	3	**2N-2371**	3	LAMP AS-INDICATOR (RED)	
					(EACH LAMP AS INCLUDES)	
		3	**2V-7088**	1	LENS-RED	
		3	**6V-8367**	1	LOCKWASHER	
		3	**6V-8382**	1	NUT-HEX (11/16-27-THD)	
		3	**6V-8817**	2	SCREW-MACHINE (4-36X4.76-IN)	
	2	3	**156-0520**	2	LENS-GREEN (POWER ON)	
	3	3	**2V-7087**	1	LENS-AMBER (INDICATORS)	
	4	1	**3E-5239**	1	RELAY AS (24-VOLT) (BACKUP ALARM)	
	5	1,2,3,4	**3S-2093**	20	STRAP-CABLE	
	6	3	**4V-7740**	3	SCREW-BUTTON HEAD	
	7	3	**5V-2998**	1	PLATE	
	8	3	**6T-6329**	1	BEZEL	
	9	3	**6V-8927**	2	BOLT-SOCKET HEAD (6-32X0.5-IN)	
	10	3	**8X-6296**	1	LEVER	
	11	4	**108-0358**	1	FLASHER AS (24-VOLT)	
	12	4	**121-5327**	1	GROMMET	
	13	3	**143-0785**	1	TIMER	
	14	3	**144-6434**	1	RESISTOR AS	
		3	**6V-2689**	1	TUBE-HEAT SHRINK (6.35-MM DIA)	
		3	**066-8391**	2	TERMINAL-BLADE (14-GA TO 18-GA)	
	15	1,2,3	**156-6175**	11	CLIP	
	16	4	**158-5089**	1	RELAY AS (24-VOLT) (TURN SIGNAL)	
	17	3	**173-3064**	1	SWITCH GP-ROTARY (TURN SIGNAL, HAZARD)	
		3	**5L-7200**	1	SCREW (8-32X0.375-IN)	
		3	**9B-7233**	1	LOCKWASHER	
	18	3	**187-9719**	2	FILM (TURN SIGNAL)	
	19	1,3	**189-3158**	2	SUPPRESSOR-ARC	
	20	3	**239-1319**	1	PLATE	
	21	1,3,4	**252-6645**	6	REFLECTOR-YELLOW	
Y	22	2	**259-0134**	1	LAMP GP-REGISTRATION PLATE (24-VOLT)	144
	23	1	**322-2699**	1	HARNESS AS-CHASSIS	
		1	**102-8802**	1	KIT-RECEPTACLE (2-PIN)	
		1	**102-8806**	1	KIT-RECEPTACLE (8-PIN)	
					(EACH RECEPTACLE KIT INCLUDES RECEPTACLE AS & WEDGE)	
		1	**155-2270**	3	KIT-CONNECTING PLUG (2-PIN)	
		1	**155-2274**	3	KIT-CONNECTING PLUG (6-PIN)	
					(EACH PLUG KIT INCLUDES PLUG AS & WEDGE)	
		1	**2L-8069**	1	TERMINAL-RING (2-GA TO 10-GA, 3/8-IN SCREW)	
		1	**9X-3401**	2	PIN-CONNECTOR (16-GA TO 18-GA)	
		1	**8T-8729**	8	PIN-CONNECTOR (16-GA TO 18-GA)	
		1	**8T-8730**	21	SOCKET-CONNECTOR (16-GA TO 18-GA)	
		1	**8T-8737**	3	PLUG-SEAL	
		1	**9X-1054**	1	PLUG AS-CONNECTOR (4-PIN)	
		1	**9X-1056**	4	TERMINAL-RECEPTACLE (14-GA TO 16-GA)	
E		1	**119-3662**		TUBE-HEAT SHRINK (10.85-MM DIA) (13-CM)	
E		1	**125-7874**		TUBE-HEAT SHRINK (5.72-MM DIA) (15-CM)	
E		1	**125-7875**		TUBE-HEAT SHRINK (7.44-MM DIA) (15-CM)	
	24	3	**323-5921**	1	HARNESS AS-CONSOLE (SIDE, LIGHTING)	
		3	**155-2270**	1	KIT-CONNECTING PLUG (2-PIN)	
		3	**155-2265**	2	KIT-CONNECTING PLUG (8-PIN)	
					(EACH PLUG KIT INCLUDES PLUG AS & WEDGE)	
		3	**5P-4571**	2	TERMINAL-BLADE (14-GA TO 16-GA)	
		3	**2L-8074**	6	TERMINAL-RING (14-GA TO 16-GA, NO. 6 SCREW)	
		3	**8T-8730**	17	SOCKET-CONNECTOR (16-GA TO 18-GA)	
		3	**8T-8737**	1	PLUG-SEAL	

322-3297 **LIGHTING GP-SIGNAL (*contd.*)** **i03649825**

NOTE	REF NO	GRAPHIC REF	PART NUMBER	QTY	PART NAME 1 2 3 4 5 6 (PRODUCT LEVEL)	SEE PAGE
		3	**112-9611**	2	TERMINAL-BLADE	
		3	**112-9612**	3	TERMINAL-BLADE	
		3	**116-4161**	2	TERMINAL-BLADE (16-GA TO 18-GA)	
	25	2	**324-5620**	2	REFLECTOR-WHITE	
	26	4	**327-7117**	1	HARNESS AS-FRONT	
		4	**102-8805**	1	KIT-RECEPTACLE (6-PIN)	
					(INCLUDES RECEPTACLE AS & WEDGE)	
		4	**155-2274**	2	KIT-CONNECTING PLUG (6-PIN)	
					(EACH INCLUDES PLUG AS & WEDGE)	
		4	**8T-8729**	5	PIN-CONNECTOR (16-GA TO 18-GA)	
		4	**8T-8730**	4	SOCKET-CONNECTOR (16-GA TO 18-GA)	
		4	**8T-8737**	9	PLUG-SEAL	
L		4	**9X-2389**		HOSE (103-IN)	
E		4	**9X-8243**		TUBE-HEAT SHRINK (39.9-MM DIA) (28-CM)	
E		4	**125-7874**		TUBE-HEAT SHRINK (5.72-MM DIA) (15-CM)	
	27	4	**327-9004**	1	PLATE AS	
	28	2	**117-9409**	3	GROMMET	
M	29	3	**124-0608**	1	BOLT (M4X0.7X35-MM)	
M	30	1	**129-3178**	1	LOCKNUT (M6X1-THD)	
	31	4	**130-5300**	5	CLIP	
Y	32	2	**203-7625**	1	LAMP GP-HEAD & SIGNAL (24-VOLT, LH)	140
Y	33	2	**203-7626**	1	LAMP GP-HEAD & SIGNAL (24-VOLT, RH)	142
	34	3	**239-1318**	1	HARNESS AS-PANEL (FRONT CONSOLE, LIGHTING)	
		3	**102-8806**	1	KIT-RECEPTACLE (8-PIN)	
					(INLCUDES RECEPTACLE AS & WEDGE)	
		3	**5P-4571**	5	TERMINAL-BLADE (14-GA TO 16-GA)	
		3	**2L-8074**	8	TERMINAL-RING (14-GA TO 16-GA, NO. 6 SCREW)	
		3	**8T-8729**	7	PIN-CONNECTOR (16-GA TO 18-GA)	
		3	**8T-8737**	1	PLUG-SEAL	
	35	2	**252-6646**	2	REFLECTOR-RED	
	37	3	**4B-2049**	3	NUT (10-32-THD)	
	38	3	**4B-4863**	1	WASHER (4.7X11X1.2-MM THK)	
	39	1	**4D-7794**	1	CLIP	
M	40	4	**5C-2890**	2	NUT (M6X1-THD)	
M	41	1	**6V-7357**	1	BOLT (M6X1X25-MM)	
	42	2,3,4	**7K-1181**	16	STRAP-CABLE	
	43	3	**8C-9636**	1	SWITCH AS-ROCKER (LIGHTING)	
		3	**3L-8187**	4	LOCKWASHER	
		3	**6V-8374**	4	SCREW-MACHINE (6-32X0.25-IN)	
	44	3	**8T-0328**	3	WASHER-HARD (5.5X10X1-MM THK)	
M	45	3	**8T-2659**	1	LOCKNUT (M4X0.7-THD)	
	46	4	**8T-4121**	8	WASHER-HARD (11X21X2.5-MM THK)	
M	47	4	**8T-4133**	4	NUT (M10X1.5-THD)	
M	48	4	**8T-4136**	4	BOLT (M10X1.5X25-MM)	
	49	1,2	**8T-4205**	8	WASHER-HARD (7.2X14.5X2-MM THK)	
	50	2	**9M-8406**	1	CLIP	
M	51	4	**9X-2044**	2	SCREW-TRUSS HEAD (M6X1X16-MM)	
M	52	1,2	**9X-2480**	5	BOLT (M6X1X45-MM)	
	53	4	**9X-8256**	2	WASHER (6.6X12X2-MM THK)	
Y	54	2	**327-7104**	2	LAMP GP-STOP & TAIL	145
E	55	2	**238-4527**		TAPE-REFLECTIVE (RED) (145-CM)	
E	56	2	**238-4528**		TAPE-REFLECTIVE (WHITE) (212-CM)	

E - ORDER BY THE CENTIMETER
L - ORDER BY THE INCH
M - METRIC PART
Y - SEPARATE ILLUSTRATION

322-3297 **LIGHTING GP-SIGNAL (*contd.*)** **i03649825**

REFER TO ALL ILLUSTRATIONS OF
THIS GROUP FOR AUXILIARY VIEWS

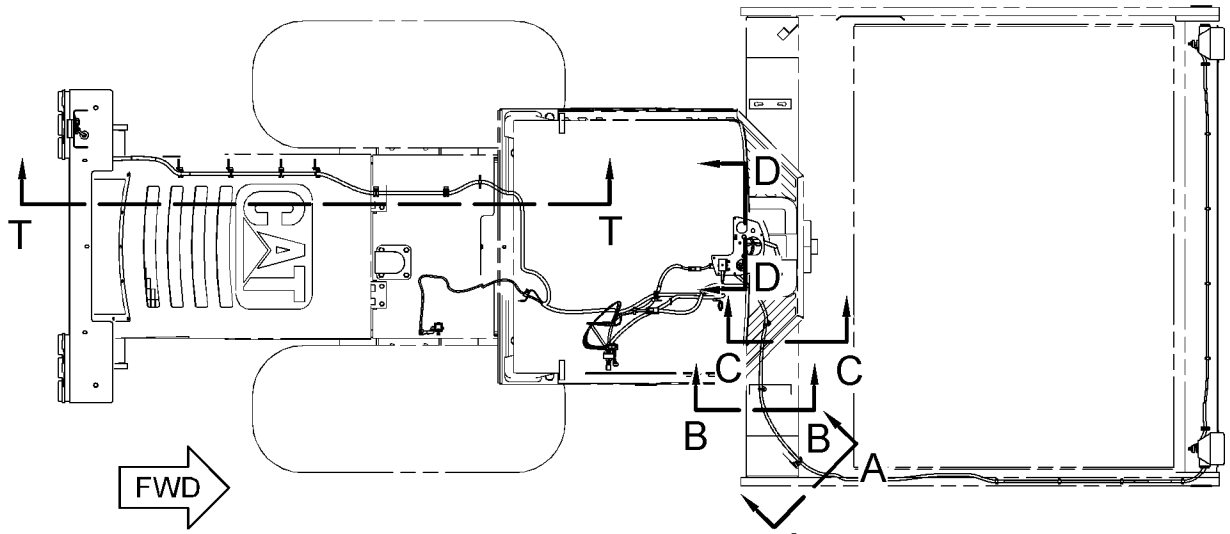

TOP VIEW A

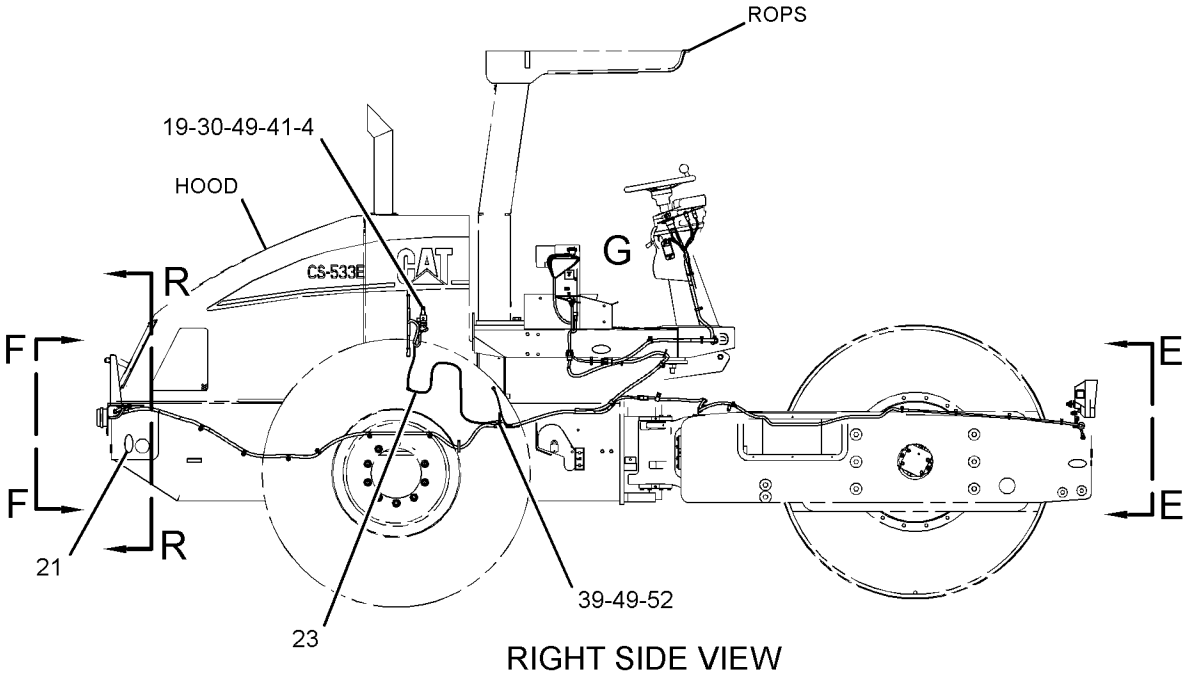

RIGHT SIDE VIEW

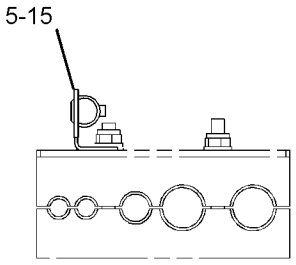

SECTION B-B

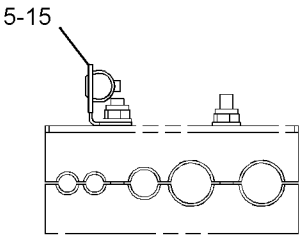

SECTION C-C

GRAPHIC #1 g01790714

322-3297 **LIGHTING GP-SIGNAL (*contd.*)** **i03649825**

REFER TO ALL ILLUSTRATIONS OF THIS GROUP FOR AUXILIARY VIEWS

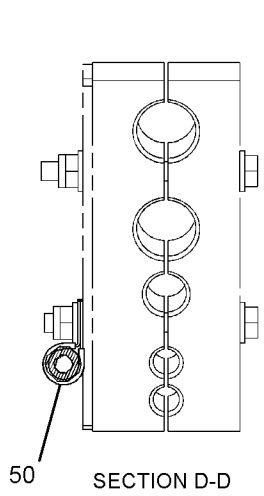

SECTION D-D

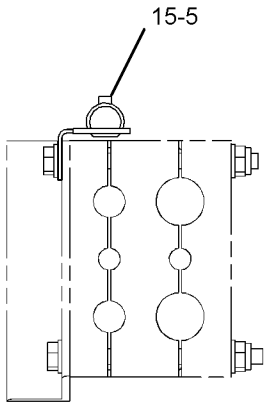

SECTION A-A

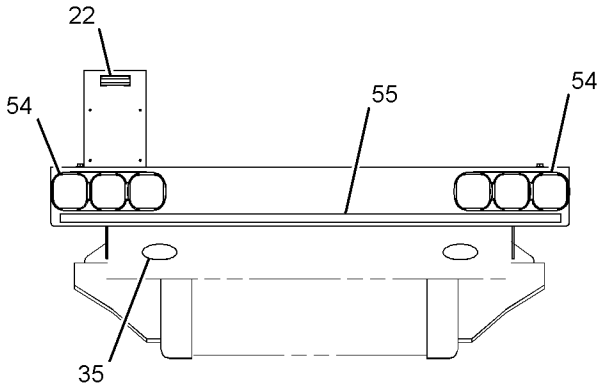

VIEW F-F

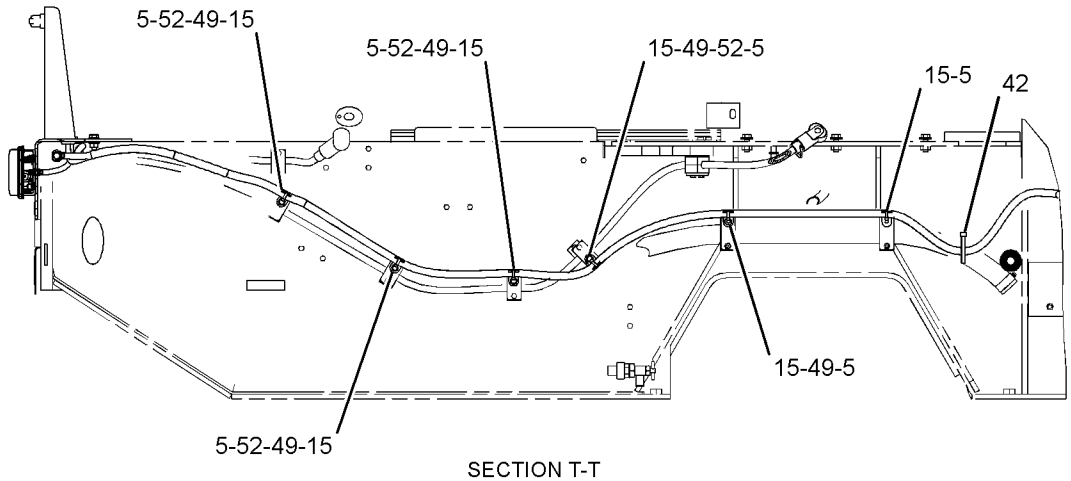

SECTION T-T

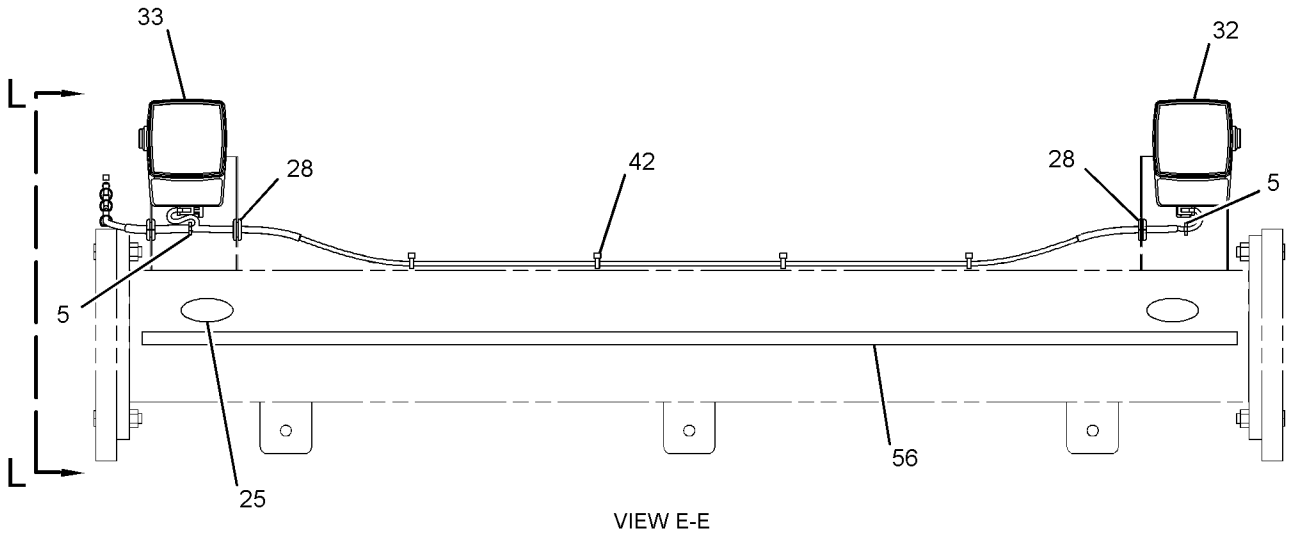

VIEW E-E

GRAPHIC #2 g01790715

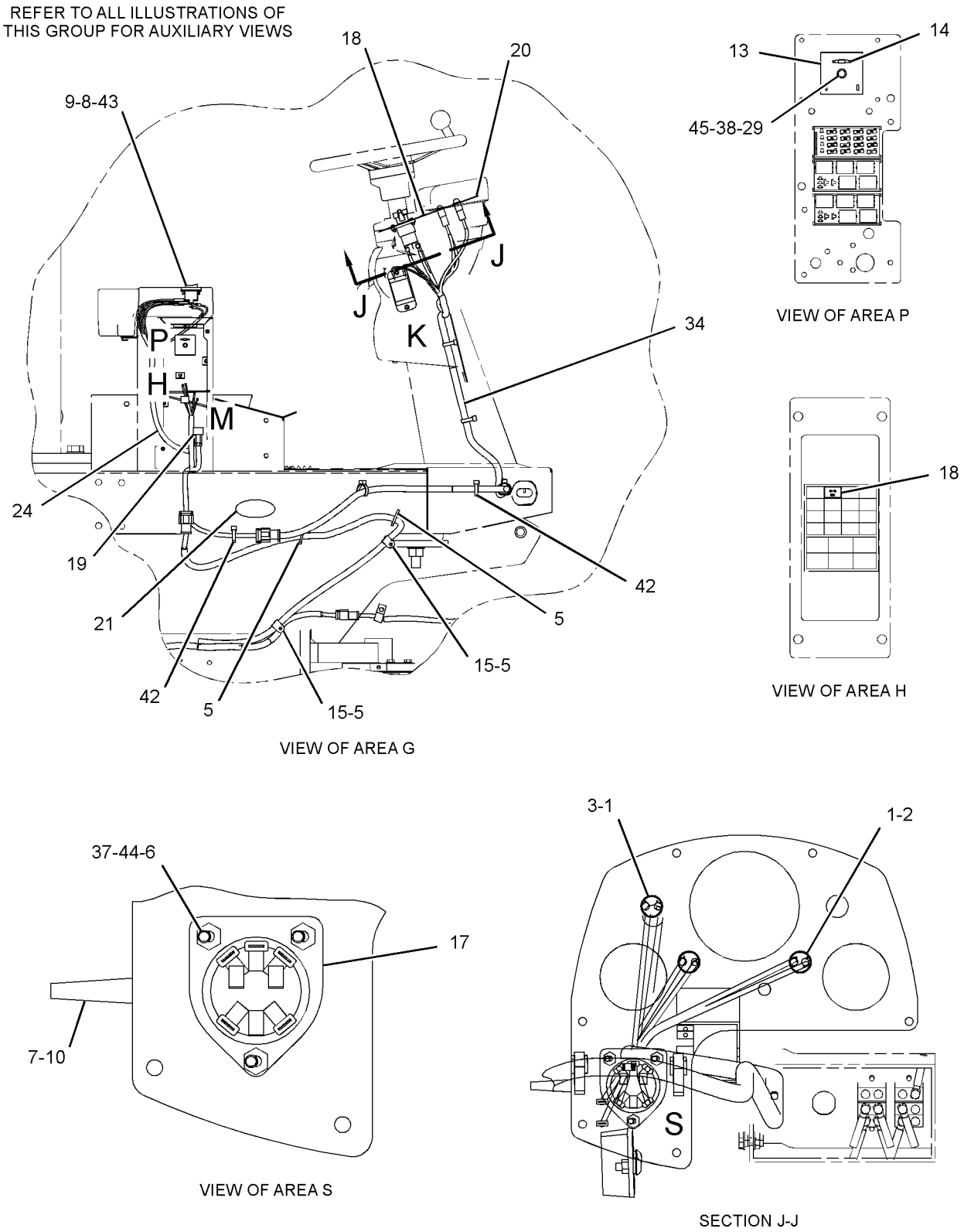

GRAPHIC #3 g01790716

322-3297 **LIGHTING GP-SIGNAL (*contd.*)** **i03649825**

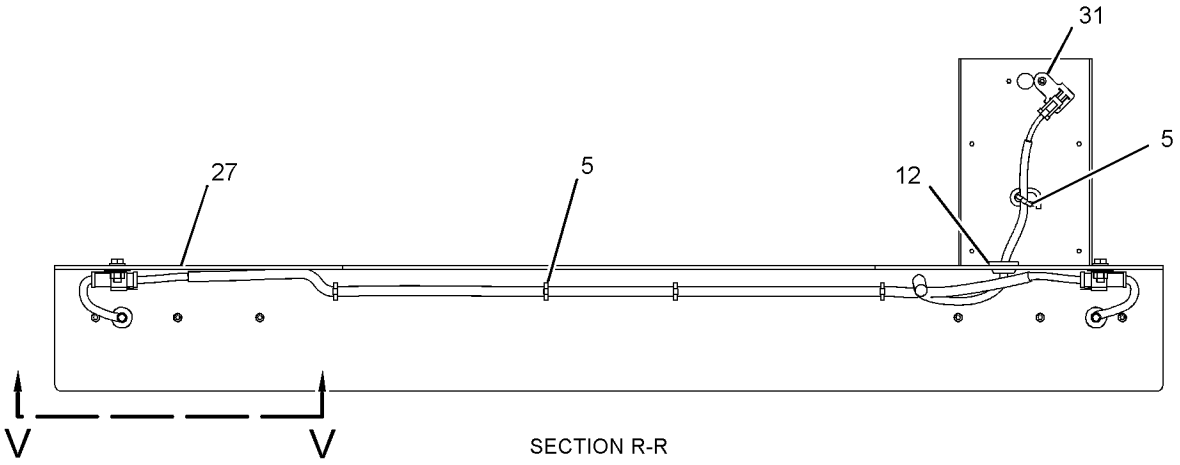

SECTION R-R

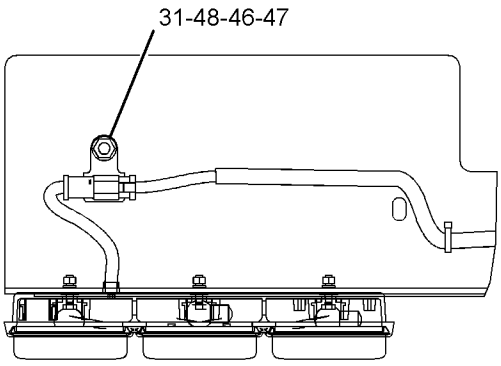

VIEW V-V

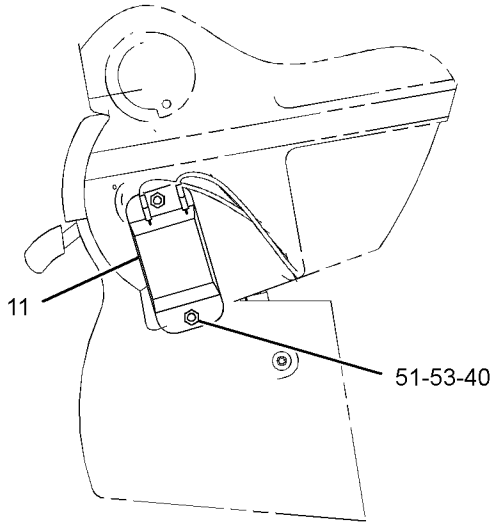

VIEW OF AREA K

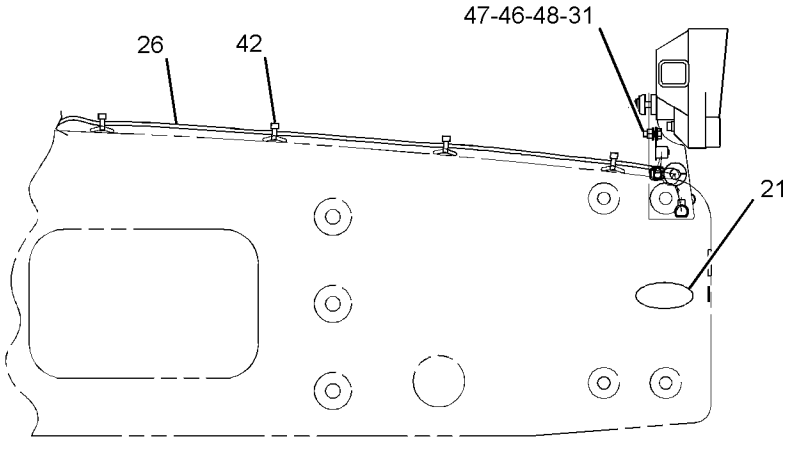

VIEW L-L

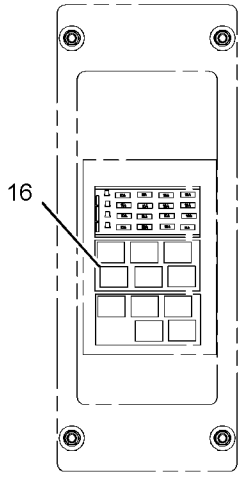

VIEW OF AREA M

GRAPHIC #4 **<END>** g01790717

204-1304 LIGHTING GP-WARNING

S/N: TJL1-UP
AN ATTACHMENT

SMCS-1431 **i03043946**

NOTE	REF NO	GRAPHIC REF	PART NUMBER	QTY	PART NAME 1 2 3 4 5 6 (PRODUCT LEVEL)	SEE PAGE
	1	1	**6T-6329**	1	BEZEL	
	2	1	**6V-8927**	2	BOLT-SOCKET HEAD (6-32X0.5-IN)	
	3	1	**9R-7941**	1	SOCKET AS	
		1	**9R-7980**	1	COVER	
Y	4	1	**108-1029**	1	LAMP GP-WARNING BEACON (24-VOLT) (AMBER)	146
	5	1	**6T-3990**	1	SWITCH AS-ROCKER (WARNING BEACON)	
		1	**3L-8187**	2	LOCKWASHER	
		1	**6V-8374**	2	SCREW-MACHINE (6-32X0.25-IN)	
	6	1	**8X-7008**	1	BRACKET	
	7	1	**8T-4121**	2	WASHER-HARD (11X21X2.5-MM THK)	
M	8	1	**8T-4133**	1	NUT (M10X1.5-THD)	
M	9	1	**8T-4195**	1	BOLT (M10X1.5X30-MM)	

M - METRIC PART
Y - SEPARATE ILLUSTRATION

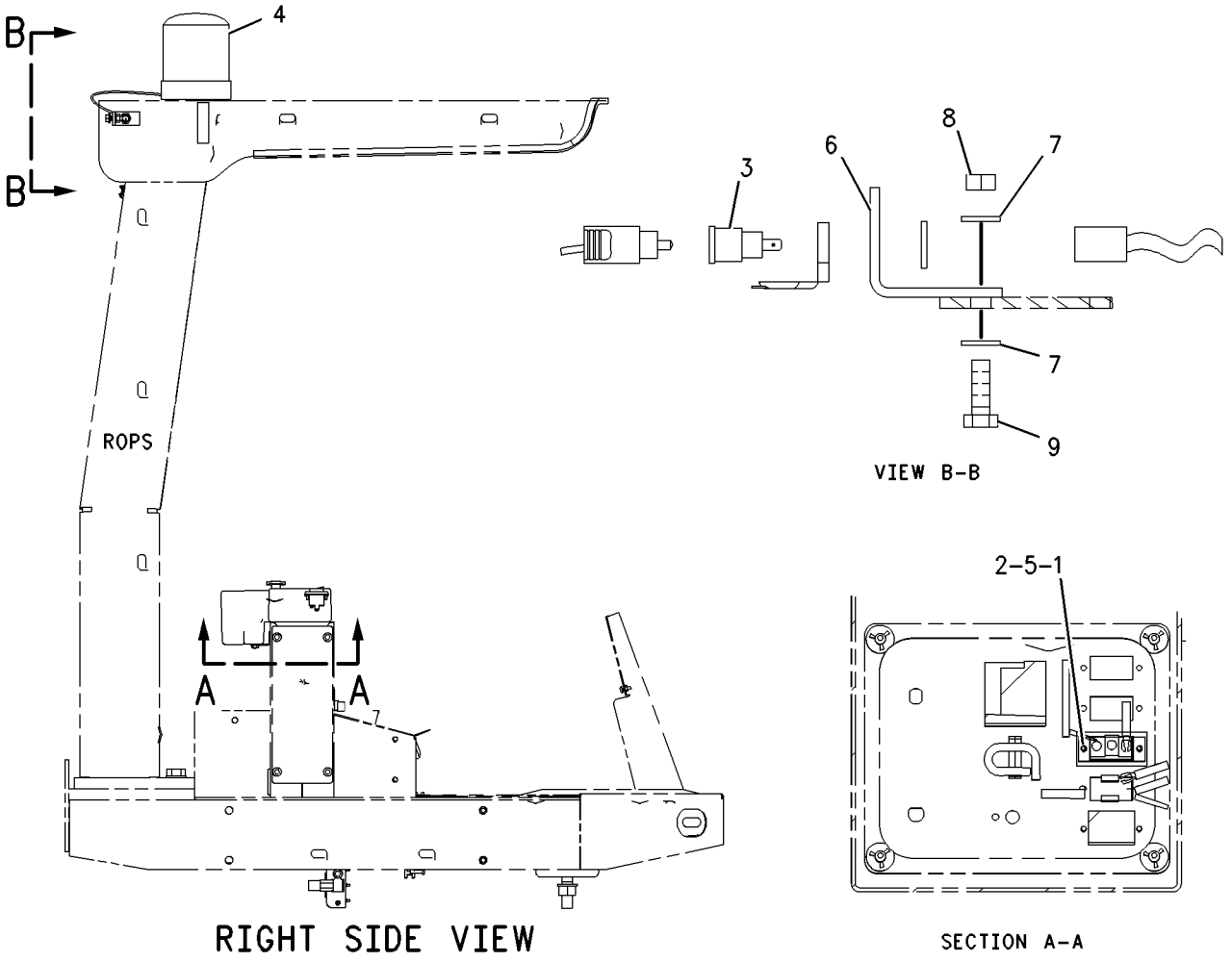

GRAPHIC #1 **<END>** g00853200

204-1305 LIGHTING GP-WARNING

S/N: TJL1-UP
AN ATTACHMENT

SMCS-1431 **i03043961**

NOTE	REF NO	GRAPHIC REF	PART NUMBER	QTY	PART NAME 1 2 3 4 5 6 (PRODUCT LEVEL)	SEE PAGE
	1	1	**6T-6329**	1	BEZEL	
	2	1	**6V-8927**	2	BOLT-SOCKET HEAD (6-32X0.5-IN)	
Y	3	1	**108-1029**	1	LAMP GP-WARNING BEACON (24-VOLT) (AMBER)	146
	4	1	**6T-3990**	1	SWITCH AS-ROCKER (WARNING BEACON)	
		1	**3L-8187**	2	LOCKWASHER	
		1	**6V-8374**	2	SCREW-MACHINE (6-32X0.25-IN)	

Y - SEPARATE ILLUSTRATION

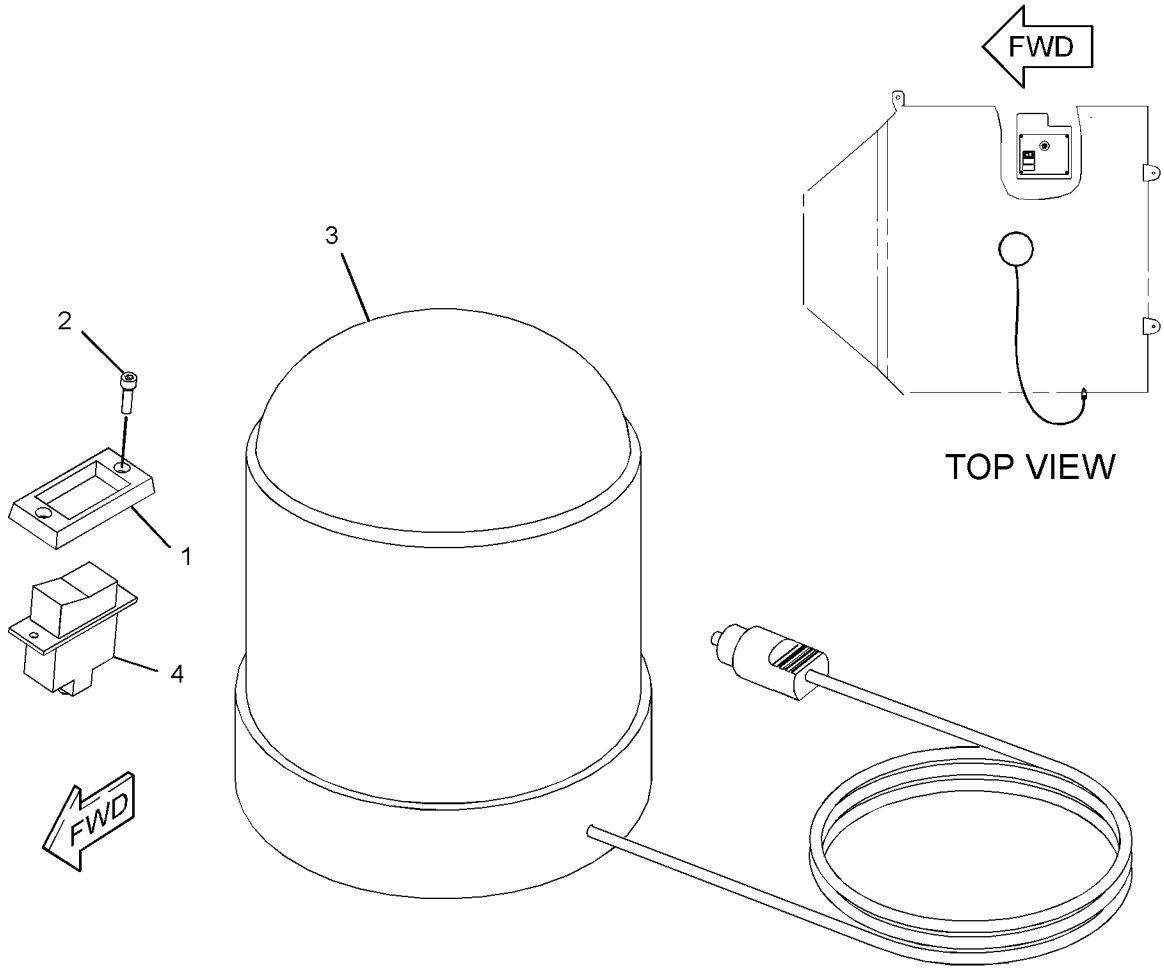

GRAPHIC #1 **<END>** g01160186

363-5084 SENSOR GP-LIQUID LEVEL—WATER IN FUEL

S/N: TJL2532-UP

PART OF 376-9229 FILTER GP-WATER SEP & FUEL

SMCS-1439, 7422 **i05433960**

NOTE	REF NO	GRAPHIC REF	PART NUMBER	QTY	PART NAME 1 2 3 4 5 6 (PRODUCT LEVEL)	SEE PAGE
	1	1	**214-7568**	1	SEAL-O-RING	
	2	1	**281-8805**	1	RECEPTACLE AS-CONNECTOR	
	3	1	**9X-3401**	3	PIN-CONNECTOR (16-GA TO 18-GA)	

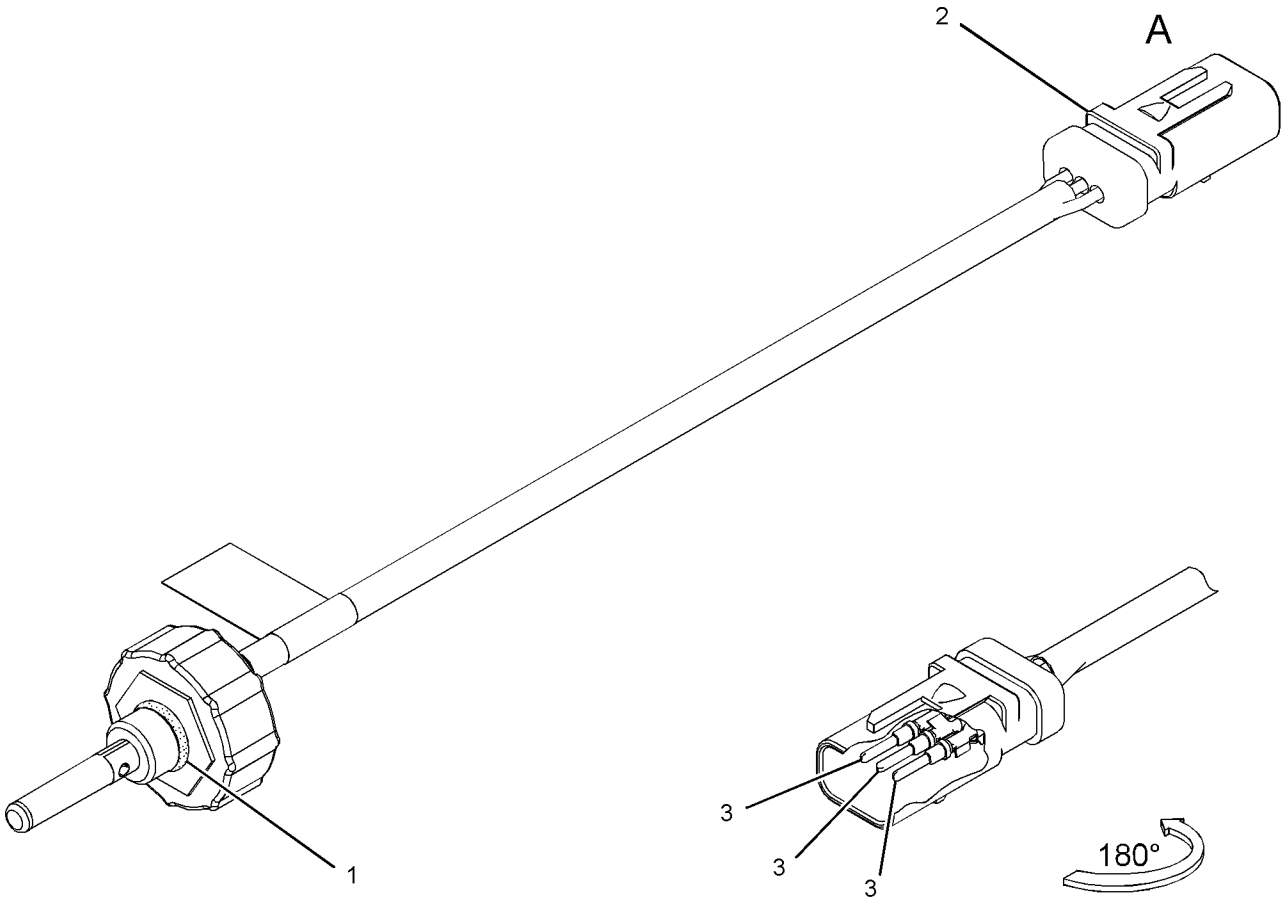

VIEW OF AREA A

GRAPHIC #1 **<END>** g02423836

120-4187 SOLENOID GP-THROTTLE

S/N: TJL1-UP

PART OF 227-4799 GOVERNOR GP

SMCS-1265 **i03038662**

NOTE	REF NO	GRAPHIC REF	PART NUMBER	QTY	PART NAME 1 2 3 4 5 6 (PRODUCT LEVEL)	SEE PAGE
	1	1	**119-7017**	1	SOLENOID	
	2	1	**102-8803**	1	KIT-RECEPTACLE (3-PIN)	
					(INCLUDES RECEPTACLE AS & WEDGE)	
	3	1	**186-3735**	3	PIN-CONNECTOR (16-GA TO 18-GA)	
	4	1	**3E-3371**	1	WEDGE-RECEPTACLE LOCK (3-PIN)	
E	5	1	**9X-1813**		SLEEVE (20-CM)	

E - ORDER BY THE CENTIMETER

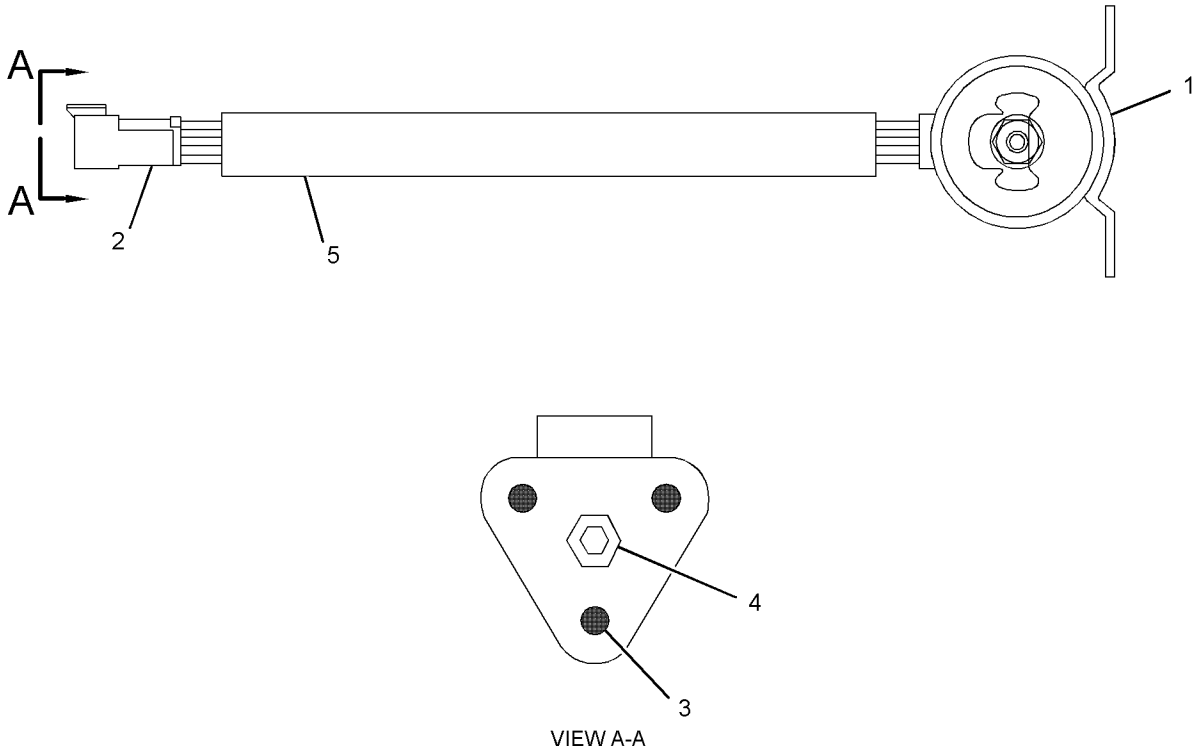

VIEW A-A

GRAPHIC #1 **<END>** g01537493

230-7304 STARTING MOTOR GP-ELECTRIC

S/N: CRS1-UP; CST1-UP

PART OF 297-4055, 390-5113 ENGINE AR-PRIMARY

SMCS-1453 **i03047556**

NOTE	REF NO	GRAPHIC REF	PART NUMBER	QTY	PART NAME 1 2 3 4 5 6 (PRODUCT LEVEL)	SEE PAGE
	1	1	**6I-0364**	3	STUD (M10X1.5X45-MM)	
	2	1	**6I-0594**	3	NUT (M10X1.5-THD)	
	3	1	**225-3150**	1	STARTING MOTOR GP-ELECTRIC	

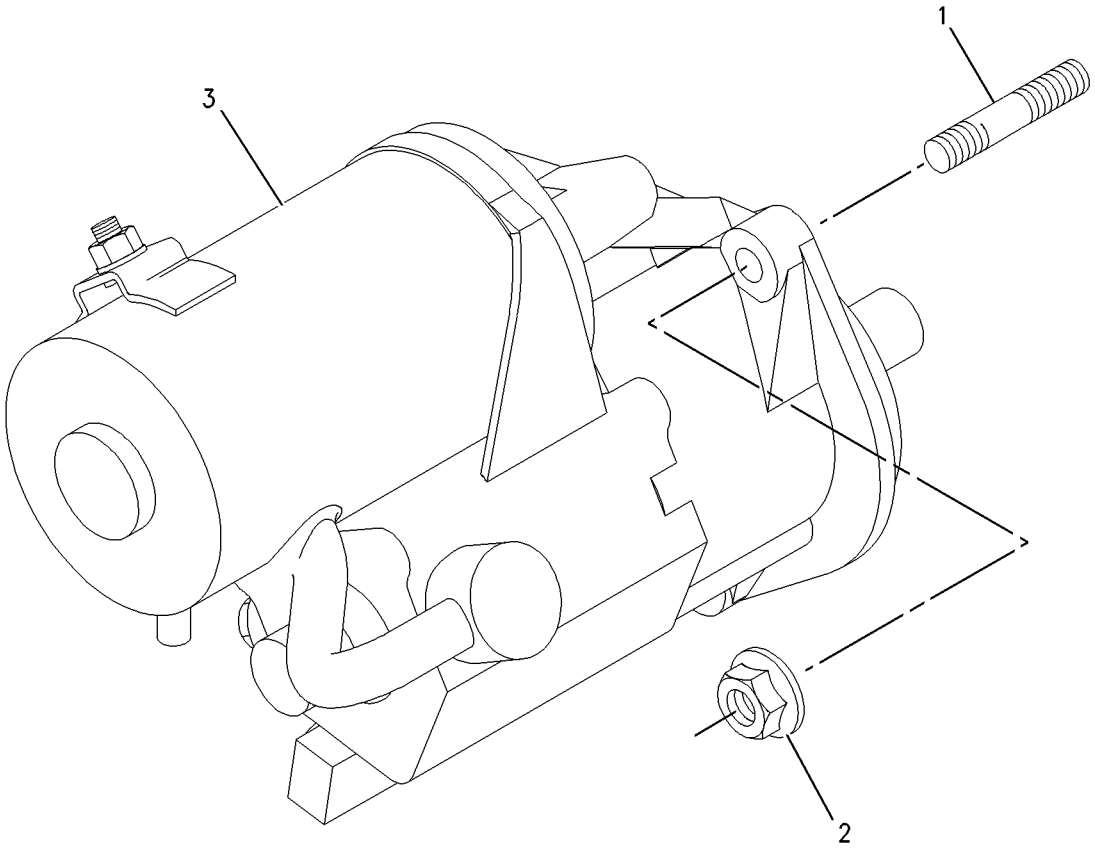

GRAPHIC #1 **<END>** g00933413

7N-0718 SWITCH GP-DISCONNECT–BATTERY

S/N: TJL1-UP

PART OF 238-8682 BATTERY & WIRING GP

SMCS-1411 **i02636136**

NOTE	REF NO	GRAPHIC REF	PART NUMBER	QTY	PART NAME 1 2 3 4 5 6 (PRODUCT LEVEL)	SEE PAGE
	1	1	**2H-3922**	2	LOCKWASHER	
	2	1	**8H-5303**	1	NUT (3/4-16-THD)	
	3	1	**9F-5644**	2	LOCKWASHER	
	4	1	**6F-7045**	2	NUT-FULL (3/8-24-THD)	
	5	1	**8H-5306**	1	KEY (BATTERY DISCONNECT)	

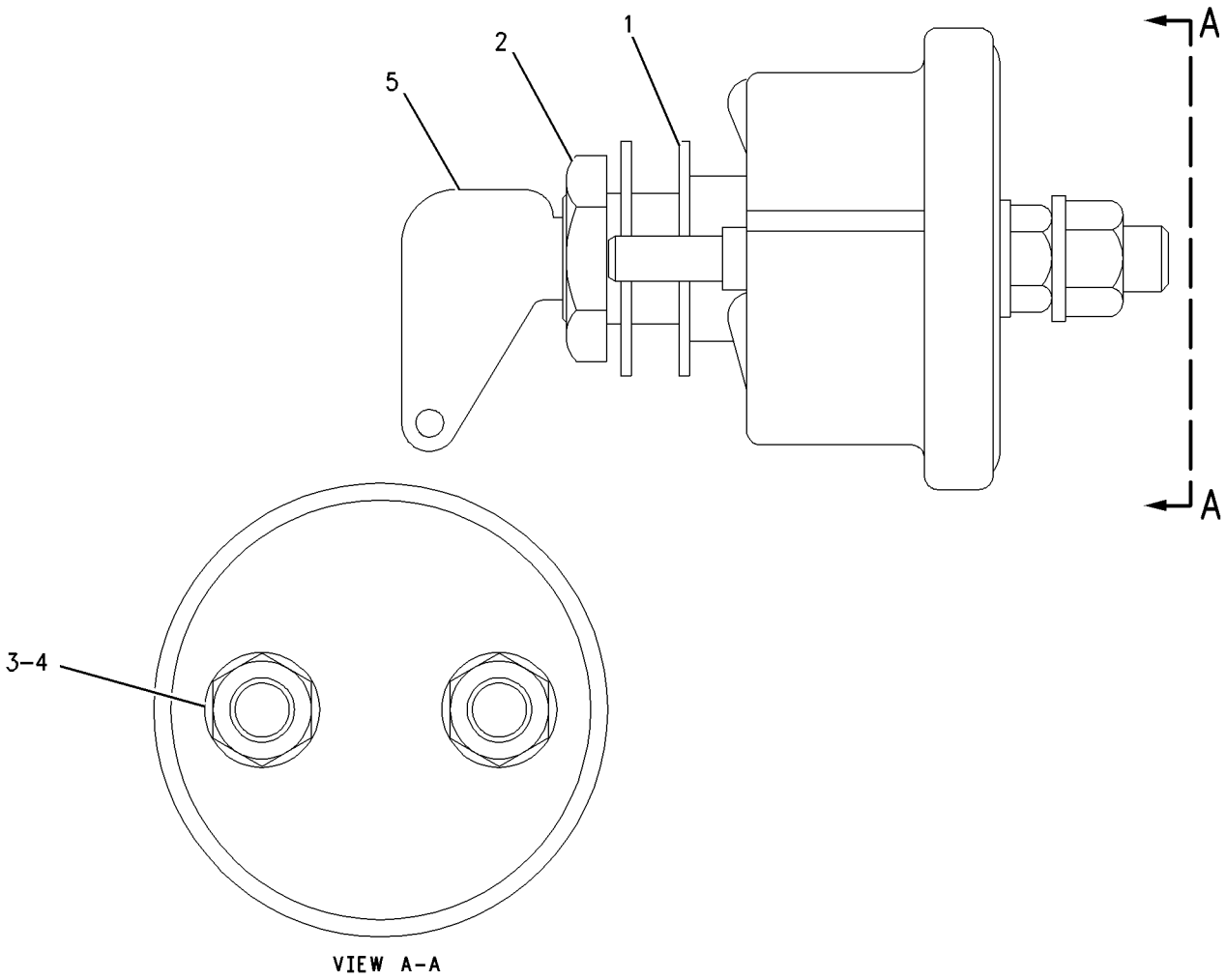

GRAPHIC #1 **<END>** g00664195

118-3534 SWITCH GP-MAGNETIC

S/N: TJL1-UP
24-VOLT
PART OF 222-4921 WIRING GP-MACHINE

SMCS-7499 **i03440322**

NOTE	PART NUMBER	QTY	PART NAME 1 2 3 4 5 6 (PRODUCT LEVEL)	SEE PAGE
Y	*175-2308*	1	SWITCH GP-MAGNETIC (24-VOLT) (START RELAY)	166
			—OR—	
Y	*175-2309*	1	SWITCH GP-MAGNETIC (24-VOLT) (START RELAY)	167

Y - SEPARATE ILLUSTRATION

<END>

167-0138 SWITCH GP-MAGNETIC—MAIN POWER RELAY

S/N: TJL1-UP
24-VOLT. FUSE, RELAY
FIELD REPLACEMENT ORDER 241-8368—PAGE: 168, 254-3783—PAGE: 169
PART OF 243-5693 PANEL GP-INSTRUMENT
AN ATTACHMENT

SMCS-7499 **i02529362**

NOTE	REF NO	GRAPHIC REF	PART NUMBER	QTY	PART NAME 1 2 3 4 5 6 (PRODUCT LEVEL)	SEE PAGE
	1	1	**155-2270**	1	KIT-CONNECTING PLUG (2-PIN)	
					(INCLUDES PLUG AS, WEDGE, & INTERFACE SEAL)	
	2	1	**4F-2294**	2	NUT-JAM (5/16-24-THD)	
	3	1	**186-3736**	2	SOCKET-CONNECTOR (16-GA TO 18-GA)	

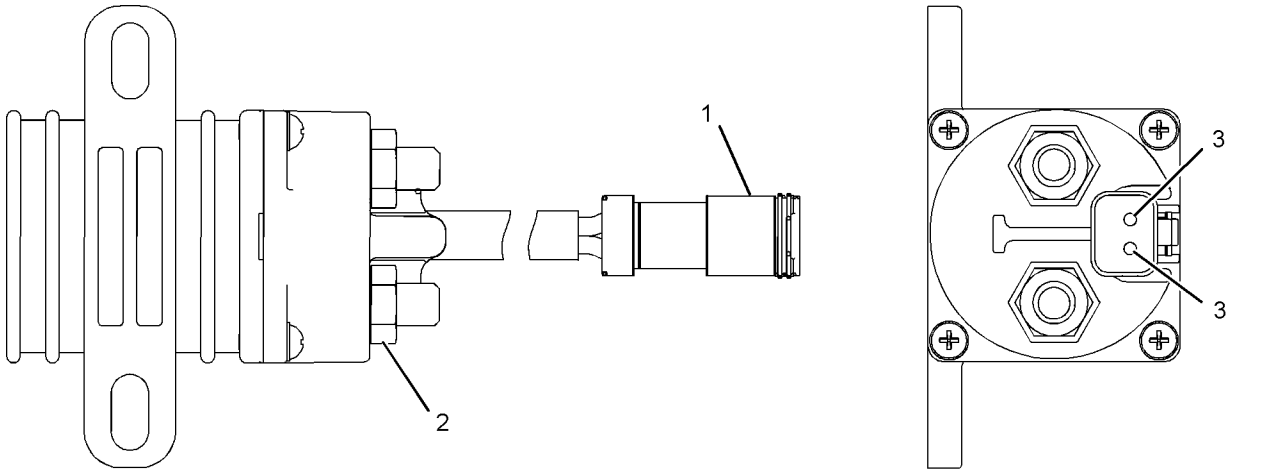

GRAPHIC #1 **<END>** g01079731

175-2308 SWITCH GP-MAGNETIC

S/N: TJL1-UP
24-VOLT
PART OF 118-3534 SWITCH GP-MAGNETIC

SMCS-7499 **i02529277**

NOTE	REF NO	GRAPHIC REF	PART NUMBER	QTY	PART NAME 1 2 3 4 5 6 (PRODUCT LEVEL)	SEE PAGE
	1	1	**102-8802**	1	KIT-RECEPTACLE (2-PIN)	
					(INCLUDES RECEPTACLE AS & WEDGE)	
	2	1	**186-3735**	2	PIN-CONNECTOR (16-GA TO 18-GA)	
	3	1	**1H-3338**	2	LOCKWASHER (EXTERNAL TOOTH)	
	4	1	**012-0380**	2	LOCKWASHER	
M	5	1	**5C-2890**	2	NUT (M6X1-THD)	
E	6	1	**9X-1813**		SLEEVE (16-CM)	

E - ORDER BY THE CENTIMETER
M - METRIC PART

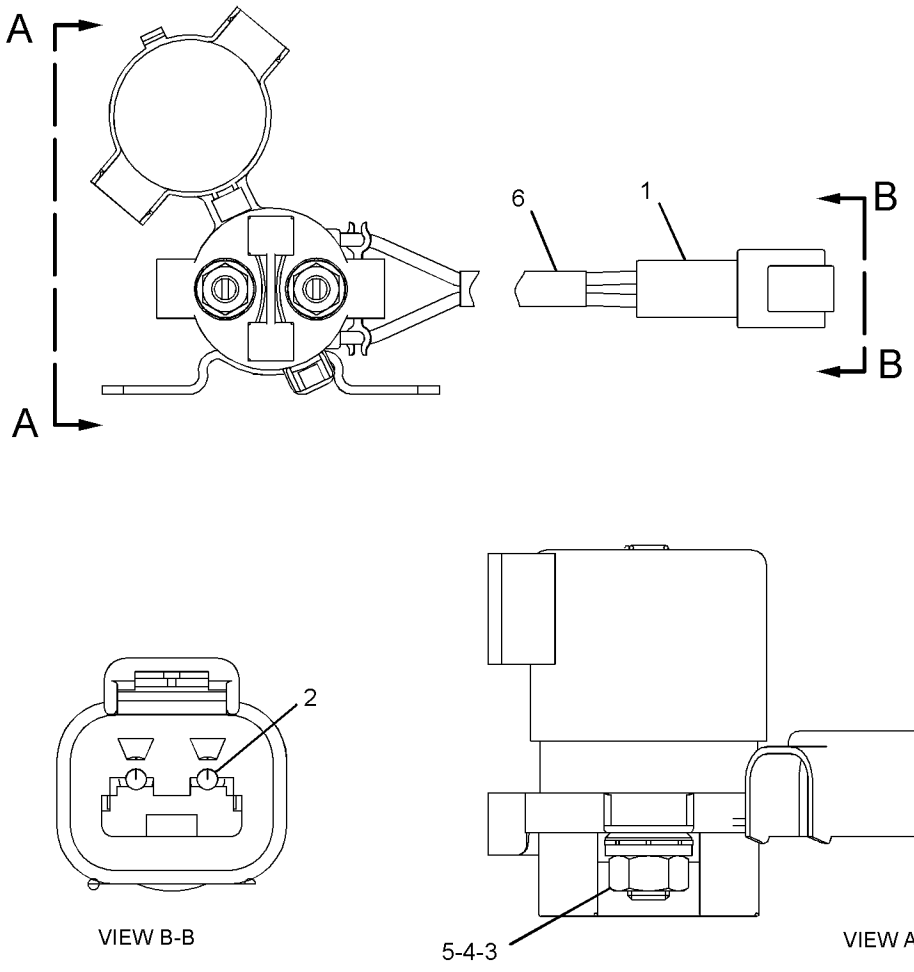

GRAPHIC #1 **<END>** g01266266

175-2309 SWITCH GP-MAGNETIC

S/N: TJL1-UP
24-VOLT
PART OF 118-3534 SWITCH GP-MAGNETIC

SMCS-7499 **i02668670**

NOTE	REF NO	GRAPHIC REF	PART NUMBER	QTY	PART NAME 1 2 3 4 5 6 (PRODUCT LEVEL)	SEE PAGE
	1	1	**117-9081**	1	SWITCH AS-MAGNETIC (STARTER RELAY)	
	1A	1	**1H-3338**	2	LOCKWASHER (EXTERNAL TOOTH)	
M	1B	1	**5C-2890**	2	NUT (M6X1-THD)	
	1C	1	**012-0380**	2	LOCKWASHER	
	2	1	**102-8802**	1	KIT-RECEPTACLE (2-PIN)	
					(INCLUDES RECEPTACLE AS & WEDGE)	
	3	1	**186-3735**	2	PIN-CONNECTOR (16-GA TO 18-GA)	
E	4	1	**9X-1813**		SLEEVE (16-CM)	

E - ORDER BY THE CENTIMETER
M - METRIC PART

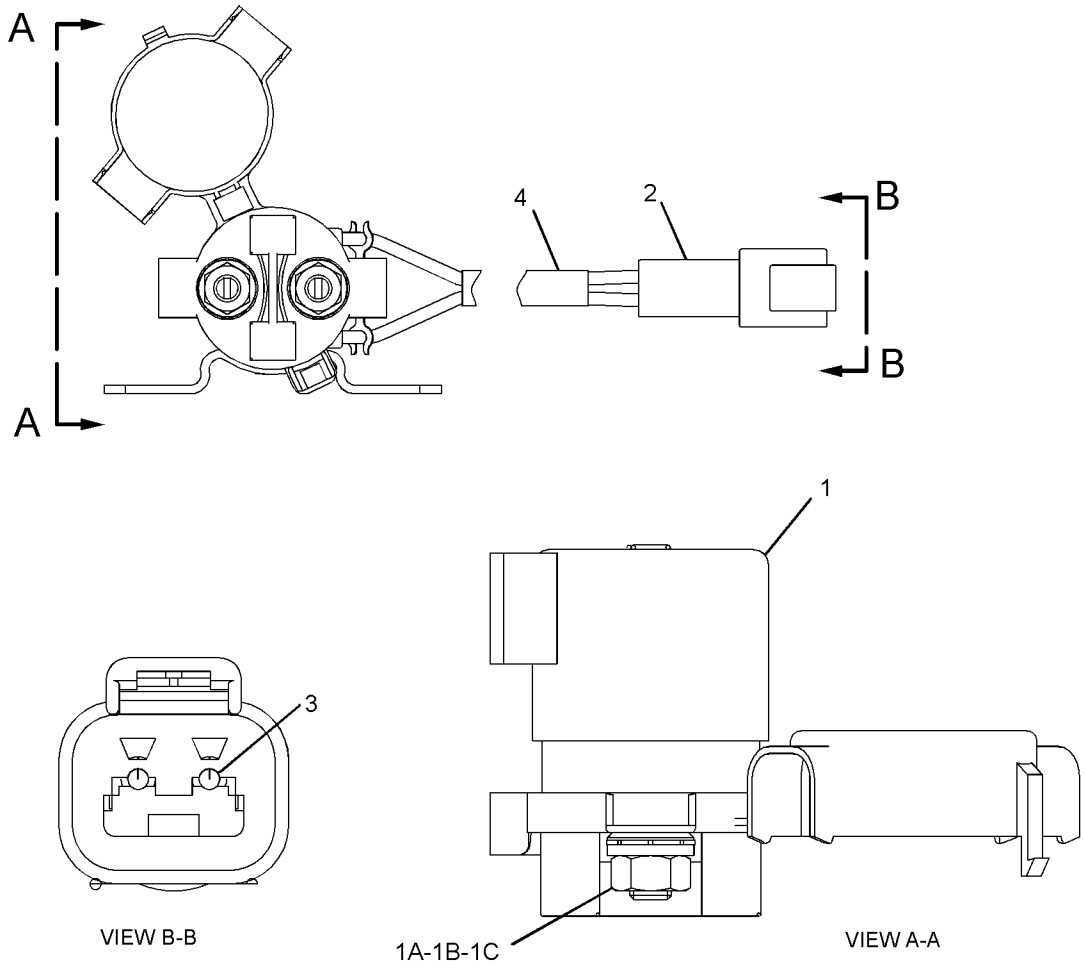

GRAPHIC #1 **<END>** g01266277

241-8368 SWITCH GP-MAGNETIC—MAIN RELAY

S/N: TJL1-UP
24-VOLT
FIELD REPLACEMENT FOR 167-0138—PAGE: 165
PART OF 224-1152 PANEL GP-INSTRUMENT
AN ATTACHMENT

SMCS-7499 **i04895204**

NOTE	REF NO	GRAPHIC REF	PART NUMBER	QTY	PART NAME 1 2 3 4 5 6 (PRODUCT LEVEL)	SEE PAGE
	1	1	**155-2270**	1	KIT-CONNECTING PLUG (2-PIN)	
					(INCLUDES PLUG AS, WEDGE & INTERFACE SEAL)	
	2	1	**4F-2294**	2	NUT-JAM (5/16-24-THD)	
	3	1	**8T-8730**	2	SOCKET-CONNECTOR (16-GA TO 18-GA)	

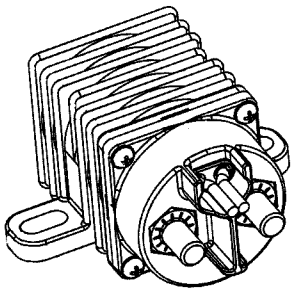

ISOMETRIC VIEW

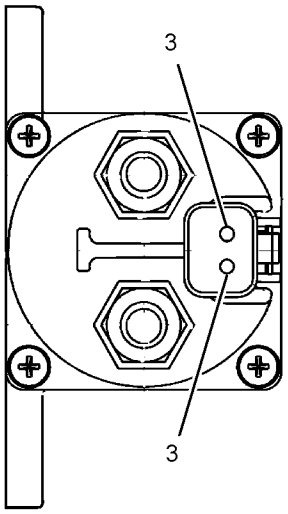

VIEW A-A

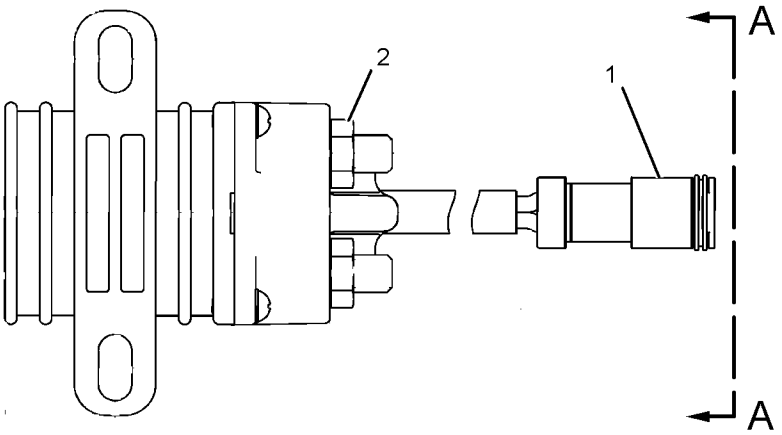

GRAPHIC #1 **<END>** g01077362

254-3783 SWITCH GP-MAGNETIC—MAIN RELAY—MAIN POWER RELAY

S/N: TJL1-UP
24-VOLT
FIELD REPLACEMENT FOR 167-0138—PAGE: 165
PART OF 224-1152 PANEL GP-INSTRUMENT
AN ATTACHMENT

SMCS-7499 **i03056718**

NOTE	REF NO	GRAPHIC REF	PART NUMBER	QTY	PART NAME 1 2 3 4 5 6 (PRODUCT LEVEL)	SEE PAGE
	1	1	**4F-2294**	2	NUT-JAM (5/16-24-THD)	
	2	1	**6V-8186**	2	NUT-FULL (5/16-24-THD)	
	3	1	**155-2270**	1	KIT-CONNECTING PLUG (2-PIN)	
					(INCLUDES PLUG AS & WEDGE)	
	4	1	**186-3736**	2	SOCKET-CONNECTOR (16-GA TO 18-GA)	

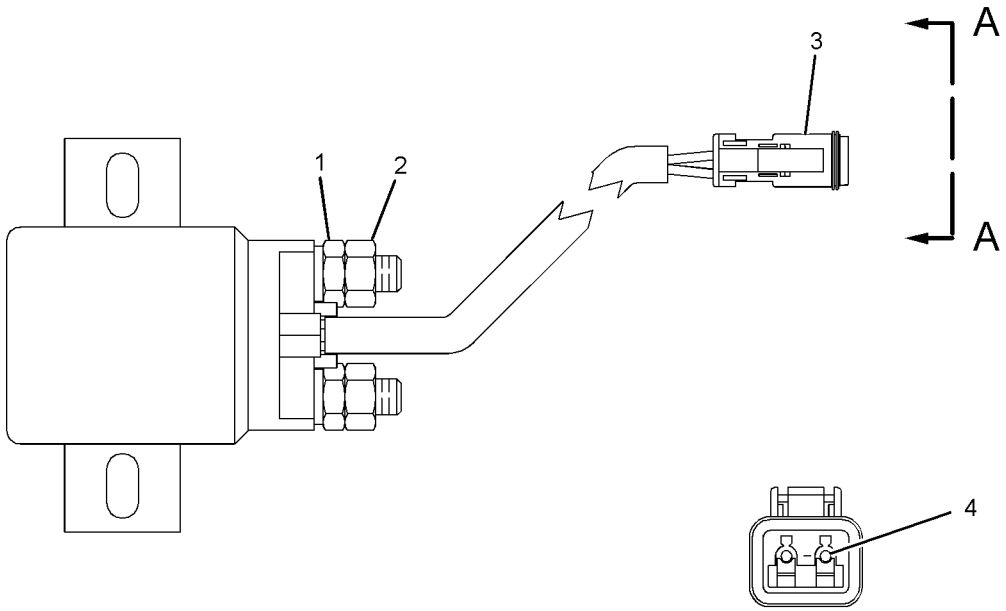

VIEW A-A

GRAPHIC #1 **<END>** g01141735

220-8549 WARNING GP-BACKUP

S/N: TJL1-UP

PART OF 238-8680 ELECTRICAL AR

SMCS-7406 **i03640054**

NOTE	REF NO	GRAPHIC REF	PART NUMBER	QTY	PART NAME 1 2 3 4 5 6 (PRODUCT LEVEL)	SEE PAGE
	1	1	**3S-2093**	18	STRAP-CABLE	
Y	2	1	**244-1090**	1	ALARM GP	121
	3	1	**229-9782**	1	HARNESS AS-ALARM (BACKUP WARNING)	
		1	**8T-8729**	2	PIN-CONNECTOR (16-GA TO 18-GA)	
		1	**155-2270**	1	KIT-CONNECTING PLUG (2-PIN)	
					(INCLUDES PLUG AS, WEDGE & INTERFACE SEAL)	
		1	**102-8802**	1	KIT-RECEPTACLE (2-PIN)	
					(INCLUDES RECEPTACLE AS & WEDGE)	
		1	**8T-8730**	2	SOCKET-CONNECTOR (16-GA TO 18-GA)	
	4	1	**8T-4121**	2	WASHER-HARD (11X21X2.5-MM THK)	
M	5	1	**8T-4133**	2	NUT (M10X1.5-THD)	
M	6	1	**8T-6685**	2	BOLT (M10X1.5X110-MM)	

M - METRIC PART
Y - SEPARATE ILLUSTRATION

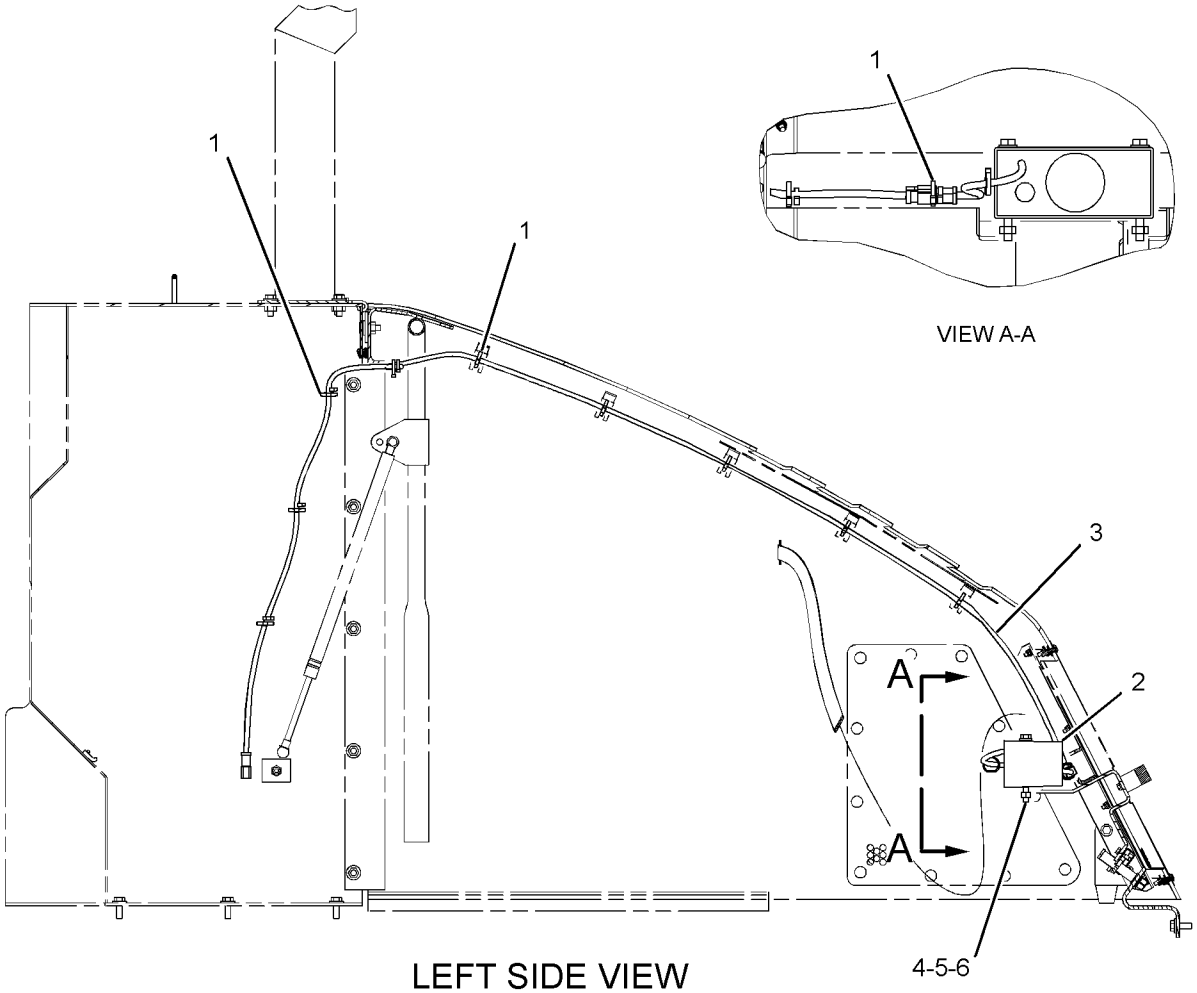

LEFT SIDE VIEW

GRAPHIC #1

<END>

g01227508

227-0063 WIRING GP-AIR CONDITIONER

S/N: TJL1-UP
PART OF 227-5595, 348-5640 OPERATOR AR
AN ATTACHMENT

SMCS-1408, 7320 **i05264571**

NOTE	REF NO	GRAPHIC REF	PART NUMBER	QTY	PART NAME 1 2 3 4 5 6 (PRODUCT LEVEL)	SEE PAGE
	1	1	**3S-2093**	18	STRAP-CABLE	
	2	1	**189-3158**	1	SUPPRESSOR-ARC	
	3	1	**8T-4223**	1	WASHER-HARD (13.5X25.5X3-MM THK)	
	4	1	**132-5789**	2	CLIP	
Y	5	1	**419-1800**	1	HARNESS AS-HEATER & AIR COND	128
	6	1	**4P-7428**	1	CLIP	
	7	1	**4P-7581**	1	CLIP	
	8	1	**7K-1181**	4	STRAP-CABLE	
M	9	1	**8T-4192**	1	BOLT (M12X1.75X25-MM)	
	10	1	**116-0118**	1	CLIP	
M	11	1	**8T-4970**	1	BOLT (M6X1X14-MM)	
	12	1	**5P-4115**	1	WASHER-HARD (7.2X19X2-MM THK)	

M - METRIC PART
Y - SEPARATE ILLUSTRATION

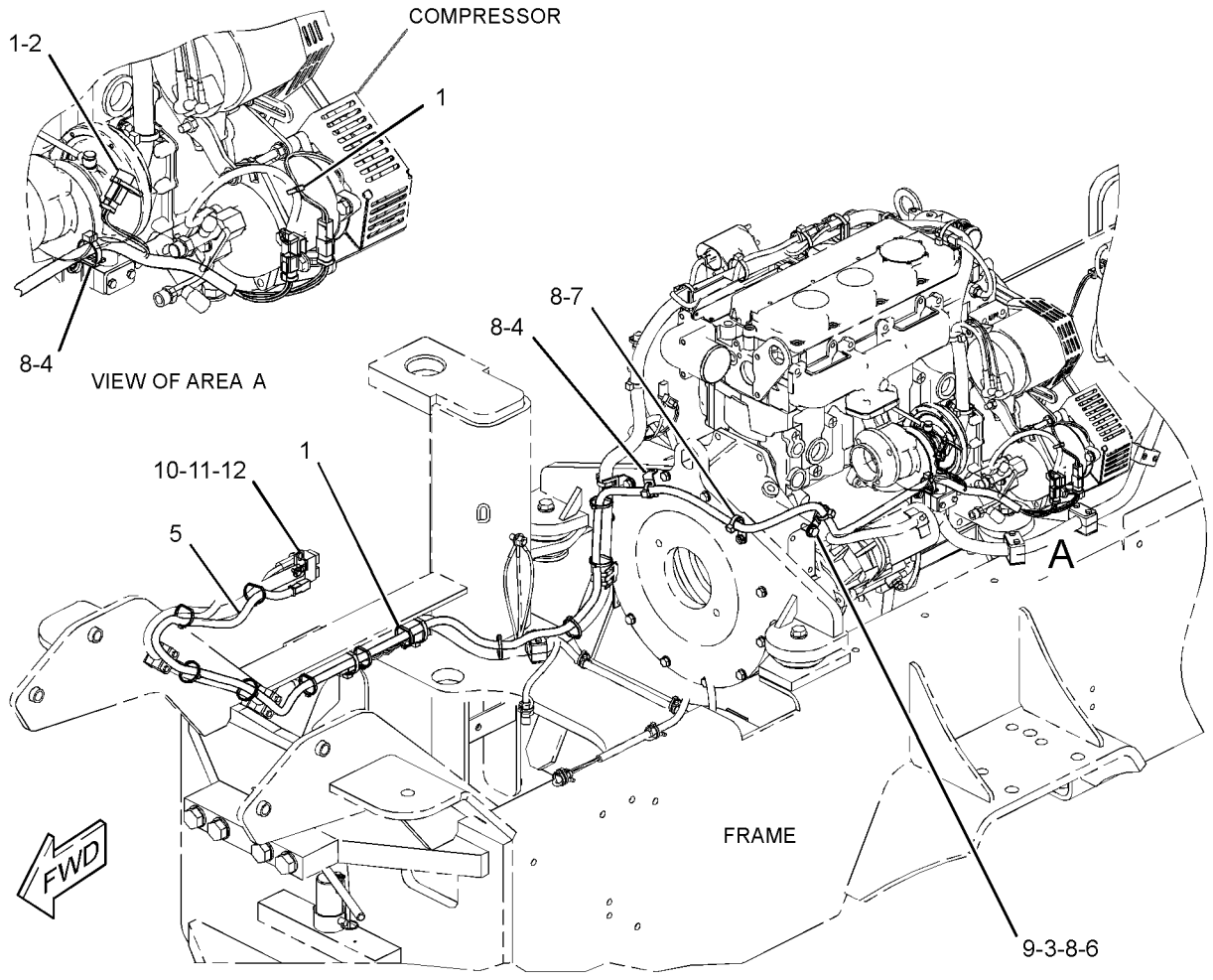

GRAPHIC #1 **<END>** g03341034

226-8940 WIRING GP-CAB

S/N: TJL1-UP
WIPER
PART OF 259-4423, 339-6602 CAB AR
AN ATTACHMENT

SMCS-1408 **i03649446**

NOTE	REF NO	GRAPHIC REF	PART NUMBER	QTY	PART NAME 1 2 3 4 5 6 (PRODUCT LEVEL)	SEE PAGE
	1	1	**3S-2093**	35	STRAP-CABLE	
	2	1	**152-9802**	1	HARNESS AS-CAB	
		1	**8T-8729**	13	PIN-CONNECTOR (16-GA TO 18-GA)	
		1	**155-2271**	1	KIT-CONNECTING PLUG (4-PIN)	
		1	**155-2274**	2	KIT-CONNECTING PLUG (6-PIN)	
					(EACH PLUG KIT INCLUDES PLUG AS, WEDGE & INTERFACE SEAL)	
		1	**8T-8737**	5	PLUG-SEAL	
		1	**102-8804**	1	KIT-RECEPTACLE (4-PIN)	
		1	**102-8801**	1	KIT-RECEPTACLE (12-PIN)	
					(EACH RECEPTACLE KIT INCLUDES RECEPTACLE AS & WEDGE)	
		1	**8T-8730**	14	SOCKET-CONNECTOR (16-GA TO 18-GA)	
		1	**9X-1056**	2	TERMINAL-RECEPTACLE (14-GA TO 16-GA)	
	3	1	**5P-6264**	1	GROMMET	

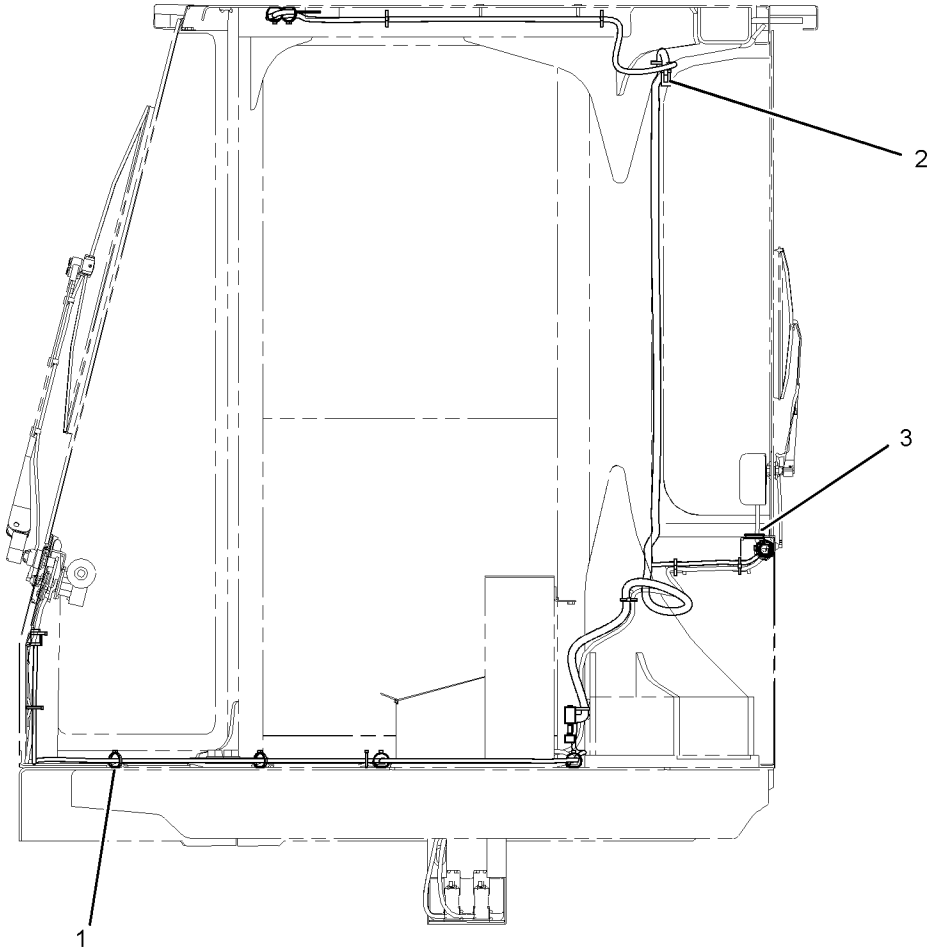

LEFT SIDE VIEW

GRAPHIC #1 **<END>** g01038183

222-4921 WIRING GP-MACHINE

S/N: TJL1-UP
PART OF 238-8680 ELECTRICAL AR
TYPE 1

SMCS-1408 **i03651198**

NOTE	REF NO	GRAPHIC REF	PART NUMBER	QTY	PART NAME 1 2 3 4 5 6 (PRODUCT LEVEL)	SEE PAGE
	1	1,2	**1G-9959**	6	CLAMP	
	2	2,3	**2G-5786**	2	CABLE AS	
					(EACH INCLUDES)	
E		2,3	**5P-0744**		CABLE (00-GA, BLACK) (48-CM)	
		2,3	**5P-2600**	1	RING-TERMINAL (000-GA, 1/2-IN SCREW)	
		2,3	**035-0425**	1	RING-TERMINAL (000-GA, 3/8-IN SCREW)	
	3	2	**3E-2028**	1	SWITCH AS-TEMPERATURE (COOLANT)	
		2	**186-3735**	2	PIN-CONNECTOR (16-GA TO 18-GA)	
		2	**102-8802**	1	KIT-RECEPTACLE (2-PIN)	
					(INCLUDES RECEPTACLE AS & WEDGE)	
	4	1,2,3	**3S-2093**	25	STRAP-CABLE	
	5	3	**5P-3741**	1	TEE-PIPE	
	6	1,2	**7V-5628**	10	PLATE	
	7	1,2	**7V-6089**	14	CLAMP	
	8	1	**7V-9275**	2	STRAP	
	9	1	**8T-8799**	5	BOOT	
	10	3	**103-4977**	1	SWITCH AS-PRESSURE (ENGINE OIL)	
	11	3	**107-0611**	1	SWITCH AS-PRESSURE (ENGINE OIL)	
					(EACH SWITCH AS INCLUDES)	
		3	**186-3735**	2	PIN-CONNECTOR (16-GA TO 18-GA)	
		3	**102-8802**	1	KIT-RECEPTACLE (2-PIN)	
					(INCLUDES RECEPTACLE AS & WEDGE)	
	12	3	**116-0118**	2	CLIP	
Y	13	1	**118-3534**	1	SWITCH GP-MAGNETIC (24-VOLT) (GLOW PLUG RELAY)	164
Y	13A	1	**118-3534**	1	SWITCH GP-MAGNETIC (24-VOLT) (START RELAY)	164
	14	2,3	**132-5789**	7	CLIP	
	15	2	**156-6175**	1	CLIP	
	16	1	**171-2208**	1	CIRCUIT BREAKER AS (60-AMPERE) (ALTERNATOR)	
	16A	1	**171-2208**	1	CIRCUIT BREAKER AS (60-AMPERE) (MAIN)	
	16B	1	**171-2208**	1	CIRCUIT BREAKER AS (60-AMPERE) (GLOW PLUG)	
					(EACH CIRCUIT BREAKER AS INCLUDES)	
		1	**6V-8187**	2	NUT (1/4-28-THD)	
		1	**8T-4205**	2	WASHER-HARD (7.2X14.5X2-MM THK)	
		1	**253-2111**	2	LOCKWASHER	
	17	1	**203-0203**	1	CABLE AS	
D		1	**5P-5675**		WIRE (6-GA, BLACK) (0.18-M)	
		1	**2L-8050**	2	TERMINAL-RING (6-GA, 1/4-IN SCREW)	
	18	1	**253-1847**	1	HARNESS AS-CHASSIS	
		1	**102-8802**	1	KIT-RECEPTACLE (2-PIN)	
		1	**102-8805**	1	KIT-RECEPTACLE (6-PIN)	
					(EACH RECEPTACLE KIT INCLUDES RECEPTACLE AS & WEGE)	
		1	**6L-3483**	1	COVER-TERMINAL	
		1	**7E-0976**	2	BOOT	
		2	**7X-6222**	1	PLUG AS-CONNECTOR (24-PIN)	
		1	**3E-4367**	1	RING-RETAINING	
M		1	**3E-8558**	1	BOLT (M5X0.8X39.37-MM)	
		1	**9X-3265**	2	SEAL-CONNECTOR (24-PIN)	
		1	**8N-1547**	1	SOCKET-CONNECTOR (6-GA)	
		1	**8T-8737**	16	PLUG-SEAL	
		1	**9G-4348**	1	HOUSING-PLUG	
		1	**100-3320**	1	PLUG AS-CONNECTOR (2-PIN)	
		1	**126-5011**	1	SEAL-CONNECTOR	
		1	**305-5362**	2	TERMINAL AS (18-GA)	
		1	**2L-8081**	3	TERMINAL-RING (14-GA TO 16-GA, 1/2-IN SCREW)	
		1	**5P-4571**	1	TERMINAL-BLADE (14-GA TO 16-GA)	

222-4921 **WIRING GP-MACHINE (*contd.*)** **i03651198**

NOTE	REF NO	GRAPHIC REF	PART NUMBER	QTY	PART NAME 1 2 3 4 5 6 (PRODUCT LEVEL)	SEE PAGE
		1	**131-1487**	1	TERMINAL AS (6-GA TO 8-GA)	
		1	**131-1490**	1	TERMINAL AS (6-GA TO 8-GA)	
E		1	**119-3662**		TUBE-HEAT SHRINK (10.85-MM DIA) (4-CM)	
		1	**2L-8076**	2	TERMINAL-RING (14-GA TO 16-GA, NO. 10 SCREW)	
		1	**2L-8079**	1	TERMINAL-RING (14-GA TO 16-GA, 3/8-IN SCREW)	
		1	**152-5542**	6	TERMINAL AS (6-GA TO 8-GA)	
					(EACH INCLUDES)	
E		1	**119-3662**		TUBE-HEAT SHRINK (10.85-MM DIA) (4-CM)	
		1	**155-2270**	13	KIT-CONNECTING PLUG (2-PIN)	
		1	**155-2260**	4	KIT-CONNECTING PLUG (3-PIN)	
		1	**155-2271**	1	KIT-CONNECTING PLUG (4-PIN)	
		1	**155-2274**	1	KIT-CONNECTING PLUG (6-PIN)	
					(EACH PLUG KIT INCLUDES PLUG AS, WEDGE & INTERFACE SEAL)	
		1	**180-9340**	64	SOCKET-CONNECTOR (14-GA TO 18-GA)	
	19	2	**229-2884**	1	GUARD AS-ALTERNATOR	
	20	1	**231-6603**	1	WIRE AS	
	21	2	**232-0295**	1	PLATE AS	
		2	**178-8505**	1	PLATE AS	
	22	2	**232-0296**	1	PANEL AS	
		2	**7T-1099**	1	LINK	
M		2	**8T-3612**	2	NUT-WELD (M8X1.25-THD)	
		2	**178-8505**	1	PLATE AS	
	23	2	**232-0310**	1	ANGLE	
	24	2	**257-9290**	1	FILM-IDENTIFICATION (CIRCUIT PANEL)	
	25	2	**033-4814**	6	SCREW (10-32X1-IN)	
	26	3	**3B-6552**	1	ELBOW-PIPE	
	27	2	**3B-7255**	1	BUSHING-REDUCING	
	28	2	**4B-4274**	6	WASHER (5.5X13X1.2-MM THK)	
	29	3	**4P-7428**	1	CLIP	
	30	1,2,3	**4P-7581**	8	CLIP	
M	31	3	**5C-2874**	2	NUT (M5X0.8-THD)	
M	32	2,3	**5C-2890**	5	NUT (M6X1-THD)	
	33	2	**5J-4715**	1	WASHER (10.3X20.6X4.2-MM THK)	
	34	3	**5K-5068**	1	FITTING-PIPE (1/8-27 PTF)	
	35	2	**5P-4115**	5	WASHER-HARD (7.2X19X2-MM THK)	
	36	1,2	**5P-4116**	5	WASHER-HARD (8.8X20.5X2-MM THK)	
	37	1,2,3	**7K-1181**	26	STRAP-CABLE	
	38	2	**7X-7729**	2	WASHER (11X25X3-MM THK)	
M	39	1,2	**8C-8451**	20	BOLT (M6X1X40-MM)	
	40	2	**8T-4121**	1	WASHER-HARD (11X21X2.5-MM THK)	
M	41	2	**8T-4137**	3	BOLT (M10X1.5X20-MM)	
M	42	2	**8T-4138**	4	BOLT (M6X1X20-MM)	
M	43	1,2,3	**8T-4189**	8	BOLT (M8X1.25X20-MM)	
M	44	1	**8T-4200**	4	BOLT (M8X1.25X16-MM)	
	45	2,3	**8T-4223**	2	WASHER-HARD (13.5X25.5X3-MM THK)	
	46	1,2,3	**8T-4224**	12	WASHER-HARD (8.8X16X2-MM THK)	
M	47	2,3	**8T-4244**	2	NUT (M12X1.75-THD)	
M	48	2	**8T-4908**	4	BOLT (M8X1.25X25-MM)	
M	49	2	**8T-4970**	1	BOLT (M6X1X14-MM)	
E	51	1	**206-2733**		GUARD-HOSE (35-CM)	

D - ORDER BY THE METER
E - ORDER BY THE CENTIMETER
M - METRIC PART
Y - SEPARATE ILLUSTRATION

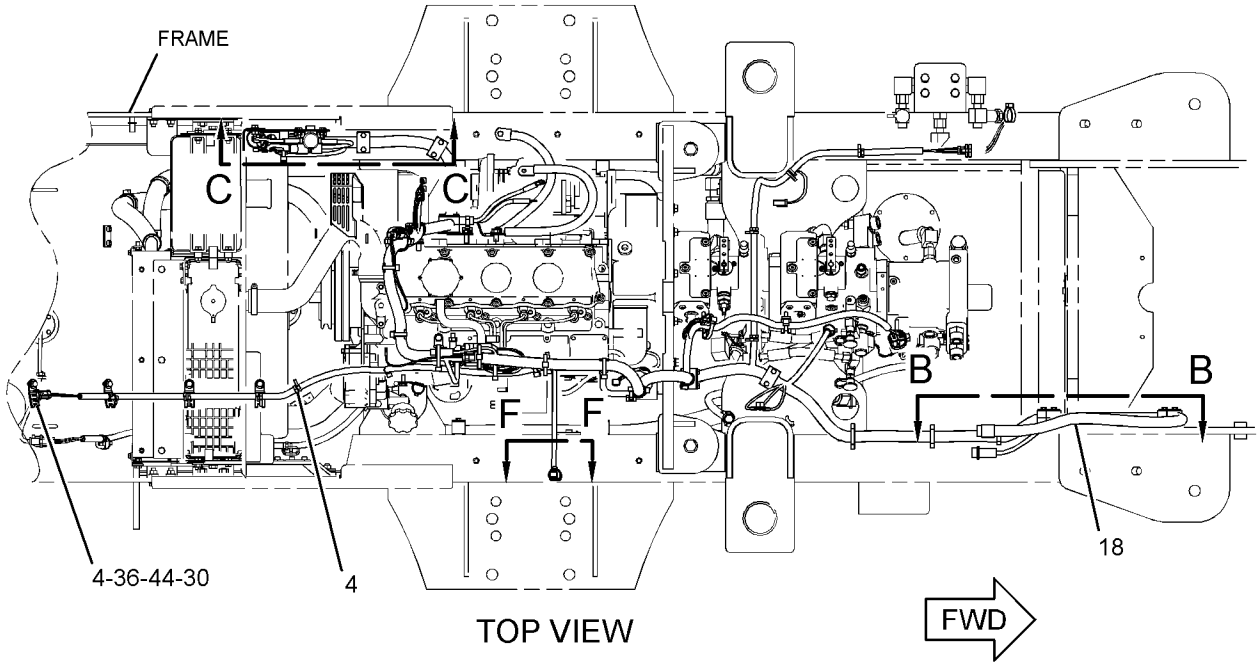

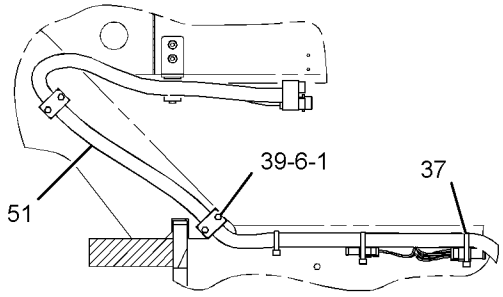

VIEW B-B

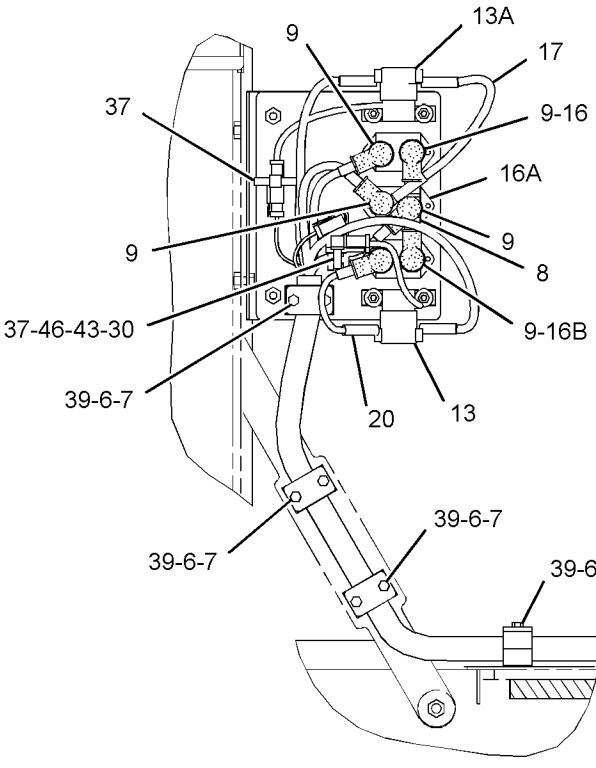

VIEW C-C

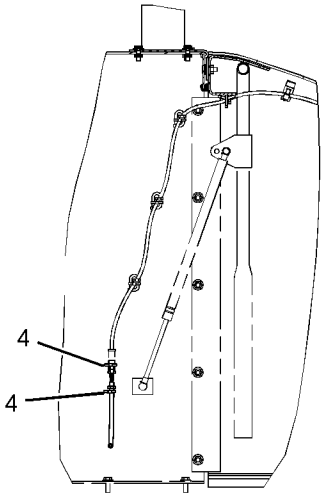

VIEW F-F

GRAPHIC #1 g01934495

222-4921 **WIRING GP-MACHINE (*contd.*)** **i03651198**

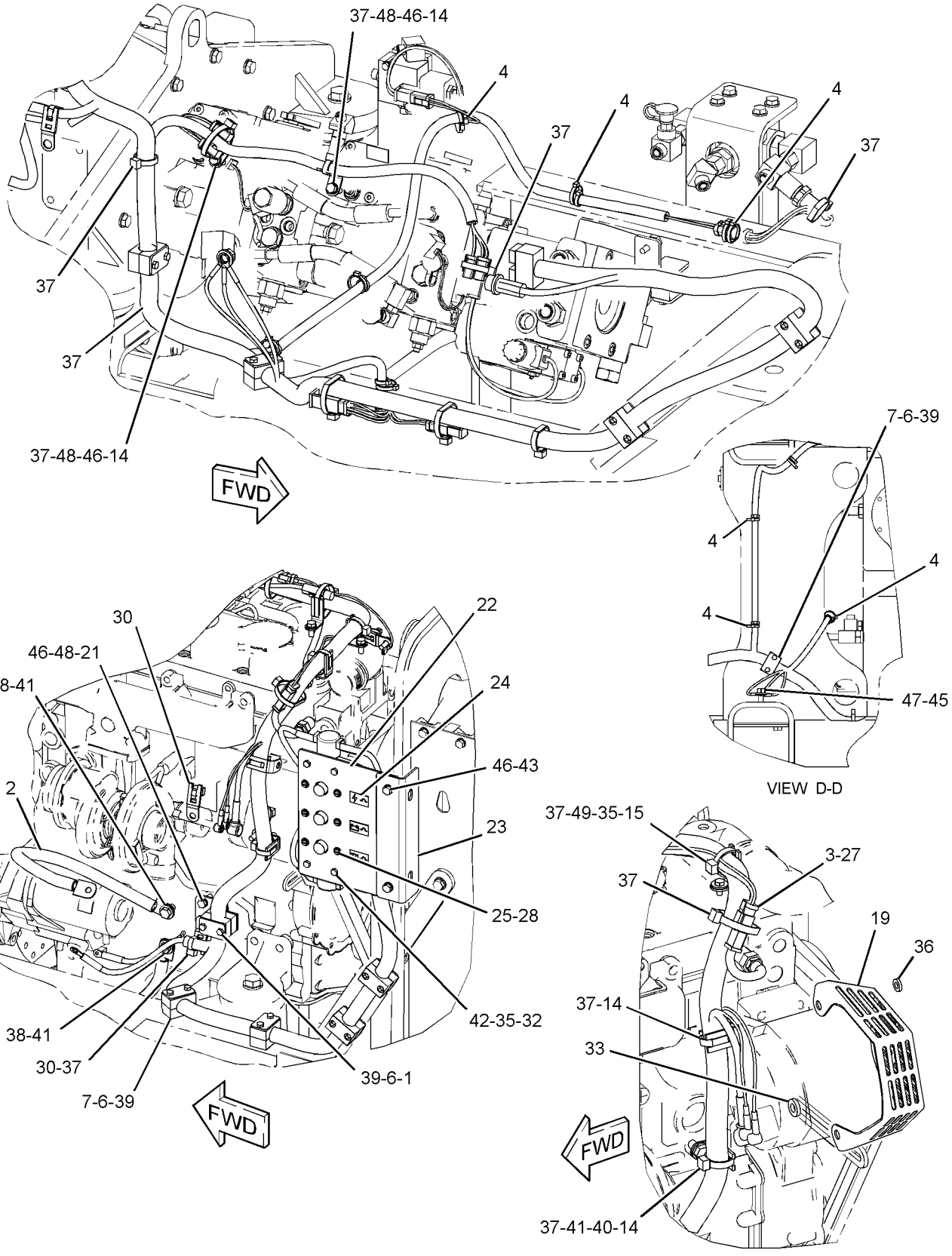

GRAPHIC #2 g01934496

222-4921 **WIRING GP-MACHINE (*contd.*)** **i03651198**

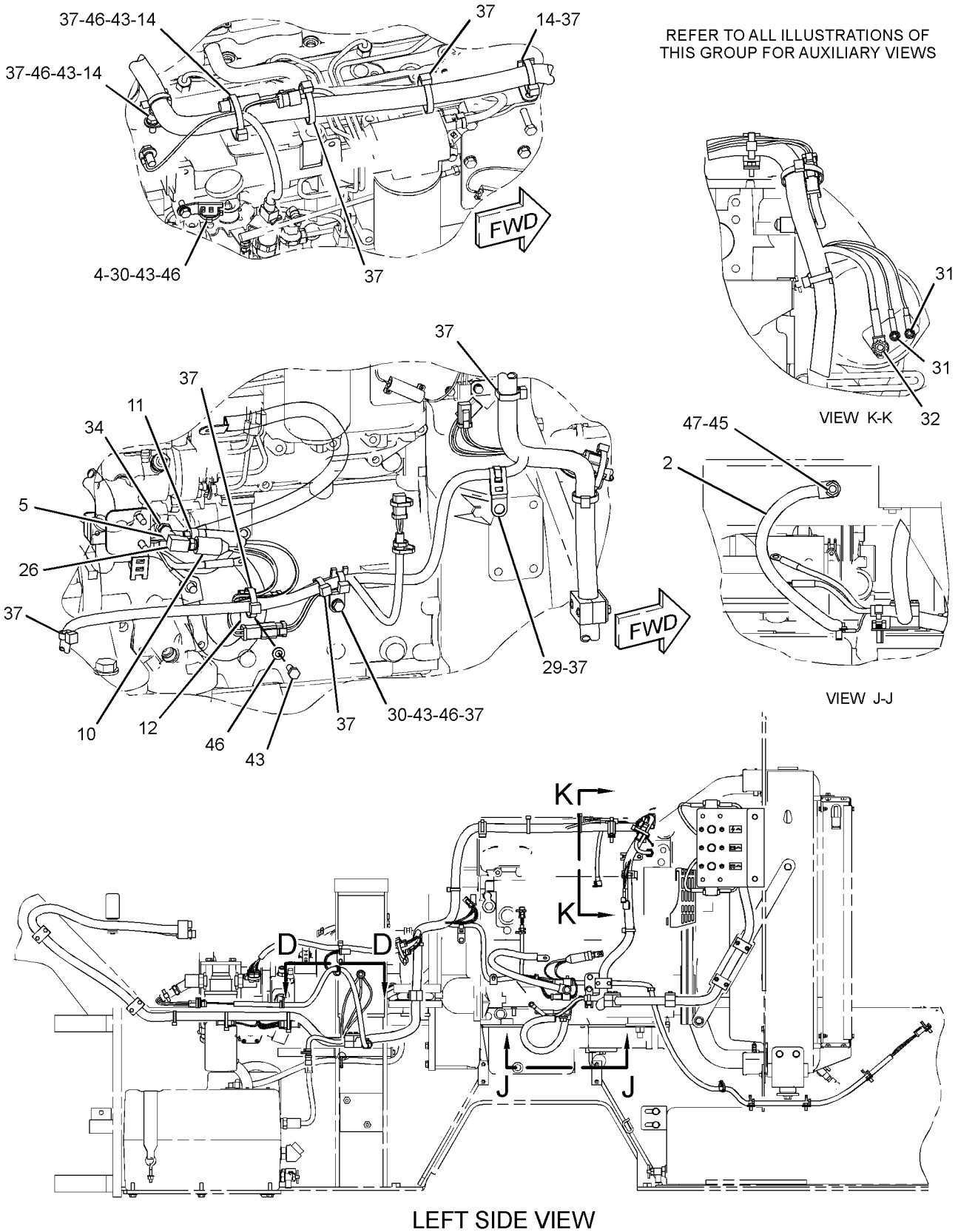

LEFT SIDE VIEW

GRAPHIC #3 **<END>** g01934497

222-4921 WIRING GP-MACHINE

S/N: TJL1-UP

PART OF 238-8680 ELECTRICAL AR

TYPE 2

SMCS-1408 **i03916354**

NOTE	REF NO	GRAPHIC REF	PART NUMBER	QTY	PART NAME 1 2 3 4 5 6 (PRODUCT LEVEL)	SEE PAGE
	1	1,2	**1G-9959**	6	CLAMP	
	2	2,3	**2G-5786**	2	CABLE AS	
					(EACH INCLUDES)	
E		2,3	**5P-0744**		CABLE (00-GA, BLACK) (48-CM)	
		2,3	**5P-2600**	1	RING-TERMINAL (000-GA, 1/2-IN SCREW)	
		2,3	**035-0425**	1	RING-TERMINAL (000-GA, 3/8-IN SCREW)	
	3	2	**3E-2028**	1	SWITCH AS-TEMPERATURE (COOLANT)	
		2	**8T-8729**	2	PIN-CONNECTOR (16-GA TO 18-GA)	
		2	**102-8802**	1	KIT-RECEPTACLE (2-PIN)	
					(INCLUDES RECEPTACLE AS & WEDGE)	
	4	1,2,3	**3S-2093**	25	STRAP-CABLE	
	5	3	**5P-3741**	1	TEE-PIPE	
	6	1,2	**7V-5628**	10	PLATE	
	7	1,2	**7V-6089**	14	CLAMP	
	8	1	**7V-9275**	2	STRAP	
	9	1	**8T-8799**	5	BOOT	
	10	3	**103-4977**	1	SWITCH AS-PRESSURE (ENGINE OIL)	
	11	3	**107-0611**	1	SWITCH AS-PRESSURE (ENGINE OIL)	
					(EACH SWITCH AS INCLUDES)	
		3	**8T-8729**	2	PIN-CONNECTOR (16-GA TO 18-GA)	
		3	**102-8802**	1	KIT-RECEPTACLE (2-PIN)	
					(INCLUDES RECEPTACLE AS & WEDGE)	
	12	3	**116-0118**	2	CLIP	
Y	13	1	**118-3534**	1	SWITCH GP-MAGNETIC (24-VOLT) (GLOW PLUG RELAY)	164
Y	13A	1	**118-3534**	1	SWITCH GP-MAGNETIC (24-VOLT) (START RELAY)	164
	14	2,3	**132-5789**	7	CLIP	
	15	2	**156-6175**	1	CLIP	
	16	1	**171-2208**	1	CIRCUIT BREAKER AS (60-AMPERE) (ALTERNATOR)	
	16A	1	**171-2208**	1	CIRCUIT BREAKER AS (60-AMPERE) (MAIN)	
	16B	1	**171-2208**	1	CIRCUIT BREAKER AS (60-AMPERE) (GLOW PLUG)	
					(EACH CIRCUIT BREAKER AS INCLUDES)	
		1	**6V-8187**	2	NUT (1/4-28-THD)	
		1	**8T-4205**	2	WASHER-HARD (7.2X14.5X2-MM THK)	
		1	**253-2111**	2	LOCKWASHER	
	17	1	**203-0203**	1	CABLE AS	
D		1	**5P-5675**		WIRE (6-GA, BLACK) (0.18-M)	
		1	*152-5542*	2	TERMINAL AS (6-GA TO 8-GA)	
					(EACH INCLUDES)	
		1	**9X-9882**	1	TERMINAL-RING (6-GA TO 8-GA, 1/4-IN SCREW)	
E		1	**119-3662**		TUBE-HEAT SHRINK (10.85-MM DIA) (4-CM)	
	18	1	**253-1847**	1	HARNESS AS-CHASSIS	
		1	**102-8802**	1	KIT-RECEPTACLE (2-PIN)	
		1	**102-8805**	1	KIT-RECEPTACLE (6-PIN)	
					(EACH RECEPTACLE KIT INCLUDES RECEPTACLE AS & WEGE)	
		1	**6L-3483**	1	COVER-TERMINAL	
		1	**7E-0976**	2	BOOT	
		1	**7X-6222**	1	PLUG AS-CONNECTOR (24-PIN)	
		1	**3E-4367**	1	RING-RETAINING	
M		1	**3E-8558**	1	BOLT (M5X0.8X39.37-MM)	
		1	**9X-3265**	2	SEAL-CONNECTOR (24-PIN)	
		1	**8N-1547**	1	SOCKET-CONNECTOR (6-GA)	
		1	**8T-8737**	16	PLUG-SEAL	
		1	**9G-4348**	1	HOUSING-PLUG	
		1	**100-3320**	1	PLUG AS-CONNECTOR (2-PIN)	
		1	**126-5011**	1	SEAL-CONNECTOR	

222-4921 **WIRING GP-MACHINE (*contd.*)** **i03916354**

NOTE	REF NO	GRAPHIC REF	PART NUMBER	QTY	PART NAME 1 2 3 4 5 6 (PRODUCT LEVEL)	SEE PAGE
		1	**305-5362**	2	TERMINAL AS (18-GA)	
		1	**2L-8081**	3	TERMINAL-RING (14-GA TO 16-GA, 1/2-IN SCREW)	
		1	**5P-4571**	1	TERMINAL-BLADE (14-GA TO 16-GA)	
		1	*131-1487*	1	TERMINAL AS (6-GA TO 8-GA)	
		1	**4K-4639**	1	TERMINAL-SOLDER (6-GA TO 8-GA, NO. 10 SCREW)	
E		1	**119-3662**		TUBE-HEAT SHRINK (10.85-MM DIA) (4-CM)	
		1	*131-1490*	1	TERMINAL AS (6-GA TO 8-GA)	
		1	**6H-3587**	1	TERMINAL-RING (6-GA TO 8-GA, 3/8-IN SCREW)	
E		1	**119-3662**		TUBE-HEAT SHRINK (10.85-MM DIA) (4-CM)	
		1	**2L-8076**	2	TERMINAL-RING (14-GA TO 16-GA, NO. 10 SCREW)	
		1	**2L-8079**	1	TERMINAL-RING (14-GA TO 16-GA, 3/8-IN SCREW)	
		1	*152-5542*	6	TERMINAL AS (6-GA TO 8-GA)	
					(EACH INCLUDES)	
		1	**9X-9882**	1	TERMINAL-RING (6-GA TO 8-GA, 1/4-IN SCREW)	
E		1	**119-3662**		TUBE-HEAT SHRINK (10.85-MM DIA) (4-CM)	
		1	**155-2270**	13	KIT-CONNECTING PLUG (2-PIN)	
		1	**155-2260**	4	KIT-CONNECTING PLUG (3-PIN)	
		1	**155-2271**	1	KIT-CONNECTING PLUG (4-PIN)	
		1	**155-2274**	1	KIT-CONNECTING PLUG (6-PIN)	
					(EACH PLUG KIT INCLUDES PLUG AS, WEDGE & INTERFACE SEAL)	
		1	**180-9340**	64	SOCKET-CONNECTOR (14-GA TO 18-GA)	
	19	2	**229-2884**	1	GUARD AS-ALTERNATOR	
	20	1	**231-6603**	1	WIRE AS	
	21	2	**232-0295**	1	PLATE AS	
		2	**178-8505**	1	PLATE AS	
	22	2	**232-0296**	1	PANEL AS	
M		2	**9R-2160**	1	BOSS (M8X1.25X25-MM)	
		2	**7T-1099**	1	LINK	
M		2	**8T-3612**	2	NUT-WELD (M8X1.25-THD)	
		2	**178-8505**	1	PLATE AS	
	23	2	**232-0310**	1	ANGLE	
	24	2	**257-9290**	1	FILM-IDENTIFICATION (CIRCUIT PANEL)	
	25	2	**033-4814**	6	SCREW (10-32X1-IN)	
	26	3	**3B-6552**	1	ELBOW-PIPE	
	27	2	**3B-7255**	1	BUSHING-REDUCING	
	28	2	**4B-4274**	6	WASHER (5.5X13X1.2-MM THK)	
	29	3	**4P-7428**	1	CLIP	
	30	1,2,3	**4P-7581**	8	CLIP	
M	31	3	**5C-2874**	2	NUT (M5X0.8-THD)	
M	32	2,3	**5C-2890**	5	NUT (M6X1-THD)	
	33	2	**5J-4715**	1	WASHER (10.3X20.6X4.2-MM THK)	
	34	3	**5K-5068**	1	FITTING-PIPE (1/8-27 PTF)	
	35	2	**5P-4115**	5	WASHER-HARD (7.2X19X2-MM THK)	
	36	1,2	**5P-4116**	5	WASHER-HARD (8.8X20.5X2-MM THK)	
C	37	1,2,3	**7K-1181**	25	STRAP-CABLE	
	38	2	**7X-7729**	2	WASHER (11X25X3-MM THK)	
M	39	1,2	**8C-8451**	20	BOLT (M6X1X40-MM)	
	40	2	**8T-4121**	1	WASHER-HARD (11X21X2.5-MM THK)	
M	41	2	**8T-4137**	3	BOLT (M10X1.5X20-MM)	
M	42	2	**8T-4138**	4	BOLT (M6X1X20-MM)	
M	43	1,2,3	**8T-4189**	8	BOLT (M8X1.25X20-MM)	
M	44	1	**8T-4200**	4	BOLT (M8X1.25X16-MM)	
	45	2,3	**8T-4223**	2	WASHER-HARD (13.5X25.5X3-MM THK)	
	46	1,2,3	**8T-4224**	12	WASHER-HARD (8.8X16X2-MM THK)	
M	47	2,3	**8T-4244**	2	NUT (M12X1.75-THD)	
M	48	2	**8T-4908**	4	BOLT (M8X1.25X25-MM)	
M	49	2	**8T-4970**	1	BOLT (M6X1X14-MM)	
E	51	1	**206-2733**		GUARD-HOSE (35-CM)	
C	52	2	**130-5301**	2	CLIP	

222-4921 **WIRING GP-MACHINE (*contd.*)** **i03916354**

NOTE	REF NO	GRAPHIC REF	PART NUMBER	QTY	PART NAME 1 2 3 4 5 6 (PRODUCT LEVEL)	SEE PAGE
C	53	2	**200-6345**	2	MOUNT (DUAL SWIVEL)	
C	54	2	**204-2281**	4	STRAP-CABLE	
C	55	2	**341-0134**	1	HARNESS AS-PUMP	
		2	**155-2270**	2	KIT-CONNECTING PLUG (2-PIN)	
					(EACH INCLUDES PLUG AS, WEDGE & INTERFACE SEAL)	
		2	**102-8804**	1	KIT-RECEPTACLE (4-PIN)	
					(INCLUDES RECEPTACLE AS & WEDGE)	
		2	**180-9340**	8	SOCKET-CONNECTOR (14-GA TO 18-GA)	

C - CHANGE FROM PREVIOUS TYPE
D - ORDER BY THE METER
E - ORDER BY THE CENTIMETER
M - METRIC PART
Y - SEPARATE ILLUSTRATION

222-4921 **WIRING GP-MACHINE (*contd.*)** **i03916354**

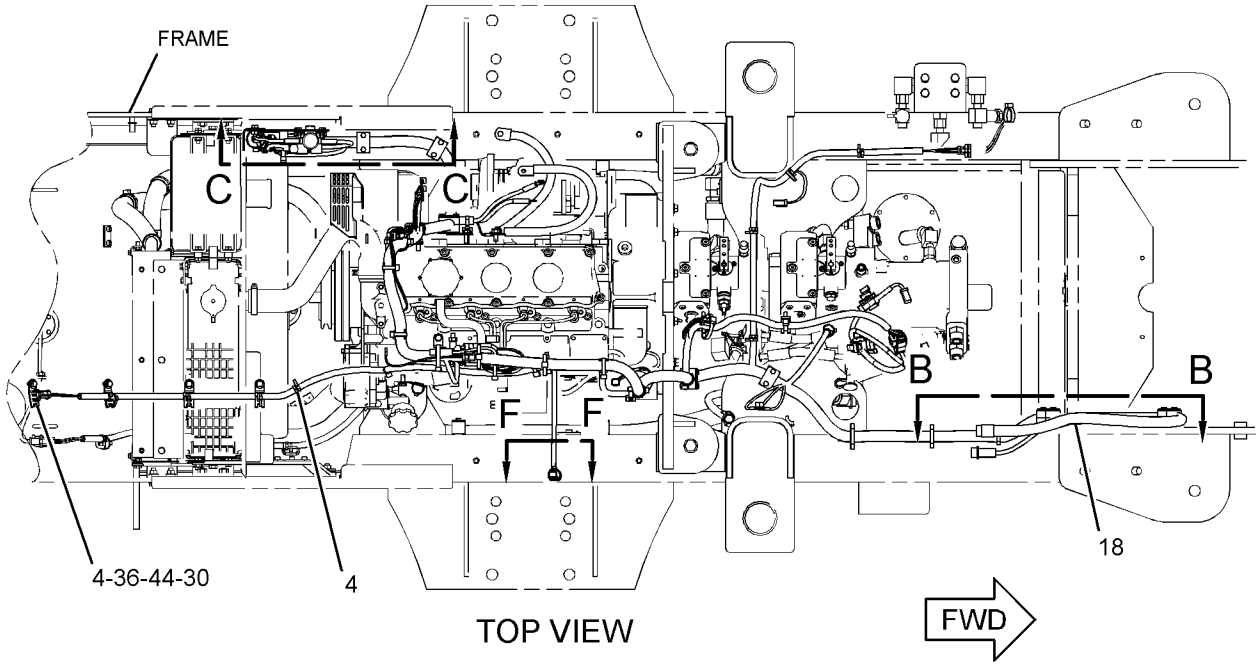

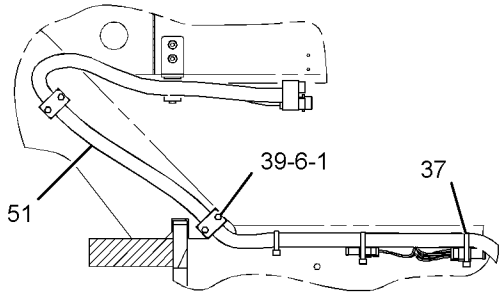

VIEW B-B

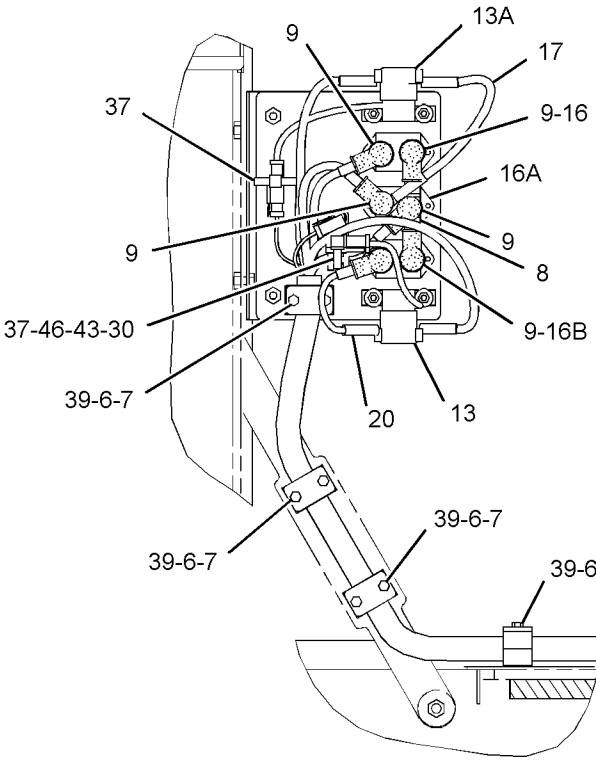

VIEW C-C

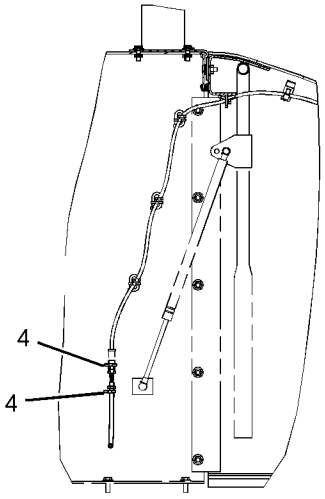

VIEW F-F

GRAPHIC #1 g01952033

222-4921 **WIRING GP-MACHINE (*contd.*)** **i03916354**

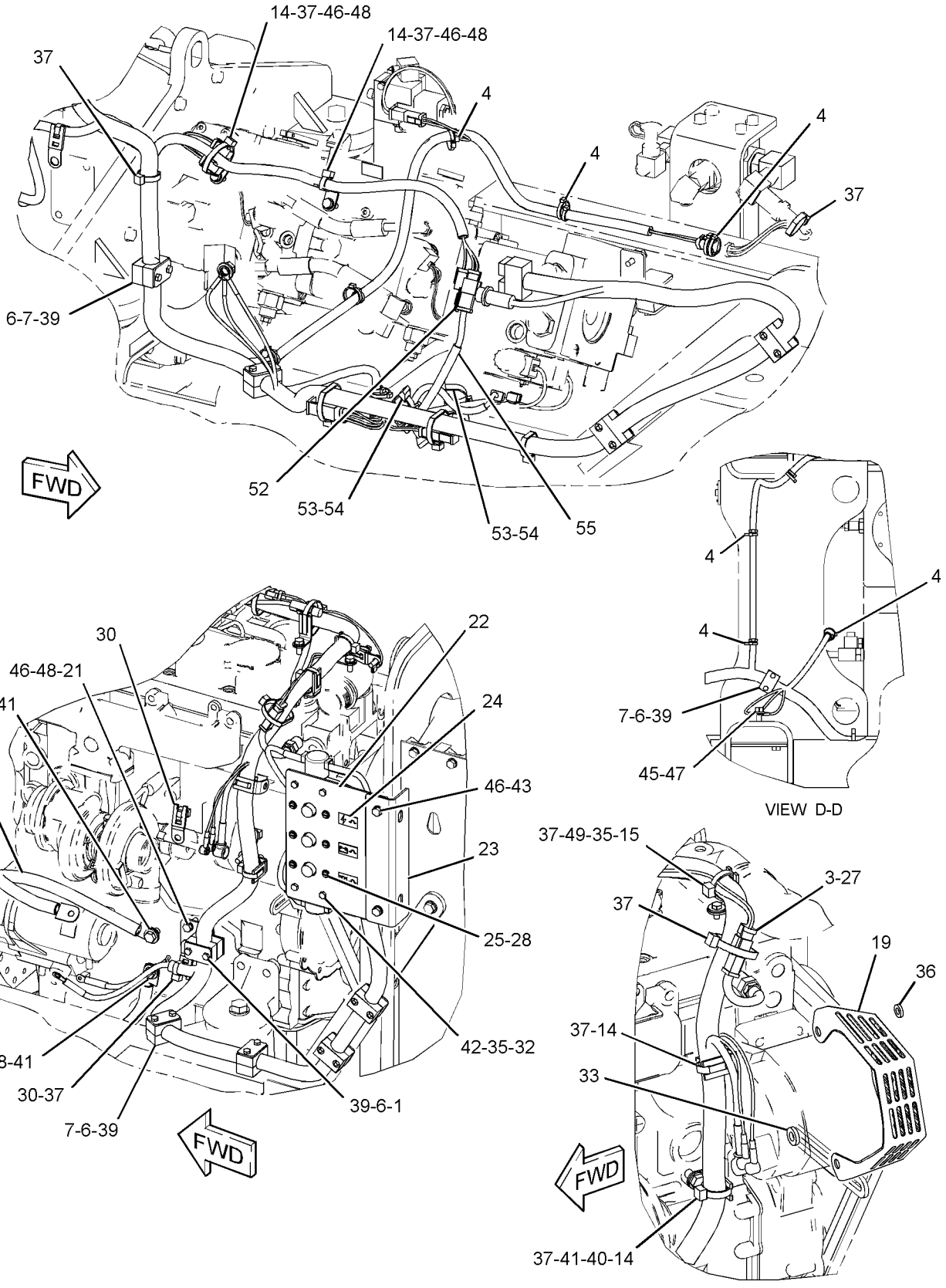

GRAPHIC #2 g01952034

222-4921 **WIRING GP-MACHINE (*contd.*)** **i03916354**

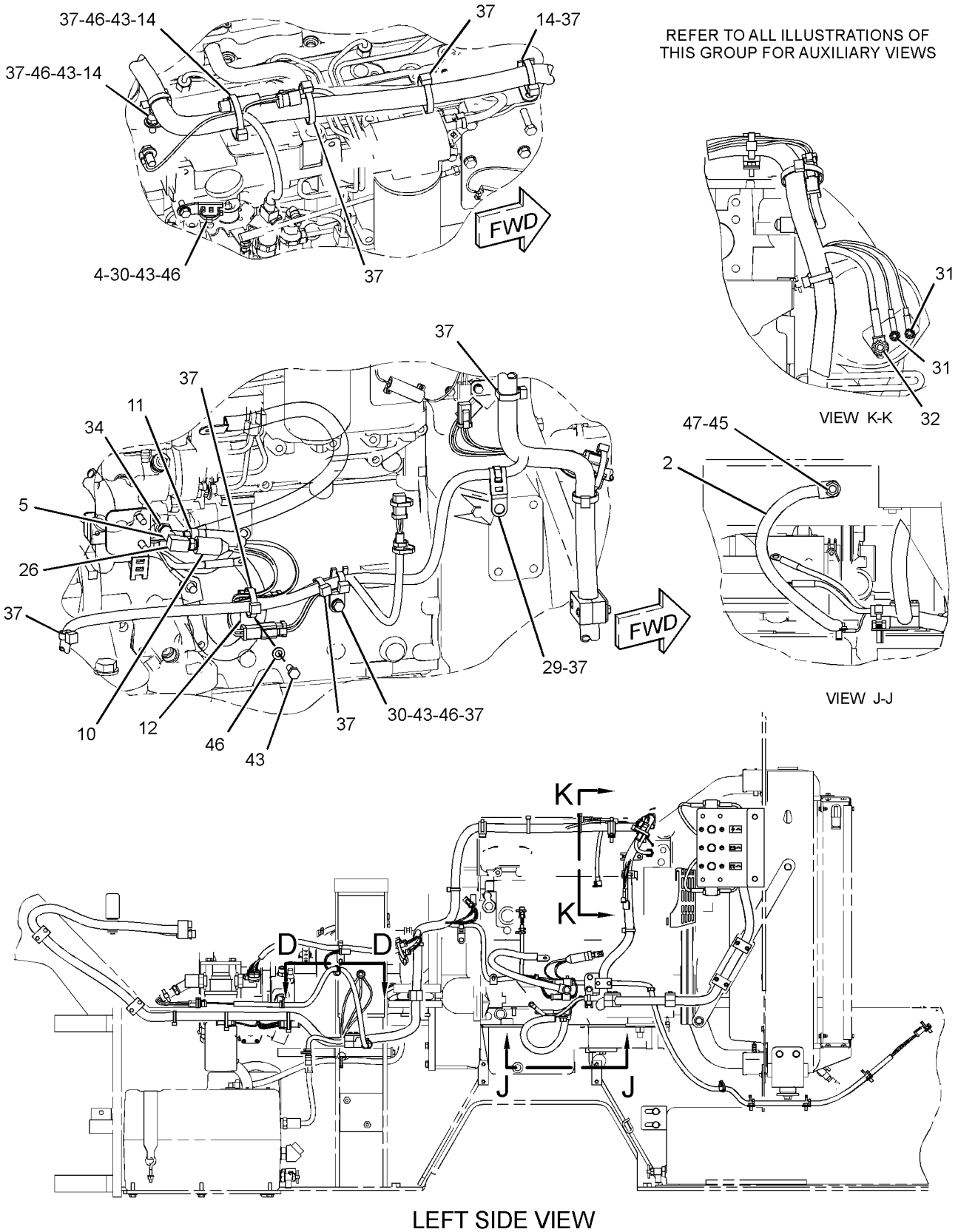

LEFT SIDE VIEW

GRAPHIC #3 **<END>** g01934497

203-4685 AXLE & MTG GP-DRIVE—WITHOUT BRAKES

S/N: TJL1-418

PART OF 227-4257 AXLE AR-DRIVE

ALSO AN ATTACHMENT

SMCS-3278 **i03034152**

NOTE	REF NO	GRAPHIC REF	PART NUMBER	QTY	PART NAME 1 2 3 4 5 6 (PRODUCT LEVEL)	SEE PAGE
Y	1	1	*325-3644*	1	AXLE GP-DRIVE (WITHOUT BRAKES)	192
Y	2	1	**203-4692**	1	PLANETARY GP-FINAL DRIVE	228
	3	1	**7X-0510**	6	WASHER-HARD (15.5X29X3-MM THK)	
M	4	1	**7X-2571**	8	BOLT (M20X2.5X240-MM)	
	5	1	**8S-4734**	6	BOLT (9/16-12X2-IN)	
	6	1	**8T-4123**	16	WASHER (3.62X5.75X0.375-MM THK)	
M	7	1	**8T-4131**	8	NUT (M20X2.5-THD)	

M - METRIC PART
Y - SEPARATE ILLUSTRATION

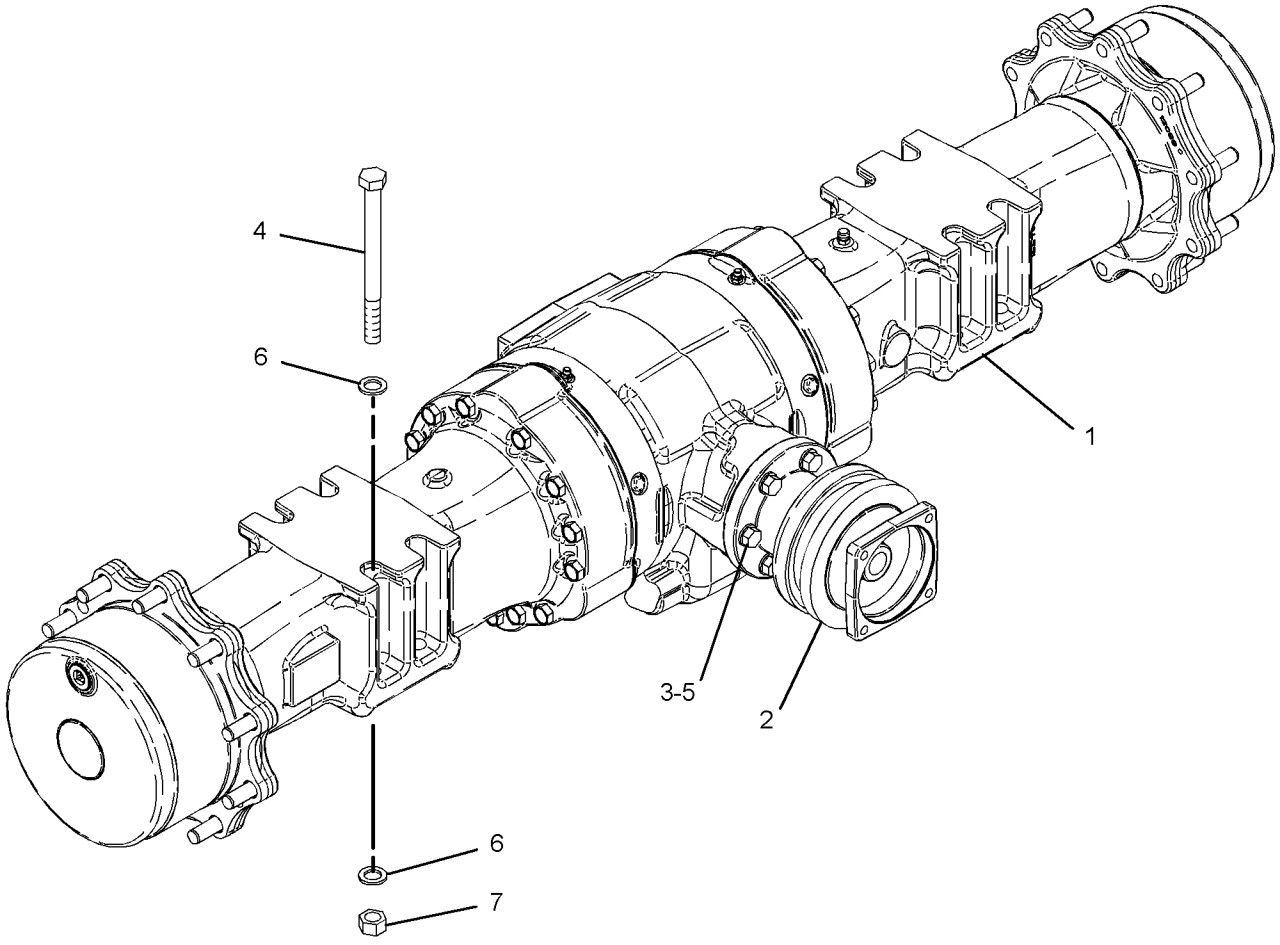

GRAPHIC #1 **<END>** g01164221

203-4685 AXLE & MTG GP-DRIVE—WITHOUT BRAKES

S/N: TJL419-UP
PART OF 227-4257 AXLE AR-DRIVE
ALSO AN ATTACHMENT

SMCS-3278 **i04340771**

NOTE	REF NO	GRAPHIC REF	PART NUMBER	QTY	PART NAME 1 2 3 4 5 6 (PRODUCT LEVEL)	SEE PAGE
Y	1	1	*325-3644*	1	AXLE GP-DRIVE (WITHOUT BRAKES)	192
CY	2	1	**354-5642**	1	PLANETARY GP-FINAL DRIVE	233
	3	1	**7X-0510**	6	WASHER-HARD (15.5X29X3-MM THK)	
M	4	1	**7X-2571**	8	BOLT (M20X2.5X240-MM)	
	5	1	**8S-4734**	6	BOLT (9/16-12X2-IN)	
	6	1	**8T-4123**	16	WASHER (3.62X5.75X0.375-MM THK)	
M	7	1	**8T-4131**	8	NUT (M20X2.5-THD)	

C - CHANGE FROM PREVIOUS TYPE
M - METRIC PART
Y - SEPARATE ILLUSTRATION

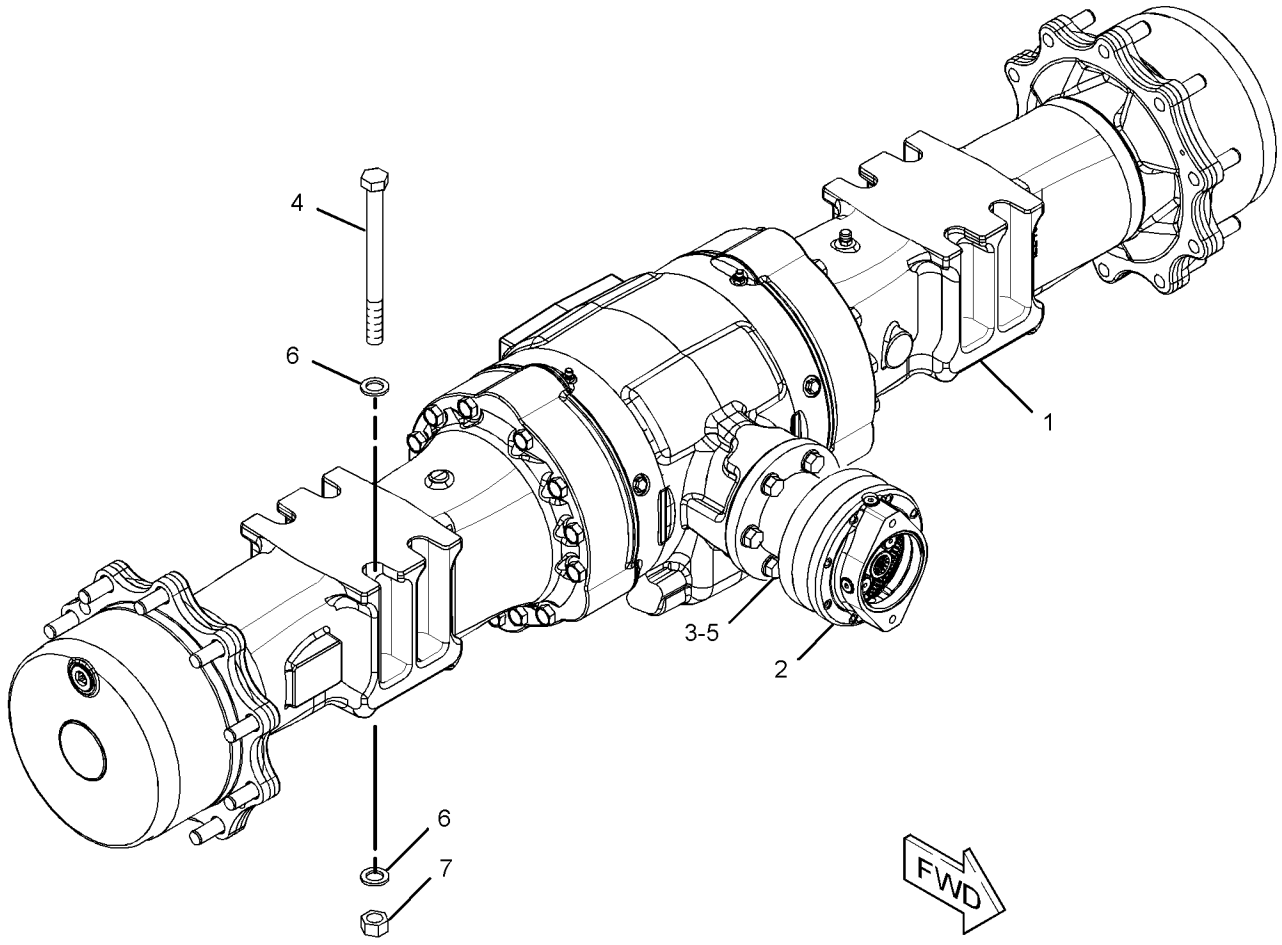

GRAPHIC #1 **<END>** g02570757

203-4686 AXLE & MTG GP-DRIVE—WITH BRAKES

S/N: TJL1-UP

PART OF 219-4262 AXLE AR-DRIVE

AN ATTACHMENT

SMCS-3278 **i05254211**

NOTE	REF NO	GRAPHIC REF	PART NUMBER	QTY	PART NAME 1 2 3 4 5 6 (PRODUCT LEVEL)	SEE PAGE
Y	1	1	*202-4173*	1	AXLE GP-DRIVE (WITH BRAKES)	188
Y	2	1	*203-4692*	1	PLANETARY GP-FINAL DRIVE (AXLE)	228
	3	1	**7X-0510**	6	WASHER-HARD (15.5X29X3-MM THK)	
M	4	1	**7X-2571**	8	BOLT (M20X2.5X240-MM)	
	5	1	**8S-4734**	6	BOLT (9/16-12X2-IN)	
	6	1	**8T-4123**	16	WASHER (22X35X3.5-MM THK)	
M	7	1	**8T-4131**	8	NUT (M20X2.5-THD)	

M - METRIC PART
Y - SEPARATE ILLUSTRATION

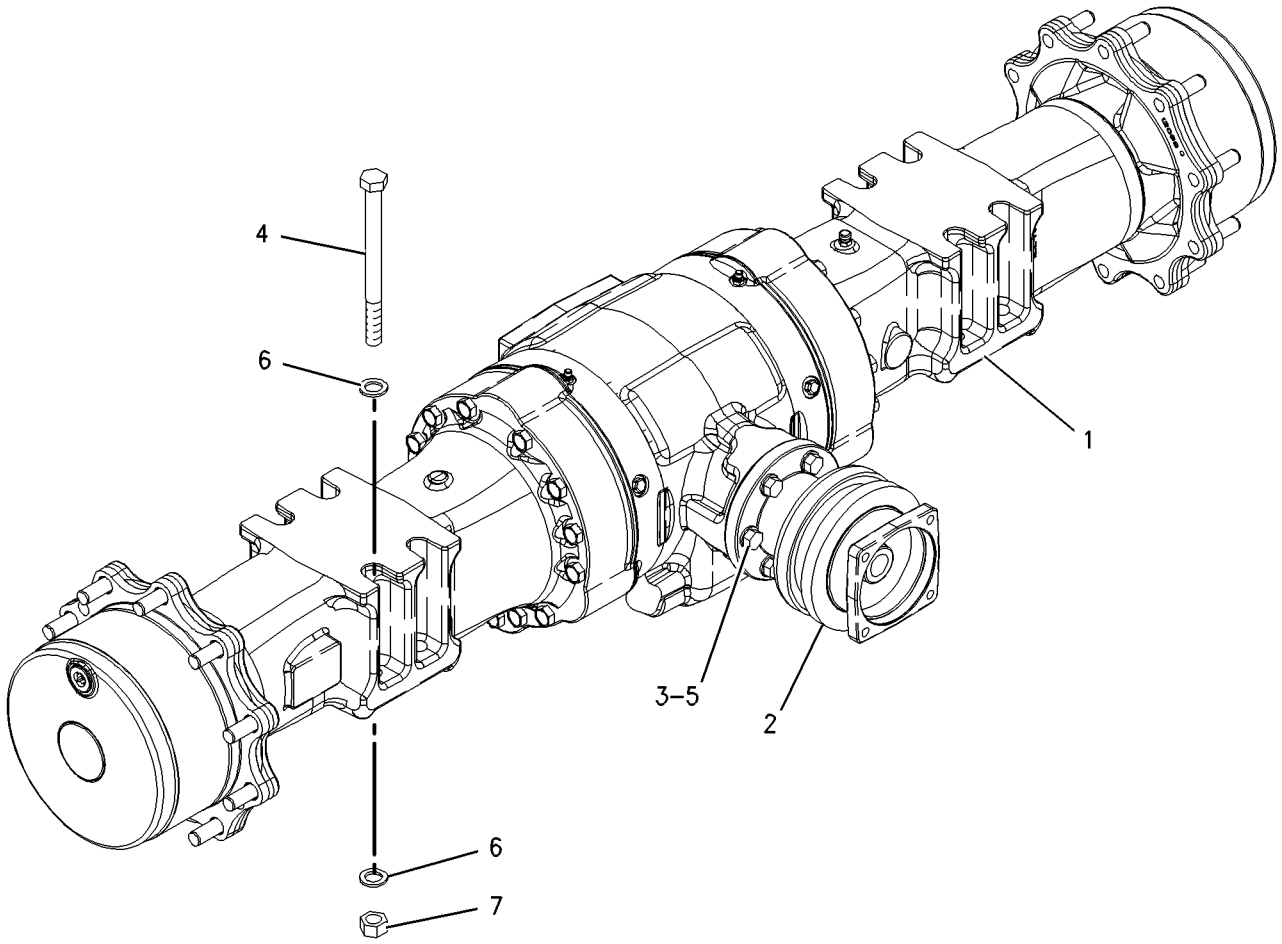

GRAPHIC #1 **<END>** g00918841

219-4262 AXLE AR-DRIVE

S/N: TJL1-UP
AN ATTACHMENT

SMCS-3013, 3278 **i05254206**

NOTE	PART NUMBER	QTY	PART NAME 1 2 3 4 5 6 (PRODUCT LEVEL)	SEE PAGE
Y	*203-4686*	1	AXLE & MTG GP-DRIVE (WITH BRAKES)	186
Y	*222-5629*	1	CONTROL GP-PARKING BRAKE	279
Y	*222-2848*	1	LINES GP-BRAKE	282
Y	*222-2844*	1	LINES GP-SHIFT	220

Y - SEPARATE ILLUSTRATION

<END>

227-4257 AXLE AR-DRIVE

S/N: TJL1-UP
WITHOUT BRAKES
PART OF 316-9934 GENERAL AR
ALSO AN ATTACHMENT

SMCS-3013, 3278 **i03034144**

NOTE	PART NUMBER	QTY	PART NAME 1 2 3 4 5 6 (PRODUCT LEVEL)	SEE PAGE
Y	*203-4685*	1	AXLE & MTG GP-DRIVE (WITHOUT BRAKES)	184
Y	*221-1731*	1	LINES GP-BRAKE & SHIFT	283

Y - SEPARATE ILLUSTRATION

<END>

202-4173 AXLE GP-DRIVE—WITH BRAKES

S/N: TJL1-UP

PART OF 203-4686 AXLE & MTG GP-DRIVE

AN ATTACHMENT

SMCS-3278 **i05254224**

NOTE	REF NO	GRAPHIC REF	PART NUMBER	QTY	PART NAME 1 2 3 4 5 6 (PRODUCT LEVEL)	SEE PAGE
	1	1	**199-0639**	4	SCREW-FLAT HEAD (M8X1.25X20-MM)	
	2	1	**210-3097**	2	CLIP	
	4	1	**210-3098**	2	SEAL	
	5	1	**197-9155**	1	BREATHER (DRIVE AXLE)	
	7	1	**198-7811**	2	DOWEL	
	8	1	**152-6144**	4	PLUG AS-DRAIN (MAGNETIC) (DRIVE AXLE)	
	9	1	**210-3099**	2	SLEEVE	
	10	1	**210-3100**	2	BUSHING	
	11	1	**238-5291**	6	DISC-BRAKE	
	12	1	**238-5292**	2	HUB-BRAKE	
	13	1	**199-0786**	8	PLATE	
	14	1	**199-0787**	6	PIN	
	15	1	**210-3328**	2	SHAFT-AXLE	
M	16	1	**7X-2559**	26	BOLT (M16X2X160-MM)	
	17	1	**212-5713**	2	PLUG AS	
Y	18	1	**216-1609**	2	FLANGE GP-WHEEL	209
	19	1	*226-4352*	2	GEAR GP-RING	
					(EACH INCLUDES)	
		1	**199-0767**	1	GEAR-RING (81-TEETH)	
		1	**199-0778**	1	RING-SNAP	
		1	**226-4364**	1	HUB	
Y	20	1	*226-4390*	1	HOUSING GP-AXLE (WITH BRAKES)	211
	21	1	**226-4377**	2	SHAFT-AXLE	
	22	1	**238-5293**	1	HOUSING-AXLE (LH)	
	23	1	**238-5294**	1	HOUSING-AXLE (RH)	
Y	24	1	*229-5051*	2	PLANETARY GP-FINAL DRIVE (AXLE)	230
	25	1	**226-4366**	2	NUT-SPANNER	
	26	1	**226-4365**	2	WASHER-TAB	
	27	1	**226-4367**	2	SPACER (110X123X22.99-MM THK)	
	28	1	**226-4370**	6	BOLT-SELF-LOCKING	
	29	1	**199-0662**	2	SEAL-O-RING	
B	30	1	**069-4707**		SEALANT (GASKET)	

B - USE AS REQUIRED
M - METRIC PART
Y - SEPARATE ILLUSTRATION

202-4173 **AXLE GP-DRIVE (*contd.*)** **i05254224**

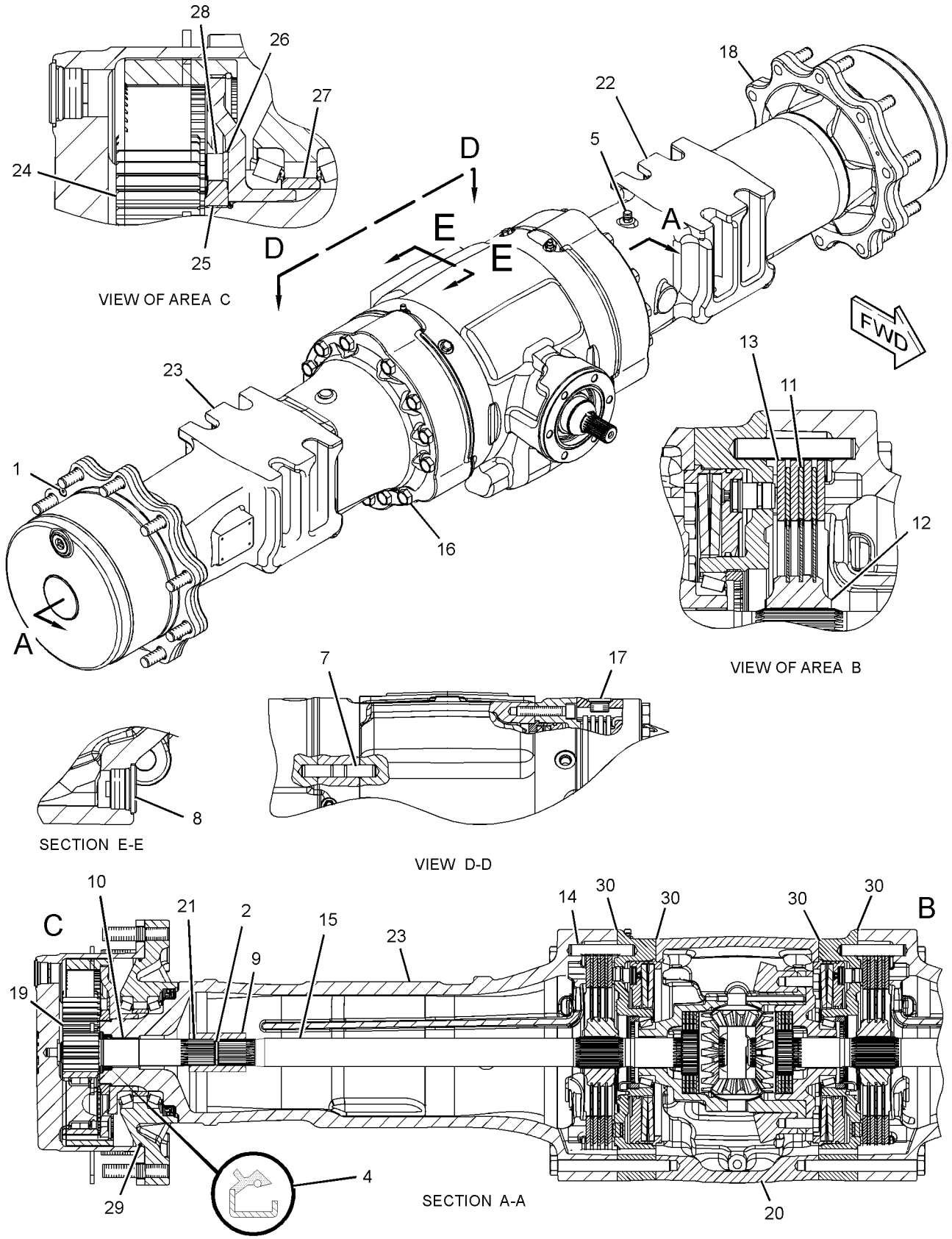

GRAPHIC #1 **<END>** g01182678

315-1260 AXLE GP-DRIVE—WITHOUT BRAKES

S/N: TJL1-UP

SMCS-3278 **i05292860**

NOTE	REF NO	GRAPHIC REF	PART NUMBER	QTY	PART NAME 1 2 3 4 5 6 (PRODUCT LEVEL)	SEE PAGE
	1	1	**207-4255**	2	PLUG	
	2	1	**210-3098**	2	SEAL	
	3	1	**197-9155**	1	BREATHER (DRIVE AXLE)	
	4	1	**198-7811**	2	DOWEL	
	5	1	**152-6144**	5	PLUG AS-DRAIN (MAGNETIC) (DRIVE AXLE)	
					(EACH INCLUDES)	
		1	**6V-6228**	1	SEAL-O-RING	
	6	1	**210-3099**	2	SLEEVE	
	7	1	**210-3100**	2	BUSHING	
	8	1	**210-3328**	2	SHAFT-AXLE	
	9	1	**212-5713**	2	PLUG AS	
					(EACH INCLUDES)	
		1	**033-6041**	1	SEAL-O-RING	
	10	1	*226-4352*	2	GEAR GP-RING	
					(EACH INCLUDES)	
		1	**199-0767**	1	GEAR-RING (81-TEETH)	
		1	**199-0778**	1	RING-SNAP	
		1	**226-4364**	1	HUB	
Y	11	1	*226-4353*	2	FLANGE GP-WHEEL	210
Y	12	1	*226-4400*	1	HOUSING GP-AXLE (WITHOUT BRAKES)	213
	13	1	**226-4377**	2	SHAFT-AXLE	
Y	14	1	*229-5051*	2	PLANETARY GP-FINAL DRIVE	230
	15	1	**226-4366**	2	NUT-SPANNER	
	16	1	**226-4365**	2	WASHER-TAB	
	17	1	**226-4367**	2	SPACER (110X123X22.99-MM THK)	
	18	1	**226-4370**	6	BOLT-SELF-LOCKING	
	19	1	**238-5293**	1	HOUSING-AXLE (LH)	
	20	1	**238-5294**	1	HOUSING-AXLE (RH)	
M	21	1	**8C-7505**	4	SCREW-FLAT HEAD (M8X1.25X20-MM)	
	22	1	**9X-6378**	2	RING-RETAINING	
	23	1	**5H-4909**	2	SEAL-O-RING	
M	25	1	**7X-2559**	26	BOLT (M16X2X160-MM)	
B	26	1	**069-4707**		SEALANT (GASKET)	

B - USE AS REQUIRED
M - METRIC PART
Y - SEPARATE ILLUSTRATION

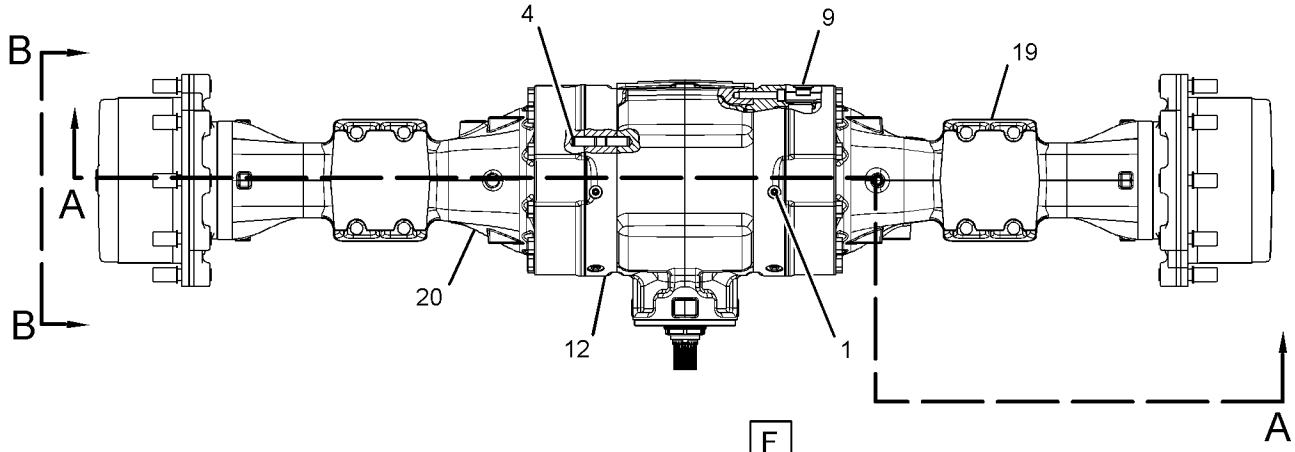

TOP VIEW

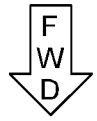

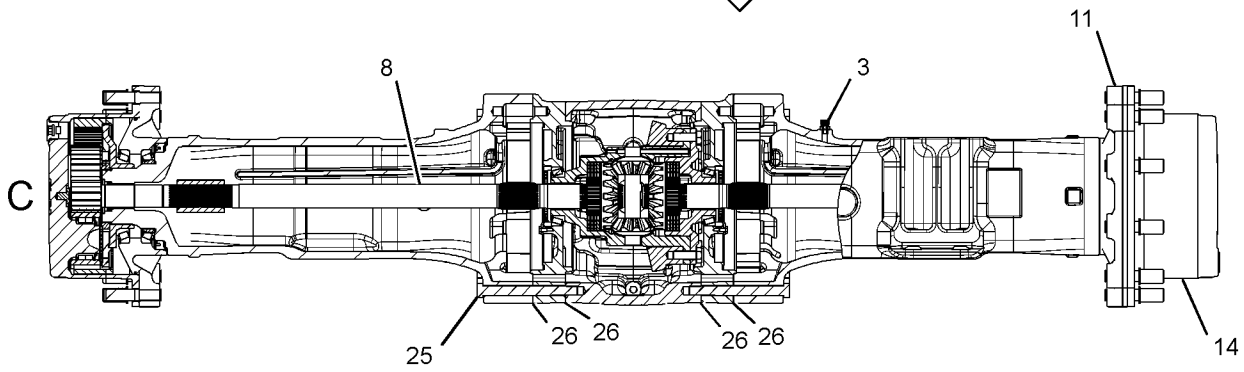

SECTION A-A

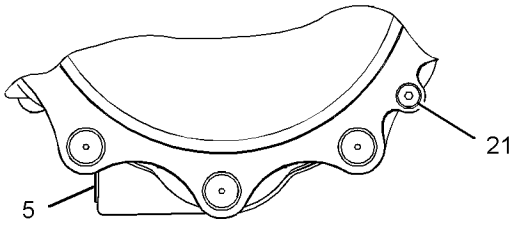

VIEW B-B

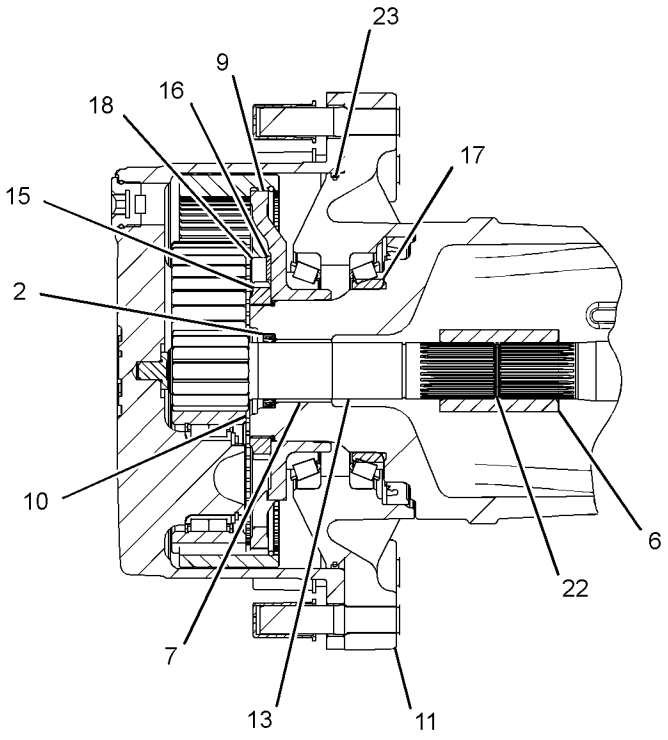

VIEW OF AREA C

GRAPHIC #1 **<END>** g01450795

325-3644 AXLE GP-DRIVE

S/N: TJL1-UP
WITHOUT BRAKES
FIELD REPLACEMENT ORDER 315-1260—PAGE: 190
PART OF 203-4685 AXLE & MTG GP-DRIVE
ALSO AN ATTACHMENT

SMCS-3278 **i03639875**

NOTE	REF NO	GRAPHIC REF	PART NUMBER	QTY	PART NAME 1 2 3 4 5 6 (PRODUCT LEVEL)	SEE PAGE
M	1	1	**8C-7505**	4	SCREW-FLAT HEAD (M8X1.25X20-MM)	
	2	1	**9X-6378**	2	RING-RETAINING	
	3	1	**198-7811**	2	DOWEL	
	4	1	**210-3098**	2	SEAL	
	5	1	**210-3100**	2	BUSHING	
	6	1	**210-3328**	2	SHAFT-AXLE	
	7	1	**212-5713**	2	PLUG AS	
					(EACH INCLUDES)	
		1	**033-6041**	1	SEAL-O-RING	
	8	1	*216-1608*	2	GEAR GP-RING	
					(EACH INCLUDES)	
		1	**199-0778**	1	RING-SNAP	
		1	**210-7302**	1	GEAR-RING (81-TEETH)	
		1	**226-4364**	1	HUB	
Y	9	1	*216-1609*	2	FLANGE GP-WHEEL	209
Y	10	1	**216-1610**	2	PLANETARY GP-FINAL DRIVE	229
	11	1	**226-4365**	2	WASHER-TAB	
	12	1	**226-4366**	2	NUT-SPANNER	
	13	1	**226-4367**	2	SPACER (110X123X22.99-MM THK)	
	14	1	**226-4370**	6	BOLT-SELF-LOCKING	
	15	1	**226-4377**	2	SHAFT-AXLE	
Y	16	1	*226-4400*	1	HOUSING GP-AXLE (WITHOUT BRAKES)	213
	17	1	**238-5293**	1	HOUSING-AXLE (LH)	
	18	1	**238-5294**	1	HOUSING-AXLE (RH)	
	19	1	**152-6144**	5	PLUG AS-DRAIN (MAGNETIC)	
	20	1	**197-9155**	1	BREATHER (AXLE, REAR)	
	21	1	**207-4255**	2	PLUG	
	22	1	**210-3099**	2	SLEEVE	
	23	1	**5H-4909**	2	SEAL-O-RING	
M	24	1	**7X-2559**	26	BOLT (M16X2X160-MM)	

PARTS SHOWN IN GRAPHIC(S) WITHOUT A REFERENCE NUMBER ARE NOT SERVICED SEPARATELY

M - METRIC PART
Y - SEPARATE ILLUSTRATION

325-3644 **AXLE GP-DRIVE (*contd.*)** **i03639875**

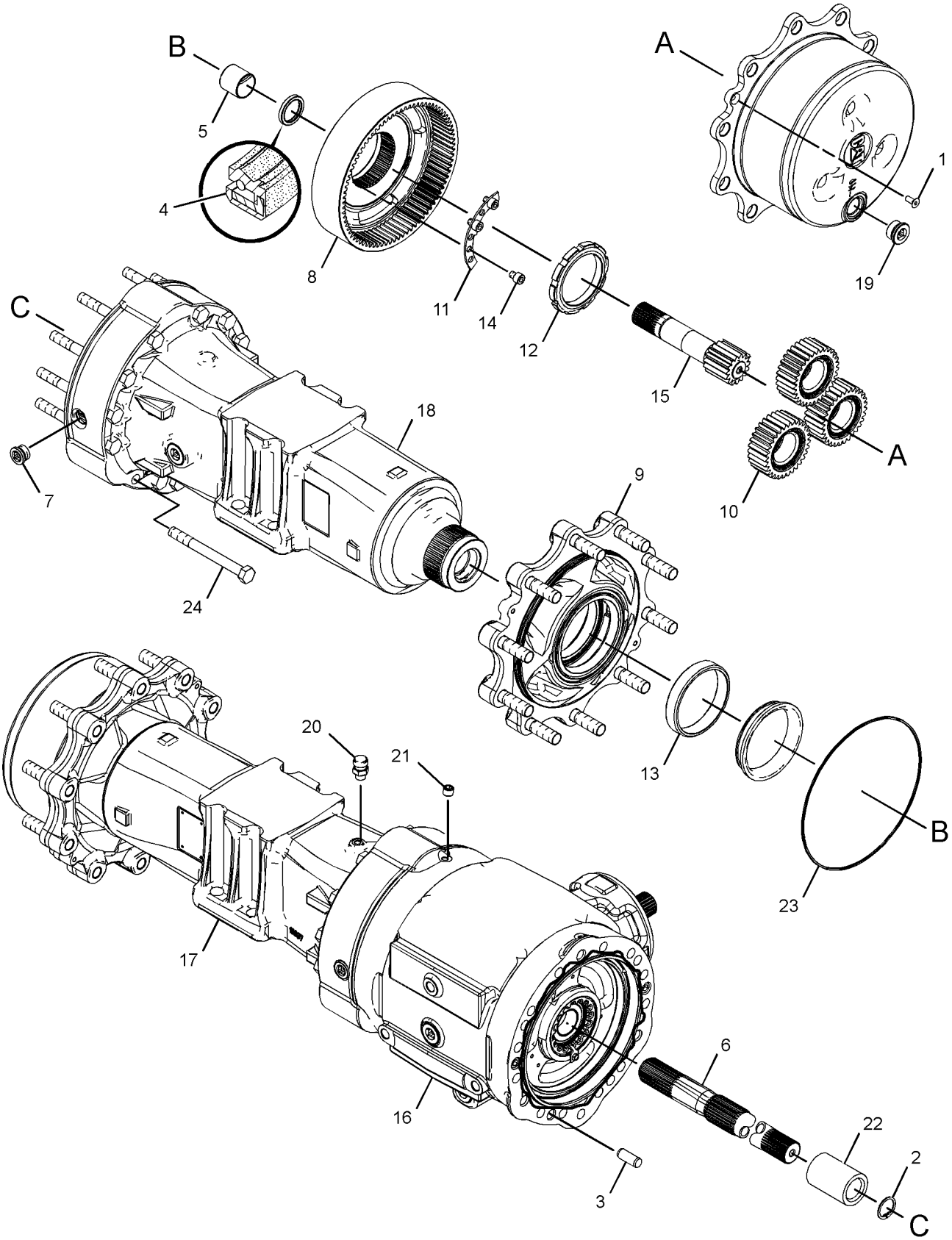

GRAPHIC #1 **<END>** g01953411

226-4394 DIFFERENTIAL GP

S/N: TJL1-UP

PART OF 226-4390, 226-4400 HOUSING GP-AXLE

ALSO AN ATTACHMENT

SMCS-3258, 3283, 3284

i03036105

NOTE	REF NO	GRAPHIC REF	PART NUMBER	QTY	PART NAME 1 2 3 4 5 6 (PRODUCT LEVEL)	SEE PAGE
	1	1	**199-0673**	2	BUSHING	
	2	1	**199-0694**	12	BOLT (M14X2X40-MM)	
J	3	1	**199-0808**	1	PIN	
	4	1	**209-7481**	2	DISC-FRICTION	
	5	1	**209-7482**	6	DISC-FRICTION	
	6	1	**226-4397**	8	PLATE	
	7	1	**226-4380**	1	HOUSING	
	8	1	**226-4381**	1	COVER	
J	9	1	**231-0670**	1	SHAFT	
J	10	1	**231-0671**	2	WASHER-THRUST	
					AVAILABLE REPAIR KIT(S):	
J			**231-0689**	1	DIFFERENTIAL GP (KIT)	
					(ALSO INCLUDES SIDE GEARS & SPIDER GEARS)	

J - PARTS MARKED J INCLUDED IN KIT MARKED J

226-4394 **DIFFERENTIAL GP (*contd.*)** **i03036105**

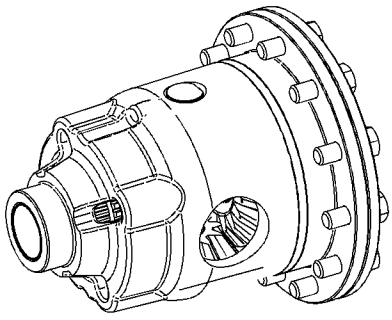

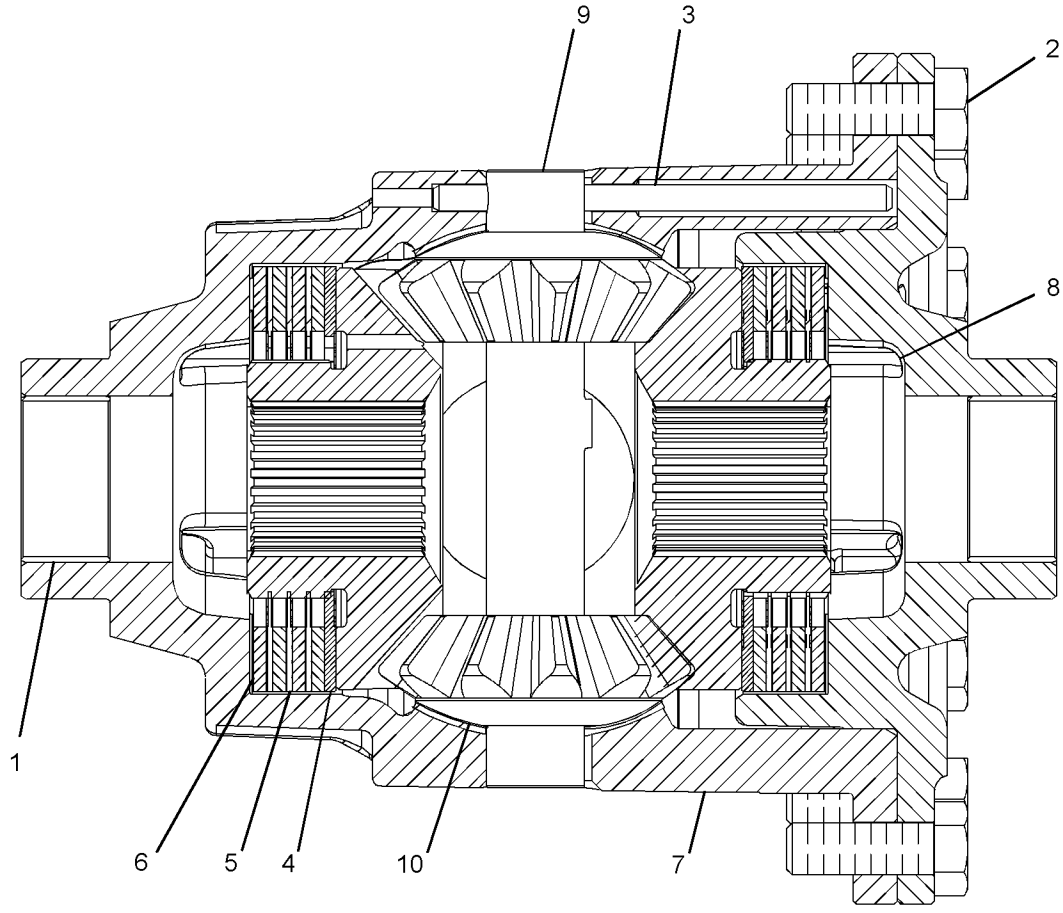

GRAPHIC #1 **<END>** g01359045

220-1944 DRIVE GP-DRUM

S/N: TJL1-UP
PART OF 220-4051 DRUM GP-DRIVE & VIBRATORY
AN ATTACHMENT
TYPE 1

SMCS-4050, 4351, 5058 **i03063180**

NOTE	REF NO	GRAPHIC REF	PART NUMBER	QTY	PART NAME 1 2 3 4 5 6 (PRODUCT LEVEL)	SEE PAGE
	1	1	**139-3178**	1	PLATE-DRUM DRIVE	
Y	2	1	**263-6349**	1	PLANETARY GP-FINAL DRIVE	231
	3	1	**206-3658**	1	PLATE AS (MOUNTING)	
		1	**102-8704**	1	PLATE AS	
		1	**178-8505**	1	PLATE AS	
YR	4	1	**296-5159**	1	MOTOR GP-PISTON	318
	5	1	**220-1945**	1	ADAPTER (MOTOR DRUM)	
	6	1	**223-5849**	1	ADAPTER (SPLINED)	
	7	1	**227-0172**	6	MOUNT (SANDWICH)	
	8	1	**111-7052**	1	SEAL-O-RING	
	9	1	*148-8325*	1	CONNECTOR AS	
		1	**3J-1907**	1	SEAL-O-RING	
		1	**4J-5477**	1	SEAL-O-RING	
		1	**6V-8641**	1	CONNECTOR	
	10	1	*148-8327*	1	CONNECTOR AS	
		1	**3D-2824**	1	SEAL-O-RING	
		1	**6V-8637**	1	CONNECTOR	
		1	**6V-9746**	1	SEAL-O-RING	
	11	1	*148-8369*	1	ELBOW AS	
		1	**3J-7354**	1	SEAL-O-RING	
		1	**4J-5477**	1	SEAL-O-RING	
		1	**6V-8628**	1	ELBOW	
	12	1	*148-8372*	1	ELBOW AS	
		1	**2M-9780**	1	SEAL-O-RING	
		1	**6V-8398**	1	SEAL-O-RING	
		1	**6V-8721**	1	ELBOW	
	13	1	*153-6237*	1	ELBOW AS	
		1	**3D-2824**	1	SEAL-O-RING	
		1	**6V-9004**	1	ELBOW	
		1	**6V-9746**	1	SEAL-O-RING	
	14	1	**169-7442**	1	SEAL-O-RING	
M	15	1	**6V-8200**	2	BOLT-SOCKET HEAD (M12X1.75X35-MM)	
M	16	1	**7X-2562**	6	BOLT (M20X2.5X45-MM)	
M	17	1	**110-4821**	2	BOLT-SOCKET HEAD (M16X2X55-MM)	
	18	1	**8T-4994**	36	WASHER-HARD (20X36.5X3.5-MM THK)	
	19	1	**8T-5360**	2	WASHER (12X22.5X2.5-MM THK)	
M	20	1	**8T-5460**	6	BOLT (M20X2.5X40-MM)	
M	21	1	**8T-6430**	24	BOLT (M20X2.5X50-MM)	

M - METRIC PART
R - REMFG PART MAY BE AVAILABLE
Y - SEPARATE ILLUSTRATION

220-1944 **DRIVE GP-DRUM (*contd.*)** **i03063180**

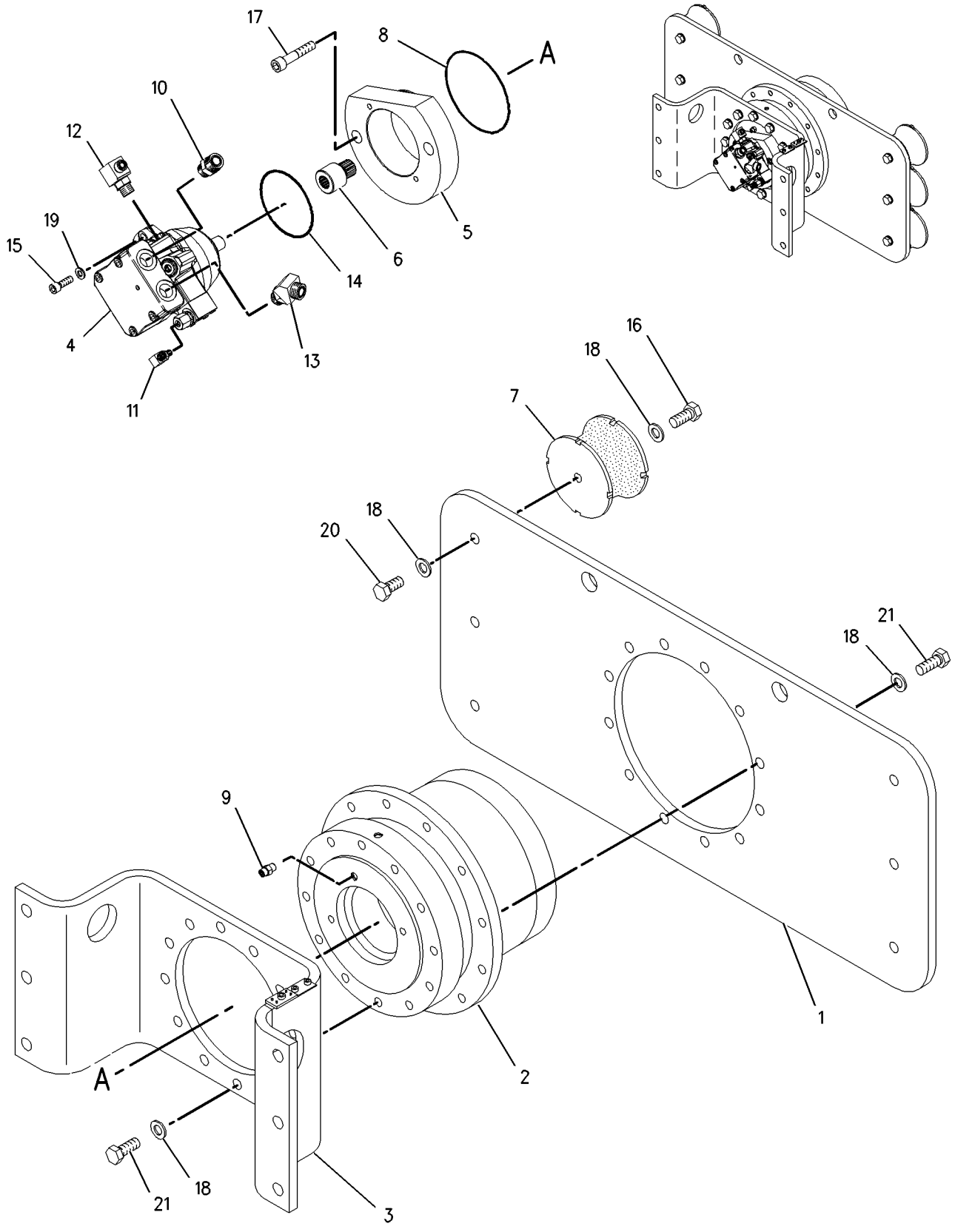

GRAPHIC #1 **<END>** g01004673

220-1944 DRIVE GP-DRUM

S/N: TJL1-UP
PART OF 220-4051 DRUM GP-DRIVE & VIBRATORY
AN ATTACHMENT
TYPE 2

SMCS-4050, 4351, 5058 **i03747029**

NOTE	REF NO	GRAPHIC REF	PART NUMBER	QTY	PART NAME 1 2 3 4 5 6 (PRODUCT LEVEL)	SEE PAGE
	1	1	**139-3178**	1	PLATE-DRUM DRIVE	
C	2	1	**336-0281**	1	PLANETARY GP-FINAL DRIVE (DRUM)	
	3	1	**206-3658**	1	PLATE AS	
		1	**102-8704**	1	PLATE AS	
		1	**178-8505**	1	PLATE AS	
YR	4	1	**296-5159**	1	MOTOR GP-PISTON (VIBRATORY)	318
	5	1	**220-1945**	1	ADAPTER	
	6	1	**223-5849**	1	ADAPTER	
	7	1	**227-0172**	6	MOUNT	
	8	1	**111-7052**	1	SEAL-O-RING	
	9	1	*148-8325*	1	CONNECTOR AS	
		1	**3J-1907**	1	SEAL-O-RING	
		1	**4J-5477**	1	SEAL-O-RING	
		1	**6V-8641**	1	CONNECTOR	
	10	1	*148-8327*	1	CONNECTOR AS	
		1	**3D-2824**	1	SEAL-O-RING	
		1	**6V-8637**	1	CONNECTOR	
		1	**6V-9746**	1	SEAL-O-RING	
	11	1	*148-8369*	1	ELBOW AS	
		1	**3J-7354**	1	SEAL-O-RING	
		1	**4J-5477**	1	SEAL-O-RING	
		1	**6V-8628**	1	ELBOW	
	12	1	*148-8372*	1	ELBOW AS	
		1	**2M-9780**	1	SEAL-O-RING	
		1	**6V-8398**	1	SEAL-O-RING	
		1	**6V-8721**	1	ELBOW	
	13	1	*153-6237*	1	ELBOW AS	
		1	**3D-2824**	1	SEAL-O-RING	
		1	**6V-9004**	1	ELBOW	
		1	**6V-9746**	1	SEAL-O-RING	
	14	1	**169-7442**	1	SEAL-O-RING	
M	15	1	**6V-8200**	2	BOLT-SOCKET HEAD (M12X1.75X35-MM)	
M	16	1	**7X-2562**	6	BOLT (M20X2.5X45-MM)	
M	17	1	**110-4821**	2	BOLT-SOCKET HEAD (M16X2X55-MM)	
	18	1	**8T-4994**	36	WASHER-HARD (20X36.5X3.5-MM THK)	
	19	1	**8T-5360**	2	WASHER (12X22.5X2.5-MM THK)	
M	20	1	**8T-5460**	6	BOLT (M20X2.5X40-MM)	
M	21	1	**8T-6430**	24	BOLT (M20X2.5X50-MM)	

C - CHANGE FROM PREVIOUS TYPE
M - METRIC PART
R - REMFG PART MAY BE AVAILABLE
Y - SEPARATE ILLUSTRATION

220-1944 **DRIVE GP-DRUM (*contd.*)** **i03747029**

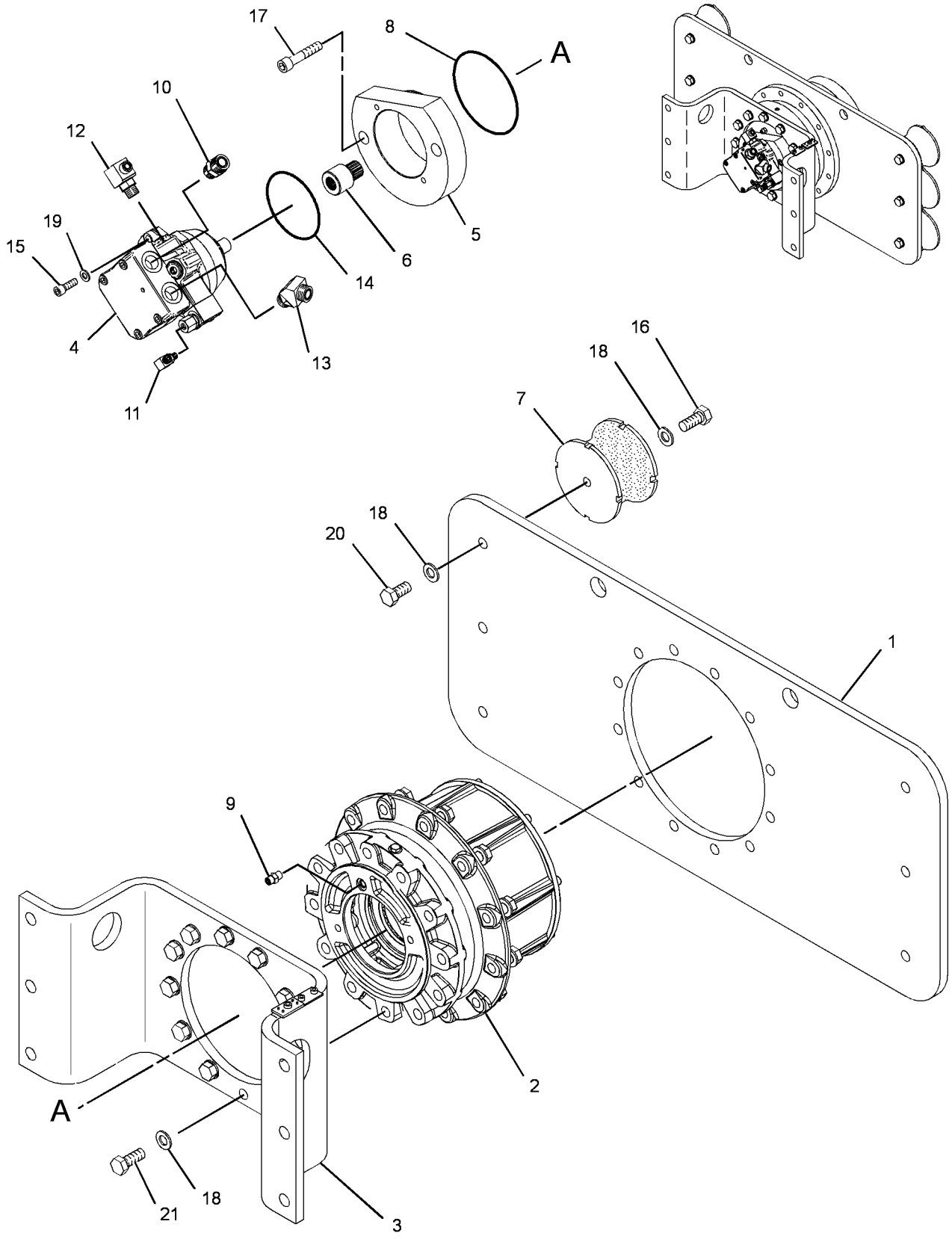

GRAPHIC #1 **<END>** g02034353

242-3499 DRIVE GP-DRUM

S/N: TJL1-UP
PART OF 242-3497 DRUM GP-DRIVE & VIBRATORY
AN ATTACHMENT
TYPE 1

SMCS-4050, 4351, 5058 **i03469163**

NOTE	REF NO	GRAPHIC REF	PART NUMBER	QTY	PART NAME 1 2 3 4 5 6 (PRODUCT LEVEL)	SEE PAGE
	1	1	**139-3178**	1	PLATE-DRUM DRIVE	
Y	2	1	**263-6349**	1	PLANETARY GP-FINAL DRIVE	231
	3	1	**206-3658**	1	PLATE AS	
YR	4	1	**296-5159**	1	MOTOR GP-PISTON (PROPEL)	318
	5	1	**220-1945**	1	ADAPTER	
	6	1	**223-5849**	1	ADAPTER	
	7	1	**235-5027**	6	MOUNT	
	8	1	**111-7052**	1	SEAL-O-RING	
	9	1	*148-8325*	1	CONNECTOR AS	
		1	**3J-1907**	1	SEAL-O-RING	
		1	**4J-5477**	1	SEAL-O-RING	
		1	**6V-8641**	1	CONNECTOR	
	10	1	*148-8327*	1	CONNECTOR AS	
		1	**3D-2824**	1	SEAL-O-RING	
		1	**6V-8637**	1	CONNECTOR	
		1	**6V-9746**	1	SEAL-O-RING	
	11	1	*148-8369*	1	ELBOW AS	
		1	**3J-7354**	1	SEAL-O-RING	
		1	**4J-5477**	1	SEAL-O-RING	
		1	**6V-8628**	1	ELBOW	
	12	1	*148-8372*	1	ELBOW AS	
		1	**2M-9780**	1	SEAL-O-RING	
		1	**6V-8398**	1	SEAL-O-RING	
		1	**6V-8721**	1	ELBOW	
	13	1	*153-6237*	1	ELBOW AS	
		1	**3D-2824**	1	SEAL-O-RING	
		1	**6V-9004**	1	ELBOW	
		1	**6V-9746**	1	SEAL-O-RING	
	14	1	**169-7442**	1	SEAL-O-RING	
M	15	1	**6V-8200**	2	BOLT-SOCKET HEAD (M12X1.75X35-MM)	
M	16	1	**7X-2562**	6	BOLT (M20X2.5X45-MM)	
M	17	1	**110-4821**	2	BOLT-SOCKET HEAD (M16X2X55-MM)	
	18	1	**8T-4994**	36	WASHER-HARD (20X36.5X3.5-MM THK)	
	19	1	**8T-5360**	2	WASHER (12X22.5X2.5-MM THK)	
M	20	1	**8T-5460**	6	BOLT (M20X2.5X40-MM)	
M	21	1	**8T-6430**	24	BOLT (M20X2.5X50-MM)	

M - METRIC PART
R - REMFG PART MAY BE AVAILABLE
Y - SEPARATE ILLUSTRATION

242-3499 **DRIVE GP-DRUM (*contd.*)** **i03469163**

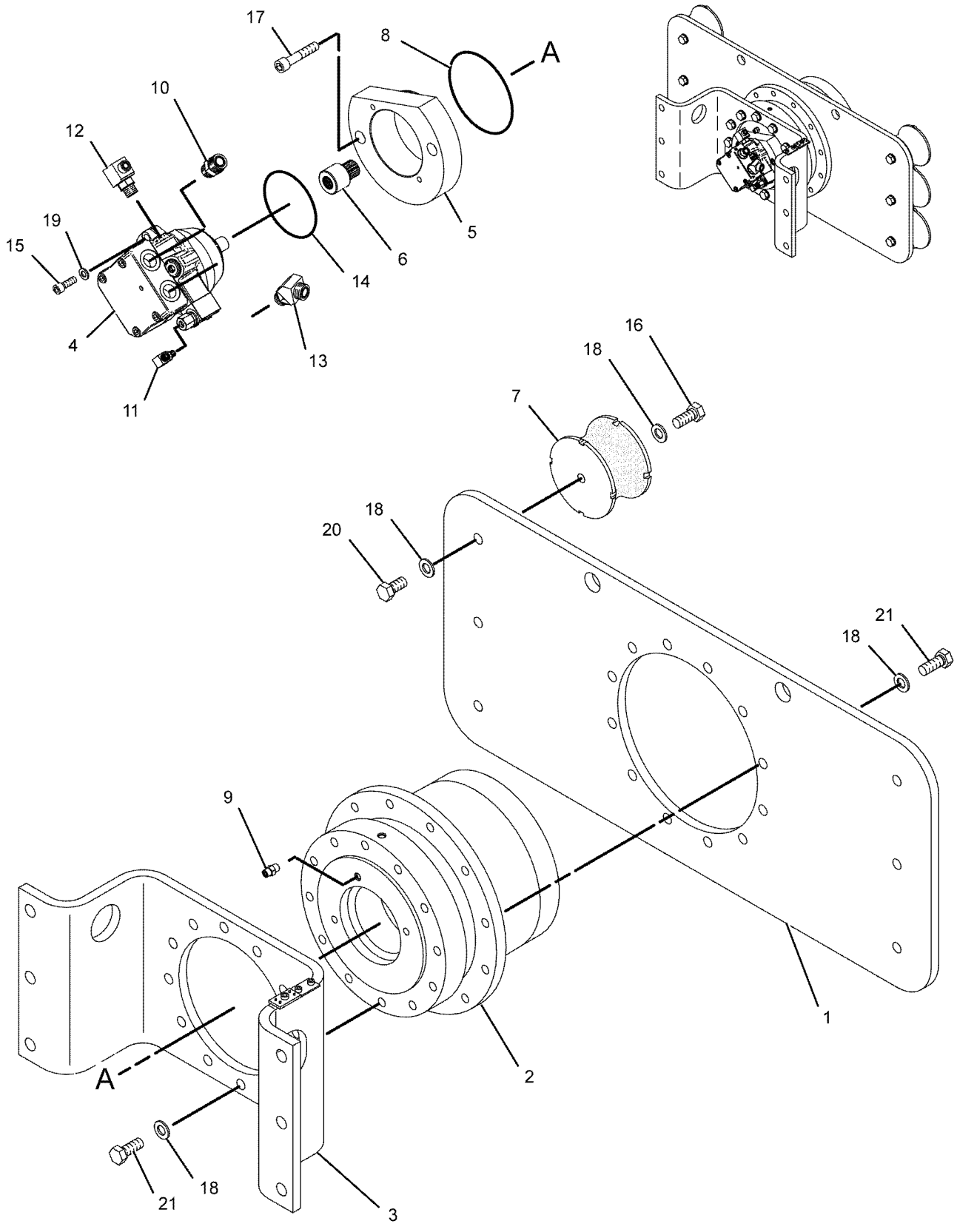

GRAPHIC #1 **<END>** g01038244

242-3499 DRIVE GP-DRUM

S/N: TJL1-UP
PART OF 242-3497 DRUM GP-DRIVE & VIBRATORY
AN ATTACHMENT
TYPE 2

SMCS-4050, 4351, 5058 **i05421112**

NOTE	REF NO	GRAPHIC REF	PART NUMBER	QTY	PART NAME 1 2 3 4 5 6 (PRODUCT LEVEL)	SEE PAGE
	1	1	**139-3178**	1	PLATE-DRUM DRIVE	
Y	2	1	**358-9474**	1	DRIVE GP-FINAL	204
	3	1	**206-3658**	1	PLATE AS	
		1	**102-8704**	1	PLATE AS	
		1	**178-8505**	1	PLATE AS	
YR	4	1	**296-5159**	1	MOTOR GP-PISTON (VIBRATORY)	318
	5	1	**220-1945**	1	ADAPTER	
	6	1	**223-5849**	1	ADAPTER	
	7	1	**235-5027**	6	MOUNT	
	8	1	**111-7052**	1	SEAL-O-RING	
	9	1	*148-8325*	1	CONNECTOR AS	
		1	**3J-1907**	1	SEAL-O-RING	
		1	**4J-5477**	1	SEAL-O-RING	
		1	**6V-8641**	1	CONNECTOR	
	10	1	*148-8327*	1	CONNECTOR AS	
		1	**3D-2824**	1	SEAL-O-RING	
		1	**6V-8637**	1	CONNECTOR	
		1	**6V-9746**	1	SEAL-O-RING	
	11	1	*148-8369*	1	ELBOW AS	
		1	**3J-7354**	1	SEAL-O-RING	
		1	**4J-5477**	1	SEAL-O-RING	
		1	**6V-8628**	1	ELBOW	
	12	1	*148-8372*	1	ELBOW AS	
		1	**2M-9780**	1	SEAL-O-RING	
		1	**6V-8398**	1	SEAL-O-RING	
		1	**6V-8721**	1	ELBOW	
	13	1	*153-6237*	1	ELBOW AS	
		1	**3D-2824**	1	SEAL-O-RING	
		1	**6V-9004**	1	ELBOW	
		1	**6V-9746**	1	SEAL-O-RING	
	14	1	**169-7442**	1	SEAL-O-RING	
M	15	1	**6V-8200**	2	BOLT-SOCKET HEAD (M12X1.75X35-MM)	
M	16	1	**7X-2562**	6	BOLT (M20X2.5X45-MM)	
M	17	1	**110-4821**	2	BOLT-SOCKET HEAD (M16X2X55-MM)	
	18	1	**8T-4123**	36	WASHER (3.62X5.75X0.375-MM THK)	
	19	1	**8T-5360**	2	WASHER (12X22.5X2.5-MM THK)	
M	20	1	**8T-5460**	6	BOLT (M20X2.5X40-MM)	
M	21	1	**8T-6430**	24	BOLT (M20X2.5X50-MM)	

M - METRIC PART
R - REMFG PART MAY BE AVAILABLE
Y - SEPARATE ILLUSTRATION

242-3499 **DRIVE GP-DRUM (*contd.*)** **i05421112**

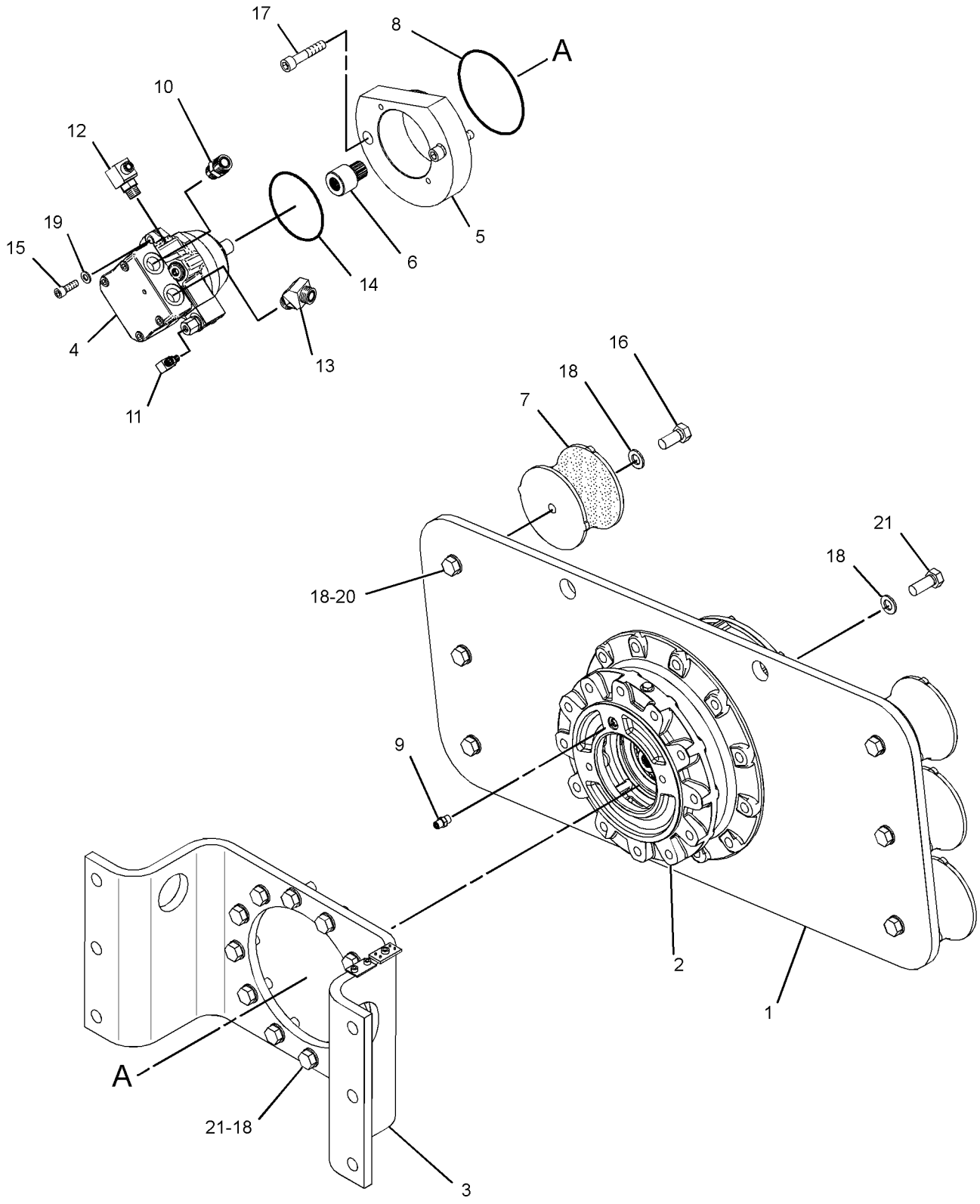

GRAPHIC #1 **<END>** g02100815

358-9474 DRIVE GP-FINAL

S/N: TJL1-UP
PART OF 242-3499 DRIVE GP-DRUM
AN ATTACHMENT

SMCS-4050, 4051 **i05269612**

NOTE	REF NO	GRAPHIC REF	PART NUMBER	QTY	PART NAME 1 2 3 4 5 6 (PRODUCT LEVEL)	SEE PAGE
	1	1	**7U-3538**	1	RING-RETAINING	
	2	1	**371-1922**	1	DISC-RETAINING	
	3	1	**205-0192**	1	SEAL-BRAKE	
	4	1	**207-2817**	16	SPRING	
	5	1	**371-1921**	1	PISTON-BRAKE	
	6	1	**205-0191**	1	SEAL-BRAKE	
	7	1	**136-8068**	7	DISC-MIDDLE	
	8	1	**136-8064**	6	DISC-FRICTION	
	9	1	**388-5001**	1	HUB	
	10	1	**151-7518**	2	PLUG	
	11	1	**7T-2459**	1	SEAL GP-DUO-CONE	
		1	**7T-2457**	2	RING-TORIC	
	12	1	**421-5646**	1	RING-GUIDE	
	13	1	**371-1920**	1	COUPLING	
	14	1	**136-8641**	1	SEAL-O-RING	
	15	1	**151-7517**	1	SEAL-O-RING	
	16	1	**191-2287**	1	PAD	
	17	1	**371-2170**	1	SHAFT-INPUT	
	18	1	**371-1928**	1	COVER	
M	19	1	**237-5121**	6	BOLT-SOCKET HEAD (M8X1.25X16-MM)	
	20	1	**371-2171**	1	GEAR-RING	
	21	1	**243-0716**	1	GEAR-RING	
M	22	1	**9X-6032**	8	BOLT-SOCKET HEAD (M10X1.5X30-MM)	
	23	1	**2D-6533**	1	SEAL-O-RING	
M	24	1	**095-0707**	6	BOLT (M16X2X120-MM)	
	25	1	**151-7490**	6	BUSHING	
	26	1	**387-4403**	1	DISC-RETAINING	
	27	1	**151-3085**	2	CUP	
	28	1	**151-3084**	2	CONE	
	29	1	**151-7516**	1	PLUG-DRAIN (FINAL DRIVE)	
					AVAILABLE REPAIR KIT(S):	
J			**371-2173**	1	KIT-GEAR (THIRD STAGE)	
					(INCLUDES PARTS MARKED " J " IN THE GRAPHIC)	
H			**371-2174**	1	KIT-GEAR (SECOND STAGE)	
					(INCLUDES PARTS MARKED " H " IN THE GRAPHIC)	
L			**371-2172**	1	KIT-GEAR (FIRST STAGE)	
					(INCLUDES PARTS MARKED " L " IN THE GRAPHIC)	

H - KIT MARKED H SERVICES PARTS MARKED H
J - KIT MARKED J SERVICES PARTS MARKED J
L - KIT MARKED L SERVICES PARTS MARKED L
M - METRIC PART

358-9474 **DRIVE GP-FINAL (*contd.*)** **i05269612**

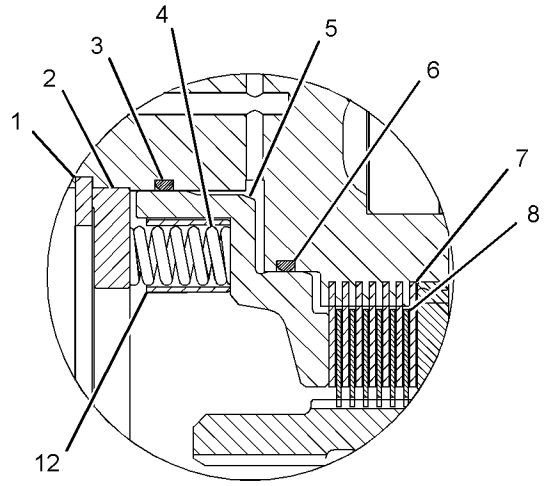

VIEW OF AREA B

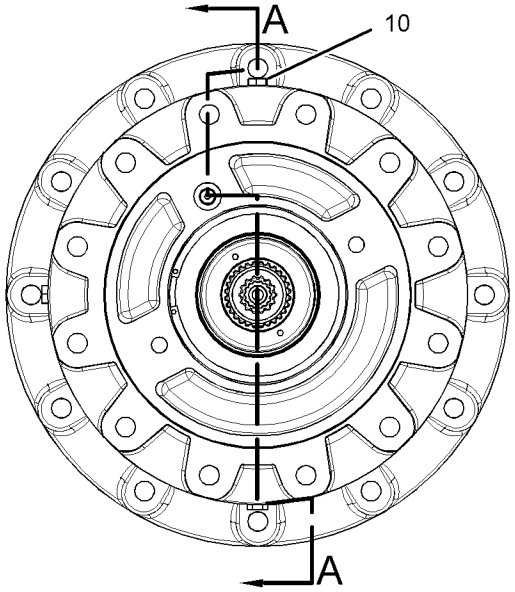

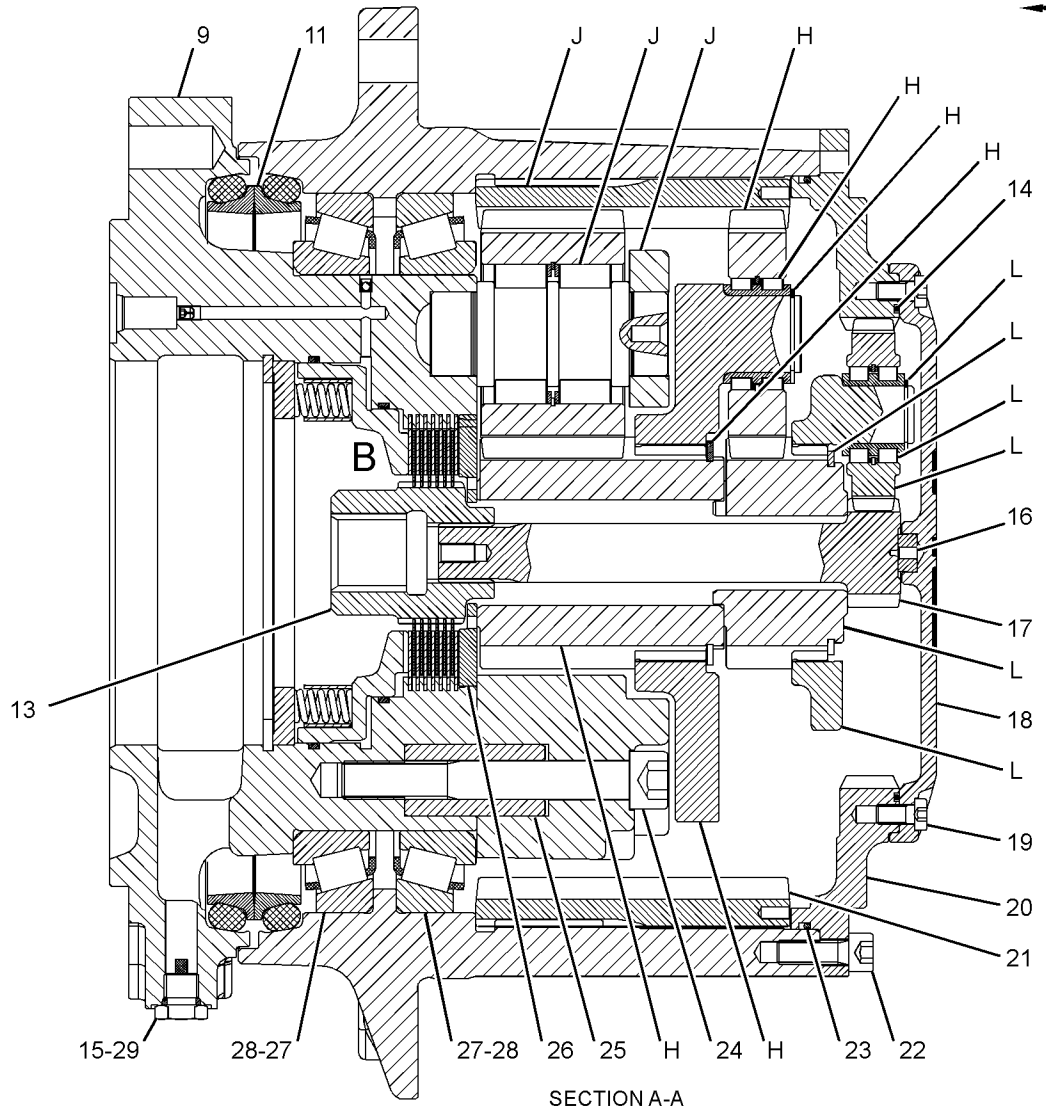

SECTION A-A

GRAPHIC #1

<END>

g03385624

220-4051 DRUM GP-DRIVE & VIBRATORY

S/N: TJL1-UP
PART OF 327-7069 CHASSIS AR
AN ATTACHMENT

SMCS-4050, 5622, 6605

i03057520

NOTE	REF NO	GRAPHIC REF	PART NUMBER	QTY	PART NAME 1 2 3 4 5 6 (PRODUCT LEVEL)	SEE PAGE
Y	1	1	*193-5892*	1	DRIVE GP-SUPPORT & VIBRATORY	349
Y	2	1	*220-1944*	1	DRIVE GP-DRUM	196
Y	3	1	*220-4053*	1	DRUM GP-SMOOTH	208

Y - SEPARATE ILLUSTRATION

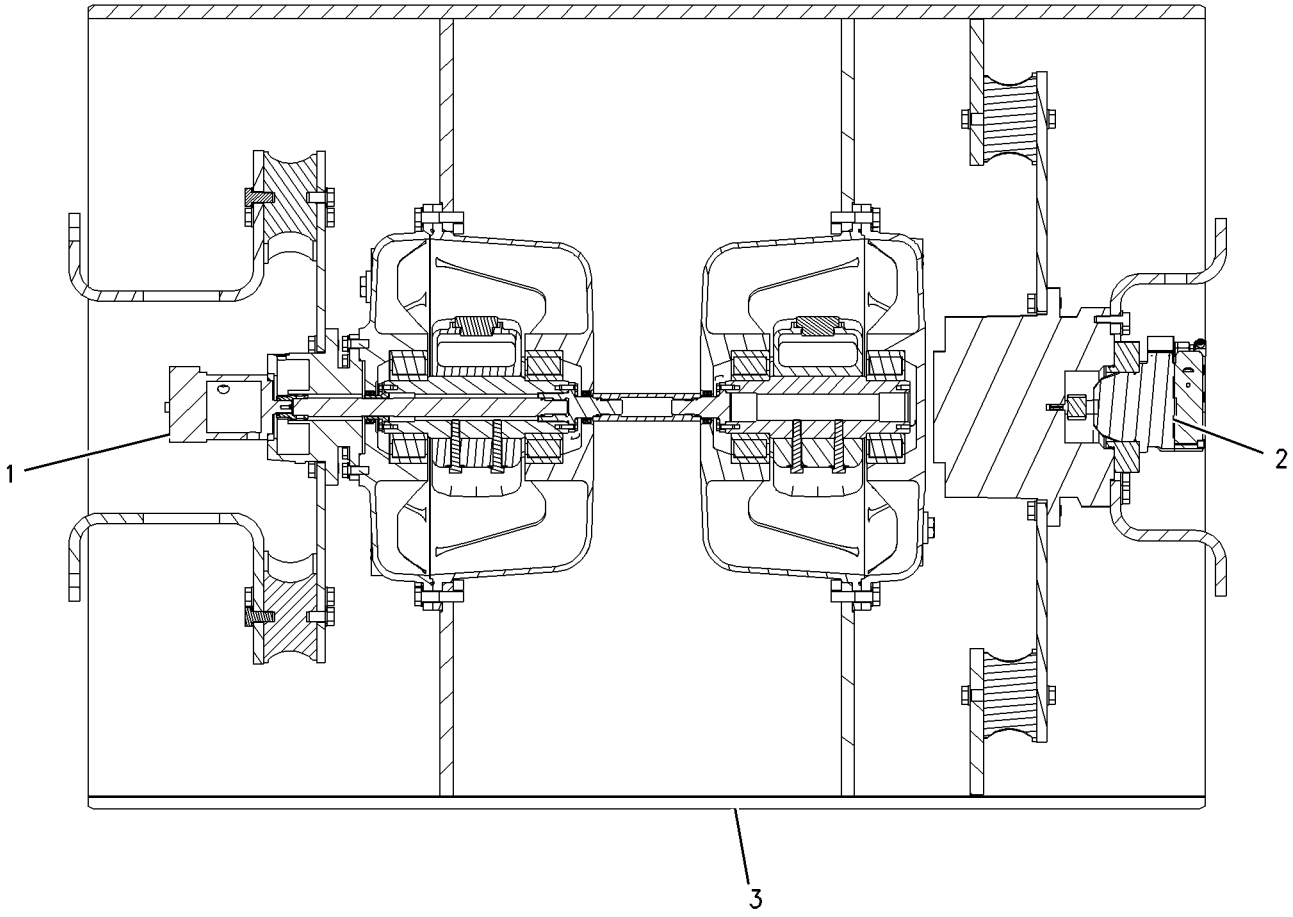

GRAPHIC #1 **<END>** g01002408

242-3497 DRUM GP-DRIVE & VIBRATORY

S/N: TJL1-UP
PART OF 327-7071 CHASSIS AR
AN ATTACHMENT

SMCS-4050, 5622, 6605

i03064282

NOTE	REF NO	GRAPHIC REF	PART NUMBER	QTY	PART NAME 1 2 3 4 5 6 (PRODUCT LEVEL)	SEE PAGE
Y	1	1	*220-4053*	1	DRUM GP-SMOOTH	208
Y	2	1	*242-3498*	1	DRIVE GP-SUPPORT & VIBRATORY	352
Y	3	1	*242-3499*	1	DRIVE GP-DRUM	200

Y - SEPARATE ILLUSTRATION

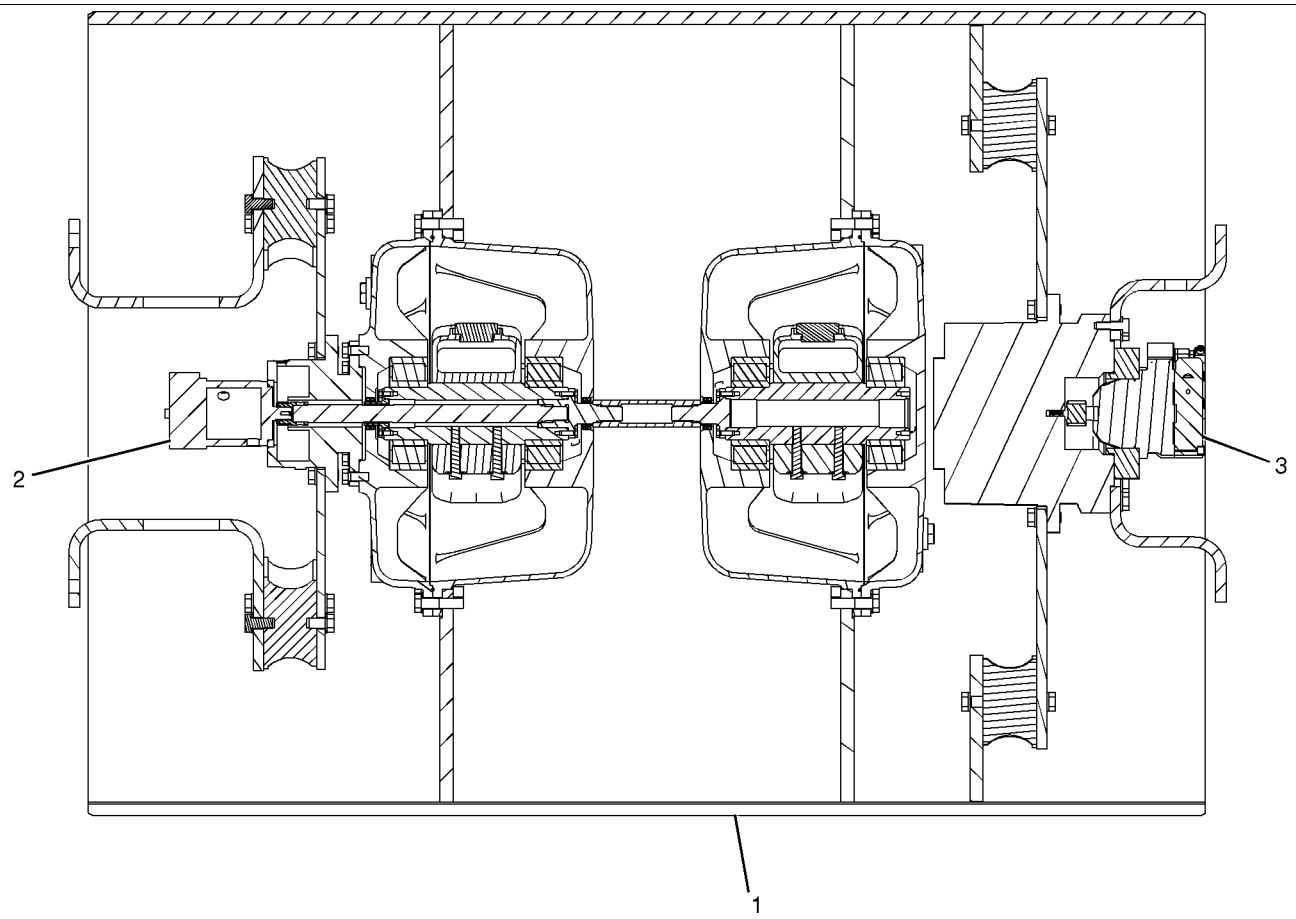

GRAPHIC #1 **<END>** g01038263

220-4053 DRUM GP-SMOOTH

S/N: TJL1-UP

PART OF 220-4051, 242-3497 DRUM GP-DRIVE & VIBRATORY

AN ATTACHMENT

SMCS-6605 **i04835814**

NOTE	REF NO	GRAPHIC REF	PART NUMBER	QTY	PART NAME 1 2 3 4 5 6 (PRODUCT LEVEL)	SEE PAGE
	1	1	*165-4929*	1	PLUG AS (MAGNETIC)	
		1	**5P-4484**	1	PLUG-MAGNETIC (SMOOTH DRUM)	
		1	**7M-8485**	1	SEAL-O-RING	
	2	1	**140-1321**	1	SHAFT	
	3	1	**220-4054**	1	DRUM AS-SMOOTH	
		1	**5C-3370**	1	BOSS	
		1	**129-3216**	2	PLATE AS	
Y	4	1	**222-1889**	1	HOUSING GP-ECCENTRIC WEIGHT (LH)	353
Y	5	1	**222-1890**	1	HOUSING GP-ECCENTRIC WEIGHT (RH)	354
	6	1	**061-9458**	2	SEAL-O-RING	
M	8	1	**8T-4187**	36	BOLT (M20X2.5X80-MM)	
	9	1	**8T-4123**	36	WASHER (3.62X5.75X0.375-MM THK)	
	10	1	**9H-6832**	2	SEAL-O-RING	

M - METRIC PART
Y - SEPARATE ILLUSTRATION

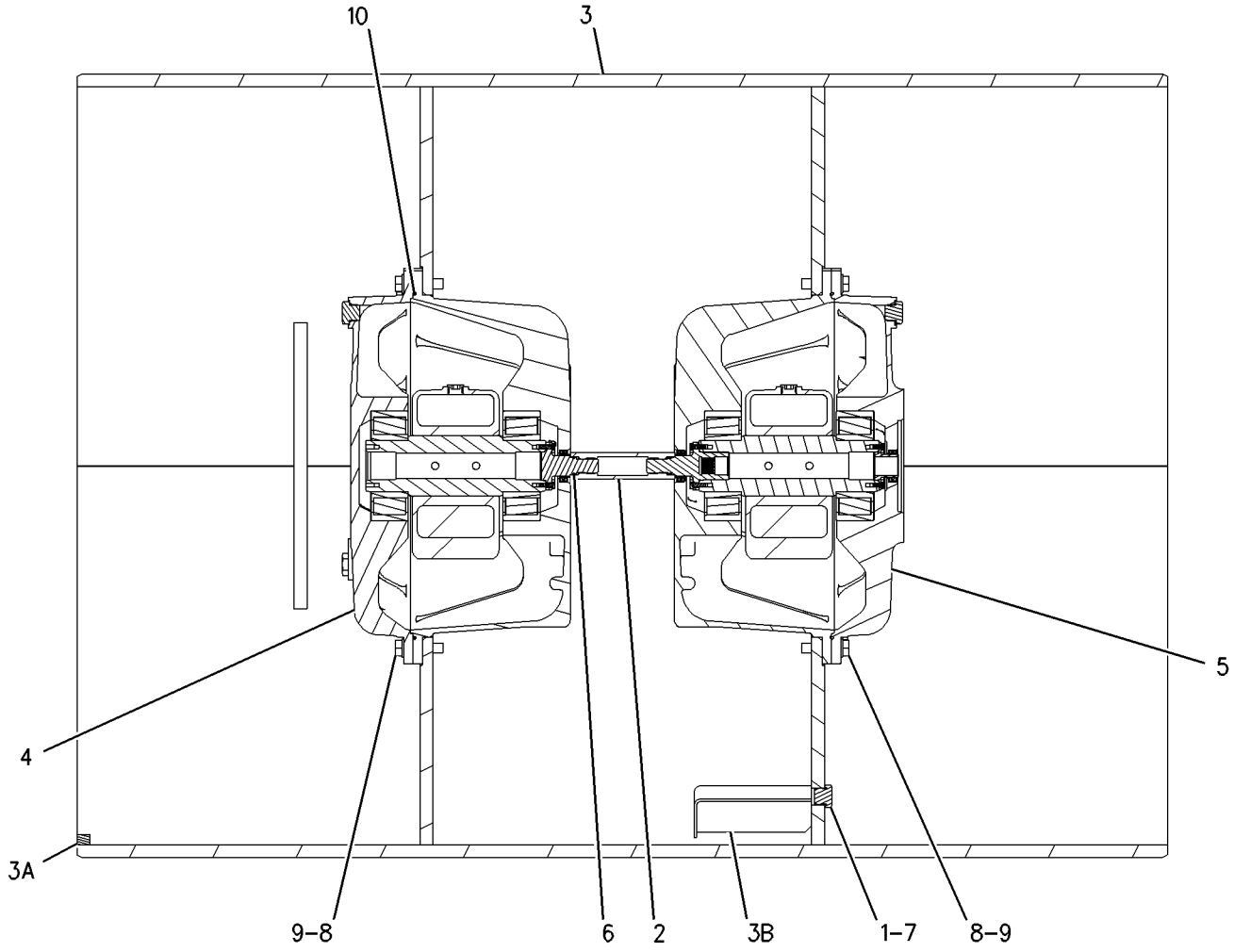

GRAPHIC #1 **<END>** g01002437

216-1609 FLANGE GP-WHEEL

S/N: TJL1-UP
PART OF 202-4173, 325-3644 AXLE GP-DRIVE
ALSO AN ATTACHMENT

SMCS-4057 **i03042520**

NOTE	REF NO	GRAPHIC REF	PART NUMBER	QTY	PART NAME 1 2 3 4 5 6 (PRODUCT LEVEL)	SEE PAGE
	1	1	**210-5932**	2	BEARING-WHEEL	
	2	1	**216-1602**	1	FLANGE	
	3	1	**226-4346**	10	STUD	
	4	1	**229-5092**	1	SEAL	

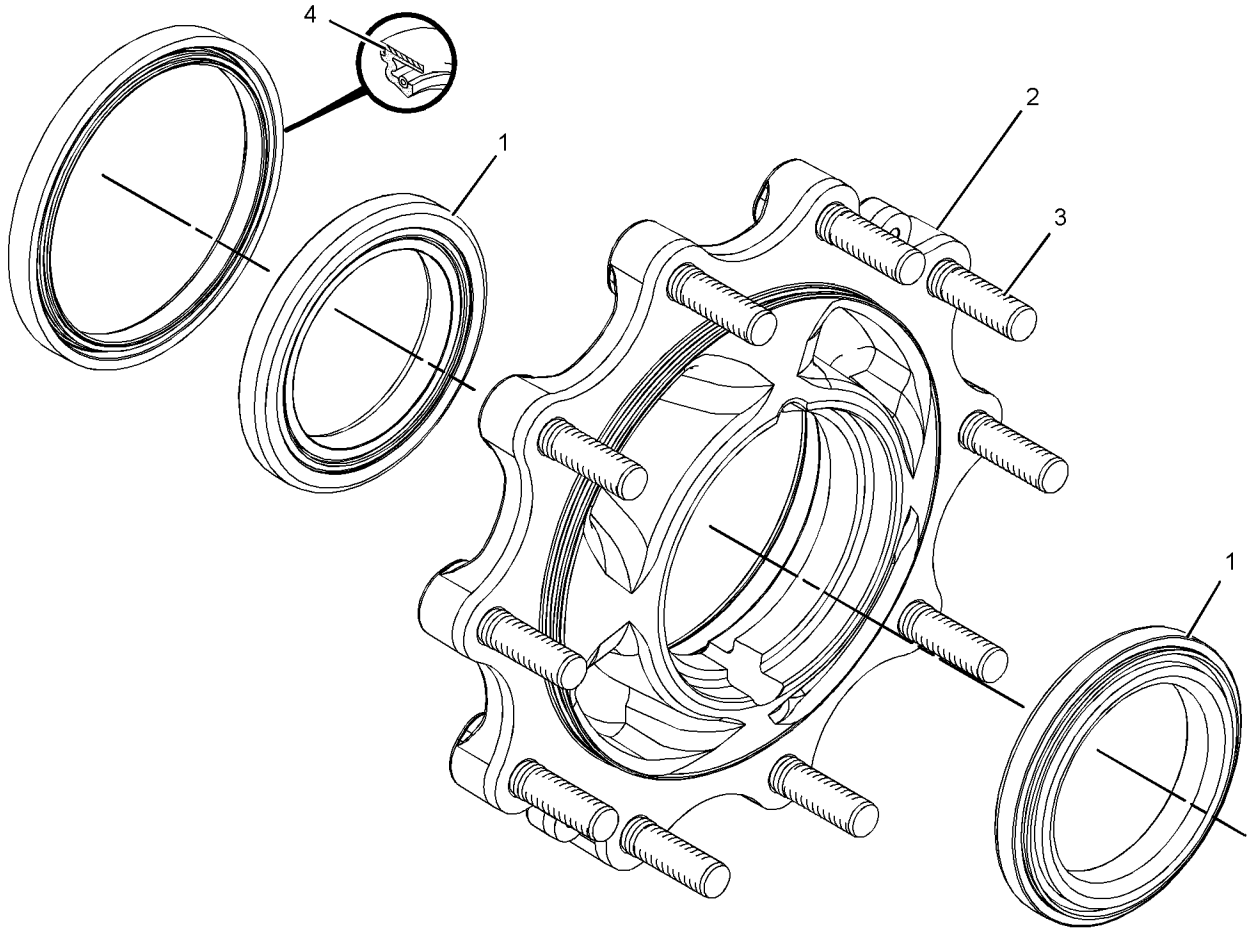

GRAPHIC #1 **<END>** g01180592

226-4353 FLANGE GP-WHEEL

S/N: TJL1-UP

PART OF 315-1260 AXLE GP-DRIVE

SMCS-4057 **i05292869**

NOTE	REF NO	GRAPHIC REF	PART NUMBER	QTY	PART NAME 1 2 3 4 5 6 (PRODUCT LEVEL)	SEE PAGE
	1	1	**199-0718**	2	BEARING	
	2	1	**229-5092**	1	SEAL	
	3	1	**231-0719**	1	KIT-WHEEL FLANGE	
	3A	1	**226-4346**	10	STUD	

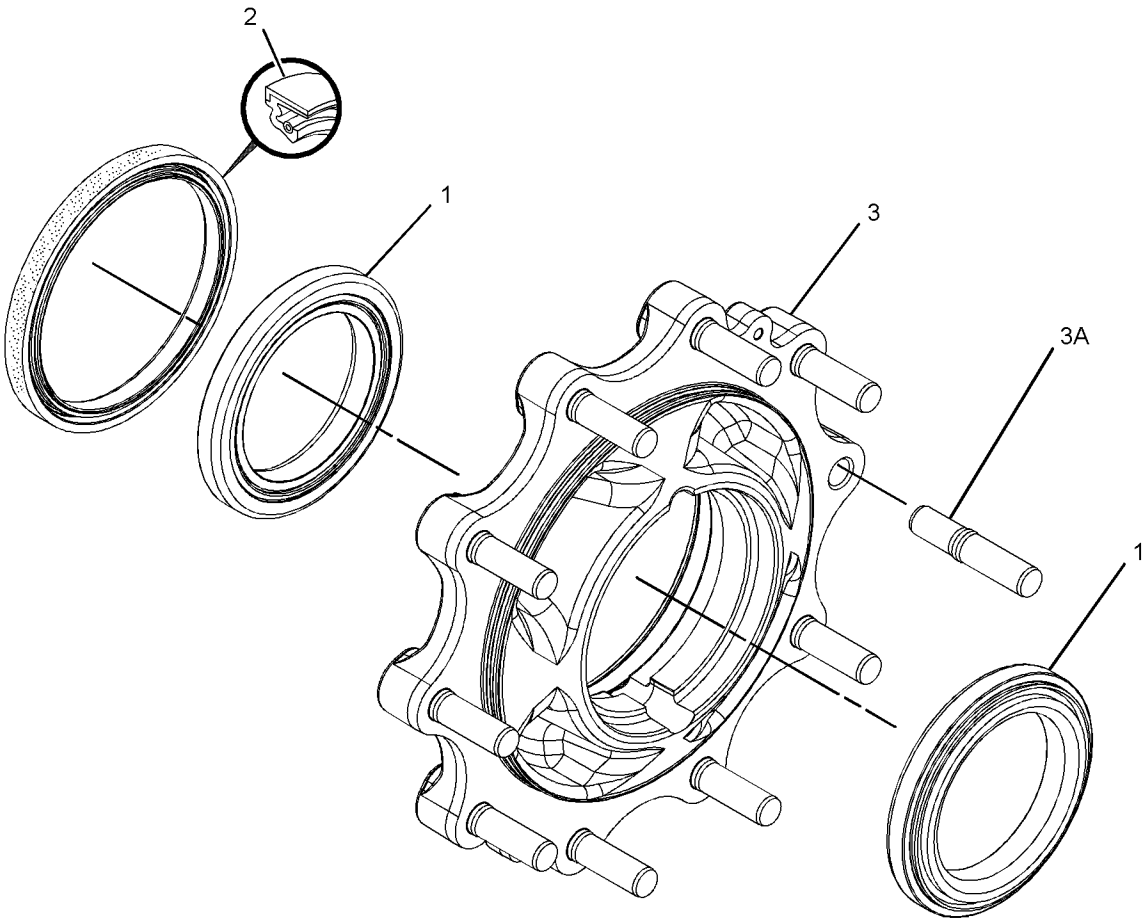

GRAPHIC #1 **<END>** g01810335

226-4390 HOUSING GP-AXLE—WITH BRAKES

S/N: TJL1-UP
PART OF 202-4173 AXLE GP-DRIVE
AN ATTACHMENT

SMCS-3260 **i05254226**

NOTE	REF NO	GRAPHIC REF	PART NUMBER	QTY	PART NAME 1 2 3 4 5 6 (PRODUCT LEVEL)	SEE PAGE
	1	1	**095-1041**	1	BEARING AS	
	2	1	**198-7811**	2	DOWEL	
	3	1	**199-0656**	2	CUP & CONE AS	
	4	1	**199-0675**	2	NUT (M104X2-THD)	
J	5	1	**199-0678**	2	WASHER (45.5X55X2-MM THK)	
J	6	1	**199-0680**	1	SPACER (47X50X19.2-MM THK)	
J	7	1	**209-7457**	1	NUT (M45X1.5-THD)	
	8	1	**226-4373**	1	SPACER (45X73X18-MM THK)	
	9	1	**226-4374**	1	HOUSING-CENTER	
	10	1	**226-4385**	4	BRAKE DISC	
	11	1	**226-4386**	2	PISTON-BRAKE	
	12	1	**226-4387**	2	NUT (TAPERED ROLLER)	
Y	13	1	*226-4392*	2	CYLINDER GP-BRAKE	281
Y	14	1	**226-4394**	1	DIFFERENTIAL GP	194
J	16	1	**229-5055**	1	WASHER	
	17	1	**093-8828**	1	BEARING AS	
M	18	1	**095-0674**	8	BOLT-SOCKET HEAD (M12X1.75X65-MM)	
M	19	1	**199-0695**	2	BOLT (M6X1X14-MM)	
	20	1	**2D-0598**	1	SEAL-O-RING	
	21	1	**5H-6734**	1	SEAL-O-RING	
B	22	1	**1U-8846**		SEALANT-GASKET	
B	23	1	**199-0684**	1	SHIM (2.5-MM THK)	
B		1	**199-0685**	1	SHIM (2.6-MM THK)	
B		1	**199-0686**	1	SHIM (2.7-MM THK)	
B		1	**199-0687**	1	SHIM (2.8-MM THK)	
B		1	**199-0688**	1	SHIM (2.9-MM THK)	
B		1	**199-0689**	1	SHIM (3-MM THK)	
B		1	**199-0690**	1	SHIM (3.1-MM THK)	
B		1	**199-0691**	1	SHIM (3.2-MM THK)	
B		1	**199-0692**	1	SHIM (3.3-MM THK)	
B		1	**199-0693**	1	SHIM (3.4-MM THK)	
					AVAILABLE REPAIR KIT(S):	
J			**229-5099**	1	KIT-GEAR (AXLE HOUSING)	
					(ALSO INCLUDES BEVEL GEAR & PINION)	

B - USE AS REQUIRED
J - KIT MARKED J SERVICES PARTS MARKED J
M - METRIC PART
Y - SEPARATE ILLUSTRATION

226-4390 **HOUSING GP-AXLE (*contd.*)** **i05254226**

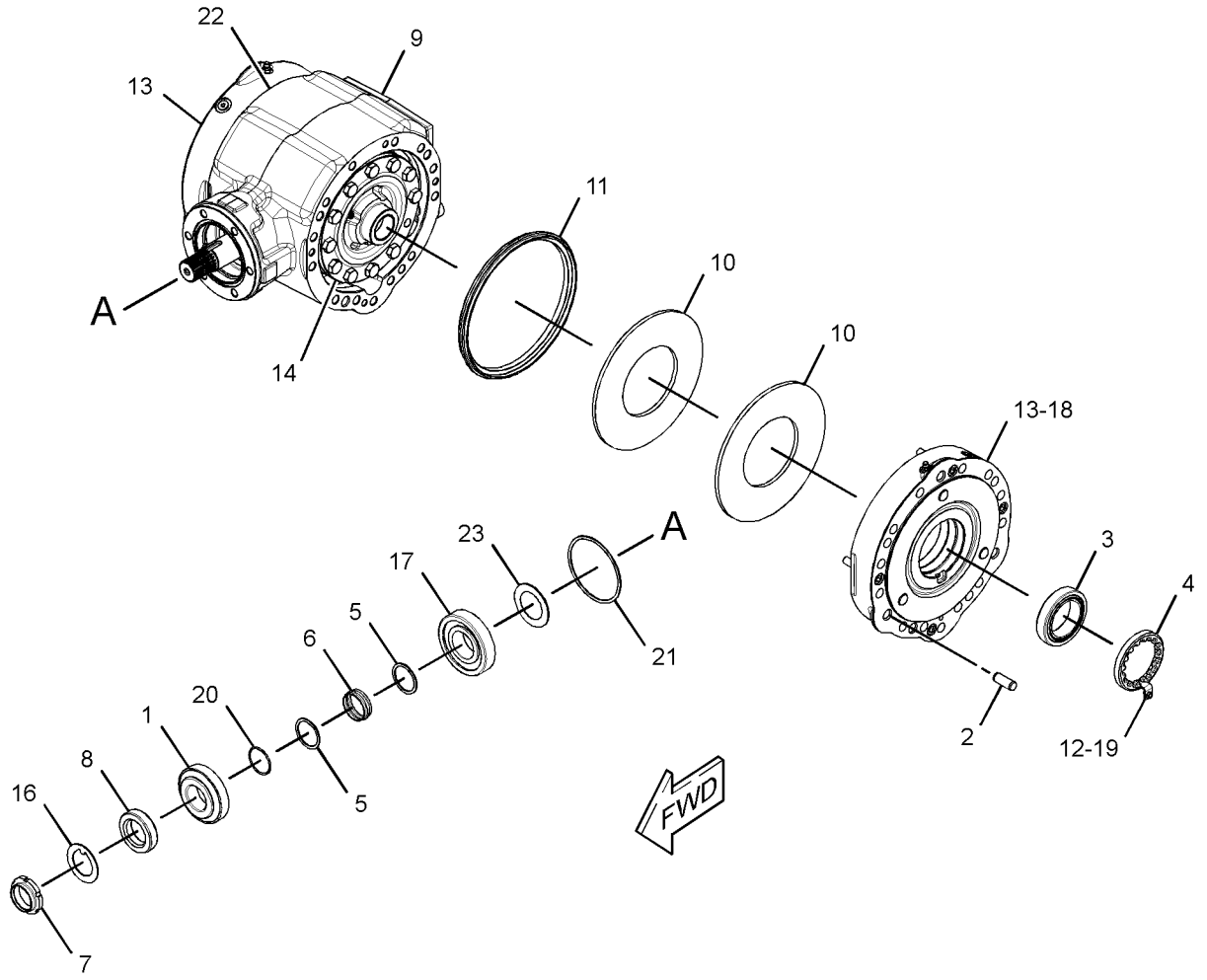

GRAPHIC #1 **<END>** g02187615

226-4400 HOUSING GP-AXLE

S/N: TJL1-UP
PART OF 315-1260, 325-3644 AXLE GP-DRIVE
ALSO AN ATTACHMENT

SMCS-3260 **i04534393**

NOTE	REF NO	GRAPHIC REF	PART NUMBER	QTY	PART NAME 1 2 3 4 5 6 (PRODUCT LEVEL)	SEE PAGE
M	1	1	**095-0674**	4	BOLT-SOCKET HEAD (M12X1.75X65-MM)	
	2	1	**199-0656**	2	CUP & CONE AS	
J	3	1	**209-7457**	1	NUT (M45X1.5-THD)	
	4	1	**198-7811**	2	DOWEL	
	5	1	**199-0675**	2	NUT (M104X2-THD)	
J	6	1	**229-5055**	1	WASHER	
J	7	1	**199-0678**	2	WASHER (45.5X55X2-MM THK)	
J	8	1	**199-0680**	1	SPACER (47X50X19.2-MM THK)	
B	9	1	**199-0684**	1	SHIM (2.5-MM THK)	
B		1	**199-0685**	1	SHIM (2.6-MM THK)	
B		1	**199-0686**	1	SHIM (2.7-MM THK)	
B		1	**199-0687**	1	SHIM (2.8-MM THK)	
B		1	**199-0688**	1	SHIM (2.9-MM THK)	
B		1	**199-0689**	1	SHIM (3-MM THK)	
B		1	**199-0690**	1	SHIM (3.1-MM THK)	
B		1	**199-0691**	1	SHIM (3.2-MM THK)	
B		1	**199-0692**	1	SHIM (3.3-MM THK)	
B		1	**199-0693**	1	SHIM (3.4-MM THK)	
M	10	1	**199-0695**	2	BOLT (M6X1X14-MM)	
	12	1	**199-0858**	2	RETAINER	
	13	1	**095-1041**	1	BEARING AS	
	14	1	**093-8828**	1	BEARING AS	
	15	1	**219-8834**	1	CYLINDER-BRAKE	
	16	1	**219-8835**	1	CYLINDER-BRAKE	
Y	17	1	**226-4394**	1	DIFFERENTIAL GP (RIGHT AXLE HOUSING)	194
	19	1	**226-4374**	1	HOUSING-CENTER	
	20	1	**226-4373**	1	SPACER (45X73X18-MM THK)	
	22	1	**5H-6734**	1	SEAL-O-RING	
	24	1	**2D-0598**	1	SEAL-O-RING	
					AVAILABLE REPAIR KIT(S):	
J			**229-5099**	1	KIT-GEAR (AXLE HOUSING)	
					(ALSO INCLUDES BEVEL GEAR & PINION)	

B - USE AS REQUIRED
J - KIT MARKED J SERVICES PART(S) MARKED J
M - METRIC PART
Y - SEPARATE ILLUSTRATION

226-4400 **HOUSING GP-AXLE (*contd.*)** **i04534393**

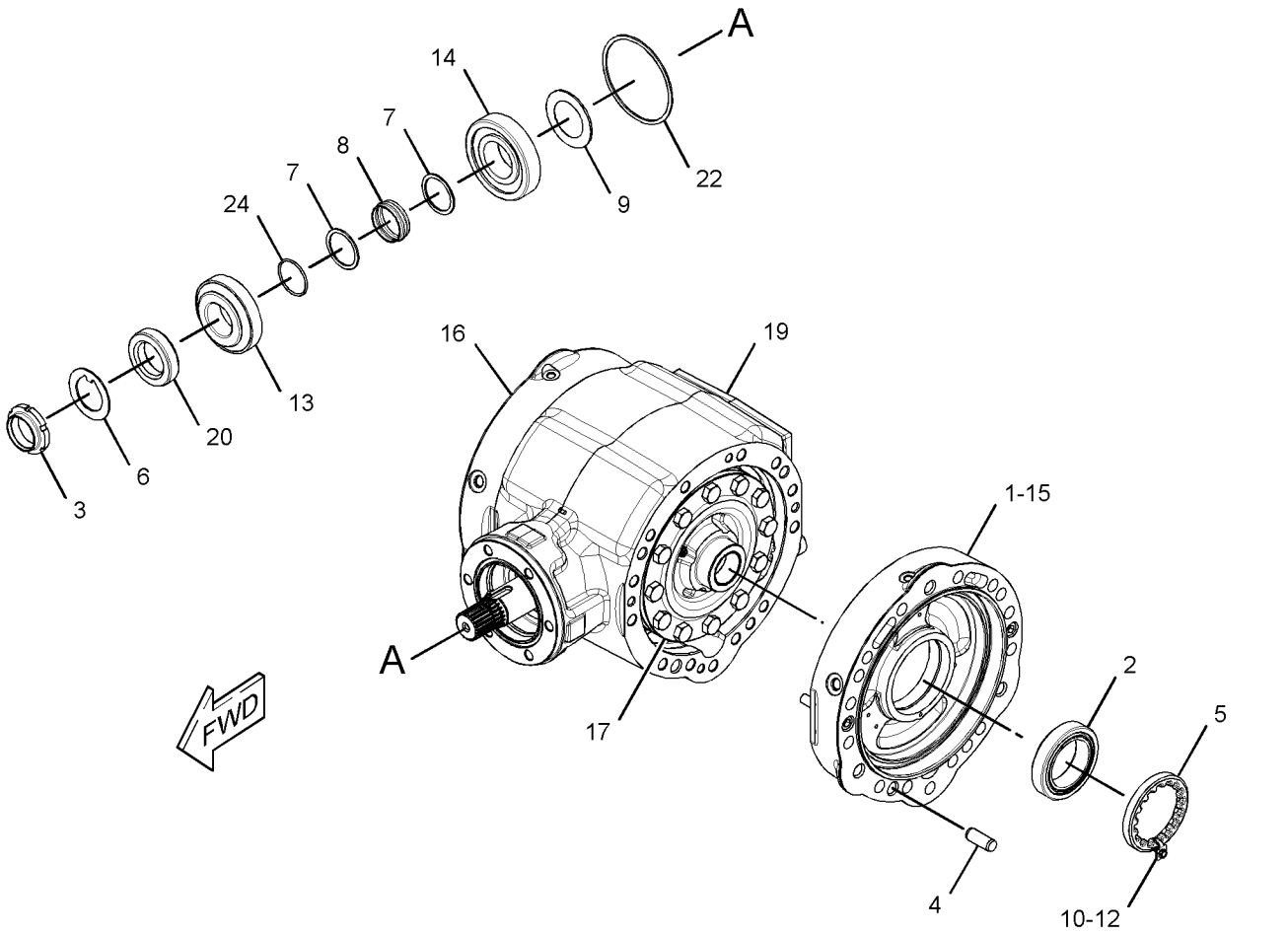

GRAPHIC #1 **<END>** g02717774

224-4336 HYDRAULIC AR-PROPEL

S/N: TJL1-UP

PART OF 316-9934 GENERAL AR

SMCS-3154, 4257, 5058, 5068, 5070

i03033107

NOTE	PART NUMBER	QTY	PART NAME 1 2 3 4 5 6 (PRODUCT LEVEL)	SEE PAGE
Y	*218-4281*	1	CONTROL GP-DIRECTION & SPEED	387
Y	*218-0377*	1	LINES GP-PROPEL	218
Y	*218-3163*	1	MOTOR & MTG GP-PROPEL (AXLE)	222
Y	*218-2973*	1	PUMP & MTG GP-PROPEL	234
Y	*208-0368*	1	VALVE & MTG GP-CONTROL	338

Y - SEPARATE ILLUSTRATION

<END>

148-6790 INSTALLATION GP-DRUM

S/N: TJL1-UP
PART OF 327-7069 CHASSIS AR
AN ATTACHMENT

SMCS-6605 **i03072942**

NOTE	REF NO	GRAPHIC REF	PART NUMBER	QTY	PART NAME 1 2 3 4 5 6 (PRODUCT LEVEL)	SEE PAGE
B	1	1	**124-0357**	4	SPACER (1.6-MM THK)	
B	2	1	**124-0358**	4	SPACER (2-MM THK)	
B	3	1	**124-0359**	4	SPACER (3-MM THK)	
M	4	1	**8T-4001**	12	NUT (M24X3-THD)	
	5	1	**8T-4167**	12	WASHER-HARD (26X44X4-MM THK)	
M	6	1	**8T-5878**	12	BOLT (M24X3X80-MM)	

B - USE AS REQUIRED
M - METRIC PART

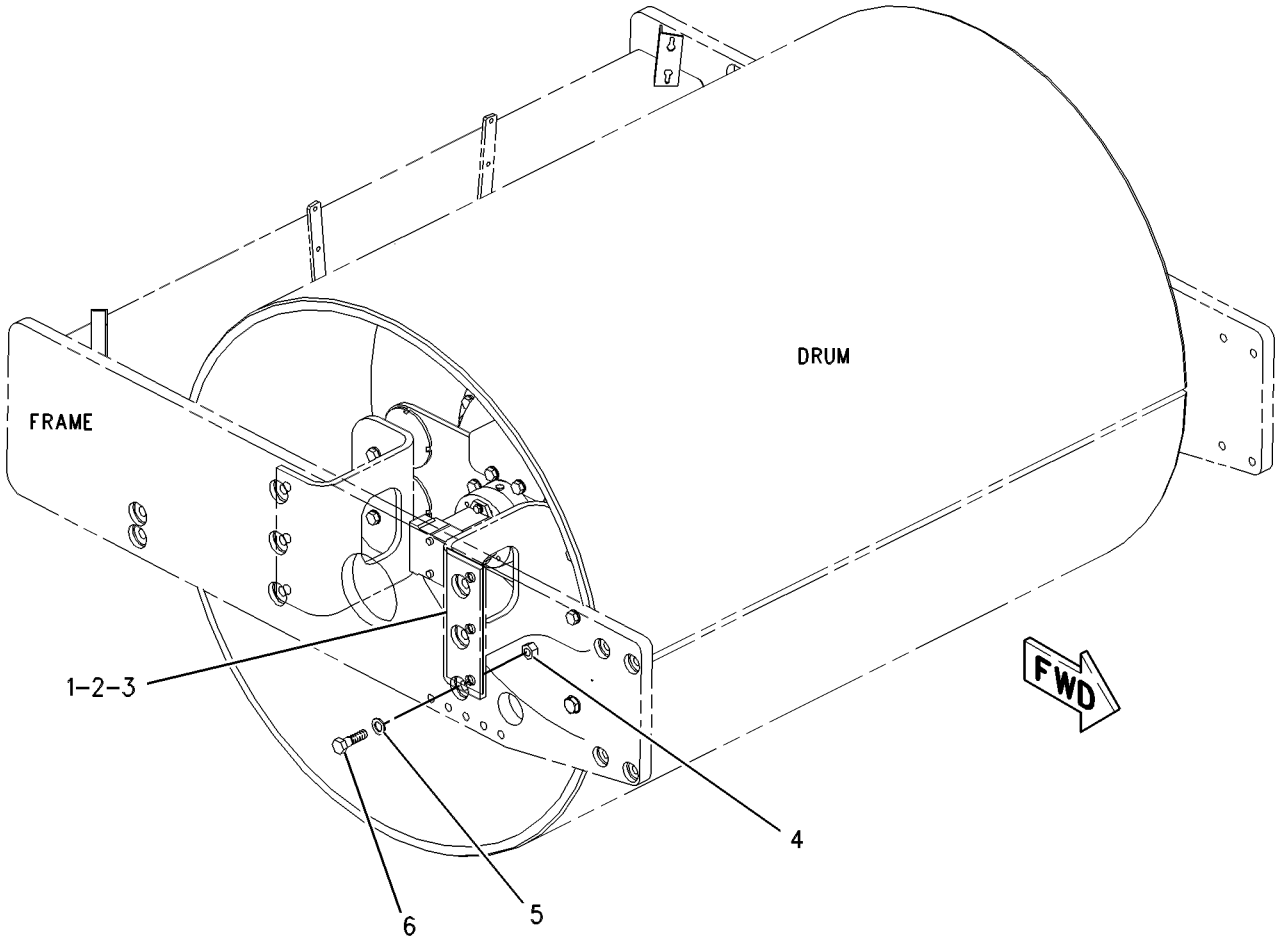

GRAPHIC #1 **<END>** g00468810

242-5116 INSTALLATION GP-DRUM

S/N: TJL1-UP
PART OF 327-7071 CHASSIS AR
AN ATTACHMENT

SMCS-6605 **i03064381**

NOTE	REF NO	GRAPHIC REF	PART NUMBER	QTY	PART NAME 1 2 3 4 5 6 (PRODUCT LEVEL)	SEE PAGE
B	1	1	**124-0357**	4	SPACER (1.6-MM THK)	
B	2	1	**124-0358**	4	SPACER (2-MM THK)	
B	3	1	**124-0359**	4	SPACER (3-MM THK)	
M	4	1	**8T-0363**	12	BOLT (M24X3X120-MM)	
M	5	1	**8T-4001**	12	NUT (M24X3-THD)	
	6	1	**8T-4167**	12	WASHER-HARD (26X44X4-MM THK)	

B - USE AS REQUIRED
M - METRIC PART

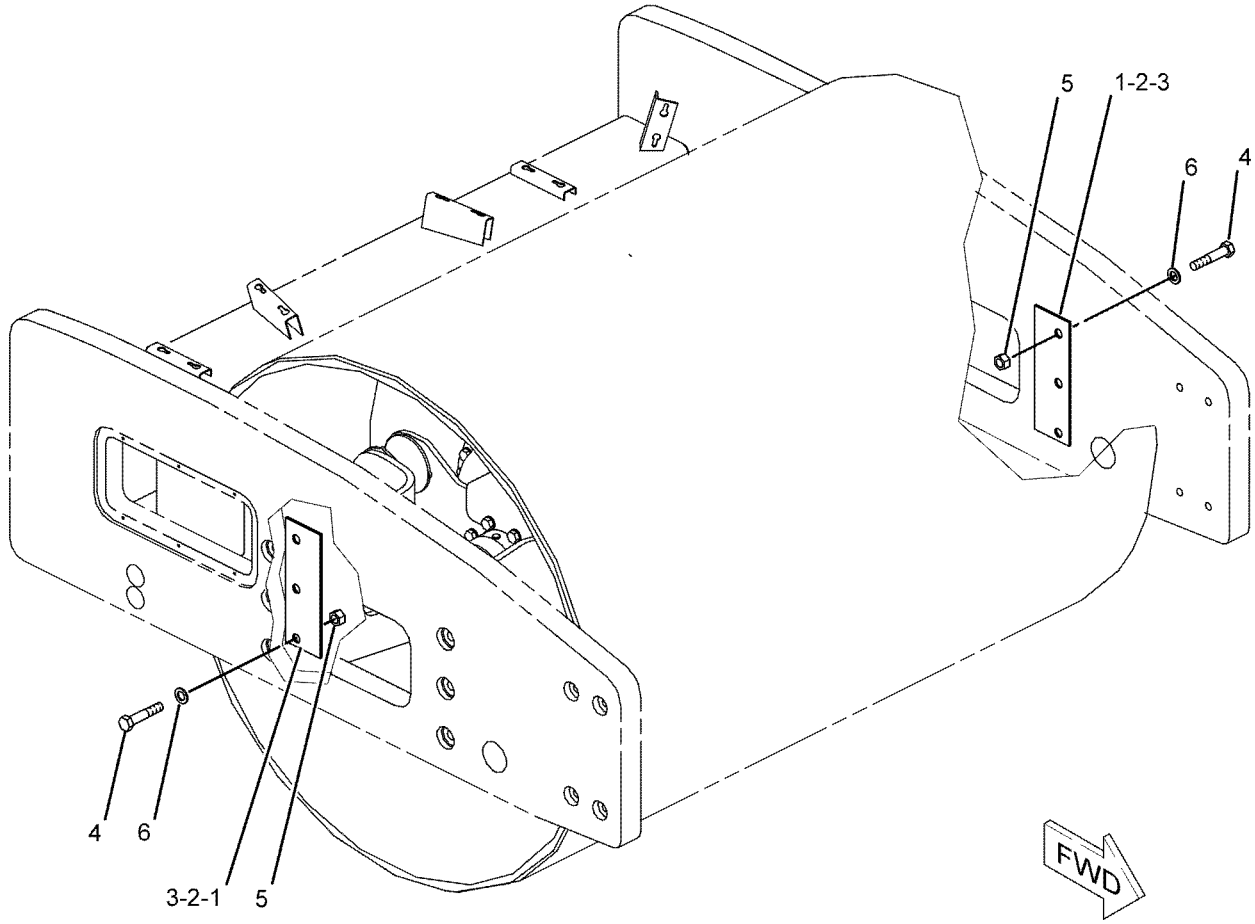

GRAPHIC #1 **<END>** g01031689

218-0377 LINES GP-PROPEL

S/N: TJL1-UP

PART OF 224-4336 HYDRAULIC AR-PROPEL

SMCS-3154 **i04129135**

NOTE	REF NO	GRAPHIC REF	PART NUMBER	QTY	PART NAME 1 2 3 4 5 6 (PRODUCT LEVEL)	SEE PAGE
	1	1	**1G-9959**	2	CLAMP	
	2	1	**7R-7940**	2	CLAMP	
	3	1	**7R-7951**	1	PLATE	
	4	1	**7V-5628**	1	PLATE	
I	5	1	**119-8436**	1	HOSE AS	
	6	1	**135-0708**	1	CLAMP AS	
I	7	1	**152-0116**	1	HOSE AS	
	8	1	**172-5267**	3	STRIP	
	9	1	**172-5523**	3	BLOCK-CLAMP	
I	10	1	**178-0274**	1	HOSE AS	
	11	1	**205-0706**	1	PLATE	
	12	1	**209-5382**	1	PLATE AS	
	13	1	**216-2801**	1	BRACKET AS	
I	14	1	**220-2173**	1	HOSE AS	
I	15	1	**220-2174**	1	HOSE AS	
I	16	1	**220-2297**	1	HOSE AS	
I	17	1	**220-2298**	1	HOSE AS	
	18	1	**7K-1181**	18	STRAP-CABLE	
M	19	1	**7X-2535**	2	BOLT (M6X1X60-MM)	
M	20	1	**8C-8451**	2	BOLT (M6X1X40-MM)	
M	21	1	**8T-0389**	8	LOCKNUT (M10X1.5-THD)	
	22	1	**8T-4121**	18	WASHER-HARD (11X21X2.5-MM THK)	
M	23	1	**8T-4137**	2	BOLT (M10X1.5X20-MM)	
M	24	1	**8T-4189**	6	BOLT (M8X1.25X20-MM)	
M	25	1	**8T-5436**	2	BOLT (M10X1.5X130-MM)	
M	26	1	**8T-6685**	6	BOLT (M10X1.5X110-MM)	
G	27	1	**160-2248**		SLEEVE-ABRASION (13-IN EACH)	
G	27A	1	**160-2248**		SLEEVE-ABRASION (15-IN EACH)	
G	27B	1	**160-2248**		SLEEVE-ABRASION (26-IN)	
G	27C	1	**160-2248**		SLEEVE-ABRASION (27.6-IN)	
G	28	1	**160-2246**		SLEEVE-ABRASION (28-IN)	
G	28A	1	**160-2246**		SLEEVE-ABRASION (15-IN)	
G	28B	1	**160-2246**		SLEEVE-ABRASION (13.2-IN)	
	29	1	**177-2215**	2	STRAP-DUAL CLAMP	

G - ORDER BY THE INCH
I - REFER TO HYDRAULIC INFORMATION SYSTEM
M - METRIC PART

218-0377 **LINES GP-PROPEL (*contd.*)** **i04129135**

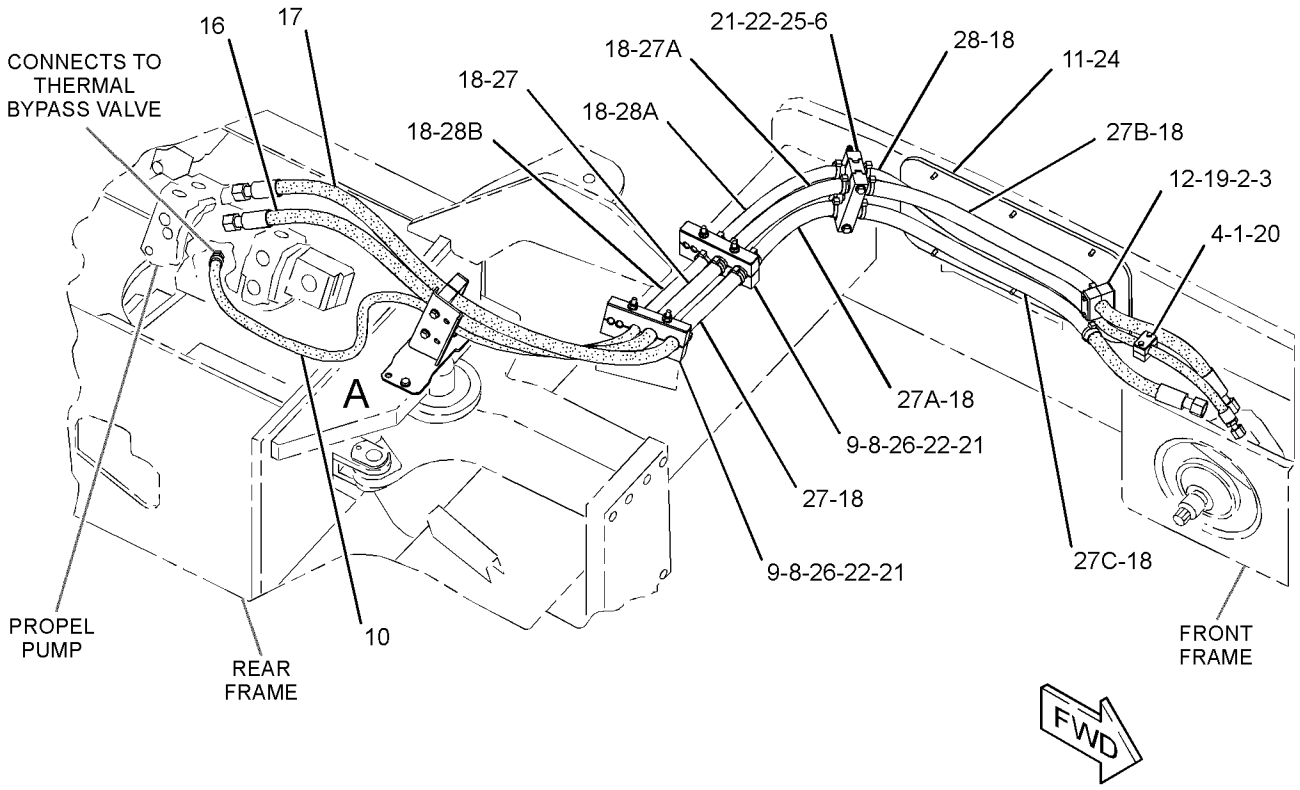

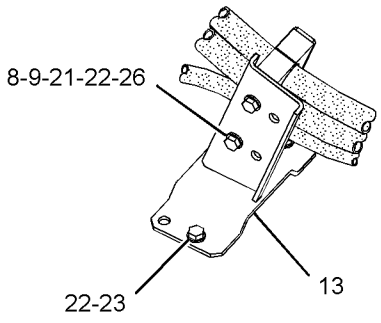

VIEW OF AREA A

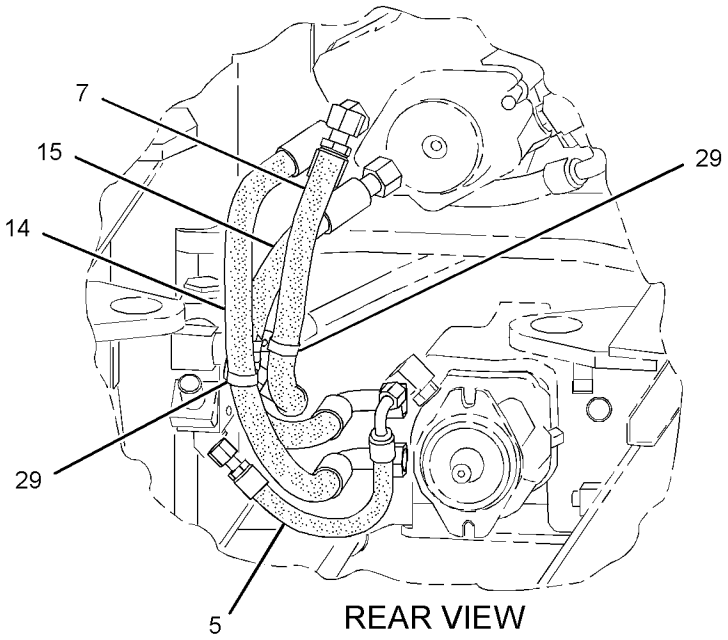

REAR VIEW
(UPPER RIGHT)

GRAPHIC #1 **<END>** g02187633

222-2844 LINES GP-SHIFT

S/N: TJL1-UP
PART OF 219-4262 AXLE AR-DRIVE
AN ATTACHMENT

SMCS-3154 **i05254216**

NOTE	REF NO	GRAPHIC REF	PART NUMBER	QTY	PART NAME 1 2 3 4 5 6 (PRODUCT LEVEL)	SEE PAGE
	1	1	**102-8703**	2	PLATE-COVER	
I	2	1	**116-9894**	1	HOSE AS	
I	3	1	**209-3855**	1	HOSE AS	
	4	1	**154-4879**	4	CLAMP-HALF	
I	5	1	**161-6853**	1	HOSE AS	
	6	1	**177-2215**	3	STRAP-DUAL CLAMP	
I	7	1	**204-9737**	1	HOSE AS	
	8	1	*148-8351*	1	ELBOW AS	
		1	**4J-5477**	1	SEAL-O-RING	
		1	**6V-9849**	1	ELBOW	
	9	1	*150-5968*	1	TEE AS	
		1	**4J-5477**	2	SEAL-O-RING	
		1	**6V-9835**	1	TEE-SWIVEL	
M	10	1	**7X-2537**	2	BOLT (M8X1.25X35-MM)	

I - REFER TO HYDRAULIC INFORMATION SYSTEM
M - METRIC PART

222-2844 **LINES GP-SHIFT (*contd.*)** **i05254216**

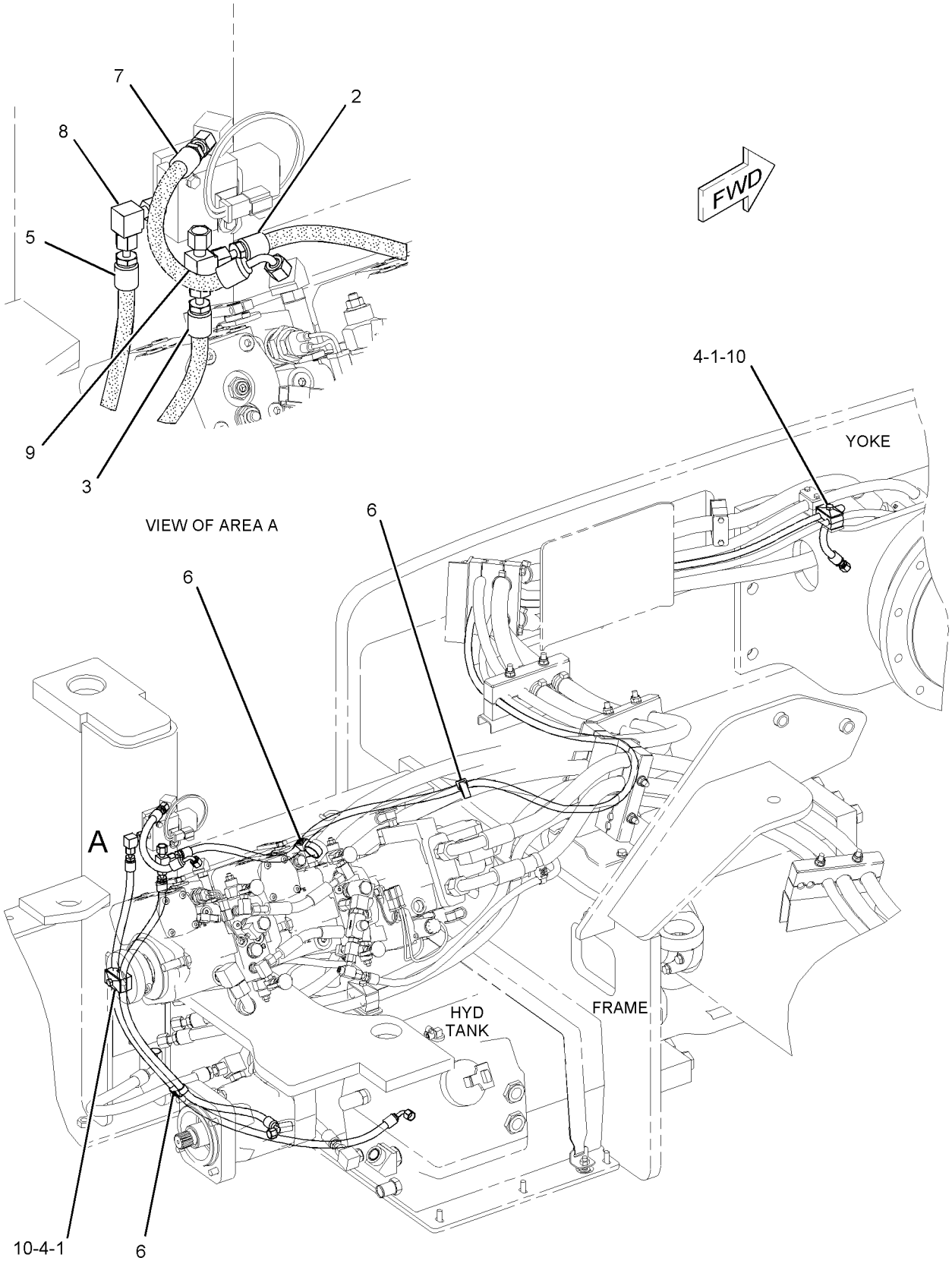

GRAPHIC #1

<END>

g01024196

218-3163 MOTOR & MTG GP-PROPEL–AXLE

S/N: TJL1-1399, 1525-1541

PART OF 224-4336 HYDRAULIC AR-PROPEL

SMCS-4351, 5058

i03033880

NOTE	REF NO	GRAPHIC REF	PART NUMBER	QTY	PART NAME 1 2 3 4 5 6 (PRODUCT LEVEL)	SEE PAGE
	1	1	**220-2309**	1	ADAPTER	
	2	1	**223-5849**	1	ADAPTER	
YR	3		**296-5160**	1	MOTOR GP-PISTON	320
	4	1	*148-8316*	1	CONNECTOR AS	
		1	**3J-7354**	1	SEAL-O-RING	
		1	**4J-5477**	1	SEAL-O-RING	
		1	**6V-8647**	1	CONNECTOR	
	5	1	*148-8327*	2	CONNECTOR AS	
					(EACH INCLUDES)	
		1	**3D-2824**	1	SEAL-O-RING	
		1	**6V-8637**	1	CONNECTOR	
		1	**6V-9746**	1	SEAL-O-RING	
	6	1	*148-8372*	1	ELBOW AS	
		1	**2M-9780**	1	SEAL-O-RING	
		1	**6V-8398**	1	SEAL-O-RING	
		1	**6V-8721**	1	ELBOW	
	7	1	**3F-7147**	4	BOLT (1/2-13X1.5-IN)	
	8	1	**7J-6285**	1	SEAL-O-RING	
	9	1	**8T-4223**	2	WASHER-HARD (13.5X25.5X3-MM THK)	
M	10	1	**8T-4956**	2	BOLT (M12X1.75X35-MM)	
	11	1	**9X-7549**	1	SEAL-O-RING	

M - METRIC PART
R - REMFG PART MAY BE AVAILABLE
Y - SEPARATE ILLUSTRATION

218-3163 **MOTOR & MTG GP-PROPEL (*contd.*)** **i03033880**

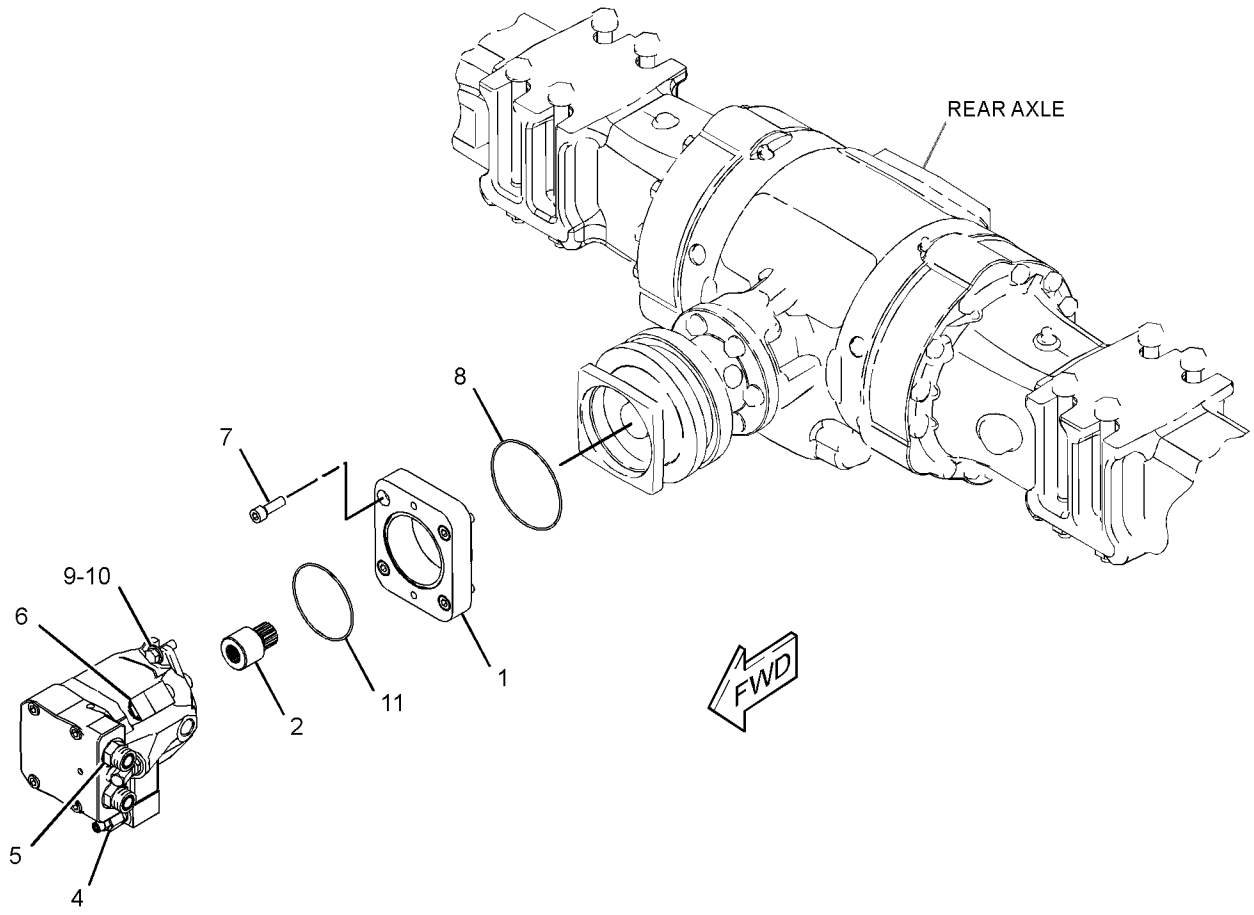

GRAPHIC #1 **<END>** g01551433

218-3163 MOTOR & MTG GP-PROPEL–AXLE

S/N: TJL1400-1524, 1542-UP

PART OF 224-4336 HYDRAULIC AR-PROPEL

SMCS-4351, 5058 **i04377196**

NOTE	REF NO	GRAPHIC REF	PART NUMBER	QTY	PART NAME 1 2 3 4 5 6 (PRODUCT LEVEL)	SEE PAGE
YR	1	1	**296-5160**	1	MOTOR GP-PISTON (PROPEL)	320
	2	1	*148-8316*	1	CONNECTOR AS	
		1	**3J-7354**	1	SEAL-O-RING	
		1	**4J-5477**	1	SEAL-O-RING	
		1	**6V-8647**	1	CONNECTOR	
	3	1	*148-8327*	2	CONNECTOR AS	
					(EACH INCLUDES)	
		1	**3D-2824**	1	SEAL-O-RING	
		1	**6V-8637**	1	CONNECTOR	
		1	**6V-9746**	1	SEAL-O-RING	
	4	1	*148-8372*	1	ELBOW AS	
		1	**2M-9780**	1	SEAL-O-RING	
		1	**6V-8398**	1	SEAL-O-RING	
		1	**6V-8721**	1	ELBOW	
	5	1	**8T-4223**	2	WASHER-HARD (13.5X25.5X3-MM THK)	
M	6	1	**8T-4956**	2	BOLT (M12X1.75X35-MM)	
	7	1	**9X-7549**	1	SEAL-O-RING	

M - METRIC PART
R - REMFG PART MAY BE AVAILABLE
Y - SEPARATE ILLUSTRATION

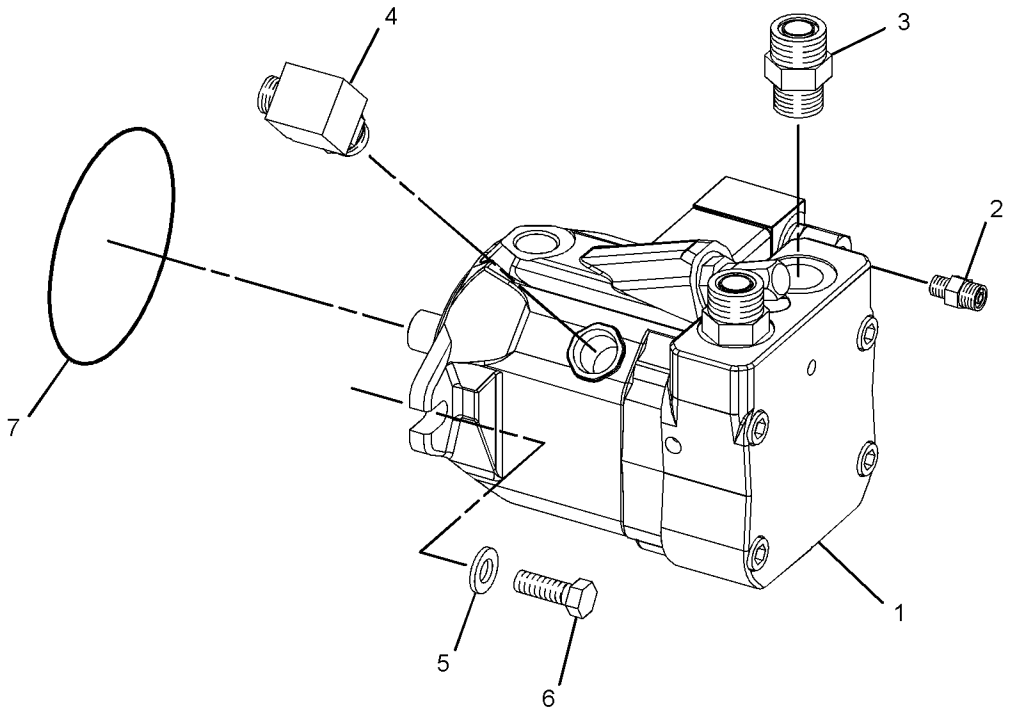

GRAPHIC #1 **<END>** g02404276

247-5651 MOUNTING GP-WHEEL

S/N: TJL1-UP
AN ATTACHMENT

SMCS-4201 **i03055721**

NOTE	REF NO	GRAPHIC REF	PART NUMBER	QTY	PART NAME 1 2 3 4 5 6 (PRODUCT LEVEL)	SEE PAGE
M	1	1	**201-1919**	20	NUT (M20X1.5-THD)	
Y	2	1	*247-5653*	2	WHEEL & TIRE GP	244
	3	1	**8T-5439**	20	WASHER-HARD (21.5X45X6-MM THK)	

M - METRIC PART
Y - SEPARATE ILLUSTRATION

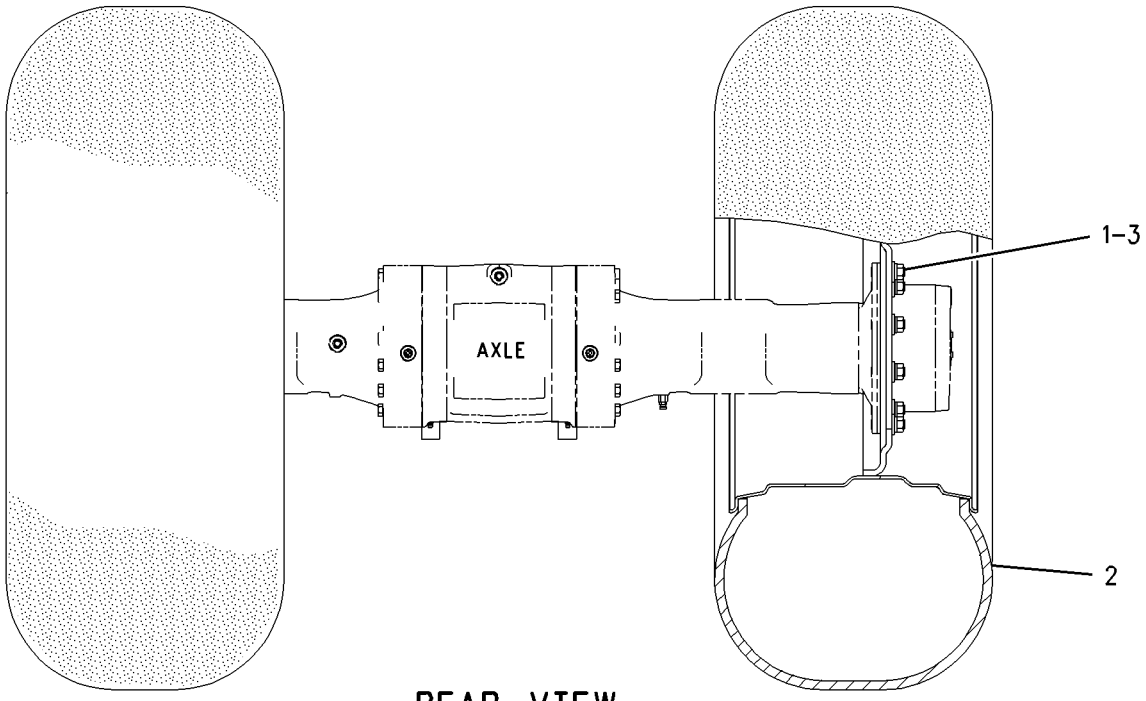

REAR VIEW

GRAPHIC #1 **<END>** g00917025

324-9216 MOUNTING GP-WHEEL

S/N: TJL1-UP
PART OF 376-1389, 376-1392, 376-1393 DISTRIBUTION AR
AN ATTACHMENT

SMCS-4201 **i03057084**

NOTE	REF NO	GRAPHIC REF	PART NUMBER	QTY	PART NAME 1 2 3 4 5 6 (PRODUCT LEVEL)	SEE PAGE
M	1	1	**201-1919**	20	NUT (M20X1.5-THD)	
Y	2	1	*324-9214*	2	WHEEL & TIRE GP	247
	3	1	**8T-5439**	20	WASHER-HARD (21.5X45X6-MM THK)	

M - METRIC PART
Y - SEPARATE ILLUSTRATION

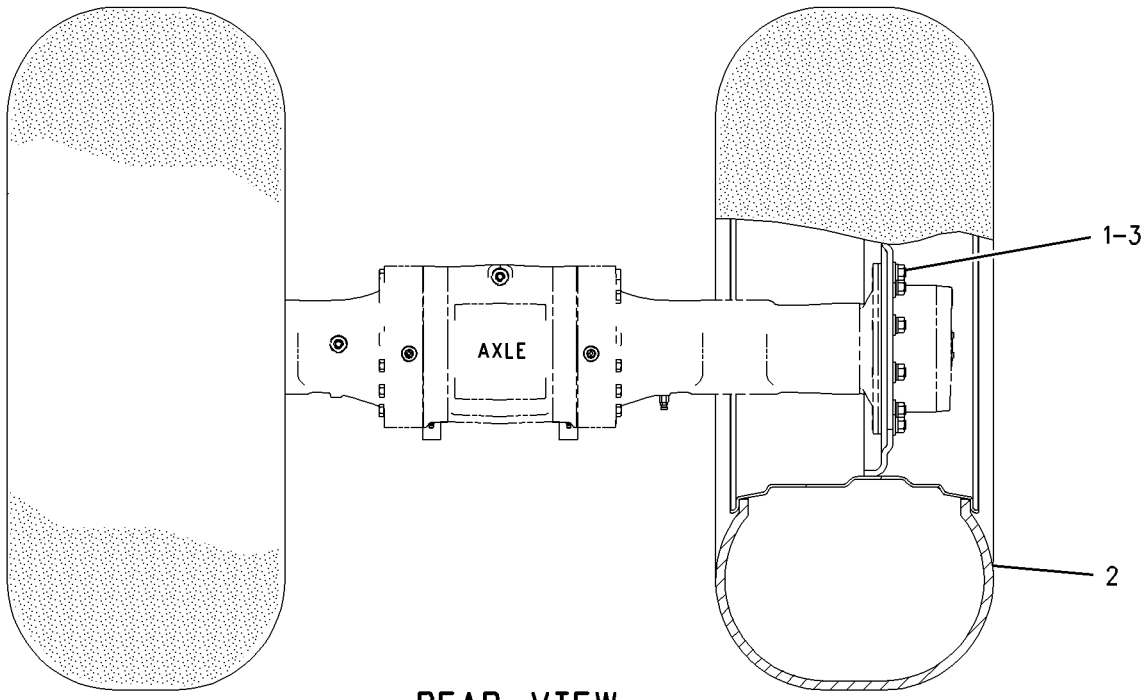

REAR VIEW

GRAPHIC #1 **<END>** g00917025

324-9217 MOUNTING GP-WHEEL

S/N: TJL1-UP
PART OF 368-9181, 368-9182, 369-9031 DISTRIBUTION AR
AN ATTACHMENT

SMCS-4201 **i03057170**

NOTE	REF NO	GRAPHIC REF	PART NUMBER	QTY	PART NAME 1 2 3 4 5 6 (PRODUCT LEVEL)	SEE PAGE
M	1	1	**201-1919**	20	NUT (M20X1.5-THD)	
Y	2	1	*324-9215*	2	WHEEL & TIRE GP	248
	3	1	**8T-5439**	20	WASHER-HARD (21.5X45X6-MM THK)	

M - METRIC PART
Y - SEPARATE ILLUSTRATION

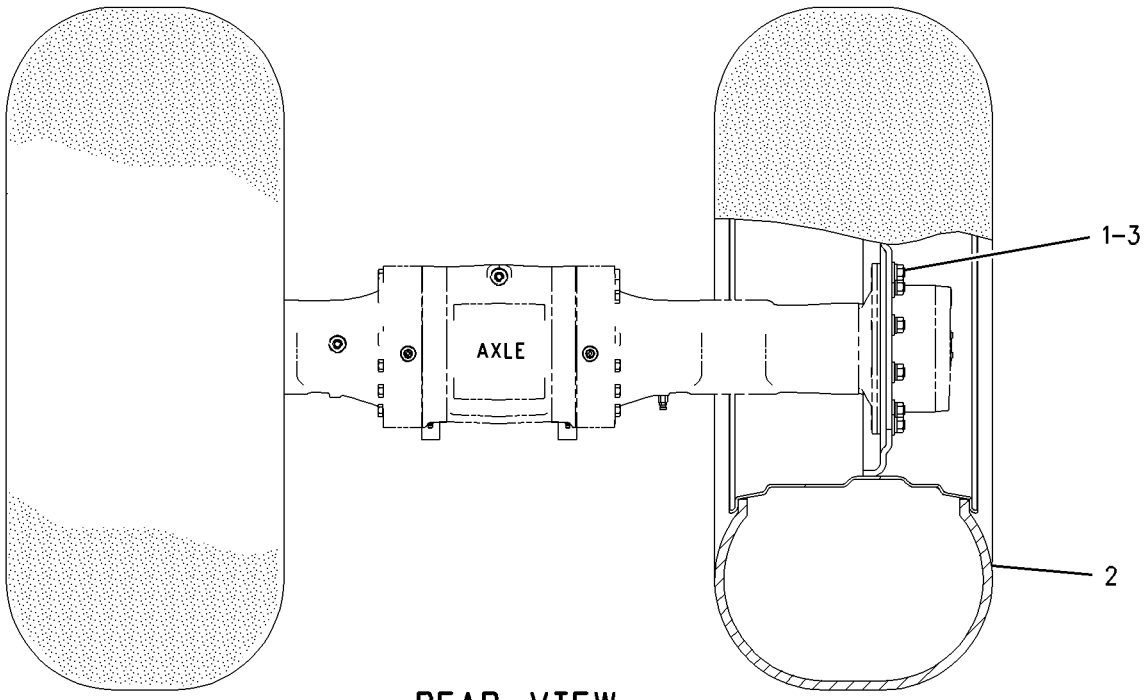

REAR VIEW

GRAPHIC #1 **<END>** g00917025

203-4692 PLANETARY GP-FINAL DRIVE

S/N: TJL1-418

PART OF 203-4685, 203-4686 AXLE & MTG GP-DRIVE

ALSO AN ATTACHMENT

SMCS-4050 **i05269535**

NOTE	REF NO	GRAPHIC REF	PART NUMBER	QTY	PART NAME 1 2 3 4 5 6 (PRODUCT LEVEL)	SEE PAGE
	1	1	**5J-2974**	1	SEAL-O-RING	
	2	1	**243-4362**	1	PLUG	
	3	1	**176-9287**	4	PIN-PLANETARY	
	4	1	**176-9288**	8	WASHER-PLANETARY	
	5	1	**176-9289**	152	BEARING AS-NEEDLE	
	6	1	**177-1809**	8	BOLT-SOCKET HEAD (M8X1.25X65-MM)	
	7	1	**151-7518**	2	PLUG	
	8	1	**151-7517**	3	SEAL-O-RING	
	9	1	**095-0919**	4	RING-RETAINING	
	10	1	**176-9285**	1	COVER	
	11	1	**151-7516**	1	PLUG-DRAIN (FINAL DRIVE PLANETARY)	
	12	1	**5P-3864**	2	SEAL-O-RING	
	13	1	**095-0892**	2	PIN-SPRING	

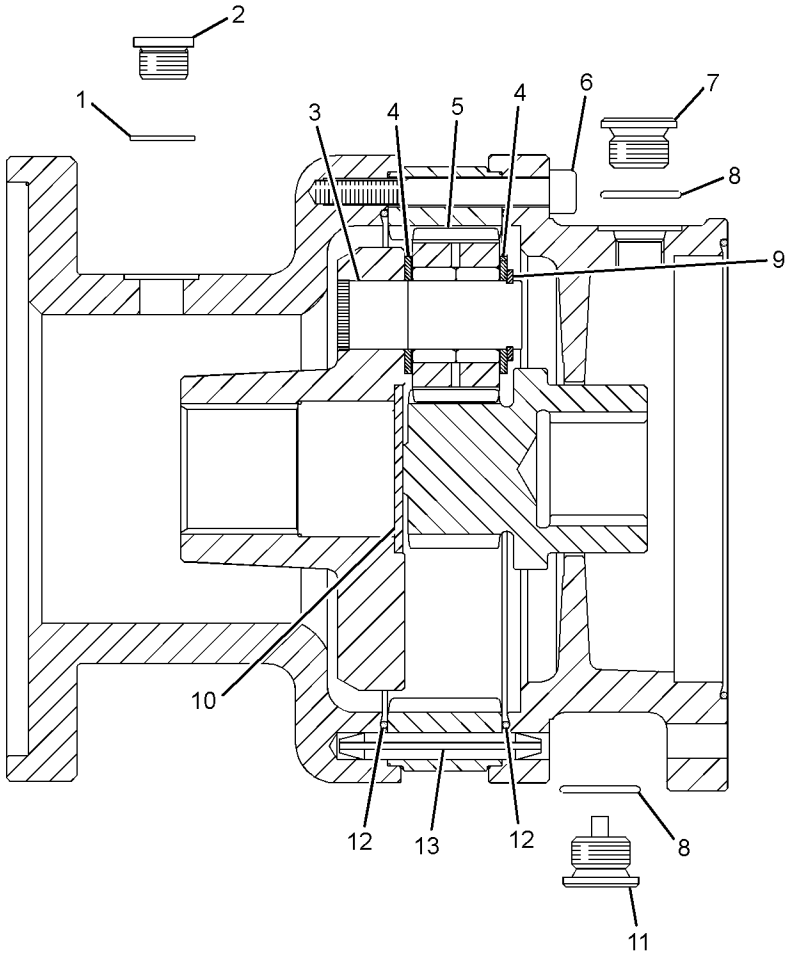

GRAPHIC #1 **<END>** g02041793

216-1610 PLANETARY GP-FINAL DRIVE

S/N: TJL1-UP
PART OF 325-3644 AXLE GP-DRIVE
ALSO AN ATTACHMENT

SMCS-4050 **i03898317**

NOTE	REF NO	GRAPHIC REF	PART NUMBER	QTY	PART NAME 1 2 3 4 5 6 (PRODUCT LEVEL)	SEE PAGE
	1	1	**199-0653**	3	RING-RETAINING	
	2	1	**207-4257**	6	RING-RETAINER	
	3	1	**199-0760**	3	BEARING	
	4	1	**213-4222**	3	WASHER (50.1X61X2.5-MM THK)	
	5	1	**207-5962**	6	WASHER (65X72X2-MM THK)	
	6	1	**216-1606**	3	GEAR-PLANETARY (31-TEETH)	
	7	1	**216-1601**	1	CARRIER	
	8	1	**253-5022**	1	PLUG	

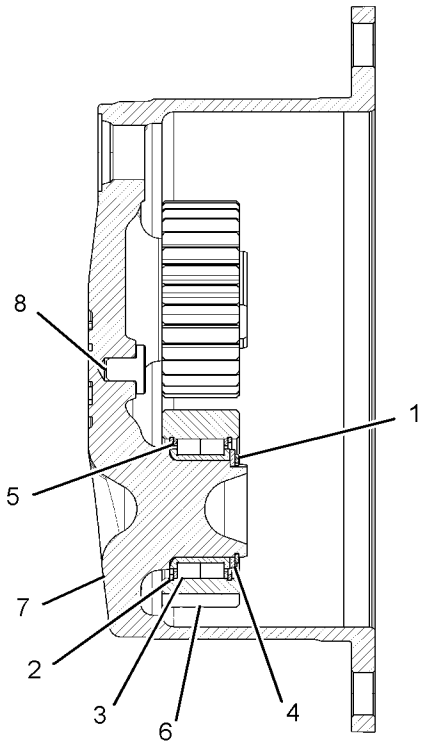

SECTION A-A

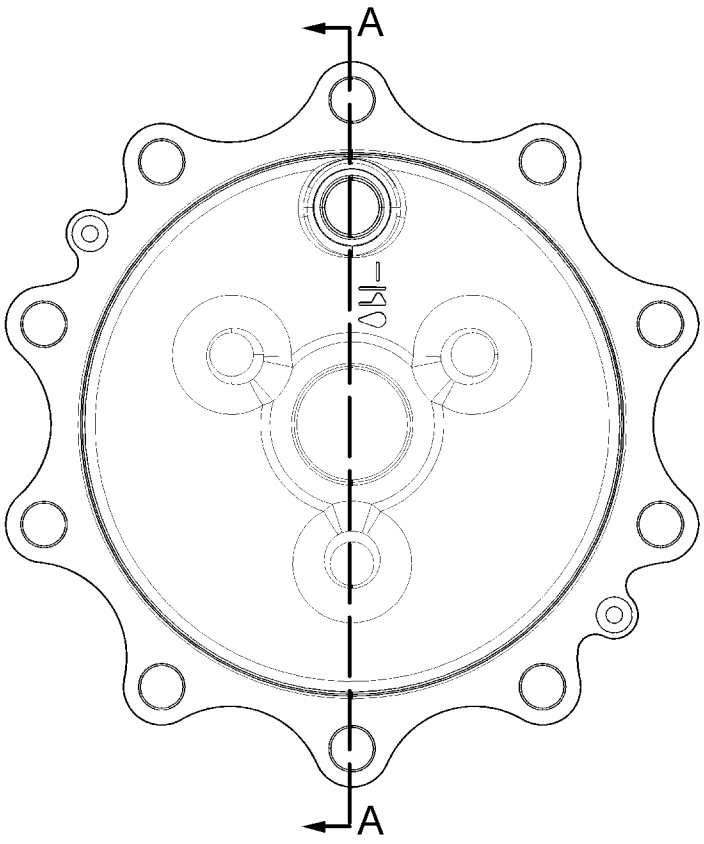

GRAPHIC #1 **<END>** g02141640

229-5051 PLANETARY GP-FINAL DRIVE–AXLE

S/N: TJL1-UP

PART OF 202-4173, 315-1260 AXLE GP-DRIVE

AN ATTACHMENT

SMCS-4050 **i05254227**

NOTE	REF NO	GRAPHIC REF	PART NUMBER	QTY	PART NAME 1 2 3 4 5 6 (PRODUCT LEVEL)	SEE PAGE
	1	1	**199-0653**	3	RING-RETAINING	
	2	1	**207-4257**	6	RING-RETAINER	
	3	1	**231-0720**	1	KIT-PLANETARY CARRIER	
					(ALSO INCLUDES CARRIER)	
	3A	1	**199-0669**	1	PLUG (THRUST)	
	4	1	**199-0760**	3	BEARING	
	5	1	**213-4222**	3	WASHER (50.1X61X2.5-MM THK)	
	6	1	**207-5962**	6	WASHER (65X72X2-MM THK)	
	7	1	**226-4378**	3	GEAR-PLANETARY (31-TEETH)	

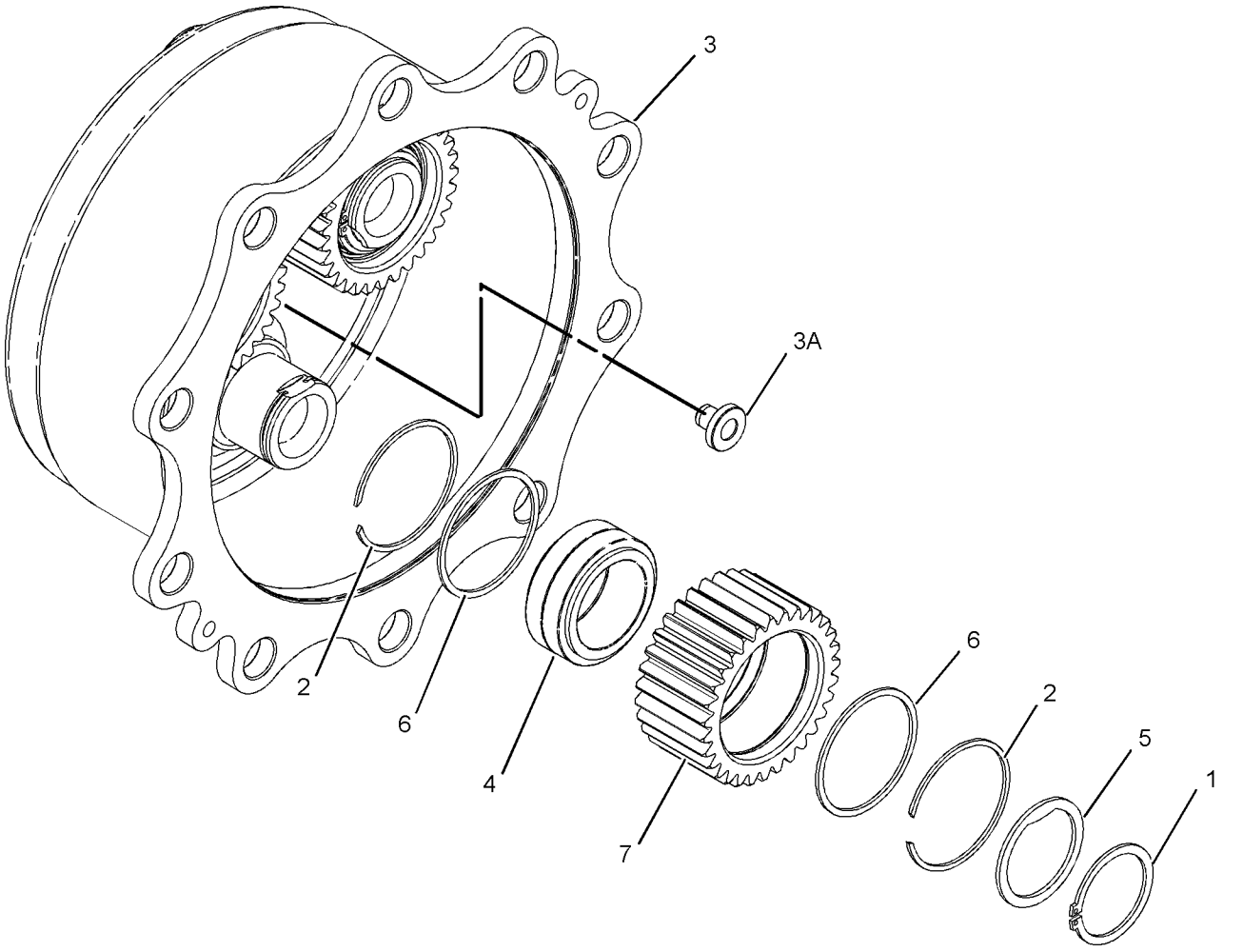

GRAPHIC #1 **<END>** g01201180

263-6349 PLANETARY GP-FINAL DRIVE

S/N: TJL1-UP

PART OF 220-1944, 242-3499 DRIVE GP-DRUM

AN ATTACHMENT

SMCS-4050 **i05016291**

NOTE	REF NO	GRAPHIC REF	PART NUMBER	QTY	PART NAME 1 2 3 4 5 6 (PRODUCT LEVEL)	SEE PAGE
	1	1	**177-0012**	1	HUB	
	2	1	**151-7485**	1	COUPLING	
	3	1	**207-2817**	16	SPRING	
	4	1	**177-0013**	1	PISTON-BRAKE	
	5	1	**151-3085**	2	CUP	
	6	1	**151-3084**	2	CONE	
	7	1	**151-7482**	1	DISC-RETAINING	
	8	1	**270-3933**	6	WASHER (42.5X64X2.5-MM THK)	
	9	1	**151-7496**	3	GEAR-PLANETARY	
	10	1	**151-7513**	225	NEEDLE	
	11	1	**270-3932**	3	PIN	
	12	1	**151-7497**	3	WASHER-ANTIROTATION	
	13	1	**151-7510**	150	NEEDLE	
	14	1	**151-7508**	3	GEAR-PLANETARY	
M	15	1	**095-9805**	15	BOLT-SOCKET HEAD (M14X2X40-MM)	
	16	1	**151-7483**	3	WASHER-GEAR	
	17	1	**096-8058**	3	RING-RETAINING	
	18	1	**151-7507**	3	PIN-GEAR	
	19	1	**151-7503**	3	GEAR-INPUT PLANETARY	
	20	1	**151-7506**	54	NEEDLE	
	21	1	**151-7504**	3	PIN-GEAR	
	22	1	**151-7505**	3	RING-RETAINING	
	23	1	**151-7502**	3	WASHER-ANTIROTATION	
	24	1	**151-7500**	3	WASHER-GEAR	
	25	1	**151-7486**	1	GEAR-SUN	
	26	1	**151-7501**	2	DISC	
	27	1	**151-7498**	1	COVER-FLANGE	
	28	1	**136-8638**	1	RING-RETAINING	
	29	1	**136-8641**	1	SEAL-O-RING	
	30	1	**151-7499**	1	CARRIER-PLANETARY	
	31	1	**151-7493**	1	GEAR-INPUT RING	
	32	1	**151-7484**	1	GEAR-SUN	
	33	1	**151-7515**	3	PIN	
	34	1	**5P-2545**	1	SEAL-O-RING	
	35	1	**151-7509**	1	CARRIER-PLANETARY	
	36	1	**151-7481**	1	GEAR-OUTPUT	
	37	1	**270-3934**	1	CARRIER-PLANETARY	
	38	1	**151-7490**	6	BUSHING	
	40	1	**205-0191**	1	SEAL-BRAKE	
	41	1	**205-0192**	1	SEAL-BRAKE	
	43	1	**151-7491**	2	RING-RETAINING	
	44	1	**7T-2459**	1	SEAL GP-DUO-CONE	
	45	1	**151-7516**	1	PLUG-DRAIN (FINAL DRIVE PLANETARY)	
	46	1	**151-7517**	3	SEAL-O-RING	
	47	1	**151-7518**	2	PLUG	
	48	1	**109-0119**	1	RING-RETAINING	
	49	1	**177-0014**	1	DISC-RETAINING	
	50	1	**136-8064**	5	DISC-FRICTION	
	51	1	**136-8068**	6	DISC-MIDDLE	
B	52	1	**218-9878**	1	SHIM (0.1-MM THK)	
B	53	1	**218-9880**	1	SHIM (0.2-MM THK)	
	54	1	**151-7511**	1	RING-RETAINING	
	55	1	**151-7514**	1	KIT-SHIM (FINAL DRIVE)	
M	56	1	**095-0707**	6	BOLT (M16X2X120-MM)	

B - USE AS REQUIRED
M - METRIC PART

263-6349 **PLANETARY GP-FINAL DRIVE (*contd.*)** **i05016291**

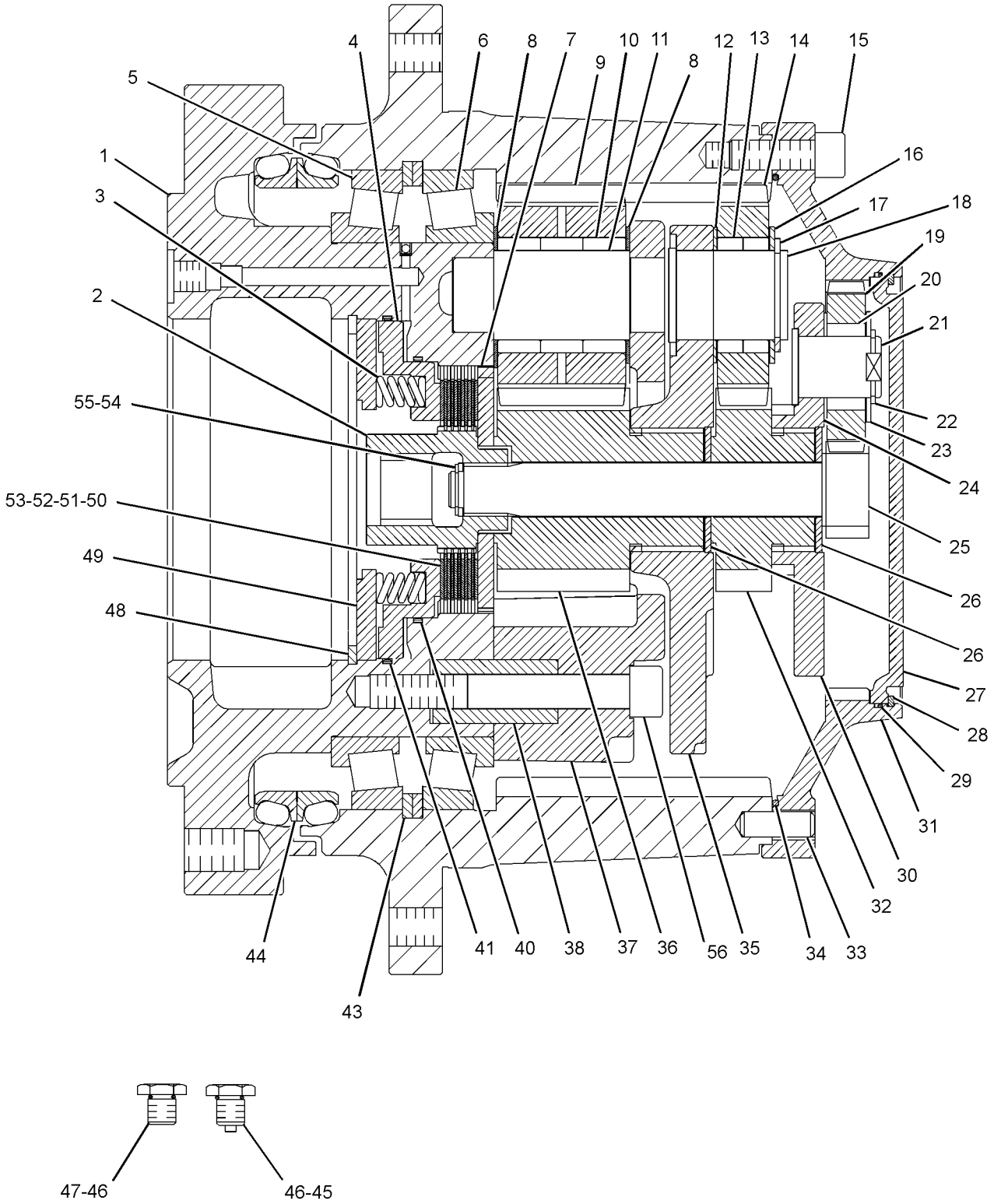

GRAPHIC #1 **<END>** g01720313

354-5642 PLANETARY GP-FINAL DRIVE

S/N: TJL419-UP

PART OF 203-4685 AXLE & MTG GP-DRIVE

ALSO AN ATTACHMENT

SMCS-4050 **i04340772**

NOTE	REF NO	GRAPHIC REF	PART NUMBER	QTY	PART NAME 1 2 3 4 5 6 (PRODUCT LEVEL)	SEE PAGE
					(NO BREAKDOWN OF SERVICEABLE PARTS AVAILABLE AT TIME OF PUBLICATION)	

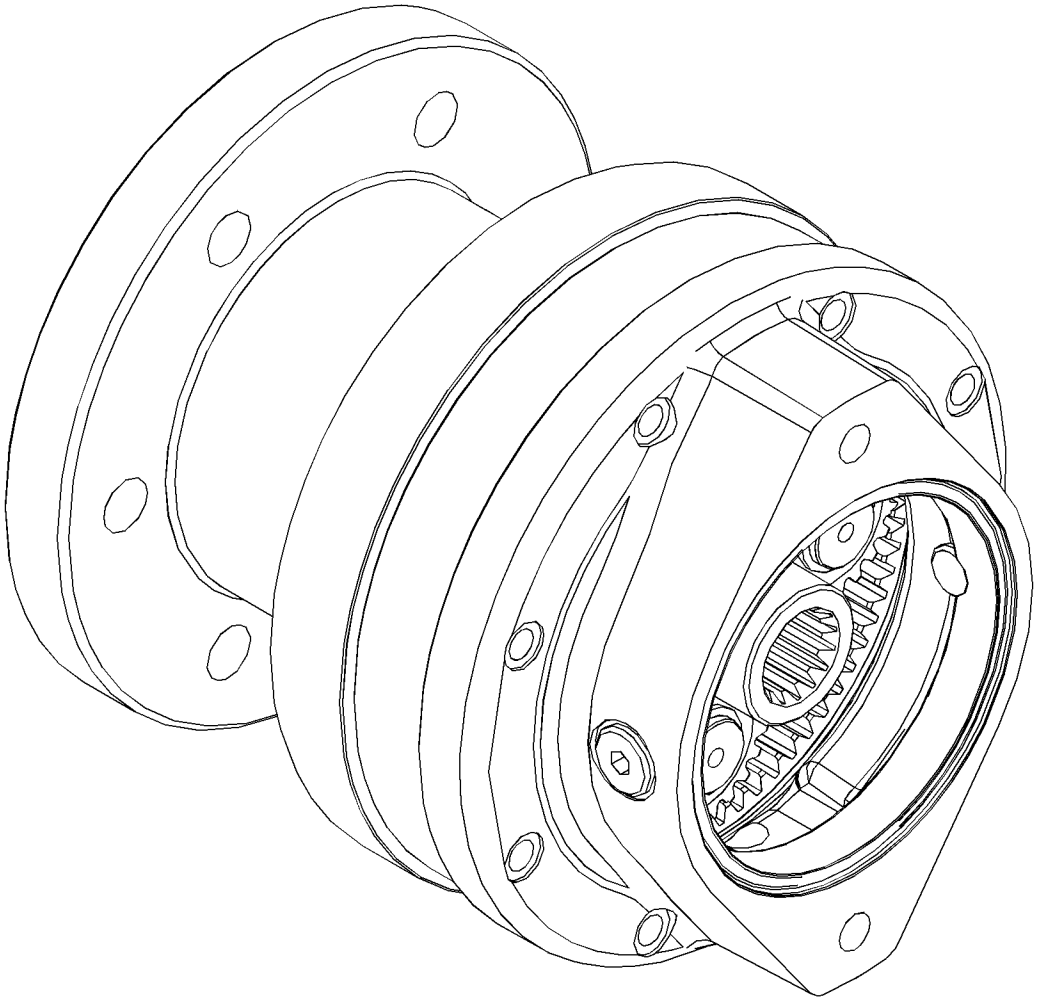

GRAPHIC #1 **<END>** g02486026

218-2973 PUMP & MTG GP-PROPEL

S/N: TJL1-UP

PART OF 224-4336 HYDRAULIC AR-PROPEL

SMCS-3203, 3204, 5070 **i05251271**

NOTE	REF NO	GRAPHIC REF	PART NUMBER	QTY	PART NAME 1 2 3 4 5 6 (PRODUCT LEVEL)	SEE PAGE
	1	1	**6V-0852**	5	CAP-DUST	
	2	1	**7X-5315**	4	FITTING AS (QUICK DISCONNECT)	
	3	1	*106-8715*	2	ELBOW AS	
					(EACH INCLUDES)	
		1	**8C-8400**	1	ELBOW	
		1	**3D-2824**	1	SEAL-O-RING	
		1	**6V-9746**	1	SEAL-O-RING	
	4	1	**124-8909**	4	ELBOW	
	5	1	**191-8924**	1	COUPLING GP-PUMP	
M		1	**6V-8200**	1	BOLT-SOCKET HEAD (M12X1.75X35-MM)	
	6	1	*196-2036*	1	TEE AS	
		1	**3K-0360**	1	SEAL-O-RING	
		1	**6V-8398**	1	SEAL-O-RING	
		1	**9X-2492**	1	TEE-O-RING	
YR	7	1	**296-3331**	1	PUMP GP-PISTON (PROPEL, DRUM)	325
YR	8	1	**296-3329**	1	PUMP GP-PISTON (PROPEL, AXLE)	323
I	9	1	**220-2109**	1	HOSE AS	
I	10	1	**240-9093**	2	HOSE AS	
	11	1	*240-9021*	2	TEE AS	
					(EACH INCLUDES)	
		1	**239-8484**	1	TEE	
		1	**6V-8397**	1	SEAL-O-RING	
	12	1	*240-9022*	2	TEE AS	
					(EACH INCLUDES)	
		1	**239-8485**	1	TEE	
		1	**6V-8397**	1	SEAL-O-RING	
	13	1	*148-8322*	1	CONNECTOR AS	
		1	**2M-9780**	1	SEAL-O-RING	
		1	**6V-8640**	1	CONNECTOR	
		1	**6V-9746**	1	SEAL-O-RING	
	14	1	*148-8324*	1	CONNECTOR AS	
		1	**3K-0360**	1	SEAL-O-RING	
		1	**6V-9746**	1	SEAL-O-RING	
		1	**6V-9874**	1	CONNECTOR (STRAIGHT)	
	15	1	*148-8388*	1	ELBOW AS	
		1	**2M-9780**	1	SEAL-O-RING	
		1	**6V-8629**	1	ELBOW	
		1	**6V-9746**	1	SEAL-O-RING	
	16	1	*150-3033*	1	ELBOW AS	
		1	**3J-1907**	1	SEAL-O-RING	
		1	**4J-5477**	1	SEAL-O-RING	
		1	**8T-0164**	1	ELBOW	
	17	1	*153-6237*	2	ELBOW AS	
					(EACH INCLUDES)	
		1	**3D-2824**	1	SEAL-O-RING	
		1	**6V-9004**	1	ELBOW	
		1	**6V-9746**	1	SEAL-O-RING	
	18	1	*153-6244*	1	ELBOW AS	
		1	**2M-9780**	1	SEAL-O-RING	
		1	**6V-9746**	1	SEAL-O-RING	
		1	**8T-5389**	1	ELBOW	
	19	1	*164-5567*	1	COUPLER AS-QUICK DISCONNECT (MALE)	
		1	**214-7568**	1	SEAL-O-RING	
		1	**6V-3965**	1	FITTING (QUICK DISCONNECT)	
	20	1	**3J-7354**	8	SEAL-O-RING	
M	21	1	**8T-4193**	4	BOLT (M16X2X50-MM)	
	22	1	**9X-8257**	4	WASHER (17.5X30X3.5-MM THK)	
	23	1	**102-8802**	1	KIT-RECEPTACLE (2-PIN)	

218-2973 **PUMP & MTG GP-PROPEL (*contd.*)** **i05251271**

NOTE	REF NO	GRAPHIC REF	PART NUMBER	QTY	PART NAME 1 2 3 4 5 6 (PRODUCT LEVEL)	SEE PAGE
					(INCLUDES RECEPTACLE AS & WEDGE)	
	25	1	**186-3735**	2	PIN-CONNECTOR (16-GA TO 18-GA)	
	26	1	*148-8316*	4	CONNECTOR AS	
					(EACH INCLUDES)	
		1	**3J-7354**	1	SEAL-O-RING	
		1	**4J-5477**	1	SEAL-O-RING	
		1	**6V-8647**	1	CONNECTOR	
	27	1	**3K-0715**	1	SEAL-O-RING	
	28	1	**7J-6285**	1	SEAL-O-RING	

I - REFER TO HYDRAULIC INFORMATION SYSTEM
M - METRIC PART
R - REMFG PART MAY BE AVAILABLE
Y - SEPARATE ILLUSTRATION

218-2973 **PUMP & MTG GP-PROPEL (*contd.*)** **i05251271**

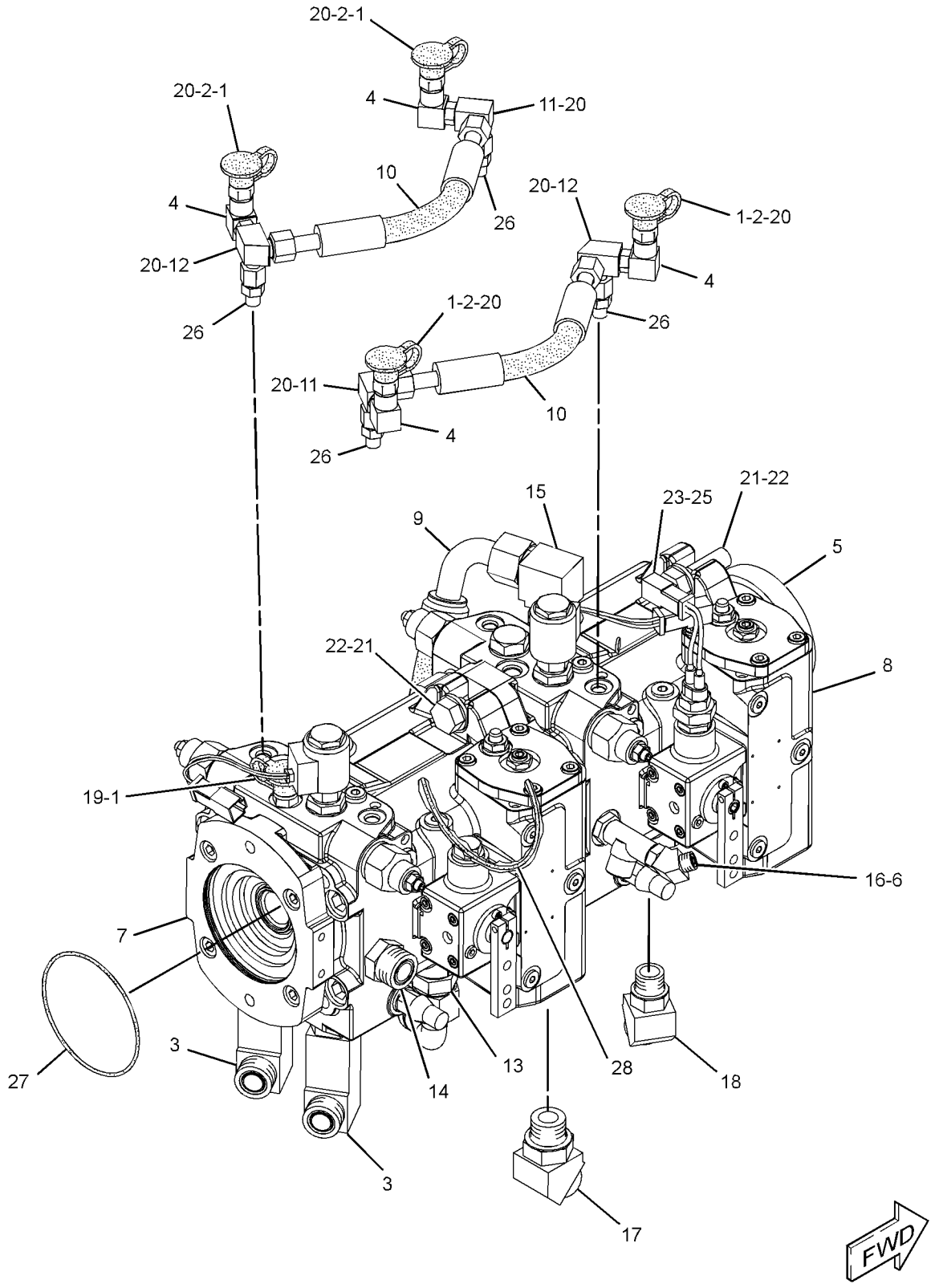

GRAPHIC #1 **<END>** g01927926

206-7492 SHELL GP-PADDED

S/N: TJL1-UP

PART OF 327-7076 BUMPER AR, 234-3461 SHELL GP-PADDED AN ATTACHMENT

SMCS-6605 **i03054341**

NOTE	REF NO	GRAPHIC REF	PART NUMBER	QTY	PART NAME 1 2 3 4 5 6 (PRODUCT LEVEL)	SEE PAGE
	1	1	**298-2109**	2	SHELL AS (PADDED DRUM)	
M	2	1	**6V-7688**	10	LOCKNUT (M20X2.5-THD)	
M	3	1	**7X-2565**	2	BOLT (M20X2.5X100-MM)	
M	4	1	**7X-2566**	8	BOLT (M20X2.5X110-MM)	
	5	1	**8T-5439**	20	WASHER-HARD (21.5X45X6-MM THK)	

M - METRIC PART

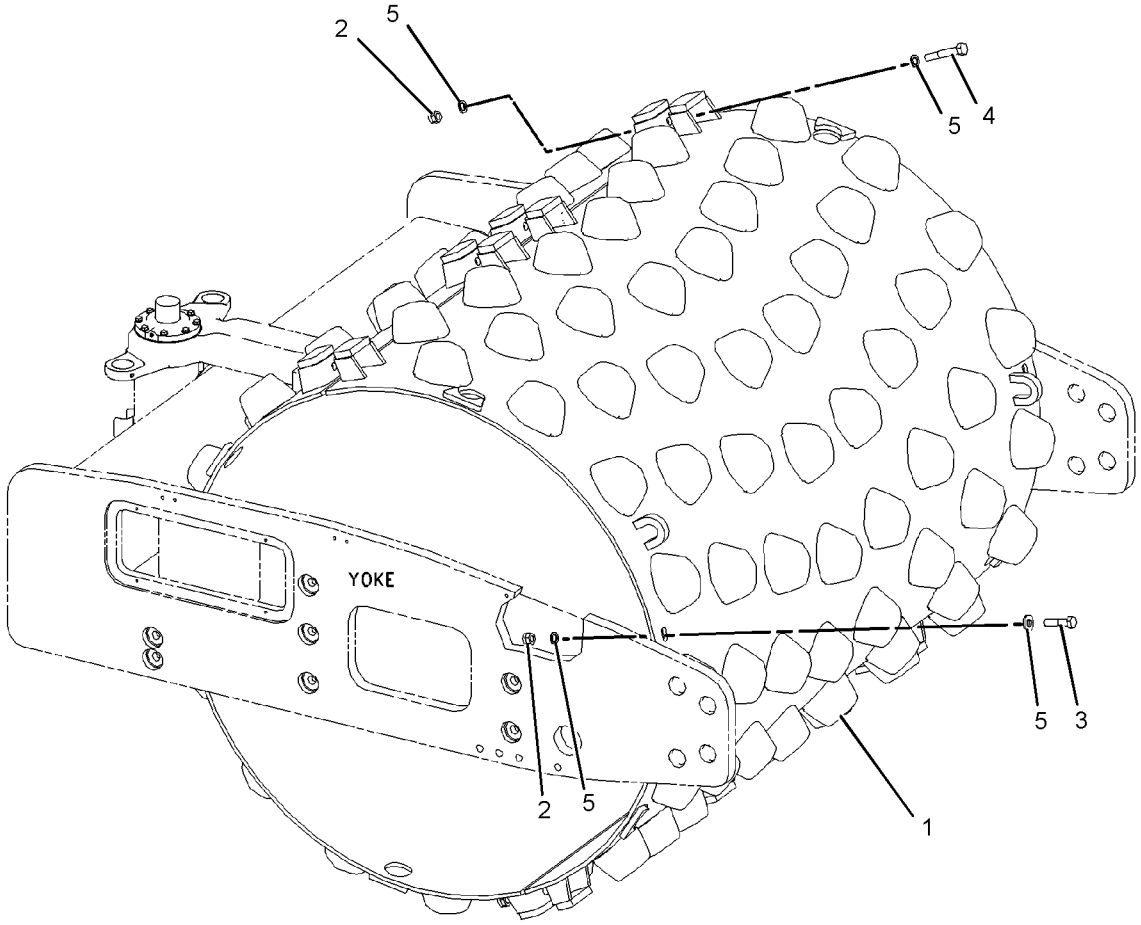

GRAPHIC #1 **<END>** g01070851

234-3461 SHELL GP-PADDED

S/N: TJL1-UP

AN ATTACHMENT

SMCS-6605 **i03054301**

NOTE	REF NO	GRAPHIC REF	PART NUMBER	QTY	PART NAME 1 2 3 4 5 6 (PRODUCT LEVEL)	SEE PAGE
Y	1	1	*206-7492*	1	SHELL GP-PADDED	237
Y	2	1	*213-3152*	1	SCRAPER GP-PADDED DRUM (WITH SHELL KIT)	273
Y	3	1	*224-0872*	1	BUMPER GP-FRONT	252

Y - SEPARATE ILLUSTRATION

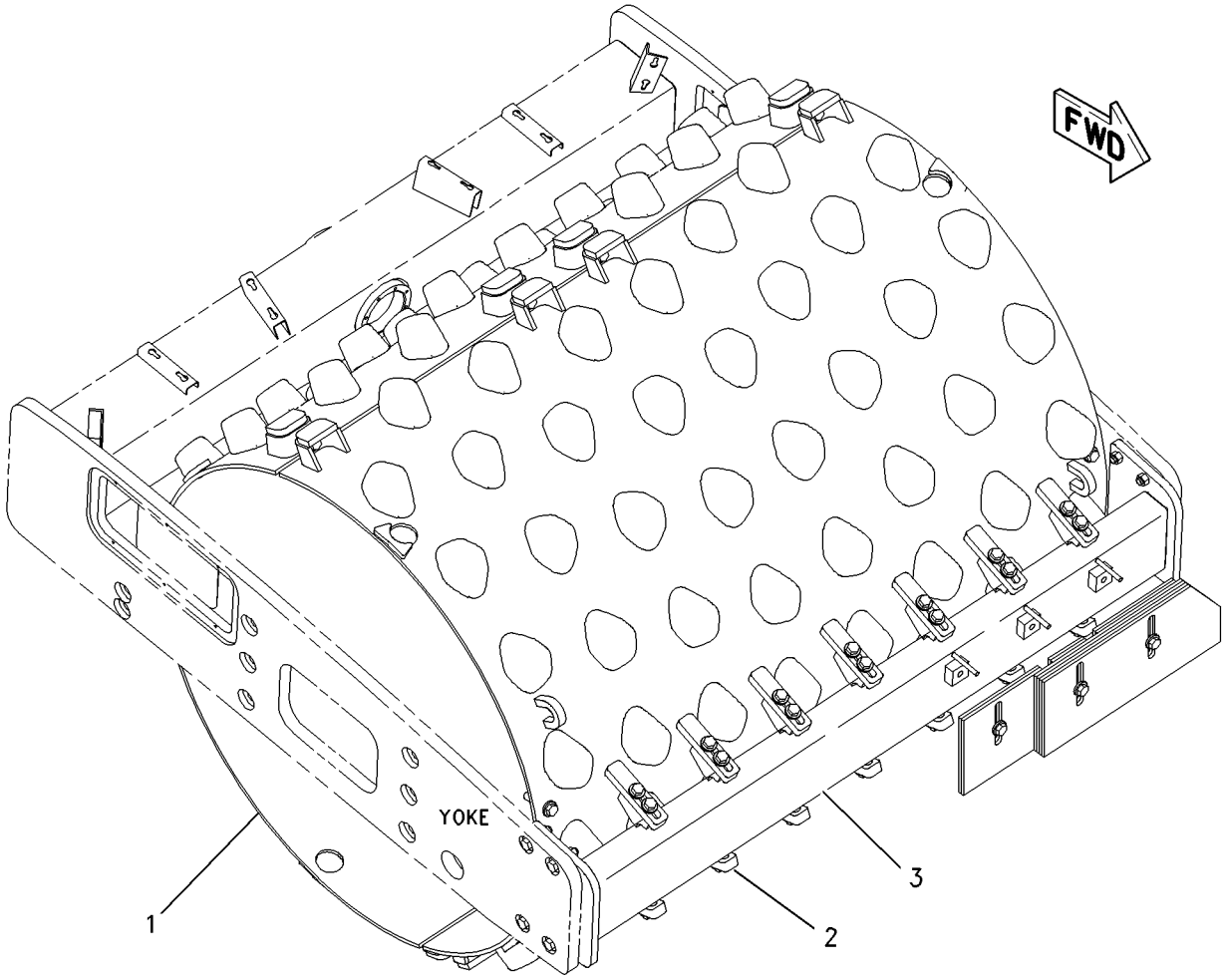

GRAPHIC #1 **<END>** g01001280

422-8832 SHELL GP-PADDED–SQUARE

S/N: TJL1-UP

AN ATTACHMENT

SMCS-6605 **i05337678**

NOTE	REF NO	GRAPHIC REF	PART NUMBER	QTY	PART NAME 1 2 3 4 5 6 (PRODUCT LEVEL)	SEE PAGE
	1	1	**422-8831**	2	SHELL AS	
M	2	1	**6V-7688**	10	LOCKNUT (M20X2.5-THD)	
M	3	1	**7X-2564**	2	BOLT (M20X2.5X90-MM)	
M	4	1	**7X-2566**	8	BOLT (M20X2.5X110-MM)	
	5	1	**8T-5439**	20	WASHER-HARD (21.5X45X6-MM THK)	

M - METRIC PART

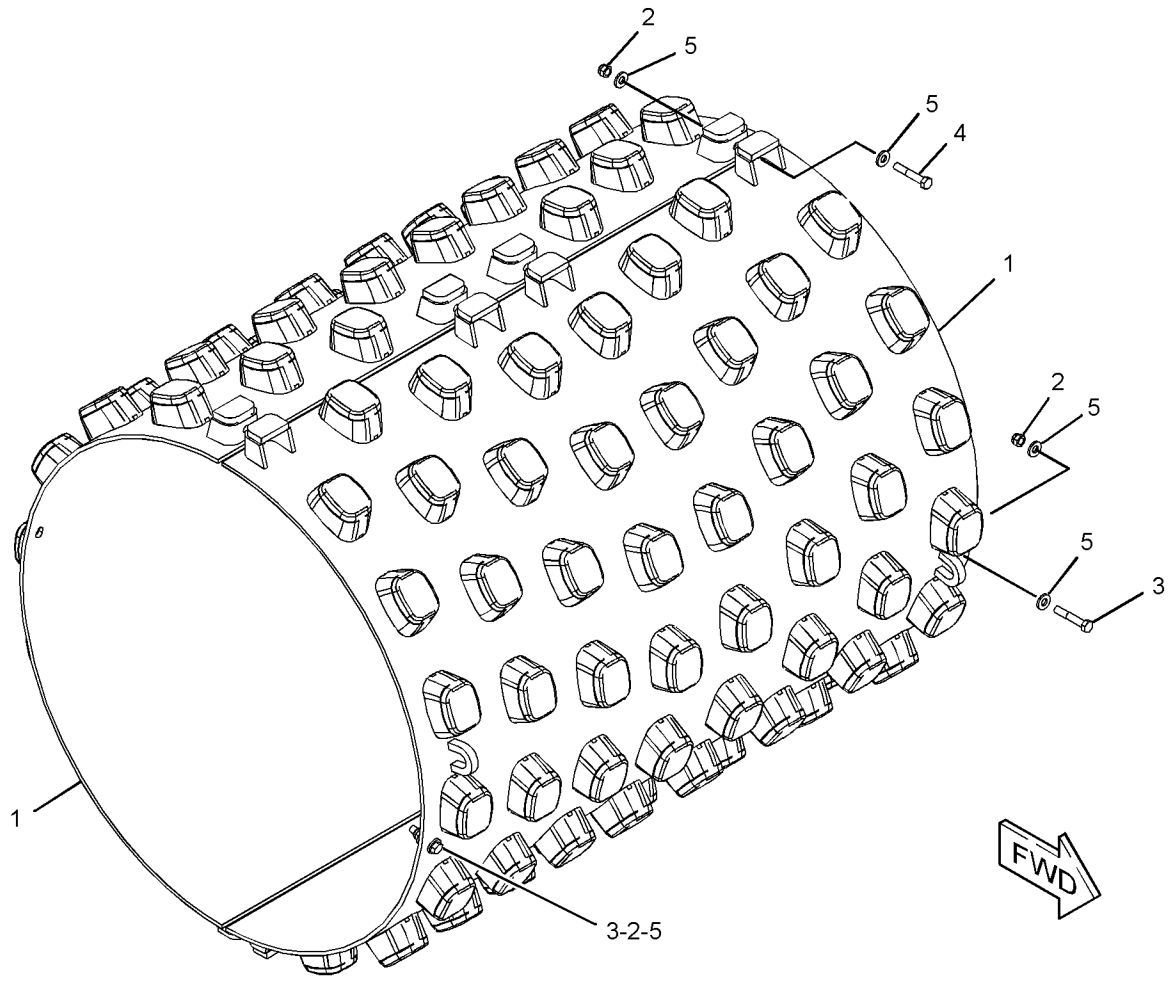

GRAPHIC #1 **<END>** g03420841

175-0050 WHEEL & MTG GP-DRIVE

S/N: TJL1-UP
AN ATTACHMENT

SMCS-4199, 7553 **i03043921**

NOTE	REF NO	GRAPHIC REF	PART NUMBER	QTY	PART NAME 1 2 3 4 5 6 (PRODUCT LEVEL)	SEE PAGE
M	1	1	**201-1919**	20	NUT (M20X1.5-THD)	
Y	2	1	*175-0048*	2	WHEEL & TIRE GP	243
	3	1	**8T-5439**	20	WASHER-HARD (21.5X45X6-MM THK)	

M - METRIC PART
Y - SEPARATE ILLUSTRATION

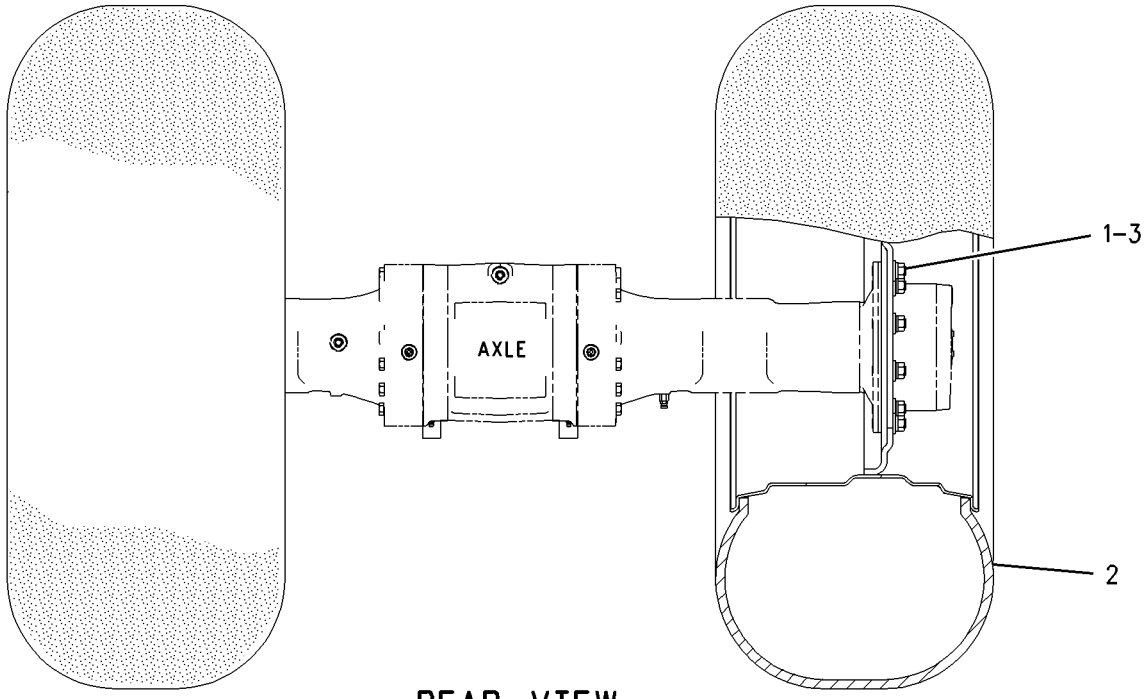

REAR VIEW

GRAPHIC #1 **<END>** g00917025

268-4040 WHEEL & MTG GP-DRIVE

S/N: TJL1-UP
PART OF 357-7421 DISTRIBUTION AR
AN ATTACHMENT

SMCS-4199, 7553

i03055820

NOTE	REF NO	GRAPHIC REF	PART NUMBER	QTY	PART NAME 1 2 3 4 5 6 (PRODUCT LEVEL)	SEE PAGE
M	1	1	**201-1919**	20	NUT (M20X1.5-THD)	
Y	2	1	*268-4044*	1	WHEEL & TIRE GP (LH)	246
Y	3	1	*268-4041*	1	WHEEL & TIRE GP (RH)	245
	4	1	**8T-5439**	20	WASHER-HARD (21.5X45X6-MM THK)	

M - METRIC PART
Y - SEPARATE ILLUSTRATION

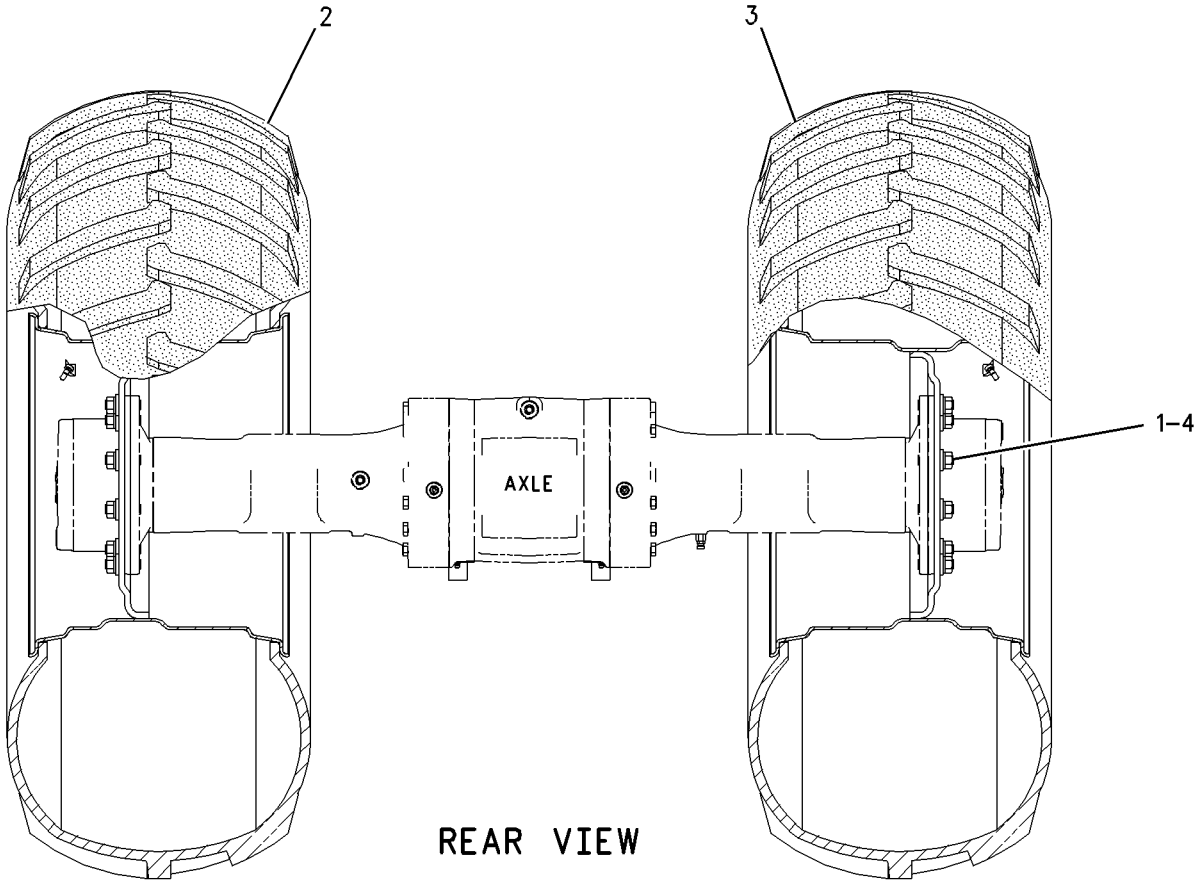

GRAPHIC #1

<END>

g00917041

330-0207 WHEEL & MTG GP-DRIVE

S/N: TJL1-UP
AN ATTACHMENT

SMCS-4199, 7553 **i03469181**

NOTE	REF NO	GRAPHIC REF	PART NUMBER	QTY	PART NAME 1 2 3 4 5 6 (PRODUCT LEVEL)	SEE PAGE
M	1	1	**201-1919**	20	NUT (M20X1.5-THD)	
Y	2	1	*330-0204*	1	WHEEL & TIRE GP (RH)	249
Y	3	1	*330-0205*	1	WHEEL & TIRE GP (LH)	250
	4	1	**8T-5439**	20	WASHER-HARD (21.5X45X6-MM THK)	

M - METRIC PART
Y - SEPARATE ILLUSTRATION

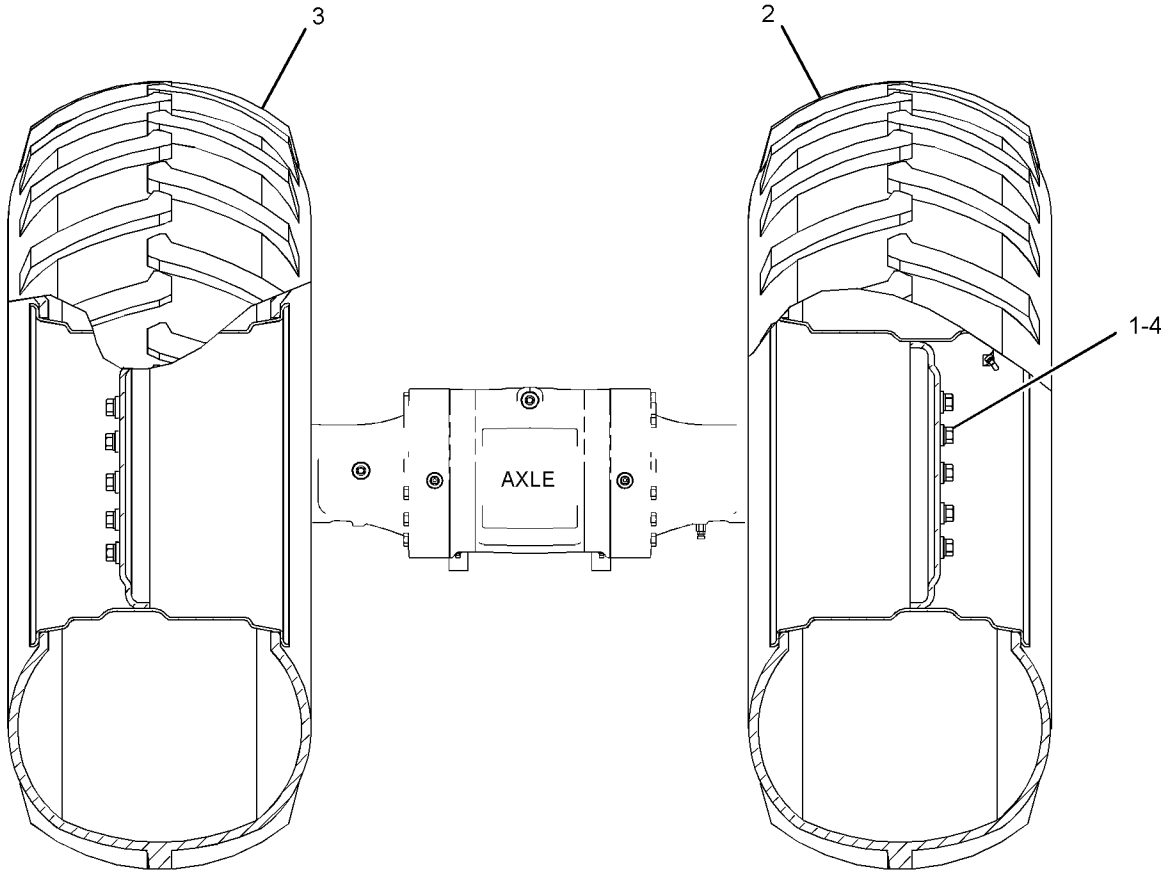

REAR VIEW

GRAPHIC #1 **<END>** g01784660

175-0048 WHEEL & TIRE GP

S/N: TJL1-UP
PART OF 175-0050 WHEEL & MTG GP-DRIVE
AN ATTACHMENT

SMCS-4202 **i03646627**

NOTE	REF NO	GRAPHIC REF	PART NUMBER	QTY	PART NAME 1 2 3 4 5 6 (PRODUCT LEVEL)	SEE PAGE
	1	1	*130-7965*	1	TIRE (23.1-26)	
	2	1	**077-3895**	1	CAP-VALVE STEM	
	3	1	**2D-2631**	1	NUT (0.482-26-THD)	
	4	1	**077-4192**	1	VALVE	
	5	1	**343-4268**	1	WHEEL AS	

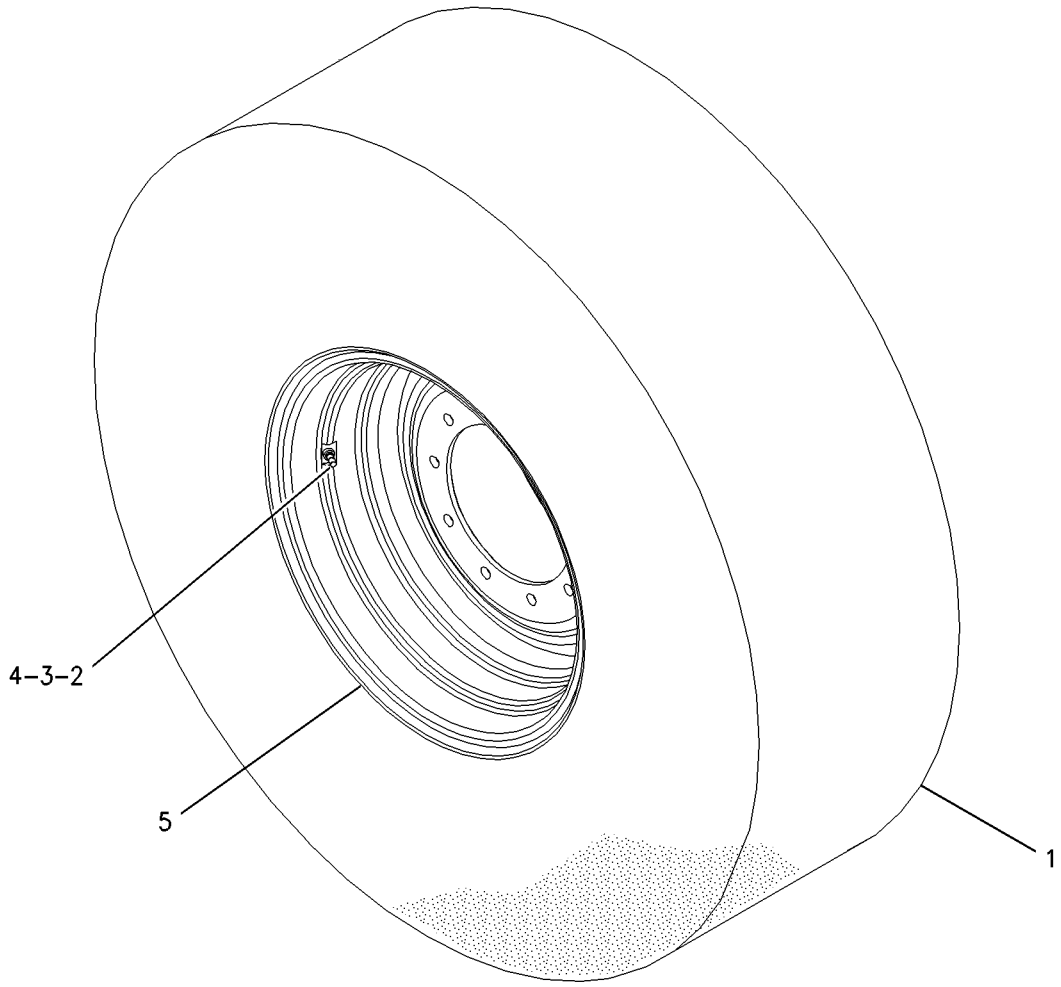

GRAPHIC #1 **<END>** g00917019

247-5653 WHEEL & TIRE GP

S/N: TJL1-UP
PART OF 247-5651 MOUNTING GP-WHEEL
AN ATTACHMENT

SMCS-4202 **i03436361**

NOTE	REF NO	GRAPHIC REF	PART NUMBER	QTY	PART NAME 1 2 3 4 5 6 (PRODUCT LEVEL)	SEE PAGE
	1	1	*247-5655*	1	TIRE-TUBELESS (23.1-26)	
	2	1	**077-3895**	1	CAP-VALVE STEM	
	3	1	**077-3906**	1	NUT-VALVE STEM	
	4	1	**077-4192**	1	VALVE	
	5	1	**203-4741**	1	WHEEL AS	

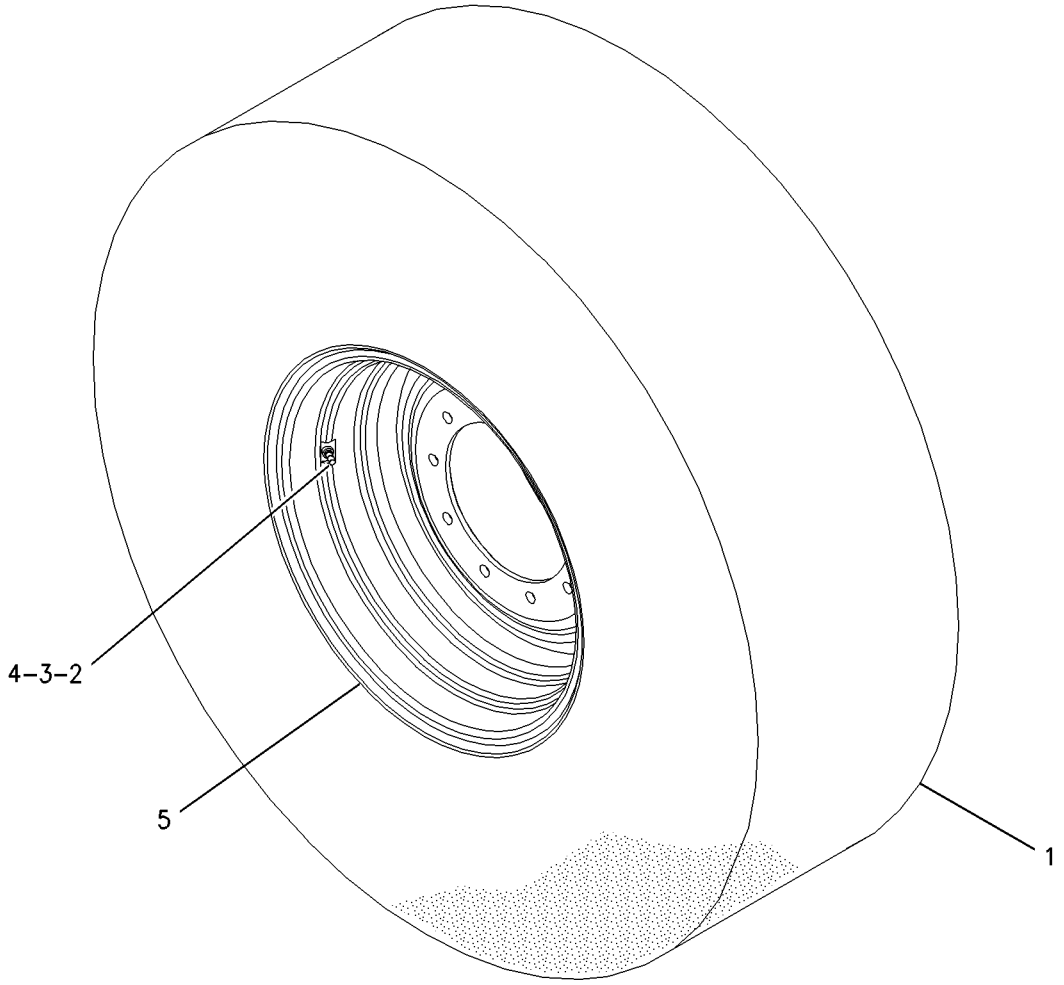

GRAPHIC #1 **<END>** g00917019

268-4041 WHEEL & TIRE GP–RH

S/N: TJL1-UP
PART OF 268-4040 WHEEL & MTG GP-DRIVE
AN ATTACHMENT

SMCS-4202 **i03436362**

NOTE	REF NO	GRAPHIC REF	PART NUMBER	QTY	PART NAME 1 2 3 4 5 6 (PRODUCT LEVEL)	SEE PAGE
	1	1	*268-4028*	1	TIRE-TUBELESS (23.1-26)	
	2	1	**077-3895**	1	CAP-VALVE STEM	
	3	1	**077-3906**	1	NUT-VALVE STEM	
	4	1	**077-4192**	1	VALVE	
	5	1	**203-4741**	1	WHEEL AS	

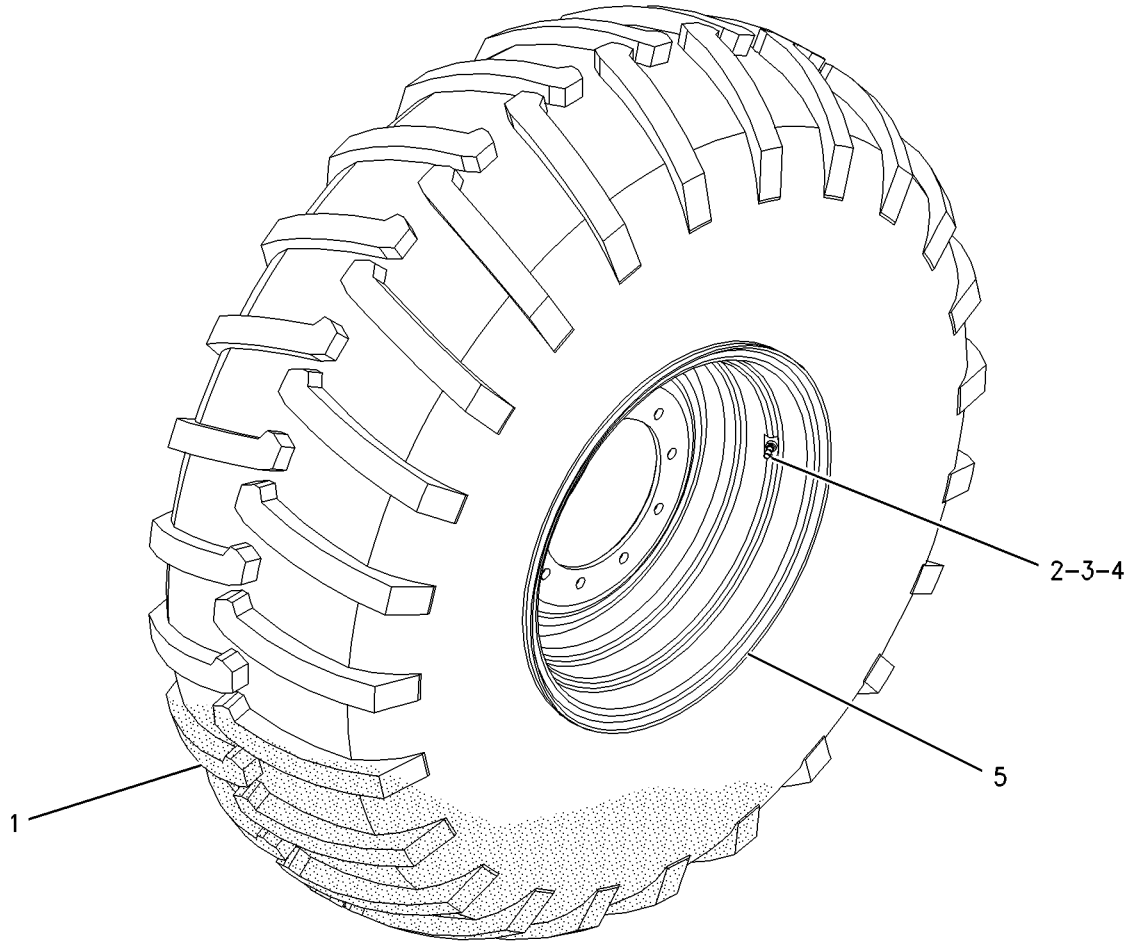

GRAPHIC #1 **<END>** g00917061

268-4044 WHEEL & TIRE GP–LH

S/N: TJL1-UP

PART OF 268-4040 WHEEL & MTG GP-DRIVE

AN ATTACHMENT

SMCS-4202 **i03436363**

NOTE	REF NO	GRAPHIC REF	PART NUMBER	QTY	PART NAME 1 2 3 4 5 6 (PRODUCT LEVEL)	SEE PAGE
	1	1	*268-4028*	1	TIRE-TUBELESS (23.1-26)	
	2	1	**077-3895**	1	CAP-VALVE STEM	
	3	1	**2D-2631**	1	NUT (0.482-26-THD)	
	4	1	**077-4192**	1	VALVE	
	5	1	**203-4741**	1	WHEEL AS	

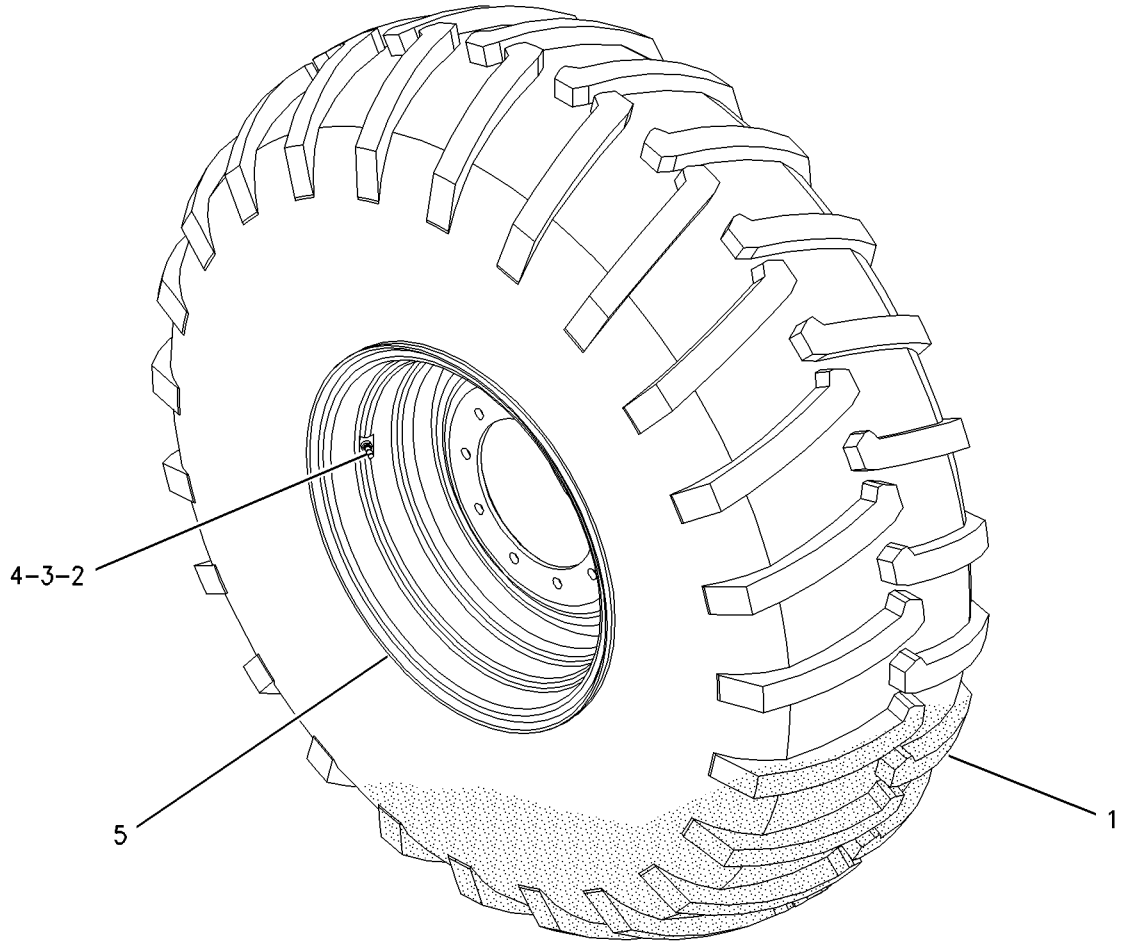

GRAPHIC #1 **<END>** g00917055

324-9214 WHEEL & TIRE GP

S/N: TJL1-UP
PART OF 324-9216 MOUNTING GP-WHEEL
AN ATTACHMENT

SMCS-4202 **i03640996**

NOTE	REF NO	GRAPHIC REF	PART NUMBER	QTY	PART NAME 1 2 3 4 5 6 (PRODUCT LEVEL)	SEE PAGE
	1	1	**077-3895**	1	CAP-VALVE STEM	
	2	1	**2D-2631**	1	NUT (0.482-26-THD)	
	3	1	**077-4192**	1	VALVE (STEM)	
	4	1	**343-4268**	1	WHEEL AS	
	5	1	*324-9213*	1	TIRE (23.1-26)	

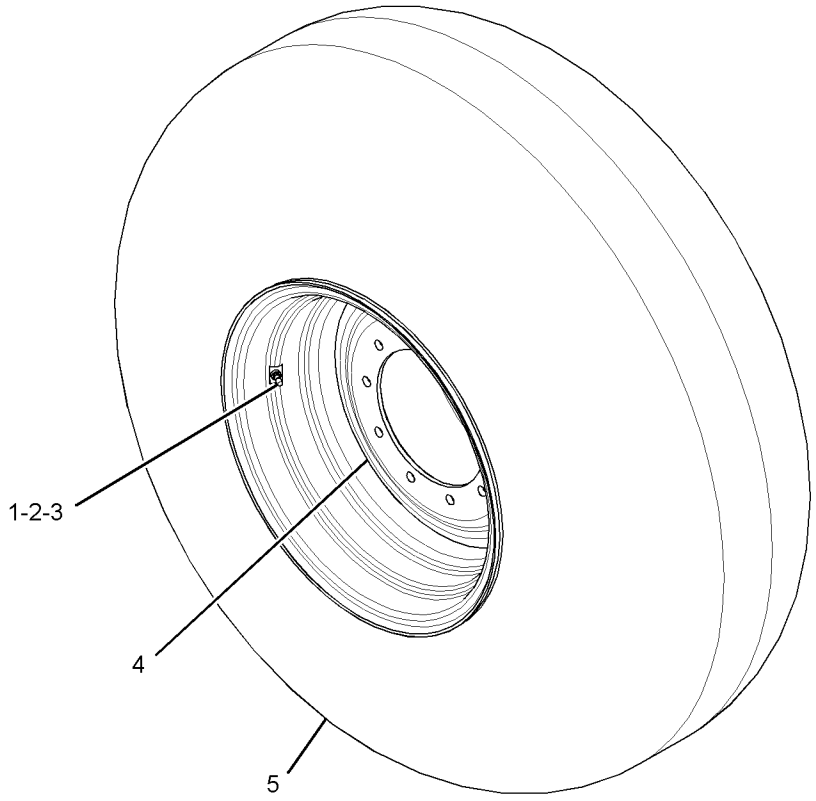

GRAPHIC #1 **<END>** g01558316

324-9215 WHEEL & TIRE GP

S/N: TJL1-UP
PART OF 324-9217 MOUNTING GP-WHEEL
AN ATTACHMENT

SMCS-4202 **i03640997**

NOTE	REF NO	GRAPHIC REF	PART NUMBER	QTY	PART NAME 1 2 3 4 5 6 (PRODUCT LEVEL)	SEE PAGE
	1	1	**077-3895**	1	CAP-VALVE STEM	
	2	1	**2D-2631**	1	NUT (0.482-26-THD)	
	3	1	**077-4192**	1	VALVE	
	4	1	**343-4268**	1	WHEEL AS	
	5	1	*324-9212*	1	TIRE (23.1-26)	

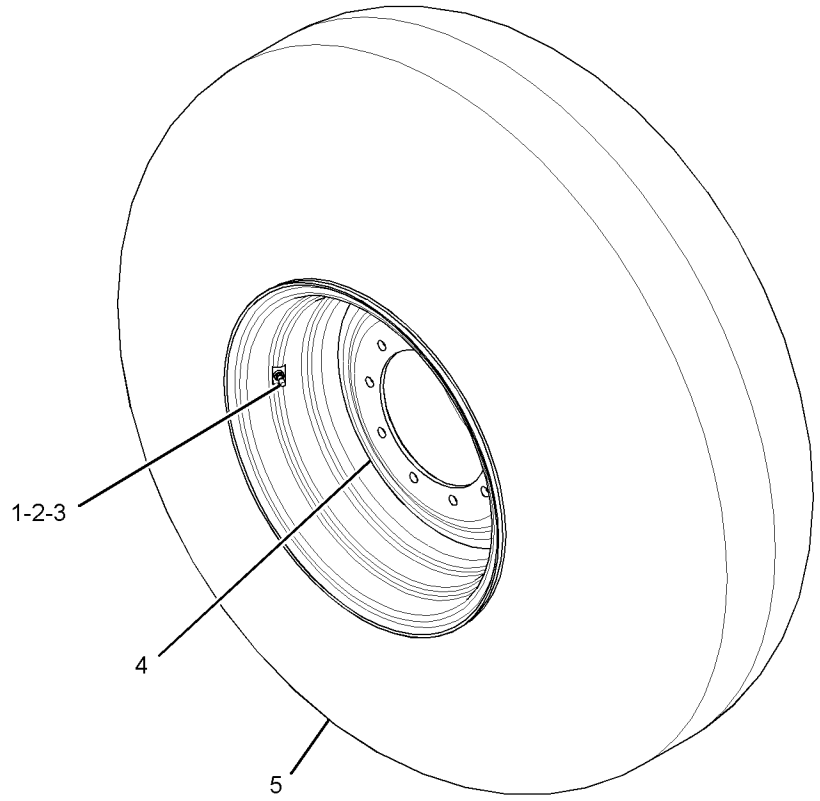

GRAPHIC #1 **<END>** g01558316

330-0204 WHEEL & TIRE GP–RH

S/N: TJL1-UP
PART OF 330-0207 WHEEL & MTG GP-DRIVE
AN ATTACHMENT

SMCS-4202 **i03626759**

NOTE	REF NO	GRAPHIC REF	PART NUMBER	QTY	PART NAME 1 2 3 4 5 6 (PRODUCT LEVEL)	SEE PAGE
	1	1	**077-3895**	1	CAP-VALVE STEM	
	2	1	**2D-2631**	1	NUT (0.482-26-THD)	
	3	1	**077-4192**	1	VALVE	
	4	1	**343-4268**	1	WHEEL AS	
	5	1	*330-0206*	1	TIRE-TUBELESS (23.1-R26)	

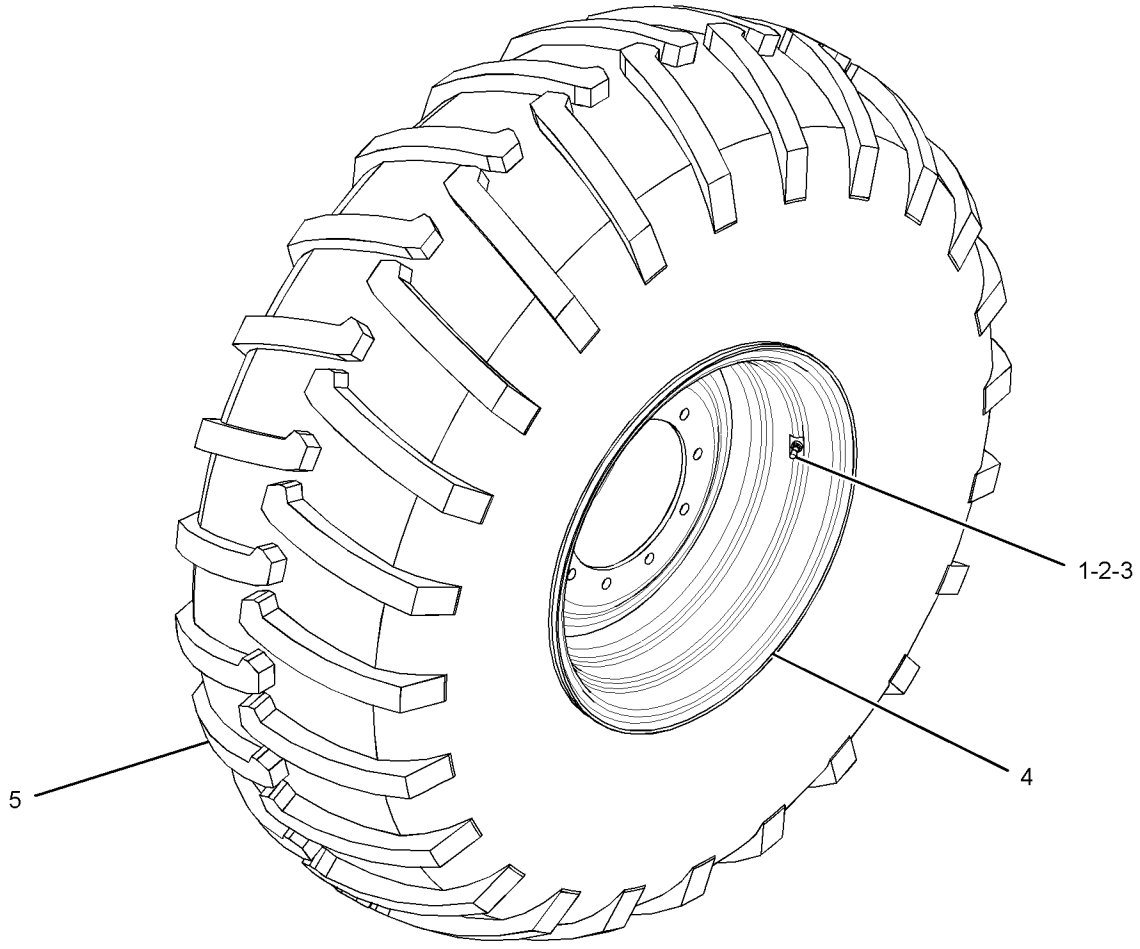

GRAPHIC #1 **<END>** g01784633

330-0205 WHEEL & TIRE GP–LH

S/N: TJL1-UP

PART OF 330-0207 WHEEL & MTG GP-DRIVE

AN ATTACHMENT

SMCS-4202 **i03626760**

NOTE	REF NO	GRAPHIC REF	PART NUMBER	QTY	PART NAME 1 2 3 4 5 6 (PRODUCT LEVEL)	SEE PAGE
	1	1	**077-3895**	1	CAP-VALVE STEM	
	2	1	**2D-2631**	1	NUT (0.482-26-THD)	
	3	1	**077-4192**	1	VALVE	
	4	1	**343-4268**	1	WHEEL AS	
	5	1	*330-0206*	1	TIRE-TUBELESS (23.1-R26)	

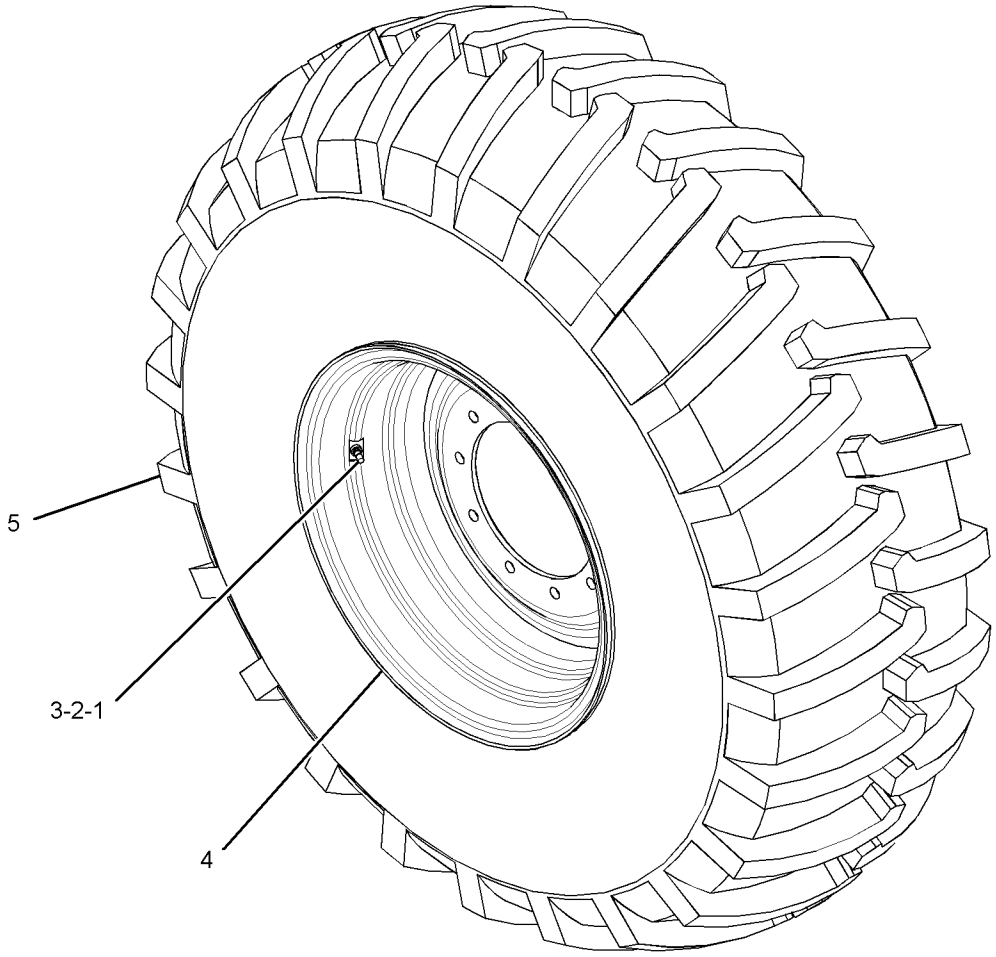

GRAPHIC #1 **<END>** g01784654

325-7666 BUMPER AR—INDIA ROADING

S/N: TJL1-UP
AN ATTACHMENT

SMCS-7156 **i03242563**

NOTE	PART NUMBER	QTY	PART NAME 1 2 3 4 5 6 (PRODUCT LEVEL)	SEE PAGE
Y	*325-7901*	1	BUMPER GP-FRONT	255

Y - SEPARATE ILLUSTRATION

<END>

327-7076 BUMPER AR—PADDED SHELL, WITHOUT BLADE

S/N: TJL1-UP
PART OF 357-7421 DISTRIBUTION AR
AN ATTACHMENT

SMCS-7156 **i03065284**

NOTE	PART NUMBER	QTY	PART NAME 1 2 3 4 5 6 (PRODUCT LEVEL)	SEE PAGE
Y	*224-0872*	1	BUMPER GP-FRONT (PADDED DRUM)	252
Y	*206-7492*	1	SHELL GP-PADDED	237

Y - SEPARATE ILLUSTRATION

<END>

327-7077 BUMPER AR—PADDED SHELL, STANDARD WEIGHT

S/N: TJL1-UP
PART OF 368-9181, 368-9182, 369-9031, 376-1389, 376-1392, 376-1393 DISTRIBUTION AR
AN ATTACHMENT

SMCS-7156 **i03065324**

NOTE	PART NUMBER	QTY	PART NAME 1 2 3 4 5 6 (PRODUCT LEVEL)	SEE PAGE
Y	*241-9529*	1	BUMPER GP-FRONT	253

Y - SEPARATE ILLUSTRATION

<END>

327-7078 BUMPER AR—PADDED SHELL, ADDED WEIGHT

S/N: TJL1-UP
AN ATTACHMENT

SMCS-7156 **i03065430**

NOTE	PART NUMBER	QTY	PART NAME 1 2 3 4 5 6 (PRODUCT LEVEL)	SEE PAGE
Y	*242-3476*	1	BUMPER GP-FRONT	254

Y - SEPARATE ILLUSTRATION

<END>

224-0872 BUMPER GP-FRONT

S/N: TJL1-UP

PART OF 327-7076 BUMPER AR, 234-3461 SHELL GP-PADDED

AN ATTACHMENT

SMCS-7156 **i03054447**

NOTE	REF NO	GRAPHIC REF	PART NUMBER	QTY	PART NAME 1 2 3 4 5 6 (PRODUCT LEVEL)	SEE PAGE
	1	1	**227-1100**	1	BUMPER AS	
		1	**8X-1986**	3	PLATE	
M	2	1	**8T-4131**	8	NUT (M20X2.5-THD)	
M	3	1	**8T-4187**	8	BOLT (M20X2.5X80-MM)	
	4	1	**8T-5439**	8	WASHER-HARD (21.5X45X6-MM THK)	

M - METRIC PART

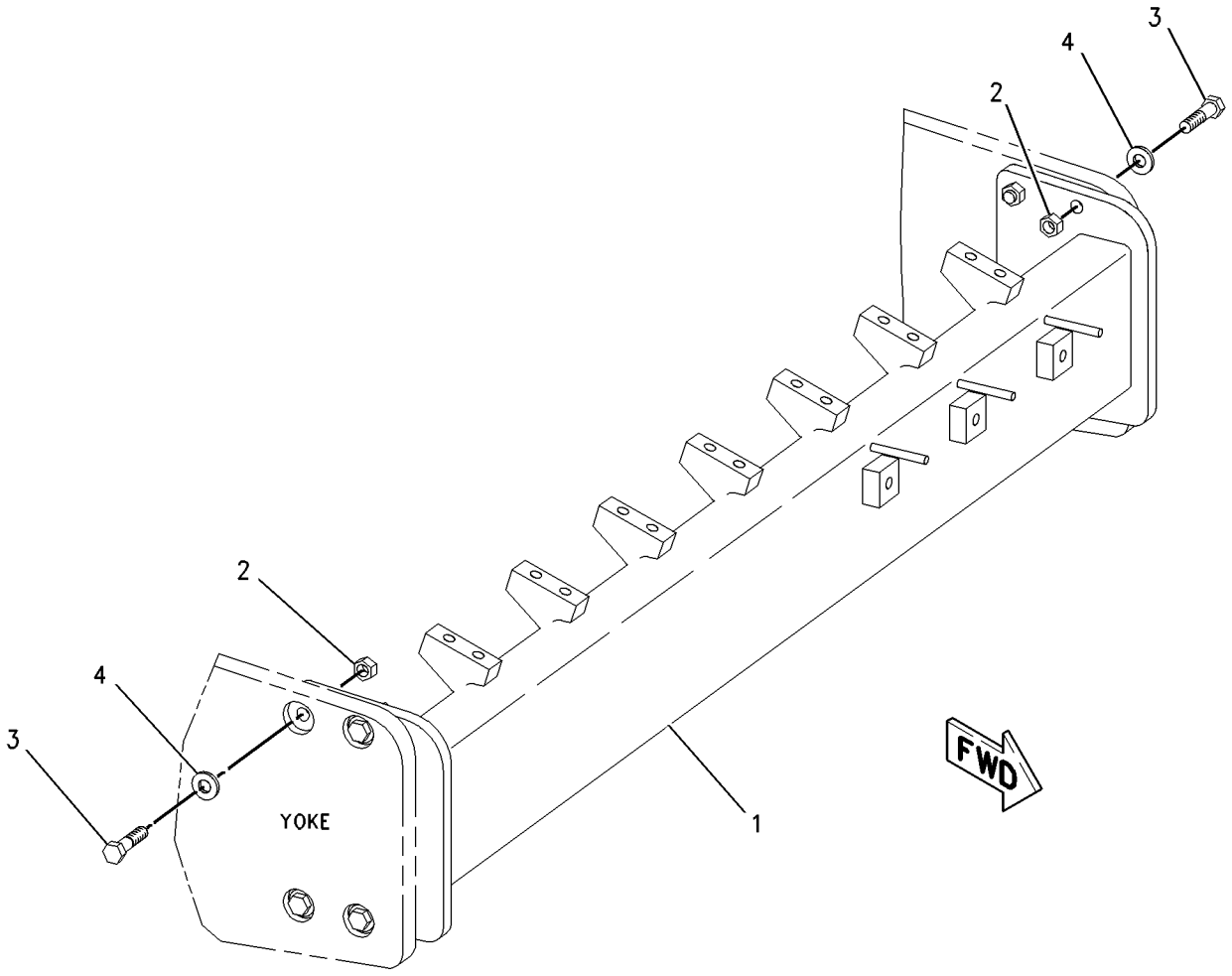

GRAPHIC #1 **<END>** g01001397

241-9529 BUMPER GP-FRONT

S/N: TJL1-UP
PART OF 327-7077 BUMPER AR
AN ATTACHMENT

SMCS-7156 **i03065354**

NOTE	REF NO	GRAPHIC REF	PART NUMBER	QTY	PART NAME 1 2 3 4 5 6 (PRODUCT LEVEL)	SEE PAGE
	1	1	**241-9527**	1	BUMPER AS	
		1	**7L-7556**	1	PLUG-CUP	
M	2	1	**8T-4131**	8	NUT (M20X2.5-THD)	
M	3	1	**8T-4187**	8	BOLT (M20X2.5X80-MM)	
	4	1	**8T-5439**	8	WASHER-HARD (21.5X45X6-MM THK)	

M - METRIC PART

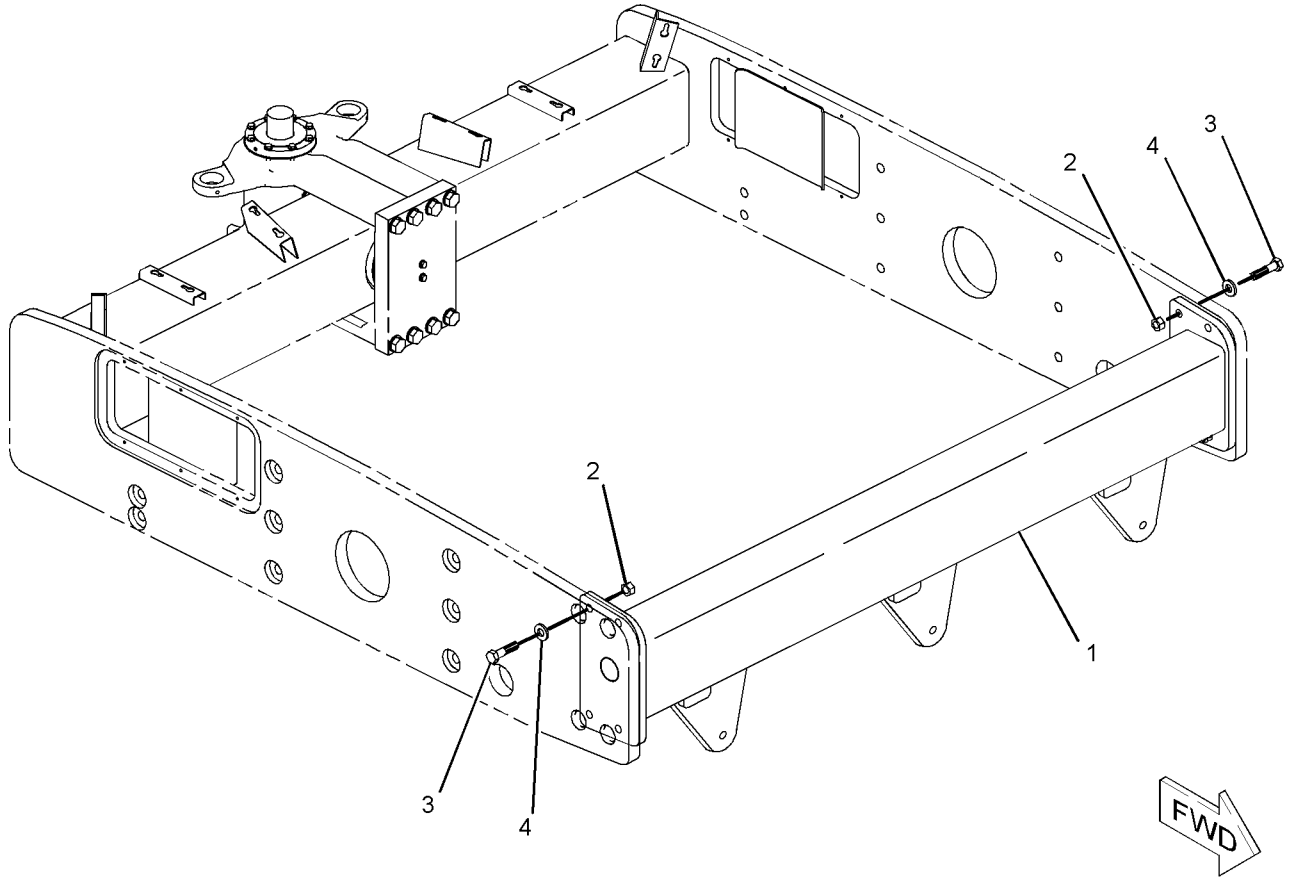

GRAPHIC #1 **<END>** g01030203

242-3476 BUMPER GP-FRONT

S/N: TJL1-UP
PART OF 327-7078 BUMPER AR
AN ATTACHMENT

SMCS-7156 **i03065504**

NOTE	REF NO	GRAPHIC REF	PART NUMBER	QTY	PART NAME 1 2 3 4 5 6 (PRODUCT LEVEL)	SEE PAGE
	1	1	**242-3477**	1	BUMPER AS	
		1	**7L-7556**	1	PLUG-CUP	
B	2	1	**242-5142**	4	SHIM (2-MM THK)	
M	3	1	**8T-4131**	8	NUT (M20X2.5-THD)	
	4	1	**8T-5439**	8	WASHER-HARD (21.5X45X6-MM THK)	
M	5	1	**7X-2566**	8	BOLT (M20X2.5X110-MM)	
F			*306-6902*	1	FILM GP	
		1	**303-1944**	2	FILM-IDENTIFICATION (XT)	

B - USE AS REQUIRED
F - NOT SHOWN
M - METRIC PART

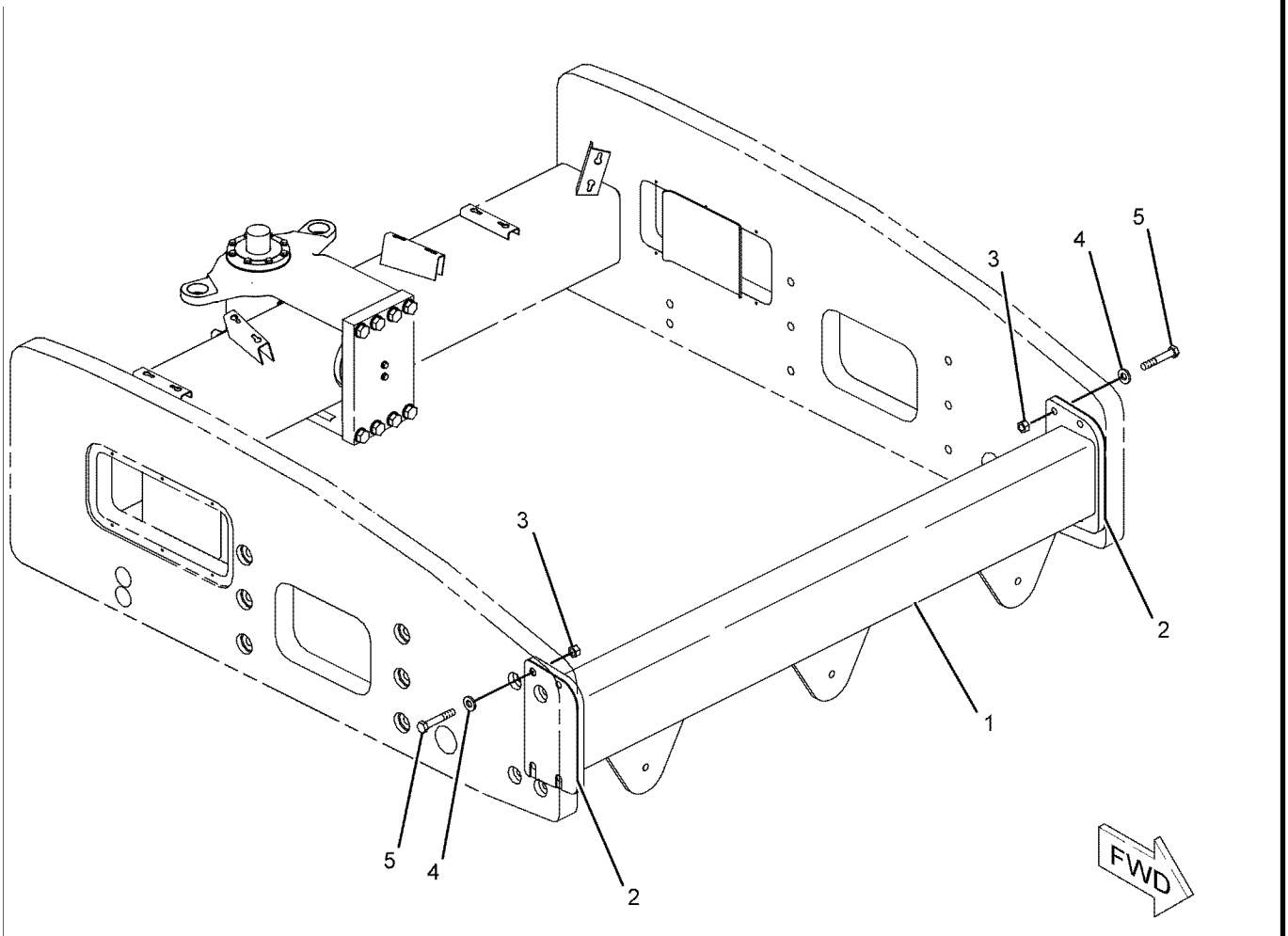

GRAPHIC #1 **<END>** g01031450

325-7901 BUMPER GP-FRONT

S/N: TJL1-UP
PART OF 325-7666 BUMPER AR
AN ATTACHMENT

SMCS-7156 **i03242564**

NOTE	REF NO	GRAPHIC REF	PART NUMBER	QTY	PART NAME 1 2 3 4 5 6 (PRODUCT LEVEL)	SEE PAGE
	1	1	**325-7449**	1	BUMPER AS	
		1	**7L-7556**	1	PLUG-CUP	
		1	**7T-1099**	4	LINK	
M	2	1	**8T-4131**	8	NUT (M20X2.5-THD)	
M	3	1	**8T-4187**	8	BOLT (M20X2.5X80-MM)	
	4	1	**8T-5439**	8	WASHER-HARD (21.5X45X6-MM THK)	

M - METRIC PART

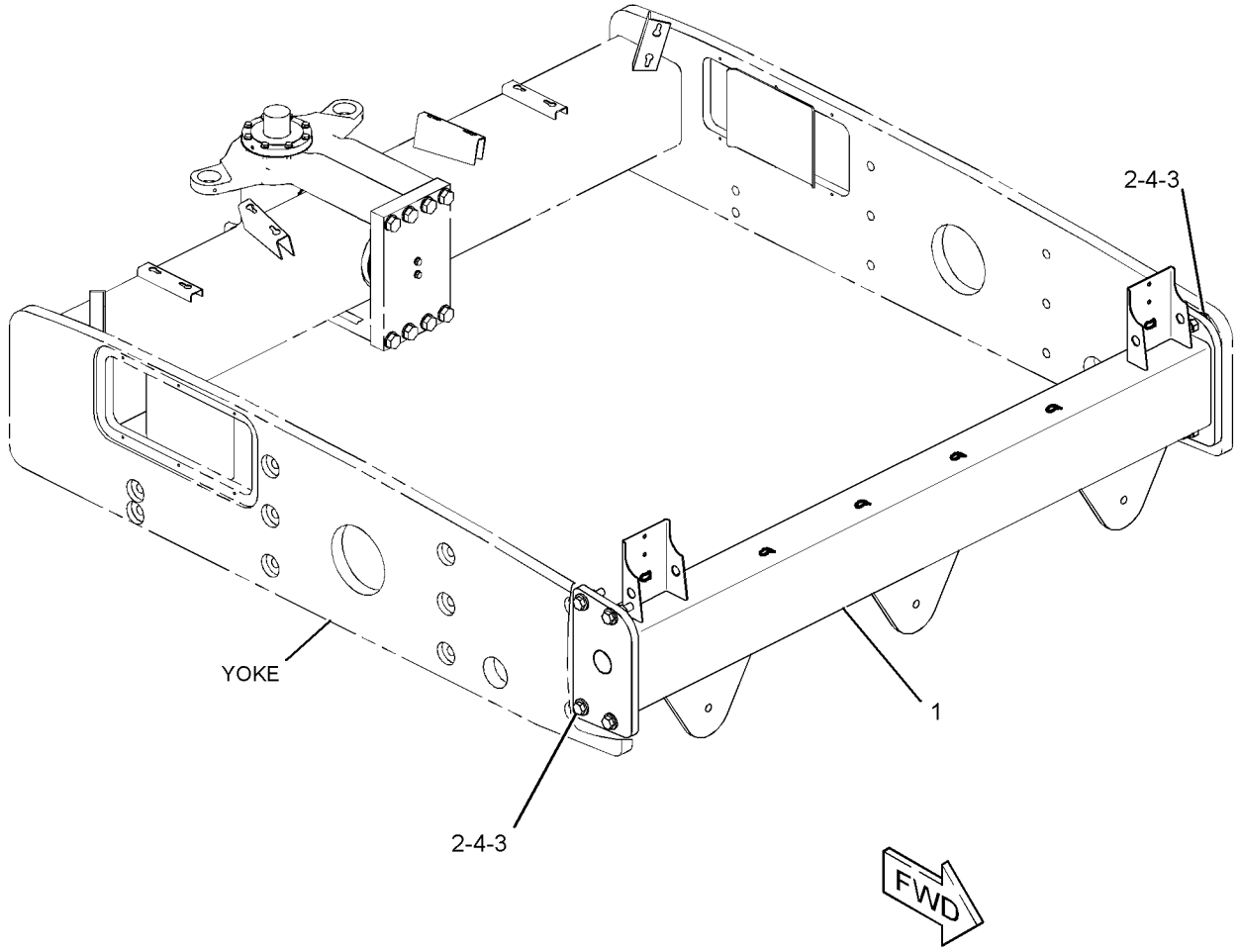

GRAPHIC #1 **<END>** g01774293

296-0023 ENCLOSURE GP-ENGINE

S/N: TJL1-UP

PART OF 239-0794 CHASSIS AR

SMCS-7263 **i05189092**

NOTE	REF NO	GRAPHIC REF	PART NUMBER	QTY	PART NAME 1 2 3 4 5 6 (PRODUCT LEVEL)	SEE PAGE
	1	1	**2T-1718**	4	RETAINER	
	2	1	**110-4463**	1	STRIKER AS (LATCH)	
	3	1	**119-9706**	2	STUD-BALL	
	4	1	**183-6121**	4	WASHER (10.31X38.1X4.78-MM THK)	
	5	1	**415-5207**	1	STACK AS	
	6	1	**187-3030**	1	GASKET	
	7	1	**202-0949**	1	STRAP AS	
	8	1	**203-5470**	2	SPRING AS-GAS (ENGINE HOOD)	
	9	1	**217-2536**	1	ENCLOSURE AS (ENGINE)	
		1	**7T-1099**	5	LINK	
M		1	**8T-3490**	8	NUT-WELD (M10X1.5-THD)	
M		1	**8T-4219**	10	STUD-WELD (M10X1.5X17.5-MM)	
	10	1	**217-3188**	2	GUIDE	
	11	1	**239-5097**	1	BRACKET-LATCH	
Y	12	1	**295-8965**	1	HOOD GP	268
M	13	1	**5C-2890**	1	NUT (M6X1-THD)	
	14	1	**5P-1076**	1	WASHER-HARD (13.5X30X4-MM THK)	
	15	1	**5P-4115**	2	WASHER-HARD (7.2X19X2-MM THK)	
	16	1	**7X-7729**	22	WASHER (11X25X3-MM THK)	
M	17	1	**8T-0389**	10	LOCKNUT (M10X1.5-THD)	
	18	1	**8T-4121**	2	WASHER-HARD (11X21X2.5-MM THK)	
M	19	1	**8T-4133**	2	NUT (M10X1.5-THD)	
M	20	1	**8T-4138**	2	BOLT (M6X1X20-MM)	
M	21	1	**8T-4195**	16	BOLT (M10X1.5X30-MM)	
M	22	1	**8T-4244**	1	NUT (M12X1.75-THD)	
	23	1	**9X-8256**	1	WASHER (6.6X12X2-MM THK)	
D	24	1	**5P-7483**		SEAL (0.8-M)	
J	25	1	**229-2565**		SEAL (7-DM EACH)	

D - ORDER BY THE METER
J - ORDER BY THE DECIMETER
M - METRIC PART
Y - SEPARATE ILLUSTRATION

296-0023 **ENCLOSURE GP-ENGINE (*contd.*)** **i05189092**

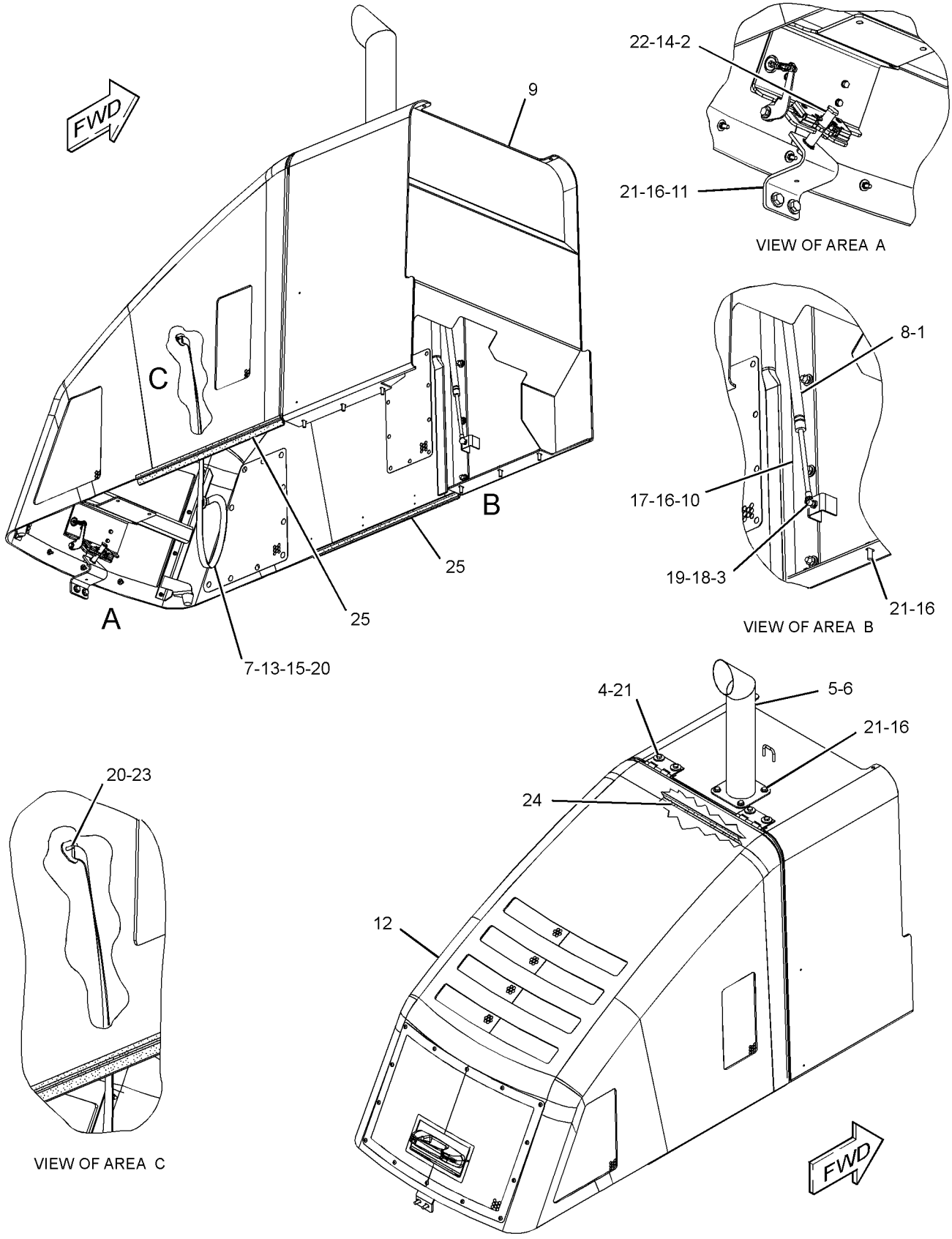

GRAPHIC #1

<END>

g01383125

217-2945 FRAME GP-FRONT

S/N: TJL1-UP
PART OF 327-7069 CHASSIS AR
AN ATTACHMENT

SMCS-7050, 7051

i03057389

NOTE	REF NO	GRAPHIC REF	PART NUMBER	QTY	PART NAME 1 2 3 4 5 6 (PRODUCT LEVEL)	SEE PAGE
	1	1	**141-9866**	1	PLATE-END	
Y	2	1	*173-2731*	1	HITCH GP-ARTICULATING & OSC	267
	3	1	**217-2947**	1	YOKE AS	
M	4	1	**7X-2577**	8	BOLT (M24X3X90-MM)	
	5	1	**8T-4121**	2	WASHER-HARD (11X21X2.5-MM THK)	
	6	1	**8T-4167**	8	WASHER-HARD (26X44X4-MM THK)	
M	7	1	**8T-4195**	2	BOLT (M10X1.5X30-MM)	

M - METRIC PART
Y - SEPARATE ILLUSTRATION

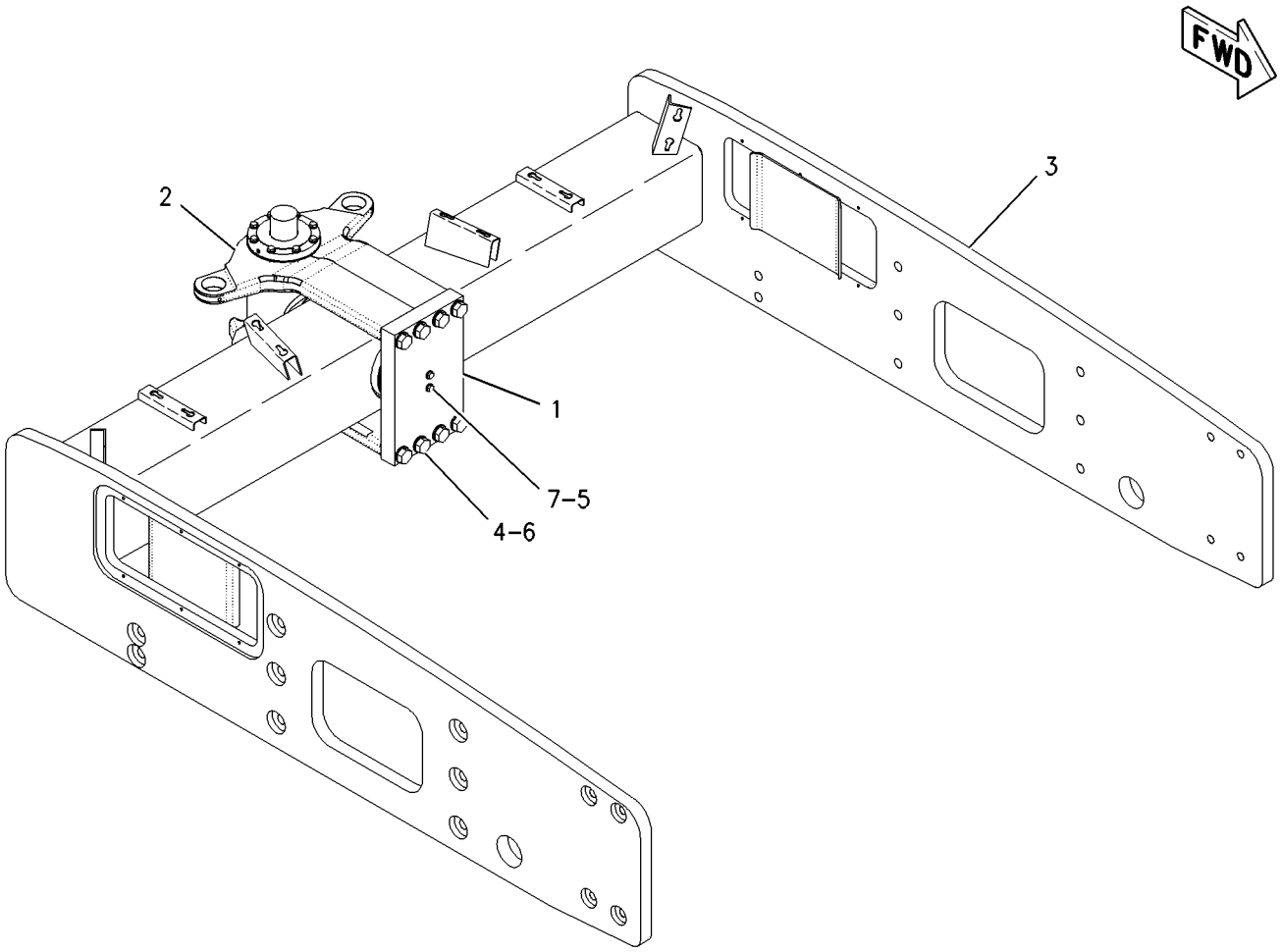

GRAPHIC #1

<END>

g00998262

242-3468 FRAME GP-FRONT–SMOOTH DRUM, ADDED WEIGHT

S/N: TJL1-UP
PART OF 327-7071 CHASSIS AR
AN ATTACHMENT

SMCS-7050, 7051

i03064180

NOTE	REF NO	GRAPHIC REF	PART NUMBER	QTY	PART NAME 1 2 3 4 5 6 (PRODUCT LEVEL)	SEE PAGE
Y	1	1	*141-9864*	1	HITCH GP-ARTICULATING & OSC (SMOOTH DRUM)	265
	2	1	**141-9866**	1	PLATE-END	
	3	1	**242-3469**	1	YOKE AS	
M	4	1	**7X-2577**	8	BOLT (M24X3X90-MM)	
	5	1	**8T-4121**	2	WASHER-HARD (11X21X2.5-MM THK)	
	6	1	**8T-4167**	8	WASHER-HARD (26X44X4-MM THK)	
M	7	1	**8T-4195**	2	BOLT (M10X1.5X30-MM)	

M - METRIC PART
Y - SEPARATE ILLUSTRATION

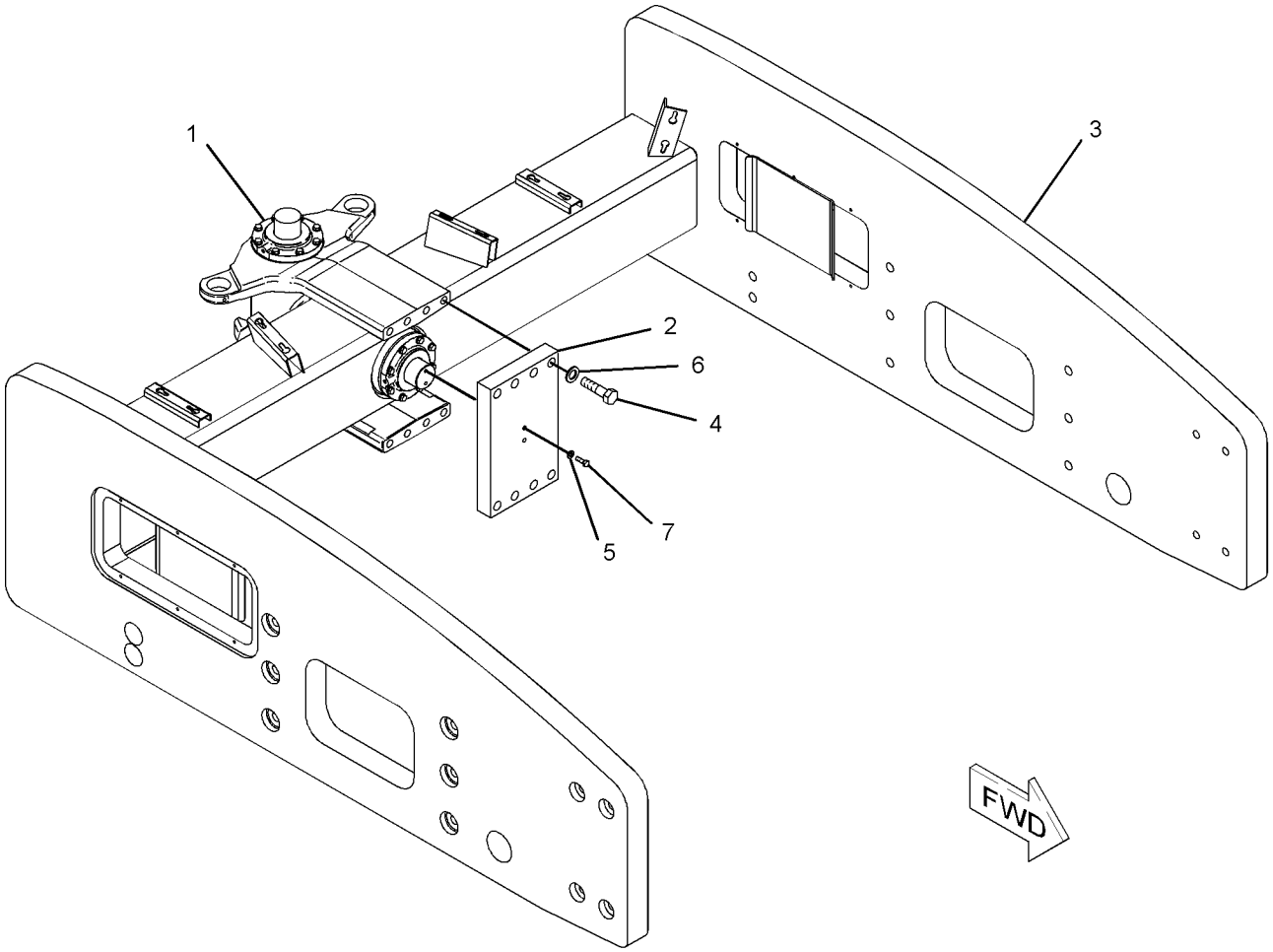

GRAPHIC #1

<END>

g01031664

239-1496 FRAME GP-REAR

S/N: TJL1-UP

PART OF 239-0794 CHASSIS AR

SMCS-7050, 7051 **i03035502**

NOTE	REF NO	GRAPHIC REF	PART NUMBER	QTY	PART NAME 1 2 3 4 5 6 (PRODUCT LEVEL)	SEE PAGE
	1	1	**5E-9892**	1	PIN	
M	2	1	**077-6627**	2	SCREW-DRIVE (NO 12X12.7-MM)	
	3	1	**143-4653**	2	CLAMP	
	4	1	**249-7589**	1	PIN AS	
	5	1	**195-1411**	1	CHAIN	
	6	1	**320-7409**	1	FRAME AS	
	7	1	**8T-4167**	8	WASHER-HARD (26X44X4-MM THK)	
M	8	1	**8T-4649**	8	BOLT (M24X3X140-MM)	

M - METRIC PART

239-1496 **FRAME GP-REAR (*contd.*)** **i03035502**

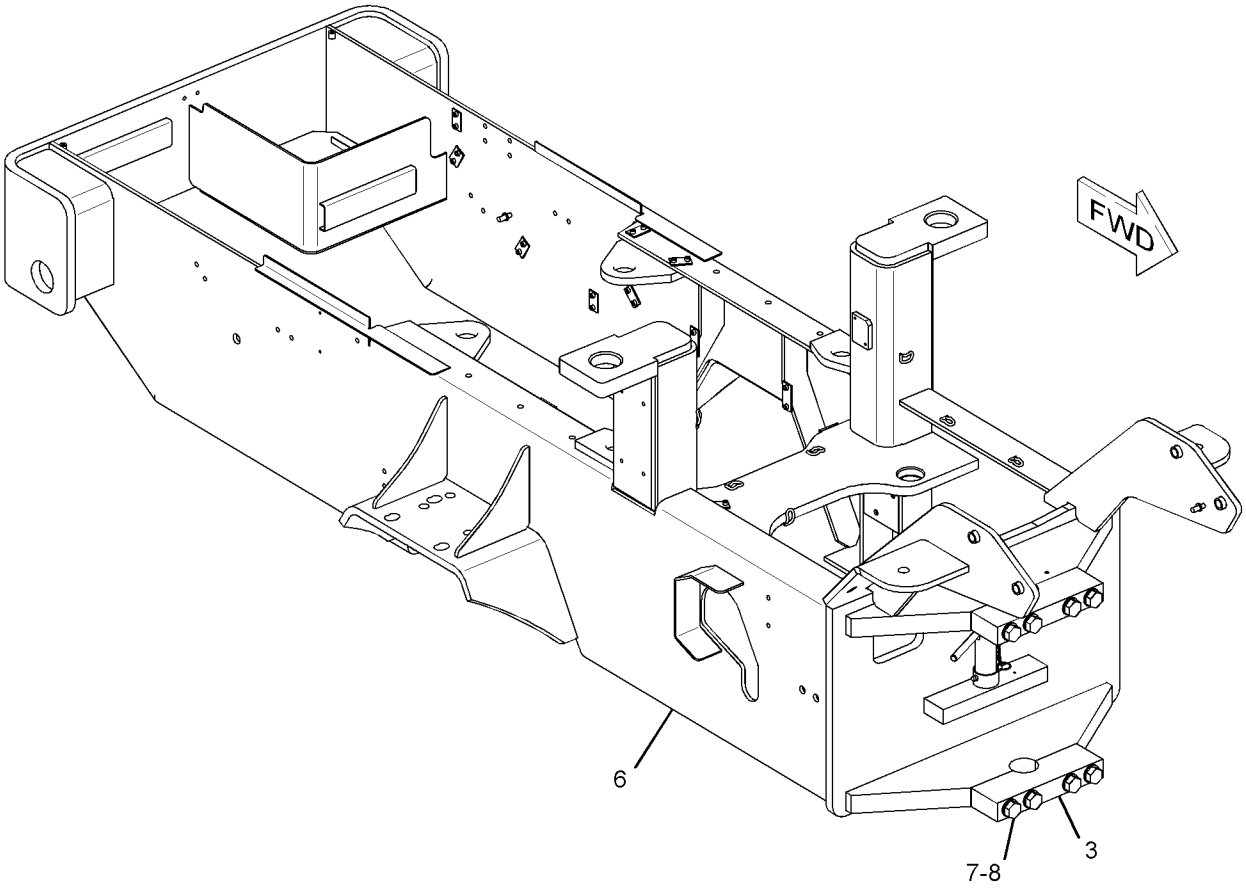

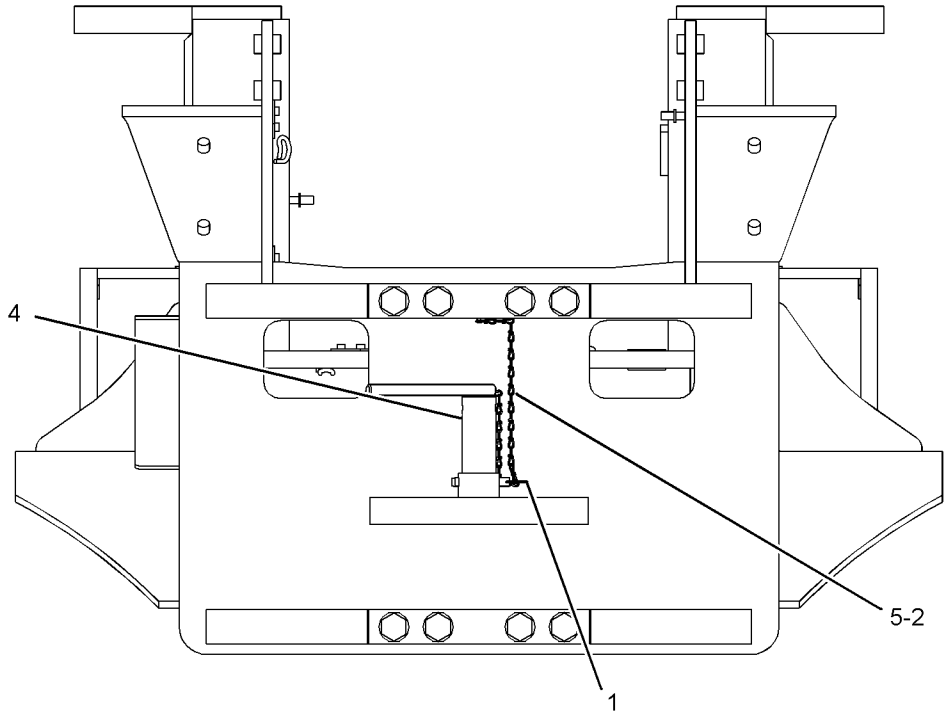

FRONT VIEW

GRAPHIC #1 **<END>** g01457585

241-3783 GUARD GP-LINES

S/N: TJL1-UP

PART OF 357-7421, 368-9181, 369-9031, 376-1389, 376-1393 DISTRIBUTION AR AN ATTACHMENT

SMCS-7167 **i03055535**

NOTE	REF NO	GRAPHIC REF	PART NUMBER	QTY	PART NAME 1 2 3 4 5 6 (PRODUCT LEVEL)	SEE PAGE
	1	1	**278-5968**	1	PLATE AS	
	2	1	**289-3423**	1	PLATE AS	
M	3	1	**8T-4195**	8	BOLT (M10X1.5X30-MM)	
	4	1	**8T-4222**	8	WASHER-PLATED (11X32X2.5-MM THK)	

M - METRIC PART

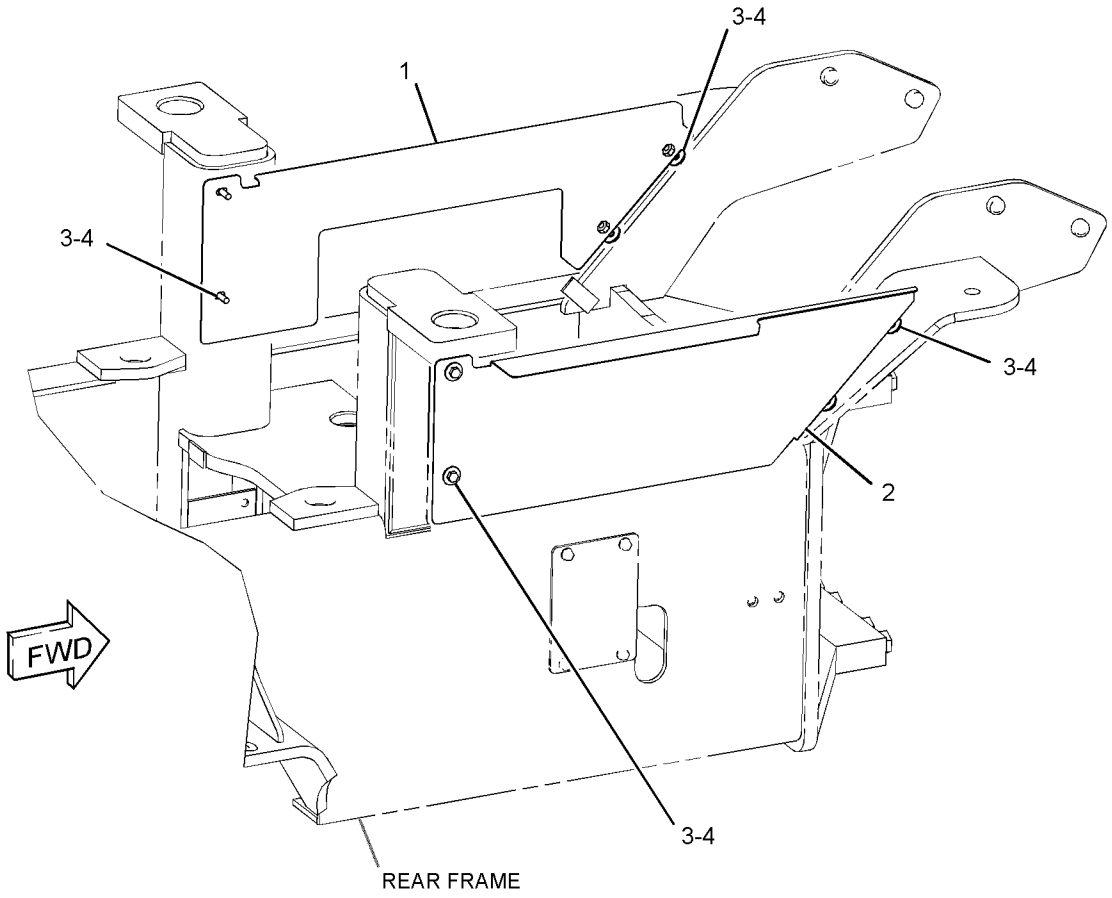

GRAPHIC #1 **<END>** g01525072

220-8754 GUARD GP-TRANSMISSION

S/N: TJL1-UP
PART OF 368-9181, 369-9031, 376-1393 DISTRIBUTION AR
AN ATTACHMENT

SMCS-7153 **i03045574**

NOTE	REF NO	GRAPHIC REF	PART NUMBER	QTY	PART NAME 1 2 3 4 5 6 (PRODUCT LEVEL)	SEE PAGE
	1	1	**226-0423**	1	GUARD AS	
M	2	1	**7X-2553**	4	BOLT (M16X2X40-MM)	
	3	1	**9X-8257**	4	WASHER (17.5X30X3.5-MM THK)	

M - METRIC PART

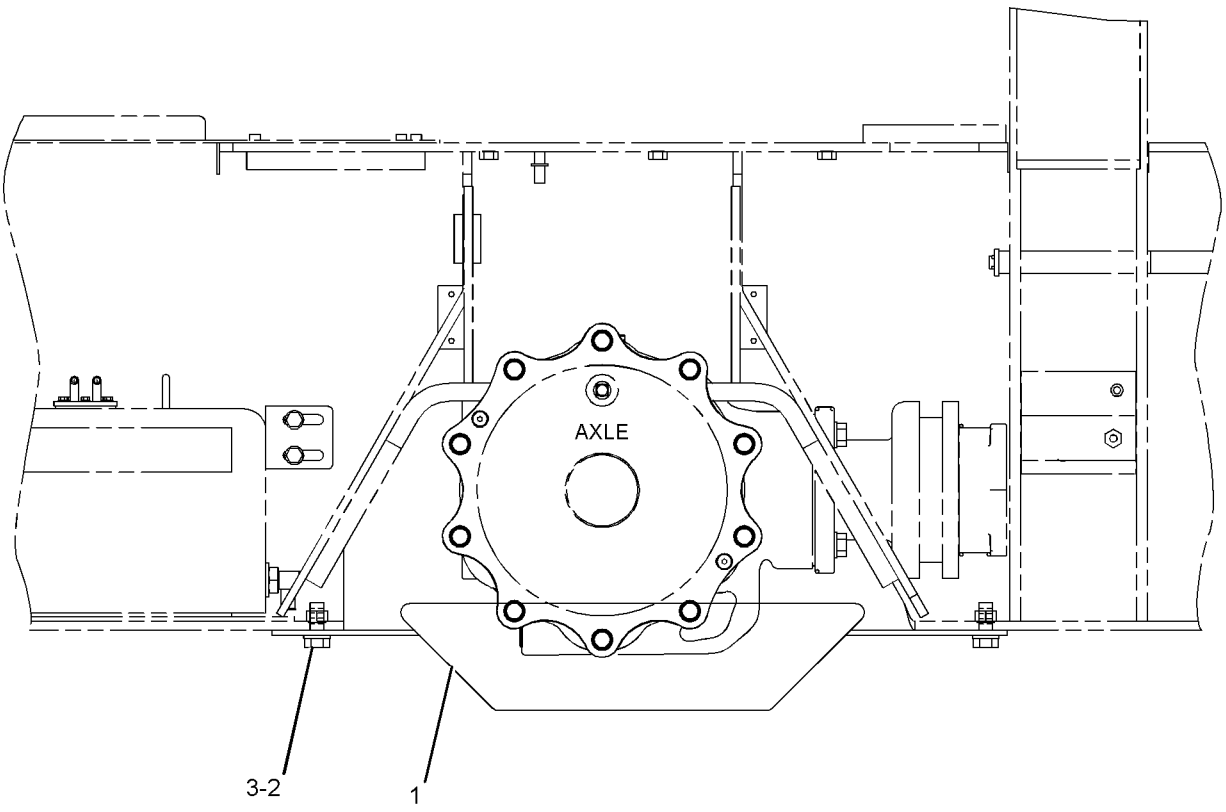

RIGHT SIDE VIEW

GRAPHIC #1 **<END>** g01026259

201-5160 HANDRAIL GP

S/N: TJL1-UP

PART OF 219-4171, 224-1151 OPERATOR AR, 348-5642, 348-5643 OPERATOR AR-OPEN ROPS AN ATTACHMENT

SMCS-7256 **i03045333**

NOTE	REF NO	GRAPHIC REF	PART NUMBER	QTY	PART NAME 1 2 3 4 5 6 (PRODUCT LEVEL)	SEE PAGE
	1	1	**159-3027**	1	HANDRAIL	
	2	1	**201-5161**	1	HANDRAIL AS	
	2A	1	**2D-3468**	1	PLATE-RETAINING	
	3	1	**5P-1076**	6	WASHER-HARD (13.5X30X4-MM THK)	
	4	1	**7X-7729**	2	WASHER (11X25X3-MM THK)	
M	5	1	**8T-4183**	6	BOLT (M12X1.75X40-MM)	
M	6	1	**8T-4195**	2	BOLT (M10X1.5X30-MM)	

M - METRIC PART

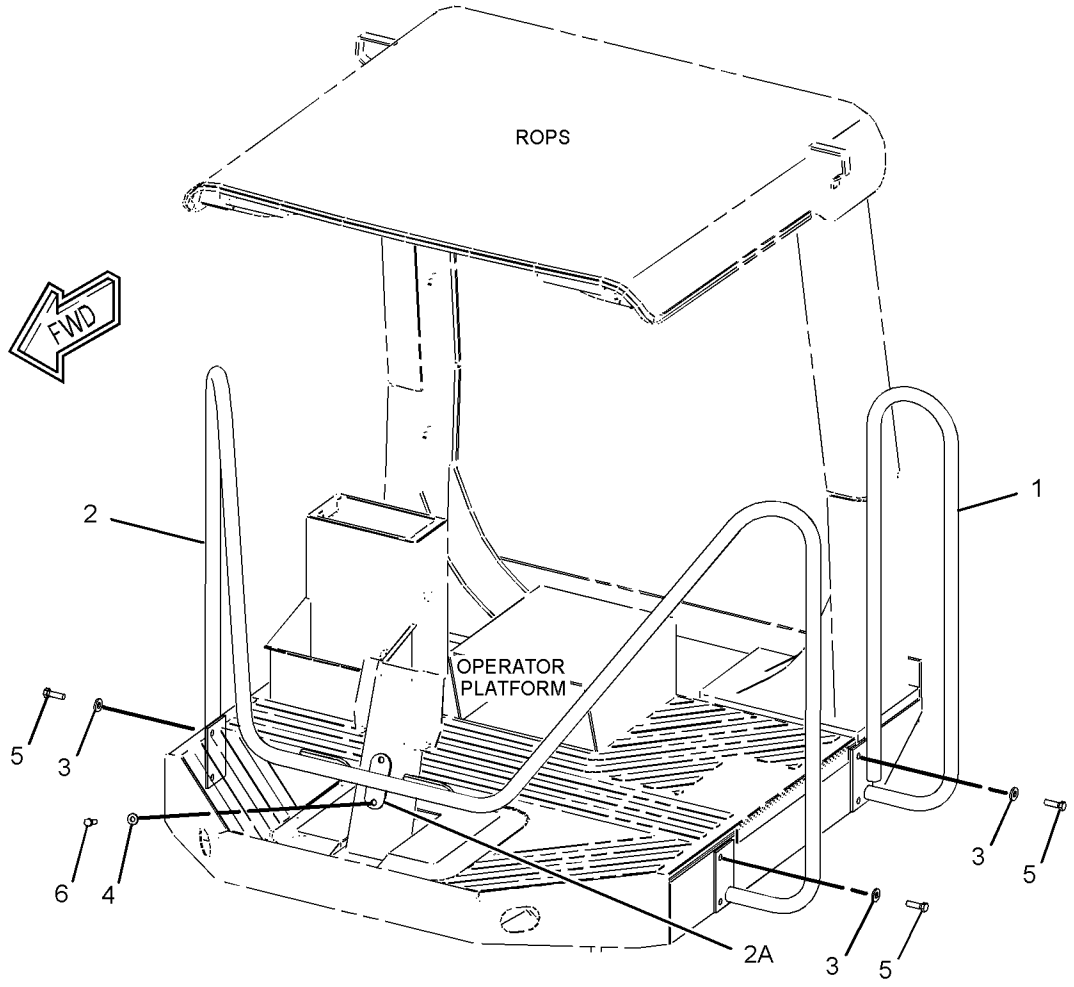

GRAPHIC #1 **<END>** g01559713

141-9864 HITCH GP-ARTICULATING & OSC—SMOOTH DRUM

S/N: TJL1-UP
PART OF 242-3468 FRAME GP-FRONT
AN ATTACHMENT

SMCS-7057, 7113

i05270563

NOTE	REF NO	GRAPHIC REF	PART NUMBER	QTY	PART NAME 1 2 3 4 5 6 (PRODUCT LEVEL)	SEE PAGE
	1	1	**2P-4471**	2	LOCKNUT	
	2	1	**9C-9219**	2	NUT-SPECIAL	
	3	1	**9H-6079**	4	SEAL-LIP TYPE	
	4	1	**249-7387**	1	HITCH	
	5	1	**141-9865**	4	CAP-BEARING	
	6	1	**162-5395**	1	SHAFT (OSCILLATION)	
	7	1	**162-5394**	1	SHAFT (ARTICULATION)	
	8	1	**185-8756**	2	SPACER (77X93X5-MM THK)	
	9	1	**143-7356**	4	BEARING-TAPERED ROLLER	
	10	1	**2H-3935**	4	SEAL-O-RING	
	11	1	**8T-4121**	32	WASHER-HARD (11X21X2.5-MM THK)	
M	12	1	**8T-4195**	32	BOLT (M10X1.5X30-MM)	
	13	1	**9F-2247**	4	PLUG-PIPE	

M - METRIC PART

141-9864 **HITCH GP-ARTICULATING & OSC (*contd.*)** **i05270563**

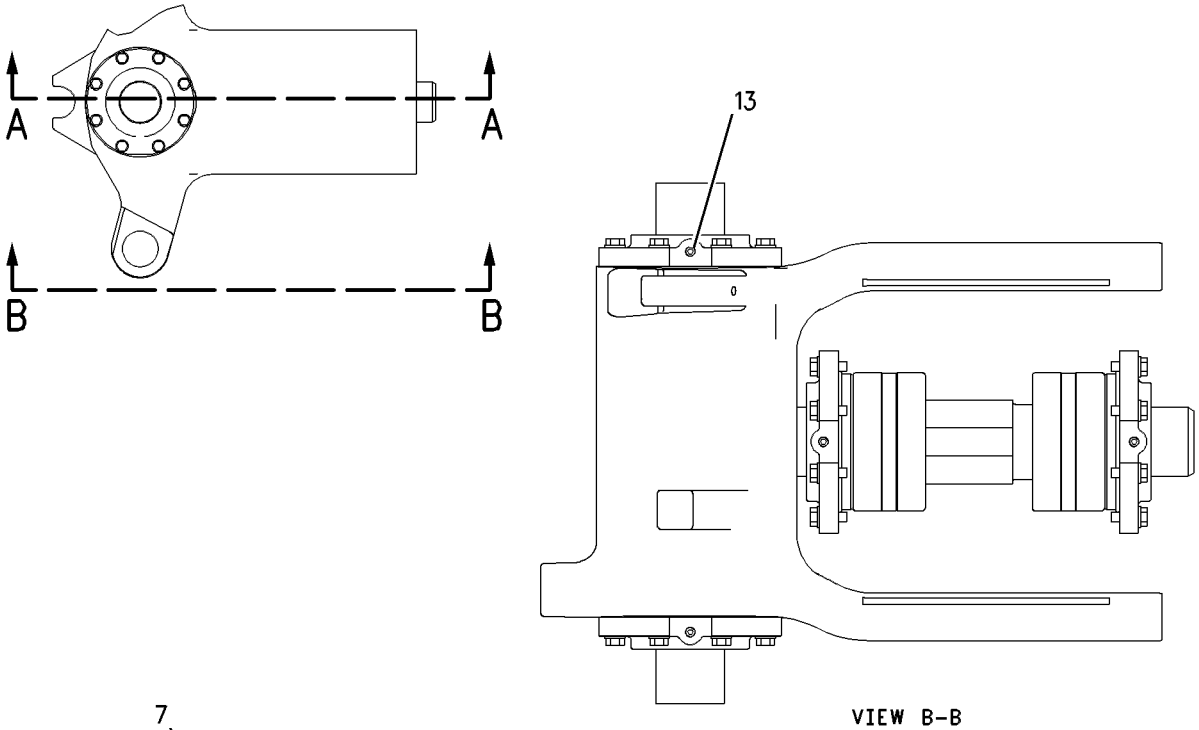

GRAPHIC #1 **<END>** g00475131

173-2731 HITCH GP-ARTICULATING & OSC

S/N: TJL1-UP
PART OF 217-2945 FRAME GP-FRONT
AN ATTACHMENT

SMCS-7057, 7113

i03057422

NOTE	REF NO	GRAPHIC REF	PART NUMBER	QTY	PART NAME 1 2 3 4 5 6 (PRODUCT LEVEL)	SEE PAGE
	1	1	**1B-3925**	4	CUP-BEARING	
	2	1	**3F-5950**	4	CONE-BEARING	
	3	1	**9H-6079**	4	SEAL-LIP TYPE	
	4	1	**249-1291**	4	CAP-BEARING	
	5	1	**173-2686**	1	SHAFT (ARTICULATION)	
	6	1	**173-2687**	1	SHAFT (OSCILLATION)	
	7	1	**249-7388**	1	HITCH	
B	8	1	**187-9278**	2	SHIM PACK (EACH INCLUDES 3-SHIMS)	
	9	1	**8T-4121**	32	WASHER-HARD (11X21X2.5-MM THK)	
M	10	1	**8T-4186**	32	BOLT (M10X1.5X40-MM)	
	11	1	**9F-2247**	4	PLUG-PIPE	

B - USE AS REQUIRED
M - METRIC PART

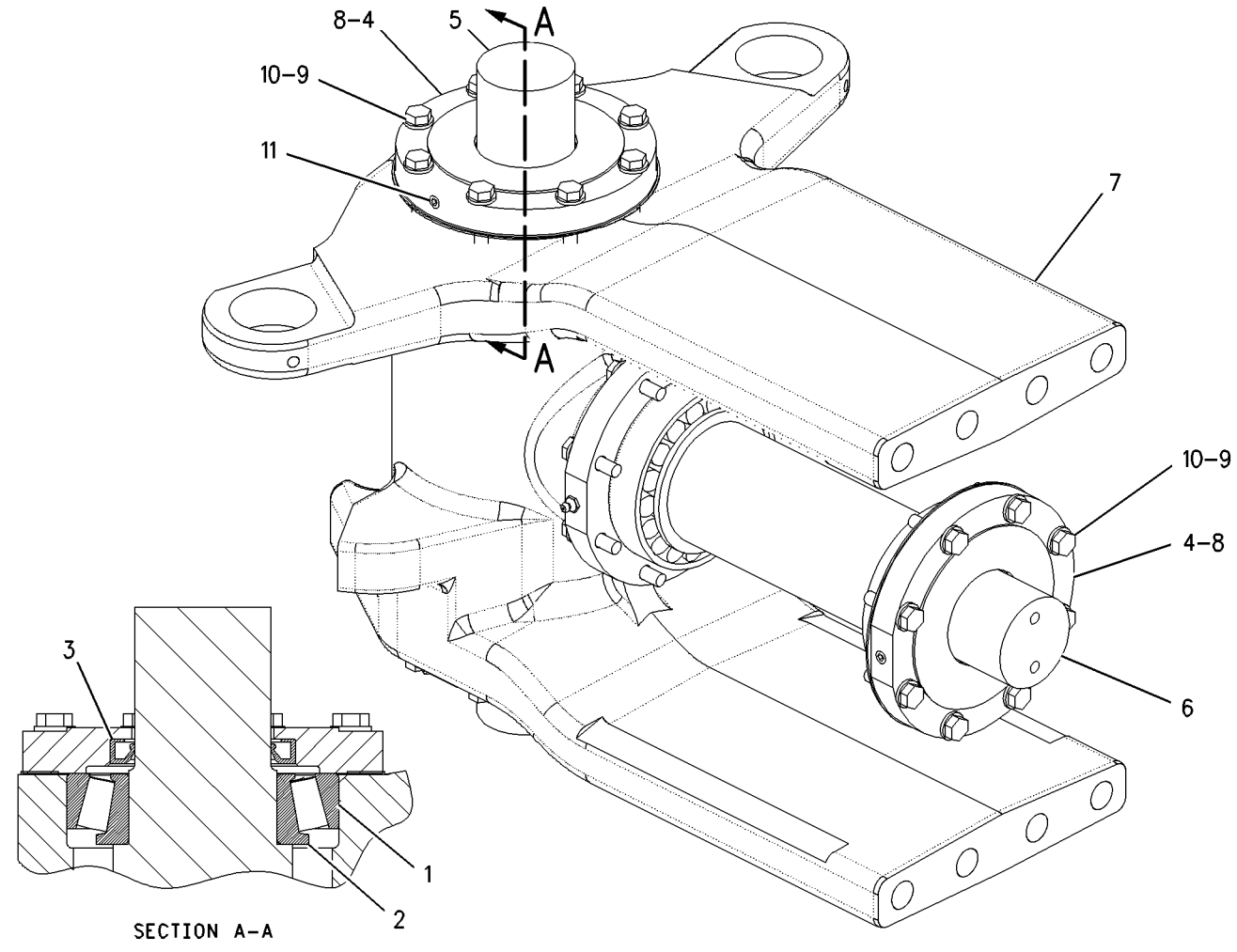

GRAPHIC #1

<END>

g00917116

295-8965 HOOD GP

S/N: TJL1-UP

PART OF 296-0023 ENCLOSURE GP-ENGINE

SMCS-7251 **i03035601**

NOTE	PART NUMBER	QTY	PART NAME 1 2 3 4 5 6 (PRODUCT LEVEL)	SEE PAGE
Y	*295-8966*	1	HOOD GP	269
			—OR—	
Y	*296-0024*	1	HOOD GP	271

Y - SEPARATE ILLUSTRATION

<END>

295-8966 HOOD GP

S/N: TJL1-UP

PART OF 295-8965 HOOD GP

SMCS-7251 **i03895911**

NOTE	REF NO	GRAPHIC REF	PART NUMBER	QTY	PART NAME 1 2 3 4 5 6 (PRODUCT LEVEL)	SEE PAGE
	1	1	**6V-7636**	1	PIN AS-SPRING	
	2	1	**108-5471**	1	CLEVIS	
	3	1	**119-9706**	2	STUD-BALL	
	4	1	**122-8427**	1	SPACER (9X14X3.5-MM THK)	
	5	1	**138-7125**	2	BUMPER	
	6	1	**200-7836**	1	HANDLE AS	
	7	1	**218-2207**	1	LATCH AS-DOOR	
	8	1	**220-0777**	1	SCREEN	
	9	1	**253-0054**	1	SCREEN	
	10	1	**9X-8256**	16	WASHER (6.6X12X2-MM THK)	
	11	1	**276-0076**	2	HINGE AS	
	12	1	**284-3083**	1	SUPPORT AS	
M	14	1	**099-0492**	14	LOCKNUT (M6X1-THD)	
M	15	1	**3E-8020**	14	SCREW-TRUSS HEAD (M6X1X25-MM)	
M	16	1	**5C-7261**	2	NUT (M8X1.25-THD)	
	17	1	**5P-4115**	6	WASHER-HARD (7.2X19X2-MM THK)	
	18	1	**5P-4116**	2	WASHER-HARD (8.8X20.5X2-MM THK)	
M	19	1	**6V-7357**	4	BOLT (M6X1X25-MM)	
	20	1	**6V-8185**	1	NUT (1/4-20-THD)	
	21	1	**7X-7729**	4	WASHER (11X25X3-MM THK)	
M	22	1	**8T-4133**	2	NUT (M10X1.5-THD)	
M	23	1	**8T-4138**	4	BOLT (M6X1X20-MM)	
M	24	1	**8T-4189**	1	BOLT (M8X1.25X20-MM)	
M	25	1	**8T-4195**	4	BOLT (M10X1.5X30-MM)	
M	26	1	**8T-4200**	8	BOLT (M8X1.25X16-MM)	
	27	1	**8T-4224**	8	WASHER-HARD (8.8X16X2-MM THK)	
	28	1	**9P-6411**	1	STUD (1/4-20-THD)	

M - METRIC PART

295-8966 **HOOD GP (*contd.*)** **i03895911**

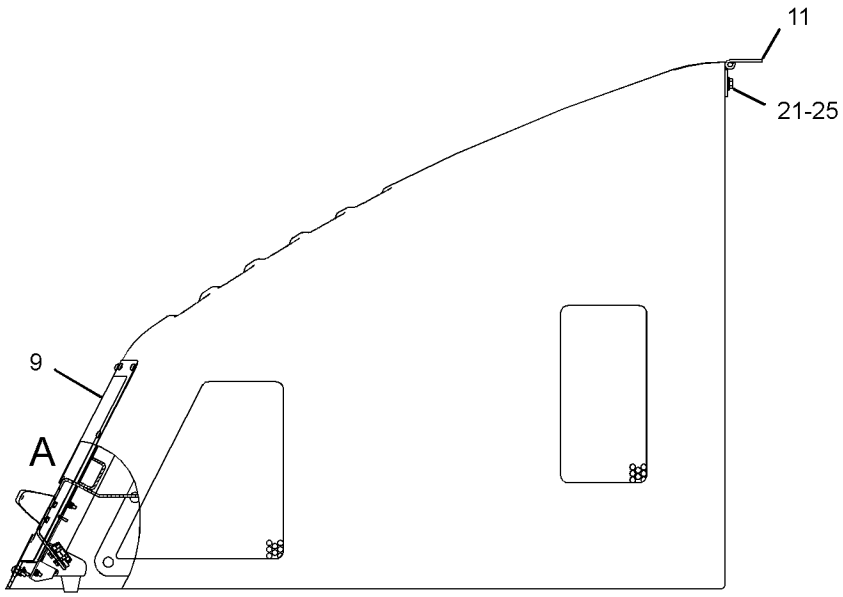

RIGHT SIDE VIEW

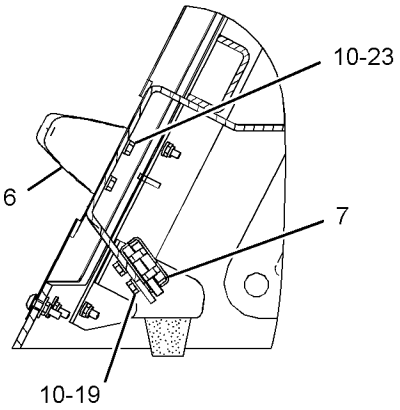

VIEW OF AREA A

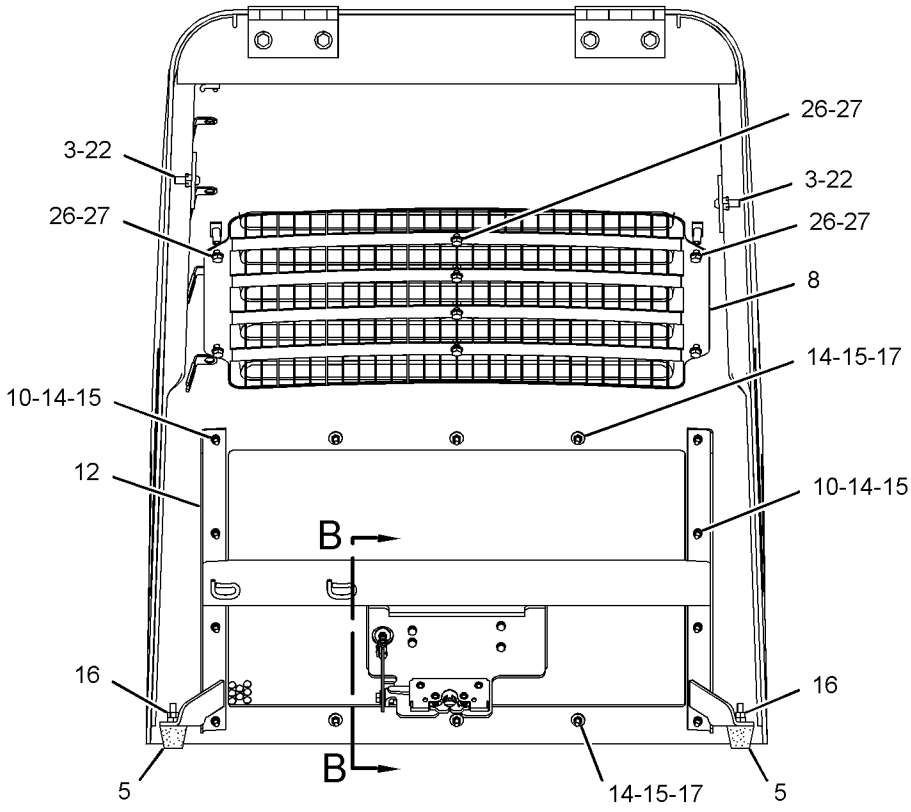

FRONT VIEW

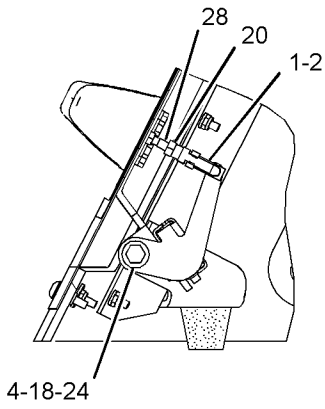

VIEW B-B

GRAPHIC #1 **<END>** g02140384

296-0024 HOOD GP

S/N: TJL1-UP

PART OF 295-8965 HOOD GP

SMCS-7251 **i03896013**

NOTE	REF NO	GRAPHIC REF	PART NUMBER	QTY	PART NAME 1 2 3 4 5 6 (PRODUCT LEVEL)	SEE PAGE
	1	1	**6V-7636**	1	PIN AS-SPRING	
	2	1	**108-5471**	1	CLEVIS	
	3	1	**119-9706**	2	STUD-BALL	
	4	1	**122-8427**	1	SPACER (9X14X3.5-MM THK)	
	5	1	**138-7125**	2	BUMPER	
	6	1	**200-7836**	1	HANDLE AS	
	7	1	**218-2207**	1	LATCH AS-DOOR	
	8	1	**253-0054**	1	SCREEN	
	9	1	**9X-8256**	16	WASHER (6.6X12X2-MM THK)	
	10	1	**276-0076**	2	HINGE AS	
	11	1	**284-3083**	1	SUPPORT AS	
	12	1	**296-0025**	1	HOOD AS	
M	13	1	**099-0492**	14	LOCKNUT (M6X1-THD)	
M	14	1	**3E-8020**	14	SCREW-TRUSS HEAD (M6X1X25-MM)	
M	15	1	**5C-7261**	2	NUT (M8X1.25-THD)	
	16	1	**5P-4115**	6	WASHER-HARD (7.2X19X2-MM THK)	
	17	1	**5P-4116**	2	WASHER-HARD (8.8X20.5X2-MM THK)	
M	18	1	**6V-7357**	4	BOLT (M6X1X25-MM)	
	19	1	**6V-8185**	1	NUT (1/4-20-THD)	
	20	1	**7X-7729**	4	WASHER (11X25X3-MM THK)	
M	21	1	**8T-4133**	2	NUT (M10X1.5-THD)	
M	22	1	**8T-4138**	4	BOLT (M6X1X20-MM)	
M	23	1	**8T-4189**	1	BOLT (M8X1.25X20-MM)	
M	24	1	**8T-4195**	4	BOLT (M10X1.5X30-MM)	
	25	1	**9P-6411**	1	STUD (1/4-20-THD)	

M - METRIC PART

296-0024 **HOOD GP** (*contd.*) **i03896013**

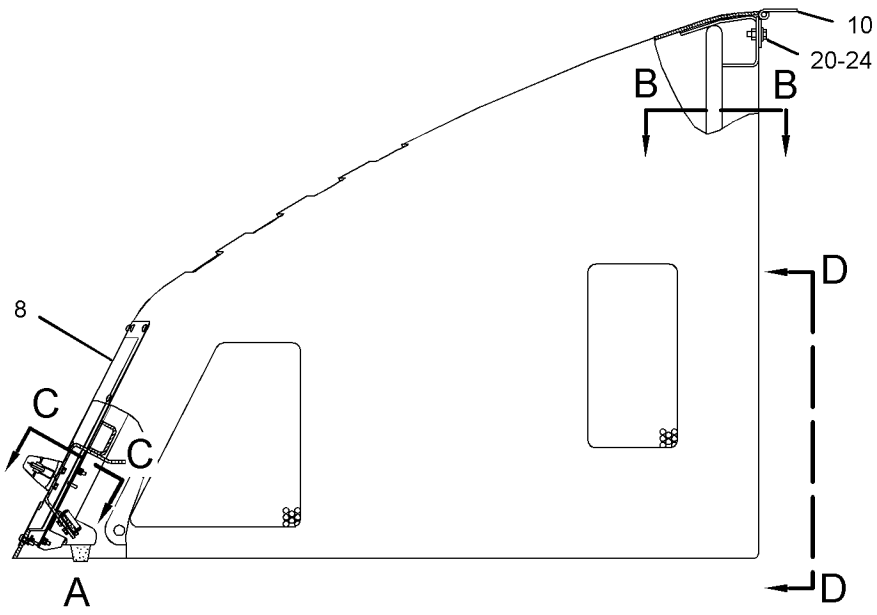

RIGHT SIDE VIEW

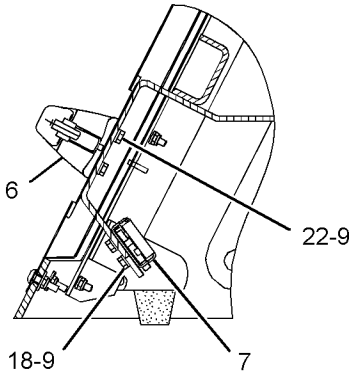

VIEW OF AREA A

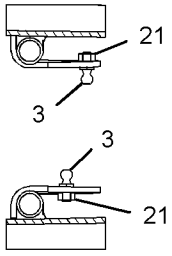

SECTION B-B

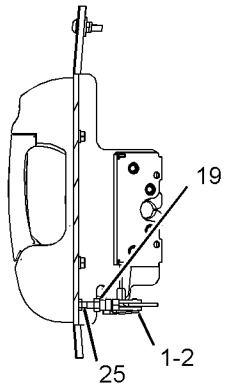

SECTION C-C

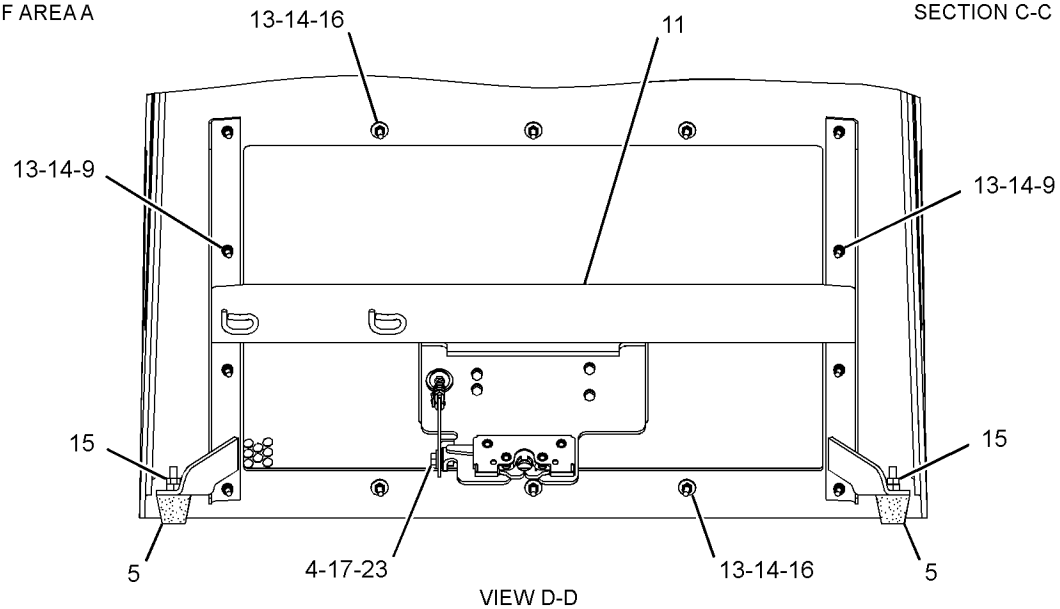

VIEW D-D

GRAPHIC #1 **<END>** g02139503

213-3152 SCRAPER GP-PADDED DRUM–WITH SHELL KIT

S/N: TJL1-UP

PART OF 357-7421 DISTRIBUTION AR, 234-3461 SHELL GP-PADDED AN ATTACHMENT

SMCS-6607 **i04835822**

NOTE	REF NO	GRAPHIC REF	PART NUMBER	QTY	PART NAME 1 2 3 4 5 6 (PRODUCT LEVEL)	SEE PAGE
	1	1	**160-6330**	2	SCRAPER	
	2	1	**160-6331**	4	SCRAPER	
C	3	1	**270-9406**	14	SCRAPER	
M	4	1	**7X-2563**	28	BOLT (M20X2.5X60-MM)	
M	5	1	**7X-2564**	2	BOLT (M20X2.5X90-MM)	
	6	1	**8T-5439**	31	WASHER-HARD (21.5X45X6-MM THK)	
M	7	1	**8T-6430**	1	BOLT (M20X2.5X50-MM)	

C - CHANGE FROM PREVIOUS TYPE
M - METRIC PART

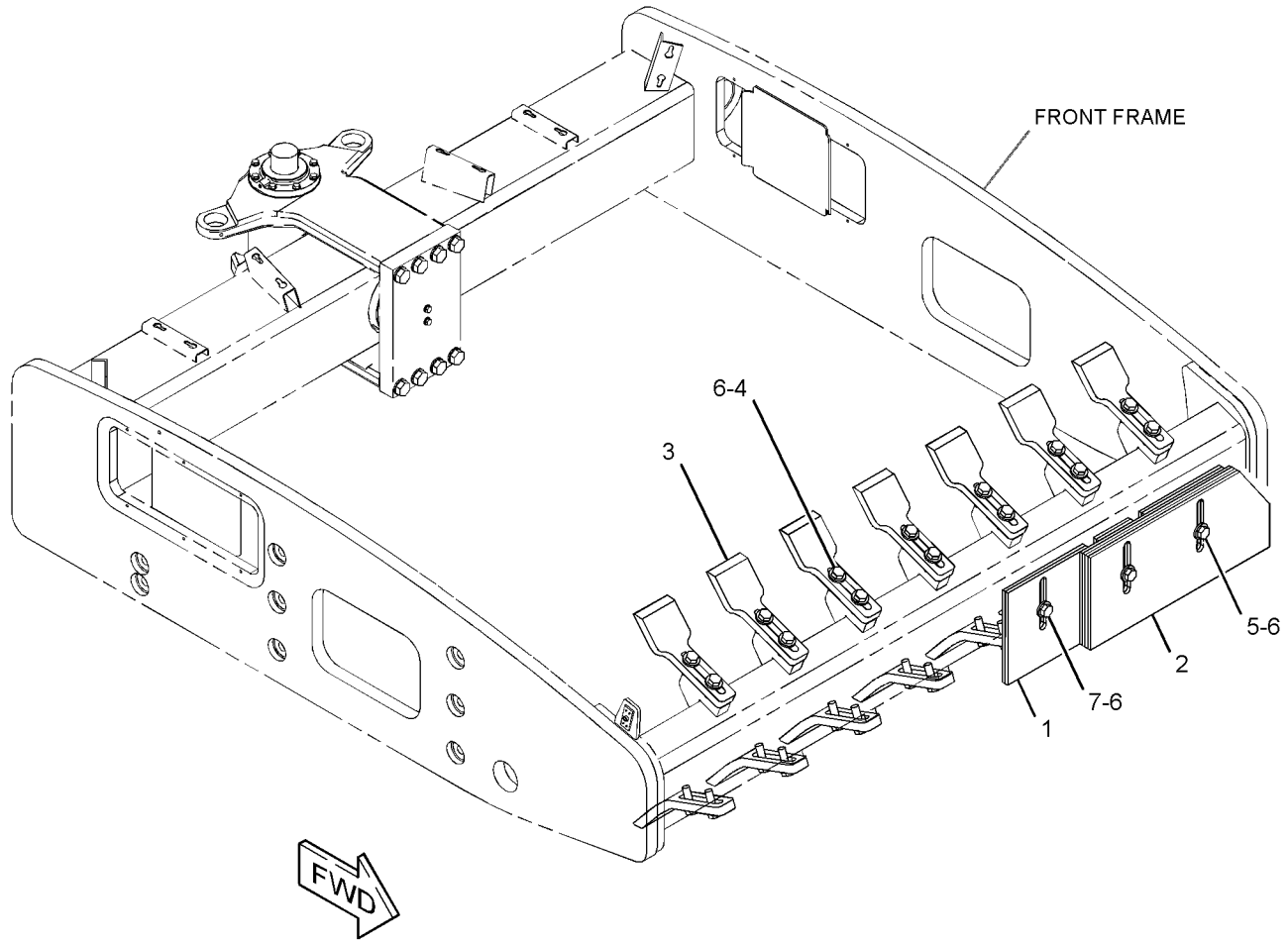

GRAPHIC #1 **<END>** g01614753

146-3165 SCRAPER GP-SMOOTH DRUM–FRONT, STEEL

S/N: TJL1-UP

PART OF 368-9181, 368-9182, 369-9031, 376-1389, 376-1392, 376-1393 DISTRIBUTION AR AN ATTACHMENT

SMCS-6607 **i04835836**

NOTE	REF NO	GRAPHIC REF	PART NUMBER	QTY	PART NAME 1 2 3 4 5 6 (PRODUCT LEVEL)	SEE PAGE
	1	1	**227-0172**	3	MOUNT	
	2	1	**155-4170**	1	SCRAPER	
	3	1	**155-4171**	3	BRACKET	
M	4	1	**155-6663**	3	BOLT (M20X2.5X54-MM)	
M	5	1	**6V-7688**	3	LOCKNUT (M20X2.5-THD)	
M	6	1	**7X-2561**	3	BOLT (M20X2.5X35-MM)	
M	7	1	**8T-5460**	3	BOLT (M20X2.5X40-MM)	
	8	1	**8T-5439**	9	WASHER-HARD (21.5X45X6-MM THK)	

M - METRIC PART

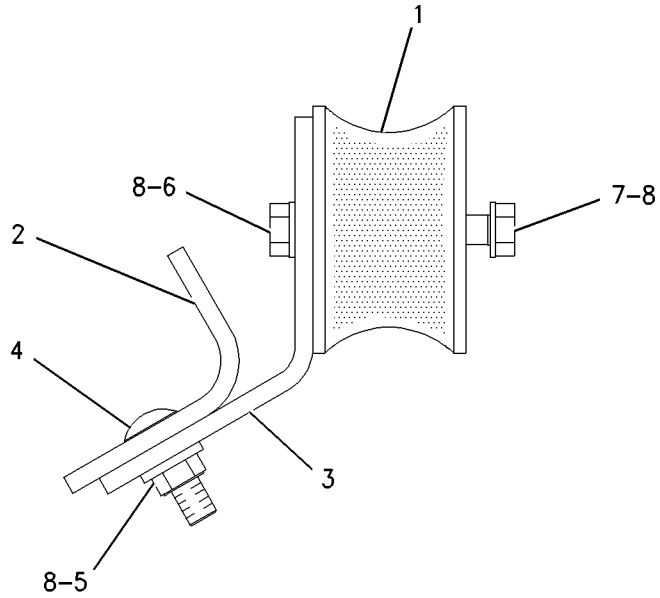

VIEW OF AREA A

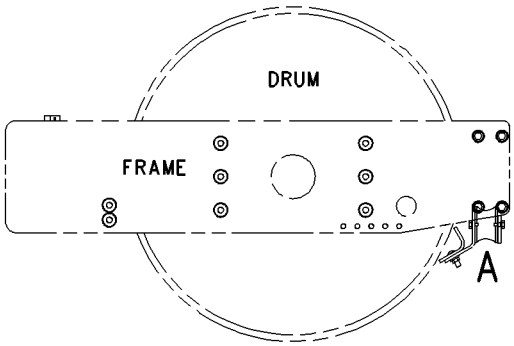

GRAPHIC #1 **<END>** g00897011

241-9599 SCRAPER GP-SMOOTH DRUM

S/N: TJL1-UP

AN ATTACHMENT

SMCS-6607 **i03055618**

NOTE	REF NO	GRAPHIC REF	PART NUMBER	QTY	PART NAME 1 2 3 4 5 6 (PRODUCT LEVEL)	SEE PAGE
	1	1	**155-4171**	6	BRACKET	
B	2	1	**166-7177**	3	SHIM (1.5-MM THK)	
	3	1	**200-0241**	1	BRACKET AS	
	4	1	**219-7803**	2	SCRAPER	
	5	1	**227-0172**	6	MOUNT	
M	6	1	**155-6663**	6	BOLT (M20X2.5X54-MM)	
M	7	1	**6V-7688**	6	LOCKNUT (M20X2.5-THD)	
M	8	1	**7X-2561**	6	BOLT (M20X2.5X35-MM)	
M	9	1	**7X-2577**	4	BOLT (M24X3X90-MM)	
M	10	1	**8T-4001**	4	NUT (M24X3-THD)	
	11	1	**8T-4167**	4	WASHER-HARD (26X44X4-MM THK)	
	12	1	**8T-4994**	3	WASHER-HARD (20X36.5X3.5-MM THK)	
	13	1	**8T-5439**	15	WASHER-HARD (21.5X45X6-MM THK)	
M	14	1	**8T-5460**	6	BOLT (M20X2.5X40-MM)	

B - USE AS REQUIRED
M - METRIC PART

241-9599 **SCRAPER GP-SMOOTH DRUM (*contd.*)** **i03055618**

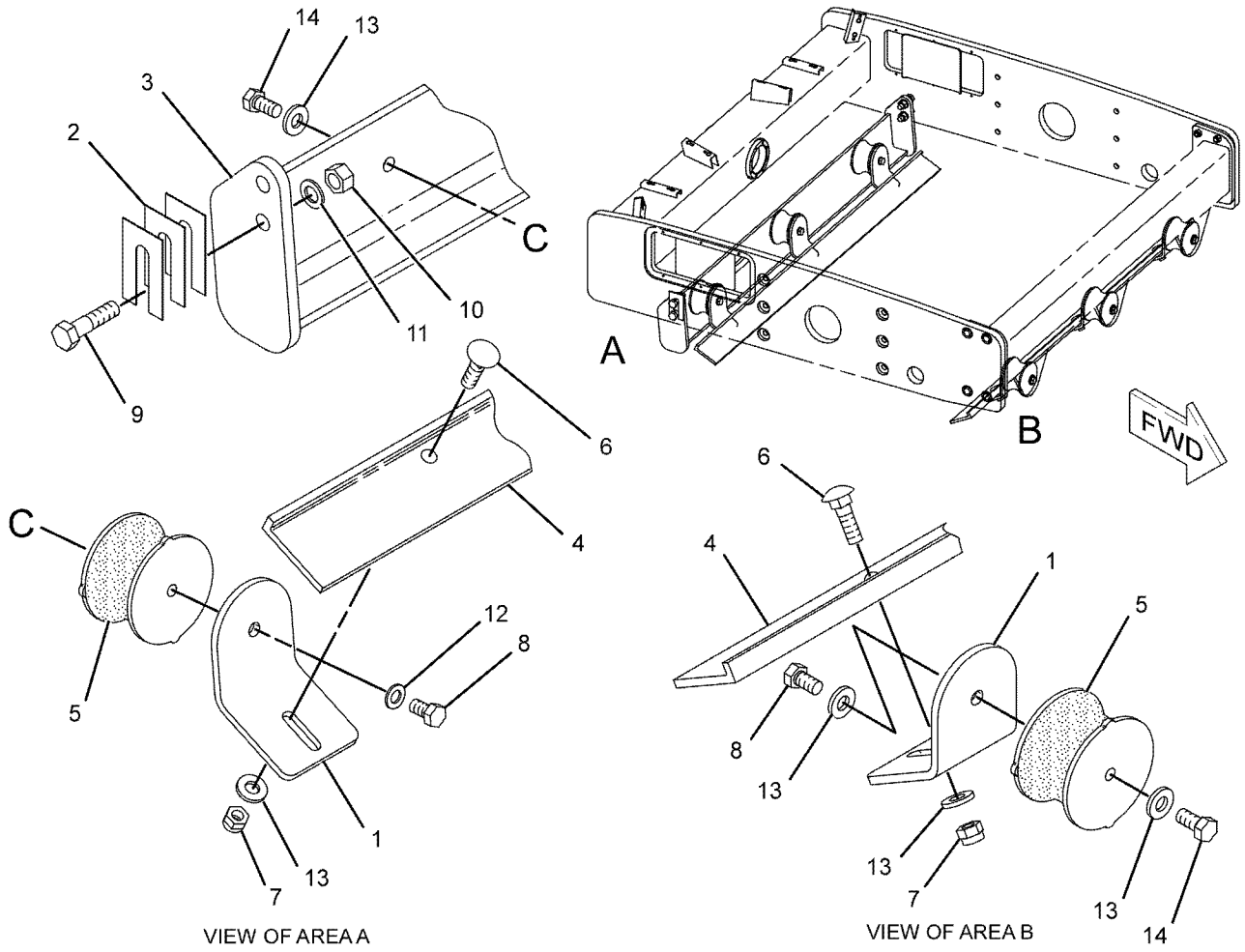

GRAPHIC #1 **<END>** g01041740

242-1293 SCRAPER GP-SMOOTH DRUM

S/N: TJL1-UP

AN ATTACHMENT

SMCS-6607 **i03055678**

NOTE	REF NO	GRAPHIC REF	PART NUMBER	QTY	PART NAME 1 2 3 4 5 6 (PRODUCT LEVEL)	SEE PAGE
	1	1	**155-4171**	6	BRACKET	
B	2	1	**166-7177**	3	SHIM (1.5-MM THK)	
	3	1	**200-0241**	1	BRACKET AS	
	4	1	**221-4148**	2	SCRAPER AS (PLASTIC)	
					(EACH INCLUDES)	
M		1	**8T-6430**	3	BOLT (M20X2.5X50-MM)	
	5	1	**227-0172**	6	MOUNT	
M	6	1	**6V-7688**	6	LOCKNUT (M20X2.5-THD)	
M	7	1	**7X-2561**	6	BOLT (M20X2.5X35-MM)	
M	8	1	**7X-2577**	4	BOLT (M24X3X90-MM)	
M	9	1	**8T-4001**	4	NUT (M24X3-THD)	
	10	1	**8T-4167**	4	WASHER-HARD (26X44X4-MM THK)	
	11	1	**8T-4994**	3	WASHER-HARD (20X36.5X3.5-MM THK)	
	12	1	**8T-5439**	15	WASHER-HARD (21.5X45X6-MM THK)	
M	13	1	**8T-5460**	6	BOLT (M20X2.5X40-MM)	

B - USE AS REQUIRED
M - METRIC PART

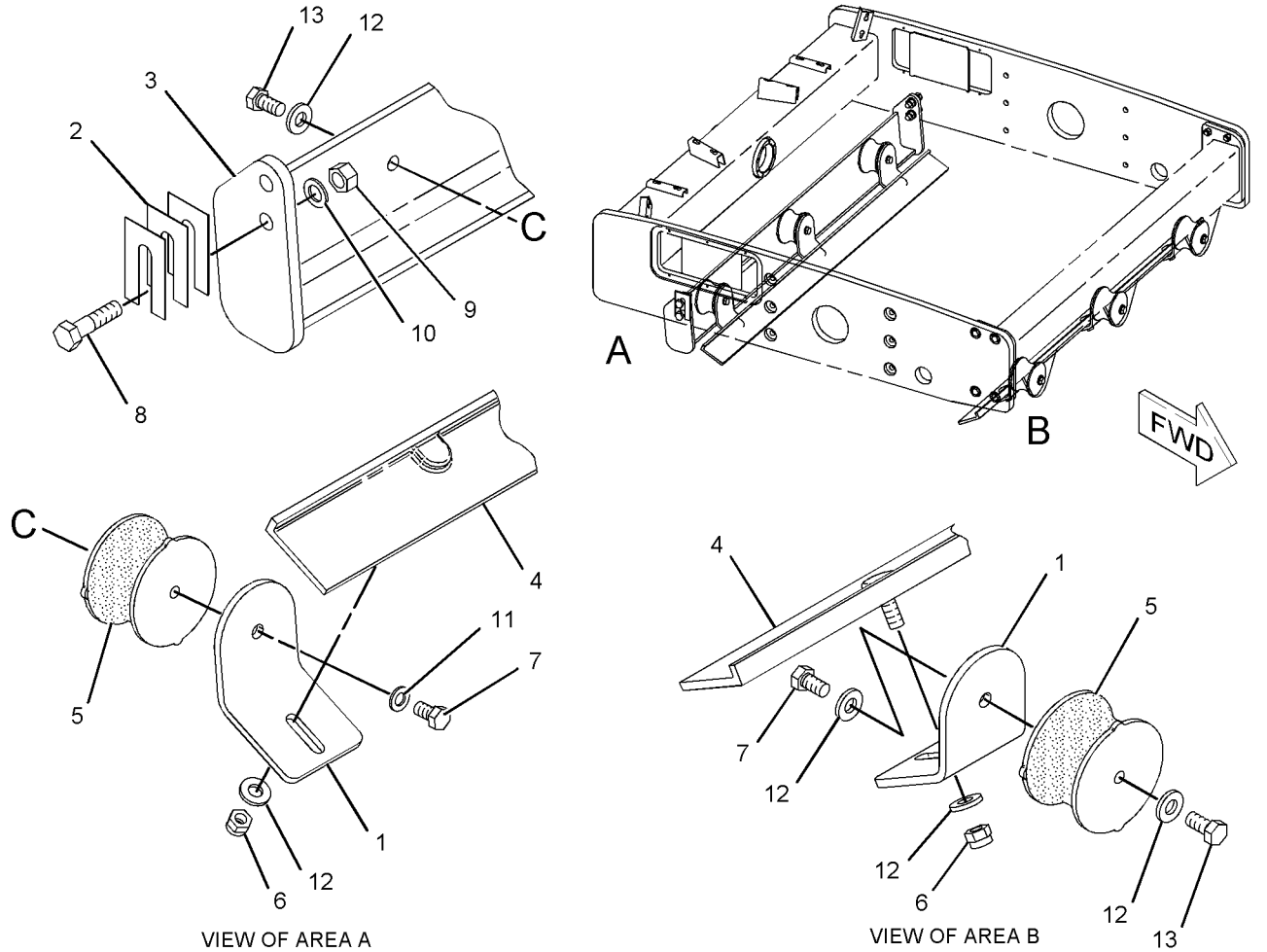

VIEW OF AREA A

VIEW OF AREA B

GRAPHIC #1

<END>

g01040188

220-8703 STEP GP

S/N: TJL1-UP

PART OF 239-0794 CHASSIS AR

SMCS-7254 **i03035146**

NOTE	REF NO	GRAPHIC REF	PART NUMBER	QTY	PART NAME 1 2 3 4 5 6 (PRODUCT LEVEL)	SEE PAGE
	1	1	**247-6271**	1	STEP AS	
	2	1	**7X-7729**	5	WASHER (11X25X3-MM THK)	
M	3	1	**8T-4195**	5	BOLT (M10X1.5X30-MM)	

M - METRIC PART

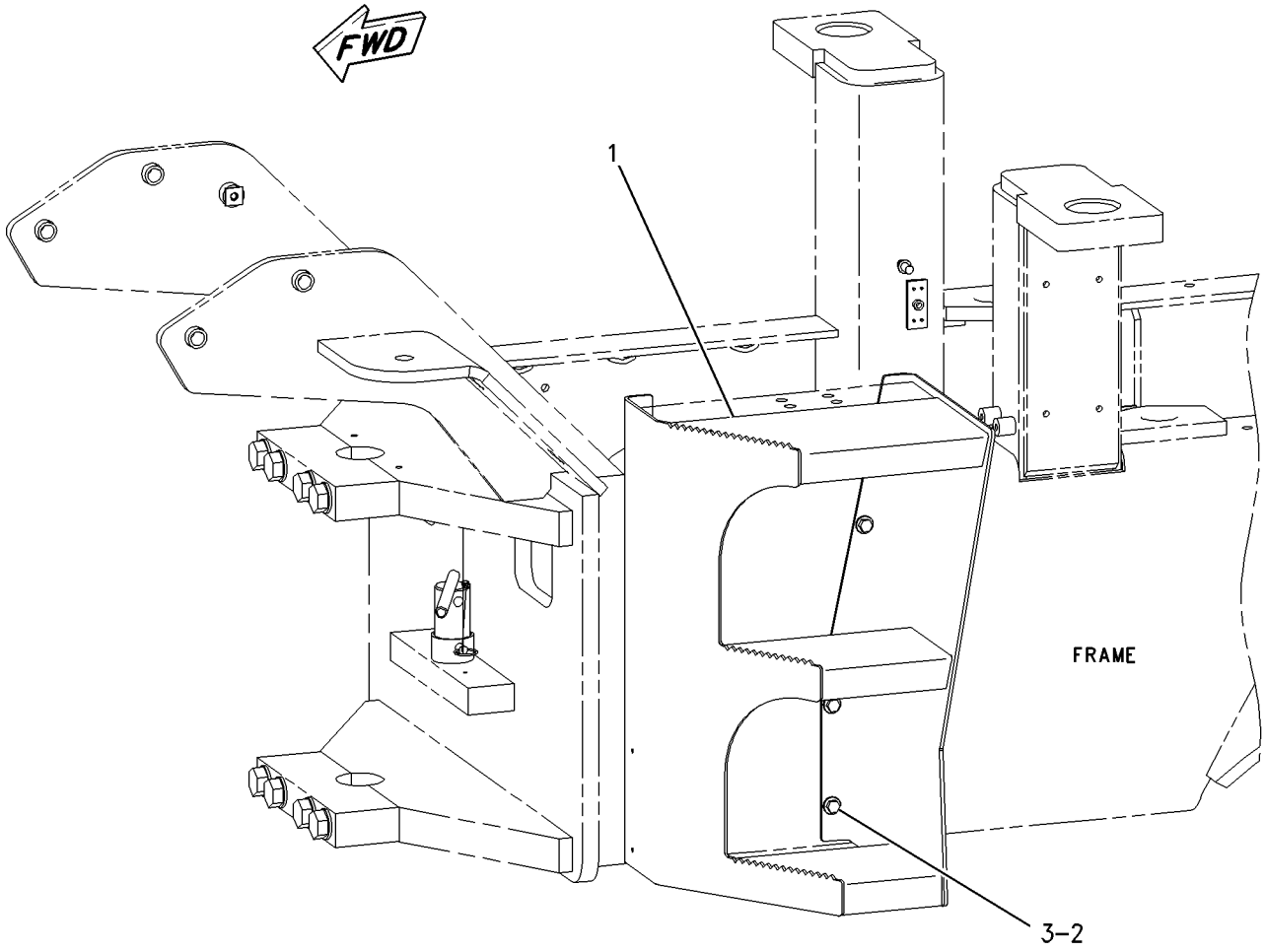

GRAPHIC #1 **<END>** g01000090

222-5629 CONTROL GP-PARKING BRAKE–MANUAL

S/N: TJL1-UP
PART OF 219-4262 AXLE AR-DRIVE
AN ATTACHMENT

SMCS-4284 **i05254223**

NOTE	REF NO	GRAPHIC REF	PART NUMBER	QTY	PART NAME 1 2 3 4 5 6 (PRODUCT LEVEL)	SEE PAGE
M	1	1	**5C-2874**	2	NUT (M5X0.8-THD)	
	2	1	**8Y-1009**	1	PIPE	
	3	1	**086-9035**	1	TEE	
	4	1	**115-3075**	1	VALVE-NEEDLE	
I	5	1	**151-2064**	1	HOSE AS	
I	6	1	**154-9756**	1	HOSE AS	
	7	1	**156-3435**	1	PUMP-HAND	
	8	1	**167-1192**	2	CLIP	
	9	1	*187-2120*	1	ELBOW AS	
		1	**4J-5477**	1	SEAL-O-RING	
		1	**8C-8408**	1	ELBOW	
	10	1	*164-9869*	1	CONNECTOR AS	
		1	**3J-1907**	1	SEAL-O-RING	
		1	**6V-8397**	1	SEAL-O-RING	
		1	**9X-2297**	1	CONNECTOR	
	11	1	*148-8448*	1	TEE AS	
		1	**4J-5477**	2	SEAL-O-RING	
		1	**6V-9842**	1	TEE-SWIVEL	
	12	1	*149-5452*	2	UNION AS (STRAIGHT)	
					(EACH INCLUDES)	
		1	**6V-8397**	2	SEAL-O-RING	
		1	**6V-8994**	1	UNION (STRAIGHT)	
	13	1	*150-4050*	3	ELBOW AS	
					(EACH INCLUDES)	
		1	**3J-1907**	1	SEAL-O-RING	
		1	**8T-0788**	1	ELBOW	
	14	1	**3J-1907**	1	SEAL-O-RING	
	15	1	**4J-5477**	2	SEAL-O-RING	
	16	1	**6V-9168**	2	NUT (11/16-16-THD)	
M	17	1	**7I-2272**	2	BOLT (M5X0.8X12-MM)	

I - REFER TO HYDRAULIC INFORMATION SYSTEM
M - METRIC PART

222-5629 **CONTROL GP-PARKING BRAKE (*contd.*)** **i05254223**

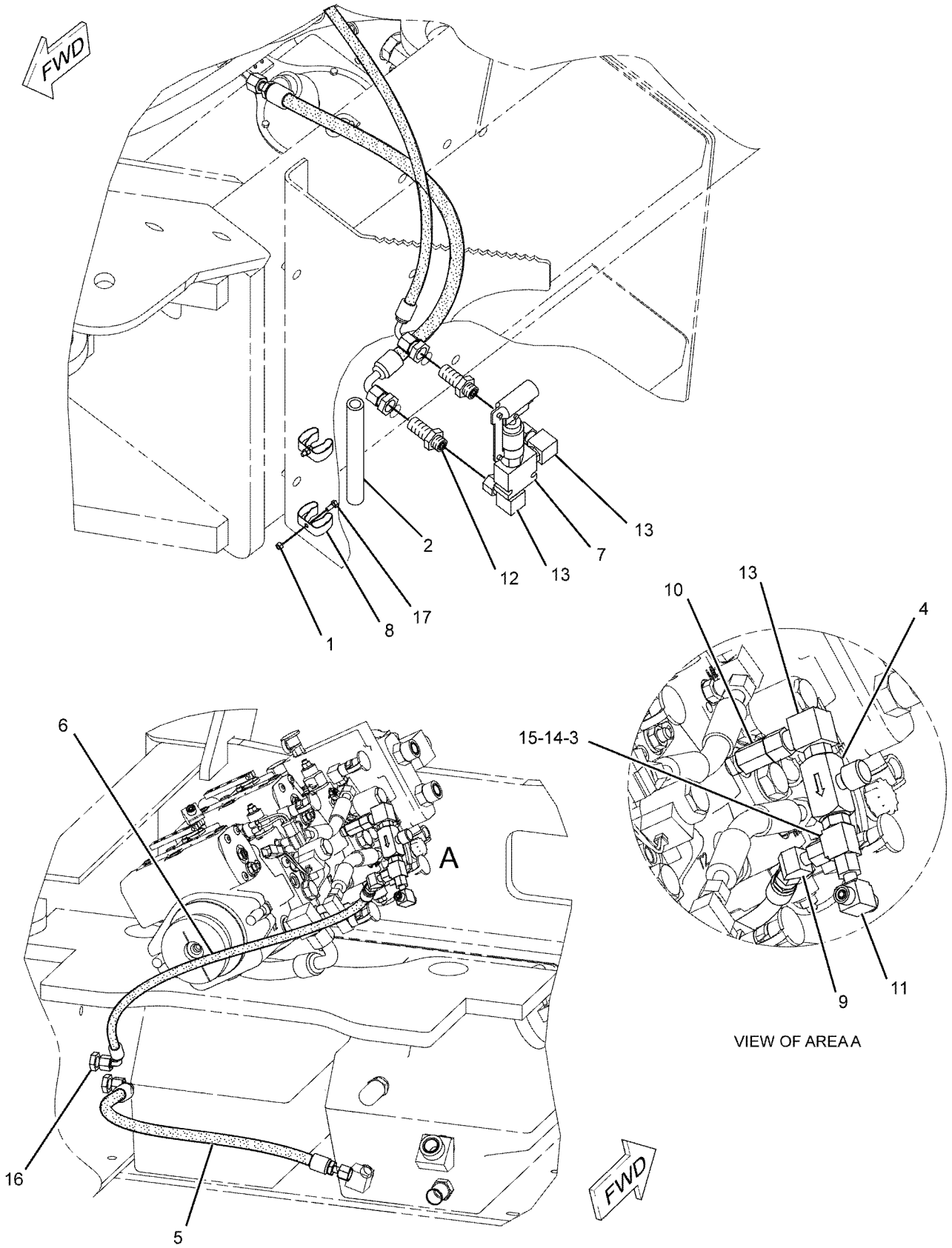

GRAPHIC #1 **<END>** g01024199

226-4392 CYLINDER GP-BRAKE

S/N: TJL1-UP
PART OF 226-4390 HOUSING GP-AXLE
AN ATTACHMENT

SMCS-4262, 4277

i05254229

NOTE	REF NO	GRAPHIC REF	PART NUMBER	QTY	PART NAME 1 2 3 4 5 6 (PRODUCT LEVEL)	SEE PAGE
	1	1	**199-0670**	1	SCREW-PURGE	
	2	1	**107-3117**	3	SEAL-O-RING	
	3	1	**226-4383**	1	CYLINDER-BRAKE	
	4	1	**226-4384**	1	PISTON-BRAKE	
	5	1	**226-4388**	1	SEAL-O-RING	
	6	1	**226-4389**	1	SEAL-O-RING	
	7	1	**226-4391**	3	PIN	
	8	1	**229-5062**	3	PLUG	
	9	1	**033-6041**	3	SEAL-O-RING	
	10	1	**3J-1907**	1	SEAL-O-RING	
	11	1	**9S-8004**	1	PLUG-O-RING	

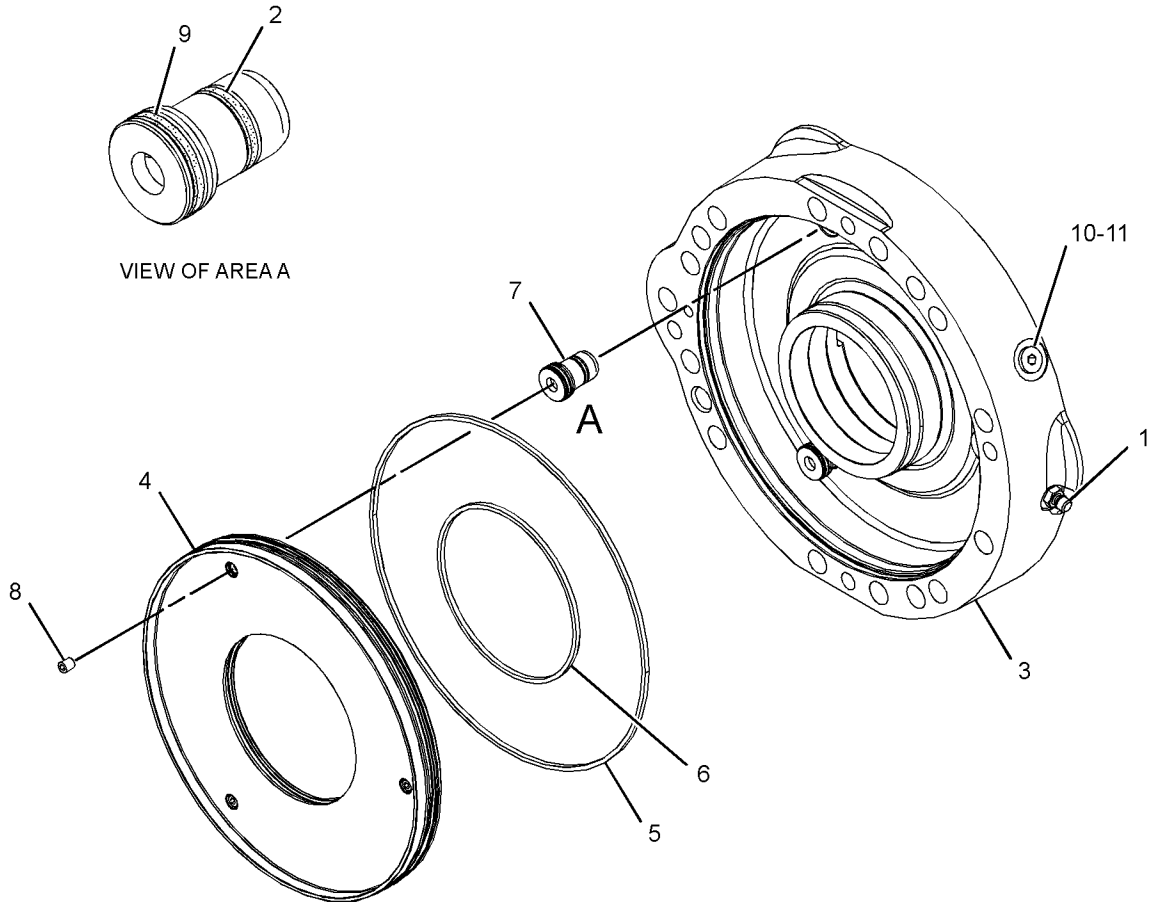

GRAPHIC #1

<END>

g02760818

222-2848 LINES GP-BRAKE

S/N: TJL1-UP
PART OF 219-4262 AXLE AR-DRIVE
AN ATTACHMENT

SMCS-4257 **i05254221**

NOTE	REF NO	GRAPHIC REF	PART NUMBER	QTY	PART NAME 1 2 3 4 5 6 (PRODUCT LEVEL)	SEE PAGE
	1	1	**177-2215**	1	STRAP-DUAL CLAMP	
I	2	1	**195-4403**	1	HOSE AS	
I	3	1	**222-6467**	1	HOSE AS	
I	4	1	**234-4287**	1	HOSE AS	
C	5	1	*148-8325*	1	CONNECTOR AS	
		1	**3J-1907**	1	SEAL-O-RING	
		1	**4J-5477**	1	SEAL-O-RING	
		1	**6V-8641**	1	CONNECTOR	
	6	1	*148-8448*	1	TEE AS	
		1	**4J-5477**	2	SEAL-O-RING	
		1	**6V-9842**	1	TEE-SWIVEL	
C	7	1	*148-8368*	1	ELBOW AS	
		1	**3J-1907**	1	SEAL-O-RING	
		1	**4J-5477**	1	SEAL-O-RING	
		1	**6V-8629**	1	ELBOW	

C - CHANGE FROM PREVIOUS TYPE
I - REFER TO HYDRAULIC INFORMATION SYSTEM

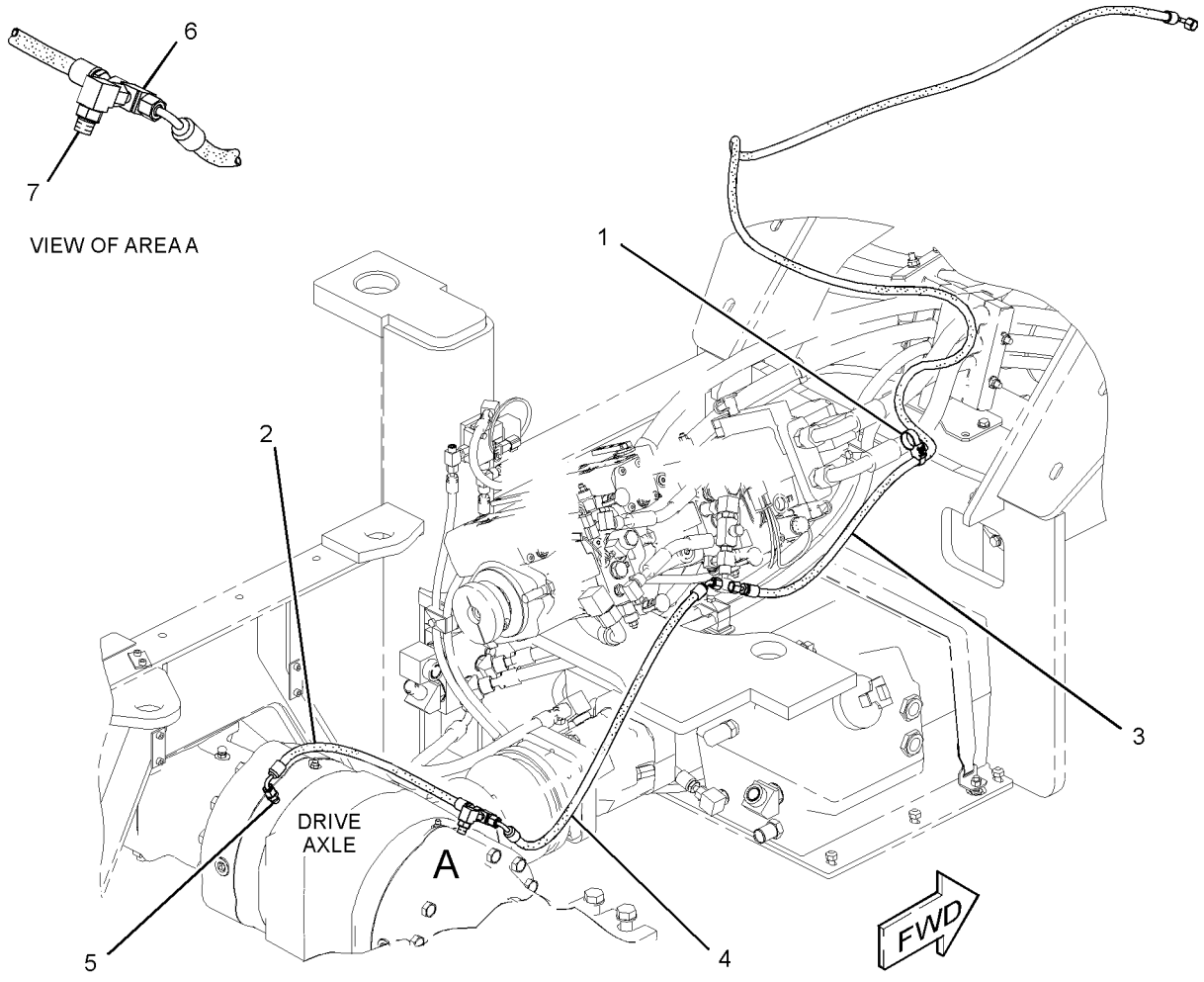

GRAPHIC #1 **<END>** g01398524

221-1731 LINES GP-BRAKE & SHIFT

S/N: TJL1-UP

PART OF 227-4257 AXLE AR-DRIVE

ALSO AN ATTACHMENT

SMCS-4257 **i04782318**

NOTE	REF NO	GRAPHIC REF	PART NUMBER	QTY	PART NAME 1 2 3 4 5 6 (PRODUCT LEVEL)	SEE PAGE
	1	1	**6V-0852**	1	CAP-DUST	
	2	1	**7X-5315**	1	FITTING AS (QUICK DISCONNECT)	
	3	1	**102-8703**	2	PLATE-COVER	
I	4	1	**115-9680**	1	HOSE AS	
I	5	1	**116-9894**	1	HOSE AS	
	6	1	**154-4879**	4	CLAMP-HALF	
I	7	1	**161-6853**	1	HOSE AS	
	8	1	**178-3620**	5	STRAP-DUAL CLAMP	
I	9	1	**204-9737**	1	HOSE AS	
I	10	1	**209-3855**	1	HOSE AS	
	11	1	*148-8325*	1	CONNECTOR AS	
		1	**3J-1907**	1	SEAL-O-RING	
		1	**4J-5477**	1	SEAL-O-RING	
		1	**6V-8641**	1	CONNECTOR	
	12	1	*148-8351*	1	ELBOW AS	
		1	**4J-5477**	1	SEAL-O-RING	
		1	**6V-9849**	1	ELBOW	
	13	1	*150-5968*	1	TEE AS	
		1	**4J-5477**	2	SEAL-O-RING	
		1	**6V-9835**	1	TEE-SWIVEL	
	14	1	*148-8305*	1	ADAPTER AS	
		1	**3J-1907**	1	SEAL-O-RING	
		1	**5P-9617**	1	ADAPTER	
	15	1	**3J-7354**	1	SEAL-O-RING	
	16	1	**6V-9829**	1	CAP AS	
M	17	1	**7X-2537**	2	BOLT (M8X1.25X35-MM)	
	18	1	*187-2120*	1	ELBOW AS	
		1	**8C-8408**	1	ELBOW	
		1	**4J-5477**	1	SEAL-O-RING	
	19	1	**200-6345**	1	MOUNT (DUAL SWIVEL)	
	20	1	**204-2281**	2	STRAP-CABLE	

I - REFER TO HYDRAULIC INFORMATION SYSTEM
M - METRIC PART

221-1731 **LINES GP-BRAKE & SHIFT (*contd.*)** **i04782318**

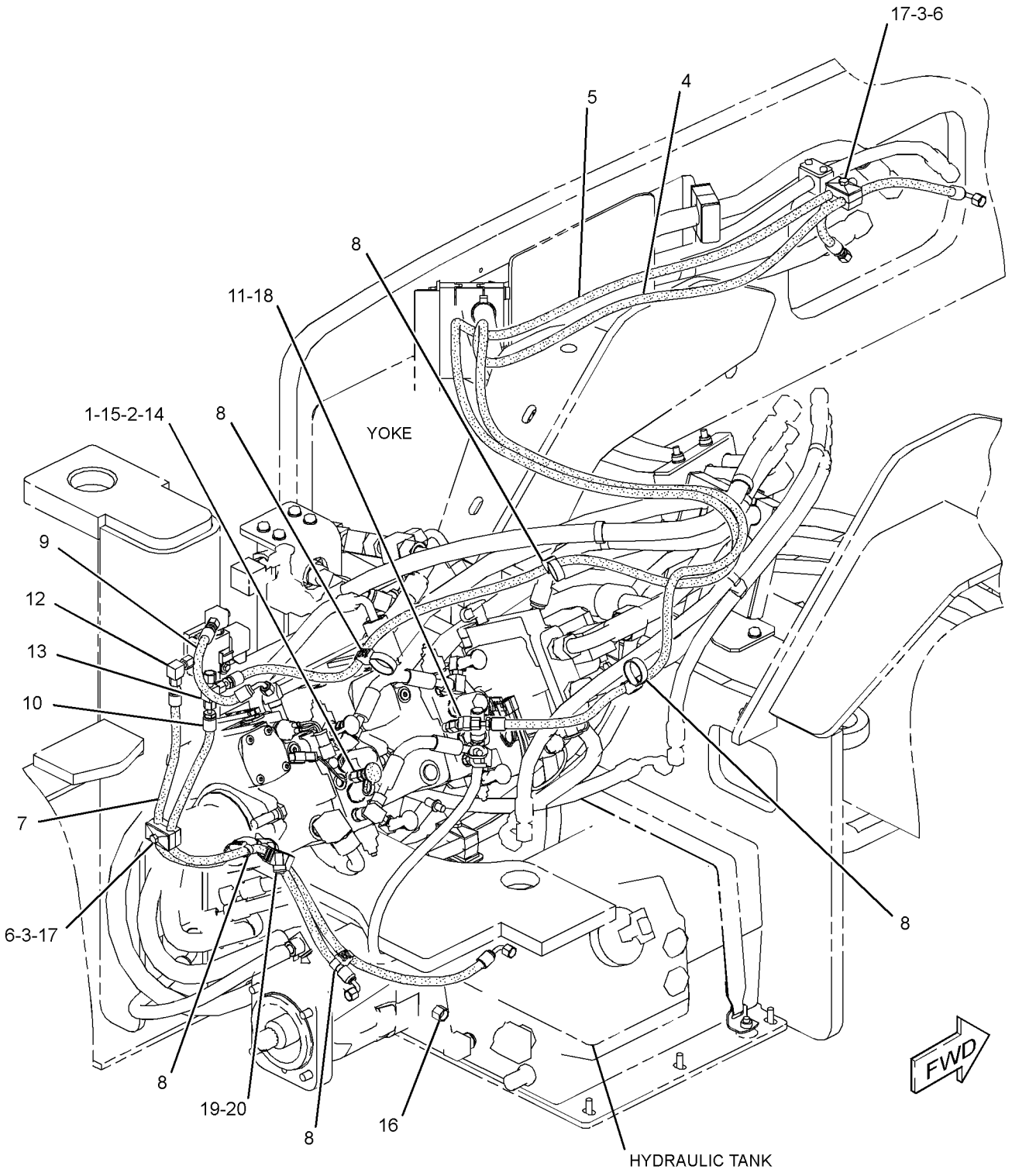

GRAPHIC #1 **<END>** g02634903

216-0595 CYLINDER & MTG GP-STEERING

S/N: TJL1-UP

PART OF 291-5081 HYDRAULIC AR-AUXILIARY

SMCS-4303 **i04178911**

NOTE	REF NO	GRAPHIC REF	PART NUMBER	QTY	PART NAME 1 2 3 4 5 6 (PRODUCT LEVEL)	SEE PAGE
	1	1	**3B-8485**	2	FITTING-GREASE	
	2	1	**4V-2057**	4	BEARING-SPHERICAL	
	3	1	**5P-9982**	2	FITTING-GREASE	
	4	1	**106-6340**	4	SPACER (10.74X17.14X7-MM THK)	
	5	1	**109-6706**	2	PIN AS	
I	6	1	**144-8242**	1	HOSE AS	
	7	1	**173-7456**	2	PIN AS	
I	8	1	**177-7155**	1	HOSE AS	
	9	1	*148-8320*	4	CONNECTOR AS	
					(EACH INCLUDES)	
		1	**4J-5477**	1	SEAL-O-RING	
		1	**8C-6865**	1	CONNECTOR	
	10	1	*148-8351*	2	ELBOW AS	
					(EACH INCLUDES)	
		1	**4J-5477**	1	SEAL-O-RING	
		1	**6V-9849**	1	ELBOW	
	11	1	*148-8444*	2	TEE AS-SWIVEL	
					(EACH INCLUDES)	
		1	**6V-8398**	2	SEAL-O-RING	
		1	**6V-9837**	1	TEE-SWIVEL	
Y	12	1	**356-2015**	2	CYLINDER GP-HYDRAULIC (STEERING)	298
	13	1	**4L-6454**	4	BOLT (3/8-16X1-IN)	
	14	1	**6V-8398**	2	SEAL-O-RING	
	15	1	**7X-0575**	2	WASHER-HARD (10.2X22.5X5-MM THK)	
	16	1	**7X-7729**	4	WASHER (11X25X3-MM THK)	

I - REFER TO HYDRAULIC INFORMATION SYSTEM
Y - SEPARATE ILLUSTRATION

216-0595 **CYLINDER & MTG GP-STEERING (*contd.*)** **i04178911**

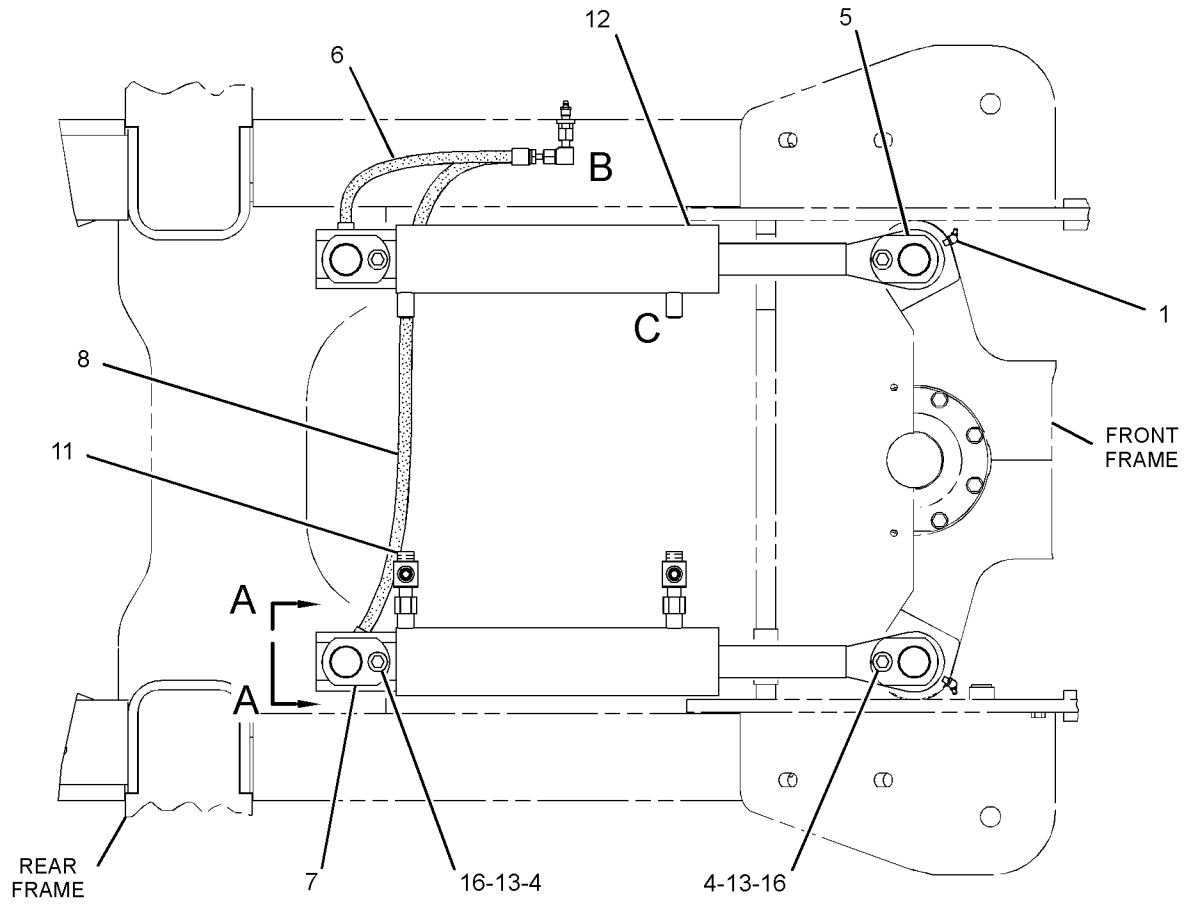

TOP VIEW FWD

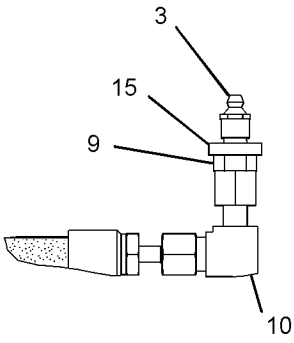

VIEW OF AREA B

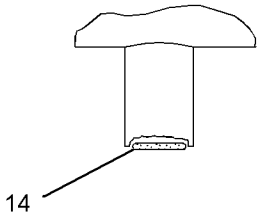

VIEW OF AREA C

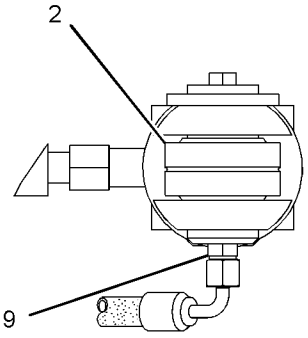

VIEW A-A

GRAPHIC #1 **<END>** g01454162

153-7369 KNOB GP-STEERING

S/N: TJL1-UP

PART OF 219-2998, 235-8557 CONTROL GP-STEERING

SMCS-4309 **i02568266**

NOTE	REF NO	GRAPHIC REF	PART NUMBER	QTY	PART NAME 1 2 3 4 5 6 (PRODUCT LEVEL)	SEE PAGE
M	1	1	**8T-6869**	1	BOLT (M8X1.25X60-MM)	
	2	1	**8T-4224**	1	WASHER-HARD (8.8X16X2-MM THK)	
M	3	1	**5C-7261**	1	NUT (M8X1.25-THD)	

M - METRIC PART

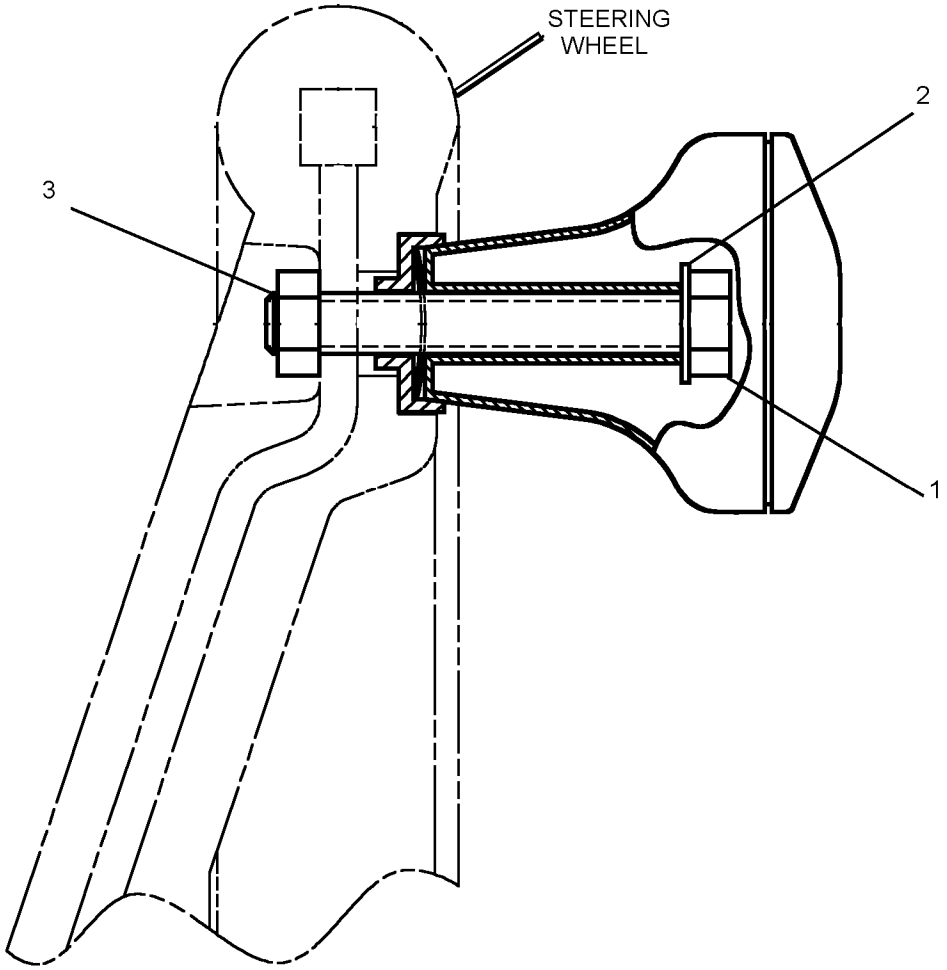

GRAPHIC #1 **<END>** g01287447

218-3920 LINES GP-STEERING

S/N: TJL1-UP

PART OF 291-5081 HYDRAULIC AR-AUXILIARY

TYPE 1

SMCS-4304 **i03036620**

NOTE	REF NO	GRAPHIC REF	PART NUMBER	QTY	PART NAME 1 2 3 4 5 6 (PRODUCT LEVEL)	SEE PAGE
I	1	1	**233-9614**	1	HOSE AS	
	2	1	**8T-4983**	1	CLAMP-HOSE	
	3	1	**177-2215**	4	STRAP-DUAL CLAMP	
I	4	1	**180-7884**	1	HOSE AS	
I	5	1	**191-2841**	1	HOSE AS	
I	6	1	**226-0912**	1	HOSE AS	
I	7	1	**226-1880**	1	HOSE AS	

I - REFER TO HYDRAULIC INFORMATION SYSTEM

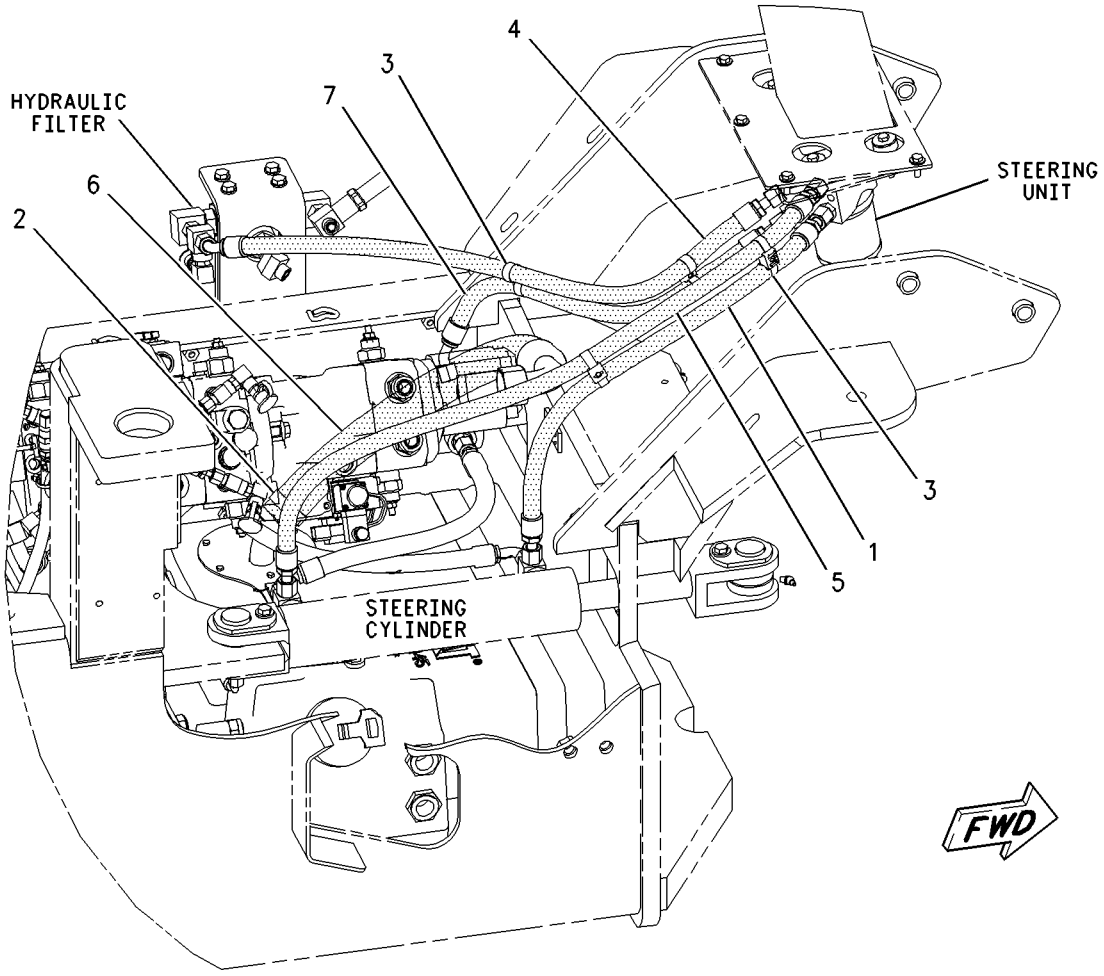

GRAPHIC #1 **<END>** g00999091

218-3920 LINES GP-STEERING

S/N: TJL1-UP

PART OF 291-5081 HYDRAULIC AR-AUXILIARY

TYPE 2

SMCS-4304 **i03962069**

NOTE	REF NO	GRAPHIC REF	PART NUMBER	QTY	PART NAME 1 2 3 4 5 6 (PRODUCT LEVEL)	SEE PAGE
	1	1	**8T-4983**	1	CLAMP-HOSE	
CI	2	1	**117-7605**	1	HOSE AS	
C	3	1	**177-2215**	2	STRAP-DUAL CLAMP	
I	4	1	**180-7884**	1	HOSE AS	
I	5	1	**191-2841**	1	HOSE AS	
I	6	1	**191-2840**	1	HOSE AS	
CI	7	1	**349-3272**	1	HOSE AS	

C - CHANGE FROM PREVIOUS TYPE
I - REFER TO HYDRAULIC INFORMATION SYSTEM

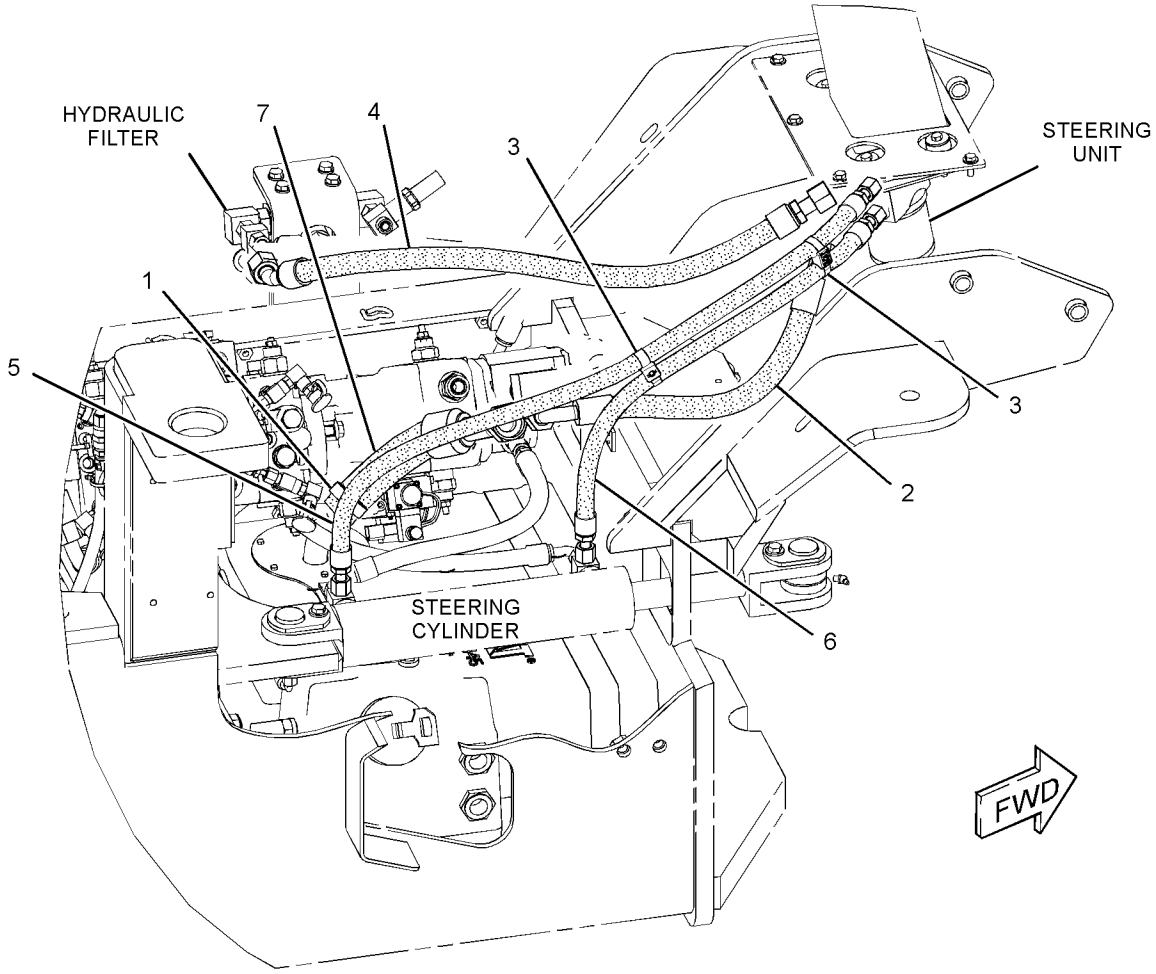

GRAPHIC #1 **<END>** g02112900

205-7407 LINES GP-STEERING CYLINDER

S/N: TJL1-UP

PART OF 291-5081 HYDRAULIC AR-AUXILIARY

SMCS-4304 **i03036165**

NOTE	REF NO	GRAPHIC REF	PART NUMBER	QTY	PART NAME 1 2 3 4 5 6 (PRODUCT LEVEL)	SEE PAGE
I	1	1	**111-2446**	2	HOSE AS	

I - REFER TO HYDRAULIC INFORMATION SYSTEM

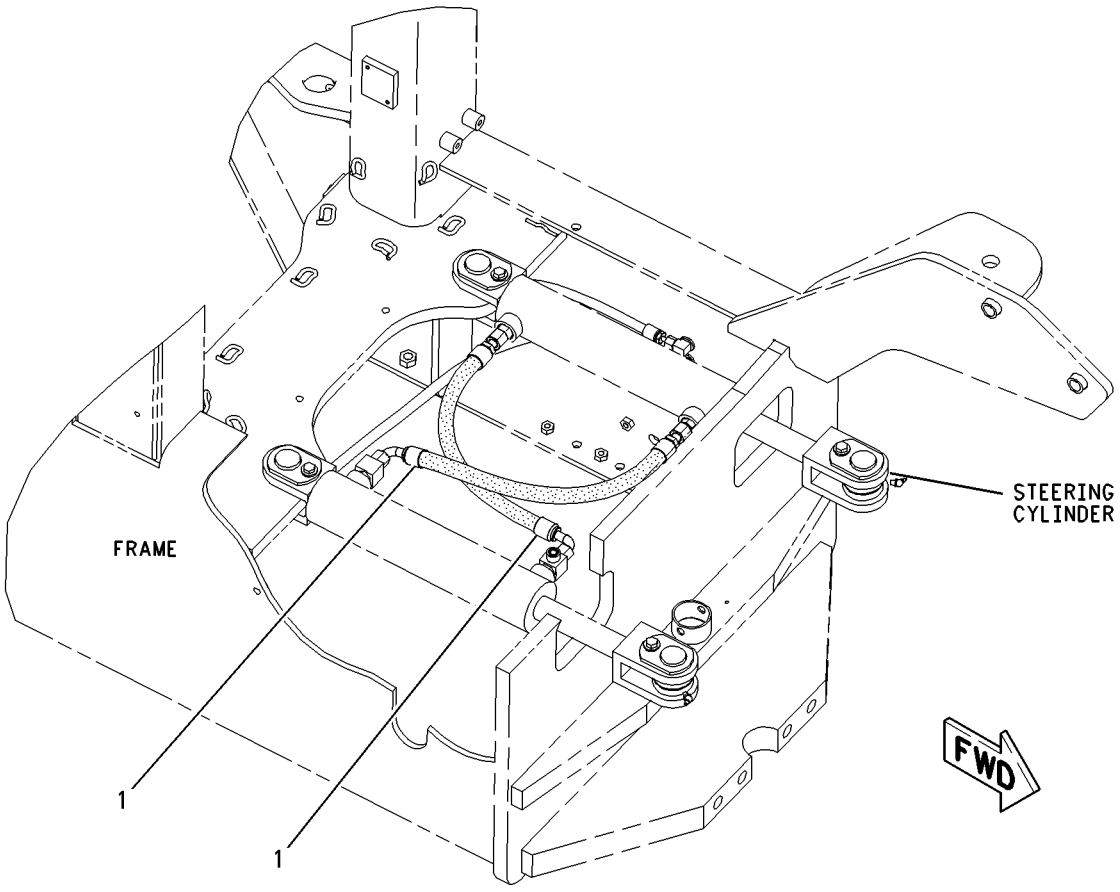

GRAPHIC #1 **<END>** g00919182

218-2975 PUMP & MTG GP-STEERING

S/N: TJL1-755

PART OF 291-5081 HYDRAULIC AR-AUXILIARY

SMCS-4306 **i03036280**

NOTE	REF NO	GRAPHIC REF	PART NUMBER	QTY	PART NAME 1 2 3 4 5 6 (PRODUCT LEVEL)	SEE PAGE
	1	1	**6V-0852**	1	CAP-DUST	
	2	1	*196-2036*	1	TEE AS	
		1	**3K-0360**	1	SEAL-O-RING	
		1	**6V-8398**	1	SEAL-O-RING	
		1	**9X-2492**	1	TEE-O-RING	
Y	3	1	**255-0625**	1	PUMP GP-GEAR (STEERING)	322
	4	1	*161-9916*	1	ADAPTER AS (STRAIGHT THREAD O-RING)	
		1	**2M-9780**	1	SEAL-O-RING	
		1	**6V-7420**	1	ADAPTER	
	5	1	*148-8373*	1	ELBOW AS	
		1	**6V-8400**	1	SEAL-O-RING	
		1	**7M-8485**	1	SEAL-O-RING	
		1	**8C-3364**	1	ELBOW	
	6	1	**3J-1907**	1	SEAL-O-RING	
	7	1	**5P-3863**	1	SEAL-O-RING	
	8	1	**6V-3965**	1	FITTING (QUICK DISCONNECT)	
M	9	1	**8T-1159**	2	BOLT-SOCKET HEAD (M10X1.5X25-MM)	
	10	1	**8T-4121**	2	WASHER-HARD (11X21X2.5-MM THK)	

M - METRIC PART
Y - SEPARATE ILLUSTRATION

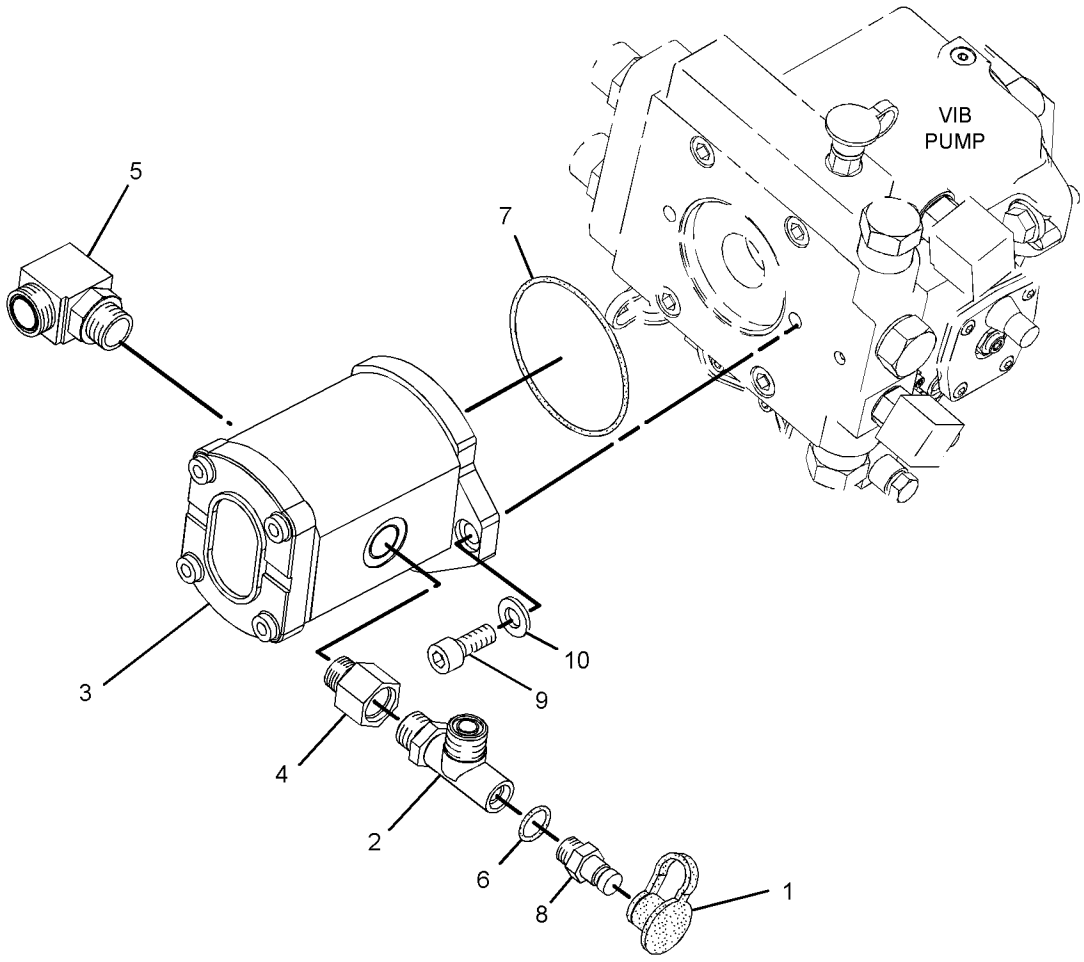

GRAPHIC #1 **<END>** g01192284

338-8440 PUMP & MTG GP-STEERING

S/N: TJL756-UP

PART OF 291-5081 HYDRAULIC AR-AUXILIARY

SMCS-4306 **i03951610**

NOTE	REF NO	GRAPHIC REF	PART NUMBER	QTY	PART NAME 1 2 3 4 5 6 (PRODUCT LEVEL)	SEE PAGE
	1	1	**6V-0852**	1	CAP-DUST	
	2	1	*148-8440*	1	TEE AS	
		1	**3D-2824**	1	SEAL-O-RING	
		1	**6V-9746**	1	SEAL-O-RING	
		1	**8C-0569**	1	TEE-O-RING	
	3	1	**315-9741**	1	PUMP GP-GEAR (STEERING)	
	4	1	*330-9754*	1	CONNECTOR AS	
		1	**8T-3611**	1	CONNECTOR	
		1	**228-7094**	1	SEAL-O-RING	
		1	**228-7096**	1	SEAL-O-RING	
	5	1	**3J-1907**	1	SEAL-O-RING	
	6	1	**3K-0715**	1	SEAL-O-RING	
	7	1	**6V-3965**	1	FITTING (QUICK DISCONNECT)	
M	8	1	**8T-4139**	2	BOLT (M12X1.75X30-MM)	
	9	1	**8T-4223**	2	WASHER-HARD (13.5X25.5X3-MM THK)	

M - METRIC PART

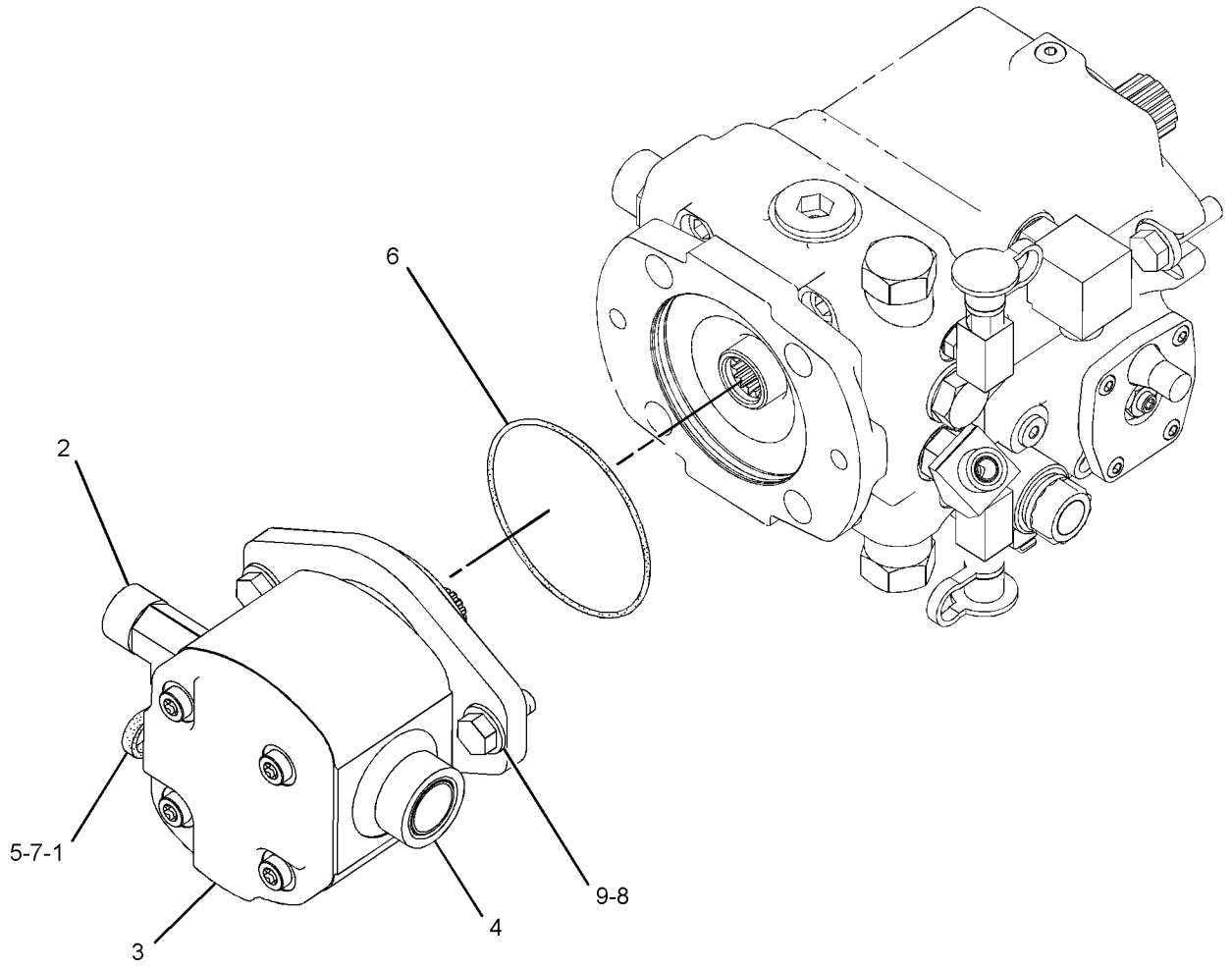

GRAPHIC #1 **<END>** g01885373

254-8188 ACTUATOR GP-PUMP

S/N: TJL1-UP

PART OF 296-3329, 296-3331 PUMP GP-PISTON

SMCS-5070, 5078 **i03033563**

NOTE	REF NO	GRAPHIC REF	PART NUMBER	QTY	PART NAME 1 2 3 4 5 6 (PRODUCT LEVEL)	SEE PAGE
	1	1	**191-3539**	2	NUT-SEAL	
	2	1	**191-3540**	2	PIN-THREADED	
	3	1	**145-3812**	2	RING	
	4	1	**145-3813**	2	RING-SEAL	
	5	1	**242-4289**	1	PISTON	
	6	1	**117-7273**	1	SEAL-O-RING	
	7	1	**161-6154**	1	SEAL-O-RING	
	8	1	**191-3553**	1	NUT-HEX	
M	9	1	**6V-8202**	4	BOLT-SOCKET HEAD (M8X1.25X16-MM)	

M - METRIC PART

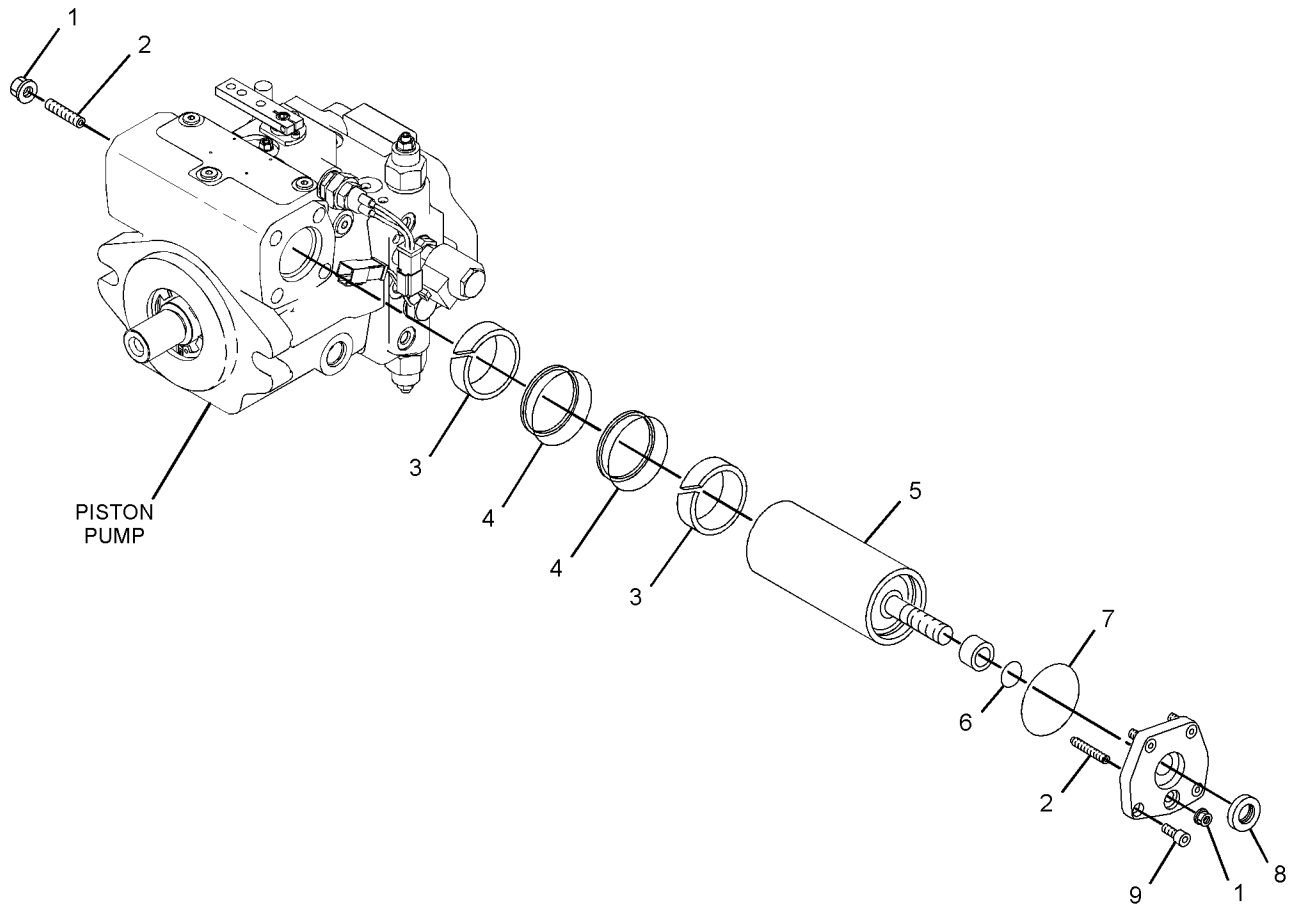

GRAPHIC #1 **<END>** g01551753

313-2635 ACTUATOR GP-PUMP

S/N: TJL1-UP

PART OF 296-3332, 315-9743 PUMP GP-PISTON

SMCS-5070, 5078 **i03031762**

NOTE	REF NO	GRAPHIC REF	PART NUMBER	QTY	PART NAME 1 2 3 4 5 6 (PRODUCT LEVEL)	SEE PAGE
M	1	1	**204-1455**	2	NUT-SEALING (M8X1-THD)	
	2	1	**204-1454**	2	PIN-THREADED	
	3	1	**177-4459**	2	RING-GUIDE	
	4	1	**166-7558**	2	RING	
	5	1	**247-4468**	1	KIT-PISTON	
	6	1	**6V-5586**	1	SEAL-O-RING	
	7	1	**256-2212**	1	SEAL-O-RING	
M	8	1	**2Y-9286**	1	NUT (M10X1-THD)	
M	9	1	**8T-0267**	4	BOLT-SOCKET HEAD (M6X1X12-MM)	
					PARTS SHOWN IN GRAPHIC(S) WITHOUT A REFERENCE NUMBER ARE NOT SERVICED SEPARATELY	

M - METRIC PART

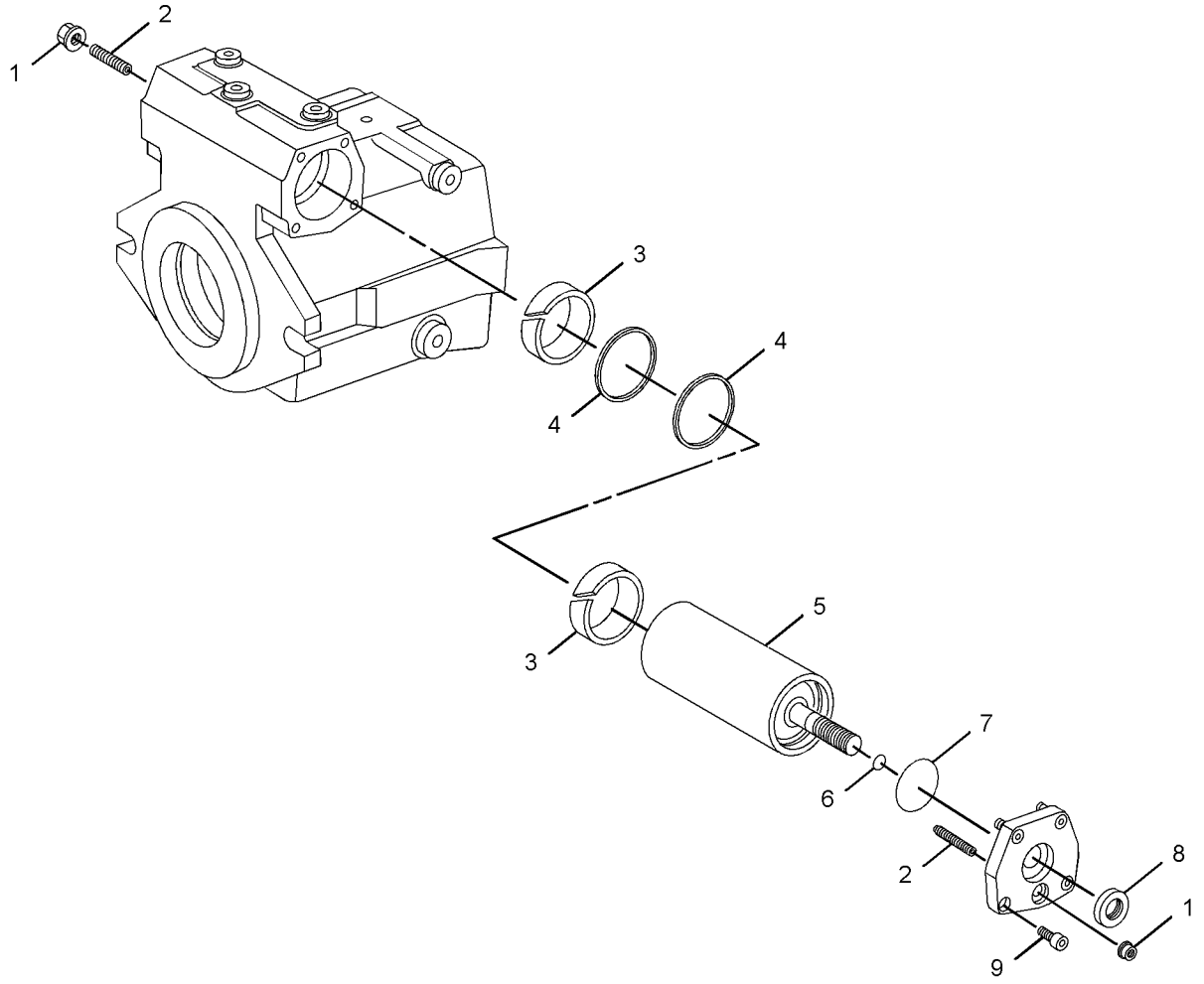

GRAPHIC #1 **<END>** g01416636

326-3592 CLAMP GP-HYDRAULIC LINES

S/N: TJL1-UP
PART OF 327-7071 CHASSIS AR
AN ATTACHMENT

SMCS-5057 **i03065080**

NOTE	REF NO	GRAPHIC REF	PART NUMBER	QTY	PART NAME 1 2 3 4 5 6 (PRODUCT LEVEL)	SEE PAGE
	1	1	**7R-7951**	1	PLATE	
	2	1	**209-5382**	1	PLATE AS	
	3	1	**7R-7940**	2	CLAMP	
M	4	1	**7X-2535**	2	BOLT (M6X1X60-MM)	

M - METRIC PART

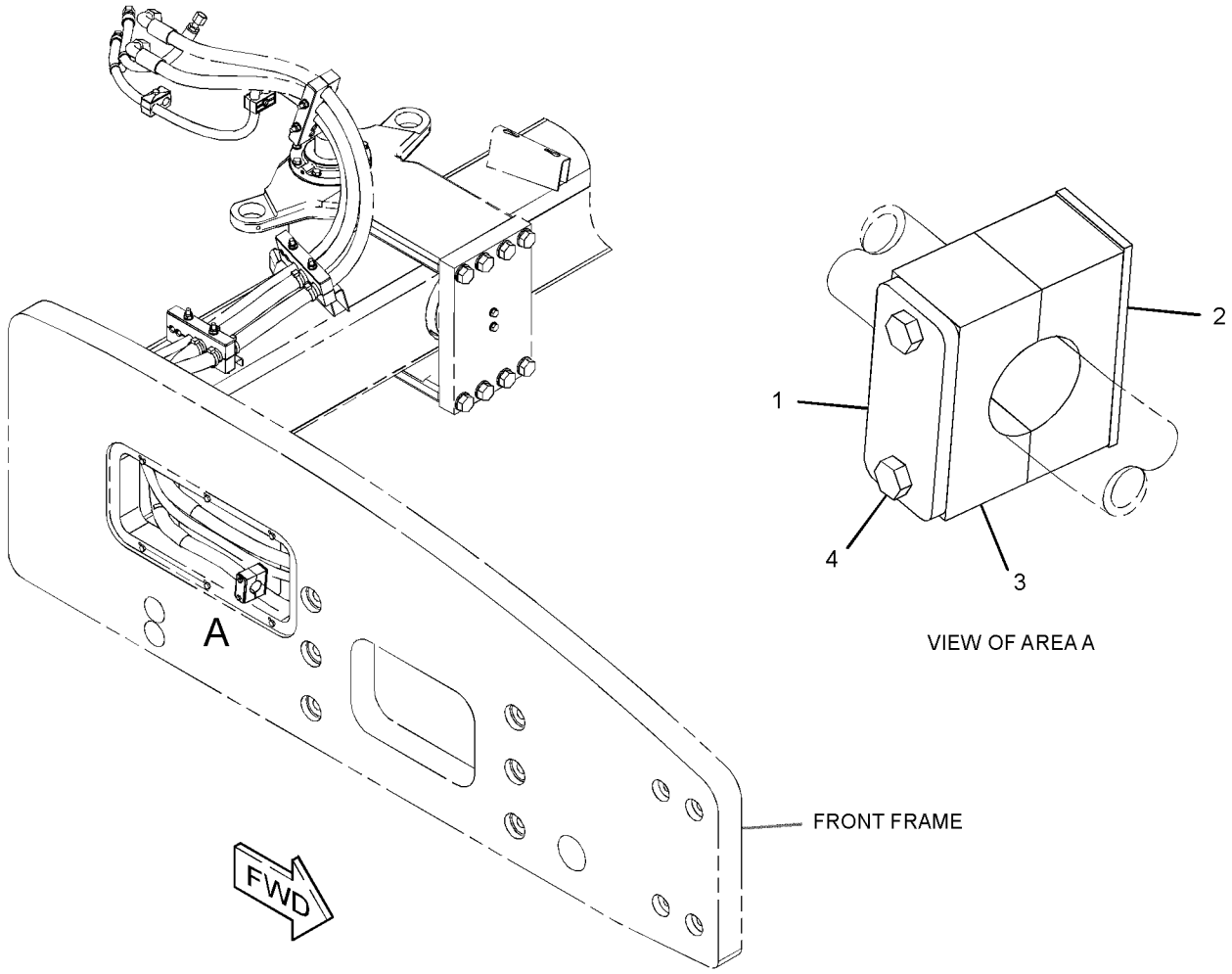

GRAPHIC #1 **<END>** g01560288

217-4112 COOLER GP-HYDRAULIC OIL

S/N: TJL1-623

PART OF 229-2588 RADIATOR & HYD OIL COOLER GP

SMCS-1374 **i03030202**

NOTE	REF NO	GRAPHIC REF	PART NUMBER	QTY	PART NAME 1 2 3 4 5 6 (PRODUCT LEVEL)	SEE PAGE
	1	1	**221-0103**	1	CHANNEL AS (RH)	
	2	1	**221-0104**	1	CHANNEL AS (LH)	
M	3	1	**6V-7743**	8	LOCKNUT (M6X1-THD)	
M	4	1	**8T-4138**	8	BOLT (M6X1X20-MM)	
	5	1	**9X-8256**	16	WASHER (6.6X12X2-MM THK)	

M - METRIC PART

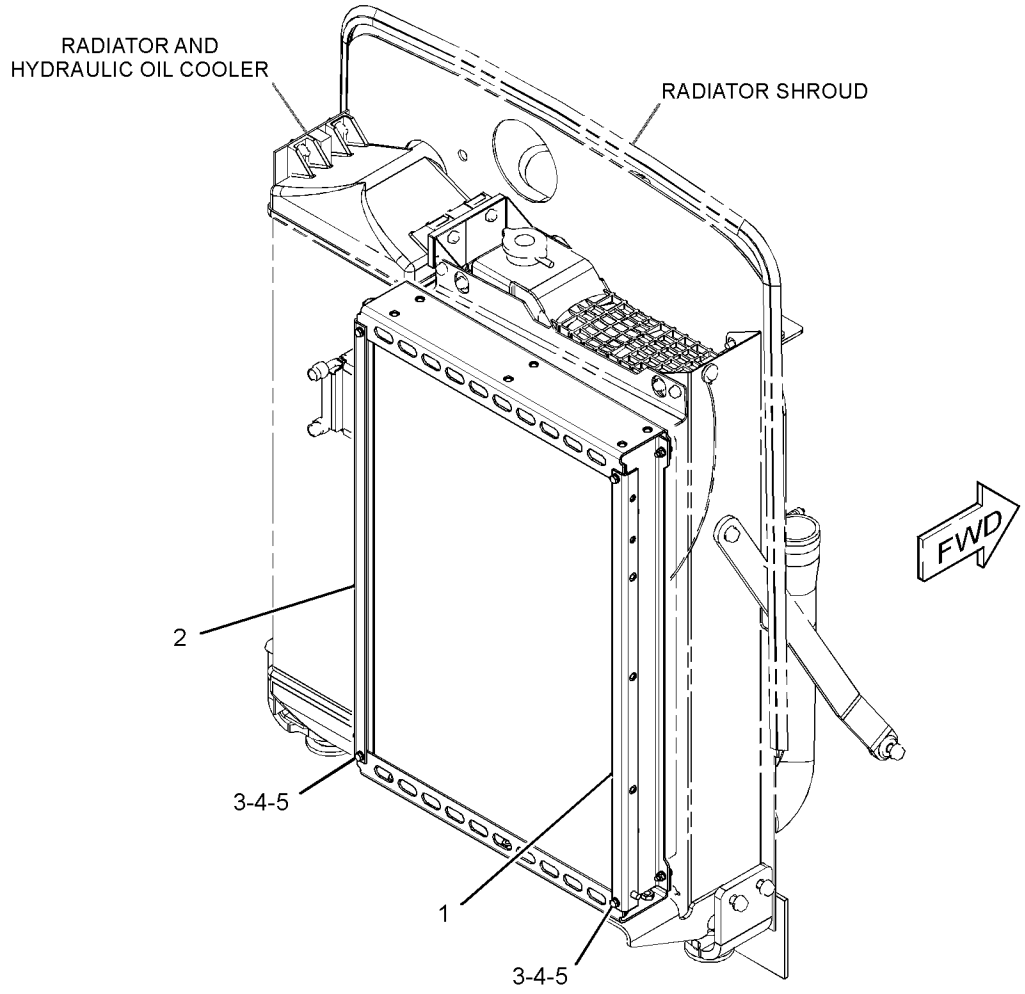

GRAPHIC #1 **<END>** g01539234

348-4918 CYLINDER GP-HYDRAULIC—STEERING

S/N: TJL1-UP
80-MM (3.15-IN) BORE X 305-MM (12-IN) STROKE
FIELD REPLACEMENT ORDER 356-2015—PAGE: 298
PART OF 356-2015 CYLINDER GP-HYDRAULIC

SMCS-4303, 5102 **i04125852**

NOTE	REF NO	GRAPHIC REF	PART NUMBER	QTY	PART NAME 1 2 3 4 5 6 (PRODUCT LEVEL)	SEE PAGE
					(NO BREAKDOWN OF SERVICEABLE PARTS AVAILABLE AT TIME OF PUBLICATION)	

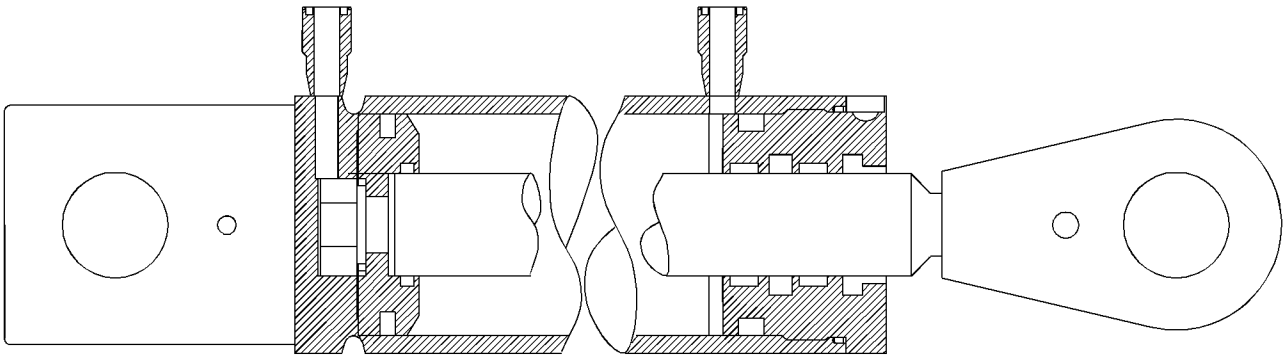

GRAPHIC #1 **<END>** g01865233

356-2015 CYLINDER GP-HYDRAULIC—STEERING

S/N: TJL1-UP
80-MM (3.2-IN) BORE X 305-MM (12-IN) STROKE
FIELD REPLACEMENT FOR 348-4918—PAGE: 297, 415-1860—PAGE: 299
PART OF 216-0595 CYLINDER & MTG GP-STEERING

SMCS-4303, 5102 **i05317094**

NOTE	PART NUMBER	QTY	PART NAME 1 2 3 4 5 6 (PRODUCT LEVEL)	SEE PAGE
Y	**415-1860**	1	CYLINDER GP-HYDRAULIC (STEERING)	299
			—OR—	
Y	*348-4918*	1	CYLINDER GP-HYDRAULIC (STEERING)	297

Y - SEPARATE ILLUSTRATION

<END>

415-1860 CYLINDER GP-HYDRAULIC

S/N: TJL1-UP
80-MM (3.2-IN) BORE X 304.8-MM (12-IN) STROKE
FIELD REPLACEMENT ORDER 356-2015—PAGE: 298
PART OF 356-2015 CYLINDER GP-HYDRAULIC

SMCS-4303, 5102 **i05317034**

NOTE	REF NO	GRAPHIC REF	PART NUMBER	QTY	PART NAME 1 2 3 4 5 6 (PRODUCT LEVEL)	SEE PAGE
					AVAILABLE REPAIR KIT(S):	
			437-1330	1	KIT-SEAL (HYDRAULIC CYLINDER)	
					(INCLUDES O-RING SEALS, BACKUP-RING, SEALS, WIPER & WEAR RINGS)	

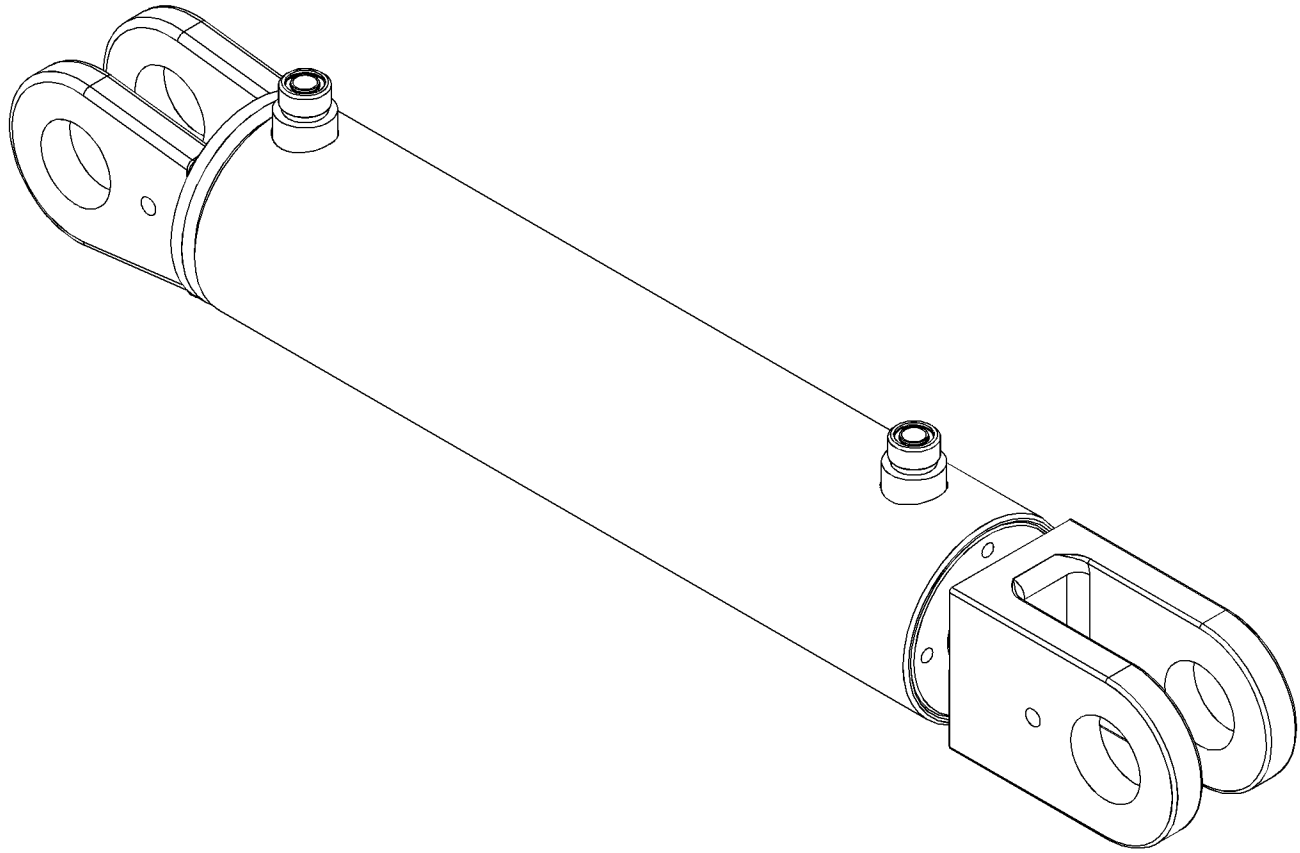

GRAPHIC #1 **<END>** g03360120

218-2976 FILTER & MTG GP-HYDRAULIC

S/N: TJL1-UP

PART OF 291-5081 HYDRAULIC AR-AUXILIARY

SMCS-5068 **i03436380**

NOTE	REF NO	GRAPHIC REF	PART NUMBER	QTY	PART NAME 1 2 3 4 5 6 (PRODUCT LEVEL)	SEE PAGE
	1	1	**8C-3451**	1	CAP-DUST	
	2	1	*107-8265*	1	TEE AS-SWIVEL	
		1	**9X-2289**	1	TEE-SWIVEL	
		1	**6V-9746**	1	SEAL-O-RING	
	3	1	*148-8430*	1	TEE AS	
		1	**6V-9746**	1	SEAL-O-RING	
		1	**7X-0873**	1	TEE	
	4	1	**165-2521**	1	SWITCH AS-PRESSURE (HYDRAULIC OIL)	
		1	**102-8803**	1	KIT-RECEPTACLE (3-PIN)	
					(INCLUDES RECEPTACLE AS & WEDGE)	
		1	**186-3735**	3	PIN-CONNECTOR (16-GA TO 18-GA)	
	5	1	**180-3813**	1	FILTER GP-OIL (HYDRAULIC)	
		1	**1G-8878**	1	FILTER-OIL (ADVANCED EFFICIENCY) (HYDRAULIC)	
	6	1	**247-6278**	1	BRACKET	
	7	1	*148-8305*	1	ADAPTER AS	
		1	**3J-1907**	1	SEAL-O-RING	
		1	**5P-9617**	1	ADAPTER	
	8	1	*148-8328*	1	CONNECTOR AS	
		1	**3D-2824**	1	SEAL-O-RING	
		1	**6V-8398**	1	SEAL-O-RING	
		1	**6V-8633**	1	CONNECTOR	
	9	1	*148-8347*	2	ELBOW AS	
					(EACH INCLUDES)	
		1	**3D-2824**	1	SEAL-O-RING	
		1	**6V-9746**	1	SEAL-O-RING	
		1	**6V-9007**	1	ELBOW	
	10	1	*153-6241*	1	ELBOW AS	
		1	**6V-8398**	1	SEAL-O-RING	
		1	*8C-8989*	1	ELBOW	
	11	1	*164-5590*	1	VALVE GP-FLUID SAMPLING (HYDRAULIC OIL)	
		1	**8C-3446**	1	VALVE-FLUID SAMPLING (HYDRAULIC OIL)	
		1	**3J-7354**	1	SEAL-O-RING	
	12	1	**7X-7729**	2	WASHER (11X25X3-MM THK)	
	13	1	**8T-4121**	4	WASHER-HARD (11X21X2.5-MM THK)	
M	14	1	**8T-4136**	4	BOLT (M10X1.5X25-MM)	
	15	1	**3K-0360**	1	SEAL-O-RING	
M	16	1	**8T-4196**	2	BOLT (M10X1.5X35-MM)	

M - METRIC PART

218-2976 **FILTER & MTG GP-HYDRAULIC (*contd.*)** **i03436380**

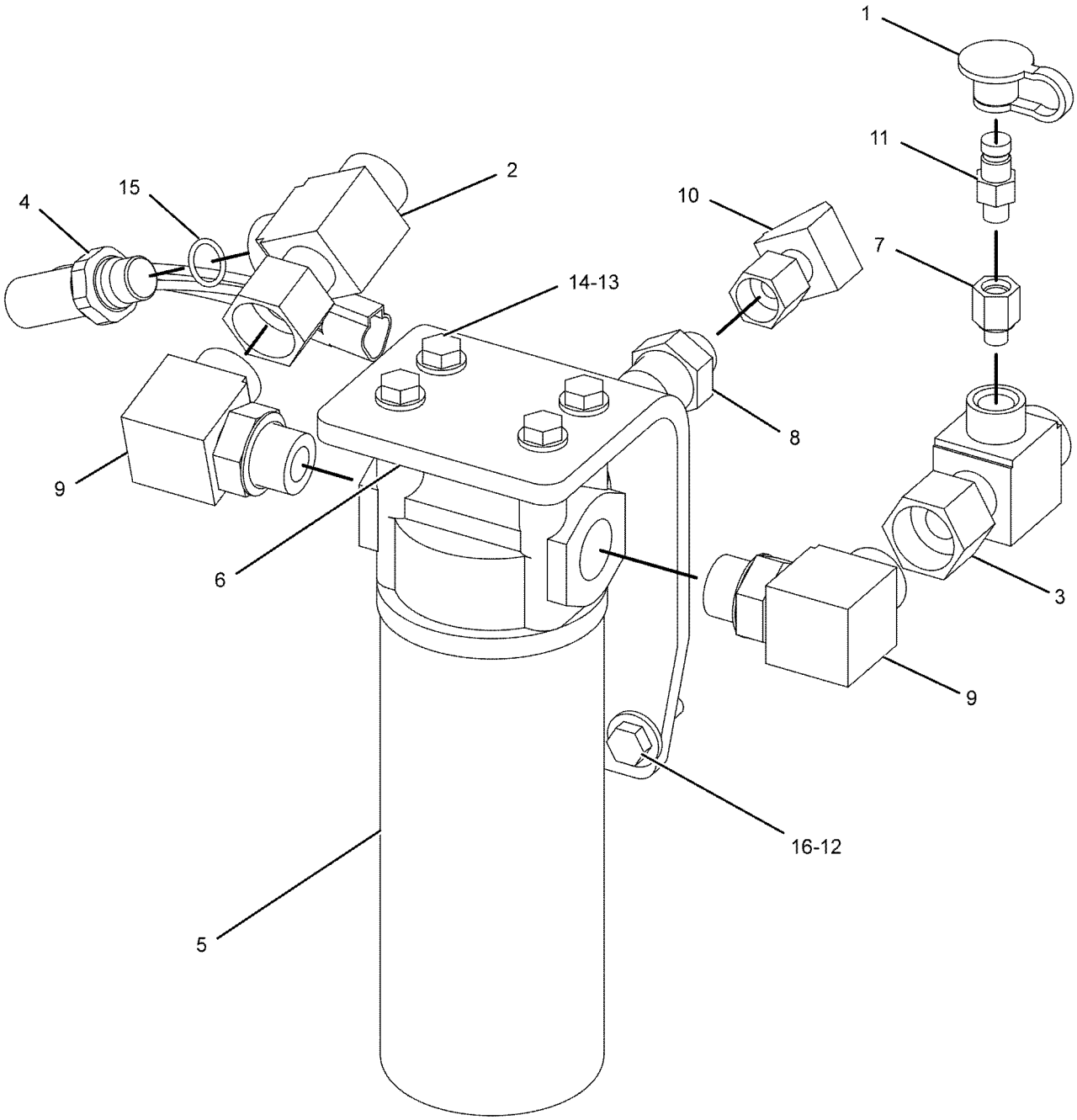

GRAPHIC #1 **<END>** g01087833

255-8680 HEAD GP-PUMP–PROPEL

S/N: TJL1-UP

PART OF 296-3331 PUMP GP-PISTON

SMCS-3222, 5070 **i03649447**

NOTE	REF NO	GRAPHIC REF	PART NUMBER	QTY	PART NAME 1 2 3 4 5 6 (PRODUCT LEVEL)	SEE PAGE
Y	1	1	**123-7557**	1	VALVE GP-RELIEF (PRESSURE OVERRIDE)	346
	2	1	**152-1810**	2	VALVE GP-RELIEF (COMBINATION)	
					(EACH INCLUDES)	
		1	**6V-5326**	1	SEAL-O-RING	
M		1	**6E-1607**	1	LOCKNUT-SEALING	
		1	**167-7713**	1	RING-BACKUP	
M	3	1	**7X-3340**	4	BOLT-SOCKET HEAD (M14X2X75-MM)	
	4	1	**6V-5326**	1	SEAL-O-RING	
	5	1	**261-0998**	1	VALVE GP-SOLENOID (PROPEL PUMP)	
		1	**285-2277**	1	NUT-SPECIAL	
		1	**301-4576**	1	COIL	
	6	1	**256-3845**	1	KIT-SEAL	
					(INCLUDES SEAL-O-RINGS & BACKUP-RINGS)	
	7	1	**212-6679**	1	VALVE GP-RELIEF (PROPEL PUMP)	
		1	**6V-8352**	1	SEAL-O-RING	
	8	1	**177-6853**	1	VALVE-THROTTLE	
	9	1	**192-4576**	1	BEARING-ROLLER	
	10	1	**123-7562**	2	SEAL-O-RING	
	11	1	**8T-4231**	2	DOWEL	
	12	1	**301-4622**	1	ADAPTER	

M - METRIC PART
Y - SEPARATE ILLUSTRATION

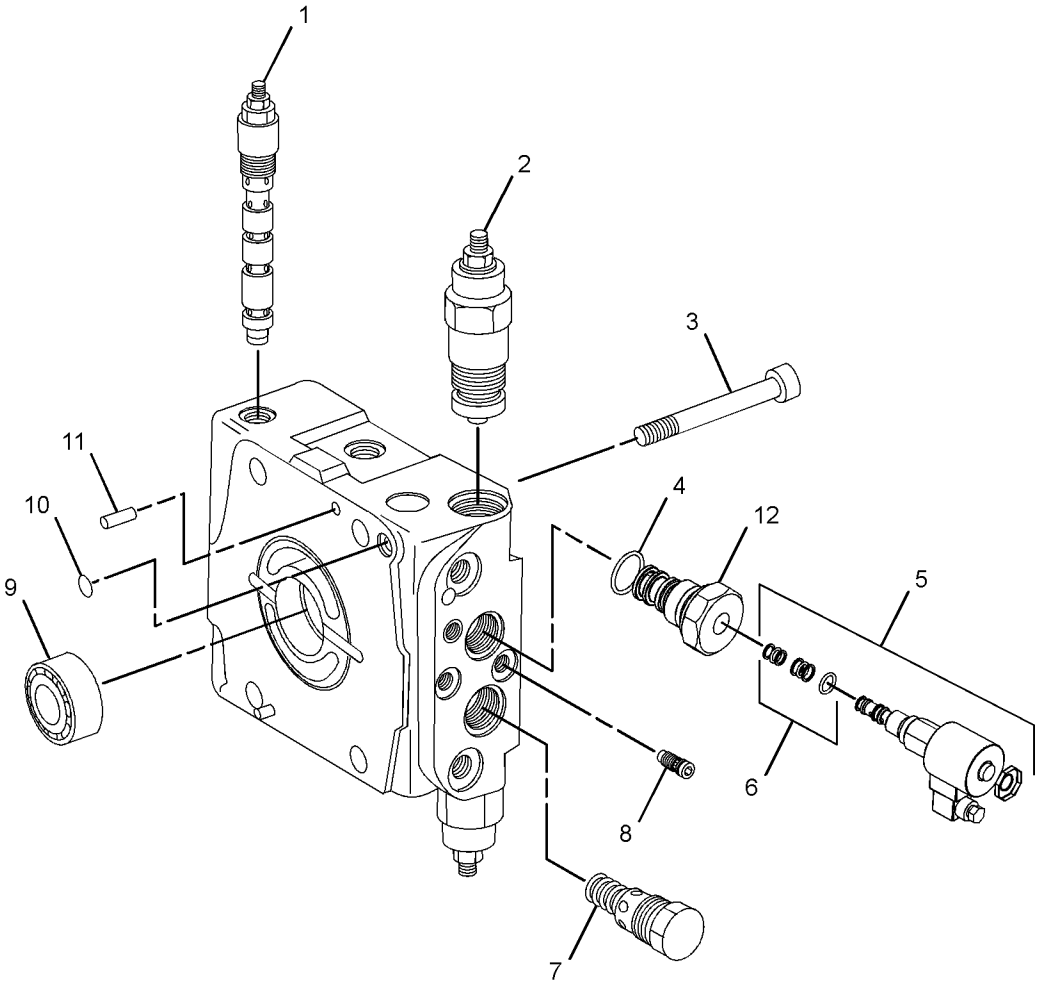

GRAPHIC #1 **<END>** g01558134

313-3391 HEAD GP-PUMP–VIBRATORY

S/N: TJL1-755

PART OF 296-3332 PUMP GP-PISTON

SMCS-3222, 5070

i03031946

NOTE	REF NO	GRAPHIC REF	PART NUMBER	QTY	PART NAME 1 2 3 4 5 6 (PRODUCT LEVEL)	SEE PAGE
	1	1	**123-7562**	1	SEAL-O-RING	
	2	1	**204-1458**	2	VALVE GP-RELIEF (CROSSOVER)	
M	3	1	**095-0670**	4	BOLT (M12X1.75X45-MM)	
	4	1	**5P-3863**	1	SEAL-O-RING	
	5	1	**087-4772**	1	PLUG-O-RING	
	6	1	**313-3392**	1	KIT-VALVE	
					(INLCUDES PRESSURE SPRING, SPRING COLLAR, VALVE PISTON, LOCKING SCREW, SEAL-O-RING, RING,KIT-SHIM & ORIFICE)	
	7	1	**112-4640**	2	PIN	
	8	1	**121-4459**	1	BEARING-ROLLER	

M - METRIC PART

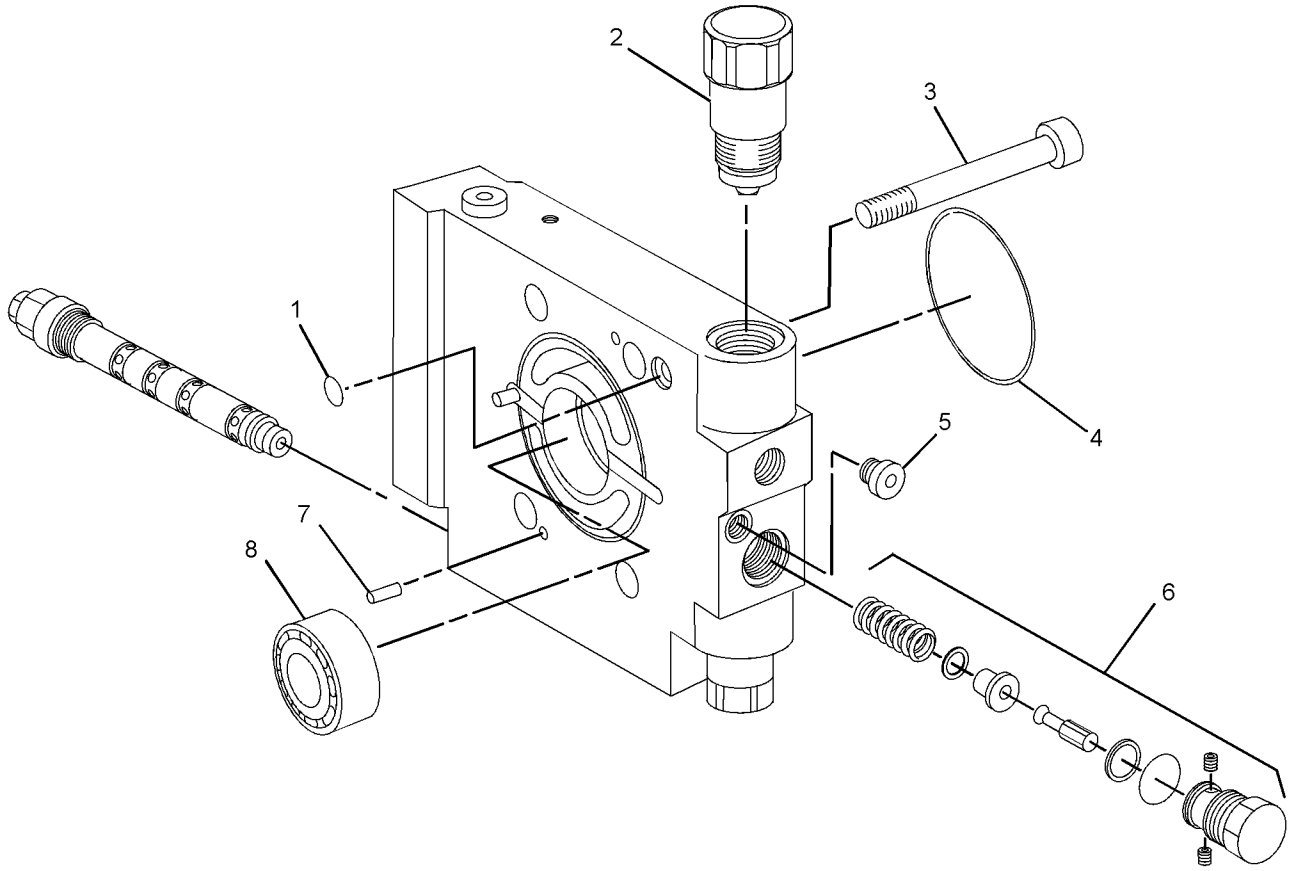

GRAPHIC #1

<END>

g01446566

314-4016 HEAD GP-PUMP–PROPEL

S/N: TJL1-UP

PART OF 296-3329 PUMP GP-PISTON

SMCS-3222, 5070 **i03649448**

NOTE	REF NO	GRAPHIC REF	PART NUMBER	QTY	PART NAME 1 2 3 4 5 6 (PRODUCT LEVEL)	SEE PAGE
Y	1	1	**123-7557**	1	VALVE GP-RELIEF (PRESSURE OVERRIDE)	346
	2	1	**152-1810**	2	VALVE GP-RELIEF (COMBINATION)	
					(EACH INCLUDES)	
		1	**6V-5326**	1	SEAL-O-RING	
M		1	**6E-1607**	1	LOCKNUT-SEALING	
		1	**167-7713**	1	RING-BACKUP	
M	3	1	**7X-3340**	4	BOLT-SOCKET HEAD (M14X2X75-MM)	
	4	1	**6V-5326**	1	SEAL-O-RING	
	5	1	**261-0998**	1	VALVE GP-SOLENOID (PROPEL PUMP)	
		1	**285-2277**	1	NUT-SPECIAL	
		1	**301-4576**	1	COIL	
	6	1	**256-3845**	1	KIT-SEAL	
					(INCLUDES SEAL-O-RINGS & BACK-UP RINGS)	
	7	1	**4J-5309**	1	SEAL-O-RING	
	8	1	**177-6853**	1	VALVE-THROTTLE	
	9	1	**314-4014**	1	KIT-RELIEF VALVE (PUMP)	
					(INCLUDES SEAL-O-RING, RING, ORIFICE & SHIM KIT)	
	10	1	**192-4576**	1	BEARING-ROLLER	
	11	1	**123-7562**	2	SEAL-O-RING	
	12	1	**301-4622**	1	ADAPTER	

M - METRIC PART
Y - SEPARATE ILLUSTRATION

314-4016 **HEAD GP-PUMP (*contd.*)** **i03649448**

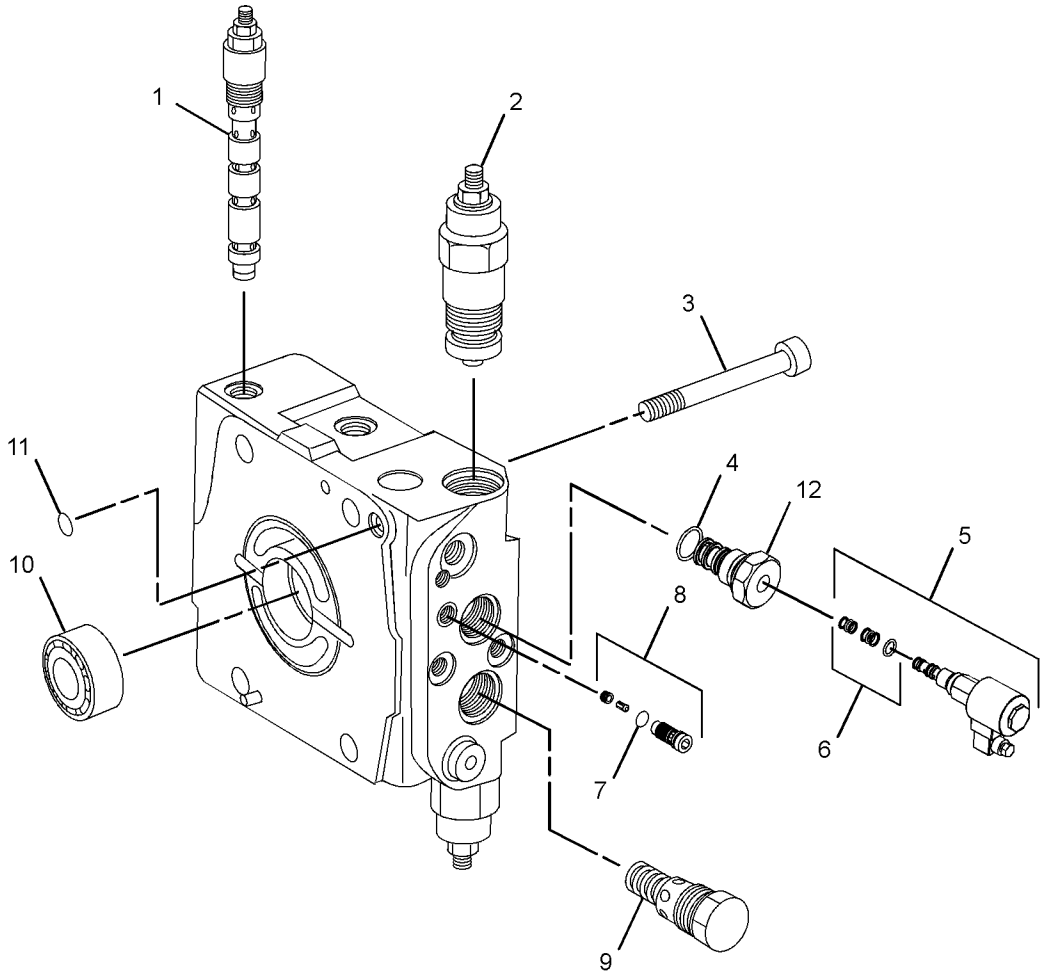

GRAPHIC #1 **<END>** g01554933

369-4725 HEAD GP-PUMP

S/N: TJL756-UP

PART OF 315-9743 PUMP GP-PISTON

SMCS-3222, 5070 **i05067369**

NOTE	REF NO	GRAPHIC REF	PART NUMBER	QTY	PART NAME 1 2 3 4 5 6 (PRODUCT LEVEL)	SEE PAGE
M	1	1	**108-3819**	4	BOLT-SOCKET HEAD (M12X1.75X70-MM)	
	2	1	**121-4459**	1	BEARING-ROLLER	
	3	1	**257-9639**	2	PIN	
	4	1	**9S-8004**	1	PLUG-O-RING	
	5	1	**112-4628**	2	SCREW	
	6	1	**204-1458**	2	VALVE GP-RELIEF (CROSSOVER)	
	7	1	**112-4719**	2	RING-BACKUP	
	8	1	**112-4717**	2	SEAL-O-RING	
Y	9	1	**373-1991**	1	VALVE GP-RELIEF (CHARGE PRESSURE, VIBRATORY)	347
	10	1	**6V-8397**	2	SEAL-O-RING	
	11	1	**3J-1907**	1	SEAL-O-RING	

M - METRIC PART
Y - SEPARATE ILLUSTRATION

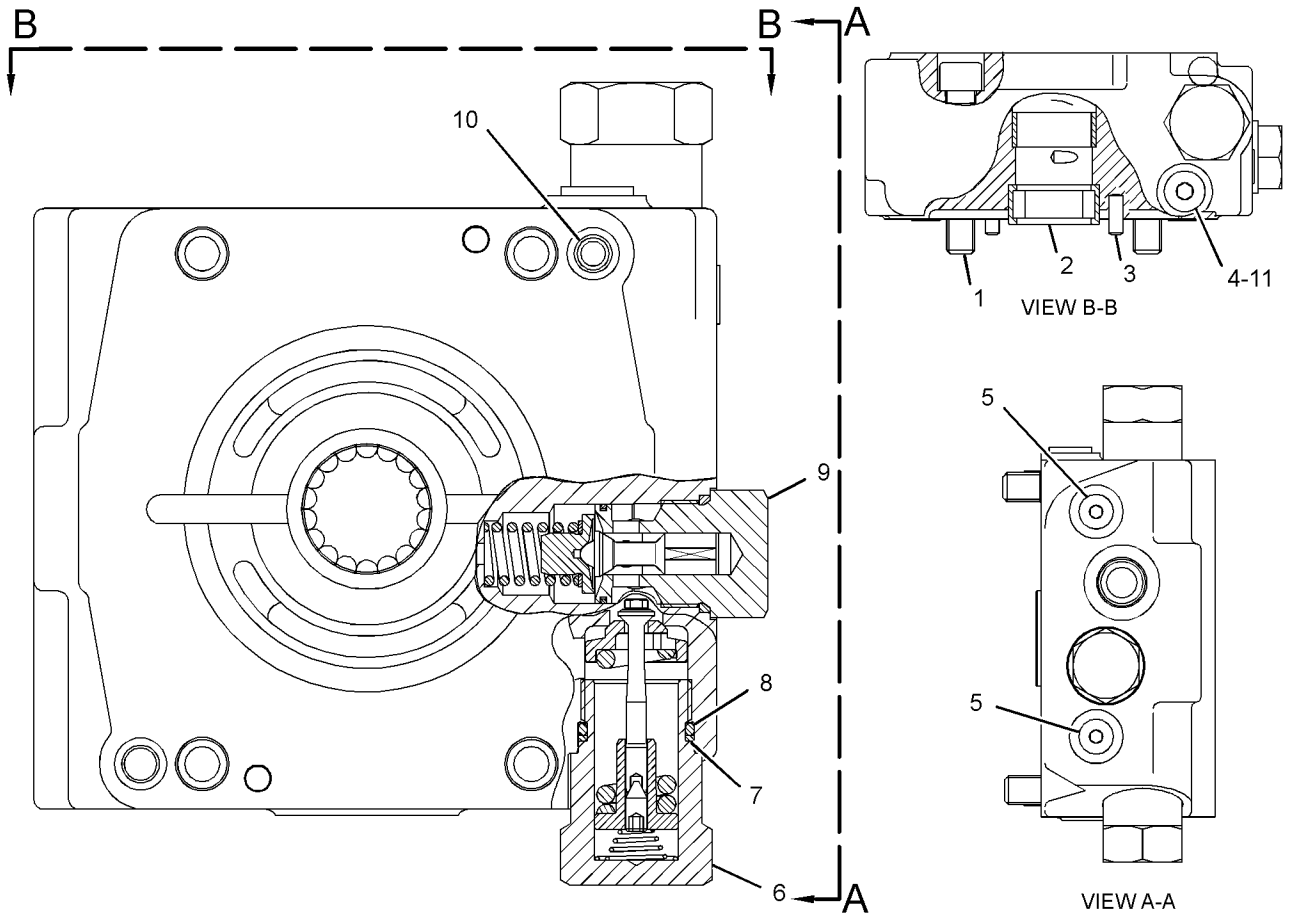

GRAPHIC #1 **<END>** g03242036

291-5081 HYDRAULIC AR-AUXILIARY

S/N: TJL1-UP

PART OF 316-9934 GENERAL AR

SMCS-5050 **i04905209**

NOTE	PART NUMBER	QTY	PART NAME 1 2 3 4 5 6 (PRODUCT LEVEL)	SEE PAGE
Y	*219-2998*	1	CONTROL GP-STEERING	392
			S/N: TJL1-2244, 2262, 2264	
Y	*235-8557*	1	CONTROL GP-STEERING	396
			S/N: TJL2245-2261, 2263, 2265-UP	
Y	*216-0595*	1	CYLINDER & MTG GP-STEERING	285
Y	*218-2976*	1	FILTER & MTG GP-HYDRAULIC	300
Y	*218-3213*	1	LINES GP-FILTER (HYDRAULIC)	308
Y	*218-4105*	1	LINES GP-HYDRAULIC OIL COOLER	311
Y	*218-3920*	1	LINES GP-STEERING	288
Y	*205-7407*	1	LINES GP-STEERING CYLINDER	290
Y	*220-2080*	1	MANIFOLD & VALVE GP (HYDRAULIC OIL COOLER BYPASS)	312
Y	*218-2975*	1	PUMP & MTG GP-STEERING	291
			S/N: TJL1-755	
Y	*338-8440*	1	PUMP & MTG GP-STEERING	292
			S/N: TJL756-UP	

Y - SEPARATE ILLUSTRATION

<END>

218-3213 LINES GP-FILTER

S/N: TJL1-UP

PART OF 291-5081 HYDRAULIC AR-AUXILIARY

TYPE 1

SMCS-5057 **i03036581**

NOTE	REF NO	GRAPHIC REF	PART NUMBER	QTY	PART NAME 1 2 3 4 5 6 (PRODUCT LEVEL)	SEE PAGE
I	1	1	**152-0277**	1	HOSE AS	
I	2	1	**229-1182**	1	HOSE AS	
I	3	1	**236-5850**	2	HOSE AS	
	4	1	*148-8449*	2	TEE AS-SWIVEL	
					(EACH INCLUDES)	
		1	**6V-9746**	2	SEAL-O-RING	
		1	**6V-9839**	1	TEE-SWIVEL	

I - REFER TO HYDRAULIC INFORMATION SYSTEM

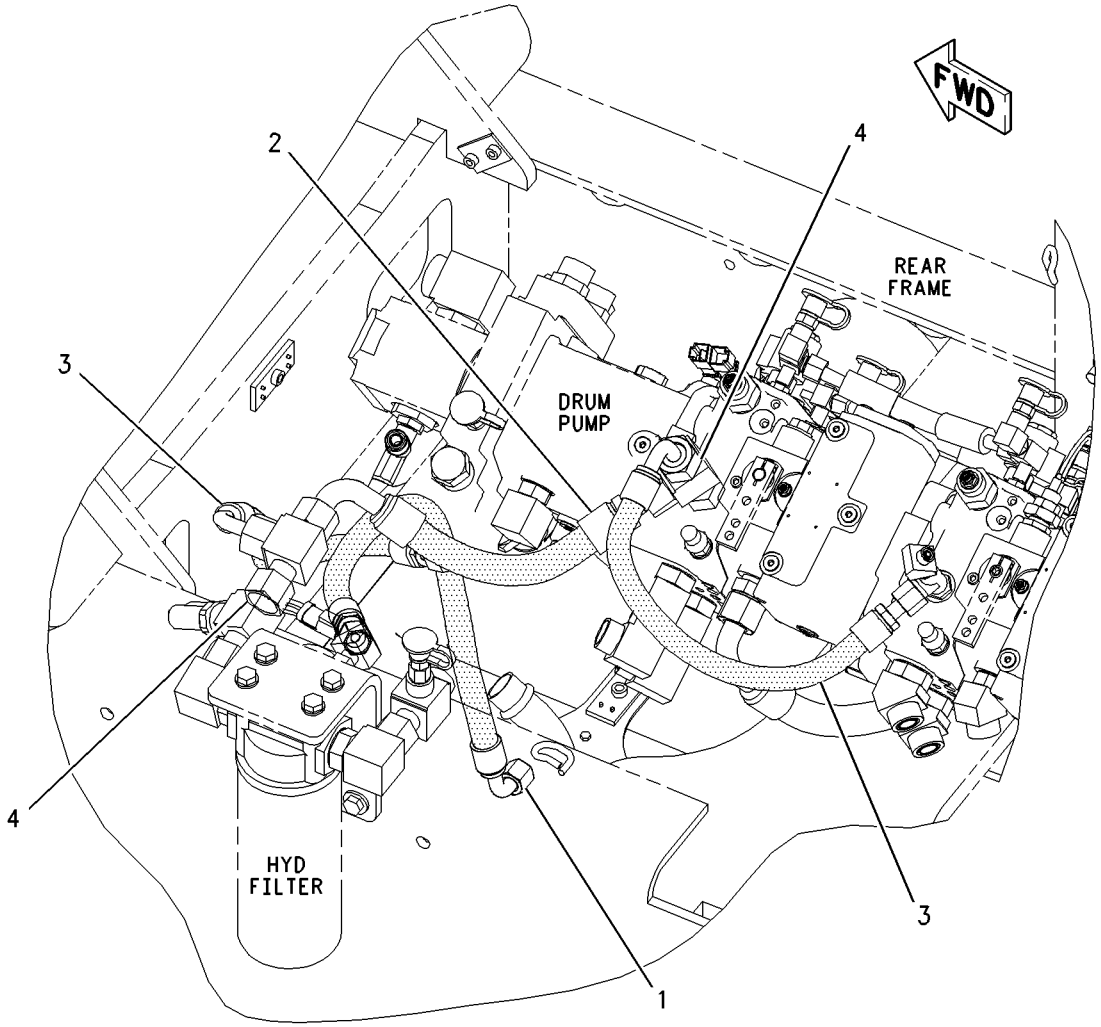

GRAPHIC #1 **<END>** g01005045

218-3213 LINES GP-FILTER

S/N: TJL1-UP

PART OF 291-5081 HYDRAULIC AR-AUXILIARY

TYPE 2

SMCS-5057 **i03931892**

NOTE	REF NO	GRAPHIC REF	PART NUMBER	QTY	PART NAME 1 2 3 4 5 6 (PRODUCT LEVEL)	SEE PAGE
C	1	1	**200-6345**	2	MOUNT (DUAL SWIVEL)	
C	2	1	**204-2281**	4	STRAP-CABLE	
I	3	1	**229-1182**	1	HOSE AS	
CI	4	1	**236-5850**	1	HOSE AS	
CI	5	1	**283-6671**	1	HOSE AS	
CI	6	1	**331-6022**	1	HOSE AS	
	7	1	*148-8449*	2	TEE AS-SWIVEL	
					(EACH INCLUDES)	
		1	**6V-9746**	2	SEAL-O-RING	
		1	**6V-9839**	1	TEE-SWIVEL	

C - CHANGE FROM PREVIOUS TYPE
I - REFER TO HYDRAULIC INFORMATION SYSTEM

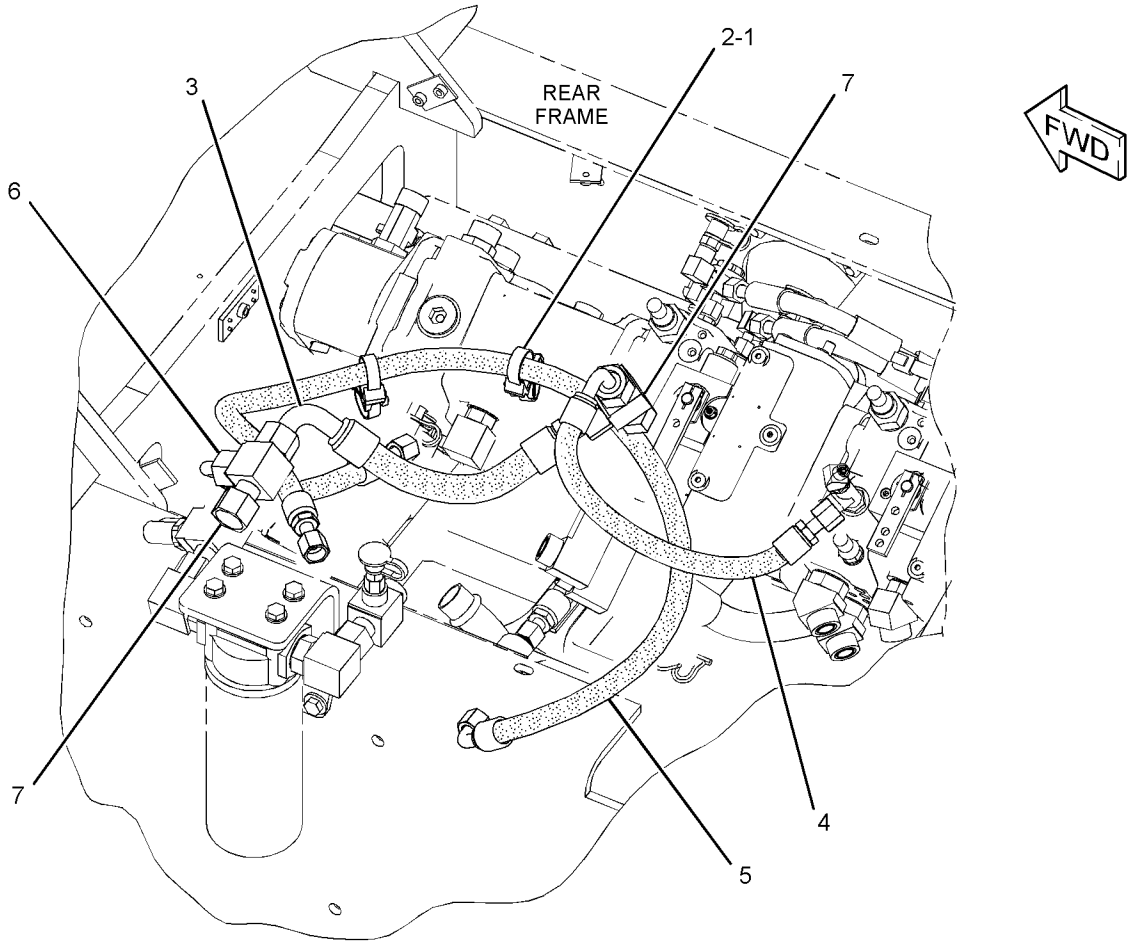

GRAPHIC #1 **<END>** g01934633

218-3213 LINES GP-FILTER

S/N: TJL1-UP

PART OF 291-5081 HYDRAULIC AR-AUXILIARY

TYPE 3

SMCS-5057 **i03931893**

NOTE	REF NO	GRAPHIC REF	PART NUMBER	QTY	PART NAME 1 2 3 4 5 6 (PRODUCT LEVEL)	SEE PAGE
C	1	1	**177-2215**	2	STRAP-DUAL CLAMP	
	2	1	*148-8449*	2	TEE AS-SWIVEL	
					(EACH INCLUDES)	
		1	**6V-9746**	2	SEAL-O-RING	
		1	**6V-9839**	1	TEE-SWIVEL	
I	3	1	**229-1182**	1	HOSE AS	
I	4	1	**236-5850**	1	HOSE AS	
I	5	1	**283-6671**	1	HOSE AS	
I	6	1	**331-6022**	1	HOSE AS	

C - CHANGE FROM PREVIOUS TYPE
I - REFER TO HYDRAULIC INFORMATION SYSTEM

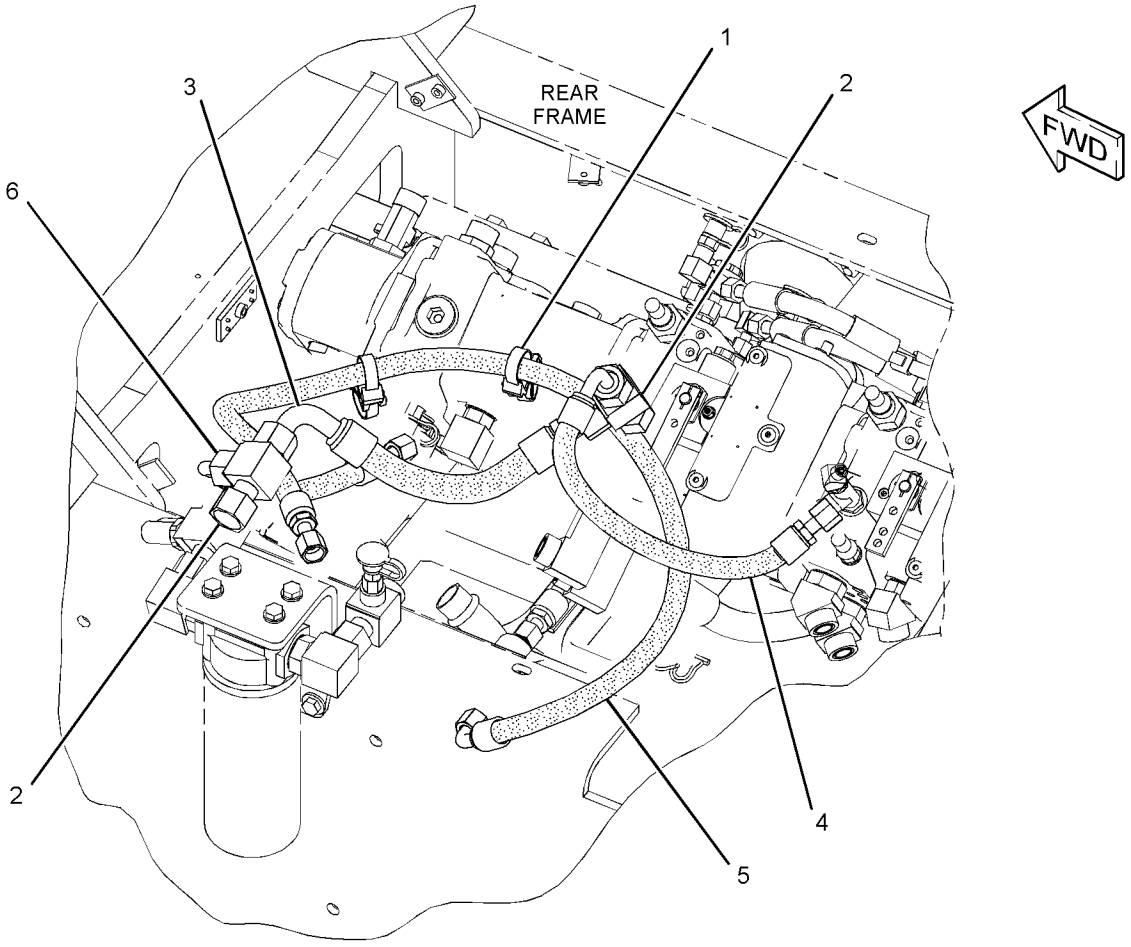

GRAPHIC #1 **<END>** g02143477

218-4105 LINES GP-HYDRAULIC OIL COOLER

S/N: TJL1-UP

PART OF 291-5081 HYDRAULIC AR-AUXILIARY

SMCS-1374, 5057

i03636372

NOTE	REF NO	GRAPHIC REF	PART NUMBER	QTY	PART NAME 1 2 3 4 5 6 (PRODUCT LEVEL)	SEE PAGE
I	1	1	**4E-0916**	1	HOSE AS	
	2	1	**5V-6152**	10	CLAMP	
	3	1	**7R-7951**	6	PLATE	
	4	1	**7X-7958**	4	CLAMP-HOSE	
	5	1	**206-6415**	2	CLAMP-HALF	
	6	1	**207-4499**	1	PLATE-COVER	
	7	1	**7K-1181**	4	STRAP-CABLE	
	8	1	**311-8367**	1	PLATE	
M	9	1	**8T-6870**	1	BOLT (M8X1.25X70-MM)	
E	10	1	**5P-1506**		HOSE (162.5-CM)	
E	10A	1	**5P-1506**		HOSE (299-CM)	
	11	1	**7D-7233**	1	CLIP	
G	12	1	**160-2247**		SLEEVE-ABRASION (18.1-IN EACH)	
	13	1	**5P-4116**	1	WASHER-HARD (8.8X20.5X2-MM THK)	
M	14	1	**8T-3844**	10	BOLT (M6X1X70-MM)	
M	15	1	**8T-4189**	1	BOLT (M8X1.25X20-MM)	

E - ORDER BY THE CENTIMETER
G - ORDER BY THE INCH
I - REFER TO HYDRAULIC INFORMATION SYSTEM
M - METRIC PART

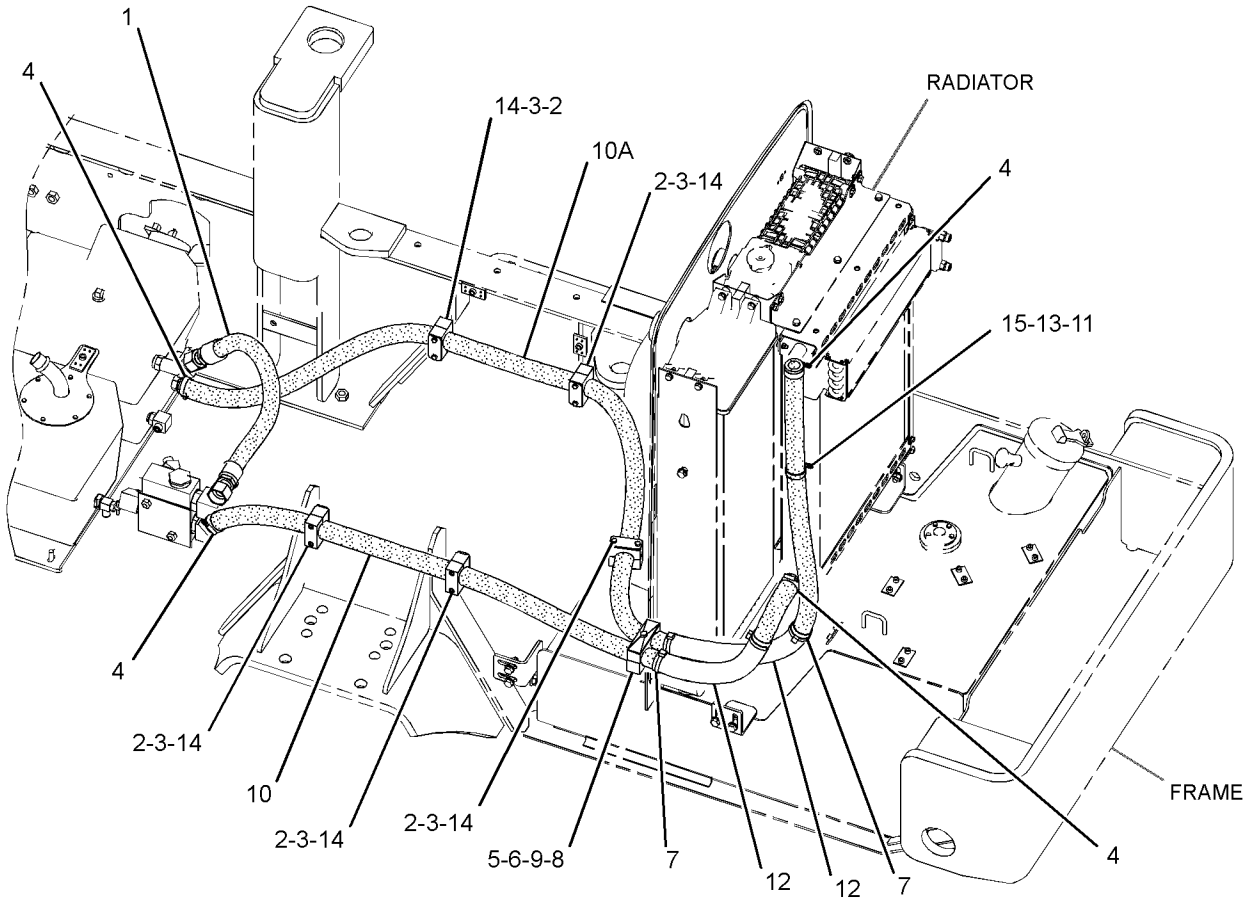

LEFT SIDE VIEW

(UPPER REAR)

GRAPHIC #1

<END>

g01944993

220-2080 MANIFOLD & VALVE GP—HYDRAULIC OIL COOLER BYPASS

S/N: TJL1-UP

PART OF 291-5081 HYDRAULIC AR-AUXILIARY

TYPE 1

SMCS-5071, 5264

i03036763

NOTE	REF NO	GRAPHIC REF	PART NUMBER	QTY	PART NAME 1 2 3 4 5 6 (PRODUCT LEVEL)	SEE PAGE
Y	1	1	**162-2453**	1	VALVE GP-BYPASS (HYDRAULIC OIL COOLER)	339
	2	1	**213-4258**	1	ELBOW AS	
		1	**7M-8485**	1	SEAL-O-RING	
	3	1	*148-8328*	1	CONNECTOR AS	
		1	**3D-2824**	1	SEAL-O-RING	
		1	**6V-8398**	1	SEAL-O-RING	
		1	**6V-8633**	1	CONNECTOR	
	4	1	*148-8354*	3	ELBOW AS	
					(EACH INCLUDES)	
		1	**3K-0360**	1	SEAL-O-RING	
		1	**6V-8398**	1	SEAL-O-RING	
		1	**6V-9002**	1	ELBOW	
	5	1	*148-8360*	1	ELBOW AS	
		1	**6V-9182**	1	ELBOW	
		1	**6V-9746**	1	SEAL-O-RING	
		1	**7M-8485**	1	SEAL-O-RING	
	6	1	*155-7328*	1	ELBOW AS	
		1	**5P-7701**	1	SEAL-O-RING	
		1	**6V-9008**	1	ELBOW	
		1	**8C-3093**	1	SEAL-O-RING	
	7	1	**8T-4121**	2	WASHER-HARD (11X21X2.5-MM THK)	
M	8	1	**8T-5005**	2	BOLT (M10X1.5X70-MM)	

M - METRIC PART
Y - SEPARATE ILLUSTRATION

220-2080 **MANIFOLD & VALVE GP (*contd.*)** **i03036763**

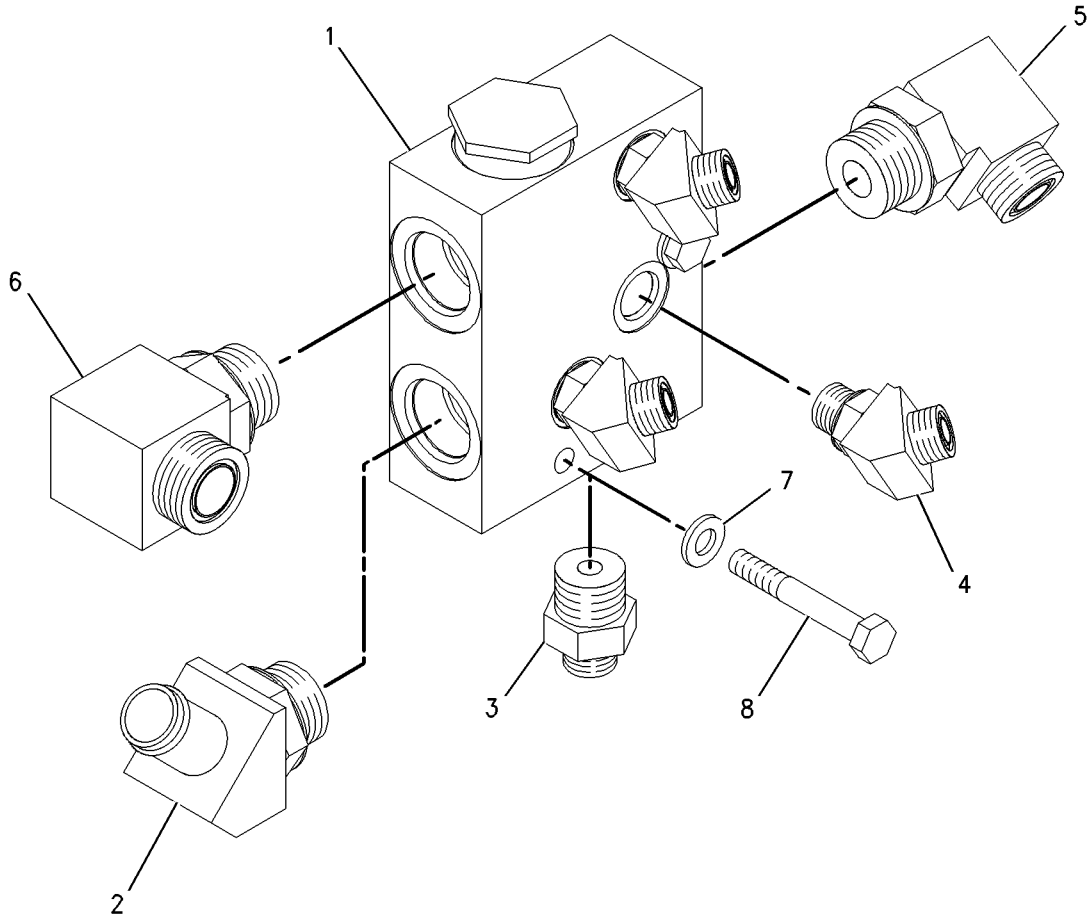

GRAPHIC #1 **<END>** g01001840

220-2080 MANIFOLD & VALVE GP—HYDRAULIC OIL COOLER BYPASS

S/N: TJL1-UP

PART OF 291-5081 HYDRAULIC AR-AUXILIARY

TYPE 2

SMCS-5071, 5264

i04156640

NOTE	REF NO	GRAPHIC REF	PART NUMBER	QTY	PART NAME 1 2 3 4 5 6 (PRODUCT LEVEL)	SEE PAGE
Y	1	1	**162-2453**	1	VALVE GP-BYPASS (HYDRAULIC OIL COOLER)	339
	2	1	**213-4258**	1	ELBOW AS	
		1	**7M-8485**	1	SEAL-O-RING	
C	3	1	*155-6258*	1	ELBOW AS	
		1	**3D-2824**	1	SEAL-O-RING	
		1	**6V-8398**	1	SEAL-O-RING	
		1	**127-1647**	1	ELBOW	
	4	1	*148-8354*	3	ELBOW AS	
					(EACH INCLUDES)	
		1	**3K-0360**	1	SEAL-O-RING	
		1	**6V-8398**	1	SEAL-O-RING	
		1	**6V-9002**	1	ELBOW	
	5	1	*148-8360*	1	ELBOW AS	
		1	**6V-9182**	1	ELBOW	
		1	**6V-9746**	1	SEAL-O-RING	
		1	**7M-8485**	1	SEAL-O-RING	
	6	1	*155-7328*	1	ELBOW AS	
		1	**5P-7701**	1	SEAL-O-RING	
		1	**6V-9008**	1	ELBOW	
		1	**8C-3093**	1	SEAL-O-RING	
	7	1	**8T-4121**	2	WASHER-HARD (11X21X2.5-MM THK)	
M	8	1	**8T-5005**	2	BOLT (M10X1.5X70-MM)	

C - CHANGE FROM PREVIOUS TYPE
M - METRIC PART
Y - SEPARATE ILLUSTRATION

220-2080 **MANIFOLD & VALVE GP (*contd.*)** **i04156640**

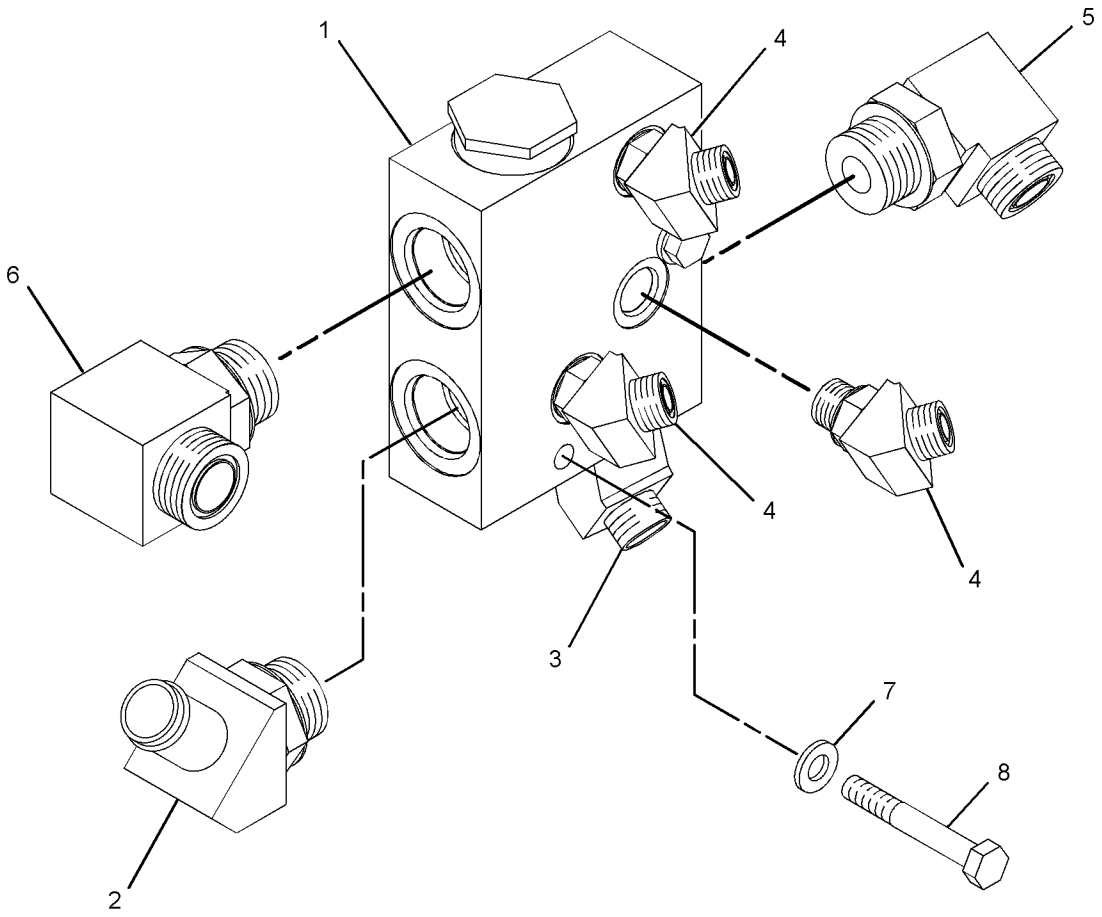

GRAPHIC #1 **<END>** g02229893

136-8869 MOTOR GP-PISTON–VIBRATORY*R

S/N: TJL1-UP

PART OF 140-9614 MOTOR & MTG GP-VIBRATORY

AN ATTACHMENT

SMCS-5058 **i05064280**

NOTE	REF NO	GRAPHIC REF	PART NUMBER	QTY	PART NAME 1 2 3 4 5 6 (PRODUCT LEVEL)	SEE PAGE
	1	1	**148-1202**	1	RING	
C	2	1	**166-0344**	1	SEAL-SHAFT	
	3	1	**6V-4635**	1	CONE-BEARING	
	4	1	**6V-4636**	1	CUP-BEARING	
	5	1	**242-6902**	1	SHAFT	
C	6	1	**2M-9780**	1	SEAL-O-RING	
	7	1	**9S-8006**	1	PLUG-O-RING	
	8	1	**148-1970**	2	PIN-DOWEL	
	9	1	**148-1240**	1	SWASHPLATE	
	10	1	**138-8172**	9	PISTON AS	
	11	1	**168-7944**	1	PLATE-RETRACTION	
	12	1	**138-8175**	1	BEARING-SPHERICAL	
	13	1	**155-6654**	1	BARREL	
	14	1	**138-8176**	3	PIN-PRESSURE	
	15	1	**138-8177**	1	SPACER	
	16	1	**128-1092**	1	SPRING	
C	17	1	**096-0015**	1	RING-RETAINING	
	18	1	**148-1219**	1	PLATE-LENS	
	19	1	**148-1238**	1	SHIM (3-MM THK)	
	20	1	**105-3035**	1	CONE-BEARING	
C	21	1	**203-8609**	1	CUP-BEARING	
C	22	1	**148-1235**	1	SEAL-O-RING	
C	23	1	**124-9899**	2	SPACER	
C	24	1	**124-9900**	2	SPRING	
	25	1	**5J-2974**	2	SEAL-O-RING	
C	26	1	**124-9891**	2	PLUG	
	27	1	**107-0313**	4	BOLT	
C	28	1	**9X-8979**	1	DOWEL	
C	29	1	**125-4572**	1	RING-RETAINING	
	30	1	**148-1252**	1	ORIFICE	
	31	1	**1G-6423**	1	VALVE-PISTON	
C	32	1	**124-9901**	1	SPRING	
C	33	1	**4J-5351**	1	SEAL-O-RING	
	34	1	**124-9898**	1	PLUG	

C - CHANGE FROM PREVIOUS TYPE

136-8869 **MOTOR GP-PISTON (*contd.*)** **i05064280**

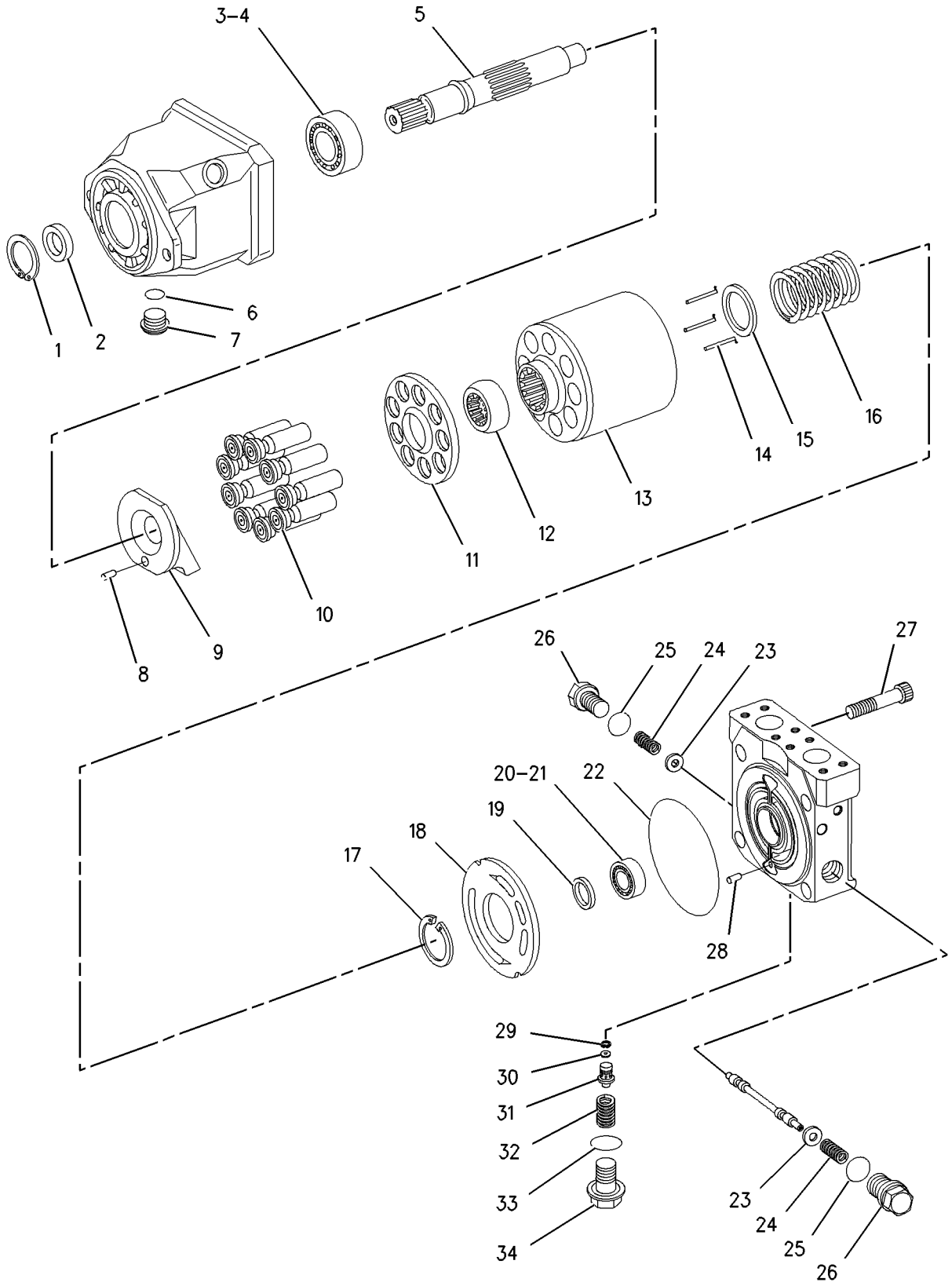

GRAPHIC #1 **<END>** g00628259

296-5159 MOTOR GP-PISTON*R

S/N: TJL1-UP
PART OF 220-1944, 242-3499 DRIVE GP-DRUM
AN ATTACHMENT

SMCS-5058 **i03063380**

NOTE	REF NO	GRAPHIC REF	PART NUMBER	QTY	PART NAME 1 2 3 4 5 6 (PRODUCT LEVEL)	SEE PAGE
	1	1	**213-4208**	1	RING-LOCK	
	2	1	**185-0248**	1	SEAL-OIL	
	3	1	**9X-7680**	3	SEAL-O-RING	
M	4	1	**151-6282**	4	BOLT-SOCKET HEAD (M6X1X40-MM)	
Y	5	1	**254-4251**	1	VALVE GP-CONTROL	341
	6	1	**228-7106**	1	SEAL-O-RING	
	7	1	**033-5879**	4	SEAL-O-RING	
	8	1	**168-3504**	1	SEAL	
	9	1	**185-0242**	1	PLATE	
	10	1	**185-0263**	1	BEARING	
	11	1	**2M-9780**	1	SEAL-O-RING	
	12	1	**107-3117**	2	SEAL-O-RING	
	13	1	**188-6392**	1	PLUG	
M	14	1	**105-3485**	4	BOLT-SOCKET HEAD (M12X1.75X60-MM)	
	15	1	**6V-8351**	1	SEAL-O-RING	
	16	1	**9X-8979**	1	DOWEL	
	17	1	**127-9485**	1	SEAL-O-RING	
	18	1	**189-4717**	1	BEARING	
		1	**105-3035**	1	CONE-BEARING	
		1	**203-8609**	1	CUP-BEARING	
B	19	1	**148-1238**	1	SHIM (3-MM THK)	
Y	20	1	**313-2545**	1	ROTATING GP-PUMP	333
	21	1	**252-9581**	2	BEARING-CRADLE	
	22	1	**313-2546**	1	SWASHPLATE	
	23	1	**9S-8006**	1	PLUG-O-RING	

PARTS SHOWN IN GRAPHIC(S) WITHOUT A REFERENCE NUMBER ARE NOT SERVICED SEPARATELY

B - USE AS REQUIRED
M - METRIC PART
Y - SEPARATE ILLUSTRATION

296-5159 **MOTOR GP-PISTON (*contd.*)** **i03063380**

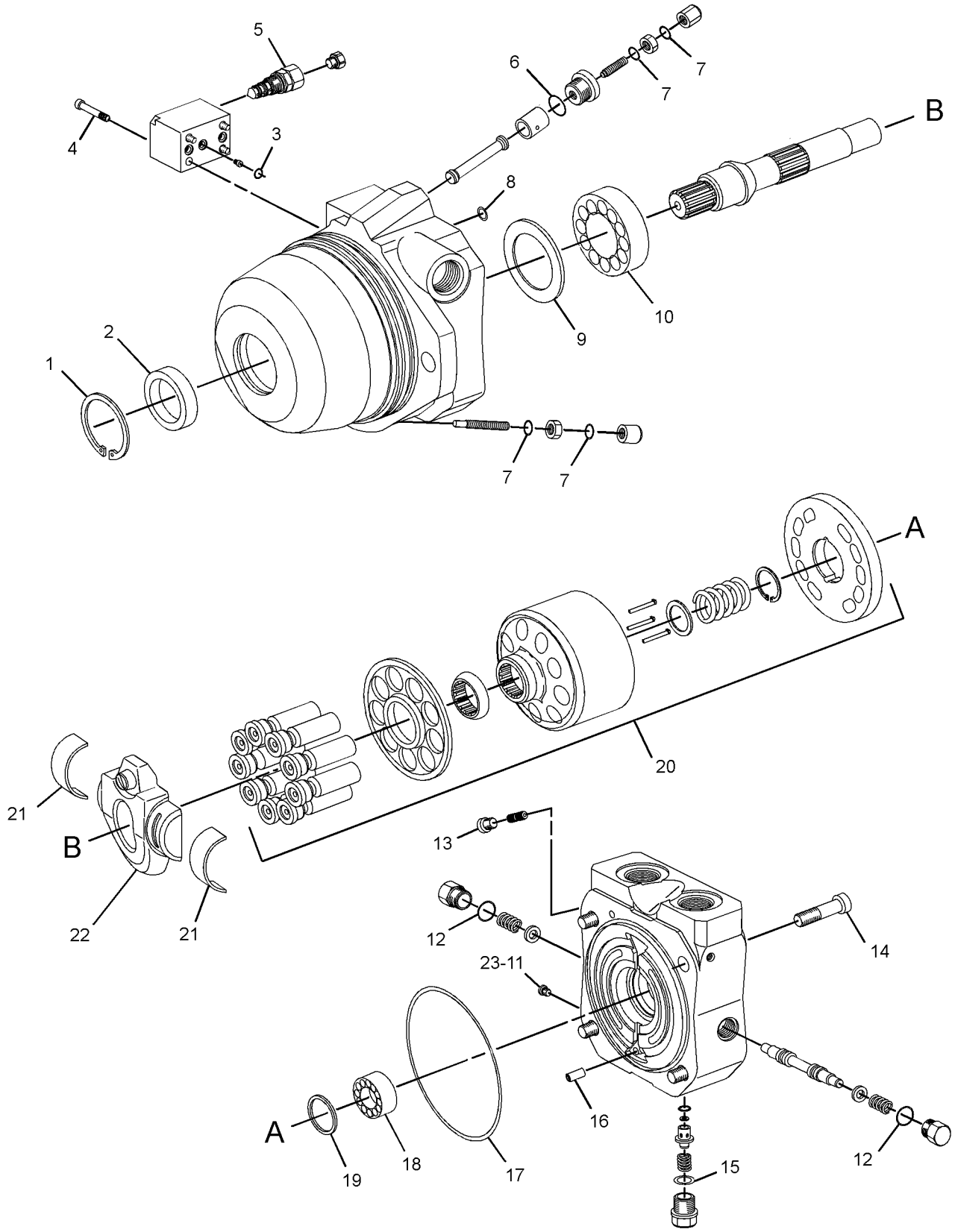

GRAPHIC #1 **<END>** g01434663

296-5160 MOTOR GP-PISTON–PROPEL*R

S/N: TJL1-UP

PART OF 218-3163 MOTOR & MTG GP-PROPEL

SMCS-5058 **i03043969**

NOTE	REF NO	GRAPHIC REF	PART NUMBER	QTY	PART NAME 1 2 3 4 5 6 (PRODUCT LEVEL)	SEE PAGE
	1	1	**213-4208**	1	RING-LOCK	
	2	1	**185-0248**	1	SEAL-OIL	
	3	1	**9X-7680**	3	SEAL-O-RING	
M	4	1	**151-6282**	4	BOLT-SOCKET HEAD (M6X1X40-MM)	
Y	5	1	**254-4251**	1	VALVE GP-CONTROL	341
	6	1	**228-7106**	1	SEAL-O-RING	
	7	1	**033-5879**	4	SEAL-O-RING	
	8	1	**168-3504**	1	SEAL	
	9	1	**185-0242**	1	PLATE	
	10	1	**185-0263**	1	BEARING	
	11	1	**2M-9780**	1	SEAL-O-RING	
	12	1	**107-3117**	2	SEAL-O-RING	
	13	1	**188-6392**	1	PLUG	
M	14	1	**105-3485**	4	BOLT-SOCKET HEAD (M12X1.75X60-MM)	
	15	1	**6V-8351**	1	SEAL-O-RING	
	16	1	**9X-8979**	1	DOWEL	
	17	1	**127-9485**	1	SEAL-O-RING	
	18	1	**189-4717**	1	BEARING	
	19	1	**148-1238**	1	SHIM (3-MM THK)	
Y	20	1	**313-2545**	1	ROTATING GP-PUMP	333
	21	1	**128-1912**	2	SHELL-CRADLE	
					(EACH INCLUDES)	
		1	**237-4227**	1	BEARING-CRADLE	
	22	1	**313-2546**	1	SWASHPLATE	
	23	1	**9S-8006**	1	PLUG-O-RING	
					PARTS SHOWN IN GRAPHIC(S) WITHOUT A REFERENCE NUMBER ARE NOT SERVICED SEPARATELY	

M - METRIC PART
Y - SEPARATE ILLUSTRATION

296-5160 **MOTOR GP-PISTON (*contd.*)** **i03043969**

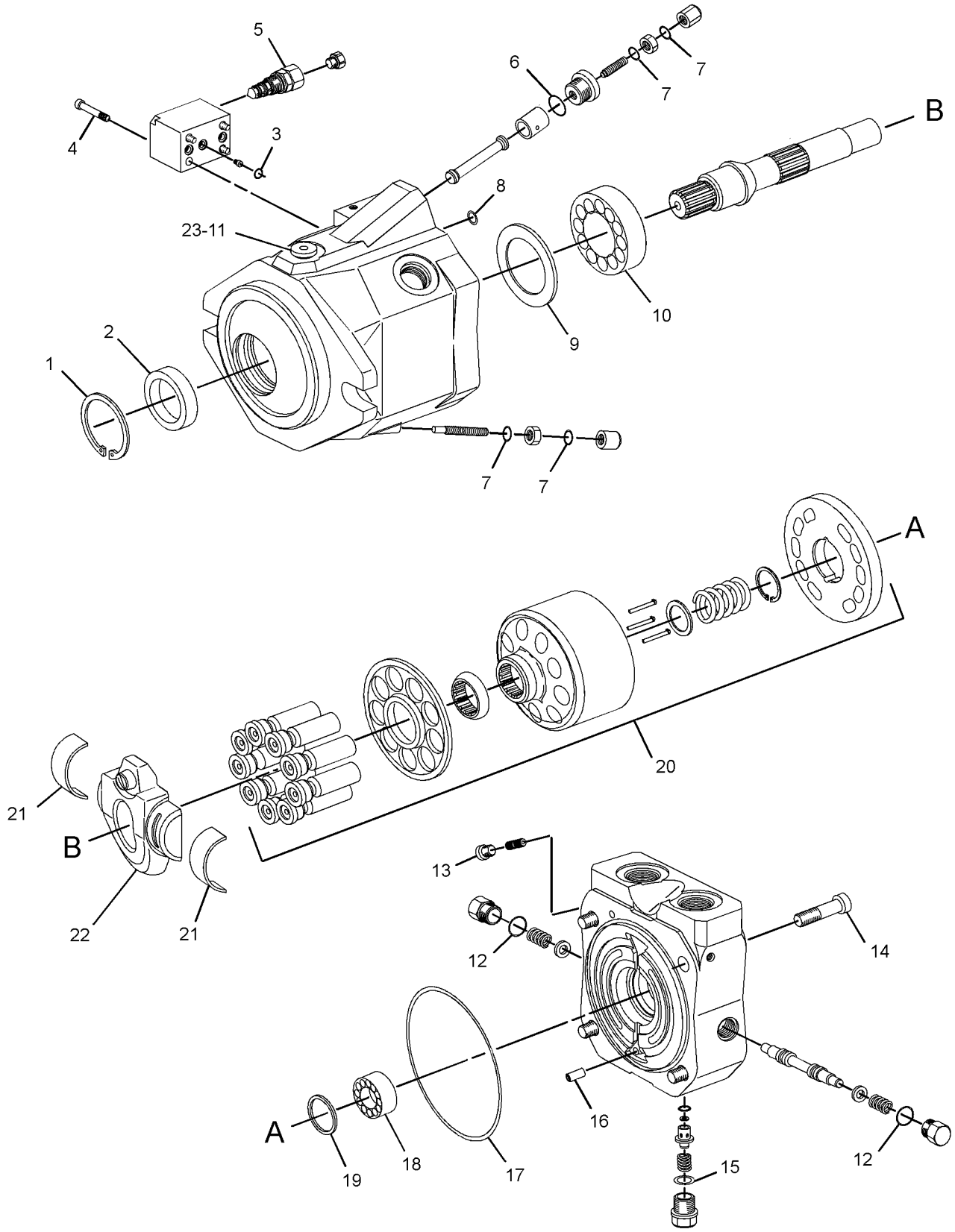

GRAPHIC #1 **<END>** g01430063

255-0625 PUMP GP-GEAR–STEERING

S/N: TJL1-755

PART OF 218-2975 PUMP & MTG GP-STEERING

SMCS-4306, 5073 **i03036380**

NOTE	REF NO	GRAPHIC REF	PART NUMBER	QTY	PART NAME 1 2 3 4 5 6 (PRODUCT LEVEL)	SEE PAGE
	1	1	**260-0769**	1	KIT-OVERHAUL	
					(INCLUDES BEARING-BLOCKS, KEY-SQUARE,SEAL-RING-SQUARE	
					BACKUP-RING,SEAL-PRESSURE LOADING & SEAL-SHAFT)	
	2	1	**096-0194**	1	RING-RETAINING	

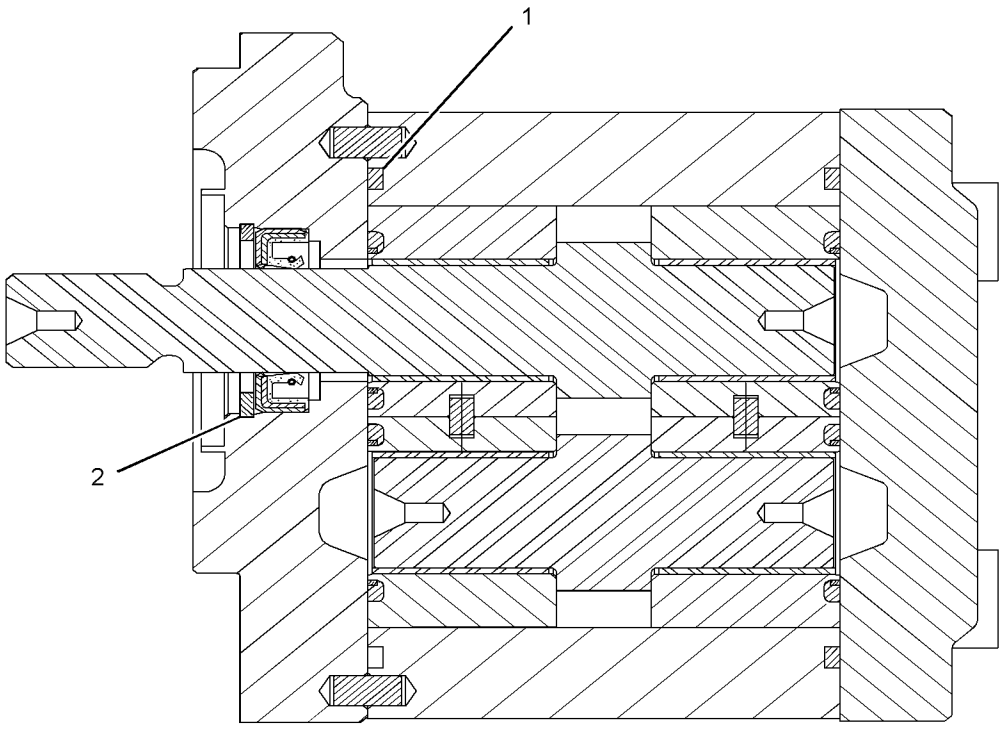

GRAPHIC #1 **<END>** g01260747

296-3329 PUMP GP-PISTON–PROPEL, AXLE*R

S/N: TJL1-UP

PART OF 218-2973 PUMP & MTG GP-PROPEL

SMCS-5070 **i03033460**

NOTE	REF NO	GRAPHIC REF	PART NUMBER	QTY	PART NAME 1 2 3 4 5 6 (PRODUCT LEVEL)	SEE PAGE
Y	1	1	**254-8191**	1	VALVE GP-PUMP CONTROL	342
	2	1	**167-6805**	2	PIN	
Y	3	1	**190-7632**	1	ROTATING GP-PUMP	331
	4	1	**5J-3886**	1	SEAL-O-RING	
	5	1	**202-6535**	1	PIN	
Y	6	1	**314-4016**	1	HEAD GP-PUMP	304
	7	1	**112-4630**	1	SCREW (1-5/16-THD)	
	8	1	**9S-8004**	2	PLUG-O-RING	
Y	9	1	**254-8188**	1	ACTUATOR GP-PUMP	293
	10	1	**9T-3928**	1	PLUG AS	
		1	**187-8001**	1	SEAL	
	11	1	**122-9718**	1	PIN	
	12	1	**112-4628**	4	SCREW	
	13	1	**206-4881**	2	PLUG-ORIFICE	
	14	1	**3K-0715**	1	SEAL-O-RING	
	15	1	**3E-6731**	1	SEAL-O-RING	
M	16	1	**8T-8441**	4	BOLT-SOCKET HEAD (M12X1.75X25-MM)	
	17	1	**7J-6285**	1	SEAL-O-RING	
	18	1	**112-4686**	1	PIN	
	19	1	**3J-1907**	2	SEAL-O-RING	

PARTS SHOWN IN GRAPHIC(S) WITHOUT A REFERENCE NUMBER ARE NOT SERVICED SEPARATELY

M - METRIC PART
Y - SEPARATE ILLUSTRATION

296-3329 **PUMP GP-PISTON (*contd.*)** **i03033460**

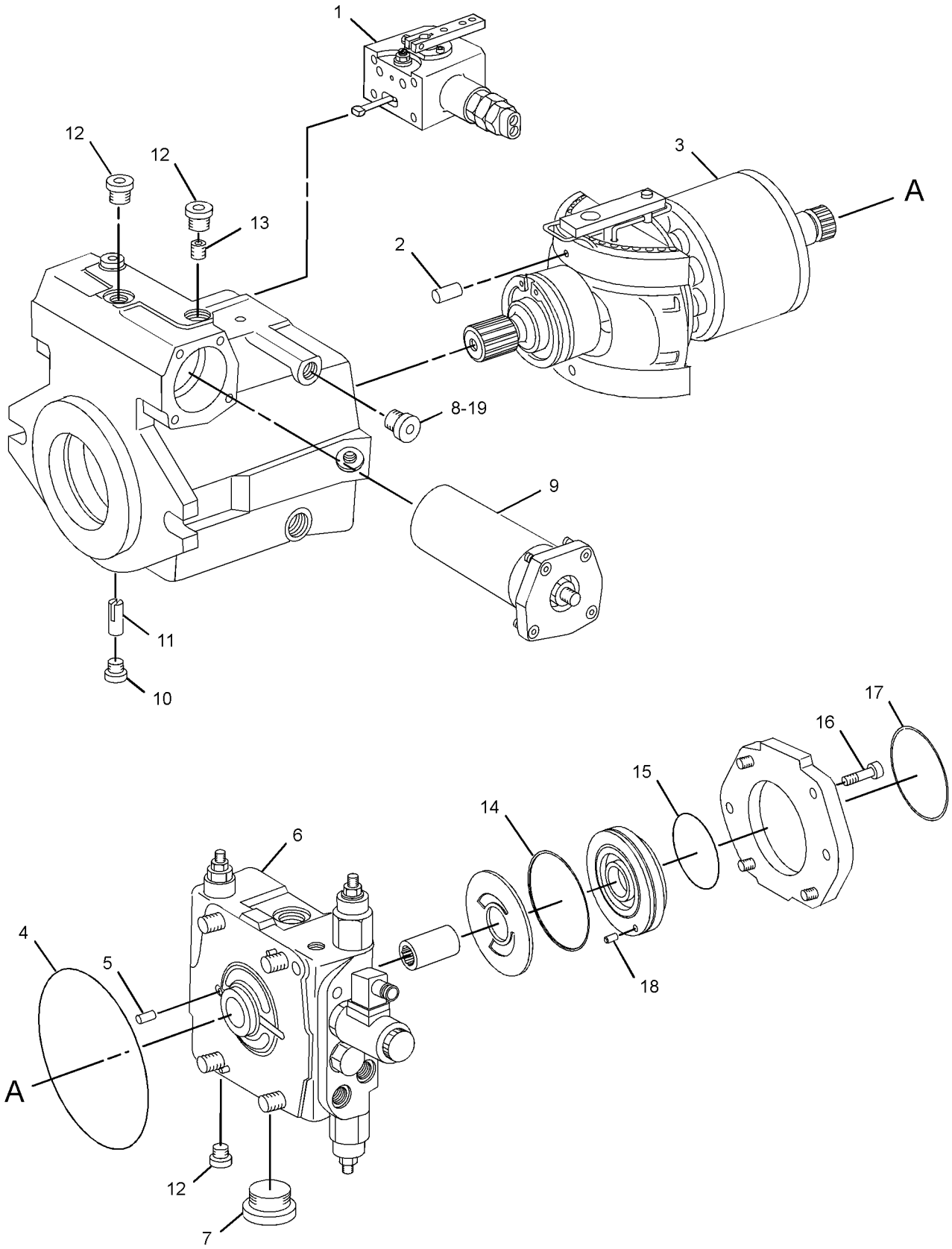

GRAPHIC #1 **<END>** g01553097

296-3331 PUMP GP-PISTON–PROPEL, DRUM*R

S/N: TJL1-UP

PART OF 218-2973 PUMP & MTG GP-PROPEL

SMCS-5070 **i03033792**

NOTE	REF NO	GRAPHIC REF	PART NUMBER	QTY	PART NAME 1 2 3 4 5 6 (PRODUCT LEVEL)	SEE PAGE
Y	1	1	**255-8686**	1	VALVE GP-PUMP CONTROL	343
	2	1	**167-6805**	2	PIN	
Y	3	1	**190-7632**	1	ROTATING GP-PUMP	331
	4	1	**5J-3886**	1	SEAL-O-RING	
	5	1	**202-6535**	1	PIN	
Y	6	1	**255-8680**	1	HEAD GP-PUMP	302
	7	1	**3K-0715**	1	SEAL-O-RING	
M	8	1	**8T-1159**	1	BOLT-SOCKET HEAD (M10X1.5X25-MM)	
	9	1	**8T-5049**	1	SEAL-O-RING	
	10	1	**3E-6731**	1	SEAL-O-RING	
	11	1	**112-4686**	1	PIN	
	12	1	**9S-8004**	3	PLUG-O-RING	
	13	1	**112-4630**	1	SCREW (1-5/16-THD)	
	14	1	**112-4628**	4	SCREW	
Y	15	1	**254-8188**	1	ACTUATOR GP-PUMP	293
	16	1	**9T-3928**	1	PLUG AS	
		1	**187-8001**	1	SEAL	
	17	1	**122-9718**	1	PIN	
	18	1	**206-4881**	2	PLUG-ORIFICE	
	19	1	**3J-1907**	1	SEAL-O-RING	
					PARTS SHOWN IN GRAPHIC(S) WITHOUT A REFERENCE NUMBER ARE NOT SERVICED SEPARATELY	

M - METRIC PART
Y - SEPARATE ILLUSTRATION

296-3331 **PUMP GP-PISTON (*contd.*)** **i03033792**

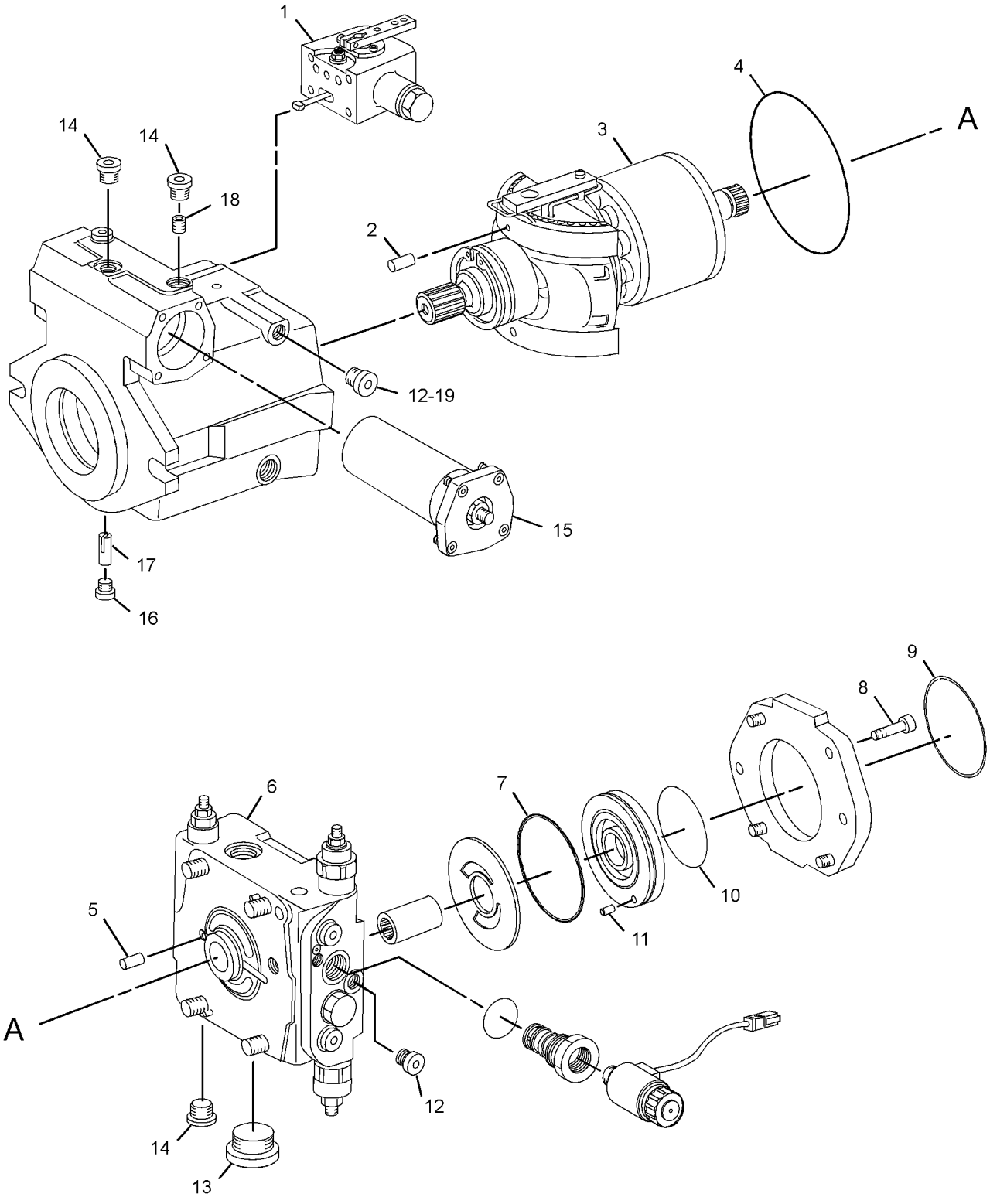

GRAPHIC #1 **<END>** g01552313

296-3332 PUMP GP-PISTON–VIBRATORY*R

S/N: TJL1-755

PART OF 218-8489 PUMP & MTG GP-VIBRATORY

SMCS-5070 **i03031620**

NOTE	REF NO	GRAPHIC REF	PART NUMBER	QTY	PART NAME 1 2 3 4 5 6 (PRODUCT LEVEL)	SEE PAGE
	1	1	**112-4628**	3	SCREW	
	2	1	**206-4881**	2	PLUG-ORIFICE	
Y	3	1	**313-3414**	1	VALVE GP-PUMP CONTROL	344
	4	1	**167-6805**	2	PIN	
Y	5	1	**313-2590**	1	ROTATING GP-PUMP	334
	6	1	**202-6535**	1	PIN	
	7	1	**112-4629**	1	SCREW	
Y	8	1	**313-3391**	1	HEAD GP-PUMP	303
	9	1	**7J-6285**	1	SEAL-O-RING	
	10	1	**9S-8004**	1	PLUG-O-RING	
Y	11	1	**313-2635**	1	ACTUATOR GP-PUMP	294
	12	1	**112-4627**	1	SCREW-LOCK	
	13	1	**9T-3928**	1	PLUG AS	
		1	**187-8001**	1	SEAL	
	14	1	**112-4626**	1	PIN	
	15	1	**3J-1907**	1	SEAL-O-RING	

Y - SEPARATE ILLUSTRATION

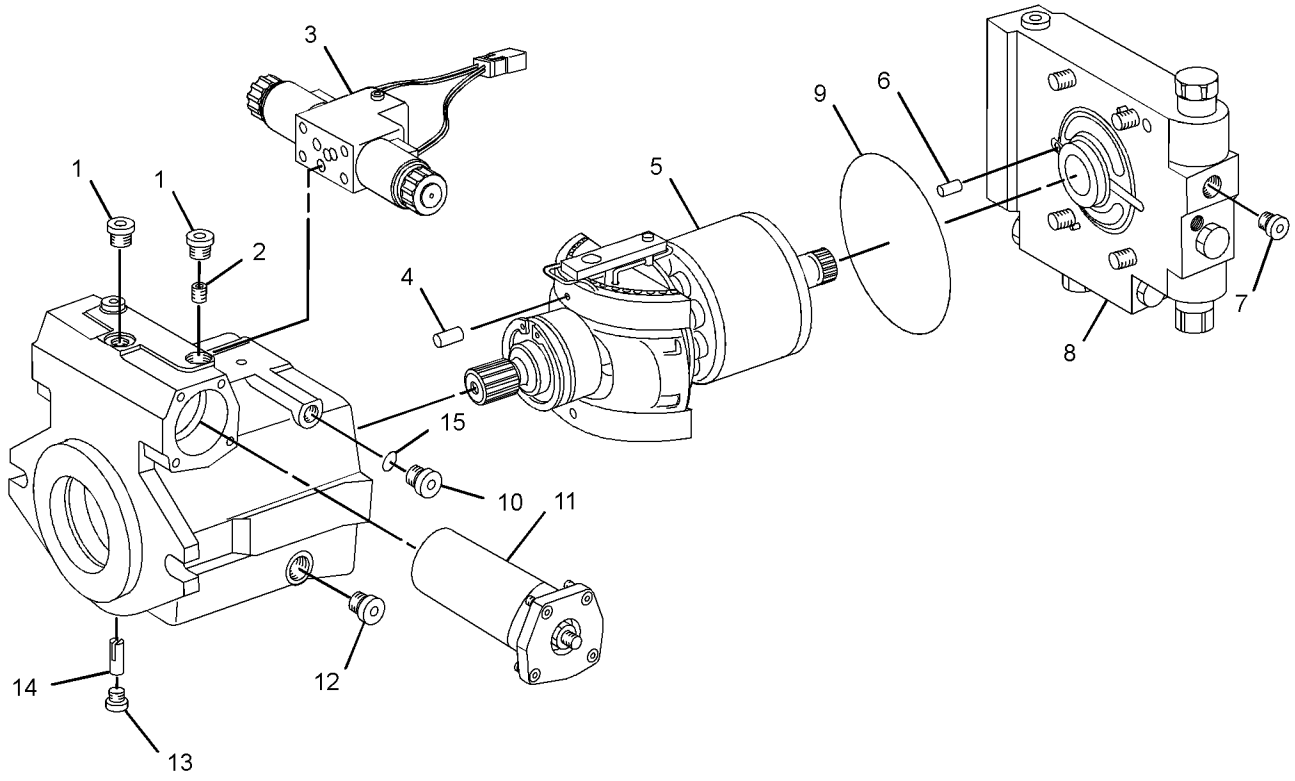

GRAPHIC #1 **<END>** g01468268

315-9743 PUMP GP-PISTON—VIBRATORY, VARIABLE DISP

S/N: TJL756-UP

PART OF 284-5886 PUMP & MTG GP-VIBRATORY

SMCS-5070 **i05200806**

NOTE	REF NO	GRAPHIC REF	PART NUMBER	QTY	PART NAME 1 2 3 4 5 6 (PRODUCT LEVEL)	SEE PAGE
	1	1	**112-4627**	2	SCREW-LOCK	
	2	1	**206-4881**	2	PLUG-ORIFICE	
	3	1	**112-4628**	3	SCREW	
	4	1	**167-6805**	2	PIN	
Y	5	1	**320-1483**	1	VALVE GP-PUMP CONTROL (VIBRATORY)	345
J	6	1	**7J-6285**	1	SEAL-O-RING	
	7	1	**202-6535**	1	PIN	
Y	8	1	**369-4725**	1	HEAD GP-PUMP	306
	9	1	**112-4629**	2	SCREW	
	10	1	**373-1989**	1	COUPLING	
J	11	1	**117-7322**	2	SEAL-RING	
	12	1	**156-2826**	1	PLATE-WEAR	
	13	1	**112-4686**	1	PIN	
M	14	1	**101-7401**	4	BOLT-SOCKET HEAD (M10X1.5X20-MM)	
J	15	1	**3K-0715**	1	SEAL-O-RING	
	16	1	**192-0626**	1	SEAL-O-RING	
	17	1	**3J-1907**	1	SEAL-O-RING	
	18	1	**112-4630**	1	SCREW (1-5/16-THD)	
Y	19	1	**369-4719**	1	ROTATING GP-MOTOR	330
	20	1	**9S-8004**	1	PLUG-O-RING	
Y	21	1	**313-2635**	1	ACTUATOR GP-PUMP	294
	22	1	**112-4626**	1	PIN	
	23	1	**9T-3928**	1	PLUG AS	
		1	**187-8001**	1	SEAL	
	24	1	**6V-3865**	1	SEAL-O-RING	
	25	1	**423-0870**	2	PLUG-LOCKING	
	26	1	**423-0871**	1	PLATE-WEAR	
					PARTS SHOWN IN GRAPHIC(S) WITHOUT A REFERENCE NUMBER ARE NOT SERVICED SEPARATELY	
					AVAILABLE REPAIR KIT(S):	
J			**369-4712**	1	KIT-SEAL (PISTON PUMP)	
					(ALSO INCLUDES V-RING, LIP TYPE SEAL, RINGS, SEAL NUTS, O-RING SEALS, GASKET & FACE SEALS)	

J - KIT MARKED J SERVICES PARTS MARKED J
M - METRIC PART
Y - SEPARATE ILLUSTRATION

315-9743 **PUMP GP-PISTON (*contd.*)** **i05200806**

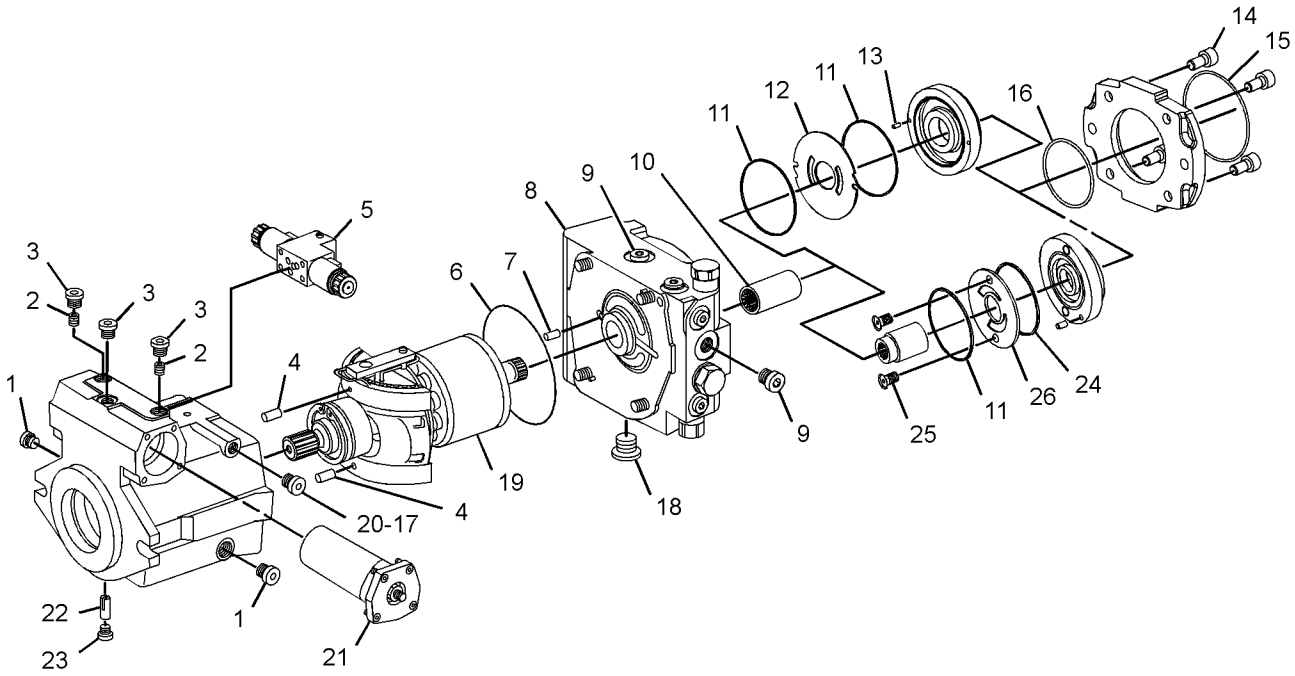

GRAPHIC #1 **<END>** g03338499

369-4719 ROTATING GP-MOTOR

S/N: TJL756-UP

PART OF 315-9743 PUMP GP-PISTON

SMCS-5058 **i05067349**

NOTE	REF NO	GRAPHIC REF	PART NUMBER	QTY	PART NAME 1 2 3 4 5 6 (PRODUCT LEVEL)	SEE PAGE
	1	1	**233-9744**	1	SEAL-LIP TYPE	
	2	1	**140-1739**	2	RING-RETAINING	
	3	1	**6V-5200**	1	RING-RETAINING	
	4	1	**126-5637**	1	WIRE	
	5	1	**126-5635**	1	ROLLER	
	6	1	**112-4657**	1	PIN	
	7	1	**313-2597**	1	KIT-ROTARY	
		1	**177-0337**	1	KIT-PUMP REPAIR	
					(INCLUDES BEARING, PINS, SPRING, WASHER, PISTON, BARREL, RETAINING PLATE & RETAINING RING)	
		1	**313-5493**	1	PLATE-CONTROL	
	8	1	**192-4255**	1	BODY	
	9	1	**1G-3410**	1	WIRE	
	10	1	**343-2906**	1	BEARING-ROLLER	
	11	1	**126-5640**	1	BEARING-ROLLER	
	12	1	**081-3698**	1	BEARING	

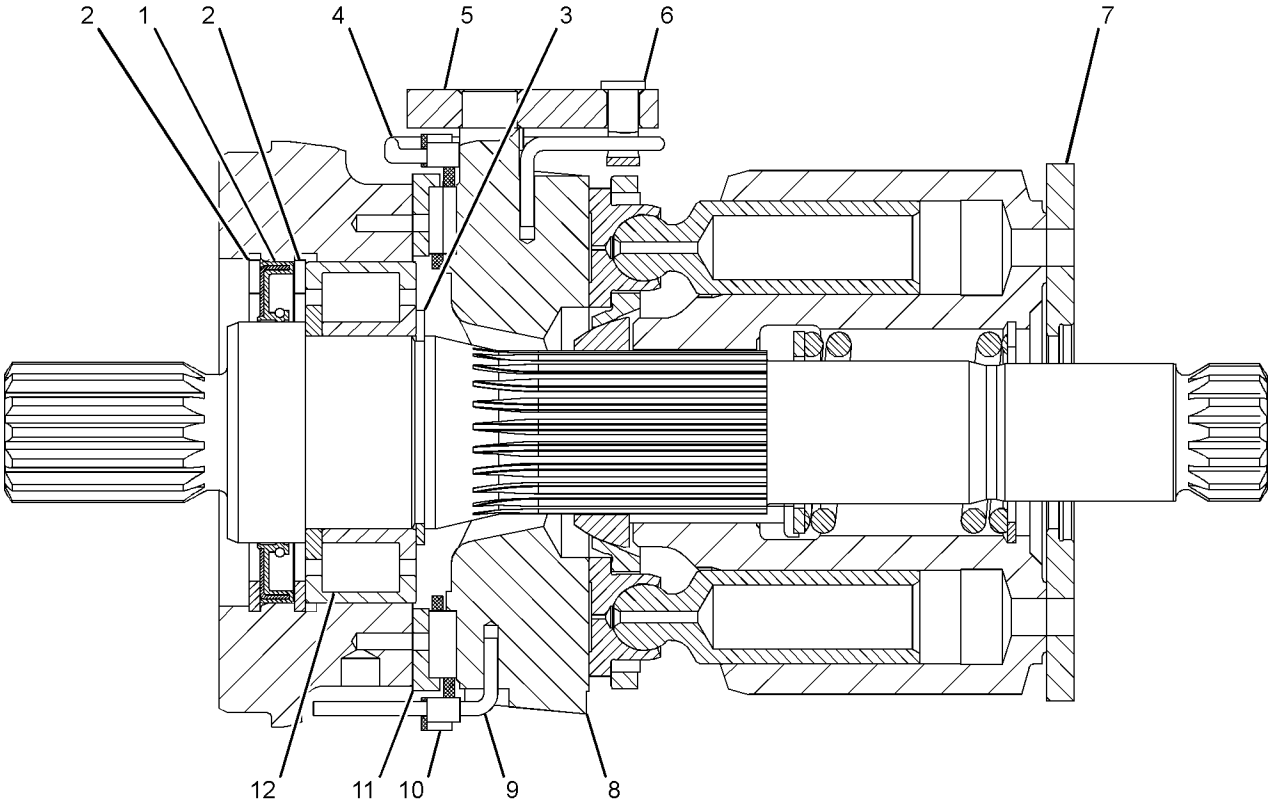

GRAPHIC #1 **<END>** g03241236

190-7632 ROTATING GP-PUMP

S/N: TJL1-UP

PART OF 296-3329, 296-3331 PUMP GP-PISTON

SMCS-5070 **i02571923**

NOTE	REF NO	GRAPHIC REF	PART NUMBER	QTY	PART NAME 1 2 3 4 5 6 (PRODUCT LEVEL)	SEE PAGE
	1	1	**194-1983**	1	SEAL-SHAFT	
	2	1	**191-4522**	1	SHAFT	
	3	1	**6V-5200**	1	RING-RETAINING	
	4	1	**122-9068**	1	WIRE	
	5	1	**117-7241**	1	PLATE	
	6	1	**112-4657**	1	PIN	
	7	1	**192-2839**	1	KIT-ROTATOR	
					(INCLUDES CYLINDER, PLATES, PINS, PISTONS, RETAINER, RING, SHIM & SPRING)	
	8	1	**117-7240**	1	CRADLE	
	9	1	**1G-3410**	1	WIRE	
	10	1	**6E-0725**	2	ROLLER	
	11	1	**117-7252**	1	CAGE	
	12	1	**125-9134**	1	BEARING AS	
	13	1	**117-7251**	1	BEARING	
	14	1	**126-9587**	1	RING-RETAINING	
	15	1	**095-0941**	1	RING-RETAINING	

190-7632 **ROTATING GP-PUMP (*contd.*)** **i02571923**

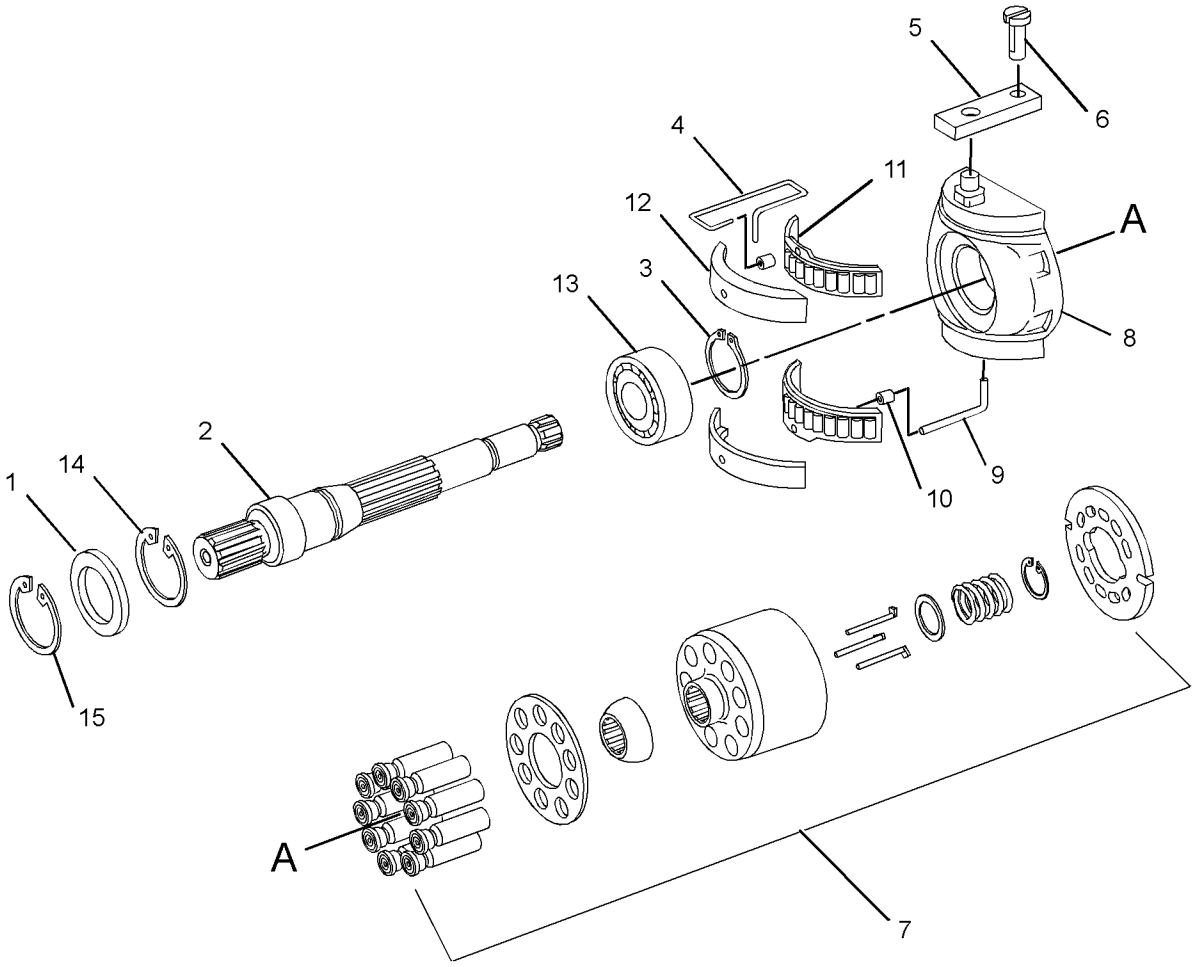

GRAPHIC #1 **<END>** g01289060

313-2545 ROTATING GP-PUMP

S/N: TJL1-UP
PART OF 296-5159, 296-5160 MOTOR GP-PISTON
ALSO AN ATTACHMENT

SMCS-5070 **i03043980**

NOTE	REF NO	GRAPHIC REF	PART NUMBER	QTY	PART NAME 1 2 3 4 5 6 (PRODUCT LEVEL)	SEE PAGE
	1	1	**168-7943**	9	PISTON AS-PUMP	
	2	1	**155-6654**	1	BARREL	
	3	1	**258-5194**	1	PLATE	
	4	1	**138-8175**	1	BEARING-SPHERICAL	
	5	1	**168-7941**	1	SPRING	
	6	1	**168-7940**	3	PIN	
	7	1	**096-0015**	1	RING-RETAINING	
	8	1	**168-7942**	1	WASHER (36.5-MM ODX2.0-MM THK)	
	9	1	**313-4424**	1	PLATE-CONTROL	

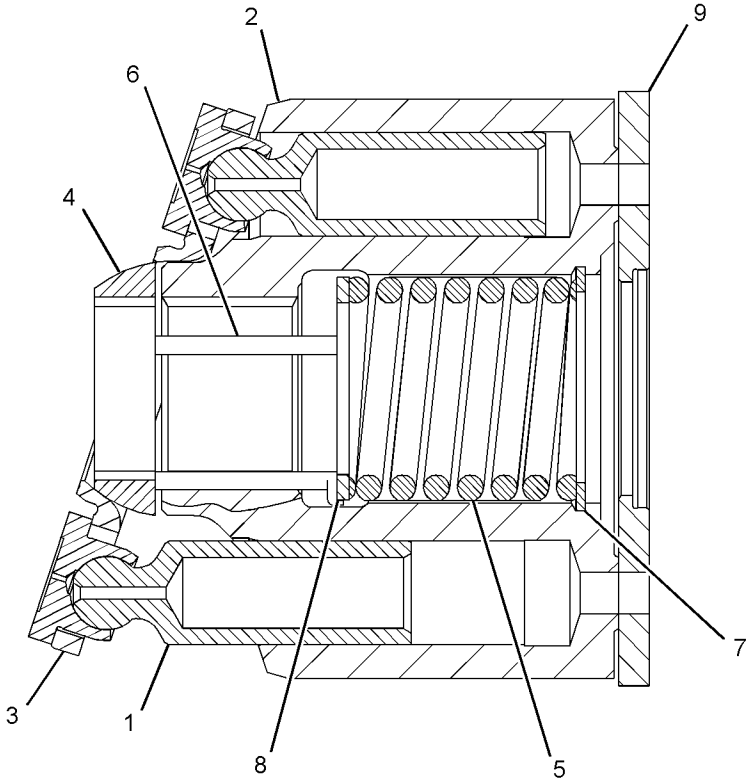

GRAPHIC #1 **<END>** g01429814

313-2590 ROTATING GP-PUMP

S/N: TJL1-755

PART OF 296-3332 PUMP GP-PISTON

SMCS-5070 **i03640336**

NOTE	REF NO	GRAPHIC REF	PART NUMBER	QTY	PART NAME 1 2 3 4 5 6 (PRODUCT LEVEL)	SEE PAGE
	1	1	**204-1452**	2	RING-RETAINING	
	2	1	**233-9744**	1	SEAL-LIP TYPE	
	3	1	**081-3698**	1	BEARING	
	4	1	**108-3565**	1	CLIP	
	5	1	**313-2597**	1	KIT-ROTARY	
					(INCLUDES BEARING, SPRING, PINS, RETAINING RING, WASHER, CONTROL PLATE, PISTONS, RETAINING PLATE & CYLINDER)	
					PARTS SHOWN IN GRAPHIC(S) WITHOUT A REFERENCE NUMBER ARE NOT SERVICED SEPARATELY	

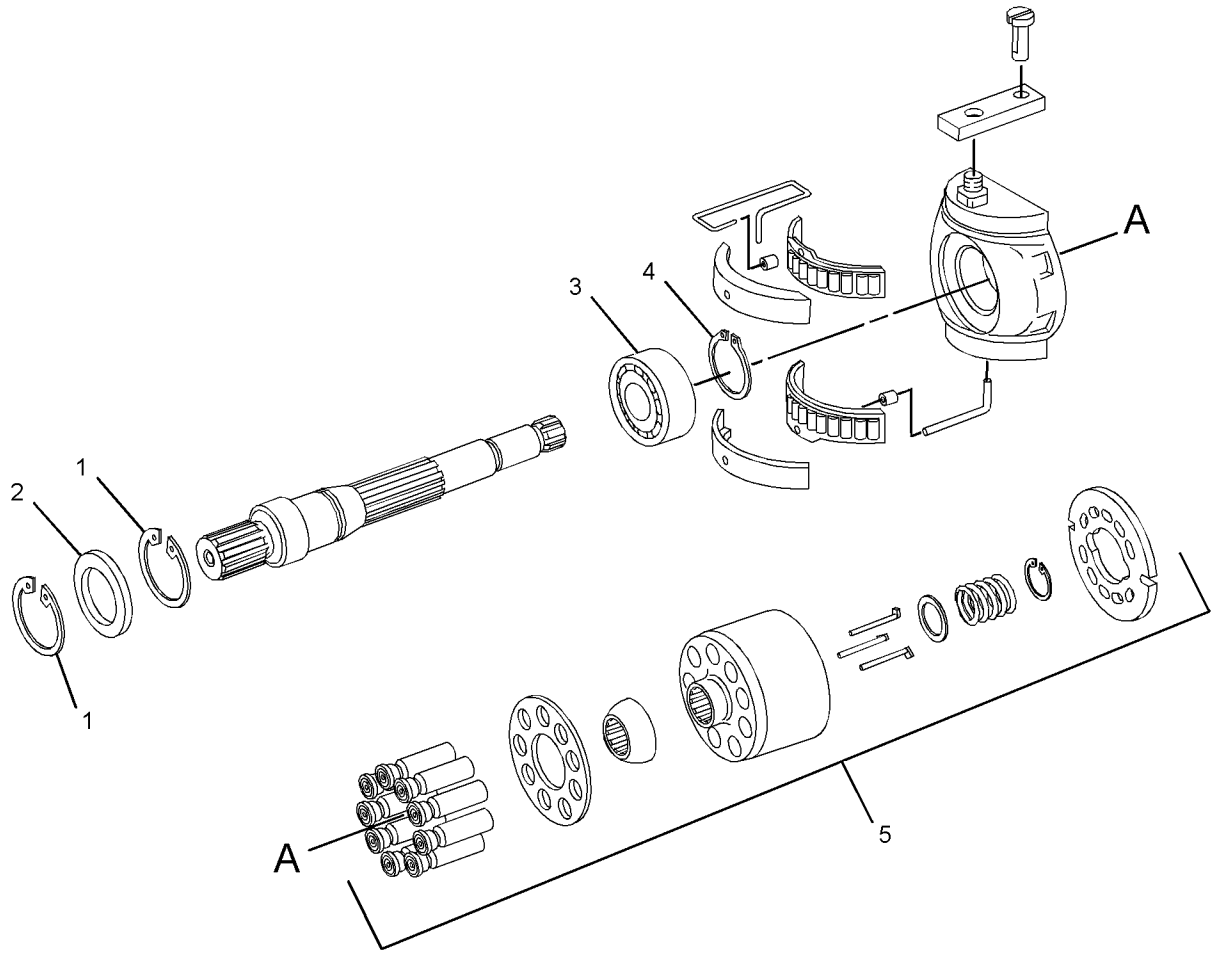

GRAPHIC #1 **<END>** g01447675

218-2751 TANK & MTG GP-HYDRAULIC

S/N: TJL1-UP

PART OF 239-0794 CHASSIS AR

SMCS-5056 **i03354880**

NOTE	REF NO	GRAPHIC REF	PART NUMBER	QTY	PART NAME 1 2 3 4 5 6 (PRODUCT LEVEL)	SEE PAGE
	1	1	**5P-4961**	2	CLAMP-HOSE	
	2	1	**7K-1181**	2	STRAP-CABLE	
	3	1	**145-3846**	1	INSERT-NYLON	
	4	1	**183-3873**	1	BREATHER (HYDRAULIC TANK)	
	5	1	**323-2978**	1	STRAP AS	
Y	6	1	*318-1033*	1	TANK GP-HYDRAULIC	336
	7	1	**326-9364**	1	PLATE AS	
	8	1	**127-5588**	1	COUPLING-REDUCER	
	9	1	**6V-8801**	1	NUT (3/8-16-THD)	
	10	1	**7X-7729**	6	WASHER (11X25X3-MM THK)	
	11	1	**8T-4121**	2	WASHER-HARD (11X21X2.5-MM THK)	
M	12	1	**8T-4133**	1	NUT (M10X1.5-THD)	
M	13	1	**8T-4195**	1	BOLT (M10X1.5X30-MM)	
M	14	1	**8T-4196**	6	BOLT (M10X1.5X35-MM)	
	15	1	**8T-4896**	1	WASHER-HARD (10.2X18.5X2.5-MM THK)	
	16	1	**298-7788**	2	BUMPER	
E	17	1	**5P-1442**		HOSE (89-CM)	
	18	1	**134-8474**	1	TUBE AS-DRAIN	

E - ORDER BY THE CENTIMETER
M - METRIC PART
Y - SEPARATE ILLUSTRATION

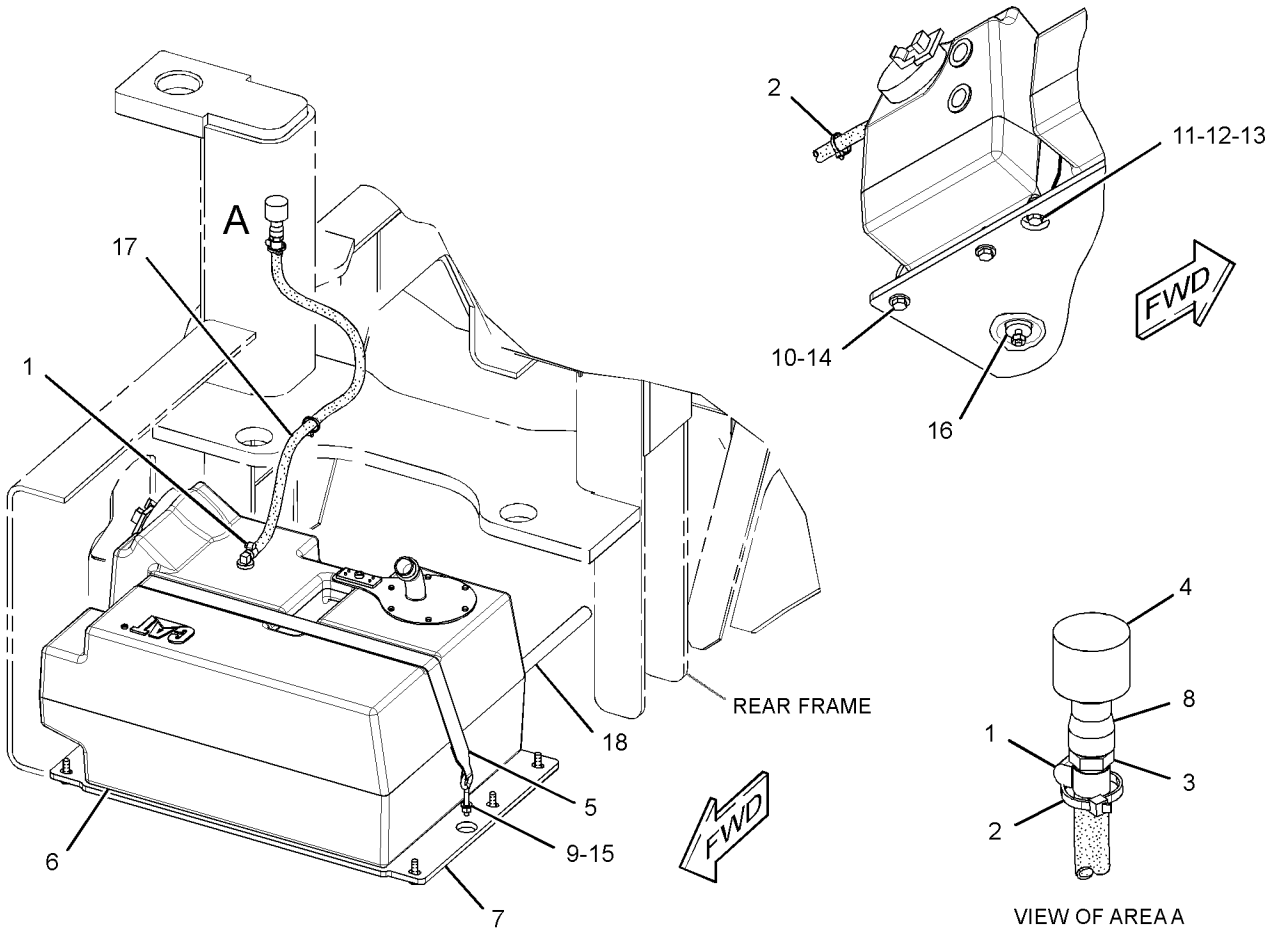

GRAPHIC #1 **<END>** g01756533

318-1033 TANK GP-HYDRAULIC

S/N: TJL1-UP

PART OF 218-2751 TANK & MTG GP-HYDRAULIC

SMCS-5056 **i03080964**

NOTE	REF NO	GRAPHIC REF	PART NUMBER	QTY	PART NAME 1 2 3 4 5 6 (PRODUCT LEVEL)	SEE PAGE
	1	1	**1G-7663**	1	STRAINER AS (HYDRAULIC TANK)	
	2	1	**6W-5698**	1	GROMMET	
	3	1	**9U-6993**	1	ADAPTER AS	
	4	1	**9Y-9236**	2	GAUGE-SIGHT (HYDRAULIC OIL LEVEL)	
	5	1	**116-0118**	2	CLIP	
	6	1	**142-8928**	1	ELBOW	
	7	1	**142-8937**	1	CAP AS-FILLER (HYDRAULIC TANK)	
	8	1	*154-5232*	1	ADAPTER AS	
		1	**3K-0360**	1	SEAL-O-RING	
		1	**4J-5477**	1	SEAL-O-RING	
		1	**112-9783**	1	ADAPTER	
	9	1	**222-7921**	1	TUBE AS	
	10	1	**273-2225**	1	PLUG-DRAIN	
	11	1	**308-3389**	1	TANK-HYDRAULIC	
	12	1	**110-0514**	1	SWITCH AS-TEMPERATURE (HYDRAULIC ALERT INDICATOR)	
		1	**102-8803**	1	KIT-RECEPTACLE (3-PIN)	
					(INCLUDES RECEPTACLE AS & WEDGE)	
		1	**186-3735**	3	PIN-CONNECTOR (16-GA TO 18-GA)	
	13	1	**132-3056**	1	SEAL-O-RING	
	14	1	*148-8354*	1	ELBOW AS	
		1	**3K-0360**	1	SEAL-O-RING	
		1	**6V-8398**	1	SEAL-O-RING	
		1	**6V-9002**	1	ELBOW	
	15	1	*148-8355*	1	ELBOW AS	
		1	**5K-9090**	1	SEAL-O-RING	
		1	**6V-9005**	1	ELBOW	
		1	**7M-8485**	1	SEAL-O-RING	
	16	1	*148-8374*	1	ELBOW AS	
		1	**3K-0360**	1	SEAL-O-RING	
		1	**6V-8397**	1	SEAL-O-RING	
		1	**6V-8723**	1	ELBOW	
	17	1	**2M-9780**	1	SEAL-O-RING	
	18	1	**2S-4078**	1	SEAL-O-RING	
	19	1	**3K-0360**	1	SEAL-O-RING	
	20	1	**5P-4115**	1	WASHER-HARD (7.2X19X2-MM THK)	
	21	1	**7M-8485**	2	SEAL-O-RING	
M	22	1	**8T-0288**	6	BOLT (M5X0.8X12-MM)	
M	23	1	**8T-4970**	1	BOLT (M6X1X14-MM)	

M - METRIC PART

318-1033 **TANK GP-HYDRAULIC (*contd.*)** **i03080964**

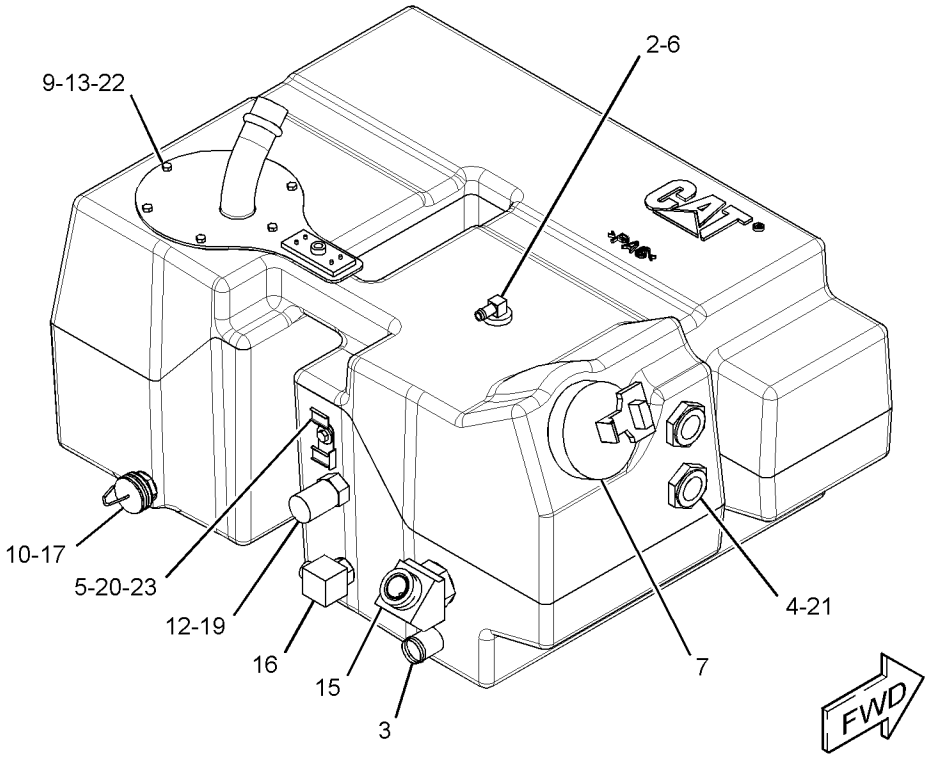

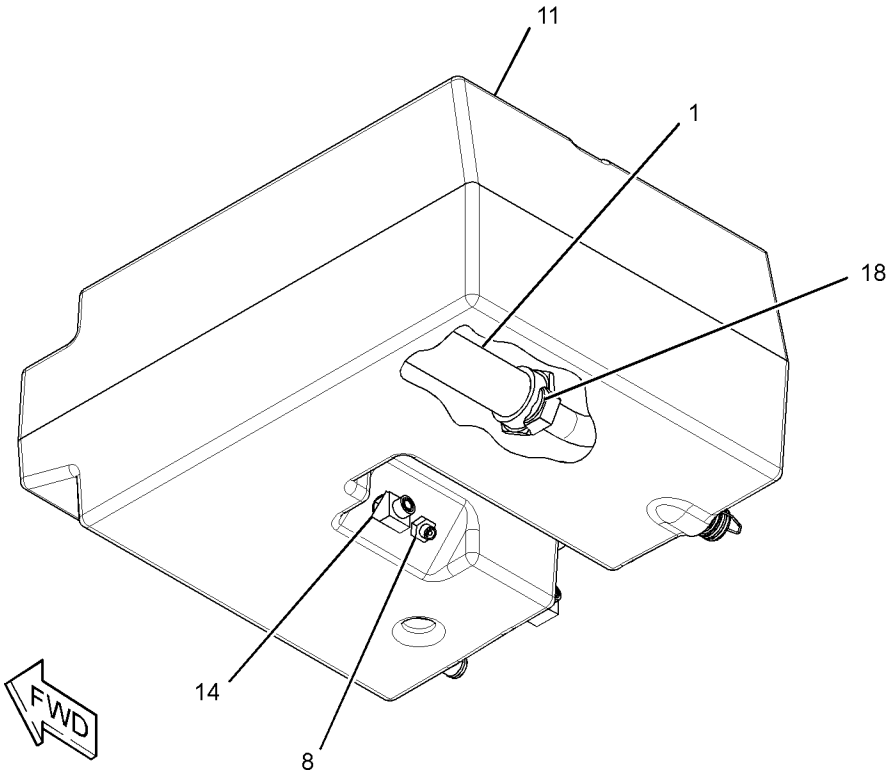

GRAPHIC #1 **<END>** g01527035

208-0368 VALVE & MTG GP-CONTROL

S/N: TJL1-UP

PART OF 224-4336 HYDRAULIC AR-PROPEL

SMCS-5051 **i03033321**

NOTE	REF NO	GRAPHIC REF	PART NUMBER	QTY	PART NAME 1 2 3 4 5 6 (PRODUCT LEVEL)	SEE PAGE
	1	1	**116-0118**	1	CLIP	
Y	2	1	**220-4133**	1	VALVE GP-CONTROL (SHIFT)	340
	3	1	*148-8325*	2	CONNECTOR AS	
					(EACH INCLUDES)	
		1	**3J-1907**	1	SEAL-O-RING	
		1	**4J-5477**	1	SEAL-O-RING	
		1	**6V-8641**	1	CONNECTOR	
	4	1	*148-8368*	1	ELBOW AS	
		1	**3J-1907**	1	SEAL-O-RING	
		1	**4J-5477**	1	SEAL-O-RING	
		1	**6V-8627**	1	ELBOW	
	5	1	**5P-4115**	1	WASHER-HARD (7.2X19X2-MM THK)	
M	6	1	**9X-2480**	2	BOLT (M6X1X45-MM)	
	7	1	**9X-8256**	1	WASHER (6.6X12X2-MM THK)	

M - METRIC PART
Y - SEPARATE ILLUSTRATION

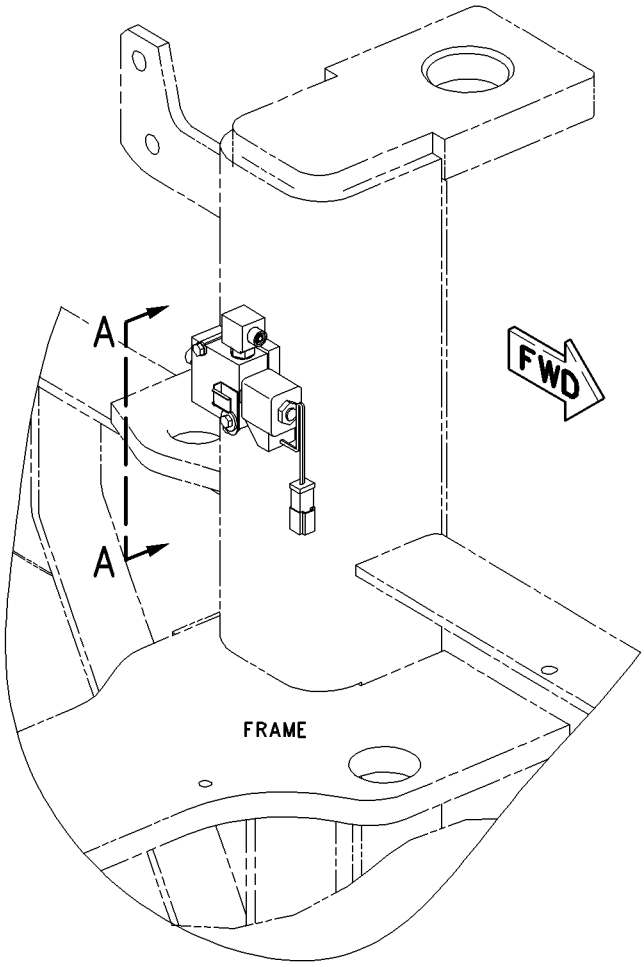

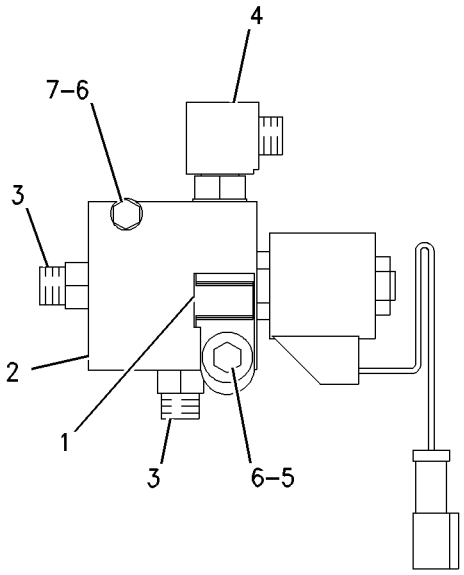

VIEW A–A

GRAPHIC #1 **<END>** g00917399

162-2453 VALVE GP-BYPASS–HYDRAULIC OIL COOLER

S/N: TJL1-UP

PART OF 220-2080 MANIFOLD & VALVE GP

SMCS-3206, 5074, 5076 **i02562083**

NOTE	REF NO	GRAPHIC REF	PART NUMBER	QTY	PART NAME 1 2 3 4 5 6 (PRODUCT LEVEL)	SEE PAGE
	1	1	**128-2034**	1	VALVE GP-BYPASS (HYDRAULIC)	
		1	**207-2055**	1	GASKET	
	2	1	**197-7864**	1	BODY-VALVE	

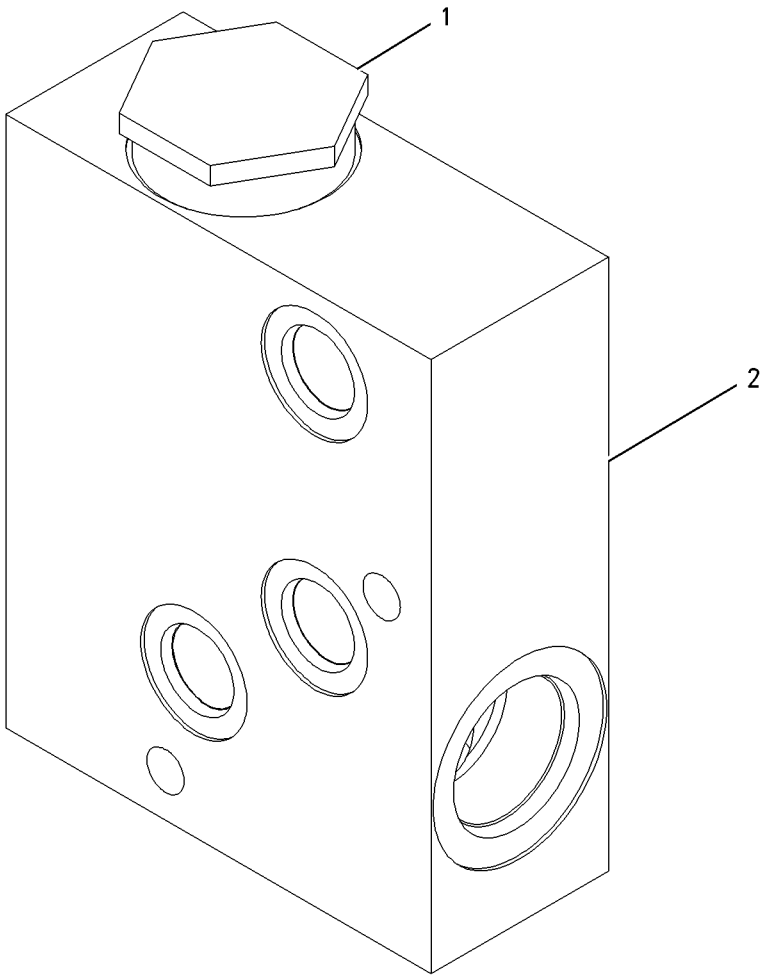

GRAPHIC #1 **<END>** g00747007

220-4133 VALVE GP-CONTROL

S/N: TJL1-UP

PART OF 208-0368 VALVE & MTG GP-CONTROL

SMCS-5051 **i03033340**

NOTE	REF NO	GRAPHIC REF	PART NUMBER	QTY	PART NAME 1 2 3 4 5 6 (PRODUCT LEVEL)	SEE PAGE
Y	1	1	**220-4165**	1	VALVE GP-SOLENOID (SHIFT)	348
	2	1	**3K-0360**	1	SEAL-O-RING	

Y - SEPARATE ILLUSTRATION

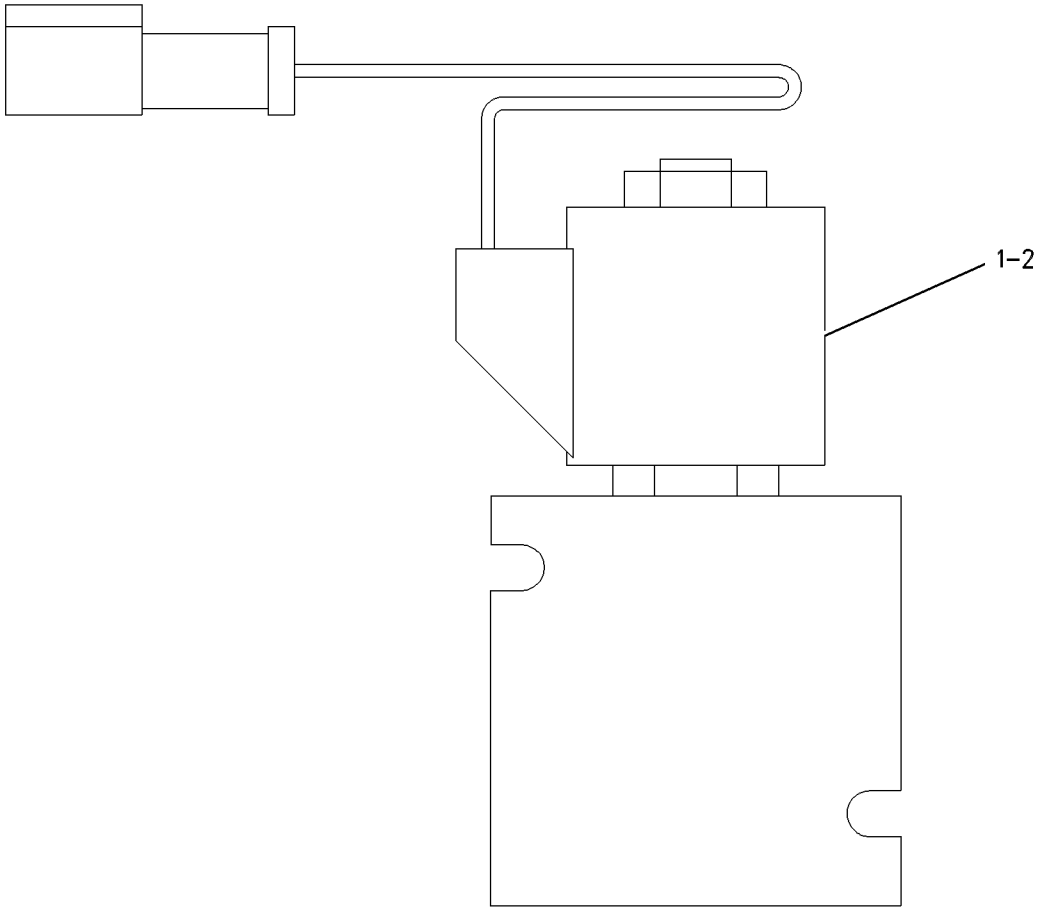

GRAPHIC #1 **<END>** g00600384

254-4251 VALVE GP-CONTROL

S/N: TJL1-UP
PART OF 296-5159, 296-5160 MOTOR GP-PISTON
ALSO AN ATTACHMENT

SMCS-5051 **i03469203**

NOTE	REF NO	GRAPHIC REF	PART NUMBER	QTY	PART NAME 1 2 3 4 5 6 (PRODUCT LEVEL)	SEE PAGE
	1	1	**7I-2750**	1	SEAL	
	2	1	**9X-7377**	1	SEAL-O-RING	
	3	1	**6V-5142**	1	SEAL-O-RING	
	4	1	**3E-6769**	1	SEAL-O-RING	

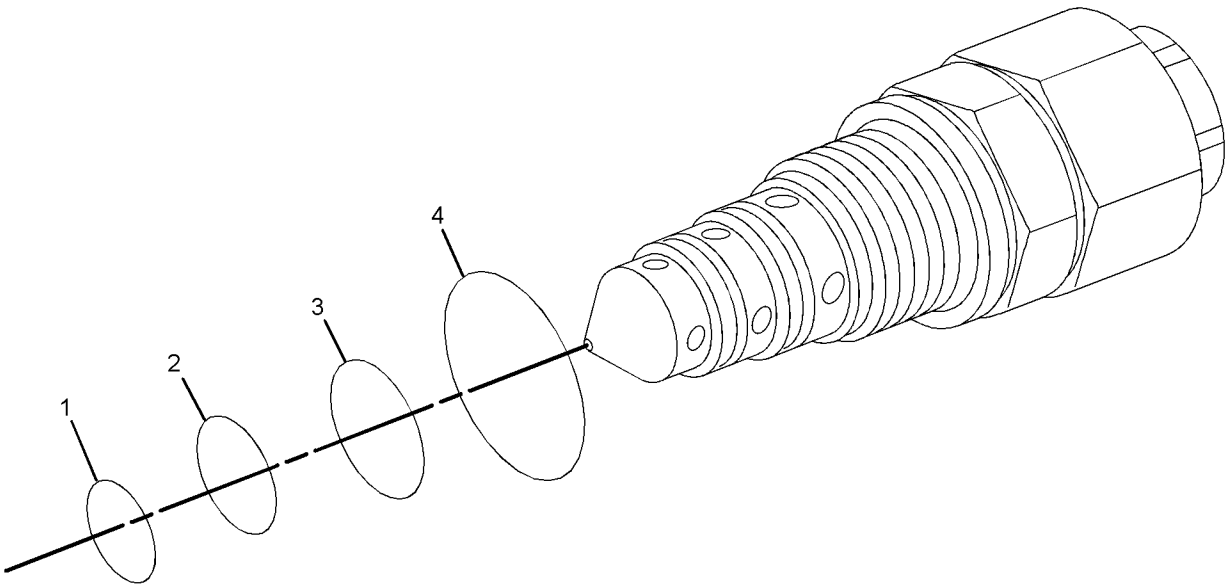

GRAPHIC #1 **<END>** g01810624

254-8191 VALVE GP-PUMP CONTROL

S/N: TJL1-UP

PART OF 296-3329 PUMP GP-PISTON

SMCS-5455 **i03033700**

NOTE	REF NO	GRAPHIC REF	PART NUMBER	QTY	PART NAME 1 2 3 4 5 6 (PRODUCT LEVEL)	SEE PAGE
	1	1	**112-4684**	1	SHIM	
M	2	1	**196-9444**	2	BOLT-SOCKET HEAD (M5X0.8X10-MM)	
	3	1	**112-4678**	1	SCREW	
	4	1	**112-4677**	1	SCREW	
	5	1	**112-4642**	3	SEAL-O-RING	
	6	1	**177-8723**	1	PIN-ROLLER	
M	7	1	**8T-2922**	4	BOLT-SOCKET HEAD (M6X1X65-MM)	
	8	1	**135-8072**	1	SWITCH-LIMIT	
	9	1	**112-4679**	1	SEAL-O-RING	
	10	1	**6H-9691**	1	SEAL-O-RING	
	11	1	**112-4686**	1	PIN	
	12	1	**112-4682**	1	SEAL-O-RING	
	13	1	**209-3565**	1	SEAL	
	14	1	**6V-6580**	1	SEAL-O-RING	

PARTS SHOWN IN GRAPHIC(S) WITHOUT A REFERENCE NUMBER ARE NOT SERVICED SEPARATELY

M - METRIC PART

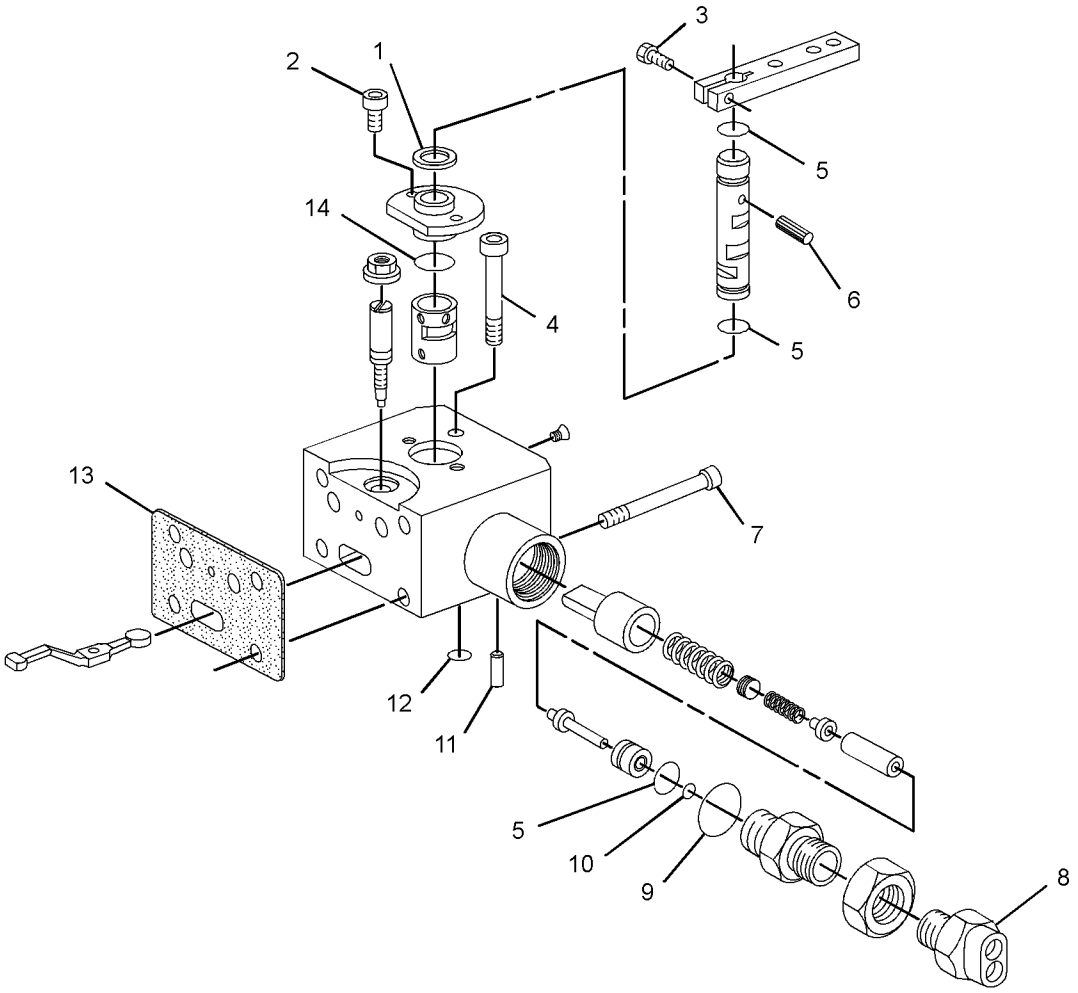

GRAPHIC #1 **<END>** g01548635

255-8686 VALVE GP-PUMP CONTROL

S/N: TJL1-UP

PART OF 296-3331 PUMP GP-PISTON

SMCS-5455 **i03076886**

NOTE	REF NO	GRAPHIC REF	PART NUMBER	QTY	PART NAME 1 2 3 4 5 6 (PRODUCT LEVEL)	SEE PAGE
	1	1	**112-4684**	1	SHIM	
M	2	1	**196-9444**	2	BOLT-SOCKET HEAD (M5X0.8X10-MM)	
	3	1	**112-4677**	1	SCREW	
	4	1	**112-4678**	1	SCREW	
	5	1	**112-4682**	1	SEAL-O-RING	
	6	1	**177-8723**	1	PIN-ROLLER	
M	7	1	**8T-2922**	4	BOLT-SOCKET HEAD (M6X1X65-MM)	
	8	1	**112-4685**	1	SCREW-LOCK	
	9	1	**112-4686**	1	PIN	
	10	1	**112-4642**	2	SEAL-O-RING	
	11	1	**209-3565**	1	SEAL	
	12	1	**6V-6580**	1	SEAL-O-RING	

M - METRIC PART

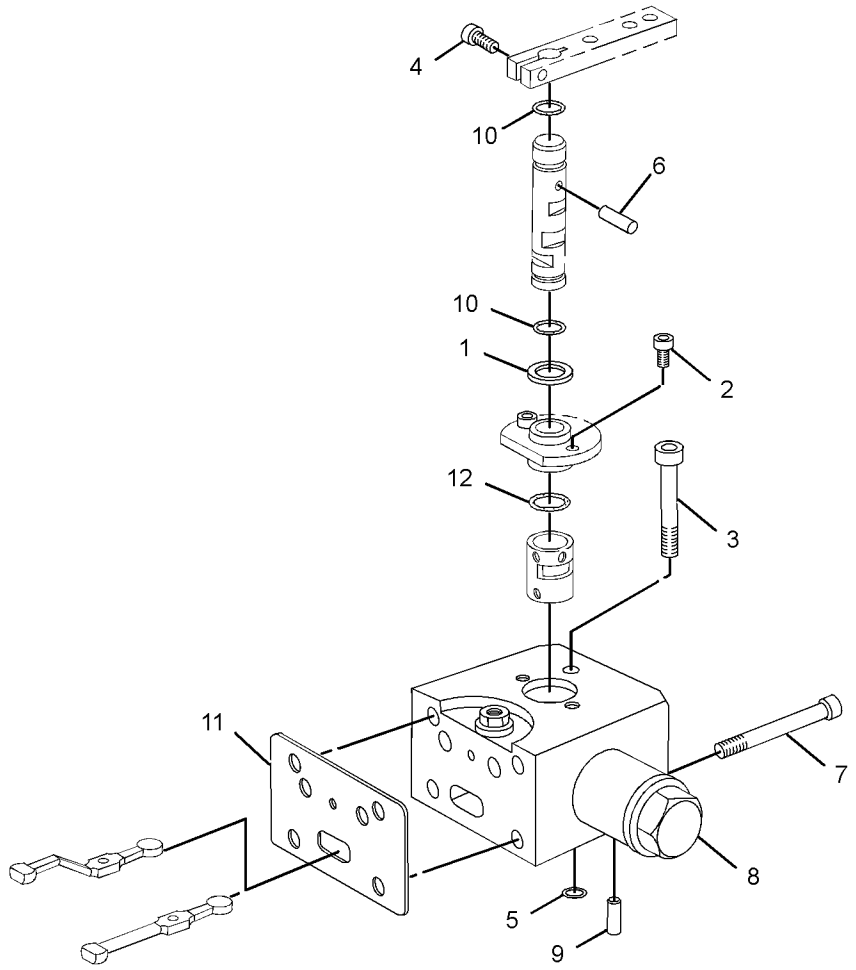

GRAPHIC #1 **<END>** g01260744

313-3414 VALVE GP-PUMP CONTROL

S/N: TJL1-755

PART OF 296-3332 PUMP GP-PISTON

SMCS-5455 **i03031956**

NOTE	REF NO	GRAPHIC REF	PART NUMBER	QTY	PART NAME 1 2 3 4 5 6 (PRODUCT LEVEL)	SEE PAGE
	1	1	**313-6014**	1	SOLENOID AS	
	2	1	**160-1757**	1	PLUG	
M	3	1	**8C-6965**	3	BOLT-SOCKET HEAD (M6X1X45-MM)	
	4	1	**192-1173**	1	BODY	
M	5	1	**9X-2537**	2	BOLT-SOCKET HEAD (M6X1X70-MM)	
	6	1	**205-5007**	1	PISTON-CONTROL	
	7	1	**1G-3455**	2	SPRING	
	8	1	**192-1172**	2	RETAINER	
	9	1	**5P-5874**	1	SEAL-O-RING	
	10	1	**120-4394**	2	PLUG-BREAK OFF	
	11	1	**209-3565**	1	SEAL	

M - METRIC PART

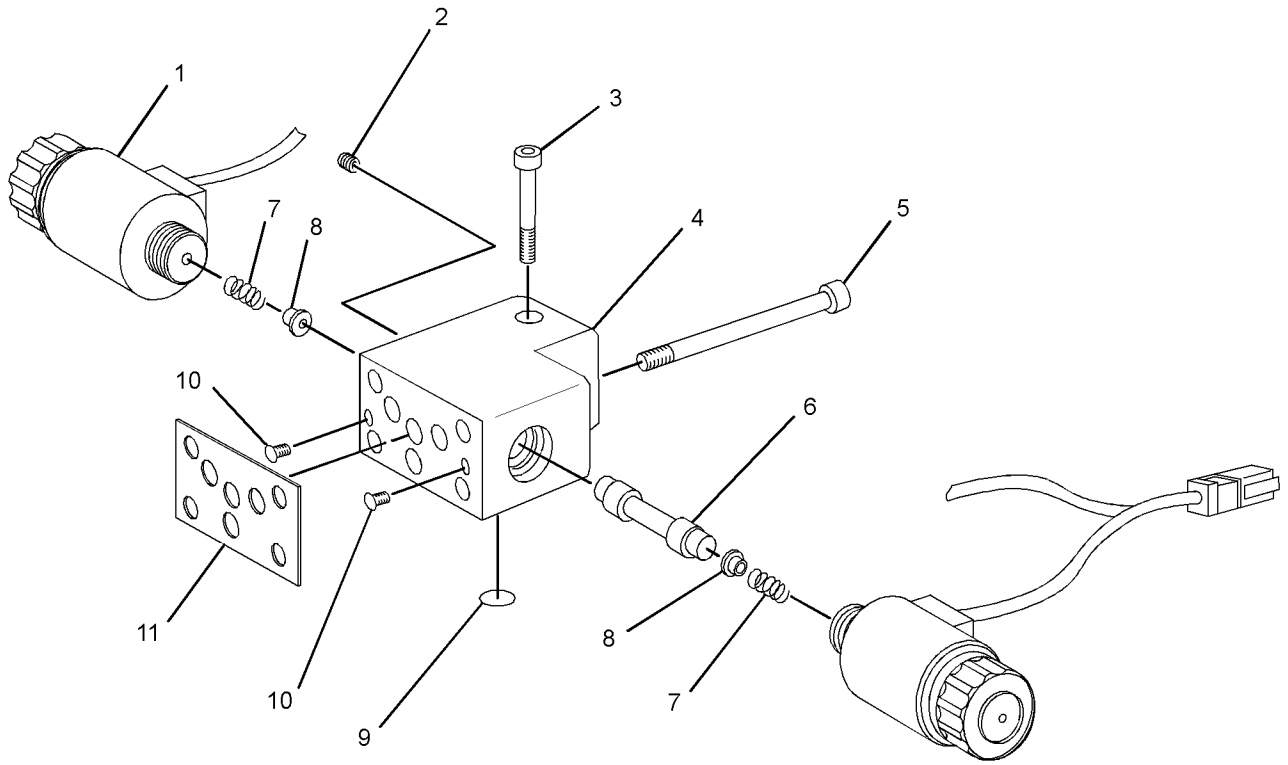

GRAPHIC #1 **<END>** g01453840

320-1483 VALVE GP-PUMP CONTROL

S/N: TJL756-UP

PART OF 315-9743 PUMP GP-PISTON

SMCS-5455 **i05067329**

NOTE	REF NO	GRAPHIC REF	PART NUMBER	QTY	PART NAME 1 2 3 4 5 6 (PRODUCT LEVEL)	SEE PAGE
	1	1	**321-5984**	2	COIL-SOLENOID	
	2	1	**160-1757**	1	PLUG	
M	3	1	**8C-6965**	3	BOLT-SOCKET HEAD (M6X1X45-MM)	
	4	1	**192-1173**	1	BODY	
M	5	1	**9X-2537**	2	BOLT-SOCKET HEAD (M6X1X70-MM)	
	6	1	**106-5618**	2	SPRING	
	7	1	**192-1172**	2	RETAINER	
	8	1	**5P-5874**	1	SEAL-O-RING	
	9	1	**120-4394**	2	PLUG-BREAK OFF	
	10	1	**209-3565**	1	SEAL	
	11	1	**205-5007**	1	PISTON-CONTROL	

M - METRIC PART

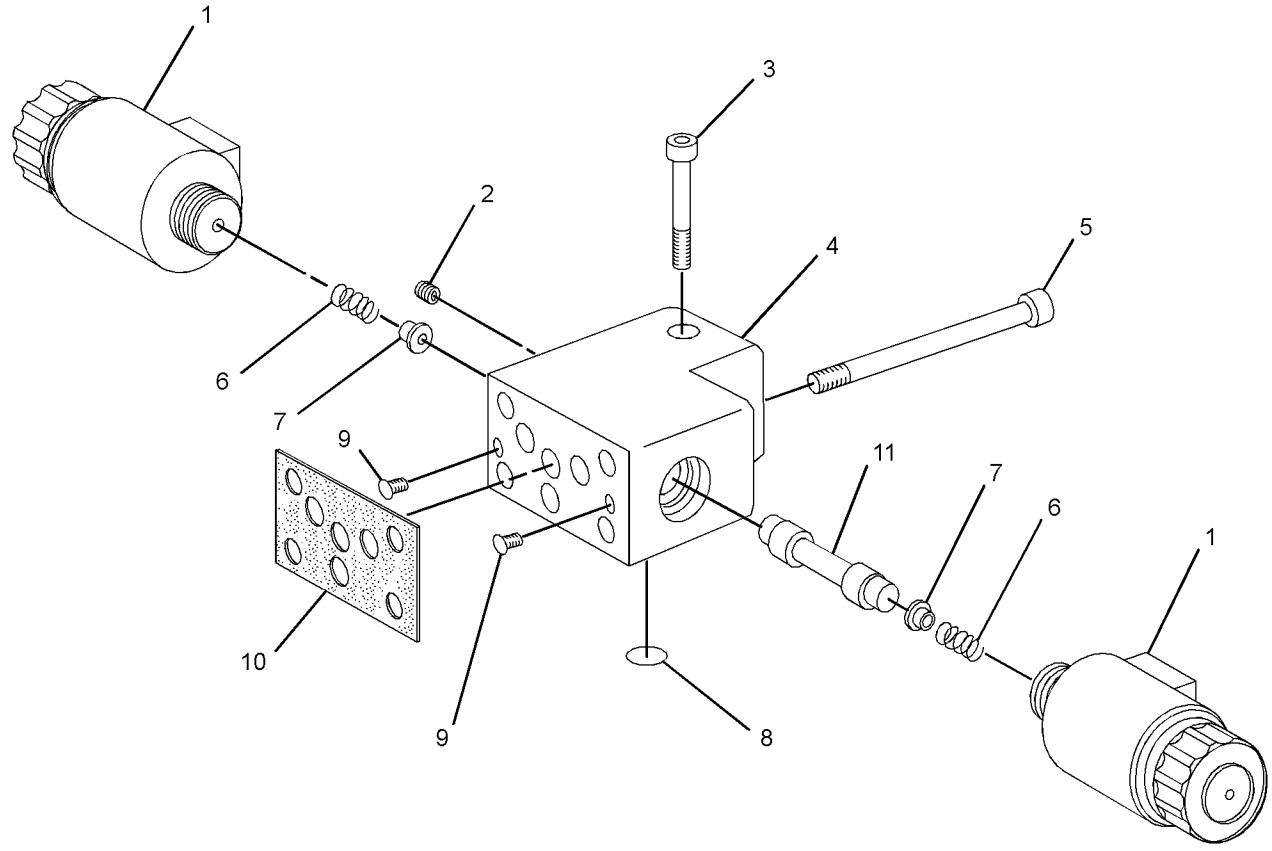

GRAPHIC #1 **<END>** g01577475

123-7557 VALVE GP-RELIEF

S/N: TJL1-UP

PART OF 255-8680, 314-4016 HEAD GP-PUMP

SMCS-5069, 5117 **i02571927**

NOTE	REF NO	GRAPHIC REF	PART NUMBER	QTY	PART NAME 1 2 3 4 5 6 (PRODUCT LEVEL)	SEE PAGE
	1	1	**123-7575**	1	SCREW-LOCK	
	2	1	**123-7589**	1	VALVE-BUSHING	
	3	1	**123-7590**	1	CONTROL-PISTON	
	4	1	**6E-4396**	1	PISTON	
	5	1	**6E-4397**	1	PISTON	
	6	1	**6E-4399**	1	SPRING	
	7	1	**6E-4400**	2	RETAINER-SPRING	
M	8	1	**6E-4401**	1	SETSCREW-ADJUSTMENT	
	9	1	**123-7591**	1	SEAL-O-RING	
M	10	1	**6E-1607**	1	LOCKNUT-SEALING	
	11	1	**6V-5586**	1	SEAL-O-RING	

M - METRIC PART

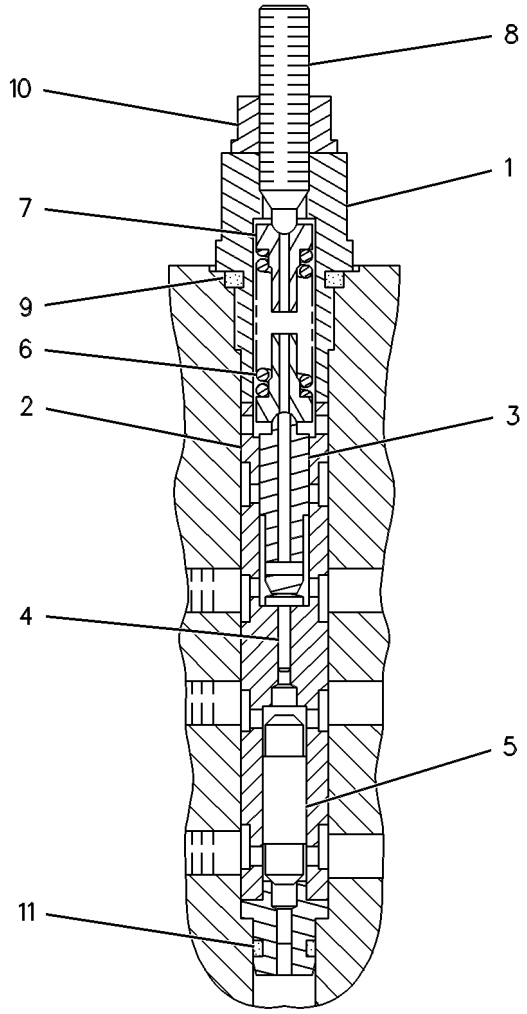

GRAPHIC #1 **<END>** g00250017

373-1991 VALVE GP-RELIEF–CHARGE PRESSURE, VIBRATORY

S/N: TJL756-UP

PART OF 369-4725 HEAD GP-PUMP

SMCS-5069, 5117

i05067371

NOTE	REF NO	GRAPHIC REF	PART NUMBER	QTY	PART NAME 1 2 3 4 5 6 (PRODUCT LEVEL)	SEE PAGE
	1	1	**112-4645**	1	SPRING	
	2	1	**204-1456**	1	SHIM	
	3	1	**167-7715**	1	RETAINER-SPRING	
	4	1	**177-7747**	1	RING	
	5	1	**117-7236**	1	PLUG	
	6	1	**6V-5326**	1	SEAL-O-RING	
	7	1	**144-9102**	1	ORIFICE	

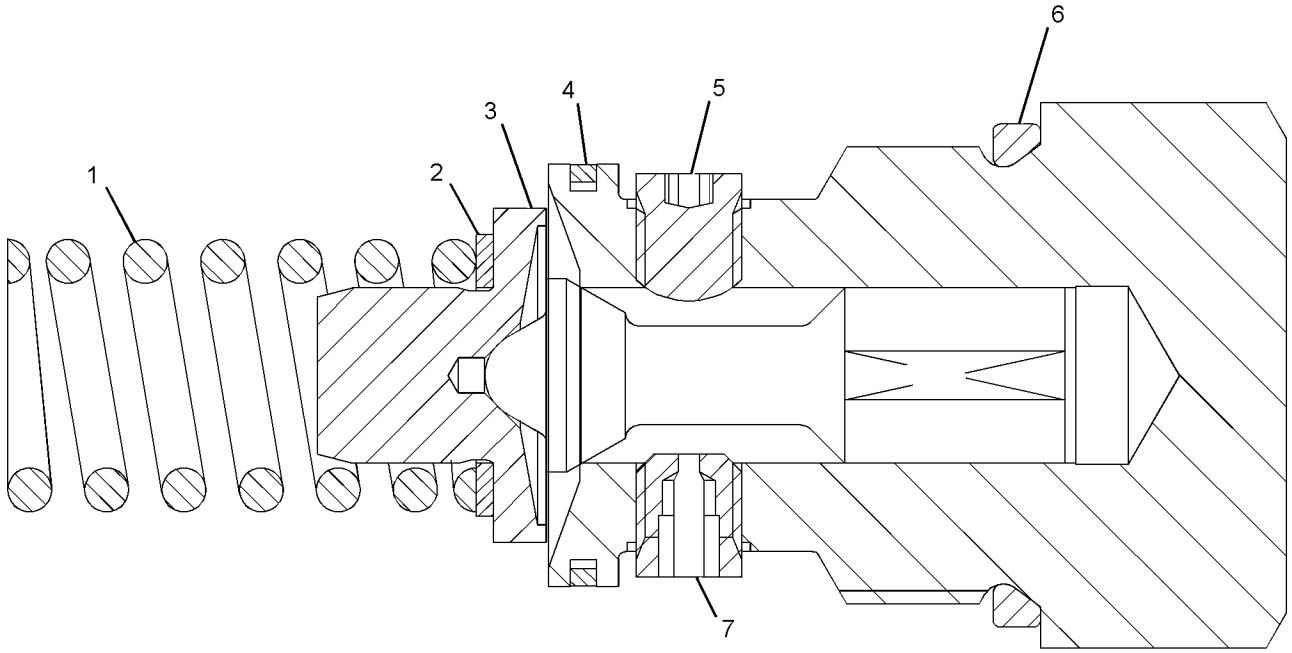

GRAPHIC #1

<END>

g03242020

220-4165 VALVE GP-SOLENOID–SHIFT

S/N: TJL1-UP

PART OF 220-4133 VALVE GP-CONTROL

SMCS-5479 **i03033360**

NOTE	REF NO	GRAPHIC REF	PART NUMBER	QTY	PART NAME 1 2 3 4 5 6 (PRODUCT LEVEL)	SEE PAGE
	1	1	**223-3384**	1	COIL AS	
	2	1	**174-3223**	1	VALVE-SOLENOID	
					AVAILABLE REPAIR KIT(S):	
			163-6513		KIT-SEAL (SHIFT SOLENOID VALVE)	
					(INCLUDES SEALS)	

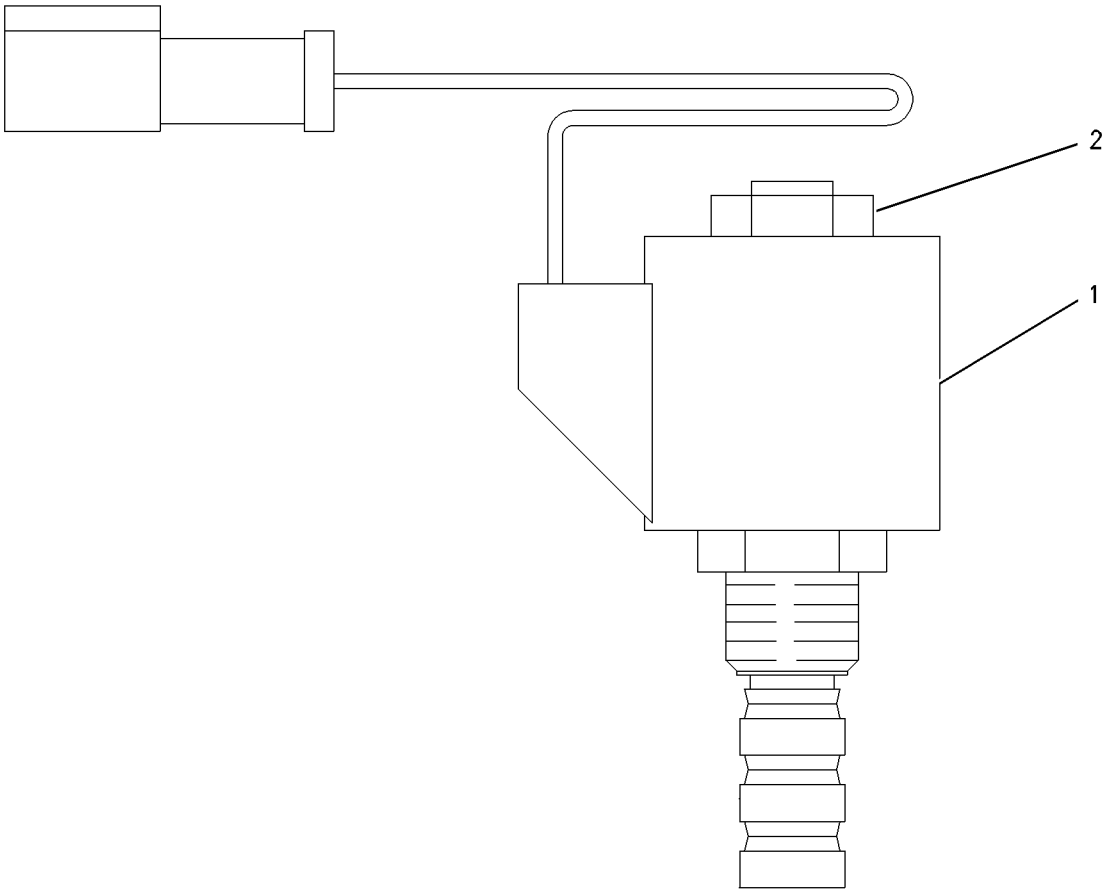

GRAPHIC #1 **<END>** g00696704

193-5892 DRIVE GP-SUPPORT & VIBRATORY

S/N: TJL1-UP
PART OF 220-4051 DRUM GP-DRIVE & VIBRATORY
AN ATTACHMENT
TYPE 1

SMCS-6605, 6606 **i03063083**

NOTE	REF NO	GRAPHIC REF	PART NUMBER	QTY	PART NAME 1 2 3 4 5 6 (PRODUCT LEVEL)	SEE PAGE
	1	1	**9X-8257**	8	WASHER (17.5X30X3.5-MM THK)	
Y	2	1	*140-9614*	1	MOTOR & MTG GP-VIBRATORY	359
	3	1	**227-0172**	6	MOUNT	
	4	1	**152-1261**	1	BRACKET	
	5	1	**155-4850**	1	SHAFT AS	
Y	6	1	**159-9405**	1	SUPPORT GP-VIBRATORY	365
	7	1	**193-5893**	1	PLATE	
	8	1	**193-5894**	2	BRACKET	
	9	1	**061-9458**	1	SEAL-O-RING	
	10	1	**5P-5397**	1	SEAL-O-RING	
M	11	1	**7X-2553**	8	BOLT (M16X2X40-MM)	
M	12	1	**7X-2561**	6	BOLT (M20X2.5X35-MM)	
M	13	1	**7X-2562**	6	BOLT (M20X2.5X45-MM)	
	14	1	**8T-4994**	20	WASHER-HARD (20X36.5X3.5-MM THK)	
M	15	1	**8T-5460**	6	BOLT (M20X2.5X40-MM)	
M	16	1	**8T-6430**	2	BOLT (M20X2.5X50-MM)	

M - METRIC PART
Y - SEPARATE ILLUSTRATION

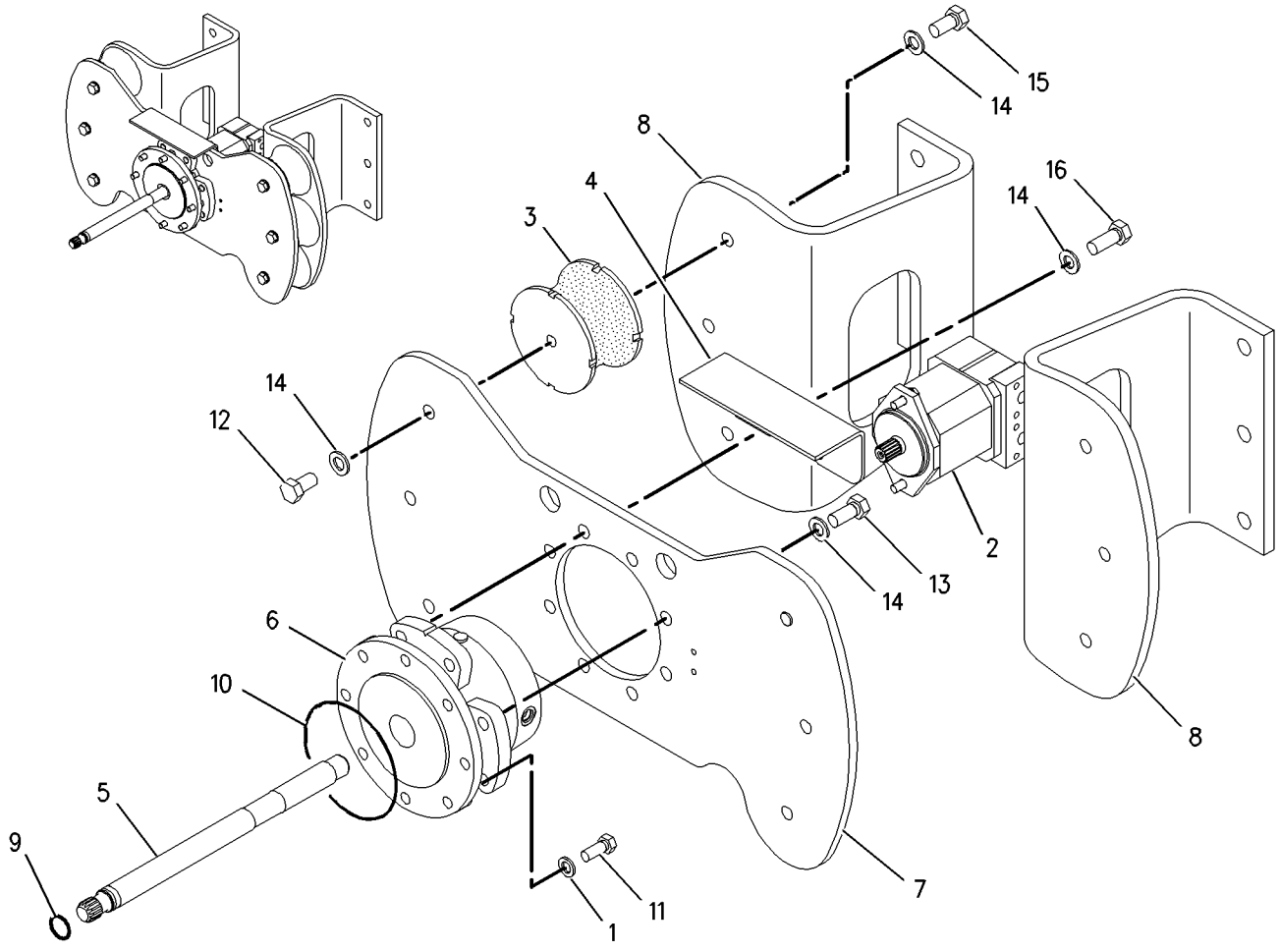

GRAPHIC #1 **<END>** g00916911

193-5892 DRIVE GP-SUPPORT & VIBRATORY

S/N: TJL1-UP
PART OF 220-4051 DRUM GP-DRIVE & VIBRATORY
AN ATTACHMENT
TYPE 2

SMCS-6605, 6606

i05234672

NOTE	REF NO	GRAPHIC REF	PART NUMBER	QTY	PART NAME 1 2 3 4 5 6 (PRODUCT LEVEL)	SEE PAGE
	1	1	**9X-8257**	8	WASHER (17.5X30X3.5-MM THK)	
Y	2	1	*140-9614*	1	MOTOR & MTG GP-VIBRATORY	359
	3	1	**227-0172**	6	MOUNT	
	4	1	**152-1261**	1	BRACKET	
	5	1	**155-4850**	1	SHAFT AS	
Y	6	1	**159-9405**	1	SUPPORT GP-VIBRATORY	365
C	7	1	**344-1401**	1	PLATE	
C	8	1	**344-1409**	2	BRACKET	
	9	1	**061-9458**	1	SEAL-O-RING	
	10	1	**5P-5397**	1	SEAL-O-RING	
M	11	1	**7X-2553**	8	BOLT (M16X2X40-MM)	
CM	12	1	**304-9129**	2	BOLT (M20X2.5X55-MM)	
CM	13	1	**8T-6430**	6	BOLT (M20X2.5X50-MM)	
	14	1	**8T-4123**	20	WASHER (3.62X5.75X0.375-MM THK)	
CM	15	1	**8T-5460**	12	BOLT (M20X2.5X40-MM)	

C - CHANGE FROM PREVIOUS TYPE
M - METRIC PART
Y - SEPARATE ILLUSTRATION

193-5892 **DRIVE GP-SUPPORT & VIBRATORY (*contd.*)** **i05234672**

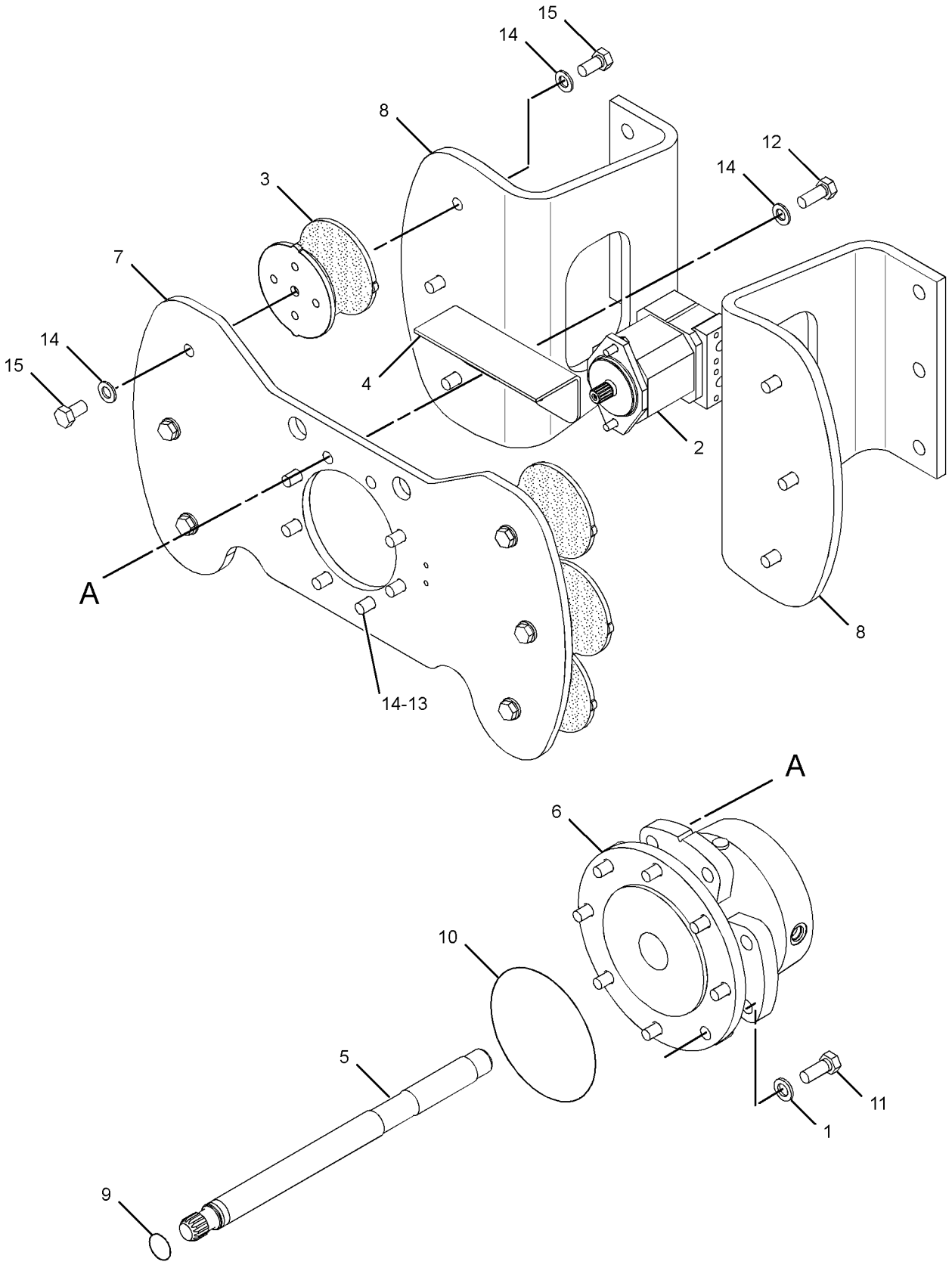

GRAPHIC #1 **<END>** g02250833

242-3498 DRIVE GP-SUPPORT & VIBRATORY

S/N: TJL1-UP

PART OF 242-3497 DRUM GP-DRIVE & VIBRATORY

AN ATTACHMENT

SMCS-6605, 6606 **i04658623**

NOTE	REF NO	GRAPHIC REF	PART NUMBER	QTY	PART NAME 1 2 3 4 5 6 (PRODUCT LEVEL)	SEE PAGE
	1	1	**9X-8257**	8	WASHER (17.5X30X3.5-MM THK)	
Y	2	1	*140-9614*	1	MOTOR & MTG GP-VIBRATORY	359
	3	1	**152-1261**	1	BRACKET	
	4	1	**155-4850**	1	SHAFT AS	
Y	5	1	**159-9405**	1	SUPPORT GP-VIBRATORY	365
	6	1	**344-1401**	1	PLATE	
	7	1	**344-1409**	2	BRACKET	
	8	1	**235-5027**	6	MOUNT	
	9	1	**061-9458**	1	SEAL-O-RING	
	10	1	**5P-5397**	1	SEAL-O-RING	
M	11	1	**7X-2553**	8	BOLT (M16X2X40-MM)	
M	12	1	**304-9129**	2	BOLT (M20X2.5X55-MM)	
M	13	1	**8T-6430**	6	BOLT (M20X2.5X50-MM)	
	14	1	**8T-4123**	20	WASHER (3.62X5.75X0.375-MM THK)	
M	15	1	**8T-5460**	12	BOLT (M20X2.5X40-MM)	

M - METRIC PART
Y - SEPARATE ILLUSTRATION

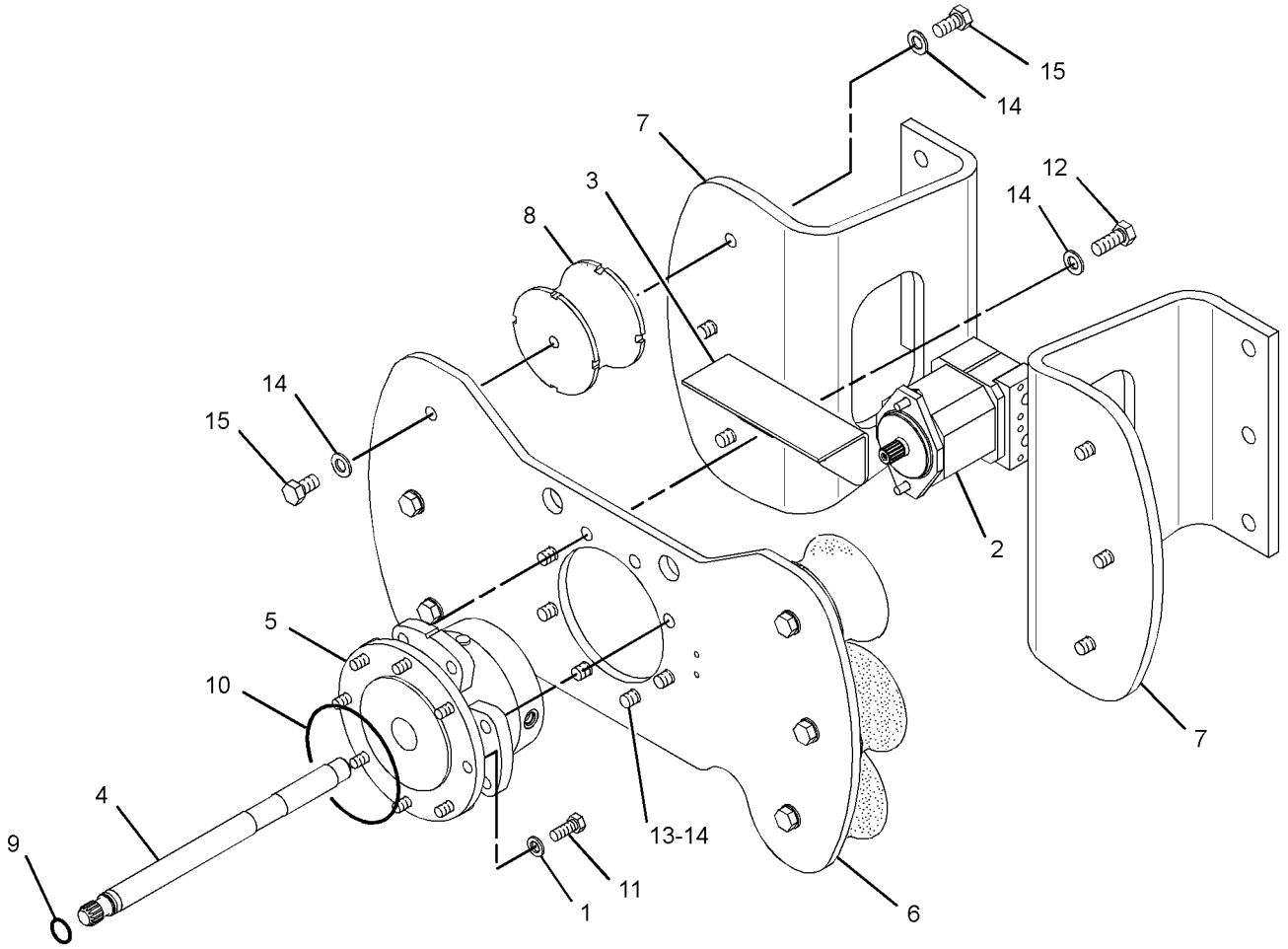

GRAPHIC #1 **<END>** g01941015

222-1889 HOUSING GP-ECCENTRIC WEIGHT–LH

S/N: TJL1-UP
PART OF 220-4053 DRUM GP-SMOOTH
AN ATTACHMENT

SMCS-6606 **i03079271**

NOTE	REF NO	GRAPHIC REF	PART NUMBER	QTY	PART NAME 1 2 3 4 5 6 (PRODUCT LEVEL)	SEE PAGE
	1	1	**5P-4484**	2	PLUG-MAGNETIC (ECCENTRIC WEIGHT)	
	2	1	**126-0287**	1	SHAFT	
	3	1	**126-9339**	2	SEAL	
	4	1	**126-9340**	2	BEARING	
	5	1	**150-2511**	1	SLEEVE	
Y	6	1	**222-1891**	1	SHAFT GP-ECCENTRIC WEIGHT	364
	7	1	**146-9502**	1	HOUSING-BEARING	
	8	1	**146-9504**	1	HOUSING-BEARING	
	9	1	**9X-8257**	6	WASHER (17.5X30X3.5-MM THK)	
	10	1	**129-9124**	1	SEAL-O-RING	
M	11	1	**6V-3940**	8	BOLT (M8X1.25X25-MM)	
	12	1	**7M-8485**	2	SEAL-O-RING	
M	13	1	**8T-4779**	6	BOLT (M16X2X35-MM)	
	14	1	**4B-4158**	2	SCREW-DRIVE (NO 4XO.25-IN)	
	15	1	**146-7512**	1	PLATE-IDENTIFICATION (ECCENTRIC WEIGHT)	

M - METRIC PART
Y - SEPARATE ILLUSTRATION

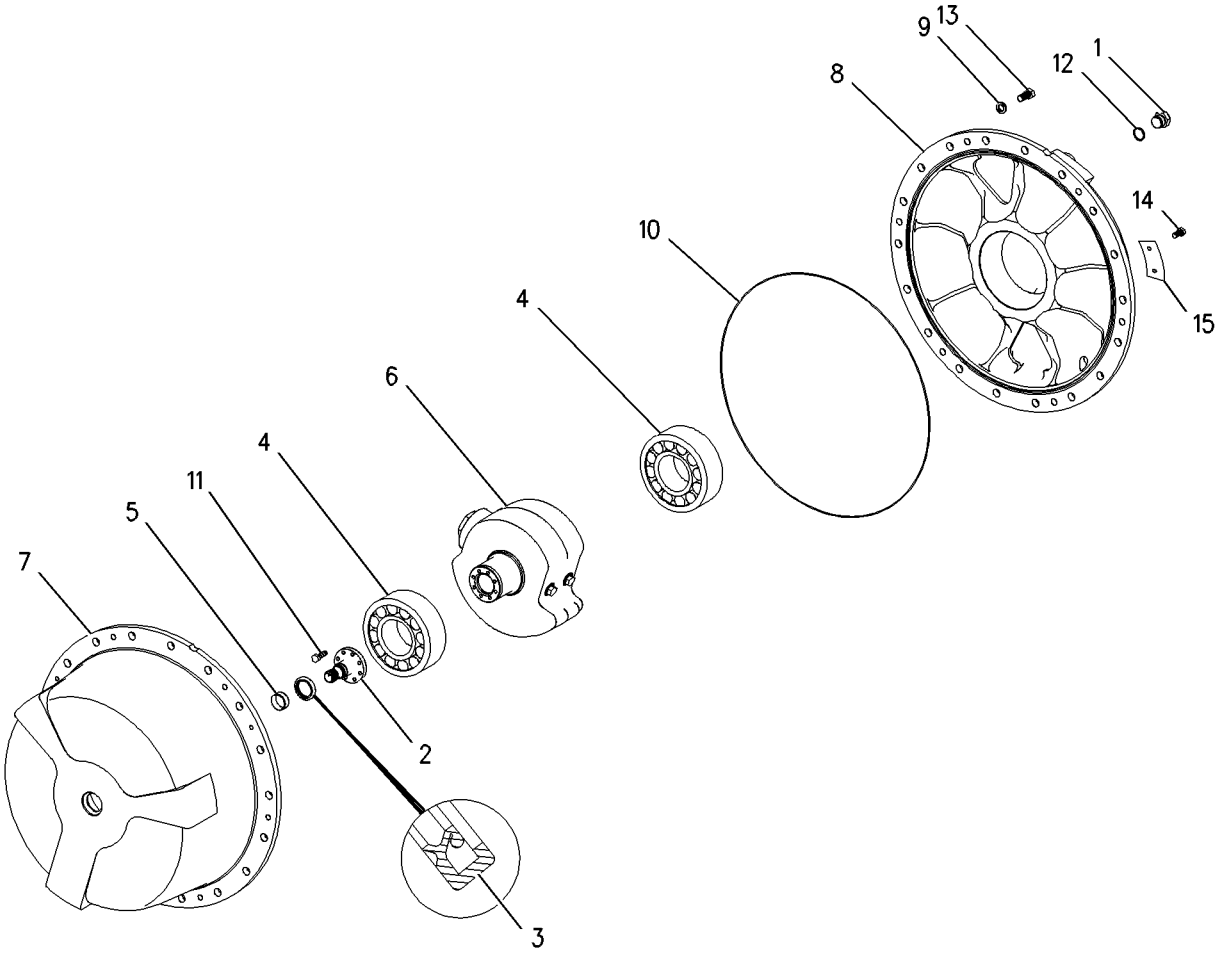

GRAPHIC #1 **<END>** g01004803

222-1890 HOUSING GP-ECCENTRIC WEIGHT—RH

S/N: TJL1-UP
PART OF 220-4053 DRUM GP-SMOOTH
AN ATTACHMENT

SMCS-6606 **i03079273**

NOTE	REF NO	GRAPHIC REF	PART NUMBER	QTY	PART NAME 1 2 3 4 5 6 (PRODUCT LEVEL)	SEE PAGE
	1	1	**5P-4484**	2	PLUG-MAGNETIC (ECCENTRIC WEIGHT)	
	2	1	**126-0288**	1	SHAFT	
	3	1	**148-3452**	1	FLANGE	
	4	1	**126-9339**	4	SEAL	
	5	1	**126-9340**	2	BEARING	
	6	1	**150-2511**	1	SLEEVE	
Y	7	1	**222-1891**	1	SHAFT GP-ECCENTRIC WEIGHT	364
	8	1	**146-9502**	1	HOUSING-BEARING	
	9	1	**146-9503**	1	HOUSING-BEARING	
	10	1	**9X-8257**	6	WASHER (17.5X30X3.5-MM THK)	
M	11	1	**8T-4779**	6	BOLT (M16X2X35-MM)	
	12	1	**129-9124**	1	SEAL-O-RING	
	13	1	**3D-7805**	2	SEAL-O-RING	
M	14	1	**6V-3940**	8	BOLT (M8X1.25X25-MM)	
M	15	1	**6V-5215**	8	BOLT (M8X1.25X16-MM)	
	16	1	**7M-8485**	2	SEAL-O-RING	
	17	1	**4B-4158**	2	SCREW-DRIVE (NO 4X0.25-IN)	
	18	1	**146-7512**	1	PLATE-IDENTIFICATION (ECCENTRIC WEIGHT)	

M - METRIC PART
Y - SEPARATE ILLUSTRATION

222-1890 **HOUSING GP-ECCENTRIC WEIGHT (*contd.*)** **i03079273**

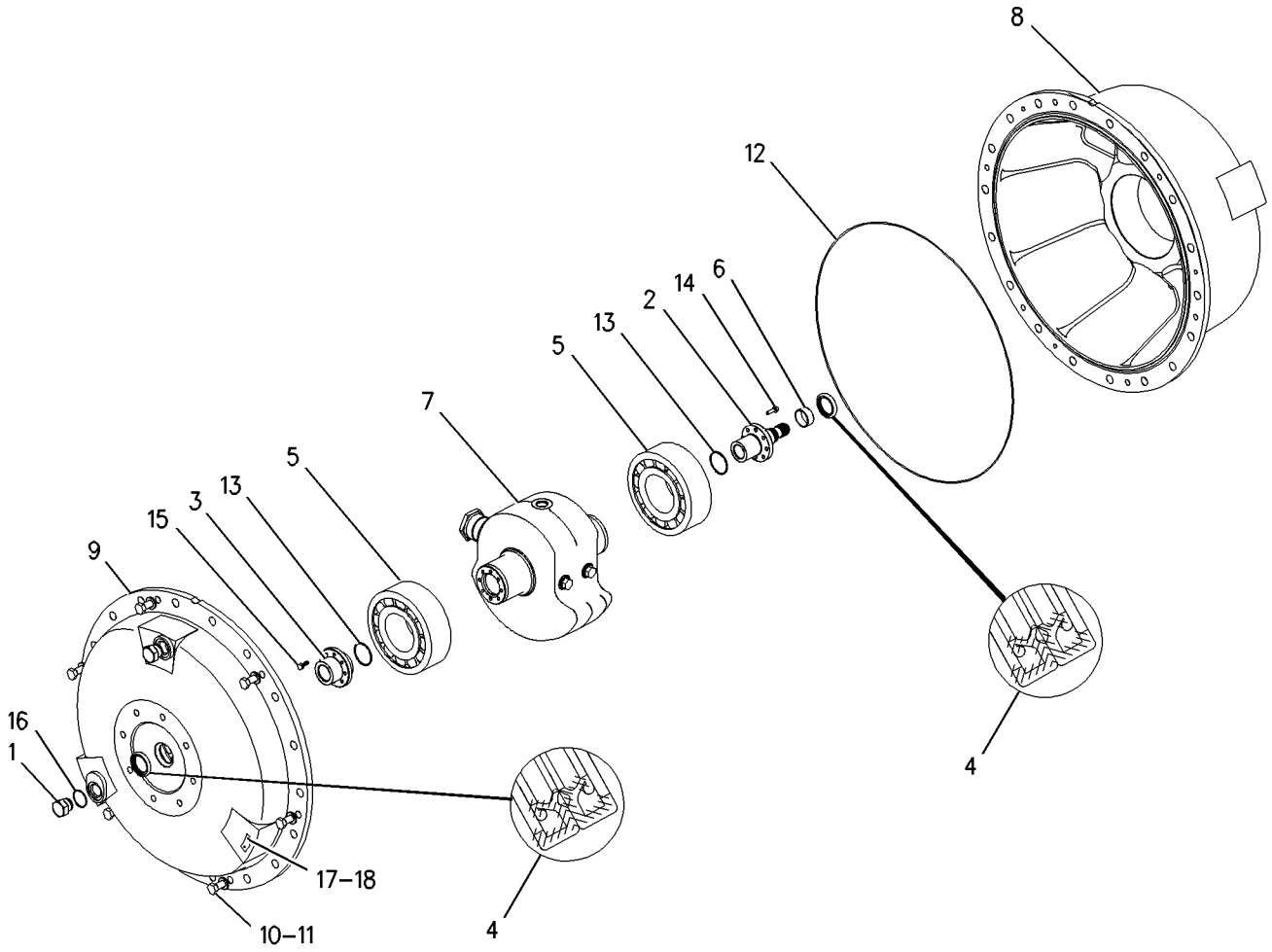

GRAPHIC #1 **<END>** g01004745

VIBRATORY SYSTEM

219-4168 HYDRAULIC AR-VIBRATORY

S/N: TJL1-UP

PART OF 316-9934 GENERAL AR

SMCS-5050 **i04015130**

NOTE	PART NUMBER	QTY	PART NAME 1 2 3 4 5 6 (PRODUCT LEVEL)	SEE PAGE
Y	*218-0378*	1	LINES GP-VIBRATORY	357
Y	*218-8489*	1	PUMP & MTG GP-VIBRATORY	360
			S/N: TJL1-755	
Y	*284-5886*	1	PUMP & MTG GP-VIBRATORY	362
			S/N: TJL756-UP	

Y - SEPARATE ILLUSTRATION

<END>

218-0378 LINES GP-VIBRATORY

S/N: TJL1-UP

PART OF 219-4168 HYDRAULIC AR-VIBRATORY

SMCS-5057 **i03626664**

NOTE	REF NO	GRAPHIC REF	PART NUMBER	QTY	PART NAME 1 2 3 4 5 6 (PRODUCT LEVEL)	SEE PAGE
	1	1	**102-8705**	2	PLATE	
I	2	1	**129-5128**	1	HOSE AS	
	3	1	**135-0708**	2	CLAMP AS	
	4	1	**8V-5718**	4	CLAMP	
	5	1	**172-5267**	3	STRIP	
	6	1	**172-5523**	3	BLOCK-CLAMP	
	7	1	**177-2215**	1	STRAP-DUAL CLAMP	
	8	1	**205-0706**	1	PLATE	
I	9	1	**216-0202**	1	HOSE AS	
I	10	1	**222-7037**	1	HOSE AS	
I	11	1	**222-7038**	1	HOSE AS	
	12	1	*148-8345*	1	CONNECTOR AS	
		1	**2M-9780**	1	SEAL-O-RING	
		1	**6V-8398**	1	SEAL-O-RING	
		1	**6V-8638**	1	CONNECTOR	
	13	1	*148-8370*	1	ELBOW AS	
		1	**6V-8398**	1	SEAL-O-RING	
		1	**6V-9851**	1	ELBOW	
	14	1	**1P-3702**	2	SEAL-RECTANGULAR	
	15	1	**1P-5765**	4	FLANGE-HALF	
	16	1	**7K-1181**	18	STRAP-CABLE	
M	17	1	**7X-0818**	2	BOLT (M8X1.25X45-MM)	
M	18	1	**8T-0389**	10	LOCKNUT (M10X1.5-THD)	
	19	1	**8T-4121**	28	WASHER-HARD (11X21X2.5-MM THK)	
M	20	1	**8T-4182**	8	BOLT (M10X1.5X45-MM)	
M	21	1	**8T-4189**	6	BOLT (M8X1.25X20-MM)	
M	22	1	**8T-5436**	4	BOLT (M10X1.5X130-MM)	
M	23	1	**8T-6685**	6	BOLT (M10X1.5X110-MM)	
G	24	1	**160-2248**		SLEEVE-ABRASION (14-IN EACH)	
G	24A	1	**160-2248**		SLEEVE-ABRASION (12-IN EACH)	
G	24B	1	**160-2248**		SLEEVE-ABRASION (31-IN)	
G	25	1	**160-2246**		SLEEVE-ABRASION (12-IN)	
G	25A	1	**160-2246**		SLEEVE-ABRASION (14-IN)	
G	25B	1	**160-2246**		SLEEVE-ABRASION (31-IN)	

G - ORDER BY THE INCH
I - REFER TO HYDRAULIC INFORMATION SYSTEM
M - METRIC PART

218-0378 **LINES GP-VIBRATORY (*contd.*)** **i03626664**

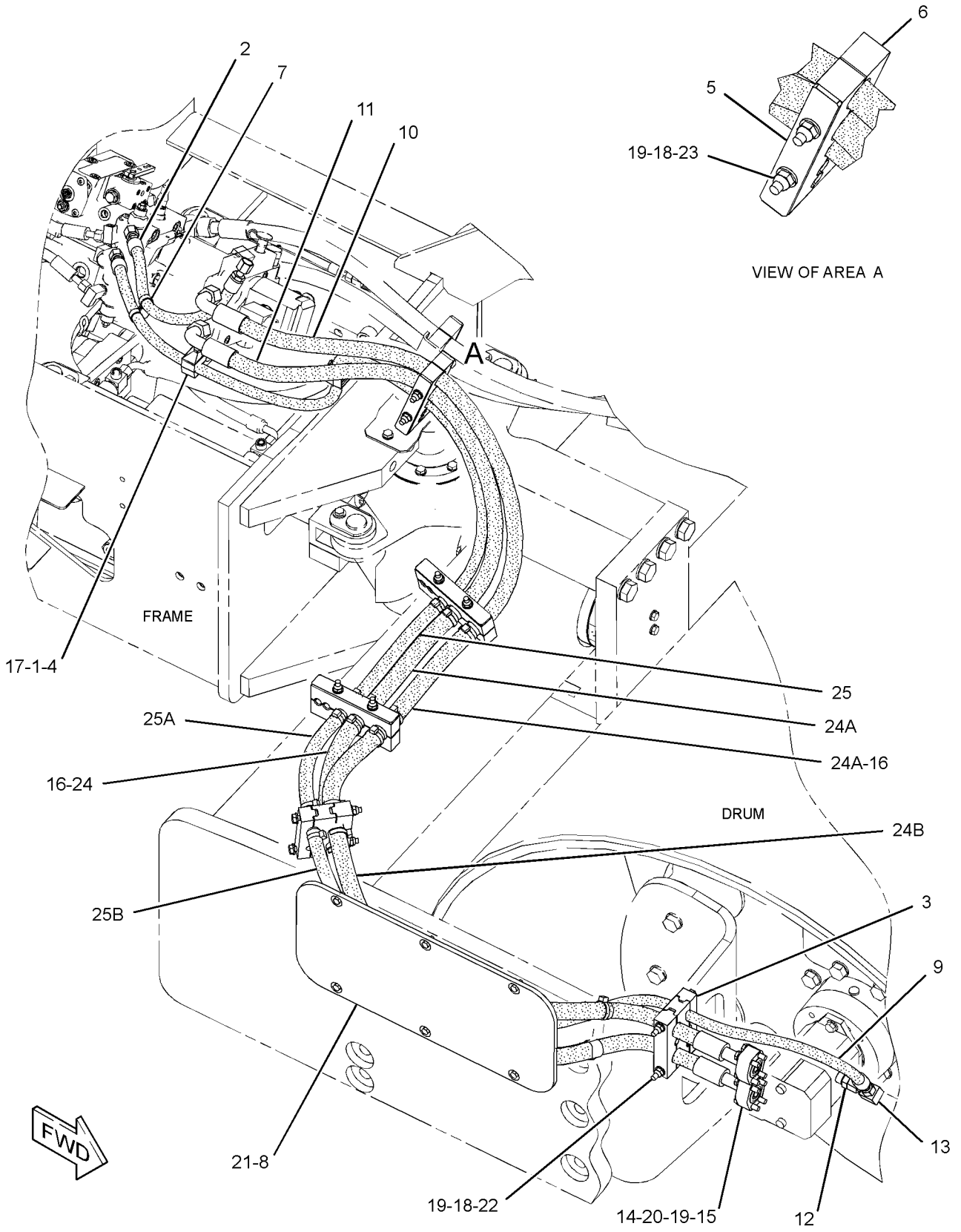

GRAPHIC #1 **<END>** g02104957

140-9614 MOTOR & MTG GP-VIBRATORY

S/N: TJL1-UP

PART OF 193-5892, 242-3498 DRIVE GP-SUPPORT & VIBRATORY

AN ATTACHMENT

SMCS-5058, 5651

i03469266

NOTE	REF NO	GRAPHIC REF	PART NUMBER	QTY	PART NAME 1 2 3 4 5 6 (PRODUCT LEVEL)	SEE PAGE
M	1	1	**8T-4956**	2	BOLT (M12X1.75X35-MM)	
YR	2	1	**136-8869**	1	MOTOR GP-PISTON (VIBRATORY)	316
	3	1	**3K-0715**	1	SEAL-O-RING	
	4	1	**8T-4223**	2	WASHER-HARD (13.5X25.5X3-MM THK)	

M - METRIC PART
R - REMFG PART MAY BE AVAILABLE
Y - SEPARATE ILLUSTRATION

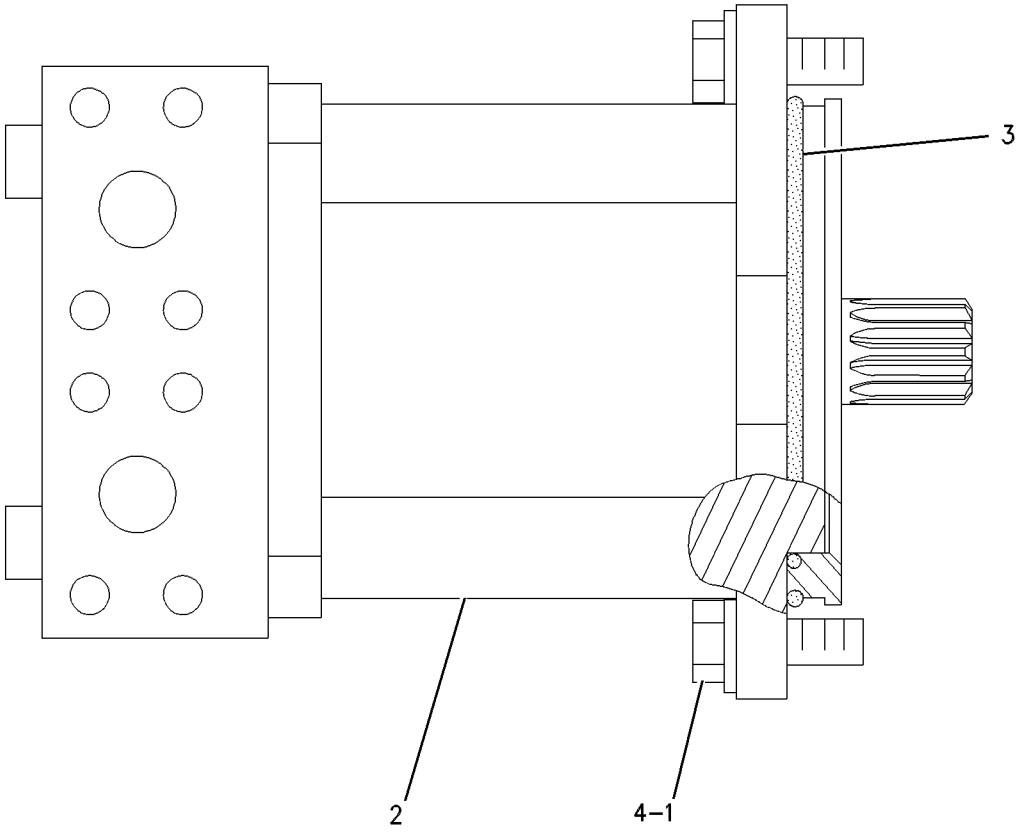

GRAPHIC #1

<END>

g00293127

218-8489 PUMP & MTG GP-VIBRATORY

S/N: TJL1-755

PART OF 219-4168 HYDRAULIC AR-VIBRATORY

SMCS-5070, 5652 **i03031604**

NOTE	REF NO	GRAPHIC REF	PART NUMBER	QTY	PART NAME 1 2 3 4 5 6 (PRODUCT LEVEL)	SEE PAGE
	1	1	**6V-0852**	2	CAP-DUST	
YR	2	1	**296-3332**	1	PUMP GP-PISTON (VIBRATORY)	327
	3	1	**110-6349**	2	FITTING AS (QUICK DISCONNECT)	
	4	1	*148-8327*	2	CONNECTOR AS	
					(EACH INCLUDES)	
		1	**3D-2824**	1	SEAL-O-RING	
		1	**6V-8637**	1	CONNECTOR	
		1	**6V-9746**	1	SEAL-O-RING	
	5	1	*148-8364*	1	ELBOW AS	
		1	**3K-0360**	1	SEAL-O-RING	
		1	**6V-8398**	1	SEAL-O-RING	
		1	**6V-8625**	1	ELBOW	
	6	1	*148-8372*	1	ELBOW AS	
		1	**2M-9780**	1	SEAL-O-RING	
		1	**6V-8398**	1	SEAL-O-RING	
		1	**6V-8721**	1	ELBOW	
M	7	1	**8T-4183**	2	BOLT (M12X1.75X40-MM)	
	8	1	**8T-7971**	2	WASHER-HARD (13.5X25.5X5-MM THK)	
	9	1	**4P-7428**	1	CLIP	
	10	1	**8T-4223**	1	WASHER-HARD (13.5X25.5X3-MM THK)	

M - METRIC PART
R - REMFG PART MAY BE AVAILABLE
Y - SEPARATE ILLUSTRATION

218-8489 **PUMP & MTG GP-VIBRATORY (*contd.*)** **i03031604**

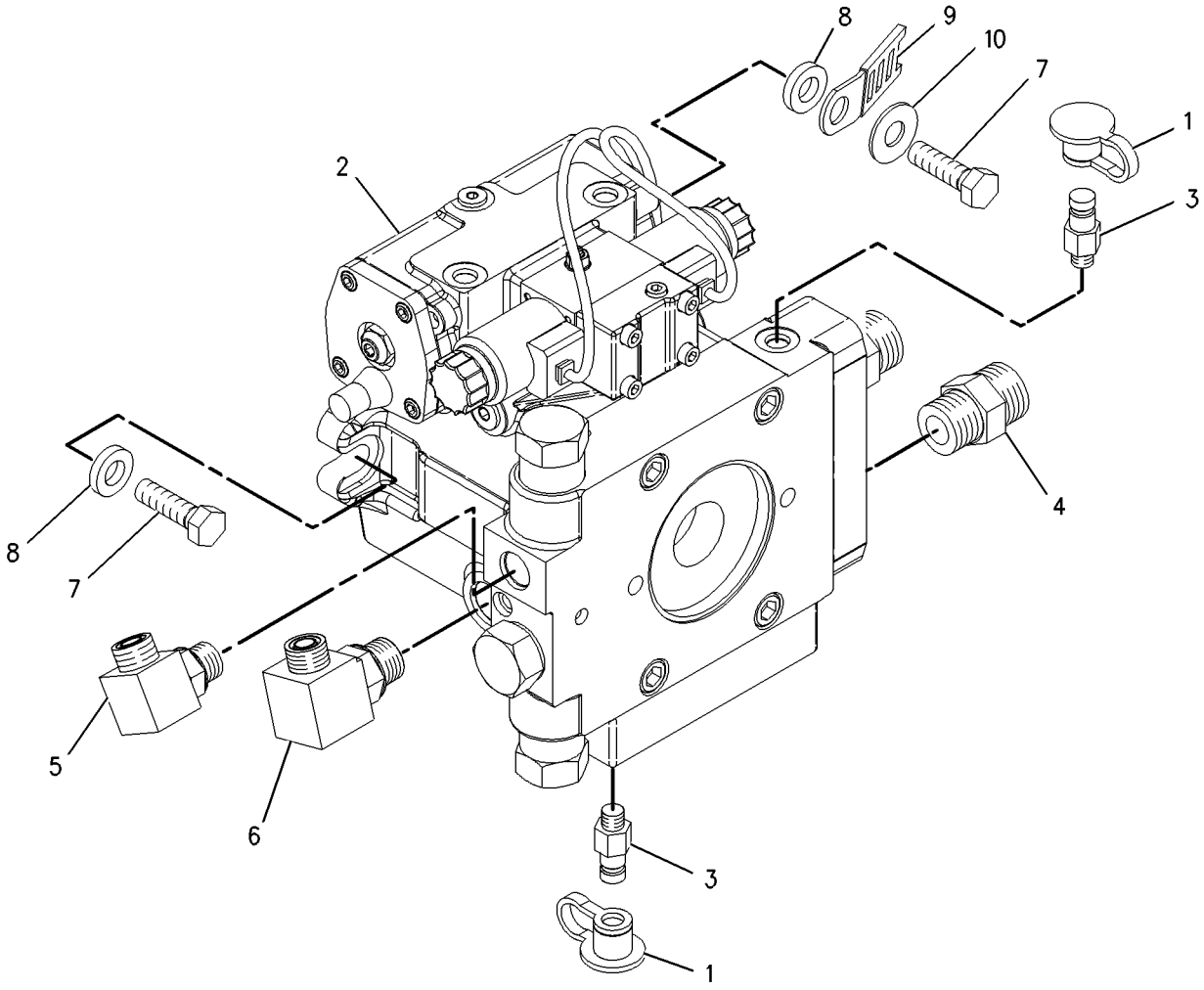

GRAPHIC #1 **<END>** g01004486

284-5886 PUMP & MTG GP-VIBRATORY—VARIABLE DISPLACEMENT

S/N: TJL756-UP

PART OF 219-4168 HYDRAULIC AR-VIBRATORY

SMCS-5070, 5652 **i05065294**

NOTE	REF NO	GRAPHIC REF	PART NUMBER	QTY	PART NAME 1 2 3 4 5 6 (PRODUCT LEVEL)	SEE PAGE
	1	1	**6V-0852**	2	CAP-DUST	
Y	2	1	**315-9743**	1	PUMP GP-PISTON (VIBRATORY, VARIABLE DISP)	328
	3	1	**110-6349**	2	FITTING AS (QUICK DISCONNECT)	
	4	1	*148-8327*	2	CONNECTOR AS	
					(EACH INCLUDES)	
		1	**3D-2824**	1	SEAL-O-RING	
		1	**6V-8637**	1	CONNECTOR	
		1	**6V-9746**	1	SEAL-O-RING	
	5	1	*148-8354*	1	ELBOW AS	
		1	**3K-0360**	1	SEAL-O-RING	
		1	**6V-8398**	1	SEAL-O-RING	
		1	**6V-9002**	1	ELBOW	
	6	1	*148-8372*	1	ELBOW AS	
		1	**2M-9780**	1	SEAL-O-RING	
		1	**6V-8398**	1	SEAL-O-RING	
		1	**6V-8721**	1	ELBOW	
M	7	1	**8T-4183**	2	BOLT (M12X1.75X40-MM)	
	8	1	**8T-7971**	2	WASHER-HARD (13.5X25.5X5-MM THK)	
	9	1	*287-7341*	2	ELBOW AS	
					(EACH INCLUDES)	
		1	**3J-7354**	1	SEAL-O-RING	
		1	**124-8909**	1	ELBOW	

M - METRIC PART
Y - SEPARATE ILLUSTRATION

284-5886 **PUMP & MTG GP-VIBRATORY (*contd.*)** **i05065294**

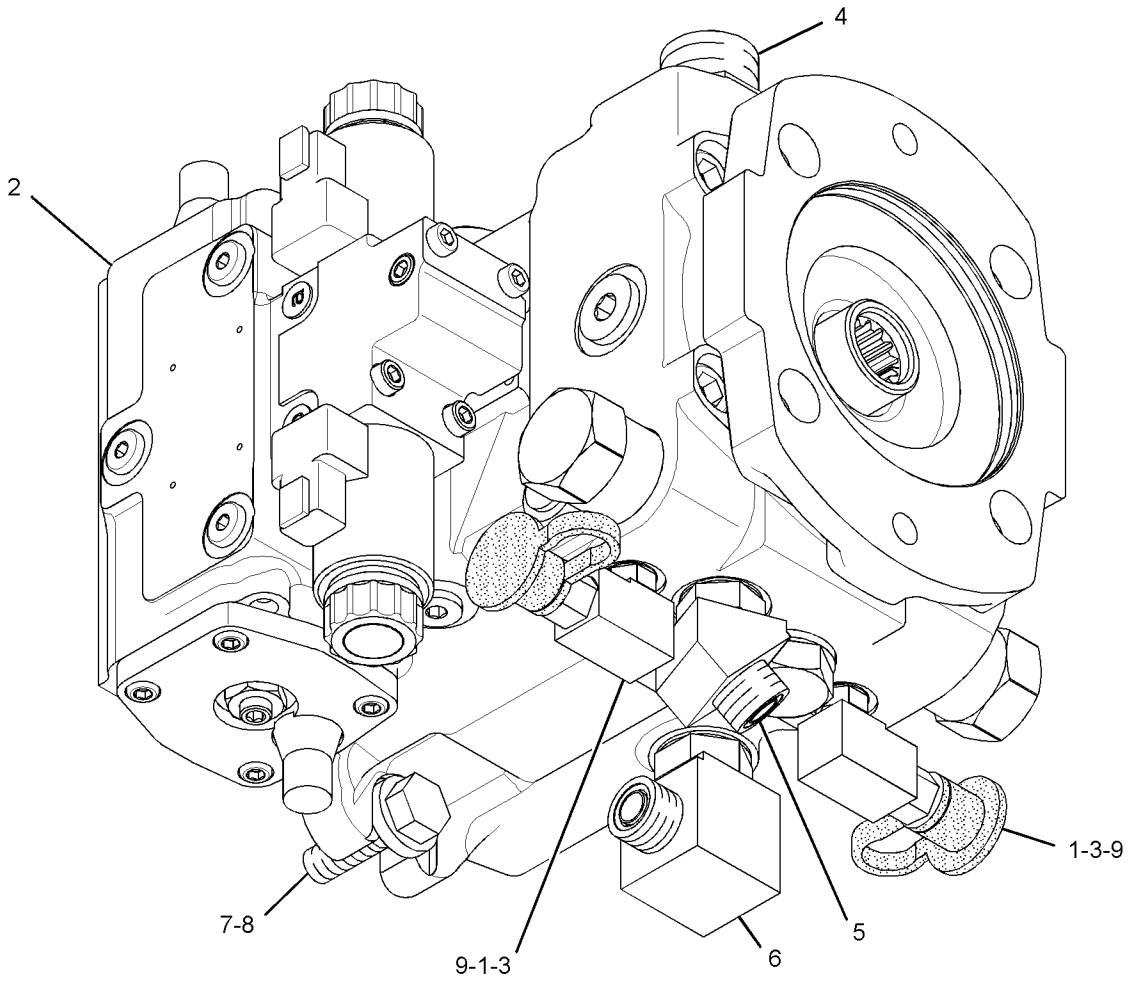

GRAPHIC #1 **<END>** g01929776

222-1891 SHAFT GP-ECCENTRIC WEIGHT

S/N: TJL1-UP

PART OF 222-1889, 222-1890 HOUSING GP-ECCENTRIC WEIGHT

AN ATTACHMENT

SMCS-6645 **i03079280**

NOTE	REF NO	GRAPHIC REF	PART NUMBER	QTY	PART NAME 1 2 3 4 5 6 (PRODUCT LEVEL)	SEE PAGE
	1	1	**9S-7583**	1	PLUG	
	2	1	**146-7292**	1	SHAFT	
M	3	1	**8T-4175**	2	BOLT (M16X2X90-MM)	
B	4	1	**9S-8008**	1	PLUG-O-RING	
	5	1	**9X-8257**	2	WASHER (17.5X30X3.5-MM THK)	
BF			**180-7333**		SHOT (STEEL)	

B - USE AS REQUIRED
F - NOT SHOWN
M - METRIC PART

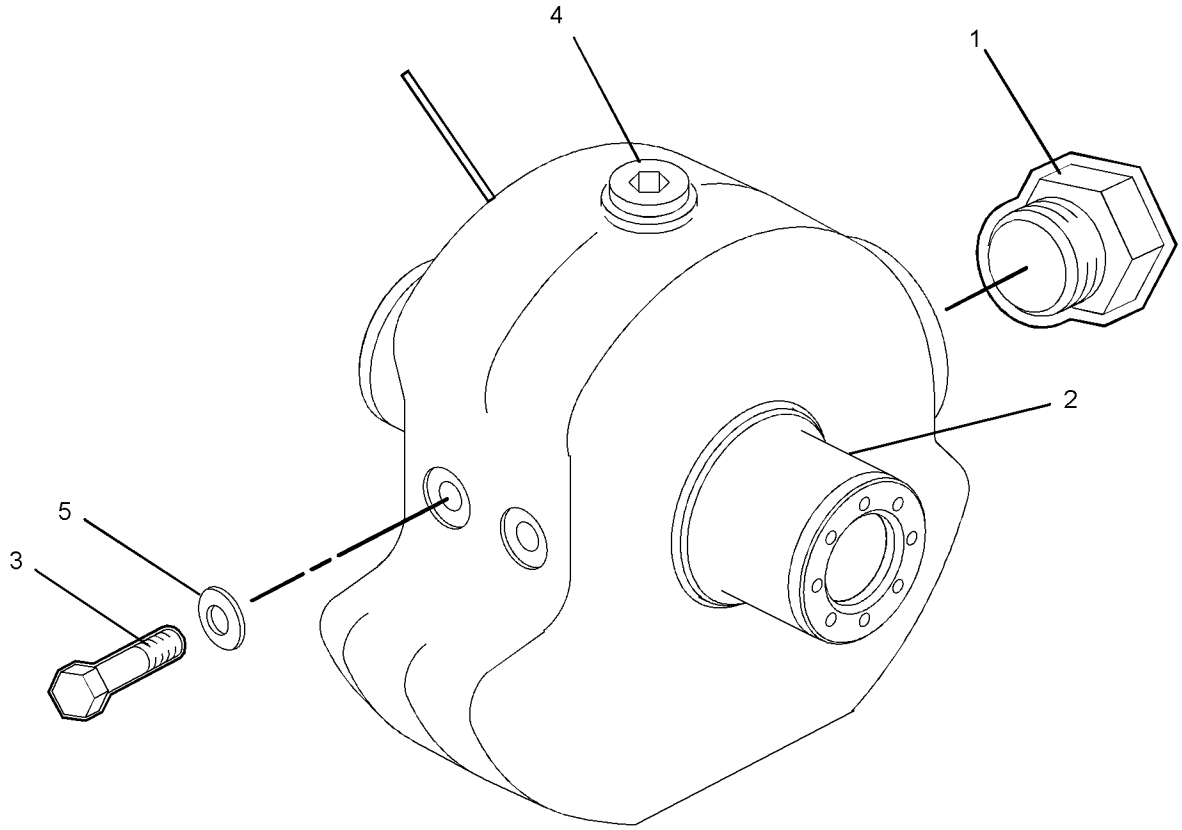

GRAPHIC #1 **<END>** g01561318

159-9405 SUPPORT GP-VIBRATORY

S/N: TJL1-UP

PART OF 193-5892, 242-3498 DRIVE GP-SUPPORT & VIBRATORY

AN ATTACHMENT

SMCS-5656 **i05288699**

NOTE	REF NO	GRAPHIC REF	PART NUMBER	QTY	PART NAME 1 2 3 4 5 6 (PRODUCT LEVEL)	SEE PAGE
	1	1	**077-3637**	1	SEAL	
	2	1	**077-6630**	1	SEAL	
	3	1	**177-4658**	1	NUT-BEARING	
	4	1	**030-0061**	1	CONE-BEARING	
	5	1	**030-0060**	1	CUP-BEARING	
	6	1	**222-2785**	1	PLUG-MAGNETIC (FINAL DRIVE PLANETARY)	
	7	1	**7D-8636**	1	CONE-BEARING	
	8	1	**7D-8637**	1	CUP-BEARING	
	9	1	**9S-8005**	3	PLUG-O-RING	
	10	1	**3K-0360**	3	SEAL-O-RING	
	11	1	**9X-7566**	1	SEAL-O-RING	
	12	1	**172-3259**	1	ADAPTER	
	13	1	**6W-4749**	1	WASHER (75.5X106X5-MM THK)	

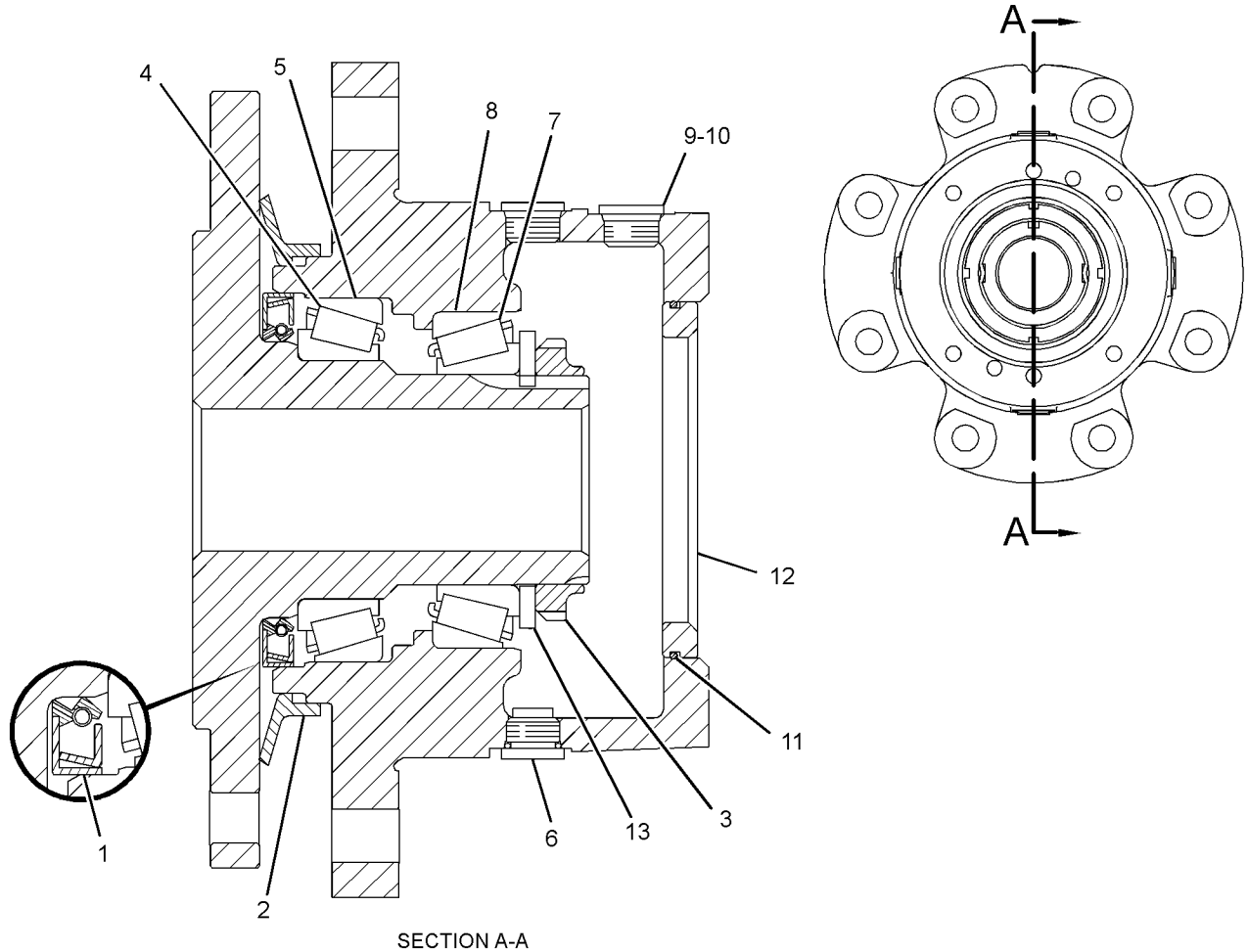

SECTION A-A

GRAPHIC #1 **<END>** g01686555

176-3900 ACCUMULATOR GP-REFRIGERANT–UNCHARGED

S/N: TJL2031-UP

PART OF 186-6190 ACCUMULATOR GP-REFRIGERANT

AN ATTACHMENT

SMCS-7320 **i04905684**

NOTE	REF NO	GRAPHIC REF	PART NUMBER	QTY	PART NAME 1 2 3 4 5 6 (PRODUCT LEVEL)	SEE PAGE
					(NO SERVICED PARTS)	

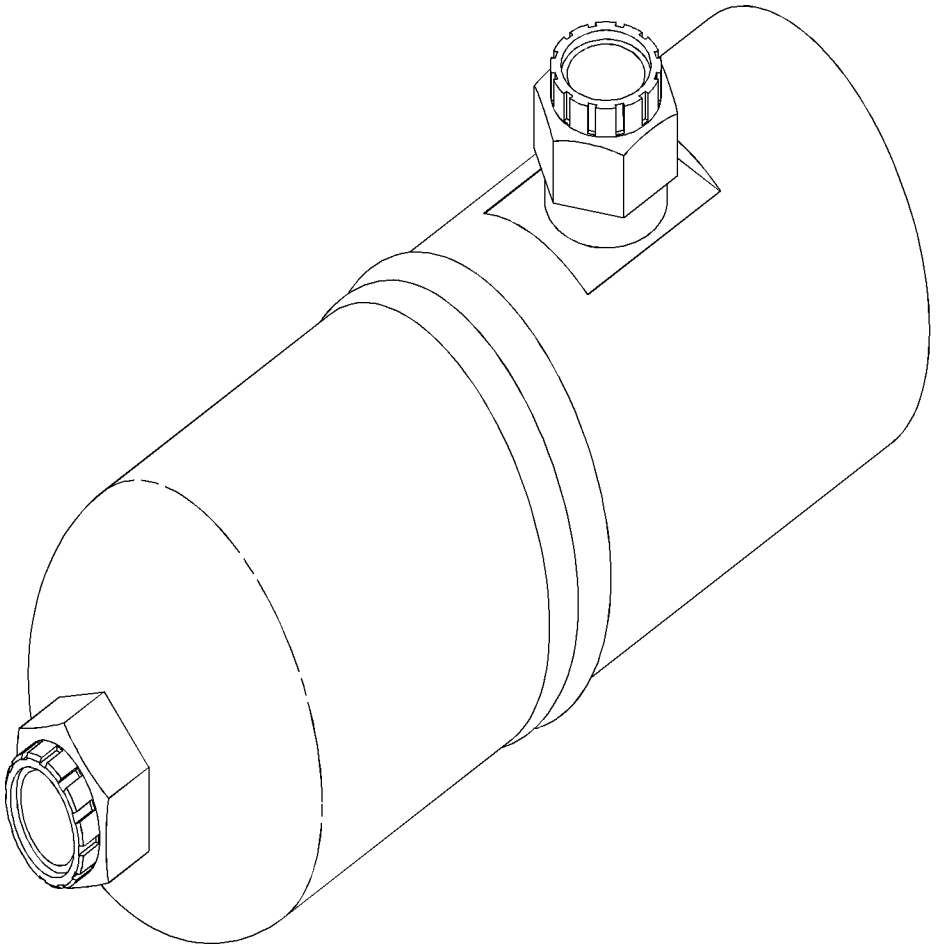

GRAPHIC #1 **<END>** g01035076

186-6190 ACCUMULATOR GP-REFRIGERANT–WITH DESICCANT

S/N: TJL2031-UP
FIELD REPLACEMENT ORDER 176-3900–PAGE: 366
PART OF 222-8663 LINES GP-AIR CONDITIONER
AN ATTACHMENT

SMCS-7320 **i04817903**

NOTE	REF NO	GRAPHIC REF	PART NUMBER	QTY	PART NAME 1 2 3 4 5 6 (PRODUCT LEVEL)	SEE PAGE
Y	1	1	**176-3900**	1	ACCUMULATOR GP-REFRIGERANT (WITH DESICCANT)	366

Y - SEPARATE ILLUSTRATION

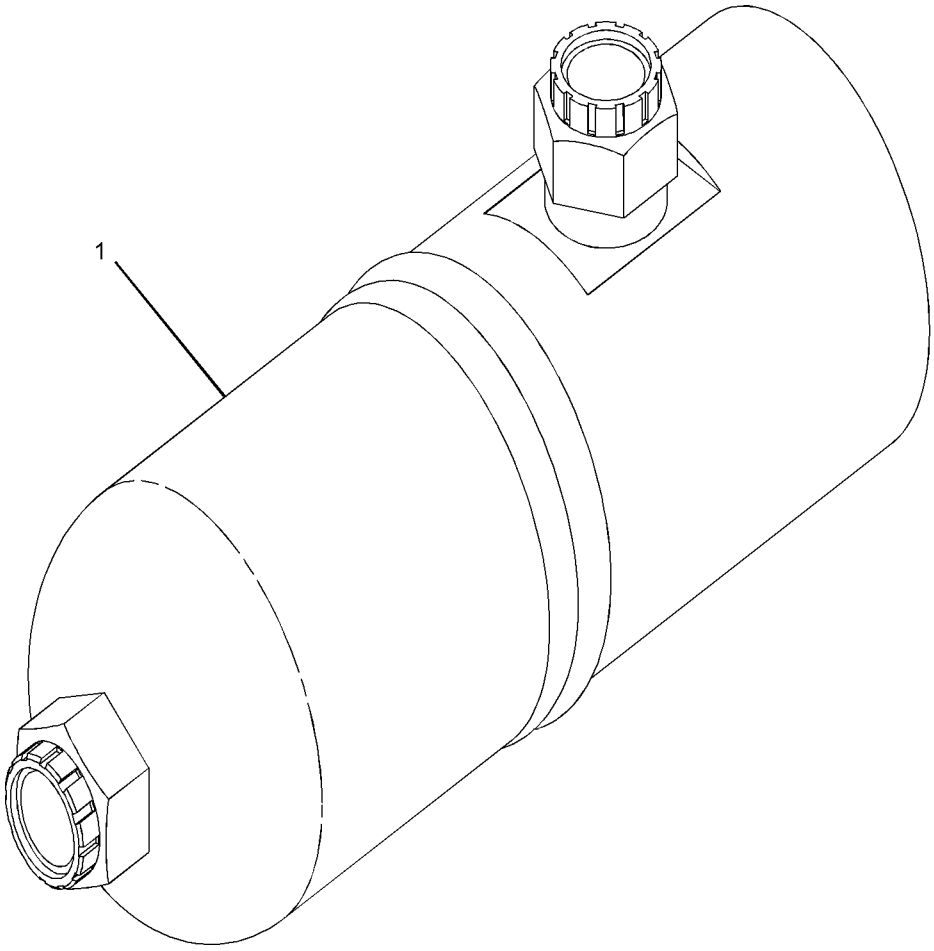

GRAPHIC #1 **<END>** g01034976

180-9873 AIR CONDITIONER GP

S/N: TJL1-UP

FIELD REPLACEMENT ORDER 311-8547—PAGE: 372, 280-2709 CIRCUIT BREAKER AS, 280-2710 CIRCUIT BREAKER AS

PART OF 240-4683 AIR CONDITIONER GP

AN ATTACHMENT

SMCS-7320 **i04444769**

NOTE	REF NO	GRAPHIC REF	PART NUMBER	QTY	PART NAME 1 2 3 4 5 6 (PRODUCT LEVEL)	SEE PAGE
D	1	1	**5P-5908**		SEAL (0.1-M)	
	2	1	**1P-6522**	1	GROMMET	
	3	1	**2H-3922**	1	LOCKWASHER	
	4	1	**2H-3923**	1	LOCKWASHER	
	5	1	**2S-3745**	6	SCREW-TAPPING (10-16X0.5-IN)	
	6	1	**096-6166**	2	WASHER-HARD (4.5X9X1-MM THK)	
	7	1	**3E-1841**	1	LEVER	
	8	1	**119-9631**	1	SWITCH-TEMPERATURE (HVAC)	
	9	1	**3S-2093**	1	STRAP-CABLE	
M	10	1	**5C-9553**	4	BOLT (M6X1X16-MM)	
	11	1	**6V-1668**	2	WASHER (6.5X29.1X3-MM THK)	
	12	1	**7F-2050**	1	LOCKNUT (3/4-16-THD)	
	13	1	**7F-2060**	1	LOCKNUT (7/8-14-THD)	
	14	1	**8C-4586**	2	CLAMP	
M	15	1	**8C-8457**	1	SCREW-MACHINE (M5X0.8X14-MM)	
	16	1	**9X-2488**	6	CLAMP-HOSE	
M	17	1	**8T-4171**	4	BOLT (M6X1X12-MM)	
	18	1	**8T-4205**	13	WASHER-HARD (7.2X14.5X2-MM THK)	
M	19	1	**8T-0337**	2	SCREW-MACHINE (M4X0.7X12-MM)	
	20	1	**8Y-5737**	1	CLAMP	
	21	1	**9G-1950**	1	RESISTOR	
M	22	1	**9X-2044**	1	SCREW-TRUSS HEAD (M6X1X16-MM)	
	23	1	**9X-2185**	4	SCREW (8-15X0.44-IN)	
	24	1	**037-4426**	1	RETAINER	
	25	1	**100-3143**	2	PLATE-ORIFICE	
	26	1	**100-3426**	2	WHEEL AS-BLOWER	
					(EACH INCLUDES)	
		1	**037-4838**	2	CLAMP	
	27	1	**102-0341**	1	CLIP	
	28	1	**114-3140**	1	GROMMET	
	29	1	**118-5044**	1	HARNESS AS-WIRING (CAB HEATER)	
		1	**6T-6505**	5	HOUSING-RECEPTACLE (BLADE, POSITIVE LOCK)	
		1	**9W-0852**	5	PIN-CONNECTOR (14-GA TO 16-GA)	
		1	**155-2270**	1	KIT-CONNECTING PLUG (2-PIN)	
					(INCLUDES PLUG AS, WEDGE & INTERFACE SEAL)	
		1	**8T-8737**	1	PLUG-SEAL	
		1	**102-8805**	1	KIT-RECEPTACLE (6-PIN)	
					(INCLUDES RECEPTACLE AS & WEDGE)	
		1	**9W-0844**	2	SOCKET-CONNECTOR (14-GA TO 16-GA)	
		1	**3S-2093**	3	STRAP-CABLE	
		1	**6T-6506**	5	TERMINAL-BLADE (14-GA TO 18-GA)	
E		1	**119-3662**		TUBE-HEAT SHRINK (10.85-MM DIA) (13-CM)	
	30	1	**118-5046**	1	HOUSING AS	
	31	1	**123-8851**	1	CASE AS	
M		1	**6V-9632**	7	NUT-WELD (M6X1-THD)	
	32	1	**124-8494**	2	GASKET	
	33	1	**124-8495**	1	VALVE AS-WATER	
M	34	1	**129-3178**	3	LOCKNUT (M6X1-THD)	
M	35	1	**141-9784**	1	BOLT (M6X1X190-MM)	
	36	1	**151-0894**	1	COVER AS	
	37	1	**174-1486**	1	MOTOR AS-BLOWER (24-VOLT, A/C, HEATER)	
		1	**102-8802**	1	KIT-RECEPTACLE (2-PIN)	
					(INCLUDES RECEPTACLE AS & WEDGE)	
		1	**9W-0852**	2	PIN-CONNECTOR (14-GA TO 16-GA)	

180-9873 **AIR CONDITIONER GP (*contd.*)** **i04444769**

NOTE	REF NO	GRAPHIC REF	PART NUMBER	QTY	PART NAME 1 2 3 4 5 6 (PRODUCT LEVEL)	SEE PAGE
	38	1	**180-3528**	1	COIL AS-EVAPORATOR	
		1	**283-2456**	1	COIL AS-EVAPORATOR	
		1	**189-1707**	1	ORIFICE AS-AIR CONDITIONER	
	39	1	**183-7528**	1	COIL AS-HEATER	
M	40	1	**6V-7728**	1	BOLT (M6X1X45-MM)	
D	41	1	**6V-1392**		SEAL (0.6-M)	
D	41A	1	**6V-1392**		SEAL (0.17-M EACH)	
E	42	1	**136-1953**		HOSE (18-CM)	
E	42A	1	**136-1953**		HOSE (15-CM)	
E	42B	1	**136-1953**		HOSE (23-CM)	
D	43	1	**8T-5372**		SEAL (0.15-M)	
D	43A	1	**8T-5372**		SEAL (0.12-M EACH)	
D	44	1	**5P-7070**		INSULATION-STRIP (0.6-M EACH)	
D	45	1	**5P-5643**		SEAL (0.4-M)	
M	46	1	**5C-8312**	2	NUT (M4X0.7-THD)	

D - ORDER BY THE METER
E - ORDER BY THE CENTIMETER
M - METRIC PART

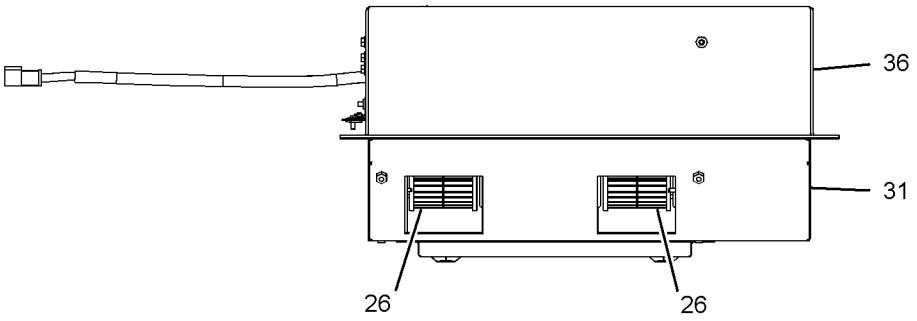

FRONT VIEW

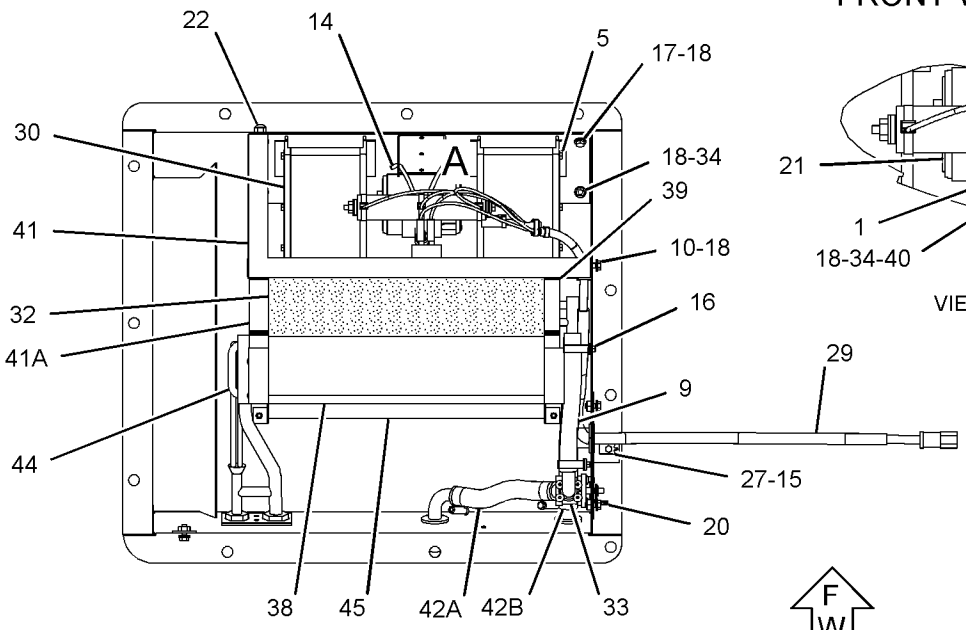

TOP VIEW
(COVER REMOVED FOR CLARITY)

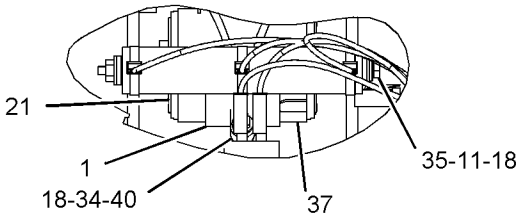

VIEW OF AREA A

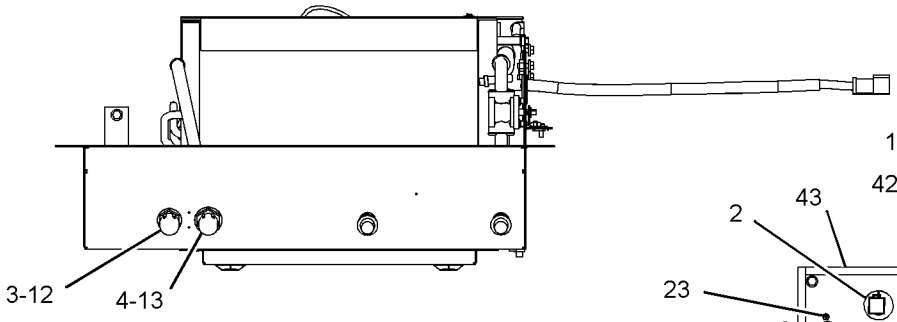

REAR VIEW
(COVER REMOVED FOR CLARITY)

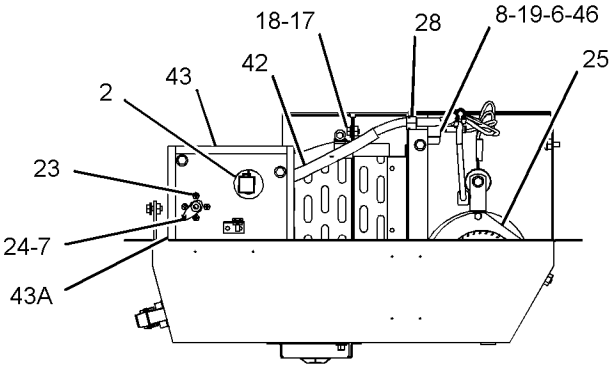

RIGHT SIDE VIEW
(COVER REMOVED FOR CLARITY)

GRAPHIC #1 **<END>** g02981617

240-4683 AIR CONDITIONER GP—WITH CONTROL

S/N: TJL1-UP
PART OF 227-5595, 348-5640 OPERATOR AR
AN ATTACHMENT

SMCS-7320 **i03079340**

NOTE	REF NO	GRAPHIC REF	PART NUMBER	QTY	PART NAME 1 2 3 4 5 6 (PRODUCT LEVEL)	SEE PAGE
	1	1	**6T-6329**	1	BEZEL	
	2	1	**6V-8927**	2	BOLT-SOCKET HEAD (6-32X0.5-IN)	
	3	1	**9X-8117**	2	TUBE AS	
	4	1	**110-6109**	1	KNOB-CONTROL (BLOWER FAN SPEED)	
	5	1	**118-7259**	1	GASKET	
	6	1	**156-4449**	1	CABLE AS (HEATER TEMPERATURE CONTROL)	
		1	**2H-3920**	2	LOCKWASHER	
		1	**6V-8369**	1	NUT (7/16-28-THD)	
		1	**143-8874**	1	BOOT	
Y	7	1	**180-9873**	1	AIR CONDITIONER GP	368
	8	1	**144-0900**	1	SWITCH AS-ROCKER (AIR CONDITIONER)	
		1	**3L-8187**	3	LOCKWASHER	
		1	**6V-8374**	3	SCREW-MACHINE (6-32X0.25-IN)	
	9	1	**7X-0579**	11	WASHER-HARD (8.8X25.5X2-MM THK)	
M	10	1	**8T-4908**	11	BOLT (M8X1.25X25-MM)	
BL	11	1	**5P-5643**		SEAL (16-DM)	

B - USE AS REQUIRED
L - ORDER BY THE DECIMETER
M - METRIC PART
Y - SEPARATE ILLUSTRATION

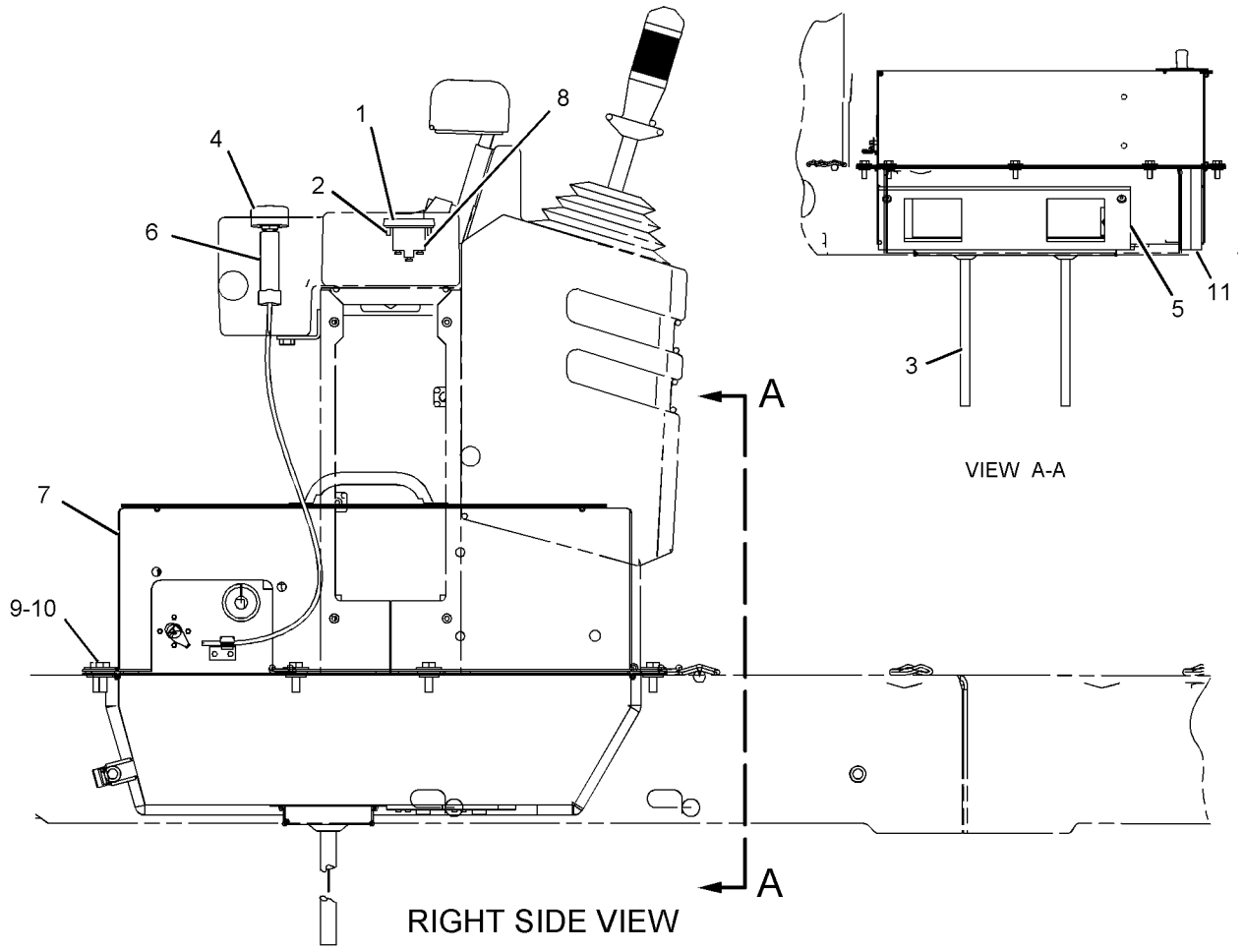

GRAPHIC #1 **<END>** g01055069

OPERATOR STATION

311-8547 AIR CONDITIONER GP

S/N: TJL1-UP

FIELD REPLACEMENT FOR 180-9873—PAGE: 368

SMCS-7320 **i04692649**

NOTE	REF NO	GRAPHIC REF	PART NUMBER	QTY	PART NAME 1 2 3 4 5 6 (PRODUCT LEVEL)	SEE PAGE
	1	1	**3E-1841**	1	LEVER	
	2	1	**3S-2093**	1	STRAP-CABLE	
	3	1	**7F-2050**	1	LOCKNUT (3/4-16-THD)	
	4	1	**8Y-5737**	1	CLAMP	
	5	1	**9G-1950**	1	RESISTOR	
	6	1	**9X-2185**	4	SCREW (8-15X0.44-IN)	
	7	1	**9X-2488**	6	CLAMP-HOSE	
	8	1	**102-0341**	1	CLIP	
	9	1	**114-3140**	1	GROMMET	
	10	1	**118-5044**	1	HARNESS AS-WIRING (CAB HEATER)	
		1	**102-8805**	1	KIT-RECEPTACLE (6-PIN)	
					(INCLUDES RECEPTACLE AS & WEDGE)	
		1	**3S-2093**	3	STRAP-CABLE	
		1	**6T-6505**	5	HOUSING-RECEPTACLE (BLADE, POSITIVE LOCK)	
		1	**6T-6506**	5	TERMINAL-BLADE (14-GA TO 18-GA)	
		1	**8T-8737**	1	PLUG-SEAL	
		1	**9W-0844**	2	SOCKET-CONNECTOR (14-GA TO 16-GA)	
		1	**9W-0852**	5	PIN-CONNECTOR (14-GA TO 16-GA)	
E		1	**119-3662**		TUBE-HEAT SHRINK (10.85-MM DIA) (13-CM)	
		1	**155-2270**	1	KIT-CONNECTING PLUG (2-PIN)	
					(INCLUDES PLUG AS, WEDGE & INTERFACE SEAL)	
	11	1	**124-8494**	2	GASKET	
	12	1	**124-8495**	1	VALVE AS-WATER (AIR CONDITIONER)	
	13	1	**309-8618**	1	CASE AS	
	14	1	**180-3528**	1	COIL AS-EVAPORATOR	
		1	**189-1707**	1	ORIFICE AS-AIR CONDITIONER	
		1	**283-2456**	1	COIL AS-EVAPORATOR	
	15	1	**183-7528**	1	COIL AS-HEATER	
	16	1	*281-4808*	1	BLOWER GP-CAB (24-VOLT, A/C, HEATER)	
M		1	**6V-5210**	8	SCREW-MACHINE (M4X0.7X10-MM)	
		1	**255-9138**	1	BRACKET AS	
M		1	**9X-2032**	8	NUT-WELD (M4X0.7-THD)	
		1	**275-6706**	1	MOTOR AS-BLOWER (24-VOLT) (HEATER, A/C)	
		1	**102-8802**	1	KIT-RECEPTACLE (2-PIN)	
					(INCLUDES RECEPTACLE AS & WEDGE)	
		1	**9W-0852**	2	PIN-CONNECTOR (14-GA TO 16-GA)	
	17	1	**151-0894**	1	COVER AS	
	18	1	**037-4426**	1	RETAINER	
M	19	1	**129-3178**	2	LOCKNUT (M6X1-THD)	
M	20	1	**141-9784**	1	BOLT (M6X1X190-MM)	
	21	1	**1P-6522**	1	GROMMET	
	22	1	**2H-3922**	1	LOCKWASHER	
	23	1	**2H-3923**	1	LOCKWASHER	
	24	1	**3B-4501**	2	LOCKWASHER	
	25	1	**3E-5464**	1	THERMOSTAT (HVAC)	
M	26	1	**5C-9553**	4	BOLT (M6X1X16-MM)	
	27	1	**6V-1668**	2	WASHER (6.5X29.1X3-MM THK)	
	28	1	**7F-2060**	1	LOCKNUT (7/8-14-THD)	
M	29	1	**8C-8457**	1	SCREW-MACHINE (M5X0.8X14-MM)	
M	30	1	**8T-4171**	4	BOLT (M6X1X12-MM)	
	31	1	**8T-4205**	11	WASHER-HARD (7.2X14.5X2-MM THK)	
	32	1	**8T-6631**	2	SCREW-MACHINE (8-32X0.5-IN)	
M	33	1	**9X-2044**	1	SCREW-TRUSS HEAD (M6X1X16-MM)	
D	34	1	**6V-1392**		SEAL (0.6-M)	
D	34A	1	**6V-1392**		SEAL (0.2-M EACH)	
E	35	1	**136-1953**		HOSE (15.2-CM)	
E	35A	1	**136-1953**		HOSE (23-CM)	

311-8547 **AIR CONDITIONER GP (*contd.*)** **i04692649**

NOTE	REF NO	GRAPHIC REF	PART NUMBER	QTY	PART NAME 1 2 3 4 5 6 (PRODUCT LEVEL)	SEE PAGE
E	35B	1	**136-1953**		HOSE (17.8-CM)	
D	36	1	**8T-5372**		SEAL (0.2-M EACH)	
D	37	1	**5P-7070**		INSULATION-STRIP (0.6-M EACH)	
D	38	1	**5P-5643**		SEAL (0.4-M)	

D - ORDER BY THE METER
E - ORDER BY THE CENTIMETER
M - METRIC PART

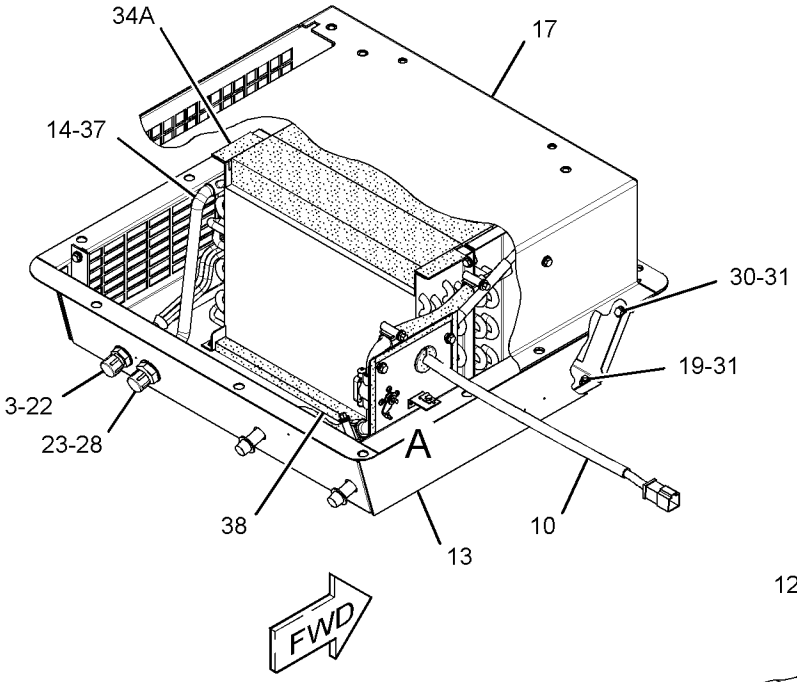

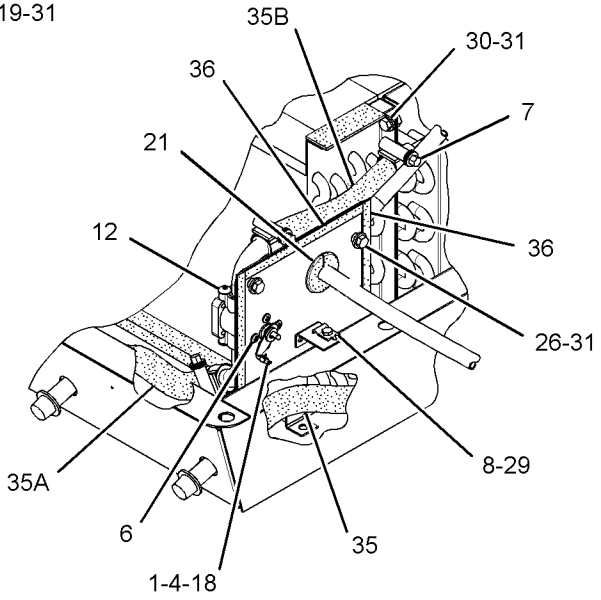

VIEW OF AREA A

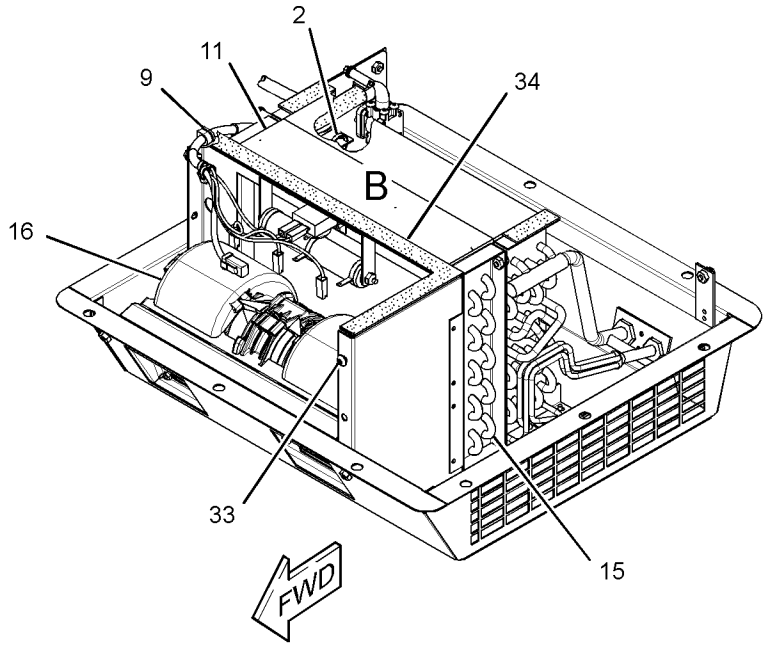

(COVER REMOVED FOR CLARITY)

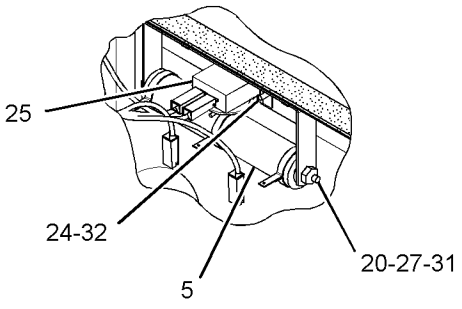

VIEW OF AREA B

GRAPHIC #1 **<END>** g01454141

214-7636 ARM GP-WINDOW WIPER–FRONT

S/N: TJL1-UP
PART OF 223-4793 WIPER & WASHER GP-WINDOW
AN ATTACHMENT

SMCS-7305 **i05218251**

NOTE	REF NO	GRAPHIC REF	PART NUMBER	QTY	PART NAME 1 2 3 4 5 6 (PRODUCT LEVEL)	SEE PAGE
M	1	1	**191-8921**	4	BOLT-SOCKET HEAD (M6X1X25-MM)	
	2	1	**227-7392**	4	WASHER (6.3X10.3X0.4-MM THK)	
	3	1	**344-5673**	4	NUT (M6X1-THD)	
	4	1	**136-3190**	1	NOZZLE AS-WASHER	
	5	1	**136-3188**	3	CLIP	
E	6	1	**194-5171**		HOSE (92-CM)	

E - ORDER BY THE CENTIMETER
M - METRIC PART

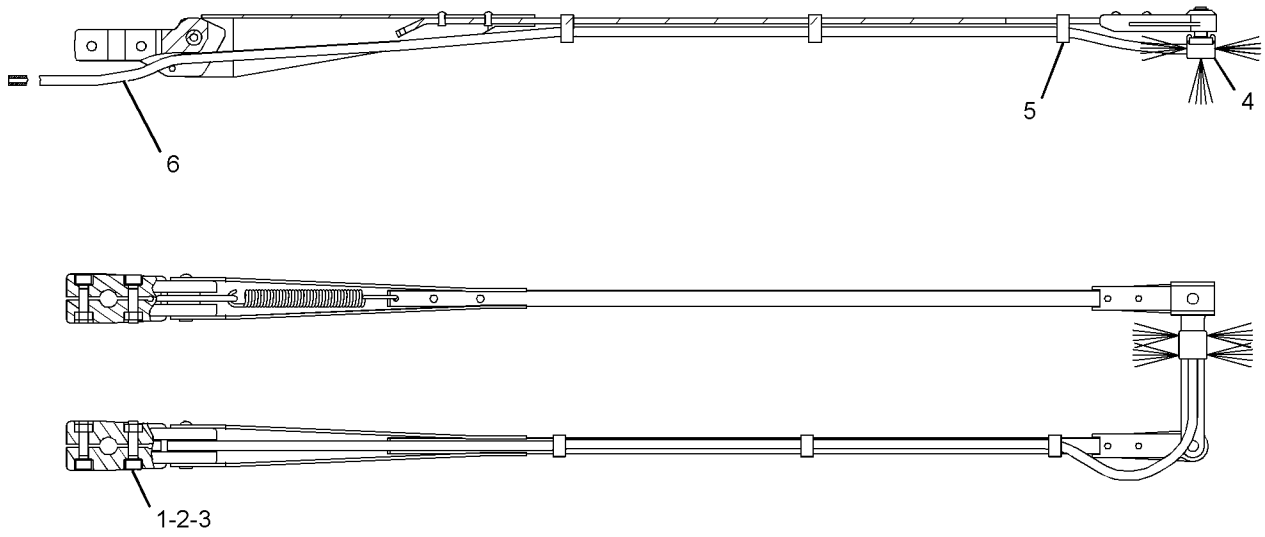

GRAPHIC #1 **<END>** g03093436

OPERATOR STATION

259-4423 CAB AR

S/N: TJL1-623

PART OF 227-5594, 227-5595 OPERATOR AR

AN ATTACHMENT

SMCS-7301 **i03046400**

NOTE	PART NUMBER	QTY	PART NAME 1 2 3 4 5 6 (PRODUCT LEVEL)	SEE PAGE
Y	*143-5948*	1	DUCT GP-CAB AIR	404
Y	*226-7758*	1	LIGHTING GP-FLOOD (CAB)	149
Y	*214-4073*	1	LINER GP-CAB	424
Y	*254-5057*	1	ROPS GP-ENCLOSED	471
Y	*223-4793*	1	WIPER & WASHER GP-WINDOW	497
Y	*226-8940*	1	WIRING GP-CAB (WIPER)	172

Y - SEPARATE ILLUSTRATION

<END>

339-6602 CAB AR

S/N: TJL1-UP

PART OF 348-5640, 348-5641 OPERATOR AR

AN ATTACHMENT

SMCS-7301 **i03933835**

NOTE	PART NUMBER	QTY	PART NAME 1 2 3 4 5 6 (PRODUCT LEVEL)	SEE PAGE
Y	*143-5948*	1	DUCT GP-CAB AIR	404
Y	*226-7758*	1	LIGHTING GP-FLOOD (CAB)	149
Y	*214-4073*	1	LINER GP-CAB	424
Y	*291-3967*	1	ROPS GP-ENCLOSED	473
Y	*223-4793*	1	WIPER & WASHER GP-WINDOW	497
Y	*226-8940*	1	WIRING GP-CAB (WIPER)	172

Y - SEPARATE ILLUSTRATION

<END>

254-5058 CAB GP-ENCLOSED ROPS

S/N: TJL1-UP

PART OF 254-5057 ROPS GP-ENCLOSED

AN ATTACHMENT

SMCS-7301 **i03640309**

NOTE	REF NO	GRAPHIC REF	PART NUMBER	QTY	PART NAME 1 2 3 4 5 6 (PRODUCT LEVEL)	SEE PAGE
	1	1	**8Y-6377**	1	STRIKER	
	2	1	**107-6145**	1	GLASS-FRONT (CENTER)	
	3	1	**111-0204**	1	PLATE AS	
	4	1	**146-9006**	1	GLASS-FRONT (LH)	
	5	1	**146-9007**	1	GLASS-FRONT (RH)	
Y	6	1	**288-8880**	1	WINDOW GP-CAB	491
	7	1	**212-9428**	1	STRIKER AS (DOOR LATCH)	
	8	1	**224-9392**	4	FASTENER-SINGLE HEAD	
	9	1	**225-7715**	1	GLASS (RH, REAR)	
	10	1	**225-7716**	1	GLASS (LH, REAR)	
	11	1	**225-7717**	1	GLASS (REAR)	
	12	1	**254-5060**	1	CAB AS	
	13	1	**108-4311**	1	SCREW-MACHINE (3/8-16X0.75-IN)	
	14	1	**5P-4116**	2	WASHER-HARD (8.8X20.5X2-MM THK)	
	15	1	**8T-4121**	2	WASHER-HARD (11X21X2.5-MM THK)	
M	16	1	**8T-4137**	2	BOLT (M10X1.5X20-MM)	
M	17	1	**8T-4189**	8	BOLT (M8X1.25X20-MM)	
	18	1	**8T-4224**	6	WASHER-HARD (8.8X16X2-MM THK)	

M - METRIC PART
Y - SEPARATE ILLUSTRATION

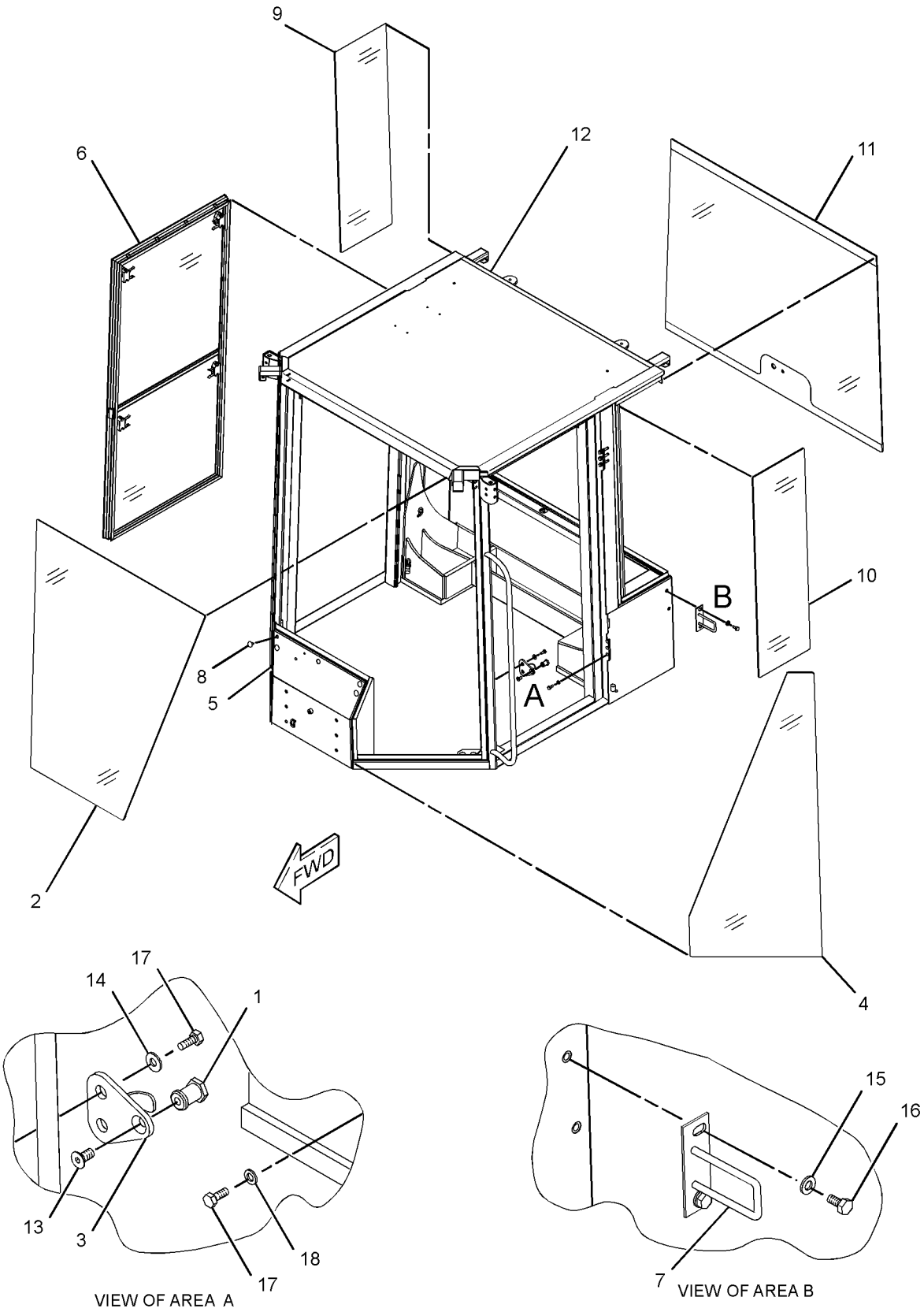

GRAPHIC #1 **<END>** g01259266

333-1669 CAB GP-ENCLOSED ROPS

S/N: TJL1-UP
PART OF 291-3967 ROPS GP-ENCLOSED
AN ATTACHMENT

SMCS-7301 **i04529010**

NOTE	REF NO	GRAPHIC REF	PART NUMBER	QTY	PART NAME 1 2 3 4 5 6 (PRODUCT LEVEL)	SEE PAGE
	1	1	**8Y-6377**	1	STRIKER	
	2	1	**107-6145**	1	GLASS-FRONT (CENTER)	
	3	1	**111-0204**	1	PLATE AS	
	4	1	**146-9006**	1	GLASS-FRONT (LH)	
	5	1	**146-9007**	1	GLASS-FRONT (RH)	
	6	1	**212-9428**	1	STRIKER AS	
	7	1	**224-9392**	4	FASTENER-SINGLE HEAD	
	8	1	**225-7715**	1	GLASS	
	9	1	**225-7716**	1	GLASS	
	10	1	**225-7717**	1	GLASS	
Y	11	1	**352-4152**	1	WINDOW GP-CAB	494
	12	1	**333-1668**	1	CAB AS	
	13	1	**108-4311**	1	SCREW-MACHINE (3/8-16X0.75-IN)	
	14	1	**5P-4116**	2	WASHER-HARD (8.8X20.5X2-MM THK)	
	15	1	**8T-4121**	2	WASHER-HARD (11X21X2.5-MM THK)	
M	16	1	**8T-4137**	2	BOLT (M10X1.5X20-MM)	
M	17	1	**8T-4189**	8	BOLT (M8X1.25X20-MM)	
	18	1	**8T-4224**	6	WASHER-HARD (8.8X16X2-MM THK)	

M - METRIC PART
Y - SEPARATE ILLUSTRATION

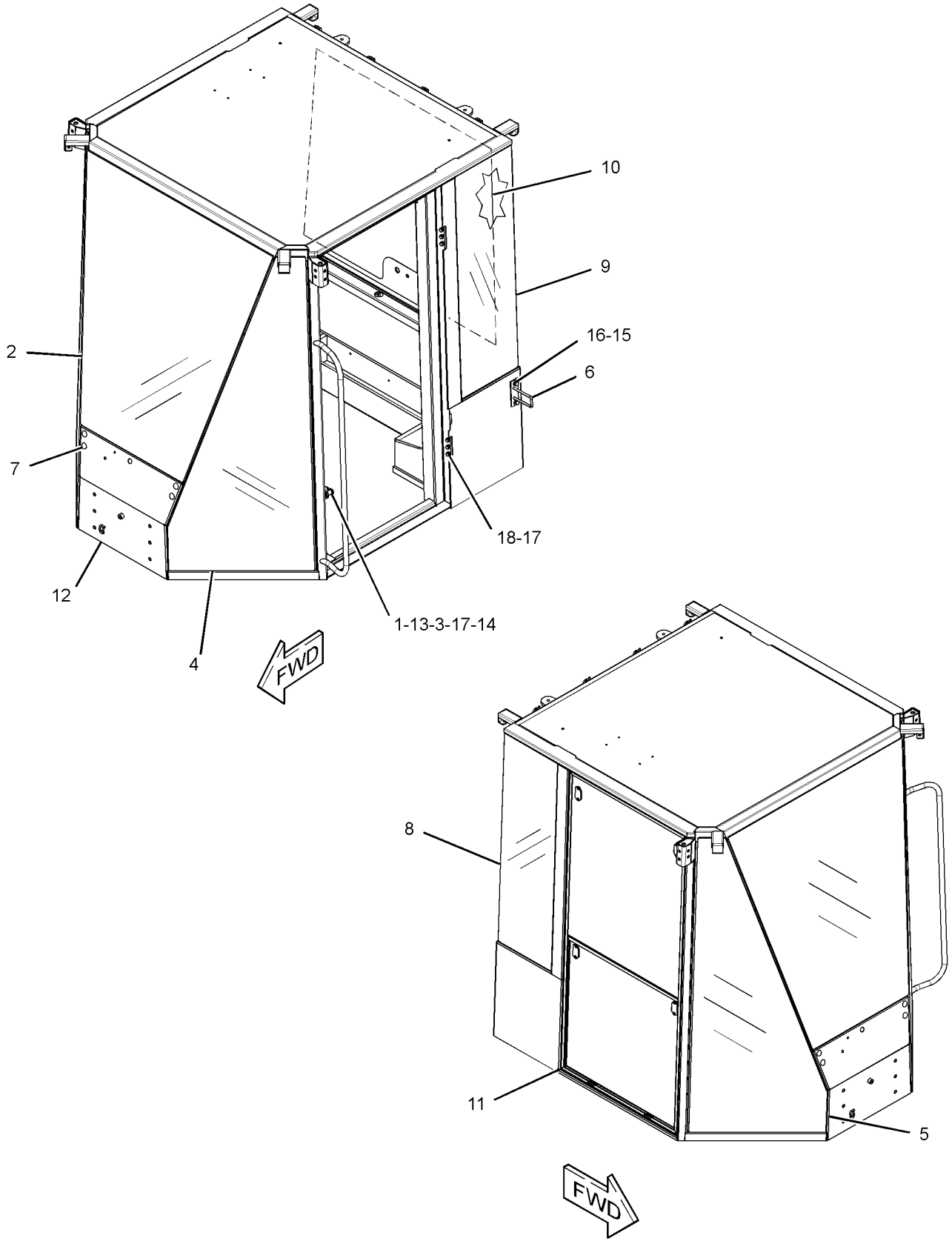

GRAPHIC #1 **<END>** g02150057

209-6165 CANOPY GP

S/N: TJL1-UP

AN ATTACHMENT

SMCS-7302 **i03044940**

NOTE	REF NO	GRAPHIC REF	PART NUMBER	QTY	PART NAME 1 2 3 4 5 6 (PRODUCT LEVEL)	SEE PAGE
Y	1	1	*279-9103*	1	CANOPY GP	382
	2	1	**209-6164**	1	SUPPORT AS	
M	3	1	**7X-2575**	6	BOLT (M24X3X60-MM)	
	4	1	**8T-4167**	6	WASHER-HARD (26X44X4-MM THK)	

M - METRIC PART
Y - SEPARATE ILLUSTRATION

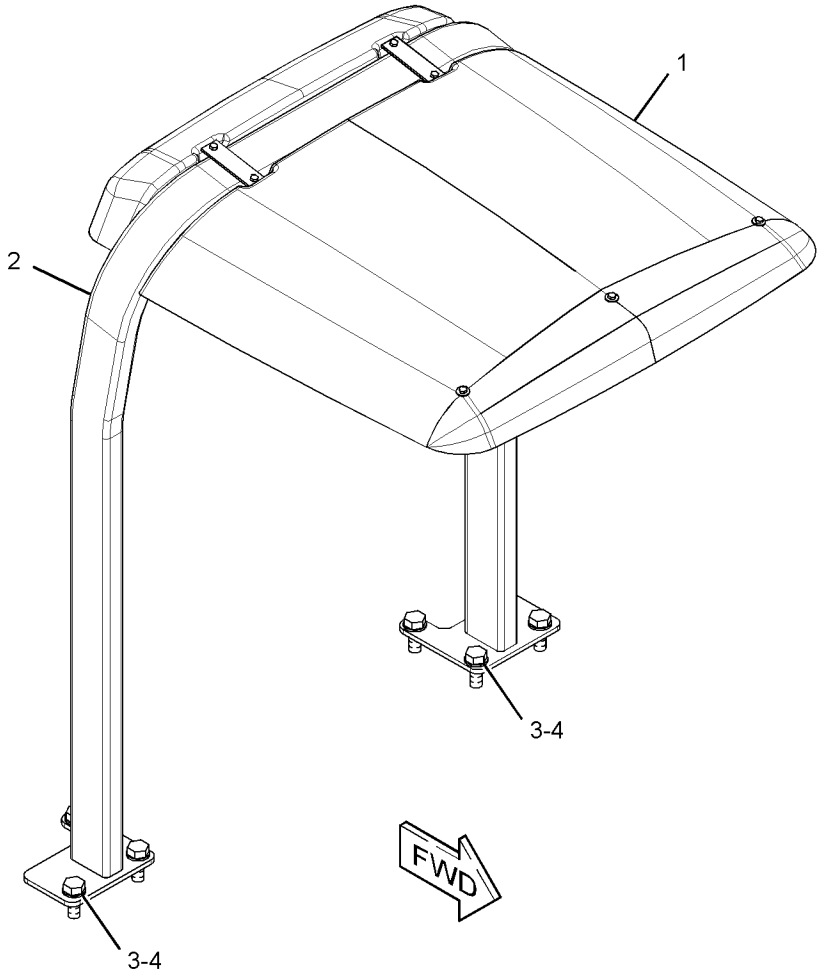

GRAPHIC #1 **<END>** g01552613

OPERATOR STATION

279-9103 CANOPY GP

S/N: TJL1-UP
PART OF 209-6165 CANOPY GP
AN ATTACHMENT

SMCS-7302 **i03044943**

NOTE	REF NO	GRAPHIC REF	PART NUMBER	QTY	PART NAME 1 2 3 4 5 6 (PRODUCT LEVEL)	SEE PAGE
	1	1	**141-5969**	2	PLATE	
	2	1	**173-7411**	1	CANOPY	
	3	1	**175-1182**	1	RUBBER	
	4	1	**278-6108**	1	SUPPORT AS	
	5	1	**280-2627**	1	RUBBER	
	6	1	**5P-4116**	9	WASHER-HARD (8.8X20.5X2-MM THK)	
M	7	1	**6V-9189**	9	LOCKNUT (M8X1.25-THD)	
	8	1	**8C-0572**	5	WASHER (8.8X25.5X2-MM THK)	
M	9	1	**8T-3647**	4	BOLT (M8X1.25X80-MM)	
M	10	1	**8T-4908**	5	BOLT (M8X1.25X25-MM)	

M - METRIC PART

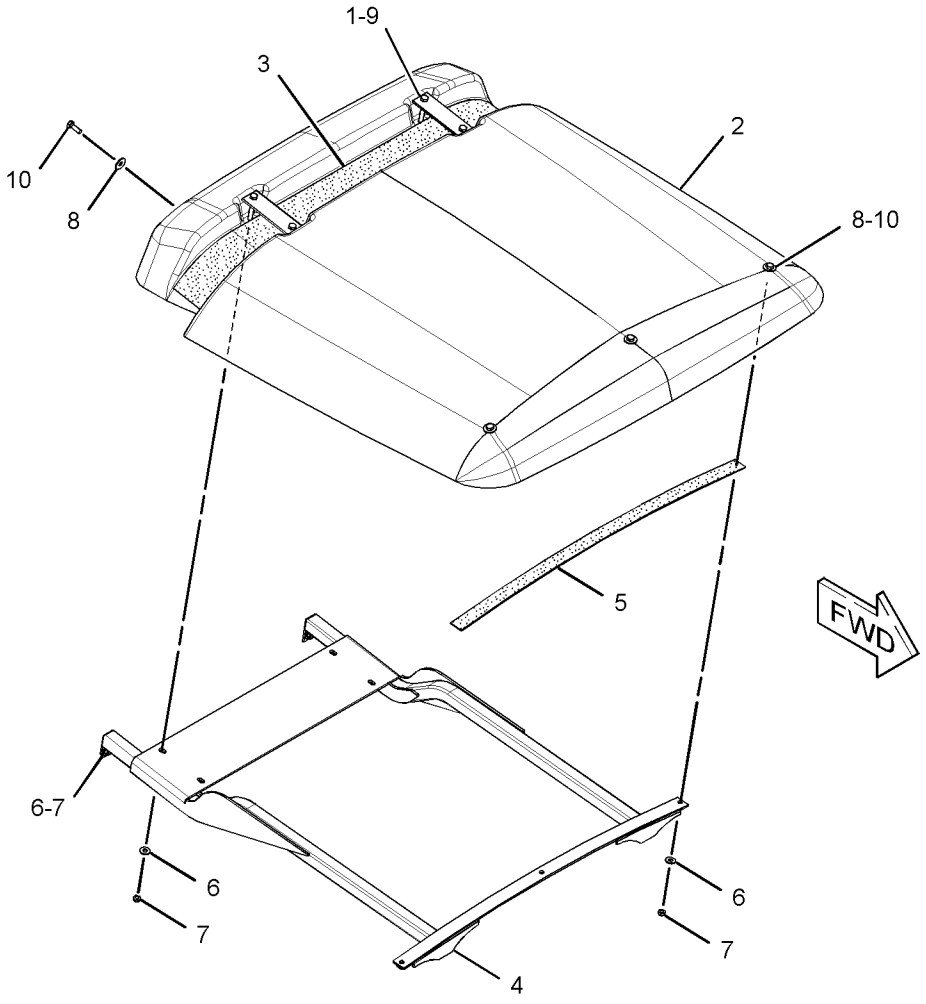

GRAPHIC #1 **<END>** g01552513

3E-1906 COMPRESSOR GP-REFRIGERANT

S/N: TJL1-UP

PART OF 222-3594 COMPRESSOR GP-REFRIGERANT

AN ATTACHMENT

SMCS-1802 **i03053605**

NOTE	REF NO	GRAPHIC REF	PART NUMBER	QTY	PART NAME 1 2 3 4 5 6 (PRODUCT LEVEL)	SEE PAGE
	1	1	**126-1767**	2	PIN-CONNECTOR (14-GA TO 16-GA)	
	2	1	**102-8802**	1	KIT-RECEPTACLE (2-PIN)	
					(INCLUDES RECEPTACLE AS & WEDGE)	
	3	1	**314-4018**	1	VALVE AS-PRESSURE RELIEF (REFRIGERANT COMPRESSOR)	
		1	**9X-7378**	1	SEAL-O-RING	
C	4	1	**7T-4532**	1	PLUG AS	
C	5	1	**9X-7385**	2	SEAL-O-RING	

C - CHANGE FROM PREVIOUS TYPE

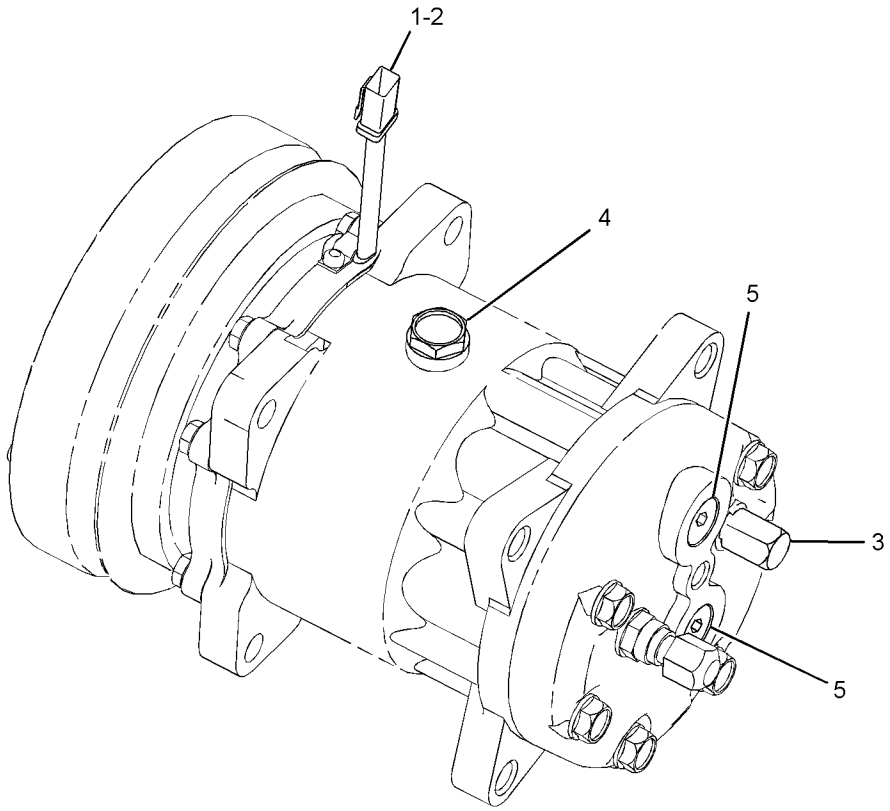

GRAPHIC #1 **<END>** g01420147

222-3594 COMPRESSOR GP-REFRIGERANT

S/N: TJL1-UP
PART OF 227-5595, 348-5640 OPERATOR AR
AN ATTACHMENT

SMCS-1802 **i03649452**

NOTE	REF NO	GRAPHIC REF	PART NUMBER	QTY	PART NAME 1 2 3 4 5 6 (PRODUCT LEVEL)	SEE PAGE
Y	1	1	**3E-1906**	1	COMPRESSOR GP-REFRIGERANT	383
	2	1	**3S-2093**	1	STRAP-CABLE	
	3	1	**4N-9891**	1	V-BELT (COMPRESSOR)	
	4	1	**9C-5344**	3	SPACER (10.5X20X18-MM THK)	
	5	1	**315-7790**	1	PLATE	
	6	1	**114-5333**	1	SWITCH AS-PRESSURE (COMPRESSOR)	
		1	**102-8802**	1	KIT-RECEPTACLE (2-PIN)	
					(INCLUDES RECEPTACLE AS & WEDGE)	
		1	**186-3735**	2	PIN-CONNECTOR (16-GA TO 18-GA)	
E		1	**9X-1386**		SLEEVE (25-CM)	
	7	1	**116-0118**	2	CLIP	
	8	1	**146-0797**	1	FITTING AS-AIR CONDITIONER (LOW SIDE)	
		1	**3E-4051**	1	CAP-SEAL (LOW SIDE CHARGE PORT)	
		1	**3E-4057**	1	VALVE AS (REFRIGERANT, LOW SIDE)	
	9	1	**219-0943**	1	FITTING AS-AIR CONDITIONER (HIGH SIDE)	
		1	**3E-4052**	1	CAP-SEAL (HIGH SIDE CHARGE PORT)	
		1	**3E-4058**	1	VALVE AS (REFRIGERANT, HIGH SIDE)	
	10	1	**222-4913**	1	BRACKET	
	11	1	**222-4914**	1	BRACKET	
	12	1	**222-8543**	1	BRACKET	
	13	1	**229-2885**	1	GUARD AS	
M		1	**8T-3490**	2	NUT-WELD (M10X1.5-THD)	
	14	1	**229-2886**	1	GUARD AS	
M		1	**8T-3490**	2	NUT-WELD (M10X1.5-THD)	
	15	1	**7X-0575**	1	WASHER-HARD (10.2X22.5X5-MM THK)	
M	16	1	**7X-2552**	2	BOLT (M16X2X30-MM)	
	17	1	**7X-7729**	1	WASHER (11X25X3-MM THK)	
	18	1	**8T-4121**	10	WASHER-HARD (11X21X2.5-MM THK)	
M	19	1	**8T-4133**	4	NUT (M10X1.5-THD)	
M	20	1	**8T-4172**	1	BOLT (M10X1.5X80-MM)	
M	21	1	**8T-4185**	1	BOLT (M10X1.5X50-MM)	
M	22	1	**8T-4186**	1	BOLT (M10X1.5X40-MM)	
M	23	1	**8T-4195**	2	BOLT (M10X1.5X30-MM)	
M	24	1	**8T-4198**	1	BOLT (M10X1.5X100-MM)	
M	25	1	**8T-6466**	3	BOLT (M10X1.5X60-MM)	
	26	1	**9X-7378**	1	SEAL-O-RING	
	27	1	**9X-8257**	2	WASHER (17.5X30X3.5-MM THK)	

E - ORDER BY THE CENTIMETER
M - METRIC PART
Y - SEPARATE ILLUSTRATION

222-3594 **COMPRESSOR GP-REFRIGERANT (*contd.*)** **i03649452**

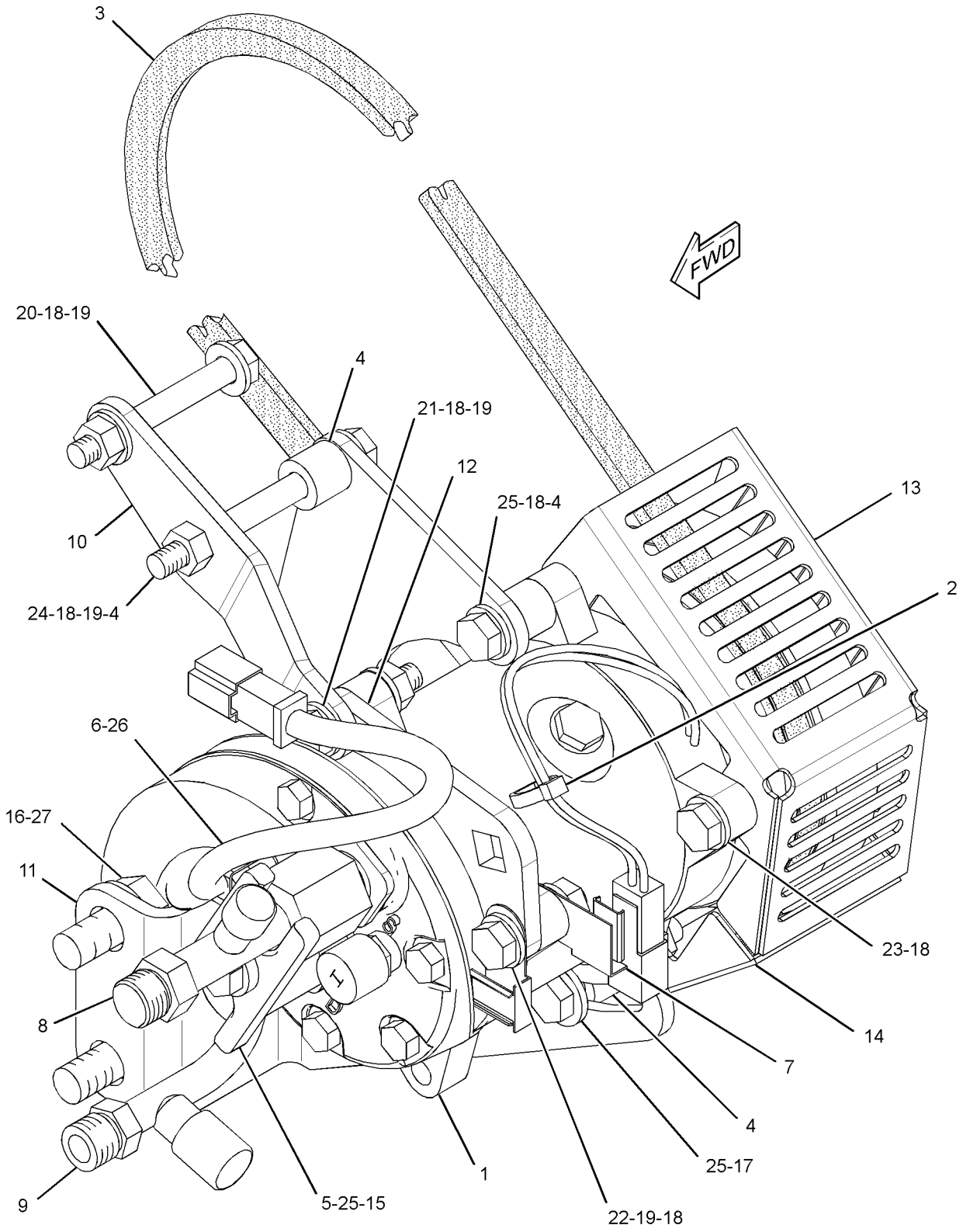

GRAPHIC #1 **<END>** g01763037

220-0205 CONDENSER & MTG GP-REFRIGERANT

S/N: TJL1-UP
PART OF 227-5595, 348-5640 OPERATOR AR
AN ATTACHMENT

SMCS-1805 **i03053680**

NOTE	REF NO	GRAPHIC REF	PART NUMBER	QTY	PART NAME 1 2 3 4 5 6 (PRODUCT LEVEL)	SEE PAGE
	1	1	**220-0204**	1	CONDENSER AS	
M	2	1	**8T-4189**	4	BOLT (M8X1.25X20-MM)	
	3	1	**8T-4224**	4	WASHER-HARD (8.8X16X2-MM THK)	

M - METRIC PART

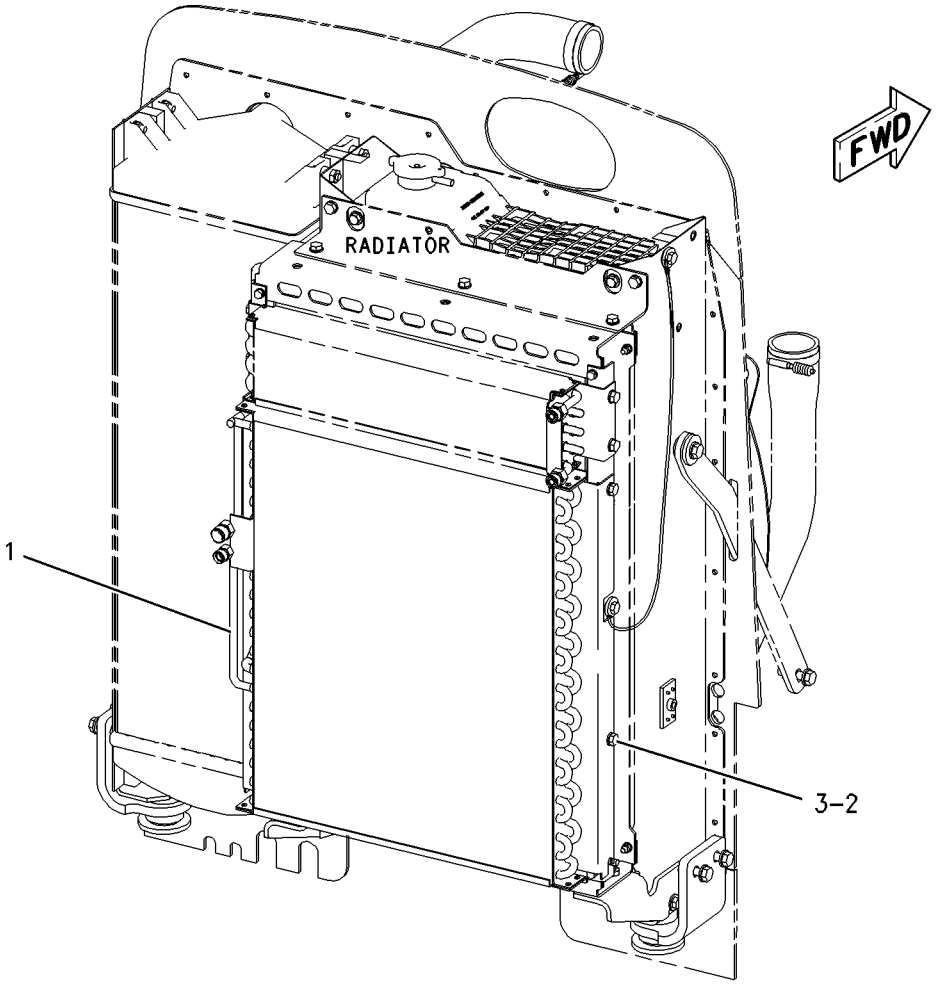

GRAPHIC #1 **<END>** g00920838

218-4281 CONTROL GP-DIRECTION & SPEED

S/N: TJL1-UP

PART OF 224-4336 HYDRAULIC AR-PROPEL

SMCS-3065, 5462 **i03033923**

NOTE	REF NO	GRAPHIC REF	PART NUMBER	QTY	PART NAME 1 2 3 4 5 6 (PRODUCT LEVEL)	SEE PAGE
	1	1	**4E-1062**	1	CUSHION AS-ARMREST	
	2	1	**6V-8187**	2	NUT (1/4-28-THD)	
	3	1	**107-6050**	1	SUPPORT AS	
		1	**7T-1099**	2	LINK	
M		1	**159-9539**	2	NUT-WELD (M6X1-THD)	
M		1	**159-9541**	4	NUT-WELD (M10X1.5-THD)	
	4	1	**111-7875**	1	PLATE	
	5	1	**151-8110**	1	SUPPORT AS	
M		1	**8T-3612**	1	NUT-WELD (M8X1.25-THD)	
	6	1	**152-4373**	1	CABLE AS	
	7	1	**153-3605**	1	COVER AS	
	8	1	**187-2082**	1	LEVER-CONTROL	
	9	1	**197-3229**	1	FILM-IDENTIFICATION (OPERATOR CONTROLS)	
Y	10	1	**197-3300**	1	CONTROL GP-PROPEL	390
	11	1	**212-0854**	1	PLATE	
	12	1	**218-4302**	1	BRACKET	
Y	13	1	*223-4281*	1	LINKAGE GP	432
M	14	1	**099-3649**	1	BOLT (M8X1.25X40-MM)	
	15	1	**2A-4133**	1	PIN	
	16	1	**3B-4611**	1	PIN-COTTER	
M	17	1	**5C-2890**	4	NUT (M6X1-THD)	
M	18	1	**5C-9553**	2	BOLT (M6X1X16-MM)	
	19	1	**5P-4115**	6	WASHER-HARD (7.2X19X2-MM THK)	
	20	1	**5P-4116**	2	WASHER-HARD (8.8X20.5X2-MM THK)	
M	21	1	**6V-9189**	3	LOCKNUT (M8X1.25-THD)	
	22	1	**8B-3768**	1	ROD END	
	23	1	**8T-4121**	6	WASHER-HARD (11X21X2.5-MM THK)	
M	24	1	**8T-4195**	6	BOLT (M10X1.5X30-MM)	
	25	1	**8T-4224**	6	WASHER-HARD (8.8X16X2-MM THK)	
M	26	1	**8T-7547**	3	BOLT (M8X1.25X30-MM)	
M	27	1	**9X-2042**	6	SCREW-TRUSS HEAD (M6X1X12-MM)	
M	28	1	**9X-2045**	6	SCREW-TRUSS HEAD (M6X1X20-MM)	

M - METRIC PART
Y - SEPARATE ILLUSTRATION

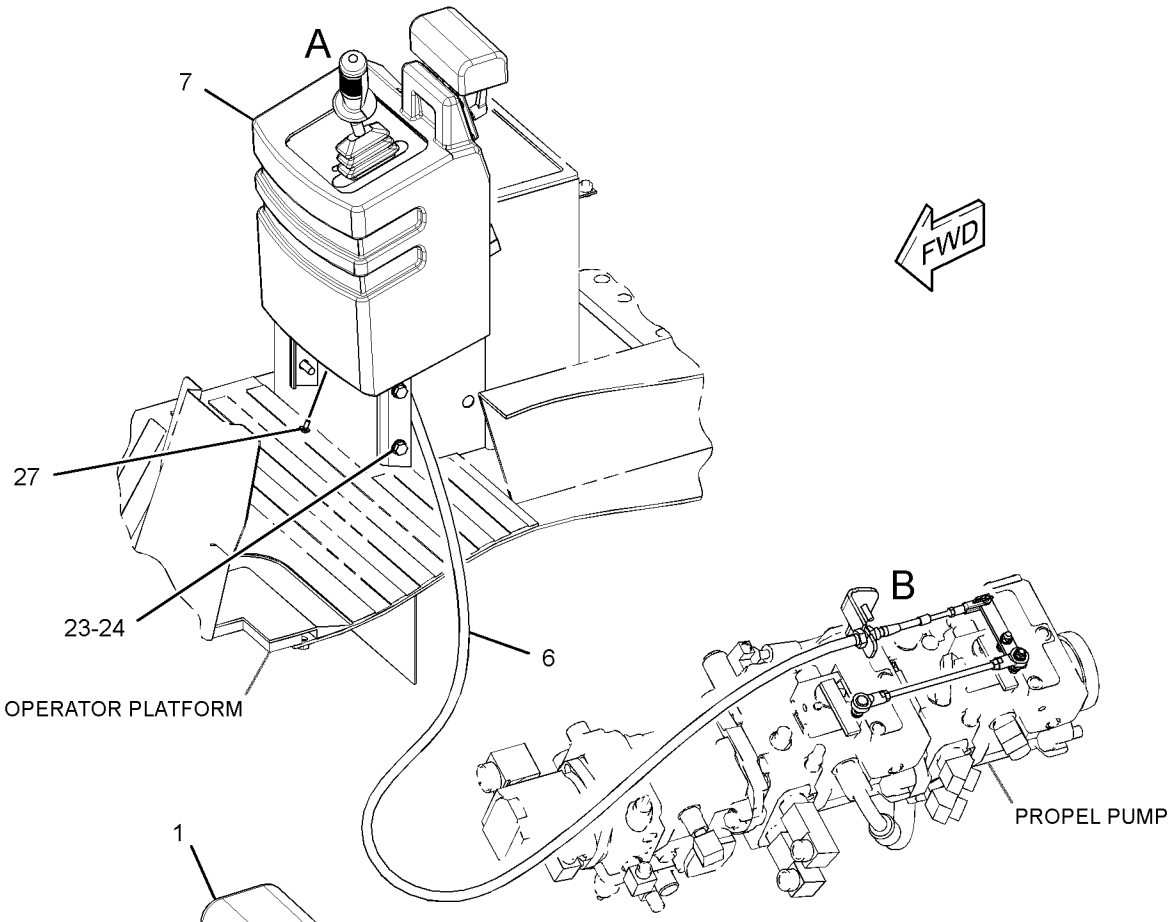

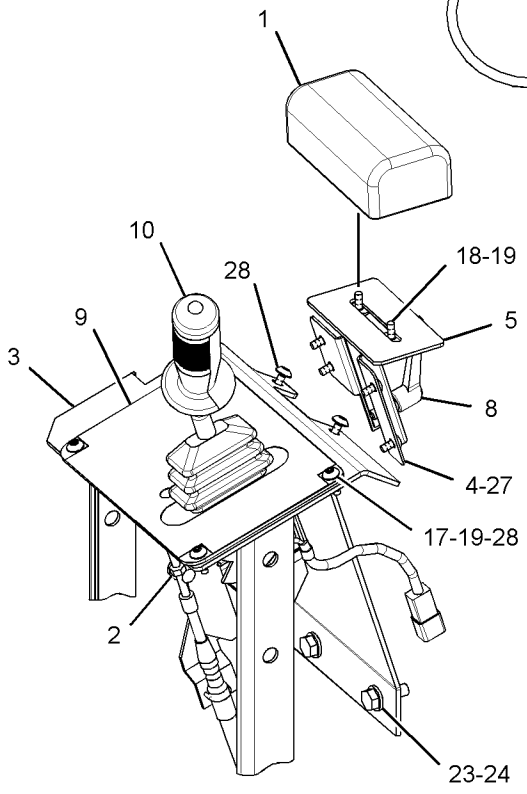

VIEW OF AREA A
(COVER REMOVED FOR CLARITY)

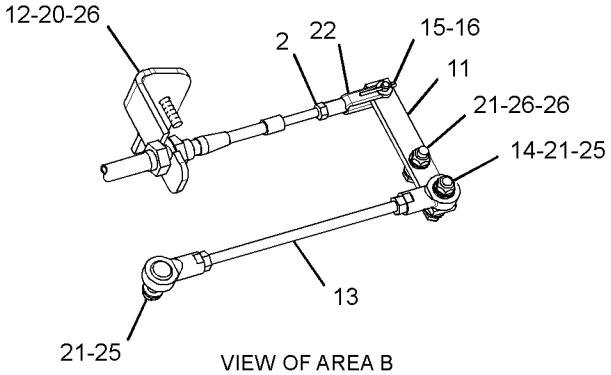

VIEW OF AREA B

GRAPHIC #1 **<END>** g01549235

186-3380 CONTROL GP-HANDLE

S/N: TJL1-UP

PART OF 197-3300 CONTROL GP-PROPEL

SMCS-5705 **i03045181**

NOTE	REF NO	GRAPHIC REF	PART NUMBER	QTY	PART NAME 1 2 3 4 5 6 (PRODUCT LEVEL)	SEE PAGE
	1	1	**086-0972**	1	SEAL-O-RING	
	2	1	**107-1723**	2	GASKET	
	3	1	**6B-4540**	6	NUT (4-40-THD)	
	4	1	**1K-6872**	1	LOCKNUT (1/2-13-THD)	
M	5	1	**107-1716**	4	SCREW (4-40X15.88-MM)	
	6	1	**113-1095**	2	HOUSING	
	7	1	**312-5546**	1	SWITCH AS-PUSH BUTTON (VIBRATORY CONTROL)	
	8	1	**107-1721**	1	CAP	
	9	1	**107-2091**	2	BOLT (4-40X0.5-IN)	

M - METRIC PART

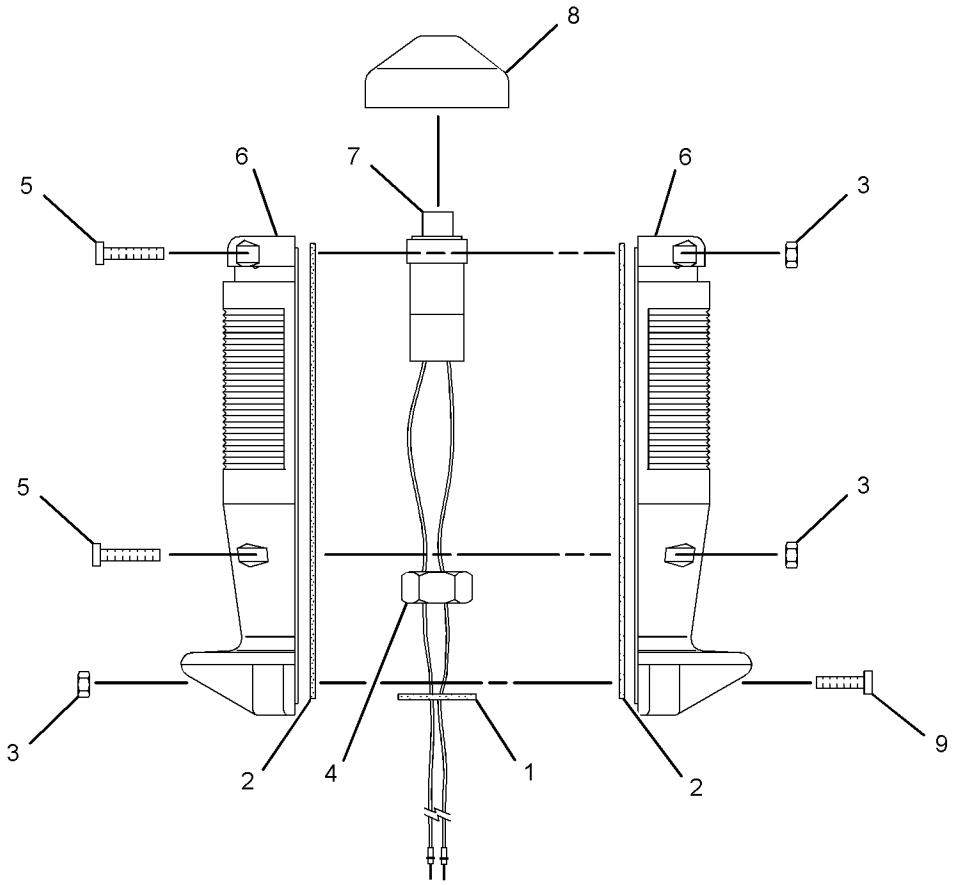

GRAPHIC #1 **<END>** g01422465

197-3300 CONTROL GP-PROPEL

S/N: TJL1-UP

PART OF 218-4281 CONTROL GP-DIRECTION & SPEED

SMCS-3065 **i03436401**

NOTE	REF NO	GRAPHIC REF	PART NUMBER	QTY	PART NAME 1 2 3 4 5 6 (PRODUCT LEVEL)	SEE PAGE
	1	1	**4B-1282**	2	SCREW-MACHINE (1/4-20X0.75-IN)	
	2	1	**009-9258**	2	NUT (1/4-20-THD)	
	3	1	**186-3169**	2	SPACER	
	4	1	**198-1111**	1	BUSHING	
	5	1	**186-3171**	1	BUSHING	
	6	1	**5B-3180**	1	NUT (5/16-18-THD)	
	7	1	**031-4155**	1	LOCKNUT (5/16-18-THD)	
	8	1	**7X-3393**	1	WASHER-HARD (8.3X19X1.83-MM THK)	
	9	1	**140-9685**	4	WASHER-SPRING (8.64X22.1X1.9-MM THK)	
	10	1	**077-7467**	2	RACE-THRUST BEARING	
	11	1	**197-9181**	1	DISC-FRICTION	
	12	1	**4L-1250**	5	LOCKNUT (10-32-THD)	
	13	1	**166-8072**	2	SPRING-COMPRESSION	
	14	1	**166-8070**	2	BOLT-SOCKET HEAD (10-32X11.18-MM)	
	15	1	**166-8071**	1	BEARING-CONNECTING ROD	
	16	1	**8L-6521**	1	BOLT (10-32X0.5-IN)	
	17	1	**7X-2466**	1	CLIP	
	18	1	**140-9337**	1	SWITCH-MICRO (NEUTRAL POSITION)	
	19	1	**171-2842**	2	BOLT-SOCKET HEAD (M3X0.5X20-MM)	
M	20	1	**8T-2658**	2	LOCKNUT (M3X0.5-THD)	
Y	21	1	**186-3380**	1	CONTROL GP-HANDLE	389
	22	1	**197-9461**	1	LEVER	
	23	1	**140-9338**	1	BOOT	
	24	1	**8H-4959**	2	BOLT (10-32X0.875-IN)	
	25	1	**098-3602**	1	SWIVEL	
	26	1	**141-1794**	1	PIN-COTTER	
	27	1	**3K-5761**	1	WASHER (0.328X0.62X0.032-IN THK)	
	28	1	**3E-9865**	1	LOCKNUT (1/4-20-THD)	
	29	1	**8T-4205**	1	WASHER-HARD (7.2X14.5X2-MM THK)	
	30	1	**166-8068**	1	CLAMP-CABLE	
	31	1	**9X-3401**	2	PIN-CONNECTOR (16-GA TO 18-GA)	
	32	1	**151-9274**	1	KIT-RECEPTACLE (4-PIN)	
					(INCLUDES RECEPTACLE AS & WEDGE)	
	33	1	**197-9238**	1	CUP-BEARING	
	34	1	**197-9695**	1	BEARING-NEEDLE	
E	35	1	**125-7876**		TUBE-HEAT SHRINK (17.78-MM DIA) (4-CM)	

E - ORDER BY THE CENTIMETER
M - METRIC PART
Y - SEPARATE ILLUSTRATION

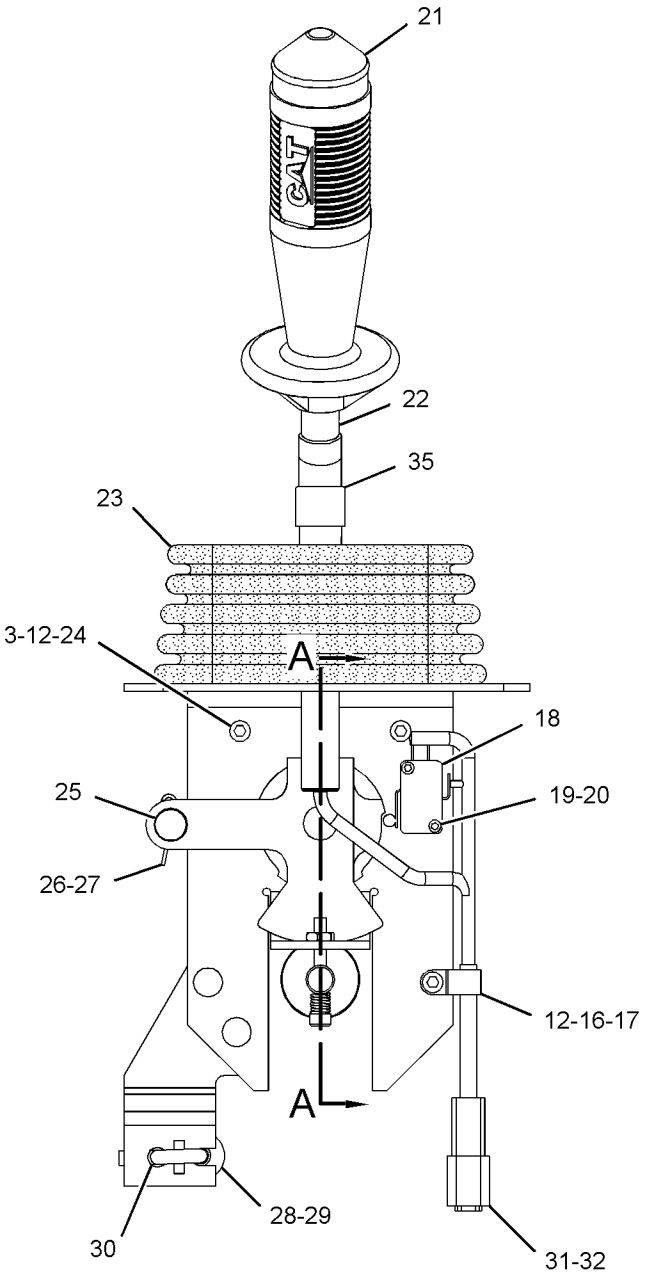

LEFT SIDE VIEW

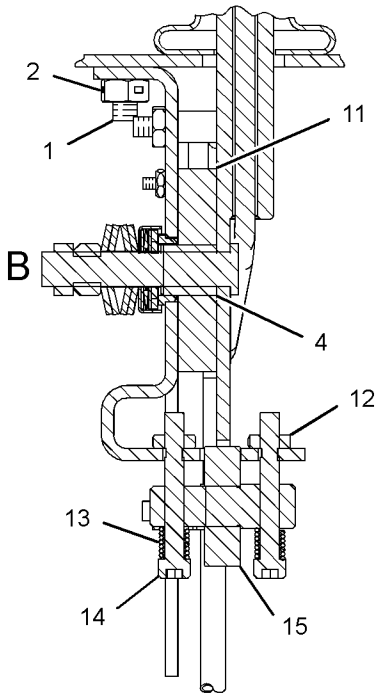

SECTION A-A

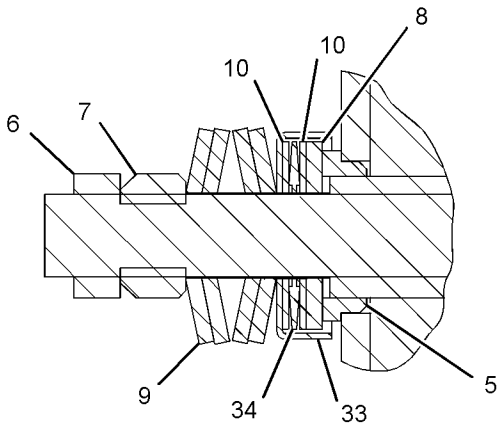

VIEW OF AREA B

GRAPHIC #1 **<END>** g01548713

219-2998 CONTROL GP-STEERING

S/N: TJL1-2244, 2262, 2264

PART OF 291-5081 HYDRAULIC AR-AUXILIARY

TYPE 1

SMCS-4309, 4310, 4343

i03036721

NOTE	REF NO	GRAPHIC REF	PART NUMBER	QTY	PART NAME 1 2 3 4 5 6 (PRODUCT LEVEL)	SEE PAGE
	1	1	**2T-3360**	1	BUTTON AS-HORN	
Y	2	1	**153-7369**	1	KNOB GP-STEERING	287
	3	1	**9D-7924**	4	MOUNTING	
	4	1	**314-2404**	1	BOOT	
	5	1	**145-9291**	1	STEERING WHEEL AS	
	6	1	**134-4735**	1	PLATE AS	
	7	1	**274-1512**	1	PUMP GP-METERING (HMU)	
	8	1	**227-2554**	1	COLUMN AS	
	9	1	**227-2556**	1	COLUMN AS	
	10	1	**227-2592**	1	SUPPORT AS	
		1	**7T-1099**	2	LINK	
	11	1	*148-8340*	2	CONNECTOR AS	
					(EACH INCLUDES)	
		1	**3K-0360**	1	SEAL-O-RING	
		1	**6V-8398**	1	SEAL-O-RING	
		1	**6V-8639**	1	CONNECTOR	
	12	1	*148-8354*	1	ELBOW AS	
		1	**3K-0360**	1	SEAL-O-RING	
		1	**6V-8398**	1	SEAL-O-RING	
		1	**6V-9002**	1	ELBOW	
	13	1	*164-6863*	1	ELBOW AS	
		1	**8C-6920**	1	ELBOW	
		1	**3K-0360**	1	SEAL-O-RING	
		1	**6V-9746**	1	SEAL-O-RING	
	14	1	**5P-4116**	5	WASHER-HARD (8.8X20.5X2-MM THK)	
M	15	1	**6V-8227**	1	NUT (M18X1.5-THD)	
	16	1	**7X-0578**	4	WASHER-HARD (10.2X32X2.5-MM THK)	
	17	1	**8T-4121**	4	WASHER-HARD (11X21X2.5-MM THK)	
M	18	1	**8T-4136**	4	BOLT (M10X1.5X25-MM)	
M	19	1	**8T-4137**	4	BOLT (M10X1.5X20-MM)	
M	20	1	**8T-4908**	5	BOLT (M8X1.25X25-MM)	
M	21	1	**8T-6869**	4	BOLT (M8X1.25X60-MM)	
	22	1	**217-8058**	1	WIRE AS	
M	23	1	**8T-0267**	1	BOLT-SOCKET HEAD (M6X1X12-MM)	

M - METRIC PART
Y - SEPARATE ILLUSTRATION

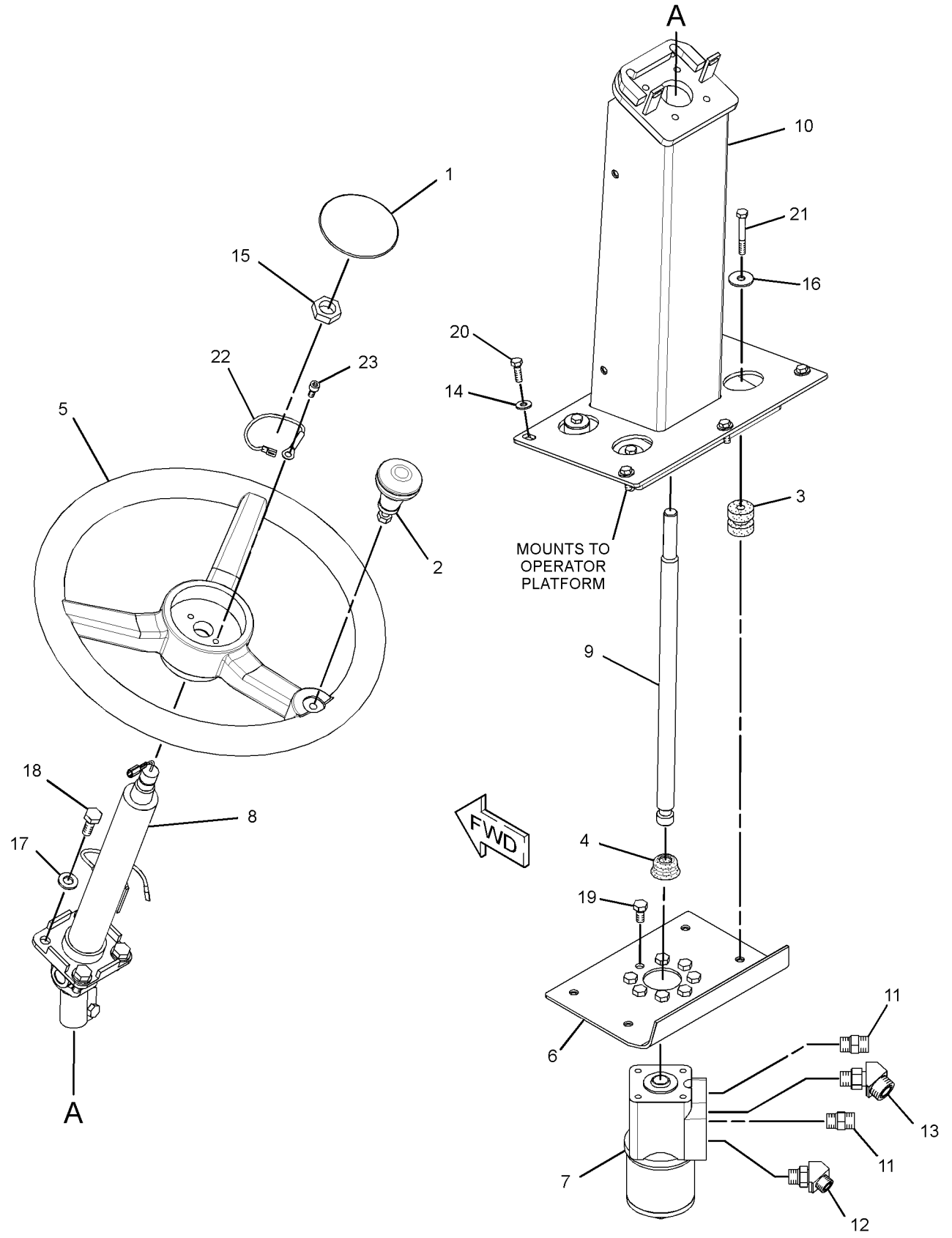

GRAPHIC #1 **<END>** g01488097

219-2998 CONTROL GP-STEERING

S/N: TJL1-2244, 2262, 2264
PART OF 291-5081 HYDRAULIC AR-AUXILIARY
TYPE 2

SMCS-4309, 4310, 4343 **i05193924**

NOTE	REF NO	GRAPHIC REF	PART NUMBER	QTY	PART NAME 1 2 3 4 5 6 (PRODUCT LEVEL)	SEE PAGE
	1	1	**322-8568**	1	BUTTON AS-HORN	
	2	1	**8R-2918**	1	KNOB AS	
M		1	**8T-4244**	1	NUT (M12X1.75-THD)	
	3	1	**9D-7924**	4	MOUNTING	
	5	1	**363-5911**	1	STEERING WHEEL AS	
		1	**363-6423**	1	PLUG	
	6	1	**134-4735**	1	PLATE AS	
M		1	**8T-3612**	4	NUT-WELD (M8X1.25-THD)	
	7	1	**274-1512**	1	PUMP GP-METERING (HMU)	
	7A	1	**314-2404**	1	BOOT	
	8	1	**227-2554**	1	COLUMN AS (UPPER)	
		1	**394-9605**	1	CONTACT-HORN	
		1	**394-9606**	2	SCREW-PAN HEAD	
	9	1	**227-2556**	1	COLUMN AS (LOWER)	
	10	1	**227-2592**	1	SUPPORT AS	
		1	**7T-1099**	2	LINK	
M		1	**159-9540**	4	NUT-WELD (M8X1.25-THD)	
	11	1	*148-8340*	2	CONNECTOR AS	
					(EACH INCLUDES)	
		1	**3K-0360**	1	SEAL-O-RING	
		1	**6V-8398**	1	SEAL-O-RING	
		1	**6V-8639**	1	CONNECTOR	
	13	1	*164-6863*	1	ELBOW AS	
		1	**8C-6920**	1	ELBOW	
		1	**3K-0360**	1	SEAL-O-RING	
		1	**6V-9746**	1	SEAL-O-RING	
	14	1	**5P-4116**	5	WASHER-HARD (8.8X20.5X2-MM THK)	
M	15	1	**6V-8227**	1	NUT (M18X1.5-THD)	
	16	1	**7X-0578**	4	WASHER-HARD (10.2X32X2.5-MM THK)	
	17	1	**8T-4121**	4	WASHER-HARD (11X21X2.5-MM THK)	
M	18	1	**8T-4136**	4	BOLT (M10X1.5X25-MM)	
M	19	1	**8T-4137**	4	BOLT (M10X1.5X20-MM)	
M	20	1	**8T-4908**	5	BOLT (M8X1.25X25-MM)	
M	21	1	**8T-6869**	4	BOLT (M8X1.25X60-MM)	
	22	1	**217-8058**	1	WIRE AS	
M	23	1	**8T-0267**	1	BOLT-SOCKET HEAD (M6X1X12-MM)	
C	24	1	*148-8324*	1	CONNECTOR AS	
		1	**3K-0360**	1	SEAL-O-RING	
		1	**6V-9746**	1	SEAL-O-RING	
		1	**6V-9874**	1	CONNECTOR (STRAIGHT)	
C	25	1	*171-6723*	1	ELBOW AS	
		1	**6V-9746**	1	SEAL-O-RING	
		1	**8T-8899**	1	ELBOW	

C - CHANGE FROM PREVIOUS TYPE
M - METRIC PART

219-2998 **CONTROL GP-STEERING (*contd.*)** **i05193924**

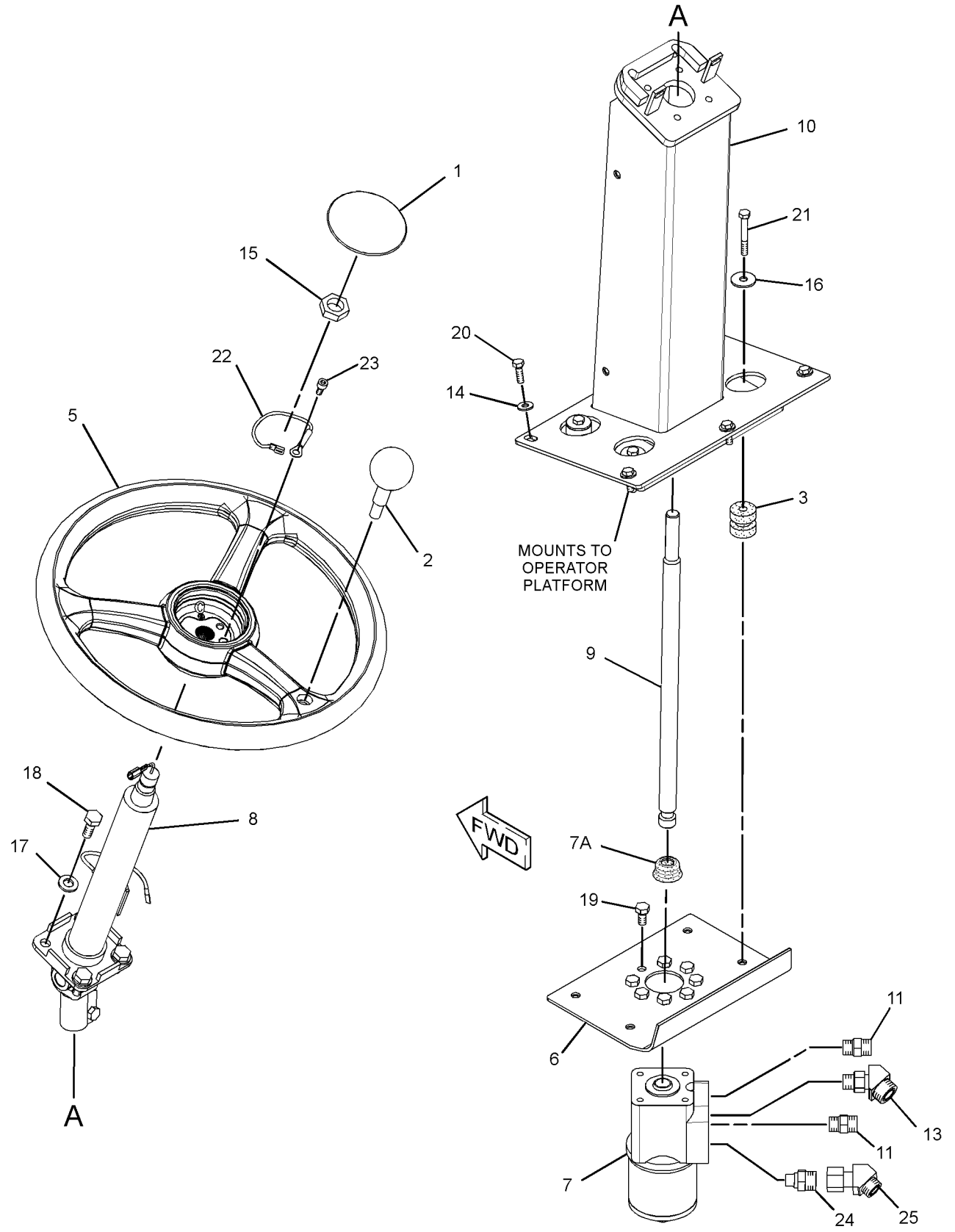

GRAPHIC #1 **<END>** g03337326

235-8557 CONTROL GP-STEERING

S/N: TJL2245-2261, 2263, 2265-UP

PART OF 291-5081 HYDRAULIC AR-AUXILIARY

SMCS-4309, 4310, 4343 **i05334209**

NOTE	REF NO	GRAPHIC REF	PART NUMBER	QTY	PART NAME 1 2 3 4 5 6 (PRODUCT LEVEL)	SEE PAGE
	1	1	**322-8568**	1	BUTTON AS-HORN	
	2	1	**9D-7924**	4	MOUNTING	
	3	1	**107-6141**	1	COVER	
	4	1	**111-7878**	1	COVER	
	5	1	**314-2404**	1	BOOT	
	6	1	**134-2364**	1	ANGLE AS	
M		1	**6V-9632**	3	NUT-WELD (M6X1-THD)	
	7	1	**134-4735**	1	PLATE AS	
M		1	**8T-3612**	4	NUT-WELD (M8X1.25-THD)	
	8	1	**145-9291**	1	STEERING WHEEL AS	
Y	9	1	**153-7369**	1	KNOB GP-STEERING	287
	10	1	**392-1729**	1	SUPPORT AS	
	11	1	**176-9166**	1	COLUMN AS	
	11A	1	**149-0779**	1	KIT-SHAFT (STEERING COLUMN)	
					(INCLUDES SHAFT AS, O-RING SEAL, RETAINING RING, & SHAFT PROTECTOR TOOL)	
	11B	1	**176-9170**	1	KIT-GAS SPRING (STEERING COLUMN)	
					(INCLUDES GAS SPRING, SET SCREWS, DOWEL PINS, COMPRESSION SPRING & TILT LEVER)	
	11C	1	**220-3926**	1	KIT-REPAIR (HORN)	
					(INCLUDES HORN CONTACT AS & SCREW)	
	11D	1	**149-0777**	1	KNOB (STEERING COLUMN)	
	12	1	**217-8058**	1	WIRE AS	
	13	1	**274-1512**	1	PUMP GP-METERING (HMU)	
		1	**314-2404**	1	BOOT	
M	14	1	**105-3484**	4	BOLT-SOCKET HEAD (M10X1.5X25-MM)	
	15	1	*148-8340*	2	CONNECTOR AS	
					(EACH INCLUDES)	
		1	**3K-0360**	1	SEAL-O-RING	
		1	**6V-8398**	1	SEAL-O-RING	
		1	**6V-8639**	1	CONNECTOR	
	17	1	*164-6863*	1	ELBOW AS	
		1	**3K-0360**	1	SEAL-O-RING	
		1	**6V-9746**	1	SEAL-O-RING	
		1	**8C-6920**	1	ELBOW	
	18	1	**5P-4116**	5	WASHER-HARD (8.8X20.5X2-MM THK)	
M	19	1	**8T-0267**	1	BOLT-SOCKET HEAD (M6X1X12-MM)	
M	20	1	**6V-8227**	1	NUT (M18X1.5-THD)	
	21	1	**7X-0578**	4	WASHER-HARD (10.2X32X2.5-MM THK)	
M	22	1	**8T-4137**	4	BOLT (M10X1.5X20-MM)	
	23	1	**8T-4896**	4	WASHER-HARD (10.2X18.5X2.5-MM THK)	
M	24	1	**8T-4908**	5	BOLT (M8X1.25X25-MM)	
M	25	1	**8T-6869**	4	BOLT (M8X1.25X60-MM)	
M	27	1	**9X-2045**	6	SCREW-TRUSS HEAD (M6X1X20-MM)	
C	28	1	*148-8324*	1	CONNECTOR AS	
		1	**6V-9874**	1	CONNECTOR (STRAIGHT)	
		1	**3K-0360**	1	SEAL-O-RING	
		1	**6V-9746**	1	SEAL-O-RING	
	29	1	*171-6723*	1	ELBOW AS	
		1	**8T-8899**	1	ELBOW	
		1	**6V-9746**	1	SEAL-O-RING	

C - CHANGE FROM PREVIOUS TYPE
M - METRIC PART
Y - SEPARATE ILLUSTRATION

235-8557 **CONTROL GP-STEERING (*contd.*)** **i05334209**

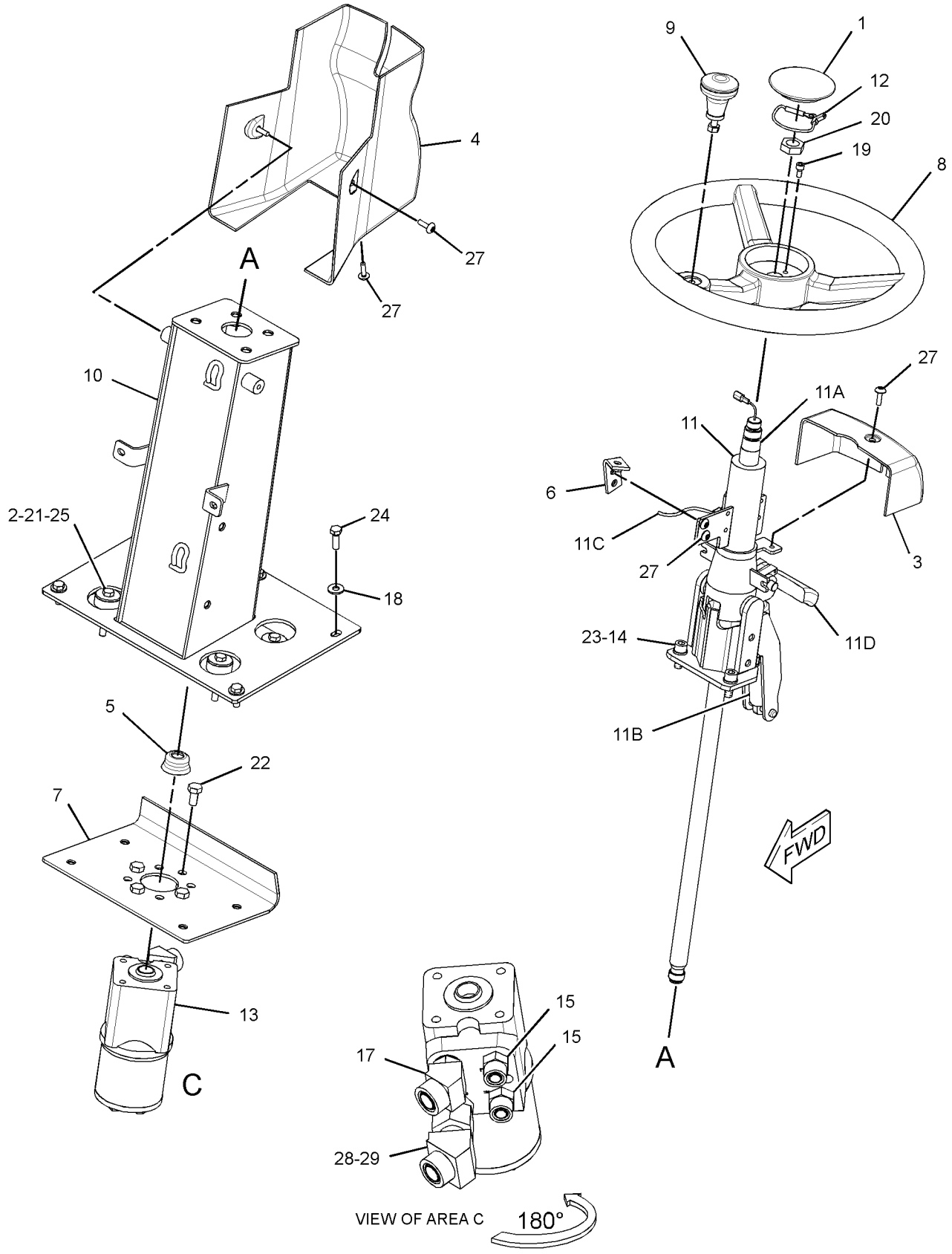

GRAPHIC #1

<END>

g03412562

178-3836 CYLINDER & MTG GP-TILT–CAB

S/N: TJL1-UP
PART OF 212-1559 TILT AR-CAB
AN ATTACHMENT

SMCS-5102, 7341 **i03044983**

NOTE	REF NO	GRAPHIC REF	PART NUMBER	QTY	PART NAME 1 2 3 4 5 6 (PRODUCT LEVEL)	SEE PAGE
	1	1	**3E-9862**	2	LOCKNUT (3/4-10-THD)	
M	2	1	**5C-2874**	2	NUT (M5X0.8-THD)	
	3	1	**7R-6728**	1	ADAPTER	
	4	1	**7X-0564**	2	WASHER-HARD (20X51X3-MM THK)	
	5	1	**8C-6865**	3	CONNECTOR	
	6	1	**081-3119**	2	SEAL-RUBBER	
	7	1	**081-3772**	1	LEVER	
	8	1	**128-1624**	1	SUPPORT AS	
	9	1	**128-4119**	1	CYLINDER AS-TILT	
	10	1	**128-4120**	1	PUMP GP-HAND	
	11	1	**147-7370**	1	BRACKET AS	
I	12	1	**154-9517**	2	HOSE AS	
	13	1	**167-1192**	2	CLIP	
	14	1	**4B-4274**	4	WASHER (5.5X13X1.2-MM THK)	
	15	1	**4J-5477**	4	SEAL-O-RING	
	16	1	**7X-0370**	1	BOLT (3/4-10X3.5-IN)	
	17	1	**7X-7729**	2	WASHER (11X25X3-MM THK)	
	18	1	**8C-6857**	1	BOLT (3/4-10X2.75-IN)	
M	19	1	**8T-0288**	2	BOLT (M5X0.8X12-MM)	
M	20	1	**8T-4136**	2	BOLT (M10X1.5X25-MM)	
M	21	1	**8T-4193**	4	BOLT (M16X2X50-MM)	
	22	1	**9X-8257**	4	WASHER (17.5X30X3.5-MM THK)	

I - REFER TO HYDRAULIC INFORMATION SYSTEM
M - METRIC PART

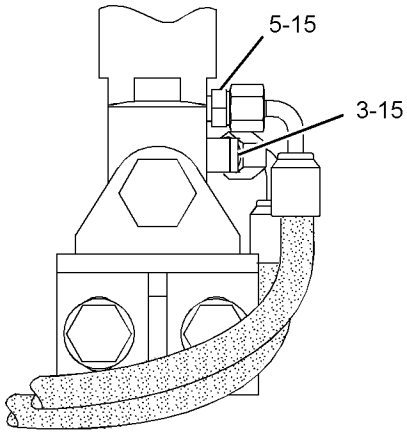

VIEW OF AREA C

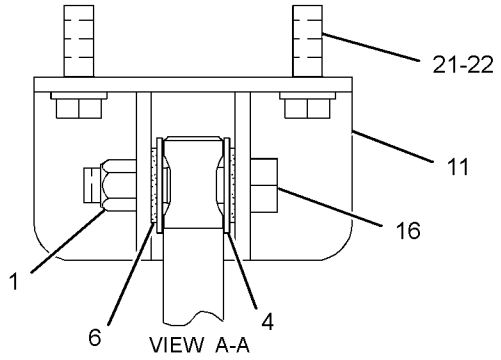

VIEW A-A

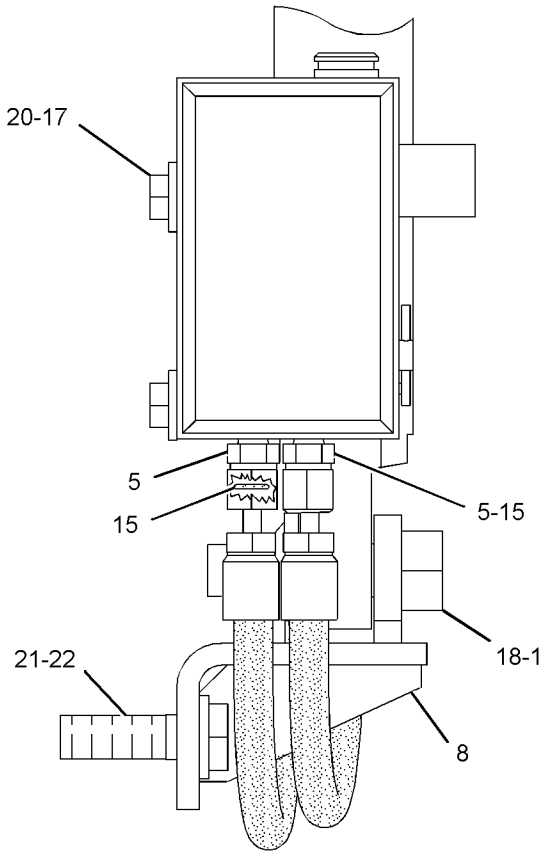

VIEW B-B

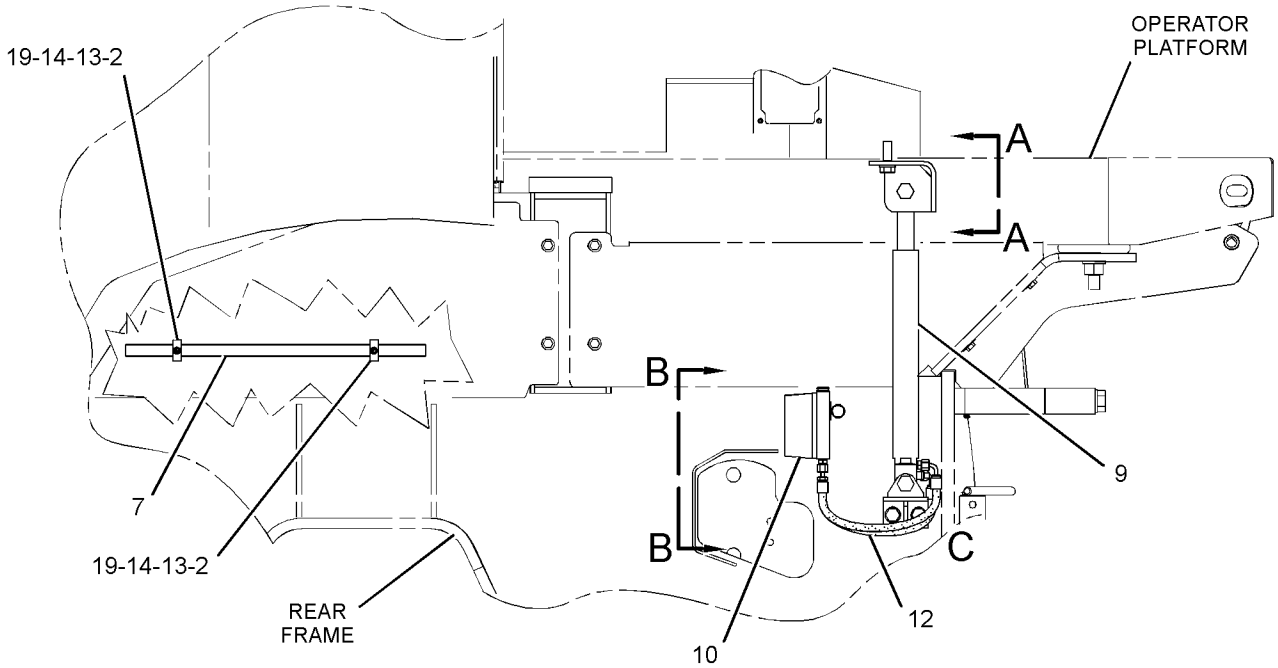

RIGHT SIDE VIEW

GRAPHIC #1

<END>

g01555093

185-5770 DOOR GP-CAB—SLIDING WINDOW, LH

S/N: TJL1-UP

PART OF 254-5057, 291-3967 ROPS GP-ENCLOSED

AN ATTACHMENT

SMCS-7308 **i03469300**

NOTE	REF NO	GRAPHIC REF	PART NUMBER	QTY	PART NAME 1 2 3 4 5 6 (PRODUCT LEVEL)	SEE PAGE
	1	1	**3T-5201**	1	BEARING	
	2	1	**4E-1384**	1	BUMPER-CONICAL	
	3	1	**7W-2108**	1	SPRING-BYPASS VALVE	
	4	1	**7X-2497**	1	HANDLE-DOOR	
M	5	1	**8T-4180**	4	SCREW-MACHINE (M5X0.8X20-MM)	
	6	1	**8T-4742**	1	END-YOKE ROD	
	7	1	**8T-4747**	2	BRACKET	
	8	1	**8Y-4807**	1	HANDLE AS	
		1	**8Y-4501**	1	SPRING-HANDLE	
	9	1	**8Y-6386**	1	SEAL-HANDLE	
	10	1	**9G-2761**	1	LATCH AS-DOOR	
	11	1	**107-6117**	1	COVER (LH)	
	12	1	**141-8580**	1	RING-RETAINING	
	13	1	**161-9640**	1	COVER	
	14	1	**161-9641**	1	PLATE	
	15	1	**161-9642**	1	ROD AS	
	16	1	**161-9647**	1	PLATE	
Y	17	1	**269-4114**	1	DOOR GP-CAB (LH)	402
	19	1	**168-2457**	1	LATCH AS-DOOR (HOLD OPEN)	
	20	1	**169-3995**	1	SEAL	
	21	1	**178-2593**	1	BUMPER	
Y	22	1	**180-3871**	1	WINDOW GP-DOOR (SLIDING)	495
M	23	1	**5C-2890**	1	NUT (M6X1-THD)	
M	24	1	**5C-7261**	2	NUT (M8X1.25-THD)	
M	25	1	**8T-4181**	5	BOLT (M6X1X20-MM)	
	26	1	**8T-4205**	6	WASHER-HARD (7.2X14.5X2-MM THK)	
M	27	1	**8T-4971**	4	BOLT (M6X1X30-MM)	
M	28	1	**9X-2042**	11	SCREW-TRUSS HEAD (M6X1X12-MM)	
E	29	1	**3E-3805**		SEAL (420-CM)	

E - ORDER BY THE CENTIMETER
M - METRIC PART
Y - SEPARATE ILLUSTRATION

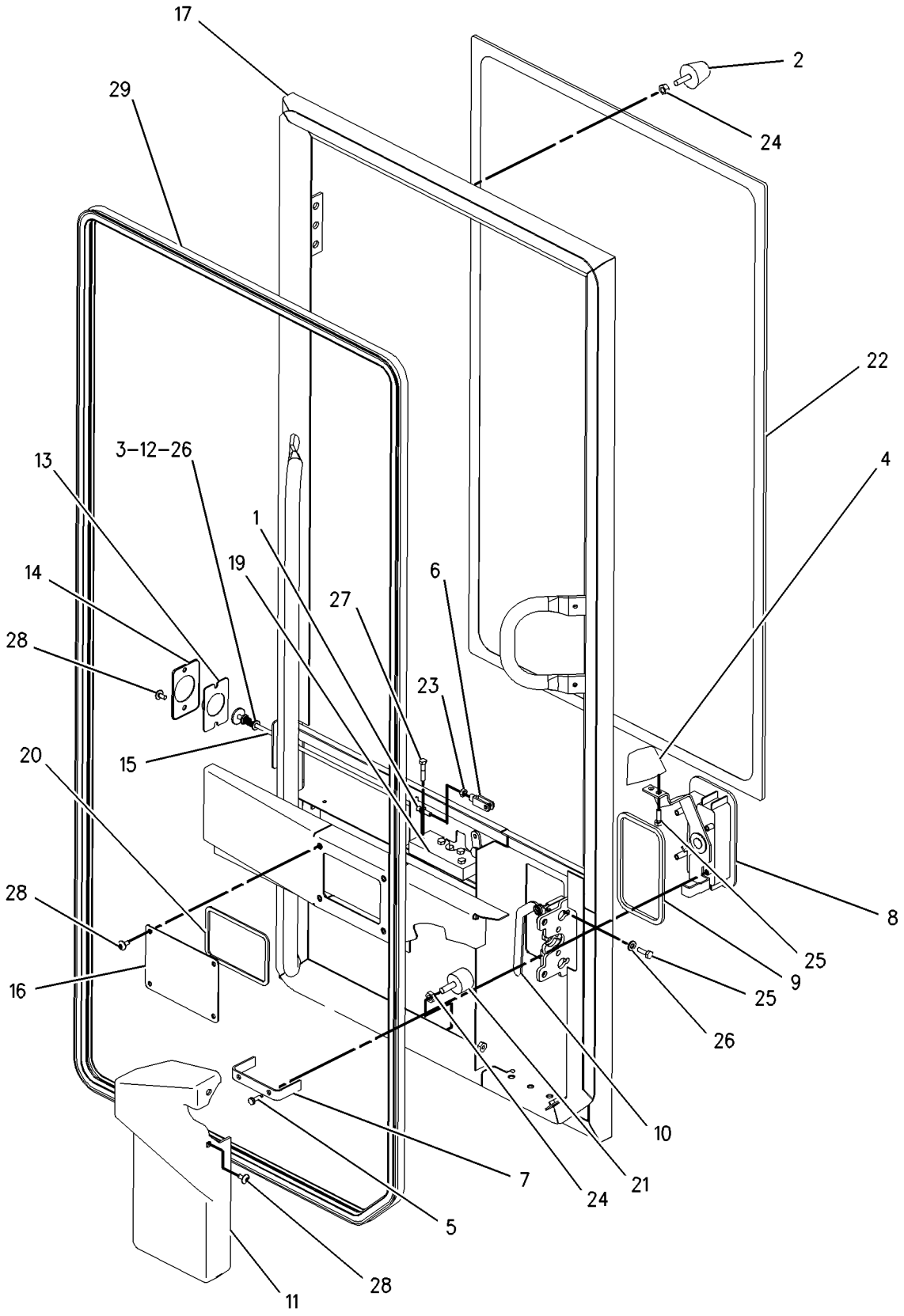

GRAPHIC #1 **<END>** g01003729

269-4114 DOOR GP-CAB—LH

S/N: TJL1-UP
PART OF 185-5770 DOOR GP-CAB
AN ATTACHMENT

SMCS-7308 **i03551191**

NOTE	REF NO	GRAPHIC REF	PART NUMBER	QTY	PART NAME 1 2 3 4 5 6 (PRODUCT LEVEL)	SEE PAGE
	1	1	**286-9593**	2	HINGE AS	
					(EACH INCLUDES)	
		1	**318-0827**	1	PIN	
		1	**096-2323**	1	RING-RETAINING (EXTERNAL)	
	2	1	**111-0200**	1	HANDRAIL	
	3	1	**115-1552**	1	HANDLE-PULL	
DF		1	**6V-0352**		SEAL (0.3-M)	

D - ORDER BY THE METER
F - NOT SHOWN

269-4114 **DOOR GP-CAB (*contd.*)** **i03551191**

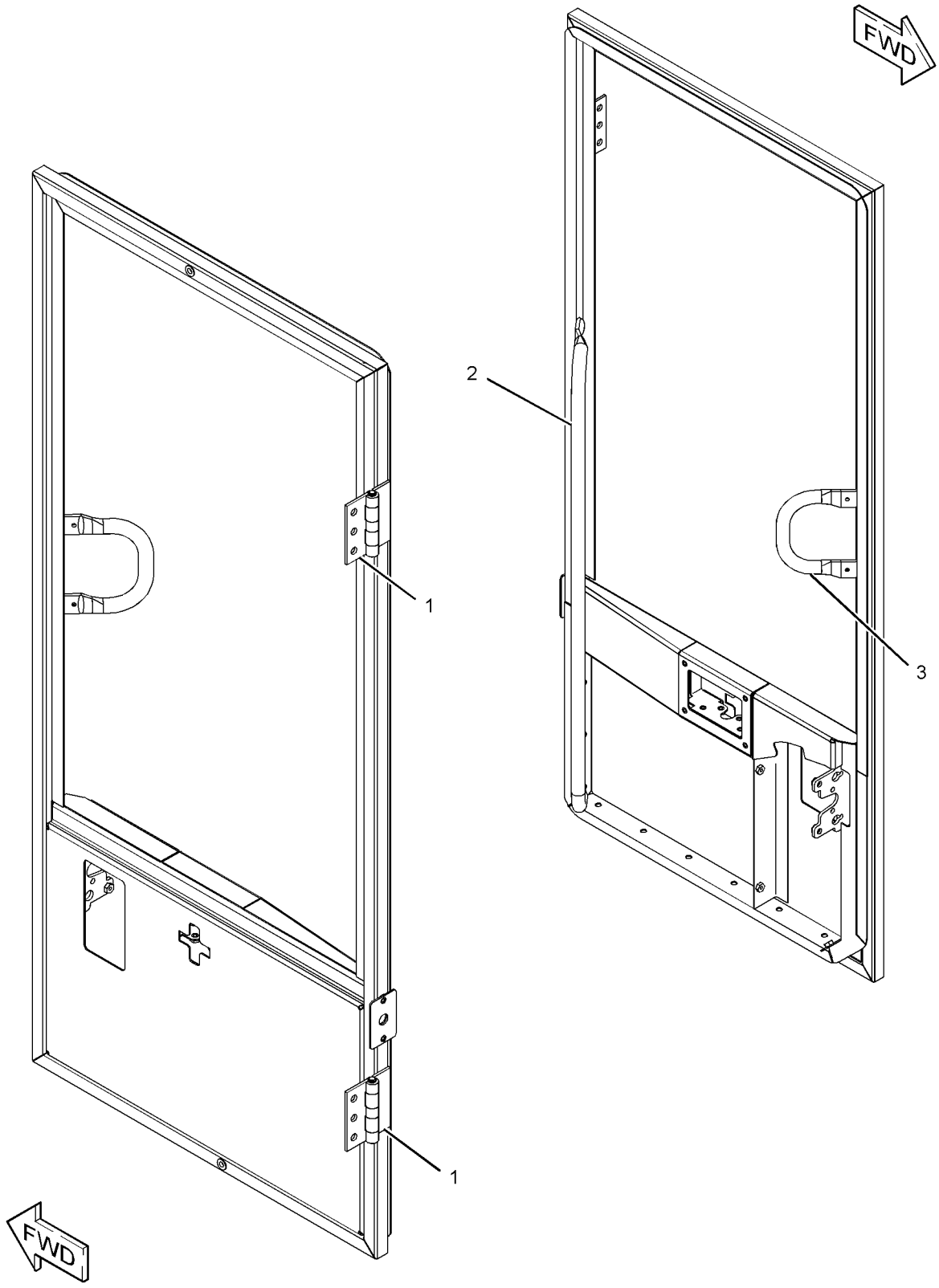

GRAPHIC #1 **<END>** g01555693

143-5948 DUCT GP-CAB AIR

S/N: TJL1-UP
PART OF 259-4423, 339-6602 CAB AR
AN ATTACHMENT

SMCS-734D **i03769932**

NOTE	REF NO	GRAPHIC REF	PART NUMBER	QTY	PART NAME 1 2 3 4 5 6 (PRODUCT LEVEL)	SEE PAGE
	1	1	**7W-7119**	2	SUPPORT	
	2	1	**8Y-6388**	6	LOUVER AS-VENT	
	3	1	**104-2091**	28	SCREW-FLAT HEAD (6-20X0.5-IN)	
	4	1	**119-3859**	15	SCREW-PAN HEAD (10-16X0.75-IN)	
	5	1	**149-9933**	1	DUCT	
	6	1	**154-1643**	1	DUCT AS	
M	7	1	**6V-5217**	2	BOLT (M8X1.25X20-MM)	
M	8	1	**8T-4171**	2	BOLT (M6X1X12-MM)	
	9	1	**8T-4224**	8	WASHER-HARD (8.8X16X2-MM THK)	
M	10	1	**9X-2045**	2	SCREW-TRUSS HEAD (M6X1X20-MM)	
	11	1	**9X-8256**	2	WASHER (6.6X12X2-MM THK)	
D	12	1	**5P-5927**		SEAL (1.2-M)	
D	12A	1	**5P-5927**		SEAL (0.75-M EACH)	
	13	1	**166-9098**	1	COVER	
M	14	1	**8T-7547**	2	BOLT (M8X1.25X30-MM)	
M	15	1	**7Y-7394**	2	SCREW-BUTTON HEAD (M8X1.25X25-MM)	
	16	1	**164-8473**	4	LOUVER AS	
M	17	1	**5C-7261**	4	NUT (M8X1.25-THD)	

D - ORDER BY THE METER
M - METRIC PART

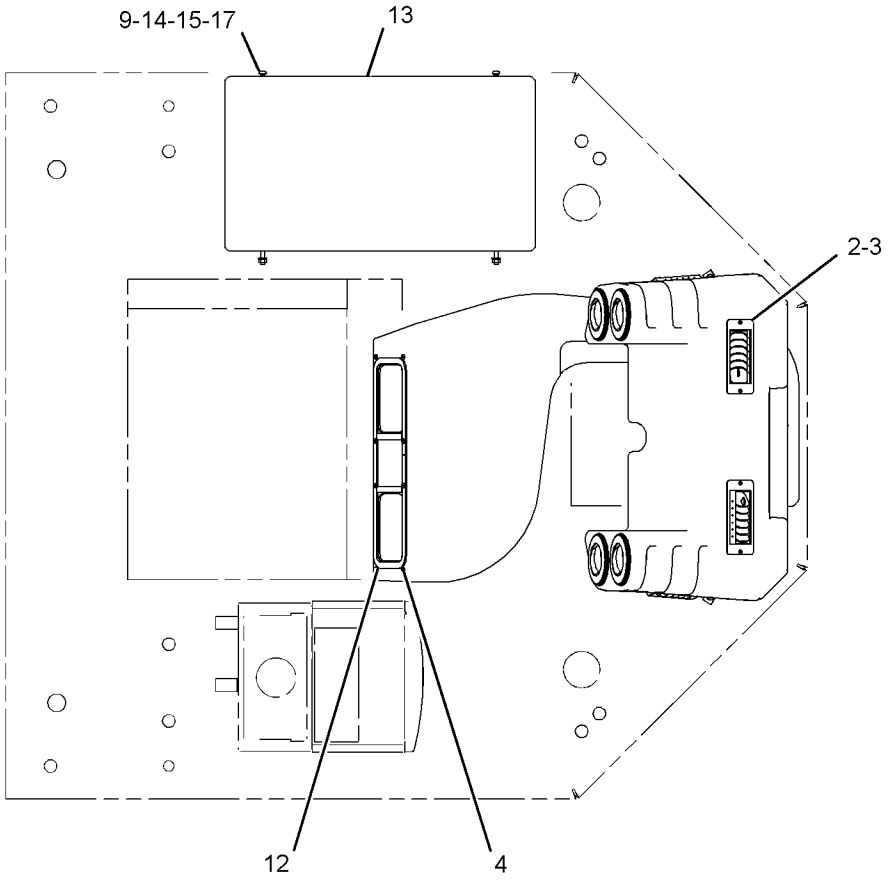

TOP VIEW FWD

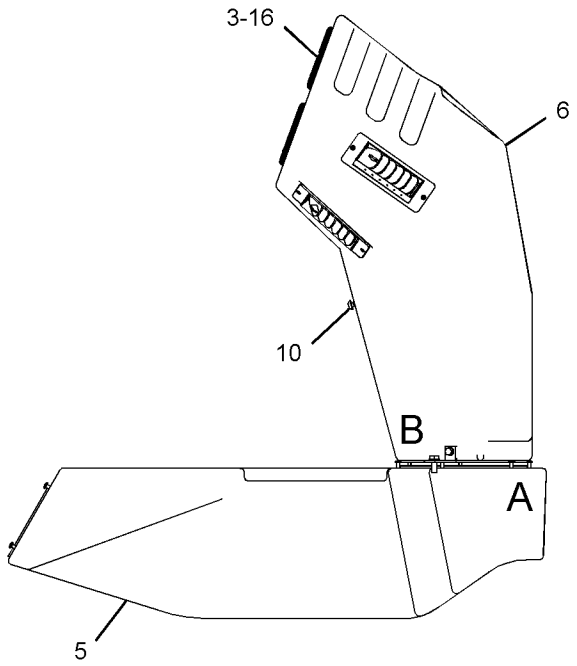

RIGHT SIDE VIEW

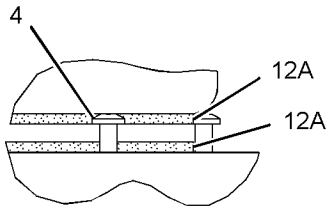

VIEW OF AREA A

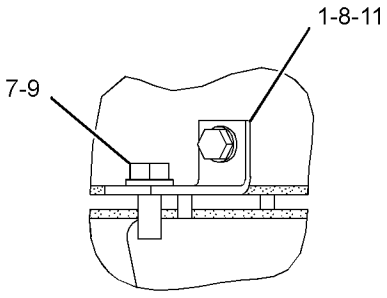

VIEW OF AREA B

GRAPHIC #1 **<END>** g02111959

240-4607 FILTER GP-CAB AIR

S/N: TJL1-UP

PART OF 227-5594, 227-5595, 348-5640, 348-5641 OPERATOR AR

AN ATTACHMENT

SMCS-7342 **i03436402**

NOTE	REF NO	GRAPHIC REF	PART NUMBER	QTY	PART NAME 1 2 3 4 5 6 (PRODUCT LEVEL)	SEE PAGE
	1	1	**116-7856**	2	KNOB	
	2	1	**127-8613**	1	GASKET	
	3	1	**180-7486**	1	COVER AS	
	4	1	**180-7487**	1	FILTER ELEMENT-CAB AIR	
					—OR—	
		1	**282-5340**	1	FILTER ELEMENT-CAB AIR (ACTIVATED CHARCOAL)	

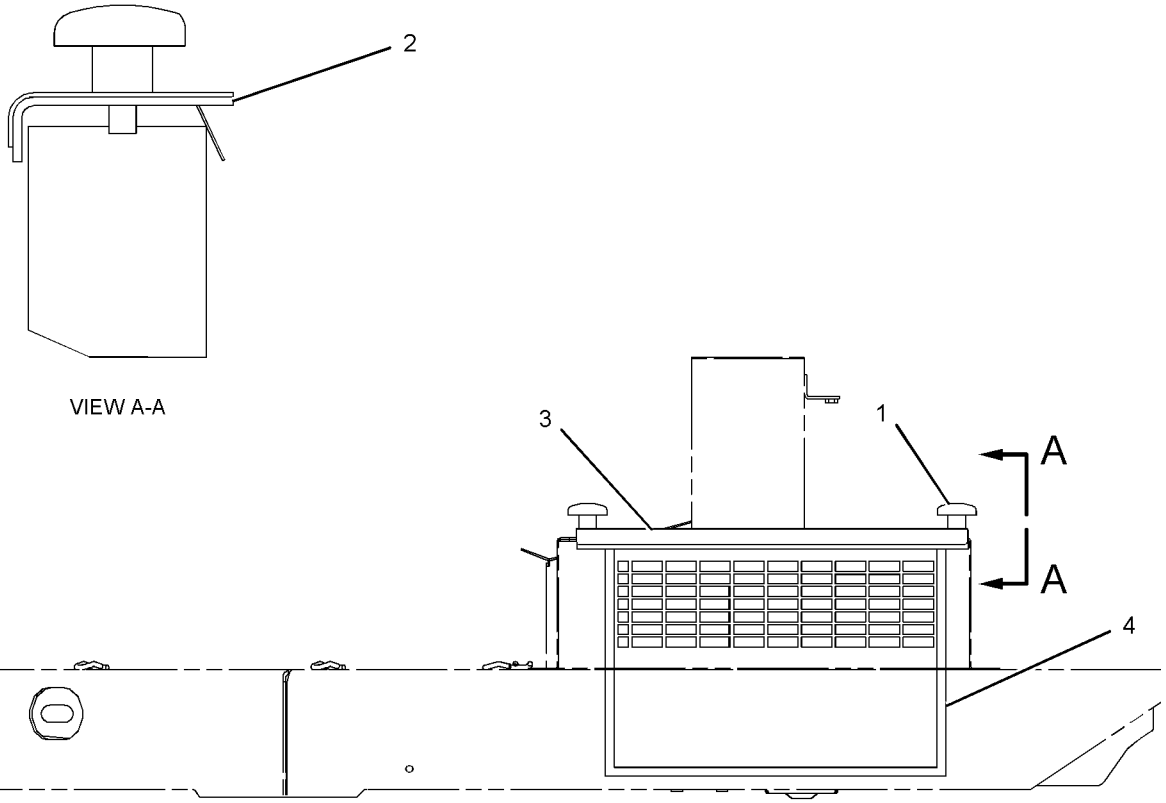

LEFT SIDE VIEW

GRAPHIC #1 **<END>** g01095833

227-0824 FLOOR MAT GP-CAB

S/N: TJL1-2268

PART OF 227-5594, 227-5595, 348-5640, 348-5641 OPERATOR AR AN ATTACHMENT

SMCS-726M **i03684662**

NOTE	REF NO	GRAPHIC REF	PART NUMBER	QTY	PART NAME 1 2 3 4 5 6 (PRODUCT LEVEL)	SEE PAGE
	1	1	**146-8999**	1	FLOOR MAT-CAB	
	2	1	**166-9319**	1	INSULATION	
	3	1	**228-6079**	1	PLATE AS (LH)	
	4	1	**228-6080**	1	PLATE AS (RH)	
M	5	1	**8T-1158**	4	BOLT-SOCKET HEAD (M8X1.25X20-MM)	
	6	1	**8T-4224**	4	WASHER-HARD (8.8X16X2-MM THK)	

M - METRIC PART

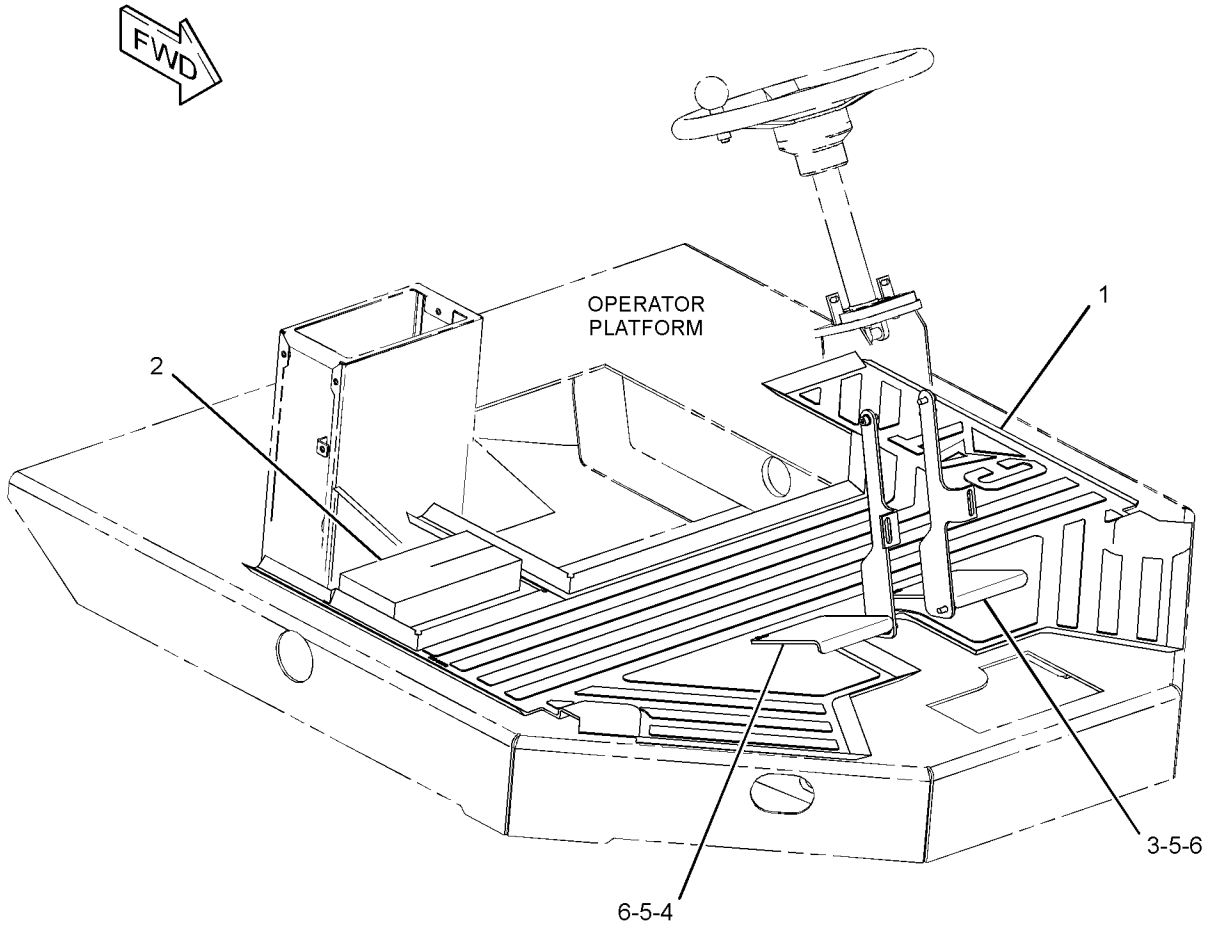

GRAPHIC #1 **<END>** g01960275

227-0824 FLOOR MAT GP-CAB

S/N: TJL2269-UP
PART OF 348-5640, 348-5641 OPERATOR AR
AN ATTACHMENT

SMCS-726M **i05370102**

NOTE	REF NO	GRAPHIC REF	PART NUMBER	QTY	PART NAME 1 2 3 4 5 6 (PRODUCT LEVEL)	SEE PAGE
	1	1	**146-8999**	1	FLOOR MAT-CAB	
	2	1	**392-3467**	1	INSULATION	
C	3	1	**392-4505**	1	PLATE AS (LH)	
C	4	1	**392-4502**	1	PLATE AS (RH)	
M	5	1	**8T-1158**	4	BOLT-SOCKET HEAD (M8X1.25X20-MM)	
	6	1	**8T-4224**	4	WASHER-HARD (8.8X16X2-MM THK)	

C - CHANGE FROM PREVIOUS TYPE
M - METRIC PART

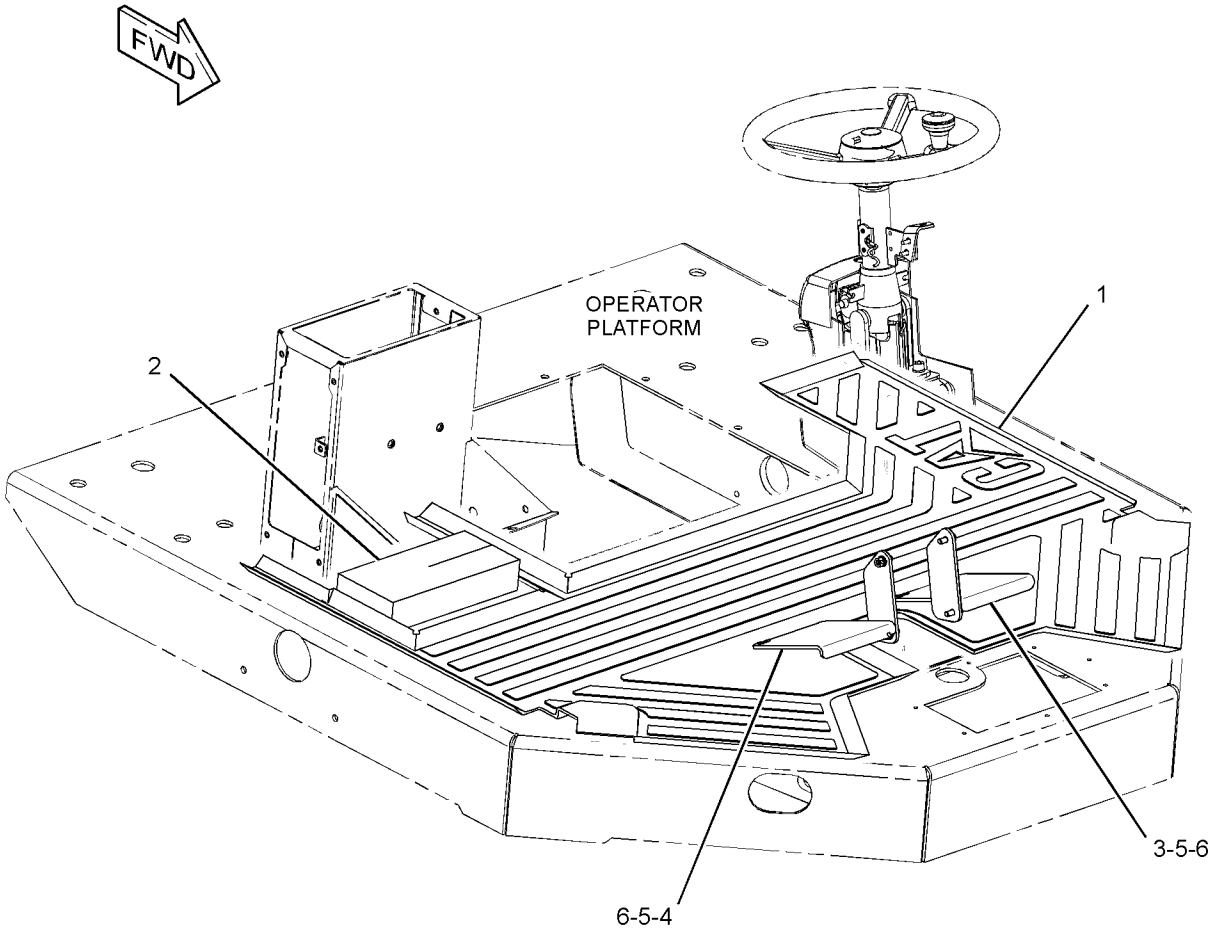

GRAPHIC #1 **<END>** g03411491

155-5234 GAUGE GP-FUEL LEVEL

S/N: TJL1-UP

PART OF 224-1149, 253-9940, 389-9450 PANEL GP-INSTRUMENT

AN ATTACHMENT

SMCS-7481 **i03066345**

NOTE	REF NO	GRAPHIC REF	PART NUMBER	QTY	PART NAME 1 2 3 4 5 6 (PRODUCT LEVEL)	SEE PAGE
	1	1	**4B-2043**	3	NUT (8-32-THD)	
	2	1	**9B-7233**	3	LOCKWASHER	
	3	1	**115-1748**	1	LAMP (24-VOLT, 3-WATT) (CLEAR)(FUEL LEVEL GAUGE)	
					—OR—	
B		1	**163-6508**	1	LAMP-LED (24-VOLT, WHITE) (FUEL LEVEL GAUGE)	

B - USE AS REQUIRED

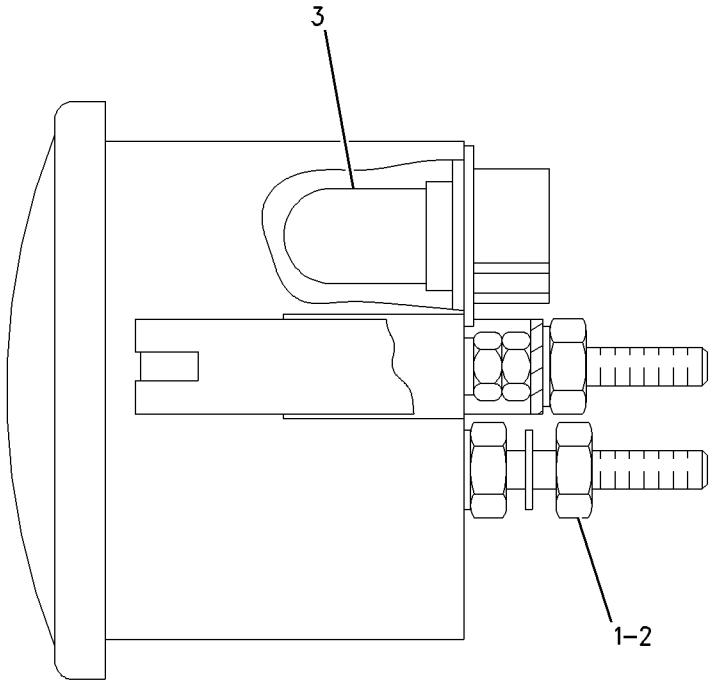

GRAPHIC #1 **<END>** g00741233

204-1328 GAUGE GP-VIBRATORY

S/N: TJL1-UP

PART OF 357-7421, 368-9181, 368-9182, 369-9031, 376-1389, 376-1392, 376-1393 DISTRIBUTION AR

AN ATTACHMENT

SMCS-7471 **i05136710**

NOTE	REF NO	GRAPHIC REF	PART NUMBER	QTY	PART NAME 1 2 3 4 5 6 (PRODUCT LEVEL)	SEE PAGE
	1	1	**7K-1181**	1	STRAP-CABLE	
	2	1	**7R-3145**	1	SENSOR GP-SPEED (VIBRATORY)	
	3	1	**7V-5628**	1	PLATE	
	4	1	**9X-7421**	1	SEAL-BONDED	
Y	5	1	**139-3280**	1	HARNESS AS-SENSOR (VIBRATORY)	129
	6	1	**157-8674**	1	BRACKET	
J	7	1	**177-2215**	1	STRAP-DUAL CLAMP	
	8	1	**311-0186**	1	GAUGE AS-TACHOMETER (VIBRATORY)	
	9	1	**1G-9960**	2	CLAMP	
M	10	1	**5C-2890**	2	NUT (M6X1-THD)	
M	11	1	**7X-2534**	2	BOLT (M6X1X50-MM)	
	12	1	**8T-4121**	2	WASHER-HARD (11X21X2.5-MM THK)	
M	13	1	**8T-4136**	2	BOLT (M10X1.5X25-MM)	
	14	1	**9X-8256**	2	WASHER (6.6X12X2-MM THK)	

J - USE ONLY FOR : PE231, PE232, PE243, PE244
M - METRIC PART
Y - SEPARATE ILLUSTRATION

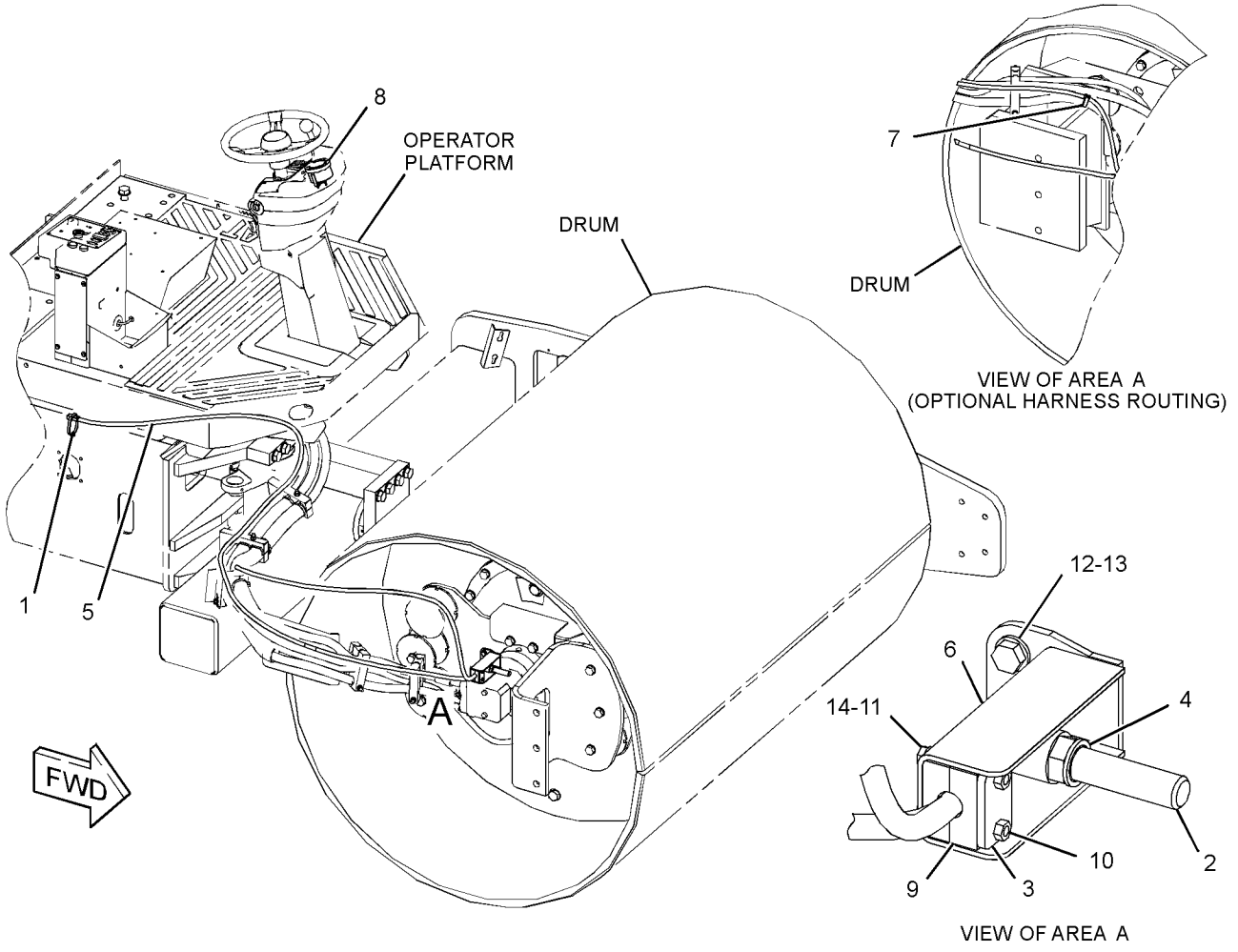

GRAPHIC #1 **<END>** g01554363

287-0538 GAUGE GP-VIBRATORY

S/N: TJL1-UP

AN ATTACHMENT

SMCS-7471 **i03649824**

NOTE	REF NO	GRAPHIC REF	PART NUMBER	QTY	PART NAME 1 2 3 4 5 6 (PRODUCT LEVEL)	SEE PAGE
	1	1	**186-3736**	2	SOCKET-CONNECTOR (16-GA TO 18-GA)	
	2	1	**8T-8737**	4	PLUG-SEAL	
	3	2	**116-0118**	1	CLIP	
	4	1	**130-2793**	1	GROMMET	
	5	1	**155-2270**	1	KIT-CONNECTING PLUG (2-PIN)	
					(INCLUDES PLUG AS, WEDGE & INTERFACE SEAL)	
	6	2	**161-6365**	2	BRACKET AS	
					(EACH INCLUDES)	
M		2	**6V-9632**	4	NUT-WELD (M6X1-THD)	
	7	2	**161-6367**	1	PLATE AS	
M		2	**6V-9632**	6	NUT-WELD (M6X1-THD)	
	8	2	**167-7542**	2	BRACKET AS	
					(EACH INCLUDES)	
M		2	**6V-9632**	2	NUT-WELD (M6X1-THD)	
	9	2	**167-7543**	2	BRACKET AS	
					(EACH INCLUDES)	
M		2	**6V-9632**	1	NUT-WELD (M6X1-THD)	
	10	1	**177-2215**	2	STRAP-DUAL CLAMP	
	11	2	**230-6431**	1	PLATE	
	12	1	**237-4843**	1	HARNESS AS-SENSOR (PROPEL)	
		1	**235-6982**	1	CONNECTOR	
		1	**237-4844**	1	CONNECTOR	
		1	**8T-8729**	3	PIN-CONNECTOR (16-GA TO 18-GA)	
		1	**8T-8737**	1	PLUG-SEAL	
		1	**102-8804**	1	KIT-RECEPTACLE (4-PIN)	
					(INCLUDES RECEPTACLE AS & WEDGE)	
	13	1	**253-0868**	1	PLATE AS	
	14	1	**253-4104**	1	HARNESS AS-WIRING (ACCELEROMETER)	
		1	**8T-8729**	2	PIN-CONNECTOR (16-GA TO 18-GA)	
		1	**102-8802**	1	KIT-RECEPTACLE (2-PIN)	
					(INCLUDES RECEPTACLE AS & WEDGE)	
		1	**5P-2321**	1	TERMINAL-FORK (14-GA TO 16-GA, NO. 6 SCREW)	
		1	**2L-8081**	1	TERMINAL-RING (14-GA TO 16-GA, 1/2-IN SCREW)	
		1	**5P-4571**	3	TERMINAL-BLADE (14-GA TO 16-GA)	
Y	15	2	*284-5322*	1	METER GP-VIBRATORY	433
M	16	2	**111-4627**	4	SCREW-MACHINE (M6X1X30-MM)	
M	17	1	**119-9453**	2	SCREW (M6X1X16-MM)	
	18	2	**132-5789**	2	CLIP	
G	19	1	**160-2242**		SLEEVE-ABRASION (31.5-IN)	
	20	2	**287-7459**	1	PLATE	
	21	1	**102-8804**	1	KIT-RECEPTACLE (4-PIN)	
					(INCLUDES RECEPTACLE AS & WEDGE)	
M	22	2	**5C-2874**	4	NUT (M5X0.8-THD)	
M	23	1	**5C-2890**	2	NUT (M6X1-THD)	
M	24	2	**5C-7261**	4	NUT (M8X1.25-THD)	
	25	2	**5P-4115**	3	WASHER-HARD (7.2X19X2-MM THK)	
	26	1	**6P-0699**	1	GROMMET	
M	27	2	**7I-2272**	4	BOLT (M5X0.8X12-MM)	
	28	1,2	**7K-1181**	5	STRAP-CABLE	
	29	2	**8T-0328**	4	WASHER-HARD (5.5X10X1-MM THK)	
M	30	2	**8T-4139**	2	BOLT (M12X1.75X30-MM)	
M	31	2	**8T-4171**	3	BOLT (M6X1X12-MM)	
	32	2	**8T-4223**	2	WASHER-HARD (13.5X25.5X3-MM THK)	
	33	2	**8T-4224**	4	WASHER-HARD (8.8X16X2-MM THK)	
M	34	1,2	**9X-2044**	10	SCREW-TRUSS HEAD (M6X1X16-MM)	
M	35	2	**9X-2480**	2	BOLT (M6X1X45-MM)	
	36	1,2	**9X-8256**	4	WASHER (6.6X12X2-MM THK)	

287-0538 **GAUGE GP-VIBRATORY (*contd.*)** **i03649824**

NOTE	REF NO	GRAPHIC REF	PART NUMBER	QTY	PART NAME 1 2 3 4 5 6 (PRODUCT LEVEL)	SEE PAGE
D	37	1	**5P-5991**		HOSE (0.03-M EACH)	
D	38	1	**5P-5643**		SEAL (0.3-M)	

D - ORDER BY THE METER
G - ORDER BY THE INCH
M - METRIC PART
Y - SEPARATE ILLUSTRATION

287-0538 **GAUGE GP-VIBRATORY (*contd.*)** **i03649824**

REFER TO ALL ILLUSTRATIONS OF THIS GROUP FOR AUXILIARY VIEWS

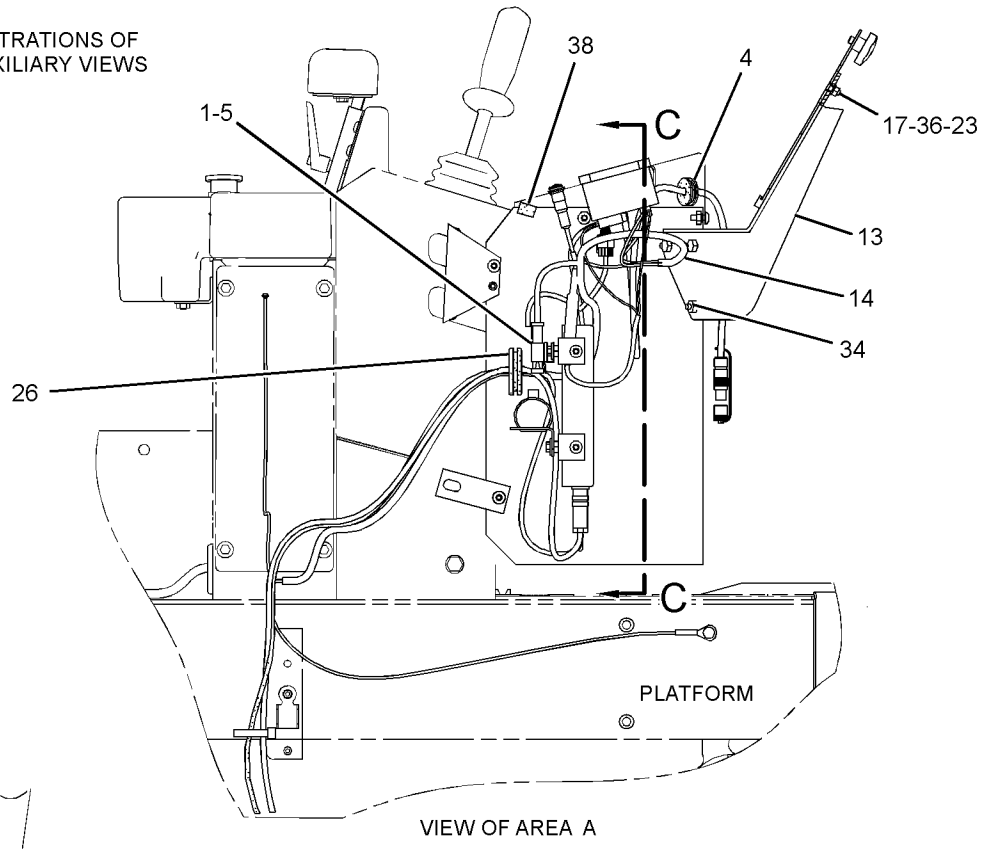

VIEW OF AREA A

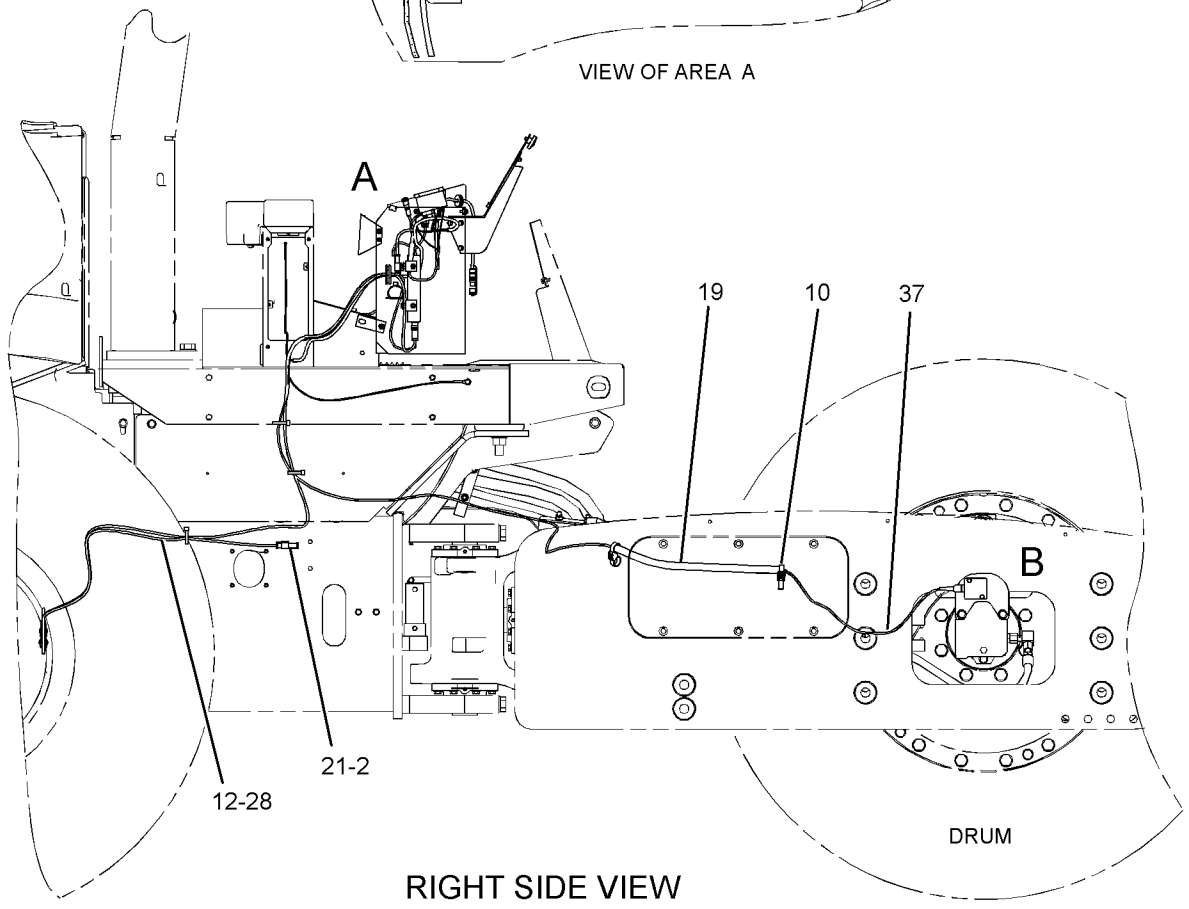

RIGHT SIDE VIEW

GRAPHIC #1

g01556693

287-0538 **GAUGE GP-VIBRATORY (*contd.*)** **i03649824**

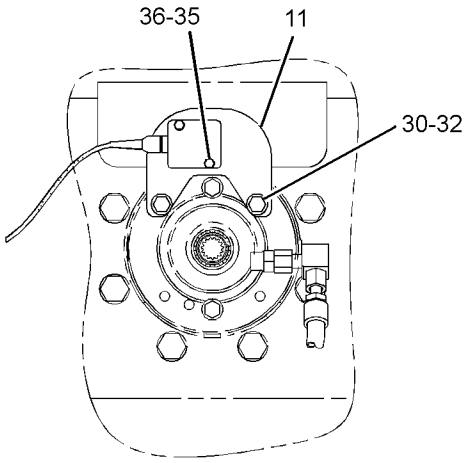

VIEW OF AREA B

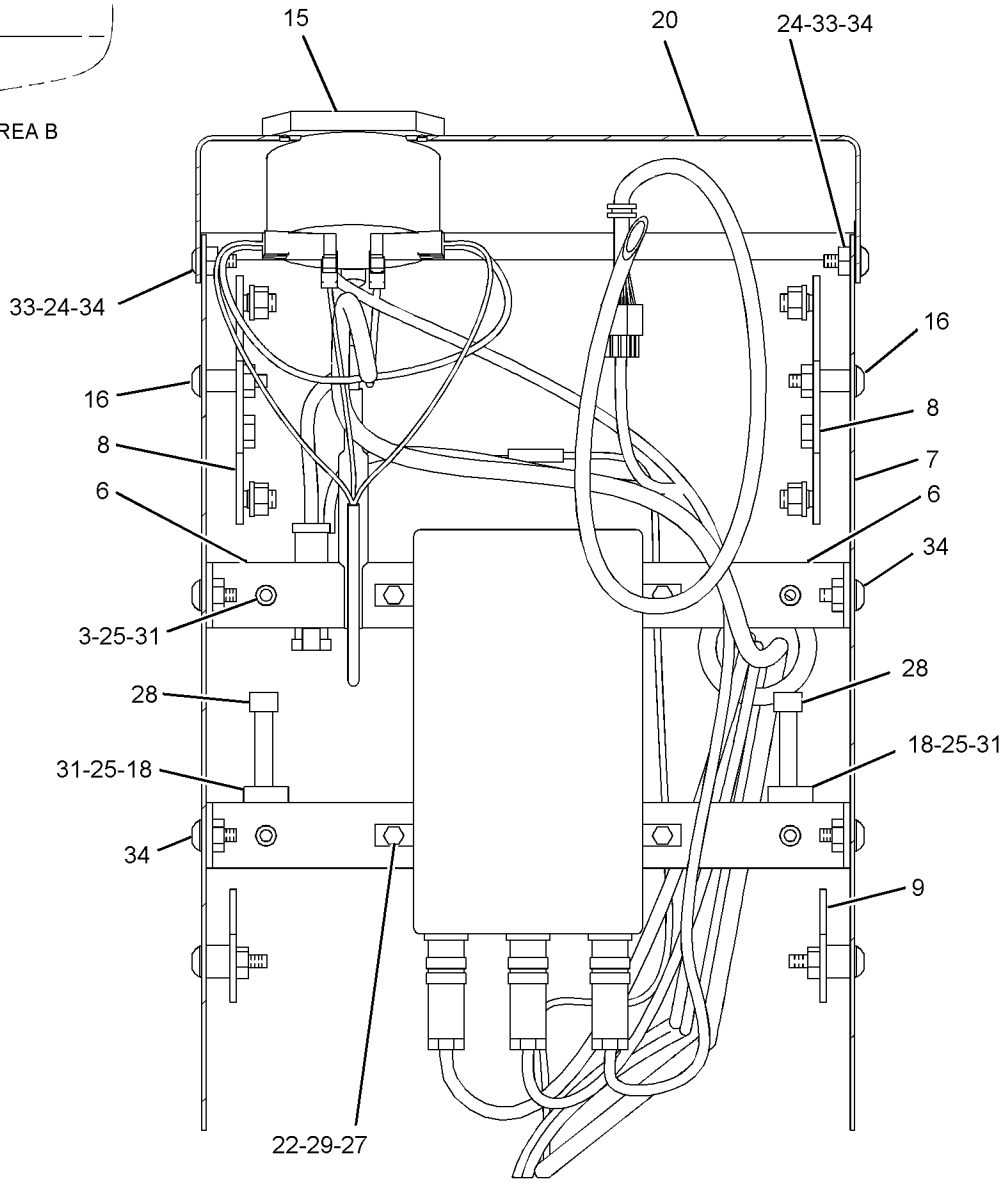

SECTION C-C

GRAPHIC #2 **<END>** g01346358

352-3056 GAUGE GP-VIBRATORY

S/N: TJL1-2436
AN ATTACHMENT

SMCS-7471 **i04608773**

NOTE	REF NO	GRAPHIC REF	PART NUMBER	QTY	PART NAME 1 2 3 4 5 6 (PRODUCT LEVEL)	SEE PAGE
	1	1	**7V-5628**	1	PLATE	
	2	1	**178-8505**	1	PLATE AS	
	3	1	**309-6974**	1	HARNESS AS-SENSOR (COMPACTION)	
	4	1	**309-6978**	1	HARNESS AS-CONSOLE	
		1	**9X-3401**	2	PIN-CONNECTOR (16-GA TO 18-GA)	
		1	**155-2274**	1	KIT-CONNECTING PLUG (6-PIN)	
					(INCLUDES PLUG AS, WEDGE & INTERFACE SEAL)	
		1	**8T-8737**	5	PLUG-SEAL	
		1	**102-8805**	1	KIT-RECEPTACLE (6-PIN)	
					(INCLUDES RECEPTACLE AS & WEDGE)	
E		1	**114-8843**		SLEEVE-PLASTIC (40-CM)	
		1	**180-9340**	5	SOCKET-CONNECTOR (14-GA TO 18-GA)	
E		1	**125-7874**		TUBE-HEAT SHRINK (5.72-MM DIA) (5-CM)	
E		1	**125-7875**		TUBE-HEAT SHRINK (7.44-MM DIA) (5-CM)	
	5	1	**309-9808**	1	GUARD AS	
		1	**6P-0205**	2	SPACER (0.269X0.405X0.656-IN THK)	
	6	1	**311-8545**	1	BRACKET AS-CLAMP	
M		1	**6V-9632**	1	NUT-WELD (M6X1-THD)	
		1	**178-8505**	1	PLATE AS	
	7	1	**338-0850**	1	METER GP-VIBRATORY	
M		1	**8T-2659**	2	LOCKNUT (M4X0.7-THD)	
	8	1	**341-3061**	1	PLATE	
	9	1	**352-3058**	1	HARNESS AS-SENSOR (VIBRATORY)	
		1	**155-2274**	1	KIT-CONNECTING PLUG (6-PIN)	
					(INCLUDES PLUG AS, WEDGE & INTERFACE SEAL)	
		1	**8T-8737**	4	PLUG-SEAL	
		1	**180-9340**	2	SOCKET-CONNECTOR (14-GA TO 18-GA)	
		1	**2L-8076**	2	TERMINAL-RING (14-GA TO 16-GA, NO. 10 SCREW)	
	10	1	**103-5676**	2	CLAMP-HALF	
	11	1	**130-5300**	1	CLIP	
	12	1	**1G-9960**	2	CLAMP	
	13	1	**1M-4543**	1	GROMMET	
	14	1	**224-3349**	1	CLIP	
M	15	1	**8C-8451**	6	BOLT (M6X1X40-MM)	
M	16	1	**8T-4139**	2	BOLT (M12X1.75X30-MM)	
	17	1	**8T-4223**	2	WASHER-HARD (13.5X25.5X3-MM THK)	
M	18	1	**9X-2045**	1	SCREW-TRUSS HEAD (M6X1X20-MM)	
M	19	1	**9X-2480**	1	BOLT (M6X1X45-MM)	
	20	1	**9X-8256**	5	WASHER (6.6X12X2-MM THK)	
	21	1	**7K-1181**	9	STRAP-CABLE	

E - ORDER BY THE CENTIMETER
M - METRIC PART

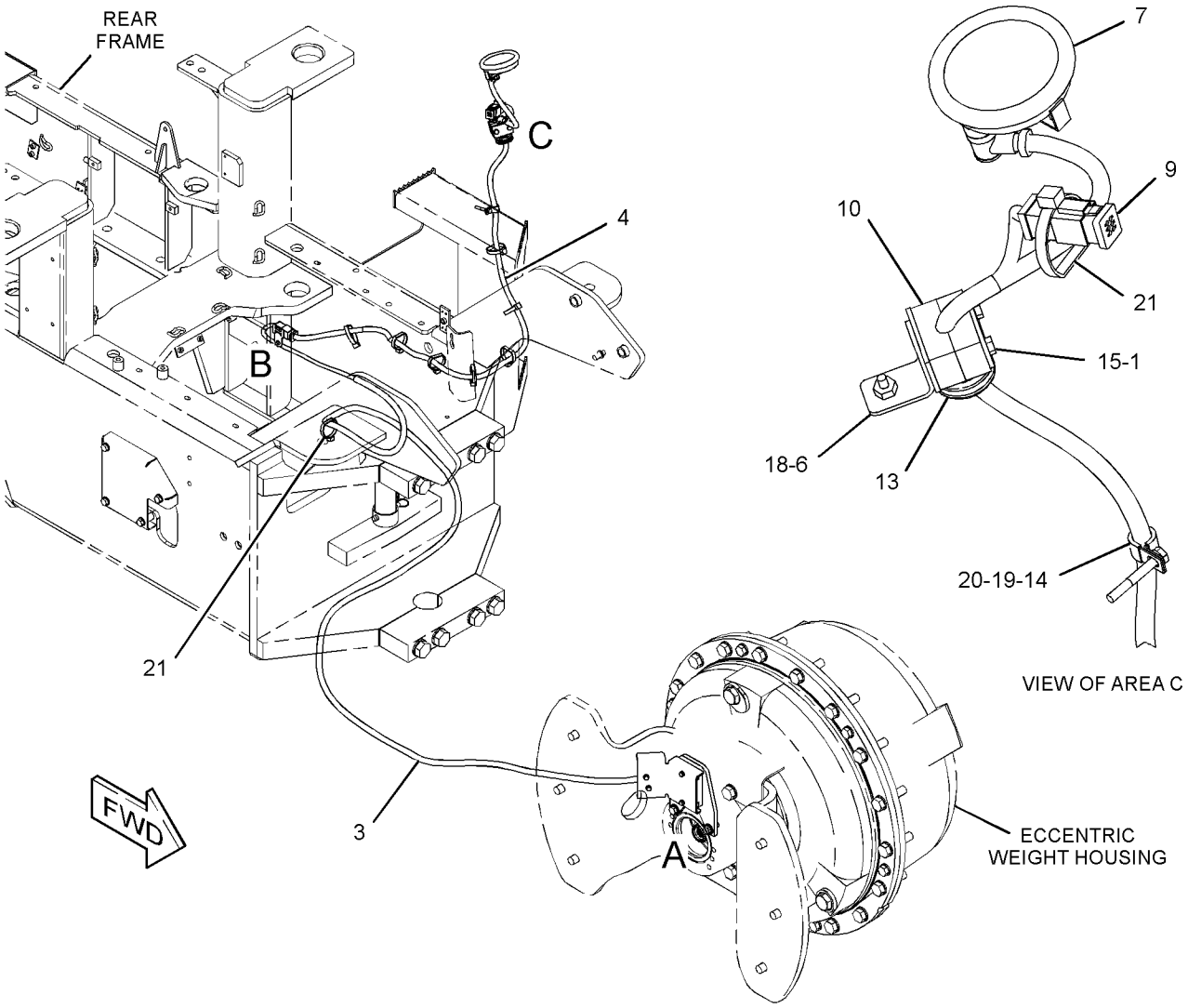

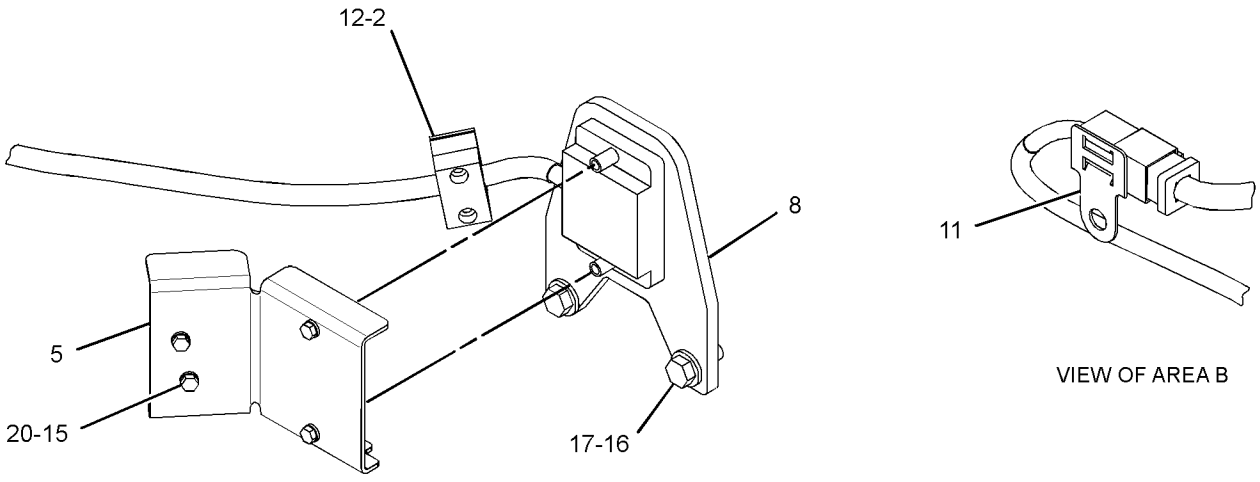

GRAPHIC #1 **<END>** g02933097

352-3056 GAUGE GP-VIBRATORY

S/N: TJL2437-UP

AN ATTACHMENT

SMCS-7471 **i04887812**

NOTE	REF NO	GRAPHIC REF	PART NUMBER	QTY	PART NAME 1 2 3 4 5 6 (PRODUCT LEVEL)	SEE PAGE
	1	1	**7V-5628**	1	PLATE	
	2	1	**178-8505**	1	PLATE AS	
	4	1	**309-6978**	1	HARNESS AS-CONSOLE	
		1	**9X-3401**	2	PIN-CONNECTOR (16-GA TO 18-GA)	
		1	**155-2274**	1	KIT-CONNECTING PLUG (6-PIN)	
					(INCLUDES PLUG AS, WEDGE & INTERFACE SEAL)	
		1	**8T-8737**	5	PLUG-SEAL	
		1	**102-8805**	1	KIT-RECEPTACLE (6-PIN)	
					(INCLUDES RECEPTACLE AS & WEDGE)	
E		1	**114-8843**		SLEEVE-PLASTIC (40-CM)	
		1	**180-9340**	5	SOCKET-CONNECTOR (14-GA TO 18-GA)	
E		1	**125-7874**		TUBE-HEAT SHRINK (5.72-MM DIA) (5-CM)	
E		1	**125-7875**		TUBE-HEAT SHRINK (7.44-MM DIA) (5-CM)	
	5	1	**309-9808**	1	GUARD AS	
	6	1	**311-8545**	1	BRACKET AS-CLAMP	
	7	1	**338-0850**	1	METER GP-VIBRATORY	
M		1	**8T-2659**	2	LOCKNUT (M4X0.7-THD)	
	8	1	**341-3061**	1	PLATE	
	10	1	**103-5676**	2	CLAMP-HALF	
	11	1	**130-5300**	1	CLIP	
	12	1	**1G-9960**	2	CLAMP	
	13	1	**1M-4543**	1	GROMMET	
M	15	1	**8C-8451**	6	BOLT (M6X1X40-MM)	
M	16	1	**8T-4139**	2	BOLT (M12X1.75X30-MM)	
	17	1	**8T-4223**	2	WASHER-HARD (13.5X25.5X3-MM THK)	
M	18	1	**9X-2045**	1	SCREW-TRUSS HEAD (M6X1X20-MM)	
C	20	1	**9X-8256**	4	WASHER (6.6X12X2-MM THK)	
C	21	1	**7K-1181**	11	STRAP-CABLE	
C	22	1	**177-2215**	1	STRAP-DUAL CLAMP	
C	23	1	**352-3058**	1	HARNESS AS-SENSOR	
		1	**155-2274**	1	KIT-CONNECTING PLUG (6-PIN)	
					(INCLUDES PLUG AS, WEDGE & INTERFACE SEAL)	
		1	**8T-8737**	4	PLUG-SEAL	
		1	**180-9340**	2	SOCKET-CONNECTOR (14-GA TO 18-GA)	
		1	**2L-8076**	2	TERMINAL-RING (14-GA TO 16-GA, NO. 10 SCREW)	
C	24	1	**390-1735**	1	SENSOR AS (COMPACTION)	
C	25	1	**390-1736**	1	CABLE AS	
		1	**102-8805**	1	KIT-RECEPTACLE (6-PIN)	
					(INCLUDES RECEPTACLE AS & WEDGE)	
		1	**8T-8737**	2	PLUG-SEAL	
		1	**9X-3401**	4	PIN-CONNECTOR (16-GA TO 18-GA)	
					—OR—	
		1	**126-1767**	1	PIN-CONNECTOR (14-GA TO 16-GA)	

C - CHANGE FROM PREVIOUS TYPE
E - ORDER BY THE CENTIMETER
M - METRIC PART

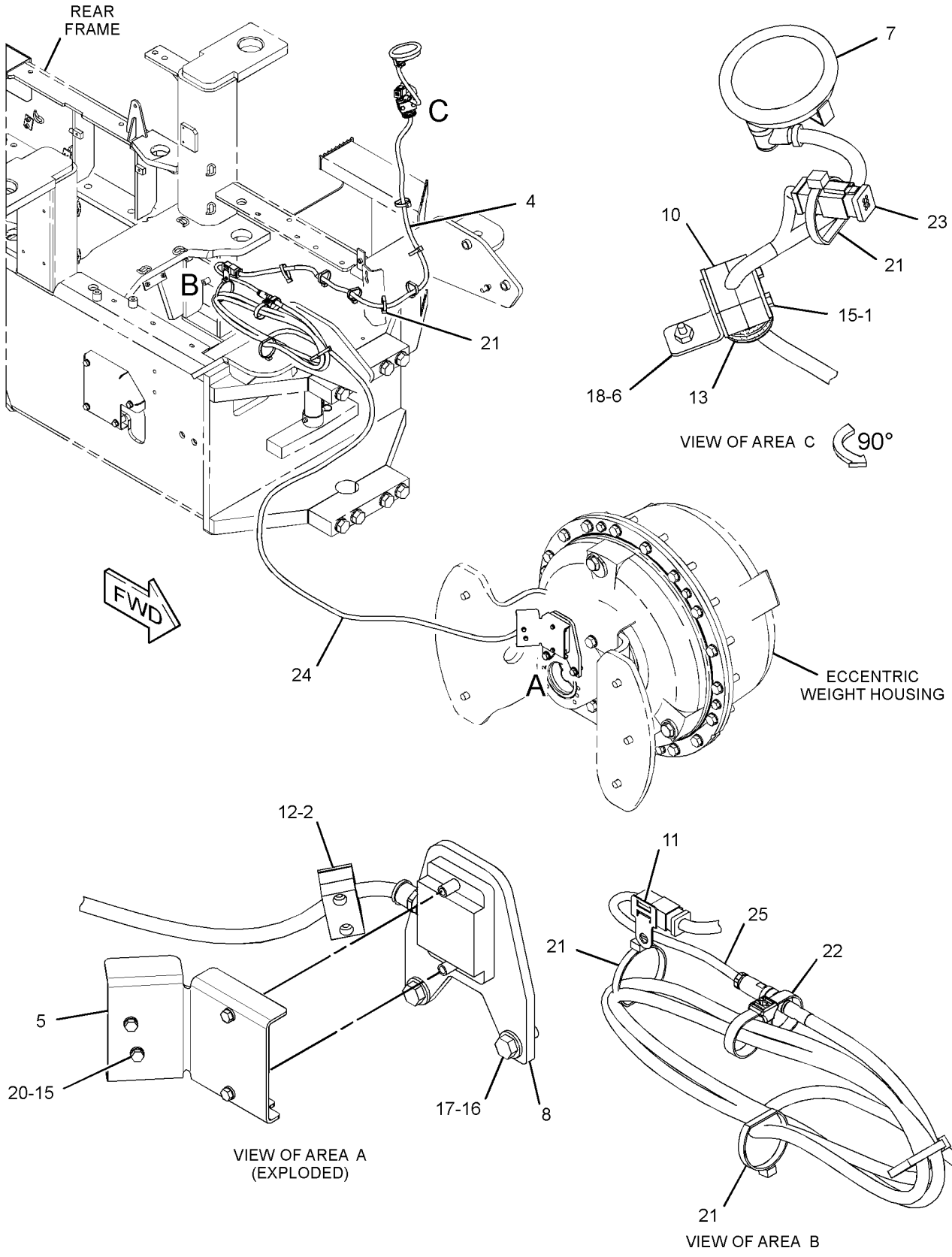

GRAPHIC #1 **<END>** g03029676

210-5550 GUARD GP-VANDALISM

S/N: TJL1-UP

PART OF 219-4171, 224-1151 OPERATOR AR, 348-5642, 348-5643 OPERATOR AR-OPEN ROPS AN ATTACHMENT

SMCS-7315 **i03045380**

NOTE	REF NO	GRAPHIC REF	PART NUMBER	QTY	PART NAME 1 2 3 4 5 6 (PRODUCT LEVEL)	SEE PAGE
	1	1	**246-2641**	1	PADLOCK GP (VANDALISM GUARD)	
		1	**5P-8500**	1	KEY	
	2	1	**175-3722**	1	BRACKET	
	3	1	**210-5487**	1	COVER	
	4	1	**210-5489**	1	PLATE	
	5	1	**8T-4121**	4	WASHER-HARD (11X21X2.5-MM THK)	
M	6	1	**8T-4133**	2	NUT (M10X1.5-THD)	
M	7	1	**8T-4195**	2	BOLT (M10X1.5X30-MM)	
BE	8	1	**7X-7877**		STRIP-EDGING	

B - USE AS REQUIRED
E - ORDER BY THE CENTIMETER
M - METRIC PART

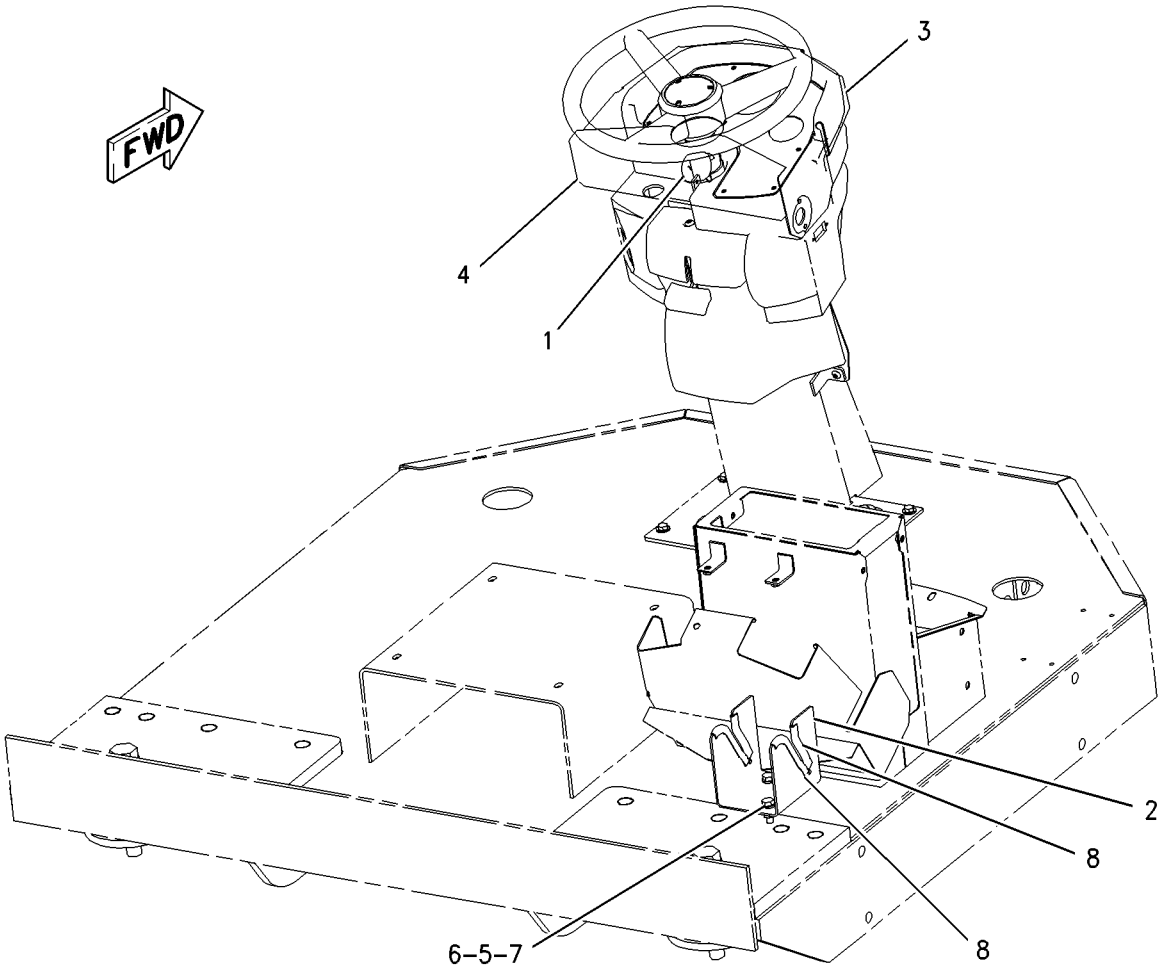

GRAPHIC #1 **<END>** g00828522

OPERATOR STATION

240-4672 HEATER & MTG GP-CAB

S/N: TJL1-UP

PART OF 227-5594, 348-5641 OPERATOR AR

AN ATTACHMENT

SMCS-7304 **i03046200**

NOTE	REF NO	GRAPHIC REF	PART NUMBER	QTY	PART NAME 1 2 3 4 5 6 (PRODUCT LEVEL)	SEE PAGE
	1	1	**110-6109**	1	KNOB-CONTROL (BLOWER FAN SPEED)	
	2	1	**118-7259**	1	GASKET	
	3	1	**156-4449**	1	CABLE AS (HEATER TEMPERATURE CONTROL)	
		1	**2H-3920**	2	LOCKWASHER	
		1	**6V-8369**	1	NUT (7/16-28-THD)	
		1	**143-8874**	1	BOOT	
Y	4	1	**180-9874**	1	HEATER GP-CAB	421
	5	1	**7X-0579**	11	WASHER-HARD (8.8X25.5X2-MM THK)	
M	6	1	**8T-4908**	11	BOLT (M8X1.25X25-MM)	
D	7	1	**5P-5643**		SEAL (2-M)	

D - ORDER BY THE METER
M - METRIC PART
Y - SEPARATE ILLUSTRATION

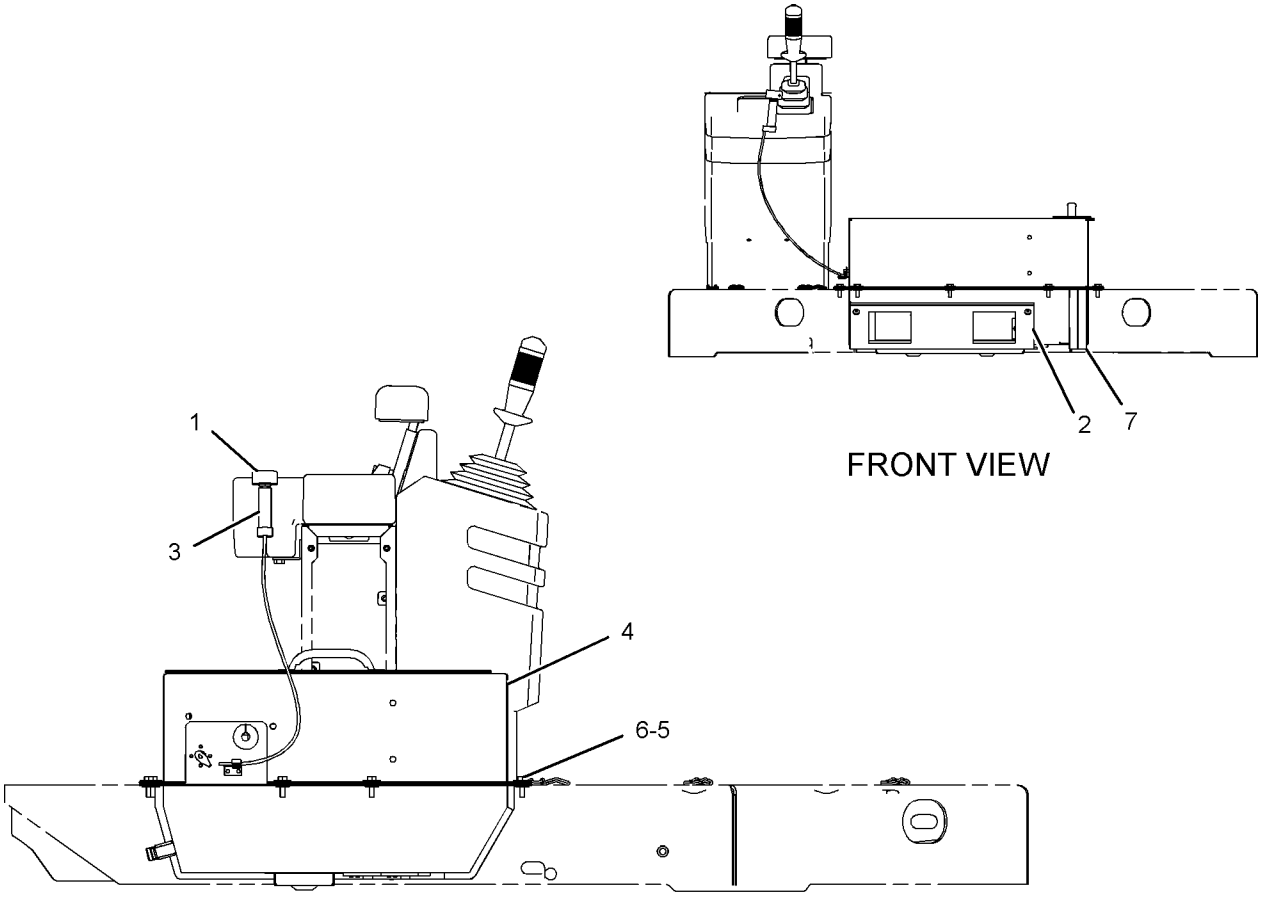

FRONT VIEW

LEFT SIDE VIEW

GRAPHIC #1 **<END>** g01095798

180-9874 HEATER GP-CAB

S/N: TJL1-UP
PART OF 240-4672 HEATER & MTG GP-CAB
AN ATTACHMENT

SMCS-7304 **i03640571**

NOTE	REF NO	GRAPHIC REF	PART NUMBER	QTY	PART NAME 1 2 3 4 5 6 (PRODUCT LEVEL)	SEE PAGE
D	1	1	**5P-5908**		SEAL (0.1-M)	
	2	1	**3E-1841**	1	LEVER	
	3	1	**3S-2093**	2	STRAP-CABLE	
	4	1	**8C-4586**	2	CLAMP	
	5	1	**8Y-5737**	1	CLAMP	
	6	1	**9G-1950**	1	RESISTOR	
	7	1	**9X-2185**	4	SCREW (8-15X0.44-IN)	
	8	1	**9X-2488**	6	CLAMP-HOSE	
	9	1	**100-3143**	2	PLATE-ORIFICE	
	10	1	**100-3426**	2	WHEEL AS-BLOWER	
					(EACH INCLUDES)	
		1	**037-4838**	2	CLAMP	
	11	1	**102-0341**	1	CLIP	
	12	1	**114-3140**	1	GROMMET	
	13	1	**118-5044**	1	HARNESS AS-WIRING (CAB HEATER)	
		1	**6T-6505**	5	HOUSING-RECEPTACLE (BLADE, POSITIVE LOCK)	
		1	**9W-0852**	5	PIN-CONNECTOR (14-GA TO 16-GA)	
		1	**155-2270**	1	KIT-CONNECTING PLUG (2-PIN)	
					(INCLUDES PLUG AS, WEDGE & INTERFACE SEAL)	
		1	**8T-8737**	1	PLUG-SEAL	
		1	**102-8805**	1	KIT-RECEPTACLE (6-PIN)	
					(INCLUDES RECEPTACLE AS & WEDGE)	
		1	**9W-0844**	2	SOCKET-CONNECTOR (14-GA TO 16-GA)	
		1	**3S-2093**	3	STRAP-CABLE	
		1	**6T-6506**	5	TERMINAL-BLADE (14-GA TO 18-GA)	
E		1	**119-3662**		TUBE-HEAT SHRINK (10.85-MM DIA) (13-CM)	
	14	1	**118-5046**	1	HOUSING AS	
	15	1	**124-8494**	1	GASKET	
	16	1	**124-8495**	1	VALVE AS-WATER	
	17	1	**151-0894**	1	COVER AS	
	18	1	**156-6819**	1	CASE AS	
M		1	**6V-9632**	9	NUT-WELD (M6X1-THD)	
	19	1	**174-1486**	1	MOTOR AS-BLOWER (24-VOLT, A/C, HEATER)	
		1	**9W-0852**	2	PIN-CONNECTOR (14-GA TO 16-GA)	
		1	**102-8802**	1	KIT-RECEPTACLE (2-PIN)	
					(INCLUDES RECEPTACLE AS & WEDGE)	
	20	1	**183-7528**	1	COIL AS-HEATER	
	21	1	**037-4426**	1	RETAINER	
M	22	1	**129-3178**	3	LOCKNUT (M6X1-THD)	
M	23	1	**141-9784**	1	BOLT (M6X1X190-MM)	
	24	1	**1P-6522**	1	GROMMET	
	25	1	**2S-3745**	6	SCREW-TAPPING (10-16X0.5-IN)	
M	26	1	**5C-9553**	4	BOLT (M6X1X16-MM)	
	27	1	**6V-1668**	2	WASHER (6.5X29.1X3-MM THK)	
M	28	1	**6V-7728**	1	BOLT (M6X1X45-MM)	
M	29	1	**8C-8457**	1	SCREW-MACHINE (M5X0.8X14-MM)	
M	30	1	**8T-4171**	2	BOLT (M6X1X12-MM)	
	31	1	**8T-4205**	11	WASHER-HARD (7.2X14.5X2-MM THK)	
M	32	1	**9X-2044**	1	SCREW-TRUSS HEAD (M6X1X16-MM)	
E	33	1	**136-1953**		HOSE (56-CM)	
D	34	1	**8T-5372**		SEAL (0.4-M)	
D	35	1	**6V-1392**		SEAL (0.8-M)	

D - ORDER BY THE METER
E - ORDER BY THE CENTIMETER
M - METRIC PART

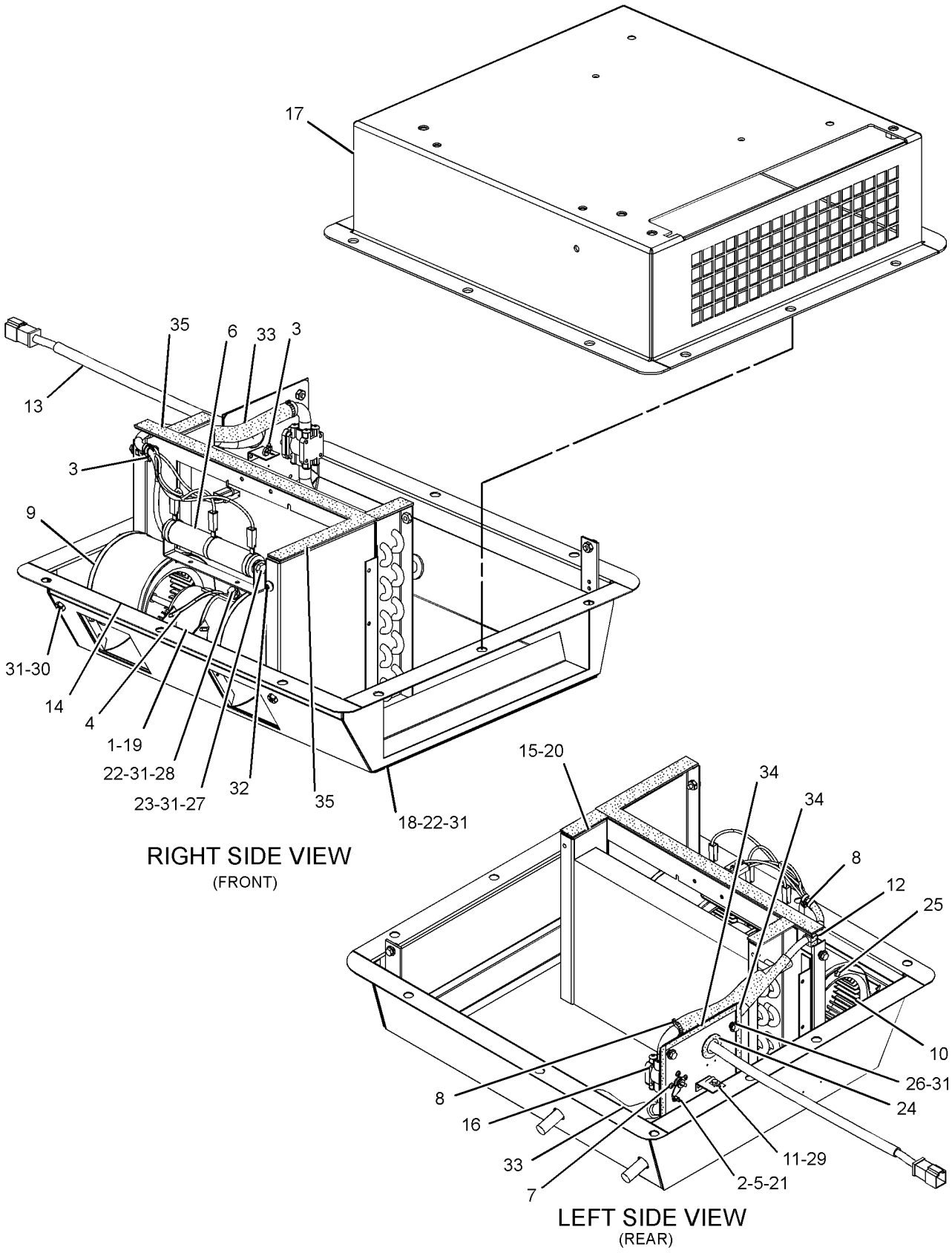

GRAPHIC #1 **<END>** g01303888

328-2072 KIT-FLOW CONTROL VALVE

S/N: TJL1-UP

AN ATTACHMENT

SMCS-5137, 7309 **i03065746**

NOTE	PART NUMBER	QTY	PART NAME 1 2 3 4 5 6 (PRODUCT LEVEL)	SEE PAGE
	314-2404	1	BOOT	
	274-1512	1	PUMP GP-METERING (HMU)	

<END>

214-4073 LINER GP-CAB

S/N: TJL1-UP
PART OF 259-4423, 339-6602 CAB AR
AN ATTACHMENT

SMCS-7301, 7329 **i03046556**

NOTE	REF NO	GRAPHIC REF	PART NUMBER	QTY	PART NAME 1 2 3 4 5 6 (PRODUCT LEVEL)	SEE PAGE
	1	1	**4E-2161**	1	STRAP	
	2	1	**6V-8928**	1	HOOK-COAT	
	3	1	**8N-9033**	2	PLUG	
	4	1	**107-6032**	1	LAMP GP-DOME (24-VOLT)	
		1	**112-5219**	1	LAMP (24-VOLT, 10-WATT)	
	5	1	**146-9002**	1	COVER AS	
	6	1	**226-3465**	1	FOAM	
	7	1	**236-8767**	1	COVER AS	
	8	1	**5P-4116**	4	WASHER-HARD (8.8X20.5X2-MM THK)	
M	9	1	**8T-4189**	2	BOLT (M8X1.25X20-MM)	
M	10	1	**8T-4200**	2	BOLT (M8X1.25X16-MM)	
M	11	1	**9X-2042**	4	SCREW-TRUSS HEAD (M6X1X12-MM)	
M	12	1	**9X-2045**	1	SCREW-TRUSS HEAD (M6X1X20-MM)	

M - METRIC PART

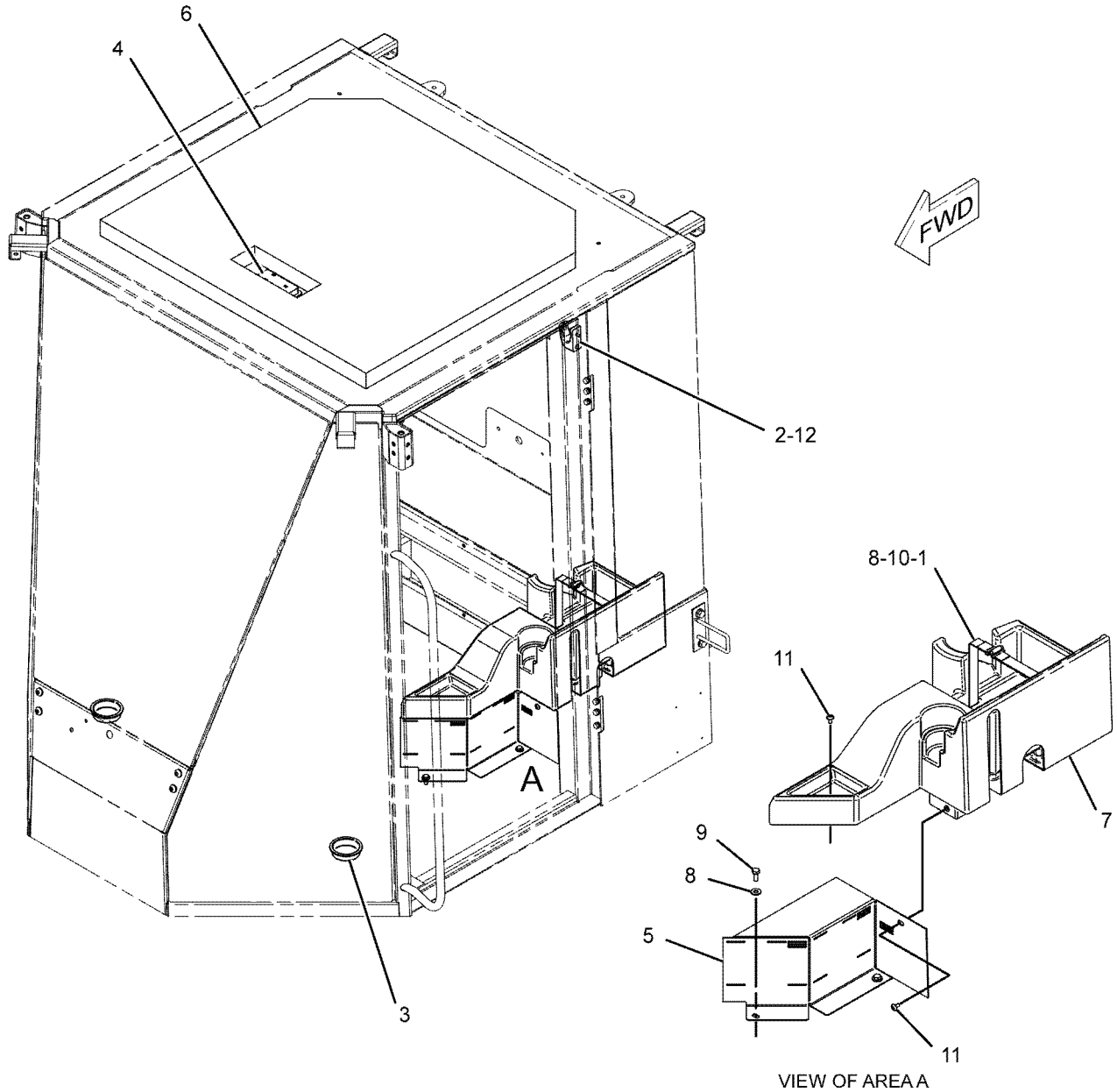

GRAPHIC #1 **<END>** g01043109

222-8663 LINES GP-AIR CONDITIONER

S/N: TJL1-2030

PART OF 227-5595, 348-5640 OPERATOR AR

AN ATTACHMENT

SMCS-1808, 7320

i03053897

NOTE	REF NO	GRAPHIC REF	PART NUMBER	QTY	PART NAME 1 2 3 4 5 6 (PRODUCT LEVEL)	SEE PAGE
G	1	1	**160-2247**		SLEEVE-ABRASION (27.6-IN)	
	2	1	**1G-9960**	2	CLAMP	
	3	1	**7R-7954**	1	PLATE	
	4	1	**7V-5628**	2	PLATE	
	5	1	**7V-6089**	4	CLAMP	
	6	1	**7V-6659**	4	CLAMP-DOUBLE	
	7	1	**102-8705**	1	PLATE	
	8	1	**125-0653**	2	SPACER-SPECIAL (SPLIT)	
	9	1	**163-9324**	1	PLATE-INSTRUCTION (AIR CONDITIONER)	
	10	1	**178-3620**	10	STRAP-DUAL CLAMP (DUEL CLAMP)	
	11	1	**176-3900**	1	ACCUMULATOR GP-REFRIGERANT (WITH DESICCANT)	
	12	1	**209-0617**	1	PLATE AS	
I	13	1	**223-3945**	1	HOSE AS	
I	14	1	**223-6459**	1	HOSE AS	
I	15	1	**223-6460**	1	HOSE AS	
I	16	1	**227-9503**	1	HOSE AS	
M	17	1	**196-4205**	2	BOLT-STACKING (M6X1X44-MM)	
	18	1	**6V-4356**	1	CLIP (SLOT)	
	19	1	**6V-4357**	1	CLIP (TAB)	
	20	1	**7K-1181**	3	STRAP-CABLE	
M	21	1	**7X-0818**	1	BOLT (M8X1.25X45-MM)	
M	22	1	**8C-8451**	4	BOLT (M6X1X40-MM)	
M	23	1	**8T-3647**	1	BOLT (M8X1.25X80-MM)	
	24	1	**7X-7729**	1	WASHER (11X25X3-MM THK)	
M	25	1	**8T-4196**	1	BOLT (M10X1.5X35-MM)	
	26	1	**8T-4205**	2	WASHER-HARD (7.2X14.5X2-MM THK)	
	28	1	**9X-7380**	1	SEAL-O-RING	
	29	1	**9X-7381**	3	SEAL-O-RING	
	30	1	**9X-7382**	2	SEAL-O-RING	
	31	1	**9X-7383**	1	SEAL-O-RING	
	32	1	**3S-2093**	1	STRAP-CABLE	
	33	1	**4P-8134**	1	CLIP (LADDER)	

G - ORDER BY THE INCH
I - REFER TO HYDRAULIC INFORMATION SYSTEM
M - METRIC PART

222-8663 **LINES GP-AIR CONDITIONER (*contd.*)** **i03053897**

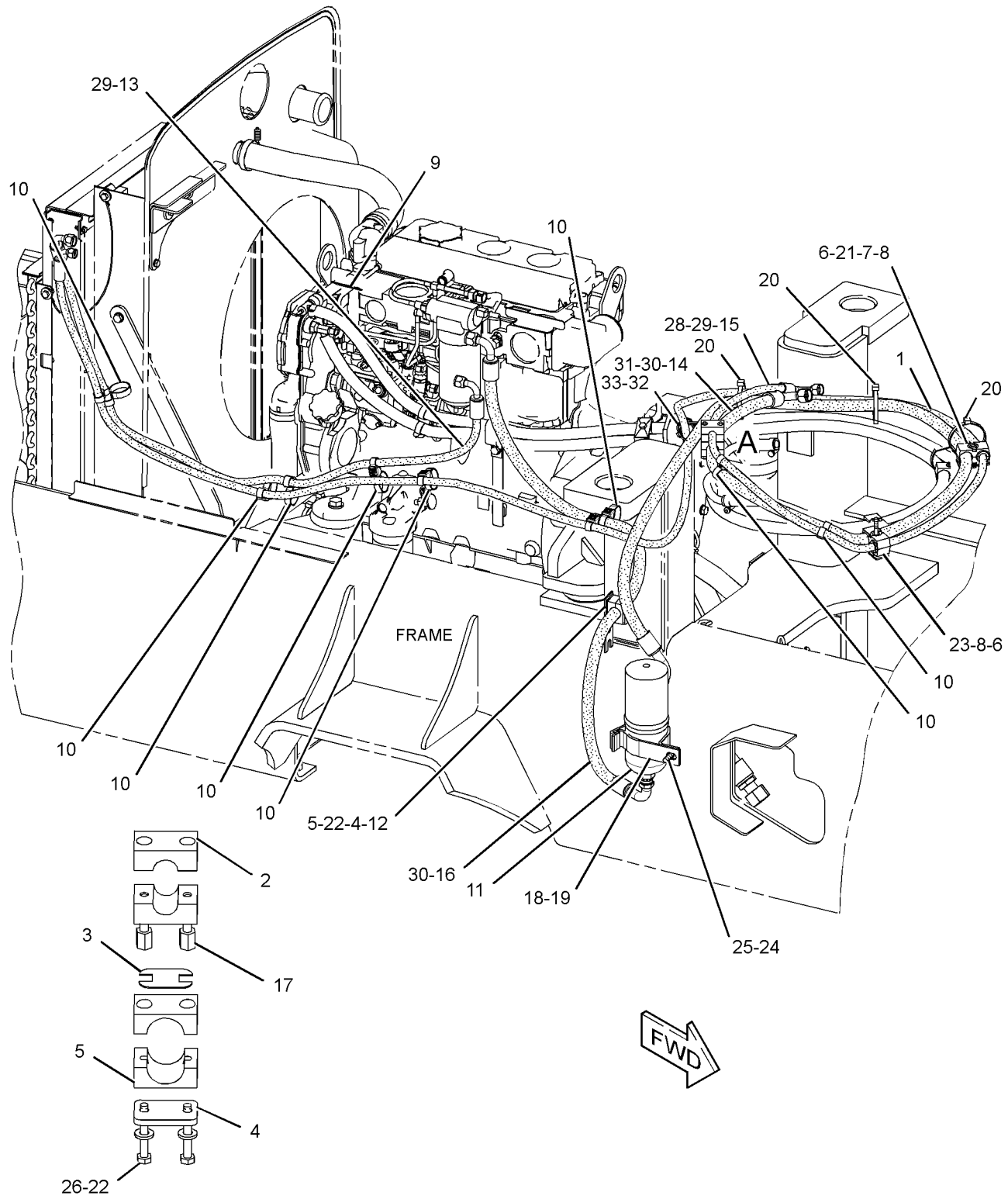

VIEW OF AREA A
(EXPLODED)

GRAPHIC #1 **<END>** g01329345

222-8663 LINES GP-AIR CONDITIONER

S/N: TJL2031-UP
PART OF 348-5640 OPERATOR AR
AN ATTACHMENT

SMCS-1808, 7320 **i05398059**

NOTE	REF NO	GRAPHIC REF	PART NUMBER	QTY	PART NAME 1 2 3 4 5 6 (PRODUCT LEVEL)	SEE PAGE
G	1	1	**160-2247**		SLEEVE-ABRASION (27.6-IN)	
	2	1	**1G-9960**	2	CLAMP	
	3	1	**7R-7954**	1	PLATE	
	4	1	**7V-5628**	2	PLATE	
	5	1	**7V-6089**	4	CLAMP	
	6	1	**7V-6659**	4	CLAMP-DOUBLE	
	7	1	**102-8705**	1	PLATE	
	8	1	**125-0653**	2	SPACER-SPECIAL (SPLIT)	
	9	1	**163-9324**	1	PLATE-INSTRUCTION (AIR CONDITIONER)	
	10	1	**178-3620**	10	STRAP-DUAL CLAMP	
Y	11	1	**186-6190**	1	ACCUMULATOR GP-REFRIGERANT (CHARGED)	367
	12	1	**209-0617**	1	PLATE AS	
I	13	1	**223-3945**	1	HOSE AS	
CI	14	1	**382-4385**	1	HOSE AS	
I	15	1	**223-6460**	1	HOSE AS	
I	16	1	**227-9503**	1	HOSE AS	
M	17	1	**196-4205**	2	BOLT-STACKING (M6X1X44-MM)	
	18	1	**6V-4356**	1	CLIP (SLOT)	
	19	1	**6V-4357**	1	CLIP (TAB)	
	20	1	**7K-1181**	3	STRAP-CABLE	
M	21	1	**7X-0818**	1	BOLT (M8X1.25X45-MM)	
M	22	1	**8C-8451**	4	BOLT (M6X1X40-MM)	
M	23	1	**8T-3647**	1	BOLT (M8X1.25X80-MM)	
	24	1	**7X-7729**	1	WASHER (11X25X3-MM THK)	
M	25	1	**8T-4196**	1	BOLT (M10X1.5X35-MM)	
	26	1	**8T-4205**	2	WASHER-HARD (7.2X14.5X2-MM THK)	
	28	1	**9X-7380**	1	SEAL-O-RING	
	29	1	**9X-7381**	3	SEAL-O-RING	
	30	1	**9X-7382**	2	SEAL-O-RING	
	31	1	**9X-7383**	2	SEAL-O-RING	
	32	1	**3S-2093**	1	STRAP-CABLE	
	33	1	**4P-8134**	1	CLIP	

C - CHANGE FROM PREVIOUS TYPE
G - ORDER BY THE INCH
I - REFER TO HYDRAULIC INFORMATION SYSTEM
M - METRIC PART
Y - SEPARATE ILLUSTRATION

222-8663 **LINES GP-AIR CONDITIONER (*contd.*)** **i05398059**

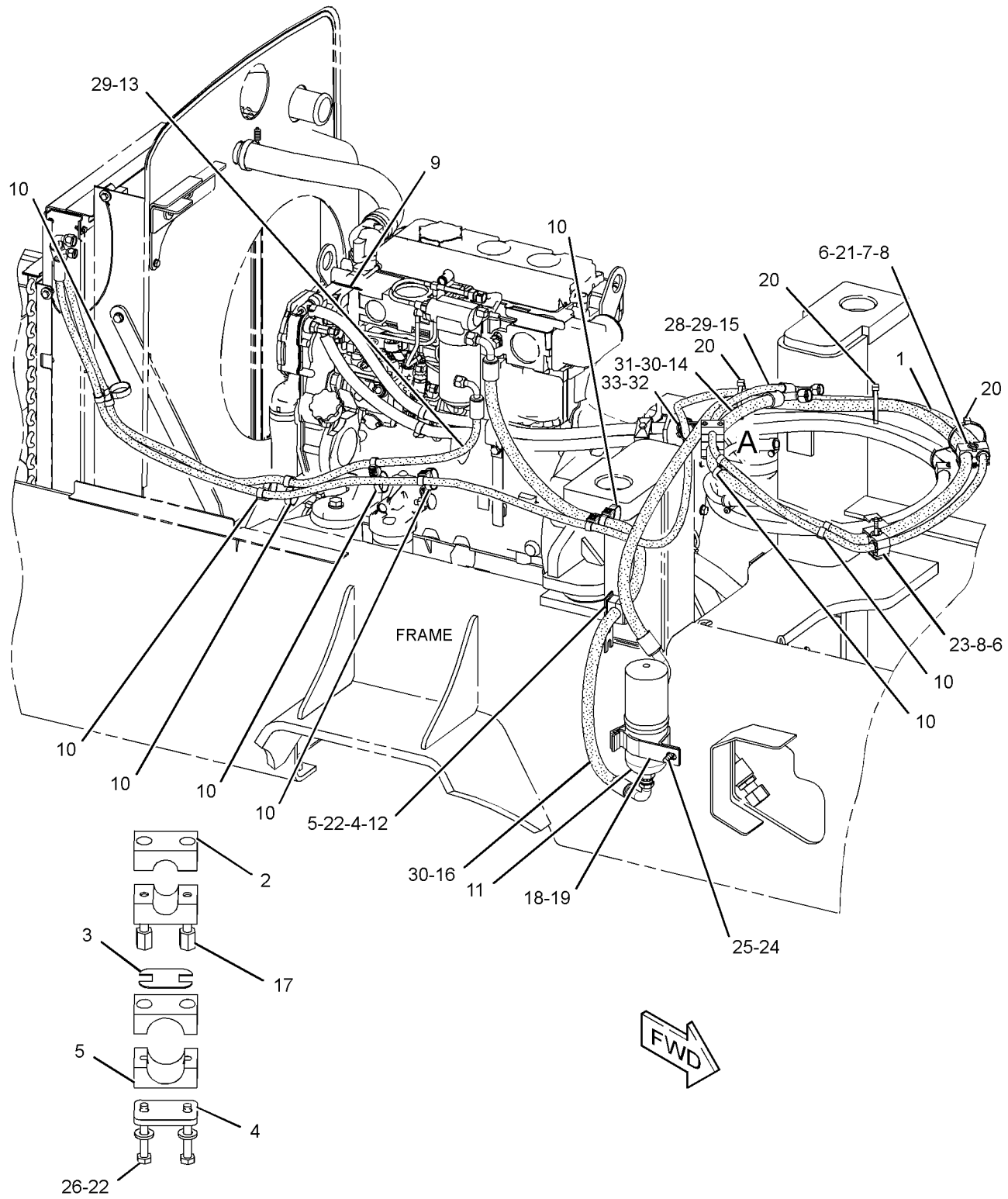

VIEW OF AREA A
(EXPLODED)

GRAPHIC #1 **<END>** g01329345

223-5824 LINES GP-CAB HEATER

S/N: TJL1-UP

PART OF 227-5594, 227-5595, 348-5640, 348-5641 OPERATOR AR

AN ATTACHMENT

SMCS-7304 **i03046042**

NOTE	REF NO	GRAPHIC REF	PART NUMBER	QTY	PART NAME 1 2 3 4 5 6 (PRODUCT LEVEL)	SEE PAGE
	1	1	**1V-6585**	1	VALVE-SHUTOFF (CAB HEATER)	
	2	1	**4V-0612**	3	PLATE	
	3	1	**7V-6659**	6	CLAMP-DOUBLE	
	4	1	**8F-8151**	1	VALVE-SHUTOFF (CAB HEATER)	
	5	1	**8T-0154**	2	CLAMP-HOSE	
	6	1	**9X-2488**	6	CLAMP-HOSE	
	7	1	**109-0741**	1	CONNECTOR-TUBE	
	8	1	**130-7287**	1	NIPPLE-PIPE	
	9	1	**155-6616**	1	BRACKET	
	10	1	**155-6741**	1	CONNECTOR-TUBE	
	11	1	**177-2215**	2	STRAP-DUAL CLAMP	
	12	1	**230-9577**	1	BRACKET	
	13	1	**1H-1360**	1	COUPLING	
	14	1	**3B-7255**	1	BUSHING-REDUCING	
M	15	1	**5C-7261**	1	NUT (M8X1.25-THD)	
	16	1	**5P-6994**	1	CLIP	
	17	1	**7K-1181**	2	STRAP-CABLE	
M	18	1	**7X-0818**	2	BOLT (M8X1.25X45-MM)	
	19	1	**8T-4121**	1	WASHER-HARD (11X21X2.5-MM THK)	
M	20	1	**8T-4133**	1	NUT (M10X1.5-THD)	
M	21	1	**8T-4136**	1	BOLT (M10X1.5X25-MM)	
M	22	1	**8T-4189**	2	BOLT (M8X1.25X20-MM)	
	23	1	**8T-4224**	3	WASHER-HARD (8.8X16X2-MM THK)	
M	24	1	**8T-6869**	1	BOLT (M8X1.25X60-MM)	
E	25	1	**5P-0767**		HOSE (228-CM)	
E	25A	1	**5P-0767**		HOSE (227-CM)	
E	25B	1	**5P-0767**		HOSE (7-CM EACH)	
	26	1	**1L-2279**	1	ELBOW	
G	27	1	**160-2247**		SLEEVE-ABRASION (7-IN)	
M	28	1	**5C-2890**	2	NUT (M6X1-THD)	
M	29	1	**7X-2534**	2	BOLT (M6X1X50-MM)	
M	30	1	**9X-2045**	2	SCREW-TRUSS HEAD (M6X1X20-MM)	
	31	1	**9X-8256**	2	WASHER (6.6X12X2-MM THK)	
	32	1	**242-9392**	1	BRACKET	
	33	1	**242-9393**	1	PLATE	

E - ORDER BY THE CENTIMETER
G - ORDER BY THE INCH
M - METRIC PART

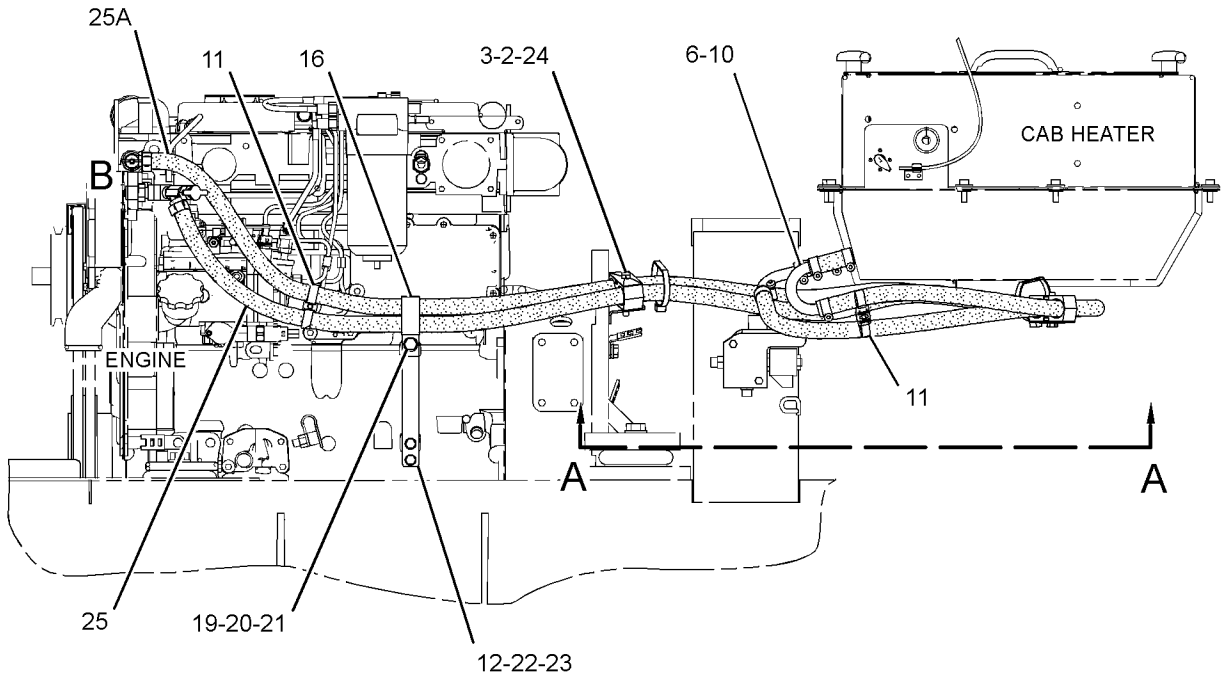

RIGHT SIDE VIEW

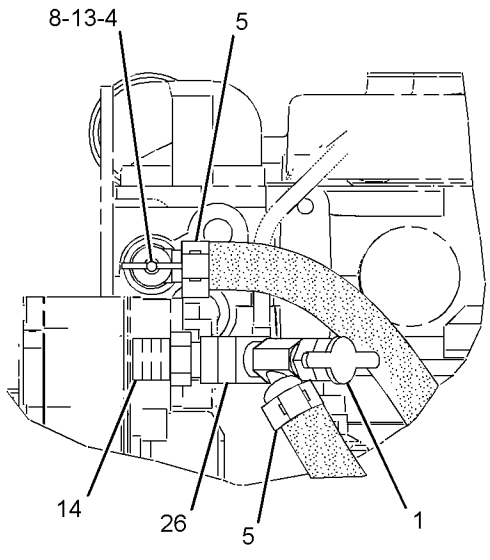

VIEW OF AREA B

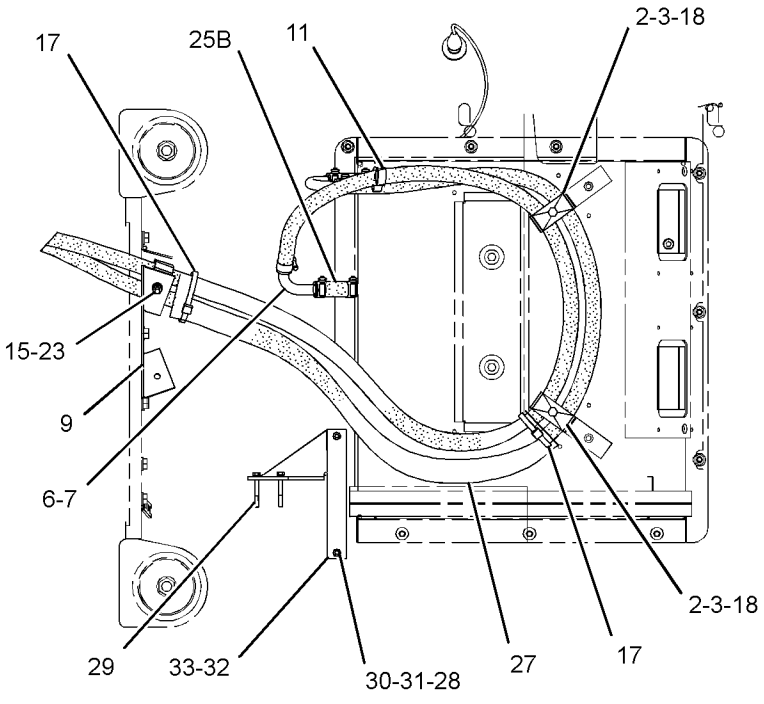

VIEW A-A

GRAPHIC #1 **<END>** g01255766

223-4281 LINKAGE GP

S/N: TJL1-UP

PART OF 218-4281 CONTROL GP-DIRECTION & SPEED

SMCS-3065 **i03034101**

NOTE	REF NO	GRAPHIC REF	PART NUMBER	QTY	PART NAME 1 2 3 4 5 6 (PRODUCT LEVEL)	SEE PAGE
	1	1	**7X-7915**	1	ROD END	
	2	1	**124-4592**	1	ROD END	
	3	1	**230-4665**	1	ROD	
M	4	1	**125-0380**	1	NUT-HEX (M8X1.25-THD, LH)	
M	5	1	**5C-7261**	1	NUT (M8X1.25-THD)	

M - METRIC PART

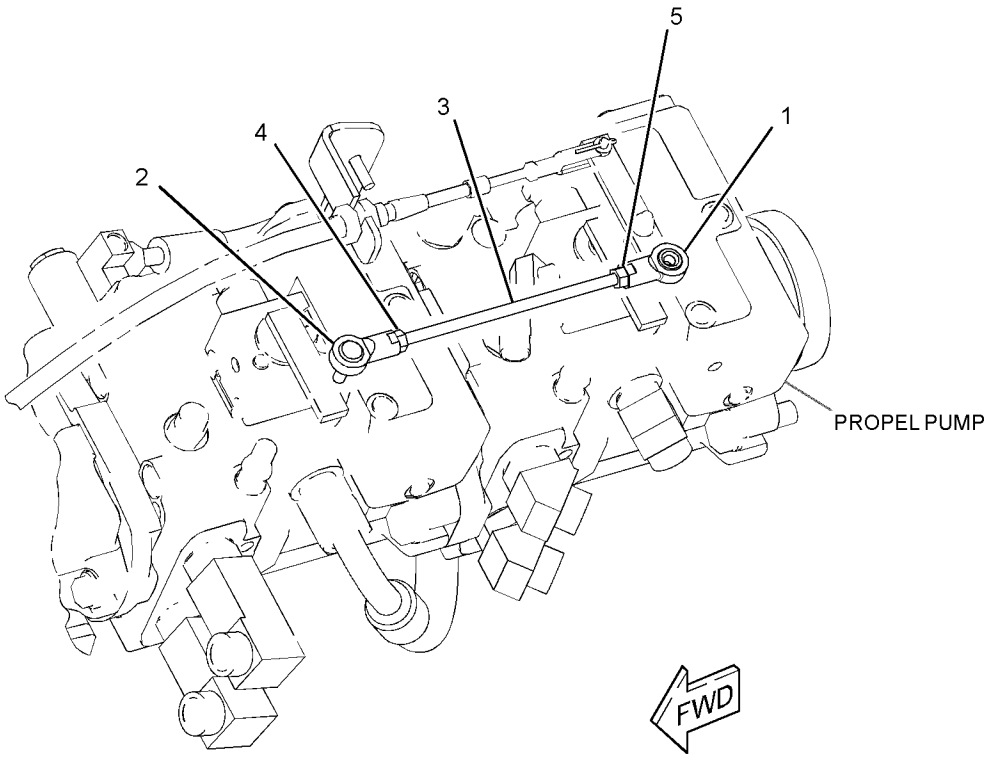

GRAPHIC #1 **<END>** g01550175

284-5322 METER GP-VIBRATORY

S/N: TJL1-UP

PART OF 287-0538 GAUGE GP-VIBRATORY

AN ATTACHMENT

SMCS-7471 **i03056986**

NOTE	REF NO	GRAPHIC REF	PART NUMBER	QTY	PART NAME 1 2 3 4 5 6 (PRODUCT LEVEL)	SEE PAGE
	1	1	**203-2328**	1	BOX (PROCESSOR)	
	2	1	**203-2330**	1	SENSOR (VPM)	
	3	1	**248-0338**	1	PLATE	
	4	1	**248-0339**	1	ADAPTER	
	5	1	**248-0342**	1	SENSOR AS (ACCELEROMETER)	
	6	1	**250-4195**	1	GAUGE-COMPACTION	
	7	1	**285-2097**	1	HARNESS AS-PANEL (VIBRATORY AMPLITUDE)	
	8	1	**285-2098**	1	HARNESS AS-WIRING (ACCELEROMETER INDICATOR)	
	9	1	**285-2099**	1	INDICATOR (ACCELEROMETER)	

284-5322 **METER GP-VIBRATORY (*contd.*)** **i03056986**

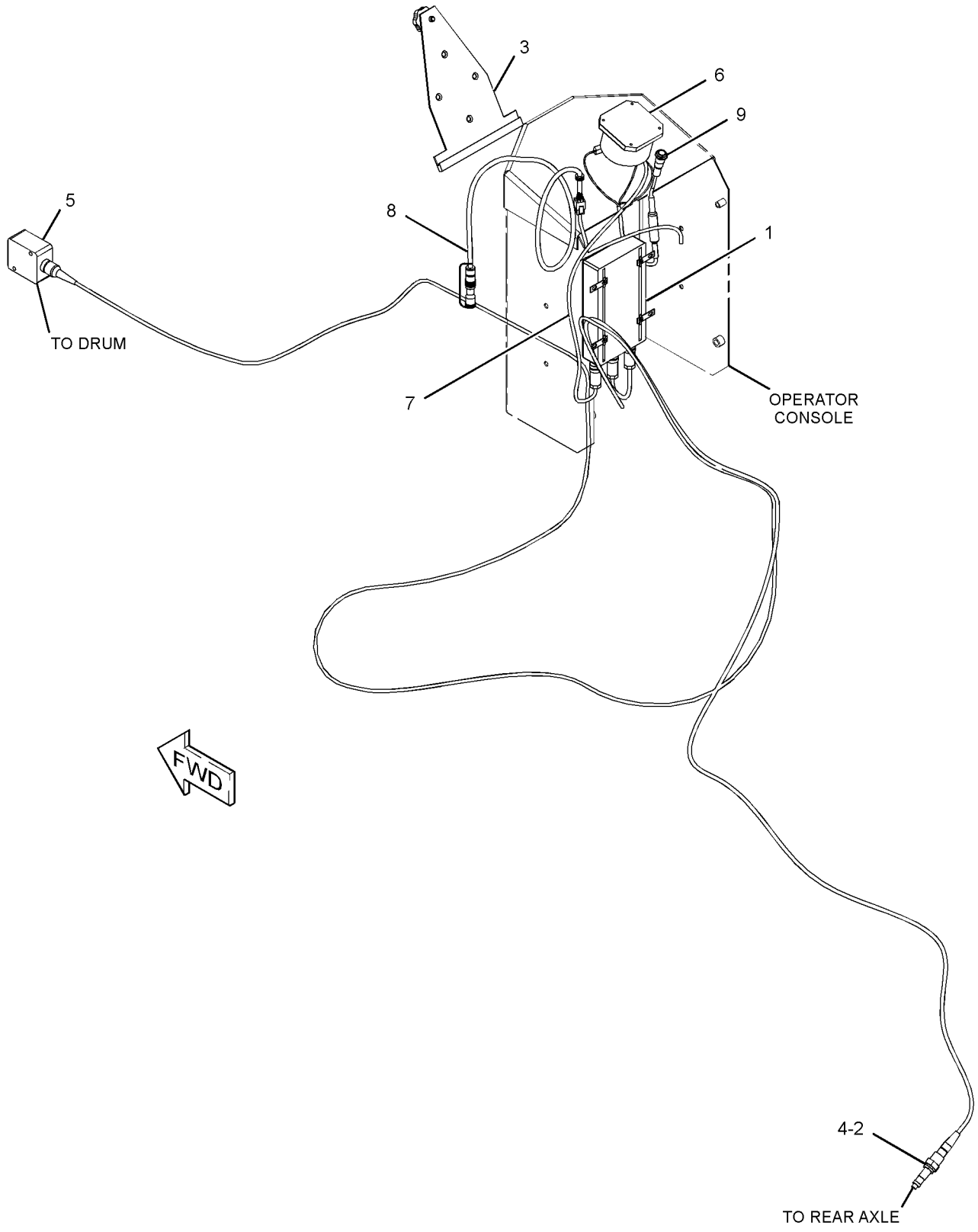

GRAPHIC #1 **<END>** g01348792

107-4643 MIRROR GP-REAR VIEW–INTERIOR

S/N: TJL1-UP
PART OF 369-9031, 376-1393 DISTRIBUTION AR
AN ATTACHMENT

SMCS-7319 **i03043888**

NOTE	REF NO	GRAPHIC REF	PART NUMBER	QTY	PART NAME 1 2 3 4 5 6 (PRODUCT LEVEL)	SEE PAGE
	1	1	**5P-6872**	2	MIRROR AS	
	2	1	**114-3956**	2	PLATE	
M	3	1	**5C-9553**	4	BOLT (M6X1X16-MM)	
	4	1	**8T-4205**	4	WASHER-HARD (7.2X14.5X2-MM THK)	
	5	1	**3K-6060**	2	LOCKNUT (3/8-16-THD)	
	6	1	**235-4546**	2	NUT-JAM (3/8-16-THD)	
F			**9X-8256**	4	WASHER (6.6X12X2-MM THK)	
FM			**5C-2890**	2	NUT (M6X1-THD)	
FM			**5C-9553**	2	BOLT (M6X1X16-MM)	

F - NOT SHOWN
M - METRIC PART

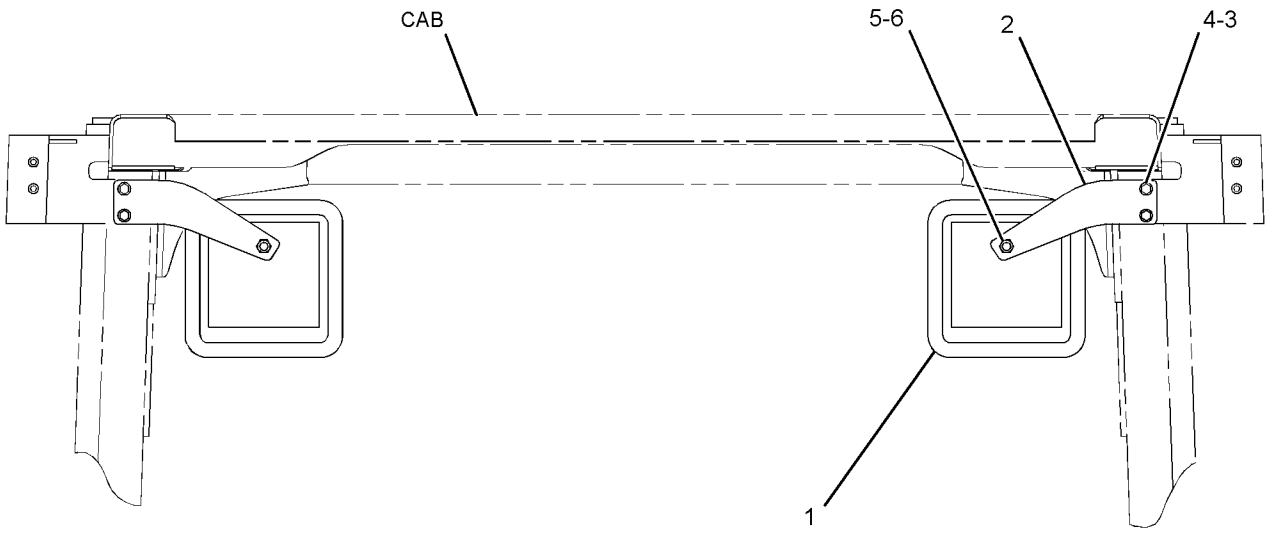

FRONT VIEW

GRAPHIC #1 **<END>** g01427257

186-1709 MIRROR GP-REAR VIEW–ROPS

S/N: TJL1-UP

PART OF 219-4171 OPERATOR AR, 348-5643 OPERATOR AR-OPEN ROPS

AN ATTACHMENT

SMCS-7319 **i03045330**

NOTE	REF NO	GRAPHIC REF	PART NUMBER	QTY	PART NAME 1 2 3 4 5 6 (PRODUCT LEVEL)	SEE PAGE
	1	1	**5K-9179**	1	BOLT-ROUND HEAD (3/8-16X11-IN)	
	2	1	**5P-6874**	1	MIRROR	
	3	1	**9P-9388**	1	KNOB	
	4	1	**186-0898**	1	BRACKET	
	5	1	**7X-7729**	4	WASHER (11X25X3-MM THK)	
M	6	1	**8T-4133**	2	NUT (M10X1.5-THD)	
M	7	1	**8T-4195**	2	BOLT (M10X1.5X30-MM)	

M - METRIC PART

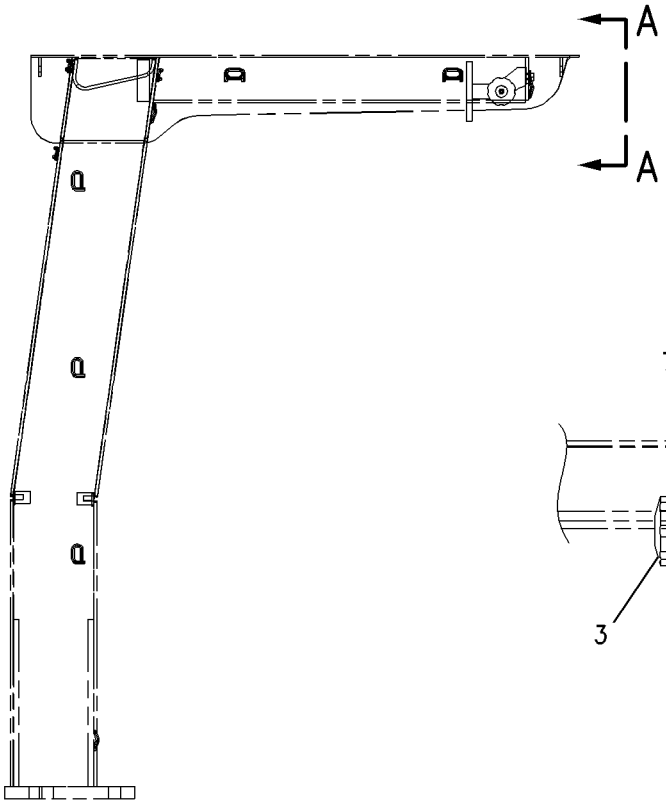

RIGHT SIDE VIEW

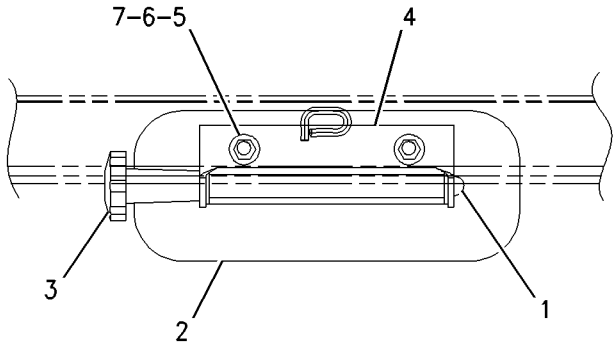

VIEW A–A

GRAPHIC #1 **<END>** g00672669

227-5690 MIRROR GP-REAR VIEW–EXTERIOR

S/N: TJL1-UP

PART OF 227-5594, 227-5595, 348-5640, 348-5641 OPERATOR AR AN ATTACHMENT

SMCS-7319 **i03046160**

NOTE	REF NO	GRAPHIC REF	PART NUMBER	QTY	PART NAME 1 2 3 4 5 6 (PRODUCT LEVEL)	SEE PAGE
	1	1	**132-9982**	2	ARM-MIRROR	
	2	1	**132-9983**	2	MIRROR-CONVEX	
	3	1	**230-7470**	2	PLATE	
M	4	1	**7X-2536**	4	BOLT (M8X1.25X14-MM)	
M	5	1	**8T-4189**	4	BOLT (M8X1.25X20-MM)	
	6	1	**8T-4224**	8	WASHER-HARD (8.8X16X2-MM THK)	

M - METRIC PART

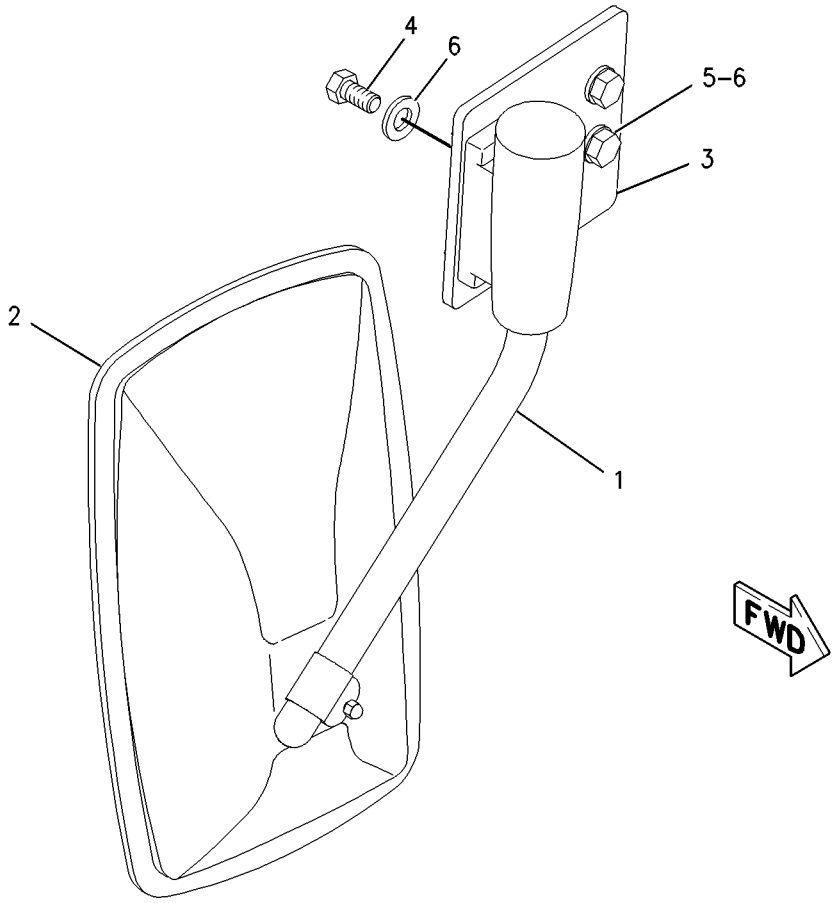

GRAPHIC #1 **<END>** g00964622

335-1908 MIRROR GP-REAR VIEW

S/N: TJL1-UP

AN ATTACHMENT

SMCS-7319 **i03446820**

NOTE	REF NO	GRAPHIC REF	PART NUMBER	QTY	PART NAME 1 2 3 4 5 6 (PRODUCT LEVEL)	SEE PAGE
	1	1	**5P-6872**	2	MIRROR AS	
					(EACH INCLUDES)	
		1	**3K-6060**	1	LOCKNUT (3/8-16-THD)	
	2	1	**207-4499**	8	PLATE-COVER	
	3	1	**335-3228**	2	TUBE AS	
	4	1	**154-4884**	8	CLAMP-HALF	
M	5	1	**5C-7261**	4	NUT (M8X1.25-THD)	
M	6	1	**8T-3647**	4	BOLT (M8X1.25X80-MM)	

M - METRIC PART

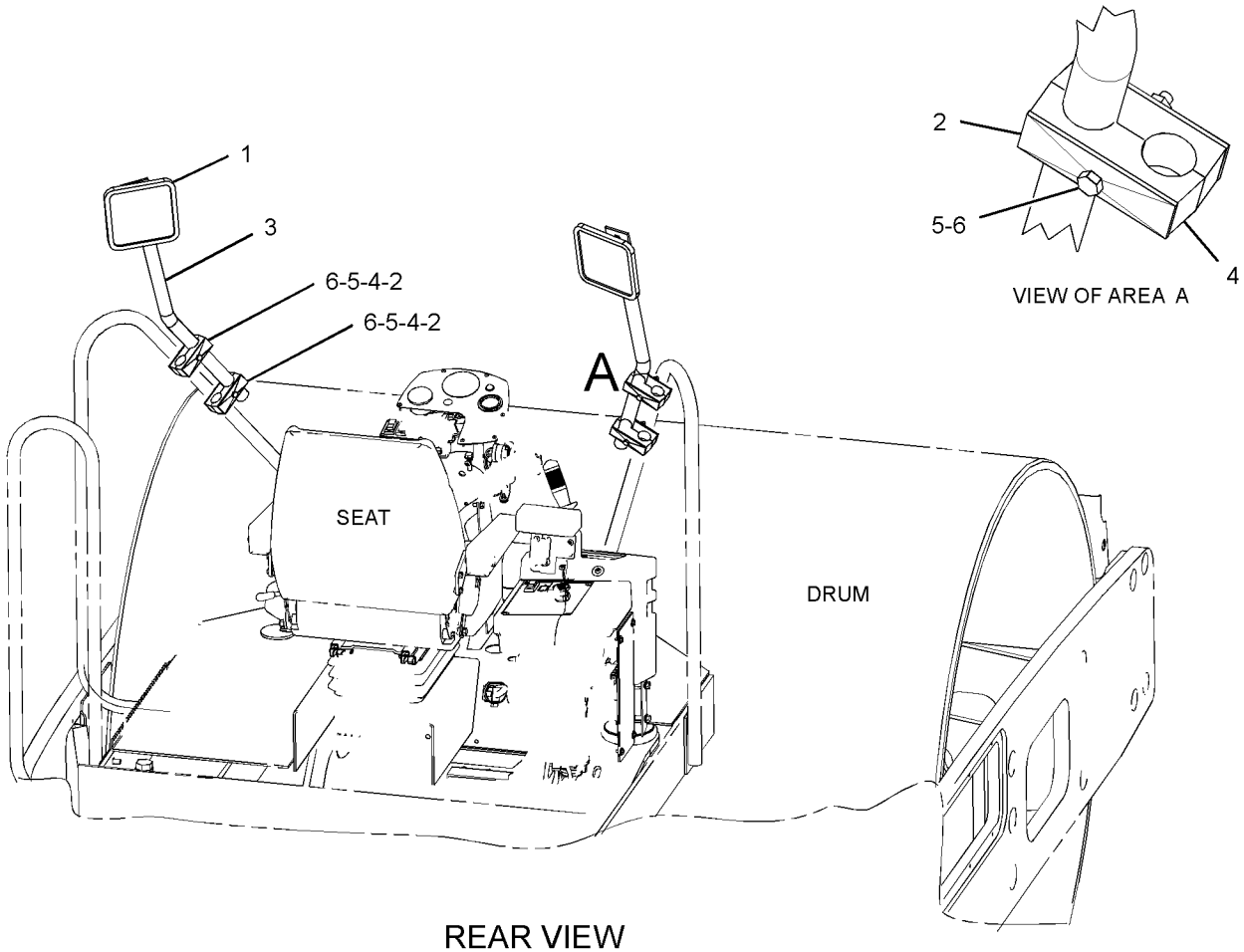

REAR VIEW
(UPPER RIGHT)

GRAPHIC #1 **<END>** g01789859

135-2929 MODULE GP-WARNING INDICATOR

S/N: TJL1-UP

PART OF 224-1149, 253-9940, 389-9450 PANEL GP-INSTRUMENT

AN ATTACHMENT

SMCS-7407 **i03640248**

NOTE	REF NO	GRAPHIC REF	PART NUMBER	QTY	PART NAME 1 2 3 4 5 6 (PRODUCT LEVEL)	SEE PAGE
	1	1	**110-2079**	1	LAMP (24-VOLT) (OIL PRESSURE)	
	1A	1	**110-2079**	1	LAMP (24-VOLT) (ENGINE TEMPERATURE)	
	1B	1	**110-2079**	1	LAMP (24-VOLT) (HYD OIL TEMP)	
	1C	1	**110-2079**	1	LAMP (24-VOLT) (HYDRAULIC PRESSURE)	

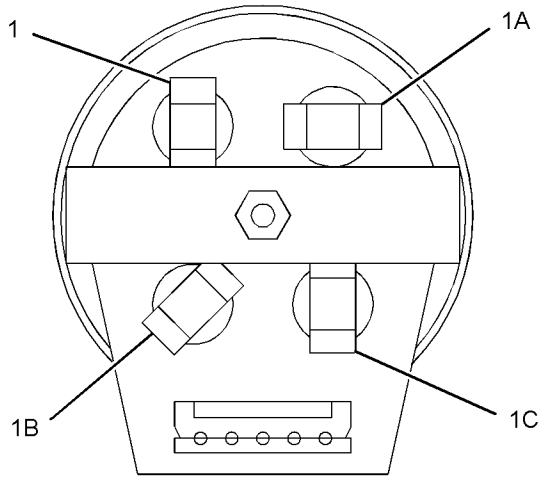

GRAPHIC #1 **<END>** g01954213

155-5783 MOTOR GP-WINDOW WIPER–FRONT

S/N: TJL1-UP
24-VOLT
PART OF 223-4793 WIPER & WASHER GP-WINDOW
AN ATTACHMENT

SMCS-7305 **i04942359**

NOTE	REF NO	GRAPHIC REF	PART NUMBER	QTY	PART NAME 1 2 3 4 5 6 (PRODUCT LEVEL)	SEE PAGE
	1	1	**135-0611**	1	MOTOR GP-WINDOW WIPER (24-VOLT, 2-SPEED)	
		1	**102-8805**	1	KIT-RECEPTACLE (6-PIN)	
					(INCLUDES RECEPTACLE AS & WEDGE)	
		1	**8T-8737**	1	PLUG-SEAL	
		1	**8T-8729**	5	PIN-CONNECTOR (16-GA TO 18-GA)	
	2	1	**206-5823**	1	CAP (MOTOR)	
M	3	1	**6V-6213**	1	NUT (M20X1-THD)	
	4	1	**8J-1899**	1	WASHER (0.81X1X0.45-MM THK)	

M - METRIC PART

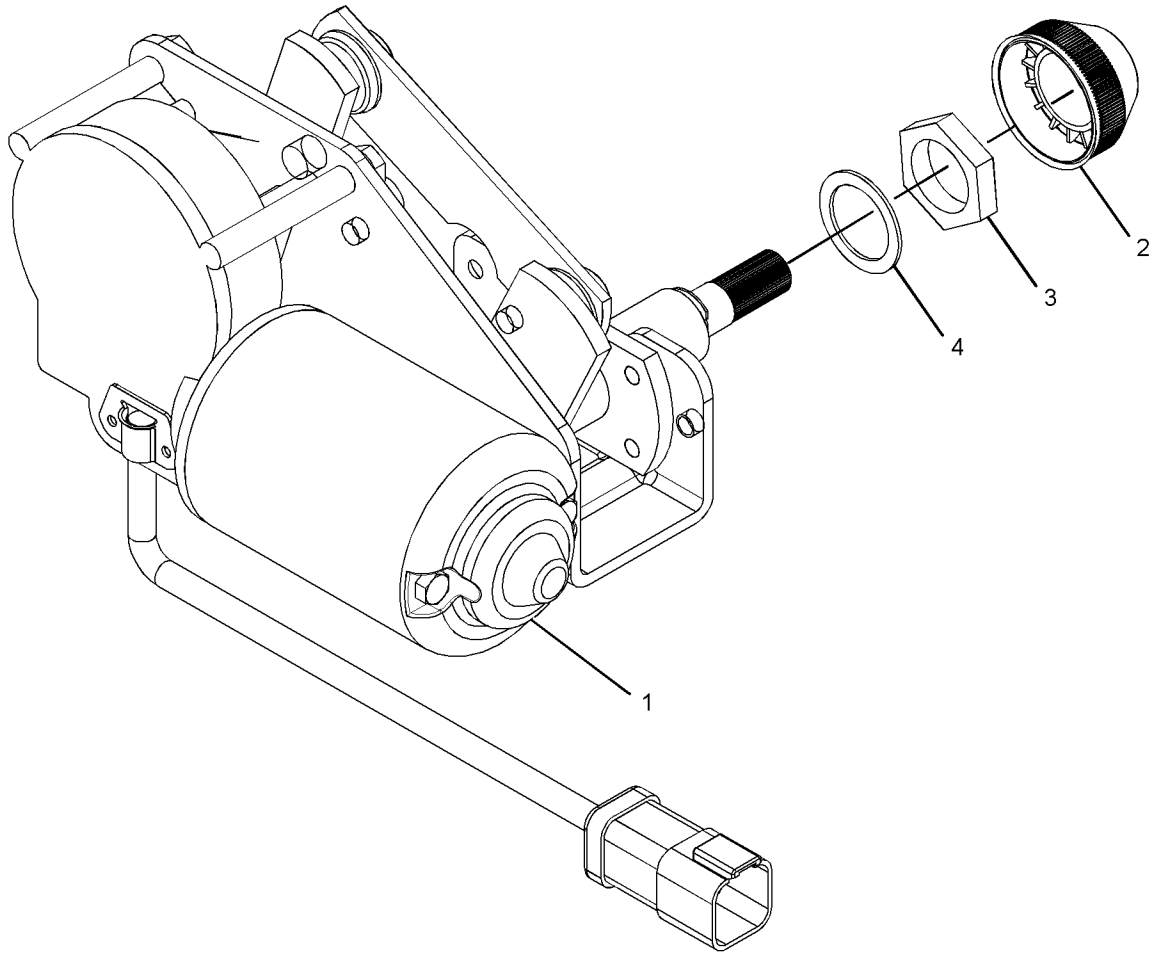

GRAPHIC #1 **<END>** g03126476

239-4009 MOTOR GP-WINDOW WIPER

S/N: TJL1-1468
24-VOLT. REAR
FIELD REPLACEMENT ORDER 330-5044—PAGE: 442
PART OF 223-4793 WIPER & WASHER GP-WINDOW
AN ATTACHMENT

SMCS-7305 **i03046975**

NOTE	REF NO	GRAPHIC REF	PART NUMBER	QTY	PART NAME 1 2 3 4 5 6 (PRODUCT LEVEL)	SEE PAGE
	1	1	**208-8760**	1	COVER	
	2	1	**219-7202**	1	PLATE	
	3	1	**102-8805**	1	KIT-RECEPTACLE (6-PIN)	
					(INCLUDES RECEPTACLE AS & WEDGE)	
	4	1	**8T-8737**	1	PLUG-SEAL	
	5	1	**186-3735**	5	PIN-CONNECTOR (16-GA TO 18-GA)	
M	6	1	**5C-7261**	1	NUT (M8X1.25-THD)	
	7	1	**3F-9556**	1	LOCKWASHER	
	8	1	**194-3710**	1	CAP-WIPER	

M - METRIC PART

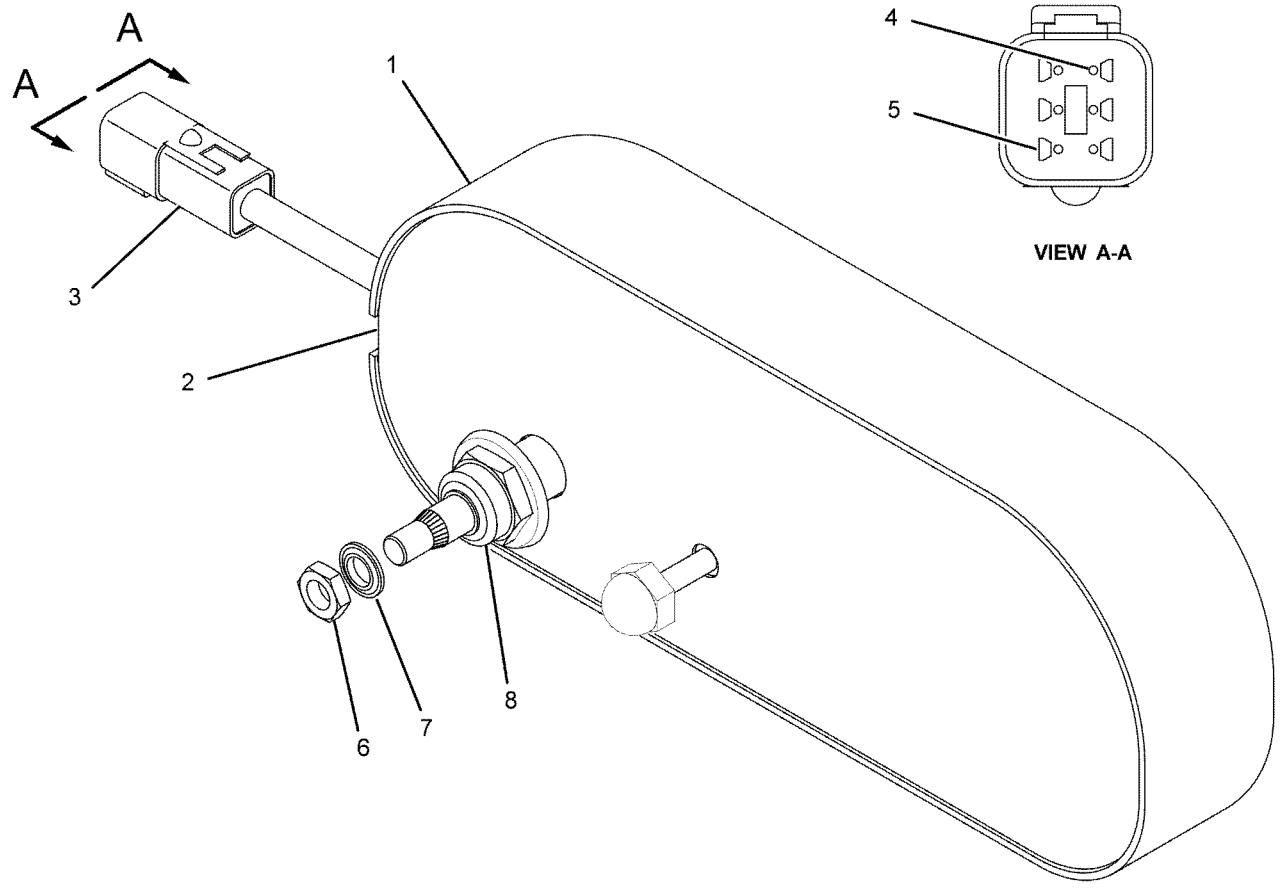

GRAPHIC #1 **<END>** g01085367

330-5044 MOTOR GP-WINDOW WIPER

S/N: TJL1-UP
24-VOLT. REAR
FIELD REPLACEMENT FOR 239-4009—PAGE: 441
PART OF 223-4793 WIPER & WASHER GP-WINDOW
AN ATTACHMENT

SMCS-7305 **i03660658**

NOTE	REF NO	GRAPHIC REF	PART NUMBER	QTY	PART NAME 1 2 3 4 5 6 (PRODUCT LEVEL)	SEE PAGE
	1	1	**8T-8737**	1	PLUG-SEAL	
	2	1	**102-8805**	1	KIT-RECEPTACLE (6-PIN)	
					(INLCUDES RECEPTACLE AS & WEDGE)	
	3	1	**186-3735**	5	PIN-CONNECTOR (16-GA TO 18-GA)	
	4	1	**208-8760**	1	COVER	
	5	1	**263-3823**	1	CAP-WIPER	
	6	1	**3F-9556**	1	LOCKWASHER	
M	7	1	**5C-7261**	1	NUT (M8X1.25-THD)	

M - METRIC PART

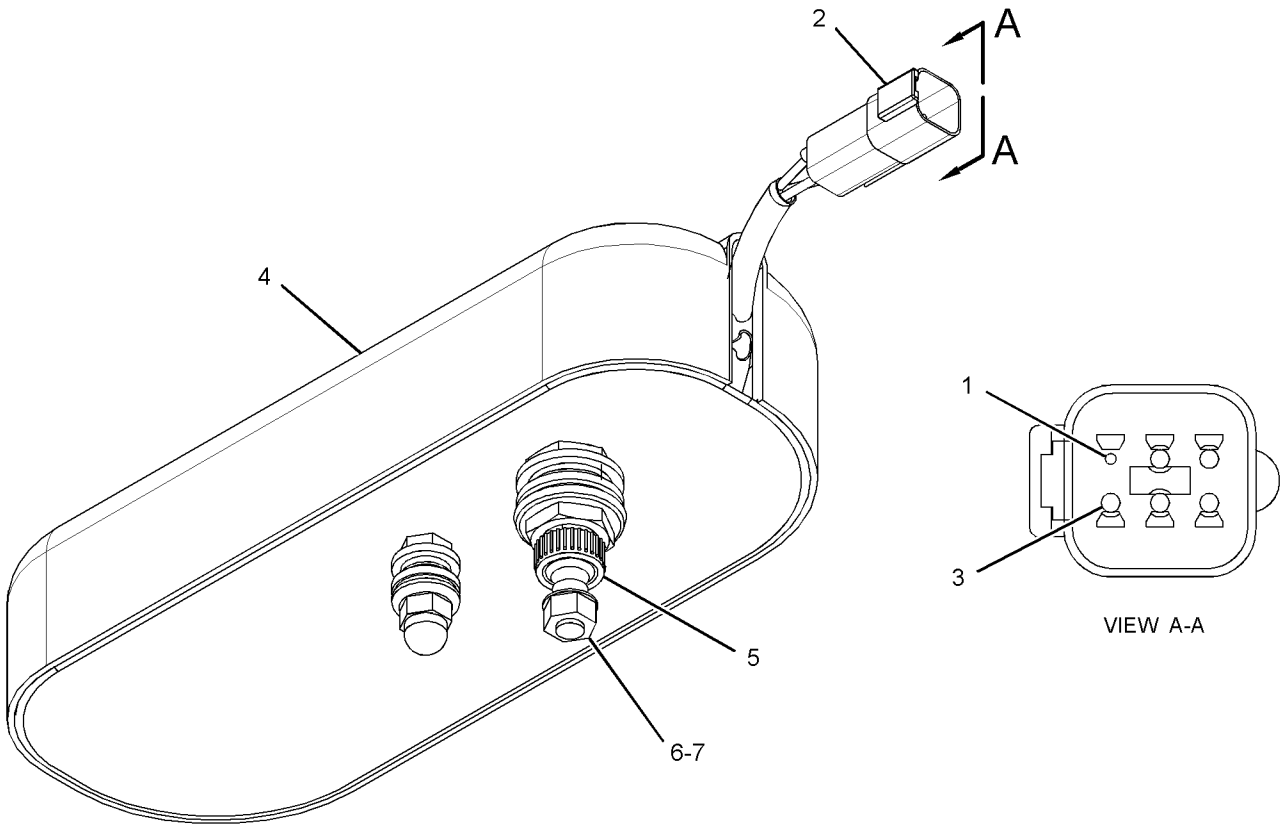

GRAPHIC #1 **<END>** g01965274

259-1188 MOUNTING GP-CAB

S/N: TJL1-UP

PART OF 227-5594, 227-5595, 348-5640, 348-5641 OPERATOR AR AN ATTACHMENT

SMCS-7266, 7301

i03500642

NOTE	REF NO	GRAPHIC REF	PART NUMBER	QTY	PART NAME 1 2 3 4 5 6 (PRODUCT LEVEL)	SEE PAGE
	1	1	**9U-0512**	2	WASHER (32X144X12-MM THK)	
	2	1	**9W-7388**	2	WASHER (26X144X12-MM THK)	
	3	1	**054-8974**	4	PIN	
	4	1	**159-7142**	2	WASHER (70.75X143X10-MM THK)	
	5	1	**342-2382**	8	MOUNT	
M	6	1	**8C-8722**	2	NUT (M30X3.5-THD)	
M	7	1	**7X-2465**	2	BOLT (M24X3X180-MM)	
M	8	1	**8T-4001**	2	NUT (M24X3-THD)	
	9	1	**8T-4167**	4	WASHER-HARD (26X44X4-MM THK)	
M	10	1	**9X-6385**	2	BOLT (M30X3.5X200-MM)	
	11	1	**9X-8258**	4	WASHER (33X56X6-MM THK)	

M - METRIC PART

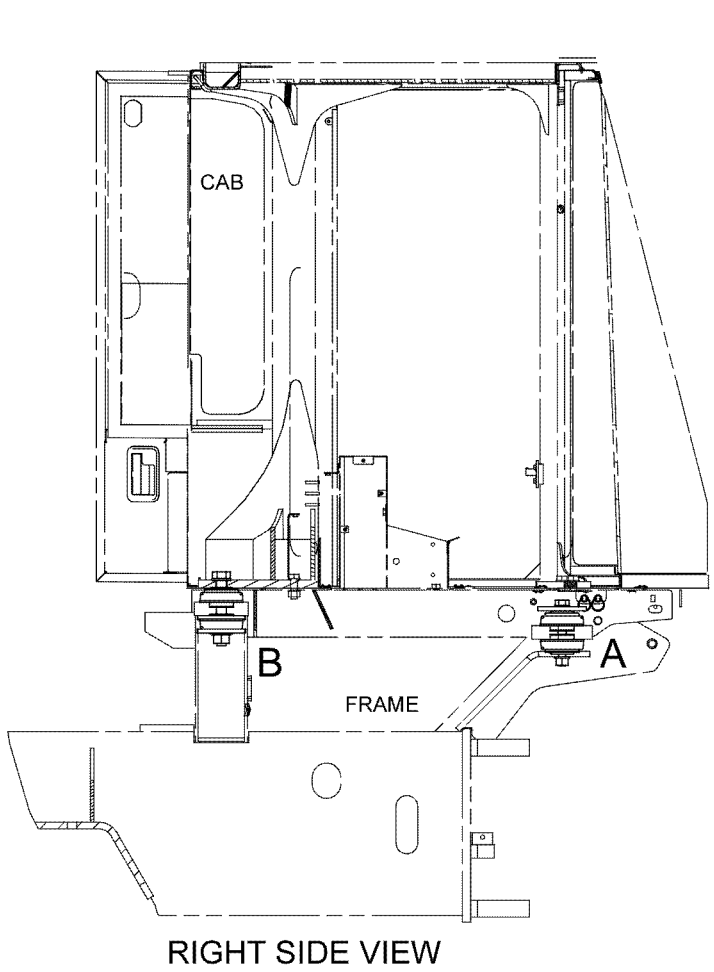

RIGHT SIDE VIEW

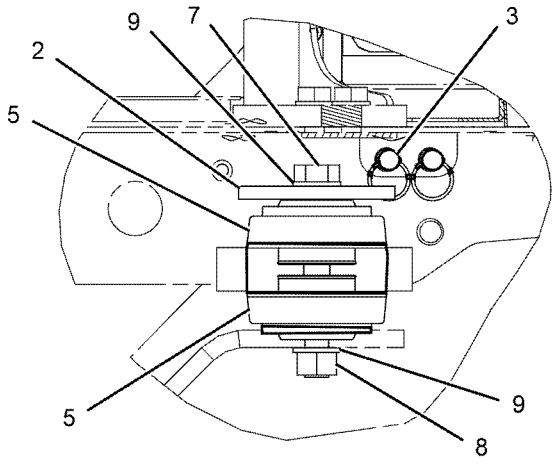

VIEW OF AREA A

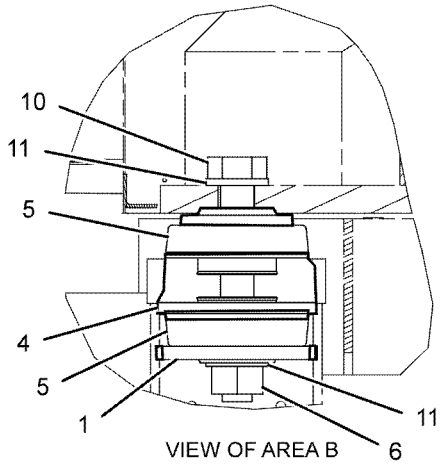

VIEW OF AREA B

GRAPHIC #1

<END>

g01141794

OPERATOR STATION

219-4171 OPERATOR AR

S/N: TJL1-623
AN ATTACHMENT

SMCS-7301 **i03045320**

NOTE	PART NUMBER	QTY	PART NAME 1 2 3 4 5 6 (PRODUCT LEVEL)	SEE PAGE
Y	*153-5030*	1	FAN GP-SUCTION (WITHOUT AIR CONDITIONER)	61
Y	*210-5550*	1	GUARD GP-VANDALISM	419
Y	*201-5160*	1	HANDRAIL GP	264
Y	*204-1321*	1	LIGHTING GP-FLOOD (OPEN ROPS)	147
Y	*186-1709*	1	MIRROR GP-REAR VIEW (OPEN ROPS)	436
Y	*224-1149*	1	PANEL GP-INSTRUMENT (FRONT CONSOLE)	448
Y	*224-1152*	1	PANEL GP-INSTRUMENT (SIDE CONSOLE)	451
Y	*235-0511*	1	PLATFORM GP-OPERATOR	468
Y	*202-0679*	1	ROPS GP	470

Y - SEPARATE ILLUSTRATION

<END>

224-1151 OPERATOR AR

S/N: TJL1-623
AN ATTACHMENT

SMCS-7301 **i03649458**

NOTE	PART NUMBER	QTY	PART NAME 1 2 3 4 5 6 (PRODUCT LEVEL)	SEE PAGE
Y	*153-5030*	1	FAN GP-SUCTION (WITHOUT AIR CONDITIONER)	61
Y	*210-5550*	1	GUARD GP-VANDALISM	419
Y	*201-5160*	1	HANDRAIL GP	264
Y	*234-9980*	1	LIGHTING GP-FLOOD (OPEN PLATFORM)	150
Y	*224-1152*	1	PANEL GP-INSTRUMENT (SIDE CONSOLE)	451
Y	*224-1149*	1	PANEL GP-INSTRUMENT (FRONT CONSOLE)	448
Y	*235-0511*	1	PLATFORM GP-OPERATOR	468

Y - SEPARATE ILLUSTRATION

<END>

227-5594 OPERATOR AR

S/N: TJL1-623
AN ATTACHMENT

SMCS-7301 **i03649813**

NOTE	PART NUMBER	QTY	PART NAME 1 2 3 4 5 6 (PRODUCT LEVEL)	SEE PAGE
Y	*259-4423*	1	CAB AR	376
Y	*153-5030*	1	FAN GP-SUCTION (WITHOUT AIR CONDITIONER)	61
Y	*240-4607*	1	FILTER GP-CAB AIR	406
Y	*227-0824*	1	FLOOR MAT GP-CAB	407
Y	*240-4672*	1	HEATER & MTG GP-CAB	420
Y	*223-5824*	1	LINES GP-CAB HEATER	430
Y	*227-5690*	1	MIRROR GP-REAR VIEW (EXTERIOR)	437
Y	*259-1188*	1	MOUNTING GP-CAB	443
Y	*243-5693*	1	PANEL GP-INSTRUMENT (SIDE CONSOLE)	455
Y	*253-9940*	1	PANEL GP-INSTRUMENT (CENTER CONSOLE)	460

Y - SEPARATE ILLUSTRATION

<END>

OPERATOR STATION

227-5595 OPERATOR AR

S/N: TJL1-623

AN ATTACHMENT

SMCS-7301 **i03053359**

NOTE	PART NUMBER	QTY	PART NAME 1 2 3 4 5 6 (PRODUCT LEVEL)	SEE PAGE
Y	*240-4683*	1	AIR CONDITIONER GP (WITH CONTROL)	371
Y	*259-4423*	1	CAB AR	376
Y	*222-3594*	1	COMPRESSOR GP-REFRIGERANT	384
Y	*220-0205*	1	CONDENSER & MTG GP-REFRIGERANT	386
Y	*153-4982*	1	FAN GP-SUCTION (WITH AIR CONDITIONER)	60
Y	*201-0183*	1	FILM GP (STRIPE)	501
Y	*240-4607*	1	FILTER GP-CAB AIR	406
Y	*227-0824*	1	FLOOR MAT GP-CAB	407
Y	*222-8663*	1	LINES GP-AIR CONDITIONER	426
Y	*223-5824*	1	LINES GP-CAB HEATER	430
Y	*227-5690*	1	MIRROR GP-REAR VIEW (EXTERIOR)	437
Y	*259-1188*	1	MOUNTING GP-CAB	443
Y	*253-9940*	1	PANEL GP-INSTRUMENT (CENTER CONSOLE)	460
Y	*243-5693*	1	PANEL GP-INSTRUMENT (SIDE CONSOLE)	455
Y	*227-0063*	1	WIRING GP-AIR CONDITIONER	171

Y - SEPARATE ILLUSTRATION

<END>

348-5640 OPERATOR AR–CAB WITH AIR CONDITIONER

S/N: TJL1-UP

PART OF 369-9031, 376-1393 DISTRIBUTION AR

AN ATTACHMENT

SMCS-7301 **i05371394**

NOTE	PART NUMBER	QTY	PART NAME 1 2 3 4 5 6 (PRODUCT LEVEL)	SEE PAGE
Y	*240-4683*	1	AIR CONDITIONER GP (WITH CONTROL)	371
Y	*339-6602*	1	CAB AR	376
Y	*222-3594*	1	COMPRESSOR GP-REFRIGERANT	384
Y	*220-0205*	1	CONDENSER & MTG GP-REFRIGERANT	386
Y	*339-9775*	1	FAN GP-SUCTION	63
Y	*240-4607*	1	FILTER GP-CAB AIR	406
Y	*227-0824*	1	FLOOR MAT GP-CAB	407
Y	*222-8663*	1	LINES GP-AIR CONDITIONER	426
Y	*223-5824*	1	LINES GP-CAB HEATER	430
Y	*227-5690*	1	MIRROR GP-REAR VIEW (EXTERIOR)	437
Y	*259-1188*	1	MOUNTING GP-CAB	443
Y	*243-5693*	1	PANEL GP-INSTRUMENT (SIDE CONSOLE)	455
Y	*253-9940*	1	PANEL GP-INSTRUMENT (CENTER CONSOLE)	460
			S/N: TJL1-2531	
Y	*389-9450*	1	PANEL GP-INSTRUMENT	464
			S/N: TJL2532-UP	
Y	*227-0063*	1	WIRING GP-AIR CONDITIONER	171

Y - SEPARATE ILLUSTRATION

<END>

OPERATOR STATION

348-5641 OPERATOR AR—CAB WITHOUT AIR CONDITIONER

S/N: TJL1-UP
PART OF 368-9181 DISTRIBUTION AR
AN ATTACHMENT

SMCS-7301 **i05371398**

NOTE	PART NUMBER	QTY	PART NAME 1 2 3 4 5 6 (PRODUCT LEVEL)	SEE PAGE
Y	**339-6602**	1	CAB AR	376
Y	*339-9774*	1	FAN GP-SUCTION	62
Y	*240-4607*	1	FILTER GP-CAB AIR	406
Y	*227-0824*	1	FLOOR MAT GP-CAB	407
Y	*240-4672*	1	HEATER & MTG GP-CAB	420
Y	*223-5824*	1	LINES GP-CAB HEATER	430
Y	*227-5690*	1	MIRROR GP-REAR VIEW (EXTERIOR)	437
Y	*259-1188*	1	MOUNTING GP-CAB	443
Y	*243-5693*	1	PANEL GP-INSTRUMENT (SIDE CONSOLE)	455
Y	*253-9940*	1	PANEL GP-INSTRUMENT (CENTER CONSOLE)	460
			S/N: TJL1-2531	
Y	*389-9450*	1	PANEL GP-INSTRUMENT (CENTER CONSOLE)	464
			S/N: TJL2531-UP	

Y - SEPARATE ILLUSTRATION

<END>

348-5642 OPERATOR AR-OPEN ROPS

S/N: TJL1-UP
PART OF 368-9182, 376-1392 DISTRIBUTION AR
AN ATTACHMENT

SMCS-7300, 7323 **i03933831**

NOTE	PART NUMBER	QTY	PART NAME 1 2 3 4 5 6 (PRODUCT LEVEL)	SEE PAGE
Y	*339-9774*	1	FAN GP-SUCTION	62
Y	*210-5550*	1	GUARD GP-VANDALISM	419
Y	*201-5160*	1	HANDRAIL GP	264
Y	*234-9980*	1	LIGHTING GP-FLOOD (OPEN PLATFORM)	150
Y	*224-1149*	1	PANEL GP-INSTRUMENT (FRONT CONSOLE)	448
Y	*224-1152*	1	PANEL GP-INSTRUMENT (SIDE CONSOLE)	451
Y	*235-0511*	1	PLATFORM GP-OPERATOR	468

Y - SEPARATE ILLUSTRATION

<END>

348-5643 OPERATOR AR-OPEN ROPS

S/N: TJL1-UP

PART OF 357-7421, 376-1389 DISTRIBUTION AR, 357-7423 OPTION AR-MACHINE AN ATTACHMENT

SMCS-7300, 7323

i03933832

NOTE	PART NUMBER	QTY	PART NAME 1 2 3 4 5 6 (PRODUCT LEVEL)	SEE PAGE
Y	*339-9774*	1	FAN GP-SUCTION	62
Y	*210-5550*	1	GUARD GP-VANDALISM	419
Y	*201-5160*	1	HANDRAIL GP	264
Y	*204-1321*	1	LIGHTING GP-FLOOD (OPEN ROPS)	147
Y	*186-1709*	1	MIRROR GP-REAR VIEW (OPEN ROPS)	436
Y	*224-1149*	1	PANEL GP-INSTRUMENT (FRONT CONSOLE)	448
Y	*224-1152*	1	PANEL GP-INSTRUMENT (SIDE CONSOLE)	451
Y	*235-0511*	1	PLATFORM GP-OPERATOR	468
Y	*202-0679*	1	ROPS GP	470

Y - SEPARATE ILLUSTRATION

<END>

OPERATOR STATION

224-1149 PANEL GP-INSTRUMENT—FRONT CONSOLE

S/N: TJL1-UP

PART OF 219-4171, 224-1151 OPERATOR AR, 348-5642, 348-5643 OPERATOR AR-OPEN ROPS AN ATTACHMENT

SMCS-7451 **i03653969**

NOTE	REF NO	GRAPHIC REF	PART NUMBER	QTY	PART NAME 1 2 3 4 5 6 (PRODUCT LEVEL)	SEE PAGE
	1	1	**2N-2371**	1	LAMP AS-INDICATOR (RED) (ALTERNATOR)	
		1	**2V-7088**	1	LENS-RED	
		1	**6V-8367**	1	LOCKWASHER	
		1	**6V-8382**	1	NUT-HEX (11/16-27-THD)	
		1	**6V-8817**	2	SCREW-MACHINE (4-36X4.76-IN)	
	2	1	**2V-7087**	1	LENS-AMBER	
	3	1	**3S-2093**	1	STRAP-CABLE	
	4	1	**219-1672**	1	SEAL	
	5	1	**5P-8500**	2	KEY (ENGINE START-STOP)	
	6	1	**6T-6329**	3	BEZEL	
	7	1	**6V-8927**	6	BOLT-SOCKET HEAD (6-32X0.5-IN)	
	8	1	**6Y-6584**	1	STRAP AS-GROUND	
	9	1	**7N-5876**	1	LAMP (24-VOLT, 0.2-AMPERE) (ALTERNATOR INDICATOR)	
B	10	1	**104-6216**	1	PLUG	
	11	1	**105-3542**	3	DIODE GP (INSTRUMENT)	
	12	1	**110-7887**	1	SWITCH AS-START (KEY)	
		1	**7T-6799**	1	NUT-MOUNTING (1-32-THD)	
		1	**186-3735**	4	PIN-CONNECTOR (16-GA TO 18-GA)	
		1	**102-8804**	1	KIT-RECEPTACLE (4-PIN)	
					(INCLUDES RECEPTACLE AS & WEDGE)	
Y	13	1	**155-5234**	1	GAUGE GP-FUEL LEVEL (24-VOLT) (INSTRUMENT PANEL)	409
	14	1	**128-8617**	1	PLATE AS	
	15	1	**129-7184**	1	FILM-INSTRUCTION (ENGINE START)	
Y	16	1	**135-2929**	1	MODULE GP-WARNING INDICATOR (ENGINE TEMPERATURE)	439
	17	1	**145-9296**	1	PLATE	
	18	1	**301-7292**	1	KIT-SERVICE METER	
					(INCLUDES METER & FILM)	
	19	1	**180-8576**	1	PLATE-IDENTIFICATION (START AID)	
	20	1	**267-3060**	1	HARNESS AS-PANEL (FRONT CONSOLE)	
		1	**117-2979**	1	CONNECTOR-RECEPTACLE	
		1	**117-2978**	6	CONTACT-CONNECTION	
		1	**9X-3401**	26	PIN-CONNECTOR (16-GA TO 18-GA)	
		1	**155-2265**	3	KIT-CONNECTING PLUG (8-PIN)	
		1	**155-2270**	1	KIT-CONNECTING PLUG (2-PIN)	
		1	**155-2271**	1	KIT-CONNECTING PLUG (4-PIN)	
					(EACH PLUG KIT INCLUDES PLUG AS, WEDGE & INTERFACE SEAL)	
		1	**8T-8737**	15	PLUG-SEAL	
		1	**102-8806**	2	KIT-RECEPTACLE (8-PIN)	
		1	**102-8801**	1	KIT-RECEPTACLE (12-PIN)	
					(EACH RECEPTACLE KIT INCLUDES RECEPTACLE AS & WEDGE)	
		1	**180-9340**	17	SOCKET-CONNECTOR (14-GA TO 18-GA)	
		1	**5P-4571**	5	TERMINAL-BLADE (14-GA TO 16-GA)	
		1	**5P-2321**	16	TERMINAL-FORK (14-GA TO 16-GA, NO. 6 SCREW)	
	21	1	**198-9137**	1	BRACKET	
	22	1	**163-1201**	1	HORN AS (24-VOLT, LOW TONE)	
	23	1	**252-9205**	1	FASTENER	
	24	1	**229-2313**	1	HOUSING AS	
	25	1	**230-5455**	1	PLATE	
	26	1	**230-8093**	1	FILM-IDENTIFICATION (INSTRUMENT PANEL)	
	28	1	**237-2711**	1	SEAL	
	29	1	**4P-8134**	2	CLIP	
M	30	1	**5C-2890**	3	NUT (M6X1-THD)	

224-1149 **PANEL GP-INSTRUMENT (*contd.*)** **i03653969**

NOTE	REF NO	GRAPHIC REF	PART NUMBER	QTY	PART NAME 1 2 3 4 5 6 (PRODUCT LEVEL)	SEE PAGE
M	31	1	**5C-7261**	1	NUT (M8X1.25-THD)	
	32	1	**5P-4115**	1	WASHER-HARD (7.2X19X2-MM THK)	
	33	1	**6P-0699**	1	GROMMET	
	34	1	**6T-6066**	1	SWITCH AS-ROCKER (START AID)	
		1	**3L-8187**	2	LOCKWASHER	
		1	**6V-8374**	2	SCREW-MACHINE (6-32X0.25-IN)	
	35	1	**7K-1181**	9	STRAP-CABLE	
	36	1	**8D-1470**	1	GROMMET	
	37	1	**8T-4121**	5	WASHER-HARD (11X21X2.5-MM THK)	
M	38	1	**8T-4133**	2	NUT (M10X1.5-THD)	
M	39	1	**8T-4136**	1	BOLT (M10X1.5X25-MM)	
M	40	1	**8T-4186**	2	BOLT (M10X1.5X40-MM)	
	41	1	**5P-4116**	1	WASHER-HARD (8.8X20.5X2-MM THK)	
	42	1	**8T-4205**	2	WASHER-HARD (7.2X14.5X2-MM THK)	
	43	1	**8T-4223**	2	WASHER-HARD (13.5X25.5X3-MM THK)	
	44	1	**195-4973**	1	BRACKET	
M	45	1	**8T-4244**	2	NUT (M12X1.75-THD)	
M	46	1	**9X-1046**	10	SCREW (M4X0.7X18-MM)	
M	47	1	**9X-2045**	1	SCREW-TRUSS HEAD (M6X1X20-MM)	
	48	1	**9X-9099**	1	SWITCH AS-ROCKER (SPEED SELECT)	
	48A	1	**9X-9099**	1	SWITCH AS-ROCKER (THROTTLE)	
					(EACH SWITCH AS-ROCKER INCLUDES)	
		1	**3L-8187**	6	LOCKWASHER	
		1	**6V-8374**	6	SCREW-MACHINE (6-32X0.25-IN)	
M	49	1	**8T-4137**	1	BOLT (M10X1.5X20-MM)	
M	50	1	**9X-2042**	2	SCREW-TRUSS HEAD (M6X1X12-MM)	

B - USE AS REQUIRED
M - METRIC PART
Y - SEPARATE ILLUSTRATION

224-1149 **PANEL GP-INSTRUMENT (*contd.*)** **i03653969**

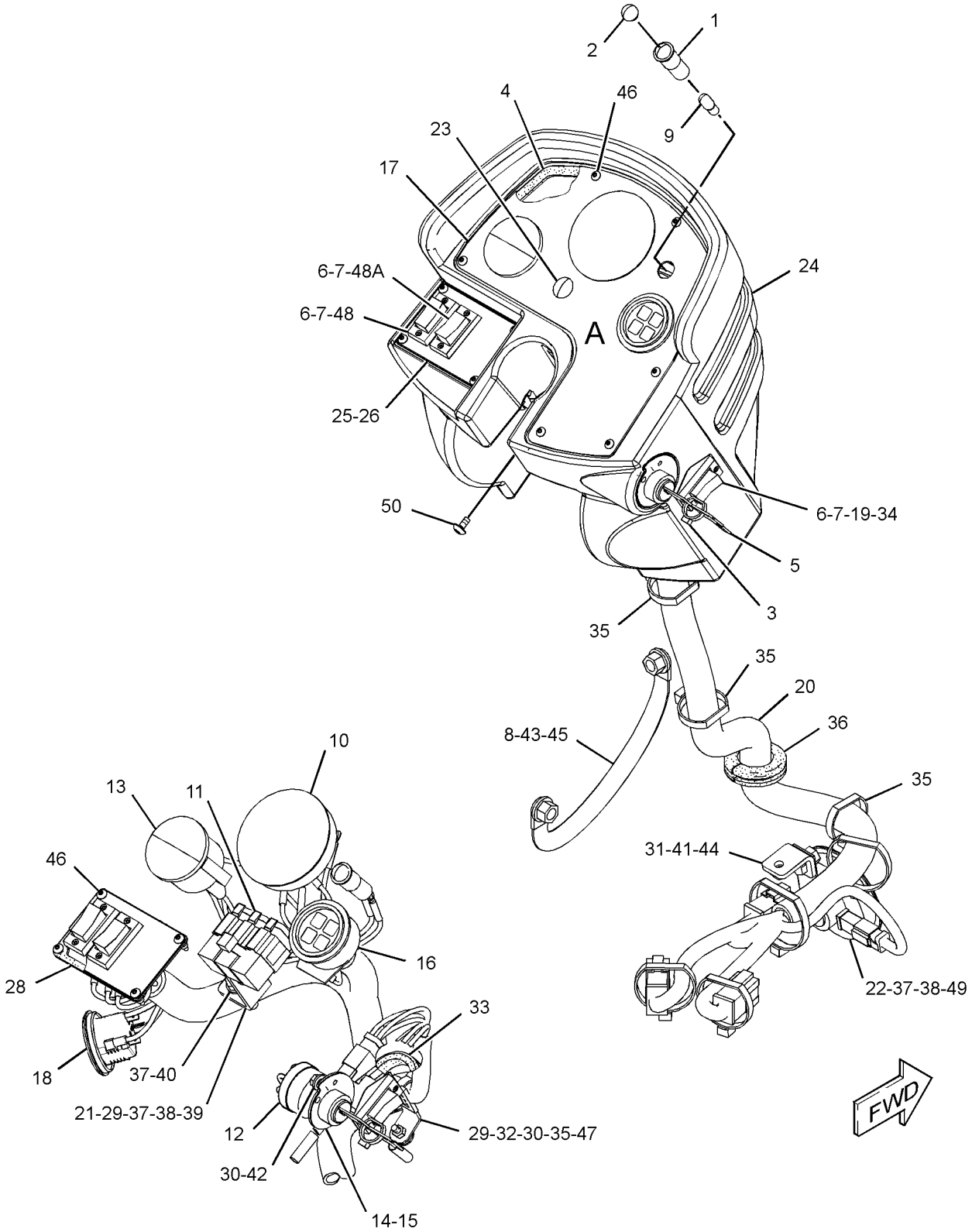

VIEW OF AREA A
(HOUSING ASSEMBLY REMOVED FOR CLARITY)

GRAPHIC #1 **<END>** g01953420

224-1152 PANEL GP-INSTRUMENT—SIDE CONSOLE

S/N: TJL1-UP

PART OF 219-4171, 224-1151 OPERATOR AR, 348-5642, 348-5643 OPERATOR AR-OPEN ROPS AN ATTACHMENT

SMCS-7451 **i03640620**

NOTE	REF NO	GRAPHIC REF	PART NUMBER	QTY	PART NAME 1 2 3 4 5 6 (PRODUCT LEVEL)	SEE PAGE
Y	1	1	**3E-6328**	1	ALARM GP (24-VOLT)	120
	2	1,2	**3S-2093**	3	STRAP-CABLE	
B	3	2	**6T-2774**	2	CLIP	
	4	2	**6T-6329**	1	BEZEL	
	5	2	**6V-8927**	2	BOLT-SOCKET HEAD (6-32X0.5-IN)	
B	6	2	**7T-0493**	1	PLUG	
	7	2	**7V-5628**	1	PLATE	
	8	2	**7V-6089**	2	CLAMP	
	9	1	**8T-8799**	2	BOOT	
	10	1	**9G-9154**	1	CLIP	
	11	1	**9X-7449**	1	GROMMET	
	12	1	**107-6013**	1	SEAL	
	13	1	**107-6072**	1	PLATE	
	14	1	**113-8490**	16	FUSE (10-AMPERE)	
	15	1	**116-0118**	1	CLIP	
	16	1	**116-4159**	1	BASE	
	17	2	**116-5270**	1	LAMP (24-VOLT) (PARKING BRAKE)	
	18	2	**116-5274**	1	KNOB (PARKING BRAKE)	
	19	2	**116-5275**	1	SWITCH GP-PUSH BUTTON (PARKING BRAKE)	
	20	2	**116-6565**	1	BLOCK AS (LIGHT)	
	21	1	**118-7362**	1	GROMMET-SPLIT	
	22	1	**139-0234**	1	PLATE	
	23	1	**139-0236**	1	PLATE AS	
M		1	**6V-9632**	2	NUT-WELD (M6X1-THD)	
	24	2	**145-9297**	1	PLATE AS	
		2	**5D-9629**	1	ROD	
		2	**7T-1099**	1	LINK	
	25	1	**9X-8486**	2	SCREW-MACHINE (8-32X0.75-IN)	
	26	2	**228-9108**	1	MODULE GP-TIMER	
	27	1	**160-9412**	1	HOUSING AS	
Y	28	1	**254-3783**	1	SWITCH GP-MAGNETIC (24-VOLT) (MAIN RELAY)	169
					—OR—	
Y		1	**241-8368**	1	SWITCH GP-MAGNETIC (24-VOLT) (MAIN RELAY)	168
	29	2	**116-5277**	1	BLOCK (CONTACT)	
	30	2	**193-4126**	1	FILM (INSTRUMENTS)	
	31	1	**193-8565**	1	HARNESS AS-PANEL (SIDE CONSOLE)	
		1	**112-9609**	2	BLOCK-MICRORELAY	
		1	**124-9636**	1	BLOCK-MINIFUSE	
		1	**9G-4351**	1	HOUSING-RECEPTACLE (4-GA TO 6-GA)	
		1	**112-9610**	4	LOCK-MICRORELAY	
		1	**124-9637**	1	LOCK-MINIFUSE	
		1	**8N-1546**	1	PIN-CONNECTOR (6-GA)	
		1	**9X-3401**	24	PIN-CONNECTOR (16-GA TO 18-GA)	
					—OR—	
		1	**126-1767**	24	PIN-CONNECTOR (14-GA TO 16-GA)	
		1	**155-2255**	1	KIT-CONNECTING PLUG (12-PIN)	
		1	**155-2265**	2	KIT-CONNECTING PLUG (8-PIN)	
		1	**155-2270**	1	KIT-CONNECTING PLUG (2-PIN)	
		1	**155-2271**	2	KIT-CONNECTING PLUG (4-PIN)	
		1	**155-2274**	1	KIT-CONNECTING PLUG (6-PIN)	
					(EACH PLUG KIT INCLUDES PLUG AS, WEDGE & INTERFACE SEAL)	
		1	**8T-8737**	5	PLUG-SEAL	
		1	**102-8802**	1	KIT-RECEPTACLE (2-PIN)	
					(INCLUDES RECEPTACLE AS & WEDGE)	
		1	**9X-0145**	1	RECEPTACLE AS-CONNECTOR (24-PIN)	
		1	**180-9340**	41	SOCKET-CONNECTOR (14-GA TO 18-GA)	

224-1152 **PANEL GP-INSTRUMENT (*contd.*)** **i03640620**

NOTE	REF NO	GRAPHIC REF	PART NUMBER	QTY	PART NAME 1 2 3 4 5 6 (PRODUCT LEVEL)	SEE PAGE
		1	**5P-2321**	16	TERMINAL-FORK (14-GA TO 16-GA, NO. 6 SCREW)	
		1	**5P-3454**	1	TERMINAL-RING (4-GA, 5/16-IN SCREW)	
		1	**131-1489**	1	TERMINAL AS-RING (6-GA TO 8-GA)	
		1	**2L-8065**	1	TERMINAL-RING (10-GA TO 12-GA, NO. 8 SCREW)	
		1	**2L-8071**	2	TERMINAL-RING (10-GA TO 12-GA, 1/2-IN SCREW)	
		1	*286-7193*	1	TERMINAL AS-RING	
E		1	**125-7874**		TUBE-HEAT SHRINK (5.72-MM DIA) (3-CM)	
		1	**112-9611**	14	TERMINAL-BLADE	
		1	**112-9612**	27	TERMINAL-BLADE	
		1	**116-4161**	9	TERMINAL-BLADE (16-GA TO 18-GA)	
		1	**113-5100**	4	TERMINAL-BUS	
	32	1	**206-5108**	1	SEAL	
	33	2	**206-5109**	1	SEAL	
	34	2	**225-8541**	1	PLATE AS	
		2	**178-8505**	1	PLATE AS	
	35	1	**230-9092**	1	FILM-FUSE/RELAY	
					(CENTER FILM ON INSIDE OF FUSE COVER PLATE)	
	36	2	**031-0249**	2	LOCKNUT (10-24-THD)	
	37	1	**096-6166**	3	WASHER-HARD (4.5X9X1-MM THK)	
	38	2	**144-0900**	1	SWITCH AS-ROCKER (VIBRATORY SELECT)	
		2	**3L-8187**	3	LOCKWASHER	
		2	**6V-8374**	3	SCREW-MACHINE (6-32X0.25-IN)	
	39	2	**2N-3480**	2	SCREW-MACHINE (10-24X0.75-IN)	
	40	1,2	**4B-4274**	4	WASHER (5.5X13X1.2-MM THK)	
	41	1	**4P-7581**	1	CLIP	
M	42	1	**5C-2890**	2	NUT (M6X1-THD)	
	43	1	**5P-4115**	11	WASHER-HARD (7.2X19X2-MM THK)	
	44	1	**6T-3643**	1	CIRCUIT BREAKER AS (15-AMPERE) (MAIN POWER RELAY)	
		1	**6V-8376**	2	SCREW-MACHINE (8-32X0.25-IN)	
		1	**9B-7233**	2	LOCKWASHER	
	45	1	**6V-3970**	1	GROMMET	
M	46	1	**6V-9491**	3	SCREW-MACHINE (M4X0.7X20-MM)	
	47	1	**7K-1181**	3	STRAP-CABLE	
M	48	2	**8C-8451**	2	BOLT (M6X1X40-MM)	
M	49	1	**8T-2659**	3	LOCKNUT (M4X0.7-THD)	
M	50	1	**8T-4138**	8	BOLT (M6X1X20-MM)	
M	51	2	**8T-4189**	2	BOLT (M8X1.25X20-MM)	
	52	1	**8T-4223**	1	WASHER-HARD (13.5X25.5X3-MM THK)	
	53	2	**8T-4224**	2	WASHER-HARD (8.8X16X2-MM THK)	
M	54	1	**8T-4244**	1	NUT (M12X1.75-THD)	
M	55	1	**8T-4970**	9	BOLT (M6X1X14-MM)	
	56	1	**8Y-8606**	1	GROMMET	
M	57	2	**9X-1046**	4	SCREW (M4X0.7X18-MM)	
	58	1	**9X-8256**	6	WASHER (6.6X12X2-MM THK)	
	59	1	**158-5089**	1	RELAY AS (24-VOLT) (ENGINE OIL PRESSURE)	
	59A	1	**158-5089**	1	RELAY AS (24-VOLT) (COOLANT TEMPERATURE)	
	59B	1	**158-5089**	1	RELAY AS (24-VOLT) (WARNING LIGHT)	
	59C	1	**158-5089**	1	RELAY AS (24-VOLT) (HYDRAULIC OIL TEMPERATURE)	
	59D	1	**158-5089**	1	RELAY AS (24-VOLT) (FUNCTION LIGHT)	
	59E	1	**158-5089**	1	RELAY AS (24-VOLT) (BRAKE ONE)	
	59F	1	**158-5089**	1	RELAY AS (24-VOLT) (BRAKE TWO)	
	59G	1	**158-5089**	1	RELAY AS (24-VOLT) (NEUTRAL START ONE)	
	59H	1	**158-5089**	1	RELAY AS (24-VOLT) (NEUTRAL START TWO)	
	59I	1	**158-5089**	1	RELAY AS (24-VOLT) (HYDRAULIC OIL PRESSURE)	

B - USE AS REQUIRED
E - ORDER BY THE CENTIMETER
M - METRIC PART
Y - SEPARATE ILLUSTRATION

REFER TO ALL ILLUSTRATIONS OF THIS GROUP FOR AUXILIARY VIEWS

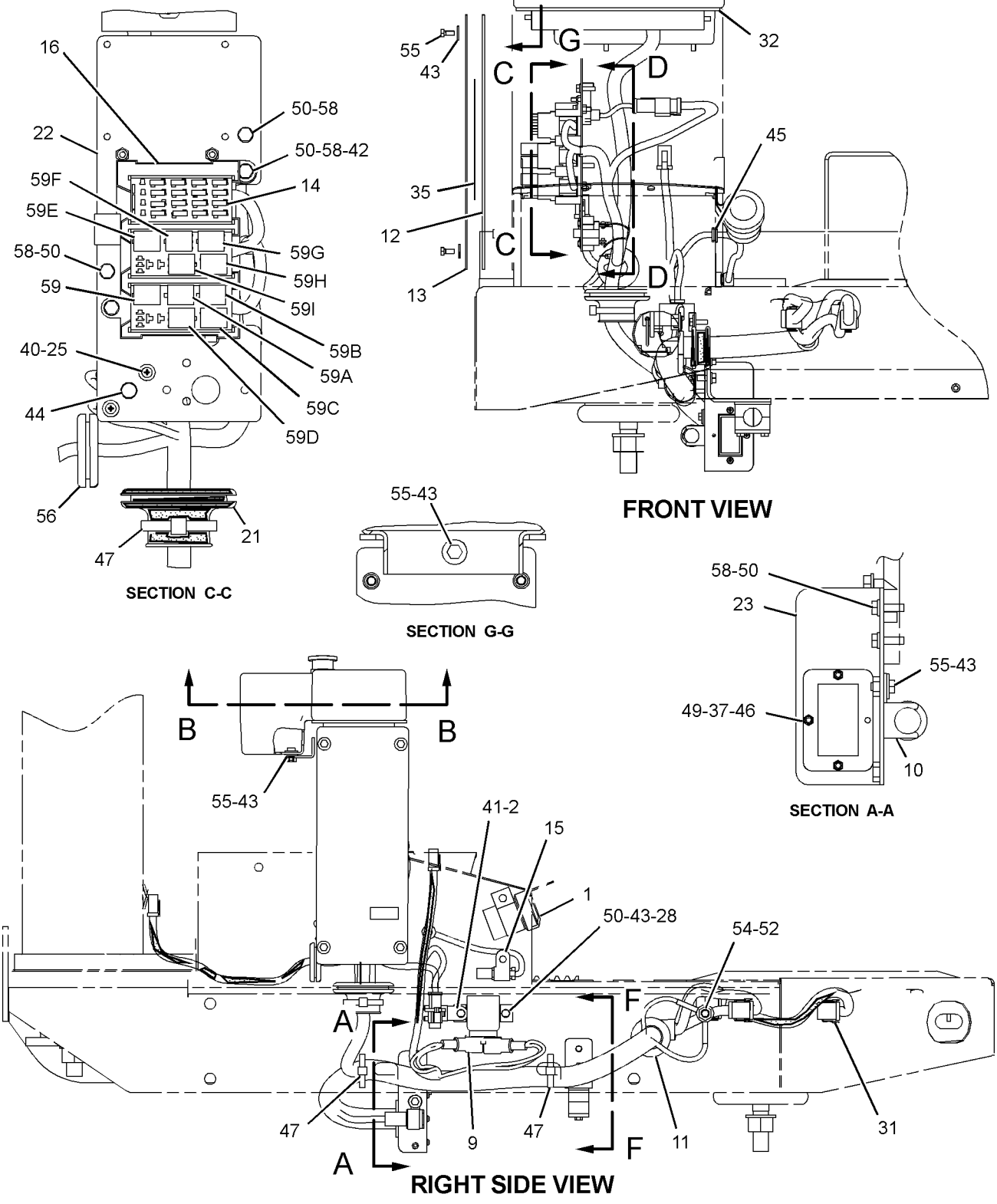

GRAPHIC #1

g01810844

224-1152 **PANEL GP-INSTRUMENT (*contd.*)** **i03640620**

REFER TO ALL ILLUSTRATIONS OF THIS GROUP FOR AUXILIARY VIEWS

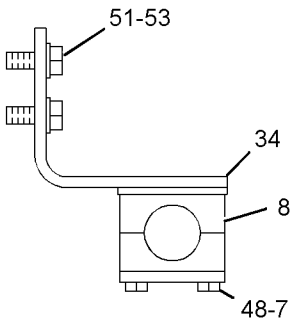

SECTION F-F

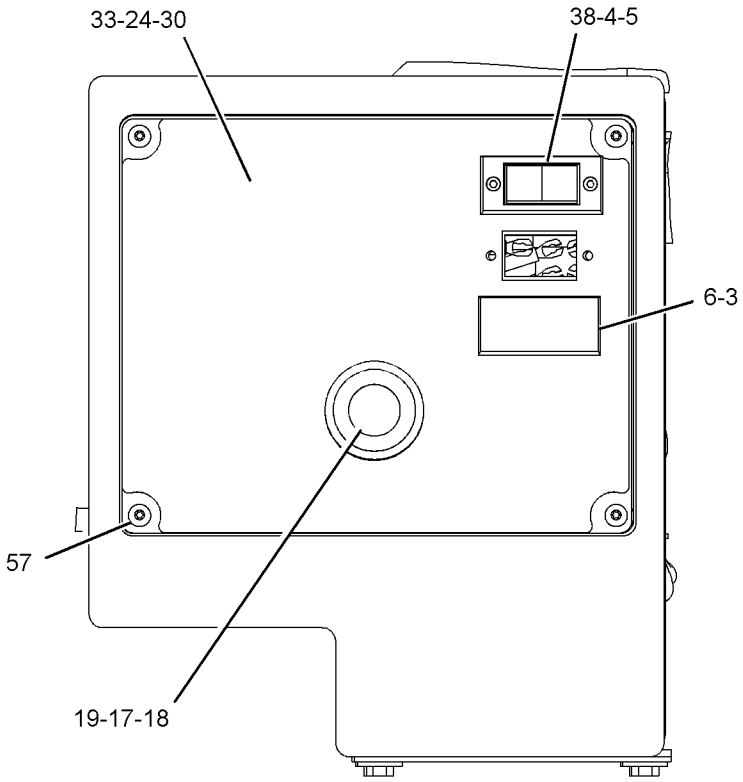

VIEW J-J

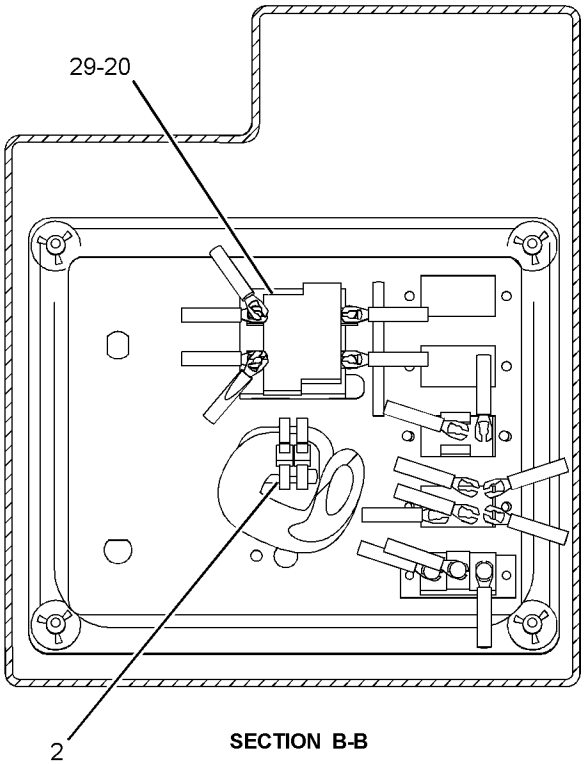

SECTION B-B

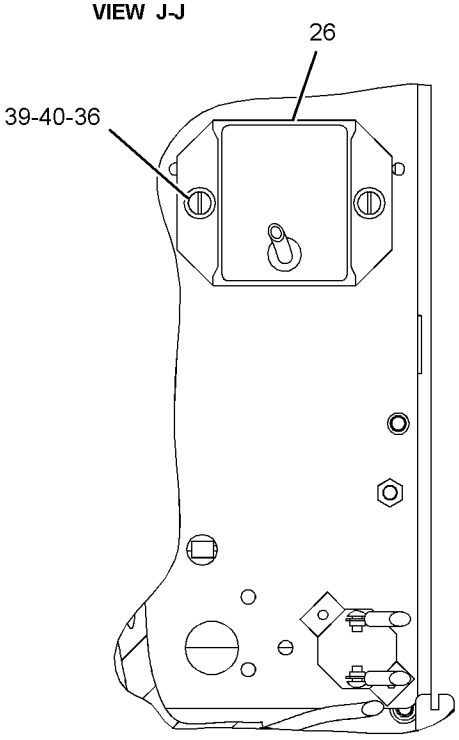

SECTION D-D

GRAPHIC #2 **<END>** g01085385

243-5693 PANEL GP-INSTRUMENT—SIDE CONSOLE

S/N: TJL1-UP

PART OF 227-5594, 227-5595, 348-5640, 348-5641 OPERATOR AR

AN ATTACHMENT

SMCS-7451 **i05432185**

NOTE	REF NO	GRAPHIC REF	PART NUMBER	QTY	PART NAME 1 2 3 4 5 6 (PRODUCT LEVEL)	SEE PAGE
	1	1	**2P-4339**	1	NUT-JAM (7/16-28-THD)	
Y	2	2	**3E-6328**	1	ALARM GP (24-VOLT) (FAULT INDICATOR)	120
	3	2	**3S-2093**	3	STRAP-CABLE	
	4	1	**6T-2774**	6	CLIP	
	5	1	**6T-6329**	2	BEZEL	
	6	1	**6V-8927**	4	BOLT-SOCKET HEAD (6-32X0.5-IN)	
	7	1	**7T-0493**	3	PLUG	
	8	1	**7T-3811**	1	SWITCH AS-ROCKER (FLOOD LIGHTS)	
		1	**3L-8187**	6	LOCKWASHER	
		1	**6V-8374**	6	SCREW-MACHINE (6-32X0.25-IN)	
	9	1	**7T-9302**	1	KNOB AS-WIPER SWITCH	
		1	**014-0816**	1	SETSCREW (8-32X0.5-IN)	
	10	2	**7V-5628**	1	PLATE	
	11	2	**1G-9959**	2	CLAMP	
	12	2	**8T-8799**	2	BOOT (RED)	
	13	2	**9G-9154**	1	CLIP	
	14	2	**9X-7449**	1	GROMMET	
	15	1	**107-6013**	1	SEAL	
	16	1	**107-6072**	1	PLATE	
	17	1	**110-6109**	1	KNOB-CONTROL (FAN SPEED)	
	18	1	**110-7885**	1	KNOB AS-WIPER SWITCH	
		1	**014-0816**	1	SETSCREW (8-32X0.5-IN)	
	19	1	**110-7890**	1	SWITCH AS-ROTARY (24-VOLT) (FAN)	
		1	**3E-3383**	1	WEDGE-RECEPTACLE LOCK (6-PIN)	
		1	**8T-8737**	1	PLUG-SEAL	
		1	**9W-0852**	5	PIN-CONNECTOR (14-GA TO 16-GA)	
		1	**102-8805**	1	KIT-RECEPTACLE (6-PIN)	
					(INCLUDES RECEPTACLE AS & WEDGE)	
	20	1	**112-6174**	1	SWITCH GP-ROTARY (WIPER, WASHER)	
		1	**3E-3389**	1	WEDGE-RECEPTACLE LOCK (8-PIN)	
		1	**2H-3920**	1	LOCKWASHER	
		1	**6V-8369**	1	NUT (7/16-28-THD)	
		1	**8T-8729**	6	PIN-CONNECTOR (16-GA TO 18-GA)	
		1	**8T-8737**	2	PLUG-SEAL	
		1	**102-8806**	1	KIT-RECEPTACLE (8-PIN)	
					(INCLUDES RECEPTACLE AS & WEDGE)	
	21	1	**113-8490**	15	FUSE (10-AMPERE)	
	22	2	**116-0118**	1	CLIP	
	23	1	**116-4159**	1	BASE	
	24	1	**116-5270**	1	LAMP (24-VOLT) (RED)	
	25	1	**116-5274**	1	KNOB (PARKING BRAKE) (RED)	
	26	2	**116-5275**	1	SWITCH GP-PUSH BUTTON (PARKING BRAKE)	
	27	2	**116-6565**	1	BLOCK AS (LIGHT)	
	28	1	**118-7362**	1	GROMMET-SPLIT	
	29	1	**132-7084**	1	SWITCH AS-ROTARY (WIPER, WASHER)	
		1	**3E-3389**	1	WEDGE-RECEPTACLE LOCK (8-PIN)	
		1	**2H-3920**	1	LOCKWASHER	
		1	**6V-8369**	1	NUT (7/16-28-THD)	
		1	**8T-8729**	6	PIN-CONNECTOR (16-GA TO 18-GA)	
		1	**102-8805**	1	KIT-RECEPTACLE (6-PIN)	
					(INCLUDES RECEPTACLE AS & WEDGE)	
	30	1	**139-0234**	1	PLATE	
	31	2	**139-0236**	1	PLATE AS	
M		2	**6V-9632**	2	NUT-WELD (M6X1-THD)	
	32	1	**145-9297**	1	PLATE AS	
		1	**5D-9629**	1	ROD	

243-5693 **PANEL GP-INSTRUMENT (*contd.*)** **i05432185**

NOTE	REF NO	GRAPHIC REF	PART NUMBER	QTY	PART NAME 1 2 3 4 5 6 (PRODUCT LEVEL)	SEE PAGE
		1	**7T-1099**	1	LINK	
	33	1	**153-3606**	1	HOUSING AS	
	34	1	**9X-8486**	2	SCREW-MACHINE (8-32X0.75-IN)	
	35	1	**228-9108**	1	MODULE GP-TIMER	
Y	36	2	*167-0138*	1	SWITCH GP-MAGNETIC (24-VOLT) (MAIN POWER RELAY)	165
C	37	2	**116-5277**	1	BLOCK (CONTACT)	
	38	2	**193-8565**	1	HARNESS AS-PANEL (SIDE CONSOLE)	
		1	**112-9609**	2	BLOCK-MICRORELAY	
		1	**124-9636**	1	BLOCK-MINIFUSE	
		1	**9G-4351**	1	HOUSING-RECEPTACLE (4-GA TO 6-GA)	
		1	**112-9610**	4	LOCK-MICRORELAY	
		1	**124-9637**	1	LOCK-MINIFUSE	
		1	**8N-1546**	1	PIN-CONNECTOR (6-GA)	
		1	**9X-3401**	24	PIN-CONNECTOR (16-GA TO 18-GA)	
					—OR—	
		1	**126-1767**	24	PIN-CONNECTOR (14-GA TO 16-GA)	
		1	**155-2255**	1	KIT-CONNECTING PLUG (12-PIN)	
		1	**155-2265**	2	KIT-CONNECTING PLUG (8-PIN)	
		1	**155-2270**	1	KIT-CONNECTING PLUG (2-PIN)	
		1	**155-2271**	2	KIT-CONNECTING PLUG (4-PIN)	
		1	**155-2274**	1	KIT-CONNECTING PLUG (6-PIN)	
					(EACH PLUG KIT INCLUDES PLUG AS, WEDGE & INTERFACE SEAL)	
		1	**8T-8737**	5	PLUG-SEAL	
		1	**102-8802**	1	KIT-RECEPTACLE (2-PIN)	
					(INCLUDES RECEPTACLE AS & WEDGE)	
		1	**9X-0145**	1	RECEPTACLE AS-CONNECTOR (24-PIN)	
		1	**194-5226**	41	WIRE AS (16-GA)	
					—OR—	
		1	**194-5227**	41	WIRE AS (14-GA)	
		1	**5P-2321**	16	TERMINAL-FORK (14-GA TO 16-GA, NO. 6 SCREW)	
		1	**5P-3454**	1	TERMINAL-RING (4-GA, 5/16-IN SCREW)	
		1	**2L-8051**	1	TERMINAL-RING (6-GA, 5/16-IN SCREW)	
					—OR—	
		1	**5P-3455**	1	TERMINAL-RING (8-GA, 5/16-IN SCREW)	
		1	**2L-8065**	1	TERMINAL-RING (10-GA TO 12-GA, NO. 8 SCREW)	
		1	**2L-8071**	2	TERMINAL-RING (10-GA TO 12-GA, 1/2-IN SCREW)	
		1	*286-7193*	1	TERMINAL AS-RING	
E		1	**125-7874**		TUBE-HEAT SHRINK (5.72-MM DIA) (3-CM)	
		1	**112-9611**	14	TERMINAL-BLADE	
		1	**112-9612**	27	TERMINAL-BLADE	
		1	**116-4161**	9	TERMINAL-BLADE (16-GA TO 18-GA)	
		1	**113-5100**	4	TERMINAL-BUS	
	39	1	**198-1506**	1	FILM-INSTRUMENT (PANEL)	
	40	1	**206-5108**	1	SEAL	
	41	1	**206-5109**	1	SEAL	
	42	2	**225-8541**	1	PLATE AS	
	43	1	**230-9092**	1	FILM-FUSE/RELAY	
	44	2	**243-5696**	1	HARNESS AS-CAB	
		1	**155-2255**	1	KIT-CONNECTING PLUG (12-PIN)	
		1	**155-2265**	1	KIT-CONNECTING PLUG (8-PIN)	
		1	**155-2270**	1	KIT-CONNECTING PLUG (2-PIN)	
		1	**155-2274**	3	KIT-CONNECTING PLUG (6-PIN)	
					(EACH PLUG KIT INCLUDES PLUG AS, WEDGE & INTERFACE SEAL)	
		1	**8T-8737**	11	PLUG-SEAL	
		1	**102-8802**	1	KIT-RECEPTACLE (2-PIN)	
					(INCLUDES RECEPTACLE AS & WEDGE)	
		1	**8T-8730**	31	SOCKET-CONNECTOR (16-GA TO 18-GA)	
		1	**5P-2321**	3	TERMINAL-FORK (14-GA TO 16-GA, NO. 6 SCREW)	

243-5693 **PANEL GP-INSTRUMENT (*contd.*)** **i05432185**

NOTE	REF NO	GRAPHIC REF	PART NUMBER	QTY	PART NAME 1 2 3 4 5 6 (PRODUCT LEVEL)	SEE PAGE
		1	**2L-8054**	1	TERMINAL-RING (6-GA, 1/2-IN SCREW)	
					—OR—	
		1	**2L-8061**	1	TERMINAL-RING (8-GA, 1/2-IN SCREW)	
		1	**7T-6364**	4	TERMINAL-BLADE (12-GA TO 16-GA)	
		1	**116-4161**	3	TERMINAL-BLADE (16-GA TO 18-GA)	
E		1	**125-7874**		TUBE-HEAT SHRINK (5.72-MM DIA) (20-CM)	
	45	1	**031-0249**	2	LOCKNUT (10-24-THD)	
	46	2	**096-6166**	3	WASHER-HARD (4.5X9X1-MM THK)	
	47	1	**144-0900**	1	SWITCH AS-ROCKER (VIBRATORY SELECT)	
		1	**3L-8187**	3	LOCKWASHER	
		1	**6V-8374**	3	SCREW-MACHINE (6-32X0.25-IN)	
	48	1	**2H-3920**	1	LOCKWASHER	
C	49	1	**2N-3480**	2	SCREW-MACHINE (10-24X0.75-IN)	
	50	1	**4B-4274**	4	WASHER (5.5X13X1.2-MM THK)	
	51	2	**4P-7581**	1	CLIP	
M	52	1	**5C-2890**	2	NUT (M6X1-THD)	
	53	1,2	**5P-4115**	11	WASHER-HARD (7.2X19X2-MM THK)	
	54	1	**6P-0699**	2	GROMMET	
	55	1	**6T-3643**	1	CIRCUIT BREAKER AS (15-AMPERE) (KEY SWITCH)	
		1	**6V-8376**	2	SCREW-MACHINE (8-32X0.25-IN)	
		1	**9B-7233**	2	LOCKWASHER	
	56	1	**6V-3970**	1	GROMMET	
M	57	2	**6V-9491**	3	SCREW-MACHINE (M4X0.7X20-MM)	
	58	1,2	**7K-1181**	3	STRAP-CABLE	
M	59	2	**8C-8451**	2	BOLT (M6X1X40-MM)	
M	60	2	**8T-2659**	3	LOCKNUT (M4X0.7-THD)	
M	61	1,2	**8T-4138**	8	BOLT (M6X1X20-MM)	
M	62	2	**8T-4189**	2	BOLT (M8X1.25X20-MM)	
	63	2	**8T-4223**	1	WASHER-HARD (13.5X25.5X3-MM THK)	
	64	2	**8T-4224**	2	WASHER-HARD (8.8X16X2-MM THK)	
M	65	2	**8T-4244**	1	NUT (M12X1.75-THD)	
M	66	1,2	**8T-4970**	9	BOLT (M6X1X14-MM)	
D	67	1	**8T-3426**		CHANNEL-TRIM (0.2-M)	
M	68	1	**9X-1046**	4	SCREW (M4X0.7X18-MM)	
	69	1,2	**9X-8256**	6	WASHER (6.6X12X2-MM THK)	
	70	1	**158-5089**	1	RELAY AS (24-VOLT) (HYDRAULIC OIL PRESSURE)	
	70A	1	**158-5089**	1	RELAY AS (24-VOLT) (BRAKE ONE)	
	70B	1	**158-5089**	1	RELAY AS (24-VOLT) (BRAKE TWO)	
	70C	1	**158-5089**	1	RELAY AS (24-VOLT) (NEUTRAL START ONE)	
	70D	1	**158-5089**	1	RELAY AS (24-VOLT) (NEUTRAL START TWO)	
	70E	1	**158-5089**	1	RELAY AS (24-VOLT) (WARNING LIGHT)	
	70F	1	**158-5089**	1	RELAY AS (24-VOLT) (HYDRAULIC OIL TEMPERATURE)	
	70G	1	**158-5089**	1	RELAY AS (24-VOLT) (FUNCTIONAL LIGHT)	
	70H	1	**158-5089**	1	RELAY AS (24-VOLT) (COOLANT TEMPERATURE)	
	70J	1	**158-5089**	1	RELAY AS (24-VOLT) (ENGINE OIL PRESSURE)	
	71	1	**113-8491**	1	FUSE (15-AMPERE)	

C - CHANGE FROM PREVIOUS TYPE
D - ORDER BY THE METER
E - ORDER BY THE CENTIMETER
M - METRIC PART
Y - SEPARATE ILLUSTRATION

243-5693 **PANEL GP-INSTRUMENT** (*contd.*) **i05432185**

REFER TO ALL ILLUSTRATIONS OF THIS GROUP FOR AUXILIARY VIEWS

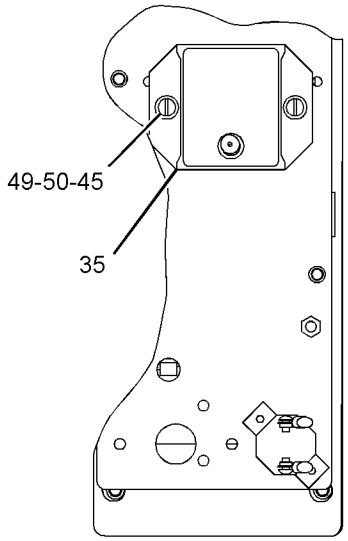

VIEW D-D

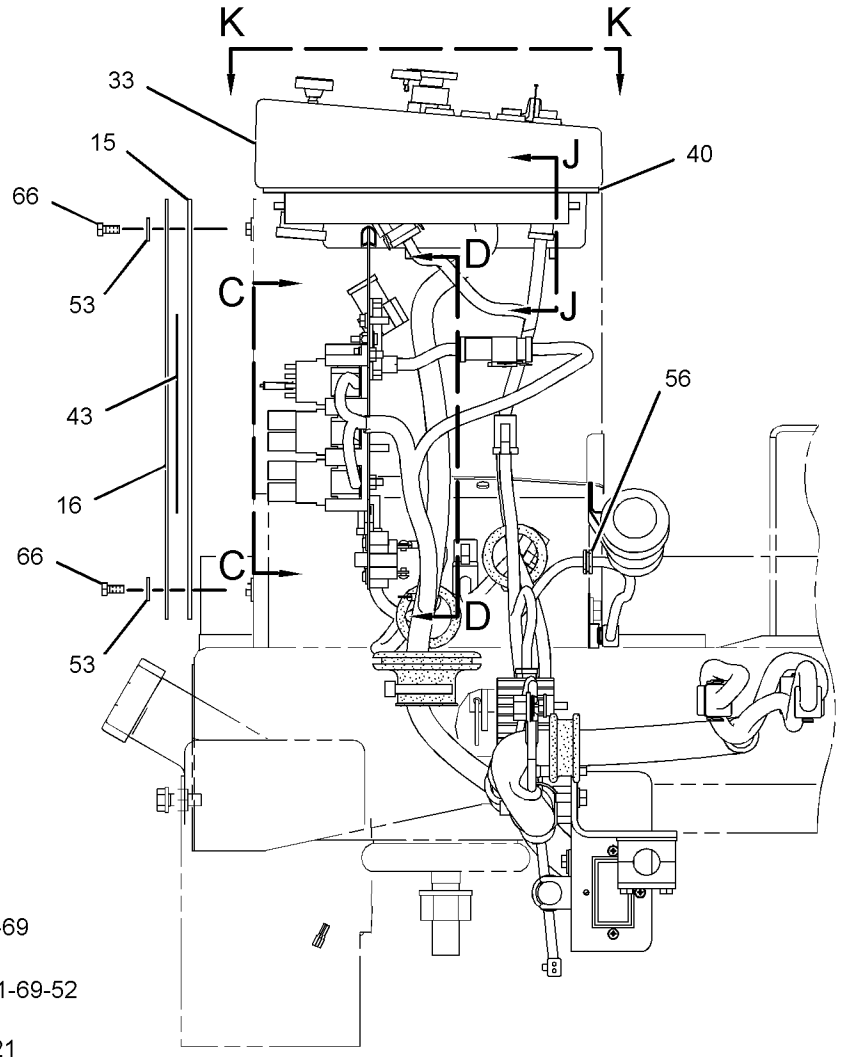

FRONT VIEW

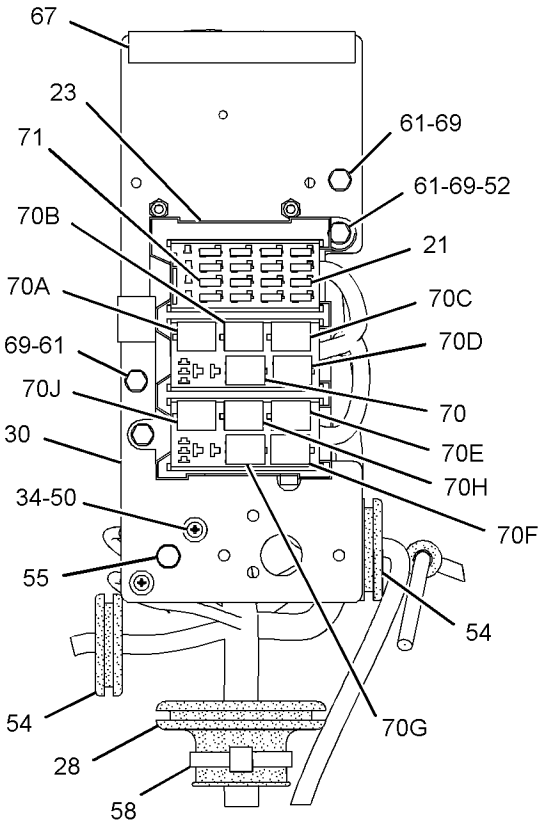

VIEW C-C

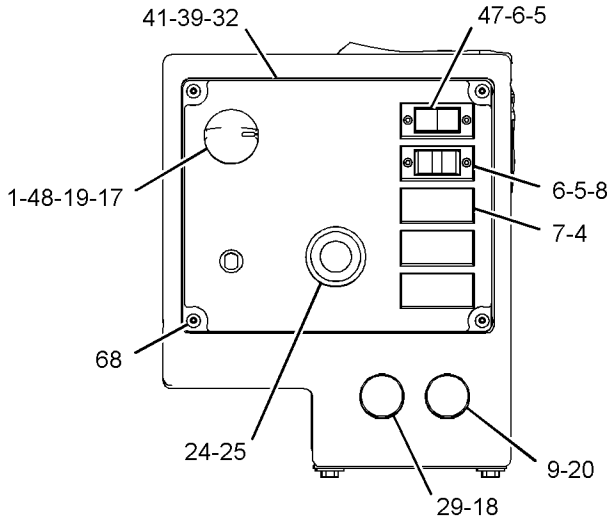

VIEW K-K

GRAPHIC #1

g03423826

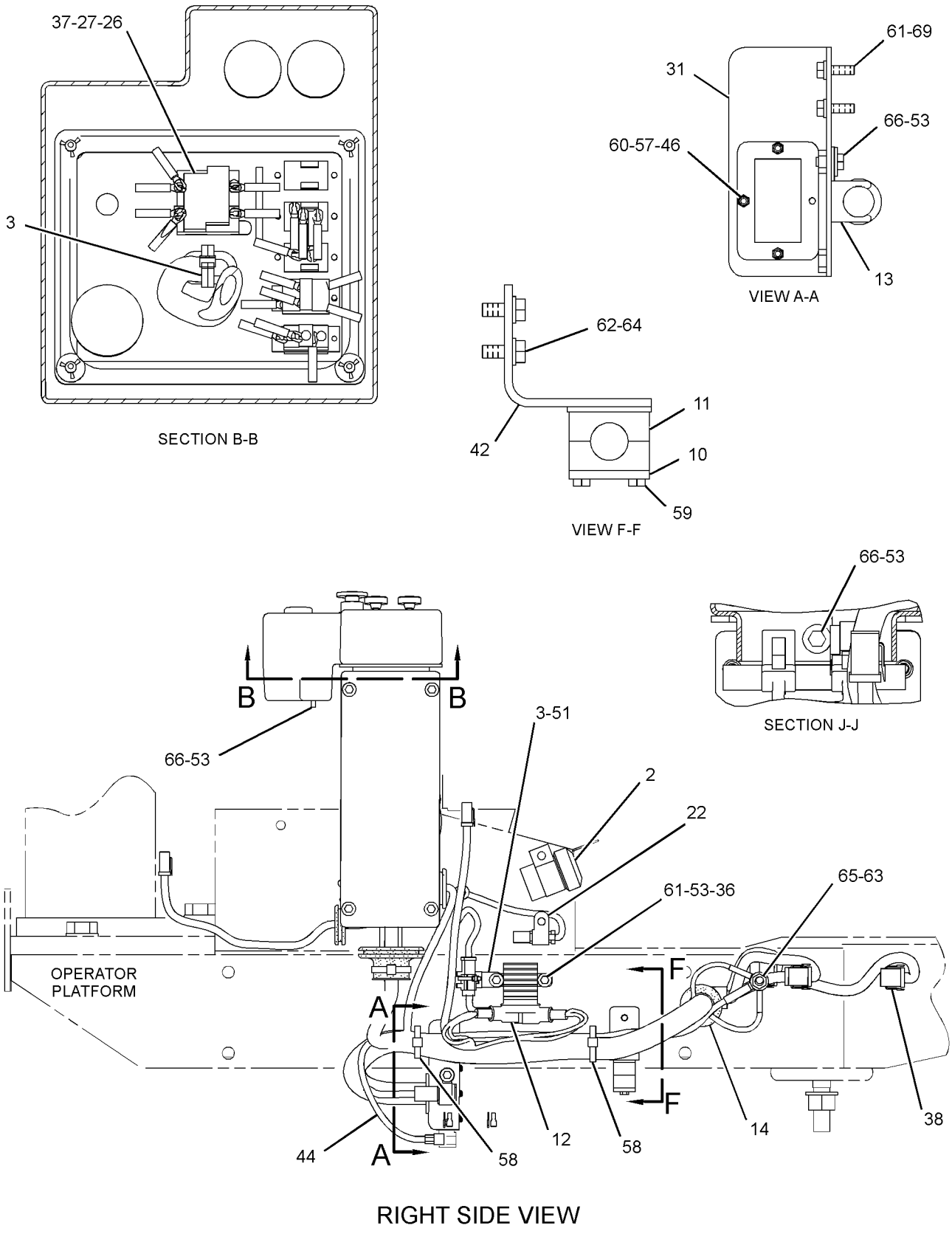

RIGHT SIDE VIEW

GRAPHIC #2 **<END>** g03423827

253-9940 PANEL GP-INSTRUMENT—CENTER CONSOLE

S/N: TJL1-2531

PART OF 227-5594, 227-5595, 348-5640, 348-5641 OPERATOR AR

AN ATTACHMENT

SMCS-7451 **i03649827**

NOTE	REF NO	GRAPHIC REF	PART NUMBER	QTY	PART NAME 1 2 3 4 5 6 (PRODUCT LEVEL)	SEE PAGE
	1	2	*2N-2371*	1	LAMP AS-INDICATOR (RED) (ALTERNATOR)	
		2	**2V-7088**	1	LENS-RED	
		2	**6V-8367**	1	LOCKWASHER	
		2	**6V-8382**	1	NUT-HEX (11/16-27-THD)	
		2	**6V-8817**	2	SCREW-MACHINE (4-36X4.76-IN)	
	2	2	**2V-7087**	1	LENS-AMBER (ALTERNATOR)	
	3	2	**3S-2093**	1	STRAP-CABLE	
	4	2	**9X-9099**	2	SWITCH AS-ROCKER (SPEED SELECT)	
					(EACH INCLUDES)	
		2	**3L-8187**	6	LOCKWASHER	
		2	**6V-8374**	6	SCREW-MACHINE (6-32X0.25-IN)	
	5	2	**5P-8500**	2	KEY	
	6	2	**6T-6329**	3	BEZEL	
	7	2	**6V-8927**	6	BOLT-SOCKET HEAD (6-32X0.5-IN)	
	8	1	**6Y-6584**	1	STRAP AS-GROUND	
	9	2	**7N-5876**	1	LAMP (24-VOLT, 0.2-AMPERE) (ALTERNATOR INDICATOR)	
	10	2	**104-6216**	1	PLUG	
	11	1	**105-3542**	3	DIODE GP (INSTRUMENT)	
	12	2	**110-7887**	1	SWITCH AS-START (KEY)	
		2	**7T-6799**	1	NUT-MOUNTING (1-32-THD)	
		2	**102-8804**	1	KIT-RECEPTACLE (4-PIN)	
					(INCLUDES RECEPTACLE AS & WEDGE)	
		2	**186-3735**	4	PIN-CONNECTOR (16-GA TO 18-GA)	
Y	13	2	**155-5234**	1	GAUGE GP-FUEL LEVEL (24-VOLT)	409
	14	1	**121-5327**	1	GROMMET	
	15	2	**128-8617**	1	PLATE AS	
	16	2	**129-7184**	1	FILM-INSTRUCTION (ENGINE START)	
Y	17	2	**135-2929**	1	MODULE GP-WARNING INDICATOR (ENGINE TEMPERATURE)	439
	18	2	**145-9296**	1	PLATE	
	19	1	**163-1201**	1	HORN AS (24-VOLT, LOW TONE)	
M	20	2	**9X-2045**	1	SCREW-TRUSS HEAD (M6X1X20-MM)	
	21	1	**267-3060**	1	HARNESS AS-PANEL (FRONT CONSOLE)	
		1	**117-2979**	1	CONNECTOR-RECEPTACLE	
		1	**117-2978**	6	CONTACT-CONNECTION	
		1	**9X-3401**	26	PIN-CONNECTOR (16-GA TO 18-GA)	
		1	**155-2265**	3	KIT-CONNECTING PLUG (8-PIN)	
		1	**155-2270**	1	KIT-CONNECTING PLUG (2-PIN)	
		1	**155-2271**	1	KIT-CONNECTING PLUG (4-PIN)	
					(EACH PLUG KIT INCLUDES PLUG AS, WEDGE & INTERFACE SEAL)	
		1	**8T-8737**	15	PLUG-SEAL	
		1	**102-8806**	2	KIT-RECEPTACLE (8-PIN)	
		1	**102-8801**	1	KIT-RECEPTACLE (12-PIN)	
					(EACH RECEPTACLE KIT INCLUDES RECEPTACLE AS & WEDGE)	
		1	**180-9340**	17	SOCKET-CONNECTOR (14-GA TO 18-GA)	
		1	**5P-4571**	5	TERMINAL-BLADE (14-GA TO 16-GA)	
		1	**5P-2321**	16	TERMINAL-FORK (14-GA TO 16-GA, NO. 6 SCREW)	
		1	**200-2213**	1	HARNESS AS-WIRING (3-PIN, GAUGE)	
	22	1	**301-7292**	1	KIT-SERVICE METER	
					(INCLUDES METER & FILM)	
	23	1	**198-9137**	1	BRACKET	
	24	1	**229-2313**	1	HOUSING AS	
	25	2	**230-5455**	1	PLATE	

253-9940 **PANEL GP-INSTRUMENT (*contd.*)** **i03649827**

NOTE	REF NO	GRAPHIC REF	PART NUMBER	QTY	PART NAME 1 2 3 4 5 6 (PRODUCT LEVEL)	SEE PAGE
	26	2	**230-8093**	1	FILM-IDENTIFICATION (INSTRUMENT PANEL)	
	27	1	**248-7650**	1	GUARD	
	28	2	**252-9205**	1	FASTENER	
	29	1	**253-9942**	1	HARNESS AS-AUXILIARY (HORN)	
		1	**8T-8729**	2	PIN-CONNECTOR (16-GA TO 18-GA)	
		1	**155-2270**	1	KIT-CONNECTING PLUG (2-PIN)	
					(INCLUDES PLUG AS, WEDGE & INTERFACE SEAL)	
		1	**102-8802**	1	KIT-RECEPTACLE (2-PIN)	
					(INCLUDES RECEPTACLE AS & WEDGE)	
		1	**8T-8730**	2	SOCKET-CONNECTOR (16-GA TO 18-GA)	
	30	1,2	**4P-8134**	2	CLIP	
M	31	2	**5C-2890**	3	NUT (M6X1-THD)	
	32	2	**5P-4115**	1	WASHER-HARD (7.2X19X2-MM THK)	
	33	2	**6P-0699**	1	GROMMET	
	34	2	**6T-6066**	1	SWITCH AS-ROCKER (STARTING AID)	
		2	**3L-8187**	2	LOCKWASHER	
		2	**6V-8374**	2	SCREW-MACHINE (6-32X0.25-IN)	
M	35	1	**6V-8212**	1	BOLT (M10X1.5X16-MM)	
	36	1,2	**7K-1181**	10	STRAP-CABLE	
	37	1	**8D-1470**	1	GROMMET	
	38	1	**8T-4121**	11	WASHER-HARD (11X21X2.5-MM THK)	
M	39	1	**8T-4133**	1	NUT (M10X1.5-THD)	
M	40	1	**8T-4136**	1	BOLT (M10X1.5X25-MM)	
M	41	1	**8T-4186**	2	BOLT (M10X1.5X40-MM)	
	42	2	**8T-4205**	2	WASHER-HARD (7.2X14.5X2-MM THK)	
	43	1	**8T-4223**	2	WASHER-HARD (13.5X25.5X3-MM THK)	
M	44	1	**8T-4244**	2	NUT (M12X1.75-THD)	
M	45	2	**9X-1046**	10	SCREW (M4X0.7X18-MM)	
M	46	1	**9X-2041**	6	SCREW-TRUSS HEAD (M10X1.5X20-MM)	
M	47	1	**9X-2042**	2	SCREW-TRUSS HEAD (M6X1X12-MM)	
	48	1	**237-2711**	1	SEAL	
	49	1	**219-1672**	1	SEAL	
D	50	1	**6V-2689**		TUBE-HEAT SHRINK (6.35-MM DIA) (0.03-M EACH)	

D - ORDER BY THE METER
M - METRIC PART
Y - SEPARATE ILLUSTRATION

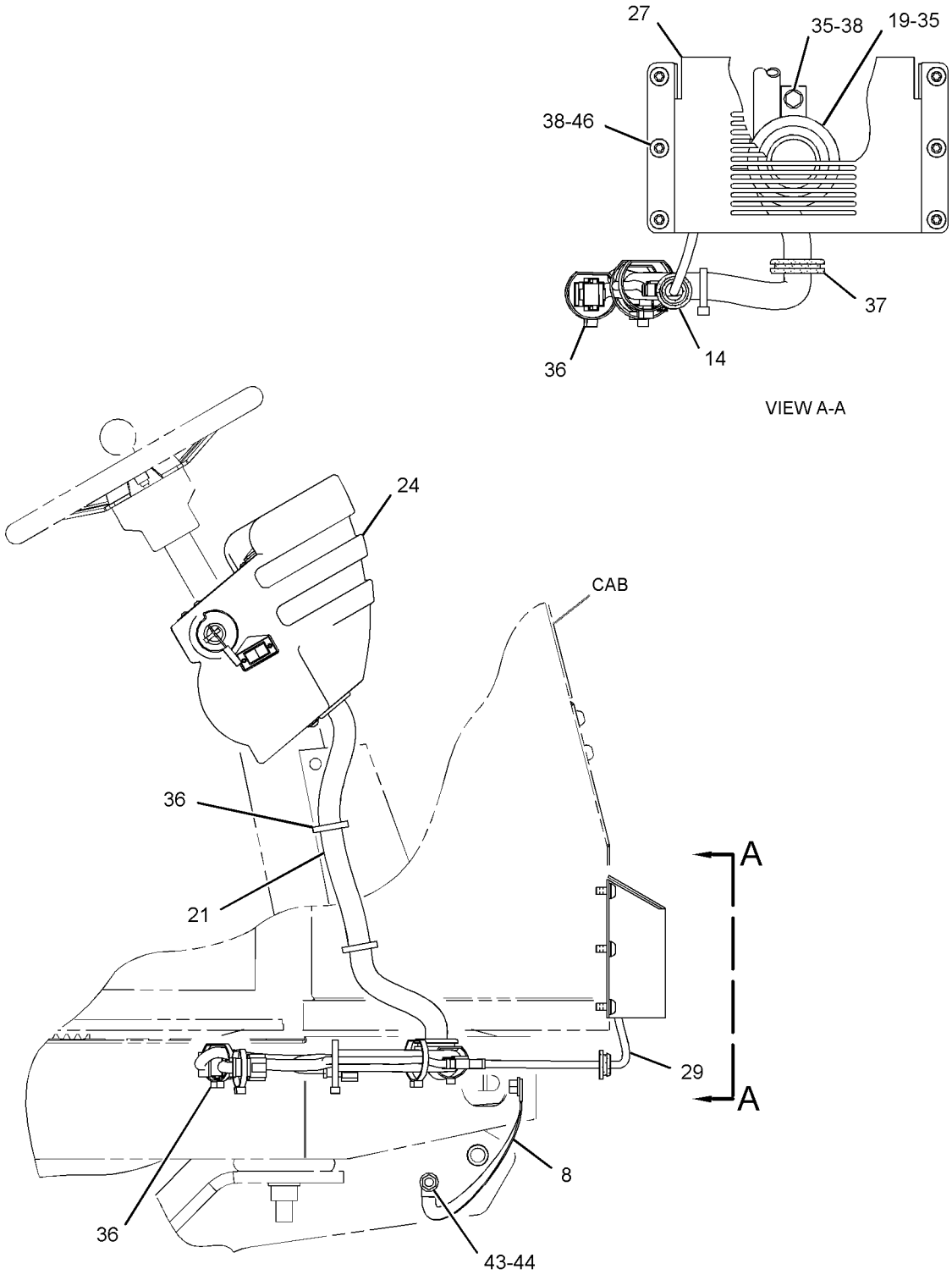

RIGHT SIDE VIEW

GRAPHIC #1 g01778236

253-9940 **PANEL GP-INSTRUMENT (*contd.*)** **i03649827**

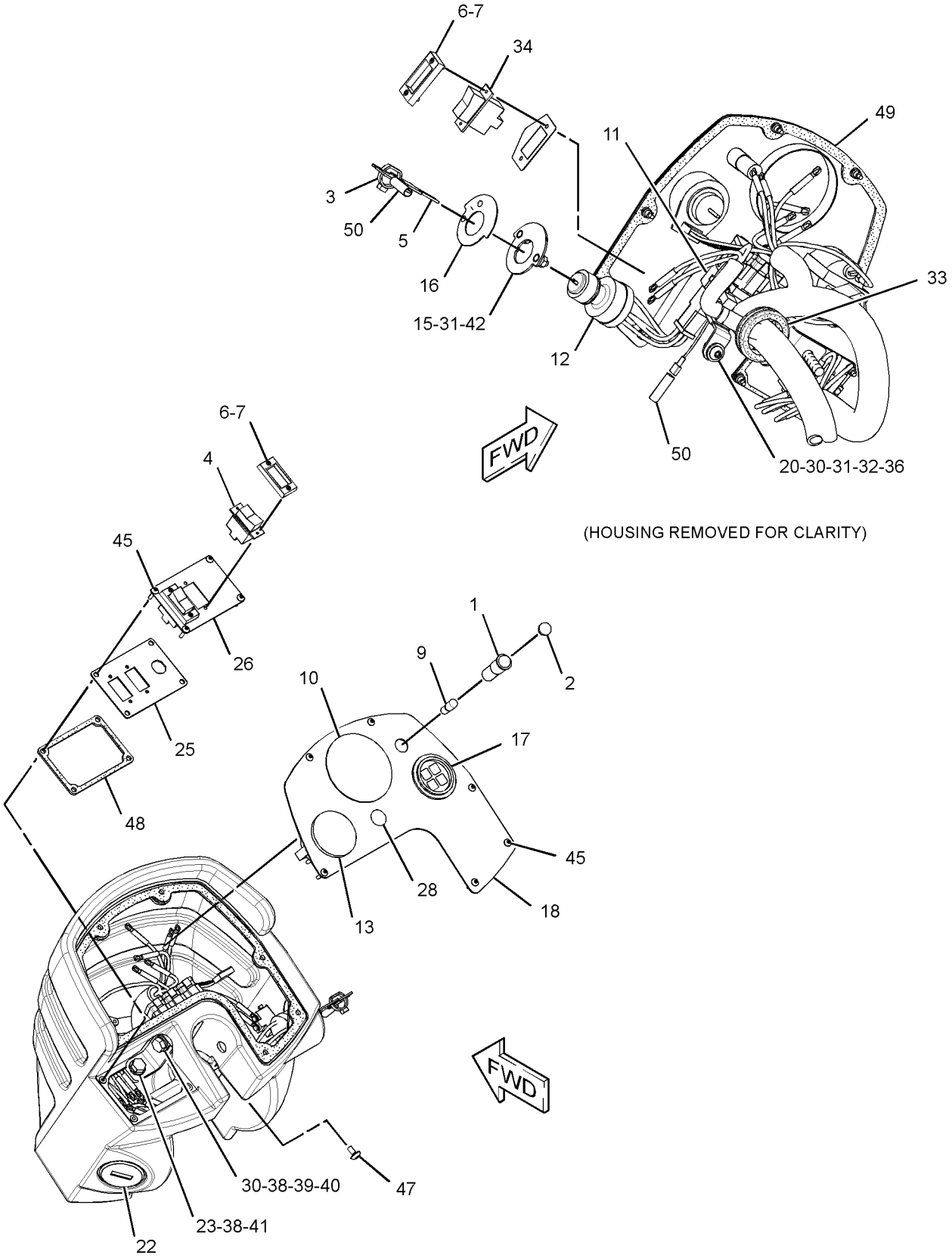

GRAPHIC #2 **<END>** g01778253

OPERATOR STATION

389-9450 PANEL GP-INSTRUMENT—CENTER CONSOLE

S/N: TJL2532-UP

PART OF 348-5640, 348-5641 OPERATOR AR

AN ATTACHMENT

SMCS-7451 **i05371397**

NOTE	REF NO	GRAPHIC REF	PART NUMBER	QTY	PART NAME 1 2 3 4 5 6 (PRODUCT LEVEL)	SEE PAGE
	1	2	**9X-9099**	2	SWITCH AS-ROCKER (SPEED SELECT)	
					(EACH INCLUDES)	
		2	**3L-8187**	6	LOCKWASHER	
		2	**6V-8374**	6	SCREW-MACHINE (6-32X0.25-IN)	
	2	2	**2V-7087**	2	LENS-AMBER	
	3	2	**3S-2093**	1	STRAP-CABLE	
	4	2	**5P-8500**	2	KEY	
	5	2	**6T-6329**	3	BEZEL	
	6	2	**6V-8927**	6	BOLT-SOCKET HEAD (6-32X0.5-IN)	
	7	1	**6Y-6584**	1	STRAP AS-GROUND	
	8	2	**7N-5876**	2	LAMP (24-VOLT, 0.2-AMPERE)	
B	9	2	**104-6216**	1	PLUG	
	10	2	**105-3542**	3	DIODE GP	
	11	2	**110-7887**	1	SWITCH AS-START (KEY)	
		2	**7T-6799**	1	NUT-MOUNTING (1-32-THD)	
		2	**8T-8729**	4	PIN-CONNECTOR (16-GA TO 18-GA)	
		2	**102-8804**	1	KIT-RECEPTACLE (4-PIN)	
					(INCLUDES RECEPTACLE AS & WEDGE)	
	12	1	**121-5327**	1	GROMMET	
	13	2	**128-8617**	1	PLATE AS	
	14	2	**129-7184**	1	FILM-INSTRUCTION (ENGINE START)	
Y	15	2	**135-2929**	1	MODULE GP-WARNING INDICATOR	439
Y	16	2	**155-5234**	1	GAUGE GP-FUEL LEVEL (24-VOLT)	409
	17	1	**163-1201**	1	HORN AS (24-VOLT, LOW TONE)	
	18	2	**180-8576**	1	PLATE-IDENTIFICATION	
	19	2	**219-1672**	1	SEAL	
	20	1	**229-2313**	1	HOUSING AS	
	21	2	**230-5455**	1	PLATE	
	22	2	**230-8093**	1	FILM-IDENTIFICATION (INSTRUMENT PANEL)	
	23	2	**237-2711**	1	SEAL	
	24	1	**248-7650**	1	GUARD	
	25	1	**253-9942**	1	HARNESS AS-AUXILIARY	
		1	**8T-8729**	2	PIN-CONNECTOR (16-GA TO 18-GA)	
		1	**155-2270**	1	KIT-CONNECTING PLUG (2-PIN)	
					(INCLUDES PLUG AS, WEDGE & INTERFACE SEAL)	
		1	**102-8802**	1	KIT-RECEPTACLE (2-PIN)	
					(INCLUDES RECEPTACLE AS & WEDGE)	
		1	**8T-8730**	2	SOCKET-CONNECTOR (16-GA TO 18-GA)	
Y	26	1	**267-3060**	1	HARNESS AS-PANEL (FRONT CONSOLE)	128
	27	2	**300-3282**	2	BASE AS-LIGHT	
	28	2	**362-0288**	1	KIT-SERVICE METER	
					(INCLUDES SERVICE METER & SERVICE METER FILM)	
	29	2	**389-6370**	1	FILM-IDENTIFICATION (MOISTURE IN FUEL)	
	30	2	**398-6791**	1	PLATE	
	31	1	**390-1766**	1	HARNESS AS-PANEL	
		1	**9X-3401**	2	PIN-CONNECTOR (16-GA TO 18-GA)	
		1	**102-8802**	1	KIT-RECEPTACLE (2-PIN)	
					(INCLUDES RECEPTACLE AS & WEDGE)	
		1	*162-4171*	2	TERMINAL AS (18-GA TO 20-GA)	
		1	**5P-1475**	1	TERMINAL-FORK (14-GA TO 16-GA, NO. 8 SCREW)	
E		1	**125-7875**		TUBE-HEAT SHRINK (7.44-MM DIA) (4-CM)	
	32	1,2	**4P-8134**	2	CLIP	
M	33	1,2	**5C-2890**	3	NUT (M6X1-THD)	
	34	1,2	**5P-4115**	4	WASHER-HARD (7.2X19X2-MM THK)	
	35	1	**6P-0699**	1	GROMMET	
	36	2	**6T-6066**	1	SWITCH AS-ROCKER (START AID)	

389-9450 **PANEL GP-INSTRUMENT (*contd.*)** **i05371397**

NOTE	REF NO	GRAPHIC REF	PART NUMBER	QTY	PART NAME 1 2 3 4 5 6 (PRODUCT LEVEL)	SEE PAGE
		2	**3L-8187**	2	LOCKWASHER	
		2	**6V-8374**	2	SCREW-MACHINE (6-32X0.25-IN)	
M	37	1	**6V-8212**	1	BOLT (M10X1.5X16-MM)	
	38	1,2	**7K-1181**	20	STRAP-CABLE	
	39	1	**8D-1470**	1	GROMMET	
	40	1	**8T-4121**	7	WASHER-HARD (11X21X2.5-MM THK)	
	41	1	**8T-4223**	2	WASHER-HARD (13.5X25.5X3-MM THK)	
M	42	1	**8T-4244**	2	NUT (M12X1.75-THD)	
M	43	2	**9X-1046**	10	SCREW (M4X0.7X18-MM)	
M	44	1	**9X-2041**	6	SCREW-TRUSS HEAD (M10X1.5X20-MM)	
M	45	1	**9X-2042**	2	SCREW-TRUSS HEAD (M6X1X12-MM)	
M	46	1,2	**9X-2045**	2	SCREW-TRUSS HEAD (M6X1X20-MM)	
D	47	1	**6V-2689**		TUBE-HEAT SHRINK (6.35-MM DIA) (0.025-M)	

B - USE AS REQUIRED
D - ORDER BY THE METER
E - ORDER BY THE CENTIMETER
M - METRIC PART
Y - SEPARATE ILLUSTRATION

REFER TO ALL ILLUSTRATIONS OF
THIS GROUP FOR AUXILIARY VIEWS

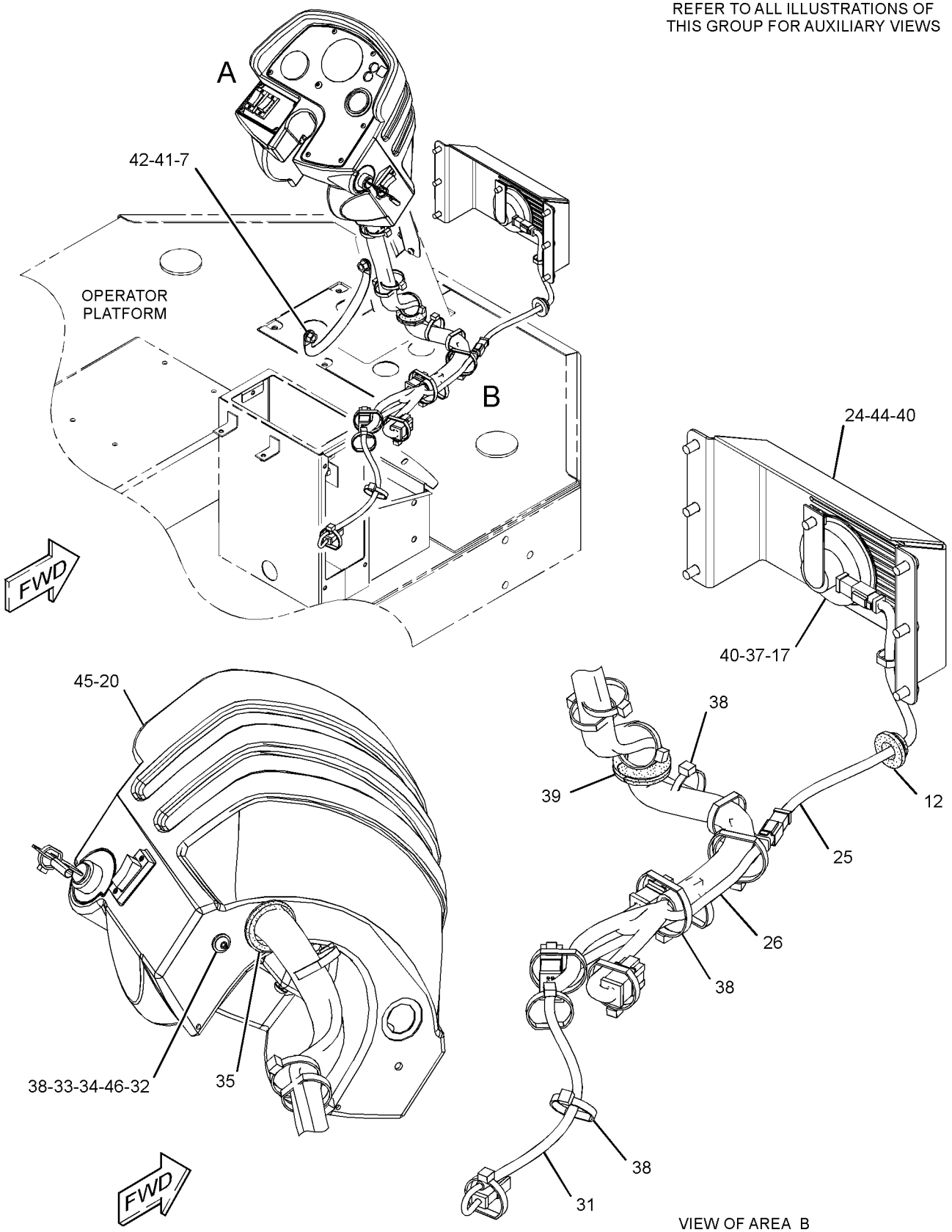

VIEW OF AREA B

GRAPHIC #1

g03136717

389-9450 **PANEL GP-INSTRUMENT (*contd.*)** **i05371397**

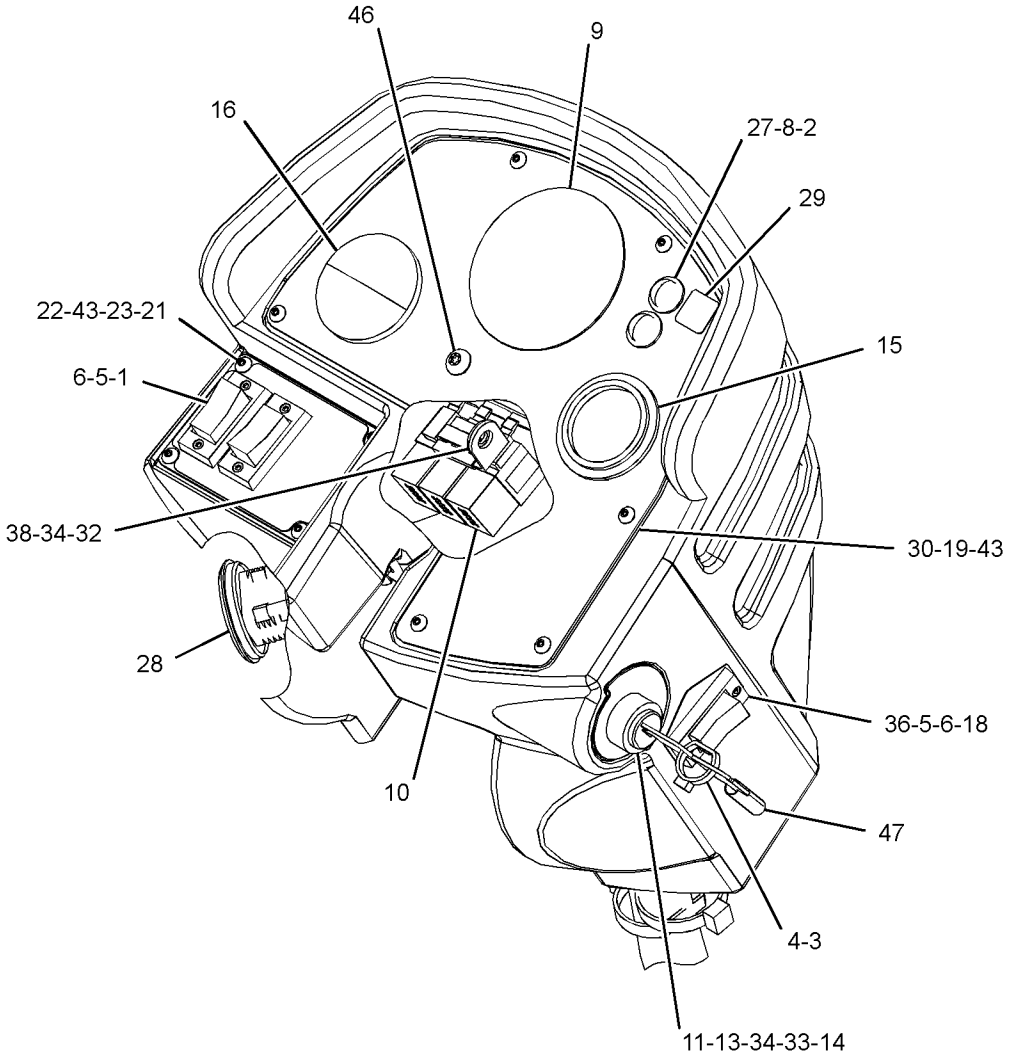

VIEW OF AREA A

GRAPHIC #2 **<END>** g03137200

235-0511 PLATFORM GP-OPERATOR

S/N: TJL1-UP

PART OF 219-4171, 224-1151 OPERATOR AR, 348-5642, 348-5643 OPERATOR AR-OPEN ROPS

AN ATTACHMENT

SMCS-7253 **i03045537**

NOTE	REF NO	GRAPHIC REF	PART NUMBER	QTY	PART NAME 1 2 3 4 5 6 (PRODUCT LEVEL)	SEE PAGE
	1	1	**3E-4883**	4	SLEEVE	
	2	1	**9W-7388**	4	WASHER (26X144X12-MM THK)	
	3	1	**9W-9931**	2	MOUNT AS	
	4	1	**054-8974**	4	PIN	
	5	1	**314-6915**	1	FLOOR MAT	
	6	1	**159-4026**	2	SLEEVE	
	7	1	**227-2550**	1	COVER AS	
M		1	**8T-3490**	2	NUT-WELD (M10X1.5-THD)	
	8	1	**235-0374**	1	FLOORPLATE AS	
	9	1	**156-1141**	2	MOUNT AS	
M	10	1	**7X-2465**	2	BOLT (M24X3X180-MM)	
M	11	1	**7X-2567**	2	BOLT (M24X3X160-MM)	
M	12	1	**8T-4001**	4	NUT (M24X3-THD)	
	13	1	**8T-4167**	8	WASHER-HARD (26X44X4-MM THK)	
M	14	1	**8T-4189**	4	BOLT (M8X1.25X20-MM)	
	15	1	**8T-4224**	4	WASHER-HARD (8.8X16X2-MM THK)	
	16	1	**8Y-8606**	1	GROMMET	
	17	1	**1L-6366**	2	BUTTON-PLUG	
	18	1	**314-6914**	1	FLOOR MAT	

M - METRIC PART

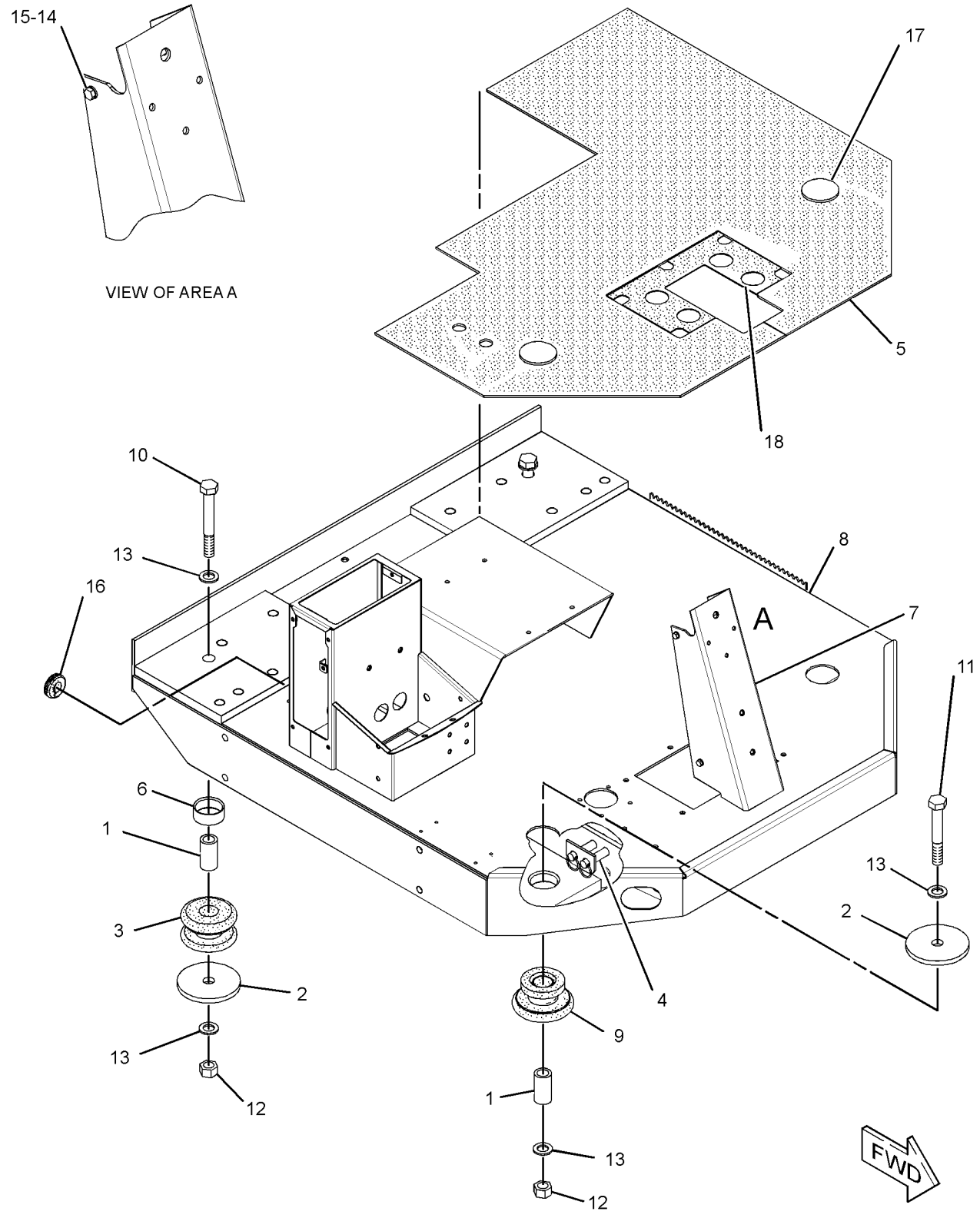

GRAPHIC #1 **<END>** g01445342

OPERATOR STATION

202-0679 ROPS GP

S/N: TJL1-UP

PART OF 219-4171 OPERATOR AR, 348-5643 OPERATOR AR-OPEN ROPS

AN ATTACHMENT

SMCS-7323 **i03045336**

NOTE	REF NO	GRAPHIC REF	PART NUMBER	QTY	PART NAME 1 2 3 4 5 6 (PRODUCT LEVEL)	SEE PAGE
	1	1	**165-0571**	1	ROPS AS	
		1	**7T-1099**	16	LINK	
M	2	1	**7X-2575**	10	BOLT (M24X3X60-MM)	
	3	1	**8T-4167**	12	WASHER-HARD (26X44X4-MM THK)	
D	4	1	**8T-3426**		CHANNEL-TRIM (2.8-M)	
M	5	1	**7X-2576**	2	BOLT (M24X3X70-MM)	

D - ORDER BY THE METER
M - METRIC PART

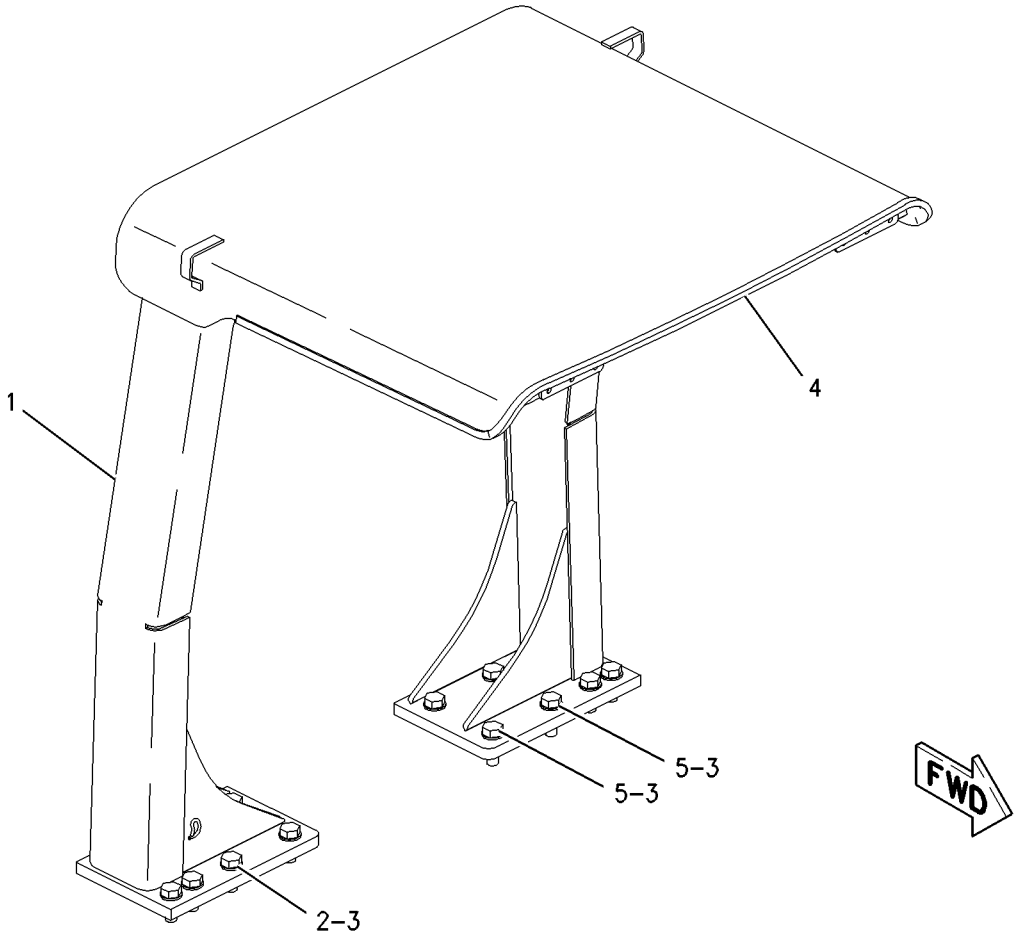

GRAPHIC #1 **<END>** g00844746

254-5057 ROPS GP-ENCLOSED

S/N: TJL1-623
PART OF 259-4423 CAB AR
AN ATTACHMENT

SMCS-7301 **i03052634**

NOTE	REF NO	GRAPHIC REF	PART NUMBER	QTY	PART NAME 1 2 3 4 5 6 (PRODUCT LEVEL)	SEE PAGE
	1	1	**118-6375**	1	FILM-INSTRUCTION (UNLOCK, RELEASE)	
Y	2	1	**185-5770**	1	DOOR GP-CAB (SLIDING WINDOW, LH)	400
	3	1	**187-9185**	1	FILM-INFORMATION (ALTERNATE EXIT)	
	4	1	**229-9269**	2	BRACKET	
Y	5	1	*254-5058*	1	CAB GP-ENCLOSED ROPS	377
	6	1	**259-2646**	1	FLOORPLATE AS	
M	7	1	**7X-2563**	12	BOLT (M20X2.5X60-MM)	
	8	1	**8T-4123**	22	WASHER (3.62X5.75X0.375-MM THK)	
M	9	1	**8T-4131**	10	NUT (M20X2.5-THD)	
	10	1	**8T-4223**	2	WASHER-HARD (13.5X25.5X3-MM THK)	
M	11	1	**8T-4244**	2	NUT (M12X1.75-THD)	
D	12	1	**5P-5643**		SEAL (4.8-M)	

D - ORDER BY THE METER
M - METRIC PART
Y - SEPARATE ILLUSTRATION

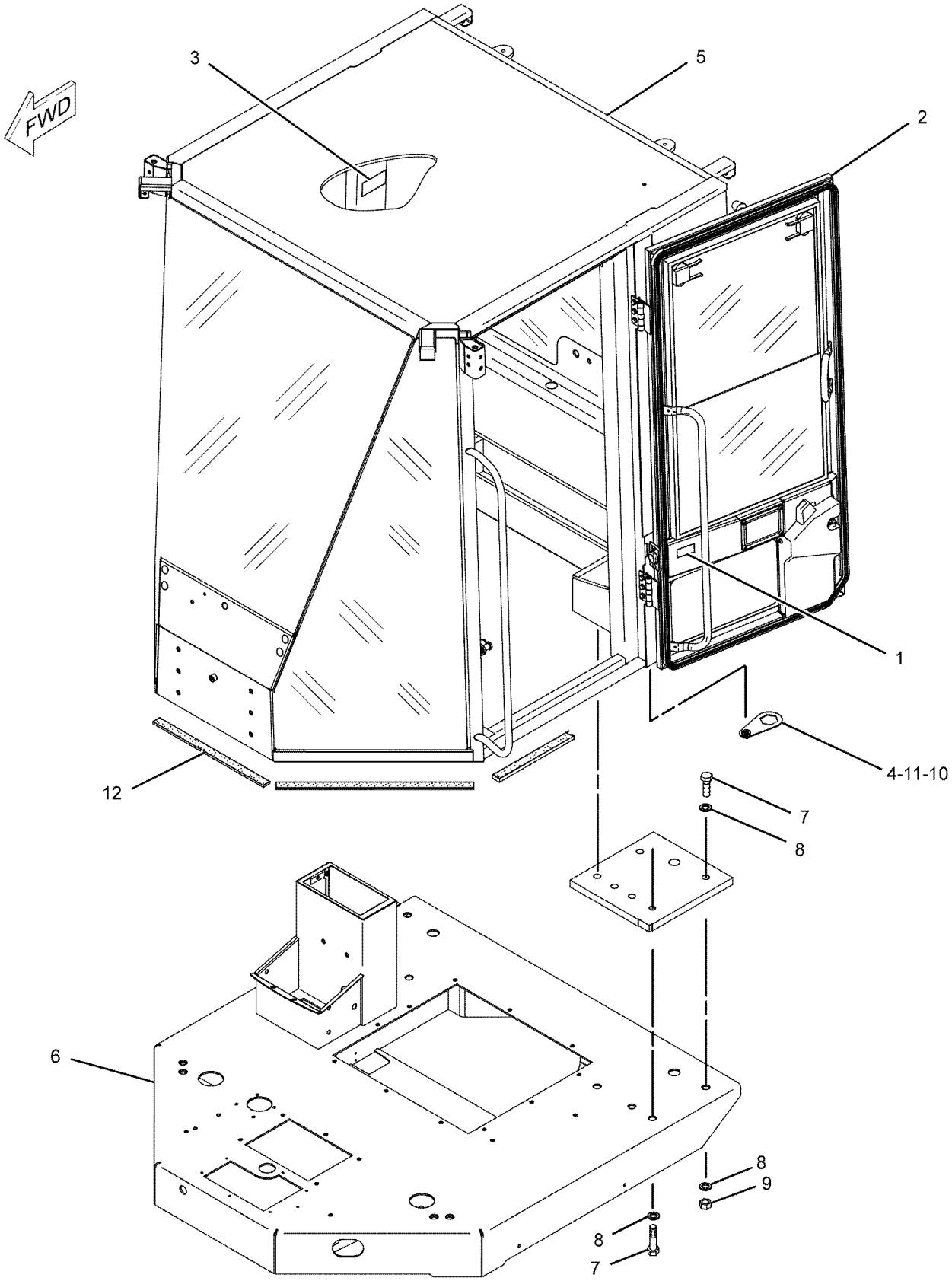

GRAPHIC #1 **<END>** g01144842

291-3967 ROPS GP-ENCLOSED

S/N: TJL1-UP
PART OF 339-6602 CAB AR
AN ATTACHMENT

SMCS-7301 **i03933849**

NOTE	REF NO	GRAPHIC REF	PART NUMBER	QTY	PART NAME 1 2 3 4 5 6 (PRODUCT LEVEL)	SEE PAGE
	1	1	**118-6375**	1	FILM-INSTRUCTION (UNLOCK, RELEASE)	
Y	2	1	**185-5770**	1	DOOR GP-CAB (SLIDING WINDOW, LH)	400
	3	1	**187-9185**	1	FILM-INFORMATION (ALTERNATE EXIT)	
	4	1	**229-9269**	2	BRACKET	
	5	1	**259-2646**	1	FLOORPLATE AS	
Y	6	1	*333-1669*	1	CAB GP-ENCLOSED ROPS	379
M	7	1	**7X-2563**	12	BOLT (M20X2.5X60-MM)	
	8	1	**8T-4123**	22	WASHER (3.62X5.75X0.375-MM THK)	
M	9	1	**8T-4131**	10	NUT (M20X2.5-THD)	
	10	1	**8T-4223**	2	WASHER-HARD (13.5X25.5X3-MM THK)	
M	11	1	**8T-4244**	2	NUT (M12X1.75-THD)	
D	12	1	**5P-5643**	1	SEAL (0.5-M)	

D - ORDER BY THE METER
M - METRIC PART
Y - SEPARATE ILLUSTRATION

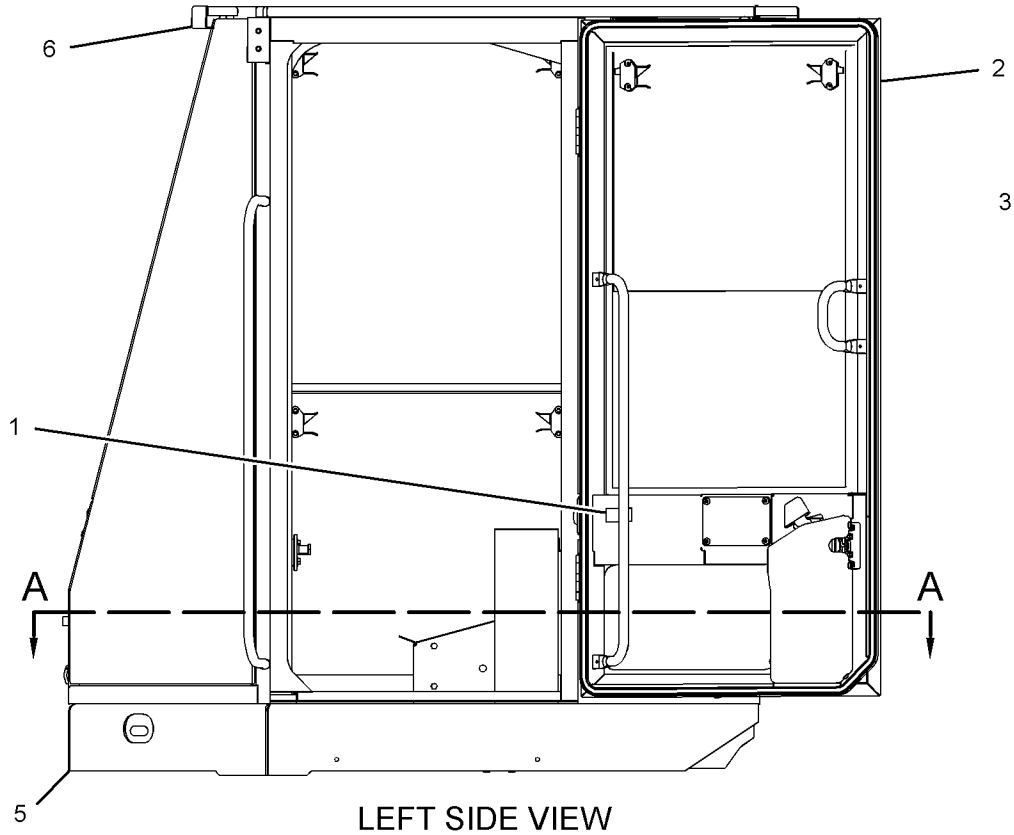

LEFT SIDE VIEW

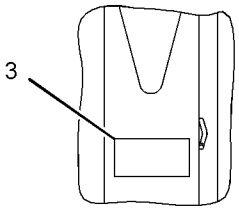

VIEW B-B

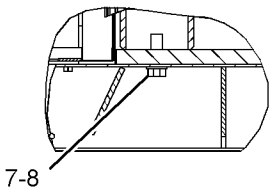

SECTION F-F

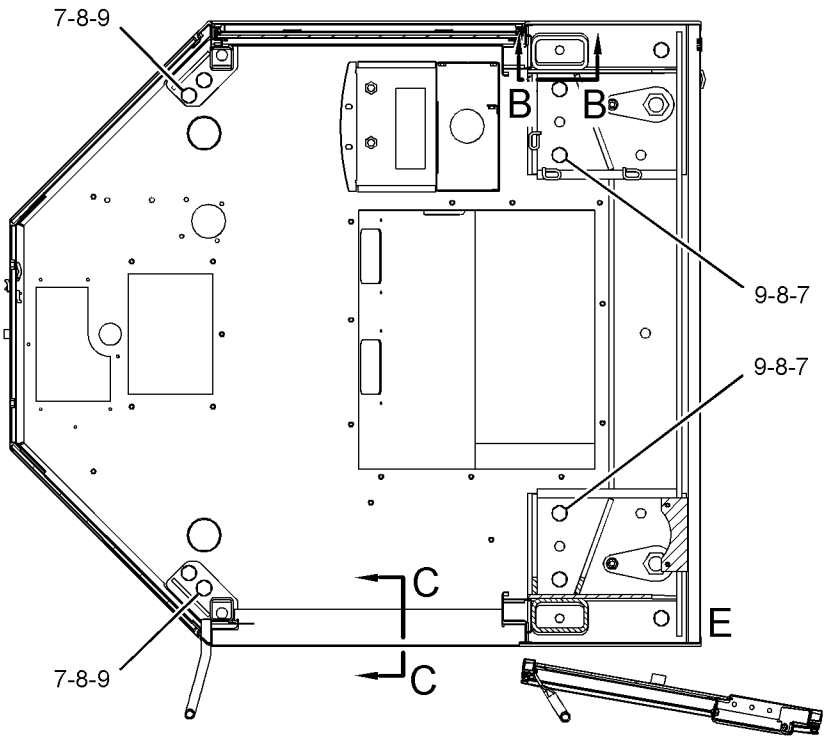

SECTION A-A

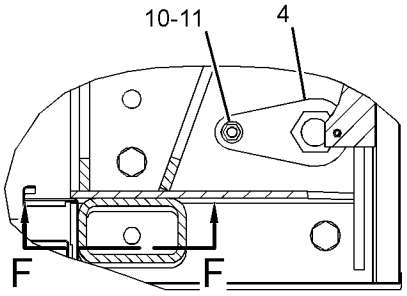

VIEW OF AREA E

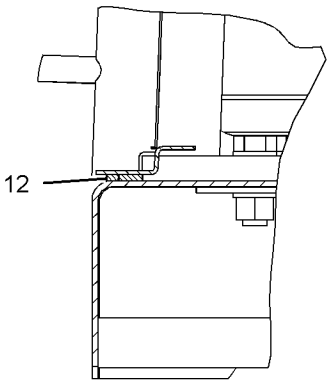

SECTION C-C

GRAPHIC #1 **<END>** g02144352

118-7250 SCREEN GP-SUN

S/N: TJL1-UP

PART OF 204-4390, 255-6422 SCREEN GP-SUN

AN ATTACHMENT

SMCS-7165 **i03044920**

NOTE	REF NO	GRAPHIC REF	PART NUMBER	QTY	PART NAME 1 2 3 4 5 6 (PRODUCT LEVEL)	SEE PAGE
F			**119-2073**	2	HOOK-RETAINER	

F - NOT SHOWN

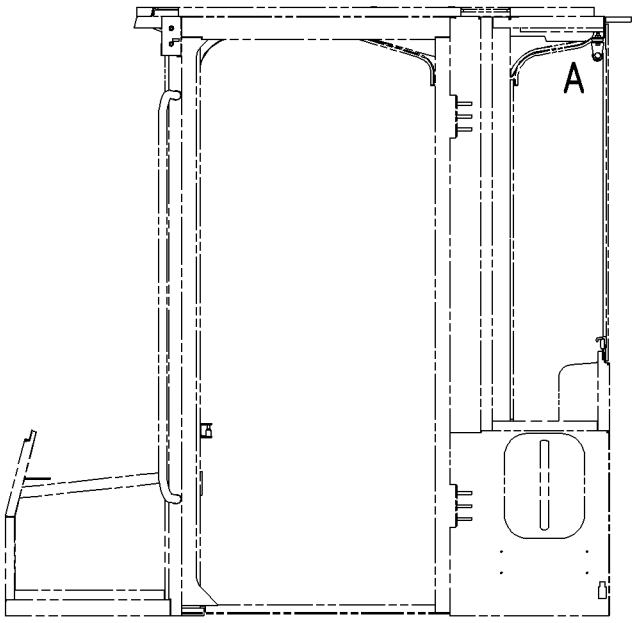

LEFT SIDE VIEW

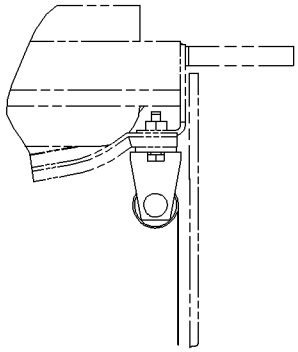

VIEW OF AREA A

GRAPHIC #1 **<END>** g00869480

204-4390 SCREEN GP-SUN

S/N: TJL1-UP

AN ATTACHMENT

SMCS-7165 **i03044903**

NOTE	PART NUMBER	QTY	PART NAME 1 2 3 4 5 6 (PRODUCT LEVEL)	SEE PAGE
Y	**118-7250**	1	SCREEN GP-SUN	475

Y - SEPARATE ILLUSTRATION

<END>

OPERATOR STATION

255-6422 SCREEN GP-SUN–CAB

S/N: TJL1-UP

AN ATTACHMENT

SMCS-7165 **i03439037**

NOTE	REF NO	GRAPHIC REF	PART NUMBER	QTY	PART NAME 1 2 3 4 5 6 (PRODUCT LEVEL)	SEE PAGE
Y	1	1	**118-7250**	1	SCREEN GP-SUN	475
M	2	1	**5C-9553**	2	BOLT (M6X1X16-MM)	
	3	1	**5P-4115**	2	WASHER-HARD (7.2X19X2-MM THK)	

M - METRIC PART
Y - SEPARATE ILLUSTRATION

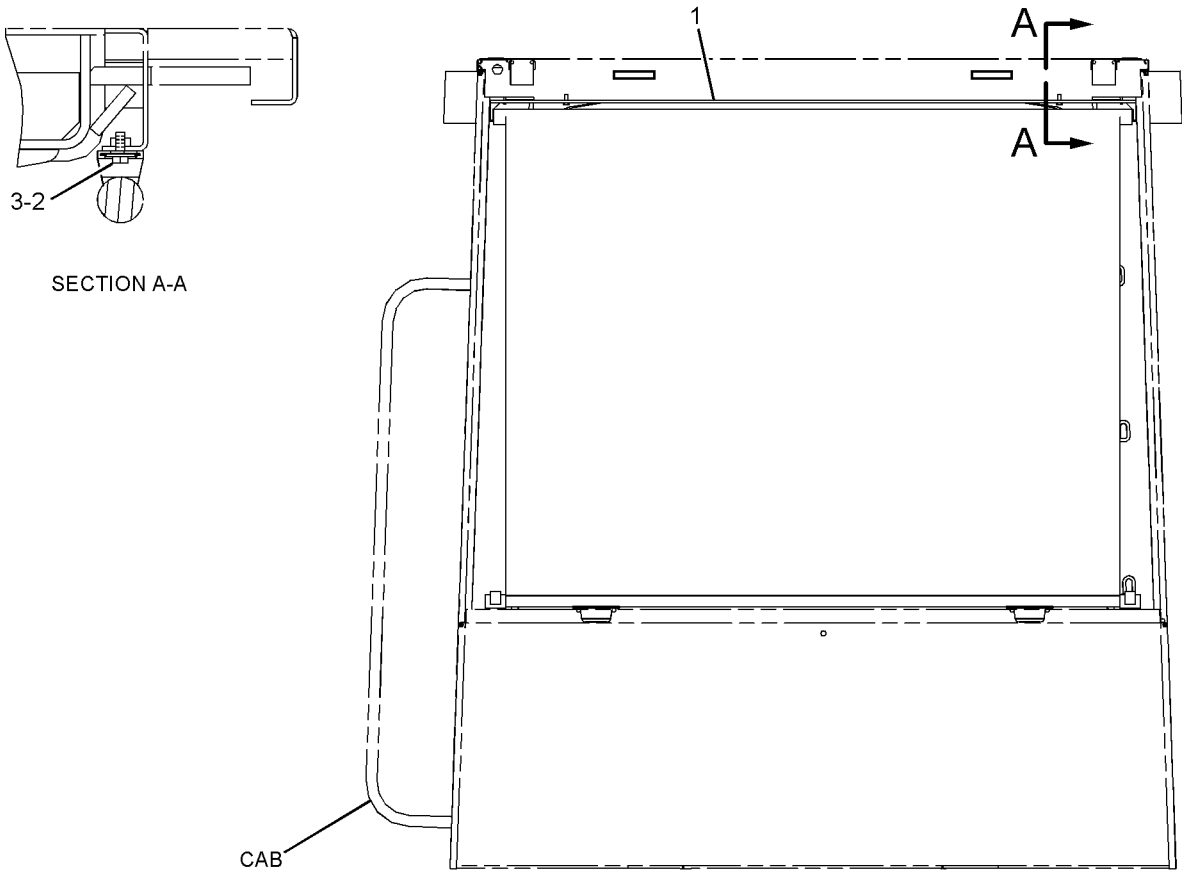

SECTION A-A

REAR VIEW

GRAPHIC #1 **<END>** g01090009

235-0512 SEAT & MOUNTING GP

S/N: TJL1-UP

AN ATTACHMENT

SMCS-7312 **i03054590**

NOTE	REF NO	GRAPHIC REF	PART NUMBER	QTY	PART NAME 1 2 3 4 5 6 (PRODUCT LEVEL)	SEE PAGE
	1	1	**230-6367**	1	SEAT BELT GP (RETRACTABLE, 76-MM)	
Y	2	1	**235-3151**	1	SEAT GP-SUSPENSION (VINYL)	481
	3	1	**236-5056**	1	FASTENER GP-SEAT	
M	4	1	**5C-7261**	4	NUT (M8X1.25-THD)	
	5	1	**8T-4224**	8	WASHER-HARD (8.8X16X2-MM THK)	
M	6	1	**5A-3604**	4	BOLT-SOCKET HEAD (M8X1.25X25-MM)	
	7	1	**5P-7958**	1	SLEEVE-CABLE SPLICE	

M - METRIC PART
Y - SEPARATE ILLUSTRATION

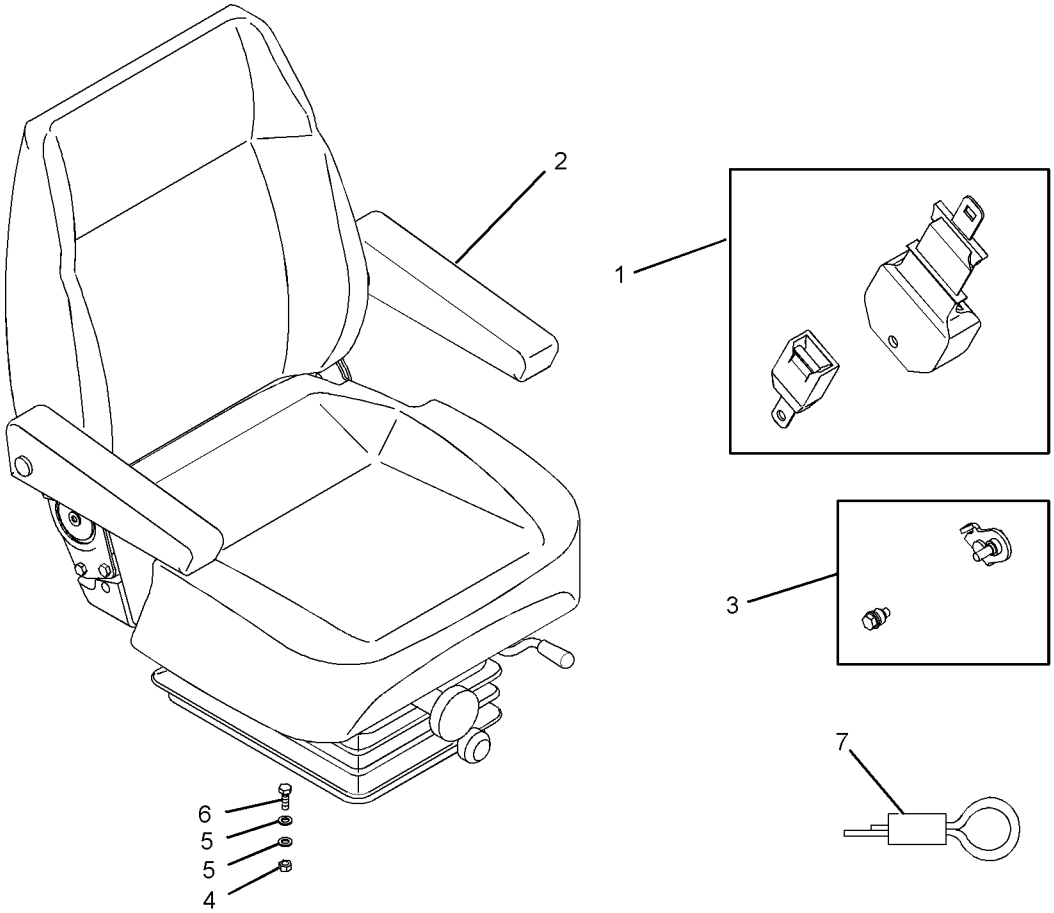

GRAPHIC #1 **<END>** g01134470

358-1226 SEAT & MOUNTING GP–VINYL

S/N: TJL1-UP

PART OF 357-7421, 368-9182, 376-1389, 376-1392 DISTRIBUTION AR, 357-7423 OPTION AR-MACHINE

AN ATTACHMENT

SMCS-7312 **i03994997**

NOTE	REF NO	GRAPHIC REF	PART NUMBER	QTY	PART NAME 1 2 3 4 5 6 (PRODUCT LEVEL)	SEE PAGE
	1	1	**5P-7958**	1	SLEEVE-CABLE SPLICE	
	2	1	**230-6367**	1	SEAT BELT GP (RETRACTABLE, 76-MM)	
	3	1	**236-5056**	1	FASTENER GP-SEAT (VINYL)	
	4	1	**356-7541**	1	SEAT GP-SUSPENSION	
M	5	1	**5C-7261**	4	NUT (M8X1.25-THD)	
	6	1	**8T-4224**	8	WASHER-HARD (8.8X16X2-MM THK)	
M	7	1	**8T-4908**	4	BOLT (M8X1.25X25-MM)	

M - METRIC PART

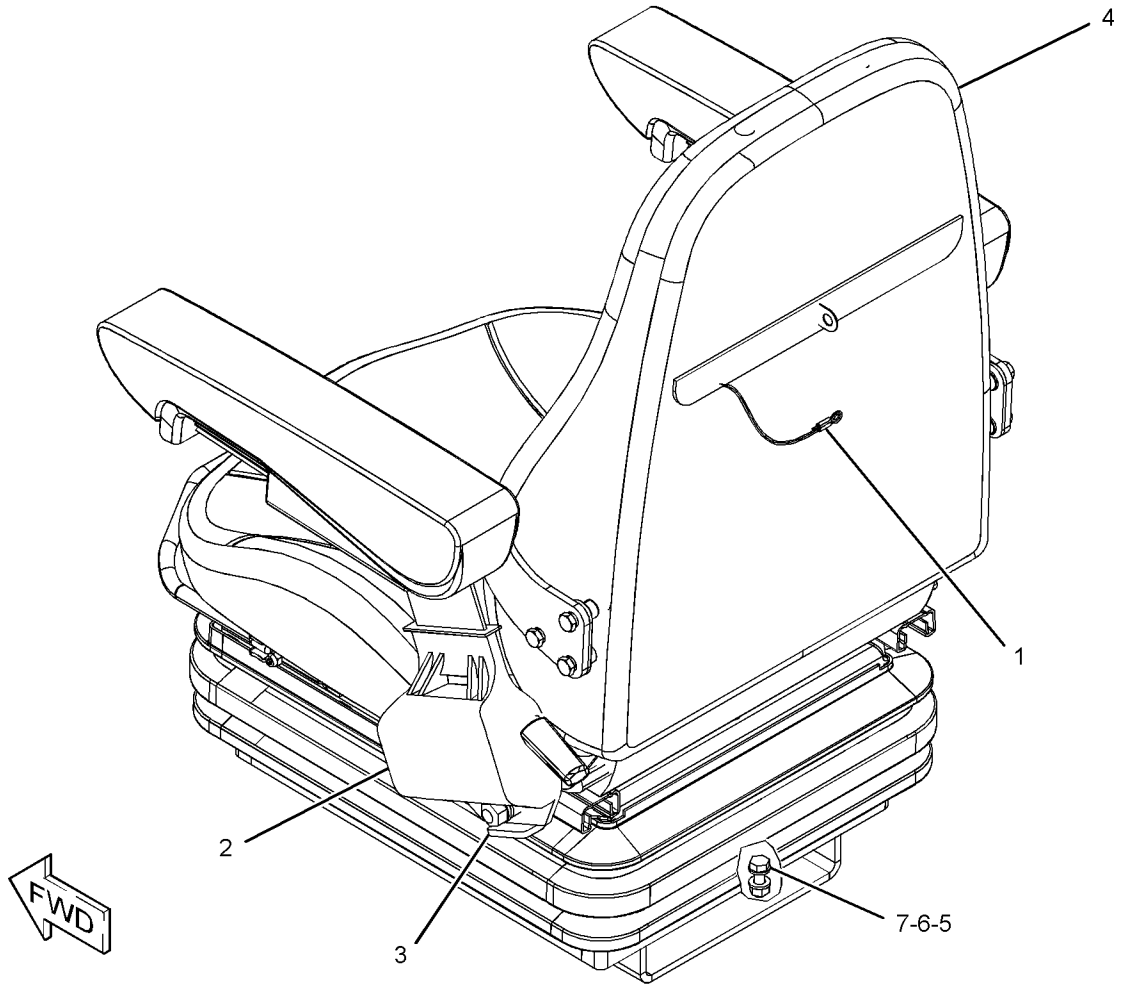

GRAPHIC #1 **<END>** g02347356

358-1227 SEAT & MOUNTING GP–CLOTH

S/N: TJL1-UP

PART OF 368-9181, 369-9031, 376-1393 DISTRIBUTION AR

AN ATTACHMENT

SMCS-7312 **i03994998**

NOTE	REF NO	GRAPHIC REF	PART NUMBER	QTY	PART NAME 1 2 3 4 5 6 (PRODUCT LEVEL)	SEE PAGE
	1	1	**5P-7958**	1	SLEEVE-CABLE SPLICE	
	2	1	**230-6367**	1	SEAT BELT GP (RETRACTABLE, 76-MM)	
	3	1	**235-1491**	1	PLATE	
	4	1	**236-5056**	1	FASTENER GP-SEAT (CLOTH)	
	5	1	**356-6533**	1	SEAT GP-SUSPENSION	
	6	1	**8T-4121**	4	WASHER-HARD (11X21X2.5-MM THK)	
M	7	1	**8T-4195**	4	BOLT (M10X1.5X30-MM)	
M	8	1	**8T-4200**	4	BOLT (M8X1.25X16-MM)	
	9	1	**8T-4224**	4	WASHER-HARD (8.8X16X2-MM THK)	

M - METRIC PART

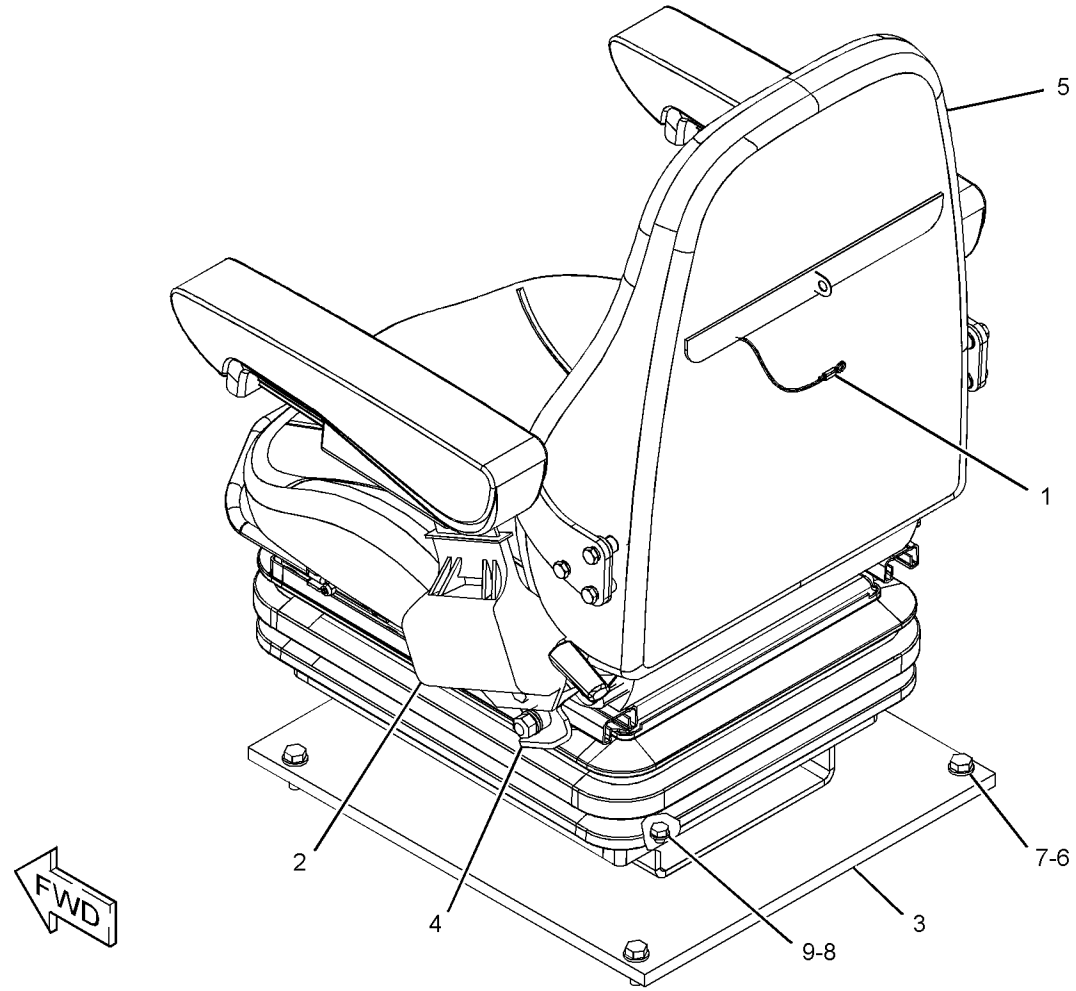

GRAPHIC #1 **<END>** g02347258

235-3151 SEAT GP-SUSPENSION—VINYL

S/N: TJL1-UP

PART OF 235-0512 SEAT & MOUNTING GP

AN ATTACHMENT

SMCS-7324 **i04939183**

NOTE	REF NO	GRAPHIC REF	PART NUMBER	QTY	PART NAME 1 2 3 4 5 6 (PRODUCT LEVEL)	SEE PAGE
	1	1	**233-7538**	1	ARMREST (RH)	
	2	1	**233-7537**	1	ARMREST (LH)	
J	3	1	**233-7530**	1	COVER-SEAT (BACK, VINYL)	
J	4	1	**190-9732**	1	KIT-FOAM BACK (SUSPENSION SEAT)	
J	5	1	**247-6479**	1	KIT-SEAT (SUSPENSION)	
					(INCLUDES SCREWS, WASHERS & UPPER AS)	
J	6	1	**233-7532**	1	COVER-SEAT (BOTTOM, VINYL)	
J	7	1	**233-7533**	1	FOAM-SEAT (BOTTOM)	
	9	1	**202-4739**	1	KIT-STOP (SUSPENSION SEAT)	
					(INCLUDES UPSTOPS & BUMPSTOP)	
	10	1	**217-5821**	1	ADJUSTER GP-HEIGHT (SUSPENSION SEAT)	
	11	1	**202-4737**	1	KIT-SEAT (INDICATORS)	
					(INCLUDES WASHER & INDICATOR)	
	12	1	**202-4736**	1	KIT-DAMPER	
					(INCLUDES DAMPERS, PINS, CLIPS, WASHERS, PUSHNUT & SPACER)	
	13	1	**233-7535**	1	KIT-RAIL (SUSPENSION SEAT)	
					(INCLUDES RAILS)	
	14	1	**233-7536**	1	KIT-STRAP (SUSPENSION SEAT)	
					(INCLUDES FRONT STRAP & REAR STRAP)	
	15	1	**202-4740**	1	KIT-ADJUSTER	
					(INCLUDES SPACER, PINS, WEIGHT ADJUSTER KNOB, SPRINGS, ADJUSTER SHAFT, SPACERS, ANCHORS,	
					NEEDLE BEARINGS & WASHER BEARING)	
	16	1	**232-4226**	1	KIT-BOOT (SUSPENSION SEAT)	
	17	1	**233-7534**	1	KIT-KNOB	
					(INCLUDES KNOBS)	
	18	1	**232-4230**	1	KIT-SEAT SUSPENSION	

J - KIT MARKED J SERVICES PARTS MARKED J

235-3151 **SEAT GP-SUSPENSION (*contd.*)** **i04939183**

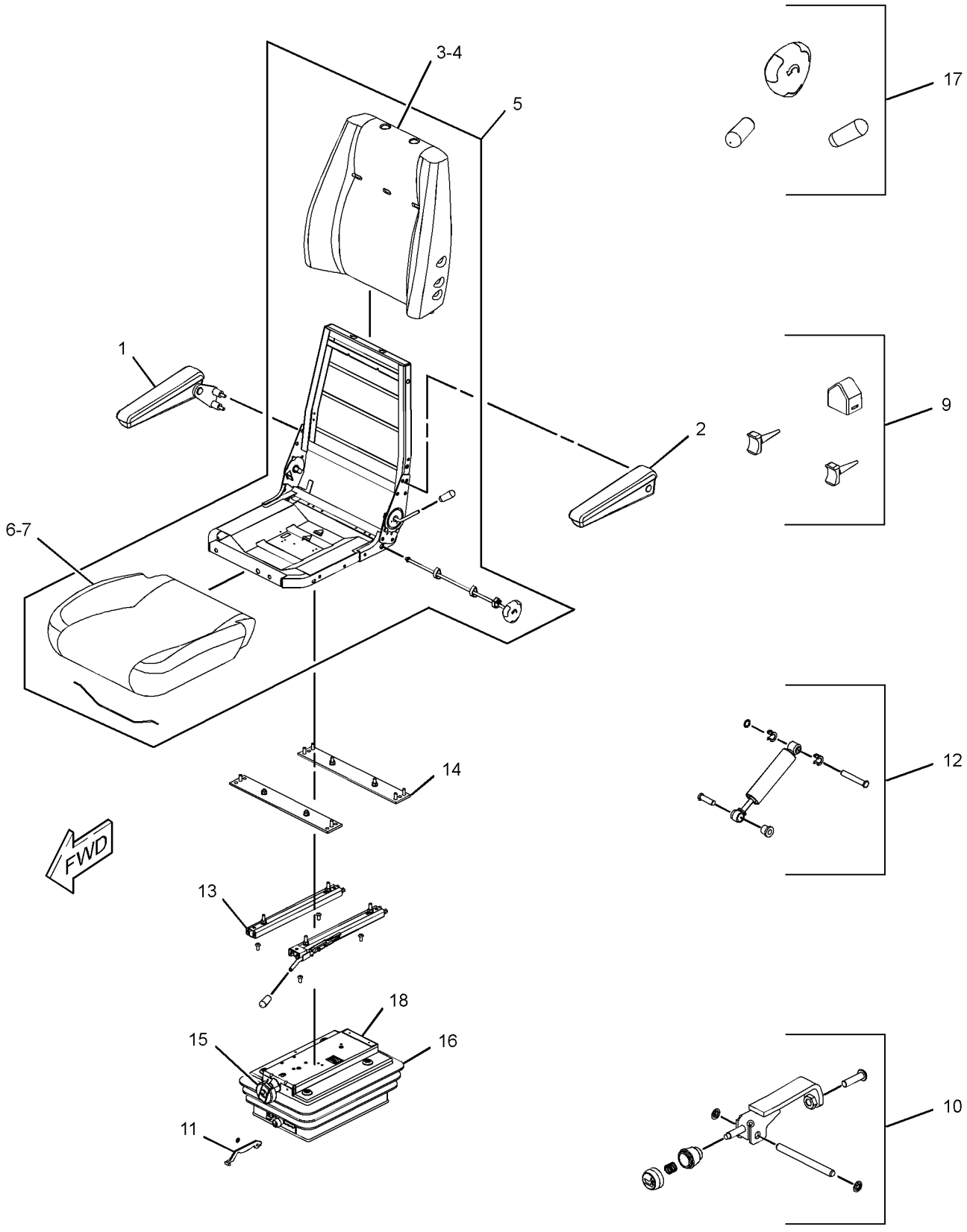

GRAPHIC #1 **<END>** g02798157

235-4119 SEAT GP-SUSPENSION—CLOTH

S/N: TJL1-UP

AN ATTACHMENT

SMCS-7324 **i03079420**

NOTE	REF NO	GRAPHIC REF	PART NUMBER	QTY	PART NAME 1 2 3 4 5 6 (PRODUCT LEVEL)	SEE PAGE
	1	1	**230-6367**	1	SEAT BELT GP (RETRACTABLE, 76-MM)	
	2	1	**235-1491**	1	PLATE	
	3	1	**236-5056**	1	FASTENER GP-SEAT	
Y	4	1	**248-1362**	1	SEAT GP-SUSPENSION (CLOTH)	484
M	5	1	**6V-8202**	4	BOLT-SOCKET HEAD (M8X1.25X16-MM)	
	6	1	**8T-4121**	4	WASHER-HARD (11X21X2.5-MM THK)	
M	7	1	**8T-4195**	4	BOLT (M10X1.5X30-MM)	
	8	1	**8T-4224**	4	WASHER-HARD (8.8X16X2-MM THK)	
	9	1	**5P-7958**	1	SLEEVE-CABLE SPLICE	

M - METRIC PART
Y - SEPARATE ILLUSTRATION

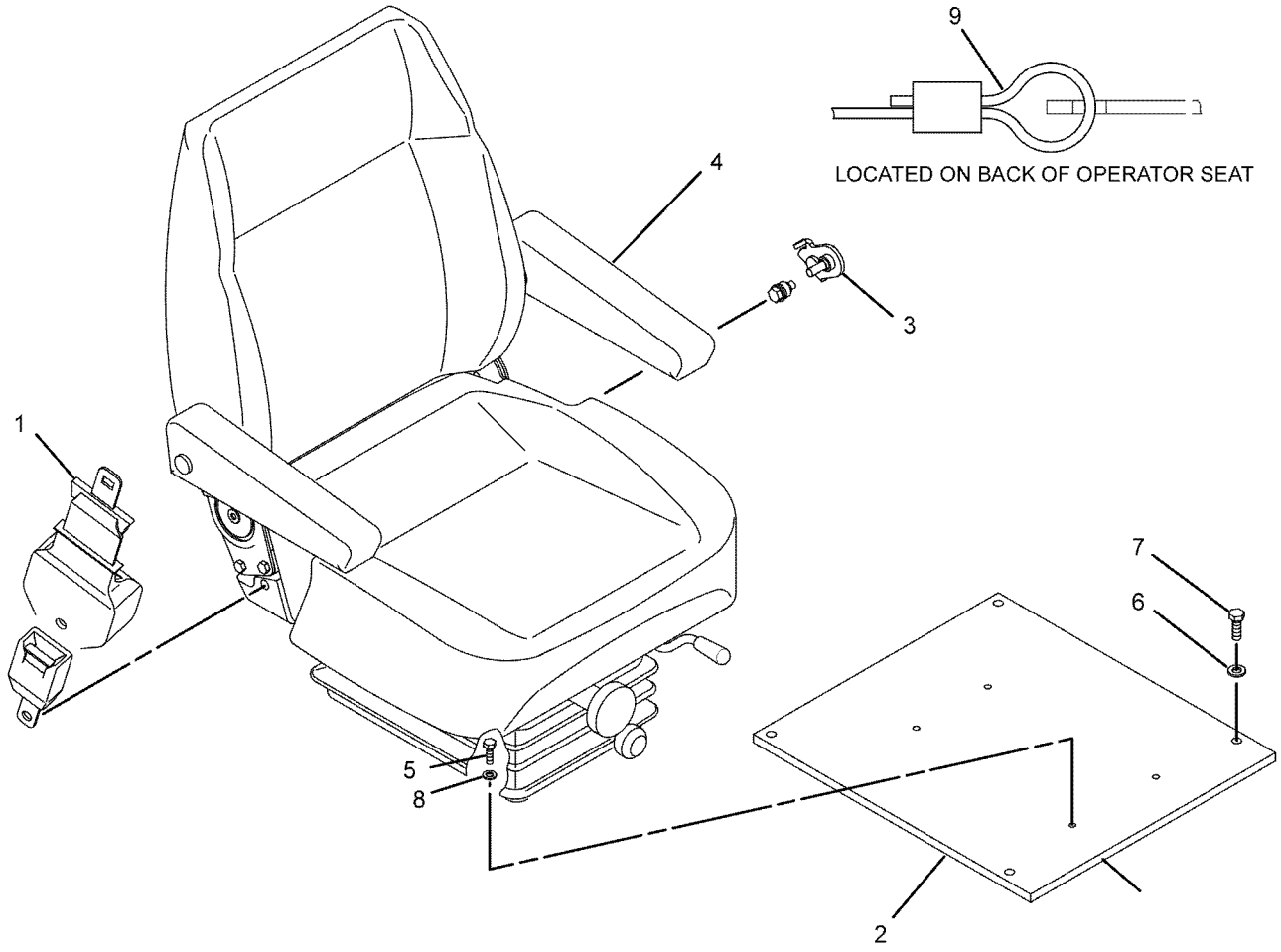

GRAPHIC #1 **<END>** g01144355

248-1362 SEAT GP-SUSPENSION—CLOTH

S/N: TJL1-UP

PART OF 235-4119 SEAT GP-SUSPENSION

AN ATTACHMENT

SMCS-7324 **i04939186**

NOTE	REF NO	GRAPHIC REF	PART NUMBER	QTY	PART NAME 1 2 3 4 5 6 (PRODUCT LEVEL)	SEE PAGE
	1	1	**233-7538**	1	ARMREST (RH)	
	2	1	**233-7537**	1	ARMREST (LH)	
	3	1	**233-7535**	1	KIT-RAIL (SUSPENSION SEAT)	
					(INCLUDES RAILS)	
	4	1	**233-7536**	1	KIT-STRAP (SUSPENSION SEAT)	
					(INCLUDES STRAPS)	
	5	1	**233-7534**	1	KIT-KNOB (SUSPENSION SEAT)	
					(INCLUDES KNOBS)	
	6	1	**202-4739**	1	KIT-STOP (SUSPENSION SEAT)	
					(INCLUDES UPSTOPS & BUMPSTOP)	
	7	1	**202-4736**	1	KIT-DAMPER (SUSPENSION SEAT)	
					(INCLUDES DAMPERS, PINS, PUSHNUT, SPACERS & WASHERS)	
	8	1	**217-5821**	1	ADJUSTER GP-HEIGHT (SUSPENSION SEAT)	
	9	1	**202-4737**	1	KIT-SEAT (INDICATORS)	
					(INCLUDES INDICATOR & WASHER)	
	10	1	**202-4740**	1	KIT-ADJUSTER (SUSPENSION SEAT)	
					(INCLUDES SPACERS, SPIRAL PINS, SPRINGS, BEARINGS, ANCHOR BUSH, ADJUSTER SHAFT & WEIGHT ADJUSTER KNOB)	
	11	1	**232-4226**	1	KIT-BOOT (SUSPENSION SEAT)	
					(INCLUDES BOOT COVER)	
J	12	1	**190-9732**	1	KIT-FOAM BACK (SUSPENSION SEAT)	
J	13	1	**247-4941**	1	COVER-SEAT (BACK, CLOTH)	
J	14	1	**247-4942**	1	COVER-SEAT (BOTTOM, CLOTH)	
J	15	1	**233-7533**	1	FOAM-SEAT (BOTTOM)	
	16	1	**232-4230**	1	KIT-SEAT SUSPENSION	
					PARTS SHOWN IN GRAPHIC(S) WITHOUT A REFERENCE NUMBER ARE NOT SERVICED SEPARATELY	
					AVAILABLE REPAIR KIT(S):	
J			**253-4313**	1	KIT-SEAT (SUSPENSION SEAT)	
					(ALSO INCLUDES SCREWS, WASHERS & UPPER ASSEMBLY)	

J - KIT MARKED J SERVICES PARTS MARKED J

248-1362 **SEAT GP-SUSPENSION (*contd.*)** **i04939186**

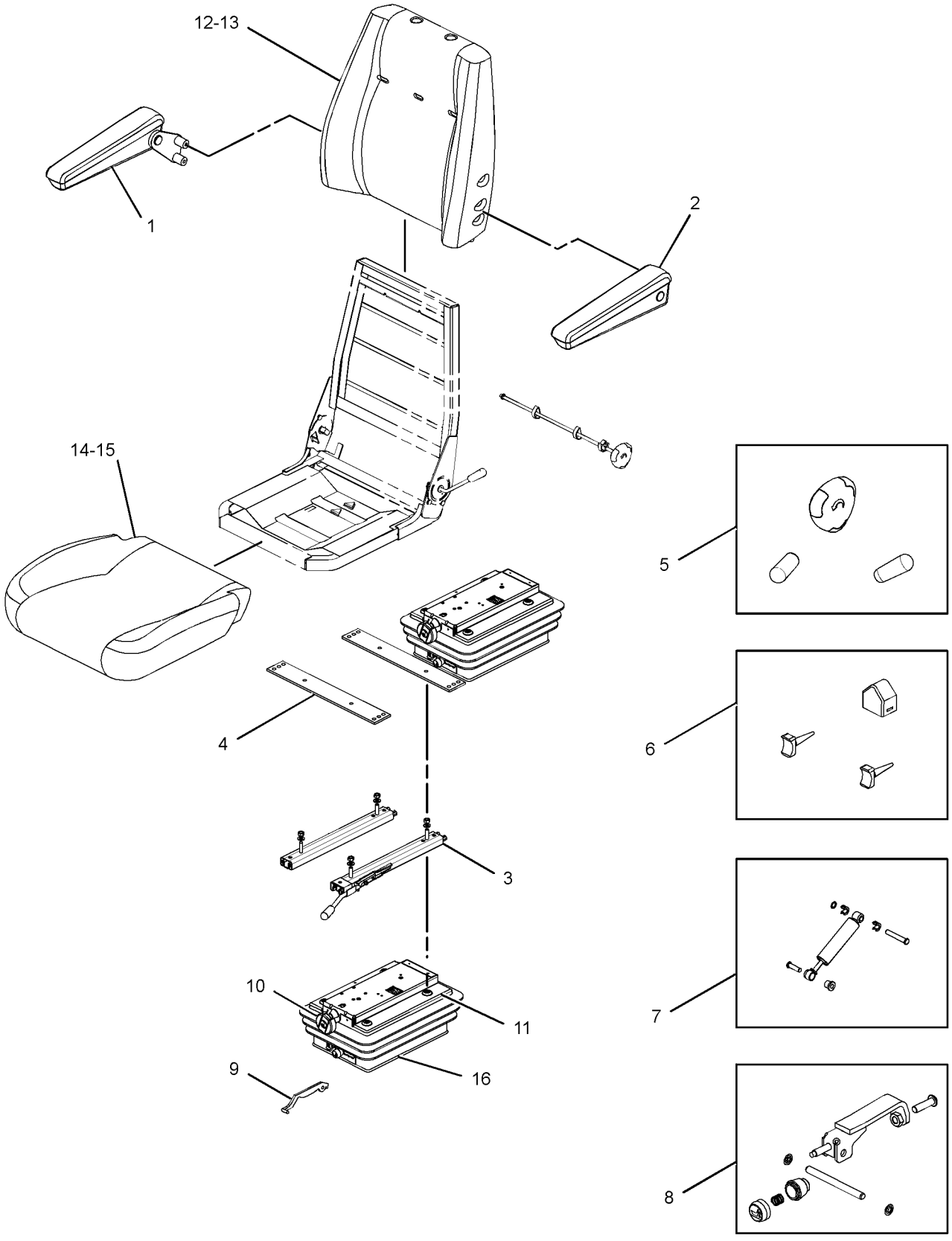

GRAPHIC #1 **<END>** g02926777

230-2473 SPEEDOMETER GP

S/N: TJL1-UP

AN ATTACHMENT

SMCS-7463 **i03640671**

NOTE	REF NO	GRAPHIC REF	PART NUMBER	QTY	PART NAME 1 2 3 4 5 6 (PRODUCT LEVEL)	SEE PAGE
	1	1	**130-2793**	1	GROMMET	
	2	1	**282-6447**	1	HARNESS AS-SENSOR (SPEED)	
		1	**8T-8729**	4	PIN-CONNECTOR (16-GA TO 18-GA)	
		1	**102-8804**	1	KIT-RECEPTACLE (4-PIN)	
					(INCLUDES RECEPTACLE AS & WEDGE)	
M	3	1	**214-3437**	1	NUT (M18X1.5-THD)	
	4	1	**214-3438**	1	SENSOR-SPEED (PROPEL)	
	5	1	**214-4603**	1	SUPPORT AS	
	6	1	**214-7861**	1	SPEEDOMETER AS	
		1	**102-8804**	1	KIT-RECEPTACLE (4-PIN)	
					(INCLUDES RECEPTACLE AS & WEDGE)	
		1	**8T-8729**	3	PIN-CONNECTOR (16-GA TO 18-GA)	
		1	**8T-8737**	1	PLUG-SEAL	
		1	**9B-7233**	2	LOCKWASHER	
		1	**4B-2043**	2	NUT (8-32-THD)	
	7	1	**230-8055**	1	HARNESS AS-CAB (SPEED SENSOR)	
		1	**6N-9587**	2	CONNECTOR	
		1	**5P-5610**	2	CONNECTOR	
		1	**155-2271**	2	KIT-CONNECTING PLUG (4-PIN)	
					(EACH PLUG KIT INCLUDES PLUG AS, WEDGE & INTERFACE SEAL)	
		1	**8T-8737**	2	PLUG-SEAL	
		1	**8T-8730**	6	SOCKET-CONNECTOR (16-GA TO 18-GA)	
		1	**3S-2093**	2	STRAP-CABLE	
		1	**2L-8081**	1	TERMINAL-RING (14-GA TO 16-GA, 1/2-IN SCREW)	
		1	**116-4161**	1	TERMINAL-BLADE (16-GA TO 18-GA)	
D		1	**5P-6006**		TUBE-HEAT SHRINK (9.52-MM DIA) (1-M)	
M	8	1	**5C-2890**	3	NUT (M6X1-THD)	
M	9	1	**8T-4138**	3	BOLT (M6X1X20-MM)	
	10	1	**9X-8256**	3	WASHER (6.6X12X2-MM THK)	
	11	1	**7K-1181**	12	STRAP-CABLE	
	12	1	**095-0924**	1	RING-RETAINING	
	13	1	**231-0748**	1	SPACER	

D - ORDER BY THE METER
M - METRIC PART

230-2473 **SPEEDOMETER GP (*contd.*)** **i03640671**

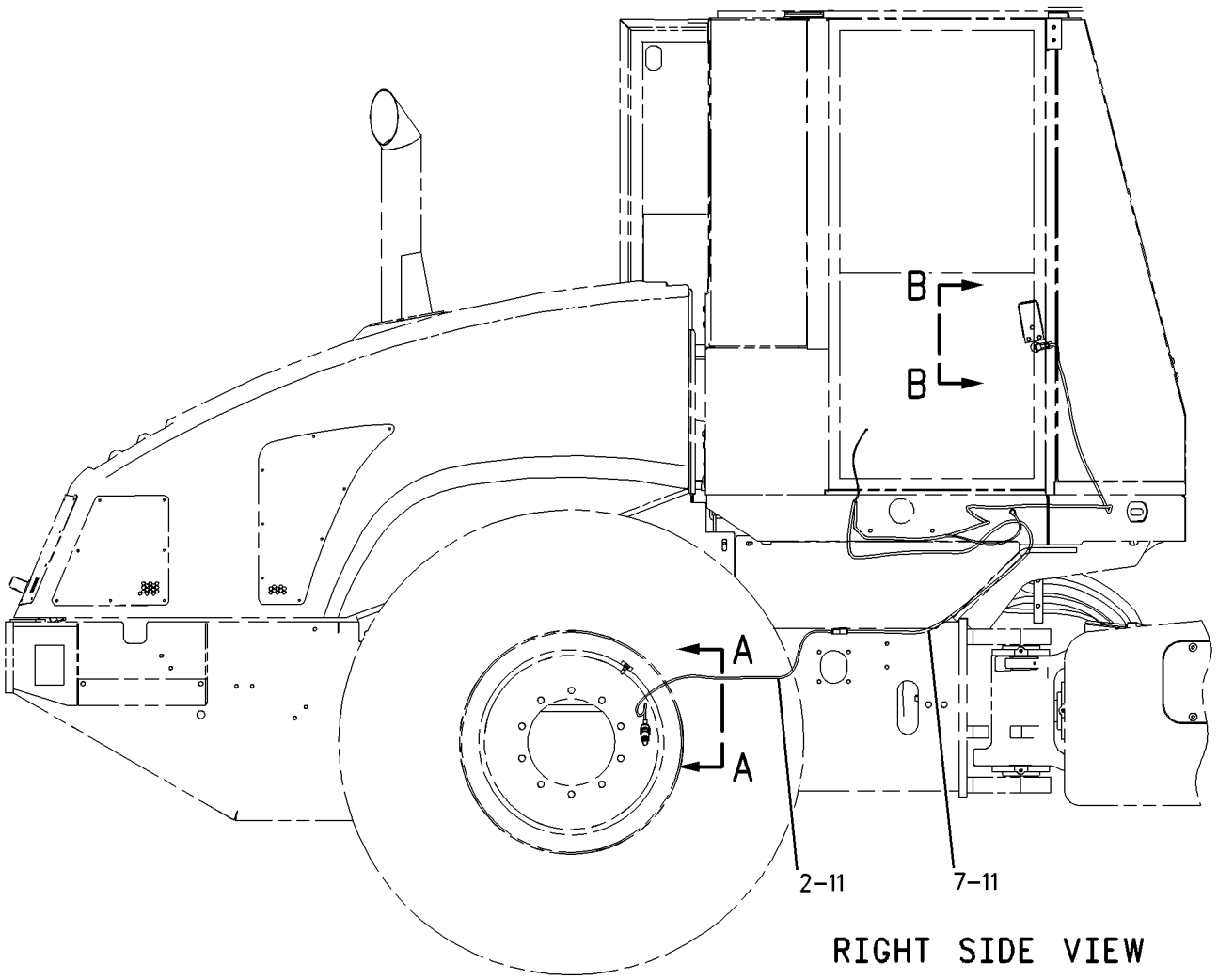

RIGHT SIDE VIEW

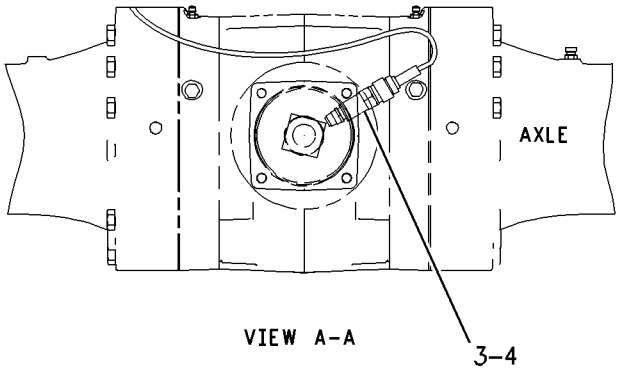

VIEW A-A

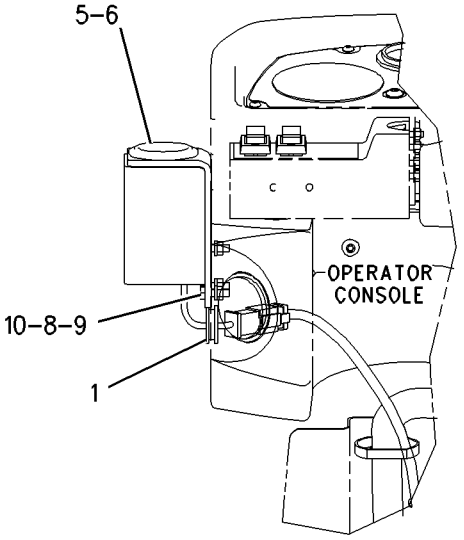

VIEW B-B

GRAPHIC #1 **<END>** g00947463

155-4774 TANK GP-WINDOW WASHER

S/N: TJL1-UP

PART OF 223-4793 WIPER & WASHER GP-WINDOW

AN ATTACHMENT

SMCS-7306 **i05385622**

NOTE	REF NO	GRAPHIC REF	PART NUMBER	QTY	PART NAME 1 2 3 4 5 6 (PRODUCT LEVEL)	SEE PAGE
	1	1	**7T-8890**	2	PUMP AS-WASHER (24-VOLT)	
	2	1	**8T-5913**	2	SCREEN-FILTER (WINDOW WASHER PUMP)	
	3	1	**8T-5914**	2	GROMMET	
	4	1	**322-4964**	1	CAP-VENTED (WINDOW WASHER TANK)	
	5	1	**155-4777**	1	RESERVOIR	

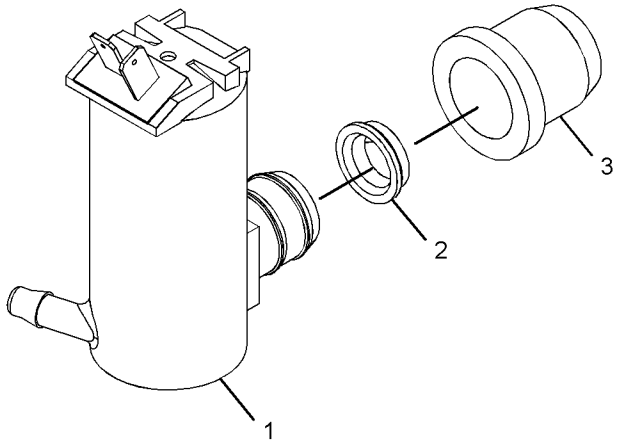

VIEW OF AREA A
(EXPLODED)

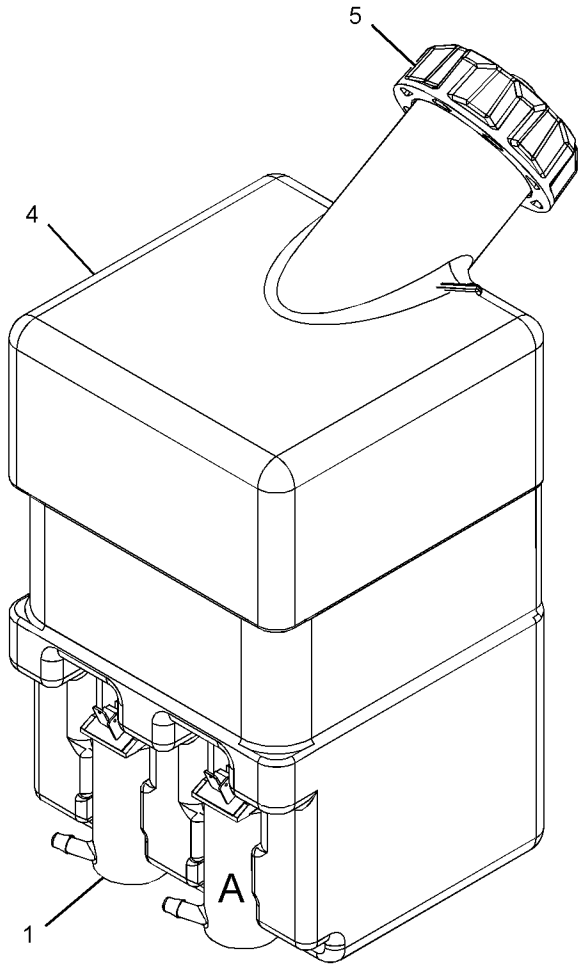

GRAPHIC #1

<END>

g03414769

212-1559 TILT AR-CAB

S/N: TJL1-UP
PART OF 368-9181 DISTRIBUTION AR
AN ATTACHMENT

SMCS-7301 **i03044980**

NOTE	PART NUMBER	QTY	PART NAME 1 2 3 4 5 6 (PRODUCT LEVEL)	SEE PAGE
Y	*178-3836*	1	CYLINDER & MTG GP-TILT (CAB)	398

Y - SEPARATE ILLUSTRATION

<END>

107-4641 VISOR GP-CAB

S/N: TJL1-UP

AN ATTACHMENT

SMCS-7301 **i03043782**

NOTE	REF NO	GRAPHIC REF	PART NUMBER	QTY	PART NAME 1 2 3 4 5 6 (PRODUCT LEVEL)	SEE PAGE
	1	1	**9R-3203**	2	PLATE	
	2	1	**9R-3204**	1	PLATE AS	
M		1	**6V-9632**	2	NUT-WELD (M6X1-THD)	
	3	1	**9R-3205**	1	VISOR AS	
M	4	1	**9X-2042**	2	SCREW-TRUSS HEAD (M6X1X12-MM)	
M	5	1	**9X-2045**	2	SCREW-TRUSS HEAD (M6X1X20-MM)	

M - METRIC PART

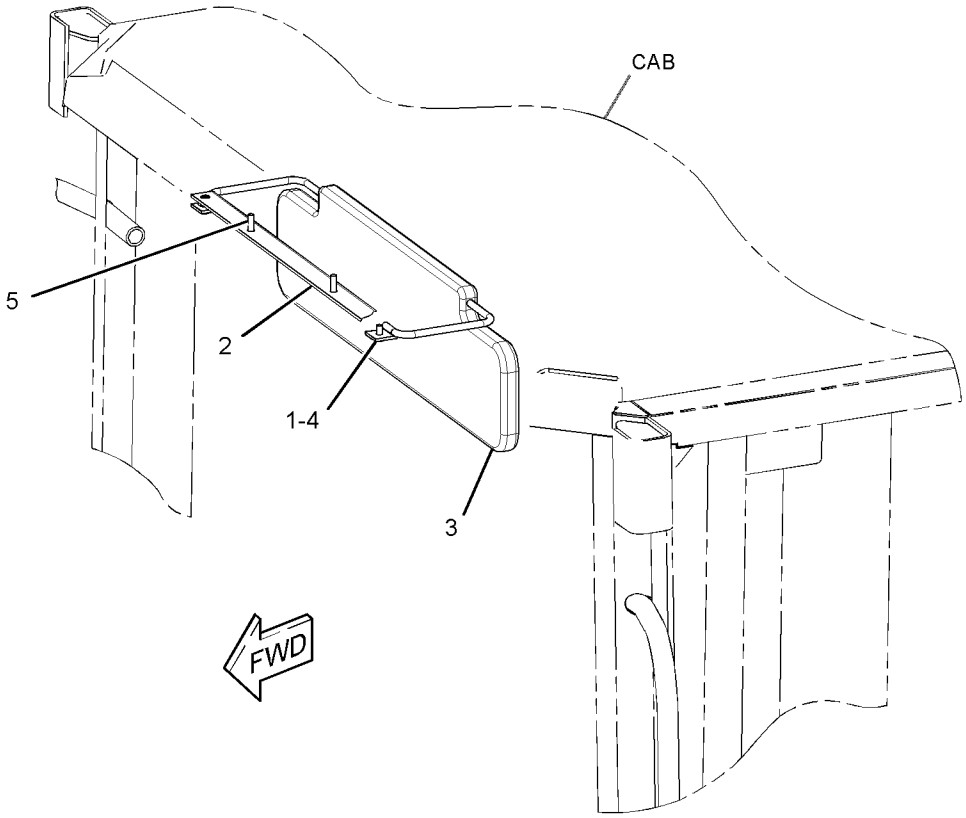

GRAPHIC #1 **<END>** g01552093

288-8880 WINDOW GP-CAB

S/N: TJL1-UP

PART OF 254-5058 CAB GP-ENCLOSED ROPS, 352-4152 WINDOW GP-CAB

AN ATTACHMENT

SMCS-7310 **i03053092**

NOTE	REF NO	GRAPHIC REF	PART NUMBER	QTY	PART NAME 1 2 3 4 5 6 (PRODUCT LEVEL)	SEE PAGE
	1	1	**165-0177**	1	CATCH AS	
		1	**150-8015**	1	GASKET	
	2	1	**165-0178**	1	CATCH AS	
		1	**150-8015**	1	GASKET	
	3	1	**187-5127**	1	CATCH AS	
		1	**150-8015**	1	GASKET	
	4	1	**187-5128**	1	CATCH AS	
		1	**150-8015**	1	GASKET	
	5	1	**187-5379**	1	RAIL	
	6	1	**187-5381**	1	GLASS (UPPER SLIDING)	
	7	1	**187-5383**	1	GLASS (LOWER SLIDING)	
	8	1	**187-5386**	2	RAIL AS	
	9	1	**288-8884**	2	BUMPER	
M	10	1	**099-0857**	6	SCREW-MACHINE (M5X0.8X5.2-MM)	
E	11	1	**191-3040**		SEAL (2-CM)	
E	12	1	**137-2170**		SEAL (1436-CM)	
D	13	1	**9X-2532**		SEAL (1-M EACH)	

D - ORDER BY THE METER
E - ORDER BY THE CENTIMETER
M - METRIC PART

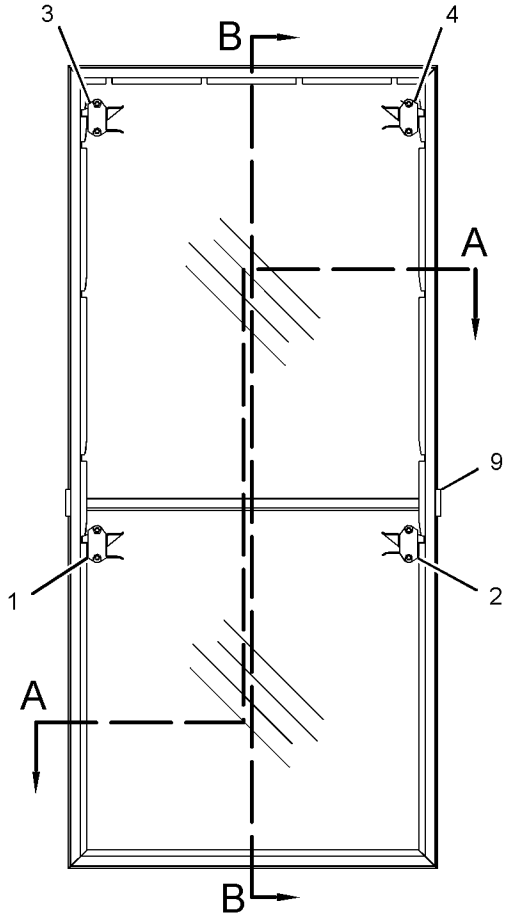

LEFT SIDE VIEW
(INSIDE CAB)

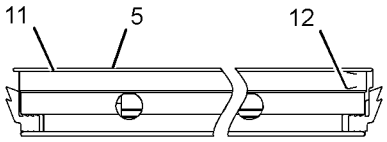

SECTION A-A

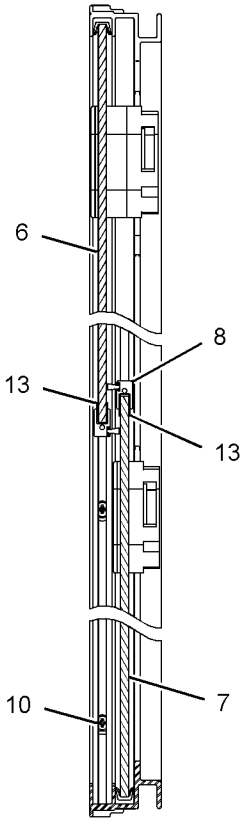

SECTION B-B

GRAPHIC #1 **<END>** g01287730

351-6992 WINDOW GP-CAB—RH

S/N: TJL1-UP
FIELD REPLACEMENT ORDER 352-4152—PAGE: 494
PART OF 352-4152 WINDOW GP-CAB
AN ATTACHMENT

SMCS-7310 **i04553572**

NOTE	REF NO	GRAPHIC REF	PART NUMBER	QTY	PART NAME 1 2 3 4 5 6 (PRODUCT LEVEL)	SEE PAGE
	1	1	**187-5381**	1	GLASS (UPPER SLIDING)	
	2	1	**187-5383**	1	GLASS (LOWER SLIDING)	
	3	1	**318-8503**	1	HANDLE AS (LH)	
	4	1	**318-8504**	1	HANDLE AS (RH)	
	5	1	**352-4156**	1	RAIL	
	6	1	**352-4898**	1	HANDLE AS (RH)	
	7	1	**352-4899**	1	HANDLE AS (LH)	
	8	1	**353-5395**	1	KIT-SEAL (WINDOW)	
					(INCLUDES FLOCKED RUBBER, BRUSH, BUMPERS & GLAZING)	

351-6992 **WINDOW GP-CAB (*contd.*)** **i04553572**

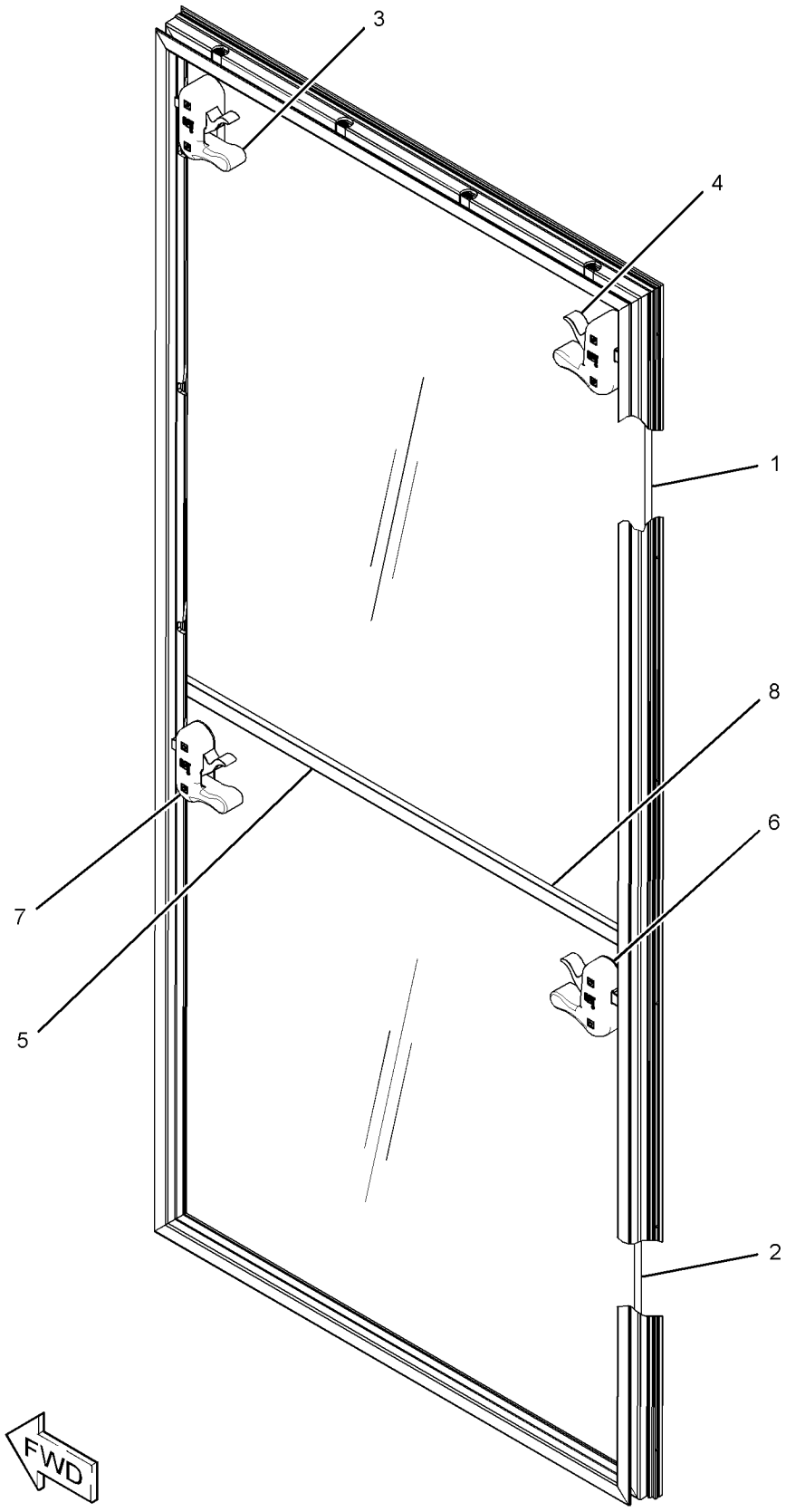

GRAPHIC #1 **<END>** g02173339

OPERATOR STATION

352-4152 WINDOW GP-CAB

S/N: TJL1-UP
FIELD REPLACEMENT FOR 288-8880—PAGE: 491, 351-6992—PAGE: 492
PART OF 333-1669 CAB GP-ENCLOSED ROPS
AN ATTACHMENT

SMCS-7310 **i04553466**

NOTE	PART NUMBER	QTY	PART NAME 1 2 3 4 5 6 (PRODUCT LEVEL)	SEE PAGE
Y	**288-8880**	1	WINDOW GP-CAB (RH)	491
			—OR—	
Y	*351-6992*	1	WINDOW GP-CAB (RH)	492

Y - SEPARATE ILLUSTRATION

<END>

180-3871 WINDOW GP-DOOR—SLIDING

S/N: TJL1-UP
PART OF 185-5770 DOOR GP-CAB
AN ATTACHMENT

SMCS-7308, 7310

i03052769

NOTE	REF NO	GRAPHIC REF	PART NUMBER	QTY	PART NAME 1 2 3 4 5 6 (PRODUCT LEVEL)	SEE PAGE
	1	1	**144-1569**	1	STOP	
	2	1	**187-5122**	1	FRAME	
	3	1	**187-5123**	1	RAIL	
	4	1	**187-5124**	1	GLASS-SLIDING	
	5	1	**187-5125**	1	GLASS-FIXED	
	6	1	**187-5126**	1	RAIL AS	
	7	1	**187-5127**	1	CATCH AS	
		1	**150-8015**	1	GASKET	
	8	1	**187-5128**	1	CATCH AS	
		1	**150-8015**	1	GASKET	
M	9	1	**8T-0306**	6	SCREW-MACHINE (M5X0.8X10-MM)	
D	10	1	**9X-2532**		SEAL (1-M)	
E	11	1	**137-2170**		SEAL (250-CM)	

D - ORDER BY THE METER
E - ORDER BY THE CENTIMETER
M - METRIC PART

180-3871 **WINDOW GP-DOOR (*contd.*)** **i03052769**

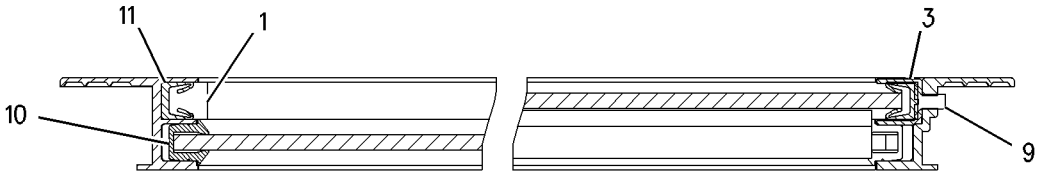

SECTION A-A

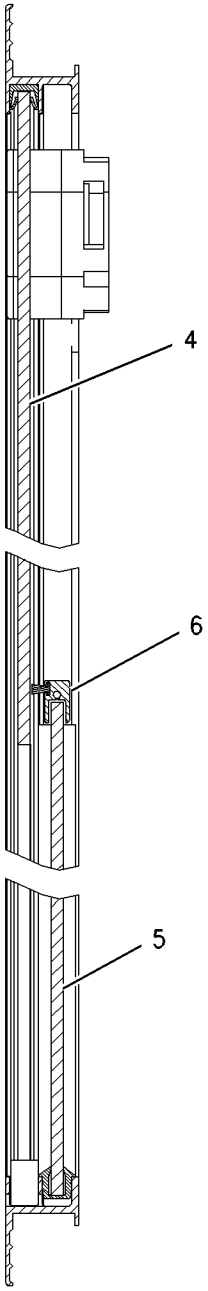

SECTION B-B

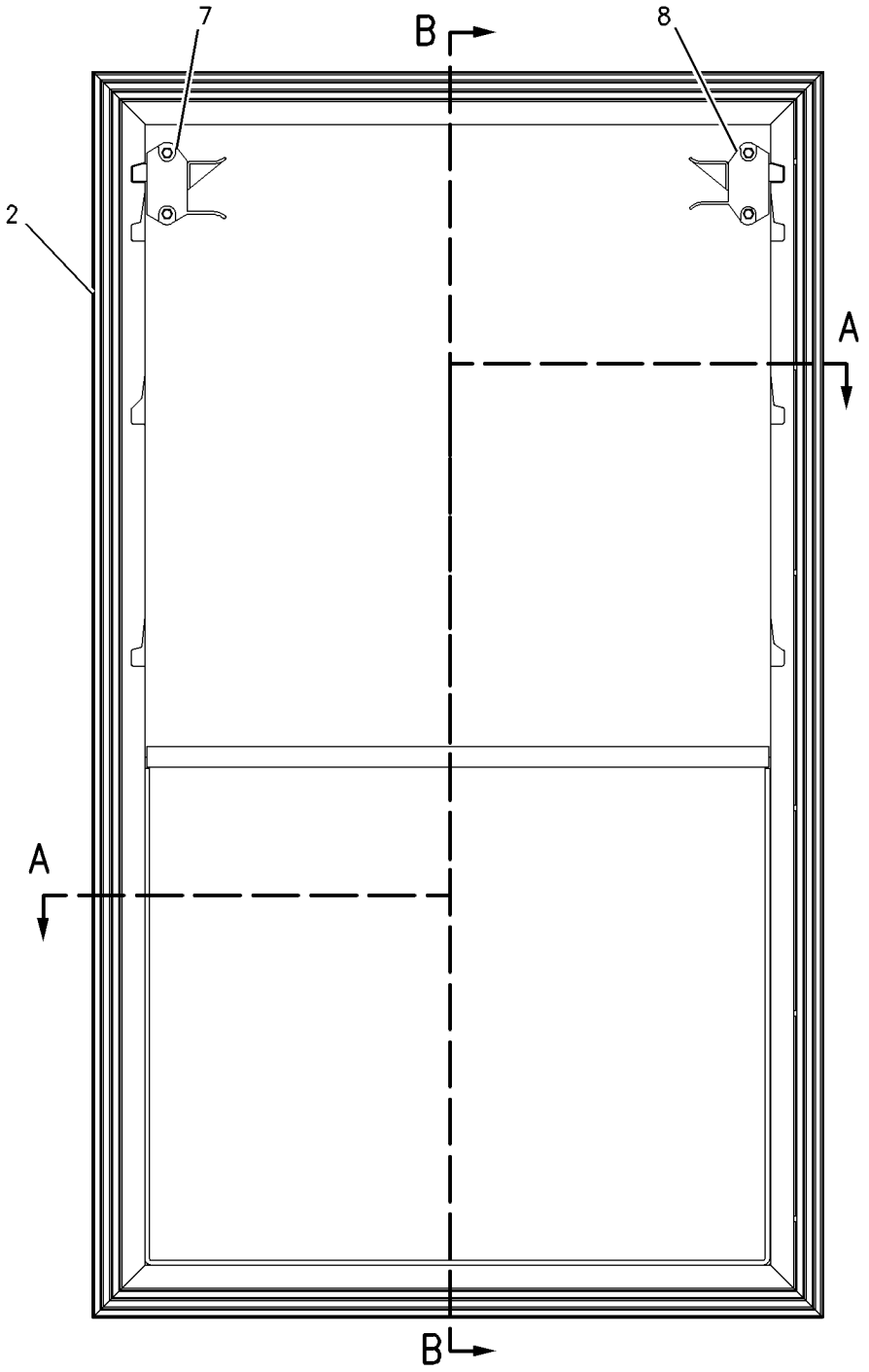

GRAPHIC #1 **<END>** g00758887

223-4793 WIPER & WASHER GP-WINDOW

S/N: TJL1-1468
PART OF 259-4423, 339-6602 CAB AR
AN ATTACHMENT

SMCS-7305, 7306

i03649423

NOTE	REF NO	GRAPHIC REF	PART NUMBER	QTY	PART NAME 1 2 3 4 5 6 (PRODUCT LEVEL)	SEE PAGE
	1	1	**5C-8811**	1	BLADE AS-WIPER (500-MM) (REAR WINDOW)	
	2	1	**6V-7419**	1	BLADE AS-WIPER (700-MM) (FRONT WINDOW)	
	3	1	**8T-5400**	2	CONNECTOR AS	
	4	1	**112-5869**	1	ARM AS-WINDOW WIPER (REAR)	
Y	5	1	**155-4774**	1	TANK GP-WINDOW WASHER	488
	6	1	**155-5779**	1	WIPER PIVOT AS	
Y	7	1	**155-5783**	1	MOTOR GP-WINDOW WIPER (24-VOLT) (FRONT)	440
	8	1	**169-0502**	1	PLATE AS	
Y	9	1	**214-7636**	1	ARM GP-WINDOW WIPER (FRONT)	375
Y	10	1	**239-4009**	1	MOTOR GP-WINDOW WIPER (24-VOLT) (REAR)	441
	11	1	**8T-4121**	2	WASHER-HARD (11X21X2.5-MM THK)	
M	12	1	**8T-4195**	2	BOLT (M10X1.5X30-MM)	
M	13	1	**9X-2045**	1	SCREW-TRUSS HEAD (M6X1X20-MM)	
E	14	1	**144-0195**		HOSE (250-CM)	
E	14A	1	**144-0195**		HOSE (290-CM)	
E	15	1	**194-5171**		HOSE (43-CM)	

E - ORDER BY THE CENTIMETER
M - METRIC PART
Y - SEPARATE ILLUSTRATION

223-4793 **WIPER & WASHER GP-WINDOW (*contd.*)** **i03649423**

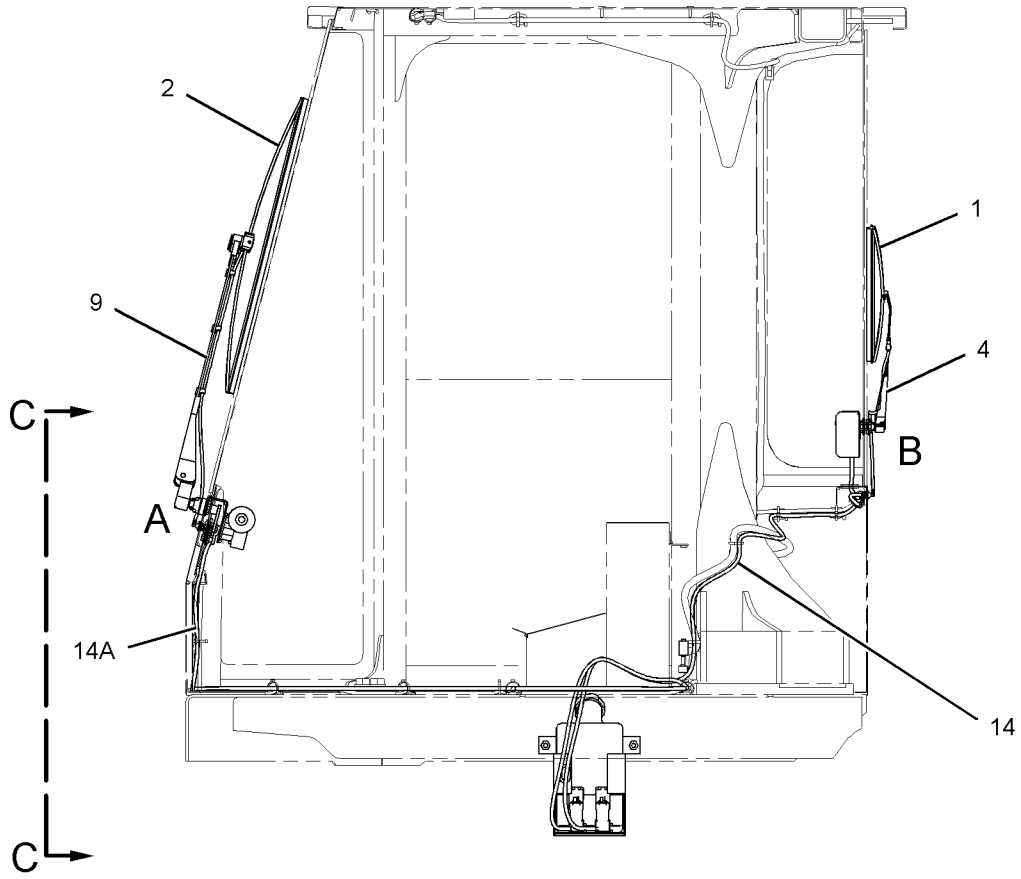

LEFT SIDE VIEW

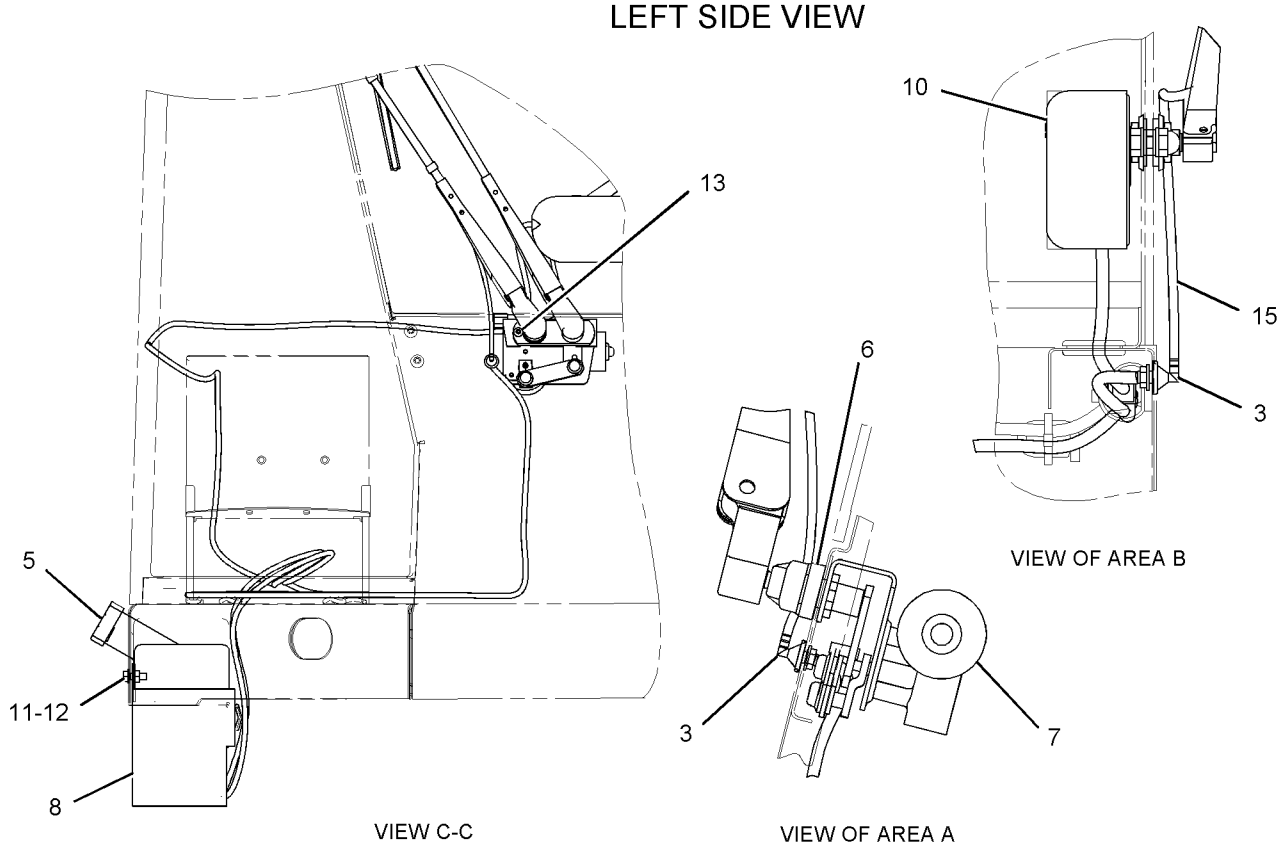

VIEW OF AREA B

VIEW C-C

VIEW OF AREA A

GRAPHIC #1 **<END>** g01040483

223-4793 WIPER & WASHER GP-WINDOW

S/N: TJL1469-UP
PART OF 339-6602 CAB AR
AN ATTACHMENT

SMCS-7305, 7306

i04377197

NOTE	REF NO	GRAPHIC REF	PART NUMBER	QTY	PART NAME 1 2 3 4 5 6 (PRODUCT LEVEL)	SEE PAGE
	1	1	**5C-8811**	1	BLADE AS-WIPER (500-MM) (REAR)	
	2	1	**6V-7419**	1	BLADE AS-WIPER (700-MM) (FRONT)	
	3	1	**8T-5400**	2	CONNECTOR AS	
	4	1	**112-5869**	1	ARM AS-WINDOW WIPER (REAR)	
E		1	**194-5171**		HOSE (43-CM)	
		1	**305-9192**	1	NOZZLE AS-WASHER	
Y	5	1	**155-4774**	1	TANK GP-WINDOW WASHER	488
	6	1	**155-5779**	1	WIPER PIVOT AS	
Y	7	1	**155-5783**	1	MOTOR GP-WINDOW WIPER (24-VOLT) (FRONT)	440
	8	1	**169-0502**	1	PLATE AS	
		1	**7T-1099**	1	LINK	
M		1	**8T-3490**	2	NUT-WELD (M10X1.5-THD)	
Y	9	1	**214-7636**	1	ARM GP-WINDOW WIPER (FRONT)	375
CY	10	1	**330-5044**	1	MOTOR GP-WINDOW WIPER (24-VOLT) (REAR)	442
	11	1	**8T-4121**	2	WASHER-HARD (11X21X2.5-MM THK)	
M	12	1	**8T-4195**	2	BOLT (M10X1.5X30-MM)	
M	13	1	**9X-2045**	1	SCREW-TRUSS HEAD (M6X1X20-MM)	
E	14	1	**144-0195**		HOSE (250-CM)	
E	14A	1	**144-0195**		HOSE (290-CM)	
E	15	1	**194-5171**		HOSE (43-CM)	

C - CHANGE FROM PREVIOUS TYPE
E - ORDER BY THE CENTIMETER
M - METRIC PART
Y - SEPARATE ILLUSTRATION

223-4793 **WIPER & WASHER GP-WINDOW (*contd.*)** **i04377197**

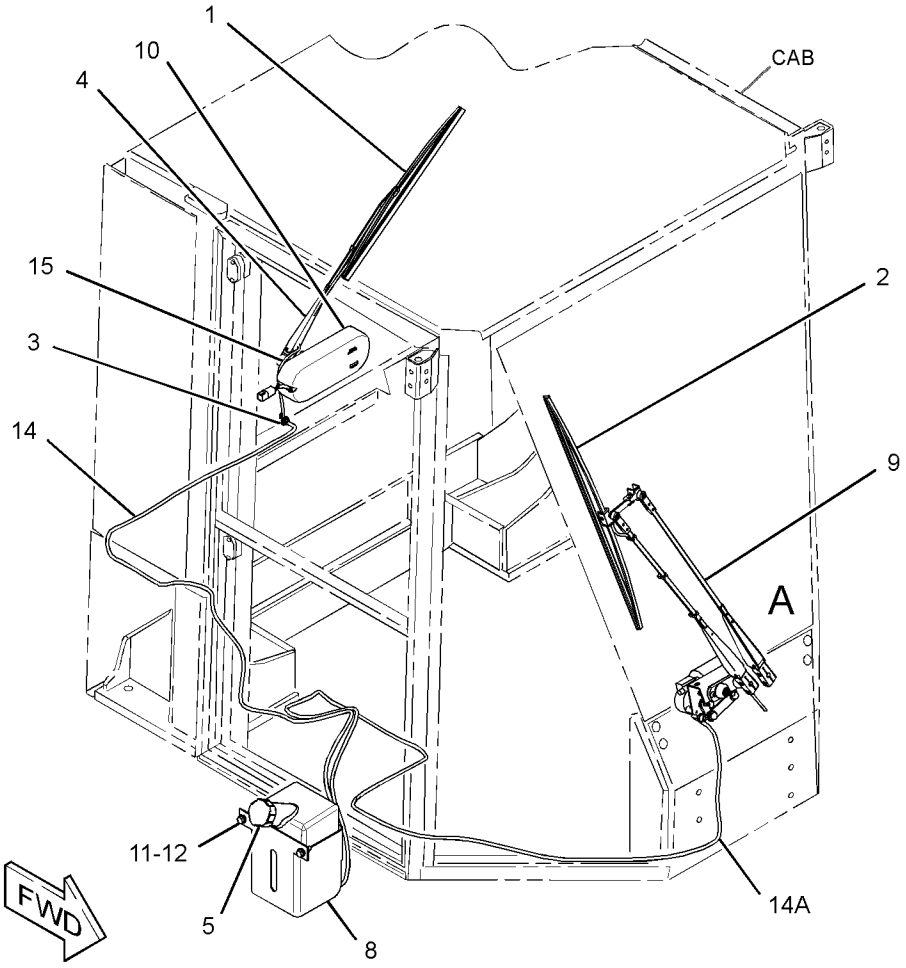

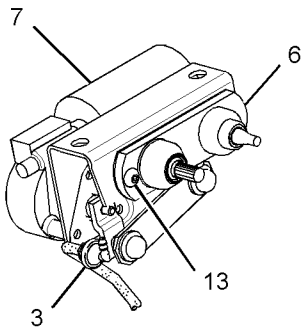

VIEW OF AREA A
(WINDOW WIPER ARM REMOVED
FOR CLARITY)

GRAPHIC #1 **<END>** g02503276

201-0183 FILM GP–STRIPE

S/N: TJL1-623
PART OF 227-5595 OPERATOR AR
AN ATTACHMENT

SMCS-7405, 7557

i03079541

NOTE	REF NO	GRAPHIC REF	PART NUMBER	QTY	PART NAME 1 2 3 4 5 6 (PRODUCT LEVEL)	SEE PAGE
	1	1	**201-4169**	1	FILM-STRIPE (LH)	
	2	1	**201-4170**	1	FILM-STRIPE (RH)	

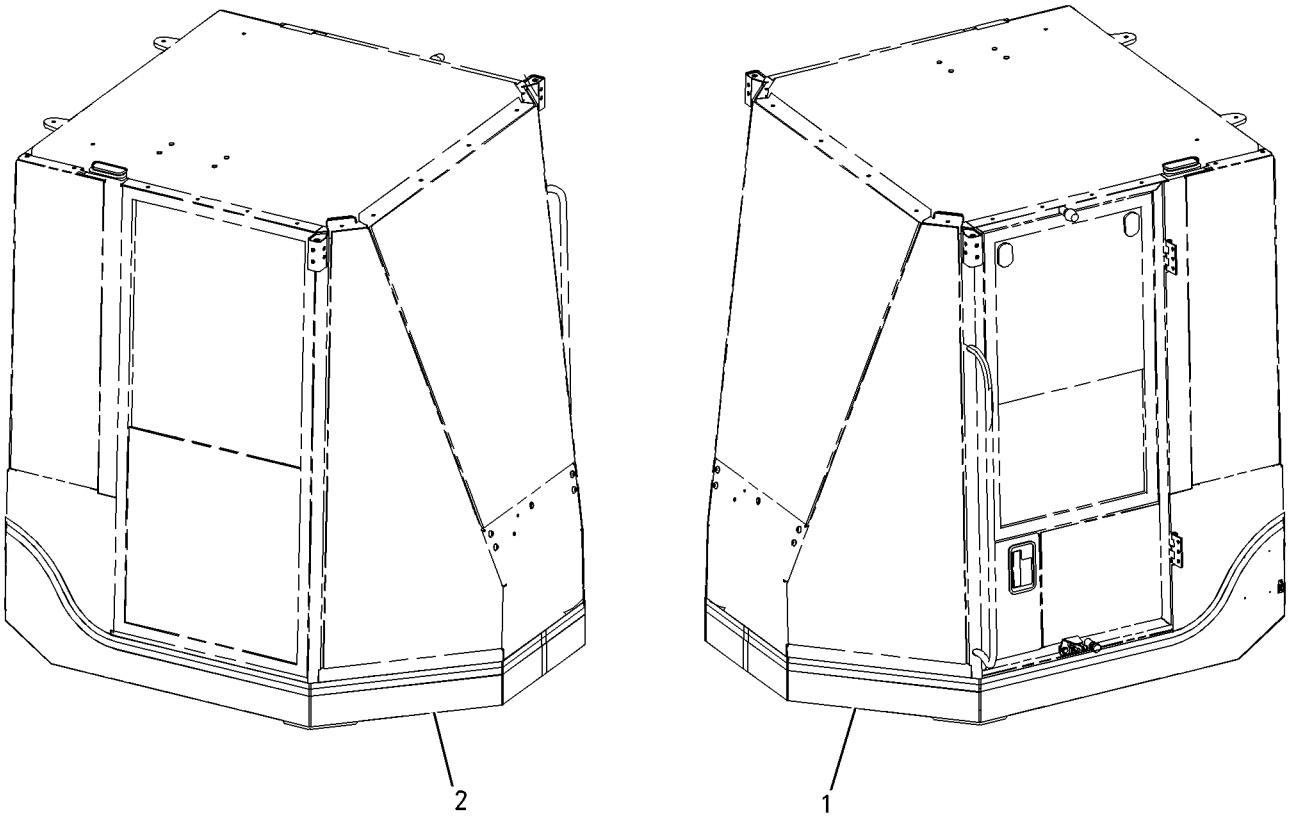

GRAPHIC #1

<END>

g00876809

SERVICE EQUIPMENT AND SUPPLIES

333-9214 FILM GP–KOREAN

S/N: TJL1-UP

AN ATTACHMENT

SMCS-7405, 7557 **i03354963**

NOTE	REF NO	GRAPHIC REF	PART NUMBER	QTY	PART NAME 1 2 3 4 5 6 (PRODUCT LEVEL)	SEE PAGE
	1	1	**3E-8140**	2	PLATE-WARNING (NO CLEARANCE)	
	2	1	**163-8783**	1	PLATE-WARNING-ROPS/FOPS	
	3	1	**169-3196**	1	PLATE-WARNING-ROPS/FOPS	
	4	1	**219-0305**	1	FILM-WARNING (NO WELD, NO DRILL, READ OMM)	
	5	1	**333-8414**	1	FILM-WARNING (READ OMM, KOREAN)	
	6	1	**333-8413**	1	FILM-WARNING (CONTROL)	

333-9214 **FILM GP (*contd.*)** **i03354963**

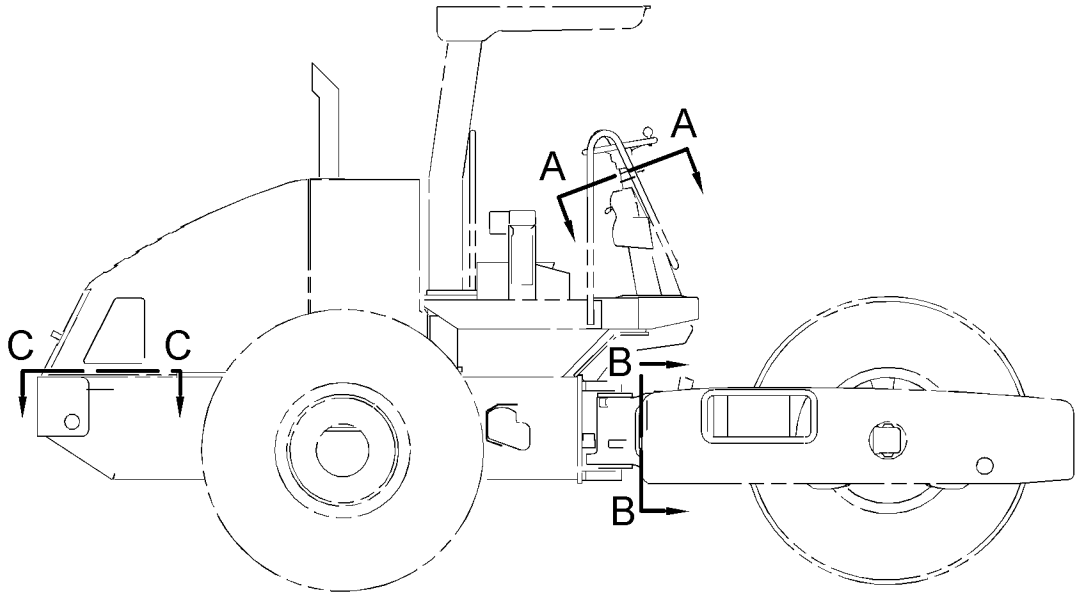

RIGHT SIDE VIEW

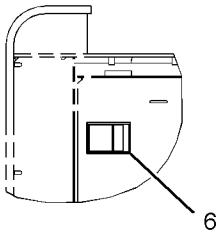

VIEW C-C

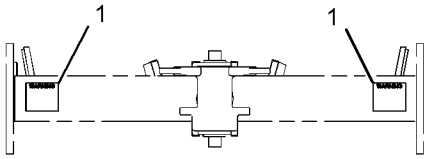

VIEW B-B

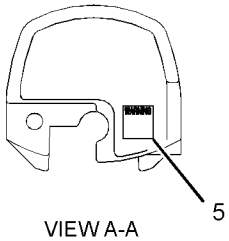

VIEW A-A

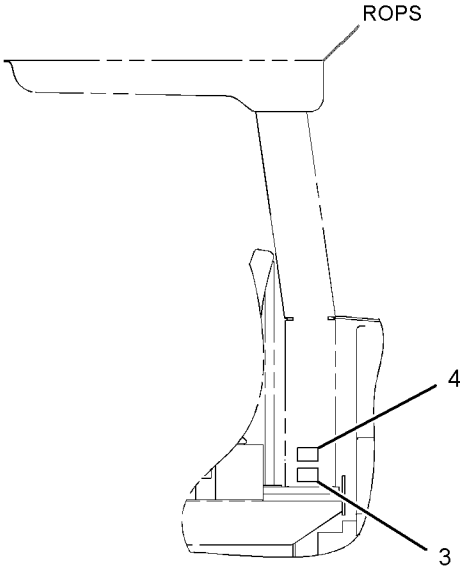

LEFT SIDE VIEW

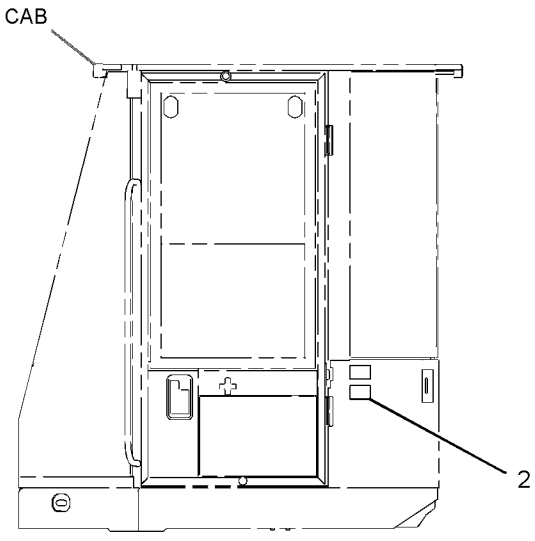

LEFT SIDE VIEW
(ALTERNATE VIEW)

GRAPHIC #1

<END>

g01779603

220-8539 PLATE & FILM GP

S/N: TJL1-UP

PART OF 239-0794 CHASSIS AR

SMCS-7405, 7557, 7563 **i03437116**

NOTE	REF NO	GRAPHIC REF	PART NUMBER	QTY	PART NAME 1 2 3 4 5 6 (PRODUCT LEVEL)	SEE PAGE
	1	1	**304-8925**	1	FILM-STRIPE (RH)	
	2	1	**4P-6422**	1	FILM-WARNING (NO ETHER SPRAY/AIR INTAKE)	
	3	1	**246-2641**	1	PADLOCK GP	
		1	**5P-8500**	1	KEY (HYDRAULIC TANK)	
	4	1	**7X-3229**	4	FILM-IDENTIFICATION (LIFT EYE, TIE-DOWN LOCATION)	
	5	1	**239-6986**	1	PLATE-SERIAL NUMBER (MACHINE)	
	7	1	**158-7864**	1	FILM-IDENTIFICATION (HYDRAULIC OIL)	
	8	1	**190-2938**	1	FILM-WARNING (ENG COOLANT PRESSURE, READ OMM)	
	9	1	**190-5386**	2	FILM-STRIPE (ROUND RED REFLECTIVE)	
	10	1	**214-1737**	4	FILM-INFORMATION (JACKING POINT)	
	11	1	**234-3390**	1	FILM-INFORMATION (HYDRAULIC OIL LEVEL)	
	14	1	**292-4428**	1	FILM-IDENTIFICATION (CATERPILLAR)	
	15	1	**224-7717**	1	FILM-WARNING (SEAT BELT, U.S.)	
	18	1	**292-4427**	2	FILM-IDENTIFICATION (CAT HOOD)	
	19	1	**304-7855**	2	FILM-IDENTIFICATION (CS533E)	
	20	1	**304-8924**	1	FILM-STRIPE (LH)	

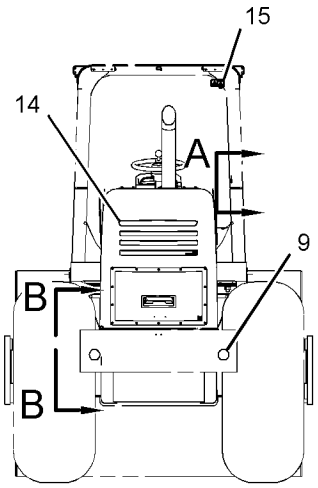

REAR VIEW

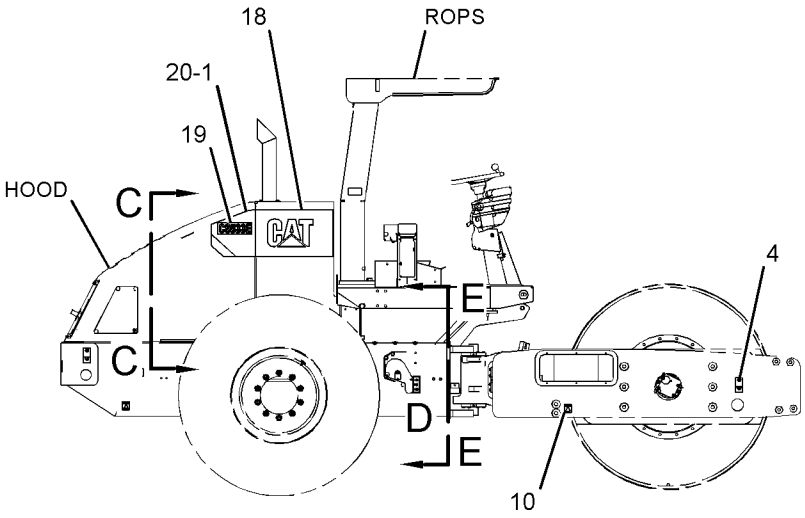

RIGHT SIDE VIEW

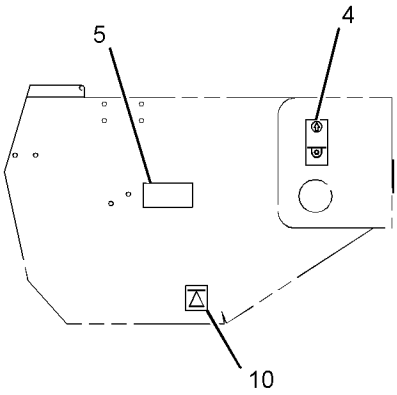

VIEW B-B

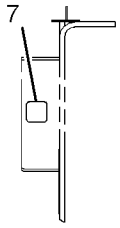

VIEW E-E

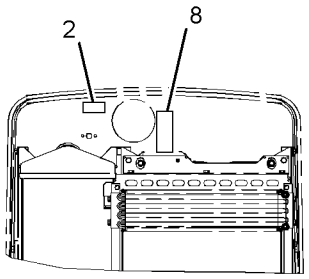

VIEW C-C

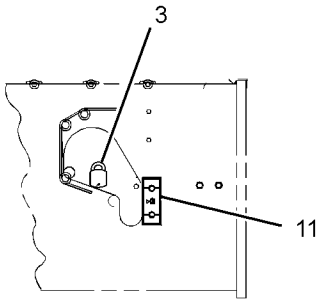

VIEW OF AREA D

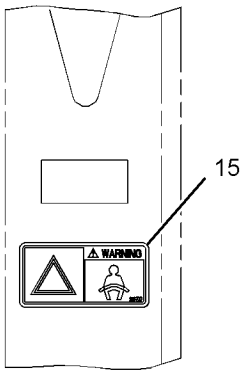

VIEW A
(ALTERNATE LOCATION FOR CAB)

GRAPHIC #1 **<END>** g01420104

224-0857 PLATE & FILM GP–ENGLISH

S/N: TJL1-UP

PART OF 368-9181, 368-9182, 376-1392 DISTRIBUTION AR

AN ATTACHMENT

SMCS-7405, 7557, 7563

i04936965

NOTE	REF NO	GRAPHIC REF	PART NUMBER	QTY	PART NAME 1 2 3 4 5 6 (PRODUCT LEVEL)	SEE PAGE
	1	2	**3E-8140**	2	PLATE-WARNING (NO CLEARANCE)	
	2	1	**6V-4611**	1	FILM-WARNING (JUMP START, READ OMM)	
	3	2	**163-8783**	1	PLATE-WARNING-ROPS/FOPS	
	4	2	**169-3196**	1	PLATE-WARNING-ROPS/FOPS	
	5	1	**216-4881**	1	FILM-WARNING (READ OMM)	
	6	2	**219-0305**	2	FILM-WARNING (NO WELD, NO DRILL, READ OMM)	
	7	1	**367-0844**	1	FILM-INSTRUCTION (FUEL, READ OMM)	

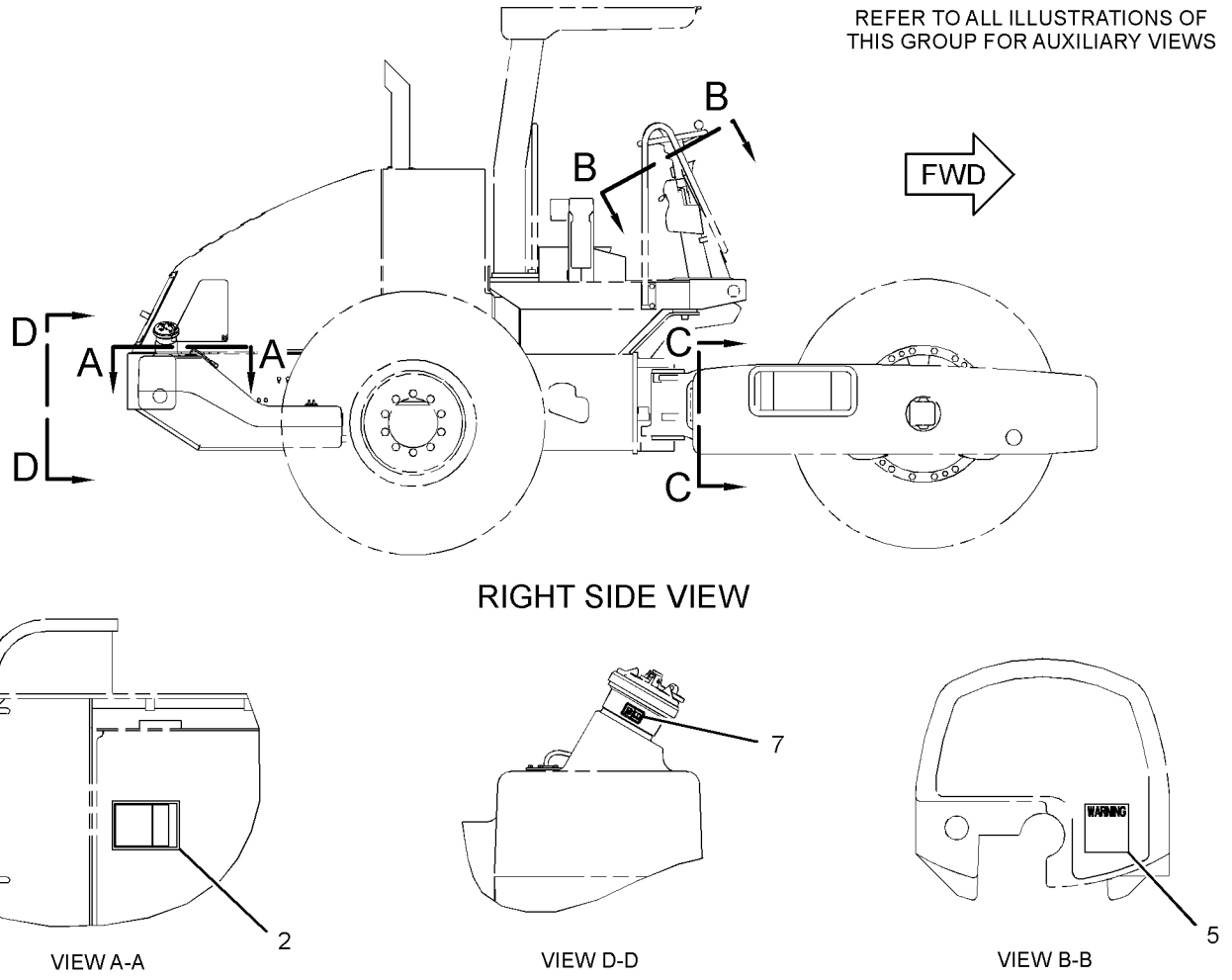

GRAPHIC #1

g02986480

224-0857 **PLATE & FILM GP (*contd.*)** **i04936965**

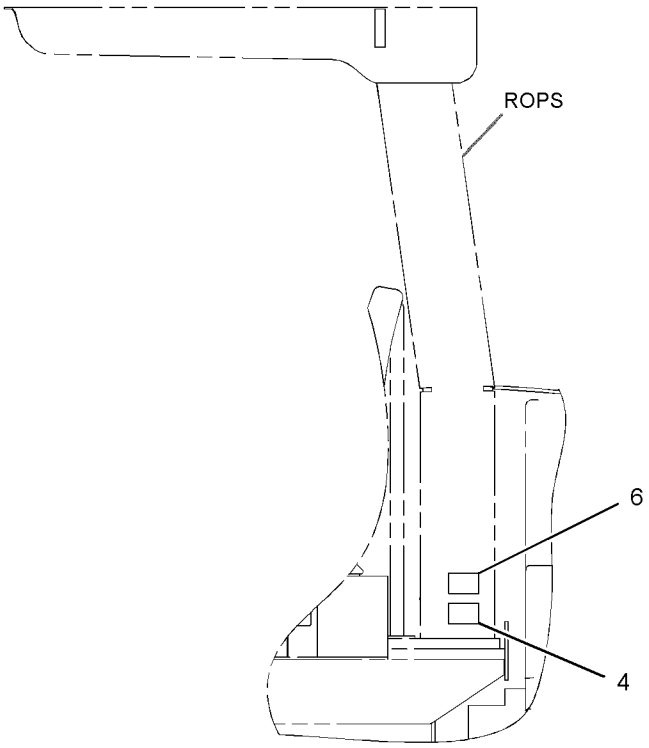

LEFT SIDE VIEW

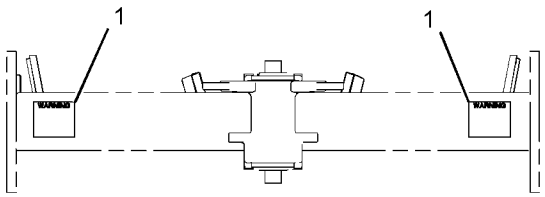

VIEW C-C

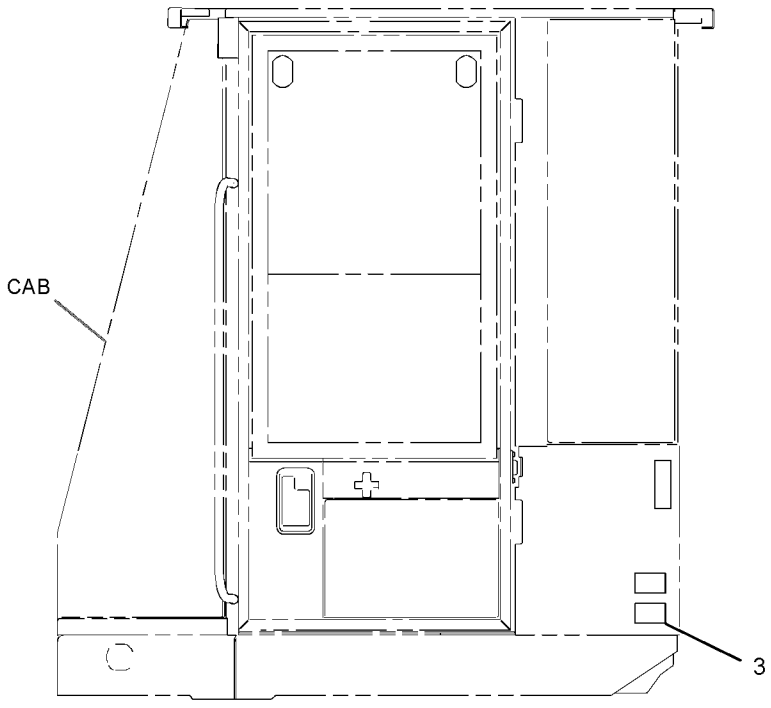

LEFT SIDE VIEW
(ALTERNATE VIEW)

GRAPHIC #2 **<END>** g01558993

224-0858 PLATE & FILM GP–FRENCH

S/N: TJL1-UP

AN ATTACHMENT

SMCS-7405, 7557, 7563 **i03045632**

NOTE	REF NO	GRAPHIC REF	PART NUMBER	QTY	PART NAME 1 2 3 4 5 6 (PRODUCT LEVEL)	SEE PAGE
	1	2	**3E-8140**	2	PLATE-WARNING (NO CLEARANCE)	
	2	1	**6V-4612**	1	FILM-WARNING (JUMP START, READ OMM)	
	3	2	**163-8783**	1	PLATE-WARNING-ROPS/FOPS	
	4	2	**169-3196**	1	PLATE-WARNING-ROPS/FOPS	
	5	1	**215-1445**	1	FILM-WARNING (OPERATING INSTRUCTIONS)	
	6	2	**219-0305**	1	FILM-WARNING (NO WELD, NO DRILL, READ OMM)	

REFER TO ALL ILLUSTRATIONS OF THIS GROUP FOR AUXILIARY VIEWS

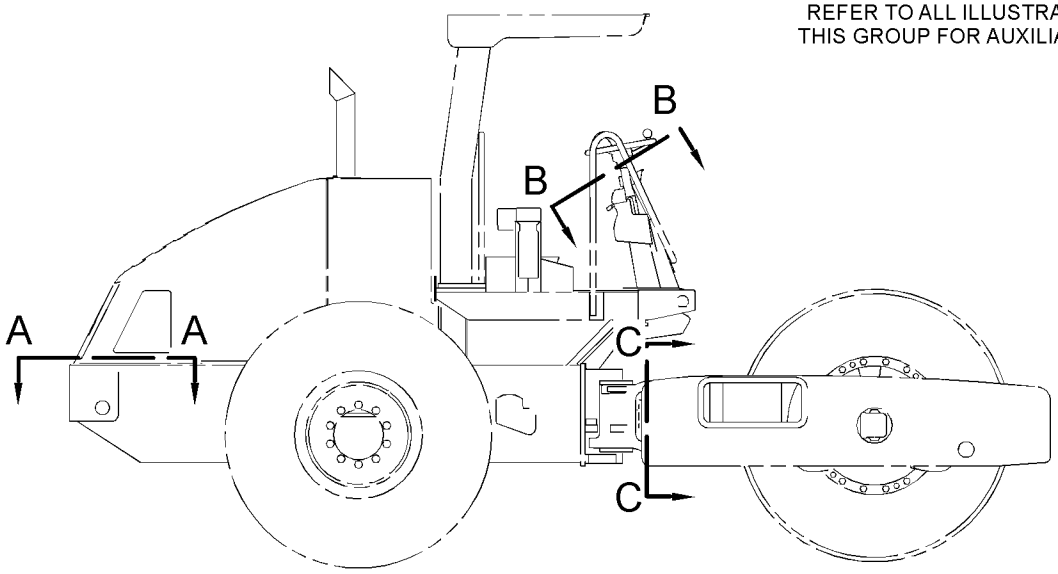

RIGHT SIDE VIEW

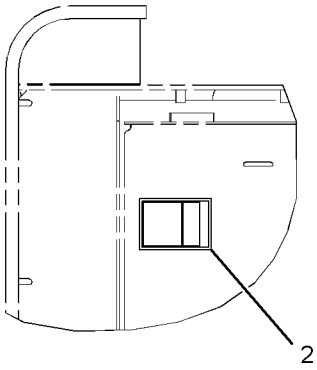

VIEW A-A

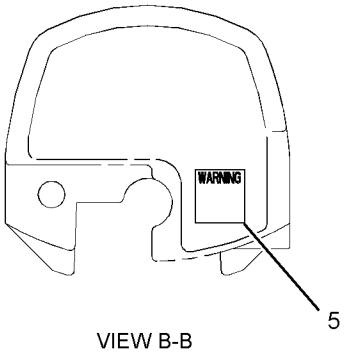

VIEW B-B

GRAPHIC #1 g01559393

224-0858 **PLATE & FILM GP (*contd.*)** **i03045632**

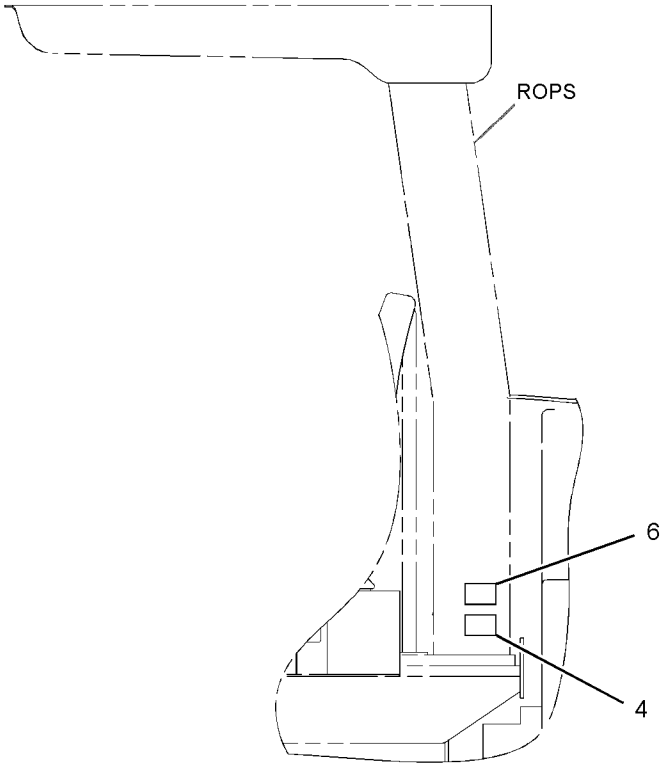

LEFT SIDE VIEW

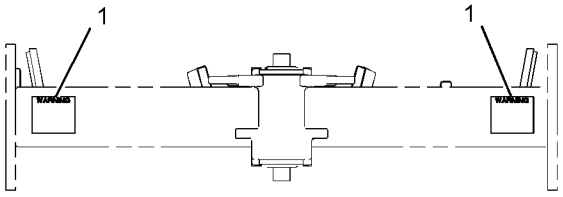

VIEW C-C

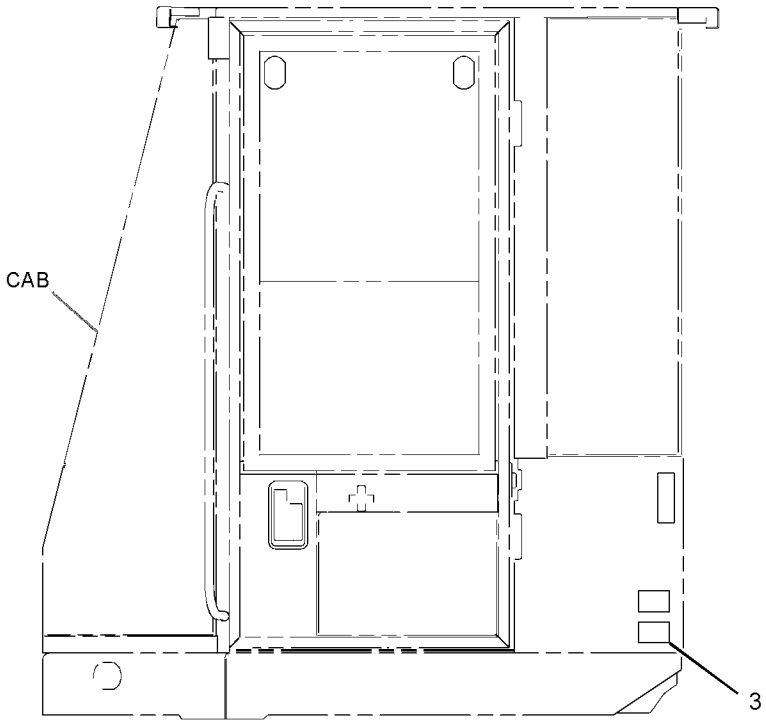

LEFT SIDE VIEW
(ALTERNATE VIEW)

GRAPHIC #2 **<END>** g01559394

224-0859 PLATE & FILM GP–SPANISH

S/N: TJL1-UP

AN ATTACHMENT

SMCS-7405, 7557, 7563 **i03045671**

NOTE	REF NO	GRAPHIC REF	PART NUMBER	QTY	PART NAME 1 2 3 4 5 6 (PRODUCT LEVEL)	SEE PAGE
	1	1	**3E-8140**	2	PLATE-WARNING (NO CLEARANCE)	
	2	1	**6V-4613**	1	FILM-WARNING (JUMP START, READ OMM)	
	3	1	**163-8783**	1	PLATE-WARNING-ROPS/FOPS	
	4	1	**169-3196**	1	PLATE-WARNING-ROPS/FOPS	
	5	1	**215-1446**	1	FILM-WARNING (OPERATING INSTRUCTIONS)	
	6	1	**219-0305**	1	FILM-WARNING (NO WELD, NO DRILL, READ OMM)	

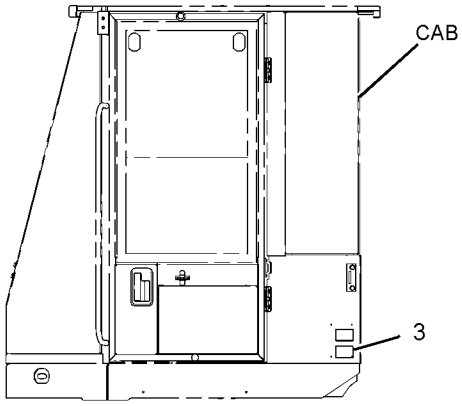

LEFT SIDE VIEW
(ALTERNATE VIEW)

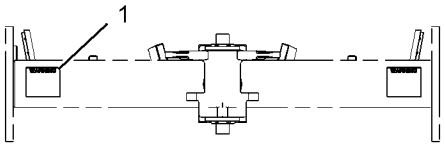

VIEW C-C

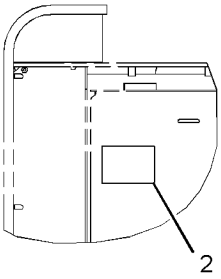

VIEW A-A

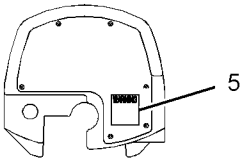

VIEW B-B

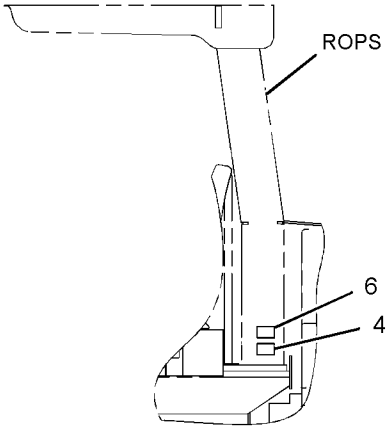

LEFT SIDE VIEW

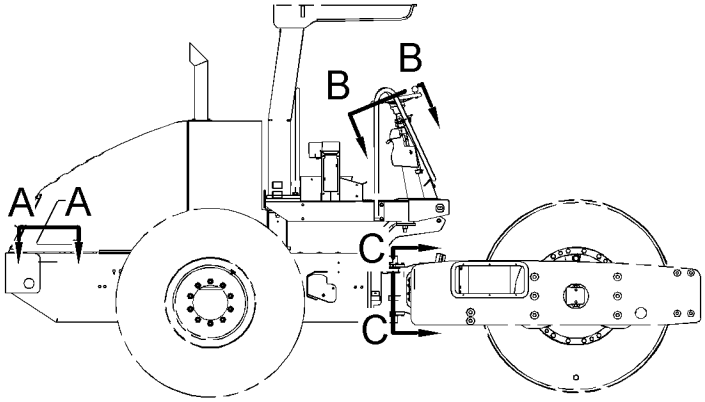

RIGHT SIDE VIEW

GRAPHIC #1 **<END>** g01560259

224-0860 PLATE & FILM GP–PORTUGUESE

S/N: TJL1-UP

AN ATTACHMENT

SMCS-7405, 7557, 7563

i03045728

NOTE	REF NO	GRAPHIC REF	PART NUMBER	QTY	PART NAME 1 2 3 4 5 6 (PRODUCT LEVEL)	SEE PAGE
	1	2	**3E-8140**	2	PLATE-WARNING (NO CLEARANCE)	
	2	1	**6V-4614**	1	FILM-WARNING (JUMP START, READ OMM)	
	3	2	**163-8783**	1	PLATE-WARNING-ROPS/FOPS	
	4	2	**169-3196**	1	PLATE-WARNING-ROPS/FOPS	
	5	1	**215-1447**	1	FILM-WARNING (OPERATING INSTRUCTIONS)	
	6	2	**219-0305**	1	FILM-WARNING (NO WELD, NO DRILL, READ OMM)	

REFER TO ALL ILLUSTRATIONS OF THIS GROUP FOR AUXILIARY VIEWS

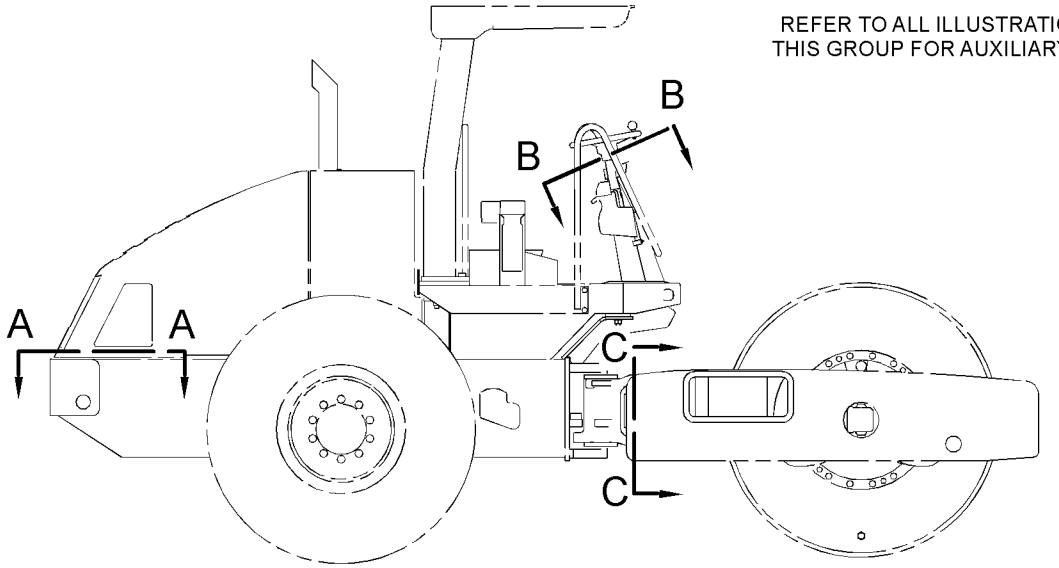

RIGHT SIDE VIEW

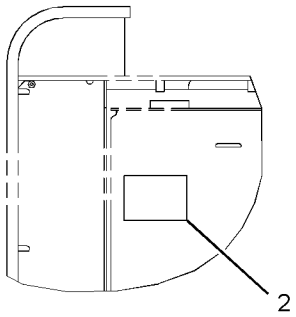

VIEW A-A

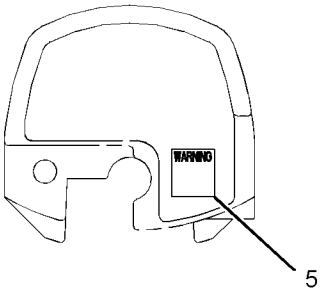

VIEW B-B

GRAPHIC #1

g01556594

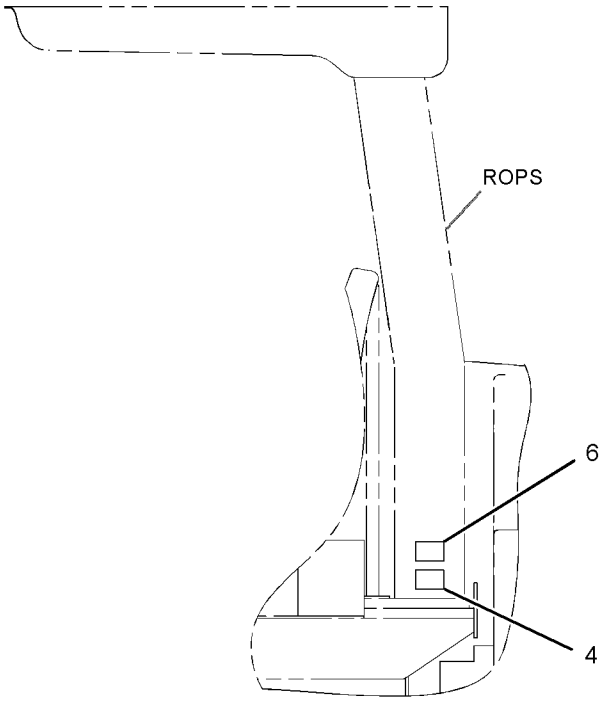

LEFT SIDE VIEW

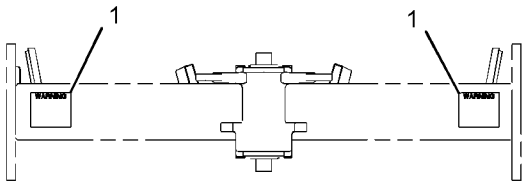

VIEW C-C

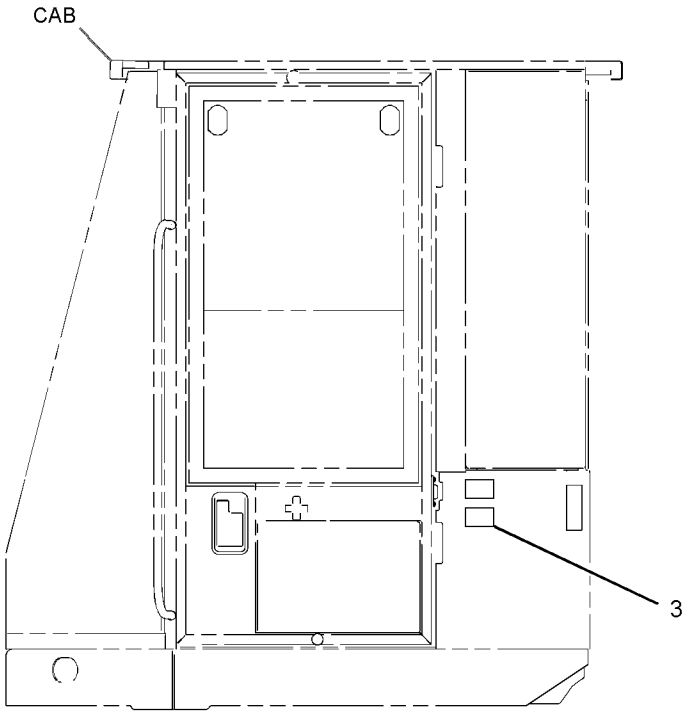

LEFT SIDE VIEW
(ALTERNATE VIEW)

GRAPHIC #2 **<END>** g01556613

224-0864 PLATE & FILM GP–RUSSIAN

S/N: TJL1-UP

AN ATTACHMENT

SMCS-7405, 7557, 7563 **i03045746**

NOTE	REF NO	GRAPHIC REF	PART NUMBER	QTY	PART NAME 1 2 3 4 5 6 (PRODUCT LEVEL)	SEE PAGE
	1	2	**3E-8140**	2	PLATE-WARNING (NO CLEARANCE)	
	2	1	**8T-4904**	1	FILM-WARNING (JUMP START, READ OMM)	
	3	2	**163-8783**	1	PLATE-WARNING-ROPS/FOPS	
	4	2	**169-3196**	1	PLATE-WARNING-ROPS/FOPS	
	5	1	**215-1451**	1	FILM-WARNING (OPERATING INSTRUCTIONS)	
	6	2	**219-0305**	1	FILM-WARNING (NO WELD, NO DRILL, READ OMM)	

REFER TO ALL ILLUSTRATIONS OF THIS GROUP FOR AUXILIARY VIEWS

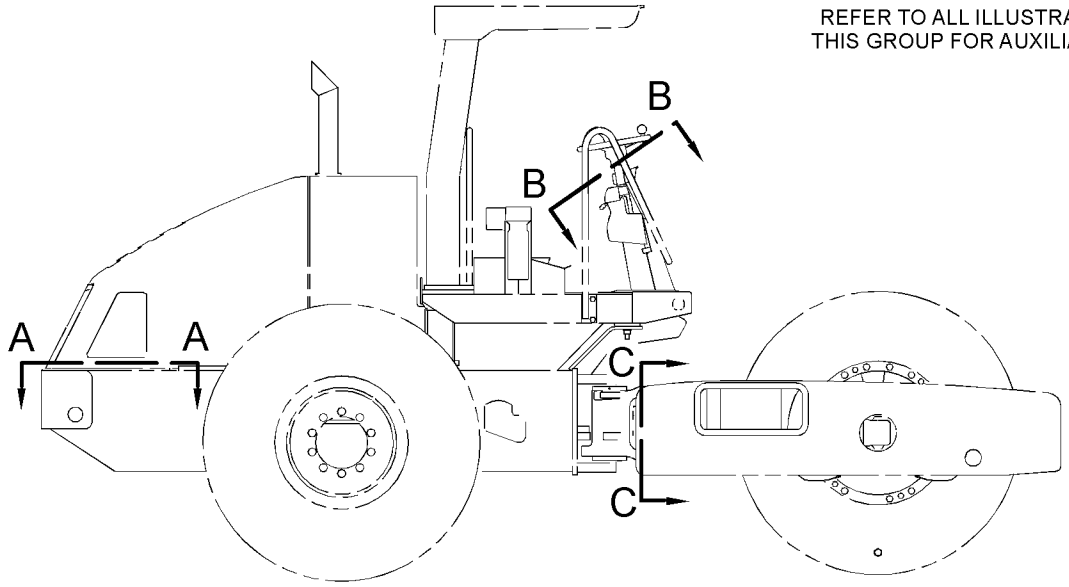

RIGHT SIDE VIEW

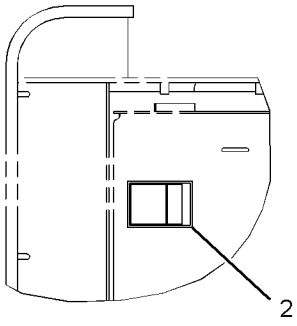

VIEW A-A

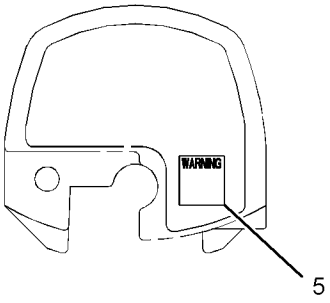

VIEW B-B

GRAPHIC #1 g01558254

224-0864 **PLATE & FILM GP (*contd.*)** **i03045746**

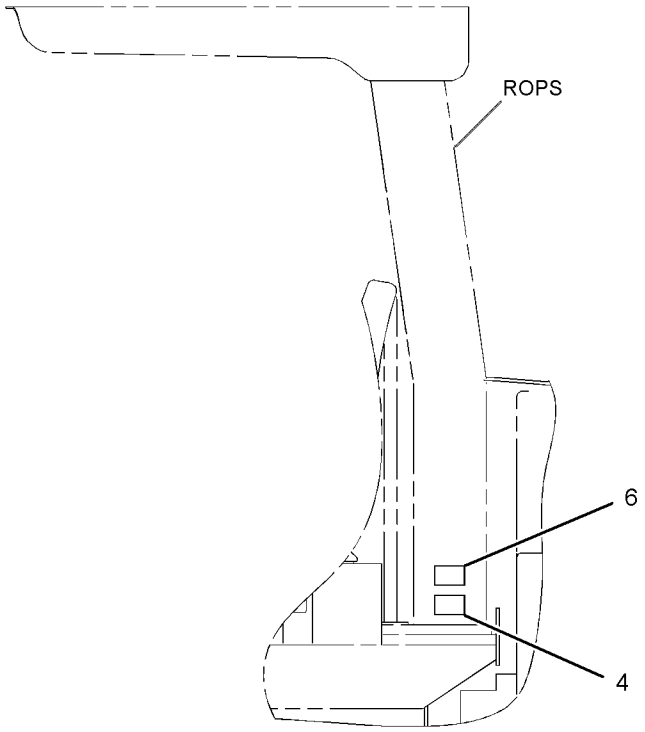

LEFT SIDE VIEW

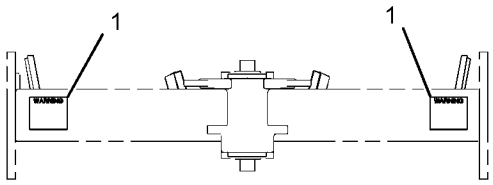

VIEW C-C

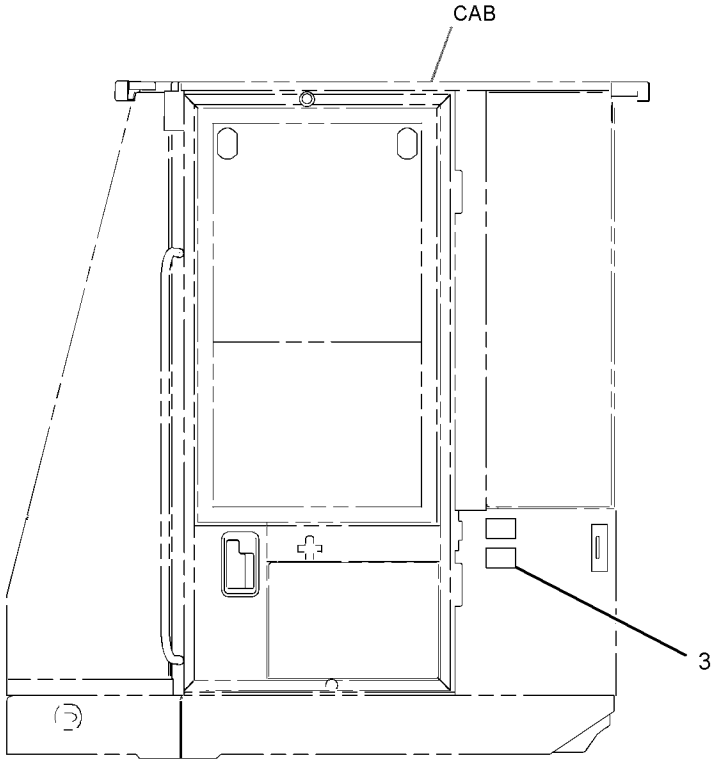

LEFT SIDE VIEW
(ALTERNATE VIEW)

GRAPHIC #2 **<END>** g01558274

439-5275 PLATE & FILM GP

S/N: TJL1-UP

AN ATTACHMENT

SMCS-7405, 7557, 7563 **i05335974**

NOTE	REF NO	GRAPHIC REF	PART NUMBER	QTY	PART NAME 1 2 3 4 5 6 (PRODUCT LEVEL)	SEE PAGE
	1	1	**392-8754**	1	PLATE-SERIAL NUMBER	

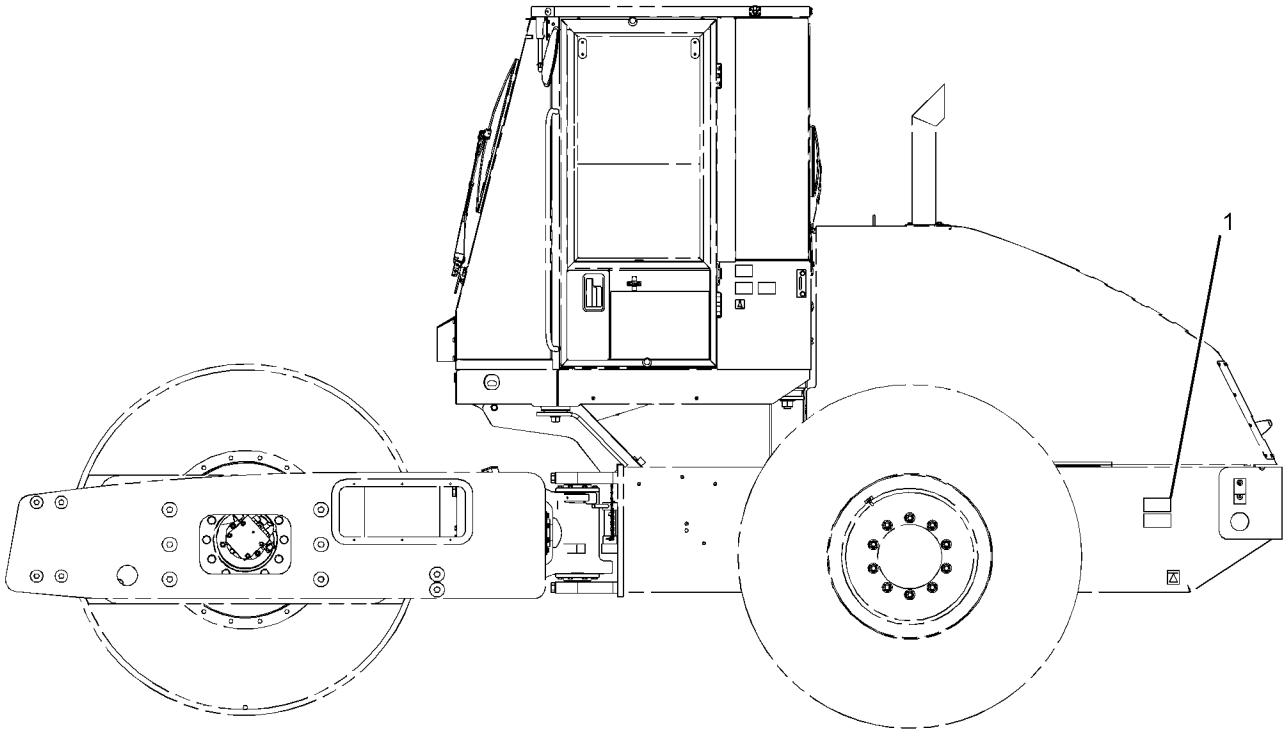

LEFT SIDE VIEW

GRAPHIC #1 **<END>** g03384339

PART NUMBER INDEX

Part	Page
0	
0S-1603	30
0T-0924	29
1	
1B-3925	267
1B-8736	8
	13
	54
1G-3410	330
	331
1G-3455	344
1G-6423	316
1G-7663	336
1G-8878	300
1G-9959	173
	178
	218
	455
1G-9960	123
	410
	415
	417
	426
	428
1H-1360	430
1H-3338	166
	167
1K-6872	389
1L-2279	430
1L-6366	468
1M-4543	415
	417
1M-6119	123
1M-6120	123
1P-3702	357
1P-4278	51
	66
	74
	75
	98
1P-5765	357
1P-6522	368
	372
	421
1P-6886	76
1R-1804	86
1S-7251	123
1S-7252	123
1U-8846	211
1V-6585	430
2	
2A-4133	387
2B-0858	25
	45
2D-0598	211
	213
2D-2631	243
	246
	247
	248
	249
	250
2D-3468	264
2D-6533	204
2G-5786	173
	178
2H-3920	371
	420
	455
	457
2H-3922	163
	368
	372
2H-3923	368
	372
2H-3935	265
2L-8050	173
2L-8051	456
2L-8054	457
2L-8061	457
2L-8065	452
	456
2L-8069	152
2L-8071	452
	456
2L-8074	152
	153
2L-8075	150
2L-8076	129
	174
	179
	415
	417
2L-8077	129
2L-8079	174
	179
2L-8081	173
	179
	411
	486
2M-9780	196
	198
	200
	202
	222
	224
	234
	291
	316
	318
	320
	336
	357
	360
	362
2N-1931	66
2N-2371	152
	448
	460
2N-3480	452
	457
2P-4339	455
2P-4471	265
2S-3440	118
2S-3745	368
	421
2S-4078	336
2T-1718	256
2T-3360	392
2V-7087	94
	152
	448
	460
	464
2V-7088	152
	448
	460
2Y-9286	294
3	
3B-4501	372
3B-4611	387
3B-6487	76
3B-6552	174
	179
3B-7255	174
	179
	430
3B-8485	285
3D-2824	196
	198
	200
	202
	222
	224
	234
	292
	300
	312
	314
	360
	362
3D-7805	354
3E-1841	368
	372
	421
3E-1906	▶383
	384
3E-2028	173
	178
3E-3365	120
3E-3371	161
3E-3383	136
	138
	140
	142
	455
3E-3389	455
3E-3805	400
3E-4051	384
3E-4052	384
3E-4057	384
3E-4058	384
3E-4367	173
	178
3E-4883	468
3E-5239	94
	115
	152
3E-5464	372
3E-6328	▶120
	451
	455
3E-6731	323
	325
3E-6769	341
3E-8020	269
	271
3E-8140	502
	506
	508
	510
	511
	513
3E-8320	123
3E-8558	173
	178
3E-9862	398
3E-9865	390
3F-5950	267
3F-7147	222
3F-9556	441
	442
3J-1907	88
	196
	198
	200
	202
	234
	279
	281
	282
	283
	291
	292
	300
	306
	323
	325
	327
	328
	338
3J-7354	51
	196
	198
	200
	202
	222
	224
	234
	235
	283
	300
	362
3K-0360	51
	118
	234
	291
	300
	312
	314
	336
	340
	360
	362
	365
	392
	394
	396
3K-0715	235
	292
	323
	325
	328
	359
3K-5761	390
3K-6060	435
	438
3L-8187	94
	115
	147
	150
	153
	158
	159
	371
	449
	452
	455
	457
	460
	461
	464
	465
3P-1823	51
3S-2093	90

► **PRIMARY REFERENCE**

PART NUMBER INDEX

Part	Page
	92
	123
	147
	150
	152
	170
	171
	172
	173
	178
	368
	372
	384
	421
	426
	428
	448
	451
	455
	460
	464
	486
3S-6049	123
3S-6050	123
3T-5201	400
3T-5760	123

4

4B-1282	390
4B-2043	409
	486
4B-2049	153
4B-4158	353
	354
4B-4274	174
	179
	398
	452
	457
4B-4863	153
4D-7794	153
4E-0916	311
4E-1062	387
4E-1384	400
4E-2161	424
4F-2294	165
	168
	169
4J-5309	304
4J-5351	316
4J-5477	196
	198
	200
	202
	220
	222
	224
	234
	235
	279
	282
	283
	285
	336
	338
	398
4K-4639	179
4K-9821	76
4K-9822	76
4L-1250	390
4L-6454	285
4N-9891	384
4P-6422	504
4P-7428	37
	171
	174
	179
	360
4P-7581	96
	171
	174
	179
	452
	457
4P-8134	90
	92
	426
	428
	448
	461
	464
4V-0612	94
	98
	430
4V-2057	285
4V-7740	152

5

5A-3604	478
5B-3180	390
5B-9079	50
	53
5C-2874	174
	179
	279
	398
	411
5C-2890	76
	90
	92
	94
	115
	145
	153
	166
	167
	174
	179
	256
	387
	400
	410
	411
	430
	435
	448
	452
	457
	461
	464
	486
5C-3370	208
5C-7261	74
	75
	76
	94
	115
	150
	269
	271
	287
	400
	404
	411
	430
	432
	438
	441
	442
	449
	478
	479
5C-8312	369
5C-8811	497
	499
5C-9553	70
	368
	372
	387
	421
	435
	477
5C-9583	144
5D-1026	10
	51
	94
	98
5D-9629	451
	455
5E-9892	260
5H-4909	190
	192
5H-6734	211
	213
5J-2974	228
	316
5J-3886	323
	325
5J-4715	174
	179
5K-5068	174
	179
5K-9090	336
5K-9179	436
5L-4995	28
5L-7200	152
5P-0743	51
5P-0744	123
	173
	178
5P-0747	123
5P-0761	123
5P-0767	430
5P-1076	256
	264
5P-1420	51
	66
	74
	75
	94
	98
5P-1442	94
	96
	98
	335
5P-1475	94
	129
	464
5P-1476	149
5P-1505	94
	98
5P-1506	311
5P-2321	128
	411
	448
	452
	456
	460
5P-2545	231
5P-2600	173
	178
5P-2948	76
5P-3454	452
	456
5P-3455	456
5P-3741	173
	178
5P-3863	291
	303
5P-3864	228
5P-4115	66
	90
	92
	123
	171
	174
	179
	256
	269
	271
	336
	338
	387
	411
	449
	452
	457
	461
	464
	477
5P-4116	60
	61
	66
	68
	70
	74
	75
	76
	82
	90
	92
	123
	174
	179
	269
	271
	311
	377
	379
	382
	387
	392
	394
	396
	424
	449
5P-4484	208
	353
	354
5P-4571	128
	152
	153
	173
	179
	411
	448
	460
5P-4961	94
	96
	98

PART NUMBER INDEX

Part	Page
	335
5P-5397	349
	350
	352
5P-5610	486
5P-5623	90
	92
	121
5P-5630	76
5P-5643	369
	371
	373
	412
	420
	471
	473
5P-5675	173
	178
5P-5687	68
5P-5874	344
	345
5P-5908	368
	421
5P-5927	404
5P-5991	94
	98
	412
5P-6006	486
5P-6264	172
5P-6872	435
	438
5P-6874	436
5P-6994	430
5P-7070	369
	373
5P-7177	123
5P-7483	256
5P-7701	312
	314
5P-7833	51
5P-7958	66
	72
	478
	479
	480
	483
5P-8245	30
5P-8500	419
	448
	460
	464
	504
5P-9186	51
5P-9617	283
	300
5P-9982	285
5R-5927	66
	72
5V-2998	152
5V-6152	311

6

6B-0933	122
6B-4540	389
6D-3479	74
	75
6E-0725	331
6E-1607	302
	304
	346
6E-4396	346
6E-4397	346
6E-4399	346
6E-4400	346
6E-4401	346
6F-7045	163
6F-7062	96
6H-3587	179
6H-3616	35
6H-9691	342
6I-0217	32
	38
	64
	84
	102
	105
	108
6I-0254	10
	64
6I-0260	38
	57
	58
	102
	105
	108
	122
6I-0289	38
6I-0291	102
	105
	108
6I-0363	38
6I-0364	162
6I-0423	31
6I-0454	122
6I-0501	48
6I-0502	48
6I-0563	84
6I-0572	19
	24
	38
	59
	79
	80
6I-0593	84
6I-0594	122
	162
6I-0631	31
6I-0645	32
	59
6I-0646	9
	24
6I-0650	32
6I-0654	84
6I-0846	10
6I-1497	38
6I-2933	76
6I-4039	82
6I-4079	38
6I-4200	31
6I-4374	10
	58
6K-8178	94
	98
6L-3483	173
	178
6N-9587	486
6P-0205	415
6P-0699	411
	449
	457
	461
	464
6T-2774	451
	455
6T-3631	94
	115
6T-3632	94
	115
6T-3633	94
	115
6T-3643	452
	457
6T-3990	158
	159
6T-6066	449
	461
	464
6T-6329	147
	150
	152
	158
	159
	371
	448
	451
	455
	460
	464
6T-6505	368
	372
	421
6T-6506	368
	372
	421
6V-0352	402
6V-0491	147
6V-0852	234
	283
	291
	292
	360
	362
6V-1392	369
	372
	421
6V-1668	368
	372
	421
6V-2689	129
	152
	461
	465
6V-3865	328
6V-3940	353
	354
6V-3965	234
	291
	292
6V-3970	452
	457
6V-4356	426
	428
6V-4357	426
	428
6V-4611	506
6V-4612	508
6V-4613	510
6V-4614	511
6V-4635	316
6V-4636	316
6V-5142	341
6V-5200	330
	331
6V-5210	372
6V-5215	354
6V-5217	404
6V-5326	302
	304
	347
6V-5586	294
	346
6V-6213	440
6V-6228	190
6V-6580	342
	343
6V-7238	51
	118
6V-7357	90
	92
	153
	269
	271
6V-7419	497
	499
6V-7420	291
6V-7636	269
	271
6V-7688	237
	239
	274
	275
	277
6V-7728	369
	421
6V-7743	296
6V-7744	150
6V-8185	269
	271
6V-8186	169
6V-8187	90
	92
	173
	178
	387
6V-8200	196
	198
	200
	202
	234
6V-8202	293
	483
6V-8212	461
	465
6V-8227	392
	394
	396
6V-8351	318
	320
6V-8352	302
6V-8367	152
	448
	460
6V-8369	371
	420
	455
6V-8374	94
	115
	147
	150
	153
	158
	159
	371
	449
	452
	455
	457
	460
	461
	464
	465
6V-8376	452
	457

► **PRIMARY REFERENCE**

PART NUMBER INDEX

Part	Page
6V-8382	152
	448
	460
6V-8397	234
	279
	306
	336
6V-8398	196
	198
	200
	202
	222
	224
	234
	285
	291
	300
	312
	314
	336
	357
	360
	362
	392
	394
	396
6V-8400	291
6V-8625	360
6V-8627	338
6V-8628	196
	198
	200
	202
6V-8629	234
	282
6V-8633	300
	312
6V-8637	196
	198
	200
	202
	222
	224
	360
	362
6V-8638	357
6V-8639	392
	394
	396
6V-8640	234
6V-8641	196
	198
	200
	202
	282
	283
	338
6V-8647	222
	224
	235
6V-8721	196
	198
	200
	202
	222
	224
	360
	362
6V-8723	336
6V-8801	335
6V-8817	152
	448
	460
6V-8927	147
	150
	152
	158
	159
	371
	448
	451
	455
	460
	464
6V-8928	424
6V-8994	279
6V-9002	312
	314
	336
	362
	392
6V-9004	196
	198
	200
	202
	234
6V-9005	336
6V-9007	300
6V-9008	312
	314
6V-9168	279
6V-9182	312
	314
6V-9189	68
	135
	150
	382
	387
6V-9491	452
	457
6V-9632	70
	368
	396
	411
	415
	421
	451
	455
	490
6V-9746	196
	198
	200
	202
	222
	224
	234
	292
	300
	308
	309
	310
	312
	314
	360
	362
	392
	394
	396
6V-9829	283
6V-9835	220
	283
6V-9837	285
6V-9839	308
	309
	310
6V-9842	279
	282
6V-9849	220
	283
	285
6V-9851	357
6V-9874	234
	394
	396
6W-4749	365
6W-5698	336
6W-6005	123
6Y-6584	448
	460
	464
6Y-9915	37

7

7C-0351	38
7C-1281	10
7C-4616	32
7D-7233	311
7D-8636	365
7D-8637	365
7E-0976	173
	178
7F-2050	368
	372
7F-2060	368
	372
7I-2272	279
	411
7I-2750	341
7J-6285	222
	235
	323
	327
	328
7K-1181	51
	95
	128
	150
	153
	171
	174
	179
	218
	311
	335
	357
	410
	411
	415
	417
	426
	428
	430
	449
	452
	457
	461
	465
	486
7L-7556	253
	254
	255
7M-8485	208
	291
	312
	314
	336
	353
	354
7N-0718	123
	►163
7N-5274	123
7N-5876	94
	448
	460
	464
7R-3145	410
7R-6728	398
7R-7940	218
	295
7R-7951	218
	295
	311
7R-7954	426
	428
7T-0493	451
	455
7T-1099	174
	179
	255
	256
	387
	392
	394
	451
	456
	470
	499
7T-2457	204
7T-2459	204
	231
7T-3811	147
	150
	455
7T-4532	383
7T-6364	457
7T-6799	448
	460
	464
7T-8890	488
7T-9302	455
7U-3538	204
7V-5628	123
	173
	178
	218
	410
	415
	417
	426
	428
	451
	455
7V-6089	173
	178
	426
	428
	451
7V-6659	426
	428
	430
7V-9275	173
	178
7W-0629	76
7W-2108	400
7W-2326	55
7W-4634	48
7W-4642	31
7W-7119	404
7X-0370	398
7X-0510	184
	185
	186
7X-0564	398

► PRIMARY REFERENCE

PART NUMBER INDEX

Part	Page
7X-0575	285
	384
7X-0578	392
	394
	396
7X-0579	371
	420
7X-0818	94
	115
	357
	426
	428
	430
7X-0873	300
7X-2465	443
	468
7X-2466	390
7X-2497	400
7X-2533	94
	98
7X-2534	410
	430
7X-2535	218
	295
7X-2536	437
7X-2537	76
	96
	98
	220
	283
7X-2552	384
7X-2553	263
	349
	350
	352
7X-2559	188
	190
	192
7X-2561	274
	275
	277
	349
7X-2562	196
	198
	200
	202
	349
7X-2563	273
	471
	473
7X-2564	239
	273
7X-2565	237
7X-2566	237
	239
	254
7X-2567	468
7X-2571	184
	185
	186
7X-2575	381
	470
7X-2576	470
7X-2577	258
	259
	275
	277
7X-3229	504
7X-3340	302
	304
7X-3393	390
7X-5315	234
	283
7X-6222	173
	178
7X-7655	66
7X-7729	72
	82
	117
	174
	179
	256
	264
	269
	271
	278
	285
	300
	335
	384
	398
	426
	428
	436
7X-7739	66
	72
7X-7877	419
7X-7915	432
7X-7958	311
7Y-1976	70
7Y-7394	404

8

Part	Page
8B-3768	387
8C-0569	292
8C-0572	382
8C-3093	312
	314
8C-3364	291
8C-3445	51
8C-3446	51
	300
8C-3451	300
8C-4586	368
	421
8C-5918	123
8C-6438	118
8C-6857	398
8C-6865	285
	398
8C-6920	392
	394
	396
8C-6965	344
	345
8C-7505	190
	192
8C-8400	234
8C-8408	279
	283
8C-8451	123
	174
	179
	218
	415
	417
	426
	428
	452
	457
8C-8457	368
	372
	421
8C-8722	443
8C-8989	300
8C-9636	153
8D-1470	449
	461
	465
8E-0853	90
	92
8E-9571	66
	70
8F-8151	430
8H-4959	390
8H-5303	163
8H-5306	163
8J-1899	440
8L-2779	96
8L-6521	390
8L-8413	123
8M-3121	82
8N-0694	94
	115
8N-0869	123
8N-1546	451
	456
8N-1547	173
	178
8N-1725	123
8N-9033	424
8Q-6744	150
8R-2918	394
8S-4734	184
	185
	186
8T-0087	145
8T-0154	430
8T-0164	234
8T-0267	294
	392
	394
	396
8T-0288	336
	398
8T-0289	118
8T-0306	495
8T-0328	118
	153
	411
8T-0337	130
	131
	132
	133
	368
8T-0363	217
8T-0389	123
	136
	138
	140
	142
	218
	256
	357
8T-0788	279
8T-1158	407
	408
8T-1159	82
	291
	325
8T-2658	390
8T-2659	153
	415
	417
	452
	457
8T-2922	342
	343
8T-3426	457
	470
8T-3490	66
	72
	150
	256
	384
	468
	499
8T-3597	70
8T-3611	292
8T-3612	60
	61
	70
	174
	179
	387
	394
	396
8T-3647	382
	426
	428
	438
8T-3844	311
8T-4001	216
	217
	275
	277
	443
	468
8T-4121	37
	66
	70
	72
	76
	81
	82
	95
	96
	98
	115
	117
	130
	149
	150
	153
	158
	170
	174
	179
	218
	256
	258
	259
	265
	267
	291
	300
	312
	314
	335
	357
	377
	379
	384
	387
	392
	394
	410
	419
	430
	449
	461
	465
	480

► **PRIMARY REFERENCE**

PART NUMBER INDEX

Part	Page
	483
	497
	499
8T-4122	37
8T-4123	184
	185
	186
	202
	208
	350
	352
	471
	473
8T-4131	184
	185
	186
	252
	253
	254
	255
	471
	473
8T-4132	37
8T-4133	66
	72
	81
	82
	117
	130
	149
	153
	158
	170
	256
	269
	271
	335
	384
	419
	430
	436
	449
	461
8T-4136	70
	72
	76
	81
	82
	150
	153
	300
	392
	394
	398
	410
	430
	449
	461
8T-4137	66
	70
	82
	150
	174
	179
	218
	377
	379
	392
	394
	396
	449
8T-4138	76
	90
	92
	94
	115
	123
	174
	179
	256
	269
	271
	296
	452
	457
	486
8T-4139	292
	411
	415
	417
8T-4167	216
	217
	258
	259
	260
	275
	277
	381
	443
	468
	470
8T-4171	368
	372
	404
	411
	421
8T-4172	384
8T-4174	37
8T-4175	364
8T-4180	400
8T-4181	400
8T-4182	66
	72
	357
8T-4183	264
	360
	362
8T-4185	384
8T-4186	37
	82
	267
	384
	449
	461
8T-4187	208
	252
	253
	255
8T-4189	66
	68
	70
	72
	74
	75
	82
	150
	174
	179
	218
	269
	271
	311
	357
	377
	379
	386
	424
	430
	437
	452
	457
	468
8T-4192	96
	98
	171
8T-4193	234
	398
8T-4195	82
	94
	96
	98
	115
	158
	256
	258
	259
	262
	264
	265
	269
	271
	278
	335
	384
	387
	419
	436
	480
	483
	497
	499
8T-4196	66
	72
	117
	300
	335
	426
	428
8T-4198	384
8T-4200	66
	68
	174
	179
	269
	424
	480
8T-4205	76
	153
	173
	178
	368
	372
	390
	400
	421
	426
	428
	435
	449
	461
8T-4219	256
8T-4222	123
	262
8T-4223	66
	72
	96
	98
	123
	171
	174
	179
	222
	224
	292
	359
	360
	411
	415
	417
	449
	452
	457
	461
	465
	471
	473
8T-4224	60
	61
	62
	63
	66
	68
	70
	74
	75
	95
	96
	98
	115
	135
	150
	174
	179
	269
	287
	377
	379
	386
	387
	404
	407
	408
	411
	430
	437
	452
	457
	468
	478
	479
	480
	483
8T-4231	302
8T-4244	123
	174
	179
	256
	394
	449
	452
	457
	461
	465
	471
	473
8T-4649	260
8T-4742	400
8T-4747	400
8T-4779	353
	354
8T-4896	335
	396
8T-4904	513
8T-4908	60
	61
	68

PART NUMBER INDEX

Part	Page
	70
	74
	75
	90
	92
	174
	179
	371
	382
	392
	394
	396
	420
	479
8T-4956	222
	224
	359
8T-4970	171
	174
	179
	336
	452
	457
8T-4971	400
8T-4983	288
	289
8T-4984	81
8T-4985	81
8T-4994	196
	198
	200
	275
	277
	349
8T-5005	136
	138
	140
	142
	312
	314
8T-5043	96
8T-5049	325
8T-5346	129
8T-5360	196
	198
	200
	202
8T-5372	369
	373
	421
8T-5389	234
8T-5400	497
	499
8T-5436	218
	357
8T-5439	225
	226
	227
	237
	239
	240
	241
	242
	252
	253
	254
	255
	273
	274
	275
	277
8T-5460	196
	198
	200
	202
	274
	275
	277
	349
	350
	352
8T-5878	216
8T-5913	488
8T-5914	488
8T-6430	196
	198
	200
	202
	273
	277
	349
	350
	352
8T-6466	384
8T-6631	372
8T-6685	170
	218
	357
8T-6703	66
	72
8T-6868	66
	72
8T-6869	90
	94
	98
	150
	287
	392
	394
	396
	430
8T-6870	311
8T-6912	96
	98
	135
8T-7547	66
	68
	74
	75
	94
	96
	98
	387
	404
8T-7859	51
8T-7876	51
	59
8T-7971	360
	362
8T-8441	323
8T-8729	92
	128
	129
	136
	140
	142
	149
	150
	152
	153
	170
	172
	178
	411
	440
	455
	461
	464
	486
8T-8730	128
	152
	153
	168
	170
	172
	456
	461
	464
	486
8T-8737	128
	129
	136
	138
	140
	142
	145
	150
	152
	153
	172
	173
	178
	368
	372
	411
	415
	417
	421
	440
	441
	442
	448
	451
	455
	456
	460
	486
8T-8799	173
	178
	451
	455
8T-8899	394
	396
8T-9756	123
8V-5718	357
8X-1986	252
8X-6296	152
8X-7008	158
8Y-1009	279
8Y-4501	400
8Y-4807	400
8Y-5737	368
	372
	421
8Y-6377	377
	379
8Y-6386	400
8Y-6388	404
8Y-8606	452
	468
9	
9B-7233	152
	409
	452
	457
	486
9C-5344	384
9C-9219	265
9D-7924	392
	394
	396
9F-2247	265
	267
9F-5644	163
9G-0002	123
9G-0005	123
9G-1950	368
	372
	421
9G-2761	400
9G-4348	173
	178
9G-4351	451
	456
9G-8909	123
9G-9154	451
	455
9H-6079	265
	267
9H-6832	208
9L-2685	90
	92
9M-8406	153
9N-1909	150
9P-6411	269
	271
9P-7121	118
9P-9388	436
9R-2160	179
9R-2620	149
9R-3203	490
9R-3204	490
9R-3205	490
9R-7240	94
	118
9R-7941	149
	158
9R-7942	146
9R-7958	146
9R-7980	149
	158
9S-7583	364
9S-8004	88
	281
	306
	323
	325
	327
	328
9S-8005	365
9S-8006	316
	318
	320
9S-8008	364
9T-3928	323
	325
	327
	328
9U-0512	443
9U-1950	123
9U-6993	336
9W-0844	368
	372
	421
9W-0852	149
	368
	372
	421
	455
9W-7388	443
	468
9W-9931	468

► **PRIMARY REFERENCE**

PART NUMBER INDEX

Part	Page
9W-9952	37
9W-9953	37
9X-0145	451
	456
9X-0196	149
9X-1046	449
	452
	457
	461
	465
9X-1054	129
	152
9X-1056	129
	152
	172
9X-1386	384
9X-1439	▶130
9X-1813	121
	161
	166
	167
9X-2032	372
9X-2041	461
	465
9X-2042	387
	400
	424
	449
	461
	465
	490
9X-2044	153
	368
	372
	411
	421
9X-2045	387
	396
	404
	415
	417
	424
	430
	449
	460
	465
	490
	497
	499
9X-2185	368
	372
	421
9X-2289	300
9X-2297	279
9X-2389	153
9X-2480	153
	338
	411
	415
9X-2488	368
	372
	421
	430
9X-2492	234
	291
9X-2532	491
	495
9X-2537	344
	345
9X-2616	123
9X-3265	173
	178
9X-3401	94
	128
	129
	152
	160
	390
	415
	417
	448
	451
	456
	460
	464
9X-3455	131
9X-3463	131
	133
	134
9X-3465	136
	138
	140
	142
9X-4174	131
9X-4243	130
	131
	132
9X-4244	130
	131
	132
	135
	136
	138
	140
	142
9X-4381	▶131
	▶132
	149
9X-4492	145
9X-4493	136
	138
	140
	142
	145
9X-6032	204
9X-6378	190
	192
9X-6385	443
9X-7344	150
9X-7377	341
9X-7378	383
	384
9X-7380	426
	428
9X-7381	426
	428
9X-7382	426
	428
9X-7383	426
	428
9X-7385	383
9X-7421	410
9X-7449	451
	455
9X-7549	222
	224
9X-7566	365
9X-7680	318
	320
9X-7849	146
9X-8117	371
9X-8139	146
9X-8243	153
9X-8256	70
	90
	92
	95
	115
	153
	256
	269
	271
	296
	338
	404
	410
	411
	415
	417
	430
	435
	452
	457
	486
9X-8257	234
	263
	349
	350
	352
	353
	354
	364
	384
	398
9X-8258	443
9X-8486	451
	456
9X-8979	316
	318
	320
9X-9099	449
	460
	464
9X-9865	136
	138
	140
	142
9X-9882	178
	179
9Y-5015	25
9Y-9236	336

0

Part	Page
009-9258	390
012-0380	166
	167
014-0816	455
030-0060	365
030-0061	365
031-0249	452
	457
031-4155	390
032-9090	13
	18
032-9091	13
	18
033-4814	174
	179
033-5879	318
	320
033-6041	190
	192
	281
033-7687	30
035-0425	173
	178
035-8017	102
	105
	108
035-8063	24
	47
035-8068	19
037-4426	368
	372
	421
037-4838	368
	421
038-9317	123
054-8974	443
	468
061-9458	208
	349
	350
	352
066-8391	152
067-6002	19
067-6006	19
	25
067-6043	19
067-6095	53
	54
067-6135	15
	17
067-6179	32
067-6213	38
067-6265	102
	105
	108
067-6366	122
067-6873	13
	18
067-6874	13
	18
067-6999	102
	105
	108
069-3686	66
069-4707	188
	190
077-3637	365
077-3895	243
	244
	245
	246
	247
	248
	249
	250
077-3906	244
	245
077-4192	243
	244
	245
	246
	247
	248
	249
	250
077-6627	260
077-6630	365
077-7467	390
081-3119	398
081-3698	330
	334
081-3772	398
086-0972	389
086-9035	279
087-4772	303
093-8828	211
	213
095-0670	303
095-0674	211
	213

PART NUMBER INDEX

095-0707 204
231
095-0892 228
095-0919 228
095-0924 486
095-0941 331
095-1041 211
213
095-9805 231
096-0015 316
333
096-0194 322
096-2323 402
096-4035 70
096-6166 368
452
457
096-8058 231
098-3602 390
099-0492 269
271
099-0857 491
099-3649 387

1

100-3143 368
421
100-3245 136
138
140
142
100-3248 136
138
100-3249 140
142
100-3250 136
138
140
142
100-3251 136
138
140
142
100-3253 136
138
140
142
100-3254 136
138
140
142
100-3255 136
138
140
142
100-3320 173
178
100-3426 368
421
100-3751 32
57
64
100-4461 56
100-4830 9
32
34
102
105
108
100-4838 10
100-4841 19
24
101-3771 38
101-3895 32
58
101-7401 328
102-0341 368
372
421
102-1733 29
102-1957 31
102-8703 96
98
220
283
102-8704 68
96
98
196
198
202
102-8705 357
426
428
102-8801 128
172
448
460
102-8802 90
92
94
118
120
121
128
129
134
144
152
166
167
170
173
178
234
368
372
383
384
411
421
451
456
461
464
102-8803 129
161
300
336
102-8804 147
149
150
172
180
411
448
460
464
486
102-8805 136
138
140
142
145
153
173
178
368
372
415
417
421
440
441
442
455
102-8806 128
152
153
448
455
460
103-4977 173
178
103-5676 415
417
104-2091 404
104-6216 448
460
464
105-3035 316
318
105-3484 396
105-3485 318
320
105-3542 448
460
464
105-4849 . . . . . ▶136
105-4850 . . . . . ▶138
106-5618 345
106-6340 285
106-8715 234
106-8916 84
107-0313 316
107-0611 173
178
107-1716 389
107-1721 389
107-1723 389
107-2091 389
107-3117 281
318
320
107-4641 . . . . . ▶490
107-4643 3
4
▶435
107-4749 94
98
107-5852 133
107-5853 133
107-5854 133
107-6013 451
455
107-6032 424
107-6050 387
107-6072 451
455
107-6117 400
107-6141 396
107-6145 377
379
107-6689 . . . . . ▶133
150
107-8265 300
108-0358 152
108-1029 . . . . . ▶146
158
159
108-3565 334
108-3819 306
108-4311 377
379
108-5471 269
271
109-0119 231
109-0741 430
109-6706 285
110-0514 336
110-2079 439
110-4463 256
110-4821 196
198
200
202
110-6109 371
420
455
110-6349 360
362
110-7885 455
110-7887 448
460
464
110-7890 455
111-0200 402
111-0204 377
379
111-0859 28
111-2446 290
111-4627 411
111-7052 196
198
200
202
111-7758 123
111-7875 387
111-7878 396
111-8222 9
79
80
112-4159 66
72
112-4626 327
328
112-4627 327
328
112-4628 306
323
325
327
328
112-4629 327
328
112-4630 323
325
328
112-4640 303
112-4642 342
343
112-4645 347
112-4657 330
331
112-4677 342
343
112-4678 342
343
112-4679 342
112-4682 342
343
112-4684 342
343

► **PRIMARY REFERENCE**

PART NUMBER INDEX

Part	Page
112-4685	343
112-4686	323
	325
	328
	342
	343
112-4717	306
112-4719	306
112-5219	424
112-5869	497
	499
112-6174	455
112-9609	451
	456
112-9610	451
	456
112-9611	153
	452
	456
112-9612	153
	452
	456
112-9783	336
113-1095	389
113-1504	10
113-5100	452
	456
113-6349	122
113-8129	64
113-8490	129
	451
	455
113-8491	457
114-2579	79
	80
114-3140	368
	372
	421
114-3956	435
114-5333	384
114-8843	415
	417
115-0617	150
115-1552	402
115-1748	409
115-3075	279
115-9680	283
116-0118	90
	92
	171
	173
	178
	336
	338
	384
	411
	451
	455
116-4159	451
	455
116-4161	153
	452
	456
	457
	486
116-5270	451
	455
116-5274	451
	455
116-5275	451
	455
116-5277	451
	456
116-6565	451
	455
116-7856	406
116-9894	220
	283
117-2978	128
	448
	460
117-2979	128
	448
	460
117-7236	347
117-7240	331
117-7241	331
117-7251	331
117-7252	331
117-7273	293
117-7322	328
117-7605	289
117-9081	167
117-9409	153
118-3534	▶164
	173
	178
118-5044	368
	372
	421
118-5046	368
	421
118-6375	471
	473
118-7250	▶475
	476
	477
118-7259	371
	420
118-7362	451
	455
119-2073	475
119-3662	152
	174
	178
	179
	368
	372
	421
119-3859	404
119-7017	161
119-8436	218
119-9453	411
119-9631	368
119-9706	256
	269
	271
120-4187	90
	▶161
120-4394	344
	345
120-6872	111
121-0883	31
121-4459	303
	306
121-5327	152
	460
	464
122-3608	81
122-6867	129
122-8427	66
	72
	269
	271
122-9068	331
122-9718	323
	325
123-7557	302
	304
	▶346
123-7562	302
	303
	304
123-7575	346
123-7589	346
123-7590	346
123-7591	346
123-7615	147
123-8851	368
124-0357	216
	217
124-0358	216
	217
124-0359	216
	217
124-0506	12
124-0608	153
124-3536	40
	42
	43
124-3815	32
	102
	105
	108
124-4592	432
124-8494	368
	372
	421
124-8495	368
	372
	421
124-8909	234
	362
124-9636	451
	456
124-9637	451
	456
124-9891	316
124-9898	316
124-9899	316
124-9900	316
124-9901	316
125-0380	432
125-0653	426
	428
125-3295	90
	92
125-4572	316
125-7874	129
	152
	153
	415
	417
	452
	456
	457
125-7875	94
	129
	147
	152
	415
	417
	464
125-7876	147
	390
125-9134	331
126-0287	353
126-0288	354
126-1767	128
	147
	383
	417
	451
	456
126-5011	173
	178
126-5635	330
126-5637	330
126-5640	330
126-9339	353
	354
126-9340	353
	354
126-9587	331
127-1647	314
127-5588	335
127-8613	406
127-9485	318
	320
128-0314	123
128-1092	316
128-1624	398
128-1912	320
128-2034	339
128-4119	398
128-4120	398
128-8617	448
	460
	464
129-3178	153
	368
	372
	421
129-3216	208
129-5128	357
129-7184	448
	460
	464
129-9124	353
	354
130-2793	411
	486
130-3879	28
130-3881	60
	63
130-5300	153
	415
	417
130-5301	179
130-6469	150
130-7287	430
130-7965	243
130-9888	10
131-1487	174
	179
131-1489	452
131-1490	174
	179
131-3540	74
	75
131-8829	78
132-3056	336
132-5789	171
	173
	178
	411
132-7084	455
132-9982	437
132-9983	437
133-1011	32
134-2364	396
134-4735	392
	394
	396
134-8474	335
135-0611	440

PART NUMBER INDEX

Part	Page
135-0708	218
	357
135-2929	▶439
	448
	460
	464
135-8072	342
136-1953	369
	372
	373
	421
136-3188	375
136-3190	375
136-3608	12
136-3845	136
136-3846	138
136-3848	136
	138
	140
	142
136-8064	204
	231
136-8068	204
	231
136-8638	231
136-8641	204
	231
136-8869	▶316
	359
137-2170	491
	495
138-2053	53
	54
138-7125	269
	271
138-8172	316
138-8175	316
	333
138-8176	316
138-8177	316
139-0234	451
	455
139-0236	451
	455
139-3178	196
	198
	200
	202
139-3280	▶129
	410
140-1321	208
140-1739	330
140-8714	102
	105
	108
140-8718	102
	105
	108
140-8783	122
140-9337	390
140-9338	390
140-9614	349
	350
	352
	▶359
140-9685	390
141-1794	390
141-5969	382
141-8580	400
141-9784	368
	372
	421
141-9864	259
	▶265
141-9865	265
141-9866	258
	259
142-3388	60
	61
	62
	63
142-3391	60
	61
	62
	63
142-8928	336
142-8937	336
143-0785	152
143-1646	123
143-4653	260
143-5948	376
	▶404
143-7356	265
143-8874	371
	420
144-0195	497
	499
144-0900	371
	452
	457
144-1569	495
144-6434	152
144-8242	285
144-9102	347
145-3812	293
145-3813	293
145-3846	335
145-9291	392
	396
145-9296	448
	460
145-9297	451
	455
146-0797	384
146-3165	2
	3
	4
	▶274
146-7292	364
146-7512	353
	354
146-8999	407
	408
146-9002	424
146-9006	377
	379
146-9007	377
	379
146-9502	353
	354
146-9503	354
146-9504	353
147-1979	25
147-2645	100
147-5553	84
147-7370	398
148-1202	316
148-1219	316
148-1235	316
148-1238	316
	318
	320
148-1240	316
148-1252	316
148-1517	90
	92
148-1970	316
148-3452	354
148-6790	1
	▶216
148-8305	283
	300
148-8316	222
	224
	235
148-8320	285
148-8322	234
148-8324	234
	394
	396
148-8325	196
	198
	200
	202
	282
	283
	338
148-8327	196
	198
	200
	202
	222
	224
	360
	362
148-8328	300
	312
148-8340	392
	394
	396
148-8345	357
148-8347	300
148-8351	220
	283
	285
148-8354	312
	314
	336
	362
	392
148-8355	336
148-8360	312
	314
148-8364	360
148-8368	282
	338
148-8369	196
	198
	200
	202
148-8370	357
148-8372	196
	198
	200
	202
	222
	224
	360
	362
148-8373	291
148-8374	336
148-8388	234
148-8430	300
148-8440	292
148-8444	285
148-8448	279
	282
148-8449	308
	309
	310
149-0777	396
149-0779	396
149-5452	279
149-9176	31
149-9933	404
150-2511	353
	354
150-3033	234
150-4050	279
150-5968	220
	283
150-8015	491
	495
151-0894	368
	372
	421
151-2064	279
151-3084	204
	231
151-3085	204
	231
151-6282	318
	320
151-7481	231
151-7482	231
151-7483	231
151-7484	231
151-7485	231
151-7486	231
151-7490	204
	231
151-7491	231
151-7493	231
151-7496	231
151-7497	231
151-7498	231
151-7499	231
151-7500	231
151-7501	231
151-7502	231
151-7503	231
151-7504	231
151-7505	231
151-7506	231
151-7507	231
151-7508	231
151-7509	231
151-7510	231
151-7511	231
151-7513	231
151-7514	231
151-7515	231
151-7516	204
	228
	231
151-7517	204
	228
	231
151-7518	204
	228
	231
151-8110	387
151-9274	390
152-0116	218
152-0277	308
152-1261	349
	350
	352
152-1810	302
	304
152-3968	100
152-4373	387
152-5542	174
	178
	179
152-6144	188

▶ **PRIMARY REFERENCE**

PART NUMBER INDEX

Part	Page
	190
	192
152-9802	172
153-3061	60
	61
	62
	63
153-3605	387
153-3606	456
153-4980	7
	▶29
153-4982	▶60
	445
153-5030	▶61
	444
153-6237	196
	198
	200
	202
	234
153-6241	300
153-6244	234
153-7369	▶287
	392
	396
154-1643	404
154-4879	220
	283
154-4884	438
154-5232	336
154-9025	51
154-9517	398
154-9756	279
155-2255	451
	456
155-2260	174
	179
155-2265	128
	152
	448
	451
	456
	460
155-2270	128
	129
	147
	152
	165
	168
	169
	170
	174
	179
	180
	368
	372
	411
	421
	448
	451
	456
	460
	461
	464
155-2271	128
	172
	174
	179
	448
	451
	456
	460
	486
155-2272	147
155-2274	152
	153
	172
	174
	179
	415
	417
	451
	456
155-4170	274
155-4171	274
	275
	277
155-4774	▶488
	497
	499
155-4777	488
155-4850	349
	350
	352
155-5234	▶409
	448
	460
	464
155-5779	497
	499
155-5783	▶440
	497
	499
155-6258	314
155-6616	430
155-6654	316
	333
155-6663	274
	275
155-6741	430
155-7328	312
	314
156-0520	152
156-1141	468
156-2826	328
156-3435	279
156-3617	96
156-4449	371
	420
156-5114	117
156-6175	152
	173
	178
156-6819	421
157-0670	51
157-8674	410
158-0252	134
158-5089	152
	452
	457
158-7864	504
159-3027	264
159-4026	468
159-5255	51
159-7142	443
159-9405	349
	350
	352
	▶365
159-9539	387
159-9540	394
159-9541	387
160-1757	344
	345
160-2242	411
160-2246	218
	357
160-2247	311
	426
	428
	430
160-2248	218
	357
160-6330	273
160-6331	273
160-9412	451
161-6154	293
161-6365	411
161-6367	411
161-6853	220
	283
161-9640	400
161-9641	400
161-9642	400
161-9647	400
161-9916	291
162-1565	10
162-2453	312
	314
	▶339
162-2480	66
162-4171	94
	129
	464
162-5372	134
162-5394	265
162-5395	265
163-1201	448
	460
	464
163-6508	409
163-6513	348
163-8783	502
	506
	508
	510
	511
	513
163-9324	426
	428
164-5567	234
164-5590	51
	300
164-6863	392
	394
	396
164-7556	135
164-8473	404
164-9869	279
165-0177	491
165-0178	491
165-0571	470
165-2273	51
	118
165-2521	300
165-4929	208
165-6689	30
166-0344	316
166-7177	275
	277
166-7558	294
166-8068	390
166-8070	390
166-8071	390
166-8072	390
166-9098	404
166-9319	407
167-0138	▶165
	456
167-1192	279
	398
167-6805	323
	325
	327
	328
167-7542	411
167-7543	411
167-7713	302
	304
167-7715	347
168-2457	400
168-3504	318
	320
168-7940	333
168-7941	333
168-7942	333
168-7943	333
168-7944	316
169-0502	497
	499
169-3196	502
	506
	508
	510
	511
	513
169-3995	400
169-7442	196
	198
	200
	202
170-3528	118
171-2065	▶134
171-2208	173
	178
171-2842	390
171-6723	394
	396
172-3259	365
172-5267	218
	357
172-5523	218
	357
173-2686	267
173-2687	267
173-2731	258
	▶267
173-3064	152
173-7411	382
173-7456	285
174-1486	368
	421
174-3223	348
174-9638	84
175-0048	240
	▶243
175-0050	▶240
175-1182	382
175-2308	164
	▶166
175-2309	164
	▶167
175-3722	419
175-4291	135
175-4292	135
176-3900	▶366
	367
	426
176-9166	396
176-9170	396
176-9285	228
176-9287	228
176-9288	228
176-9289	228
177-0012	231
177-0013	231

PART NUMBER INDEX

Part	Page
177-0014	231
177-0337	330
177-1809	228
177-2215	96
	218
	220
	282
	288
	289
	310
	357
	410
	411
	417
	430
177-4459	294
177-4658	365
177-6853	302
	304
177-7155	285
177-7747	347
177-8723	342
	343
178-0274	218
178-2593	400
178-3620	74
	75
	95
	98
	283
	426
	428
178-3836	▶398
	489
178-8505	66
	72
	174
	179
	196
	198
	202
	415
	417
	452
180-3528	369
	372
180-3813	300
180-3871	400
	▶495
180-7333	364
180-7486	406
180-7487	406
180-7884	288
	289
180-8576	448
	464
180-9339	147
180-9340	147
	174
	179
	180
	415
	417
	448
	451
	460
180-9873	▶368
	371
180-9874	420
	▶421
183-3873	335
183-6121	66
	72
	256
183-7413	150
183-7528	369
	372
	421
185-0242	318
	320
185-0248	318
	320
185-0263	318
	320
185-0882	25
185-0884	19
185-1546	50
	53
185-5770	▶400
	471
	473
185-6627	79
	80
185-8756	265
186-0898	436
186-1709	▶436
	444
	447
186-3169	390
186-3171	390
186-3380	▶389
	390
186-3735	90
	118
	120
	121
	134
	138
	144
	145
	161
	166
	167
	173
	235
	300
	336
	384
	441
	442
	448
	460
186-3736	165
	169
	411
186-6190	▶367
	428
187-2082	387
187-2120	279
	283
187-3030	256
187-5122	495
187-5123	495
187-5124	495
187-5125	495
187-5126	495
187-5127	491
	495
187-5128	491
	495
187-5379	491
187-5381	491
	492
187-5383	491
	492
187-5386	491
187-8001	323
	325
	327
	328
187-9185	471
	473
187-9278	267
187-9719	152
188-6392	318
	320
188-8849	134
189-1707	369
	372
189-3158	152
	171
189-4717	318
	320
190-0360	149
190-2938	504
190-5386	504
190-7632	323
	325
	▶331
190-9732	481
	484
191-2287	204
191-2840	289
191-2841	288
	289
191-3040	491
191-3539	293
191-3540	293
191-3553	293
191-4522	331
191-8921	375
191-8924	234
192-0626	328
192-1172	344
	345
192-1173	344
	345
192-2839	331
192-4255	330
192-4576	302
	304
193-4126	451
193-5892	206
	▶349
	▶350
193-5893	349
193-5894	349
193-8565	451
	456
194-1983	331
194-3710	441
194-5171	375
	497
	499
194-5226	128
	129
	456
194-5227	128
	129
	456
194-5390	84
195-1411	260
195-2132	35
195-2134	35
195-2136	35
195-2221	35
195-4403	282
195-4973	74
	449
196-2036	234
	291
196-4205	426
	428
196-9444	342
	343
197-3229	387
197-3300	387
	▶390
197-7864	339
197-8932	123
197-9155	188
	190
	192
197-9181	390
197-9238	390
197-9461	390
197-9695	390
198-1111	390
198-1506	456
198-7811	188
	190
	192
	211
	213
198-9137	448
	460
198-9169	10
199-0639	188
199-0653	229
	230
199-0656	211
	213
199-0662	188
199-0669	230
199-0670	281
199-0673	194
199-0675	211
	213
199-0678	211
	213
199-0680	211
	213
199-0684	211
	213
199-0685	211
	213
199-0686	211
	213
199-0687	211
	213
199-0688	211
	213
199-0689	211
	213
199-0690	211
	213
199-0691	211
	213
199-0692	211
	213
199-0693	211
	213
199-0694	194
199-0695	211
	213
199-0718	210
199-0760	229
	230
199-0767	188
	190
199-0778	188
	190
	192
199-0786	188
199-0787	188
199-0808	194

▶ **PRIMARY REFERENCE**

PART NUMBER INDEX

Part	Page
199-0858	213
199-3108	31
199-3109	31
199-9267	47
199-9751	25
	46
2	
200-0241	275
	277
200-2213	128
	460
200-6345	180
	283
	309
200-7836	269
	271
201-0183	445
	▶501
201-1601	66
	70
201-1919	225
	226
	227
	240
	241
	242
201-4169	501
201-4170	501
201-5160	▶264
	444
	446
	447
201-5161	264
201-7671	7
	▶74
202-0679	444
	447
	▶470
202-0949	256
202-1206	74
	75
202-4173	186
	▶188
202-4736	481
	484
202-4737	481
	484
202-4739	481
	484
202-4740	481
	484
202-6535	323
	325
	327
	328
202-6614	135
203-0203	173
	178
203-2328	433
203-2330	433
203-4231	66
	72
203-4685	▶184
	▶185
	187
203-4686	▶186
	187
203-4692	184
	186
	▶228
203-4741	244
	245
	246
203-5470	256
203-7625	▶140
	153
203-7626	▶142
	153
203-8609	316
	318
204-1304	▶158
204-1305	▶159
204-1321	▶147
	444
	447
204-1328	2
	3
	4
	▶410
204-1452	334
204-1454	294
204-1455	294
204-1456	347
204-1458	303
	306
204-2281	180
	283
	309
204-4390	▶476
204-9737	220
	283
205-0191	204
	231
205-0192	204
	231
205-0706	218
	357
205-5007	344
	345
205-7407	▶290
	307
206-2733	174
	179
206-3658	196
	198
	200
	202
206-4881	323
	325
	327
	328
206-5108	452
	456
206-5109	452
	456
206-5234	78
206-5235	78
206-5237	78
206-5823	440
206-6410	94
	98
206-6415	311
206-6418	94
	98
206-7492	▶237
	238
	251
207-2055	339
207-2757	86
207-2817	204
	231
207-4255	190
	192
207-4257	229
	230
207-4499	311
	438
207-5962	229
	230
208-0368	215
	▶338
208-8760	441
	442
209-0617	426
	428
209-3090	145
209-3091	145
209-3093	145
209-3565	342
	343
	344
	345
209-3855	220
	283
209-5382	218
	295
209-6164	381
209-6165	▶381
209-7457	211
	213
209-7481	194
209-7482	194
209-7659	94
	98
209-9219	21
	22
	23
210-3097	188
210-3098	188
	190
	192
210-3099	188
	190
	192
210-3100	188
	190
	192
210-3328	188
	190
	192
210-5487	419
210-5489	419
210-5550	▶419
	444
	446
	447
210-5932	209
210-7302	192
211-6574	68
212-0854	387
212-1559	2
	▶489
212-5713	188
	190
	192
212-6679	302
212-9428	377
	379
213-3152	2
	238
	▶273
213-4208	318
	320
213-4222	229
	230
213-4258	312
	314
213-9684	117
214-1737	504
214-3203	9
	24
214-3437	486
214-3438	486
214-4073	376
	▶424
214-4603	486
214-7568	160
	234
214-7636	▶375
	497
	499
214-7861	486
215-1445	508
215-1446	510
215-1447	511
215-1451	513
215-6300	150
215-9508	111
	113
215-9509	94
	98
	111
	113
216-0202	357
216-0595	▶285
	307
216-1601	229
216-1602	209
216-1606	229
216-1608	192
216-1609	188
	192
	▶209
216-1610	192
	▶229
216-2801	218
216-4881	506
216-7940	7
	▶81
216-7953	81
216-7956	66
	72
216-8158	7
	▶82
216-8163	82
216-8314	15
	16
	17
216-8634	32
217-0747	7
	▶76
217-2536	256
217-2728	82
217-2733	66
	72
217-2945	1
	▶258
217-2947	258
217-3188	256
217-3627	123
217-4111	68
217-4112	68
	▶296
217-4113	68
217-5821	481
	484
217-8058	392
	394
	396
217-8225	7
	▶66
217-9039	10

PART NUMBER INDEX

Part	Page
218-0377	215
	▶218
218-0378	356
	▶357
218-2207	269
	271
218-2751	1
	▶335
218-2973	215
	▶234
218-2975	▶291
	307
218-2976	▶300
	307
218-3163	215
	▶222
	▶224
218-3213	307
	▶308
	309
	310
218-3920	▶288
	▶289
	307
218-4105	307
	▶311
218-4281	215
	▶387
218-4302	387
218-5014	68
218-8489	356
	▶360
218-9878	231
218-9880	231
219-0305	502
	506
	508
	510
	511
	513
219-0617	66
	72
219-0943	384
219-1672	448
	461
	464
219-2998	307
	▶392
	▶394
219-4162	4
	▶7
219-4168	4
	▶356
219-4171	▶444
219-4262	▶187
219-6487	▶135
	147
219-7202	441
219-7803	275
219-8834	213
219-8835	213
220-0204	386
220-0205	▶386
	445
220-0777	269
220-1944	▶196
	▶198
	206
220-1945	196
	198
	200
	202
220-1960	7
	▶51
220-2080	307
	▶312
	▶314
220-2109	234
220-2173	218
220-2174	218
220-2297	218
220-2298	218
220-2309	222
220-3259	66
220-3813	66
220-3926	396
220-4051	1
	▶206
220-4053	206
	207
	▶208
220-4054	208
220-4120	81
220-4133	338
	▶340
220-4165	340
	▶348
220-5746	76
	▶78
220-8539	1
	▶504
220-8549	126
	▶170
220-8703	1
	▶278
220-8754	2
	3
	4
	▶263
220-8779	7
	▶37
221-0103	296
221-0104	296
221-1731	187
	▶283
221-2014	86
221-4148	277
222-1889	208
	▶353
222-1890	208
	▶354
222-1891	353
	354
	▶364
222-2785	365
222-2844	187
	▶220
222-2848	187
	▶282
222-3102	7
	▶96
222-3594	▶384
	445
222-4913	384
222-4914	384
222-4921	126
	▶173
	▶178
222-5629	187
	▶279
222-6445	66
	72
222-6467	282
222-6617	86
222-7037	357
222-7038	357
222-7921	336
222-8543	384
222-8663	▶426
	▶428
	445
223-3384	348
223-3945	426
	428
223-4281	387
	▶432
223-4793	376
	▶497
	▶499
223-5824	▶430
	444
	445
	446
223-5849	196
	198
	200
	202
	222
223-6459	426
223-6460	426
	428
223-7825	5
	6
	▶31
224-0857	2
	3
	▶506
224-0858	▶508
224-0859	▶510
224-0860	▶511
224-0864	▶513
224-0872	238
	251
	▶252
224-1149	444
	446
	447
	▶448
224-1151	▶444
224-1152	444
	446
	447
	▶451
224-2264	66
	72
224-3349	415
224-4336	4
	▶215
224-5917	94
	98
	115
224-7717	504
224-9392	377
	379
225-3150	162
225-4317	5
	6
	▶45
225-5436	40
	42
	43
225-5437	40
	42
	43
225-5438	40
	42
	43
225-5439	42
225-5441	42
225-5451	42
225-5453	42
225-5454	42
225-5458	42
225-5459	42
225-5495	25
225-5496	25
225-5498	25
225-5499	25
225-5501	26
	27
225-5502	26
	27
225-5625	50
	53
225-5629	50
	53
225-5634	50
	53
225-5638	50
	53
225-5640	50
	53
225-5959	50
	53
225-5960	50
	53
225-5961	50
	53
225-5962	50
	53
225-5963	▶50
	53
	54
225-5967	8
225-6005	38
225-6041	38
225-6451	12
225-6456	12
225-6461	12
225-6464	12
225-6477	12
225-6478	12
225-6479	12
225-6817	58
225-6818	58
225-7715	377
	379
225-7716	377
	379
225-7717	377
	379
225-7738	64
225-7739	64
225-7741	64
225-7772	13
225-7941	59
225-7944	19
	24
	59
225-8016	64
225-8019	64
225-8329	56
225-8524	84
225-8526	84
225-8536	84
225-8541	452
	456
225-8848	34
225-8858	19
226-0423	263
226-0912	288
226-1880	288
226-3465	424
226-4346	209
	210
226-4352	188

▶ **PRIMARY REFERENCE**

PART NUMBER INDEX

Part	Page
	190
226-4353	190
	▶210
226-4364	188
	190
	192
226-4365	188
	190
	192
226-4366	188
	190
	192
226-4367	188
	190
	192
226-4370	188
	190
	192
226-4373	211
	213
226-4374	211
	213
226-4377	188
	190
	192
226-4378	230
226-4380	194
226-4381	194
226-4383	281
226-4384	281
226-4385	211
226-4386	211
226-4387	211
226-4388	281
226-4389	281
226-4390	188
	▶211
226-4391	281
226-4392	211
	▶281
226-4394	▶194
	211
	213
226-4397	194
226-4400	190
	192
	▶213
226-7758	▶149
	376
226-8766	32
226-8767	32
226-8770	127
226-8940	▶172
	376
227-0063	▶171
	445
227-0172	196
	198
	274
	275
	277
	349
	350
227-0824	▶407
	▶408
	444
	445
	446
227-1100	252
227-2550	468
227-2554	392
	394
227-2556	392
	394
227-2592	392
	394
227-4257	4
	▶187
227-4562	84
227-4794	90
	92
227-4799	7
	▶90
	▶92
227-5446	123
227-5594	▶444
227-5595	▶445
227-5690	▶437
	444
	445
	446
227-7392	375
227-9503	426
	428
228-4841	76
228-5108	74
	75
228-5778	96
	98
228-6056	133
228-6079	407
228-6080	407
228-7094	292
228-7096	292
228-7102	95
	115
228-7106	318
	320
228-7704	81
228-9108	451
	456
229-1182	308
	309
	310
229-1538	66
229-1567	66
229-1641	66
	70
229-2313	448
	460
	464
229-2565	256
229-2588	66
	▶68
229-2884	174
	179
229-2885	384
229-2886	384
229-3469	74
	75
229-5051	188
	190
	▶230
229-5055	211
	213
229-5062	281
229-5092	209
	210
229-5099	211
	213
229-9269	471
	473
229-9291	118
229-9782	170
230-2473	▶486
230-4665	432
230-5455	448
	460
	464
230-6367	478
	479
	480
	483
230-6431	411
230-7304	5
	6
	▶162
230-7353	5
	▶48
230-7355	5
	6
	▶64
230-7470	437
230-7578	5
	6
	▶56
230-7881	92
230-8055	486
230-8065	28
230-8093	448
	461
	464
230-8094	38
230-8989	102
	105
	108
230-8995	102
	105
	108
230-8996	102
	105
	108
230-8997	102
	105
	108
230-8998	102
	105
	108
230-8999	102
	105
	108
230-9092	452
	456
230-9127	10
230-9196	5
	6
	▶9
230-9577	430
231-0038	5
	6
	▶57
231-0670	194
231-0671	194
231-0689	194
231-0719	210
231-0720	230
231-0748	486
231-3310	82
231-6603	174
	179
232-0295	174
	179
232-0296	174
	179
232-0310	174
	179
232-1322	25
	46
232-1323	102
	105
232-1328	102
	105
	108
232-1793	102
	105
	108
232-1794	102
	105
	108
232-2565	5
	6
	▶38
232-2724	102
	105
	108
232-2725	102
	105
	108
232-2726	102
	105
	108
232-3126	102
	105
	108
232-3149	102
	105
	108
232-3157	102
	105
	108
232-3274	102
	105
	108
232-3666	32
232-3713	5
	6
	▶34
232-3751	19
	24
	59
232-3861	47
232-4226	481
	484
232-4230	481
	484
232-6204	5
	6
	▶46
232-7378	5
	6
	▶55
232-7400	▶13
	16
232-7439	6
	▶15
232-7440	19
232-7442	6
	▶40
232-7449	21
	22
	23
232-7519	▶25
	26
	27
232-7524	6
	▶26
232-7526	6
	▶53
232-7528	6
	▶8
232-7596	19
232-7597	19
232-7599	19

▶ **PRIMARY REFERENCE**

KEBP0356-17

PART NUMBER INDEX

Part	Page
232-7600	19
	24
232-7603	19
	24
232-7604	►19
	22
232-7606	6
	►21
232-9758	111
	113
232-9759	111
	113
233-3784	13
233-3785	13
233-3786	13
	18
233-7489	79
	80
233-7530	481
233-7532	481
233-7533	481
	484
233-7534	481
	484
233-7535	481
	484
233-7536	481
	484
233-7537	481
	484
233-7538	481
	484
233-9417	5
	►111
233-9530	122
233-9531	122
233-9532	122
233-9533	5
	6
	►122
233-9534	84
233-9536	84
233-9537	84
233-9539	5
	6
	►84
233-9614	288
233-9744	330
	334
233-9834	5
	6
	►127
234-3390	504
234-3461	►238
234-4287	282
234-9680	5
	6
	►28
234-9980	►150
	444
	446
235-0374	468
235-0511	444
	446
	447
	►468
235-0512	►478
235-1491	480
	483
235-1790	102
	105
	108
235-3151	478
	►481
235-4119	►483
235-4546	435
235-5027	200
	202
	352
235-6982	411
235-8557	307
	►396
236-2144	102
	105
	108
236-5056	478
	479
	480
	483
236-5850	308
	309
	310
236-8767	424
237-0284	111
	113
237-0285	111
	113
237-0286	111
	113
237-2711	448
	461
	464
237-4227	320
237-4843	411
237-4844	411
237-5121	204
238-2799	5
	6
	►59
238-4527	153
238-4528	153
238-5291	188
238-5292	188
238-5293	188
	190
	192
238-5294	188
	190
	192
238-8288	79
	80
238-8563	117
	►118
238-8671	102
	105
	108
238-8680	4
	►126
238-8682	►123
	126
239-0641	1
	►117
239-0649	66
239-0794	►1
	4
239-1318	153
239-1319	152
239-1496	1
	►260
239-4009	►441
	497
239-5097	256
239-5433	96
239-5812	118
239-6986	504
239-8484	234
239-8485	234
240-4607	►406
	444
	445
	446
240-4672	►420
	444
	446
240-4683	►371
	445
240-5535	5
	►125
240-5571	102
	105
	108
240-9021	234
240-9022	234
240-9093	234
240-9756	111
241-3783	2
	3
	4
	►262
241-8368	►168
	451
241-9527	253
241-9529	251
	►253
241-9599	►275
242-1293	►277
242-3468	1
	►259
242-3469	259
242-3476	251
	►254
242-3477	254
242-3497	1
	►207
242-3498	207
	►352
242-3499	►200
	►202
	207
242-4289	293
242-5116	1
	►217
242-5142	254
242-6902	316
242-9392	430
242-9393	430
243-0716	204
243-4362	228
243-5693	444
	445
	446
	►455
243-5696	456
244-1090	►121
	170
245-3556	78
245-9831	5
	6
	►30
246-2641	419
	504
247-0144	64
247-4468	294
247-4941	484
247-4942	484
247-5651	►225
247-5653	225
	►244
247-5655	244
247-6271	278
247-6278	300
247-6479	481
248-0338	433
248-0339	433
248-0342	433
248-1362	483
	►484
248-7650	461
	464
249-0974	59
249-1291	267
249-7106	84
249-7387	265
249-7388	267
249-7589	260
250-4195	433
251-4336	32
251-6241	80
251-8338	38
252-6334	►87
	96
252-6338	87
252-6438	25
252-6456	5
	6
	►35
252-6645	152
252-6646	153
252-9205	448
	461
252-9581	318
253-0054	269
	271
253-0868	411
253-1847	173
	178
253-2111	173
	178
253-2479	5
	6
	►47
253-4104	411
253-4313	484
253-5022	229
253-9940	444
	445
	446
	►460
253-9942	461
	464
254-2269	57
254-2270	57
254-3783	►169
	451
254-3954	25
254-4251	318
	320
	►341
254-5057	376
	►471
254-5058	►377
	471
254-5060	377
254-8188	►293
	323
	325
254-8191	323
	►342
255-0625	291
	►322
255-6422	►477
255-8680	►302
	325
255-8686	325
	►343
255-9138	372

► **PRIMARY REFERENCE**

PART NUMBER INDEX

Part	Page
256-2212	294
256-3845	302
	304
256-4438	6
	▶79
256-4447	79
	80
257-9290	174
	179
257-9639	306
258-4946	26
	27
258-5194	333
259-0134	▶144
	152
259-1044	94
	98
259-1188	▶443
	444
	445
	446
259-2646	471
	473
259-4423	▶376
	444
	445
260-0769	322
261-0998	302
	304
262-4947	90
263-2162	38
263-3823	442
263-6349	196
	200
	▶231
264-7030	129
267-3060	▶128
	448
	460
	464
268-4028	245
	246
268-4040	2
	▶241
268-4041	241
	▶245
268-4044	241
	▶246
269-3101	5
	6
	▶10
269-4114	400
	▶402
270-3932	231
270-3933	231
270-3934	231
270-4374	5
	▶80
270-9406	273
272-0494	5
	6
272-2265	58
272-9800	146
273-2225	336
274-1512	392
	394
	396
	423
274-7855	60
	61
275-1038	102
	105
	108
275-2452	34
275-6706	372
275-9883	38
276-0076	269
	271
276-1243	118
276-5605	19
	24
277-2103	96
277-3012	32
277-5156	5
	6
278-5689	118
278-5968	262
278-6108	382
279-0122	118
279-9103	381
	▶382
279-9876	118
280-2627	382
281-0028	147
281-4808	372
281-6366	37
281-8803	129
281-8805	160
282-5340	406
282-6447	486
283-2456	369
	372
283-6671	309
	310
284-3083	269
	271
284-4999	▶100
	102
284-5000	▶101
	105
	108
284-5322	411
	▶433
284-5886	356
	▶362
285-2097	433
285-2098	433
285-2099	433
285-2277	302
	304
286-3592	64
286-7193	452
	456
286-9593	402
287-0538	▶411
287-7341	362
287-7459	411
287-8573	10
287-8597	31
288-0422	32
288-1394	40
	43
288-1395	40
	43
288-8880	377
	▶491
	494
288-8884	491
289-3423	262
291-2619	81
291-3957	81
291-3959	81
291-3961	81
291-3967	376
	▶473
291-5081	4
	▶307
292-4427	504
292-4428	504
295-1711	32
295-8965	256
	▶268
295-8966	268
	▶269
296-0023	1
	▶256
296-0024	268
	▶271
296-0025	271
296-3329	234
	▶323
296-3331	234
	▶325
296-3332	▶327
	360
296-5159	196
	198
	200
	202
	▶318
296-5160	222
	224
	▶320
297-4055	▶5
298-2109	237
298-7788	335

3

Part	Page
300-3282	94
	464
300-5183	125
301-4576	302
	304
301-4622	302
	304
301-7292	448
	460
301-9825	66
	72
302-0581	84
303-1944	254
304-6910	4
	▶5
304-7855	504
304-8924	504
304-8925	504
304-9129	350
	352
305-5362	173
	179
305-9192	499
306-2337	10
306-4998	118
306-6902	254
306-8127	118
307-5598	92
308-1393	10
	▶12
308-3389	336
308-4728	5
	▶22
	▶23
308-4729	5
	▶16
	▶17
308-4730	5
	▶42
	▶43
308-4731	5
	▶27
308-4732	5
	▶54
308-4733	5
	6
	▶102
	▶105
	▶108
308-4764	5
	6
	▶32
309-6974	415
309-6978	415
	417
309-8618	372
309-9808	415
	417
311-0186	410
311-6822	111
	113
311-8367	96
	98
	311
311-8545	415
	417
311-8547	▶372
312-5546	389
313-2545	318
	320
	▶333
313-2546	318
	320
313-2590	327
	▶334
313-2597	330
	334
313-2635	▶294
	327
	328
313-3391	▶303
	327
313-3392	303
313-3414	327
	▶344
313-4424	333
313-5493	330
313-6014	344
314-2404	392
	394
	396
	423
314-4014	304
314-4016	▶304
	323
314-4018	383
314-6914	468
314-6915	468
315-1260	▶190
315-7790	384
315-9741	292
315-9743	▶328
	362
316-9934	▶4
318-0827	402
318-1033	335
	▶336
318-2365	102
	105
	108
318-8503	492
318-8504	492
318-9511	113
318-9512	113
320-1483	328

PART NUMBER INDEX

Part	Page
	▶345
320-7409	260
321-2383	10
321-5984	345
322-2699	152
322-3297	▶152
322-4964	488
322-8568	394
	396
322-9663	25
323-2978	335
323-3515	32
323-5921	152
323-9312	40
	43
324-0444	32
324-5620	153
324-9212	248
324-9213	247
324-9214	226
	▶247
324-9215	227
	▶248
324-9216	3
	4
	▶226
324-9217	2
	3
	▶227
325-3644	184
	185
	▶192
325-7449	255
325-7666	▶251
325-7901	251
	▶255
326-3592	1
	▶295
326-9364	335
327-7069	▶1
	2
	3
	4
327-7071	▶1
327-7076	2
	▶251
327-7077	2
	3
	4
	▶251
327-7078	▶251
327-7104	▶145
	153
327-7117	153
327-9004	153
328-2072	▶423
329-6655	25
329-7854	9
329-7856	9
330-0204	242
	▶249
330-0205	242
	▶250
330-0206	249
	250
330-0207	▶242
330-5044	▶442
	499
330-9754	292
331-6022	309
	310
332-4175	70
332-4182	70
332-4185	70
332-4186	70
332-4187	▶70
	72
332-4188	70
332-4189	70
332-4190	70
332-4191	70
332-4192	70
332-4193	70
332-4194	70
332-4195	70
332-4196	70
332-4197	70
332-4199	70
332-4200	70
332-4201	70
332-4202	70
332-4203	70
332-8546	94
	115
333-1668	379
333-1669	▶379
	473
333-1936	96
333-8413	502
333-8414	502
333-9214	▶502
334-2318	40
	43
334-2319	40
	43
334-9334	49
335-1908	▶438
335-3228	438
336-0281	198
336-7235	134
338-0850	415
	417
338-8440	▶292
	307
339-6602	▶376
	445
	446
339-9774	▶62
	446
	447
339-9775	▶63
	445
341-0134	180
341-3061	415
	417
342-2382	443
343-2906	330
343-4268	243
	247
	248
	249
	250
344-1401	350
	352
344-1409	350
	352
344-5673	375
345-7772	94
	98
346-9826	122
348-4918	▶297
	298
348-5640	3
	4
	▶445
348-5641	2
	▶446
348-5642	2
	3
	▶446
348-5643	2
	3
	4
	▶447
348-5644	7
	▶72
348-5645	4
	▶7
348-5646	7
	▶75
349-2746	12
349-3272	289
350-2374	54
350-5171	▶86
	94
	113
351-6992	▶492
	494
351-9918	130
	132
	135
352-3056	▶415
	▶417
352-3058	415
	417
352-4152	379
	▶494
352-4156	492
352-4898	492
352-4899	492
353-2205	13
353-2206	13
353-2207	13
353-2208	13
353-3477	84
353-3478	84
353-5219	38
353-5395	492
353-7423	18
353-7424	18
353-7425	18
353-7426	18
354-1274	▶58
	59
354-5642	185
	▶233
356-2015	285
	▶298
356-6533	480
356-7541	479
357-0664	94
	98
357-4187	111
357-6475	94
	115
357-7421	▶2
357-7423	▶4
358-1226	2
	3
	4
	▶479
358-1227	2
	3
	4
	▶480
358-9474	202
	▶204
359-0715	15
	17
	▶18
359-0719	40
	43
359-0720	40
	43
359-0721	40
	43
359-0722	40
	43
359-0723	40
	43
359-0724	40
	43
359-0734	5
359-0747	49
359-9666	122
360-3986	18
360-7351	5
	6
	▶49
360-8959	88
362-0288	464
362-2190	21
	23
	▶24
362-5412	88
	89
362-8205	89
363-5084	89
	▶160
363-5911	394
363-6423	394
365-3308	102
	105
	108
367-0844	506
367-6361	89
367-6363	89
367-6364	89
367-6836	94
	98
368-3151	127
368-3976	▶88
	89
368-9181	▶2
368-9182	▶2
369-2472	127
369-3705	26
369-4712	328
369-4719	328
	▶330
369-4725	▶306
	328
369-9031	▶3
371-1920	204
371-1921	204
371-1922	204
371-1928	204
371-2170	204
371-2171	204
371-2172	204
371-2173	204
371-2174	204
371-6116	84
373-1989	328
373-1991	306
	▶347
375-9272	31
376-1389	▶3
376-1392	▶3
376-1393	▶4
376-9229	▶89
	94
	115
382-4385	428
386-1294	130
	132

PART NUMBER INDEX

Part	Page
387-4403	204
388-3920	94
388-5001	204
389-3066	94
	115
389-3746	94
	►129
389-6369	94
	98
389-6370	94
	464
389-6371	94
	98
389-7291	98
	►115
389-7292	7
	►98
389-9450	445
	446
	►464
390-1735	417
390-1736	417
390-1766	94
	464
390-5113	5
	►6
391-2704	6
	►113
391-5551	►94
392-1729	396
392-3467	408
392-4502	408
392-4505	408
392-8754	515
394-9605	394
394-9606	394
398-6791	464

4

Part	Page
415-1860	298
	►299
415-5207	256
419-1800	►128
	171
421-5646	204
422-8831	239
422-8832	►239
423-0870	328
423-0871	328
437-1330	299
439-5275	►515



©2013 Caterpillar
All Rights Reserved

CAT, CATERPILLAR, their respective logos, “Caterpillar Yellow”, and the POWER EDGE trade dress as well as corporate and product identity used herein, are trademarks of Caterpillar and may not be used without permission.