CATERPILLAR®

KEBP0271-28
May 2008

RUTHZIL TRATOR COMERCIAL DE PEÇAS LTDA 11 97083-6812 ROLANDO CITRANGULO

Parts Manual

SIS

See “General Information” for New Parts Manual Features.

CS-533E,CP-533E Vibratory Compactor

BZE1-Up (Machine)
BZG1-Up (Machine)
CRS1-Up (Engine)

Powered By 3054C Engine

Product and Dealer Information

Note: For product identification plate locations, see the section “Product Identification Information” in the Operation and Maintenance Manual.

Delivery Date: _____

Product Information

Model: _____

Product Identification Number: _____

Engine Serial Number: _____

Transmission Serial Number: _____

Generator Serial Number: _____

Attachment Serial Numbers: _____

Attachment Information: _____

Customer Equipment Number: _____

Dealer Equipment Number: _____

Dealer Information

Name: _____ Branch: _____

Address: _____

_____

_____

	Dealer Contact	Phone Number	Hours
Sales:	_____	_____	_____
Parts:	_____	_____	_____
Service:	_____	_____	_____

Informations produit et concessionnaire

Nota: Voir l'emplacement de la plaque signalétique du produit au chapitre "Informations produit" du guide d'utilisation et d'entretien.

Date de livraison: _____

Informations produit

Modèle: _____

Numéro d'identification produit: _____

Numéro de série du moteur: _____

Numéro de série de la boîte de vitesses: _____

Numéro de série de l'alternateur: _____

Numéros de série d'équipement: _____

Informations sur l'équipement: _____

Numéro matériel client: _____

Numéro matériel concessionnaire: _____

Informations concessionnaire

Nom: _____ Agence: _____

Adresse: _____

_____

_____

	Contact concessionnaire	Numéro de téléphone	Heures
Ventes:			
Pièces:			
Service:			

Información del Producto/Distribuidor

Nota: Para saber la ubicación de las placas de identificación del producto, ver la sección “Información sobre identificación del producto” en el Manual de Operación y Mantenimiento.

Fecha de entrega: _____

Información del producto

Modelo: _____

Número de identificación del producto: _____

Número de serie del motor: _____

Número de serie de la transmisión: _____

Número de serie del generador: _____

Números de serie de los accesorios: _____

Información sobre los accesorios: _____

Número del equipo del cliente: _____

Número del equipo del distribuidor: _____

Información del distribuidor

Nombre: _____ Sucursal: _____

Dirección: _____

_____

_____

Comunicación con el distribuidor	Número de teléfono	Horas
Ventas: _____	_____	_____
Piezas: _____	_____	_____
Servicio: _____	_____	_____

Informações Sobre Produto e Revendedor

Nota: Para localizações da placa de identificação do produto, consulte a seção, “Informações Sobre Identificação do Produto” no Manual de Operação e Manutenção.

Data de Entrega: _____

Informações Sobre o Produto

Modelo: _____

Número de Identificação do Produto: _____

Número de Série do Motor: _____

Número de Série da Transmissão: _____

Número de Série do Gerador: _____

Números de Série de Acessórios: _____

Informações Sobre Acessórios: _____

Número do Equipamento do Cliente: _____

Número do Equipamento do Revendedor: _____

Informações Sobre o Revendedor

Nome: _____ Filial: _____

Endereço: _____

_____

_____

	Contato do Revendedor	Telefone	Horas
Vendas:	_____	_____	_____
Peças:	_____	_____	_____
Serviço:	_____	_____	_____

Produkt- und Händlerinformation

Anmerkung: Für die Lage der Produkt-Identnummer und Seriennummern siehe Abschnitt “Produkt-Identinformation” im Betriebs- und Wartungshandbuch.

Lieferdatum: _____

Produkt-Identinformation

Modell: _____

Produkt-Identnummer: _____

Seriennummer des Motors: _____

Seriennummer des Getriebes: _____

Seriennummer des Generators: _____

Seriennummern der Arbeitsgeräte: _____

Arbeitsgeräteinformation: _____

Kundennummer: _____

Händlernummer: _____

Händlerinformation

Name: _____ Niederlassung: _____

Adresse: _____

_____

_____

	Kontaktperson beim Händler	Telefon	Dienststunden
Verkauf:	_____	_____	_____
Ersatzteile:	_____	_____	_____
Service:	_____	_____	_____

MEMORANDA

TABLE OF CONTENTS

Name	Page
GENERAL INFORMATION	A16
REPAIR ALTERNATIVES	A35
SUPPLEMENTAL COOLANT ADDITIVES	A40
ENGLISH-PORTUGUESE PARTS NOMENCLATURE	A45
MAINTENANCE PARTS	A53
INDEX	A76
MACHINE ARRANGEMENT	1
CHASSIS AR	1
COMMON AR	1
ENGINE ARRANGEMENT	3
ENGINE AR	3
ENGINE AR-PRIMARY	4
INSTALLATION AR-ENGINE	6
BASIC ENGINE	7
CAMSHAFT GP	7
COVER GP-FRONT HOUSING	8
COVER GP-VALVE MECHANISM	9
CRANKSHAFT GP	19
CYLINDER BLOCK GP	23
CYLINDER HEAD GP	27
DRIVE GP-FAN	30
DRIVE GP-PUMP	32
FLYWHEEL GP	33
HOUSING GP-FLYWHEEL	34
HOUSING GP-FRONT	35
LIFTING GP-ENGINE	41
MOUNTING GP-ENGINE	42
MOUNTING GP-ENGINE FLEXIBLE	45
PAN GP-OIL	47
PISTON & ROD GP	51
PLUG GP-ENGINE	54
PULLEY GP-CRANKSHAFT	58
ROCKER ARM GP	59
SERVICE GP-ENGINE	60
VALVE MECHANISM GP	63
LUBRICATION SYSTEM	66
FILTER GP-ENGINE OIL	66
PUMP GP-ENGINE OIL	67
COOLING SYSTEM	68
CONNECTION GP-WATER	68
COOLER GP-ENGINE OIL	70
COOLER GP-FLTR BASE & ENG OIL	71
FAN GP-SUCTION	74
PUMP GP-WATER	78
RADIATOR & HYD OIL COOLER GP	80
RECOVERY GP-COOLANT	84
AIR INLET AND EXHAUST SYSTEM	85
AIR CLEANER GP	85
ELBOW GP-AIR INLET	88
LINES GP-AIR	89
MUFFLER GP	90
TURBOCHARGER GP	92
FUEL SYSTEM	94
CAP GP-FUEL FILLER	94
FILTER GP-FUEL	95
GAUGE GP-FUEL LEVEL	99
GOVERNOR GP	100
LINES GP-FUEL	102
PUMP GP-FUEL INJECTION	103
PUMP GP-FUEL PRM & PRIM FILTER	115
TANK & MTG GP-FUEL	119
TANK GP-FUEL	120
ELECTRICAL AND STARTING SYSTEM	125
ALARM GP	125
ALTERNATOR GP-CHARGING	126
BATTERY & WIRING GP	127
CONVERTER GP-ELECTRICAL	129
ELECTRICAL AR	130
GLOW PLUG GP	131
LAMP GP-DOME	132
LAMP GP-FLOOD	133
LAMP GP-WARNING BEACON	138
LIGHTING GP-FLOOD	139
LIGHTING GP-WARNING	144
MODULE GP-TIMER	146
SOLENOID GP-THROTTLE	147
STARTING MOTOR GP-ELECTRIC	148
SWITCH GP-DISCONNECT	149
SWITCH GP-MAGNETIC	150
WARNING GP-BACKUP	152
WIRING GP-AIR CONDITIONER	154
WIRING GP-CAB	155
WIRING GP-MACHINE	156
POWER TRAIN	166
AXLE & MTG GP-DRIVE	166
AXLE GP-DRIVE	168
DIFFERENTIAL GP	172
DRIVE GP-DRUM	175
DRUM GP-COMPACTOR	185
DRUM GP-DRIVE & VIBRATORY	186
DRUM GP-PADDED	191
DRUM GP-SMOOTH	193
FLANGE GP-WHEEL	194
HOUSING GP-AXLE	195
INSTALLATION GP-DRUM	197

TABLE OF CONTENTS

Name	Page
LINES GP-PROPEL	198
MOTOR & MTG GP-PROPEL	200
MOUNTING GP-WHEEL	203
PLANETARY GP-FINAL DRIVE	204
POWER TRAIN AR	211
PUMP & MTG GP-PROPEL	212
SHELL GP-PADDED	216
WHEEL & MTG GP-DRIVE	218
WHEEL & TIRE GP	219
FRAME AND BODY	223
BUMPER AR	223
BUMPER GP-FRONT	224
ENCLOSURE GP-ENGINE	227
FRAME GP-FRONT	233
FRAME GP-REAR	234
GUARD GP-LINES	236
GUARD GP-TRANSMISSION	238
HANDRAIL GP	239
HITCH GP-ARTICULATING & OSC	240
HOOD GP	241
SCRAPER GP-PADDED DRUM	255
SCRAPER GP-SMOOTH DRUM	257
STEP GP	260
BRAKING SYSTEM	261
LINES GP-BRAKE & SHIFT	261
STEERING SYSTEM	263
CONTROL GP-STEERING	263
CYLINDER & MTG GP-STEERING	265
KNOB GP-STEERING	269
LINES GP-STEERING	270
LINES GP-STEERING CYLINDER	271
PUMP & MTG GP-STEERING	272
HYDRAULIC SYSTEM	273
ACTUATOR GP-PUMP	273
CONTROL GP-HYDRAULIC	275
CYLINDER GP-HYDRAULIC	276
FILTER & MTG GP-HYDRAULIC	278
HEAD GP-PUMP	280
HYDRAULIC AR	288
HYDRAULIC AR-AUXILIARY	288
LINES GP-FILTER	289
LINES GP-HYDRAULIC OIL COOLER	290
MANIFOLD & VALVE GP	291
MOTOR GP-PISTON	293
PUMP GP-GEAR	305
PUMP GP-PISTON	306
ROTATING GP-MOTOR	316
ROTATING GP-PUMP	317
TANK & MTG GP-HYDRAULIC	322
TANK GP-HYDRAULIC	330
VALVE & MTG GP-CONTROL	334
VALVE GP-BYPASS	335
VALVE GP-CONTROL	336
VALVE GP-PUMP CONTROL	338
VALVE GP-RELIEF	343
VIBRATORY SYSTEM	344
DRIVE GP-SUPPORT & VIBRATORY	344
HOUSING GP-ECCENTRIC WEIGHT	345
HYDRAULIC AR-VIBRATORY	351
LINES GP-VIBRATORY	352
MOTOR & MTG GP-VIBRATORY	354
PUMP & MTG GP-VIBRATORY	355
SHAFT GP-ECCENTRIC WEIGHT	359
SUPPORT GP-VIBRATORY	362
OPERATOR STATION	364
ACCUMULATOR GP-REFRIGERANT	364
AIR CONDITIONER GP	366
ARM GP-WINDOW WIPER	375
CAB AR	376
CAB GP-ENCLOSED ROPS	377
CANOPY GP	383
COMPRESSOR GP-REFRIGERANT	384
CONDENSER & MTG GP-REFRIGERANT	387
CONTROL GP-DIRECTION & SPEED	388
CONTROL GP-HANDLE	390
CONTROL GP-PROPEL	391
CYLINDER & MTG GP-TILT	395
DOOR GP-CAB	397
DUCT GP-CAB AIR	403
FILTER GP-CAB AIR	405
FLOOR MAT GP	406
GAUGE GP-VIBRATORY	407
GUARD GP-VANDALISM	409
HEATER & MTG GP-CAB	410
HEATER GP-CAB	411
LINER GP-CAB	415
LINES GP-AIR CONDITIONER	416
LINES GP-CAB HEATER	418
LINKAGE GP	420
MIRROR GP-REAR VIEW	421
MODULE GP-WARNING INDICATOR	425
MOTOR GP-WINDOW WIPER	426
MOUNTING GP-CAB	428
OPERATOR AR	431
PANEL GP-INSTRUMENT	434
PLATFORM GP-OPERATOR	459
ROPS GP	462
ROPS GP-ENCLOSED	463
SCREEN GP-SUN	466
SEAT & MOUNTING GP	469
SEAT GP-SUSPENSION	470
TANK GP-WINDOW WASHER	476
VISOR GP-CAB	477

TABLE OF CONTENTS

Name	Page	Name	Page
WINDOW GP	478		
WINDOW GP-DOOR	480		
WINDOW GP-REAR	482		
WIPER & WASHER GP-WINDOW	483		
SERVICE EQUIPMENT AND SUPPLIES	485		
FILM GP	485		
PLATE & FILM GP	486		
PART NUMBER INDEX	B1		

TABLE DES MATIÈRES

Désignation	Page
GÉNÉRALITÉS	A19
OPTIONS DE RÉPARATION	A36
ADDITIFS POUR LIQUIDE DE REFROIDISSEMENT	A41
PIÈCES DE RECHANGE	A58
INDEX	A84
VERSION DE MACHINE	1
VERSION DE CHASSIS	1
VERSION NORMALE	1
VERSION DE MOTEUR	3
MOTEUR (VERSION)	3
MOTEUR (VERSION PRINCIPALE)	4
MONTAGE DE MOTEUR (VERSION)	6
MOTEUR STANDARD	7
ARBRE A CAMES (ASS)	7
COUVERCLE DE CARTER AV (ASS)	8
CACHE-SOUPAPES (ASS)	9
VILEBREQUIN (ASS)	19
BLOC-CYLINDRES (ASS)	23
CULASSE (ASS)	27
ENTRAÎNEMENT DE VENTILATEUR (ASS)	30
ENTRAÎNEMENT DE POMPE (ASS)	32
VOLANT MOTEUR (ASS)	33
CARTER DE VOLANT (ASS)	34
CARTER AV (ASS)	35
OEILLETONS DE LEVAGE MOTEUR (ASS)	41
MONTAGE DE MOTEUR (ASS)	42
MONTAGE SOUPLE DU MOTEUR (ASS)	45
HUILE MOTEUR - CARTER (ASS)	47
PISTON ET BIELLE (ASS)	51
BOUCHON DE MOTEUR (ASS)	54
VILEBREQUIN - POULIE (ASS)	58
AXE DE CULBUTEUR (ASS)	59
ENTRETIEN DU MOTEUR (ASS)	60
CULBUTERIE (ASS)	63
CIRCUIT DE GRAISSAGE	66
FILTRE À HUILE MOTEUR (ASS)	66
POMPE A HUILE MOTEUR (ASS)	67
CIRCUIT DE REFROIDISSEMENT	68
RACCORD D'EAU (ASS)	68
REFROIDISSEUR D'HUILE MOTEUR (ASS)	70
SUPPORT DE FILTRE ET REFROIDISSEUR D'HUILE MOTEUR	71
VENTILATEUR ASPIRANT (ASS)	74
POMPE A EAU (ASS)	78
RADIATEUR ET REFROIDISSEUR D'HUILE HYDRAULIQUE (ASS)	80
VASE D'EXPANSION POUR LIQUIDE RÉFRIGERANT	84
CIRCUIT D'ADMISSION D'AIR ET D'ÉCHAPPEMENT	85
FILTRE A AIR (ASS)	85
COUDE D'ADMISSION D'AIR (ASS)	88
CANALISATIONS D'AIR (ASS)	89
SILENCIEUX (ASS)	90
TURBOCOMPRESSEUR (ASS)	92
CIRCUIT DE CARBURANT	94
BOUCHON DE GOULOTTE DE CARBURANT (ASS)	94
FILTRE A CARBURANT (ASS)	95
BAÏONNETTE- NIVEAU DE CARBURANT (ASS)	99
REGULATEUR (ASS)	100
CANALISATIONS DE CARBURANT (ASS)	102
POMPE D'INJECTION DE CARBURANT (ASS)	103
POMPE D'AMORÇAGE DE CARBURANT ET FILTRE PRINCIPAL	115
RÉSERVOIR DE CARBURANT ET MONTAGE (ASS)	119
RÉSERVOIR DE CARBURANT (ASS)	120
CIRCUIT ÉLECTRIQUE ET DE DÉMARRAGE	125
AVERTISSEUR (ASS)	125
ALTERNATEUR DE CHARGE (ASS)	126
BATTERIE ET CÂBLAGE	127
TRANSFORMATION ELECTRIQUE (ASS)	129
VERSION ÉLECTRIQUE	130
BOUGIE DE PRÉCHAUFFAGE (ASS)	131
PLAFONNIER (ASS)	132
LAMPE - PHARE (ASS)	133
LAMPE - GYROPHARE (ASS)	138
ÉCLAIRAGE - PROJECTEURS (ASS)	139
ÉCLAIRAGE - AVERTISSEUR (ASS)	144
MODULE CHRONOMETRE	146
SOLENOIDE D'ACCELERATION (ASS)	147
DÉMARREUR ÉLECTRIQUE (ASS)	148

* TRADUCTION NON DISPONIBLE AU MOMENT DE LA PUBLICATION

TABLE DES MATIÈRES

Désignation	Page
ROBINET DE BATTERIE (ASS)	149
CONTACTEUR MAGNETIQUE (ASS)	150
AVERTISSEUR DE RECUL (ASS)	152
CABLAGE - CLIMATISEUR (ASS)	154
CABLAGE DE CABINE (ASS)	155
CABLAGE DE LA MACHINE (ASS)	156
TRANSMISSION	166
ESSIEU DE MOTEUR ET MONTAGE (ASS)	166
ESSIEU MOTEUR (ASS)	168
DIFFERENTIEL (ASS)	172
ENTRAINEMENT DE TAMBOUR (ASS)	175
TAMBOUR DE COMPACTEUR (ASS)	185
TAMBOUR VIBRATEUR ET ENTRAINEMENT (ASS)	186
TAMBOUR À PIEDS DAMEURS (ASS)	191
TAMBOUR LISSE	193
BOUDIN DE ROUE (ASS)	194
BOÎTIER D'ESSIEU (ASS)	195
MONTAGE DES TAMBOURS (ASS)	197
CANALISATIONS D'ENTRAINEMENT	198
MOTEUR ET MONTAGE - PROPULSION (ASS)	200
ROUE - GROUPE DE MONTAGE	203
TRAINS PLANÉTAIRES-RÉDUCTEURS (ASS)	204
TRANSMISSION (VERSION)	211
POMPE ET MONTAGE DE PROPULSION (ASS)	212
ENVELOPPE À PIEDS DAMEURS (ASS)	216
ENTRAÎNEMENT DE ROUE ET MONTAGE (ASS)	218
ROUE ET PNEU (ASS)	219
CHÂSSIS ET BENNE	223
VERSION DE PARE-CHOCS	223
PARE-CHOCS AV (ASS)	224
CARENAGE DE MOTEUR (ASS)	227
CHÂSSIS AV (ASS)	233
BÂTI AR (ASS)	234
PROTECTEUR DES CANALISATIONS (ASS)	236
BLINDAGE DE TRANSMISSION	238
MAIN COURANTE (ASS)	239
ATTELAGE-ARTICULATION ET OSCILLATION (ASS)	240
CAPOT (ASS)	241
RACLOIR-CYLINDRE À PIEDS DAMEURS (ASS)	255
RACLOIR-CYLINDRE LISSE	257
MARCHEPIED (ASS)	260
CIRCUIT DE FREIN	261
CANALISATIONS DE FREIN ET CHANGEMENT DE VIT (ENS)	261
CIRCUIT DE DIRECTION	263
COMMANDE DE DIRECTION (ASS)	263
VERIN DE DIRECTION ET MONTAGE (ASS)	265
BOUTON DE DIRECTION (ASS)	269
CANALISATIONS DE DIRECTION (ASS)	270
CANALISATIONS DE VÉRIN DE DIRECTION (ASS)	271
POMPE DE DIRECTION ET MONTAGE (ASS)	272
CIRCUIT HYDRAULIQUE	273
MECANISME DE COMMANDE DE POMPE (ASS)	273
COMMANDE HYDRAULIQUE (ASS)	275
VÉRIN HYDRAULIQUE (ASS)	276
FILTRE À HUILE HYDRAULIQUE ET MONTAGE (ASS)	278
TÊTE DE POMPE (ASS)	280
VERSION HYDRAULIQUE	288
HYDRAULIQUE AUXILIAIRE (VERSION)	288
CANALISATIONS DE FILTRE	289
CANALISATIONS DE REFROIDISSEUR D'HUILE HYDR. (ASS)	290
COLLECTEUR ET SOUPAPE (ASS)	291
GROUPE DE MOTEUR A PISTONS	293
POMPE A ENGRENAGES (ASS)	305
POMPE A PISTONS (ASS)	306
GROUPE DE ROTATION DE MOTEUR	316
GROUPE DE ROTATION DE POMPE	317
RÉSERVOIR HYDRAULIQUE ET MONTAGE (ASS)	322
RÉSERVOIR HYDRAULIQUE (ASS)	330
DISTRIBUTEUR ET MONTAGE (ASS)	334
SOUPAPE DE DÉRIVATION (ASS)	335
DISTRIBUTEUR (ASS)	336
DISTRIBUTEUR DE POMPE (ASS)	338
CLAPET DE DECHARGE (ASS)	343
CIRCUIT DE VIBRATION	344
TAMBOUR VIBRATEUR ET ENTRAINEMENT (ASS)	344
CARTER-POIDS EXCENTRIQUE (ASS)	345
VIBRATION HYDRAULIQUE (VERSION)	351

* TRADUCTION NON DISPONIBLE AU MOMENT DE LA PUBLICATION

TABLE DES MATIÈRES

Désignation	Page
CANALISATIONS DE VIBRATEUR (ASS)	352
MOTEUR - MONTAGE ET VIBRATION (ENS)	354
POMPE ET MONTAGE - VIBRATION (ASS)	355
ARBRE - POIDS EXCENTRIQUE (ASS)	359
SUPPORT DE VIBRATEUR (ASS)	362
POSTE DE CONDUITE	364
ACCUMULATEUR - CLIMATISEUR (ASS)	364
CLIMATISEUR (ASS)	366
BRAS D'ESSUIE-GLACE (ASS)	375
CABINE (VERSION)	376
*CAB GP-ENCLOSED ROPS	377
TOIT (ASS)	383
COMPRESSEUR DE REFRIGERANT (ASS)	384
CONDENSATEUR ET MONTAGE (RÉFRIGÉRANT)	387
COMMANDE DE VITESSE ET DE SENS DE MARCHE	388
COMMANDE DE POIGNÉE (ASS)	390
COMMANDE DE DEPLACEMENT (ASS)	391
VERIN D'INCLINAISON ET MONTAGE (ASS)	395
PORTIÈRE DE CABINE (ASS)	397
GAINE D'AIR (ASS)	403
FILTRE À AIR DE CABINE (ASS)	405
TAPIS DU PLANCHER (ASS)	406
INDICATEUR DE VIBRATION (ASS)	407
PROTECTION ANTIVANDALISME (ASS)	409
CHAUFFAGE ET MONTAGE - CABINE (ASS)	410
CHAUFFAGE DE CABINE (ASS)	411
CABINE - REVÊTEMENT (ASS)	415
CANALISATIONS DE CLIMATISEUR (ASS)	416
CANALISATIONS DE CHAUFFAGE DE CABINE (ASS)	418
TIMONERIE (ASS)	420
RÉTROVISEUR (ASS)	421
MODULE - TÉMOIN (ASS)	425
MOTEUR D'ESSUIE-GLACE (ASS)	426
MONTAGE DE CABINE (ASS)	428
POSTE DE CONDUITE (VERSION)	431
TABLEAU DE BORD (ASS)	434
PLATE-FORME DE CABINE	459
TOIT ROPS (ASS)	462
CABINE ROPS FERMÉE (ASS)	463
PARE-SOLEIL (ASS)	466
SIÈGE ET MONTAGE (ASS)	469
SIÈGE AVEC SUSPENSION (ASS)	470
RÉSERVOIR - LAVE-GLACE (ASS)	476
RETROVISEUR - CABINE (ASS)	477
VITRE (ASS)	478
GLACE DE PORTIÈRE (ASS)	480
GLACE AR	482
ESSUIE-GLACE ET LAVE-GLACE	483
MATÉRIEL ET FOURNITURES D'ENTRETIEN	485
PLAQUE SIGNALÉTIQUE (ASS)	485
PLAQUES SIGNALETIQUES ET AUTOCOLLANTS (ASS)	486
INDEX DE NUMÉROS DE PIÈCES	B1

* TRADUCTION NON DISPONIBLE AU MOMENT DE LA PUBLICATION

CONTENIDO

Nombre	Página
INFORMACIÓN GENERAL	A23
ALTERNATIVAS DE REPARACIÓN	A37
ADITIVOS DE REFRIGERANTE SUPLEMENTARIOS	A42
PIEZAS DE MANTENIMIENTO	A62
INDICE	A93
CONFIGURACIÓN DE MOTOR	1
CHASIS (CONFIG)	1
CONFIGURACIÓN COMÚN	1
CONFIGURACIÓN DE MOTOR	3
CONFIGURACIÓN DE MOTORES	3
MOTOR PRIMARIO (CONFIG)	4
CONFIGURACIÓN DE INSTALACIÓN DEL MOTOR	6
MOTOR BÁSICO	7
ÁRBOL DE LEVAS (GR)	7
TAPA DE LA CAJA DELANTERA (GR)	8
TAPA DEL MECANISMO DE VÁLVULAS (GR)	9
CIGÜEÑAL (GR)	19
BLOQUE MOTOR (GR)	23
CULATA DE CILINDROS (GR)	27
IMPULSOR DE VENTILADOR (GR)	30
MANDO DE BOMBA (GR)	32
VOLANTE (GR)	33
VOLANTE - CAJA DE (GR)	34
CAJA DELANTERA (GR)	35
CÁNCAMOS DE LEVANTAMIENTO DEL MOTOR (GR)	41
MONTAJE DEL MOTOR (GR)	42
MONTAJE FLEXIBLE DEL MOTOR (GR)	45
CÁRTER - COLECTOR DEL (GR)	47
PISTÓN Y BIELA (GR)	51
TAPÓN DEL MOTOR (GR)	54
CIGÜEÑAL - POLEA DE (GR)	58
BALANCÍN (GR)	59
SERVICIO GR-MOTOR	60
MECANISMO DE VÁLVULAS (GR)	63
SISTEMA DE LUBRICACIÓN	66
FILTRO DE ACEITE DEL MOTOR (GR)	66
BOMBA DE ACEITE DEL MOTOR (GR)	67
SISTEMA DE ENFRIAMIENTO	68
AGUA - CONEXIÓN DE (GR)	68
ENFRIADOR DE ACEITE DEL MOTOR (GR)	70
ENFRIADOR DE ACEITE DEL MOTOR Y BASE DEL FILTRO	71
SUCCIÓN - VENTILADOR DE (GR)	74
BOMBA DE AGUA (GR)	78
RADIADOR Y ENFRIADOR DE ACEITE HIDRÁULICO (GR)	80
RECUPERACIÓN DEL REFRIGERANTE (GR)	84
SISTEMA DE ADMISIÓN Y ESCAPE DE AIRE	85
FILTRO DE AIRE (GR)	85
CODO DE ADMISIÓN DE AIRE (GR)	88
AIRE - TUBERÍAS DE (GR)	89
SILENCIADOR (GR)	90
TURBOCOMPRESOR (GR)	92
SISTEMA DE COMBUSTIBLE	94
TAPA DEL TUBO DE LLENADO DE COMBUSTIBLE (GR)	94
FILTRO DE COMBUSTIBLE (GR)	95
INDICADOR DEL NIVEL DE ACEITE (GR)	99
REGULADOR (GR)	100
TUBERÍAS DE COMBUSTIBLE (GR)	102
BOMBA DE INYECCIÓN DE COMBUSTIBLE (GR)	103
BOMBA DE CEBADO Y FILTRO PRIMARIO DE COMBUSTIBLE (GR)	115
TANQUE DE COMBUSTIBLE Y GRUPO DE MONTAJE	119
COMBUSTIBLE - TANQUE DE (GR)	120
SISTEMA ELÉCTRICO Y DE ARRANQUE	125
ALARMA (GR)	125
CARGA - ALTERNADOR DE (GR)	126
BATERÍA Y CABLES (GR)	127
CONVERTIDOR ELÉCTRICO (GR)	129
CONFIGURACIÓN ELÉCTRICA	130
BUJÍA INCANDESCENTE (GR)	131
LÁMPARA DEL TECHO (GR)	132
REFLECTOR (GR)	133
LÁMPARA DE BALIZA DE ADVERTENCIA (GR)	138
LUCES DE REFLECTOR (GR)	139
LUCES DE ADVERTENCIA (GR)	144
MÓDULO DEL CRONÓMETRO (GR)	146
SOLENOIDE DEL ACELERADOR (GR)	147
MOTOR DE ARRANQUE ELÉCTRICO (GR)	148
DISYUNTOR (GR)	149

* NO HAY TRADUCCION DISPONIBLE EN EL MOMENTO DE LA IMPRESION

CONTENIDO

Nombre	Página
INTERRUPTOR MAGNÉTICO (GR)	150
RETROCESO - ALARMA DE (GR)	152
CABLES DEL ACONDICIONADOR DE AIRE (GR)	154
CABLES DE LA CABINA (GR)	155
CABLES DE LA MÁQUINA (GR)	156
TREN DE FUERZA	166
EJE DE IMPULSIÓN Y MONTAJE (GR)	166
EJE MOTRIZ (GR)	168
DIFERENCIAL (GR)	172
MANDO DEL TAMBOR (GR)	175
TAMBOR COMPACTADOR (GR)	185
TAMBOR VIBRADOR Y MANDO (GR)	186
RODILLO DE PISONES (GR)	191
RODILLO LISO (GR)	193
GRUPO DE PESTAÑA, RUEDA	194
CAJA DEL EJE (GRUPO)	195
INSTALACIÓN DEL TAMBOR (GR)	197
TUBERÍAS DE PROPULSIÓN (GR)	198
MOTOR DE PROPULSIÓN Y MONTAJE (GR)	200
MONTAJE DE RUEDA (GR)	203
PLANETARIO DEL MANDO FINAL (GR)	204
TREN DE FUERZA (CONFIG)	211
BOMBA DE PROPULSIÓN Y MONTAJE	212
CASCO ACOLCHADO (GR)	216
RUEDA DE MANDO Y MONTAJE (GR)	218
RUEDA Y NEUMÁTICO (GR)	219
BASTIDOR Y CHASIS	223
PARACHOQUES (CONFIG)	223
PARAGOLPES DELANTERO	224
COMPARTIMIENTO DEL MOTOR (GR)	227
BASTIDOR DELANTERO (GR)	233
BASTIDOR TRASERO (GR)	234
PROTECTOR DE LAS TUBERÍAS (GR)	236
PROTECTOR DE LA TRANSMISIÓN (GR)	238
*HANDRAIL GP	239
ENGANCHE ARTICULADO Y OSCILANTE (GR)	240
CAPÓ (GR)	241
RASPADOR DE TAMBOR AMORTIGUADO (GR)	255
RASPADOR DE TAMBOR LISO (GR)	257
ESTRIBO DEL OPERADOR (GR)	260
SISTEMA DE FRENOS	261
TUBERÍAS DEL FRENO Y CAMBIO DE VELOCIDADES (GR)	261
SISTEMA DE DIRECCIÓN	263
CONTROL DE DIRECCIÓN (GR)	263
CILINDRO DE DIRECCIÓN Y MONTAJE (GR)	265
GRUPO PERILLA, DIRECCIÓN	269
TUBERÍAS DE DIRECCIÓN (GR)	270
TUBERÍAS DEL CILINDRO DE DIRECCIONAL (GR)	271
BOMBA DE DIRECCIÓN Y MONTAJE (GR)	272
SISTEMA HIDRÁULICO	273
ACTIVADOR DE LA BOMBA (GR)	273
CONTROL HIDRÁULICO (GR)	275
CILINDRO HIDRÁULICO (GRUPO)	276
FILTRO DE ACEITE HIDRÁULICO Y MONTAJE (GR)	278
CABEZA DE BOMBA (GR)	280
HIDRÁULICA (CONFIG)	288
CONFIGURACIÓN AUXILIAR HIDRÁULICA	288
FILTRO - TUBERÍAS DE (GR)	289
TUBERÍAS DEL ENFRIADOR DE ACEITE HIDRÁULICO (GR)	290
MÚLTIPLE Y VÁLVULA (GR)	291
PISTONES DEL MOTOR (GR)	293
BOMBA DE ENGRANAJES (GR)	305
BOMBA DE PISTONES (GR)	306
GRUPO DE ROTACIÓN DEL MOTOR (GR)	316
GRUPO GIRATORIO DE BOMBA	317
TANQUE HIDRÁULICO Y MONTAJE (GR)	322
TANQUE HIDRÁULICO (GR)	330
VÁLVULA DE CONTROL Y MONTAJE (GR)	334
DERIVACIÓN - VÁLVULA DE (GR)	335
VÁLVULA DE CONTROL (GR)	336
VALVULA DE CONTROL DE LA BOMBA (GR)	338
VÁLVULA DE ALIVIO (GR)	343
SISTEMA VIBRATORIO	344
MANDO DE SOPORTE Y VIBRATORIO (GR)	344
PESAS EXCÉNTRICAS -CAJA DE (GR)	345
VIBRADOR HIDRÁULICO (CONFIG)	351
TUBERÍAS DEL VIBRADOR (GR)	352
MOTOR DE LA VIBRACIÓN Y MONTAJE (GR)	354
BOMBA DEL VIBRADOR Y MONTAJE (GR)	355

* NO HAY TRADUCCION DISPONIBLE EN EL MOMENTO DE LA IMPRESION

CONTENIDO

Nombre	Página
PESAS EXCÉNTRICAS DEL EJE (GR)	359
SOPORTE VIBRATORIO (GR)	362
PUESTO DEL OPERADOR	364
ACUMULADOR DEL ACONDICIONADOR DE AIRE (GR)	364
ACONDICIONADOR DE AIRE (GR)	366
BRAZO DE LIMPIAPARABRISAS (GR)	375
CABINA (CONFIG)	376
CABINA INCLUYE ROPS (GR)	377
TECHO (GR)	383
COMPRESOR DE REFRIGERANTE (GR)	384
CONDENSADOR DEL REFRIGERANTE Y MONTAJE (GR)	387
CONTROL GR-DIRECCIÓN Y VELOCIDAD	388
CONTROL DE MANIJA (GR)	390
CONTROL DE PROPULSION (GR)	391
CILINDRO DE INCLINACIÓN Y MONTAJE (GR)	395
PUERTA DE CABINA	397
CONDUCTO DE AIRE (GR)	403
FILTRO DE AIRE DE LA CABINA (GR)	405
ALFOMBRILLA DEL PISO (GR)	406
MEDIDOR VIBRATORIO (GR)	407
PROTECTOR CONTRA EL VANDALISMO (GR)	409
CALEFACCIÓN Y MONTAJE DE LA CABINA (GR)	410
CALEFACCIÓN DE LA CABINA (GR)	411
REVESTIMIENTO DE LA CABINA (GR)	415
TUBERÍAS DE ACONDICIONADOR DE AIRE (GR)	416
TUBERÍAS DE CALEFACCIÓN DE LA CABINA	418
VARILLAJE (GR)	420
RETROVISOR (GR)	421
MÓDULO INDICADOR DE ADVERTENCIA (GR)	425
MOTOR-LIMPIAPARABRISAS (GR)	426
GRUPO DE MONTAJE DE LA CABINA	428
COMPARTIMIENTO DEL OPERADOR (CONFIG)	431
TABLERO DE INSTRUMENTOS (GR)	434
PLATAFORMA DE LA CABINA	459
ESTRUCTURA ROPS (GR)	462
CABINA ROPS CERRADA (GR)	463
PERSIANA PARA EL SOL (GR)	466
ASIENTO Y MONTAJE (GR)	469
SUSPENSIÓN - ASIENTO CON (GR)	470
TANQUE DEL LAVAPARABRISAS (GR)	476
VISERA (GR)	477
VENTANA (GR)	478
VENTANA DE LA PUERTA (GR)	480
VENTANA TRASERA (GR)	482
LIMPIA Y LAVAPARABRISAS (GR)	483
EQUIPOS Y SUMINISTRO DE SERVICIOS	485
ETIQUETA DE ADVERTENCIA (GR)	485
CALCOMANÍAS Y PLACAS DE IDENTIFICACIÓN (GR)	486
INDICE DE NUMEROS DE PIEZA	B1

* NO HAY TRADUCCION DISPONIBLE EN EL MOMENTO DE LA IMPRESION

ÍNDICE

Designação	Página
INFORMAÇÃO GERAL	A27
ALTERNATIVAS DE REPARO	A38
ADITIVOS SUPLEMENTARES DO LÍQUIDO ARREFECEDOR	A43
NOMENCLATURA DE PEÇAS INGLÊS-PORTUGUÊS	A45
PEÇAS DE MANUTENÇÃO	A67
ÍNDICE	A102
MÁQUINA - ARRANJO	1
CHASSI	1
ARRANJO BÁSICO	1
MOTOR - ARRANJO	3
MOTOR	3
MOTOR PRIMÁRIO	4
GRUPO DE INSTALAÇÃO - MOTOR	6
MOTOR BÁSICO	7
EIXO-COMANDO DE VÁLVULA	7
TAMPA - CAIXA DIANTEIRA	8
TAMPA - MECANISMO DAS VÁLVULAS	9
VIRABREQUIM	19
BLOCO DO MOTOR	23
CABEÇOTE DO MOTOR	27
COMANDO DO VENTILADOR	30
COMANDO DA BOMBA	32
VOLANTE DO MOTOR	33
CAIXA DO VOLANTE DO MOTOR	34
CAIXA DIANTEIRA	35
LEVANTAMENTO DO MOTOR	41
MONTAGEM - MOTOR	42
MONTAGEM FLEXÍVEL DO MOTOR	45
CÁRTER DO ÓLEO DO MOTOR	47
PISTÃO E BIELA	51
BUJÃO DO MOTOR	54
POLIA DO VIRABREQUIM	58
BALANCIM	59
MANUTENÇÃO-MOTOR	60
MECANISMO DAS VÁLVULAS	63
SISTEMA DE LUBRIFICAÇÃO	66
FILTRO - ÓLEO DO MOTOR	66
BOMBA DE ÓLEO - MOTOR	67
SISTEMA DE ARREFECIMENTO	68
CONEXÃO - TUBO D'ÁGUA	68
ARREFECEDOR - ÓLEO DO MOTOR	70
ARREFECEDOR DE ÓLEO DO MOTOR E BASE DO FILTRO	71
VENTILADOR DE SUCÇÃO	74
BOMBA DE ÁGUA	78
RADIADOR E ARREFECEDOR DO ÓLEO HIDRÁULICO	80
RECUPERAÇÃO DE LÍQUIDO ARREFECEDOR	84
SISTEMA DA ADMISSÃO DE AR E DE ESCAPE	85
PURIFICADOR DE AR	85
COTOVELO DE ADMISSÃO DE AR	88
TUBOS - AR	89
SILENCIADOR	90
TURBOALIMENTADOR	92
SISTEMA DE COMBUSTÍVEL	94
TAMPA - BOCAL DE ENCHIMENTO DE COMBUSTÍVEL	94
FILTRO - COMBUSTÍVEL	95
MEDIDOR - NÍVEL DE COMBUSTÍVEL	99
GOVERNADOR	100
TUBOS - COMBUSTÍVEL	102
BOMBA DE INJEÇÃO DO COMBUSTÍVEL	103
BOMBA DE ESCORVA DO COMBUSTÍVEL E DO FILTRO PRIMÁRIO	115
TANQUE DE COMBUSTÍVEL E MONTAGEM	119
TANQUE DE COMBUSTÍVEL	120
SISTEMA ELÉTRICO E DE PARTIDA	125
ALARME	125
ALTERNADOR DE CORRENTE	126
BATERIA E CABOS / FIOS ELÉTRICOS	127
CONVERSOR ELÉTRICO	129
SISTEMA ELÉTRICO	130
VELA DE AQUECIMENTO; VELA INCANDESCENTE	131
LÂMPADA - TETO	132
LÂMPADA - FAROL	133
LUZ GIRATÓRIA DE ALARME	138
SISTEMA DE ILUMINAÇÃO - FARÓIS	139
SISTEMA DE ILUMINAÇÃO - ADVERTÊNCIA	144
MÓDULO - CRONÔMETRO	146
SOLENÓIDE - ACELERADOR	147
MOTOR ELÉTRICO DE PARTIDA	148
CHAVE GERAL	149
INTERRUPTOR - MAGNÉTICO	150
ALARME DE MARCHA À RÉ	152
CABOS/FIOS ELÉTRICOS - AR CONDICIONADO	154
CABOS/FIOS ELÉTRICOS - CABINE	155

ÍNDICE

Designação	Página
CABOS/FIOS ELÉTRICOS - MÁQUINA	156
TREM DE FORÇA	166
EIXO PROPULSÃO E MONTAGEM	166
EIXO DE PROPULSÃO	168
DIFERENCIAL	172
COMANDO DO TAMBOR	175
TAMBOR - COMPACTADOR	185
TAMBOR VIBRATÓRIO - COMANDO	186
TAMBOR COM PISO	191
TAMBOR LISO	193
FLANGE - RODA	194
CAIXA DO SEMI-EIXO	195
TAMBOR - INSTALAÇÃO	197
TUBOS - PROPULSÃO	198
MOTOR DE PROPULSÃO E MONTAGEM	200
MONTAGEM - RODA	203
GR. PLANETÁRIO - COMANDO FINAL	204
TREM DE FORÇA	211
BOMBA DE PROPULSÃO E MONTAGEM	212
CARCAÇA ACOLCHOADA	216
RODA DE ACIONAMENTO E MONTAGEM	218
RODA E PNEU	219
CHASSI E CARROCERIA	223
PÁRA-CHOQUE	223
PÁRA-CHOQUE DIANTEIRO	224
COBERTURA DO MOTOR	227
CHASSI DIANTEIRO	233
CHASSI TRASEIRO	234
PROTETOR - TUBOS	236
PROTETOR - TRANSMISSÃO	238
CORRIMAO, BALAUSTRE	239
ENGATE - ARTICULAÇÃO E OSCILAÇÃO	240
CAPÔ	241
RASPADOR - ROLO COM PISO	255
RASPADOR - ROLO LISO	257
DEGRAU	260
SISTEMA DE FREIO	261
TUBOS - FREIO E MUDANÇA	261
SISTEMA DE DIREÇÃO	263
CONTROLE DE DIREÇÃO	263
CILINDRO DE DIREÇÃO E MONTAGEM	265
BOTÃO - DIREÇÃO	269
TUBOS - DIREÇÃO	270
TUBOS DO CILINDRO DE DIREÇÃO	271
BOMBA E MONTAGEM - DIREÇÃO	272
SISTEMA HIDRÁULICO	273
ACIONADOR DA BOMBA	273
CONTROLE HIDRÁULICO	275
CILINDRO HIDRÁULICO	276
FILTRO HIDRÁULICO E MONTAGEM	278
CABEÇA DA BOMBA	280
COMANDO HIDRÁULICO	288
COMANDO HIDRÁULICO AUXILIAR	288
TUBOS - FILTRO	289
TUBOS - ARREFECEDOR DE ÓLEO HIDRÁULICO	290
COLETOR E VÁLVULA	291
MOTOR - PISTÃO	293
BOMBA DE ENGRENAGENS	305
BOMBA DE PISTÃO	306
MOTOR DO GRUPO ROTATIVO	316
GRUPO ROTATIVO DA BOMBA	317
TANQUE DE ÓLEO HIDRÁULICO E MONTAGEM	322
TANQUE HIDRÁULICO	330
VÁLVULA DE CONTROLE E MONTAGEM	334
VÁLVULA DE DERIVAÇÃO	335
VÁLVULA DE CONTROLE	336
VÁLVULA DE CONTROLE DA BOMBA	338
VÁLVULA DE ALÍVIO	343
SISTEMA VIBRATÓRIO	344
COMANDO VIBRATÓRIO E SUPORTE	344
CAIXA - PESO EXCÊNTRICO	345
VIBRADOR HIDRÁULICO	351
TUBOS - SISTEMA VIBRATÓRIO	352
MOTOR VIBRATÓRIO E MONTAGEM	354
BOMBA E MONTAGEM VIBRATÓRIA	355
EIXO - PESO ECÊNTRICO	359
SUPORTE DO SISTEMA VIBRATÓRIO	362
POSTO DO OPERADOR	364
ACUMULADOR - AR CONDICIONADO	364
CONDICIONADOR DE AR	366
BRAÇO DO LIMPADOR	375
CABINE	376
CABINE - ESTRUTURA DE PROTEÇÃO CONTRA CAPOTAMENTO	377
TOLDO	383
COMPRESSOR DE REFRIGERANTE	384
CONDENSADOR DO REFRIGERANTE E MONTAGEM	387
CONTROLE - SENTIDO E VELOCIDADE	388
CONTROLE-CABO	390
CONTROLE DE PROPULSÃO	391
CILINDRO DE INCLINAÇÃO E MONTAGEM	395
PORTA DA CABINE	397

ÍNDICE

Designação	Página
DUCTO DE AR	403
FILTRO - AR DA CABINE	405
TAPETE	406
INDICATOR VIBRATÓRIO	407
PROTETOR CONTRA VANDALISMO	409
AQUECEDOR DA CABINE E MONTAGEM	410
AQUECEDOR DA CABINE	411
REVESTIMENTO DA CABINE	415
TUBOS - AR CONDICIONADO	416
TUBOS - AQUECEDOR DA CABINE	418
ARTICULAÇÃO	420
ESPELHO RETROVISOR	421
MÓDULO - INDICADOR DE ALARME	425
MOTOR - LIMPADOR DO VIDRO	426
MONTAGEM - CABINE	428
CABINE	431
PAINEL DE INSTRUMENTOS	434
PLATAFORMA DO OPERADOR	459
ESTRUTURA ROPS	462
ROPS FECHADA	463
TELA PÁRA-SOL	466
ASSENTO E MONTAGEM	469
ASSENTO COM SUSPENSÃO	470
TANQUE - LAVADOR DE JANELA	476
PÁRA-SOL DA CABINE	477
VIDRO	478
VIDRO DA PORTA	480
VIDRO TRASEIRO	482
LIMPADOR E LAVADOR - JANELA	483
EQUIPAMENTOS DE SERVIÇO E SUPRIMENTOS	485
DECALQUE	485
PLACA E DECALQUE	486
ÍNDICE DE NÚMERO DE PEÇA	B1

INHALTSVERZEICHNIS

Bezeichnung	Seite
ALLGEMEINE HINWEISE	A31
REPARATURALTERNATIVEN	A39
KÜHLMITTELZUSATZ	A44
WARTUNGSTEILE	A72
STICHWORTVERZEICHNIS	A111
MASCHINE	1
FAHRWERK	1
GRUNDAUSFÜHRUNG	1
MOTOR	3
MOTORAUSFÜHRUNG	3
MOTOR-EINBAUSATZ	6
MOTOR (GRUNDAUSFÜHRUNG)	7
NOCKENWELLE	7
STIRNRADGEHÄUSEDECKEL	8
VENTILDECKEL	9
KURBELWELLE	19
MOTORBLOCK	23
ZYLINDERKOPF	27
LÜFTERANTRIEB	30
PUMPENANTRIEB	32
SCHWUNGRAD	33
SCHWUNGRADGEHÄUSE	34
STIRNRADGEHÄUSE	35
MOTORHUBÖSE	41
MOTORAUFLAGER	42
MOTORAUFHÄNGUNG, ELASTISCH	45
ÖLWANNE	47
PLEUELSTANGE UND KOLBEN	51
MOTORSTOPFEN	54
KURBELWELLEN-RIEMENSCHEIBE	58
VENTILKIPPHEBEL	59
SERVICE - MOTOR	60
VENTILSTEUERUNG	63
SCHMIERSYSTEM	66
ÖLFILTER	66
SCHMIERPUMPE	67
KÜHLSYSTEM	68
KÜHLWASSERANSCHLUSS	68
MOTORÖLKÜHLER	70
MOTORÖLKÜHLER UND FILTER-SOCKEL	71
SAUGLÜFTER	74
KÜHLWASSERPUMPE	78
KÜHLER UND HYDRAULIKÖLKÜHLER	80
KÜHLMITTELÜBERLAUFBEHÄLTER	84
LUFTANSAUG- UND ABGASSYSTEM	85
LUFTREINIGER	85
LUFTEINLASSBOGEN	88
DRUCKLUFTLEITUNGEN	89
SCHALLDÄMPFER	90
TURBOLADER	92
KRAFTSTOFFSYSTEM	94
KRAFTSTOFFFILTERKAPPE	94
KRAFTSTOFFILTER	95
KRAFTSTOFFSTANDANZEIGE	99
REGLER	100
KRAFTSTOFFLEITUNGEN	102
KRAFTSTOFFEINSPRITZPUMPE	103
KRAFTSTOFFENTLÜFTUNGSPUMPE UND -HAUPTFILTER	115
KRAFTSTOFFTANK U. BEFESTIGUNG	119
KRAFTSTOFFTANK	120
ELEKTRISCHE ANLAGE UND STARTSYSTEM	125
WARNVORRICHTUNG	125
DREHSTROMGENERATOR	126
BATTERIE UND VERDRAHTUNG	127
ELEKTR. UMFORMER	129
ELEKTR. ANLAGE	130
GLÜHKERZE	131
FAHRERHAUSBELEUCHTUNG	132
ARBEITSLEUCHTEN	133
RUNDUM-KENNLEUCHTE	138
ARBEITSLEUCHTEN	139
WARNLEUCHTEN	144
TIMERMODUL	146
DREHZAHLSTEUERUNGSSOLENOID	147
STARTERMOTOR	148
TRENNSCHALTER	149
MAGNETSCHALTER	150
RÜCKFAHRWARNHORN	152
KLIMAANLAGENVERDRAHTUNG	154
FAHRERHAUSVERDRAHTUNG	155
MASCHINENVERDRAHTUNG	156
KRAFTÜBERTRAGUNG	166
ANTRIEBSACHSE U. AUFHÄNGUNG	166
ANTRIEBSACHSE	168
DIFFERENTIAL	172
BANDAGENANTRIEB	175
VERDICHTUNGSBANDAGE	185

* ÜBERSETZUNG ZUM ZEITPUNKT DER DRUCKLEGUNG NICHT VORHANDEN

INHALTSVERZEICHNIS

Bezeichnung	Seite
VIBRATIONSBANDAGE UND ANTRIEB	186
STAMPFFUSSBANDAGE	191
GLATTBANDAGE	193
RADFLANSCH	194
ACHSGEHÄUSE	195
WALZENEINBAU	197
FAHRANTRIEBSLEITUNGEN	198
ANTRIEBSMOTOR UND BEFESTIGUNGSTEILE	200
RADAUFHAENGUNG	203
SEITENANTRIEB - PLANETENGETRIEBE	204
KRAFTÜBERTRAGUNG	211
FAHRANTRIEBSPUMPE U. BEFESTIGUNGSTEILE	212
STAMPFFUSSBANDAGENKÖRPER	216
*WHEEL & MTG GP-DRIVE	218
RAD UND REIFEN	219
RAHMEN UND FAHRGESTELL	223
RAMMSCHUTZ	223
FRONTSTOSSSTANGE	224
MOTORVERKLEIDUNG	227
VORDERRAHMEN	233
RAHMEN, HINTEN	234
LEITUNGSVERKLEIDUNG	236
GETRIEBESCHUTZ	238
GELAENDER	239
KNICKGELENK- U. SCHWINGANHÄNGUNG	240
HAUBE	241
ABSTREIFER F. STAMPFFUSSBANDAGE	255
GLATTBANDAGEN-ABSTREIFER	257
STEIGLEITER	260
BREMSSYSTEM	261
BREMS- U. SCHALTUNGSLEITUNGEN	261
LENKSYSTEM	263
LENKBETÄTIGUNG	263
LENKZYLINDER UND AUFHÄNGUNG	265
LENKKNOPF	269
LENKÖLLEITUNGEN	270
LENKZYLINDERLEITUNGEN	271
LENKPUMPE UND AUFHÄNGUNG	272
HYDRAULIKSYSTEM	273
PUMPENSTELLGLIED	273
HYDRAULIKSTEUERUNG	275
HYDRAULIKZYLINDER	276
HYDRAULIKFILTER UND BEFESTIGUNGSTEILE	278
PUMPENKOPF	280
HYDRAULIKSYSTEM	288
ZUSATZHYDRAULIK	288
FILTERLEITUNGEN	289
HYDRAULIKÖLKÜHLERLEITUNGEN	290
KRÜMMER UND VENTIL	291
KOLBENMOTOR	293
ZAHNRADPUMPE	305
KOLBENPUMPE	306
MOTORDREHVORRICHTUNG	316
KOLBENPUMPENUMLAUFSATZ	317
HYDRAULIKTANK UND BEFESTIGUNGSTEILE	322
HYDRAULIKTANK	330
STEUERVENTIL UND BEFESTIGUNGSTEILE	334
NEBENSTROMVENTIL	335
STEUERVENTIL	336
PUMPENSTEUERVENTIL	338
ÜBERDRUCKVENTIL	343
VIBRATIONSSYSTEM	344
NEBENANTRIEB U. VIBRATIONSBANDAGE	344
EXZENTERGEWICHTSGEHÄUSE	345
VIBRATIONSHYDRAULIK	351
VIBRATIONSLEITUNGEN	352
VIBRATIONSMOTOR U. BEFESTIGUNG	354
VIBRATIONSPUMPE U. BEFESTIGUNGSTEILE	355
EXZENTERGEWICHTSWELLE	359
VIBRATIONSUNTERSTÜTZUNG	362
FAHRERHAUS	364
KLIMAANLAGENDRUCKSPEICHER	364
KLIMAANLAGE	366
SCHEIBENWISCHERARM	375
FAHRERHAUS	376
FAHRERHAUS MIT ÜBERROLLSCHUTZ	377
WETTERDACH	383
KÄLTEMITTELKOMPRESSOR	384
KÄLTEMITTELKONDENSATOR U. BEFESTIGUNGSTEILE	387
STEUERUNG - RICHTUNG U. DREHZAHL	388
STEUERHEBEL	390
FAHRANTRIEBSSTEUERUNG	391
KIPPZYLINDER U. BEFESTIGUNG	395
FAHRERHAUSTÜR	397

* ÜBERSETZUNG ZUM ZEITPUNKT DER DRUCKLEGUNG NICHT VORHANDEN

INHALTSVERZEICHNIS

Bezeichnung	Seite
LUFTKANAL	403
FAHRERHAUSLUFTFILTER	405
FUSSMATTE	406
VIBRATIONSANZEIGE	407
SCHUTZVERKLEIDUNG	409
FAHRERHAUSHEIZUNG U. BEFESTIGUNGSTEILE	410
FAHRERHAUSHEIZUNG	411
FAHRERHAUSAUSKLEIDUNG	415
KLIMAANLAGENLEITUNGEN	416
FAHRERHAUSHEIZUNGSLEITUNGEN	418
GESTÄNGE	420
RÜCKSPIEGEL	421
WARNANZEIGEMODUL	425
SCHEIBENWISCHERMOTOR	426
FAHRERHAUSANBAUSATZ	428
FAHRERHAUSAUSRÜSTUNG	431
INSTRUMENTENTAFEL	434
FAHRERPLATTFORM	459
ÜBERROLLSCHUTZ	462
ÜBERROLL-SCHUTZKABINE	463
SONNENBLENDE	466
FAHRERSITZ UND UNTERBAU	469
SCHWINGSITZ	470
SCHEIBENWASCHMITTELBEHÄLTER	476
FAHRERHAUS, SONNENBLENDE	477
FAHRERHAUSFENSTER	478
TÜRFENSTER	480
HECKFENSTER	482
SCHEIBENWISCHER UND -WASCHANLAGE	483
WARTUNGSAUSRÜSTUNG UND -ZUBEHÖR	485
AUFKLEBER	485
SCHILD UND AUFKLEBER	486
ERSATZTEILNUMMERNINDEX	B1

* ÜBERSETZUNG ZUM ZEITPUNKT DER DRUCKLEGUNG NICHT VORHANDEN

GENERAL INFORMATION

1. MACHINE IDENTIFICATION

Caterpillar machines are identified by Product Identification Numbers (PIN). Some components included in a machine may be identified by Serial Numbers (S/N). Typical components that will be serialized include engines, transmissions, bulldozers, and rippers. The machine and engine are further identified by arrangement numbers and in some cases modification numbers. These numbers are shown on the product identification plate(s) and on the master plate in the operator's compartment.

Caterpillar dealers need all of these numbers to determine accurate parts identification.

SIS *New Feature*

Effective First Quarter 2001 the Caterpillar Product Identification Number (PIN) changed from 8 to 17 characters. In an effort to provide uniform equipment identification, Caterpillar and other construction equipment manufacturers are moving to comply with the latest version of the product identification numbering standard. Non-road machine PINs are defined by ISO 10261. The new PIN format will apply to all Caterpillar machines and generator sets. The PIN plates and frame marking will display the 17 character PIN. The new format will look like the following:

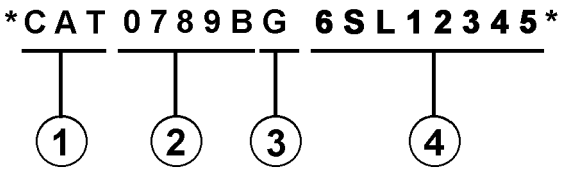

Where:

1. Caterpillar's World Manufacturing Code (characters 1-3)

2. Machine Descriptor (characters 4-8)

3. Check Character (character 9)

4. Machine Indicator Section (MIS) or Product Sequence Number (characters 10-17). These were previously referred to as the Serial Number.

Machines and generator sets produced before First Quarter 2001 will maintain their 8 character PIN format.

Components such as engines, transmissions, axles, etc. and work tools will continue to use an 8 character Serial Number (S/N).

2. ORDERING PARTS

⚠ WARNING

When replacement parts are required for this product Caterpillar recommends using Caterpillar replacement parts or parts with equivalent specifications including, but not limited to, physical dimensions, type, strength and material.

Failure to heed this warning can lead to premature failures, product damage, personal injury or death.

Quality Caterpillar replacement parts are available from Caterpillar dealers throughout the world. Their parts inventories are up to date and include all parts normally required to protect your investment in Caterpillar machines. Dealers may offer repair kits or remanufactured parts to allow selection of the most effective repair alternative for a particular situation. When ordering parts, your order should specify the quantity, part number, part name, and the serial number/product identification number of the machine for which the parts are needed.

3. PARTS MANUAL ORGANIZATION

Product information in this manual is presented as "information elements" that represent all of the components for the specific model. Engine Arrangement and Seat Group are examples of information elements. The information elements are organized alphabetically by part name and secondarily by part number within each major section of the manual.

4. TABLE OF CONTENTS

A table of contents (TOC) is found at the beginning of the manual. The TOC lists each section of the manual with a complete list of all information elements organized as they appear in the manual. Page numbers are provided for quick reference to detailed parts identification illustrations and serviceable consist lists.

5. MAINTENANCE PARTS INDEX

The Maintenance Parts Index, located near the beginning of the manual, references most frequently used maintenance part numbers, providing description, quantity, usage and page number. This information is organized alphabetically by part description.

6. INDEX

The index located near the front of the manual is an alphabetical listing of all information elements included in the manual. Page numbers are provided for quick reference to detailed parts identification illustrations and serviceable consist lists.

7. PART NUMBER INDEX

A numerical index listing all part numbers and the corresponding page number(s) appears at the back of the manual.

8. CAPTIONS

Captions located at the beginning of each information element identify the part number and part name along with additional descriptive information. PIN and S/N information found in each caption should be used to select correct information for a specific machine. Field replacement options, identification of optional attachment components, and where used ("part of") information is also provided.

The first line of a caption is shown in larger type font to indicate the beginning of an information element. Captions for additional pages that may be required to illustrate an information element will be shown in standard type font and will include the term *(contd.)* .

9. NON-SERVICED PARTS

In some instances it is necessary to display non-serviced parts that are a link to a lower level serviceable consist lists. These non-serviced part numbers are shown in *italic* type indicating that they are not available.

10. PARTS LIST REFERENCE NUMBERS

Numbers shown in the Ref No column correspond to numbers used in the associated graphic(s). An alphabetic suffix may be added to a reference number to identify lower level consist items. Numbers shown in the Graphic Ref column refer to the graphic number identifier displayed in the lower left corner of each illustration. The Graphic Ref number may be used in combination with the item Ref No to determine the correct part number. There may be intentional omission of a Ref No in a consist list as information is updated to reflect the latest serviceable part numbers.

11. INDENTED PART NAMES

When a part name is indented in a parts list, it is part of (included in) the group or assembly under which it is indented.

12. ILLUSTRATION REFERENCE LETTERS

When necessary, illustrations contain reference letters (A, B, C etc.) that are intended to track lines and harnesses from one point to another. They are also used to show where to reconnect illustrations that have been separated.

13. ABBREVIATIONS AND SYMBOLS

O.D. – Outside Diameter
I.D. – Inside Diameter
A – Not Part Of This Group
B – Use As Required
C – Change From Previous Type
D – Order By The Meter
E – Order By The Centimeter
F – Not Shown
G – Order By The Inch
I – Refer To Hydraulic Information System
M – Metric Part
R – Remfg Part May Be Available
Y – Separate Illustration
Z – Not Serviced Separately

SIS *New Feature*

14. DESCRIPTION OF TYPE CHANGES

Type - A type is defined as any configuration change that requires an additional Information Element for an Arrangement, Group, or Assembly. If serial number breaks for types are not available, a type # (Type 1, Type 2, etc.) will be displayed in the caption. These "type" changes are identified with a "C" note (change from previous type) in the Parts List. Only the "types" that apply to this Parts Manual will be included. Additional types may exist causing "C" notes to appear on an Information Element when no other types are shown.

15.<END>

This symbol indicates the end of an information element.

NOTE:

Continuing improvement and advancement of product design may cause changes to your machine which may not be included in this publication. Whenever a question arises regarding your caterpillar product or this publication, please consult your caterpillar dealer for the latest available information.

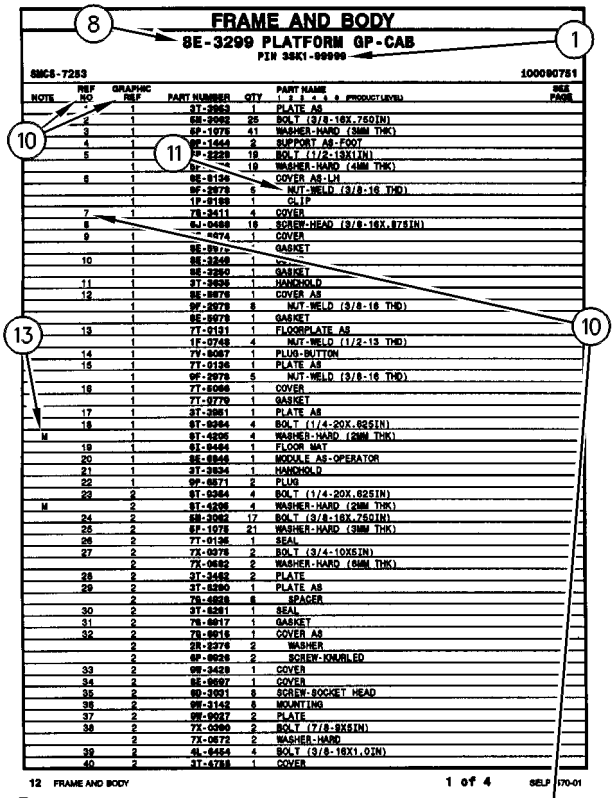

FRAME AND BODY

8E-3299 PLATFORM GP-CAB

PIN 3SK1-99999

SMCS-7283 100090751

NOTE	REF NO	GRAPHIC REF	PART NUMBER	QTY	PART NAME 1 2 3 4 5 6 (PRODUCT LEVEL)	SEE PAGE
	*	1	3T-3963	1	PLATE AS	
	2	1	6H-3062	25	BOLT (3/8-16X.750IN)	
	3	1	6P-1075	41	WASHER-HARD (3MM THK)	
	4	1	9F-1444	2	SUPPORT AS-FOOT	
	5	1	9P-2229	19	BOLT (1/2-13X1IN)	
		1	6P-[illegible]	19	WASHER-HARD (4MM THK)	
	6	1	8E-8136	*	COVER AS-LH	
		1	9F-2979	6	NUT-WELD (3/8-16 THD)	
		1	1P-8189	1	CLIP	
	7	1	7X-3411	4	COVER	
	8	1	6J-0468	18	SCREW-HEAD (3/8-16X.87SIN)	
	9	1	[illegible]-0874	1	COVER	
		1	8E-8976	*	GASKET	
	10	1	8E-3249	1	[illegible]	
		1	8E-2260	1	GASKET	
	11	1	3T-3636	1	HANDHOLD	
	12	1	8E-8976	1	COVER AS	
		1	9F-2979	8	NUT-WELD (3/8-16 THD)	
		1	8E-8978	1	GASKET	
	13	1	7T-0131	1	FLOORPLATE AS	
		1	1F-0748	4	NUT-WELD (1/2-13 THD)	
	14	1	7Y-8067	1	PLUG-BUTTON	
	15	1	7T-0126	1	PLATE AS	
		1	9F-2978	5	NUT-WELD (3/8-16 THD)	
	16	1	7T-8066	1	COVER	
		1	7T-0779	1	GASKET	
	17	1	3T-3961	1	PLATE AS	
	18	1	9T-0264	4	BOLT (1/4-20X.62SIN)	
M		1	9T-4295	4	WASHER-HARD (2MM THK)	
	19	1	6J-8464	1	FLOOR MAT	
	20	1	8E-8846	1	MODULE AS-OPERATOR	
	21	1	3T-3934	1	HANDHOLD	
	22	1	9F-8871	2	PLUG	
	23	2	9T-0264	4	BOLT (1/4-20X.62SIN)	
M		2	9T-4295	4	WASHER-HARD (2MM THK)	
	24	2	6H-3062	17	BOLT (3/8-16X.750IN)	
	25	2	6P-1075	21	WASHER-HARD (3MM THK)	
	26	2	7T-0136	1	SEAL	
	27	2	7X-0078	2	BOLT (3/4-10X5IN)	
		2	7X-0682	2	WASHER-HARD (6MM THK)	
	28	2	3T-3482	2	PLATE	
	29	2	3T-8290	1	PLATE AS	
		2	7S-4828	8	SPACER	
	30	2	3T-8281	1	SEAL	
	31	2	7S-8817	1	GASKET	
	32	2	7S-8816	1	COVER AS	
		2	2R-2276	2	WASHER	
		2	9F-8826	2	SCREW-KNURLED	
	33	2	9M-3429	1	COVER	
	34	2	8E-8697	1	COVER	
	35	2	9D-3091	8	SCREW-SOCKET HEAD	
	36	2	9M-3142	8	MOUNTING	
	37	2	9M-9017	2	PLATE	
	38	2	7X-0360	2	BOLT (7/8-9X5IN)	
		2	7X-0672	2	WASHER-HARD	
	39	2	4L-8454	4	BOLT (3/8-16X1.0IN)	
	40	2	3T-4788	1	COVER	

12 FRAME AND BODY 1 of 4 SELP4570-01

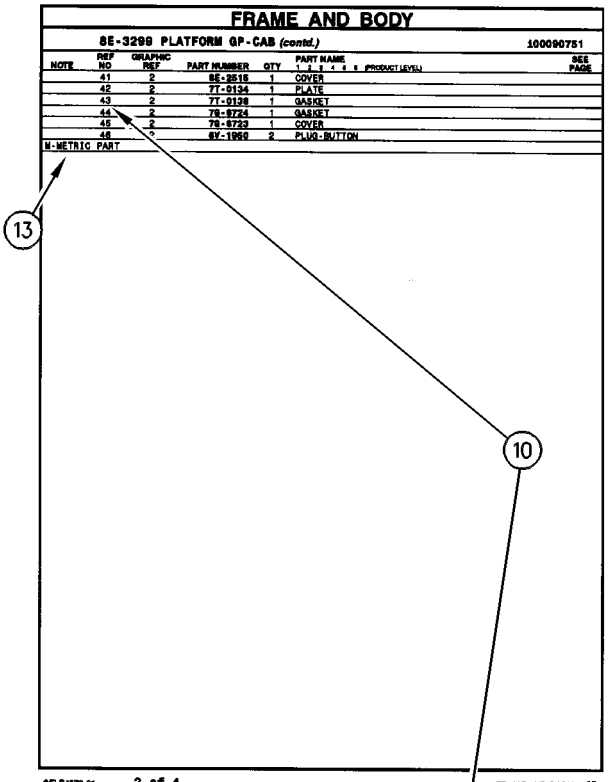

FRAME AND BODY

8E-3299 PLATFORM GP-CAB (contd.) 100090751

NOTE	REF NO	GRAPHIC REF	PART NUMBER	QTY	PART NAME 1 2 3 4 5 6 (PRODUCT LEVEL)	SEE PAGE
	41	2	8E-2515	1	COVER	
	42	2	7T-0134	1	PLATE	
	43	2	7T-0138	1	GASKET	
	44	2	7S-8724	1	GASKET	
	45	2	7S-8723	1	COVER	
	46	*	8Y-1950	2	PLUG-BUTTON	

M-METRIC PART

SELP4570-01 2 of 4 FRAME AND BODY 13

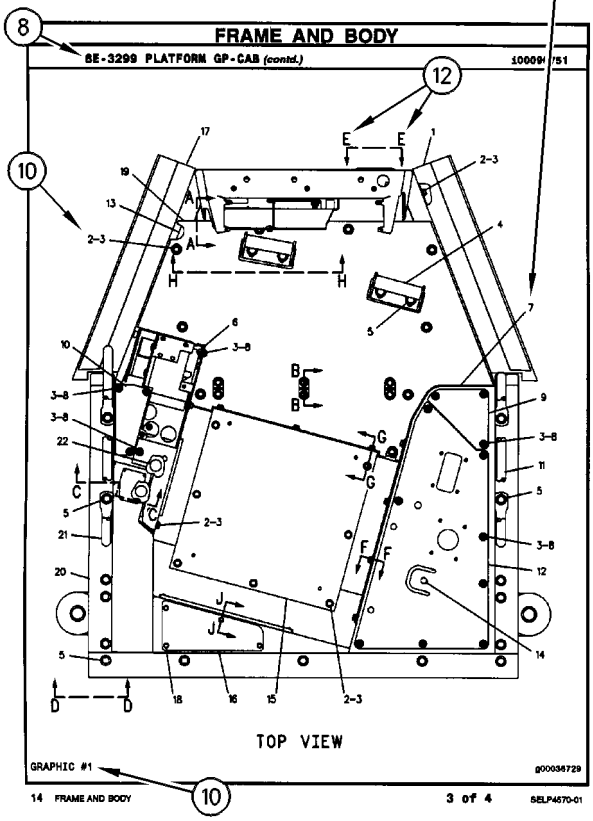

FRAME AND BODY

8E-3299 PLATFORM GP-CAB (contd.) 100090751

GRAPHIC #1 g00036729

14 FRAME AND BODY 3 of 4 SELP4570-01

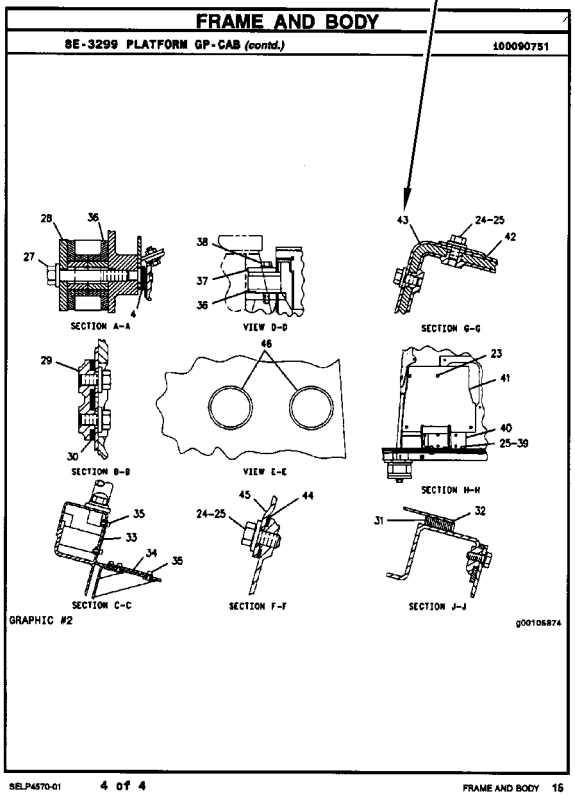

FRAME AND BODY

8E-3299 PLATFORM GP-CAB (contd.) 100090751

GRAPHIC #2 g00105874

SELP4570-01 4 of 4 FRAME AND BODY 15

1. IDENTIFICATION DE LA MACHINE

Toutes les machines Caterpillar portent un numéro d'identification (PIN). Certains composants des machines peuvent porter des numéros de série (S/N). En général, parmi les composants qui portent des numéros de série il y a les moteurs, les transmissions, les bulldozers et les rippers. En plus, la machine et le moteur peuvent recevoir des numéros de version, et dans certains cas, de modification. Ces numéros figurent sur les plaques de numéro de série et sur la plaque signalétique principale qui se trouve dans le poste de conduite.

Les concessionnaires Caterpillar doivent connaître tous ces numéros pour identifier correctement les pièces.

SIS *Nouvelle Caractéristique*

À partir du premier trimestre 2001, le numéro d'identification produit (PIN) Caterpillar passe de 8 à 17 caractères. Afin de permettre une identification uniforme des matériels, Caterpillar et d'autres constructeurs de machines de travaux publics s'efforcent de se conformer à la norme la plus récente portant sur les numéros d'identification des produits. Les numéros d'identification (PIN) de machines de chantier sont définis par la norme ISO 10261. Le nouveau format du numéro d'identification est valable pour toutes les machines et tous les groupes électrogènes Caterpillar. Le numéro d'identification produit (PIN) figurant sur la plaque et sur le châssis se composera de 17 caractères. Le nouveau format ressemblera à ceci:

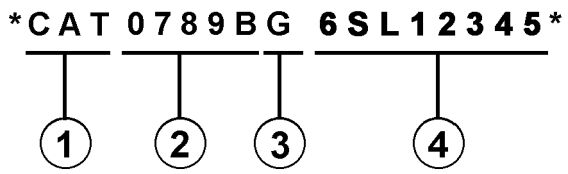

Il se décomposera de la façon suivante:

1. Code international de fabrication de Caterpillar (caractères 1 à 3)

2. Descriptif de la machine (caractères 4 à 8)

3. Contrôle (caractère 9)

4. Indicateur machine (MIS) ou numéro de séquence produit (caractères 10 à 17). Ceux-ci étaient auparavant désignés sous le terme de numéro de série.

Les machines et les groupes électrogènes construits avant le premier trimestre 2001 garderont le format à 8 caractères du numéro d'identification produit (PIN).

Les organes tels que les moteurs, les boîtes de vitesses, les essieux, etc., continueront d'être désignés par un numéro de série (S/N) à 8 caractères.

2. COMMANDE DE PIÈCES

⚠ DANGER

Lorsqu'il faut remplacer des pièces de rechange pour ce produit Caterpillar recommande d'utiliser les pièces de rechange Caterpillar ou les pièces qui ont des spécifications équivalentes dont les dimensions physiques, le type, la force et le matériau. Ces équivalences ne se limitent pas à l'énoncé précédent.

L'inobservation de cette mise en garde peut entraîner des défaillances prématurées, des dommages au produit, des blessures ou même la mort.

Les concessionnaires Caterpillar fournissent dans le monde entier des pièces de rechange de qualité Caterpillar. Leurs stocks de pièces sont constamment réapprovisionnés et comptent toutes les pièces nécessaires pour assurer la bonne marche de vos machines Caterpillar. Certains concessionnaires proposent également des kits de réparation ou des pièces rénovées, ce qui permet de choisir la solution la plus économique dans une situation donnée. Lors des commandes de pièces, mentionner la quantité, le numéro et la désignation des pièces ainsi que le numéro de série ou le numéro d'identification (PIN) de la machine pour laquelle ces pièces sont requises.

3. ORGANISATION DU CATALOGUE DE PIÈCES

Les renseignements sur les produits sont présentés sous forme de "Information element" (élément d'information) représentant tous les composants d'un modèle donné. "Engine Arrangement" (version de moteur) et "Seat Group" (assemblage de siège)" sont des exemples d'éléments d'information. Les éléments d'information sont classés par ordre alphabétique par la désignation standard des pièces et par numéros de pièces dans chaque partie importante du manuel.

4. TABLE DES MATIÈRES

SIS *Nouvelle Caractéristique*

La table des matières se trouve au début du manuel. La table des matières fournit la liste de tous les chapitres du manuel avec une liste complète de tous les éléments d'information classés par ordre d'apparition dans le manuel. Les numéros de page sont fournis afin que l'utilisateur puisse trouver rapidement les illustrations détaillées concernant l'identification des pièces et les listes des pièces d'entretien.

5. INDEX DES PIÈCES D'ENTRETIEN

La rubrique "Index des pièces d'entretien" qui se trouve au début du manuel renvoie aux pièces d'entretien les plus fréquemment utilisées en précisant la désignation, la quantité, là où la pièce est utilisée et le numéro de page. Ces pièces sont classés par ordre alphabétique.

6. INDEX

L'index qui se trouve vers le début du manuel est une liste alphabétique de tous les éléments d'information du manuel. Les numéros de page sont fournis afin que l'utilisateur puisse trouver rapidement les illustrations détaillées concernant l'identification des pièces et les listes des pièces d'entretien.

7. INDEX DES NUMÉROS DE PIÈCES

Une liste numérique de tous les numéros de pièces et des pages correspondantes se trouve à la fin du manuel.

8. LÉGENDES

Les légendes qui se trouvent en haut de chaque page de chaque élément d'information fournissent le numéro de pièce, la désignation ainsi que des renseignements supplémentaires sur les pièces. Les renseignements concernant les numéros de série (S/N) qui se trouvent dans chaque légende doivent être utilisés pour sélectionner les informations correctes pour un moteur donné. Les informations concernant les options de remplacement sur le chantier, l'identification des composants des équipements offerts en option et les lieux d'application sont aussi fournies.

SIS *Nouvelle Caractéristique*

Les lettres de la première ligne d'une légende sont présentées en police plus grande afin d'indiquer le début d'une unité d'information. Les légendes qui pourraient être requises pour des pages supplémentaires afin d'illustrer une unité d'information seront présentées en police standard et comprendront le terme (à suivre).

9. PIÈCES NON FOURNIES

SIS *Nouvelle Caractéristique*

Dans certains cas, il est nécessaire d'indiquer les pièces non fournies qui sont en aval de la liste des pièces d'entretien. Les numéros des pièces non fournies dans la liste des pièces et les légendes seront en italique pour signaler qu'ils ne sont pas disponibles.

10. NUMÉROS DE RÉFÉRENCE DE LA LISTE DES PIÈCES

SIS *Nouvelle Caractéristique*

Les numéros indiqués dans la colonne des numéros de références correspondent aux numéros utilisés dans les illustrations auxquelles ils sont associés. Un suffixe alphabétique peut être ajouté à un numéro de référence pour identifier la liste des articles en aval. Les numéros indiqués dans la colonne de référence de l'illustration renvoient à l'identification du numéro affiché dans le coin inférieur gauche de chaque illustration. Le numéro de référence de l'illustration pourrait être utilisé avec le numéro de référence de l'article pour déterminer le numéro de pièce correct. Il peut y avoir une omission intentionnelle d'un numéro de référence dans une liste de pièces suite à la mise à jour des informations en vue de refléter les numéros de pièces les plus récentes.

11. DÉSIGNATIONS DE PIÈCES EN RETRAIT

Lorsqu'une désignation de pièce est en retrait, cela veut dire que l'article en regard fait partie de l'ensemble sous lequel il figure.

12. LETTRES DE RÉFÉRENCE DES ILLUSTRATIONS

Quand cela est nécessaire, les illustrations comportent des lettres de référence (A, B, C, etc.) pour montrer le trajet des canalisations et faisceaux de câbles d'un point à l'autre. Elles sont utilisées également pour indiquer où relier les illustrations séparées auparavant.

13. ABRÉVIATIONS ET SYMBOLES

O.D. – Diamètre extérieur
I.D. – Diamètre intérieur
A – Ne fait pas partie de ce groupe
B – Utiliser selon besoin
C – Modification
D – Commander par mètre
E – Commander par centimètre
F – Non représenté
G – Commander par pouce
I – Voir "Hydraulic Information System"
M – Pièce métrique
R – Pièce rénovée éventuellement disponible
Y – Illustration séparée
Z – Non fourni séparément

NOTA:

En raison du progrès technique et des améliorations continuelles apportées au matériel, votre machine comporte peut-être des modifications qui n'apparaissent pas dans la présente publication. En cas de doute sur un détail de votre machine Caterpillar ou sur le texte de la présente publication, adressez-vous à votre concessionnaire Caterpillar.

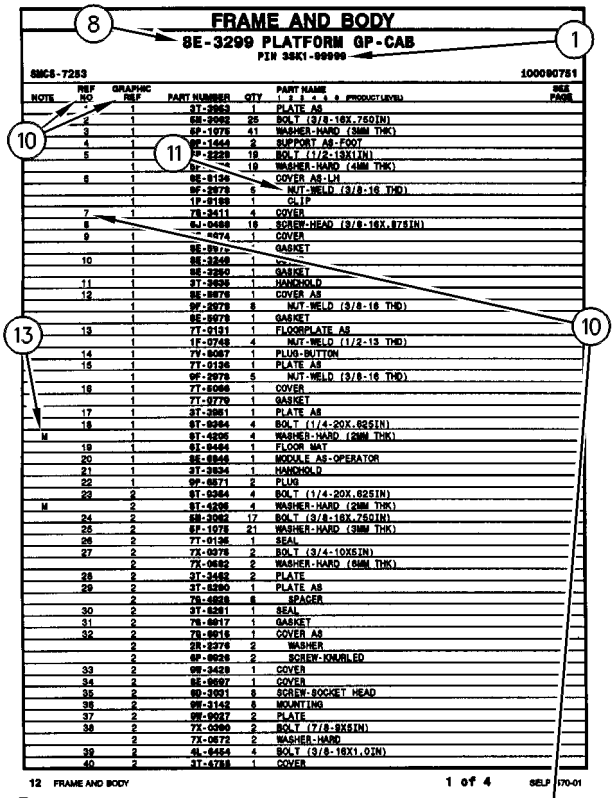
FRAME AND BODY
8E-3299 PLATFORM GP-CAB
PIN 3SK1-99999
SMCS-7283
100090751
1 of 4
SELP4570-01

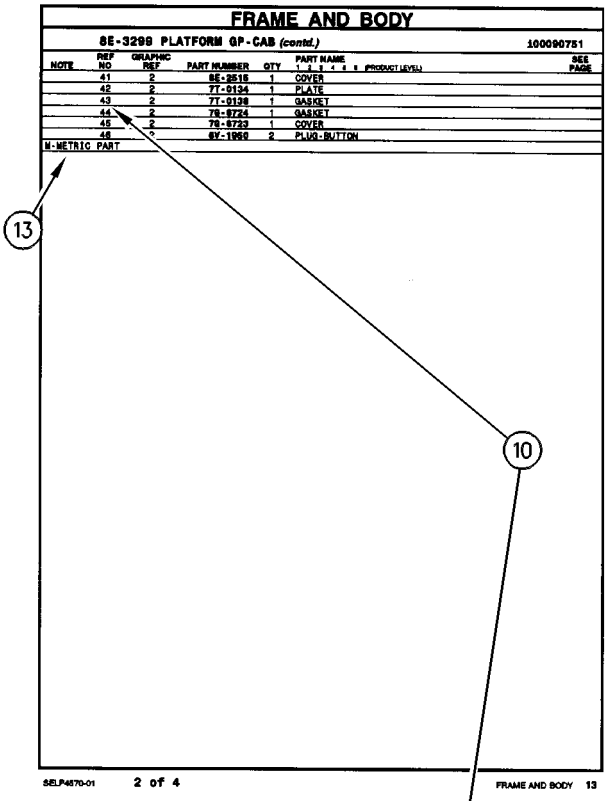
FRAME AND BODY
8E-3299 PLATFORM GP-CAB (contd.)
100090751
2 of 4
SELP4570-01

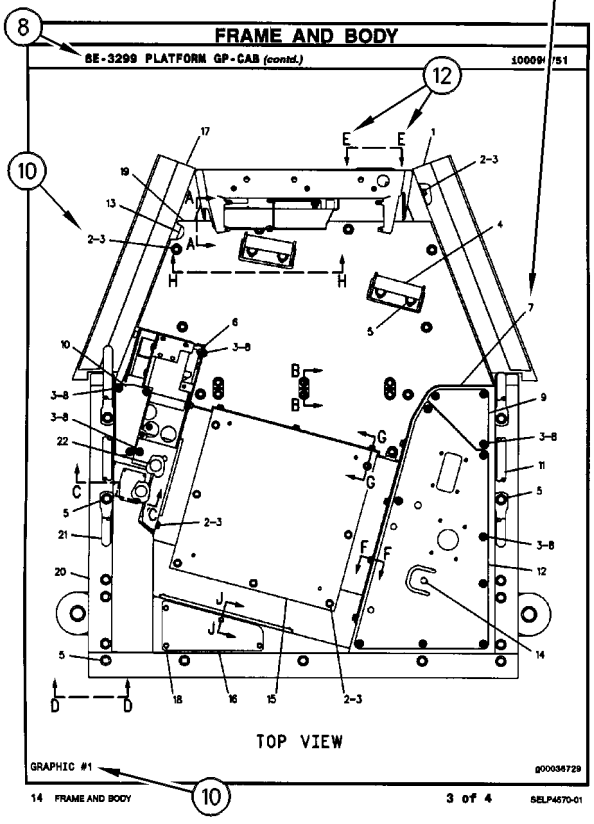
FRAME AND BODY
8E-3299 PLATFORM GP-CAB (contd.)
TOP VIEW
GRAPHIC #1
g00036729
3 of 4
SELP4570-01

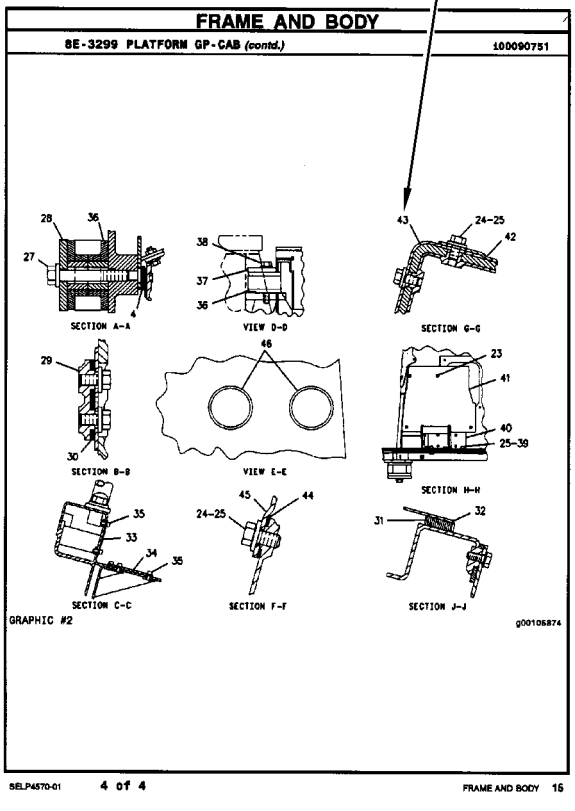
FRAME AND BODY
8E-3299 PLATFORM GP-CAB (contd.)
100090751
SECTION A-A
VIEW D-D
SECTION G-G
SECTION B-B
VIEW E-E
SECTION H-H
SECTION C-C
SECTION F-F
SECTION J-J
GRAPHIC #2
g00105874
4 of 4
SELP4570-01

INFORMACIÓN GENERAL

1. MÁQUINAS

Las máquinas Caterpillar se identifican con Números de Identificación del Producto (PIN). Algunos componentes incluídos en la máquina pueden estar identificados con Números de Serie (N/S). Los componentes que tienen típicamente esta identificación incluyen motores, transmisiones, hojas topadoras y desgarradores. La máquina y el motor se identifican además con Números de Configuración y en algunos casos, Números de Modificación. Estos números están en las placas de identificación del producto o en la placa principal en la cabina del operador.

Los distribuidores Caterpillar necesitan estos números para identificar con exactitud los números de piezas de repuesto.

SIS *Nueva Característica*

A partir del primer trimestre del 2001, el Número de Identificación de Producto (PIN) de Caterpillar cambió de 8 a 17 caracteres. Para hacer más uniforme el método de identificación de equipos, Caterpillar y otros fabricantes de equipo de construcción han tomado medidas para cumplir con la versión más reciente de la norma de numeración de identificación de productos. Los Números de Identificación de Producto para máquinas que no se operan en carreteras son definidos por la norma ISO 10261. El nuevo formato PIN corresponderá a todas las máquinas y grupos electrógenos Caterpillar. Las placas y los caracteres PIN estampados en el bastidor mostrarán el PIN de 17 caracteres. El nuevo formato tendrá la apariencia siguiente:

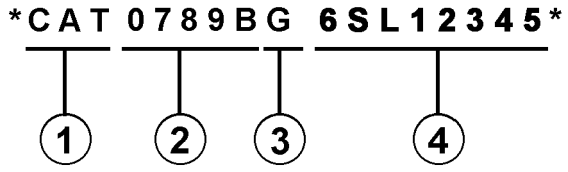

Significado de los caracteres:

1. Código de Fabricación Mundial de Caterpillar (caracteres 1-3)

2. Sección Descriptor de la Máquina (caracteres 4-8)

3. Carácter de Verificación (carácter 9)

4. Sección Indicador de la Máquina (MIS) o Número de Secuencia de Producto (caracteres 10-17). Anteriormente, estos caracteres constituían el Número de Serie.

Las máquinas y grupos electrógenos producidos antes del primer semestre del 2001 mantendrán su formato PIN de 8 caracteres.

Los componentes como motores, transmisiones, ejes, herramientas de trabajo, etc., continuarán usando un Número de Serie (S/N) de 8 caracteres.

2. COMO PEDIR REPUESTOS

⚠ ADVERTENCIA

Cuando se necesiten piezas de repuesto para este producto, Caterpillar recomienda usar piezas de repuesto Caterpillar o piezas que tengan especificaciones equivalentes incluyendo, pero sin estar limitadas a, dimensiones físicas, tipo, fortaleza y material.

El no hacer caso de esta advertencia puede llevar a fallas prematuras, daños al producto y lesiones graves o mortales.

Las piezas de repuesto Caterpillar de calidad están a la disposición de los distribuidores Caterpillar en todo el mundo. Sus existencias actualizadas incluyen todas las piezas normalmente requeridas para proteger su inversión en máquinas Caterpillar. Los distribuidores pueden tener juegos de reparación o piezas remanufacturadas para permitir la selección de la mejor alternativa de reparación en un caso en particular. Al pedir piezas de repuesto, especifique en su pedido la cantidad, el número de pieza, el nombre de la pieza y el número de serie/número de identificación del producto, de la máquina para la cual se necesitan estas piezas.

3. ORGANIZACION DEL MANUAL DE PIEZAS

La información sobre el producto, se presenta en este manual, como "elementos de información" que representan todos los componentes de un modelo específico. Las configuraciones de motores y los grupos de asientos son ejemplos de elementos de información. Los elementos de información están organizados primeramente por nombres de piezas en orden alfabético y en segundo lugar, por el número de pieza dentro de cada sección principal del manual.

4. CONTENIDO

La página de Contenido se encuentra al principio del manual. El Contenido indica cada sección del manual con una lista completa de todos los elementos de información organizados en el orden que aparecen en el manual. Los números de página proporcionan una referencia rápida a las ilustraciones detalladas de identificación de piezas y a las listas de componentes de repuesto de dichas piezas.

5. ÍNDICE DE PIEZAS DE MANTENIMIENTO

Al principio de este catálogo se encuentra un índice de los números de piezas utilizadas más frecuentemente para el mantenimiento, que incluye descripción, cantidad necesaria, lugar de utilización y número de página. Esta información está organizada alfabéticamente, por descripción de la pieza.

6. ÍNDICE

El Índice, ubicado cerca del principio del manual, es una lista en orden alfabético de todos los elementos de información incluídos en el manual. Los números de página proporcionan una referencia rápida a las ilustraciones detalladas de identificación de piezas y a las listas de componentes de repuesto de dichas piezas.

7. INDICE NUMÉRICO DE PIEZAS

Un índice numérico de piezas con el correspondiente número de página aparece al final de este catálogo.

8. TÍTULOS

Los títulos ubicados al principio de cada elemento de información identifican el número y el nombre de la pieza junto con información descriptiva. Se debe usar información sobre los Números de Identificación de Pieza (PIN) y los números de serie (S/N) para seleccionar la información que corresponda a una máquina en particular. También se suministra información sobre las opciones de reparación en el campo, la identificación de componentes de accesorios optativos y el lugar de ubicación de la pieza ("es parte de").

La primera línea del título se muestra con un tipo de letra más grande para indicar el comienzo de un elemento de información. Si se requieren páginas adicionales para ilustrar un elemento de información, los títulos se muestran con un tipo de letra normal y la continuación se indica entre paréntesis.

9. PIEZAS QUE NO SE SUMINISTRAN COMO REPUESTO

En algunos casos es necesario indicar piezas que no se suministran como repuesto pero que pueden estar conectadas a listas de componentes de otras piezas de repuesto. En tal caso, dichas piezas se muestran en cursiva para indicar que no son piezas disponibles.

10. NÚMEROS DE REFERENCIA

Los números en la columna de No. de Referencia corresponden a los números indicados en la ilustración que pertenece a ese número de pieza. Los números que tienen un sufijo alfabético identifican artículos de las listas de componentes de piezas. Los números en la columna de Referencia de la ilustración se identifican en la esquina inferior izquierda de cada ilustración. Para determinar el número de pieza correcto se puede utilizar tanto el No. de Referencia de la ilustración como el No. de Referencia del artículo. A medida que se actualiza la información para indicar los más recientes números de piezas de repuesto, puede omitirse intencionalmente un No. de Referencia en una lista de componentes de piezas.

11. NOMBRES DE PIEZA SANGRADOS

Cuando el nombre de una pieza está sangrado en una lista, significa que esta pieza forma parte del grupo o conjunto del renglón inmediatamente superior.

12. LETRAS DE REFERENCIA DE ILUSTRACIONES

Las ilustraciones contienen algunas veces letras de referencia (A, B, C etc.) cuyo propósito es seguir el trayecto de líneas y mazos de cables de un punto a otro. También se utilizan para mostrar dónde volver a unir ilustraciones que se habían separado.

13. ABREVIATURAS Y SIMBOLOS

O.D. – Diámetro exterior
I.D. – Diámetro interior
A – No es pieza de este grupo
B – Utilizado según la demanda
C – Indica cambio
D – Se pide por metro
E – Se pide por centímetro
F – No se muestra
G – Se pide por pulgada
I – Consulte el sistema de información hidráulica
M – Pieza métrica
R – Puede estar disponible como pieza remanufacturada
Y – Ilustración separada
Z – No se suministra por separado

SIS *Nueva Característica*

14. DESCRIPCIÓN DE LOS CAMBIOS DE TIPO

Tipo – Un tipo se define como cualquier cambio de configuración que requiere un Elemento de información adicional de una Configuración, Grupo o Conjunto. Si el número de serie se clasifica por tipos que no están disponibles, se mostrará un número de tipo (Tipo 1,Tipo 2,etc.) en el comentario de la fotografía. Estos cambios de "tipo" se identifican con una nota "C" (cambio con respecto al tipo anterior) en la Lista de Piezas. Se incluirían sólo los "tipos" que aplican a este Manual de Piezas. Es posible que haya tipos adicionales que causen la aparición de notas "C" en el Elemento de Información cuando no se muestran otros tipos."

15.<END>

Este símbolo indica el final de un elemento de información.

NOTA:

Las contínuas mejoras y adelantos en diseño podrían originar cambios a su máquina que no se incluyen en esta publicación. Cuando tenga alguna pregunta acerca de su producto Caterpillar o de esta publicación, consulte al distribuidor Caterpillar para obtener la información más reciente.

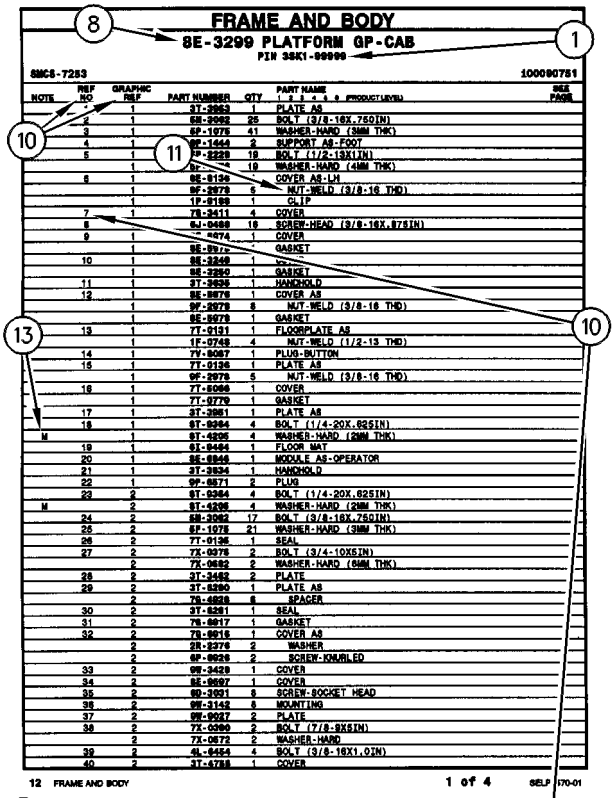

FRAME AND BODY

8E-3299 PLATFORM GP-CAB

PIN 3SK1-99999

SMCS-7283 100090751

NOTE	REF NO	GRAPHIC REF	PART NUMBER	QTY	PART NAME 1 2 3 4 5 6 (PRODUCT LEVEL)	SEE PAGE
	*	1	3T-3963	1	PLATE AS	
	2	1	5M-3062	25	BOLT (3/8-16X.750IN)	
	3	1	6P-1075	41	WASHER-HARD (3MM THK)	
	4	1	9F-1443	2	SUPPORT AS-FOOT	
	5	1	9P-2229	19	BOLT (1/2-13X1IN)	
		1	6P-[illegible]	19	WASHER-HARD (4MM THK)	
	6	1	8E-8136	*	COVER AS-LH	
		1	9F-2979	6	NUT-WELD (3/8-16 THD)	
		1	1P-8189	1	CLIP	
	7	1	7X-3411	4	COVER	
	8	1	6J-0468	18	SCREW-HEAD (3/8-16X.87SIN)	
	9	1	[illegible]-0874	1	COVER	
		1	8E-8976	*	GASKET	
	10	1	8E-3249	1	[illegible]	
		1	8E-3250	1	GASKET	
	11	1	3T-3636	1	HANDHOLD	
	12	1	8E-8976	1	COVER AS	
		1	9F-2979	8	NUT-WELD (3/8-16 THD)	
		1	8E-8978	1	GASKET	
	13	1	7T-9131	1	FLOORPLATE AS	
		1	1F-0748	4	NUT-WELD (1/2-13 THD)	
	14	1	7Y-8067	1	PLUG-BUTTON	
	15	1	7T-0136	1	PLATE AS	
		1	9F-2978	5	NUT-WELD (3/8-16 THD)	
	16	1	7T-8066	1	COVER	
		1	7T-9779	1	GASKET	
	17	1	3T-3961	1	PLATE AS	
	18	1	9T-0264	4	BOLT (1/4-20X.62SIN)	
M		1	9T-4295	4	WASHER-HARD (2MM THK)	
	19	1	9X-8464	1	FLOOR MAT	
	20	1	8E-8946	1	MODULE AS-OPERATOR	
	21	1	3T-3934	1	HANDHOLD	
	22	1	9F-8671	2	PLUG	
	23	2	9T-0264	4	BOLT (1/4-20X.62SIN)	
M		2	9T-4295	4	WASHER-HARD (2MM THK)	
	24	2	5M-3062	17	BOLT (3/8-16X.75QIN)	
	25	2	6P-1075	21	WASHER-HARD (3MM THK)	
	26	2	7T-0136	1	SEAL	
	27	2	7X-0078	2	BOLT (3/4-10X5IN)	
		2	7X-0682	2	WASHER-HARD (6MM THK)	
	28	2	3T-3482	2	PLATE	
	29	2	3T-8290	1	PLATE AS	
		2	7X-4828	8	SPACER	
	30	2	3T-8281	1	SEAL	
	31	2	7X-8017	1	GASKET	
	32	2	7X-8016	1	COVER AS	
		2	2R-2276	2	WASHER	
		2	9F-8026	2	SCREW-KNURLED	
	33	2	9M-3429	1	COVER	
	34	2	8E-8697	1	COVER	
	35	2	9D-3091	8	SCREW-SOCKET HEAD	
	36	2	9M-3142	8	MOUNTING	
	37	2	9M-9017	2	PLATE	
	38	2	7X-0360	2	BOLT (7/8-9X5IN)	
		2	7X-0672	2	WASHER-HARD	
	39	2	4L-8454	4	BOLT (3/8-16X1.0IN)	
	40	2	3T-4788	1	COVER	

12 FRAME AND BODY 1 of 4 SELP4570-01

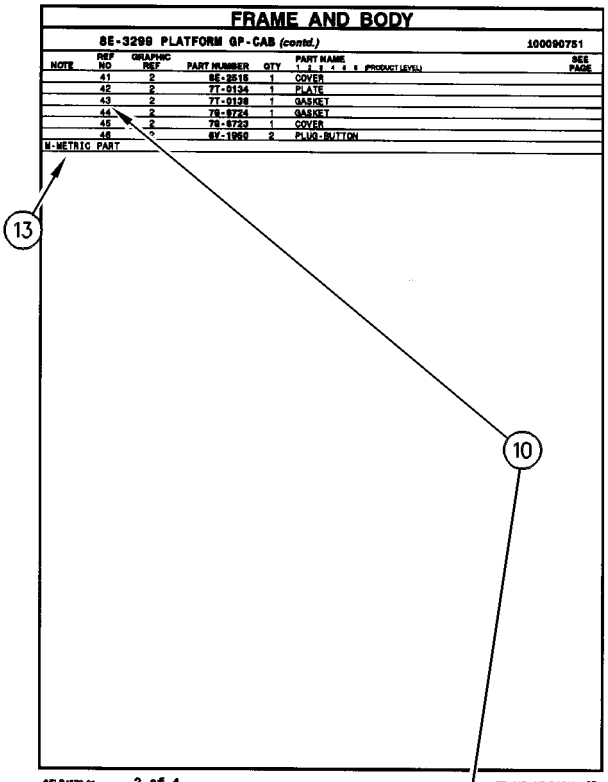

FRAME AND BODY

8E-3299 PLATFORM GP-CAB (contd.) 100090751

NOTE	REF NO	GRAPHIC REF	PART NUMBER	QTY	PART NAME 1 2 3 4 5 6 (PRODUCT LEVEL)	SEE PAGE
	41	2	8E-2515	1	COVER	
	42	2	7T-0134	1	PLATE	
	43	2	7T-0138	1	GASKET	
	44	2	7S-8724	1	GASKET	
	45	2	7S-8723	1	COVER	
	46	*	8Y-1950	2	PLUG-BUTTON	

M-METRIC PART

SELP4570-01 2 of 4 FRAME AND BODY 13

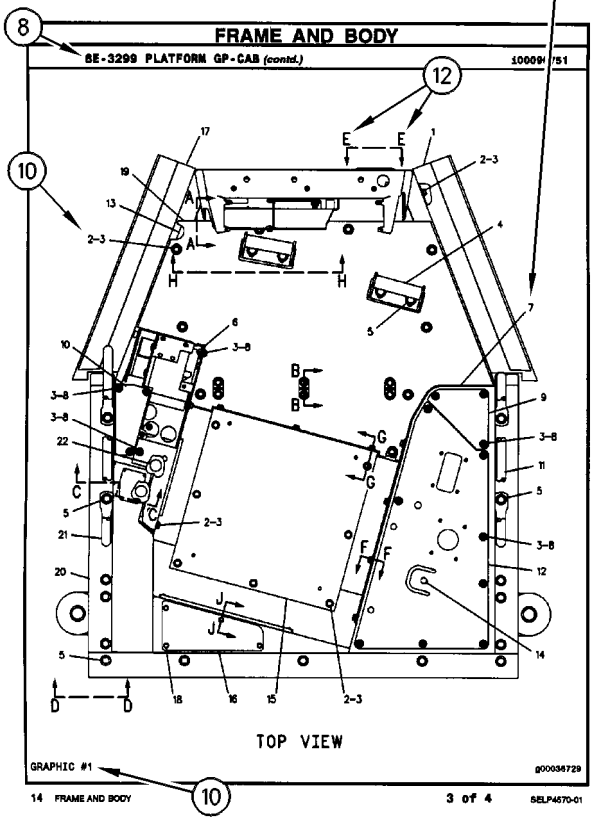

FRAME AND BODY

8E-3299 PLATFORM GP-CAB (contd.) 100090751

TOP VIEW

GRAPHIC #1 g00036729

14 FRAME AND BODY 3 of 4 SELP4570-01

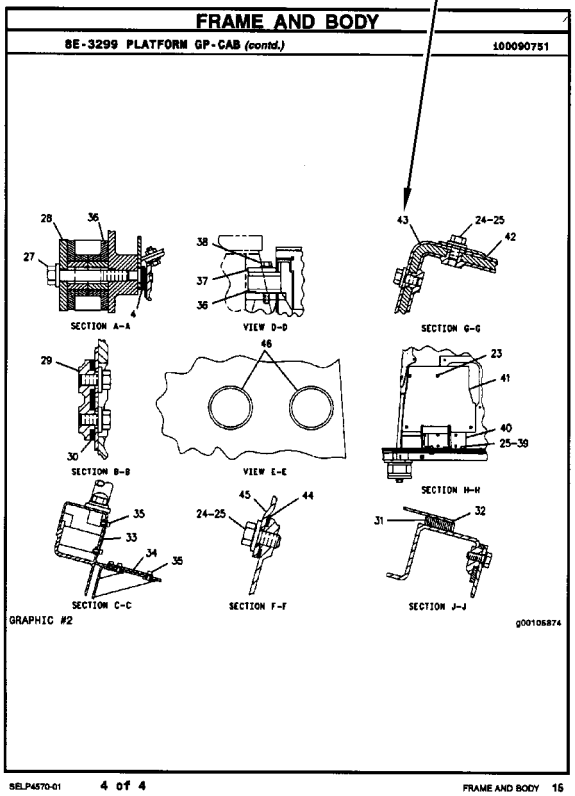

FRAME AND BODY

8E-3299 PLATFORM GP-CAB (contd.) 100090751

SECTION A-A

VIEW D-D

SECTION G-G

SECTION B-B

VIEW E-E

SECTION H-H

SECTION C-C

SECTION F-F

SECTION J-J

GRAPHIC #2 g00105874

SELP4570-01 4 of 4 FRAME AND BODY 15

1. IDENTIFICAÇÃO DA MÁQUINA

As máquinas Caterpillar são identificadas pelos Números de Informação do Produto (PIN). Alguns componentes incluídos numa máquina podem ser identificados por Números de Série (S/N). Componentes típicos que serão enumerados com números de série incluem motores, transmissões, lâminas e ríperes. Além do número de série, a máquina e o motor são ainda identificados por números de arranjo e, em alguns casos, números de modificações. Tais números encontram-se na(s) placa(s) de identificação do produto e na placa mestre no compartimento do operador.

SIS *Novidades*

A partir do primeiro trimestre de 2001 o Número de Identificação de Produto da Caterpillar (PIN) precisa ser mudado de 8 para 17 caracteres. Esforçando-se para fornecer uma identificação uniforme de equipamentos, a Caterpillar e outros fabricantes de equipamento de construção estão mudando para atender a versão mais atualizada do padrão de identificação de produtos. Os números de PIN para produtos de aplicações não rodoviárias são definidos pela ISO 10261. O novo formato de número PIN será adotado em todas as máquinas e grupos geradores Caterpillar. As placas e as marcações do chassi mostrarão os 17 dígitos de PIN. O novo formato terá a seguinte disposição:

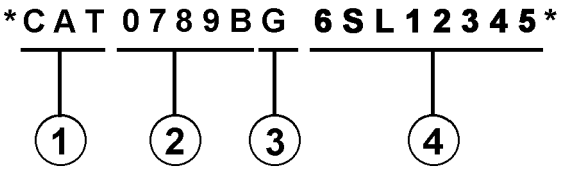

Onde:

1. Código de Fabricação Mundial da Caterpillar (dígitos 1-3)

2. Descrição da Máquina (dígitos 4-8)

3. Dígito de Verificação (dígito 9)

4. Seção de Indicador da Máquina (MIS) ou Número de Seqüência de Produto (dígitos 10-17). Estes eram anteriormente chamados de Número de Série.

Máquinas e grupos geradores produzidos antes do primeiro trimestre de 2001 manterão o formato de 8 caracteres de PIN.

Componentes como motores, transmissões, eixos, ferramentas de trabalho, etc. continuarão a usar Número de Série (S/N) com oito caracteres.

2. COMO OBTER PEÇAS

⚠ CUIDADO

Quando peças de substituição são exigidas para este produto, a Caterpillar recomenda a utilização de peças de substituição Caterpillar ou peças com as especificações equivalentes incluindo, mas não limitadas, à dimensões físicas, tipos, resistência e materiais.

A inobservância desta advertência poderá resultar em falhas prematuras, danos ao produto, ferimentos ou morte.

As Peças de Reposição de Qualidade Caterpillar encontram-se disponíveis nos revendedores Caterpillar no mundo inteiro. Seus estoques de peças são atualizados e incluem todas as peças normalmente necessárias para proteger seu investimento em máquinas Caterpillar. Alguns revendedores podem oferecer jogos de reparo ou peças de troca/remanufaturadas disponíveis como uma opção da alternativa de reparo mais eficaz para uma situação específica. Ao encomendar peças, seu pedido deve especificar a quantidade, o número e o nome da peça e o número de série/número de identificação do produto referentes à máquina para a qual as peças se destinam.

3. ORGANIZAÇÃO DO MANUAL DE PEÇAS

A informação do produto neste manual é apresentada em forma de "elementos de informação" que representam todos os componentes para o modelo específico. Arranjo de Motor e Grupo de Assento são exemplos de elementos de informação. Os elementos de informação são organizados em ordem alfabética por nome de peça ou secundariamente, por número de peça incluído em cada seção principal do manual.

4. LISTA DE CONTEÚDOS

A Lista de Conteúdos (TOC) se encontra no princípio do manual. A Lista de Conteúdos (TOC) relaciona em cada seção do manual uma lista completa com todos os elementos de informação organizados conforme aparecem no manual. Números de página são fornecidos para que se tenha referência rápida de ilustrações de peças detalhadas e listas de conteúdos que podem receber serviço de manutenção.

5. ÍNDICE DE PEÇAS DE MANUTENÇÃO

O Índice de Peças de Manutenção, localizado perto do princípio do manual, faz referência aos números de peça de manutenção usados com maior frequência, fornecendo uma descrição, a quantidade, o uso e o número de página. Esta informação é organizada com a descrição da peça em ordem alfabética.

6. ÍNDICE

O Índice localizado perto do princípio do manual, consiste de uma lista em ordem alfabética de todos os elementos de informação incluídos no manual. Números de página são fornecidos para que se tenha referência rápida de ilustrações de peças detalhadas e listas de conteúdos que podem receber serviço de manutenção.

7. ÍNDICE DE NÚMERO DE PEÇA

Um índice numérico relacionando todos os números de peça e a(s) página(s) correspondentes, aparece no final do manual.

8. LEGENDAS

As legendas localizadas no início de cada elemento de informação identificam o número e o nome de peça, juntamente com informação descritiva adicional. Informações sobre o Número de Informação do Produto (PIN) e o Número de Série (S/N) encontradas em cada legenda devem ser usadas para selecionar a informação correta sobre uma máquina específica. Opções de substituição no campo, identificação de componentes de acessórios opcionais e informações sobre onde são utilizados ("parte de") são também fornecidas.

A primeira linha de uma legenda é indicada em tipo maior para indicar o princípio de um elemento de informação. Legendas para páginas adicionais que podem ser necessárias para ilustrar um elemento de informação serão apresentadas em tipo padrão e incluirão o termo *(continua)* .

9. NÃO DISPONÍVEL SEPARADAMENTE

Em alguns casos, é necessário mostrar peças não disponíveis separadamente que têm uma ligação com listas de conteúdos de nível inferior que podem receber serviço de manutenção. Os números de peça destes componentes não disponíveis aparecerão em *itálico* , a fim de indicar que não estão disponíveis.

10. NÙMEROS DE REFERÊNCIA À LISTA DE PEÇAS

Os números indicados na coluna Ref No (No. de Referência) correspondem-se aos números usados no(s) gráfico(s) correspondente(s). Um sufixo com letras pode ser acrescentado a um número de referência para identificar itens de conteúdo de nível inferior. Os números indicados na coluna Graphic Ref (Referência de Gráfico) referem-se ao identificador de número de gráfico presente no canto esquerdo inferior de cada ilustração. O número de Referência de Gráfico pode ser usado em combinação com o item Ref No para determinar-se o número de peça correto. Poderá haver omissão intencional de um número de referência (Ref No) de uma lista de conteúdos uma vez que as informações são atualizadas para refletir os números de peça mais recentes que podem receber serviço de manutenção.

11. NOMES DE PEÇAS DESALINHADOS

Quando um nome de peça encontra-se desalinhado numa lista de peças, significa que tal item faz parte do (está incluído no) grupo ou conjunto sob o qual está relacionado.

12. LETRAS DE REFERÊNCIA NAS ILUSTRAÇÕES

Quando necessário, as ilustrações contêm letras de referência (A, B, C, etc.) que são utilizadas para seguir tubulações e cabos elétricos de um ponto a outro. Também foram utilizadas para indicar onde se pode reconectar as ilustrações que foram separadas.

13. ABREVIAÇÕES E SÍMBOLOS

O.D. – "Outside Diameter" (Diâmetro Externo)
I.D. – "Inside Diameter" (Diâmetro Interno)
A – Não faz parte deste grupo
B – Use conforme necessário
C – Indica modificação
D – Vendido por metro
E – Vendido por centímetro
F – Não ilustrado
G – Vendido por polegada
I – Consultar o Sistema de Informações Hidráulicas
M – Peça métrica
R – Peça remanufaturada pode estar disponível; consulte o seu revendedor Cat
Y – Ilustração separada
Z – Não disponível separadamente

SIS *Novidades*

14. <END>

Este símbolo indica o final de um elemento de informação.

NOTA:

Os contínuos aperfeiçoamentos e avanços no projeto do produto podem ocasionar modificações em sua máquina que talvez ainda não estejam incluídas nesta publicação. Sempre que surgirem dúvidas quanto a um produto Caterpillar ou quanto à presente publicação, consulte o seu revendedor Caterpillar para obter as informações mais recentes disponíveis.

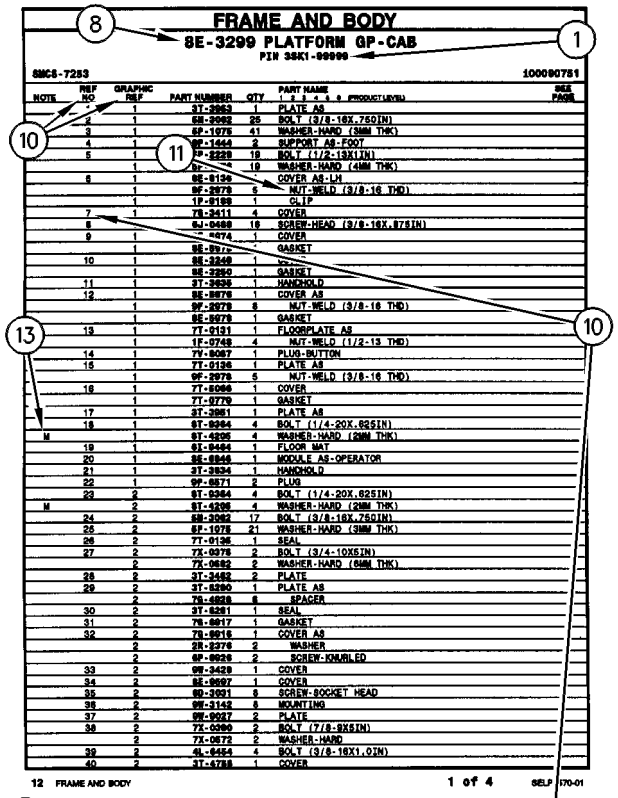

FRAME AND BODY

8E-3299 PLATFORM GP-CAB

PIN 3SK1-99999

SMCS-7283 100090751

NOTE	REF NO	GRAPHIC REF	PART NUMBER	QTY	PART NAME 1 2 3 4 5 6 (PRODUCT LEVEL)	SEE PAGE
	*	1	3T-3963	1	PLATE AS	
	2	1	6M-2062	25	BOLT (3/8-16X.750IN)	
	3	1	6P-1075	41	WASHER-HARD (3MM THK)	
	4	1	9F-1443	2	SUPPORT AS-FOOT	
	5	1	9P-2229	19	BOLT (1/2-13X1IN)	
		1	9P-[illegible]	19	WASHER-HARD (4MM THK)	
	6	1	8E-8136	*	COVER AS-LH	
		1	9F-2078	6	NUT-WELD (3/8-16 THD)	
		1	1P-8189	1	CLIP	
	7	1	7X-3411	4	COVER	
	8	1	6J-0468	18	SCREW-HEAD (3/8-16X.875IN)	
	9	1	[illegible]-8074	1	COVER	
		1	8E-8976	*	GASKET	
	10	1	8E-3249	1	[illegible]	
		1	8E-2260	1	GASKET	
	11	1	3T-3636	1	HANDHOLD	
	12	1	8E-8976	1	COVER AS	
		1	9F-2078	8	NUT-WELD (3/8-16 THD)	
		1	8E-8978	1	GASKET	
	13	1	7T-0131	1	FLOORPLATE AS	
		1	1F-0748	4	NUT-WELD (1/2-13 THD)	
	14	1	7Y-8067	1	PLUG-BUTTON	
	15	1	7T-0126	1	PLATE AS	
		1	9F-2078	5	NUT-WELD (3/8-16 THD)	
	16	1	7T-8066	1	COVER	
		1	7T-0779	1	GASKET	
	17	1	3T-3961	1	PLATE AS	
	18	1	9T-0264	4	BOLT (1/4-20X.625IN)	
M		1	9T-4295	4	WASHER-HARD (2MM THK)	
	19	1	9X-8464	1	FLOOR MAT	
	20	1	8E-8846	1	MODULE AS-OPERATOR	
	21	1	3T-3934	1	HANDHOLD	
	22	1	9F-8671	2	PLUG	
	23	2	9T-0264	4	BOLT (1/4-20X.625IN)	
M		2	9T-4295	4	WASHER-HARD (2MM THK)	
	24	2	6M-2062	17	BOLT (3/8-16X.750IN)	
	25	2	6P-1075	21	WASHER-HARD (3MM THK)	
	26	2	7T-0136	1	SEAL	
	27	2	7X-0078	2	BOLT (3/4-10X5IN)	
		2	7X-0682	2	WASHER-HARD (6MM THK)	
	28	2	3T-3482	2	PLATE	
	29	2	3T-8290	1	PLATE AS	
		2	7S-4828	8	SPACER	
	30	2	3T-8281	1	SEAL	
	31	2	7S-8817	1	GASKET	
	32	2	7S-8816	1	COVER AS	
		2	2R-2276	2	WASHER	
		2	9F-8626	2	SCREW-KNURLED	
	33	2	9M-3429	1	COVER	
	34	2	8E-8697	1	COVER	
	35	2	9D-3931	8	SCREW-SOCKET HEAD	
	36	2	9M-3142	8	MOUNTING	
	37	2	9M-9017	2	PLATE	
	38	2	7X-0360	2	BOLT (7/8-9X5IN)	
		2	7X-0672	2	WASHER-HARD	
	39	2	4L-8454	4	BOLT (3/8-16X1.0IN)	
	40	2	3T-4788	1	COVER	

12 FRAME AND BODY 1 of 4 SELP4570-01

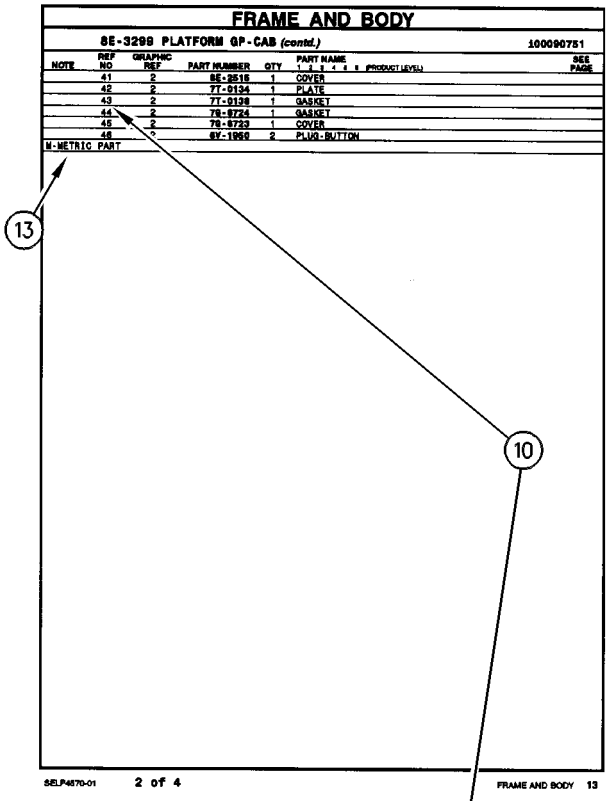

FRAME AND BODY

8E-3299 PLATFORM GP-CAB (contd.) 100090751

NOTE	REF NO	GRAPHIC REF	PART NUMBER	QTY	PART NAME 1 2 3 4 5 6 (PRODUCT LEVEL)	SEE PAGE
	41	2	8E-2515	1	COVER	
	42	2	7T-0134	1	PLATE	
	43	2	7T-0138	1	GASKET	
	44	2	7S-8724	1	GASKET	
	45	2	7S-8723	1	COVER	
	46	*	8Y-1952	2	PLUG-BUTTON	

M-METRIC PART

SELP4570-01 2 of 4 FRAME AND BODY 13

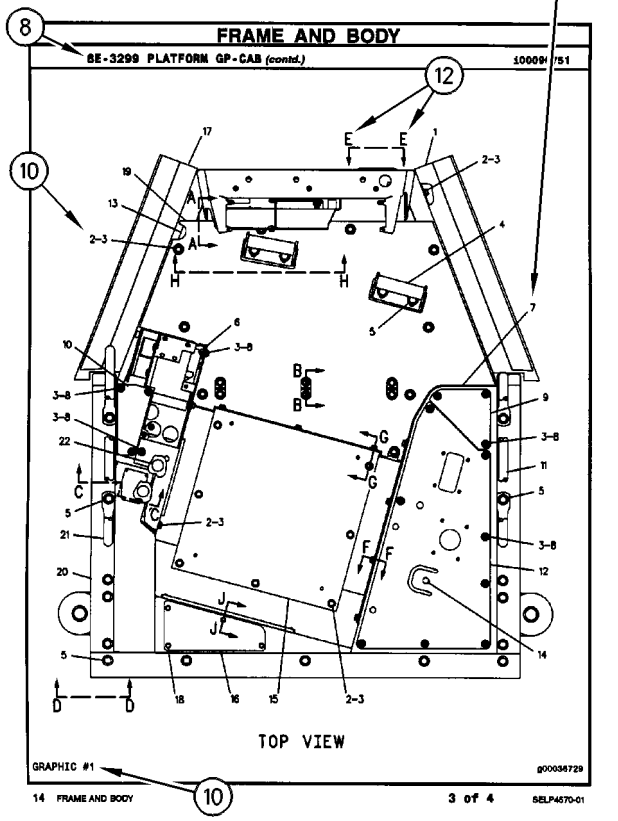

FRAME AND BODY

8E-3299 PLATFORM GP-CAB (contd.) 100090751

TOP VIEW

GRAPHIC #1 g00036729

14 FRAME AND BODY 3 of 4 SELP4570-01

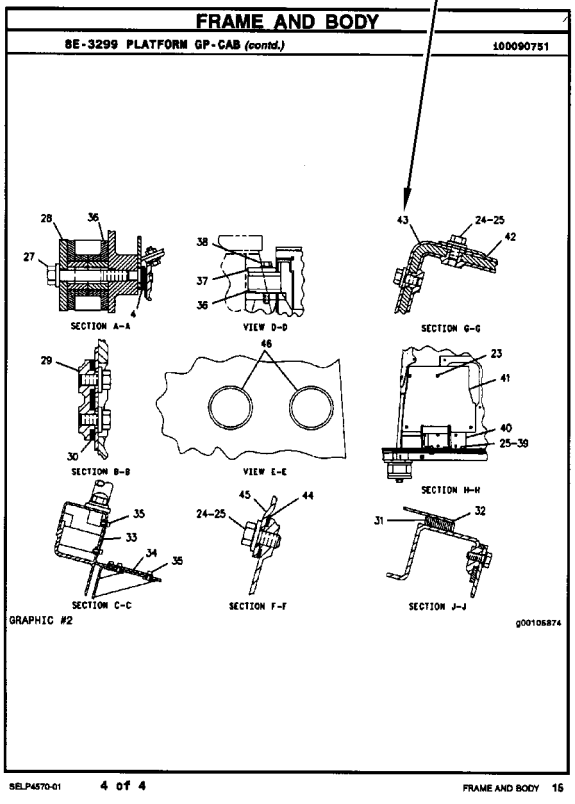

FRAME AND BODY

8E-3299 PLATFORM GP-CAB (contd.) 100090751

SECTION A-A

VIEW D-D

SECTION G-G

SECTION B-B

VIEW E-E

SECTION H-H

SECTION C-C

SECTION F-F

SECTION J-J

GRAPHIC #2 g00105874

SELP4570-01 4 of 4 FRAME AND BODY 15

ALLGEMEINE HINWEISE

1. MASCHINENKENNZEICHNUNG

Caterpillar-Maschinen sind mit PRODUCT IDENTIFICATION NUMBERS (PIN) (Produkt-Identnummern) gekennzeichnet. Einige Baugruppen, z.B. Motoren, Getriebe, Planierschilde und Aufreißer, sind mit SERIAL NUMBERS (S/N) (Seriennummern) gekennzeichnet. An der Maschine und am Motor befinden sich außerdem ARRANGEMENT NUMBERS (Ausrüstungsnummern) sowie in einigen Fällen MODIFICATION NUMBERS (Änderungsnummern). Sie befinden sich auf den PIN-Schildern und auf dem Typenschild im Fahrerhaus.

Bei Ersatzteilbestellungen müssen dem Händler alle diese Nummern zur Verfügung gestellt werden.

SIS *Neu im Parts Manual*

Vom ersten Quartal 2001 ab wurde die Caterpillar Produkt-Identnummer (PIN) von 8 auf 17 Zeichen geändert. Um zur Standardisierung der Produkt-Identnummer beizutragen, sind Caterpillar und andere Baumaschinenhersteller bestrebt, die aktuellste Norm zur Produkt-Identnummerierung einzuführen. Produkt-Identnummern für Baumaschinen sind durch ISO 10261 definiert. Das neue Format der Produkt-Identnummern gilt für alle Caterpillar-Maschinen und -Stromaggregate. Die Produkt-Identschilder und -Identrahmenmarkierung enthalten die aus 17 Zeichen bestehende Identnummer. Das neue Format hat folgende Abschnitte:

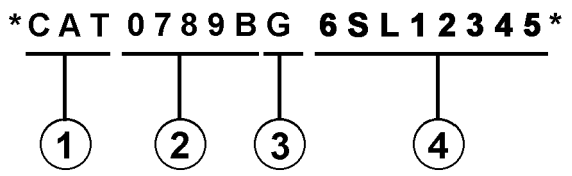

Abschnitte:

1. Caterpillars weltweiter Herstellungscode (Zeichen 1-3)

2. Modell (Zeichen 4-8)

3. Kontrollzeichen (Zeichen 9)

4. Maschinenspezifische Kennung (MIS) oder Produktsequenznummer (Zeichen 10-17). Diese wurde früher als Seriennummer bezeichnet.

Für vor dem ersten Quartal 2001 hergestellte Maschinen und Stromaggregate wird das aus 8 Zeichen bestehende PIN-Format beibehalten.

Bauteile wie z.B. Motoren, Getriebe, Achsen sowie Arbeitsgeräte werden weiterhin eine aus 8 Zeichen bestehende Seriennummer (S/N) aufweisen.

2. BESTELLEN VON ERSATZTEILEN

⚠ WARNUNG

Wenn für diese Maschine Ersatzteile benötigt werden, empfiehlt Caterpillar, ausschließlich Caterpillar-Ersatzteile oder solche zu verwenden, die die gleichen technischen Merkmale hinsichtlich Typ, Festigkeit, Werkzeugeigenschaften und die gleichen Maße aufweisen.

Bei Nichtbeachtung dieser Warnung besteht Verletzungs- oder sogar Lebensgefahr! Ferner kann Nichtbeachtung vorzeitige Ausfälle der Teile und Beschädigung der Maschine zur Folge haben.

Original Caterpillar-Ersatzteile können weltweit bei jedem Caterpillar-Händlern bestellt werden. Die umfangreichen Händlerlager enthalten normalerweise alle Teile, die Sie für Ihre Caterpillar-Maschine benötigen. Einige Händler bieten Reparatursätze, Austausch- oder werküberholte Teile an, so daß Sie eine Auswahl unter verschiedenen Reparaturmöglichkeiten treffen können. Ihre Bestellung muß folgende Angaben enthalten: Anzahl der benötigten Teile, Bestellnummer, Bezeichnung des Teils, Serien-Nr./Produkt-Ident-Nr., Ausrüstungs-Nr. und Änderungs-Nr. der Maschine, für die diese Teile benötigt werden.

3. AUFBAU DES PARTS MANUAL

Die Produktinformationen für alle Komponenten eines bestimmten Modells sind in INFORMATION ELEMENTS (Informationseinheiten) gegliedert. ENGINE ARRANGEMENT (Motorausführung) und SEAT GROUP (Fahrersitz) sind Beispiele für solche Informationseinheiten. Sie sind innerhalb jeder Gruppe alphabetisch, entsprechend der Ersatzteilbezeichnung, und zusätzlich numerisch, entsprechend der Ersatzteilnummer, geordnet.

4. INHALTSVERZEICHNIS

Das Inhaltsverzeichnis befindet sich am Anfang des Buches. Im Inhaltsverzeichnis werden die einzelnen Abschnitte des Buches aufgeführt. Die Abschnitte enthalten eine vollständige Aufstellung aller Informationseinheiten. Diese sind entsprechend ihrem Erscheinen im Buch geordnet. Das Inhaltsverzeichnis enthält Seitenangaben für Schnellverweise auf detaillierte Abbildungen und Teillisten.

ALLGEMEINE HINWEISE

5. INDEX FÜR WARTUNGSTEILE

Der Index für Wartungsteile vorn im Buch enthält die Bestellnummern, Seitenangaben, Mengenangaben und Informationen über den Einsatzbereich für die am häufigsten benötigten Ersatzteile. Die Angaben sind alphabetisch entsprechend der Teilebezeichnung geordnet.

6. INDEX

Der Index vorn im Buch enthält eine alphabetische Liste aller Informationseinheiten. Er enthält Seitenangaben für Schnellverweise auf detaillierte Abbildungen und Teillisten.

7. INDEX FÜR BESTELLNUMMERN

Hinten im Buch befindet sich ein numerischer Index, mit allen Bestellnummern und dem Hinweis auf die Seite, auf der sich die betreffende Abbildung befindet.

8. ÜBERSCHRIFTEN

Die Überschriften, die sich am Anfang jeder der Informationseinheiten befinden, enthalten Bestellnummern, Ersatzteilbezeichnungen und zusätzliche beschreibende Informationen. Produkt-Ident- und Seriennummern in den Überschriften sollten zur Auswahl der richtigen Informationen für die betreffende Maschine verwendet werden. Die Überschriften enthalten außerdem Informationen über möglichen Außendienstersatz, mögliche Baugerätekomponenten und die Baugruppe, zu der das Teil gehört.

Die erste Zeile einer Überschrift erscheint in einer größeren Schriftart, um den Anfang einer Informationseinheit zu kennzeichnen. Überschriften für zusätzliche Seiten, die zur Erläuterung einer Informationseinheit notwendig sind, erscheinen in normaler Schriftart und enthalten den Begriff "(contd.)".

9. NICHT EINZELN LIEFERBARE TEILE

In einigen Fällen ist es notwendig nicht lieferbare Teile, die selbst mit einer eigenen Teilliste im Buch vertreten sind, aufzuführen. Die Bestellnummern dieser nicht einzeln lieferbaren Teile erscheinen kursiv, wodurch angezeigt wird, daß sie nur in Verbindung mit anderen Teilen lieferbar sind.

10. REFERENZNUMMER FÜR ERSATZTEILE

Die Zahlen, die in der Spalte "Ref No" aufgeführt sind, stimmen mit den Zahlen in den beigefügten Abbildungen überein. Ein Buchstaben-Suffix kann zu einer Referenznummer hinzugefügt werden, um zu kennzeichnen, daß das Teil mit einer eigenen Teilliste im Buch aufgeführt ist. Die in der Spalte "Graphic Ref" angeführten Zahlen verweisen auf die Identifikationsnummer der Abbildung, die sich in der linken unteren Ecke der Abbildung befindet. Diese Nummer kann zusammen mit der Referenznummer des Teils angegeben werden, um die richtige Ersatzteilnummer zu ermitteln. Referenznummern können absichtlich weggelassen werden, da die Nummern der lieferbaren Ersatzteile ständig aktualisiert werden.

11. EINGERÜCKTE BEZEICHNUNGEN

Wenn eine Bezeichnung eingerückt ist, wird dadurch angezeigt, daß das Teil zu einer Baugruppe gehört, unter deren Bezeichnung es eingerückt ist.

12. REFERENZBUCHSTABEN

Falls erforderlich sind in den Abbildungen Referenzbuchstaben enthalten (z.B. A, B, C, usw.), die Leitungen und Kabelbäume von einem Punkt zum anderen verfolgen. Außerdem geben sie die Stelle an, an der getrennte Abbildungen fortgesetzt werden.

13. ABKÜRZUNGEN UND SYMBOLE

O.D. – Außendurchmesser
I.D. – Innendurchmesser
A – kein Teil dieser Gruppe
B – nach Bedarf verwenden
C – Hinweis auf eine Änderung
D – in Meter-Länge bestellen
E – in Zentimeter-Länge bestellen
F – nicht gezeigt
G – in Zoll-Länge bestellen
I – siehe Hydraulikinformationssystem
M – metrisches Teil
R – werküberholtes Teil unter Umständen lieferbar
Y – separate Abbildung
Z – nicht einzeln lieferbar

SIS *Neu im Parts Manual*

14. BESCHREIBUNG DER TYPENÄNDERUNGEN

Typ-A bezieht sich auf alle Konfigurationsänderungen, die ein zusätzliches Informationselement für Ausführung, Gruppe oder Einheit benötigen. Wenn kein Seriennummernumbruch für Typen erhältlich ist, wird in der Überschrift eine Typennummer (Typ 1, Typ 2, etc.) angegeben. Diese "Typenänderungen" sind in der Teileliste mit der Anmerkung "C" (Änderung des vorherigen Typs) versehen. Es werden nur die für dieses Ersatzteilhandbuch relevanten "Typen" angegeben. Es können zusätzliche Typen vorhanden sein, was zu "C" Anmerkungen zu einem Informationselement führen kann, wenn keine anderen Typen angegeben werden.

15. <END>

Dieses Symbol zeigt das Ende eines Informationselements an.

ANMERKUNG:

Ständig vorgenommene Verbesserungen und Weiterentwicklungen an Ihrer Maschine können Änderungen verursachen, die in der vorliegenden Ausgabe noch nicht berücksichtigt sind. Fragen zu Ihrer Caterpillar-Maschine oder diesem Ersatzteilbuch beantwortet Ihr Caterpillar-Händler.

ALLGEMEINE HINWEISE

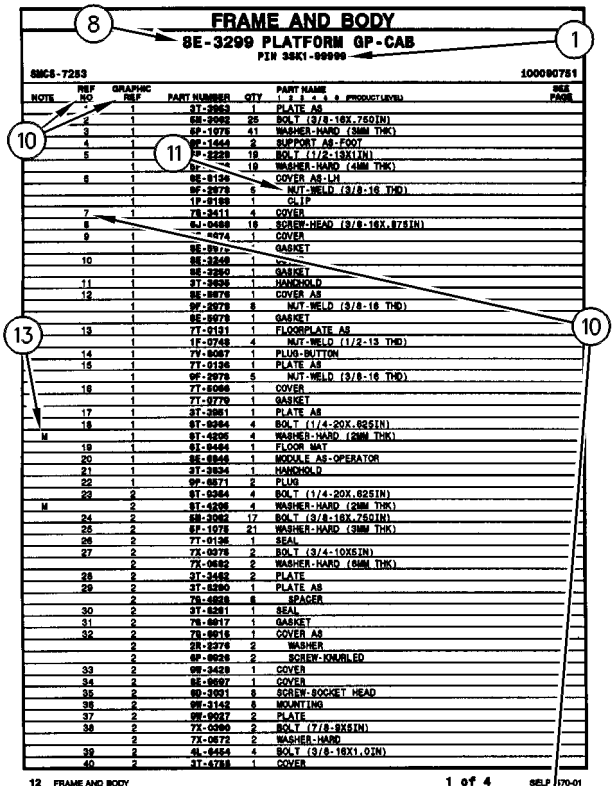

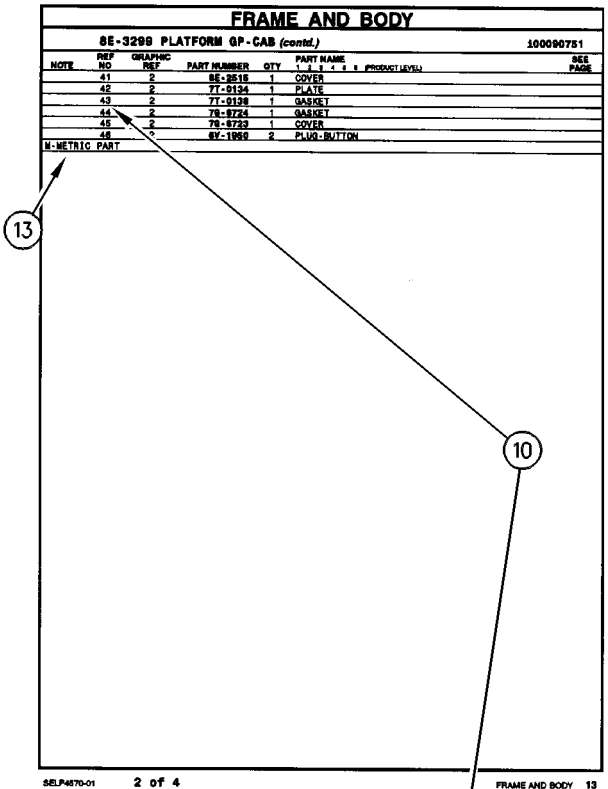

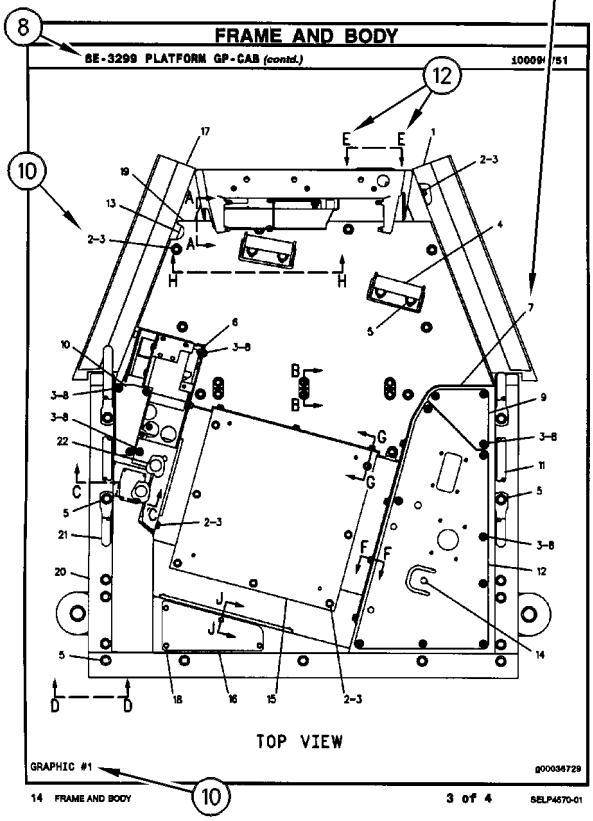

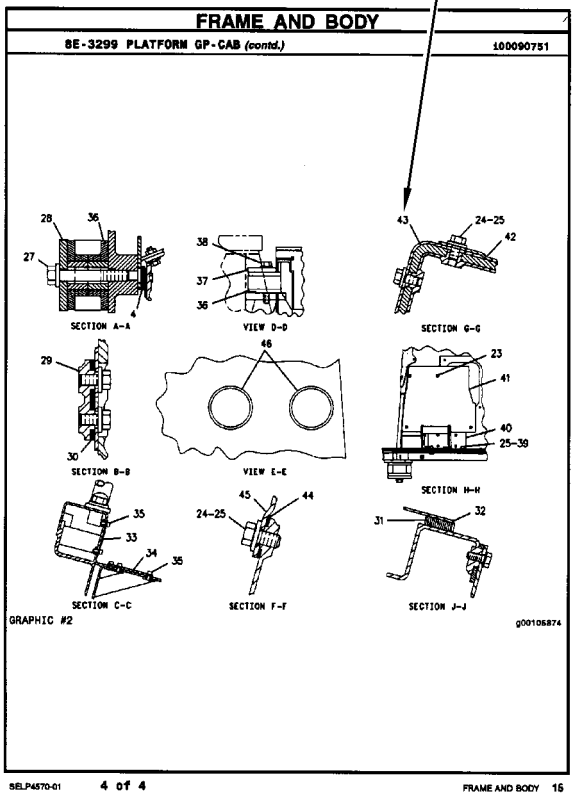

REMANUFACTURED COMPONENTS

As an option when making repairs consider Caterpillar Remanufactured Components. Components that are available through the Caterpillar Remanufactured Program are identified three ways in the parts book:

- with the letter R in the note field of the parts list
- with an R* at the beginning of the first line of the caption
- with an *R at the end of the first line of the caption

Typical components included in the Remanufacturing Program include:

ALTERNATORS
CONNECTING RODS
CRANKSHAFTS - UNDERSIZE
CRANKSHAFTS - UPGRADE TO NEW
CYLINDER HEADS
ELECTRONIC CONTROL MODULES (ECM)
ELECTRONIC SENSORS
FUEL INJECTORS
FUEL NOZZLES
FUEL PUMPS
GOVERNORS
OIL PUMPS
PISTONS
SHORT BLOCKS
STARTERS
TURBOCHARGERS - COMPLETE
TURBOCHARGER CARTRIDGES
WATER PUMPS

Caterpillar Remanufactured engines for many engine arrangements are also available.

OPTIONS DE RÉPARATION

COMPOSANTS RÉNOVÉS

Comme option de réparation, considérer les composants rénovés Caterpillar. Les composants disponibles dans le cadre du programme Caterpillar de composants rénovés sont identifiés de trois façons dans le catalogue de pièces:

- avec la lettre "R" dans l'espace note de la liste des pièces
- avec R* au début de la première ligne des légendes
- avec *R à la fin de la première ligne des légendes

Les composants suivants figurent parmi les composants typiques du programme de rénovation:

ALTERNATEURS
BIELLES
VILEBREQUINS - SOUS-DIMENSIONNÉS
VILEBREQUINS - REMIS À NEUF
CULASSES
MODULES DE COMMANDE ÉLECTRONIQUE (ECM)
CAPTEURS ÉLECTRONIQUES
INJECTEURS
TÊTES D'INJECTEURS
POMPES À CARBURANT
RÉGULATEURS
POMPES À HUILE
PISTONS
BLOCS EMBIELLÉS
DÉMARREURS
TURBOCOMPRESSEURS - COMPLETS
CARTOUCHES DE TURBOCOMPRESSEUR
POMPES À EAU

Des moteurs rénovés sont aussi disponibles pour plusieurs versions de moteur.

ALTERNATIVAS DE REPARACIÓN

COMPONENTES REMANUFACTURADOS

Al hacer reparaciones, tenga en cuenta la opción de Componentes Remanufacturados Caterpillar. Los componentes que están disponibles por medio del programa de Productos Remanufacturados Caterpillar se identifican de tres maneras en el manual de piezas:

- con la letra R en el espacio de Nota de la lista de piezas
- con una R* al comienzo de la primera línea de la leyenda
- con una *R al final de la primera línea de la leyenda

Los componentes que se incluyen típicamente en el Programa de Productos Remanufacturados son:

ALTERNADORES
BIELAS
CIGÜEÑALES - BAJOMEDIDA
CIGÜEÑALES - REMANUFACTURADOS A NUEVO
CULATAS
MÓDULOS DE CONTROL ELECTRÓNICO (ECM)
SENSORES ELECTRONICOS
INYECTORES
BOQUILLAS
BOMBAS DE COMBUSTIBLE
REGULADORES
BOMBAS DE ACEITE
PISTONES
MONOBLOQUES
MOTORES DE ARRANQUE
TURBOCOMPRESORES - COMPLETOS
NÚCLEOS DE TURBOCOMPRESOR
BOMBAS DE AGUA

También hay disponibles motores Remanufacturados Caterpillar para muchas de las configuraciones de motores.

ALTERNATIVAS DE REPARO

COMPONENTES REMANUFATURADOS

Considere o uso de Componentes Remanufaturados Caterpillar ao efetuar reparos. Os componentes disponíveis através do Programa de Remanufatura Caterpillar são identificados de três formas no manual de peças:

- com um R na área da nota da lista de peças
- com um R* no princípio da primeira linha da legenda
- com um *R no final da primeira linha da legenda

Os componentes típicos que constam no Programa de Remanufatura incluem:

ALTERNADORES
BIELAS
VIRABREQUINS - SUBMEDIDAS
VIRABREQUINS - ATUALIZAÇÃO
CABEÇOTES
MÓDULOS DE CONTROLE ELETRÔNICO (ECM)
SENSORES ELETRÔNICOS
INJETORES DE COMBUSTÍVEL
BICOS DE ABASTECIMENTO DE COMBUSTÍVEL
BOMBAS DE COMBUSTÍVEL
GOVERNADORES
BOMBAS DE ÓLEO
PISTÕES
BLOCOS BÁSICOS DO MOTOR
MOTORES DE PARTIDA
TURBOALIMENTADORES - COMPLETOS
CARTUCHOS DE TURBOALIMENTADORES
BOMBAS D'ÁGUA

Motores Remanufaturados Caterpillar também encontram-se disponíveis para diversos arranjos de motor.

WERKÜBERHOLTE AT-PRODUKTE

Bei Reparaturen sollten werküberholte AT-Produkte von Caterpillar in Betracht gezogen werden. Die durch das AT-Programm von Caterpillar erhältlichen Teile sind im Parts Book auf drei verschiedene Arten gekennzeichnet:

- mit dem Buchstaben R in der Spalte NOTE der Ersatzteilliste
- mit einem R* am Anfang der ersten Zeile der Überschrift
- mit einem *R am Ende der ersten Zeile der Überschrift

Das AT-Programm umfaßt u.a. folgende Produkte:

DREHSTROMGENERATOREN
PLEUELSTANGEN
KURBELWELLEN - MIT UNTERMASS
KURBELWELLEN - MIT ORIGINALMASS
ZYLINDERKÖPFE
ELEKTRONISCHE STEUEREINHEITEN (EMC)
ELEKTRONISCHE SENSOREN
PUMPENDÜSEN
EINSPRITZDÜSEN
KRAFTSTOFFPUMPEN
DREHZAHLREGLER
ÖLPUMPEN
KOLBEN
TEILMOTOREN
ANLASSER
TURBOLADER - KOMPLETT
TURBOLADERLAUFZEUGE
KÜHLWASSERPUMPEN

Viele Motoren können durch werküberholte AT-Motoren von Caterpillar ersetzt werden.

SUPPLEMENTAL COOLANT ADDITIVES

CUSTOMER BENEFITS:

Protects against cavitation, foam, erosion, corrosion, and scale buildup in cooling systems.

- Provides measured coolant conditioner.

DESCRIPTION:

Additives deplete from the coolant with normal operation. For this reason, Supplemental Coolant Additives (SCA) must be added to all heavy duty coolants at regular intervals. In addition, when not using a fully formulated, pre-charged antifreeze, like Caterpillar's DEAC, an initial charge of SCA must be added to the cooling system. The amount of SCA added to the system is dependent on the capacity of the system.

The SCA for initial fill is provided as a liquid. SCA's for maintenance intervals are available in liquid form and as a spin-on element. (No Spin-on available for 3600 Family of Engines)

NOTE:

The amount of SCA added at initial fill is not the same as the amount added at maintenance intervals.

The coolant additive elements can be used with any ethylene or propylene glycol type antifreeze which meets ASTM D4985 or ASTM D5345 Specifications.

NOTE:

For use with standard heavy duty coolant only, not for use with Extended Life Coolant.

PARTS NEEDED:

Cooling System Capacity		Liquid SCA at Initial Fill	Liquid SCA at Maintenance*	Spin-on SCA Maintenance Element*
Liters	Gallons			
22-30	(6-8)	3P-2044 (1)	6V-3542 (1)	111-2370 (1)
30-38	(8-10)	3P-2044 (1) 6V-3542 (1)	111-2372 (1)	111-2369 (1)
38-49	(10-13)	3P-2044 (1) 8T-1589 (1)	111-2372 (1)	111-2369 (1)
49-64	(13-17)	3P-2044 (2)	8T-1589 (1)	9N-3368 (1)
64-83	(17-22)	3P-2044 (2) 8T-1589 (1)	111-2372 (1) 6V-3542 (1)	111-2371 (1)
83-114	(22-30)	3P-2044 (3) 8T-1589 (1)	3P-2044 (1)	9N-3718 (1)
114-163	(30-43)	3P-2044 (5)	3P-2044 (1) 6V-3542 (1)	111-2371 (2)
163-242	(43-64)	3P-2044 (8)	3P-2044 (2)	9N-3718 (2)

** Normal maintenance period is 250 hrs. See your Operation and Maintenance Manual for complete coolant maintenance instructions.*

( ) Indicates quantity required.

ADDITIFS POUR LIQUIDE DE REFROIDISSEMENT

AVANTAGES POUR LE CLIENT

L'additif protège contre la cavitation, la mousse, l'érosion, la corrosion et l'accumulation de dépôts dans le circuit de refroidissement.

- L'additif complémentaire fournit une quantité mesurée d'additif.

DESCRIPTION:

Les additifs s'épuisent pendant l'utilisation du moteur. C'est pourquoi l'on doit ajouter de l'additif au liquide de refroidissement/antigel pour moteurs diesel à intervalles réguliers. En plus, si l'on n'utilise pas de l'antigel entièrement formulé et pré-chargé comme le liquide de refroidissement/antigel Caterpillar pour moteurs diesel, une quantité initiale d'additif doit être ajoutée au circuit de refroidissement. La quantité d'additif à ajouter au circuit dépend de la contenance du circuit.

L'additif pour le remplissage initial est fourni sous forme liquide. L'additif pour l'entretien ultérieur est disponible sous forme liquide et sous forme d'élément à visser. (Il n'y a pas d'élément à visser pour les moteurs de la famille 3600).

NOTA:

La quantité d'additif à ajouter au remplissage initial diffère de la quantité à ajouter aux intervalles d'entretien.

Les éléments d'additif peuvent être utilisés avec tout antigel de type éthylène ou propylène-glycol conforme à la norme ASTM D4985 ou ASTM D5345.

NOTA:

A utiliser uniquement avec du liquide de refroidissement pour moteurs diesel et non avec le liquide de refroidissement longue durée.

PIÈCES NÉCESSAIRES:

Contenance du circuit de refroidissement		Additif liquide au remplissage initial	Additif liquide aux intervalles d'entretien*	Elément d'additif à visser aux intervalles d'entretien*
Litres	Gallons U.S.			
22-30	(6-8)	3P-2044 (1)	6V-3542 (1)	111-2370 (1)
30-38	(8-10)	3P-2044 (1) 6V-3542 (1)	111-2372 (1)	111-2369 (1)
38-49	(10-13)	3P-2044 (1) 8T-1589 (1)	111-2372 (1)	111-2369 (1)
49-64	(13-17)	3P-2044 (2)	8T-1589 (1)	9N-3368 (1)
64-83	(17-22)	3P-2044 (2) 8T-1589 (1)	111-2372 (1) 6V-3542 (1)	111-2371 (1)
83-114	(22-30)	3P-2044 (3) 8T-1589 (1)	3P-2044 (1)	9N-3718 (1)
114-163	(30-43)	3P-2044 (5)	3P-2044 (1) 6V-3542 (1)	111-2371 (2)
163-242	(43-64)	3P-2044 (8)	3P-2044 (2)	9N-3718 (2)

** L'intervalle d'entretien normal est de 250 heures-service. Voir le Guide d'utilisation et d'entretien pour de plus amples renseignements concernant l'entretien du circuit de refroidissement.*

( ) Indique la quantité exigée.

ADITIVOS DE REFRIGERANTE SUPLEMENTARIOS

VENTAJAS PARA EL USUARIO:

Protegen contra la cavitación, la formación de espuma, la corrosión y la acumulación de escamas en los sistemas de enfriamiento.

- Suministra un acondicionador dosificado de refrigerante.

DESCRIPCIÓN:

Los aditivos en el refrigerante se agotan con la operación normal. Por esta razón, se debe agregar Aditivo de refrigerante suplementario (SCA) a todos los refrigerantes para servicio pesado, a intervalos regulares. Además, cuando no se usa un anticongelante de precarga completo, tal como el DEAC de Caterpillar, es necesario agregar una cantidad de aditivo de refrigerante suplementario inicial al sistema de enfriamiento. La cantidad de aditivo que se debe agregar depende de la capacidad del sistema.

El SCA de llenado inicial es líquido. El que se usa para el mantenimiento está disponible tanto en líquido como en un elemento enroscable. (No hay elemento enroscable disponible para la Familia de Motores 3600).

NOTA:

La cantidad de aditivo de llenado inicial no es la misma que se agrega en los intervalos de mantenimiento.

Los elementos de aditivo de refrigerante se pueden usar con cualquier anticongelante de tipo glicol etilénico o propílico que esté de acuerdo con las especificaciones de las normas ASTM D4985 o ASTM D5345.

NOTA:

Se debe utilizar únicamente con refrigerante estándar para servicio pesado; no se debe usar con Refrigerante de Larga Duración.

PIEZAS NECESARIAS:

Capacidad del Sistema de Enfriamiento		SCA líquido de llenado inicial	SCA líquido de mantenimiento*	Elemento de mantenimiento enroscable*
litros	gal EE.UU.			
22-30	6-8	3P-2044 (1)	6V-3542 (1)	111-2370 (1)
30-38	8-10	3P-2044 (1) 6V-3542 (1)	111-2372 (1)	111-2369 (1)
38-49	10-13	3P-2044 (1) 8T-1589 (1)	111-2372 (1)	111-2369 (1)
49-64	13-17	3P-2044 (2)	8T-1589 (1)	9N-3368 (1)
64-83	17-22	3P-2044 (2) 8T-1589 (1)	111-2372 (1) 6V-3542 (1)	111-2371 (1)
83-114	22-30	3P-2044 (3) 8T-1589 (1)	3P-2044 (1)	9N-3718 (1)
114-163	30-43	3P-2044 (5)	3P-2044 (1) 6V-3542 (1)	111-2371 (2)
163-242	43-64	3P-2044 (8)	3P-2044 (2)	9N-3718 (2)

** El período normal de mantenimiento es de 250 horas. Para ver las instrucciones completas sobre el mantenimiento del refrigerante, consulte el Manual de Operación y Mantenimiento.*

( ) Indica la cantidad necesaria.

ADITIVOS SUPLEMENTARES DO LÍQUIDO ARREFECEDOR

BENEFÍCIOS PARA O CLIENTE:

Protege contra cavitação, espuma, erosão, corrosão e acúmulo de crostas nos sistemas de arrefecimento.

- Fornece uma quantidade pré-determinada de condicionador de arrefecimento.

DESCRIÇÃO:

Com a operação normal, os aditivos se esgotam do líquido arrefecedor. Por isso, Aditivos Suplementares do Líquido Arrefecedor (SCA) devem ser acrescentados a todos os líquidos arrefecedores para serviço pesado em intervalos regulares. Além disso, quando um anticongelante pré-carregado, totalmente formulado não for usado, como o DEAC Caterpillar, uma carga inicial de SCA deve ser acrescentada ao sistema de arrefecimento. A quantidade de SCA acrescentada ao sistema depende da capacidade do sistema.

O SCA para abastecimento inicial é fornecido em forma de líquido. Os aditivos suplementares (SCA) para intervalos de manutenção estão à disposição em forma líquida e como um elemento com roscas. (Exceto os Motores da Família 3600)

NOTA:

A quantidade de SCA adicionada no abastecimento inicial não é a mesma que a acrescentada nos intervalos de manutenção.

Os elementos do aditivo do líquido arrefecedor podem ser usados com qualquer tipo de anticongelante etileno ou propileno que satisfaz as Especificações ASTM D4985 ou ASTM D5345.

NOTA:

Para uso apenas com líquido arrefecedor para serviço pesado padrão, não deve ser usado com Líquido Arrefecedor de Vida Longa.

PEÇAS NECESSÁRIAS:

Capacidade do Sistema de Arrefecimento		Líquido SCA Durante Abastecimento Inicial	Líquido SCA Durante Manutenção*	Elemento de Manutenção de SCA com Roscas*
Litros	Galões			
22-30	6-8	3P-2044 (1)	6V-3542 (1)	111-2370 (1)
30-38	8-10	3P-2044 (1) 6V-3542 (1)	111-2372 (1)	111-2369 (1)
38-49	10-13	3P-2044 (1) 8T-1589 (1)	111-2372 (1)	111-2369 (1)
49-64	13-17	3P-2044 (2)	8T-1589 (1)	9N-3368 (1)
64-83	17-22	3P-2044 (2) 8T-1589 (1)	111-2372 (1) 6V-3542 (1)	111-2371 (1)
83-114	22-30	3P-2044 (3) 8T-1589 (1)	3P-2044 (1)	9N-3718 (1)
114-163	30-43	3P-2044 (5)	3P-2044 (1) 6V-3542 (1)	111-2371 (2)
163-242	43-64	3P-2044 (8)	3P-2044 (2)	9N-3718 (2)

** O período normal de manutenção é de 250 horas. Consulte o Manual de Operação e Manutenção para obter instruções completas quanto à manutenção do líquido arrefecedor.*

( ) Indica a quantidade exigida.

KÜHLMITTELZUSATZ

VORTEILE FÜR DEN KUNDEN:

Schutz gegen Kavitation, Schaumbildung, Erosion, Korrosion und Kesselsteinbildung in Kühlsystemen.

- Richtig dosierter Kühlmittelzusatz

BESCHREIBUNG:

Additive erschöpfen sich während des Motorbetriebs. Deshalb muß allen HD-Kühlmitteln regelmäßig Kühlmittelzusatz beigefügt werden. Wenn bei Erstfüllung kein vollwertiges Fertigkühlmittel, wie das Frostschutz- und Kühlmittel für Dieselmotoren von Caterpiller (DEAC), verwendet wird, muß bei Erstfüllung Kühlmittelzusatz beigefügt werden. Wieviel Kühlmittelzusatz beigefügt werden muß, hängt vom Inhalt des Kühlsystems ab.

Für Erstfüllung ist Kühlmittelzusatz nur in flüssiger Form erhältlich. Für Wartungsintervalle ist Kühlmittelzusatz in flüssiger Form und als Zusatzelement erhältlich. (Für die Motorbaureihe 3600 sind keine Zusatzelemente erhältlich.)

ANMERKUNG:

Die Kühlmittelmenge bei Erstfüllung ist nicht die gleiche Menge, die bei Wartungsintervallen beigefügt werden muß.

Die Kühlmittelzusatzelemente können mit allen Frostschutzmitteln auf Ethylen- oder Propylenglykolbasis verwendet werden, die den Standards nach ASTM D4985 oder ASTM D5345 entsprechen.

ANMERKUNG:

Den Kühlmittelzusatz nicht mit Langzeitkühlmittel (ELC) von Caterpillar verwenden. Der Kühlmittelzusatz ist nur für HD-Kühlmittel bestimmt.

TEILEBEZEICHNUNG:

Kühlsysteminhalt		Kühlmittelzusatz bei Erstfüllung	Flüssiger Kühlmittelzusatz bei Wartung*	Kühlmittelzusatzelement bei Wartung*
Liter	US-Gall.			
22-30	(6-8)	3P-2044 (1)	6V-3542 (1)	111-2370 (1)
30-38	(8-10)	3P-2044 (1) 6V-3542 (1)	111-2372 (1)	111-2369 (1)
38-49	(10-13)	3P-2044 (1) 8T-1589 (1)	111-2372 (1)	111-2369 (1)
49-64	(13-17)	3P-2044 (2)	8T-1589 (1)	9N-3368 (1)
64-83	(17-22)	3P-2044 (2) 8T-1589 (1)	111-2372 (1) 6V-3542 (1)	111-2371 (1)
83-114	(22-30)	3P-2044 (3) 8T-1589 (1)	3P-2044 (1)	9N-3718 (1)
114-163	(30-43)	3P-2044 (5)	3P-2044 (1) 6V-3542 (1)	111-2371 (2)
163-242	(43-64)	3P-2044 (8)	3P-2044 (2)	9N-3718 (2)

** Der normale Wartungsintervall beträgt 250 Betriebsstunden. Für vollständige Anweisungen zur Wartung des Kühlsystems, siehe Betriebs- und Wartungshandbuch.*

( ) Erforderliche Anzahl

NOMENCLATURA DE PEÇAS INGLÊS-PORTUGUÊS

INGLÊS	PORTUGUÊS
ABOVE	Acima
ABSORBER	Amortecedor
ACCESSORY	Acessório
ACTUATOR	Acionador
ADAPTER	Adaptador
ADHESIVE	Adesivo
ADJUSTER	Adjustador
AFTERCOOLER	Pós-resfriador
AIR	Ar
AIR CLEANER	Purificador de ar
AIR SYSTEM	Sistema de ar
ALARM	Alarme
ALTERNATOR	Alternador
AMMETER	Amperímetro
ANCHOR	Âncora, fixador
ANGLE	Ângulo, canto
ANVIL A.	Bigorna conj.
ARBOR	Mandril, eixo
ARM	Braço
ARMATURE	Armadura, Induzida
ARM REST	Apoio para braço
ARRESTER	Detentor
ASSEM. = ASSEMBLY	Conjunto
ATTACHMENT	Acessório
AVAILABLE	Disponível
AXLE	Eixo
AXLE SHAFT	Semi-eixo, ponta
BACK-UP ALARM	Alarme de marcha à ré
BACK-UP LIGHT	Luz da marcha à ré
BACK-UP SWITCH	Interruptor de marcha à ré
BACKBOARD	Prancha traseira
BACK CUSHION	Encosto
BACKHOE	Retroescavadeira
BAFFLE	Defletor
BAG	Saco, sacola
BAIL	Alça
BALANCER	Balanceador
BALL	Esfera
BALLCHECK ASSEMBLY	Conjunto de (válvula) de esfera de retenção
BALL JOINT	Junta esférica
BALLSTUD	Munhão esférica
BAND	Banda, cinta, tira
BAND & LINING	Banda e revestimento
BAR	Barra
BARREL	Cilindro
BARRIER	Barreira
BASE	Base
BASIN	Bacia, coletor
BATTERY	Bateria
BEAM	Barra, viga, trave
BEARING	Mancal, rolamento
BEARING BALL	Rolamento de esferas
BEARING-SLEEVE	Mancal tipo luva
BEARING-NEEDLE	Rolamento de agulha
BEARING-ROLLER	Rolamento tipo roletes
BELL	Campânula
BELLCRANK	Alavanca angular
BELLOWS	Fole
BELOW	Abaixo
BELT	Correia, cinto
BELT TIGHTENER	Ajustador de correia
BEVEL GEAR	Coroa
BIT-CUTTER	Broca, fresa
BLACK	Preto
BLADE	Lâmina
BLEEDER	Sangrador
BLOCK	Bloco, calço
BLOWER	Ventilador
BLUE	Azul
BOARD	Prancha, tábua
BODY	Corpo
BOLT	Parafuso
BONNET	Tampa
BOOM	Lança
BOOSTER	Reforçador
BOOT	Protetor contra poeira
BORE	Furo
BOSS	Ressalto
BOTH	Ambos (as)
BOTTOM	Fundo
BOWL	Caçamba
BOX	Caixa
BRACE	Tirante
BRACKET	Suporte
BRAKE	Freio
BREAKER	Interruptor
BREATHER	Respiro
BRIDGE	Braço
BROWN	Marrom
BRUSH	Escova
BUCKET	Caçamba
BULB	Bulbo
BULLDOZER	Bulldozer
BUMPER	Pára-choque
BUSHING	Bucha
BUTTON	Botão
BUZZER WARNING	Alarme sonoro
C = CHANGE	Alteração
CAB	Cabina
CABINET	Gabinete
CABLE	Cabo
CAGE	Alojamento
CALIPER	Calibrador
CAM	Excêntrico, ressalto
CAMSHAFT	Eixo-comando-de-válvulas
CANOPY	Coberta, toldo

NOMENCLATURA DE PEÇAS INGLÊS-PORTUGUÊS

INGLÊS	PORTUGUÊS
CAP	Tampa
CAPACITOR	Capacitor, condensador
CARBURETOR	Caburador
CARCASS	Carcaça
CARRIER	Suporte
CARTON	Caixa de papelão
CARTRIDGE	Cartucho
CASE	Caixa, alojamento
CASING	Invólucro, revestimento
CASTER	Rolete, roldana
CAST IRON	Ferro fundido
CATWALK	Passadiço
CENTER	Centro
CHAIN	Corrente
CHAMBER	Câmara
CHANGEOVER	Modificação
CHANNEL	Canal
CHASSIS	Chassi, armação
CHECK-VALVE	Válvula de retenção
CIRCUIT	Circuito
CIRCUIT BREAKER	Interruptor de circuito
CLAMP	Braçadeira
CLASP	Fecho, grampo
CLEANER	Purificador
CLEVIS	Forquilha, garfo
CLIP	Clipe, presilha, grampo
CLOSURE	Fecho
CLUTCH	Embreagem
COARSE	Grosso, áspero
COATING	Capa, revestimento
COCK	Torneira
COIL	Bobina, serpentina
COLLAR	Colar
COLLECTOR	Coletor
COLLET	Mandril
COLUMN	Coluna
COMPACTOR	Compactador
COMPARTMENT	Compartimento
COMPLETE	Completo
COMPOUND	Composto
COMPRESSOR	Compressor
CONCAVE	Côncavo
CONDITIONER	Condicionador
CONDUIT	Conduite, eletroduto
CONE	Cone
CONNECTING	Ligação
CONNECTED ROD	Biela
CONNECTION	Conexão
CONNECTOR	Conetor
CONSISTS OF	Consiste de
CONSOLE	Consolo
CONTACT	Contato, platinado
CONTACTOR	Contactador
CONTINUED FROM	Continuação de
CONTROL	Controle
CONVERSION	Conversão
CONVERTER	Conversor
COOLER	Arrefecedor
COOLING	Arrefecimento
CORK	Cortiça
CORE	Núcleo
CORNER	Canto
COTTER PIN	Contrapino
COUNTER	Contador, tacômetro
COUNTERWEIGHT	Contrapeso
COUPLER	Acoplador, engate
COUPLING	Acoplamento, conexão
COVER	Tampa
COWL	Capota
COWLING	Capota
CRADLE	Armação, suporte
CRANK	Manivela
CRANKCASE	Cárter
CRANKSHAFT	Virabrequim
CROSS UNION	Junta transversal
CROSSBAR	Barra transversal
CUP	Capa, anel externa
CURTAIN	Cortina
CUSHION	Almofada, amortecedor
CUTTER	Fresa, cortador
CUTTING EDGE	Borda cortante
CYLINDER	Cilindro
CYLINDER BLOCK	Bloco do motor
CYLINDER HEAD	Cabeçote
DAMPER	Amortecedor
DARK GREEN	Verde escuro
DASH	Painel
DASH PANEL	Painel de Instrumento
DECELERATOR	Desacelerador
DEFLECTOR	Defletor
DETENT	Retém, pino de trava
DIAGRAM-WIRING	Diagrama dos circuitos elétricos
DIAL	Medidor de dial
DIAPHRAGM	Diafragma
DIESEL ENGINE COMPLETE	Motor diesel completo
DIFFERENTIAL	Diferencial
DIFFUSER	Difusor
DIMMER	Redutor de luminosidade
DIODE	Diodo
DIRECTOR	Diretor
DISC	Disco
DISCONNECT	Desligar
DISPOSABLE	Disponível, substituível
DISSIPATOR	Dissipador de calor
DISTRIBUTOR	Distribuidor
DM = DECIMETER	dm = decímetro

NOMENCLATURA DE PEÇAS INGLÊS-PORTUGUÊS

INGLÊS	PORTUGUÊS
DOME LIGHT	Lâmpada do teto
DOOR	Porta
DOWEL	Pino-guia, cavilha
DOWNSHIFT	Mudança para marcha mais baixa
DOZER	Bulldozer (lâmina)
DRAIN	Dreno
DRAWBAR	Barra de tração
DRILL	Broca
DRILLED	Broqueado, perturado
DRIVE	Comando, acionamento, propulsão
DRIVER	Acionador, mecanismo propulsor
DRIVESHAFT	Eixo acionador, eixo de transmissão
DRUM	Tambor
DUCT	Conduto, canal
EACH	Cada
EDGE	Borda, canto
EFFECTIVE WITH	Efetivo a partir de
EJECTOR	Ejetor
ELBOW	Cotovelo
ELEMENT	Elemento
ENCLOSURE	Cobertura
END	Extremidade
END BIT	Canto de lâmina
END VIEW	Vista traseira
ENGINE	Motor
ENGINE ARRANGEMENT	Arranjo do motor
EXCEPT	Exceto
EXHAUST	Escape
EXHAUST PIPE	Cano de escape
EXPANDER	Expansor
EXPANSION PLUG	Bujão de expansão
EXTENSION	Extensão
EXTINGUISHER	Extintor
EXTRACTOR	Extrator
EYE	Olhal
EYEBOLT	Parafuso de olhal
FABRIC	Tecido, tela textura
FACING	Revestimento, forro
FAN	Ventilador
FASTENED	Fixo, preso
FASTENER	Fixador, prendedor
FENDER	Pára-lamas
FERRULE	Virola
FIELD COIL	Bobina indutora, ou de campo
FIELD REPLACEMENT	Reposicão ou substituicão no campo
FILLER	Bocal de enchimento
FILM	Película
FILTER	Filtro
FINAL DRIVE	Comando final
FINGER	Dedo
FIREWALL	Parede contra fogo
FITTING	Graxeira, conexão
FIXTURE	Dispositivo, Aparelho
FLANGE	Flange
FLASHER	Luz intermitente
FLOAT	Flutuar, livre
FLOOD-LAMP	Farol
FLOOR	Piso
FLOORMAT	Tapete
FLOORPLATE	Chapa do piso
FLYWEIGHT	Peso volante
FLYWHEEL	Volante
FOLLOWER	Seguidor
FOOT	Pé
FORK	Garfo
FOR USE WITH	Para usar com
FOUNDATION	Assentamento, alicerce
FRAME	Armacão, chassi
FRONT	Frente, dianteiro
FT = FOOT	Pé
FUEL INJECTION	Injecão de combustível
FUEL PUMP	Bomba de combustível
FUEL RATIO	Limitador de combustível
FUEL SYSTEM	Sistema do combustível
FUEL TANK	Tanque do combustível
FUMES DISPOSAL	Eliminação de vapores do cárter
FUSE	Fusível
G = GROUP	Grupo
GAGE	Indicador, manômetro
GAP	Folga, lacuna, intervalo
GASKET	Junta
GASKET KIT	Jogo de junta
GATE	Entrada, trava
GAUGE	Indicador, manômetro
GEAR	Engrenagem, marcha
GEAR BOX	Caixa de engrenagem
GEAR PUMP	Bomba de engrenagem
GENERATOR	Gerador
GLAND	Junta, gaxeta, vedacão sobreposta
GLASS	Vidro
GLOW PLUG	Vela incandescente
GOVERNOR	Governador
GRAB IRON	Balaústre corrimão
GRATE	Grade, grelha
GRAY	Cinza
GRID	Grade, grelha
GRILL	Grade, grelha
GRIP	Pega, garra, cabo

NOMENCLATURA DE PEÇAS INGLÊS-PORTUGUÊS

INGLÊS	PORTUGUÊS
GROMMET	Ilhós
GROUND BRUSH	Escova-terra
GROUND (ELECTRIC)	Terra (eletricidade)
GROUSER	Garra (de sapata)
GUARD	Protetor
GUIDE	Guia
GUSSET	Cantoneira
HACKSAW	Serra para metais
HALF	Metade, meio (a)
HALF LINK	Semi-elo
HAMMER	Martelo
HAND CONTROL	Controle manual
HANDLE	Cabo, alça
HANDRAIL	Corrimão, balaústre
HANGER	Suporte, dispositivo de suspensão
HARDWARE	Ferragem
HARDWARE KIT	Jogo de ferragem
HARNESS	Chicote
HEAD = HD	Cabeça
HEADER	Coletor
HEADLAMP	Farol dianteiro
HEADLIGHT	Farol dianteiro
HEAT SINK	Difusor de calor
HEATER	Aquecedor
HIGH-IDLE	Marcha acelerada em vazio
HINGE	Dobradiça, articulacão
HITCH	Engate
HOIST	Guincho, talha
HOLD	Suporte, fixador
HOLD DOWN	Fixar, reter, manter abaixado
HOLDER	Fixador, suporte
HOLE	Furo, buraco
HOOD	Capô
HOOD & DASH	Capô e painel
HOOK	Gancho
HORN	Buzina
HOSE	Mangueira
HOUSING	Alojamento
HUB	Cubo
HYDRAULIC	Hidráulico
ID = INSIDE DIAMETER	Diâmetro interno
IDLER	Roda-guia
IDLER & SHAFT	Roda-guia e eixo
IDLER GEAR	Engrenagem intermediária
IDLER PULLEY	Polia intermediária
IMPELLER	Impulsor, rotor
IN = INCH	Polegada
INCLUDES	Inclui
INDICATE	Indicam
INDICATOR	Indicador
INLAY	Incrustação
INLET	Admissão, entrada
INPUT	Entrada
INSERT	Inserção
INSTALLATION	Instalação
INSTALLED ON MODEL	Instalação no modelo
INSTRUCTION	Instrução
INSTRUMENT	Instrumento
INSULATED BRUSH	Escova isolada
INSULATION	Isolação, isolamento
INSULATOR	Isolante, isolador
INTAKE	Admissão
INTERLOCK	Trava interna
INTERMEDIATE	Intermediário
INTERNAL	Interno
INVERTER	Inversor
IRON	Ferro
JACK	Macaco
JAW	Mandíbula, garra
JET	Jato, vaporizador
JOINT	Junta, articulação
JUNCTION	Junção
KEY	Chaveta
KINGBOLT	Pino de engate
KNIFE	Faca, lâmina
KNOB	Maçaneta, botão
LADDER	Escada
LAMP	Lâmpada
LARGE	Grande
LATCH	Trinco, lingüeta
LEAD	Condutor, cabo
LEG	Perna
LENS	Lente
LEVEL	Nível
LEVER	Alavanca
L.H. = LEFT HAND	Lado esquerdo
LID	Placa, tampa
LIFT	Levantar
LIFT CYLINDER	Cilindro de levantamento
LIFTER	Tucho
LIFTING EYE	Olhal de levantamento
LIGHT GREEN	Verde claro
LIGHTING	Sistema de iluminação
LINE	Tubulação
LINER	Camisa
LINES & PUMP	Tubulação e bomba
LINES & VALVE	Tubulação e válvula
LINING	Revestimento, lona
LINK	Elo
LINKAGE	Articulação
LIP	Lábio, borda
LISTED	Relacionamento
LITERATURE	Literatura
LOCATED	Localizado

NOMENCLATURA DE PEÇAS INGLÊS-PORTUGUÊS

INGLÊS	PORTUGUÊS
LOCATOR	Localizador
LOCK	Trava
LOCKNUT	Contraporca
LOCKWASHER	Arruela de pressão
LOCKWIRE	Arame de trava
LONG	Longo
LOOM	Tubo isolador
LOW IDLE	Marcha lenta
LOUVER	Persiana
LOWER	Abaixar, inferior
LUBRICANT	Lubrificante
LUG	Ressalto, orelha
MACHINE SCREW	Parafuso de fenda
MAGNET	Imã magneto
MAIN	Principal
MAINTENANCE	Manutenção
MANIFOLD	Coletor
MARKED	Marcado (a)
MARKER	Marcador
MASTER PIN	Pino mestre
MAT	Capacho, esteira
METER	Medidor, contador
MINOR	Menor
MIRROR	Espelho
MISCELLANEOUS	Miscelânea
MODIFICATION	Modificação
MOLDBOARD	Armação da lâmina
MOTOR	Motor
MOULDING	Moldura
MOUNT	Montar
MOUNTED	Montado (a)
MOUNTING	Montagem
MUFFLER	Silenciador
NAMEPLATE	Plaqueta de identificação
N.C. (THREAD)	Rosca grossa
NEEDLE	Agulha
N.F. (THREAD)	Rosca fina
NIB	Ponta, bico
NIPPLE	Conexão
NONE	Nenhum (a)
NORMALIZING	Normalização
NOT PART OF	Não faz parte de
NOZZLE	Bocal, bico injetor
N/S = NOT SERVICED	Não vendável
NUMBER (No)	Número (No)
NUT	Porca
NUT-WING	Porca borboleta
NUT-CASTLE	Porca acastelada
NUT-WELD	Porca-soldada
NUT-CAP	Porca cega
NUT-HEX	Porca sextavada
NUT-LOCK	Contraporca
NUT-IMPERIAL	Porca imperial
NUT-JAM	Porca de trava, contraporca
NUT-LOW CROWN	Porca de meia coroa
NUT-RETAINING	Porca de retenção
NUT-SELF LOCK	Porca de autotravamento
NUT-SLOTTED	Porca fendada
NUT-SPANNER	Porca para chaves
O.D. = OUTSIDE DIAMETER	Diâmetro externo
O-RING	Anel "O"
OIL	Óleo
OILPAN	Cárter
OIL PUMP	Bomba de óleo
OIL SYSTEM	Sistema de lubrificação
OILER	Almotolia, lubrificador
ORANGE	Laranja
TO ORDER	Para pedir
ORIFICE	Orifício
OUTER	Externo
OUTER RACE	Anel externo
OUTPUT	Saída
OVERALL	Geral, total
OVERHAUL	Revisão
OVER SIZE	Sobremedida
PACKING	Embalagem, gaxeta
PAD	Coxim, calço
PADLOCK	Cadeado
PAINT	Pintura
PAN	Cárter
PANEL	Painel
PARKING BRAKE	Freio de estacionamento
PARTITION	Separacão
PARTS G	Grupo de peças
PARTS OF	Peça de
PARTS OF ALL ENGINE ARRANGEMENTS	Peças de todos os arranjos do motor exceto
PAWL	Garra
PEDAL	Pedal
PEDESTAL	Pedestal
PERFORMANCE	Desempenho
PILOT	Piloto
PIN	Pino
PIN & BUSHING	Pino e bucha
PIN-COTTER	Contrapino
PINCH BAR	Pé de cabra
PINION	Pinhão
PIPE	Tubo
PISTON	Pistão
PIVOT	Articulação, pivô
PLANETARY	Planetário
PLATE	Placa
PLATFORM	Plataforma
PLUG	Bujão
PLUNGER	Pistão, êmbolo

NOMENCLATURA DE PEÇAS INGLÊS-PORTUGUÊS

INGLÊS	PORTUGUÊS
POINT	Ponta, ponto
POINTER	Ponteiro
POLE & COIL	Polo e bobina
POLE	Polo, lança, vara
POPPET	Gatilho
POST	Poste, coluna
POTENTIOMETER	Potenciômetro
POWER TAKE OFF	Tomada de força
POWER TRAIN	Trem de força
PRE-SCREENER	Tela protetora
PRECHAMBER	Câmara de pré-combustão
PRECLEANER	Pré-purificador
PRECOMBUSTION	Pré-combustão
PRESS	Prensa
PRESS = PRESSURE	Pressão
PREVIOUS	Prévio, anterior
PRIMARY	Primário, principal
PROBE	Prova
PROJECTOR	Projeter
PROTECTION	Proteção
PROTECTOR	Proteter
PULLER	Extrator, sacador
PULLEY	Polia
PUMP	Bomba
PURPLE	Roxo
PUSHROD	Haste de empuxo
QTY = QUANTITY	Quantidade
RACE	Pista
RACE & ROLLER	Pista e rolete
RACK	Cremalheira
RADIATOR	Radiador
RAIL	Trilho, guia
RANGE TRANSM	Transmissão manual
RATCHET	Catraca
REAR	Traseiro (a)
REBORED	Escareado, alargado
REBUILD KIT	Jogo de recondicionamento
RECEPTACLE	Recipiente
RECTIFIER	Retificador
RED	Vermelho
REDUCER	Redutor
REFER	Referir
REGULATOR	Regulador
RELATED REPAIR ITEMS	Itens de reparos relacionados
RELAY	Relé
RELIEF VALVE	Válvula de alívio
REPAIR G	Grupo de reparo
REPAIR KIT	Jogo de reparo
REPAIR ITEMS	Itens de reparo
REPLACEMENT	Reposição, substituição
REQUIRED	Necessário
RESERVOIR A	Reservatôrio
RESIN	Resina
RESISTOR	Resistência
RETAINER	Fixador
RETARDER	Retardador
REVERSIBLE	Reversível
R.H. = RIGHT HAND	Lado direito
RIM	Aro
RIM & TIRE	Aro e pneu
RING	Anel
RIVET	Rebite
ROCKET	Balancim
ROD	Haste
ROD END	Extremidade da haste
ROLLER	Rolete
ROPE-STARTING	Partida à corda
ROTATOR	Girador
ROTOCHAMBER	Càmara pneumática
ROTOCOIL	Girador de válvula
ROTOR	Rotor
RUST INHIBITOR	Antioxidante
SADDLE	Sela, assento
SAFETY	Segurança
SAFETY TREAD	Tiras antiderrapante
SCRAPER	Tampa
SCREEN	Tela
SCREW	Parafuso
SCREW-HEX HD	Parafuso de cabeça hexagonal
SCREW-KIT	Jogos de parafuso
SCREW-MACHINE	Parafuso de fenda
SCREW-ROUND HD	Parafuso de cabeça redonda
SCREW-FLANGED	Parafuso com flange
SCREW-LOCKING	Parafuso de trava
SCREW-THUMB	Parafuso de orelhas
SCREWDRIVER	Chave de fenda
SEAL	Retentor
SEALED UNIT	Unidade vedada
SEALER	Vedador isolante
SEAT	Assento
SECONDARY	Secundário
SECTION	Seção
SEGMENT	Segmento
SENDER	Emissor
SENSOR	Sensor
SEPARATE	Separar, separado
SEPARATOR	Separador
SERIAL NUMBER PLATE	Placa de número de série
SERVICE	Serviço, manutenção
SERVICE KIT	Jogo de manutenção
SERVICE METER	Horômetro
SETSCREW	Parafuso de fixação
SHACKLE	Grilheto, anel, manilha
SHAFT	Eixo

NOMENCLATURA DE PEÇAS INGLÊS-PORTUGUÊS

INGLÊS	PORTUGUÊS
SHANK	Porta-ponta do escarificador
SHEAVE	Polia, roldana
SHEET	Folha, lâmina
SHELL	Invólucro, cápsula, casquilho
SHIELD	Blindagem, protetor
SHIFT	Mudança
SHIM	Calço
SHIPPING	Embarque
SHOCK ABSORBER	Amortecedor de choques
SHOCKMOUNT	Montagem a prova de choques
SHOE	Sapata
SHORT	Curto
SHOWN	Ilustrado, mostrado
SHROUD	Tampa de proteção
SHUNT	Derivação
SHUT OFF	Desligar, parada
SHUTTLE	Pistão de vaivém
SIDE	Lateral
SIDE VIEW	Vista lateral
SILICONE	Silicone
SINK	Absorvente de calor
SKIVING	Desbaste
SLACK ADJUSTER	Adjustador de folga
SLEEVE	Luva, manga, camisa
SLIDER	Cursor, deslizador
SLIDE RAIL	Trilho deslizante
SLING	Cabos, amarras, linga
SLINGER	Defletor
SLUG	Pistão de reação, pistãozinho
SMALL	Pequeno
SNAP RING	Anel de retenção, anel de pressão
SNUBBER	Amortecedor
SOCKET	Soquete, tomada
SOLENOID	Solenóide
SPACER	Espaçador
SPARE	Sobressalente
SPARK PLUG	Vela de ignição
SPECIAL	Especial
SPEEDOMETER	Velocimetro
SPIDER	Cruzeta
SPINDLE	Ponta de eixo
SPLINE	Estria
SPOOL	Carretel
SPOUT	Calha, tubo
SPRING	Mola
SPROCKET	Roda motriz, roda dentada
STABILIZER	Estabilizador
STACK	Chaminé, cano de escapamento
STAND	Suporte, cavalete
STANDPIPE	Suporte vertical de sucção
STAPLE	Grampo
STARTER	Arranque motor de partida
STATOR	Estator
STEERING	Direção
STEM	Haste
STEP	Degrau
STICK	Vareta
STOP	Parar
STORAGE	Armazenagem
STRAINER	Tela filtrante
STRAP	Tira, cinta, suporte de fixação
STREET ELL	Conexão cotovelo
STRIP	Tira, fita, listra
STROKE	Curso do pistão
STUD	Prisioneiro
SUMP	Tanque, reservatório
SUPPLY VALVE	Válvula de suprimento
SUPPORT	Suporte
SUSPENSION	Suspensão
SWITCH	Interruptor
SWIVEL	Articulação giratória
TAB	Tira, aba, lingüeta
TABLE	Mesa
TACHOGRAPH	Tacógrafo
TACHOMETER	Tacômetro
TAG	Etiqueta
TAIL LAMP	Farol traseiro
TAN	Castanho
TANG	Lingüeta
TANK	Tanque
TAP	Macho
TAPE	Fita
TAPPET	Tucho
TEE	Conexão em "T"
TEMP. = TEMPERATURE	Temperatura
TERMINAL	Terminal
TEST UNIT	Unidade de teste
TESTER	Aparelho de teste
THERMISTOR	Termistor
THERMOCOUPLE	Termopar
THERMOMETER	Termômetro
THERMOSTAT	Termostato
THERMOSWITCH	Interruptor térmico
THICK	Grosso (a) espesso (a)
TIE	Ligação, tirante
THREAD (OF NUT)	Rosca (de porca)
THROTTLE	Acelerador de
THROWER	Defletor
THRU = THROUGH	Através de
TIGHTENER	Tensor
TILT CYLINDER	Cilindro de inclinação
TIMING	Sincronização, Distribuição

NOMENCLATURA DE PEÇAS INGLÊS-PORTUGUÊS

INGLÊS	PORTUGUÊS
TIP	Ponta
TIRE	Pneu
TIRE & RIM	Pneu e aro
TONGUE	Língua, lingueta
TOOL	Ferramenta
TOOLCABINET	Armário para ferramenta
TOOTH/TEETH	Dente/dentes
TOP	Topo, parte superior
TORQUE	Torque
TORQ. CONV.	Conversor de torque
TORQ. DIVIDER	Divisor de torque
TOWER	Torre
TRACK	Esteira
TRACK PIN	Pino de esteira
TRACTOR	Trator
TRAILING UNIT	Unidade rebocada
TRANSFER	Decalcomania
TRANSFORMER	Transformador
TRANSISTOR	Transistor
TRANSMISSION	Transmissão
TRANSMISSION OVERHAUL	Revisão da transmissão
TREAD	Piso, banda de rodagem
TREADLE	Pedal
TROLLY	Carrinho
TRUCK	Caminhão
TRUNNION	Munhão
TUBE	Tubo, cano
TUBING	Tubulagem canalização
TURBINE	Turbina
TURBOCHARGER	Turboalimentador
U-BOLT	Parafuso em "U"
U-JOINT	Junta universal
UNDERSIZE	Submedida
UNION	União
UPPER	Superior
USE AS REQUIRED	Usar conforme necessitar
VALUE	Valor
VALVE	Válvula
VALVE GRINDING	Retificação das válvulas
VEE BELT	Correia "V"
VEE BELT SET	Jogo de correia em "V"
VENT	Respiro
VIEW	Vista
VISE	Morsa, torno
VISOR	Pára-sol
WALKWAY	Passadiço, corredor
WARNING G.	Grupo de alarma
WASHER	Arruela
WATER PUMP	Bomba d'água
WEARPLATE	Placa de desgaste
WEDGE	Cunha
WEIGHT	Peso
WELD	Solda
WELDNUT	Porca soldada
WHEEL	Roda
WHITE	Branco
WICK	Mecha, pavio
WINCH	Guincho
WINDOW	Janela
WINDSHIELD	Pára-brisa
WIPER	Limpador
WIRE	Fio
WIRING	Sistema elétrico
WIRING DIAGRAM	Diagrama do sistema elétrico
WITH	Com
WRAPPER	Invólucro, envoltório
WRENCH	Chave
YELLOW	Amarelo
YOKE	Garfo

MAINTENANCE PARTS

DESCRIPTION	PART NUMBER	QTY	WHERE USED	PAGE
AIR INLET AND EXHAUST SYSTEM				
FILTER ELEMENT AS-AIR (PRIMARY)	206-5234	1	AIR CLEANER GP	87
FILTER ELEMENT AS-AIR (SECONDARY)	206-5235	1	AIR CLEANER GP	87
BASIC ENGINE				
CAP AS (ENGINE OIL FILLER)	136-3608	1	COVER GP-VALVE MECHANISM	11
		1	COVER GP-VALVE MECHANISM	13
		1	COVER GP-VALVE MECHANISM	15
		1	COVER GP-VALVE MECHANISM	17
CAP-OIL FILLER (ENGINE)	130-9888	1	COVER GP-VALVE MECHANISM	13
		1	COVER GP-VALVE MECHANISM	15
		1	COVER GP-VALVE MECHANISM	17
		1	COVER GP-VALVE MECHANISM	9
		1	COVER GP-VALVE MECHANISM	11
COVER	230-9127	1	COVER GP-VALVE MECHANISM	17
COVER AS-FRONT	226-8767	1	HOUSING GP-FRONT	35
GASKET-COVER	226-8766	1	HOUSING GP-FRONT	35
GASKET (VALVE COVER)	225-6451	1	COVER GP-VALVE MECHANISM	9
		1	COVER GP-VALVE MECHANISM	11
		1	COVER GP-VALVE MECHANISM	13
		1	COVER GP-VALVE MECHANISM	15
		1	COVER GP-VALVE MECHANISM	17
KEY-WOODRUFF	1B-8736	1	HOUSING GP-FRONT	35
PLUG-DRAIN (ENGINE OIL)	7C-0351	2	PAN GP-OIL	47
		2	PAN GP-OIL	49
V-BELT SET (INCLUDES 2-BELTS)	128-5397	1	DRIVE GP-FAN	31
V-BELT SET (INCLUDES 2-BELTS) (FAN)	247-0099	1	DRIVE GP-FAN	30
COOLING SYSTEM				
CAP AS-RADIATOR	211-6574	1	RADIATOR & HYD OIL COOLER GP	82
CAP AS-VENTED (COOLANT RECOVERY)	229-3469	1	RECOVERY GP-COOLANT	84
CONNECTION GP-WATER (TEMPERATURE REGULATOR)	254-2269	1	CONNECTION GP-WATER	69
HOSE-RADIATOR (LOWER)	217-2733	1	RADIATOR & HYD OIL COOLER GP	80
HOSE-RADIATOR (UPPER)	216-7956	1	RADIATOR & HYD OIL COOLER GP	80
REGULATOR-WATER TEMPERATURE	225-6908	1	CONNECTION GP-WATER	68

MAINTENANCE PARTS

DESCRIPTION	PART NUMBER	QTY	WHERE USED	PAGE
ELECTRICAL AND STARTING SYSTEM				
BATTERY (12-VOLT, MAINTENANCE FREE)	3T-5760	2	BATTERY & WIRING GP	127
BELT-DRIVE	9X-8139	1	LAMP GP-WARNING BEACON	138
CIRCUIT BREAKER AS (60-AMPERE) (ALTERNATOR)	171-2208	1	WIRING GP-MACHINE	161
CIRCUIT BREAKER AS (60-AMPERE) (GLOW PLUG)	171-2208	1	WIRING GP-MACHINE	156
		1	WIRING GP-MACHINE	161
CIRCUIT BREAKER AS (60-AMPERE) (MAIN)	171-2208	1	WIRING GP-MACHINE	161
GLOW PLUG	226-8770	4	GLOW PLUG GP	131
KEY (BATTERY DISCONNECT)	8H-5306	1	SWITCH GP-DISCONNECT	149
LAMP-HALOGEN (24-VOLT, 65-WATT)	9X-3463	1	LAMP GP-FLOOD	137
LAMP-HALOGEN (24-VOLT, 65-WATT) (FLOOD)	9X-3463	1	LAMP GP-FLOOD	136
LAMP-HALOGEN (24-VOLT, 65-WATT) (FLOODLIGHT)	9X-3463	1	LAMP GP-FLOOD	133
		1	LAMP GP-FLOOD	134
		1	LAMP GP-FLOOD	135
LAMP (24-VOLT) (DOME)	7N-9943	1	LAMP GP-DOME	132
LAMP (24-VOLT, 70-WATT) (WARNING BEACON)	9X-7849	1	LAMP GP-WARNING BEACON	138
FUEL SYSTEM				
CAP-FUEL FILLER (LOCKABLE)	276-1243	1	TANK GP-FUEL	121
		1	TANK GP-FUEL	123
CAP GP-FUEL FILLER (EXTREME SERVICE, LOCKABLE)	164-4858	1	TANK GP-FUEL	120
CAP GP-FUEL FILLER (LOCKABLE, WITH BOOT)	306-4998	1	TANK GP-FUEL	121
DRAIN AS	222-6617	1	PUMP GP-FUEL PRM & PRIM FILTER	117
FILTER-BREATHER (FUEL CAP)	279-9876	1	TANK GP-FUEL	121
		1	TANK GP-FUEL	123
FILTER ELEMENT AS-FUEL	1R-1804	1	FILTER GP-FUEL	95
		1	FILTER GP-FUEL	97
FILTER ELEMENT AS-FUEL (WATER, FUEL SEPARATOR)	1R-1804	1	PUMP GP-FUEL PRM & PRIM FILTER	115
FILTER ELEMENT AS-FUEL (WATER SEPARATOR)	1R-1804	1	PUMP GP-FUEL PRM & PRIM FILTER	117
LAMP-LED (WHITE, 24-VOLT) (FUEL LEVEL GAUGE)	163-6508	1	GAUGE GP-FUEL LEVEL	99
LAMP (24-VOLT, 3-WATT) (CLEAR)(FUEL LEVEL GAUGE)	115-1748	1	GAUGE GP-FUEL LEVEL	99
STRAINER-FUEL	9P-7121	1	TANK GP-FUEL	120
		1	TANK GP-FUEL	121
		1	TANK GP-FUEL	123

MAINTENANCE PARTS

DESCRIPTION	PART NUMBER	QTY	WHERE USED	PAGE
HYDRAULIC SYSTEM				
BREATHER (HYDRAULIC TANK)	171-5286	1	TANK & MTG GP-HYDRAULIC	322
	183-3873	1	TANK & MTG GP-HYDRAULIC	324
		1	TANK & MTG GP-HYDRAULIC	326
		1	TANK & MTG GP-HYDRAULIC	328
CAP AS-FILLER (HYDRAULIC TANK)	142-8937	1	TANK GP-HYDRAULIC	330
		1	TANK GP-HYDRAULIC	332
FILTER-OIL (ADVANCED EFFICIENCY) (HYDRAULIC)	1G-8878	1	FILTER & MTG GP-HYDRAULIC	278
STRAINER-SUCTION	1G-7663	1	TANK GP-HYDRAULIC	332
STRAINER-SUCTION (HYDRAULIC TANK)	1G-7663	1	TANK GP-HYDRAULIC	330
LUBRICATION SYSTEM				
FILTER AS-ENGINE OIL	7W-2326	1	FILTER GP-ENGINE OIL	66

MAINTENANCE PARTS

DESCRIPTION	PART NUMBER	QTY	WHERE USED	PAGE
OPERATOR STATION				
ACCUMULATOR GP-REFRIGERANT (WITH DESICCANT)	176-3900	1	ACCUMULATOR GP-REFRIGERANT	365
BLADE AS-WIPER (500-MM)	5C-8811	1	WIPER & WASHER GP-WINDOW	483
BLADE AS-WIPER (700-MM)	6V-7419	1	WIPER & WASHER GP-WINDOW	483
CAP-VENTED (WINDOW WASHER)	8E-8292	1	TANK GP-WINDOW WASHER	476
CIRCUIT BREAKER AS (10-AMPERE)	320-3072	1	PANEL GP-INSTRUMENT	448
CIRCUIT BREAKER AS (15-AMPERE) (KEY SWITCH)	6T-3643	1	PANEL GP-INSTRUMENT	448
CIRCUIT BREAKER AS (15-AMPERE) (MAIN POWER RELAY)	6T-3643	1	PANEL GP-INSTRUMENT	444
FILTER	180-7487	1	AIR CONDITIONER GP	369
		1	FILTER GP-CAB AIR	405
FUSE (10-AMPERE)	113-8490	16	PANEL GP-INSTRUMENT	443
		15	PANEL GP-INSTRUMENT	447
KEY	5P-8500	2	PANEL GP-INSTRUMENT	434
		2	PANEL GP-INSTRUMENT	437
		2	PANEL GP-INSTRUMENT	440
		2	PANEL GP-INSTRUMENT	451
		2	PANEL GP-INSTRUMENT	455
LAMP AS-INDICATOR	2N-2371	1	PANEL GP-INSTRUMENT	434
		1	PANEL GP-INSTRUMENT	437
		1	PANEL GP-INSTRUMENT	440
LAMP AS-INDICATOR (ALTERNATOR)	2N-2371	1	PANEL GP-INSTRUMENT	455
		1	PANEL GP-INSTRUMENT	451
LAMP GP-DOME (24-VOLT)	3E-6389	1	LINER GP-CAB	415
LAMP (24-VOLT)	5D-0019	1	PANEL GP-INSTRUMENT	434
		1	PANEL GP-INSTRUMENT	437
LAMP (24-VOLT) (FUEL LEVEL GAUGE)	5D-0019	1	PANEL GP-INSTRUMENT	451
LAMP (24-VOLT) (PARKING BRAKE)	116-5270	1	PANEL GP-INSTRUMENT	443
LAMP (24-VOLT) (RED)	116-5270	1	PANEL GP-INSTRUMENT	447
LAMP (24-VOLT) (WARNING LAMP)	110-2079	4	MODULE GP-WARNING INDICATOR	425
LAMP (24-VOLT, 3-WATT)	115-1748	1	PANEL GP-INSTRUMENT	455
LAMP (24-VOLT, 5.6-WATT)	7N-5876	1	PANEL GP-INSTRUMENT	434
		1	PANEL GP-INSTRUMENT	437
		1	PANEL GP-INSTRUMENT	440
LAMP (24-VOLT, 5.6-WATT) (ALTERNATOR INDICATOR)	7N-5876	1	PANEL GP-INSTRUMENT	451
		1	PANEL GP-INSTRUMENT	455
LENS-AMBER	2V-7087	1	PANEL GP-INSTRUMENT	434
		1	PANEL GP-INSTRUMENT	437
		1	PANEL GP-INSTRUMENT	440
LENS-AMBER (ALTERNATOR)	2V-7087	1	PANEL GP-INSTRUMENT	451
		1	PANEL GP-INSTRUMENT	455
LENS-RED	2V-7088	1	PANEL GP-INSTRUMENT	434
		1	PANEL GP-INSTRUMENT	437
		1	PANEL GP-INSTRUMENT	440
		1	PANEL GP-INSTRUMENT	451
		1	PANEL GP-INSTRUMENT	455
V-BELT (COMPRESSOR)	4N-9891	1	COMPRESSOR GP-REFRIGERANT	385

MAINTENANCE PARTS

DESCRIPTION	PART NUMBER	QTY	WHERE USED	PAGE
POWER TRAIN				
BREATHER (AXLE)	197-9155	1	AXLE GP-DRIVE	168
BREATHER (AXLE, REAR)	197-9155	1	AXLE GP-DRIVE	170
PLUG AS-DRAIN (MAGNETIC)	152-6144	5	AXLE GP-DRIVE	170
PLUG AS-DRAIN (MAGNETIC) (AXLE)	152-6144	5	AXLE GP-DRIVE	168
PLUG-DRAIN	151-7516	1	PLANETARY GP-FINAL DRIVE	209
PLUG-DRAIN (PLANETARY)	151-7516	1	PLANETARY GP-FINAL DRIVE	204
PLUG-DRAIN (SPEED REDUCTION GEAR)	151-7516	1	PLANETARY GP-FINAL DRIVE	205
PLUG-MAGNETIC	5P-4484	1	DRUM GP-PADDED	191
		1	DRUM GP-SMOOTH	193
PLUG-MAGNETIC (PADDED DRUM)	5P-4484	1	DRUM GP-PADDED	192
VIBRATORY SYSTEM				
PLUG-MAGNETIC (VIBRATORY SUPPORT)	159-5846	1	SUPPORT GP-VIBRATORY	362

PIÈCES DE RECHANGE

DESCRIPTION	NUMÉRO DE PIECÈS	QTÉ	DOMAINE D'APPLICATION	PAGE
CIRCUIT D'ADMISSION D'AIR ET D'ÉCHAPPEMENT				
ÉLÉMENT DE FILTRE À AIR (ENS) (PRINCIPAL)	206-5234	1	FILTRE A AIR (ASS)	87
ÉLÉMENT DE FILTRE À AIR (ENS) (SECONDAIRE)	206-5235	1	FILTRE A AIR (ASS)	87
CIRCUIT DE CARBURANT				
AMPOULE (24V, 3W) (EFFACER)(INDICATEUR DE NIVEAU DE CARBURANT)	115-1748	1	BAÏONNETTE- NIVEAU DE CARBURANT (ASS)	99
BOUCHON DE GOULOTTE DE CARBURANT (ASS) (*LOCKABLE, WITH BOOT)	306-4998	1	RÉSERVOIR DE CARBURANT (ASS)	121
BOUCHON DE GOULOTTE DE CARBURANT (ASS) (SERVICE INTENSIF, VERROUILLABLE)	164-4858	1	RÉSERVOIR DE CARBURANT (ASS)	120
BOUCHON DE REMPLISSAGE DE CARBURANT (VERROUILLABLE)	276-1243	1	RÉSERVOIR DE CARBURANT (ASS)	121
		1	RÉSERVOIR DE CARBURANT (ASS)	123
DIODE (*WHITE, 24-VOLT) (JAUGE DE NIVEAU D'HUILE)	163-6508	1	BAÏONNETTE- NIVEAU DE CARBURANT (ASS)	99
ÉLÉMENT DE FILTRE (ENS)-CARBURANT	1R-1804	1	FILTRE A CARBURANT (ASS)	95
		1	FILTRE A CARBURANT (ASS)	97
ÉLÉMENT DE FILTRE (ENS)-CARBURANT (SÉPARATEUR D'EAU)	1R-1804	1	POMPE D'AMORÇAGE DE CARBURANT ET FILTRE PRINCIPAL	115
		1	POMPE D'AMORÇAGE DE CARBURANT ET FILTRE PRINCIPAL	117
FILTRE - RENIFLARD (*FUEL CAP)	279-9876	1	RÉSERVOIR DE CARBURANT (ASS)	121
		1	RÉSERVOIR DE CARBURANT (ASS)	123
FILTRE À CARBURANT	9P-7121	1	RÉSERVOIR DE CARBURANT (ASS)	120
		1	RÉSERVOIR DE CARBURANT (ASS)	121
		1	RÉSERVOIR DE CARBURANT (ASS)	123
VIDANGE (ENS)	222-6617	1	POMPE D'AMORÇAGE DE CARBURANT ET FILTRE PRINCIPAL	117
CIRCUIT DE GRAISSAGE				
FILTRE A HUILE MOTEUR (ENS)	7W-2326	1	FILTRE À HUILE MOTEUR (ASS)	66
CIRCUIT DE REFROIDISSEMENT				
BOUCHON À ÉVENT (ENS) (VASE D'EXPANSION DE LIQUIDE DE REFROIDISSEMENT)	229-3469	1	VASE D'EXPANSION POUR LIQUIDE RÉFRIGERANT	84
BOUCHON DE RADIATEUR (ENS)	211-6574	1	RADIATEUR ET REFROIDISSEUR D'HUILE HYDRAULIQUE (ASS)	82
FLEXIBLE DE RADIATEUR (INFÉRIEUR)	217-2733	1	RADIATEUR ET REFROIDISSEUR D'HUILE HYDRAULIQUE (ASS)	80
FLEXIBLE DE RADIATEUR (SUPÉRIEUR)	216-7956	1	RADIATEUR ET REFROIDISSEUR D'HUILE HYDRAULIQUE (ASS)	80
RACCORD D'EAU (ASS) (THERMOSTAT)	254-2269	1	RACCORD D'EAU (ASS)	69
THERMOSTAT-TEMPÉRATURE D'EAU	225-6908	1	RACCORD D'EAU (ASS)	68

* TRADUCTION NON DISPONIBLE AU MOMENT DE LA PUBLICATION

PIÈCES DE RECHANGE

DESCRIPTION	NUMÉRO DE PIECÈS	QTÉ	DOMAINE D'APPLICATION	PAGE
CIRCUIT DE VIBRATION				
BOUCHON AIMANTÉ (SUPPORT VIBRANT)	159-5846	1	SUPPORT DE VIBRATEUR (ASS)	362
CIRCUIT ÉLECTRIQUE ET DE DÉMARRAGE				
AMPOULE (24 VOLTS) (PLAFONNIER)	7N-9943	1	PLAFONNIER (ASS)	132
AMPOULE (24V, 70W) (GYROPHARE)	9X-7849	1	LAMPE - GYROPHARE (ASS)	138
BATTERIE (12V, SANS ENTRETIEN)	3T-5760	2	BATTERIE ET CÂBLAGE	127
BOUGIE DE PRECHAUFFAGE	226-8770	4	BOUGIE DE PRÉCHAUFFAGE (ASS)	131
CLÉ (COUPE-BATTERIE)	8H-5306	1	ROBINET DE BATTERIE (ASS)	149
DISJONCTEUR (ENS) (60A) (ALTERNATEUR)	171-2208	1	CABLAGE DE LA MACHINE (ASS)	161
DISJONCTEUR (ENS) (60A) (BOUGIE DE PRÉCHAUFFAGE)	171-2208	1	CABLAGE DE LA MACHINE (ASS)	156
		1	CABLAGE DE LA MACHINE (ASS)	161
DISJONCTEUR (ENS) (60A) (PRINCIPAL)	171-2208	1	CABLAGE DE LA MACHINE (ASS)	161
ENTRAÎNEMENT POUR COURROIE	9X-8139	1	LAMPE - GYROPHARE (ASS)	138
LAMPE HALOGÈNE (24V, 65W)	9X-3463	1	LAMPE - PHARE (ASS)	137
LAMPE HALOGÈNE (24V, 65W) (PROJECTEUR)	9X-3463	1	LAMPE - PHARE (ASS)	133
		1	LAMPE - PHARE (ASS)	134
		1	LAMPE - PHARE (ASS)	135
		1	LAMPE - PHARE (ASS)	136
CIRCUIT HYDRAULIQUE				
BOUCHON DE GOULOTTE DE REMPLISSAGE (ENS) (RÉSERVOIR HYDRAULIQUE)	142-8937	1	RÉSERVOIR HYDRAULIQUE (ASS)	330
		1	RÉSERVOIR HYDRAULIQUE (ASS)	332
CRÉPINE-ASPIRATION	1G-7663	1	RÉSERVOIR HYDRAULIQUE (ASS)	332
CRÉPINE-ASPIRATION (RÉSERVOIR HYDRAULIQUE)	1G-7663	1	RÉSERVOIR HYDRAULIQUE (ASS)	330
FILTRE À HUILE (EFFICACITÉ AVANCÉE) (HYDRAULIQUE)	1G-8878	1	FILTRE À HUILE HYDRAULIQUE ET MONTAGE (ASS)	278
RENIFLARD (RÉSERVOIR HYDRAULIQUE)	171-5286	1	RÉSERVOIR HYDRAULIQUE ET MONTAGE (ASS)	322
	183-3873	1	RÉSERVOIR HYDRAULIQUE ET MONTAGE (ASS)	324
		1	RÉSERVOIR HYDRAULIQUE ET MONTAGE (ASS)	326
		1	RÉSERVOIR HYDRAULIQUE ET MONTAGE (ASS)	328

* TRADUCTION NON DISPONIBLE AU MOMENT DE LA PUBLICATION

PIÈCES DE RECHANGE

DESCRIPTION	NUMÉRO DE PIECÈS	QTÉ	DOMAINE D'APPLICATION	PAGE
MOTEUR STANDARD				
BOUCHON DE GOULOTTE DE REMPLISSAGE D'HUILE (MOTEUR)	130-9888	1	CACHE-SOUPAPES (ASS)	9
		1	CACHE-SOUPAPES (ASS)	11
		1	CACHE-SOUPAPES (ASS)	13
		1	CACHE-SOUPAPES (ASS)	15
		1	CACHE-SOUPAPES (ASS)	17
BOUCHON DE VIDANGE (HUILE MOTEUR)	7C-0351	2	HUILE MOTEUR - CARTER (ASS)	47
		2	HUILE MOTEUR - CARTER (ASS)	49
CHAPEAU (ENS) (GOULOTTE D'HUILE MOTEUR)	136-3608	1	CACHE-SOUPAPES (ASS)	11
		1	CACHE-SOUPAPES (ASS)	13
		1	CACHE-SOUPAPES (ASS)	15
		1	CACHE-SOUPAPES (ASS)	17
CLAVETTE WOODRUFF	1B-8736	1	CARTER AV (ASS)	35
COUVERCLE	230-9127	1	CACHE-SOUPAPES (ASS)	17
COUVERCLE AVANT (ENS)	226-8767	1	CARTER AV (ASS)	35
JEU DE COURROIES TRAPEZOIDALES (COMPREND 2 COURROIES)	128-5397	1	ENTRAÎNEMENT DE VENTILATEUR (ASS)	31
JEU DE COURROIES TRAPEZOIDALES (COMPREND 2 COURROIES) (VENTILATEUR)	247-0099	1	ENTRAÎNEMENT DE VENTILATEUR (ASS)	30
JOINT DE COUVERCLE	226-8766	1	CARTER AV (ASS)	35
JOINT PLAT (CACHE-SOUPAPES)	225-6451	1	CACHE-SOUPAPES (ASS)	9
		1	CACHE-SOUPAPES (ASS)	11
		1	CACHE-SOUPAPES (ASS)	13
		1	CACHE-SOUPAPES (ASS)	15
		1	CACHE-SOUPAPES (ASS)	17
POSTE DE CONDUITE				
ACCUMULATEUR - CLIMATISEUR (ASS) (AVEC SICCATIF)	176-3900	1	ACCUMULATEUR - CLIMATISEUR (ASS)	365
AMPOULE (*24-VOLT, 5.6-WATT)	7N-5876	1	TABLEAU DE BORD (ASS)	440
		1	TABLEAU DE BORD (ASS)	434
		1	TABLEAU DE BORD (ASS)	437
AMPOULE (*24-VOLT, 5.6-WATT) (TÉMOIN D'ALTERNATEUR)	7N-5876	1	TABLEAU DE BORD (ASS)	455
		1	TABLEAU DE BORD (ASS)	451
AMPOULE (24 VOLTS)	5D-0019	1	TABLEAU DE BORD (ASS)	434
		1	TABLEAU DE BORD (ASS)	437
AMPOULE (24 VOLTS) (FREIN DE STATIONNEMENT)	116-5270	1	TABLEAU DE BORD (ASS)	443
AMPOULE (24 VOLTS) (JAUGE DE NIVEAU D'HUILE)	5D-0019	1	TABLEAU DE BORD (ASS)	451
AMPOULE (24 VOLTS) (ROUGE)	116-5270	1	TABLEAU DE BORD (ASS)	447
AMPOULE (24 VOLTS) (VOYANT)	110-2079	4	MODULE - TÉMOIN (ASS)	425
AMPOULE (24V, 3W)	115-1748	1	TABLEAU DE BORD (ASS)	455
BALAI D'ESSUIE-GLACE (ENS) (500-MM)	5C-8811	1	ESSUIE-GLACE ET LAVE-GLACE	483
BALAI D'ESSUIE-GLACE (ENS) (700-MM)	6V-7419	1	ESSUIE-GLACE ET LAVE-GLACE	483

* TRADUCTION NON DISPONIBLE AU MOMENT DE LA PUBLICATION

PIÈCES DE RECHANGE

DESCRIPTION	NUMÉRO DE PIECÈS	QTÉ	DOMAINE D'APPLICATION	PAGE
BOUCHON À ÉVENT (LAVE-GLACE)	8E-8292	1	RÉSERVOIR - LAVE-GLACE (ASS)	476
CLÉ	5P-8500	2	TABLEAU DE BORD (ASS)	434
		2	TABLEAU DE BORD (ASS)	437
		2	TABLEAU DE BORD (ASS)	440
		2	TABLEAU DE BORD (ASS)	451
		2	TABLEAU DE BORD (ASS)	455
COURROIE TRAPEZOIDALE (COMPRESSEUR)	4N-9891	1	COMPRESSEUR DE REFRIGERANT (ASS)	385
DISJONCTEUR (ENS) (10A)	320-3072	1	TABLEAU DE BORD (ASS)	448
DISJONCTEUR (ENS) (15A) (INTERRUPTEUR À CLÉ)	6T-3643	1	TABLEAU DE BORD (ASS)	448
DISJONCTEUR (ENS) (15A) (RELAIS DE PUISSANCE PRINCIPAL)	6T-3643	1	TABLEAU DE BORD (ASS)	444
FILTRE	180-7487	1	CLIMATISEUR (ASS)	369
		1	FILTRE À AIR DE CABINE (ASS)	405
FUSIBLE (10A)	113-8490	16	TABLEAU DE BORD (ASS)	443
		15	TABLEAU DE BORD (ASS)	447
LAMPE DE TÉMOIN (ENS)	2N-2371	1	TABLEAU DE BORD (ASS)	434
		1	TABLEAU DE BORD (ASS)	437
		1	TABLEAU DE BORD (ASS)	440
LAMPE DE TÉMOIN (ENS) (ALTERNATEUR)	2N-2371	1	TABLEAU DE BORD (ASS)	451
		1	TABLEAU DE BORD (ASS)	455
LENTILLE ORANGE	2V-7087	1	TABLEAU DE BORD (ASS)	434
		1	TABLEAU DE BORD (ASS)	437
		1	TABLEAU DE BORD (ASS)	440
LENTILLE ORANGE (ALTERNATEUR)	2V-7087	1	TABLEAU DE BORD (ASS)	451
		1	TABLEAU DE BORD (ASS)	455
LENTILLE ROUGE	2V-7088	1	TABLEAU DE BORD (ASS)	434
		1	TABLEAU DE BORD (ASS)	437
		1	TABLEAU DE BORD (ASS)	440
		1	TABLEAU DE BORD (ASS)	451
		1	TABLEAU DE BORD (ASS)	455
PLAFONNIER (ASS) (24 VOLTS)	3E-6389	1	CABINE - REVÊTEMENT (ASS)	415
TRANSMISSION				
BOUCHON AIMANTÉ	5P-4484	1	TAMBOUR À PIEDS DAMEURS (ASS)	191
		1	TAMBOUR LISSE	193
BOUCHON AIMANTÉ (TAMBOUR À PIEDS DAMEURS)	5P-4484	1	TAMBOUR À PIEDS DAMEURS (ASS)	192
BOUCHON DE VIDANGE	151-7516	1	TRAINS PLANÉTAIRES-RÉDUCTEURS (ASS)	209
BOUCHON DE VIDANGE (ENS) (MAGNÉTIQUE)	152-6144	5	ESSIEU MOTEUR (ASS)	170
BOUCHON DE VIDANGE (ENS) (MAGNÉTIQUE) (ESSIEU)	152-6144	5	ESSIEU MOTEUR (ASS)	168
BOUCHON DE VIDANGE (PIGNON DE RÉDUCTION DE VITESSE)	151-7516	1	TRAINS PLANÉTAIRES-RÉDUCTEURS (ASS)	205
BOUCHON DE VIDANGE (PLANÉTAIRE)	151-7516	1	TRAINS PLANÉTAIRES-RÉDUCTEURS (ASS)	204
RENIFLARD (ESSIEU)	197-9155	1	ESSIEU MOTEUR (ASS)	168
RENIFLARD (ESSIEU ARRIÈRE)	197-9155	1	ESSIEU MOTEUR (ASS)	170

* TRADUCTION NON DISPONIBLE AU MOMENT DE LA PUBLICATION

PIEZAS DE MANTENIMIENTO

DESCRIPCION	NUMERO DE PIEZA	CANT	SE UTILIZA EN	PAGINA
MOTOR BÁSICO				
CHAVETA DE MEDIA LUNA	1B-8736	1	CAJA DELANTERA (GR)	35
*COVER AS-FRONT	226-8767	1	CAJA DELANTERA (GR)	35
CUBIERTA	230-9127	1	TAPA DEL MECANISMO DE VÁLVULAS (GR)	17
EMPAQUETADURA (TAPA DE VÁLVULA)	225-6451	1	TAPA DEL MECANISMO DE VÁLVULAS (GR)	9
		1	TAPA DEL MECANISMO DE VÁLVULAS (GR)	11
		1	TAPA DEL MECANISMO DE VÁLVULAS (GR)	13
		1	TAPA DEL MECANISMO DE VÁLVULAS (GR)	15
		1	TAPA DEL MECANISMO DE VÁLVULAS (GR)	17
JUEGO DE CORREAS TRAPEZOIDALES (INCLUYE 2-CORREAS)	128-5397	1	IMPULSOR DE VENTILADOR (GR)	31
JUEGO DE CORREAS TRAPEZOIDALES (INCLUYE 2-CORREAS) (VENTILADOR)	247-0099	1	IMPULSOR DE VENTILADOR (GR)	30
JUNTA DE LA TAPA DE VÁLVULAS	226-8766	1	CAJA DELANTERA (GR)	35
TAPA DEL TUBO DE LLENADO DE ACEITE (MOTOR)	130-9888	1	TAPA DEL MECANISMO DE VÁLVULAS (GR)	9
		1	TAPA DEL MECANISMO DE VÁLVULAS (GR)	11
		1	TAPA DEL MECANISMO DE VÁLVULAS (GR)	13
		1	TAPA DEL MECANISMO DE VÁLVULAS (GR)	15
		1	TAPA DEL MECANISMO DE VÁLVULAS (GR)	17
TAPÓN (CONJ) (LLENADO DE ACEITE DEL MOTOR)	136-3608	1	TAPA DEL MECANISMO DE VÁLVULAS (GR)	11
		1	TAPA DEL MECANISMO DE VÁLVULAS (GR)	13
		1	TAPA DEL MECANISMO DE VÁLVULAS (GR)	15
		1	TAPA DEL MECANISMO DE VÁLVULAS (GR)	17
TAPÓN DE DRENAJE (ACEITE DE MOTOR)	7C-0351	2	CÁRTER - COLECTOR DEL (GR)	47
		2	CÁRTER - COLECTOR DEL (GR)	49
PUESTO DEL OPERADOR				
ACUMULADOR DEL ACONDICIONADOR DE AIRE (GR) (CON DESECANTE)	176-3900	1	ACUMULADOR DEL ACONDICIONADOR DE AIRE (GR)	365
CORREA TRAPEZOIDAL (COMPRESOR)	4N-9891	1	COMPRESOR DE REFRIGERANTE (GR)	385
DISYUNTOR (CONJ) (10-AMPERIOS)	320-3072	1	TABLERO DE INSTRUMENTOS (GR)	448
DISYUNTOR (CONJ) (15 AMPERIOS) (INTERRUPTOR DE LLAVE)	6T-3643	1	TABLERO DE INSTRUMENTOS (GR)	448

* NO HAY TRADUCCION DISPONIBLE EN EL MOMENTO DE LA IMPRESION

PIEZAS DE MANTENIMIENTO

DESCRIPCION	NUMERO DE PIEZA	CANT	SE UTILIZA EN	PAGINA
DISYUNTOR (CONJ) (15 AMPERIOS) (RELÉ DE FUERZA PRINCIPAL)	6T-3643	1	TABLERO DE INSTRUMENTOS (GR)	444
FILTRO	180-7487	1	ACONDICIONADOR DE AIRE (GR)	369
		1	FILTRO DE AIRE DE LA CABINA (GR)	405
FUSIBLE (10-AMPERIOS)	113-8490	16	TABLERO DE INSTRUMENTOS (GR)	443
		15	TABLERO DE INSTRUMENTOS (GR)	447
HOJA DE LIMPIAPARABRISAS (CONJ) (*500-MM)	5C-8811	1	LIMPIA Y LAVAPARABRISAS (GR)	483
HOJA DE LIMPIAPARABRISAS (CONJ) (*700-MM)	6V-7419	1	LIMPIA Y LAVAPARABRISAS (GR)	483
LÁMPARA DEL TECHO (GR) (24 VOLTIOS)	3E-6389	1	REVESTIMIENTO DE LA CABINA (GR)	415
LAMPARA INDICADORA (CONJ)	2N-2371	1	TABLERO DE INSTRUMENTOS (GR)	437
		1	TABLERO DE INSTRUMENTOS (GR)	440
		1	TABLERO DE INSTRUMENTOS (GR)	434
LAMPARA INDICADORA (CONJ) (ALTERNADOR)	2N-2371	1	TABLERO DE INSTRUMENTOS (GR)	455
		1	TABLERO DE INSTRUMENTOS (GR)	451
LÁMPARA (*24-VOLT, 5.6-WATT)	7N-5876	1	TABLERO DE INSTRUMENTOS (GR)	434
		1	TABLERO DE INSTRUMENTOS (GR)	437
		1	TABLERO DE INSTRUMENTOS (GR)	440
LÁMPARA (*24-VOLT, 5.6-WATT) (*ALTERNATOR INDICATOR)	7N-5876	1	TABLERO DE INSTRUMENTOS (GR)	451
		1	TABLERO DE INSTRUMENTOS (GR)	455
LÁMPARA (24 VOLTIOS)	5D-0019	1	TABLERO DE INSTRUMENTOS (GR)	434
		1	TABLERO DE INSTRUMENTOS (GR)	437
LÁMPARA (24 VOLTIOS) (FRENO DE ESTACIONAMIENTO)	116-5270	1	TABLERO DE INSTRUMENTOS (GR)	443
LÁMPARA (24 VOLTIOS) (LÁMPARA DE ADVERTENCIA)	110-2079	4	MÓDULO INDICADOR DE ADVERTENCIA (GR)	425
LÁMPARA (24 VOLTIOS) (MEDIDOR DE NIVEL DE COMBUSTIBLE)	5D-0019	1	TABLERO DE INSTRUMENTOS (GR)	451
LÁMPARA (24 VOLTIOS) (ROJO)	116-5270	1	TABLERO DE INSTRUMENTOS (GR)	447
LÁMPARA (24-VOLTIOS, 3-VATIOS)	115-1748	1	TABLERO DE INSTRUMENTOS (GR)	455
LENTE AMBAR	2V-7087	1	TABLERO DE INSTRUMENTOS (GR)	434
		1	TABLERO DE INSTRUMENTOS (GR)	437
		1	TABLERO DE INSTRUMENTOS (GR)	440
LENTE AMBAR (ALTERNADOR)	2V-7087	1	TABLERO DE INSTRUMENTOS (GR)	451
		1	TABLERO DE INSTRUMENTOS (GR)	455
LENTE-ROJO	2V-7088	1	TABLERO DE INSTRUMENTOS (GR)	434
		1	TABLERO DE INSTRUMENTOS (GR)	437
		1	TABLERO DE INSTRUMENTOS (GR)	440
		1	TABLERO DE INSTRUMENTOS (GR)	451
		1	TABLERO DE INSTRUMENTOS (GR)	455
LLAVE	5P-8500	2	TABLERO DE INSTRUMENTOS (GR)	434
		2	TABLERO DE INSTRUMENTOS (GR)	437
		2	TABLERO DE INSTRUMENTOS (GR)	440
		2	TABLERO DE INSTRUMENTOS (GR)	451
		2	TABLERO DE INSTRUMENTOS (GR)	455
TAPA CON RESPIRADERO (LIMPIAPARABRISAS)	8E-8292	1	TANQUE DEL LAVAPARABRISAS (GR)	476

* NO HAY TRADUCCION DISPONIBLE EN EL MOMENTO DE LA IMPRESION

PIEZAS DE MANTENIMIENTO

DESCRIPCION	NUMERO DE PIEZA	CANT	SE UTILIZA EN	PAGINA
SISTEMA DE ADMISIÓN Y ESCAPE DE AIRE				
ELEMENTO DEL FILTRO DE AIRE (CONJ) (PRIMARIO)	206-5234	1	FILTRO DE AIRE (GR)	87
ELEMENTO DEL FILTRO DE AIRE (CONJ) (SECUNDARIO)	206-5235	1	FILTRO DE AIRE (GR)	87
SISTEMA DE COMBUSTIBLE				
*CAP-FUEL FILLER (TRABABLE)	276-1243	1	COMBUSTIBLE - TANQUE DE (GR)	121
		1	COMBUSTIBLE - TANQUE DE (GR)	123
COLADOR DE COMBUSTIBLE	9P-7121	1	COMBUSTIBLE - TANQUE DE (GR)	120
		1	COMBUSTIBLE - TANQUE DE (GR)	121
		1	COMBUSTIBLE - TANQUE DE (GR)	123
DRENAJE (CONJ)	222-6617	1	BOMBA DE CEBADO Y FILTRO PRIMARIO DE COMBUSTIBLE (GR)	117
ELEMENTO DE FILTRO DE COMBUSTIBLE (CONJ)	1R-1804	1	FILTRO DE COMBUSTIBLE (GR)	95
		1	FILTRO DE COMBUSTIBLE (GR)	97
ELEMENTO DE FILTRO DE COMBUSTIBLE (CONJ) (SEPARADOR DE AGUA)	1R-1804	1	BOMBA DE CEBADO Y FILTRO PRIMARIO DE COMBUSTIBLE (GR)	117
ELEMENTO DE FILTRO DE COMBUSTIBLE (CONJ) (SEPARADOR DE AGUA Y COMBUSTIBLE)	1R-1804	1	BOMBA DE CEBADO Y FILTRO PRIMARIO DE COMBUSTIBLE (GR)	115
*FILTER-BREATHER (*FUEL CAP)	279-9876	1	COMBUSTIBLE - TANQUE DE (GR)	121
		1	COMBUSTIBLE - TANQUE DE (GR)	123
LAMPARA-LED (*WHITE, 24-VOLT) (MEDIDOR DE NIVEL DE COMBUSTIBLE)	163-6508	1	INDICADOR DEL NIVEL DE ACEITE (GR)	99
LÁMPARA (24-VOLTIOS, 3-VATIOS) (TRANSPARENTE) (MEDIDOR DEL NIVEL DE COMBUSTIBLE)	115-1748	1	INDICADOR DEL NIVEL DE ACEITE (GR)	99
TAPA DEL TUBO DE LLENADO DE COMBUSTIBLE (GR) (*LOCKABLE, WITH BOOT)	306-4998	1	COMBUSTIBLE - TANQUE DE (GR)	121
TAPA DEL TUBO DE LLENADO DE COMBUSTIBLE (GR) (SERVICIO PESADO, TRABABLE)	164-4858	1	COMBUSTIBLE - TANQUE DE (GR)	120
SISTEMA DE ENFRIAMIENTO				
AGUA - CONEXIÓN DE (GR) (REGULADOR DE TEMPERATURA)	254-2269	1	AGUA - CONEXIÓN DE (GR)	69
CONJUNTO DE TAPA-VENTILADA (COLECTOR DE REFRIGERANTE)	229-3469	1	RECUPERACIÓN DEL REFRIGERANTE (GR)	84
MANGUERA DE RADIADOR (INFERIOR)	217-2733	1	RADIADOR Y ENFRIADOR DE ACEITE HIDRÁULICO (GR)	80
MANGUERA DE RADIADOR (SUPERIOR)	216-7956	1	RADIADOR Y ENFRIADOR DE ACEITE HIDRÁULICO (GR)	80
REGULADOR DE TEMPERATURA DEL AGUA	225-6908	1	AGUA - CONEXIÓN DE (GR)	68
TAPA DE RADIADOR (CONJ)	211-6574	1	RADIADOR Y ENFRIADOR DE ACEITE HIDRÁULICO (GR)	82

* NO HAY TRADUCCION DISPONIBLE EN EL MOMENTO DE LA IMPRESION

PIEZAS DE MANTENIMIENTO

DESCRIPCION	NUMERO DE PIEZA	CANT	SE UTILIZA EN	PAGINA
SISTEMA DE LUBRICACIÓN				
FILTRO DE ACEITE DEL MOTOR (CONJ)	7W-2326	1	FILTRO DE ACEITE DEL MOTOR (GR)	66
SISTEMA ELÉCTRICO Y DE ARRANQUE				
BATERÍA (12-VOLTIOS, LIBRE DE MANTENIMIENTO)	3T-5760	2	BATERÍA Y CABLES (GR)	127
BUJÍA INCANDESCENTE	226-8770	4	BUJÍA INCANDESCENTE (GR)	131
DISYUNTOR (CONJ) (60 AMPERIOS) (ALTERNADOR)	171-2208	1	CABLES DE LA MÁQUINA (GR)	161
DISYUNTOR (CONJ) (60 AMPERIOS) (BUJÍA INCANDESCENTE)	171-2208	1	CABLES DE LA MÁQUINA (GR)	156
		1	CABLES DE LA MÁQUINA (GR)	161
DISYUNTOR (CONJ) (60 AMPERIOS) (PRINCIPAL)	171-2208	1	CABLES DE LA MÁQUINA (GR)	161
LÁMPARA (24 VOLTIOS) (CÚPULA)	7N-9943	1	LÁMPARA DEL TECHO (GR)	132
LÁMPARA (24-VOLTIOS, 70-VATIOS) (BALIZA GIRATORIA DE ADVERTENCIA)	9X-7849	1	LÁMPARA DE BALIZA DE ADVERTENCIA (GR)	138
LLAVE (INTERRUPTOR GENERAL)	8H-5306	1	DISYUNTOR (GR)	149
LUCES DE ALÓGENO (24 VOLTIOS, 65 VATIOS)	9X-3463	1	REFLECTOR (GR)	137
LUCES DE ALÓGENO (24 VOLTIOS, 65 VATIOS) (REFLECTOR)	9X-3463	1	REFLECTOR (GR)	133
		1	REFLECTOR (GR)	134
		1	REFLECTOR (GR)	135
		1	REFLECTOR (GR)	136
MANDO DE CORREA	9X-8139	1	LÁMPARA DE BALIZA DE ADVERTENCIA (GR)	138
SISTEMA HIDRÁULICO				
COLADOR-SUCCION	1G-7663	1	TANQUE HIDRÁULICO (GR)	332
COLADOR-SUCCION (TANQUE HIDRÁULICO)	1G-7663	1	TANQUE HIDRÁULICO (GR)	330
FILTRO DE ACEITE (EFICIENCIA AVANZADA) (HIDRÁULICO)	1G-8878	1	FILTRO DE ACEITE HIDRÁULICO Y MONTAJE (GR)	278
RESPIRADERO (TANQUE HIDRÁULICO)	171-5286	1	TANQUE HIDRÁULICO Y MONTAJE (GR)	322
	183-3873	1	TANQUE HIDRÁULICO Y MONTAJE (GR)	324
		1	TANQUE HIDRÁULICO Y MONTAJE (GR)	326
		1	TANQUE HIDRÁULICO Y MONTAJE (GR)	328
TAPA DE LLENADO (CONJ) (TANQUE HIDRAULICO)	142-8937	1	TANQUE HIDRÁULICO (GR)	330
		1	TANQUE HIDRÁULICO (GR)	332
SISTEMA VIBRATORIO				
TAPÓN MAGNÉTICO (SOPORTE VIBRATORIO)	159-5846	1	SOPORTE VIBRATORIO (GR)	362

* NO HAY TRADUCCION DISPONIBLE EN EL MOMENTO DE LA IMPRESION

PIEZAS DE MANTENIMIENTO

DESCRIPCION	NUMERO DE PIEZA	CANT	SE UTILIZA EN	PAGINA
TREN DE FUERZA				
CONJUNTO DE TAPON, DRENAJE (MAGNÉTICO)	152-6144	5	EJE MOTRIZ (GR)	170
CONJUNTO DE TAPON, DRENAJE (MAGNÉTICO) (EJE)	152-6144	5	EJE MOTRIZ (GR)	168
RESPIRADERO (*AXLE, REAR)	197-9155	1	EJE MOTRIZ (GR)	170
RESPIRADERO (EJE)	197-9155	1	EJE MOTRIZ (GR)	168
TAPÓN DE DRENAJE	151-7516	1	PLANETARIO DEL MANDO FINAL (GR)	209
TAPÓN DE DRENAJE (ENGRANAJE REDUCTOR DE VELOCIDAD)	151-7516	1	PLANETARIO DEL MANDO FINAL (GR)	205
TAPÓN DE DRENAJE (PLANETARIO)	151-7516	1	PLANETARIO DEL MANDO FINAL (GR)	204
TAPÓN MAGNÉTICO	5P-4484	1	RODILLO DE PISONES (GR)	191
		1	RODILLO LISO (GR)	193
TAPÓN MAGNÉTICO (TAMBOR DE PISONES)	5P-4484	1	RODILLO DE PISONES (GR)	192

* NO HAY TRADUCCION DISPONIBLE EN EL MOMENTO DE LA IMPRESION

PEÇAS DE MANUTENÇÃO

DESCRIÇÃO	NÚMERO DE PEÇA	QUANT	UTILIZADA EM	PÁGINA
MOTOR BÁSICO				
BUJÃO DO DRENO (ÓLEO DO MOTOR)	7C-0351	2	CÁRTER DO ÓLEO DO MOTOR	47
		2	CÁRTER DO ÓLEO DO MOTOR	49
CHAVETA WOODRUFF/SEMICIRCULAR	1B-8736	1	CAIXA DIANTEIRA	35
JOGO DE CORREIAS EM V (INCLUI 2 CORREIAS)	128-5397	1	COMANDO DO VENTILADOR	31
JOGO DE CORREIAS EM V (INCLUI 2 CORREIAS) (VENTILADOR)	247-0099	1	COMANDO DO VENTILADOR	30
JUNTA - TAMPA	226-8766	1	CAIXA DIANTEIRA	35
JUNTA (TAMPA DA VÁLVULA)	225-6451	1	TAMPA - MECANISMO DAS VÁLVULAS	11
		1	TAMPA - MECANISMO DAS VÁLVULAS	13
		1	TAMPA - MECANISMO DAS VÁLVULAS	15
		1	TAMPA - MECANISMO DAS VÁLVULAS	17
		1	TAMPA - MECANISMO DAS VÁLVULAS	9
TAMPA	230-9127	1	TAMPA - MECANISMO DAS VÁLVULAS	17
TAMPA - BOCAL DE ENCHIMENTO DE ÓLEO (MOTOR)	130-9888	1	TAMPA - MECANISMO DAS VÁLVULAS	9
		1	TAMPA - MECANISMO DAS VÁLVULAS	11
		1	TAMPA - MECANISMO DAS VÁLVULAS	13
		1	TAMPA - MECANISMO DAS VÁLVULAS	15
		1	TAMPA - MECANISMO DAS VÁLVULAS	17
TAMPA (BOCAL DE ENCHIMENTO DO ÓLEO DO MOTOR)	136-3608	1	TAMPA - MECANISMO DAS VÁLVULAS	11
		1	TAMPA - MECANISMO DAS VÁLVULAS	13
		1	TAMPA - MECANISMO DAS VÁLVULAS	15
		1	TAMPA - MECANISMO DAS VÁLVULAS	17
TAMPA-DIANTEIRA	226-8767	1	CAIXA DIANTEIRA	35
POSTO DO OPERADOR				
ACUMULADOR - AR CONDICIONADO (COM DESSECANTE)	176-3900	1	ACUMULADOR - AR CONDICIONADO	365
CHAVE	5P-8500	2	PAINEL DE INSTRUMENTOS	434
		2	PAINEL DE INSTRUMENTOS	437
		2	PAINEL DE INSTRUMENTOS	440
		2	PAINEL DE INSTRUMENTOS	451
		2	PAINEL DE INSTRUMENTOS	455
CORREIA EM V (COMPRESSOR)	4N-9891	1	COMPRESSOR DE REFRIGERANTE	385
DISJUNTOR AUTOMÁTICO DE CIRCUITO (10 AMPERES)	320-3072	1	PAINEL DE INSTRUMENTOS	448
DISJUNTOR AUTOMÁTICO DE CIRCUITO (15 AMPERES) (CHAVE INTERRUPTORA)	6T-3643	1	PAINEL DE INSTRUMENTOS	448
DISJUNTOR AUTOMÁTICO DE CIRCUITO (15 AMPERES) (RELÉ PRINCIPAL DE POTÊNCIA)	6T-3643	1	PAINEL DE INSTRUMENTOS	444
FILTRO	180-7487	1	CONDICIONADOR DE AR	369
		1	FILTRO - AR DA CABINE	405
FUSÍVEL (10 AMPERES)	113-8490	15	PAINEL DE INSTRUMENTOS	447
		16	PAINEL DE INSTRUMENTOS	443
LÂMINA DO LIMPADOR DE PÁRA-BRISA (500 MM)	5C-8811	1	LIMPADOR E LAVADOR - JANELA	483

* TRADUÇÃO NÃO DISPONÍVEL NO MOMENTO DA IMPRESSÃO

PEÇAS DE MANUTENÇÃO

DESCRIÇÃO	NÚMERO DE PEÇA	QUANT	UTILIZADA EM	PÁGINA
LÂMINA DO LIMPADOR DE PÁRA-BRISA (700 MM)	6V-7419	1	LIMPADOR E LAVADOR - JANELA	483
LÂMPADA - TETO (24 VOLTS)	3E-6389	1	REVESTIMENTO DA CABINE	415
LÂMPADA INDICADORA	2N-2371	1	PAINEL DE INSTRUMENTOS	434
		1	PAINEL DE INSTRUMENTOS	437
		1	PAINEL DE INSTRUMENTOS	440
LÂMPADA INDICADORA (ALTERNADOR)	2N-2371	1	PAINEL DE INSTRUMENTOS	451
		1	PAINEL DE INSTRUMENTOS	455
LÂMPADA (*24-VOLT, 5.6-WATT)	7N-5876	1	PAINEL DE INSTRUMENTOS	434
		1	PAINEL DE INSTRUMENTOS	437
		1	PAINEL DE INSTRUMENTOS	440
LÂMPADA (*24-VOLT, 5.6-WATT) (INDICADOR DO ALTERNADOR)	7N-5876	1	PAINEL DE INSTRUMENTOS	455
		1	PAINEL DE INSTRUMENTOS	451
LÂMPADA (24 VOLTS)	5D-0019	1	PAINEL DE INSTRUMENTOS	434
		1	PAINEL DE INSTRUMENTOS	437
LÂMPADA (24 VOLTS) (FREIO DE ESTACIONAMENTO)	116-5270	1	PAINEL DE INSTRUMENTOS	443
LÂMPADA (24 VOLTS) (INDICATOR DO NÍVEL DE COMBUSTÍVEL)	5D-0019	1	PAINEL DE INSTRUMENTOS	451
LÂMPADA (24 VOLTS) (LUZ DE ADVERTÊNCIA)	110-2079	4	MÓDULO - INDICADOR DE ALARME	425
LÂMPADA (24 VOLTS) (VERMELHO)	116-5270	1	PAINEL DE INSTRUMENTOS	447
LÂMPADA (24 VOLTS, 3 WATTS)	115-1748	1	PAINEL DE INSTRUMENTOS	455
LENTE ÂMBAR	2V-7087	1	PAINEL DE INSTRUMENTOS	434
		1	PAINEL DE INSTRUMENTOS	437
		1	PAINEL DE INSTRUMENTOS	440
LENTE ÂMBAR (ALTERNADOR)	2V-7087	1	PAINEL DE INSTRUMENTOS	451
		1	PAINEL DE INSTRUMENTOS	455
LENTE VERMELHA	2V-7088	1	PAINEL DE INSTRUMENTOS	434
		1	PAINEL DE INSTRUMENTOS	437
		1	PAINEL DE INSTRUMENTOS	440
		1	PAINEL DE INSTRUMENTOS	451
		1	PAINEL DE INSTRUMENTOS	455
TAMPA COM RESPIRO (LAVADOR DO VIDRO)	8E-8292	1	TANQUE - LAVADOR DE JANELA	476
SISTEMA DA ADMISSÃO DE AR E DE ESCAPE				
ELEMENTO DO FILTRO DE AR (PRIMÁRIO)	206-5234	1	PURIFICADOR DE AR	87
ELEMENTO DO FILTRO DE AR (SECUNDÁRIO)	206-5235	1	PURIFICADOR DE AR	87

* TRADUÇÃO NÃO DISPONÍVEL NO MOMENTO DA IMPRESSÃO

PEÇAS DE MANUTENÇÃO

DESCRIÇÃO	NÚMERO DE PEÇA	QUANT	UTILIZADA EM	PÁGINA
SISTEMA DE ARREFECIMENTO				
CONEXÃO - TUBO D'ÁGUA (TERMOSTATO)	254-2269	1	CONEXÃO - TUBO D'ÁGUA	69
MANGUEIRA - RADIADOR (INFERIOR)	217-2733	1	RADIADOR E ARREFECEDOR DO ÓLEO HIDRÁULICO	80
MANGUEIRA - RADIADOR (SUPERIOR)	216-7956	1	RADIADOR E ARREFECEDOR DO ÓLEO HIDRÁULICO	80
REGULADOR DE TEMPERATURA DA ÁGUA	225-6908	1	CONEXÃO - TUBO D'ÁGUA	68
TAMPA - COM RESPIRO (RECUPERACÃO DO LÍQUIDO ARREFECEDOR)	229-3469	1	RECUPERAÇÃO DE LÍQUIDO ARREFECEDOR	84
TAMPA - RADIADOR	211-6574	1	RADIADOR E ARREFECEDOR DO ÓLEO HIDRÁULICO	82
SISTEMA DE COMBUSTÍVEL				
DRENO	222-6617	1	BOMBA DE ESCORVA DO COMBUSTÍVEL E DO FILTRO PRIMÁRIO	117
ELEMENTO - FILTRO DE COMBUSTÍVEL	1R-1804	1	FILTRO - COMBUSTÍVEL	95
		1	FILTRO - COMBUSTÍVEL	97
ELEMENTO - FILTRO DE COMBUSTÍVEL (ÁGUA, SEPARADOR DE COMBUSTÍVEL)	1R-1804	1	BOMBA DE ESCORVA DO COMBUSTÍVEL E DO FILTRO PRIMÁRIO	115
ELEMENTO - FILTRO DE COMBUSTÍVEL (SEPARADOR DE ÁGUA)	1R-1804	1	BOMBA DE ESCORVA DO COMBUSTÍVEL E DO FILTRO PRIMÁRIO	117
FILTRO - COMBUSTÍVEL	9P-7121	1	TANQUE DE COMBUSTÍVEL	120
		1	TANQUE DE COMBUSTÍVEL	121
		1	TANQUE DE COMBUSTÍVEL	123
FILTRO - RESPIRO (TAMPA DO COMBUSTÍVEL)	279-9876	1	TANQUE DE COMBUSTÍVEL	121
		1	TANQUE DE COMBUSTÍVEL	123
LÂMPADA - LED (BRANCO, 24 VOLTS) (INDICATOR DO NÍVEL DE COMBUSTÍVEL)	163-6508	1	MEDIDOR - NÍVEL DE COMBUSTÍVEL	99
LÂMPADA (24 VOLTS, 3 WATTS) (APAGAR)(MEDIDOR DE NÍVEL DE COMBUSTÍVEL)	115-1748	1	MEDIDOR - NÍVEL DE COMBUSTÍVEL	99
TAMPA - BOCAL DE ENCHIMENTO DE COMBUSTÍVEL (SERVIÇO PESADO, TRAVÁVEL)	164-4858	1	TANQUE DE COMBUSTÍVEL	120
TAMPA - BOCAL DE ENCHIMENTO DE COMBUSTÍVEL (TRAVÁVEL, COM PROTETOR)	306-4998	1	TANQUE DE COMBUSTÍVEL	121
TAMPA-BOCAL DE ENCHIMENTO DE COMBUSTÍVEL (PODE SER TRANCADO)	276-1243	1	TANQUE DE COMBUSTÍVEL	121
		1	TANQUE DE COMBUSTÍVEL	123
SISTEMA DE LUBRIFICAÇÃO				
FILTRO - ÓLEO DO MOTOR	7W-2326	1	FILTRO - ÓLEO DO MOTOR	66

* TRADUÇÃO NÃO DISPONÍVEL NO MOMENTO DA IMPRESSÃO

PEÇAS DE MANUTENÇÃO

DESCRIÇÃO	NÚMERO DE PEÇA	QUANT	UTILIZADA EM	PÁGINA
SISTEMA ELÉTRICO E DE PARTIDA				
BATERIA (12 VOLTS, ISENTO DE MANUTENÇÃO)	3T-5760	2	BATERIA E CABOS / FIOS ELÉTRICOS	127
CHAVE (DESCONEXÃO DA BATERIA)	8H-5306	1	CHAVE GERAL	149
CORREIA DE COMANDO	9X-8139	1	LUZ GIRATÓRIA DE ALARME	138
DISJUNTOR AUTOMÁTICO DE CIRCUITO (60 AMPERES) (ALTERNADOR)	171-2208	1	CABOS/FIOS ELÉTRICOS - MÁQUINA	161
DISJUNTOR AUTOMÁTICO DE CIRCUITO (60 AMPERES) (PRINCIPAL)	171-2208	1	CABOS/FIOS ELÉTRICOS - MÁQUINA	161
DISJUNTOR AUTOMÁTICO DE CIRCUITO (60 AMPERES) (VELA DE AQUECIMENTO)	171-2208	1	CABOS/FIOS ELÉTRICOS - MÁQUINA	156
		1	CABOS/FIOS ELÉTRICOS - MÁQUINA	161
LÂMPADA - HALOGÊNEO (24 VOLTS, 65 WATTS)	9X-3463	1	LÂMPADA - FAROL	137
LÂMPADA - HALOGÊNEO (24 VOLTS, 65 WATTS) (FAROL)	9X-3463	1	LÂMPADA - FAROL	133
		1	LÂMPADA - FAROL	134
		1	LÂMPADA - FAROL	135
		1	LÂMPADA - FAROL	136
LÂMPADA (24 VOLTS) (TETO)	7N-9943	1	LÂMPADA - TETO	132
LÂMPADA (24 VOLTS, 70 WATTS) (PISCA-PISCA DE ADVERTÊNCIA)	9X-7849	1	LUZ GIRATÓRIA DE ALARME	138
VELA DE AQUECIMENTO; VELA INCANDESCENTE	226-8770	4	VELA DE AQUECIMENTO; VELA INCANDESCENTE	131
SISTEMA HIDRÁULICO				
FILTRO - ÓLEO (EFICIÊNCIA AVANÇADA) (HIDRÁULICO)	1G-8878	1	FILTRO HIDRÁULICO E MONTAGEM	278
RESPIRO (TANQUE HIDRÁULICO)	171-5286	1	TANQUE DE ÓLEO HIDRÁULICO E MONTAGEM	322
	183-3873	1	TANQUE DE ÓLEO HIDRÁULICO E MONTAGEM	324
		1	TANQUE DE ÓLEO HIDRÁULICO E MONTAGEM	326
		1	TANQUE DE ÓLEO HIDRÁULICO E MONTAGEM	328
TAMPA - BOCAL DE ENCHIMENTO (TANQUE HIDRÁULICO)	142-8937	1	TANQUE HIDRÁULICO	330
		1	TANQUE HIDRÁULICO	332
TELA DE SUCÇÃO	1G-7663	1	TANQUE HIDRÁULICO	332
TELA DE SUCÇÃO (TANQUE HIDRÁULICO)	1G-7663	1	TANQUE HIDRÁULICO	330
SISTEMA VIBRATÓRIO				
BUJÃO MAGNÉTICO (SUPORTE VIBRATÓRIO)	159-5846	1	SUPORTE DO SISTEMA VIBRATÓRIO	362

* TRADUÇÃO NÃO DISPONÍVEL NO MOMENTO DA IMPRESSÃO

PEÇAS DE MANUTENÇÃO

DESCRIÇÃO	NÚMERO DE PEÇA	QUANT	UTILIZADA EM	PÁGINA
TREM DE FORÇA				
BUJÃO DO DRENO	151-7516	1	GR. PLANETÁRIO - COMANDO FINAL	209
BUJÃO DO DRENO (ENGRENAGEM DE REDUÇÃO DE VELOCIDADE)	151-7516	1	GR. PLANETÁRIO - COMANDO FINAL	205
BUJÃO DO DRENO (PLANETÁRIO)	151-7516	1	GR. PLANETÁRIO - COMANDO FINAL	204
BUJÃO-DRENAGEM (MAGNÉTICO)	152-6144	5	EIXO DE PROPULSÃO	170
BUJÃO-DRENAGEM (MAGNÉTICO) (EIXO)	152-6144	5	EIXO DE PROPULSÃO	168
BUJÃO MAGNÉTICO	5P-4484	1	TAMBOR COM PISO	191
		1	TAMBOR LISO	193
BUJÃO MAGNÉTICO (TAMBOR COM PISO)	5P-4484	1	TAMBOR COM PISO	192
RESPIRO (EIXO)	197-9155	1	EIXO DE PROPULSÃO	168
RESPIRO (EIXO, TRASEIRO)	197-9155	1	EIXO DE PROPULSÃO	170

* TRADUÇÃO NÃO DISPONÍVEL NO MOMENTO DA IMPRESSÃO

WARTUNGSTEILE

BESCHREIBUNG	ERSATZTEIL-NUMMER	MENGE	VERWENDET IN	SEITE
ELEKTRISCHE ANLAGE UND STARTSYSTEM				
BATTERIE (12 V, WARTUNGSFREI)	3T-5760	2	BATTERIE UND VERDRAHTUNG	127
GLÜHKERZE	226-8770	4	GLÜHKERZE	131
HALOGENSCHINWERFER (24V)(65W)	9X-3463	1	ARBEITSLEUCHTEN	137
HALOGENSCHINWERFER (24V)(65W) (ARBEITSSCHEINWERFER)	9X-3463	1	ARBEITSLEUCHTEN	133
		1	ARBEITSLEUCHTEN	134
		1	ARBEITSLEUCHTEN	135
		1	ARBEITSLEUCHTEN	136
LAUFBAND UND ANTRIEB	9X-8139	1	RUNDUM-KENNLEUCHTE	138
LEUCHTE (24 V) (FAHRERHAUSDACH)	7N-9943	1	FAHRERHAUSBELEUCHTUNG	132
LEUCHTE (24 V, 70 W) (RUNDUM-KENNLEUCHTE)	9X-7849	1	RUNDUM-KENNLEUCHTE	138
SCHLÜSSEL (ELEKTRISCHER HAUPTSCHALTER)	8H-5306	1	TRENNSCHALTER	149
UNTERBRECHER (60 A) (DREHSTROM-GENERATOR)	171-2208	1	MASCHINENVERDRAHTUNG	161
UNTERBRECHER (60 A) (GLÜHKERZE)	171-2208	1	MASCHINENVERDRAHTUNG	156
		1	MASCHINENVERDRAHTUNG	161
UNTERBRECHER (60 A) (HAUPTUN-TERBRECHER)	171-2208	1	MASCHINENVERDRAHTUNG	161
FAHRERHAUS				
ABDECKGLAS (GELB)	2V-7087	1	INSTRUMENTENTAFEL	434
		1	INSTRUMENTENTAFEL	437
		1	INSTRUMENTENTAFEL	440
ABDECKGLAS (GELB) (DREHSTROM-GENERATOR)	2V-7087	1	INSTRUMENTENTAFEL	451
		1	INSTRUMENTENTAFEL	455
FAHRERHAUSBELEUCHTUNG (24 V)	3E-6389	1	FAHRERHAUSAUSKLEIDUNG	415
FILTER	180-7487	1	FAHRERHAUSLUFTFILTER	405
		1	KLIMAANLAGE	369
KAPPE MIT ENTLÜFTER (SCHEIBEN-WASCHER)	8E-8292	1	SCHEIBENWASCHMITTELBEHÄLTER	476
KEILRIEMEN (KOMPRESSOR)	4N-9891	1	KÄLTEMITTELKOMPRESSOR	385
KLIMAANLAGENDRUCKSPEICHER (MIT TROCKENMITTEL)	176-3900	1	KLIMAANLAGENDRUCKSPEICHER	365
KONTROLLEUCHTE	2N-2371	1	INSTRUMENTENTAFEL	434
		1	INSTRUMENTENTAFEL	437
		1	INSTRUMENTENTAFEL	440
KONTROLLEUCHTE (DREHSTROMGE-NERATOR)	2N-2371	1	INSTRUMENTENTAFEL	451
		1	INSTRUMENTENTAFEL	455
LEUCHTE (24 V)	5D-0019	1	INSTRUMENTENTAFEL	434
		1	INSTRUMENTENTAFEL	437
LEUCHTE (24 V) (FESTSTELLBREMSE)	116-5270	1	INSTRUMENTENTAFEL	443
LEUCHTE (24 V) (KRAFTSTOFFANZEI-GE)	5D-0019	1	INSTRUMENTENTAFEL	451
LEUCHTE (24 V) (ROT)	116-5270	1	INSTRUMENTENTAFEL	447
LEUCHTE (24 V) (WARNLEUCHTE)	110-2079	4	WARNANZEIGEMODUL	425
LEUCHTE (24 V, 3 W)	115-1748	1	INSTRUMENTENTAFEL	455
LEUCHTE (24-VOLT, 5.6-WATT)	7N-5876	1	INSTRUMENTENTAFEL	434

* ÜBERSETZUNG ZUM ZEITPUNKT DER DRUCKLEGUNG NICHT VORHANDEN

WARTUNGSTEILE

BESCHREIBUNG	ERSATZTEIL-NUMMER	MENGE	VERWENDET IN	SEITE
		1	INSTRUMENTENTAFEL	437
		1	INSTRUMENTENTAFEL	440
LEUCHTE (24-VOLT, 5.6-WATT) (DREHSTROMGENERATORANZEIGE)	7N-5876	1	INSTRUMENTENTAFEL	451
		1	INSTRUMENTENTAFEL	455
LINSE - ROT	2V-7088	1	INSTRUMENTENTAFEL	434
		1	INSTRUMENTENTAFEL	437
		1	INSTRUMENTENTAFEL	440
		1	INSTRUMENTENTAFEL	451
		1	INSTRUMENTENTAFEL	455
SCHEIBENWISCHERBLATT (500 MM)	5C-8811	1	SCHEIBENWISCHER UND -WASCHANLAGE	483
SCHEIBENWISCHERBLATT (700 MM)	6V-7419	1	SCHEIBENWISCHER UND -WASCHANLAGE	483
SCHLÜSSEL	5P-8500	2	INSTRUMENTENTAFEL	434
		2	INSTRUMENTENTAFEL	437
		2	INSTRUMENTENTAFEL	440
		2	INSTRUMENTENTAFEL	451
		2	INSTRUMENTENTAFEL	455
SICHERUNG (10 A)	113-8490	15	INSTRUMENTENTAFEL	447
		16	INSTRUMENTENTAFEL	443
UNTERBRECHER (10 A)	320-3072	1	INSTRUMENTENTAFEL	448
UNTERBRECHER (15 A) (HAUPT-SCHALTER)	6T-3643	1	INSTRUMENTENTAFEL	444
UNTERBRECHER (15 A) (STARTSCHAL-TERSCHLÜSSEL)	6T-3643	1	INSTRUMENTENTAFEL	448
HYDRAULIKSYSTEM				
ANSAUGSIEB	1G-7663	1	HYDRAULIKTANK	332
ANSAUGSIEB (HYDRAULIKTANK)	1G-7663	1	HYDRAULIKTANK	330
EINFÜLLKAPPE (HYDRAULIKTANK)	142-8937	1	HYDRAULIKTANK	330
		1	HYDRAULIKTANK	332
ENTLÜFTER (HYDRAULIKTANK)	171-5286	1	HYDRAULIKTANK UND BEFESTI-GUNGSTEILE	322
	183-3873	1	HYDRAULIKTANK UND BEFESTI-GUNGSTEILE	324
		1	HYDRAULIKTANK UND BEFESTI-GUNGSTEILE	326
		1	HYDRAULIKTANK UND BEFESTI-GUNGSTEILE	328
ÖLFILTER (HOCHLEISTUNG) (HYDRAULIK)	1G-8878	1	HYDRAULIKFILTER UND BEFESTIGUNGSTEILE	278

* ÜBERSETZUNG ZUM ZEITPUNKT DER DRUCKLEGUNG NICHT VORHANDEN

WARTUNGSTEILE

BESCHREIBUNG	ERSATZTEIL-NUMMER	MENGE	VERWENDET IN	SEITE
KRAFTSTOFFSYSTEM				
ABLASSVORRICHTUNG	222-6617	1	KRAFTSTOFFENTLÜFTUNGSPUMPE UND -HAUPTFILTER	117
ENTLÜFTERFILTER (KRAFTSTOFF-KAPPE)	279-9876	1	KRAFTSTOFFTANK	121
		1	KRAFTSTOFFTANK	123
KRAFTSTOFFEINFÜLLKAPPE (VERSCHLIESSBAR)	276-1243	1	KRAFTSTOFFTANK	121
		1	KRAFTSTOFFTANK	123
KRAFTSTOFFFILTEREINSATZ	1R-1804	1	KRAFTSTOFFILTER	95
		1	KRAFTSTOFFILTER	97
KRAFTSTOFFFILTEREINSATZ (WASSER, KRAFTSTOFFABSCHEIDER)	1R-1804	1	KRAFTSTOFFENTLÜFTUNGSPUMPE UND -HAUPTFILTER	115
KRAFTSTOFFFILTEREINSATZ (WASSERABSCHEIDER)	1R-1804	1	KRAFTSTOFFENTLÜFTUNGSPUMPE UND -HAUPTFILTER	117
KRAFTSTOFFFILTERKAPPE (ABSCHLIESSBAR, MIT STIEFEL)	306-4998	1	KRAFTSTOFFTANK	121
KRAFTSTOFFFILTERKAPPE (SCHWEREINSATZ, SPERRBAR)	164-4858	1	KRAFTSTOFFTANK	120
KRAFTSTOFFSIEB	9P-7121	1	KRAFTSTOFFTANK	120
		1	KRAFTSTOFFTANK	121
		1	KRAFTSTOFFTANK	123
LEUCHTE, ROT (WEISS, 24 V) (KRAFTSTOFFANZEIGE)	163-6508	1	KRAFTSTOFFSTANDANZEIGE	99
LEUCHTE (24 V, 3 W) (KLAR) (KRAFTSTOFFANZEIGE)	115-1748	1	KRAFTSTOFFSTANDANZEIGE	99
KRAFTÜBERTRAGUNG				
ABLASSSCHRAUBE (MAGNETISCH)	152-6144	5	ANTRIEBSACHSE	170
ABLASSSCHRAUBE (MAGNETISCH) (ACHSE)	152-6144	5	ANTRIEBSACHSE	168
ABLASSSTOPFEN	151-7516	1	SEITENANTRIEB - PLANETENGETRIEBE	209
ABLASSSTOPFEN (GESCHWINDIGKEITSVERRINGERUNGSGANG)	151-7516	1	SEITENANTRIEB - PLANETENGETRIEBE	205
ABLASSSTOPFEN (PLANETENGETRIEBE)	151-7516	1	SEITENANTRIEB - PLANETENGETRIEBE	204
ENTLÜFTER (ACHSE)	197-9155	1	ANTRIEBSACHSE	168
ENTLÜFTER (*AXLE, REAR)	197-9155	1	ANTRIEBSACHSE	170
MAGNETSTOPFEN	5P-4484	1	GLATTBANDAGE	193
		1	STAMPFFUSSBANDAGE	191
MAGNETSTOPFEN (STAMPFFLUSSBANDAGE)	5P-4484	1	STAMPFFUSSBANDAGE	192

* ÜBERSETZUNG ZUM ZEITPUNKT DER DRUCKLEGUNG NICHT VORHANDEN

WARTUNGSTEILE

BESCHREIBUNG	ERSATZTEIL-NUMMER	MENGE	VERWENDET IN	SEITE
KÜHLSYSTEM				
KÜHLERKAPPE	211-6574	1	KÜHLER UND HYDRAULIKÖLKÜHLER	82
KÜHLERSCHLAUCH (OBEN)	216-7956	1	KÜHLER UND HYDRAULIKÖLKÜHLER	80
KÜHLERSCHLAUCH (UNTEN)	217-2733	1	KÜHLER UND HYDRAULIKÖLKÜHLER	80
KÜHLWASSERANSCHLUSS (THERMOSTAT)	254-2269	1	KÜHLWASSERANSCHLUSS	69
LÜFTUNGSKAPPE (KÜHLMITTELAUFFANG)	229-3469	1	KÜHLMITTELÜBERLAUFBEHÄLTER	84
WASSERTEMPERATURREGLER	225-6908	1	KÜHLWASSERANSCHLUSS	68
LUFTANSAUG- UND ABGASSYSTEM				
LUFTFILTER (HAUPTELEMENT)	206-5234	1	LUFTREINIGER	87
LUFTFILTER (HILFSELEMENT)	206-5235	1	LUFTREINIGER	87
MOTOR (GRUNDAUSFÜHRUNG)				
ABDECKUNG	230-9127	1	VENTILDECKEL	17
ABLASSSTOPFEN (MOTORÖL)	7C-0351	2	ÖLWANNE	47
		2	ÖLWANNE	49
DECKEL, VORN	226-8767	1	STIRNRADGEHÄUSE	35
DICHTUNG (VENTILDECKEL)	225-6451	1	VENTILDECKEL	9
		1	VENTILDECKEL	11
		1	VENTILDECKEL	13
		1	VENTILDECKEL	15
		1	VENTILDECKEL	17
KAPPE (MOTORÖLFÜLLUNG)	136-3608	1	VENTILDECKEL	11
		1	VENTILDECKEL	13
		1	VENTILDECKEL	15
		1	VENTILDECKEL	17
KEILRIEMENSATZ (EINSCHL. 2 RIEMEN)	128-5397	1	LÜFTERANTRIEB	31
KEILRIEMENSATZ (EINSCHL. 2 RIEMEN) (LÜFTER)	247-0099	1	LÜFTERANTRIEB	30
ÖLEINFÜLLKAPPE (MOTOR)	130-9888	1	VENTILDECKEL	9
		1	VENTILDECKEL	11
		1	VENTILDECKEL	13
		1	VENTILDECKEL	15
		1	VENTILDECKEL	17
SCHEIBENFEDER	1B-8736	1	STIRNRADGEHÄUSE	35
VENTILDECKELDICHTUNG	226-8766	1	STIRNRADGEHÄUSE	35
SCHMIERSYSTEM				
ÖLFILTER	7W-2326	1	ÖLFILTER	66
VIBRATIONSSYSTEM				
MAGNETSTOPFEN (VIBRATIONSAUFHÄNGUNG)	159-5846	1	VIBRATIONSUNTERSTÜTZUNG	362

* ÜBERSETZUNG ZUM ZEITPUNKT DER DRUCKLEGUNG NICHT VORHANDEN

INDEX

Name	Page
A	
ACCUMULATOR GP-REFRIGERANT–WITH DESICCANT	364, 365
ACCUMULATOR GP-REFRIGERANT (WITH DESICCANT)	365
ACTUATOR GP-PUMP	273
ACTUATOR GP-PUMP–VIBRATORY	274
ADJUSTER GP-HEIGHT (SUSPENSION SEAT)	470, 474
AIR CLEANER GP	85, 87
AIR CONDITIONER GP	366, 369, 370, 372, 373
ALARM GP	125
ALTERNATOR GP-CHARGING	126
ALTERNATOR GP-CHARGING (24-VOLT)	126
ARM GP-WINDOW WIPER	375, 483
AXLE & MTG GP-DRIVE	166, 167
AXLE GP-DRIVE	168
AXLE GP-DRIVE–WITHOUT BRAKES	170
B	
BATTERY & WIRING GP	127
BATTERY (12-VOLT, MAINTENANCE FREE)	127
BELT-DRIVE	138
BLADE AS-WIPER (500-MM)	483
BLADE AS-WIPER (700-MM)	483
BLOWER GP-REFRIG CONDENSER	373
BREATHER (AXLE)	168
BREATHER (AXLE, REAR)	170
BREATHER (HYDRAULIC TANK)	322, 324, 326, 328
BUMPER AR	223
BUMPER AR–PADDED SHELL, WITHOUT BLADE	223
BUMPER GP-FRONT	224, 225, 226
C	
CAB AR	376
CAB GP-ENCLOSED ROPS	377, 379, 381
CAMSHAFT GP	7
CANOPY GP–NON ROPS/FOPS	383
CAP AS (ENGINE OIL FILLER)	11, 13, 15, 17
CAP AS-FILLER (HYDRAULIC TANK)	330, 332
CAP AS-RADIATOR	82
CAP AS-VENTED (COOLANT RECOVERY)	84
CAP-FUEL FILLER (LOCKABLE)	121, 123
CAP GP-FUEL FILLER	94
CAP GP-FUEL FILLER (EXTREME SERVICE, LOCKABLE)	120
CAP GP-FUEL FILLER (LOCKABLE, WITH BOOT)	121, 123
CAP-OIL FILLER (ENGINE)	9, 11, 13, 15, 17
CAP-VENTED (WINDOW WASHER)	476
CHASSIS AR–PE238	1
CHASSIS AR–PE239	1
CIRCUIT BREAKER AS (10-AMPERE)	448
CIRCUIT BREAKER AS (15-AMPERE) (KEY SWITCH)	448
CIRCUIT BREAKER AS (15-AMPERE) (MAIN POWER RELAY)	444
CIRCUIT BREAKER AS (60-AMPERE) (ALTERNATOR)	161
CIRCUIT BREAKER AS (60-AMPERE) (GLOW PLUG)	156
CIRCUIT BREAKER AS (60-AMPERE) (GLOW PLUG)	161
CIRCUIT BREAKER AS (60-AMPERE) (MAIN)	161
COMMON AR–PE238	1
COMMON AR–PE239	2
COMPRESSOR GP-REFRIGERANT	384, 385
CONDENSER & MTG GP-REFRIGERANT	387
CONNECTION GP-WATER	68, 69
CONNECTION GP-WATER (TEMPERATURE REGULATOR)	69
CONTROL GP-DIRECTION & SPEED	388
CONTROL GP-HANDLE–PROPEL LEVER	390
CONTROL GP-HYDRAULIC	275
CONTROL GP-PROPEL	391, 393
CONTROL GP-STEERING	263
CONVERTER GP-ELECTRICAL	129

INDEX

Name	Page
COOLANT HEATER LINES	418
COOLER GP-ENGINE OIL	70
	73
COOLER GP-FLTR BASE & ENG OIL	71
	73
COUPLING GP-PUMP	212
	214
COVER	17
COVER AS-FRONT	35
COVER GP-FRONT HOUSING	8
COVER GP-VALVE MECHANISM	9
	11
	13
	15
	17
CRANKSHAFT GP	19
	21
CYLINDER & MTG GP-STEERING	265
	267
CYLINDER & MTG GP-TILT	395
CYLINDER AS-TILT	395
CYLINDER BLOCK GP	23
	25
	26
CYLINDER GP-HYDRAULIC	277
CYLINDER GP-HYDRAULIC–STEERING	276
	277
CYLINDER HEAD GP	27
	28
	29

D

DIAPHRAGM (CRANKCASE PRESSURE CONTACTOR)	9
	11
	13
	15
	17
DIFFERENTIAL GP	172
	173
	174
DIODE GP	434
	437
	440
DIODE GP (INSTRUMENT)	451
	455
DOOR GP-CAB–LH	401
DOOR GP-CAB–SLIDING WINDOW, LH	397
	399
DRAIN AS	117
DRIVE GP-DRUM	175
	177
	179
	181
	183
DRIVE GP-FAN	30
	31
DRIVE GP-PUMP	32
DRIVE GP-SUPPORT & VIBRATORY	344
DRUM GP-COMPACTOR	185
DRUM GP-DRIVE & VIBRATORY–PADDED	186
	188
	189
DRUM GP-DRIVE & VIBRATORY–SMOOTH	187
DRUM GP-PADDED	191
	192
DRUM GP-SMOOTH	193
DUCT GP-CAB AIR	403

E

ELBOW GP-AIR INLET	88
ELECTRICAL AR	130
ENCLOSURE GP-ENGINE	227
	229
	231
ENGINE AR	3
ENGINE AR-PRIMARY	4
	5

F

FAN GP-SUCTION	74
	75
	76
	77
FASTENER GP-SEAT	469
	472
FILLER GP-ENGINE OIL	9
	11
	13
	15
FILM-FUSE/RELAY	444
	448
FILM GP	485
FILM-IDENTIFICATION (CIRCUIT PANEL)	157
	162
FILM-IDENTIFICATION (CS-533E)	486
	490
FILM-IDENTIFICATION (INSTRUMENT PANEL)	434
	437
	452
FILM-IDENTIFICATION (INSTRUMENT PANEL)	440
	456
FILM-IDENTIFICATION (OPERATOR CONTROLS)	388
FILM-IDENTIFICATION (SERVICE METER)	437

INDEX

Name	Page
	452
FILM-INFORMATION (ALTERNATE EXIT)	463
	464
FILM-INSTRUCTION (ENGINE START)	434
	437
	440
	451
	455
FILM-INSTRUCTION (UNLOCK, RELEASE)	463
	464
FILM-INSTRUMENT (PANEL)	448
FILM (INSTRUMENTS)	443
FILM-WARNING (JUMP START, READ OMM)	492
	493
FILM-WARNING (NO WELD, NO DRILL, READ OMM)	492
	494
FILM-WARNING (NON ROPS/FOPS)	383
FILM-WARNING (OPERATING INSTRUCTIONS)	493
FILTER	369
	405
FILTER & MTG GP-HYDRAULIC	278
FILTER AS-ENGINE OIL	66
FILTER BASE & ENG OIL COOLER	71
	73
FILTER-BREATHER (FUEL CAP)	121
	123
FILTER ELEMENT AS-AIR (PRIMARY)	87
FILTER ELEMENT AS-AIR (SECONDARY)	87
FILTER ELEMENT AS-FUEL	95
	97
FILTER ELEMENT AS-FUEL (WATER, FUEL SEPARATOR)	115
FILTER ELEMENT AS-FUEL (WATER SEPARATOR)	117
FILTER GP-CAB AIR	405
FILTER GP-ENGINE OIL	66
FILTER GP-FUEL	95
	97
FILTER GP-OIL (HYDRAULIC)	278
FILTER-OIL (ADVANCED EFFICIENCY) (HYDRAULIC)	278
FITTING GP	330
	332
FLANGE GP-WHEEL	194
FLOOR MAT	460
FLOOR MAT AS	459
FLOOR MAT-CAB	406
FLOOR MAT GP	406
FLYWHEEL GP	33
FRAME GP-FRONT	233
FRAME GP-REAR	234
FUSE (10-AMPERE)	443
FUSE (10-AMPERE)	447

G

Name	Page
GASKET-COVER	35
GASKET (VALVE COVER)	9
	11
	13
	15
	17
GAUGE AS-OIL LEVEL (DIPSTICK) (ENGINE)	47
	49
GAUGE AS-TACHOMETER	407
GAUGE GP-FUEL LEVEL	99
GAUGE GP-FUEL LEVEL (24-VOLT)	434
	437
	451
GAUGE GP-VIBRATORY	407
GAUGE-SIGHT	330
	332
GEAR GP-RING	168
	170
GLOW PLUG	131
GLOW PLUG GP	131
GOVERNOR GP	100
GUARD GP-LINES	236
	237
GUARD GP-TRANSMISSION	238
GUARD GP-VANDALISM	409

H

Name	Page
HANDRAIL GP	239
HARNESS AS-ALARM (BACKUP WARNING)	152
	153
HARNESS AS-CAB	155
	448
HARNESS AS-CHASSIS	156
	161
HARNESS AS-HEATER & AIR COND	154
	366
	373
	411
	413
HARNESS AS-LIGHTING (FLOODLIGHT)	139
	140
	141
	142
HARNESS AS-PANEL	440
	455
HARNESS AS-PANEL (FRONT CONSOLE)	434
	437
	451
HARNESS AS-PANEL (HORN)	434
	452
	456
HARNESS AS-PANEL (SIDE CONSOLE)	448

INDEX

Name	Page
HARNESS AS-PANEL (SIDE CONSOLE)	443
HARNESS AS-SENSOR (VIBRATORY)	407
HEAD GP-PUMP	280 283
HEAD GP-PUMP–PROPEL	286
HEAD GP-PUMP–VIBRATORY	281 285
HEATER & MTG GP-CAB	410
HEATER GP-CAB	411 413
HITCH GP-ARTICULATING & OSC	240
HOOD GP	241 243 244 246 248 250 251 253
HOSE-RADIATOR (LOWER)	80
HOSE-RADIATOR (UPPER)	80
HOUSING GP-AXLE	195
HOUSING GP-ECCENTRIC WEIGHT	345 346 348 349
HOUSING GP-FLYWHEEL	34
HOUSING GP-FRONT	35 37 39
HYDRAULIC AR	288
HYDRAULIC AR-AUXILIARY	288
HYDRAULIC AR-VIBRATORY	351

I

INDICATOR GP-AIR FILTER CHANGE	85
INSTALLATION AR-ENGINE	6
INSTALLATION GP-DRUM	197

K

KEY	434 437 440 451 455
KEY (BATTERY DISCONNECT)	149
KEY-WOODRUFF	35
KIT-ADJUSTER	470 474
KIT-CRANKSHAFT BEARING (0.25-MM OS)	19
KIT-CRANKSHAFT BEARING (0.5-MM OS)	19
KIT-CRANKSHAFT BEARING (0.76-MM OS)	19
KIT-MOUNTING (FUEL PRIMING PUMP)	115
KIT-ROD BEARING (0.25-MM OS)	19
KIT-ROD BEARING (0.51-MM OS)	19
KIT-ROD BEARING (0.76-MM OS)	19
KIT-SEAL (STEERING CYLINDER)	276
KNOB GP-STEERING	269

L

LAMP AS-INDICATOR	434 437 440
LAMP AS-INDICATOR (ALTERNATOR)	455
LAMP AS-INDICATOR (ALTERNATOR)	451
LAMP GP-DOME	132
LAMP GP-DOME (24-VOLT)	415
LAMP GP-FLOOD	135 137
LAMP GP-FLOOD–SUSPENDED MOUNT	134
LAMP GP-FLOOD–VERTICAL MOUNT	133 136
LAMP GP-WARNING BEACON–AMBER	138
LAMP-HALOGEN (24-VOLT, 65-WATT)	137
LAMP-HALOGEN (24-VOLT, 65-WATT) (FLOOD)	136
LAMP-HALOGEN (24-VOLT, 65-WATT) (FLOODLIGHT)	133 134 135
LAMP-LED (WHITE, 24-VOLT) (FUEL LEVEL GAUGE)	99
LAMP (24-VOLT)	434 437
LAMP (24-VOLT) (DOME)	132
LAMP (24-VOLT) (FUEL LEVEL GAUGE)	451
LAMP (24-VOLT) (PARKING BRAKE)	443
LAMP (24-VOLT) (RED)	447
LAMP (24-VOLT) (WARNING LAMP)	425
LAMP (24-VOLT, 3-WATT)	455
LAMP (24-VOLT, 3-WATT) (CLEAR)(FUEL LEVEL GAUGE)	99
LAMP (24-VOLT, 5.6-WATT)	434
LAMP (24-VOLT, 5.6-WATT)	437 440
LAMP (24-VOLT, 5.6-WATT) (ALTERNATOR INDICATOR)	451
LAMP (24-VOLT, 5.6-WATT) (ALTERNATOR INDICATOR)	455
LAMP (24-VOLT, 70-WATT) (WARNING BEACON)	138
LENS-AMBER	434 437 440
LENS-AMBER (ALTERNATOR)	451 455
LENS-RED	434

INDEX

Name	Page
	437
	440
	451
	455
LIFTING GP-ENGINE	41
LIGHTING GP-FLOOD	139
	140
	141
LIGHTING GP-FLOOD–OPEN ROPS	142
LIGHTING GP-WARNING–CAB	145
LIGHTING GP-WARNING–ROPS	144
LINER GP-CAB	415
LINES GP-AIR	89
LINES GP-AIR CONDITIONER	416
LINES GP-BRAKE & SHIFT	261
LINES GP-CAB HEATER	418
LINES GP-FILTER–HYDRAULIC	289
LINES GP-FUEL	102
LINES GP-HYDRAULIC OIL COOLER	290
LINES GP-PROPEL	198
LINES GP-STEERING	270
LINES GP-STEERING CYLINDER	271
LINES GP-VIBRATORY	352
LINKAGE GP	420

M

MANIFOLD & VALVE GP	291
MIRROR GP-REAR VIEW	422
MIRROR GP-REAR VIEW–CAB	424
MIRROR GP-REAR VIEW–CANOPY	423
MIRROR GP-REAR VIEW–INTERIOR	421
MODULE GP-TIMER	146
	443
	448
MODULE GP-WARNING INDICATOR	425
MOTOR & MTG GP-PROPEL	200
	201
MOTOR & MTG GP-VIBRATORY	354
MOTOR GP-PISTON	299
	303
MOTOR GP-PISTON–PROPEL	297
MOTOR GP-PISTON–SLIPPER	301
MOTOR GP-PISTON–VIBRATORY	293
	295
MOTOR GP-WINDOW WIPER–FRONT	426
MOTOR GP-WINDOW WIPER–24-VOLT	427
MOTOR GP-WINDOW WIPER (24-VOLT)	483
MOUNTING GP-CAB	428
	430
MOUNTING GP-ENGINE	42
	43
MOUNTING GP-ENGINE FLEXIBLE	45
	46
MOUNTING GP-WHEEL	203
MUFFLER GP	90

O

OPERATOR AR–CAB WITH AIR CONDITIONER	432
OPERATOR AR–CAB WITHOUT AIR CONDITIONER	433
OPERATOR AR–OPEN PLATFORM	431
OPERATOR AR–ROPS	431
OPERATOR AR–WITH SOFT CANOPY	431
ORIFICE AS-AIR CONDITIONER	367
	373

P

PADLOCK	489
PADLOCK GP	486
	487
	490
	491
PADLOCK GP (VANDALISM GUARD)	409
PAN GP-OIL	47
	49
PANEL GP-INSTRUMENT	434
	437
	440
	451
	455
PANEL GP-INSTRUMENT–SIDE CONSOLE	443
	447
PISTON & ROD GP	51
	53
PLANETARY GP-FINAL DRIVE	204
	205
	207
	208
	209
PLATE & FILM GP–CP-533E	489
PLATE & FILM GP–CS-533E	486
	487
	490
	491
PLATE & FILM GP–ENGLISH	492
PLATE & FILM GP–PORTUGUESE	494
PLATE & FILM GP–SPANISH	493
PLATE-IDENTIFICATION (ECCENTRIC WEIGHT)	345
	348
	349
PLATE-IDENTIFICATION (ENGINE)	440
PLATE-IDENTIFICATION (START AID)	434
	437
PLATE-IDENTIFICATION (STARTING AID)	451
	455

INDEX

Name	Page
PLATE-INSTRUCTION (AIR CONDITIONER)	416
PLATE-INSTRUCTION (BATTERY)	127
PLATE-WARNING-ROPS/FOPS	493
PLATFORM GP-OPERATOR	459
	460
PLUG AS-DRAIN (MAGNETIC)	170
PLUG AS-DRAIN (MAGNETIC) (AXLE)	168
PLUG-DRAIN	209
PLUG-DRAIN (ENGINE OIL)	47
	49
PLUG-DRAIN (PLANETARY)	204
PLUG-DRAIN (SPEED REDUCTION GEAR)	205
PLUG GP-ENGINE	54
	55
	56
	57
PLUG-MAGNETIC	191
	193
PLUG-MAGNETIC (PADDED DRUM)	192
PLUG-MAGNETIC (VIBRATORY SUPPORT)	362
POWER TRAIN AR	211
PULLEY GP-CRANKSHAFT	58
PUMP & MTG GP-PROPEL	212
	214
PUMP & MTG GP-STEERING	272
PUMP & MTG GP-VIBRATORY	355
	357
PUMP GP-ENGINE OIL	67
PUMP GP-FUEL INJECTION	103
	106
	109
	110
	111
	112
PUMP GP-FUEL PRIMING	95
	97
PUMP GP-FUEL PRM & PRIM FILTER	115
	117
PUMP GP-GEAR–STEERING	305
PUMP GP-HAND (TILT CYLINDER)	395
PUMP GP-PISTON–PROPEL	306
	308
PUMP GP-PISTON–PROPEL, AXLE	313
PUMP GP-PISTON–PROPEL, DRUM	311
PUMP GP-PISTON–VIBRATORY	310
	315
PUMP GP-WATER	78

R

Name	Page
RADIATOR & HYD OIL COOLER GP	80
	82
RADIATOR GP	82
RECOVERY GP-COOLANT	84
REGULATOR AS-VOLTAGE (24-VOLT) (FUEL FILTER)	95
	97
REGULATOR-WATER TEMPERATURE	68
RELAY AS (24-VOLT) (BRAKE ONE)	444
	448
RELAY AS (24-VOLT) (BRAKE TWO)	444
	448
RELAY AS (24-VOLT) (COOLANT TEMPERATURE)	444
	448
RELAY AS (24-VOLT) (ENGINE OIL PRESSURE)	443
RELAY AS (24-VOLT) (ENGINE OIL PRESSURE)	448
RELAY AS (24-VOLT) (FUNCTION LIGHT)	444
RELAY AS (24-VOLT) (FUNCTIONAL LIGHT)	448
RELAY AS (24-VOLT) (HYDRAULIC OIL PRESSURE)	444
	448
RELAY AS (24-VOLT) (HYDRAULIC OIL TEMPERATURE)	444
	448
RELAY AS (24-VOLT) (NEUTRAL START ONE)	444
	448
RELAY AS (24-VOLT) (NEUTRAL START TWO)	444
	448
RELAY AS (24-VOLT) (WARNING LIGHT)	444
	448
ROCKER ARM GP	59
ROPS GP	462
ROPS GP-ENCLOSED	463
	464
ROTATING GP-MOTOR	316
ROTATING GP-PUMP	317
	319
	320
ROTATING GP-PUMP–VIBRATORY	321

S

Name	Page
SCRAPER GP-PADDED DRUM	255
SCRAPER GP-PADDED DRUM–PADDED SHELL	256
SCRAPER GP-SMOOTH DRUM–FRONT, REAR FLEXIBLE	259
SCRAPER GP-SMOOTH DRUM–FRONT, REAR STEEL	258
SCRAPER GP-SMOOTH DRUM–FRONT STEEL	257
SCREEN GP-SUN	466
	467
SCREEN GP-SUN–CAB	468

INDEX

Name	Page
SEAL GP-DUO-CONE	205, 209
SEAT & MOUNTING GP	469
SEAT BELT GP	469, 472
SEAT GP-SUSPENSION	470
SEAT GP-SUSPENSION–CLOTH	472, 474
SENDER AS-FUEL LEVEL	120, 121, 123
SENSOR GP-SPEED (VIBRATORY TACHOMETER GAUGE)	407
SERVICE GP-ENGINE	60, 61
SHAFT GP-ECCENTRIC WEIGHT	359, 360, 361
SHELL GP-PADDED	216, 217
SOLENOID GP-THROTTLE	147
SPRING AS-GAS	227
SPRING AS-GAS (ENGINE HOOD)	229, 231
STARTING MOTOR GP-ELECTRIC	148
STEP GP	260
STRAINER-FUEL	120, 121, 123
STRAINER-SUCTION	332
STRAINER-SUCTION (HYDRAULIC TANK)	330
SUN VISOR	477
SUPPORT GP-VIBRATORY	362
SWITCH AS-PRESSURE (COMPRESSOR)	385
SWITCH AS-PRESSURE (ENGINE OIL)	156, 161
SWITCH AS-PRESSURE (HYDRAULIC OIL)	278
SWITCH AS-PUSH BUTTON (PARKING BRAKE)	447
SWITCH AS-PUSH BUTTON (PARKING BRAKE)	443
SWITCH AS-PUSH BUTTON (VIBRATORY, SELECT ON/OFF)	390
SWITCH AS-ROCKER (AIR CONDITIONER)	372
SWITCH AS-ROCKER (AIR CONDITIONER ON/OFF)	370
SWITCH AS-ROCKER (BEACON)	144, 145
SWITCH AS-ROCKER (FLOOD LIGHT)	139, 140
SWITCH AS-ROCKER (FLOOD LIGHTS)	447
SWITCH AS-ROCKER (FLOOD LIGHTS)	142
SWITCH AS-ROCKER (SPEED SELECT)	435, 438, 441, 452, 456
SWITCH AS-ROCKER (START AID)	435, 438, 440
SWITCH AS-ROCKER (STARTING AID)	452, 456
SWITCH AS-ROCKER (THROTTLE)	435, 438, 441
SWITCH AS-ROCKER (VIBRATORY SELECT)	448
SWITCH AS-ROCKER (VIBRATORY SELECT)	444
SWITCH AS-ROTARY (WIPER, WASHER)	447
SWITCH AS-ROTARY (WIPER, WASHER)	447
SWITCH AS-ROTARY (24-VOLT) (FAN)	447
SWITCH AS-START (KEY)	434, 437, 440, 451, 455
SWITCH AS-TEMPERATURE (COOLANT)	156, 161
SWITCH AS-TEMPERATURE (HYDRAULIC ALERT INDICATOR)	332
SWITCH AS-TEMPERATURE (HYDRAULIC OIL)	330
SWITCH GP-DISCONNECT–BATTERY	149
SWITCH GP-MAGNETIC	150, 151
SWITCH GP-MAGNETIC (24-VOLT) (GLOW PLUG)	156
SWITCH GP-MAGNETIC (24-VOLT) (GLOW PLUG RELAY)	161
SWITCH GP-MAGNETIC (24-VOLT) (START RELAY)	161
SWITCH-MICRO (NEUTRAL POSITION)	391, 393
SWITCH-NEUTRAL START	339
SWITCH-TEMPERATURE	112
SWITCH-TEMPERATURE (TIMING ADVANCE)	103, 106

T

Name	Page
TANK & MTG GP-FUEL	119
TANK & MTG GP-HYDRAULIC	322, 324, 326, 328
TANK GP-FUEL	120, 121, 123
TANK GP-HYDRAULIC	330, 332

INDEX

Name	Page
TANK GP-WINDOW WASHER	476
TURBOCHARGER GP	92

V

Name	Page
V-BELT (COMPRESSOR)	385
V-BELT SET (INCLUDES 2-BELTS)	31
V-BELT SET (INCLUDES 2-BELTS) (FAN)	30
VALVE & MTG GP-CONTROL	334
VALVE GP-BYPASS	335
VALVE GP-CONTROL	336
VALVE GP-CONTROL–PROPEL MOTOR	337
VALVE GP-FLOW CONTROL (STEERING)	263
VALVE GP-PUMP CONTROL	338
	339
	341
VALVE GP-PUMP CONTROL–VIBRATORY, FIXED DISPLACEMENT	342
VALVE GP-RELIEF	283
	343
VALVE GP-RELIEF (COMBINATION)	280
	283
	286
VALVE GP-RELIEF (CROSSOVER)	281
	285
VALVE GP-RELIEF (REFRIGERANT COMPRESSOR)	384
VALVE GP-SOLENOID	280
	283
VALVE GP-SOLENOID (PROPEL PUMP)	286
VALVE GP-SOLENOID (SHIFT)	336
VALVE GP-SOLENOID (24 V) (FUEL INJECTION PUMP)	109
VALVE GP-SOLENOID (24-VOLT) (FUEL SHUTOFF)	110
VALVE MECHANISM GP	63
	64
VALVE-SHUTOFF (COOLANT)	418
VISOR GP-CAB	477

W

Name	Page
WARNING GP-BACKUP	152
	153
WHEEL & MTG GP-DRIVE	218
WHEEL & TIRE GP–LH	219
	221
WHEEL & TIRE GP–RH	220
	222
WINDOW GP	478
WINDOW GP-DOOR	480
WINDOW GP-REAR	482
WIPER & WASHER GP-WINDOW	483
WIRING GP-AIR CONDITIONER	154
WIRING GP-CAB	155
WIRING GP-MACHINE	156
	161

INDEX

Désignation	Page

A

ACCOUPLEMENT DE POMPE (ASS)	212 214
ACCUMULATEUR - CLIMATISEUR (ASS)	364 365
ACCUMULATEUR - CLIMATISEUR (ASS) (AVEC SICCATIF)	365
ALTERNATEUR DE CHARGE (ASS)	126
ALTERNATEUR DE CHARGE (ASS) (24 VOLTS)	126
AMPOULE (*24-VOLT, 5.6-WATT)	440
AMPOULE (*24-VOLT, 5.6-WATT)	434 437
AMPOULE (*24-VOLT, 5.6-WATT) (TÉMOIN D'ALTERNATEUR)	455
AMPOULE (*24-VOLT, 5.6-WATT) (TÉMOIN D'ALTERNATEUR)	451
AMPOULE (24 VOLTS)	434 437
AMPOULE (24 VOLTS) (FREIN DE STATIONNEMENT)	443
AMPOULE (24 VOLTS) (JAUGE DE NIVEAU D'HUILE)	451
AMPOULE (24 VOLTS) (PLAFONNIER)	132
AMPOULE (24 VOLTS) (ROUGE)	447
AMPOULE (24 VOLTS) (VOYANT)	425
AMPOULE (24V, 3W)	455
AMPOULE (24V, 3W) (EFFACER)(INDICATEUR DE NIVEAU DE CARBURANT)	99
AMPOULE (24V, 70W) (GYROPHARE)	138
ARBRE - POIDS EXCENTRIQUE (ASS)	359 360 361
ARBRE A CAMES (ASS)	7
ATTELAGE-ARTICULATION ET OSCILLATION (ASS)	240
AUTOCOLLANT DE FUSIBLE/ RELAIS	444 448
AUTOCOLLANT DE MISE EN GARDE (DÉMARRAGE AVEC CÂBLES VOLANTS, LIRE LE GUIDE)	493
AUTOCOLLANT DE MISE EN GARDE (DÉMARRAGE AVEC CÂBLES VOLANTS, LIRE LE GUIDE)	492
AUTOCOLLANT DE MISE EN GARDE (INSTRUCTIONS D'UTILISATION)	493
AUTOCOLLANT DE MISE EN GARDE (PAS DE CADRE ROPS/FOPS)	383
AUTOCOLLANT DE MISE EN GARDE (PAS DE SOUDAGE, PAS DE PERÇAGE, LIRE LE GUIDE D'UTILISATION ET D'ENTRETIEN)	492 494
AUTOCOLLANT D'IDENTIFICATION (COMMANDES DE POSTE DE CONDUITE)	388
AUTOCOLLANT D'IDENTIFICATION (COMPTEUR D'ENTRETIEN)	437
AUTOCOLLANT D'IDENTIFICATION (COMPTEUR D'ENTRETIEN)	452
AUTOCOLLANT D'IDENTIFICATION (CS-533E)	486 490
AUTOCOLLANT D'IDENTIFICATION (PANNEAU DE DISJONCTEUR)	157 162
AUTOCOLLANT D'IDENTIFICATION (TABLEAU DE BORD)	434 437 440 452 456
AUTOCOLLANT-INFORMATION (ISSUE DE SECOURS)	463 464
AUTOCOLLANT (INSTRUMENTS)	443
AUTOCOLLANT INSTRUMENTS (PANNEAU)	448
AVERTISSEUR (ASS)	125
AVERTISSEUR DE RECUL (ASS)	153
AVERTISSEUR DE RECUL (ASS)	152
AXE DE CULBUTEUR (ASS)	59

B

BAÏONNETTE- NIVEAU DE CARBURANT (ASS)	99
BAÏONNETTE- NIVEAU DE CARBURANT (ASS) (24 VOLTS)	434 437 451
BALAI D'ESSUIE-GLACE (ENS) (500-MM)	483
BALAI D'ESSUIE-GLACE (ENS) (700-MM)	483
BÂTI AR (ASS)	234
BATTERIE ET CÂBLAGE	127
BATTERIE (12V, SANS ENTRETIEN)	127
BLINDAGE DE TRANSMISSION	238
BLOC-CYLINDRES (ASS)	23 25 26
BOÎTIER D'ESSIEU (ASS)	195
BOUCHON À ÉVENT (ENS) (VASE D'EXPANSION DE LIQUIDE DE REFROIDISSEMENT)	84
BOUCHON À ÉVENT (LAVE-GLACE)	476
BOUCHON AIMANTÉ	191 193
BOUCHON AIMANTÉ (SUPPORT VIBRANT)	362

* TRADUCTION NON DISPONIBLE AU MOMENT DE LA PUBLICATION

INDEX

Désignation	Page
BOUCHON AIMANTÉ (TAMBOUR À PIEDS DAMEURS)	192
BOUCHON DE GOULOTTE DE CARBURANT (ASS)	94
BOUCHON DE GOULOTTE DE CARBURANT (ASS) (*LOCKABLE, WITH BOOT)	123
BOUCHON DE GOULOTTE DE CARBURANT (ASS) (*LOCKABLE, WITH BOOT)	121
BOUCHON DE GOULOTTE DE CARBURANT (SERVICE INTENSIF, VERROUILLABLE)	120
BOUCHON DE GOULOTTE DE REMPLISSAGE D'HUILE (MOTEUR)	9 11 13 15 17
BOUCHON DE GOULOTTE DE REMPLISSAGE (ENS) (RÉSERVOIR HYDRAULIQUE)	330 332
BOUCHON DE MOTEUR (ASS)	54 55 56 57
BOUCHON DE RADIATEUR (ENS)	82
BOUCHON DE REMPLISSAGE DE CARBURANT (VERROUILLABLE)	121 123
BOUCHON DE REMPLISSAGE D'HUILE MOTEUR (ASS)	9 11 13 15
BOUCHON DE VIDANGE	209
BOUCHON DE VIDANGE (ENS) (MAGNÉTIQUE)	170
BOUCHON DE VIDANGE (ENS) (MAGNÉTIQUE) (ESSIEU)	168
BOUCHON DE VIDANGE (HUILE MOTEUR)	47
BOUCHON DE VIDANGE (HUILE MOTEUR)	49
BOUCHON DE VIDANGE (PIGNON DE RÉDUCTION DE VITESSE)	205
BOUCHON DE VIDANGE (PLANÉTAIRE)	204
BOUDIN DE ROUE (ASS)	194
BOUGIE DE PRECHAUFFAGE	131
BOUGIE DE PRÉCHAUFFAGE (ASS)	131
BOULONNERIE-SIÈGE (ASS)	469 472
BOUTON DE DIRECTION (ASS)	269
BRAS D'ESSUIE-GLACE (ASS)	375 483

C

Désignation	Page
*CAB GP-ENCLOSED ROPS	377 379 381
CABINE - REVÊTEMENT (ASS)	415
CABINE-FAISCEAU DE CÂBLES (ENS)	155 448
CABINE ROPS FERMÉE (ASS)	463 464
CABINE (VERSION)	376
CABLAGE - CLIMATISEUR (ASS)	154
CABLAGE DE CABINE (ASS)	155
CABLAGE DE LA MACHINE (ASS)	156 161
CACHE-SOUPAPES (ASS)	9 11 13 15 17
CADENAS	489
CADENAS (ASS)	486 487 490 491
CADENAS (ASS) (PROTECTION ANTIVANDALISME)	409
CANALISATIONS D'AIR (ASS)	89
CANALISATIONS DE CARBURANT (ASS)	102
CANALISATIONS DE CHAUFFAGE DE CABINE (ASS)	418
CANALISATIONS DE CLIMATISEUR (ASS)	416
CANALISATIONS DE DIRECTION (ASS)	270
CANALISATIONS DE FILTRE	289
CANALISATIONS DE FREIN ET CHANGEMENT DE VIT (ENS)	261
CANALISATIONS DE RÉCHAUFFEUR DE LIQUIDE DE REFROIDISSEMENT	418
CANALISATIONS DE REFROIDISSEUR D'HUILE HYDR. (ASS)	290
CANALISATIONS DE VÉRIN DE DIRECTION (ASS)	271
CANALISATIONS DE VIBRATEUR (ASS)	352
CANALISATIONS D'ENTRAINEMENT	198
CAPOT (ASS)	241 243 244 246 248 250 251 253
CAPTEUR DE VITESSE (ASS) (JAUGE DE COMPTE-TOURS DE VIBRATION)	407

* TRADUCTION NON DISPONIBLE AU MOMENT DE LA PUBLICATION

INDEX

Désignation	Page
CARENAGE DE MOTEUR (ASS)	227, 229, 231
CARTER AV (ASS)	35, 37, 39
CARTER DE VOLANT (ASS)	34
CARTER-POIDS EXCENTRIQUE (ASS)	345
CARTER-POIDS EXCENTRIQUE (ASS)	346, 348, 349
CEINTURE DE SECURITE (ASS)	472
CEINTURE DE SECURITE (ASS)	469
CHAPEAU (ENS) (GOULOTTE D'HUILE MOTEUR)	11, 13, 15, 17
CHÂSSIS AV (ASS)	233
CHAUFFAGE DE CABINE (ASS)	411, 413
CHAUFFAGE ET MONTAGE - CABINE (ASS)	410
CLAPET DE DECHARGE (ASS)	343
CLAPET DE DECHARGE (ASS)	283
CLAPET DE DECHARGE (ASS) (COMBINAISON)	280
CLAPET DE DECHARGE (ASS) (COMBINAISON)	283, 286
CLAPET DE DECHARGE (ASS) (COMPRESSEUR DE RÉFRIGÉRANT)	384
CLAPET DE DECHARGE (ASS) (LIMITEUR SECONDAIRE)	281, 285
CLAVETTE WOODRUFF	35
CLÉ	434, 437, 440, 451, 455
CLÉ (COUPE-BATTERIE)	149
CLIMATISEUR (ASS)	366, 369, 370, 372, 373
COLLECTEUR ET SOUPAPE (ASS)	291
COMMANDE DE DEPLACEMENT (ASS)	391, 393
COMMANDE DE DIRECTION (ASS)	263
COMMANDE DE POIGNÉE (ASS)	390
COMMANDE DE VITESSE ET DE SENS DE MARCHE	388
COMMANDE HYDRAULIQUE (ASS)	275
COMPRESSEUR DE REFRIGERANT (ASS)	384, 385
COMPTE-TOURS (ENS)	407
CONDENSATEUR ET MONTAGE (RÉFRIGÉRANT)	387
CONTACTEUR DE DÉMARRAGE AU POINT MORT	339
CONTACTEUR MAGNETIQUE (ASS)	150, 151
CONTACTEUR MAGNETIQUE (ASS) (24 VOLTS) (BOUGIE DE PRÉCHAUFFAGE)	156
CONTACTEUR MAGNETIQUE (ASS) (24 VOLTS) (RELAIS DE BOUGIE D'ALLUMAGE)	161
CONTACTEUR MAGNETIQUE (ASS) (24 VOLTS) (RELAIS DE DÉMARRAGE)	161
CONTACTEUR-MICRO (POINT MORT)	391, 393
COUDE D'ADMISSION D'AIR (ASS)	88
COURONNE DENTEE	168, 170
COURROIE TRAPEZOIDALE (COMPRESSEUR)	385
COUVERCLE	17
COUVERCLE AVANT (ENS)	35
COUVERCLE DE CARTER AV (ASS)	8
CRÉPINE-ASPIRATION	332
CRÉPINE-ASPIRATION (RÉSERVOIR HYDRAULIQUE)	330
CULASSE (ASS)	27, 28, 29
CULBUTERIE (ASS)	63, 64

D

Désignation	Page
DÉMARREUR ÉLECTRIQUE (ASS)	148
DIAPHRAGME (CONTACTEUR DE PRESSION DE VILEBREQUIN)	11, 13, 15, 17
DIAPHRAGME (CONTACTEUR DE PRESSION DE VILEBREQUIN)	9
DIFFERENTIEL (ASS)	172, 173, 174
DIODE (*WHITE, 24-VOLT) (JAUGE DE NIVEAU D'HUILE)	99
DIODES (ASS)	434, 437, 440

* TRADUCTION NON DISPONIBLE AU MOMENT DE LA PUBLICATION

INDEX

Désignation	Page
DIODES (ASS) (INSTRUMENT)	451, 455
DISJONCTEUR (ENS) (10A)	448
DISJONCTEUR (ENS) (15A) (INTERRUPTEUR À CLÉ)	448
DISJONCTEUR (ENS) (15A) (RELAIS DE PUISSANCE PRINCIPAL)	444
DISJONCTEUR (ENS) (60A) (ALTERNATEUR)	161
DISJONCTEUR (ENS) (60A) (BOUGIE DE PRÉCHAUFFAGE)	156, 161
DISJONCTEUR (ENS) (60A) (PRINCIPAL)	161
DISTRIBUTEUR (ASS)	336, 337
DISTRIBUTEUR DE DÉBIT (ASS) (DIRECTION)	263
DISTRIBUTEUR DE POMPE (ASS)	341, 342
DISTRIBUTEUR DE POMPE (ASS)	338, 339
DISTRIBUTEUR ET MONTAGE (ASS)	334

E

ÉCLAIRAGE - AVERTISSEUR (ASS)	145
ÉCLAIRAGE - AVERTISSEUR (ASS)	144
ÉCLAIRAGE - PROJECTEURS (ASS)	139
ÉCLAIRAGE - PROJECTEURS (ASS)	140, 141, 142
ÉLÉMENT DE FILTRE À AIR (ENS) (PRINCIPAL)	87
ÉLÉMENT DE FILTRE À AIR (ENS) (SECONDAIRE)	87
ÉLÉMENT DE FILTRE (ENS)-CARBURANT	95, 97
ÉLÉMENT DE FILTRE (ENS)-CARBURANT (SÉPARATEUR D'EAU)	115, 117
ENSEMBLE DE TAPIS DE PLANCHER	459
ENTRAÎNEMENT DE POMPE (ASS)	32
ENTRAÎNEMENT DE ROUE ET MONTAGE (ASS)	218
ENTRAINEMENT DE TAMBOUR (ASS)	175, 177, 179, 181, 183
ENTRAÎNEMENT DE VENTILATEUR (ASS)	30, 31
ENTRAÎNEMENT POUR COURROIE	138
ENTRETIEN DU MOTEUR (ASS)	60, 61
ENVELOPPE À PIEDS DAMEURS (ASS)	216, 217
ESSIEU DE MOTEUR ET MONTAGE (ASS)	166, 167
ESSIEU MOTEUR (ASS)	168, 170
ESSUIE-GLACE ET LAVE-GLACE	483

F

FAISCEAU DE CABLES - AVERTISSEUR (ENS) (AVERTISSEMENT DE RECUL)	152, 153
FAISCEAU DE CABLES - CAPTEUR (ENS) (VIBRANT)	407
FAISCEAU DE CHÂSSIS (ENS)	156, 161
FAISCEAU DE CHAUFFAGE ET CLIMATISATION	154, 366, 373, 411, 413
FAISCEAU D'ÉCLAIRAGE (ENS) (PLAFONNIER)	141
FAISCEAU D'ÉCLAIRAGE (ENS) (PLAFONNIER)	142
FAISCEAU D'ÉCLAIRAGE (ENS) (PLAFONNIER)	139, 140
FILTRE	369, 405
FILTRE - RENIFLARD (*FUEL CAP)	121, 123
FILTRE A AIR (ASS)	85, 87
FILTRE À AIR DE CABINE (ASS)	405
FILTRE À CARBURANT	120, 121, 123
FILTRE A CARBURANT (ASS)	95, 97
FILTRE A HUILE (ASS) (HYDRAULIQUE)	278
FILTRE À HUILE (EFFICACITÉ AVANCÉE) (HYDRAULIQUE)	278
FILTRE À HUILE HYDRAULIQUE ET MONTAGE (ASS)	278
FILTRE À HUILE MOTEUR (ASS)	66
FILTRE A HUILE MOTEUR (ENS)	66
FLEXIBLE DE RADIATEUR (INFÉRIEUR)	80
FLEXIBLE DE RADIATEUR (SUPÉRIEUR)	80
FUSIBLE (10A)	443, 447

* TRADUCTION NON DISPONIBLE AU MOMENT DE LA PUBLICATION

INDEX

Désignation — Page

G

GAINE D'AIR (ASS) 403
GLACE AR 482
GLACE DE PORTIÈRE (ASS) 480
GROUPE DE MOTEUR A PISTONS 293
295
297
299
301
303
GROUPE DE ROTATION DE MOTEUR 316
GROUPE DE ROTATION DE POMPE 317
319
320
321

H

HUILE MOTEUR - CARTER (ASS) 47
49
HYDRAULIQUE AUXILIAIRE (VERSION) 288

I

INDICATEUR DE COLMATAGE DE FILTRE À AIR (ASS) 85
INDICATEUR DE VIBRATION (ASS) 407
INTERRUPTEUR - BOUTON-POUSSOIR (ENS) (FREIN DE STATIONNEMENT) 443
447
INTERRUPTEUR - BOUTON-POUSSOIR (ENS) (VIBREUR, CHOISIR MARCHE/ ARRÊT) 390
INTERRUPTEUR BALANCIER (ENS) (ACCÉLÉRATEUR) 435
438
441
INTERRUPTEUR BALANCIER (ENS) (AUXILIAIRE DE DÉMARRAGE) 435
438
440
452
456
INTERRUPTEUR BALANCIER (ENS) (CLIMATISEUR) 372
INTERRUPTEUR BALANCIER (ENS) (CLIMATISEUR MARCHE/ARRÊT) 370
INTERRUPTEUR BALANCIER (ENS) (GYROPHARE) 144
145
INTERRUPTEUR BALANCIER (ENS) (PROJECTEUR) 139
140
INTERRUPTEUR BALANCIER (ENS) (PROJECTEURS) 447
INTERRUPTEUR BALANCIER (ENS) (PROJECTEURS) 142
INTERRUPTEUR BALANCIER (ENS) (SÉLECTEUR DE VIBRATEUR) 444
INTERRUPTEUR BALANCIER (ENS) (SÉLECTEUR DE VIBRATEUR) 448
INTERRUPTEUR BALANCIER (ENS) (SÉLECTEUR DE VITESSE) 435
438
441
452
456
INTERRUPTEUR DE DEMARRAGE (ENS) (CLAVETTE) 434
437
440
INTERRUPTEUR DE DEMARRAGE (ENS) (CLAVETTE) 451
455
INTERRUPTEUR ROTATIF (ENS) (ESSUIE-GLACE, LAVE-GLACE) 447
INTERRUPTEUR ROTATIF (ENS) (24 VOLTS) (VENTILATEUR) 447

J

JAUGE D'HUILE MOTEUR (BAÏONNETTE) (ENS) (MOTEUR) 47
49
JEU DE COURROIES TRAPEZOIDALES (COMPREND 2 COURROIES) 31
JEU DE COURROIES TRAPEZOIDALES (COMPREND 2 COURROIES) (VENTILATEUR) 30
JOINT DE COUVERCLE 35
JOINT DUO-CONE (ASS) 205
209
JOINT PLAT (CACHE-SOUPAPES) 15
17
JOINT PLAT (CACHE-SOUPAPES) 11
13
JOINT PLAT (CACHE-SOUPAPES) 9

K

KIT DE COUSSINET DE BIELLE (0,25-MM SURDIMENSIONNÉ) 19
KIT DE COUSSINET DE BIELLE (0,51-MM SURDIMENSIONNÉ) 19
KIT DE COUSSINET DE BIELLE (0,76-MM SURDIMENSIONNÉ) 19

* TRADUCTION NON DISPONIBLE AU MOMENT DE LA PUBLICATION

INDEX

Désignation	Page
KIT DE COUSSINET DE VILEBREQUIN (0,25-MM SURDIMENSIONNÉ)	19
KIT DE COUSSINET DE VILEBREQUIN (0,5 MM SURDIMENSIONNÉ)	19
KIT DE COUSSINET DE VILEBREQUIN (0,76-MM SURDIMENSIONNÉ)	19
KIT DE JOINTS (VÉRIN DE DIRECTION)	276
KIT DE MONTAGE (POMPE D'AMORÇAGE DE CARBURANT)	115
KIT DE REGLAGE	470
	474

L

LAMPE - GYROPHARE (ASS)	138
LAMPE - PHARE (ASS)	133
LAMPE - PHARE (ASS)	134
	135
	136
	137
LAMPE DE TÉMOIN (ENS)	434
	437
	440
LAMPE DE TÉMOIN (ENS) (ALTERNATEUR)	455
LAMPE DE TÉMOIN (ENS) (ALTERNATEUR)	451
LAMPE HALOGÈNE (24V, 65W)	137
LAMPE HALOGÈNE (24V, 65W) (PROJECTEUR)	133
	134
	135
	136
LENTILLE ORANGE	434
	437
	440
LENTILLE ORANGE (ALTERNATEUR)	455
LENTILLE ORANGE (ALTERNATEUR)	451
LENTILLE ROUGE	434
	437
	440
	451
	455

M

MAIN COURANTE (ASS)	239
MANOCONTACT (ENS) (COMPRESSEUR)	385
MANOCONTACT (ENS) (HUILE HYDRAULIQUE)	278
MANOCONTACT (ENS) (HUILE MOTEUR)	156
	161
MARCHEPIED (ASS)	260
MECANISME DE COMMANDE DE POMPE (ASS)	273
	274
MODULE - TÉMOIN (ASS)	425
MODULE CHRONOMETRE	146
	443
	448
MONTAGE DE CABINE (ASS)	428
	430
MONTAGE DE MOTEUR (ASS)	42
	43
MONTAGE DE MOTEUR (VERSION)	6
MONTAGE DES TAMBOURS (ASS)	197
MONTAGE SOUPLE DU MOTEUR (ASS)	45
	46
MOTEUR - MONTAGE ET VIBRATION (ENS)	354
MOTEUR D'ESSUIE-GLACE (ASS)	426
	427
MOTEUR D'ESSUIE-GLACE (ASS) (24 VOLTS)	483
MOTEUR ET MONTAGE - PROPULSION (ASS)	200
	201
MOTEUR (VERSION)	3
MOTEUR (VERSION PRINCIPALE)	4
	5

O

OEILLETONS DE LEVAGE MOTEUR (ASS)	41
ORIFICE DE CLIMATISEUR (ENS)	367
	373

P

PANNEAU DE FAISCEAU (ENS)	440
	455
PANNEAU DE FAISCEAU (ENS) (CONSOLE AVANT)	434
	437
	451
PANNEAU DE FAISCEAU (ENS) (CONSOLE LATÉRALE)	443
PANNEAU DE FAISCEAU (ENS) (CONSOLE LATÉRALE)	448
PANNEAU DE FAISCEAU (ENS) (KLAXON)	434
	452
	456
PARE-CHOCS AV (ASS)	224
	225
	226
PARE-SOLEIL	477
PARE-SOLEIL (ASS)	466
	467
	468

* TRADUCTION NON DISPONIBLE AU MOMENT DE LA PUBLICATION

INDEX

Désignation	Page
PISTON ET BIELLE (ASS)	51
	53
PLAFONNIER (ASS)	132
PLAFONNIER (ASS) (24 VOLTS)	415
PLAQUE D'INSTRUCTIONS (BATTERIE)	127
PLAQUE D'INSTRUCTIONS (CLIMATISEUR)	416
PLAQUE (IDENTIFICATION) (AUXILIAIRE DE DÉMARRAGE)	434
	437
	451
	455
PLAQUE (IDENTIFICATION) (BALOURD)	345
	348
	349
PLAQUE (IDENTIFICATION) (MOTEUR)	440
PLAQUE SIGNALÉTIQUE (ASS)	485
PLAQUE SIGNALÉTIQUE ROPS/FOPS	493
PLAQUES SIGNALETIQUES ET AUTOCOLLANTS (ASS)	486
	493
	494
PLAQUES SIGNALETIQUES ET AUTOCOLLANTS (ASS)	487
	489
	490
	491
	492
PLATE-FORME DE CABINE	459
	460
POMPE À COMMANDE MANUELLE (ASS) (INCLINAISON DE VÉRIN LEVAGE DE NÉRIN)	395
POMPE A EAU (ASS)	78
POMPE A ENGRENAGES (ASS)	305
POMPE A HUILE MOTEUR (ASS)	67
POMPE A PISTONS (ASS)	306
	308
	310
	311
	313
	315
POMPE D'AMORÇAGE DE CARBURANT (ASS)	95
	97
POMPE D'AMORÇAGE DE CARBURANT ET FILTRE PRINCIPAL	115
	117
POMPE DE DIRECTION ET MONTAGE (ASS)	272
POMPE D'INJECTION DE CARBURANT (ASS)	103
	106
	109
	110
POMPE D'INJECTION DE CARBURANT (ASS)	111
	112
POMPE ET MONTAGE - VIBRATION (ASS)	355
	357
POMPE ET MONTAGE DE PROPULSION (ASS)	212
	214
PORTIÈRE DE CABINE (ASS)	397
	399
	401
POSTE DE CONDUITE (VERSION)	431
	432
	433
PROTECTEUR DES CANALISATIONS (ASS)	236
	237
PROTECTION ANTIVANDALISME (ASS)	409

R

Désignation	Page
RACCORD (ASS)	330
	332
RACCORD D'EAU (ASS)	69
RACCORD D'EAU (ASS)	68
RACCORD D'EAU (ASS) (THERMOSTAT)	69
RACLOIR-CYLINDRE À PIEDS DAMEURS (ASS)	255
	256
RACLOIR-CYLINDRE LISSE	257
	258
	259
RADIATEUR (ASS)	82
RADIATEUR ET REFROIDISSEUR D'HUILE HYDRAULIQUE (ASS)	80
	82
REFROIDISSEUR D'HUILE MOTEUR (ASS)	70
	73
REFROIDISSEUR HUILE MOTEUR ET SUPPORT DE FILTRE	71
	73
REGARD DE NIVEAU	330
	332
REGLAGE DE HAUTEUR (ASS) (SIEGE A SUSPENSION)	470
	474
REGULATEUR (ASS)	100
REGULATEUR DE LA TENSION (ENS) (24 VOLTS) (FILTRE À CARBURANT)	95
	97
RELAIS (ENS) (24 VOLTS) (DÉMARRAGE AU POINT MORT DEUX)	444
RELAIS (ENS) (24 VOLTS) (DÉMARRAGE AU POINT MORT DEUX)	448

* TRADUCTION NON DISPONIBLE AU MOMENT DE LA PUBLICATION

INDEX

Désignation	Page
RELAIS (ENS) (24 VOLTS) (DÉMARRAGE AU POINT MORT UN)	444, 448
RELAIS (ENS) (24 VOLTS) (ÉCLAIRAGE FONCTIONNEL)	448
RELAIS (ENS) (24 VOLTS) (FREIN DEUX)	444, 448
RELAIS (ENS) (24 VOLTS) (FREIN UN)	444, 448
RELAIS (ENS) (24 VOLTS) (PRESSION D'HUILE HYDRAULIQUE)	444, 448
RELAIS (ENS) (24 VOLTS) (PRESSION D'HUILE MOTEUR)	443, 448
RELAIS (ENS) (24 VOLTS) (TÉMOIN DE FONCTIONNEMENT)	444
RELAIS (ENS) (24 VOLTS) (TÉMOINS LUMINEUX)	444, 448
RELAIS (ENS) (24 VOLTS) (TEMPÉRATURE DE L'HUILE HYDRAULIQUE)	444, 448
RELAIS (ENS) (24 VOLTS) (TEMPÉRATURE DE LIQUIDE DE REFROIDISSEMENT)	444, 448
RENIFLARD (ESSIEU)	168
RENIFLARD (ESSIEU ARRIÈRE)	170
RENIFLARD (RÉSERVOIR HYDRAULIQUE)	322, 324, 326, 328
RÉSERVOIR - LAVE-GLACE (ASS)	476
RÉSERVOIR DE CARBURANT (ASS)	120, 121
RÉSERVOIR DE CARBURANT (ASS)	123
RÉSERVOIR DE CARBURANT ET MONTAGE (ASS)	119
RÉSERVOIR HYDRAULIQUE (ASS)	330, 332
RÉSERVOIR HYDRAULIQUE ET MONTAGE (ASS)	322, 324, 326, 328
RETROVISEUR - CABINE (ASS)	477
RÉTROVISEUR (ASS)	421, 422, 423, 424
ROBINET DE BATTERIE (ASS)	149
ROTATION DE LA ROUE DU VENTILATEUR SOUFFLANT (DÉMARRAGE DU MOTEUR)	434, 437, 440, 451, 455
ROTATION DE LA ROUE DU VENTILATEUR SOUFFLANT (DÉVERROUILLAGE, DÉBLOCAGE)	463, 464
ROUE - GROUPE DE MONTAGE	203
ROUE ET PNEU (ASS)	219, 220, 221, 222

S

Désignation	Page
SIÈGE AVEC SUSPENSION (ASS)	472
SIÈGE AVEC SUSPENSION (ASS)	470, 474
SIÈGE ET MONTAGE (ASS)	469
SILENCIEUX (ASS)	90
SOLENOIDE D'ACCELERATION (ASS)	147
SONDE - NIVEAU DE CARBURANT (ENS)	120
SONDE - NIVEAU DE CARBURANT (ENS)	121, 123
SOUFFLANTE-CONDENSEUR DE RÉFRIGÉRANT (ASS)	373
SOUPAPE - SOLÉNOÏDE (ASS)	280, 283
SOUPAPE - SOLÉNOÏDE (ASS) (CHANGEMENT DE VITESSES)	336
SOUPAPE - SOLÉNOÏDE (ASS) (POMPE DE TRANSLATION)	286
SOUPAPE - SOLÉNOÏDE (ASS) (24 V) (POMPE D'INJECTION)	109
SOUPAPE - SOLÉNOÏDE (ASS) (24 VOLTS) (ARRÊT DE CARBURANT)	110
SOUPAPE D'ARRÊT (LIQUIDE DE REFROIDISSEMENT)	418
SOUPAPE DE DÉRIVATION (ASS)	335
SUPPORT DE FILTRE ET REFROIDISSEUR D'HUILE MOTEUR	73
SUPPORT DE FILTRE ET REFROIDISSEUR D'HUILE MOTEUR	71
SUPPORT DE VIBRATEUR (ASS)	362

T

Désignation	Page
TABLEAU DE BORD (ASS)	434, 437, 440, 443, 447

* TRADUCTION NON DISPONIBLE AU MOMENT DE LA PUBLICATION

INDEX

Désignation	Page
	455
TABLEAU DE BORD (ASS)	451
TAMBOUR À PIEDS DAMEURS (ASS)	191
	192
TAMBOUR DE COMPACTEUR (ASS)	185
TAMBOUR LISSE	193
TAMBOUR VIBRATEUR ET ENTRAINEMENT (ASS)	186
	187
	188
	189
	344
TAPIS DE PLANCHER	460
TAPIS DE PLANCHER DU POSTE DE CONDUITE	406
TAPIS DU PLANCHER (ASS)	406
TÊTE DE POMPE (ASS)	281
	283
	285
	286
TÊTE DE POMPE (ASS)	280
THERMOCONTACT	112
THERMOCONTACT (AVANCE À L'INJECTION)	103
	106
THERMOCONTACT (ENS) (HUILE HYDRAULIQUE)	330
THERMOCONTACT (ENS) (*HYDRAULIC ALERT INDICATOR)	332
THERMOCONTACT (ENS) (LIQUIDE DE REFROIDISSEMENT)	156
	161
THERMOSTAT-TEMPÉRATURE D'EAU	68
TIMONERIE (ASS)	420
TOIT (ASS)	383
TOIT ROPS (ASS)	462
TRAINS PLANÉTAIRES-RÉDUCTEURS (ASS)	207
	208
	209
TRAINS PLANÉTAIRES-RÉDUCTEURS (ASS)	204
TRAINS PLANÉTAIRES-RÉDUCTEURS (ASS)	205
TRANSFORMATION ELECTRIQUE (ASS)	129
TRANSMISSION (VERSION)	211
TURBOCOMPRESSEUR (ASS)	92

V

Désignation	Page
VASE D'EXPANSION POUR LIQUIDE RÉFRIGERANT	84
VENTILATEUR ASPIRANT (ASS)	74
	75
	76
	77
VERIN DE DIRECTION ET MONTAGE (ASS)	265
	267
VERIN D'INCLINAISON	395
VERIN D'INCLINAISON ET MONTAGE (ASS)	395
VERIN-GAZ (ENS)	227
VERIN-GAZ (ENS) (CAPOT MOTEUR)	229
	231
VÉRIN HYDRAULIQUE (ASS)	276
	277
VERSION DE CHASSIS	1
VERSION DE PARE-CHOCS	223
VERSION ÉLECTRIQUE	130
VERSION HYDRAULIQUE	288
VERSION NORMALE	1
	2
VIBRATION HYDRAULIQUE (VERSION)	351
VIDANGE (ENS)	117
VILEBREQUIN - POULIE (ASS)	58
VILEBREQUIN (ASS)	19
	21
VITRE (ASS)	478
VOLANT MOTEUR (ASS)	33

* TRADUCTION NON DISPONIBLE AU MOMENT DE LA PUBLICATION

INDICE

Nombre	Página
A	
ACONDICIONADOR DE AIRE (GR)	366, 369, 370
ACONDICIONADOR DE AIRE (GR)	372, 373
ACOPLAMIENTO DE BOMBA (GR)	212, 214
ACTIVADOR DE LA BOMBA (GR)	273, 274
ACUMULADOR DEL ACONDICIONADOR DE AIRE (GR)	364, 365
ACUMULADOR DEL ACONDICIONADOR DE AIRE (GR) (CON DESECANTE)	365
AGUA - CONEXIÓN DE (GR)	68, 69
AGUA - CONEXIÓN DE (GR) (REGULADOR DE TEMPERATURA)	69
AIRE - TUBERÍAS DE (GR)	89
AJUSTADOR DE ALTURA (GR) (ASIENTO DE SUSPENSION)	470, 474
ALARMA (GR)	125
ALFOMBRA (CONJ)	459
ALFOMBRILLA DE LA CABINA	406
ALFOMBRILLA DEL PISO	460
ALFOMBRILLA DEL PISO (GR)	406
ÁRBOL DE LEVAS (GR)	7
ASIENTO Y MONTAJE (GR)	469
B	
BALANCÍN (GR)	59
BASE DEL FILTRO Y ACEITE REFRIGERANTE DE MOTOR	71, 73
BASTIDOR DELANTERO (GR)	233
BASTIDOR TRASERO (GR)	234
BATERÍA Y CABLES (GR)	127
BATERÍA (12-VOLTIOS, LIBRE DE MANTENIMIENTO)	127
BLOQUE MOTOR (GR)	23, 25, 26
*BLOWER GP-REFRIG CONDENSER	373
BOMBA DE ACEITE DEL MOTOR (GR)	67
BOMBA DE AGUA (GR)	78
BOMBA DE CEBADO DE COMBUSTIBLE (GR)	95, 97
BOMBA DE CEBADO Y FILTRO PRIMARIO DE COMBUSTIBLE (GR)	115, 117
BOMBA DE DIRECCIÓN Y MONTAJE (GR)	272
BOMBA DE ENGRANAJES (GR)	305
BOMBA DE INYECCIÓN DE COMBUSTIBLE (GR)	103, 106, 109, 110, 111, 112
BOMBA DE PISTONES (GR)	306, 308, 310, 311, 313, 315
BOMBA DE PROPULSIÓN Y MONTAJE	212, 214
BOMBA DEL VIBRADOR Y MONTAJE (GR)	355, 357
BOMBA MANUAL (GR) (CILINDRO DE INCLINACIÓN)	395
BRAZO DE LIMPIAPARABRISAS (GR)	375
BRAZO DE LIMPIAPARABRISAS (GR)	483
BUJÍA INCANDESCENTE	131
BUJÍA INCANDESCENTE (GR)	131
C	
CABEZA DE BOMBA (GR)	283, 285, 286
CABEZA DE BOMBA (GR)	281
CABEZA DE BOMBA (GR)	280
CABINA - MAZO DE CABLES DE LA	155, 448
CABINA (CONFIG)	376
CABINA INCLUYE ROPS (GR)	377, 379, 381
CABINA ROPS CERRADA (GR)	463
CABINA ROPS CERRADA (GR)	464
CABLES DE LA CABINA (GR)	155
CABLES DE LA MÁQUINA (GR)	156, 161
CABLES DEL ACONDICIONADOR DE AIRE (GR)	154
CAJA DEL EJE (GRUPO)	195
CAJA DELANTERA (GR)	35, 37, 39
CALCOMANÍA DE ADVERTENCIA (ARRANQUE DEL MOTOR)	434

* NO HAY TRADUCCION DISPONIBLE EN EL MOMENTO DE LA IMPRESION

INDICE

Nombre	Página
	437
	440
	451
	455
CALCOMANÍA DE ADVERTENCIA (DESTRABAR, ALIVIO)	463
	464
CALCOMANÍA DE ADVERTENCIA (*JUMP START, READ OMM)	492
CALCOMANÍA DE ADVERTENCIA (*JUMP START, READ OMM)	493
CALCOMANÍA DE ADVERTENCIA (NO SUELDE, NO TALADRE, LEA EL OMM)	494
CALCOMANÍA DE ADVERTENCIA (NO SUELDE, NO TALADRE, LEA EL OMM)	492
CALCOMANÍA DE ADVERTENCIA (*OPERATING INSTRUCTIONS)	493
CALCOMANÍA DE ADVERTENCIA (SIN ROPS/FOPS)	383
CALCOMANÍA DE IDENTIFICACIÓN (CONTROLES DEL OPERADOR)	388
CALCOMANÍA DE IDENTIFICACIÓN (*CS-533E)	486
	490
CALCOMANÍA DE IDENTIFICACIÓN (MEDIDOR DE SERVICIO)	437
	452
CALCOMANÍA DE IDENTIFICACIÓN (TABLERO DE CIRCUITO)	157
	162
CALCOMANÍA DE IDENTIFICACIÓN (TABLERO DE INSTRUMENTOS)	440
	456
CALCOMANÍA DE IDENTIFICACIÓN (TABLERO DE INSTRUMENTOS)	434
	437
	452
CALCOMANIA-FUSIBLE/RELÉ	444
	448
CALCOMANÍA-INSTRUMENTO (TABLERO)	448
CALCOMANÍA (INSTRUMENTOS)	443
CALCOMANÍAS Y PLACAS DE IDENTIFICACIÓN (GR)	486
	487
	489
	490
	491
	492
	493
	494
CALEFACCIÓN DE LA CABINA (GR)	411
	413
CALEFACCIÓN Y MONTAJE DE LA CABINA (GR)	410
CÁNCAMOS DE LEVANTAMIENTO DEL MOTOR (GR)	41
CANDADO	489
CANDADO (GR)	486
	487
	490
	491
CANDADO (GR) (PROTECCIÓN CONTRA BANDALISMO)	409
*CAP-FUEL FILLER (TRABABLE)	121
	123
CAPÓ (GR)	241
	243
	244
	246
	248
	250
	251
	253
CARGA - ALTERNADOR DE (GR)	126
CARGA - ALTERNADOR DE (GR) (24 VOLTIOS)	126
CÁRTER - COLECTOR DEL (GR)	49
CÁRTER - COLECTOR DEL (GR)	47
CASCO ACOLCHADO (GR)	216
	217
CHASIS (CONFIG)	1
CHAVETA DE MEDIA LUNA	35
CIGÜEÑAL - POLEA DE (GR)	58
CIGÜEÑAL (GR)	21
CIGÜEÑAL (GR)	19
CILINDRO DE DIRECCIÓN Y MONTAJE (GR)	265
	267
CILINDRO DE INCLINACIÓN Y MONTAJE (GR)	395
CILINDRO HIDRÁULICO (GRUPO)	276
	277
CINTURÓN DE SEGURIDAD (GR)	469
	472
CODO DE ADMISIÓN DE AIRE (GR)	88
COLADOR DE COMBUSTIBLE	120
	121
	123
COLADOR-SUCCION	332
COLADOR-SUCCION (TANQUE HIDRÁULICO)	330
COMBUSTIBLE - TANQUE DE (GR)	120
	121
	123
COMPARTIMIENTO DEL MOTOR (GR)	231
COMPARTIMIENTO DEL MOTOR (GR)	227

* NO HAY TRADUCCION DISPONIBLE EN EL MOMENTO DE LA IMPRESION

INDICE

Nombre	Página
	229
COMPARTIMIENTO DEL OPERADOR (CONFIG)	431
	432
	433
COMPRESOR DE REFRIGERANTE (GR)	384
	385
CONDENSADOR DEL REFRIGERANTE Y MONTAJE (GR)	387
CONDUCTO DE AIRE (GR)	403
CONEXIÓN (GR)	330
	332
CONFIGURACIÓN AUXILIAR HIDRÁULICA	288
CONFIGURACIÓN COMÚN	1
	2
CONFIGURACIÓN DE CABLERIA, CALENTADOR Y ACONDICIONADOR DE AIRE	154
	366
	373
	411
	413
CONFIGURACIÓN DE INSTALACIÓN DEL MOTOR	6
CONFIGURACIÓN DE MOTORES	3
CONFIGURACIÓN ELÉCTRICA	130
CONJ. ORIFICIO-AIRE ACONDICIONADO	367
	373
CONJUNTO DE TAPA-VENTILADA (COLECTOR DE REFRIGERANTE)	84
CONJUNTO DE TAPON, DRENAJE (MAGNÉTICO)	170
CONJUNTO DE TAPON, DRENAJE (MAGNÉTICO) (EJE)	168
CONTROL DE DIRECCIÓN (GR)	263
CONTROL DE MANIJA (GR)	390
CONTROL DE PROPULSION (GR)	393
CONTROL DE PROPULSION (GR)	391
CONTROL GR-DIRECCIÓN Y VELOCIDAD	388
CONTROL HIDRÁULICO (GR)	275
CONVERTIDOR ELÉCTRICO (GR)	129
CORONA (GR)	168
	170
CORREA TRAPEZOIDAL (COMPRESOR)	385
*COVER AS-FRONT	35
CUBIERTA	17
CULATA DE CILINDROS (GR)	27
	28
	29
*CYLINDER AS-TILT	395

D

Nombre	Página
DERIVACIÓN - VÁLVULA DE (GR)	335
DETECTOR DE NIVEL DEL COMBUSTIBLE	120
	121
	123
DIAFRAGMA (CONTACTOR DE PRESIÓN DEL CÁRTER)	9
DIAFRAGMA (CONTACTOR DE PRESIÓN DEL CÁRTER)	11
	13
	15
	17
DIFERENCIAL (GR)	172
	173
	174
DIODO (GR)	434
	437
	440
DIODO (GR) (INSTRUMENTO)	451
	455
DISYUNTOR (CONJ) (10-AMPERIOS)	448
DISYUNTOR (CONJ) (15 AMPERIOS) (INTERRUPTOR DE LLAVE)	448
DISYUNTOR (CONJ) (15 AMPERIOS) (RELÉ DE FUERZA PRINCIPAL)	444
DISYUNTOR (CONJ) (60 AMPERIOS) (ALTERNADOR)	161
DISYUNTOR (CONJ) (60 AMPERIOS) (BUJÍA INCANDESCENTE)	156
	161
DISYUNTOR (CONJ) (60 AMPERIOS) (PRINCIPAL)	161
DISYUNTOR (GR)	149
DRENAJE (CONJ)	117

E

Nombre	Página
EJE DE IMPULSIÓN Y MONTAJE (GR)	166
	167
EJE MOTRIZ (GR)	168
	170
ELEMENTO DE FILTRO DE COMBUSTIBLE (CONJ)	95
	97
ELEMENTO DE FILTRO DE COMBUSTIBLE (CONJ) (SEPARADOR DE AGUA)	117
ELEMENTO DE FILTRO DE COMBUSTIBLE (CONJ) (SEPARADOR DE AGUA Y COMBUSTIBLE)	115
ELEMENTO DEL FILTRO DE AIRE (CONJ) (PRIMARIO)	87
ELEMENTO DEL FILTRO DE AIRE (CONJ) (SECUNDARIO)	87

* NO HAY TRADUCCION DISPONIBLE EN EL MOMENTO DE LA IMPRESION

INDICE

Nombre	Página
EMPAQUETADURA (TAPA DE VÁLVULA)	9, 15, 17
EMPAQUETADURA (TAPA DE VÁLVULA)	11, 13
ENFRIADOR DE ACEITE DEL MOTOR (GR)	70, 73
ENFRIADOR DE ACEITE DEL MOTOR Y BASE DEL FILTRO	71, 73
ENGANCHE ARTICULADO Y OSCILANTE (GR)	240
ESTRIBO DEL OPERADOR (GR)	260
ESTRUCTURA ROPS (GR)	462
ETIQUETA DE ADVERTENCIA (GR)	485

F

*FILTER-BREATHER (*FUEL CAP)	121, 123
FILTRO	369, 405
FILTRO - TUBERÍAS DE (GR)	289
FILTRO DE ACEITE DEL MOTOR (CONJ)	66
FILTRO DE ACEITE DEL MOTOR (GR)	66
FILTRO DE ACEITE (EFICIENCIA AVANZADA) (HIDRÁULICO)	278
FILTRO DE ACEITE (GR) (HIDRÁULICO)	278
FILTRO DE ACEITE HIDRÁULICO Y MONTAJE (GR)	278
FILTRO DE AIRE DE LA CABINA (GR)	405
FILTRO DE AIRE (GR)	85, 87
FILTRO DE COMBUSTIBLE (GR)	95, 97
FUSIBLE (10-AMPERIOS)	443, 447

G

*GAUGE AS-TACHOMETER	407
GRUPO DE MONTAJE DE LA CABINA	428, 430
GRUPO DE PESTAÑA, RUEDA	194
GRUPO DE ROTACIÓN DEL MOTOR (GR)	316
GRUPO GIRATORIO DE BOMBA	317, 319, 320, 321
GRUPO PERILLA, DIRECCIÓN	269

H

*HANDRAIL GP	239
HIDRÁULICA (CONFIG)	288
HOJA DE LIMPIAPARABRISAS (CONJ) (*500-MM)	483
HOJA DE LIMPIAPARABRISAS (CONJ) (*700-MM)	483

I

IMPULSOR DE VENTILADOR (GR)	31
IMPULSOR DE VENTILADOR (GR)	30
INDICADOR DE CAMBIO DE FILTRO DE ACEITE (GR)	85
INDICADOR DEL NIVEL DE ACEITE (GR)	99
INDICADOR DEL NIVEL DE ACEITE (GR) (24 VOLTIOS)	434, 437, 451
INDICADOR DEL NIVEL DEL ACEITE (VARILLA) (CONJ) (MOTOR)	47, 49
INSTALACIÓN DEL TAMBOR (GR)	197
INTERRUPTOR DE ARRANQUE (CONJ) (LLAVE)	434, 437, 440, 451, 455
INTERRUPTOR DE ARRANQUE EN NEUTRAL	339
INTERRUPTOR DE PRESIÓN (CONJ) (ACEITE DEL MOTOR)	156, 161
INTERRUPTOR DE PRESIÓN (CONJ) (ACEITE HIDRÁULICO)	278
INTERRUPTOR DE PRESIÓN (CONJ) (COMPRESOR)	385
INTERRUPTOR DE TEMPERATURA	112
INTERRUPTOR DE TEMPERATURA (AVANCE DE SINCRONIZACION)	103, 106
INTERRUPTOR DE TEMPERATURA (CONJ) (ACEITE HIDRÁULICO)	330
INTERRUPTOR DE TEMPERATURA (CONJ) (*HYDRAULIC ALERT INDICATOR)	332
INTERRUPTOR DE TEMPERATURA (CONJ) (REFRIGERANTE)	156, 161
INTERRUPTOR DE VOLQUETE (CONJ) (ACELERACIÓN)	435, 438, 441

* NO HAY TRADUCCION DISPONIBLE EN EL MOMENTO DE LA IMPRESION

INDICE

Nombre	Página
INTERRUPTOR DE VOLQUETE (CONJ) (ACONDICIONADOR DE AIRE ACTIVACION/DESACTIV.)	370
INTERRUPTOR DE VOLQUETE (CONJ) (AIRE ACONDICIONADO)	372
INTERRUPTOR DE VOLQUETE (CONJ) (AUXILIAR DE ARRANQUE)	435, 438, 440, 456
INTERRUPTOR DE VOLQUETE (CONJ) (AUXILIAR DE ARRANQUE)	452
INTERRUPTOR DE VOLQUETE (CONJ) (BALIZA)	144, 145
INTERRUPTOR DE VOLQUETE (CONJ) (REFLECTOR)	139
INTERRUPTOR DE VOLQUETE (CONJ) (REFLECTOR)	140
INTERRUPTOR DE VOLQUETE (CONJ) (REFLECTORES)	447
INTERRUPTOR DE VOLQUETE (CONJ) (REFLECTORES)	142
INTERRUPTOR DE VOLQUETE (CONJ) (SELECCIÓN DE VELOCIDAD)	435, 438, 441
INTERRUPTOR DE VOLQUETE (CONJ) (SELECCIÓN DE VELOCIDAD)	452, 456
INTERRUPTOR DE VOLQUETE (CONJ) (SELECTOR VIBRADOR)	444, 448
INTERRUPTOR MAGNÉTICO (GR)	150, 151
INTERRUPTOR MAGNÉTICO (GR) (24 VOLTIOS) (BUJÍA INCANDESCENTE)	156
INTERRUPTOR MAGNÉTICO (GR) (24 VOLTIOS) (RELÉ DE ARRANQUE)	161
INTERRUPTOR MAGNÉTICO (GR) (24 VOLTIOS) (RELÉ DE LA BUJÍA INCANDESCENTE)	161
INTERRUPTOR-MICRO (POSICIÓN NEUTRAL)	391, 393
INTERRUPTOR PULSADOR (CONJ) (FRENO DE ESTACIONAMIENTO)	443, 447
INTERRUPTOR PULSADOR (CONJ) (VIBRATORIO, SECCIÓN ACTIVO/INACTIVO)	390
INTERRUPTOR ROTATIVO (CONJ) (LIMPIA, LAVAPARABRISAS)	447
INTERRUPTOR ROTATIVO (CONJ) (LIMPIA, LAVAPARABRISAS)	447
INTERRUPTOR ROTATIVO (CONJ) (24 VOLTIOS) (VENTILADOR)	447

J

JUEGO DE AJUSTE DEL ASIENTO	470, 474
JUEGO DE COJINETES DE BANCADA (0,25 MM OS)	19
JUEGO DE COJINETES DE BANCADA (0,5-MM)	19
JUEGO DE COJINETES DE BANCADA (0,76 MM OS)	19
JUEGO DE COJINETES DE BIELA (0,25 MM OS)	19
JUEGO DE COJINETES DE BIELA (0,51 MM OS)	19
JUEGO DE COJINETES DE BIELA (0,76 MM OS)	19
JUEGO DE CORREAS TRAPEZOIDALES (INCLUYE 2-CORREAS)	31
JUEGO DE CORREAS TRAPEZOIDALES (INCLUYE 2-CORREAS) (VENTILADOR)	30
JUEGO DE MONTAJE (BOMBA DE CEBADO DE COMBUSTIBLE)	115
JUEGO DE SELLOS (CILINDRO DE DIRECCION)	276
JUNTA DE LA TAPA DE VÁLVULAS	35

L

LÁMPARA DE BALIZA DE ADVERTENCIA (GR)	138
LÁMPARA DEL TECHO (GR)	132
LÁMPARA DEL TECHO (GR) (24 VOLTIOS)	415
LAMPARA INDICADORA (CONJ)	434, 437, 440
LAMPARA INDICADORA (CONJ) (ALTERNADOR)	451, 455
LAMPARA-LED (*WHITE, 24-VOLT) (MEDIDOR DE NIVEL DE COMBUSTIBLE)	99
LÁMPARA (*24-VOLT, 5.6-WATT)	434
LÁMPARA (*24-VOLT, 5.6-WATT)	437, 440
LÁMPARA (*24-VOLT, 5.6-WATT) (*ALTERNATOR INDICATOR)	451, 455
LÁMPARA (24 VOLTIOS)	434, 437

* NO HAY TRADUCCION DISPONIBLE EN EL MOMENTO DE LA IMPRESION

INDICE

Nombre	Página
LÁMPARA (24 VOLTIOS) (CÚPULA)	132
LÁMPARA (24 VOLTIOS) (FRENO DE ESTACIONAMIENTO)	443
LÁMPARA (24 VOLTIOS) (LÁMPARA DE ADVERTENCIA)	425
LÁMPARA (24 VOLTIOS) (MEDIDOR DE NIVEL DE COMBUSTIBLE)	451
LÁMPARA (24 VOLTIOS) (ROJO)	447
LÁMPARA (24-VOLTIOS, 3-VATIOS)	455
LÁMPARA (24-VOLTIOS, 3-VATIOS) (TRANSPARENTE) (MEDIDOR DEL NIVEL DE COMBUSTIBLE)	99
LÁMPARA (24-VOLTIOS, 70-VATIOS) (BALIZA GIRATORIA DE ADVERTENCIA)	138
LENTE AMBAR	434 437 440
LENTE AMBAR (ALTERNADOR)	451 455
LENTE-ROJO	434 437 440 451 455
LIMPIA Y LAVAPARABRISAS (GR)	483
LLAVE	434 437 440 451 455
LLAVE (INTERRUPTOR GENERAL)	149
LUCES DE ADVERTENCIA (GR)	144 145
LUCES DE ALÓGENO (24 VOLTIOS, 65 VATIOS)	137
LUCES DE ALÓGENO (24 VOLTIOS, 65 VATIOS) (REFLECTOR)	133 134 135 136
LUCES DE REFLECTOR (GR)	140 141 142
LUCES DE REFLECTOR (GR)	139
	181 183
MANGUERA DE RADIADOR (INFERIOR)	80
MANGUERA DE RADIADOR (SUPERIOR)	80
MAZO DE CABLES DE ALARMA (CONJ) (ADVERTENCIA DE RETROCESO)	152 153
MAZO DE CABLES DE SENSOR (CONJ) (VIBRATORIO)	407
MAZO DE CABLES DEL CHASIS (CONJ)	156 161
MAZO DE CABLES DEL TABLERO (CONJ)	440 455
MAZO DE CABLES DEL TABLERO (CONJ) (BOCINA)	434 452 456
MAZO DE CABLES DEL TABLERO (CONJ) (CONSOLA DELANTERA)	434 437
MAZO DE CABLES DEL TABLERO (CONJ) (CONSOLA DELANTERA)	451
MAZO DE CABLES DEL TABLERO (CONJ) (CONSOLA LATERAL)	443 448
MAZO DE CABLES, LUCES (REFLECTOR)	139 140 141 142
MECANISMO DE VÁLVULAS (GR)	63 64
MEDIDOR VIBRATORIO (GR)	407
MIRILLA	330 332
MÓDULO DEL CRONÓMETRO (GR)	146
MÓDULO DEL CRONÓMETRO (GR)	443 448
MÓDULO INDICADOR DE ADVERTENCIA (GR)	425
MONTAJE DE RUEDA (GR)	203
MONTAJE DEL MOTOR (GR)	42 43
MONTAJE FLEXIBLE DEL MOTOR (GR)	45 46
MOTOR DE ARRANQUE ELÉCTRICO (GR)	148
MOTOR DE LA VIBRACIÓN Y MONTAJE (GR)	354
MOTOR DE PROPULSIÓN Y MONTAJE (GR)	200 201
MOTOR-LIMPIAPARABRISAS (GR)	426 427
MOTOR-LIMPIAPARABRISAS (GR) (24 VOLTIOS)	483
MOTOR PRIMARIO (CONFIG)	4

M

Nombre	Página
MANDO DE BOMBA (GR)	32
MANDO DE CORREA	138
MANDO DE SOPORTE Y VIBRATORIO (GR)	344
MANDO DEL TAMBOR (GR)	175 177 179

* NO HAY TRADUCCION DISPONIBLE EN EL MOMENTO DE LA IMPRESION

INDICE

Nombre	Página
	5
MUELLE DE GAS (CONJ)	227
MUELLE DE GAS (CONJ) (*ENGINE HOOD)	229
	231
MÚLTIPLE Y VÁLVULA (GR)	291

P

PARACHOQUES (CONFIG)	223
PARAGOLPES DELANTERO	224
	225
	226
PERSIANA PARA EL SOL (GR)	466
	467
	468
PESAS EXCÉNTRICAS -CAJA DE (GR)	345
	346
	348
	349
PESAS EXCÉNTRICAS DEL EJE (GR)	359
	360
	361
PISTÓN Y BIELA (GR)	51
	53
PISTONES DEL MOTOR (GR)	293
	295
	297
	299
	301
	303
PLACA DE IDENTIFICACION (AUXILIAR DE ARRANQUE)	434
	437
	451
	455
PLACA DE IDENTIFICACION (MOTOR)	440
PLACA DE IDENTIFICACION (PESA EXCÉNTRICA)	345
	348
	349
PLACA DE INFORMACION (SALIDA ALTERNATIVA)	463
	464
PLACA DE INSTRUCCIONES (ACONDICIONADOR DE AIRE)	416
PLACA DE INSTRUCCIONES (BATERÍA)	127
PLACA DE TECHO ROPS/FOPS	493
PLANETARIO DEL MANDO FINAL (GR)	204
	205
	207
	208
	209
PLATAFORMA DE LA CABINA	459
	460
PROTECTOR CONTRA EL VANDALISMO (GR)	409
PROTECTOR DE LA TRANSMISIÓN (GR)	238
PROTECTOR DE LAS TUBERÍAS (GR)	236
	237
PUERTA DE CABINA	397
	399
	401

R

RADIADOR (GR)	82
RADIADOR Y ENFRIADOR DE ACEITE HIDRÁULICO (GR)	80
	82
RASPADOR DE TAMBOR AMORTIGUADO (GR)	255
	256
RASPADOR DE TAMBOR LISO (GR)	257
	258
	259
RECUPERACIÓN DEL REFRIGERANTE (GR)	84
REFLECTOR (GR)	133
	134
	135
	136
	137
REGULADOR DE TEMPERATURA DEL AGUA	68
REGULADOR DE VOLTAJE (24 VOLTIOS) (FILTRO DE COMBUSTIBLE)	95
REGULADOR DE VOLTAJE (24 VOLTIOS) (FILTRO DE COMBUSTIBLE)	97
REGULADOR (GR)	100
RELÉ (CONJ) (24 VOLTIOS) (ARRANQUE NEUTRAL DOS)	444
	448
RELÉ (CONJ) (24 VOLTIOS) (ARRANQUE NEUTRAL UNO)	444
	448
RELÉ (CONJ) (24 VOLTIOS) (FRENO DOS)	444
	448
RELÉ (CONJ) (24 VOLTIOS) (FRENO UNO)	444
	448
RELÉ (CONJ) (24 VOLTIOS) (LUZ DE ALARMA)	444
	448
RELÉ (CONJ) (24 VOLTIOS) (LUZ FUNCIONAL)	444
	448
RELÉ (CONJ) (24 VOLTIOS) (PRESIÓN DE ACEITE)	444

* NO HAY TRADUCCION DISPONIBLE EN EL MOMENTO DE LA IMPRESION

INDICE

Nombre	Página
	448
RELÉ (CONJ) (24 VOLTIOS) (PRESIÓN DEL ACEITE DE MOTOR)	448
RELÉ (CONJ) (24 VOLTIOS) (PRESIÓN DEL ACEITE DE MOTOR)	443
RELÉ (CONJ) (24 VOLTIOS) (TEMPERATURA DEL ACEITE HIDRÁULICO)	444
	448
RELÉ (CONJ) (24 VOLTIOS) (TEMPERATURA DEL REFRIGERANTE)	444
	448
RESPIRADERO (*AXLE, REAR)	170
RESPIRADERO (EJE)	168
RESPIRADERO (TANQUE HIDRÁULICO)	322
	324
	326
	328
RETROCESO - ALARMA DE (GR)	153
RETROCESO - ALARMA DE (GR)	152
RETROVISOR (GR)	421
	422
	423
	424
REVESTIMIENTO DE LA CABINA (GR)	415
RODILLO DE PISONES (GR)	191
	192
RODILLO LISO (GR)	193
RUEDA DE MANDO Y MONTAJE (GR)	218
RUEDA Y NEUMÁTICO (GR)	219
	220
	221
	222

S

SELLO DUOCONE (GR)	205
	209
SENSOR DE VELOCIDAD (GR) (IDICADOR DE TACÓMETRO VIBRATORIO)	407
SERVICIO GR-MOTOR	60
	61
SILENCIADOR (GR)	90
SOLENOIDE DEL ACELERADOR (GR)	147
SOPORTE VIBRATORIO (GR)	362
SUCCIÓN - VENTILADOR DE (GR)	74
	75
	76
	77
SUSPENSIÓN - ASIENTO CON (GR)	470
	472
	474

T

TABLERO DE INSTRUMENTOS (GR)	434
	437
	440
	443
	451
	455
TABLERO DE INSTRUMENTOS (GR)	447
TAMBOR COMPACTADOR (GR)	185
TAMBOR VIBRADOR Y MANDO (GR)	186
	187
	188
	189
TANQUE DE COMBUSTIBLE Y GRUPO DE MONTAJE	119
TANQUE DEL LAVAPARABRISAS (GR)	476
TANQUE HIDRÁULICO (GR)	330
	332
TANQUE HIDRÁULICO Y MONTAJE (GR)	322
	324
	326
	328
TAPA CON RESPIRADERO (LIMPIAPARABRISAS)	476
TAPA DE LA CAJA DELANTERA (GR)	8
TAPA DE LLENADO (CONJ) (TANQUE HIDRAULICO)	330
	332
TAPA DE RADIADOR (CONJ)	82
TAPA DEL MECANISMO DE VÁLVULAS (GR)	9
	11
	13
	15
	17
TAPA DEL TUBO DE LLENADO DE ACEITE (MOTOR)	9
	11
	13
	15
	17
TAPA DEL TUBO DE LLENADO DE COMBUSTIBLE (GR)	94
TAPA DEL TUBO DE LLENADO DE COMBUSTIBLE (GR) (*LOCKABLE, WITH BOOT)	121
	123
TAPA DEL TUBO DE LLENADO DE COMBUSTIBLE (GR) (SERVICIO PESADO, TRABABLE)	120
TAPÓN (CONJ) (LLENADO DE ACEITE DEL MOTOR)	11
	13
	15

* NO HAY TRADUCCION DISPONIBLE EN EL MOMENTO DE LA IMPRESION

INDICE

Nombre	Página
	17
TAPÓN DE DRENAJE	209
TAPÓN DE DRENAJE (ACEITE DE MOTOR)	47
	49
TAPÓN DE DRENAJE (ENGRANAJE REDUCTOR DE VELOCIDAD)	205
TAPÓN DE DRENAJE (PLANETARIO)	204
TAPÓN DEL MOTOR (GR)	54
	55
	56
	57
TAPÓN MAGNÉTICO	191
	193
TAPÓN MAGNÉTICO (SOPORTE VIBRATORIO)	362
TAPÓN MAGNÉTICO (TAMBOR DE PISONES)	192
TECHO (GR)	383
TORNILLERIA DE ASIENTO (GR)	469
	472
TREN DE FUERZA (CONFIG)	211
TUBERÍAS DE ACONDICIONADOR DE AIRE (GR)	416
TUBERIAS DE CALEFACCION	418
TUBERÍAS DE CALEFACCIÓN DE LA CABINA	418
TUBERÍAS DE COMBUSTIBLE (GR)	102
TUBERÍAS DE DIRECCIÓN (GR)	270
TUBERÍAS DE PROPULSIÓN (GR)	198
TUBERÍAS DEL CILINDRO DE DIRECCIONAL (GR)	271
TUBERÍAS DEL ENFRIADOR DE ACEITE HIDRÁULICO (GR)	290
TUBERÍAS DEL FRENO Y CAMBIO DE VELOCIDADES (GR)	261
TUBERÍAS DEL VIBRADOR (GR)	352
TUBO DE LLENADO DE ACEITE (GR)	9
TUBO DE LLENADO DE ACEITE (GR)	11
	13
	15
TURBOCOMPRESOR (GR)	92

V

VÁLVULA DE ALIVIO (GR)	283
	343
VÁLVULA DE ALIVIO (GR) (*COMBINATION)	280
	283
	286
VÁLVULA DE ALIVIO (GR) (COMPRESOR DEL REFRIGERANTE)	384
VÁLVULA DE ALIVIO (GR) (CRUCE)	281
	285
VÁLVULA DE CONTROL DE FLUJO (GR) (DIRECCIÓN)	263
VALVULA DE CONTROL DE LA BOMBA (GR)	338
	339
	341
	342
VÁLVULA DE CONTROL (GR)	337
VÁLVULA DE CONTROL (GR)	336
VÁLVULA DE CONTROL Y MONTAJE (GR)	334
VÁLVULA DE CORTE (REFRIGERANTE)	418
VÁLVULA DE SOLENOIDE (GR)	280
	283
VÁLVULA DE SOLENOIDE (GR) (BOMBA DE PROPULSIÓN)	286
VÁLVULA DE SOLENOIDE (GR) (*SHIFT)	336
VÁLVULA DE SOLENOIDE (GR) (24 V) (BOMBA DE INYECCION DE COMBUSTIBLE)	109
VÁLVULA DE SOLENOIDE (GR) (24 VOLTIOS) (CORTE DE COMBUSTIBLE)	110
VARILLAJE (GR)	420
VENTANA DE LA PUERTA (GR)	480
VENTANA (GR)	478
VENTANA TRASERA (GR)	482
VIBRADOR HIDRÁULICO (CONFIG)	351
VISERA	477
VISERA (GR)	477
VOLANTE - CAJA DE (GR)	34
VOLANTE (GR)	33

* NO HAY TRADUCCION DISPONIBLE EN EL MOMENTO DE LA IMPRESION

ÍNDICE

Designação	Página

A

ACIONADOR DA BOMBA 273
274
ACOPLAMENTO DA BOMBA 212
214
ACUMULADOR - AR CONDICIONADO 364
365
ACUMULADOR - AR CONDICIONADO (COM DESSECANTE) 365
ADESIVO - FUSÍVEL/RELÉ 444
448
AJUSTADOR DE ALTURA (ASSENTO DA SUSPENSÃO) 470
474
ALARME 125
ALARME DE MARCHA À RÉ 152
153
ALTERNADOR DE CORRENTE 126
ALTERNADOR DE CORRENTE (24 VOLTS) 126
AQUECEDOR DA CABINE 411
413
AQUECEDOR DA CABINE E MONTAGEM 410
ARRANJO BÁSICO 1
2
ARREFECEDOR - ÓLEO DO MOTOR 70
73
ARREFECEDOR DE ÓLEO DO MOTOR E BASE DO FILTRO 71
73
ARTICULAÇÃO 420
ASSENTO COM SUSPENSÃO 470
472
474
ASSENTO E MONTAGEM 469

B

BALANCIM 59
BATERIA E CABOS / FIOS ELÉTRICOS 127
BATERIA (12 VOLTS, ISENTO DE MANUTENÇÃO) 127
BLOCO DO MOTOR 23
25
26
BOCAL DE ENCHIMENTO DE ÓLEO DO MOTOR 9
11
13
15
BOMBA DE ÁGUA 78
BOMBA DE ENGRENAGENS 305
BOMBA DE ESCORVA DO COMBUSTÍVEL 95
97
BOMBA DE ESCORVA DO COMBUSTÍVEL E DO FILTRO PRIMÁRIO 115
117
BOMBA DE INJEÇÃO DO COMBUSTÍVEL 103
106
109
110
111
112
BOMBA DE ÓLEO - MOTOR 67
BOMBA DE PISTÃO 306
308
310
311
313
315
BOMBA DE PROPULSÃO E MONTAGEM 212
214
BOMBA E MONTAGEM - DIREÇÃO 272
BOMBA E MONTAGEM VIBRATÓRIA 355
357
BOMBA MANUAL (CILINDRO DE INCLINAÇÃO) 395
BOTÃO - DIREÇÃO 269
BRAÇO DO LIMPADOR 375
483
BUJÃO DO DRENO 209
BUJÃO DO DRENO (ENGRENAGEM DE REDUÇÃO DE VELOCIDADE) 205
BUJÃO DO DRENO (ÓLEO DO MOTOR) 47
49
BUJÃO DO DRENO (PLANETÁRIO) 204
BUJÃO DO MOTOR 54
55
56
57
BUJÃO-DRENAGEM (MAGNÉTICO) 170
BUJÃO-DRENAGEM (MAGNÉTICO) (EIXO) 168
BUJÃO MAGNÉTICO 191
193
BUJÃO MAGNÉTICO (SUPORTE VIBRATÓRIO) 362
BUJÃO MAGNÉTICO (TAMBOR COM PISO) 192

C

CABEÇA DA BOMBA 280
281
283
285
286
CABEÇOTE DO MOTOR 27
28

* TRADUÇÃO NÃO DISPONÍVEL NO MOMENTO DA IMPRESSÃO

ÍNDICE

Designação	Página
	29
CABINE	376
	431
	432
	433
CABINE - ESTRUTURA DE PROTEÇÃO CONTRA CAPOTAMENTO	377
	379
	381
CABOS/FIOS ELÉTRICOS - AR CONDICIONADO	154
CABOS/FIOS ELÉTRICOS - CABINE	155
CABOS/FIOS ELÉTRICOS - MÁQUINA	156
	161
CADEADO	486
	487
	489
	490
	491
CADEADO (PROTETOR CONTRA VANDALISMO)	409
CAIXA - PESO EXCÊNTRICO	345
	346
	348
	349
CAIXA DIANTEIRA	35
	37
	39
CAIXA DO SEMI-EIXO	195
CAIXA DO VOLANTE DO MOTOR	34
CAPÔ	241
	243
	244
	246
	248
	250
	251
	253
CARCAÇA ACOLCHOADA	216
	217
CÁRTER DO ÓLEO DO MOTOR	47
	49
CHASSI	1
CHASSI DIANTEIRO	233
CHASSI TRASEIRO	234
CHAVE	434
	437
	440
	451
	455
CHAVE (DESCONEXÃO DA BATERIA)	149
CHAVE GERAL	149
CHAVETA WOODRUFF/SEMICIRCULAR	35
CHICOTE - CABINE	155
	448
CHICOTE - CHASSI	156
	161
CHICOTE - ILUMINAÇÃO (HOLOFOTE)	139
	140
	141
	142
CHICOTE - SENSOR (VIBRATÓRIO)	407
CILINDRO DE DIREÇÃO E MONTAGEM	265
	267
CILINDRO DE INCLINAÇÃO E MONTAGEM	395
CILINDRO HIDRÁULICO	276
	277
CILINDRO-INCLINAÇÃO	395
CINTO DE SEGURANÇA	469
	472
COBERTURA DO MOTOR	227
	229
	231
COLETOR E VÁLVULA	291
COMANDO DA BOMBA	32
COMANDO DO TAMBOR	175
	177
	179
	181
	183
COMANDO DO VENTILADOR	30
	31
COMANDO HIDRÁULICO	288
COMANDO HIDRÁULICO AUXILIAR	288
COMANDO VIBRATÓRIO E SUPORTE	344
COMPRESSOR DE REFRIGERANTE	384
	385
CONDENSADOR DO REFRIGERANTE E MONTAGEM	387
CONDICIONADOR DE AR	366
	369
	370
	372
	373
CONEXÃO	330
	332
CONEXÃO - TUBO D'ÁGUA	68
	69
CONEXÃO - TUBO D'ÁGUA (TERMOSTATO)	69
CONTROLE - SENTIDO E VELOCIDADE	388
CONTROLE-CABO	390
CONTROLE DE DIREÇÃO	263
CONTROLE DE PROPULSÃO	391
	393
CONTROLE HIDRÁULICO	275
CONVERSOR ELÉTRICO	129

* TRADUÇÃO NÃO DISPONÍVEL NO MOMENTO DA IMPRESSÃO

ÍNDICE

Designação	Página
CORREIA DE COMANDO	138
CORREIA EM V (COMPRESSOR)	385
CORRIMAO, BALAUSTRE	239
COTOVELO DE ADMISSÃO DE AR	88

D

DECALQUE	485
DECALQUE - ADVERTÊNCIA (INSTRUÇÕES DE OPERAÇÃO)	493
DECALQUE - ADVERTÊNCIA (NÃO SOLDAR, NÃO PERFURAR, CONSULTAR OMM)	492 494
DECALQUE - ADVERTÊNCIA (PARTIDA COM CABO AUXILIAR, CONSULTAR OMM)	492 493
DECALQUE - ADVERTÊNCIA (SEM ROPS/FOPS)	383
DECALQUE - IDENTIFICAÇÃO (CONTROLES DO OPERADOR)	388
DECALQUE - IDENTIFICAÇÃO (CS-533E)	486 490
DECALQUE - IDENTIFICAÇÃO (MARCADOR DE HORAS DE SERVIÇO)	437 452
DECALQUE - IDENTIFICAÇÃO (PAINEL DE CIRCUITO)	157 162
DECALQUE - IDENTIFICAÇÃO (PAINEL DE INSTRUMENTOS)	434 437 440 452 456
DECALQUE - INFORMAÇÕES (SAÍDA DE EMERGÊNCIA)	463 464
DECALQUE - INSTRUÇÃO (DESTRAVAR, LIBERAR)	463 464
DECALQUE - INSTRUÇÃO (PARTIDA DO MOTOR)	434 437 451 455
DECALQUE - INSTRUÇÃO (PARTIDA DO MOTOR)	440
DECALQUE - INSTRUMENTO (PAINEL)	448
DECALQUE (INSTRUMENTOS)	443
DEGRAU	260
DIAFRAGMA (CONTACTOR DE PRESSÃO DO CÁRTER)	9 11 13 15 17
DIFERENCIAL	172 173 174
DIODO	434 437 440
DIODO (INSTRUMENTO)	451 455
DISJUNTOR AUTOMÁTICO DE CIRCUITO (10 AMPERES)	448
DISJUNTOR AUTOMÁTICO DE CIRCUITO (15 AMPERES) (CHAVE INTERRUPTORA)	448
DISJUNTOR AUTOMÁTICO DE CIRCUITO (15 AMPERES) (RELÉ PRINCIPAL DE POTÊNCIA)	444
DISJUNTOR AUTOMÁTICO DE CIRCUITO (60 AMPERES) (ALTERNADOR)	161
DISJUNTOR AUTOMÁTICO DE CIRCUITO (60 AMPERES) (PRINCIPAL)	161
DISJUNTOR AUTOMÁTICO DE CIRCUITO (60 AMPERES) (VELA DE AQUECIMENTO)	156 161
DRENO	117
DUCTO DE AR	403

E

EIXO - PESO ECÊNTRICO	359 360 361
EIXO-COMANDO DE VÁLVULA	7
EIXO DE PROPULSÃO	168 170
EIXO PROPULSÃO E MONTAGEM	166 167
ELEMENTO - FILTRO DE COMBUSTÍVEL	95 97
ELEMENTO - FILTRO DE COMBUSTÍVEL (ÁGUA, SEPARADOR DE COMBUSTÍVEL)	115
ELEMENTO - FILTRO DE COMBUSTÍVEL (SEPARADOR DE ÁGUA)	117
ELEMENTO DO FILTRO DE AR (PRIMÁRIO)	87
ELEMENTO DO FILTRO DE AR (SECUNDÁRIO)	87
EMISSOR - NÍVEL DO COMBUSTÍVEL	120 121 123
ENGATE - ARTICULAÇÃO E OSCILAÇÃO	240
ENGRENAGEM ANELAR	168 170

* TRADUÇÃO NÃO DISPONÍVEL NO MOMENTO DA IMPRESSÃO

ÍNDICE

Designação	Página
ESPELHO RETROVISOR	421, 422, 423, 424
ESTRUTURA ROPS	462

F

FIAÇÃO - ALARME (AVISO DE MARCHA À RÉ)	152, 153
FIAÇÃO - AQUECEDOR E AR CONDICIONADO	154, 366, 373, 411, 413
FIAÇÃO - PAINEL	440, 455
FIAÇÃO - PAINEL (BUZINA)	434, 452, 456
FIAÇÃO - PAINEL (CONSOLE DIANTEIRO)	434, 437, 451
FIAÇÃO - PAINEL (CONSOLE LATERAL)	443, 448
FILTRO	369, 405
FILTRO - AR DA CABINE	405
FILTRO - COMBUSTÍVEL	95, 97, 120, 121, 123
FILTRO - ÓLEO DO MOTOR	66
FILTRO - ÓLEO (EFICIÊNCIA AVANÇADA) (HIDRÁULICO)	278
FILTRO - ÓLEO (HIDRÁULICO)	278
FILTRO - RESPIRO (TAMPA DO COMBUSTÍVEL)	121, 123
FILTRO HIDRÁULICO E MONTAGEM	278
FIXADOR - ASSENTO	469, 472
FLANGE - RODA	194
FUSÍVEL (10 AMPERES)	443, 447

G

GOVERNADOR	100
GR. PLANETÁRIO - COMANDO FINAL	204, 205, 207, 208, 209
GRUPO DE INSTALAÇÃO - MOTOR	6
GRUPO ROTATIVO DA BOMBA	317, 319, 320, 321

I

INDICADOR - TROCA DO FILTRO DE AR	85
INDICADOR - VARETA DO NÍVEL DE ÓLEO (MOTOR)	47, 49
INDICATOR VIBRATÓRIO	407
INTERRUPTOR - BALANCIM (ACELERADOR)	438, 441
INTERRUPTOR - BALANCIM (ACELERADOR)	435
INTERRUPTOR - BALANCIM (AR CONDICIONADO)	372
INTERRUPTOR - BALANCIM (AUXILIAR DE PARTIDA)	438, 440
INTERRUPTOR - BALANCIM (AUXILIAR DE PARTIDA)	435, 452, 456
INTERRUPTOR - BALANCIM (FARÓIS)	142
INTERRUPTOR - BALANCIM (FARÓIS)	447
INTERRUPTOR - BALANCIM (FAROL)	139
INTERRUPTOR - BALANCIM (FAROL)	140
INTERRUPTOR - BALANCIM (LIGAR - DESLIGAR AR CONDICIONADO)	370
INTERRUPTOR - BALANCIM (PISCA-PISCA)	144, 145
INTERRUPTOR - BALANCIM (SELEÇÃO VIBRATÓRIA)	444, 448
INTERRUPTOR - BALANCIM (SELECIONAR VELOCIDADE)	438, 441
INTERRUPTOR - BALANCIM (SELECIONAR VELOCIDADE)	435, 452, 456
INTERRUPTOR - BOTÃO (FREIO DE ESTACIONAMENTO)	447
INTERRUPTOR - BOTÃO (FREIO DE ESTACIONAMENTO)	443
INTERRUPTOR - BOTÃO (VIBRATÓRIO, SELECIONAR LIGAR-DESLIGAR)	390

* TRADUÇÃO NÃO DISPONÍVEL NO MOMENTO DA IMPRESSÃO

ÍNDICE

Designação	Página
INTERRUPTOR - MAGNÉTICO	150, 151
INTERRUPTOR - MAGNÉTICO (24 VOLTS) (RELÉ DA VELA DE AQUECIMENTO)	161
INTERRUPTOR - MAGNÉTICO (24 VOLTS) (RELÉ DE PARTIDA)	161
INTERRUPTOR - MAGNÉTICO (24 VOLTS) (VELA DE AQUECIMENTO)	156
INTERRUPTOR - MICRO (POSIÇÃO NEUTRO)	391, 393
INTERRUPTOR - PARTIDA (CHAVE)	434, 437, 440, 451, 455
INTERRUPTOR - PRESSÃO (COMPRESSOR)	385
INTERRUPTOR - PRESSÃO (ÓLEO DO MOTOR)	156, 161
INTERRUPTOR - PRESSÃO (ÓLEO HIDRÁULICO)	278
INTERRUPTOR - ROTATIVO (LIMPADOR, LAVADOR DE PÁRA-BRISA)	447
INTERRUPTOR - ROTATIVO (LIMPADOR, LAVADOR DE PÁRA-BRISA)	447
INTERRUPTOR - ROTATIVO (24 VOLTS) (VENTILADOR)	447
INTERRUPTOR - TEMPERATURA	112
INTERRUPTOR - TEMPERATURA (AVANÇO DE REGULAGEM)	103, 106
INTERRUPTOR - TEMPERATURA (*HYDRAULIC ALERT INDICATOR)	332
INTERRUPTOR - TEMPERATURA (LÍQUIDO ARREFECEDOR)	156
INTERRUPTOR - TEMPERATURA (LÍQUIDO ARREFECEDOR)	161
INTERRUPTOR - TEMPERATURA (ÓLEO HIDRÁULICO)	330
INTERRUPTOR-PARTIDA EM NEUTRO	339

J

Designação	Página
JOGO DE AJUSTADOR	470, 474
JOGO DE CORREIAS EM V (INCLUI 2 CORREIAS)	31
JOGO DE CORREIAS EM V (INCLUI 2 CORREIAS) (VENTILADOR)	30
JOGO DE FIXADORES (BOMBA DE ESCORVA DE COMBUSTÍVEL)	115
JOGO DE MANCAL DA BIELA (0,25 MM OS)	19
JOGO DE MANCAL DA BIELA (0,51 MM OS)	19
JOGO DE MANCAL DA BIELA (0,76 MM OS)	19
JOGO DE MANCAL PRINCIPAL DO MOTOR (0,25 MM OS)	19
JOGO DE MANCAL PRINCIPAL DO MOTOR (0,5 MM OS)	19
JOGO DE MANCAL PRINCIPAL DO MOTOR (0,76 MM OS)	19
JOGO DE RETENTOR (CILINDRO DA DIREÇÃO)	276
JUNTA - TAMPA	35
JUNTA (TAMPA DA VÁLVULA)	9, 11, 13, 15, 17

L

Designação	Página
LÂMINA DO LIMPADOR DE PÁRA-BRISA (500 MM)	483
LÂMINA DO LIMPADOR DE PÁRA-BRISA (700 MM)	483
LÂMPADA - FAROL	133, 134, 135, 136, 137
LÂMPADA - HALOGÊNEO (24 VOLTS, 65 WATTS)	137
LÂMPADA - HALOGÊNEO (24 VOLTS, 65 WATTS) (FAROL)	133, 134, 135, 136
LÂMPADA - LED (BRANCO, 24 VOLTS) (INDICATOR DO NÍVEL DE COMBUSTÍVEL)	99
LÂMPADA - TETO	132
LÂMPADA - TETO (24 VOLTS)	415
LÂMPADA INDICADORA	434, 437, 440
LÂMPADA INDICADORA (ALTERNADOR)	451, 455
LÂMPADA (*24-VOLT, 5.6-WATT)	440
LÂMPADA (*24-VOLT, 5.6-WATT)	434, 437
LÂMPADA (*24-VOLT, 5.6-WATT) (INDICADOR DO ALTERNADOR)	455
LÂMPADA (*24-VOLT, 5.6-WATT) (INDICADOR DO ALTERNADOR)	451

* TRADUÇÃO NÃO DISPONÍVEL NO MOMENTO DA IMPRESSÃO

ÍNDICE

Designação	Página
LÂMPADA (24 VOLTS)	434, 437
LÂMPADA (24 VOLTS) (FREIO DE ESTACIONAMENTO)	443
LÂMPADA (24 VOLTS) (INDICATOR DO NÍVEL DE COMBUSTÍVEL)	451
LÂMPADA (24 VOLTS) (LUZ DE ADVERTÊNCIA)	425
LÂMPADA (24 VOLTS) (TETO)	132
LÂMPADA (24 VOLTS) (VERMELHO)	447
LÂMPADA (24 VOLTS, 3 WATTS)	455
LÂMPADA (24 VOLTS, 3 WATTS) (APAGAR)(MEDIDOR DE NÍVEL DE COMBUSTÍVEL)	99
LÂMPADA (24 VOLTS, 70 WATTS) (PISCA-PISCA DE ADVERTÊNCIA)	138
LENTE ÂMBAR	434, 437, 440
LENTE ÂMBAR (ALTERNADOR)	451, 455
LENTE VERMELHA	434, 437, 440, 451, 455
LEVANTAMENTO DO MOTOR	41
LIMPADOR E LAVADOR - JANELA	483
LUZ GIRATÓRIA DE ALARME	138

M

Designação	Página
MANGUEIRA - RADIADOR (INFERIOR)	80
MANGUEIRA - RADIADOR (SUPERIOR)	80
MANUTENÇÃO-MOTOR	60, 61
MECANISMO DAS VÁLVULAS	63, 64
MEDIDOR - NÍVEL DE COMBUSTÍVEL	99
MEDIDOR - NÍVEL DE COMBUSTÍVEL (24 VOLTS)	434, 437
MEDIDOR - NÍVEL DE COMBUSTÍVEL (24 VOLTS)	451
MEDIDOR-TACÔMETRO	407
MÓDULO - CRONÔMETRO	146, 443, 448
MÓDULO - INDICADOR DE ALARME	425
MOLA ACIONADA A GAS	227
MOLA ACIONADA A GAS (CAPÔ DO MOTOR)	229, 231
MONTAGEM - CABINE	428
	430
MONTAGEM - MOTOR	42, 43
MONTAGEM - RODA	203
MONTAGEM FLEXÍVEL DO MOTOR	45, 46
MOTOR	3
MOTOR - LIMPADOR DO VIDRO	426, 427
MOTOR - LIMPADOR DO VIDRO (24 VOLTS)	483
MOTOR - PISTÃO	293, 295, 297, 299, 301, 303
MOTOR DE PROPULSÃO E MONTAGEM	200, 201
MOTOR DO GRUPO ROTATIVO	316
MOTOR ELÉTRICO DE PARTIDA	148
MOTOR PRIMÁRIO	4, 5
MOTOR VIBRATÓRIO E MONTAGEM	354

O

Designação	Página
ORIFÍCIO-CONDICIONADOR DE AR	367, 373

P

Designação	Página
PAINEL DE INSTRUMENTOS	434, 437, 440, 443, 447, 451, 455
PÁRA-CHOQUE	223
PÁRA-CHOQUE DIANTEIRO	224, 225, 226
PÁRA-SOL	477
PÁRA-SOL DA CABINE	477
PISTÃO E BIELA	51, 53
PLACA DE IDENTIFICAÇÃO (AUXILIAR DE PARTIDA)	434, 437, 451, 455
PLACA DE IDENTIFICAÇÃO (MOTOR)	440

* TRADUÇÃO NÃO DISPONÍVEL NO MOMENTO DA IMPRESSÃO

ÍNDICE

Designação	Página
PLACA DE IDENTIFICAÇÃO (PESO EXCÊNTRICO)	345, 348, 349
PLACA DE INSTRUÇÃO (BATERIA)	127
PLACA DE INSTRUÇÃO (CONDICIONADOR DE AR)	416
PLACA E DECALQUE	486, 487, 489, 490, 491, 492, 493, 494
PLACA INDICADORA - ROPS/FOPS	493
PLATAFORMA DO OPERADOR	459, 460
POLIA DO VIRABREQUIM	58
PORTA DA CABINE	397, 399, 401
PROTETOR - TRANSMISSÃO	238
PROTETOR - TUBOS	236, 237
PROTETOR CONTRA VANDALISMO	409
PURIFICADOR DE AR	85, 87

R

Designação	Página
RADIADOR	82
RADIADOR E ARREFECEDOR DO ÓLEO HIDRÁULICO	80, 82
RASPADOR - ROLO COM PISO	255, 256
RASPADOR - ROLO LISO	257, 258, 259
RECUPERAÇÃO DE LÍQUIDO ARREFECEDOR	84
REGULADOR DE TEMPERATURA DA ÁGUA	68
REGULADOR DE VOLTAGEM (24 VOLTS) (FILTRO DE COMBUSTÍVEL)	95, 97
RELÉ (CONJ) (24 VOLTS) (FREIO DOIS)	444, 448
RELÉ (CONJ) (24 VOLTS) (FREIO UM)	444, 448
RELÉ (CONJ) (24 VOLTS) (LUZ DE ADVERTÊNCIA)	444, 448
RELÉ (CONJ) (24 VOLTS) (LUZ DE FUNÇÃO)	444
RELÉ (CONJ) (24 VOLTS) (LUZ FUNCIONAL)	448
RELÉ (CONJ) (24 VOLTS) (PARTIDA EM NEUTRO DOIS)	444, 448
RELÉ (CONJ) (24 VOLTS) (PARTIDA EM NEUTRO UM)	444, 448
RELÉ (CONJ) (24 VOLTS) (PRESSÃO DO ÓLEO DO MOTOR)	443, 448
RELÉ (CONJ) (24 VOLTS) (PRESSÃO DO ÓLEO HIDRÁULICO)	444, 448
RELÉ (CONJ) (24 VOLTS) (TEMPERATURA DO LÍQUIDO ARREFECEDOR)	444, 448
RELÉ (CONJ) (24 VOLTS) (TEMPERATURA DO ÓLEO HIDRÁULICO)	444, 448
RESPIRO (EIXO)	168
RESPIRO (EIXO, TRASEIRO)	170
RESPIRO (TANQUE HIDRÁULICO)	322, 324, 326, 328
RETENTOR DUO-CONE	205, 209
REVESTIMENTO DA CABINE	415
RODA DE ACIONAMENTO E MONTAGEM	218
RODA E PNEU	219, 220, 221, 222
ROPS FECHADA	463, 464

S

Designação	Página
SENSOR DE VELOCIDADE (MEDIDOR DO TACÔMETRO VIBRATÓRIO)	407
SILENCIADOR	90
SISTEMA DE ILUMINAÇÃO - ADVERTÊNCIA	144, 145
SISTEMA DE ILUMINAÇÃO - FARÓIS	139, 140, 141, 142
SISTEMA ELÉTRICO	130
SOLENÓIDE - ACELERADOR	147
SUPORTE DO SISTEMA VIBRATÓRIO	362

* TRADUÇÃO NÃO DISPONÍVEL NO MOMENTO DA IMPRESSÃO

ÍNDICE

Designação	Página

T

TAMBOR - COMPACTADOR 185
TAMBOR - INSTALAÇÃO 197
TAMBOR COM PISO 191
192
TAMBOR LISO 193
TAMBOR VIBRATÓRIO - COMANDO 186
187
188
189
TAMPA 17
TAMPA - BOCAL DE ENCHIMENTO DE COMBUSTÍVEL 94
TAMPA - BOCAL DE ENCHIMENTO DE COMBUSTÍVEL (SERVIÇO PESADO, TRAVÁVEL) 120
TAMPA - BOCAL DE ENCHIMENTO DE COMBUSTÍVEL (TRAVÁVEL, COM PROTETOR) 121
123
TAMPA - BOCAL DE ENCHIMENTO DE ÓLEO (MOTOR) 9
11
TAMPA - BOCAL DE ENCHIMENTO DE ÓLEO (MOTOR) 13
15
17
TAMPA - BOCAL DE ENCHIMENTO (TANQUE HIDRÁULICO) 330
332
TAMPA - CAIXA DIANTEIRA 8
TAMPA - COM RESPIRO (RECUPERACÃO DO LÍQUIDO ARREFECEDOR) 84
TAMPA - MECANISMO DAS VÁLVULAS 9
11
13
15
17
TAMPA - RADIADOR 82
TAMPA-BOCAL DE ENCHIMENTO DE COMBUSTÍVEL (PODE SER TRANCADO) . . . 121
123
TAMPA (BOCAL DE ENCHIMENTO DO ÓLEO DO MOTOR) 11
13
15
17
TAMPA COM RESPIRO (LAVADOR DO VIDRO) 476
TAMPA-DIANTEIRA 35
TANQUE - LAVADOR DE JANELA 476
TANQUE DE COMBUSTÍVEL 120
121
123
TANQUE DE COMBUSTÍVEL E MONTAGEM 119
TANQUE DE ÓLEO HIDRÁULICO E MONTAGEM 322
324
326
328
TANQUE HIDRÁULICO 330
332
TAPETE 406
459
460
TAPETE - CABINE 406
TELA DE SUCÇÃO 332
TELA DE SUCÇÃO (TANQUE HIDRÁULICO) 330
TELA PÁRA-SOL 466
467
468
TOLDO 383
TREM DE FORÇA 211
TUBOS - AQUECEDOR DA CABINE 418
TUBOS - AR 89
TUBOS - AR CONDICIONADO 416
TUBOS - ARREFECEDOR DE ÓLEO HIDRÁULICO 290
TUBOS - COMBUSTÍVEL 102
TUBOS - DIREÇÃO 270
TUBOS - FILTRO 289
TUBOS - FREIO E MUDANÇA 261
TUBOS - PROPULSÃO 198
TUBOS - SISTEMA VIBRATÓRIO 352
TUBOS DO AQUECEDOR 418
TUBOS DO CILINDRO DE DIREÇÃO 271
TURBOALIMENTADOR 92

V

VÁLVULA DE ALÍVIO 283
343
VÁLVULA DE ALÍVIO (COMBINAÇÃO) 280
283
286
VÁLVULA DE ALÍVIO (COMPRESSOR DO REFRIGERANTE) 384
VÁLVULA DE ALÍVIO (DE DUAS DIREÇÕES) . . . 281
285
VÁLVULA DE CONTROLE 336
337
VÁLVULA DE CONTROLE - FLUXO (DIREÇÃO) 263
VÁLVULA DE CONTROLE DA BOMBA 338
339
341

* TRADUÇÃO NÃO DISPONÍVEL NO MOMENTO DA IMPRESSÃO

ÍNDICE

Designação	Página
	342
VÁLVULA DE CONTROLE E MONTAGEM	334
VÁLVULA DE DERIVAÇÃO	335
VÁLVULA DE PARADA (LÍQUIDO ARREFECEDOR)	418
VÁLVULA SOLENÓIDE	280
	283
VÁLVULA SOLENÓIDE (BOMBA DE PROPULSÃO)	286
VÁLVULA SOLENÓIDE (MUDANÇA)	336
VÁLVULA SOLENÓIDE (24 V) (BOMBA DE INJEÇÃO DE COMBUSTÍVEL)	109
VÁLVULA SOLENÓIDE (24 VOLTS) (DESLIGAMENTO - COMBUSTÍVEL)	110
VELA DE AQUECIMENTO; VELA INCANDESCENTE	131
VENTILADOR - CONDENSADOR DO REFRIG.	373
VENTILADOR DE SUCÇÃO	74
	75
	76
	77
VIBRADOR HIDRÁULICO	351
VIDRO	478
VIDRO DA PORTA	480
VIDRO TRASEIRO	482
VIGIA	330
	332
VIRABREQUIM	19
	21
VOLANTE DO MOTOR	33

* TRADUÇÃO NÃO DISPONÍVEL NO MOMENTO DA IMPRESSÃO

STICHWORTVERZEICHNIS

Bezeichnung	Seite
A	
ABDECKGLAS (GELB)	434, 437, 440
ABDECKGLAS (GELB) (DREHSTROMGENERATOR)	451, 455
ABDECKUNG	17
ABLASSSCHRAUBE (MAGNETISCH)	170
ABLASSSCHRAUBE (MAGNETISCH) (ACHSE)	168
ABLASSSTOPFEN	209
ABLASSSTOPFEN (GESCHWINDIGKEITSVERRINGERUNGSGANG)	205
ABLASSSTOPFEN (MOTORÖL)	49
ABLASSSTOPFEN (MOTORÖL)	47
ABLASSSTOPFEN (PLANETENGETRIEBE)	204
ABLASSVORRICHTUNG	117
ABSPERRVENTIL (KÜHLMITTEL)	418
ABSTREIFER F. STAMPFFUSSBANDAGE	255, 256
ACHSGEHÄUSE	195
ALARMKABELSTRANG (RÜCKFAHRWARNUNG)	152, 153
ANBAUSATZ (KRAFTSTOFFENTLÜFTUNGSPUMPE)	115
ANSAUGSIEB	332
ANSAUGSIEB (HYDRAULIKTANK)	330
ANSCHLUSSSTÜCK	330, 332
ANTRIEBSACHSE	168, 170
ANTRIEBSACHSE U. AUFHÄNGUNG	166, 167
ANTRIEBSMOTOR UND BEFESTIGUNGSTEILE	200, 201
ARBEITSLEUCHTEN	133, 134, 135, 136, 137, 139, 140, 141, 142
AUFKLEBER	485
AUFKLEBER - INFORMATION (NOTAUSGANG)	463, 464
AUFKLEBER - SOICHERUNG/RELAIS	444
AUFKLEBER - SOICHERUNG/RELAIS	448
AUFKLEBER (INSTRUMENTE)	443
B	
BANDAGENANTRIEB	175, 177, 179, 181, 183
BATTERIE UND VERDRAHTUNG	127
BATTERIE (12 V, WARTUNGSFREI)	127
BELEUCHTUNGSKABELSTRANG (ARBEITSSCHEINWERFER)	139, 140, 141, 142
BREMS- U. SCHALTUNGSLEITUNGEN	261
D	
DECKEL, VORN	35
DICHTUNG (VENTILDECKEL)	9, 11, 13, 15, 17
DICHTUNGSSATZ (LENKUNGSZYLINDER)	276
DIFFERENTIAL	172, 173, 174
DIODE	434, 437, 440
DIODE (ANZEIGE)	451, 455
DREHKNOPFSCHALTER (WISCHER, WASCHER)	447
DREHKNOPFSCHALTER (WISCHER, WASCHER)	447
DREHKNOPFSCHALTER (24 V) (LÜFTER)	447
DREHSTROMGENERATOR	126
DREHSTROMGENERATOR (24 V)	126
DREHZAHLMESSER	407
DREHZAHLSENSOR (VERDICHTERTACHOMETER)	407
DREHZAHLSTEUERUNGSSOLENOID	147
DRUCKKNOPFSCHALTER (FESTSTELLBREMSE)	443
DRUCKKNOPFSCHALTER (FESTSTELLBREMSE)	447
DRUCKKNOPFSCHALTER (VIBRATION, WAHL EIN/AUS)	390
DRUCKLUFTLEITUNGEN	89

* ÜBERSETZUNG ZUM ZEITPUNKT DER DRUCKLEGUNG NICHT VORHANDEN

STICHWORTVERZEICHNIS

Bezeichnung	Seite
DRUCKSCHALTER (HYDRAULIKÖL)	278
DRUCKSCHALTER (KOMPRESSOR)	385
DRUCKSCHALTER (MOTORÖL)	156, 161

E

EINFÜLLKAPPE (HYDRAULIKTANK)	330, 332
EINSTELLER-EINBAUSATZ	470, 474
ELEKTR. ANLAGE	130
ELEKTR. UMFORMER	129
ENTLÜFTER (ACHSE)	168
ENTLÜFTER (*AXLE, REAR)	170
ENTLÜFTER (HYDRAULIKTANK)	322, 324, 326, 328
ENTLÜFTERFILTER (KRAFTSTOFFKAPPE)	121, 123
EXZENTERGEWICHTSGEHÄUSE	345, 346, 348, 349
EXZENTERGEWICHTSWELLE	359, 360, 361

F

FAHRANTRIEBSLEITUNGEN	198
FAHRANTRIEBSPUMPE U. BEFESTIGUNGS-TEILE	212, 214
FAHRANTRIEBSSTEUERUNG	391, 393
FAHRERHAUS	376
FAHRERHAUS-KABELBAUM	155, 448
FAHRERHAUS MIT ÜBERROLLSCHUTZ	377, 379, 381
FAHRERHAUS, SONNENBLENDE	477
FAHRERHAUSANBAUSATZ	428, 430
FAHRERHAUSAUSKLEIDUNG	415
FAHRERHAUSAUSRÜSTUNG	431, 432, 433
FAHRERHAUSBELEUCHTUNG	132
FAHRERHAUSBELEUCHTUNG (24 V)	415
FAHRERHAUSFENSTER	478
FAHRERHAUSFUSSMATTE	406
FAHRERHAUSHEIZUNG	411, 413
FAHRERHAUSHEIZUNG U. BEFESTIGUNGS-TEILE	410
FAHRERHAUSHEIZUNGSLEITUNGEN	418
FAHRERHAUSLUFTFILTER	405
FAHRERHAUSTÜR	397, 399, 401
FAHRERHAUSVERDRAHTUNG	155
FAHRERPLATTFORM	459, 460
FAHRERSITZ UND UNTERBAU	469
FAHRWERK	1
FAHRWERK-KABELBAUM	156, 161
FILTER	369, 405
FILTERLEITUNGEN	289
FILTERSOCKEL U. MOTORÖLKÜHLER	71, 73
FRONTSTOSSSTANGE	224, 225, 226
FUSSMATTE	406, 460
FUSSMATTENSATZ	459

G

GASFEDER	227
GASFEDER (MOTORHAUBE)	229, 231
GELAENDER	239
GESTÄNGE	420
GETRIEBESCHUTZ	238
GLATTBANDAGE	193
GLATTBANDAGEN-ABSTREIFER	257, 258, 259
GLEITRINGDICHTUNG	205, 209
GLÜHKERZE	131
GRUNDAUSFÜHRUNG	1, 2

H

HALOGENSCHINWERFER (24V)(65W)	137
HALOGENSCHINWERFER (24V)(65W) (ARBEITSSCHEINWERFER)	133, 134

* ÜBERSETZUNG ZUM ZEITPUNKT DER DRUCKLEGUNG NICHT VORHANDEN

STICHWORTVERZEICHNIS

Bezeichnung	Seite
	135
	136
HANDPUMPE (KIPPZYLINDER)	395
HAUBE	241
	243
	244
	246
	248
	250
	251
	253
HECKFENSTER	482
HEIZUNGSLEITUNGEN	418
HÖHENEINSTELLUNG (SCHWINGSITZ)	470
	474
HOHLRAD	168
	170
HYDRAULIKFILTER UND BEFESTIGUNGSTEILE	278
HYDRAULIKÖLKÜHLERLEITUNGEN	290
HYDRAULIKSTEUERUNG	275
HYDRAULIKSYSTEM	288
HYDRAULIKTANK	330
	332
HYDRAULIKTANK UND BEFESTIGUNGSTEILE	322
	324
	326
	328
HYDRAULIKZYLINDER	276
	277

I

IDENTIFIKATIONSSCHILD (EXZENTERGEWICHT)	345
	348
	349
IDENTIFIKATIONSSCHILD (MOTOR)	440
IDENTIFIKATIONSSCHILD (STARTHILFE)	437
IDENTIFIKATIONSSCHILD (STARTHILFE)	434
	451
	455
IDENTIFIZIERUNGS-AUFKLEBER (BEDIENUNGSELEMENTE)	388
IDENTIFIZIERUNGS-AUFKLEBER (CS-533E)	486
	490
IDENTIFIZIERUNGS-AUFKLEBER (INSTRUMENTENTAFEL)	452
	456
IDENTIFIZIERUNGS-AUFKLEBER (INSTRUMENTENTAFEL)	434
	437
	440
IDENTIFIZIERUNGS-AUFKLEBER (SCHUTZ-SCHALTERTAFEL)	157
	162
IDENTIFIZIERUNGS-AUFKLEBER (WARTUNGSANZEIGE)	437
	452
INSTRUKTIONS-AUFKLEBER (ENTSPERREN, FREIGEBEN)	463
INSTRUKTIONS-AUFKLEBER (ENTSPERREN, FREIGEBEN)	464
INSTRUKTIONS-AUFKLEBER (MOTOR-START)	434
	437
	440
	451
	455
INSTRUKTONSSCHILD (BATTERIE)	127
INSTRUKTONSSCHILD (KLIMAANLAGE)	416
INSTRUMENTEN-AUFKLEBER (PANEL)	448
INSTRUMENTENTAFEL	434
	437
	440
	443
	447
	451
	455
INSTRUMENTENTAFEL-KABELSTRANG	440
	455
INSTRUMENTENTAFEL-KABELSTRANG (HUPE)	452
	456
INSTRUMENTENTAFEL-KABELSTRANG (KONSOLE, VORN)	451
INSTRUMENTENTAFEL-KABELSTRANG (KONSOLE, VORN)	434
	437
INSTRUMENTENTAFEL-KABELSTRANG (SEITENKONSOLE)	443
	448
INSTRUMENTENTAFEL-KABELSTRANG (WARNHORN)	434

K

KABELSTRANG - HEIZUNG U. KLIMAANLAGE	154
	366
	373
	411
	413
KÄLTEMITTELKOMPRESSOR	384
	385

* ÜBERSETZUNG ZUM ZEITPUNKT DER DRUCKLEGUNG NICHT VORHANDEN

STICHWORTVERZEICHNIS

Bezeichnung	Seite
KÄLTEMITTELKONDENSATOR U. BEFESTIGUNGSTEILE	387
KÄLTEMITTELKONDENSATOR-VENTILATOR	373
KAPPE MIT ENTLÜFTER (SCHEIBENWASCHER)	476
KAPPE (MOTORÖLFÜLLUNG)	11
	13
	15
KAPPE (MOTORÖLFÜLLUNG)	17
KEILRIEMEN (KOMPRESSOR)	385
KEILRIEMENSATZ (EINSCHL. 2 RIEMEN)	31
KEILRIEMENSATZ (EINSCHL. 2 RIEMEN) (LÜFTER)	30
KIPPSCHALTER (ARBEITSLEUCHTE)	139
	140
KIPPSCHALTER (ARBEITSLEUCHTEN)	142
	447
KIPPSCHALTER (GANGWAHL)	435
	438
	441
	452
	456
KIPPSCHALTER (GASSTEUERUNG)	435
	438
	441
KIPPSCHALTER (KLIMAANLAGE)	372
KIPPSCHALTER (KLIMAANLAGE EIN/AUS)	370
KIPPSCHALTER (RUNDUMWARNLEUCHTE)	144
	145
KIPPSCHALTER (STARTHILFE)	435
	438
	440
	452
	456
KIPPSCHALTER (VIBRATIONSWÄHLSCHALTER)	444
	448
KIPPZYLINDER U. BEFESTIGUNG	395
KLIMAANLAGE	366
	369
	370
	372
	373
KLIMAANLAGENDRUCKSPEICHER	364
	365
KLIMAANLAGENDRUCKSPEICHER (MIT TROCKENMITTEL)	365
KLIMAANLAGENLEITUNGEN	416
KLIMAANLAGENVERDRAHTUNG	154
KNICKGELENK- U. SCHWINGANHÄNGUNG	240
KOLBENMOTOR	293
	295
	297
	299
	301
	303
KOLBENPUMPE	306
	308
	310
	311
	313
	315
KOLBENPUMPENUMLAUFSATZ	317
	319
	320
	321
KONTROLLEUCHTE	434
	437
	440
KONTROLLEUCHTE (DREHSTROMGENERATOR)	451
KONTROLLEUCHTE (DREHSTROMGENERATOR)	455
KRAFTSTOFF-ENTLÜFTUNGSPUMPE	95
	97
KRAFTSTOFFEINFÜLLKAPPE (VERSCHLIESSBAR)	121
	123
KRAFTSTOFFEINSPRITZPUMPE	103
	106
	109
	110
	111
	112
KRAFTSTOFFENTLÜFTUNGSPUMPE UND -HAUPTFILTER	115
	117
KRAFTSTOFFFILTEREINSATZ	95
	97
KRAFTSTOFFFILTEREINSATZ (WASSER, KRAFTSTOFFABSCHEIDER)	115
KRAFTSTOFFFILTEREINSATZ (WASSERABSCHEIDER)	117
KRAFTSTOFFFILTERKAPPE	94
KRAFTSTOFFFILTERKAPPE (ABSCHLIESSBAR, MIT STIEFEL)	121
	123
KRAFTSTOFFFILTERKAPPE (SCHWEREINSATZ, SPERRBAR)	120
KRAFTSTOFFILTER	95
	97
KRAFTSTOFFLEITUNGEN	102
KRAFTSTOFFSIEB	120
	121
	123

* ÜBERSETZUNG ZUM ZEITPUNKT DER DRUCKLEGUNG NICHT VORHANDEN

STICHWORTVERZEICHNIS

Bezeichnung	Seite
KRAFTSTOFFSTANDANZEIGE	99
KRAFTSTOFFSTANDANZEIGE (24 V)	451
KRAFTSTOFFSTANDANZEIGE (24 V)	437
KRAFTSTOFFSTANDANZEIGE (24 V)	434
KRAFTSTOFFSTANDGEBER	120
	121
	123
KRAFTSTOFFTANK	120
	121
	123
KRAFTSTOFFTANK U. BEFESTIGUNG	119
KRAFTÜBERTRAGUNG	211
KRÜMMER UND VENTIL	291
KÜHLER	82
KÜHLER UND HYDRAULIKÖLKÜHLER	80
	82
KÜHLERKAPPE	82
KÜHLERSCHLAUCH (OBEN)	80
KÜHLERSCHLAUCH (UNTEN)	80
KÜHLMITTELÜBERLAUFBEHÄLTER	84
KÜHLWASSERANSCHLUSS	68
	69
KÜHLWASSERANSCHLUSS (THERMOSTAT)	69
KÜHLWASSERPUMPE	78
KURBELLAGER-EINBAUSATZ (0,25 MM OS)	19
KURBELLAGER-EINBAUSATZ (0,5 MM OS)	19
KURBELLAGER-EINBAUSATZ (0,76 MM OS)	19
KURBELWELLE	19
	21
KURBELWELLEN-RIEMENSCHEIBE	58

L

Bezeichnung	Seite
LAUFBAND UND ANTRIEB	138
LEITUNGSVERKLEIDUNG	236
	237
LENKBETÄTIGUNG	263
LENKKNOPF	269
LENKÖLLEITUNGEN	270
LENKPUMPE UND AUFHÄNGUNG	272
LENKZYLINDER UND AUFHÄNGUNG	265
	267
LENKZYLINDERLEITUNGEN	271
LEUCHTE, ROT (WEISS, 24 V) (KRAFTSTOFF-ANZEIGE)	99
LEUCHTE (24 V)	434
	437
LEUCHTE (24 V) (FAHRERHAUSDACH)	132
LEUCHTE (24 V) (FESTSTELLBREMSE)	443
LEUCHTE (24 V) (KRAFTSTOFFANZEIGE)	451
LEUCHTE (24 V) (ROT)	447
LEUCHTE (24 V) (WARNLEUCHTE)	425
LEUCHTE (24 V, 3 W)	455
LEUCHTE (24 V, 3 W) (KLAR) (KRAFTSTOFFANZEIGE)	99
LEUCHTE (24 V, 70 W) (RUNDUM-KENNLEUCHTE)	138
LEUCHTE (24-VOLT, 5.6-WATT)	440
LEUCHTE (24-VOLT, 5.6-WATT)	437
LEUCHTE (24-VOLT, 5.6-WATT)	434
LEUCHTE (24-VOLT, 5.6-WATT) (DREHSTROM-GENERATORANZEIGE)	451
	455
LINSE - ROT	434
	437
	440
	451
	455
LUFTEINLASSBOGEN	88
LÜFTERANTRIEB	30
	31
LUFTFILTER (HAUPTELEMENT)	87
LUFTFILTER (HILFSELEMENT)	87
LUFTFILTERWARTUNGSANZEIGE	85
LUFTKANAL	403
LUFTREINIGER	85
	87
LÜFTUNGSKAPPE (KÜHLMITTELAUFFANG)	84

M

Bezeichnung	Seite
MAGNETSCHALTER	150
	151
MAGNETSCHALTER (24 V) (GLÜHKERZE)	156
MAGNETSCHALTER (24 V) (GLÜHKERZENRE-LAIS)	161
MAGNETSCHALTER (24 V) (STARTRELAIS)	161
MAGNETSTOPFEN	191
	193
MAGNETSTOPFEN (STAMPFFLUSSBANDA-GE)	192
MAGNETSTOPFEN (VIBRATIONSAUFHÄN-GUNG)	362
MAGNETVENTIL	280
	283
MAGNETVENTIL (ANTRIEBSPUMPE)	286
MAGNETVENTIL (SCHALTEN)	336
MAGNETVENTIL (24 V) (KRAFTSTOFFABSTEL-LUNG)	110
MAGNETVENTIL (24 V) (KRAFTSTOFFEIN-SPRITZPUMPE)	109
MASCHINENVERDRAHTUNG	156
	161
MEMBRAN (KURBELGEHÄUSEDRUCKSCHAL-TER)	15
	17

* ÜBERSETZUNG ZUM ZEITPUNKT DER DRUCKLEGUNG NICHT VORHANDEN

STICHWORTVERZEICHNIS

Bezeichnung	Seite
MEMBRAN (KURBELGEHÄUSEDRUCKSCHALTER)	9, 11, 13
MOTOR-EINBAUSATZ	6
MOTORAUFHÄNGUNG, ELASTISCH	45, 46
MOTORAUFLAGER	42, 43
MOTORAUSFÜHRUNG	3, 4, 5
MOTORBLOCK	23, 25, 26
MOTORDREHVORRICHTUNG	316
MOTORHUBÖSE	41
MOTORÖLEINFÜLLSTUTZEN	9, 11, 13, 15
MOTORÖLKÜHLER	70, 73
MOTORÖLKÜHLER UND FILTERSOCKEL	71, 73
MOTORSTOPFEN	54, 55, 56, 57
MOTORVERKLEIDUNG	227, 229, 231

N

NEBENANTRIEB U. VIBRATIONSBANDAGE	344
NEBENSTROMVENTIL	335
NEIGEZYLINDER	395
NEUTRALSTARTSCHALTER	339
NOCKENWELLE	7

O

ÖFFNUNG - KLIMAANLAGE	367, 373
ÖLEINFÜLLKAPPE (MOTOR)	9, 11, 13, 15
ÖLEINFÜLLKAPPE (MOTOR)	17
ÖLFILTER	66
ÖLFILTER (HOCHLEISTUNG) (HYDRAULIK)	278
ÖLFILTER (HYDRAULIK)	278
ÖLMESSSTAB (MOTOR)	47, 49
ÖLWANNE	47, 49

P

PLATTE (ÜBERROLLSCHUTZ/STEINSCHLAGSCHUTZ)	493
PLEUELLAGER-EINBAUSATZ (0,25 MM OS)	19
PLEUELLAGER-EINBAUSATZ (0,51 MM OS)	19
PLEUELLAGER-EINBAUSATZ (0,76 MM OS)	19
PLEUELSTANGE UND KOLBEN	51, 53
PUMPENANSCHLUSS	212, 214
PUMPENANTRIEB	32
PUMPENKOPF	280, 281, 283, 285, 286
PUMPENSTELLGLIED	273, 274
PUMPENSTEUERVENTIL	338, 339, 341, 342

R

RAD UND REIFEN	219, 220, 221, 222
RADAUFHAENGUNG	203
RADFLANSCH	194
RAHMEN, HINTEN	234
RAMMSCHUTZ	223
REGLER	100
RELAIS (24 V) (BREMSE EINS)	444, 448
RELAIS (24 V) (BREMSE ZWEI)	444, 448
RELAIS (24 V) (FUNKTIONSLEUCHTE)	444, 448
RELAIS (24 V) (HYDRAULIKÖLDRUCK)	448
RELAIS (24 V) (HYDRAULIKÖLDRUCK)	444
RELAIS (24 V) (HYDRAULIKÖLTEMPERATUR)	444, 448
RELAIS (24 V) (KÜHLMITTELTEMPERATUR)	444
RELAIS (24 V) (KÜHLMITTELTEMPERATUR)	448

* ÜBERSETZUNG ZUM ZEITPUNKT DER DRUCKLEGUNG NICHT VORHANDEN

STICHWORTVERZEICHNIS

Bezeichnung	Seite
RELAIS (24 V) (MOTORÖLDRUCK)	443, 448
RELAIS (24 V) (NEUTRALSTART EINS)	444, 448
RELAIS (24 V) (NEUTRALSTART ZWEI)	444, 448
RELAIS (24 V) (WARNLEUCHTE)	444, 448
RÜCKFAHRWARNHORN	152, 153
RÜCKSPIEGEL	421, 422, 423, 424
RUNDUM-KENNLEUCHTE	138
S	
SAUGLÜFTER	74, 75, 76, 77
SCHALLDÄMPFER	90
SCHALTER - MICRO (NEUTRALSTELLUNG)	391, 393
SCHAUGLAS	330, 332
SCHEIBENFEDER	35
SCHEIBENWASCHMITTELBEHÄLTER	476
SCHEIBENWISCHER UND -WASCHANLAGE	483
SCHEIBENWISCHERARM	375, 483
SCHEIBENWISCHERBLATT (500 MM)	483
SCHEIBENWISCHERBLATT (700 MM)	483
SCHEIBENWISCHERMOTOR	426, 427
SCHEIBENWISCHERMOTOR (24 V)	483
SCHILD UND AUFKLEBER	486, 487, 489, 490, 491, 492, 493, 494
SCHLÜSSEL	434, 437, 440, 451, 455
SCHLÜSSEL (ELEKTRISCHER HAUPTSCHALTER)	149
SCHMIERPUMPE	67
SCHUTZVERKLEIDUNG	409
SCHWINGSITZ	470, 472, 474
SCHWUNGRAD	33
SCHWUNGRADGEHÄUSE	34
SEITENANTRIEB - PLANETENGETRIEBE	204, 205, 207, 208, 209
SENSOR, KABELSTRANG (VIBRATION)	407
SERVICE - MOTOR	60, 61
SICHERHEITSGURT	469, 472
SICHERUNG (10 A)	443, 447
SITZBEFESTIGUNGSTEIL	469, 472
SONNENBLENDE	466, 467, 468, 477
SPANNUNGSREGLER (24 V) (KRAFTSTOFFILTER)	95, 97
STAMPFFUSSBANDAGE	191, 192
STAMPFFUSSBANDAGENKÖRPER	216, 217
STARTERMOTOR	148
STARTSCHALTER (TASTE)	434, 437, 440
STARTSCHALTER (TASTE)	451, 455
STEIGLEITER	260
STEUERHEBEL	390
STEUERUNG - RICHTUNG U. DREHZAHL	388
STEUERVENTIL	336, 337
STEUERVENTIL UND BEFESTIGUNGSTEILE	334
STIRNRADGEHÄUSE	35, 37, 39
STIRNRADGEHÄUSEDECKEL	8
T	
TEMPERATURSCHALTER	112
TEMPERATURSCHALTER (*HYDRAULIC ALERT INDICATOR)	332

* ÜBERSETZUNG ZUM ZEITPUNKT DER DRUCKLEGUNG NICHT VORHANDEN

STICHWORTVERZEICHNIS

Bezeichnung	Seite
TEMPERATURSCHALTER (HYDRAULIKÖL)	330
TEMPERATURSCHALTER (KÜHLMITTEL)	156
	161
TEMPERATURSCHALTER (SPRITZVERSTELLUNG)	103
	106
TIMERMODUL	146
	443
	448
TRENNSCHALTER	149
TURBOLADER	92
TÜRFENSTER	480

U

ÜBERDRUCKVENTIL	283
	343
ÜBERDRUCKVENTIL (KÄLTEMITTELKOMPRESSOR)	384
ÜBERDRUCKVENTIL (KOMBINATION)	280
	283
	286
ÜBERDRUCKVENTIL (UMSCHALTVENTIL)	281
	285
ÜBERROLL-SCHUTZKABINE	463
	464
ÜBERROLLSCHUTZ	462
UNTERBRECHER (10 A)	448
UNTERBRECHER (15 A) (HAUPTSCHALTER)	444
UNTERBRECHER (15 A) (STARTSCHALTER-SCHLÜSSEL)	448
UNTERBRECHER (60 A) (DREHSTROMGENERATOR)	161
UNTERBRECHER (60 A) (GLÜHKERZE)	156
	161
UNTERBRECHER (60 A) (HAUPTUNTERBRECHER)	161

V

VENTILDECKEL	9
	11
	13
	15
	17
VENTILDECKELDICHTUNG	35
VENTILKIPPHEBEL	59
VENTILSTEUERUNG	63
	64
VERDICHTUNGSBANDAGE	185
VIBRATIONSANZEIGE	407
VIBRATIONSBANDAGE UND ANTRIEB	186
	187
	188
	189
VIBRATIONSHYDRAULIK	351
VIBRATIONSLEITUNGEN	352
VIBRATIONSMOTOR U. BEFESTIGUNG	354
VIBRATIONSPUMPE U. BEFESTIGUNGSTEILE	355
	357
VIBRATIONSUNTERSTÜTZUNG	362
VORDERRAHMEN	233
VORHÄNGESCHLOSS	486
	487
	489
	490
	491
VORHÄNGESCHLOSS (VANDALISMUSSCHUTZ)	409

W

WALZENEINBAU	197
WARNANZEIGEMODUL	425
WARNAUFKLEBER (BETRIEBSANWEISUNGEN)	493
WARNAUFKLEBER (NICHT SCHWEISSEN, NICHT BOHREN, HANDBUCH LESEN)	492
	494
WARNAUFKLEBER (OHNE ÜBERROLLSCHUTZ/STEINSCHLAGSCHUTZ)	383
WARNAUFKLEBER (STARTHILFEKABEL, HANDBUCH LESEN)	492
WARNAUFKLEBER (STARTHILFEKABEL, HANDBUCH LESEN)	493
WARNLEUCHTEN	144
	145
WARNVORRICHTUNG	125
WASSERTEMPERATURREGLER	68
WETTERDACH	383
*WHEEL & MTG GP-DRIVE	218

Z

ZAHNRADPUMPE	305
ZUFLUSSREGULIERVENTIL (LENKUNG)	263
ZUSATZHYDRAULIK	288
ZYLINDERKOPF	27
	28
	29

* ÜBERSETZUNG ZUM ZEITPUNKT DER DRUCKLEGUNG NICHT VORHANDEN

MACHINE ARRANGEMENT

239-0795 CHASSIS AR–PE238

S/N: BZE1-UP

PART OF 230-4178 COMMON AR

SMCS-7000 **i02762447**

NOTE	PART NUMBER	QTY	PART NAME 1 2 3 4 5 6 (PRODUCT LEVEL)	SEE PAGE
Y	*296-0023*	1	ENCLOSURE GP-ENGINE	231
Y	*217-2945*	1	FRAME GP-FRONT	233
Y	*239-1496*	1	FRAME GP-REAR	234
Y	*220-8703*	1	STEP GP	260
Y	*239-0641*	1	TANK & MTG GP-FUEL	119
Y	*218-2751*	1	TANK & MTG GP-HYDRAULIC	322
Y-SEPARATE ILLUSTRATION				

<END>

239-0796 CHASSIS AR–PE239

S/N: BZG1-UP

PART OF 231-8816 COMMON AR

SMCS-7000 **i02764515**

NOTE	PART NUMBER	QTY	PART NAME 1 2 3 4 5 6 (PRODUCT LEVEL)	SEE PAGE
Y	*222-4326*	1	BUMPER GP-FRONT	224
Y	*296-0023*	1	ENCLOSURE GP-ENGINE	231
Y	*217-2945*	1	FRAME GP-FRONT	233
Y	*239-1496*	1	FRAME GP-REAR	234
Y	*222-9975*	1	PLATE & FILM GP	489
Y	*212-9533*	1	SCRAPER GP-PADDED DRUM	255
Y	*220-8703*	1	STEP GP	260
Y	*239-0641*	1	TANK & MTG GP-FUEL	119
Y	*218-2751*	1	TANK & MTG GP-HYDRAULIC	322
Y-SEPARATE ILLUSTRATION				

<END>

230-4178 COMMON AR–PE238

S/N: BZE1-UP

SMCS-7000 **i02744203**

NOTE	PART NUMBER	QTY	PART NAME 1 2 3 4 5 6 (PRODUCT LEVEL)	SEE PAGE
Y	*239-0795*	1	CHASSIS AR	1
Y	*238-8680*	1	ELECTRICAL AR	130
Y	**177-9752**	1	ENGINE AR-PRIMARY	4
			S/N: BZE1-777	
Y	*219-4167*	1	HYDRAULIC AR	288
Y	*235-8556*	1	HYDRAULIC AR-AUXILIARY	288
Y	*219-4168*	1	HYDRAULIC AR-VIBRATORY	351
Y	*219-4162*	1	INSTALLATION AR-ENGINE	6
Y	*219-4164*	1	POWER TRAIN AR	211
Y-SEPARATE ILLUSTRATION				

<END>

MACHINE ARRANGEMENT

231-8816 COMMON AR–PE239

S/N: BZG1-UP

SMCS-7000 **i02744395**

NOTE	PART NUMBER	QTY	PART NAME 1 2 3 4 5 6 (PRODUCT LEVEL)	SEE PAGE
Y	*239-0796*	1	CHASSIS AR	1
Y	*238-8680*	1	ELECTRICAL AR	130
Y	**177-9752**	1	ENGINE AR-PRIMARY	4
			S/N: BZG1-381	
Y	*219-4167*	1	HYDRAULIC AR	288
Y	*235-8556*	1	HYDRAULIC AR-AUXILIARY	288
Y	*219-4168*	1	HYDRAULIC AR-VIBRATORY	351
Y	*219-4162*	1	INSTALLATION AR-ENGINE	6
Y	*231-8815*	1	POWER TRAIN AR	211

Y-SEPARATE ILLUSTRATION

<END>

ENGINE ARRANGEMENT

304-7046 ENGINE AR

S/N: BZE1-UP; BZG1-UP
AN ATTACHMENT

SMCS-1000 **i02718060**

NOTE	PART NUMBER	QTY	PART NAME 1 2 3 4 5 6 (PRODUCT LEVEL)	SEE PAGE
Y	**297-4047**	1	ENGINE AR-PRIMARY	5

Y-SEPARATE ILLUSTRATION

ENGINE ARRANGEMENT

177-9752 ENGINE AR-PRIMARY

S/N: CRS1-UP

PART OF 230-4178, 231-8816 COMMON AR

SMCS-1000 **i02660026**

NOTE	PART NUMBER	QTY	PART NAME 1 2 3 4 5 6 (PRODUCT LEVEL)	SEE PAGE
Y	*233-9533*	1	ALTERNATOR GP-CHARGING	126
Y	*232-7528*	1	CAMSHAFT GP	7
Y	*231-0038*	1	CONNECTION GP-WATER	68
Y	*240-5535*	1	CONVERTER GP-ELECTRICAL	129
Y	*232-6177*	1	COOLER GP-FLTR BASE & ENG OIL	71
			S/N: CRS1-364	
Y	*238-2799*	1	COOLER GP-FLTR BASE & ENG OIL	73
			S/N: CRS365-UP	
Y	*230-9196*	1	COVER GP-FRONT HOUSING	8
Y	*234-0251*	1	COVER GP-VALVE MECHANISM	9
			S/N: CRS1-13968	
Y	*269-3101*	1	COVER GP-VALVE MECHANISM	11
			S/N: CRS13969-UP	
Y	*232-7439*	1	CRANKSHAFT GP	19
Y	*232-7606*	1	CYLINDER BLOCK GP	25
Y	*232-7524*	1	CYLINDER HEAD GP	28
Y	*230-9699*	1	DRIVE GP-FAN	30
Y	*270-4374*	1	ELBOW GP-AIR INLET	88
Y	*232-7378*	1	FILTER GP-ENGINE OIL	66
Y	*233-9832*	1	FILTER GP-FUEL	95
			S/N: CRS1-364	
Y	*233-9417*	1	PUMP GP-FUEL PRM & PRIM FILTER	115
			S/N: CRS365-UP	
Y	*245-9831*	1	FLYWHEEL GP	33
Y	*233-9834*	1	GLOW PLUG GP	131
Y	*223-7825*	1	HOUSING GP-FLYWHEEL	34
Y	*232-6179*	1	HOUSING GP-FRONT	35
Y	*232-3713*	1	LIFTING GP-ENGINE	41
Y	*233-9840*	1	MOUNTING GP-ENGINE	42
			S/N: CRS1-2612	
Y	*252-6456*	1	MOUNTING GP-ENGINE	43
			S/N: CRS2613-UP	
Y	*232-2565*	1	PAN GP-OIL	47
Y	*232-7442*	1	PISTON & ROD GP	51
Y	*225-4317*	1	PLUG GP-ENGINE	54
Y	*232-3716*	1	PLUG GP-ENGINE	55
			S/N: CRS1-364	
Y	*253-2479*	1	PLUG GP-ENGINE	57
			S/N: CRS365-UP	
Y	*232-6204*	1	PLUG GP-ENGINE	56
Y	*230-7353*	1	PULLEY GP-CRANKSHAFT	58
Y	*230-7578*	1	PUMP GP-ENGINE OIL	67
Y	*233-9526*	1	PUMP GP-FUEL INJECTION	103
Y	*230-7355*	1	PUMP GP-WATER	78
Y	*230-7304*	1	STARTING MOTOR GP-ELECTRIC	148
Y	*233-9539*	1	TURBOCHARGER GP	92
Y	*232-7526*	1	VALVE MECHANISM GP	63
			AVAILABLE REPAIR KIT(S):	
	277-5156	1	KIT-GASKET (TOP)	
	272-0494	1	KIT-GASKET (BOTTOM)	

Y-SEPARATE ILLUSTRATION

ENGINE ARRANGEMENT

297-4047 ENGINE AR-PRIMARY

S/N: CRS1-UP
97 BRAKE KW (129 BHP) AT 2200 RPM
PART OF 304-7046 ENGINE AR
AN ATTACHMENT

SMCS-1000 **i02718145**

NOTE	PART NUMBER	QTY	PART NAME 1 2 3 4 5 6 (PRODUCT LEVEL)	SEE PAGE
Y	*231-0038*	1	CONNECTION GP-WATER	68
Y	*240-5535*	1	CONVERTER GP-ELECTRICAL	129
Y	*238-2799*	1	COOLER GP-FLTR BASE & ENG OIL	73
Y	*230-9196*	1	COVER GP-FRONT HOUSING	8
Y	*269-3101*	1	COVER GP-VALVE MECHANISM	11
Y	*308-4729*	1	CRANKSHAFT GP	21
Y	*308-4728*	1	CYLINDER BLOCK GP	26
Y	*308-4731*	1	CYLINDER HEAD GP	29
Y	*234-9680*	1	DRIVE GP-FAN	31
Y	*270-4374*	1	ELBOW GP-AIR INLET	88
Y	*232-7378*	1	FILTER GP-ENGINE OIL	66
Y	*245-9831*	1	FLYWHEEL GP	33
Y	*223-7825*	1	HOUSING GP-FLYWHEEL	34
Y	*308-4764*	1	HOUSING GP-FRONT	39
Y	*232-3713*	1	LIFTING GP-ENGINE	41
Y	*252-6456*	1	MOUNTING GP-ENGINE	43
Y	*232-2565*	1	PAN GP-OIL	47
Y	*308-4730*	1	PISTON & ROD GP	53
Y	*225-4317*	1	PLUG GP-ENGINE	54
Y	*232-6204*	1	PLUG GP-ENGINE	56
Y	*253-2479*	1	PLUG GP-ENGINE	57
Y	*230-7353*	1	PULLEY GP-CRANKSHAFT	58
Y	*308-4733*	1	PUMP GP-FUEL INJECTION	112
Y	*233-9417*	1	PUMP GP-FUEL PRM & PRIM FILTER	115
Y	*230-7355*	1	PUMP GP-WATER	78
Y	*230-7304*	1	STARTING MOTOR GP-ELECTRIC	148
Y	*233-9539*	1	TURBOCHARGER GP	92
Y	*308-4732*	1	VALVE MECHANISM GP	64
	268-0867	1	CYLINDER BLOCK GP-SHORT	
			AVAILABLE GASKET KIT(S):	
	272-0494	1	KIT-GASKET (BOTTOM)	
	277-5156		KIT-GASKET (TOP)	

Y-SEPARATE ILLUSTRATION

ENGINE ARRANGEMENT

219-4162 INSTALLATION AR-ENGINE

S/N: BZE1-UP; BZG1-UP

PART OF 230-4178, 231-8816 COMMON AR

SMCS-1000 **i02088157**

NOTE	PART NUMBER	QTY	PART NAME 1 2 3 4 5 6 (PRODUCT LEVEL)	SEE PAGE
Y	*217-0747*	1	AIR CLEANER GP	85
Y	*153-4980*	1	DRIVE GP-PUMP	32
Y	*227-4799*	1	GOVERNOR GP	100
Y	*216-7940*	1	LINES GP-AIR	89
Y	*222-3102*	1	LINES GP-FUEL	102
Y	*220-8779*	1	MOUNTING GP-ENGINE FLEXIBLE	45
Y	*216-8158*	1	MUFFLER GP	90
Y	*217-8225*	1	RADIATOR & HYD OIL COOLER GP	80
Y	*201-7671*	1	RECOVERY GP-COOLANT	84
Y	*220-1960*	1	SERVICE GP-ENGINE (FLUID SAMPLING, DRAIN)	60

Y-SEPARATE ILLUSTRATION

BASIC ENGINE

232-7528 CAMSHAFT GP

S/N: CRS1-UP

PART OF 177-9752 ENGINE AR-PRIMARY

SMCS-1210 **i02053604**

NOTE	REF NO	GRAPHIC REF	PART NUMBER	QTY	PART NAME 1 2 3 4 5 6 (PRODUCT LEVEL)	SEE PAGE
	1	1	**1B-8736**	1	KEY-WOODRUFF	
	2	1	**225-5967**	1	CAMSHAFT	

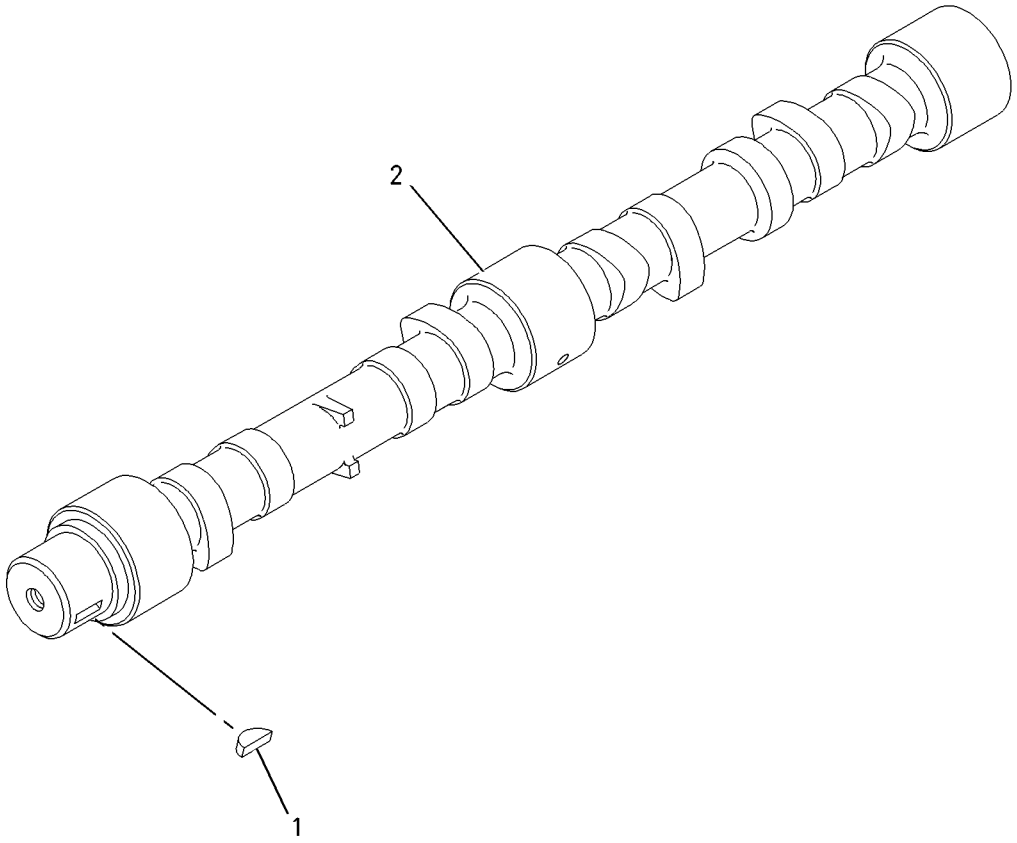

GRAPHIC #1 **<END>** g00911297

BASIC ENGINE

230-9196 COVER GP-FRONT HOUSING

S/N: CRS1-UP

PART OF 177-9752, 297-4047 ENGINE AR-PRIMARY

ALSO AN ATTACHMENT

SMCS-1151, 1166 **i02655371**

NOTE	REF NO	GRAPHIC REF	PART NUMBER	QTY	PART NAME 1 2 3 4 5 6 (PRODUCT LEVEL)	SEE PAGE
M	1	1	**100-4830**	1	BOLT (M10X1.5X20-MM)	
	2	1	**111-8222**	5	BOLT	
	3	1	**209-5502**	1	COVER AS (POWER TAKE-OFF)	
	3A	1	**209-5503**	1	SEAL-COVER	
	4	1	**6I-0646**	1	BOLT (M10X1.5X14-MM)	
	5	1	**214-3203**	1	WASHER (SEALING)	

M-METRIC PART

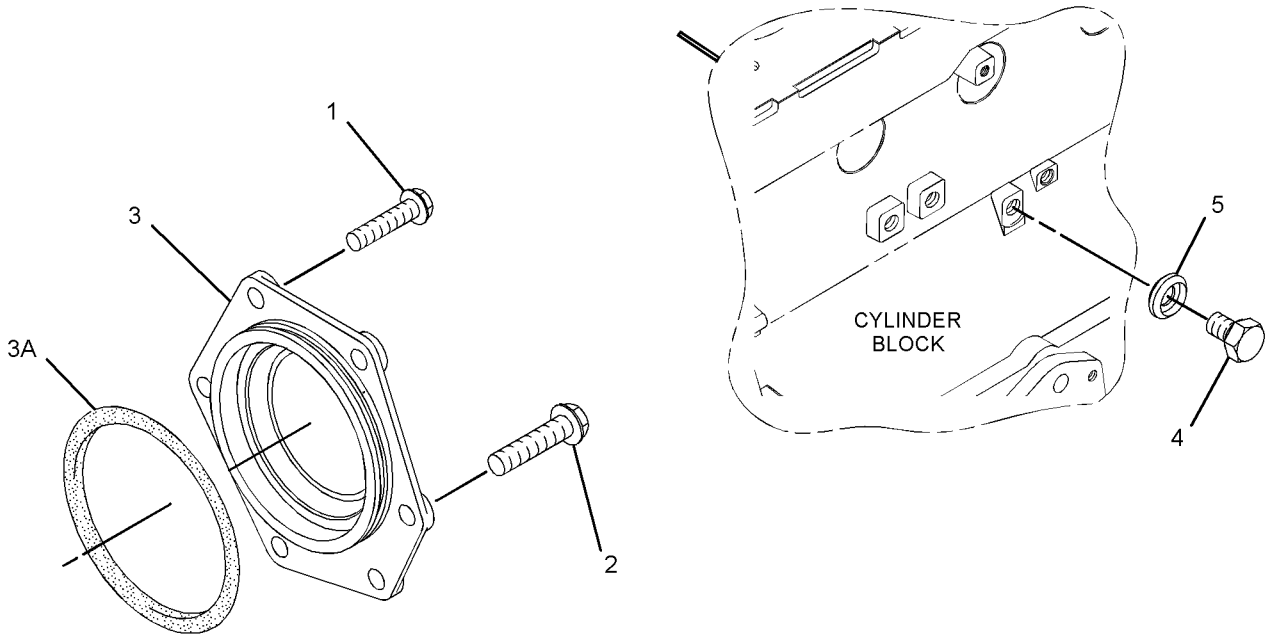

GRAPHIC #1 **<END>** g01342815

234-0251 COVER GP-VALVE MECHANISM

S/N: CRS1-13968

PART OF 177-9752 ENGINE AR-PRIMARY

SMCS-1107, 1120 **i02154895**

NOTE	REF NO	GRAPHIC REF	PART NUMBER	QTY	PART NAME 1 2 3 4 5 6 (PRODUCT LEVEL)	SEE PAGE
	1	1	**5D-1026**	1	CLAMP-HOSE	
M	2	1	**6I-0254**	1	BOLT (M8X1.25X30-MM)	
	3	1	**6I-0517**	1	SPRING (CRANKCASE BREATHER HOSE)	
	4	1	**6I-0846**	3	BOLT (M6X1X14-MM)	
	5	1	**6I-4374**	1	BOLT (M8X1.25X60-MM)	
	6	1	**7C-1281**	1	BRACKET	
	7	1	**198-8645**	1	HOSE (CRANKCASE BREATHER)	
	9	1	**226-8763**	1	COVER AS-VALVE	
	9A	1	**225-6451**	1	GASKET (VALVE COVER)	
	9B	1	**225-6455**	10	BOLT	
	9C	1	**225-6456**	1	SPRING	
	9D	1	**225-6461**	1	CAP	
	9E	1	**225-6464**	1	DIAPHRAGM (CRANKCASE PRESSURE CONTACTOR)	
	9F	1	**225-6477**	1	PLATE	
	9G	1	**225-6478**	4	SCREW-MACHINE	
	9H	1	**225-6479**	1	CAP	
	10	1	**230-9127**	1	COVER	
	11	1	**230-9144**	1	CONNECTOR	
	11A	1	**150-7732**	1	SEAL-O-RING	
	11B	1	**225-6455**	2	BOLT	
	11C	1	**225-6517**	1	GASKET	
	12	1	**230-9152**	1	FILLER GP-ENGINE OIL	
	12A	1	**6I-1201**	1	SEAL-O-RING	
	12B	1	**130-9888**	1	CAP-OIL FILLER (ENGINE)	
	12C	1	**113-1504**	1	SEAL-O-RING	

M-METRIC PART

234-0251 **COVER GP-VALVE MECHANISM** *(contd.)* **i02154895**

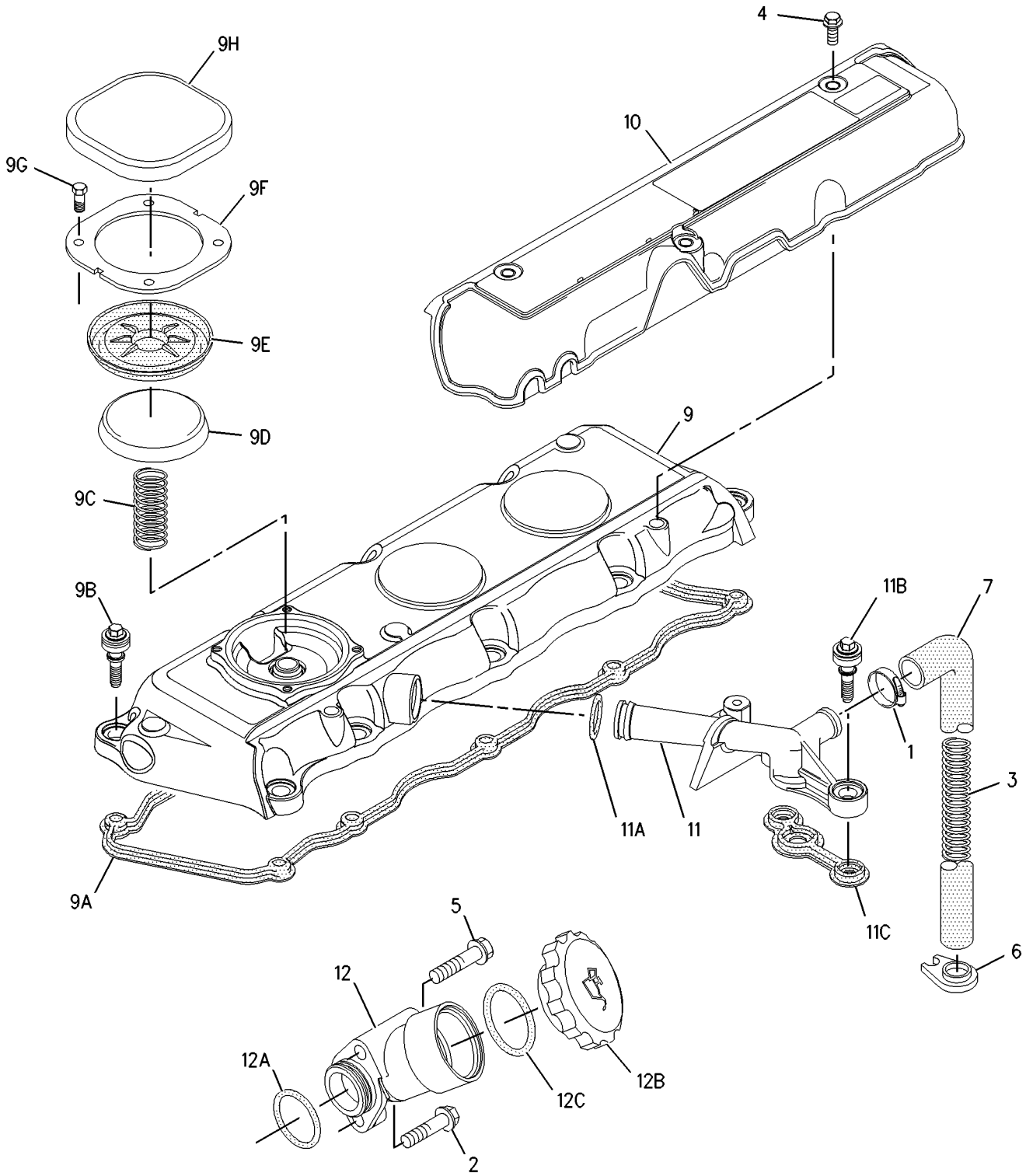

GRAPHIC #1 **<END>** g00985145

269-3101 COVER GP-VALVE MECHANISM

S/N: CRS13969-UP

PART OF 177-9752 ENGINE AR-PRIMARY

TYPE 1

SMCS-1107, 1120 **i02342252**

NOTE	REF NO	GRAPHIC REF	PART NUMBER	QTY	PART NAME 1 2 3 4 5 6 (PRODUCT LEVEL)	SEE PAGE
	1	1	**5D-1026**	1	CLAMP-HOSE	
M	2	1	**6I-0254**	1	BOLT (M8X1.25X30-MM)	
	3	1	**162-1565**	1	SPRING (CRANKCASE BREATHER HOSE)	
	4	1	**6I-0846**	3	BOLT (M6X1X14-MM)	
	5	1	**6I-4374**	1	BOLT (M8X1.25X60-MM)	
	6	1	**7C-1281**	1	BRACKET	
	7	1	**198-9169**	1	HOSE (CRANKCASE BREATHER)	
	8	1	**230-9127**	1	COVER	
	9	1	**230-9144**	1	CONNECTOR	
	9A	1	**150-7732**	1	SEAL-O-RING	
	9B	1	**225-6455**	2	BOLT	
	9C	1	**225-6517**	1	GASKET	
	10	1	**230-9152**	1	FILLER GP-ENGINE OIL	
	10A	1	**6I-1201**	1	SEAL-O-RING	
	10B	1	**130-9888**	1	CAP-OIL FILLER (ENGINE)	
	10C	1	**113-1504**	1	SEAL-O-RING	
	11	1	**247-7799**	1	COVER AS-VALVE	
	11A	1	**136-3608**	1	CAP AS (ENGINE OIL FILLER)	
	11B	1	**124-0506**	1	SEAL	
	11C	1	**225-6451**	1	GASKET (VALVE COVER)	
	11D	1	**225-6455**	10	BOLT	
	11E	1	**225-6456**	1	SPRING	
	11F	1	**225-6461**	1	CAP	
	11G	1	**225-6464**	1	DIAPHRAGM (CRANKCASE PRESSURE CONTACTOR)	
	11H	1	**225-6477**	1	PLATE	
	11J	1	**225-6478**	4	SCREW-MACHINE	
	11K	1	**225-6479**	1	CAP	

M-METRIC PART

269-3101 **COVER GP-VALVE MECHANISM** *(contd.)* **i02342252**

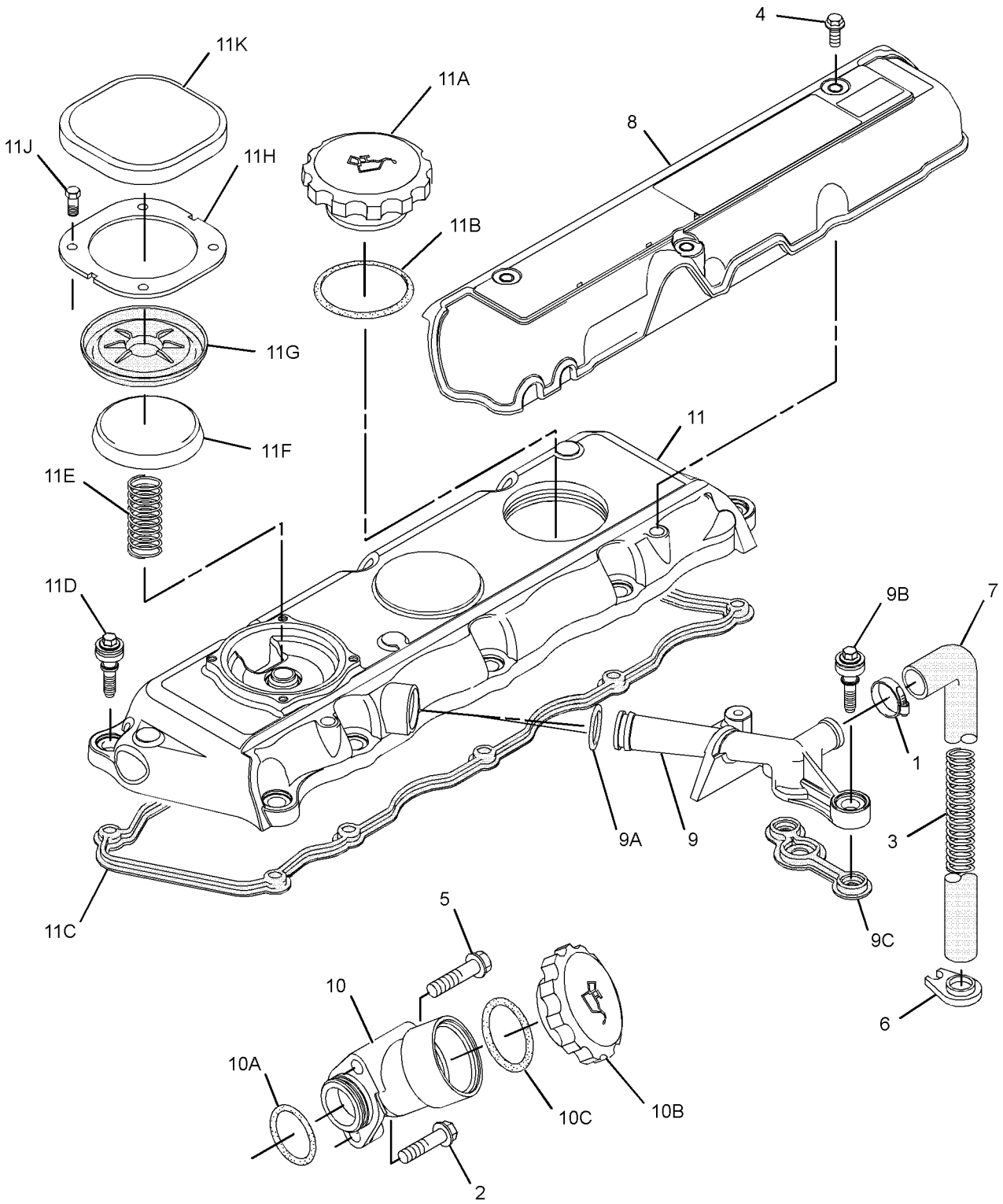

GRAPHIC #1 **<END>** g01171325

269-3101 COVER GP-VALVE MECHANISM

S/N: CRS13969-UP

PART OF 177-9752 ENGINE AR-PRIMARY

TYPE 2

SMCS-1107, 1120 **i02554659**

NOTE	REF NO	GRAPHIC REF	PART NUMBER	QTY	PART NAME 1 2 3 4 5 6 (PRODUCT LEVEL)	SEE PAGE
	1	1	**5D-1026**	1	CLAMP-HOSE	
M	2	1	**6I-0254**	1	BOLT (M8X1.25X30-MM)	
	3	1	**162-1565**	1	SPRING (CRANKCASE BREATHER HOSE)	
	4	1	**6I-0846**	3	BOLT (M6X1X14-MM)	
	5	1	**6I-4374**	1	BOLT (M8X1.25X60-MM)	
	6	1	**7C-1281**	1	BRACKET	
	7	1	**198-9169**	1	HOSE (CRANKCASE BREATHER)	
	8	1	**230-9127**	1	COVER	
C	9	1	**287-8573**	1	PIPE-BREATHER	
	10	1	**230-9152**	1	FILLER GP-ENGINE OIL	
	10A	1	**6I-1201**	1	SEAL-O-RING	
	10B	1	**130-9888**	1	CAP-OIL FILLER (ENGINE)	
	10C	1	**113-1504**	1	SEAL-O-RING	
	11	1	**247-7799**	1	COVER AS-VALVE	
	11A	1	**136-3608**	1	CAP AS (ENGINE OIL FILLER)	
	11B	1	**124-0506**	1	SEAL	
	11C	1	**225-6451**	1	GASKET (VALVE COVER)	
	11D	1	**225-6455**	10	BOLT	
	11E	1	**225-6456**	1	SPRING	
	11F	1	**225-6461**	1	CAP	
	11G	1	**225-6464**	1	DIAPHRAGM (CRANKCASE PRESSURE CONTACTOR)	
	11H	1	**225-6477**	1	PLATE	
	11J	1	**225-6478**	4	SCREW-MACHINE	
	11K	1	**225-6479**	1	CAP	
C	12	1	**100-4838**	2	BOLT (M6X20-MM)	

C-CHANGE FROM PREVIOUS TYPE
M-METRIC PART

269-3101 **COVER GP-VALVE MECHANISM** *(contd.)* **i02554659**

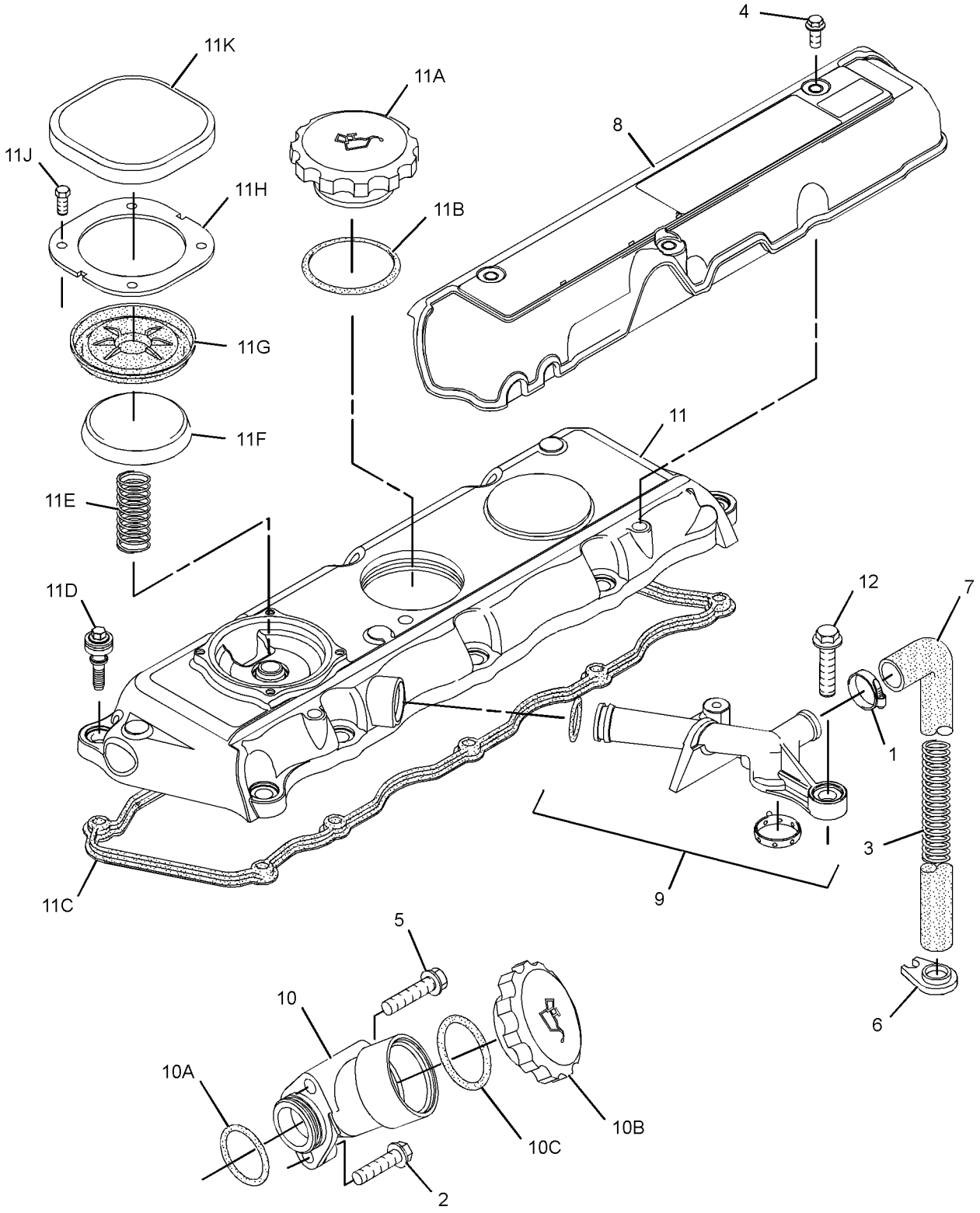

GRAPHIC #1 **<END>** g01294724

269-3101 COVER GP-VALVE MECHANISM

S/N: CRS13969-UP
PART OF 177-9752, 297-4047 ENGINE AR-PRIMARY
ALSO AN ATTACHMENT
TYPE 3

SMCS-1107, 1120 **i02702232**

NOTE	REF NO	GRAPHIC REF	PART NUMBER	QTY	PART NAME 1 2 3 4 5 6 (PRODUCT LEVEL)	SEE PAGE
	1	1	**5D-1026**	1	CLAMP-HOSE	
M	2	1	**6I-0254**	1	BOLT (M8X1.25X30-MM)	
	3	1	**162-1565**	1	SPRING (CRANKCASE BREATHER HOSE)	
	4	1	**6I-0846**	3	BOLT (M6X1X14-MM)	
	5	1	**6I-4374**	1	BOLT (M8X1.25X60-MM)	
	6	1	**7C-1281**	1	BRACKET	
	7	1	**198-9169**	1	HOSE (CRANKCASE BREATHER)	
	8	1	**230-9127**	1	COVER	
C	9	1	**287-8573**	1	PIPE-BREATHER	
	10	1	**230-9152**	1	FILLER GP-ENGINE OIL	
	10A	1	**6I-1201**	1	SEAL-O-RING	
	10B	1	**130-9888**	1	CAP-OIL FILLER (ENGINE)	
	10C	1	**113-1504**	1	SEAL-O-RING	
	11	1	**308-1393**	1	COVER AS-CYLINDER	
	11A	1	**136-3608**	1	CAP AS (ENGINE OIL FILLER)	
	11B	1	**124-0506**	1	SEAL	
	11C	1	**225-6456**	1	SPRING	
	11D	1	**225-6461**	1	CAP	
	11E	1	**225-6464**	1	DIAPHRAGM (CRANKCASE PRESSURE CONTACTOR)	
	11F	1	**225-6477**	1	PLATE	
	11G	1	**225-6478**	4	SCREW-MACHINE	
	11H	1	**225-6479**	1	CAP	
	11J	1	**225-6451**	1	GASKET (VALVE COVER)	
C	12	1	**100-4838**	2	BOLT (M6X20-MM)	

C-CHANGE FROM PREVIOUS TYPE
M-METRIC PART

269-3101 **COVER GP-VALVE MECHANISM** *(contd.)* **i02702232**

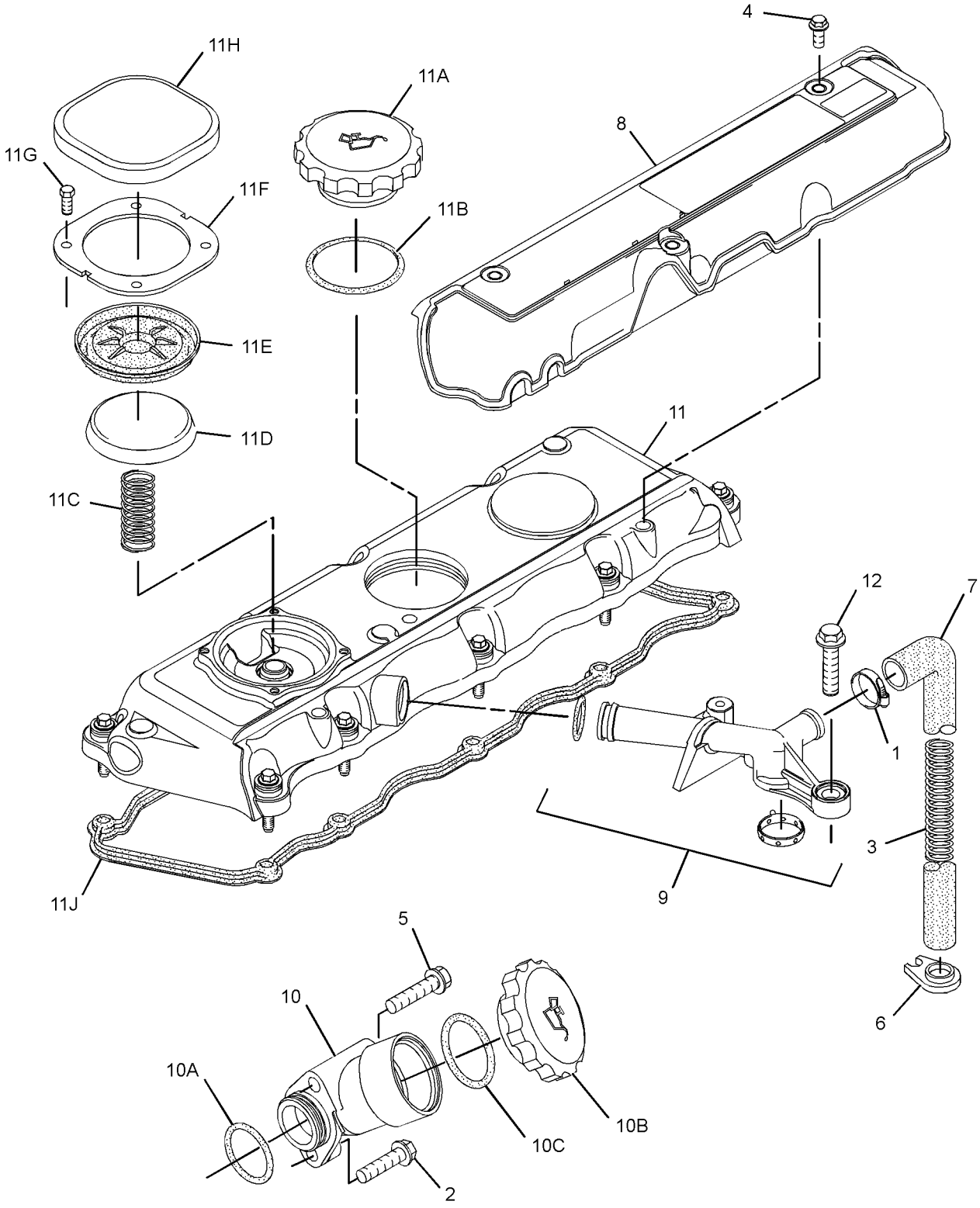

GRAPHIC #1 **<END>** g01372331

269-3101 COVER GP-VALVE MECHANISM

S/N: CRS1-UP
PART OF 297-4047 ENGINE AR-PRIMARY
AN ATTACHMENT

SMCS-1107, 1120 **i02891495**

NOTE	REF NO	GRAPHIC REF	PART NUMBER	QTY	PART NAME 1 2 3 4 5 6 (PRODUCT LEVEL)	SEE PAGE
	1	1	**5D-1026**	1	CLAMP-HOSE	
M	2	1	**6I-0254**	1	BOLT (M8X1.25X30-MM)	
	3	1	**162-1565**	1	SPRING (CRANKCASE BREATHER HOSE)	
	4	1	**6I-0846**	3	BOLT (M6X1X14-MM)	
	5	1	**6I-4374**	1	BOLT (M8X1.25X60-MM)	
	6	1	**7C-1281**	1	BRACKET	
	7	1	**198-9169**	1	HOSE (CRANKCASE BREATHER)	
	8	1	**230-9127**	1	COVER	
	9	1	**287-8573**	1	PIPE-BREATHER	
C	10	1	**321-2383**	1	FILLER GP-ENGINE OIL	
	10A	1	**306-2337**	1	SEAL-O-RING	
	10B	1	**130-9888**	1	CAP-OIL FILLER (ENGINE)	
	10C	1	**113-1504**	1	SEAL-O-RING	
	11	1	**308-1393**	1	COVER AS-CYLINDER	
	11A	1	**136-3608**	1	CAP AS (ENGINE OIL FILLER)	
	11B	1	**124-0506**	1	SEAL	
	11C	1	**225-6456**	1	SPRING	
	11D	1	**225-6461**	1	CAP	
	11E	1	**225-6464**	1	DIAPHRAGM (CRANKCASE PRESSURE CONTACTOR)	
	11F	1	**225-6477**	1	PLATE	
	11G	1	**225-6478**	4	SCREW-MACHINE	
	11H	1	**225-6479**	1	CAP	
	11J	1	**225-6451**	1	GASKET (VALVE COVER)	
	12	1	**100-4838**	2	BOLT (M6X20-MM)	

C-CHANGE FROM PREVIOUS TYPE
M-METRIC PART

269-3101 **COVER GP-VALVE MECHANISM** *(contd.)* **i02891495**

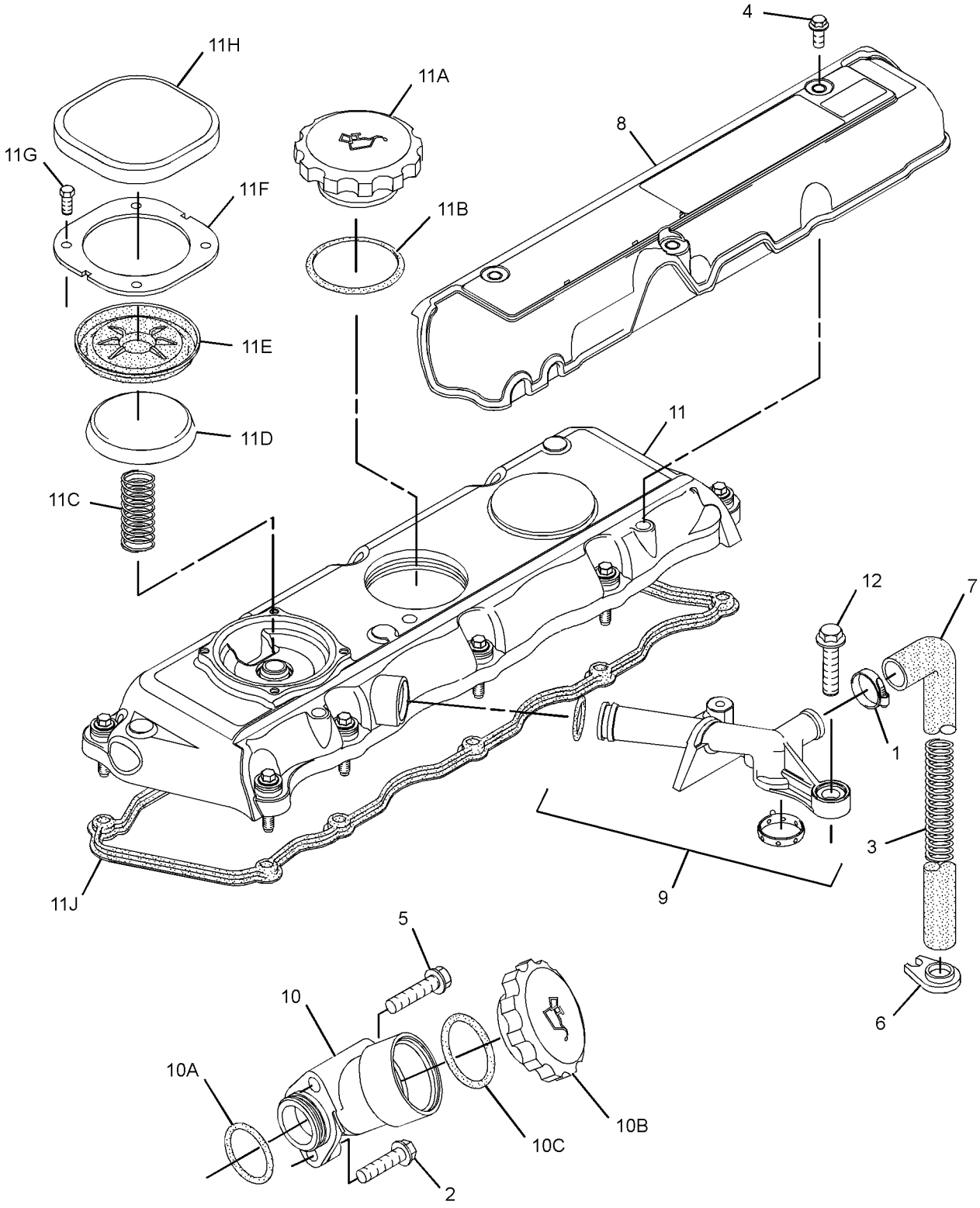

GRAPHIC #1 **<END>** g01372331

BASIC ENGINE

232-7439 CRANKSHAFT GP

S/N: CRS1-UP

PART OF 177-9752 ENGINE AR-PRIMARY

SMCS-1202 **i02354783**

NOTE	REF NO	GRAPHIC REF	PART NUMBER	QTY	PART NAME 1 2 3 4 5 6 (PRODUCT LEVEL)	SEE PAGE
	1	1	**1B-8736**	1	KEY-WOODRUFF	
	2	1	**216-8314**	1	GEAR-CRANKSHAFT (34-TEETH)	
	3	1	**232-7400**	1	CRANKSHAFT GP	
	4	1	**225-7772**	1	BEARING SET-MAIN (STANDARD)	
AB		1	**233-3784**	1	KIT-CRANKSHAFT BEARING (0.25-MM OS)	
AB		1	**233-3785**	1	KIT-CRANKSHAFT BEARING (0.5-MM OS)	
AB		1	**233-3786**	1	KIT-CRANKSHAFT BEARING (0.76-MM OS)	
	5	1	**225-7781**	1	BEARING SET-ROD (STANDARD)	
AB		1	**233-3788**	1	KIT-ROD BEARING (0.25-MM OS)	
AB		1	**233-3789**	1	KIT-ROD BEARING (0.51-MM OS)	
AB		1	**233-3790**	1	KIT-ROD BEARING (0.76-MM OS)	
	6	1	**032-9090**	2	WASHER-THRUST (STANDARD-UPPER)	
AB		1	**067-6873**	2	WASHER-THRUST (0.18-MM OS) (UPPER)	
	7	1	**032-9091**	2	WASHER-THRUST (STANDARD-LOWER)	
AB		1	**067-6874**	2	WASHER-THRUST (0.18-MM OS) (LOWER)	

A-NOT PART OF THIS GROUP
B-USE AS REQUIRED

232-7439 **CRANKSHAFT GP** *(contd.)* **i02354783**

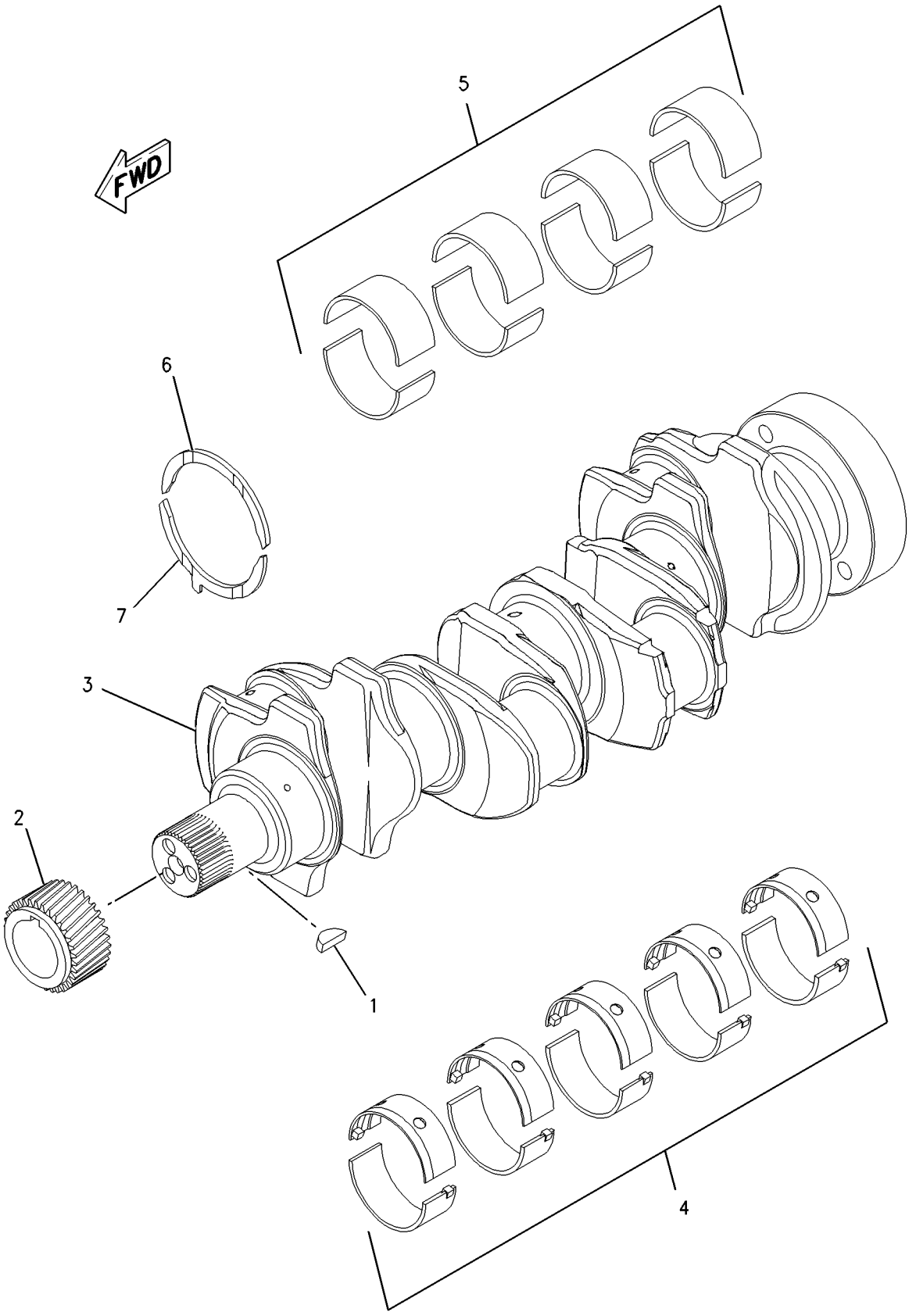

GRAPHIC #1 **<END>** g00950782

308-4729 CRANKSHAFT GP

S/N: CRS1-UP
PART OF 297-4047 ENGINE AR-PRIMARY
AN ATTACHMENT

SMCS-1202 **i02719053**

NOTE	REF NO	GRAPHIC REF	PART NUMBER	QTY	PART NAME 1 2 3 4 5 6 (PRODUCT LEVEL)	SEE PAGE
	1	1	**216-8314**	1	GEAR-CRANKSHAFT (34-TEETH)	
	3	1	**232-7400**	1	CRANKSHAFT GP	
	4	1	**225-7772**	1	BEARING SET-MAIN (STANDARD)	
AB		1	**233-3784**		KIT-CRANKSHAFT BEARING (0.25-MM OS)	
AB		1	**233-3785**		KIT-CRANKSHAFT BEARING (0.5-MM OS)	
AB		1	**233-3786**		KIT-CRANKSHAFT BEARING (0.76-MM OS)	
	5	1	**225-7781**	1	BEARING SET-ROD (STANDARD)	
AB		1	**233-3788**		KIT-ROD BEARING (0.25-MM OS)	
AB		1	**233-3789**		KIT-ROD BEARING (0.51-MM OS)	
AB		1	**233-3790**		KIT-ROD BEARING (0.76-MM OS)	
	6	1	**032-9090**	2	WASHER-THRUST (STANDARD-UPPER)	
AB		1	**067-6873**		WASHER-THRUST (0.18-MM OS) (UPPER)	
	7	1	**032-9091**	2	WASHER-THRUST (STANDARD-LOWER)	
AB		1	**067-6874**		WASHER-THRUST (0.18-MM OS) (LOWER)	
	8	1	**1B-8736**	1	KEY-WOODRUFF	

A-NOT PART OF THIS GROUP
B-USE AS REQUIRED

308-4729 **CRANKSHAFT GP** *(contd.)* **i02719053**

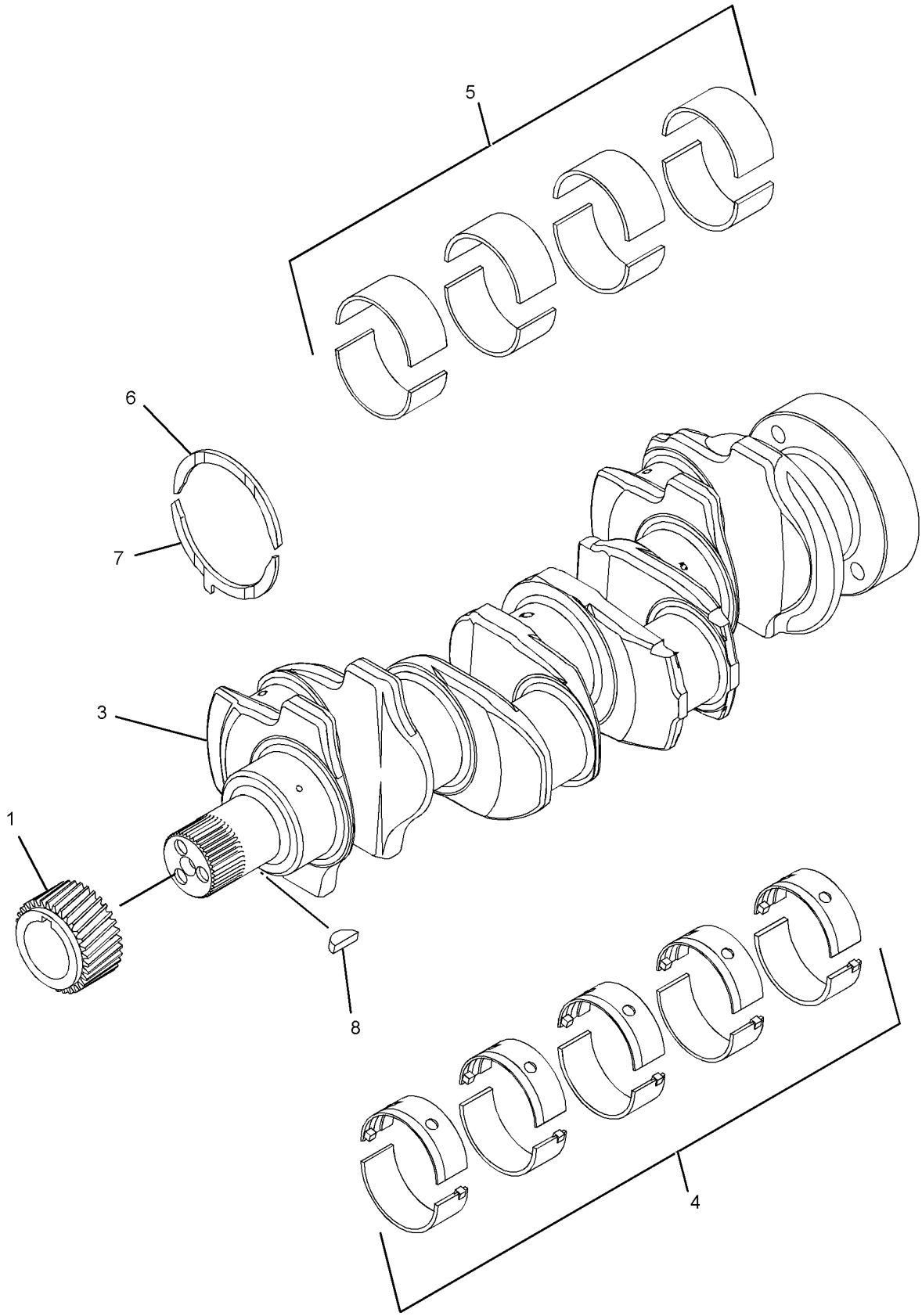

GRAPHIC #1 **<END>** g01367628

232-7604 CYLINDER BLOCK GP

S/N: CRS1-UP

PART OF 232-7606, 308-4728 CYLINDER BLOCK GP

ALSO AN ATTACHMENT

SMCS-1201 **i02535617**

NOTE	REF NO	GRAPHIC REF	PART NUMBER	QTY	PART NAME 1 2 3 4 5 6 (PRODUCT LEVEL)	SEE PAGE
	1	1	**6I-0572**	4	BOLT (M8X1.25X20-MM)	
	2	1	**035-8068**	10	BOLT (5/8-18X3.75-IN)	
	3	1	**067-6002**	10	DOWEL	
	4	1	**067-6006**	1	PLUG	
	5	1	**067-6043**	1	PLUG-SIDE	
M	6	1	**100-4841**	4	BOLT (M6X1X10-MM)	
	7	1	**185-0884**	2	DOWEL	
	8	1	**225-7944**	1	GASKET (ENGINE OIL FILTER BASE)	
	9	1	**225-8858**	2	PLUG	
	10	1	**232-3751**	1	PLATE	
	11	1	**232-7440**	1	BEARING	
	12	1	**276-5605**	4	JET AS-PISTON COOLING	
	13	1	**232-7596**	1	PLUG	
	14	1	**232-7597**	2	PLUG	
	15	1	**232-7599**	1	PLUG	
	16	1	**232-7600**	1	PLUG-CUP	
	17	1	**232-7603**	1	PLUG	

M-METRIC PART

232-7604 CYLINDER BLOCK GP *(contd.)* i02535617

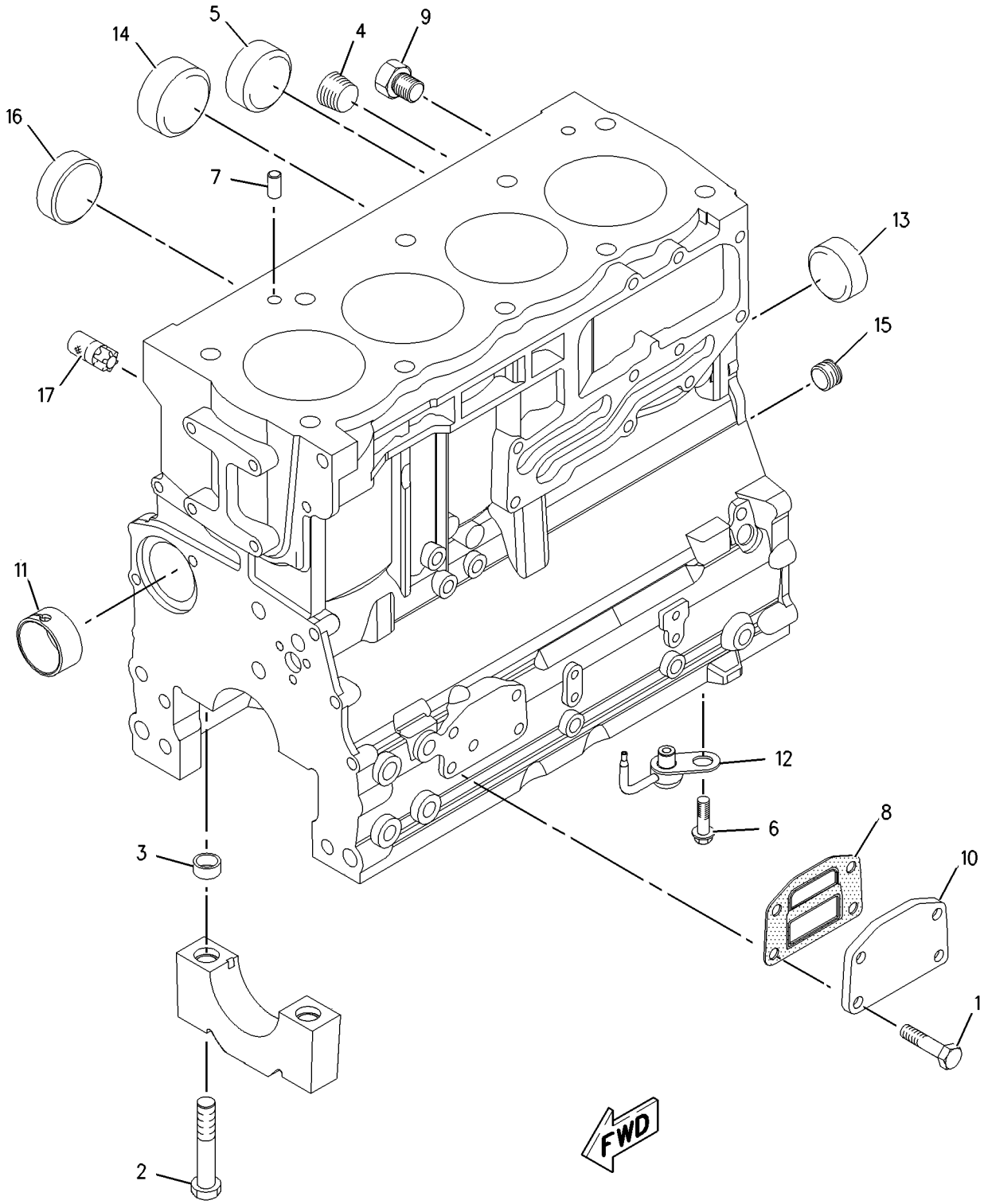

GRAPHIC #1 **<END>** g00951214

232-7606 CYLINDER BLOCK GP

S/N: CRS1-UP

PART OF 177-9752 ENGINE AR-PRIMARY

SMCS-1201 **i02053612**

NOTE	REF NO	GRAPHIC REF	PART NUMBER	QTY	PART NAME 1 2 3 4 5 6 (PRODUCT LEVEL)	SEE PAGE
M	1	1	**209-9219**	10	BOLT (M8X1.25X16-MM)	
	2	1	**232-7449**	1	HOUSING AS	
Y	3	1	**232-7604**	1	CYLINDER BLOCK GP	23

M-METRIC PART
Y-SEPARATE ILLUSTRATION

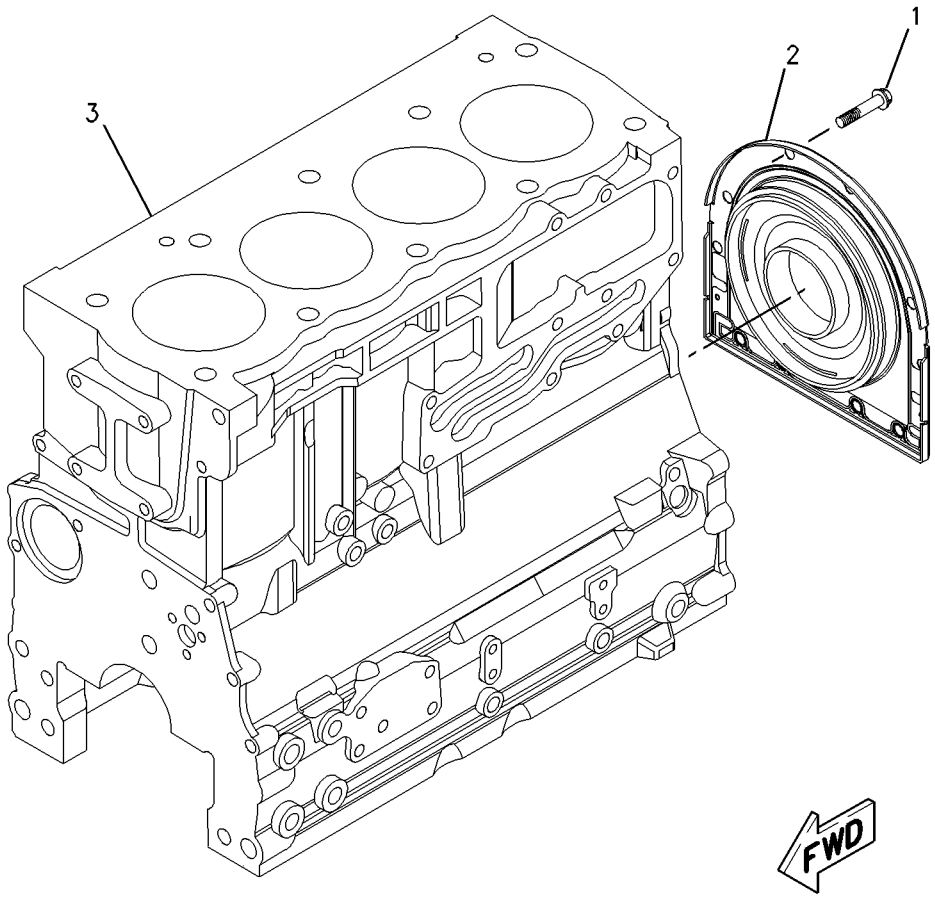

GRAPHIC #1 **<END>** g00952056

308-4728 CYLINDER BLOCK GP

S/N: CRS1-UP
PART OF 297-4047 ENGINE AR-PRIMARY
AN ATTACHMENT

SMCS-1201 **i02719090**

NOTE	REF NO	GRAPHIC REF	PART NUMBER	QTY	PART NAME 1 2 3 4 5 6 (PRODUCT LEVEL)	SEE PAGE
M	1	1	**209-9219**	10	BOLT (M8X1.25X16-MM)	
	2	1	**232-7449**	1	HOUSING AS	
Y	3	1	**232-7604**	1	CYLINDER BLOCK GP	23

M-METRIC PART
Y-SEPARATE ILLUSTRATION

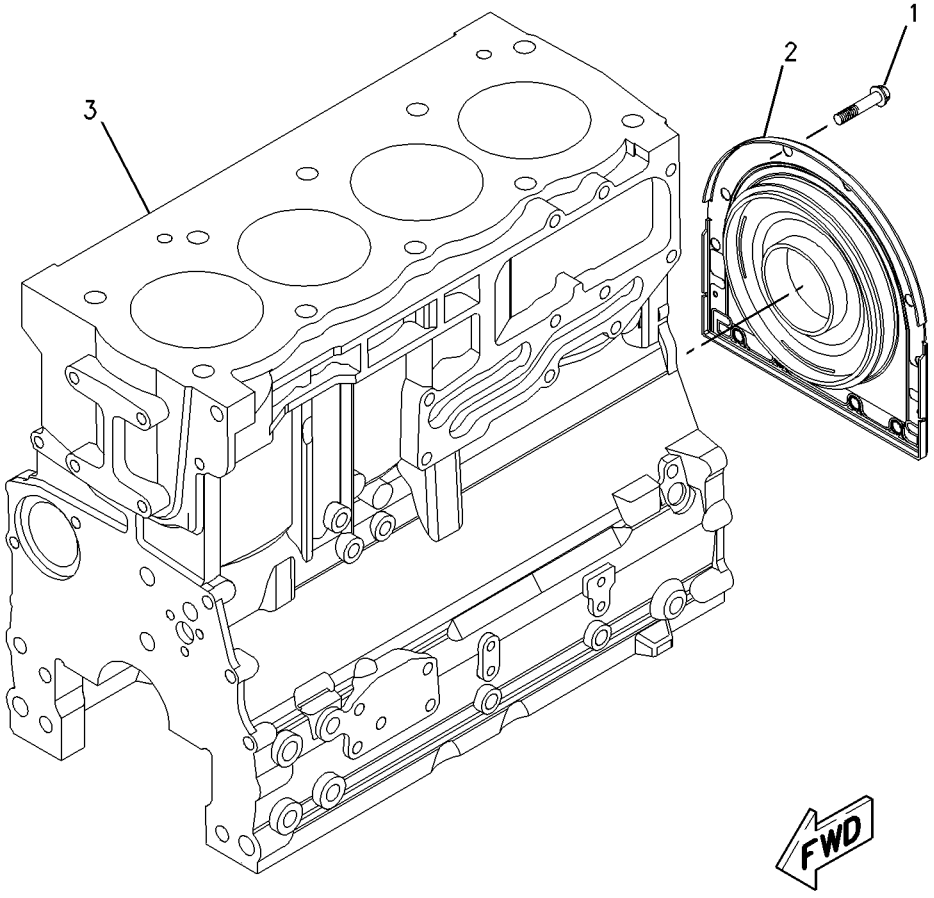

GRAPHIC #1 **<END>** g00952056

232-7519 CYLINDER HEAD GP

S/N: CRS1-UP

PART OF 232-7524, 308-4731 CYLINDER HEAD GP

ALSO AN ATTACHMENT

SMCS-1100 **i02274200**

NOTE	REF NO	GRAPHIC REF	PART NUMBER	QTY	PART NAME 1 2 3 4 5 6 (PRODUCT LEVEL)	SEE PAGE
	1	1	**2B-0858**	1	PLUG-PIPE	
	2	1	**9Y-5015**	2	PLUG-FREEZE	
	3	1	**067-6006**	4	PLUG	
	4	1	**147-1979**	16	RETAINER-VALVE SPRING	
	5	1	**185-0882**	8	GUIDE-VALVE (INTAKE)	
	6	1	**199-9751**	1	SEAL-O-RING	
	7	1	**225-5493**	4	INSERT-VALVE (INLET)	
	8	1	**225-5494**	4	INSERT-VALVE (EXHAUST)	
	9	1	**225-5495**	4	VALVE-INLET	
	10	1	**225-5496**	8	SPRING-VALVE	
	11	1	**252-6438**	4	SEAL-INLET VALVE	
	12	1	**225-5498**	8	CAP	
	13	1	**225-5499**	4	VALVE-EXHAUST	
	14	1	**232-1322**	1	PLUG	
	15	1	**254-3954**	4	SEAL-EXHAUST VALVE	

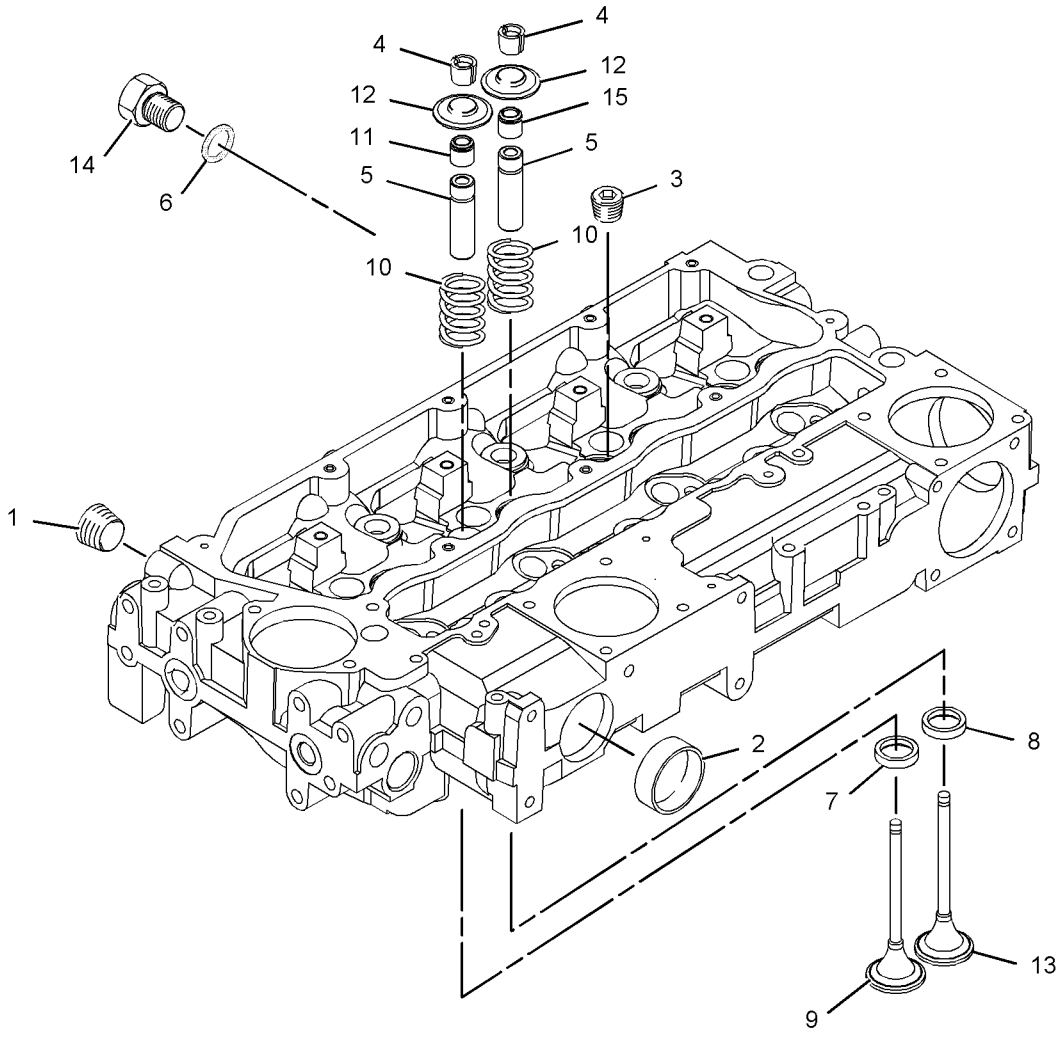

GRAPHIC #1 **<END>** g01095382

BASIC ENGINE

232-7524 CYLINDER HEAD GP

S/N: CRS1-UP

PART OF 177-9752 ENGINE AR-PRIMARY

SMCS-1100 **i02499231**

NOTE	REF NO	GRAPHIC REF	PART NUMBER	QTY	PART NAME 1 2 3 4 5 6 (PRODUCT LEVEL)	SEE PAGE
	1	1	**225-5501**	7	BOLT (M15X1.5X137-MM)	
	2	1	**225-5502**	3	BOLT (M15X1.5X162-MM)	
	3	1	**258-4946**	1	GASKET-HEAD	
Y	4	1	**232-7519**	1	CYLINDER HEAD GP	27

Y-SEPARATE ILLUSTRATION

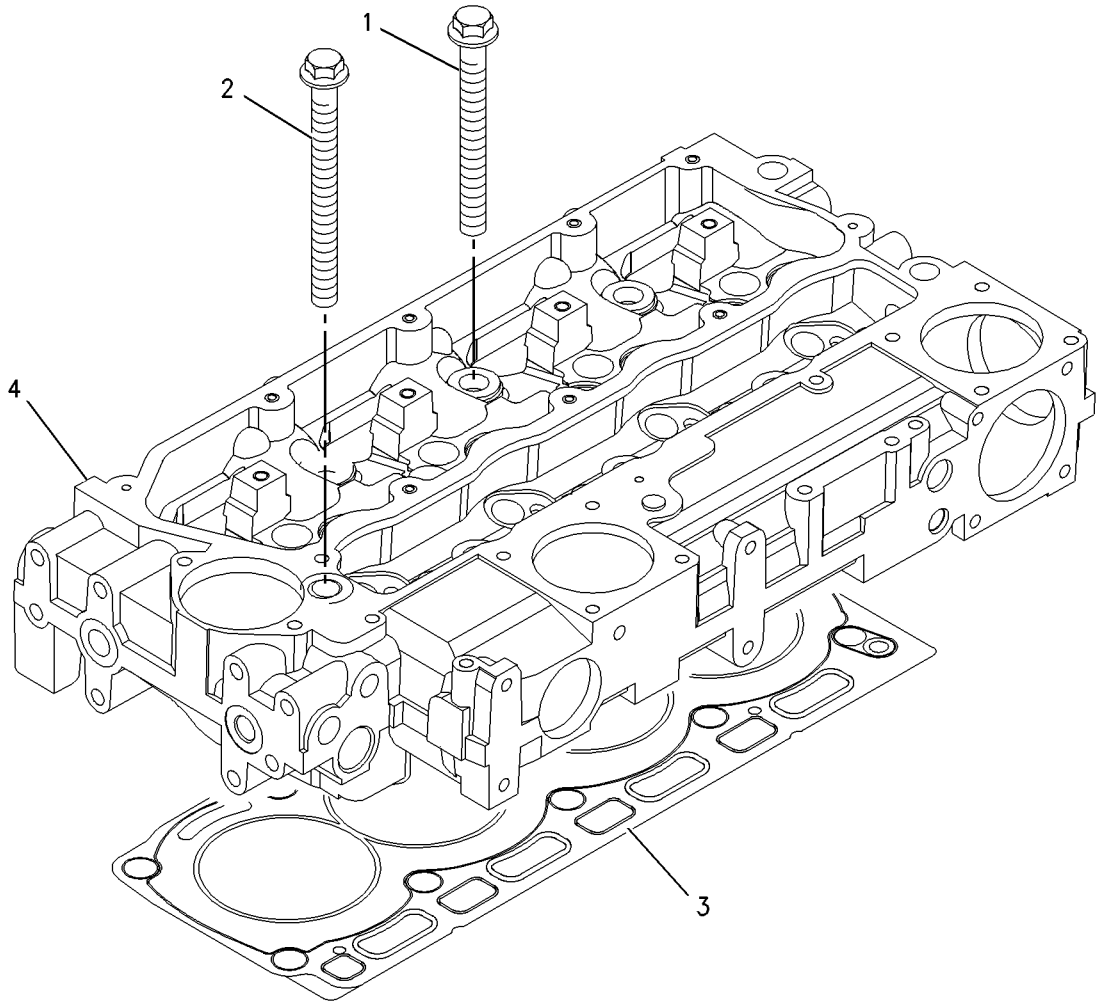

GRAPHIC #1 **<END>** g00909291

308-4731 CYLINDER HEAD GP

S/N: CRS1-UP
PART OF 297-4047 ENGINE AR-PRIMARY
AN ATTACHMENT

SMCS-1100 **i02719203**

NOTE	REF NO	GRAPHIC REF	PART NUMBER	QTY	PART NAME 1 2 3 4 5 6 (PRODUCT LEVEL)	SEE PAGE
	1	1	**225-5501**	7	BOLT (M15X1.5X137-MM)	
	2	1	**225-5502**	3	BOLT (M15X1.5X162-MM)	
Y	3	1	**232-7519**	1	CYLINDER HEAD GP	27
	4	1	**258-4946**	1	GASKET-HEAD	

Y-SEPARATE ILLUSTRATION

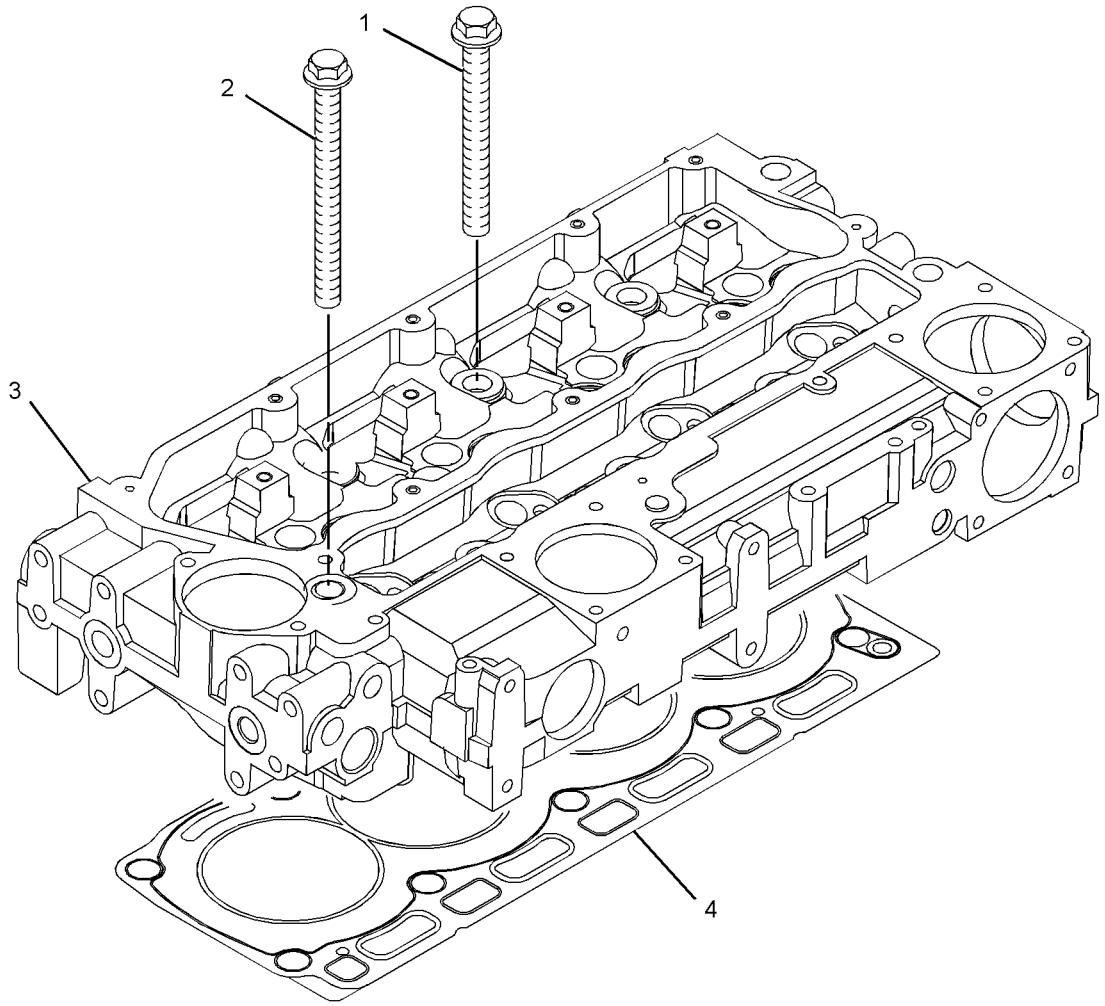

GRAPHIC #1 **<END>** g01367488

BASIC ENGINE

230-9699 DRIVE GP-FAN

S/N: CRS1-UP

PART OF 177-9752 ENGINE AR-PRIMARY

SMCS-1359 **i02096006**

NOTE	REF NO	GRAPHIC REF	PART NUMBER	QTY	PART NAME 1 2 3 4 5 6 (PRODUCT LEVEL)	SEE PAGE
	1	1	**111-0859**	4	BOLT (M10X1.5X35-MM)	
	2	1	**130-3879**	1	PULLEY-FAN DRIVE	
	3	1	**230-8065**	1	HOUSING AS	
	4	1	**247-0099**	1	V-BELT SET (INCLUDES 2-BELTS) (FAN)	

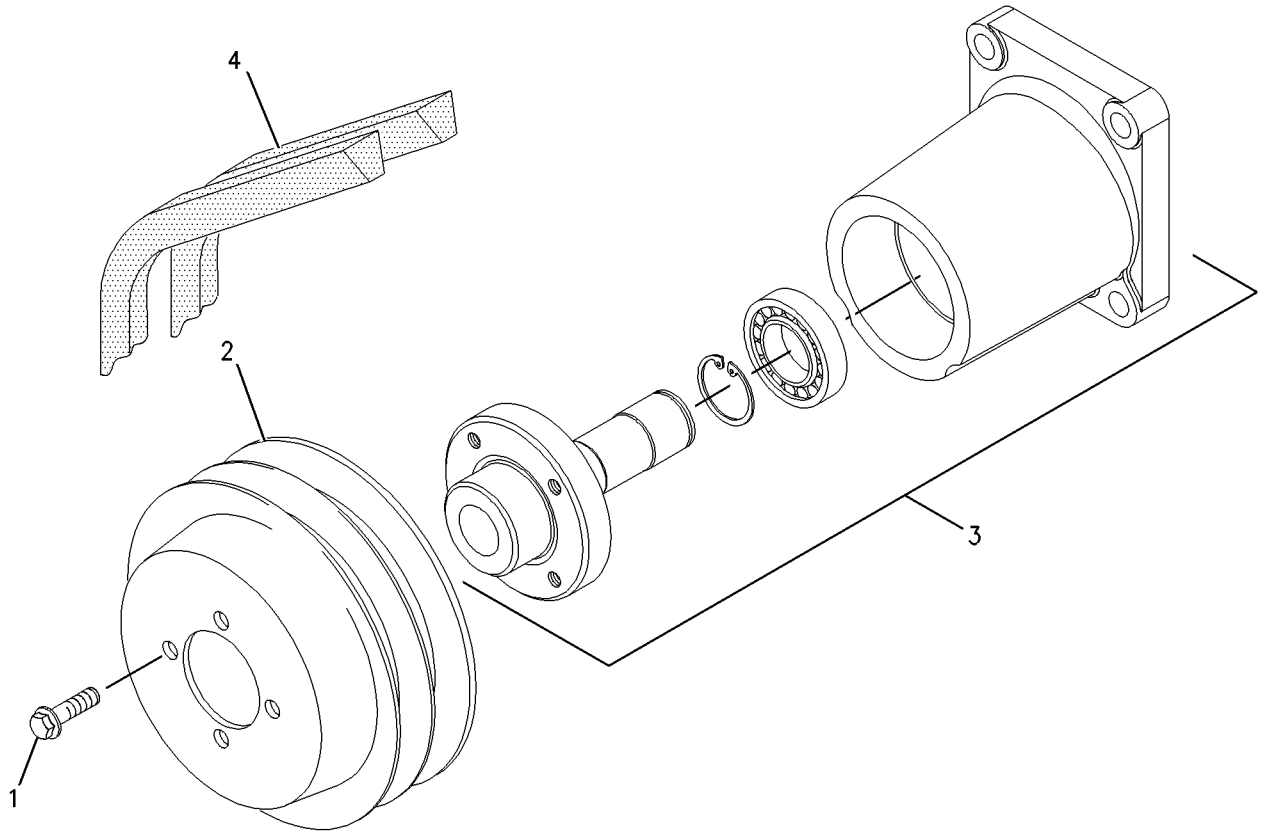

GRAPHIC #1 **<END>** g00956514

234-9680 DRIVE GP-FAN

S/N: CRS1-UP
PART OF 297-4047 ENGINE AR-PRIMARY
AN ATTACHMENT

SMCS-1359 **i02719083**

NOTE	REF NO	GRAPHIC REF	PART NUMBER	QTY	PART NAME 1 2 3 4 5 6 (PRODUCT LEVEL)	SEE PAGE
	1	1	**111-0859**	4	BOLT (M10X1.5X35-MM)	
	2	1	**130-3879**	1	PULLEY-FAN DRIVE	
	3	1	**230-8065**	1	HOUSING AS	
	4	1	**128-5397**	1	V-BELT SET (INCLUDES 2-BELTS)	

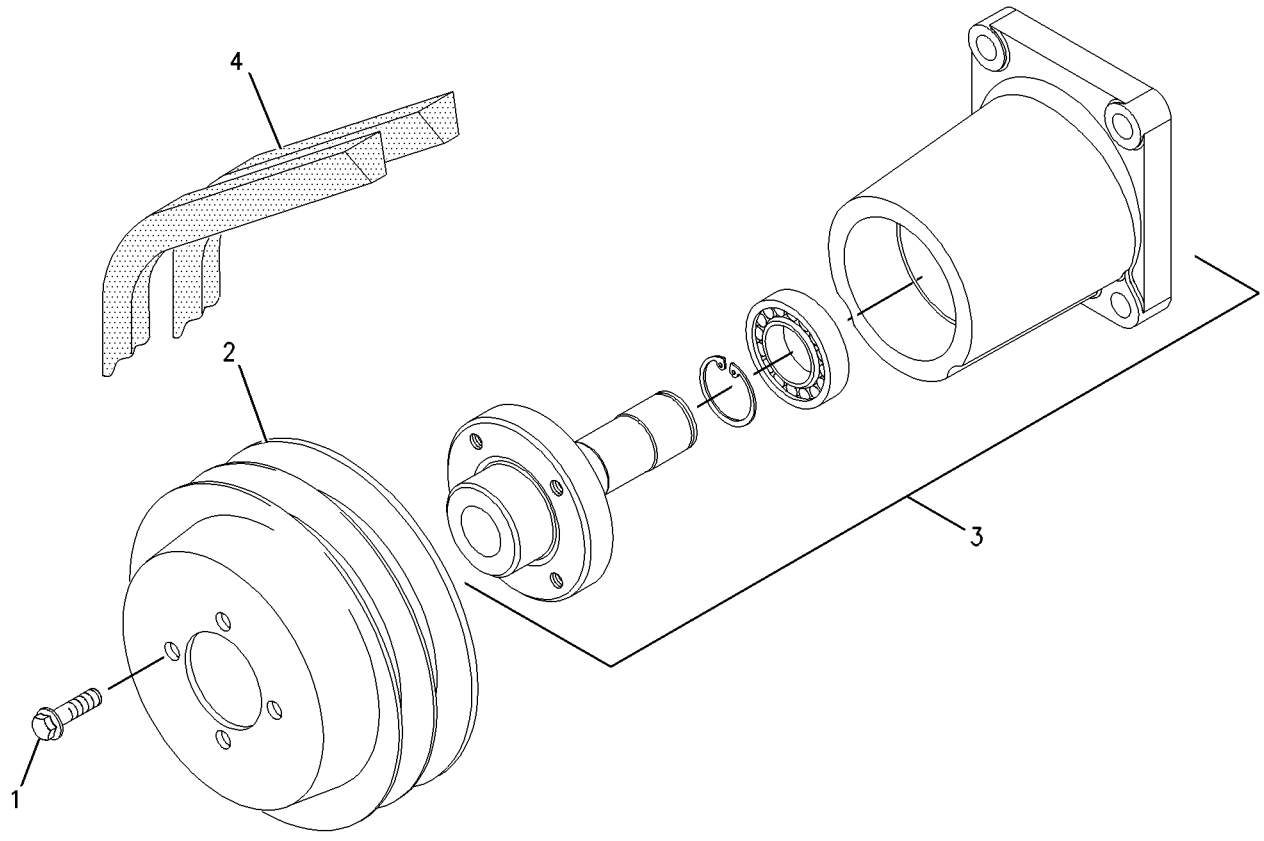

GRAPHIC #1 **<END>** g00956514

BASIC ENGINE

153-4980 DRIVE GP-PUMP

S/N: BZE1-UP; BZG1-UP

PART OF 219-4162 INSTALLATION AR-ENGINE

SMCS-3108 **i02896511**

NOTE	REF NO	GRAPHIC REF	PART NUMBER	QTY	PART NAME 1 2 3 4 5 6 (PRODUCT LEVEL)	SEE PAGE
	1	1	**102-1733**	1	FLANGE-NYLON	
	2	1	**0T-0924**	8	BOLT (3/8-24X1.5-IN)	

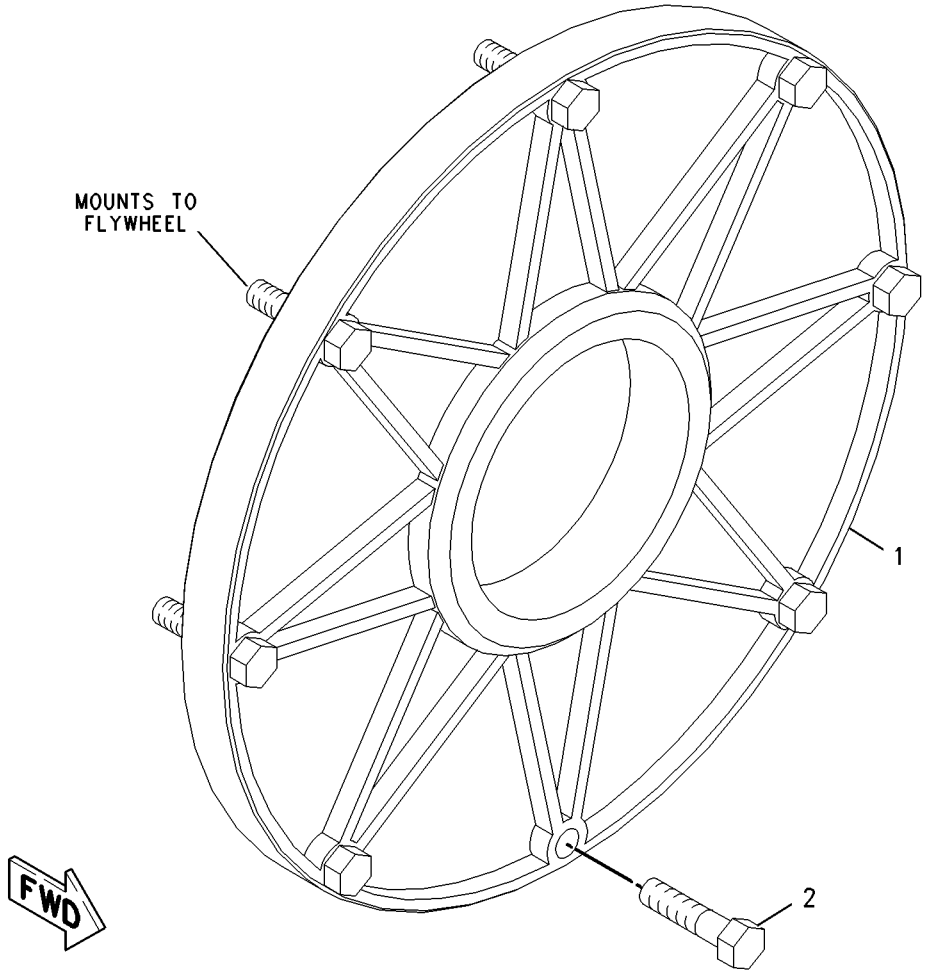

GRAPHIC #1 **<END>** g00847131

245-9831 FLYWHEEL GP

S/N: CRS1-UP
PART OF 177-9752, 297-4047 ENGINE AR-PRIMARY
ALSO AN ATTACHMENT

SMCS-1156 **i02096004**

NOTE	REF NO	GRAPHIC REF	PART NUMBER	QTY	PART NAME 1 2 3 4 5 6 (PRODUCT LEVEL)	SEE PAGE
	1	1	**0S-1603**	10	BOLT (1/2-20X1.5-IN)	
	2	1	**5P-8245**	10	WASHER-HARD (13.5X25.5X3-MM THK)	
	3	1	**165-6689**	1	FLYWHEEL AS	
	4	1	**033-7687**	1	RING-STARTING MOTOR (126-TEETH)	

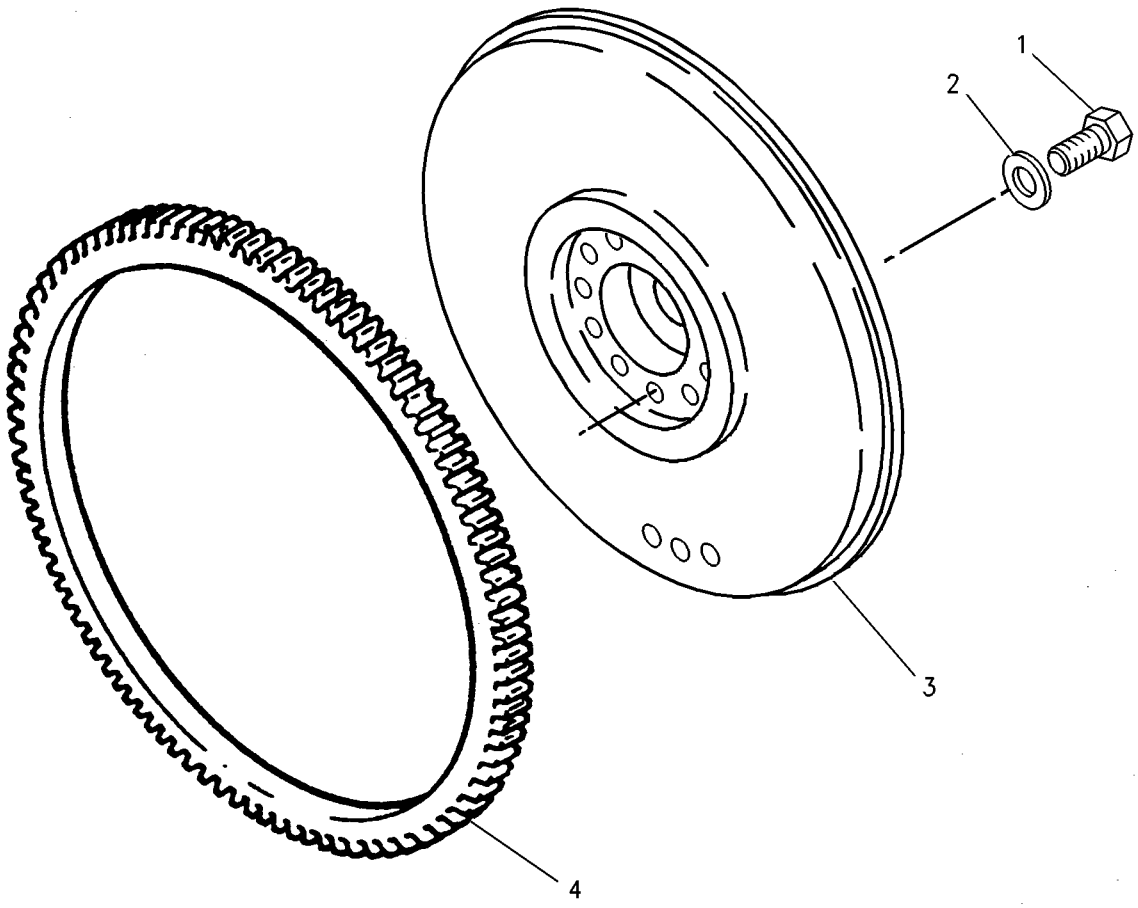

GRAPHIC #1 **<END>** g00931180

BASIC ENGINE

223-7825 HOUSING GP-FLYWHEEL

S/N: CRS1-UP

PART OF 177-9752, 297-4047 ENGINE AR-PRIMARY

ALSO AN ATTACHMENT

SMCS-1157 **i02535012**

NOTE	REF NO	GRAPHIC REF	PART NUMBER	QTY	PART NAME 1 2 3 4 5 6 (PRODUCT LEVEL)	SEE PAGE
M	1	1	**6I-0423**	2	BOLT (M12X1.75X30-MM)	
	2	1	**6I-0631**	2	BOLT (M6X1X12-MM)	
	3	1	**6I-0847**	1	PLUG	
	4	1	**6I-4200**	3	BOLT (M10X1.5X16-MM)	
	5	1	**7W-4642**	1	SHIELD-DUST	
	6	1	**287-8597**	2	DOWEL	
	7	1	**102-1957**	1	PLATE	
M	8	1	**121-0883**	6	BOLT (M10X1.5X30-MM)	
	9	1	**149-9176**	1	HOUSING-FLYWHEEL	
	10	1	**199-3108**	1	PLUG	
	11	1	**199-3109**	1	PLUG	

M-METRIC PART

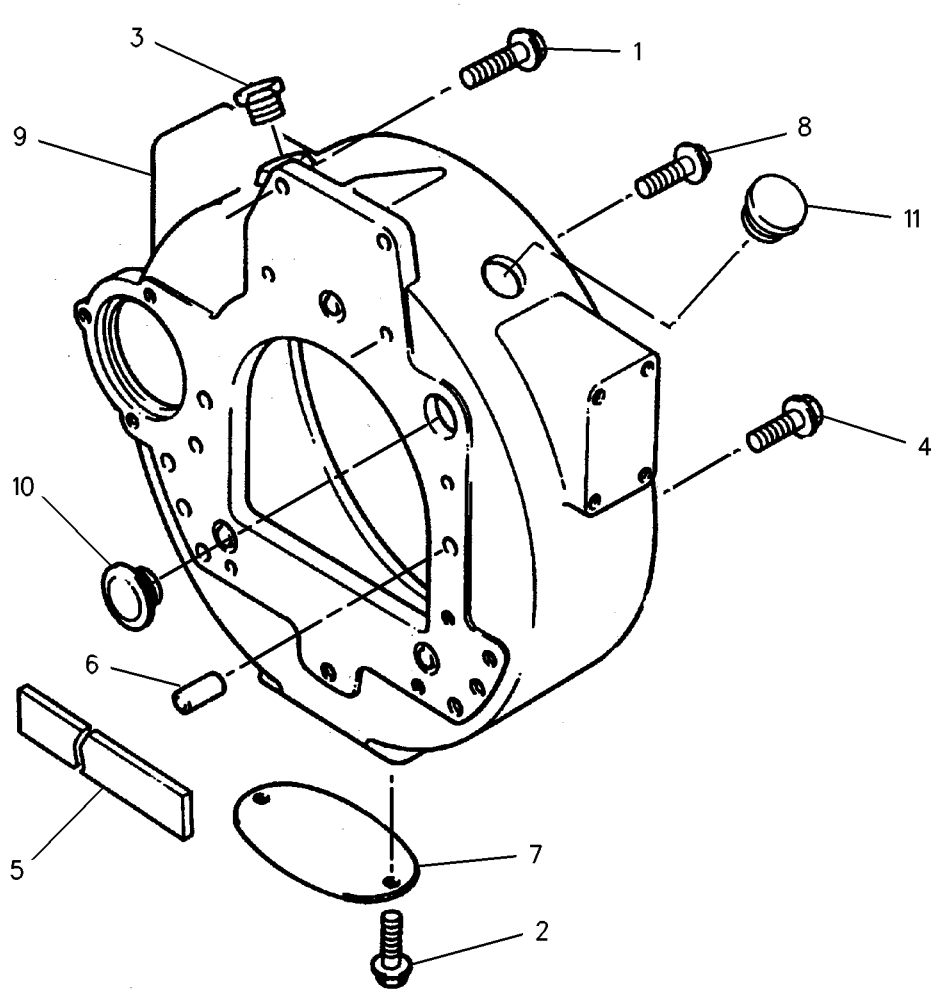

GRAPHIC #1 **<END>** g00949601

BASIC ENGINE

232-6179 HOUSING GP-FRONT

S/N: CRS1-2032

PART OF 177-9752 ENGINE AR-PRIMARY

SMCS-1151, 1162 **i02896514**

NOTE	REF NO	GRAPHIC REF	PART NUMBER	QTY	PART NAME 1 2 3 4 5 6 (PRODUCT LEVEL)	SEE PAGE
	1	1	**1B-8736**	1	KEY-WOODRUFF	
	2	1	**4W-5359**	1	SEAL-CRANKSHAFT	
	2A	1	**167-2153**	1	SLEEVE-CRANKSHAFT	
M	3	1	**6I-0217**	8	BOLT (M8X1.25X20-MM)	
M	4	1	**6I-0645**	4	BOLT (M8X1.25X25-MM)	
	5	1	**6I-0789**	3	BOLT (M10X1.5X60-MM)	
	6	1	**7C-4616**	1	BOLT (M12X1.75X45-MM)	
	7	1	**067-6179**	1	DOWEL	
	8	1	**067-6897**	1	HUB-IDLER GEAR	
	9	1	**067-6900**	1	PLATE-RETAINING	
M	10	1	**100-3751**	5	BOLT (M8X1.25X65-MM)	
M	11	1	**100-4830**	1	BOLT (M10X1.5X20-MM)	
M	12	1	**124-3815**	9	BOLT (M8X16X1.25-MM)	
	13	1	**232-3666**	1	WASHER-THRUST	
	14	1	**216-8634**	1	GEAR-CAMSHAFT (68-TEETH)	
	15	1	**225-8281**	1	GASKET	
	16	1	**225-8282**	1	GASKET	
	17	1	**226-8767**	1	COVER AS-FRONT	
	17A	1	**226-8766**	1	GASKET-COVER	
	18	1	**133-1011**	1	WASHER	
	19	1	**251-4336**	1	GEAR AS-IDLER (73-TEETH)	
	20	1	**232-6178**	1	HOUSING-FRONT	
					AVAILABLE REPAIR KIT(S):	
			252-8737	1	KIT-REPAIR (FRONT COVER, TIMING GEAR)	
					(INCLUDES SEAL, GEAR, HUB, PLATE, GASKETS)	

M-METRIC PART

232-6179 **HOUSING GP-FRONT** *(contd.)* **i02896514**

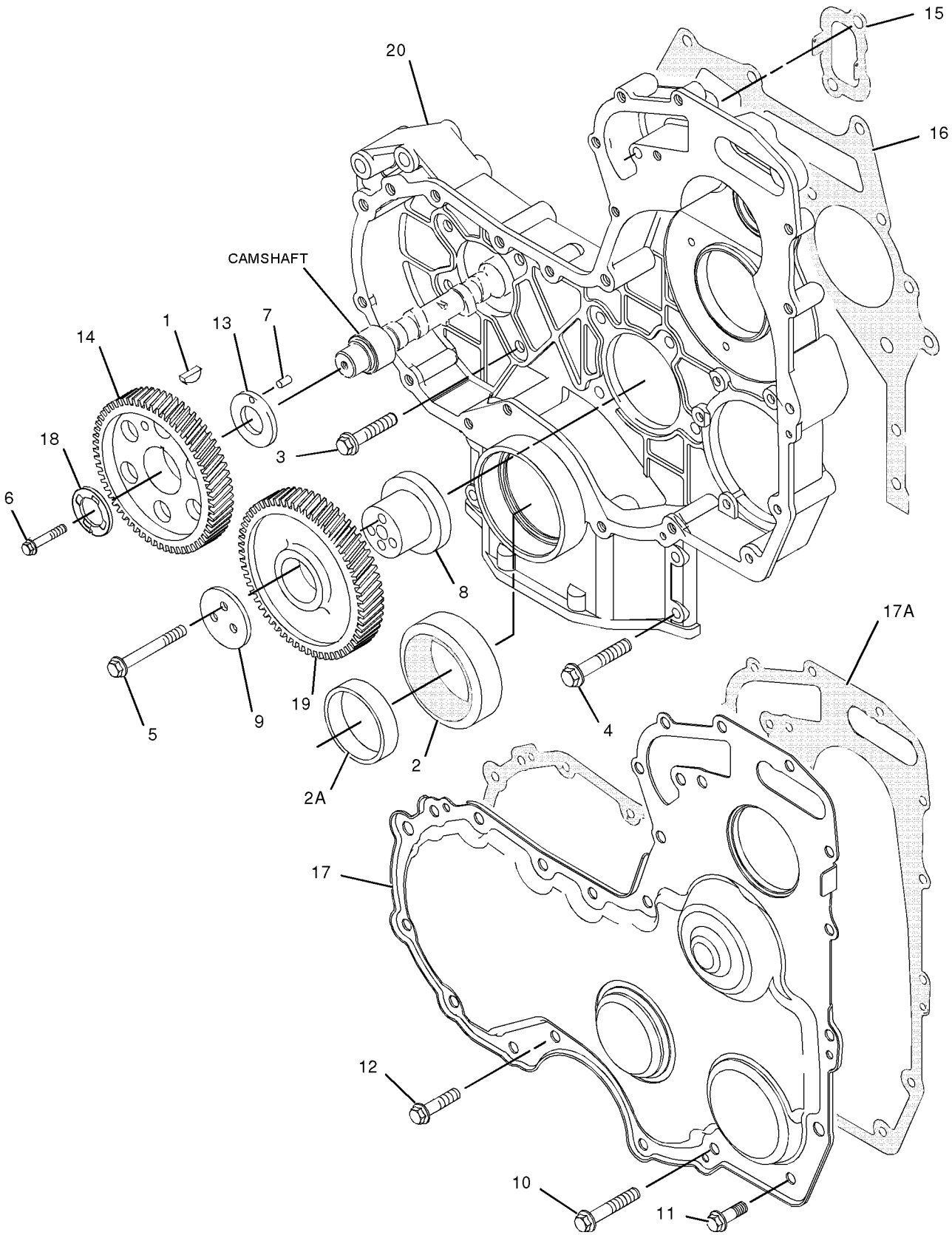

GRAPHIC #1 **<END>** g01053850

232-6179 HOUSING GP-FRONT

S/N: CRS2033-UP

PART OF 177-9752 ENGINE AR-PRIMARY

SMCS-1151, 1162 **i02918653**

NOTE	REF NO	GRAPHIC REF	PART NUMBER	QTY	PART NAME 1 2 3 4 5 6 (PRODUCT LEVEL)	SEE PAGE
	1	1	**1B-8736**	1	KEY-WOODRUFF	
	2	1	**288-0422**	1	SEAL-OIL (FRONT)	
M	3	1	**6I-0217**	8	BOLT (M8X1.25X20-MM)	
M	4	1	**6I-0645**	4	BOLT (M8X1.25X25-MM)	
CM	5	1	**6I-0650**	3	BOLT (M10X1.5X65-MM)	
	6	1	**7C-4616**	1	BOLT (M12X1.75X45-MM)	
	7	1	**067-6179**	1	DOWEL	
C	8	1	**324-0444**	1	HUB-IDLER GEAR	
C	9	1	**295-1711**	1	PLATE-RETAINING	
M	10	1	**100-3751**	5	BOLT (M8X1.25X65-MM)	
M	11	1	**100-4830**	1	BOLT (M10X1.5X20-MM)	
M	12	1	**124-3815**	9	BOLT (M8X16X1.25-MM)	
	13	1	**232-3666**	1	WASHER-THRUST	
	14	1	**216-8634**	1	GEAR-CAMSHAFT (68-TEETH)	
	15	1	**277-3012**	1	GASKET-COVER	
	17	1	**226-8767**	1	COVER AS-FRONT	
	17A	1	**226-8766**	1	GASKET-COVER	
	18	1	**133-1011**	1	WASHER	
	19	1	**251-4336**	1	GEAR AS-IDLER (73-TEETH)	
	20	1	**323-3515**	1	HOUSING-FRONT	

C-CHANGE FROM PREVIOUS TYPE
M-METRIC PART

232-6179 **HOUSING GP-FRONT** *(contd.)* **i02918653**

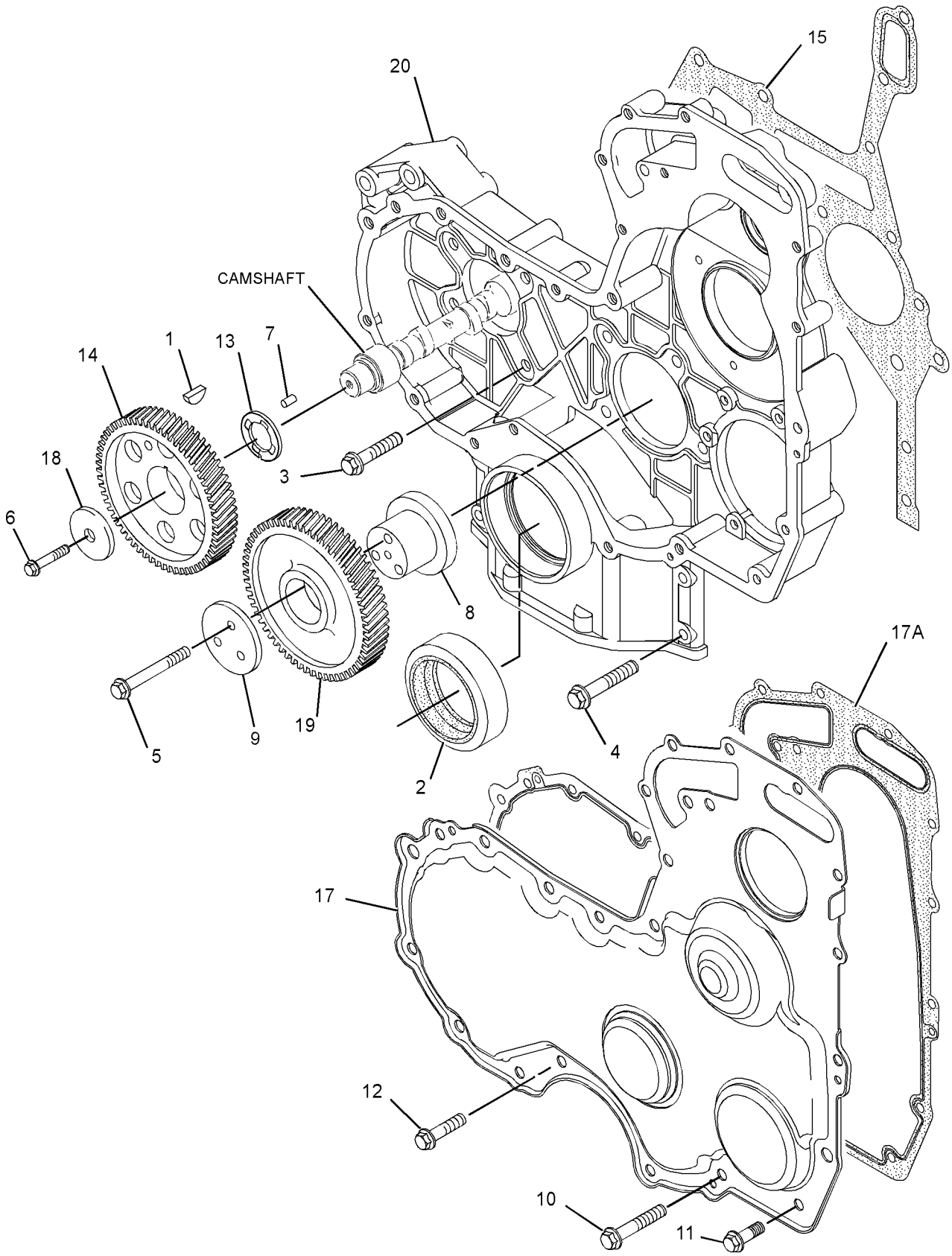

GRAPHIC #1 **<END>** g01311941

308-4764 HOUSING GP-FRONT

S/N: CRS1-UP
PART OF 297-4047 ENGINE AR-PRIMARY
AN ATTACHMENT

SMCS-1151, 1162 **i02909698**

NOTE	REF NO	GRAPHIC REF	PART NUMBER	QTY	PART NAME 1 2 3 4 5 6 (PRODUCT LEVEL)	SEE PAGE
	1	1	**1B-8736**	1	KEY-WOODRUFF	
M	2	1	**6I-0217**	8	BOLT (M8X1.25X20-MM)	
M	3	1	**6I-0645**	4	BOLT (M8X1.25X25-MM)	
M	4	1	**6I-0650**	3	BOLT (M10X1.5X65-MM)	
	5	1	**7C-4616**	1	BOLT (M12X1.75X45-MM)	
	6	1	**067-6179**	1	DOWEL	
M	7	1	**100-3751**	5	BOLT (M8X1.25X65-MM)	
M	8	1	**100-4830**	1	BOLT (M10X1.5X20-MM)	
M	9	1	**124-3815**	9	BOLT (M8X16X1.25-MM)	
	10	1	**133-1011**	1	WASHER	
	11	1	**216-8634**	1	GEAR-CAMSHAFT (68-TEETH)	
	12	1	**226-8767**	1	COVER AS-FRONT	
	12A	1	**226-8766**	1	GASKET-COVER	
	13	1	**232-3666**	1	WASHER-THRUST	
	14	1	**251-4336**	1	GEAR AS-IDLER (73-TEETH)	
	15	1	**277-3012**	1	GASKET-COVER	
	16	1	**324-0444**	1	HUB-IDLER GEAR	
	17	1	**288-0422**	1	SEAL-OIL (FRONT)	
	18	1	**323-3515**	1	HOUSING-FRONT	
	19	1	**295-1711**	1	PLATE-RETAINING	

M-METRIC PART

308-4764 **HOUSING GP-FRONT** *(contd.)* **i02909698**

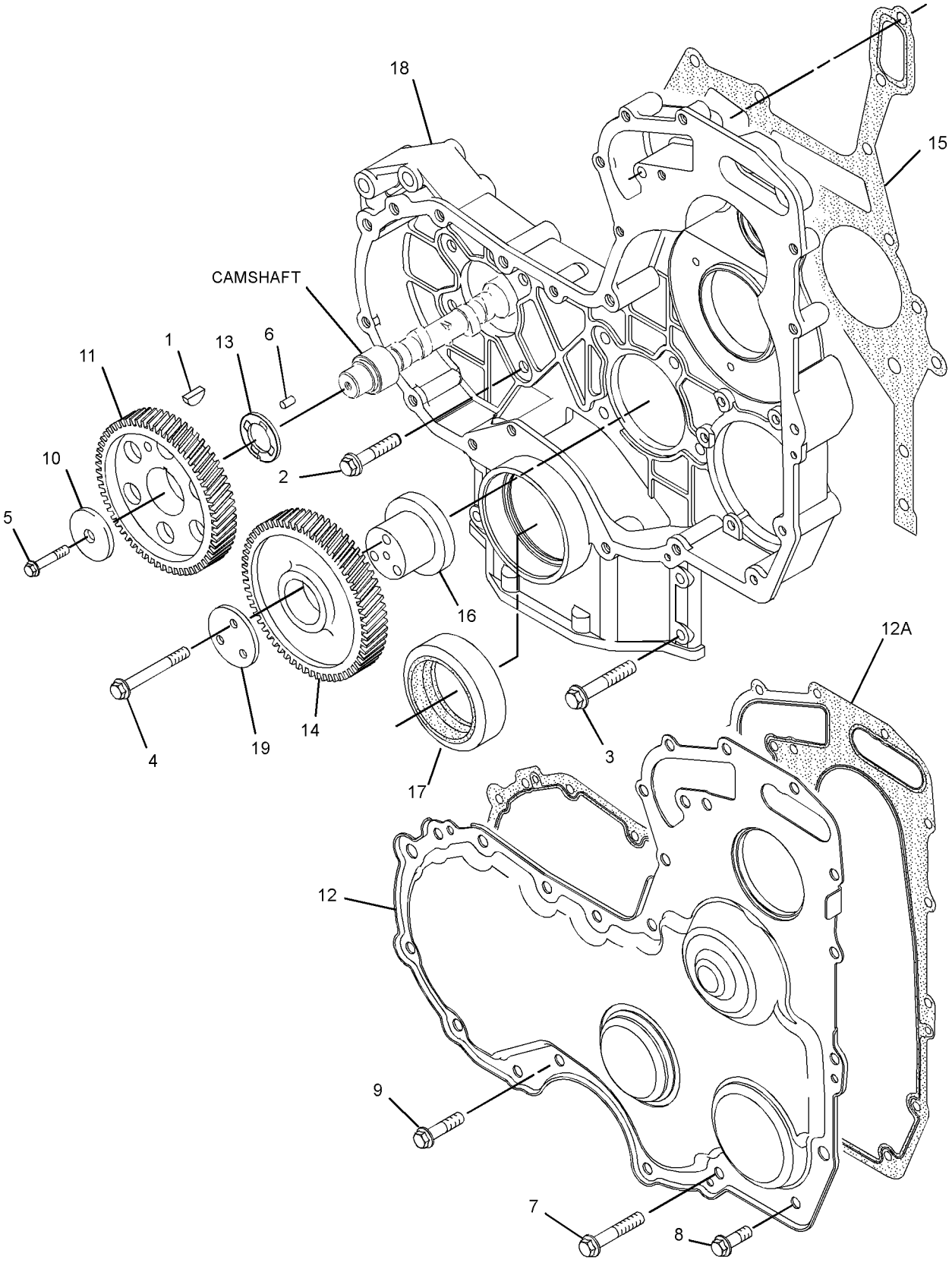

GRAPHIC #1 **<END>** g01451477

232-3713 LIFTING GP-ENGINE

S/N: CRS1-UP
PART OF 177-9752, 297-4047 ENGINE AR-PRIMARY
ALSO AN ATTACHMENT

SMCS-1122 **i02419719**

NOTE	REF NO	GRAPHIC REF	PART NUMBER	QTY	PART NAME 1 2 3 4 5 6 (PRODUCT LEVEL)	SEE PAGE
M	1	1	**100-4830**	4	BOLT (M10X1.5X20-MM)	
	2	1	**225-8848**	1	PLATE-LIFTING	
	3	1	**275-2452**	1	PLATE-LIFTING	

M-METRIC PART

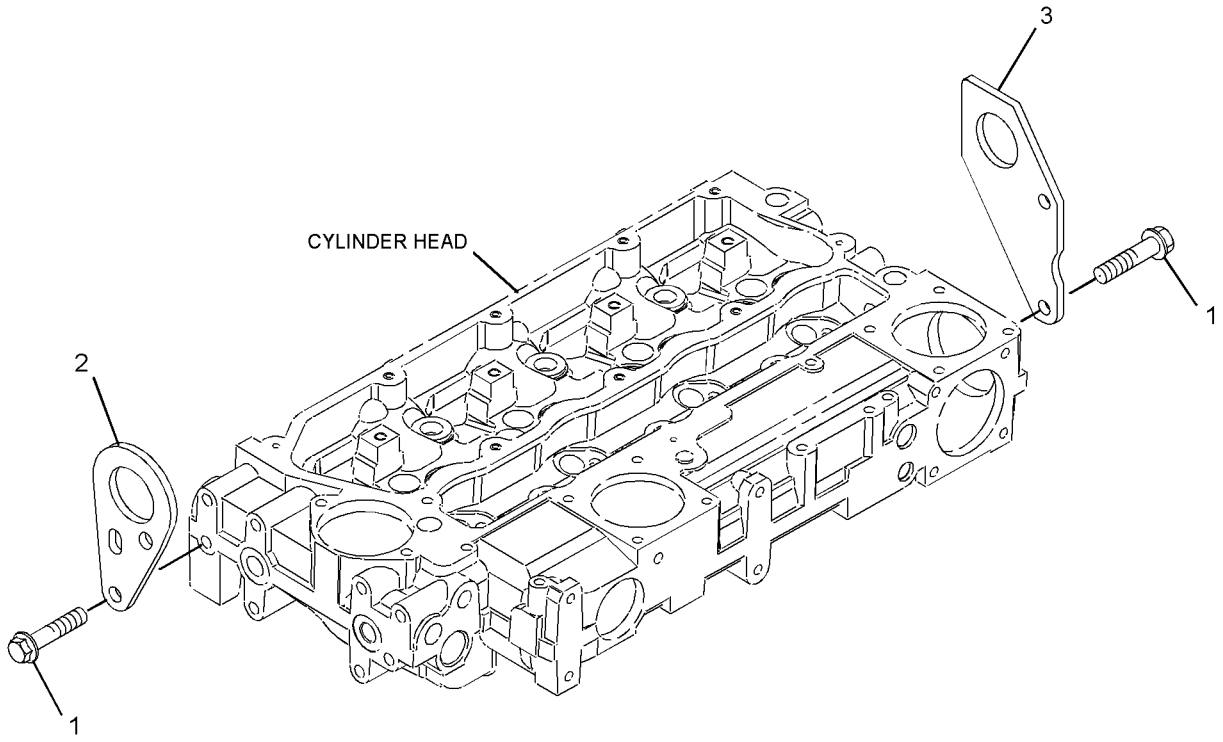

GRAPHIC #1 **<END>** g01210949

BASIC ENGINE

233-9840 MOUNTING GP-ENGINE

S/N: CRS1-2612

PART OF 177-9752 ENGINE AR-PRIMARY

SMCS-1152 **i02089645**

NOTE	REF NO	GRAPHIC REF	PART NUMBER	QTY	PART NAME 1 2 3 4 5 6 (PRODUCT LEVEL)	SEE PAGE
	1	1	**6H-3616**	6	PLUG-PROTECTION	
M	2	1	**6I-0233**	8	NUT (M12X1.75-THD)	
	3	1	**183-1343**	8	STUD	

M-METRIC PART

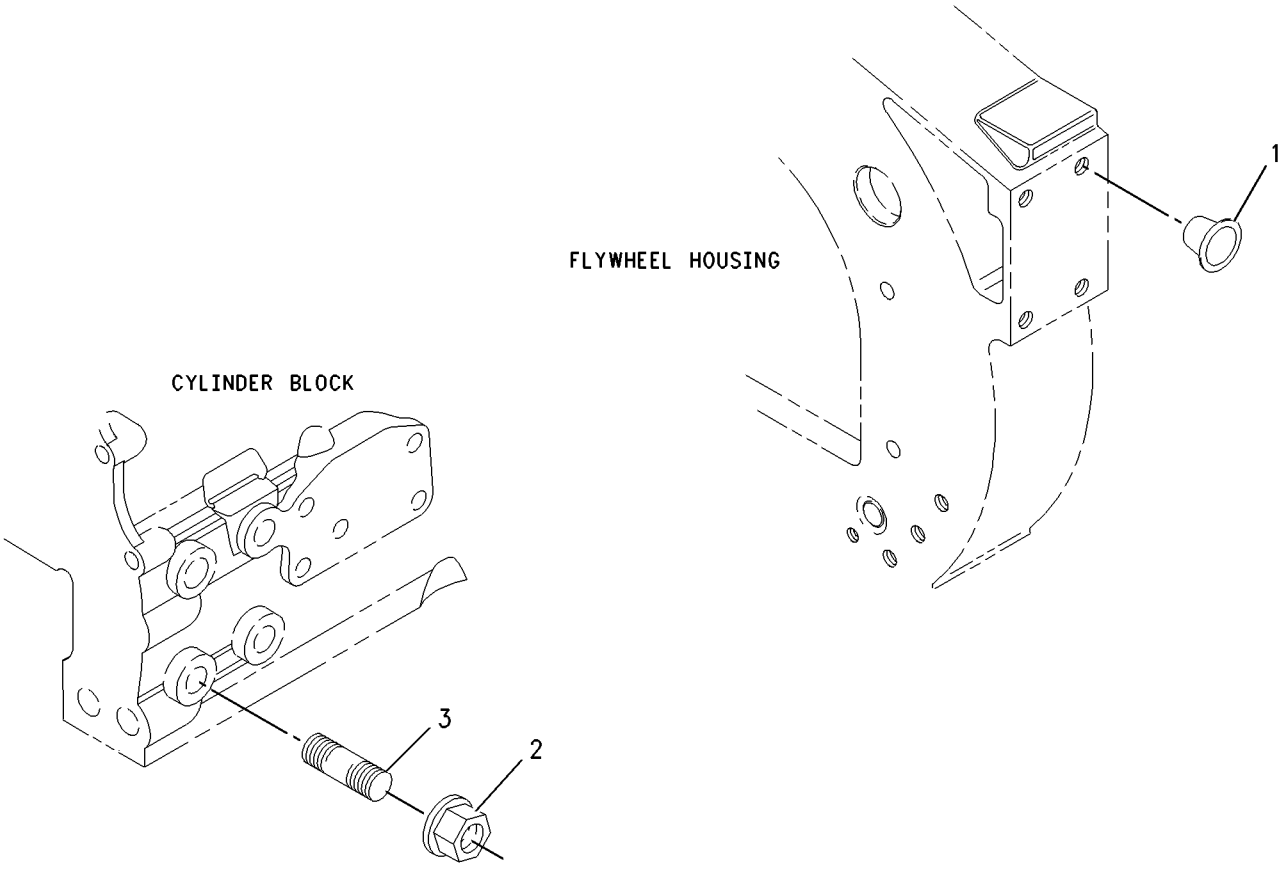

GRAPHIC #1 **<END>** g01003075

252-6456 MOUNTING GP-ENGINE

S/N: CRS2613-UP
PART OF 177-9752, 297-4047 ENGINE AR-PRIMARY
ALSO AN ATTACHMENT

SMCS-1152 **i02942775**

NOTE	REF NO	GRAPHIC REF	PART NUMBER	QTY	PART NAME 1 2 3 4 5 6 (PRODUCT LEVEL)	SEE PAGE
	1	1	**6H-3616**	3	PLUG-PROTECTION	
	2	1	**195-2132**	1	SUPPORT-FRONT (LH)	
	3	1	**195-2134**	1	SUPPORT-FRONT (RH)	
	4	1	**195-2136**	8	STUD	
	5	1	**195-2221**	8	NUT (M12X1.75-THD)	

252-6456 **MOUNTING GP-ENGINE** ***(contd.)*** **i02942775**

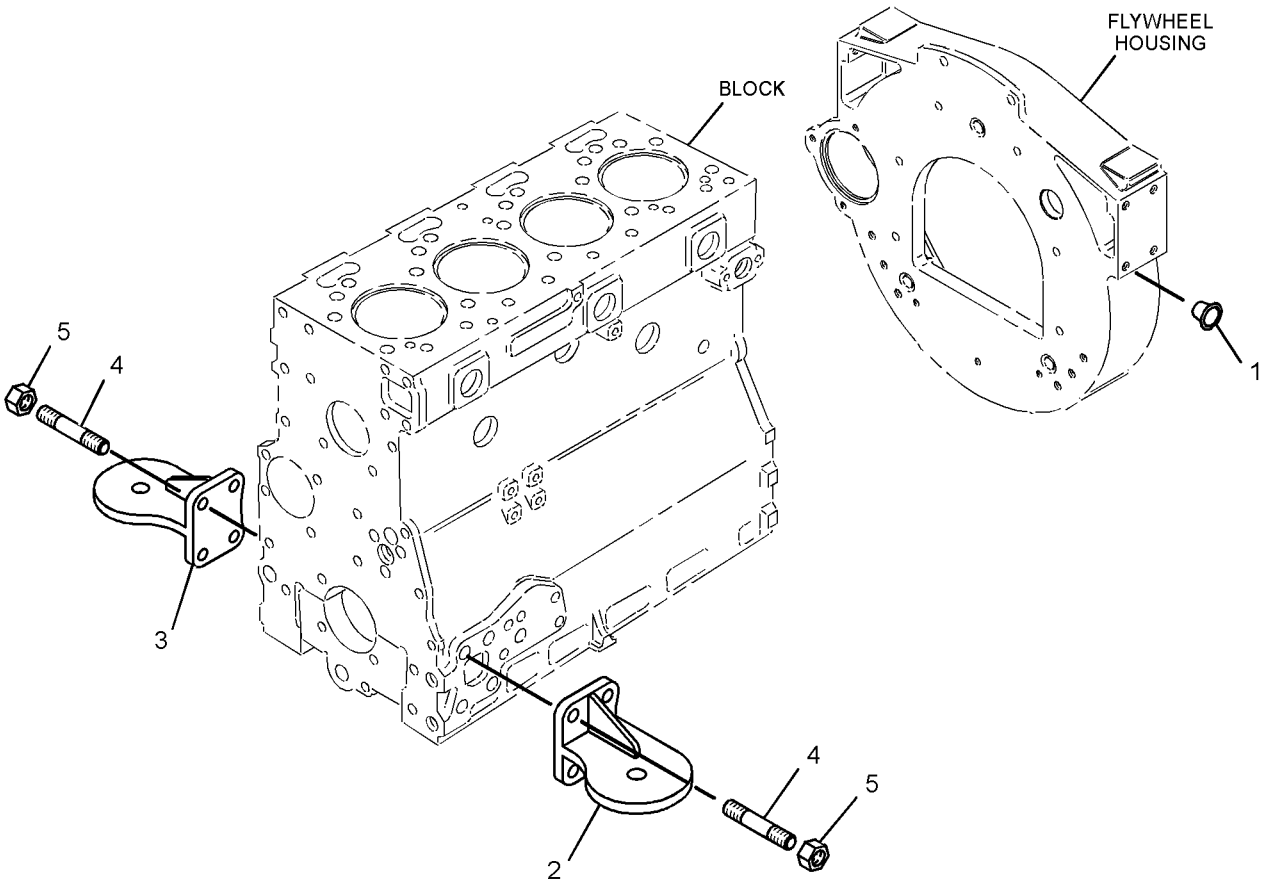

GRAPHIC #1 **<END>** g01458535

220-8779 MOUNTING GP-ENGINE FLEXIBLE

S/N: BZE1-UP; BZG1-UP
PART OF 219-4162 INSTALLATION AR-ENGINE
TYPE 1

SMCS-1152 **i02095128**

NOTE	REF NO	GRAPHIC REF	PART NUMBER	QTY	PART NAME 1 2 3 4 5 6 (PRODUCT LEVEL)	SEE PAGE
	1	1	**6Y-9915**	4	MOUNT AS	
	2	1	**9W-9952**	4	WASHER (16.75X86X8-MM THK)	
	3	1	**9W-9953**	4	SLEEVE	
	4	1	**178-1781**	1	CLIP	
	5	1	**220-4119**	1	SUPPORT AS-ENGINE	
	6	1	**4P-7428**	1	CLIP	
	7	1	**4P-8134**	1	CLIP	
	8	1	**8T-4121**	12	WASHER-HARD (11X21X2.5-MM THK)	
	9	1	**8T-4122**	8	WASHER-HARD (17X32X3.5-MM THK)	
M	10	1	**8T-4132**	4	NUT (M16X2-THD)	
M	11	1	**8T-4174**	4	BOLT (M16X2X120-MM)	
M	12	1	**8T-4186**	12	BOLT (M10X1.5X40-MM)	

M-METRIC PART

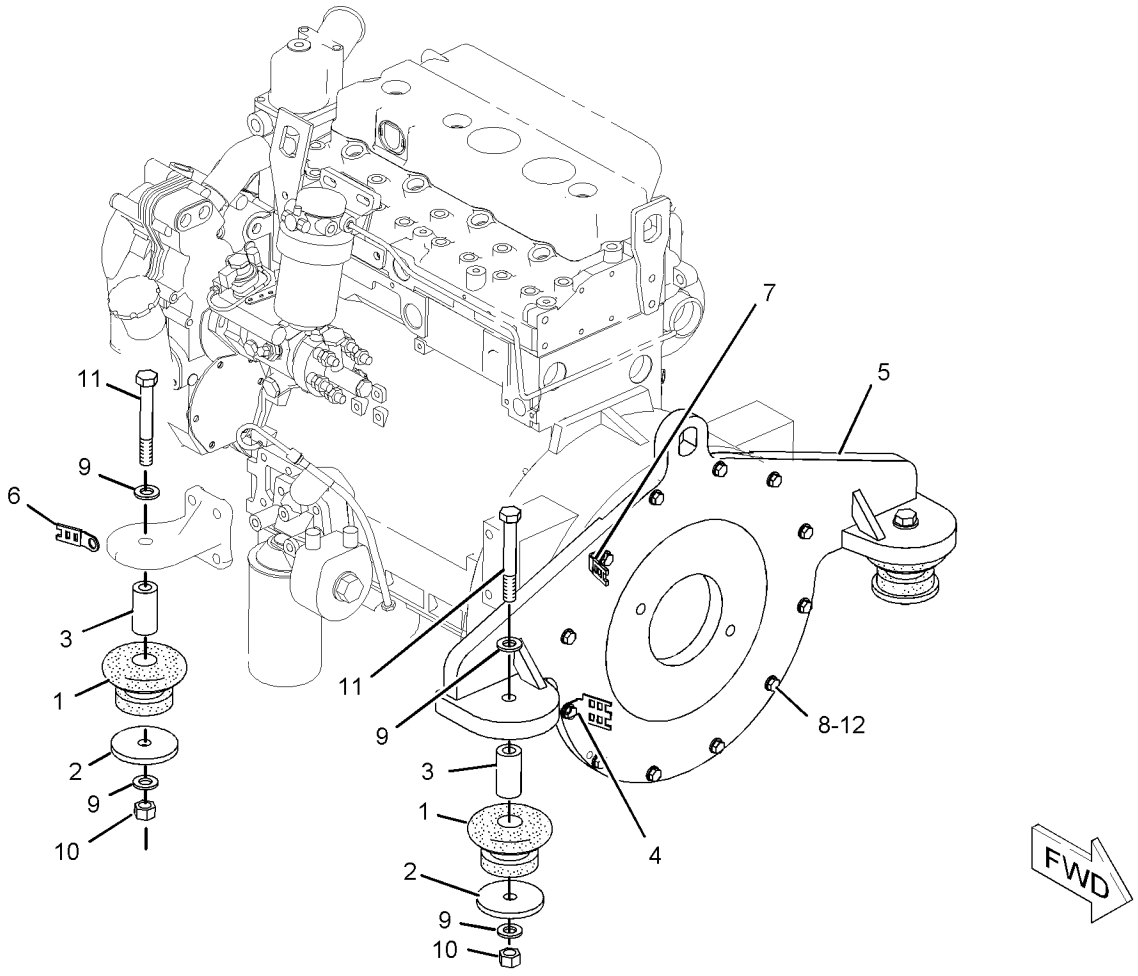

GRAPHIC #1 **<END>** g01068347

220-8779 MOUNTING GP-ENGINE FLEXIBLE

S/N: BZE1-UP; BZG1-UP
PART OF 219-4162 INSTALLATION AR-ENGINE
TYPE 2

SMCS-1152 **i02998649**

NOTE	REF NO	GRAPHIC REF	PART NUMBER	QTY	PART NAME 1 2 3 4 5 6 (PRODUCT LEVEL)	SEE PAGE
	1	1	**6Y-9915**	4	MOUNT AS	
	2	1	**9W-9952**	4	WASHER (16.75X86X8-MM THK)	
	3	1	**9W-9953**	4	SLEEVE	
C	5	1	**281-6366**	1	SUPPORT AS-ENGINE	
	6	1	**4P-7428**	1	CLIP	
	8	1	**8T-4121**	12	WASHER-HARD (11X21X2.5-MM THK)	
	9	1	**8T-4122**	8	WASHER-HARD (17X32X3.5-MM THK)	
M	10	1	**8T-4132**	4	NUT (M16X2-THD)	
M	11	1	**8T-4174**	4	BOLT (M16X2X120-MM)	
M	12	1	**8T-4186**	12	BOLT (M10X1.5X40-MM)	

C-CHANGE FROM PREVIOUS TYPE
M-METRIC PART

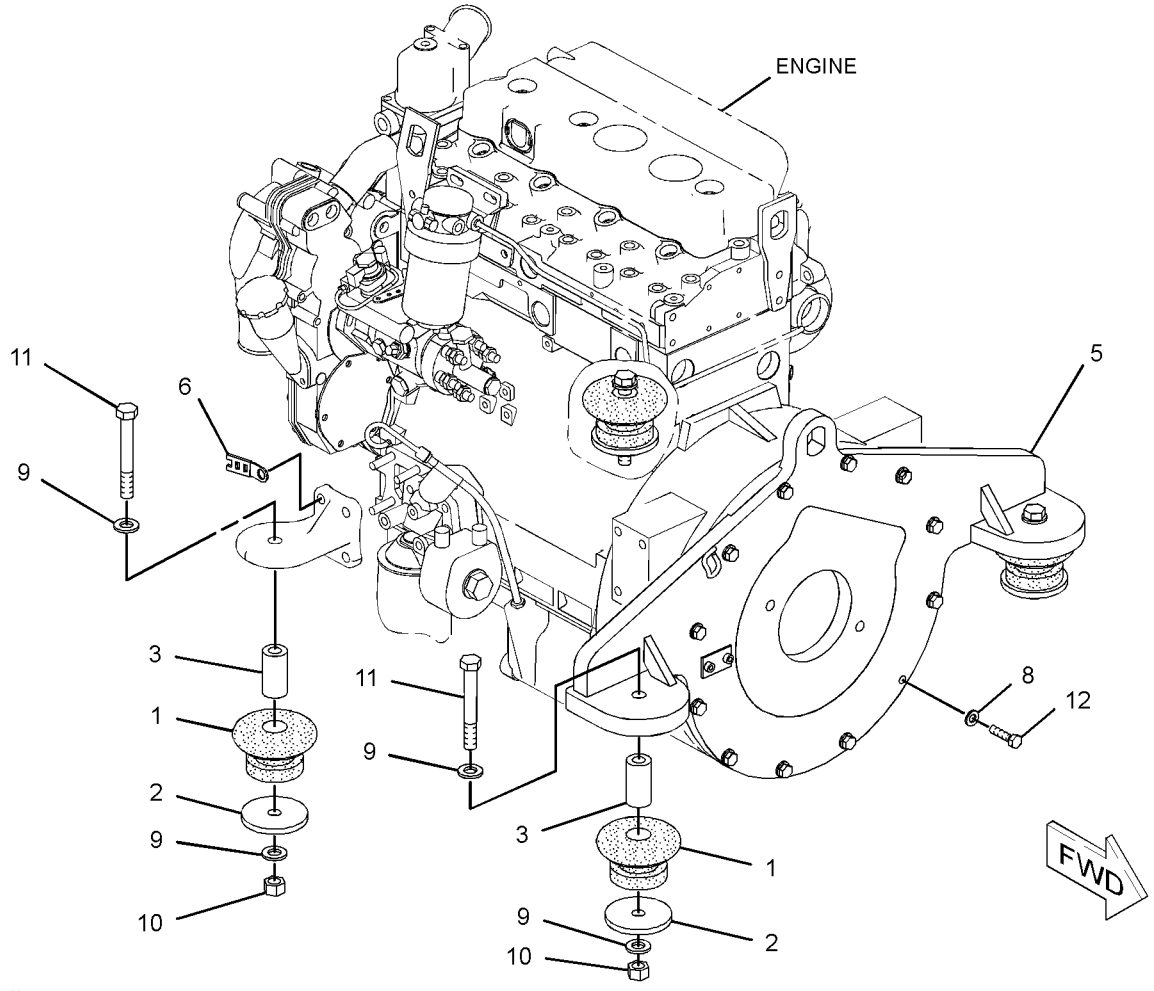

GRAPHIC #1 **<END>** g01511463

232-2565 PAN GP-OIL

S/N: CRS1-UP

PART OF 177-9752 ENGINE AR-PRIMARY

TYPE 1

SMCS-1302 **i02231118**

NOTE	REF NO	GRAPHIC REF	PART NUMBER	QTY	PART NAME 1 2 3 4 5 6 (PRODUCT LEVEL)	SEE PAGE
	1	1	**5P-6718**	2	SEAL-O-RING (SUMP DRAIN)	
M	2	1	**6I-0217**	12	BOLT (M8X1.25X20-MM)	
M	3	1	**6I-0260**	2	BOLT (M8X1.25X25-MM)	
	4	1	**6I-0289**	1	PLUG	
M	5	1	**6I-0363**	2	BOLT (M6X1X20-MM)	
	6	1	**6I-0572**	2	BOLT (M8X1.25X20-MM)	
	7	1	**6I-1497**	1	SEAL	
	8	1	**7C-0351**	2	PLUG-DRAIN (ENGINE OIL)	
	9	1	**067-6213**	1	GASKET	
	10	1	**101-3771**	6	BOLT	
	11	1	**232-2551**	1	TUBE AS	
	12	1	**6I-4079**	1	NUT	
	13	1	**263-2162**	1	GAUGE AS-OIL LEVEL (DIPSTICK) (ENGINE)	
	14	1	**225-6004**	1	PAN AS-OIL	
	15	1	**7C-1224**	2	INSERT	
	16	1	**225-6005**	1	GASKET	
	17	1	**230-8094**	1	BRIDGE	
	18	1	**225-6041**	1	TUBE	

M-METRIC PART

232-2565 **PAN GP-OIL** *(contd.)* **i02231118**

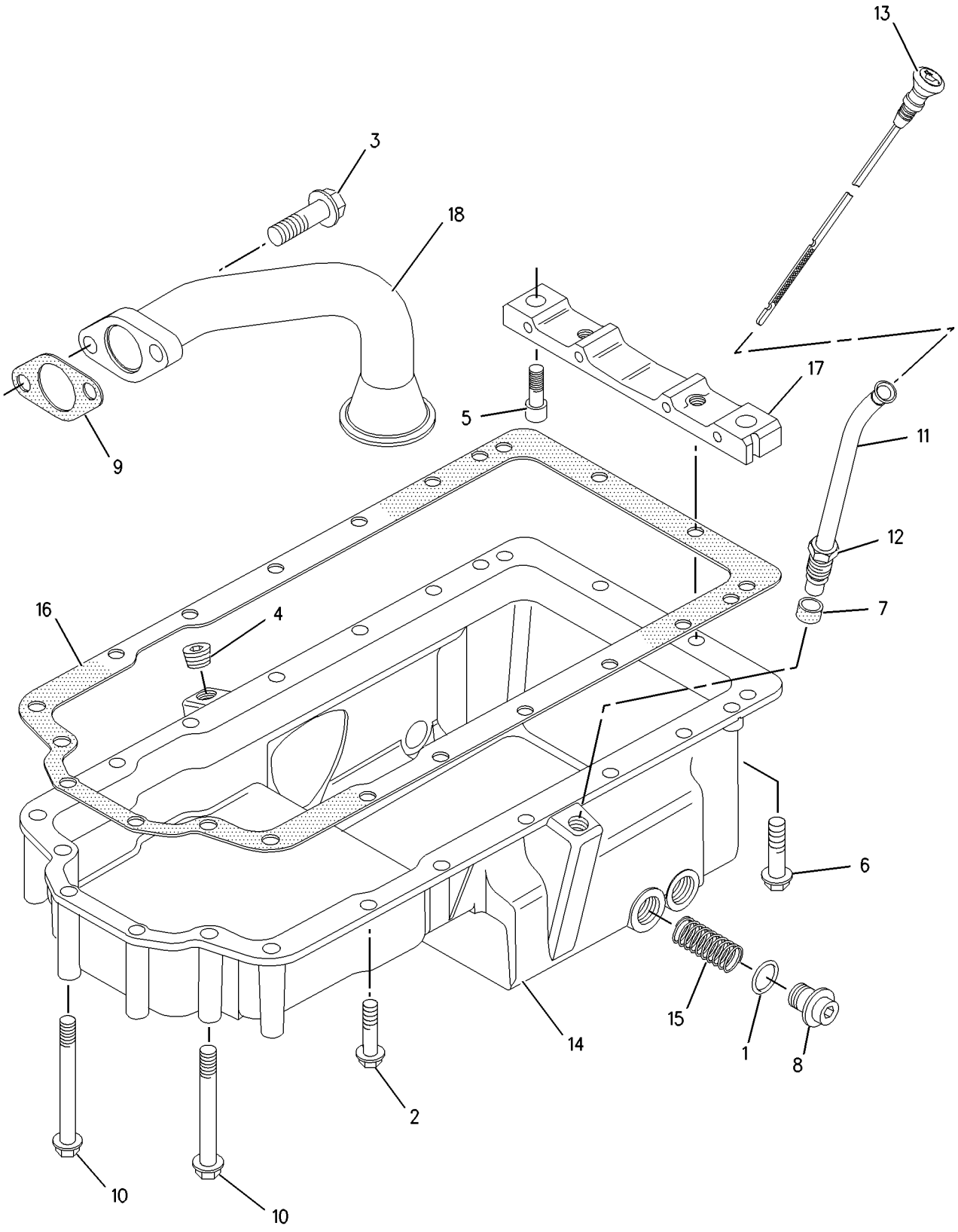

GRAPHIC #1 **<END>** g00994129

232-2565 PAN GP-OIL

S/N: CRS1-UP
PART OF 177-9752, 297-4047 ENGINE AR-PRIMARY
ALSO AN ATTACHMENT
TYPE 2

SMCS-1302 **i02655477**

NOTE	REF NO	GRAPHIC REF	PART NUMBER	QTY	PART NAME 1 2 3 4 5 6 (PRODUCT LEVEL)	SEE PAGE
	1	1	**275-9883**	2	SEAL	
M	2	1	**6I-0217**	12	BOLT (M8X1.25X20-MM)	
M	3	1	**6I-0260**	2	BOLT (M8X1.25X25-MM)	
	4	1	**6I-0289**	1	PLUG	
M	5	1	**6I-0363**	2	BOLT (M6X1X20-MM)	
	6	1	**6I-0572**	2	BOLT (M8X1.25X20-MM)	
	7	1	**6I-1497**	1	SEAL	
	8	1	**7C-0351**	2	PLUG-DRAIN (ENGINE OIL)	
	9	1	**067-6213**	1	GASKET	
	10	1	**101-3771**	6	BOLT	
	11	1	**251-8338**	1	TUBE AS	
	13	1	**263-2162**	1	GAUGE AS-OIL LEVEL (DIPSTICK) (ENGINE)	
	14	1	**304-8764**	1	PAN AS-OIL	
	15	1	**7C-1224**	2	INSERT	
	16	1	**225-6005**	1	GASKET	
	17	1	**230-8094**	1	BRIDGE	
	18	1	**225-6041**	1	TUBE	

M-METRIC PART

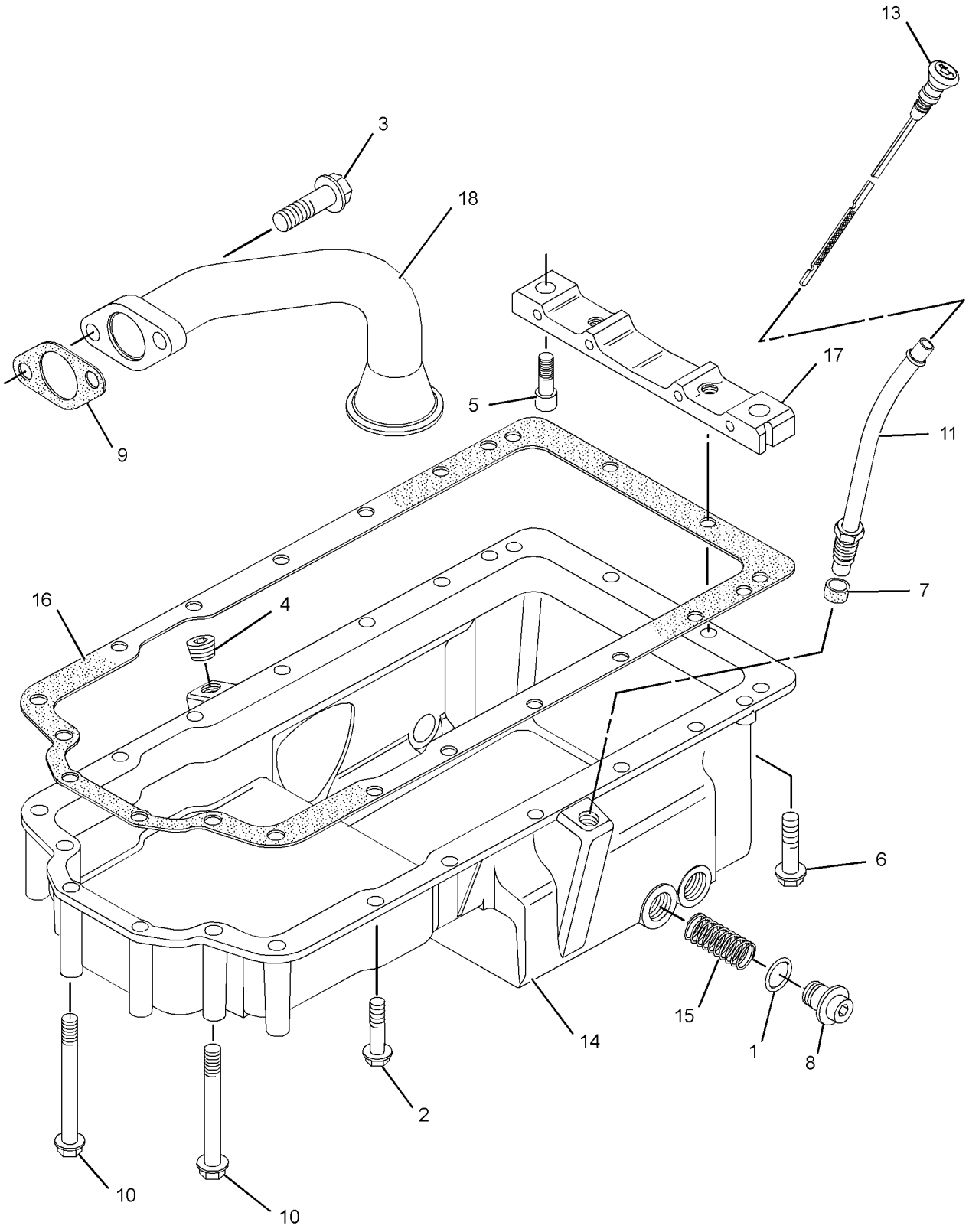

GRAPHIC #1 **<END>** g01271681

232-7442 PISTON & ROD GP

S/N: CRS1-UP

PART OF 177-9752 ENGINE AR-PRIMARY

SMCS-1225 **i03038355**

NOTE	REF NO	GRAPHIC REF	PART NUMBER	QTY	PART NAME 1 2 3 4 5 6 (PRODUCT LEVEL)	SEE PAGE
	1	1	**225-5437**	4	PISTON AS	
					(EACH PISTON AS INCLUDES)	
	2	1	**124-3536**	2	RING-RETAINING	
	3	1	**225-5436**	1	KIT-PISTON RING	
AB		1	**288-1394**	1	PISTON AS (0.5-MM OS)	
AB		1	**288-1395**	1	PISTON AS (1.0-MM OS)	
J	4	1	**225-5441**	4	ROD AS-CONNECTING (LENGTH L) (L)	
					—OR—	
J		1	**225-5451**	4	ROD AS-CONNECTING (LENGTH K) (K)	
					—OR—	
J		1	**225-5453**	4	ROD AS-CONNECTING (LENGTH J) (J)	
					—OR—	
J		1	**225-5454**	4	ROD AS-CONNECTING (LENGTH H) (H)	
					—OR—	
J		1	**225-5458**	4	ROD AS-CONNECTING (LENGTH G) (G)	
					—OR—	
J		1	**225-5459**	4	ROD AS-CONNECTING (LENGTH F) (F)	
					(EACH ROD AS INCLUDES)	
	5	1	**225-5438**	1	BUSHING	
	6	1	**225-5439**	2	BOLT-SPECIAL (CONNECTING ROD)	

A-NOT PART OF THIS GROUP
B-USE AS REQUIRED
J-ENSURE THAT CORRECT ROD LENGTH IS FITTED

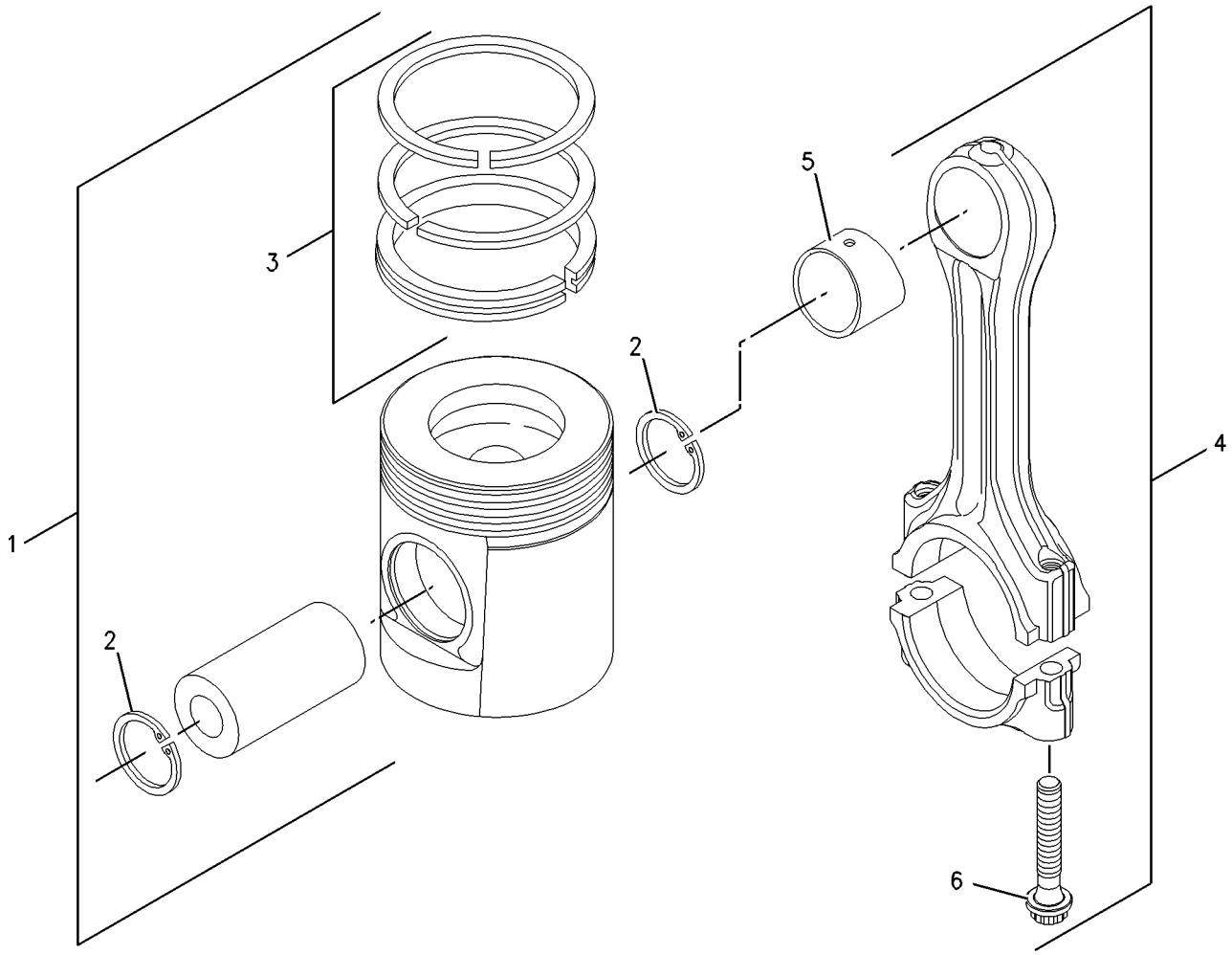

GRAPHIC #1 **<END>** g00909669

308-4730 PISTON & ROD GP

S/N: CRS1-UP
PART OF 297-4047 ENGINE AR-PRIMARY
AN ATTACHMENT

SMCS-1225 **i02719132**

NOTE	REF NO	GRAPHIC REF	PART NUMBER	QTY	PART NAME 1 2 3 4 5 6 (PRODUCT LEVEL)	SEE PAGE
	1	1	**225-5437**	4	PISTON AS	
					(EACH PISTON AS INCLUDES)	
	1A	1	**124-3536**	2	RING-RETAINING	
	1B	1	**225-5436**	1	KIT-PISTON RING	
BJ	2	1	**225-5441**	4	ROD AS-CONNECTING (LENGTH L)	
					—OR—	
BJ		1	**225-5451**	4	ROD AS-CONNECTING (LENGTH K)	
					—OR—	
BJ		1	**225-5453**	4	ROD AS-CONNECTING (LENGTH J)	
					—OR—	
BJ		1	**225-5454**	4	ROD AS-CONNECTING (LENGTH H)	
					—OR—	
BJ		1	**225-5458**	4	ROD AS-CONNECTING (LENGTH G)	
					—OR—	
BJ		1	**225-5459**	4	ROD AS-CONNECTING (LENGTH F)	
					(EACH ROD AS INCLUDES)	
	2A	1	**225-5438**	1	BUSHING	
	2B	1	**225-5439**	2	BOLT	

B-USE AS REQUIRED
J-ENSURE THAT CORRECT ROD LENGTH IS FITTED

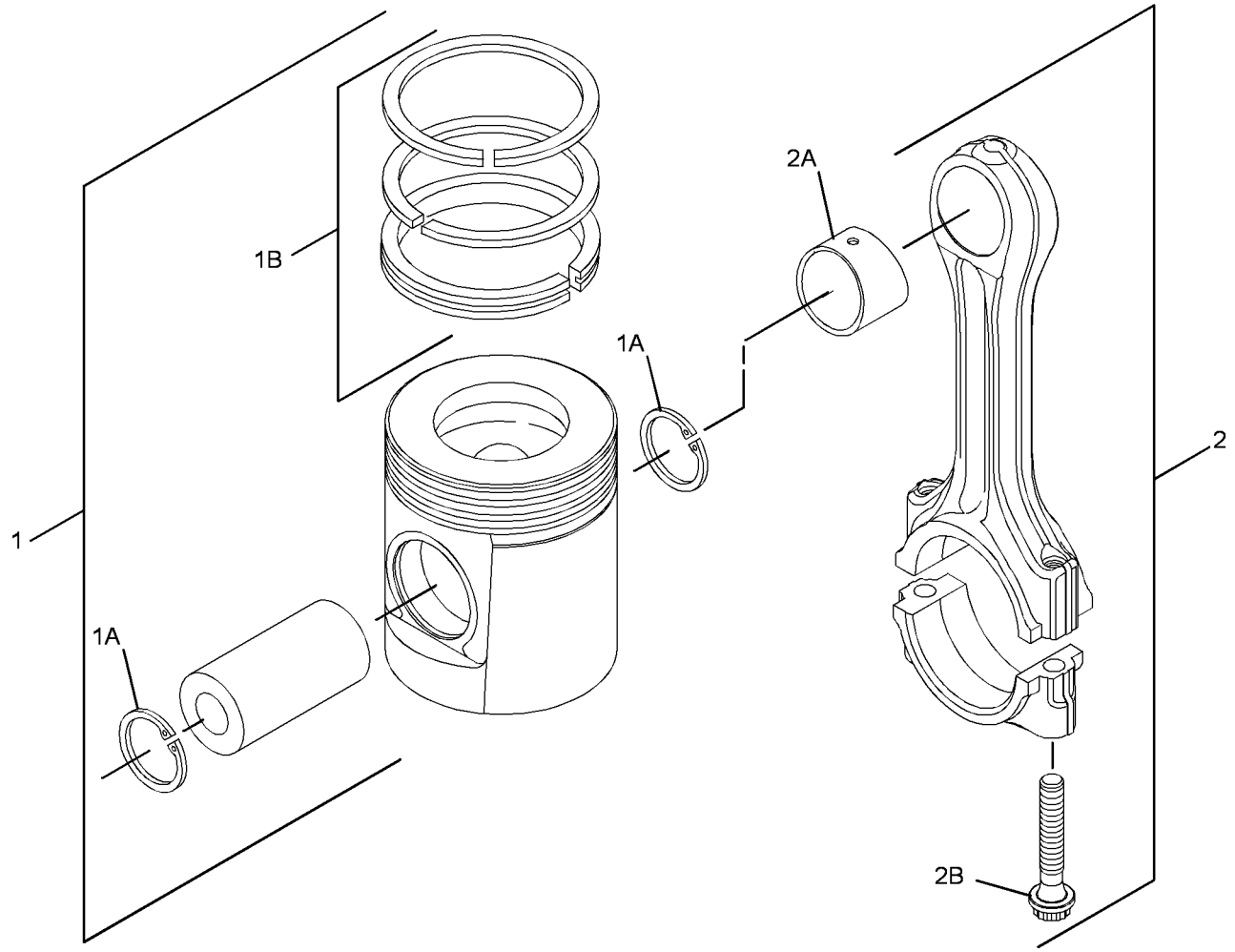

GRAPHIC #1 **<END>** g01374535

BASIC ENGINE

225-4317 PLUG GP-ENGINE

S/N: CRS1-UP
FRONT HOUSING, CYLINDER HEAD
PART OF 177-9752, 297-4047 ENGINE AR-PRIMARY
ALSO AN ATTACHMENT

SMCS-1000 **i02052065**

NOTE	REF NO	GRAPHIC REF	PART NUMBER	QTY	PART NAME 1 2 3 4 5 6 (PRODUCT LEVEL)	SEE PAGE
	1	1	**2B-0858**	3	PLUG-PIPE	

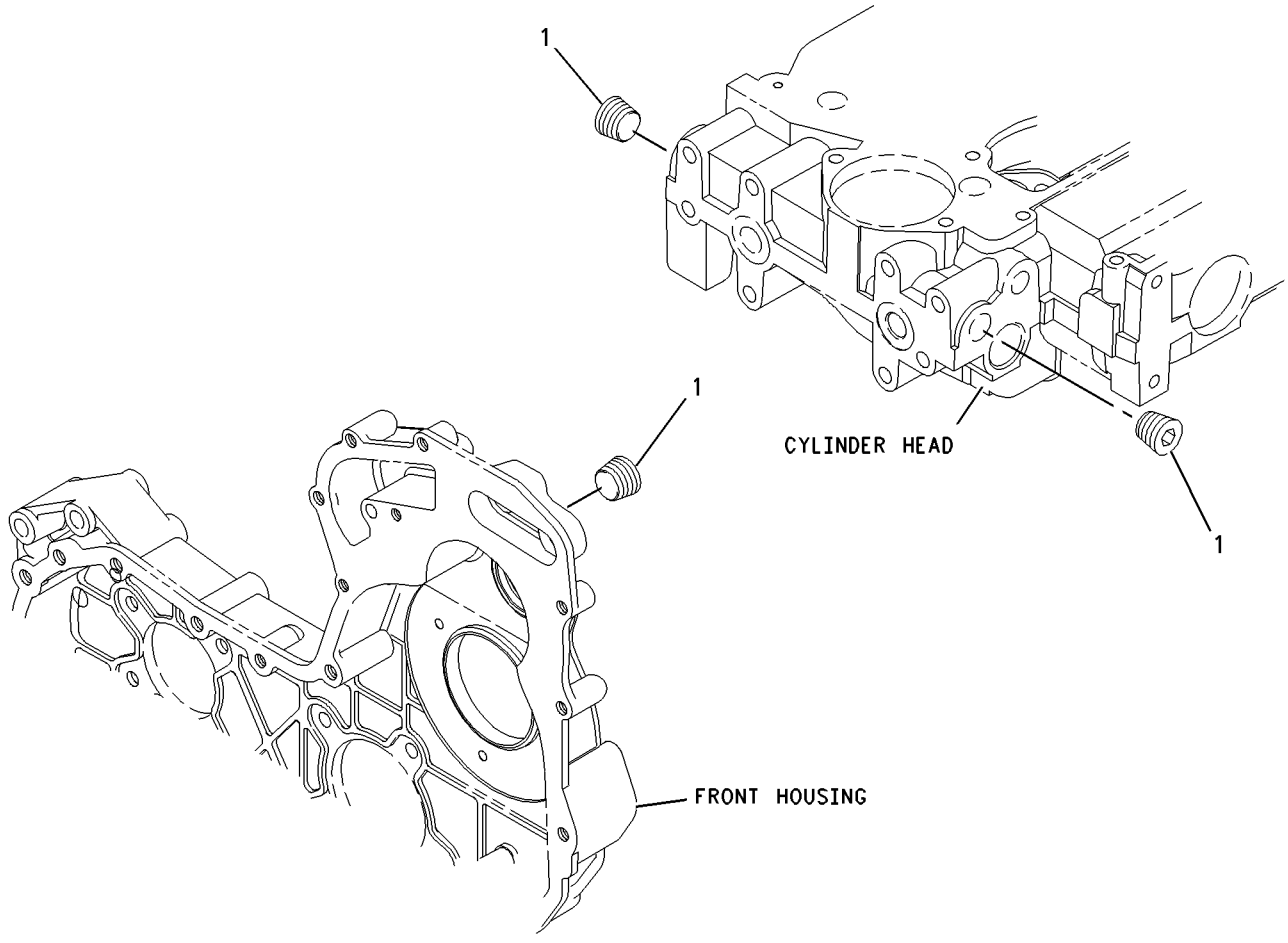

GRAPHIC #1 **<END>** g00911937

232-3716 PLUG GP-ENGINE

S/N: CRS1-364

PART OF 177-9752 ENGINE AR-PRIMARY

SMCS-1000 **i02089630**

NOTE	REF NO	GRAPHIC REF	PART NUMBER	QTY	PART NAME 1 2 3 4 5 6 (PRODUCT LEVEL)	SEE PAGE
	1	1	**035-8063**	1	PLUG	

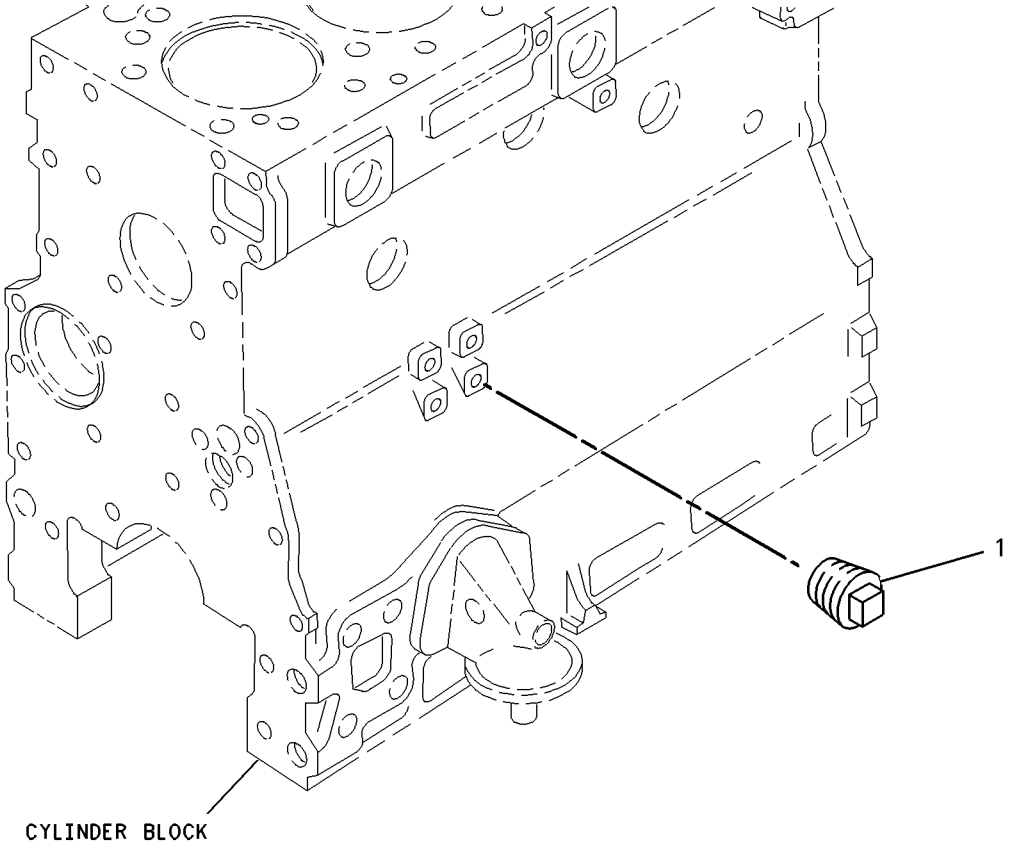

GRAPHIC #1 **<END>** g00777007

232-6204 PLUG GP-ENGINE

S/N: CRS1-UP
PART OF 177-9752, 297-4047 ENGINE AR-PRIMARY
ALSO AN ATTACHMENT

SMCS-1000 **i02089627**

NOTE	REF NO	GRAPHIC REF	PART NUMBER	QTY	PART NAME 1 2 3 4 5 6 (PRODUCT LEVEL)	SEE PAGE
	1	1	**199-9751**	1	SEAL-O-RING	
	2	1	**232-1322**	1	PLUG	

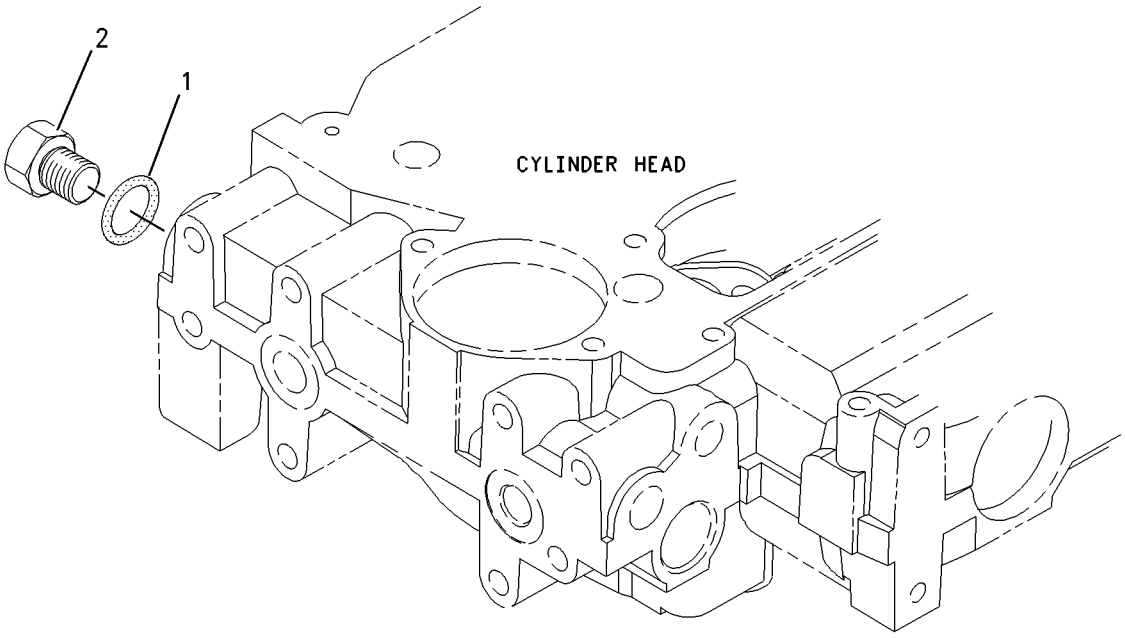

GRAPHIC #1 **<END>** g00950934

253-2479 PLUG GP-ENGINE

S/N: CRS365-UP
PART OF 177-9752, 297-4047 ENGINE AR-PRIMARY
ALSO AN ATTACHMENT

SMCS-1000 **i02091129**

NOTE	REF NO	GRAPHIC REF	PART NUMBER	QTY	PART NAME 1 2 3 4 5 6 (PRODUCT LEVEL)	SEE PAGE
	1	1	**035-8063**	1	PLUG	
	2	1	**199-9267**	1	SEAL-O-RING	
	3	1	**232-3861**	1	PLUG	

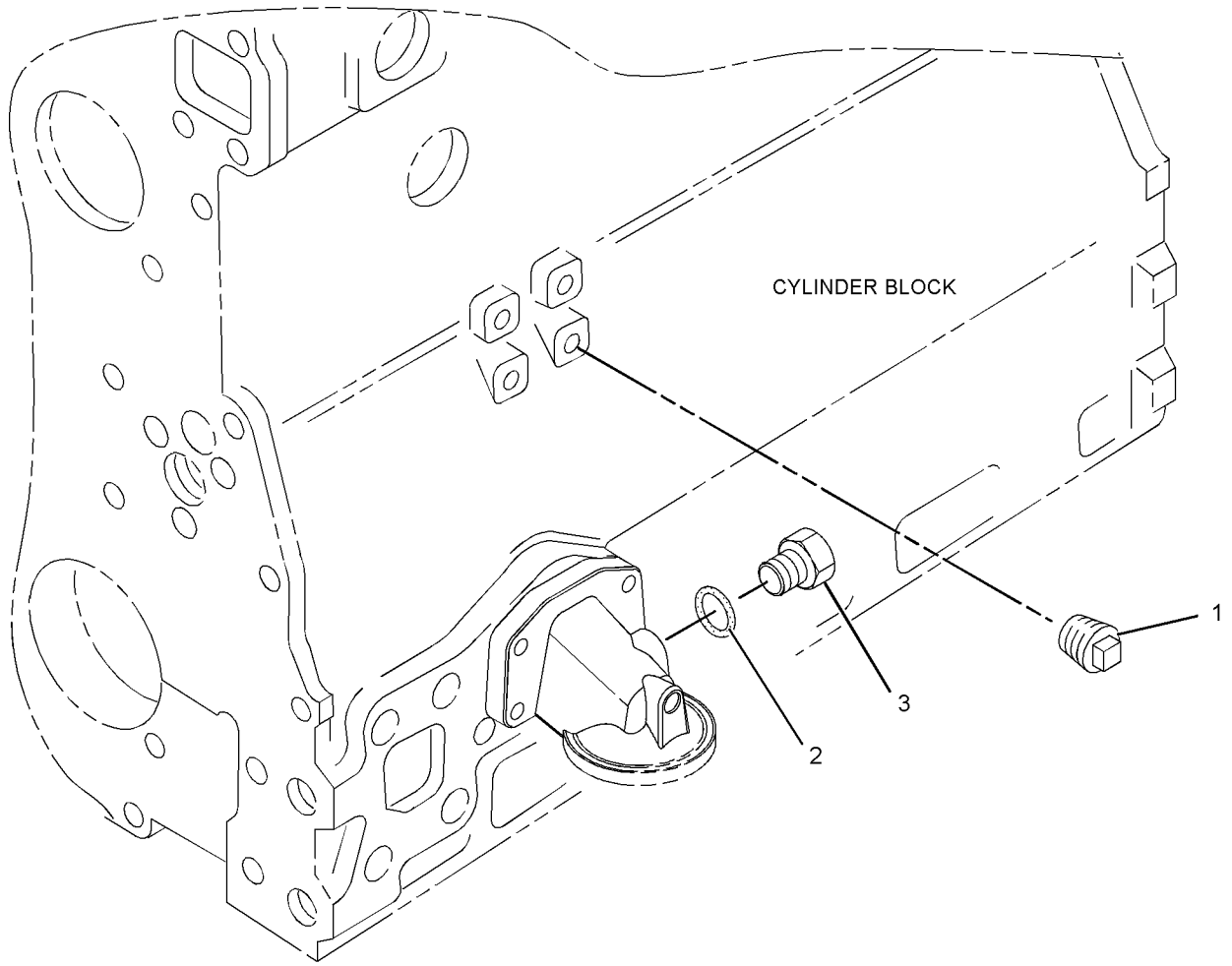

GRAPHIC #1 **<END>** g01079757

BASIC ENGINE

230-7353 PULLEY GP-CRANKSHAFT

S/N: CRS1-UP
PART OF 177-9752, 297-4047 ENGINE AR-PRIMARY
ALSO AN ATTACHMENT

SMCS-1205 **i02053125**

NOTE	REF NO	GRAPHIC REF	PART NUMBER	QTY	PART NAME 1 2 3 4 5 6 (PRODUCT LEVEL)	SEE PAGE
	1	1	**6I-0501**	1	BLOCK	
	2	1	**6I-0502**	1	PULLEY	
	3	1	**7W-4634**	3	BOLT (7/16-20X1.5-IN)	

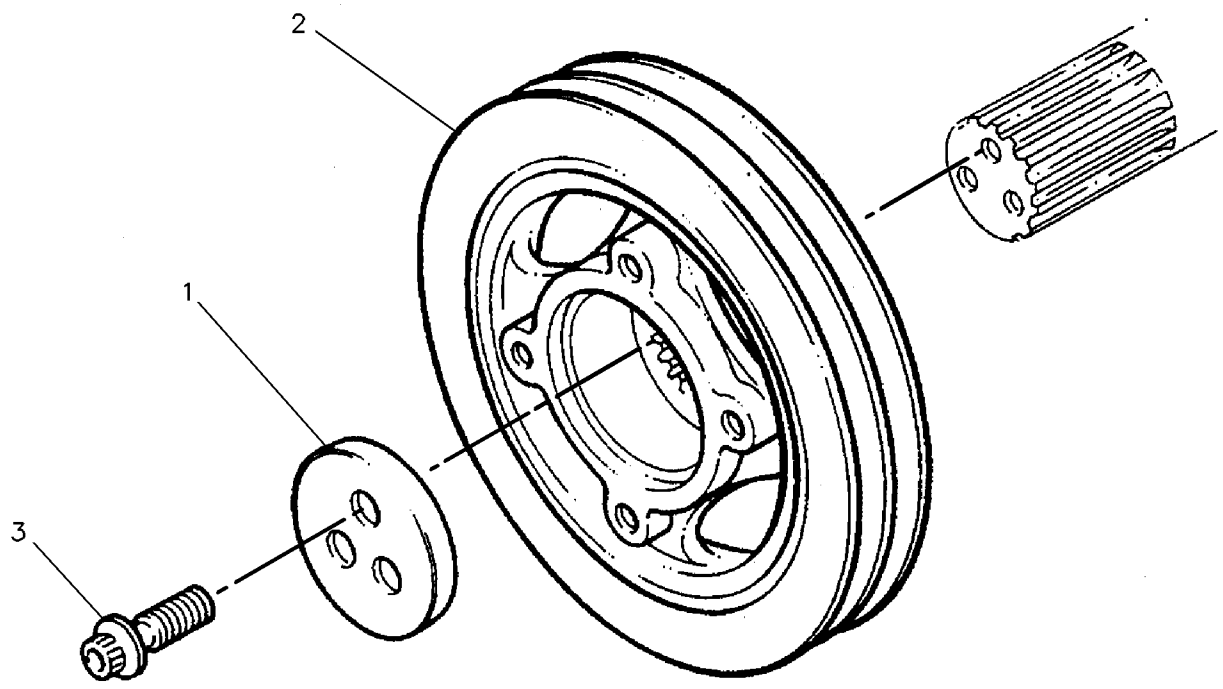

GRAPHIC #1 **<END>** g00130941

225-5963 ROCKER ARM GP

S/N: CRS1-UP

PART OF 308-4732 VALVE MECHANISM GP

AN ATTACHMENT

SMCS-1102, 1123 **i02720066**

NOTE	REF NO	GRAPHIC REF	PART NUMBER	QTY	PART NAME 1 2 3 4 5 6 (PRODUCT LEVEL)	SEE PAGE
	1	1	**225-5625**	4	LEVER AS	
	1A	1	**5B-9079**	1	NUT-JAM (3/8-24-THD)	
	1B	1	**185-1546**	1	SCREW	
	2	1	**225-5634**	1	SHAFT AS	
	2A	1	**225-5629**	2	PLUG	
	3	1	**225-5638**	3	SPRING	
	4	1	**225-5640**	4	LEVER AS	
	4A	1	**5B-9079**	1	NUT-JAM (3/8-24-THD)	
	4B	1	**185-1546**	1	SCREW	
	5	1	**225-5959**	2	CLIP	
	6	1	**225-5960**	1	BOLT (M8X1.25X60-MM)	
	7	1	**225-5961**	2	WASHER (26.7X34.32X0.38-MM THK)	
	8	1	**225-5962**	3	BOLT (M8X1.25X30-MM)	

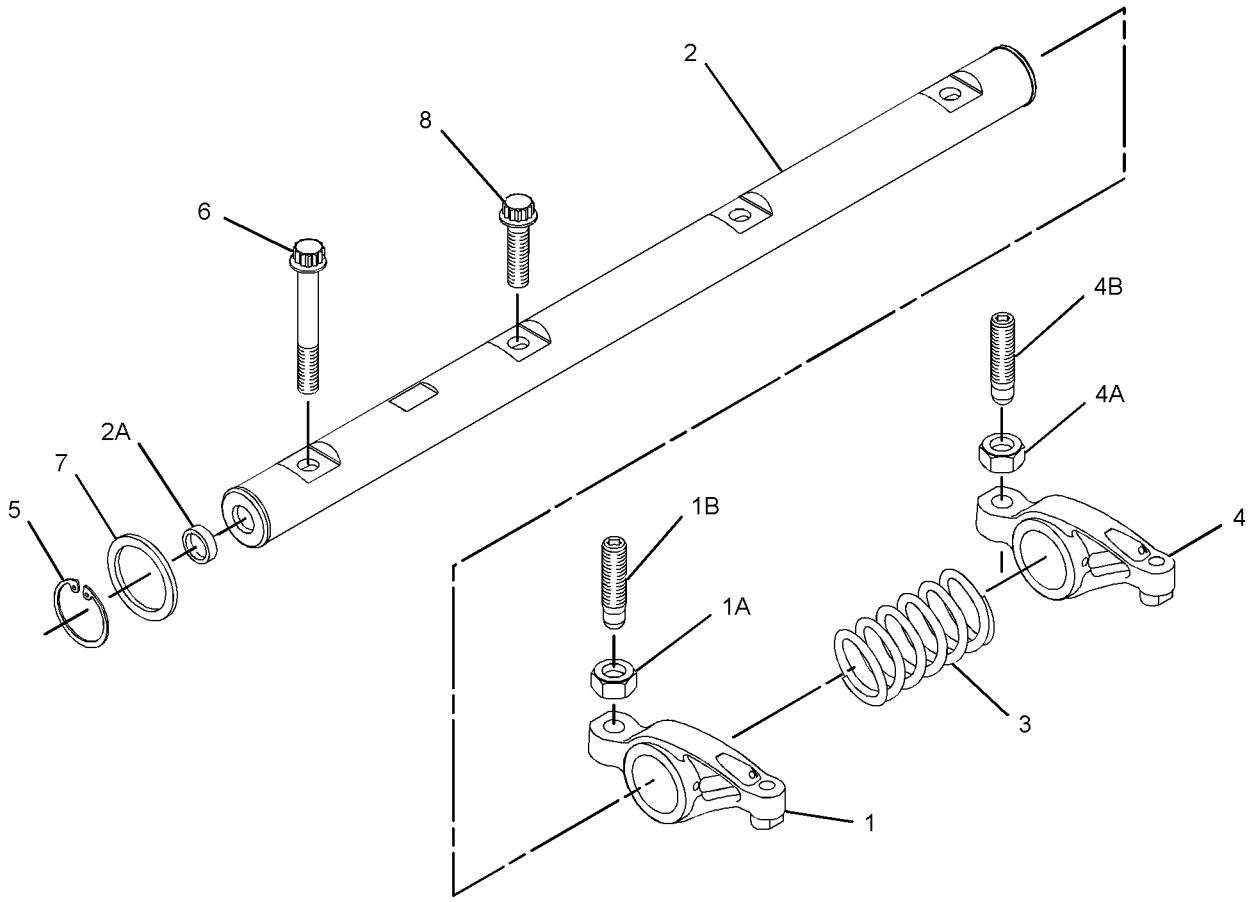

GRAPHIC #1 **<END>** g01368510

220-1960 SERVICE GP-ENGINE

S/N: BZE1-UP; BZG1-UP

PART OF 219-4162 INSTALLATION AR-ENGINE

TYPE 1

SMCS-1261, 1263, 1302, 7542 **i02897059**

NOTE	REF NO	GRAPHIC REF	PART NUMBER	QTY	PART NAME 1 2 3 4 5 6 (PRODUCT LEVEL)	SEE PAGE
	1	1	**1P-4278**	1	CLAMP-HOSE	
	2	1	**5D-1026**	1	CLAMP-HOSE	
	3	1	**8C-3445**	1	CAP-DUST	
	4	1	**8T-7859**	1	CONNECTOR	
	5	1	**157-0670**	1	CAP-DUST	
	6	1	**6V-7238**	1	VALVE-SHUTOFF (ENGINE OIL DRAIN)	
			3K-0360	1	SEAL-O-RING	
	7	1	**154-9025**	1	VALVE-FLUID SAMPLING (ENGINE OIL)	
	8	1	**159-5255**	1	ADAPTER	
	9	1	**8C-3446**	1	VALVE-FLUID SAMPLING (ENGINE OIL)	
			3J-7354	1	SEAL-O-RING	
	10	1	**5P-9186**	1	SEAL-O-RING	
	11	1	**7K-1181**	1	STRAP-CABLE	
	12	1	**8T-7876**	1	SEAL-O-RING	
E	13	1	**5P-0743**	1	HOSE (50-CM)	
E	14	1	**5P-1420**	1	HOSE (80-CM)	

E-ORDER BY THE CENTIMETER

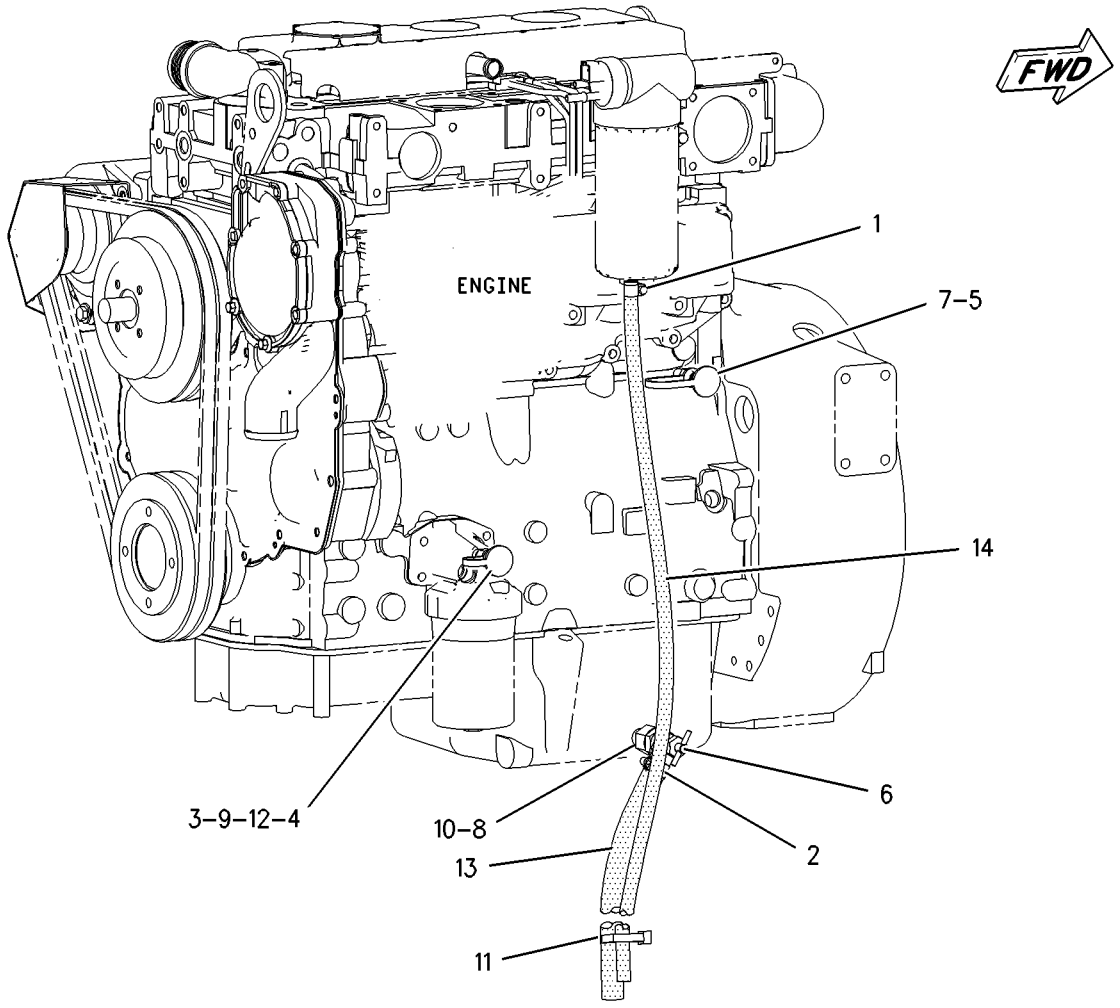

GRAPHIC #1 **<END>** g01002140

220-1960 SERVICE GP-ENGINE

S/N: BZE1-UP; BZG1-UP
PART OF 219-4162 INSTALLATION AR-ENGINE
TYPE 2

SMCS-1261, 1263, 1302, 7542 **i02515840**

NOTE	REF NO	GRAPHIC REF	PART NUMBER	QTY	PART NAME 1 2 3 4 5 6 (PRODUCT LEVEL)	SEE PAGE
	1	1	**1P-4278**	1	CLAMP-HOSE	
	2	1	**5D-1026**	1	CLAMP-HOSE	
C	3	1	**5P-7833**	1	VALVE-SHUTOFF (COOLANT)	
	4	1	**8C-3445**	1	CAP-DUST (FLUID SAMPLING VALVE)	
	5	1	**8T-7859**	1	CONNECTOR	
	6	1	**157-0670**	1	CAP-DUST	
	7	1	**165-2273**	1	VALVE AS-SHUTOFF (ENGINE OIL DRAIN)	
		1	**3K-0360**	1	SEAL-O-RING	
		1	**6V-7238**	1	VALVE-SHUTOFF (ENGINE OIL DRAIN)	
	8	1	**154-9025**	1	VALVE-FLUID SAMPLING (ENGINE OIL)	
	9	1	**159-5255**	1	ADAPTER	
	10	1	*164-5590*	1	VALVE AS-FLUID SAMPLING (ENGINE OIL)	
		1	**8C-3446**	1	VALVE-FLUID SAMPLING (ENGINE OIL)	
		1	**3J-7354**	1	SEAL-O-RING	
C	11	1	**3P-1823**	1	ADAPTER-PIPE	
	12	1	**5P-9186**	1	SEAL-O-RING	
	13	1	**7K-1181**	1	STRAP-CABLE	
	14	1	**8T-7876**	1	SEAL-O-RING	
E	15	1	**5P-0743**		HOSE (50-CM)	
E	16	1	**5P-1420**		HOSE (80-CM)	

C-CHANGE FROM PREVIOUS TYPE
E-ORDER BY THE CENTIMETER

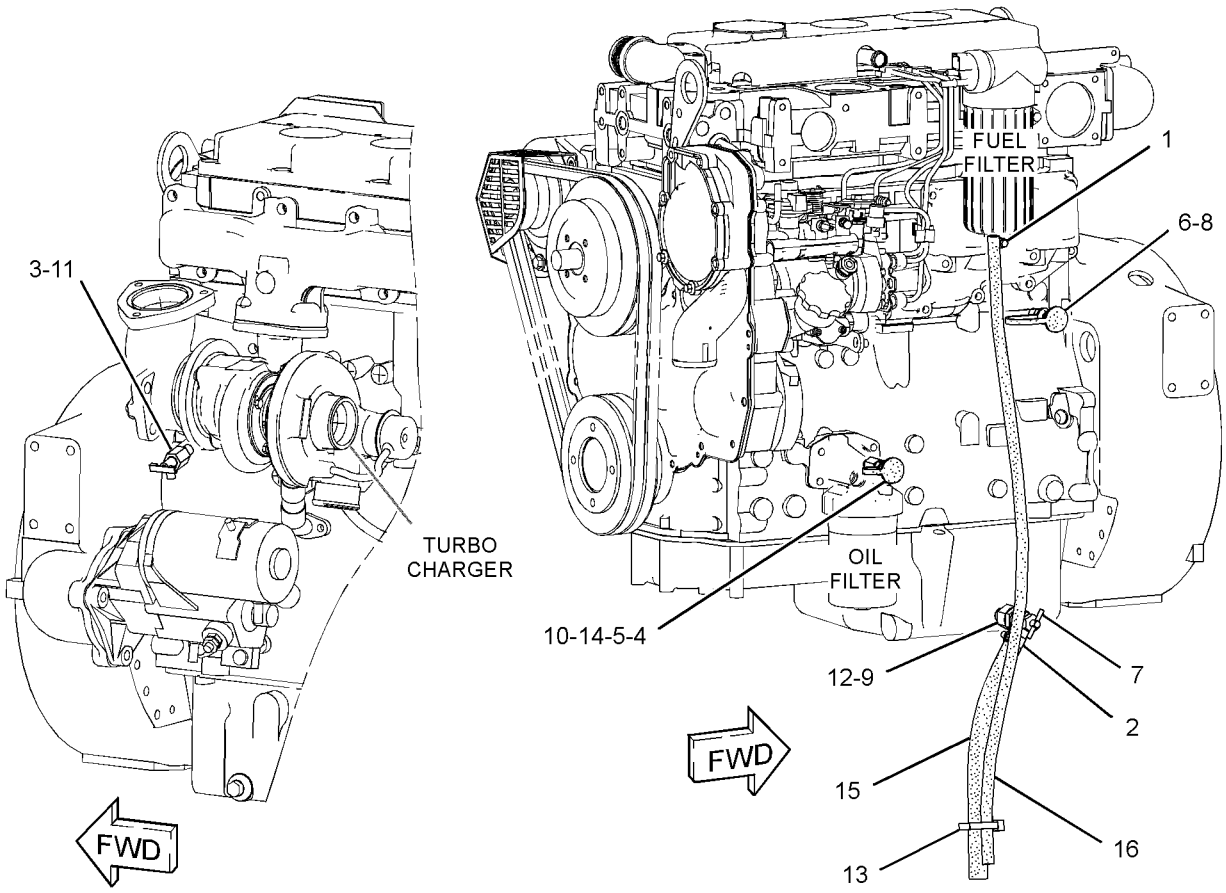

GRAPHIC #1 **<END>** g01256477

232-7526 VALVE MECHANISM GP

S/N: CRS1-UP

PART OF 177-9752 ENGINE AR-PRIMARY

SMCS-1102, 1121, 1123 **i02053613**

NOTE	REF NO	GRAPHIC REF	PART NUMBER	QTY	PART NAME 1 2 3 4 5 6 (PRODUCT LEVEL)	SEE PAGE
	1	1	**067-6095**	8	ROD	
	2	1	**138-2053**	8	TAPPET	
	3	1	**225-5963**	1	ROCKER ARM GP	
	4	1	**225-5625**	4	LEVER AS	
					(EACH INCLUDES)	
	5	1	**5B-9079**	1	NUT-JAM (3/8-24-THD)	
	6	1	**185-1546**	1	SCREW	
	7	1	**225-5634**	1	SHAFT AS	
	8	1	**225-5629**	2	PLUG	
	9	1	**225-5638**	3	SPRING	
	10	1	**225-5640**	4	LEVER AS	
					(EACH INCLUDES)	
	11	1	**5B-9079**	1	NUT-JAM (3/8-24-THD)	
	12	1	**185-1546**	1	SCREW	
	13	1	**225-5959**	2	CLIP	
	14	1	**225-5960**	1	BOLT (M8X1.25X60-MM)	
	15	1	**225-5961**	2	WASHER (26.7X34.32X0.38-MM THK)	
	16	1	**225-5962**	3	BOLT (M8X1.25X30-MM)	

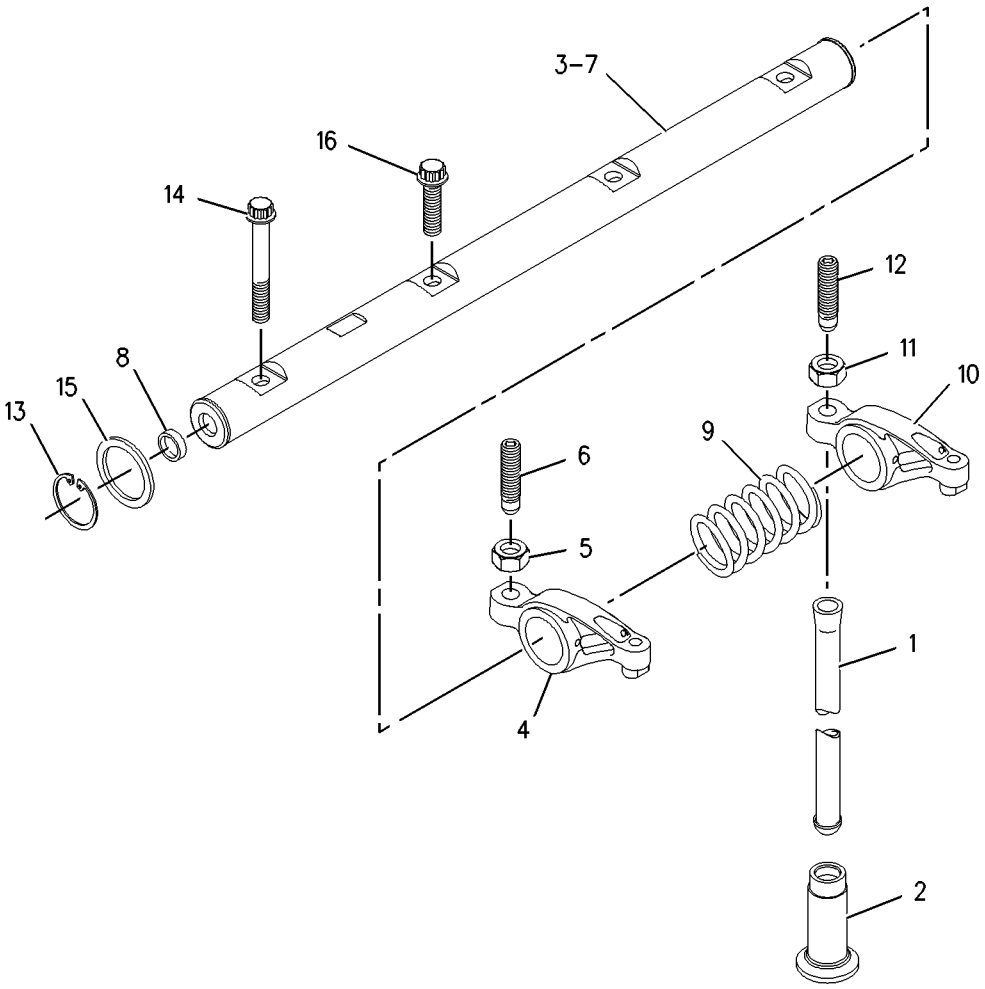

GRAPHIC #1 **<END>** g00910253

BASIC ENGINE

308-4732 VALVE MECHANISM GP

S/N: CRS1-UP

PART OF 297-4047 ENGINE AR-PRIMARY

AN ATTACHMENT

SMCS-1102, 1121, 1123 **i02719186**

NOTE	REF NO	GRAPHIC REF	PART NUMBER	QTY	PART NAME 1 2 3 4 5 6 (PRODUCT LEVEL)	SEE PAGE
	1	1	**067-6095**	8	ROD	
	2	1	**138-2053**	8	TAPPET	
Y	3	1	**225-5963**	1	ROCKER ARM GP	59
	4	1	**225-5967**	1	CAMSHAFT	

Y-SEPARATE ILLUSTRATION

308-4732 **VALVE MECHANISM GP** ***(contd.)*** **i02719186**

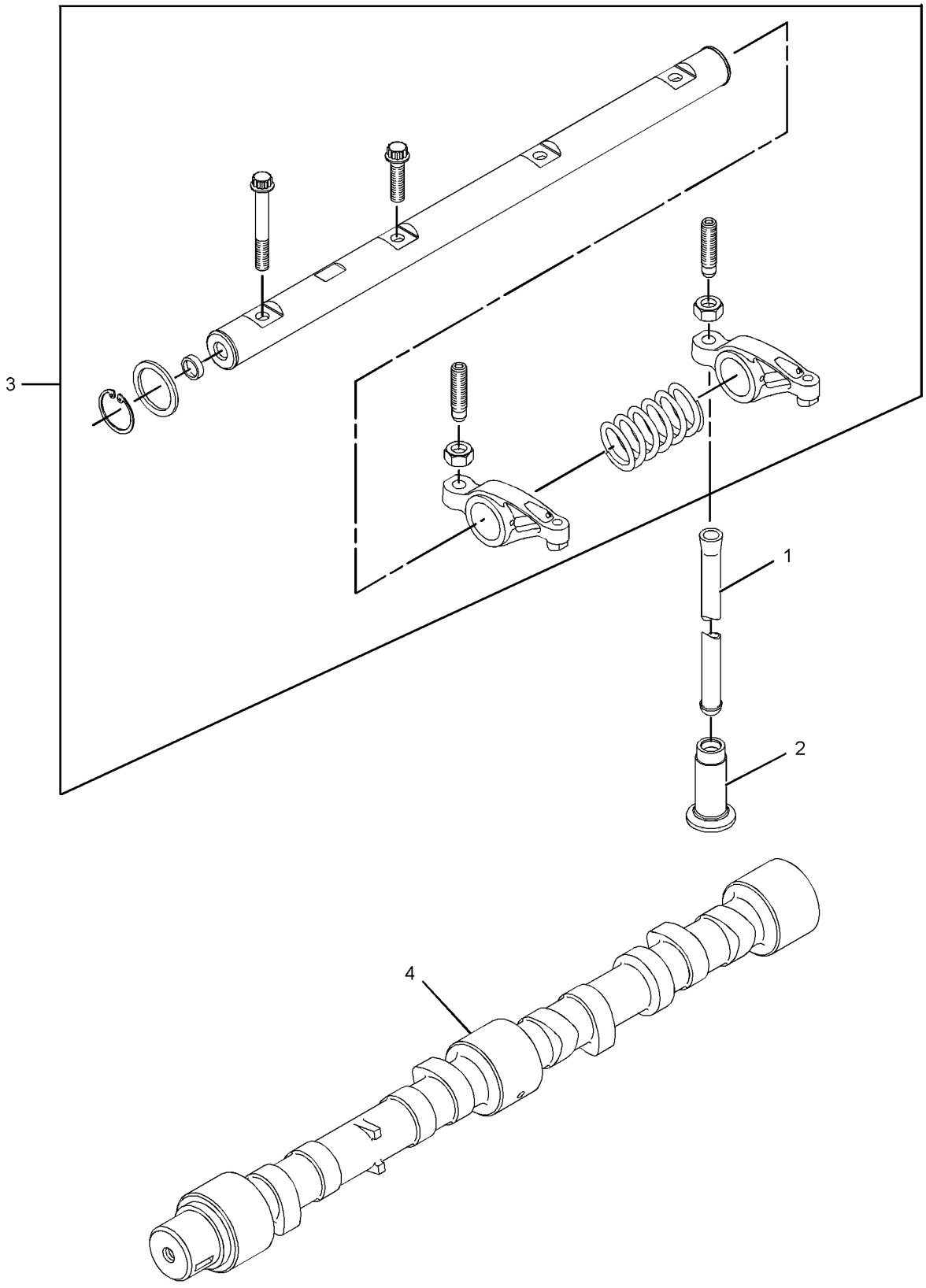

GRAPHIC #1 **<END>** g01368563

LUBRICATION SYSTEM

232-7378 FILTER GP-ENGINE OIL

S/N: CRS1-UP
PART OF 177-9752, 297-4047 ENGINE AR-PRIMARY
ALSO AN ATTACHMENT

SMCS-1306, 1308 **i02089626**

NOTE	REF NO	GRAPHIC REF	PART NUMBER	QTY	PART NAME 1 2 3 4 5 6 (PRODUCT LEVEL)	SEE PAGE
	1	1	**7W-2326**	1	FILTER AS-ENGINE OIL	

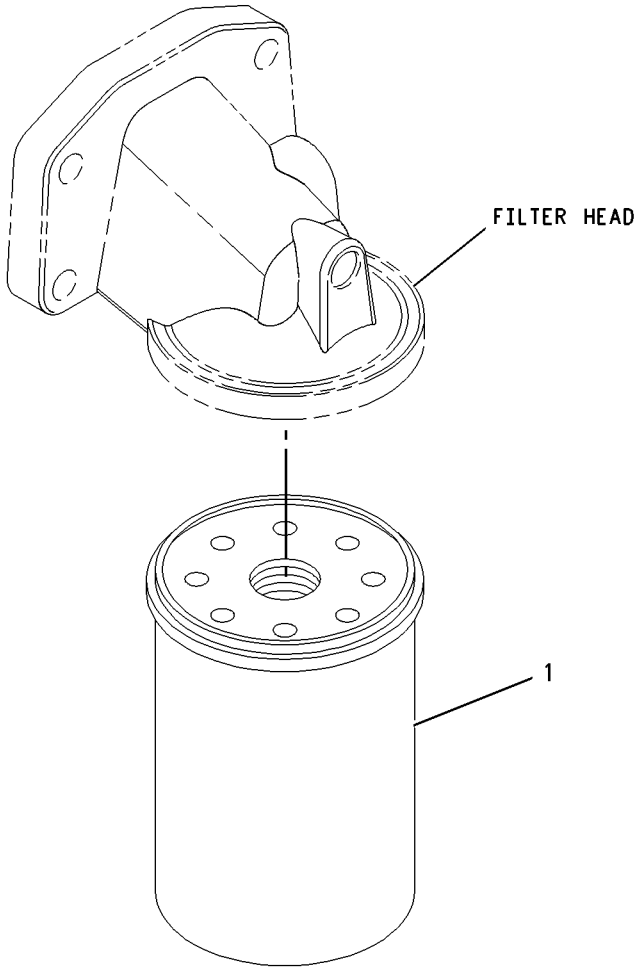

GRAPHIC #1 **<END>** g00950898

230-7578 PUMP GP-ENGINE OIL

S/N: CRS1-UP

PART OF 177-9752 ENGINE AR-PRIMARY

SMCS-1304, 1315 **i02052081**

NOTE	REF NO	GRAPHIC REF	PART NUMBER	QTY	PART NAME 1 2 3 4 5 6 (PRODUCT LEVEL)	SEE PAGE
M	1	1	**100-4461**	5	BOLT (M10X1.50X50-MM)	
	2	1	**225-8329**	1	PUMP AS-ENGINE OIL	

M-METRIC PART

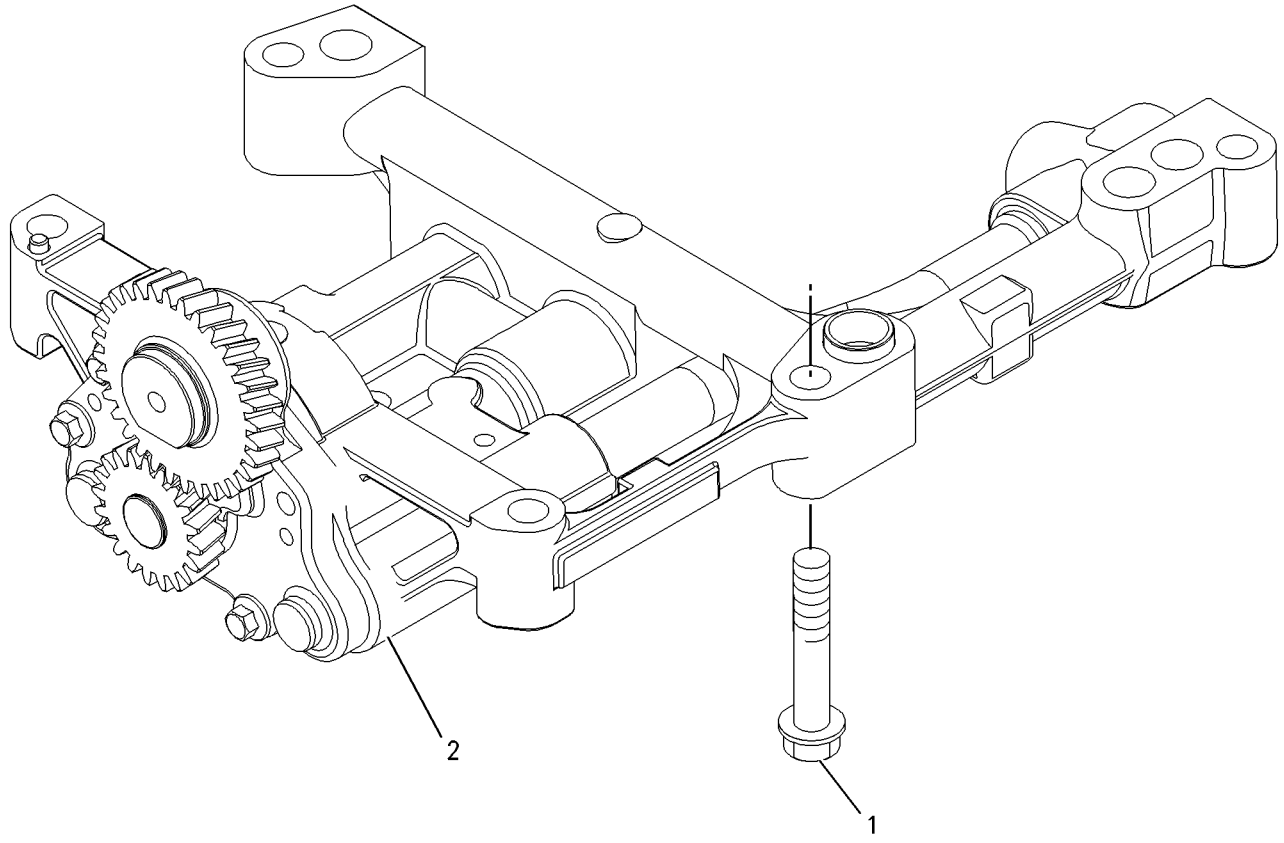

GRAPHIC #1 **<END>** g00911993

COOLING SYSTEM

231-0038 CONNECTION GP-WATER

S/N: CRS1-2714

PART OF 177-9752 ENGINE AR-PRIMARY

SMCS-1380 **i02135721**

NOTE	REF NO	GRAPHIC REF	PART NUMBER	QTY	PART NAME 1 2 3 4 5 6 (PRODUCT LEVEL)	SEE PAGE
M	1	1	**6I-0260**	1	BOLT (M8X1.25X25-MM)	
M	2	1	**100-3751**	1	BOLT (M8X1.25X65-MM)	
	3	1	**225-6907**	1	CONNECTION AS (WATER TEMPERATURE REGULATOR)	
	4	1	**225-6908**	1	REGULATOR-WATER TEMPERATURE	
	5	1	**252-1821**	1	SEAL-O-RING (WATER TEMPERATURE REGULATOR)	

M-METRIC PART

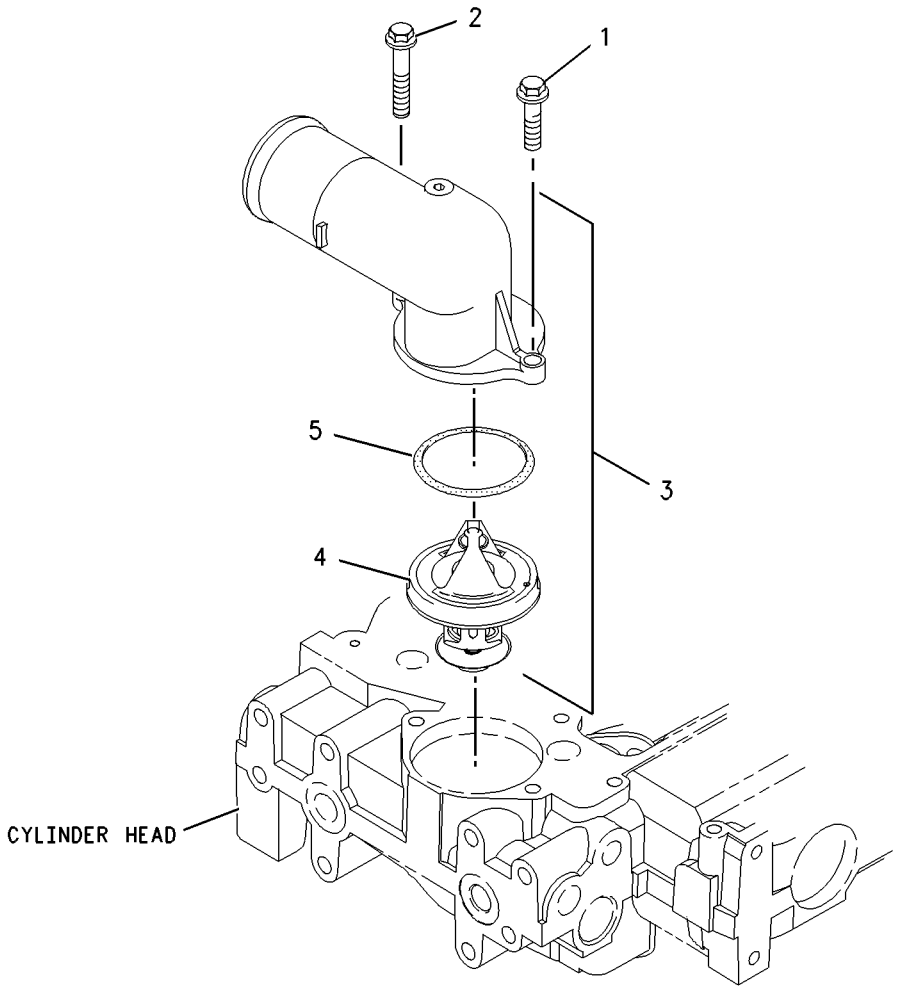

GRAPHIC #1 **<END>** g00956620

231-0038 CONNECTION GP-WATER

S/N: CRS2715-UP

PART OF 177-9752, 297-4047 ENGINE AR-PRIMARY

ALSO AN ATTACHMENT

SMCS-1380 **i02309391**

NOTE	REF NO	GRAPHIC REF	PART NUMBER	QTY	PART NAME 1 2 3 4 5 6 (PRODUCT LEVEL)	SEE PAGE
M	1	1	**6I-0260**	1	BOLT (M8X1.25X25-MM)	
M	2	1	**100-3751**	1	BOLT (M8X1.25X65-MM)	
	3	1	**254-2269**	1	CONNECTION GP-WATER (TEMPERATURE REGULATOR)	
	4	1	**254-2270**	1	SEAL-O-RING	

M-METRIC PART

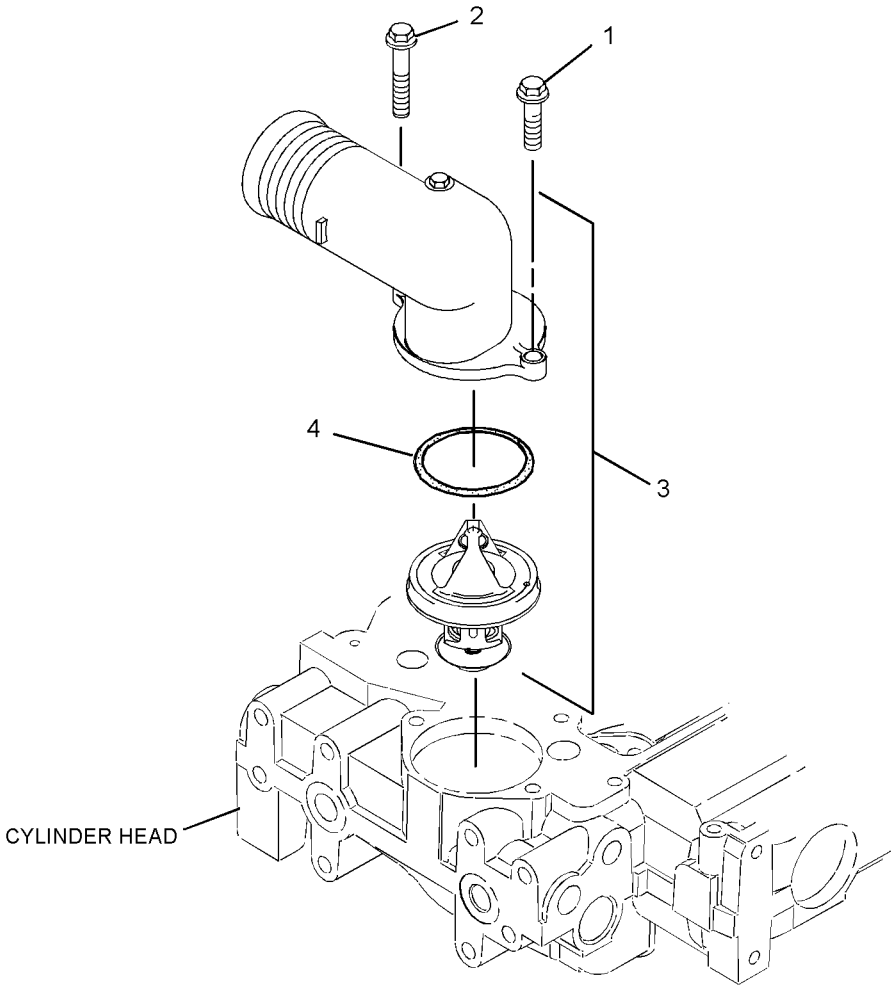

GRAPHIC #1 **<END>** g01156772

232-3722 COOLER GP-ENGINE OIL

S/N: CRS365-UP

PART OF 238-2799 COOLER GP-FLTR BASE & ENG OIL

ALSO AN ATTACHMENT

SMCS-1378 **i02534916**

NOTE	REF NO	GRAPHIC REF	PART NUMBER	QTY	PART NAME 1 2 3 4 5 6 (PRODUCT LEVEL)	SEE PAGE
M	1	1	**6I-0260**	10	BOLT (M8X1.25X25-MM)	
	2	1	**6I-4374**	3	BOLT (M8X1.25X60-MM)	
M	3	1	**101-3895**	4	BOLT (M8X1.25X35-MM)	
	4	1	**225-6817**	1	COOLER-OIL (ENGINE)	
	5	1	**225-6818**	2	SEAL	
	6	1	**272-2265**	1	SEAL	

M-METRIC PART

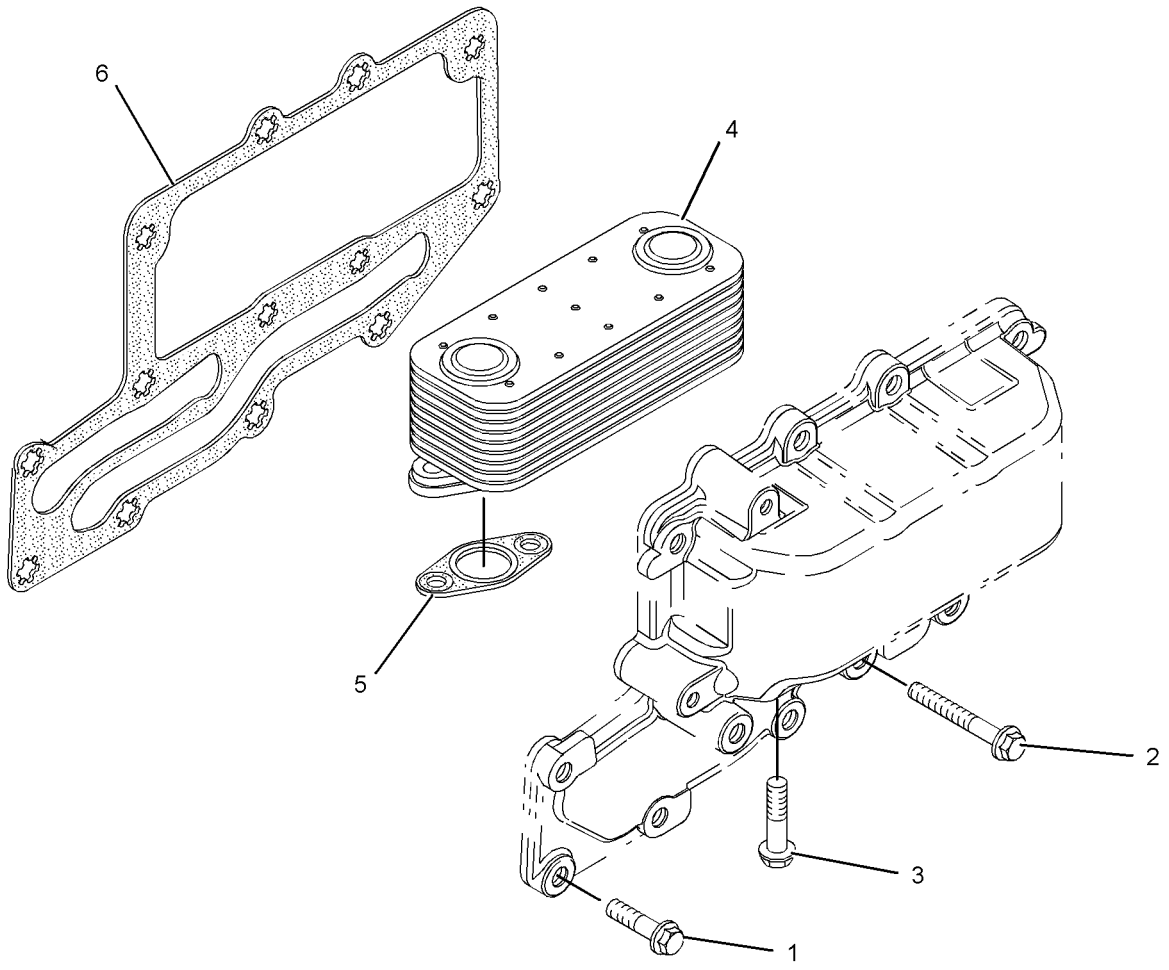

GRAPHIC #1 **<END>** g01111678

232-6177 COOLER GP-FLTR BASE & ENG OIL

S/N: CRS1-364

PART OF 177-9752 ENGINE AR-PRIMARY

SMCS-1306, 1378 **i02053603**

NOTE	REF NO	GRAPHIC REF	PART NUMBER	QTY	PART NAME 1 2 3 4 5 6 (PRODUCT LEVEL)	SEE PAGE
	1	1	**6I-0572**	4	BOLT (M8X1.25X20-MM)	
M	2	1	**6I-0645**	4	BOLT (M8X1.25X25-MM)	
	3	1	**199-9267**	1	SEAL-O-RING	
	4	1	**225-7941**	1	PLUG (ENGINE OIL FILTER LINES)	
	5	1	**225-7944**	2	GASKET	
	6	1	**230-8279**	1	HEAD AS-OIL FILTER	
	6A	1	**118-9145**	1	CONNECTOR	
	7	1	**232-3722**	1	COOLER GP-ENGINE OIL	
M	7A	1	**6I-0260**	10	BOLT (M8X1.25X25-MM)	
	7B	1	**6I-4374**	3	BOLT (M8X1.25X60-MM)	
M	7C	1	**101-3895**	4	BOLT (M8X1.25X35-MM)	
	7D	1	**225-6817**	1	COOLER-OIL	
	7E	1	**225-6818**	2	SEAL	
	7F	1	**225-6820**	1	GASKET	
	8	1	**232-3751**	1	PLATE	
	9	1	**232-3861**	1	PLUG (BLANKING)	
	10	1	**8T-7876**	1	SEAL-O-RING	

M-METRIC PART

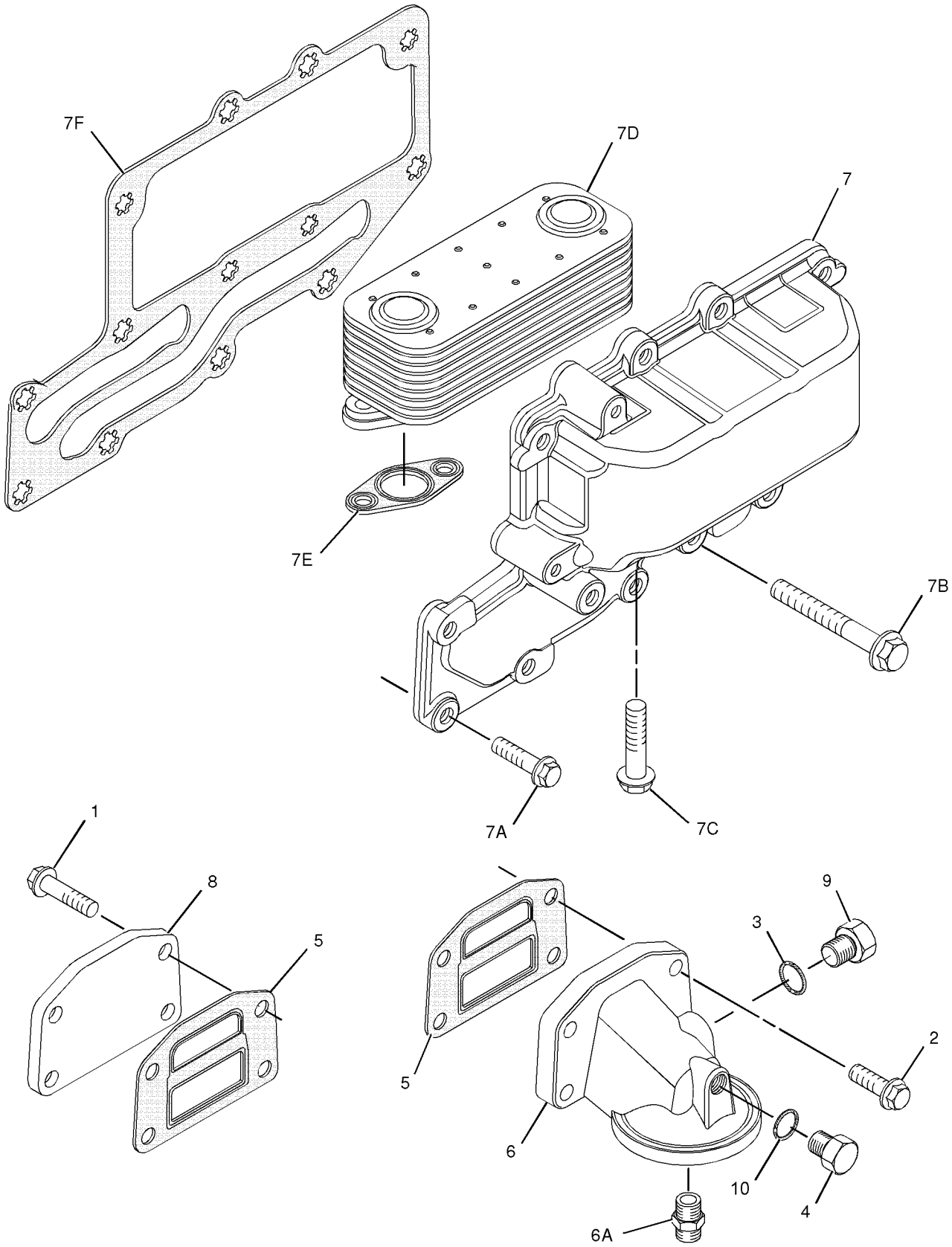

GRAPHIC #1 **<END>** g01042316

238-2799 COOLER GP-FLTR BASE & ENG OIL

S/N: CRS365-UP
PART OF 177-9752, 297-4047 ENGINE AR-PRIMARY
ALSO AN ATTACHMENT

SMCS-1306, 1378 **i02574321**

NOTE	REF NO	GRAPHIC REF	PART NUMBER	QTY	PART NAME 1 2 3 4 5 6 (PRODUCT LEVEL)	SEE PAGE
	1	1	**6I-0572**	4	BOLT (M8X1.25X20-MM)	
M	2	1	**6I-0645**	4	BOLT (M8X1.25X25-MM)	
	3	1	**8T-7876**	1	SEAL-O-RING	
	4	1	**225-7941**	1	PLUG	
	5	1	**225-7944**	2	GASKET	
	6	1	**249-0974**	1	HEAD AS-OIL FILTER	
Y	7	1	**232-3722**	1	COOLER GP-ENGINE OIL	70
	8	1	**232-3751**	1	PLATE	

M-METRIC PART
Y-SEPARATE ILLUSTRATION

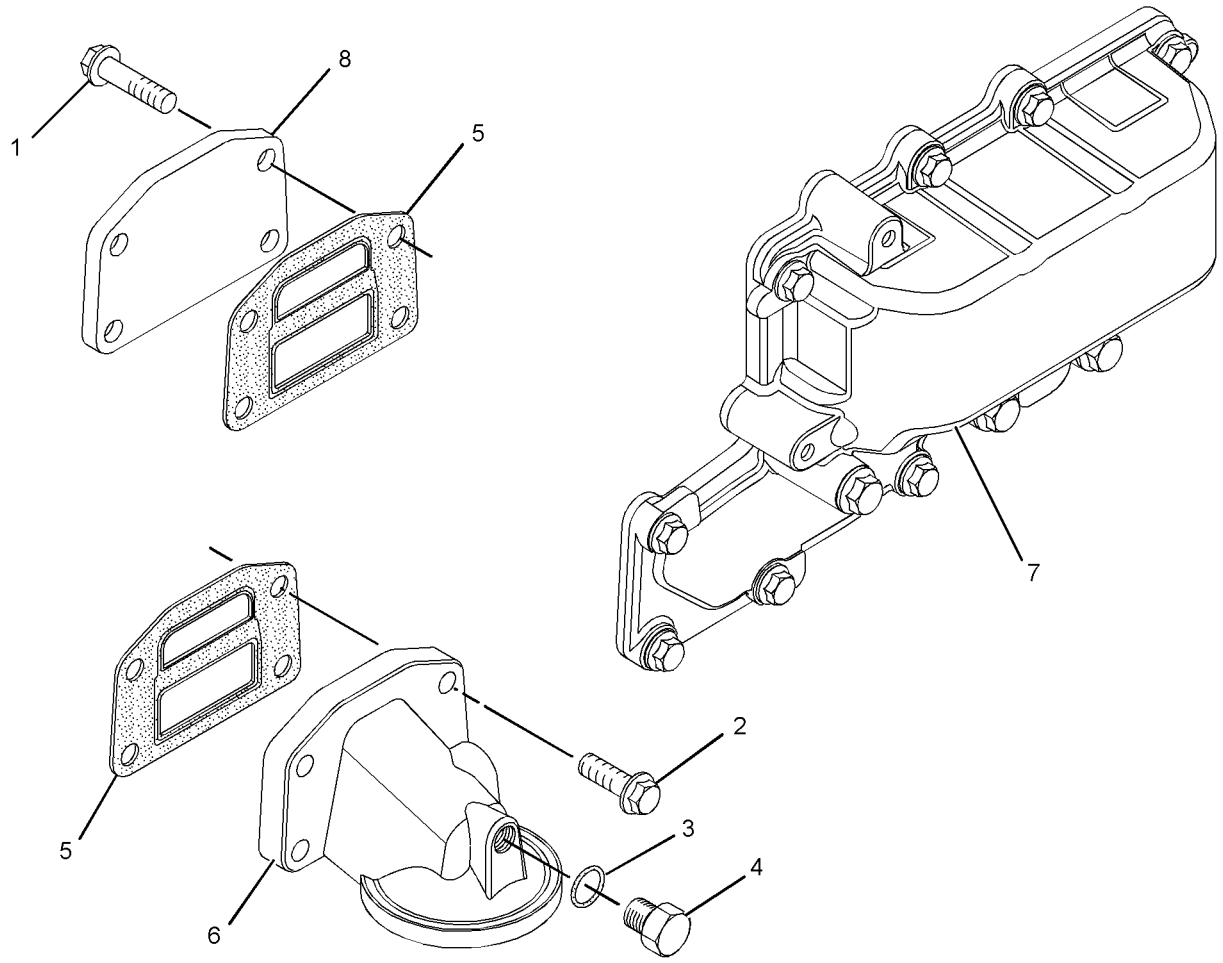

GRAPHIC #1 **<END>** g01289551

COOLING SYSTEM

153-4982 FAN GP-SUCTION

S/N: BZE1-UP; BZG1-UP
PART OF 249-9323 OPERATOR AR
AN ATTACHMENT
TYPE 1

SMCS-1356 **i02242537**

NOTE	REF NO	GRAPHIC REF	PART NUMBER	QTY	PART NAME 1 2 3 4 5 6 (PRODUCT LEVEL)	SEE PAGE
	1	1	**5P-4116**	4	WASHER-HARD (8.8X20.5X2-MM THK)	
	2	1	**259-0513**	2	GUARD AS-FAN	
	3	1	**130-3881**	1	PULLEY-FAN	
	4	1	**142-3388**	1	SPACER-FAN	
	5	1	**142-3391**	1	SPIDER AS (9-BLADE)	
M	6	1	**153-3061**	4	BOLT (M8X1.25X130-MM)	
	7	1	**8T-4224**	6	WASHER-HARD (8.8X16X2-MM THK)	
M	8	1	**8T-4908**	6	BOLT (M8X1.25X25-MM)	

M-METRIC PART

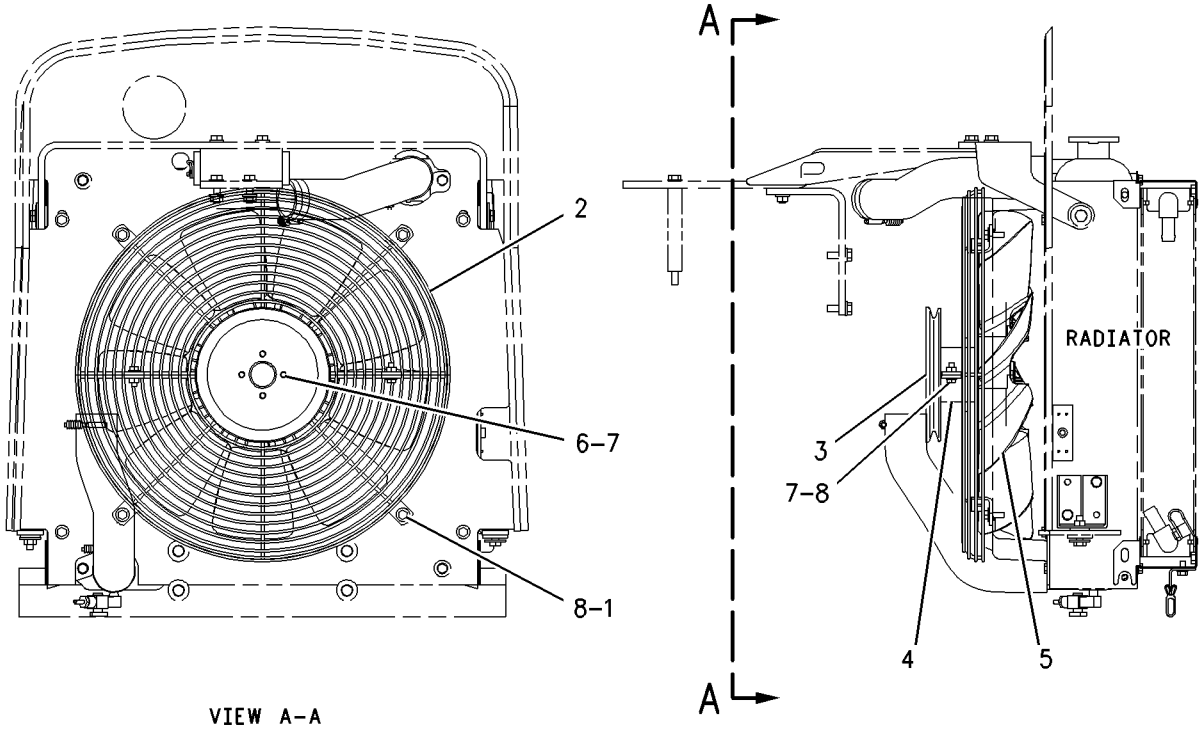

VIEW A-A

GRAPHIC #1 **<END>** g00897351

153-4982 FAN GP-SUCTION

S/N: BZE1-UP; BZG1-UP
PART OF 249-9323 OPERATOR AR
AN ATTACHMENT
TYPE 2

SMCS-1356 **i02617281**

NOTE	REF NO	GRAPHIC REF	PART NUMBER	QTY	PART NAME 1 2 3 4 5 6 (PRODUCT LEVEL)	SEE PAGE
	1	1	**5P-4116**	4	WASHER-HARD (8.8X20.5X2-MM THK)	
C	2	1	**274-7855**	2	GUARD AS-FAN	
					(EACH INCLUDES)	
M		1	**8T-3612**	1	NUT-WELD (M8X1.25-THD)	
	3	1	**130-3881**	1	PULLEY-FAN	
	4	1	**142-3388**	1	SPACER-FAN	
	5	1	**142-3391**	1	SPIDER AS (9-BLADE)	
M	6	1	**153-3061**	4	BOLT (M8X1.25X130-MM)	
	7	1	**8T-4224**	6	WASHER-HARD (8.8X16X2-MM THK)	
M	8	1	**8T-4908**	6	BOLT (M8X1.25X25-MM)	

C-CHANGE FROM PREVIOUS TYPE
M-METRIC PART

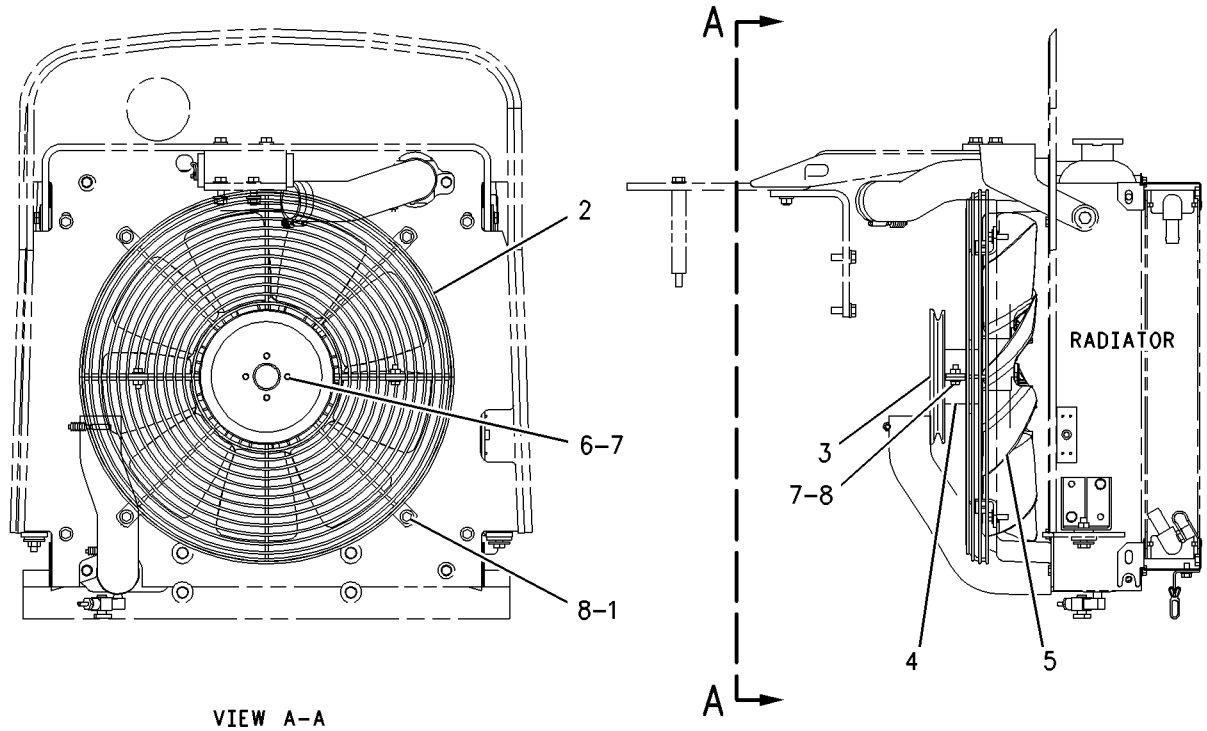

VIEW A-A

GRAPHIC #1 **<END>** g00897351

153-5030 FAN GP-SUCTION

S/N: BZE1-499; BZG1-299
PART OF 236-1517, 236-1518, 236-6627, 249-9324 OPERATOR AR
ALSO AN ATTACHMENT

SMCS-1356 **i02242534**

NOTE	REF NO	GRAPHIC REF	PART NUMBER	QTY	PART NAME 1 2 3 4 5 6 (PRODUCT LEVEL)	SEE PAGE
	1	1	**5P-4116**	4	WASHER-HARD (8.8X20.5X2-MM THK)	
	2	1	**259-0513**	2	GUARD AS-FAN	
	3	1	**142-3388**	1	SPACER-FAN	
	4	1	**142-3391**	1	SPIDER AS (9-BLADE)	
M	5	1	**153-3061**	4	BOLT (M8X1.25X130-MM)	
	6	1	**8T-4224**	6	WASHER-HARD (8.8X16X2-MM THK)	
M	7	1	**8T-4908**	6	BOLT (M8X1.25X25-MM)	

M-METRIC PART

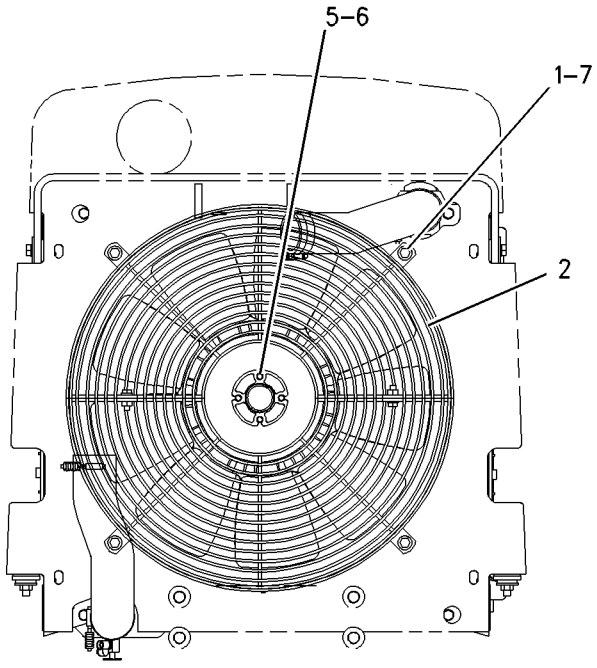

VIEW A-A

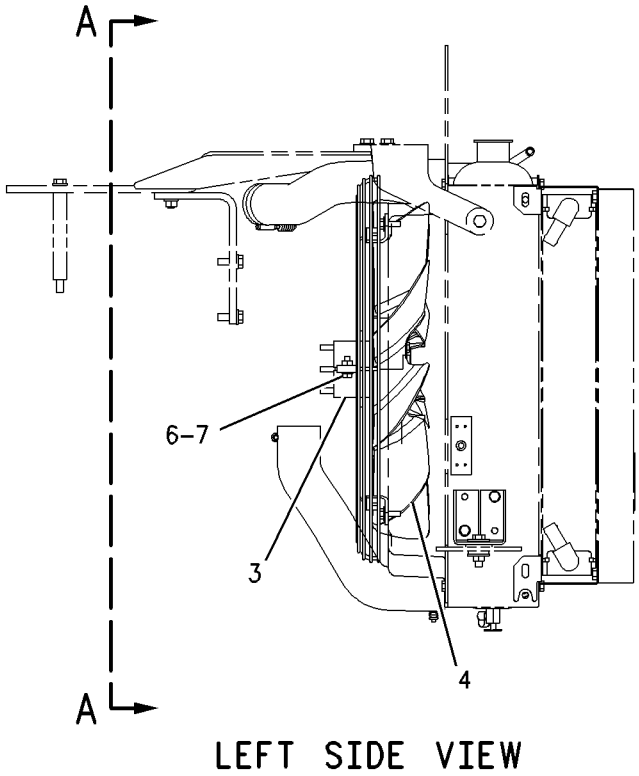

LEFT SIDE VIEW

GRAPHIC #1 **<END>** g00893362

153-5030 FAN GP-SUCTION

S/N: BZE500-UP; BZG300-UP
PART OF 236-1517, 236-1518, 236-6627, 249-9324 OPERATOR AR
ALSO AN ATTACHMENT

SMCS-1356 **i02654700**

NOTE	REF NO	GRAPHIC REF	PART NUMBER	QTY	PART NAME 1 2 3 4 5 6 (PRODUCT LEVEL)	SEE PAGE
	1	1	**5P-4116**	4	WASHER-HARD (8.8X20.5X2-MM THK)	
C	2	1	**274-7855**	2	GUARD AS-FAN	
	3	1	**142-3388**	1	SPACER-FAN	
	4	1	**142-3391**	1	SPIDER AS (9-BLADE)	
M	5	1	**153-3061**	4	BOLT (M8X1.25X130-MM)	
	6	1	**8T-4224**	6	WASHER-HARD (8.8X16X2-MM THK)	
M	7	1	**8T-4908**	6	BOLT (M8X1.25X25-MM)	

C-CHANGE FROM PREVIOUS TYPE
M-METRIC PART

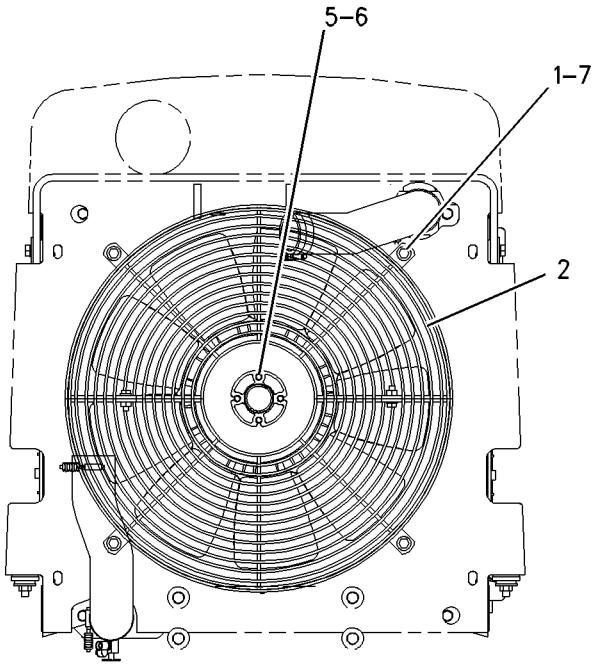

VIEW A-A

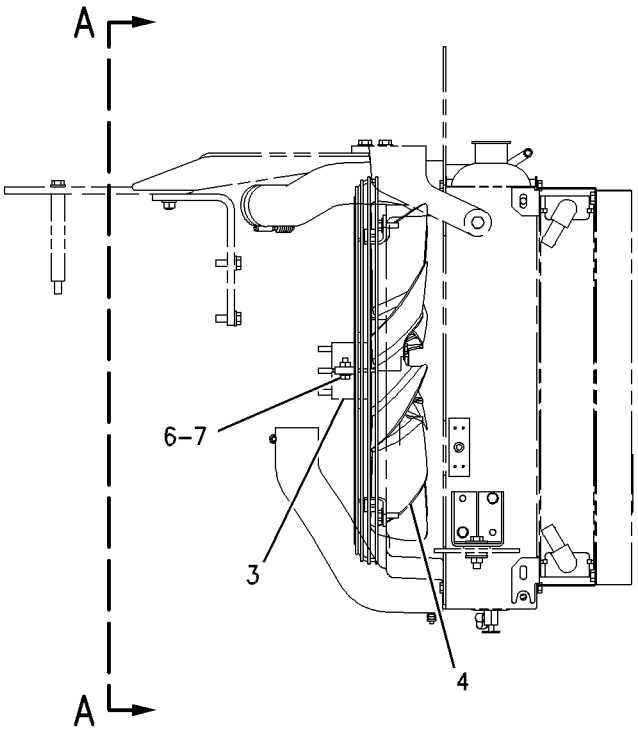

LEFT SIDE VIEW

GRAPHIC #1 **<END>** g00893362

COOLING SYSTEM

230-7355 PUMP GP-WATER

S/N: CRS1-UP

PART OF 177-9752, 297-4047 ENGINE AR-PRIMARY

ALSO AN ATTACHMENT

SMCS-1361 **i02900673**

NOTE	REF NO	GRAPHIC REF	PART NUMBER	QTY	PART NAME 1 2 3 4 5 6 (PRODUCT LEVEL)	SEE PAGE
M	1	1	**6I-0217**	2	BOLT (M8X1.25X20-MM)	
M	2	1	**6I-0254**	2	BOLT (M8X1.25X30-MM)	
M	3	1	**100-3751**	5	BOLT (M8X1.25X65-MM)	
	4	1	**113-8129**	2	BOLT (M8X75-MM)	
	5	1	**225-7741**	1	CONNECTION AS	
	5A	1	**225-7738**	1	SEAL-O-RING	
	5B	1	**225-7739**	1	SEAL-O-RING	
	6	1	**225-8016**	1	PUMP GP-WATER	
J	6A	1	**225-8019**	1	GASKET (PUMP HOUSING)	
					AVAILABLE REPAIR KIT(S):	
J			**247-0144**	1	KIT-WATER PUMP	
					(INCLUDES IMPELLER, BEARINGS, SEALS, CIRCLIPS, & GASKETS)	

J-KIT MARKED J INCLUDES PARTS MARKED J
M-METRIC PART

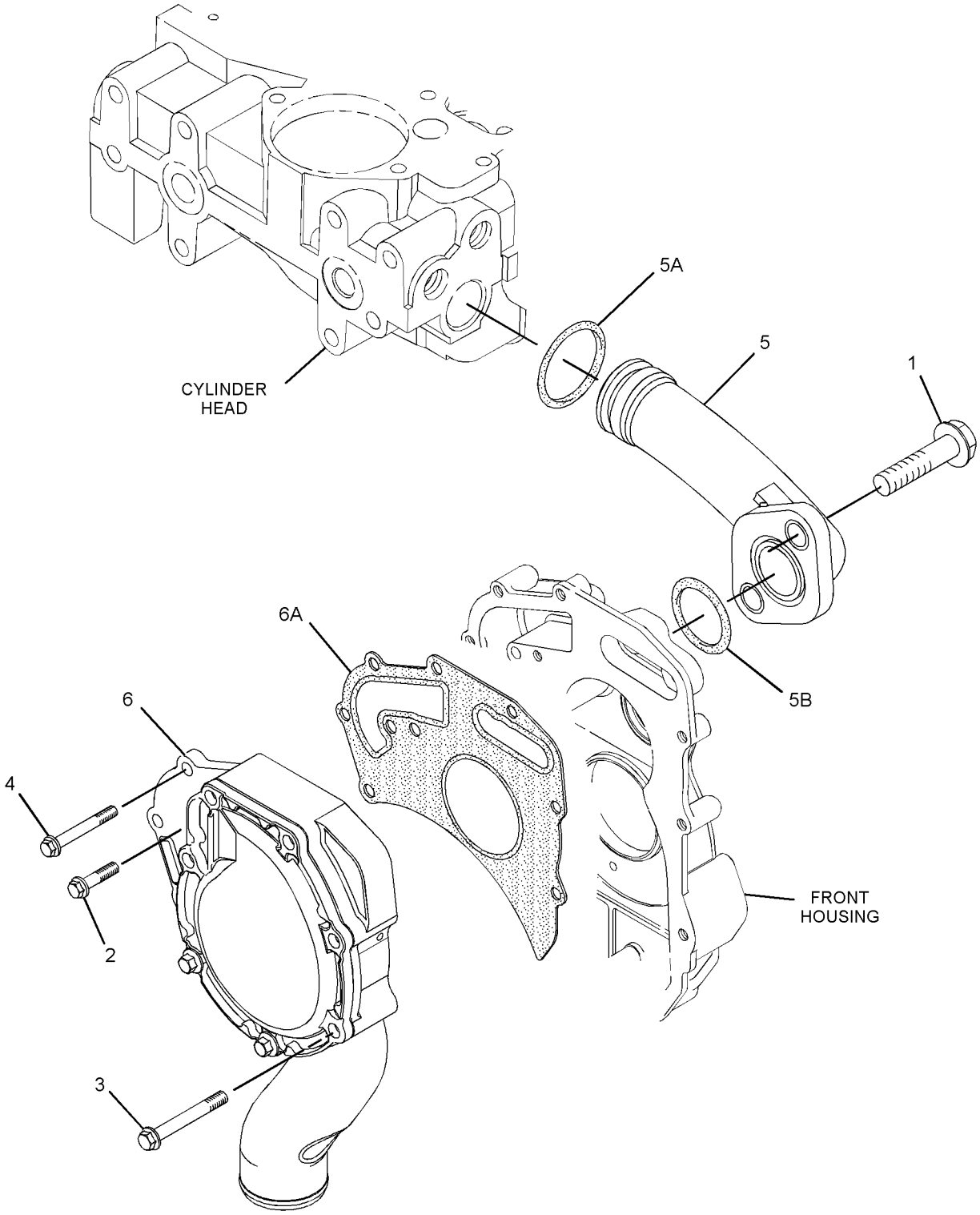

GRAPHIC #1 **<END>** g01445159

COOLING SYSTEM

217-8225 RADIATOR & HYD OIL COOLER GP

S/N: BZE1-UP; BZG1-UP

PART OF 219-4162 INSTALLATION AR-ENGINE

SMCS-1351, 1353, 1374 **i02724442**

NOTE	REF NO	GRAPHIC REF	PART NUMBER	QTY	PART NAME 1 2 3 4 5 6 (PRODUCT LEVEL)	SEE PAGE
	1	1	**1P-4278**	1	CLAMP-HOSE	
	2	1	**5R-5927**	2	WASHER (14X65X6-MM THK)	
	3	1	**7X-7655**	1	VALVE-DRAIN (RADIATOR)	
	4	1	**7X-7739**	2	WASHER (9.7X25.4 X4-MM THK)	
	5	1	**8E-9571**	1	WASHER-HARD (8.8X16X7-MM THK)	
	6	1	**8T-6703**	4	CLAMP-HOSE	
	7	1	**069-3686**	1	CONNECTOR	
	8	1	**112-4159**	2	MOUNTING AS	
	9	1	**122-8427**	2	SPACER (9X14X3.5-MM THK)	
	10	1	**301-9825**	2	MOUNT	
	11	1	**183-6121**	2	WASHER (10.31X38.1X4.78-MM THK)	
	12	1	**203-4231**	2	BRACKET AS	
					(EACH INCLUDES)	
M		1	**8T-3490**	2	NUT-WELD (M10X1.5-THD)	
	13	1	**216-7956**	1	HOSE-RADIATOR (UPPER)	
	14	1	**217-2733**	1	HOSE-RADIATOR (LOWER)	
	15	1	**219-0617**	1	BAR	
	16	1	*220-3813*	1	SHROUD GP	
		1	**5P-4115**	5	WASHER-HARD (7.2X19X2-MM THK)	
		1	**162-2480**	5	RIVET	
		1	**220-3259**	1	SHROUD AS	
		1	**239-0649**	1	SEAL	
	17	1	**222-6445**	1	TETHER AS (RADIATOR, HYD OIL COOLING)	
		1	**5P-7958**	2	SLEEVE-CABLE SPLICE	
	18	1	**224-2264**	1	BRACE AS	
		1	**178-8505**	2	PLATE AS	
	19	1	**229-1538**	1	BRACKET	
	20	1	**229-1567**	1	BRACKET	
	21	1	**229-1641**	1	WASHER (9X35X5-MM THK)	
Y	22	1	**229-2588**	1	RADIATOR & HYD OIL COOLER GP	82
	23	1	**2N-1931**	1	ELBOW-PIPE	
	24	1	**5P-4116**	7	WASHER-HARD (8.8X20.5X2-MM THK)	
	25	1	**8T-4121**	8	WASHER-HARD (11X21X2.5-MM THK)	
M	26	1	**8T-4133**	2	NUT (M10X1.5-THD)	
M	27	1	**8T-4137**	2	BOLT (M10X1.5X20-MM)	
M	28	1	**8T-4182**	2	BOLT (M10X1.5X45-MM)	
M	29	1	**8T-4189**	2	BOLT (M8X1.25X20-MM)	
M	30	1	**8T-4196**	4	BOLT (M10X1.5X35-MM)	
M	31	1	**8T-4200**	9	BOLT (M8X1.25X16-MM)	
	32	1	**8T-4223**	2	WASHER-HARD (13.5X25.5X3-MM THK)	
	33	1	**8T-4224**	2	WASHER-HARD (8.8X16X2-MM THK)	
M	34	1	**8T-6868**	2	BOLT (M12X1.75X80-MM)	
M	35	1	**8T-7547**	1	BOLT (M8X1.25X30-MM)	
E	36	1	**5P-1420**		HOSE (50-CM)	
E	37	1	**201-1601**		SEAL (231-CM)	

E-ORDER BY THE CENTIMETER
M-METRIC PART
Y-SEPARATE ILLUSTRATION

217-8225 **RADIATOR & HYD OIL COOLER GP** *(contd.)* **i02724442**

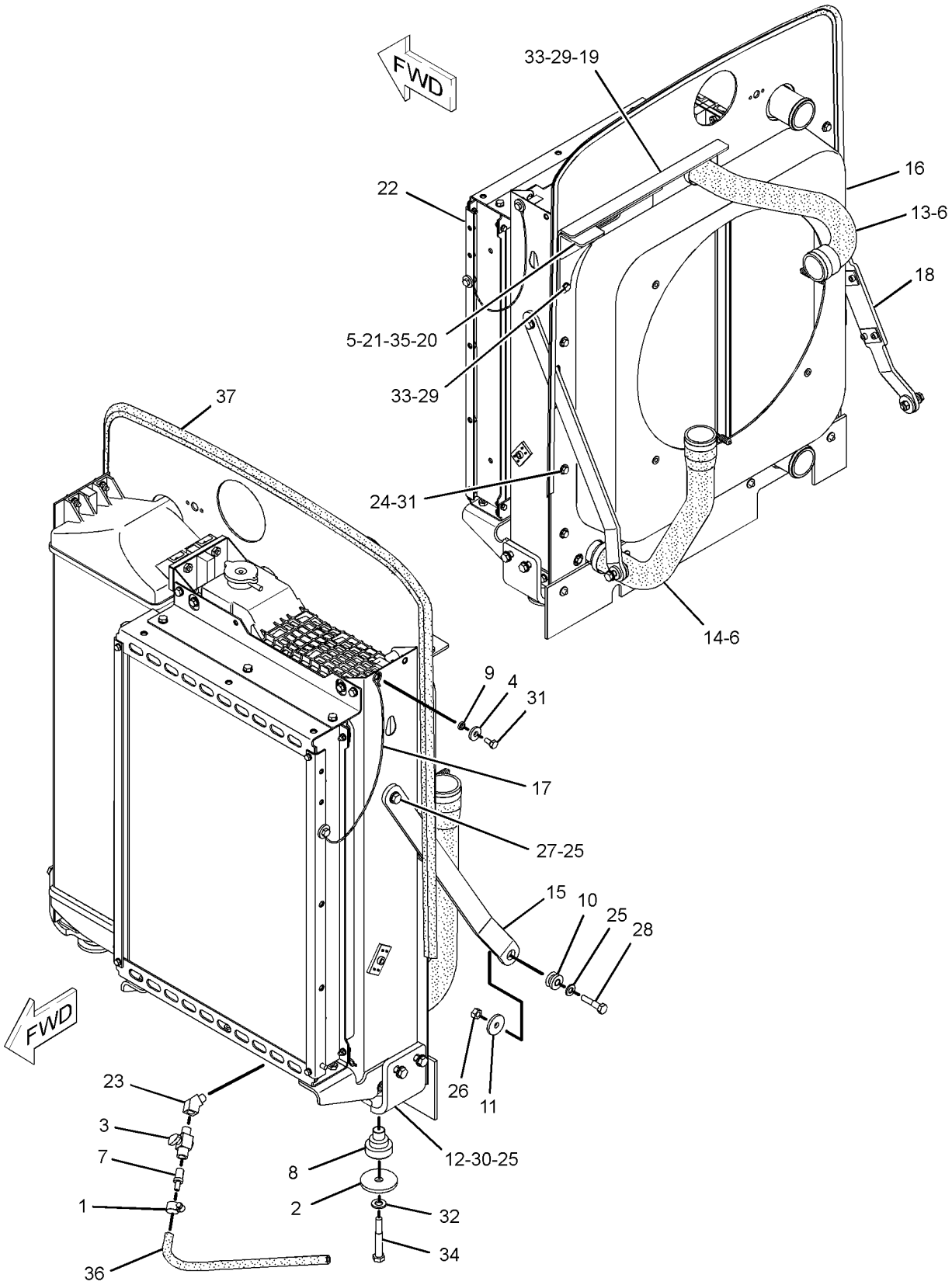

GRAPHIC #1 **<END>** g01275743

COOLING SYSTEM

229-2588 RADIATOR & HYD OIL COOLER GP

S/N: BZE1-UP; BZG1-UP

PART OF 217-8225 RADIATOR & HYD OIL COOLER GP

SMCS-1351, 1353, 1374 **i02373750**

NOTE	REF NO	GRAPHIC REF	PART NUMBER	QTY	PART NAME 1 2 3 4 5 6 (PRODUCT LEVEL)	SEE PAGE
	2	1	**211-6574**	1	CAP AS-RADIATOR	
	3	1	**217-4111**	1	AFTERCOOLER AS	
	4	1	**217-4112**	1	COOLER GP-HYDRAULIC OIL	
M	4A	1	**6V-7743**	8	LOCKNUT (M6X1-THD)	
M	4B	1	**8T-4138**	8	BOLT (M6X1X20-MM)	
	4C	1	**9X-8256**	16	WASHER (6.6X12X2-MM THK)	
	4D	1	**221-0103**	1	CHANNEL AS	
	4E	1	**221-0104**	1	CHANNEL AS	
	5	1	**217-4113**	1	RADIATOR GP	
BD	5A	1	**5P-5687**		SEAL	
	5B	1	**102-8704**	1	PLATE AS	
BD	6	1	**5P-5687**		SEAL	
	9	1	**218-5014**	3	SPACER (8.2X18X7-MM THK)	
	12	1	**5P-4116**	1	WASHER-HARD (8.8X20.5X2-MM THK)	
M	13	1	**6V-9189**	4	LOCKNUT (M8X1.25-THD)	
M	14	1	**8T-4189**	6	BOLT (M8X1.25X20-MM)	
M	15	1	**8T-4200**	3	BOLT (M8X1.25X16-MM)	
	16	1	**8T-4224**	22	WASHER-HARD (8.8X16X2-MM THK)	
M	17	1	**8T-4908**	6	BOLT (M8X1.25X25-MM)	
M	18	1	**8T-7547**	4	BOLT (M8X1.25X30-MM)	

B-USE AS REQUIRED
D-ORDER BY THE METER
M-METRIC PART

229-2588 RADIATOR & HYD OIL COOLER GP *(contd.)* i02373750

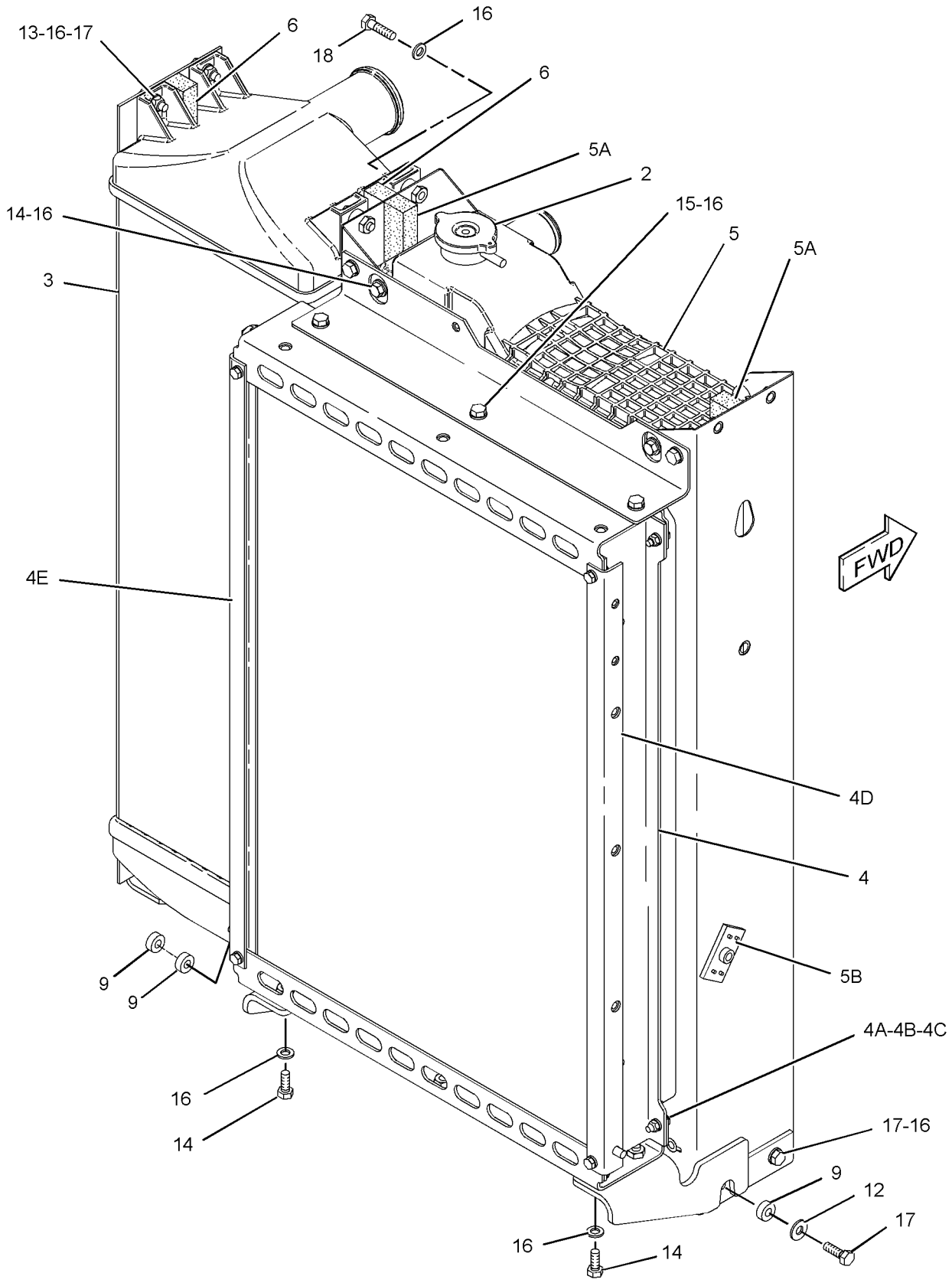

GRAPHIC #1 **<END>** g01173548

201-7671 RECOVERY GP-COOLANT

S/N: BZE1-UP; BZG1-UP

PART OF 219-4162 INSTALLATION AR-ENGINE

SMCS-1354 **i02088208**

NOTE	REF NO	GRAPHIC REF	PART NUMBER	QTY	PART NAME 1 2 3 4 5 6 (PRODUCT LEVEL)	SEE PAGE
	1	1	**1P-4278**	2	CLAMP-HOSE	
	2	1	**178-3620**	2	STRAP-DUAL CLAMP	
	3	1	**195-4973**	1	BRACKET	
	4	1	**202-1206**	1	BRACKET AS	
	5	1	**228-5108**	1	TANK GP-COOLANT	
		1	**229-3469**	1	CAP AS-VENTED (COOLANT RECOVERY)	
M	6	1	**5C-7261**	5	NUT (M8X1.25-THD)	
	7	1	**5P-4116**	2	WASHER-HARD (8.8X20.5X2-MM THK)	
	8	1	**6D-3479**	1	CLIP	
M	9	1	**8T-4189**	1	BOLT (M8X1.25X20-MM)	
	10	1	**8T-4224**	16	WASHER-HARD (8.8X16X2-MM THK)	
M	11	1	**8T-4908**	4	BOLT (M8X1.25X25-MM)	
M	12	1	**8T-7547**	4	BOLT (M8X1.25X30-MM)	
E	13	1	**5P-1420**		HOSE (120-CM)	
M	14	1	**131-3540**	4	LOCKNUT (M8X1.25-THD)	

E-ORDER BY THE CENTIMETER
M-METRIC PART

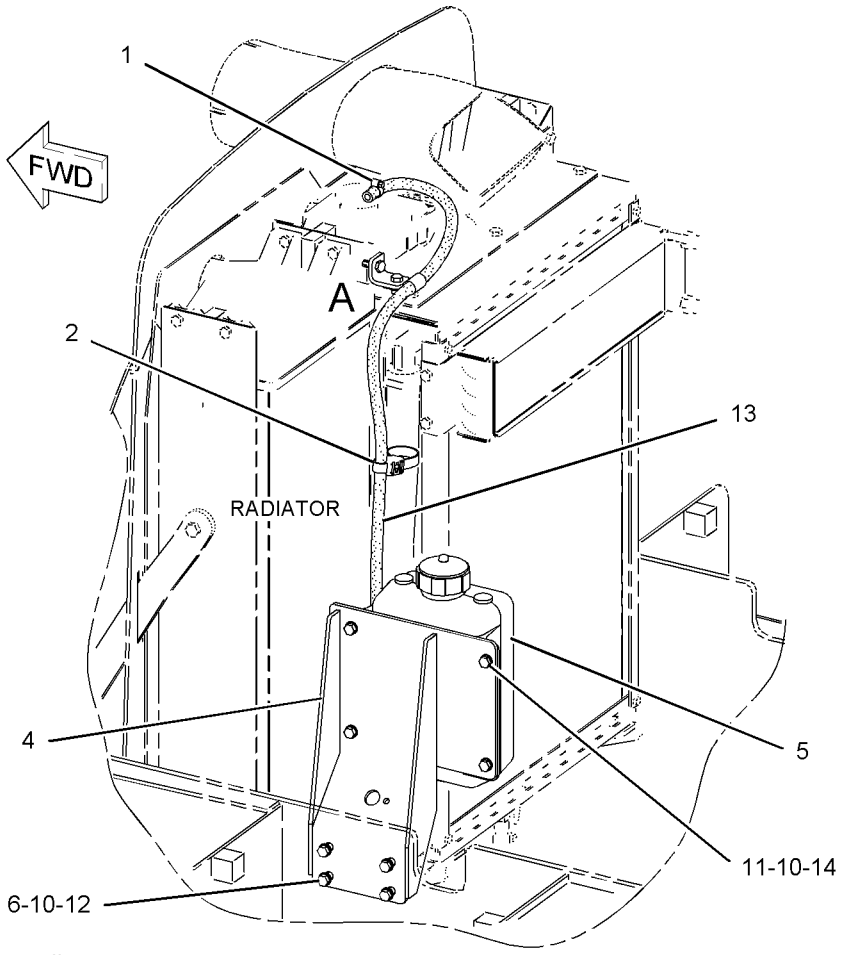

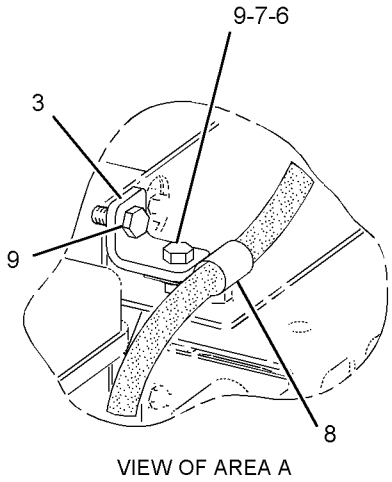

VIEW OF AREA A

GRAPHIC #1 **<END>** g01090040

AIR INLET AND EXHAUST SYSTEM

217-0747 AIR CLEANER GP

S/N: BZE1-UP; BZG1-UP

PART OF 219-4162 INSTALLATION AR-ENGINE

SMCS-1051, 1054 **i02088948**

NOTE	REF NO	GRAPHIC REF	PART NUMBER	QTY	PART NAME 1 2 3 4 5 6 (PRODUCT LEVEL)	SEE PAGE
	1	1	**1P-6886**	1	ADAPTER	
	2	1	**5P-2948**	2	FITTING AS	
					(EACH INCLUDES)	
		1	**4K-9821**	1	SLEEVE	
		1	**4K-9822**	1	NUT (5/16-24-THD)	
	3	1	**6I-2933**	1	INDICATOR GP-AIR FILTER CHANGE	
	4	1	**7W-0629**	1	ADAPTER AS-FILTER	
Y	5	1	**220-5746**	1	AIR CLEANER GP	87
	6	1	**228-4841**	1	BRACKET	
	7	1	**3B-6487**	1	COUPLING (PIPE)	
M	8	1	**5C-2890**	2	NUT (M6X1-THD)	
M	9	1	**5C-7261**	4	NUT (M8X1.25-THD)	
	10	1	**5P-4116**	8	WASHER-HARD (8.8X20.5X2-MM THK)	
M	11	1	**7X-2537**	4	BOLT (M8X1.25X35-MM)	
	12	1	**8T-4121**	4	WASHER-HARD (11X21X2.5-MM THK)	
M	13	1	**8T-4136**	4	BOLT (M10X1.5X25-MM)	
M	14	1	**8T-4138**	2	BOLT (M6X1X20-MM)	
	15	1	**8T-4205**	4	WASHER-HARD (7.2X14.5X2-MM THK)	
BD	16	1	**5P-5630**		TUBE	

B-USE AS REQUIRED
D-ORDER BY THE METER
M-METRIC PART
Y-SEPARATE ILLUSTRATION

217-0747 **AIR CLEANER GP** ***(contd.)*** **i02088948**

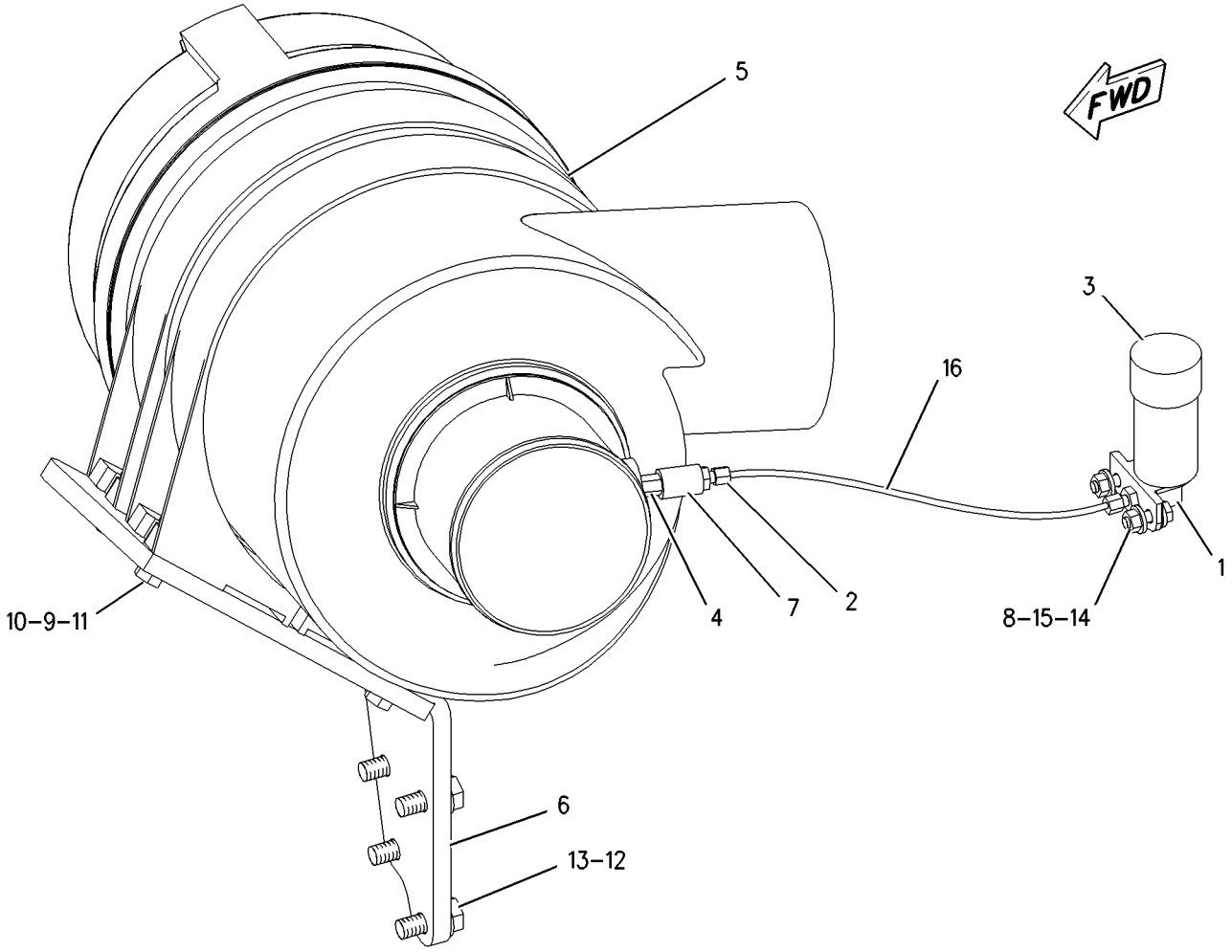

GRAPHIC #1 **<END>** g01002332

AIR INLET AND EXHAUST SYSTEM

220-5746 AIR CLEANER GP

S/N: BZE1-UP; BZG1-UP

PART OF 217-0747 AIR CLEANER GP

SMCS-1051, 1054 **i02067130**

NOTE	REF NO	GRAPHIC REF	PART NUMBER	QTY	PART NAME 1 2 3 4 5 6 (PRODUCT LEVEL)	SEE PAGE
	1	1	**206-5234**	1	FILTER ELEMENT AS-AIR (PRIMARY)	
	2	1	**206-5235**	1	FILTER ELEMENT AS-AIR (SECONDARY)	
	3	1	**131-8829**	1	VALVE-VACUATOR	
	4	1	**245-3556**	2	BRACKET	
	5	1	**206-5237**	1	COVER AS	

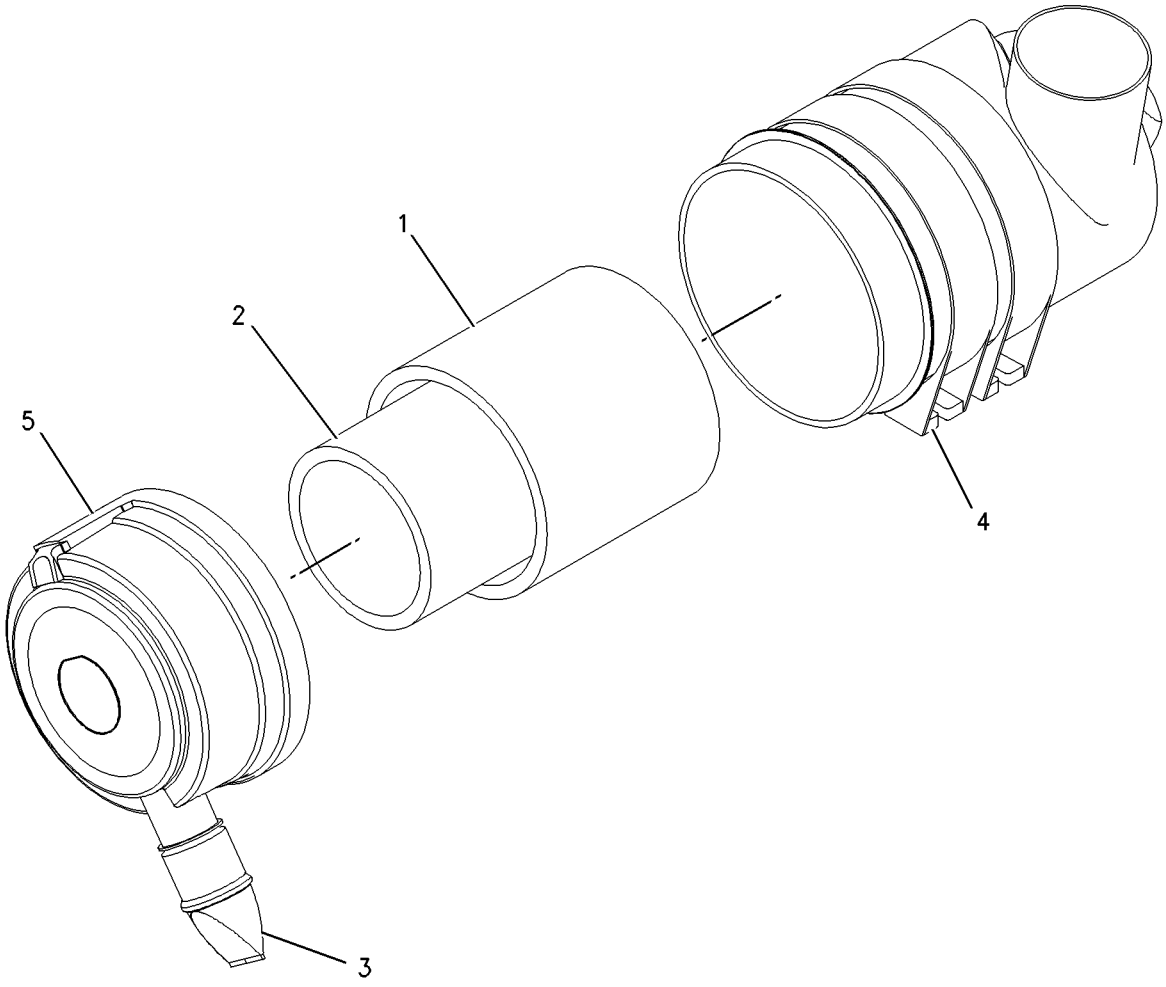

GRAPHIC #1 **<END>** g00948052

270-4374 ELBOW GP-AIR INLET

S/N: CRS1-UP

PART OF 177-9752, 297-4047 ENGINE AR-PRIMARY

ALSO AN ATTACHMENT

SMCS-1087 **i02660352**

NOTE	REF NO	GRAPHIC REF	PART NUMBER	QTY	PART NAME 1 2 3 4 5 6 (PRODUCT LEVEL)	SEE PAGE
	1	1	**6I-0572**	10	BOLT (M8X1.25X20-MM)	
	2	1	**114-2579**	3	GASKET	
	3	1	**115-1162**	3	PLATE	
	4	1	**233-7489**	2	BOLT (M8X1.25-MM)	
	5	1	**251-6241**	4	BOLT-SPECIAL	
	6	1	**256-4447**	1	ELBOW AS-AIR INLET	
	6A	1	**238-8288**	1	GASKET-INLET	

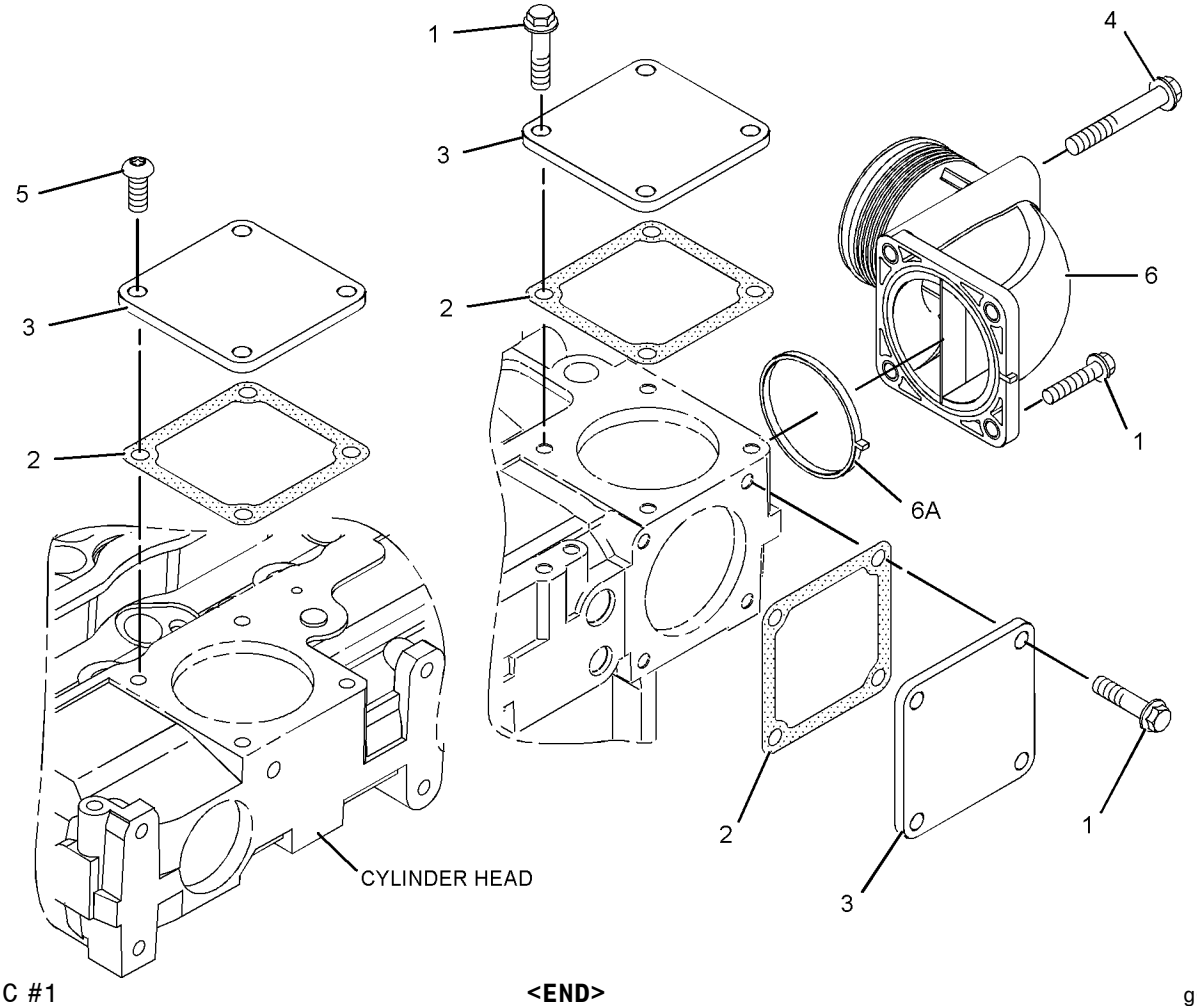

GRAPHIC #1 **<END>** g01153363

216-7940 LINES GP-AIR

S/N: BZE1-UP; BZG1-UP

PART OF 219-4162 INSTALLATION AR-ENGINE

SMCS-1071 **i03009860**

NOTE	REF NO	GRAPHIC REF	PART NUMBER	QTY	PART NAME 1 2 3 4 5 6 (PRODUCT LEVEL)	SEE PAGE
	1	1	**8T-4984**	3	CLAMP-HOSE	
	2	1	**8T-4985**	1	CLAMP-HOSE	
	3	1	**291-3957**	1	CLAMP-HOSE	
	4	1	**122-3608**	1	CLIP	
	5	1	**216-7953**	1	HOSE	
	6	1	**291-2619**	1	HOSE	
	7	1	**220-4120**	1	HOSE	
	8	1	**228-7704**	1	HOSE	
	9	1	**8T-4121**	2	WASHER-HARD (11X21X2.5-MM THK)	
M	10	1	**8T-4133**	1	NUT (M10X1.5-THD)	
M	11	1	**8T-4136**	1	BOLT (M10X1.5X25-MM)	
	12	1	**291-3961**	1	CLAMP-HOSE	
	13	1	**291-3959**	1	CLAMP-HOSE	

M-METRIC PART

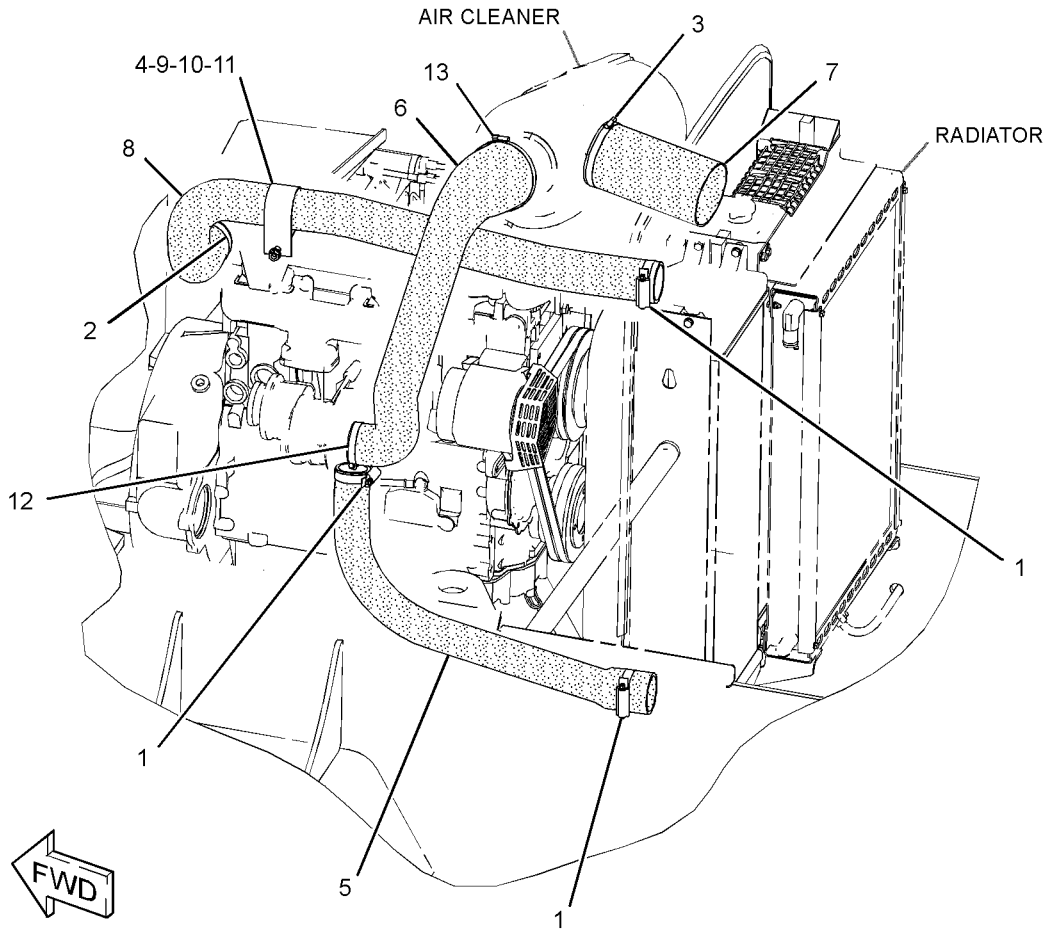

GRAPHIC #1 **<END>** g01526150

AIR INLET AND EXHAUST SYSTEM

216-8158 MUFFLER GP

S/N: BZE1-UP; BZG1-UP

PART OF 219-4162 INSTALLATION AR-ENGINE

SMCS-1062 **i02089667**

NOTE	REF NO	GRAPHIC REF	PART NUMBER	QTY	PART NAME 1 2 3 4 5 6 (PRODUCT LEVEL)	SEE PAGE
	1	1	**6I-4039**	1	GASKET	
	2	1	**216-8163**	1	TUBE AS	
	3	1	**217-2728**	1	MUFFLER	
	4	1	**231-3310**	1	BRACKET	
	5	1	**5P-4116**	1	WASHER-HARD (8.8X20.5X2-MM THK)	
	6	1	**7X-7729**	3	WASHER (11X25X3-MM THK)	
	7	1	**8M-3121**	1	CLAMP	
M	8	1	**8T-1159**	1	BOLT-SOCKET HEAD (M10X1.5X25-MM)	
	9	1	**8T-4121**	6	WASHER-HARD (11X21X2.5-MM THK)	
M	10	1	**8T-4133**	1	NUT (M10X1.5-THD)	
M	11	1	**8T-4136**	2	BOLT (M10X1.5X25-MM)	
M	12	1	**8T-4137**	1	BOLT (M10X1.5X20-MM)	
M	13	1	**8T-4186**	1	BOLT (M10X1.5X40-MM)	
M	14	1	**8T-4189**	1	BOLT (M8X1.25X20-MM)	
M	15	1	**8T-4195**	3	BOLT (M10X1.5X30-MM)	

M-METRIC PART

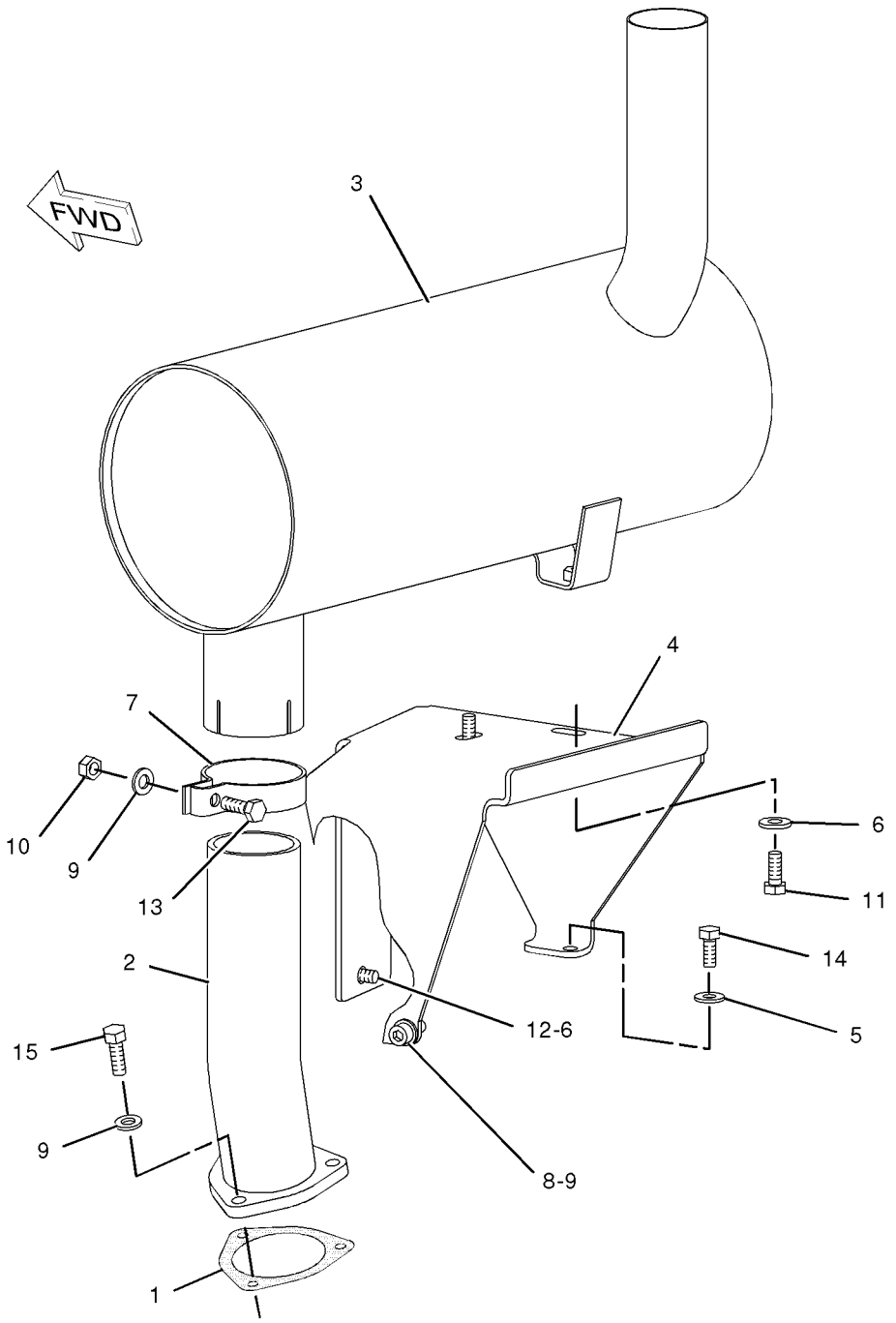

GRAPHIC #1 **<END>** g01049932

AIR INLET AND EXHAUST SYSTEM

233-9539 TURBOCHARGER GP

S/N: CRS1-UP

PART OF 177-9752, 297-4047 ENGINE AR-PRIMARY

ALSO AN ATTACHMENT

SMCS-1052, 1053 **i02640219**

NOTE	REF NO	GRAPHIC REF	PART NUMBER	QTY	PART NAME 1 2 3 4 5 6 (PRODUCT LEVEL)	SEE PAGE
M	1	1	**6I-0217**	2	BOLT (M8X1.25X20-MM)	
	2	1	**6I-0563**	7	NUT (M10X1.15-THD)	
M	3	1	**6I-0593**	2	BOLT (M10X1.5X30-MM)	
M	4	1	**6I-0654**	3	BOLT (M10X1.5X25-MM)	
	5	1	**147-5553**	7	STUD	
	6	1	**174-9638**	8	BOLT	
	7	1	**194-5390**	1	GASKET-MANIFOLD	
	8	1	**225-8533**	1	GASKET	
	9	1	**225-8534**	1	GASKET	
	10	1	**225-8536**	1	GASKET	
	11	1	**227-4562**	1	ELBOW-EXHAUST	
	12	1	**302-0581**	1	ADAPTER-EXHAUST	
	13	1	**106-8916**	2	BOLT (M6X16-MM)	
	14	1	**233-9534**	1	TURBOCHARGER GP	
	15	1	**233-9536**	1	TUBE AS	
	15A	1	**225-8524**	3	BOLT (M10X1X23-MM)	
	15B	1	**225-8526**	7	WASHER (10.4X13.75X1.37-MM THK)	
	16	1	**233-9537**	1	TUBE AS	
	17	1	**252-9614**	1	MANIFOLD-EXHAUST	
	18	1	**249-7106**	1	BRACKET-ELBOW	

M-METRIC PART

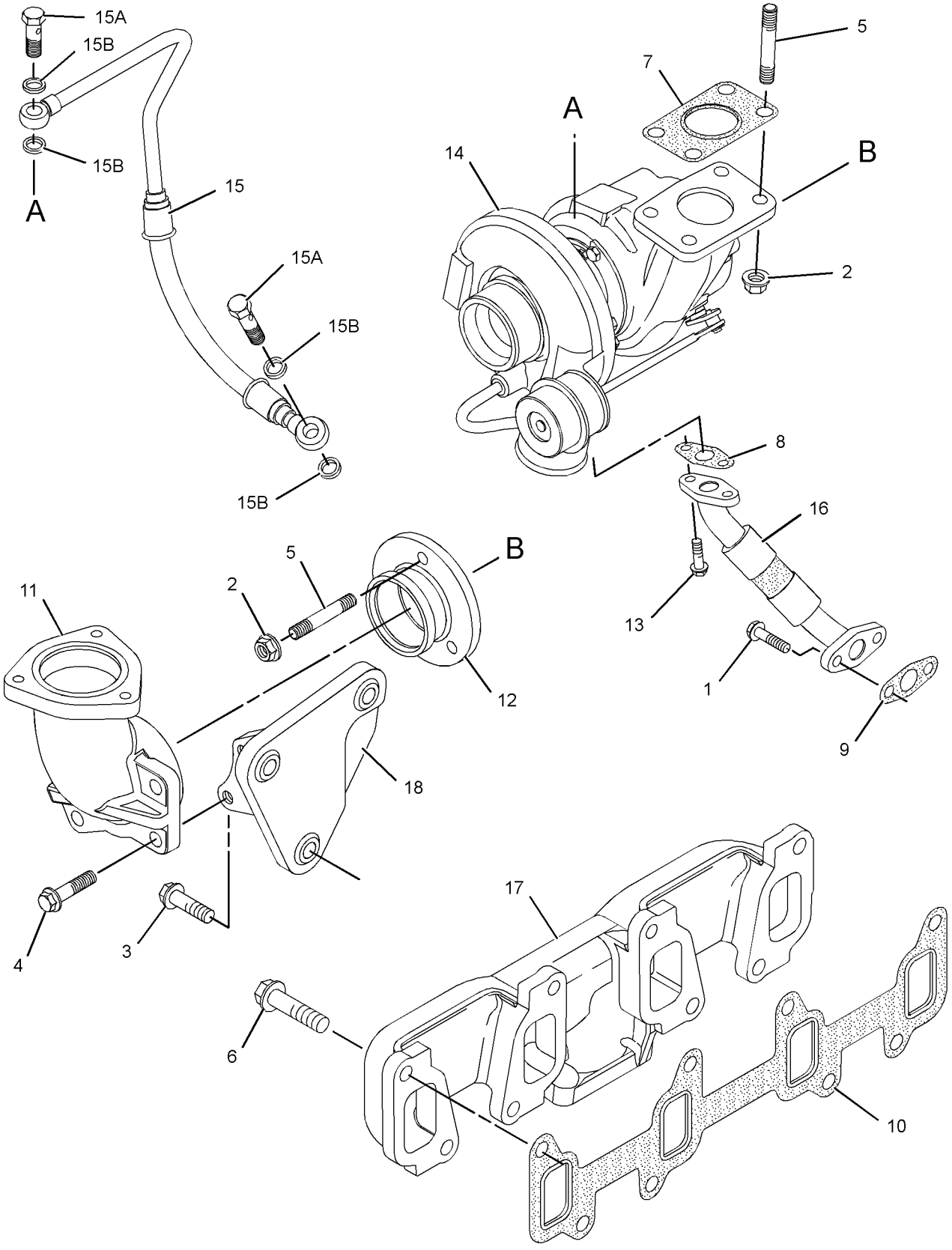

GRAPHIC #1 **<END>** g01327108

FUEL SYSTEM

164-4858 CAP GP-FUEL FILLER

S/N: BZE1-UP; BZG1-UP

PART OF 238-8563 TANK GP-FUEL

SMCS-1273 **i02056139**

NOTE	REF NO	GRAPHIC REF	PART NUMBER	QTY	PART NAME 1 2 3 4 5 6 (PRODUCT LEVEL)	SEE PAGE
	1	1	**9X-8600**	1	SEAL-O-RING	
	2	1	**190-9775**	1	COVER AS-FILTER	

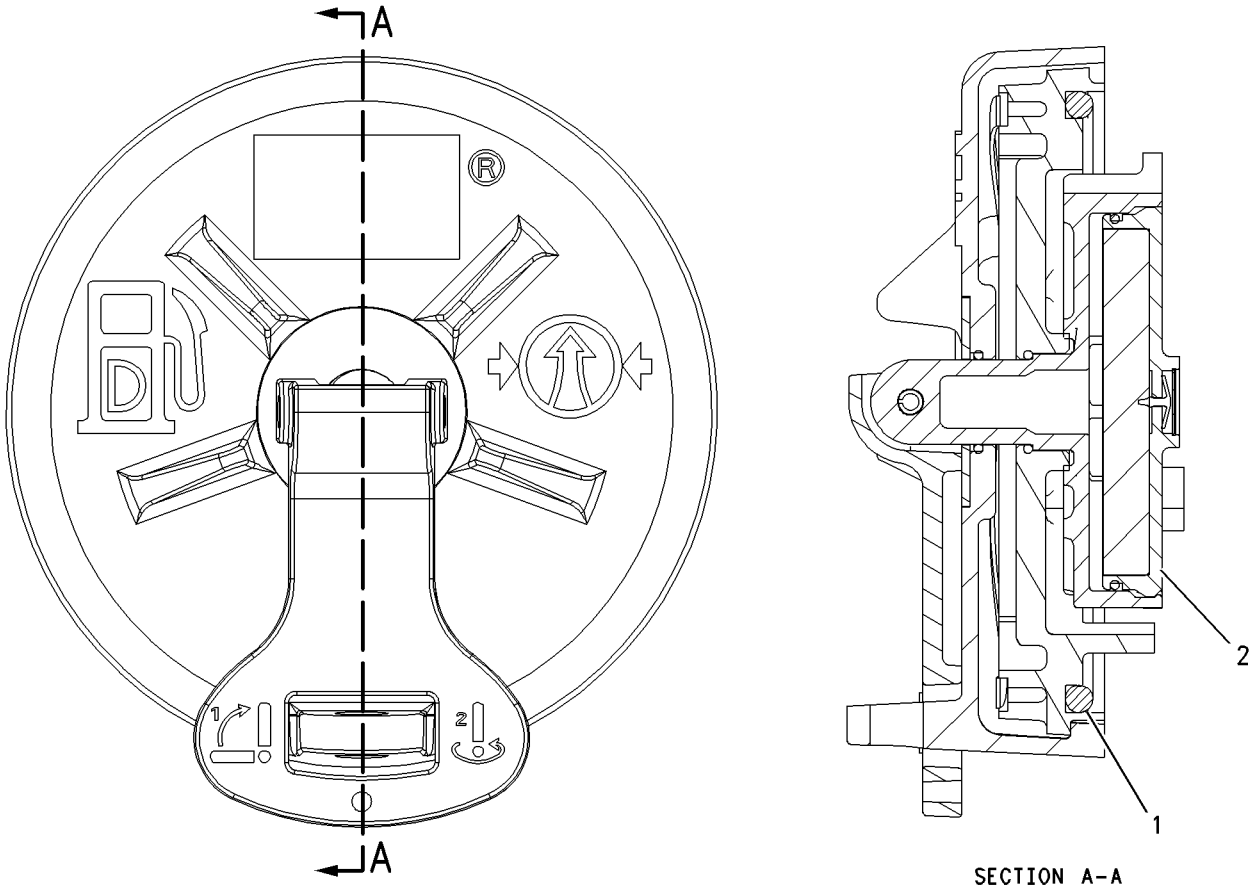

SECTION A-A

GRAPHIC #1 **<END>** g00849812

233-9832 FILTER GP-FUEL

S/N: CRS1-242

PART OF 177-9752 ENGINE AR-PRIMARY

SMCS-1261 **i02095998**

NOTE	REF NO	GRAPHIC REF	PART NUMBER	QTY	PART NAME 1 2 3 4 5 6 (PRODUCT LEVEL)	SEE PAGE
	1	1	**6I-0456**	1	BOLT (M8X1.25X45-MM)	
	2	1	**106-8916**	2	BOLT (M6X16-MM)	
	3	1	**120-6872**	3	BOLT	
	4	1	**154-8045**	2	NUT	
	5	1	**160-7197**	1	CLIP	
	6	1	**167-7418**	1	SPACER	
	7	1	**215-9508**	1	FITTING AS (QUICK DISCONNECT)	
	8	1	**215-9509**	1	FITTING AS (QUICK DISCONNECT)	
	9	1	**217-9039**	2	STRAP-CABLE	
	10	1	**226-8773**	1	REGULATOR AS-VOLTAGE (24-VOLT) (FUEL FILTER)	
	11	1	**232-3126**	1	CLIP	
	12	1	**238-8864**		PUMP GP-FUEL PRIMING	
	12A	1	**1R-1804**	1	FILTER ELEMENT AS-FUEL	
	13	1	**232-9758**	3	WASHER (6.51X17.785X1.6-MM THK)	
	14	1	**232-9759**	1	LINE AS-FUEL	
	15	1	**232-9760**	1	LINE AS-FUEL	
	16	1	**232-9762**	1	BRACKET	
	17	1	**233-9831**	1	BRACKET	

233-9832 **FILTER GP-FUEL** *(contd.)* **i02095998**

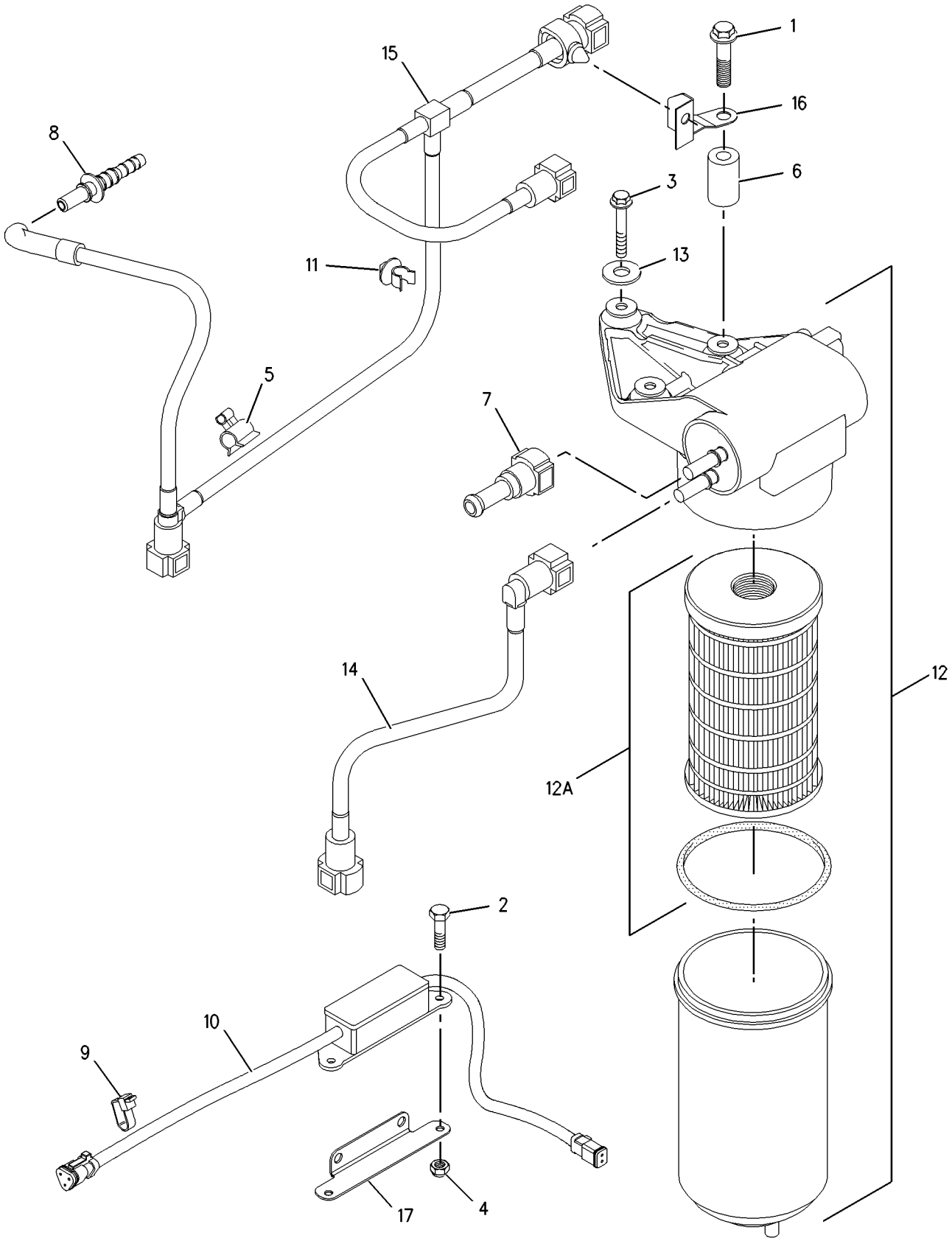

GRAPHIC #1 **<END>** g01003197

233-9832 FILTER GP-FUEL

S/N: CRS243-364

PART OF 177-9752 ENGINE AR-PRIMARY

SMCS-1261 **i02095999**

NOTE	REF NO	GRAPHIC REF	PART NUMBER	QTY	PART NAME 1 2 3 4 5 6 (PRODUCT LEVEL)	SEE PAGE
	1	1	**106-8916**	2	BOLT (M6X16-MM)	
	2	1	**120-6872**	3	BOLT	
	3	1	**154-8045**	2	NUT	
	4	1	**160-7197**	1	CLIP	
	5	1	**215-9508**	1	FITTING AS (QUICK DISCONNECT)	
	6	1	**215-9509**	1	FITTING AS (QUICK DISCONNECT)	
	7	1	**217-9039**	2	STRAP-CABLE	
	8	1	**226-8773**	1	REGULATOR AS-VOLTAGE (24-VOLT) (FUEL FILTER)	
	9	1	**232-1115**	2	CLIP-PIPE	
	10	1	**232-3126**	1	CLIP	
	11	1	**238-8864**		PUMP GP-FUEL PRIMING	
	11A	1	**1R-1804**	1	FILTER ELEMENT AS-FUEL	
	12	1	**232-9758**	3	WASHER (6.51X17.785X1.6-MM THK)	
	13	1	**232-9759**	1	LINE AS-FUEL	
	14	1	**233-9831**	1	BRACKET	
	15	1	**237-0284**	1	LINE AS-FUEL	
	16	1	**237-0285**	1	BRACKET	
	17	1	**237-0286**	1	PLUG	

233-9832 **FILTER GP-FUEL** *(contd.)* **i02095999**

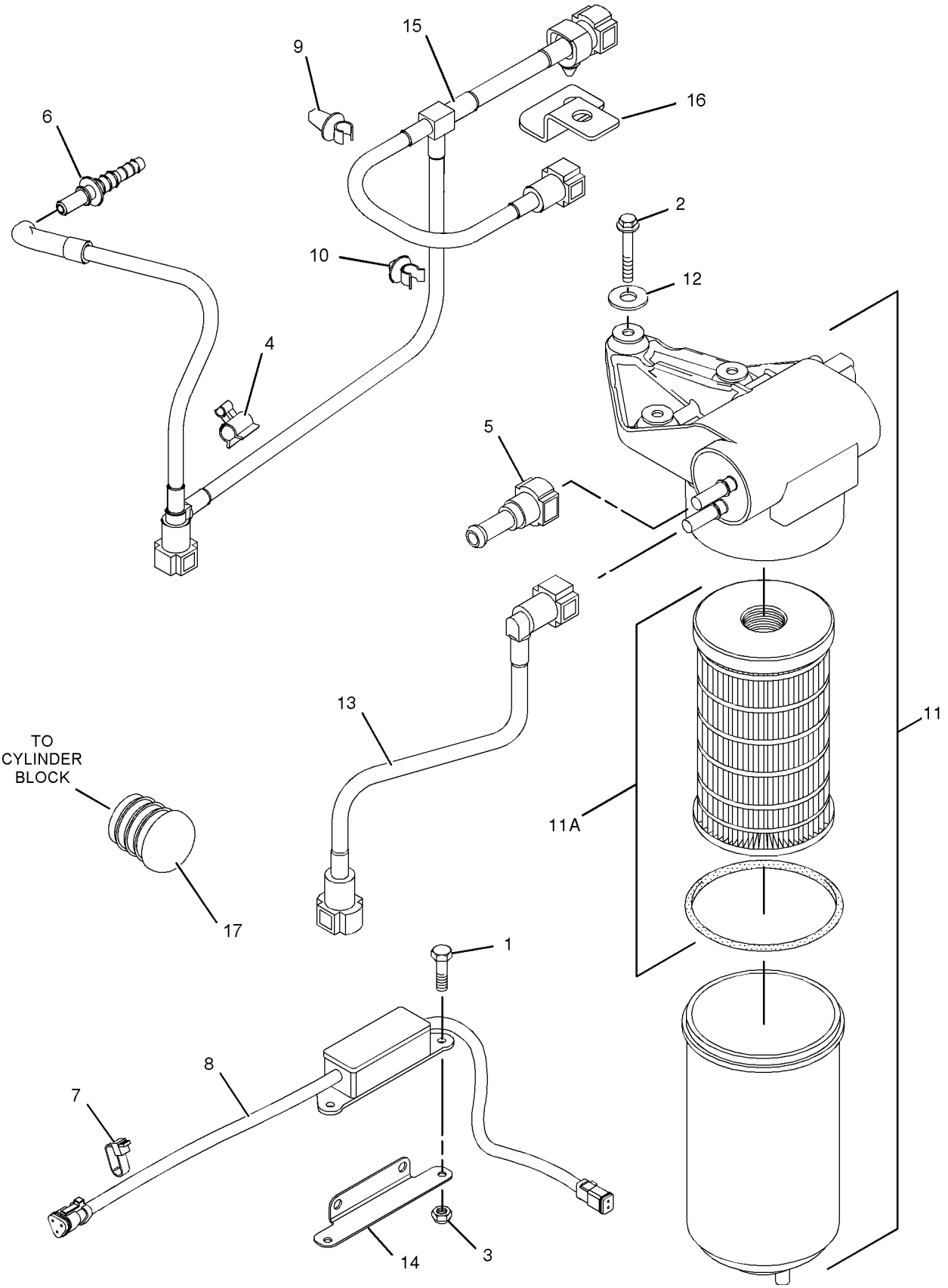

GRAPHIC #1 **<END>** g01025486

155-5234 GAUGE GP-FUEL LEVEL

S/N: BZE484-UP; BZG290-UP
PART OF 224-1149 PANEL GP-INSTRUMENT
ALSO AN ATTACHMENT

SMCS-7481 **i03015875**

NOTE	REF NO	GRAPHIC REF	PART NUMBER	QTY	PART NAME 1 2 3 4 5 6 (PRODUCT LEVEL)	SEE PAGE
	1	1	**4B-2043**	3	NUT (8-32-THD)	
	2	1	**9B-7233**	3	LOCKWASHER	
	3	1	**115-1748**	1	LAMP (24-VOLT, 3-WATT) (CLEAR)(FUEL LEVEL GAUGE)	
					—OR—	
B		1	**163-6508**	1	LAMP-LED (WHITE, 24-VOLT) (FUEL LEVEL GAUGE)	

B-USE AS REQUIRED

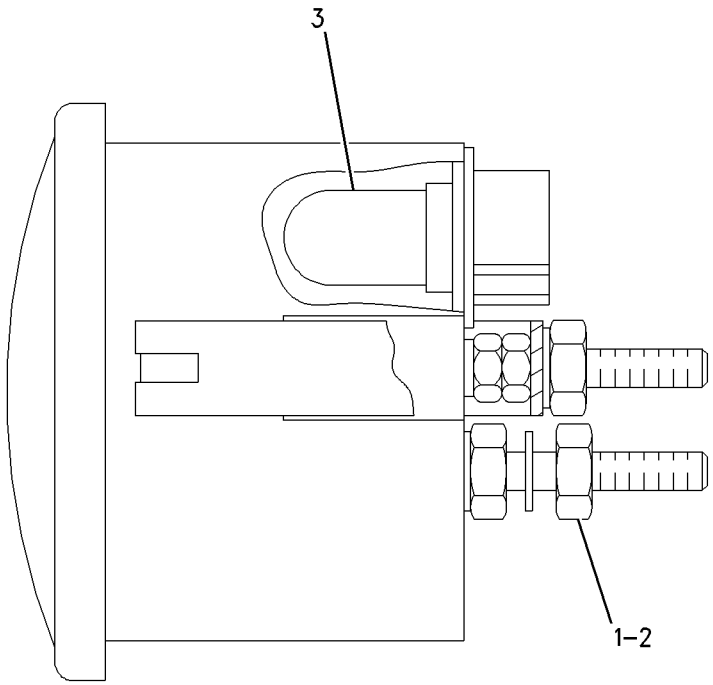

GRAPHIC #1 **<END>** g00741233

FUEL SYSTEM

227-4799 GOVERNOR GP

S/N: BZE1-UP; BZG1-UP

PART OF 219-4162 INSTALLATION AR-ENGINE

SMCS-1264, 1908 **i02869842**

NOTE	REF NO	GRAPHIC REF	PART NUMBER	QTY	PART NAME 1 2 3 4 5 6 (PRODUCT LEVEL)	SEE PAGE
	1	1	**3S-2093**	1	STRAP-CABLE	
	2	1	**6V-8187**	3	NUT (1/4-28-THD)	
	3	1	**8E-0853**	1	BALL JOINT AS	
	4	1	**9L-2685**	1	BALL JOINT AS	
	5	1	**116-0118**	2	CLIP	
	6	1	**148-1517**	1	RESISTOR AS	
		1	**5P-0623**	5	WIRE-ELECTRICAL	
		1	**8T-8729**	2	PIN-CONNECTOR (16-GA TO 18-GA)	
		1	**102-8802**	1	KIT-RECEPTACLE (2-PIN)	
					(INCLUDES RECEPTACLE AS & WEDGE)	
Y	7	1	*120-4187*	1	SOLENOID GP-THROTTLE (GOVERNOR)	147
	8	1	**227-4794**	1	PLATE	
	9	1	**262-4947**	1	ROD	
M	10	1	**125-3295**	2	SCREW-PAN HEAD (M2.5X0.45X12-MM)	
	11	1	**4P-8134**	1	CLIP	
M	12	1	**5C-2890**	4	NUT (M6X1-THD)	
	13	1	**5P-4115**	1	WASHER-HARD (7.2X19X2-MM THK)	
	14	1	**5P-4116**	3	WASHER-HARD (8.8X20.5X2-MM THK)	
M	15	1	**6V-7357**	3	BOLT (M6X1X25-MM)	
M	16	1	**8T-6869**	1	BOLT (M8X1.25X60-MM)	
M	17	1	**8T-4908**	3	BOLT (M8X1.25X25-MM)	
	18	1	**9X-8256**	8	WASHER (6.6X12X2-MM THK)	
M	19	1	**8T-4138**	1	BOLT (M6X1X20-MM)	

M-METRIC PART
Y-SEPARATE ILLUSTRATION

227-4799 **GOVERNOR GP** ***(contd.)*** **i02869842**

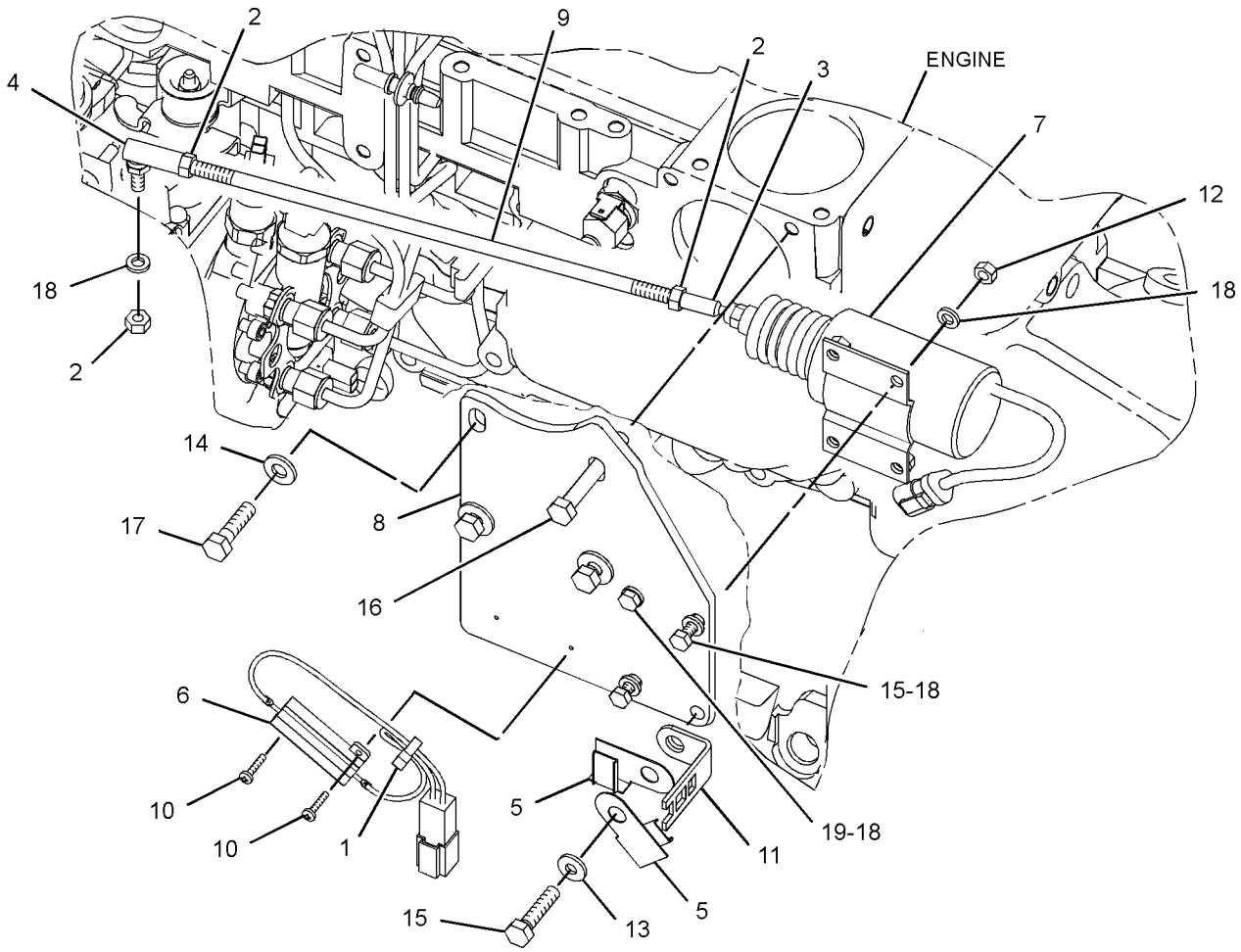

GRAPHIC #1 **<END>** g01416981

FUEL SYSTEM

222-3102 LINES GP-FUEL

S/N: BZE1-UP; BZG1-UP

PART OF 219-4162 INSTALLATION AR-ENGINE

SMCS-1274 **i02149376**

NOTE	REF NO	GRAPHIC REF	PART NUMBER	QTY	PART NAME 1 2 3 4 5 6 (PRODUCT LEVEL)	SEE PAGE
	1	1	**5P-4961**	4	CLAMP-HOSE	
	2	1	**102-8703**	5	PLATE-COVER	
	3	1	**156-3617**	10	CLAMP-HALF	
	4	1	**228-5778**	1	PLATE AS	
M	5	1	**7X-2537**	3	BOLT (M8X1.25X35-MM)	
M	6	1	**8T-4192**	1	BOLT (M12X1.75X25-MM)	
	7	1	**8T-4223**	1	WASHER-HARD (13.5X25.5X3-MM THK)	
E	8	1	**5P-1442**		HOSE (175-CM)	
E	8A	1	**5P-1442**		HOSE (168-CM)	
	9	1	**239-5433**	1	CONNECTOR-SPECIAL	
	10	1	**4P-7581**	1	CLIP	
M	11	1	**8T-6912**	1	BOLT (M8X1.25X50-MM)	
	12	1	**7X-0603**	1	WASHER-HARD (9.9X35X2.5-MM THK)	

E-ORDER BY THE CENTIMETER
M-METRIC PART

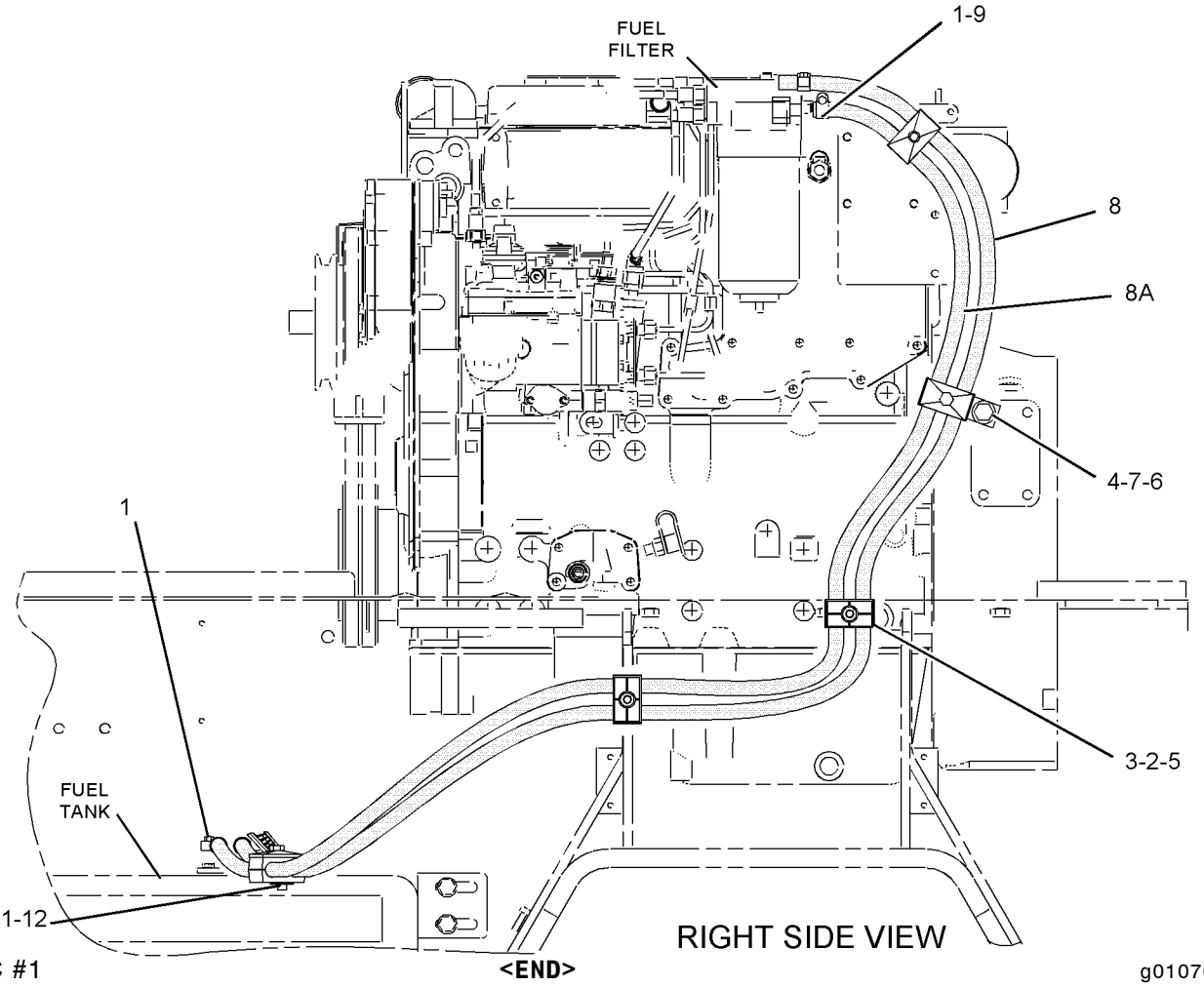

GRAPHIC #1 **<END>** g01070189

233-9526 PUMP GP-FUEL INJECTION

S/N: CRS1-UP
PART OF 177-9752 ENGINE AR-PRIMARY
TYPE 1

SMCS-1251, 1290 **i02096002**

NOTE	REF NO	GRAPHIC REF	PART NUMBER	QTY	PART NAME 1 2 3 4 5 6 (PRODUCT LEVEL)	SEE PAGE
M	1	1	**6I-0217**	1	BOLT (M8X1.25X20-MM)	
M	2	1	**6I-0260**	3	BOLT (M8X1.25X25-MM)	
	3	1	**6I-0291**	1	NUT (M8X1.25-THD)	
	4	1	**035-8017**	1	UNION	
	5	1	**067-6264**	1	FITTING-FLARED	
	6	1	**067-6265**	1	FITTING-BRASS	
M	7	1	**100-4830**	1	BOLT (M10X1.5X20-MM)	
	8	1	**111-3422**	1	NUT	
	9	1	**111-3423**	1	WASHER	
M	10	1	**124-3815**	1	BOLT (M8X16X1.25-MM)	
	11	1	**140-8714**	1	CLIP	
	12	2	**235-1790**	1	SWITCH-TEMPERATURE (TIMING ADVANCE)	
	13	2	**199-9252**	1	SEAL-O-RING	
	14	2	**199-9751**	2	SEAL-O-RING	
	15	1	**236-2144**	1	TUBE AS	
	15A	1	**067-6999**	1	FERRULE	
	15B	1	**106-8835**	1	NUT	
	16	1	**230-8989**	1	GEAR-FUEL PUMP (68-TEETH)	
	17	1	**230-8995**	1	TUBE AS (CYL NO.1)	
	18	1	**230-8996**	1	TUBE AS (CYL NO.2)	
	19	1	**230-8997**	1	TUBE AS (CYL NO.3)	
	20	1	**230-8998**	1	TUBE AS (CYL NO.4)	
	21	1	**230-8999**	4	INJECTOR AS-FUEL	
					(EACH INCLUDES)	
	21A	1	**140-8718**	1	WASHER	
	22	1	**230-9527**	1	BRACKET	
	24	1	**232-1117**	1	CLIP-PIPE	
	25	2	**232-1295**	1	PLUG	
	26	2	**232-1322**	2	PLUG	
	27	2	**232-1323**	1	PLUG-CUP	
	28	1	**232-1328**	1	CAP	
	29	2	**232-1793**	1	CABLE	
	30	1	**232-1794**	3	HOSE	
	31	1	**232-2725**	2	CLIP	
	32	1	**232-2726**	1	CLIP	
	33	1	**232-3149**	3	WASHER (8.35X16.85X1.55-MM THK)	
	34	1	**232-3157**	1	BRACKET	
	35	1	**232-3158**	4	CLAMP-INJECTOR	
	36	1	**232-3274**	4	BOLT (M8X1.25X48.1-MM)	
	37	1	**236-6910**	1	PUMP GP-FUEL INJECTION	
	37A	1	**152-3968**	1	SEAL-O-RING	
	37B	1	**176-6219**	1	VALVE GP-SOLENOID (12-VOLT)	
					(AIR FUEL RATIO CONTROL)	
	37C	1	**193-0161**	1	CABLE AS-ADAPTER	
	38	1	**9X-0506**	1	TIE	
F			**232-3263**	3	CLIP-PIPE	

F-NOT SHOWN
M-METRIC PART

233-9526 **PUMP GP-FUEL INJECTION** *(contd.)* **i02096002**

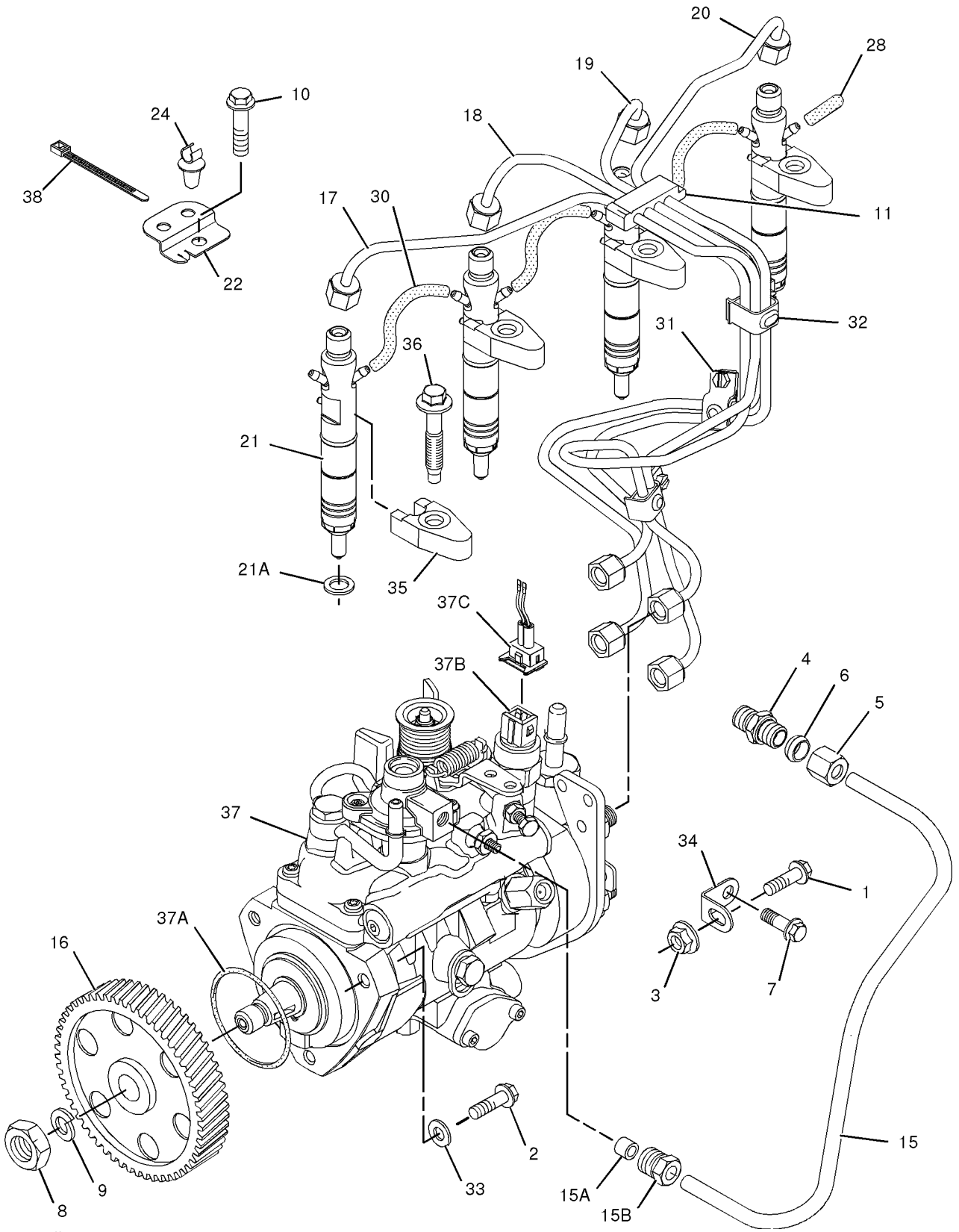

GRAPHIC #1 g01030597

233-9526 **PUMP GP-FUEL INJECTION** *(contd.)* **i02096002**

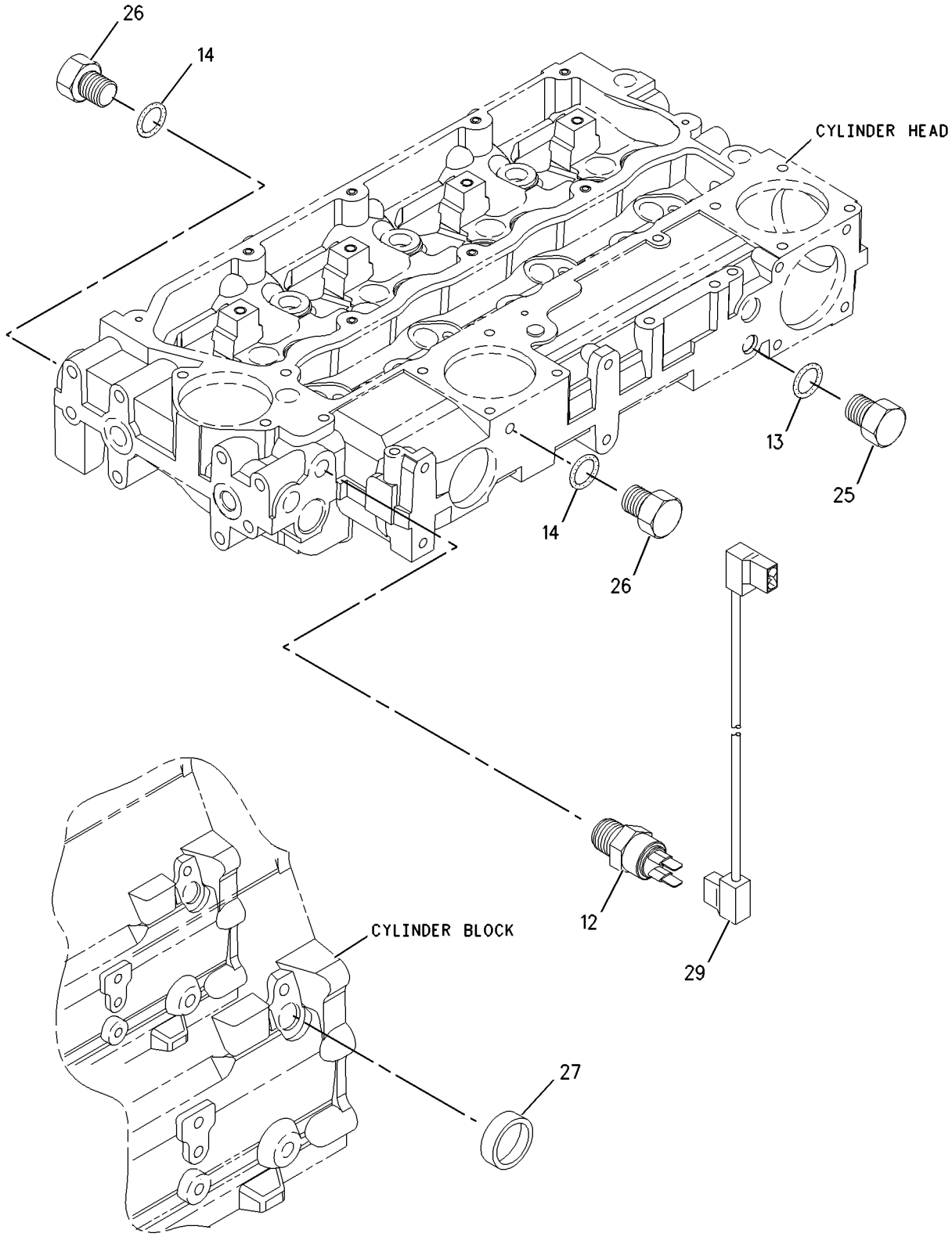

GRAPHIC #2 **<END>** g01003060

233-9526 PUMP GP-FUEL INJECTION

S/N: CRS1-UP
PART OF 177-9752 ENGINE AR-PRIMARY
TYPE 2

SMCS-1251, 1290 **i02432449**

NOTE	REF NO	GRAPHIC REF	PART NUMBER	QTY	PART NAME 1 2 3 4 5 6 (PRODUCT LEVEL)	SEE PAGE
M	1	1	**6I-0217**	1	BOLT (M8X1.25X20-MM)	
M	2	1	**6I-0260**	3	BOLT (M8X1.25X25-MM)	
	3	1	**6I-0291**	1	NUT (M8X1.25-THD)	
	4	1	**035-8017**	1	UNION	
	5	1	**067-6264**	1	FITTING-FLARED	
	6	1	**067-6265**	1	FITTING-BRASS	
M	7	1	**100-4830**	1	BOLT (M10X1.5X20-MM)	
	8	1	**111-3422**	1	NUT	
	9	1	**111-3423**	1	WASHER	
M	10	1	**124-3815**	1	BOLT (M8X16X1.25-MM)	
	11	1	**140-8714**	1	CLIP	
	12	2	**235-1790**	1	SWITCH-TEMPERATURE (TIMING ADVANCE)	
	13	2	**199-9252**	1	SEAL-O-RING	
	14	2	**199-9751**	2	SEAL-O-RING	
	15	1	**236-2144**	1	TUBE AS	
	15A	1	**067-6999**	1	FERRULE	
	15B	1	**106-8835**	1	NUT	
	16	1	**230-8989**	1	GEAR-FUEL PUMP (68-TEETH)	
	17	1	**230-8995**	1	TUBE AS (CYL NO.1)	
	18	1	**230-8996**	1	TUBE AS (CYL NO.2)	
	19	1	**230-8997**	1	TUBE AS (CYL NO.3)	
	20	1	**230-8998**	1	TUBE AS (CYL NO.4)	
	21	1	**230-8999**	4	INJECTOR AS-FUEL	
					(EACH INCLUDES)	
	21A	1	**140-8718**	1	WASHER	
C	22	1	**240-5571**	1	BRACKET	
	25	2	**232-1295**	1	PLUG	
	26	2	**232-1322**	2	PLUG	
	27	2	**232-1323**	1	PLUG-CUP	
	28	1	**232-1328**	1	CAP	
	29	2	**232-1793**	1	CABLE	
	30	1	**232-1794**	3	HOSE	
	31	1	**232-2725**	2	CLIP	
	32	1	**232-2726**	1	CLIP	
	33	1	**232-3149**	3	WASHER (8.35X16.85X1.55-MM THK)	
	34	1	**232-3157**	1	BRACKET	
	35	1	**238-8671**	4	CLAMP-INJECTOR	
	36	1	**232-3274**	4	BOLT (M8X1.25X48.1-MM)	
Y	37	1	**236-6910**	1	PUMP GP-FUEL INJECTION	109
	38	1	**160-7197**	1	CLIP	
F			**232-3263**	3	CLIP-PIPE	

C-CHANGE FROM PREVIOUS TYPE
F-NOT SHOWN
M-METRIC PART
Y-SEPARATE ILLUSTRATION

233-9526 **PUMP GP-FUEL INJECTION** *(contd.)* **i02432449**

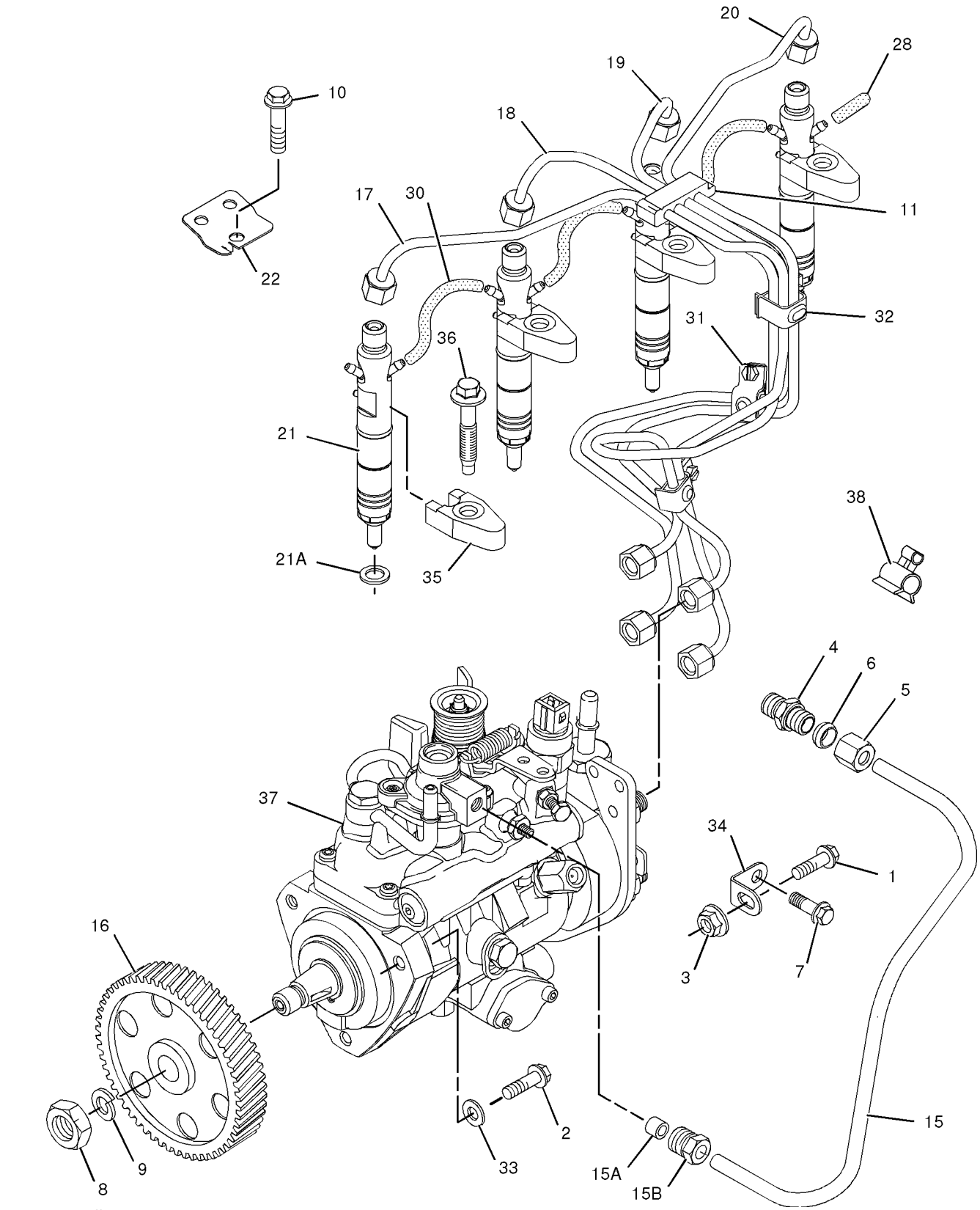

GRAPHIC #1

g01047405

233-9526 **PUMP GP-FUEL INJECTION** *(contd.)* **i02432449**

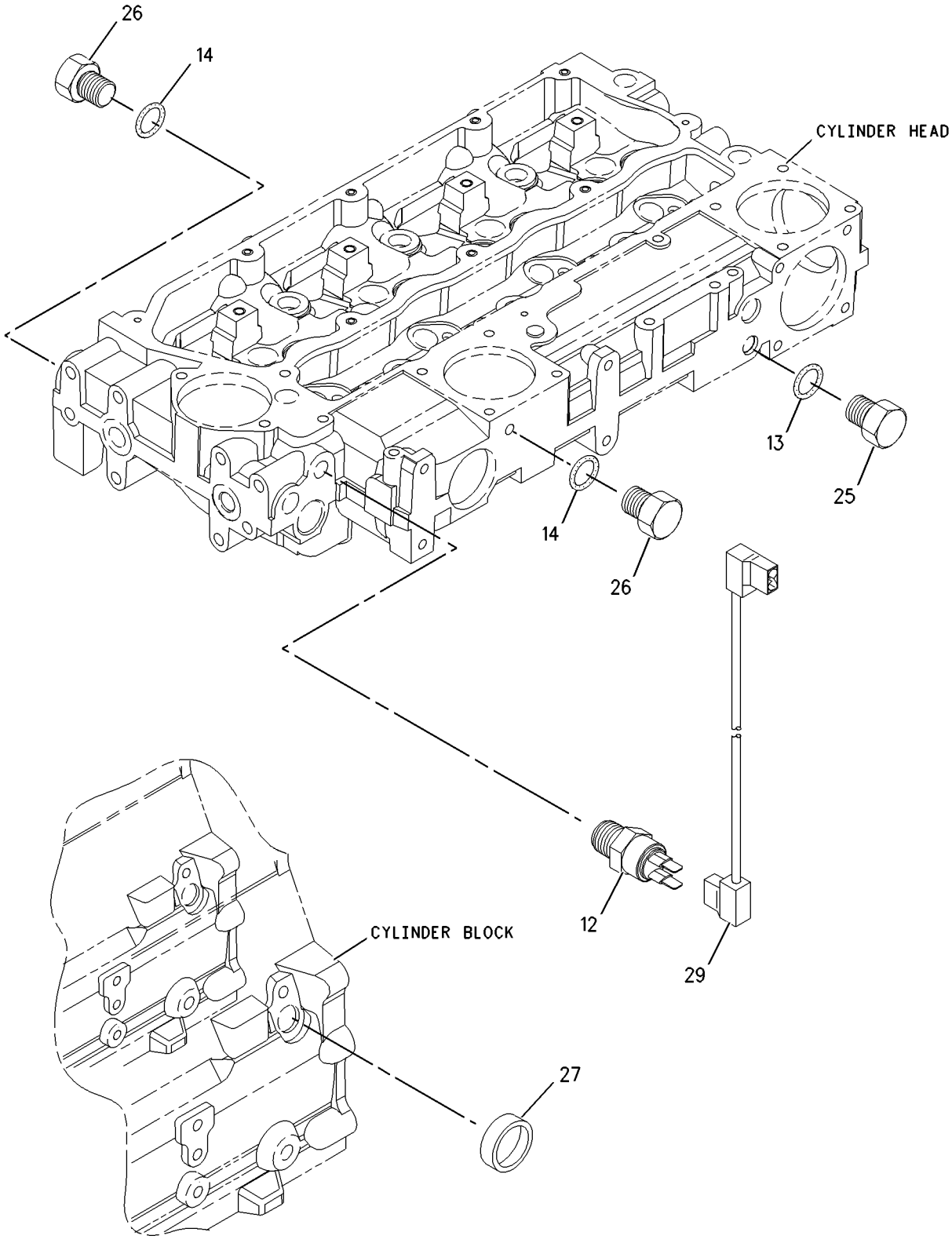

GRAPHIC #2 **<END>** g01003060

236-6910 PUMP GP-FUEL INJECTION

S/N: CRS1-UP

PART OF 233-9526 PUMP GP-FUEL INJECTION

SMCS-1251, 1290 **i02145843**

NOTE	REF NO	GRAPHIC REF	PART NUMBER	QTY	PART NAME 1 2 3 4 5 6 (PRODUCT LEVEL)	SEE PAGE
	1	1	**152-3968**	1	SEAL-O-RING	
	2	1	**147-2645**	1	VALVE GP-SOLENOID (24 V) (FUEL INJECTION PUMP)	

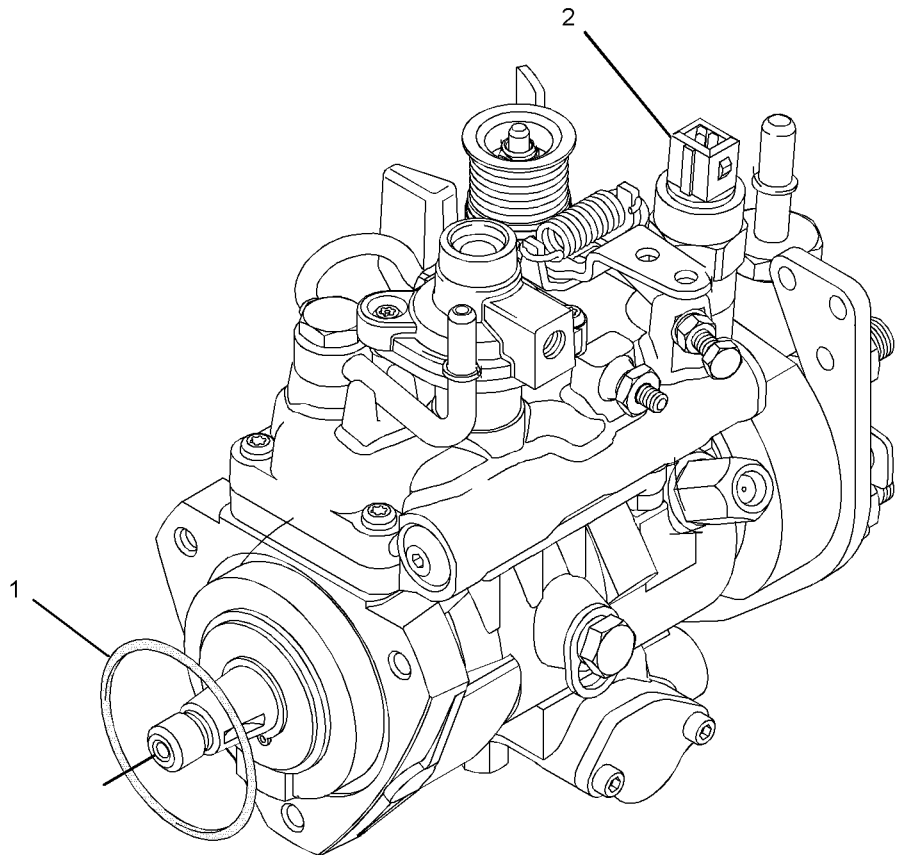

GRAPHIC #1 **<END>** g01085467

284-4999 PUMP GP-FUEL INJECTION

S/N: CRS1-UP
PART OF 308-4733 PUMP GP-FUEL INJECTION
FIELD REPLACEMENT ORDER 284-5000—PAGE 111
AN ATTACHMENT

SMCS-1251, 1290 **i02742688**

NOTE	REF NO	GRAPHIC REF	PART NUMBER	QTY	PART NAME 1 2 3 4 5 6 (PRODUCT LEVEL)	SEE PAGE
	1	1	**152-3968**	1	SEAL-O-RING	
	2	1	**147-2645**	1	VALVE GP-SOLENOID (24-VOLT) (FUEL SHUTOFF)	

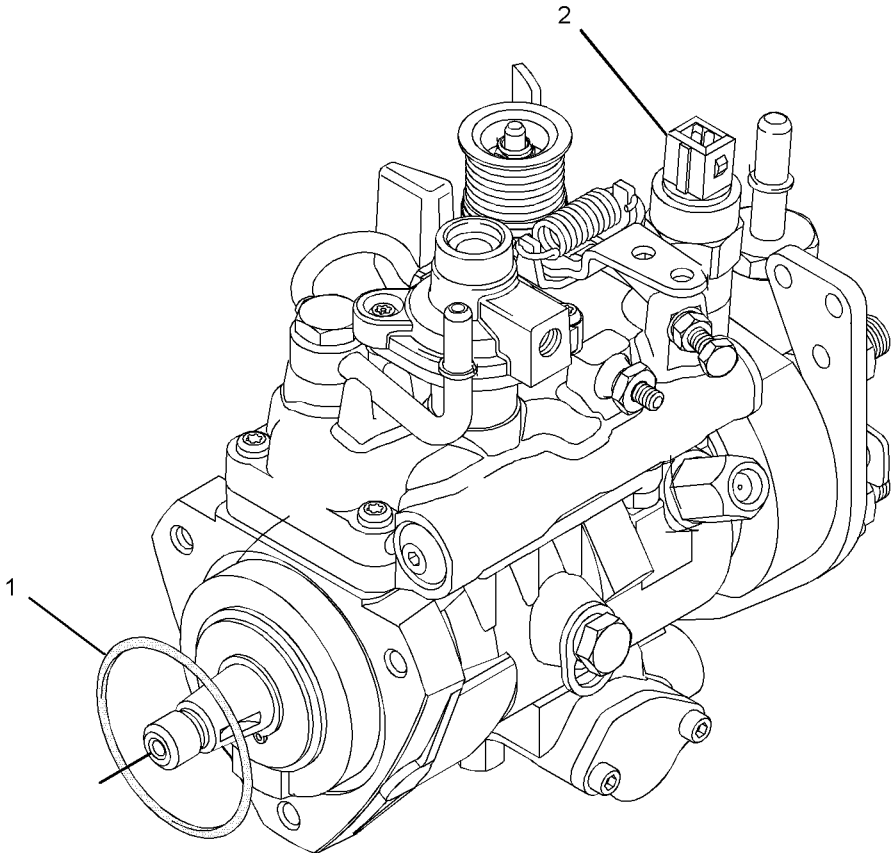

GRAPHIC #1 **<END>** g01085467

FUEL SYSTEM

284-5000 PUMP GP-FUEL INJECTION

S/N: CRS1-UP

FIELD REPLACEMENT FOR 284-4999—PAGE 110. FOR USE WITH 2200 RPM ENGINES

SMCS-1251, 1290 **i02747221**

NOTE	PART NUMBER	QTY	PART NAME 1 2 3 4 5 6 (PRODUCT LEVEL)	SEE PAGE
			(NO SERVICED PARTS)	

<END>

FUEL SYSTEM

308-4733 PUMP GP-FUEL INJECTION

S/N: CRS1-UP
PART OF 297-4047 ENGINE AR-PRIMARY
AN ATTACHMENT

SMCS-1251, 1290 **i02719185**

NOTE	REF NO	GRAPHIC REF	PART NUMBER	QTY	PART NAME 1 2 3 4 5 6 (PRODUCT LEVEL)	SEE PAGE
M	1	1	**6I-0217**	1	BOLT (M8X1.25X20-MM)	
M	2	1	**6I-0260**	3	BOLT (M8X1.25X25-MM)	
	3	1	**6I-0291**	1	NUT (M8X1.25-THD)	
	4	1	**035-8017**	1	UNION	
	5	1	**067-6264**	1	FITTING-FLARED	
	6	1	**067-6265**	1	FITTING-BRASS	
M	7	1	**100-4830**	1	BOLT (M10X1.5X20-MM)	
M	8	1	**124-3815**	1	BOLT (M8X16X1.25-MM)	
	9	1	**140-8714**	1	CLIP	
	10	1	**160-7197**	1	CLIP	
	11	1	**230-8989**	1	GEAR-FUEL PUMP (68-TEETH)	
	12	1	**230-8995**	1	TUBE AS (CYL NO.1)	
	13	1	**230-8996**	1	TUBE AS (CYL NO.2)	
	14	1	**230-8997**	1	TUBE AS (CYL NO.3)	
	15	1	**230-8998**	1	TUBE AS (CYL NO.4)	
	16	1	**230-8999**	4	INJECTOR AS-FUEL	
		1	**232-2724**	1	NOZZLE	
		1	**275-1038**	1	SEAL-O-RING	
	16A	1	**140-8718**	1	WASHER	
	17	2	**232-1323**	1	PLUG-CUP	
	18	1	**232-1328**	1	CAP	
	19	2	**232-1793**	1	CABLE	
	20	1	**232-1794**	3	HOSE	
	21	1	**232-2725**	2	CLIP	
	22	1	**232-2726**	1	CLIP	
	23	1	**232-3126**	1	CLIP	
	24	1	**232-3149**	3	WASHER (8.35X16.85X1.55-MM THK)	
	25	1	**232-3157**	1	BRACKET	
	26	1	**232-3274**	4	BOLT (M8X1.25X48.1-MM)	
	27	2	**235-1790**	1	SWITCH-TEMPERATURE	
	28	1	**236-2144**	1	TUBE AS	
	28A	1	**067-6999**	1	FERRULE	
	28B	1	**106-8835**	1	NUT	
	29	1	**238-8671**	4	CLAMP-INJECTOR	
	30	1	**240-5571**	1	BRACKET	
Y	31	1	*284-4999*	1	PUMP GP-FUEL INJECTION	110

M-METRIC PART
Y-SEPARATE ILLUSTRATION

308-4733 **PUMP GP-FUEL INJECTION** *(contd.)* **i02719185**

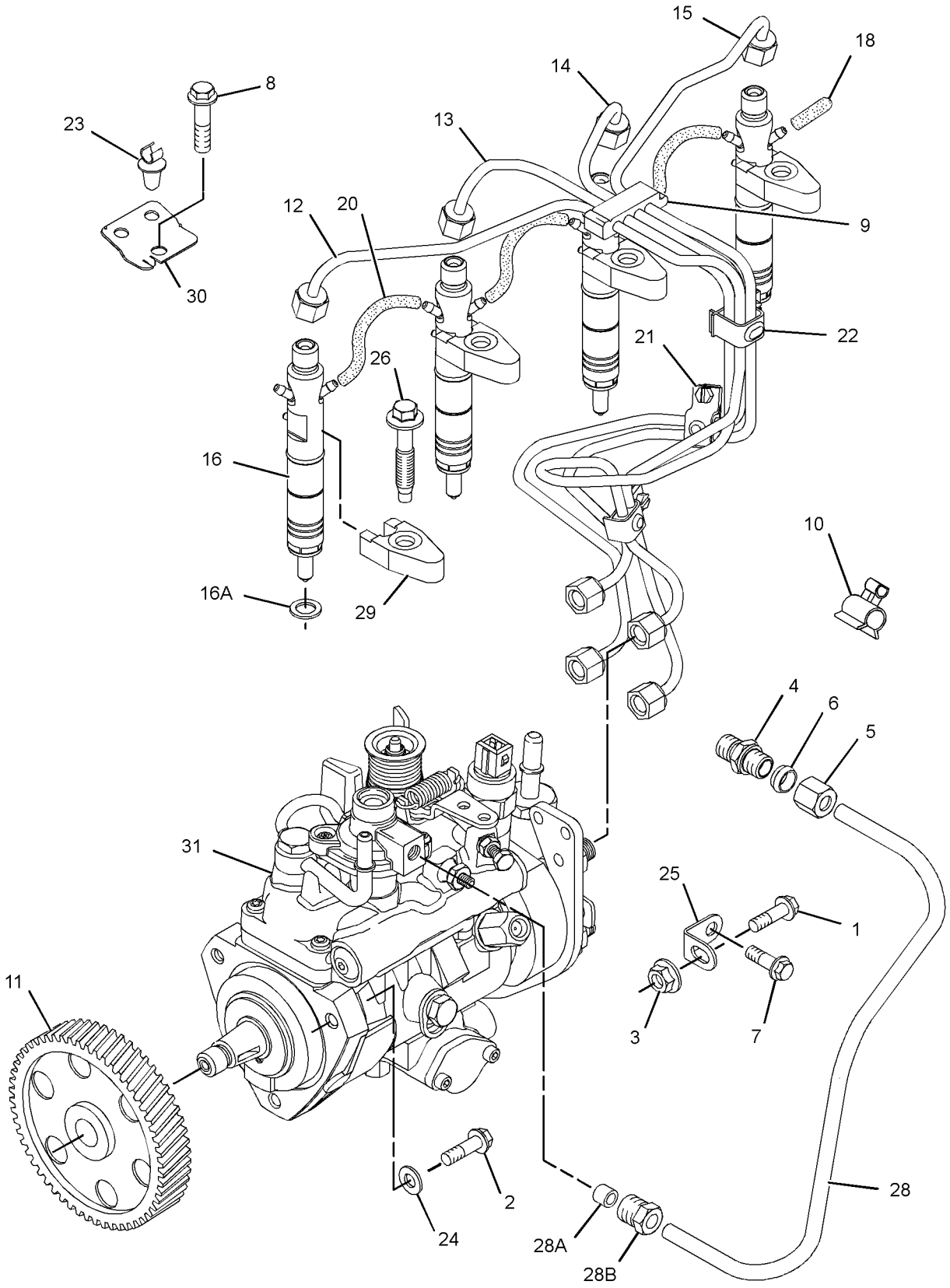

GRAPHIC #1 g01375867

308-4733 **PUMP GP-FUEL INJECTION** *(contd.)* **i02719185**

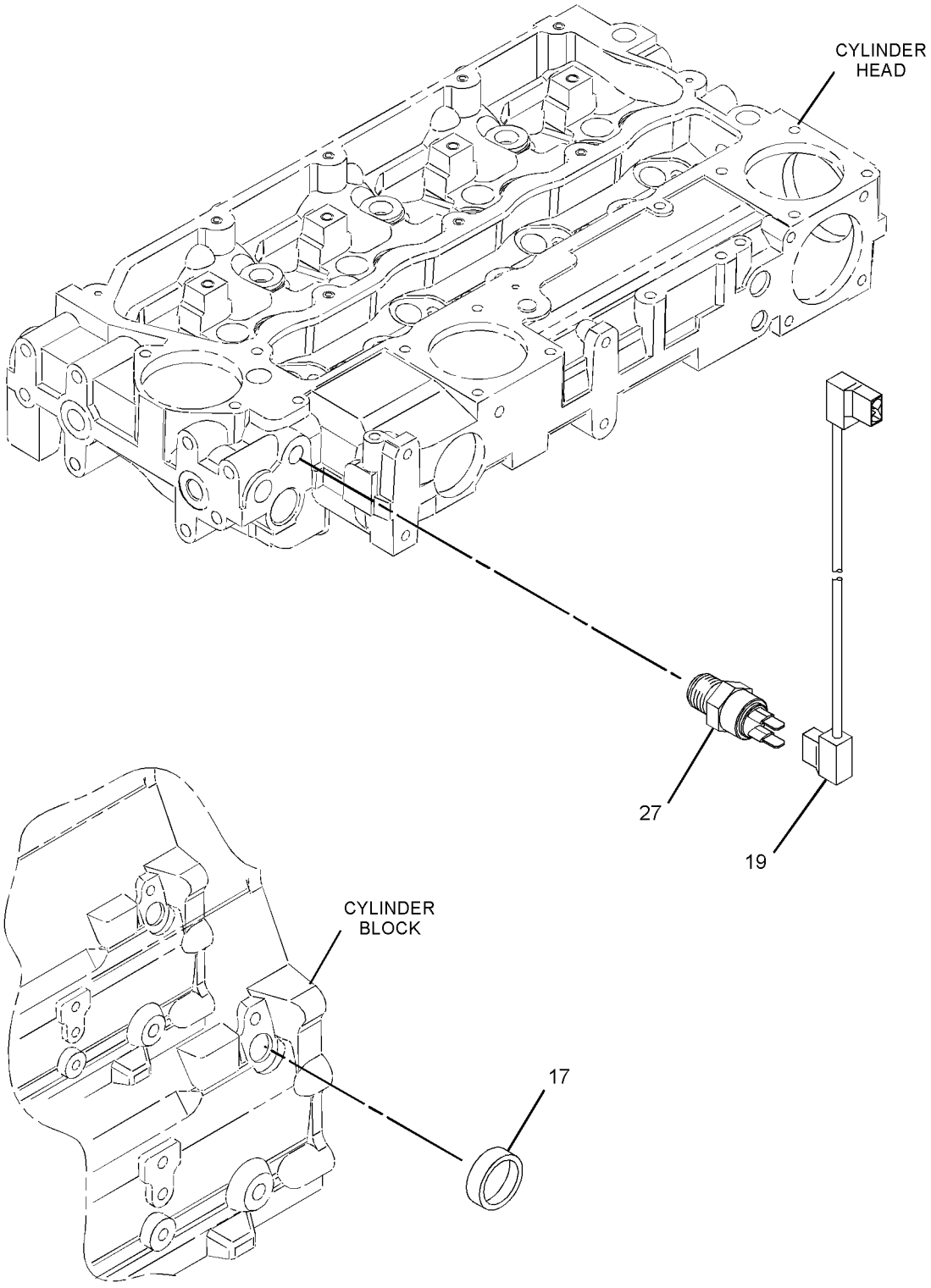

GRAPHIC #2 **<END>** g01375868

233-9417 PUMP GP-FUEL PRM & PRIM FILTER

S/N: CRS365-UP

PART OF 177-9752 ENGINE AR-PRIMARY

TYPE 1

SMCS-1258, 1260 **i02503692**

NOTE	REF NO	GRAPHIC REF	PART NUMBER	QTY	PART NAME 1 2 3 4 5 6 (PRODUCT LEVEL)	SEE PAGE
	1	1	**237-0285**	1	BRACKET	
	2	1	**240-9756**	1	KIT-MOUNTING (FUEL PRIMING PUMP)	
	2A	1	**232-9758**	3	WASHER (6.51X17.785X1.6-MM THK)	
		1	**120-6872**	3	BOLT	
	4	1	**237-0286**	1	PLUG	
	5	1	**215-9508**	1	FITTING AS (QUICK DISCONNECT)	
	6	1	**215-9509**	1	FITTING AS (QUICK DISCONNECT)	
	7	1	**232-3126**	1	CLIP	
	8	1	**270-6992**	1	PUMP GP-FUEL PRM & PRIM FILTER	
	8A	1	**207-2757**	1	SEAL	
	8B	1	**221-2014**	1	BOWL AS	
	8C	1	**1R-1804**	1	FILTER ELEMENT AS-FUEL (WATER, FUEL SEPARATOR)	
	10	1	**232-9759**	1	LINE AS-FUEL	
	11	1	**237-0284**	1	LINE AS-FUEL	
	12	1	**232-1115**	1	CLIP-PIPE	

233-9417 **PUMP GP-FUEL PRM & PRIM FILTER** *(contd.)* **i02503692**

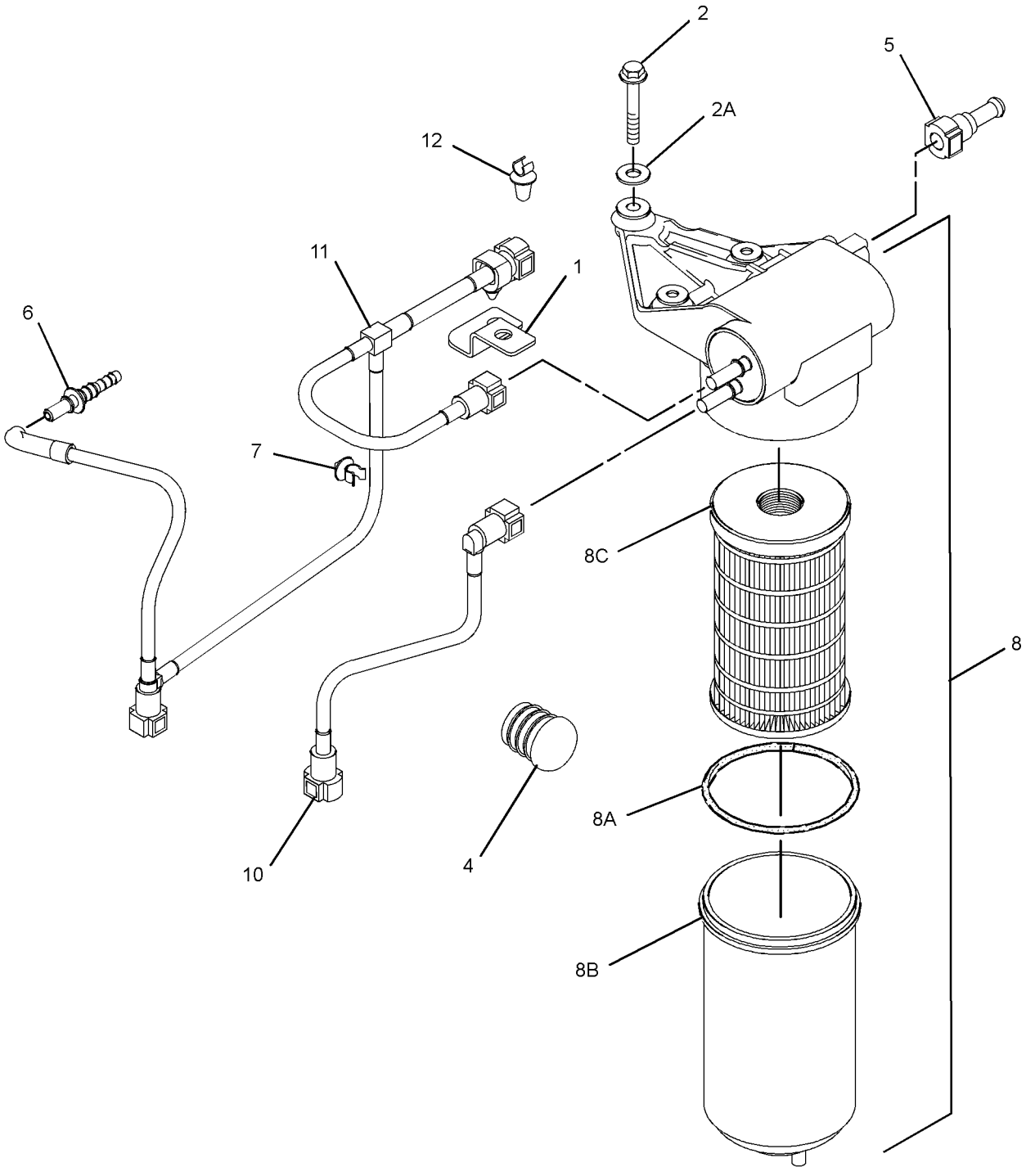

GRAPHIC #1 **<END>** g01282412

233-9417 PUMP GP-FUEL PRM & PRIM FILTER

S/N: CRS365-UP
PART OF 177-9752, 297-4047 ENGINE AR-PRIMARY
ALSO AN ATTACHMENT
TYPE 2

SMCS-1258, 1260 **i02755321**

NOTE	REF NO	GRAPHIC REF	PART NUMBER	QTY	PART NAME 1 2 3 4 5 6 (PRODUCT LEVEL)	SEE PAGE
	1	1	**237-0285**	1	BRACKET	
	2	1	**240-9756**	1	KIT-MOUNTING (FUEL PRIMING PUMP)	
	2A	1	**232-9758**	3	WASHER (6.51X17.785X1.6-MM THK)	
		1	**120-6872**	3	BOLT	
	4	1	**237-0286**	1	PLUG	
	5	1	**215-9508**	1	FITTING AS (QUICK DISCONNECT)	
	6	1	**215-9509**	1	FITTING AS (QUICK DISCONNECT)	
	7	1	**232-3126**	1	CLIP	
C	8	1	**299-9265**	1	PUMP GP-FUEL PRM & PRIM FILTER	
	8A	1	**207-2757**	1	SEAL	
	8B	1	**221-2014**	1	BOWL AS	
	8C	1	**222-6617**	1	DRAIN AS	
	8D	1	**1R-1804**	1	FILTER ELEMENT AS-FUEL (WATER SEPARATOR)	
	10	1	**232-9759**	1	LINE AS-FUEL	
	11	1	**237-0284**	1	LINE AS-FUEL	
	12	1	**311-6822**	1	CLIP-TUBE	

C-CHANGE FROM PREVIOUS TYPE

233-9417 **PUMP GP-FUEL PRM & PRIM FILTER** *(contd.)* **i02755321**

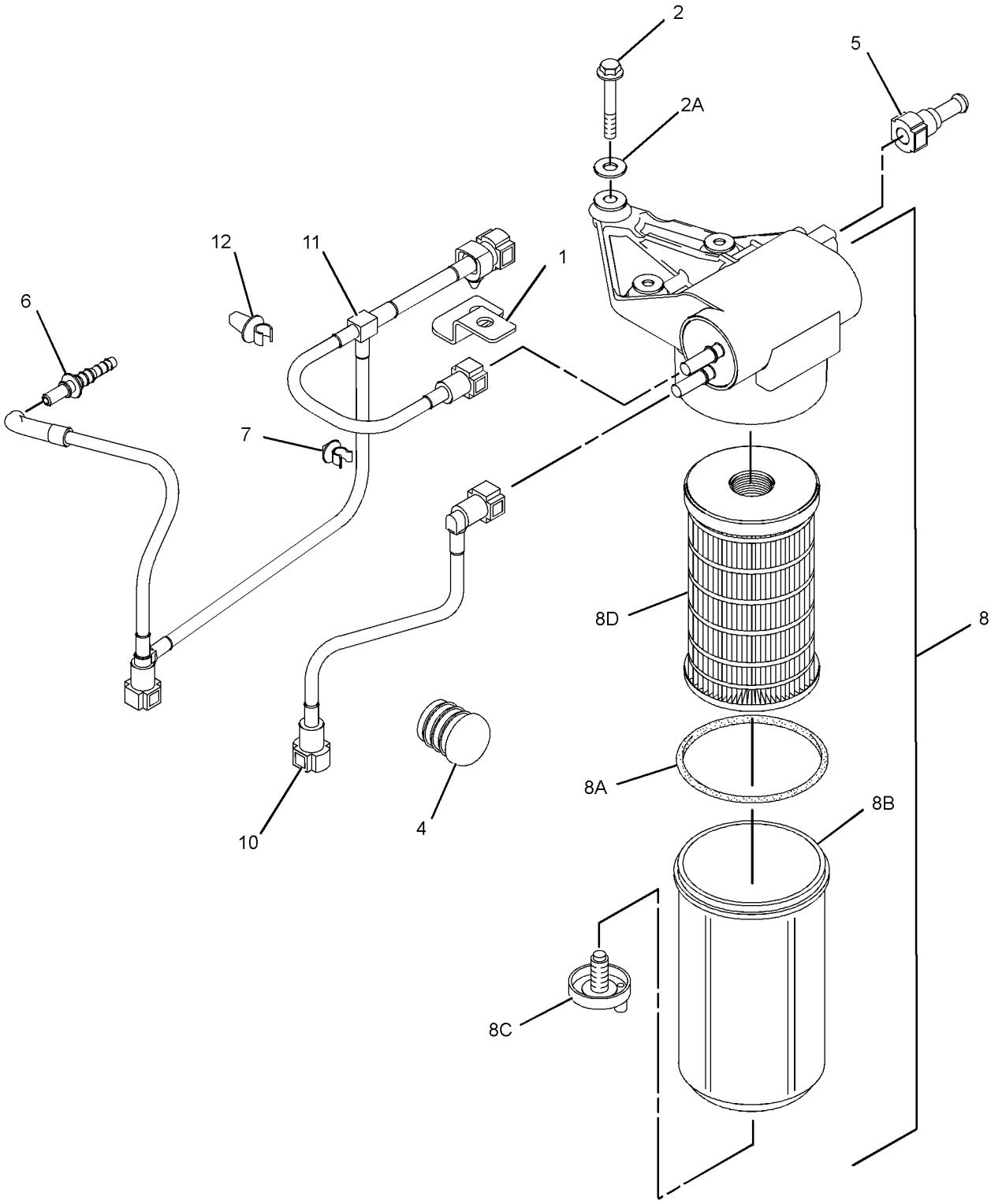

GRAPHIC #1 **<END>** g01389777

239-0641 TANK & MTG GP-FUEL

S/N: BZE1-UP; BZG1-UP

PART OF 239-0795, 239-0796 CHASSIS AR

SMCS-1273 **i02140751**

NOTE	REF NO	GRAPHIC REF	PART NUMBER	QTY	PART NAME 1 2 3 4 5 6 (PRODUCT LEVEL)	SEE PAGE
	1	1	**156-5114**	1	ANGLE	
	2	1	**213-9684**	3	ANGLE	
Y	3	1	*238-8563*	1	TANK GP-FUEL	120
	4	1	**7X-7729**	8	WASHER (11X25X3-MM THK)	
	5	1	**8T-4121**	8	WASHER-HARD (11X21X2.5-MM THK)	
M	6	1	**8T-4133**	8	NUT (M10X1.5-THD)	
M	7	1	**8T-4196**	8	BOLT (M10X1.5X35-MM)	

M-METRIC PART
Y-SEPARATE ILLUSTRATION

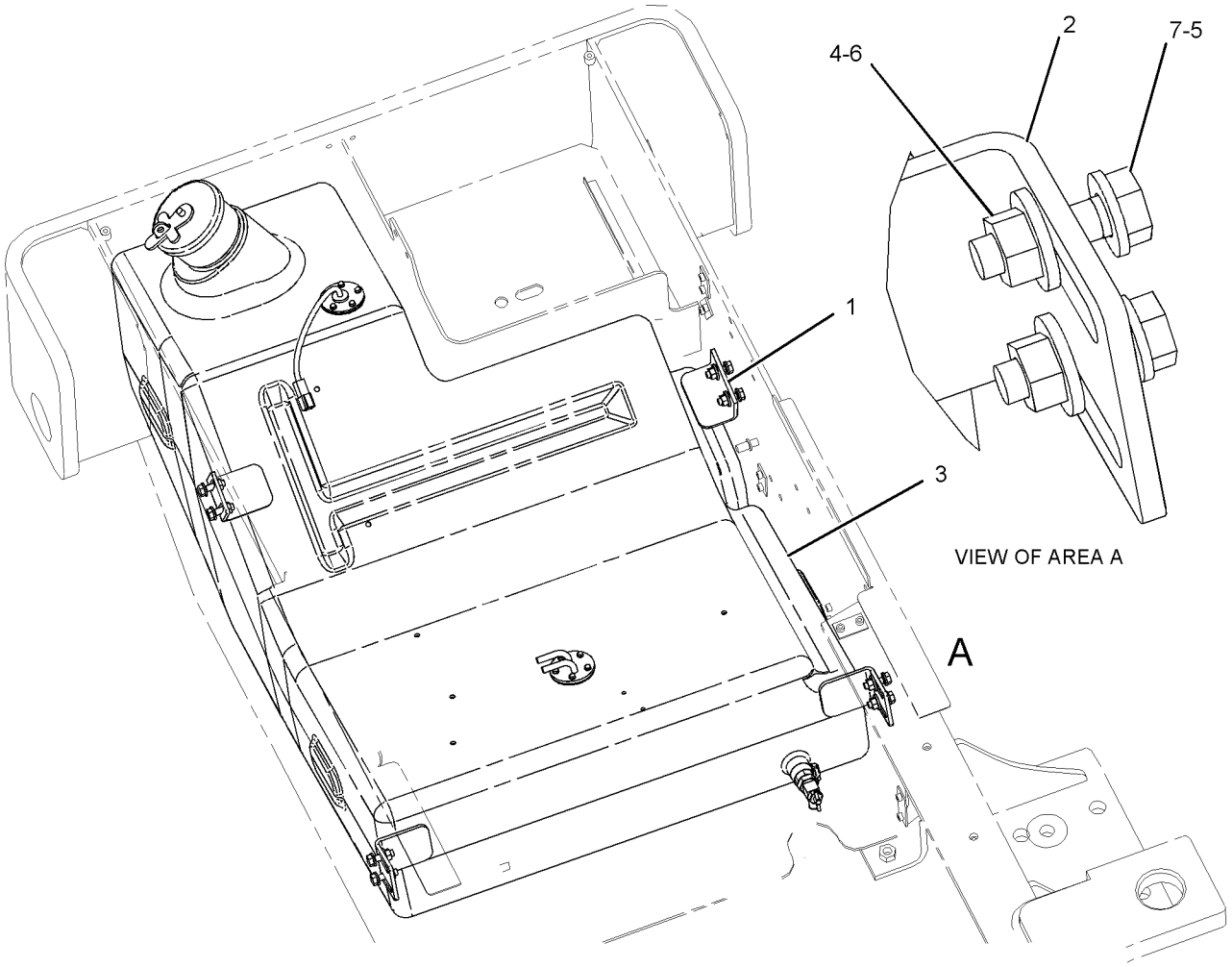

GRAPHIC #1 **<END>** g01038260

FUEL SYSTEM

238-8563 TANK GP-FUEL

S/N: BZE1-UP; BZG1-UP
PART OF 239-0641 TANK & MTG GP-FUEL
TYPE 1

SMCS-1273 **i02327507**

NOTE	REF NO	GRAPHIC REF	PART NUMBER	QTY	PART NAME 1 2 3 4 5 6 (PRODUCT LEVEL)	SEE PAGE
	1	1	**2S-3440**	1	CLAMP-HOSE	
	2	1	**9P-7121**	1	STRAINER-FUEL	
	3	1	**9R-7240**	2	GASKET	
Y	4	1	**164-4858**	1	CAP GP-FUEL FILLER (EXTREME SERVICE, LOCKABLE)	94
	5	1	**6V-7238**	1	VALVE-SHUTOFF (FUEL TANK)	
		1	**3K-0360**	1	SEAL-O-RING	
	6	1	**170-3528**	1	ADAPTER	
	7	1	**194-6523**	1	ADAPTER	
	8	1	**229-9291**	1	LINE AS-FUEL	
	9	1	**238-8560**	1	TANK-FUEL	
	10	1	**239-5812**	1	SENDER AS-FUEL LEVEL	
		1	**102-8802**	1	KIT-RECEPTACLE (2-PIN)	
					(INCLUDES RECEPTACLE AS & WEDGE)	
		1	**186-3735**	2	PIN-CONNECTOR (16-GA TO 18-GA)	
M	11	1	**8T-0289**	10	BOLT (M5X0.8X20-MM)	
	12	1	**8C-6438**	1	SCREW-PAN HEAD (6-20X12.7-MM)	
	13	1	**8T-0328**	10	WASHER-HARD (5.5X10X1-MM THK)	

M-METRIC PART
Y-SEPARATE ILLUSTRATION

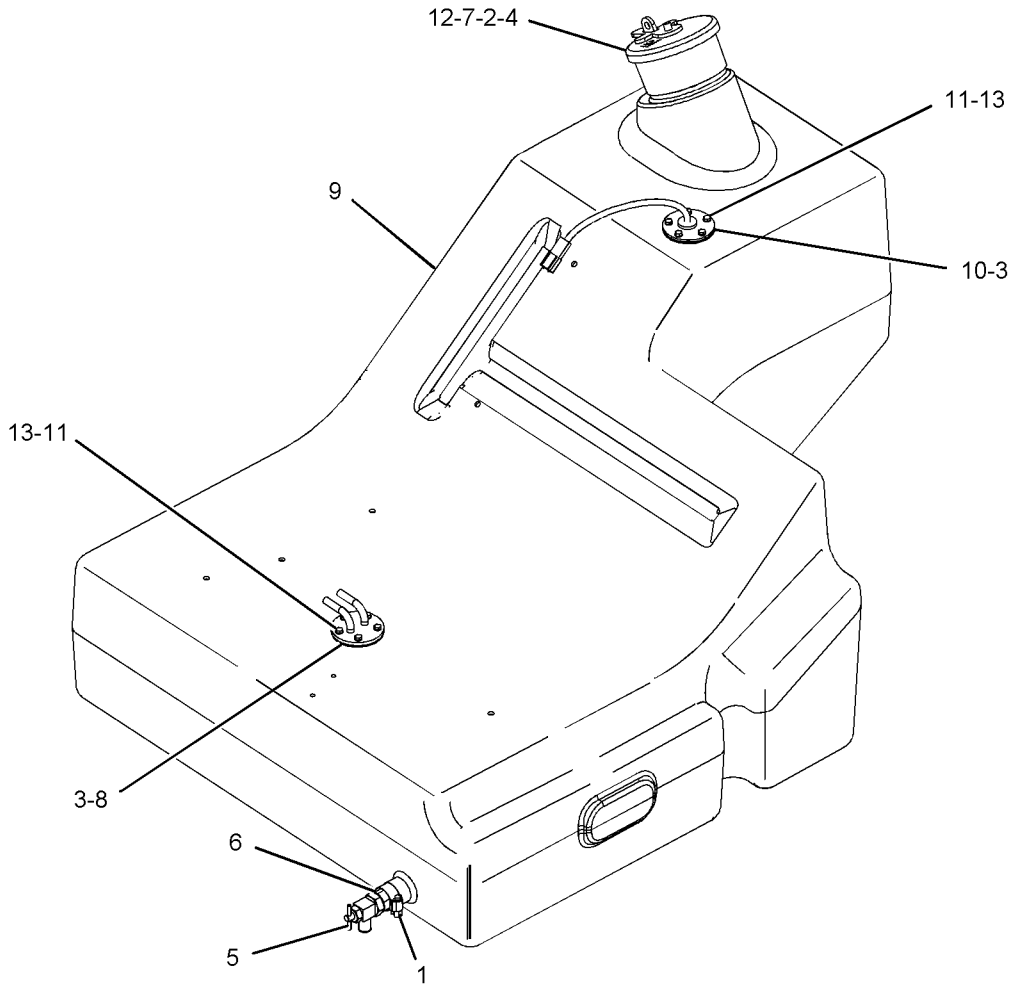

GRAPHIC #1 **<END>** g01024900

238-8563 TANK GP-FUEL

S/N: BZE1-UP; BZG1-UP
PART OF 239-0641 TANK & MTG GP-FUEL
TYPE 2

SMCS-1273 **i02906058**

NOTE	REF NO	GRAPHIC REF	PART NUMBER	QTY	PART NAME 1 2 3 4 5 6 (PRODUCT LEVEL)	SEE PAGE
	1	1	**2S-3440**	1	CLAMP-HOSE	
	2	1	**9P-7121**	1	STRAINER-FUEL	
	3	1	**9R-7240**	2	GASKET	
C	4	1	**306-4998**	1	CAP GP-FUEL FILLER (LOCKABLE, WITH BOOT)	
		1	**276-1243**	1	CAP-FUEL FILLER (LOCKABLE)	
		1	**278-5689**	1	BOOT-FUEL CAP	
		1	**279-9876**	1	FILTER-BREATHER (FUEL CAP)	
	5	1	*165-2273*	1	VALVE AS-SHUTOFF (FUEL DRAIN SHUTOFF)	
		1	**6V-7238**	1	VALVE-SHUTOFF	
		1	**3K-0360**	1	SEAL-O-RING	
	6	1	**170-3528**	1	ADAPTER	
	7	1	**306-8127**	1	ADAPTER	
	8	1	**229-9291**	1	LINE AS-FUEL	
	9	1	**279-0122**	1	TANK-FUEL	
	10	1	**239-5812**	1	SENDER AS-FUEL LEVEL	
		1	**102-8802**	1	KIT-RECEPTACLE (2-PIN)	
					(INCLUDES RECEPTACLE AS & WEDGE)	
		1	**186-3735**	2	PIN-CONNECTOR (16-GA TO 18-GA)	
M	11	1	**8T-0289**	10	BOLT (M5X0.8X20-MM)	
	12	1	**8C-6438**	1	SCREW-PAN HEAD (6-20X12.7-MM)	
	13	1	**8T-0328**	10	WASHER-HARD (5.5X10X1-MM THK)	

C-CHANGE FROM PREVIOUS TYPE
M-METRIC PART

238-8563 TANK GP-FUEL *(contd.)* **i02906058**

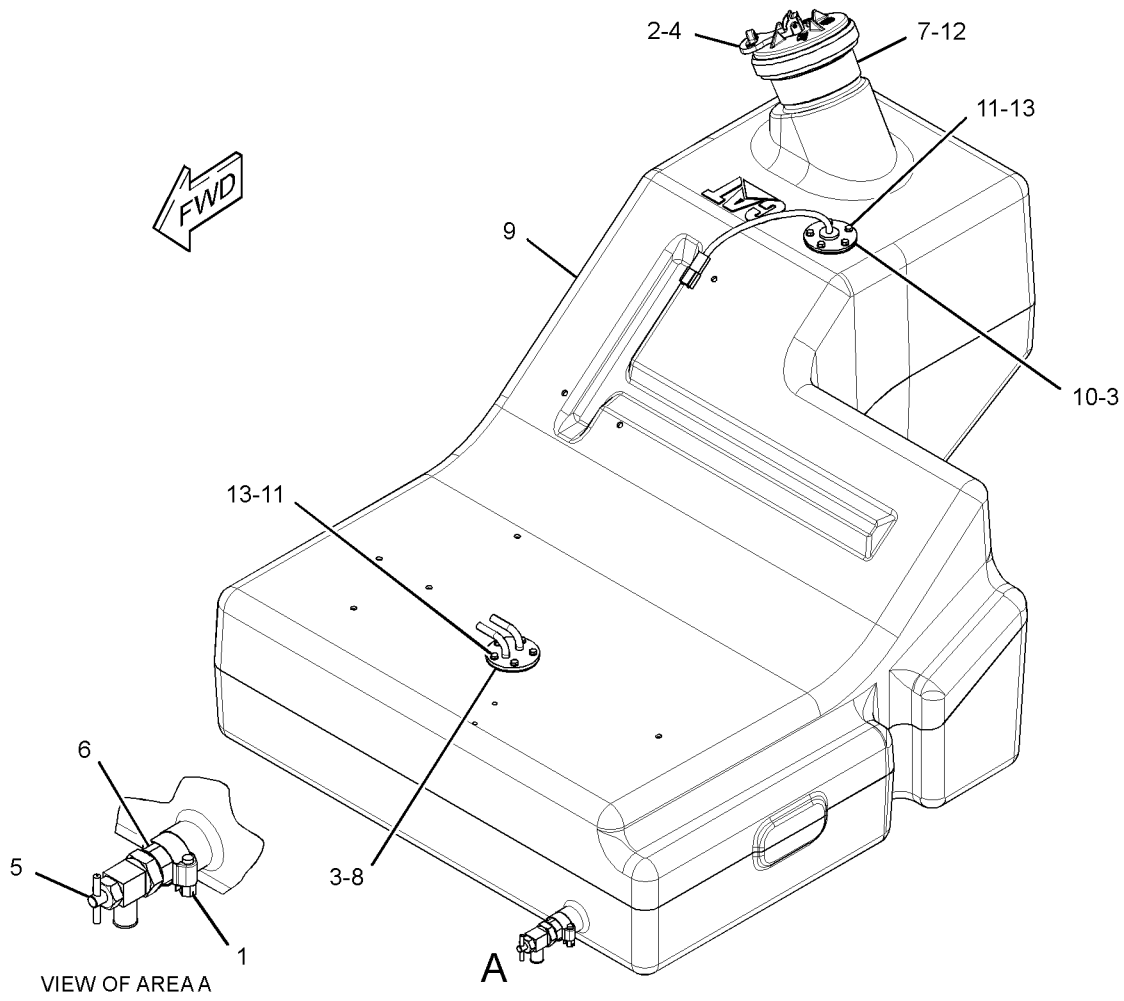

GRAPHIC #1 **<END>** g01455302

238-8563 TANK GP-FUEL

S/N: BZE1-UP; BZG1-UP
PART OF 239-0641 TANK & MTG GP-FUEL
TYPE 3

SMCS-1273 **i02982241**

NOTE	REF NO	GRAPHIC REF	PART NUMBER	QTY	PART NAME 1 2 3 4 5 6 (PRODUCT LEVEL)	SEE PAGE
	1	1	**2S-3440**	1	CLAMP-HOSE	
	2	1	**9P-7121**	1	STRAINER-FUEL	
	3	1	**9R-7240**	2	GASKET	
C	4	1	**306-4998**	1	CAP GP-FUEL FILLER (LOCKABLE, WITH BOOT)	
		1	**276-1243**	1	CAP-FUEL FILLER (LOCKABLE)	
		1	**278-5689**	1	BOOT-FUEL CAP	
		1	**279-9876**	1	FILTER-BREATHER (FUEL CAP)	
	5	1	*165-2273*	1	VALVE AS-SHUTOFF (FUEL DRAIN SHUTOFF)	
		1	**6V-7238**	1	VALVE-SHUTOFF	
		1	**3K-0360**	1	SEAL-O-RING	
	6	1	**170-3528**	1	ADAPTER	
	7	1	**306-8127**	1	ADAPTER	
	8	1	**229-9291**	1	LINE AS-FUEL	
	9	1	**279-0122**	1	TANK-FUEL	
	10	1	**239-5812**	1	SENDER AS-FUEL LEVEL	
		1	**102-8802**	1	KIT-RECEPTACLE (2-PIN)	
					(INCLUDES RECEPTACLE AS & WEDGE)	
		1	**186-3735**	2	PIN-CONNECTOR (16-GA TO 18-GA)	
M	11	1	**8T-0289**	10	BOLT (M5X0.8X20-MM)	
	12	1	**8C-6438**	1	SCREW-PAN HEAD (6-20X12.7-MM)	
	13	1	**8T-0328**	10	WASHER-HARD (5.5X10X1-MM THK)	

C-CHANGE FROM PREVIOUS TYPE
M-METRIC PART

238-8563 TANK GP-FUEL *(contd.)* **i02982241**

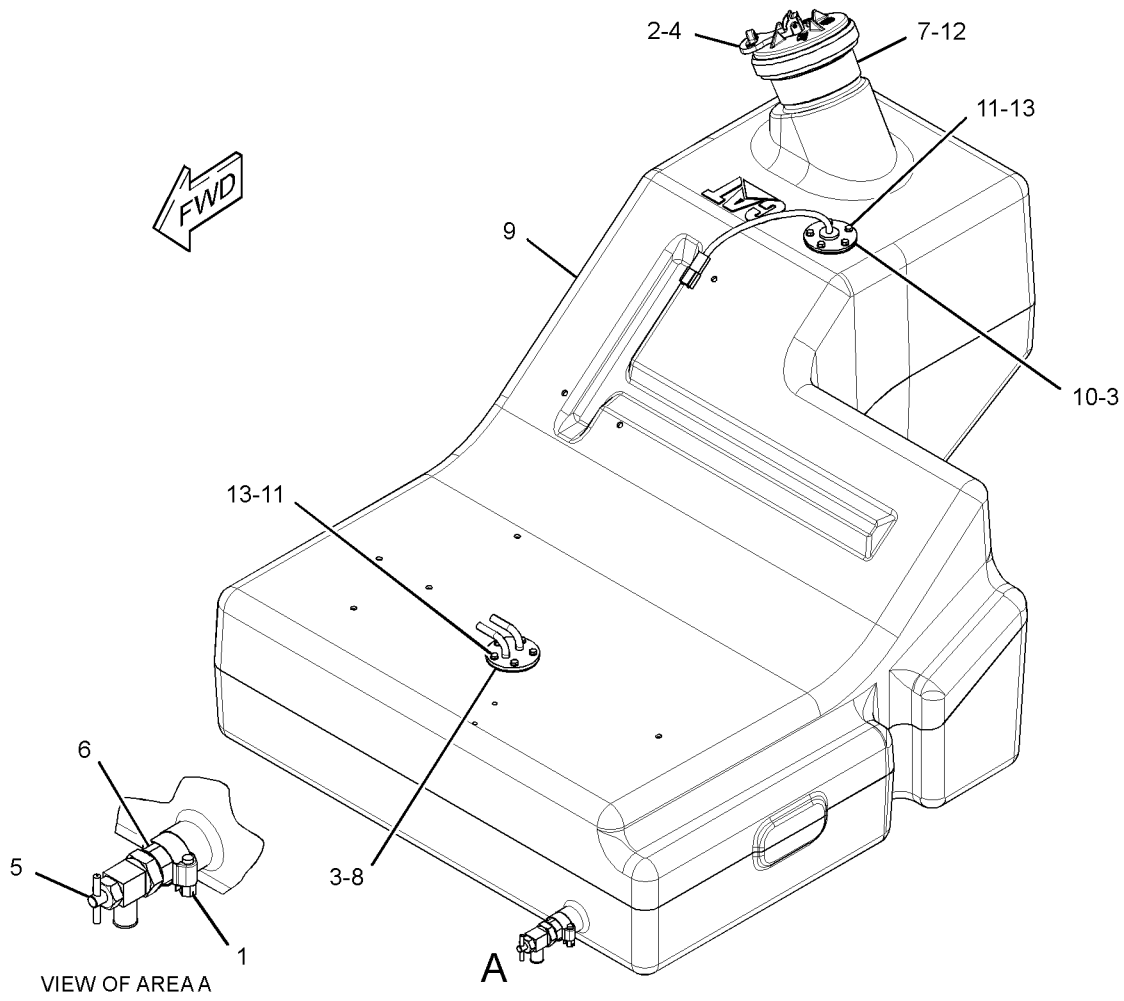

GRAPHIC #1 **<END>** g01455302

3E-6328 ALARM GP

S/N: BZE1-UP; BZG1-UP
24-VOLT
PART OF 224-1152, 243-5693 PANEL GP-INSTRUMENT
ALSO AN ATTACHMENT

SMCS-7400, 7402, 7406, 7407, 7429 **i02942905**

NOTE	REF NO	GRAPHIC REF	PART NUMBER	QTY	PART NAME 1 2 3 4 5 6 (PRODUCT LEVEL)	SEE PAGE
	1	1	**102-8802**	1	KIT-RECEPTACLE (2-PIN)	
					(INCLUDES RECEPTACLE AS & WEDGE)	
	2	1	**186-3735**	2	PIN-CONNECTOR (16-GA TO 18-GA)	

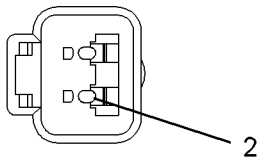

VIEW A–A

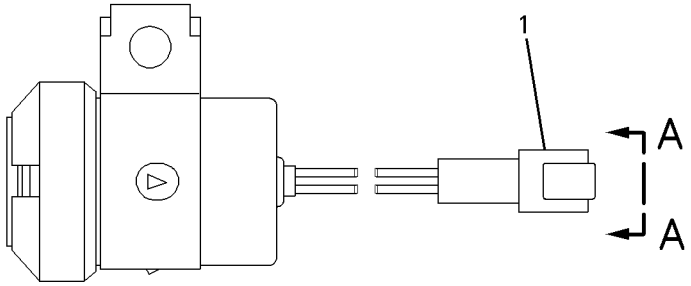

GRAPHIC #1 **<END>** g00697818

233-9533 ALTERNATOR GP-CHARGING

S/N: CRS1-UP

PART OF 177-9752 ENGINE AR-PRIMARY

SMCS-1405 **i02651359**

NOTE	REF NO	GRAPHIC REF	PART NUMBER	QTY	PART NAME 1 2 3 4 5 6 (PRODUCT LEVEL)	SEE PAGE
	1	1	**6B-0933**	1	SPACER (10.31X19.05X6.35-MM THK)	
M	2	1	**6I-0260**	1	BOLT (M8X1.25X25-MM)	
M	3	1	**6I-0454**	1	BOLT (M10X1.5X70-MM)	
	4	1	**6I-0594**	1	NUT (M10X1.15-THD)	
	5	1	**7W-2632**	1	WASHER (8.5X16.8X1.6-MM THK)	
	6	1	**100-8451**	1	BOLT	
	7	1	**113-6349**	1	NUT (M12X1.75X93-MM)	
M	8	1	**140-8783**	2	BOLT (M10X45-THD)	
	9	1	**225-3146**	1	ALTERNATOR GP-CHARGING (24-VOLT)	
	10	1	**233-9530**	1	BRACKET	
	11	1	**233-9531**	1	LEVER-ADJUSTING	
	12	1	**233-9532**	1	PULLEY-ALTERNATOR	
	13	1	**067-6366**	1	WASHER (M8X1.25-THD)	

M-METRIC PART

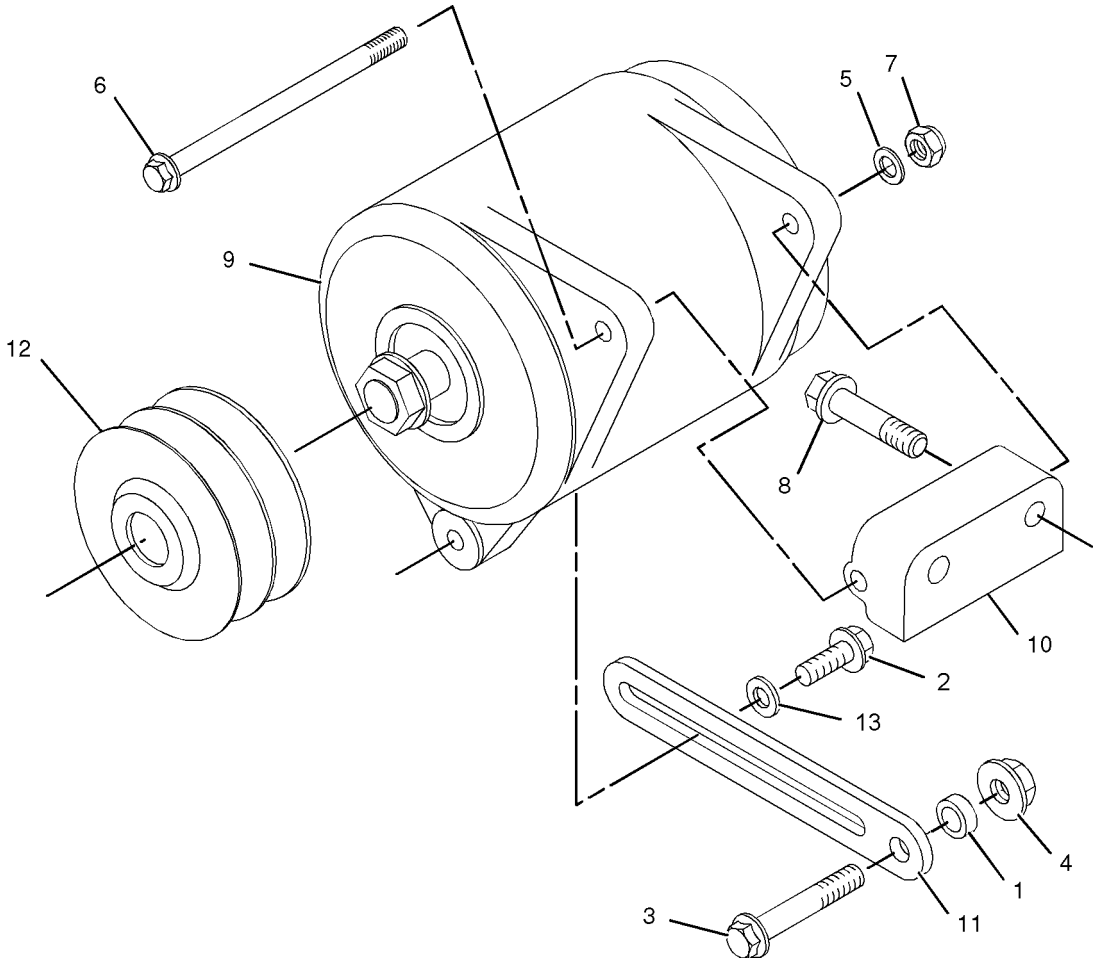

GRAPHIC #1 **<END>** g01045894

ELECTRICAL AND STARTING SYSTEM

238-8682 BATTERY & WIRING GP

S/N: BZE1-UP; BZG1-UP

PART OF 238-8680 ELECTRICAL AR

SMCS-1401, 1402, 1408 **i02557767**

NOTE	REF NO	GRAPHIC REF	PART NUMBER	QTY	PART NAME 1 2 3 4 5 6 (PRODUCT LEVEL)	SEE PAGE
	1	1	**1G-9960**	12	CLAMP	
	2	1	**3E-8320**	1	PLATE-INSTRUCTION (BATTERY)	
	3	1	**3S-2093**	1	STRAP-CABLE	
	4	1	**5P-7177**	1	RETAINER	
	5	1	**6W-6005**	1	HOLD-DOWN-BATTERY	
	6	1	**7V-5628**	6	PLATE	
	7	1	**9G-8909**	1	COVER-TERMINAL (BLACK)	
	8	1	**038-9317**	2	TREAD-NONSKID	
	9	1	**111-7758**	1	ROD	
	10	1	**128-0314**	1	CABLE AS	
E		1	**5P-0761**		CABLE (00-GA, RED) (29-CM)	
		1	**9G-0002**	1	COVER-TERMINAL (RED)	
		1	**9G-0005**	1	COVER-TERMINAL (BLACK)	
		1	**8C-5918**	1	TERMINAL AS (NEGATIVE)	
		1	**8T-9756**	1	TERMINAL AS (POSITIVE)	
	11	1	**143-1646**	1	CABLE AS	
E		1	**5P-0747**		CABLE (00-GA, BLACK) (32-CM)	
		1	**1S-7252**	1	TERMINAL-CABLE (00-GA, 3/8-IN BOLT)	
		1	**7N-5274**	1	COVER-TERMINAL (BLACK)	
		1	**8L-8413**	1	STRAP-CABLE	
		1	**9G-8909**	1	COVER-TERMINAL (BLACK)	
		1	**3S-6050**	1	TERMINAL AS-BATTERY (NEGATIVE)	
		1	**1M-6119**	1	BOLT (5/16-18X1.375-IN)	
		1	**1M-6120**	1	NUT (5/16-18-THD)	
	12	1	**197-8932**	1	MAT	
	13	1	**9U-1950**	1	CABLE AS	
E		1	**5P-0761**		CABLE (00-GA, RED) (178-CM)	
		1	**1S-7251**	1	TERMINAL-CABLE (00-GA, 1/2-IN BOLT)	
		1	**8N-0869**	1	COVER-TERMINAL (RED)	
		1	**8N-1725**	1	COVER-TERMINAL (RED)	
		1	**8L-8413**	1	STRAP-CABLE	
		1	**3S-6049**	1	TERMINAL AS-BATTERY (POSITIVE)	
		1	**1M-6119**	1	BOLT (5/16-18X1.375-IN)	
		1	**1M-6120**	1	NUT (5/16-18-THD)	
	14	1	**217-3627**	1	PLATE	
	15	1	**227-5446**	1	CABLE AS	
E		1	**5P-0744**		CABLE (00-GA, BLACK) (17-CM)	
		1	**1S-7251**	1	TERMINAL-CABLE (00-GA, 1/2-IN BOLT)	
		1	**1S-7252**	1	TERMINAL-CABLE (00-GA, 3/8-IN BOLT)	
	16	1	**3T-5760**	2	BATTERY (12-VOLT, MAINTENANCE FREE)	
	17	1	**5P-4115**	2	WASHER-HARD (7.2X19X2-MM THK)	
	18	1	**5P-4116**	3	WASHER-HARD (8.8X20.5X2-MM THK)	
M	19	1	**8T-4138**	2	BOLT (M6X1X20-MM)	
Y	20	1	**7N-0718**	1	SWITCH GP-DISCONNECT	149
M	21	1	**8C-8451**	12	BOLT (M6X1X40-MM)	
M	22	1	**8T-0389**	1	LOCKNUT (M10X1.5-THD)	
	23	1	**8T-4222**	1	WASHER-PLATED (11X32X2.5-MM THK)	
	24	1	**8T-4223**	1	WASHER-HARD (13.5X25.5X3-MM THK)	
M	25	1	**8T-4244**	1	NUT (M12X1.75-THD)	
M	26	1	**9X-2616**	3	SCREW-SOCKET (M8X1.25X16-MM)	

E-ORDER BY THE CENTIMETER
M-METRIC PART
Y-SEPARATE ILLUSTRATION

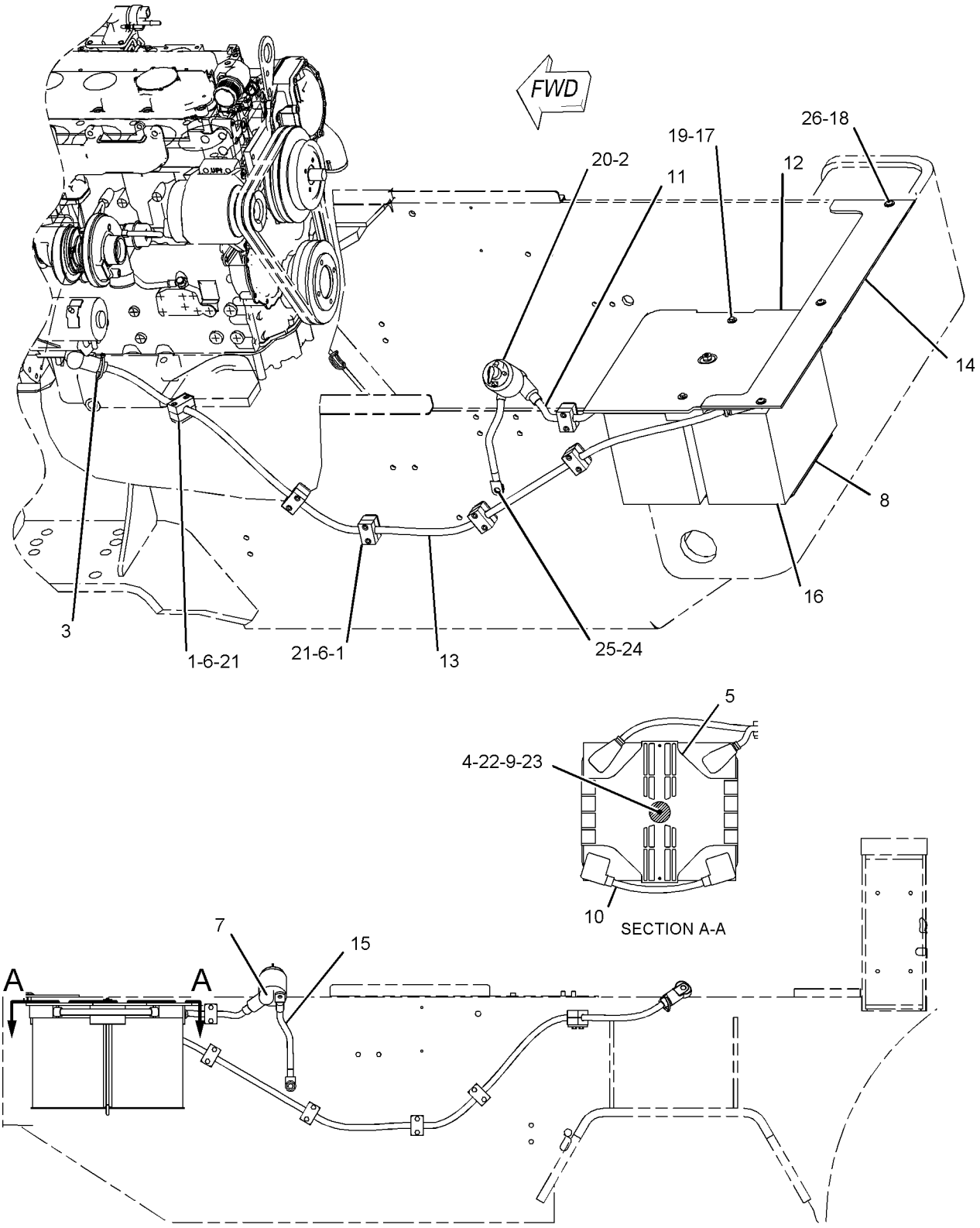

LEFT SIDE VIEW

GRAPHIC #1

<END>

g01047680

240-5535 CONVERTER GP-ELECTRICAL

S/N: CRS1-UP
PART OF 177-9752, 297-4047 ENGINE AR-PRIMARY
ALSO AN ATTACHMENT

SMCS-1421 **i02877892**

NOTE	REF NO	GRAPHIC REF	PART NUMBER	QTY	PART NAME 1 2 3 4 5 6 (PRODUCT LEVEL)	SEE PAGE
	1	1	**300-5183**	1	RESISTOR AS (24-VOLT)	

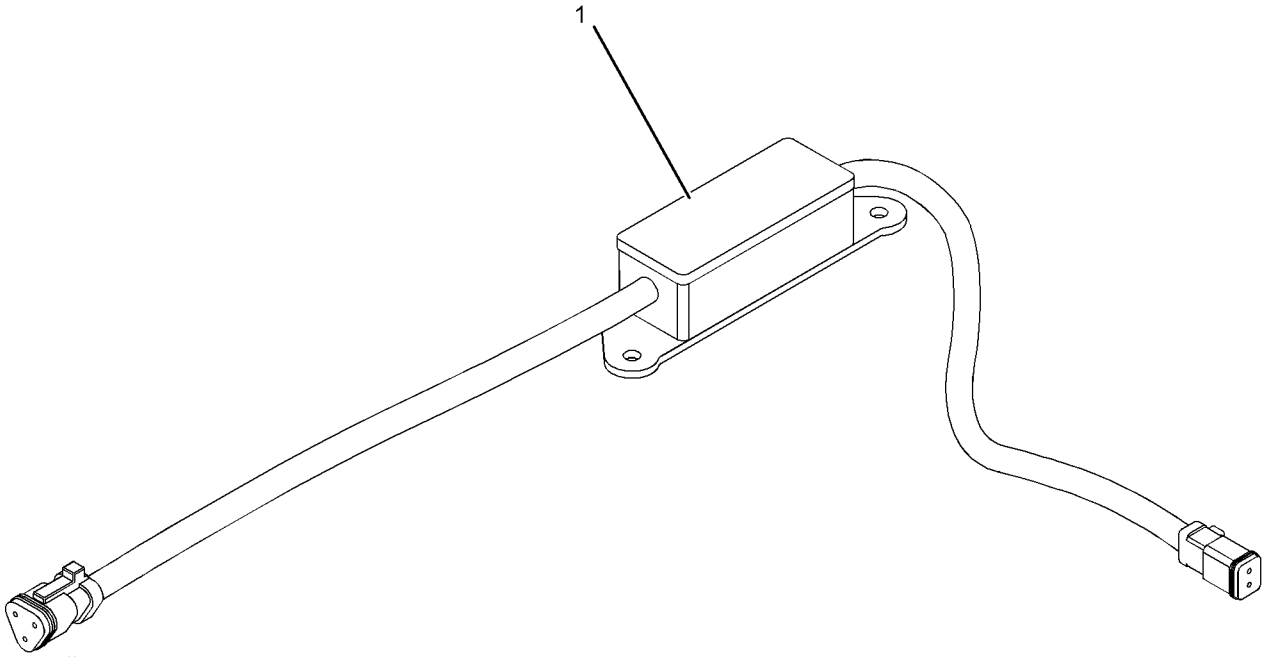

GRAPHIC #1 **<END>** g01029709

238-8680 ELECTRICAL AR

S/N: BZE1-UP; BZG1-UP

PART OF 230-4178, 231-8816 COMMON AR

SMCS-1408 **i02293871**

NOTE	PART NUMBER	QTY	PART NAME 1 2 3 4 5 6 (PRODUCT LEVEL)	SEE PAGE
Y	*238-8682*	1	BATTERY & WIRING GP	127
Y	*220-8549*	1	WARNING GP-BACKUP	152
Y	*222-4921*	1	WIRING GP-MACHINE	156

Y-SEPARATE ILLUSTRATION

<END>

233-9834 GLOW PLUG GP

S/N: CRS1-UP

PART OF 177-9752 ENGINE AR-PRIMARY

SMCS-1412 **i02783111**

NOTE	REF NO	GRAPHIC REF	PART NUMBER	QTY	PART NAME 1 2 3 4 5 6 (PRODUCT LEVEL)	SEE PAGE
	1	1	**286-4880**	1	BAR	
	2	1	**226-8770**	4	GLOW PLUG	
	3	1	**232-3126**	1	CLIP	

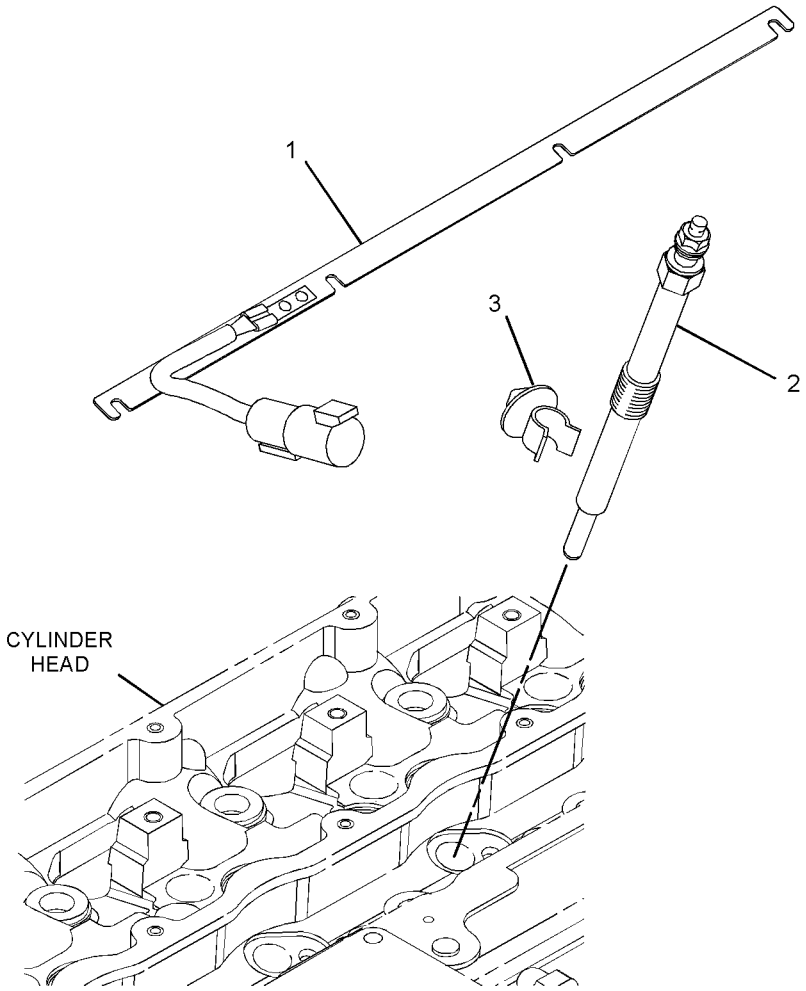

GRAPHIC #1 **<END>** g01392990

3E-6389 LAMP GP-DOME

S/N: BZE1-UP; BZG1-UP
24-VOLT, WITH SWITCH
PART OF 214-4073 LINER GP-CAB
AN ATTACHMENT

SMCS-1433 **i02942903**

NOTE	REF NO	GRAPHIC REF	PART NUMBER	QTY	PART NAME 1 2 3 4 5 6 (PRODUCT LEVEL)	SEE PAGE
	1	1	**7N-9943**	1	LAMP (24-VOLT) (DOME)	
	2	1	**102-8803**	1	KIT-RECEPTACLE (3-PIN)	
					(INCLUDES RECEPTACLE AS & WEDGE)	
	3	1	**186-3735**	3	PIN-CONNECTOR (16-GA TO 18-GA)	
	4	1	**7T-0020**	1	LENS-DOME LAMP	

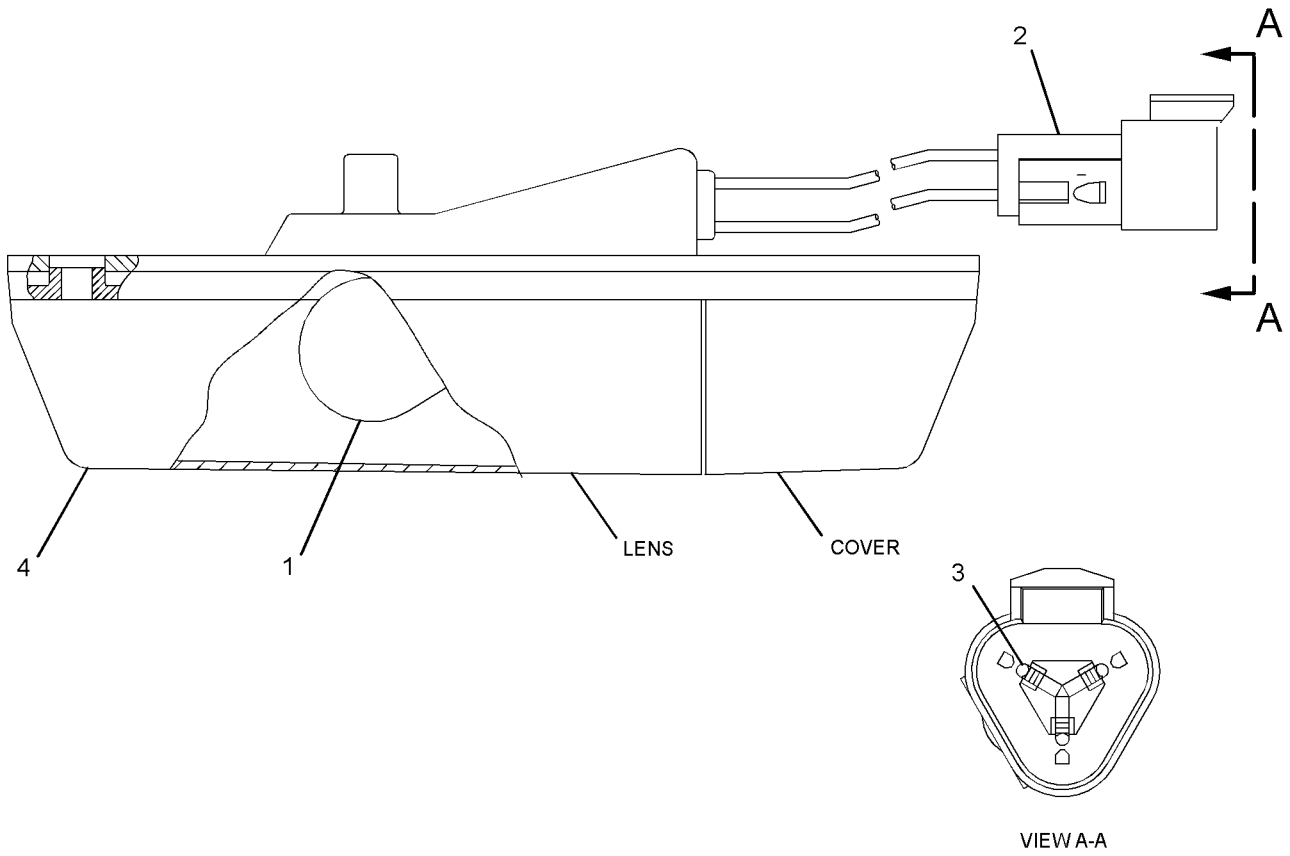

GRAPHIC #1 **<END>** g01270113

9X-1439 LAMP GP-FLOOD—VERTICAL MOUNT

S/N: BZE1-UP; BZG1-UP
24-VOLT
OPTIONAL FIELD REPLACEMENT ORDER 162-3294—PAGE 136, 1-165-0699 KIT-MOUNTING BRACKET, 1-155-2270 KIT-CONNECTING PLUG, 2-8T-8730 SOCKET-CONNECTOR. FIELD REPLACEMENT FOR 9X-4381—PAGE 134

SMCS-1434 **i02897065**

NOTE	REF NO	GRAPHIC REF	PART NUMBER	QTY	PART NAME 1 2 3 4 5 6 (PRODUCT LEVEL)	SEE PAGE
	1	1	**9X-4244**	4	SCREW-SPECIAL	
	2	1	**9X-4174**	1	LENS AS (FLOODLIGHT)	
		1	**9X-4243**	1	SEAL	
M	3	1	**8T-0337**	2	SCREW-MACHINE (M4X0.7X12-MM)	
	4	1	**9X-3455**	1	BODY AS-LAMP	
	5	1	**9X-3463**	1	LAMP-HALOGEN (24-VOLT, 65-WATT) (FLOODLIGHT)	

M-METRIC PART

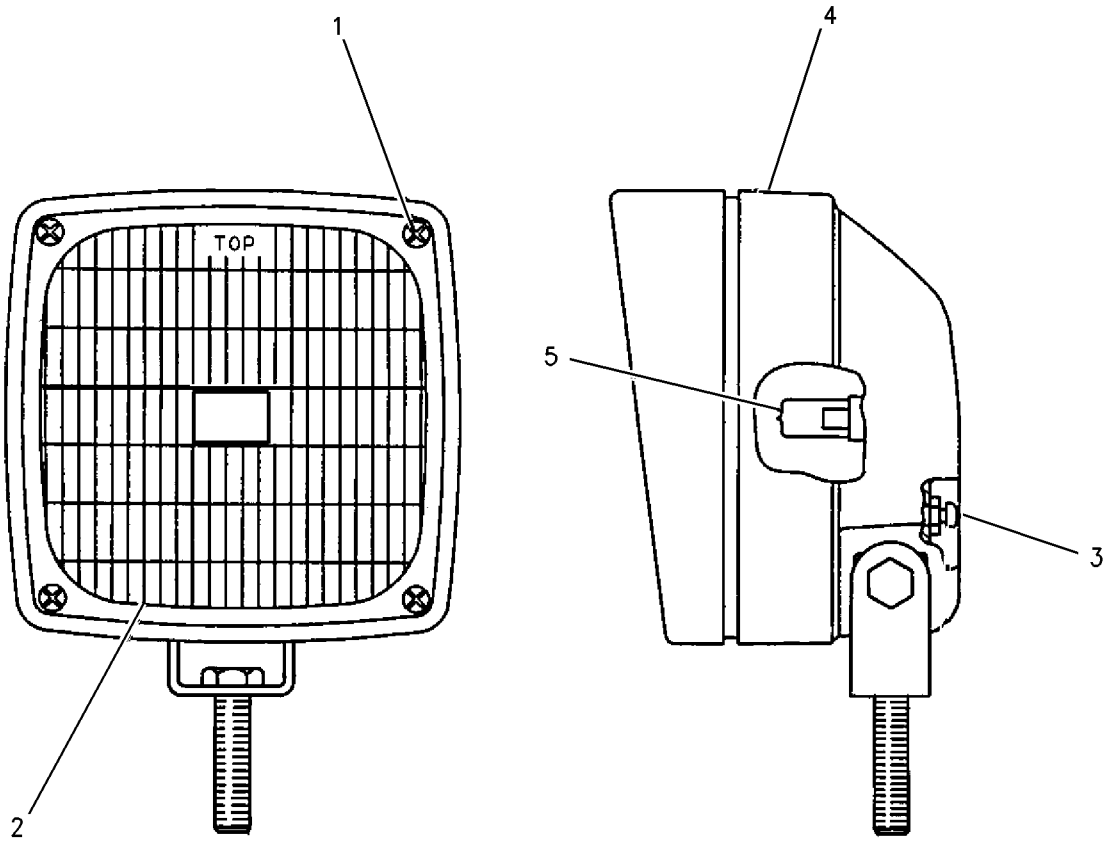

GRAPHIC #1 **<END>** g00644587

9X-4381 LAMP GP-FLOOD–SUSPENDED MOUNT

S/N: BZE1-UP; BZG1-UP
24-VOLT
PART OF 204-1321, 226-7758 LIGHTING GP-FLOOD
FIELD REPLACEMENT ORDER 9X-1439–PAGE 133
ALSO AN ATTACHMENT

SMCS-1434 **i02138908**

NOTE	REF NO	GRAPHIC REF	PART NUMBER	QTY	PART NAME 1 2 3 4 5 6 (PRODUCT LEVEL)	SEE PAGE
	1	1	**9X-4244**	4	SCREW-SPECIAL	
	2	1	**9X-4174**	1	LENS AS (FLOODLIGHT)	
M	3	1	**8T-0337**	2	SCREW-MACHINE (M4X0.7X12-MM)	
	4	1	**9X-3455**	1	BODY AS-LAMP	
		1	**8T-4121**	1	WASHER-HARD (11X21X2.5-MM THK)	
M		1	**8T-4133**	1	NUT (M10X1.5-THD)	
	5	1	**9X-3463**	1	LAMP-HALOGEN (24-VOLT, 65-WATT) (FLOODLIGHT)	
	6	1	**9X-4243**	1	SEAL	

M-METRIC PART

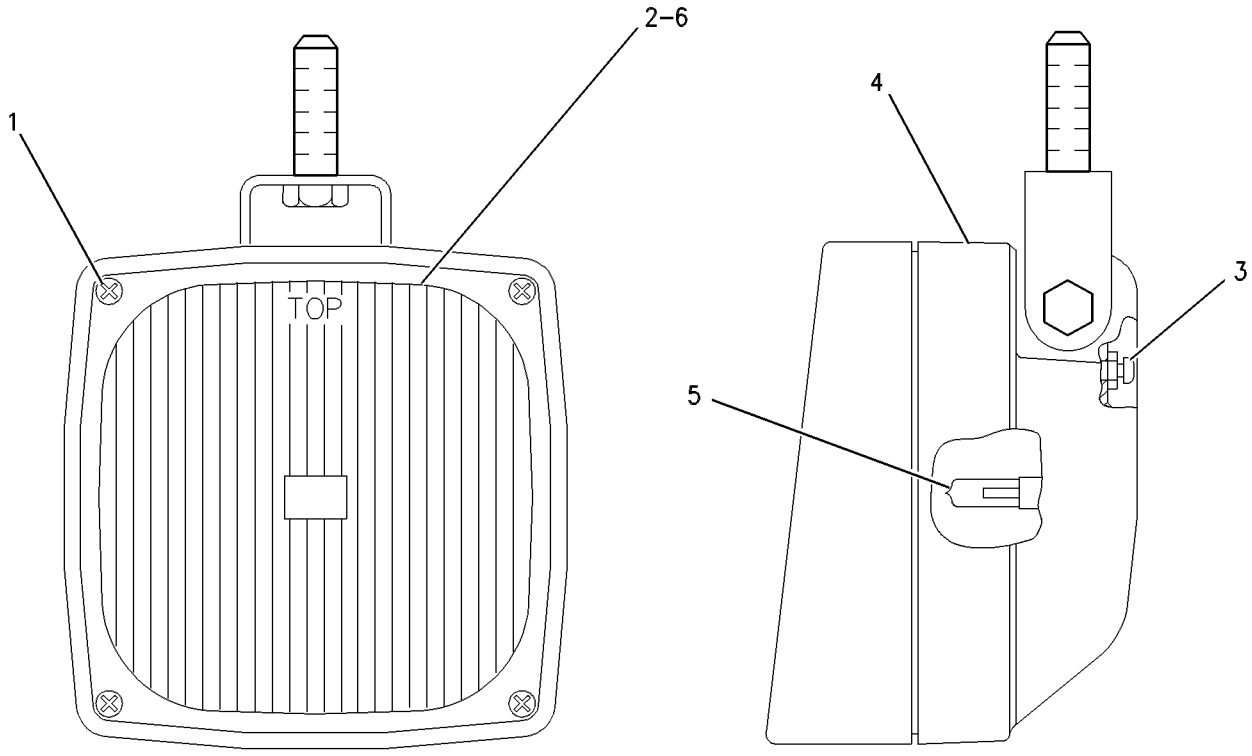

GRAPHIC #1 **<END>** g00384712

107-6689 LAMP GP-FLOOD

S/N: BZE1-UP; BZG1-UP
24 VOLT. VERTICAL
PART OF 234-9980 LIGHTING GP-FLOOD
AN ATTACHMENT

SMCS-1434 **i02154281**

NOTE	REF NO	GRAPHIC REF	PART NUMBER	QTY	PART NAME 1 2 3 4 5 6 (PRODUCT LEVEL)	SEE PAGE
	1	1	**107-5851**	4	SCREW (M4X32-MM)	
	2	1	**107-5853**	1	LENS AS (FLOODLIGHT)	
		1	**107-5852**	1	SEAL	
	3	1	**107-5854**	1	BODY AS-LAMP	
M		1	**8T-0337**	2	SCREW-MACHINE (M4X0.7X12-MM)	
	4	1	**9X-3463**	1	LAMP-HALOGEN (24-VOLT, 65-WATT) (FLOODLIGHT)	

M-METRIC PART

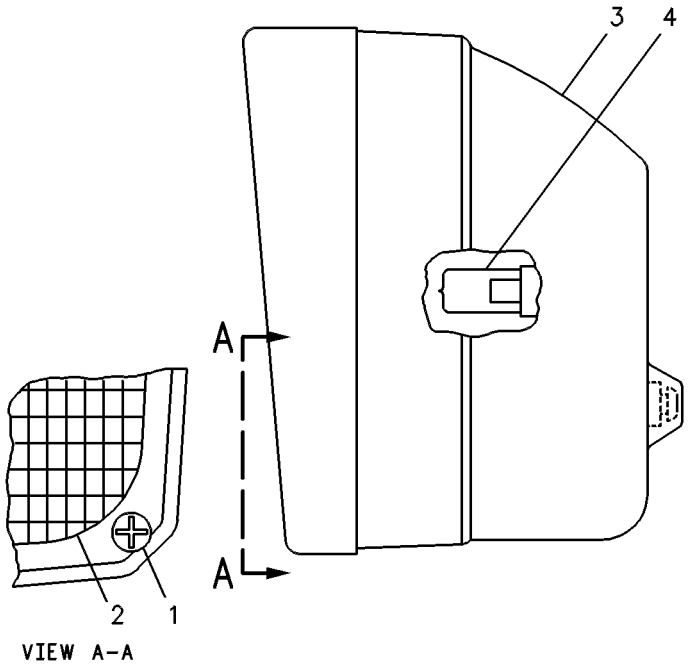

VIEW A-A

GRAPHIC #1 **<END>** g00084818

162-3294 LAMP GP-FLOOD—VERTICAL MOUNT

S/N: BZE1-UP; BZG1-UP
24-VOLT
FIELD REPLACEMENT FOR 9X-1439—PAGE 133

SMCS-1434 **i01740166**

NOTE	REF NO	GRAPHIC REF	PART NUMBER	QTY	PART NAME 1 2 3 4 5 6 (PRODUCT LEVEL)	SEE PAGE
	1	1	**9X-3463**	1	LAMP-HALOGEN (24-VOLT, 65-WATT) (FLOOD)	
	2	1	**162-5372**	1	BODY AS-LAMP	
	3	1	**158-0248**	1	LENS AS (FLOOD)	
	4	1	**158-0252**	1	BEZEL	
	5	1	**188-8849**	2	CLAMP	
	6	1	**186-3735**	2	PIN-CONNECTOR (16-GA TO 18-GA)	
J	7	1	**3E-3365**	1	WEDGE-RECEPTACLE LOCK (2-PIN)	
J	8	1	**102-8802**	1	KIT-RECEPTACLE (2-PIN)	
					(INCLUDES RECEPTACLE AS & WEDGE)	

J-KIT MARKED J SERVICES PART MARKED J

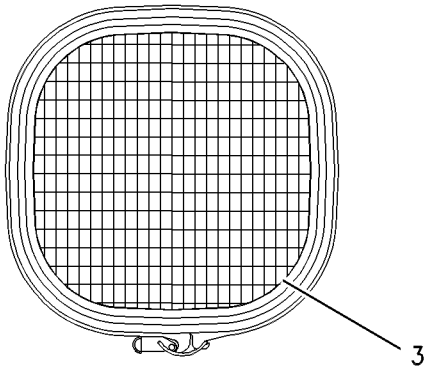

FRONT VIEW

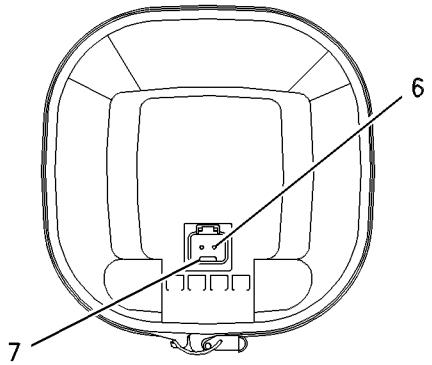

REAR VIEW

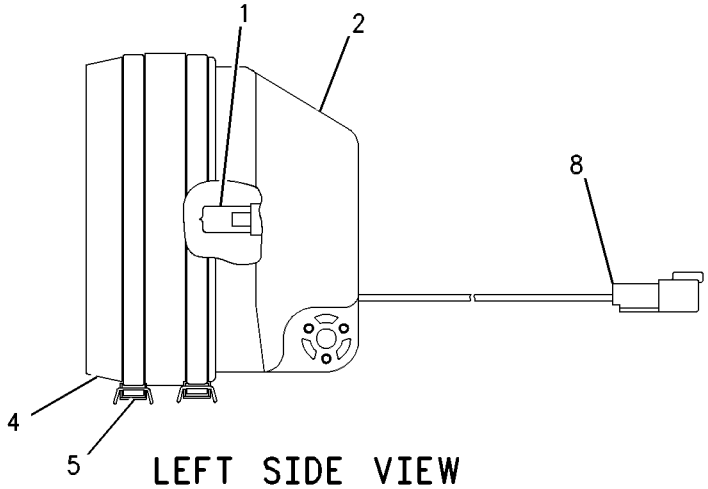

LEFT SIDE VIEW

GRAPHIC #1

<END>

g00510980

219-6487 LAMP GP-FLOOD

S/N: BZE1-UP; BZG1-UP
24-VOLT, 65-WATT
PART OF 204-1321 LIGHTING GP-FLOOD
ALSO AN ATTACHMENT

SMCS-1434 **i02920280**

NOTE	REF NO	GRAPHIC REF	PART NUMBER	QTY	PART NAME 1 2 3 4 5 6 (PRODUCT LEVEL)	SEE PAGE
	1	1	**9X-3463**	1	LAMP-HALOGEN (24-VOLT, 65-WATT)	
M	2	1	**8T-6912**	1	BOLT (M8X1.25X50-MM)	
M	3	1	**6V-9189**	1	LOCKNUT (M8X1.25-THD)	
	4	1	**8T-4224**	2	WASHER-HARD (8.8X16X2-MM THK)	
	5	1	**9X-4244**	2	SCREW-SPECIAL	
	6	1	**202-6614**	1	LENS AS (FLOODLIGHT)	
	7	1	**175-4292**	1	BODY AS	
	8	1	**164-7556**	1	BRACKET (LAMP RETAINING)	
	9	1	**175-4291**	1	BRACKET AS	

M-METRIC PART

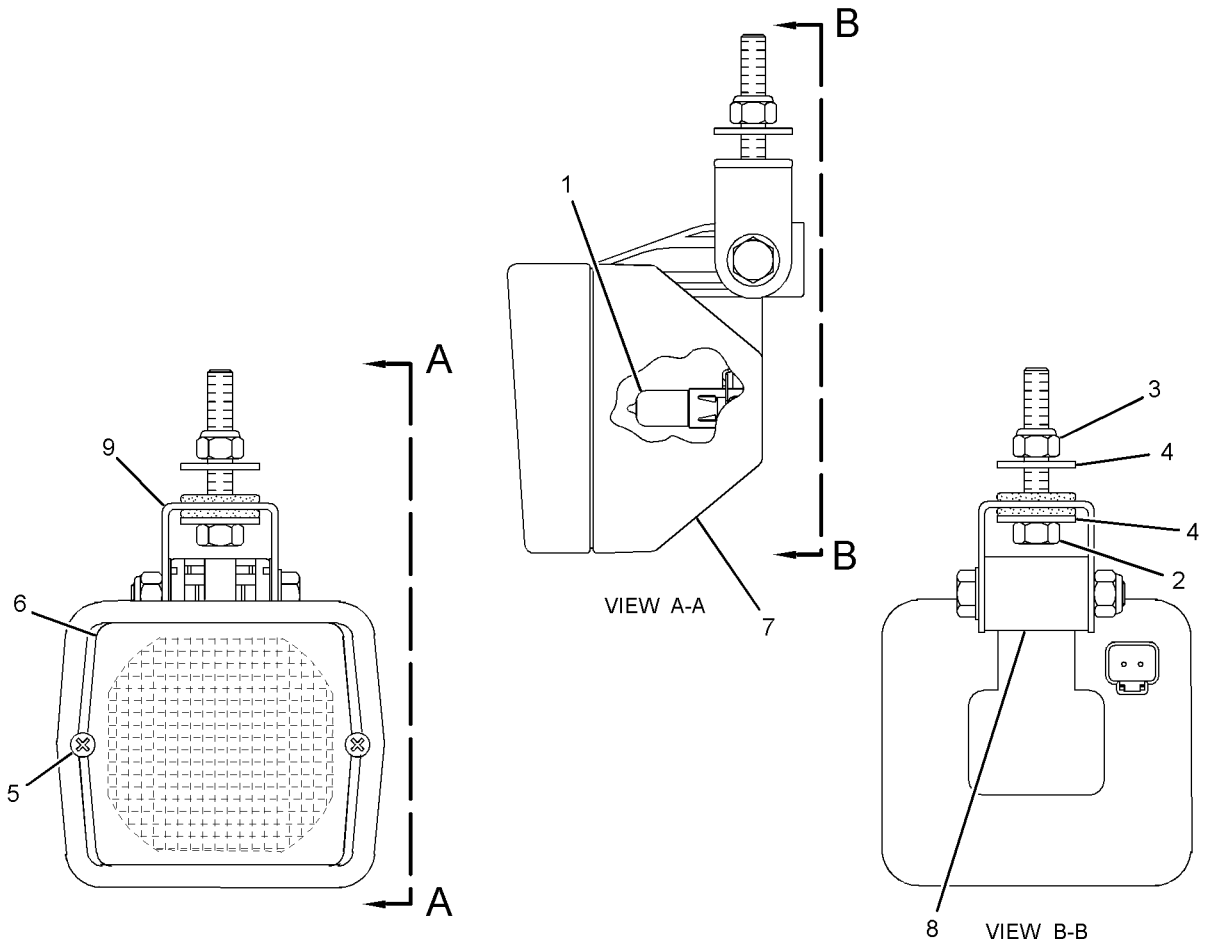

GRAPHIC #1 **<END>** g01453913

108-1029 LAMP GP-WARNING BEACON–AMBER

S/N: BZE1-UP; BZG1-UP
24-VOLT
PART OF 204-1304, 204-1305 LIGHTING GP-WARNING
AN ATTACHMENT

SMCS-1431 **i02505603**

NOTE	REF NO	GRAPHIC REF	PART NUMBER	QTY	PART NAME 1 2 3 4 5 6 (PRODUCT LEVEL)	SEE PAGE
	1	1	**272-9800**	1	LENS (AMBER)	
	2	1	**9X-7849**	1	LAMP (24-VOLT, 70-WATT) (WARNING BEACON)	
	3	1	**9X-8139**	1	BELT-DRIVE	
	4	1	**9R-7958**	1	CORD AS	
	5	1	**9R-7942**	1	PLUG AS	

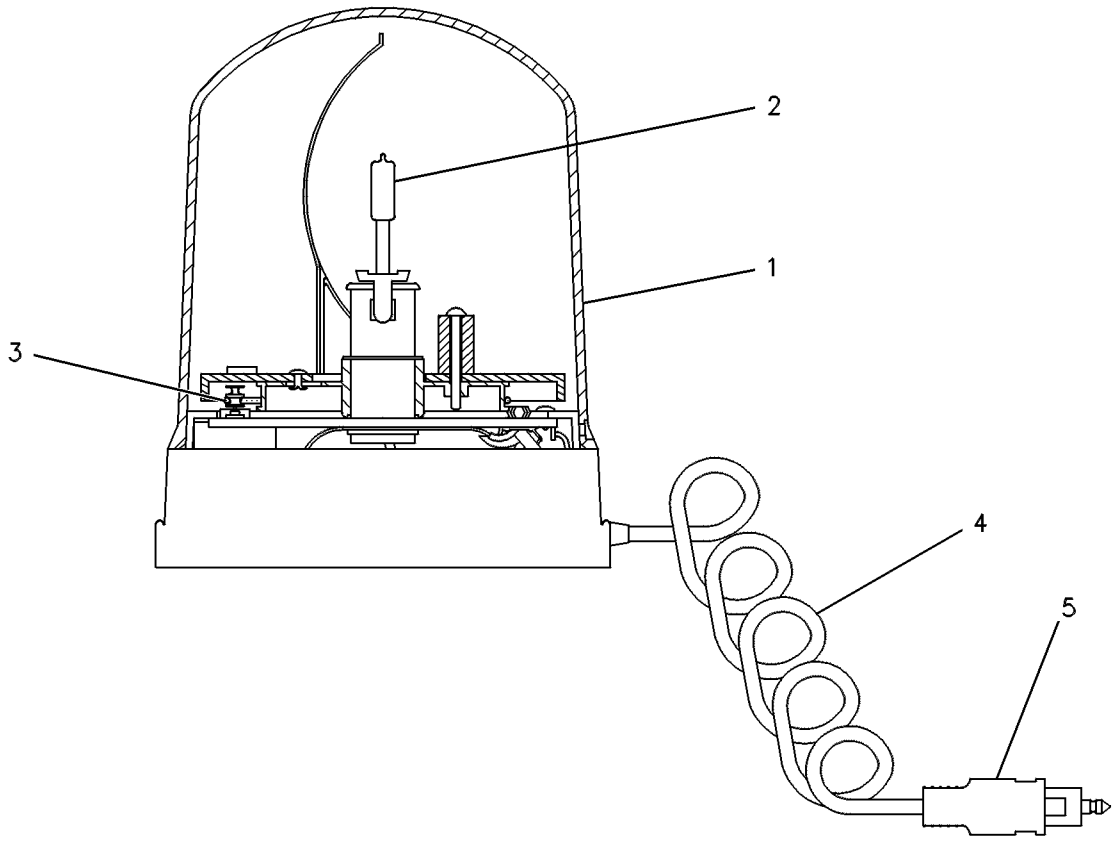

GRAPHIC #1 **<END>** g00131297

204-1321 LIGHTING GP-FLOOD

S/N: BZE1-UP; BZG1-UP
PART OF 236-1518, 236-6627 OPERATOR AR
ALSO AN ATTACHMENT
TYPE 1

SMCS-1434 **i02016377**

NOTE	REF NO	GRAPHIC REF	PART NUMBER	QTY	PART NAME 1 2 3 4 5 6 (PRODUCT LEVEL)	SEE PAGE
	1	1	**3S-2093**	32	STRAP-CABLE	
	2	1	**6T-6329**	1	BEZEL	
	3	1	**6V-8927**	2	BOLT-SOCKET HEAD (6-32X0.5-IN)	
	4	1	**7T-3811**	1	SWITCH AS-ROCKER (FLOOD LIGHT)	
		1	**3L-8187**	6	LOCKWASHER	
		1	**6V-8374**	6	SCREW-MACHINE (6-32X0.25-IN)	
Y	5	1	*9X-4381*	4	LAMP GP-FLOOD (24-VOLT)	134
	6	1	**139-2787**	1	HARNESS AS-LIGHTING (FLOODLIGHT)	
		1	**102-8804**	1	KIT-RECEPTACLE (4-PIN)	
	7	1	**8T-4121**	4	WASHER-HARD (11X21X2.5-MM THK)	
M	8	1	**8T-4133**	4	NUT (M10X1.5-THD)	

M-METRIC PART
Y-SEPARATE ILLUSTRATION

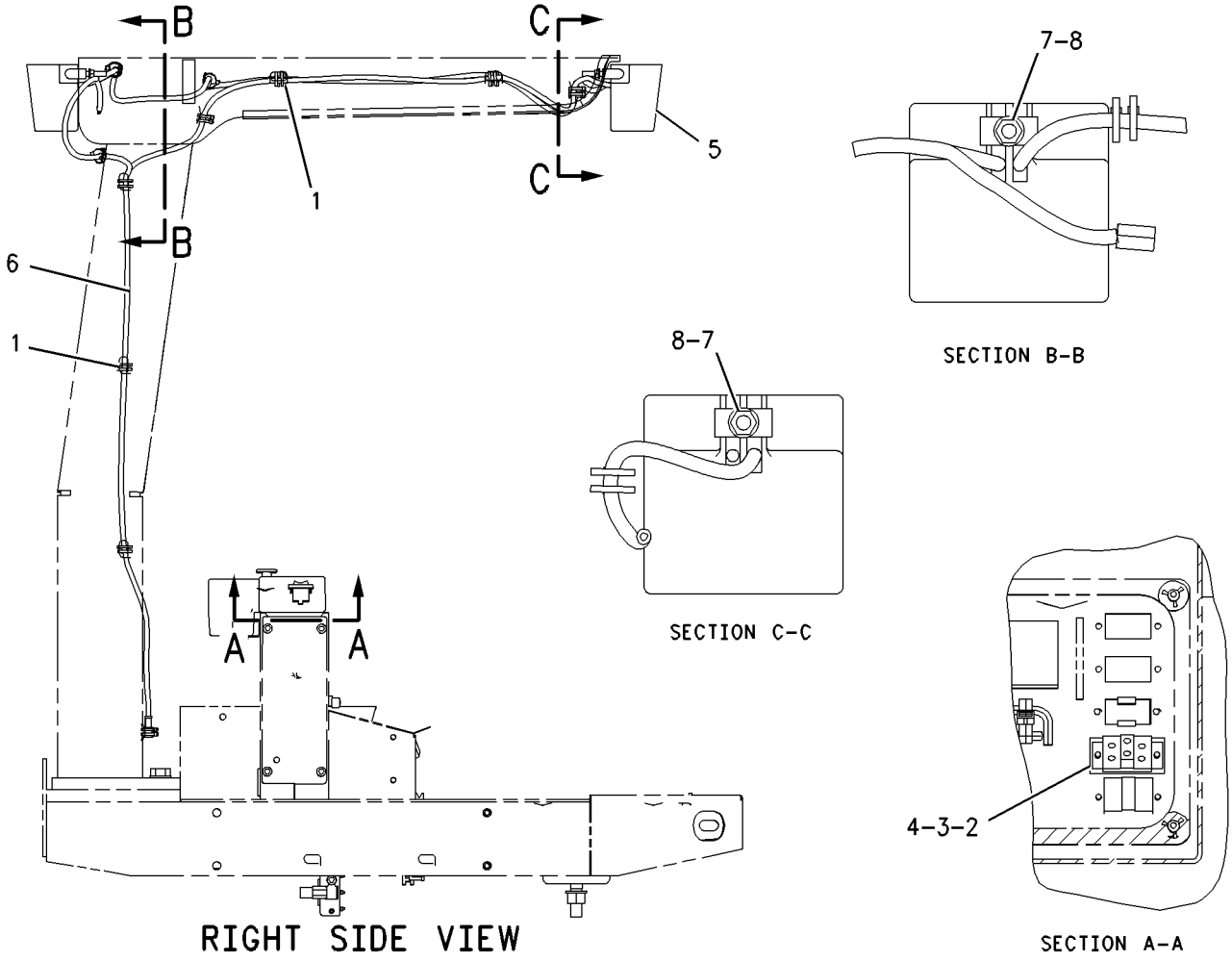

GRAPHIC #1 **<END>** g00840578

204-1321 LIGHTING GP-FLOOD

S/N: BZE1-UP; BZG1-UP
PART OF 236-1518, 236-6627 OPERATOR AR
ALSO AN ATTACHMENT
TYPE 2

SMCS-1434 **i02897068**

NOTE	REF NO	GRAPHIC REF	PART NUMBER	QTY	PART NAME 1 2 3 4 5 6 (PRODUCT LEVEL)	SEE PAGE
	1	1	**3S-2093**	32	STRAP-CABLE	
	2	1	**6T-6329**	1	BEZEL	
	3	1	**6V-8927**	2	BOLT-SOCKET HEAD (6-32X0.5-IN)	
	4	1	**7T-3811**	1	SWITCH AS-ROCKER (FLOOD LIGHT)	
		1	**3L-8187**	6	LOCKWASHER	
		1	**6V-8374**	6	SCREW-MACHINE (6-32X0.25-IN)	
C	5	1	**281-0028**	1	HARNESS AS-LIGHTING (FLOODLIGHT)	
CY	6	1	**219-6487**	4	LAMP GP-FLOOD (24-VOLT, 65-WATT)	137

C-CHANGE FROM PREVIOUS TYPE
Y-SEPARATE ILLUSTRATION

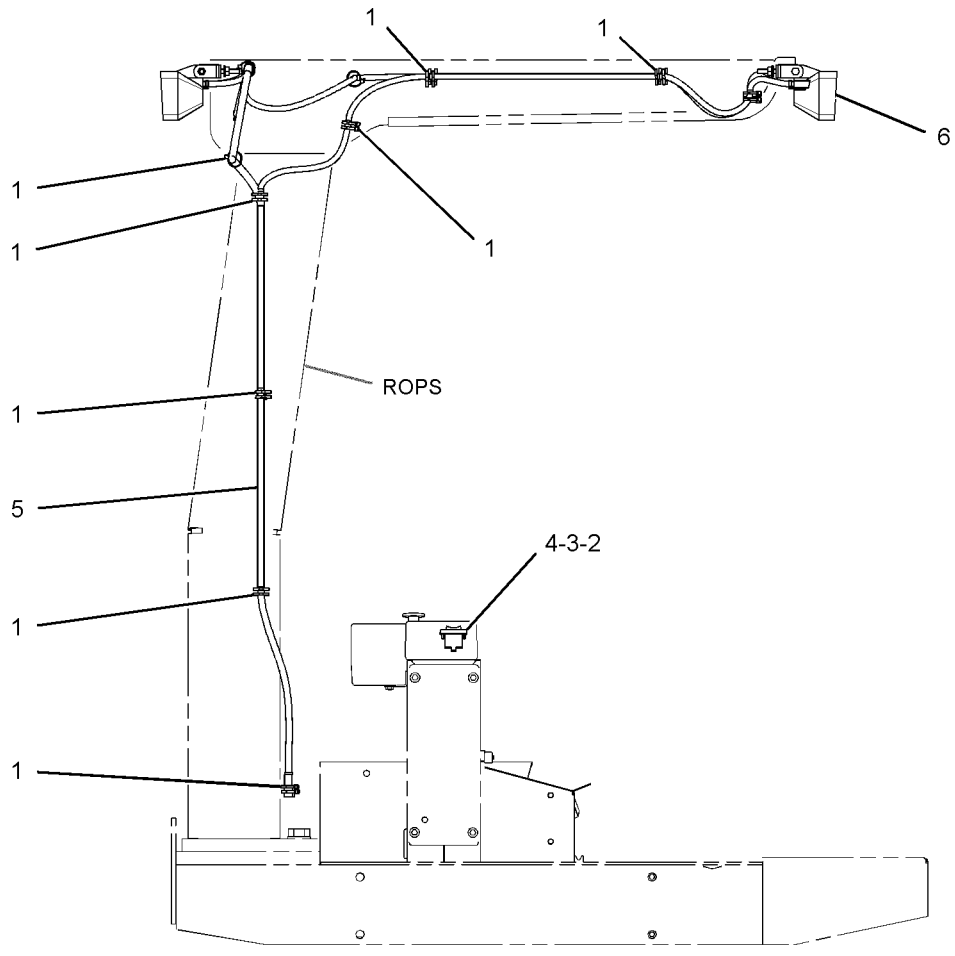

RIGHT SIDE VIEW

GRAPHIC #1

<END>

g01427198

226-7758 LIGHTING GP-FLOOD

S/N: BZE1-UP; BZG1-UP
PART OF 223-4791, 254-5054, 259-4423 CAB AR
AN ATTACHMENT

SMCS-1434 **i02138916**

NOTE	REF NO	GRAPHIC REF	PART NUMBER	QTY	PART NAME 1 2 3 4 5 6 (PRODUCT LEVEL)	SEE PAGE
	1	1	**9R-7941**	1	SOCKET AS	
		1	**9R-7980**	1	COVER	
	2	1	**9X-0506**	6	TIE	
	3	1	**190-0360**	1	HARNESS AS-LIGHTING (FLOODLIGHT)	
		1	**102-8804**	1	KIT-RECEPTACLE (4-PIN)	
					(INCLUDES RECEPTACLE AS & WEDGE)	
		1	**186-3735**	2	PIN-CONNECTOR (16-GA TO 18-GA)	
	4	1	**8T-4121**	8	WASHER-HARD (11X21X2.5-MM THK)	
M	5	1	**8T-4133**	4	NUT (M10X1.5-THD)	
	6	1	**9R-2620**	4	PLUG	
Y	7	1	**9X-4381**	4	LAMP GP-FLOOD (24-VOLT)	134

M-METRIC PART
Y-SEPARATE ILLUSTRATION

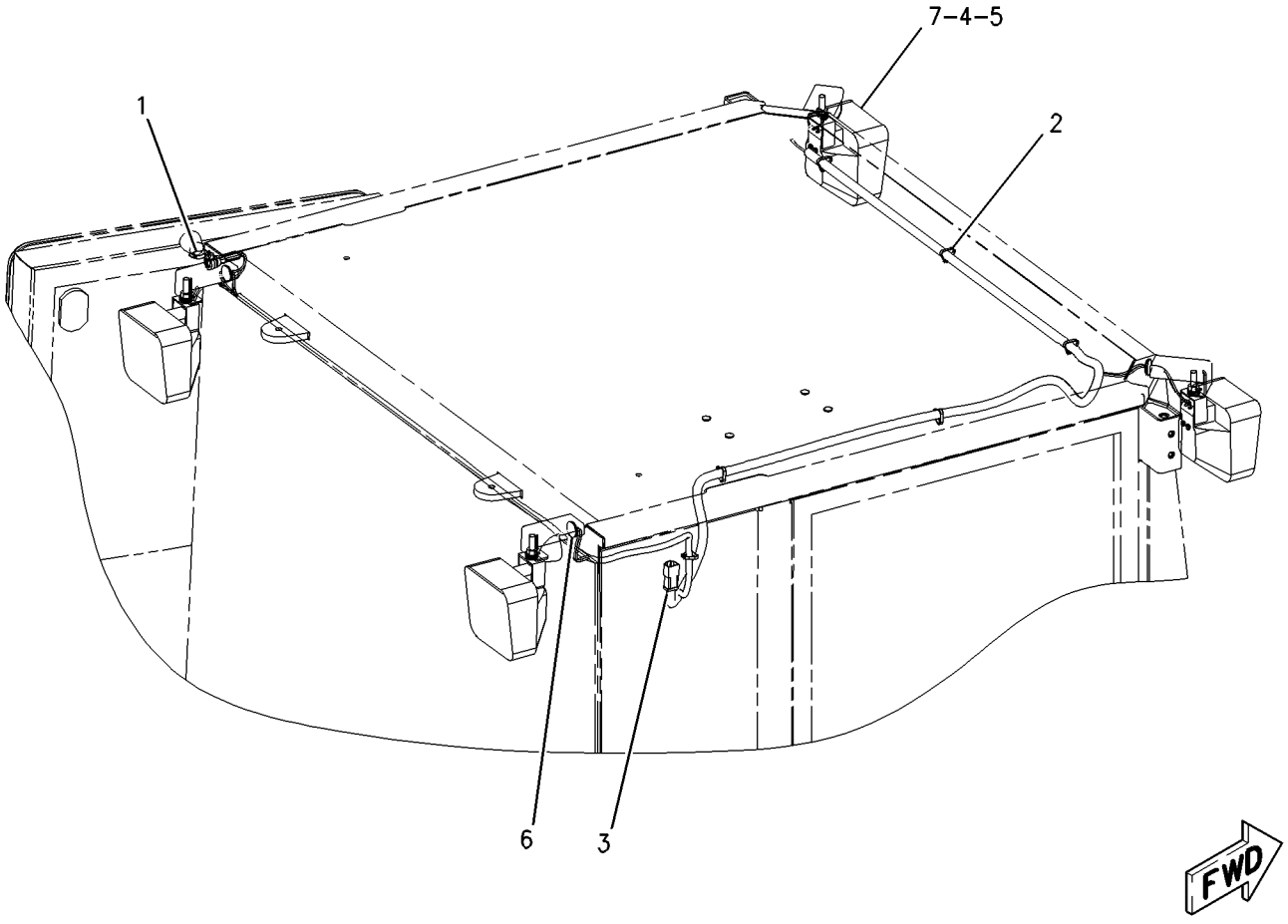

GRAPHIC #1 **<END>** g00998732

234-9980 LIGHTING GP-FLOOD–OPEN ROPS

S/N: BZE1-UP; BZG1-UP
PART OF 236-1517 OPERATOR AR
AN ATTACHMENT

SMCS-1434 **i02144124**

NOTE	REF NO	GRAPHIC REF	PART NUMBER	QTY	PART NAME 1 2 3 4 5 6 (PRODUCT LEVEL)	SEE PAGE
	1	1	**3S-2093**	6	STRAP-CABLE	
	2	1	**6T-6329**	1	BEZEL	
	3	1	**6V-8927**	2	BOLT-SOCKET HEAD (6-32X0.5-IN)	
	4	1	**7T-3811**	1	SWITCH AS-ROCKER (FLOOD LIGHTS)	
		1	**3L-8187**	6	LOCKWASHER	
		1	**6V-8374**	6	SCREW-MACHINE (6-32X0.25-IN)	
	5	1	**8Q-6744**	6	BASE-MOUNTING	
	6	1	**9N-1909**	2	BRACKET	
	7	1	**130-6469**	4	BRACKET AS	
	8	1	**183-7413**	1	BRACKET	
	9	1	**215-6300**	1	HARNESS AS-LIGHTING (FLOODLIGHT)	
		1	**102-8804**	1	KIT-RECEPTACLE (4-PIN)	
					(INCLUDES RECEPTACLE AS & WEDGE)	
Y	10	1	**107-6689**	4	LAMP GP-FLOOD (24-VOLT)	135
M	11	1	**5C-7261**	3	NUT (M8X1.25-THD)	
M	12	1	**6V-7744**	2	LOCKNUT (M10X1.5-THD)	
M	13	1	**6V-9189**	4	LOCKNUT (M8X1.25-THD)	
	14	1	**7K-1181**	9	STRAP-CABLE	
	15	1	**8T-4121**	8	WASHER-HARD (11X21X2.5-MM THK)	
M	16	1	**8T-4136**	4	BOLT (M10X1.5X25-MM)	
M	17	1	**8T-4137**	2	BOLT (M10X1.5X20-MM)	
M	18	1	**8T-4189**	3	BOLT (M8X1.25X20-MM)	
	19	1	**8T-4224**	14	WASHER-HARD (8.8X16X2-MM THK)	
M	20	1	**8T-6869**	4	BOLT (M8X1.25X60-MM)	
	21	1	**9X-7344**	1	GROMMET	

M-METRIC PART
Y-SEPARATE ILLUSTRATION

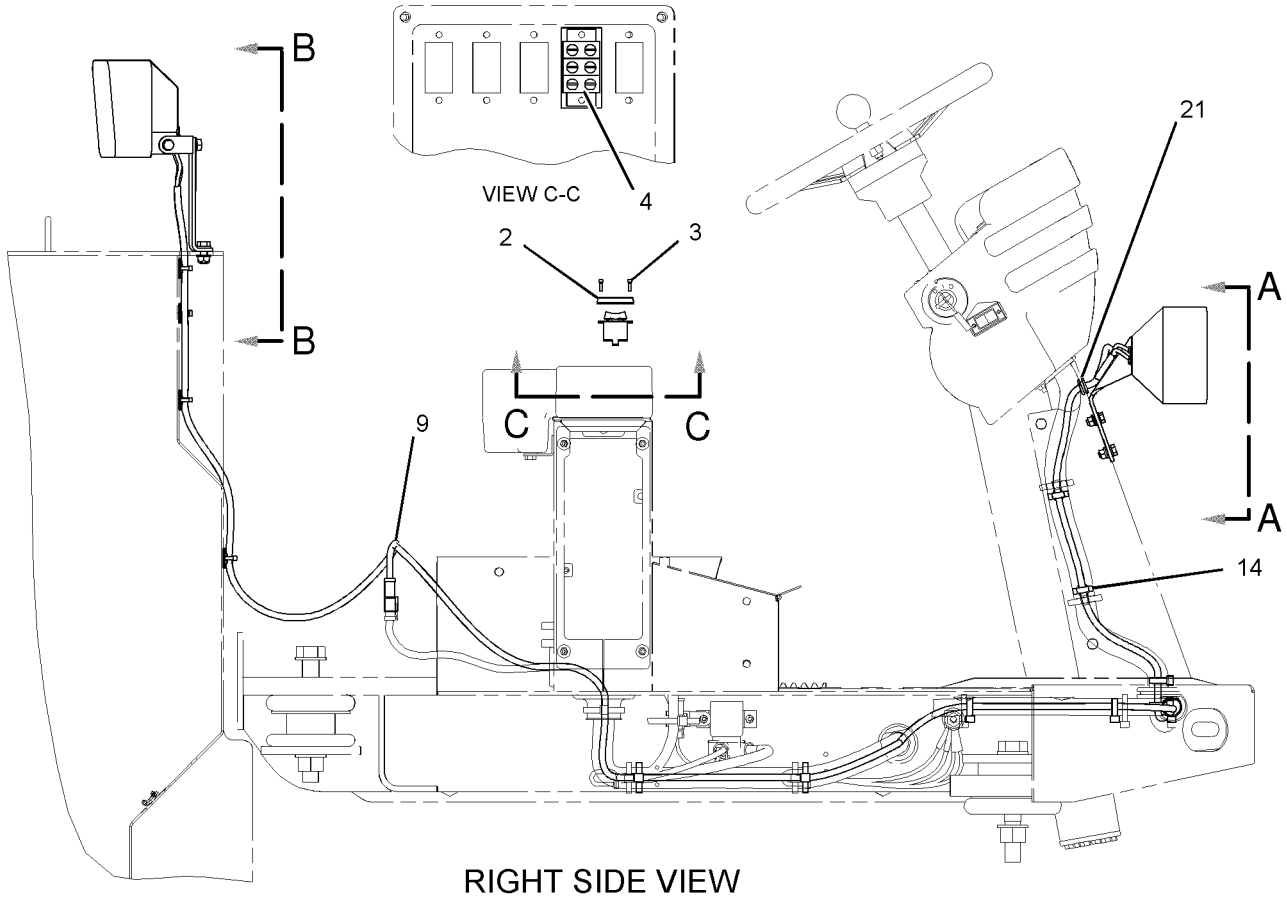

RIGHT SIDE VIEW

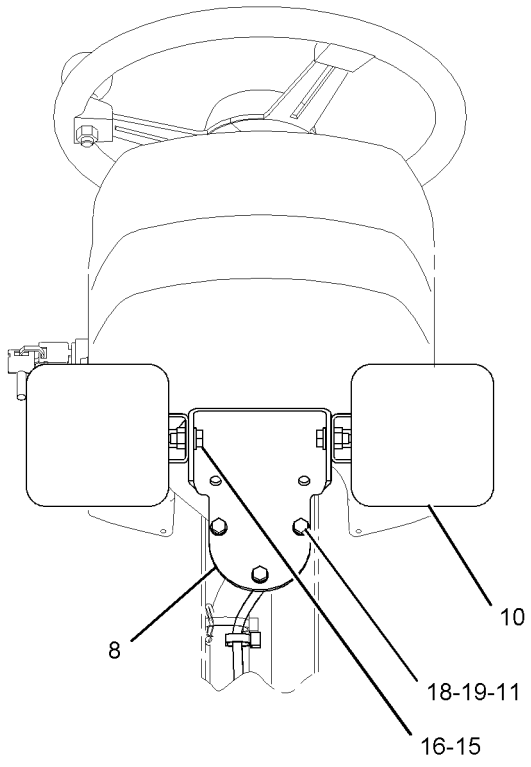

VIEW A-A

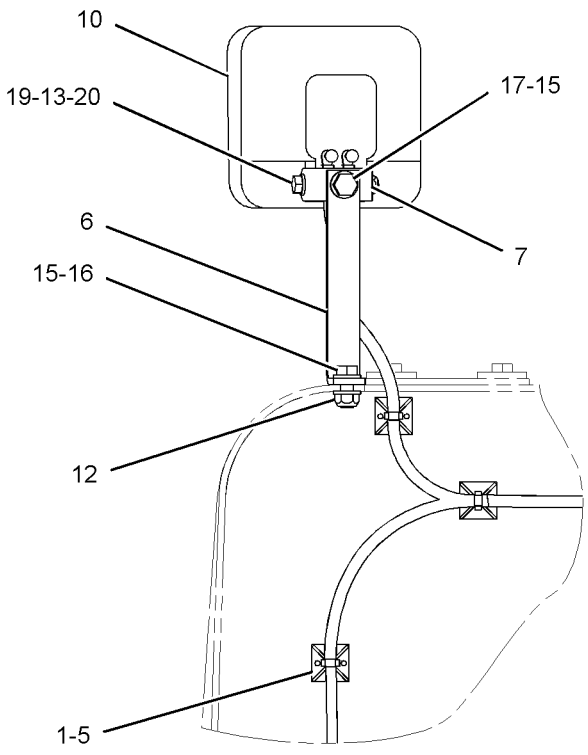

VIEW B-B

GRAPHIC #1 **<END>** g01024203

204-1304 LIGHTING GP-WARNING–ROPS

S/N: BZE1-UP; BZG1-UP
AN ATTACHMENT

SMCS-1431 **i01972497**

NOTE	REF NO	GRAPHIC REF	PART NUMBER	QTY	PART NAME 1 2 3 4 5 6 (PRODUCT LEVEL)	SEE PAGE
	1	1	**6T-6329**	1	BEZEL	
	2	1	**6V-8927**	2	BOLT-SOCKET HEAD (6-32X0.5-IN)	
	3	1	**9R-7941**	1	SOCKET AS	
		1	**9R-7980**	1	COVER	
Y	4	1	**108-1029**	1	LAMP GP-WARNING BEACON (24-VOLT)	138
	5	1	**6T-3990**	1	SWITCH AS-ROCKER (BEACON)	
		1	**3L-8187**	2	LOCKWASHER	
		1	**6V-8374**	2	SCREW-MACHINE (6-32X0.25-IN)	
	6	1	**8X-7008**	1	BRACKET	
	7	1	**8T-4121**	2	WASHER-HARD (11X21X2.5-MM THK)	
M	8	1	**8T-4133**	1	NUT (M10X1.5-THD)	
M	9	1	**8T-4195**	1	BOLT (M10X1.5X30-MM)	

M-METRIC PART
Y-SEPARATE ILLUSTRATION

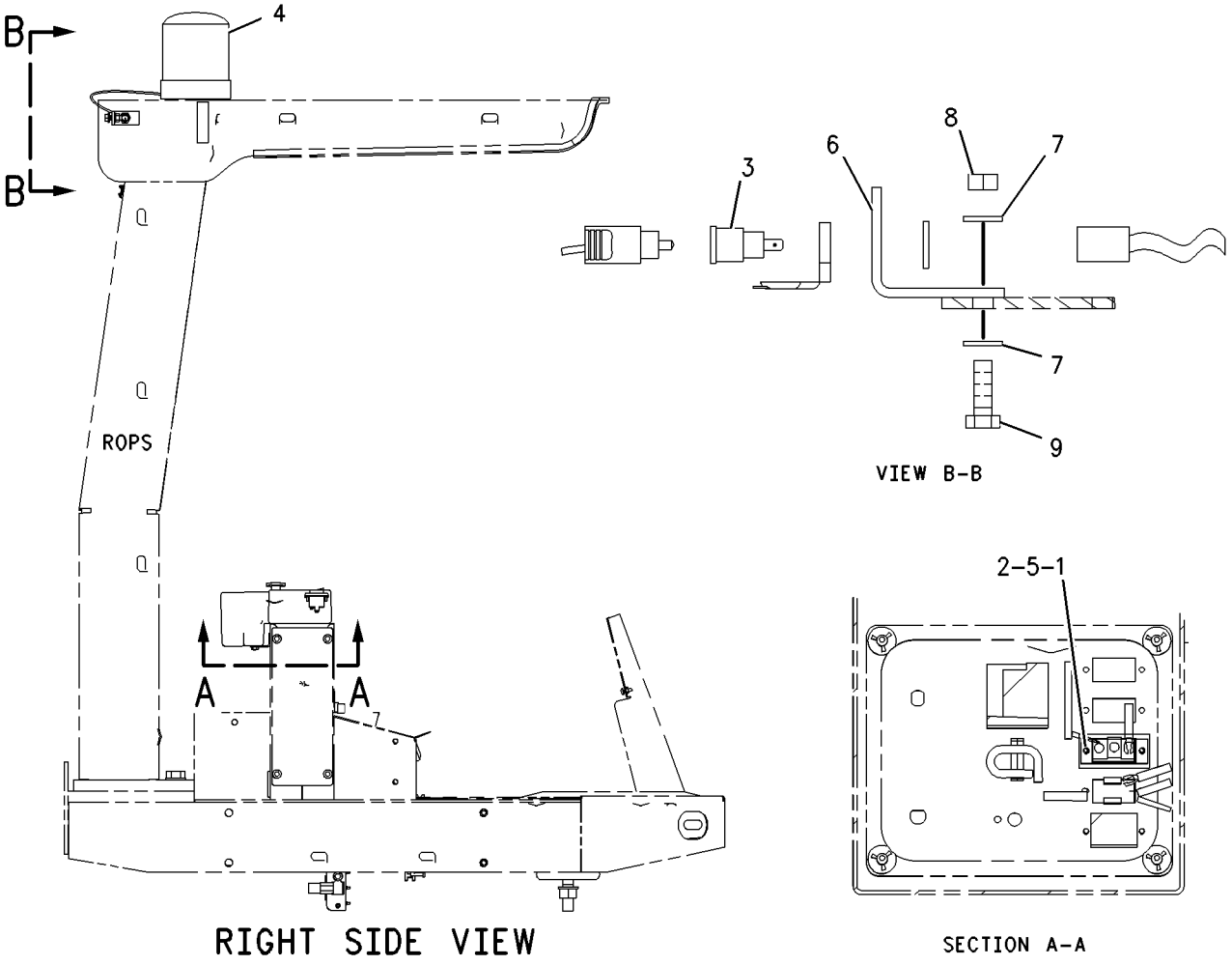

GRAPHIC #1 **<END>** g00853200

204-1305 LIGHTING GP-WARNING–CAB

S/N: BZE1-UP; BZG1-UP
AN ATTACHMENT

SMCS-1431 **i02327508**

NOTE	REF NO	GRAPHIC REF	PART NUMBER	QTY	PART NAME 1 2 3 4 5 6 (PRODUCT LEVEL)	SEE PAGE
	1	1	**6T-6329**	1	BEZEL	
	2	1	**6V-8927**	2	BOLT-SOCKET HEAD (6-32X0.5-IN)	
Y	3	1	**108-1029**	1	LAMP GP-WARNING BEACON (24-VOLT)	138
	4	1	**6T-3990**	1	SWITCH AS-ROCKER (BEACON)	
		1	**3L-8187**	2	LOCKWASHER	
		1	**6V-8374**	2	SCREW-MACHINE (6-32X0.25-IN)	

Y-SEPARATE ILLUSTRATION

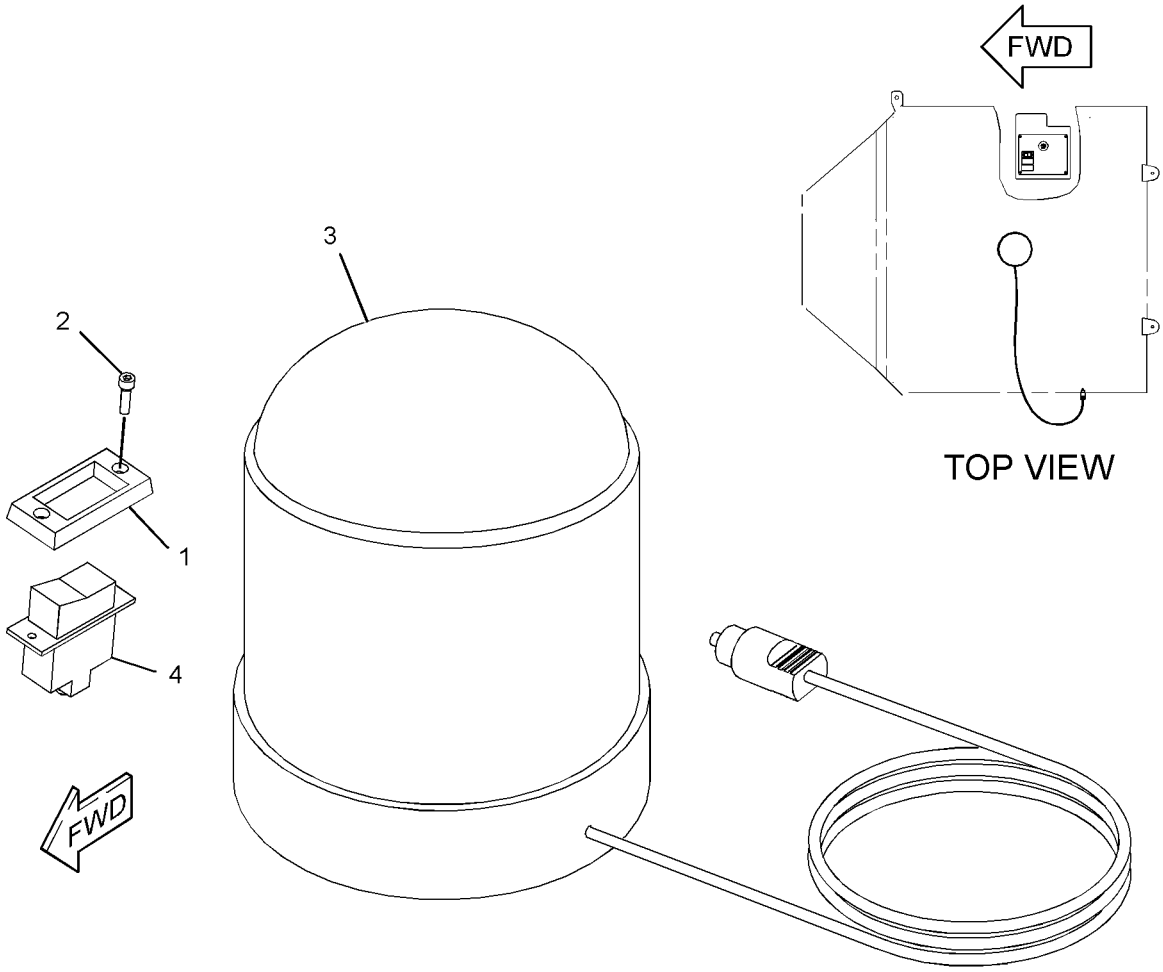

GRAPHIC #1 **<END>** g01160186

228-9108 MODULE GP-TIMER

S/N: BZE1-UP; BZG1-UP
PART OF 224-1152, 243-5693 PANEL GP-INSTRUMENT
ALSO AN ATTACHMENT

SMCS-4490, 7451 **i02130133**

NOTE	REF NO	GRAPHIC REF	PART NUMBER	QTY	PART NAME 1 2 3 4 5 6 (PRODUCT LEVEL)	SEE PAGE
					(NO SERVICED PARTS)	

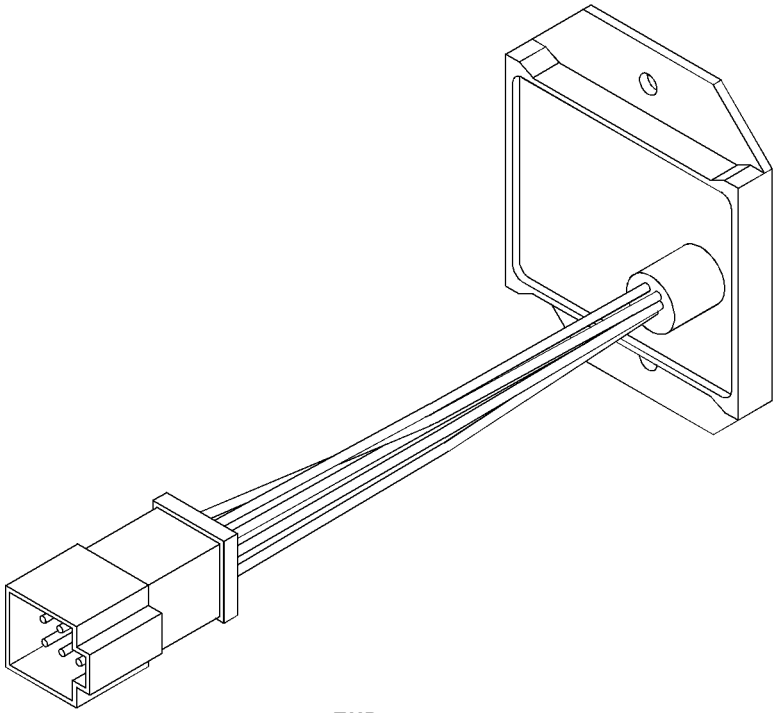

GRAPHIC #1

<END>

g01085465

120-4187 SOLENOID GP-THROTTLE

S/N: BZE1-UP; BZG1-UP
PART OF 227-4799 GOVERNOR GP

SMCS-1265 **i01159952**

NOTE	REF NO	GRAPHIC REF	PART NUMBER	QTY	PART NAME 1 2 3 4 5 6 (PRODUCT LEVEL)	SEE PAGE
	1	1	**119-7017**	1	SOLENOID	
	2	1	**102-8803**	1	KIT-RECEPTACLE (3-PIN)	
					(INCLUDES RECEPTACLE AS & WEDGE)	
BE	3	1	**9X-1813**		SLEEVE	

B-USE AS REQUIRED
E-ORDER BY THE CENTIMETER

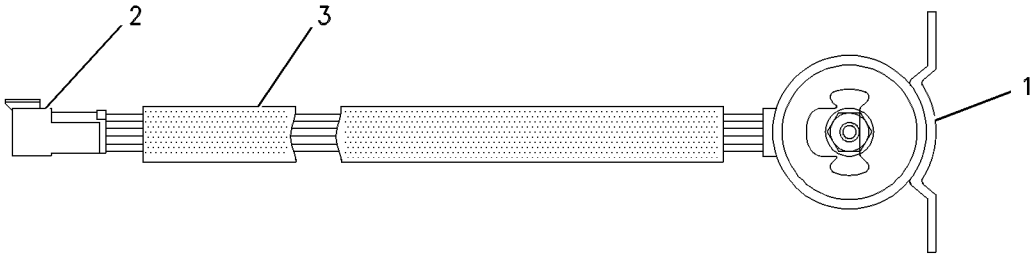

GRAPHIC #1 **<END>** g00476791

230-7304 STARTING MOTOR GP-ELECTRIC

S/N: CRS1-UP
PART OF 177-9752, 297-4047 ENGINE AR-PRIMARY
ALSO AN ATTACHMENT

SMCS-1453 **i02089640**

NOTE	REF NO	GRAPHIC REF	PART NUMBER	QTY	PART NAME 1 2 3 4 5 6 (PRODUCT LEVEL)	SEE PAGE
	1	1	**6I-0364**	3	STUD (M10X1.5X30-MM)	
	2	1	**6I-0594**	3	NUT (M10X1.5-THD)	
	3	1	**225-3150**	1	STARTING MOTOR GP-ELECTRIC	

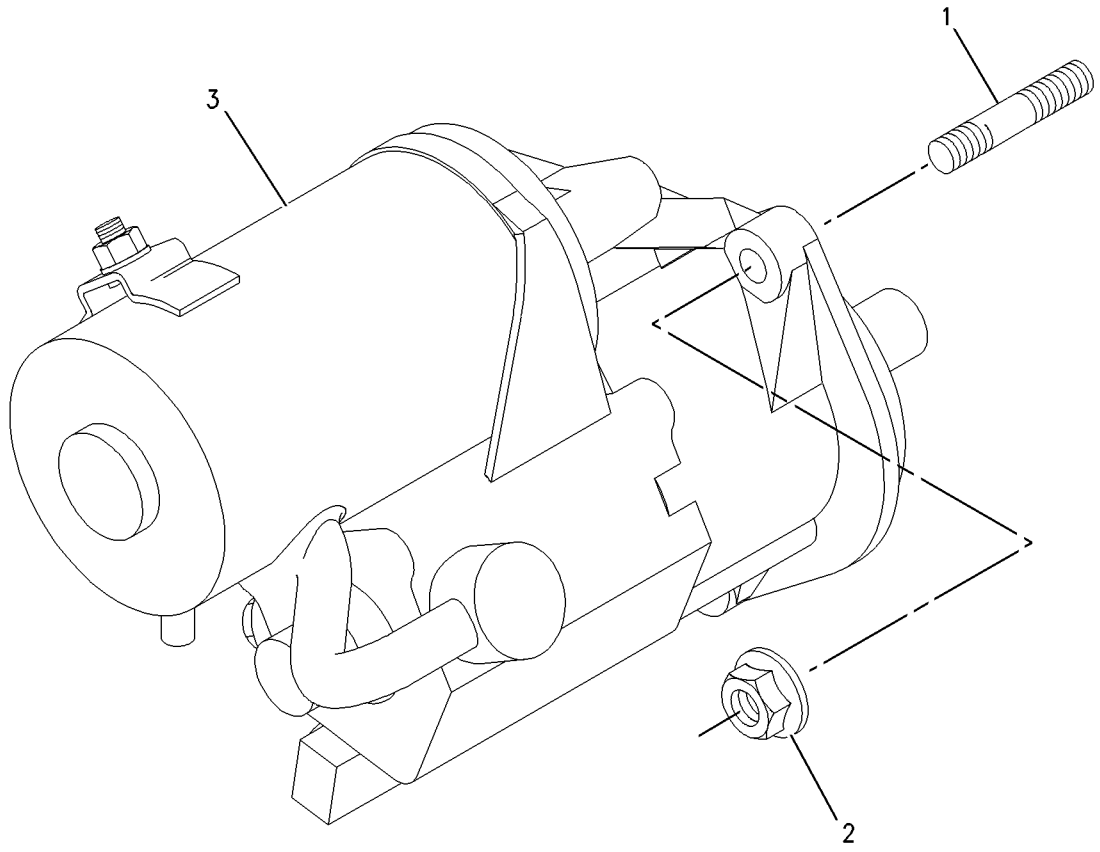

GRAPHIC #1 **<END>** g00933413

7N-0718 SWITCH GP-DISCONNECT–BATTERY

S/N: BZE1-UP; BZG1-UP

PART OF 238-8682 BATTERY & WIRING GP

SMCS-1411 **i02587657**

NOTE	REF NO	GRAPHIC REF	PART NUMBER	QTY	PART NAME 1 2 3 4 5 6 (PRODUCT LEVEL)	SEE PAGE
	1	1	**8H-5306**	1	KEY (BATTERY DISCONNECT)	
	2	1	**8H-5303**	1	NUT (3/4-16-THD)	
	3	1	**2H-3922**	2	LOCKWASHER	
	4	1	**9F-5644**	2	LOCKWASHER	
	5	1	**6F-7045**	2	NUT-FULL (3/8-24-THD)	

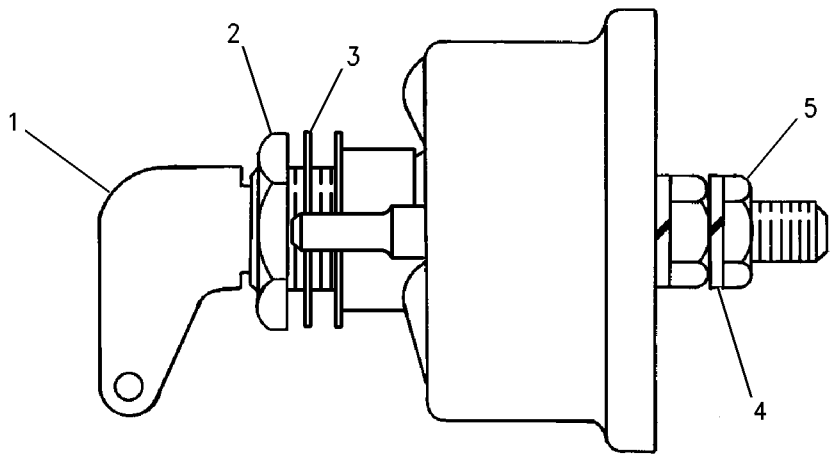

GRAPHIC #1 **<END>** g00715584

167-0138 SWITCH GP-MAGNETIC

S/N: BZE1-UP; BZG1-UP
24-VOLT
PART OF 224-1152, 243-5693 PANEL GP-INSTRUMENT
FIELD REPLACEMENT ORDER 241-8368—PAGE 151
ALSO AN ATTACHMENT

SMCS-7499 **i02021607**

NOTE	REF NO	GRAPHIC REF	PART NUMBER	QTY	PART NAME 1 2 3 4 5 6 (PRODUCT LEVEL)	SEE PAGE
	1	1	**4F-2294**	2	NUT-JAM (5/16-24-THD)	
	2	1	**6V-8186**	2	NUT-FULL (5/16-24-THD)	
	3	1	**155-2270**	1	KIT-CONNECTING PLUG (2-PIN)	
	4	1	**8T-8730**	2	SOCKET-CONNECTOR	
	5	1	**155-2261**	1	WEDGE-PLUG LOCK (2-PIN)	

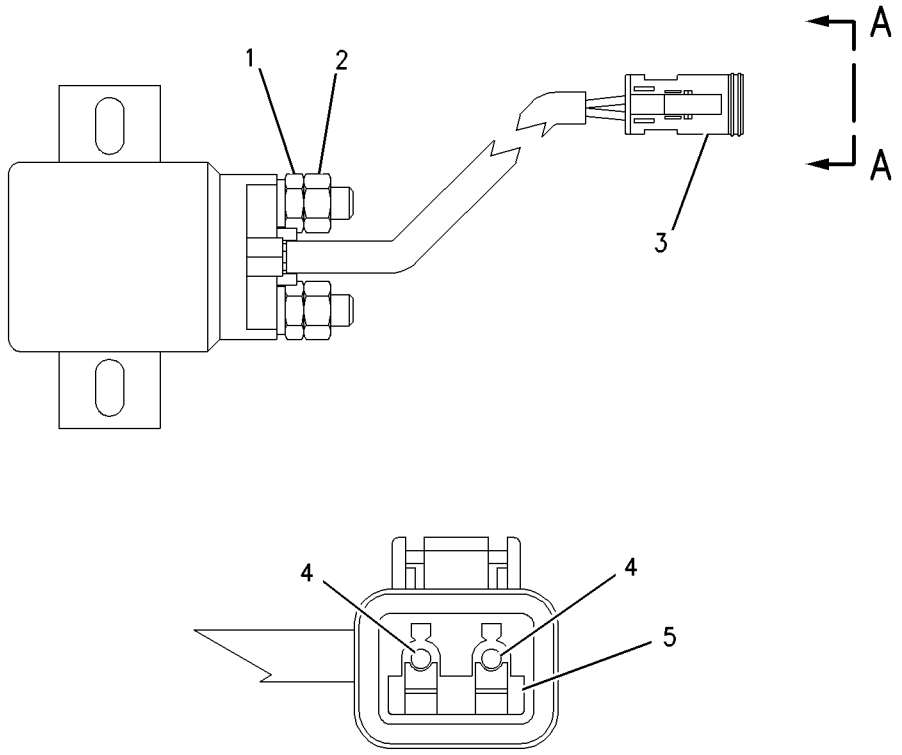

VIEW A-A

GRAPHIC #1 **<END>** g00823979

241-8368 SWITCH GP-MAGNETIC

S/N: BZE1-UP; BZG1-UP
24-VOLT
FIELD REPLACEMENT FOR 167-0138—PAGE 150

SMCS-7499 **i02290099**

NOTE	REF NO	GRAPHIC REF	PART NUMBER	QTY	PART NAME 1 2 3 4 5 6 (PRODUCT LEVEL)	SEE PAGE
	1	1	**155-2270**	1	KIT-CONNECTING PLUG (2-PIN)	
					(INCLUDES PLUG AS, WEDGE & INTERFACE SEAL)	
	2	1	**4F-2294**	2	NUT-JAM (5/16-24-THD)	
	3	1	**186-3736**	2	SOCKET-CONNECTOR (16-GA TO 18-GA)	

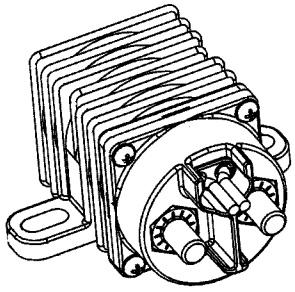

ISOMETRIC VIEW

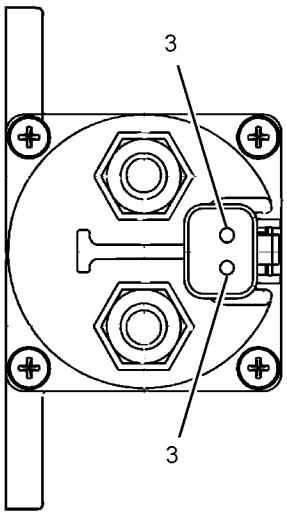

VIEW A-A

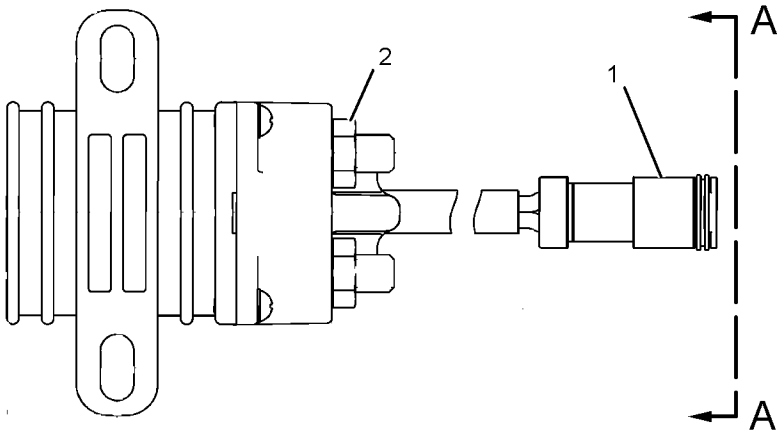

GRAPHIC #1 **<END>** g01077362

220-8549 WARNING GP-BACKUP

S/N: BZE1-356; BZG1-150

PART OF 238-8680 ELECTRICAL AR

SMCS-7406 **i02090163**

NOTE	REF NO	GRAPHIC REF	PART NUMBER	QTY	PART NAME 1 2 3 4 5 6 (PRODUCT LEVEL)	SEE PAGE
	1	1	**3S-2093**	17	STRAP-CABLE	
	2	1	**220-0229**	1	ALARM AS (BACKUP)	
		1	**102-8802**	1	KIT-RECEPTACLE (2-PIN)	
					(INCLUDES RECEPTACLE AS & WEDGE)	
	3	1	**229-9782**	1	HARNESS AS-ALARM (BACKUP WARNING)	
		1	**102-8802**	1	KIT-RECEPTACLE (2-PIN)	
					(INCLUDES RECEPTACLE AS & WEDGE)	
		1	**8T-8730**	2	SOCKET-CONNECTOR (16-GA TO 18-GA)	
		1	**155-2270**	1	KIT-CONNECTING PLUG (2-PIN)	
					(INCLUDES PLUG AS, WEDGE & INTERFACE SEAL)	
	4	1	**8T-4121**	2	WASHER-HARD (11X21X2.5-MM THK)	
M	5	1	**8T-4133**	2	NUT (M10X1.5-THD)	
M	6	1	**8T-4136**	2	BOLT (M10X1.5X25-MM)	

M-METRIC PART

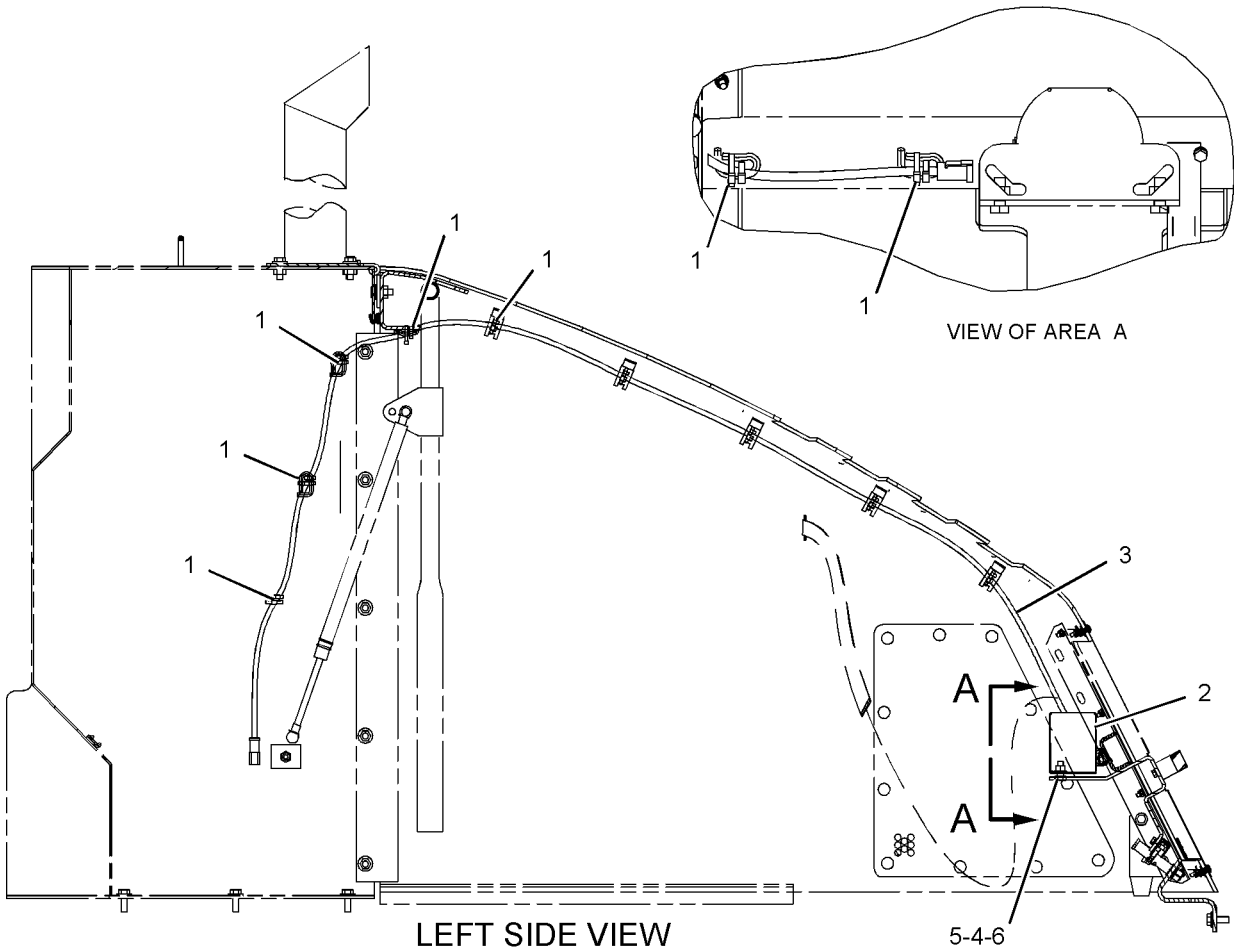

LEFT SIDE VIEW

GRAPHIC #1

<END>

g01066761

220-8549 WARNING GP-BACKUP

S/N: BZE357-UP; BZG151-UP
PART OF 238-8680 ELECTRICAL AR

SMCS-7406 **i02512801**

NOTE	REF NO	GRAPHIC REF	PART NUMBER	QTY	PART NAME 1 2 3 4 5 6 (PRODUCT LEVEL)	SEE PAGE
C	1	1	**3S-2093**	18	STRAP-CABLE	
C	2	1	**244-1090**	1	ALARM GP	
	3	1	**229-9782**	1	HARNESS AS-ALARM (BACKUP WARNING)	
		1	**102-8802**	1	KIT-RECEPTACLE (2-PIN)	
					(INCLUDES RECEPTACLE AS & WEDGE)	
		1	**155-2270**	1	KIT-CONNECTING PLUG (2-PIN)	
					(INCLUDES PLUG AS & WEDGE)	
	4	1	**8T-4121**	2	WASHER-HARD (11X21X2.5-MM THK)	
M	5	1	**8T-4133**	2	NUT (M10X1.5-THD)	
CM	6	1	**8T-6685**	2	BOLT (M10X1.5X110-MM)	

C-CHANGE FROM PREVIOUS TYPE
M-METRIC PART

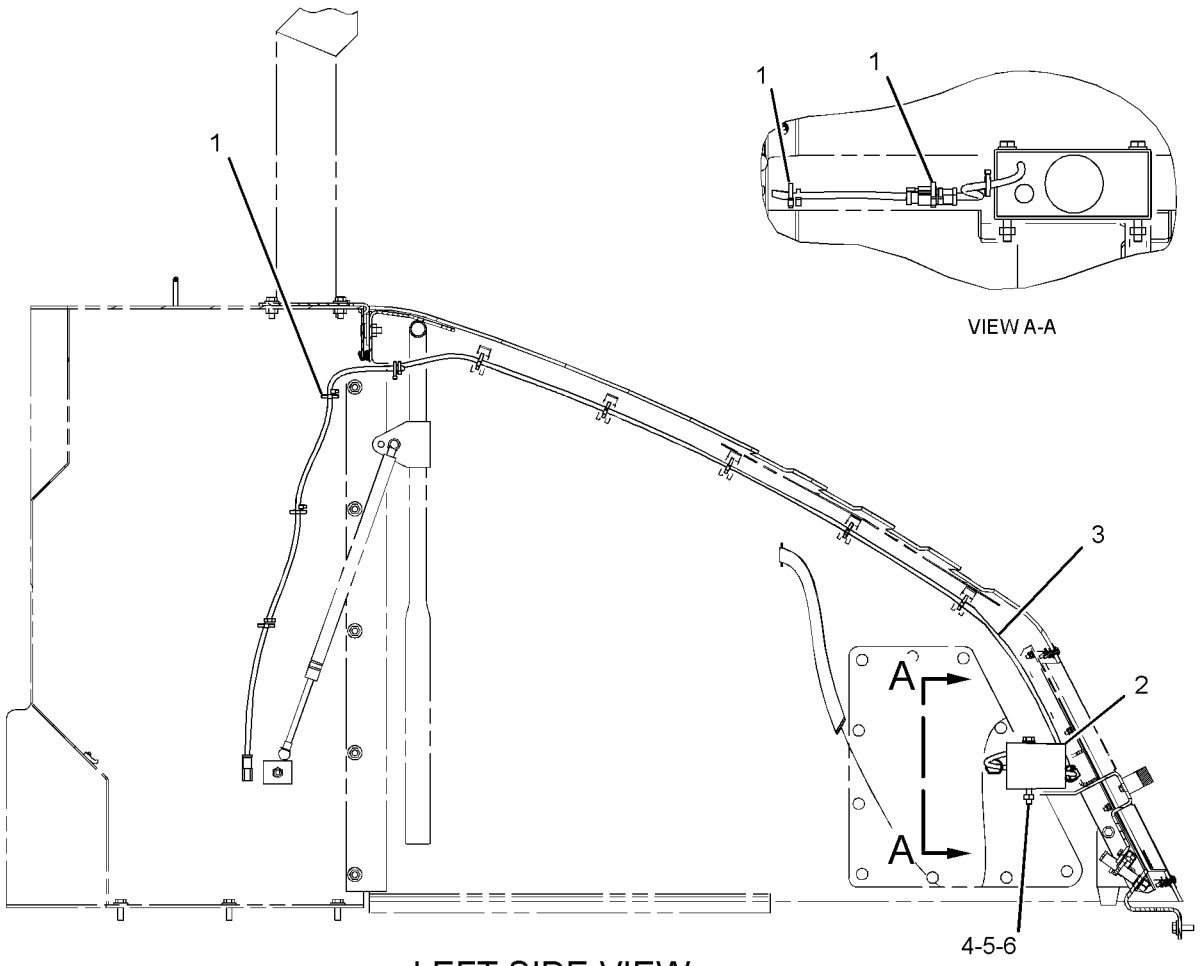

LEFT SIDE VIEW

GRAPHIC #1 **<END>** g01260339

227-0063 WIRING GP-AIR CONDITIONER

S/N: BZE1-UP; BZG1-UP
PART OF 249-9323 OPERATOR AR
AN ATTACHMENT

SMCS-1408, 7320 **i02142803**

NOTE	REF NO	GRAPHIC REF	PART NUMBER	QTY	PART NAME 1 2 3 4 5 6 (PRODUCT LEVEL)	SEE PAGE
	1	1	**3S-2093**	18	STRAP-CABLE	
	2	1	**106-8704**	1	SUPPRESSOR AS-ARC	
		1	**102-8802**	1	KIT-RECEPTACLE (2-PIN)	
					(INCLUDES RECEPTACLE AS & WEDGE)	
		1	**186-3735**	2	PIN-CONNECTOR (16-GA TO 18-GA)	
	3	1	**8T-4223**	1	WASHER-HARD (13.5X25.5X3-MM THK)	
	4	1	**132-5789**	2	CLIP	
	5	1	**213-3724**	1	HARNESS AS-HEATER & AIR COND	
		1	**102-8802**	1	KIT-RECEPTACLE (2-PIN)	
					(INCLUDES RECEPTACLE AS & WEDGE)	
		1	**186-3735**	2	PIN-CONNECTOR (16-GA TO 18-GA)	
		1	**155-2270**	3	KIT-CONNECTING PLUG (2-PIN)	
					(EACH KIT-PLUG INCLUDES PLUG AS & WEDGE)	
	6	1	**4P-7428**	1	CLIP	
	7	1	**4P-7581**	1	CLIP	
	8	1	**7K-1181**	4	STRAP-CABLE	
M	9	1	**8T-4192**	1	BOLT (M12X1.75X25-MM)	

M-METRIC PART

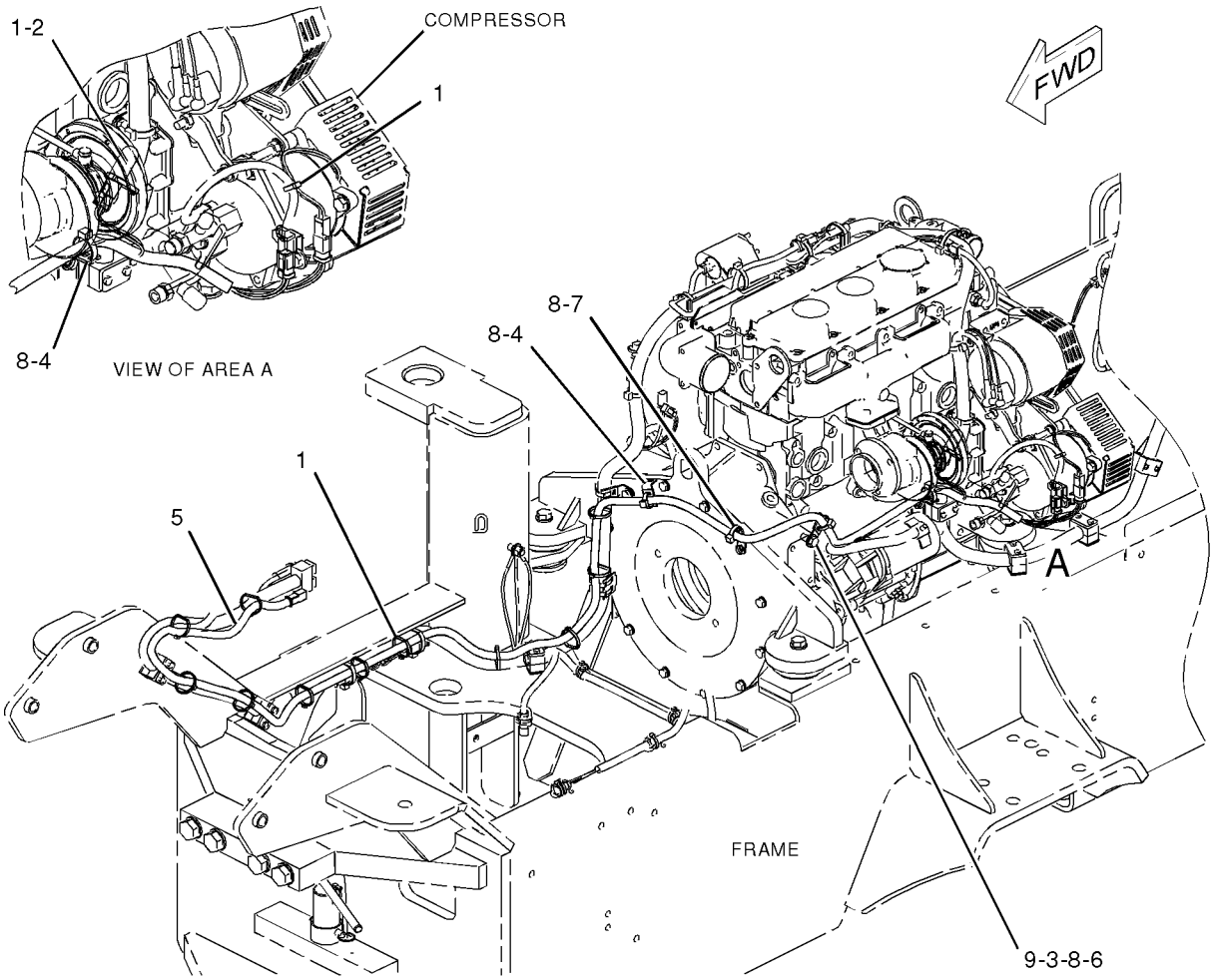

GRAPHIC #1 **<END>** g01008082

226-8940 WIRING GP-CAB

S/N: BZE1-UP; BZG1-UP
PART OF 223-4791, 254-5054, 259-4423 CAB AR
AN ATTACHMENT

SMCS-1408 **i02138917**

NOTE	REF NO	GRAPHIC REF	PART NUMBER	QTY	PART NAME 1 2 3 4 5 6 (PRODUCT LEVEL)	SEE PAGE
	1	1	**3S-2093**	28	STRAP-CABLE	
	2	1	**226-8941**	1	HARNESS AS-CAB	
		1	**102-8804**	1	KIT-RECEPTACLE (4-PIN)	
		1	**102-8801**	1	KIT-RECEPTACLE (12-PIN)	
					(EACH KIT INCLUDES RECEPTACLE AS & WEDGE)	
		1	**8T-8737**	6	PLUG-SEAL	
		1	**155-2260**	1	KIT-CONNECTING PLUG (3-PIN)	
		1	**155-2271**	1	KIT-CONNECTING PLUG (4-PIN)	
		1	**155-2274**	2	KIT-CONNECTING PLUG (6-PIN)	
					(EACH KIT INCLUDES PLUG AS & WEDGE)	

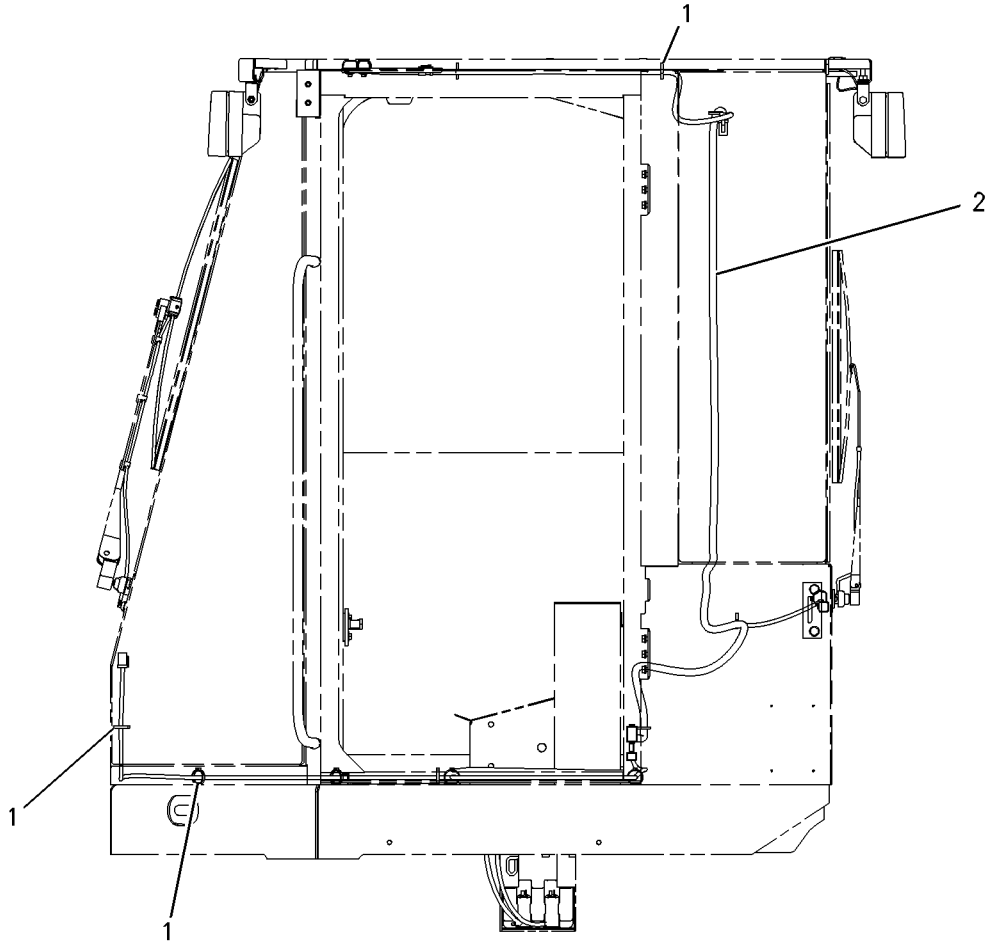

LEFT SIDE VIEW

GRAPHIC #1 **<END>** g01001480

222-4921 WIRING GP-MACHINE

S/N: BZE1-UP; BZG1-UP
PART OF 238-8680 ELECTRICAL AR
TYPE 1

SMCS-1408 **i02275820**

NOTE	REF NO	GRAPHIC REF	PART NUMBER	QTY	PART NAME 1 2 3 4 5 6 (PRODUCT LEVEL)	SEE PAGE
	1	1,2	**1G-9959**	6	CLAMP	
	2	2,3	**2G-5786**	2	CABLE AS	
					(EACH INCLUDES)	
E		2,3	**5P-0744**		CABLE (00-GA, BLACK) (48-CM)	
		2,3	**5P-2600**	1	RING-TERMINAL (FOR 1/2-IN BOLT)	
		2,3	**035-0425**	1	RING-TERMINAL (FOR 3/8-IN BOLT)	
	3	2	**3E-2028**	1	SWITCH AS-TEMPERATURE (COOLANT)	
		2	**102-8802**	2	KIT-RECEPTACLE (2-PIN)	
					(EACH RECEPTACLE KIT INCLUDES RECEPTACLE AS & WEDGE)	
	4	1,2,3	**3S-2093**	25	STRAP-CABLE	
	5	3	**5P-3741**	1	TEE-PIPE	
	6	1,2	**7V-5628**	9	PLATE	
	7	1,2	**7V-6089**	12	CLAMP	
	8	1	**7V-9275**	2	STRAP	
	9	1	**8T-8799**	5	BOOT	
	10	3	**103-4977**	1	SWITCH AS-PRESSURE (ENGINE OIL)	
		3	**102-8802**	1	KIT-RECEPTACLE (2-PIN)	
					(INCLUDES RECEPTACLE AS & WEDGE)	
	11	3	**107-0611**	1	SWITCH AS-PRESSURE (ENGINE OIL)	
		3	**102-8802**	1	KIT-RECEPTACLE (2-PIN)	
					(INCLUDES RECEPTACLE AS & WEDGE)	
	12	3	**116-0118**	2	CLIP	
	13	1	**118-3534**	1	SWITCH GP-MAGNETIC (24-VOLT) (GLOW PLUG)	
	13A	1	**118-3534**	1	SWITCH GP-MAGNETIC (24-VOLT) (GLOW PLUG)	
					(EACH SWITCH GP INCLUDES)	
		1	**102-8802**	1	KIT-RECEPTACLE (2-PIN)	
					(INCLUDES RECEPTACLE AS & WEDGE)	
	14	2,3	**132-5789**	8	CLIP	
	15	2	**156-6175**	1	CLIP	
	16	1	**171-2208**	1	CIRCUIT BREAKER AS (60-AMPERE) (GLOW PLUG)	
	16A	1	**171-2208**	1	CIRCUIT BREAKER AS (60-AMPERE) (GLOW PLUG)	
	16B	1	**171-2208**	1	CIRCUIT BREAKER AS (60-AMPERE) (GLOW PLUG)	
					(EACH CIRCUIT BREAKER AS INCLUDES)	
		1	**6V-8187**	2	NUT (1/4-28-THD)	
		1	**8T-4205**	2	WASHER-HARD (7.2X14.5X2-MM THK)	
		1	**253-2111**	2	LOCKWASHER	
	17	1	**203-0203**	1	CABLE AS	
	18	1	**253-1847**	1	HARNESS AS-CHASSIS	
		1	**102-8802**	1	KIT-RECEPTACLE (2-PIN)	
		1	**102-8805**	1	KIT-RECEPTACLE (6-PIN)	
					(EACH RECEPTACLE KIT INCLUDES RECEPTACLE AS & WEDGE)	
		1	**6L-3483**	1	COVER-TERMINAL	
		1	**7E-0976**	2	BOOT	
		1	**7X-6222**	1	PLUG AS-CONNECTOR (24-PIN)	
		1	**8T-8737**	16	PLUG-SEAL	
		1	**9G-4348**	1	HOUSING-PLUG	
		1	**100-3320**	1	PLUG AS-CONNECTOR (2-PIN)	
		1	**155-2260**	4	KIT-CONNECTING PLUG (3-PIN)	
		1	**155-2270**	13	KIT-CONNECTING PLUG (2-PIN)	
		1	**155-2271**	1	KIT-CONNECTING PLUG (4-PIN)	
		1	**155-2274**	1	KIT-CONNECTING PLUG (6-PIN)	
					(EACH PLUG KIT INCLUDES PLUG AS, WEDGE & INTERFACE SEAL)	

222-4921 **WIRING GP-MACHINE** *(contd.)* **i02275820**

NOTE	REF NO	GRAPHIC REF	PART NUMBER	QTY	PART NAME 1 2 3 4 5 6 (PRODUCT LEVEL)	SEE PAGE
	19	2	**229-2884**	1	GUARD AS	
	20	1	**231-6603**	1	WIRE AS	
	21	2	**232-0295**	1	PLATE AS	
	22	2	**232-0296**	1	PANEL AS	
	23	2	**232-0310**	1	ANGLE	
	24	2	**257-9290**	1	FILM-IDENTIFICATION (CIRCUIT PANEL)	
	25	2	**033-4814**	6	SCREW (10-32X1-IN)	
	26	3	**3B-6552**	1	ELBOW-PIPE	
	27	2	**3B-7255**	1	BUSHING-REDUCING	
	28	2	**4B-4274**	6	WASHER (5.5X13X1.2-MM THK)	
	29	3	**4P-7428**	1	CLIP	
	30	1,2,3	**4P-7581**	7	CLIP	
M	31	3	**5C-2874**	2	NUT (M5X0.8-THD)	
M	32	2,3	**5C-2890**	5	NUT (M6X1-THD)	
	33	2	**5J-4715**	1	WASHER (10.3X20.6X4.2-MM THK)	
	34	3	**5K-5068**	1	FITTING-PIPE	
	35	2	**5P-4115**	5	WASHER-HARD (7.2X19X2-MM THK)	
	36	1,2	**5P-4116**	5	WASHER-HARD (8.8X20.5X2-MM THK)	
	37	1,2,3	**7K-1181**	28	STRAP-CABLE	
	38	2	**7X-7729**	2	WASHER (11X25X3-MM THK)	
M	39	1,2	**8C-8451**	18	BOLT (M6X1X40-MM)	
	40	2	**8T-4121**	1	WASHER-HARD (11X21X2.5-MM THK)	
M	41	2	**8T-4137**	3	BOLT (M10X1.5X20-MM)	
M	42	2	**8T-4138**	4	BOLT (M6X1X20-MM)	
M	43	1,2,3	**8T-4189**	8	BOLT (M8X1.25X20-MM)	
M	44	1	**8T-4200**	4	BOLT (M8X1.25X16-MM)	
	45	2,3	**8T-4223**	2	WASHER-HARD (13.5X25.5X3-MM THK)	
	46	1,2,3	**8T-4224**	12	WASHER-HARD (8.8X16X2-MM THK)	
M	47	2,3	**8T-4244**	2	NUT (M12X1.75-THD)	
M	48	2	**8T-4908**	4	BOLT (M8X1.25X25-MM)	
M	49	2	**8T-4970**	1	BOLT (M6X1X14-MM)	
BE	51	1	**206-2733**		GUARD-HOSE	

B-USE AS REQUIRED
E-ORDER BY THE CENTIMETER
M-METRIC PART

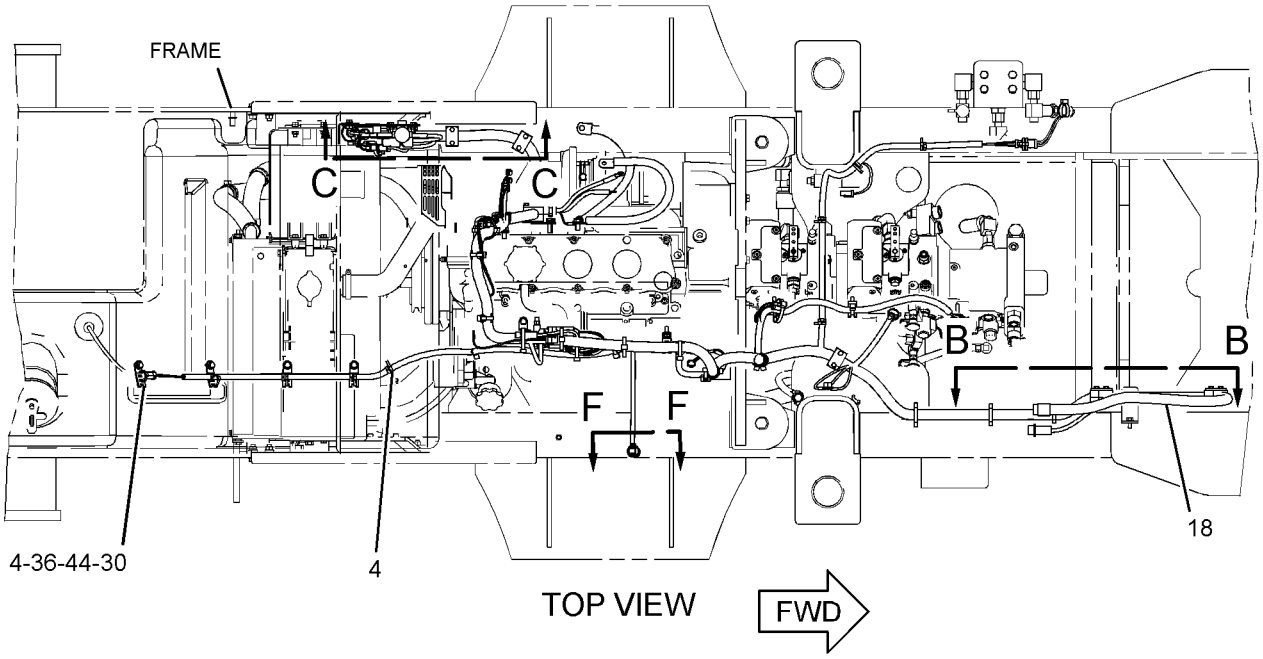

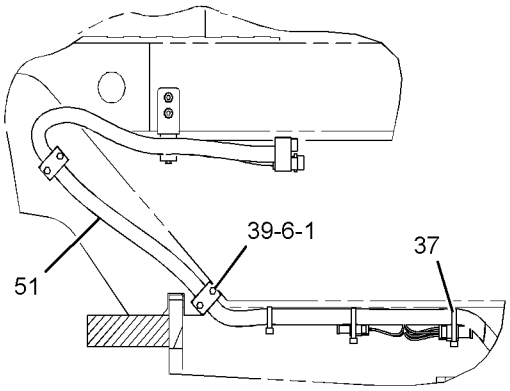

SECTION B-B

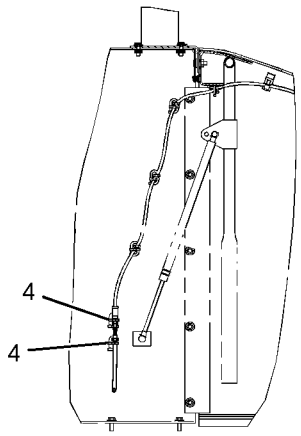

VIEW F-F

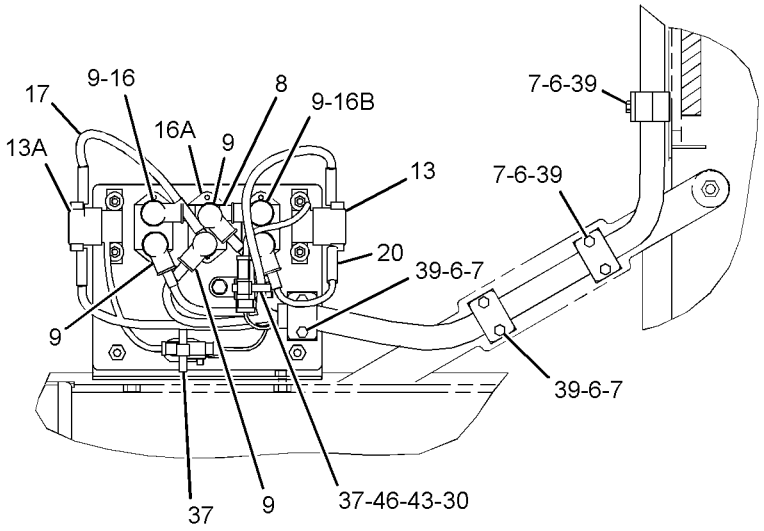

SECTION C-C

GRAPHIC #1

g01275239

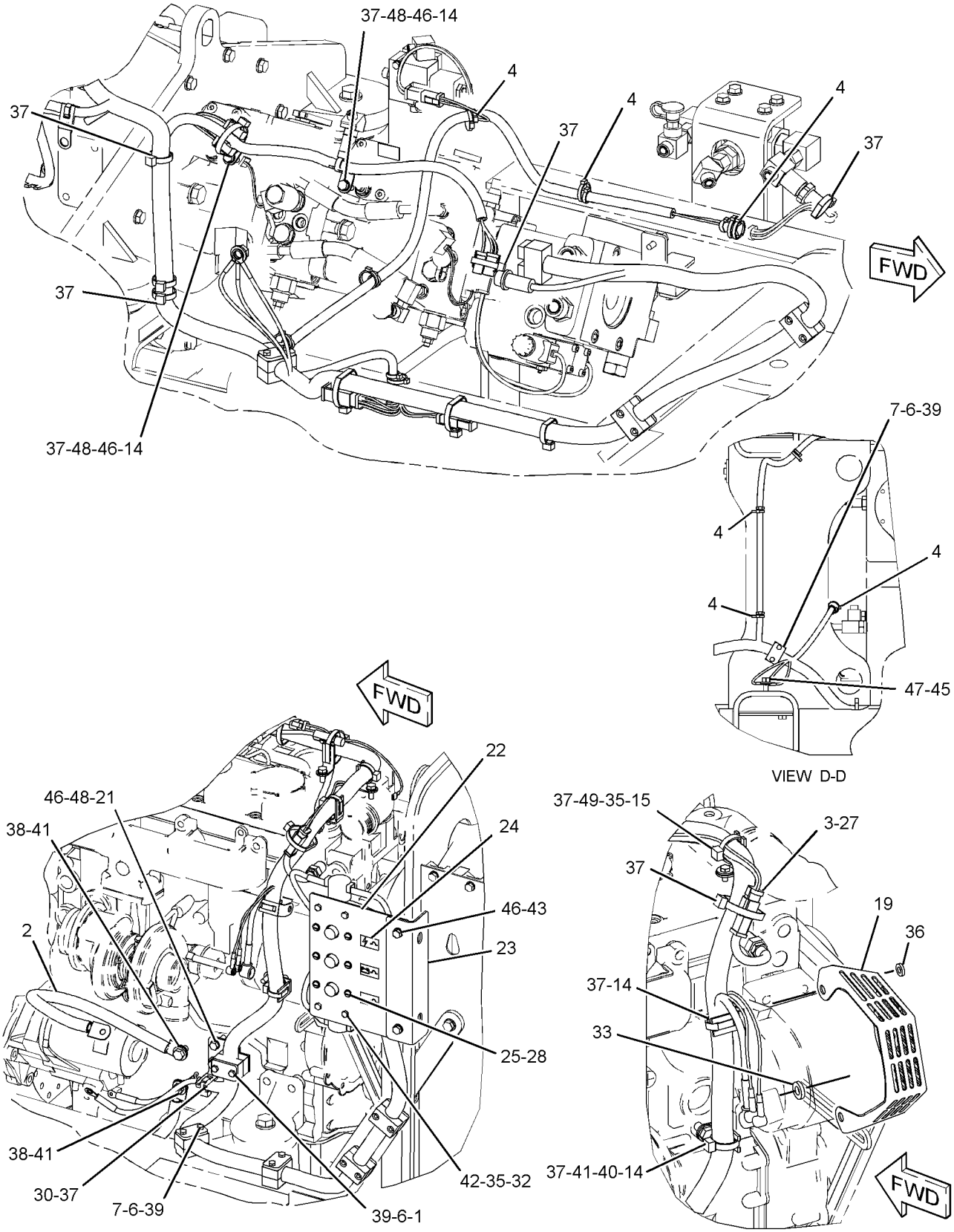

GRAPHIC #2

g01275240

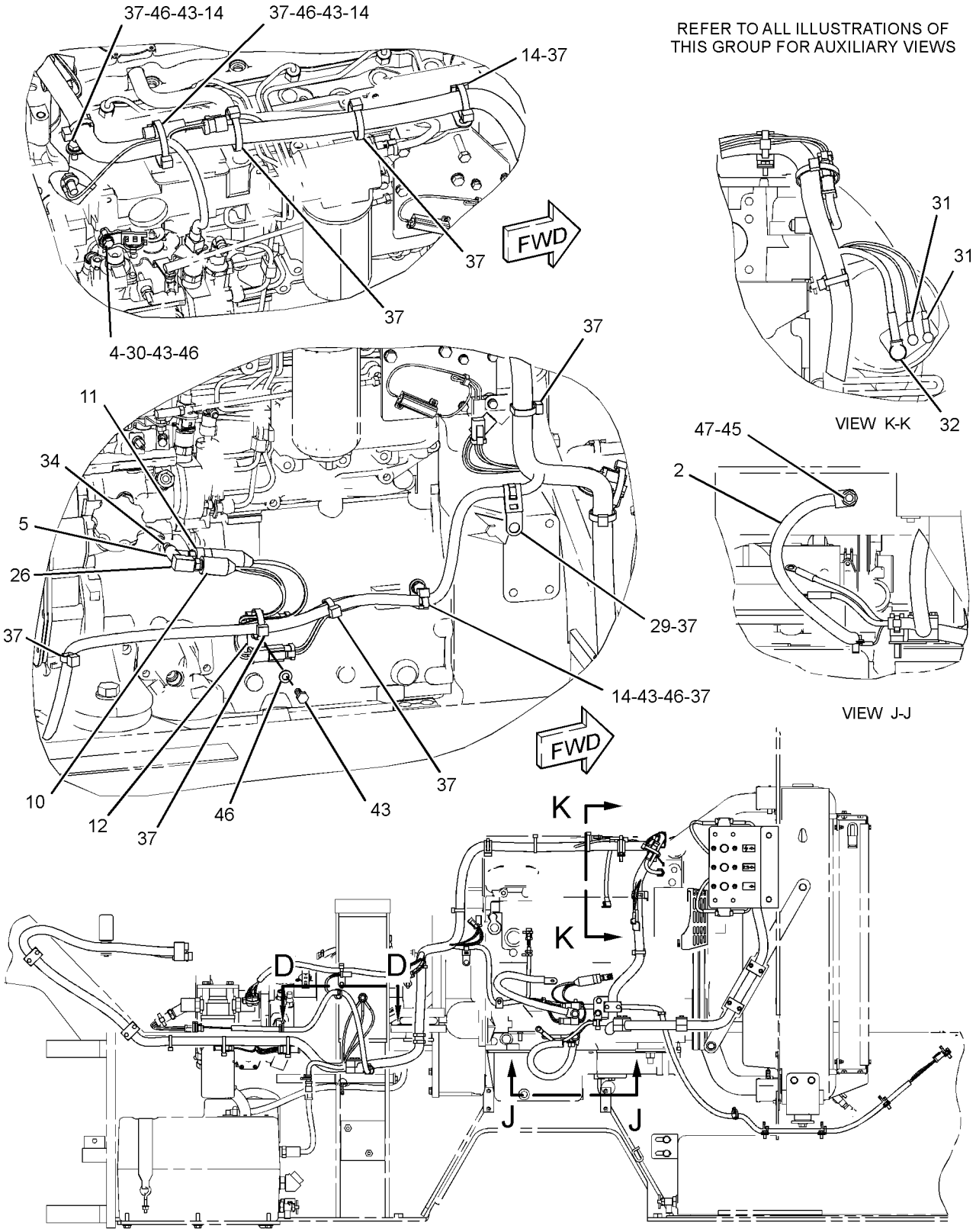

LEFT SIDE VIEW

GRAPHIC #3 **<END>** g01275242

ELECTRICAL AND STARTING SYSTEM

222-4921 WIRING GP-MACHINE

S/N: BZE1-UP; BZG1-UP
PART OF 238-8680 ELECTRICAL AR
TYPE 2

SMCS-1408 **i02998651**

NOTE	REF NO	GRAPHIC REF	PART NUMBER	QTY	PART NAME 1 2 3 4 5 6 (PRODUCT LEVEL)	SEE PAGE
	1	1,2	**1G-9959**	6	CLAMP	
	2	2,3	**2G-5786**	2	CABLE AS	
					(EACH INCLUDES)	
E		2,3	**5P-0744**		CABLE (00-GA, BLACK) (48-CM)	
		2,3	**5P-2600**	1	RING-TERMINAL (FOR 1/2-IN BOLT)	
		2,3	**035-0425**	1	RING-TERMINAL (FOR 3/8-IN BOLT)	
	3	2	**3E-2028**	1	SWITCH AS-TEMPERATURE (COOLANT)	
		2	**186-3735**	2	PIN-CONNECTOR (16-GA TO 18-GA)	
		2	**102-8802**	1	KIT-RECEPTACLE (2-PIN)	
					(INCLUDES RECEPTACLE AS & WEDGE)	
	4	1,2,3	**3S-2093**	25	STRAP-CABLE	
	5	3	**5P-3741**	1	TEE-PIPE	
C	6	1,2	**7V-5628**	10	PLATE	
C	7	1,2	**7V-6089**	14	CLAMP	
	8	1	**7V-9275**	2	STRAP	
	9	1	**8T-8799**	5	BOOT	
	10	3	**103-4977**	1	SWITCH AS-PRESSURE (ENGINE OIL)	
	11	3	**107-0611**	1	SWITCH AS-PRESSURE (ENGINE OIL)	
					(EACH SWITCH AS INCLUDES)	
		3	**186-3735**	2	PIN-CONNECTOR (16-GA TO 18-GA)	
		3	**102-8802**	1	KIT-RECEPTACLE (2-PIN)	
					(INCLUDES RECEPTACLE AS & WEDGE)	
	12	3	**116-0118**	2	CLIP	
	13	1	**118-3534**	1	SWITCH GP-MAGNETIC (24-VOLT) (GLOW PLUG RELAY)	
	13A	1	**118-3534**	1	SWITCH GP-MAGNETIC (24-VOLT) (START RELAY)	
					(EACH SWITCH GP INCLUDES)	
		1	**1H-3338**	2	LOCKWASHER	
M		1	**5C-2890**	2	NUT (M6X1-THD)	
		1	**186-3735**	2	PIN-CONNECTOR (16-GA TO 18-GA)	
E		1	**9X-1813**		SLEEVE (16-CM)	
		1	**012-0380**	2	LOCKWASHER	
		1	**102-8802**	1	KIT-RECEPTACLE (2-PIN)	
					(INCLUDES RECEPTACLE AS & WEDGE)	
	14	2,3	**132-5789**	8	CLIP	
	15	2	**156-6175**	1	CLIP	
	16	1	**171-2208**	1	CIRCUIT BREAKER AS (60-AMPERE) (ALTERNATOR)	
	16A	1	**171-2208**	1	CIRCUIT BREAKER AS (60-AMPERE) (MAIN)	
	16B	1	**171-2208**	1	CIRCUIT BREAKER AS (60-AMPERE) (GLOW PLUG)	
					(EACH CIRCUIT BREAKER AS INCLUDES)	
		1	**6V-8187**	2	NUT (1/4-28-THD)	
		1	**8T-4205**	2	WASHER-HARD (7.2X14.5X2-MM THK)	
		1	**253-2111**	2	LOCKWASHER	
	17	1	**203-0203**	1	CABLE AS	
D		1	**5P-5675**		WIRE (06-GA, BLACK) (1.8-M)	
		1	**2L-8050**	2	TERMINAL-RING (6-GA, 1/4-IN)	
	18	1	**253-1847**	1	HARNESS AS-CHASSIS	
	19	2	**229-2884**	1	GUARD AS	
	20	1	**231-6603**	1	WIRE AS	
	21	2	**232-0295**	1	PLATE AS	
		2	**178-8505**	1	PLATE AS	
	22	2	**232-0296**	1	PANEL AS	
		2	**7T-1099**	1	LINK	
M		2	**8T-3612**	2	NUT-WELD (M8X1.25-THD)	
M		2	**9R-2160**	1	BOSS (M8X1.25X25-MM)	
		2	**178-8505**	1	PLATE AS	

222-4921 **WIRING GP-MACHINE** *(contd.)* **i02998651**

NOTE	REF NO	GRAPHIC REF	PART NUMBER	QTY	PART NAME 1 2 3 4 5 6 (PRODUCT LEVEL)	SEE PAGE
	23	2	**232-0310**	1	ANGLE	
	24	2	**257-9290**	1	FILM-IDENTIFICATION (CIRCUIT PANEL)	
	25	2	**033-4814**	6	SCREW (10-32X1-IN)	
	26	3	**3B-6552**	1	ELBOW-PIPE	
	27	2	**3B-7255**	1	BUSHING-REDUCING	
	28	2	**4B-4274**	6	WASHER (5.5X13X1.2-MM THK)	
	29	3	**4P-7428**	1	CLIP	
	30	1,2,3	**4P-7581**	7	CLIP	
M	31	3	**5C-2874**	2	NUT (M5X0.8-THD)	
M	32	2,3	**5C-2890**	5	NUT (M6X1-THD)	
	33	2	**5J-4715**	1	WASHER (10.3X20.6X4.2-MM THK)	
	34	3	**5K-5068**	1	FITTING-PIPE	
	35	2	**5P-4115**	5	WASHER-HARD (7.2X19X2-MM THK)	
	36	1,2	**5P-4116**	5	WASHER-HARD (8.8X20.5X2-MM THK)	
C	37	1,2,3	**7K-1181**	26	STRAP-CABLE	
	38	2	**7X-7729**	2	WASHER (11X25X3-MM THK)	
CM	39	1,2	**8C-8451**	20	BOLT (M6X1X40-MM)	
	40	2	**8T-4121**	1	WASHER-HARD (11X21X2.5-MM THK)	
M	41	2	**8T-4137**	3	BOLT (M10X1.5X20-MM)	
M	42	2	**8T-4138**	4	BOLT (M6X1X20-MM)	
M	43	1,2,3	**8T-4189**	8	BOLT (M8X1.25X20-MM)	
M	44	1	**8T-4200**	4	BOLT (M8X1.25X16-MM)	
	45	2,3	**8T-4223**	2	WASHER-HARD (13.5X25.5X3-MM THK)	
	46	1,2,3	**8T-4224**	12	WASHER-HARD (8.8X16X2-MM THK)	
M	47	2,3	**8T-4244**	2	NUT (M12X1.75-THD)	
M	48	2	**8T-4908**	4	BOLT (M8X1.25X25-MM)	
M	49	2	**8T-4970**	1	BOLT (M6X1X14-MM)	
E	51	1	**206-2733**		GUARD-HOSE (35-CM)	

C-CHANGE FROM PREVIOUS TYPE
D-ORDER BY THE METER
E-ORDER BY THE CENTIMETER
M-METRIC PART

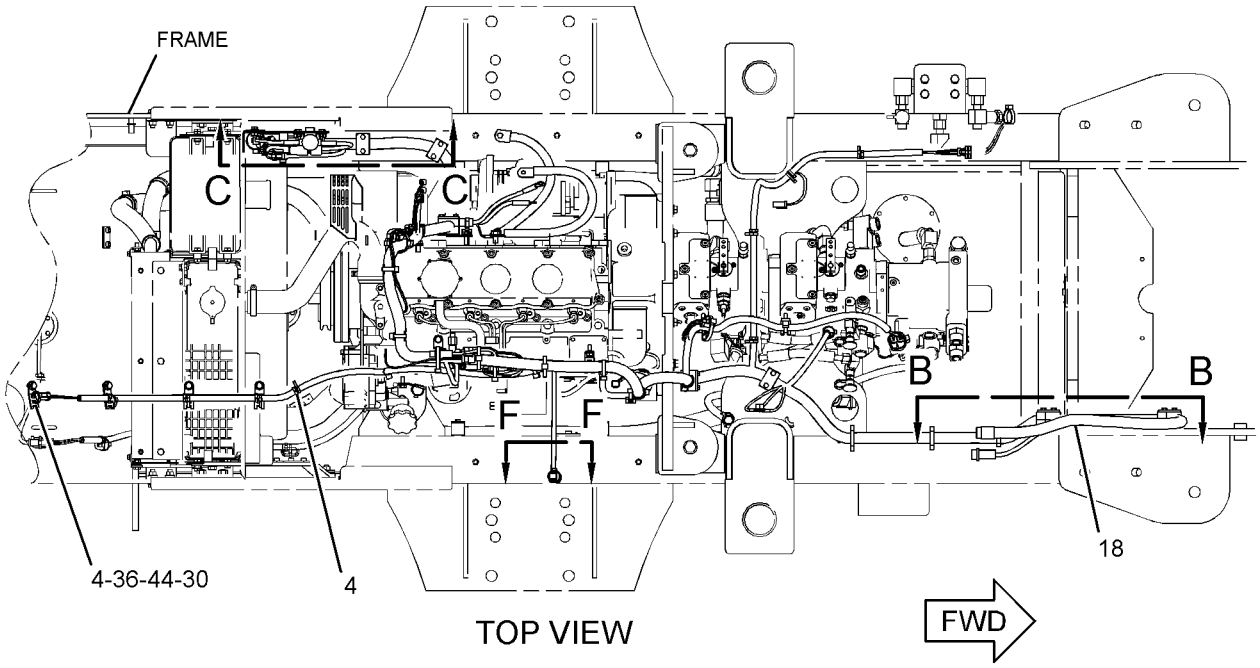

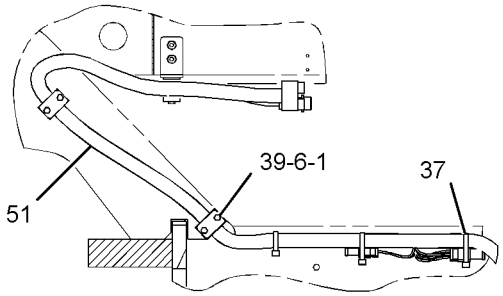

VIEW B-B

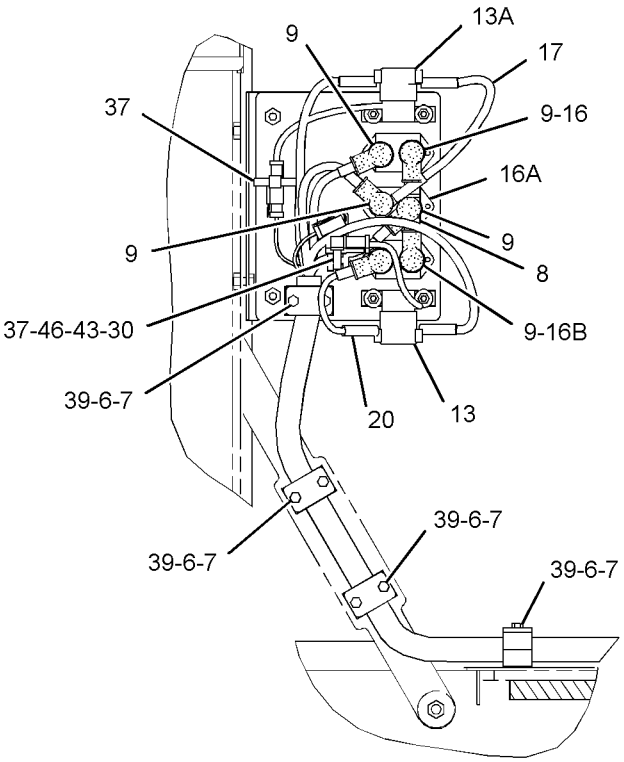

VIEW C-C

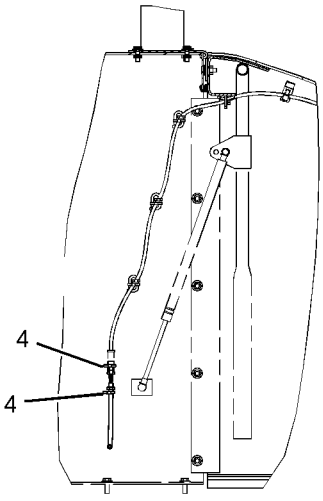

VIEW F-F

GRAPHIC #1

g01526123

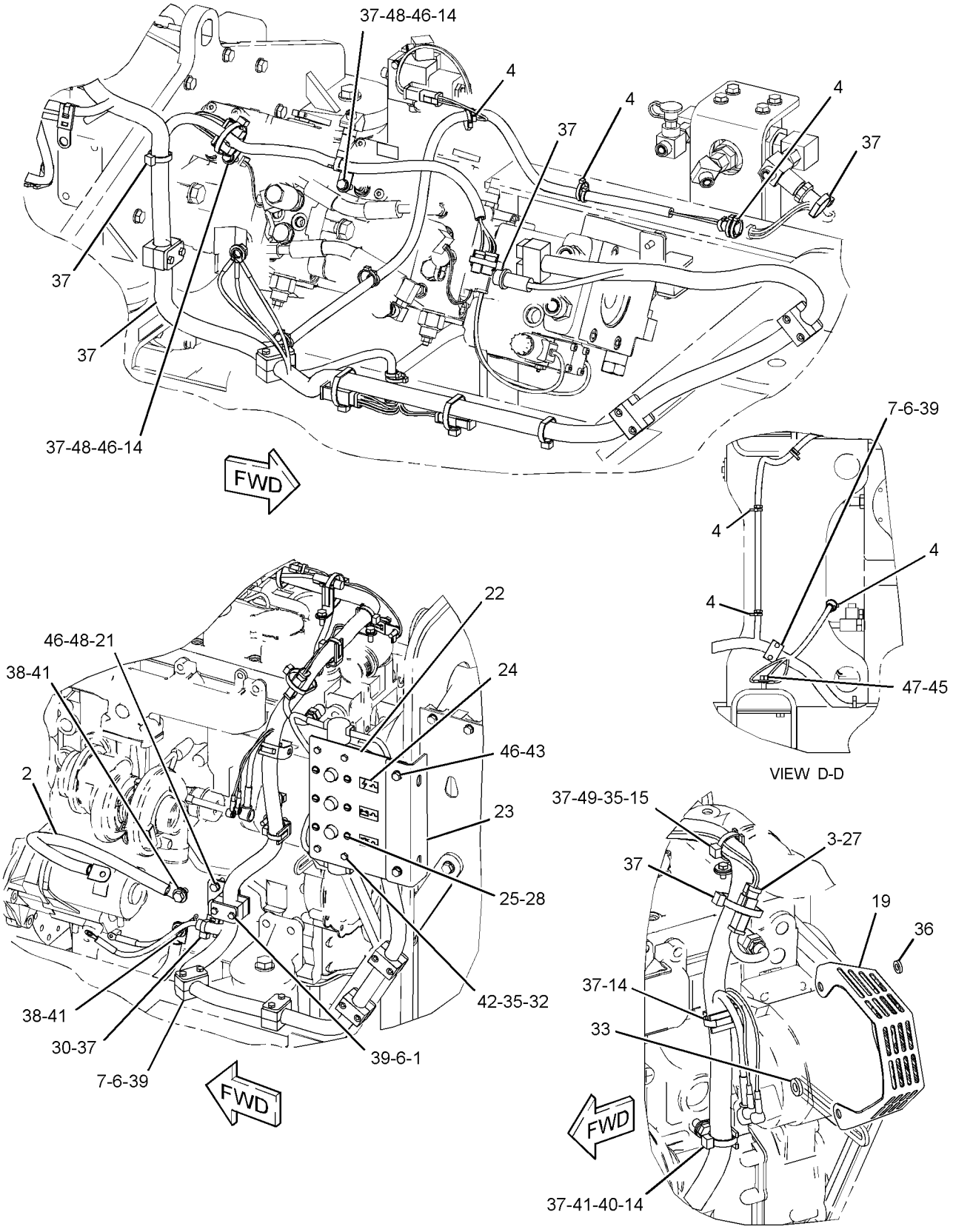

GRAPHIC #2

g01526124

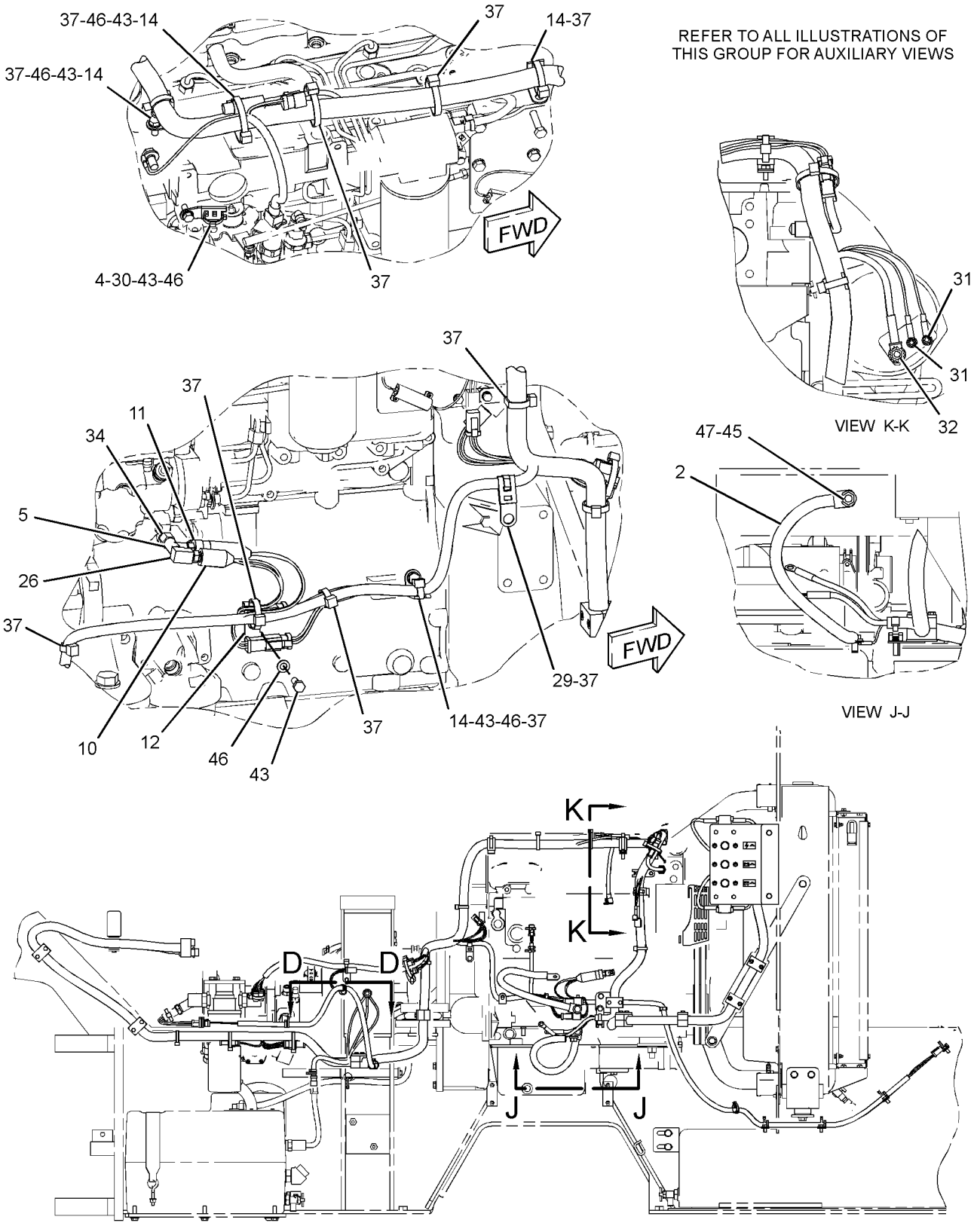

GRAPHIC #3 **<END>** g01526125

203-4685 AXLE & MTG GP-DRIVE

S/N: BZE1-UP; BZG1-UP
PART OF 219-4164, 231-8815 POWER TRAIN AR
TYPE 1

SMCS-3278 **i02140802**

NOTE	REF NO	GRAPHIC REF	PART NUMBER	QTY	PART NAME 1 2 3 4 5 6 (PRODUCT LEVEL)	SEE PAGE
Y	1	1	**202-4172**	1	AXLE GP-DRIVE (WITHOUT BRAKES)	168
Y	2	1	**203-4692**	1	PLANETARY GP-FINAL DRIVE	204
	3	1	**7X-0510**	6	WASHER-HARD (15.5X29X3-MM THK)	
M	4	1	**7X-2571**	8	BOLT (M20X2.5X240-MM)	
	5	1	**8S-4734**	6	BOLT (9/16-12X2-IN)	
	6	1	**8T-4123**	16	WASHER (22X35X3.5-MM THK)	
M	7	1	**8T-4131**	8	NUT (M20X2.5-THD)	

M-METRIC PART
Y-SEPARATE ILLUSTRATION

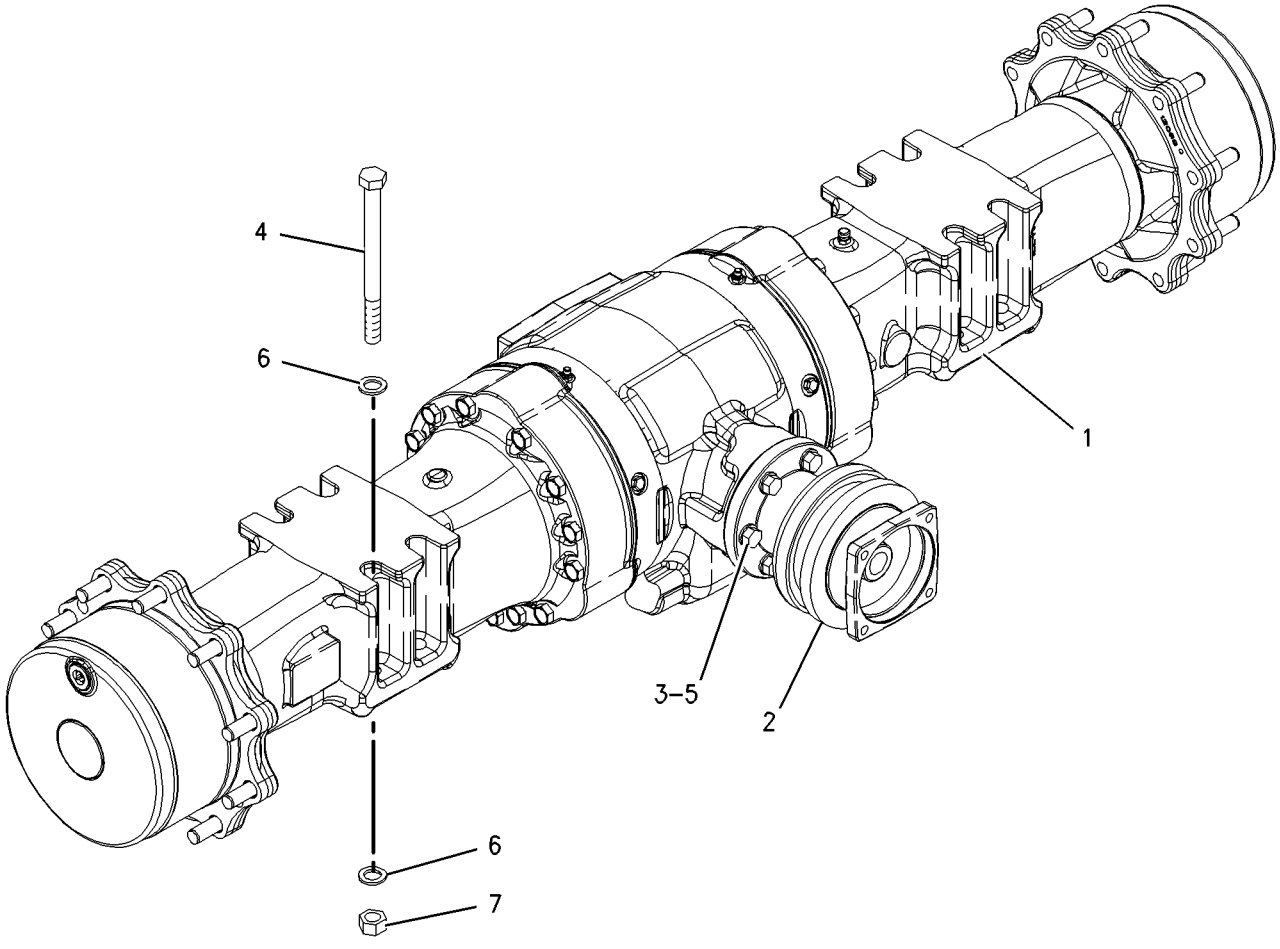

GRAPHIC #1 **<END>** g00918841

203-4685 AXLE & MTG GP-DRIVE

S/N: BZE1-UP; BZG1-UP
PART OF 219-4164, 231-8815 POWER TRAIN AR
TYPE 2

SMCS-3278 **i03001243**

NOTE	REF NO	GRAPHIC REF	PART NUMBER	QTY	PART NAME 1 2 3 4 5 6 (PRODUCT LEVEL)	SEE PAGE
CY	1	1	*325-3644*	1	AXLE GP-DRIVE (WITHOUT BRAKES)	170
Y	2	1	**203-4692**	1	PLANETARY GP-FINAL DRIVE	204
	3	1	**7X-0510**	6	WASHER-HARD (15.5X29X3-MM THK)	
M	4	1	**7X-2571**	8	BOLT (M20X2.5X240-MM)	
	5	1	**8S-4734**	6	BOLT (9/16-12X2-IN)	
	6	1	**8T-4123**	16	WASHER (22X35X3.5-MM THK)	
M	7	1	**8T-4131**	8	NUT (M20X2.5-THD)	

C-CHANGE FROM PREVIOUS TYPE
M-METRIC PART
Y-SEPARATE ILLUSTRATION

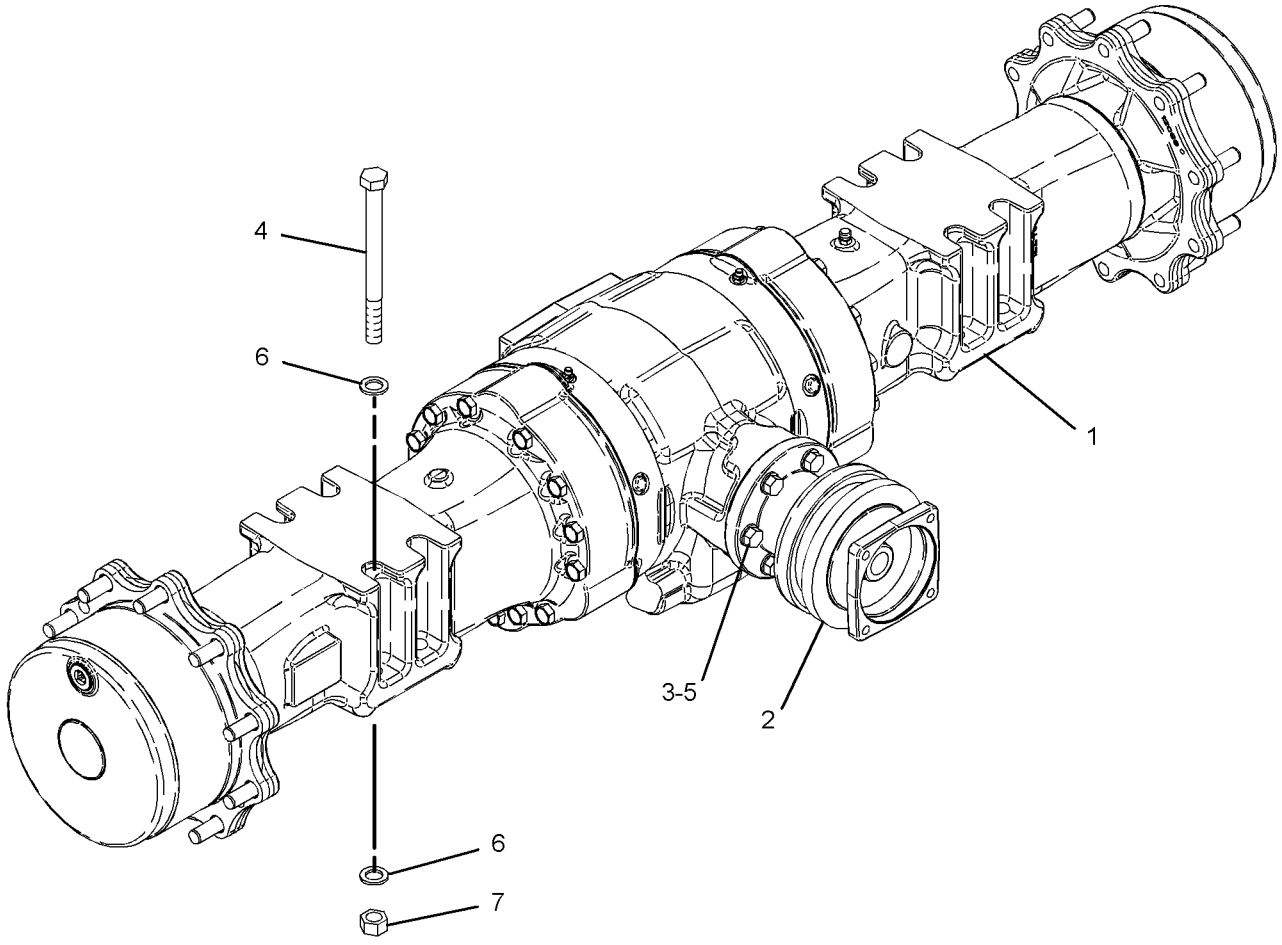

GRAPHIC #1 **<END>** g01164221

202-4172 AXLE GP-DRIVE

S/N: BZE1-UP; BZG1-UP

PART OF 203-4685 AXLE & MTG GP-DRIVE

SMCS-3278 **i02346808**

NOTE	REF NO	GRAPHIC REF	PART NUMBER	QTY	PART NAME 1 2 3 4 5 6 (PRODUCT LEVEL)	SEE PAGE
	1	1	**199-0639**	4	SCREW (WHEEL HUB)	
	2	1	**207-4255**	2	PLUG	
	3	1	**210-3097**	2	CLIP	
	4	1	**210-3098**	2	SEAL	
	5	1	**197-9155**	1	BREATHER (AXLE)	
	6	1	**198-7811**	2	DOWEL	
	7	1	**152-6144**	5	PLUG AS-DRAIN (MAGNETIC) (AXLE)	
	8	1	**210-3099**	2	SLEEVE	
	9	1	**210-3100**	2	BUSHING	
	10	1	**210-3328**	2	SHAFT-AXLE	
M	11	1	**7X-2559**	26	BOLT (M16X2X160-MM)	
	12	1	**212-5713**	2	PLUG	
Y	13	1	*216-1609*	2	FLANGE GP-WHEEL	194
	14	1	*226-4352*	2	GEAR GP-RING	
					(EACH INCLUDES)	
		1	**199-0767**	1	GEAR-RING	
		1	**199-0778**	1	RING-SNAP	
		1	**226-4364**	1	HUB	
Y	15	1	*226-4400*	1	HOUSING GP-AXLE	195
	16	1	**226-4377**	2	SHAFT-AXLE	
	17	1	**238-5293**	1	HOUSING-AXLE (LH)	
	18	1	**238-5294**	1	HOUSING-AXLE (RH)	
Y	19	1	*229-5051*	2	PLANETARY GP-FINAL DRIVE	208
	20	1	**226-4366**	2	NUT-SPANNER	
	21	1	**226-4365**	2	WASHER-TAB	
	22	1	**226-4367**	2	SPACER (110X123X22.99-MM THK)	
	23	1	**226-4370**	6	BOLT-SELF-LOCKING	
	24	1	**199-0662**	2	SEAL-O-RING	

M-METRIC PART
Y-SEPARATE ILLUSTRATION

202-4172 AXLE GP-DRIVE *(contd.)* **i02346808**

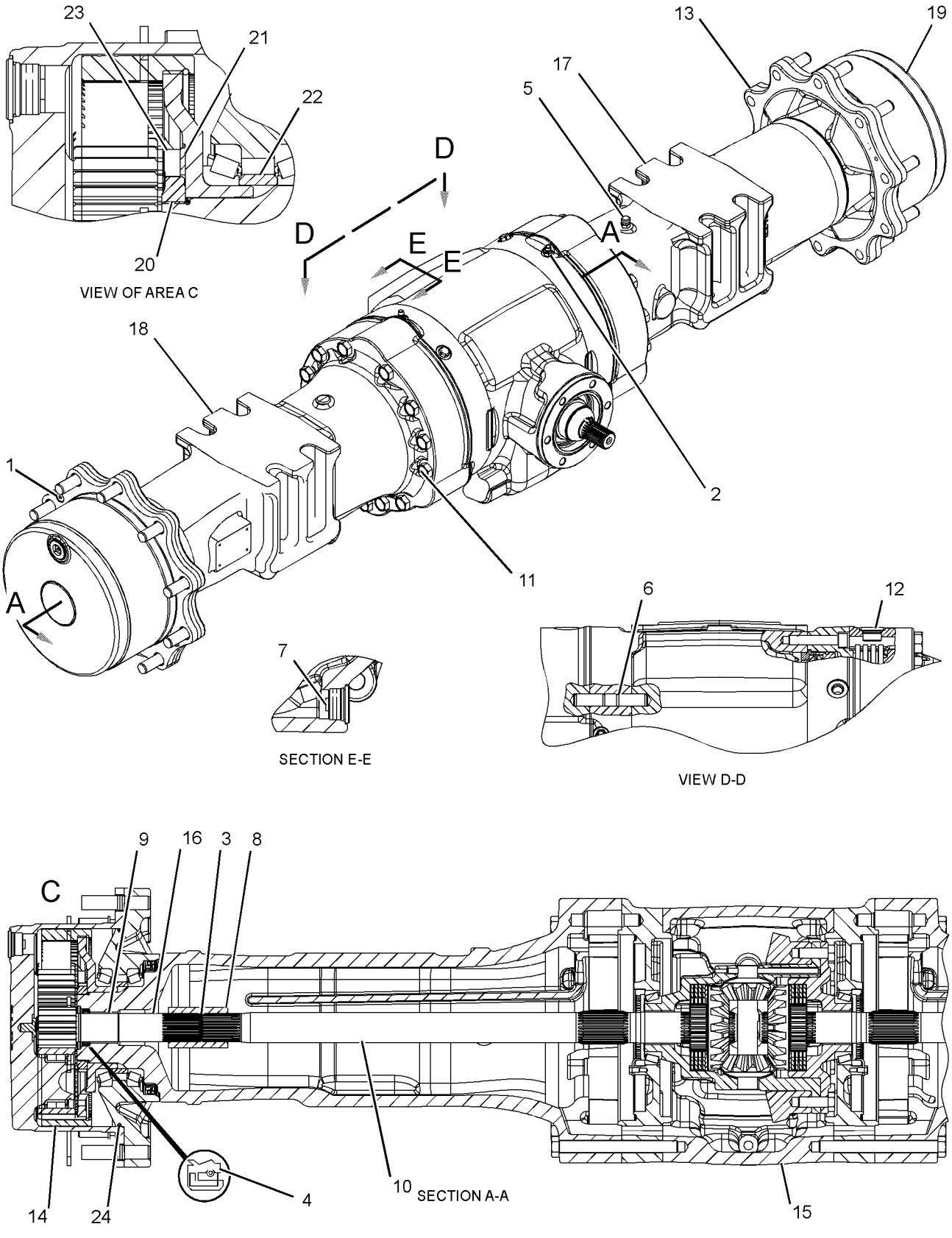

GRAPHIC #1 **<END>** g01172570

325-3644 AXLE GP-DRIVE—WITHOUT BRAKES

S/N: BZE1-UP; BZG1-UP

PART OF 203-4685 AXLE & MTG GP-DRIVE

SMCS-3278 **i03001253**

NOTE	REF NO	GRAPHIC REF	PART NUMBER	QTY	PART NAME 1 2 3 4 5 6 (PRODUCT LEVEL)	SEE PAGE
M	1	1	**8C-7505**	4	SCREW-FLAT HEAD (M8X1.25X20-MM)	
	2	1	**9X-6378**	2	RING-RETAINING	
	3	1	**198-7811**	2	DOWEL	
	4	1	**210-3098**	2	SEAL	
	5	1	**210-3100**	2	BUSHING	
	6	1	**210-3328**	2	SHAFT-AXLE	
	7	1	**212-5713**	2	PLUG	
					(EACH INCLUDES)	
		1	**033-6041**	1	SEAL-O-RING	
	8	1	*216-1608*	2	GEAR GP-RING	
					(EACH INCLUDES)	
		1	**199-0778**	1	RING-SNAP	
		1	**210-7302**	1	GEAR-RING (81-TEETH)	
		1	**226-4364**	1	HUB	
Y	9	1	*216-1609*	2	FLANGE GP-WHEEL	194
Y	10	1	**216-1610**	2	PLANETARY GP-FINAL DRIVE	207
	11	1	**226-4365**	2	WASHER-TAB	
	12	1	**226-4366**	2	NUT-SPANNER	
	13	1	**226-4367**	2	SPACER (110X123X22.99-MM THK)	
	14	1	**226-4370**	6	BOLT-SELF-LOCKING	
	15	1	**226-4377**	2	SHAFT-AXLE	
Y	16	1	*226-4400*	1	HOUSING GP-AXLE	195
	17	1	**238-5293**	1	HOUSING-AXLE (LH)	
	18	1	**238-5294**	1	HOUSING-AXLE (RH)	
	19	1	**152-6144**	5	PLUG AS-DRAIN (MAGNETIC)	
	20	1	**197-9155**	1	BREATHER (AXLE, REAR)	
	21	1	**207-4255**	2	PLUG	
	22	1	**210-3099**	2	SLEEVE	
	23	1	**5H-4909**	2	SEAL-O-RING	
	24	1	**069-4707**	1	SEALANT (GASKET)	
M	25	1	**7X-2559**	26	BOLT (M16X2X160-MM)	

M-METRIC PART
Y-SEPARATE ILLUSTRATION

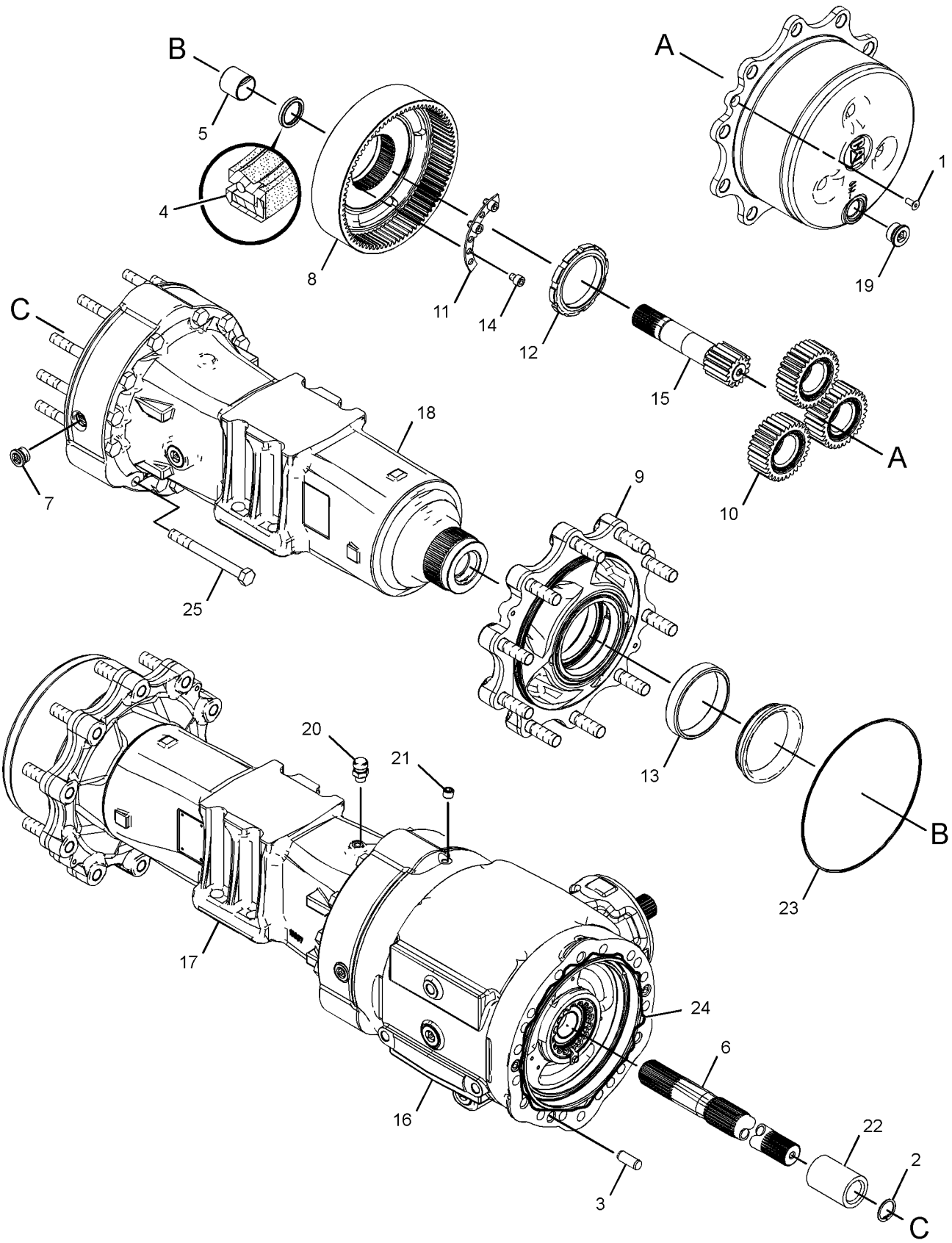

GRAPHIC #1 **<END>** g01534953

226-4393 DIFFERENTIAL GP

S/N: BZE1-UP; BZG1-UP
PART OF 226-4394 DIFFERENTIAL GP
FIELD REPLACEMENT ORDER 231-0689–PAGE 174

SMCS-3258, 3283, 3284 **i02144508**

NOTE	REF NO	GRAPHIC REF	PART NUMBER	QTY	PART NAME 1 2 3 4 5 6 (PRODUCT LEVEL)	SEE PAGE
Z	1	1		2	GEAR-SIDE	
Z	2	1		2	GEAR-SPIDER	

Z-NOT SERVICED SEPARATELY

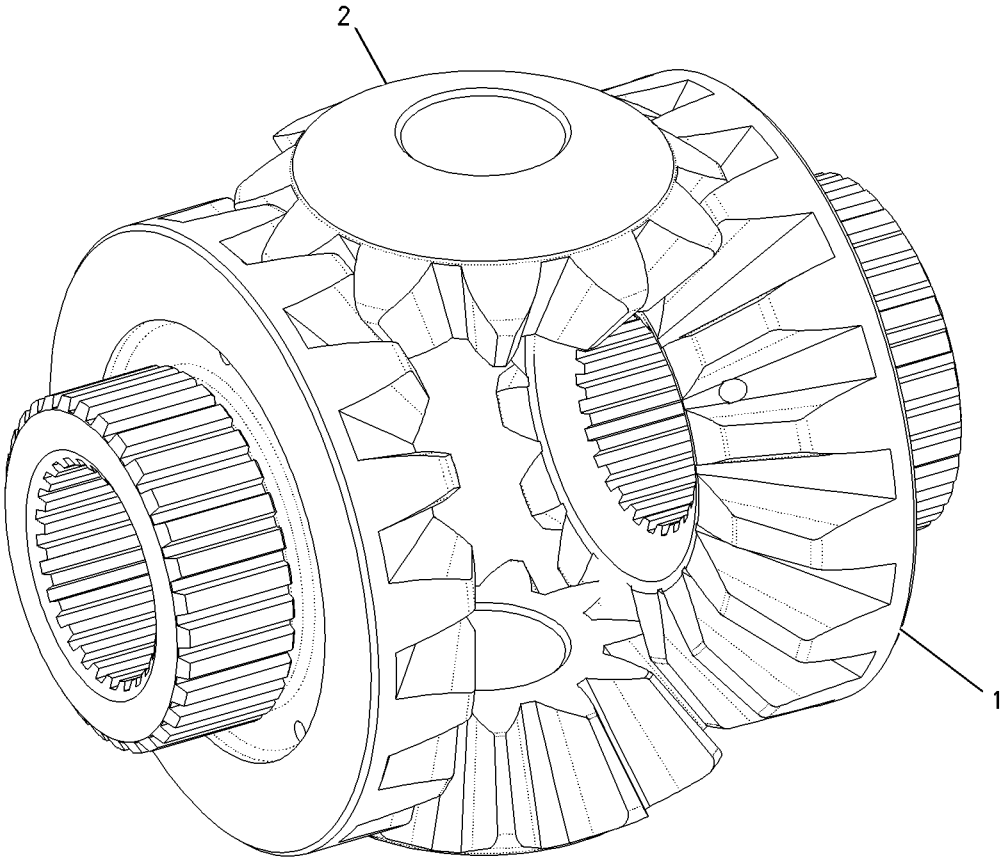

GRAPHIC #1 **<END>** g00986387

226-4394 DIFFERENTIAL GP

S/N: BZE1-UP; BZG1-UP

PART OF 226-4400 HOUSING GP-AXLE

SMCS-3258, 3283, 3284 **i02144198**

NOTE	REF NO	GRAPHIC REF	PART NUMBER	QTY	PART NAME 1 2 3 4 5 6 (PRODUCT LEVEL)	SEE PAGE
	1	1	**199-0673**	2	BUSHING	
	2	1	**199-0694**	12	BOLT (M14X2X40-MM)	
	3	1	**199-0808**	1	PIN	
	4	1	**209-7481**	2	DISC-FRICTION	
	5	1	**209-7482**	6	DISC-FRICTION	
	6	1	**226-4397**	8	PLATE	
	7	1	**226-4380**	1	HOUSING	
	8	1	**226-4381**	1	COVER	
Y	9	1	**226-4393**	1	DIFFERENTIAL GP	172
	10	1	**231-0670**	1	SHAFT	
	11	1	**231-0671**	2	WASHER-THRUST	

Y-SEPARATE ILLUSTRATION

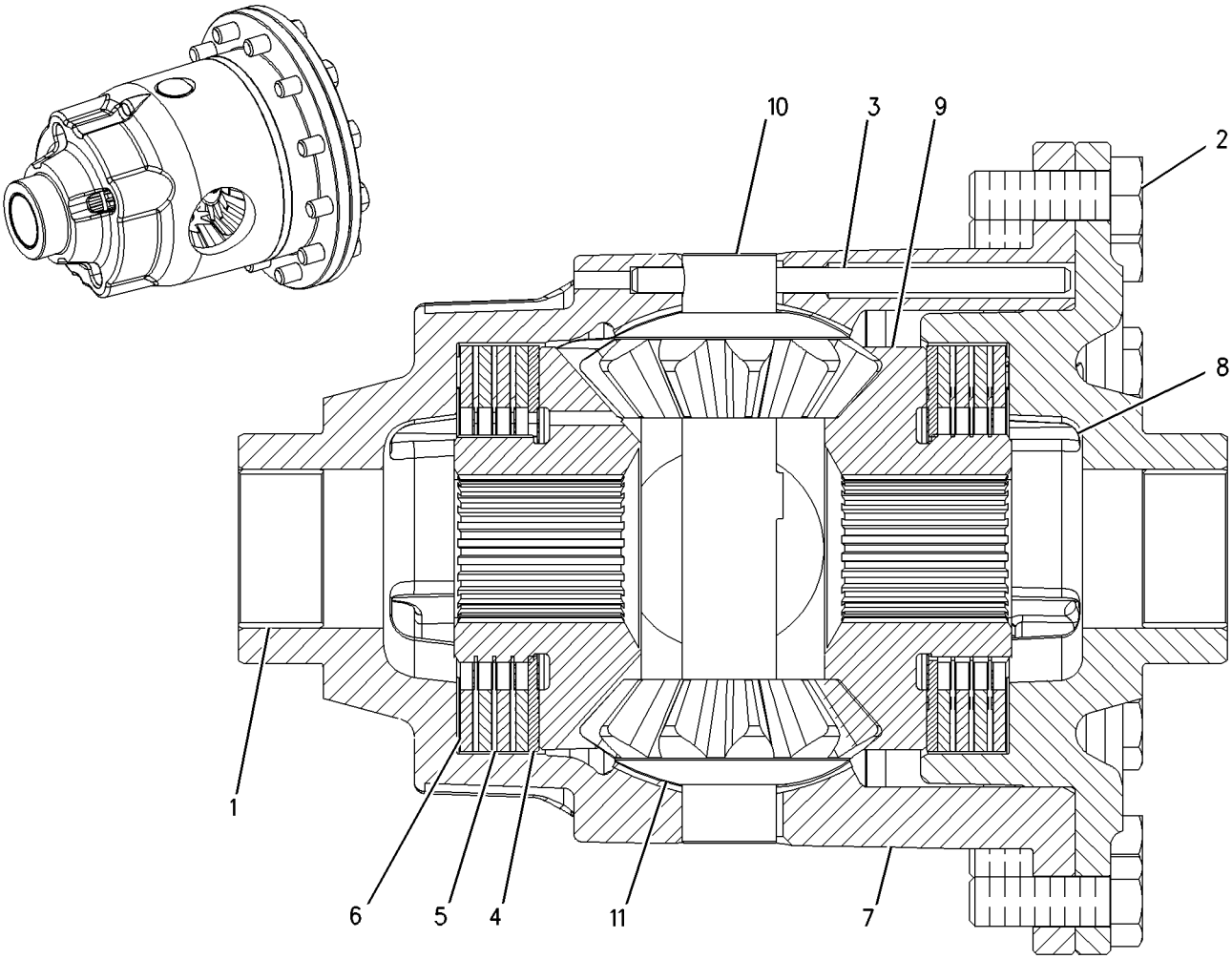

GRAPHIC #1 **<END>** g00987080

231-0689 DIFFERENTIAL GP

S/N: BZE1-UP; BZG1-UP
PART OF 226-4393 DIFFERENTIAL GP
FIELD REPLACEMENT FOR 226-4393—PAGE 172

SMCS-3258, 3283, 3284 **i02147766**

NOTE	REF NO	GRAPHIC REF	PART NUMBER	QTY	PART NAME 1 2 3 4 5 6 (PRODUCT LEVEL)	SEE PAGE
	1	1	**231-0670**	1	SHAFT	
	2	1	**199-0808**	1	PIN	
	3	1	**231-0671**	2	WASHER-THRUST	
	4	1	**226-4382**	2	GEAR (16-TEETH)	
	5	1	**231-0669**	2	GEAR (11-TEETH)	

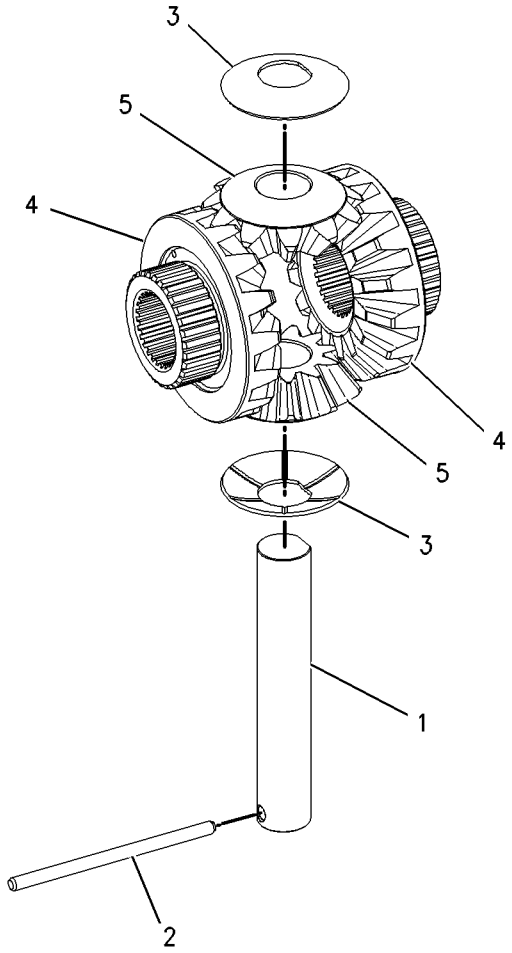

GRAPHIC #1 **<END>** g00986391

220-1944 DRIVE GP-DRUM

S/N: BZE1-332

PART OF 220-4051 DRUM GP-DRIVE & VIBRATORY

SMCS-4050, 4351, 5058 **i02141150**

NOTE	REF NO	GRAPHIC REF	PART NUMBER	QTY	PART NAME 1 2 3 4 5 6 (PRODUCT LEVEL)	SEE PAGE
	1	1	**139-3178**	1	PLATE-DRUM DRIVE	
Y	2	1	**203-4710**	1	PLANETARY GP-FINAL DRIVE	205
	3	1	**206-3658**	1	PLATE AS	
Y	4	1	**219-0616**	1	MOTOR GP-PISTON (PROPEL)	299
	5	1	**220-1945**	1	ADAPTER	
	6	1	**223-5849**	1	ADAPTER	
	7	1	**227-0172**	6	MOUNT	
	8	1	**111-7052**	1	SEAL-O-RING	
	9	1	*148-8325*	1	CONNECTOR AS	
		1	**3J-1907**	1	SEAL-O-RING	
		1	**4J-5477**	1	SEAL-O-RING	
		1	**6V-8641**	1	CONNECTOR	
	10	1	*148-8327*	1	CONNECTOR AS	
		1	**3D-2824**	1	SEAL-O-RING	
		1	**6V-8637**	1	CONNECTOR	
		1	**6V-9746**	1	SEAL-O-RING	
	11	1	*148-8369*	1	ELBOW AS	
		1	**3J-7354**	1	SEAL-O-RING	
		1	**4J-5477**	1	SEAL-O-RING	
		1	**6V-8628**	1	ELBOW	
	12	1	*148-8372*	1	ELBOW AS	
		1	**2M-9780**	1	SEAL-O-RING	
		1	**6V-8398**	1	SEAL-O-RING	
		1	**6V-8721**	1	ELBOW	
	13	1	*153-6237*	1	ELBOW AS	
		1	**3D-2824**	1	SEAL-O-RING	
		1	**6V-9004**	1	ELBOW	
		1	**6V-9746**	1	SEAL-O-RING	
	14	1	**169-7442**	1	SEAL-O-RING	
M	15	1	**6V-8200**	2	BOLT-SOCKET HEAD (M12X1.75X35-MM)	
M	16	1	**7X-2562**	6	BOLT (M20X2.5X45-MM)	
M	17	1	**8T-2393**	2	BOLT-SOCKET HEAD (M16X2X60-MM)	
	18	1	**8T-4994**	36	WASHER-HARD (20X36.5X3.5-MM THK)	
	19	1	**8T-5360**	2	WASHER (12X22.5X2.5-MM THK)	
M	20	1	**8T-5460**	6	BOLT (M20X2.5X40-MM)	
M	21	1	**8T-6430**	24	BOLT (M20X2.5X50-MM)	

M-METRIC PART
Y-SEPARATE ILLUSTRATION

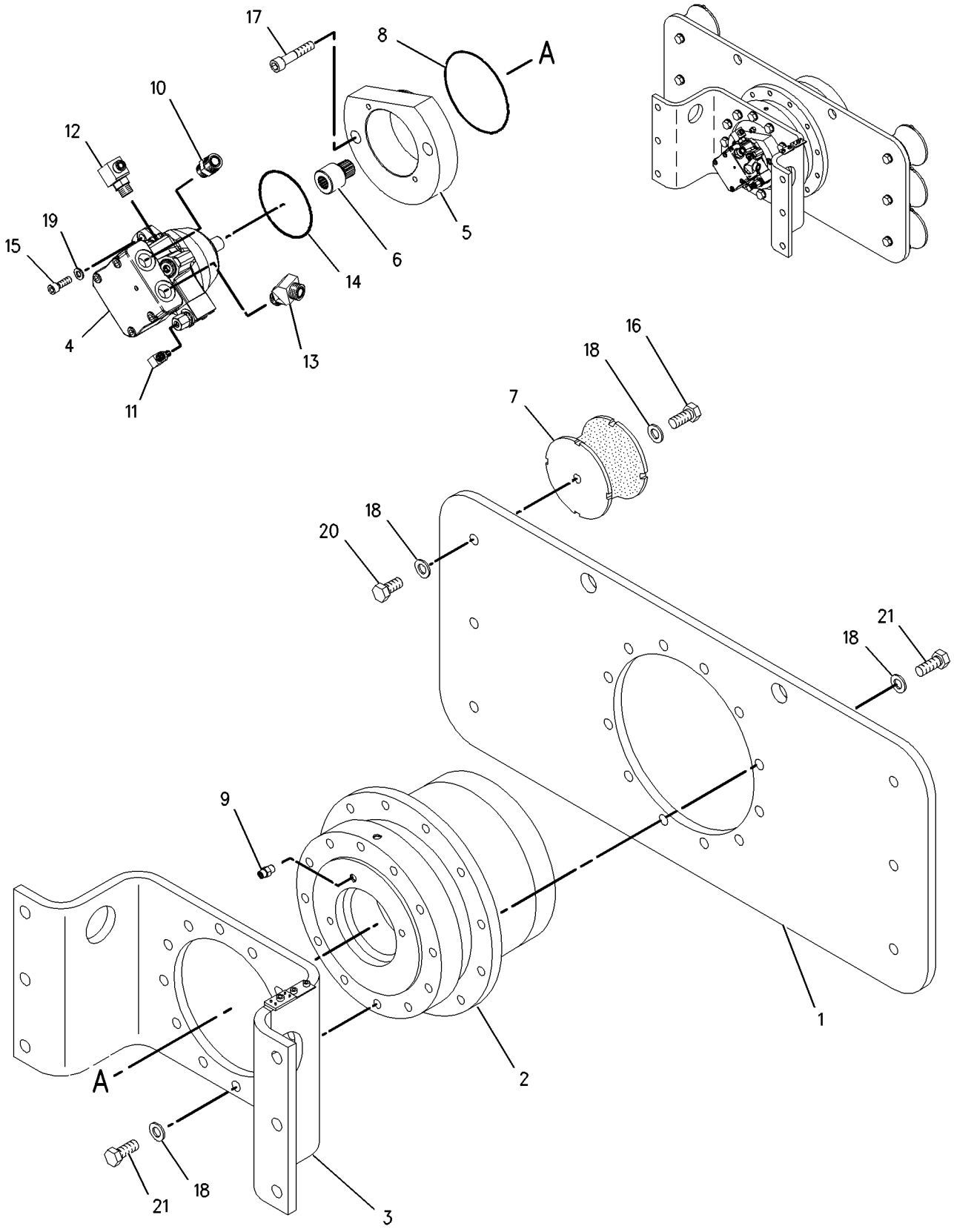

GRAPHIC #1 **<END>** g01004673

220-1944 DRIVE GP-DRUM

S/N: BZE333-645

PART OF 220-4051 DRUM GP-DRIVE & VIBRATORY

SMCS-4050, 4351, 5058 **i02404084**

NOTE	REF NO	GRAPHIC REF	PART NUMBER	QTY	PART NAME 1 2 3 4 5 6 (PRODUCT LEVEL)	SEE PAGE
	1	1	**139-3178**	1	PLATE-DRUM DRIVE	
CY	2	1	**263-6349**	1	PLANETARY GP-FINAL DRIVE	209
	3	1	**206-3658**	1	PLATE AS	
Y	4	1	**219-0616**	1	MOTOR GP-PISTON	299
	5	1	**220-1945**	1	ADAPTER	
	6	1	**223-5849**	1	ADAPTER	
	7	1	**227-0172**	6	MOUNT	
	8	1	**111-7052**	1	SEAL-O-RING	
	9	1	*148-8325*	1	CONNECTOR AS	
		1	**3J-1907**	1	SEAL-O-RING	
		1	**4J-5477**	1	SEAL-O-RING	
		1	**6V-8641**	1	CONNECTOR	
	10	1	*148-8327*	1	CONNECTOR AS	
		1	**3D-2824**	1	SEAL-O-RING	
		1	**6V-8637**	1	CONNECTOR	
		1	**6V-9746**	1	SEAL-O-RING	
	11	1	*148-8369*	1	ELBOW AS	
		1	**3J-7354**	1	SEAL-O-RING	
		1	**4J-5477**	1	SEAL-O-RING	
		1	**6V-8628**	1	ELBOW	
	12	1	*148-8372*	1	ELBOW AS	
		1	**2M-9780**	1	SEAL-O-RING	
		1	**6V-8398**	1	SEAL-O-RING	
		1	**6V-8721**	1	ELBOW	
	13	1	*153-6237*	1	ELBOW AS	
		1	**3D-2824**	1	SEAL-O-RING	
		1	**6V-9004**	1	ELBOW	
		1	**6V-9746**	1	SEAL-O-RING	
	14	1	**169-7442**	1	SEAL-O-RING	
M	15	1	**6V-8200**	2	BOLT-SOCKET HEAD (M12X1.75X35-MM)	
M	16	1	**7X-2562**	6	BOLT (M20X2.5X45-MM)	
CM	17	1	**110-4821**	2	BOLT-SOCKET HEAD (M16X2X55-MM)	
	18	1	**8T-4994**	36	WASHER-HARD (20X36.5X3.5-MM THK)	
	19	1	**8T-5360**	2	WASHER (12X22.5X2.5-MM THK)	
M	20	1	**8T-5460**	6	BOLT (M20X2.5X40-MM)	
M	21	1	**8T-6430**	24	BOLT (M20X2.5X50-MM)	

C-CHANGE FROM PREVIOUS TYPE
M-METRIC PART
Y-SEPARATE ILLUSTRATION

220-1944 **DRIVE GP-DRUM** *(contd.)* **i02404084**

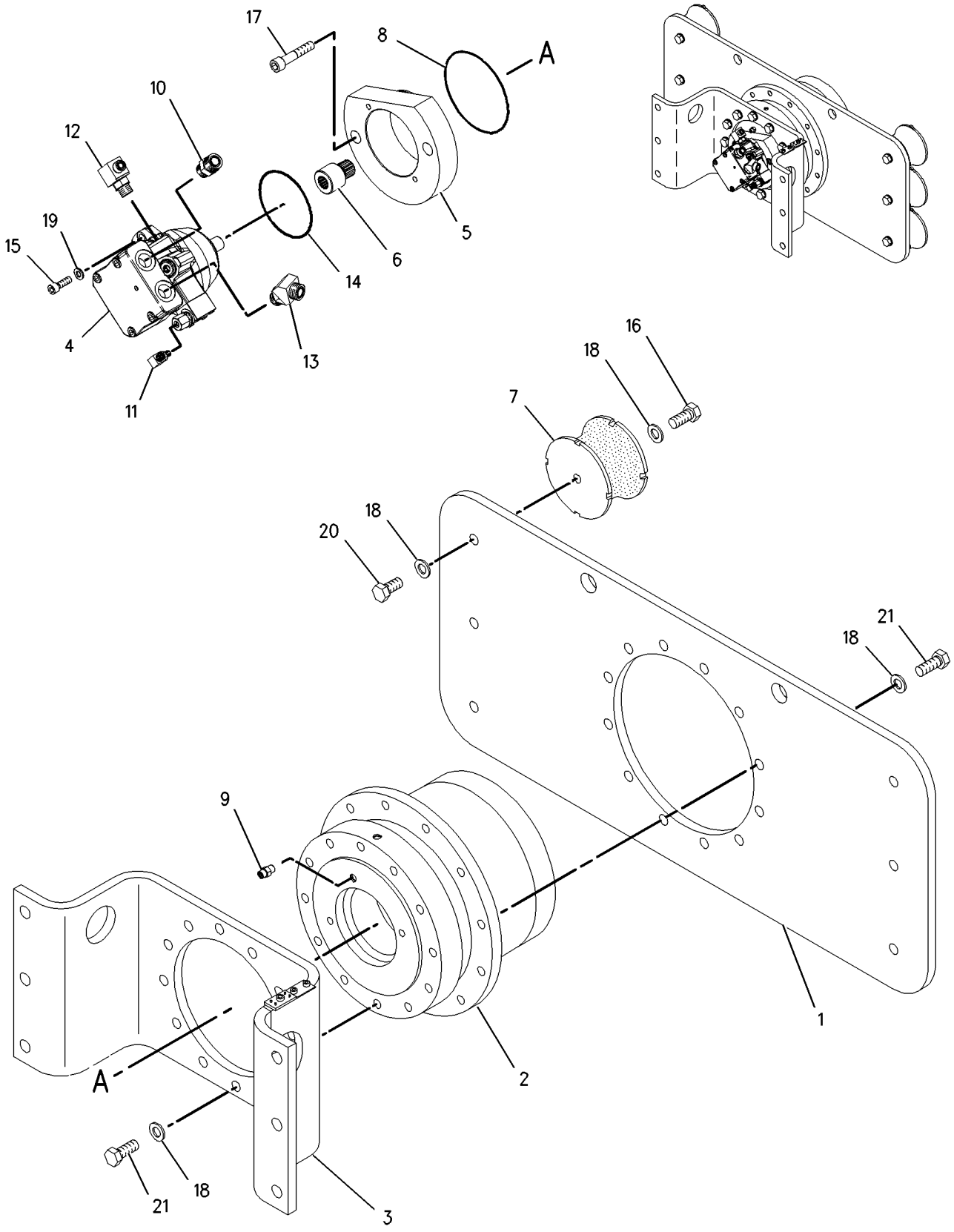

GRAPHIC #1 **<END>** g01004673

221-0800 DRIVE GP-DRUM

S/N: BZG1-240

PART OF 219-4192, 231-4913 DRUM GP-DRIVE & VIBRATORY AN ATTACHMENT

SMCS-4050, 4351, 5058 **i02142819**

NOTE	REF NO	GRAPHIC REF	PART NUMBER	QTY	PART NAME 1 2 3 4 5 6 (PRODUCT LEVEL)	SEE PAGE
	1	1	**140-5846**	1	PLATE-DRUM DRIVE	
Y	2	1	**203-4710**	1	PLANETARY GP-FINAL DRIVE	205
	3	1	**206-3658**	1	PLATE AS	
Y	4	1	**219-0616**	1	MOTOR GP-PISTON (VIBRATORY)	299
	5	1	**220-1945**	1	ADAPTER	
	6	1	**223-5849**	1	ADAPTER	
	7	1	**227-0172**	8	MOUNT	
	8	1	**111-7052**	1	SEAL-O-RING	
	9	1	*148-8325*	1	CONNECTOR AS	
		1	**3J-1907**	1	SEAL-O-RING	
		1	**4J-5477**	1	SEAL-O-RING	
		1	**6V-8641**	1	CONNECTOR	
	10	1	*148-8327*	1	CONNECTOR AS	
		1	**3D-2824**	1	SEAL-O-RING	
		1	**6V-8637**	1	CONNECTOR	
		1	**6V-9746**	1	SEAL-O-RING	
	11	1	*148-8369*	1	ELBOW AS	
		1	**3J-7354**	1	SEAL-O-RING	
		1	**4J-5477**	1	SEAL-O-RING	
		1	**6V-8628**	1	ELBOW	
	12	1	*148-8372*	1	ELBOW AS	
		1	**2M-9780**	1	SEAL-O-RING	
		1	**6V-8398**	1	SEAL-O-RING	
		1	**6V-8721**	1	ELBOW	
	13	1	*153-6237*	1	ELBOW AS	
		1	**3D-2824**	1	SEAL-O-RING	
		1	**6V-9004**	1	ELBOW	
		1	**6V-9746**	1	SEAL-O-RING	
	14	1	**169-7442**	1	SEAL-O-RING	
M	15	1	**6V-8200**	2	BOLT-SOCKET HEAD (M12X1.75X35-MM)	
M	16	1	**7X-2562**	8	BOLT (M20X2.5X45-MM)	
M	17	1	**8T-2393**	2	BOLT-SOCKET HEAD (M16X2X60-MM)	
	18	1	**8T-4994**	40	WASHER-HARD (20X36.5X3.5-MM THK)	
	19	1	**8T-5360**	2	WASHER (12X22.5X2.5-MM THK)	
M	20	1	**8T-5460**	8	BOLT (M20X2.5X40-MM)	
M	21	1	**8T-6430**	24	BOLT (M20X2.5X50-MM)	

M-METRIC PART
Y-SEPARATE ILLUSTRATION

221-0800 **DRIVE GP-DRUM** *(contd.)* **i02142819**

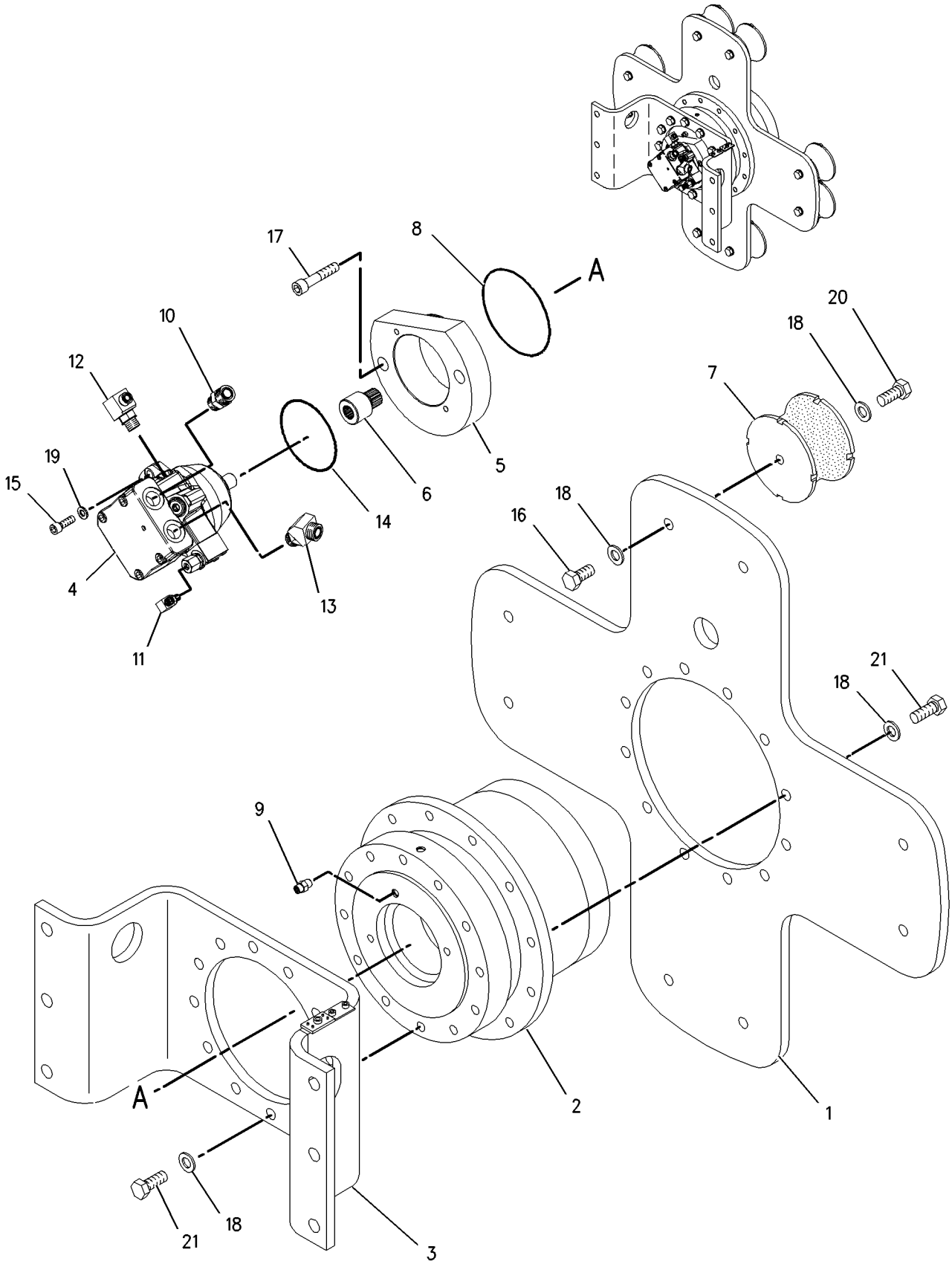

GRAPHIC #1 **<END>** g01004452

221-0800 DRIVE GP-DRUM

S/N: BZG241-357

PART OF 231-4913 DRUM GP-DRIVE & VIBRATORY

AN ATTACHMENT

SMCS-4050, 4351, 5058 **i02405540**

NOTE	REF NO	GRAPHIC REF	PART NUMBER	QTY	PART NAME 1 2 3 4 5 6 (PRODUCT LEVEL)	SEE PAGE
	1	1	**140-5846**	1	PLATE-DRUM DRIVE	
CY	2	1	**263-6349**	1	PLANETARY GP-FINAL DRIVE	209
	3	1	**206-3658**	1	PLATE AS	
Y	4	1	**219-0616**	1	MOTOR GP-PISTON	299
	5	1	**220-1945**	1	ADAPTER	
	6	1	**223-5849**	1	ADAPTER	
	7	1	**227-0172**	8	MOUNT	
	8	1	**111-7052**	1	SEAL-O-RING	
	9	1	*148-8325*	1	CONNECTOR AS	
		1	**3J-1907**	1	SEAL-O-RING	
		1	**4J-5477**	1	SEAL-O-RING	
		1	**6V-8641**	1	CONNECTOR	
	10	1	*148-8327*	1	CONNECTOR AS	
		1	**3D-2824**	1	SEAL-O-RING	
		1	**6V-8637**	1	CONNECTOR	
		1	**6V-9746**	1	SEAL-O-RING	
	11	1	*148-8369*	1	ELBOW AS	
		1	**3J-7354**	1	SEAL-O-RING	
		1	**4J-5477**	1	SEAL-O-RING	
		1	**6V-8628**	1	ELBOW	
	12	1	*148-8372*	1	ELBOW AS	
		1	**2M-9780**	1	SEAL-O-RING	
		1	**6V-8398**	1	SEAL-O-RING	
		1	**6V-8721**	1	ELBOW	
	13	1	*153-6237*	1	ELBOW AS	
		1	**3D-2824**	1	SEAL-O-RING	
		1	**6V-9004**	1	ELBOW	
		1	**6V-9746**	1	SEAL-O-RING	
	14	1	**169-7442**	1	SEAL-O-RING	
M	15	1	**6V-8200**	2	BOLT-SOCKET HEAD (M12X1.75X35-MM)	
M	16	1	**7X-2562**	8	BOLT (M20X2.5X45-MM)	
CM	17	1	**110-4821**	2	BOLT-SOCKET HEAD (M16X2X55-MM)	
	18	1	**8T-4994**	40	WASHER-HARD (20X36.5X3.5-MM THK)	
	19	1	**8T-5360**	2	WASHER (12X22.5X2.5-MM THK)	
M	20	1	**8T-5460**	8	BOLT (M20X2.5X40-MM)	
M	21	1	**8T-6430**	24	BOLT (M20X2.5X50-MM)	

C-CHANGE FROM PREVIOUS TYPE
M-METRIC PART
Y-SEPARATE ILLUSTRATION

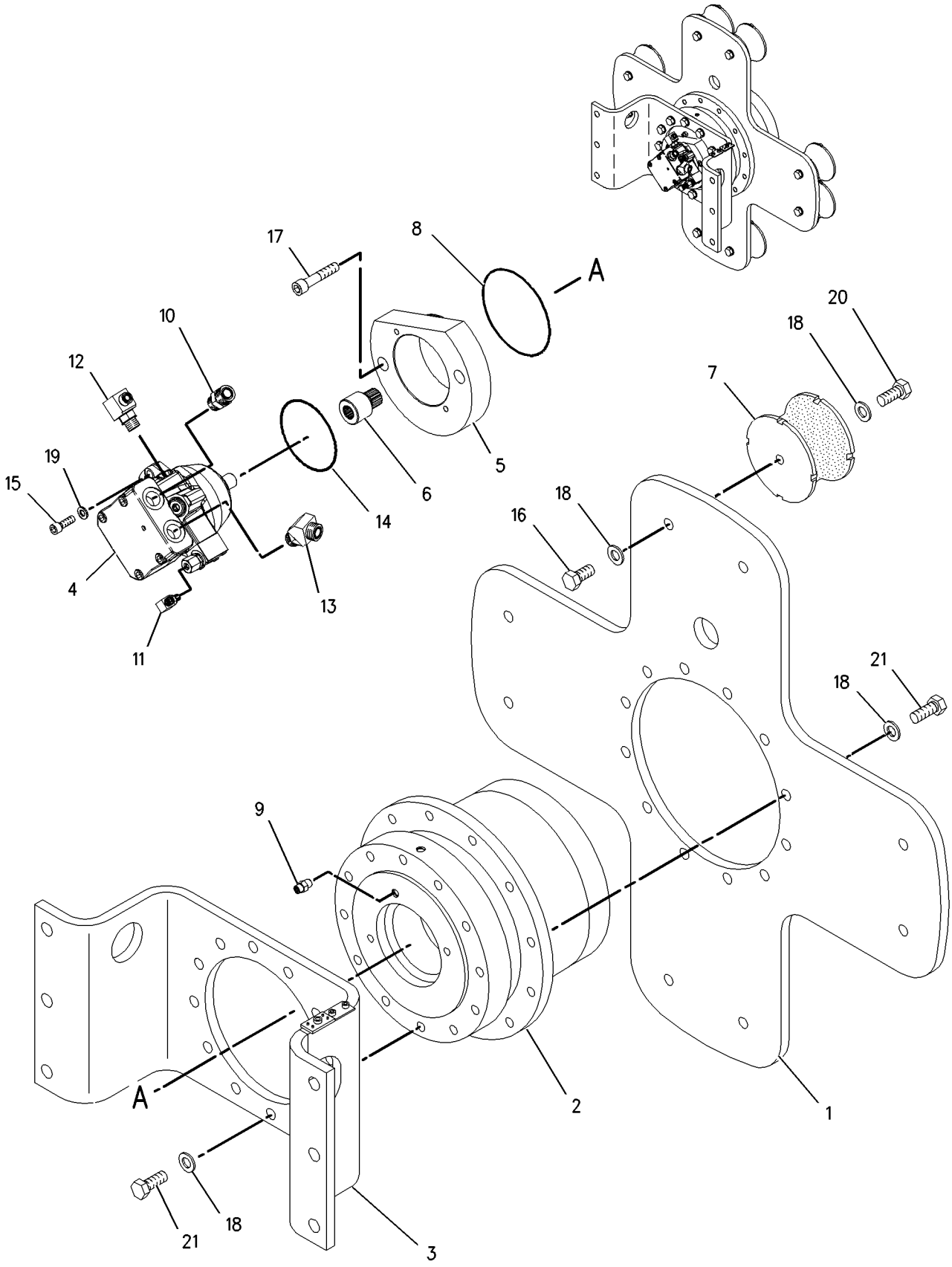

GRAPHIC #1 **<END>** g01004452

221-0800 DRIVE GP-DRUM

S/N: BZG358-UP

PART OF 231-4913 DRUM GP-DRIVE & VIBRATORY

AN ATTACHMENT

SMCS-4050, 4351, 5058 **i03013561**

NOTE	REF NO	GRAPHIC REF	PART NUMBER	QTY	PART NAME 1 2 3 4 5 6 (PRODUCT LEVEL)	SEE PAGE
	1	1	**140-5846**	1	PLATE-DRUM DRIVE	
Y	2	1	**263-6349**	1	PLANETARY GP-FINAL DRIVE	209
	3	1	**206-3658**	1	PLATE AS	
		1	**102-8704**	1	PLATE AS	
		1	**178-8505**	1	PLATE AS	
CYR	4	1	**296-5159**	1	MOTOR GP-PISTON	301
	5	1	**220-1945**	1	ADAPTER	
	6	1	**223-5849**	1	ADAPTER	
	7	1	**227-0172**	8	MOUNT	
	8	1	**111-7052**	1	SEAL-O-RING	
	9	1	*148-8325*	1	CONNECTOR AS	
		1	**3J-1907**	1	SEAL-O-RING	
		1	**4J-5477**	1	SEAL-O-RING	
		1	**6V-8641**	1	CONNECTOR	
	10	1	*148-8327*	1	CONNECTOR AS	
		1	**3D-2824**	1	SEAL-O-RING	
		1	**6V-8637**	1	CONNECTOR	
		1	**6V-9746**	1	SEAL-O-RING	
	11	1	*148-8369*	1	ELBOW AS	
		1	**3J-7354**	1	SEAL-O-RING	
		1	**4J-5477**	1	SEAL-O-RING	
		1	**6V-8628**	1	ELBOW	
	12	1	*148-8372*	1	ELBOW AS	
		1	**2M-9780**	1	SEAL-O-RING	
		1	**6V-8398**	1	SEAL-O-RING	
		1	**6V-8721**	1	ELBOW	
	13	1	*153-6237*	1	ELBOW AS	
		1	**3D-2824**	1	SEAL-O-RING	
		1	**6V-9004**	1	ELBOW	
		1	**6V-9746**	1	SEAL-O-RING	
	14	1	**169-7442**	1	SEAL-O-RING	
M	15	1	**6V-8200**	2	BOLT-SOCKET HEAD (M12X1.75X35-MM)	
M	16	1	**7X-2562**	8	BOLT (M20X2.5X45-MM)	
M	17	1	**110-4821**	2	BOLT-SOCKET HEAD (M16X2X55-MM)	
	18	1	**8T-4994**	40	WASHER-HARD (20X36.5X3.5-MM THK)	
	19	1	**8T-5360**	2	WASHER (12X22.5X2.5-MM THK)	
M	20	1	**8T-5460**	8	BOLT (M20X2.5X40-MM)	
M	21	1	**8T-6430**	24	BOLT (M20X2.5X50-MM)	

C-CHANGE FROM PREVIOUS TYPE
M-METRIC PART
R-REMFG PART MAY BE AVAILABLE
Y-SEPARATE ILLUSTRATION

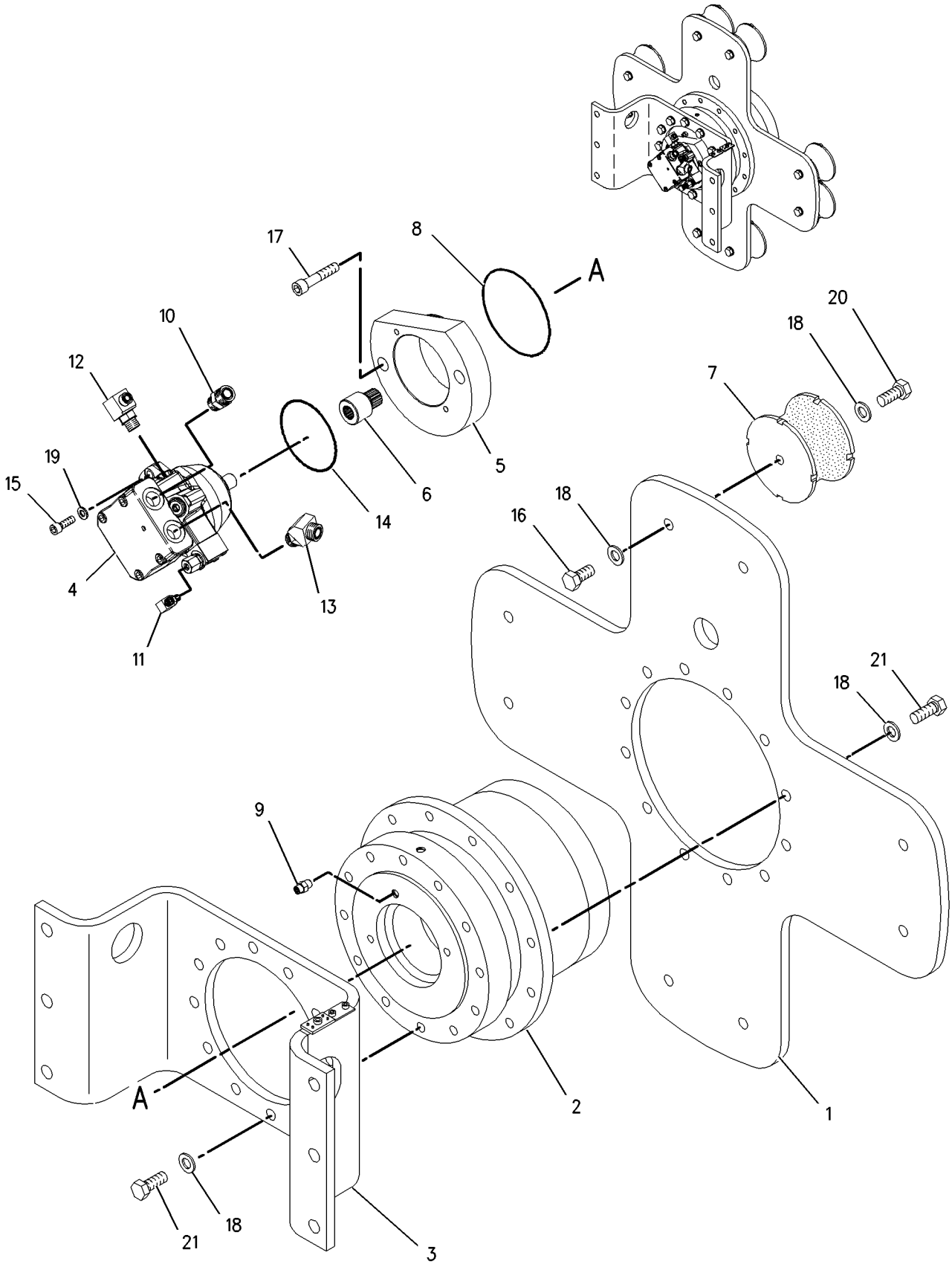

GRAPHIC #1 **<END>** g01004452

254-1323 DRUM GP-COMPACTOR

S/N: BZE1-UP
AN ATTACHMENT

SMCS-6605 **i02145703**

NOTE	REF NO	GRAPHIC REF	PART NUMBER	QTY	PART NAME 1 2 3 4 5 6 (PRODUCT LEVEL)	SEE PAGE
B	1	1	**124-0357**	2	SPACER	
B	2	1	**124-0358**	2	SPACER	
B	3	1	**124-0359**	2	SPACER	
Y	4	1	*212-9533*	1	SCRAPER GP-PADDED DRUM	255
Y	5	1	*222-4326*	1	BUMPER GP-FRONT	224
Y	6	1	*254-1347*	1	DRUM GP-DRIVE & VIBRATORY	189

B-USE AS REQUIRED
Y-SEPARATE ILLUSTRATION

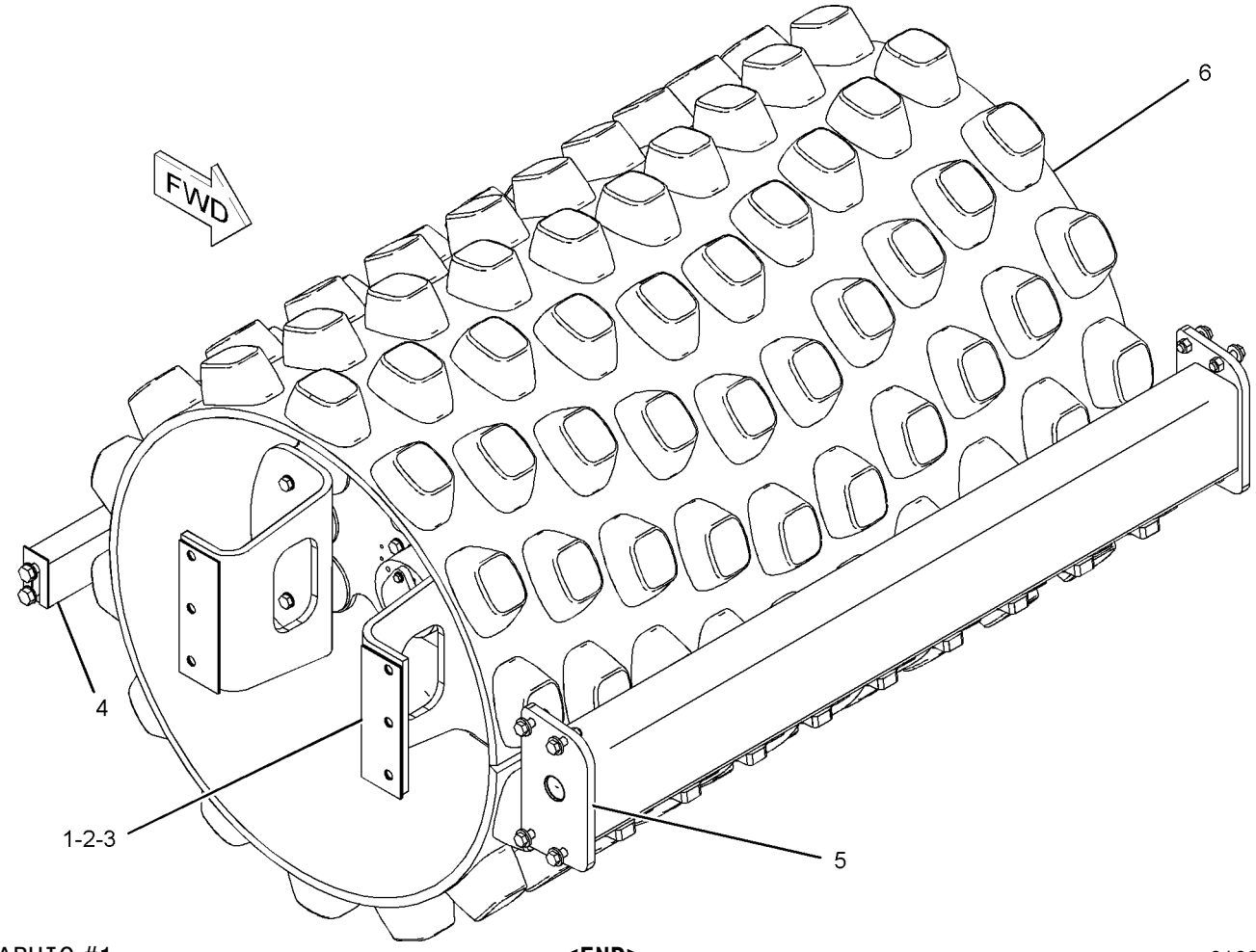

GRAPHIC #1 **<END>** g01089942

219-4192 DRUM GP-DRIVE & VIBRATORY—PADDED

S/N: BZG1-UP
AN ATTACHMENT

SMCS-4050, 5622, 6605 **i02142645**

NOTE	REF NO	GRAPHIC REF	PART NUMBER	QTY	PART NAME 1 2 3 4 5 6 (PRODUCT LEVEL)	SEE PAGE
Y	1	1	*139-2036*	1	DRUM GP-PADDED	191
Y	2	1	*193-5892*	1	DRIVE GP-SUPPORT & VIBRATORY	344
Y	3	1	*221-0800*	1	DRIVE GP-DRUM	179

Y-SEPARATE ILLUSTRATION

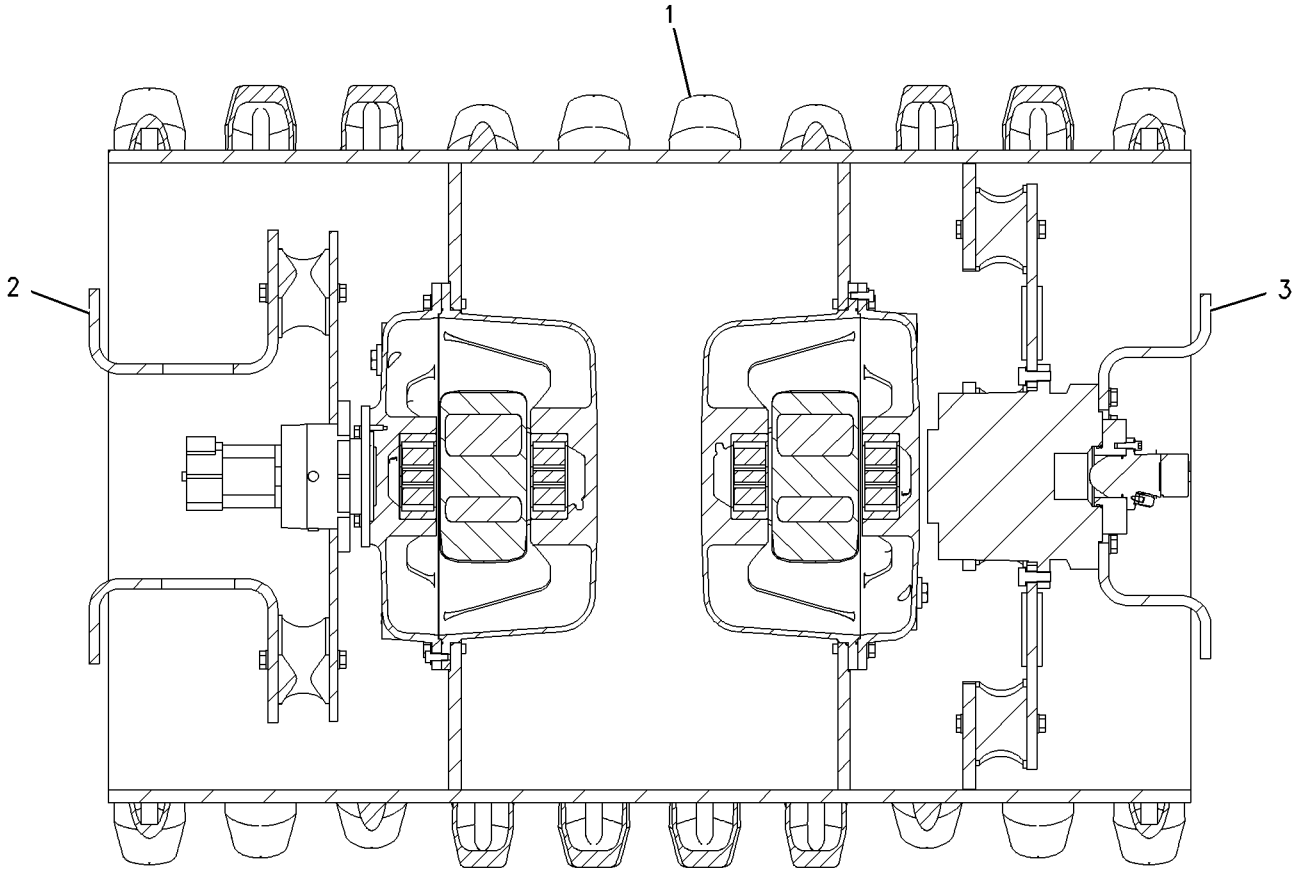

GRAPHIC #1 **<END>** g01001190

220-4051 DRUM GP-DRIVE & VIBRATORY—SMOOTH

S/N: BZE1-UP

PART OF 219-4164 POWER TRAIN AR

SMCS-4050, 5622, 6605 **i02141134**

NOTE	REF NO	GRAPHIC REF	PART NUMBER	QTY	PART NAME 1 2 3 4 5 6 (PRODUCT LEVEL)	SEE PAGE
Y	1	1	*193-5892*	1	DRIVE GP-SUPPORT & VIBRATORY	344
Y	2	1	*220-1944*	1	DRIVE GP-DRUM	175
Y	3	1	*220-4053*	1	DRUM GP-SMOOTH	193

Y-SEPARATE ILLUSTRATION

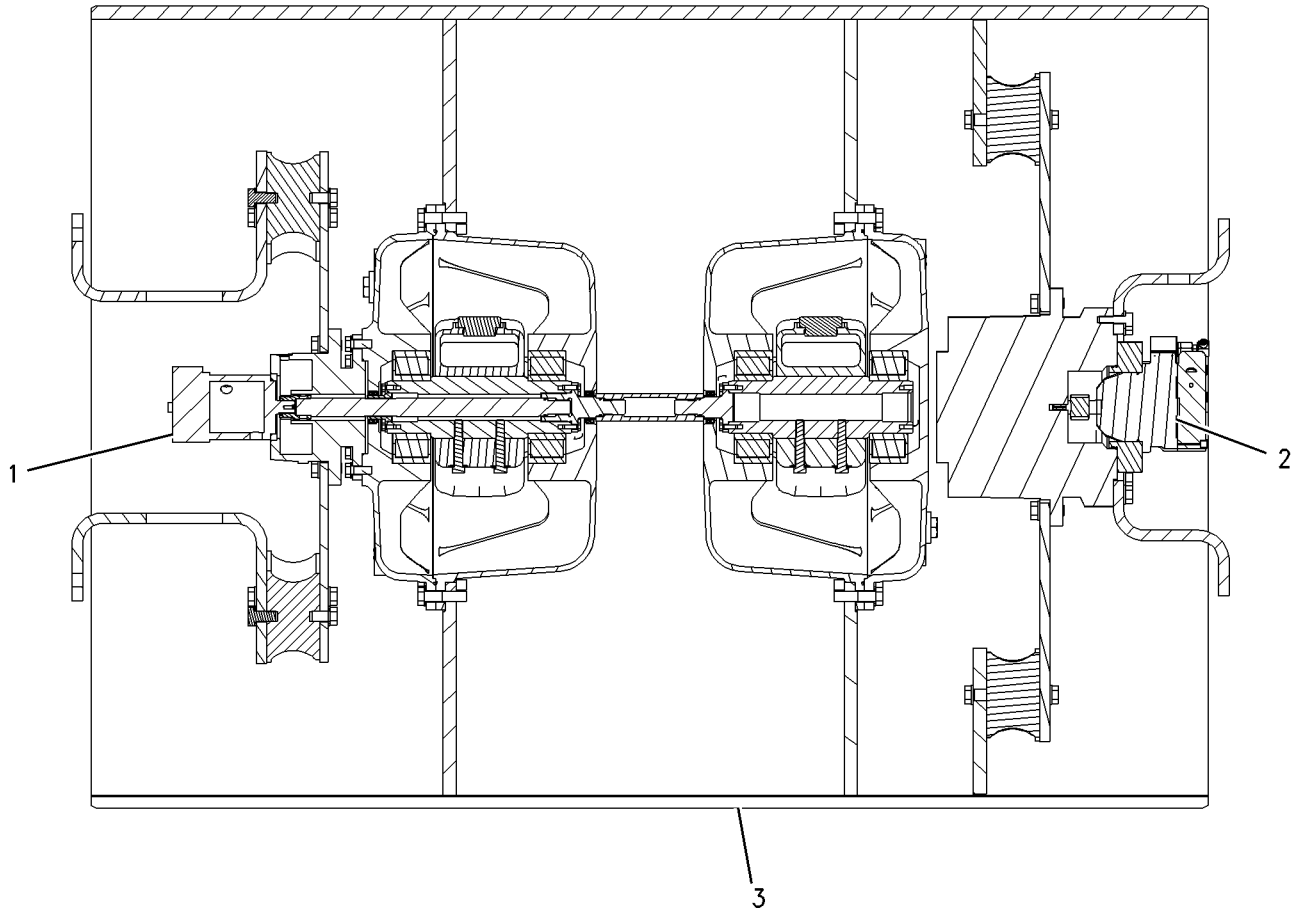

GRAPHIC #1 **<END>** g01002408

231-4913 DRUM GP-DRIVE & VIBRATORY—PADDED

S/N: BZG1-UP

AN ATTACHMENT

SMCS-4050, 5622, 6605 **i02142133**

NOTE	REF NO	GRAPHIC REF	PART NUMBER	QTY	PART NAME 1 2 3 4 5 6 (PRODUCT LEVEL)	SEE PAGE
Y	1	1	*193-5892*	1	DRIVE GP-SUPPORT & VIBRATORY	344
Y	2	1	*221-0800*	1	DRIVE GP-DRUM	179
Y	3	1	*231-8768*	1	DRUM GP-PADDED	192

Y-SEPARATE ILLUSTRATION

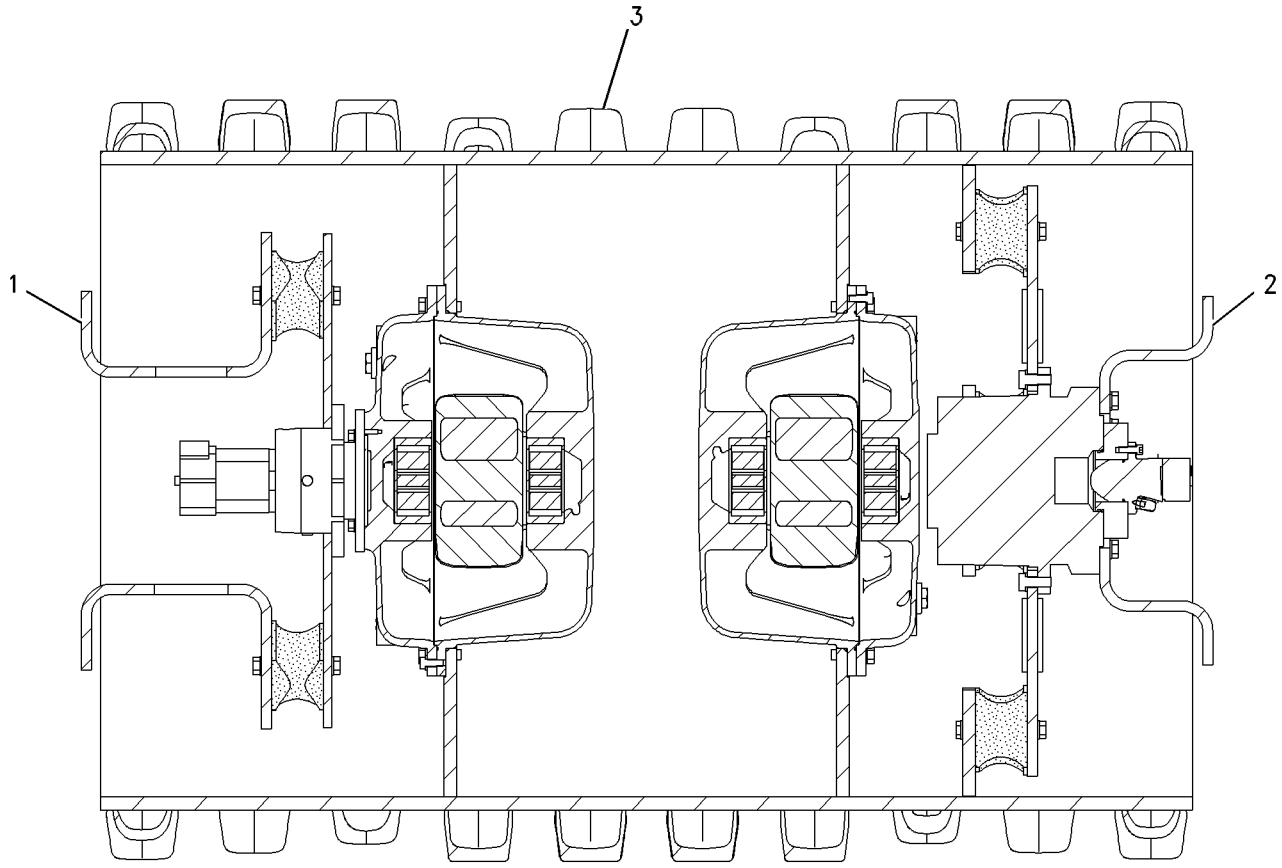

GRAPHIC #1 **<END>** g01001488

254-1347 DRUM GP-DRIVE & VIBRATORY—PADDED

S/N: BZE1-UP

PART OF 254-1323 DRUM GP-COMPACTOR

AN ATTACHMENT

SMCS-4050, 5622, 6605 **i02145720**

NOTE	REF NO	GRAPHIC REF	PART NUMBER	QTY	PART NAME 1 2 3 4 5 6 (PRODUCT LEVEL)	SEE PAGE
	1	1	**7X-9294**	1	COVER	
	2	1	**140-5846**	1	PLATE-DRUM DRIVE	
	3	1	**152-1261**	1	BRACKET	
	4	1	**155-4850**	1	SHAFT AS	
Y	5	1	**159-9405**	1	SUPPORT GP-VIBRATORY	362
	6	1	**193-5893**	1	PLATE	
	7	1	**193-5894**	2	BRACKET	
	8	1	**227-0172**	14	MOUNT	
Y	9	1	*231-8768*	1	DRUM GP-PADDED	192
	10	1	**061-9458**	1	SEAL-O-RING	
	11	1	**3K-0715**	1	SEAL-O-RING	
	12	1	**5P-5397**	1	SEAL-O-RING	
M	13	1	**7X-2553**	8	BOLT (M16X2X40-MM)	
M	14	1	**7X-2561**	6	BOLT (M20X2.5X35-MM)	
M	15	1	**7X-2562**	14	BOLT (M20X2.5X45-MM)	
M	16	1	**8T-4183**	2	BOLT (M12X1.75X40-MM)	
	17	1	**8T-4223**	2	WASHER-HARD (13.5X25.5X3-MM THK)	
	18	1	**8T-4994**	36	WASHER-HARD (20X36.5X3.5-MM THK)	
M	19	1	**8T-5460**	14	BOLT (M20X2.5X40-MM)	
M	20	1	**8T-6430**	2	BOLT (M20X2.5X50-MM)	
	21	1	**9X-8257**	8	WASHER (17.5X30X3.5-MM THK)	

M-METRIC PART
Y-SEPARATE ILLUSTRATION

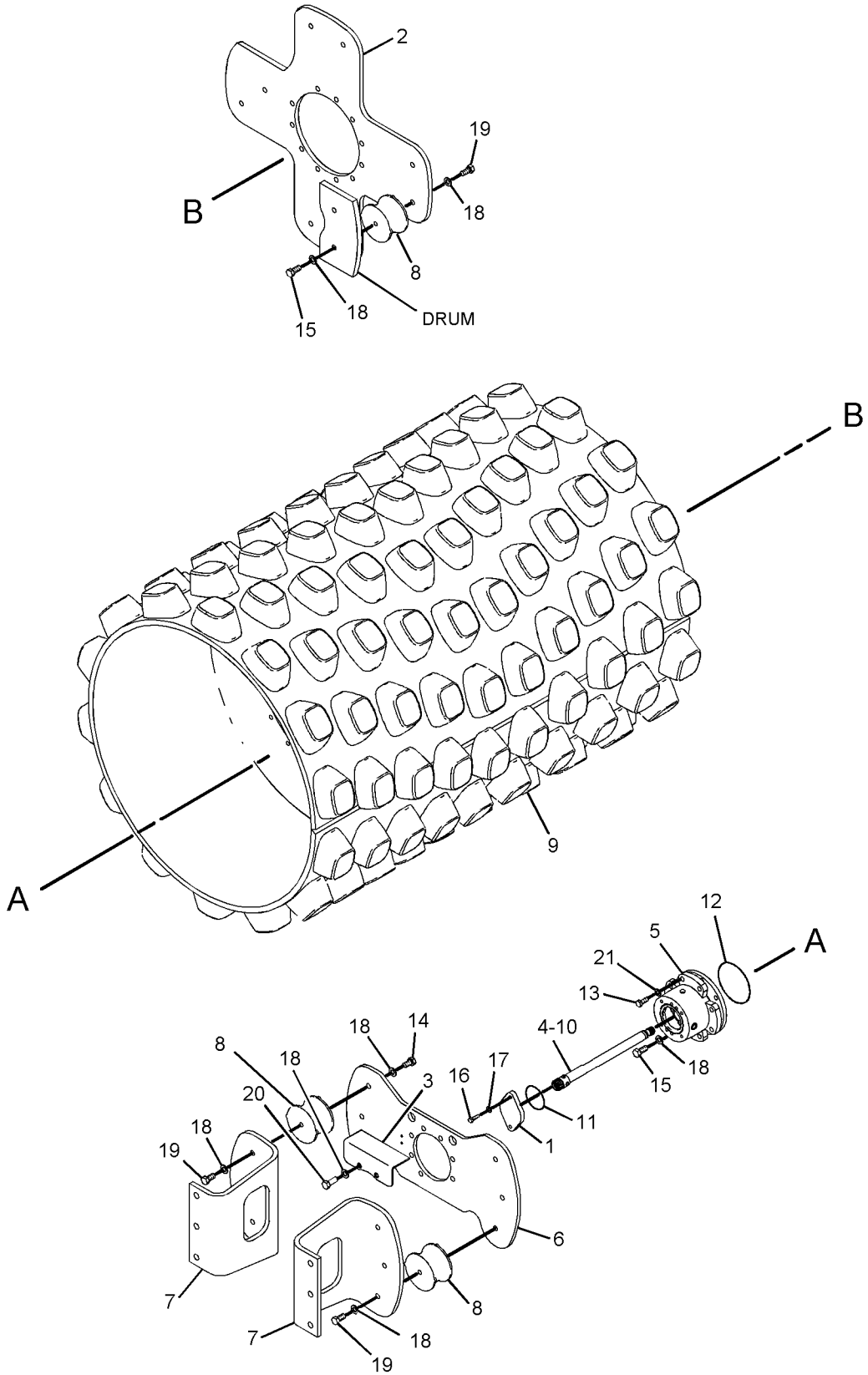

GRAPHIC #1

<END>

g01090092

139-2036 DRUM GP-PADDED

S/N: BZG1-UP

PART OF 219-4192 DRUM GP-DRIVE & VIBRATORY

AN ATTACHMENT

SMCS-6605 **i03007166**

NOTE	REF NO	GRAPHIC REF	PART NUMBER	QTY	PART NAME 1 2 3 4 5 6 (PRODUCT LEVEL)	SEE PAGE
	1	1	**165-4929**	1	PLUG AS (STORAGE)	
		1	**5P-4484**	1	PLUG-MAGNETIC	
		1	**7M-8485**	1	SEAL-O-RING	
	2	1	**139-3181**	1	DRUM AS-PADDED	
		1	**7X-8009**	140	PAD	
	3	1	**140-1321**	1	SHAFT	
YR	4	1	**140-8266**	1	HOUSING GP-ECCENTRIC WEIGHT	345
YR	5	1	**140-8267**	1	HOUSING GP-ECCENTRIC WEIGHT	346
	6	1	**061-9458**	2	SEAL-O-RING	
	8	1	**8T-4994**	36	WASHER-HARD (20X36.5X3.5-MM THK)	
M	9	1	**8T-4187**	36	BOLT (M20X2.5X80-MM)	
	10	1	**9H-6832**	2	SEAL-O-RING	

M-METRIC PART
R-REMFG PART MAY BE AVAILABLE
Y-SEPARATE ILLUSTRATION

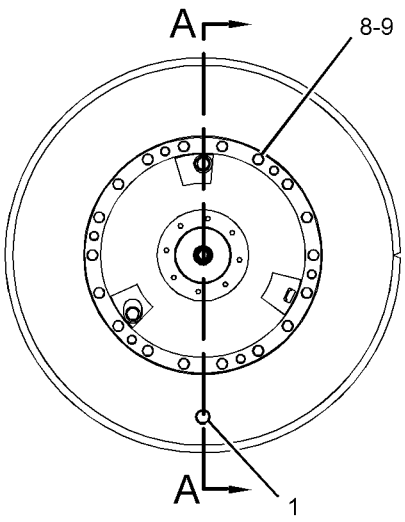

RIGHT SIDE VIEW

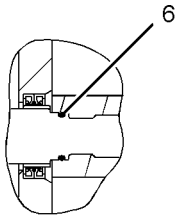

VIEW OF AREA C

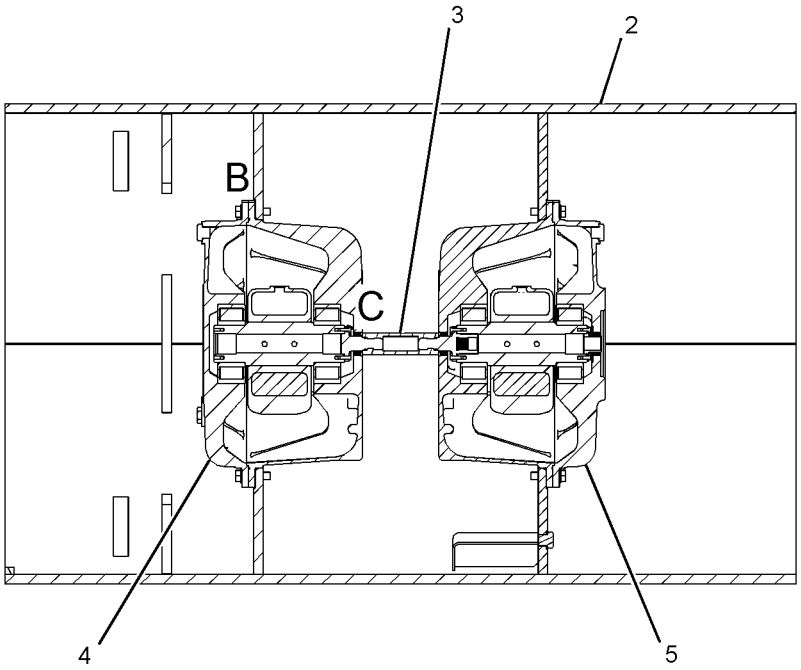

SECTION A-A

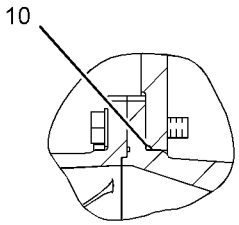

VIEW OF AREA B

GRAPHIC #1 **<END>** g01525239

POWER TRAIN

231-8768 DRUM GP-PADDED

S/N: BZE1-UP; BZG1-UP
PART OF 231-4913, 254-1347 DRUM GP-DRIVE & VIBRATORY
AN ATTACHMENT

SMCS-6605 **i03013634**

NOTE	REF NO	GRAPHIC REF	PART NUMBER	QTY	PART NAME 1 2 3 4 5 6 (PRODUCT LEVEL)	SEE PAGE
	1	1	**165-4929**	1	PLUG AS (STORAGE)	
		1	**5P-4484**	1	PLUG-MAGNETIC (PADDED DRUM)	
		1	**7M-8485**	1	SEAL-O-RING	
	2	1	**140-1321**	1	SHAFT	
YR	3	1	**140-8266**	1	HOUSING GP-ECCENTRIC WEIGHT (LH)	345
YR	4	1	**140-8267**	1	HOUSING GP-ECCENTRIC WEIGHT (RH)	346
	5	1	**225-8023**	1	DRUM AS-PADDED	
		1	**217-6838**	140	PAD	
	5A	1	**5C-3370**	1	BOSS	
	5B	1	**129-3216**	2	PLATE AS	
	6	1	**061-9458**	2	SEAL-O-RING	
	7	1	**7M-8485**	1	SEAL-O-RING	
M	8	1	**8T-4187**	36	BOLT (M20X2.5X80-MM)	
	9	1	**8T-4994**	36	WASHER-HARD (20X36.5X3.5-MM THK)	
	10	1	**9H-6832**	2	SEAL-O-RING	

M-METRIC PART
R-REMFG PART MAY BE AVAILABLE
Y-SEPARATE ILLUSTRATION

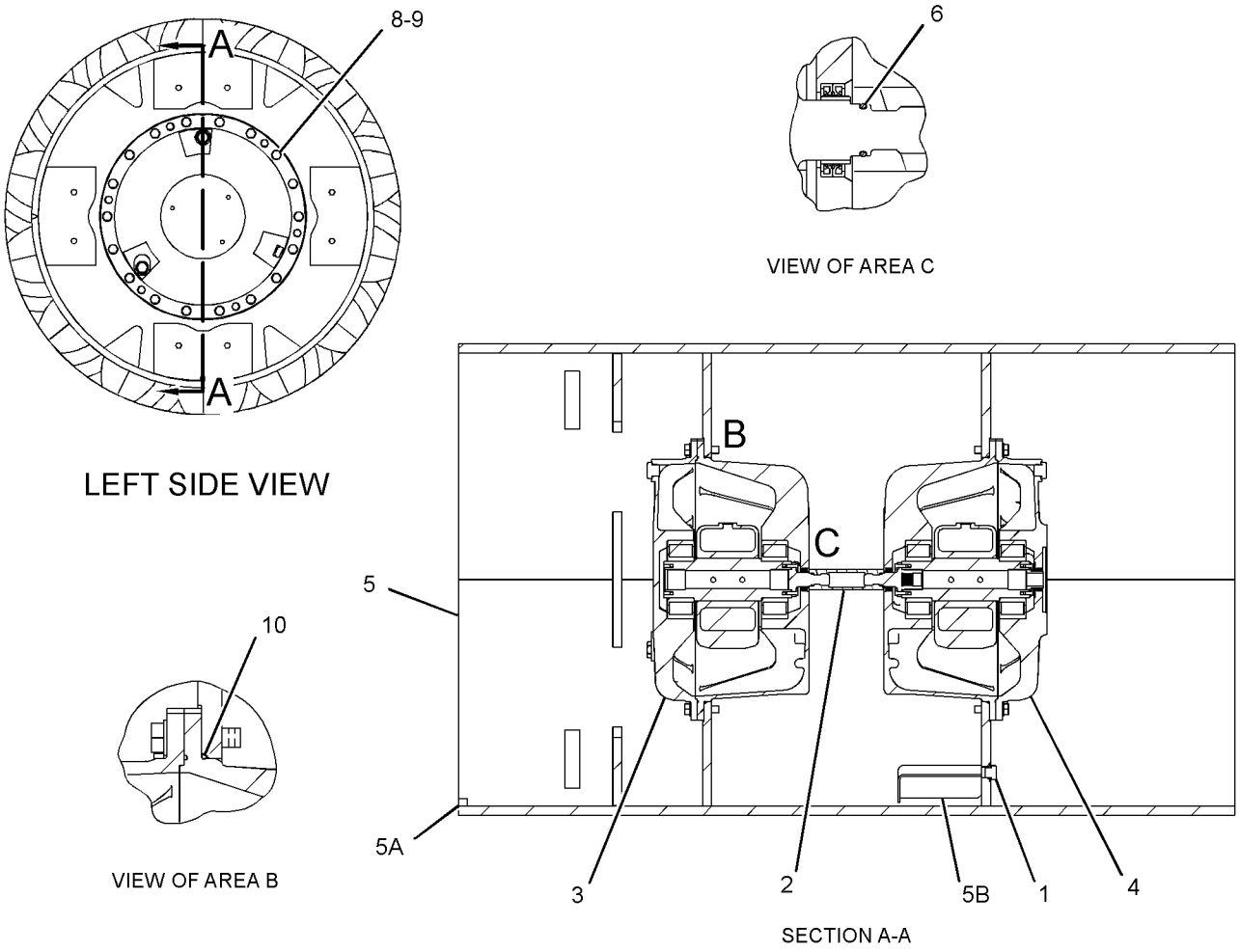

GRAPHIC #1 **<END>** g01526979

220-4053 DRUM GP-SMOOTH

S/N: BZE1-UP

PART OF 220-4051 DRUM GP-DRIVE & VIBRATORY

SMCS-6605 **i03009861**

NOTE	REF NO	GRAPHIC REF	PART NUMBER	QTY	PART NAME 1 2 3 4 5 6 (PRODUCT LEVEL)	SEE PAGE
	1	1	**165-4929**	1	PLUG AS (STORAGE) (SMOOTH DRUM)	
		1	**7M-8485**	1	SEAL-O-RING	
		1	**5P-4484**	1	PLUG-MAGNETIC	
	2	1	**140-1321**	1	SHAFT	
	3	1	**220-4054**	1	DRUM AS-SMOOTH	
	3A	1	**5C-3370**	1	BOSS	
	3B	1	**129-3216**	2	PLATE AS	
Y	4	1	**222-1889**	1	HOUSING GP-ECCENTRIC WEIGHT	348
Y	5	1	**222-1890**	1	HOUSING GP-ECCENTRIC WEIGHT	349
	6	1	**061-9458**	2	SEAL-O-RING	
M	8	1	**8T-4187**	36	BOLT (M20X2.5X80-MM)	
	9	1	**8T-4994**	36	WASHER-HARD (20X36.5X3.5-MM THK)	
	10	1	**9H-6832**	2	SEAL-O-RING	

M-METRIC PART
Y-SEPARATE ILLUSTRATION

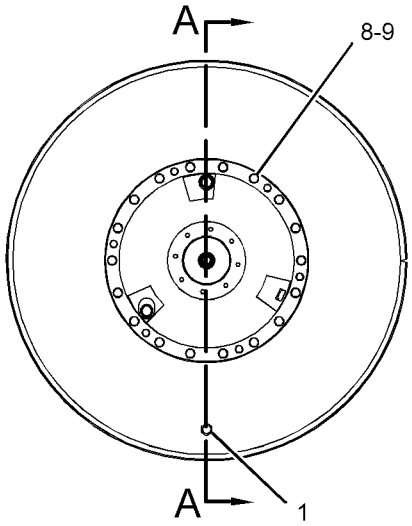

RIGHT SIDE VIEW

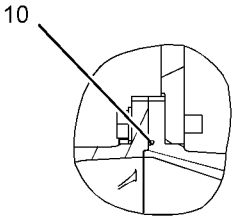

VIEW OF AREA B

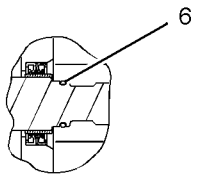

VIEW OF AREA C

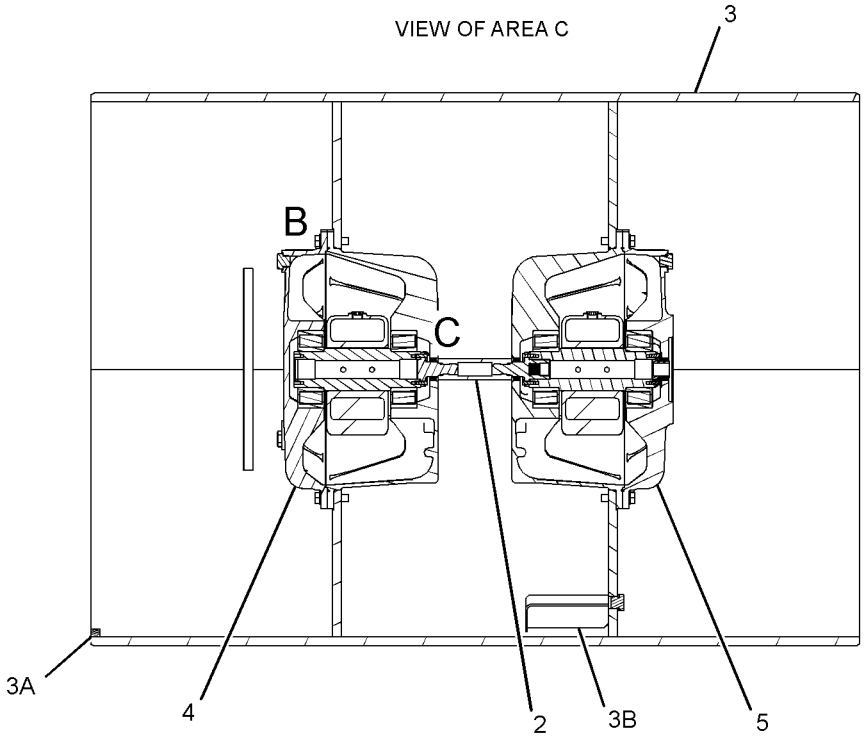

SECTION A-A

GRAPHIC #1

<END>

g01525109

216-1609 FLANGE GP-WHEEL

S/N: BZE1-UP; BZG1-UP

PART OF 202-4172, 325-3644 AXLE GP-DRIVE

SMCS-4057 **i02361150**

NOTE	REF NO	GRAPHIC REF	PART NUMBER	QTY	PART NAME 1 2 3 4 5 6 (PRODUCT LEVEL)	SEE PAGE
	1	1	**210-5932**	2	BEARING-WHEEL	
	2	1	**216-1602**	1	FLANGE	
	3	1	**226-4346**	10	STUD	
	4	1	**229-5092**	1	SEAL	

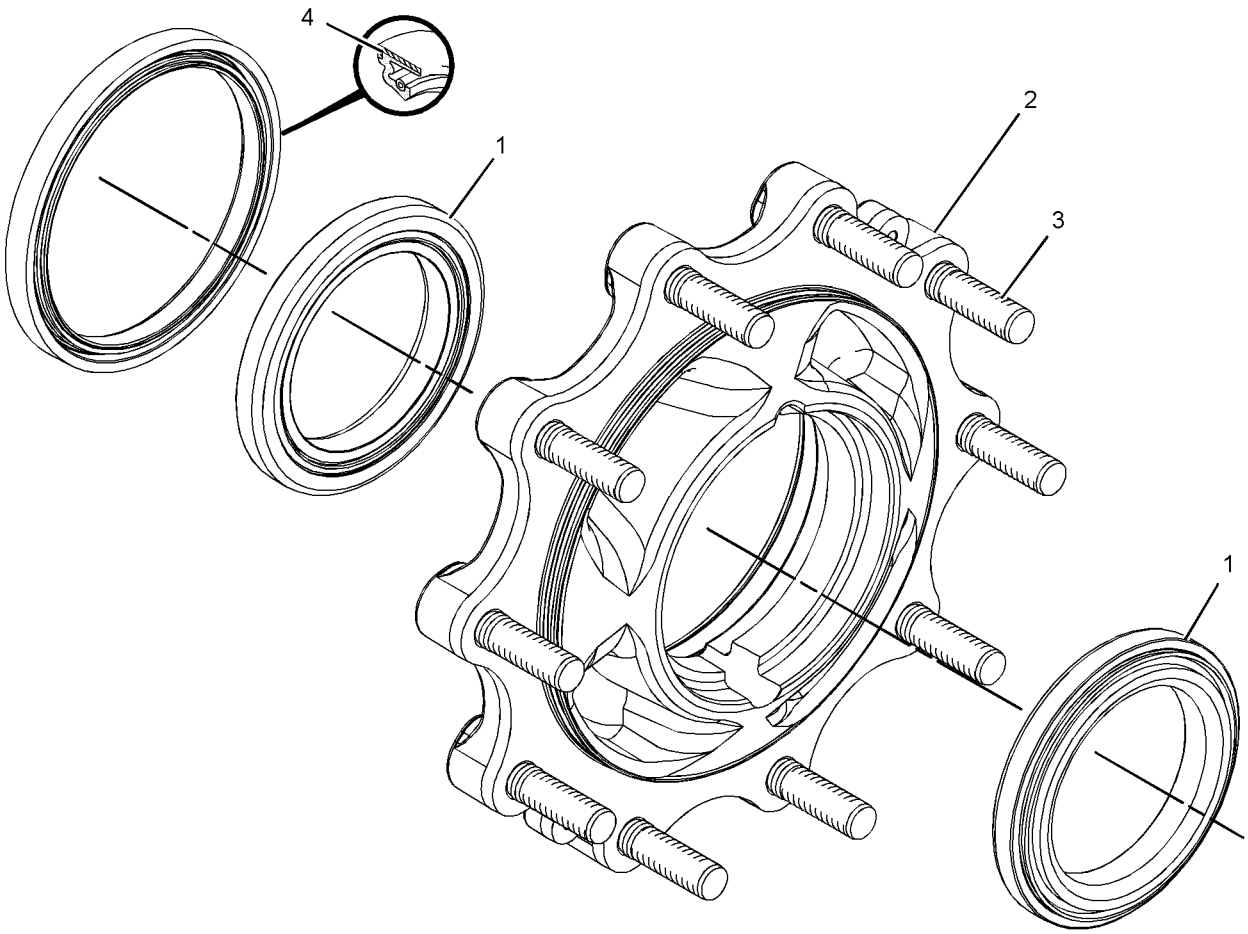

GRAPHIC #1 **<END>** g01180592

POWER TRAIN

226-4400 HOUSING GP-AXLE

S/N: BZE1-UP; BZG1-UP

PART OF 202-4172, 325-3644 AXLE GP-DRIVE

SMCS-3260 **i02204807**

NOTE	REF NO	GRAPHIC REF	PART NUMBER	QTY	PART NAME 1 2 3 4 5 6 (PRODUCT LEVEL)	SEE PAGE
	1	1	**199-0646**	4	BOLT	
	2	1	**199-0656**	2	BEARING	
J	3	1	**209-7457**	1	NUT	
	4	1	**198-7811**	2	DOWEL	
	5	1	**199-0675**	2	NUT	
J	6	1	**229-5055**	1	WASHER	
J	7	1	**199-0678**	2	WASHER (45.5X55X2-MM THK)	
J	8	1	**199-0680**	1	SPACER (47X50X19.2-MM THK)	
B	9	1	**199-0684**	1	SHIM (2.5-MM THK)	
B		1	**199-0685**	1	SHIM (2.6-MM THK)	
B		1	**199-0686**	1	SHIM (2.7-MM THK)	
B		1	**199-0687**	1	SHIM (2.8-MM THK)	
B		1	**199-0688**	1	SHIM (2.9-MM THK)	
B		1	**199-0689**	1	SHIM (3-MM THK)	
B		1	**199-0690**	1	SHIM (3.1-MM THK)	
B		1	**199-0691**	1	SHIM (3.2-MM THK)	
B		1	**199-0692**	1	SHIM (3.3-MM THK)	
B		1	**199-0693**	1	SHIM (3.4-MM THK)	
M	10	1	**199-0695**	2	BOLT (M6X1X14-MM)	
JZ	11	1		1	PINION	
	12	1	**199-0858**	2	RETAINER	
	13	1	**095-1041**	1	BEARING AS	
	14	1	**093-8828**	1	BEARING AS	
	15	1	**219-8834**	1	CYLINDER-BRAKE (RH)	
	16	1	**219-8835**	1	CYLINDER-BRAKE (LH)	
Y	17	1	**226-4394**	1	DIFFERENTIAL GP	173
	18	1	**231-0748**	1	SPACER	
	19	1	**226-4374**	1	HOUSING-CENTER	
	20	1	**226-4373**	1	SPACER (45X73X18-MM THK)	
	21	1	**095-0924**	1	RING-RETAINING	
	22	1	**229-5056**	1	SEAL-O-RING	
B	23	1	**069-4707**		SEALANT (GASKET)	
JZ	24	1		1	GEAR-BEVEL	
					AVAILABLE REPAIR KIT(S):	
J			**229-5099**	1	KIT-GEAR	

B-USE AS REQUIRED
J-KIT MARKED J SERVICES PART(S) MARKED J
M-METRIC PART
Y-SEPARATE ILLUSTRATION
Z-NOT SERVICED SEPARATELY

226-4400 **HOUSING GP-AXLE** *(contd.)* **i02204807**

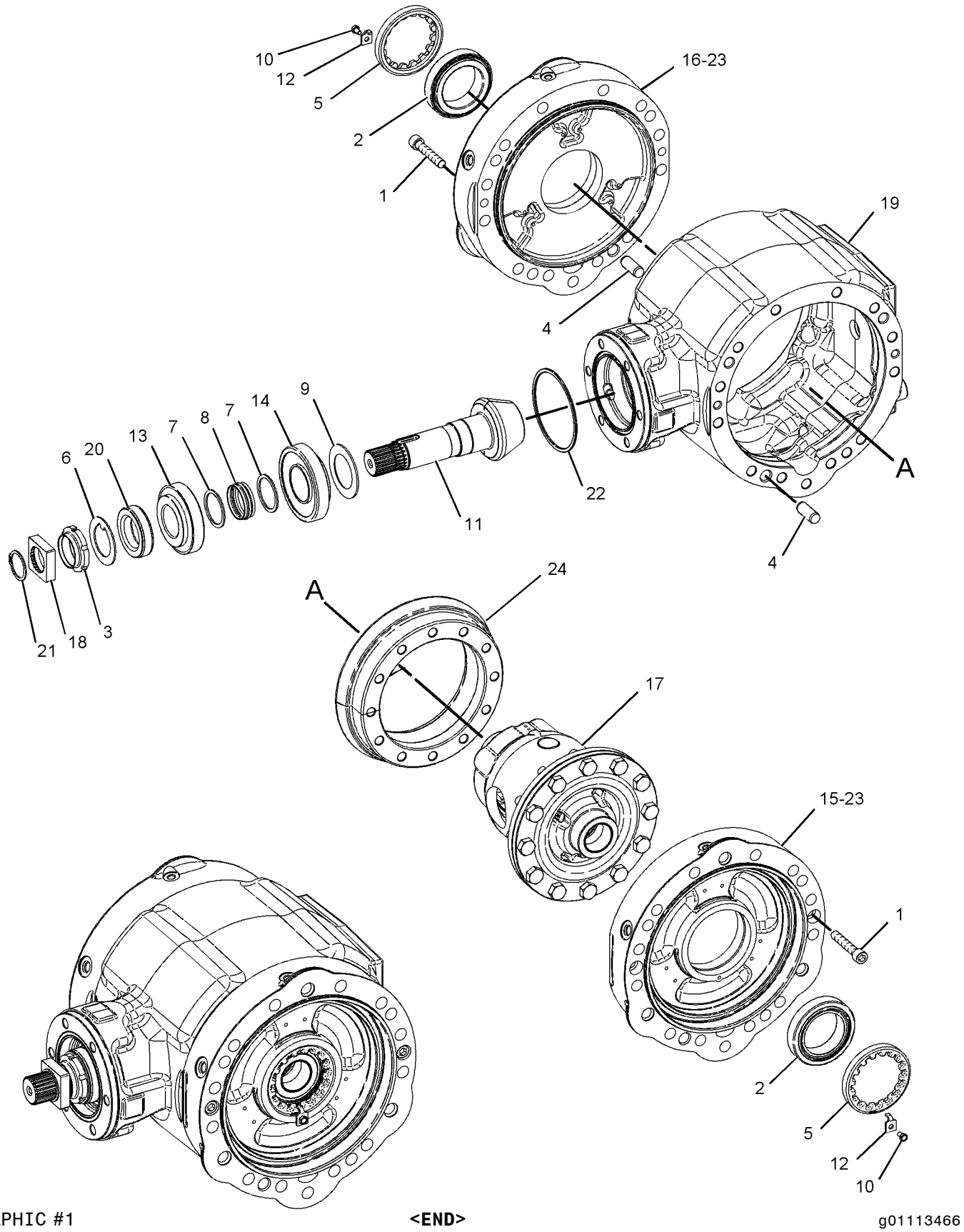

GRAPHIC #1 **<END>** g01113466

148-6790 INSTALLATION GP-DRUM

S/N: BZE1-UP; BZG1-UP

PART OF 219-4164, 231-8815 POWER TRAIN AR

SMCS-6605 **i01103528**

NOTE	REF NO	GRAPHIC REF	PART NUMBER	QTY	PART NAME 1 2 3 4 5 6 (PRODUCT LEVEL)	SEE PAGE
B	1	1	**124-0357**	4	SPACER	
B	2	1	**124-0358**	4	SPACER	
B	3	1	**124-0359**	4	SPACER	
M	4	1	**8T-4001**	12	NUT (M24X3-THD)	
	5	1	**8T-4167**	12	WASHER-HARD (26X44X4-MM THK)	
M	6	1	**8T-5878**	12	BOLT (M24X3X80-MM)	

B-USE AS REQUIRED
M-METRIC PART

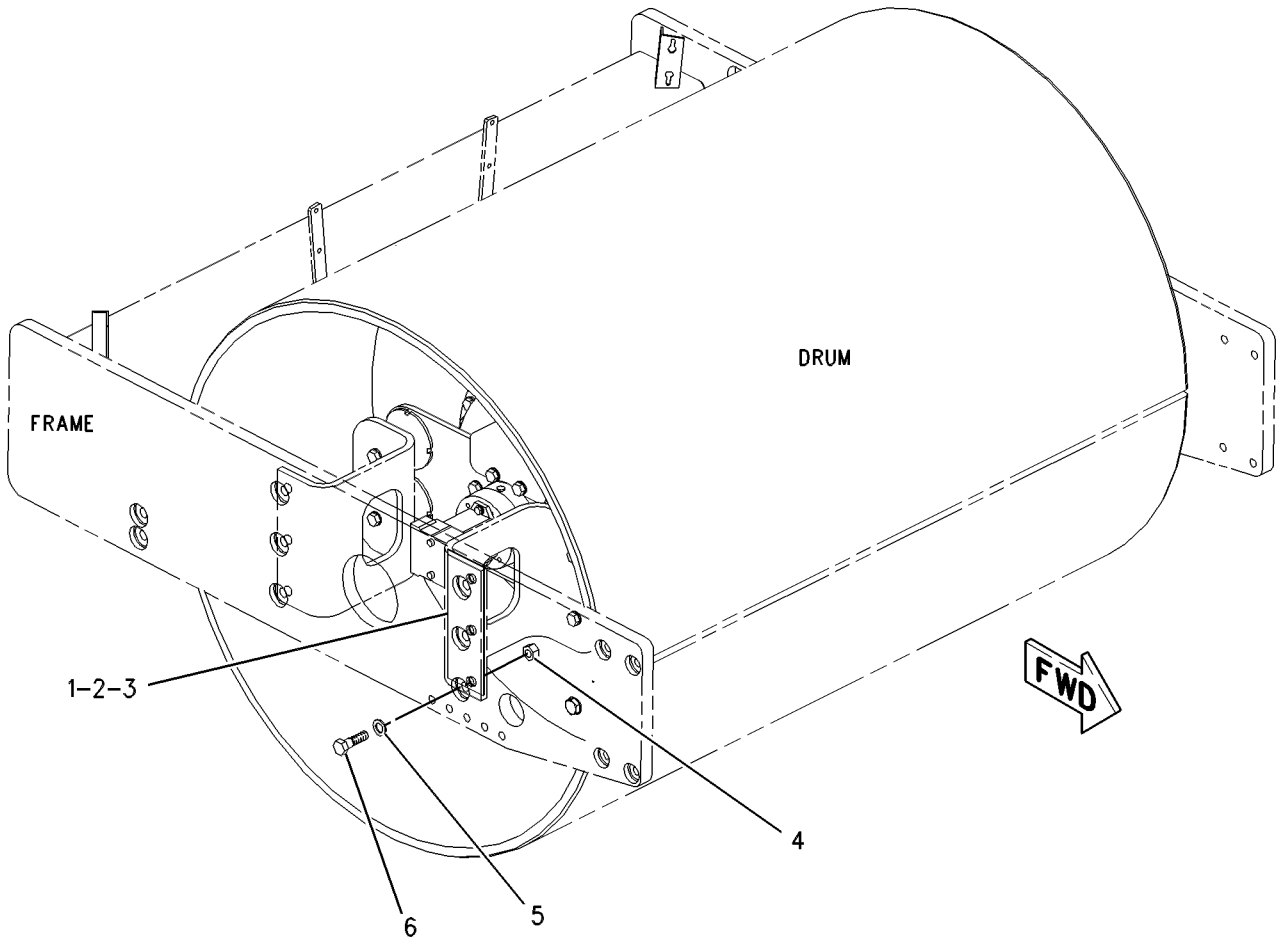

GRAPHIC #1 **<END>** g00468810

218-0377 LINES GP-PROPEL

S/N: BZE1-UP; BZG1-UP

PART OF 219-4167 HYDRAULIC AR

SMCS-3154 **i02835431**

NOTE	REF NO	GRAPHIC REF	PART NUMBER	QTY	PART NAME 1 2 3 4 5 6 (PRODUCT LEVEL)	SEE PAGE
	1	1	**1G-9959**	2	CLAMP	
	2	1	**7R-7940**	2	CLAMP	
	3	1	**7R-7951**	1	PLATE	
	4	1	**7V-5628**	1	PLATE	
I	5	1	**119-8436**	1	HOSE AS	
	6	1	**135-0708**	1	CLAMP AS	
I	7	1	**152-0116**	1	HOSE AS	
	8	1	**172-5267**	3	STRIP	
	9	1	**172-5523**	3	CLAMP-BLOCK	
I	10	1	**178-0274**	1	HOSE AS	
	11	1	**205-0706**	1	PLATE	
	12	1	**209-5382**	1	PLATE AS	
	13	1	**216-2801**	1	BRACKET AS	
I	14	1	**220-2173**	1	HOSE AS	
I	15	1	**220-2174**	1	HOSE AS	
I	16	1	**220-2297**	1	HOSE AS	
I	17	1	**220-2298**	1	HOSE AS	
	18	1	**7K-1181**	18	STRAP-CABLE	
M	19	1	**7X-2535**	2	BOLT (M6X1X60-MM)	
M	20	1	**8C-8451**	2	BOLT (M6X1X40-MM)	
M	21	1	**8T-0389**	8	LOCKNUT (M10X1.5-THD)	
	22	1	**8T-4121**	18	WASHER-HARD (11X21X2.5-MM THK)	
M	23	1	**8T-4137**	2	BOLT (M10X1.5X20-MM)	
M	24	1	**8T-4189**	6	BOLT (M8X1.25X20-MM)	
M	25	1	**8T-5436**	2	BOLT (M10X1.5X130-MM)	
M	26	1	**8T-6685**	6	BOLT (M10X1.5X110-MM)	
G	27	1	**160-2248**		SLEEVE-ABRASION (12.8-IN EACH)	
G	27A	1	**160-2248**		SLEEVE-ABRASION (14.8-IN EACH)	
G	27B	1	**160-2248**		SLEEVE-ABRASION (26.3-IN)	
G	27C	1	**160-2248**		SLEEVE-ABRASION (27.6-IN)	
E	28	1	**149-7372**		SLEEVE-ABRASION (70-CM)	
E	28A	1	**149-7372**		SLEEVE-ABRASION (38-CM)	
E	28B	1	**149-7372**		SLEEVE-ABRASION (33.5-CM)	

E-ORDER BY THE CENTIMETER
G-ORDER BY THE INCH
I-REFER TO HYDRAULIC INFORMATION SYSTEM
M-METRIC PART

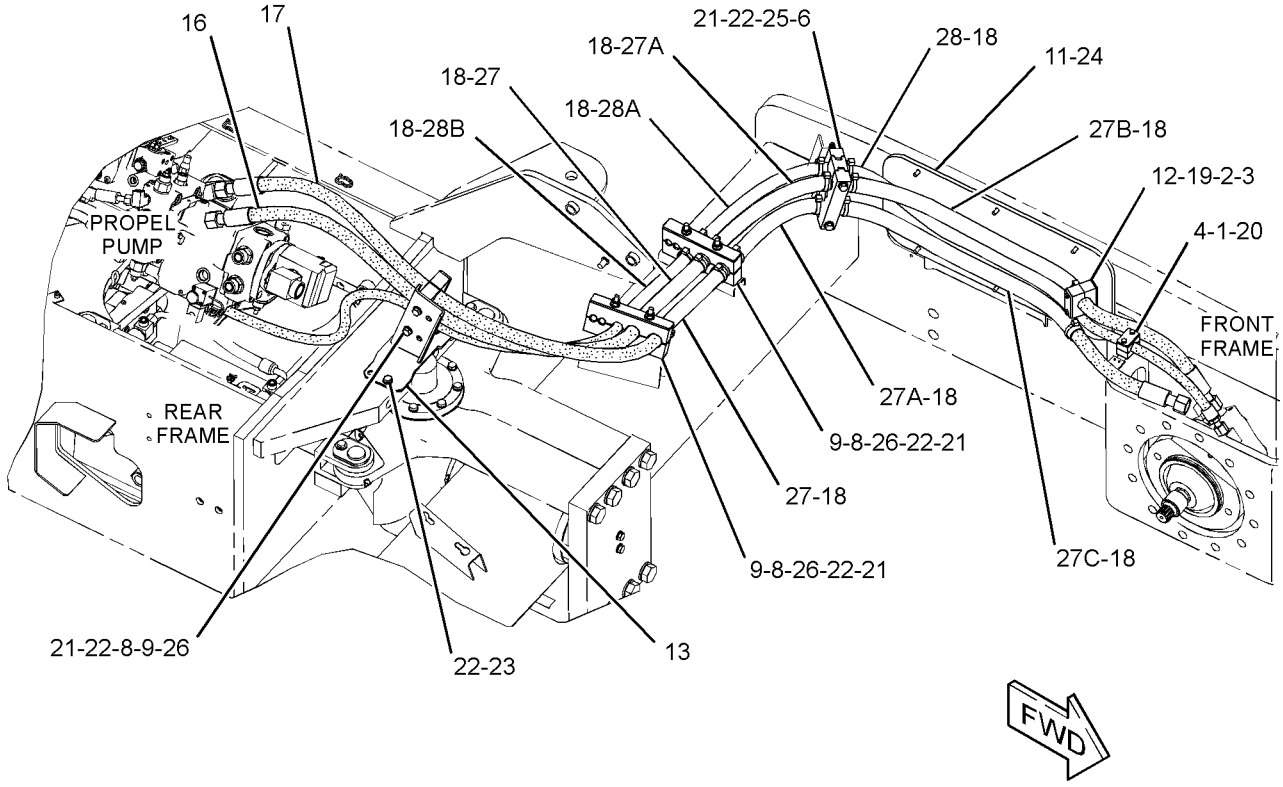

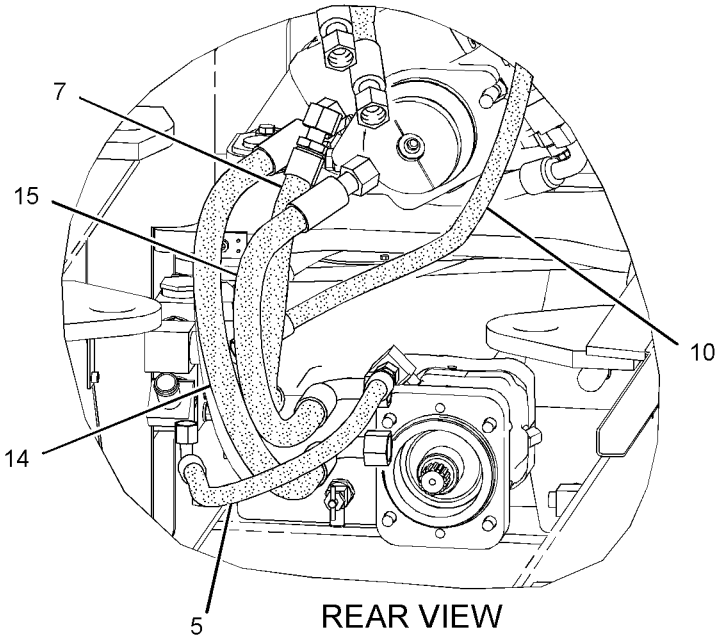

REAR VIEW
(UPPER RIGHT)

GRAPHIC #1 **<END>** g01394981

218-3163 MOTOR & MTG GP-PROPEL

S/N: BZE1-645; BZG1-357

PART OF 219-4167 HYDRAULIC AR

SMCS-4351, 5058 **i02093788**

NOTE	REF NO	GRAPHIC REF	PART NUMBER	QTY	PART NAME 1 2 3 4 5 6 (PRODUCT LEVEL)	SEE PAGE
Y	1	1	**218-3164**	1	MOTOR GP-PISTON (PROPEL)	297
	2	1	**220-2309**	1	ADAPTER	
	3	1	**223-5849**	1	ADAPTER	
	4	1	*148-8316*	1	CONNECTOR AS	
		1	**3J-7354**	1	SEAL-O-RING	
		1	**4J-5477**	1	SEAL-O-RING	
		1	**6V-8647**	1	CONNECTOR	
	5	1	*148-8327*	1	CONNECTOR AS	
		1	**3D-2824**	1	SEAL-O-RING	
		1	**6V-8637**	1	CONNECTOR	
		1	**6V-9746**	1	SEAL-O-RING	
	6	1	*148-8372*	1	ELBOW AS	
		1	**2M-9780**	1	SEAL-O-RING	
		1	**6V-8398**	1	SEAL-O-RING	
		1	**6V-8721**	1	ELBOW	
	7	1	**3F-7147**	4	BOLT (1/2-13X1.5-IN)	
	8	1	**7J-6285**	1	SEAL-O-RING	
	9	1	**8T-4223**	2	WASHER-HARD (13.5X25.5X3-MM THK)	
M	10	1	**8T-4956**	2	BOLT (M12X1.75X35-MM)	
	11	1	**9X-7549**	1	SEAL-O-RING	

M-METRIC PART
Y-SEPARATE ILLUSTRATION

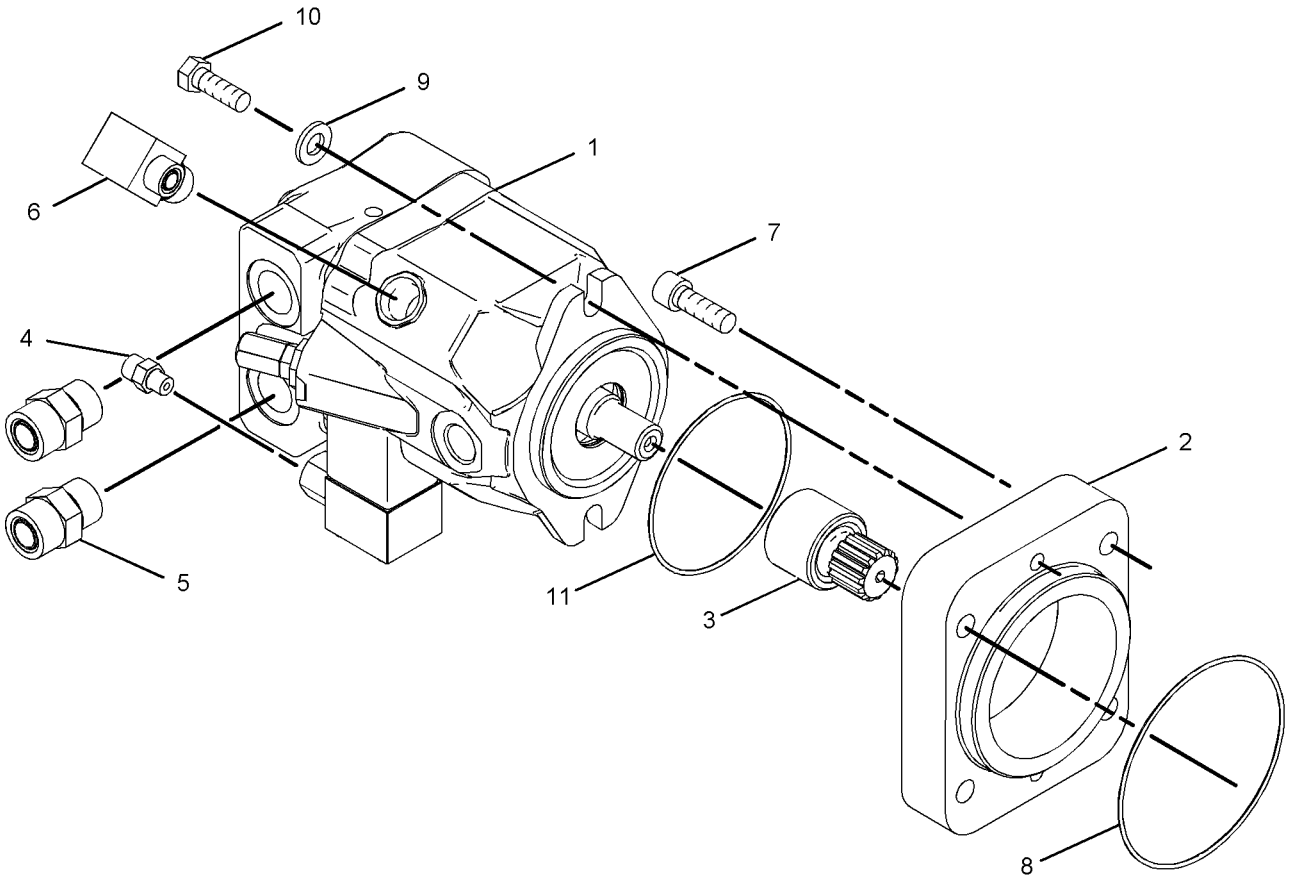

GRAPHIC #1 **<END>** g01082336

218-3163 MOTOR & MTG GP-PROPEL

S/N: BZE646-UP; BZG358-UP
PART OF 219-4167 HYDRAULIC AR

SMCS-4351, 5058 **i03008568**

NOTE	REF NO	GRAPHIC REF	PART NUMBER	QTY	PART NAME 1 2 3 4 5 6 (PRODUCT LEVEL)	SEE PAGE
CYR	1	1	**296-5160**	1	MOTOR GP-PISTON	303
	2	1	**220-2309**	1	ADAPTER	
	3	1	**223-5849**	1	ADAPTER	
	4	1	*148-8316*	1	CONNECTOR AS	
		1	**3J-7354**	1	SEAL-O-RING	
		1	**4J-5477**	1	SEAL-O-RING	
		1	**6V-8647**	1	CONNECTOR	
	5	1	*148-8327*	2	CONNECTOR AS	
					(EACH INCLUDES)	
		1	**3D-2824**	1	SEAL-O-RING	
		1	**6V-8637**	1	CONNECTOR	
		1	**6V-9746**	1	SEAL-O-RING	
	6	1	*148-8372*	1	ELBOW AS	
		1	**2M-9780**	1	SEAL-O-RING	
		1	**6V-8398**	1	SEAL-O-RING	
		1	**6V-8721**	1	ELBOW	
	7	1	**3F-7147**	4	BOLT (1/2-13X1.5-IN)	
	8	1	**7J-6285**	1	SEAL-O-RING	
	9	1	**8T-4223**	2	WASHER-HARD (13.5X25.5X3-MM THK)	
M	10	1	**8T-4956**	2	BOLT (M12X1.75X35-MM)	
	11	1	**9X-7549**	1	SEAL-O-RING	

C-CHANGE FROM PREVIOUS TYPE
M-METRIC PART
R-REMFG PART MAY BE AVAILABLE
Y-SEPARATE ILLUSTRATION

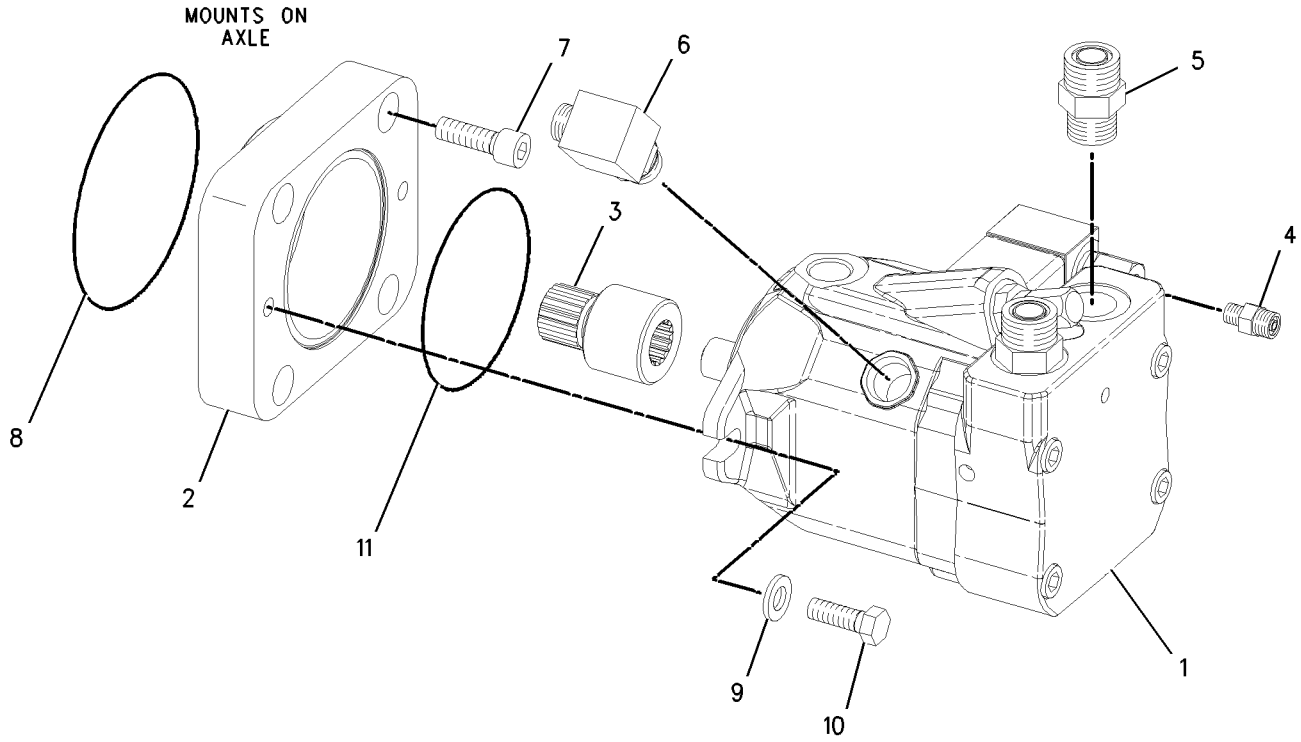

GRAPHIC #1 **<END>** g01000483

229-5403 MOUNTING GP-WHEEL

S/N: BZG1-UP
AN ATTACHMENT

SMCS-4201 **i02140865**

NOTE	REF NO	GRAPHIC REF	PART NUMBER	QTY	PART NAME 1 2 3 4 5 6 (PRODUCT LEVEL)	SEE PAGE
M	1	1	**201-1919**	20	NUT (M20X1.5-THD)	
Y	2	1	*229-5404*	1	WHEEL & TIRE GP (LH)	221
Y	3	1	*229-5406*	1	WHEEL & TIRE GP (RH)	222
	4	1	**8T-5439**	20	WASHER-HARD (21.5X45X6-MM THK)	

M-METRIC PART
Y-SEPARATE ILLUSTRATION

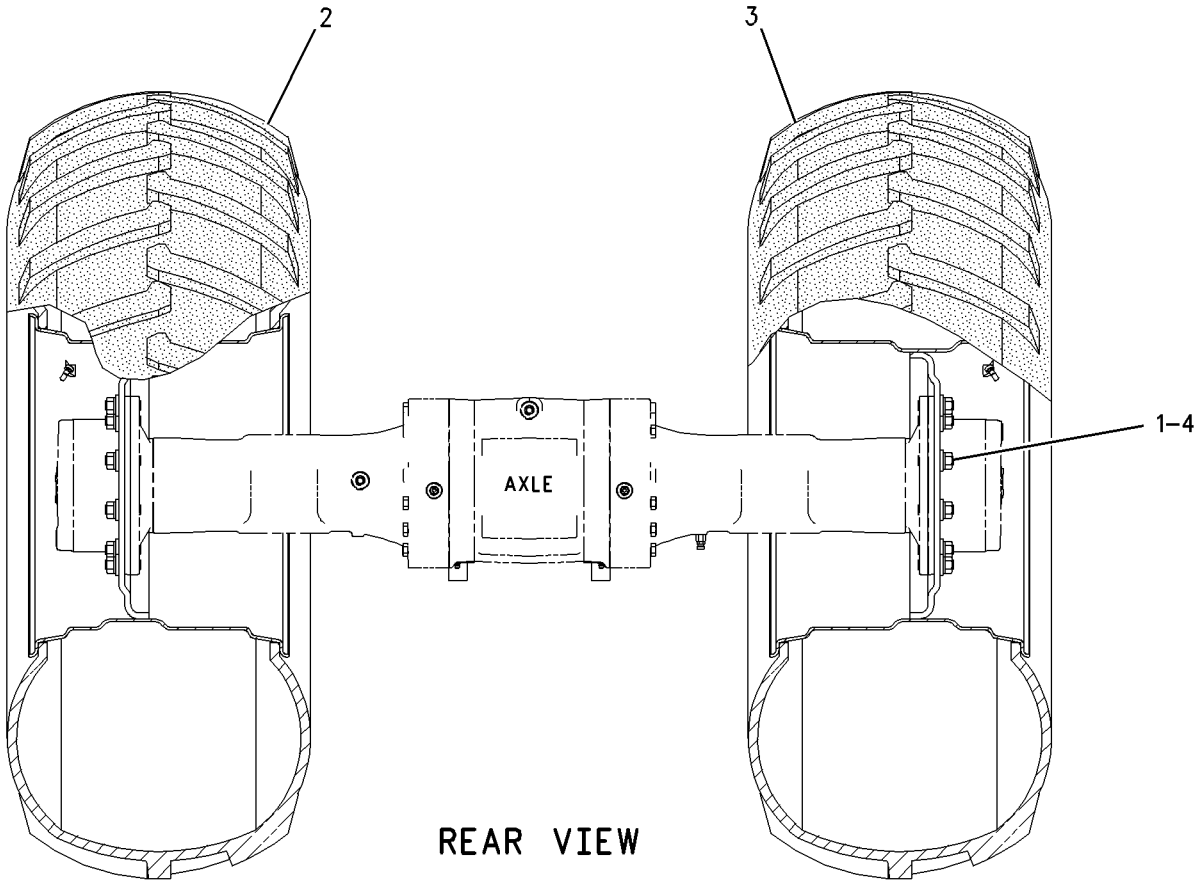

GRAPHIC #1 **<END>** g00917041

203-4692 PLANETARY GP-FINAL DRIVE

S/N: BZE1-UP; BZG1-UP

PART OF 203-4685 AXLE & MTG GP-DRIVE

SMCS-4050 **i02140860**

NOTE	REF NO	GRAPHIC REF	PART NUMBER	QTY	PART NAME 1 2 3 4 5 6 (PRODUCT LEVEL)	SEE PAGE
	1	1	**5J-2974**	1	SEAL-O-RING	
	2	1	**243-4362**	1	PLUG	
	3	1	**176-9287**	4	PIN-PLANETARY	
	4	1	**176-9288**	8	WASHER-PLANETARY	
	5	1	**176-9289**	152	BEARING AS-NEEDLE	
	6	1	**177-1809**	8	BOLT-SOCKET HEAD	
	7	1	**151-7518**	2	PLUG	
	8	1	**151-7517**	3	SEAL-O-RING	
	9	1	**095-0919**	4	RING-RETAINING	
	10	1	**7J-6285**	1	SEAL-O-RING	
	11	1	**151-7516**	1	PLUG-DRAIN (PLANETARY)	
	12	1	**5P-3864**	2	SEAL-O-RING	
	13	1	**095-0892**	2	PIN-SPRING	
	14	1	**176-9285**	1	COVER	

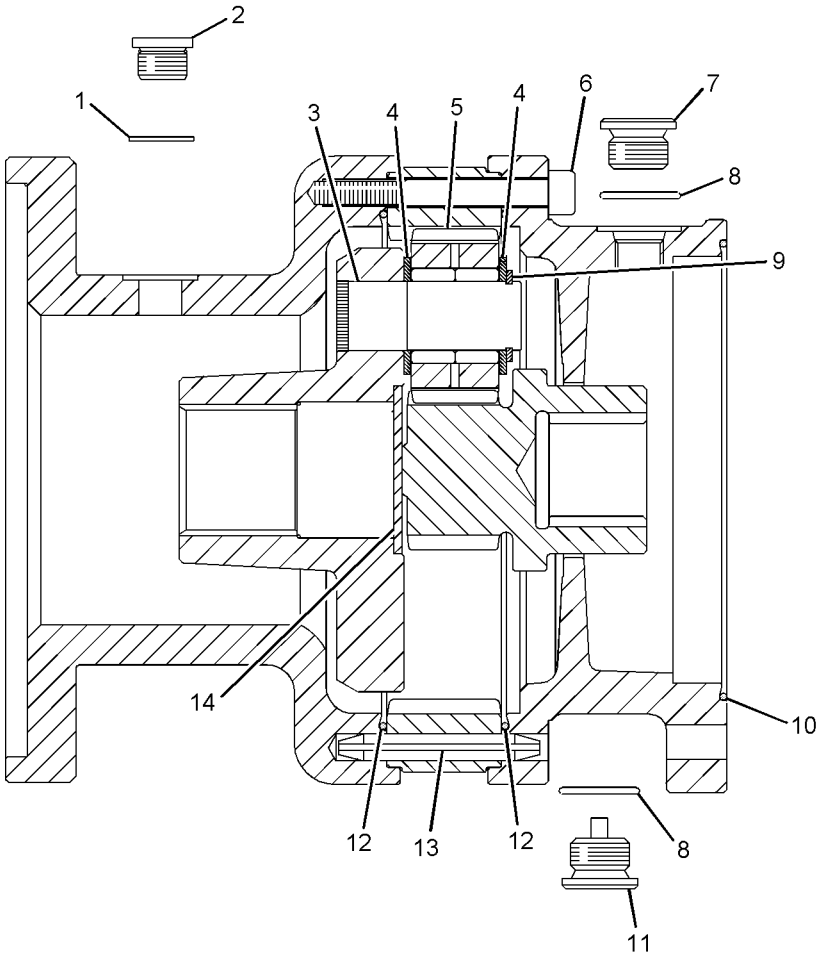

GRAPHIC #1 **<END>** g01082888

POWER TRAIN

203-4710 PLANETARY GP-FINAL DRIVE

S/N: BZE1-332; BZG1-240

PART OF 220-1944, 221-0800 DRIVE GP-DRUM

ALSO AN ATTACHMENT

SMCS-4050 **i02141181**

NOTE	REF NO	GRAPHIC REF	PART NUMBER	QTY	PART NAME 1 2 3 4 5 6 (PRODUCT LEVEL)	SEE PAGE
	1	1	**177-0012**	1	HUB	
	2	1	**151-7485**	1	COUPLING	
	3	1	**207-2817**	16	SPRING	
	4	1	**177-0013**	1	PISTON-BRAKE	
	5	1	**151-3085**	2	CUP	
	6	1	**151-3084**	2	CONE	
	7	1	**151-7482**	1	DISC-RETAINING	
	8	1	**207-2819**	6	WASHER-ANTIROTATION (42.5X64X1.5-MM THK)	
	9	1	**151-7496**	3	GEAR-PLANETARY	
	10	1	**151-7513**	225	NEEDLE	
	11	1	**207-2818**	3	PIN	
	12	1	**151-7497**	3	WASHER-ANTIROTATION	
	13	1	**151-7510**	150	NEEDLE	
	14	1	**151-7508**	3	GEAR-PLANETARY	
	15	1	**151-7519**	15	BOLT-SOCKET HEAD	
	16	1	**151-7483**	3	WASHER-GEAR	
	17	1	**096-8058**	3	RING-RETAINING	
	18	1	**151-7507**	3	PIN-GEAR	
	19	1	**151-7503**	3	GEAR-INPUT PLANETARY	
	20	1	**151-7506**	54	NEEDLE	
	21	1	**151-7504**	3	PIN-GEAR	
	22	1	**151-7505**	3	RING-RETAINING	
	23	1	**151-7502**	3	WASHER-ANTIROTATION	
	24	1	**151-7500**	3	WASHER-GEAR	
	25	1	**151-7486**	1	GEAR-SUN	
	26	1	**151-7501**	2	DISC	
	27	1	**151-7498**	1	COVER-FLANGE	
	28	1	**136-8638**	1	RING-RETAINING	
	29	1	**136-8641**	1	SEAL-O-RING	
	30	1	**151-7499**	1	CARRIER-PLANETARY	
	31	1	**151-7493**	1	GEAR-INPUT RING	
	32	1	**151-7484**	1	GEAR-SUN	
	33	1	**151-7515**	3	PIN	
	34	1	**5P-2545**	1	SEAL-O-RING	
	35	1	**151-7509**	1	CARRIER-PLANETARY	
	36	1	**151-7481**	1	GEAR-OUTPUT	
	37	1	**151-7488**	1	CARRIER-PLANETARY	
	38	1	**151-7490**	6	BUSHING	
	39	1	**207-2815**	1	RING-BACKUP	
	40	1	**207-2813**	1	SEAL-O-RING	
	41	1	**207-2814**	1	SEAL-O-RING	
	42	1	**207-2816**	1	RING-BACKUP	
	43	1	**151-7491**	2	RING-RETAINING	
	44	1	**7T-2459**	1	SEAL GP-DUO-CONE	
	45	1	**151-7516**	1	PLUG-DRAIN (SPEED REDUCTION GEAR)	
	46	1	**151-7517**	3	SEAL-O-RING	
	47	1	**151-7518**	2	PLUG	
	48	1	**109-0119**	1	RING-RETAINING	
	49	1	**177-0014**	1	DISC-RETAINING	
	50	1	**136-8064**	5	DISC-FRICTION	
	51	1	**136-8068**	6	DISC-MIDDLE	
B	52	1	**218-9878**	1	SHIM (0.1-MM THK)	
B	53	1	**218-9880**	1	SHIM (0.2-MM THK)	
	54	1	**151-7511**	1	RING-RETAINING	
	55	1	**151-7514**	1	KIT-SHIM (FINAL DRIVE)	

B-USE AS REQUIRED

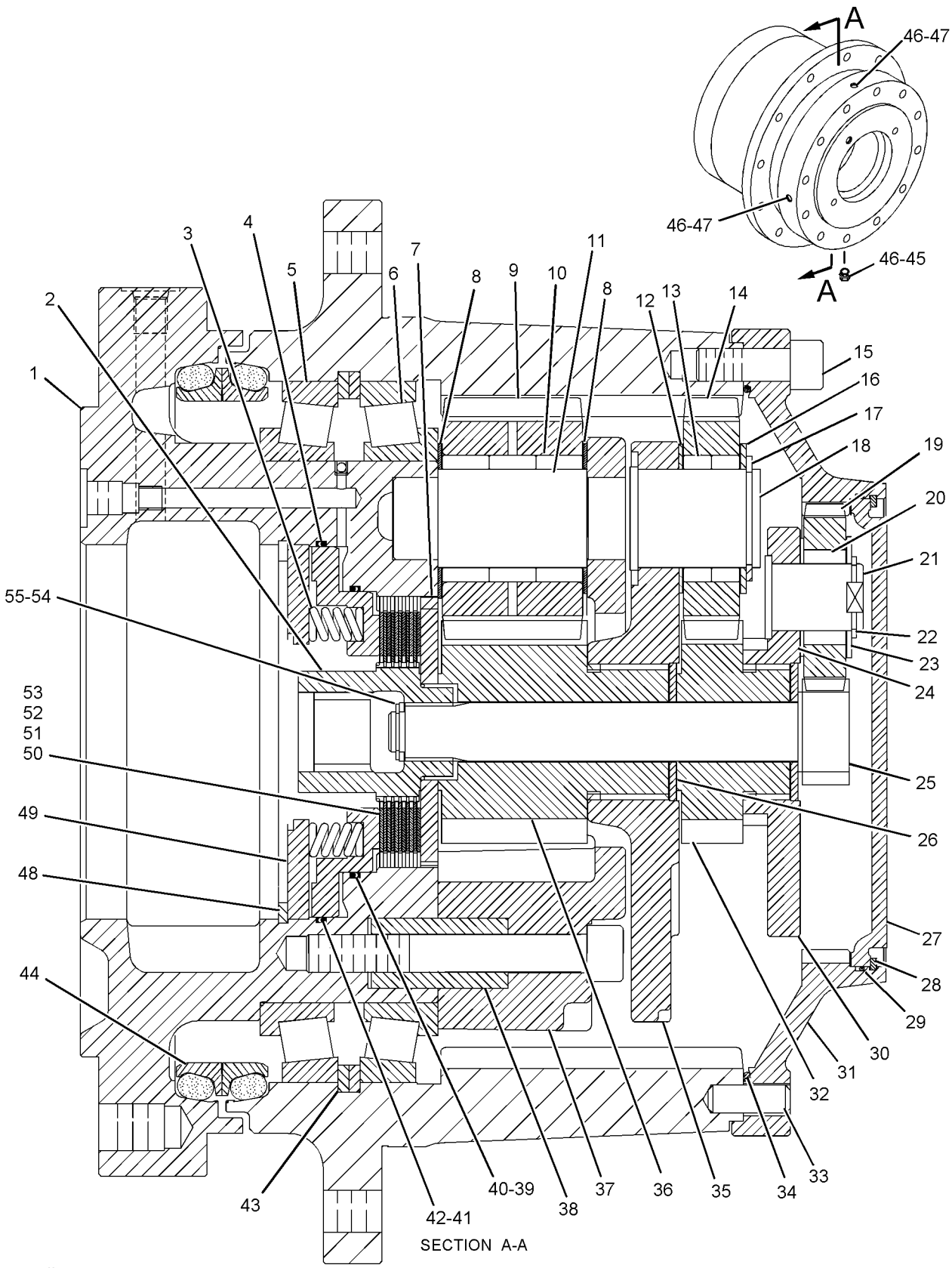

SECTION A-A

GRAPHIC #1 **<END>** g01048787

216-1610 PLANETARY GP-FINAL DRIVE

S/N: BZE1-UP; BZG1-UP

PART OF 325-3644 AXLE GP-DRIVE

SMCS-4050 **i02520201**

NOTE	REF NO	GRAPHIC REF	PART NUMBER	QTY	PART NAME 1 2 3 4 5 6 (PRODUCT LEVEL)	SEE PAGE
	1	1	**199-0653**	3	RING-RETAINING	
	2	1	**207-4257**	6	RING-RETAINER	
	3	1	**199-0760**	3	BEARING	
	4	1	**213-4222**	3	WASHER (50.1X61X2.5-MM THK)	
	5	1	**207-5962**	6	WASHER (65X72X2-MM THK)	
	6	1	**216-1606**	3	GEAR-PLANETARY (31-TEETH)	
	7	1	**216-1601**	1	CARRIER	
	8	1	**253-5022**	1	PLUG	

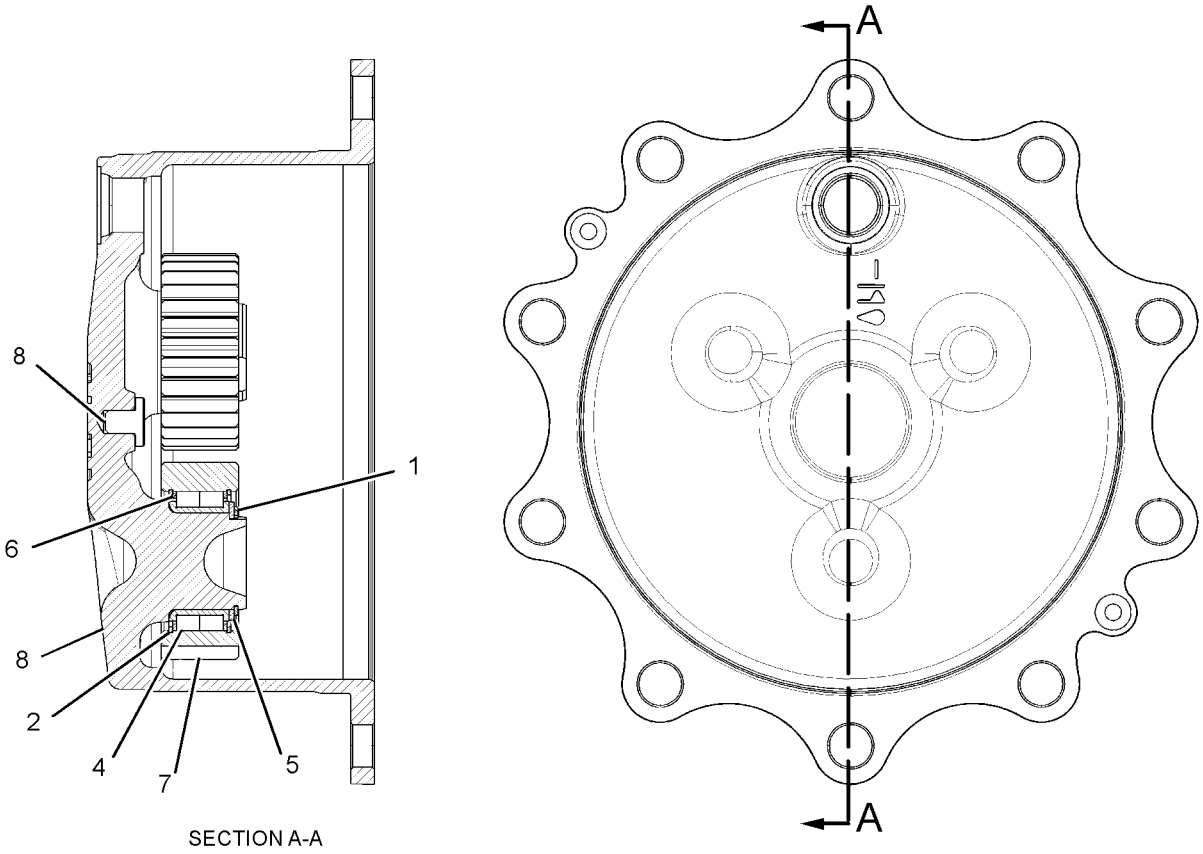

SECTION A-A

GRAPHIC #1 **<END>** g01263391

229-5051 PLANETARY GP-FINAL DRIVE

S/N: BZE1-UP; BZG1-UP

PART OF 202-4172 AXLE GP-DRIVE

SMCS-4050 **i02140850**

NOTE	REF NO	GRAPHIC REF	PART NUMBER	QTY	PART NAME 1 2 3 4 5 6 (PRODUCT LEVEL)	SEE PAGE
	1	1	**199-0653**	3	RING-RETAINING	
	2	1	**207-4257**	6	RING-RETAINER	
	3	1	**231-0720**	1	KIT-PLANETARY CARRIER	
	4	1	**199-0669**	1	PLUG (THRUST)	
	5	1	**213-4222**	3	WASHER (50.1X61X2.5-MM THK)	
	6	1	**207-5962**	6	WASHER (65X72X2-MM THK)	
	7	1	**226-4378**	3	GEAR-PLANETARY	
	8	1	**199-0760**	3	BEARING	

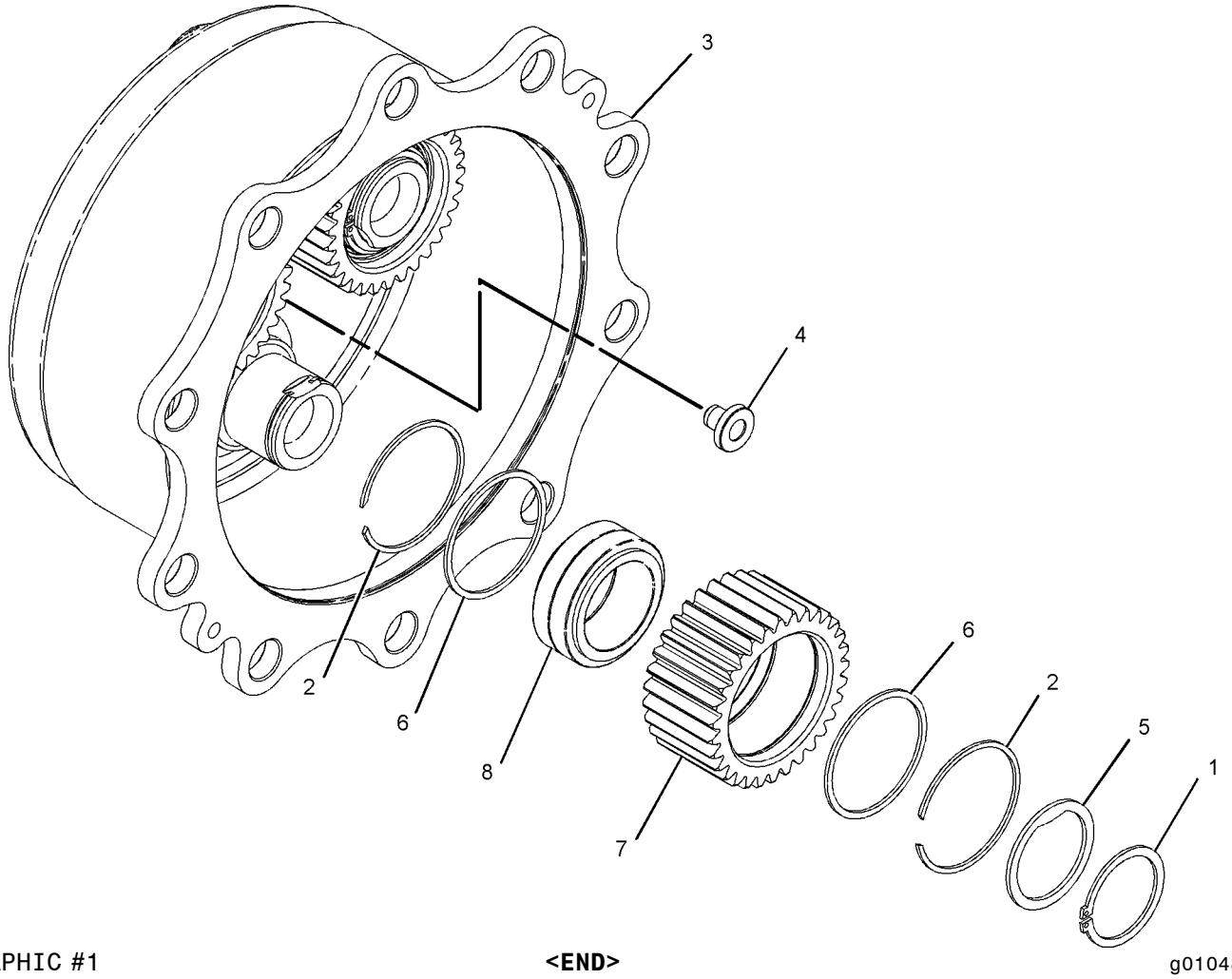

GRAPHIC #1 **<END>** g01048779

POWER TRAIN

263-6349 PLANETARY GP-FINAL DRIVE

S/N: BZE333-UP; BZG241-UP
PART OF 220-1944, 221-0800 DRIVE GP-DRUM
ALSO AN ATTACHMENT

SMCS-4050 **i03013575**

NOTE	REF NO	GRAPHIC REF	PART NUMBER	QTY	PART NAME 1 2 3 4 5 6 (PRODUCT LEVEL)	SEE PAGE
	1	1	**177-0012**	1	HUB	
	2	1	**151-7485**	1	COUPLING	
	3	1	**207-2817**	16	SPRING	
	4	1	**177-0013**	1	PISTON-BRAKE	
	5	1	**151-3085**	2	CUP	
	6	1	**151-3084**	2	CONE	
	7	1	**151-7482**	1	DISC-RETAINING	
	8	1	**270-3933**	6	WASHER (35.8X64X2.5-MM THK)	
	9	1	**151-7496**	3	GEAR-PLANETARY	
	10	1	**151-7513**	225	NEEDLE	
	11	1	**270-3932**	3	PIN	
	12	1	**151-7497**	3	WASHER-ANTIROTATION	
	13	1	**151-7510**	150	NEEDLE	
	14	1	**151-7508**	3	GEAR-PLANETARY	
	15	1	**151-7519**	15	BOLT-SOCKET HEAD	
	16	1	**151-7493**	1	GEAR-INPUT RING	
	17	1	**096-8058**	3	RING-RETAINING	
	18	1	**151-7507**	3	PIN-GEAR	
	19	1	**151-7503**	3	GEAR-INPUT PLANETARY	
	20	1	**151-7506**	54	NEEDLE	
	21	1	**151-7504**	3	PIN-GEAR	
	22	1	**151-7505**	3	RING-RETAINING	
	23	1	**151-7502**	3	WASHER-ANTIROTATION	
	24	1	**151-7500**	3	WASHER-GEAR	
	25	1	**151-7486**	1	GEAR-SUN	
	26	1	**151-7501**	2	DISC	
	27	1	**151-7498**	1	COVER-FLANGE	
	28	1	**136-8638**	1	RING-RETAINING	
	29	1	**136-8641**	1	SEAL-O-RING	
	30	1	**151-7499**	1	CARRIER-PLANETARY	
	31	1	**151-7483**	3	WASHER-GEAR	
	32	1	**151-7484**	1	GEAR-SUN	
	33	1	**151-7515**	3	PIN	
	34	1	**5P-2545**	1	SEAL-O-RING	
	35	1	**151-7509**	1	CARRIER-PLANETARY	
	36	1	**151-7481**	1	GEAR-OUTPUT	
	37	1	**270-3934**	1	CARRIER-PLANETARY	
	38	1	**151-7490**	6	BUSHING	
	40	1	**205-0191**	1	SEAL-BRAKE	
	41	1	**205-0192**	1	SEAL-BRAKE	
	43	1	**151-7491**	2	RING-RETAINING	
	44	1	**7T-2459**	1	SEAL GP-DUO-CONE	
	45	1	**151-7516**	1	PLUG-DRAIN	
	46	1	**151-7517**	3	SEAL-O-RING	
	47	1	**151-7518**	2	PLUG	
	48	1	**109-0119**	1	RING-RETAINING	
	49	1	**177-0014**	1	DISC-RETAINING	
	50	1	**136-8064**	5	DISC-FRICTION	
	51	1	**136-8068**	6	DISC-MIDDLE	
B	52	1	**218-9878**	1	SHIM (0.1-MM THK)	
B	53	1	**218-9880**	1	SHIM (0.2-MM THK)	
	54	1	**151-7511**	1	RING-RETAINING	
	55	1	**151-7514**	1	KIT-SHIM	

B-USE AS REQUIRED

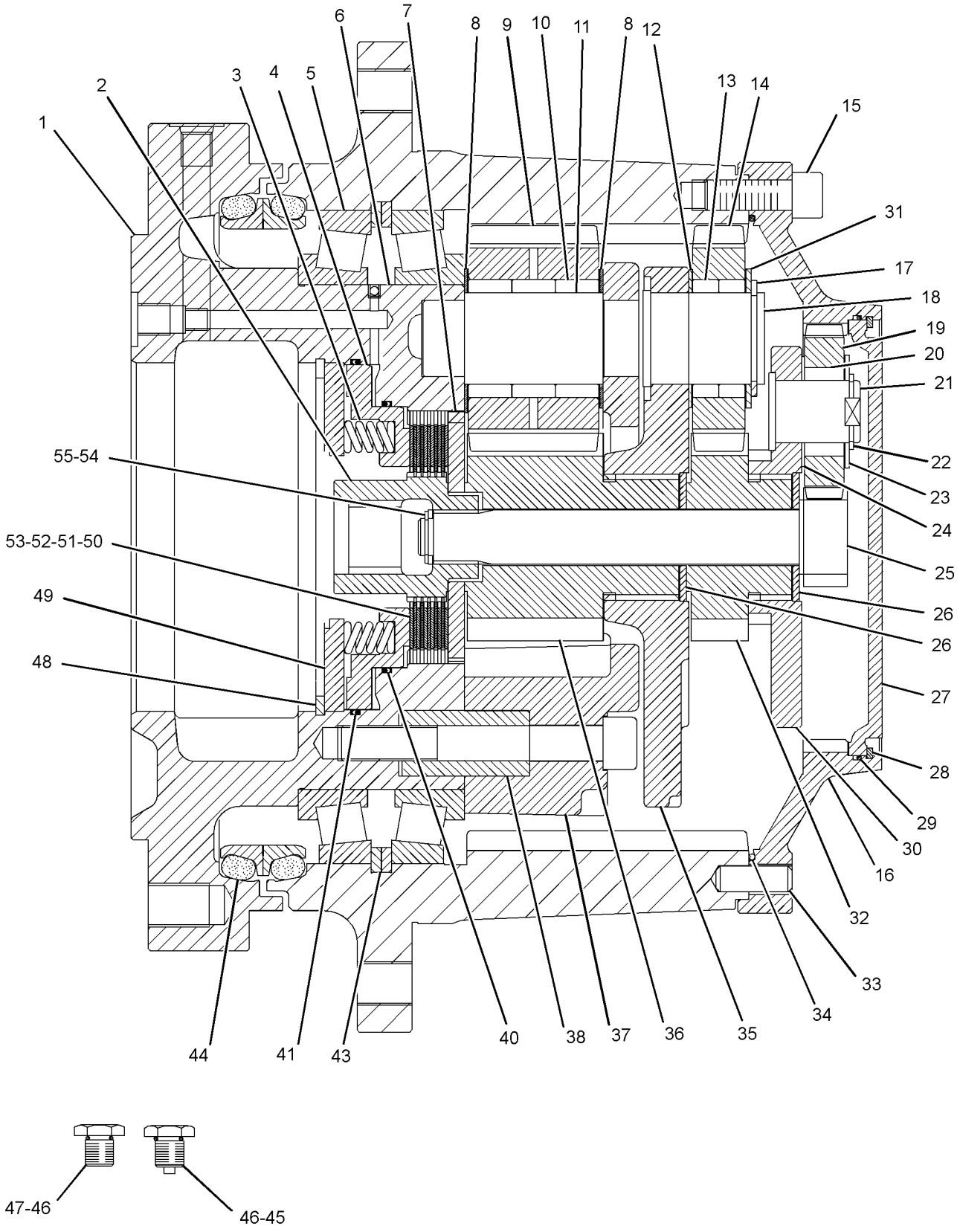

GRAPHIC #1 **<END>** g01426259

219-4164 POWER TRAIN AR

S/N: BZE1-UP

PART OF 230-4178 COMMON AR

SMCS-3000, 4000 **i02141126**

NOTE	PART NUMBER	QTY	PART NAME 1 2 3 4 5 6 (PRODUCT LEVEL)	SEE PAGE
Y	*203-4685*	1	AXLE & MTG GP-DRIVE (WITHOUT BRAKES)	166
Y	*220-4051*	1	DRUM GP-DRIVE & VIBRATORY	187
Y	*148-6790*	1	INSTALLATION GP-DRUM	197

Y-SEPARATE ILLUSTRATION

<END>

231-8815 POWER TRAIN AR

S/N: BZG1-UP

PART OF 231-8816 COMMON AR

SMCS-3000, 4000 **i02293879**

NOTE	PART NUMBER	QTY	PART NAME 1 2 3 4 5 6 (PRODUCT LEVEL)	SEE PAGE
Y	*203-4685*	1	AXLE & MTG GP-DRIVE (WITHOUT BRAKES)	166
Y	*148-6790*	1	INSTALLATION GP-DRUM	197

Y-SEPARATE ILLUSTRATION

<END>

POWER TRAIN

218-2973 PUMP & MTG GP-PROPEL

S/N: BZE1-645; BZG1-357

PART OF 219-4167 HYDRAULIC AR

SMCS-3203, 3204, 5070 **i02153889**

NOTE	REF NO	GRAPHIC REF	PART NUMBER	QTY	PART NAME 1 2 3 4 5 6 (PRODUCT LEVEL)	SEE PAGE
	1	1	**6V-0852**	5	CAP-DUST	
	2	1	**7X-5315**	4	FITTING AS (QUICK DISCONNECT)	
	3	1	*106-8715*	2	ELBOW AS	
					(EACH INCLUDES)	
		1	**8C-8400**	1	ELBOW	
		1	**3D-2824**	1	SEAL-O-RING	
		1	**6V-9746**	1	SEAL-O-RING	
	4	1	**124-8909**	4	ELBOW	
	5	1	**191-8924**	1	COUPLING GP-PUMP	
M		1	**6V-8200**	1	BOLT-SOCKET HEAD (M12X1.75X35-MM)	
	6	1	*196-2036*	1	TEE AS	
		1	**3K-0360**	1	SEAL-O-RING	
		1	**6V-8398**	1	SEAL-O-RING	
		1	**9X-2492**	1	TEE-O-RING	
Y	7	1	**218-3159**	1	PUMP GP-PISTON (PROPEL)	306
Y	8	1	**218-3160**	1	PUMP GP-PISTON (PROPEL)	308
I	9	1	**220-2109**	1	HOSE AS	
I	10	1	**240-9093**	2	HOSE AS	
	11	1	*240-9021*	2	TEE AS	
					(EACH INCLUDES)	
		1	**6V-8397**	1	SEAL-O-RING	
		1	**239-8485**	1	TEE	
	12	1	*240-9022*	2	TEE AS	
					(EACH INCLUDES)	
		1	**6V-8397**	1	SEAL-O-RING	
		1	**239-8485**	1	TEE	
	13	1	*148-8322*	1	CONNECTOR AS	
		1	**2M-9780**	1	SEAL-O-RING	
		1	**6V-8640**	1	CONNECTOR	
		1	**6V-9746**	1	SEAL-O-RING	
	14	1	*148-8324*	1	CONNECTOR AS	
		1	**3K-0360**	1	SEAL-O-RING	
		1	**6V-9746**	1	SEAL-O-RING	
		1	**6V-9874**	1	CONNECTOR	
	15	1	*148-8388*	1	ELBOW AS	
		1	**2M-9780**	1	SEAL-O-RING	
		1	**6V-8629**	1	ELBOW	
		1	**6V-9746**	1	SEAL-O-RING	
	16	1	*150-3033*	1	ELBOW AS	
		1	**3J-1907**	1	SEAL-O-RING	
		1	**4J-5477**	1	SEAL-O-RING	
		1	**8T-0164**	1	ELBOW	
	17	1	*153-6237*	2	ELBOW AS	
					(EACH INCLUDES)	
		1	**3D-2824**	1	SEAL-O-RING	
		1	**6V-9004**	1	ELBOW	
		1	**6V-9746**	1	SEAL-O-RING	
	18	1	*153-6244*	1	ELBOW AS	
		1	**2M-9780**	1	SEAL-O-RING	
		1	**6V-9746**	1	SEAL-O-RING	
		1	**8T-5389**	1	ELBOW	
	19	1	*164-5567*	1	COUPLER AS-QUICK DISCONNECT (QUICK DISCONNECT)	
		1	**3J-1907**	1	SEAL-O-RING	
		1	**6V-3965**	1	COUPLER AS-QUICK DISCONNECT	
	20	1	**3J-7354**	8	SEAL-O-RING	
M	21	1	**8T-4193**	4	BOLT (M16X2X50-MM)	

218-2973 **PUMP & MTG GP-PROPEL** *(contd.)* **i02153889**

NOTE	REF NO	GRAPHIC REF	PART NUMBER	QTY	PART NAME 1 2 3 4 5 6 (PRODUCT LEVEL)	SEE PAGE
	22	1	**9X-8257**	4	WASHER (17.5X30X3.5-MM THK)	
	23	1	**102-8802**	1	KIT-RECEPTACLE (2-PIN)	
	24	1	**3E-3365**	1	WEDGE-RECEPTACLE LOCK (2-PIN)	
	25	1	**186-3735**	2	PIN-CONNECTOR (16-GA TO 18-GA)	
	26	1	*148-8316*	4	CONNECTOR AS	
					(EACH INCLUDES)	
		1	**3J-7354**	1	SEAL-O-RING	
		1	**4J-5477**	1	SEAL-O-RING	
		1	**6V-8647**	1	CONNECTOR	

I-REFER TO HYDRAULIC INFORMATION SYSTEM
M-METRIC PART
Y-SEPARATE ILLUSTRATION

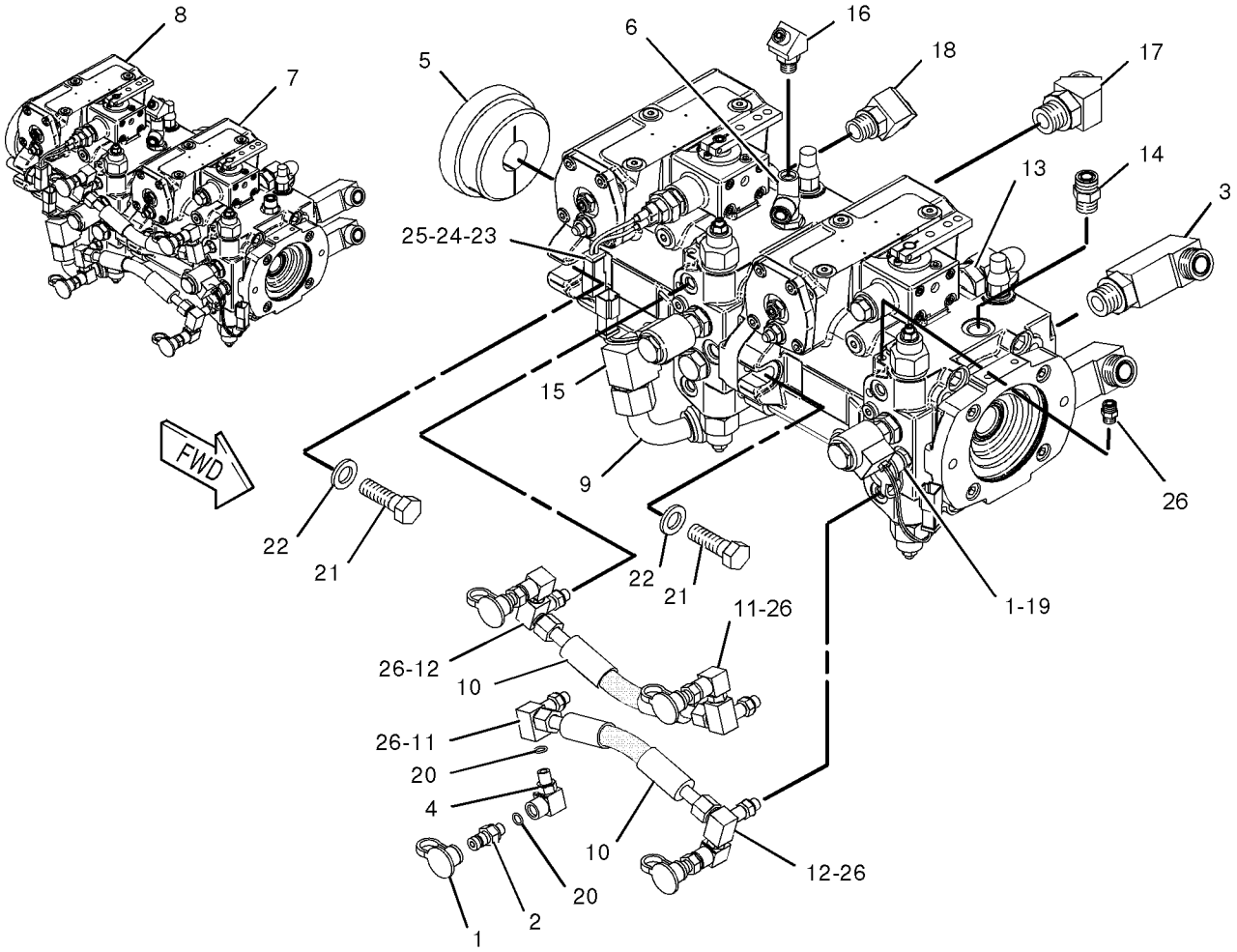

GRAPHIC #1 **<END>** g01043574

POWER TRAIN

218-2973 PUMP & MTG GP-PROPEL

S/N: BZE646-UP; BZG358-UP

PART OF 219-4167 HYDRAULIC AR

SMCS-3203, 3204, 5070 **i03009803**

NOTE	REF NO	GRAPHIC REF	PART NUMBER	QTY	PART NAME 1 2 3 4 5 6 (PRODUCT LEVEL)	SEE PAGE
	1	1	**6V-0852**	5	CAP-DUST	
	2	1	**7X-5315**	4	FITTING AS (QUICK DISCONNECT)	
	3	1	*106-8715*	2	ELBOW AS	
					(EACH INCLUDES)	
		1	**8C-8400**	1	ELBOW	
		1	**3D-2824**	1	SEAL-O-RING	
		1	**6V-9746**	1	SEAL-O-RING	
	4	1	**124-8909**	4	ELBOW	
	5	1	**191-8924**	1	COUPLING GP-PUMP	
M		1	**6V-8200**	1	BOLT-SOCKET HEAD (M12X1.75X35-MM)	
	6	1	*196-2036*	1	TEE AS	
		1	**3K-0360**	1	SEAL-O-RING	
		1	**6V-8398**	1	SEAL-O-RING	
		1	**9X-2492**	1	TEE-O-RING	
CYR	7	1	**296-3331**	1	PUMP GP-PISTON (PROPEL)	313
CYR	8	1	**296-3329**	1	PUMP GP-PISTON (PROPEL)	311
I	9	1	**220-2109**	1	HOSE AS	
I	10	1	**240-9093**	2	HOSE AS	
	11	1	*240-9021*	2	TEE AS	
					(EACH INCLUDES)	
		1	**6V-8397**	1	SEAL-O-RING	
		1	**239-8484**	1	TEE	
	12	1	*240-9022*	2	TEE AS	
					(EACH INCLUDES)	
		1	**6V-8397**	1	SEAL-O-RING	
		1	**239-8485**	1	TEE	
	13	1	*148-8322*	1	CONNECTOR AS	
		1	**2M-9780**	1	SEAL-O-RING	
		1	**6V-8640**	1	CONNECTOR	
		1	**6V-9746**	1	SEAL-O-RING	
	14	1	*148-8324*	1	CONNECTOR AS	
		1	**3K-0360**	1	SEAL-O-RING	
		1	**6V-9746**	1	SEAL-O-RING	
		1	**6V-9874**	1	CONNECTOR	
	15	1	*148-8388*	1	ELBOW AS	
		1	**2M-9780**	1	SEAL-O-RING	
		1	**6V-8629**	1	ELBOW	
		1	**6V-9746**	1	SEAL-O-RING	
	16	1	*150-3033*	1	ELBOW AS	
		1	**3J-1907**	1	SEAL-O-RING	
		1	**4J-5477**	1	SEAL-O-RING	
		1	**8T-0164**	1	ELBOW	
	17	1	*153-6237*	2	ELBOW AS	
					(EACH INCLUDES)	
		1	**3D-2824**	1	SEAL-O-RING	
		1	**6V-9004**	1	ELBOW	
		1	**6V-9746**	1	SEAL-O-RING	
	18	1	*153-6244*	1	ELBOW AS	
		1	**2M-9780**	1	SEAL-O-RING	
		1	**6V-9746**	1	SEAL-O-RING	
		1	**8T-5389**	1	ELBOW	
	19	1	*164-5567*	1	COUPLER AS-QUICK DISCONNECT	
		1	**3J-1907**	1	SEAL-O-RING	
		1	**6V-3965**	1	COUPLER AS-QUICK DISCONNECT	
	20	1	**3J-7354**	8	SEAL-O-RING	
M	21	1	**8T-4193**	4	BOLT (M16X2X50-MM)	

218-2973 **PUMP & MTG GP-PROPEL** *(contd.)* **i03009803**

NOTE	REF NO	GRAPHIC REF	PART NUMBER	QTY	PART NAME 1 2 3 4 5 6 (PRODUCT LEVEL)	SEE PAGE
	22	1	**9X-8257**	4	WASHER (17.5X30X3.5-MM THK)	
	23	1	**102-8802**	1	KIT-RECEPTACLE (2-PIN)	
					(INCLUDES RECEPTACLE AS & WEDGE)	
	25	1	**186-3735**	2	PIN-CONNECTOR (16-GA TO 18-GA)	
	26	1	*148-8316*	4	CONNECTOR AS	
					(EACH INCLUDES)	
		1	**3J-7354**	1	SEAL-O-RING	
		1	**4J-5477**	1	SEAL-O-RING	
		1	**6V-8647**	1	CONNECTOR	

C-CHANGE FROM PREVIOUS TYPE
I-REFER TO HYDRAULIC INFORMATION SYSTEM
M-METRIC PART
R-REMFG PART MAY BE AVAILABLE
Y-SEPARATE ILLUSTRATION

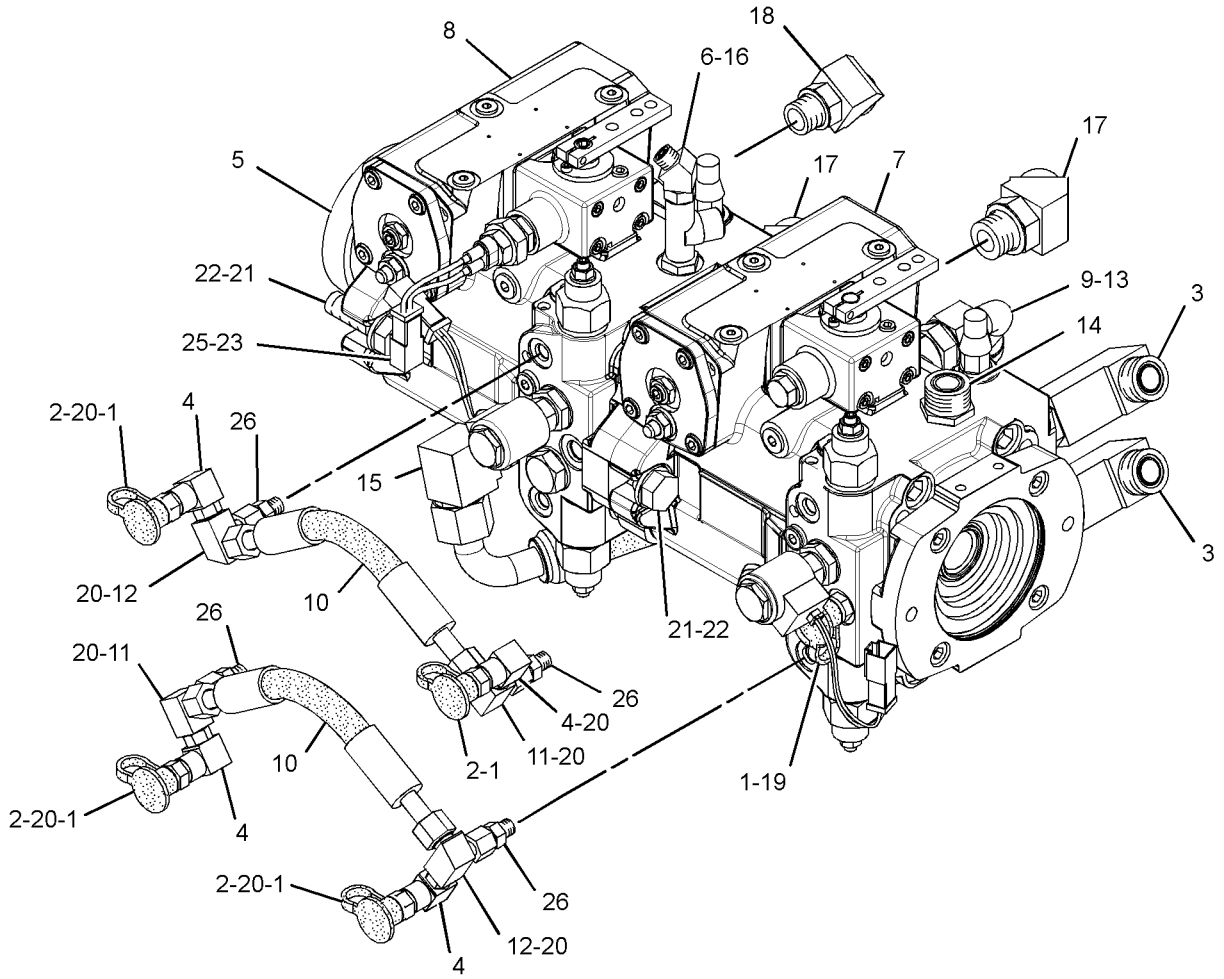

GRAPHIC #1 **<END>** g01445311

206-7492 SHELL GP-PADDED

S/N: BZE1-UP

PART OF 224-0871 BUMPER AR, 234-3461 SHELL GP-PADDED

AN ATTACHMENT

SMCS-6605 **i02865760**

NOTE	REF NO	GRAPHIC REF	PART NUMBER	QTY	PART NAME 1 2 3 4 5 6 (PRODUCT LEVEL)	SEE PAGE
	1	1	**298-2109**	2	SHELL AS (PADDED DRUM)	
					(EACH INCLUDES)	
		1	**167-0634**	60	PAD-DRUM	
M	2	1	**6V-7688**	10	LOCKNUT (M20X2.5-THD)	
M	3	1	**7X-2565**	2	BOLT (M20X2.5X100-MM)	
M	4	1	**7X-2566**	8	BOLT (M20X2.5X110-MM)	
	5	1	**8T-5439**	20	WASHER-HARD (21.5X45X6-MM THK)	

M-METRIC PART

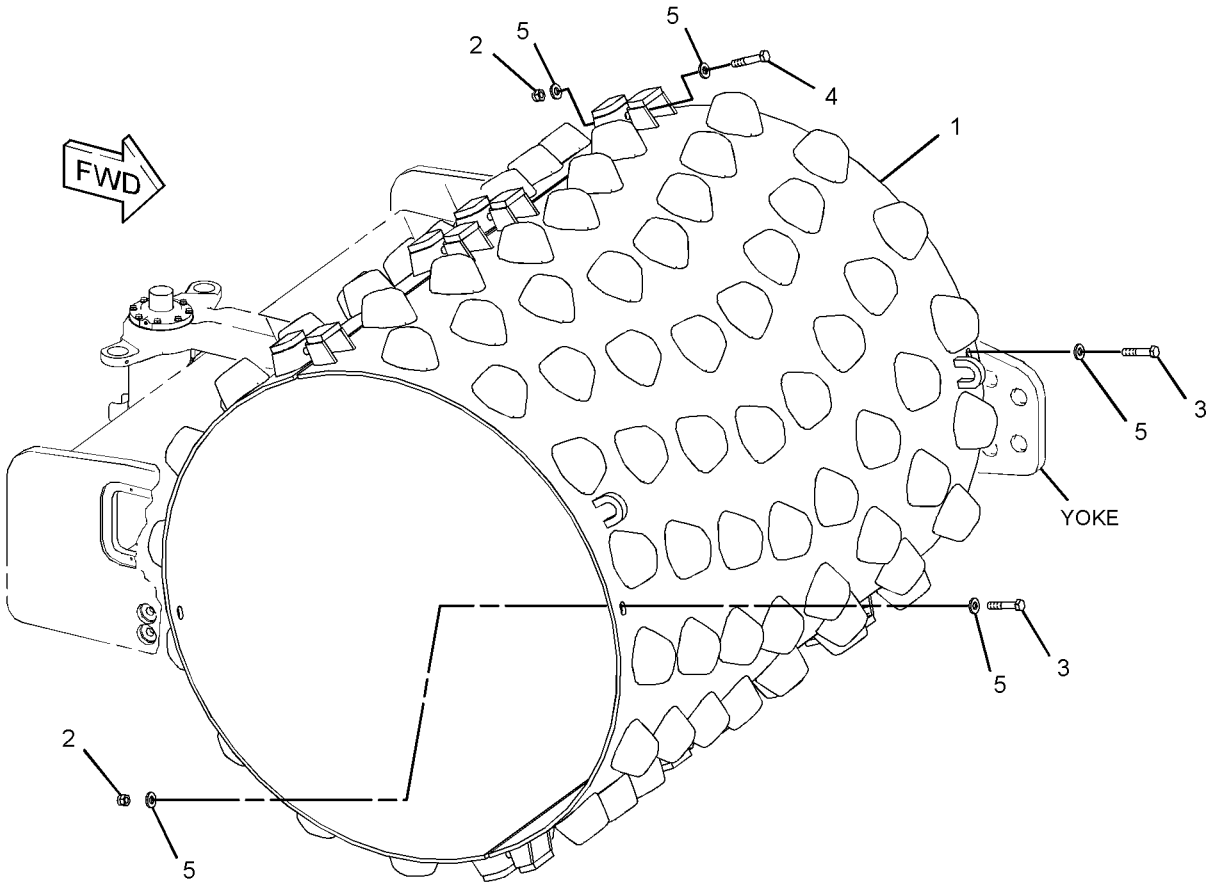

GRAPHIC #1 **<END>** g01428687

234-3461 SHELL GP-PADDED

S/N: BZE1-UP
AN ATTACHMENT

SMCS-6605 **i01972582**

NOTE	REF NO	GRAPHIC REF	PART NUMBER	QTY	PART NAME 1 2 3 4 5 6 (PRODUCT LEVEL)	SEE PAGE
Y	1	1	*206-7492*	1	SHELL GP-PADDED	216
Y	2	1	*213-3152*	1	SCRAPER GP-PADDED DRUM	256
Y	3	1	*224-0872*	1	BUMPER GP-FRONT	225

Y-SEPARATE ILLUSTRATION

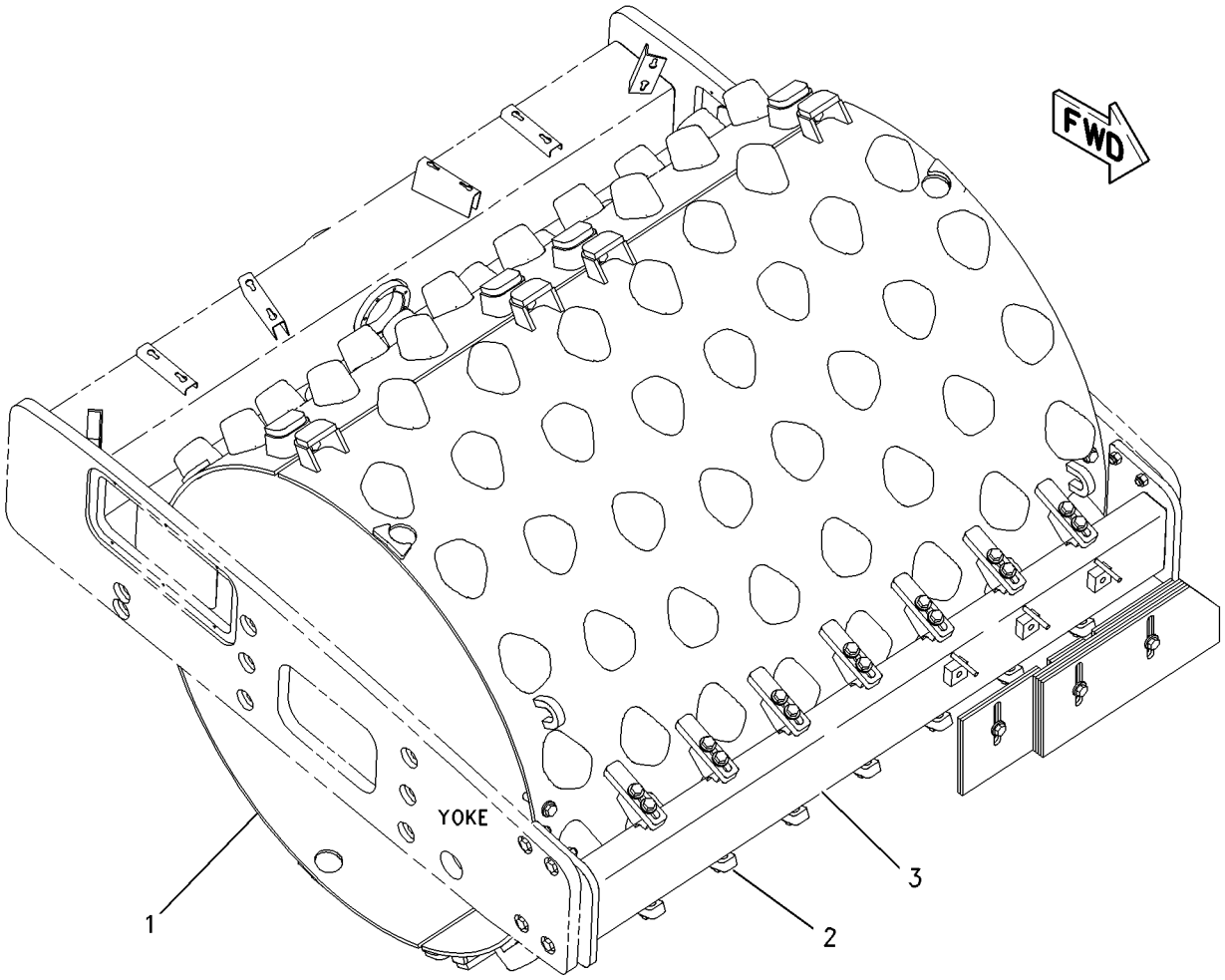

GRAPHIC #1 **<END>** g01001280

203-4718 WHEEL & MTG GP-DRIVE

S/N: BZE1-UP
AN ATTACHMENT

SMCS-4199, 7553 **i02142111**

NOTE	REF NO	GRAPHIC REF	PART NUMBER	QTY	PART NAME 1 2 3 4 5 6 (PRODUCT LEVEL)	SEE PAGE
M	1	1	**201-1919**	20	NUT (M20X1.5-THD)	
Y	2	1	*203-4687*	1	WHEEL & TIRE GP (LH)	219
Y	3	1	*203-4688*	1	WHEEL & TIRE GP (RH)	220
	4	1	**8T-5439**	20	WASHER-HARD (21.5X45X6-MM THK)	

M-METRIC PART
Y-SEPARATE ILLUSTRATION

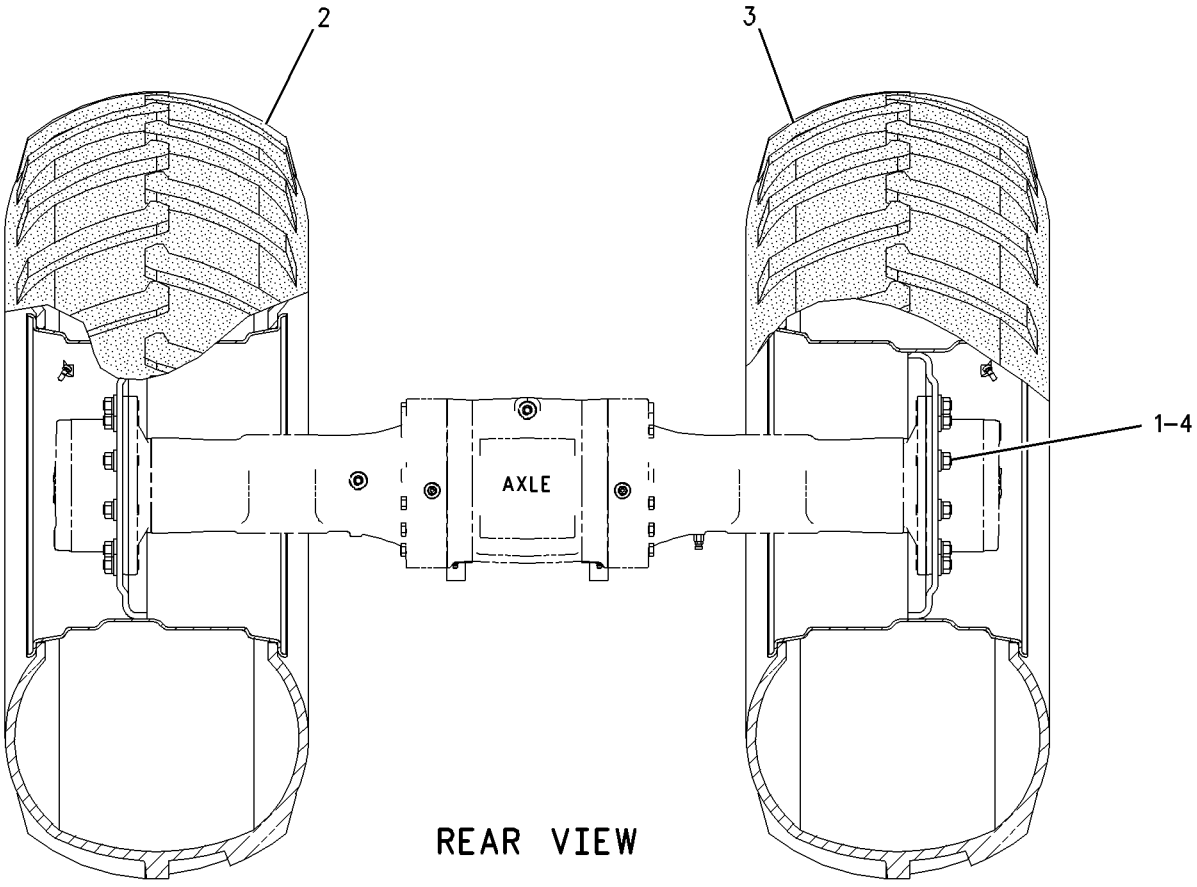

GRAPHIC #1 **<END>** g00917041

203-4687 WHEEL & TIRE GP–LH

S/N: BZE1-UP

PART OF 203-4718 WHEEL & MTG GP-DRIVE

AN ATTACHMENT

SMCS-4202 **i03009857**

NOTE	REF NO	GRAPHIC REF	PART NUMBER	QTY	PART NAME 1 2 3 4 5 6 (PRODUCT LEVEL)	SEE PAGE
	1	1	*180-1555*	1	TIRE (23.1-26)	
	2	1	**077-3895**	1	CAP-VALVE STEM	
	3	1	**2D-2631**	1	NUT (0.482-26-THD)	
	4	1	**077-4192**	1	VALVE	
	5	1	**203-4741**	1	WHEEL AS	

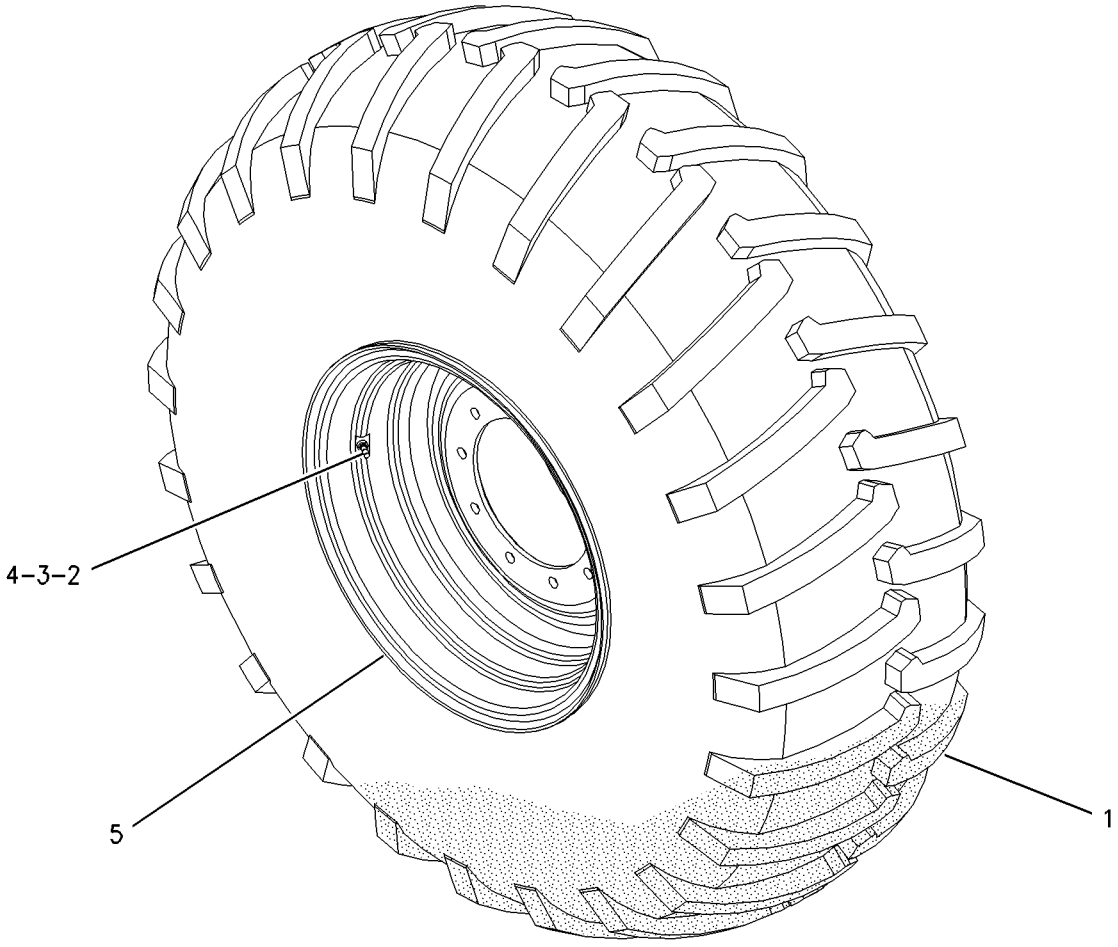

GRAPHIC #1 **<END>** g00917055

203-4688 WHEEL & TIRE GP–RH

S/N: BZE1-UP
PART OF 203-4718 WHEEL & MTG GP-DRIVE
AN ATTACHMENT

SMCS-4202 **i03009858**

NOTE	REF NO	GRAPHIC REF	PART NUMBER	QTY	PART NAME 1 2 3 4 5 6 (PRODUCT LEVEL)	SEE PAGE
	1	1	*180-1555*	1	TIRE (23.1-26)	
	2	1	**077-3895**	1	CAP-VALVE STEM	
	3	1	**2D-2631**	1	NUT (0.482-26-THD)	
	4	1	**077-4192**	1	VALVE	
	5	1	**203-4741**	1	WHEEL AS	

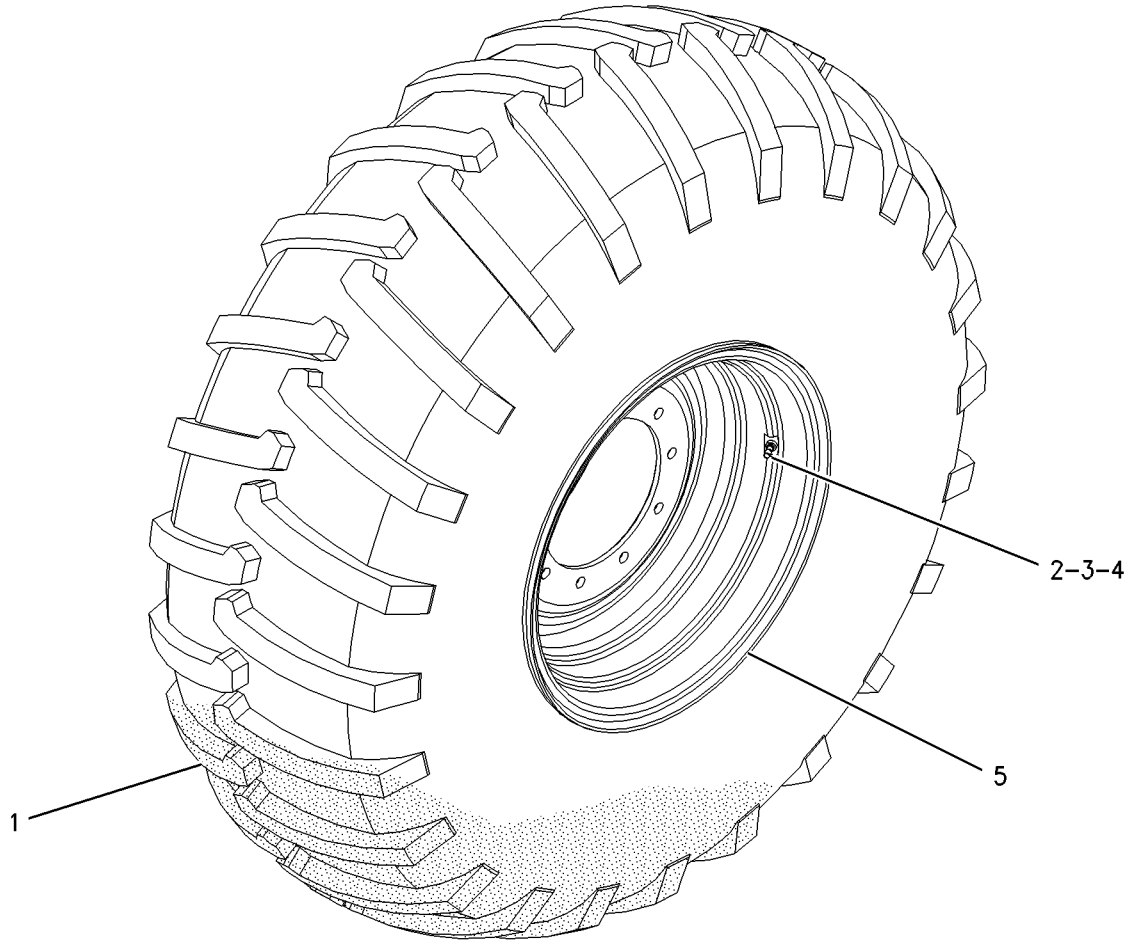

GRAPHIC #1 **<END>** g00917061

229-5404 WHEEL & TIRE GP–LH

S/N: BZG1-UP
PART OF 229-5403 MOUNTING GP-WHEEL
AN ATTACHMENT

SMCS-4202 **i02140904**

NOTE	REF NO	GRAPHIC REF	PART NUMBER	QTY	PART NAME 1 2 3 4 5 6 (PRODUCT LEVEL)	SEE PAGE
J	1	1	*180-1555*	1	TIRE (23.1X26-14 PLY)	
	2	1	**077-3895**	1	CAP-VALVE STEM	
	3	1	**077-3906**	1	NUT-VALVE STEM	
	4	1	**077-4192**	1	VALVE	
	5	1	**203-4741**	1	WHEEL AS	

J-PROCURE LOCALLY

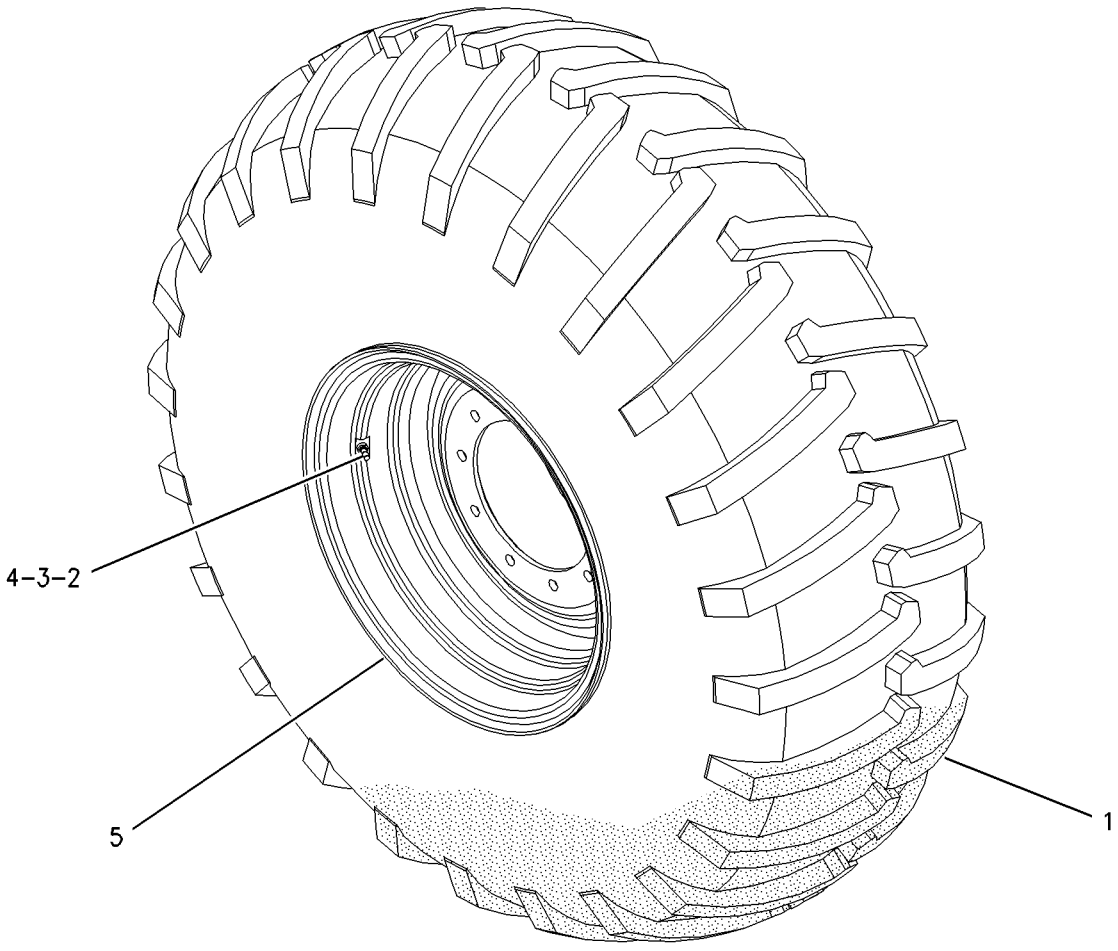

GRAPHIC #1 **<END>** g00917055

229-5406 WHEEL & TIRE GP–RH

S/N: BZG1-UP
PART OF 229-5403 MOUNTING GP-WHEEL
AN ATTACHMENT

SMCS-4202 **i02140918**

NOTE	REF NO	GRAPHIC REF	PART NUMBER	QTY	PART NAME 1 2 3 4 5 6 (PRODUCT LEVEL)	SEE PAGE
J	1	1	*180-1555*	1	TIRE (23.1X26-14 PLY)	
	2	1	**077-3895**	1	CAP-VALVE STEM	
	3	1	**077-3906**	1	NUT-VALVE STEM	
	4	1	**077-4192**	1	VALVE	
	5	1	**203-4741**	1	WHEEL AS	

J-PROCURE LOCALLY

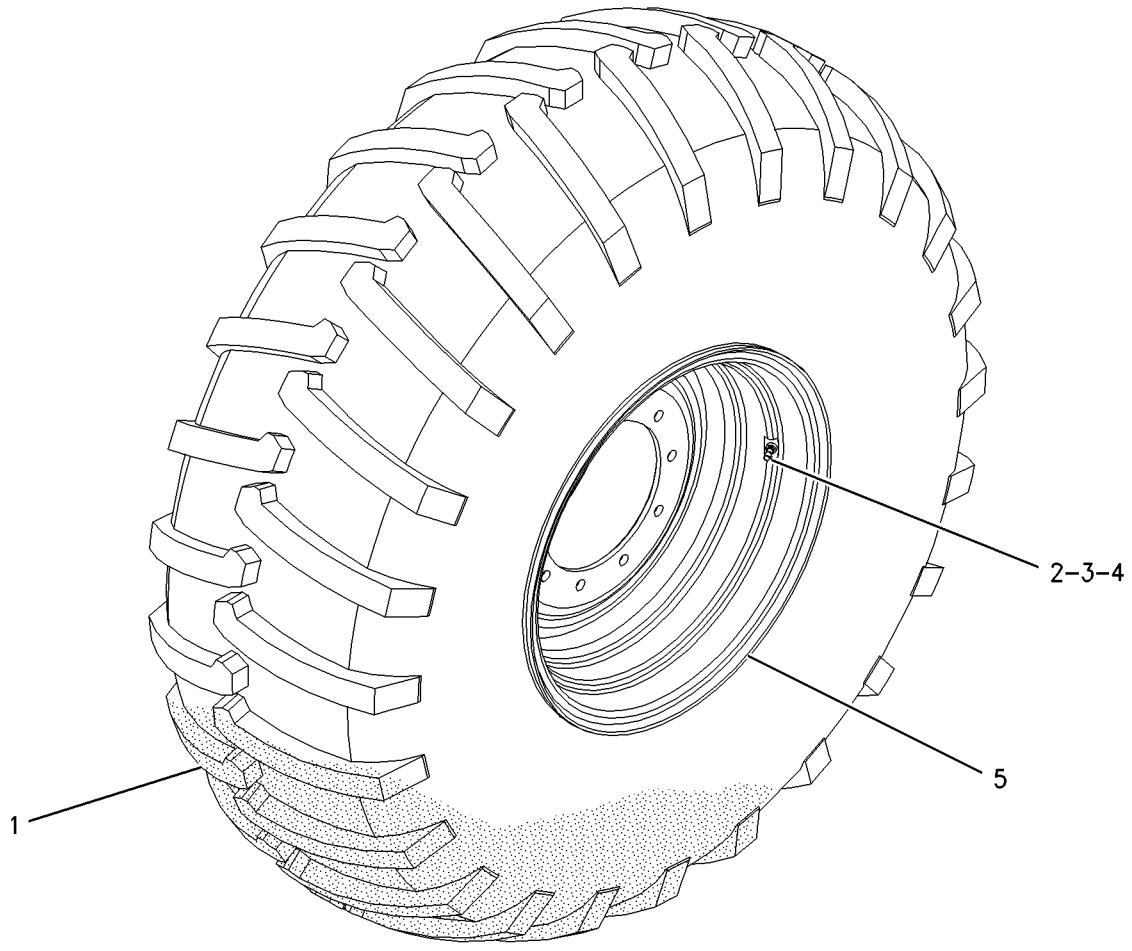

GRAPHIC #1 **<END>** g00917061

224-0871 BUMPER AR—PADDED SHELL, WITHOUT BLADE

S/N: BZE1-UP
AN ATTACHMENT

SMCS-7156 **i01972581**

NOTE	PART NUMBER	QTY	PART NAME 1 2 3 4 5 6 (PRODUCT LEVEL)	SEE PAGE
Y	*224-0872*	1	BUMPER GP-FRONT	225
Y	*223-8344*	1	PLATE & FILM GP	490
Y	*206-7492*	1	SHELL GP-PADDED	216

Y-SEPARATE ILLUSTRATION

<END>

242-0737 BUMPER AR

S/N: BZE1-UP

SMCS-7156 **i01972595**

NOTE	PART NUMBER	QTY	PART NAME 1 2 3 4 5 6 (PRODUCT LEVEL)	SEE PAGE
Y	*241-9529*	1	BUMPER GP-FRONT	226
Y	*220-8539*	1	PLATE & FILM GP	486

Y-SEPARATE ILLUSTRATION

<END>

222-4326 BUMPER GP-FRONT

S/N: BZE1-UP; BZG1-UP
PART OF 239-0796 CHASSIS AR, 254-1323 DRUM GP-COMPACTOR
ALSO AN ATTACHMENT

SMCS-7156 **i02140641**

NOTE	REF NO	GRAPHIC REF	PART NUMBER	QTY	PART NAME 1 2 3 4 5 6 (PRODUCT LEVEL)	SEE PAGE
	1	1	**210-4563**	18	NUT (M20X2.5-THD)	
	2	1	**211-4674**	9	SCRAPER	
	3	1	**217-2948**	1	BUMPER AS	
		1	**7L-7556**	1	PLUG-CUP	
M	4	1	**7X-2565**	9	BOLT (M20X2.5X100-MM)	
M	5	1	**8T-4131**	8	NUT (M20X2.5-THD)	
M	6	1	**8T-4187**	8	BOLT (M20X2.5X80-MM)	
	7	1	**8T-5439**	26	WASHER-HARD (21.5X45X6-MM THK)	
M	8	1	**8T-6381**	9	BOLT (M20X2.5X120-MM)	

M-METRIC PART

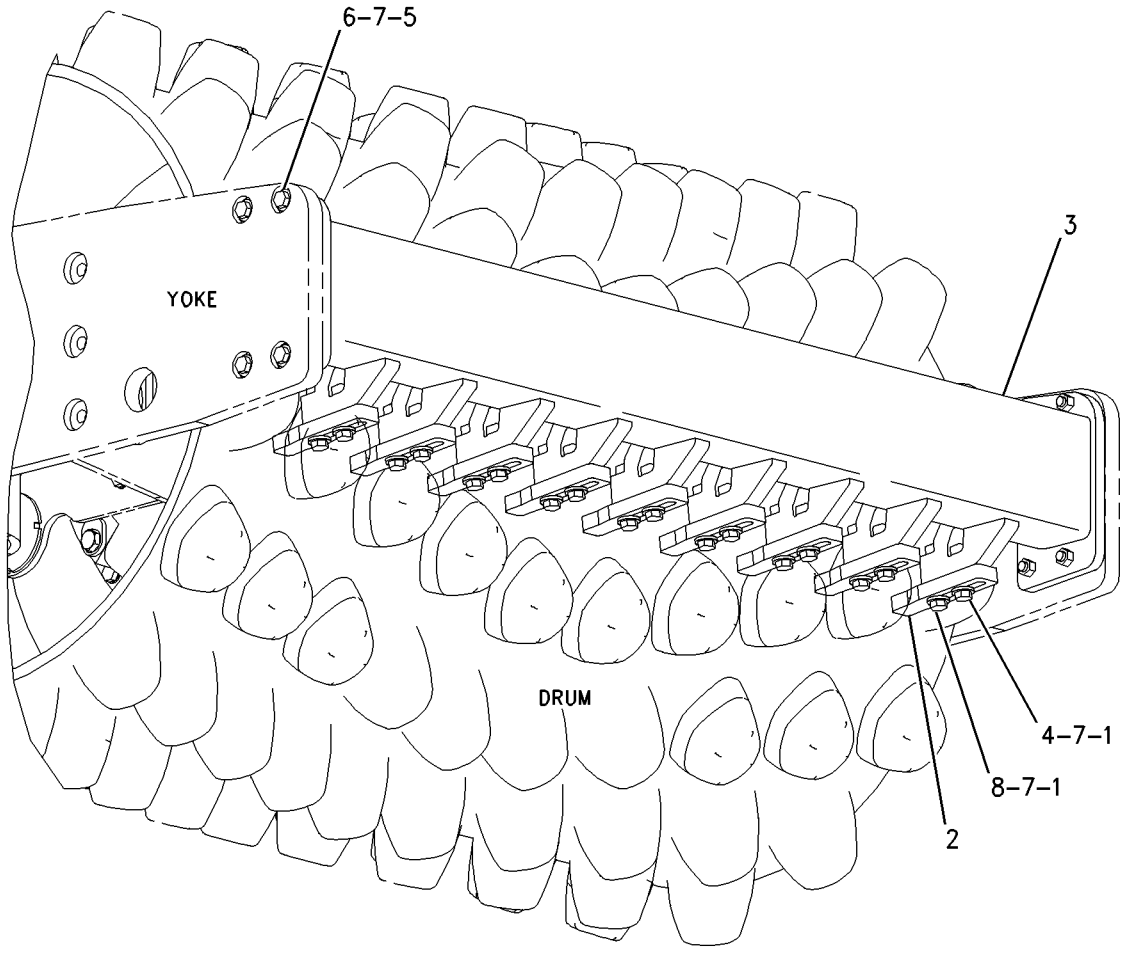

GRAPHIC #1 **<END>** g01003443

224-0872 BUMPER GP-FRONT

S/N: BZE1-UP

PART OF 224-0871 BUMPER AR, 234-3461 SHELL GP-PADDED

AN ATTACHMENT

SMCS-7156 **i01972578**

NOTE	REF NO	GRAPHIC REF	PART NUMBER	QTY	PART NAME 1 2 3 4 5 6 (PRODUCT LEVEL)	SEE PAGE
	1	1	**227-1100**	1	BUMPER AS	
		1	**8X-1986**	3	PLATE	
M	2	1	**8T-4131**	8	NUT (M20X2.5-THD)	
M	3	1	**8T-4187**	8	BOLT (M20X2.5X80-MM)	
	4	1	**8T-5439**	8	WASHER-HARD (21.5X45X6-MM THK)	

M-METRIC PART

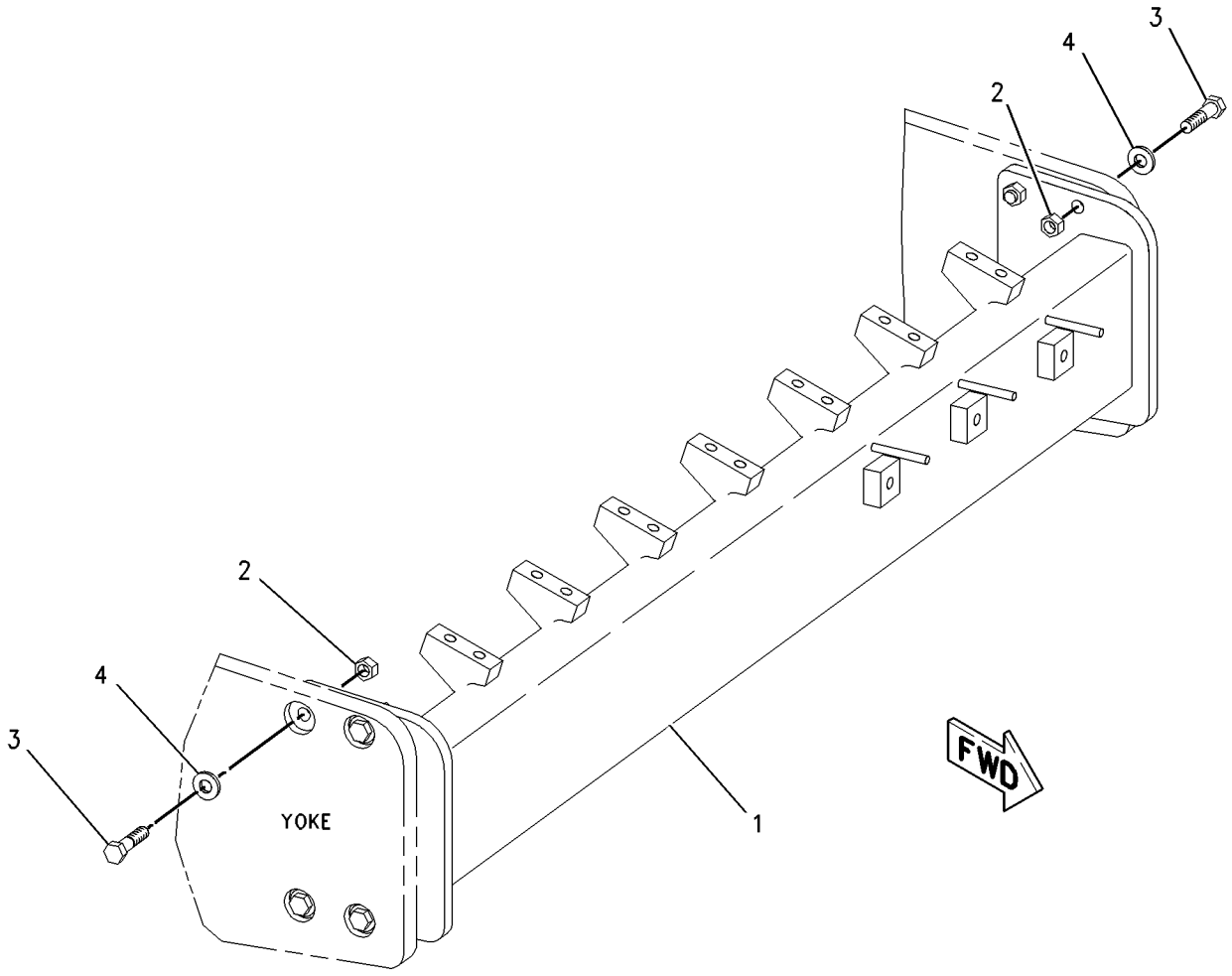

GRAPHIC #1 **<END>** g01001397

241-9529 BUMPER GP-FRONT

S/N: BZE1-UP

PART OF 242-0737 BUMPER AR

SMCS-7156 **i01972596**

NOTE	REF NO	GRAPHIC REF	PART NUMBER	QTY	PART NAME 1 2 3 4 5 6 (PRODUCT LEVEL)	SEE PAGE
	1	1	**241-9527**	1	BUMPER AS	
		1	**7L-7556**	1	PLUG-CUP	
M	2	1	**8T-4131**	8	NUT (M20X2.5-THD)	
M	3	1	**8T-4187**	8	BOLT (M20X2.5X80-MM)	
	4	1	**8T-5439**	8	WASHER-HARD (21.5X45X6-MM THK)	

M-METRIC PART

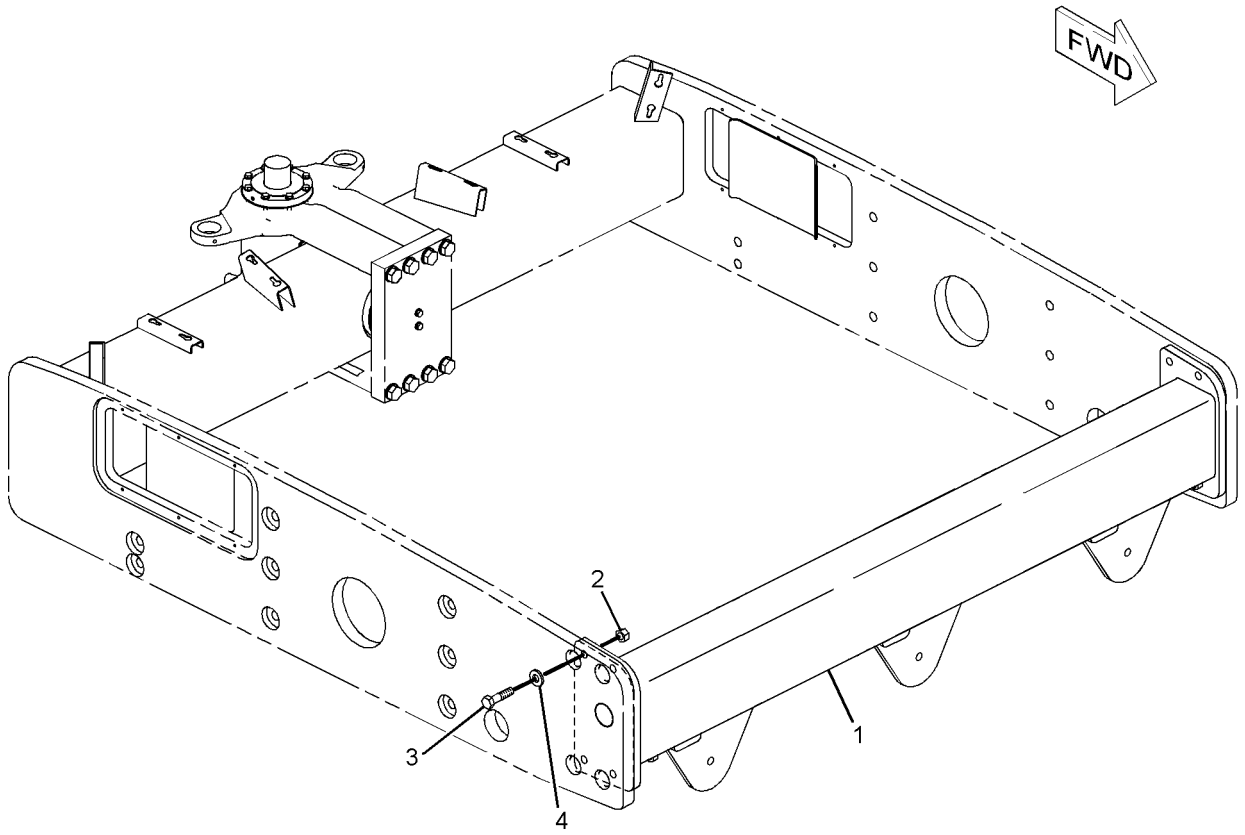

GRAPHIC #1 **<END>** g01066736

217-2650 ENCLOSURE GP-ENGINE

S/N: BZE1-UP; BZG1-UP
PART OF 239-0795, 239-0796 CHASSIS AR

SMCS-7263 **i02140308**

NOTE	REF NO	GRAPHIC REF	PART NUMBER	QTY	PART NAME 1 2 3 4 5 6 (PRODUCT LEVEL)	SEE PAGE
	1	1	**2T-1718**	4	RETAINER	
	2	1	**110-4463**	1	STRIKER AS (LATCH)	
	3	1	**119-9706**	2	STUD-BALL	
	4	1	**183-6121**	4	WASHER (10.31X38.1X4.78-MM THK)	
	5	1	**187-3021**	1	PIPE AS-EXHAUST	
	6	1	**187-3030**	1	GASKET	
	7	1	**202-0949**	1	STRAP AS	
	8	1	**203-5470**	2	SPRING AS-GAS	
	9	1	**217-2536**	1	ENCLOSURE AS	
		1	**7T-1099**	5	LINK	
M		1	**8T-3490**	8	NUT-WELD (M10X1.5-THD)	
M		1	**8T-4219**	10	STUD-WELD (M10X1.5X17.5-MM)	
	10	1	**217-3188**	2	GUIDE (SEAL)	
	11	1	**239-5097**	1	BRACKET-LATCH	
Y	12	1	**236-7001**	1	HOOD GP	243
M	13	1	**5C-2890**	1	NUT (M6X1-THD)	
	14	1	**5P-1076**	1	WASHER-HARD (13.5X30X4-MM THK)	
	15	1	**5P-4115**	2	WASHER-HARD (7.2X19X2-MM THK)	
	16	1	**7X-7729**	22	WASHER (11X25X3-MM THK)	
M	17	1	**8T-0389**	10	LOCKNUT (M10X1.5-THD)	
	18	1	**8T-4121**	2	WASHER-HARD (11X21X2.5-MM THK)	
M	19	1	**8T-4133**	2	NUT (M10X1.5-THD)	
M	20	1	**8T-4138**	2	BOLT (M6X1X20-MM)	
M	21	1	**8T-4195**	16	BOLT (M10X1.5X30-MM)	
M	22	1	**8T-4244**	1	NUT (M12X1.75-THD)	
	23	1	**9X-8256**	1	WASHER (6.6X12X2-MM THK)	
BD	24	1	**5P-7483**		SEAL	
BD	25	1	**229-2565**		SEAL	

B-USE AS REQUIRED
D-ORDER BY THE METER
M-METRIC PART
Y-SEPARATE ILLUSTRATION

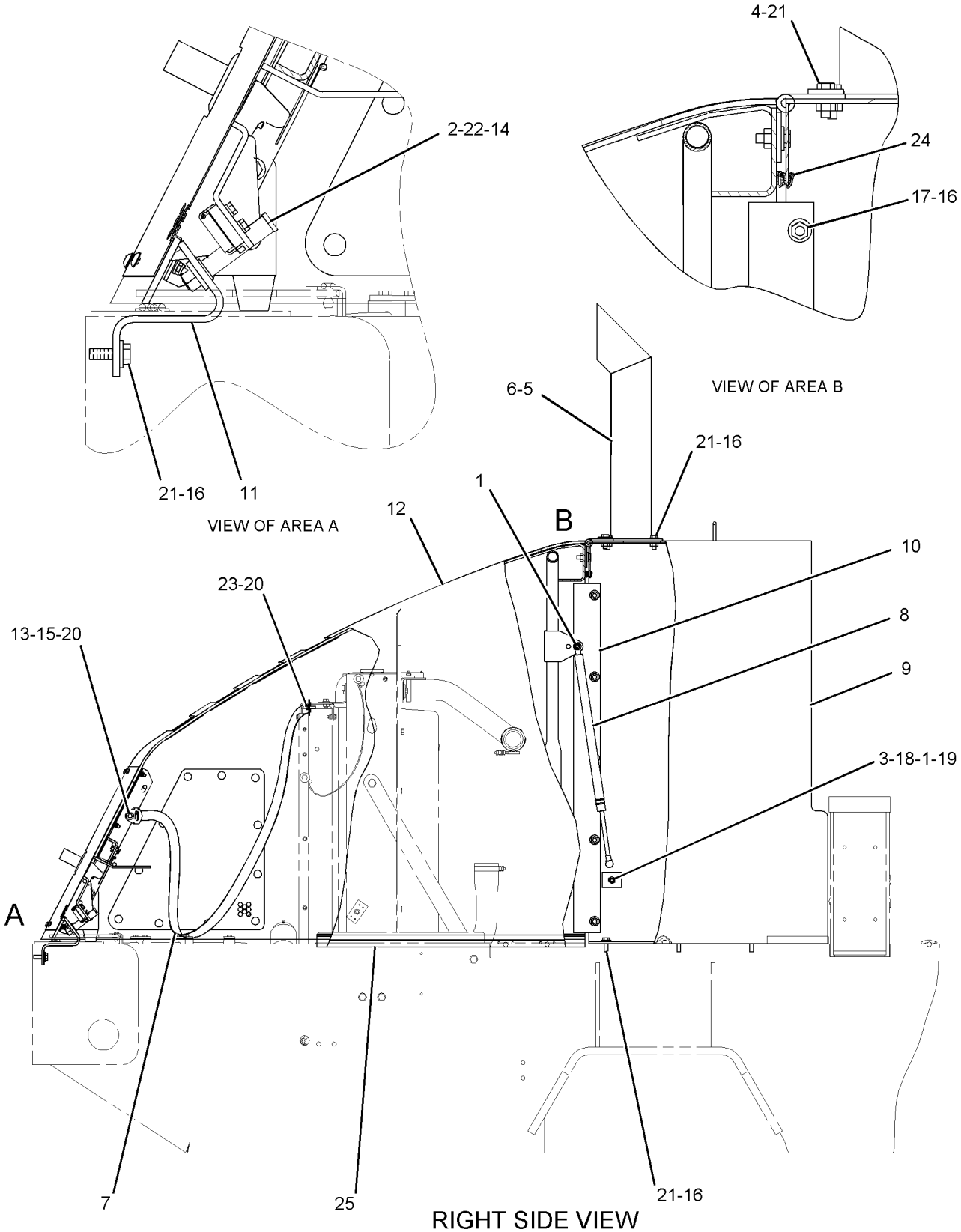

RIGHT SIDE VIEW

GRAPHIC #1

<END>

g01041884

217-2650 ENCLOSURE GP-ENGINE

S/N: BZE1-738; BZG1-368
PART OF 239-0795, 239-0796 CHASSIS AR
ALSO AN ATTACHMENT

SMCS-7263 **i02676220**

NOTE	REF NO	GRAPHIC REF	PART NUMBER	QTY	PART NAME 1 2 3 4 5 6 (PRODUCT LEVEL)	SEE PAGE
	1	1	**2T-1718**	4	RETAINER	
	2	1	**110-4463**	1	STRIKER AS (LATCH)	
	3	1	**119-9706**	2	STUD-BALL	
	4	1	**183-6121**	4	WASHER (10.31X38.1X4.78-MM THK)	
	5	1	**187-3021**	1	PIPE AS-EXHAUST	
	6	1	**187-3030**	1	GASKET	
	7	1	**202-0949**	1	STRAP AS	
	8	1	**203-5470**	2	SPRING AS-GAS (ENGINE HOOD)	
	9	1	**217-2536**	1	ENCLOSURE AS	
		1	**7T-1099**	5	LINK	
M		1	**8T-3490**	8	NUT-WELD (M10X1.5-THD)	
M		1	**8T-4219**	10	STUD-WELD (M10X1.5X17.5-MM)	
	10	1	**217-3188**	2	GUIDE (SEAL)	
	11	1	**239-5097**	1	BRACKET-LATCH	
CY	12	1	**284-3090**	1	HOOD GP	250
M	13	1	**5C-2890**	1	NUT (M6X1-THD)	
	14	1	**5P-1076**	1	WASHER-HARD (13.5X30X4-MM THK)	
	15	1	**5P-4115**	2	WASHER-HARD (7.2X19X2-MM THK)	
	16	1	**7X-7729**	22	WASHER (11X25X3-MM THK)	
M	17	1	**8T-0389**	10	LOCKNUT (M10X1.5-THD)	
	18	1	**8T-4121**	2	WASHER-HARD (11X21X2.5-MM THK)	
M	19	1	**8T-4133**	2	NUT (M10X1.5-THD)	
M	20	1	**8T-4138**	2	BOLT (M6X1X20-MM)	
M	21	1	**8T-4195**	16	BOLT (M10X1.5X30-MM)	
M	22	1	**8T-4244**	1	NUT (M12X1.75-THD)	
	23	1	**9X-8256**	1	WASHER (6.6X12X2-MM THK)	
D	24	1	**5P-7483**		SEAL (0.8-M)	
H	25	1	**229-2565**		SEAL (7-DM EACH)	

C-CHANGE FROM PREVIOUS TYPE
D-ORDER BY THE METER
H-ORDER BY THE DECIMETER
M-METRIC PART
Y-SEPARATE ILLUSTRATION

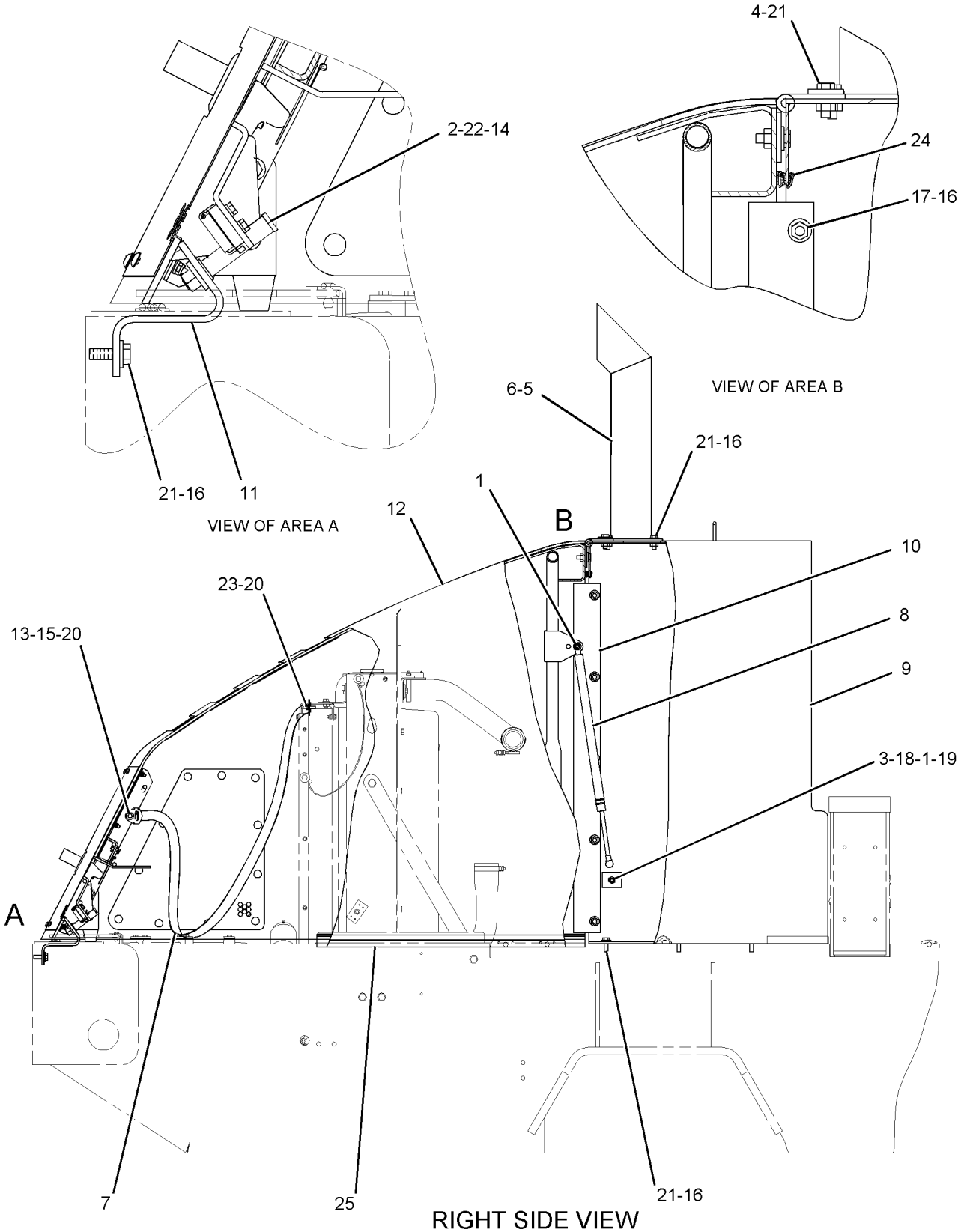

RIGHT SIDE VIEW

GRAPHIC #1

<END>

g01041884

296-0023 ENCLOSURE GP-ENGINE

S/N: BZE739-UP; BZG369-UP
PART OF 239-0795, 239-0796 CHASSIS AR

SMCS-7263 **i02762452**

NOTE	REF NO	GRAPHIC REF	PART NUMBER	QTY	PART NAME 1 2 3 4 5 6 (PRODUCT LEVEL)	SEE PAGE
	1	1	**2T-1718**	4	RETAINER	
	2	1	**110-4463**	1	STRIKER AS (LATCH)	
	3	1	**119-9706**	2	STUD-BALL	
	4	1	**183-6121**	4	WASHER (10.31X38.1X4.78-MM THK)	
	5	1	**187-3021**	1	PIPE AS-EXHAUST	
	6	1	**187-3030**	1	GASKET	
	7	1	**202-0949**	1	STRAP AS	
	8	1	**203-5470**	2	SPRING AS-GAS (ENGINE HOOD)	
	9	1	**217-2536**	1	ENCLOSURE AS (ENGINE)	
		1	**7T-1099**	5	LINK	
	10	1	**217-3188**	2	GUIDE (SEAL)	
	11	1	**239-5097**	1	BRACKET-LATCH	
Y	12	1	**295-8965**	1	HOOD GP	250
M	13	1	**5C-2890**	1	NUT (M6X1-THD)	
	14	1	**5P-1076**	1	WASHER-HARD (13.5X30X4-MM THK)	
	15	1	**5P-4115**	2	WASHER-HARD (7.2X19X2-MM THK)	
	16	1	**7X-7729**	22	WASHER (11X25X3-MM THK)	
M	17	1	**8T-0389**	10	LOCKNUT (M10X1.5-THD)	
	18	1	**8T-4121**	2	WASHER-HARD (11X21X2.5-MM THK)	
M	19	1	**8T-4133**	2	NUT (M10X1.5-THD)	
M	20	1	**8T-4138**	2	BOLT (M6X1X20-MM)	
M	21	1	**8T-4195**	16	BOLT (M10X1.5X30-MM)	
M	22	1	**8T-4244**	1	NUT (M12X1.75-THD)	
	23	1	**9X-8256**	1	WASHER (6.6X12X2-MM THK)	
D	24	1	**5P-7483**		SEAL (1-M)	
J	25	1	**229-2565**		SEAL (7-DM EACH)	

D-ORDER BY THE METER
J-ORDER BY THE DECIMETER
M-METRIC PART
Y-SEPARATE ILLUSTRATION

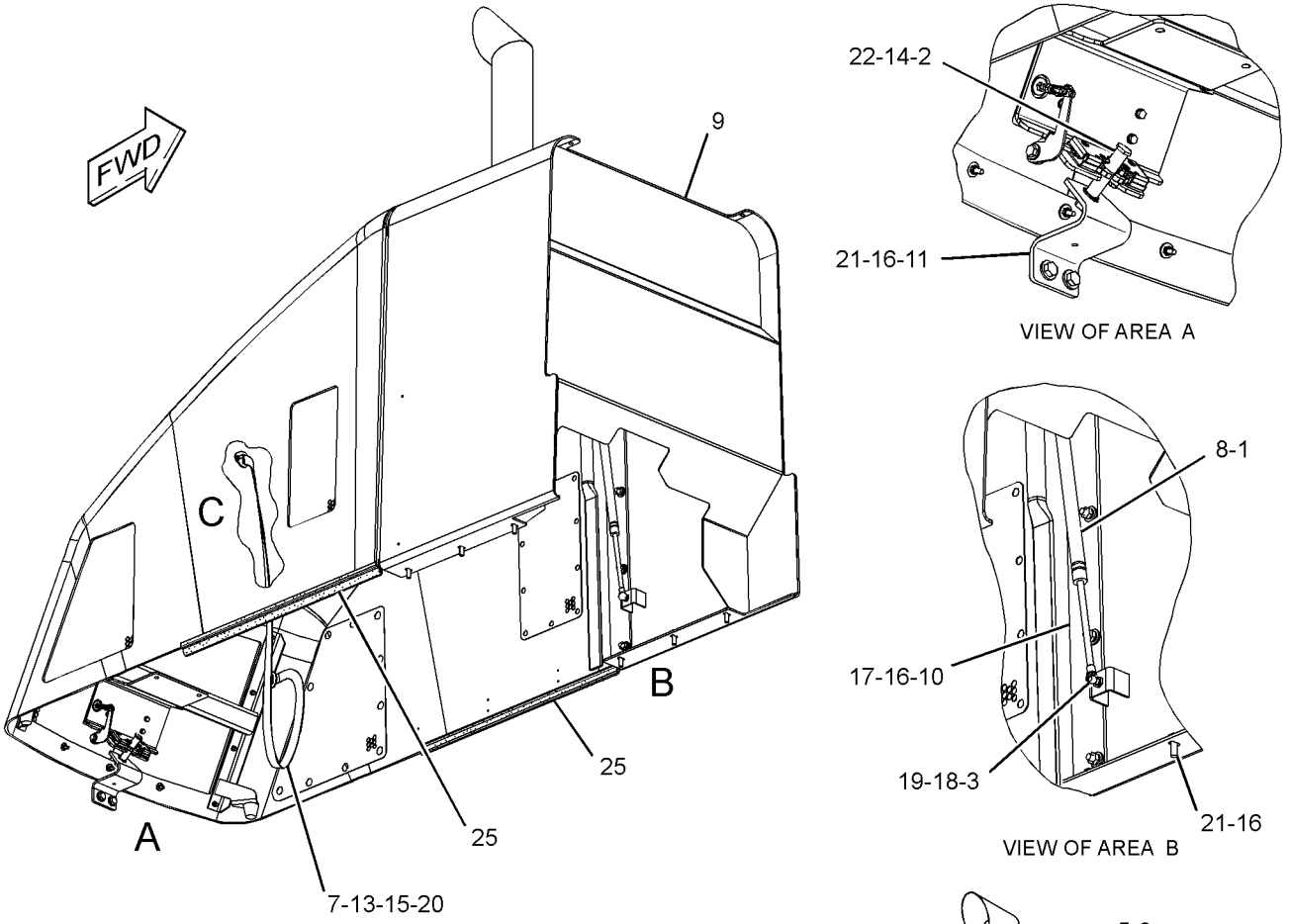

GRAPHIC #1

<END>

g01383125

FRAME AND BODY

217-2945 FRAME GP-FRONT

S/N: BZE1-UP; BZG1-UP

PART OF 239-0795, 239-0796 CHASSIS AR

SMCS-7050, 7051 **i02140324**

NOTE	REF NO	GRAPHIC REF	PART NUMBER	QTY	PART NAME 1 2 3 4 5 6 (PRODUCT LEVEL)	SEE PAGE
	1	1	**141-9866**	1	PLATE-END	
Y	2	1	*173-2731*	1	HITCH GP-ARTICULATING & OSC	240
	3	1	**217-2947**	1	YOKE AS	
M	4	1	**7X-2577**	8	BOLT (M24X3X90-MM)	
	5	1	**8T-4121**	2	WASHER-HARD (11X21X2.5-MM THK)	
	6	1	**8T-4167**	8	WASHER-HARD (26X44X4-MM THK)	
M	7	1	**8T-4195**	2	BOLT (M10X1.5X30-MM)	

M-METRIC PART
Y-SEPARATE ILLUSTRATION

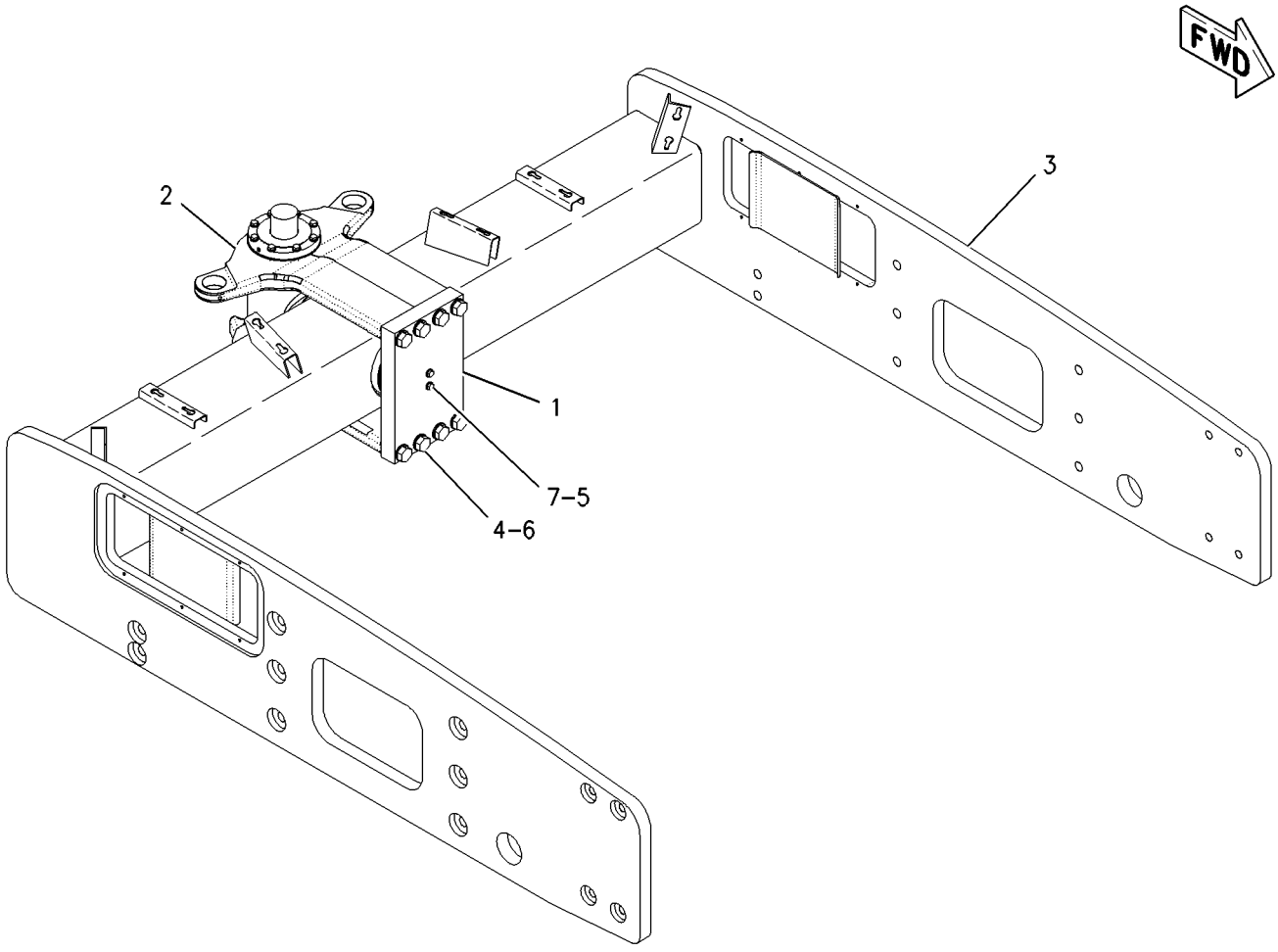

GRAPHIC #1 **<END>** g00998262

239-1496 FRAME GP-REAR

S/N: BZE1-UP; BZG1-UP

PART OF 239-0795, 239-0796 CHASSIS AR

SMCS-7050, 7051 **i03013570**

NOTE	REF NO	GRAPHIC REF	PART NUMBER	QTY	PART NAME 1 2 3 4 5 6 (PRODUCT LEVEL)	SEE PAGE
	1	1	**5E-9892**	1	PIN	
	2	1	**077-6627**	2	SCREW (NO 12X0.5-IN)	
	3	1	**143-4653**	2	CLAMP	
	4	1	**318-8631**	1	PIN AS	
	5	1	**195-1411**	1	CHAIN	
	6	1	**320-7409**	1	FRAME AS	
	7	1	**8T-4167**	8	WASHER-HARD (26X44X4-MM THK)	
M	8	1	**8T-4649**	8	BOLT (M24X3X140-MM)	

M-METRIC PART

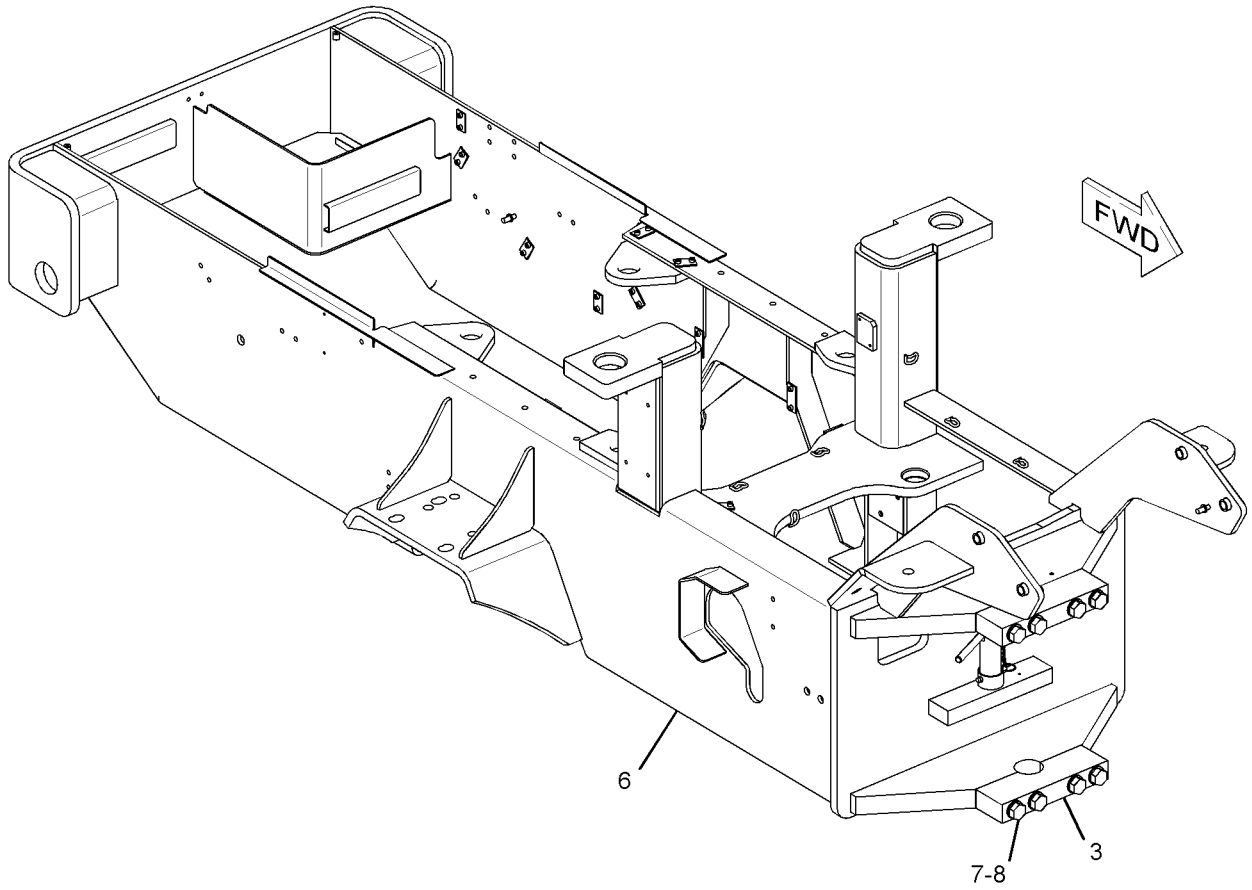

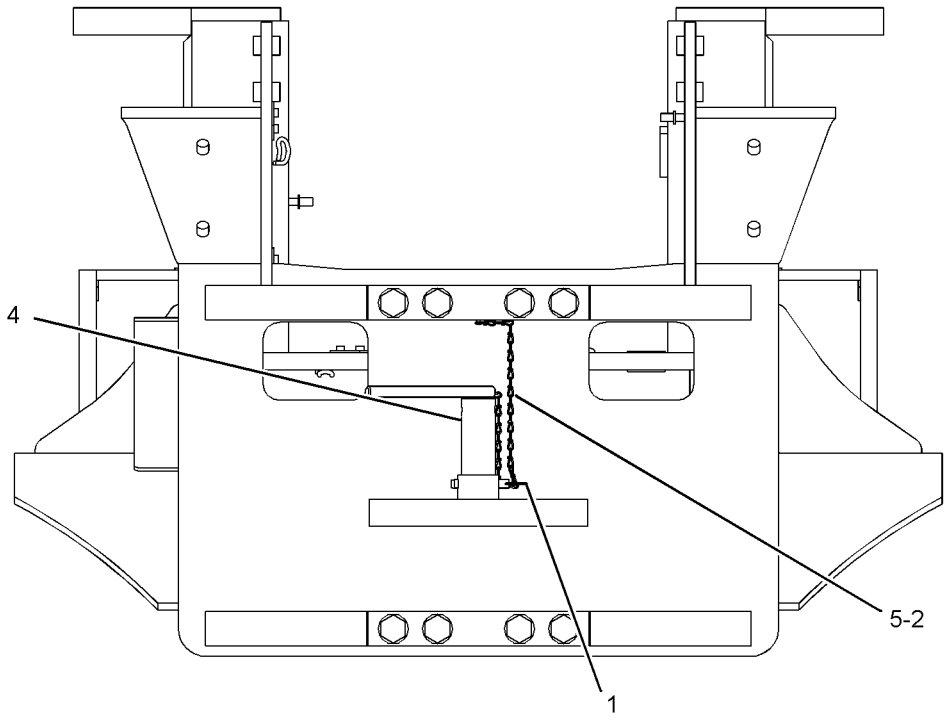

FRONT VIEW

GRAPHIC #1 **<END>** g01457585

FRAME AND BODY

241-3783 GUARD GP-LINES

S/N: BZE1-UP; BZG1-UP
AN ATTACHMENT
TYPE 1

SMCS-7167 **i02145467**

NOTE	REF NO	GRAPHIC REF	PART NUMBER	QTY	PART NAME 1 2 3 4 5 6 (PRODUCT LEVEL)	SEE PAGE
	1	1	**162-2480**	9	RIVET	
	2	1	**186-2000**	1	INSERT	
	3	1	**186-2879**	1	PLATE AS	
	4	1	**186-2880**	1	PLATE AS	
	5	1	**5P-4115**	9	WASHER-HARD (7.2X19X2-MM THK)	
M	6	1	**8T-4195**	8	BOLT (M10X1.5X30-MM)	
	7	1	**8T-4222**	8	WASHER-PLATED (11X32X2.5-MM THK)	

M-METRIC PART

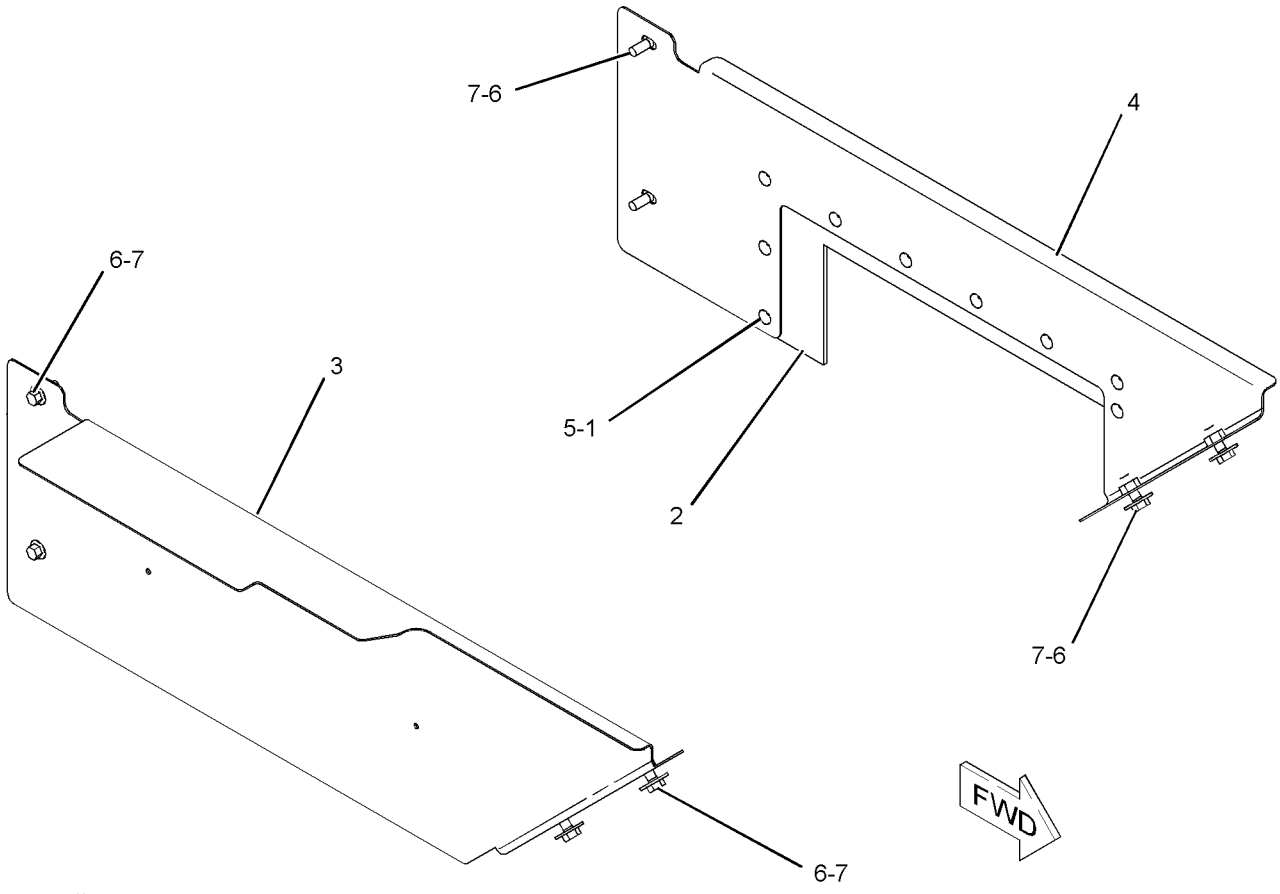

GRAPHIC #1 **<END>** g01048253

FRAME AND BODY

241-3783 GUARD GP-LINES

S/N: BZE1-UP; BZG1-UP
AN ATTACHMENT
TYPE 2

SMCS-7167 **i03009782**

NOTE	REF NO	GRAPHIC REF	PART NUMBER	QTY	PART NAME 1 2 3 4 5 6 (PRODUCT LEVEL)	SEE PAGE
	1	1	**278-5968**	1	PLATE AS	
	2	1	**289-3423**	1	PLATE AS	
M	3	1	**8T-4195**	8	BOLT (M10X1.5X30-MM)	
	4	1	**8T-4222**	8	WASHER-PLATED (11X32X2.5-MM THK)	

M-METRIC PART

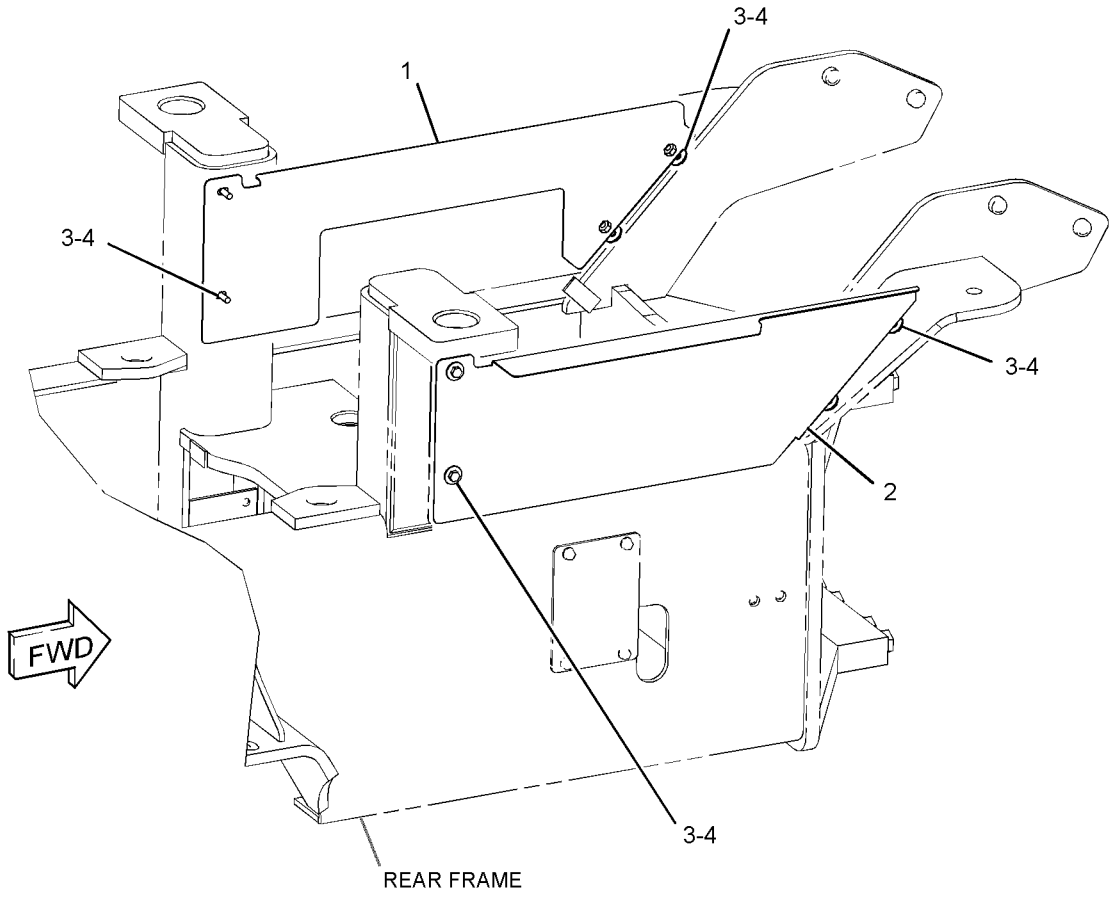

GRAPHIC #1 **<END>** g01525072

220-8754 GUARD GP-TRANSMISSION

S/N: BZE1-UP; BZG1-UP
AN ATTACHMENT

SMCS-7153 **i02145377**

NOTE	REF NO	GRAPHIC REF	PART NUMBER	QTY	PART NAME 1 2 3 4 5 6 (PRODUCT LEVEL)	SEE PAGE
	1	1	**226-0423**	1	GUARD AS	
M	2	1	**7X-2553**	4	BOLT (M16X2X40-MM)	
	3	1	**9X-8257**	4	WASHER (17.5X30X3.5-MM THK)	

M-METRIC PART

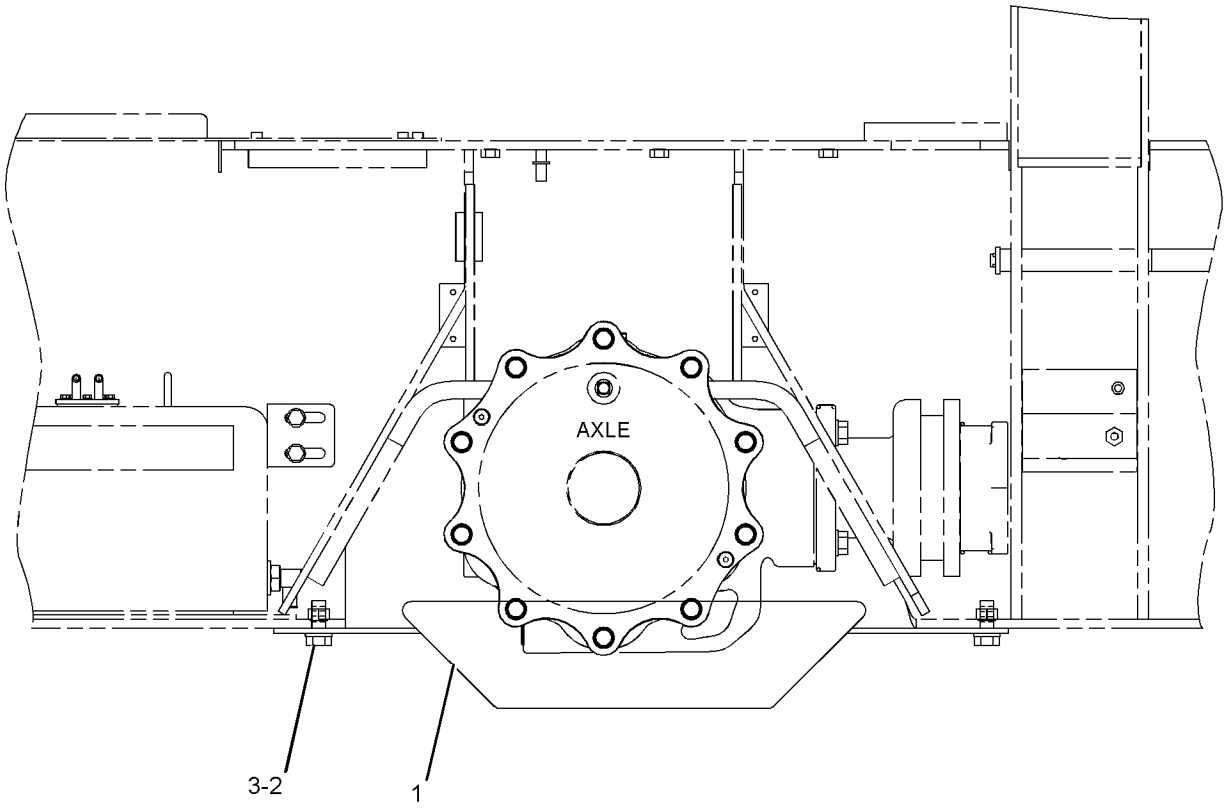

RIGHT SIDE VIEW

GRAPHIC #1

<END>

g01026259

201-5160 HANDRAIL GP

S/N: BZE1-UP; BZG1-UP
PART OF 236-1517, 236-1518, 236-6627 OPERATOR AR
ALSO AN ATTACHMENT

SMCS-7256 **i01972584**

NOTE	REF NO	GRAPHIC REF	PART NUMBER	QTY	PART NAME 1 2 3 4 5 6 (PRODUCT LEVEL)	SEE PAGE
	1	1	**159-3027**	1	HANDRAIL	
	2	1	**201-5161**	1	HANDRAIL AS	
	3	1	**5P-1076**	6	WASHER-HARD (13.5X30X4-MM THK)	
	4	1	**7X-7729**	2	WASHER (11X25X3-MM THK)	
M	5	1	**8T-4183**	6	BOLT (M12X1.75X40-MM)	
M	6	1	**8T-4195**	2	BOLT (M10X1.5X30-MM)	

M-METRIC PART

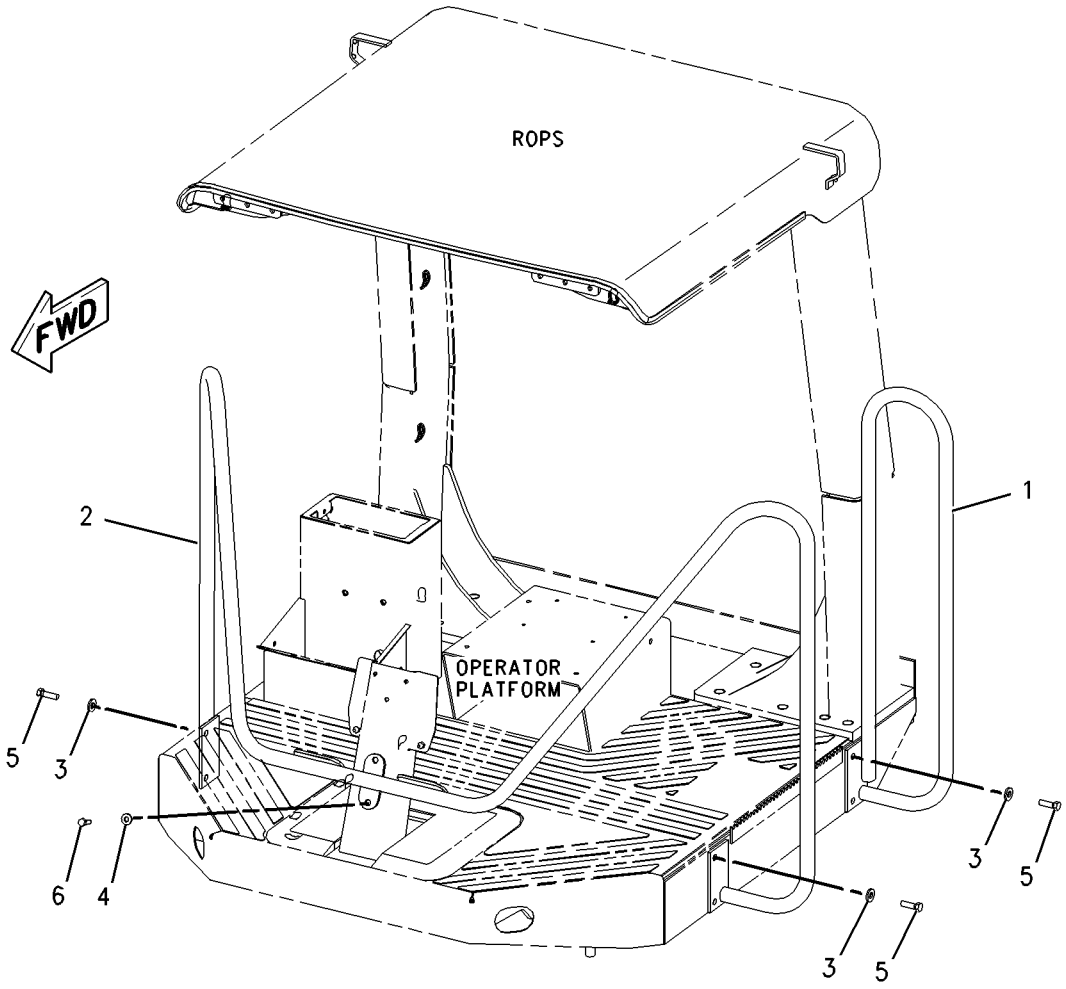

GRAPHIC #1 **<END>** g00918769

173-2731 HITCH GP-ARTICULATING & OSC

S/N: BZE1-UP; BZG1-UP

PART OF 217-2945 FRAME GP-FRONT

SMCS-7057, 7113 **i02942863**

NOTE	REF NO	GRAPHIC REF	PART NUMBER	QTY	PART NAME 1 2 3 4 5 6 (PRODUCT LEVEL)	SEE PAGE
	1	1	**1B-3925**	4	CUP-BEARING	
	2	1	**3F-5950**	4	CONE-BEARING	
	3	1	**9H-6079**	4	SEAL-LIP TYPE	
	4	1	**249-1291**	4	CAP-BEARING	
	5	1	**173-2686**	1	SHAFT (ARTICULATION)	
	6	1	**173-2687**	1	SHAFT (OSCILLATION)	
	7	1	**249-7388**	1	HITCH	
B	8	1	**187-9278**	2	SHIM PACK (EACH INCLUDES 3-SHIMS)	
	9	1	**8T-4121**	32	WASHER-HARD (11X21X2.5-MM THK)	
M	10	1	**8T-4186**	32	BOLT (M10X1.5X40-MM)	
	11	1	**9F-2247**	4	PLUG-PIPE	

B-USE AS REQUIRED
M-METRIC PART

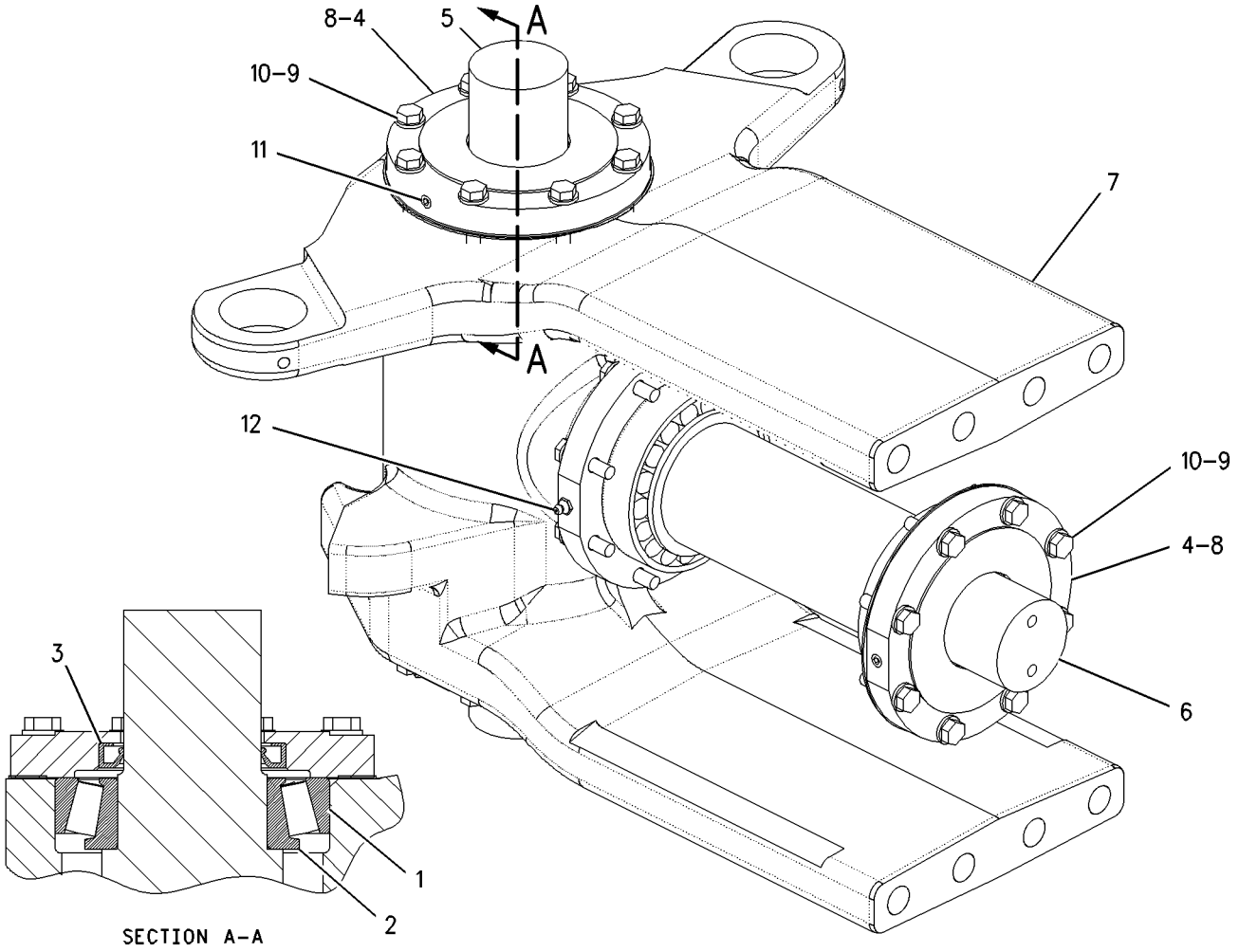

GRAPHIC #1 **<END>** g00823231

FRAME AND BODY

217-2651 HOOD GP

S/N: BZE1-UP; BZG1-UP
PART OF 236-7001 HOOD GP

SMCS-7251 **i02140392**

NOTE	REF NO	GRAPHIC REF	PART NUMBER	QTY	PART NAME 1 2 3 4 5 6 (PRODUCT LEVEL)	SEE PAGE
	1	1	**118-3149**	1	HANDLE AS	
	2	1	**119-9706**	2	STUD-BALL	
	3	1	**138-7125**	2	BUMPER	
	4	1	**217-2537**	1	BRACKET AS	
M		1	**8T-3612**	2	NUT-WELD (M8X1.25-THD)	
	5	1	**217-2652**	1	HOOD AS	
		1	**4P-7429**	5	CLIP	
	6	1	**217-2687**	1	SCREEN	
	7	1	**217-2689**	1	TUBE	
	8	1	**217-3167**	1	SUPPORT AS	
M		1	**6V-9632**	2	NUT-WELD (M6X1-THD)	
		1	**7T-1099**	2	LINK	
	9	1	**217-3180**	2	HINGE AS	
	10	1	**217-3189**	1	BRACKET AS	
M		1	**8T-3612**	2	NUT-WELD (M8X1.25-THD)	
	11	1	**217-4315**	1	LEVER	
	12	1	**218-2207**	1	LATCH AS-DOOR	
	13	1	**230-8873**	1	SPRING	
	14	1	**9X-8256**	16	WASHER (6.6X12X2-MM THK)	
M	15	1	**099-0492**	14	LOCKNUT (M6X1-THD)	
M	16	1	**3E-8020**	14	SCREW-TRUSS HEAD (M6X1X25-MM)	
M	17	1	**5C-7261**	2	NUT (M8X1.25-THD)	
	18	1	**5P-4115**	8	WASHER-HARD (7.2X19X2-MM THK)	
	19	1	**5P-4116**	6	WASHER-HARD (8.8X20.5X2-MM THK)	
M	20	1	**6V-7357**	4	BOLT (M6X1X25-MM)	
	21	1	**7X-7729**	6	WASHER (11X25X3-MM THK)	
M	22	1	**8T-4133**	3	NUT (M10X1.5-THD)	
M	23	1	**8T-4138**	6	BOLT (M6X1X20-MM)	
M	24	1	**8T-4185**	1	BOLT (M10X1.5X50-MM)	
M	25	1	**8T-4189**	4	BOLT (M8X1.25X20-MM)	
M	26	1	**8T-4195**	4	BOLT (M10X1.5X30-MM)	

M-METRIC PART

217-2651 **HOOD GP** *(contd.)* **i02140392**

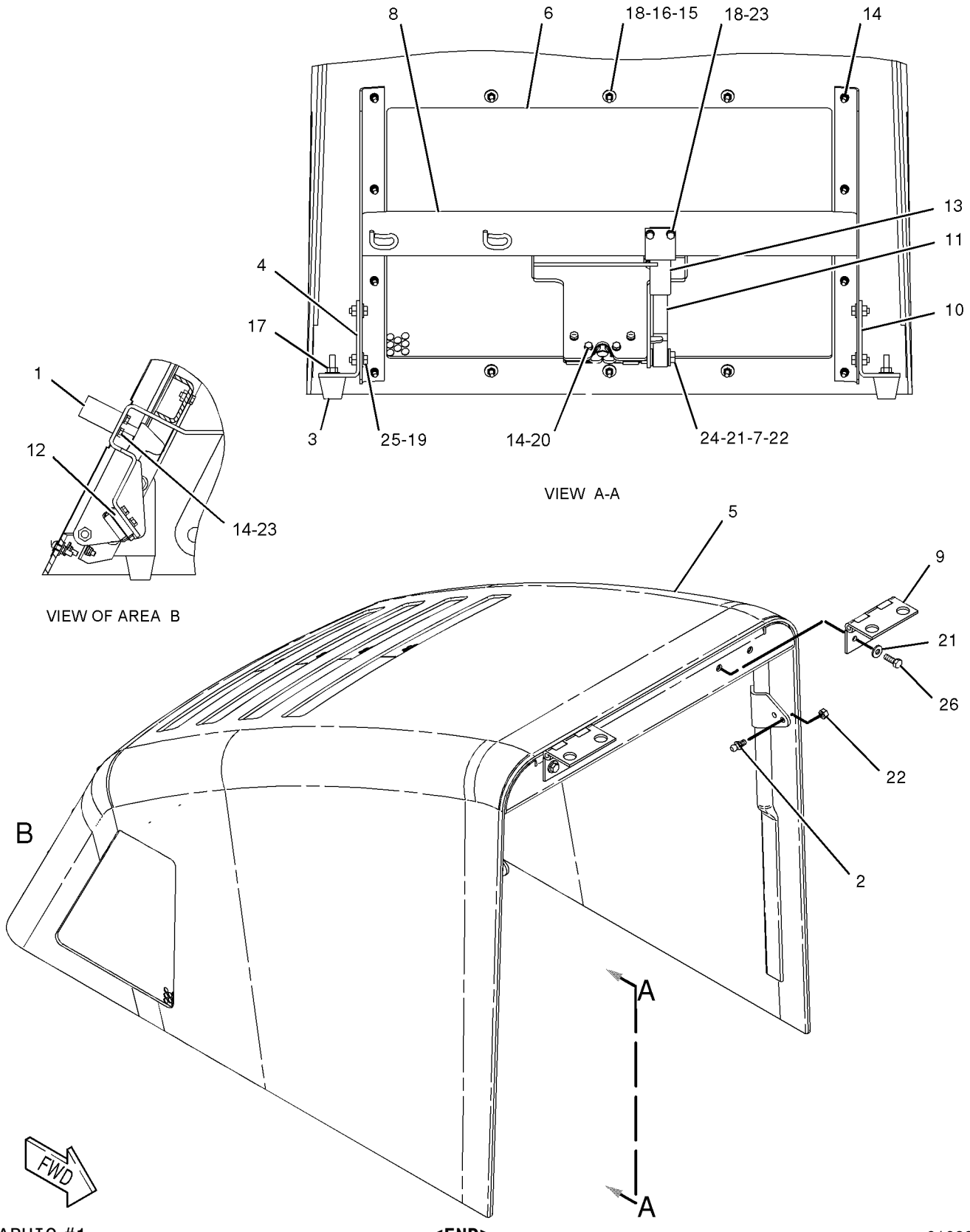

GRAPHIC #1

<END>

g01023044

236-7001 HOOD GP

S/N: BZE1-UP; BZG1-UP

PART OF 217-2650 ENCLOSURE GP-ENGINE

SMCS-7251 **i02140348**

NOTE	PART NUMBER	QTY	PART NAME 1 2 3 4 5 6 (PRODUCT LEVEL)	SEE PAGE
Y	*217-2651*	1	HOOD GP	241
			–OR–	
Y	*236-7002*	1	HOOD GP	244

Y-SEPARATE ILLUSTRATION

<END>

FRAME AND BODY

236-7002 HOOD GP

S/N: BZE1-UP; BZG1-UP

PART OF 236-7001 HOOD GP

SMCS-7251 **i02140477**

NOTE	REF NO	GRAPHIC REF	PART NUMBER	QTY	PART NAME 1 2 3 4 5 6 (PRODUCT LEVEL)	SEE PAGE
	1	1	**118-3149**	1	HANDLE AS	
	2	1	**119-9706**	2	STUD-BALL	
	3	1	**138-7125**	2	BUMPER	
	4	1	**217-2537**	1	BRACKET AS	
	5	1	**217-2687**	1	SCREEN	
	6	1	**217-2689**	1	TUBE	
	7	1	**217-3167**	1	SUPPORT AS	
M		1	**6V-9632**	2	NUT-WELD (M6X1-THD)	
		1	**7T-1099**	2	LINK	
	8	1	**217-3180**	2	HINGE AS	
	9	1	**217-3189**	1	BRACKET AS	
	10	1	**217-4315**	1	LEVER	
	11	1	**218-2207**	1	LATCH AS-DOOR	
	12	1	**220-0777**	1	SCREEN	
	13	1	**230-8873**	1	SPRING	
	14	1	**236-7003**	1	HOOD AS	
		1	**4P-7429**	1	CLIP	
M	15	1	**099-0492**	14	LOCKNUT (M6X1-THD)	
M	16	1	**3E-8020**	14	SCREW-TRUSS HEAD (M6X1X25-MM)	
M	17	1	**5C-7261**	2	NUT (M8X1.25-THD)	
	18	1	**5P-4115**	8	WASHER-HARD (7.2X19X2-MM THK)	
	19	1	**5P-4116**	6	WASHER-HARD (8.8X20.5X2-MM THK)	
M	20	1	**6V-7357**	4	BOLT (M6X1X25-MM)	
	21	1	**7X-7729**	6	WASHER (11X25X3-MM THK)	
M	22	1	**8T-4133**	3	NUT (M10X1.5-THD)	
M	23	1	**8T-4138**	6	BOLT (M6X1X20-MM)	
M	24	1	**8T-4185**	1	BOLT (M10X1.5X50-MM)	
M	25	1	**8T-4189**	4	BOLT (M8X1.25X20-MM)	
M	26	1	**8T-4195**	4	BOLT (M10X1.5X30-MM)	
M	27	1	**8T-4200**	8	BOLT (M8X1.25X16-MM)	
	28	1	**8T-4224**	8	WASHER-HARD (8.8X16X2-MM THK)	
	29	1	**9X-8256**	16	WASHER (6.6X12X2-MM THK)	

M-METRIC PART

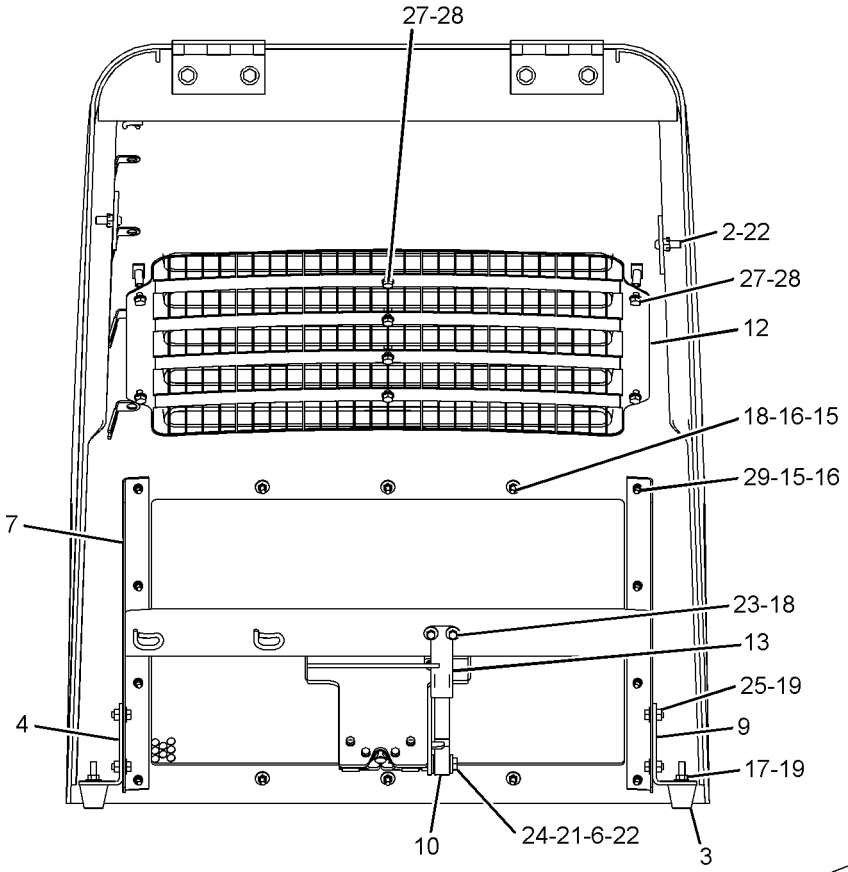

VIEW A-A

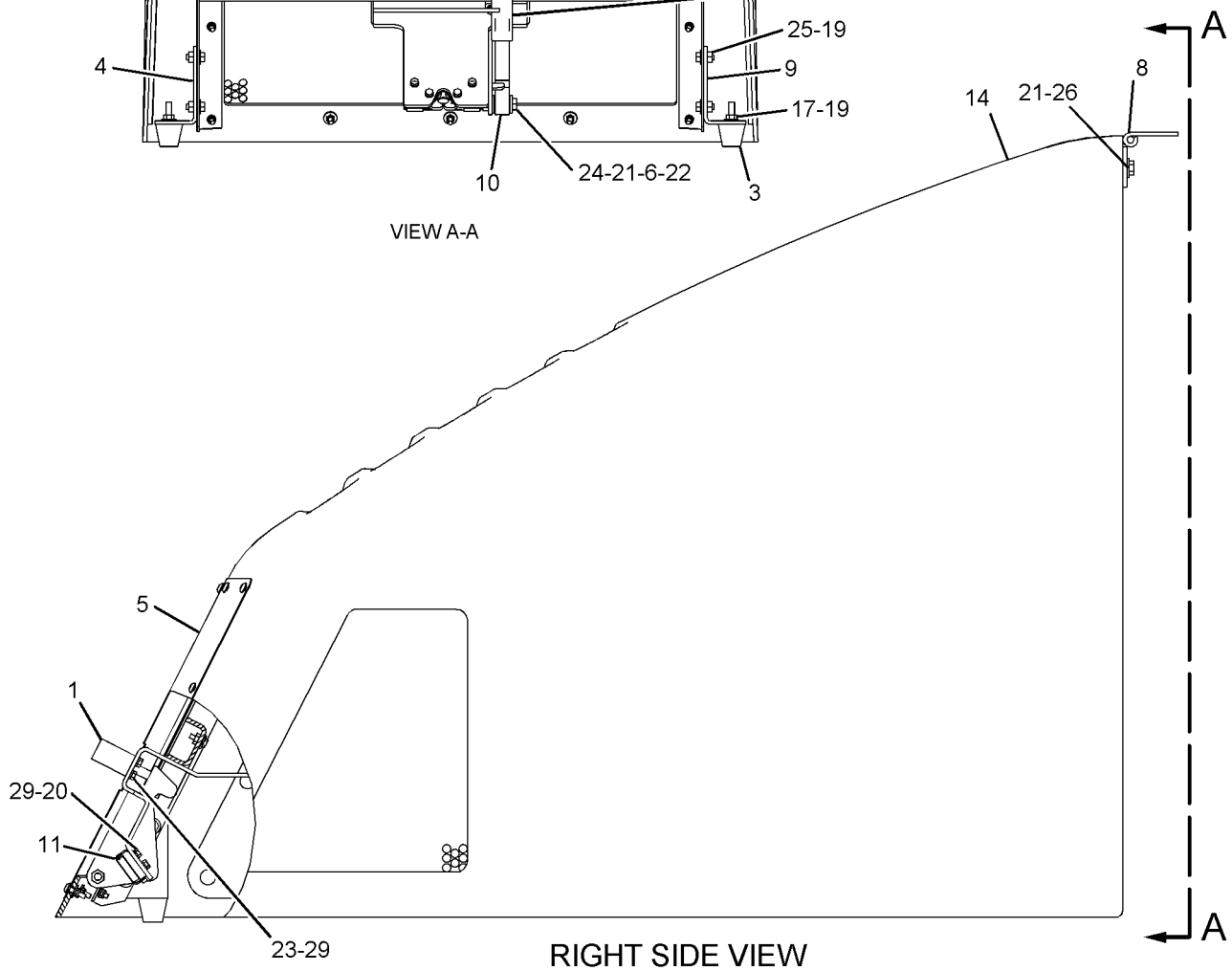

RIGHT SIDE VIEW

<END>

GRAPHIC #1

g01088377

284-3088 HOOD GP

S/N: BZE1-UP; BZG1-UP
PART OF 284-3090 HOOD GP
ALSO AN ATTACHMENT

SMCS-7251 **i03009755**

NOTE	REF NO	GRAPHIC REF	PART NUMBER	QTY	PART NAME 1 2 3 4 5 6 (PRODUCT LEVEL)	SEE PAGE
	1	1	**6V-7636**	1	PIN AS-SPRING	
	2	1	**108-5471**	1	CLEVIS	
	3	1	**119-9706**	2	STUD-BALL	
	4	1	**122-8427**	1	SPACER (9X14X3.5-MM THK)	
	5	1	**138-7125**	2	BUMPER	
	6	1	**200-7836**	1	HANDLE AS	
	7	1	**296-0025**	1	HOOD AS	
	8	1	**218-2207**	1	LATCH AS-DOOR	
	9	1	**9P-6411**	1	STUD (1/4-20-THD)	
	10	1	**9X-8256**	16	WASHER (6.6X12X2-MM THK)	
	11	1	**276-0076**	2	HINGE AS	
	12	1	**284-3083**	1	SUPPORT AS (HANDLE)	
M	13	1	**099-0492**	14	LOCKNUT (M6X1-THD)	
M	14	1	**3E-8020**	14	SCREW-TRUSS HEAD (M6X1X25-MM)	
M	15	1	**5C-7261**	2	NUT (M8X1.25-THD)	
	16	1	**5P-4115**	6	WASHER-HARD (7.2X19X2-MM THK)	
	17	1	**5P-4116**	2	WASHER-HARD (8.8X20.5X2-MM THK)	
M	18	1	**6V-7357**	4	BOLT (M6X1X25-MM)	
	19	1	**6V-8185**	1	NUT (1/4-20-THD)	
	20	1	**7X-7729**	4	WASHER (11X25X3-MM THK)	
M	21	1	**8T-4133**	2	NUT (M10X1.5-THD)	
M	22	1	**8T-4138**	4	BOLT (M6X1X20-MM)	
M	23	1	**8T-4189**	1	BOLT (M8X1.25X20-MM)	
M	24	1	**8T-4195**	4	BOLT (M10X1.5X30-MM)	

M-METRIC PART

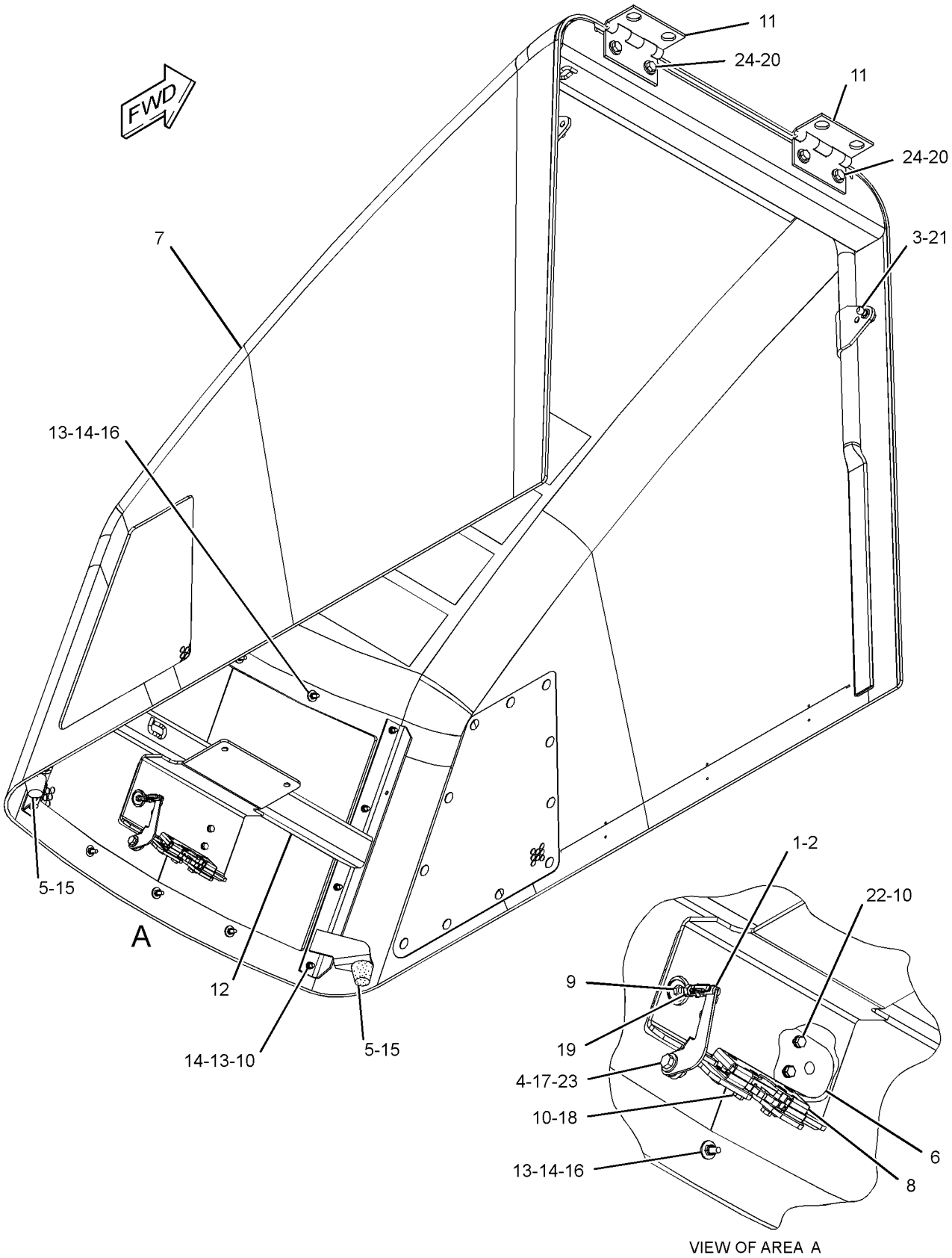

GRAPHIC #1 **<END>** g01370285

284-3089 HOOD GP

S/N: BZE1-UP; BZG1-UP
PART OF 284-3090 HOOD GP
ALSO AN ATTACHMENT

SMCS-7251 **i03009756**

NOTE	REF NO	GRAPHIC REF	PART NUMBER	QTY	PART NAME 1 2 3 4 5 6 (PRODUCT LEVEL)	SEE PAGE
	1	1	**6V-7636**	1	PIN AS-SPRING	
	2	1	**108-5471**	1	CLEVIS	
	3	1	**119-9706**	2	STUD-BALL	
	4	1	**122-8427**	1	SPACER (9X14X3.5-MM THK)	
	5	1	**138-7125**	2	BUMPER	
	6	1	**200-7836**	1	HANDLE AS	
	7	1	**218-2207**	1	LATCH AS-DOOR	
	8	1	**220-0777**	1	SCREEN	
	9	1	**296-0025**	1	HOOD AS	
	10	1	**9P-6411**	1	STUD (1/4-20-THD)	
	11	1	**9X-8256**	16	WASHER (6.6X12X2-MM THK)	
	12	1	**276-0076**	2	HINGE AS	
	13	1	**284-3083**	1	SUPPORT AS (HANDLE)	
M	14	1	**099-0492**	14	LOCKNUT (M6X1-THD)	
M	15	1	**3E-8020**	14	SCREW-TRUSS HEAD (M6X1X25-MM)	
M	16	1	**5C-7261**	2	NUT (M8X1.25-THD)	
	17	1	**5P-4115**	6	WASHER-HARD (7.2X19X2-MM THK)	
	18	1	**5P-4116**	2	WASHER-HARD (8.8X20.5X2-MM THK)	
M	19	1	**6V-7357**	4	BOLT (M6X1X25-MM)	
	20	1	**6V-8185**	1	NUT (1/4-20-THD)	
	21	1	**7X-7729**	4	WASHER (11X25X3-MM THK)	
M	22	1	**8T-4133**	2	NUT (M10X1.5-THD)	
M	23	1	**8T-4138**	4	BOLT (M6X1X20-MM)	
M	24	1	**8T-4189**	1	BOLT (M8X1.25X20-MM)	
M	25	1	**8T-4195**	4	BOLT (M10X1.5X30-MM)	
M	26	1	**8T-4200**	8	BOLT (M8X1.25X16-MM)	
	27	1	**8T-4224**	8	WASHER-HARD (8.8X16X2-MM THK)	

M-METRIC PART

284 - 3089 **HOOD GP** *(contd.)* **i03009756**

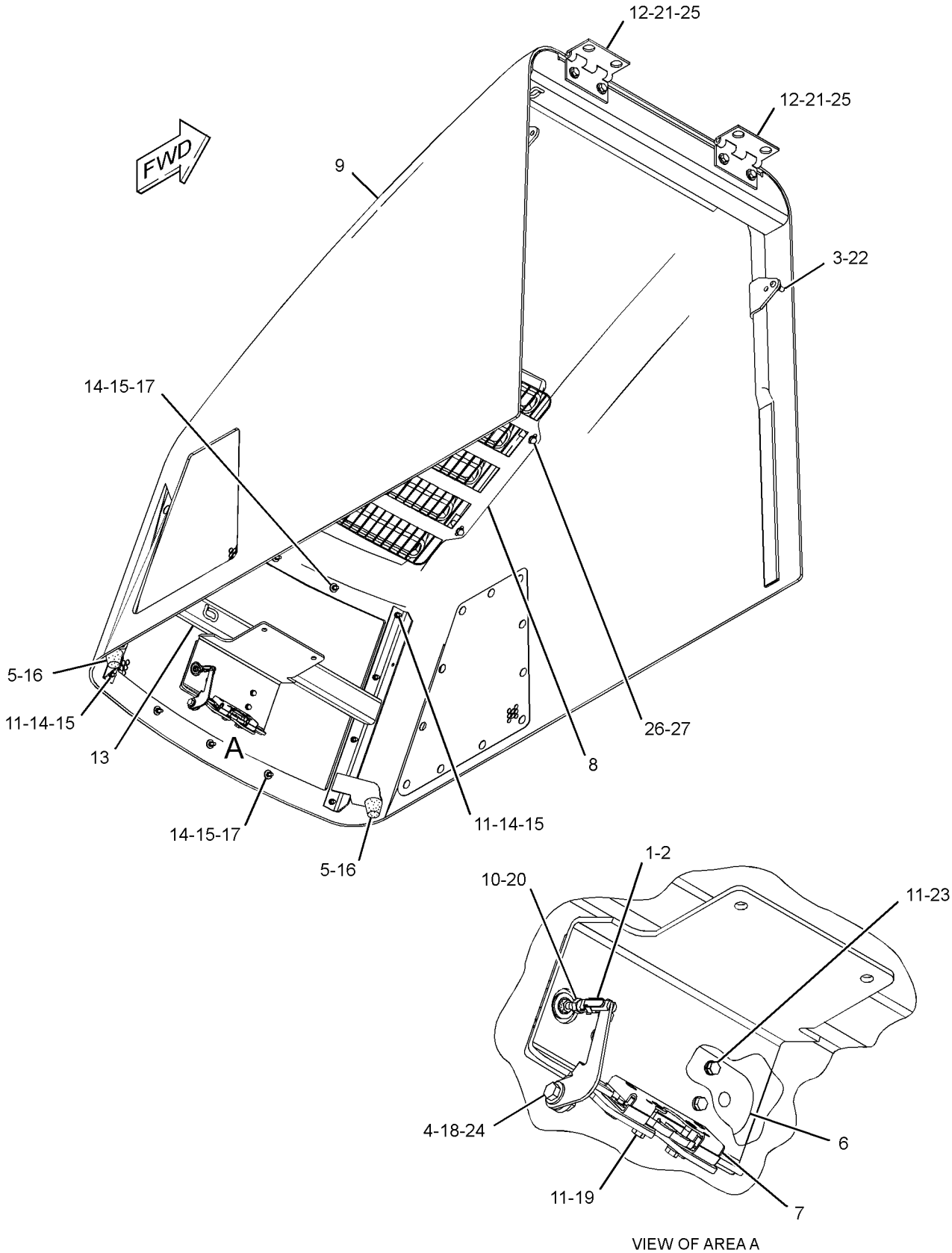

GRAPHIC #1 **<END>** g01370191

284-3090 HOOD GP

S/N: BZE1-UP; BZG1-UP
PART OF 217-2650 ENCLOSURE GP-ENGINE
ALSO AN ATTACHMENT

SMCS-7251 **i02676236**

NOTE	PART NUMBER	QTY	PART NAME 1 2 3 4 5 6 (PRODUCT LEVEL)	SEE PAGE
Y	*284-3088*	1	HOOD GP	246
			—OR—	
Y	*284-3089*	1	HOOD GP	248

Y-SEPARATE ILLUSTRATION

<END>

295-8965 HOOD GP

S/N: BZE739-UP; BZG369-UP
PART OF 296-0023 ENCLOSURE GP-ENGINE

SMCS-7251 **i02762509**

NOTE	PART NUMBER	QTY	PART NAME 1 2 3 4 5 6 (PRODUCT LEVEL)	SEE PAGE
Y	**295-8966**	1	HOOD GP	251
Y	**296-0024**	1	HOOD GP	253

Y-SEPARATE ILLUSTRATION

<END>

295-8966 HOOD GP

S/N: BZE739-UP; BZG369-UP

PART OF 295-8965 HOOD GP

SMCS-7251 **i02762510**

NOTE	REF NO	GRAPHIC REF	PART NUMBER	QTY	PART NAME 1 2 3 4 5 6 (PRODUCT LEVEL)	SEE PAGE
	1	1	**6V-7636**	1	PIN AS-SPRING	
	2	1	**108-5471**	1	CLEVIS	
	3	1	**119-9706**	2	STUD-BALL	
	4	1	**122-8427**	1	SPACER (9X14X3.5-MM THK)	
	5	1	**138-7125**	2	BUMPER	
	6	1	**200-7836**	1	HANDLE AS	
	7	1	**218-2207**	1	LATCH AS-DOOR (ROTARY)	
	8	1	**220-0777**	1	SCREEN	
	11	1	**276-0076**	2	HINGE AS	
	12	1	**284-3083**	1	SUPPORT AS (HANDLE)	
	13	1	*295-8969*	1	HOOD AS	
		1	**4P-7429**	5	CLIP	
		1	**172-7615**	8	BOSS AS	
		1	**296-0027**	2	SCREEN-SIDE	
M	14	1	**099-0492**	14	LOCKNUT (M6X1-THD)	
M	15	1	**3E-8020**	14	SCREW-TRUSS HEAD (M6X1X25-MM)	
M	16	1	**5C-7261**	2	NUT (M8X1.25-THD)	
	17	1	**5P-4115**	6	WASHER-HARD (7.2X19X2-MM THK)	
	18	1	**5P-4116**	2	WASHER-HARD (8.8X20.5X2-MM THK)	
M	19	1	**6V-7357**	4	BOLT (M6X1X25-MM)	
	20	1	**6V-8185**	1	NUT (1/4-20-THD)	
	21	1	**7X-7729**	4	WASHER (11X25X3-MM THK)	
M	22	1	**8T-4133**	2	NUT (M10X1.5-THD)	
M	23	1	**8T-4138**	4	BOLT (M6X1X20-MM)	
M	24	1	**8T-4189**	1	BOLT (M8X1.25X20-MM)	
M	25	1	**8T-4195**	4	BOLT (M10X1.5X30-MM)	
M	26	1	**8T-4200**	8	BOLT (M8X1.25X16-MM)	
	27	1	**8T-4224**	8	WASHER-HARD (8.8X16X2-MM THK)	
	28	1	**9P-6411**	1	STUD (1/4-20-THD)	
	29	1	**9X-8256**	16	WASHER (6.6X12X2-MM THK)	

M-METRIC PART

295-8966 **HOOD GP** *(contd.)* **i02762510**

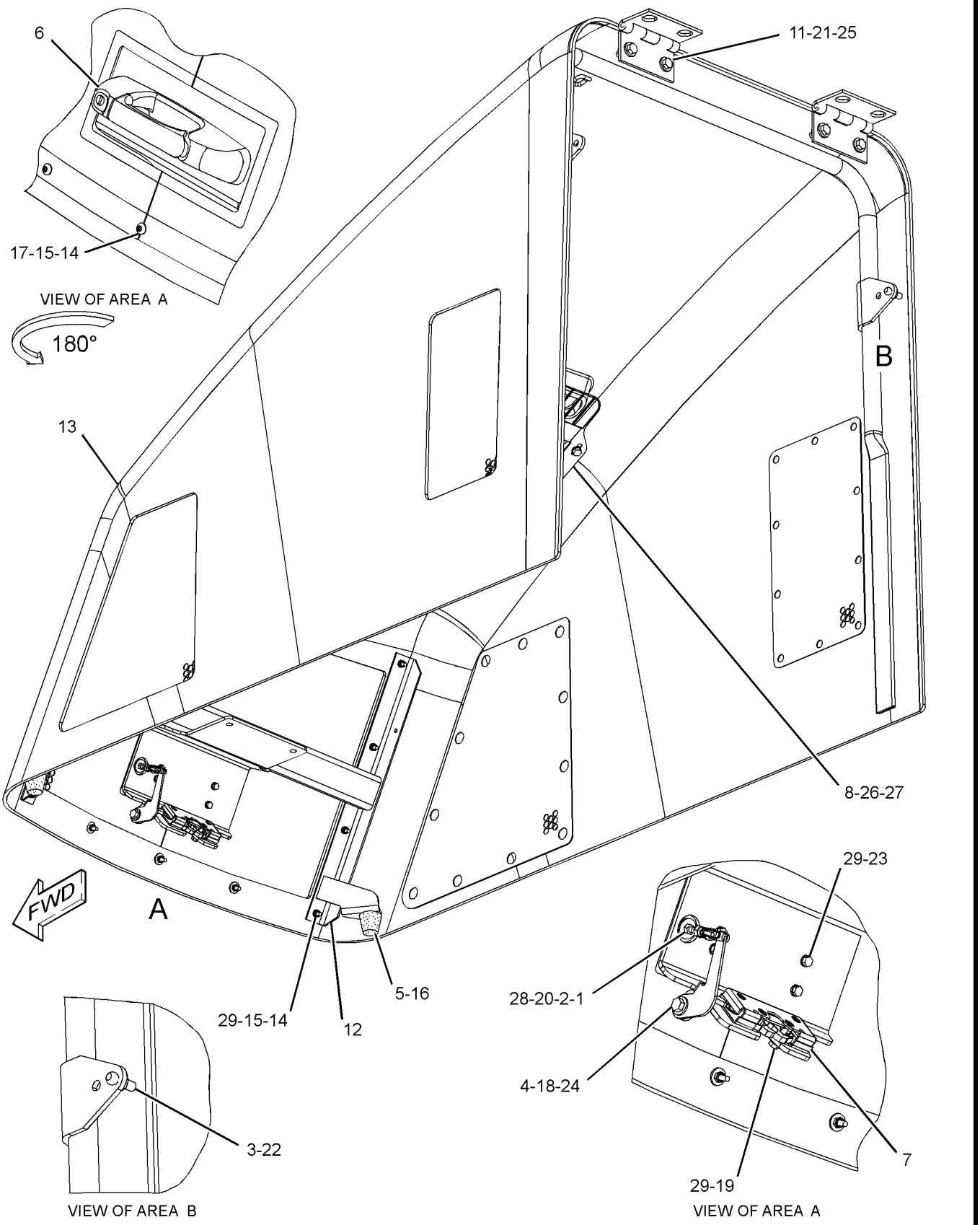

GRAPHIC #1 **<END>** g01383165

296-0024 HOOD GP

S/N: BZE739-UP; BZG369-UP
PART OF 295-8965 HOOD GP

SMCS-7251 **i02762512**

NOTE	REF NO	GRAPHIC REF	PART NUMBER	QTY	PART NAME 1 2 3 4 5 6 (PRODUCT LEVEL)	SEE PAGE
	1	1	**6V-7636**	1	PIN AS-SPRING	
	2	1	**108-5471**	1	CLEVIS	
	3	1	**119-9706**	2	STUD-BALL	
	4	1	**122-8427**	1	SPACER (9X14X3.5-MM THK)	
	5	1	**138-7125**	2	BUMPER	
	6	1	**200-7836**	1	HANDLE AS	
	7	1	**218-2207**	1	LATCH AS-DOOR (ROTARY)	
	10	1	**276-0076**	2	HINGE AS	
	11	1	**284-3083**	1	SUPPORT AS (HANDLE)	
	12	1	**296-0025**	1	HOOD AS	
		1	**4P-7429**	5	CLIP	
		1	**296-0027**	2	SCREEN-SIDE	
M	13	1	**099-0492**	14	LOCKNUT (M6X1-THD)	
M	14	1	**3E-8020**	14	SCREW-TRUSS HEAD (M6X1X25-MM)	
M	15	1	**5C-7261**	2	NUT (M8X1.25-THD)	
	16	1	**5P-4115**	6	WASHER-HARD (7.2X19X2-MM THK)	
	17	1	**5P-4116**	2	WASHER-HARD (8.8X20.5X2-MM THK)	
M	18	1	**6V-7357**	4	BOLT (M6X1X25-MM)	
	19	1	**6V-8185**	1	NUT (1/4-20-THD)	
	20	1	**7X-7729**	4	WASHER (11X25X3-MM THK)	
M	21	1	**8T-4133**	2	NUT (M10X1.5-THD)	
M	22	1	**8T-4138**	4	BOLT (M6X1X20-MM)	
M	23	1	**8T-4189**	1	BOLT (M8X1.25X20-MM)	
M	24	1	**8T-4195**	4	BOLT (M10X1.5X30-MM)	
	25	1	**9P-6411**	1	STUD (1/4-20-THD)	
	26	1	**9X-8256**	16	WASHER (6.6X12X2-MM THK)	

M-METRIC PART

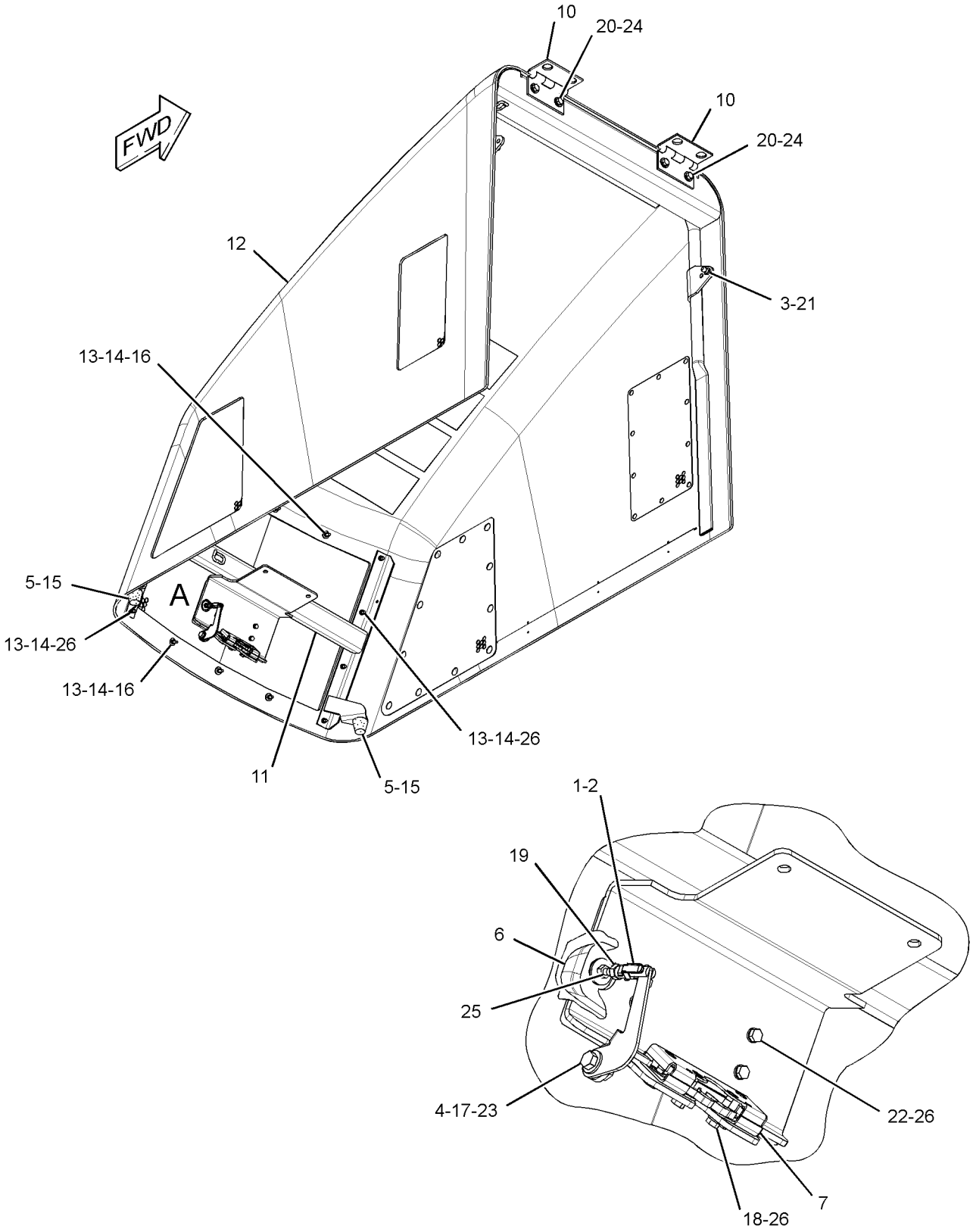

VIEW OF AREA A

GRAPHIC #1 **<END>** g01383357

212-9533 SCRAPER GP-PADDED DRUM

S/N: BZE1-UP; BZG1-UP
PART OF 239-0796 CHASSIS AR, 254-1323 DRUM GP-COMPACTOR
ALSO AN ATTACHMENT

SMCS-6607 **i02140233**

NOTE	REF NO	GRAPHIC REF	PART NUMBER	QTY	PART NAME 1 2 3 4 5 6 (PRODUCT LEVEL)	SEE PAGE
B	1	1	**166-7177**	3	SHIM (1.5-MM THK)	
	2	1	**210-4563**	18	NUT (M20X2.5-THD)	
	3	1	**211-4674**	9	SCRAPER	
	4	1	**212-5993**	1	SCRAPER AS	
M	5	1	**7X-2565**	9	BOLT (M20X2.5X100-MM)	
M	6	1	**7X-2576**	4	BOLT (M24X3X70-MM)	
	7	1	**8T-4167**	4	WASHER-HARD (26X44X4-MM THK)	
	8	1	**8T-5439**	18	WASHER-HARD (21.5X45X6-MM THK)	
M	9	1	**8T-6381**	9	BOLT (M20X2.5X120-MM)	

B-USE AS REQUIRED
M-METRIC PART

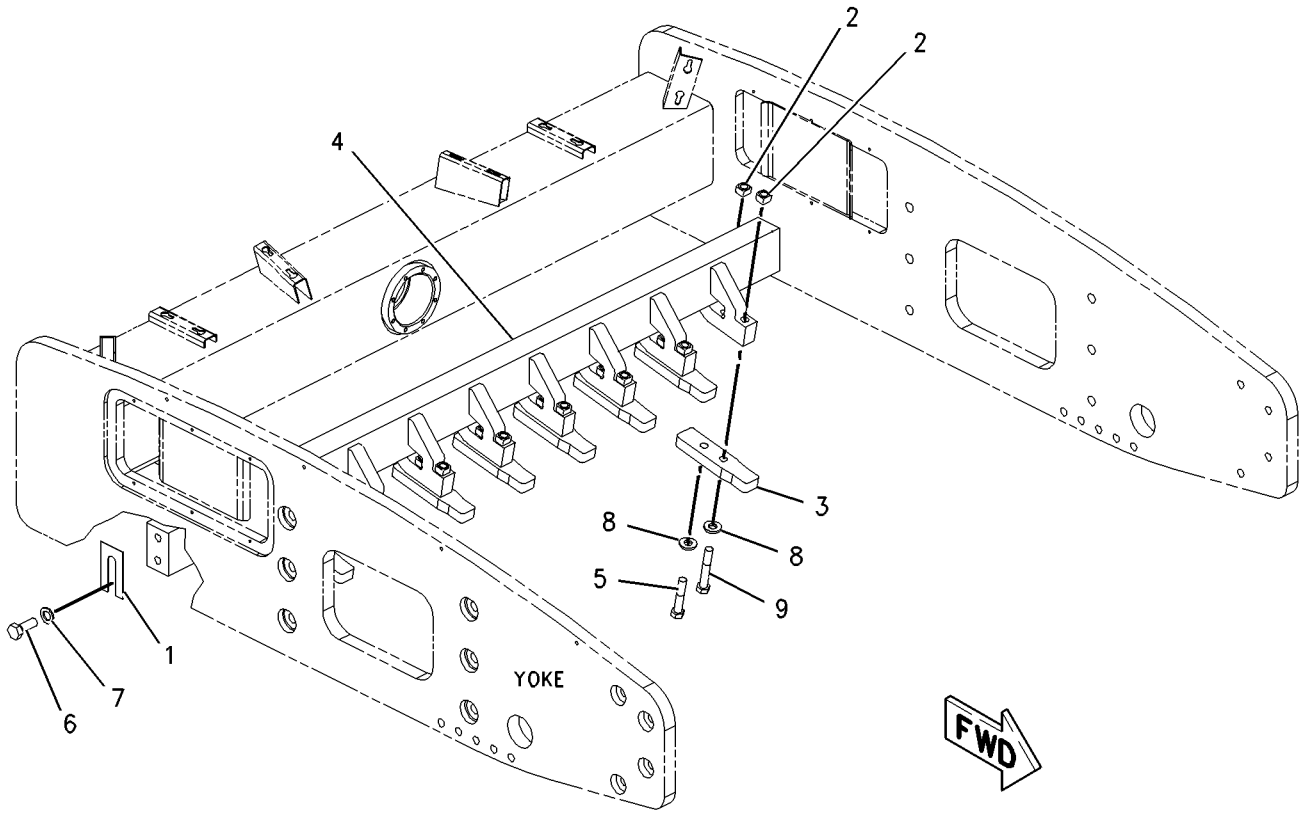

GRAPHIC #1 **<END>** g00918044

213-3152 SCRAPER GP-PADDED DRUM–PADDED SHELL

S/N: BZE1-UP
PART OF 234-3461 SHELL GP-PADDED
FOR USE WITH 206-7492–PAGE 216
AN ATTACHMENT

SMCS-6607 **i01972538**

NOTE	REF NO	GRAPHIC REF	PART NUMBER	QTY	PART NAME 1 2 3 4 5 6 (PRODUCT LEVEL)	SEE PAGE
	1	1	**160-6330**	2	SCRAPER	
	2	1	**160-6331**	4	SCRAPER-STEEL	
	3	1	**160-6812**	14	SCRAPER	
M	4	1	**7X-2563**	28	BOLT (M20X2.5X60-MM)	
M	5	1	**8T-4187**	2	BOLT (M20X2.5X80-MM)	
	6	1	**8T-5439**	31	WASHER-HARD (21.5X45X6-MM THK)	
M	7	1	**8T-5460**	1	BOLT (M20X2.5X40-MM)	

M-METRIC PART

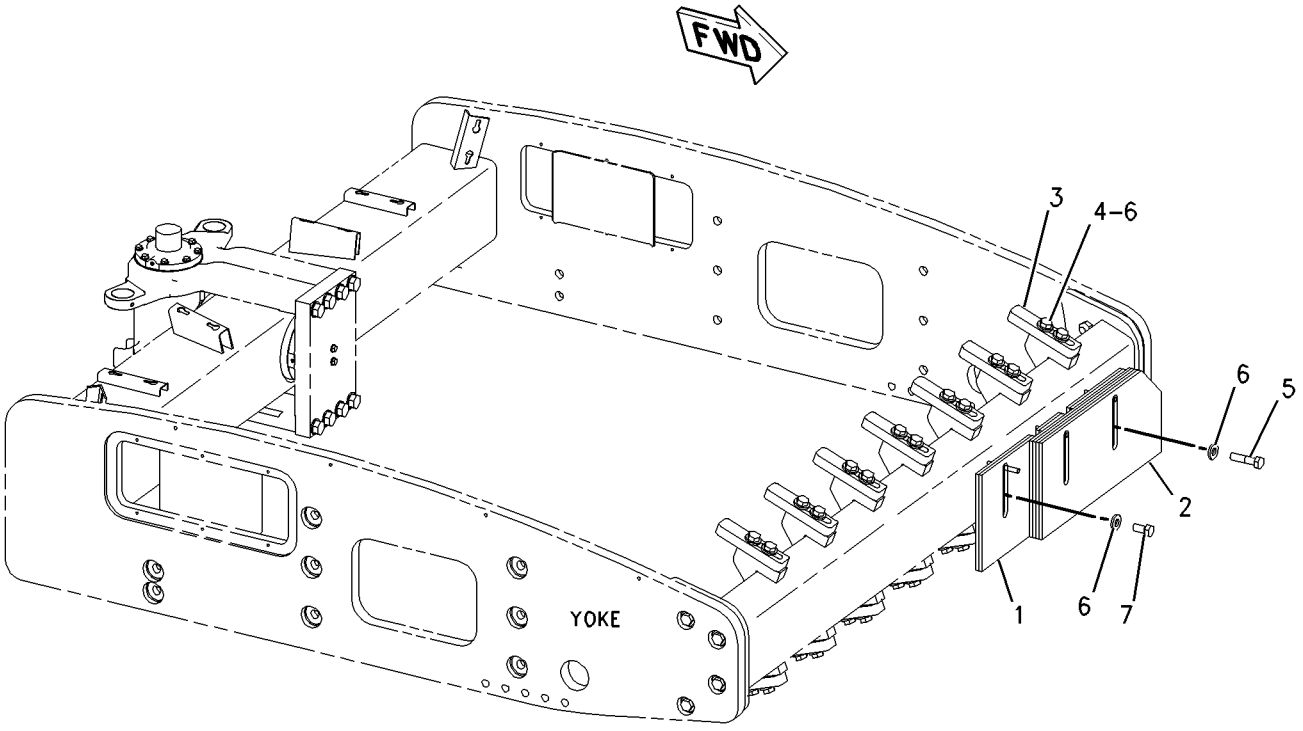

GRAPHIC #1 **<END>** g00918382

146-3165 SCRAPER GP-SMOOTH DRUM–FRONT STEEL

S/N: BZE1-UP
AN ATTACHMENT

SMCS-6607 **i01833661**

NOTE	REF NO	GRAPHIC REF	PART NUMBER	QTY	PART NAME 1 2 3 4 5 6 (PRODUCT LEVEL)	SEE PAGE
	1	1	**227-0172**	3	MOUNT	
	2	1	**155-4170**	1	SCRAPER-STEEL	
	3	1	**155-4171**	3	BRACKET	
M	4	1	**155-6663**	3	BOLT (M20X2.5X54-MM)	
M	5	1	**6V-7688**	3	LOCKNUT (M20X2.5-THD)	
M	6	1	**7X-2561**	3	BOLT (M20X2.5X35-MM)	
	7	1	**8T-5439**	9	WASHER-HARD (21.5X45X6-MM THK)	
M	8	1	**8T-5460**	3	BOLT (M20X2.5X40-MM)	

M-METRIC PART

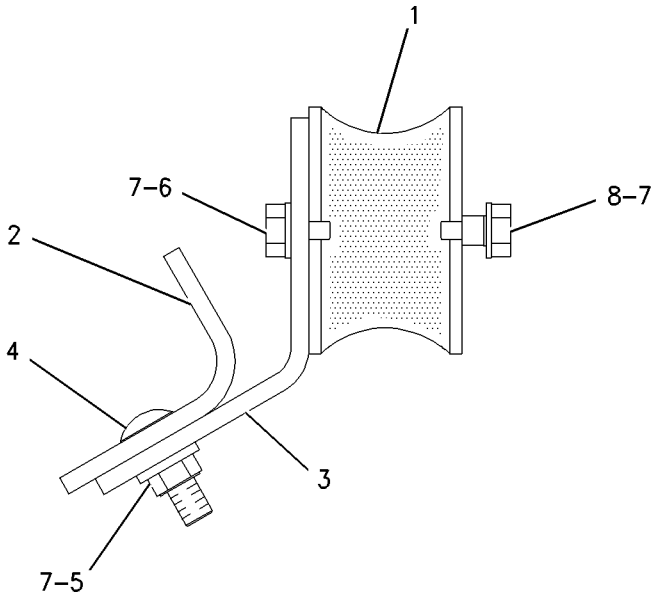

VIEW OF AREA A

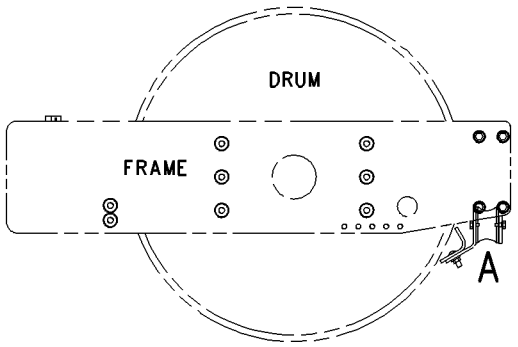

GRAPHIC #1 **<END>** g00914205

FRAME AND BODY

241-9599 SCRAPER GP-SMOOTH DRUM–FRONT, REAR STEEL

S/N: BZE1-UP

AN ATTACHMENT

SMCS-6607 **i01972593**

NOTE	REF NO	GRAPHIC REF	PART NUMBER	QTY	PART NAME 1 2 3 4 5 6 (PRODUCT LEVEL)	SEE PAGE
	1	1	**155-4171**	6	BRACKET	
B	2	1	**166-7177**	3	SHIM (1.5-MM THK)	
	3	1	**200-0241**	1	BRACKET AS	
	4	1	**219-7803**	2	SCRAPER-STEEL	
	5	1	**227-0172**	6	MOUNT	
M	6	1	**155-6663**	6	BOLT (M20X2.5X54-MM)	
M	7	1	**6V-7688**	6	LOCKNUT (M20X2.5-THD)	
M	8	1	**7X-2561**	6	BOLT (M20X2.5X35-MM)	
M	9	1	**7X-2577**	4	BOLT (M24X3X90-MM)	
M	10	1	**8T-4001**	4	NUT (M24X3-THD)	
	11	1	**8T-4167**	4	WASHER-HARD (26X44X4-MM THK)	
	12	1	**8T-4994**	3	WASHER-HARD (20X36.5X3.5-MM THK)	
	13	1	**8T-5439**	15	WASHER-HARD (21.5X45X6-MM THK)	
M	14	1	**8T-5460**	6	BOLT (M20X2.5X40-MM)	

B-USE AS REQUIRED
M-METRIC PART

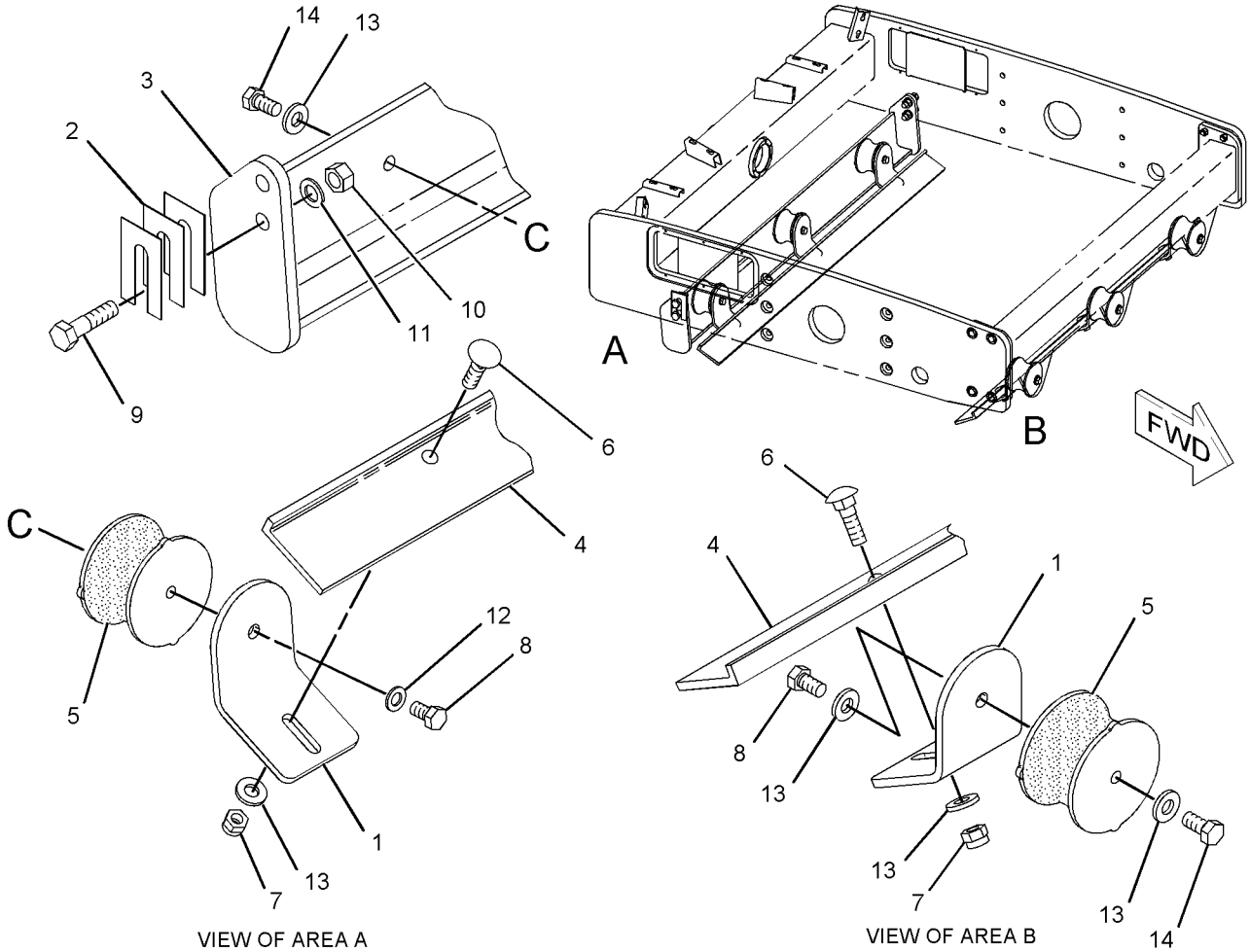

GRAPHIC #1 **<END>** g01041740

242-1293 SCRAPER GP-SMOOTH DRUM–FRONT, REAR FLEXIBLE

S/N: BZE1-UP
AN ATTACHMENT

SMCS-6607 **i01972600**

NOTE	REF NO	GRAPHIC REF	PART NUMBER	QTY	PART NAME 1 2 3 4 5 6 (PRODUCT LEVEL)	SEE PAGE
	1	1	**155-4171**	6	BRACKET	
B	2	1	**166-7177**	3	SHIM (1.5-MM THK)	
	3	1	**200-0241**	1	BRACKET AS	
	4	1	**221-4148**	2	SCRAPER AS	
					(EACH INCLUDES)	
M		1	**8T-6430**	3	BOLT (M20X2.5X50-MM)	
	5	1	**227-0172**	6	MOUNT	
M	6	1	**6V-7688**	6	LOCKNUT (M20X2.5-THD)	
M	7	1	**7X-2561**	6	BOLT (M20X2.5X35-MM)	
M	8	1	**7X-2577**	4	BOLT (M24X3X90-MM)	
M	9	1	**8T-4001**	4	NUT (M24X3-THD)	
	10	1	**8T-4167**	4	WASHER-HARD (26X44X4-MM THK)	
	11	1	**8T-4994**	3	WASHER-HARD (20X36.5X3.5-MM THK)	
	12	1	**8T-5439**	15	WASHER-HARD (21.5X45X6-MM THK)	
M	13	1	**8T-5460**	6	BOLT (M20X2.5X40-MM)	

B-USE AS REQUIRED
M-METRIC PART

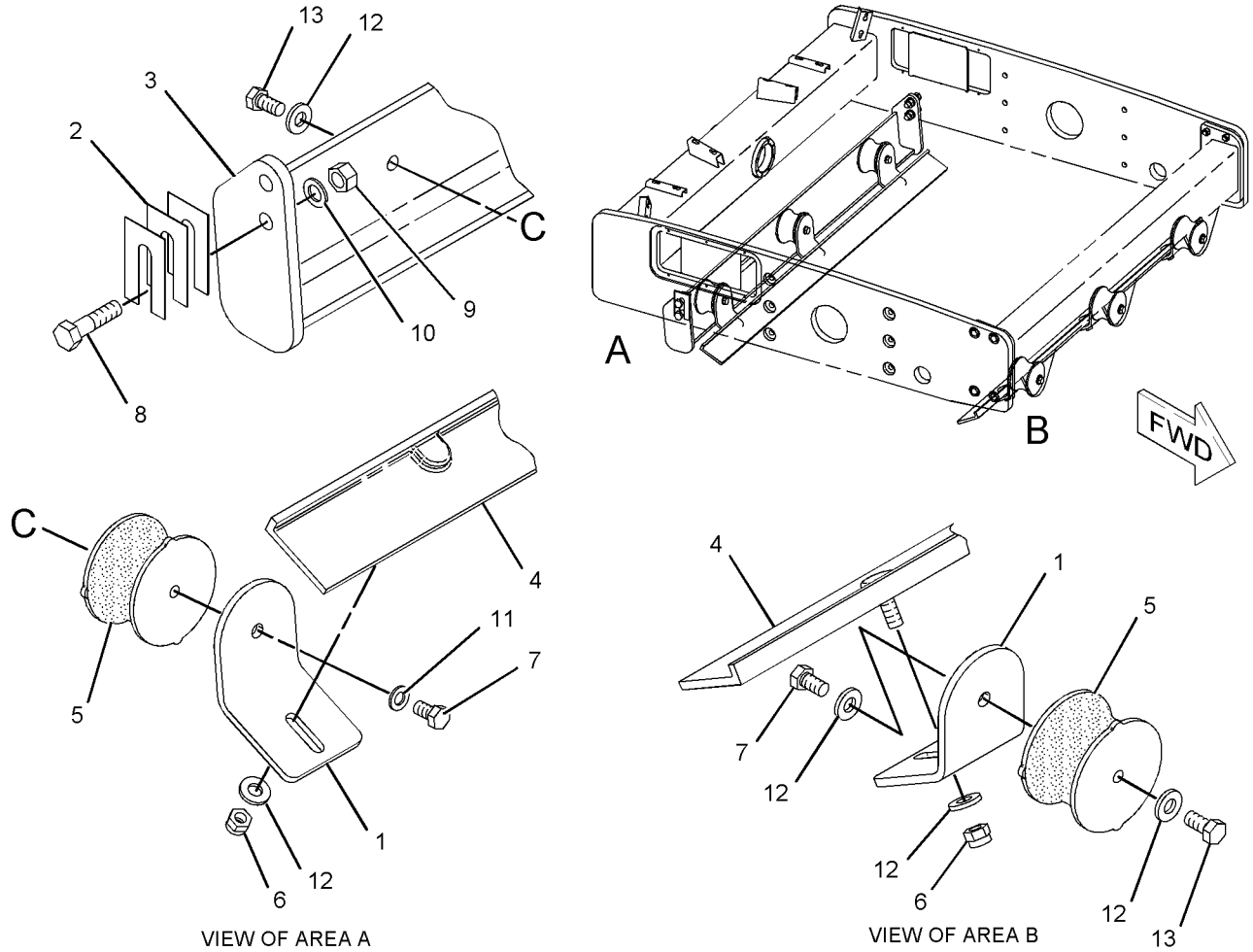

GRAPHIC #1 **<END>** g01040188

FRAME AND BODY

220-8703 STEP GP

S/N: BZE1-UP; BZG1-UP

PART OF 239-0795, 239-0796 CHASSIS AR

SMCS-7254 **i02140633**

NOTE	REF NO	GRAPHIC REF	PART NUMBER	QTY	PART NAME 1 2 3 4 5 6 (PRODUCT LEVEL)	SEE PAGE
	1	1	**247-6271**	1	STEP AS	
	2	1	**7X-7729**	5	WASHER (11X25X3-MM THK)	
M	3	1	**8T-4195**	5	BOLT (M10X1.5X30-MM)	

M-METRIC PART

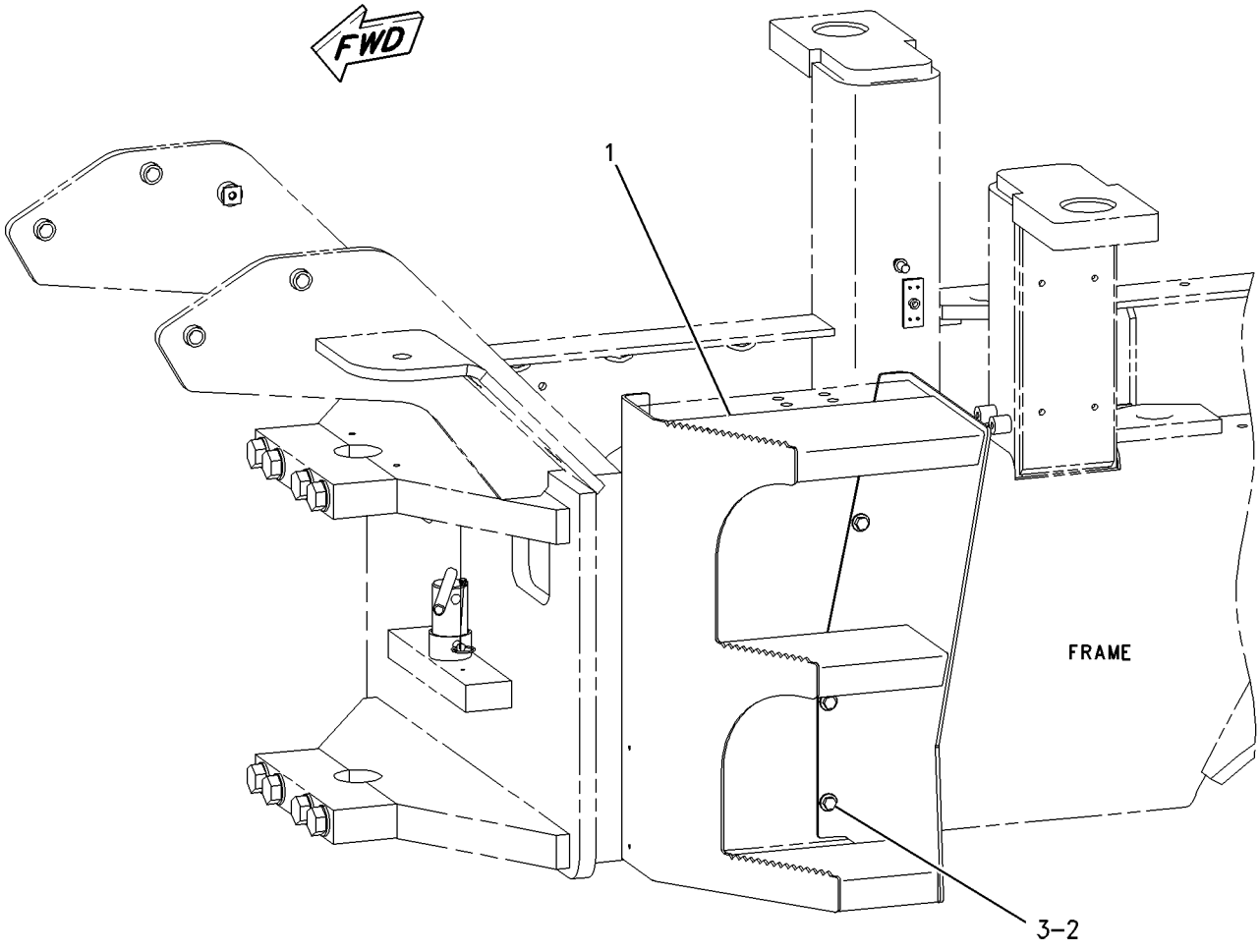

GRAPHIC #1 **<END>** g01000090

221-1731 LINES GP-BRAKE & SHIFT

S/N: BZE1-UP; BZG1-UP
PART OF 219-4167 HYDRAULIC AR

SMCS-4257 **i02138026**

NOTE	REF NO	GRAPHIC REF	PART NUMBER	QTY	PART NAME 1 2 3 4 5 6 (PRODUCT LEVEL)	SEE PAGE
	1	1	**6V-0852**	1	CAP-DUST	
	2	1	*7X-5315*	1	FITTING AS (QUICK DISCONNECT)	
	3	1	**102-8703**	2	PLATE-COVER	
I	4	1	**115-9680**	1	HOSE AS	
I	5	1	**116-9894**	1	HOSE AS	
	6	1	**154-4879**	4	CLAMP-HALF	
I	7	1	**161-6853**	1	HOSE AS	
	8	1	**178-3620**	4	STRAP-DUAL CLAMP	
I	9	1	**204-9737**	1	HOSE AS	
I	10	1	**209-3855**	1	HOSE AS	
	11	1	*148-8325*	1	CONNECTOR AS	
		1	**3J-1907**	1	SEAL-O-RING	
		1	**4J-5477**	1	SEAL-O-RING	
		1	**6V-8641**	1	CONNECTOR	
	12	1	*148-8351*	1	ELBOW AS	
		1	**4J-5477**	1	SEAL-O-RING	
		1	**6V-9849**	1	ELBOW	
	13	1	*150-5968*	1	TEE AS	
		1	**4J-5477**	2	SEAL-O-RING	
		1	**6V-9835**	1	TEE-SWIVEL	
	14	1	*148-8305*	1	ADAPTER AS	
		1	**3J-1907**	1	SEAL-O-RING	
		1	**5P-9617**	11	ADAPTER	
	15	1	**3J-7354**	1	SEAL-O-RING	
	16	1	**6V-9829**	1	CAP AS	
M	17	1	**7X-2537**	2	BOLT (M8X1.25X35-MM)	
	18	1	*187-2120*	1	ELBOW AS	
		1	**4J-5477**	1	SEAL-O-RING	
		1	**8C-8408**	1	ELBOW	

I-REFER TO HYDRAULIC INFORMATION SYSTEM
M-METRIC PART

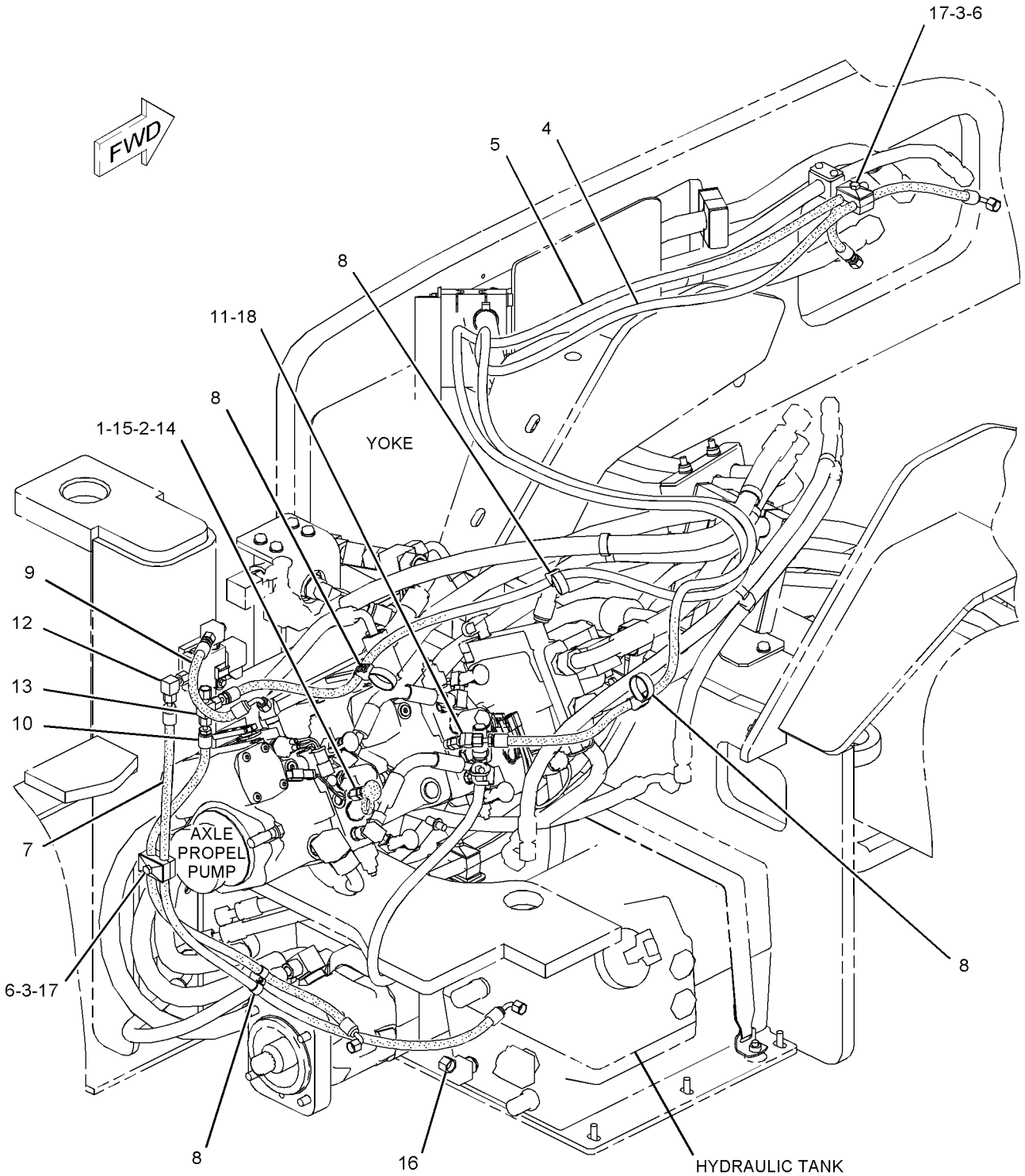

GRAPHIC #1

<END>

g01088093

STEERING SYSTEM

235-8557 CONTROL GP-STEERING

S/N: BZE1-UP; BZG1-UP

PART OF 235-8556 HYDRAULIC AR-AUXILIARY

SMCS-4309, 4322, 4343 **i02883265**

NOTE	REF NO	GRAPHIC REF	PART NUMBER	QTY	PART NAME 1 2 3 4 5 6 (PRODUCT LEVEL)	SEE PAGE
	1	1	**2T-3360**	1	BUTTON AS-HORN	
	2	1	**9D-7924**	4	MOUNTING	
	3	1	**107-6141**	1	COVER	
C	4	1	**111-7878**	1	COVER	
	5	1	**314-2404**	1	BOOT	
	6	1	**134-2364**	1	ANGLE AS	
M		1	**6V-9632**	3	NUT-WELD (M6X1-THD)	
	7	1	**134-4735**	1	PLATE AS	
M		1	**8T-3612**	4	NUT-WELD (M8X1.25-THD)	
	8	1	**145-9291**	1	STEERING WHEEL AS	
Y	9	1	**153-7369**	1	KNOB GP-STEERING	269
	10	1	**154-5212**	1	SUPPORT AS	
		1	**107-6011**	1	PLATE AS	
		1	**7T-1099**	2	LINK	
	11	1	**176-9166**	1	COLUMN AS	
	11A	1	**149-0779**	1	KIT-SHAFT (STEERING COLUMN) (STEERING COLUMN)	
					(INCLUDES SHAFT AS, O-RING SEAL, RETAINING RING, & SHAFT PROTECTOR TOOL)	
	11B	1	**176-9170**	1	KIT-GAS SPRING (STEERING COLUMN)	
					(INCLUDES GAS SPRING, SET SCREWS, DOWEL PINS, COMPRESSION SPRING & TILT LEVER)	
	11C	1	**220-3926**	1	KIT-REPAIR (HORN)	
					(INCLUDES HORN CONTACT AS, SCREW & GREASE)	
	11D	1	**149-0777**	1	KNOB	
	12	1	**217-8058**	1	WIRE AS	
C	13	1	**274-1512**	1	VALVE GP-FLOW CONTROL (STEERING)	
M	14	1	**105-3484**	4	BOLT-SOCKET HEAD (M10X1.5X25-MM)	
	15	1	*148-8340*	2	CONNECTOR AS	
					(EACH INCLUDES)	
		1	**3K-0360**	1	SEAL-O-RING	
		1	**6V-8398**	1	SEAL-O-RING	
		1	**6V-8639**	1	CONNECTOR	
	16	1	*148-8354*	1	ELBOW AS	
		1	**3K-0360**	1	SEAL-O-RING	
		1	**6V-8398**	1	SEAL-O-RING	
		1	**6V-9002**	1	ELBOW	
	17	1	*164-6863*	1	ELBOW AS	
		1	**3K-0360**	1	SEAL-O-RING	
		1	**6V-9746**	1	SEAL-O-RING	
		1	**8C-6920**	1	ELBOW	
	18	1	**5P-4116**	5	WASHER-HARD (8.8X20.5X2-MM THK)	
M	19	1	**8T-0267**	1	BOLT-SOCKET HEAD (M6X1X12-MM)	
M	20	1	**6V-8227**	1	NUT (M18X1.5-THD)	
	21	1	**7X-0578**	4	WASHER-HARD (10.2X32X2.5-MM THK)	
M	22	1	**8T-4137**	4	BOLT (M10X1.5X20-MM)	
	23	1	**8T-4896**	4	WASHER-HARD (10.2X18.5X2.5-MM THK)	
M	24	1	**8T-4908**	5	BOLT (M8X1.25X25-MM)	
M	25	1	**8T-6869**	4	BOLT (M8X1.25X60-MM)	
M	26	1	**9X-2042**	1	SCREW-TRUSS HEAD (M6X1X12-MM)	
M	27	1	**9X-2045**	6	SCREW-TRUSS HEAD (M6X1X20-MM)	

C-CHANGE FROM PREVIOUS TYPE
M-METRIC PART
Y-SEPARATE ILLUSTRATION

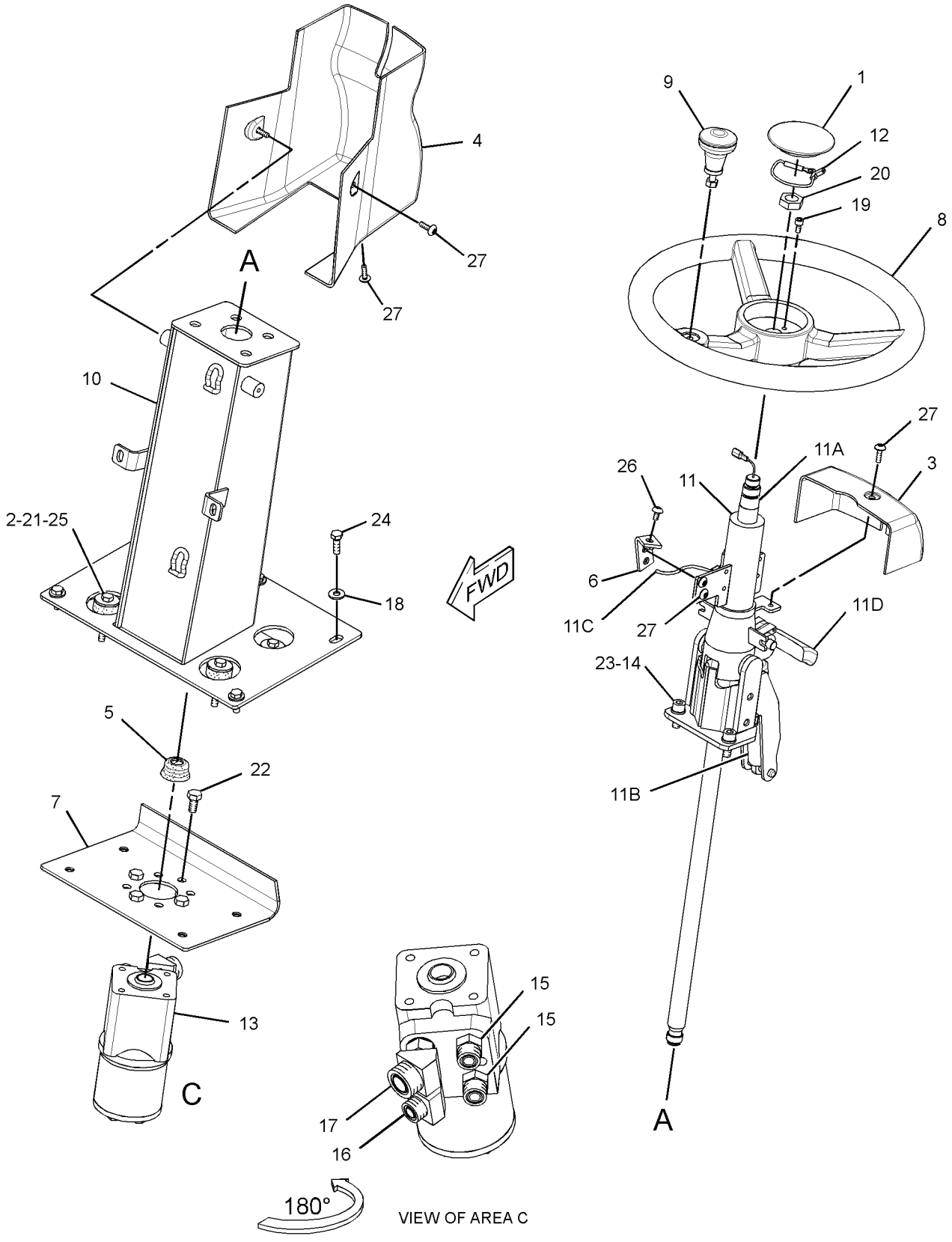

GRAPHIC #1

<END>

g01475093

STEERING SYSTEM

203-6511 CYLINDER & MTG GP-STEERING

S/N: BZE1-454; BZG1-280

PART OF 235-8556 HYDRAULIC AR-AUXILIARY

SMCS-4303 **i02138294**

NOTE	REF NO	GRAPHIC REF	PART NUMBER	QTY	PART NAME 1 2 3 4 5 6 (PRODUCT LEVEL)	SEE PAGE
	1	1	**3B-8485**	2	FITTING-GREASE	
	2	1	**4V-2057**	4	BEARING-SPHERICAL	
	3	1	**5P-9982**	2	FITTING-GREASE	
	4	1	**106-6340**	4	SPACER (10.74X17.14X7-MM THK)	
	5	1	**109-6706**	2	PIN AS	
I	6	1	**144-8242**	1	HOSE AS	
	7	1	**173-7456**	2	PIN AS	
I	8	1	**177-7155**	1	HOSE AS	
Y	9	1	**206-7017**	2	CYLINDER GP-HYDRAULIC (STEERING)	277
M	10	1	**8T-4136**	4	BOLT (M10X1.5X25-MM)	
	11	1	*148-8320*	2	CONNECTOR AS	
					(EACH INCLUDES)	
		1	**4J-5477**	1	SEAL-O-RING	
		1	**8C-6865**	1	CONNECTOR	
	12	1	*148-8340*	2	CONNECTOR AS	
					(EACH INCLUDES)	
		1	**3K-0360**	1	SEAL-O-RING	
		1	**6V-8398**	1	SEAL-O-RING	
		1	**6V-8639**	1	CONNECTOR	
	13	1	*148-8389*	2	ELBOW AS	
					(EACH INCLUDES)	
		1	**4J-5477**	1	SEAL-O-RING	
		1	**7X-0492**	1	ELBOW	
	14	1	*148-8428*	2	TEE AS	
					(EACH INCLUDES)	
		1	**3K-0360**	1	SEAL-O-RING	
		1	**6V-8398**	2	SEAL-O-RING	
		1	**6V-8782**	1	TEE	
	15	1	**7X-7729**	4	WASHER (11X25X3-MM THK)	
	16	1	**7X-0575**	2	WASHER-HARD (10.2X22.5X5-MM THK)	

I-REFER TO HYDRAULIC INFORMATION SYSTEM
M-METRIC PART
Y-SEPARATE ILLUSTRATION

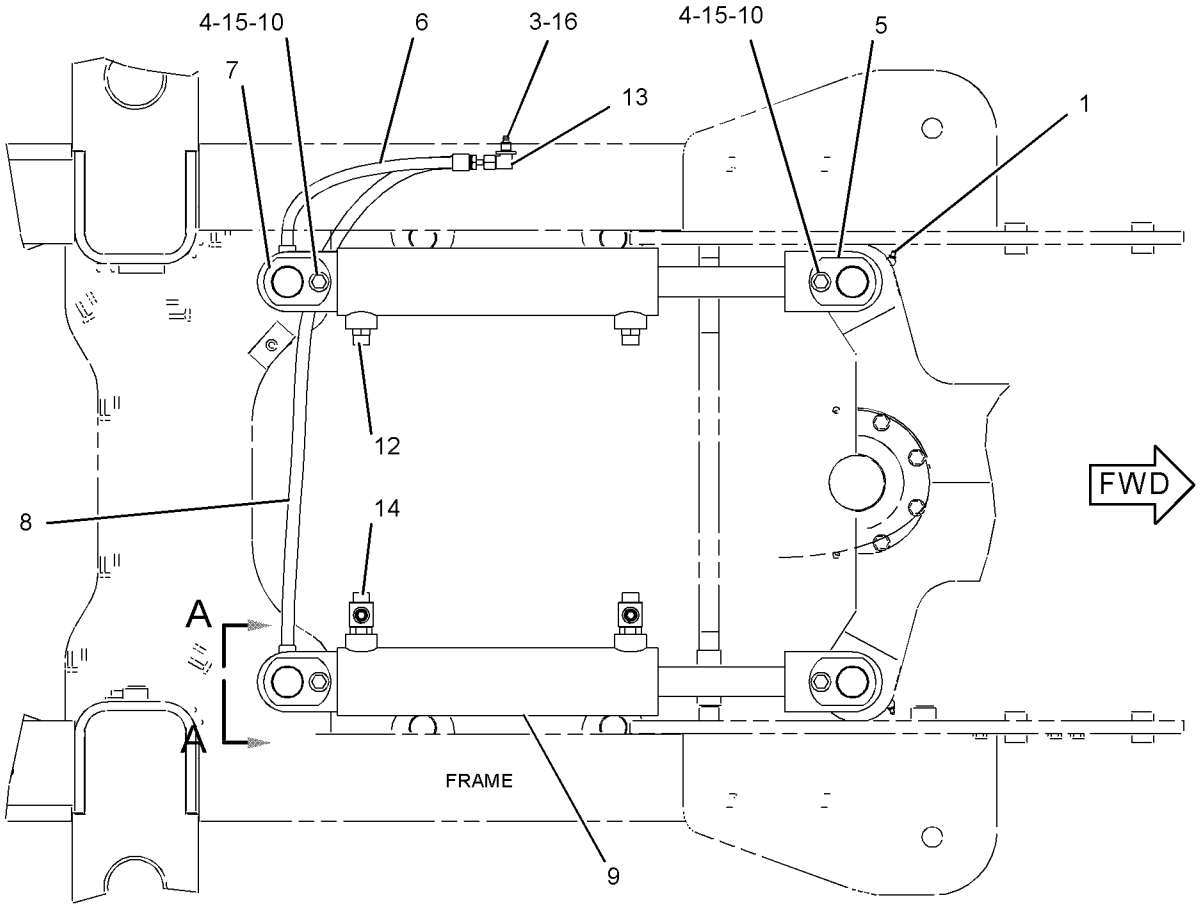

TOP
VIEW

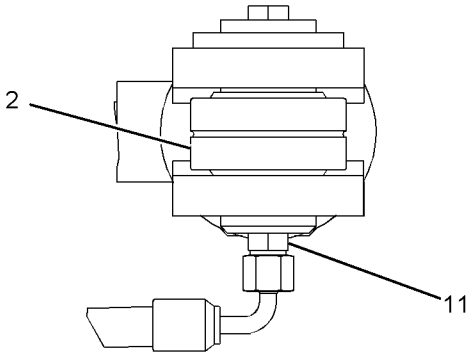

VIEW
A-A

GRAPHIC #1

<END>

g01071251

203-6511 CYLINDER & MTG GP-STEERING

S/N: BZE455-UP; BZG281-UP

PART OF 235-8556 HYDRAULIC AR-AUXILIARY

SMCS-4303 **i02607928**

NOTE	REF NO	GRAPHIC REF	PART NUMBER	QTY	PART NAME 1 2 3 4 5 6 (PRODUCT LEVEL)	SEE PAGE
	1	1	**3B-8485**	2	FITTING-GREASE	
	2	1	**4V-2057**	4	BEARING-SPHERICAL	
	3	1	**5P-9982**	2	FITTING-GREASE	
	4	1	**106-6340**	4	SPACER (10.74X17.14X7-MM THK)	
	5	1	**109-6706**	2	PIN AS	
I	6	1	**144-8242**	1	HOSE AS	
	7	1	**173-7456**	2	PIN AS	
I	8	1	**177-7155**	1	HOSE AS	
CY	9	1	**206-7017**	2	CYLINDER GP-HYDRAULIC (STEERING)	277
C	10	1	*148-8320*	4	CONNECTOR AS	
					(EACH INCLUDES)	
		1	**4J-5477**	1	SEAL-O-RING	
		1	**8C-6865**	1	CONNECTOR	
	11	1	*148-8340*	2	CONNECTOR AS	
					(EACH INCLUDES)	
		1	**3K-0360**	1	SEAL-O-RING	
		1	**6V-8398**	1	SEAL-O-RING	
		1	**6V-8639**	1	CONNECTOR	
C	12	1	*148-8351*	2	ELBOW AS	
					(EACH INCLUDES)	
		1	**4J-5477**	1	SEAL-O-RING	
		1	**6V-9849**	1	ELBOW	
	13	1	*148-8428*	2	TEE AS	
					(EACH INCLUDES)	
		1	**3K-0360**	1	SEAL-O-RING	
		1	**6V-8398**	2	SEAL-O-RING	
		1	**6V-8782**	1	TEE	
	14	1	**7X-0575**	2	WASHER-HARD (10.2X22.5X5-MM THK)	
	15	1	**7X-7729**	4	WASHER (11X25X3-MM THK)	
M	16	1	**8T-4136**	4	BOLT (M10X1.5X25-MM)	

C-CHANGE FROM PREVIOUS TYPE
I-REFER TO HYDRAULIC INFORMATION SYSTEM
M-METRIC PART
Y-SEPARATE ILLUSTRATION

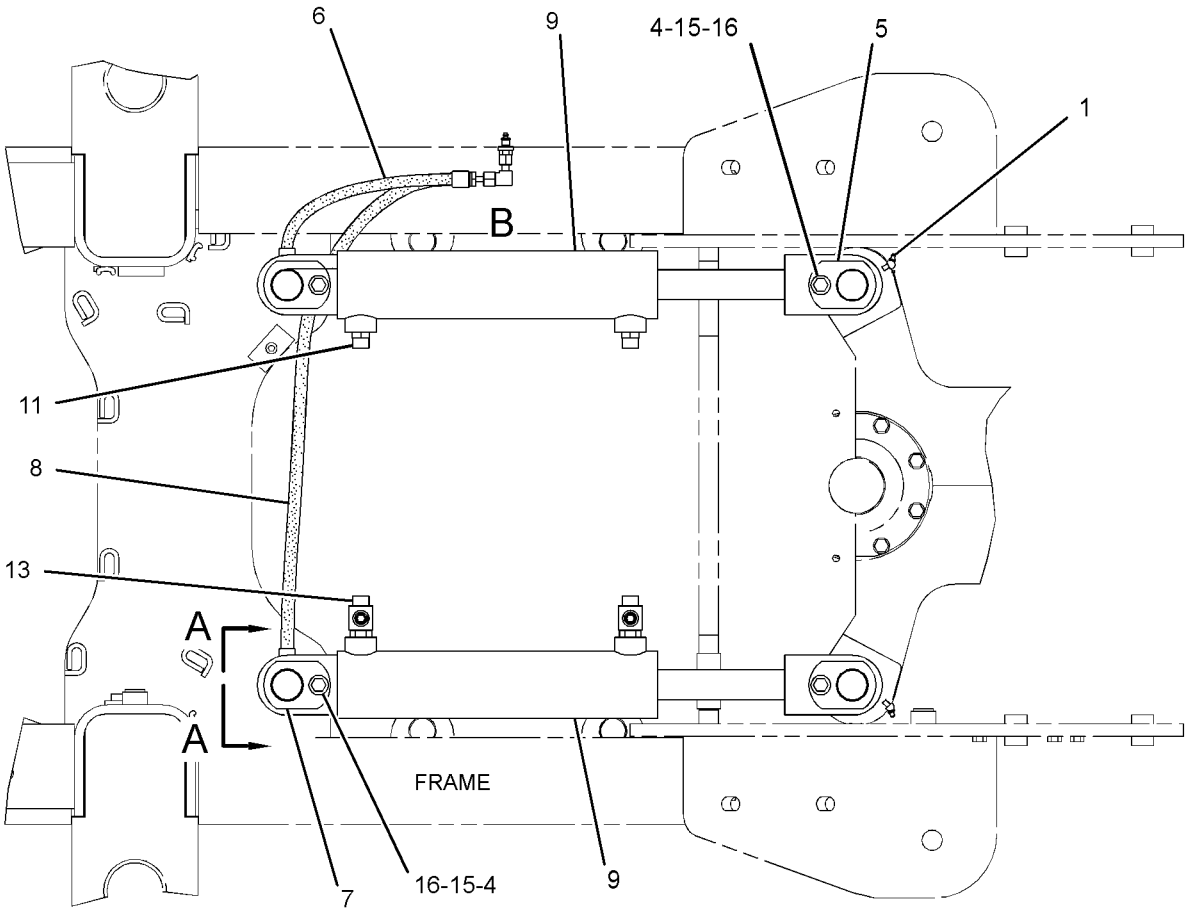

TOP VIEW

FWD

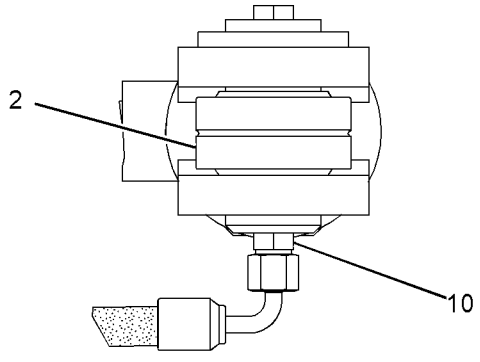

VIEW A-A

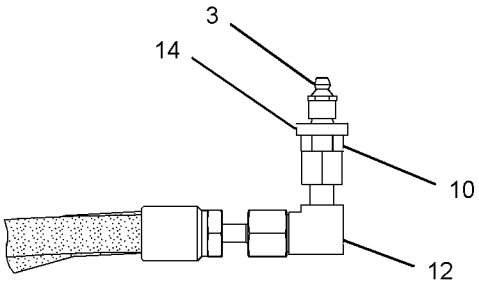

VIEW OF AREA B

GRAPHIC #1 **<END>** g01255698

153-7369 KNOB GP-STEERING

S/N: BZE1-UP; BZG1-UP

PART OF 235-8557 CONTROL GP-STEERING

SMCS-4309 **i01509389**

NOTE	REF NO	GRAPHIC REF	PART NUMBER	QTY	PART NAME 1 2 3 4 5 6 (PRODUCT LEVEL)	SEE PAGE
M	1	1	**8T-6869**	1	BOLT (M8X1.25X60-MM)	
	2	1	**8T-4224**	1	WASHER-HARD (8.8X16X2-MM THK)	
M	3	1	**5C-7261**	1	NUT (M8X1.25-THD)	

M-METRIC PART

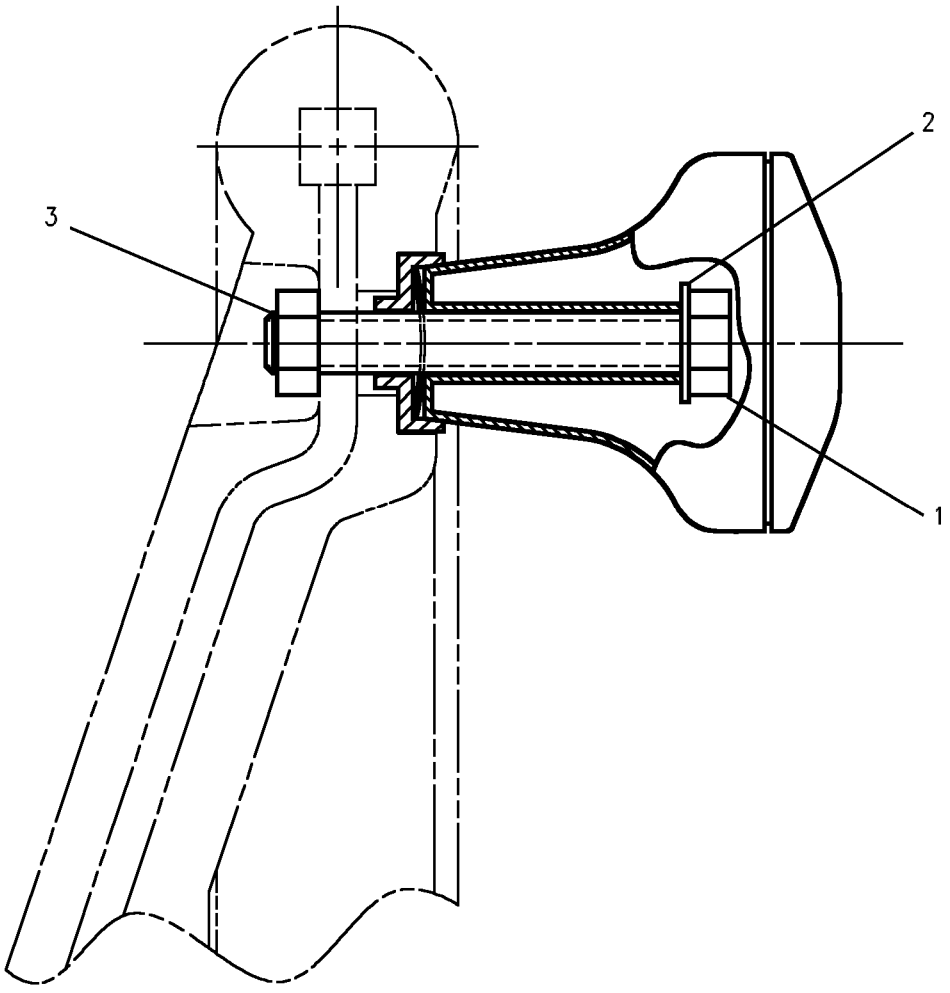

GRAPHIC #1 **<END>** g00534771

STEERING SYSTEM

218-3920 LINES GP-STEERING

S/N: BZE1-UP; BZG1-UP

PART OF 235-8556 HYDRAULIC AR-AUXILIARY

SMCS-4104, 4133, 4304 **i02378911**

NOTE	REF NO	GRAPHIC REF	PART NUMBER	QTY	PART NAME 1 2 3 4 5 6 (PRODUCT LEVEL)	SEE PAGE
I	1	1	**233-9614**	1	HOSE AS	
	2	1	**8T-4983**	1	CLAMP-HOSE	
	3	1	**177-2215**	4	STRAP-DUAL CLAMP	
I	4	1	**180-7884**	1	HOSE AS	
I	5	1	**191-2841**	1	HOSE AS	
I	6	1	**226-0912**	1	HOSE AS	
I	7	1	**226-1880**	1	HOSE AS	

I-REFER TO HYDRAULIC INFORMATION SYSTEM

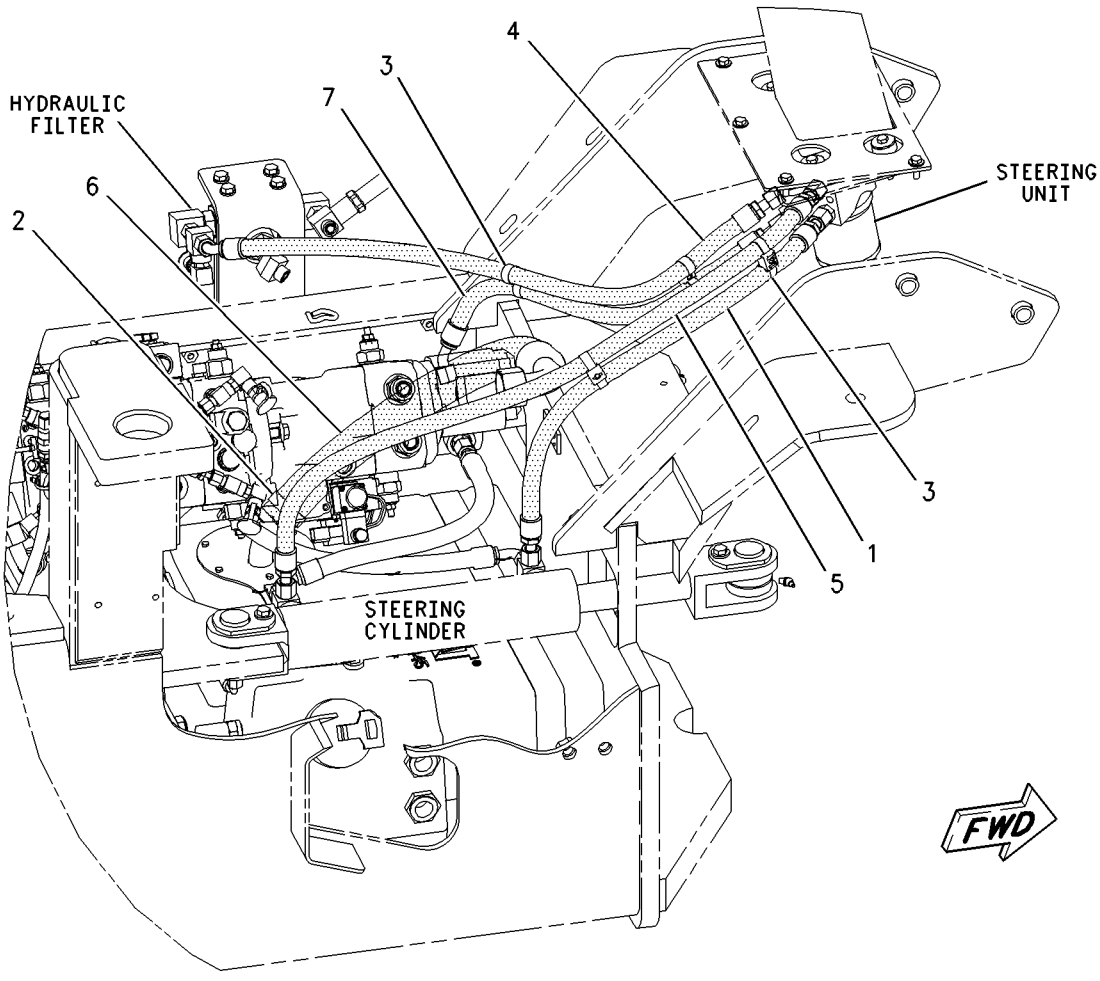

GRAPHIC #1 **<END>** g00999091

205-7407 LINES GP-STEERING CYLINDER

S/N: BZE1-UP; BZG1-UP

PART OF 235-8556 HYDRAULIC AR-AUXILIARY

SMCS-4304 **i02138374**

NOTE	REF NO	GRAPHIC REF	PART NUMBER	QTY	PART NAME 1 2 3 4 5 6 (PRODUCT LEVEL)	SEE PAGE
I	1	1	**111-2446**	2	HOSE AS	

I-REFER TO HYDRAULIC INFORMATION SYSTEM

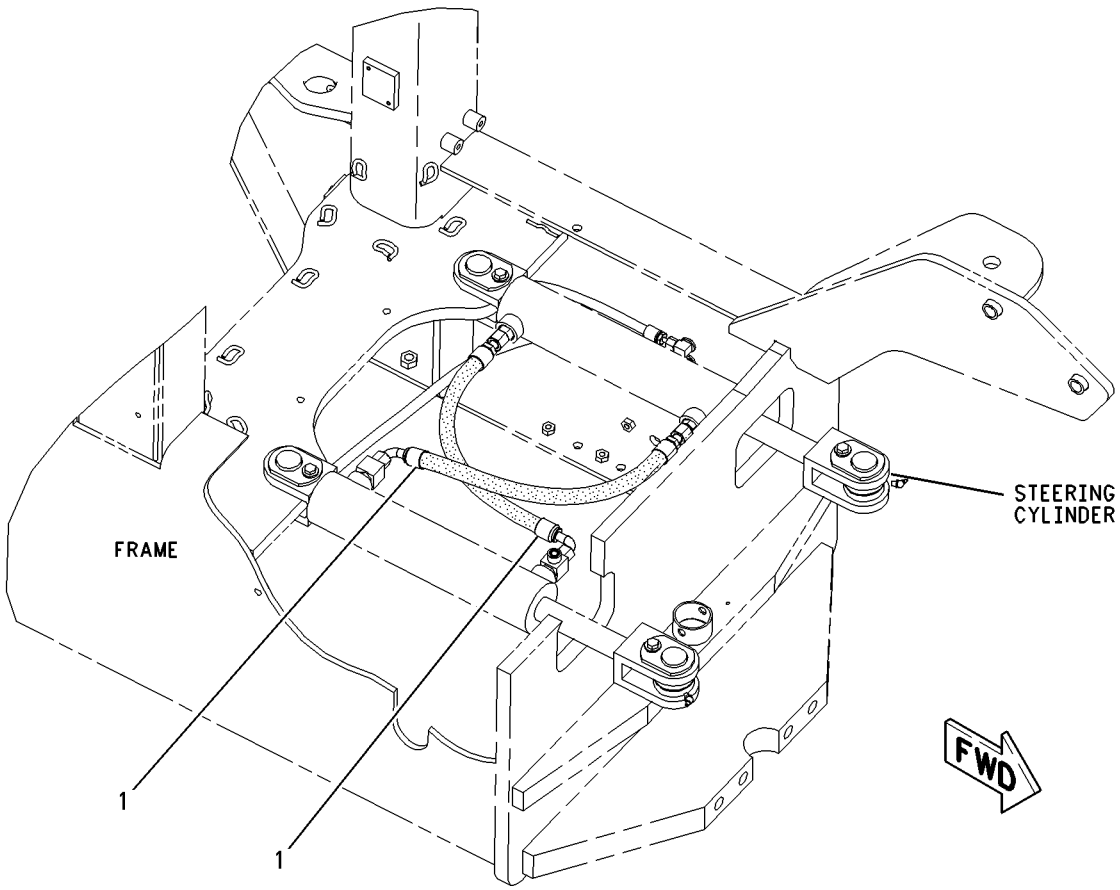

GRAPHIC #1 **<END>** g00919182

STEERING SYSTEM

218-2975 PUMP & MTG GP-STEERING

S/N: BZE1-UP; BZG1-UP

PART OF 235-8556 HYDRAULIC AR-AUXILIARY

SMCS-4306 **i02233857**

NOTE	REF NO	GRAPHIC REF	PART NUMBER	QTY	PART NAME 1 2 3 4 5 6 (PRODUCT LEVEL)	SEE PAGE
	1	1	**6V-0852**	1	CAP-DUST	
	2	1	*196-2036*	1	TEE AS	
		1	**3K-0360**	1	SEAL-O-RING	
		1	**6V-8398**	1	SEAL-O-RING	
		1	**9X-2492**	1	TEE-O-RING	
Y	3	1	**255-0625**	1	PUMP GP-GEAR (STEERING)	305
	4	1	*161-9916*	1	ADAPTER AS (STRAIGHT THREAD O-RING)	
		1	**2M-9780**	1	SEAL-O-RING	
		1	**6V-7420**	1	ADAPTER	
	5	1	*148-8373*	1	ELBOW AS	
		1	**6V-8400**	1	SEAL-O-RING	
		1	**7M-8485**	1	SEAL-O-RING	
		1	**8C-3364**	1	ELBOW	
	6	1	**3J-1907**	1	SEAL-O-RING	
	7	1	**5P-3863**	1	SEAL-O-RING	
	8	1	**6V-3965**	1	COUPLER AS-QUICK DISCONNECT	
M	9	1	**8T-1159**	2	BOLT-SOCKET HEAD (M10X1.5X25-MM)	
	10	1	**8T-4121**	2	WASHER-HARD (11X21X2.5-MM THK)	

M-METRIC PART
Y-SEPARATE ILLUSTRATION

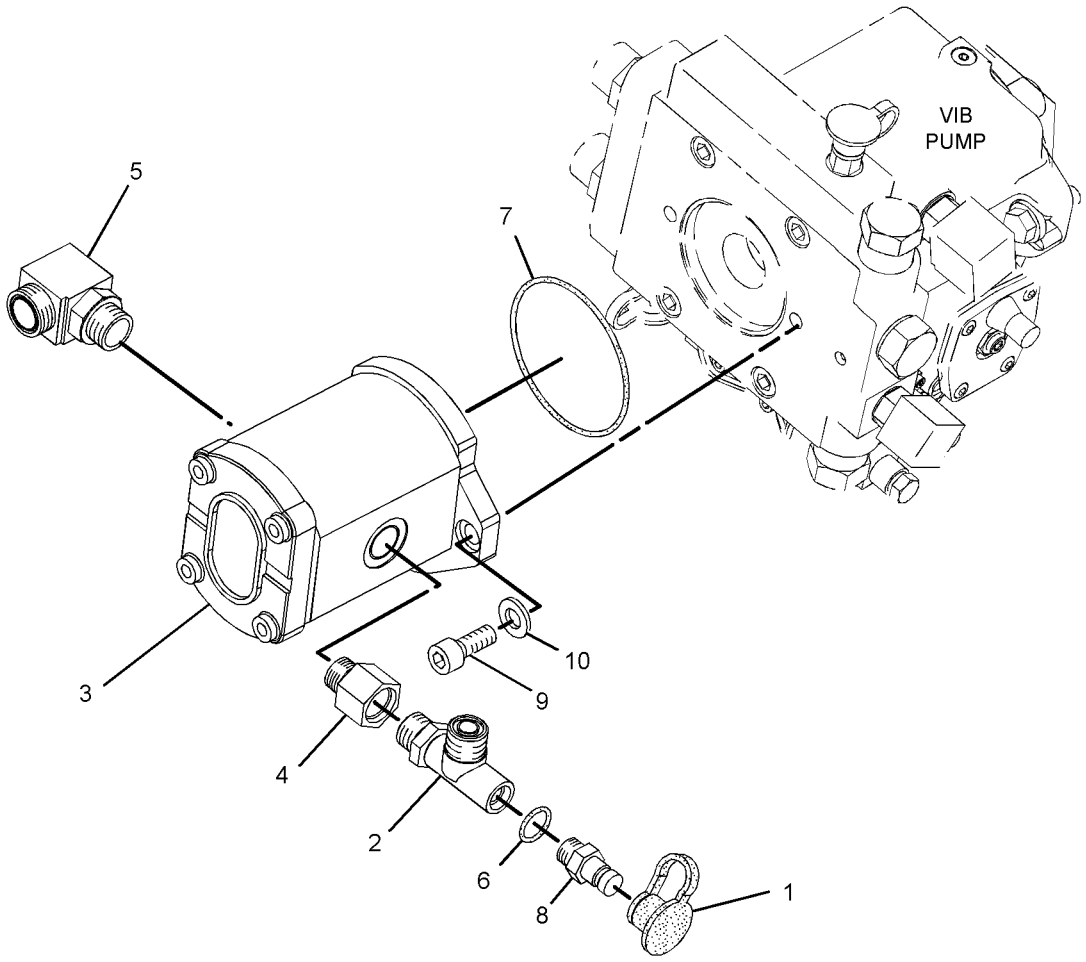

GRAPHIC #1 **<END>** g01192284

255-6667 ACTUATOR GP-PUMP

S/N: BZE1-645; BZG1-357

PART OF 218-8490 PUMP GP-PISTON

SMCS-5070, 5078 **i02294189**

NOTE	REF NO	GRAPHIC REF	PART NUMBER	QTY	PART NAME 1 2 3 4 5 6 (PRODUCT LEVEL)	SEE PAGE
M	1	1	**204-1455**	2	NUT-SEALING (M8X1-THD)	
	2	1	**204-1454**	2	PIN-THREADED	
	3	1	**177-4459**	2	RING-GUIDE	
	4	1	**177-4458**	2	RING-SEAL	
	5	1	**255-6670**	1	PISTON	
	6	1	**6V-5586**	1	SEAL-O-RING	
	7	1	**256-2212**	1	SEAL-O-RING	
M	8	1	**2Y-9286**	1	NUT (M10X1-THD)	
M	9	1	**8T-0267**	4	BOLT-SOCKET HEAD (M6X1X12-MM)	

M-METRIC PART

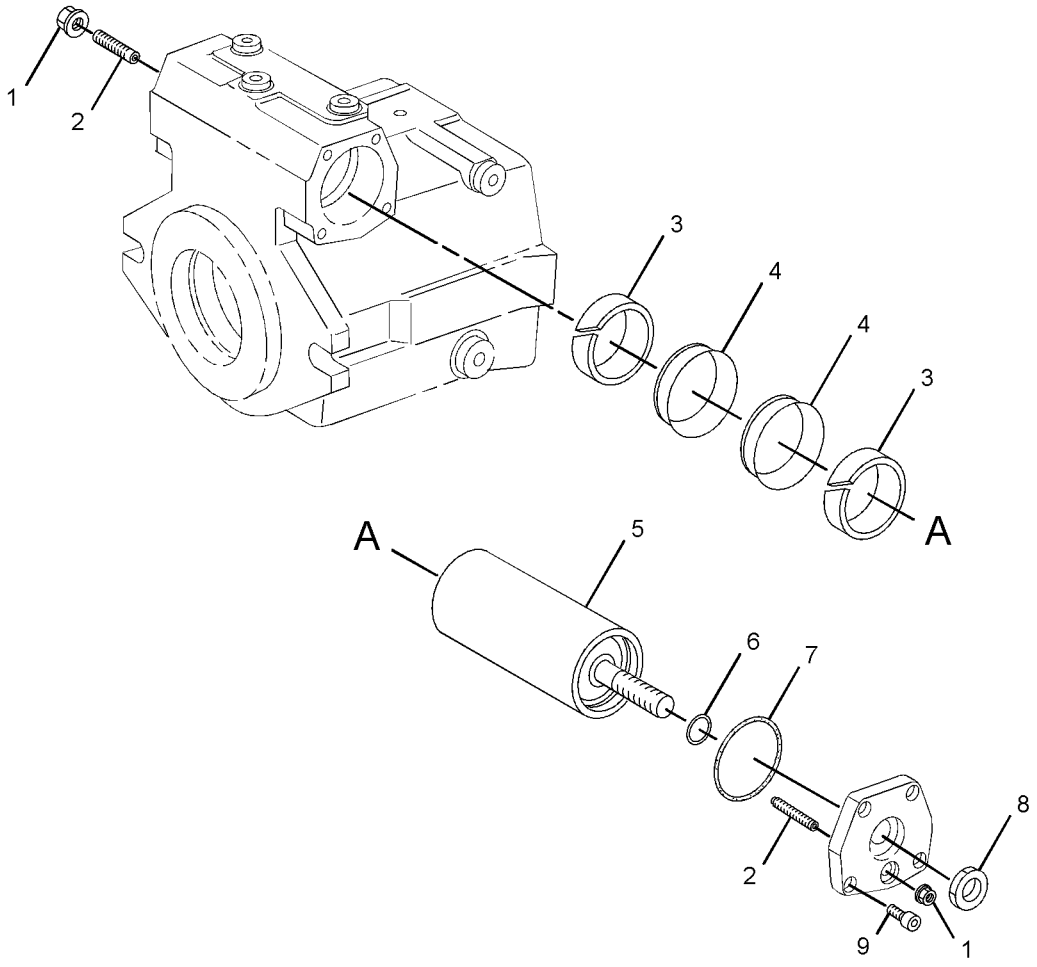

GRAPHIC #1 **<END>** g01260729

HYDRAULIC SYSTEM

313-2635 ACTUATOR GP-PUMP–VIBRATORY

S/N: BZE646-UP; BZG358-UP

PART OF 296-3332 PUMP GP-PISTON

SMCS-5070, 5078 **i03009829**

NOTE	REF NO	GRAPHIC REF	PART NUMBER	QTY	PART NAME 1 2 3 4 5 6 (PRODUCT LEVEL)	SEE PAGE
M	1	1	**204-1455**	2	NUT-SEALING (M8X1-THD)	
	2	1	**204-1454**	2	PIN-THREADED	
	3	1	**177-4459**	2	RING-GUIDE	
	4	1	**166-7558**	2	RING	
	5	1	**247-4468**	1	KIT-PISTON	
	6	1	**6V-5586**	1	SEAL-O-RING	
	7	1	**256-2212**	1	SEAL-O-RING	
M	8	1	**2Y-9286**	1	NUT (M10X1-THD)	
M	9	1	**8T-0267**	4	BOLT-SOCKET HEAD (M6X1X12-MM)	
					PARTS SHOWN IN GRAPHIC(S) WITHOUT A REFERENCE NUMBER ARE NOT SERVICED SEPARATELY	

M-METRIC PART

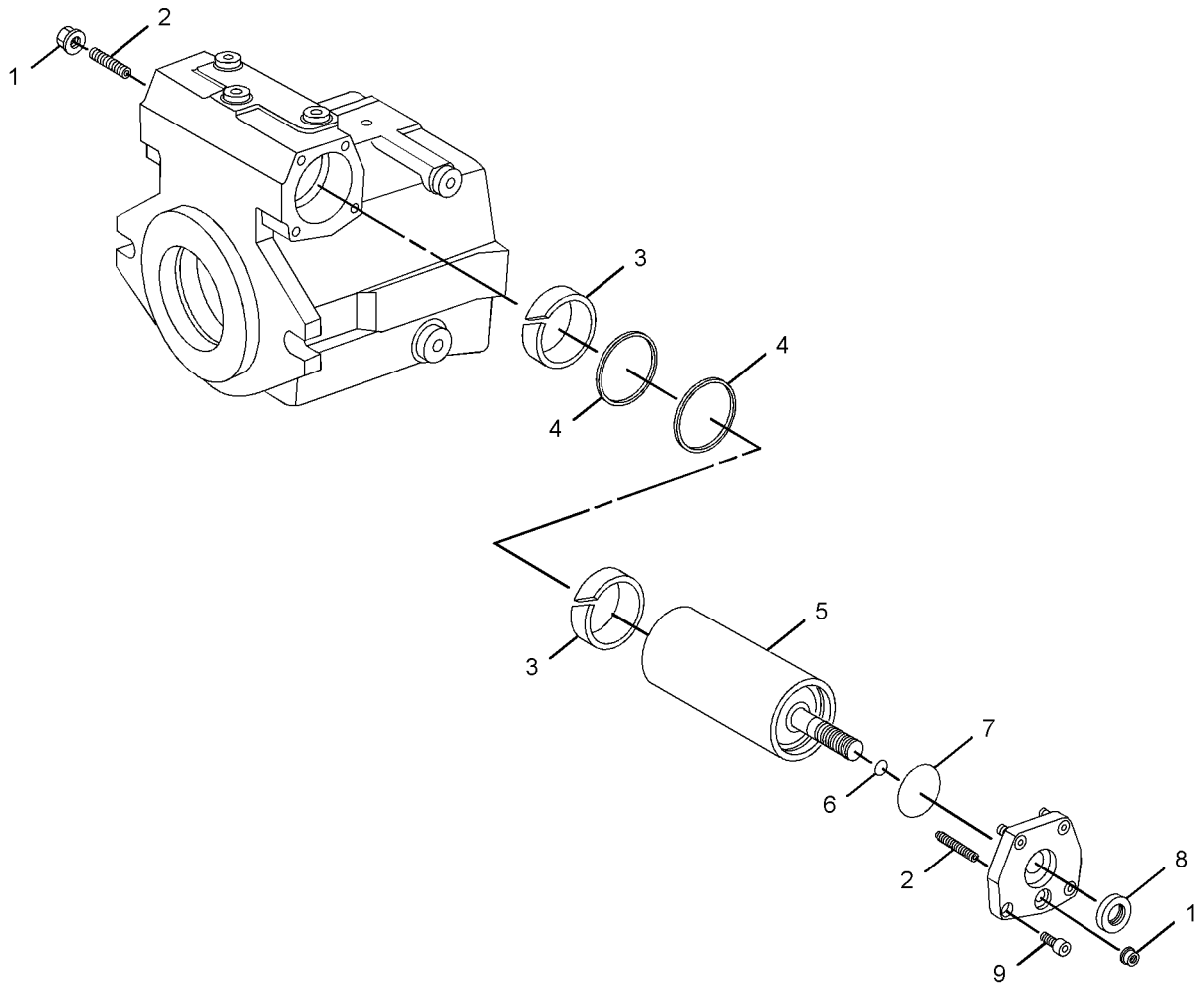

GRAPHIC #1 **<END>** g01416636

254-8188 CONTROL GP-HYDRAULIC

S/N: BZE1-UP; BZG1-UP

PART OF 218-3159, 218-3160, 296-3329, 296-3331 PUMP GP-PISTON

SMCS-5051, 5063 **i02294041**

NOTE	REF NO	GRAPHIC REF	PART NUMBER	QTY	PART NAME 1 2 3 4 5 6 (PRODUCT LEVEL)	SEE PAGE
	1	1	**191-3539**	2	NUT-SEAL	
	2	1	**191-3540**	2	PIN-THREADED	
	3	1	**145-3812**	2	RING	
	4	1	**145-3813**	2	RING-SEAL	
	5	1	**242-4289**	1	PISTON	
	6	1	**117-7273**	1	SEAL-O-RING	
	7	1	**161-6154**	1	SEAL-O-RING	
	8	1	**191-3553**	1	NUT-HEX	
M	9	1	**6V-8202**	4	BOLT-SOCKET HEAD (M8X1.25X16-MM)	

M-METRIC PART

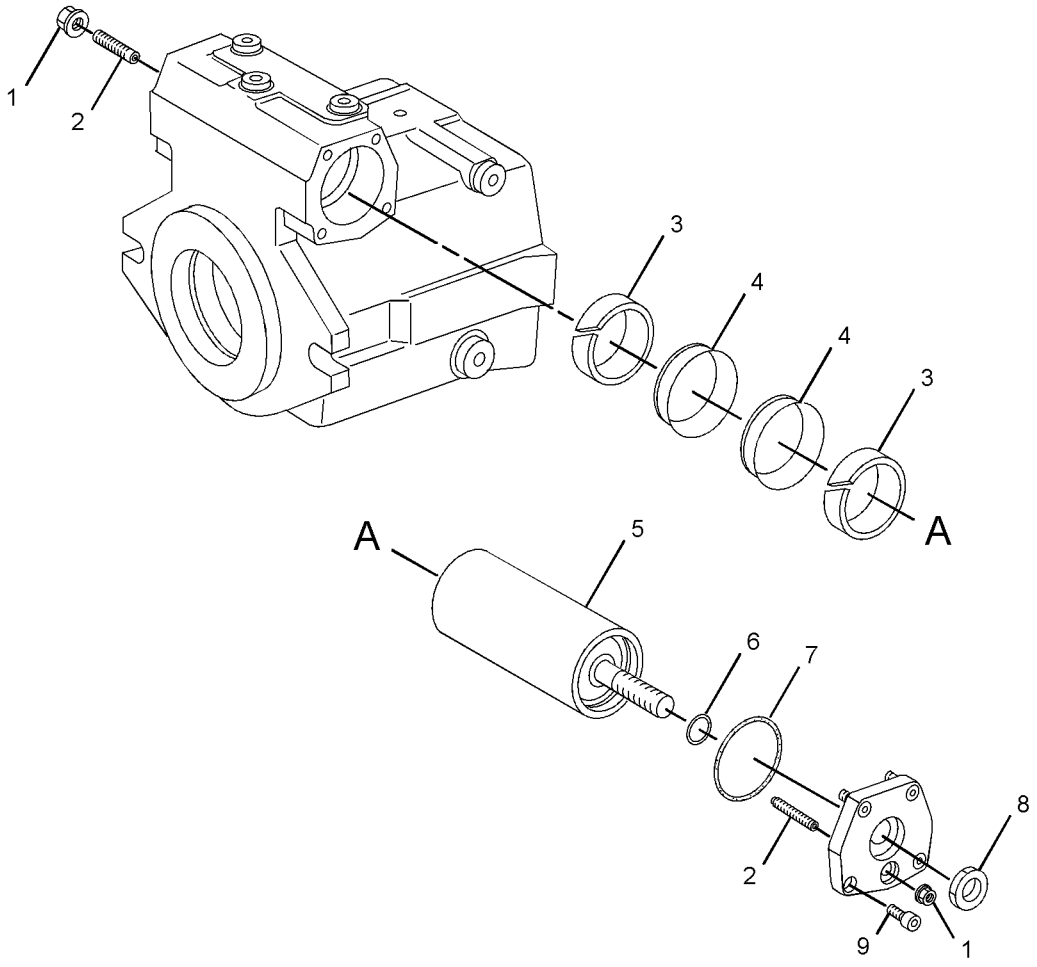

GRAPHIC #1 **<END>** g01259254

204-2135 CYLINDER GP-HYDRAULIC–STEERING

S/N: BZE1-UP; BZG1-UP
76.2MM (3IN) BORE X 304.8MM (12IN) STROKE
PART OF 206-7017 CYLINDER GP-HYDRAULIC

SMCS-4303, 5102 **i02139928**

NOTE	REF NO	GRAPHIC REF	PART NUMBER	QTY	PART NAME 1 2 3 4 5 6 (PRODUCT LEVEL)	SEE PAGE
	1	1	**2K-7471**	1	LOCKNUT (1-14-THD)	
JZ	2	1		1	RING-WEAR	
	3	1	**240-0773**	1	RING-RETAINING	
JZ	4	1		1	SEAL-CAP	
JZ		1		1	SEAL-O-RING	
JZ	5	1		1	SEAL-O-RING	
JZ	6	1		1	RING-BACKUP	
JZ	7	1		1	SEAL-O-RING	
JZ	8	1		1	SEAL-U-CUP	
JZ	9	1		1	WIPER	
					AVAILABLE REPAIR KIT(S):	
J			**240-0772**	1	KIT-SEAL (STEERING CYLINDER)	

J-KIT MARKED J SERVICES PART(S) MARKED J
Z-NOT SERVICED SEPARATELY

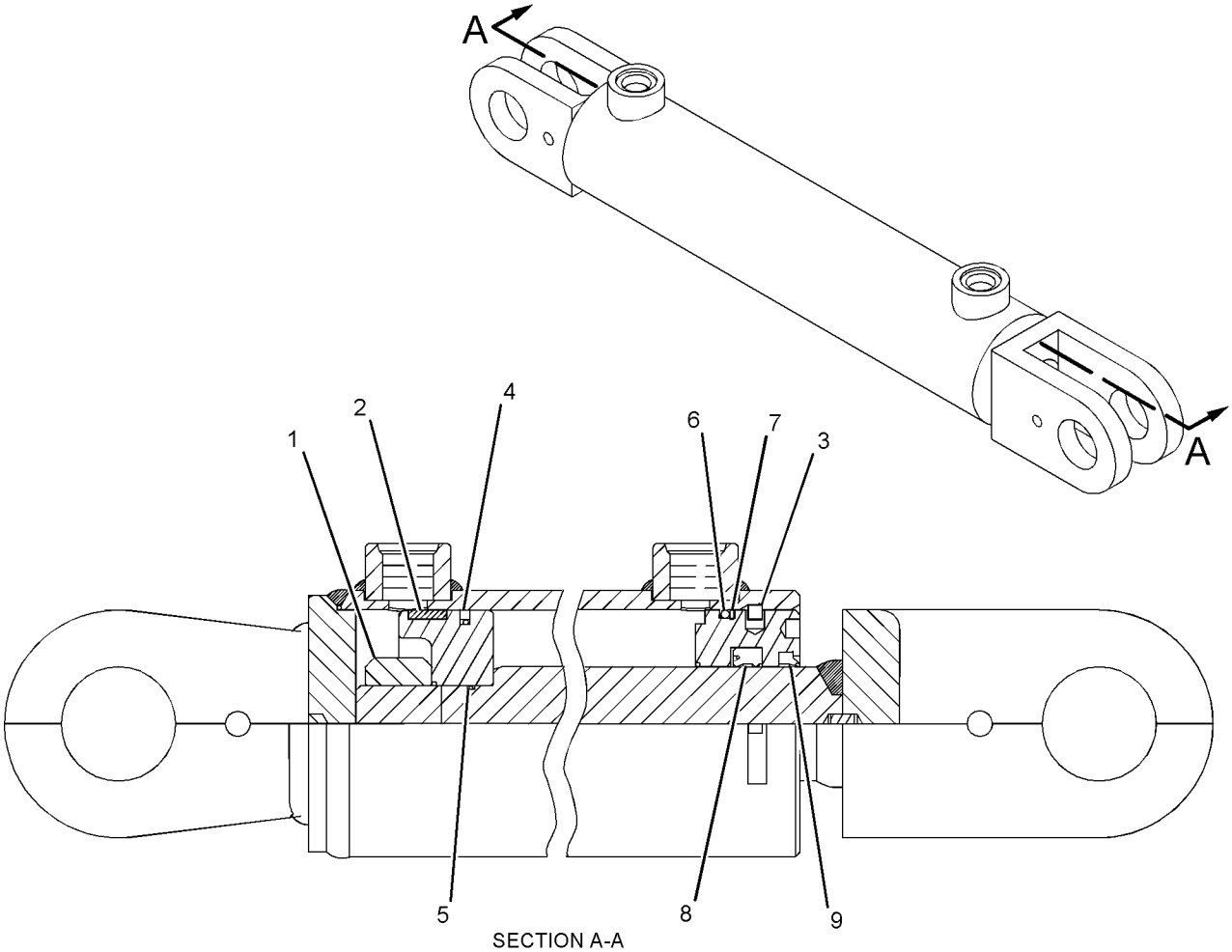

SECTION A-A

GRAPHIC #1 **<END>** g01030327

206-7017 CYLINDER GP-HYDRAULIC—STEERING

S/N: BZE1-UP; BZG1-UP

PART OF 203-6511 CYLINDER & MTG GP-STEERING

SMCS-4303, 5102 **i02143199**

NOTE	PART NUMBER	QTY	PART NAME 1 2 3 4 5 6 (PRODUCT LEVEL)	SEE PAGE
Y	*204-2135*	1	CYLINDER GP-HYDRAULIC	276
			—OR—	
	206-6339	1	CYLINDER GP-HYDRAULIC	
	125-8157	1	KIT-SEAL (HYDRAULIC CYLINDER)	
			(INCLUDES SEAL-PISTON,SEAL-BACKUP,SEAL-O-RING,RING,SEAL,WASHER AND SETSCREW)	

Y-SEPARATE ILLUSTRATION

<END>

HYDRAULIC SYSTEM

218-2976 FILTER & MTG GP-HYDRAULIC

S/N: BZE1-UP; BZG1-UP

PART OF 235-8556 HYDRAULIC AR-AUXILIARY

SMCS-5068 **i02138575**

NOTE	REF NO	GRAPHIC REF	PART NUMBER	QTY	PART NAME 1 2 3 4 5 6 (PRODUCT LEVEL)	SEE PAGE
	1	1	**8C-3451**	1	CAP-DUST	
	2	1	*107-8265*	1	TEE AS-SWIVEL	
		1	**9X-2289**	1	TEE-SWIVEL	
		1	**6V-9746**	1	SEAL-O-RING	
	3	1	*148-8430*	1	TEE AS	
		1	**6V-9746**	1	SEAL-O-RING	
		1	**7X-0873**	1	TEE	
	4	1	**165-2521**	1	SWITCH AS-PRESSURE (HYDRAULIC OIL)	
		1	**102-8803**	1	KIT-RECEPTACLE (3-PIN)	
		1	**186-3735**	3	PIN-CONNECTOR (16-GA TO 18-GA)	
	5	1	**180-3813**	1	FILTER GP-OIL (HYDRAULIC)	
Z		1		1	BASE	
		1	**1G-8878**	1	FILTER-OIL (ADVANCED EFFICIENCY) (HYDRAULIC)	
	6	1	**247-6278**	1	BRACKET	
	7	1	*148-8305*	1	ADAPTER AS	
		1	**3J-1907**	1	SEAL-O-RING	
		1	**5P-9617**	1	ADAPTER	
	8	1	*148-8328*	1	CONNECTOR AS	
		1	**3D-2824**	1	SEAL-O-RING	
		1	**6V-8398**	1	SEAL-O-RING	
		1	**6V-8633**	1	CONNECTOR	
	9	1	*148-8347*	2	ELBOW AS	
					(EACH INCLUDES)	
		1	**3D-2824**	1	SEAL-O-RING	
		1	**6V-9746**	1	SEAL-O-RING	
		1	**6V-9007**	1	ELBOW	
	10	1	*153-6241*	1	ELBOW AS	
		1	**6V-8398**	1	SEAL-O-RING	
		1	*8C-8989*	1	ELBOW	
	11	1	**8C-3446**	1	VALVE-FLUID SAMPLING (HYDRAULIC OIL)	
			3J-7354	1	SEAL-O-RING	
	12	1	**7X-7729**	2	WASHER (11X25X3-MM THK)	
	13	1	**8T-4121**	4	WASHER-HARD (11X21X2.5-MM THK)	
M	14	1	**8T-4136**	4	BOLT (M10X1.5X25-MM)	
	15	1	**3K-0360**	1	SEAL-O-RING	
M	16	1	**8T-4196**	2	BOLT (M10X1.5X35-MM)	

M-METRIC PART
Z-NOT SERVICED SEPARATELY

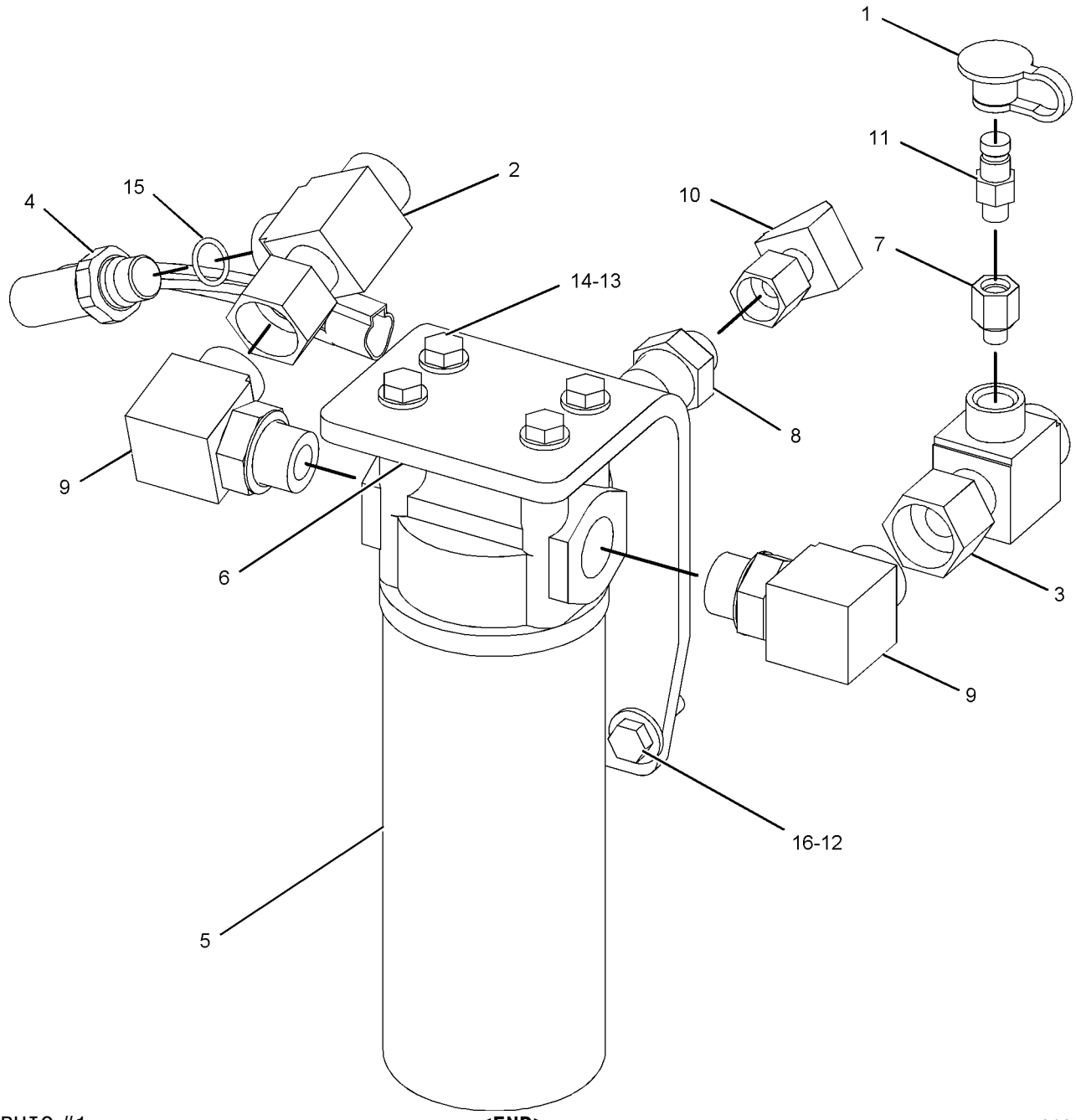

GRAPHIC #1 **<END>** g01087833

HYDRAULIC SYSTEM

254-8189 HEAD GP-PUMP

S/N: BZE1-645; BZG1-357

PART OF 218-3160 PUMP GP-PISTON

SMCS-3222, 5070 **i02294040**

NOTE	REF NO	GRAPHIC REF	PART NUMBER	QTY	PART NAME 1 2 3 4 5 6 (PRODUCT LEVEL)	SEE PAGE
Y	1	1	**123-7557**	1	VALVE GP-RELIEF (PRESSURE OVERRIDE)	343
	2	1	**152-1810**	2	VALVE GP-RELIEF (COMBINATION)	
M	3	1	**7X-3340**	4	BOLT-SOCKET HEAD (M14X2X75-MM)	
	4	1	**6V-5326**	1	SEAL-O-RING	
	5	1	**261-0998**	1	VALVE GP-SOLENOID	
	6	1	**256-3845**	1	KIT-SEAL	
					(INCLUDES O-RINGS & BACK-UP RINGS)	
	7	1	**4J-5309**	1	SEAL-O-RING	
	8	1	**177-6853**	1	VALVE-THROTTLE	
	9	1	**255-6876**	1	KIT-RELIEF VALVE	
					(INCLUDES SPRING, SHIMS, SPRING INSERT, POPPET, ORIFICES, PLUG & O-RING SEAL)	
	10	1	**192-4576**	1	BEARING-ROLLER	
	11	1	**123-7562**	2	SEAL-O-RING	

M-METRIC PART
Y-SEPARATE ILLUSTRATION

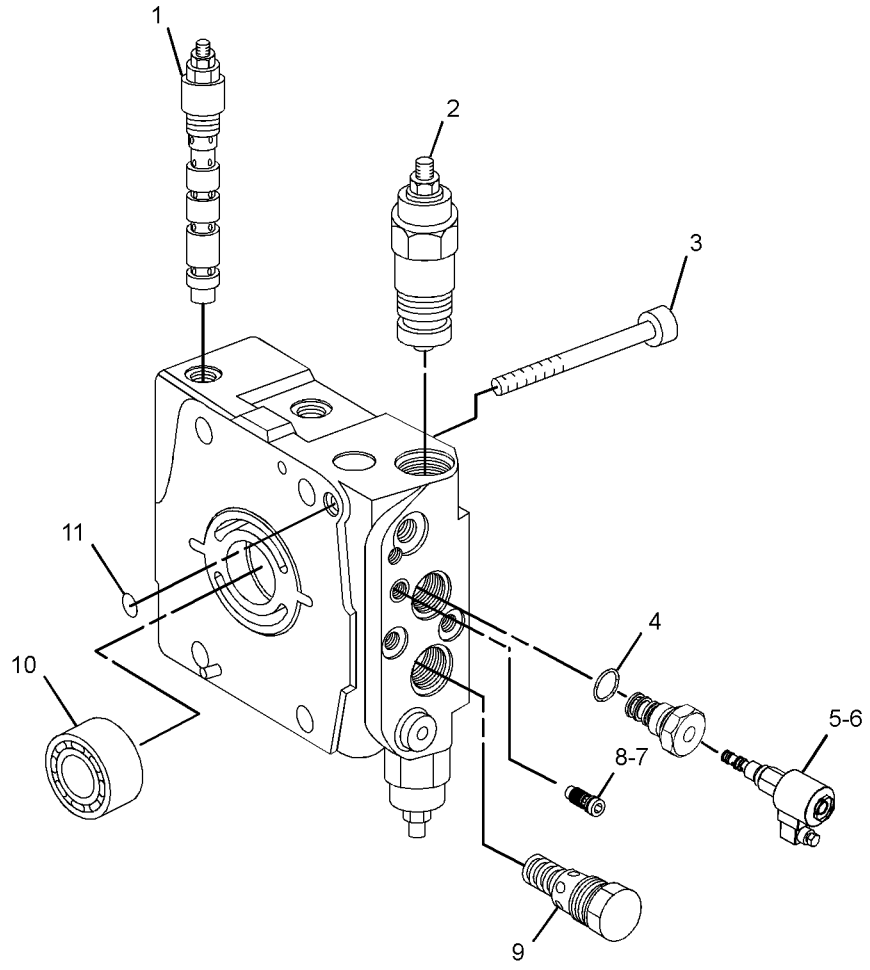

GRAPHIC #1 **<END>** g01260738

255-6668 HEAD GP-PUMP–VIBRATORY

S/N: BZE1-645; BZG1-357

PART OF 218-8490 PUMP GP-PISTON

SMCS-3222, 5070 **i02294190**

NOTE	REF NO	GRAPHIC REF	PART NUMBER	QTY	PART NAME 1 2 3 4 5 6 (PRODUCT LEVEL)	SEE PAGE
	1	1	**123-7562**	1	SEAL-O-RING	
	2	1	**204-1458**	2	VALVE GP-RELIEF (CROSSOVER)	
M	3	1	**095-0670**	4	BOLT (M12X1.75X45-MM)	
	4	1	**5P-3863**	1	SEAL-O-RING	
	5	1	**087-4772**	1	PLUG-O-RING	
J	6	1	**6V-8352**	1	SEAL-O-RING	
J	7	1	**206-4881**	2	PLUG-ORIFICE	
J	8	1	**177-7747**	1	RING	
JZ	9	1		1	PLUG	
	10	1	**112-4640**	2	PIN	
	11	1	**121-4459**	1	BEARING-ROLLER	
J	12	1	**215-7697**	1	KIT-SHIM (INCLUDES 3-SHIMS) (RELIEF VALVE)	
					(INCLUDES FOUR SHIMS)	
JZ	13	1		1	SPRING	
JZ	14	1		1	SPRING-SUPPORT	
JZ	15	1		1	POPPET	
Z	16	1		1	SPOOL	
Z	17	1		1	BODY	
					AVAILABLE REPAIR KIT(S):	
J			**255-6876**		KIT-RELIEF VALVE (VIBRATORY PUMP)	

J-PARTS MARKED J SERVICE(S) PARTS MARKED J
M-METRIC PART
Z-NOT SERVICED SEPARATELY

255-6668 HEAD GP-PUMP *(contd.)* i02294190

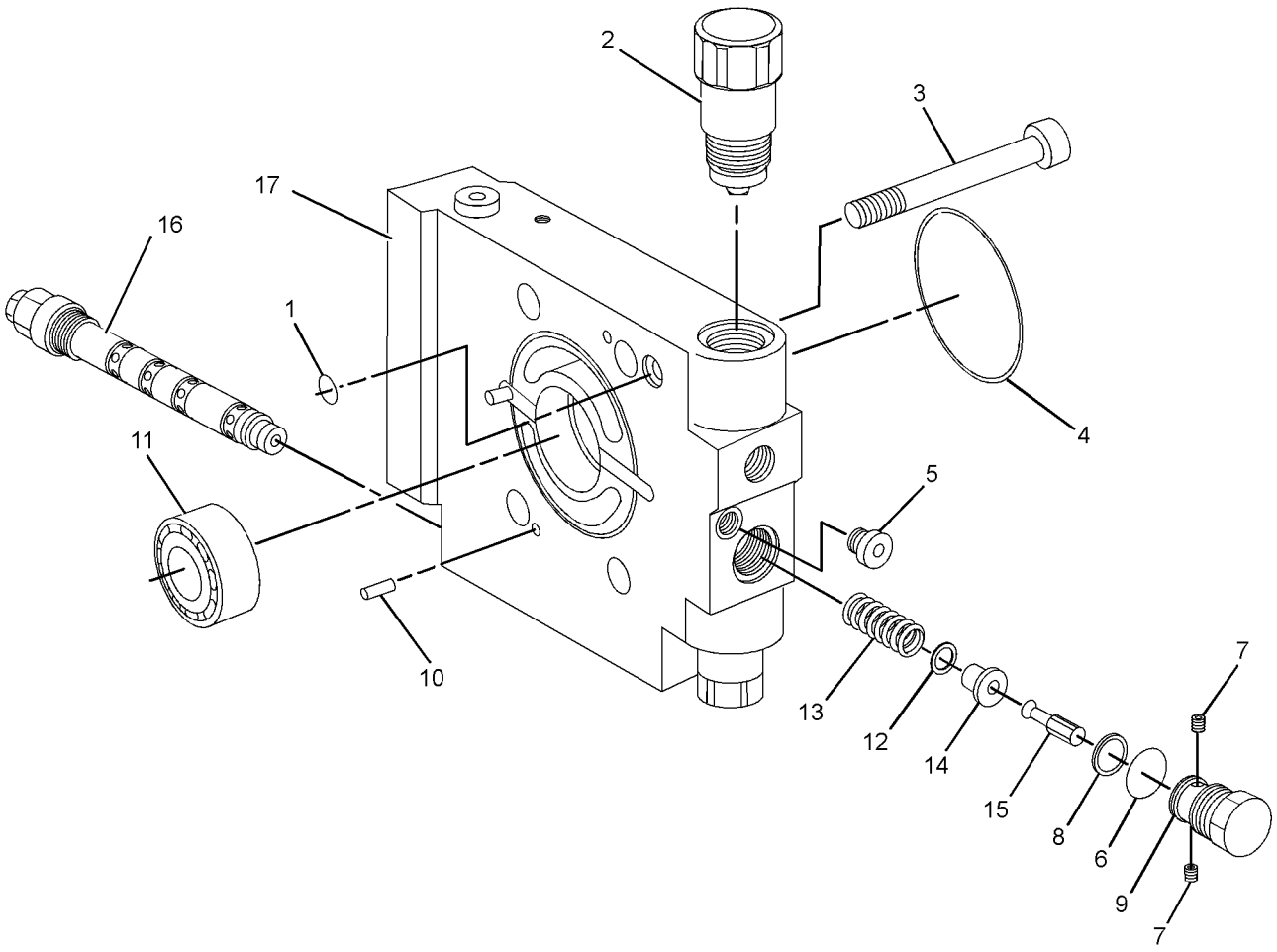

GRAPHIC #1 **<END>** g01160021

255-8680 HEAD GP-PUMP

S/N: BZE1-UP; BZG1-UP

PART OF 218-3159, 296-3331 PUMP GP-PISTON

SMCS-3222, 5070 **i02294193**

NOTE	REF NO	GRAPHIC REF	PART NUMBER	QTY	PART NAME 1 2 3 4 5 6 (PRODUCT LEVEL)	SEE PAGE
Y	1	1	**123-7557**	1	VALVE GP-RELIEF (PRESSURE OVERRIDE)	343
	2	1	**152-1810**	2	VALVE GP-RELIEF (COMBINATION)	
					(EACH INCLUDES)	
M		1	**6E-1607**	1	LOCKNUT-SEALING	
		1	**6V-5326**	1	SEAL-O-RING	
		1	**167-7713**	1	RING-BACKUP	
M	3	1	**7X-3340**	4	BOLT-SOCKET HEAD (M14X2X75-MM)	
	4	1	**6V-5326**	1	SEAL-O-RING	
	5	1	**261-0998**	1	VALVE GP-SOLENOID	
JZ	6	1		1	SEAL-O-RING	
	7	1	**212-6679**	1	VALVE GP-RELIEF	
		1	**6V-8352**	1	SEAL-O-RING	
	8	1	**177-6853**	1	VALVE-THROTTLE	
	9	1	**192-4576**	1	BEARING-ROLLER	
	10	1	**123-7562**	2	SEAL-O-RING	
	11	1	**8T-4231**	2	DOWEL	
JZ	12	1		1	SEAL-O-RING	
JZ	13	1		1	SEAL-O-RING	
JZ	14	1		1	RING-BACKUP	
JZ	15	1		1	RING-BACKUP	
Z	16	1		1	HEAD	
					AVAILABLE REPAIR KIT(S):	
J			**256-3845**	1	KIT-SEAL (SOLENOID VALVE)	

J-KIT MARKED J SERVICES PART(S) MARKED J
M-METRIC PART
Y-SEPARATE ILLUSTRATION
Z-NOT SERVICED SEPARATELY

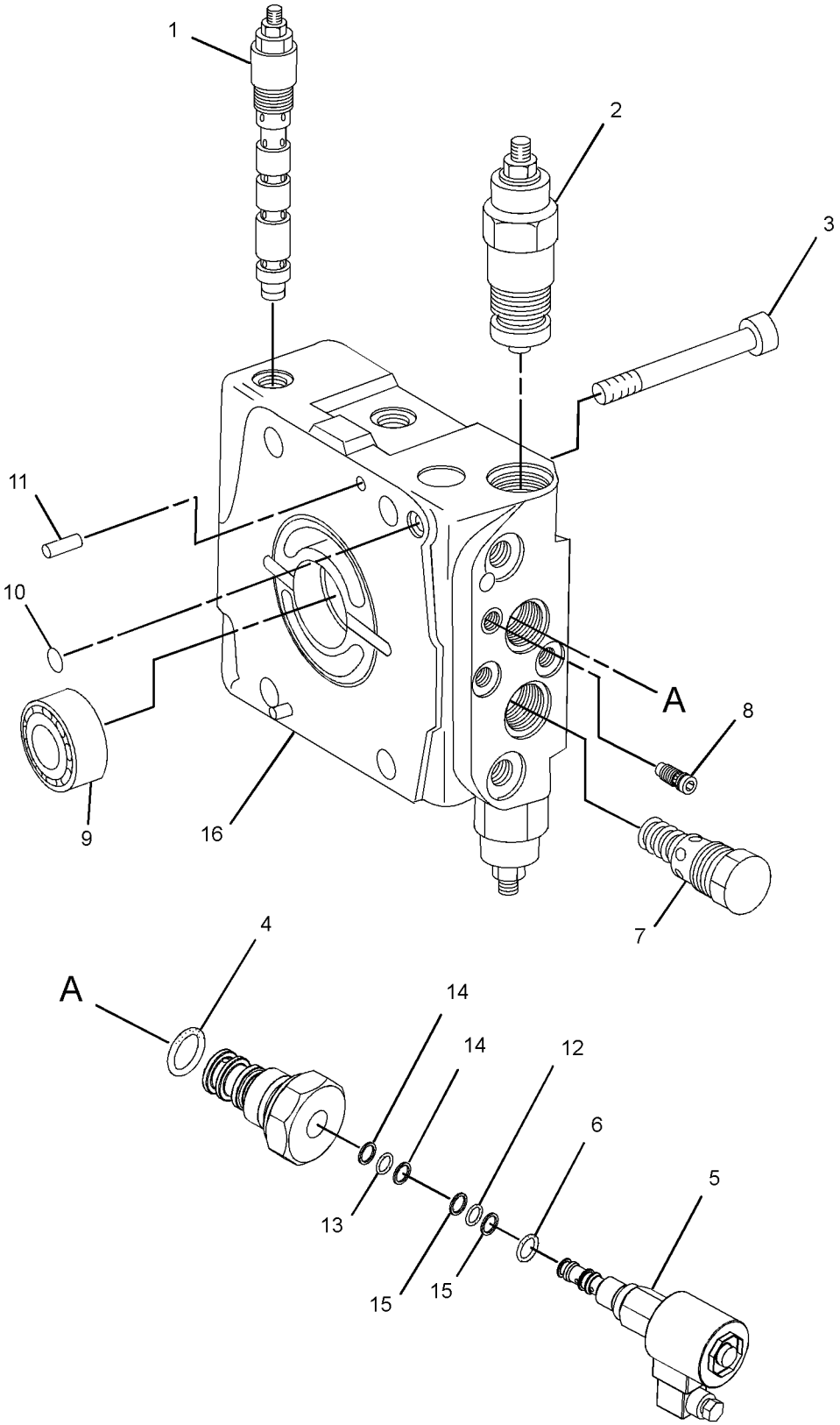

GRAPHIC #1 **<END>** g01260735

313-3391 HEAD GP-PUMP–VIBRATORY

S/N: BZE646-UP; BZG358-UP

PART OF 296-3332 PUMP GP-PISTON

SMCS-3222, 5070 **i03009830**

NOTE	REF NO	GRAPHIC REF	PART NUMBER	QTY	PART NAME 1 2 3 4 5 6 (PRODUCT LEVEL)	SEE PAGE
	1	1	**123-7562**	1	SEAL-O-RING	
	2	1	**204-1458**	2	VALVE GP-RELIEF (CROSSOVER)	
M	3	1	**095-0670**	4	BOLT (M12X1.75X45-MM)	
	4	1	**5P-3863**	1	SEAL-O-RING	
	5	1	**087-4772**	1	PLUG-O-RING	
	6	1	**313-3392**	1	KIT-VALVE	
					(INCLUDES PRESSURE SPRING, SPRING COLLAR, VALVE PISTON, LOCKING SCREW, SEAL-O-RING, RING, KIT-SHIM & ORIFICE)	
	7	1	**112-4640**	2	PIN	
	8	1	**121-4459**	1	BEARING-ROLLER	

M-METRIC PART

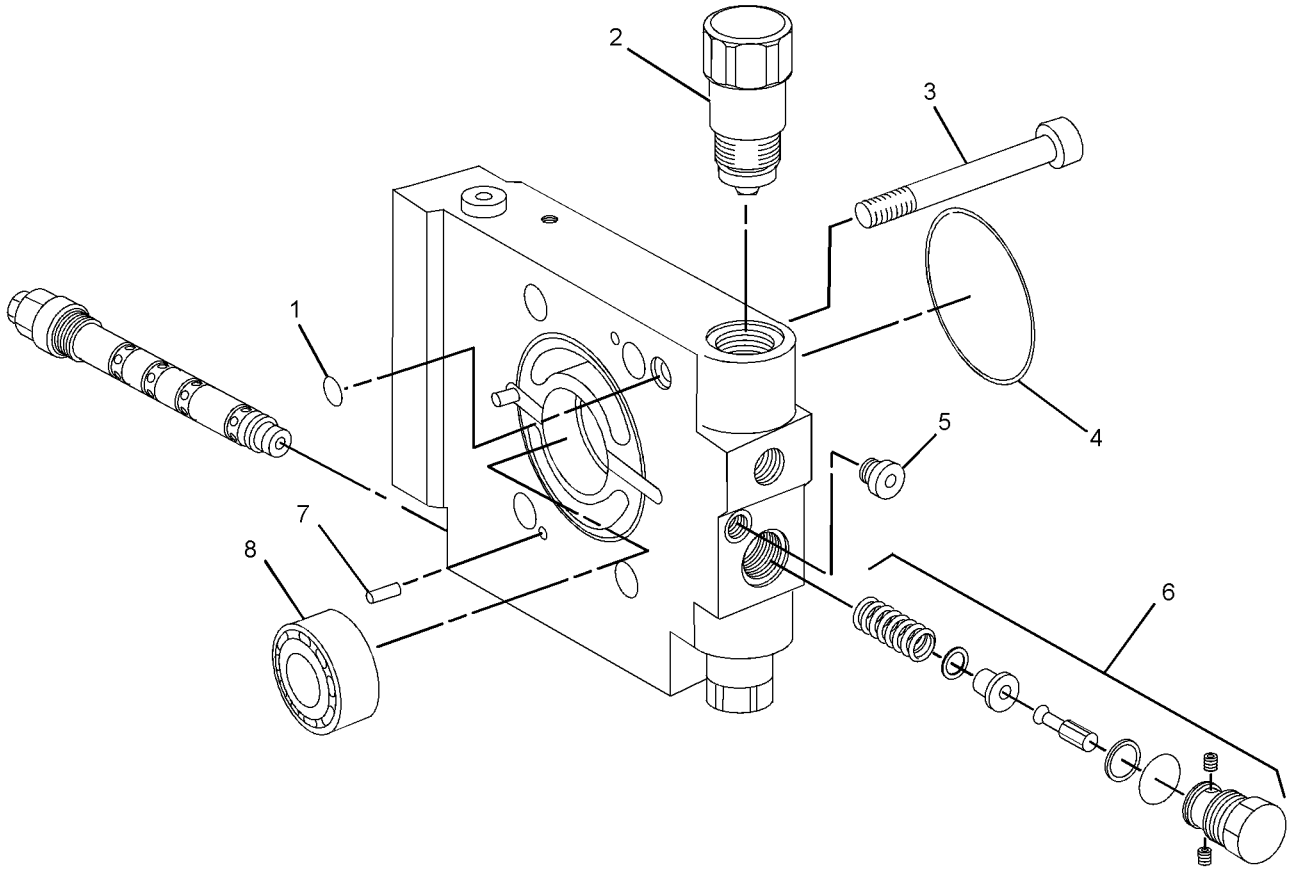

GRAPHIC #1 **<END>** g01446566

HYDRAULIC SYSTEM

314-4016 HEAD GP-PUMP–PROPEL

S/N: BZE646-UP; BZG358-UP

PART OF 296-3329 PUMP GP-PISTON

SMCS-3222, 5070 **i03009815**

NOTE	REF NO	GRAPHIC REF	PART NUMBER	QTY	PART NAME 1 2 3 4 5 6 (PRODUCT LEVEL)	SEE PAGE
Y	1	1	**123-7557**	1	VALVE GP-RELIEF (PRESSURE OVERRIDE)	343
	2	1	**152-1810**	2	VALVE GP-RELIEF (COMBINATION)	
					(EACH INCLUDES)	
M		1	**204-1455**	1	NUT-SEALING (M8X1-THD)	
		1	**167-7713**	1	RING-BACKUP	
		1	**6V-5326**	1	SEAL-O-RING	
M	3	1	**7X-3340**	4	BOLT-SOCKET HEAD (M14X2X75-MM)	
	4	1	**6V-5326**	1	SEAL-O-RING	
	5	1	**261-0998**	1	VALVE GP-SOLENOID (PROPEL PUMP)	
		1	**285-2277**	1	NUT-SPECIAL	
		1	**301-4576**	1	COIL	
	6	1	**256-3845**	1	KIT-SEAL	
					(INCLUDES O-RINGS & BACK-UP-RINGS)	
	7	1	**4J-5309**	1	SEAL-O-RING	
	8	1	**177-6853**	1	VALVE-THROTTLE	
	9	1	**314-4014**	1	KIT-RELIEF VALVE (PUMP)	
					(INCLUDES PRESSURE SPRING, SHIM KIT, SPRING COLLAR, VALVE PISTON, RING, O-RING, ORIFICES & LOCKING SCREW)	
	10	1	**192-4576**	1	BEARING-ROLLER	
	11	1	**123-7562**	2	SEAL-O-RING	
	12	1	**301-4622**	1	ADAPTER	

M-METRIC PART
Y-SEPARATE ILLUSTRATION

314-4016 **HEAD GP-PUMP** *(contd.)* **i03009815**

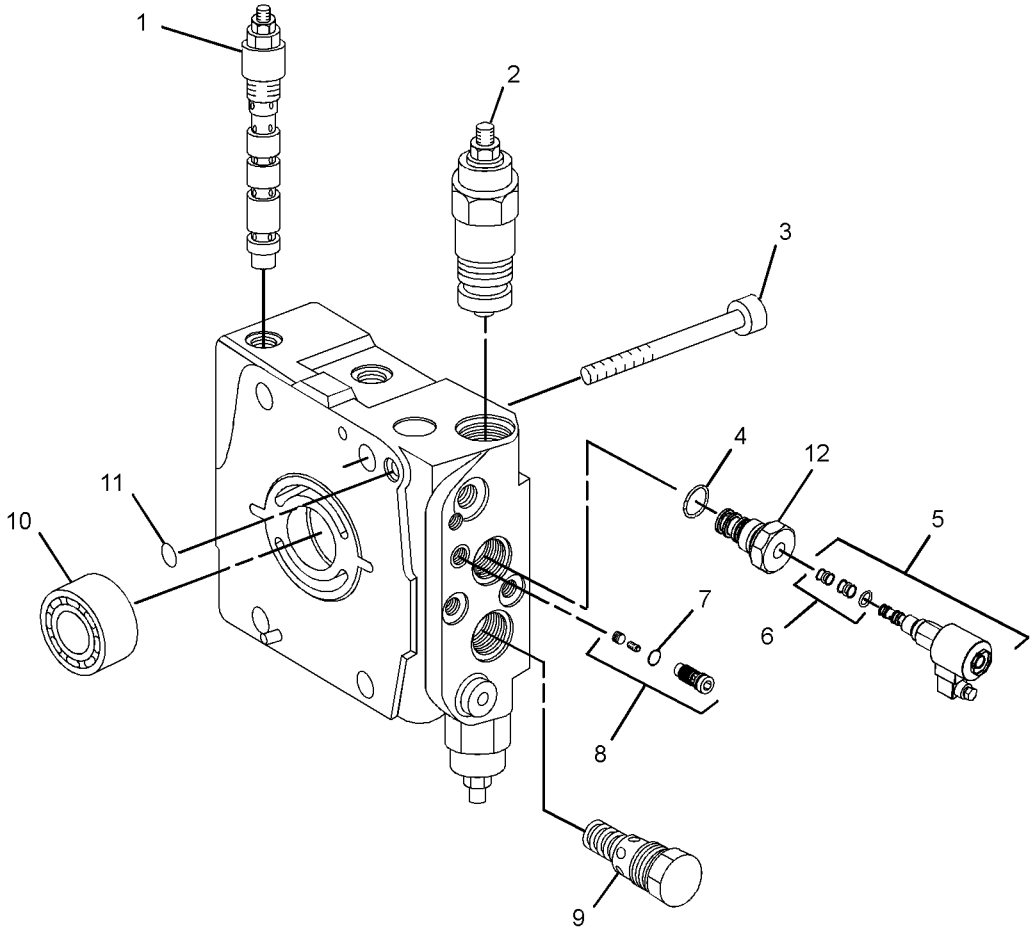

GRAPHIC #1 **<END>** g01446576

HYDRAULIC SYSTEM

219-4167 HYDRAULIC AR

S/N: BZE1-UP; BZG1-UP
PART OF 230-4178, 231-8816 COMMON AR

SMCS-5050 **i02091416**

NOTE	PART NUMBER	QTY	PART NAME 1 2 3 4 5 6 (PRODUCT LEVEL)	SEE PAGE
Y	*218-4281*	1	CONTROL GP-DIRECTION & SPEED	388
Y	*221-1731*	1	LINES GP-BRAKE & SHIFT	261
Y	*218-0377*	1	LINES GP-PROPEL	198
Y	*218-3163*	1	MOTOR & MTG GP-PROPEL (AXLE)	200
Y	*218-2973*	1	PUMP & MTG GP-PROPEL	212
Y	*208-0368*	1	VALVE & MTG GP-CONTROL	334
Y-SEPARATE ILLUSTRATION				

<END>

235-8556 HYDRAULIC AR-AUXILIARY

S/N: BZE1-UP; BZG1-UP
PART OF 230-4178, 231-8816 COMMON AR

SMCS-5050 **i02138289**

NOTE	PART NUMBER	QTY	PART NAME 1 2 3 4 5 6 (PRODUCT LEVEL)	SEE PAGE
Y	*235-8557*	1	CONTROL GP-STEERING	263
Y	*203-6511*	1	CYLINDER & MTG GP-STEERING	265
Y	*218-2976*	1	FILTER & MTG GP-HYDRAULIC	278
Y	*218-3213*	1	LINES GP-FILTER	289
Y	*218-4105*	1	LINES GP-HYDRAULIC OIL COOLER	290
Y	*218-3920*	1	LINES GP-STEERING	270
Y	*205-7407*	1	LINES GP-STEERING CYLINDER	271
Y	*220-2080*	1	MANIFOLD & VALVE GP (HYDRAULIC OIL COOLER BYPASS)	291
Y	*218-2975*	1	PUMP & MTG GP-STEERING	272
Y-SEPARATE ILLUSTRATION				

<END>

HYDRAULIC SYSTEM

218-3213 LINES GP-FILTER–HYDRAULIC

S/N: BZE1-UP; BZG1-UP

PART OF 235-8556 HYDRAULIC AR-AUXILIARY

SMCS-5057 **i02138812**

NOTE	REF NO	GRAPHIC REF	PART NUMBER	QTY	PART NAME 1 2 3 4 5 6 (PRODUCT LEVEL)	SEE PAGE
I	1	1	**152-0277**	1	HOSE AS	
I	2	1	**229-1182**	1	HOSE AS	
I	3	1	**236-5850**	2	HOSE AS	
	4	1	*148-8444*	2	TEE AS-SWIVEL	
					(EACH INCLUDES)	
		1	**6V-8398**	2	SEAL-O-RING	
		1	**6V-9837**	1	TEE-SWIVEL	

I-REFER TO HYDRAULIC INFORMATION SYSTEM

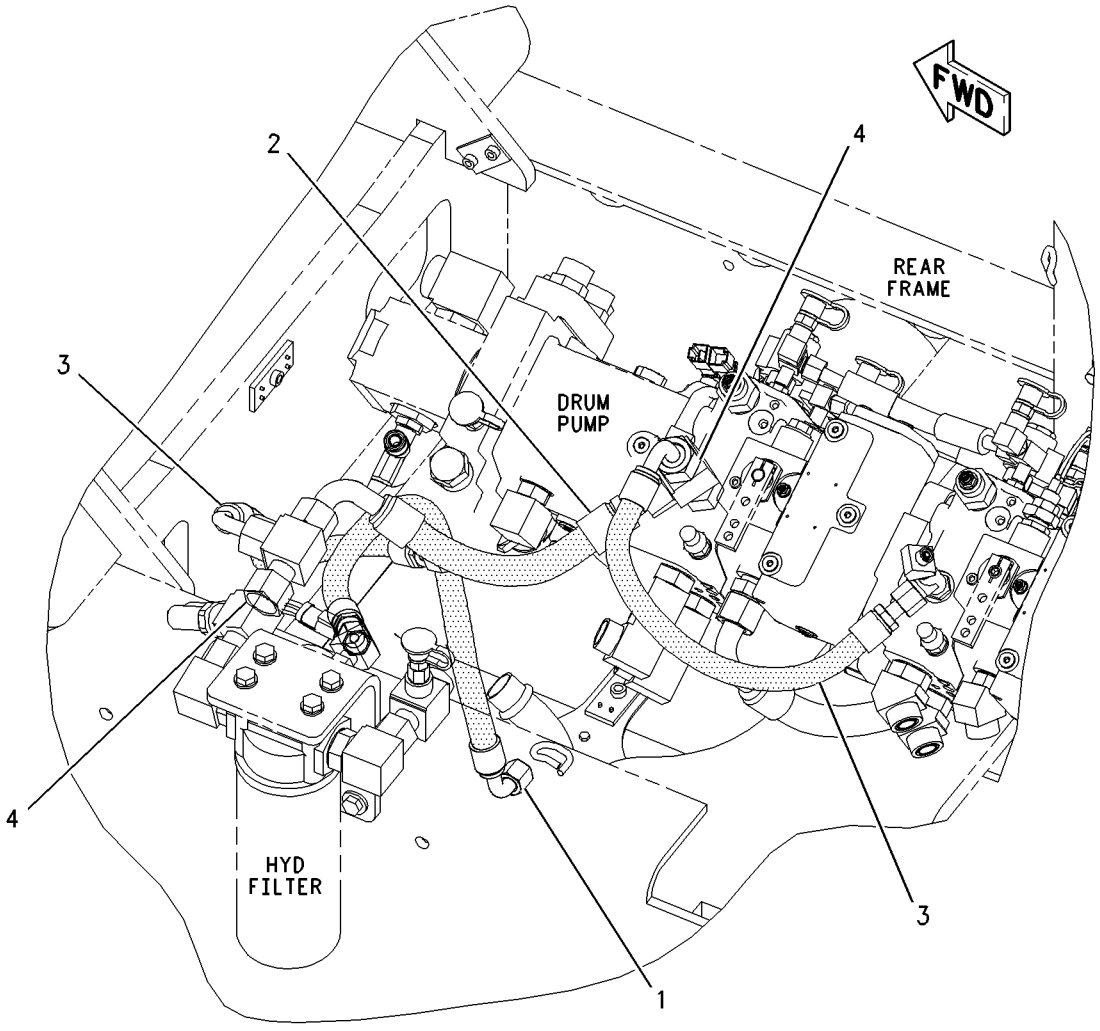

GRAPHIC #1 **<END>** g01005045

HYDRAULIC SYSTEM

218-4105 LINES GP-HYDRAULIC OIL COOLER

S/N: BZE1-UP; BZG1-UP

PART OF 235-8556 HYDRAULIC AR-AUXILIARY

SMCS-1374, 5057 **i03009783**

NOTE	REF NO	GRAPHIC REF	PART NUMBER	QTY	PART NAME 1 2 3 4 5 6 (PRODUCT LEVEL)	SEE PAGE
I	1	1	**4E-0916**	1	HOSE AS	
	2	1	**5V-6152**	10	CLAMP	
	3	1	**7R-7951**	6	PLATE	
	4	1	**7X-7958**	4	CLAMP-HOSE	
	5	1	**206-6415**	2	CLAMP-HALF	
	6	1	**207-4499**	1	PLATE-COVER	
	7	1	**7K-1181**	4	STRAP-CABLE	
M	8	1	**8T-6870**	1	BOLT (M8X1.25X70-MM)	
E	9	1	**5P-1506**		HOSE (162.5-CM)	
E	9A	1	**5P-1506**		HOSE (299-CM)	
G	11	1	**160-2247**		SLEEVE-ABRASION (18-IN)	
G	11A	1	**160-2247**		SLEEVE-ABRASION (18-IN)	
M	13	1	**8T-3844**	10	BOLT (M6X1X70-MM)	
M	14	1	**8T-4189**	1	BOLT (M8X1.25X20-MM)	
	15	1	**5P-4116**	1	WASHER-HARD (8.8X20.5X2-MM THK)	
	16	1	**7D-7233**	1	CLIP	
	17	1	**7X-0603**	1	WASHER-HARD (9.9X35X2.5-MM THK)	

E-ORDER BY THE CENTIMETER
G-ORDER BY THE INCH
I-REFER TO HYDRAULIC INFORMATION SYSTEM
M-METRIC PART

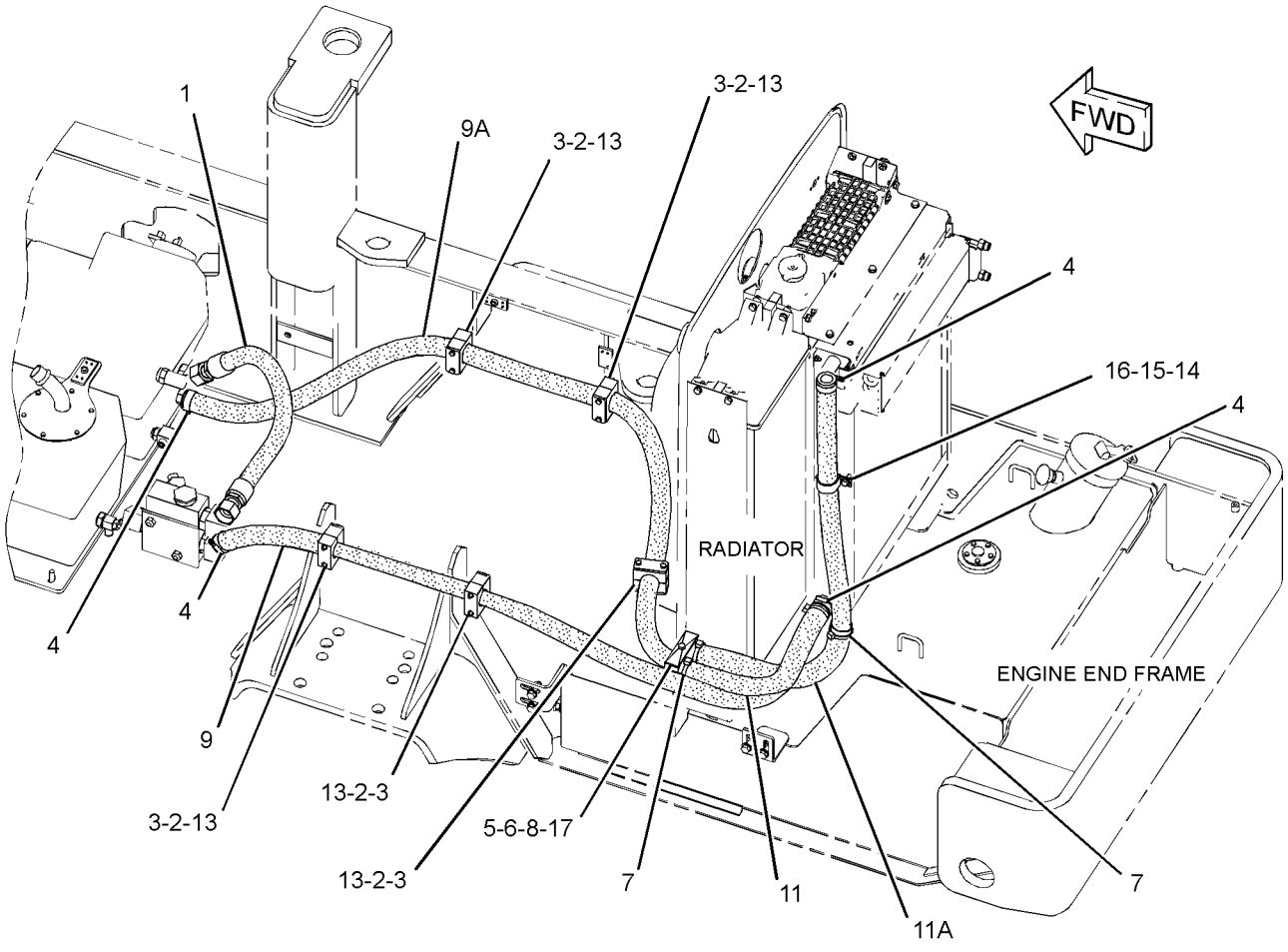

GRAPHIC #1 **<END>** g01526172

220-2080 MANIFOLD & VALVE GP

S/N: BZE1-UP; BZG1-UP

PART OF 235-8556 HYDRAULIC AR-AUXILIARY

SMCS-5071, 5264 **i02140018**

NOTE	REF NO	GRAPHIC REF	PART NUMBER	QTY	PART NAME 1 2 3 4 5 6 (PRODUCT LEVEL)	SEE PAGE
Y	1	1	**162-2453**	1	VALVE GP-BYPASS (HYDRAULIC OIL COOLER)	335
	2	1	**213-4258**	1	ELBOW AS	
		1	**7M-8485**	1	SEAL-O-RING	
	3	1	*148-8328*	1	CONNECTOR AS	
		1	**3D-2824**	1	SEAL-O-RING	
		1	**6V-8398**	1	SEAL-O-RING	
		1	**6V-8633**	1	CONNECTOR	
	4	1	*148-8354*	3	ELBOW AS	
					(EACH INCLUDES)	
		1	**3K-0360**	1	SEAL-O-RING	
		1	**6V-8398**	1	SEAL-O-RING	
		1	**6V-9002**	1	ELBOW	
	5	1	*148-8360*	1	ELBOW AS	
		1	**6V-9182**	1	ELBOW	
		1	**6V-9746**	1	SEAL-O-RING	
		1	**7M-8485**	1	SEAL-O-RING	
	6	1	*155-7328*	1	ELBOW AS	
		1	**5P-7701**	1	SEAL-O-RING	
		1	**6V-9008**	1	ELBOW	
		1	**8C-3093**	1	SEAL-O-RING	
	7	1	**8T-4121**	2	WASHER-HARD (11X21X2.5-MM THK)	
M	8	1	**8T-5005**	2	BOLT (M10X1.5X70-MM)	

M-METRIC PART
Y-SEPARATE ILLUSTRATION

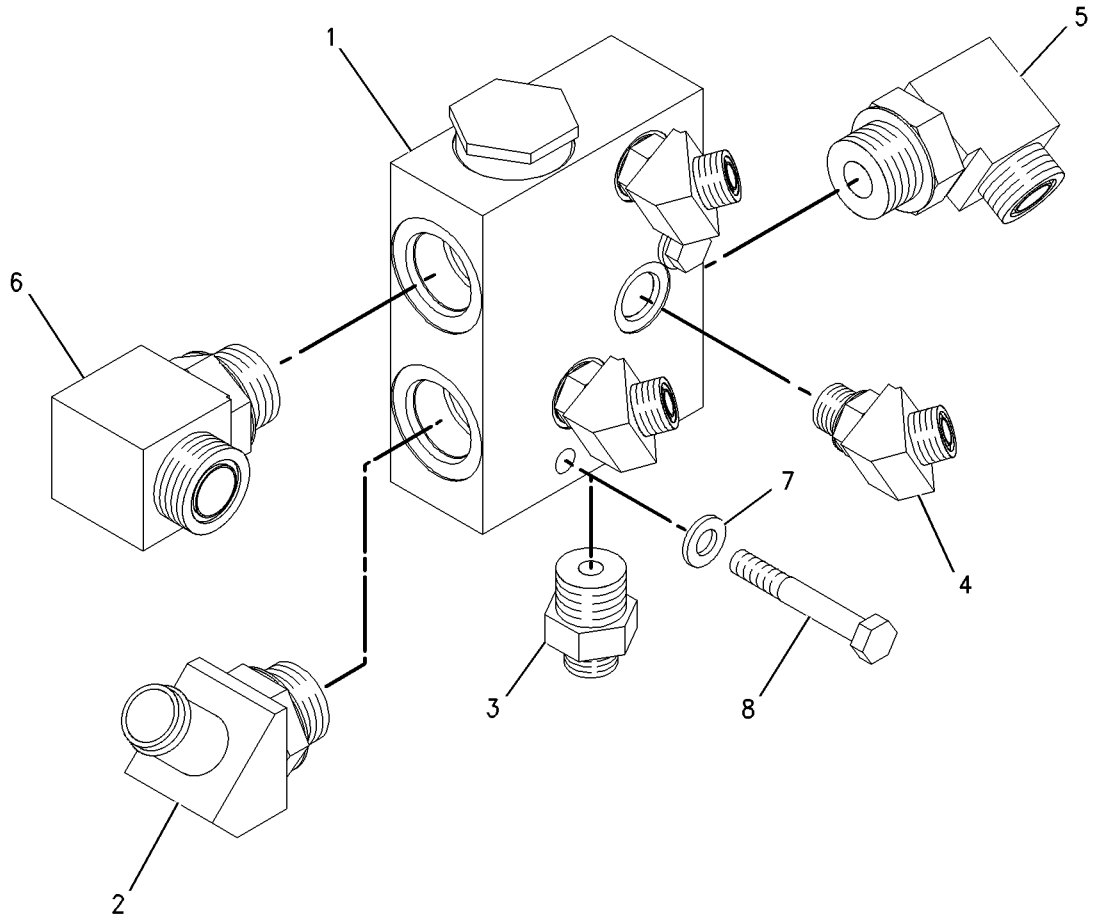

GRAPHIC #1 **<END>** g01001840

136-8869 MOTOR GP-PISTON–VIBRATORY*R

S/N: BZE1-621; BZG1-345
PART OF 140-9614 MOTOR & MTG GP-VIBRATORY
ALSO AN ATTACHMENT

SMCS-5058 **i01753535**

NOTE	REF NO	GRAPHIC REF	PART NUMBER	QTY	PART NAME 1 2 3 4 5 6 (PRODUCT LEVEL)	SEE PAGE
	1	1	**148-1202**	1	RING	
J	2	1	**166-0344**	1	SEAL-SHAFT	
	3	1	**6V-4635**	1	CONE-BEARING	
	4	1	**6V-4636**	1	CUP-BEARING	
	5	1	**155-6657**	1	SHAFT-DRIVE	
J	6	1	**2M-9780**	1	SEAL-O-RING	
	7	1	**9S-8006**	1	PLUG-O RING	
	8	1	**148-1970**	2	PIN-DOWEL	
	9	1	**148-1240**	1	SWASHPLATE	
	10	1	**148-1226**	9	PISTON	
	11	1	**168-7944**	1	PLATE-RETRACTION	
	12	1	**138-8175**	1	BEARING-TAPERED ROLLER	
	13	1	**155-6654**	1	BARREL	
	14	1	**128-1097**	3	PIN	
	15	1	**138-8177**	1	SPACER	
	16	1	**128-1092**	1	SPRING	
	17	1	**128-1093**	1	RING-RETAINING	
	18	1	**148-1219**	1	PLATE-LENS	
	19	1	**148-1238**	1	SHIM	
	20	1	**105-3035**	1	CONE-BEARING	
	21	1	**105-3036**	1	CUP-BEARING	
J	22	1	**148-1235**	1	SEAL-O-RING	
	23	1	**1G-6426**	2	DISC	
	24	1	**1G-6427**	2	SPRING-PRESSURE	
	25	1	**5J-2974**	2	SEAL-O-RING	
	26	1	**1G-6424**	2	SCREW-LOCK	
	27	1	**107-0313**	4	BOLT	
	28	1	**1G-7428**	1	DOWEL	
	29	1	**1G-6432**	1	RETAINER	
	30	1	**148-1252**	1	ORIFICE	
	31	1	**1G-6423**	1	VALVE-PISTON	
	32	1	**1G-6428**	1	SPRING-PRESSURE	
J	33	1	**4J-5351**	1	SEAL-O-RING	
	34	1	**124-9898**	1	PLUG	
Z	35	1		1	COVER	
Z	36	1		1	HOUSING	
Z	37	1		1	SPOOL	

J-KITS MARKED J INCLUDE PART(S) MARKED J
Z-NOT SERVICED SEPARATELY

136-8869 MOTOR GP-PISTON *(contd.)* **i01753535**

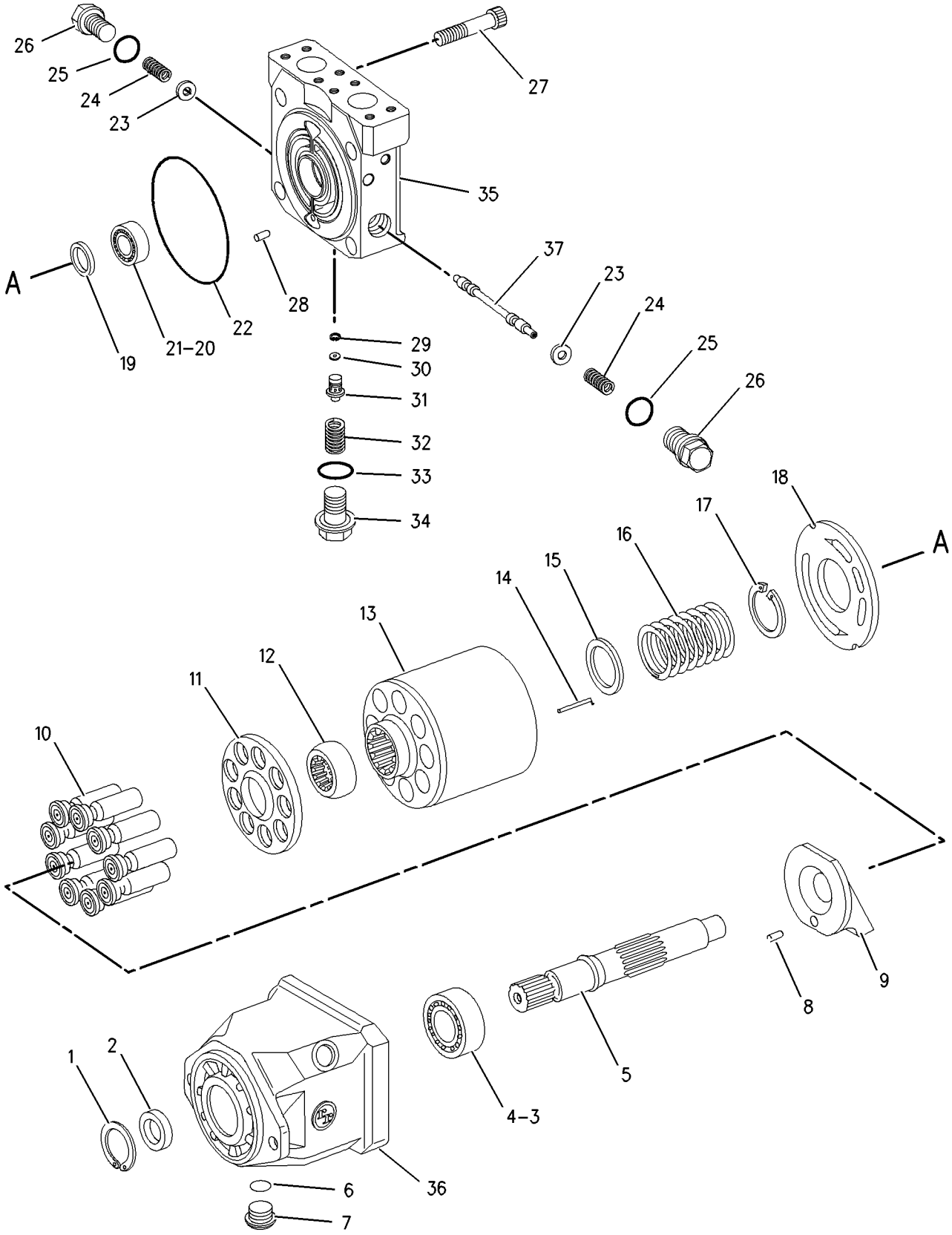

GRAPHIC #1 **<END>** g00645904

136-8869 MOTOR GP-PISTON–VIBRATORY*R

S/N: BZE622-UP; BZG346-UP
PART OF 140-9614 MOTOR & MTG GP-VIBRATORY
ALSO AN ATTACHMENT

SMCS-5058 **i02607933**

NOTE	REF NO	GRAPHIC REF	PART NUMBER	QTY	PART NAME 1 2 3 4 5 6 (PRODUCT LEVEL)	SEE PAGE
	1	1	**148-1202**	1	RING	
	2	1	**166-0344**	1	SEAL-SHAFT	
	3	1	**6V-4635**	1	CONE-BEARING	
	4	1	**6V-4636**	1	CUP-BEARING	
	5	1	**155-6657**	1	SHAFT-DRIVE	
	6	1	**2M-9780**	1	SEAL-O-RING	
	7	1	**9S-8006**	1	PLUG-O RING	
	8	1	**148-1970**	2	PIN-DOWEL	
	9	1	**148-1240**	1	SWASHPLATE	
	10	1	**148-1226**	9	PISTON	
	11	1	**168-7944**	1	PLATE-RETRACTION	
	12	1	**138-8175**	1	BEARING-TAPERED ROLLER	
	13	1	**155-6654**	1	BARREL	
	14	1	**128-1097**	3	PIN	
	15	1	**138-8177**	1	SPACER	
	16	1	**128-1092**	1	SPRING	
C	17	1	**096-0015**	1	RING-RETAINING	
	18	1	**148-1219**	1	PLATE-LENS	
	19	1	**148-1238**	1	SHIM	
	20	1	**105-3035**	1	CONE-BEARING	
C	21	1	**203-8609**	1	CUP-BEARING	
	22	1	**148-1235**	1	SEAL-O-RING	
C	23	1	**124-9899**	2	SPACER (SPRING)	
C	24	1	**124-9900**	2	SPRING	
	25	1	**5J-2974**	2	SEAL-O-RING	
C	26	1	**124-9891**	2	PLUG	
	27	1	**107-0313**	4	BOLT	
C	28	1	**9X-8979**	1	DOWEL	
C	29	1	**125-4572**	1	RING-RETAINING	
	30	1	**148-1252**	1	ORIFICE	
	31	1	**1G-6423**	1	VALVE-PISTON	
C	32	1	**124-9901**	1	SPRING	
	33	1	**4J-5351**	1	SEAL-O-RING	
	34	1	**124-9898**	1	PLUG	

C-CHANGE FROM PREVIOUS TYPE

136-8869 MOTOR GP-PISTON *(contd.)* **i02607933**

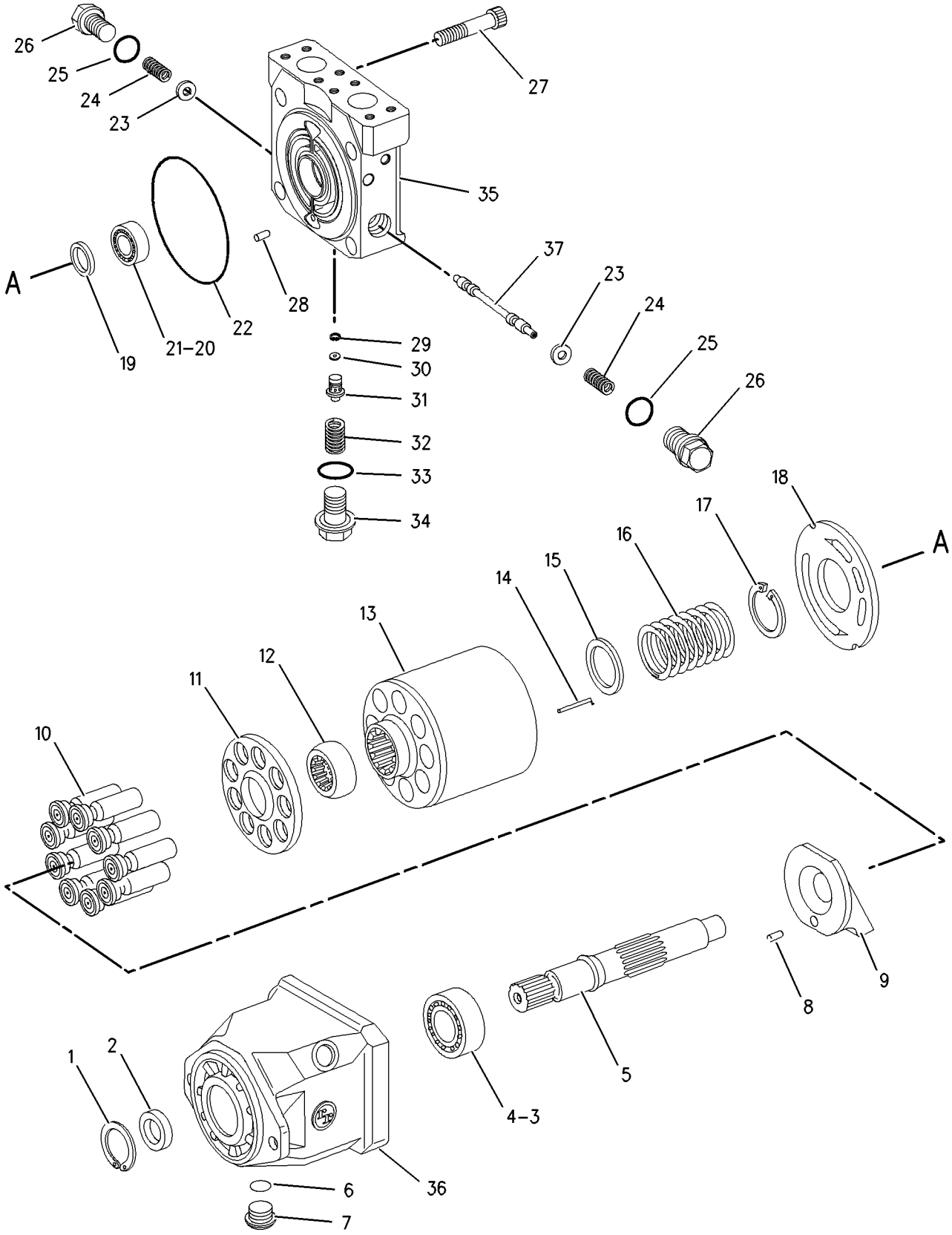

GRAPHIC #1 **<END>** g00645904

218-3164 MOTOR GP-PISTON—PROPEL

S/N: BZE1-645; BZG1-357

PART OF 218-3163 MOTOR & MTG GP-PROPEL

SMCS-5058 **i02091695**

NOTE	REF NO	GRAPHIC REF	PART NUMBER	QTY	PART NAME 1 2 3 4 5 6 (PRODUCT LEVEL)	SEE PAGE
	1	1	**213-4208**	1	RING-LOCK	
	2	1	**185-0248**	1	SEAL-OIL	
	3	1	**9X-7680**	3	SEAL-O-RING	
M	4	1	**151-6282**	4	BOLT-SOCKET HEAD (M6X1X40-MM)	
Y	5	1	**254-4251**	1	VALVE GP-CONTROL (PROPEL MOTOR)	337
	6	1	**164-5619**	1	PLUG AS	
		1	**2M-9780**	1	SEAL-O-RING	
		1	**9S-8006**	1	PLUG-O RING	
	7	1	**033-5879**	4	SEAL-O-RING	
	8	1	**228-7106**	1	SEAL-O-RING	
	9	1	**168-3504**	1	SEAL	
	10	1	**185-0242**	1	PLATE	
	11	1	**185-0263**	1	BEARING	
	12	1	**107-3117**	2	SEAL-O-RING	
	13	1	**188-6392**	1	PLUG	
M	14	1	**105-3485**	4	BOLT-SOCKET HEAD (M12X1.75X60-MM)	
	15	1	**6V-8351**	1	SEAL-O-RING	
	16	1	**204-2799**	1	DOWEL	
	17	1	**127-9485**	1	SEAL-O-RING	
	18	1	**189-4717**	1	BEARING	
	19	1	**148-1238**	1	SHIM	
Y	20	1	**185-0266**	1	ROTATING GP-MOTOR	316
	21	1	**128-1912**	2	SHELL-CRADLE	
	22	1	**128-1899**	1	SWASHPLATE	
Z	23	1		1	PLUG	
Z	24	1		1	MANIFOLD	
Z	25	1		1	HOUSING	
Z	26	1		1	SPOOL	
Z	27	1		1	SPACER	
Z	28	1		1	ADAPTOR	
Z	29	1		1	SETSCREW	
Z	30	1		2	NUT	
Z	31	1		2	NUT-CAP	
Z	32	1		1	SETSCREW	
Z	33	1		1	PLUG	
Z	34	1		2	SPRING	
Z	35	1		2	WASHER	
Z	36	1		2	PLUG	
Z	37	1		1	SPOOL	
Z	38	1		1	CAP-END	
Z	39	1		1	SETSCREW	
Z	40	1		1	SHAFT	
Z	41	1		1	RING-RETAINING	
Z	42	1		1	WASHER	
Z	43	1		1	VALVE	
Z	44	1		1	SPRING	
Z	45	1		1	PLUG	

M-METRIC PART
Y-SEPARATE ILLUSTRATION
Z-NOT SERVICED SEPARATELY

218-3164 **MOTOR GP-PISTON** *(contd.)* **i02091695**

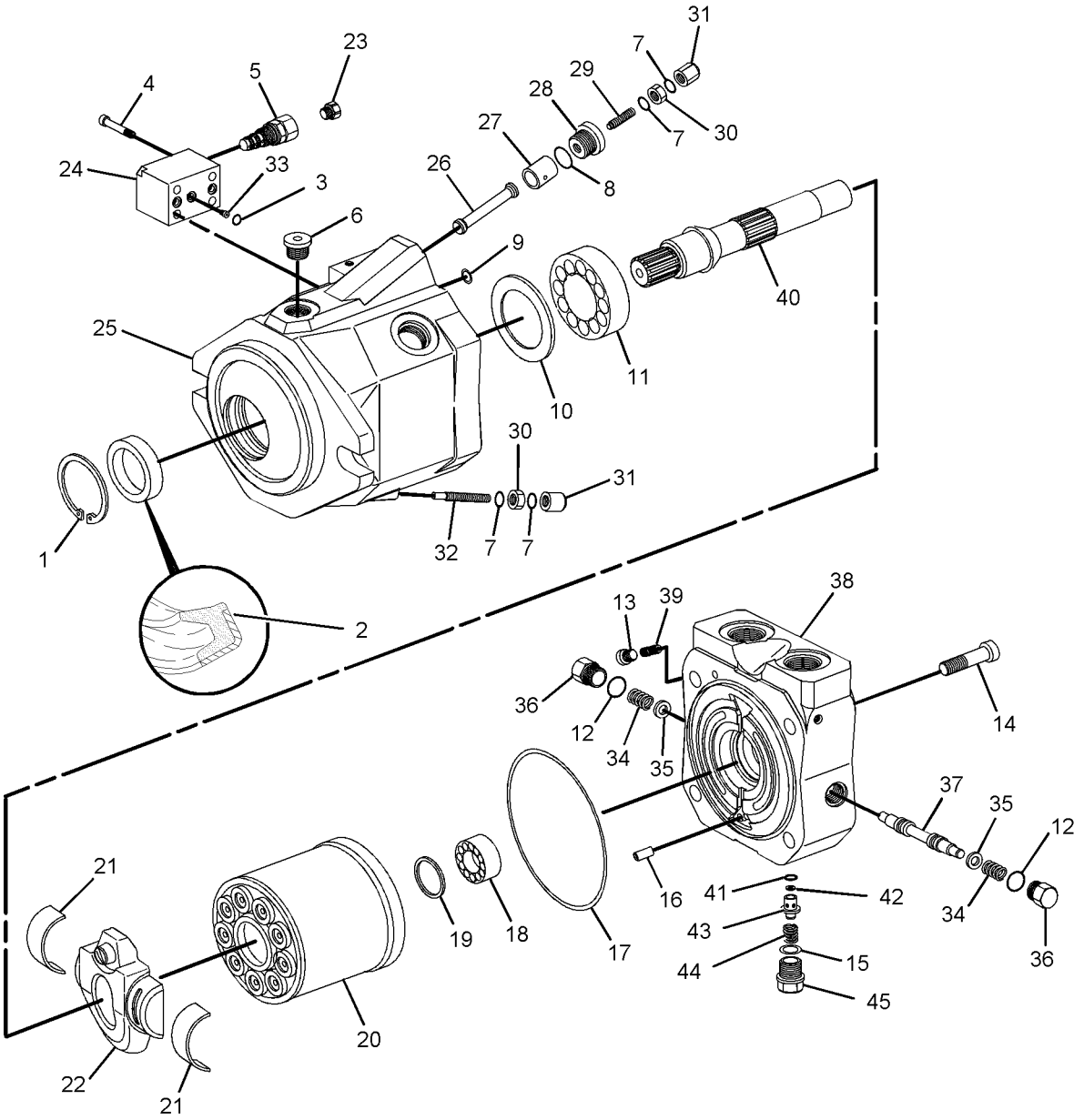

GRAPHIC #1 **<END>** g01087959

HYDRAULIC SYSTEM

219-0616 MOTOR GP-PISTON

S/N: BZE1-645; BZG1-357
PART OF 220-1944, 221-0800 DRIVE GP-DRUM
ALSO AN ATTACHMENT

SMCS-5058 **i02141198**

NOTE	REF NO	GRAPHIC REF	PART NUMBER	QTY	PART NAME 1 2 3 4 5 6 (PRODUCT LEVEL)	SEE PAGE
	1	1	**213-4208**	1	RING-LOCK	
	2	1	**185-0248**	1	SEAL-OIL	
	3	1	**9X-7680**	3	SEAL-O-RING	
M	4	1	**151-6282**	4	BOLT-SOCKET HEAD (M6X1X40-MM)	
Y	5	1	**254-4251**	1	VALVE GP-CONTROL (PROPEL MOTOR)	337
	6	1	**228-7106**	1	SEAL-O-RING	
	7	1	**033-5879**	4	SEAL-O-RING	
	8	1	**168-3504**	1	SEAL	
	9	1	**185-0242**	1	PLATE	
	10	1	**185-0263**	1	BEARING	
	11	1	**164-5619**	1	PLUG AS	
		1	**2M-9780**	1	SEAL-O-RING	
		1	**9S-8006**	1	PLUG-O RING	
	12	1	**107-3117**	2	SEAL-O-RING	
	13	1	**188-6392**	1	PLUG	
M	14	1	**105-3485**	4	BOLT-SOCKET HEAD (M12X1.75X60-MM)	
	15	1	**6V-8351**	1	SEAL-O-RING	
	16	1	**204-2799**	1	DOWEL	
	17	1	**127-9485**	1	SEAL-O-RING	
	18	1	**189-4717**	1	BEARING	
	19	1	**148-1238**	1	SHIM	
Y	20	1	**185-0266**	1	ROTATING GP-MOTOR	316
	21	1	**252-9581**	2	BEARING-CRADLE	
	22	1	**128-1899**	1	SWASHPLATE	
Z	23	1		1	PLUG	
Z	24	1		1	SPRING	
Z	25	1		1	VALVE-PISTON	
Z	26	1		1	WASHER	
Z	27	1		1	SEAL-O-RING	
Z	28	1		1	VALVE	
Z	29	1		1	WASHER	
Z	30	1		1	SPRING	
Z	31	1		1	HEAD	
Z	32	1		1	SPRING	
Z	33	1		1	SPRING	
Z	34	1		1	WASHER	
Z	35	1		1	PLUG	
Z	36	1		1	PLUG	
Z	37	1		1	BUSHING	
Z	38	1		1	NUT	
Z	39	1		1	SPRING	
Z	40	1		1	HOUSING	
Z	41	1		1	PLUG	
Z	42	1		1	BODY	
Z	43	1		1	PLUG	
Z	44	1		1	SPOOL	
Z	45	1		1	BUSHING	
Z	46	1		1	PLUG	
Z	47	1		1	SPRING	
Z	48	1		1	BUSHING	
Z	49	1		1	BUSHING	
Z	50	1		1	SHAFT	

M-METRIC PART
Y-SEPARATE ILLUSTRATION
Z-NOT SERVICED SEPARATELY

219-0616 **MOTOR GP-PISTON** *(contd.)* **i02141198**

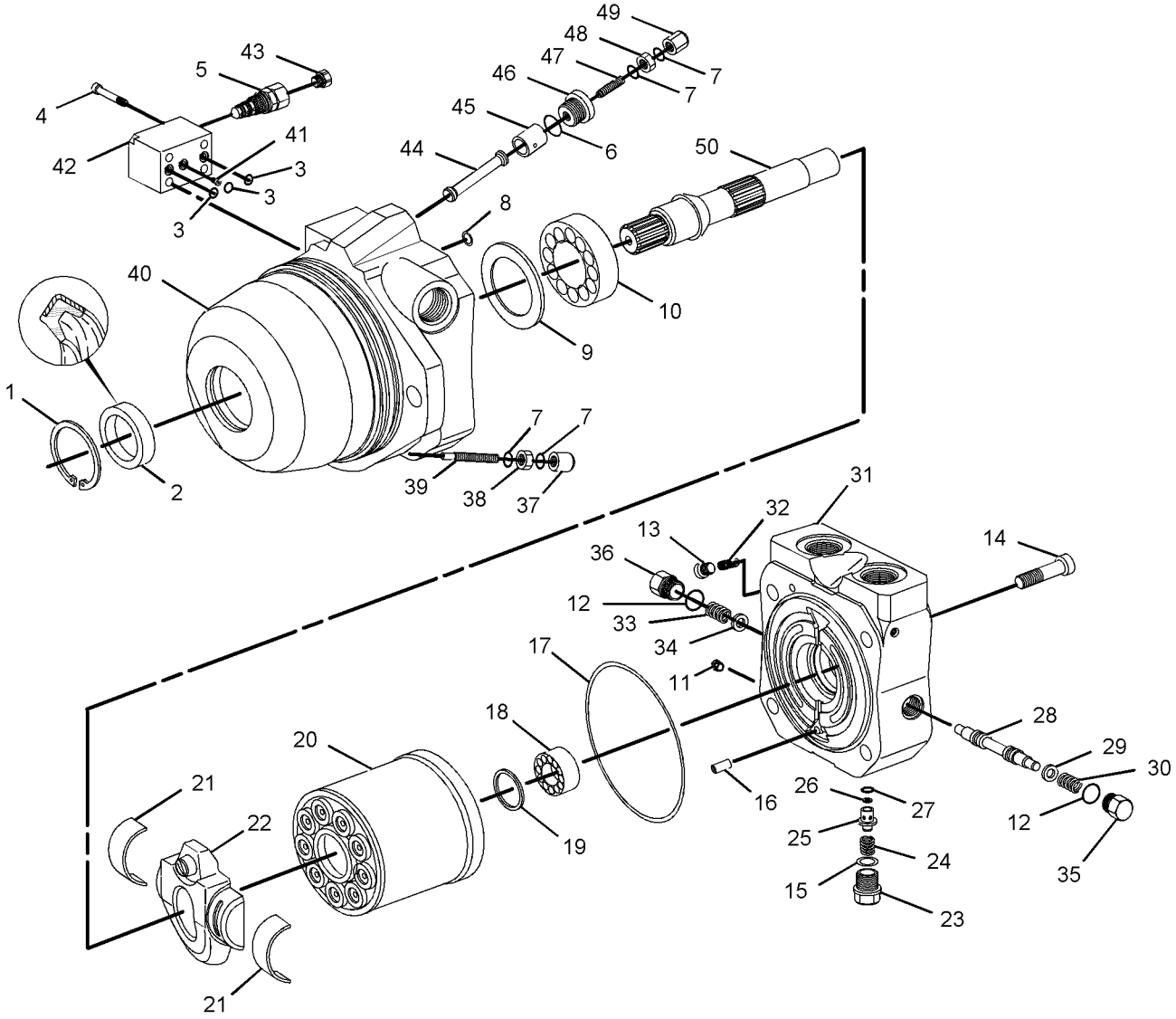

GRAPHIC #1 **<END>** g01089958

296-5159 MOTOR GP-PISTON–SLIPPER*R

S/N: BZG358-UP
PART OF 221-0800 DRIVE GP-DRUM
AN ATTACHMENT

SMCS-5058 **i03011794**

NOTE	REF NO	GRAPHIC REF	PART NUMBER	QTY	PART NAME 1 2 3 4 5 6 (PRODUCT LEVEL)	SEE PAGE
	1	1	**213-4208**	1	RING-LOCK	
	2	1	**185-0248**	1	SEAL-OIL	
	3	1	**9X-7680**	3	SEAL-O-RING	
M	4	1	**151-6282**	4	BOLT-SOCKET HEAD (M6X1X40-MM)	
Y	5	1	**254-4251**	1	VALVE GP-CONTROL (PROPEL MOTOR)	337
	6	1	**228-7106**	1	SEAL-O-RING	
	7	1	**033-5879**	4	SEAL-O-RING	
	8	1	**168-3504**	1	SEAL	
	9	1	**185-0242**	1	PLATE	
	10	1	**185-0263**	1	BEARING	
	11	1	**2M-9780**	1	SEAL-O-RING	
	12	1	**107-3117**	2	SEAL-O-RING	
	13	1	**188-6392**	1	PLUG	
M	14	1	**105-3485**	4	BOLT-SOCKET HEAD (M12X1.75X60-MM)	
	15	1	**6V-8351**	1	SEAL-O-RING	
	16	1	**9X-8979**	1	DOWEL	
	17	1	**127-9485**	1	SEAL-O-RING	
	18	1	**189-4717**	1	BEARING	
	19	1	**148-1238**	1	SHIM	
Y	20	1	**313-2545**	1	ROTATING GP-PUMP	320
	21	1	**252-9581**	2	BEARING-CRADLE	
	22	1	**313-2546**	1	SWASHPLATE	
	23	1	**9S-8006**	1	PLUG-O-RING	
					PARTS SHOWN IN GRAPHIC(S) WITHOUT A REFERENCE NUMBER ARE NOT SERVICED SEPARATELY	

M-METRIC PART
Y-SEPARATE ILLUSTRATION

296-5159 MOTOR GP-PISTON *(contd.)* **i03011794**

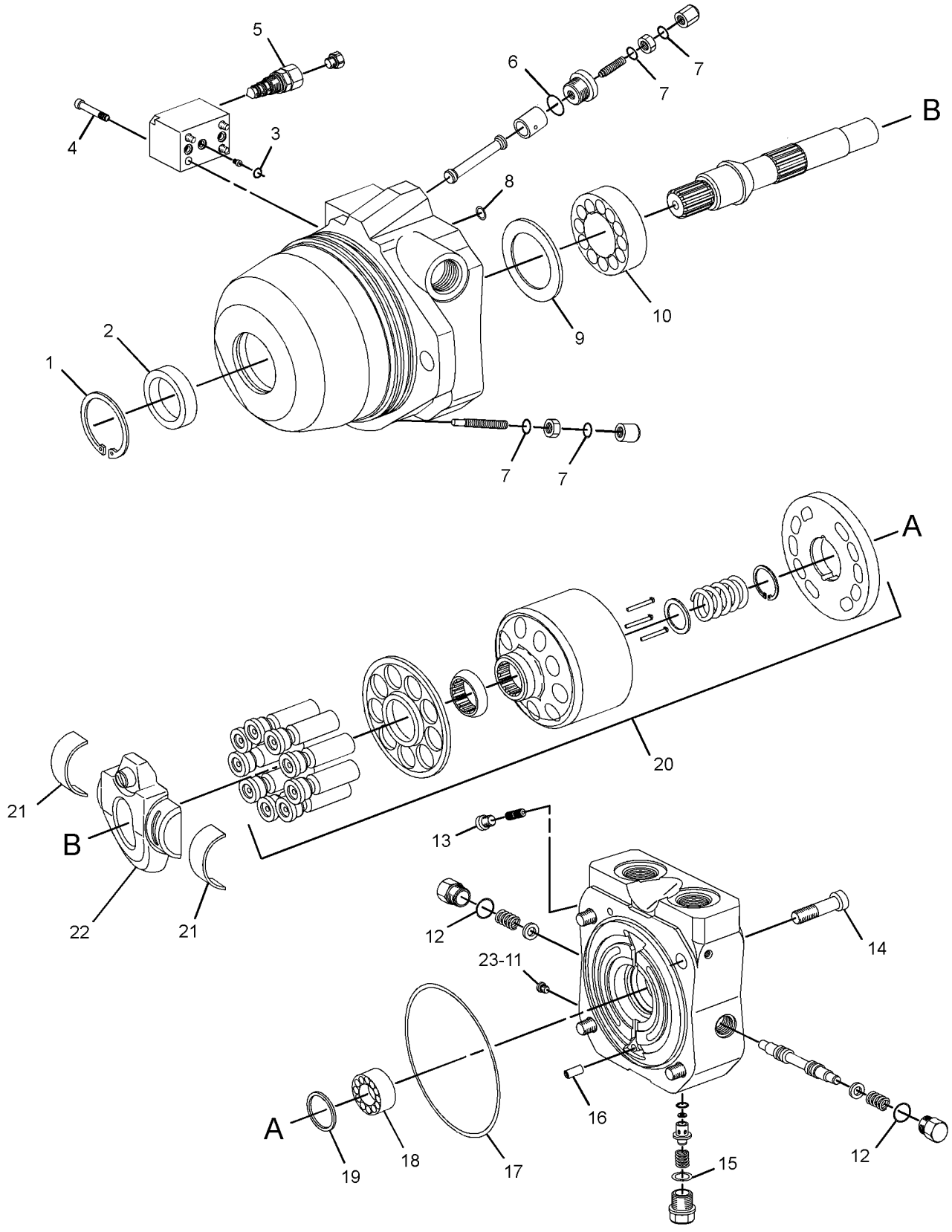

GRAPHIC #1 **<END>** g01434663

296-5160 MOTOR GP-PISTON*R

S/N: BZE646-UP; BZG358-UP

PART OF 218-3163 MOTOR & MTG GP-PROPEL

SMCS-5058 **i03008570**

NOTE	REF NO	GRAPHIC REF	PART NUMBER	QTY	PART NAME 1 2 3 4 5 6 (PRODUCT LEVEL)	SEE PAGE
	1	1	**213-4208**	1	RING-LOCK	
	2	1	**185-0248**	1	SEAL-OIL	
	3	1	**9X-7680**	3	SEAL-O-RING	
M	4	1	**151-6282**	4	BOLT-SOCKET HEAD (M6X1X40-MM)	
Y	5	1	**254-4251**	1	VALVE GP-CONTROL (PROPEL MOTOR)	337
	6	1	**228-7106**	1	SEAL-O-RING	
	7	1	**033-5879**	4	SEAL-O-RING	
	8	1	**168-3504**	1	SEAL	
	9	1	**185-0242**	1	PLATE	
	10	1	**185-0263**	1	BEARING	
	11	1	**2M-9780**	1	SEAL-O-RING	
	12	1	**107-3117**	2	SEAL-O-RING	
	13	1	**188-6392**	1	PLUG	
M	14	1	**105-3485**	4	BOLT-SOCKET HEAD (M12X1.75X60-MM)	
	15	1	**6V-8351**	1	SEAL-O-RING	
	16	1	**9X-8979**	1	DOWEL	
	17	1	**127-9485**	1	SEAL-O-RING	
	18	1	**189-4717**	1	BEARING	
	19	1	**148-1238**	1	SHIM	
Y	20	1	**313-2545**	1	ROTATING GP-PUMP	320
	21	1	**128-1912**	2	SHELL-CRADLE	
					(EACH INCLUDES)	
		1	**237-4227**	1	BEARING-CRADLE	
	22	1	**313-2546**	1	SWASHPLATE	
	23	1	**9S-8006**	1	PLUG-O-RING	

PARTS SHOWN IN GRAPHIC(S) WITHOUT A REFERENCE NUMBER ARE NOT SERVICED SEPARATELY

M-METRIC PART
Y-SEPARATE ILLUSTRATION

296-5160 **MOTOR GP-PISTON** *(contd.)* **i03008570**

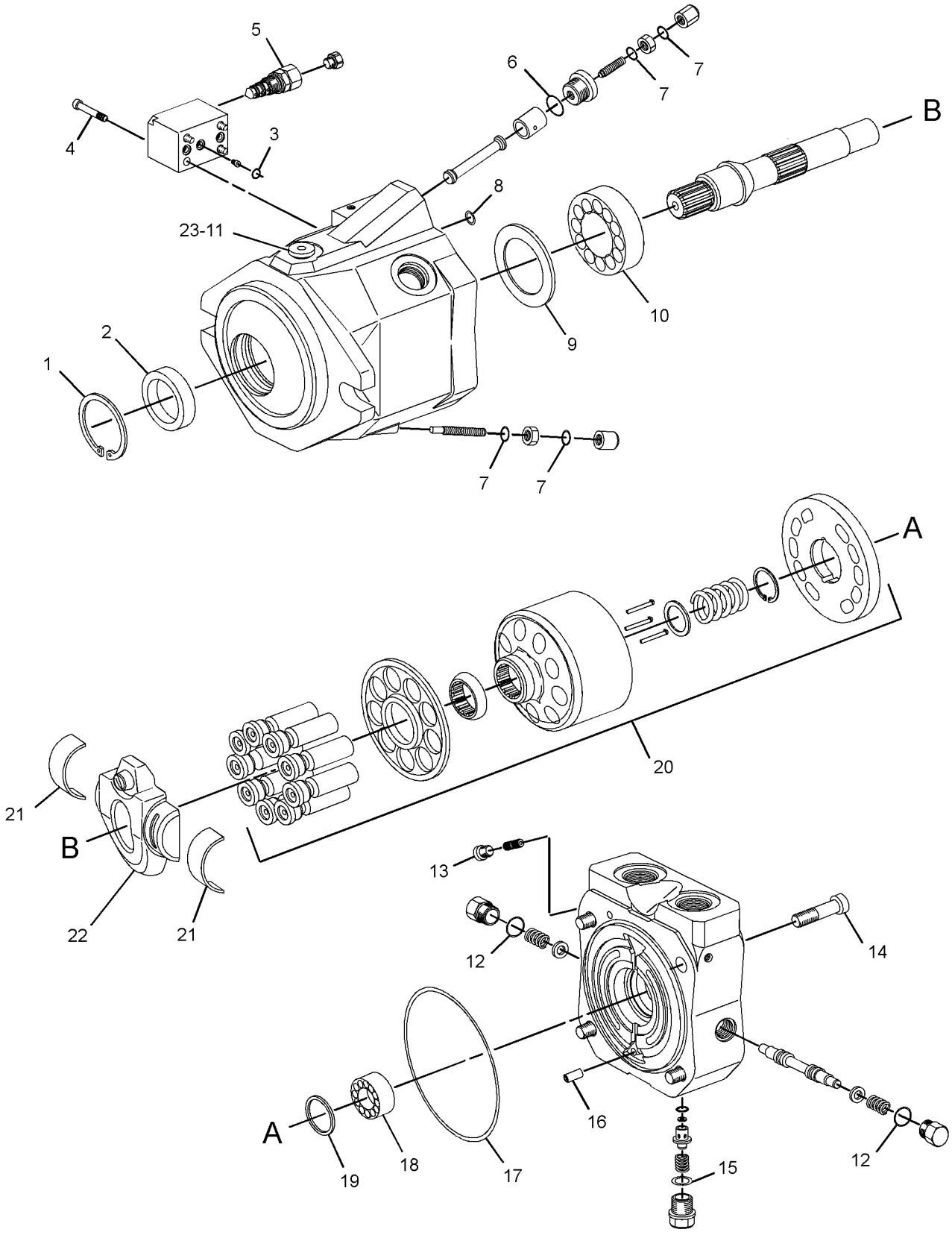

GRAPHIC #1 **<END>** g01430063

255-0625 PUMP GP-GEAR–STEERING

S/N: BZE1-UP; BZG1-UP

PART OF 218-2975 PUMP & MTG GP-STEERING

SMCS-5073 **i02326194**

NOTE	REF NO	GRAPHIC REF	PART NUMBER	QTY	PART NAME 1 2 3 4 5 6 (PRODUCT LEVEL)	SEE PAGE
	1	1	**260-0769**	1	KIT-OVERHAUL	
					(INCLUDES BEARING-BLOCKS, KEY-SQUARE,SEAL-RING-SQUARE	
					BACKUP-RING,SEAL-PRESSURE LOADING & SEAL-SHAFT)	
	2	1	**096-0194**	1	RING-RETAINING	

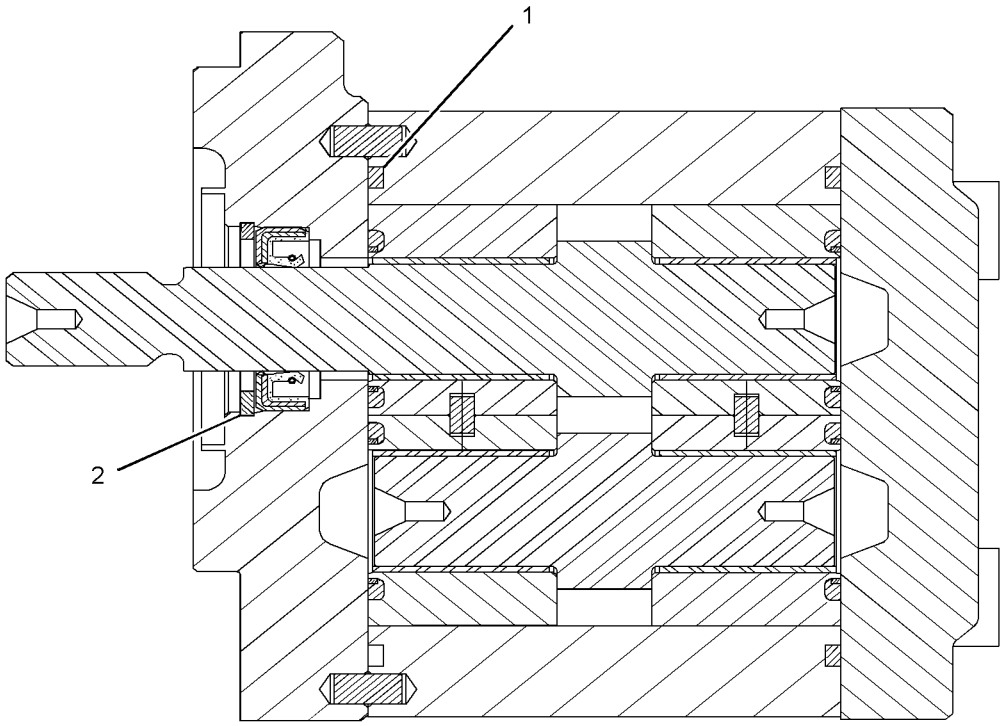

GRAPHIC #1 **<END>** g01260747

HYDRAULIC SYSTEM

218-3159 PUMP GP-PISTON–PROPEL

S/N: BZE1-645; BZG1-357

PART OF 218-2973 PUMP & MTG GP-PROPEL

SMCS-5070 **i02634596**

NOTE	REF NO	GRAPHIC REF	PART NUMBER	QTY	PART NAME 1 2 3 4 5 6 (PRODUCT LEVEL)	SEE PAGE
Y	1	1	**255-8686**	1	VALVE GP-PUMP CONTROL	341
	2	1	**167-6805**	2	PIN	
Y	3	1	**190-7632**	1	ROTATING GP-PUMP	317
	4	1	**5J-3886**	1	SEAL-O-RING	
	5	1	**202-6535**	1	PIN	
Y	6	1	**255-8680**	1	HEAD GP-PUMP	283
	7	1	**3K-0715**	1	SEAL-O-RING	
M	8	1	**8T-1159**	1	BOLT-SOCKET HEAD (M10X1.5X25-MM)	
	9	1	**8T-5049**	1	SEAL-O-RING	
	10	1	**3E-6731**	1	SEAL-O-RING	
	11	1	**112-4686**	1	PIN	
	12	1	**9S-8004**	3	PLUG-O-RING	
	13	1	**112-4630**	1	SCREW (1-5/16-THD)	
	14	1	**112-4628**	4	SCREW	
Y	15	1	**254-8188**	1	CONTROL GP-HYDRAULIC	275
M	16	1	**9T-3928**	1	PLUG AS	
		1	**187-8001**	1	SEAL	
	17	1	**122-9718**	1	PIN	
	18	1	**206-4881**	2	PLUG-ORIFICE	
Z	19	1		1	HOUSING	
Z	20	1		1	COUPLING	
Z	21	1		1	COVER-REAR	
Z	22	1		1	FLANGE	
Z	23	1		1	PLATE	

M-METRIC PART
Y-SEPARATE ILLUSTRATION
Z-NOT SERVICED SEPARATELY

218-3159 **PUMP GP-PISTON** *(contd.)* **i02634596**

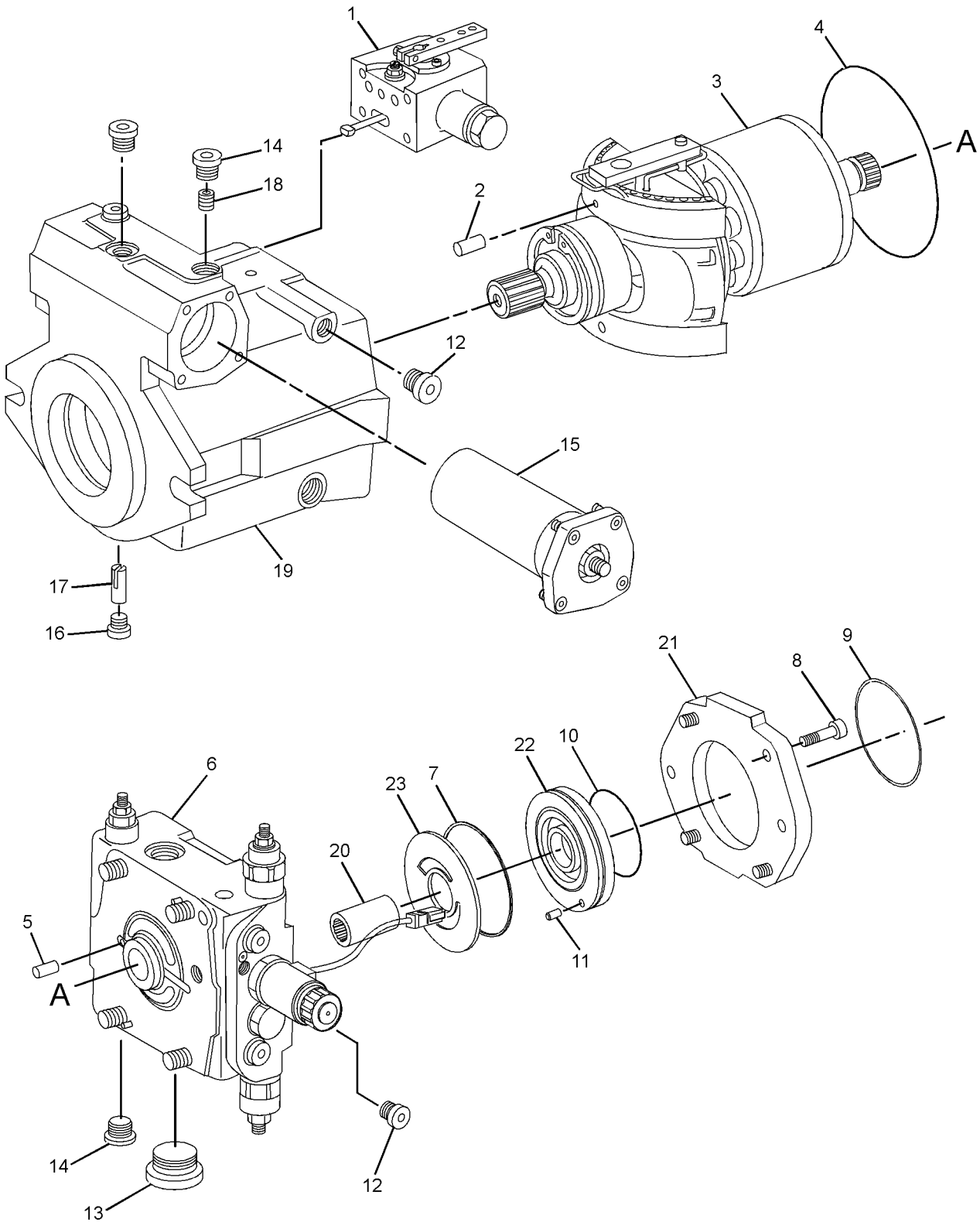

GRAPHIC #1 **<END>** g01160923

HYDRAULIC SYSTEM

218-3160 PUMP GP-PISTON—PROPEL

S/N: BZE1-645; BZG1-357

PART OF 218-2973 PUMP & MTG GP-PROPEL

SMCS-5070 **i02610593**

NOTE	REF NO	GRAPHIC REF	PART NUMBER	QTY	PART NAME 1 2 3 4 5 6 (PRODUCT LEVEL)	SEE PAGE
Y	1	1	**254-8191**	1	VALVE GP-PUMP CONTROL (HYDRAULIC)	339
	2	1	**167-6805**	2	PIN	
Y	3	1	**190-7632**	1	ROTATING GP-PUMP (VIBRATORY PUMP)	317
	4	1	**5J-3886**	1	SEAL-O-RING	
	5	1	**202-6535**	1	PIN	
	6	1	**112-4529**	1	PLUG-ORIFICE	
Y	7	1	**254-8189**	1	HEAD GP-PUMP	280
	8	1	**112-4630**	1	SCREW (1-5/16-THD)	
	9	1	**9S-8004**	2	PLUG-O-RING (9/16-18 THD)	
Y	10	1	**254-8188**	1	CONTROL GP-HYDRAULIC	275
M	11	1	**9T-3928**	1	PLUG AS	
		1	**187-8001**		SEAL	
	12	1	**122-9718**	1	PIN	
	13	1	**112-4628**	4	SCREW	
	14	1	**206-4881**	2	PLUG-ORIFICE	
	15	1	**3K-0715**	1	SEAL-O-RING	
	16	1	**3E-6731**	1	SEAL-O-RING	
M	17	1	**8T-8441**	1	BOLT-SOCKET HEAD (M12X1.75X25-MM)	
	18	1	**7J-6285**	4	SEAL-O-RING	
	19	1	**112-4686**	1	PIN	

M-METRIC PART
Y-SEPARATE ILLUSTRATION

218-3160 **PUMP GP-PISTON** *(contd.)* **i02610593**

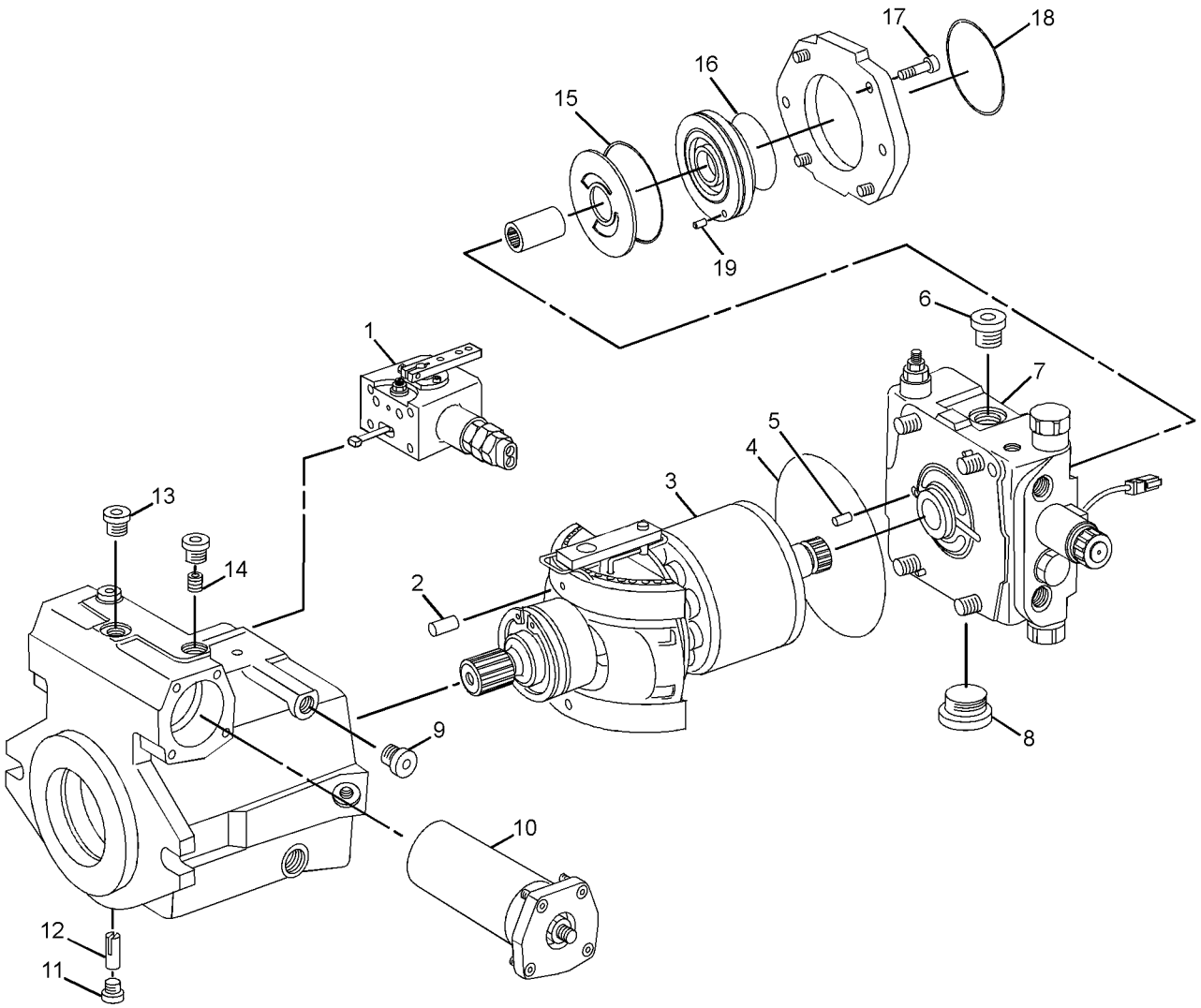

GRAPHIC #1 **<END>** g01307040

218-8490 PUMP GP-PISTON–VIBRATORY

S/N: BZE1-645; BZG1-357

PART OF 218-8489 PUMP & MTG GP-VIBRATORY

SMCS-5070 **i02610594**

NOTE	REF NO	GRAPHIC REF	PART NUMBER	QTY	PART NAME 1 2 3 4 5 6 (PRODUCT LEVEL)	SEE PAGE
	1	1	**112-4628**	3	SCREW	
	2	1	**206-4881**	2	PLUG-ORIFICE	
Y	3	1	**227-8307**	1	VALVE GP-PUMP CONTROL (VIBRATORY, FIXED DISPLACEMENT)	338
	4	1	**167-6805**	2	PIN	
Y	5	1	**255-6666**	1	ROTATING GP-PUMP	319
	6	1	**202-6535**	1	PIN	
	7	1	**112-4629**	1	SCREW	
Y	8	1	**255-6668**	1	HEAD GP-PUMP (VIBRATORY)	281
	9	1	**7J-6285**	1	SEAL-O-RING	
	10	1	**9S-8004**	1	PLUG-O-RING (STRAIGHT THREAD O-RING)	
Y	11	1	**255-6667**	1	ACTUATOR GP-PUMP (VIBRATORY)	273
	12	1	**112-4627**	1	SCREW-LOCK	
M	13	1	**9T-3928**	1	PLUG AS (PISTON MOTOR)	
		1	**187-8001**	1	SEAL	
	14	1	**112-4626**	1	PIN	

M-METRIC PART
Y-SEPARATE ILLUSTRATION

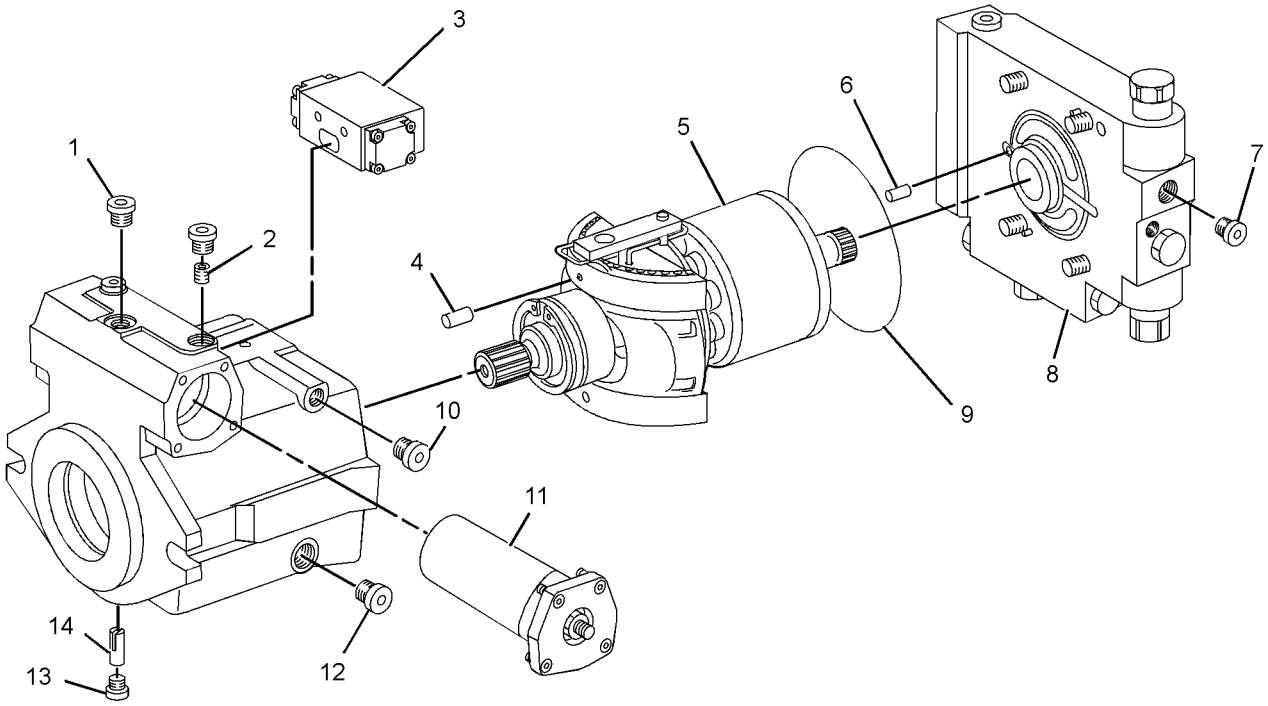

GRAPHIC #1 **<END>** g01192383

296-3329 PUMP GP-PISTON–PROPEL, DRUM*R

S/N: BZE646-UP; BZG358-UP

PART OF 218-2973 PUMP & MTG GP-PROPEL

SMCS-5070 **i03009808**

NOTE	REF NO	GRAPHIC REF	PART NUMBER	QTY	PART NAME 1 2 3 4 5 6 (PRODUCT LEVEL)	SEE PAGE
Y	1	1	**254-8191**	1	VALVE GP-PUMP CONTROL	339
	2	1	**167-6805**	2	PIN	
Y	3	1	**190-7632**	1	ROTATING GP-PUMP	317
	4	1	**5J-3886**	1	SEAL-O-RING	
	5	1	**202-6535**	1	PIN	
Y	6	1	**314-4016**	1	HEAD GP-PUMP	286
	7	1	**112-4630**	1	SCREW (1-5/16-THD)	
	8	1	**9S-8004**	2	PLUG-O-RING	
Y	9	1	**254-8188**	1	CONTROL GP-HYDRAULIC	275
M	10	1	**9T-3928**	1	PLUG AS	
		1	**187-8001**	1	SEAL	
	11	1	**122-9718**	1	PIN	
	12	1	**112-4628**	4	SCREW	
	13	1	**206-4881**	2	PLUG-ORIFICE	
	14	1	**3K-0715**	1	SEAL-O-RING	
	15	1	**3E-6731**	1	SEAL-O-RING	
M	16	1	**8T-8441**	4	BOLT-SOCKET HEAD (M12X1.75X25-MM)	
	17	1	**7J-6285**	1	SEAL-O-RING	
	18	1	**112-4686**	1	PIN	
	19	1	**3J-1907**	2	SEAL-O-RING	

PARTS SHOWN IN GRAPHIC(S) WITHOUT A REFERENCE NUMBER ARE NOT SERVICED SEPARATELY

M-METRIC PART
Y-SEPARATE ILLUSTRATION

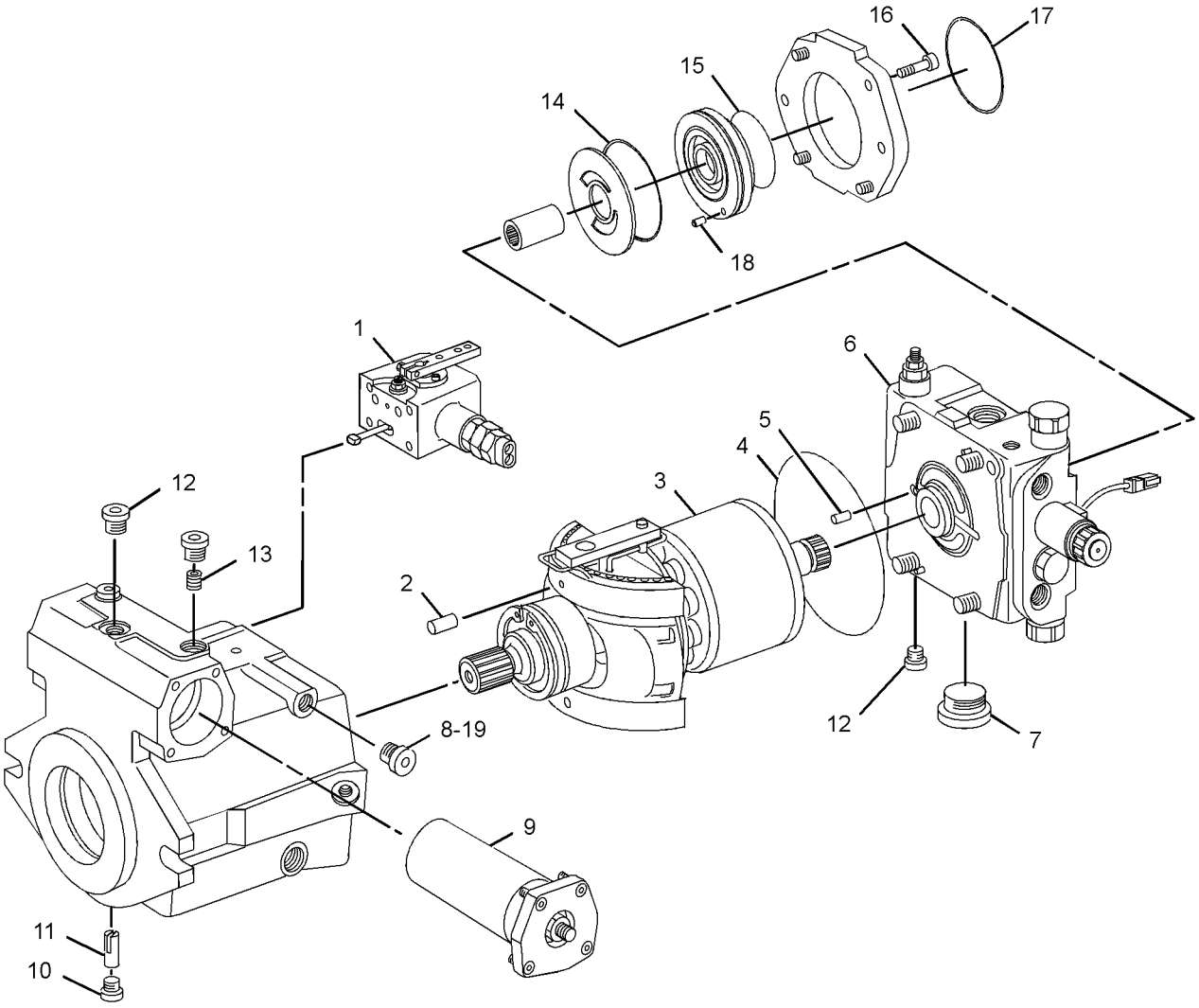

GRAPHIC #1 **<END>** g01446913

296-3331 PUMP GP-PISTON–PROPEL, AXLE*R

S/N: BZE646-UP; BZG358-UP

PART OF 218-2973 PUMP & MTG GP-PROPEL

SMCS-5070 **i03009816**

NOTE	REF NO	GRAPHIC REF	PART NUMBER	QTY	PART NAME 1 2 3 4 5 6 (PRODUCT LEVEL)	SEE PAGE
Y	1	1	**255-8686**	1	VALVE GP-PUMP CONTROL	341
	2	1	**167-6805**	2	PIN	
Y	3	1	**190-7632**	1	ROTATING GP-PUMP	317
	4	1	**5J-3886**	1	SEAL-O-RING	
	5	1	**202-6535**	1	PIN	
Y	6	1	**255-8680**	1	HEAD GP-PUMP	283
	7	1	**3K-0715**	1	SEAL-O-RING	
M	8	1	**8T-1159**	1	BOLT-SOCKET HEAD (M10X1.5X25-MM)	
	9	1	**8T-5049**	1	SEAL-O-RING	
	10	1	**3E-6731**	1	SEAL-O-RING	
	11	1	**112-4686**	1	PIN	
	12	1	**9S-8004**	3	PLUG-O-RING	
	13	1	**112-4630**	1	SCREW (1-5/16-THD)	
	14	1	**112-4628**	4	SCREW	
Y	15	1	**254-8188**	1	CONTROL GP-HYDRAULIC	275
M	16	1	**9T-3928**	1	PLUG AS	
		1	**187-8001**	1	SEAL	
	17	1	**122-9718**	1	PIN	
	18	1	**206-4881**	2	PLUG-ORIFICE	
	19	1	**3J-1907**	1	SEAL-O-RING	
					PARTS SHOWN IN GRAPHIC(S) WITHOUT A REFERENCE NUMBER ARE NOT SERVICED SEPARATELY	

M-METRIC PART
Y-SEPARATE ILLUSTRATION

296-3331 PUMP GP-PISTON *(contd.)* **i03009816**

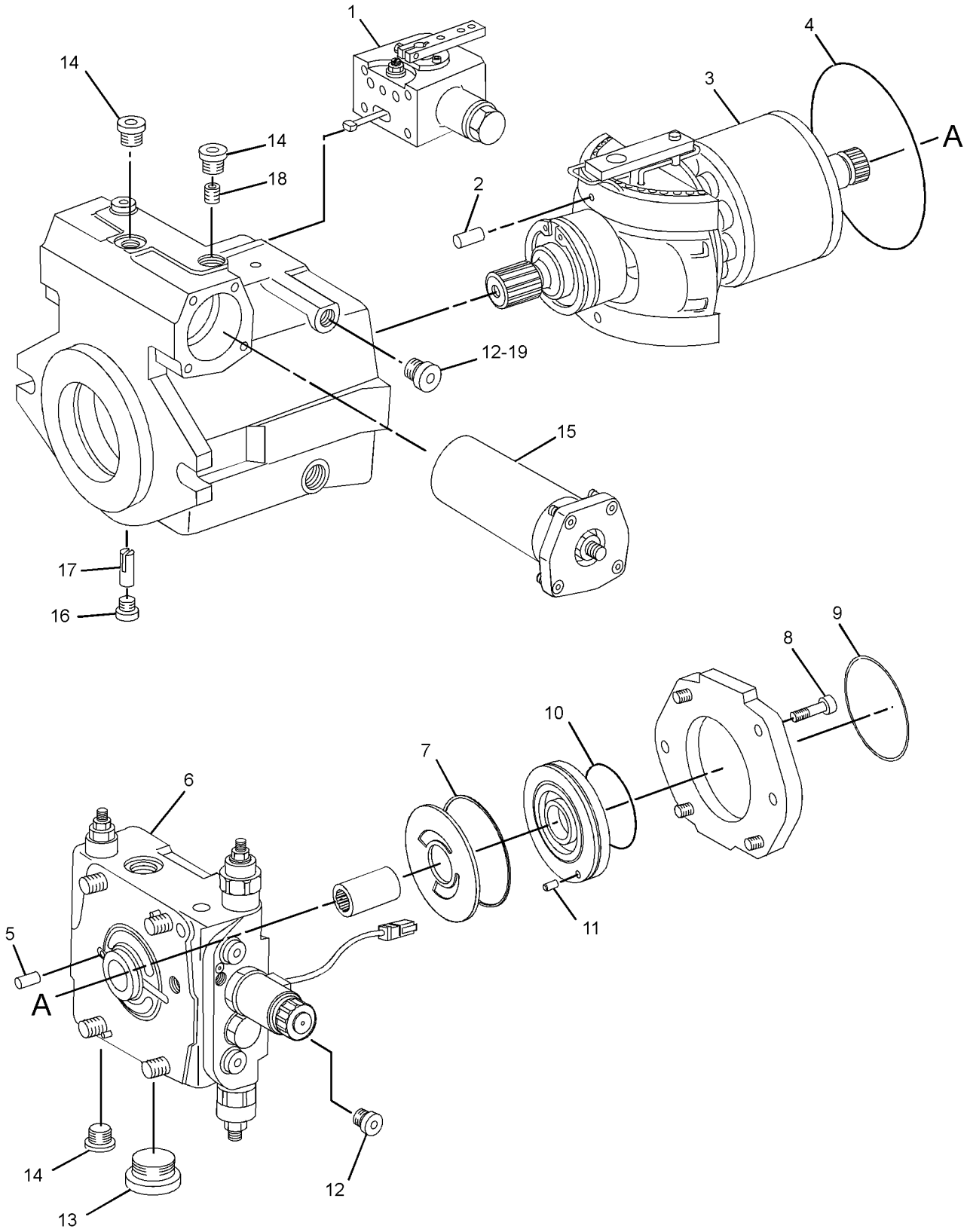

GRAPHIC #1 **<END>** g01446944

296-3332 PUMP GP-PISTON–VIBRATORY*R

S/N: BZE646-UP; BZG358-UP

PART OF 218-8489 PUMP & MTG GP-VIBRATORY

SMCS-5070 **i03009821**

NOTE	REF NO	GRAPHIC REF	PART NUMBER	QTY	PART NAME 1 2 3 4 5 6 (PRODUCT LEVEL)	SEE PAGE
	1	1	**112-4628**	3	SCREW	
	2	1	**206-4881**	2	PLUG-ORIFICE	
Y	3	1	**313-3414**	1	VALVE GP-PUMP CONTROL	342
	4	1	**167-6805**	2	PIN	
Y	5	1	**313-2590**	1	ROTATING GP-PUMP	321
	6	1	**202-6535**	1	PIN	
	7	1	**112-4629**	1	SCREW	
Y	8	1	**313-3391**	1	HEAD GP-PUMP	285
	9	1	**7J-6285**	1	SEAL-O-RING	
	10	1	**9S-8004**	1	PLUG-O-RING	
Y	11	1	**313-2635**	1	ACTUATOR GP-PUMP	274
	12	1	**112-4627**	1	SCREW-LOCK	
M	13	1	**9T-3928**	1	PLUG AS	
		1	**187-8001**	1	SEAL	
	14	1	**112-4626**	1	PIN	
	15	1	**3J-1907**	1	SEAL-O-RING	

M-METRIC PART
Y-SEPARATE ILLUSTRATION

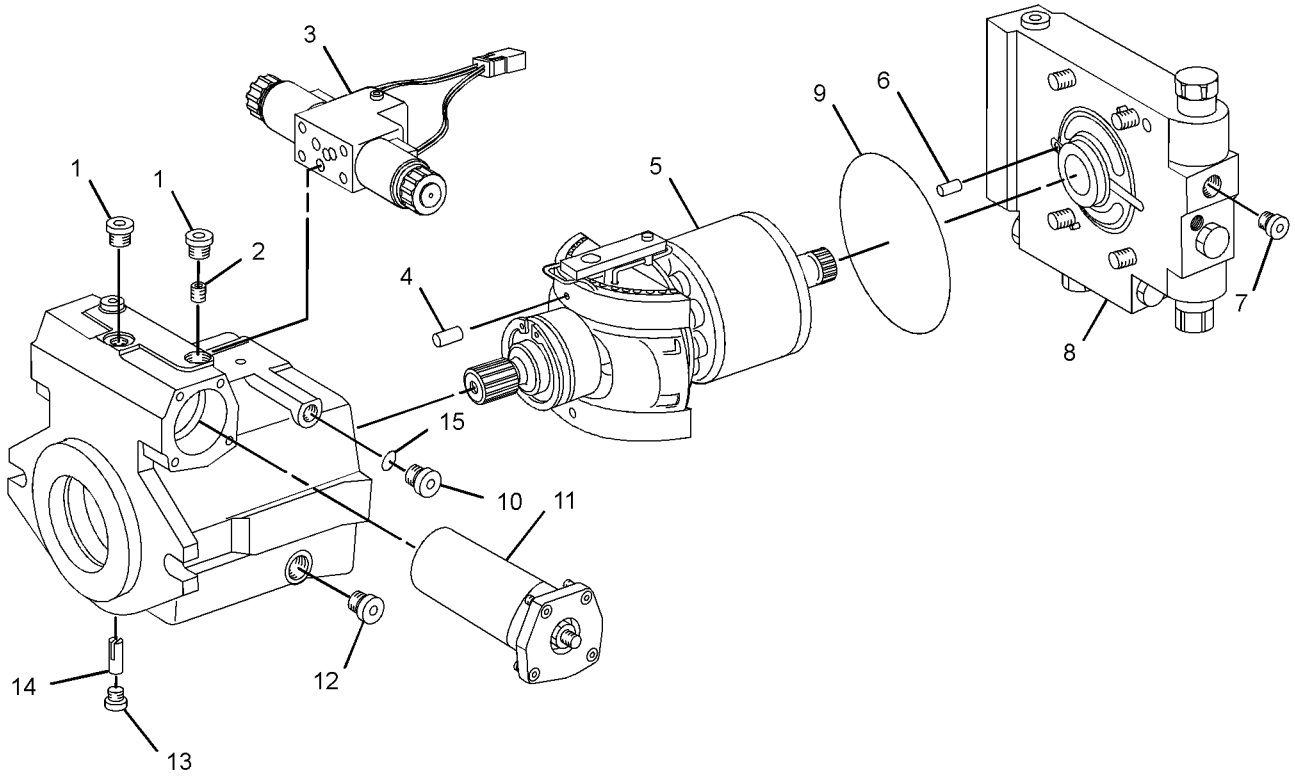

GRAPHIC #1 **<END>** g01468268

HYDRAULIC SYSTEM

185-0266 ROTATING GP-MOTOR

S/N: BZE1-645; BZG1-357
PART OF 218-3164, 219-0616 MOTOR GP-PISTON
ALSO AN ATTACHMENT

SMCS-5058 **i02140593**

NOTE	REF NO	GRAPHIC REF	PART NUMBER	QTY	PART NAME 1 2 3 4 5 6 (PRODUCT LEVEL)	SEE PAGE
	1	1	**168-7940**	3	PIN	
	2	1	**185-0273**	1	PLATE-VALVE	
	3	1	**096-0015**	1	RING-RETAINING	
	4	1	**155-6654**	1	BARREL	
	5	1	**168-7941**	1	SPRING	
	6	1	**168-7942**	1	WASHER (2-MM THK)	
	7	1	**185-0253**	1	GUIDE-BALL	
	8	1	**185-0250**	1	PISTON AS	
	9	1	**168-7944**	1	PLATE-RETRACTION	

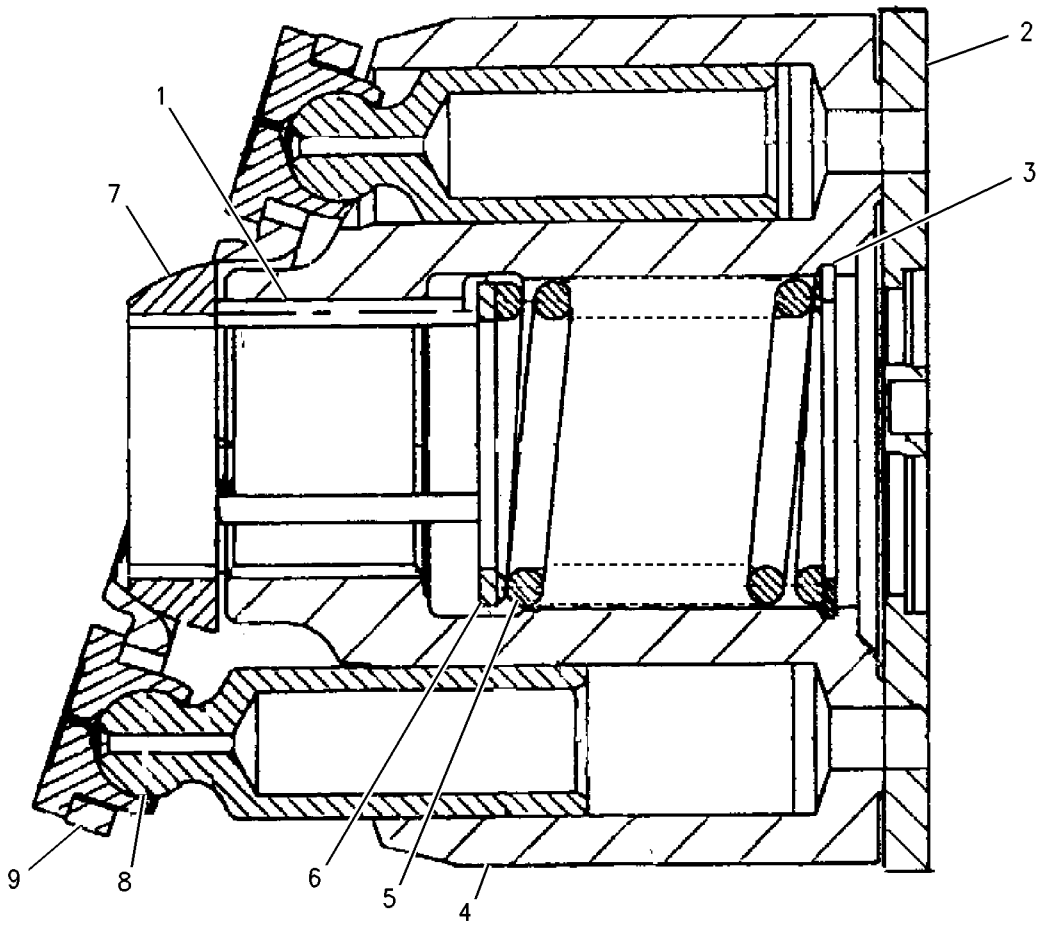

GRAPHIC #1 **<END>** g00789455

190-7632 ROTATING GP-PUMP

S/N: BZE1-UP; BZG1-UP

PART OF 218-3159, 218-3160, 296-3329, 296-3331 PUMP GP-PISTON

SMCS-5070 **i02294042**

NOTE	REF NO	GRAPHIC REF	PART NUMBER	QTY	PART NAME 1 2 3 4 5 6 (PRODUCT LEVEL)	SEE PAGE
	1	1	**194-1983**	1	SEAL-SHAFT	
	2	1	**191-4522**	1	SHAFT	
	3	1	**6V-5200**	1	RING-RETAINING	
	4	1	**122-9068**	1	WIRE	
	5	1	**117-7241**	1	PLATE	
	6	1	**112-4657**	1	PIN	
	8	1	**117-7240**	1	CRADLE	
	9	1	**1G-3410**	1	WIRE	
	10	1	**6E-0725**	2	ROLLER	
	11	1	**117-7252**	1	CAGE	
	12	1	**125-9134**	1	BEARING	
	13	1	**117-7251**	1	BEARING	
	14	1	**126-9587**	1	RING-RETAINING	
	15	1	**095-0941**	1	RING-RETAINING	
JZ	16	1		9	PISTON	
JZ	17	1		1	PLATE-RETAINER	
JZ	18	1		1	RETAINER	
JZ	19	1		1	CYLINDER	
JZ	20	1		3	PIN	
JZ	21	1		1	SHIM	
JZ	22	1		1	SPRING	
JZ	23	1		1	RETAINING RING	
JZ	24	1		1	PLATE	
					AVAILABLE REPAIR KIT(S):	
J			**192-2839**	1	KIT-ROTATOR	

J-(KIT MARKED J SERVICES PARTS MARKED J)
Z-NOT SERVICED SEPARATELY

190-7632 ROTATING GP-PUMP *(contd.)* **i02294042**

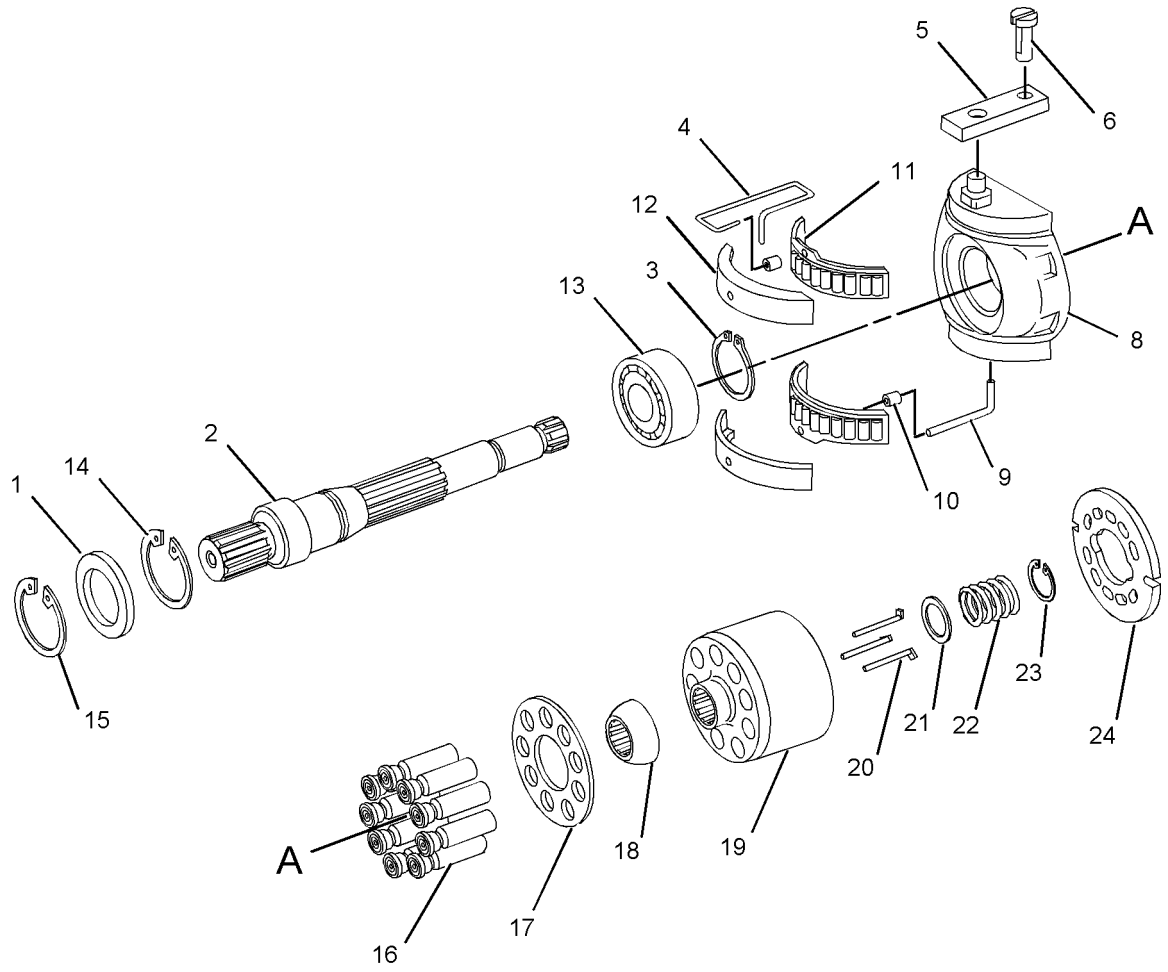

GRAPHIC #1 **<END>** g01084987

255-6666 ROTATING GP-PUMP

S/N: BZE1-645; BZG1-357

PART OF 218-8490 PUMP GP-PISTON

SMCS-5070 **i02694693**

NOTE	REF NO	GRAPHIC REF	PART NUMBER	QTY	PART NAME 1 2 3 4 5 6 (PRODUCT LEVEL)	SEE PAGE
	1	1	**204-1452**	2	RING-RETAINING	
	2	1	**204-1453**	1	SEAL	
	3	1	**081-3698**	1	BEARING	
	4	1	**108-3565**	1	CLIP	
	5	1	**255-6669**	1	KIT-ROTARY (PUMP)	
					(INCLUDES PISTONS, RETAINERS, BARREL, PINS, SPACER, SPRING & CONTROL PLATE)	
					PARTS SHOWN IN GRAPHIC(S) WITHOUT A REFERENCE NUMBER ARE NOT SERVICED SEPARATELY	

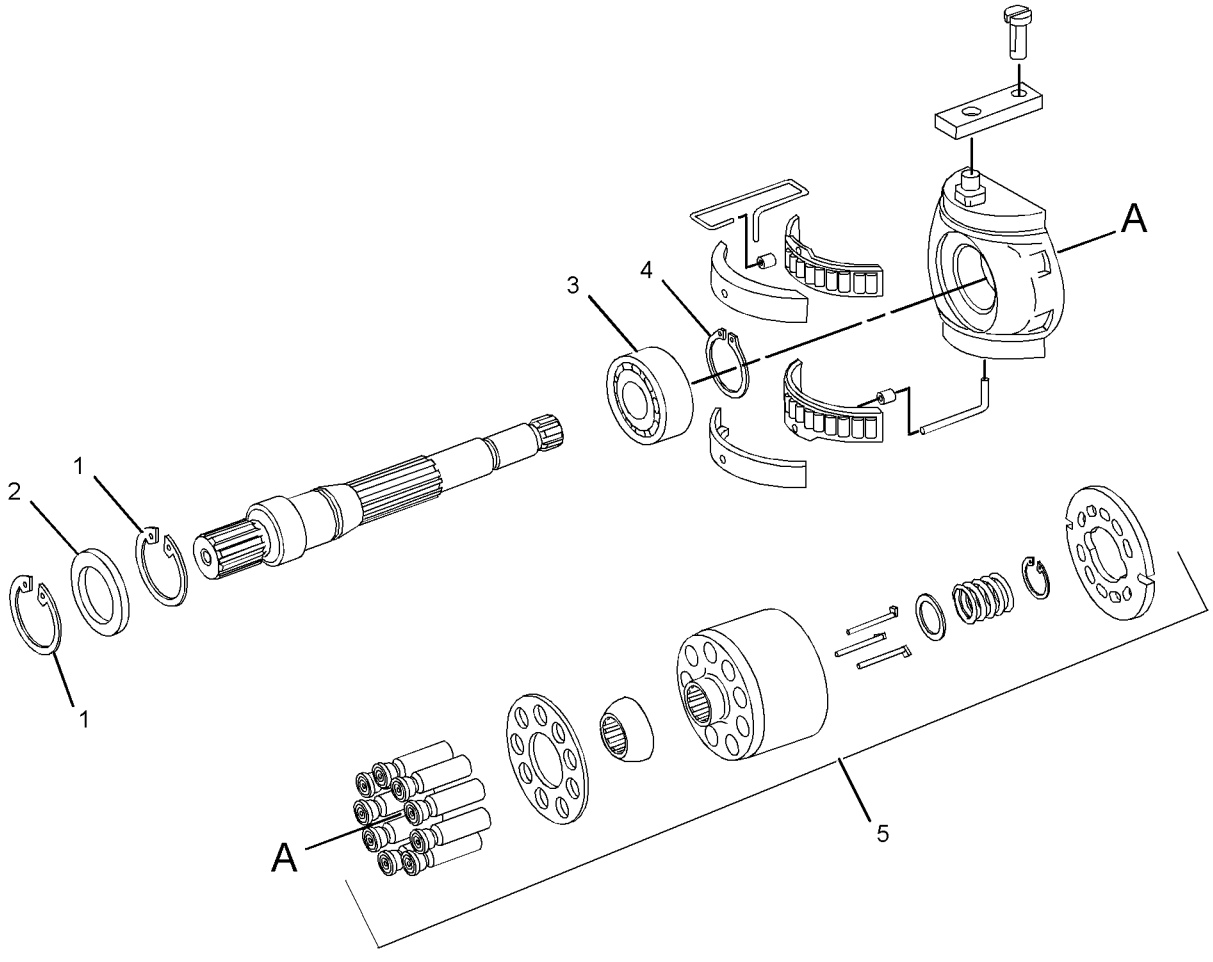

GRAPHIC #1 **<END>** g01351616

HYDRAULIC SYSTEM

313-2545 ROTATING GP-PUMP

S/N: BZE646-UP; BZG358-UP
PART OF 296-5159, 296-5160 MOTOR GP-PISTON
ALSO AN ATTACHMENT

SMCS-5070 **i03008576**

NOTE	REF NO	GRAPHIC REF	PART NUMBER	QTY	PART NAME 1 2 3 4 5 6 (PRODUCT LEVEL)	SEE PAGE
	1	1	**168-7943**	9	PISTON AS	
	2	1	**155-6654**	1	BARREL	
	3	1	**258-5194**	1	PLATE	
	4	1	**138-8175**	1	BEARING-TAPERED ROLLER	
	5	1	**168-7941**	1	SPRING	
	6	1	**168-7940**	3	PIN	
	7	1	**096-0015**	1	RING-RETAINING	
	8	1	**168-7942**	1	WASHER (2-MM THK)	
	9	1	**313-4424**	1	PLATE-CONTROL	

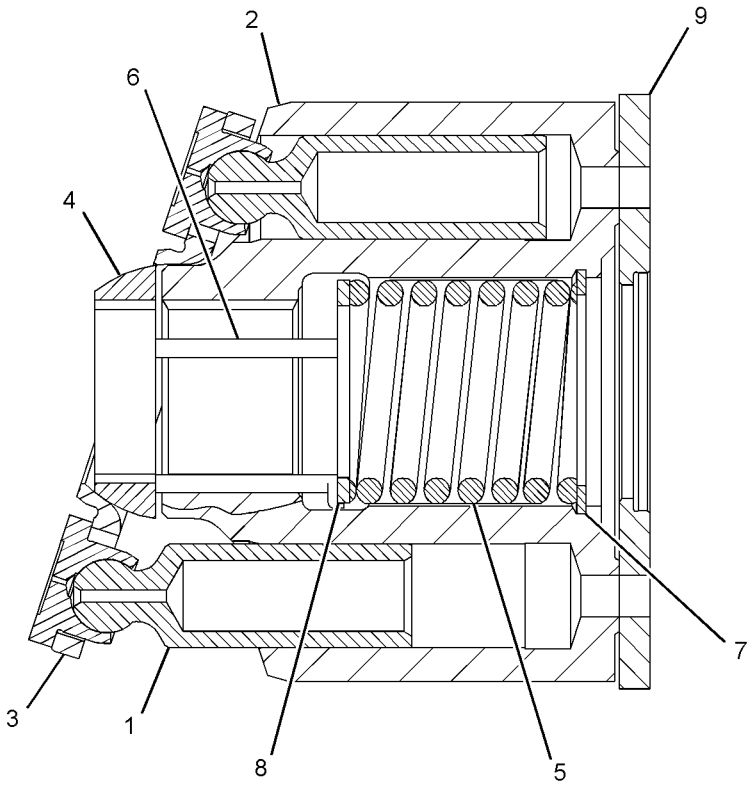

GRAPHIC #1 **<END>** g01429814

313-2590 ROTATING GP-PUMP–VIBRATORY

S/N: BZE646-UP; BZG358-UP

PART OF 296-3332 PUMP GP-PISTON

SMCS-5070 **i03009826**

NOTE	REF NO	GRAPHIC REF	PART NUMBER	QTY	PART NAME 1 2 3 4 5 6 (PRODUCT LEVEL)	SEE PAGE
	1	1	**204-1452**	2	RING-RETAINING	
	2	1	**233-9744**	1	SEAL-LIP TYPE	
	3	1	**081-3698**	1	BEARING	
	4	1	**108-3565**	1	CLIP	
	5	1	**313-2597**	1	KIT-ROTARY	
					(INCLUDES BEARING-SPHER, SPRING, PINS, RING-RETAINING, WASHER, PLATE-CONTROL, PISTONS, PLATE-RETAINING & CYLINDER)	
					PARTS SHOWN IN GRAPHIC(S) WITHOUT A REFERENCE NUMBER ARE NOT SERVICED SEPARATELY	

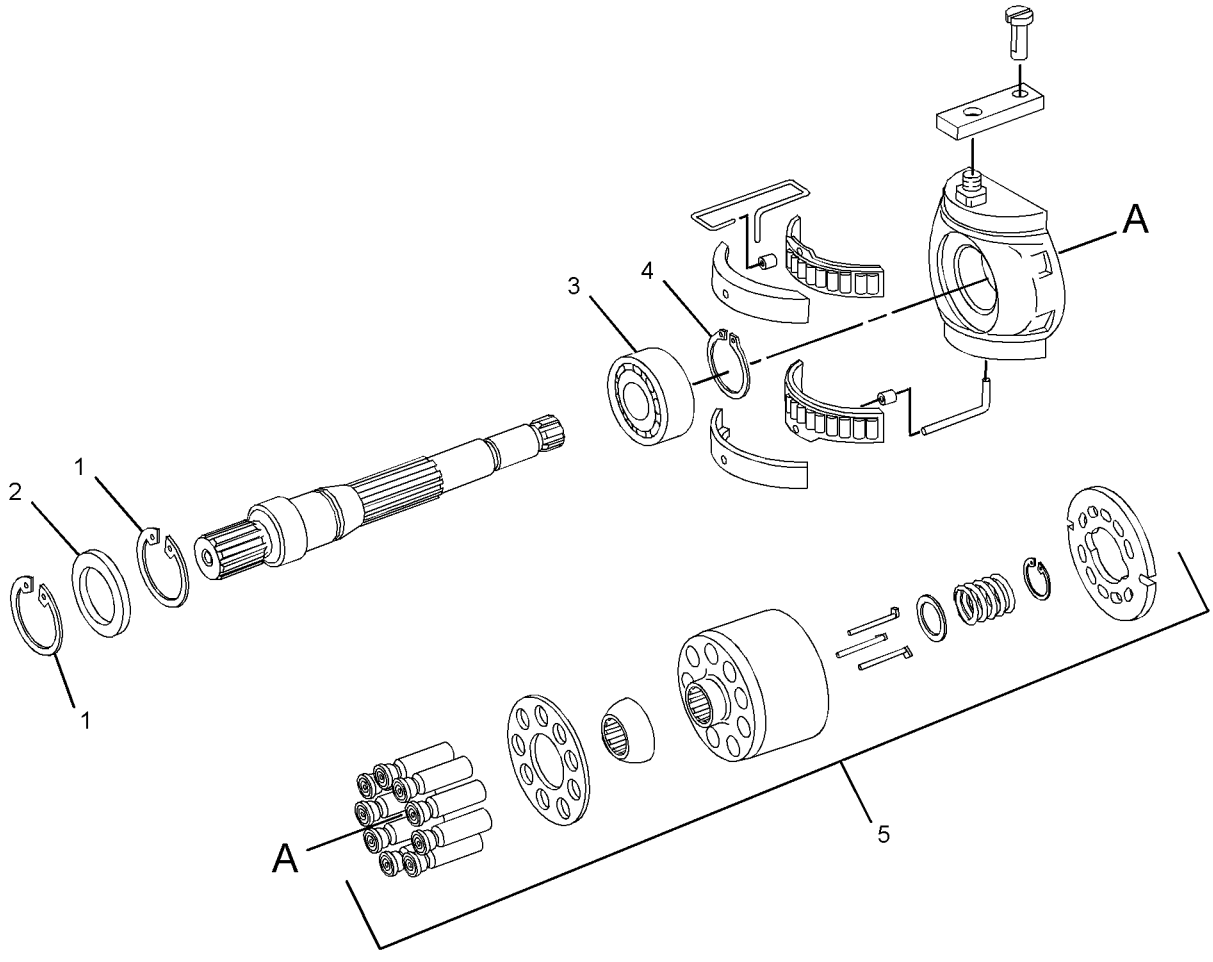

GRAPHIC #1 **<END>** g01447675

HYDRAULIC SYSTEM

218-2751 TANK & MTG GP-HYDRAULIC

S/N: BZE1-UP; BZG1-UP
PART OF 239-0795, 239-0796 CHASSIS AR
TYPE 1

SMCS-5056 **i02140489**

NOTE	REF NO	GRAPHIC REF	PART NUMBER	QTY	PART NAME 1 2 3 4 5 6 (PRODUCT LEVEL)	SEE PAGE
	1	1	**5P-4961**	2	CLAMP-HOSE	
	2	1	**7K-1181**	2	STRAP-CABLE	
	3	1	**145-3846**	1	INSERT-NYLON	
	4	1	**171-5286**	1	BREATHER (HYDRAULIC TANK)	
	5	1	**213-8609**	1	PLATE	
	6	1	**213-8655**	1	STRAP AS	
Y	7	1	*222-7874*	1	TANK GP-HYDRAULIC	330
	8	1	**003-9514**	1	COUPLING-PIPE	
	9	1	**6V-8801**	1	NUT (3/8-16-THD)	
	10	1	**7X-7729**	10	WASHER (11X25X3-MM THK)	
	11	1	**8T-4121**	1	WASHER-HARD (11X21X2.5-MM THK)	
M	12	1	**8T-4133**	1	NUT (M10X1.5-THD)	
M	13	1	**8T-4195**	1	BOLT (M10X1.5X30-MM)	
M	14	1	**8T-4196**	6	BOLT (M10X1.5X35-MM)	
	15	1	**8T-4896**	1	WASHER-HARD (10.2X18.5X2.5-MM THK)	
M	16	1	**9X-2040**	4	SCREW-TRUSS HEAD (M10X1.5X25-MM)	
E	17	1	**5P-1442**		HOSE (89-CM)	

E-ORDER BY THE CENTIMETER
M-METRIC PART
Y-SEPARATE ILLUSTRATION

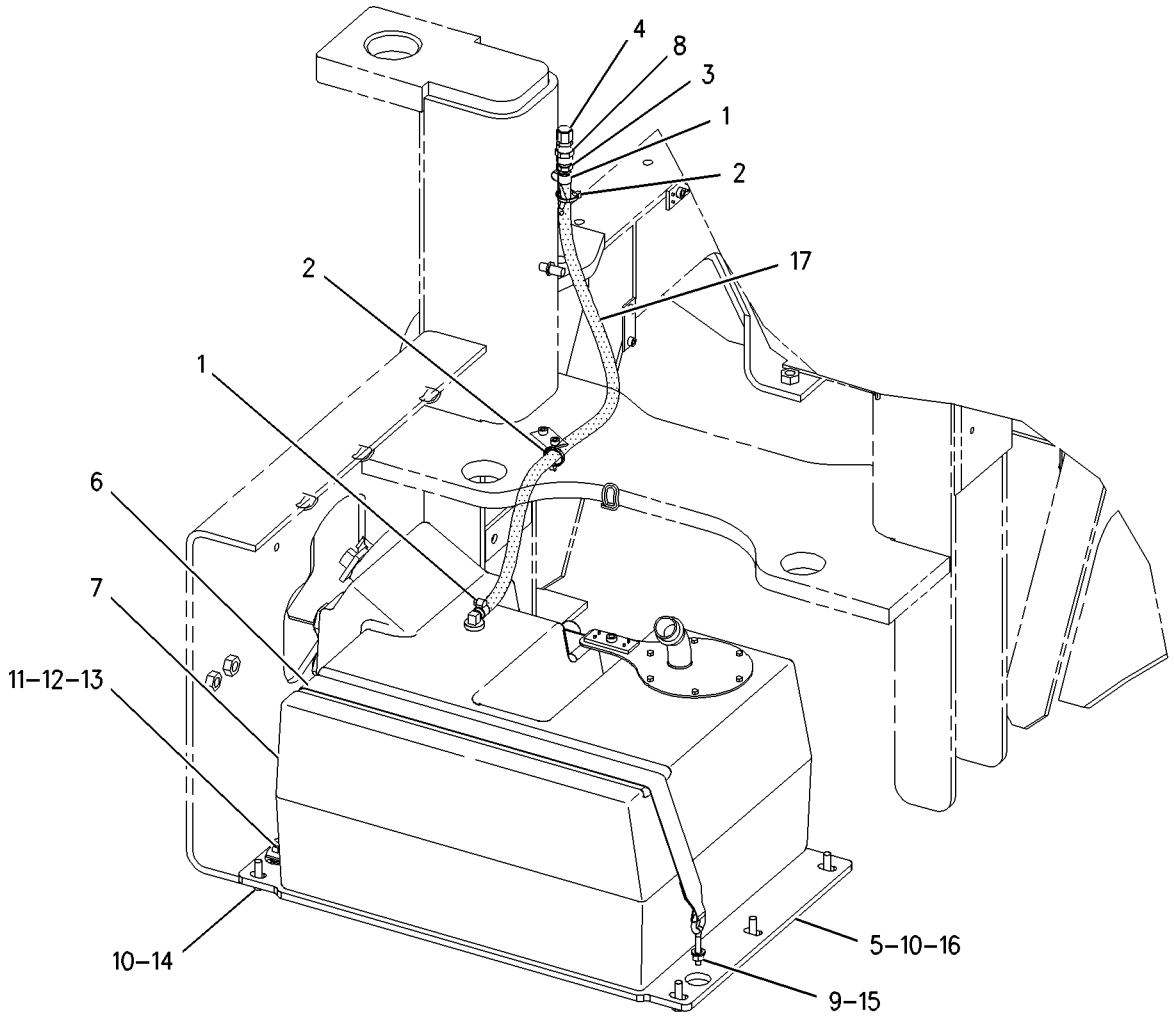

GRAPHIC #1 **<END>** g01000579

HYDRAULIC SYSTEM

218-2751 TANK & MTG GP-HYDRAULIC

S/N: BZE1-UP; BZG1-UP
PART OF 239-0795, 239-0796 CHASSIS AR
TYPE 2

SMCS-5056 **i02900782**

NOTE	REF NO	GRAPHIC REF	PART NUMBER	QTY	PART NAME 1 2 3 4 5 6 (PRODUCT LEVEL)	SEE PAGE
	1	1	**5P-4961**	2	CLAMP-HOSE	
	2	1	**7K-1181**	2	STRAP-CABLE	
	3	1	**145-3846**	1	INSERT-NYLON	
C	4	1	**183-3873**	1	BREATHER (HYDRAULIC TANK)	
	5	1	**213-8655**	1	STRAP AS	
Y	6	1	*222-7874*	1	TANK GP-HYDRAULIC	330
	7	1	**213-8609**	1	PLATE	
C	8	1	**127-5588**	1	COUPLING-REDUCER	
	9	1	**6V-8801**	1	NUT (3/8-16-THD)	
	10	1	**7X-7729**	10	WASHER (11X25X3-MM THK)	
	11	1	**8T-4121**	1	WASHER-HARD (11X21X2.5-MM THK)	
M	12	1	**8T-4133**	1	NUT (M10X1.5-THD)	
M	13	1	**8T-4195**	1	BOLT (M10X1.5X30-MM)	
M	14	1	**8T-4196**	6	BOLT (M10X1.5X35-MM)	
	15	1	**8T-4896**	1	WASHER-HARD (10.2X18.5X2.5-MM THK)	
M	16	1	**9X-2040**	4	SCREW-TRUSS HEAD (M10X1.5X25-MM)	
E	17	1	**5P-1442**		HOSE (89-CM)	

C-CHANGE FROM PREVIOUS TYPE
E-ORDER BY THE CENTIMETER
M-METRIC PART
Y-SEPARATE ILLUSTRATION

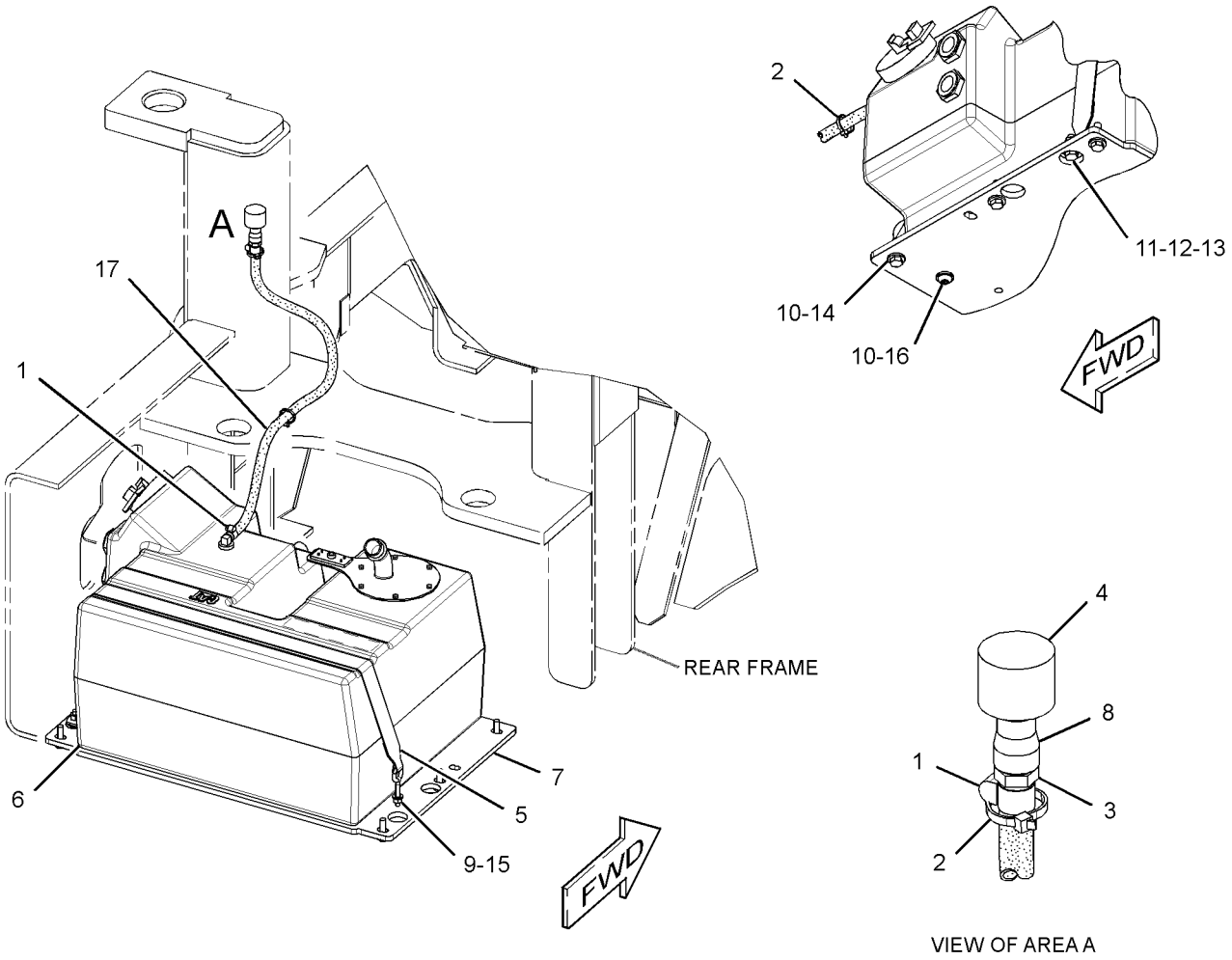

GRAPHIC #1 **<END>** g01446672

HYDRAULIC SYSTEM

218-2751 TANK & MTG GP-HYDRAULIC

S/N: BZE1-UP; BZG1-UP
PART OF 239-0795, 239-0796 CHASSIS AR
TYPE 3

SMCS-5056 **i02986321**

NOTE	REF NO	GRAPHIC REF	PART NUMBER	QTY	PART NAME 1 2 3 4 5 6 (PRODUCT LEVEL)	SEE PAGE
	1	1	**5P-4961**	2	CLAMP-HOSE	
	2	1	**7K-1181**	2	STRAP-CABLE	
	3	1	**145-3846**	1	INSERT-NYLON	
	4	1	**183-3873**	1	BREATHER (HYDRAULIC TANK)	
C	5	1	**323-2978**	1	STRAP AS	
Y	6	1	*222-7874*	1	TANK GP-HYDRAULIC	330
C	7	1	**320-7642**	1	PLATE-MOUNTING	
	8	1	**127-5588**	1	COUPLING-REDUCER	
	9	1	**6V-8801**	1	NUT (3/8-16-THD)	
C	10	1	**7X-7729**	6	WASHER (11X25X3-MM THK)	
	11	1	**8T-4121**	1	WASHER-HARD (11X21X2.5-MM THK)	
M	12	1	**8T-4133**	1	NUT (M10X1.5-THD)	
M	13	1	**8T-4195**	1	BOLT (M10X1.5X30-MM)	
M	14	1	**8T-4196**	6	BOLT (M10X1.5X35-MM)	
	15	1	**8T-4896**	1	WASHER-HARD (10.2X18.5X2.5-MM THK)	
C	16	1	**298-7788**	2	BUMPER	
E	17	1	**5P-1442**		HOSE (89-CM)	

C-CHANGE FROM PREVIOUS TYPE
E-ORDER BY THE CENTIMETER
M-METRIC PART
Y-SEPARATE ILLUSTRATION

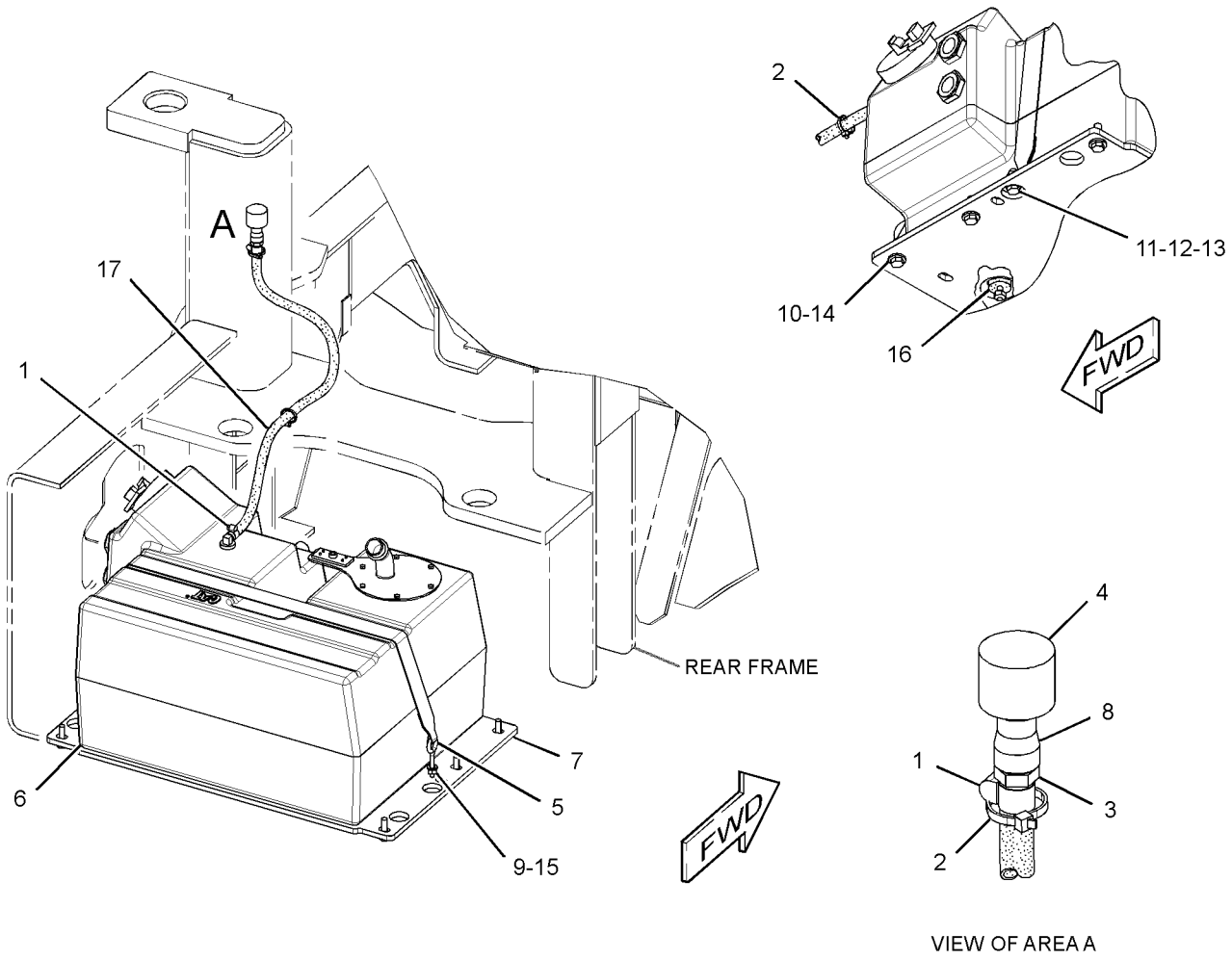

GRAPHIC #1 **<END>** g01460013

HYDRAULIC SYSTEM

218-2751 TANK & MTG GP-HYDRAULIC

S/N: BZE1-UP; BZG1-UP
PART OF 239-0795, 239-0796 CHASSIS AR
TYPE 4

SMCS-5056 **i03013626**

NOTE	REF NO	GRAPHIC REF	PART NUMBER	QTY	PART NAME 1 2 3 4 5 6 (PRODUCT LEVEL)	SEE PAGE
	1	1	**5P-4961**	2	CLAMP-HOSE	
	2	1	**7K-1181**	2	STRAP-CABLE	
	3	1	**145-3846**	1	INSERT-NYLON	
	4	1	**183-3873**	1	BREATHER (HYDRAULIC TANK)	
	5	1	**323-2978**	1	STRAP AS	
CY	6	1	*318-1033*	1	TANK GP-HYDRAULIC	332
C	7	1	**326-9364**	1	PLATE AS	
	8	1	**127-5588**	1	COUPLING-REDUCER	
	9	1	**6V-8801**	1	NUT (3/8-16-THD)	
	10	1	**7X-7729**	6	WASHER (11X25X3-MM THK)	
	11	1	**8T-4121**	1	WASHER-HARD (11X21X2.5-MM THK)	
M	12	1	**8T-4133**	1	NUT (M10X1.5-THD)	
M	13	1	**8T-4195**	1	BOLT (M10X1.5X30-MM)	
M	14	1	**8T-4196**	6	BOLT (M10X1.5X35-MM)	
	15	1	**8T-4896**	1	WASHER-HARD (10.2X18.5X2.5-MM THK)	
	16	1	**298-7788**	2	BUMPER	
E	17	1	**5P-1442**		HOSE (89-CM)	

C-CHANGE FROM PREVIOUS TYPE
E-ORDER BY THE CENTIMETER
M-METRIC PART
Y-SEPARATE ILLUSTRATION

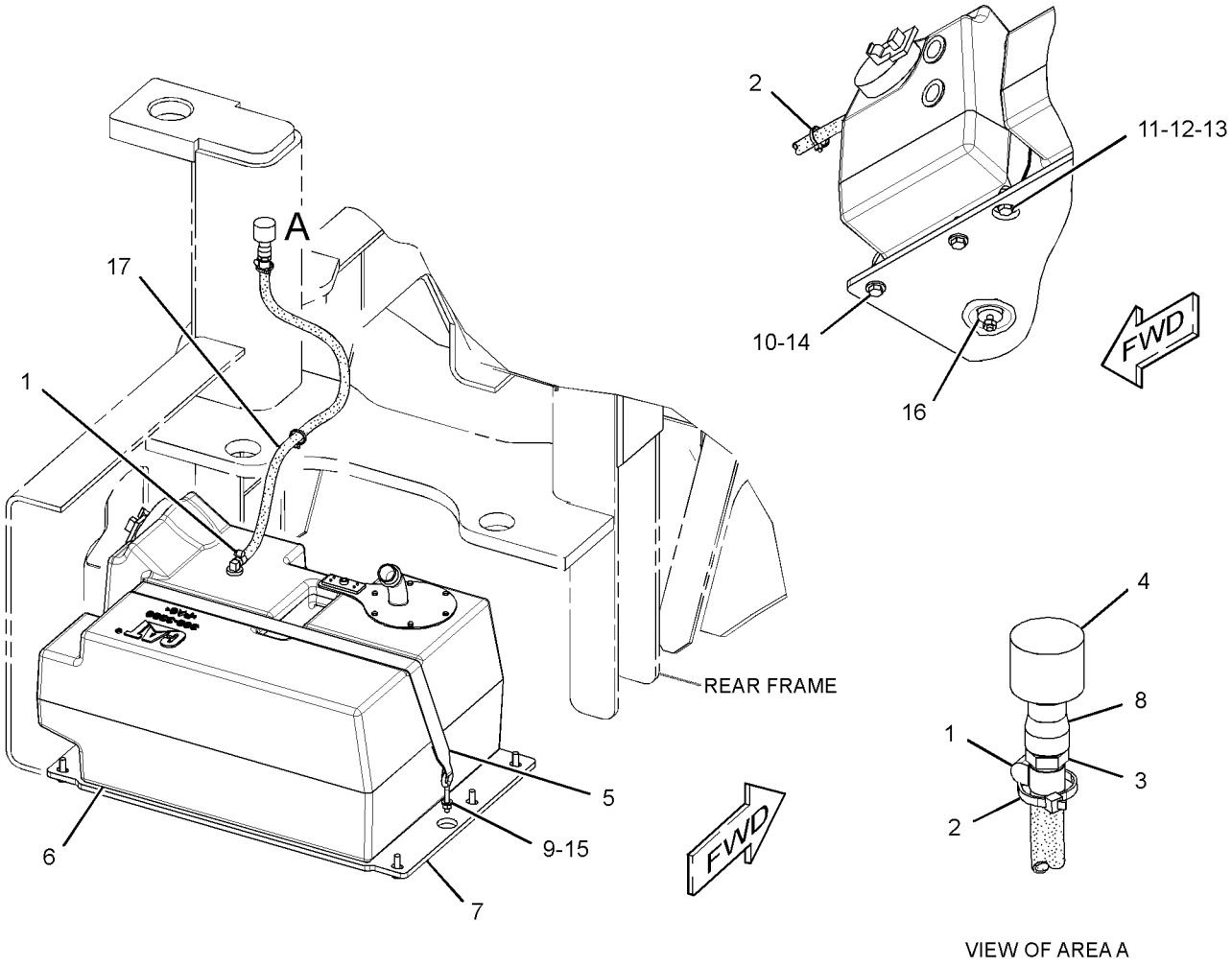

GRAPHIC #1 **<END>** g01527223

HYDRAULIC SYSTEM

222-7874 TANK GP-HYDRAULIC

S/N: BZE1-UP; BZG1-UP

PART OF 218-2751 TANK & MTG GP-HYDRAULIC

SMCS-5056 **i02140499**

NOTE	REF NO	GRAPHIC REF	PART NUMBER	QTY	PART NAME 1 2 3 4 5 6 (PRODUCT LEVEL)	SEE PAGE
	1	1	**1G-7663**	1	STRAINER-SUCTION (HYDRAULIC TANK)	
	2	1	**6W-5698**	1	GROMMET	
	3	1	**9U-6993**	1	FITTING GP	
	4	1	**9Y-9236**	2	GAUGE-SIGHT	
	5	1	**110-0514**	1	SWITCH AS-TEMPERATURE (HYDRAULIC OIL)	
		1	**102-8803**	1	KIT-RECEPTACLE (3-PIN)	
					(INCLUDES RECEPTACLE AS & WEDGE)	
		1	**186-3735**	3	PIN-CONNECTOR (16-GA TO 18-GA)	
	6	1	**132-3056**	1	SEAL-O-RING	
	7	1	**142-8928**	1	ELBOW	
	8	1	**142-8937**	1	CAP AS-FILLER (HYDRAULIC TANK)	
	9	1	*154-5232*	1	ADAPTER AS	
		1	**112-9783**	1	ADAPTER	
		1	**3K-0360**	1	SEAL-O-RING	
		1	**4J-5477**	1	SEAL-O-RING	
	10	1	**6V-7238**	1	VALVE-SHUTOFF (HYDRAULIC TANK)	
		1	**3K-0360**	1	SEAL-O-RING	
	11	1	**187-1445**	1	TANK-HYDRAULIC	
	12	1	**188-2008**	1	ELBOW AS	
		1	**8T-7970**	1	ELBOW	
		1	**3D-2824**	1	SEAL-O-RING	
		1	**5K-9090**	1	SEAL-O-RING	
	13	1	**222-7921**	1	TUBE AS	
	14	1	*148-8340*	1	CONNECTOR AS	
		1	**6V-8639**	1	CONNECTOR	
		1	**3K-0360**	1	SEAL-O-RING	
		1	**6V-8398**	1	SEAL-O-RING	
	15	1	*148-8374*	1	ELBOW AS	
		1	**6V-8723**	1	ELBOW	
		1	**3K-0360**	1	SEAL-O-RING	
		1	**6V-8397**	1	SEAL-O-RING	
	16	1	**2S-4078**	1	SEAL-O-RING	
	17	1	**3K-0360**	1	SEAL-O-RING	
	18	1	**7M-8485**	2	SEAL-O-RING	
M	19	1	**8T-0288**	6	BOLT (M5X0.8X12-MM)	

M-METRIC PART

222-7874 **TANK GP-HYDRAULIC** *(contd.)* **i02140499**

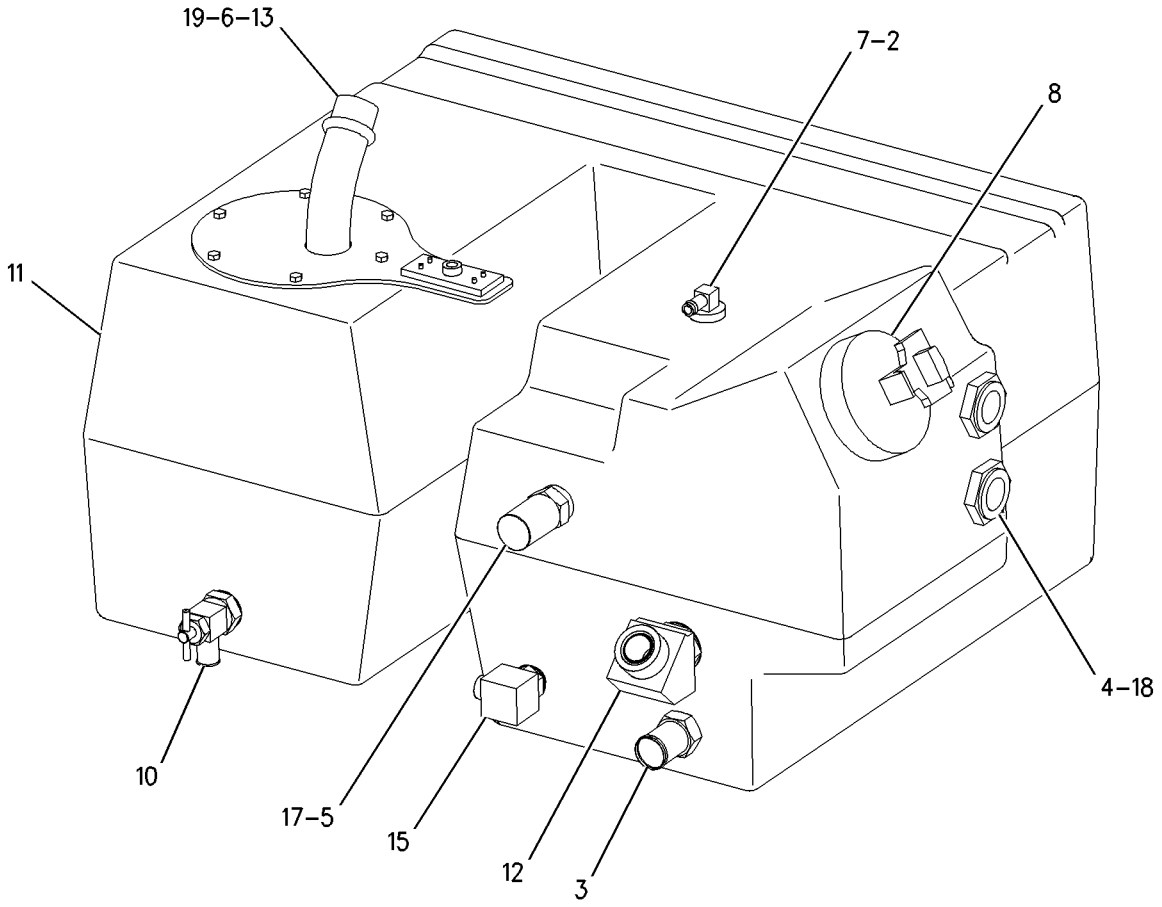

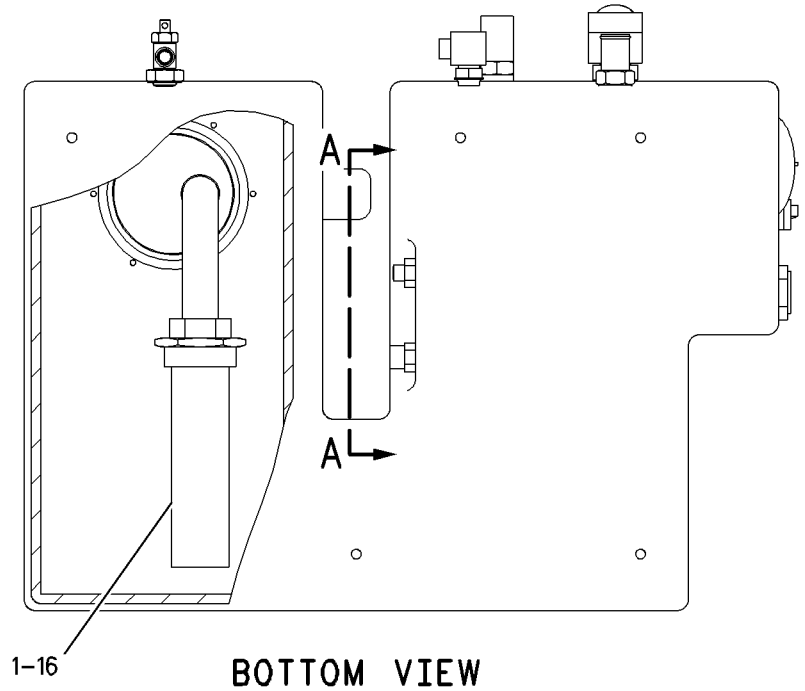

BOTTOM VIEW

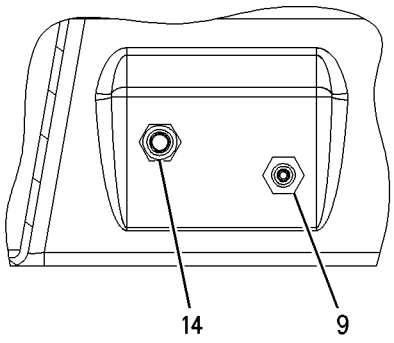

VIEW A-A

GRAPHIC #1 **<END>** g01000094

HYDRAULIC SYSTEM

318-1033 TANK GP-HYDRAULIC

S/N: BZE1-UP; BZG1-UP

PART OF 218-2751 TANK & MTG GP-HYDRAULIC

SMCS-5056 **i03013627**

NOTE	REF NO	GRAPHIC REF	PART NUMBER	QTY	PART NAME 1 2 3 4 5 6 (PRODUCT LEVEL)	SEE PAGE
	1	1	**1G-7663**	1	STRAINER-SUCTION	
	2	1	**6W-5698**	1	GROMMET	
	3	1	**9U-6993**	1	FITTING GP	
	4	1	**9Y-9236**	2	GAUGE-SIGHT	
	5	1	**116-0118**	2	CLIP	
	6	1	**142-8928**	1	ELBOW	
	7	1	**142-8937**	1	CAP AS-FILLER (HYDRAULIC TANK)	
	8	1	*154-5232*	1	ADAPTER AS	
		1	**3K-0360**	1	SEAL-O-RING	
		1	**4J-5477**	1	SEAL-O-RING	
		1	**112-9783**	1	ADAPTER	
	9	1	**222-7921**	1	TUBE AS	
	10	1	**273-2225**	1	PLUG-DRAIN	
	11	1	**308-3389**	1	TANK-HYDRAULIC	
	12	1	**110-0514**	1	SWITCH AS-TEMPERATURE (HYDRAULIC ALERT INDICATOR)	
		1	**102-8803**	1	KIT-RECEPTACLE (3-PIN)	
					(INCLUDES RECEPTACLE AS & WEDGE)	
		1	**186-3735**	3	PIN-CONNECTOR (16-GA TO 18-GA)	
	13	1	**132-3056**	1	SEAL-O-RING	
	14	1	*148-8354*	1	ELBOW AS	
		1	**3K-0360**	1	SEAL-O-RING	
		1	**6V-8398**	1	SEAL-O-RING	
		1	**6V-9002**	1	ELBOW	
	15	1	*148-8355*	1	ELBOW AS	
		1	**5K-9090**	1	SEAL-O-RING	
		1	**6V-9005**	1	ELBOW	
		1	**7M-8485**	1	SEAL-O-RING	
	16	1	*148-8374*	1	ELBOW AS	
		1	**3K-0360**	1	SEAL-O-RING	
		1	**6V-8397**	1	SEAL-O-RING	
		1	**6V-8723**	1	ELBOW	
	17	1	**2M-9780**	1	SEAL-O-RING	
	18	1	**2S-4078**	1	SEAL-O-RING	
	19	1	**3K-0360**	1	SEAL-O-RING	
	20	1	**5P-4115**	1	WASHER-HARD (7.2X19X2-MM THK)	
	21	1	**7M-8485**	2	SEAL-O-RING	
M	22	1	**8T-0288**	6	BOLT (M5X0.8X12-MM)	
M	23	1	**8T-4970**	1	BOLT (M6X1X14-MM)	

M-METRIC PART

318-1033 **TANK GP-HYDRAULIC** *(contd.)* **i03013627**

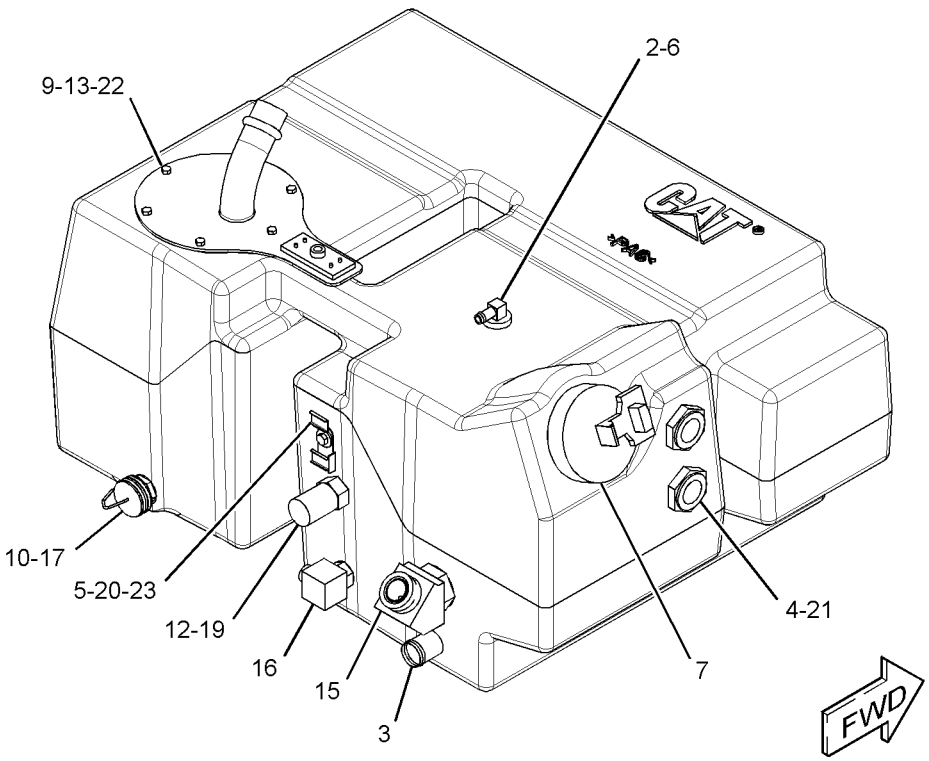

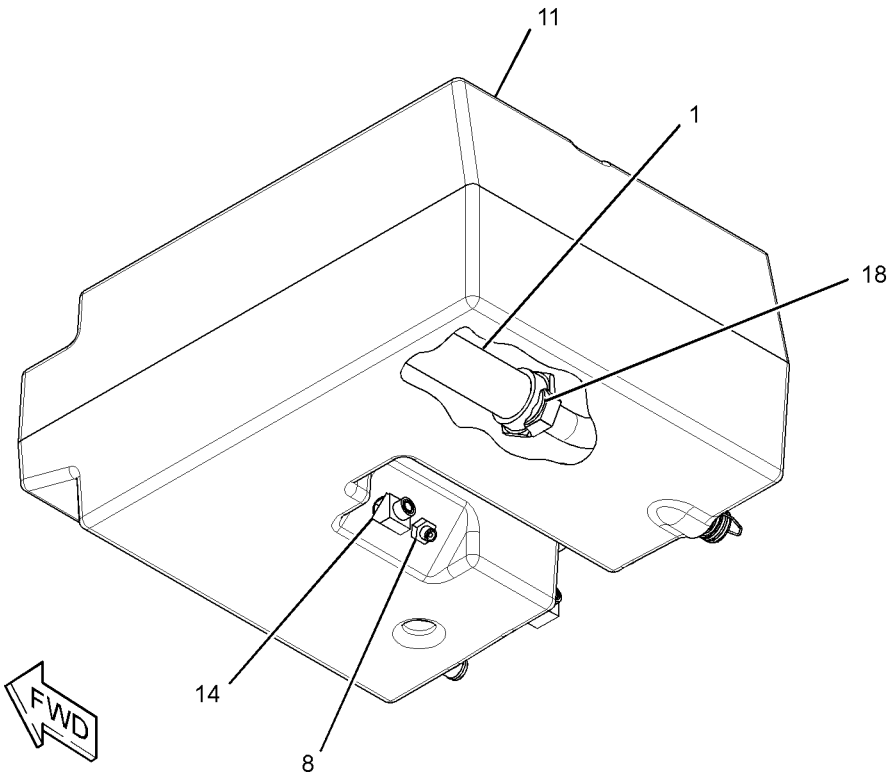

GRAPHIC #1 **<END>** g01527035

HYDRAULIC SYSTEM

208-0368 VALVE & MTG GP-CONTROL

S/N: BZE1-UP; BZG1-UP
PART OF 219-4167 HYDRAULIC AR

SMCS-5051 **i02153894**

NOTE	REF NO	GRAPHIC REF	PART NUMBER	QTY	PART NAME 1 2 3 4 5 6 (PRODUCT LEVEL)	SEE PAGE
	1	1	**116-0118**	1	CLIP	
Y	2	1	**220-4133**	1	VALVE GP-CONTROL (SHIFT)	336
	3	1	*148-8325*	2	CONNECTOR AS	
					(EACH INCLUDES)	
		1	**3J-1907**	1	SEAL-O-RING	
		1	**4J-5477**	1	SEAL-O-RING	
		1	**6V-8641**	1	CONNECTOR	
	4	1	*148-8368*	1	ELBOW AS	
		1	**3J-1907**	1	SEAL-O-RING	
		1	**4J-5477**	1	SEAL-O-RING	
		1	**6V-8627**	1	ELBOW	
	5	1	**5P-4115**	1	WASHER-HARD (7.2X19X2-MM THK)	
M	6	1	**9X-2480**	2	BOLT (M6X1X45-MM)	
	7	1	**9X-8256**	1	WASHER (6.6X12X2-MM THK)	

M-METRIC PART
Y-SEPARATE ILLUSTRATION

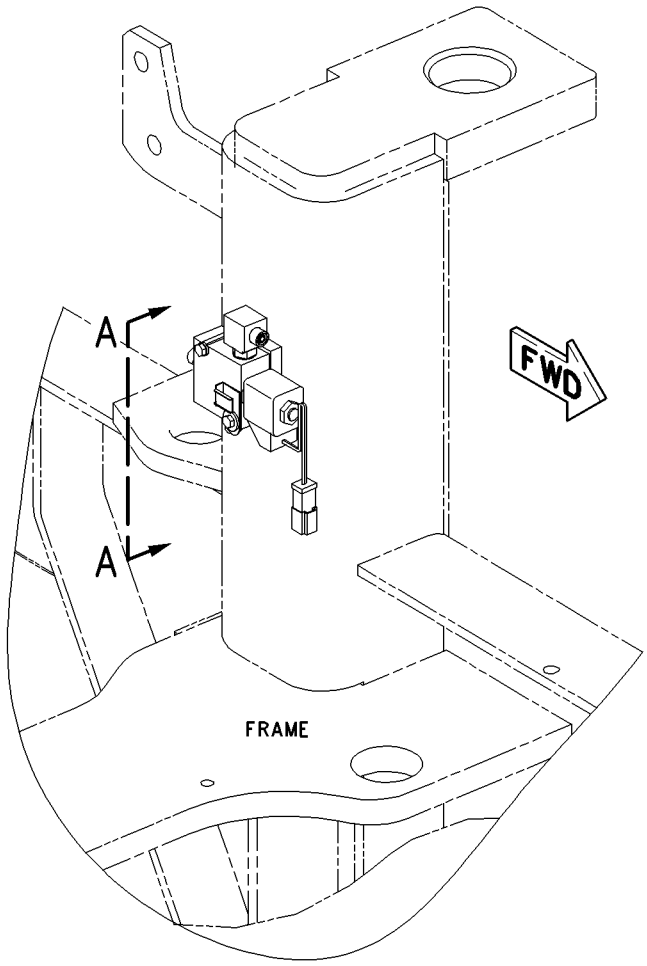

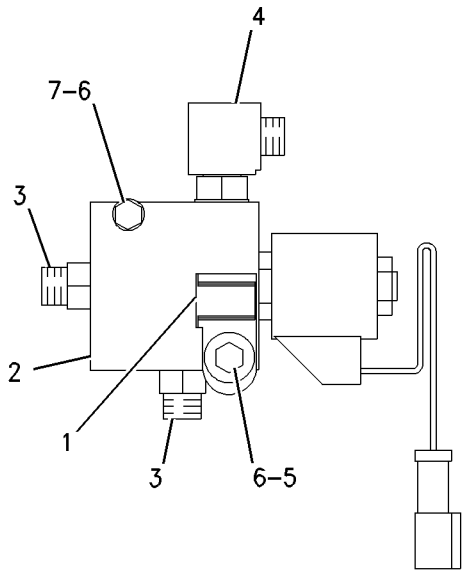

VIEW A–A

GRAPHIC #1 **<END>** g00917399

162-2453 VALVE GP-BYPASS

S/N: BZE1-UP; BZG1-UP

PART OF 220-2080 MANIFOLD & VALVE GP

SMCS-3206, 5074, 5076 **i02140969**

NOTE	REF NO	GRAPHIC REF	PART NUMBER	QTY	PART NAME 1 2 3 4 5 6 (PRODUCT LEVEL)	SEE PAGE
	1	1	**128-2034**	1	VALVE GP-BYPASS (HYDRAULIC)	
		1	**207-2055**	1	GASKET	
	2	1	**197-7864**	1	BODY-VALVE	

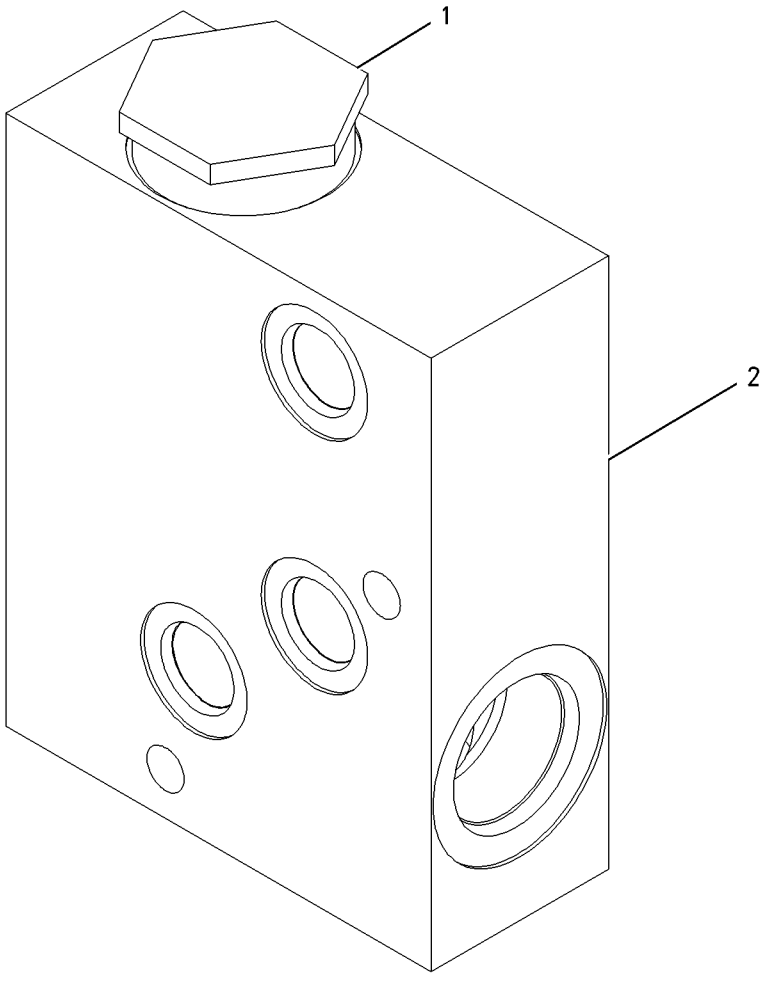

GRAPHIC #1 **<END>** g00747007

HYDRAULIC SYSTEM

220-4133 VALVE GP-CONTROL

S/N: BZE1-UP; BZG1-UP

PART OF 208-0368 VALVE & MTG GP-CONTROL

SMCS-5051 **i02898367**

NOTE	REF NO	GRAPHIC REF	PART NUMBER	QTY	PART NAME 1 2 3 4 5 6 (PRODUCT LEVEL)	SEE PAGE
	1	1	**220-4165**	1	VALVE GP-SOLENOID (SHIFT)	
		1	**223-3384**	1	COIL AS (24-VOLT)	
		1	**220-4166**	1	CARTRIDGE AS-VALVE	
		1	**163-6513**	1	KIT-SEAL (SHIFT SOLENOID VALVE)	
	2	1	**3K-0360**	1	SEAL-O-RING	

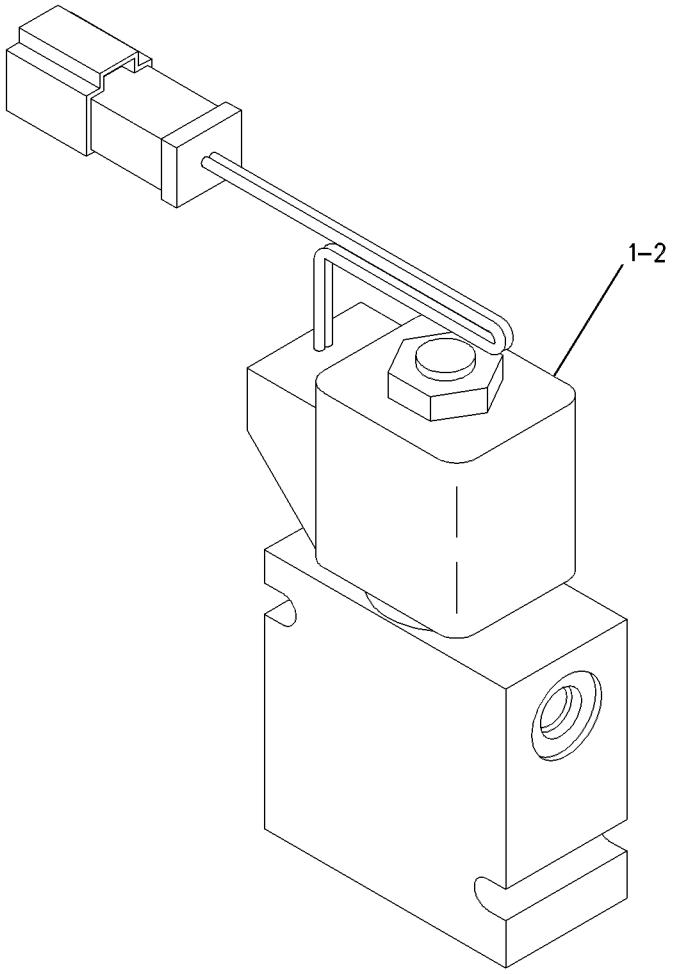

GRAPHIC #1 **<END>** g00639529

254-4251 VALVE GP-CONTROL–PROPEL MOTOR

S/N: BZE1-UP; BZG1-UP

PART OF 218-3164, 219-0616, 296-5159, 296-5160 MOTOR GP-PISTON

ALSO AN ATTACHMENT

SMCS-5051 **i02140598**

NOTE	REF NO	GRAPHIC REF	PART NUMBER	QTY	PART NAME 1 2 3 4 5 6 (PRODUCT LEVEL)	SEE PAGE
	1	1	**7I-2750**	1	SEAL	
	2	1	**9X-7377**	1	SEAL-O-RING	
	3	1	**6V-5142**	1	SEAL-O-RING	
	4	1	**3E-6769**	1	SEAL-O-RING	
Z	5	1		1	VALVE	

Z-NOT SERVICED SEPARATELY

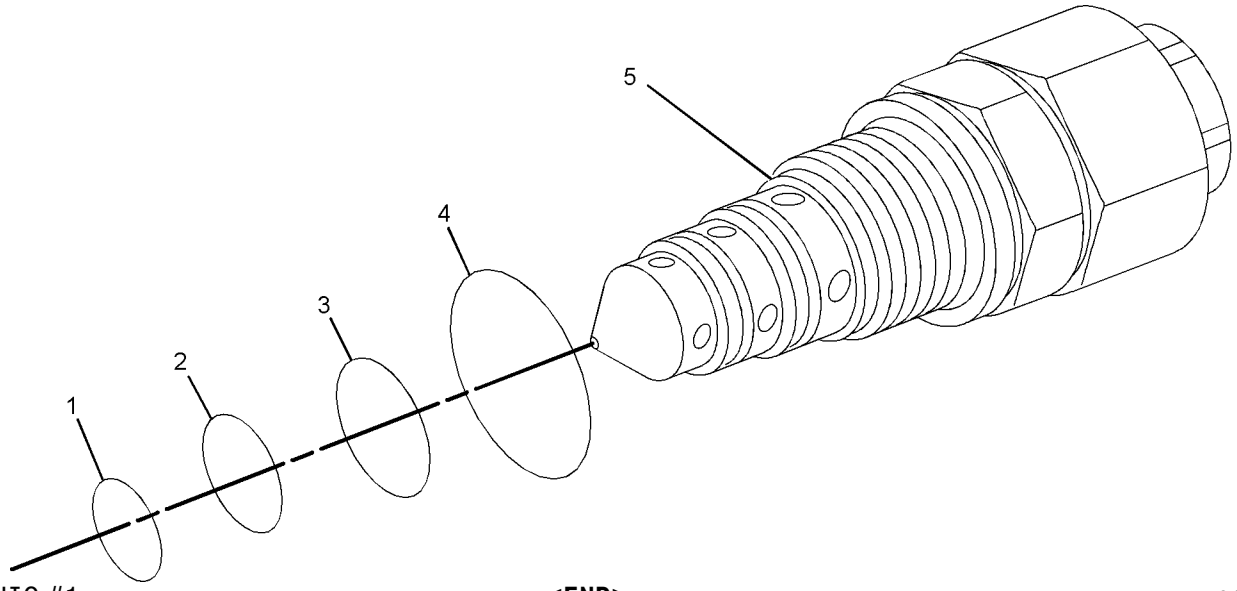

GRAPHIC #1 **<END>** g01087922

HYDRAULIC SYSTEM

227-8307 VALVE GP-PUMP CONTROL

S/N: BZE1-645; BZG1-357

PART OF 218-8490 PUMP GP-PISTON

SMCS-5455 **i02294187**

NOTE	REF NO	GRAPHIC REF	PART NUMBER	QTY	PART NAME 1 2 3 4 5 6 (PRODUCT LEVEL)	SEE PAGE
	1	1	**192-1170**	1	SOLENOID AS	
	2	1	**160-1757**	1	PLUG	
M	3	1	**8C-6965**	3	BOLT-SOCKET HEAD (M6X1X45-MM)	
	4	1	**192-1173**	1	BODY	
M	5	1	**9X-2537**	2	BOLT-SOCKET HEAD (M6X1X70-MM)	
	6	1	**205-5007**	1	PISTON-CONTROL	
	7	1	**1G-3455**	2	SPRING	
	8	1	**192-1172**	2	RETAINER	
	9	1	**5P-5874**	1	SEAL-O-RING	
	10	1	**120-4394**	2	PLUG-BREAK OFF	
	11	1	**209-3565**	1	SEAL	

M-METRIC PART

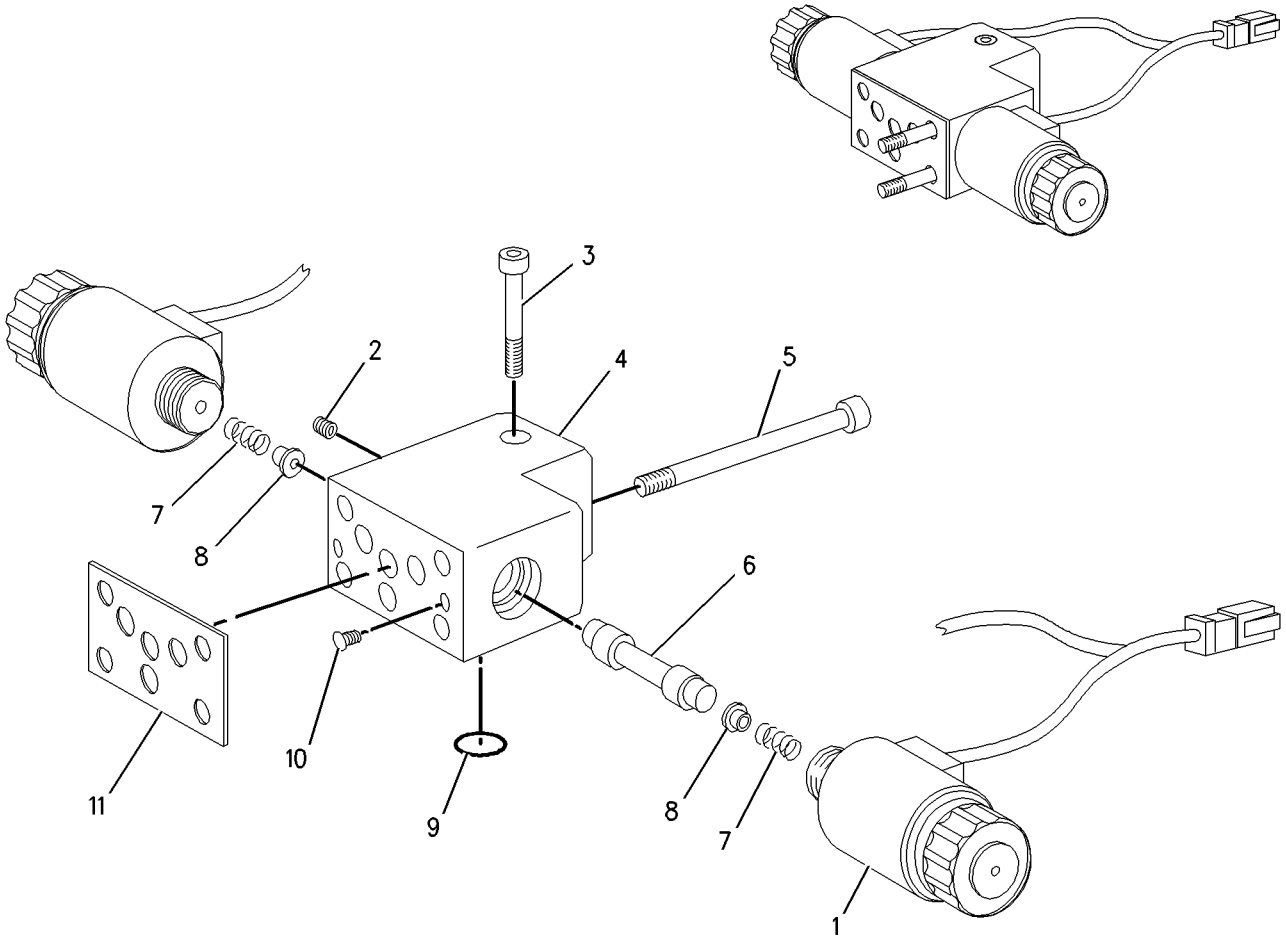

GRAPHIC #1 **<END>** g00985104

254-8191 VALVE GP-PUMP CONTROL

S/N: BZE1-UP; BZG1-UP

PART OF 218-3160, 296-3329 PUMP GP-PISTON

SMCS-5455 **i02294038**

NOTE	REF NO	GRAPHIC REF	PART NUMBER	QTY	PART NAME 1 2 3 4 5 6 (PRODUCT LEVEL)	SEE PAGE
	1	1	**112-4684**	1	SHIM	
M	2	1	**196-9444**	2	BOLT-SOCKET HEAD (M5X0.8X10-MM)	
	3	1	**112-4678**	1	SCREW	
	4	1	**112-4677**	1	SCREW	
	5	1	**112-4642**	3	SEAL-O-RING	
	6	1	**177-8723**	1	PIN-ROLLER	
M	7	1	**8T-2922**	4	BOLT-SOCKET HEAD (M6X1X65-MM)	
	8	1	**135-8072**	1	SWITCH-NEUTRAL START	
	9	1	**112-4679**	1	SEAL-O-RING	
	10	1	**6H-9691**	1	SEAL-O-RING	
	11	1	**112-4686**	1	PIN	
	12	1	**112-4682**	1	SEAL-O-RING	
	13	1	**209-3565**	1	SEAL	
	14	1	**6V-6580**	1	SEAL-O-RING	

M-METRIC PART

254-8191 **VALVE GP-PUMP CONTROL** *(contd.)* **i02294038**

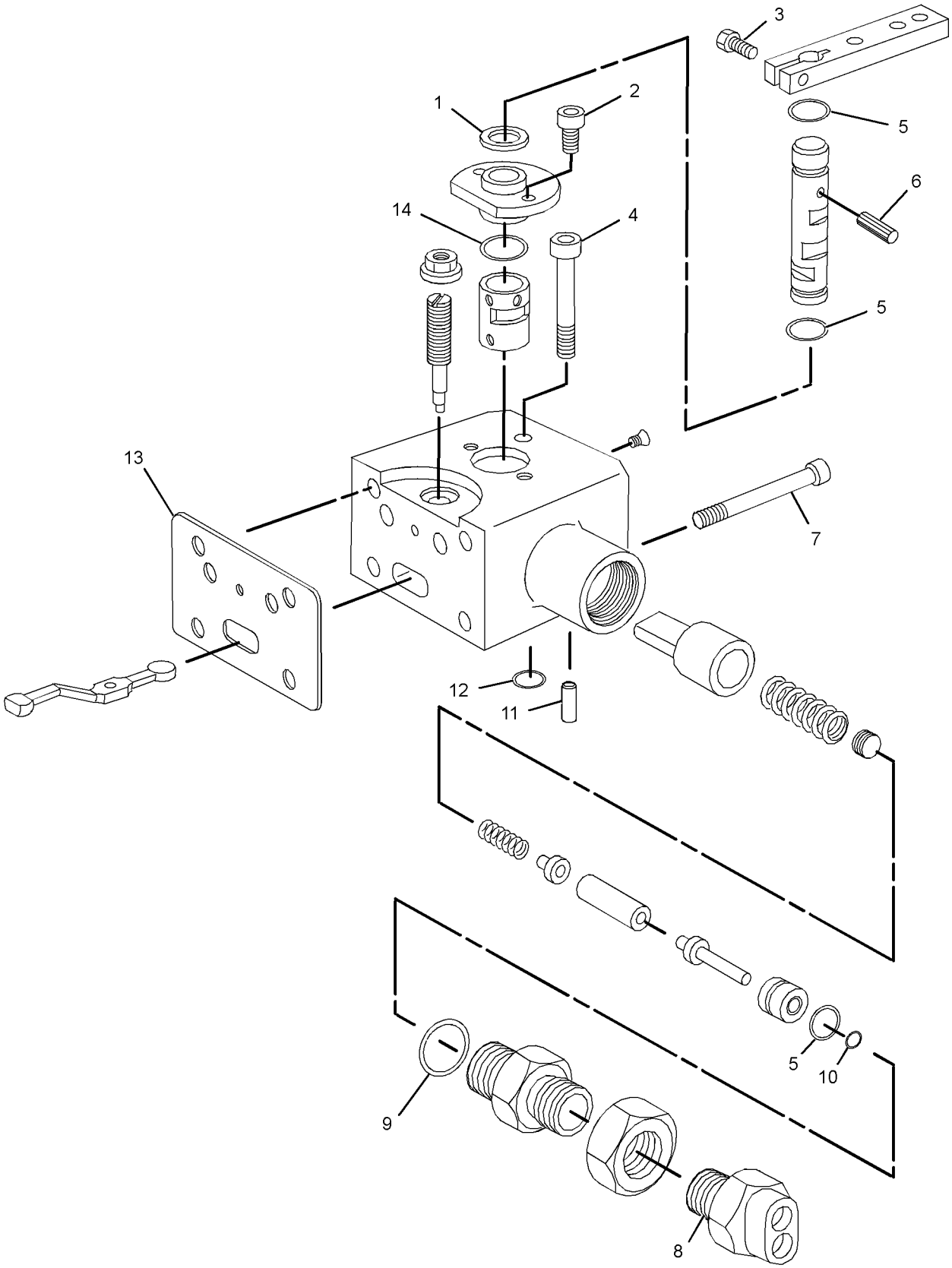

GRAPHIC #1 **<END>** g01175852

255-8686 VALVE GP-PUMP CONTROL

S/N: BZE1-UP; BZG1-UP

PART OF 218-3159, 296-3331 PUMP GP-PISTON

SMCS-5455 **i02544017**

NOTE	REF NO	GRAPHIC REF	PART NUMBER	QTY	PART NAME 1 2 3 4 5 6 (PRODUCT LEVEL)	SEE PAGE
	1	1	**112-4684**	1	SHIM	
M	2	1	**196-9444**	2	BOLT-SOCKET HEAD (M5X0.8X10-MM)	
	3	1	**112-4677**	1	SCREW	
	4	1	**112-4678**	1	SCREW	
	5	1	**112-4682**	1	SEAL-O-RING	
	6	1	**177-8723**	1	PIN-ROLLER	
M	7	1	**8T-2922**	4	BOLT-SOCKET HEAD (M6X1X65-MM)	
	8	1	**112-4685**	1	SCREW-LOCK	
	9	1	**112-4686**	1	PIN	
	10	1	**112-4642**	2	SEAL-O-RING	
	11	1	**209-3565**	1	SEAL	
	12	1	**6V-6580**	1	SEAL-O-RING	

M-METRIC PART

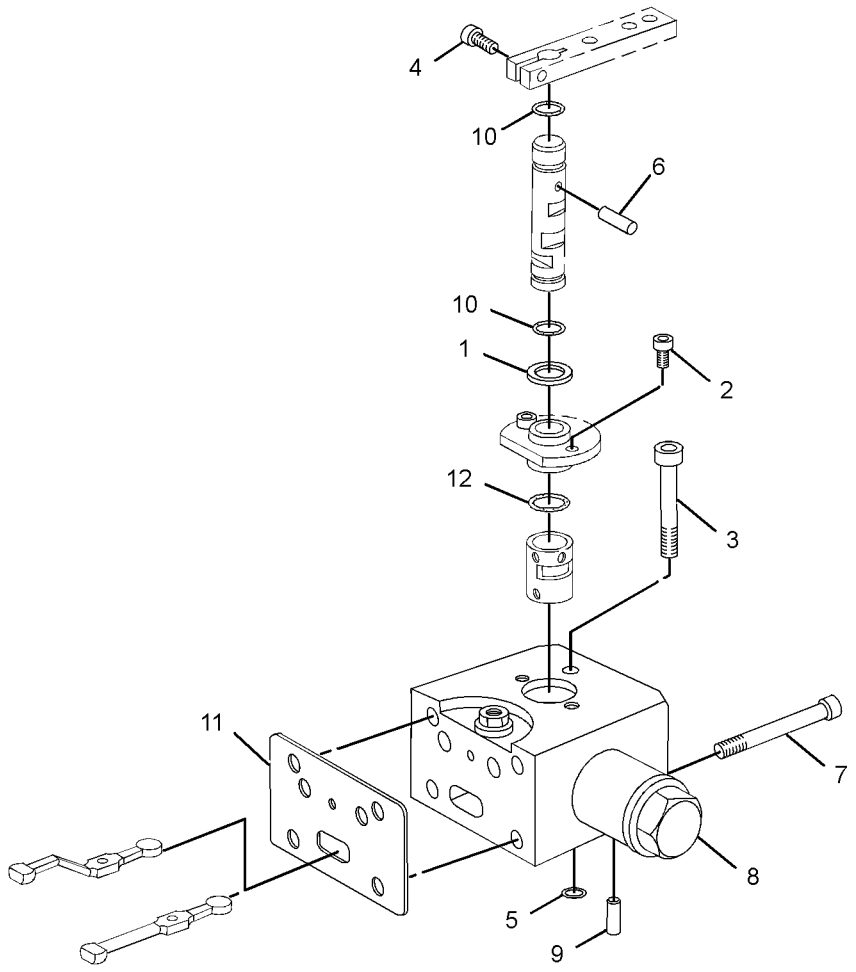

GRAPHIC #1 **<END>** g01260744

HYDRAULIC SYSTEM

313-3414 VALVE GP-PUMP CONTROL–
VIBRATORY, FIXED DISPLACEMENT
S/N: BZE646-UP; BZG358-UP
PART OF 296-3332 PUMP GP-PISTON

SMCS-5455 **i03009831**

NOTE	REF NO	GRAPHIC REF	PART NUMBER	QTY	PART NAME 1 2 3 4 5 6 (PRODUCT LEVEL)	SEE PAGE
	1	1	**313-6014**	1	SOLENOID AS	
	2	1	**160-1757**	1	PLUG	
M	3	1	**8C-6965**	3	BOLT-SOCKET HEAD (M6X1X45-MM)	
	4	1	**192-1173**	1	BODY	
M	5	1	**9X-2537**	2	BOLT-SOCKET HEAD (M6X1X70-MM)	
	6	1	**205-5007**	1	PISTON-CONTROL	
	7	1	**1G-3455**	2	SPRING	
	8	1	**192-1172**	2	RETAINER	
	9	1	**5P-5874**	1	SEAL-O-RING	
	10	1	**120-4394**	2	PLUG-BREAK OFF	
	11	1	**209-3565**	1	SEAL	

M-METRIC PART

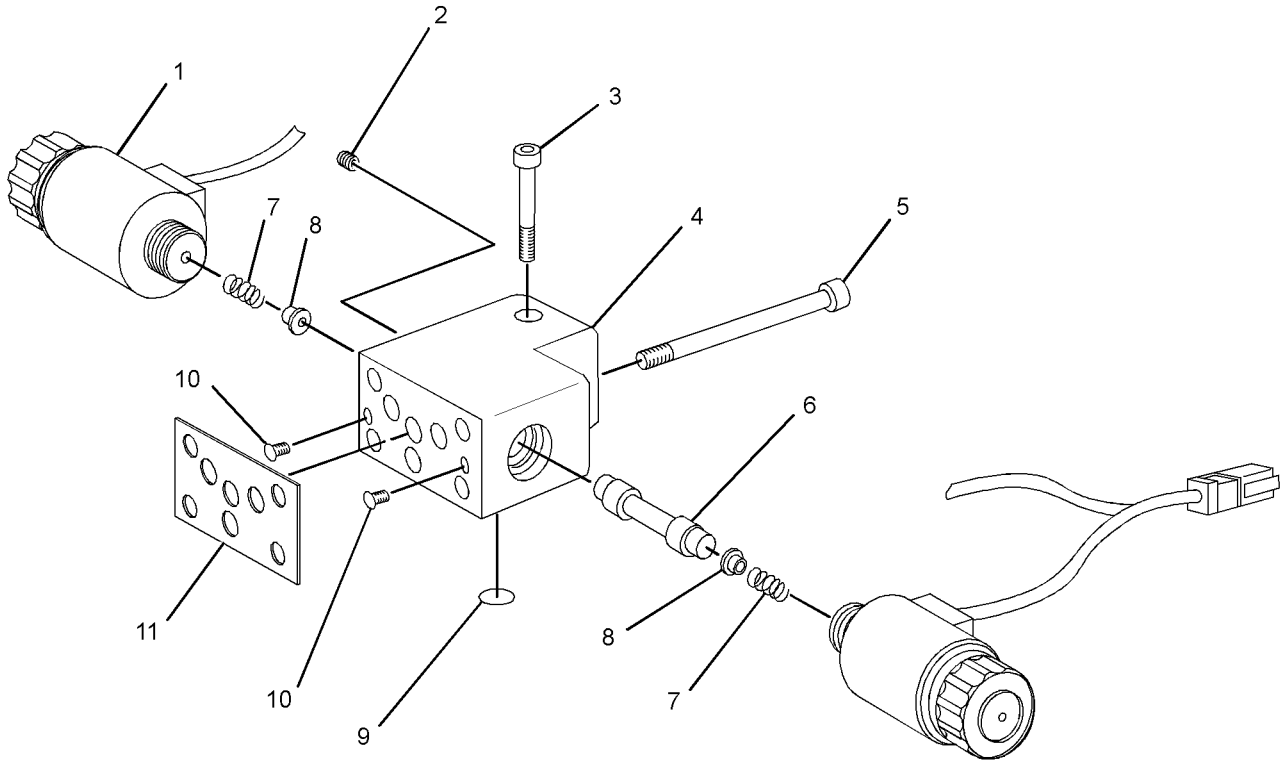

GRAPHIC #1 **<END>** g01453840

HYDRAULIC SYSTEM

123-7557 VALVE GP-RELIEF

S/N: BZE1-UP; BZG1-UP

PART OF 254-8189, 255-8680, 314-4016 HEAD GP-PUMP

SMCS-5069, 5117 **i02317507**

NOTE	REF NO	GRAPHIC REF	PART NUMBER	QTY	PART NAME 1 2 3 4 5 6 (PRODUCT LEVEL)	SEE PAGE
	1	1	**123-7575**	1	SCREW-LOCK	
	2	1	**123-7589**	1	VALVE-BUSHING	
	3	1	**123-7590**	1	CONTROL-PISTON	
	4	1	**6E-4396**	1	PISTON	
	5	1	**6E-4397**	1	PISTON (VALVE)	
	6	1	**6E-4399**	1	SPRING (PRESSURE)	
	7	1	**6E-4400**	2	RETAINER-SPRING	
M	8	1	**6E-4401**	1	SETSCREW-ADJUSTMENT	
	9	1	**123-7591**	1	SEAL-O-RING	
M	10	1	**6E-1607**	1	LOCKNUT-SEALING	
	11	1	**6V-5586**	1	SEAL-O-RING	

M-METRIC PART

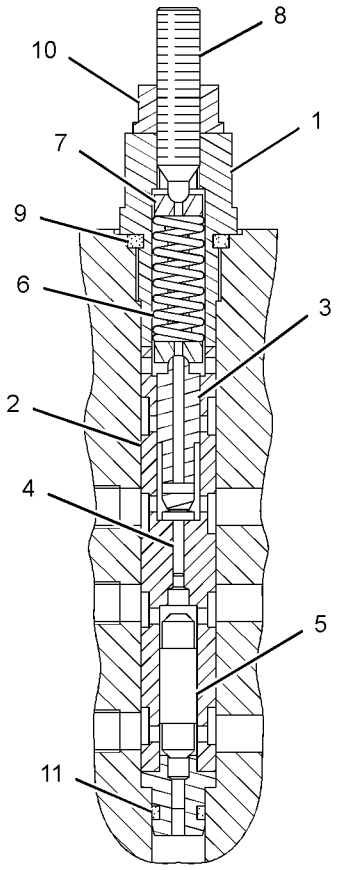

GRAPHIC #1 **<END>** g01188615

VIBRATORY SYSTEM

193-5892 DRIVE GP-SUPPORT & VIBRATORY

S/N: BZE1-UP; BZG1-UP

PART OF 219-4192, 220-4051, 231-4913 DRUM GP-DRIVE & VIBRATORY

ALSO AN ATTACHMENT

SMCS-6605, 6606 **i02141140**

NOTE	REF NO	GRAPHIC REF	PART NUMBER	QTY	PART NAME 1 2 3 4 5 6 (PRODUCT LEVEL)	SEE PAGE
	1	1	**9X-8257**	8	WASHER (17.5X30X3.5-MM THK)	
Y	2	1	*140-9614*	1	MOTOR & MTG GP-VIBRATORY	354
	3	1	**227-0172**	6	MOUNT	
	4	1	**152-1261**	1	BRACKET	
	5	1	**155-4850**	1	SHAFT AS	
Y	6	1	**159-9405**	1	SUPPORT GP-VIBRATORY	362
	7	1	**193-5893**	1	PLATE	
	8	1	**193-5894**	2	BRACKET	
	9	1	**061-9458**	1	SEAL-O-RING	
	10	1	**5P-5397**	1	SEAL-O-RING	
M	11	1	**7X-2553**	8	BOLT (M16X2X40-MM)	
M	12	1	**7X-2561**	6	BOLT (M20X2.5X35-MM)	
M	13	1	**7X-2562**	6	BOLT (M20X2.5X45-MM)	
	14	1	**8T-4994**	20	WASHER-HARD (20X36.5X3.5-MM THK)	
M	15	1	**8T-5460**	6	BOLT (M20X2.5X40-MM)	
M	16	1	**8T-6430**	2	BOLT (M20X2.5X50-MM)	

M-METRIC PART
Y-SEPARATE ILLUSTRATION

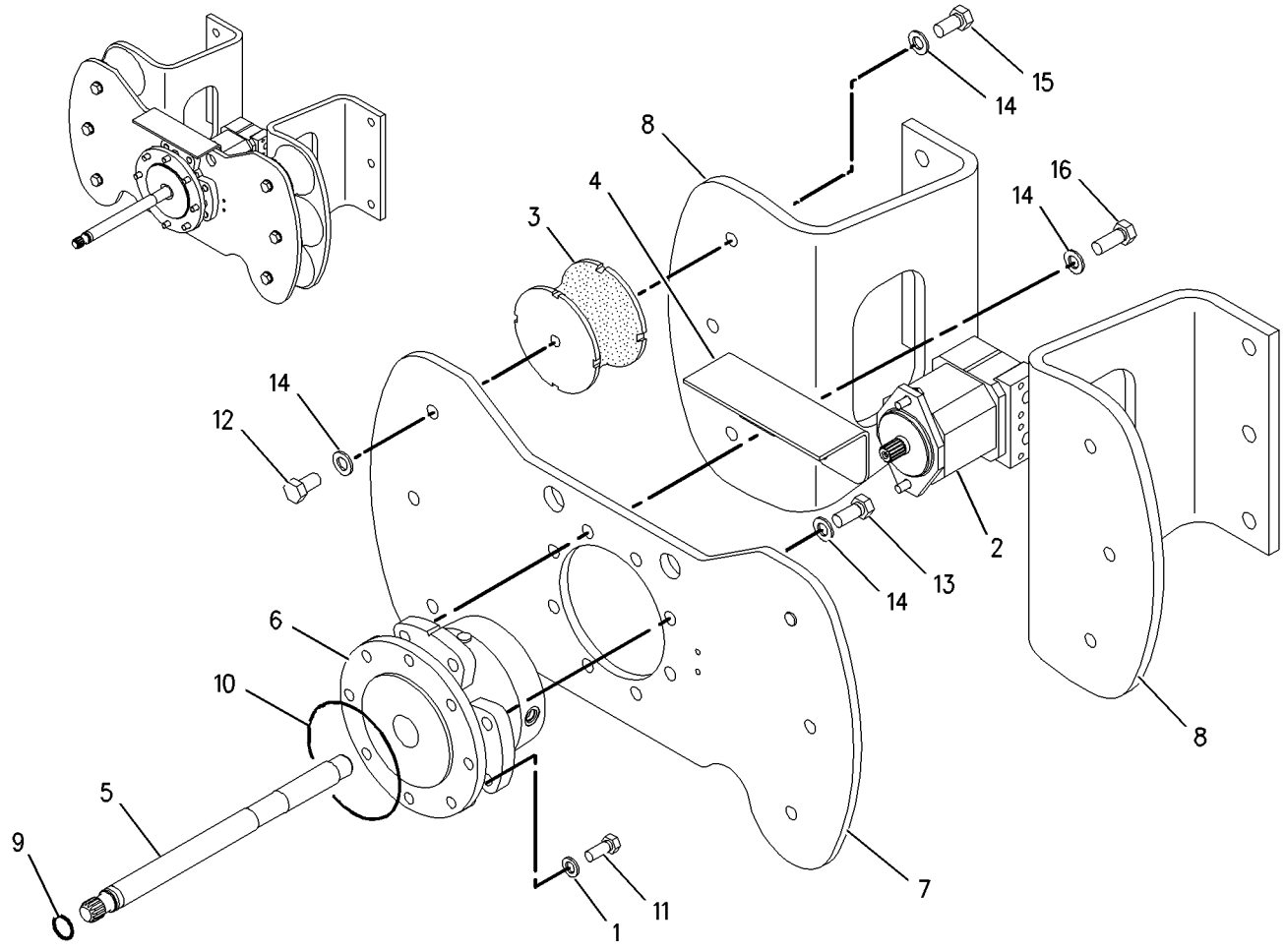

GRAPHIC #1 **<END>** g00916911

140-8266 HOUSING GP-ECCENTRIC WEIGHT*R

S/N: BZE1-UP; BZG1-UP
PART OF 139-2036, 231-8768 DRUM GP-PADDED
AN ATTACHMENT

SMCS-6606 **i02154486**

NOTE	REF NO	GRAPHIC REF	PART NUMBER	QTY	PART NAME 1 2 3 4 5 6 (PRODUCT LEVEL)	SEE PAGE
	1	1	**5P-4484**	2	PLUG-MAGNETIC (PADDED DRUM)	
	2	1	**126-0287**	1	SHAFT	
	3	1	**126-9339**	2	SEAL	
	4	1	**126-9340**	2	BEARING	
	5	1	**150-2511**	1	SLEEVE	
Y	6	1	**147-0333**	1	SHAFT GP-ECCENTRIC WEIGHT	360
	7	1	**146-9502**	1	HOUSING-BEARING	
	8	1	**146-9504**	1	HOUSING-BEARING	
	9	1	**9X-8257**	6	WASHER (17.5X30X3.5-MM THK)	
	10	1	**129-9124**	1	SEAL-O-RING	
M	11	1	**6V-3940**	8	BOLT (M8X1.25X25-MM)	
	12	1	**7M-8485**	2	SEAL-O-RING	
M	13	1	**8T-4779**	6	BOLT (M16X2X35-MM)	
	14	1	**4B-4158**	2	SCREW-DRIVE (3/16X0.25-IN)	
	15	1	**146-7512**	1	PLATE-IDENTIFICATION (ECCENTRIC WEIGHT)	

M-METRIC PART
Y-SEPARATE ILLUSTRATION

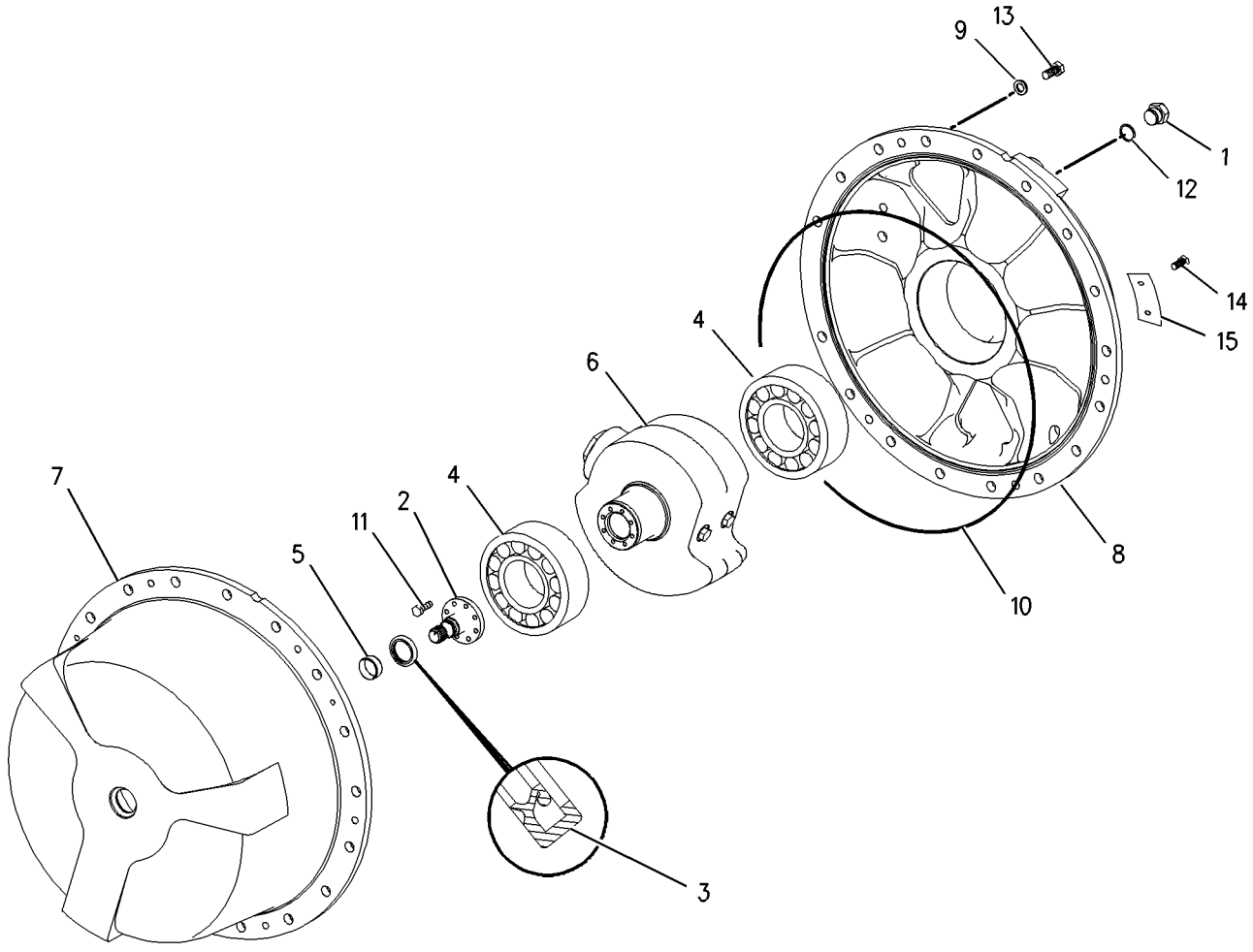

GRAPHIC #1 **<END>** g00645939

VIBRATORY SYSTEM

140-8267 HOUSING GP-ECCENTRIC WEIGHT*R

S/N: BZE1-UP; BZG1-UP
PART OF 139-2036, 231-8768 DRUM GP-PADDED
AN ATTACHMENT

SMCS-6606 **i02154489**

NOTE	REF NO	GRAPHIC REF	PART NUMBER	QTY	PART NAME 1 2 3 4 5 6 (PRODUCT LEVEL)	SEE PAGE
	1	1	**5P-4484**	2	PLUG-MAGNETIC (PADDED DRUM)	
	2	1	**126-0288**	1	SHAFT	
	3	1	**126-8185**	1	FLANGE	
	4	1	**126-9339**	2	SEAL	
	5	1	**126-9340**	2	BEARING	
	6	1	**126-9341**	1	SLEEVE	
Y	7	1	*140-6316*	1	SHAFT GP-ECCENTRIC WEIGHT	359
	8	1	**140-8260**	1	HOUSING-BEARING	
	9	1	**140-8261**	1	HOUSING-BEARING	
	10	1	**9X-8257**	6	WASHER (17.5X30X3.5-MM THK)	
	11	1	**146-9501**	2	SPACER	
	12	1	**129-9124**	1	SEAL-O-RING	
	13	1	**3D-7805**	2	SEAL-O-RING	
M	14	1	**6V-3940**	8	BOLT (M8X1.25X25-MM)	
M	15	1	**6V-5215**	8	BOLT (M8X1.25X16-MM)	
	16	1	**7M-8485**	2	SEAL-O-RING	
M	17	1	**8T-4779**	6	BOLT (M16X2X35-MM)	

M-METRIC PART
Y-SEPARATE ILLUSTRATION

140-8267 HOUSING GP-ECCENTRIC WEIGHT *(contd.)* **i02154489**

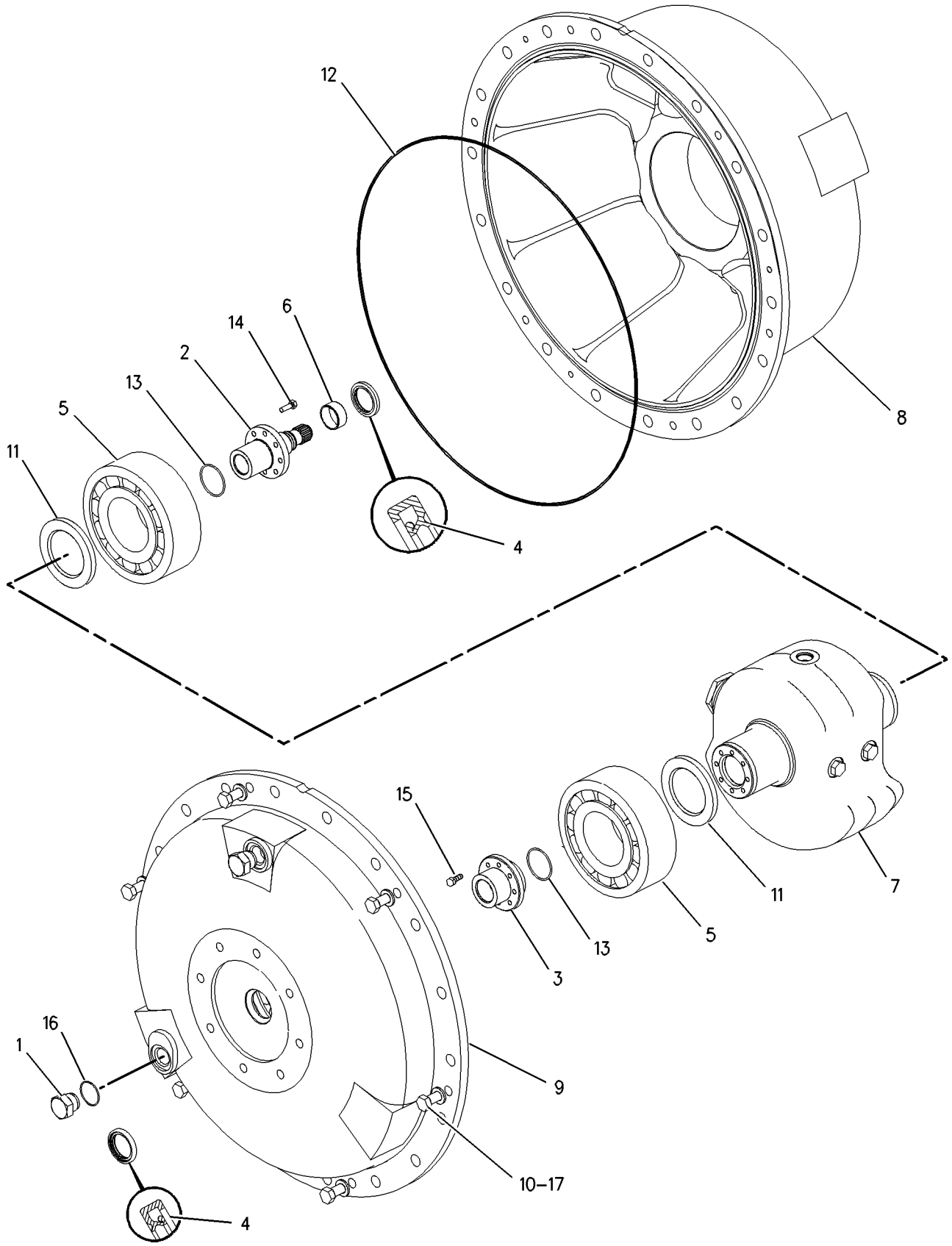

GRAPHIC #1 **<END>** g00644262

VIBRATORY SYSTEM

222-1889 HOUSING GP-ECCENTRIC WEIGHT

S/N: BZE1-UP

PART OF 220-4053 DRUM GP-SMOOTH

SMCS-6606 **i02154492**

NOTE	REF NO	GRAPHIC REF	PART NUMBER	QTY	PART NAME 1 2 3 4 5 6 (PRODUCT LEVEL)	SEE PAGE
	1	1	**5P-4484**	2	PLUG-MAGNETIC (SMOOTH DRUM)	
	2	1	**126-0287**	1	SHAFT	
	3	1	**126-9339**	2	SEAL	
	4	1	**126-9340**	2	BEARING	
	5	1	**150-2511**	1	SLEEVE	
Y	6	1	**222-1891**	1	SHAFT GP-ECCENTRIC WEIGHT	361
	7	1	**146-9502**	1	HOUSING-BEARING	
	8	1	**146-9504**	1	HOUSING-BEARING	
	9	1	**9X-8257**	6	WASHER (17.5X30X3.5-MM THK)	
	10	1	**129-9124**	1	SEAL-O-RING	
M	11	1	**6V-3940**	8	BOLT (M8X1.25X25-MM)	
	12	1	**7M-8485**	2	SEAL-O-RING	
M	13	1	**8T-4779**	6	BOLT (M16X2X35-MM)	
	14	1	**4B-4158**	2	SCREW-DRIVE (3/16X0.25-IN)	
	15	1	**146-7512**	1	PLATE-IDENTIFICATION (ECCENTRIC WEIGHT)	

M-METRIC PART
Y-SEPARATE ILLUSTRATION

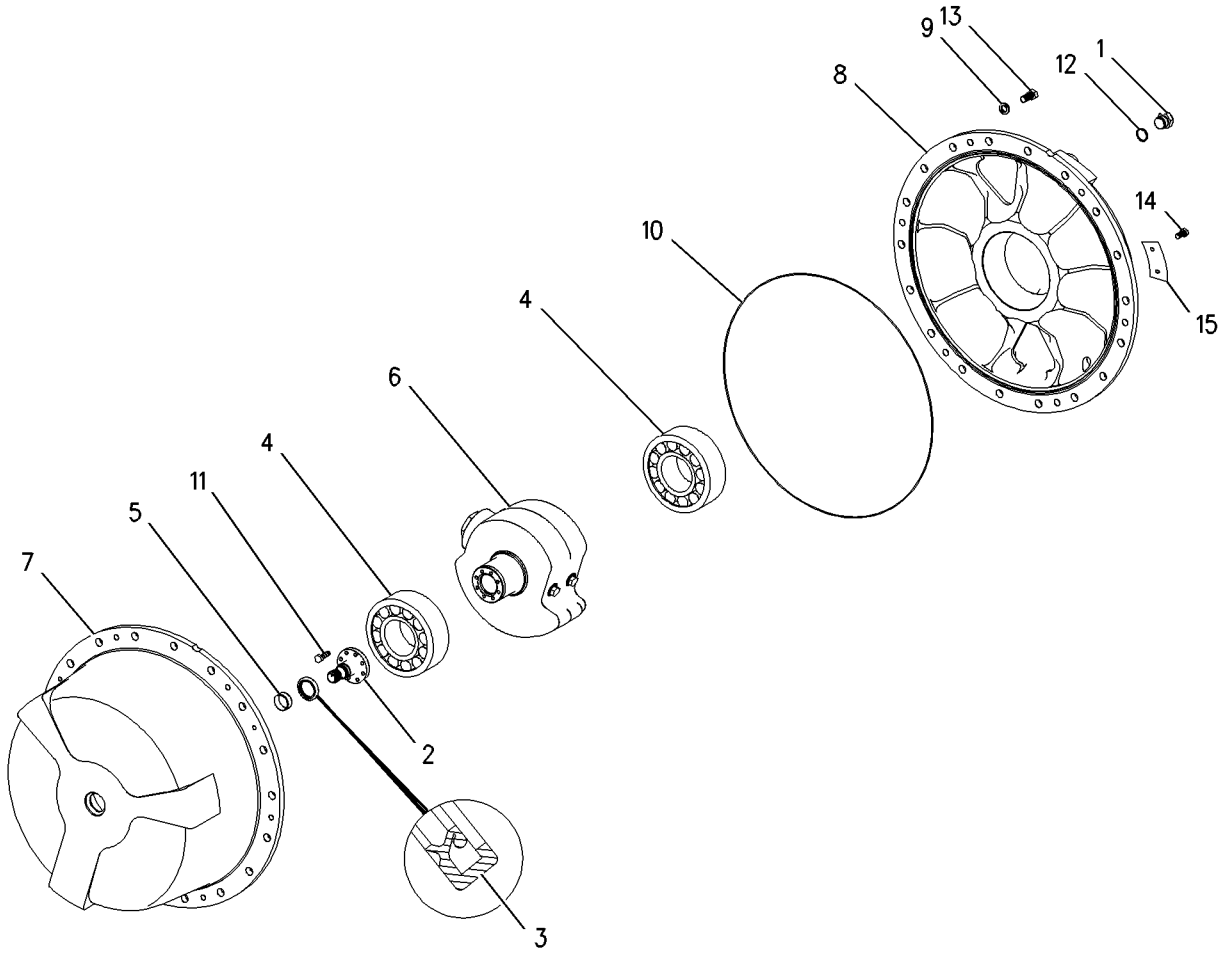

GRAPHIC #1 **<END>** g01004803

222-1890 HOUSING GP-ECCENTRIC WEIGHT

S/N: BZE1-UP

PART OF 220-4053 DRUM GP-SMOOTH

SMCS-6606 **i02154493**

NOTE	REF NO	GRAPHIC REF	PART NUMBER	QTY	PART NAME 1 2 3 4 5 6 (PRODUCT LEVEL)	SEE PAGE
	1	1	**5P-4484**	2	PLUG-MAGNETIC (SMOOTH DRUM)	
	2	1	**126-0288**	1	SHAFT	
	3	1	**148-3452**	1	FLANGE	
	4	1	**126-9339**	4	SEAL	
	5	1	**126-9340**	2	BEARING	
	6	1	**150-2511**	1	SLEEVE	
Y	7	1	**222-1891**	1	SHAFT GP-ECCENTRIC WEIGHT	361
	8	1	**146-9502**	1	HOUSING-BEARING	
	9	1	**146-9503**	1	HOUSING-BEARING	
	10	1	**9X-8257**	6	WASHER (17.5X30X3.5-MM THK)	
M	11	1	**8T-4779**	6	BOLT (M16X2X35-MM)	
	12	1	**129-9124**	1	SEAL-O-RING	
	13	1	**3D-7805**	2	SEAL-O-RING	
M	14	1	**6V-3940**	8	BOLT (M8X1.25X25-MM)	
M	15	1	**6V-5215**	8	BOLT (M8X1.25X16-MM)	
	16	1	**7M-8485**	2	SEAL-O-RING	
	17	1	**4B-4158**	2	SCREW-DRIVE (3/16X0.25-IN)	
	18	1	**146-7512**	1	PLATE-IDENTIFICATION (ECCENTRIC WEIGHT)	

M-METRIC PART
Y-SEPARATE ILLUSTRATION

222-1890 HOUSING GP-ECCENTRIC WEIGHT *(contd.)* i02154493

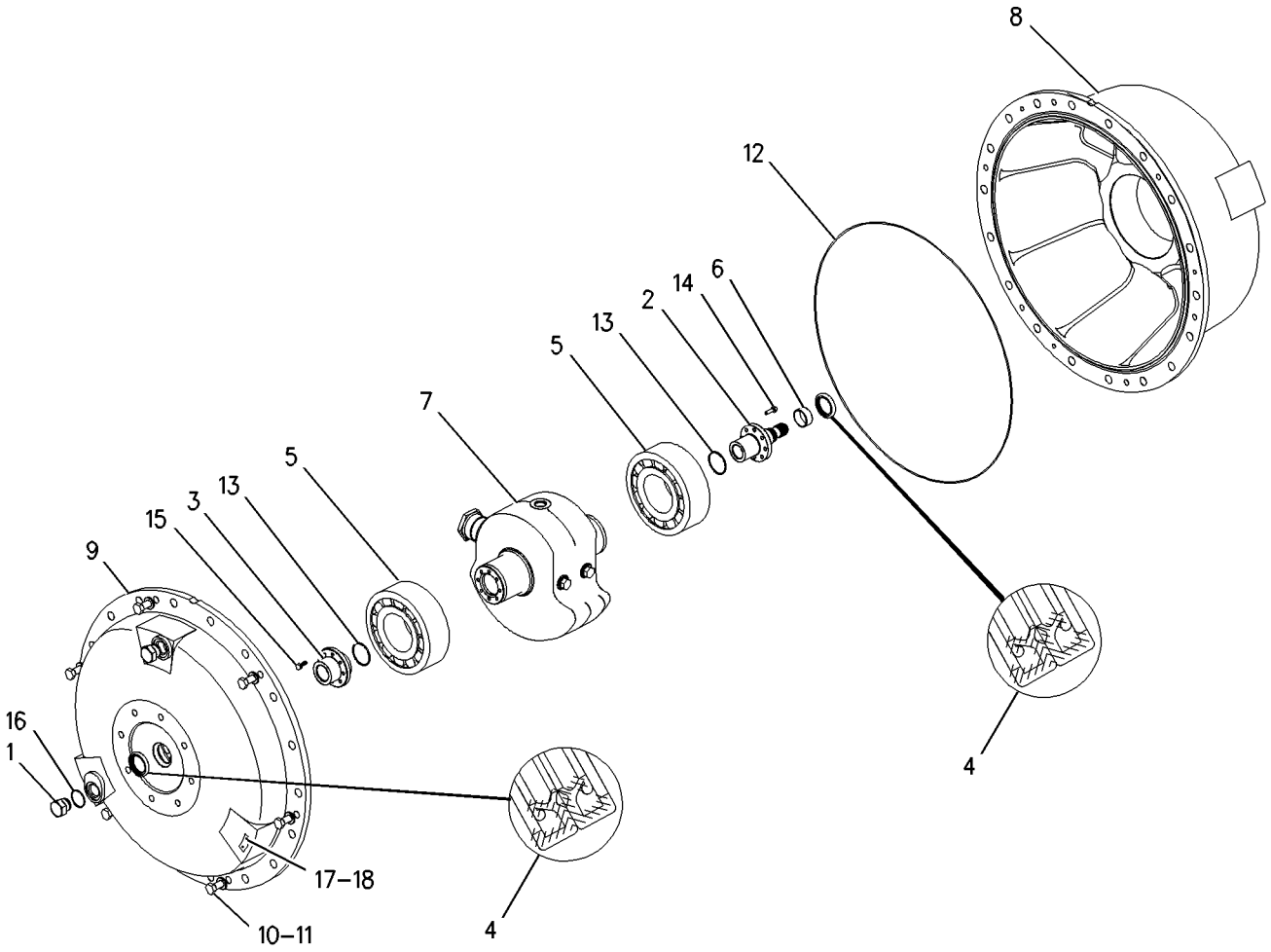

GRAPHIC #1 **<END>** g01004745

VIBRATORY SYSTEM

219-4168 HYDRAULIC AR-VIBRATORY

S/N: BZE1-UP; BZG1-UP

PART OF 230-4178, 231-8816 COMMON AR

SMCS-5050 **i02138098**

NOTE	PART NUMBER	QTY	PART NAME 1 2 3 4 5 6 (PRODUCT LEVEL)	SEE PAGE
Y	*218-0378*	1	LINES GP-VIBRATORY	352
Y	*218-8489*	1	PUMP & MTG GP-VIBRATORY	355

Y-SEPARATE ILLUSTRATION

<END>

VIBRATORY SYSTEM

218-0378 LINES GP-VIBRATORY

S/N: BZE1-UP; BZG1-UP

PART OF 219-4168 HYDRAULIC AR-VIBRATORY

SMCS-5057 **i02138150**

NOTE	REF NO	GRAPHIC REF	PART NUMBER	QTY	PART NAME 1 2 3 4 5 6 (PRODUCT LEVEL)	SEE PAGE
	1	1	**102-8705**	2	PLATE	
I	2	1	**129-5128**	1	HOSE AS	
	3	1	**135-0708**	2	CLAMP AS	
	4	1	**154-4883**	4	CLAMP-HALF	
	5	1	**172-5267**	3	STRIP	
	6	1	**172-5523**	3	CLAMP-BLOCK	
	7	1	**177-2215**	1	STRAP-DUAL CLAMP	
	8	1	**205-0706**	1	PLATE	
I	9	1	**216-0202**	1	HOSE AS	
I	10	1	**222-7037**	1	HOSE AS	
I	11	1	**222-7038**	1	HOSE AS	
	12	1	*148-8345*	1	CONNECTOR AS	
		1	**2M-9780**	1	SEAL-O-RING	
		1	**6V-8398**	1	SEAL-O-RING	
		1	**6V-8638**	1	CONNECTOR	
	13	1	*148-8370*	1	ELBOW AS	
		1	**6V-8398**	1	SEAL-O-RING	
		1	**6V-9851**	1	ELBOW	
	14	1	**1P-3702**	2	SEAL-RECTANGULAR	
	15	1	**1P-5765**	4	FLANGE-HALF	
	16	1	**7K-1181**	16	STRAP-CABLE	
M	17	1	**7X-0818**	2	BOLT (M8X1.25X45-MM)	
M	18	1	**8T-0389**	10	LOCKNUT (M10X1.5-THD)	
	19	1	**8T-4121**	28	WASHER-HARD (11X21X2.5-MM THK)	
M	20	1	**8T-4182**	8	BOLT (M10X1.5X45-MM)	
M	21	1	**8T-4189**	6	BOLT (M8X1.25X20-MM)	
M	22	1	**8T-5436**	4	BOLT (M10X1.5X130-MM)	
M	23	1	**8T-6685**	6	BOLT (M10X1.5X110-MM)	
BE	24	1	**6R-2050**		SLEEVE	

B-USE AS REQUIRED
E-ORDER BY THE CENTIMETER
I-REFER TO HYDRAULIC INFORMATION SYSTEM
M-METRIC PART

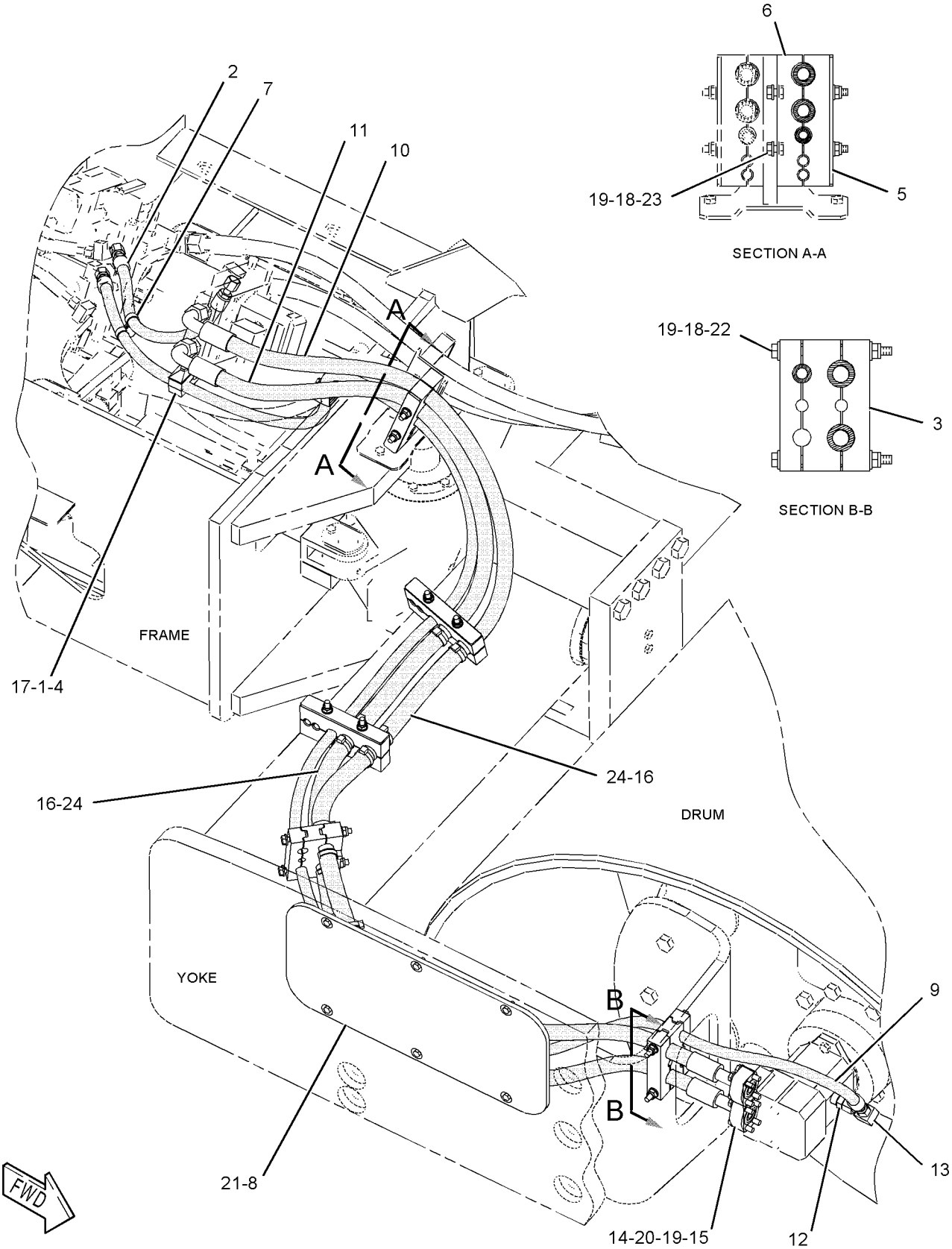

GRAPHIC #1

<END>

g01086604

VIBRATORY SYSTEM

140-9614 MOTOR & MTG GP-VIBRATORY

S/N: BZE1-UP; BZG1-UP
PART OF 193-5892 DRIVE GP-SUPPORT & VIBRATORY
ALSO AN ATTACHMENT

SMCS-5058, 5651 **i02155149**

NOTE	REF NO	GRAPHIC REF	PART NUMBER	QTY	PART NAME 1 2 3 4 5 6 (PRODUCT LEVEL)	SEE PAGE
M	1	1	**8T-4956**	2	BOLT (M12X1.75X35-MM)	
YR	2	1	**136-8869**	1	MOTOR GP-PISTON (VIBRATORY)	293
	3	1	**3K-0715**	1	SEAL-O-RING	
	4	1	**8T-4223**	2	WASHER-HARD (13.5X25.5X3-MM THK)	

M-METRIC PART
R-REMFG PART MAY BE AVAILABLE
Y-SEPARATE ILLUSTRATION

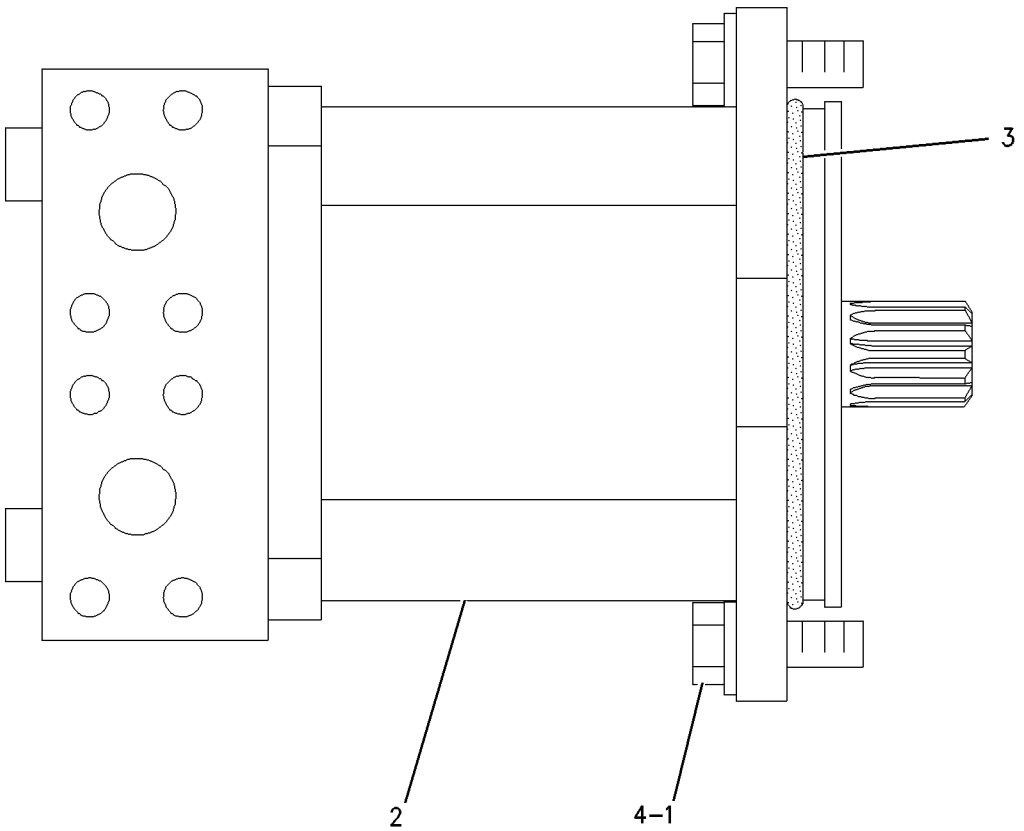

GRAPHIC #1 **<END>** g00644237

VIBRATORY SYSTEM

218-8489 PUMP & MTG GP-VIBRATORY

S/N: BZE1-645; BZG1-357

PART OF 219-4168 HYDRAULIC AR-VIBRATORY

SMCS-5070, 5652 **i02138103**

NOTE	REF NO	GRAPHIC REF	PART NUMBER	QTY	PART NAME 1 2 3 4 5 6 (PRODUCT LEVEL)	SEE PAGE
	1	1	**6V-0852**	2	CAP-DUST	
Y	2	1	**218-8490**	1	PUMP GP-PISTON (VIBRATORY)	310
	3	1	**110-6349**	2	FITTING AS (QUICK DISCONNECT)	
	4	1	*148-8327*	2	CONNECTOR AS	
					(EACH INCLUDES)	
		1	**3D-2824**	1	SEAL-O-RING	
		1	**6V-8637**	1	CONNECTOR	
		1	**6V-9746**	1	SEAL-O-RING	
	5	1	*148-8364*	1	ELBOW AS	
		1	**3K-0360**	1	SEAL-O-RING	
		1	**6V-8398**	1	SEAL-O-RING	
		1	**6V-8625**	1	ELBOW	
	6	1	*148-8372*	1	ELBOW AS	
		1	**2M-9780**	1	SEAL-O-RING	
		1	**6V-8398**	1	SEAL-O-RING	
		1	**6V-8721**	1	ELBOW	
M	7	1	**8T-4183**	2	BOLT (M12X1.75X40-MM)	
	8	1	**8T-7971**	2	WASHER-HARD (13.5X25.5X5-MM THK)	
	9	1	**4P-7428**	1	CLIP	
	10	1	**8T-4223**	1	WASHER-HARD (13.5X25.5X3-MM THK)	

M-METRIC PART
Y-SEPARATE ILLUSTRATION

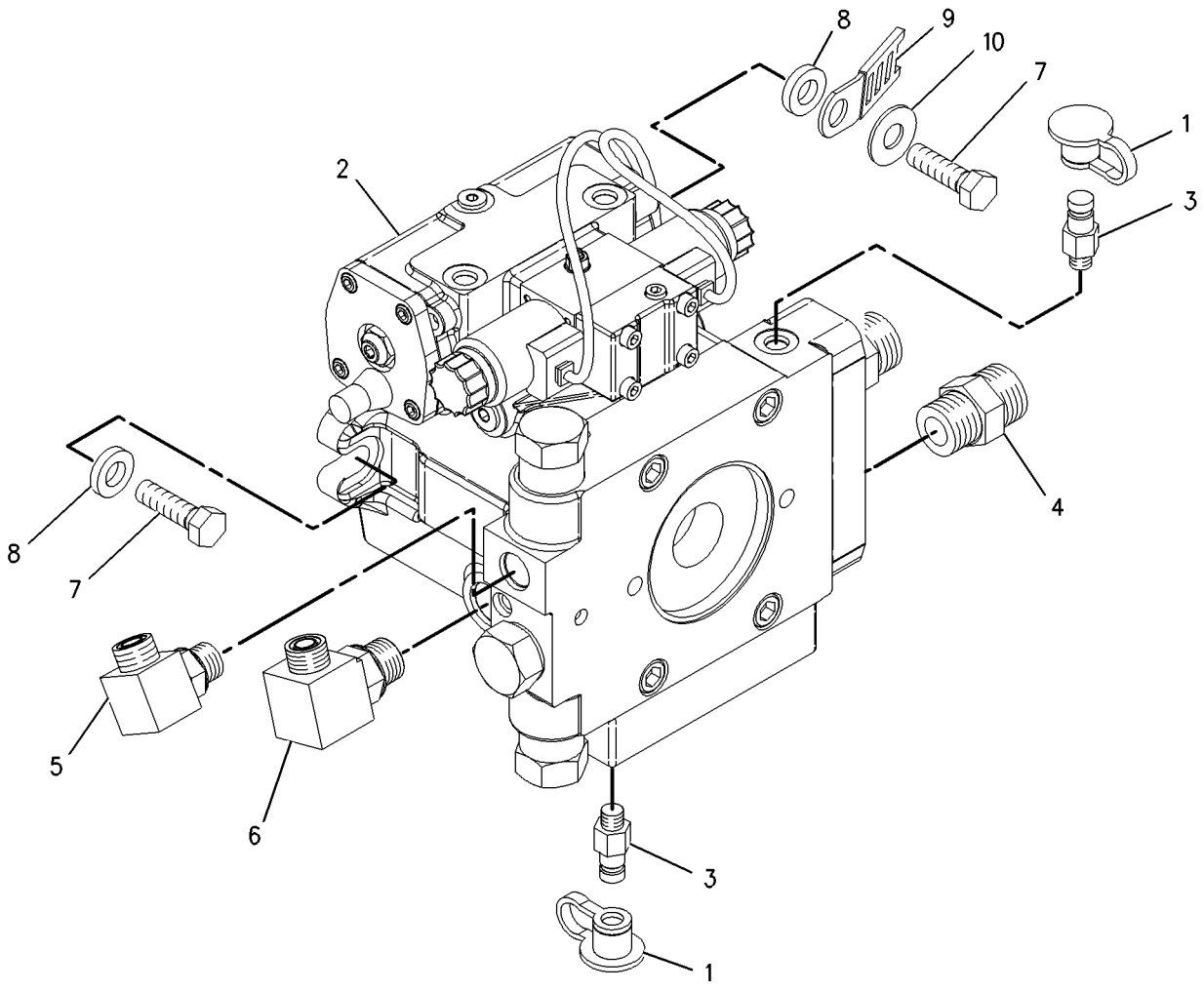

GRAPHIC #1 **<END>** g01004486

VIBRATORY SYSTEM

218-8489 PUMP & MTG GP-VIBRATORY

S/N: BZE646-UP; BZG358-UP

PART OF 219-4168 HYDRAULIC AR-VIBRATORY

SMCS-5070, 5652 **i03009820**

NOTE	REF NO	GRAPHIC REF	PART NUMBER	QTY	PART NAME 1 2 3 4 5 6 (PRODUCT LEVEL)	SEE PAGE
	1	1	**6V-0852**	2	CAP-DUST	
CYR	2	1	**296-3332**	1	PUMP GP-PISTON (VIBRATORY)	315
	3	1	**110-6349**	2	FITTING AS (QUICK DISCONNECT)	
	4	1	*148-8327*	2	CONNECTOR AS	
					(EACH INCLUDES)	
		1	**3D-2824**	1	SEAL-O-RING	
		1	**6V-8637**	1	CONNECTOR	
		1	**6V-9746**	1	SEAL-O-RING	
	5	1	*148-8364*	1	ELBOW AS	
		1	**3K-0360**	1	SEAL-O-RING	
		1	**6V-8398**	1	SEAL-O-RING	
		1	**6V-8625**	1	ELBOW	
	6	1	*148-8372*	1	ELBOW AS	
		1	**2M-9780**	1	SEAL-O-RING	
		1	**6V-8398**	1	SEAL-O-RING	
		1	**6V-8721**	1	ELBOW	
M	7	1	**8T-4183**	2	BOLT (M12X1.75X40-MM)	
	8	1	**8T-7971**	2	WASHER-HARD (13.5X25.5X5-MM THK)	
	9	1	**4P-7428**	1	CLIP	
	10	1	**8T-4223**	1	WASHER-HARD (13.5X25.5X3-MM THK)	

C-CHANGE FROM PREVIOUS TYPE
M-METRIC PART
R-REMFG PART MAY BE AVAILABLE
Y-SEPARATE ILLUSTRATION

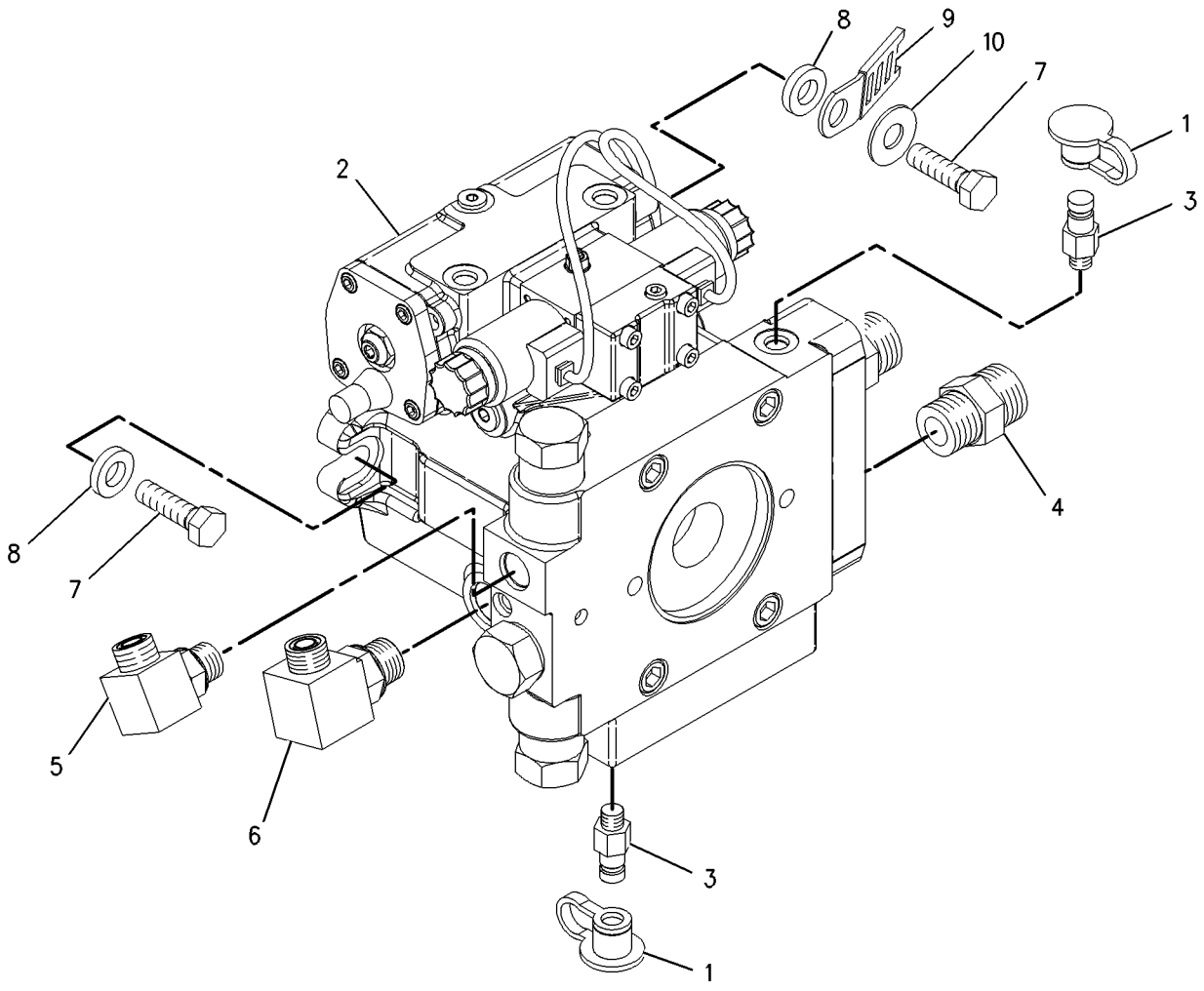

GRAPHIC #1 **<END>** g01004486

140-6316 SHAFT GP-ECCENTRIC WEIGHT

S/N: BZE1-UP; BZG1-UP
PART OF 140-8267 HOUSING GP-ECCENTRIC WEIGHT
AN ATTACHMENT

SMCS-6645 **i01204811**

NOTE	REF NO	GRAPHIC REF	PART NUMBER	QTY	PART NAME 1 2 3 4 5 6 (PRODUCT LEVEL)	SEE PAGE
	1	1	**9X-8257**	2	WASHER (17.5X30X3.5-MM THK)	
	2	1	**9S-7583**	1	PLUG	
	3	1	**125-1054**	1	SHAFT	
M	4	1	**8T-4175**	2	BOLT (M16X2X90-MM)	
	5	1	**9S-8008**	1	PLUG-O RING	
FB			**7X-5305**		SHOT	

B-USE AS REQUIRED
F-NOT SHOWN
M-METRIC PART

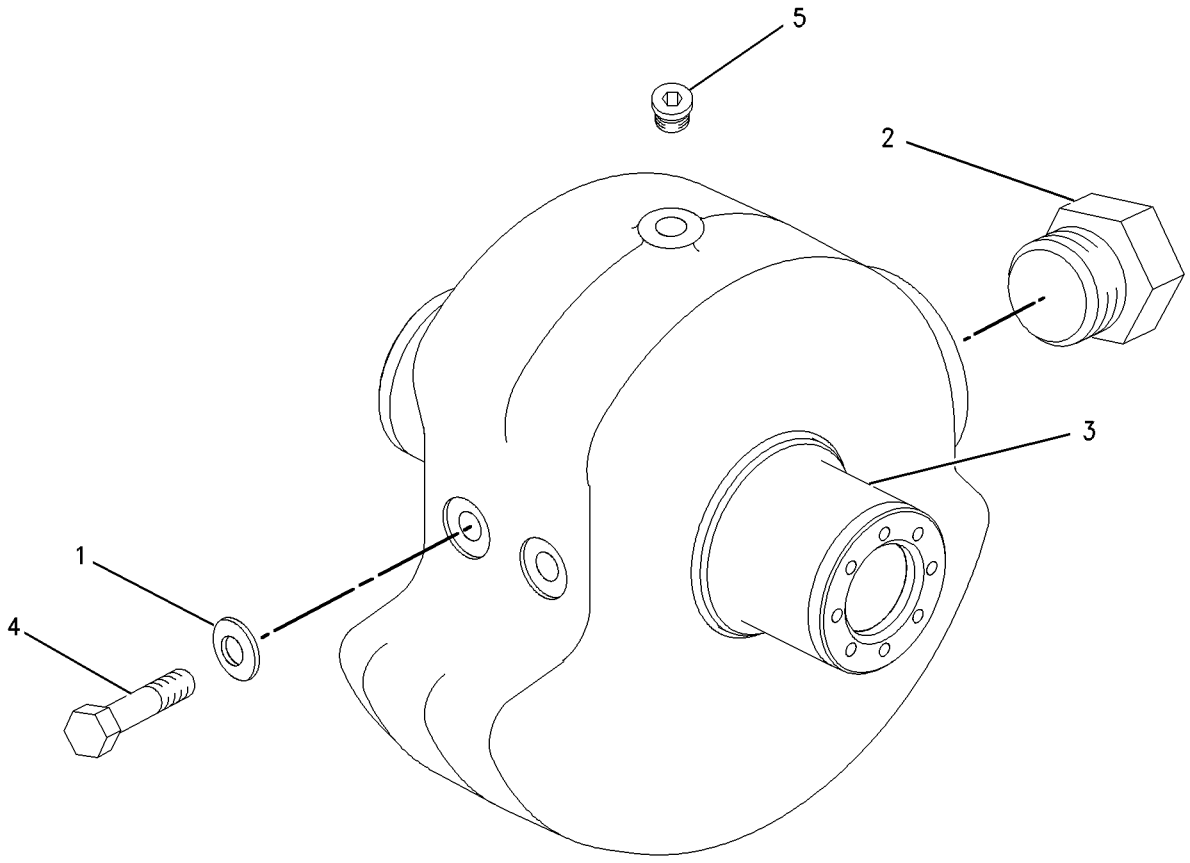

GRAPHIC #1 **<END>** g00644222

VIBRATORY SYSTEM

147-0333 SHAFT GP-ECCENTRIC WEIGHT

S/N: BZE1-UP; BZG1-UP
PART OF 140-8266 HOUSING GP-ECCENTRIC WEIGHT
AN ATTACHMENT

SMCS-6645 **i02153898**

NOTE	REF NO	GRAPHIC REF	PART NUMBER	QTY	PART NAME 1 2 3 4 5 6 (PRODUCT LEVEL)	SEE PAGE
	1	1	**9X-8257**	2	WASHER (17.5X30X3.5-MM THK)	
	2	1	**9S-7583**	1	PLUG	
	3	1	**146-7292**	1	SHAFT	
M	4	1	**8T-4175**	2	BOLT (M16X2X90-MM)	
	5	1	**9S-8008**	1	PLUG-O RING	
BF		1	**180-7333**		SHOT (STEEL)	

B-USE AS REQUIRED
F-NOT SHOWN
M-METRIC PART

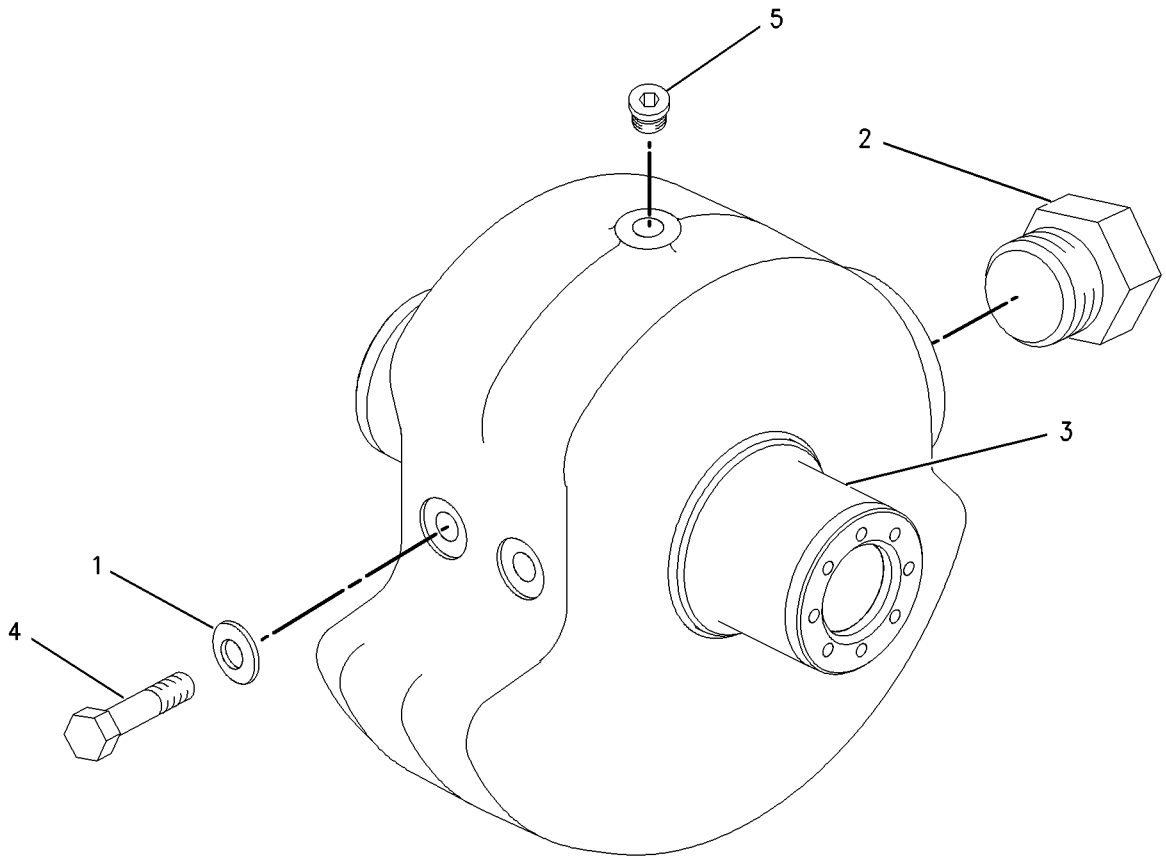

GRAPHIC #1 **<END>** g00644217

VIBRATORY SYSTEM

222-1891 SHAFT GP-ECCENTRIC WEIGHT

S/N: BZE1-UP

PART OF 222-1889, 222-1890 HOUSING GP-ECCENTRIC WEIGHT

SMCS-6645 **i02141223**

NOTE	REF NO	GRAPHIC REF	PART NUMBER	QTY	PART NAME 1 2 3 4 5 6 (PRODUCT LEVEL)	SEE PAGE
	1	1	*222-1892*	1	LOBE-WEIGHT	
	2	1	**9S-7583**	1	PLUG	
	3	1	**146-7292**	1	SHAFT	
M	4	1	**8T-4175**	2	BOLT (M16X2X90-MM)	
	5	1	**9S-8008**	1	PLUG-O RING	
	6	1	**9X-8257**	2	WASHER (17.5X30X3.5-MM THK)	
BF			**180-7333**		SHOT (STEEL)	

B-USE AS REQUIRED
F-NOT SHOWN
M-METRIC PART

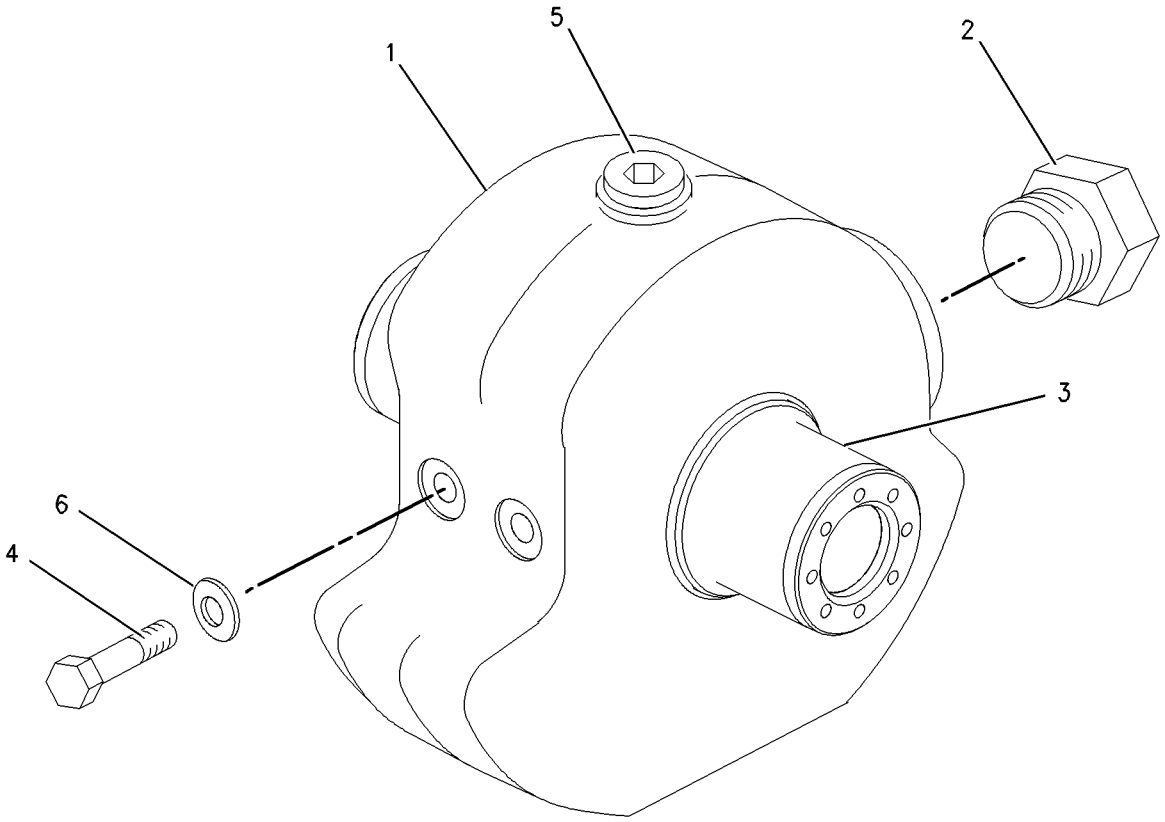

GRAPHIC #1 **<END>** g00997562

VIBRATORY SYSTEM

159-9405 SUPPORT GP-VIBRATORY

S/N: BZE1-UP; BZG1-UP

PART OF 193-5892 DRIVE GP-SUPPORT & VIBRATORY, 254-1347 DRUM GP-DRIVE & VIBRATORY

ALSO AN ATTACHMENT

SMCS-5656 **i02898371**

NOTE	REF NO	GRAPHIC REF	PART NUMBER	QTY	PART NAME 1 2 3 4 5 6 (PRODUCT LEVEL)	SEE PAGE
	1	1	**077-3637**	1	SEAL	
	2	1	**077-6630**	1	SEAL	
	3	1	**177-4658**	1	NUT-BEARING	
	4	1	**030-0061**	1	CONE-BEARING	
	5	1	**030-0060**	1	CUP-BEARING	
	6	1	**159-5846**	1	PLUG-MAGNETIC (VIBRATORY SUPPORT)	
	7	1	**7D-8636**	1	CONE-BEARING	
	8	1	**7D-8637**	1	CUP-BEARING	
	9	1	**9S-8005**	3	PLUG-O-RING	
	10	1	**3K-0360**	3	SEAL-O-RING	
	11	1	**9X-7566**	1	SEAL-O-RING	
	12	1	**172-3259**	1	ADAPTER	

159-9405 SUPPORT GP-VIBRATORY *(contd.)* **i02898371**

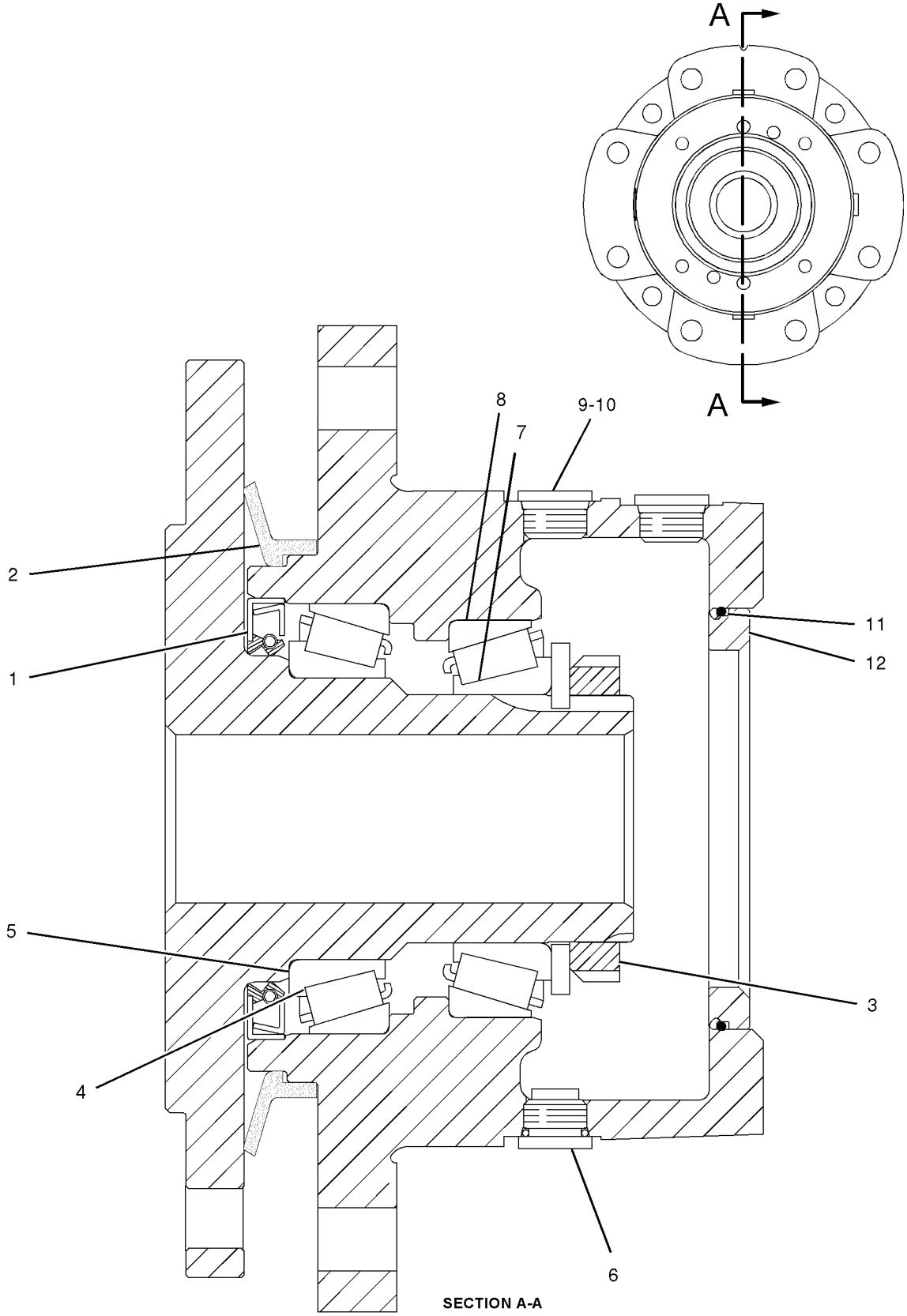

SECTION A-A

GRAPHIC #1

<END>

g01044189

OPERATOR STATION

176-3900 ACCUMULATOR GP-REFRIGERANT—WITH DESICCANT

S/N: BZE1-UP; BZG1-UP
PART OF 186-6190 ACCUMULATOR GP-REFRIGERANT
FIELD REPLACEMENT FOR 186-6190—PAGE 365
AN ATTACHMENT

SMCS-7320 **i02108337**

NOTE	REF NO	GRAPHIC REF	PART NUMBER	QTY	PART NAME 1 2 3 4 5 6 (PRODUCT LEVEL)	SEE PAGE
					(NO SERVICED PARTS)	

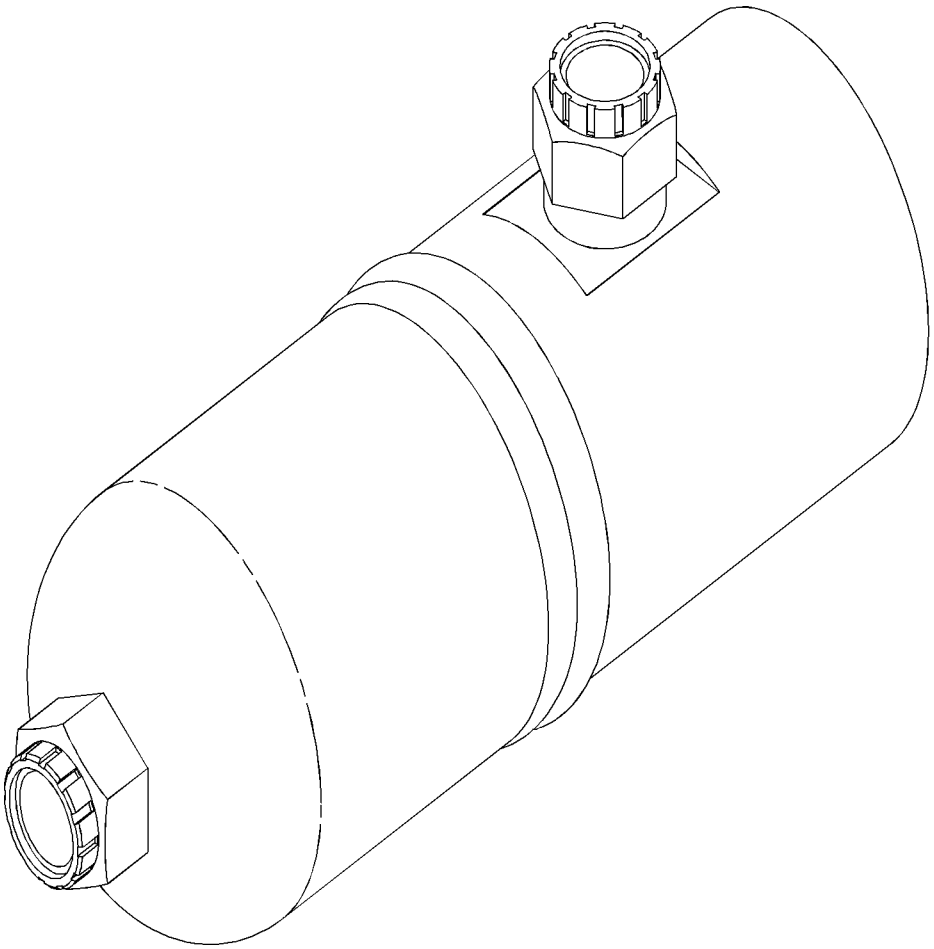

GRAPHIC #1 **<END>** g01035076

186-6190 ACCUMULATOR GP-REFRIGERANT—WITH DESICCANT

S/N: BZE1-UP; BZG1-UP
PART OF 222-8663 LINES GP-AIR CONDITIONER
FIELD REPLACEMENT ORDER 176-3900—PAGE 364
AN ATTACHMENT

SMCS-7320 **i02108702**

NOTE	REF NO	GRAPHIC REF	PART NUMBER	QTY	PART NAME 1 2 3 4 5 6 (PRODUCT LEVEL)	SEE PAGE
Y	1	1	**176-3900**	1	ACCUMULATOR GP-REFRIGERANT (WITH DESICCANT)	364

Y-SEPARATE ILLUSTRATION

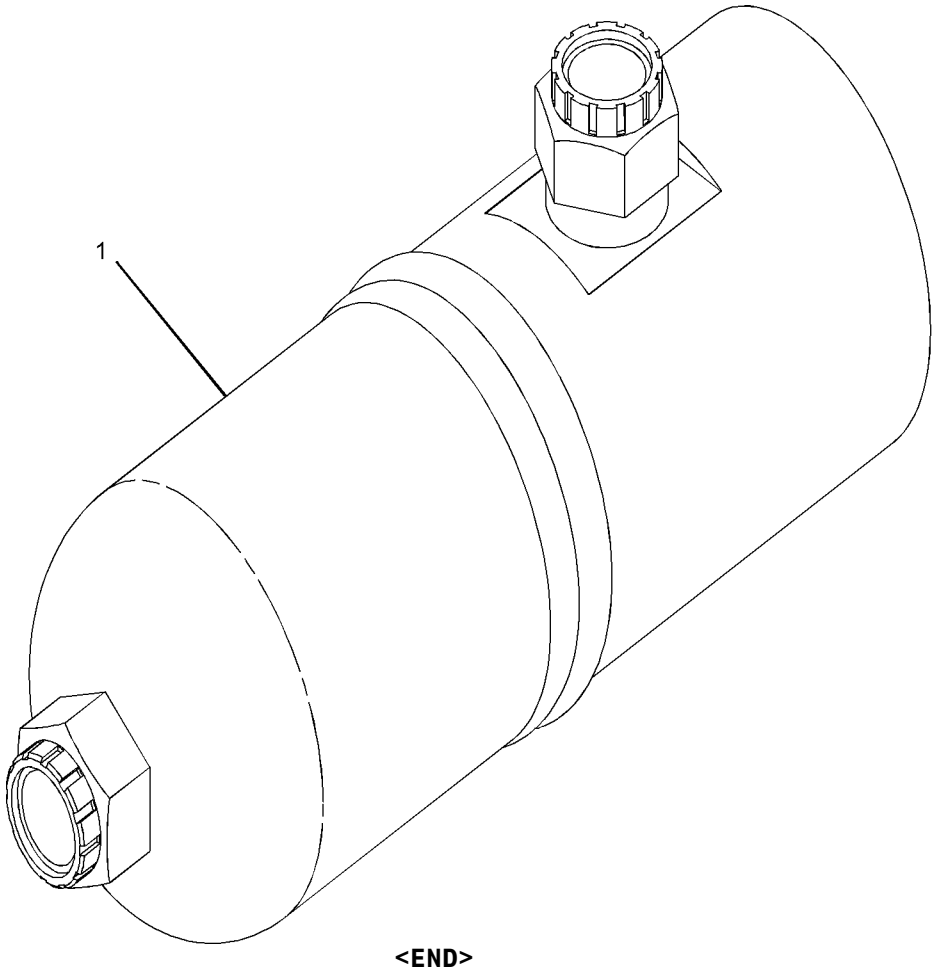

GRAPHIC #1 **<END>** g01034976

OPERATOR STATION

180-9873 AIR CONDITIONER GP

S/N: BZE1-UP; BZG1-UP
FIELD REPLACEMENT CIRCUIT BREAKER 208-2709 IS FOR USE WITH PAVING MODELS,
CIRCUIT BREAKER 280-2710 IS FOR USE WITH ALL OTHER MODELS
PART OF 192-0265, 240-4683 AIR CONDITIONER GP
FIELD REPLACEMENT ORDER 311-8547—PAGE 373, 280-2709 CIRCUIT BREAKER AS,
280-2710 CIRCUIT BREAKER AS
AN ATTACHMENT

SMCS-7320 **i02898372**

NOTE	REF NO	GRAPHIC REF	PART NUMBER	QTY	PART NAME 1 2 3 4 5 6 (PRODUCT LEVEL)	SEE PAGE
BE	1	1	**5P-5908**		SEAL	
	2	1	**1P-6522**	1	GROMMET	
	3	1	**2H-3922**	1	LOCKWASHER	
	4	1	**2H-3923**	1	LOCKWASHER	
	5	1	**2S-3745**	6	SCREW-TAPPING (10-16X0.5-IN)	
	6	1	**3B-4501**	2	LOCKWASHER	
	7	1	**3E-1841**	1	LEVER	
	8	1	**3E-5464**	1	THERMOSTAT (CAB AIR) (REFRIGERANT)	
	9	1	**3S-2093**	1	STRAP-CABLE	
M	10	1	**5C-9553**	4	BOLT (M6X1X16-MM)	
	11	1	**6V-1668**	2	WASHER (6.5X29.1X3-MM THK)	
	12	1	**7F-2050**	1	LOCKNUT (3/4-16-THD)	
	13	1	**7F-2060**	1	LOCKNUT (7/8-14-THD)	
	14	1	**8C-4586**	2	CLAMP	
M	15	1	**8C-8457**	1	SCREW-MACHINE (M5X0.8X14-MM)	
	16	1	**9X-2488**	6	CLAMP-HOSE	
M	17	1	**8T-4171**	4	BOLT (M6X1X12-MM)	
	18	1	**8T-4205**	13	WASHER-HARD (7.2X14.5X2-MM THK)	
	19	1	**8T-6631**	2	SCREW-MACHINE (8-32X0.5-IN)	
	20	1	**8Y-5737**	1	CLAMP	
	21	1	**9G-1950**	1	RESISTOR	
M	22	1	**9X-2044**	1	SCREW-TRUSS HEAD (M6X1X16-MM)	
	23	1	**9X-2185**	4	SCREW (8-15X0.44-IN)	
	24	1	**037-4426**	1	RETAINER	
	25	1	**100-3143**	2	PLATE-ORIFICE	
	26	1	**100-3426**	2	WHEEL AS-BLOWER	
					(EACH INCLUDES)	
		1	**037-4838**	2	CLAMP	
	27	1	**102-0341**	1	CLIP	
	28	1	**114-3140**	1	GROMMET	
	29	1	**118-5044**	1	HARNESS AS-HEATER & AIR COND	
		1	**155-2270**	1	KIT-CONNECTING PLUG (2-PIN)	
					(INCLUDES PLUG AS,WEDGE & INTERFACE SEAL)	
		1	**102-8805**	1	KIT-RECEPTACLE (6-PIN)	
					(INCLUDES RECEPTACLE AS & WEDGE)	
		1	**3S-2093**	3	STRAP-CABLE	
	30	1	**118-5046**	1	HOUSING AS	
M		1	**6V-9632**	1	NUT-WELD (M6X1-THD)	
	31	1	**123-8851**	1	CASE AS	
M		1	**6V-9632**	7	NUT-WELD (M6X1-THD)	
	32	1	**124-8494**	2	GASKET	
	33	1	**124-8495**	1	VALVE AS-WATER	
M	34	1	**129-3178**	3	LOCKNUT (M6X1-THD)	
M	35	1	**141-9784**	1	BOLT (M6X1X190-MM)	
	36	1	**151-0894**	1	COVER AS	
M		1	**7X-2478**	2	NUT-WELD (M8X1.25-THD)	
M		1	**8T-3490**	4	NUT-WELD (M10X1.5-THD)	
	37	1	**174-1486**	1	MOTOR AS-BLOWER (24-VOLT, A/C, HEATER)	
		1	**102-8802**	1	KIT-RECEPTACLE (2-PIN)	
					(INCLUDES RECEPTACLE AS & WEDGE)	

180-9873 AIR CONDITIONER GP *(contd.)* i02898372

NOTE	REF NO	GRAPHIC REF	PART NUMBER	QTY	PART NAME 1 2 3 4 5 6 (PRODUCT LEVEL)	SEE PAGE
		1	**9W-0852**	2	PIN-CONNECTOR (14-GA)	
	38	1	**180-3528**	1	COIL AS-EVAPORATOR	
		1	**189-1707**	1	ORIFICE AS-AIR CONDITIONER	
	39	1	**183-7528**	1	COIL AS-HEATER	
M	40	1	**6V-7728**	1	BOLT (M6X1X45-MM)	
D	41	1	**6V-1392**		SEAL (0.6-M)	
D	41A	1	**6V-1392**		SEAL (1.7-M EACH)	
E	42	1	**136-1953**		HOSE (18-CM)	
E	42A	1	**136-1953**		HOSE (15-CM)	
E	42B	1	**136-1953**		HOSE (23-CM)	
D	43	1	**8T-5372**		SEAL (0.15-M)	
D	43A	1	**8T-5372**		SEAL (0.12-M EACH)	
D	44	1	**5P-7070**		INSULATION-STRIP (0.6-M EACH)	
D	45	1	**5P-5643**		SEAL (0.4-M)	

B-USE AS REQUIRED
D-ORDER BY THE METER
E-ORDER BY THE CENTIMETER
M-METRIC PART

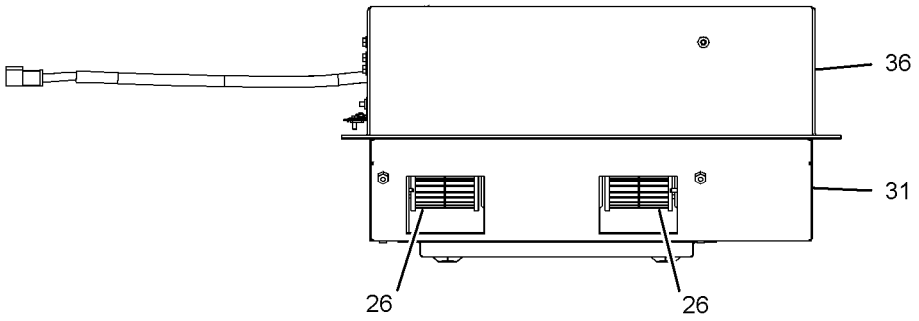

FRONT VIEW

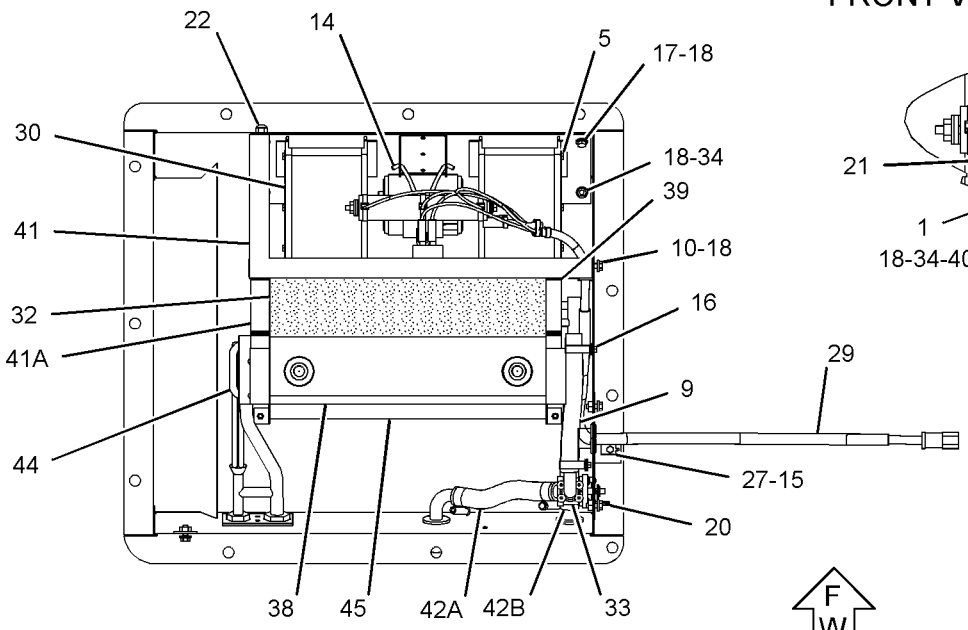

TOP VIEW
(COVER REMOVED FOR CLARITY)

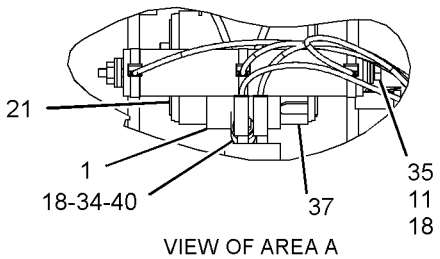

VIEW OF AREA A

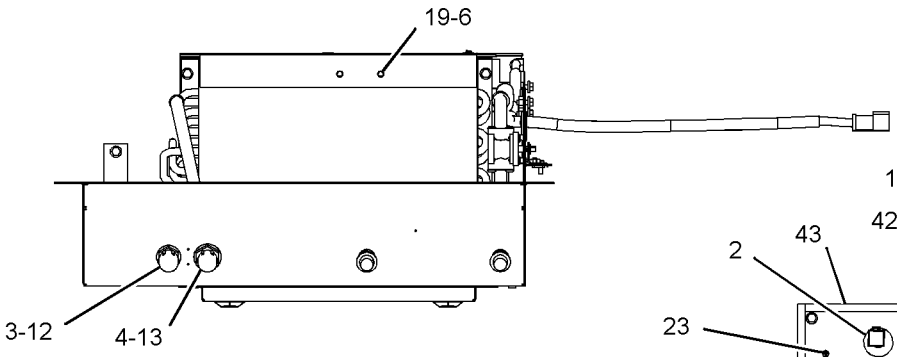

REAR VIEW
(COVER REMOVED FOR CLARITY)

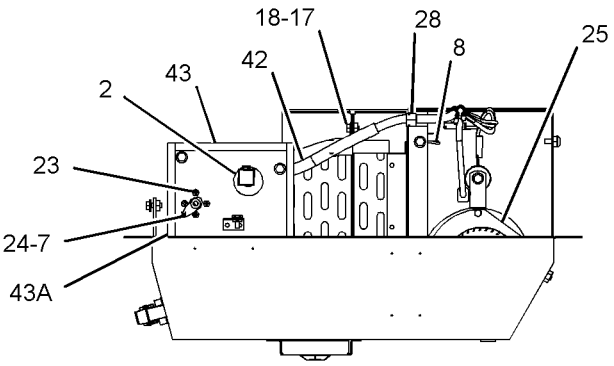

RIGHT SIDE VIEW
(COVER REMOVED FOR CLARITY)

GRAPHIC #1 **<END>** g01332234

OPERATOR STATION

192-0265 AIR CONDITIONER GP

S/N: BZE1-UP; BZG1-UP
PART OF 226-8346 AIR CONDITIONER GP
AN ATTACHMENT

SMCS-7320 **i02153900**

NOTE	PART NUMBER	QTY	PART NAME 1 2 3 4 5 6 (PRODUCT LEVEL)	SEE PAGE
Y	**180-9873**	1	AIR CONDITIONER GP	366
	180-7486	1	COVER AS	
	180-7487	1	FILTER	
	127-8613	1	GASKET	
	116-7856	2	KNOB-CONTROL (AIR CONDITIONER)	

Y-SEPARATE ILLUSTRATION

<END>

OPERATOR STATION

226-8346 AIR CONDITIONER GP

S/N: BZE1-UP; BZG1-UP
PART OF 249-9323 OPERATOR AR
AN ATTACHMENT

SMCS-7320 **i02142649**

NOTE	REF NO	GRAPHIC REF	PART NUMBER	QTY	PART NAME 1 2 3 4 5 6 (PRODUCT LEVEL)	SEE PAGE
	1	1	**6T-6329**	1	BEZEL	
	2	1	**6V-8927**	2	BOLT-SOCKET HEAD (6-32X0.5-IN)	
	3	1	**9X-8116**	2	TUBE AS	
					(EACH INCLUDES)	
		1	**7T-9793**	1	VALVE-CHECK	
	4	1	**110-6109**	1	KNOB-CONTROL	
	5	1	**118-7259**	1	GASKET	
	6	1	**156-4449**	1	CABLE AS (HEATER TEMPERATURE CONTROL)	
		1	**2H-3920**	2	LOCKWASHER	
		1	**6V-8369**	1	NUT (7/16-28-THD)	
		1	**143-8874**	1	BOOT	
Y	7	1	*192-0265*	1	AIR CONDITIONER GP	369
	8	1	**144-0900**	1	SWITCH AS-ROCKER (AIR CONDITIONER ON/OFF)	
		1	**3L-8187**	3	LOCKWASHER	
		1	**6V-8374**	3	SCREW-MACHINE (6-32X0.25-IN)	
M	9	1	**5A-3604**	11	BOLT-SOCKET HEAD (M8X1.25X25-MM)	
	10	1	**7X-0579**	11	WASHER-HARD (8.8X25.5X2-MM THK)	
BD	11	1	**5P-5643**		SEAL	

B-USE AS REQUIRED
D-ORDER BY THE METER
M-METRIC PART
Y-SEPARATE ILLUSTRATION

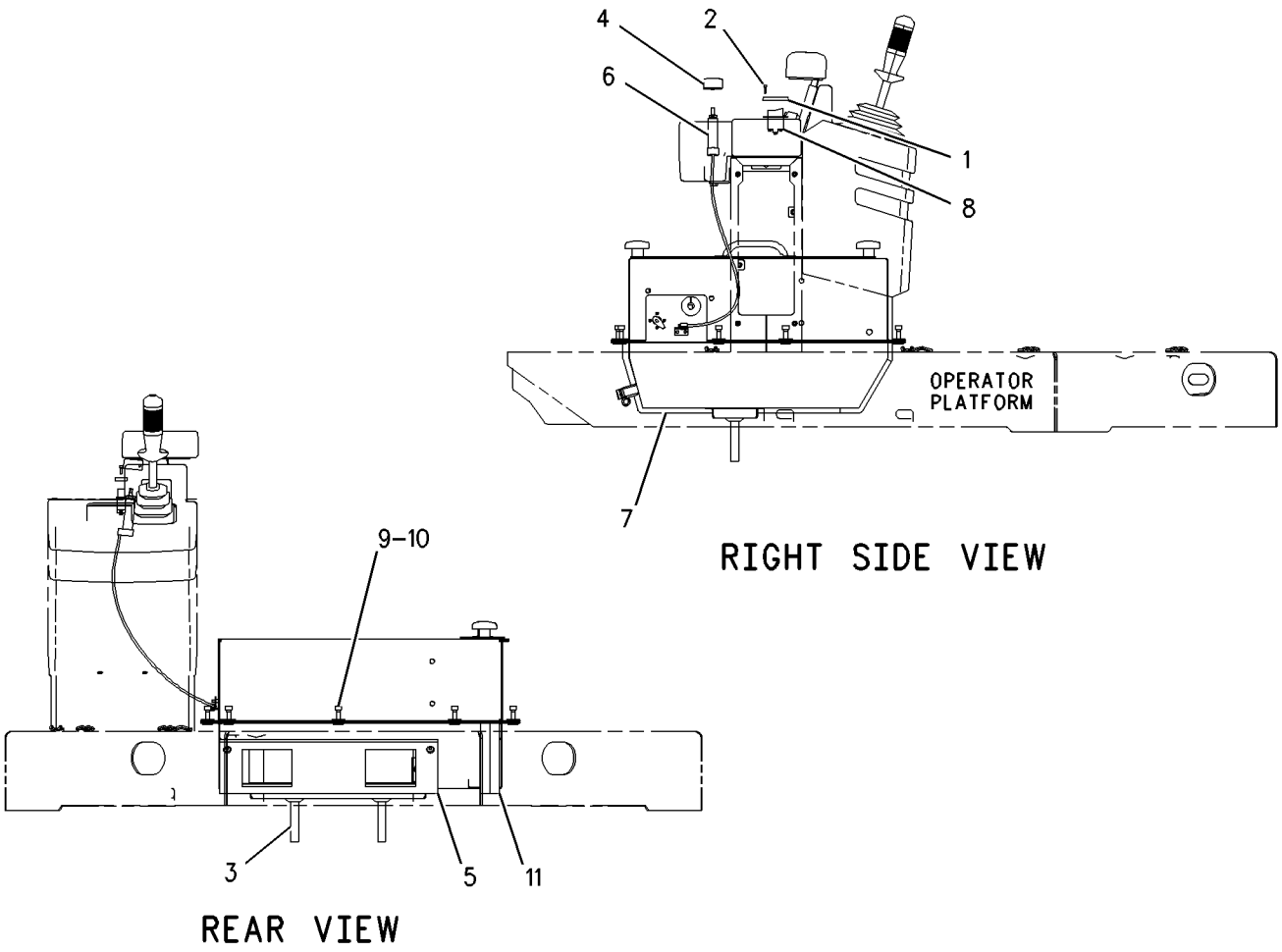

GRAPHIC #1 **<END>** g00998719

OPERATOR STATION

240-4683 AIR CONDITIONER GP

S/N: BZE1-UP; BZG1-UP
PART OF 249-9323 OPERATOR AR
AN ATTACHMENT

SMCS-7320 **i02898391**

NOTE	REF NO	GRAPHIC REF	PART NUMBER	QTY	PART NAME 1 2 3 4 5 6 (PRODUCT LEVEL)	SEE PAGE
	1	1	**6T-6329**	1	BEZEL	
	2	1	**6V-8927**	2	BOLT-SOCKET HEAD (6-32X0.5-IN)	
	3	1	**9X-8117**	2	TUBE AS	
	4	1	**110-6109**	1	KNOB-CONTROL	
	5	1	**118-7259**	1	GASKET	
	6	1	**156-4449**	1	CABLE AS (HEATER TEMPERATURE CONTROL)	
		1	**2H-3920**	2	LOCKWASHER	
		1	**6V-8369**	1	NUT (7/16-28-THD)	
		1	**143-8874**	1	BOOT	
Y	7	1	**180-9873**	1	AIR CONDITIONER GP	366
	8	1	**144-0900**	1	SWITCH AS-ROCKER (AIR CONDITIONER)	
		1	**3L-8187**	3	LOCKWASHER	
		1	**6V-8374**	3	SCREW-MACHINE (6-32X0.25-IN)	
	9	1	**7X-0579**	11	WASHER-HARD (8.8X25.5X2-MM THK)	
M	10	1	**8T-4908**	11	BOLT (M8X1.25X25-MM)	
BD	11	1	**5P-5643**		SEAL	

B-USE AS REQUIRED
D-ORDER BY THE METER
M-METRIC PART
Y-SEPARATE ILLUSTRATION

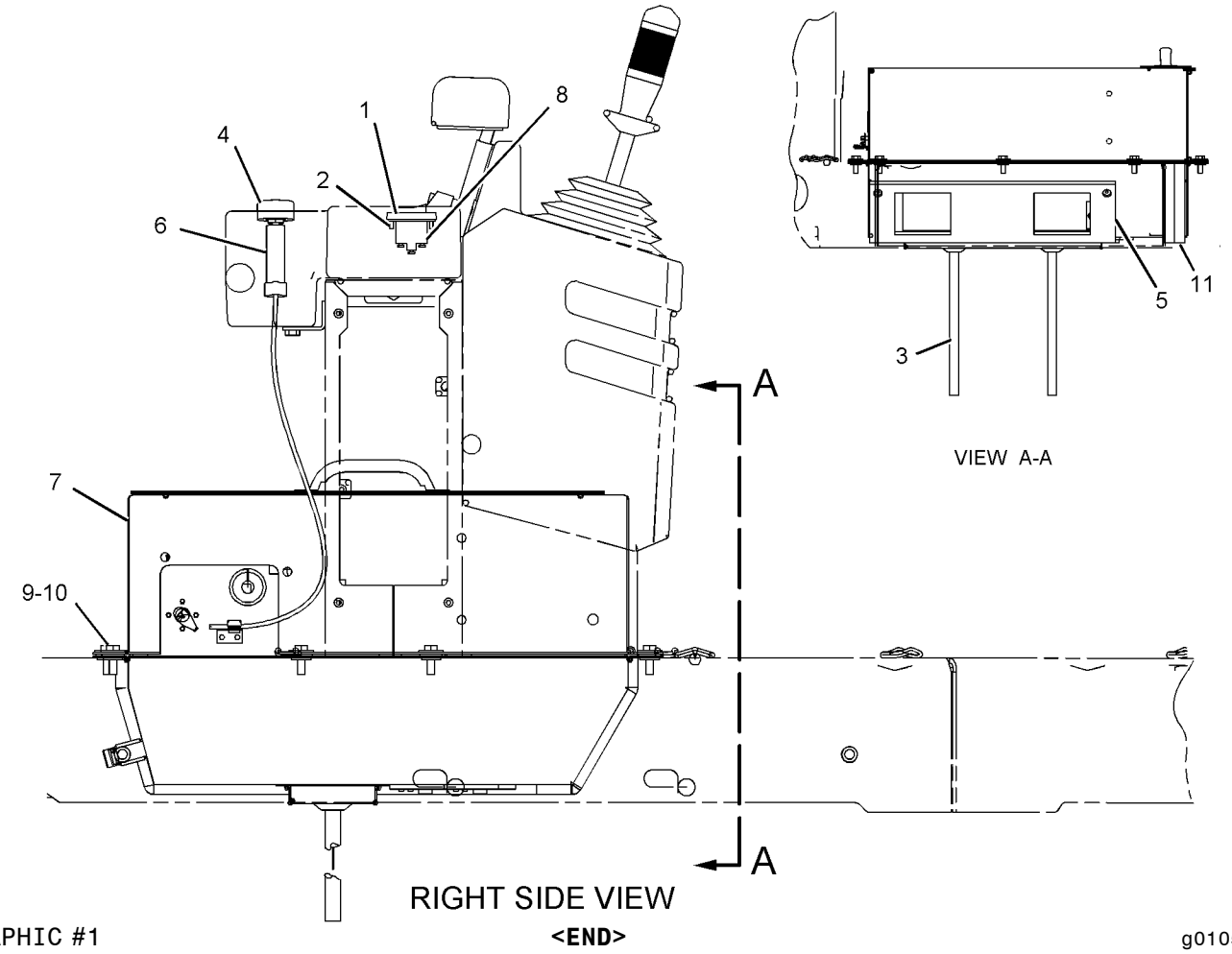

GRAPHIC #1

<END>

g01055069

OPERATOR STATION

311-8547 AIR CONDITIONER GP

S/N: BZE1-UP; BZG1-UP

FIELD REPLACEMENT FOR 180-9873—PAGE 366

SMCS-7320 **i03029660**

NOTE	REF NO	GRAPHIC REF	PART NUMBER	QTY	PART NAME 1 2 3 4 5 6 (PRODUCT LEVEL)	SEE PAGE
	1	1	**3E-1841**	1	LEVER	
	2	1	**3S-2093**	1	STRAP-CABLE	
	3	1	**7F-2050**	1	LOCKNUT (3/4-16-THD)	
	4	1	**8Y-5737**	1	CLAMP	
	5	1	**9G-1950**	1	RESISTOR	
	6	1	**9X-2185**	4	SCREW (8-15X0.44-IN)	
	7	1	**9X-2488**	6	CLAMP-HOSE	
	8	1	**102-0341**	1	CLIP	
	9	1	**114-3140**	1	GROMMET	
	10	1	**118-5044**	1	HARNESS AS-HEATER & AIR COND	
	11	1	**124-8494**	2	GASKET	
	12	1	**124-8495**	1	VALVE AS-WATER	
	13	1	**151-0894**	1	COVER AS	
	14	1	**180-3528**	1	COIL AS-EVAPORATOR	
		1	**189-1707**	1	ORIFICE AS-AIR CONDITIONER	
	15	1	**183-7528**	1	COIL AS-HEATER	
	16	1	*281-4808*	1	BLOWER GP-REFRIG CONDENSER	
M		1	**6V-5210**	8	SCREW-MACHINE (M4X0.7X10-MM)	
		1	**255-9138**	1	BRACKET AS	
M		1	**9X-2032**	8	NUT-WELD (M4X0.7-THD)	
		1	**275-6706**	1	MOTOR-BLOWER (24-VOLT, A/C, HEATER)	
	17	1	**309-8618**	1	CASE AS	
	18	1	**037-4426**	1	RETAINER	
M	19	1	**129-3178**	2	LOCKNUT (M6X1-THD)	
M	20	1	**141-9784**	1	BOLT (M6X1X190-MM)	
	21	1	**1P-6522**	1	GROMMET	
	22	1	**2H-3922**	1	LOCKWASHER	
	23	1	**2H-3923**	1	LOCKWASHER	
	24	1	**3B-4501**	2	LOCKWASHER	
	25	1	**3E-5464**	1	THERMOSTAT (CAB AIR) (AIR CONDITIONER)	
M	26	1	**5C-9553**	4	BOLT (M6X1X16-MM)	
	27	1	**6V-1668**	2	WASHER (6.5X29.1X3-MM THK)	
	28	1	**7F-2060**	1	LOCKNUT (7/8-14-THD)	
M	29	1	**8C-8457**	1	SCREW-MACHINE (M5X0.8X14-MM)	
M	30	1	**8T-4171**	4	BOLT (M6X1X12-MM)	
	31	1	**8T-4205**	11	WASHER-HARD (7.2X14.5X2-MM THK)	
	32	1	**8T-6631**	2	SCREW-MACHINE (8-32X0.5-IN)	
M	33	1	**9X-2044**	1	SCREW-TRUSS HEAD (M6X1X16-MM)	
D	34	1	**6V-1392**		SEAL (0.6-M)	
D	34A	1	**6V-1392**		SEAL (0.2-M EACH)	
E	35	1	**136-1953**		HOSE (15.2-CM)	
E	35A	1	**136-1953**		HOSE (23-CM)	
E	35B	1	**136-1953**		HOSE (17.8-CM)	
D	36	1	**8T-5372**		SEAL (0.2-M EACH)	
D	37	1	**5P-7070**		INSULATION-STRIP (0.6-M EACH)	
D	38	1	**5P-5643**		SEAL (0.4-M)	

D-ORDER BY THE METER
E-ORDER BY THE CENTIMETER
M-METRIC PART

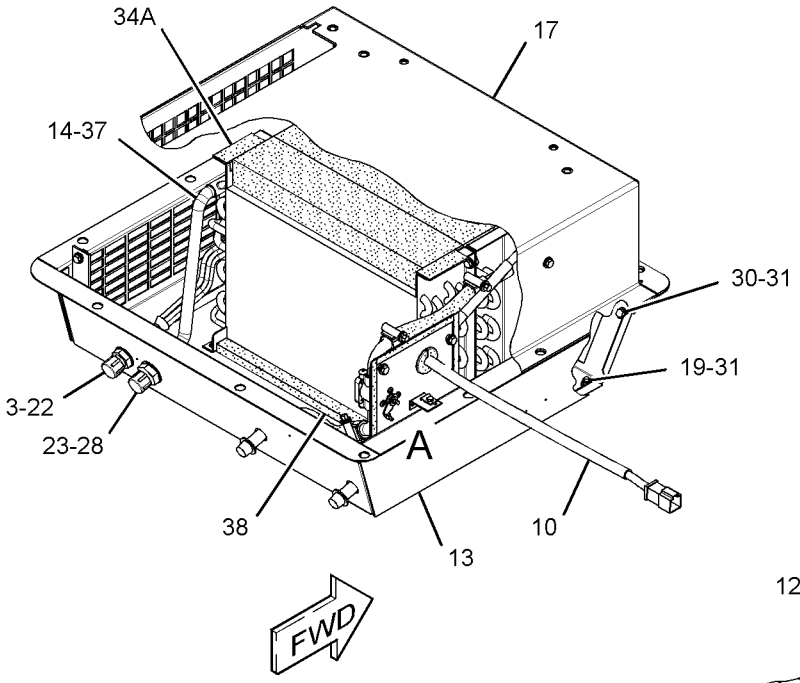

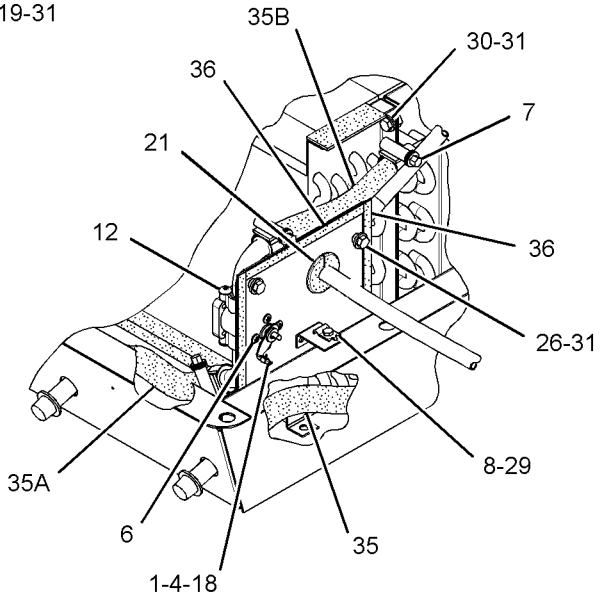

VIEW OF AREA A

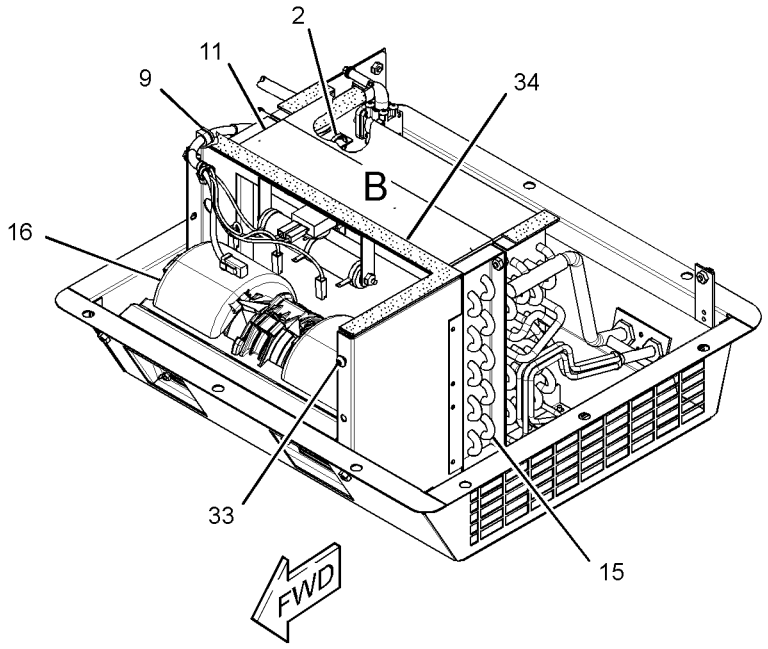

(COVER REMOVED FOR CLARITY)

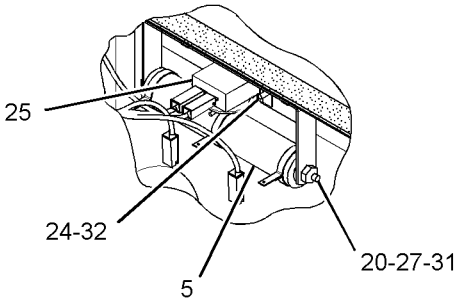

VIEW OF AREA B

GRAPHIC #1 **<END>** g01454141

214-7636 ARM GP-WINDOW WIPER

S/N: BZE1-UP; BZG1-UP
WET
PART OF 223-4793 WIPER & WASHER GP-WINDOW
AN ATTACHMENT

SMCS-7305 **i01877471**

NOTE	REF NO	GRAPHIC REF	PART NUMBER	QTY	PART NAME 1 2 3 4 5 6 (PRODUCT LEVEL)	SEE PAGE
M	1	1	**191-8921**	4	BOLT-SOCKET HEAD (M6X1X25-MM)	
	2	1	**227-7392**	4	WASHER (6.3X10.3X0.4-MM THK)	
M	3	1	**6V-8225**	4	NUT (M6X1-THD)	
	4	1	**136-3190**	1	NOZZLE AS-WASHER	
	5	1	**136-3188**	3	CLIP	

M-METRIC PART

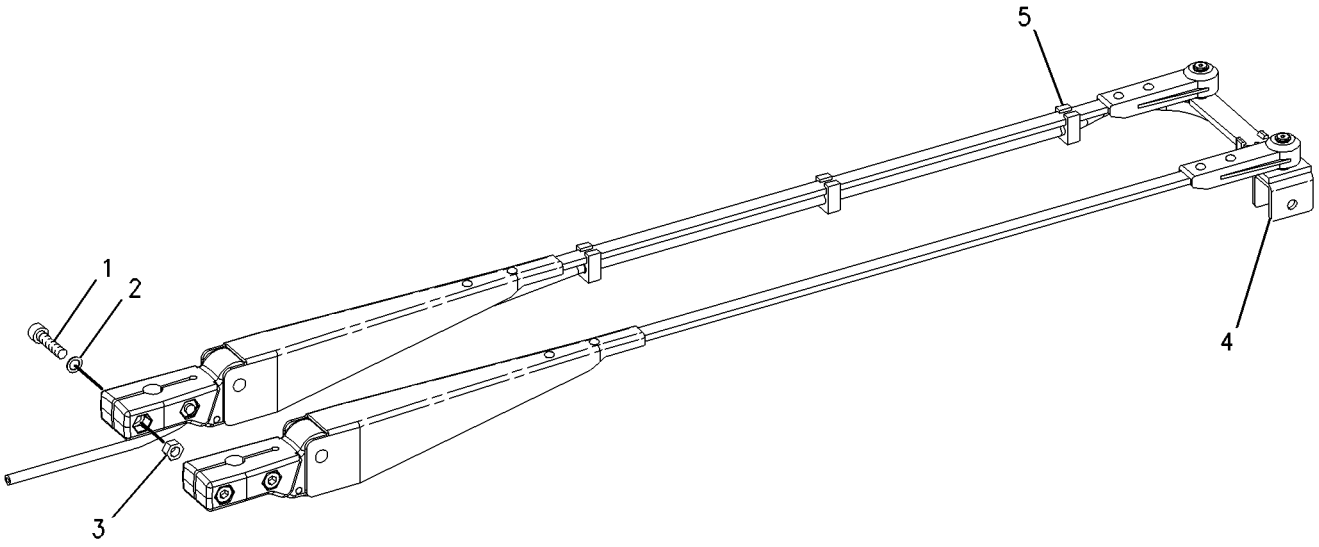

GRAPHIC #1 **<END>** g00958013

OPERATOR STATION

223-4791 CAB AR

S/N: BZE1-UP; BZG1-UP
PART OF 249-9323, 249-9324 OPERATOR AR
AN ATTACHMENT

SMCS-7301 **i02130594**

NOTE	PART NUMBER	QTY	PART NAME 1 2 3 4 5 6 (PRODUCT LEVEL)	SEE PAGE
Y	*143-5948*	1	DUCT GP-CAB AIR	403
Y	*226-7758*	1	LIGHTING GP-FLOOD (CAB)	141
Y	*214-4073*	1	LINER GP-CAB	415
Y	*223-4792*	1	ROPS GP-ENCLOSED	463
Y	*223-4793*	1	WIPER & WASHER GP-WINDOW	483
Y	*226-8940*	1	WIRING GP-CAB (WIPER)	155
Y-SEPARATE ILLUSTRATION				

<END>

254-5054 CAB AR

S/N: BZE1-UP; BZG1-UP
PART OF 249-9323 OPERATOR AR
AN ATTACHMENT

SMCS-7301 **i02187898**

NOTE	PART NUMBER	QTY	PART NAME 1 2 3 4 5 6 (PRODUCT LEVEL)	SEE PAGE
Y	*143-5948*	1	DUCT GP-CAB AIR	403
Y	*226-7758*	1	LIGHTING GP-FLOOD (CAB)	141
Y	*214-4073*	1	LINER GP-CAB	415
Y	*254-5057*	1	ROPS GP-ENCLOSED	464
Y	*223-4793*	1	WIPER & WASHER GP-WINDOW	483
Y	*226-8940*	1	WIRING GP-CAB (WIPER)	155
Y-SEPARATE ILLUSTRATION				

<END>

259-4423 CAB AR

S/N: BZE1-UP; BZG1-UP
PART OF 249-9323, 249-9324 OPERATOR AR
AN ATTACHMENT

SMCS-7301 **i02251822**

NOTE	PART NUMBER	QTY	PART NAME 1 2 3 4 5 6 (PRODUCT LEVEL)	SEE PAGE
Y	*143-5948*	1	DUCT GP-CAB AIR	403
Y	*226-7758*	1	LIGHTING GP-FLOOD (CAB)	141
Y	*214-4073*	1	LINER GP-CAB	415
Y	*254-5057*	1	ROPS GP-ENCLOSED	464
Y	*223-4793*	1	WIPER & WASHER GP-WINDOW	483
Y	*226-8940*	1	WIRING GP-CAB (WIPER)	155
Y-SEPARATE ILLUSTRATION				

<END>

OPERATOR STATION

225-7714 CAB GP-ENCLOSED ROPS

S/N: BZE1-UP; BZG1-UP
PART OF 223-4792 ROPS GP-ENCLOSED
AN ATTACHMENT

SMCS-7301 **i01972562**

NOTE	REF NO	GRAPHIC REF	PART NUMBER	QTY	PART NAME 1 2 3 4 5 6 (PRODUCT LEVEL)	SEE PAGE
	1	1	**8Y-6377**	1	STRIKER	
	2	1	**107-6145**	1	GLASS-FRONT (CENTER)	
	3	1	**111-0204**	1	PLATE AS	
	4	1	**146-9006**	1	GLASS (LH)	
	5	1	**146-9007**	1	GLASS (RH)	
Y	6	1	**153-7817**	1	WINDOW GP (CAB)	478
	7	1	**212-9428**	1	STRIKER AS	
	8	1	**225-7715**	1	GLASS (RH)	
	9	1	**225-7716**	1	GLASS (LH)	
	10	1	**225-7717**	1	GLASS (REAR)	
	11	1	**225-7718**	1	CAB AS	
	12	1	**108-4311**	1	SCREW-MACHINE (3/8-16X0.75-IN)	
	13	1	**5P-4116**	2	WASHER-HARD (8.8X20.5X2-MM THK)	
	14	1	**8T-4121**	6	WASHER-HARD (11X21X2.5-MM THK)	
M	15	1	**8T-4137**	2	BOLT (M10X1.5X20-MM)	
M	16	1	**8T-4189**	8	BOLT (M8X1.25X20-MM)	
	17	1	**8T-4224**	6	WASHER-HARD (8.8X16X2-MM THK)	
M	18	1	**9X-2041**	4	SCREW-TRUSS HEAD (M10X1.5X20-MM)	

M-METRIC PART
Y-SEPARATE ILLUSTRATION

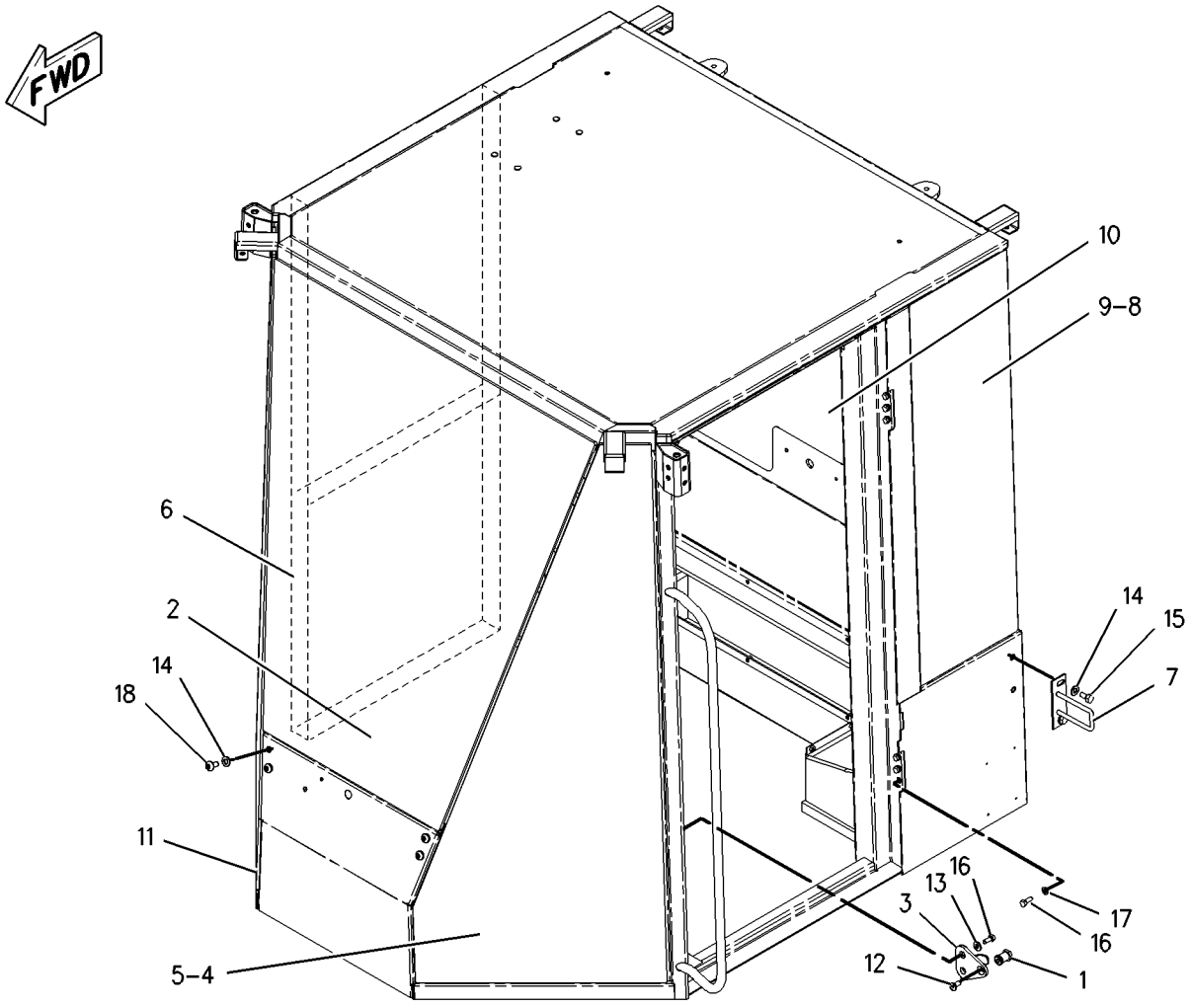

GRAPHIC #1 **<END>** g01004393

OPERATOR STATION

254-5058 CAB GP-ENCLOSED ROPS

S/N: BZE1-UP; BZG1-UP
PART OF 254-5057 ROPS GP-ENCLOSED
AN ATTACHMENT
TYPE 1

SMCS-7301 **i02898373**

NOTE	REF NO	GRAPHIC REF	PART NUMBER	QTY	PART NAME 1 2 3 4 5 6 (PRODUCT LEVEL)	SEE PAGE
	1	1	**8Y-6377**	1	STRIKER	
	2	1	**107-6145**	1	GLASS-FRONT (CENTER)	
	3	1	**111-0204**	1	PLATE AS	
	4	1	**146-9006**	1	GLASS (FRONT, LH)	
	5	1	**146-9007**	1	GLASS (FRONT, RH)	
Y	6	1	**153-7817**	1	WINDOW GP (CAB)	478
	7	1	**212-9428**	1	STRIKER AS	
	8	1	**224-9392**	4	FASTENER-SINGLE HEAD	
	9	1	**225-7715**	1	GLASS (LH)	
	10	1	**225-7716**	1	GLASS (FRONT)	
	11	1	**225-7717**	1	GLASS (REAR)	
	12	1	**254-5060**	1	CAB AS	
	13	1	**108-4311**	1	SCREW-MACHINE (3/8-16X0.75-IN)	
	14	1	**5P-4116**	2	WASHER-HARD (8.8X20.5X2-MM THK)	
	15	1	**8T-4121**	6	WASHER-HARD (11X21X2.5-MM THK)	
M	16	1	**8T-4137**	2	BOLT (M10X1.5X20-MM)	
M	17	1	**8T-4189**	8	BOLT (M8X1.25X20-MM)	
	18	1	**8T-4224**	6	WASHER-HARD (8.8X16X2-MM THK)	

M-METRIC PART
Y-SEPARATE ILLUSTRATION

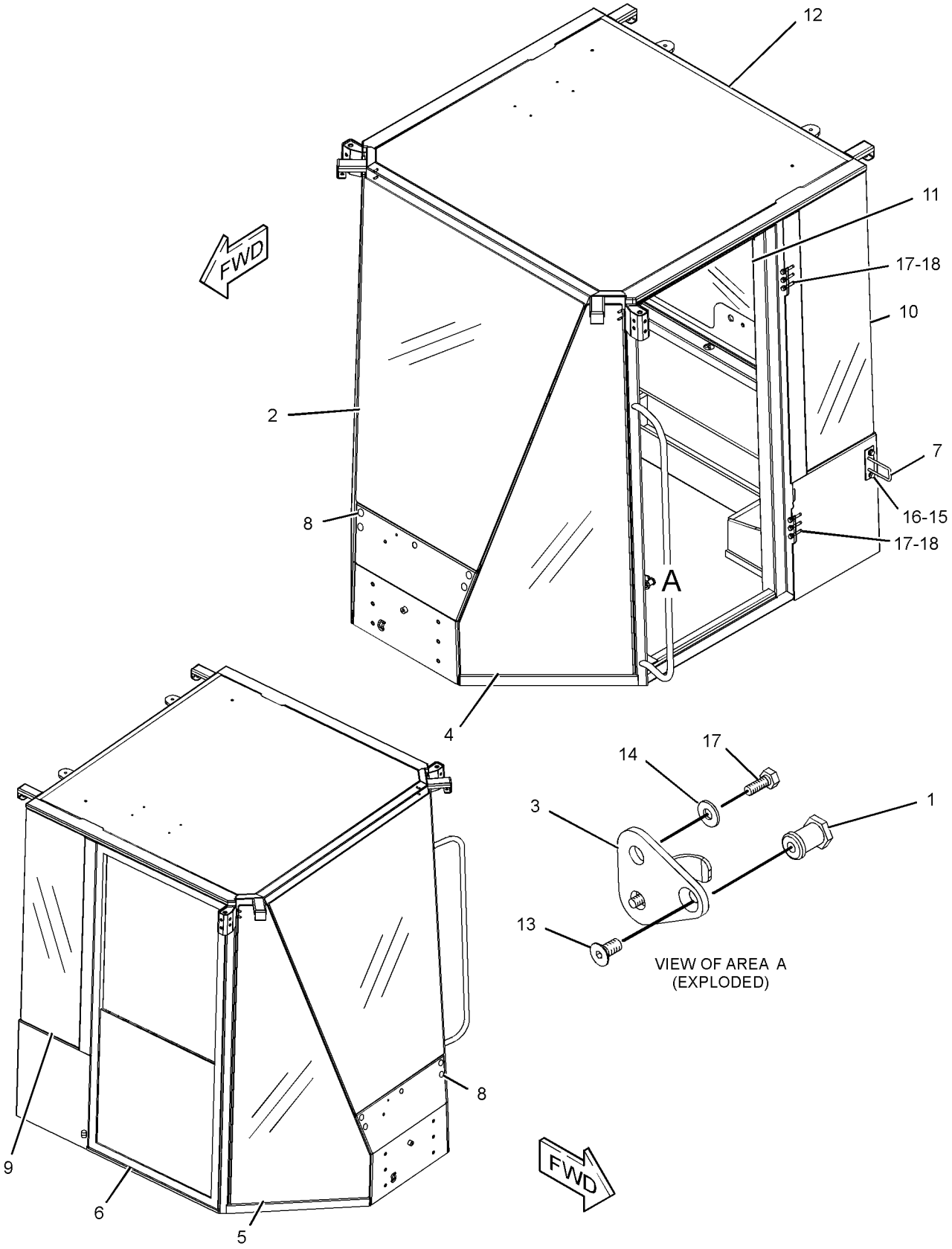

GRAPHIC #1 **<END>** g01203559

OPERATOR STATION

254-5058 CAB GP-ENCLOSED ROPS

S/N: BZE1-UP; BZG1-UP
PART OF 254-5057 ROPS GP-ENCLOSED
AN ATTACHMENT
TYPE 2

SMCS-7301 **i02863366**

NOTE	REF NO	GRAPHIC REF	PART NUMBER	QTY	PART NAME 1 2 3 4 5 6 (PRODUCT LEVEL)	SEE PAGE
	1	1	**8Y-6377**	1	STRIKER	
	2	1	**107-6145**	1	GLASS-FRONT (CENTER)	
	3	1	**111-0204**	1	PLATE AS	
	4	1	**146-9006**	1	GLASS (LH, FRONT)	
	5	1	**146-9007**	1	GLASS (RH, FRONT)	
CY	6	1	**288-8880**	1	WINDOW GP-REAR	482
	7	1	**212-9428**	1	STRIKER AS (DOOR LATCH)	
	8	1	**224-9392**	4	FASTENER-SINGLE HEAD	
	9	1	**225-7715**	1	GLASS (LH)	
	10	1	**225-7716**	1	GLASS (FRONT)	
	11	1	**225-7717**	1	GLASS (REAR)	
	12	1	**254-5060**	1	CAB AS	
	13	1	**108-4311**	1	SCREW-MACHINE (3/8-16X0.75-IN)	
	14	1	**5P-4116**	2	WASHER-HARD (8.8X20.5X2-MM THK)	
	15	1	**8T-4121**	2	WASHER-HARD (11X21X2.5-MM THK)	
M	16	1	**8T-4137**	2	BOLT (M10X1.5X20-MM)	
M	17	1	**8T-4189**	8	BOLT (M8X1.25X20-MM)	
	18	1	**8T-4224**	6	WASHER-HARD (8.8X16X2-MM THK)	

C-CHANGE FROM PREVIOUS TYPE
M-METRIC PART
Y-SEPARATE ILLUSTRATION

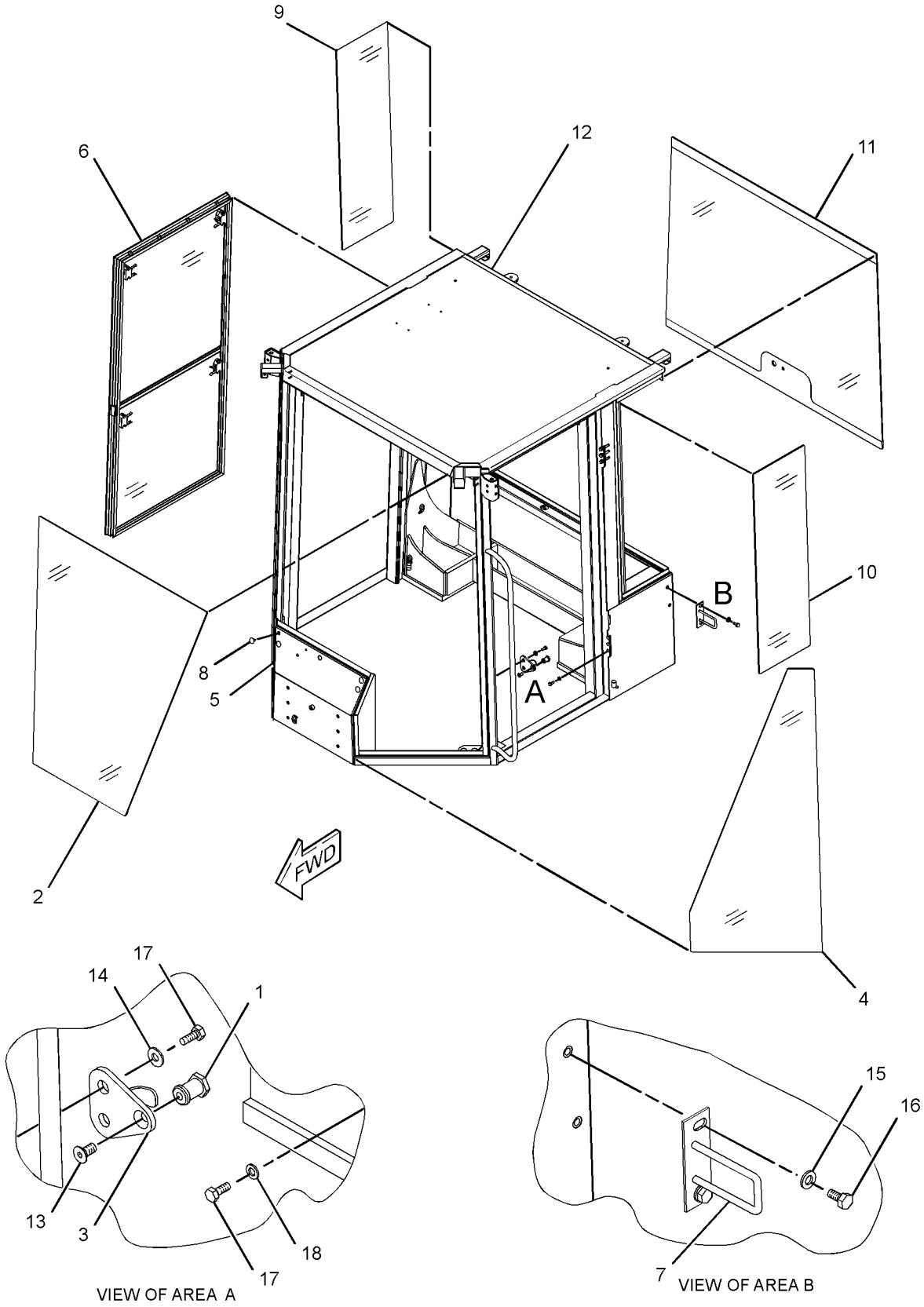

GRAPHIC #1 **<END>** g01259266

OPERATOR STATION

236-6628 CANOPY GP–NON ROPS/FOPS

S/N: BZE1-UP; BZG1-UP
PART OF 236-6627 OPERATOR AR
AN ATTACHMENT

SMCS-7302 **i02155161**

NOTE	REF NO	GRAPHIC REF	PART NUMBER	QTY	PART NAME 1 2 3 4 5 6 (PRODUCT LEVEL)	SEE PAGE
	1	1	**172-4459**	1	CANOPY AS	
	2	1	**172-4463**	1	FILM-WARNING (NON ROPS/FOPS)	
M	3	1	**7X-2575**	6	BOLT (M24X3X60-MM)	
	4	1	**8T-4167**	6	WASHER-HARD (26X44X4-MM THK)	
D		1	**8T-3426**		CHANNEL-TRIM (2.8M)	

D-ORDER BY THE METER
M-METRIC PART

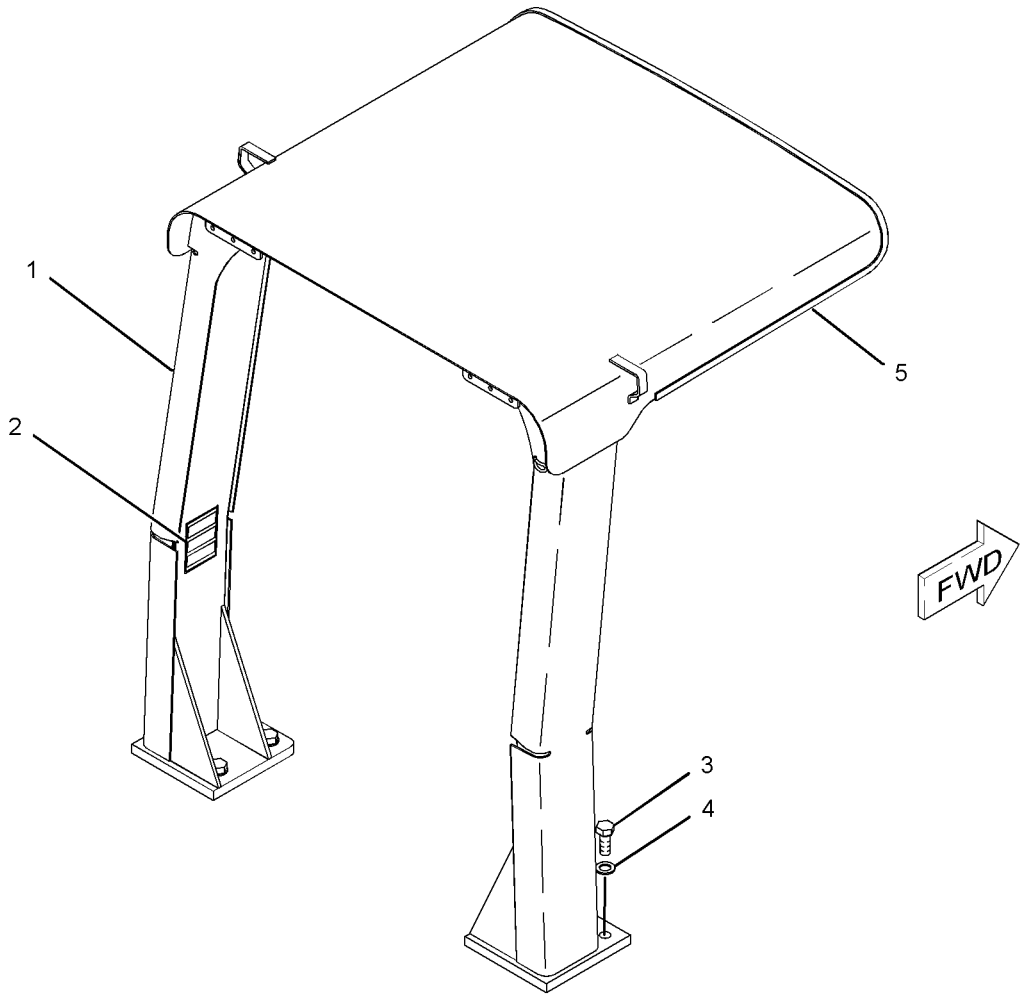

GRAPHIC #1 **<END>** g01031708

OPERATOR STATION

3E-1906 COMPRESSOR GP-REFRIGERANT

S/N: BZE1-UP; BZG1-UP
PART OF 222-3594 COMPRESSOR GP-REFRIGERANT
AN ATTACHMENT

SMCS-1802 **i01966550**

NOTE	REF NO	GRAPHIC REF	PART NUMBER	QTY	PART NAME 1 2 3 4 5 6 (PRODUCT LEVEL)	SEE PAGE
C	1	1	**7T-4532**	1	PLUG AS	
C	2	1	**9X-7385**	2	SEAL-O-RING	
	3	1	**114-3469**	1	VALVE GP-RELIEF (REFRIGERANT COMPRESSOR)	
		1	**9X-7378**	1	SEAL-O-RING	
	4	1	**102-8802**	1	KIT-RECEPTACLE (2-PIN)	
					(INCLUDES RECEPTACLE AS & WEDGE)	

C-CHANGE FROM PREVIOUS TYPE

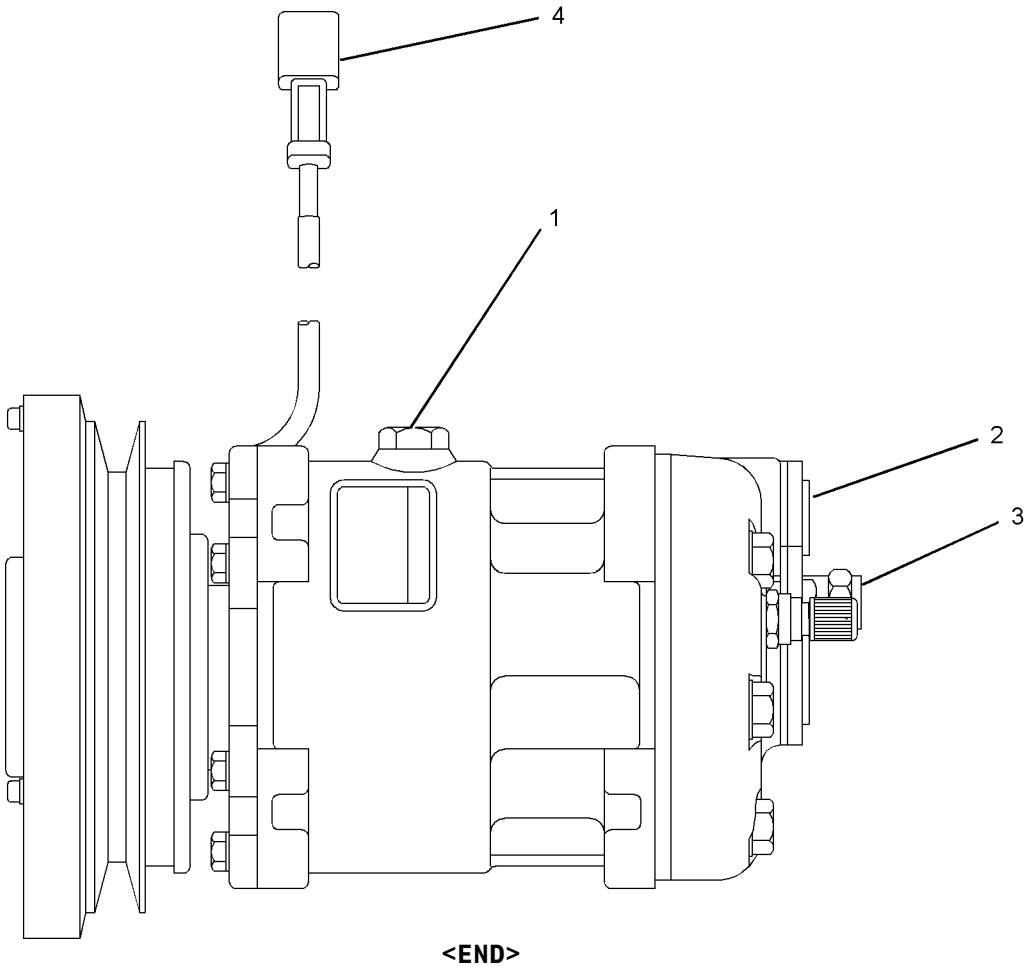

GRAPHIC #1 **<END>** g01008728

OPERATOR STATION

222-3594 COMPRESSOR GP-REFRIGERANT

S/N: BZE1-UP; BZG1-UP
PART OF 249-9323 OPERATOR AR
AN ATTACHMENT

SMCS-1802 **i02233861**

NOTE	REF NO	GRAPHIC REF	PART NUMBER	QTY	PART NAME 1 2 3 4 5 6 (PRODUCT LEVEL)	SEE PAGE
Y	1	1	**3E-1906**	1	COMPRESSOR GP-REFRIGERANT	384
	2	1	**3S-2093**	1	STRAP-CABLE	
	3	1	**4N-9891**	1	V-BELT (COMPRESSOR)	
	4	1	**9C-5344**	3	SPACER (10.5X20X18-MM THK)	
	5	1	**105-9411**	1	SUPPORT	
	6	1	**114-5333**	1	SWITCH AS-PRESSURE (COMPRESSOR)	
		1	**102-8802**	1	KIT-RECEPTACLE (2-PIN)	
		1	**186-3735**	2	PIN-CONNECTOR (16-GA TO 18-GA)	
BE		1	**9X-1386**		SLEEVE	
	7	1	**116-0118**	2	CLIP	
	8	1	**146-0797**	1	FITTING AS-AIR CONDITIONER	
		1	**3E-4051**	1	CAP-SEAL	
		1	**3E-4057**	1	VALVE AS	
	9	1	**219-0943**	1	FITTING AS	
		1	**3E-4052**	1	CAP-SEAL	
		1	**3E-4058**	1	VALVE AS	
	10	1	**222-4913**	1	BRACKET	
	11	1	**222-4914**	1	BRACKET	
	12	1	**222-8543**	1	BRACKET	
	13	1	**229-2885**	1	GUARD AS	
M		1	**8T-3490**	2	NUT-WELD (M10X1.5-THD)	
	14	1	**229-2886**	1	GUARD AS	
M		1	**8T-3490**	2	NUT-WELD (M10X1.5-THD)	
	15	1	**7X-0575**	1	WASHER-HARD (10.2X22.5X5-MM THK)	
M	16	1	**7X-2552**	2	BOLT (M16X2X30-MM)	
	17	1	**7X-7729**	1	WASHER (11X25X3-MM THK)	
	18	1	**8T-4121**	10	WASHER-HARD (11X21X2.5-MM THK)	
M	19	1	**8T-4133**	4	NUT (M10X1.5-THD)	
M	20	1	**8T-4172**	1	BOLT (M10X1.5X80-MM)	
M	21	1	**8T-4185**	1	BOLT (M10X1.5X50-MM)	
M	22	1	**8T-4186**	1	BOLT (M10X1.5X40-MM)	
M	23	1	**8T-4195**	2	BOLT (M10X1.5X30-MM)	
M	24	1	**8T-4198**	1	BOLT (M10X1.5X100-MM)	
M	25	1	**8T-6466**	3	BOLT (M10X1.5X60-MM)	
	26	1	**9X-7378**	1	SEAL-O-RING	
	27	1	**9X-8257**	2	WASHER (17.5X30X3.5-MM THK)	

B-USE AS REQUIRED
E-ORDER BY THE CENTIMETER
M-METRIC PART
Y-SEPARATE ILLUSTRATION

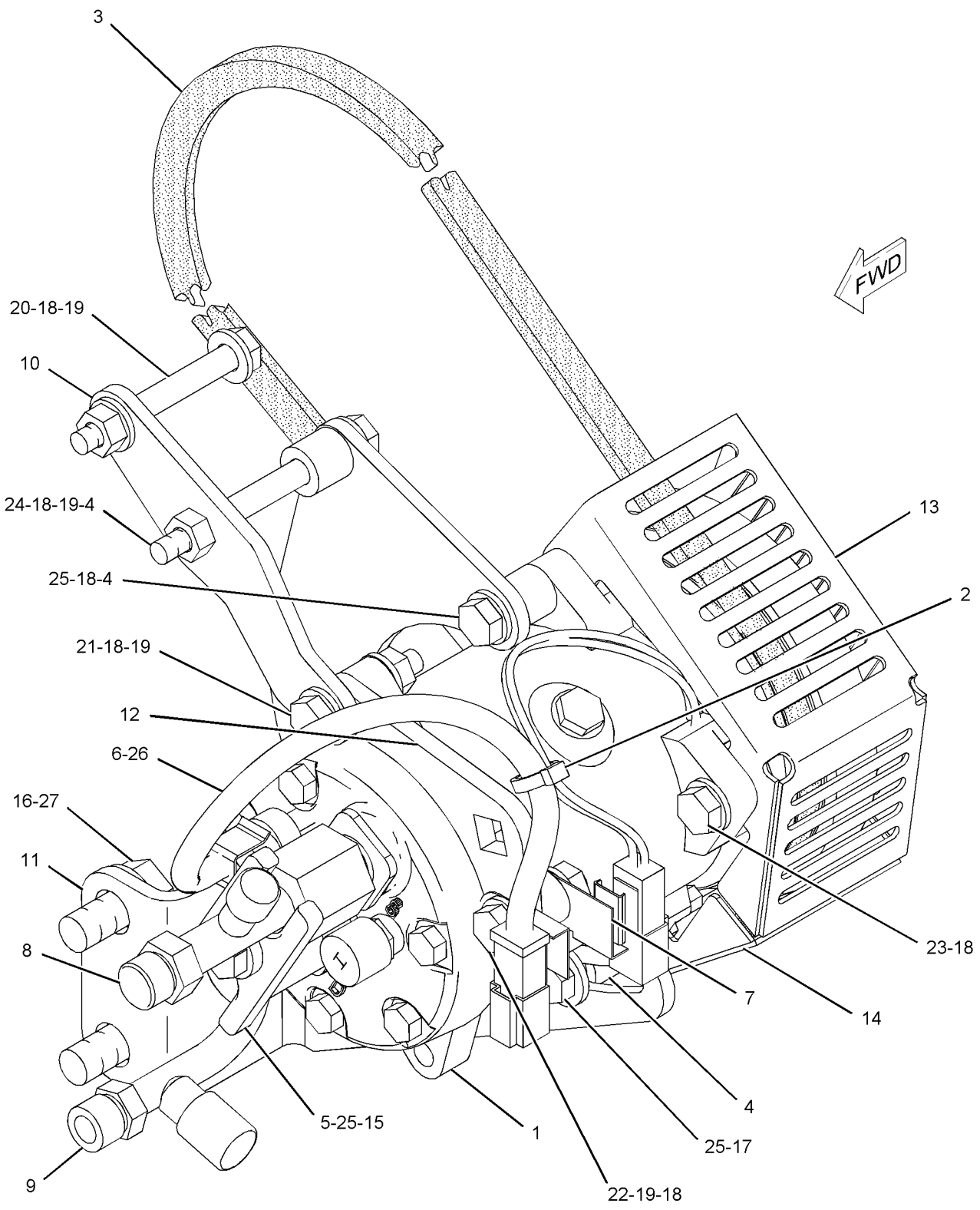

GRAPHIC #1 **<END>** g01113144

220-0205 CONDENSER & MTG GP-REFRIGERANT

S/N: BZE1-UP; BZG1-UP
PART OF 249-9323 OPERATOR AR
AN ATTACHMENT

SMCS-1805 **i02142765**

NOTE	REF NO	GRAPHIC REF	PART NUMBER	QTY	PART NAME 1 2 3 4 5 6 (PRODUCT LEVEL)	SEE PAGE
	1	1	**220-0204**	1	CONDENSER AS	
M	2	1	**8T-4189**	4	BOLT (M8X1.25X20-MM)	
	3	1	**8T-4224**	4	WASHER-HARD (8.8X16X2-MM THK)	

M-METRIC PART

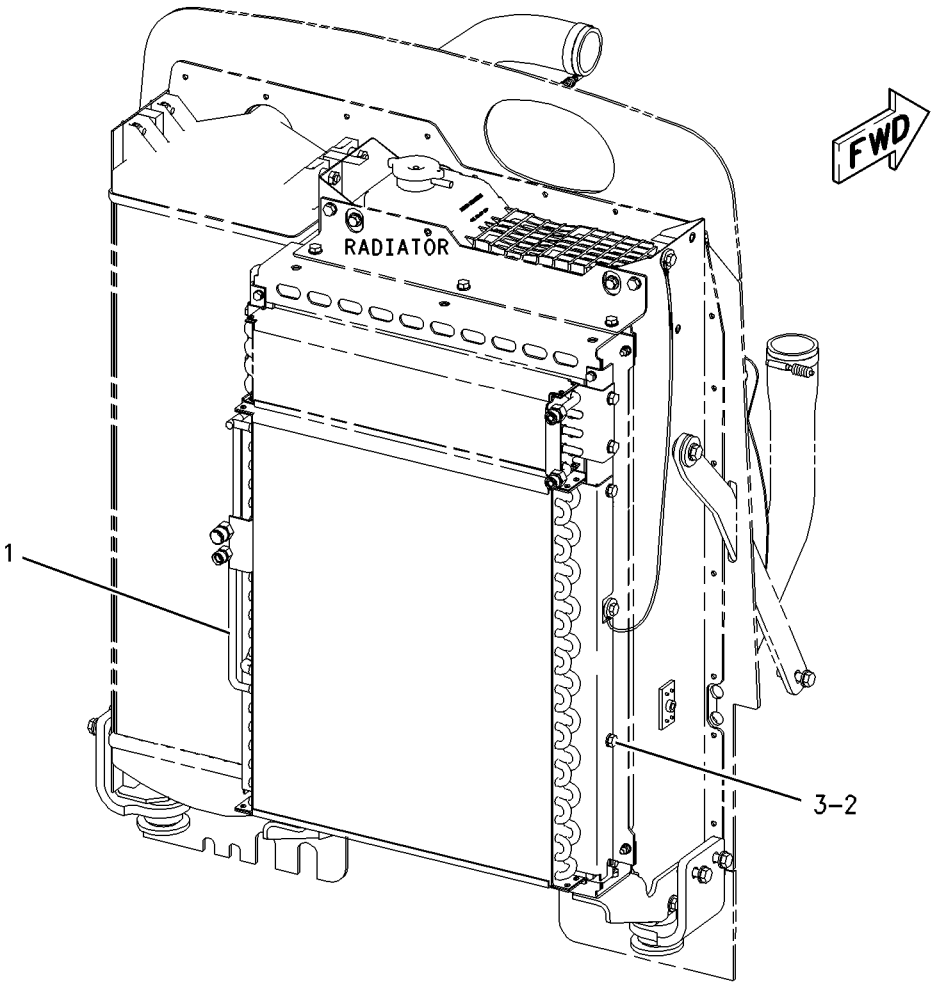

GRAPHIC #1 **<END>** g00920838

OPERATOR STATION

218-4281 CONTROL GP-DIRECTION & SPEED

S/N: BZE1-UP; BZG1-UP

PART OF 219-4167 HYDRAULIC AR

SMCS-3065, 5462 **i02138002**

NOTE	REF NO	GRAPHIC REF	PART NUMBER	QTY	PART NAME 1 2 3 4 5 6 (PRODUCT LEVEL)	SEE PAGE
	1	1	**3B-4611**	1	PIN-COTTER	
	2	1	**4E-1062**	1	CUSHION AS-ARMREST	
	3	1	**6V-8187**	2	NUT (1/4-28-THD)	
	4	1	**107-6050**	1	SUPPORT AS	
	5	1	**111-7875**	1	PLATE	
	6	1	**151-8110**	1	SUPPORT AS	
M		1	**8T-3612**	1	NUT-WELD (M8X1.25-THD)	
	7	1	**152-4373**	1	CABLE AS	
	8	1	**153-3605**	1	COVER AS	
M	9	1	**9X-2045**	6	SCREW-TRUSS HEAD (M6X1X20-MM)	
	10	1	**187-2082**	1	LEVER-CONTROL	
	11	1	**197-3229**	1	FILM-IDENTIFICATION (OPERATOR CONTROLS)	
Y	12	1	**197-3300**	1	CONTROL GP-PROPEL	391
	13	1	**212-0854**	1	PLATE	
	14	1	**218-4302**	1	BRACKET	
Y	15	1	*223-4281*	1	LINKAGE GP	420
M	16	1	**099-3649**	1	BOLT (M8X1.25X40-MM)	
	17	1	**2A-4133**	1	PIN	
M	18	1	**5C-2890**	4	NUT (M6X1-THD)	
	19	1	**5P-4115**	6	WASHER-HARD (7.2X19X2-MM THK)	
	20	1	**5P-4116**	2	WASHER-HARD (8.8X20.5X2-MM THK)	
M	21	1	**6V-9189**	3	LOCKNUT (M8X1.25-THD)	
	22	1	**8B-3768**	1	ROD END	
	23	1	**8T-4121**	6	WASHER-HARD (11X21X2.5-MM THK)	
M	24	1	**8T-4195**	6	BOLT (M10X1.5X30-MM)	
M	25	1	**5C-9553**	2	BOLT (M6X1X16-MM)	
	26	1	**8T-4224**	6	WASHER-HARD (8.8X16X2-MM THK)	
M	27	1	**8T-7547**	3	BOLT (M8X1.25X30-MM)	
M	28	1	**9X-2042**	6	SCREW-TRUSS HEAD (M6X1X12-MM)	

M-METRIC PART
Y-SEPARATE ILLUSTRATION

218-4281 **CONTROL GP-DIRECTION & SPEED** *(contd.)* **i02138002**

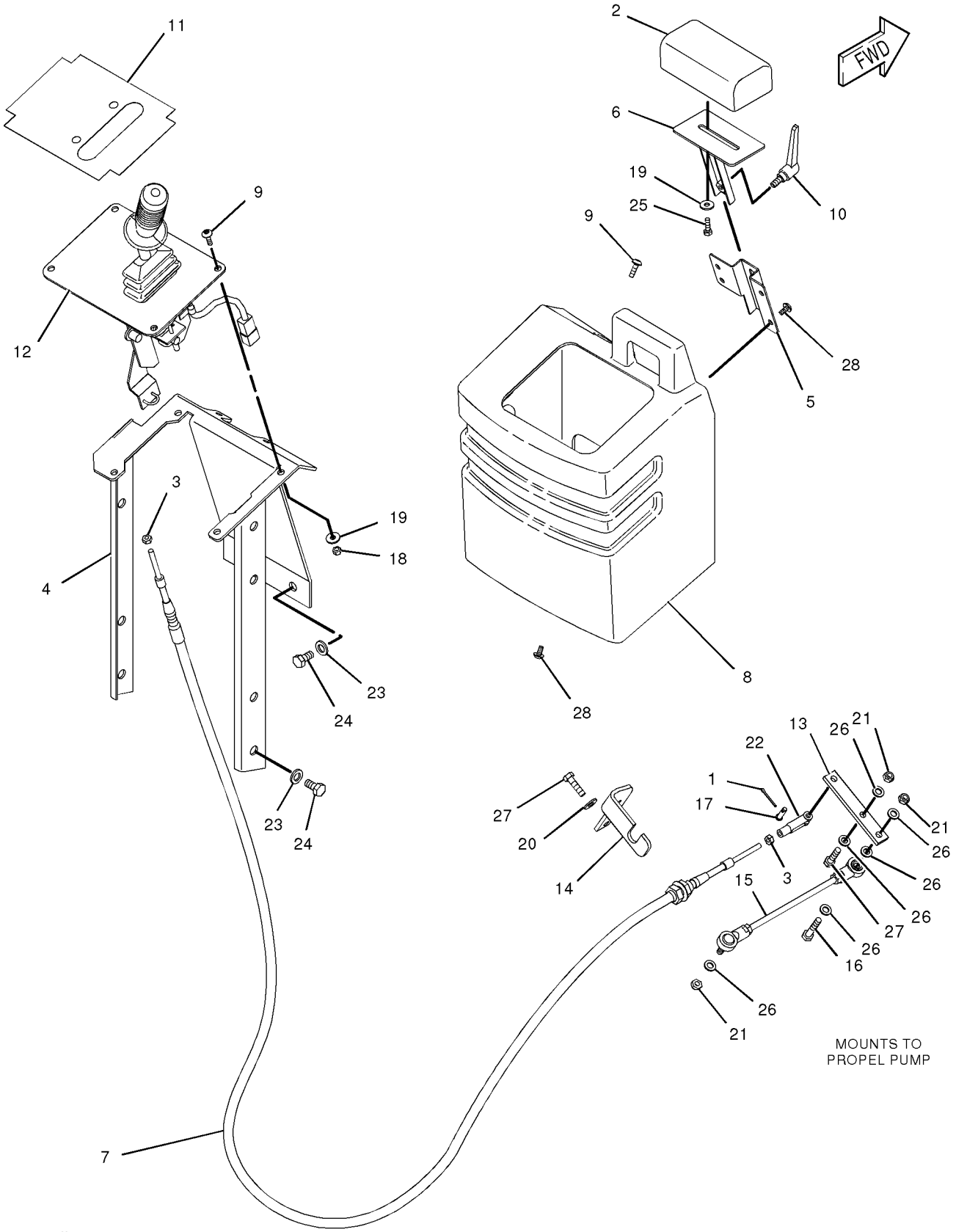

GRAPHIC #1 **<END>** g01021048

OPERATOR STATION

186-3380 CONTROL GP-HANDLE–PROPEL LEVER

S/N: BZE1-UP; BZG1-UP

PART OF 197-3300 CONTROL GP-PROPEL

SMCS-5705 **i02855399**

NOTE	REF NO	GRAPHIC REF	PART NUMBER	QTY	PART NAME 1 2 3 4 5 6 (PRODUCT LEVEL)	SEE PAGE
	1	1	**086-0972**	1	SEAL-O-RING	
	2	1	**107-1723**	2	GASKET	
	3	1	**6B-4540**	6	NUT (4-40-THD)	
	4	1	**1K-6872**	1	LOCKNUT (1/2-13-THD)	
M	5	1	**107-1716**	4	SCREW (4-40X15.88-MM)	
	6	1	**113-1095**	2	HOUSING	
	7	1	**312-5546**	1	SWITCH AS-PUSH BUTTON (VIBRATORY, SELECT ON/OFF)	
	8	1	**107-1721**	1	CAP	
	9	1	**107-2091**	2	BOLT (4-40X0.5-IN)	

M-METRIC PART

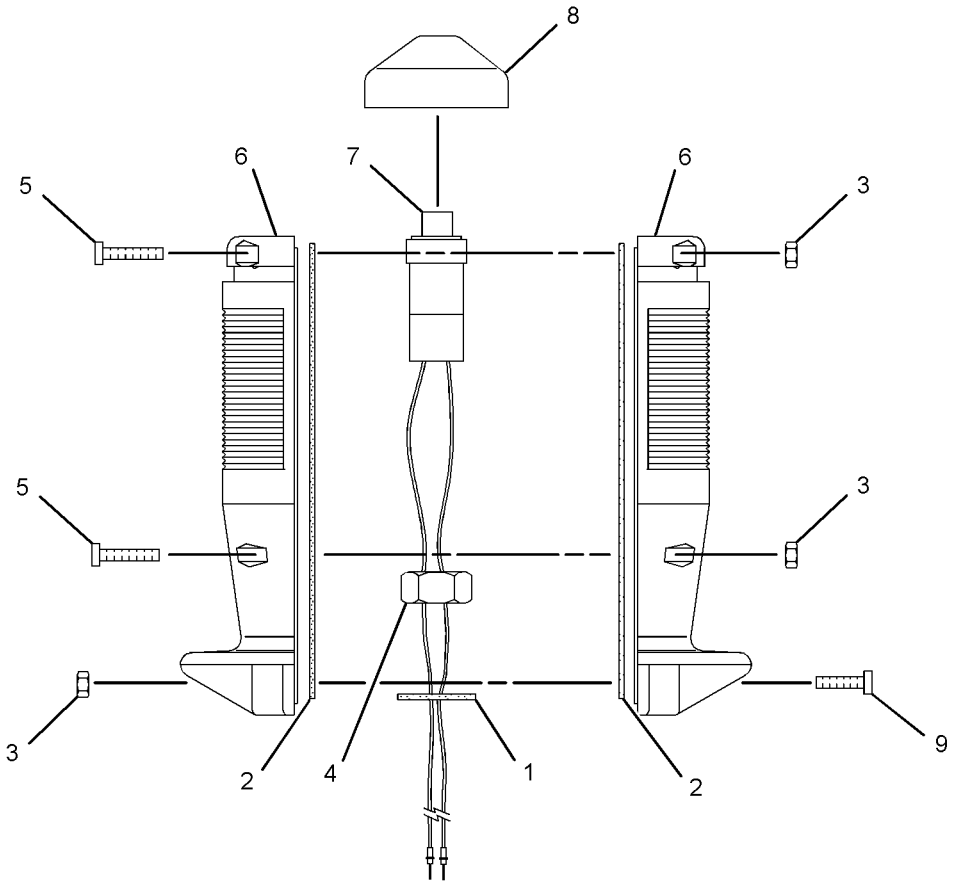

GRAPHIC #1 **<END>** g01422465

OPERATOR STATION

197-3300 CONTROL GP-PROPEL

S/N: BZE1-UP; BZG1-UP
PART OF 218-4281 CONTROL GP-DIRECTION & SPEED
TYPE 1

SMCS-3065 **i02155170**

NOTE	REF NO	GRAPHIC REF	PART NUMBER	QTY	PART NAME 1 2 3 4 5 6 (PRODUCT LEVEL)	SEE PAGE
	1	1	**197-9695**	1	BEARING-NEEDLE	
	2	1	**186-3735**	4	PIN-CONNECTOR (16-GA TO 18-GA)	
	3	1	**102-8804**	1	KIT-RECEPTACLE (4-PIN)	
					(INCLUDES RECEPTACLE AS & WEDGE)	
	4	1	**4B-1282**	2	SCREW-MACHINE (1/4-20X0.75-IN)	
	5	1	**009-9258**	2	NUT (1/4-20-THD)	
	6	1	**186-3169**	2	SPACER	
	7	1	**198-1111**	1	BUSHING	
	8	1	**186-3171**	1	BUSHING	
	9	1	**5B-3180**	1	NUT (5/16-18-THD)	
	10	1	**031-4155**	1	LOCKNUT (5/16-18-THD)	
	11	1	**7X-3393**	1	WASHER-HARD (8.3X19X1.83-MM THK)	
	12	1	**140-9685**	4	WASHER-SPRING (8.64X22.1X1.9-MM THK)	
	13	1	**077-7467**	2	RACE-THRUST BEARING	
	14	1	**197-9181**	1	DISC-FRICTION	
	15	1	**166-8072**	2	SPRING-COMPRESSION	
	16	1	**4L-1250**	3	NUT (10X32-THD)	
	17	1	**166-8070**	2	BOLT-SOCKET HEAD (10-32X11.18-MM)	
	18	1	**166-8071**	1	BEARING-CONNECTING ROD	
	19	1	**8L-6521**	1	BOLT (10-32X0.5-IN)	
	20	1	**7X-2466**	1	CLIP	
	21	1	**140-9337**	1	SWITCH-MICRO (NEUTRAL POSITION)	
	22	1	**171-2842**	2	BOLT-SOCKET HEAD (M3X0.5X20-MM)	
M	23	1	**8T-2658**	2	LOCKNUT (M3X0.5-THD)	
Y	24	1	**186-3380**	1	CONTROL GP-HANDLE	390
	25	1	**197-9461**	1	LEVER	
	26	1	**140-9338**	1	BOOT	
	27	1	**8H-4959**	2	BOLT (10-32X0.875-IN)	
	28	1	**098-3602**	1	SWIVEL	
	29	1	**8T-4205**	1	WASHER-HARD (7.2X14.5X2-MM THK)	
	30	1	**141-1794**	1	PIN-COTTER	
	31	1	**166-8068**	1	CLAMP-CABLE	
	32	1	**3E-9865**	1	LOCKNUT (1/4-20-THD)	
	33	1	**3K-5761**	1	WASHER (0.328X0.62X0.032-IN THK)	
	34	1	**197-9238**	1	CUP-BEARING	
	35	1	**218-9847**	1	WIRE AS	

M-METRIC PART
Y-SEPARATE ILLUSTRATION

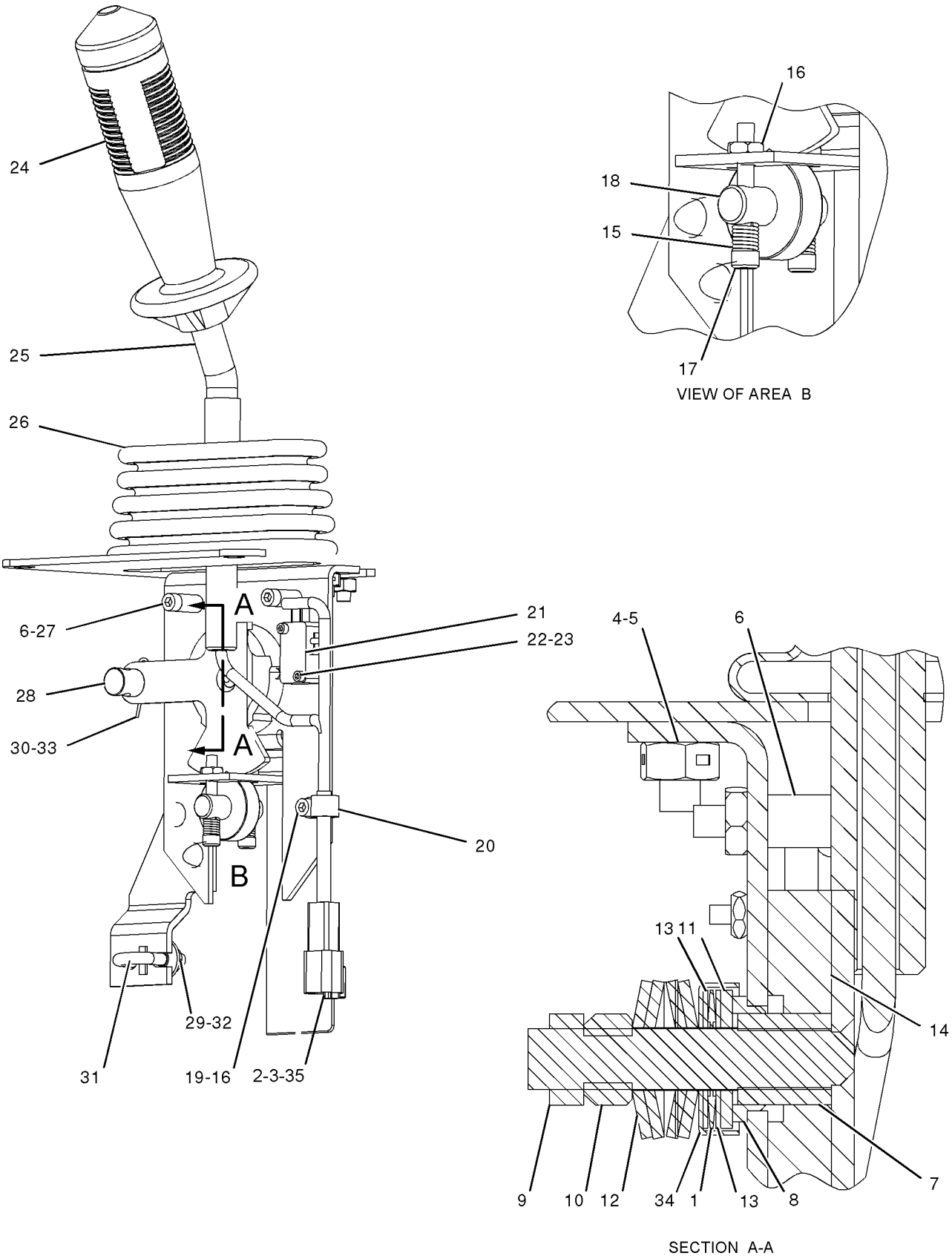

GRAPHIC #1 **<END>** g01042940

OPERATOR STATION

197-3300 CONTROL GP-PROPEL

S/N: BZE1-UP; BZG1-UP
PART OF 218-4281 CONTROL GP-DIRECTION & SPEED
TYPE 2

SMCS-3065 **i02842944**

NOTE	REF NO	GRAPHIC REF	PART NUMBER	QTY	PART NAME 1 2 3 4 5 6 (PRODUCT LEVEL)	SEE PAGE
	1	1	**197-9695**	1	BEARING-NEEDLE	
C	2	1	**9X-3401**	2	PIN-CONNECTOR (16-GA TO 18-GA)	
C	3	1	**151-9274**	1	KIT-RECEPTACLE (4-PIN)	
					(INCLUDES RECEPTACLE AS & WEDGE)	
	4	1	**4B-1282**	2	SCREW-MACHINE (1/4-20X0.75-IN)	
	5	1	**009-9258**	2	NUT (1/4-20-THD)	
	6	1	**186-3169**	2	SPACER	
	7	1	**198-1111**	1	BUSHING	
	8	1	**186-3171**	1	BUSHING	
	9	1	**5B-3180**	1	NUT (5/16-18-THD)	
	10	1	**031-4155**	1	LOCKNUT (5/16-18-THD)	
	11	1	**7X-3393**	1	WASHER-HARD (8.3X19X1.83-MM THK)	
	12	1	**140-9685**	4	WASHER-SPRING (8.64X22.1X1.9-MM THK)	
	13	1	**077-7467**	2	RACE-THRUST BEARING	
	14	1	**197-9181**	1	DISC-FRICTION	
	15	1	**166-8072**	2	SPRING-COMPRESSION	
C	16	1	**4L-1250**	5	NUT (10X32-THD)	
	17	1	**166-8070**	2	BOLT-SOCKET HEAD (10-32X11.18-MM)	
	18	1	**166-8071**	1	BEARING-CONNECTING ROD	
	19	1	**8L-6521**	1	BOLT (10-32X0.5-IN)	
	20	1	**7X-2466**	1	CLIP	
	21	1	**140-9337**	1	SWITCH-MICRO (NEUTRAL POSITION)	
	22	1	**171-2842**	2	BOLT-SOCKET HEAD (M3X0.5X20-MM)	
M	23	1	**8T-2658**	2	LOCKNUT (M3X0.5-THD)	
Y	24	1	**186-3380**	1	CONTROL GP-HANDLE	390
	25	1	**197-9461**	1	LEVER	
	26	1	**140-9338**	1	BOOT	
	27	1	**8H-4959**	2	BOLT (10-32X0.875-IN)	
	28	1	**098-3602**	1	SWIVEL	
	29	1	**8T-4205**	1	WASHER-HARD (7.2X14.5X2-MM THK)	
	30	1	**141-1794**	1	PIN-COTTER	
	31	1	**166-8068**	1	CLAMP-CABLE	
	32	1	**3E-9865**	1	LOCKNUT (1/4-20-THD)	
	33	1	**3K-5761**	1	WASHER (0.328X0.62X0.032-IN THK)	
	34	1	**197-9238**	1	CUP-BEARING	
CE	35	1	**125-7876**		TUBE-HEAT SHRINK (17.78-MM DIA) (4-CM)	

C-CHANGE FROM PREVIOUS TYPE
E-ORDER BY THE CENTIMETER
M-METRIC PART
Y-SEPARATE ILLUSTRATION

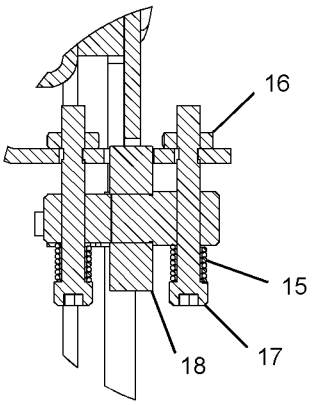

SECTION A

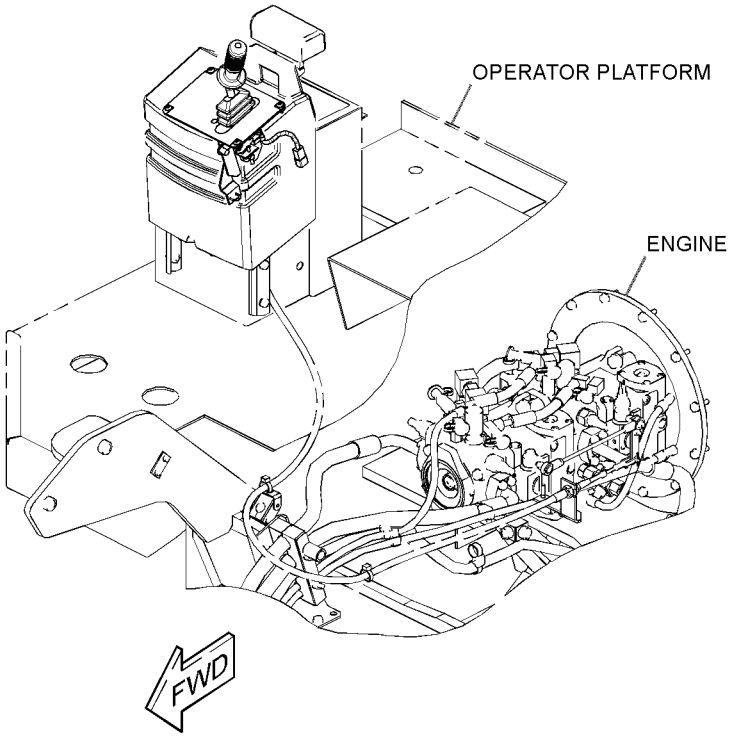

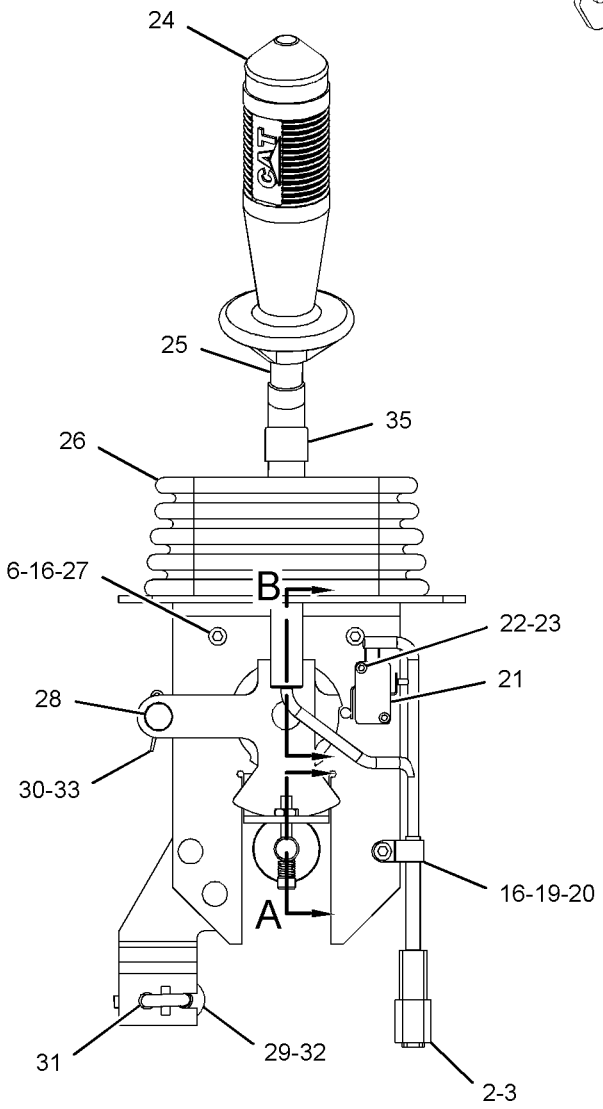

LEFT SIDE VIEW

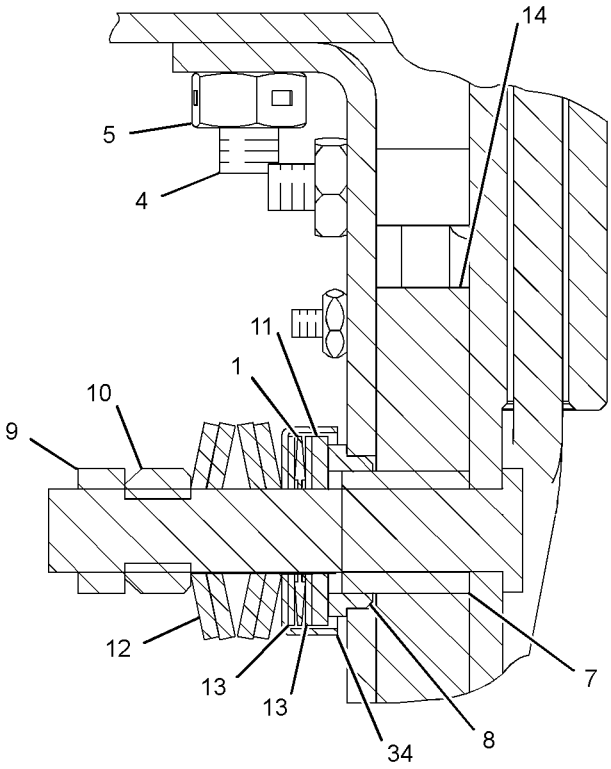

SECTION B

GRAPHIC #1 **<END>** g01418521

OPERATOR STATION

178-3836 CYLINDER & MTG GP-TILT

S/N: BZE1-UP; BZG1-UP
CAB-PLATFORM LIFT
PART OF 249-9323, 249-9324 OPERATOR AR
AN ATTACHMENT

SMCS-5102, 7341 **i02017532**

NOTE	REF NO	GRAPHIC REF	PART NUMBER	QTY	PART NAME 1 2 3 4 5 6 (PRODUCT LEVEL)	SEE PAGE
	1	1	**3E-9862**	2	LOCKNUT (3/4-10-THD)	
M	2	1	**5C-2874**	2	NUT (M5X0.8-THD)	
	3	1	**7R-6728**	1	ADAPTER	
	4	1	**7X-0564**	2	WASHER-HARD (20X51X3-MM THK)	
	5	1	**8C-6865**	3	CONNECTOR	
	6	1	**081-3119**	2	SEAL-RUBBER	
	7	1	**081-3772**	1	LEVER	
	8	1	**128-1624**	1	SUPPORT AS	
	9	1	**128-4119**	1	CYLINDER AS-TILT	
	10	1	**128-4120**	1	PUMP GP-HAND (TILT CYLINDER)	
	11	1	**147-7370**	1	BRACKET AS	
I	12	1	**154-9517**	2	HOSE AS	
	13	1	**167-1192**	2	CLIP	
	14	1	**4B-4274**	4	WASHER (5.5X13X1.2-MM THK)	
	15	1	**4J-5477**	4	SEAL-O-RING	
	16	1	**7X-0370**	1	BOLT (3/4-10X3.5-IN)	
	17	1	**7X-7729**	2	WASHER (11X25X3-MM THK)	
	18	1	**8C-6857**	1	BOLT (3/4-10X2.75-IN)	
M	19	1	**8T-0288**	2	BOLT (M5X0.8X12-MM)	
M	20	1	**8T-4136**	2	BOLT (M10X1.5X25-MM)	
M	21	1	**8T-4193**	4	BOLT (M16X2X50-MM)	
	22	1	**9X-8257**	4	WASHER (17.5X30X3.5-MM THK)	

I-REFER TO HYDRAULIC INFORMATION SYSTEM
M-METRIC PART

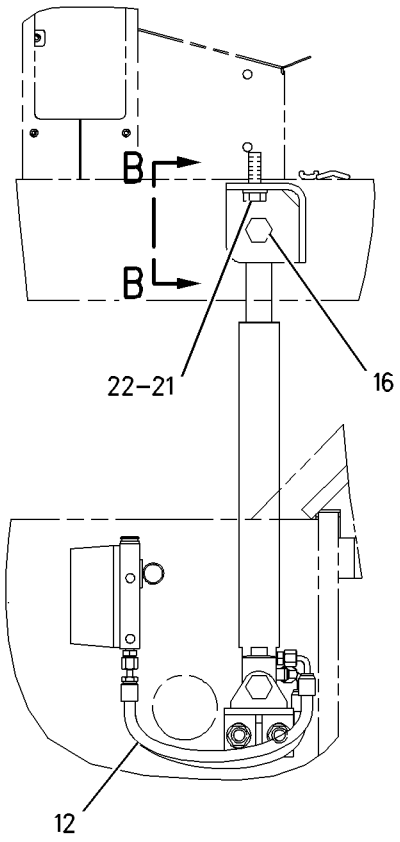

VIEW A-A

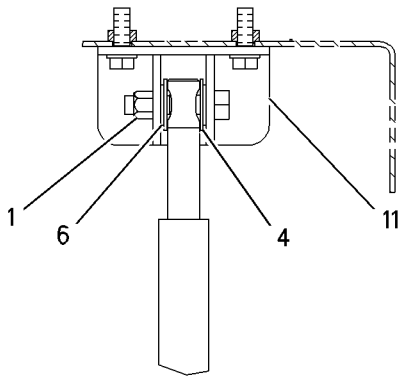

VIEW B-B

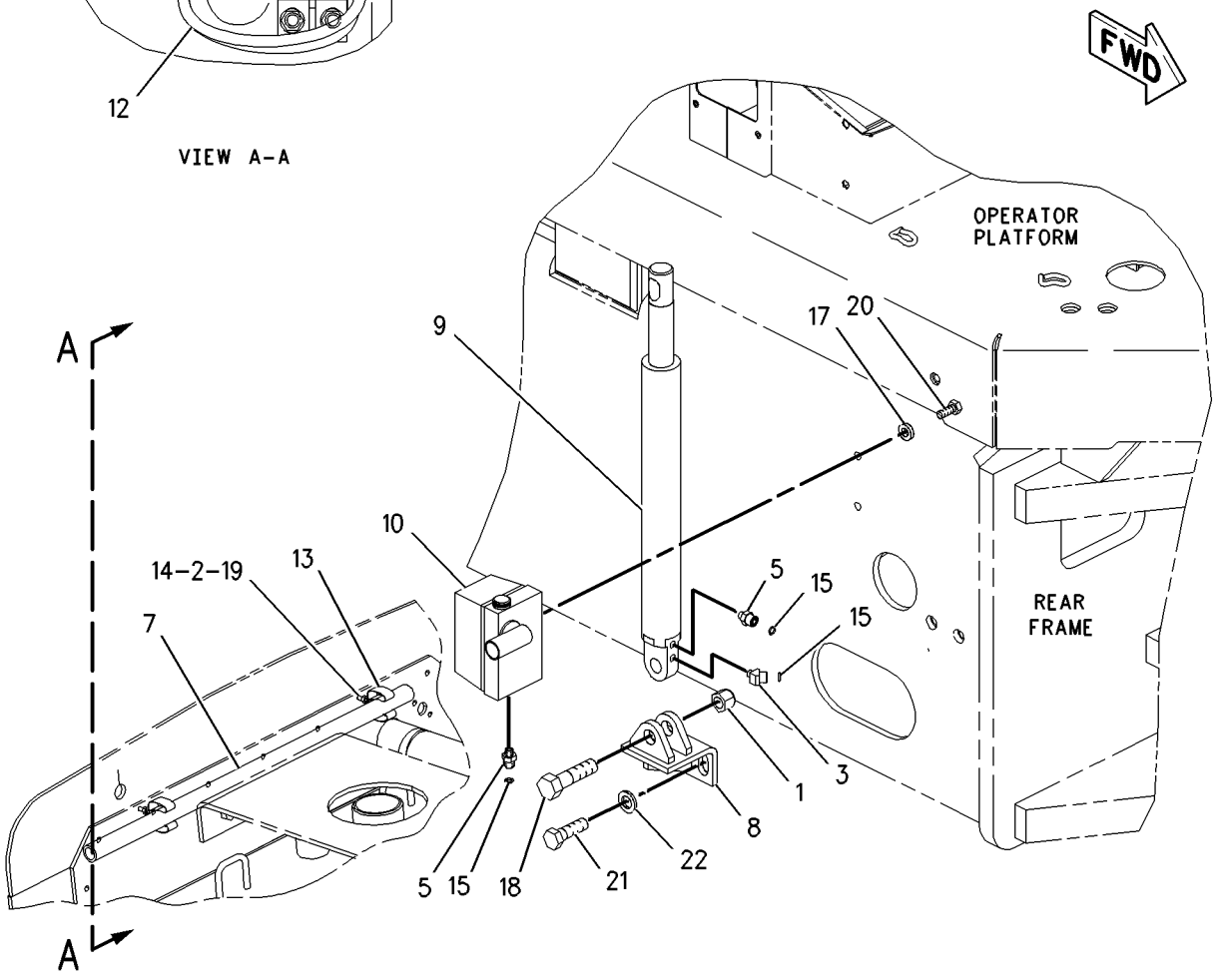

GRAPHIC #1 **<END>** g00839974

OPERATOR STATION

185-5770 DOOR GP-CAB—SLIDING WINDOW, LH

S/N: BZE1-UP; BZG1-UP
PART OF 223-4792, 254-5057 ROPS GP-ENCLOSED
AN ATTACHMENT
TYPE 1

SMCS-7308 **i02898378**

NOTE	REF NO	GRAPHIC REF	PART NUMBER	QTY	PART NAME 1 2 3 4 5 6 (PRODUCT LEVEL)	SEE PAGE
	1	1	**3T-5201**	1	BEARING	
	2	1	**4E-1384**	1	BUMPER-CONICAL	
	3	1	**7W-2108**	1	SPRING-BYPASS VALVE	
	4	1	**7X-2497**	1	HANDLE-DOOR	
M	5	1	**8T-4180**	4	SCREW-MACHINE (M5X0.8X20-MM)	
	6	1	**8T-4742**	1	END-YOKE ROD	
	7	1	**8T-4747**	2	BRACKET	
	8	1	**8Y-4807**	1	HANDLE AS (LH DOOR)	
		1	**8Y-4501**	1	SPRING-HANDLE	
	9	1	**8Y-6386**	1	SEAL-HANDLE	
	10	1	**9G-2761**	1	LATCH AS-DOOR	
	11	1	**107-6117**	1	COVER (LH)	
	12	1	**141-8580**	1	RING-RETAINING	
	13	1	**161-9640**	1	COVER	
	14	1	**161-9641**	1	PLATE	
	15	1	**161-9642**	1	ROD AS	
	16	1	**161-9647**	1	PLATE	
	17	1	**162-2188**	1	DOOR AS (CAB-LH)	
M		1	**159-9539**	12	NUT-WELD (M6X1-THD)	
		1	**107-6104**	2	INSERT	
M		1	**6V-9632**	2	NUT-WELD (M6X1-THD)	
		1	**107-6125**	2	HINGE AS	
					(EACH INCLUDES)	
		1	**096-2323**	2	RING-RETAINING (EXTERNAL)	
		1	**107-6127**	1	STRIP	
		1	**111-0200**	1	HANDRAIL	
M		1	**6V-9632**	1	NUT-WELD (M6X1-THD)	
		1	**115-1552**	1	HANDLE-PULL	
M		1	**159-9539**	2	NUT-WELD (M6X1-THD)	
	18	1	**162-2190**	1	GLASS-CAB (DOOR)	
	19	1	**168-2457**	1	LATCH AS-DOOR (LH DOOR)	
	20	1	**169-3995**	1	SEAL	
	21	1	**178-2593**	1	BUMPER	
Y	22	1	**180-3871**	1	WINDOW GP-DOOR (SLIDING)	480
M	23	1	**5C-2890**	1	NUT (M6X1-THD)	
M	24	1	**5C-7261**	2	NUT (M8X1.25-THD)	
M	25	1	**8T-4181**	5	BOLT (M6X1X20-MM)	
	26	1	**8T-4205**	6	WASHER-HARD (7.2X14.5X2-MM THK)	
M	27	1	**8T-4971**	4	BOLT (M6X1X30-MM)	
M	28	1	**9X-2042**	11	SCREW-TRUSS HEAD (M6X1X12-MM)	
E	29	1	**3E-3805**		SEAL (420-CM)	

E-ORDER BY THE CENTIMETER
M-METRIC PART
Y-SEPARATE ILLUSTRATION

185-5770 **DOOR GP-CAB** *(contd.)* **i02898378**

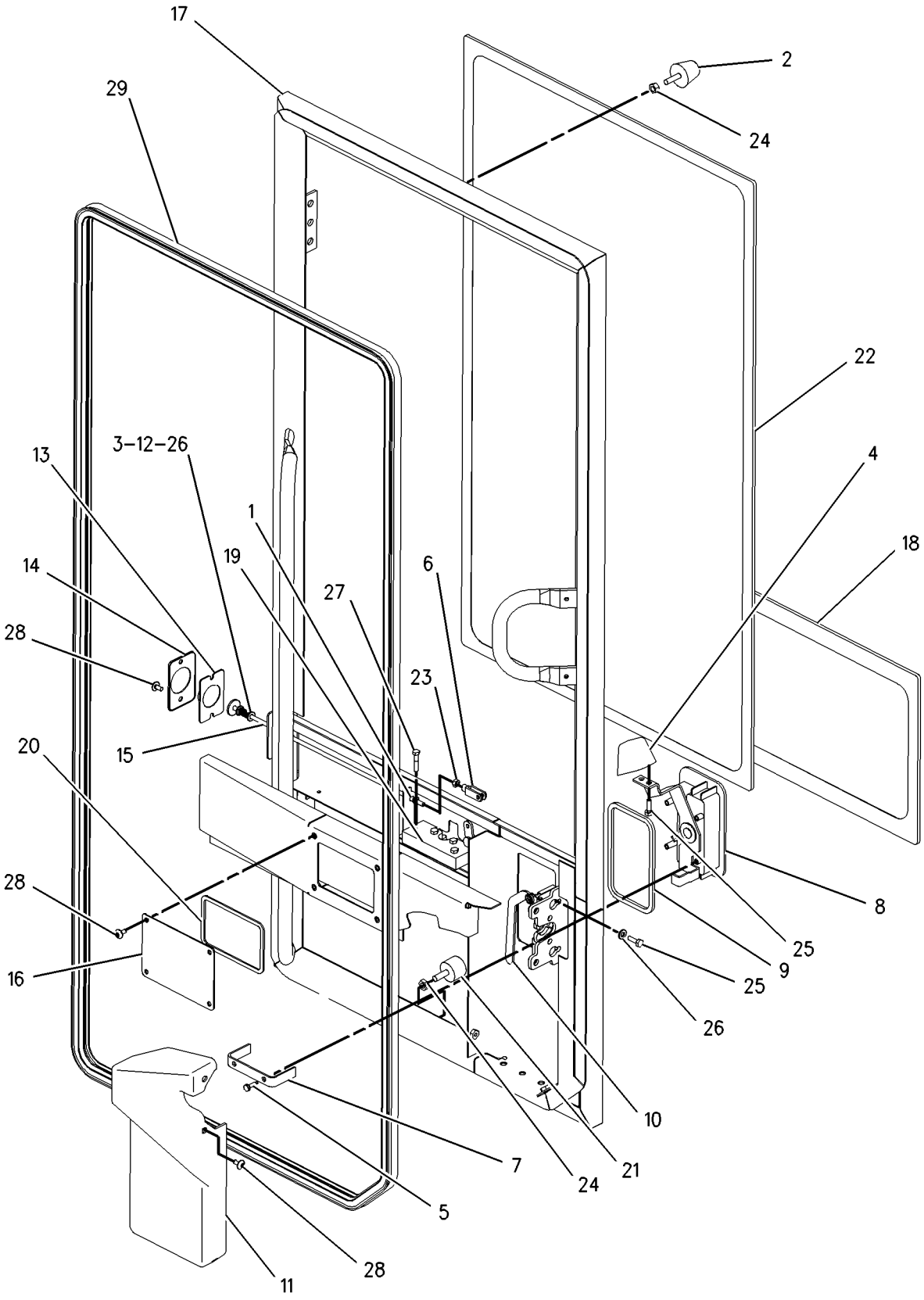

GRAPHIC #1 **<END>** g00852950

185-5770 DOOR GP-CAB—SLIDING WINDOW, LH

S/N: BZE1-UP; BZG1-UP
PART OF 223-4792, 254-5057 ROPS GP-ENCLOSED
AN ATTACHMENT
TYPE 2

SMCS-7308 **i02622927**

NOTE	REF NO	GRAPHIC REF	PART NUMBER	QTY	PART NAME 1 2 3 4 5 6 (PRODUCT LEVEL)	SEE PAGE
	1	1	**3T-5201**	1	BEARING	
	2	1	**4E-1384**	1	BUMPER-CONICAL	
	3	1	**7W-2108**	1	SPRING-BYPASS VALVE	
	4	1	**7X-2497**	1	HANDLE-DOOR	
M	5	1	**8T-4180**	4	SCREW-MACHINE (M5X0.8X20-MM)	
	6	1	**8T-4742**	1	END-YOKE ROD	
	7	1	**8T-4747**	2	BRACKET	
	8	1	**8Y-4807**	1	HANDLE AS	
		1	**8Y-4501**	1	SPRING-HANDLE	
	9	1	**8Y-6386**	1	SEAL-HANDLE	
	10	1	**9G-2761**	1	LATCH AS-DOOR	
	11	1	**107-6117**	1	COVER (LH) (LH)	
	12	1	**141-8580**	1	RING-RETAINING	
	13	1	**161-9640**	1	COVER	
	14	1	**161-9641**	1	PLATE	
	15	1	**161-9642**	1	ROD AS	
	16	1	**161-9647**	1	PLATE	
CY	17	1	**269-4114**	1	DOOR GP-CAB (LH)	401
	19	1	**168-2457**	1	LATCH AS-DOOR	
	20	1	**169-3995**	1	SEAL	
	21	1	**178-2593**	1	BUMPER	
Y	22	1	**180-3871**	1	WINDOW GP-DOOR (SLIDING)	480
M	23	1	**5C-2890**	1	NUT (M6X1-THD)	
M	24	1	**5C-7261**	2	NUT (M8X1.25-THD)	
M	25	1	**8T-4181**	5	BOLT (M6X1X20-MM)	
	26	1	**8T-4205**	6	WASHER-HARD (7.2X14.5X2-MM THK)	
M	27	1	**8T-4971**	4	BOLT (M6X1X30-MM)	
M	28	1	**9X-2042**	11	SCREW-TRUSS HEAD (M6X1X12-MM)	
E	29	1	**3E-3805**		SEAL (420-CM)	

C-CHANGE FROM PREVIOUS TYPE
E-ORDER BY THE CENTIMETER
M-METRIC PART
Y-SEPARATE ILLUSTRATION

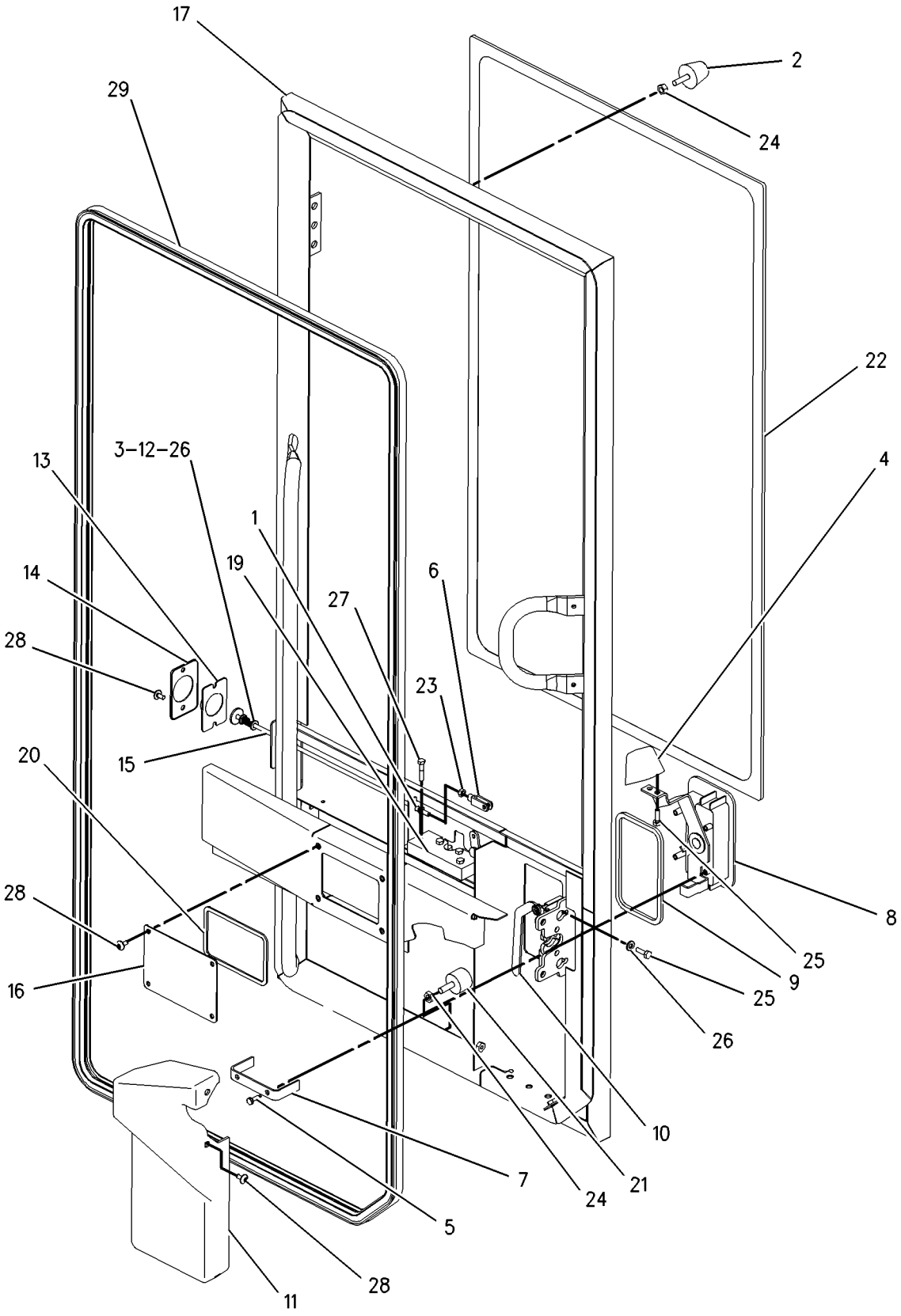

GRAPHIC #1 **<END>** g01003729

OPERATOR STATION

269-4114 DOOR GP-CAB—LH

S/N: BZE1-UP; BZG1-UP
PART OF 185-5770 DOOR GP-CAB
AN ATTACHMENT

SMCS-7308 **i02622998**

NOTE	REF NO	GRAPHIC REF	PART NUMBER	QTY	PART NAME 1 2 3 4 5 6 (PRODUCT LEVEL)	SEE PAGE
	1	1	**107-6104**	2	INSERT	
	2	1	**107-6120**	1	PLATE AS	
M		1	**159-9539**	2	NUT-WELD	
	3	1	**286-9593**	2	HINGE AS	
		1	**096-2323**	1	RING-RETAINING (EXTERNAL)	
	4	1	**111-0200**	1	HANDRAIL	
	5	1	**115-1552**	1	HANDLE-PULL	
	6	1	**161-9639**	1	PLATE AS	
M		1	**159-9539**	2	NUT-WELD	

M-METRIC PART

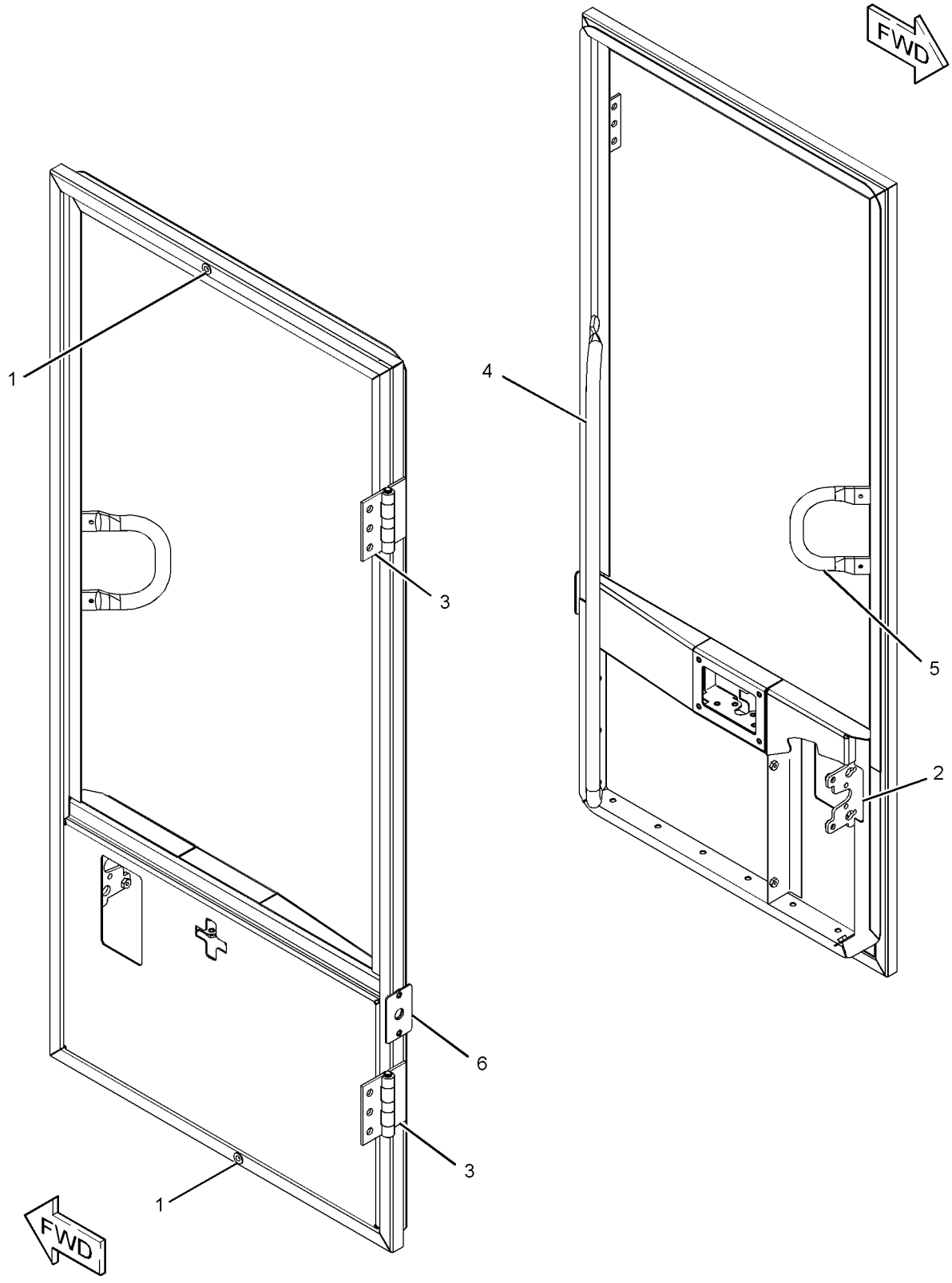

GRAPHIC #1 **<END>** g01256752

OPERATOR STATION

143-5948 DUCT GP-CAB AIR

S/N: BZE1-UP; BZG1-UP
PART OF 223-4791, 254-5054, 259-4423 CAB AR
AN ATTACHMENT

SMCS-734D **i01388281**

NOTE	REF NO	GRAPHIC REF	PART NUMBER	QTY	PART NAME 1 2 3 4 5 6 (PRODUCT LEVEL)	SEE PAGE
	1	1	**7W-7119**	2	SUPPORT	
	2	1	**8Y-6388**	6	LOUVER AS-VENT	
	3	1	**104-2091**	28	SCREW-FLAT HEAD (NO 6X0.5-IN)	
	4	1	**119-3859**	15	SCREW-PAN HEAD (10-16X0.75-IN)	
	5	1	*149-9933*	1	DUCT	
	6	1	**154-1643**	1	DUCT AS	
M	7	1	**6V-5217**	2	BOLT (M8X1.25X20-MM)	
M	8	1	**8T-4171**	2	BOLT (M6X1X12-MM)	
	9	1	**8T-4224**	8	WASHER-HARD (8.8X16X2-MM THK)	
M	10	1	**9X-2045**	2	SCREW-TRUSS HEAD (M6X1X20-MM)	
	11	1	**9X-8256**	2	WASHER (6.6X12X2-MM THK)	
BD	12	1	**5P-5927**		SEAL	
	13	1	**166-9098**	1	COVER	
M	14	1	**8T-7547**	2	BOLT (M8X1.25X30-MM)	
M	15	1	**7Y-7394**	2	SCREW-BUTTON HEAD (M8X1.25X25-MM)	
	16	1	**5C-9134**	4	LOUVER AS	
M	17	1	**5C-7261**	4	NUT (M8X1.25-THD)	

B-USE AS REQUIRED
D-ORDER BY THE METER
M-METRIC PART

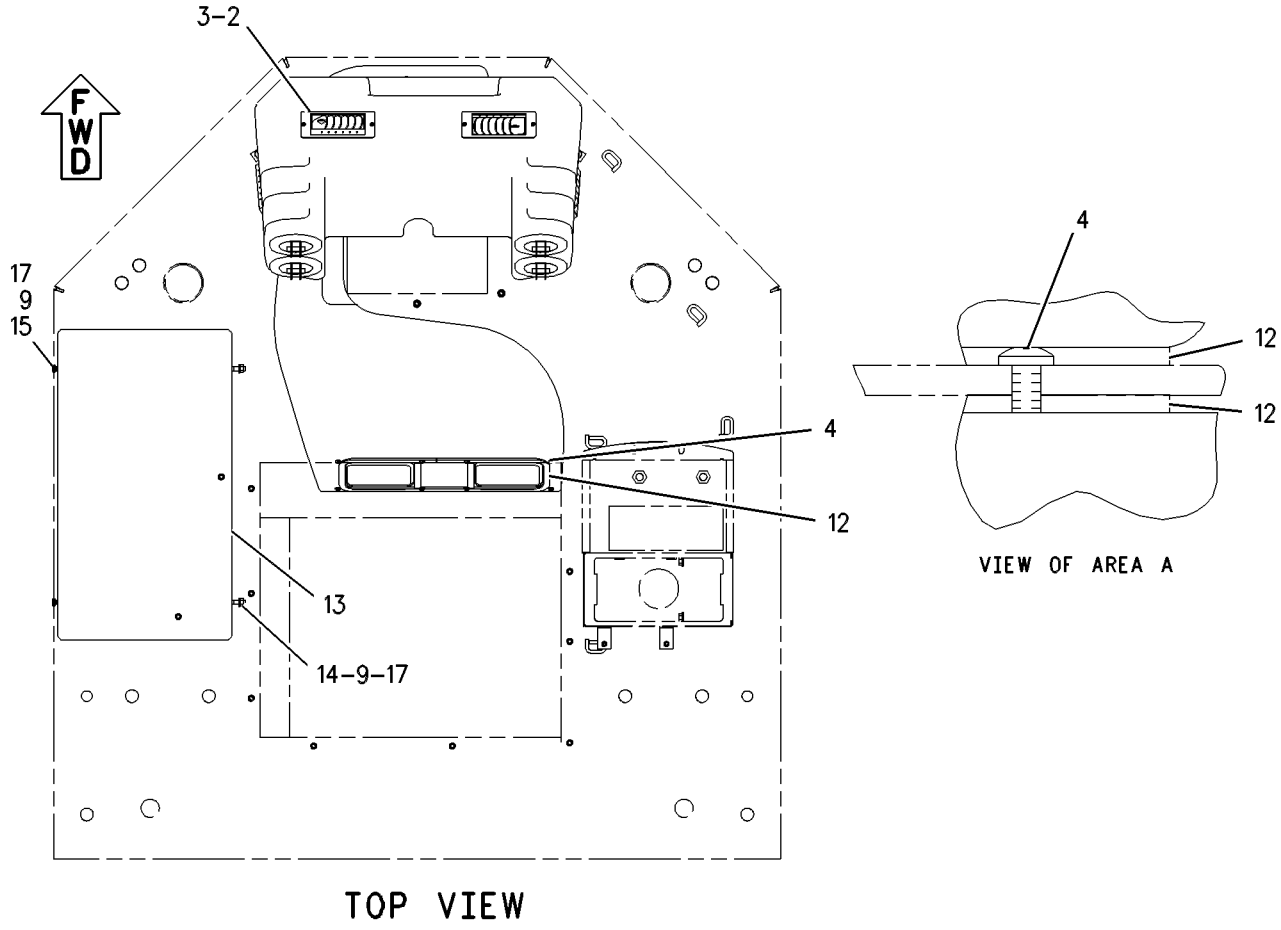

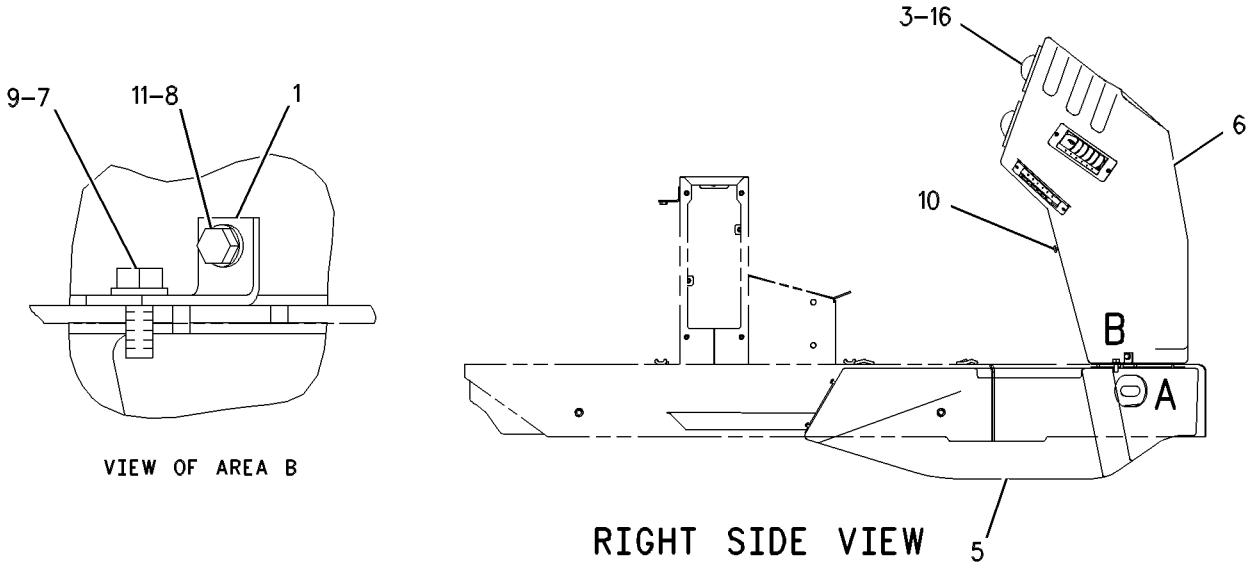

GRAPHIC #1 **<END>** g00562379

OPERATOR STATION

240-4607 FILTER GP-CAB AIR

S/N: BZE1-UP; BZG1-UP
PART OF 249-9323, 249-9324 OPERATOR AR
AN ATTACHMENT

SMCS-7342 **i02186299**

NOTE	REF NO	GRAPHIC REF	PART NUMBER	QTY	PART NAME 1 2 3 4 5 6 (PRODUCT LEVEL)	SEE PAGE
	1	1	**116-7856**	2	KNOB-CONTROL	
	2	1	**127-8613**	1	GASKET	
	3	1	**180-7486**	1	COVER AS	
	4	1	**180-7487**	1	FILTER	

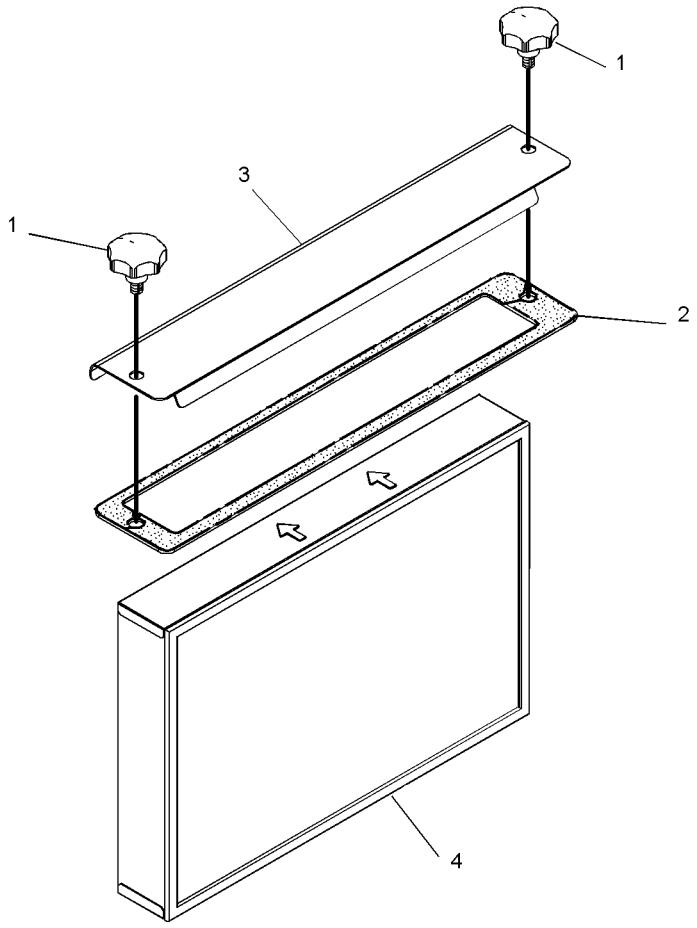

GRAPHIC #1 **<END>** g01167530

OPERATOR STATION

249-9301 FLOOR MAT GP

S/N: BZE1-UP; BZG1-UP
PART OF 249-9323, 249-9324 OPERATOR AR
AN ATTACHMENT

SMCS-726M **i02051618**

NOTE	REF NO	GRAPHIC REF	PART NUMBER	QTY	PART NAME 1 2 3 4 5 6 (PRODUCT LEVEL)	SEE PAGE
	1	1	**146-8999**	1	FLOOR MAT-CAB	
	2	1	**166-9319**	1	INSULATION	
B	3	1	**9U-5922**	1	TAPE-DUCT	

B-USE AS REQUIRED

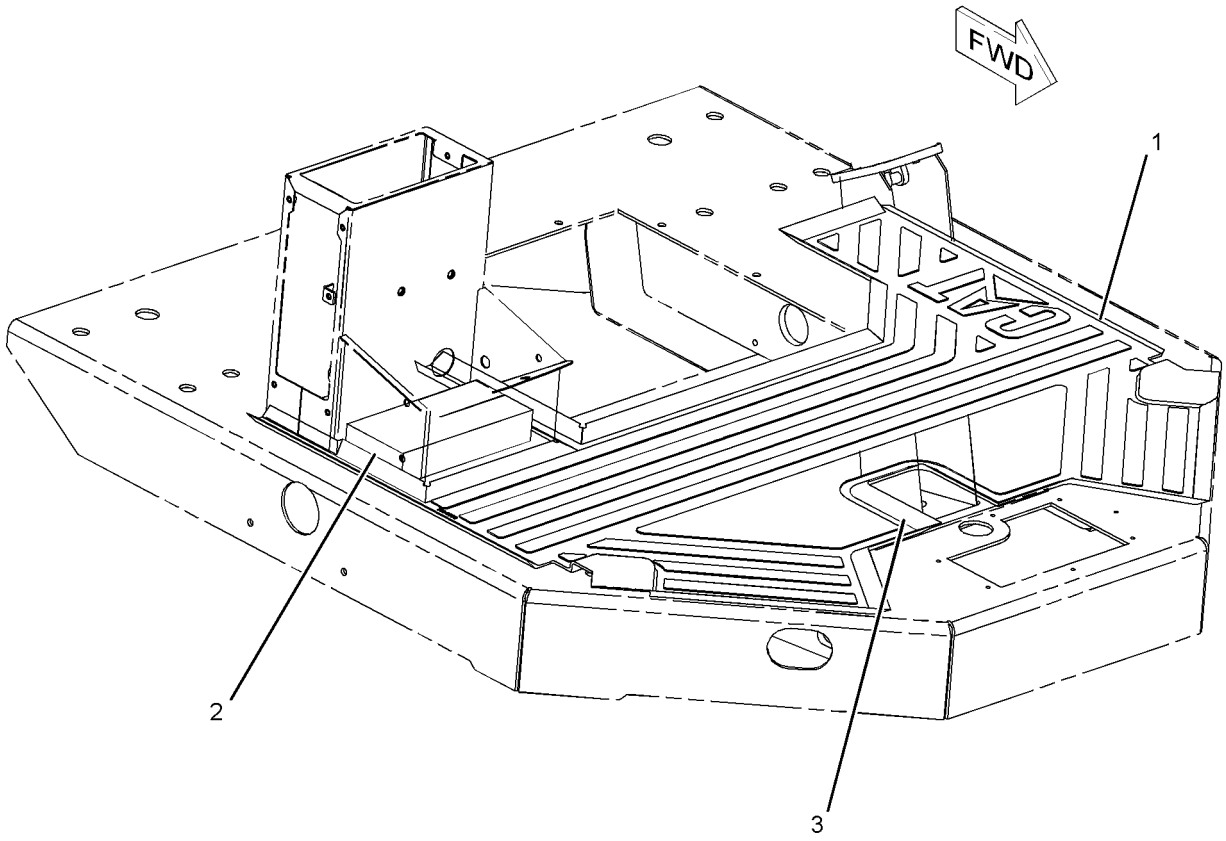

GRAPHIC #1 **<END>** g01053623

204-1328 GAUGE GP-VIBRATORY

S/N: BZE1-UP; BZG1-UP

AN ATTACHMENT

SMCS-7471 **i02868576**

NOTE	REF NO	GRAPHIC REF	PART NUMBER	QTY	PART NAME 1 2 3 4 5 6 (PRODUCT LEVEL)	SEE PAGE
	1	1	**7K-1181**	1	STRAP-CABLE	
	2	1	**7R-3145**	1	SENSOR GP-SPEED (VIBRATORY TACHOMETER GAUGE)	
	3	1	**1G-9960**	2	CLAMP	
	4	1	**7V-5628**	1	PLATE	
	5	1	**9X-7421**	1	SEAL-BONDED	
	6	1	**139-3280**	1	HARNESS AS-SENSOR (VIBRATORY)	
	7	1	**157-8674**	1	BRACKET	
	8	1	**311-0186**	1	GAUGE AS-TACHOMETER	
M	9	1	**5C-2890**	2	NUT (M6X1-THD)	
M	10	1	**7X-2534**	2	BOLT (M6X1X50-MM)	
	11	1	**8T-4121**	2	WASHER-HARD (11X21X2.5-MM THK)	
M	12	1	**8T-4136**	2	BOLT (M10X1.5X25-MM)	
	13	1	**9X-8256**	2	WASHER (6.6X12X2-MM THK)	
	14	1	**177-2215**	1	STRAP-DUAL CLAMP	

M-METRIC PART

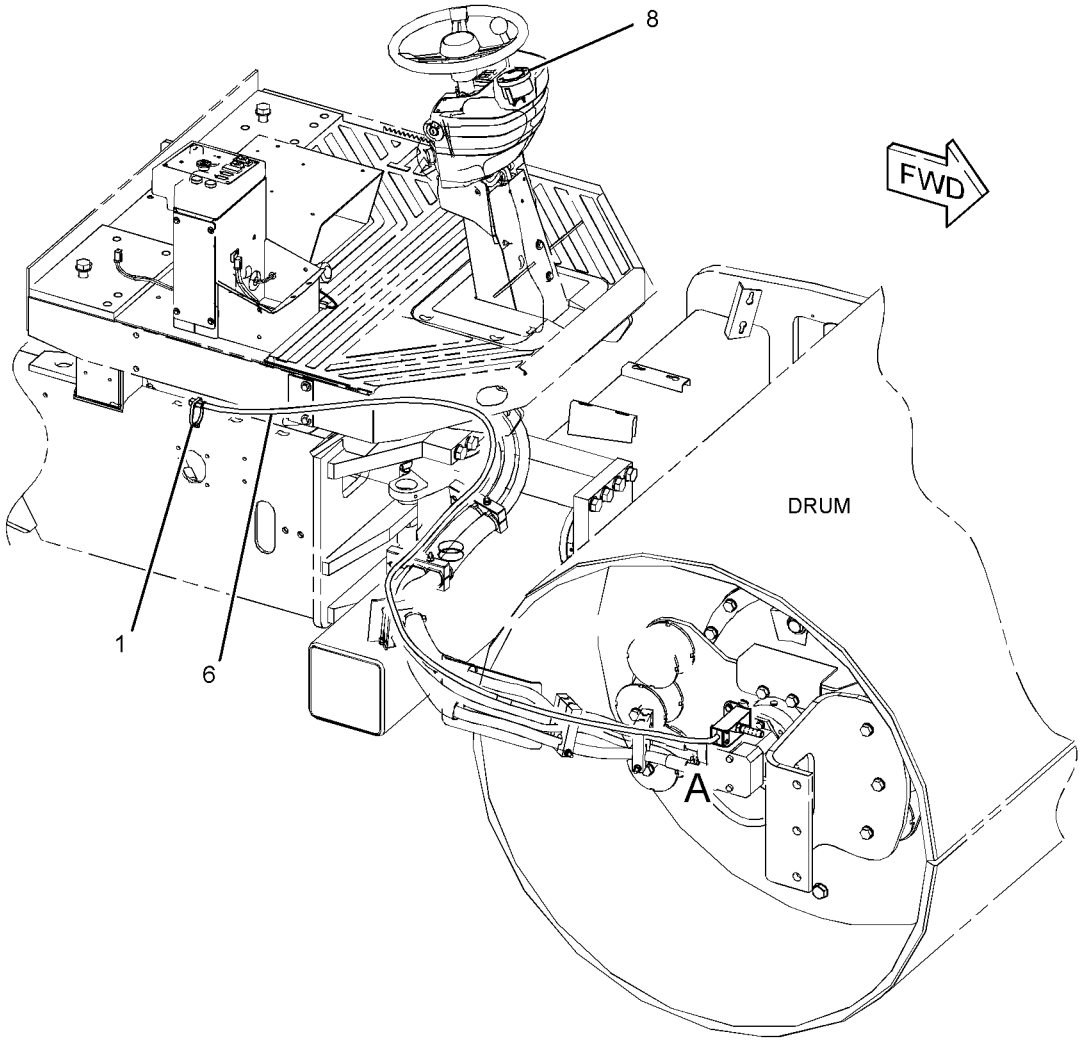

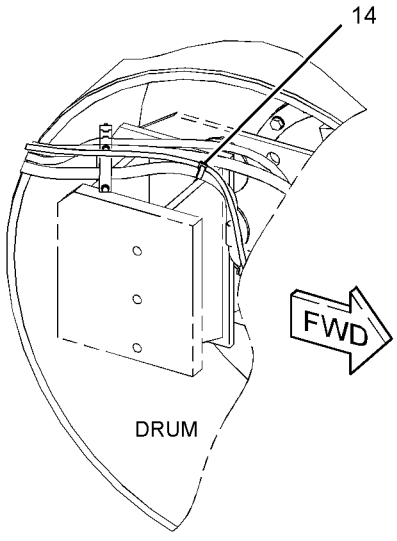

(OPTIONAL HARNESS ROUTING)

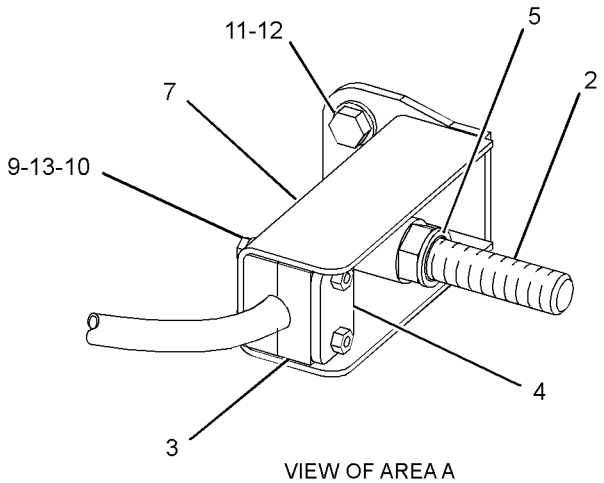

VIEW OF AREA A

GRAPHIC #1 **<END>** g01447985

210-5550 GUARD GP-VANDALISM

S/N: BZE1-UP; BZG1-UP
PART OF 236-1517, 236-1518, 236-6627 OPERATOR AR
ALSO AN ATTACHMENT

SMCS-7315 **i02017542**

NOTE	REF NO	GRAPHIC REF	PART NUMBER	QTY	PART NAME 1 2 3 4 5 6 (PRODUCT LEVEL)	SEE PAGE
	1	1	**5P-8502**	1	PADLOCK GP (VANDALISM GUARD)	
		1	**5P-8500**	1	KEY	
	2	1	**175-3722**	1	BRACKET	
	3	1	**210-5487**	1	COVER	
	4	1	**210-5489**	1	PLATE	
	5	1	**8T-4121**	4	WASHER-HARD (11X21X2.5-MM THK)	
M	6	1	**8T-4133**	2	NUT (M10X1.5-THD)	
M	7	1	**8T-4195**	2	BOLT (M10X1.5X30-MM)	
BE	8	1	**7X-7877**		STRIP-EDGING	

B-USE AS REQUIRED
E-ORDER BY THE CENTIMETER
M-METRIC PART

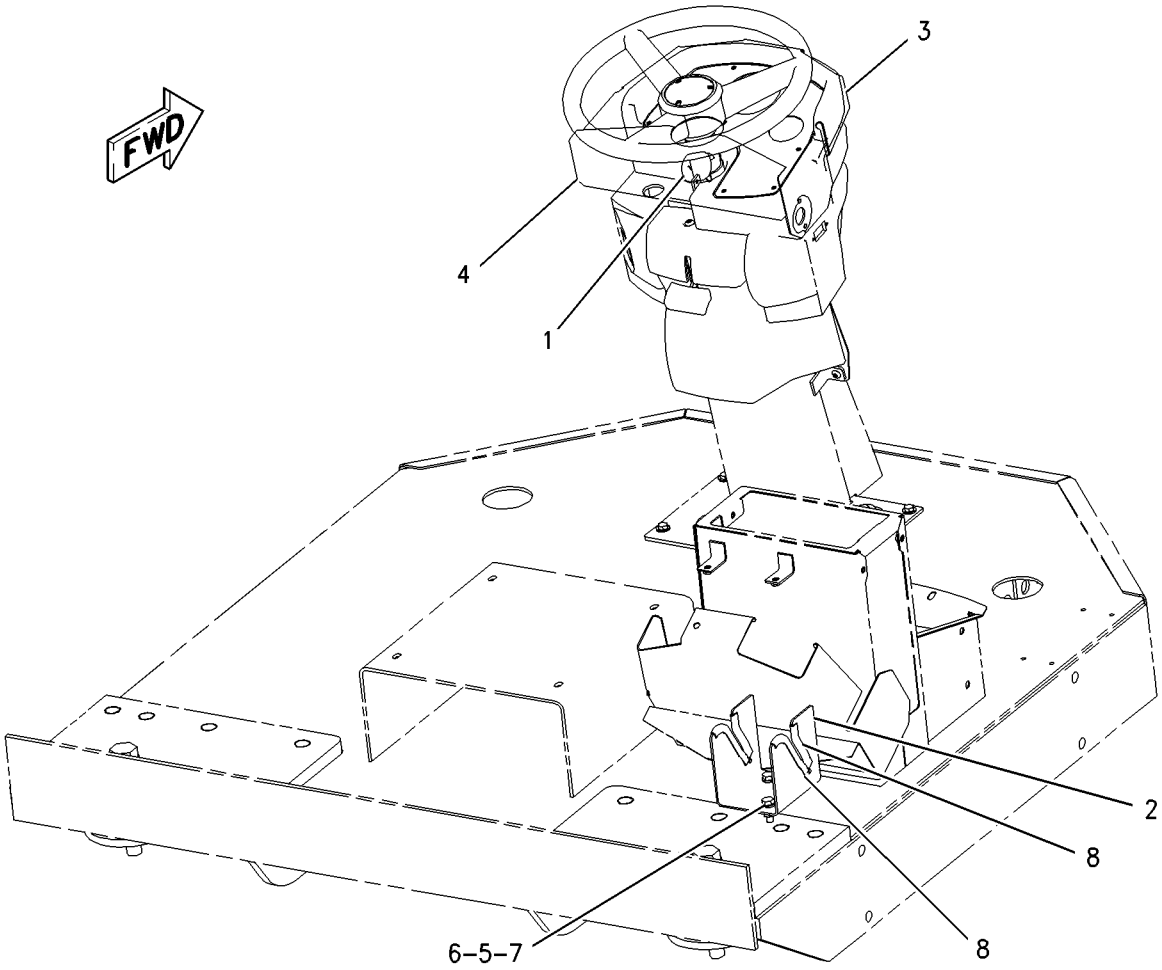

GRAPHIC #1 **<END>** g00828522

OPERATOR STATION

240-4672 HEATER & MTG GP-CAB

S/N: BZE1-UP; BZG1-UP
PART OF 249-9324 OPERATOR AR
AN ATTACHMENT

SMCS-7304 **i02898379**

NOTE	REF NO	GRAPHIC REF	PART NUMBER	QTY	PART NAME 1 2 3 4 5 6 (PRODUCT LEVEL)	SEE PAGE
	1	1	**110-6109**	1	KNOB-CONTROL (CAB HEATER)	
	2	1	**118-7259**	1	GASKET	
	3	1	**156-4449**	1	CABLE AS (HEATER TEMPERATURE CONTROL)	
		1	**2H-3920**	2	LOCKWASHER	
		1	**6V-8369**	1	NUT (7/16-28-THD)	
		1	**143-8874**	1	BOOT	
Y	4	1	**180-9874**	1	HEATER GP-CAB	411
	5	1	**7X-0579**	11	WASHER-HARD (8.8X25.5X2-MM THK)	
M	6	1	**8T-4908**	11	BOLT (M8X1.25X25-MM)	
BD	7	1	**5P-5643**		SEAL	

B-USE AS REQUIRED
D-ORDER BY THE METER
M-METRIC PART
Y-SEPARATE ILLUSTRATION

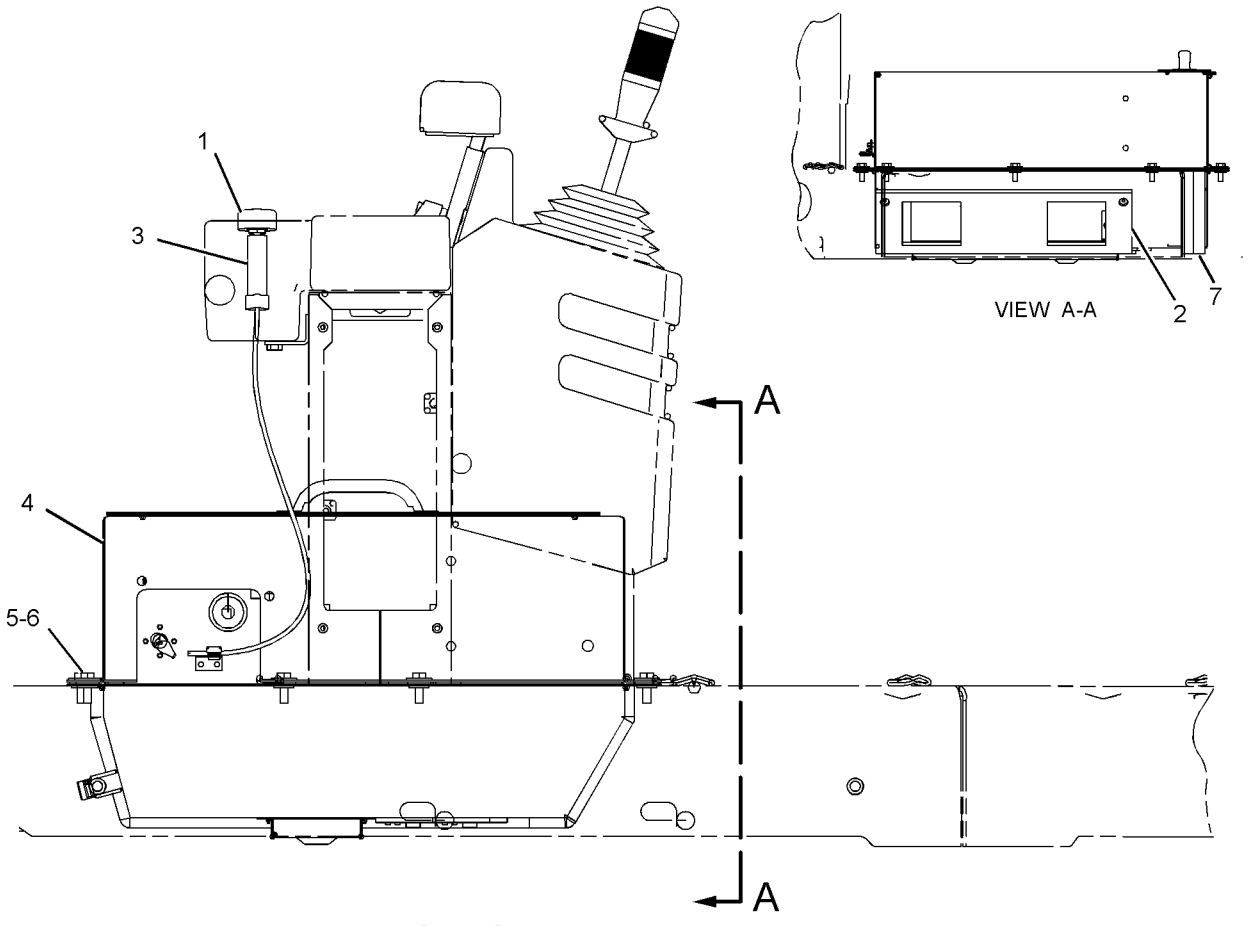

RIGHT SIDE VIEW

GRAPHIC #1 **<END>** g01055076

OPERATOR STATION

180-9874 HEATER GP-CAB

S/N: BZE1-UP; BZG1-UP
PART OF 240-4672 HEATER & MTG GP-CAB
FIELD REPLACEMENT ORDER 306-8141—PAGE 413
AN ATTACHMENT

SMCS-7304 **i02776562**

NOTE	REF NO	GRAPHIC REF	PART NUMBER	QTY	PART NAME 1 2 3 4 5 6 (PRODUCT LEVEL)	SEE PAGE
D	1	1	**5P-5908**		SEAL (0.1-M)	
	2	1	**3E-1841**	1	LEVER	
	3	1	**3S-2093**	2	STRAP-CABLE	
	4	1	**8C-4586**	2	CLAMP	
	5	1	**8Y-5737**	1	CLAMP	
	6	1	**9G-1950**	1	RESISTOR	
	7	1	**9X-2185**	4	SCREW (8-15X0.44-IN)	
	8	1	**9X-2488**	6	CLAMP-HOSE	
	9	1	**100-3143**	2	PLATE-ORIFICE	
	10	1	**100-3426**	2	WHEEL AS-BLOWER	
					(EACH INCLUDES)	
		1	**037-4838**	2	CLAMP	
	11	1	**102-0341**	1	CLIP	
	12	1	**114-3140**	1	GROMMET	
	13	1	**118-5044**	1	HARNESS AS-HEATER & AIR COND	
		1	**3E-3361**	1	PLUG AS-CONNECTOR (2-PIN)	
					(INCLUDES PLUG AS & WEDGE)	
		1	**102-8805**	1	KIT-RECEPTACLE (6-PIN)	
					(INCLUDES RECEPTACLE AS & WEDGE)	
		1	**8T-8737**	1	PLUG-SEAL	
	14	1	**118-5046**	1	HOUSING AS (CAB)	
	15	1	**124-8494**	1	GASKET	
	16	1	**124-8495**	1	VALVE AS-WATER	
	17	1	**151-0894**	1	COVER AS	
M		1	**7X-2478**	2	NUT-WELD (M8X1.25-THD)	
M		1	**8T-3490**	4	NUT-WELD (M10X1.5-THD)	
	18	1	**156-6819**	1	CASE AS	
M		1	**6V-9632**	7	NUT-WELD (M6X1-THD)	
	19	1	**174-1486**	1	MOTOR AS-BLOWER (24-VOLT, A/C, HEATER)	
		1	**9W-0852**	2	PIN-CONNECTOR (14-GA)	
		1	**102-8802**	1	KIT-RECEPTACLE (2-PIN)	
					(INCLUDES RECEPTACLE AS & WEDGE)	
	20	1	**183-7528**	1	COIL AS-HEATER	
	21	1	**037-4426**	1	RETAINER	
M	22	1	**129-3178**	3	LOCKNUT (M6X1-THD)	
M	23	1	**141-9784**	1	BOLT (M6X1X190-MM)	
	24	1	**1P-6522**	1	GROMMET	
	25	1	**2S-3745**	6	SCREW-TAPPING (10-16X0.5-IN)	
M	26	1	**5C-9553**	4	BOLT (M6X1X16-MM)	
	27	1	**6V-1668**	2	WASHER (6.5X29.1X3-MM THK)	
M	28	1	**6V-7728**	1	BOLT (M6X1X45-MM)	
M	29	1	**8C-8457**	1	SCREW-MACHINE (M5X0.8X14-MM)	
M	30	1	**8T-4171**	2	BOLT (M6X1X12-MM)	
	31	1	**8T-4205**	11	WASHER-HARD (7.2X14.5X2-MM THK)	
M	32	1	**9X-2044**	1	SCREW-TRUSS HEAD (M6X1X16-MM)	
E	33	1	**136-1953**		HOSE (56-CM)	
D	34	1	**8T-5372**		SEAL (0.4-M)	
D	35	1	**6V-1392**		SEAL (0.8-M)	

D-ORDER BY THE METER
E-ORDER BY THE CENTIMETER
M-METRIC PART

180-9874 HEATER GP-CAB *(contd.)* i02776562

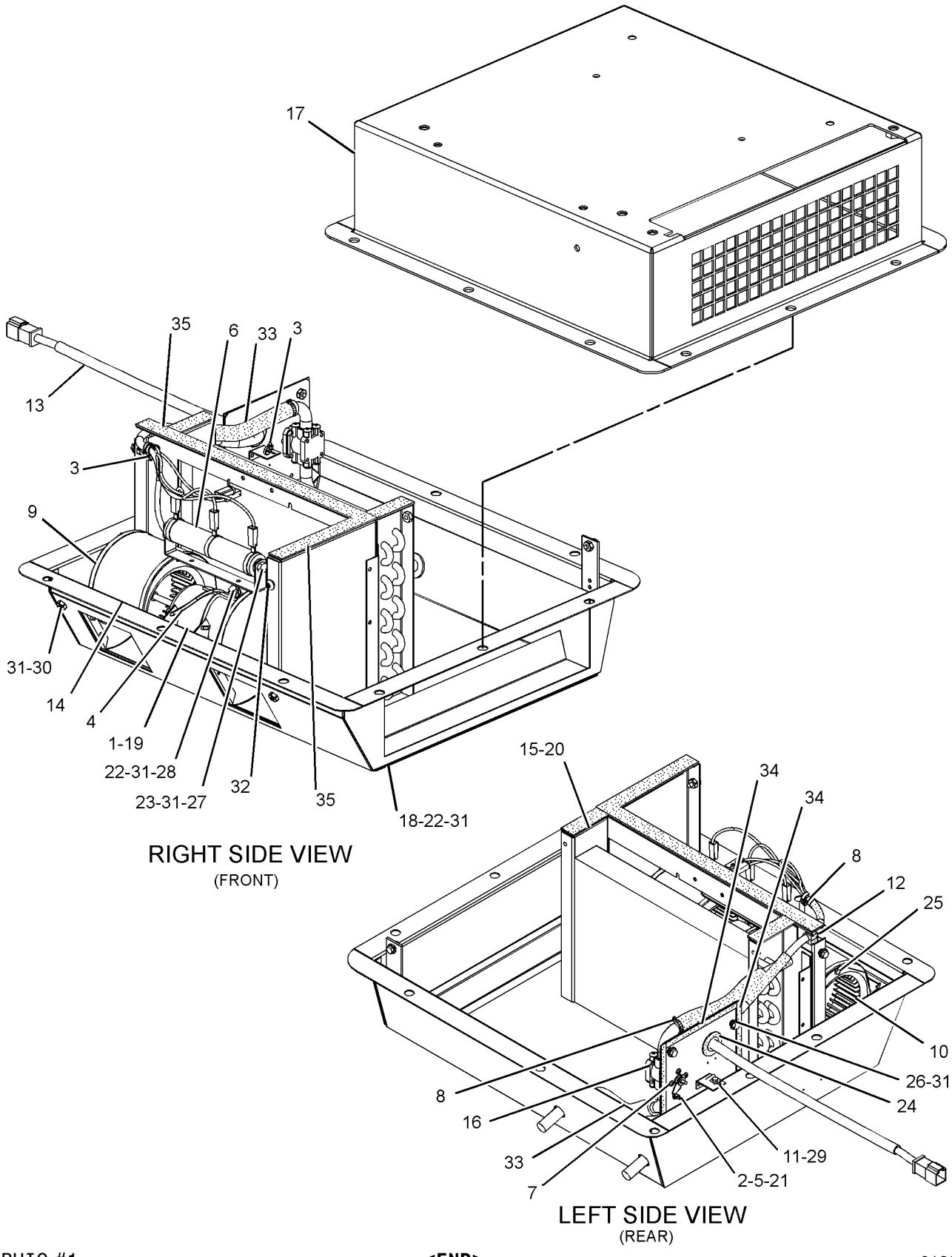

GRAPHIC #1 **<END>** g01303888

OPERATOR STATION

306-8141 HEATER GP-CAB

S/N: BZE1-UP; BZG1-UP

FIELD REPLACEMENT FOR 180-9874—PAGE 411

SMCS-7304 **i02843860**

NOTE	REF NO	GRAPHIC REF	PART NUMBER	QTY	PART NAME 1 2 3 4 5 6 (PRODUCT LEVEL)	SEE PAGE
	1	1	**3E-1841**	1	LEVER	
	2	1	**6T-6708**	2	WASHER (7X28.6X4.1-MM THK)	
	3	1	**8Y-5737**	1	CLAMP	
	4	1	**9G-1950**	1	RESISTOR	
	5	1	**9X-2185**	4	SCREW (8-15X0.44-IN)	
	6	1	**102-0341**	1	CLIP	
	7	1	**114-3140**	1	GROMMET	
	8	1	**124-8495**	1	VALVE AS-WATER	
	9	1	**151-0894**	1	COVER AS	
	10	1	**183-7528**	1	COIL AS-HEATER	
	11	1	**255-9138**	1	BRACKET AS	
M		1	**9X-2032**	8	NUT-WELD (M4X0.7-THD)	
	12	1	**275-6706**	1	MOTOR-BLOWER (24-VOLT, A/C, HEATER)	
	13	1	**309-8677**	1	CASE AS	
	14	1	**3S-2093**	1	STRAP-CABLE	
	15	1	**037-4426**	1	RETAINER	
	16	1	**124-8494**	1	GASKET	
M	17	1	**129-3178**	2	LOCKNUT (M6X1-THD)	
M	18	1	**141-9784**	1	BOLT (M6X1X190-MM)	
	19	1	**1P-6522**	1	GROMMET	
M	20	1	**5C-9553**	6	BOLT (M6X1X16-MM)	
	21	1	**6V-1668**	2	WASHER (6.5X29.1X3-MM THK)	
M	22	1	**6V-5210**	8	SCREW-MACHINE (M4X0.7X10-MM)	
M	23	1	**8C-8457**	1	SCREW-MACHINE (M5X0.8X14-MM)	
	25	1	**8T-4205**	9	WASHER-HARD (7.2X14.5X2-MM THK)	
M	26	1	**9X-2044**	1	SCREW-TRUSS HEAD (M6X1X16-MM)	
	27	1	**9X-2488**	6	CLAMP-HOSE	
D	28	1	**6V-1392**		SEAL (0.6-M)	
D	28A	1	**6V-1392**		SEAL (0.07-M EACH)	
D	29	1	**8T-5372**		SEAL (0.13-M EACH)	
D	29A	1	**8T-5372**		SEAL (0.15-M)	
E	30	1	**136-1953**		HOSE (23-CM)	
E	30A	1	**136-1953**		HOSE (17.8-CM)	
E	30B	1	**136-1953**		HOSE (15.2-CM)	
	31	1	**118-5044**	1	HARNESS AS-HEATER & AIR COND	

D-ORDER BY THE METER
E-ORDER BY THE CENTIMETER
M-METRIC PART

306-8141 HEATER GP-CAB *(contd.)* i02843860

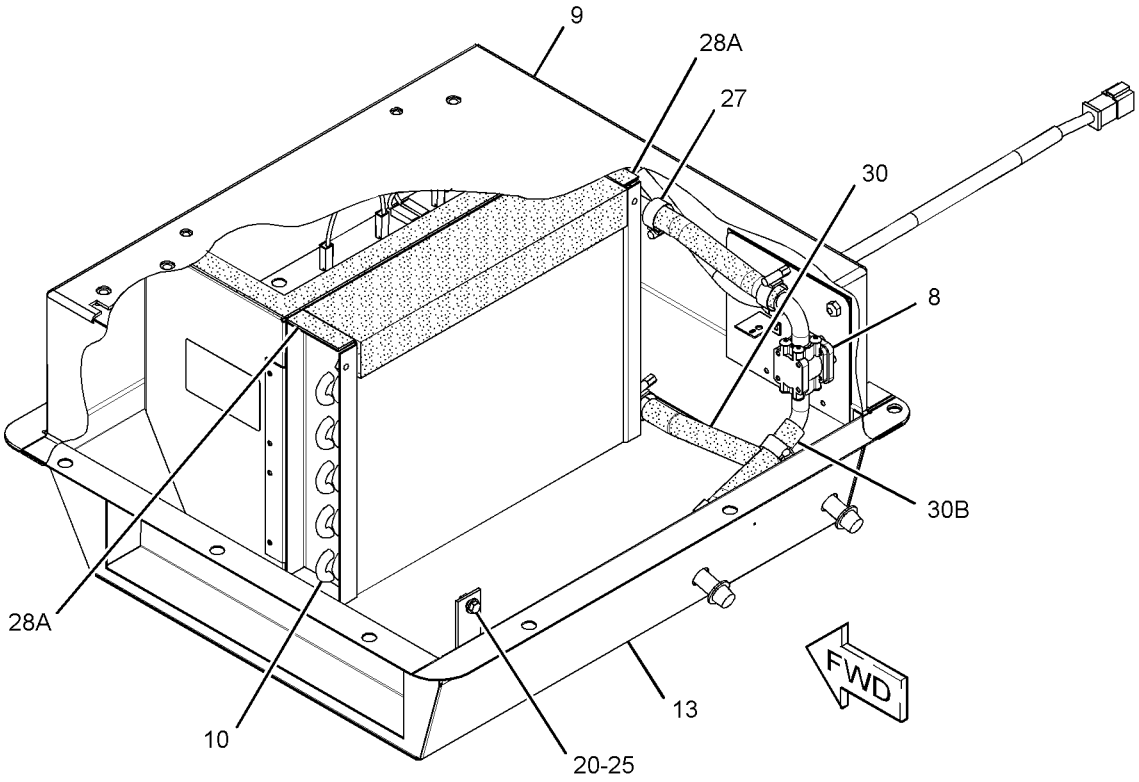

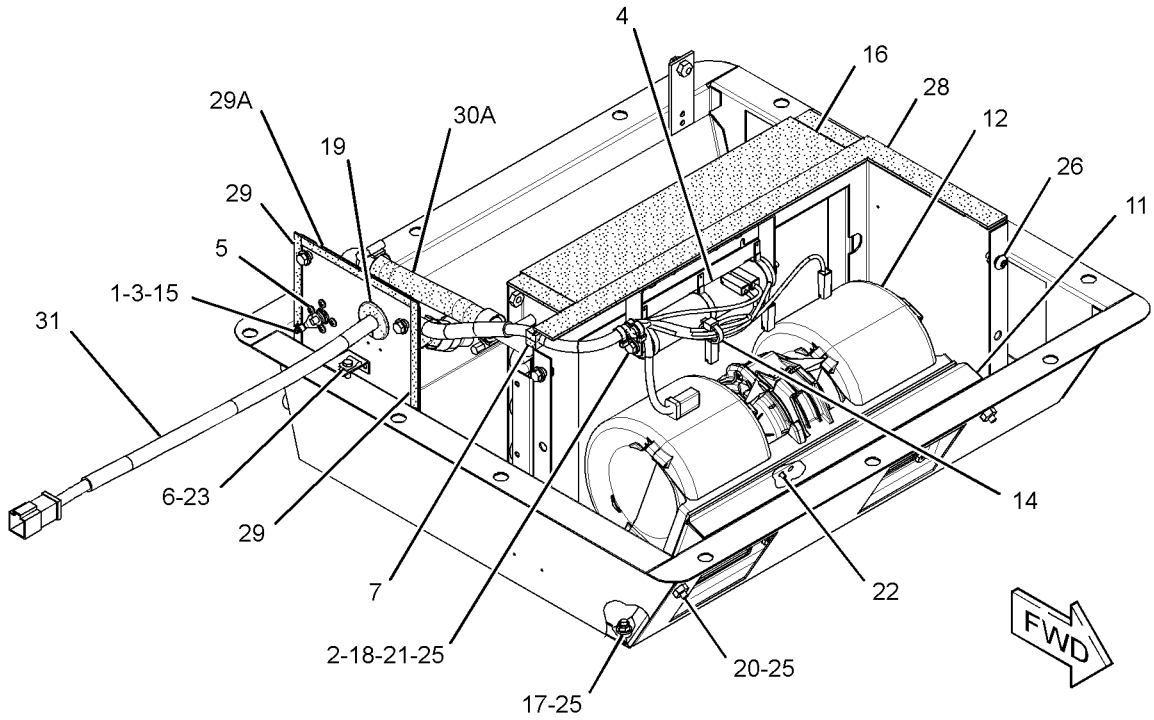

(COVER REMOVED FOR CLARITY)

GRAPHIC #1 **<END>** g01526354

OPERATOR STATION

214-4073 LINER GP-CAB

S/N: BZE1-UP; BZG1-UP
PART OF 223-4791, 254-5054, 259-4423 CAB AR
AN ATTACHMENT

SMCS-7301, 7329 **i02898381**

NOTE	REF NO	GRAPHIC REF	PART NUMBER	QTY	PART NAME 1 2 3 4 5 6 (PRODUCT LEVEL)	SEE PAGE
Y	1	1	**3E-6389**	1	LAMP GP-DOME (24-VOLT)	132
	2	1	**6V-8928**	1	HOOK-COAT	
	3	1	**8N-9033**	2	PLUG	
	4	1	**225-7729**	1	PLATE-COVER	
	5	1	**226-3444**	1	BOX (RH)	
	6	1	**226-3445**	1	BOX (LH)	
	7	1	**226-3465**	1	FOAM	
	8	1	**226-6416**	2	PLATE-COVER	
M	9	1	**5C-2890**	2	NUT (M6X1-THD)	
M	10	1	**9X-2042**	24	SCREW-TRUSS HEAD (M6X1X12-MM)	
M	11	1	**9X-2045**	1	SCREW-TRUSS HEAD (M6X1X20-MM)	
	12	1	**9X-8256**	2	WASHER (6.6X12X2-MM THK)	

M-METRIC PART
Y-SEPARATE ILLUSTRATION

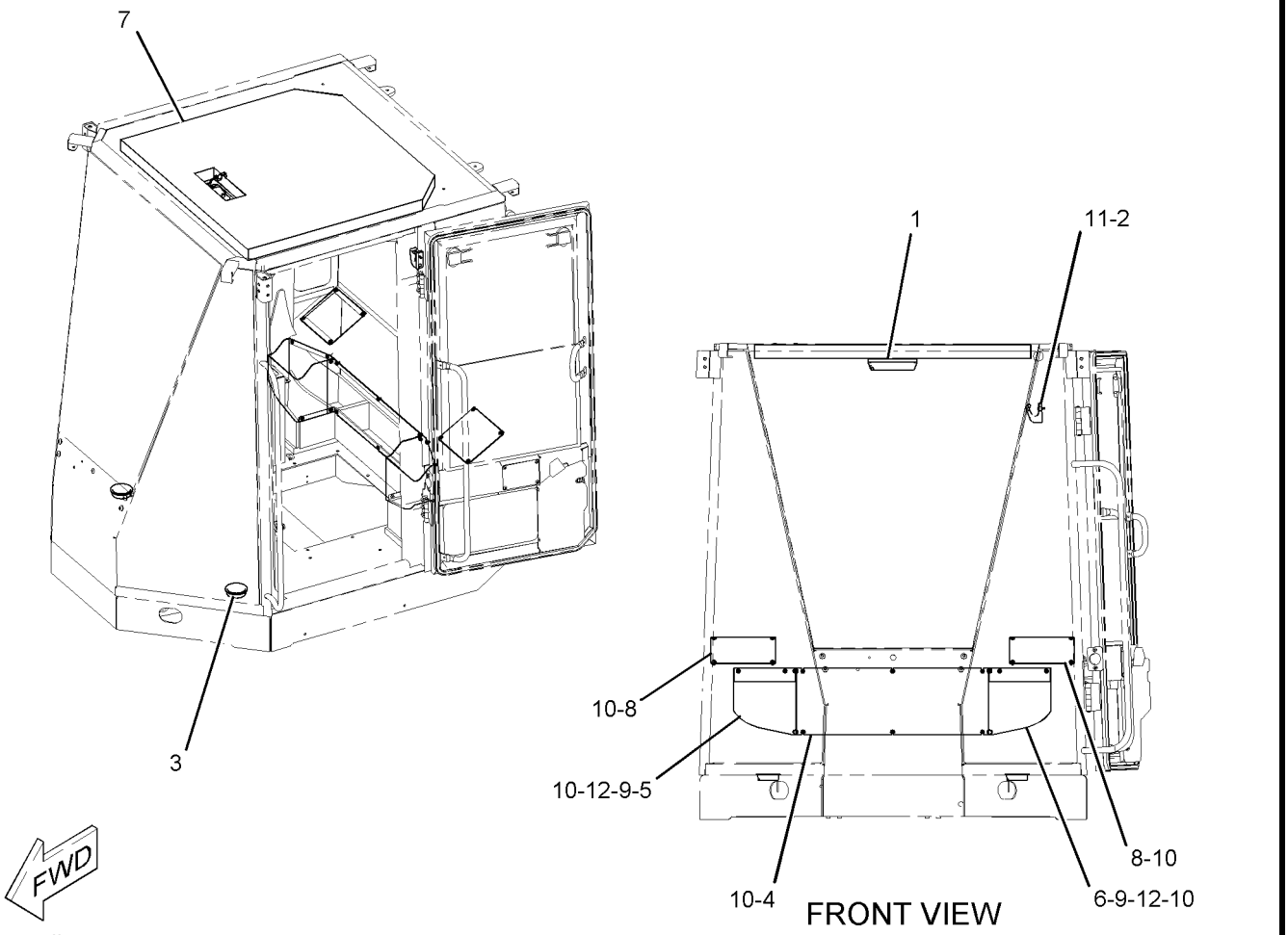

GRAPHIC #1

<END>

g01041812

OPERATOR STATION

222-8663 LINES GP-AIR CONDITIONER

S/N: BZE1-UP; BZG1-UP
PART OF 249-9323 OPERATOR AR
AN ATTACHMENT

SMCS-1808, 7320 **i02518190**

NOTE	REF NO	GRAPHIC REF	PART NUMBER	QTY	PART NAME 1 2 3 4 5 6 (PRODUCT LEVEL)	SEE PAGE
	1	1	**1G-9960**	2	CLAMP	
	2	1	**3S-2093**	1	STRAP-CABLE	
	3	1	**4P-8134**	1	CLIP (LADDER)	
	4	1	**7R-7954**	1	PLATE	
	5	1	**7V-5628**	2	PLATE	
	6	1	**7V-6089**	4	CLAMP	
	7	1	**7V-6659**	4	CLAMP-DOUBLE	
	8	1	**102-8705**	1	PLATE	
	9	1	**125-0653**	2	SPACER-SPECIAL (SPLIT)	
	10	1	**163-9324**	1	PLATE-INSTRUCTION (AIR CONDITIONER)	
	11	1	**178-3620**	10	STRAP-DUAL CLAMP	
Y	12	1	*186-6190*	1	ACCUMULATOR GP-REFRIGERANT (WITH DESICCANT)	365
M	13	1	**196-4205**	2	BOLT-STACKING (M6X1X44-MM)	
	14	1	**209-0617**	1	PLATE AS	
I	15	1	**223-3945**	1	HOSE AS	
I	16	1	**223-6459**	1	HOSE AS	
I	17	1	**223-6460**	1	HOSE AS	
I	18	1	**227-9503**	1	HOSE AS	
	19	1	**6V-4356**	1	CLIP (SLOT)	
	20	1	**6V-4357**	1	CLIP (TAB)	
	21	1	**7K-1181**	3	STRAP-CABLE	
M	22	1	**7X-0818**	1	BOLT (M8X1.25X45-MM)	
	23	1	**7X-7729**	1	WASHER (11X25X3-MM THK)	
M	24	1	**8C-8451**	4	BOLT (M6X1X40-MM)	
M	25	1	**8T-3647**	1	BOLT (M8X1.25X80-MM)	
M	26	1	**8T-4196**	1	BOLT (M10X1.5X35-MM)	
	27	1	**8T-4205**	2	WASHER-HARD (7.2X14.5X2-MM THK)	
	28	1	**9X-7380**	1	SEAL-O-RING	
	29	1	**9X-7381**	3	SEAL-O-RING	
	30	1	**9X-7382**	2	SEAL-O-RING	
	31	1	**9X-7383**	1	SEAL-O-RING	
G	32	1	**160-2247**		SLEEVE-ABRASION (28-IN)	

G-ORDER BY THE INCH
I-REFER TO HYDRAULIC INFORMATION SYSTEM
M-METRIC PART
Y-SEPARATE ILLUSTRATION

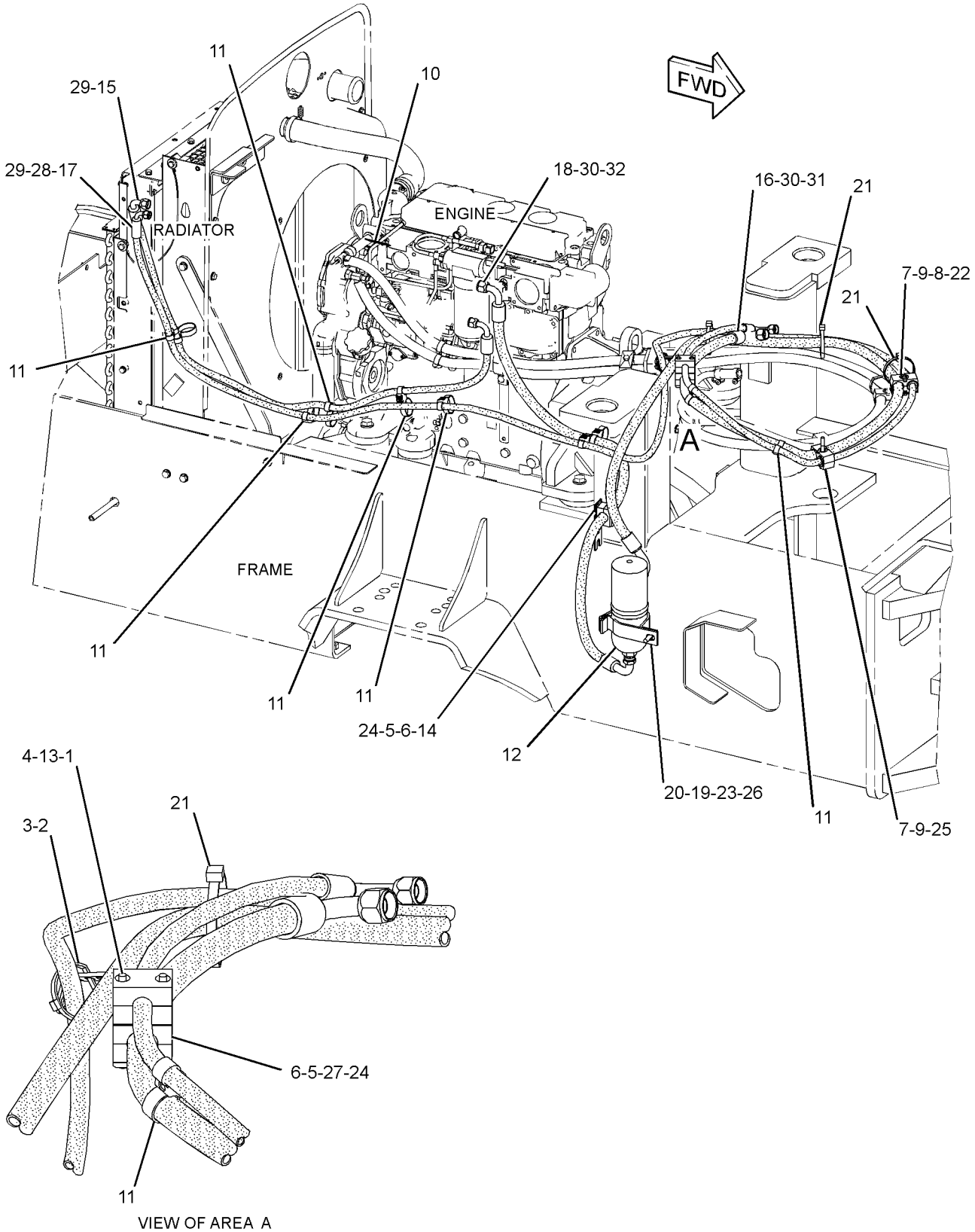

GRAPHIC #1 **<END>** g01306198

OPERATOR STATION

223-5824 LINES GP-CAB HEATER

S/N: BZE1-UP; BZG1-UP
PART OF 249-9323, 249-9324 OPERATOR AR
AN ATTACHMENT

SMCS-7304 **i02458858**

NOTE	REF NO	GRAPHIC REF	PART NUMBER	QTY	PART NAME 1 2 3 4 5 6 (PRODUCT LEVEL)	SEE PAGE
	1	1	**1V-6585**	1	VALVE-SHUTOFF (COOLANT)	
	2	1	**4V-0612**	3	PLATE	
	3	1	**7V-6659**	6	CLAMP-DOUBLE	
	4	1	**8F-8151**	1	VALVE-SHUTOFF (COOLANT)	
	5	1	**8T-0154**	2	CLAMP-HOSE	
	6	1	**9X-2488**	6	CLAMP-HOSE	
	7	1	**109-0741**	1	CONNECTOR-TUBE	
	8	1	**130-7287**	1	NIPPLE-PIPE	
	9	1	**155-6616**	1	BRACKET	
	10	1	**155-6741**	1	CONNECTOR-TUBE	
	11	1	**177-2215**	2	STRAP-DUAL CLAMP	
	12	1	**230-9577**	1	BRACKET	
	13	1	**1H-1360**	1	COUPLING	
	14	1	**3B-7255**	1	BUSHING-REDUCING	
M	15	1	**5C-7261**	1	NUT (M8X1.25-THD)	
	16	1	**5P-6994**	1	CLIP	
	17	1	**7K-1181**	2	STRAP-CABLE	
M	18	1	**7X-0818**	2	BOLT (M8X1.25X45-MM)	
	19	1	**8T-4121**	1	WASHER-HARD (11X21X2.5-MM THK)	
M	20	1	**8T-4133**	1	NUT (M10X1.5-THD)	
M	21	1	**8T-4136**	1	BOLT (M10X1.5X25-MM)	
M	22	1	**8T-4189**	2	BOLT (M8X1.25X20-MM)	
	23	1	**8T-4224**	3	WASHER-HARD (8.8X16X2-MM THK)	
M	24	1	**8T-6869**	1	BOLT (M8X1.25X60-MM)	
D	25	1	**5P-0767**		HOSE (228-CM)	
	26	1	**1L-2279**	1	ELBOW	
E	27	1	**160-2247**		SLEEVE-ABRASION (.07-IN)	
	28	1	**242-9393**	1	PLATE	
	29	1	**242-9392**	1	BRACKET	
	30	1	**9X-8256**	2	WASHER (6.6X12X2-MM THK)	
M	31	1	**9X-2045**	2	SCREW-TRUSS HEAD (M6X1X20-MM)	
M	32	1	**7X-2534**	2	BOLT (M6X1X50-MM)	
M	33	1	**5C-2890**	2	NUT (M6X1-THD)	
D	34	1	**5P-0767**		HOSE (227-CM)	
E	35	1	**5P-0767**		HOSE (7-IN EACH)	

D-ORDER BY THE METER
E-ORDER BY THE CENTIMETER
M-METRIC PART

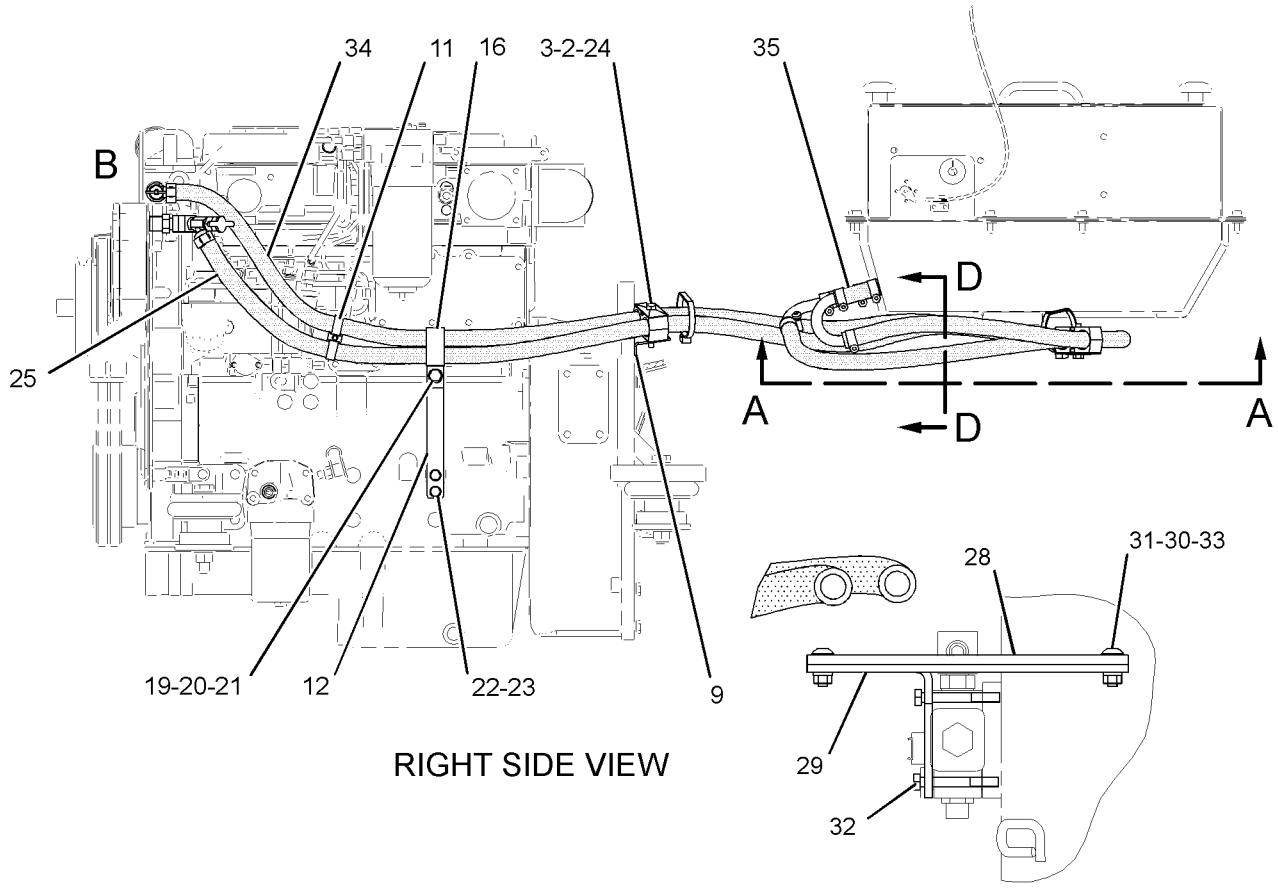

RIGHT SIDE VIEW

SECTION C-C

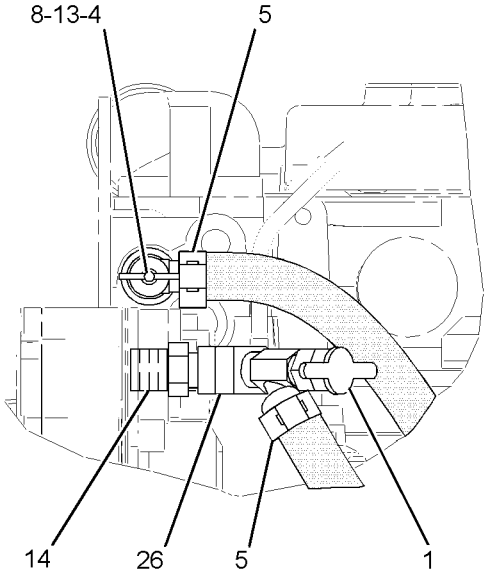

VIEW OF AREA B

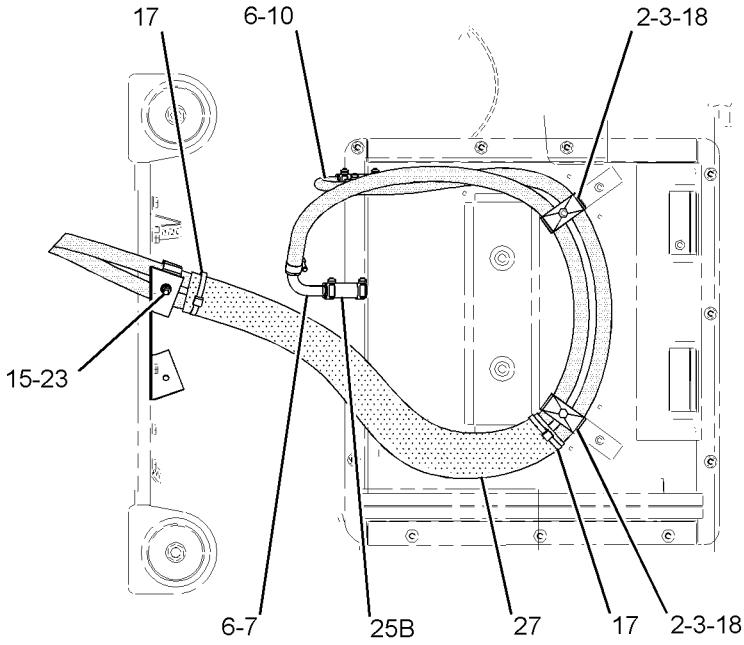

VIEW A-A

GRAPHIC #1 **<END>** g01313568

OPERATOR STATION

223-4281 LINKAGE GP

S/N: BZE1-UP; BZG1-UP

PART OF 218-4281 CONTROL GP-DIRECTION & SPEED

SMCS-3065 **i02138010**

NOTE	REF NO	GRAPHIC REF	PART NUMBER	QTY	PART NAME 1 2 3 4 5 6 (PRODUCT LEVEL)	SEE PAGE
	1	1	**7X-7915**	1	ROD END	
	2	1	**124-4592**	1	ROD END	
	3	1	**230-4665**	1	ROD	
M	4	1	**125-0380**	1	NUT-HEX (M8X1.25-THD, LH)	
M	5	1	**5C-7261**	1	NUT (M8X1.25-THD)	

M-METRIC PART

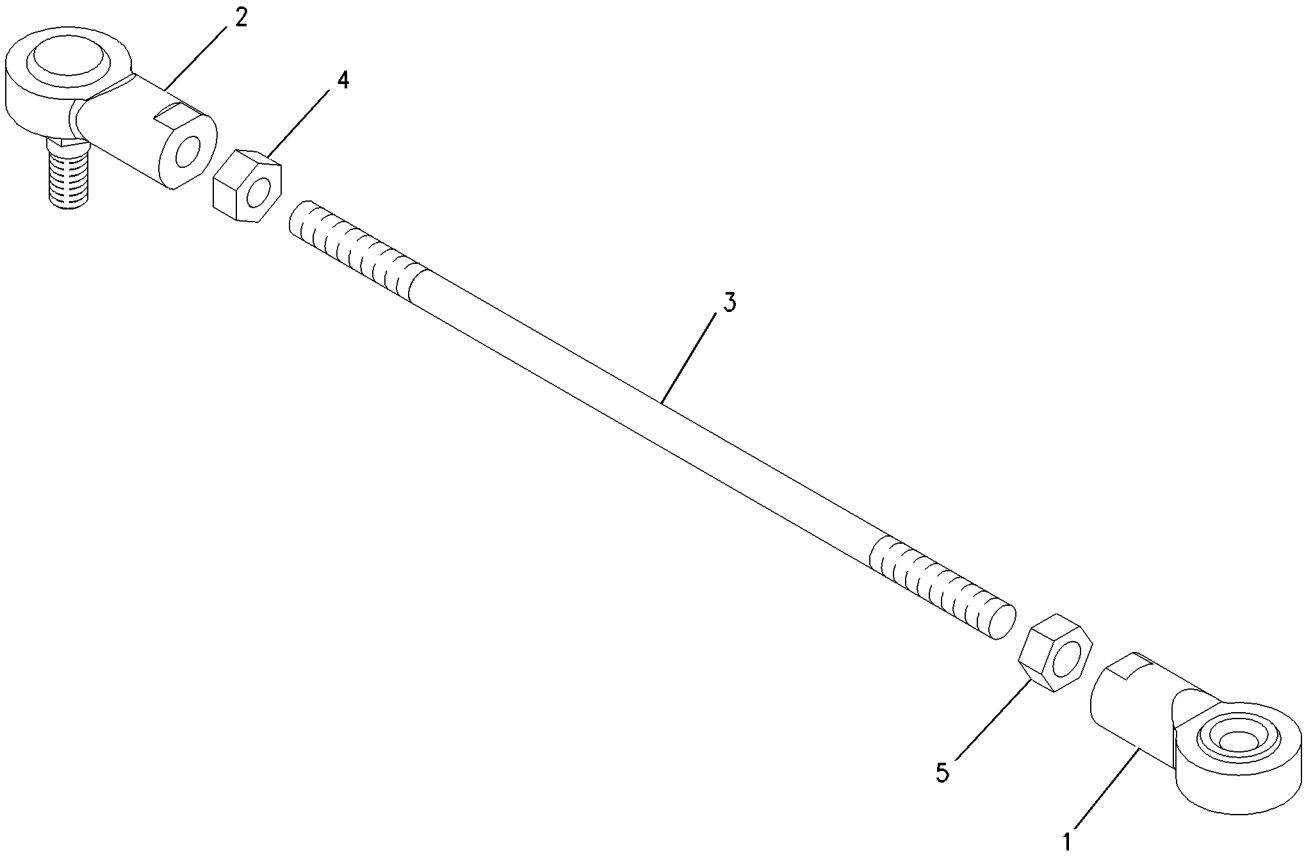

GRAPHIC #1 **<END>** g01000073

OPERATOR STATION

107-4643 MIRROR GP-REAR VIEW—INTERIOR

S/N: BZE1-UP; BZG1-UP
AN ATTACHMENT

SMCS-7319 **i02857416**

NOTE	REF NO	GRAPHIC REF	PART NUMBER	QTY	PART NAME 1 2 3 4 5 6 (PRODUCT LEVEL)	SEE PAGE
	1	1	**5P-6872**	2	MIRROR AS (INTERIOR, FRONT)	
	2	1	**114-3956**	2	PLATE	
M	3	1	**5C-9553**	4	BOLT (M6X1X16-MM)	
	4	1	**8T-4205**	4	WASHER-HARD (7.2X14.5X2-MM THK)	
	5	1	**3K-6060**	2	LOCKNUT (3/8-16-THD)	
	6	1	**235-4546**	2	NUT-JAM (3/8-16-THD)	
F			**9X-8256**	4	WASHER (6.6X12X2-MM THK)	
FM			**5C-2890**	2	NUT (M6X1-THD)	
FM			**5C-9553**	2	BOLT (M6X1X16-MM)	

F-NOT SHOWN
M-METRIC PART

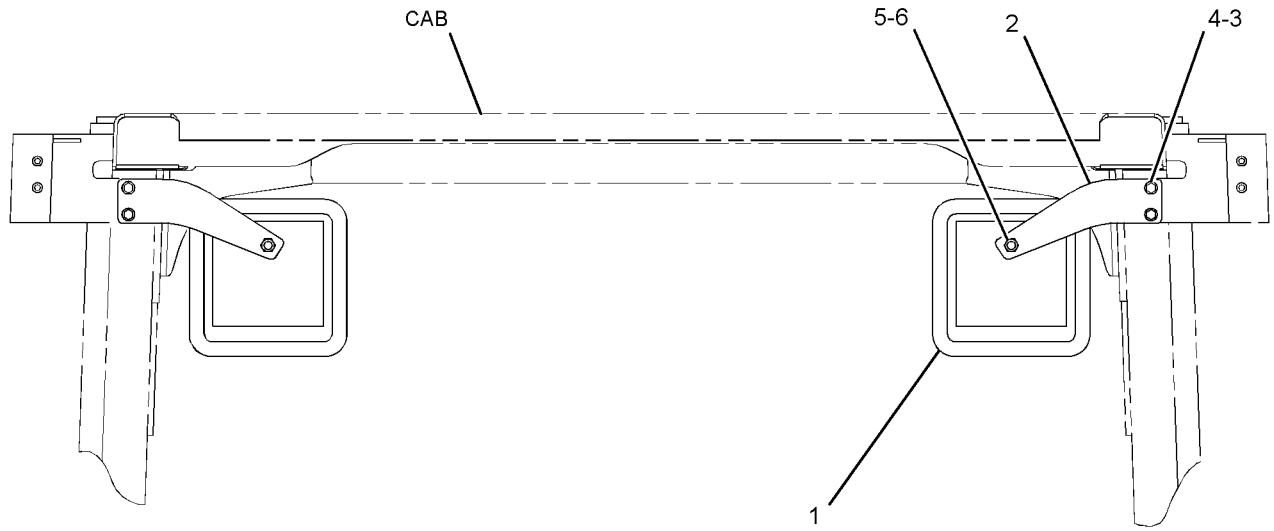

FRONT VIEW

GRAPHIC #1 **<END>** g01427257

OPERATOR STATION

186-1709 MIRROR GP-REAR VIEW

S/N: BZE1-UP; BZG1-UP

PART OF 236-1518 OPERATOR AR

SMCS-7319 **i01404492**

NOTE	REF NO	GRAPHIC REF	PART NUMBER	QTY	PART NAME 1 2 3 4 5 6 (PRODUCT LEVEL)	SEE PAGE
	1	1	**5K-9179**	1	BOLT-ROUND HEAD (3/8-16X11-IN)	
	2	1	**5P-6874**	1	MIRROR	
	3	1	**9P-9388**	1	KNOB	
	4	1	**186-0898**	1	BRACKET	
	5	1	**7X-7729**	4	WASHER (11X25X3-MM THK)	
M	6	1	**8T-4133**	2	NUT (M10X1.5-THD)	
M	7	1	**8T-4195**	2	BOLT (M10X1.5X30-MM)	

M-METRIC PART

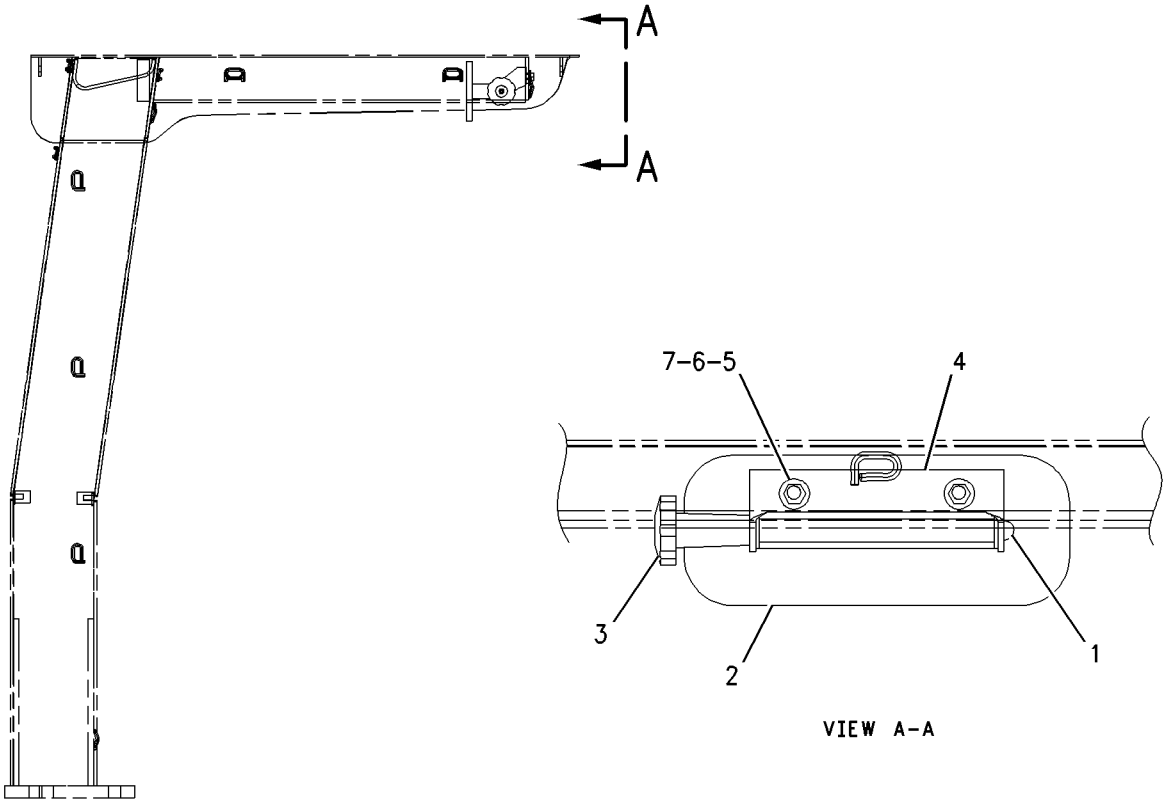

RIGHT SIDE VIEW

GRAPHIC #1 **<END>** g00672669

203-3639 MIRROR GP-REAR VIEW–CANOPY

S/N: BZE1-UP; BZG1-UP
PART OF 236-6627 OPERATOR AR
AN ATTACHMENT

SMCS-7319 **i01972588**

NOTE	REF NO	GRAPHIC REF	PART NUMBER	QTY	PART NAME 1 2 3 4 5 6 (PRODUCT LEVEL)	SEE PAGE
	1	1	**5K-9179**	1	BOLT-ROUND HEAD (3/8-16X11-IN)	
	2	1	**5P-6874**	1	MIRROR	
	3	1	**9P-9388**	1	KNOB	
	4	1	**186-0898**	1	BRACKET	
	5	1	**203-0067**	1	PLATE	
	6	1	**7X-7729**	8	WASHER (11X25X3-MM THK)	
M	7	1	**8T-4133**	4	NUT (M10X1.5-THD)	
M	8	1	**8T-4136**	2	BOLT (M10X1.5X25-MM)	
M	9	1	**8T-4195**	2	BOLT (M10X1.5X30-MM)	

M-METRIC PART

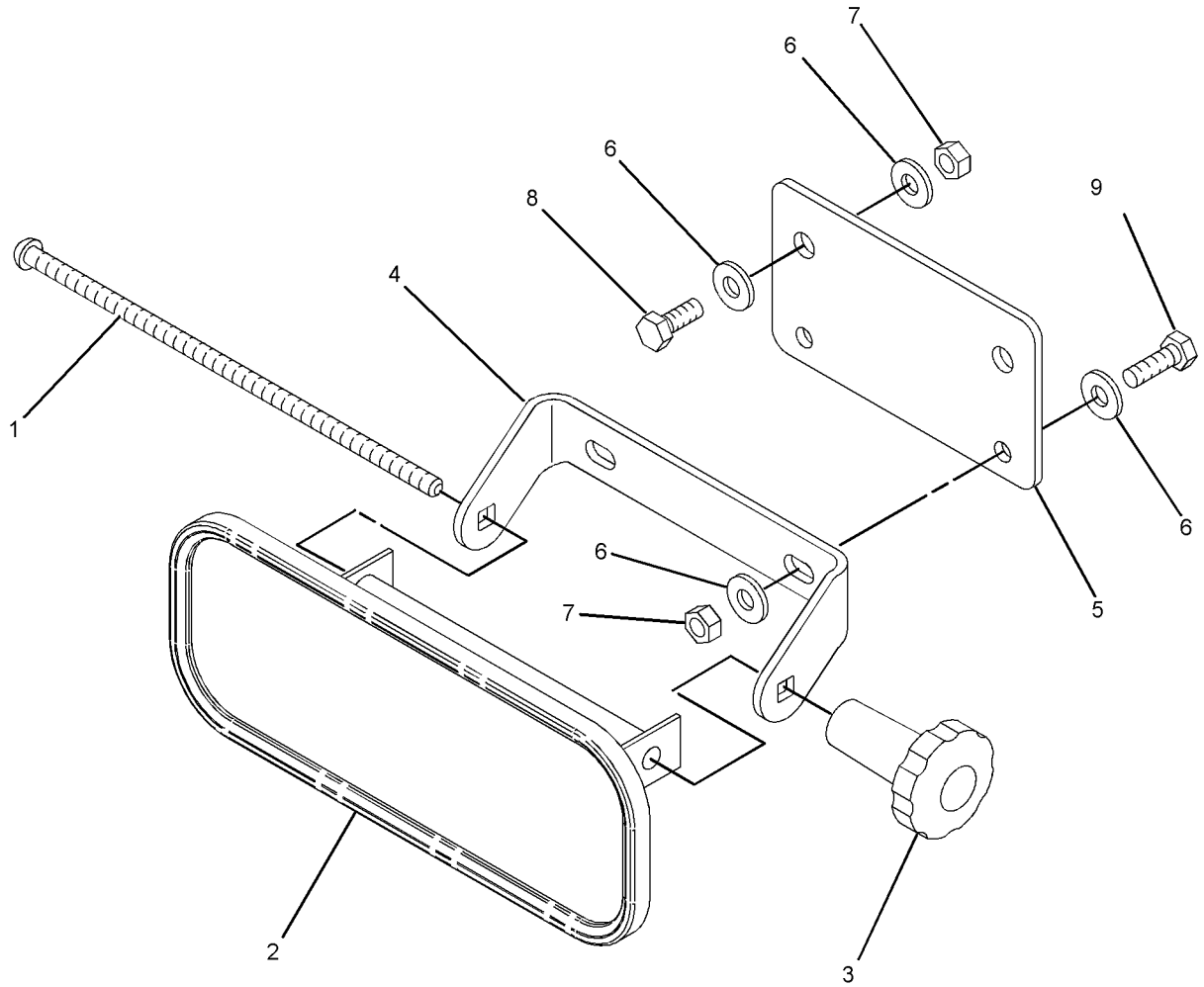

GRAPHIC #1 **<END>** g01042067

227-5690 MIRROR GP-REAR VIEW–CAB

S/N: BZE1-UP; BZG1-UP
PART OF 249-9323, 249-9324 OPERATOR AR
AN ATTACHMENT

SMCS-7319 **i01972559**

NOTE	REF NO	GRAPHIC REF	PART NUMBER	QTY	PART NAME 1 2 3 4 5 6 (PRODUCT LEVEL)	SEE PAGE
	1	1	**132-9982**	2	ARM-MIRROR	
	2	1	**132-9983**	2	MIRROR-CONVEX	
	3	1	**230-7470**	2	PLATE	
M	4	1	**7X-2536**	4	BOLT (M8X1.25X14MM)	
M	5	1	**8T-4189**	4	BOLT (M8X1.25X20MM)	
	6	1	**8T-4224**	8	WASHER-HARD (8.8X16X2MM THK)	

M-METRIC PART

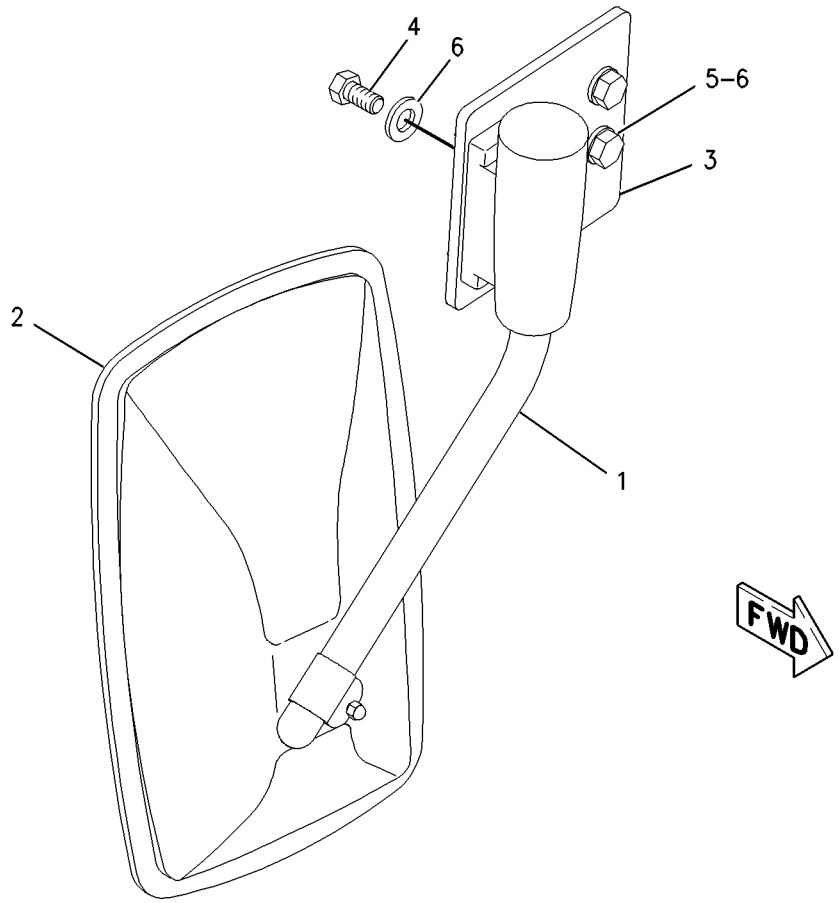

GRAPHIC #1 **<END>** g00964622

OPERATOR STATION

135-2929 MODULE GP-WARNING INDICATOR

S/N: BZE1-UP; BZG1-UP
PART OF 224-1149, 253-9940 PANEL GP-INSTRUMENT
ALSO AN ATTACHMENT

SMCS-7407 **i02139059**

NOTE	REF NO	GRAPHIC REF	PART NUMBER	QTY	PART NAME 1 2 3 4 5 6 (PRODUCT LEVEL)	SEE PAGE
	1	1	**110-2079**	4	LAMP (24-VOLT) (WARNING LAMP)	

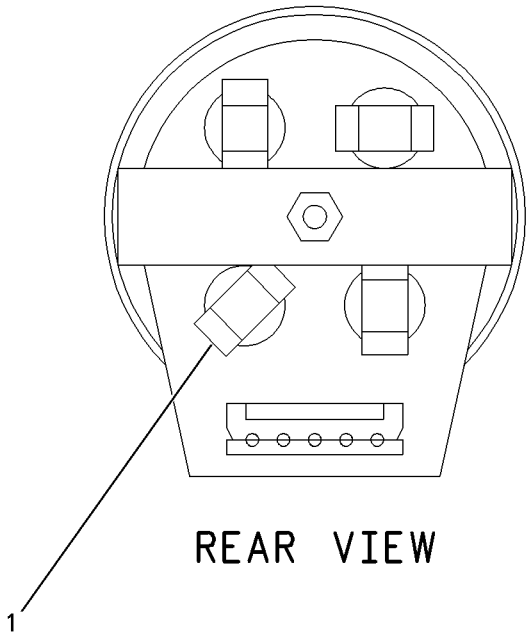

GRAPHIC #1 **<END>** g00709016

155-5783 MOTOR GP-WINDOW WIPER–FRONT

S/N: BZE1-UP; BZG1-UP
24 VOLT
PART OF 223-4793 WIPER & WASHER GP-WINDOW
AN ATTACHMENT

SMCS-7305 **i02092232**

NOTE	REF NO	GRAPHIC REF	PART NUMBER	QTY	PART NAME 1 2 3 4 5 6 (PRODUCT LEVEL)	SEE PAGE
	1	1	**102-8805**	1	KIT-RECEPTACLE (6-PIN)	
					(INCLUDES RECEPTACLE AS & WEDGE)	
	2	1	**8T-8737**	1	PLUG-SEAL	
	3	1	**186-3735**	5	PIN-CONNECTOR (16-GA TO 18-GA)	

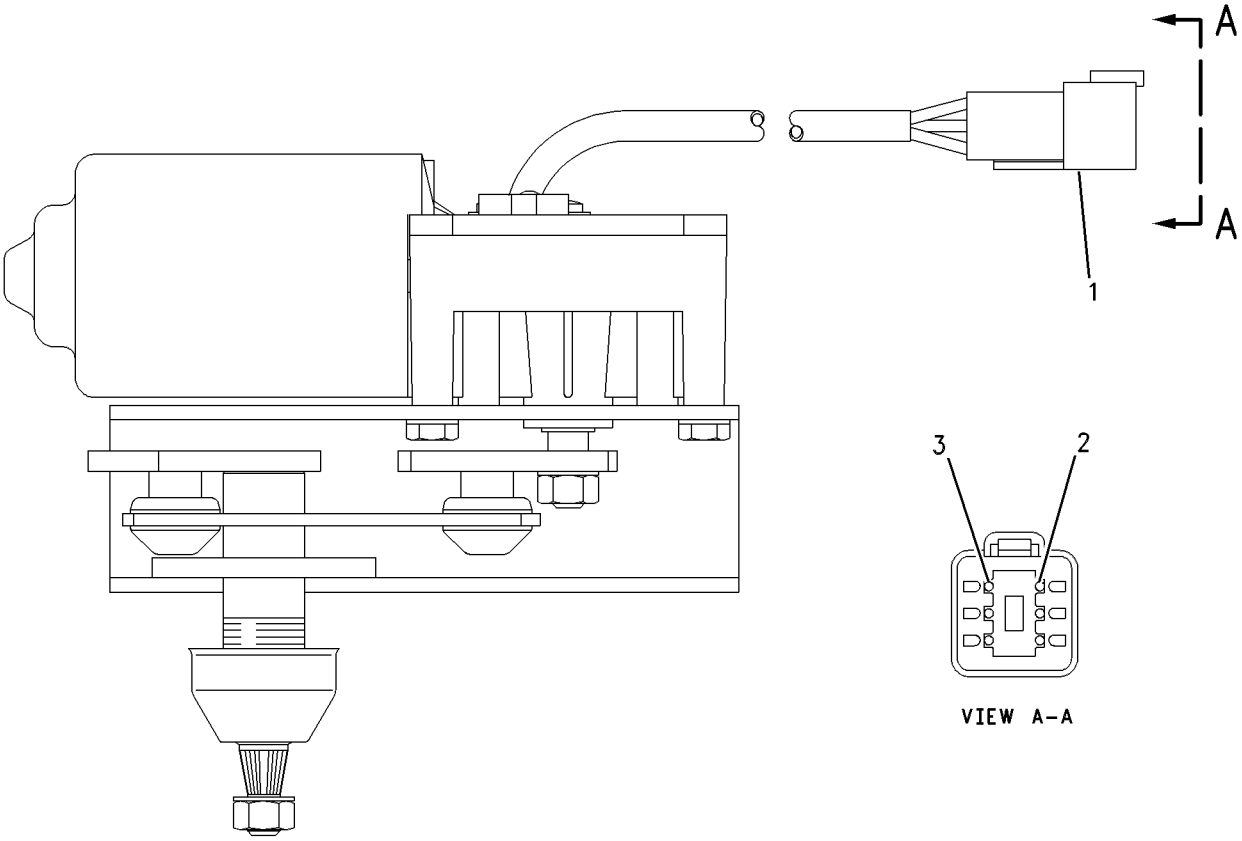

VIEW A–A

GRAPHIC #1 **<END>** g00615262

239-4009 MOTOR GP-WINDOW WIPER–24-VOLT

S/N: BZE1-UP; BZG1-UP
REAR
PART OF 223-4793 WIPER & WASHER GP-WINDOW
AN ATTACHMENT

SMCS-7305 **i02855487**

NOTE	REF NO	GRAPHIC REF	PART NUMBER	QTY	PART NAME 1 2 3 4 5 6 (PRODUCT LEVEL)	SEE PAGE
	1	1	**208-8760**	1	COVER	
	2	1	**219-7202**	1	PLATE	
	3	1	**102-8805**	1	KIT-RECEPTACLE (6-PIN)	
					(INCLUDES RECEPTACLE AS & WEDGE)	
	4	1	**8T-8737**	1	PLUG-SEAL	
	5	1	**186-3735**	5	PIN-CONNECTOR (16-GA TO 18-GA)	
M	6	1	**5C-7261**	1	NUT (M8X1.25-THD)	
	7	1	**3F-9556**	1	LOCKWASHER	
	8	1	**194-3710**	1	CAP-WIPER	

M-METRIC PART

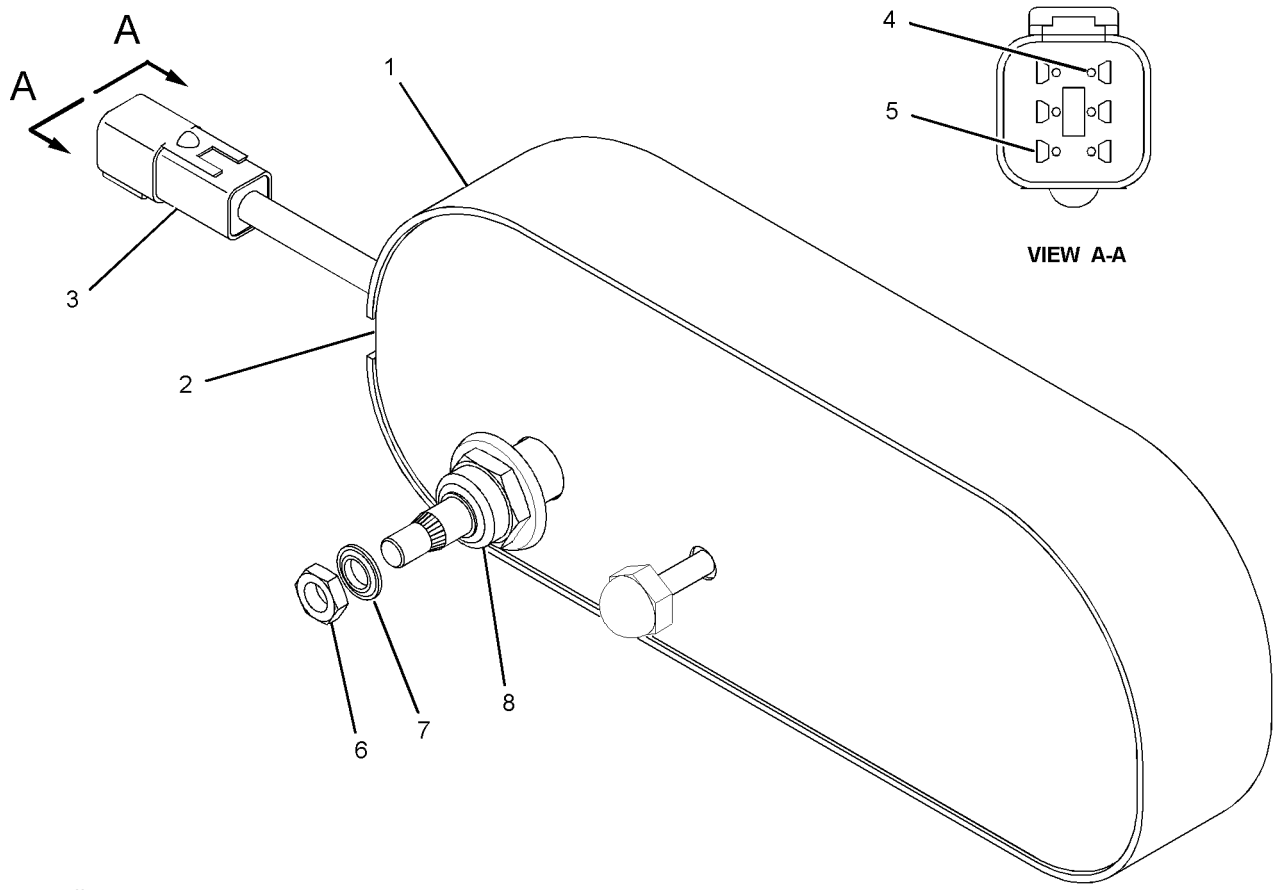

GRAPHIC #1 **<END>** g01085367

OPERATOR STATION

143-5926 MOUNTING GP-CAB

S/N: BZE1-UP; BZG1-UP
PART OF 249-9323, 249-9324 OPERATOR AR
AN ATTACHMENT

SMCS-7266, 7301 **i01356289**

NOTE	REF NO	GRAPHIC REF	PART NUMBER	QTY	PART NAME 1 2 3 4 5 6 (PRODUCT LEVEL)	SEE PAGE
	1	1	**8E-0849**	4	SLEEVE-CAB	
	2	1	**9U-0512**	2	WASHER (32X144X12-MM THK)	
	3	1	**9W-7388**	2	WASHER (26X144X12-MM THK)	
	4	1	**159-7142**	2	WASHER (70.75X143X10-MM THK)	
M	5	1	**7X-2567**	2	BOLT (M24X3X160-MM)	
M	6	1	**7X-2586**	2	BOLT (M30X35X180-MM)	
M	7	1	**8C-8722**	2	NUT (M30X3.5-THD)	
M	8	1	**8T-4001**	2	NUT (M24X3-THD)	
	9	1	**8T-4167**	4	WASHER-HARD (26X44X4-MM THK)	
	10	1	**9W-9941**	4	MOUNT AS	
	11	1	**9X-8258**	4	WASHER (33X56X6-MM THK)	
	12	1	**054-8974**	4	PIN	

M-METRIC PART

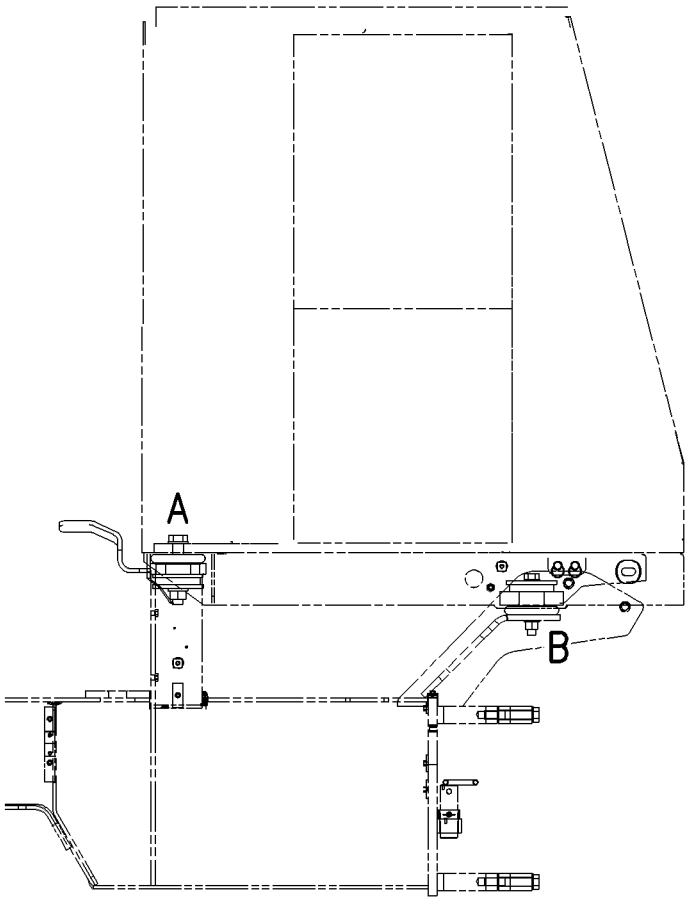

RIGHT SIDE VIEW

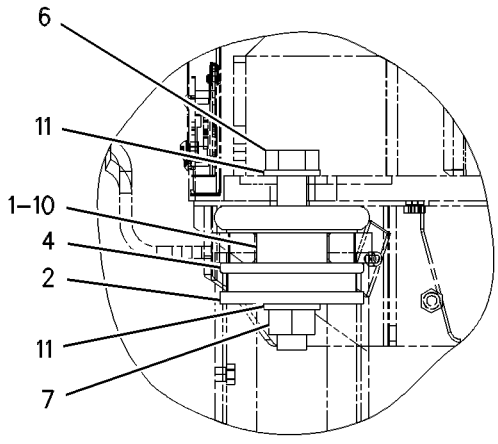

VIEW OF AREA A

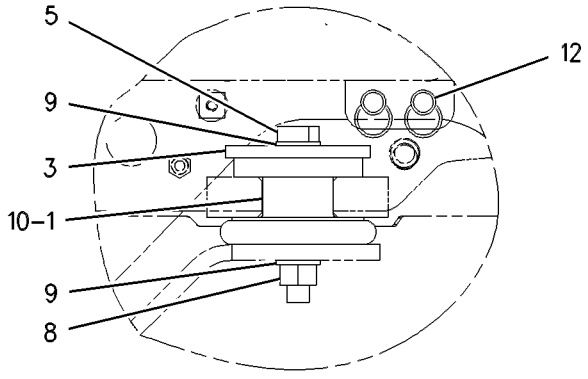

VIEW OF AREA B

GRAPHIC #1 **<END>** g00615119

OPERATOR STATION

259-1188 MOUNTING GP-CAB

S/N: BZE1-UP; BZG1-UP
PART OF 249-9323, 249-9324 OPERATOR AR
AN ATTACHMENT

SMCS-7266, 7301 **i02251786**

NOTE	REF NO	GRAPHIC REF	PART NUMBER	QTY	PART NAME 1 2 3 4 5 6 (PRODUCT LEVEL)	SEE PAGE
	1	1	**9U-0512**	2	WASHER (32X144X12-MM THK)	
	2	1	**9W-7388**	2	WASHER (26X144X12-MM THK)	
	3	1	**054-8974**	4	PIN	
	4	1	**159-7142**	2	WASHER (70.75X143X10-MM THK)	
	5	1	**248-4046**	8	MOUNT	
M	6	1	**8C-8722**	2	NUT (M30X3.5-THD)	
M	7	1	**7X-2465**	2	BOLT (M24X3X180-MM)	
M	8	1	**8T-4001**	2	NUT (M24X3-THD)	
	9	1	**8T-4167**	4	WASHER-HARD (26X44X4-MM THK)	
M	10	1	**9X-6385**	2	BOLT (M30X3.5X200-MM)	
	11	1	**9X-8258**	4	WASHER (33X56X6-MM THK)	

M-METRIC PART

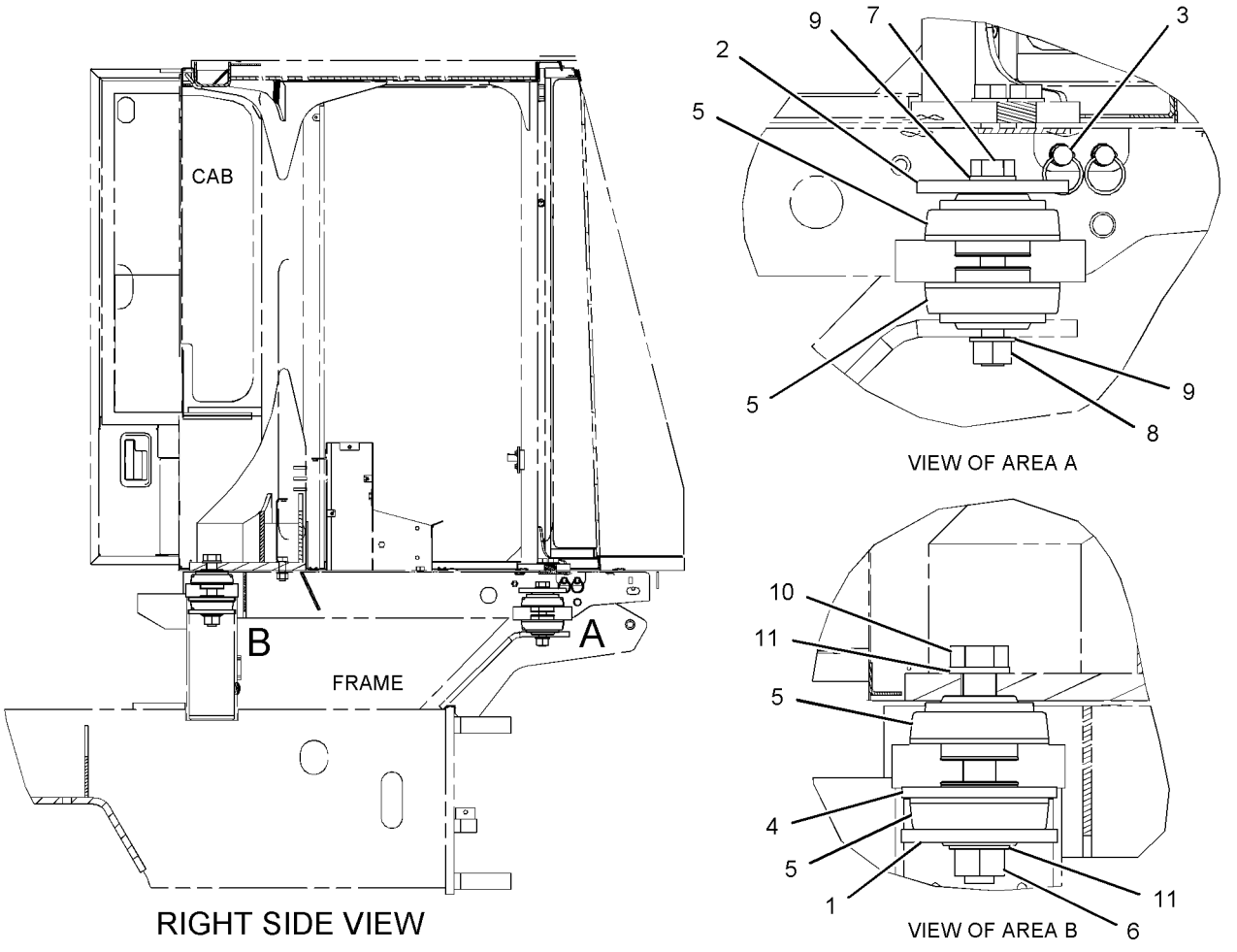

GRAPHIC #1 **<END>** g01141794

OPERATOR STATION

236-1517 OPERATOR AR—OPEN PLATFORM

S/N: BZE1-UP; BZG1-UP
AN ATTACHMENT

SMCS-7301 **i02144107**

NOTE	PART NUMBER	QTY	PART NAME 1 2 3 4 5 6 (PRODUCT LEVEL)	SEE PAGE
Y	*153-5030*	1	FAN GP-SUCTION	76
Y	*210-5550*	1	GUARD GP-VANDALISM	409
Y	*201-5160*	1	HANDRAIL GP	239
Y	*234-9980*	1	LIGHTING GP-FLOOD	142
Y	*224-1152*	1	PANEL GP-INSTRUMENT (SIDE CONSOLE)	443
Y	*224-1149*	1	PANEL GP-INSTRUMENT (FRONT CONSOLE)	434
Y	*249-2456*	1	PLATFORM GP-OPERATOR	459
Y-SEPARATE ILLUSTRATION				

<END>

236-1518 OPERATOR AR—ROPS

S/N: BZE1-UP; BZG1-UP

SMCS-7301 **i02148680**

NOTE	PART NUMBER	QTY	PART NAME 1 2 3 4 5 6 (PRODUCT LEVEL)	SEE PAGE
Y	*153-5030*	1	FAN GP-SUCTION	76
Y	*210-5550*	1	GUARD GP-VANDALISM	409
Y	*201-5160*	1	HANDRAIL GP	239
Y	*204-1321*	1	LIGHTING GP-FLOOD (OPEN ROPS)	139
Y	*186-1709*	1	MIRROR GP-REAR VIEW (ROPS)	422
Y	*224-1152*	1	PANEL GP-INSTRUMENT (SIDE CONSOLE)	443
Y	**224-1149**	1	PANEL GP-INSTRUMENT (FRONT CONSOLE)	434
Y	*249-2456*	1	PLATFORM GP-OPERATOR	459
Y	*202-0679*	1	ROPS GP	462
Y-SEPARATE ILLUSTRATION				

<END>

236-6627 OPERATOR AR—WITH SOFT CANOPY

S/N: BZE1-UP; BZG1-UP
AN ATTACHMENT

SMCS-7301 **i02293872**

NOTE	PART NUMBER	QTY	PART NAME 1 2 3 4 5 6 (PRODUCT LEVEL)	SEE PAGE
Y	*236-6628*	1	CANOPY GP (NON ROPS/FOPS)	383
Y	*153-5030*	1	FAN GP-SUCTION	76
Y	*210-5550*	1	GUARD GP-VANDALISM	409
Y	*201-5160*	1	HANDRAIL GP	239
Y	*204-1321*	1	LIGHTING GP-FLOOD (OPEN ROPS)	139
Y	**203-3639**	1	MIRROR GP-REAR VIEW	423
Y	**224-1149**	1	PANEL GP-INSTRUMENT (FRONT CONSOLE)	434
Y	*224-1152*	1	PANEL GP-INSTRUMENT (SIDE CONSOLE)	443
Y	*249-2456*	1	PLATFORM GP-OPERATOR	459
Y-SEPARATE ILLUSTRATION				

<END>

OPERATOR STATION

249-9323 OPERATOR AR—CAB WITH AIR CONDITIONER

S/N: BZE1-UP; BZG1-UP

AN ATTACHMENT

SMCS-7301 **i02883035**

NOTE	PART NUMBER	QTY	PART NAME 1 2 3 4 5 6 (PRODUCT LEVEL)	SEE PAGE
Y	*226-8346*	1	AIR CONDITIONER GP (WITH CONTROL)	370
			—OR—	
Y	*240-4683*	1	AIR CONDITIONER GP (WITH CONTROL)	372
Y	*223-4791*	1	CAB AR	376
			—OR—	
Y	*254-5054*	1	CAB AR	376
			—OR—	
Y	*259-4423*	1	CAB AR	376
Y	*222-3594*	1	COMPRESSOR GP-REFRIGERANT	385
Y	*220-0205*	1	CONDENSER & MTG GP-REFRIGERANT	387
Y	*178-3836*	1	CYLINDER & MTG GP-TILT (CAB)	395
Y	*153-4982*	1	FAN GP-SUCTION (WITH AIR CONDITIONER)	74
Y	*201-0183*	1	FILM GP (STRIPE)	485
Y	*240-4607*	1	FILTER GP-CAB AIR	405
Y	*249-9301*	1	FLOOR MAT GP	406
Y	*222-8663*	1	LINES GP-AIR CONDITIONER	416
Y	*223-5824*	1	LINES GP-CAB HEATER	418
Y	*227-5690*	1	MIRROR GP-REAR VIEW (CAB)	424
Y	*143-5926*	1	MOUNTING GP-CAB	428
			—OR—	
Y	*259-1188*	1	MOUNTING GP-CAB	430
Y	*243-5693*	1	PANEL GP-INSTRUMENT (SIDE CONSOLE)	447
Y	*253-9940*	1	PANEL GP-INSTRUMENT (CENTER CONSOLE)	451
Y	*227-0063*	1	WIRING GP-AIR CONDITIONER	154

Y-SEPARATE ILLUSTRATION

<END>

OPERATOR STATION

249-9324 OPERATOR AR—CAB WITHOUT AIR CONDITIONER

S/N: BZE1-UP; BZG1-UP

AN ATTACHMENT

SMCS-7301 **i02883049**

NOTE	PART NUMBER	QTY	PART NAME 1 2 3 4 5 6 (PRODUCT LEVEL)	SEE PAGE
Y	*223-4791*	1	CAB AR	376
			S/N: BZE1-251; BZG1-214	
Y	*259-4423*	1	CAB AR	376
			S/N: BZE252-UP; BZG215-UP	
Y	*178-3836*	1	CYLINDER & MTG GP-TILT (CAB)	395
Y	*153-5030*	1	FAN GP-SUCTION	76
Y	*201-0183*	1	FILM GP (STRIPE)	485
Y	*240-4607*	1	FILTER GP-CAB AIR	405
Y	*249-9301*	1	FLOOR MAT GP	406
Y	*240-4672*	1	HEATER & MTG GP-CAB	410
Y	*223-5824*	1	LINES GP-CAB HEATER	418
Y	*227-5690*	1	MIRROR GP-REAR VIEW (CAB)	424
Y	*143-5926*	1	MOUNTING GP-CAB	428
			S/N: BZE1-251; BZG1-214	
Y	*259-1188*	1	MOUNTING GP-CAB	430
			S/N: BZE252-UP; BZG215-UP	
Y	*253-9940*	1	PANEL GP-INSTRUMENT	451
Y	*243-5693*	1	PANEL GP-INSTRUMENT (SIDE CONSOLE)	447

Y-SEPARATE ILLUSTRATION

<END>

OPERATOR STATION

224-1149 PANEL GP-INSTRUMENT

S/N: BZE1-UP; BZG1-UP
PART OF 236-1517, 236-1518, 236-6627 OPERATOR AR
ALSO AN ATTACHMENT

SMCS-7451 **i02092164**

NOTE	REF NO	GRAPHIC REF	PART NUMBER	QTY	PART NAME 1 2 3 4 5 6 (PRODUCT LEVEL)	SEE PAGE
	1	1	**2N-2371**	1	LAMP AS-INDICATOR	
		1	**2V-7088**	1	LENS-RED	
		1	**6V-8367**	1	LOCKWASHER	
		1	**6V-8382**	1	NUT-HEX (11/16-27-THD)	
		1	**6V-8817**	2	SCREW-MACHINE (4-36X4.76-IN)	
	2	1	**2V-7087**	1	LENS-AMBER	
	3	1	**3S-2093**	1	STRAP-CABLE	
	4	1	**5D-0019**	1	LAMP (24-VOLT)	
	5	1	**5P-8500**	2	KEY	
	6	1	**6T-6329**	3	BEZEL	
	7	1	**6V-8927**	6	BOLT-SOCKET HEAD (6-32X0.5-IN)	
	8	1	**6Y-6584**	1	STRAP AS-GROUND	
	9	1	**7N-5876**	1	LAMP (24-VOLT, 5.6-WATT)	
B	10	1	**104-6216**	1	PLUG	
	11	1	**105-3542**	3	DIODE GP	
	12	1	**110-7887**	1	SWITCH AS-START (KEY)	
		1	**7T-6799**	1	NUT-MOUNTING (1-32-THD)	
		1	**186-3735**	4	PIN-CONNECTOR (16-GA TO 18-GA)	
		1	**102-8804**	1	KIT-RECEPTACLE (4-PIN)	
	13	1	**116-4684**	1	GAUGE GP-FUEL LEVEL (24-VOLT)	
		1	**3L-8187**	3	LOCKWASHER	
		1	**4B-5324**	3	WASHER (3.9X9.6X1.2-MM THK)	
		1	**6V-3507**	1	SEAL-RECTANGULAR	
		1	**6V-8368**	3	NUT (6-32-THD)	
		1	**6V-8377**	2	NUT (8-32 THD)	
		1	**9B-7233**	2	LOCKWASHER	
	14	1	**128-8617**	1	PLATE AS	
	15	1	**129-7184**	1	FILM-INSTRUCTION (ENGINE START)	
Y	16	1	**135-2929**	1	MODULE GP-WARNING INDICATOR	425
	17	1	**145-9296**	1	PLATE	
	18	1	**205-7700**	1	KIT-SERVICE METER	
					(INCLUDES FILM & METER)	
	19	1	*180-8576*	1	PLATE-IDENTIFICATION (START AID)	
	20	1	**193-8566**	1	HARNESS AS-PANEL (FRONT CONSOLE)	
		1	**102-8806**	2	KIT-RECEPTACLE (8-PIN)	
		1	**102-8801**	1	KIT-RECEPTACLE (12-PIN)	
					(EACH KIT INCLUDES RECEPTACLE AS & WEDGE)	
		1	**155-2265**	3	KIT-CONNECTING PLUG (8-PIN)	
		1	**155-2270**	1	KIT-CONNECTING PLUG (2-PIN)	
		1	**155-2271**	1	KIT-CONNECTING PLUG (4-PIN)	
					(EACH KIT INCLUDES PLUG AS & WEDGE)	
	21	1	**198-9137**	1	BRACKET	
	22	1	**213-0711**	1	HORN AS (24-VOLT, HIGH TONE)	
		1	**3B-4501**	2	LOCKWASHER	
M		1	**8C-7581**	2	SCREW-MACHINE (M4X0.7X8-MM)	
		1	**8C-9660**	2	WASHER (4.6X7.9X0.8-MM THK)	
	23	1	**218-2529**	1	PLUG	
	24	1	**229-2313**	1	HOUSING AS	
	25	1	**230-5455**	1	PLATE	
	26	1	**230-8093**	1	FILM-IDENTIFICATION (INSTRUMENT PANEL)	
	27	1	**234-0589**	1	ANGLE	
	28	1	**234-6828**	1	HARNESS AS-PANEL (HORN)	
		1	**102-8802**	1	KIT-RECEPTACLE (2-PIN)	
	29	1	**4P-8134**	2	CLIP	
M	30	1	**5C-2890**	3	NUT (M6X1-THD)	

224-1149 **PANEL GP-INSTRUMENT** *(contd.)* **i02092164**

NOTE	REF NO	GRAPHIC REF	PART NUMBER	QTY	PART NAME 1 2 3 4 5 6 (PRODUCT LEVEL)	SEE PAGE
M	31	1	**5C-7261**	4	NUT (M8X1.25-THD)	
	32	1	**5P-4115**	1	WASHER-HARD (7.2X19X2-MM THK)	
	33	1	**6P-0699**	1	GROMMET	
	34	1	**6T-6066**	1	SWITCH AS-ROCKER (START AID)	
		1	**3L-8187**	2	LOCKWASHER	
		1	**6V-8374**	2	SCREW-MACHINE (6-32X0.25-IN)	
	35	1	**7K-1181**	9	STRAP-CABLE	
	36	1	**8D-1470**	1	GROMMET	
	37	1	**8T-4121**	4	WASHER-HARD (11X21X2.5-MM THK)	
M	38	1	**8T-4133**	1	NUT (M10X1.5-THD)	
M	39	1	**8T-4136**	1	BOLT (M10X1.5X25-MM)	
M	40	1	**8T-4186**	2	BOLT (M10X1.5X40-MM)	
M	41	1	**8T-4189**	2	BOLT (M8X1.25X20-MM)	
	42	1	**8T-4205**	2	WASHER-HARD (7.2X14.5X2-MM THK)	
	43	1	**8T-4223**	2	WASHER-HARD (13.5X25.5X3-MM THK)	
	44	1	**8T-4224**	6	WASHER-HARD (8.8X16X2-MM THK)	
M	45	1	**8T-4244**	2	NUT (M12X1.75-THD)	
M	46	1	**9X-1046**	10	SCREW (M4X0.7X18-MM)	
M	47	1	**9X-2045**	1	SCREW-TRUSS HEAD (M6X1X20-MM)	
	48	1	**9X-9099**	1	SWITCH AS-ROCKER (SPEED SELECT)	
	49	1	**9X-9099**	1	SWITCH AS-ROCKER (THROTTLE)	
					(EACH SWITCH INCLUDES)	
		1	**3L-8187**	6	LOCKWASHER	
		1	**6V-8374**	6	SCREW-MACHINE (6-32X0.25-IN)	
M	50	1	**9X-2042**	2	SCREW-TRUSS HEAD (M6X1X12-MM)	

B-USE AS REQUIRED
M-METRIC PART
Y-SEPARATE ILLUSTRATION

224-1149 **PANEL GP-INSTRUMENT** *(contd.)* **i02092164**

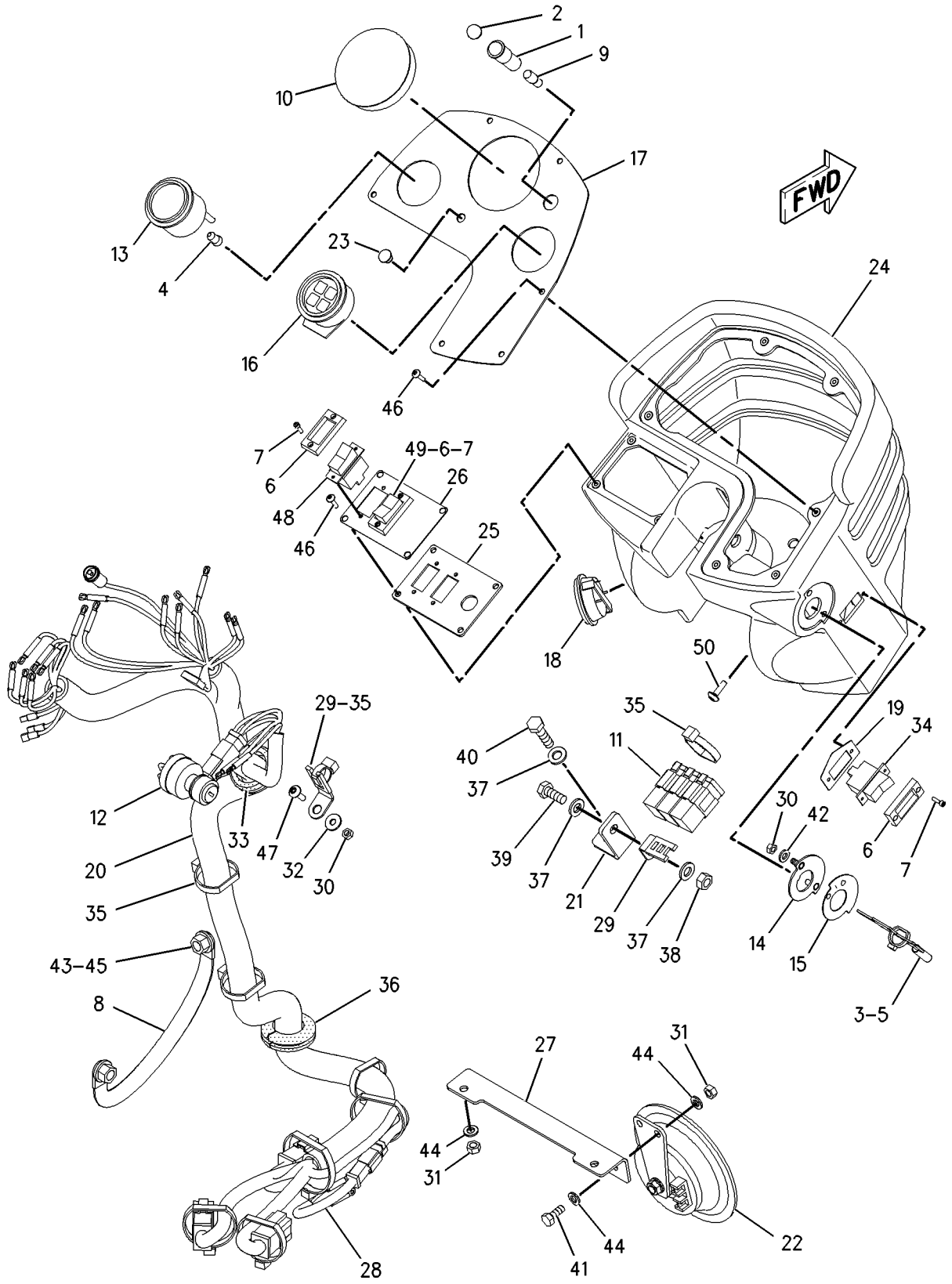

GRAPHIC #1 **<END>** g01006875

OPERATOR STATION

224-1149 PANEL GP-INSTRUMENT

S/N: BZE1-483; BZG1-289
PART OF 236-1517, 236-1518 OPERATOR AR
ALSO AN ATTACHMENT

SMCS-7451 **i02277435**

NOTE	REF NO	GRAPHIC REF	PART NUMBER	QTY	PART NAME 1 2 3 4 5 6 (PRODUCT LEVEL)	SEE PAGE
	1	1	**2N-2371**	1	LAMP AS-INDICATOR	
		1	**2V-7088**	1	LENS-RED	
		1	**6V-8367**	1	LOCKWASHER	
		1	**6V-8382**	1	NUT-HEX (11/16-27-THD)	
		1	**6V-8817**	2	SCREW-MACHINE (4-36X4.76-IN)	
	2	1	**2V-7087**	1	LENS-AMBER	
	3	1	**3S-2093**	1	STRAP-CABLE	
	4	1	**5D-0019**	1	LAMP (24-VOLT)	
	5	1	**5P-8500**	2	KEY	
	6	1	**6T-6329**	3	BEZEL	
	7	1	**6V-8927**	6	BOLT-SOCKET HEAD (6-32X0.5-IN)	
	8	1	**6Y-6584**	1	STRAP AS-GROUND	
	9	1	**7N-5876**	1	LAMP (24-VOLT, 5.6-WATT)	
B	10	1	**104-6216**	1	PLUG	
	11	1	**105-3542**	3	DIODE GP	
	12	1	**110-7887**	1	SWITCH AS-START (KEY)	
		1	**7T-6799**	1	NUT-MOUNTING (1-32-THD)	
		1	**186-3735**	4	PIN-CONNECTOR (16-GA TO 18-GA)	
		1	**102-8804**	1	KIT-RECEPTACLE (4-PIN)	
					(RECEPTACLE KIT INCLUDES RECEPTACLE AS & WEDGE)	
	13	1	**116-4684**	1	GAUGE GP-FUEL LEVEL (24-VOLT)	
		1	**3L-8187**	3	LOCKWASHER	
		1	**4B-5324**	3	WASHER (3.9X9.6X1.2-MM THK)	
		1	**6V-3507**	1	SEAL-RECTANGULAR	
		1	**6V-8368**	3	NUT (6-32-THD)	
		1	**6V-8377**	2	NUT (8-32 THD)	
		1	**9B-7233**	2	LOCKWASHER	
	14	1	**128-8617**	1	PLATE AS	
	15	1	**129-7184**	1	FILM-INSTRUCTION (ENGINE START)	
Y	16	1	**135-2929**	1	MODULE GP-WARNING INDICATOR	425
	17	1	**145-9296**	1	PLATE	
	18	1	**205-7700**	1	KIT-SERVICE METER	
		1	**114-2505**	1	FILM-IDENTIFICATION (SERVICE METER)	
	19	1	*180-8576*	1	PLATE-IDENTIFICATION (START AID)	
	20	1	**193-8566**	1	HARNESS AS-PANEL (FRONT CONSOLE)	
		1	**102-8806**	2	KIT-RECEPTACLE (8-PIN)	
		1	**102-8801**	1	KIT-RECEPTACLE (12-PIN)	
					(EACH RECEPTACLE KIT INCLUDES RECEPTACLE AS & WEDGE)	
		1	**8T-8737**	14	PLUG-SEAL	
		1	**155-2265**	3	KIT-CONNECTING PLUG (8-PIN)	
		1	**155-2270**	1	KIT-CONNECTING PLUG (2-PIN)	
		1	**155-2271**	1	KIT-CONNECTING PLUG (4-PIN)	
					(EACH PLUG KIT INCLUDES PLUG AS & WEDGE)	
	21	1	**198-9137**	1	BRACKET	
C	22	1	**163-1201**	1	HORN AS (24-VOLT, LOW TONE)	
C	23	1	**252-9205**	1	FASTENER	
	24	1	**229-2313**	1	HOUSING AS	
	25	1	**230-5455**	1	PLATE	
	26	1	**230-8093**	1	FILM-IDENTIFICATION (INSTRUMENT PANEL)	
	29	1	**4P-8134**	2	CLIP	
M	30	1	**5C-2890**	3	NUT (M6X1-THD)	
CM	31	1	**5C-7261**	1	NUT (M8X1.25-THD)	
	32	1	**5P-4115**	1	WASHER-HARD (7.2X19X2-MM THK)	

224-1149 **PANEL GP-INSTRUMENT** *(contd.)* **i02277435**

NOTE	REF NO	GRAPHIC REF	PART NUMBER	QTY	PART NAME 1 2 3 4 5 6 (PRODUCT LEVEL)	SEE PAGE
	33	1	**6P-0699**	1	GROMMET	
	34	1	**6T-6066**	1	SWITCH AS-ROCKER (START AID)	
		1	**3L-8187**	2	LOCKWASHER	
		1	**6V-8374**	2	SCREW-MACHINE (6-32X0.25-IN)	
	35	1	**7K-1181**	9	STRAP-CABLE	
	36	1	**8D-1470**	1	GROMMET	
C	37	1	**8T-4121**	5	WASHER-HARD (11X21X2.5-MM THK)	
CM	38	1	**8T-4133**	2	NUT (M10X1.5-THD)	
M	39	1	**8T-4136**	1	BOLT (M10X1.5X25-MM)	
M	40	1	**8T-4186**	2	BOLT (M10X1.5X40-MM)	
	42	1	**8T-4205**	2	WASHER-HARD (7.2X14.5X2-MM THK)	
	43	1	**8T-4223**	2	WASHER-HARD (13.5X25.5X3-MM THK)	
M	45	1	**8T-4244**	2	NUT (M12X1.75-THD)	
M	46	1	**9X-1046**	10	SCREW (M4X0.7X18-MM)	
M	47	1	**9X-2045**	1	SCREW-TRUSS HEAD (M6X1X20-MM)	
	48	1	**9X-9099**	1	SWITCH AS-ROCKER (SPEED SELECT)	
	49	1	**9X-9099**	1	SWITCH AS-ROCKER (THROTTLE)	
					(EACH SWITCH AS INCLUDES)	
		1	**3L-8187**	6	LOCKWASHER	
		1	**6V-8374**	6	SCREW-MACHINE (6-32X0.25-IN)	
M	50	1	**9X-2042**	2	SCREW-TRUSS HEAD (M6X1X12-MM)	
CM	51	1	**8T-4137**	1	BOLT (M10X1.5X20-MM)	
C	52	1	**5P-4116**	1	WASHER-HARD (8.8X20.5X2-MM THK)	
C	53	1	**195-4973**	1	BRACKET	

B-USE AS REQUIRED
C-CHANGE FROM PREVIOUS TYPE
M-METRIC PART
Y-SEPARATE ILLUSTRATION

224-1149 **PANEL GP-INSTRUMENT** *(contd.)* **i02277435**

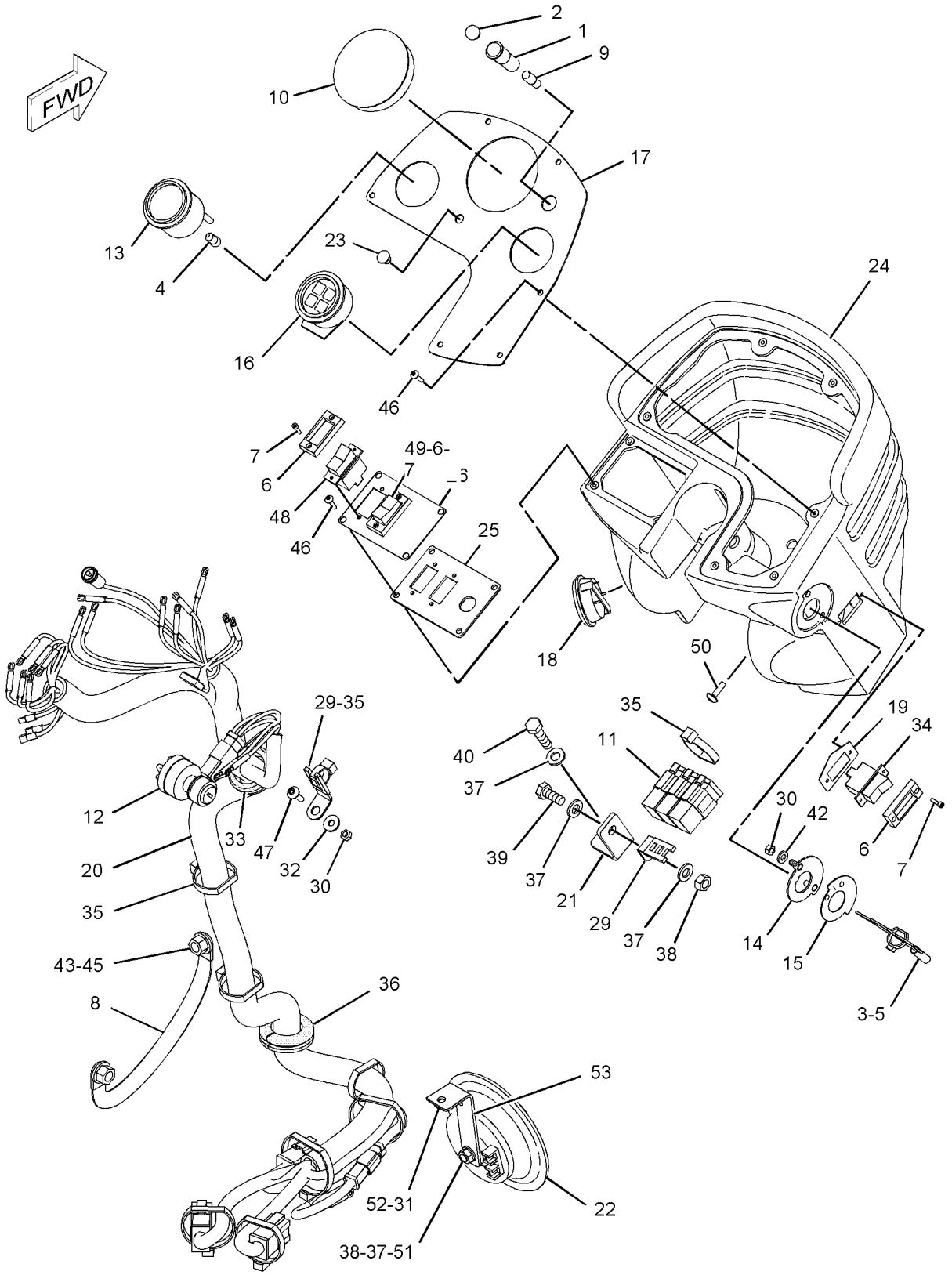

GRAPHIC #1 **<END>** g01144389

OPERATOR STATION

224-1149 PANEL GP-INSTRUMENT

S/N: BZE484-UP; BZG290-UP
PART OF 236-1517, 236-1518 OPERATOR AR
ALSO AN ATTACHMENT

SMCS-7451 **i03013569**

NOTE	REF NO	GRAPHIC REF	PART NUMBER	QTY	PART NAME 1 2 3 4 5 6 (PRODUCT LEVEL)	SEE PAGE
	1	1	**2N-2371**	1	LAMP AS-INDICATOR	
		1	**2V-7088**	1	LENS-RED	
		1	**6V-8367**	1	LOCKWASHER	
		1	**6V-8382**	1	NUT-HEX (11/16-27-THD)	
		1	**6V-8817**	2	SCREW-MACHINE (4-36X4.76-IN)	
	2	1	**2V-7087**	1	LENS-AMBER	
	3	1	**3S-2093**	1	STRAP-CABLE	
	5	1	**5P-8500**	2	KEY	
	6	1	**6T-6329**	3	BEZEL	
	7	1	**6V-8927**	6	BOLT-SOCKET HEAD (6-32X0.5-IN)	
	8	1	**6Y-6584**	1	STRAP AS-GROUND	
	9	1	**7N-5876**	1	LAMP (24-VOLT, 5.6-WATT)	
B	10	1	**104-6216**	1	PLUG	
	11	1	**105-3542**	3	DIODE GP	
					(EACH INCLUDES)	
		1	**102-8806**	1	KIT-RECEPTACLE (8-PIN)	
					(INCLUDES RECEPTACLE AS & WEDGE)	
		1	**7X-8831**	2	DIODE	
		1	**186-3735**	4	PIN-CONNECTOR (16-GA TO 18-GA)	
		1	**9G-3695**	4	PLUG	
	12	1	**110-7887**	1	SWITCH AS-START (KEY)	
		1	**7T-6799**	1	NUT-MOUNTING (1-32-THD)	
		1	**186-3735**	4	PIN-CONNECTOR (16-GA TO 18-GA)	
		1	**102-8804**	1	KIT-RECEPTACLE (4-PIN)	
					(INCLUDES RECEPTACLE AS & WEDGE)	
CY	13	1	**155-5234**	1	GAUGE GP-FUEL LEVEL	99
	14	1	**128-8617**	1	PLATE AS	
	15	1	**129-7184**	1	FILM-INSTRUCTION (ENGINE START)	
Y	16	1	**135-2929**	1	MODULE GP-WARNING INDICATOR (ENGINE TEMPERATURE)	425
	17	1	**145-9296**	1	PLATE	
	18	1	**205-7700**	1	KIT-SERVICE METER	
					(INCLUDES METER & FILM)	
	19	1	**180-8576**	1	PLATE-IDENTIFICATION (ENGINE)	
C	20	1	**267-3060**	1	HARNESS AS-PANEL	
	21	1	**198-9137**	1	BRACKET	
	22	1	**163-1201**	1	HORN AS (24-VOLT, LOW TONE)	
	23	1	**252-9205**	1	FASTENER	
	24	1	**229-2313**	1	HOUSING AS	
	25	1	**230-5455**	1	PLATE	
	26	1	**230-8093**	1	FILM-IDENTIFICATION (INSTRUMENT PANEL)	
	29	1	**4P-8134**	2	CLIP	
M	30	1	**5C-2890**	3	NUT (M6X1-THD)	
M	31	1	**5C-7261**	1	NUT (M8X1.25-THD)	
	32	1	**5P-4115**	1	WASHER-HARD (7.2X19X2-MM THK)	
	33	1	**6P-0699**	1	GROMMET	
	34	1	**6T-6066**	1	SWITCH AS-ROCKER (START AID)	
		1	**3L-8187**	2	LOCKWASHER	
		1	**6V-8374**	2	SCREW-MACHINE (6-32X0.25-IN)	
	35	1	**7K-1181**	9	STRAP-CABLE	
	36	1	**8D-1470**	1	GROMMET	
	37	1	**8T-4121**	5	WASHER-HARD (11X21X2.5-MM THK)	
M	38	1	**8T-4133**	2	NUT (M10X1.5-THD)	
M	39	1	**8T-4136**	1	BOLT (M10X1.5X25-MM)	
M	40	1	**8T-4186**	2	BOLT (M10X1.5X40-MM)	

224-1149 **PANEL GP-INSTRUMENT** *(contd.)* **i03013569**

NOTE	REF NO	GRAPHIC REF	PART NUMBER	QTY	PART NAME 1 2 3 4 5 6 (PRODUCT LEVEL)	SEE PAGE
	42	1	**8T-4205**	2	WASHER-HARD (7.2X14.5X2-MM THK)	
	43	1	**8T-4223**	2	WASHER-HARD (13.5X25.5X3-MM THK)	
M	45	1	**8T-4244**	2	NUT (M12X1.75-THD)	
M	46	1	**9X-1046**	10	SCREW (M4X0.7X18-MM)	
M	47	1	**9X-2045**	1	SCREW-TRUSS HEAD (M6X1X20-MM)	
	48	1	**9X-9099**	1	SWITCH AS-ROCKER (SPEED SELECT)	
	49	1	**9X-9099**	1	SWITCH AS-ROCKER (THROTTLE)	
					(EACH SWITCH AS INCLUDES)	
		1	**3L-8187**	6	LOCKWASHER	
		1	**6V-8374**	6	SCREW-MACHINE (6-32X0.25-IN)	
M	50	1	**9X-2042**	2	SCREW-TRUSS HEAD (M6X1X12-MM)	
M	51	1	**8T-4137**	1	BOLT (M10X1.5X20-MM)	
	52	1	**5P-4116**	1	WASHER-HARD (8.8X20.5X2-MM THK)	
	53	1	**195-4973**	1	BRACKET	
D	54	1	**6V-2689**		TUBE-HEAT SHRINK (6.35-MM DIA) (0.03-M)	

B-USE AS REQUIRED
C-CHANGE FROM PREVIOUS TYPE
D-ORDER BY THE METER
M-METRIC PART
Y-SEPARATE ILLUSTRATION

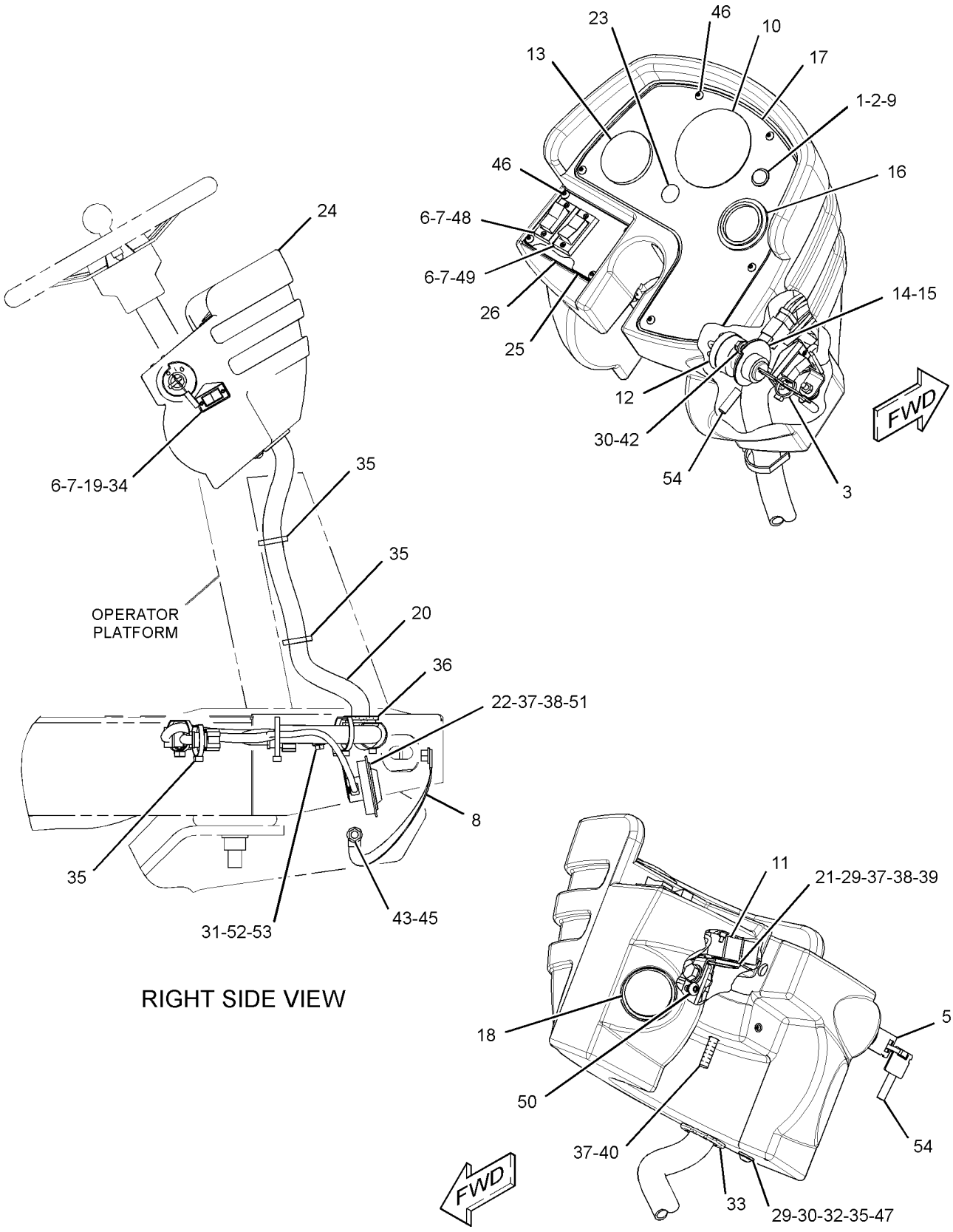

RIGHT SIDE VIEW

GRAPHIC #1 **<END>** g01443422

OPERATOR STATION

224-1152 PANEL GP-INSTRUMENT—SIDE CONSOLE

S/N: BZE1-UP; BZG1-UP
PART OF 236-1517, 236-1518, 236-6627 OPERATOR AR
ALSO AN ATTACHMENT

SMCS-7451 **i02898382**

NOTE	REF NO	GRAPHIC REF	PART NUMBER	QTY	PART NAME 1 2 3 4 5 6 (PRODUCT LEVEL)	SEE PAGE
Y	1	1	**3E-6328**	1	ALARM GP (24-VOLT)	125
	2	1,2	**3S-2093**	3	STRAP-CABLE	
	3	2	**6T-2774**	2	CLIP	
	4	2	**6T-6329**	1	BEZEL	
	5	2	**6V-8927**	2	BOLT-SOCKET HEAD (6-32X0.5-IN)	
	6	2	**7T-0493**	1	PLUG	
	7	2	**7V-5628**	1	PLATE	
	8	2	**7V-6089**	2	CLAMP	
	9	1	**8T-8799**	2	BOOT	
	10	1	**9G-9154**	1	CLIP	
	11	1	**9X-7449**	1	GROMMET	
	12	1	**107-6013**	1	SEAL	
	13	1	**107-6072**	1	PLATE	
	14	1	**113-8490**	16	FUSE (10-AMPERE)	
	15	1	**116-0118**	1	CLIP	
	16	1	**116-4159**	1	BASE	
	17	2	**116-5270**	1	LAMP (24-VOLT) (PARKING BRAKE)	
	18	2	**116-5274**	1	KNOB (PARKING BRAKE)	
	19	2	**116-5275**	1	SWITCH AS-PUSH BUTTON (PARKING BRAKE)	
	20	2	**116-6565**	1	BLOCK (LIGHT)	
	21	1	**118-7362**	1	GROMMET-SPLIT	
	22	1	**139-0234**	1	PLATE	
	23	1	**139-0236**	1	PLATE AS	
M		1	**6V-9632**	2	NUT-WELD (M6X1-THD)	
	24	2	**145-9297**	1	PLATE AS	
		2	**5D-9629**	1	ROD	
		2	**7T-1099**	1	LINK	
	25	1	**158-5089**	1	RELAY AS (24-VOLT) (ENGINE OIL PRESSURE)	
Y	26	2	**228-9108**	1	MODULE GP-TIMER	146
	27	1	**160-9412**	1	HOUSING AS	
Y	28	1	**167-0138**	1	SWITCH GP-MAGNETIC (24-VOLT) (PARKING BRAKE)	150
	29	2	**116-5277**	1	BLOCK-CONTACT	
	30	2	**193-4126**	1	FILM (INSTRUMENTS)	
	31	1	**193-8565**	1	HARNESS AS-PANEL (SIDE CONSOLE)	
		1	**112-9611**	14	TERMINAL-BLADE	
		1	**112-9612**	27	TERMINAL-BLADE	
		1	**113-5100**	4	TERMINAL-BUS	
		1	**116-4161**	9	TERMINAL-BLADE	
		1	*131-1474*	16	TERMINAL AS	
					(EACH INCLUDES)	
		1	**5P-2321**	1	TERMINAL (14-GA TO 16-GA, NO. 6 SCREW)	
		1	**5P-2321**	1	TERMINAL (14-GA TO 16-GA, NO. 6 SCREW)	
		1	**125-7874**		TUBE-HEAT SHRINK (5.72-MM DIA) (3-CM)	
		1	**5P-3454**	1	TERMINAL (4-GA)	
		1	**2L-8051**	1	TERMINAL (6-GA)	
		1	**2L-8065**	1	TERMINAL (10-GA TO 12-GA)	
		1	*286-7193*	1	TERMINAL AS-RING	
		1	**125-7874**		TUBE-HEAT SHRINK (5.72-MM DIA) (3-CM)	
		1	**102-8802**	1	KIT-RECEPTACLE (2-PIN)	
					(INCLUDES RECEPTACLE AS & WEDGE)	
		1	**8T-8737**	5	PLUG-SEAL	
		1	**9G-4351**	1	HOUSING-RECEPTACLE (4-GA TO 6-GA)	
		1	**9X-0145**	1	RECEPTACLE AS-CONNECTOR (24-PIN)	
		1	**112-9609**	2	BLOCK-MICRORELAY	
		1	**112-9610**	4	LOCK-MICRORELAY	

OPERATOR STATION

224-1152 **PANEL GP-INSTRUMENT** *(contd.)* **i02898382**

NOTE	REF NO	GRAPHIC REF	PART NUMBER	QTY	PART NAME 1 2 3 4 5 6 (PRODUCT LEVEL)	SEE PAGE
		1	**124-9636**	1	BLOCK-MINIFUSE	
		1	**124-9637**	1	LOCK-MINIFUSE	
		1	**155-2255**	1	KIT-CONNECTING PLUG (12-PIN)	
		1	**155-2265**	2	KIT-CONNECTING PLUG (8-PIN)	
		1	**155-2270**	1	KIT-CONNECTING PLUG (2-PIN)	
		1	**155-2271**	2	KIT-CONNECTING PLUG (4-PIN)	
		1	**155-2274**	1	KIT-CONNECTING PLUG (6-PIN)	
					(EACH PLUG KIT INCLUDES PLUG AS & WEDGE)	
	32	1	**206-5108**	1	SEAL	
	33	2	**206-5109**	1	SEAL	
	34	2	**225-8541**	1	PLATE AS	
	35	1	**230-9092**	1	FILM-FUSE/RELAY	
	36	2	**031-0249**	2	LOCKNUT (10-24-THD)	
	37	1	**096-6166**	3	WASHER-HARD (4.5X9X1-MM THK)	
	38	2	**144-0900**	1	SWITCH AS-ROCKER (VIBRATORY SELECT)	
		2	**3L-8187**	3	LOCKWASHER	
		2	**6V-8374**	3	SCREW-MACHINE (6-32X0.25-IN)	
	39	2	**2N-3480**	2	SCREW-MACHINE (10-24X0.75-IN)	
	40	1,2	**4B-4274**	4	WASHER (5.5X13X1.2-MM THK)	
	41	1	**4P-7581**	1	CLIP	
M	42	1	**5C-2890**	2	NUT (M6X1-THD)	
	43	1	**5P-4115**	11	WASHER-HARD (7.2X19X2-MM THK)	
	44	1	**6T-3643**	1	CIRCUIT BREAKER AS (15-AMPERE) (MAIN POWER RELAY)	
		1	**6V-8376**	2	SCREW-MACHINE (8-32X0.25-IN)	
		1	**9B-7233**	2	LOCKWASHER	
	45	1	**6V-3970**	1	GROMMET	
M	46	1	**6V-9491**	3	SCREW-MACHINE (M4X0.7X20-MM)	
	47	1	**7K-1181**	3	STRAP-CABLE	
M	48	2	**8C-8451**	2	BOLT (M6X1X40-MM)	
M	49	1	**8T-2659**	3	LOCKNUT (M4X0.7-THD)	
M	50	1	**8T-4138**	8	BOLT (M6X1X20-MM)	
M	51	2	**8T-4189**	2	BOLT (M8X1.25X20-MM)	
	52	1	**8T-4223**	1	WASHER-HARD (13.5X25.5X3-MM THK)	
	53	2	**8T-4224**	2	WASHER-HARD (8.8X16X2-MM THK)	
M	54	1	**8T-4244**	1	NUT (M12X1.75-THD)	
M	55	1	**8T-4970**	9	BOLT (M6X1X14-MM)	
	56	1	**8Y-8606**	1	GROMMET	
M	57	2	**9X-1046**	4	SCREW (M4X0.7X18-MM)	
	58	1	**9X-8256**	6	WASHER (6.6X12X2-MM THK)	
	59	1	**9X-8486**	2	SCREW-MACHINE (8-32X0.75-IN)	
	60	1	**158-5089**	1	RELAY AS (24-VOLT) (COOLANT TEMPERATURE)	
	61	1	**158-5089**	1	RELAY AS (24-VOLT) (WARNING LIGHT)	
	62	1	**158-5089**	1	RELAY AS (24-VOLT) (HYDRAULIC OIL TEMPERATURE)	
	63	1	**158-5089**	1	RELAY AS (24-VOLT) (FUNCTION LIGHT)	
	64	1	**158-5089**	1	RELAY AS (24-VOLT) (BRAKE ONE)	
	65	1	**158-5089**	1	RELAY AS (24-VOLT) (BRAKE TWO)	
	66	1	**158-5089**	1	RELAY AS (24-VOLT) (NEUTRAL START ONE)	
	67	1	**158-5089**	1	RELAY AS (24-VOLT) (NEUTRAL START TWO)	
	68	1	**158-5089**	1	RELAY AS (24-VOLT) (HYDRAULIC OIL PRESSURE)	

M-METRIC PART
Y-SEPARATE ILLUSTRATION

REFER TO ALL ILLUSTRATIONS OF THIS GROUP FOR AUXILIARY VIEWS

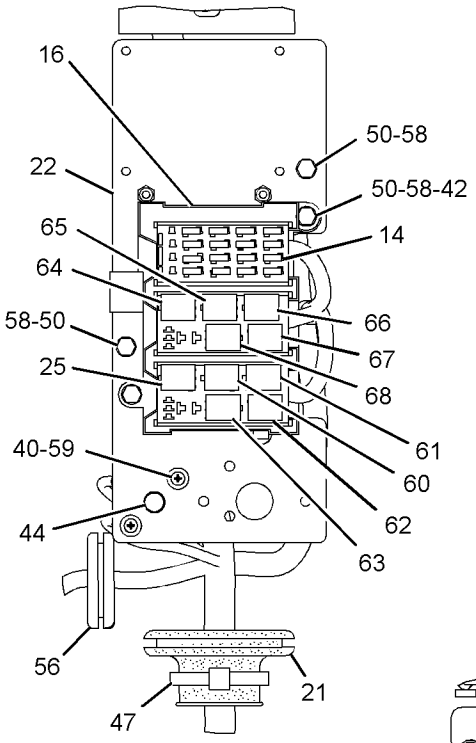

SECTION C-C

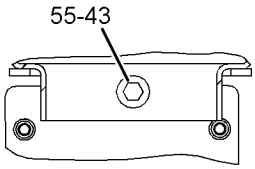

SECTION G-G

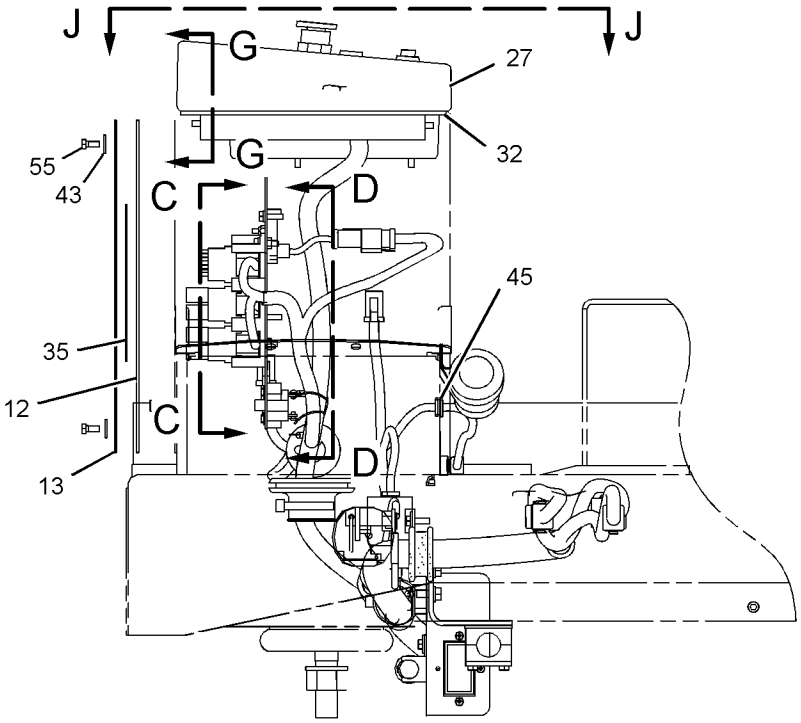

FRONT VIEW

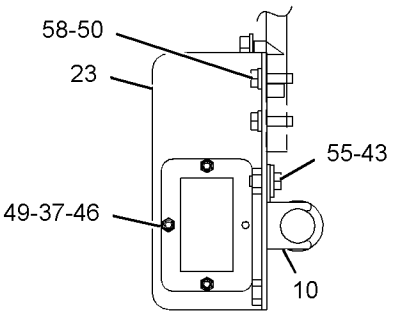

SECTION A-A

RIGHT SIDE VIEW

GRAPHIC #1

g01098756

REFER TO ALL ILLUSTRATIONS OF THIS GROUP FOR AUXILIARY VIEWS

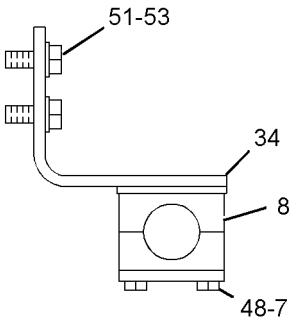

SECTION F-F

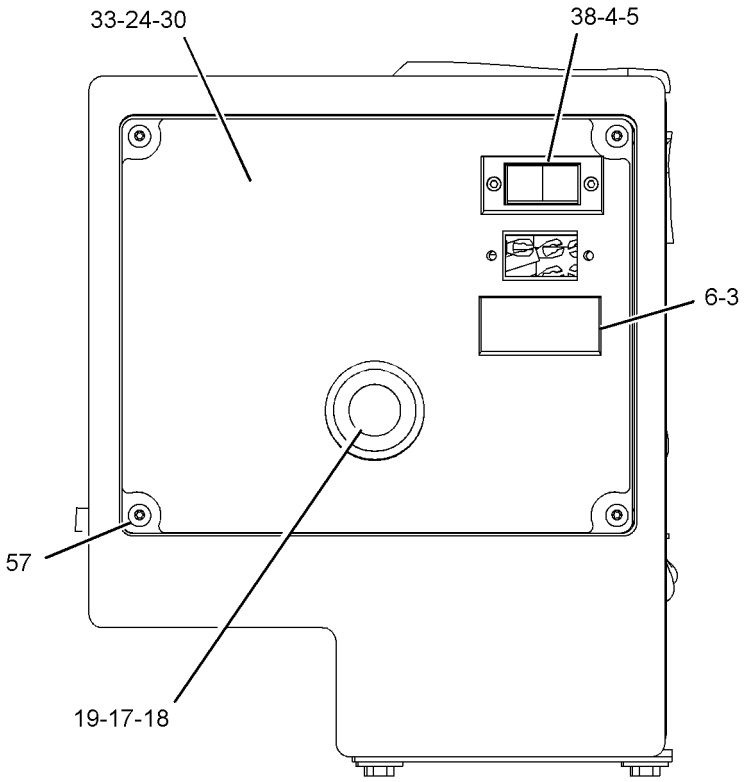

VIEW J-J

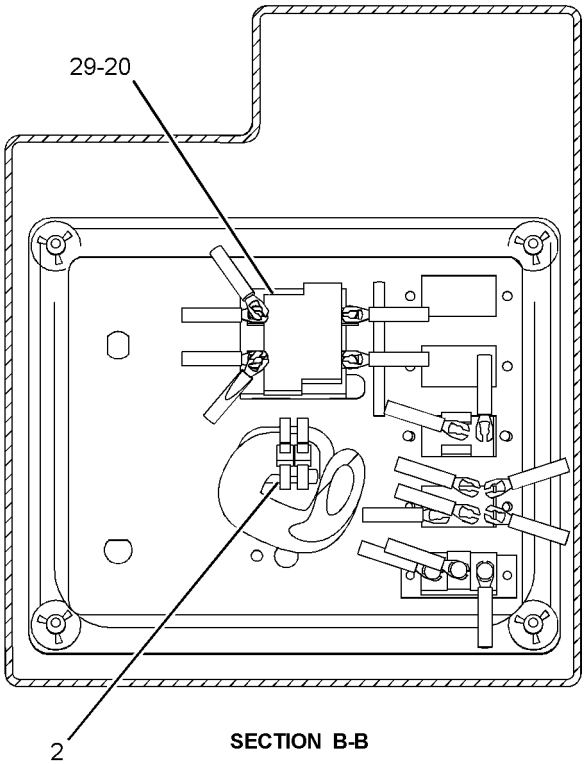

SECTION B-B

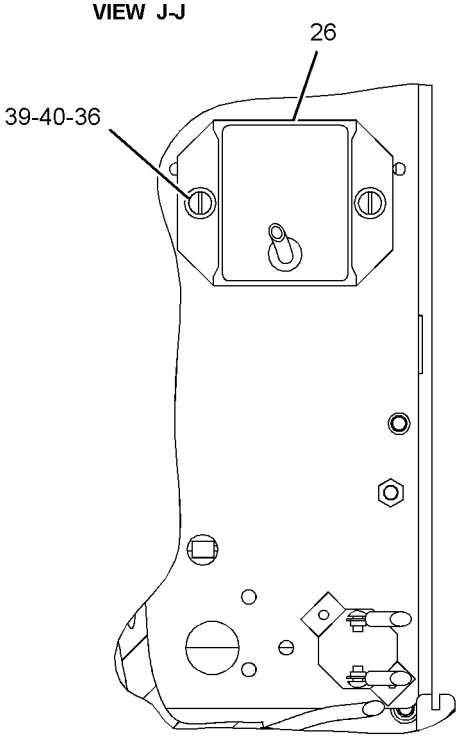

SECTION D-D

GRAPHIC #2 **<END>** g01085385

OPERATOR STATION

243-5693 PANEL GP-INSTRUMENT—SIDE CONSOLE

S/N: BZE1-UP; BZG1-UP
PART OF 249-9323, 249-9324 OPERATOR AR
AN ATTACHMENT

SMCS-7451 **i03009804**

NOTE	REF NO	GRAPHIC REF	PART NUMBER	QTY	PART NAME 1 2 3 4 5 6 (PRODUCT LEVEL)	SEE PAGE
	1	1	**2P-4339**	1	NUT-JAM (7/16-28-THD)	
Y	2	2	**3E-6328**	1	ALARM GP (24-VOLT) (FAULT INDICATOR)	125
	3	2	**3S-2093**	3	STRAP-CABLE	
	4	1	**6T-2774**	6	CLIP	
	5	1	**6T-6329**	2	BEZEL	
	6	1	**6V-8927**	4	BOLT-SOCKET HEAD (6-32X0.5-IN)	
	7	1	**7T-0493**	3	PLUG	
	8	1	**7T-3811**	1	SWITCH AS-ROCKER (FLOOD LIGHTS)	
		1	**3L-8187**	6	LOCKWASHER	
		1	**6V-8374**	6	SCREW-MACHINE (6-32X0.25-IN)	
	9	1	**7T-9302**	1	KNOB (WIPER, WASHER)	
		1	**014-0816**	1	SETSCREW (8-32X0.5-IN)	
	10	2	**7V-5628**	1	PLATE	
	11	2	**1G-9959**	2	CLAMP	
	12	2	**8T-8799**	2	BOOT	
	13	2	**9G-9154**	1	CLIP	
	14	2	**9X-7449**	1	GROMMET	
	15	1	**107-6013**	1	SEAL	
	16	1	**107-6072**	1	PLATE	
	17	1	**110-6109**	1	KNOB-CONTROL (FAN SPEED)	
	18	1	**110-7885**	1	KNOB (WIPER, WASHER)	
		1	**014-0816**	1	SETSCREW (8-32X0.5-IN)	
	19	1	**110-7890**	1	SWITCH AS-ROTARY (24-VOLT) (FAN)	
		1	**8T-8737**	1	PLUG-SEAL	
		1	**9W-0852**	5	PIN-CONNECTOR (14-GA)	
		1	**102-8805**	1	KIT-RECEPTACLE (6-PIN)	
					(INCLUDES RECEPTACLE AS & WEDGE)	
	20	1	**112-6174**	1	SWITCH AS-ROTARY (WIPER, WASHER)	
		1	**2H-3920**	1	LOCKWASHER	
		1	**6V-8369**	1	NUT (7/16-28-THD)	
		1	**186-3735**	6	PIN-CONNECTOR (16-GA TO 18-GA)	
		1	**8T-8737**	2	PLUG-SEAL	
		1	**102-8806**	1	KIT-RECEPTACLE (8-PIN)	
					(INCLUDES RECEPTACLE AS & WEDGE)	
	21	1	**113-8490**	15	FUSE (10-AMPERE)	
	22	2	**116-0118**	1	CLIP	
	23	1	**116-4159**	1	BASE	
	24	1	**116-5270**	1	LAMP (24-VOLT) (RED)	
	25	1	**116-5274**	1	KNOB (PARKING BRAKE) (RED)	
	26	2	**116-5275**	1	SWITCH AS-PUSH BUTTON (PARKING BRAKE)	
	27	2	**116-6565**	1	BLOCK (LIGHT)	
	28	1	**118-7362**	1	GROMMET-SPLIT	
	29	1	**132-7084**	1	SWITCH AS-ROTARY (WIPER, WASHER)	
		1	**2H-3920**	1	LOCKWASHER	
		1	**6V-8369**	1	NUT (7/16-28-THD)	
		1	**186-3735**	6	PIN-CONNECTOR (16-GA TO 18-GA)	
		1	**102-8805**	1	KIT-RECEPTACLE (6-PIN)	
					(INCLUDES RECEPTACLE AS & WEDGE)	
	30	1	**139-0234**	1	PLATE	
	31	2	**139-0236**	1	PLATE AS	
M		2	**6V-9632**	2	NUT-WELD (M6X1-THD)	
	32	1	**145-9297**	1	PLATE AS	
		1	**5D-9629**	1	ROD	
		1	**7T-1099**	1	LINK	
	33	1	**153-3606**	1	HOUSING AS	

243-5693 **PANEL GP-INSTRUMENT** ***(contd.)*** **i03009804**

NOTE	REF NO	GRAPHIC REF	PART NUMBER	QTY	PART NAME 1 2 3 4 5 6 (PRODUCT LEVEL)	SEE PAGE
	34	1	**9X-8486**	2	SCREW-MACHINE (8-32X0.75-IN)	
Y	35	1	**228-9108**	1	MODULE GP-TIMER	146
Y	36	2	*167-0138*	1	SWITCH GP-MAGNETIC (24-VOLT) (MAIN POWER RELAY)	150
	37	2	**116-5277**	1	BLOCK-CONTACT	
	38	2	**193-8565**	1	HARNESS AS-PANEL (SIDE CONSOLE)	
	39	1	**198-1506**	1	FILM-INSTRUMENT (PANEL)	
	40	1	**206-5108**	1	SEAL	
	41	1	**206-5109**	1	SEAL	
	42	2	**225-8541**	1	PLATE AS	
	43	1	**230-9092**	1	FILM-FUSE/RELAY	
	44	2	**243-5696**	1	HARNESS AS-CAB	
	45	1	**031-0249**	2	LOCKNUT (10-24-THD)	
	46	2	**096-6166**	3	WASHER-HARD (4.5X9X1-MM THK)	
	47	1	**144-0900**	1	SWITCH AS-ROCKER (VIBRATORY SELECT)	
		1	**3L-8187**	3	LOCKWASHER	
		1	**6V-8374**	3	SCREW-MACHINE (6-32X0.25-IN)	
	48	1	**2H-3920**	1	LOCKWASHER	
	49	1	**2N-3480**	2	SCREW-MACHINE (10-24X0.75-IN)	
	50	1	**4B-4274**	4	WASHER (5.5X13X1.2-MM THK)	
	51	2	**4P-7581**	1	CLIP	
M	52	1	**5C-2890**	2	NUT (M6X1-THD)	
	53	1,2	**5P-4115**	11	WASHER-HARD (7.2X19X2-MM THK)	
	54	1	**6P-0699**	2	GROMMET	
	55	1	**6T-3643**	1	CIRCUIT BREAKER AS (15-AMPERE) (KEY SWITCH)	
		1	**6V-8376**	2	SCREW-MACHINE (8-32X0.25-IN)	
		1	**9B-7233**	2	LOCKWASHER	
	56	1	**6V-3970**	1	GROMMET	
M	57	2	**6V-9491**	3	SCREW-MACHINE (M4X0.7X20-MM)	
	58	1,2	**7K-1181**	3	STRAP-CABLE	
M	59	2	**8C-8451**	2	BOLT (M6X1X40-MM)	
M	60	2	**8T-2659**	3	LOCKNUT (M4X0.7-THD)	
M	61	1,2	**8T-4138**	8	BOLT (M6X1X20-MM)	
M	62	2	**8T-4189**	2	BOLT (M8X1.25X20-MM)	
	63	2	**8T-4223**	1	WASHER-HARD (13.5X25.5X3-MM THK)	
	64	2	**8T-4224**	2	WASHER-HARD (8.8X16X2-MM THK)	
M	65	2	**8T-4244**	1	NUT (M12X1.75-THD)	
M	66	1,2	**8T-4970**	9	BOLT (M6X1X14-MM)	
D	67	1	**8T-3426**		CHANNEL-TRIM (0.2-M)	
M	68	1	**9X-1046**	4	SCREW (M4X0.7X18-MM)	
	69	1,2	**9X-8256**	6	WASHER (6.6X12X2-MM THK)	
	70	1	**158-5089**	1	RELAY AS (24-VOLT) (HYDRAULIC OIL PRESSURE)	
	70A	1	**158-5089**	1	RELAY AS (24-VOLT) (BRAKE ONE)	
	70B	1	**158-5089**	1	RELAY AS (24-VOLT) (BRAKE TWO)	
	70C	1	**158-5089**	1	RELAY AS (24-VOLT) (NEUTRAL START ONE)	
	70D	1	**158-5089**	1	RELAY AS (24-VOLT) (NEUTRAL START TWO)	
	70E	1	**158-5089**	1	RELAY AS (24-VOLT) (WARNING LIGHT)	
	70F	1	**158-5089**	1	RELAY AS (24-VOLT) (HYDRAULIC OIL TEMPERATURE)	
	70G	1	**158-5089**	1	RELAY AS (24-VOLT) (FUNCTIONAL LIGHT)	
	70H	1	**158-5089**	1	RELAY AS (24-VOLT) (COOLANT TEMPERATURE)	
	70J	1	**158-5089**	1	RELAY AS (24-VOLT) (ENGINE OIL PRESSURE)	
	71	1	**320-3072**	1	CIRCUIT BREAKER AS (10-AMPERE)	

D-ORDER BY THE METER
M-METRIC PART
Y-SEPARATE ILLUSTRATION

REFER TO ALL ILLUSTRATIONS OF THIS GROUP FOR AUXILIARY VIEWS

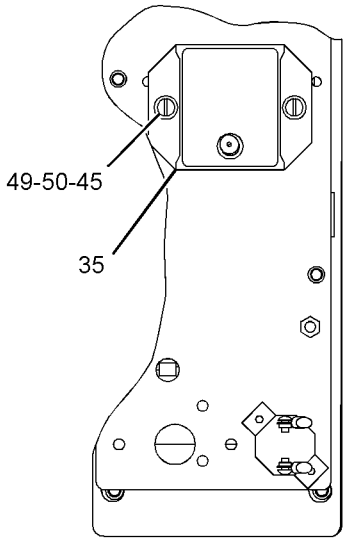

VIEW D-D

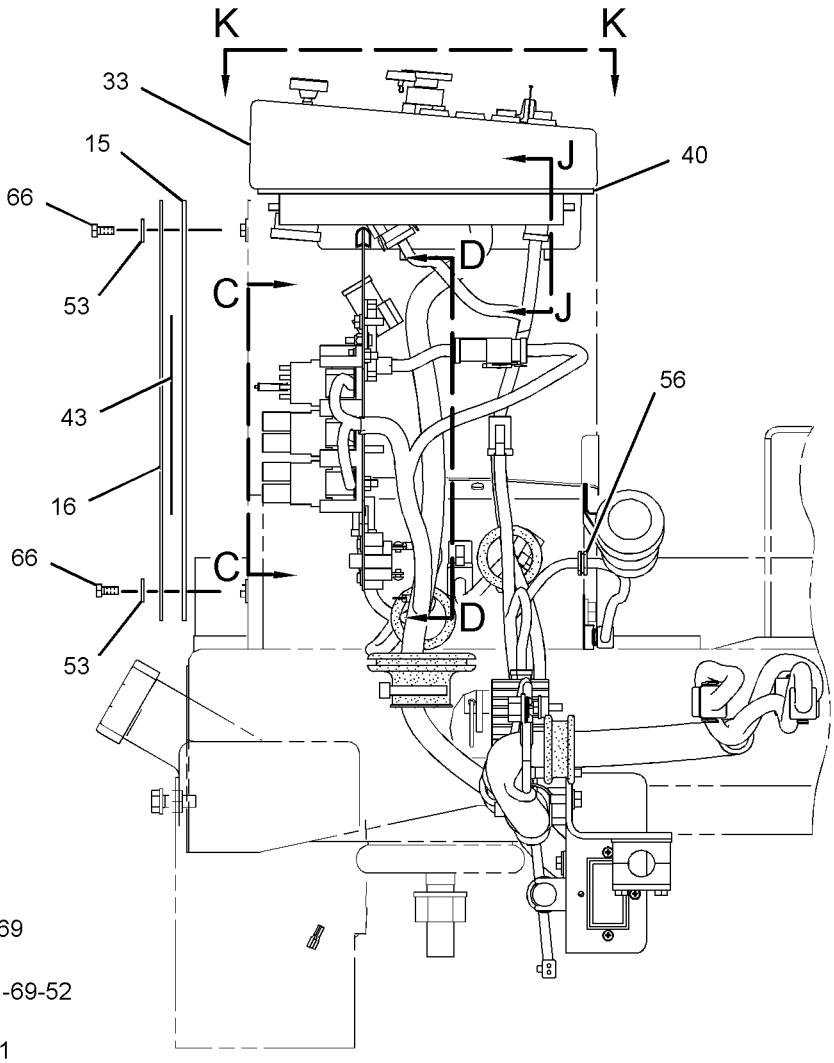

FRONT VIEW

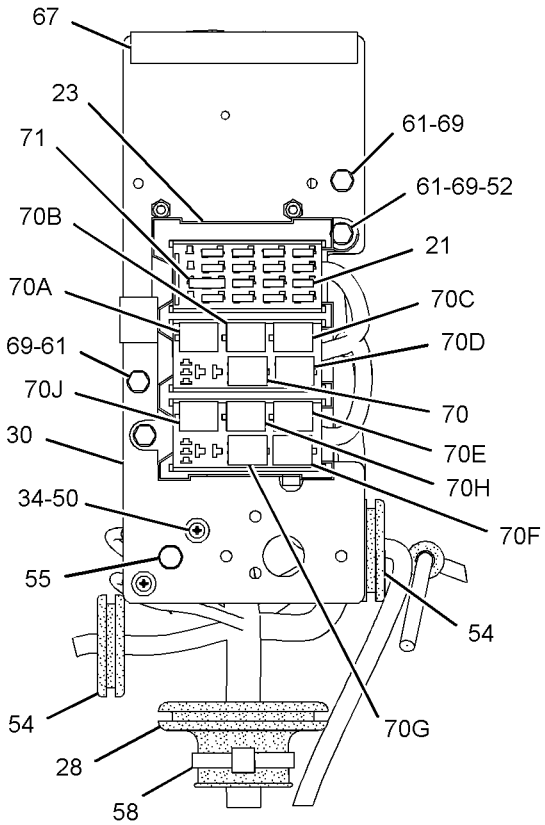

VIEW C-C

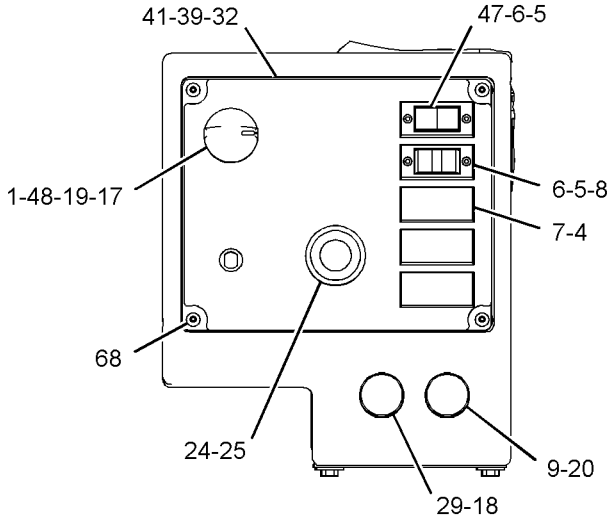

VIEW K-K

GRAPHIC #1

g01516477

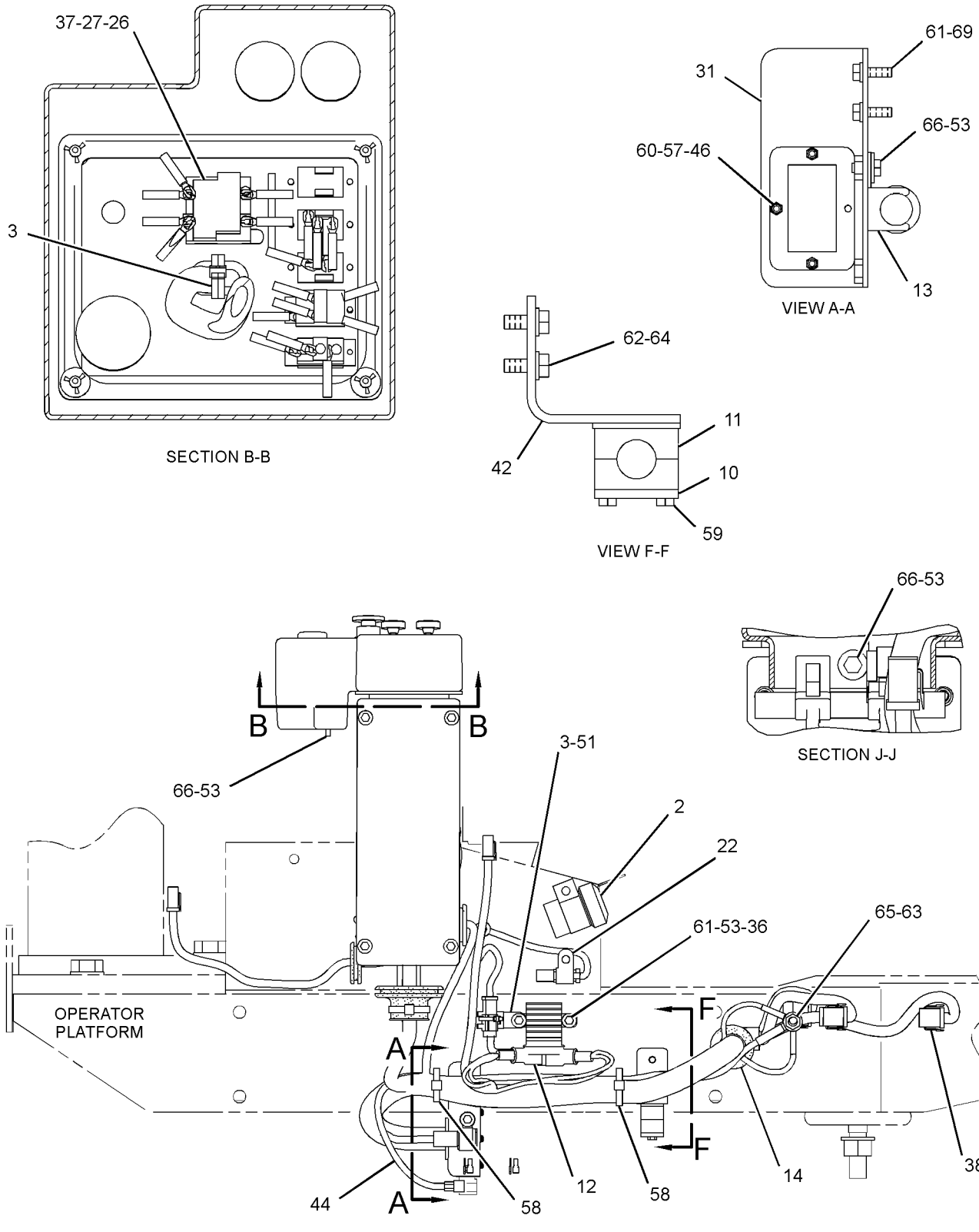

RIGHT SIDE VIEW

GRAPHIC #2

<END>

g01516478

OPERATOR STATION

253-9940 PANEL GP-INSTRUMENT

S/N: BZE1-UP; BZG1-UP
PART OF 249-9323, 249-9324 OPERATOR AR
AN ATTACHMENT
TYPE 1

SMCS-7451 **i02187895**

NOTE	REF NO	GRAPHIC REF	PART NUMBER	QTY	PART NAME 1 2 3 4 5 6 (PRODUCT LEVEL)	SEE PAGE
	1	2	**2N-2371**	1	LAMP AS-INDICATOR (ALTERNATOR)	
		2	**2V-7088**	1	LENS-RED	
		2	**6V-8367**	1	LOCKWASHER	
		2	**6V-8382**	1	NUT-HEX (11/16-27-THD)	
		2	**6V-8817**	2	SCREW-MACHINE (4-36X4.76-IN)	
	2	2	**2V-7087**	1	LENS-AMBER (ALTERNATOR)	
	3	2	**3S-2093**	1	STRAP-CABLE	
	4	2	**5D-0019**	1	LAMP (24-VOLT) (FUEL LEVEL GAUGE)	
	5	2	**5P-8500**	2	KEY	
	6	2	**6T-6329**	3	BEZEL	
	7	2	**6V-8927**	6	BOLT-SOCKET HEAD (6-32X0.5-IN)	
	8	1	**6Y-6584**	1	STRAP AS-GROUND	
	9	2	**7N-5876**	1	LAMP (24-VOLT, 5.6-WATT) (ALTERNATOR INDICATOR)	
	10	2	**104-6216**	1	PLUG	
	11	1	**105-3542**	3	DIODE GP (INSTRUMENT)	
					(EACH INCLUDES)	
		1	**102-8806**	1	KIT-RECEPTACLE (8-PIN)	
					(INCLUDES RECEPTACLE AS & WEDGE)	
		1	**7X-8831**	2	DIODE	
		1	**186-3735**	4	PIN-CONNECTOR (16-GA TO 18-GA)	
		1	**9G-3695**	4	PLUG	
	12	2	**110-7887**	1	SWITCH AS-START (KEY)	
		2	**7T-6799**	1	NUT-MOUNTING (1-32-THD)	
		2	**102-8804**	1	KIT-RECEPTACLE (4-PIN)	
					(INCLUDES RECEPTACLE AS & WEDGE)	
		2	**186-3735**	4	PIN-CONNECTOR (16-GA TO 18-GA)	
	13	2	**116-4684**	1	GAUGE GP-FUEL LEVEL (24-VOLT)	
		2	**3L-8187**	3	LOCKWASHER	
		2	**4B-5324**	3	WASHER (3.9X9.6X1.2-MM THK)	
		2	**6V-3507**	1	SEAL-RECTANGULAR	
		2	**6V-8368**	3	NUT (6-32-THD)	
		2	**6V-8377**	2	NUT (8-32 THD)	
		2	**9B-7233**	2	LOCKWASHER	
	14	1	**121-5327**	1	GROMMET	
	15	2	**128-8617**	1	PLATE AS	
	16	2	**129-7184**	1	FILM-INSTRUCTION (ENGINE START)	
Y	17	2	**135-2929**	1	MODULE GP-WARNING INDICATOR (ENGINE TEMPERATURE)	425
	18	2	**145-9296**	1	PLATE	
	19	1	**163-1201**	1	HORN AS (24-VOLT, LOW TONE)	
	20	2	*180-8576*	1	PLATE-IDENTIFICATION (STARTING AID)	
	21	1	**193-8566**	1	HARNESS AS-PANEL (FRONT CONSOLE)	
		1	**102-8806**	2	KIT-RECEPTACLE (8-PIN)	
		1	**102-8801**	1	KIT-RECEPTACLE (12-PIN)	
					(EACH INCLUDES RECEPTACLE AS & WEDGE)	
		1	**6D-4161**	1	CONTACT	
		1	**9G-7069**	1	SOCKET AS-LAMP	
		1	**117-2978**	6	CONTACT-CONNECTION	
		1	**117-2979**	1	CONNECTOR-RECEPTACLE	
		1	**155-2265**	3	KIT-CONNECTING PLUG (8-PIN)	
		1	**155-2270**	1	KIT-CONNECTING PLUG (2-PIN)	
		1	**155-2272**	1	PLUG AS-CONNECTOR (4-PIN)	
					(EACH INCLUDES PLUG AS, WEDGE & INTERFACE SEAL)	

253-9940 **PANEL GP-INSTRUMENT** *(contd.)* **i02187895**

NOTE	REF NO	GRAPHIC REF	PART NUMBER	QTY	PART NAME 1 2 3 4 5 6 (PRODUCT LEVEL)	SEE PAGE
	22	1	**205-7700**	1	KIT-SERVICE METER	
		1	**114-2505**	1	FILM-IDENTIFICATION (SERVICE METER)	
	23	1	**198-9137**	1	BRACKET	
	24	1	**229-2313**	1	HOUSING AS	
	25	2	**230-5455**	1	PLATE	
	26	2	**230-8093**	1	FILM-IDENTIFICATION (INSTRUMENT PANEL)	
	27	1	**248-7650**	1	GUARD	
	28	2	**252-9205**	1	FASTENER	
	29	1	**253-9942**	1	HARNESS AS-PANEL (HORN)	
		1	**102-8802**	1	KIT-RECEPTACLE (2-PIN)	
					(INCLUDES RECEPTACLE AS & WEDGE)	
		1	**155-2270**	1	KIT-CONNECTING PLUG (2-PIN)	
					(INCLUDES PLUG AS, WEDGE & INTERFACE SEAL)	
	30	1,2	**4P-8134**	2	CLIP	
M	31	2	**5C-2890**	3	NUT (M6X1-THD)	
	32	2	**5P-4115**	1	WASHER-HARD (7.2X19X2-MM THK)	
	33	2	**6P-0699**	1	GROMMET	
	34	2	**6T-6066**	1	SWITCH AS-ROCKER (STARTING AID)	
		2	**3L-8187**	2	LOCKWASHER	
		2	**6V-8374**	2	SCREW-MACHINE (6-32X0.25-IN)	
M	35	1	**6V-8212**	1	BOLT (M10X1.5X16-MM)	
	36	1,2	**7K-1181**	10	STRAP-CABLE	
	37	1	**8D-1470**	1	GROMMET	
	38	1	**8T-4121**	11	WASHER-HARD (11X21X2.5-MM THK)	
M	39	1	**8T-4133**	1	NUT (M10X1.5-THD)	
M	40	1	**8T-4136**	1	BOLT (M10X1.5X25-MM)	
M	41	1	**8T-4186**	2	BOLT (M10X1.5X40-MM)	
	42	2	**8T-4205**	2	WASHER-HARD (7.2X14.5X2-MM THK)	
	43	1	**8T-4223**	2	WASHER-HARD (13.5X25.5X3-MM THK)	
M	44	1	**8T-4244**	2	NUT (M12X1.75-THD)	
M	45	2	**9X-1046**	10	SCREW (M4X0.7X18-MM)	
M	46	1	**9X-2041**	6	SCREW-TRUSS HEAD (M10X1.5X20-MM)	
M	47	1	**9X-2042**	2	SCREW-TRUSS HEAD (M6X1X12-MM)	
M	48	2	**9X-2045**	1	SCREW-TRUSS HEAD (M6X1X20-MM)	
	49	2	**9X-9099**	2	SWITCH AS-ROCKER (SPEED SELECT)	
					(EACH INCLUDES)	
		2	**3L-8187**	6	LOCKWASHER	
		2	**6V-8374**	6	SCREW-MACHINE (6-32X0.25-IN)	

M-METRIC PART
Y-SEPARATE ILLUSTRATION

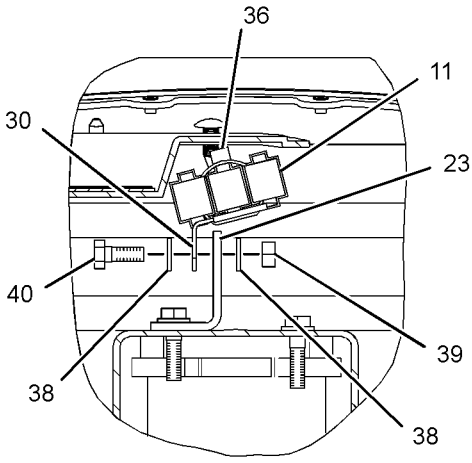

SECTION G-G

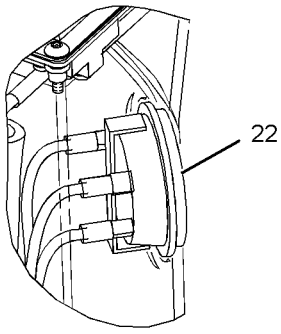

VIEW B-B

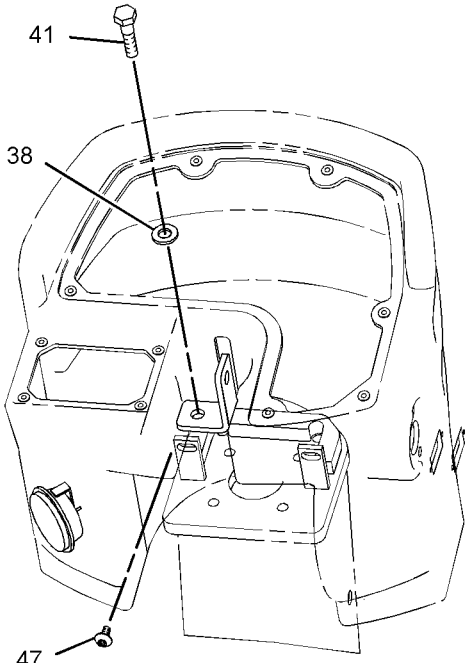

VIEW C-C
(EXPLODED)

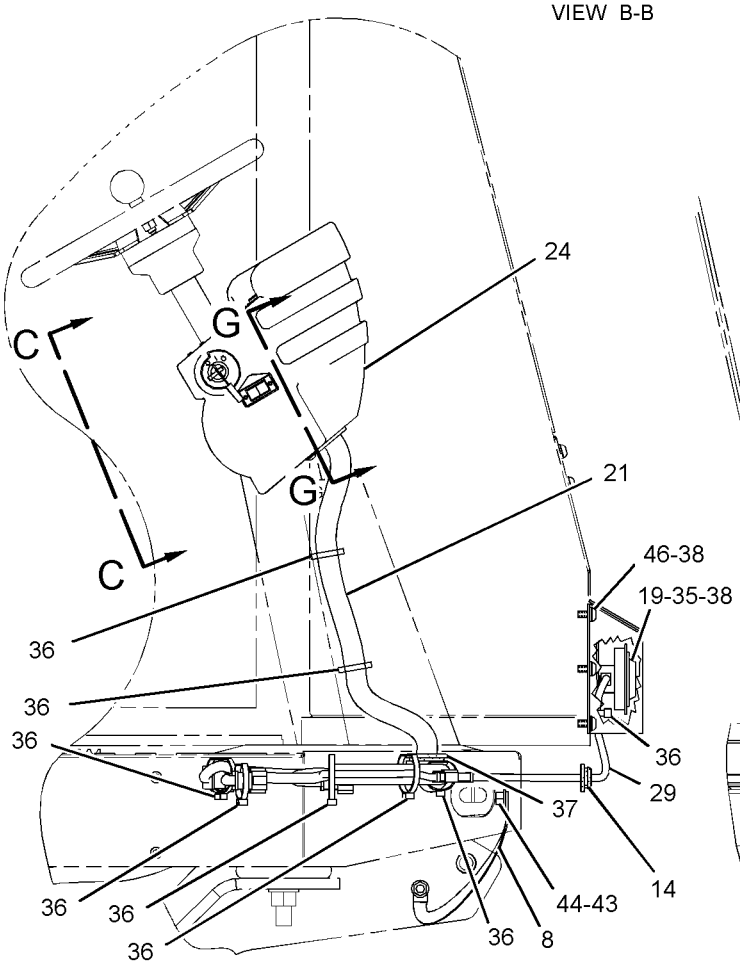

RIGHT SIDE VIEW

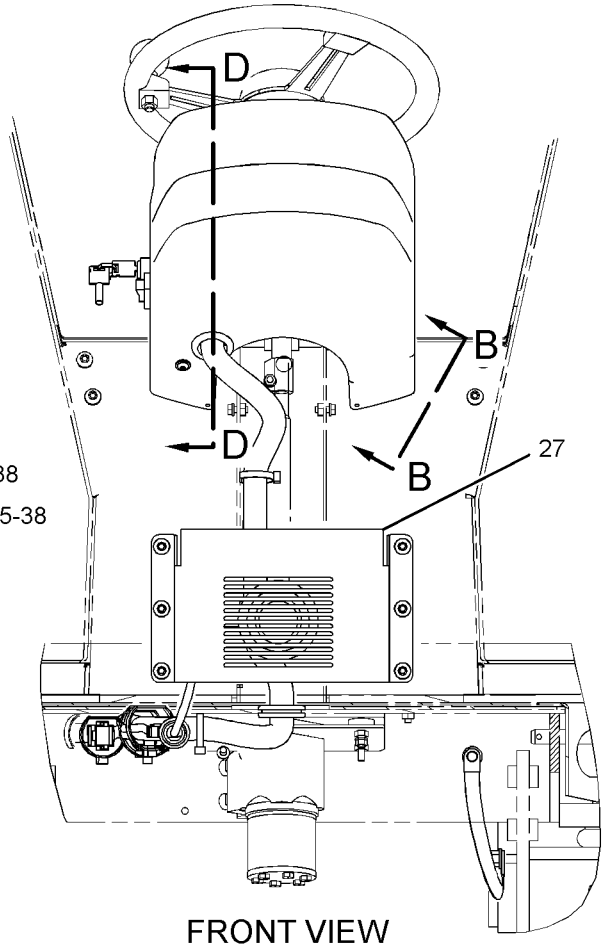

FRONT VIEW

GRAPHIC #1

g01207844

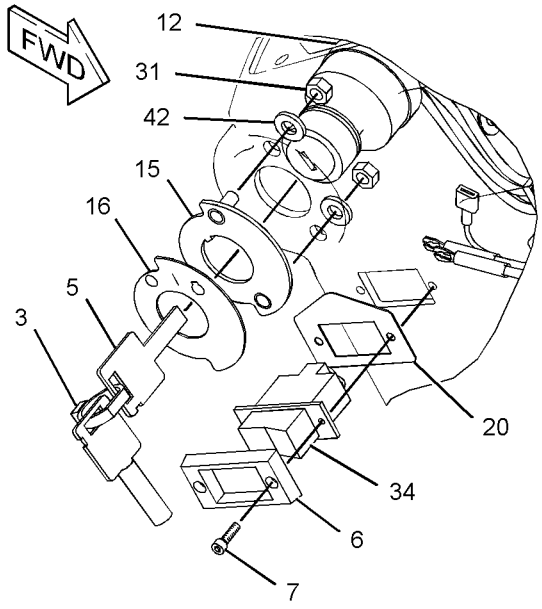

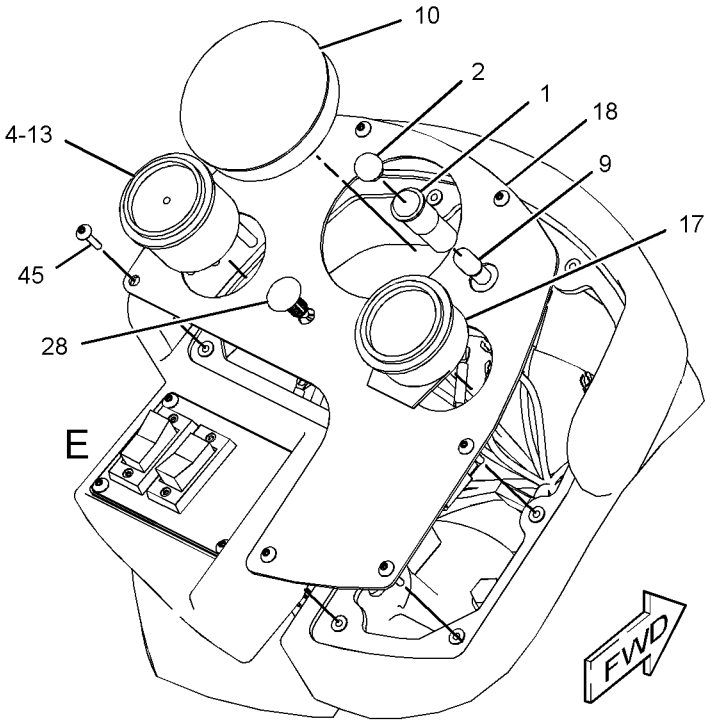

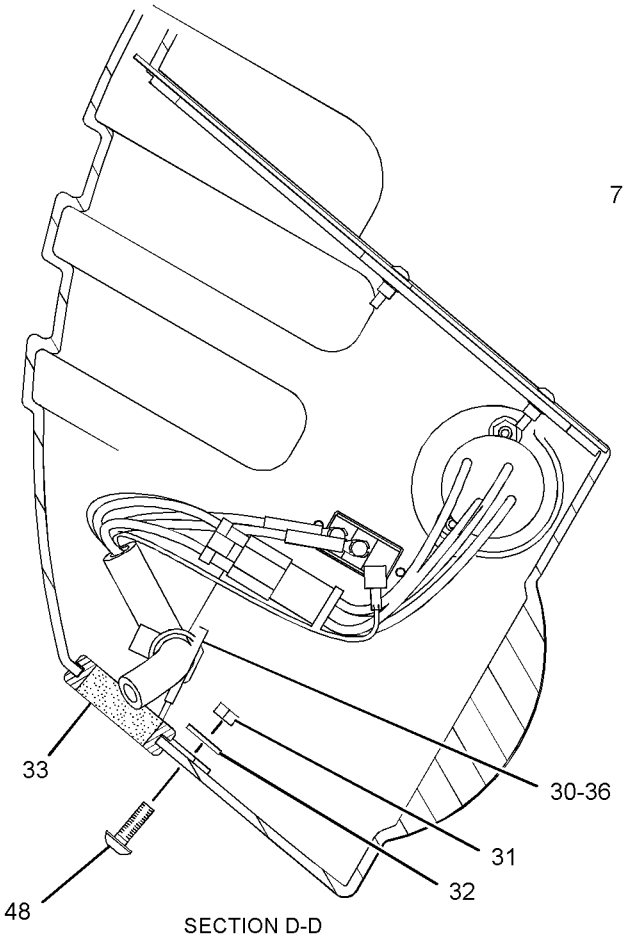

SECTION D-D

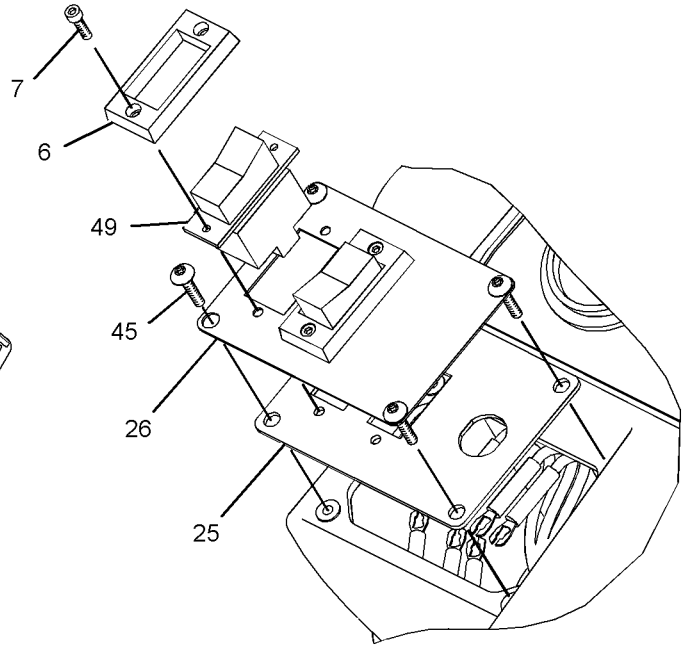

VIEW OF AREA E

GRAPHIC #2 **<END>** g01207863

OPERATOR STATION

253-9940 PANEL GP-INSTRUMENT

S/N: BZE1-UP; BZG1-UP
PART OF 249-9323, 249-9324 OPERATOR AR
AN ATTACHMENT
TYPE 2

SMCS-7451 **i02394217**

NOTE	REF NO	GRAPHIC REF	PART NUMBER	QTY	PART NAME 1 2 3 4 5 6 (PRODUCT LEVEL)	SEE PAGE
	1	2	**2N-2371**	1	LAMP AS-INDICATOR (ALTERNATOR)	
		2	**2V-7088**	1	LENS-RED	
		2	**6V-8367**	1	LOCKWASHER	
		2	**6V-8382**	1	NUT-HEX (11/16-27-THD)	
		2	**6V-8817**	2	SCREW-MACHINE (4-36X4.76-IN)	
	2	2	**2V-7087**	1	LENS-AMBER (ALTERNATOR)	
	3	2	**3S-2093**	1	STRAP-CABLE	
M	4	2	**9X-2045**	1	SCREW-TRUSS HEAD (M6X1X20-MM)	
	5	2	**5P-8500**	2	KEY	
	6	2	**6T-6329**	3	BEZEL	
	7	2	**6V-8927**	6	BOLT-SOCKET HEAD (6-32X0.5-IN)	
	8	1	**6Y-6584**	1	STRAP AS-GROUND	
	9	2	**7N-5876**	1	LAMP (24-VOLT, 5.6-WATT) (ALTERNATOR INDICATOR)	
	10	2	**104-6216**	1	PLUG	
	11	1	**105-3542**	3	DIODE GP (INSTRUMENT)	
					(EACH INCLUDES)	
		1	**102-8806**	1	KIT-RECEPTACLE (8-PIN)	
					(INCLUDES RECEPTACLE AS & WEDGE)	
		1	**7X-8831**	2	DIODE	
		1	**186-3735**	4	PIN-CONNECTOR (16-GA TO 18-GA)	
		1	**9G-3695**	4	PLUG	
	12	2	**110-7887**	1	SWITCH AS-START (KEY)	
		2	**7T-6799**	1	NUT-MOUNTING (1-32-THD)	
		2	**102-8804**	1	KIT-RECEPTACLE (4-PIN)	
					(INCLUDES RECEPTACLE AS & WEDGE)	
		2	**186-3735**	4	PIN-CONNECTOR (16-GA TO 18-GA)	
C	13	2	**155-5234**	1	GAUGE GP-FUEL LEVEL	
		1	**4B-2043**	3	NUT (8-32-THD)	
		1	**9B-7233**	3	LOCKWASHER	
		1	**115-1748**	1	LAMP (24-VOLT, 3-WATT)	
	14	1	**121-5327**	1	GROMMET	
	15	2	**128-8617**	1	PLATE AS	
	16	2	**129-7184**	1	FILM-INSTRUCTION (ENGINE START)	
Y	17	2	**135-2929**	1	MODULE GP-WARNING INDICATOR (ENGINE TEMPERATURE)	425
	18	2	**145-9296**	1	PLATE	
	19	1	**163-1201**	1	HORN AS (24-VOLT, LOW TONE)	
	20	2	*180-8576*	1	PLATE-IDENTIFICATION (STARTING AID)	
C	21	1	**267-3060**	1	HARNESS AS-PANEL	
		1	**102-8806**	1	KIT-RECEPTACLE (8-PIN)	
		1	**102-8801**	1	KIT-RECEPTACLE (12-PIN)	
					(EACH RECEPTACLE KIT INCLUDES RECEPTACLE AS & WEDGE)	
		1	**200-2213**	1	HARNESS AS-WIRING (3-PIN, GAUGE)	
		1	**117-2978**	6	CONTACT-CONNECTION	
		1	**117-2979**	1	CONNECTOR-RECEPTACLE	
		1	**155-2265**	3	KIT-CONNECTING PLUG (8-PIN)	
		1	**155-2270**	1	KIT-CONNECTING PLUG (2-PIN)	
		1	**155-2271**	1	KIT-CONNECTING PLUG (4-PIN)	
					(EACH PLUG KIT INCLUDES PLUG AS, WEDGE & INTERFACE SEAL)	
	22	1	**205-7700**	1	KIT-SERVICE METER	
					(INCLUDES FILM & METER)	
	23	1	**198-9137**	1	BRACKET	

253-9940 **PANEL GP-INSTRUMENT** *(contd.)* **i02394217**

NOTE	REF NO	GRAPHIC REF	PART NUMBER	QTY	PART NAME 1 2 3 4 5 6 (PRODUCT LEVEL)	SEE PAGE
	24	1	**229-2313**	1	HOUSING AS	
	25	2	**230-5455**	1	PLATE	
	26	2	**230-8093**	1	FILM-IDENTIFICATION (INSTRUMENT PANEL)	
	27	1	**248-7650**	1	GUARD	
	28	2	**252-9205**	1	FASTENER	
	29	1	**253-9942**	1	HARNESS AS-PANEL (HORN)	
		1	**102-8802**	1	KIT-RECEPTACLE (2-PIN)	
					(INCLUDES RECEPTACLE AS & WEDGE)	
		1	**155-2270**	1	KIT-CONNECTING PLUG (2-PIN)	
					(INCLUDES PLUG AS, WEDGE & INTERFACE SEAL)	
	30	1,2	**4P-8134**	2	CLIP	
M	31	2	**5C-2890**	3	NUT (M6X1-THD)	
	32	2	**5P-4115**	1	WASHER-HARD (7.2X19X2-MM THK)	
	33	2	**6P-0699**	1	GROMMET	
	34	2	**6T-6066**	1	SWITCH AS-ROCKER (STARTING AID)	
		2	**3L-8187**	2	LOCKWASHER	
		2	**6V-8374**	2	SCREW-MACHINE (6-32X0.25-IN)	
M	35	1	**6V-8212**	1	BOLT (M10X1.5X16-MM)	
	36	1,2	**7K-1181**	10	STRAP-CABLE	
	37	1	**8D-1470**	1	GROMMET	
	38	1	**8T-4121**	11	WASHER-HARD (11X21X2.5-MM THK)	
M	39	1	**8T-4133**	1	NUT (M10X1.5-THD)	
M	40	1	**8T-4136**	1	BOLT (M10X1.5X25-MM)	
M	41	1	**8T-4186**	2	BOLT (M10X1.5X40-MM)	
	42	2	**8T-4205**	2	WASHER-HARD (7.2X14.5X2-MM THK)	
	43	1	**8T-4223**	2	WASHER-HARD (13.5X25.5X3-MM THK)	
M	44	1	**8T-4244**	2	NUT (M12X1.75-THD)	
M	45	2	**9X-1046**	10	SCREW (M4X0.7X18-MM)	
M	46	1	**9X-2041**	6	SCREW-TRUSS HEAD (M10X1.5X20-MM)	
M	47	1	**9X-2042**	2	SCREW-TRUSS HEAD (M6X1X12-MM)	
	48	2	**9X-9099**	2	SWITCH AS-ROCKER (SPEED SELECT)	
					(EACH INCLUDES)	
		2	**3L-8187**	6	LOCKWASHER	
		2	**6V-8374**	6	SCREW-MACHINE (6-32X0.25-IN)	

C-CHANGE FROM PREVIOUS TYPE
M-METRIC PART
Y-SEPARATE ILLUSTRATION

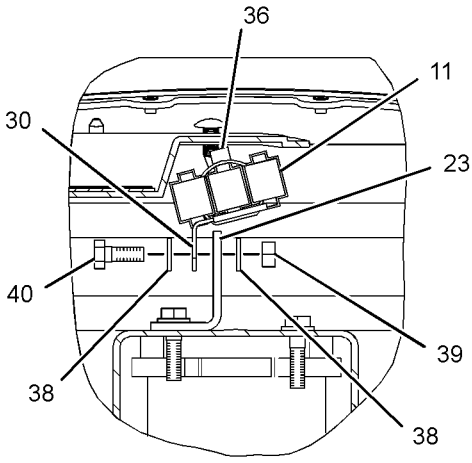

SECTION G-G

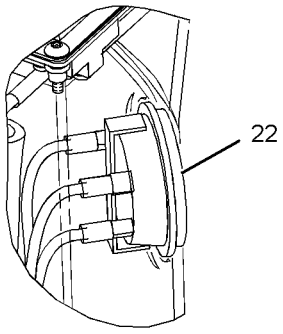

VIEW B-B

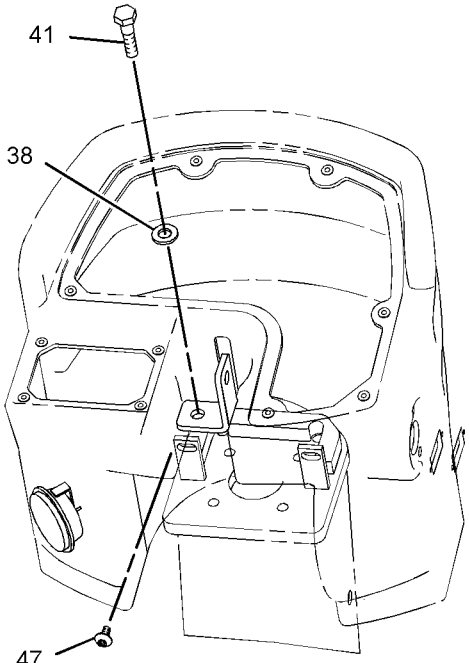

VIEW C-C
(EXPLODED)

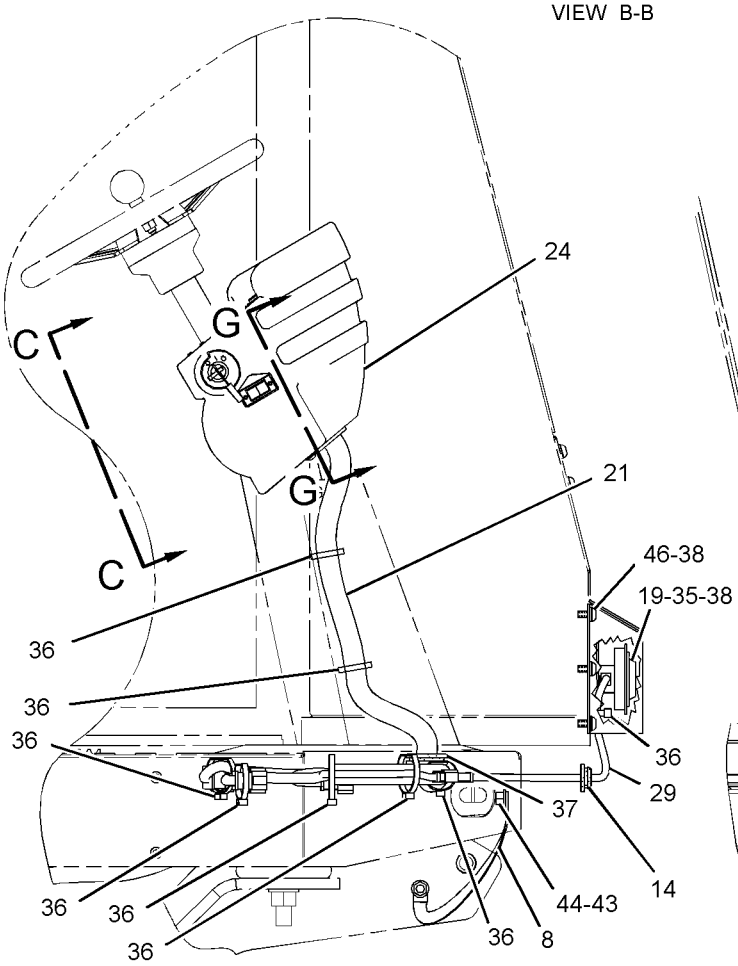

RIGHT SIDE VIEW

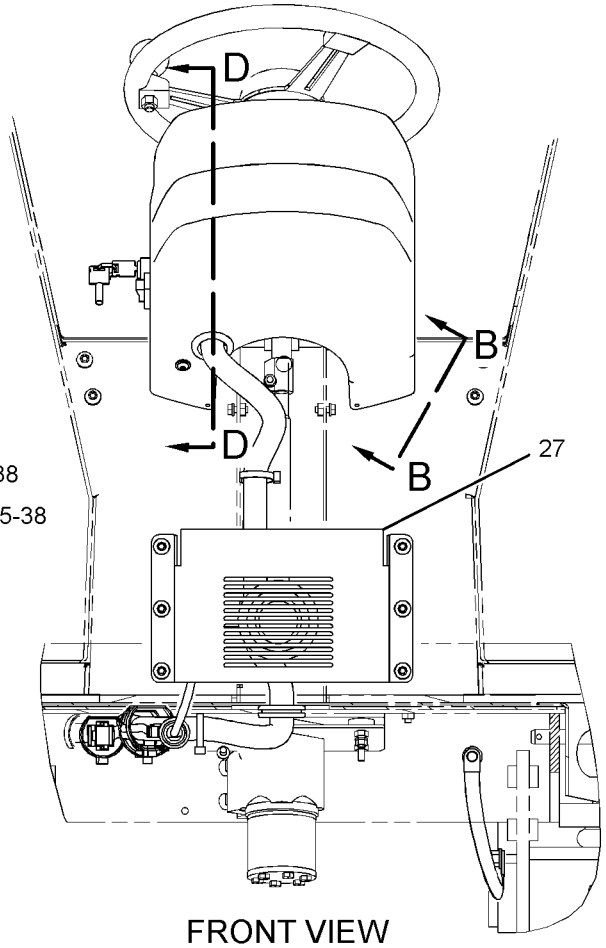

FRONT VIEW

GRAPHIC #1

g01207844

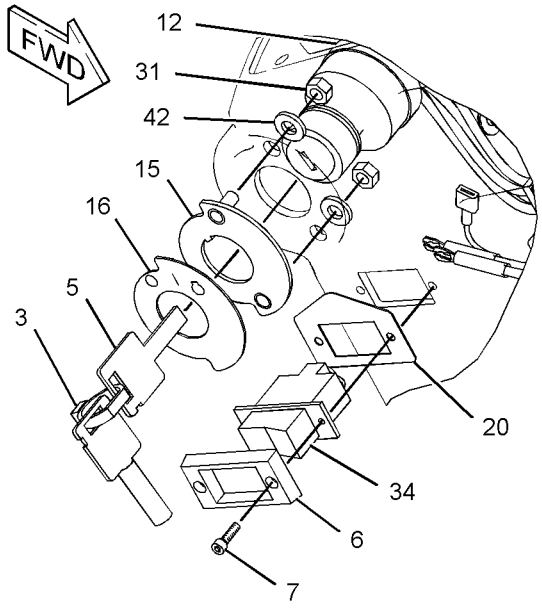

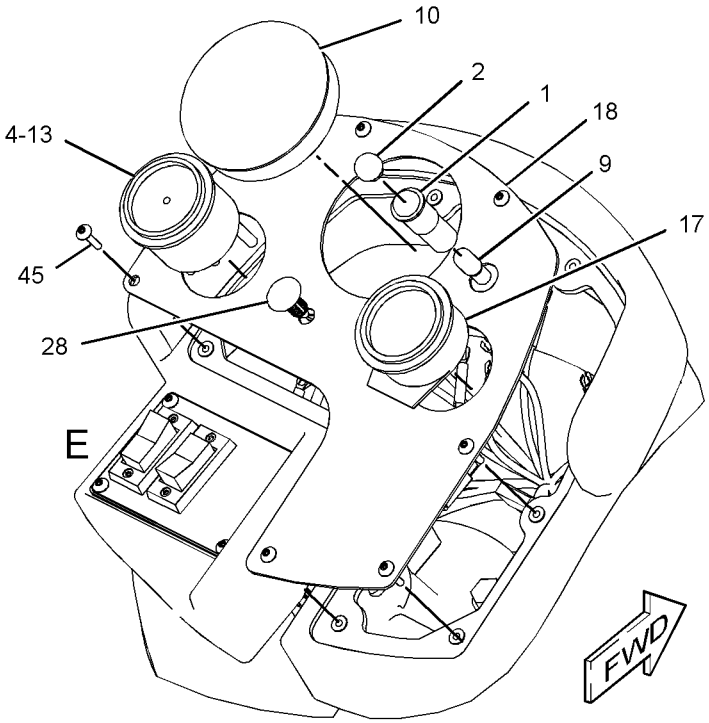

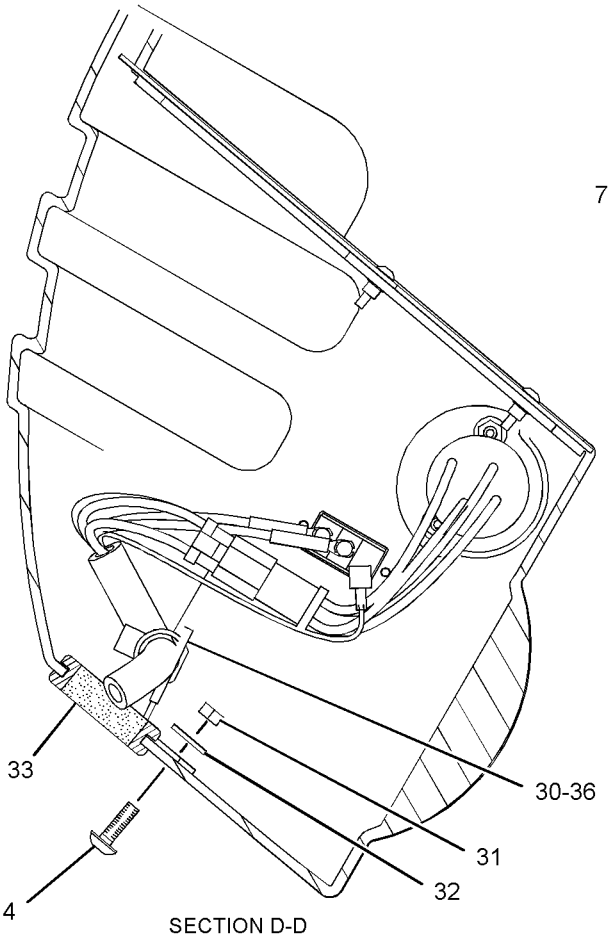

SECTION D-D

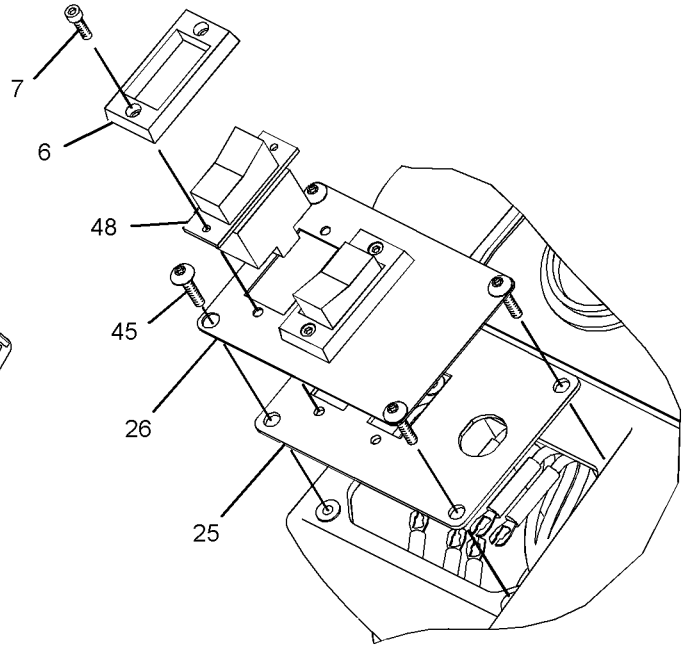

VIEW OF AREA E

GRAPHIC #2 **<END>** g01209693

OPERATOR STATION

249-2456 PLATFORM GP-OPERATOR

S/N: BZE1-976; BZG1-441
PART OF 236-1517, 236-1518, 236-6627 OPERATOR AR
ALSO AN ATTACHMENT

SMCS-7253 **i02144130**

NOTE	REF NO	GRAPHIC REF	PART NUMBER	QTY	PART NAME 1 2 3 4 5 6 (PRODUCT LEVEL)	SEE PAGE
	1	1	**3E-4883**	4	SLEEVE	
	2	1	**9W-7388**	4	WASHER (26X144X12-MM THK)	
	3	1	**9W-9931**	2	MOUNT AS	
	4	1	**054-8974**	4	PIN	
	5	1	**155-8961**	1	FLOOR MAT AS	
	6	1	**159-4026**	2	SLEEVE	
	7	1	**189-4652**	1	COVER AS	
	8	1	**235-0374**	1	FLOORPLATE AS	
	9	1	**156-1141**	2	MOUNT AS	
M	10	1	**7X-2465**	1	BOLT (M24X3X180-MM)	
M	11	1	**7X-2567**	2	BOLT (M24X3X160-MM)	
M	12	1	**8T-4001**	4	NUT (M24X3-THD)	
M	13	1	**8T-4138**	1	BOLT (M6X1X20-MM)	
	14	1	**8T-4167**	8	WASHER-HARD (26X44X4-MM THK)	
M	15	1	**9X-2045**	2	SCREW-TRUSS HEAD (M6X1X20-MM)	
	16	1	**9X-8256**	1	WASHER (6.6X12X2-MM THK)	

M-METRIC PART

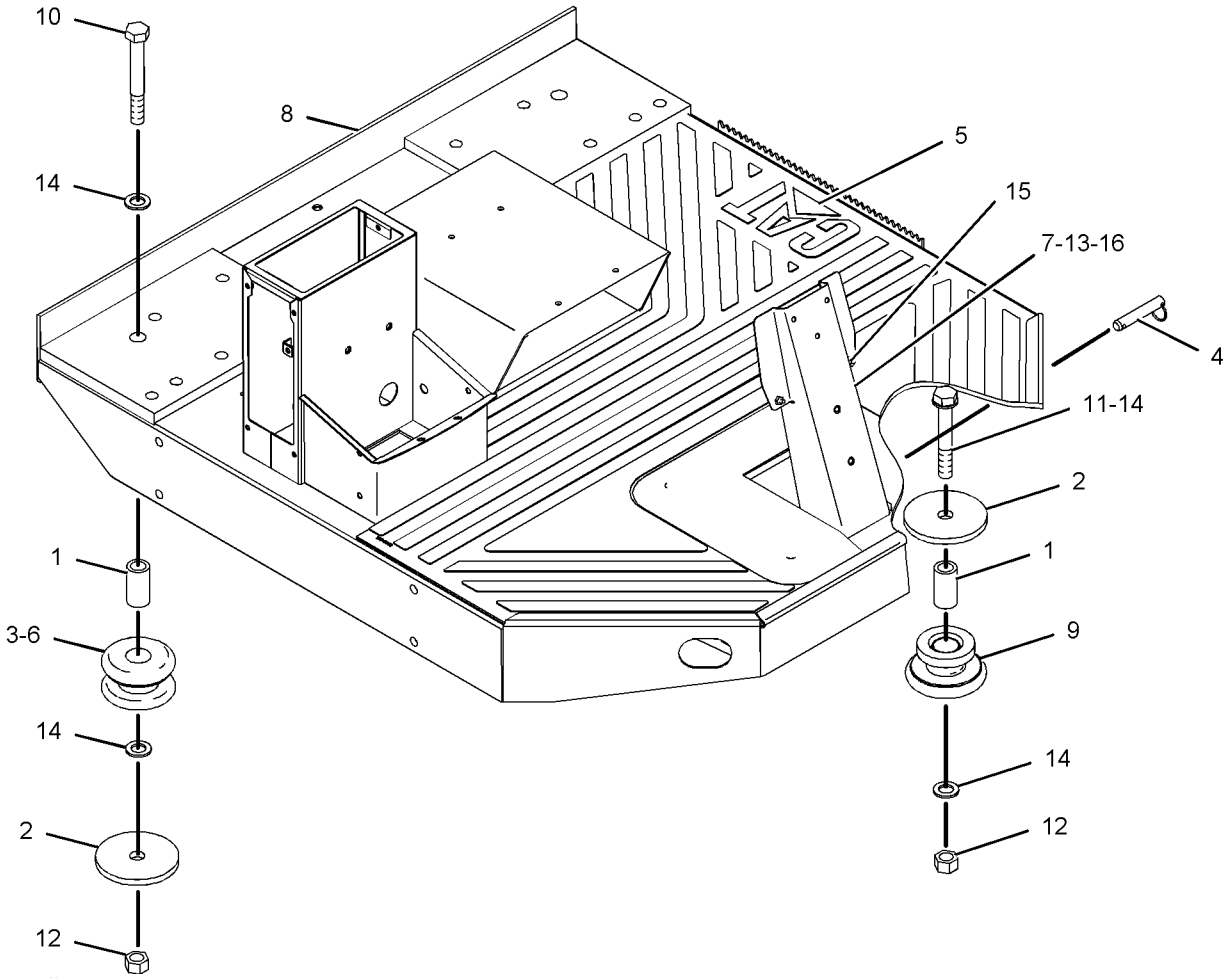

GRAPHIC #1 **<END>** g01090275

OPERATOR STATION

249-2456 PLATFORM GP-OPERATOR

S/N: BZE977-UP; BZG442-UP
PART OF 236-1517, 236-1518, 236-6627 OPERATOR AR
ALSO AN ATTACHMENT

SMCS-7253 **i03009749**

NOTE	REF NO	GRAPHIC REF	PART NUMBER	QTY	PART NAME 1 2 3 4 5 6 (PRODUCT LEVEL)	SEE PAGE
	1	1	**3E-4883**	4	SLEEVE	
	2	1	**9W-7388**	4	WASHER (26X144X12-MM THK)	
	3	1	**9W-9931**	2	MOUNT AS	
	4	1	**054-8974**	4	PIN	
C	5	1	**314-6915**	1	FLOOR MAT	
	6	1	**159-4026**	2	SLEEVE	
	7	1	**189-4652**	1	COVER AS	
	8	1	**235-0374**	1	FLOORPLATE AS	
	9	1	**156-1141**	2	MOUNT AS	
M	10	1	**7X-2465**	1	BOLT (M24X3X180-MM)	
M	11	1	**7X-2567**	2	BOLT (M24X3X160-MM)	
M	12	1	**8T-4001**	4	NUT (M24X3-THD)	
M	13	1	**8T-4138**	1	BOLT (M6X1X20-MM)	
	14	1	**8T-4167**	8	WASHER-HARD (26X44X4-MM THK)	
M	15	1	**9X-2045**	2	SCREW-TRUSS HEAD (M6X1X20-MM)	
	16	1	**9X-8256**	1	WASHER (6.6X12X2-MM THK)	
C	17	1	**314-6914**	1	FLOOR MAT	
C	18	1	**1L-6366**	2	BUTTON-PLUG	

C-CHANGE FROM PREVIOUS TYPE
M-METRIC PART

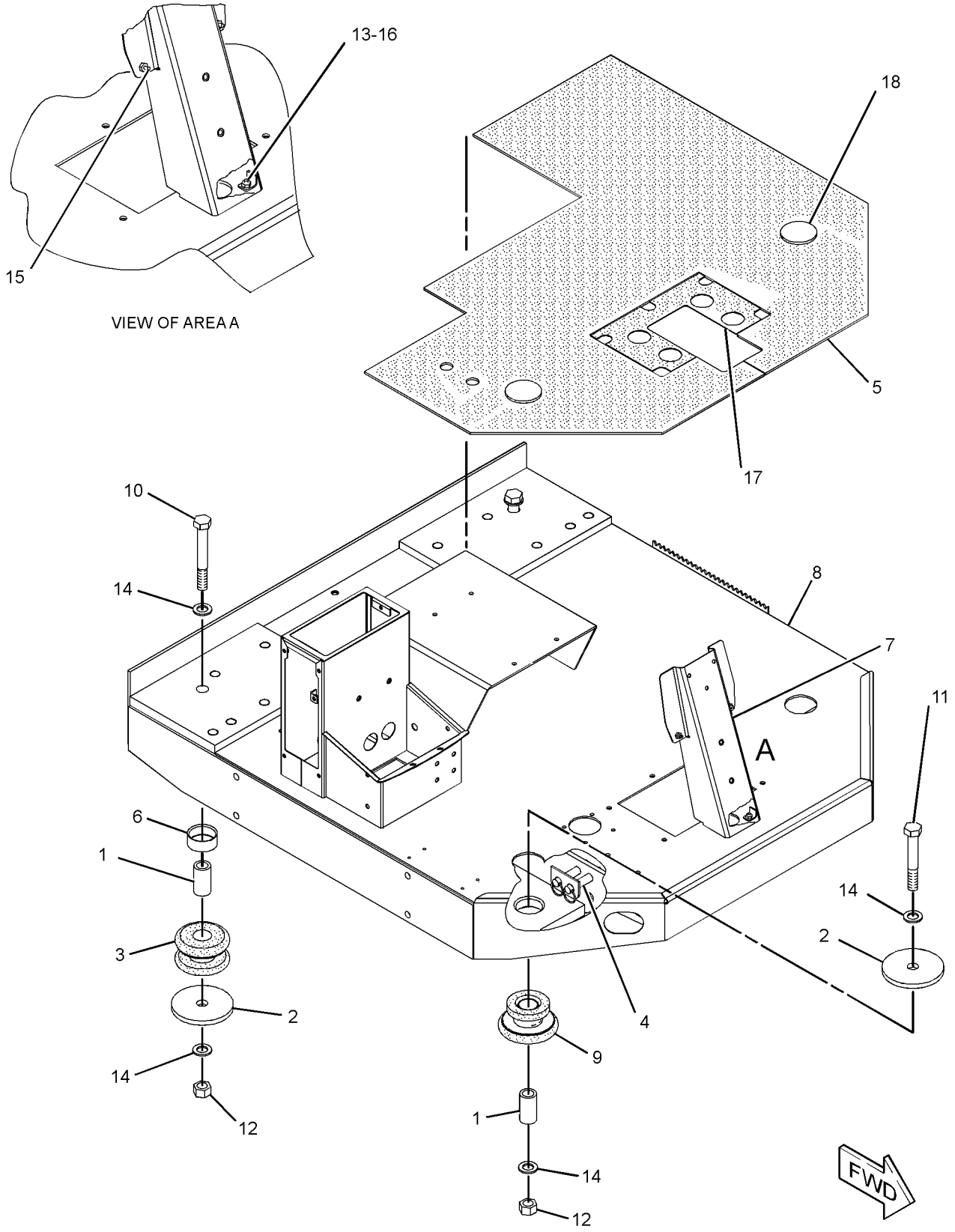

GRAPHIC #1 **<END>** g01445000

OPERATOR STATION

202-0679 ROPS GP

S/N: BZE1-UP; BZG1-UP

PART OF 236-1518 OPERATOR AR

SMCS-7323 **i01774911**

NOTE	REF NO	GRAPHIC REF	PART NUMBER	QTY	PART NAME 1 2 3 4 5 6 (PRODUCT LEVEL)	SEE PAGE
	1	1	**165-0571**	1	ROPS AS	
		1	**7T-1099**	16	LINK	
M	2	1	**7X-2575**	10	BOLT (M24X3X60-MM)	
	3	1	**8T-4167**	12	WASHER-HARD (26X44X4-MM THK)	
D	4	1	**8T-3426**		CHANNEL-TRIM (2.8M)	
M	5	1	**7X-2576**	2	BOLT (M24X3X70-MM)	

D-ORDER BY THE METER
M-METRIC PART

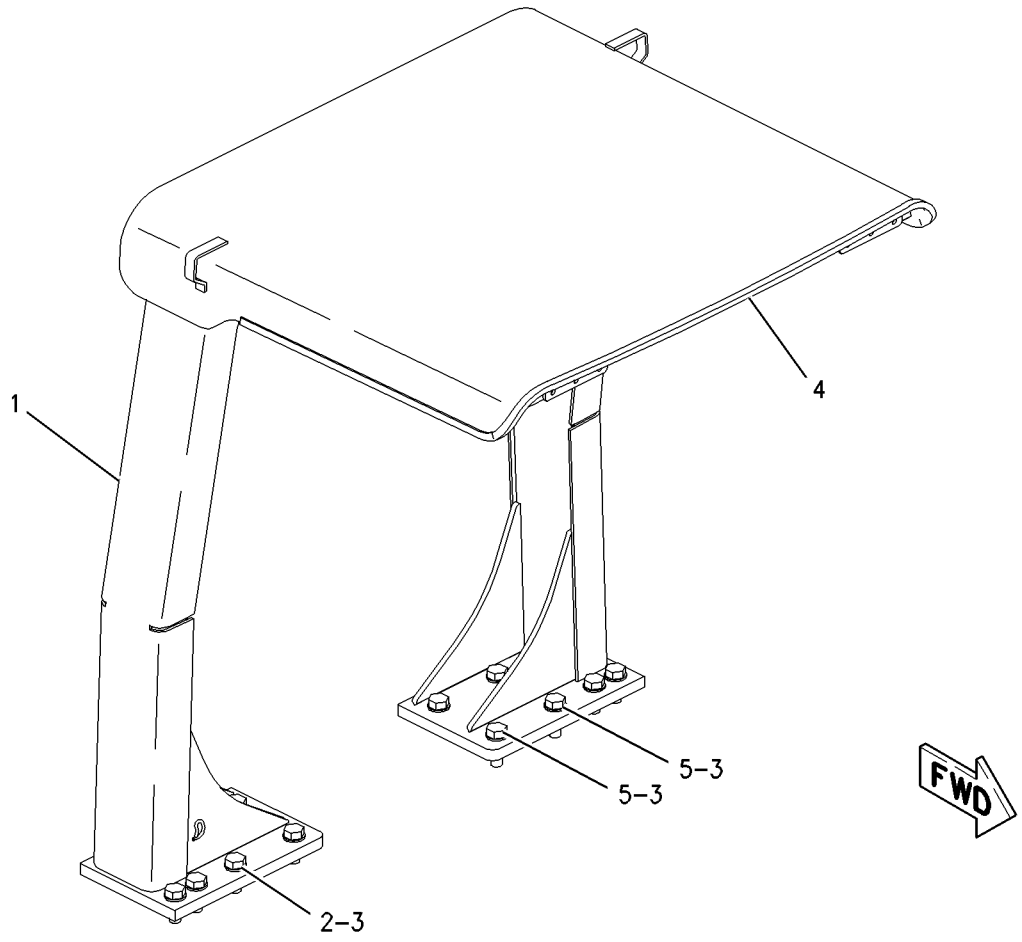

GRAPHIC #1 **<END>** g00844746

OPERATOR STATION

223-4792 ROPS GP-ENCLOSED

S/N: BZE1-UP; BZG1-UP
PART OF 223-4791 CAB AR
AN ATTACHMENT

SMCS-7301 **i02898385**

NOTE	REF NO	GRAPHIC REF	PART NUMBER	QTY	PART NAME 1 2 3 4 5 6 (PRODUCT LEVEL)	SEE PAGE
	1	1	**118-6375**	1	FILM-INSTRUCTION (UNLOCK, RELEASE)	
Y	2	1	**185-5770**	1	DOOR GP-CAB (SLIDING WINDOW, LH)	397
	3	1	**187-9185**	1	FILM-INFORMATION (ALTERNATE EXIT)	
	4	1	**225-7713**	1	FLOORPLATE AS	
		1	**7T-1099**	10	LINK	
		1	**7V-5627**	1	PLATE AS	
M		1	**8T-3635**	3	STUD-WELD (M12X1.75X34.93-MM OAL)	
Y	5	1	**225-7714**	1	CAB GP-ENCLOSED ROPS	377
	6	1	**229-9269**	2	BRACKET	
M	7	1	**7X-2563**	12	BOLT (M20X2.5X60-MM)	
	8	1	**8T-4123**	22	WASHER (22X35X3.5-MM THK)	
M	9	1	**8T-4131**	10	NUT (M20X2.5-THD)	
	10	1	**8T-4223**	2	WASHER-HARD (13.5X25.5X3-MM THK)	
M	11	1	**8T-4244**	2	NUT (M12X1.75-THD)	
D	12	1	**5P-5643**		SEAL (4.8-M)	

D-ORDER BY THE METER
M-METRIC PART
Y-SEPARATE ILLUSTRATION

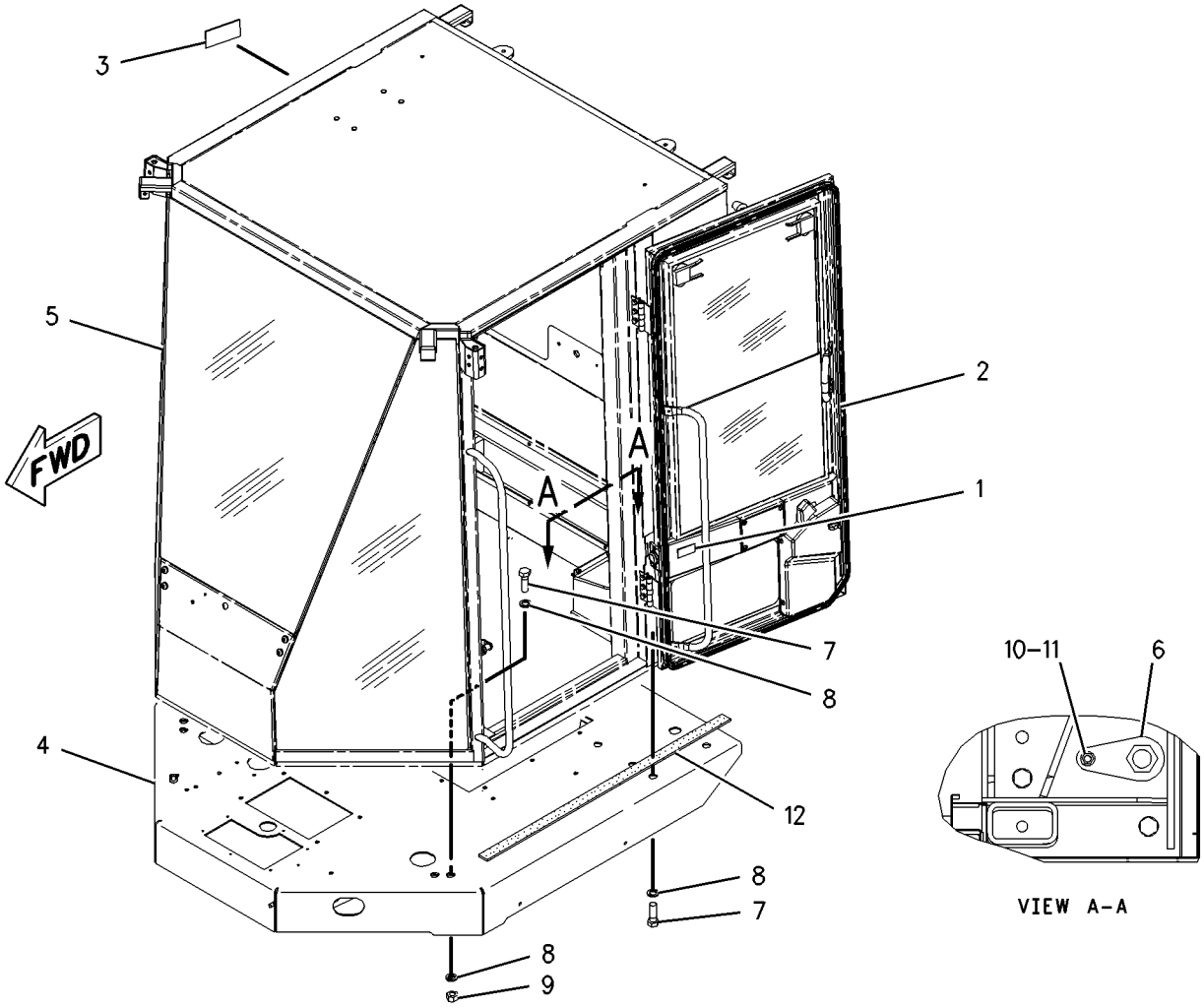

GRAPHIC #1 **<END>** g01003740

OPERATOR STATION

254-5057 ROPS GP-ENCLOSED

S/N: BZE1-UP; BZG1-UP
PART OF 254-5054, 259-4423 CAB AR
AN ATTACHMENT

SMCS-7301 **i02187925**

NOTE	REF NO	GRAPHIC REF	PART NUMBER	QTY	PART NAME 1 2 3 4 5 6 (PRODUCT LEVEL)	SEE PAGE
	1	1	**118-6375**	1	FILM-INSTRUCTION (UNLOCK, RELEASE)	
Y	2	1	**185-5770**	1	DOOR GP-CAB (SLIDING WINDOW, LH)	397
	3	1	**187-9185**	1	FILM-INFORMATION (ALTERNATE EXIT)	
	4	1	**229-9269**	2	BRACKET	
Y	5	1	*254-5058*	1	CAB GP-ENCLOSED ROPS	379
	6	1	**259-2646**	1	FLOORPLATE AS	
M	7	1	**7X-2563**	12	BOLT (M20X2.5X60-MM)	
	8	1	**8T-4123**	22	WASHER (22X35X3.5-MM THK)	
M	9	1	**8T-4131**	10	NUT (M20X2.5-THD)	
	10	1	**8T-4223**	2	WASHER-HARD (13.5X25.5X3-MM THK)	
M	11	1	**8T-4244**	2	NUT (M12X1.75-THD)	
BD	12	1	**5P-5643**		SEAL	

B-USE AS REQUIRED
D-ORDER BY THE METER
M-METRIC PART
Y-SEPARATE ILLUSTRATION

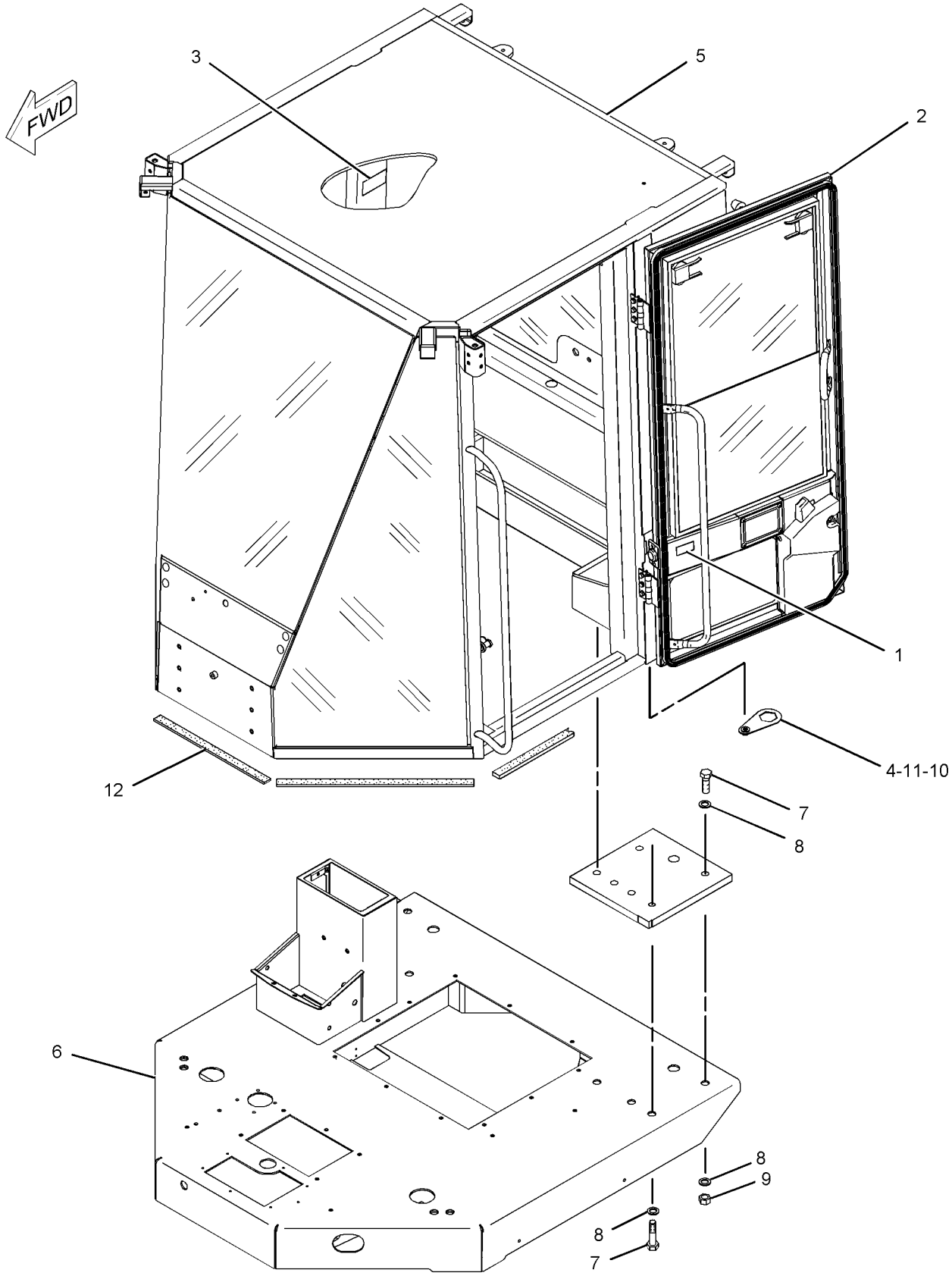

GRAPHIC #1 **<END>** g01144842

OPERATOR STATION

118-7250 SCREEN GP-SUN

S/N: BZE1-UP; BZG1-UP
PART OF 204-4390, 255-6422 SCREEN GP-SUN
AN ATTACHMENT

SMCS-7165 **i01850342**

NOTE	REF NO	GRAPHIC REF	PART NUMBER	QTY	PART NAME 1 2 3 4 5 6 (PRODUCT LEVEL)	SEE PAGE
	1	1	**119-2073**	2	HOOK-RETAINER	

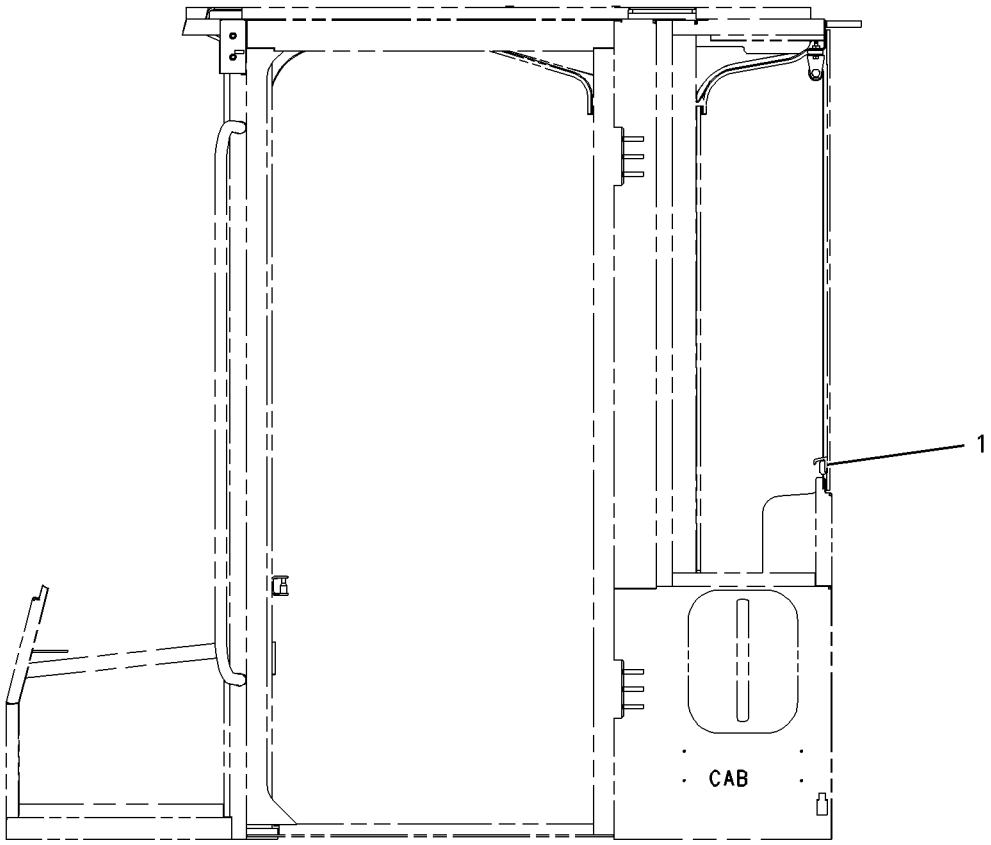

LEFT SIDE VIEW

GRAPHIC #1 **<END>** g00942564

OPERATOR STATION

204-4390 SCREEN GP-SUN

S/N: BZE1-UP; BZG1-UP
AN ATTACHMENT

SMCS-7165 **i01972536**

NOTE	REF NO	GRAPHIC REF	PART NUMBER	QTY	PART NAME 1 2 3 4 5 6 (PRODUCT LEVEL)	SEE PAGE
Y	1	1	**118-7250**	1	SCREEN GP-SUN	466

Y-SEPARATE ILLUSTRATION

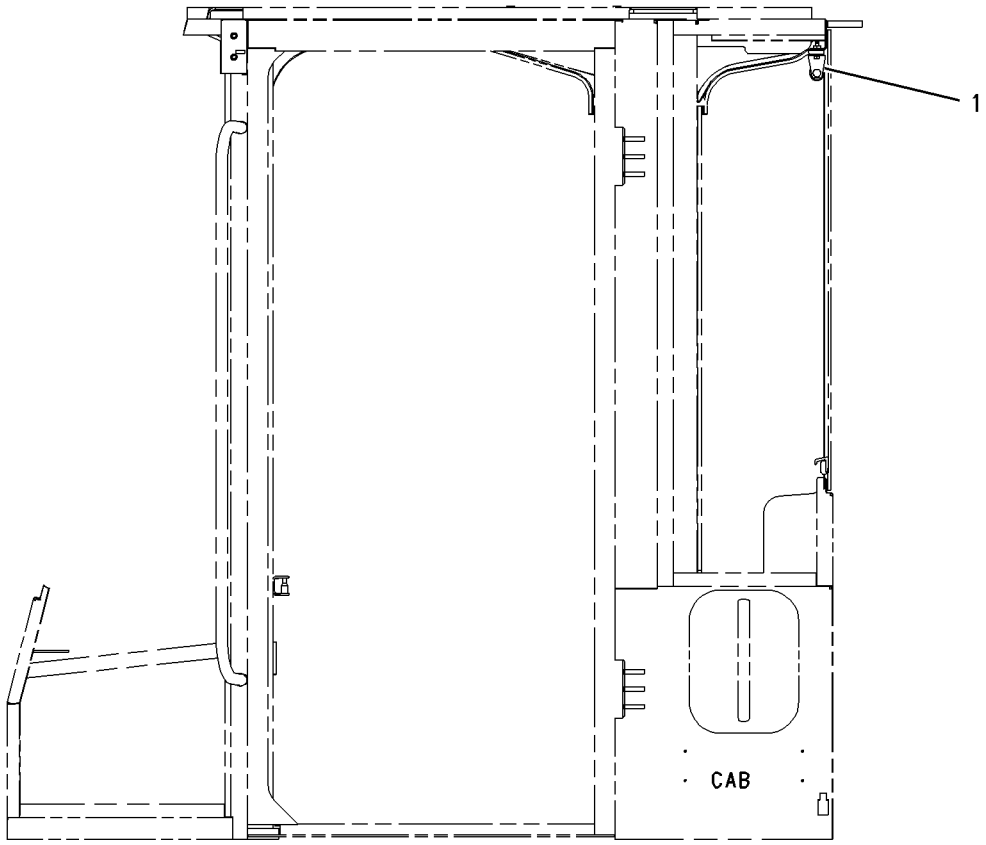

LEFT SIDE VIEW

GRAPHIC #1 **<END>** g00942562

OPERATOR STATION

255-6422 SCREEN GP-SUN–CAB

S/N: BZE1-UP; BZG1-UP
AN ATTACHMENT

SMCS-7165 **i02145480**

NOTE	REF NO	GRAPHIC REF	PART NUMBER	QTY	PART NAME 1 2 3 4 5 6 (PRODUCT LEVEL)	SEE PAGE
Y	1	1	**118-7250**	1	SCREEN GP-SUN	466
M	2	1	**5C-9553**	2	BOLT (M6X1X16-MM)	
	3	1	**5P-4115**	2	WASHER-HARD (7.2X19X2-MM THK)	

M-METRIC PART
Y-SEPARATE ILLUSTRATION

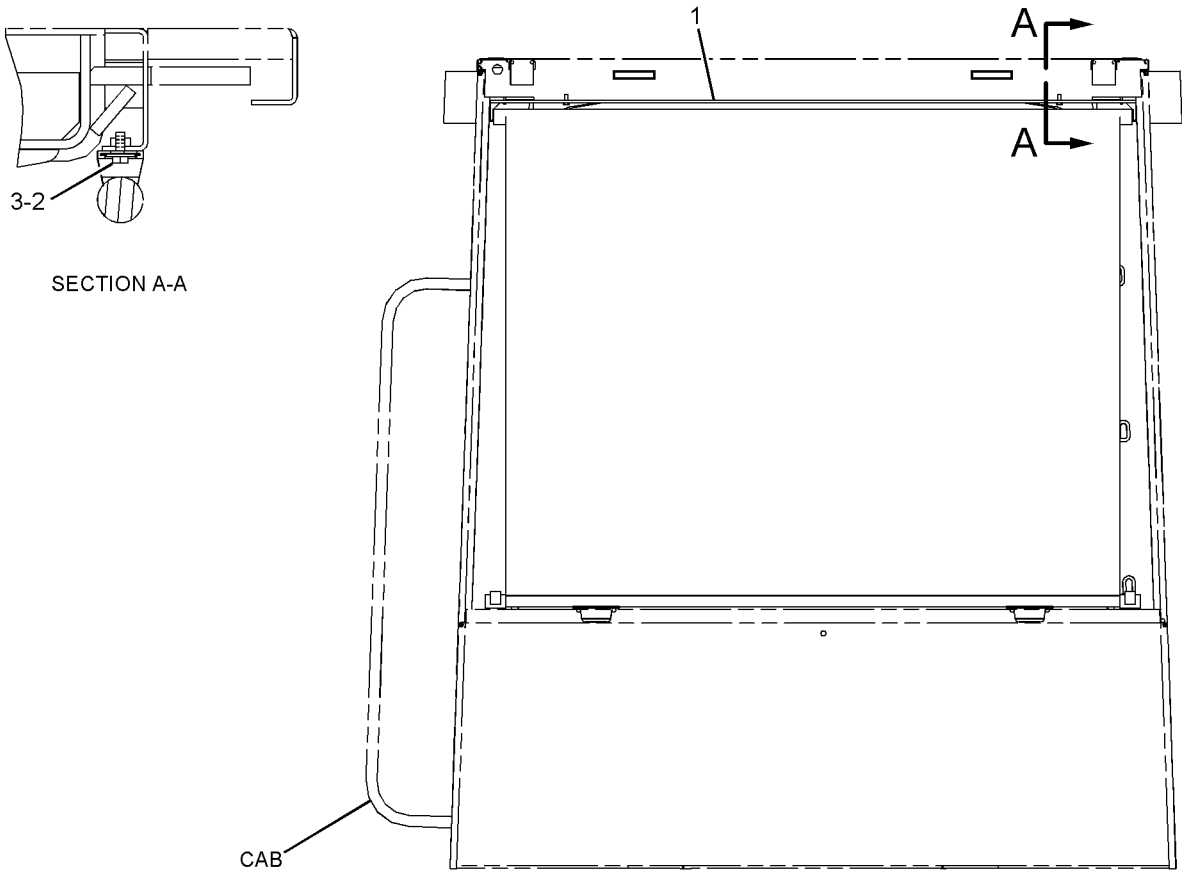

SECTION A-A

REAR VIEW

GRAPHIC #1 **<END>** g01090009

235-0512 SEAT & MOUNTING GP

S/N: BZE1-UP; BZG1-UP
AN ATTACHMENT

SMCS-7312 **i02357477**

NOTE	REF NO	GRAPHIC REF	PART NUMBER	QTY	PART NAME 1 2 3 4 5 6 (PRODUCT LEVEL)	SEE PAGE
	1	1	**230-6367**	1	SEAT BELT GP	
Y	2	1	**235-3151**	1	SEAT GP-SUSPENSION	470
	3	1	**236-5056**	1	FASTENER GP-SEAT	
M	4	1	**5C-7261**	4	NUT (M8X1.25-THD)	
	5	1	**8T-4224**	8	WASHER-HARD (8.8X16X2-MM THK)	
M	6	1	**5A-3604**	4	BOLT-SOCKET HEAD (M8X1.25X25-MM)	
	7	1	**5P-7958**	1	SLEEVE-CABLE SPLICE	

M-METRIC PART
Y-SEPARATE ILLUSTRATION

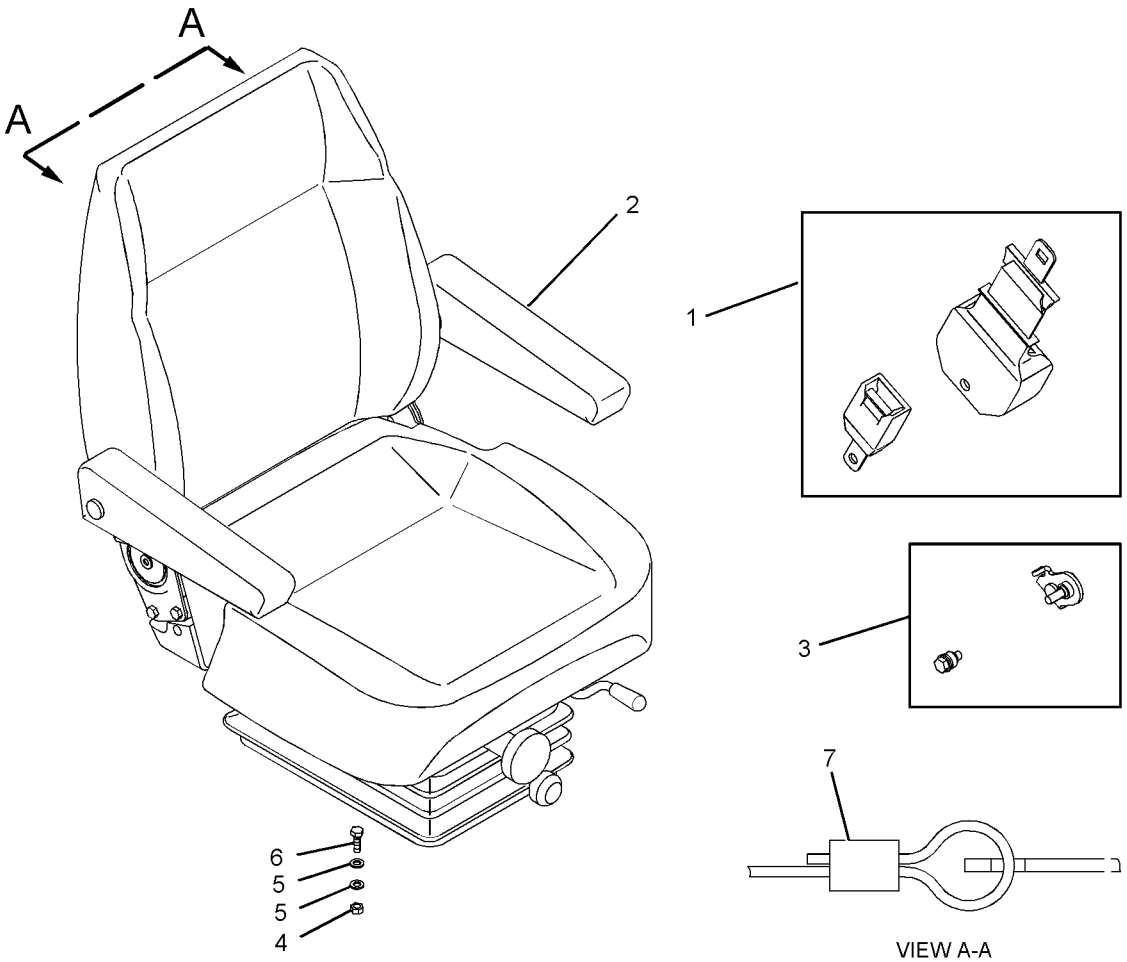

GRAPHIC #1 **<END>** g01100735

OPERATOR STATION

235-3151 SEAT GP-SUSPENSION

S/N: BZE1-UP; BZG1-UP
PART OF 235-0512 SEAT & MOUNTING GP
AN ATTACHMENT

SMCS-7324 **i02898386**

NOTE	REF NO	GRAPHIC REF	PART NUMBER	QTY	PART NAME 1 2 3 4 5 6 (PRODUCT LEVEL)	SEE PAGE
	1	1	**233-7538**	1	ARMREST (RH)	
Z	1A	1		2	BOLT	
Z	1B	1		1	BRACKET	
Z	1C	1		2	SPACER	
	2	1	**233-7537**	1	ARMREST (LH)	
Z	2A	1		2	BOLT	
Z	2B	1		1	BRACKET	
Z	2C	1		2	SPACER	
	3	1	**233-7530**	1	COVER-SEAT (BACK, VINYL)	
	4	1	**190-9732**	1	KIT-FOAM BACK (SUSPENSION SEAT)	
	5	1	**247-6479**	1	KIT-SEAT (SUSPENSION SEAT)	
	6	1	**233-7532**	1	COVER-SEAT (BOTTOM, VINYL)	
	7	1	**233-7533**	1	FOAM-SEAT (BOTTOM)	
JZ	8	1		1	KNOB (SEAT)	
JZ	8A	1		1	KNOB (RAIL)	
	9	1	**202-4739**	1	KIT-STOP (SUSPENSION SEAT)	
					(INCLUDES UPSTOP & BUMPSTOP)	
	10	1	**217-5821**	1	ADJUSTER GP-HEIGHT (SUSPENSION SEAT)	
	11	1	**202-4737**	1	KIT-SEAT (INDICATORS)	
					(INCLUDES WASHER & INDICATOR)	
	12	1	**202-4736**	1	KIT-DAMPER	
					(INCLUDES DAMPERS, PINS, WASHERS, PUSHNUT & SPACER)	
	13	1	**233-7535**	1	KIT-RAIL (SUSPENSION SEAT)	
					(INCLUDES RH-RAIL & LH-RAIL)	
	14	1	**233-7536**	1	KIT-STRAP (SUSPENSION SEAT)	
					(INCLUDES FRONT STRAP & REAR STRAP)	
	15	1	**202-4740**	1	KIT-ADJUSTER	
					(INCLUDES SPACER,PINS,WEIGHT ADJUSTER KNOB,SPRINGS,ADJUSTER SHAFT,ANCHORS,NEEDLE BEARINGS & WASHER BEARINGS)	
	16	1	**232-4226**	1	KIT-BOOT (SUSPENSION SEAT)	
					AVAILABLE REPAIR KIT(S):	
J			**233-7534**	1	KIT-KNOB (SUSPENSION SEAT)	

J-KIT MARKED J SERVICES PART(S) MARKED J
Z-NOT SERVICED SEPARATELY

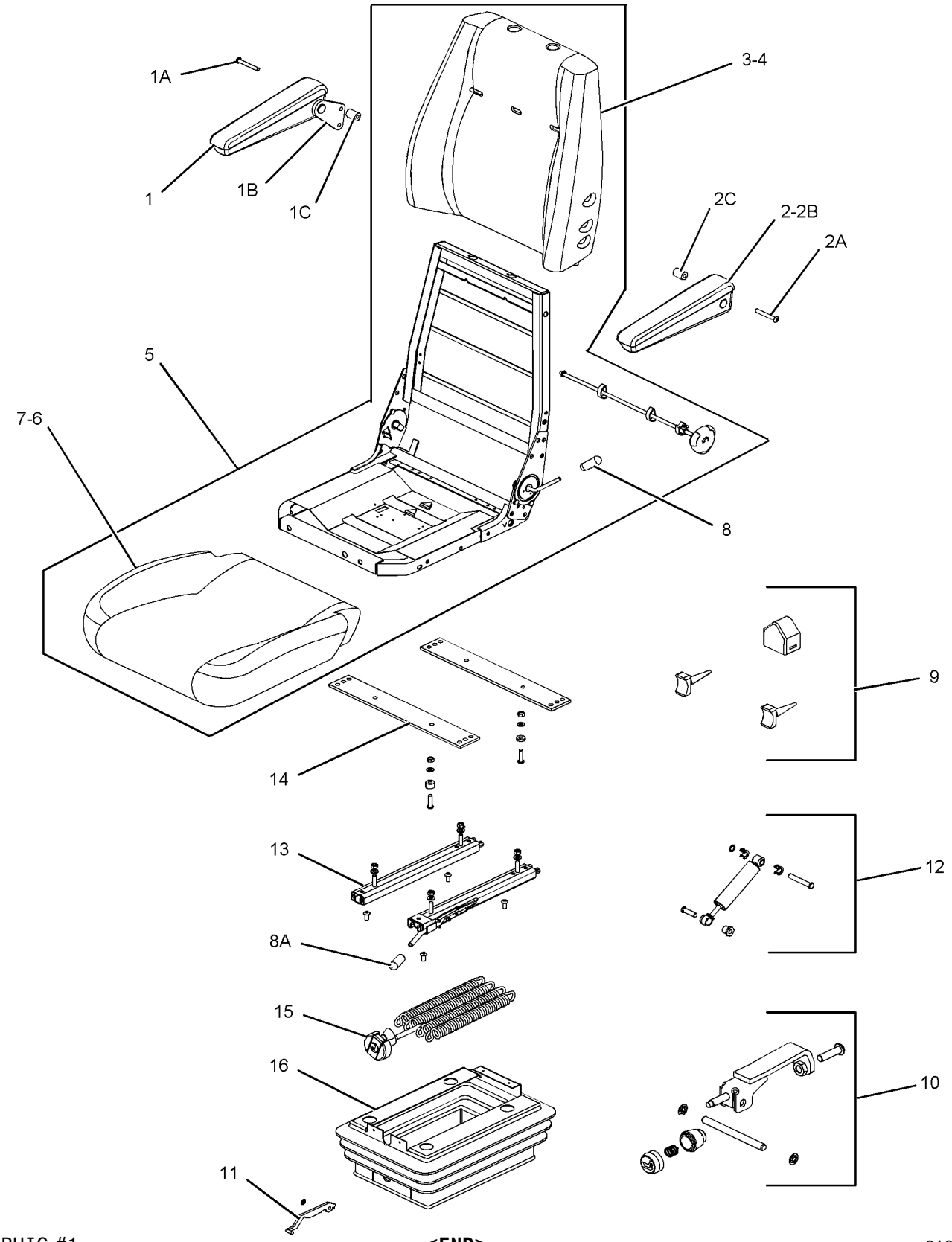

GRAPHIC #1 **<END>** g01054522

OPERATOR STATION

235-4119 SEAT GP-SUSPENSION—CLOTH

S/N: BZE1-UP; BZG1-UP

AN ATTACHMENT

SMCS-7324 **i02942705**

NOTE	REF NO	GRAPHIC REF	PART NUMBER	QTY	PART NAME 1 2 3 4 5 6 (PRODUCT LEVEL)	SEE PAGE
	1	1	**230-6367**	1	SEAT BELT GP	
	2	1	**235-1491**	1	PLATE	
	3	1	**236-5056**	1	FASTENER GP-SEAT	
Y	4	1	**248-1362**	1	SEAT GP-SUSPENSION (CLOTH)	474
M	5	1	**6V-8202**	4	BOLT-SOCKET HEAD (M8X1.25X16-MM)	
	6	1	**8T-4121**	4	WASHER-HARD (11X21X2.5-MM THK)	
M	7	1	**8T-4195**	4	BOLT (M10X1.5X30-MM)	
	8	1	**8T-4224**	4	WASHER-HARD (8.8X16X2-MM THK)	
	9	1	**5P-7958**	1	SLEEVE-CABLE SPLICE	

M-METRIC PART
Y-SEPARATE ILLUSTRATION

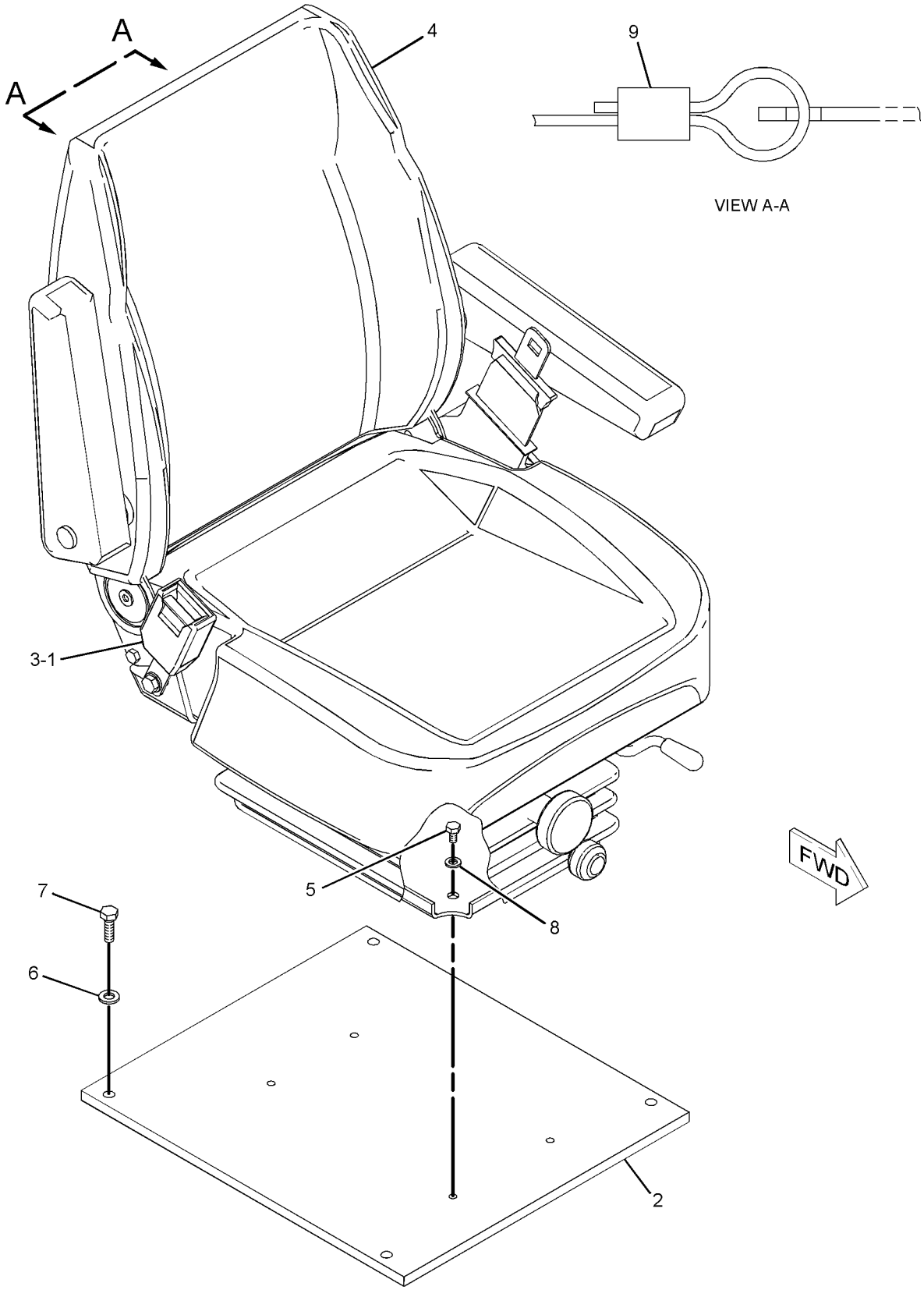

GRAPHIC #1 **<END>** g01103932

OPERATOR STATION

248-1362 SEAT GP-SUSPENSION—CLOTH

S/N: BZE1-UP; BZG1-UP
PART OF 235-4119 SEAT GP-SUSPENSION
AN ATTACHMENT

SMCS-7324 **i02898388**

NOTE	REF NO	GRAPHIC REF	PART NUMBER	QTY	PART NAME 1 2 3 4 5 6 (PRODUCT LEVEL)	SEE PAGE
	1	1	**233-7538**	1	ARMREST (RH)	
Z	1A	1		2	BOLT	
Z	1B	1		1	BRACKET	
Z	1C	1		2	SPACER	
	2	1	**233-7537**	1	ARMREST (LH)	
Z	2A	1		2	BOLT	
Z	2B	1		1	BRACKET	
Z	2C	1		2	SPACER	
	3	1	**247-4941**	1	COVER-SEAT (BACK, CLOTH)	
	4	1	**190-9732**	1	KIT-FOAM BACK (SUSPENSION SEAT)	
	5	1	**253-4313**	1	KIT-SEAT (SUSPENSION SEAT)	
	6	1	**247-4942**	1	COVER-SEAT (BOTTOM, CLOTH)	
	7	1	**233-7533**	1	FOAM-SEAT (BOTTOM)	
JZ	8	1		1	KNOB (SEAT)	
JZ	8A	1		1	KNOB (RAIL)	
	9	1	**202-4739**	1	KIT-STOP (SUSPENSION SEAT)	
					(INCLUDES UPSTOP & BUMPSTOP)	
	10	1	**217-5821**	1	ADJUSTER GP-HEIGHT (SUSPENSION SEAT)	
	11	1	**202-4737**	1	KIT-SEAT (INDICATORS)	
					(INCLUDES WASHER & INDICATOR)	
	12	1	**202-4736**	1	KIT-DAMPER	
					(INCLUDES DAMPERS, PINS, WASHERS, PUSHNUT & SPACER)	
	13	1	**233-7535**	1	KIT-RAIL (SUSPENSION SEAT)	
					(INCLUDES RH-RAIL & LH-RAIL)	
	14	1	**233-7536**	1	KIT-STRAP (SUSPENSION SEAT)	
					(INCLUDES FRONT STRAP & REAR STRAP)	
	15	1	**202-4740**	1	KIT-ADJUSTER	
					(INCLUDES SPACER,PINS,WEIGHT ADJUSTER KNOB,SPRINGS,ADJUSTER SHAFT,ANCHORS,NEEDLE BEARINGS & WASHER BEARINGS)	
	16	1	**232-4226**	1	KIT-BOOT (SUSPENSION SEAT)	
					AVAILABLE REPAIR KIT(S):	
J			**233-7534**	1	KIT-KNOB (SUSPENSION SEAT)	

J-KIT MARKED J SERVICES PART(S) MARKED J
Z-NOT SERVICED SEPARATELY

248-1362 SEAT GP-SUSPENSION *(contd.)* **i02898388**

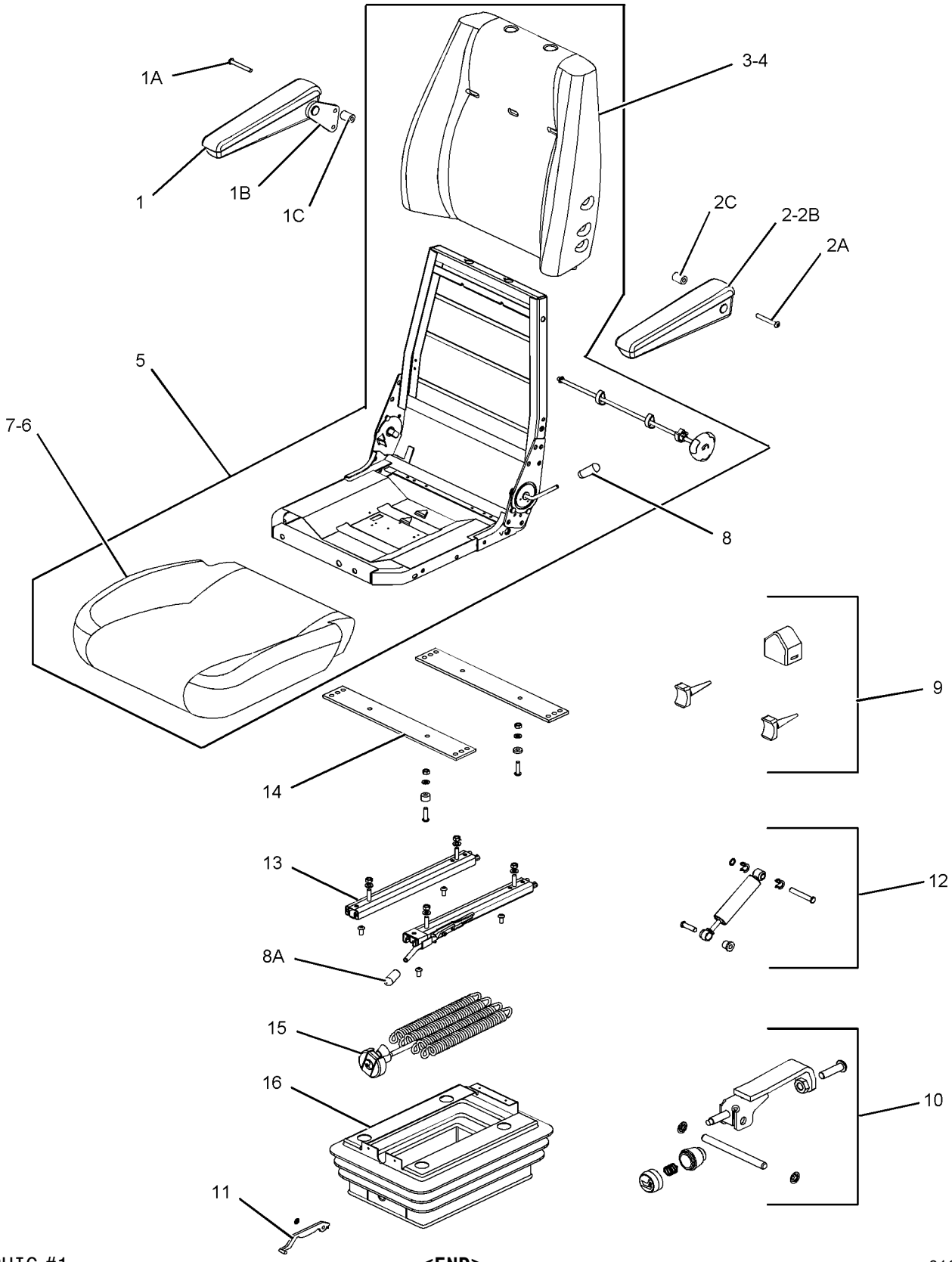

GRAPHIC #1 **<END>** g01054522

OPERATOR STATION

155-4774 TANK GP-WINDOW WASHER

S/N: BZE1-UP; BZG1-UP

PART OF 223-4793 WIPER & WASHER GP-WINDOW

AN ATTACHMENT

SMCS-7306 **i02154524**

NOTE	REF NO	GRAPHIC REF	PART NUMBER	QTY	PART NAME 1 2 3 4 5 6 (PRODUCT LEVEL)	SEE PAGE
	1	1	**7T-8890**	2	PUMP AS-WASHER	
	2	1	**8T-5913**	2	SCREEN-FILTER (WINDOW WASHER)	
	3	1	**8T-5914**	2	GROMMET	
	4	1	**8E-8292**	1	CAP-VENTED (WINDOW WASHER)	
	5	1	**155-4777**	1	RESERVOIR	

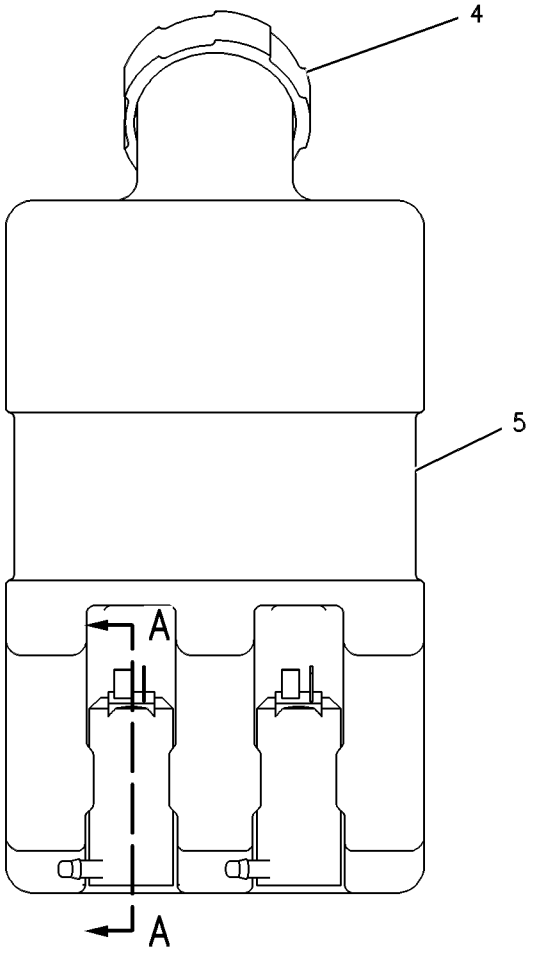

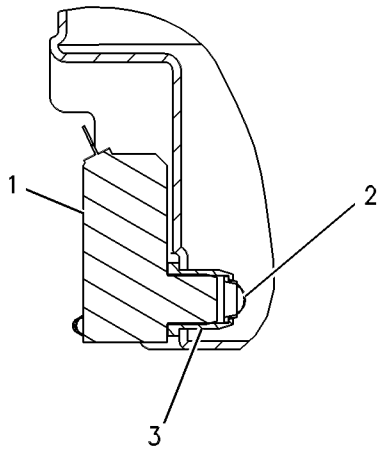

SECTION A-A

GRAPHIC #1 **<END>** g00334557

OPERATOR STATION

107-4641 VISOR GP-CAB

S/N: BZE1-UP; BZG1-UP
AN ATTACHMENT

SMCS-7301 **i01130547**

NOTE	REF NO	GRAPHIC REF	PART NUMBER	QTY	PART NAME 1 2 3 4 5 6 (PRODUCT LEVEL)	SEE PAGE
	1	1	**9R-3203**	2	PLATE	
	2	1	**9R-3204**	1	PLATE AS	
	3	1	**9R-3205**	1	VISOR AS	
M	4	1	**9X-2042**	2	SCREW-TRUSS HEAD (M6X1X12-MM)	
M	5	1	**9X-2045**	2	SCREW-TRUSS HEAD (M6X1X20-MM)	

M-METRIC PART

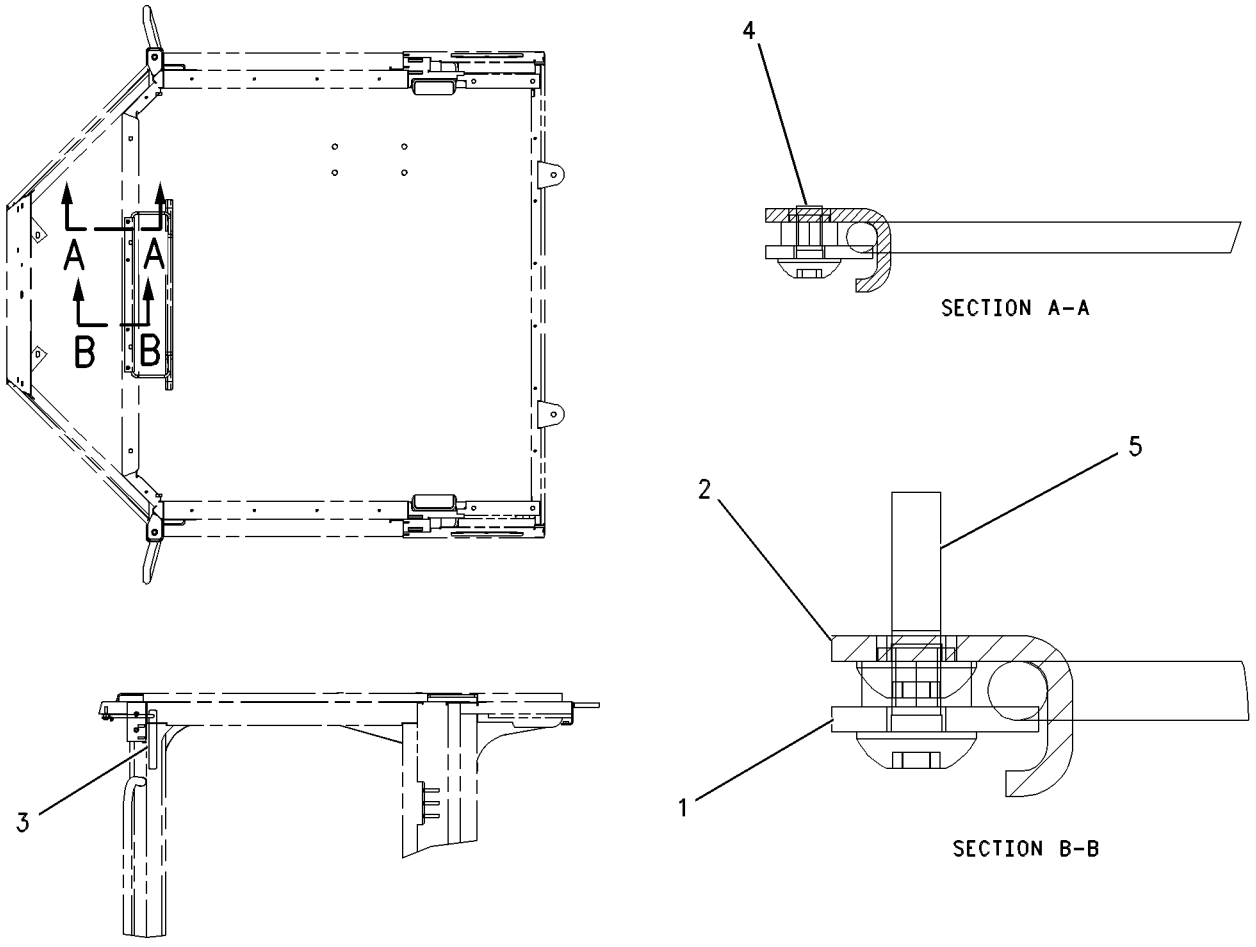

GRAPHIC #1 **<END>** g00599031

OPERATOR STATION

153-7817 WINDOW GP

S/N: BZE1-UP; BZG1-UP
PART OF 225-7714, 254-5058 CAB GP-ENCLOSED ROPS
AN ATTACHMENT

SMCS-7310 **i02898389**

NOTE	REF NO	GRAPHIC REF	PART NUMBER	QTY	PART NAME 1 2 3 4 5 6 (PRODUCT LEVEL)	SEE PAGE
	1	1	**165-0177**	1	CATCH AS (LH)	
		1	**150-8015**	1	GASKET	
	2	1	**165-0178**	1	CATCH AS (RH)	
		1	**150-8015**	1	GASKET	
	3	1	**187-5127**	1	CATCH AS (LH)	
		1	**150-8015**	1	GASKET	
	4	1	**187-5128**	1	CATCH AS (RH)	
		1	**150-8015**	1	GASKET	
	5	1	**187-5377**	1	FRAME AS	
	6	1	**187-5379**	1	RAIL	
	7	1	**187-5381**	1	GLASS (UPPER SLIDING)	
	8	1	**187-5383**	1	GLASS (LOWER SLIDING)	
	9	1	**187-5386**	1	RAIL AS	
M	10	1	**099-0857**	6	SCREW-MACHINE (M5X0.8X5.2-MM)	
E	11	1	**8Y-6913**		GLAZING (6.7-CM)	
E	12	1	**191-3040**		SEAL (2-CM)	
E	13	1	**137-2170**		SEAL (143.6-CM)	

E-ORDER BY THE CENTIMETER
M-METRIC PART

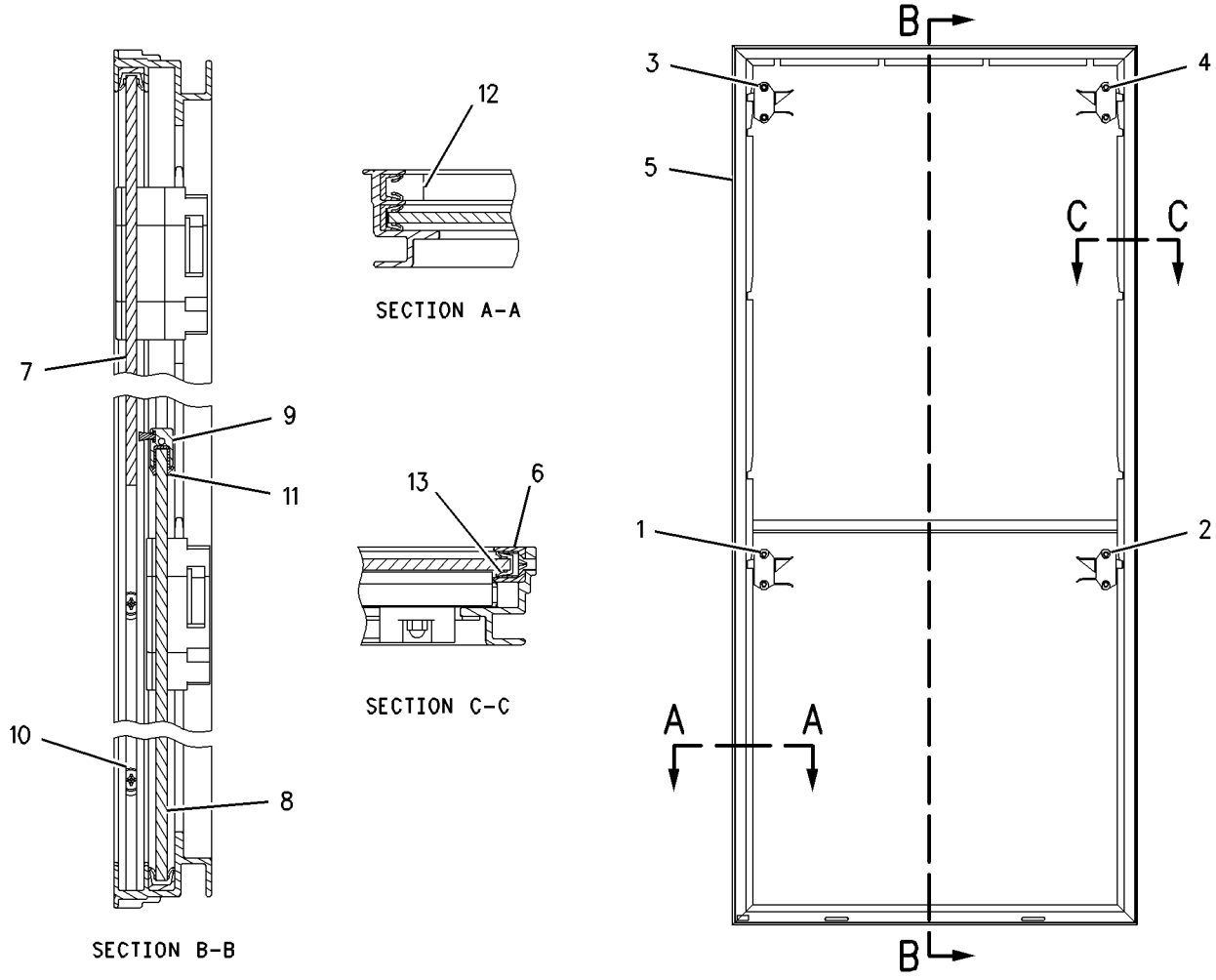

GRAPHIC #1 **<END>** g00750809

OPERATOR STATION

180-3871 WINDOW GP-DOOR

S/N: BZE1-UP; BZG1-UP
PART OF 185-5770 DOOR GP-CAB
AN ATTACHMENT

SMCS-7308, 7310 **i02898390**

NOTE	REF NO	GRAPHIC REF	PART NUMBER	QTY	PART NAME 1 2 3 4 5 6 (PRODUCT LEVEL)	SEE PAGE
	1	1	**144-1569**	1	STOP	
	2	1	**187-5122**	1	FRAME	
	3	1	**187-5123**	1	RAIL	
	4	1	**187-5124**	1	GLASS-SLIDING	
	5	1	**187-5125**	1	GLASS-FIXED	
	6	1	**187-5126**	1	RAIL AS	
	7	1	**187-5127**	1	CATCH AS (LH)	
		1	**150-8015**	1	GASKET	
	8	1	**187-5128**	1	CATCH AS (RH)	
		1	**150-8015**	1	GASKET	
M	9	1	**8T-0306**	6	SCREW-MACHINE (M5X0.8X10-MM)	
D	10	1	**9X-2532**		SEAL (1-M)	
E	11	1	**137-2170**		SEAL (250-CM)	

D-ORDER BY THE METER
E-ORDER BY THE CENTIMETER
M-METRIC PART

180-3871 WINDOW GP-DOOR *(contd.)* **i02898390**

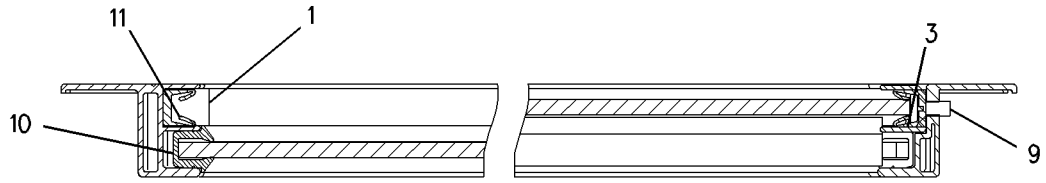

SECTION A-A

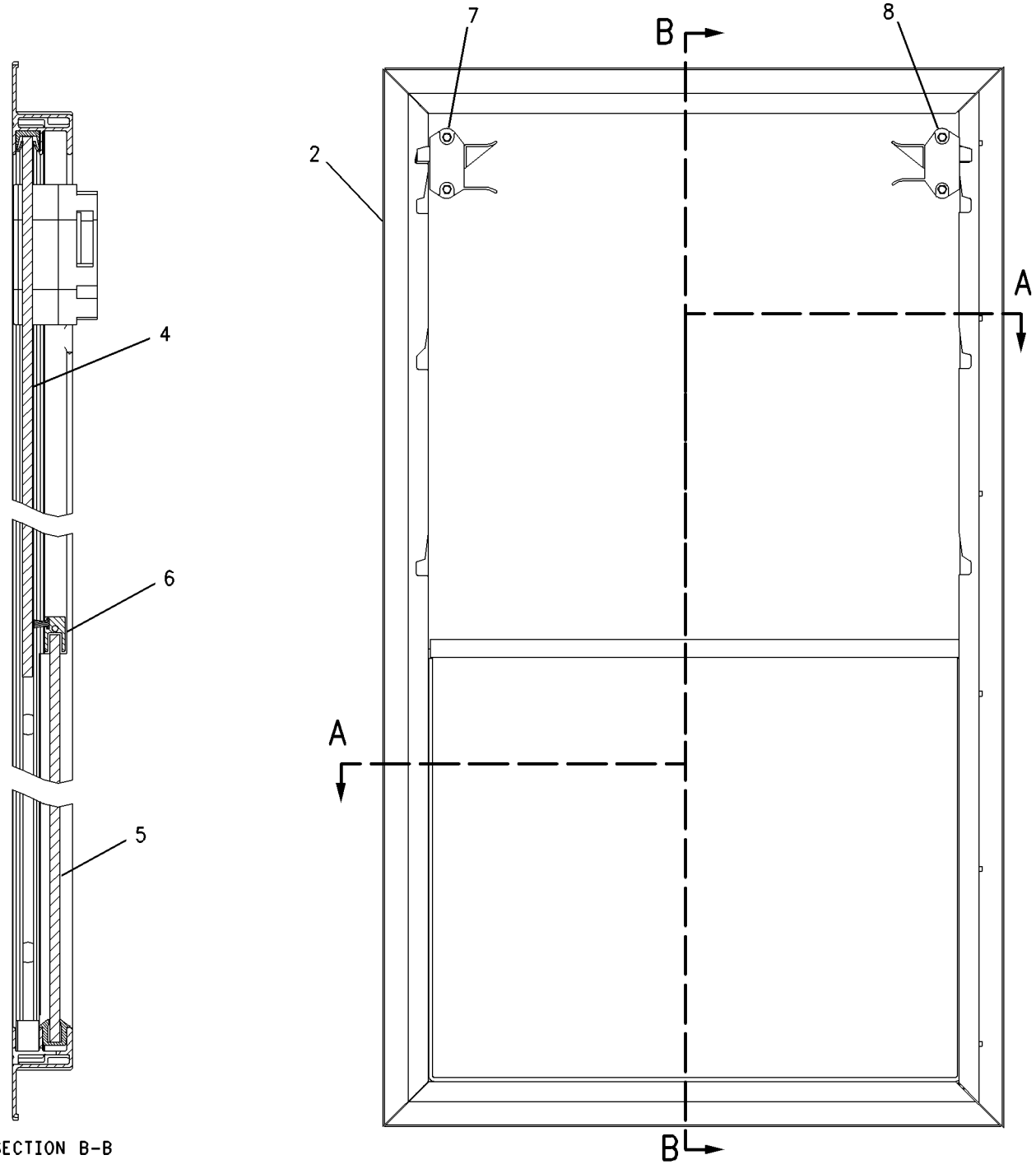

SECTION B-B

GRAPHIC #1 **<END>** g00930932

OPERATOR STATION

288-8880 WINDOW GP-REAR

S/N: BZE1-UP; BZG1-UP
PART OF 254-5058 CAB GP-ENCLOSED ROPS
AN ATTACHMENT

SMCS-7310, 7340 **i02863369**

NOTE	REF NO	GRAPHIC REF	PART NUMBER	QTY	PART NAME 1 2 3 4 5 6 (PRODUCT LEVEL)	SEE PAGE
	1	1	**165-0177**	1	CATCH AS (LH)	
	2	1	**165-0178**	1	CATCH AS (RH)	
	3	1	**187-5127**	1	CATCH AS (LH)	
	4	1	**187-5128**	1	CATCH AS (RH)	
					(EACH CATCH AS INCLUDES)	
		1	**150-8015**	1	GASKET	
	5	1	**187-5379**	1	RAIL	
	6	1	**187-5381**	1	GLASS (UPPER SLIDING)	
	7	1	**187-5383**	1	GLASS (LOWER SLIDING)	
	8	1	**187-5386**	2	RAIL AS	
	9	1	**288-8884**	2	BUMPER	
M	10	1	**099-0857**	6	SCREW-MACHINE (M5X0.8X5.2-MM)	
E	11	1	**191-3040**		SEAL (2-CM)	
E	12	1	**137-2170**		SEAL (1436-CM)	
D	13	1	**9X-2532**		SEAL (1-M EACH)	

D-ORDER BY THE METER
E-ORDER BY THE CENTIMETER
M-METRIC PART

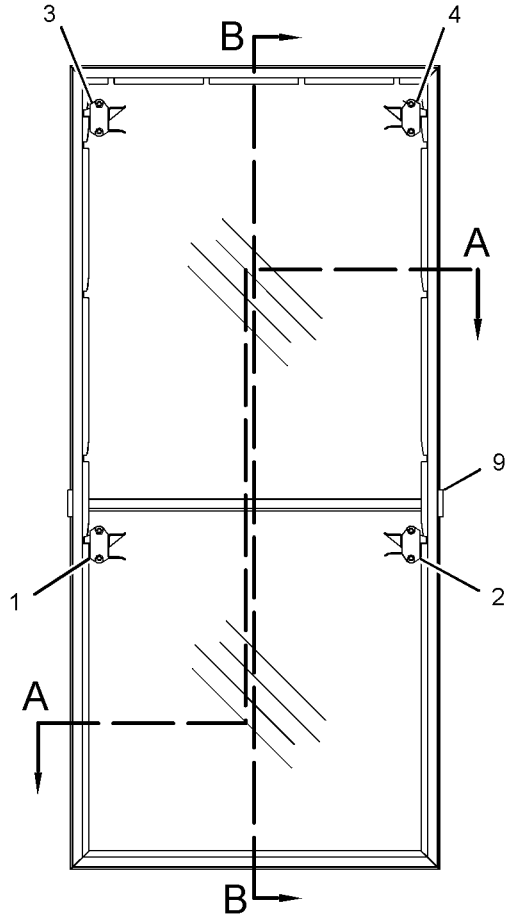

LEFT SIDE VIEW
(INSIDE CAB)

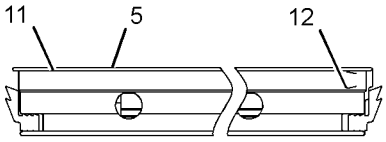

SECTION A-A

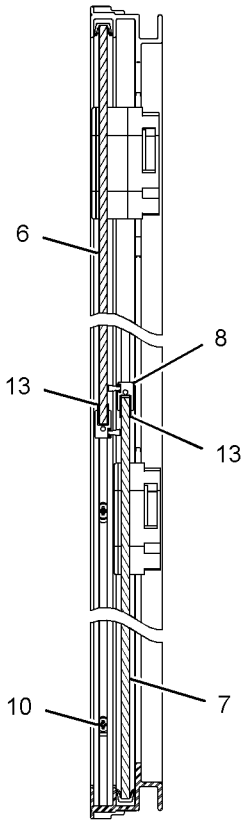

SECTION B-B

GRAPHIC #1 **<END>** g01287730

OPERATOR STATION

223-4793 WIPER & WASHER GP-WINDOW

S/N: BZE1-UP; BZG1-UP
PART OF 223-4791, 254-5054, 259-4423 CAB AR
AN ATTACHMENT

SMCS-7305, 7306 **i02855485**

NOTE	REF NO	GRAPHIC REF	PART NUMBER	QTY	PART NAME 1 2 3 4 5 6 (PRODUCT LEVEL)	SEE PAGE
	1	1	**5C-8811**	1	BLADE AS-WIPER (500-MM)	
	2	1	**6V-7419**	1	BLADE AS-WIPER (700-MM)	
	3	1	**8T-5400**	2	CONNECTOR AS	
	4	1	**112-5869**	1	ARM-WINDOW WIPER	
Y	5	1	**155-4774**	1	TANK GP-WINDOW WASHER	476
	6	1	**155-5779**	1	WIPER PIVOT AS	
Y	7	1	**155-5783**	1	MOTOR GP-WINDOW WIPER (24-VOLT)	426
	8	1	**169-0502**	1	PLATE AS	
		1	**7T-1099**	1	LINK	
M		1	**8T-3490**	2	NUT-WELD (M10X1.5-THD)	
Y	9	1	**214-7636**	1	ARM GP-WINDOW WIPER	375
Y	10	1	**239-4009**	1	MOTOR GP-WINDOW WIPER (24-VOLT)	427
	11	1	**8T-4121**	2	WASHER-HARD (11X21X2.5-MM THK)	
M	12	1	**8T-4195**	2	BOLT (M10X1.5X30-MM)	
M	13	1	**9X-2045**	1	SCREW-TRUSS HEAD (M6X1X20-MM)	
E	14	1	**144-0195**		HOSE (250-CM)	
E	14A	1	**144-0195**		HOSE (290-CM)	
E	15	1	**194-5171**		HOSE (43-CM)	

E-ORDER BY THE CENTIMETER
M-METRIC PART
Y-SEPARATE ILLUSTRATION

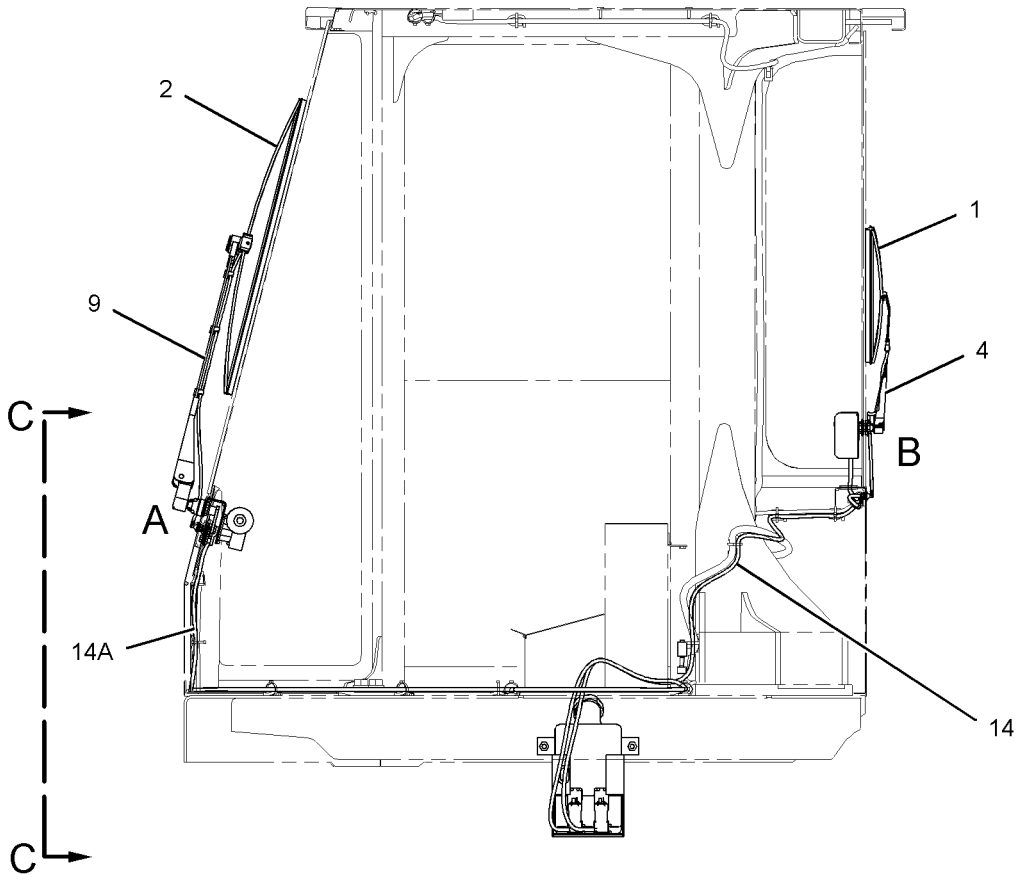

LEFT SIDE VIEW

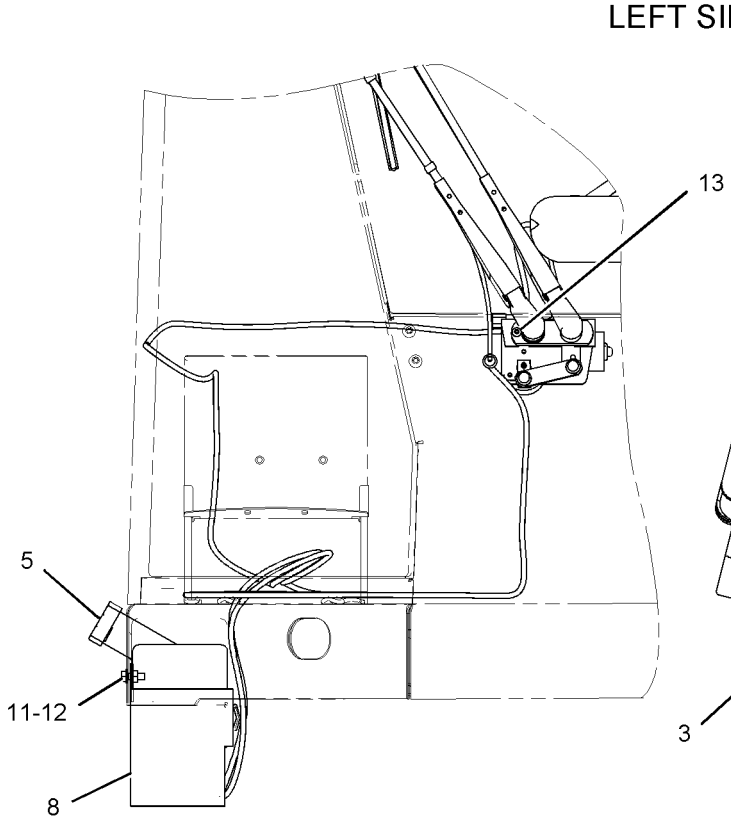

VIEW C-C

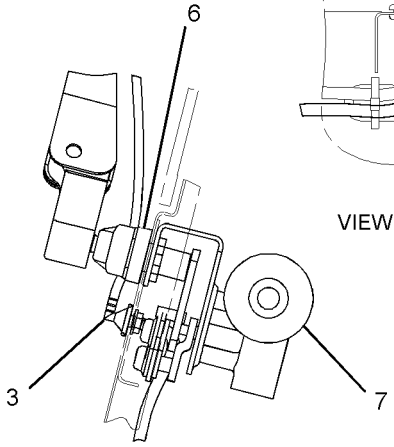

VIEW OF AREA A

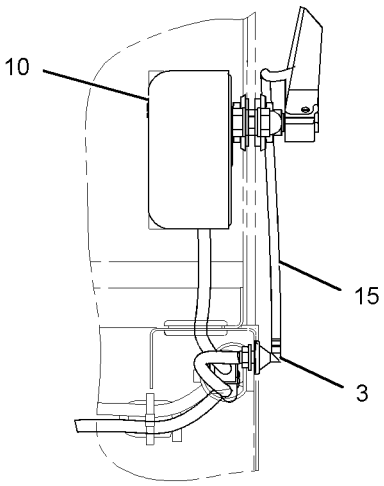

VIEW OF AREA B

GRAPHIC #1 **<END>** g01040483

SERVICE EQUIPMENT AND SUPPLIES

201-0183 FILM GP

S/N: BZE1-UP; BZG1-UP
PART OF 249-9323, 249-9324 OPERATOR AR
AN ATTACHMENT

SMCS-7405, 7557 **i01882070**

NOTE	REF NO	GRAPHIC REF	PART NUMBER	QTY	PART NAME 1 2 3 4 5 6 (PRODUCT LEVEL)	SEE PAGE
	1	1	**201-4169**	1	FILM-STRIPE (LH)	
	2	1	**201-4170**	1	FILM-STRIPE (RH)	

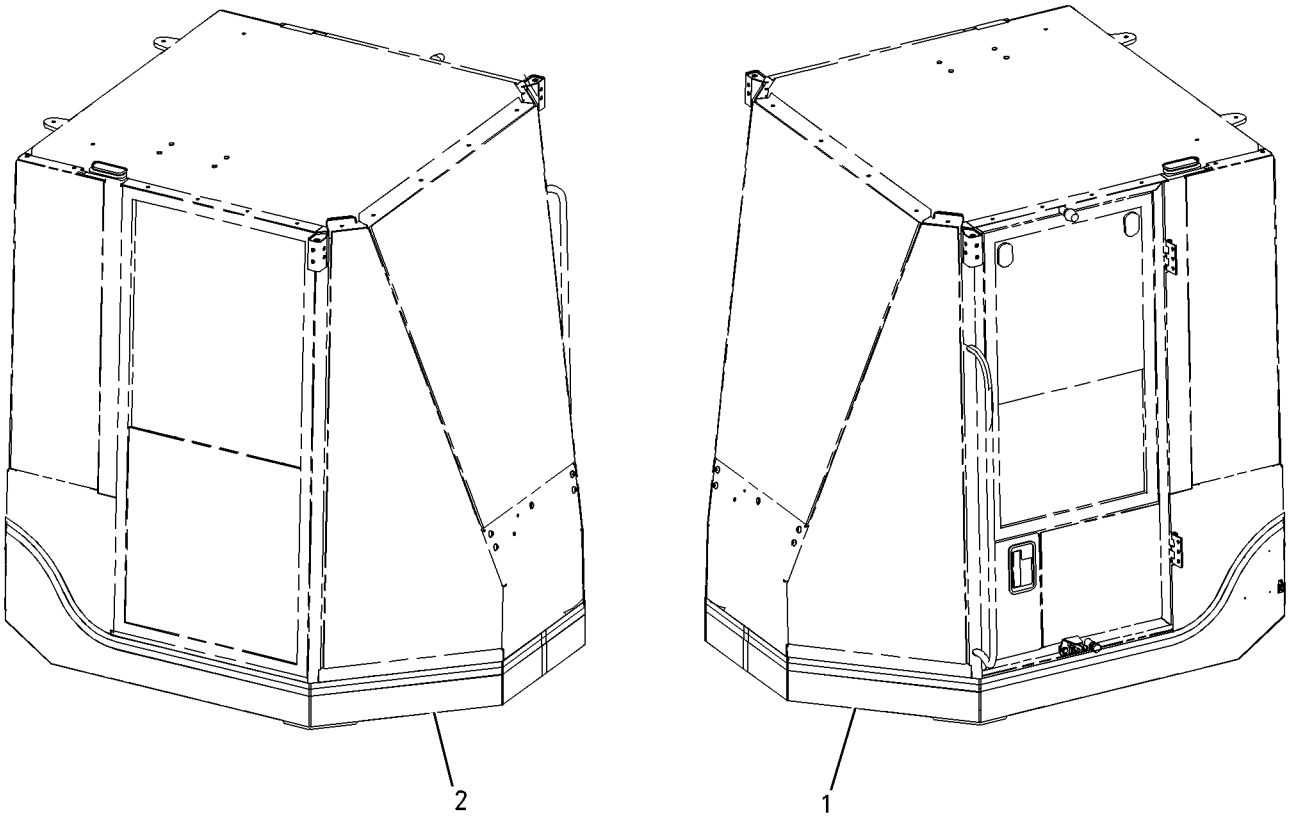

GRAPHIC #1 **<END>** g00876809

SERVICE EQUIPMENT AND SUPPLIES

220-8539 PLATE & FILM GP–CS-533E

S/N: BZE1-UP
PART OF 242-0737 BUMPER AR
TYPE 1

SMCS-7405, 7557, 7563 **i02417186**

NOTE	REF NO	GRAPHIC REF	PART NUMBER	QTY	PART NAME 1 2 3 4 5 6 (PRODUCT LEVEL)	SEE PAGE
	1	1	**4P-6422**	1	FILM-WARNING (NO ETHER SPRAY/AIR INTAKE)	
	2	1	**246-2641**	1	PADLOCK GP	
		1	**5P-8500**	1	KEY	
	3	1	**7X-3229**	4	FILM-INSTRUCTION (LIFT EYE, TIE-DOWN LOCATION)	
	4	1	**224-7717**	1	FILM-WARNING (SEAT BELT, U.S.)	
	5	1	**158-7864**	1	FILM-IDENTIFICATION (HYDRAULIC OIL)	
	6	1	**176-0786**	1	FILM (CATERPILLAR)	
	7	1	**190-2938**	1	FILM-WARNING (ENG COOLANT PRESSURE, READ OMM)	
	8	1	**190-5386**	2	FILM-STRIPE (ROUND RED REFLECTIVE)	
	9	1	**201-4162**	1	FILM (CAT)	
	10	1	**214-1737**	4	FILM-INFORMATION (JACKING POINT)	
	11	1	**263-2562**	1	FILM-IDENTIFICATION (CAT LH)	
	12	1	**263-2563**	1	FILM-IDENTIFICATION (CAT RH)	
	13	1	**234-3390**	1	FILM-INFORMATION (HYDRAULIC OIL LEVEL)	
	14	1	**239-6986**	1	PLATE-IDENTIFICATION (MACHINE)	
	15	1	**263-2565**	2	FILM-IDENTIFICATION (CS-533E)	

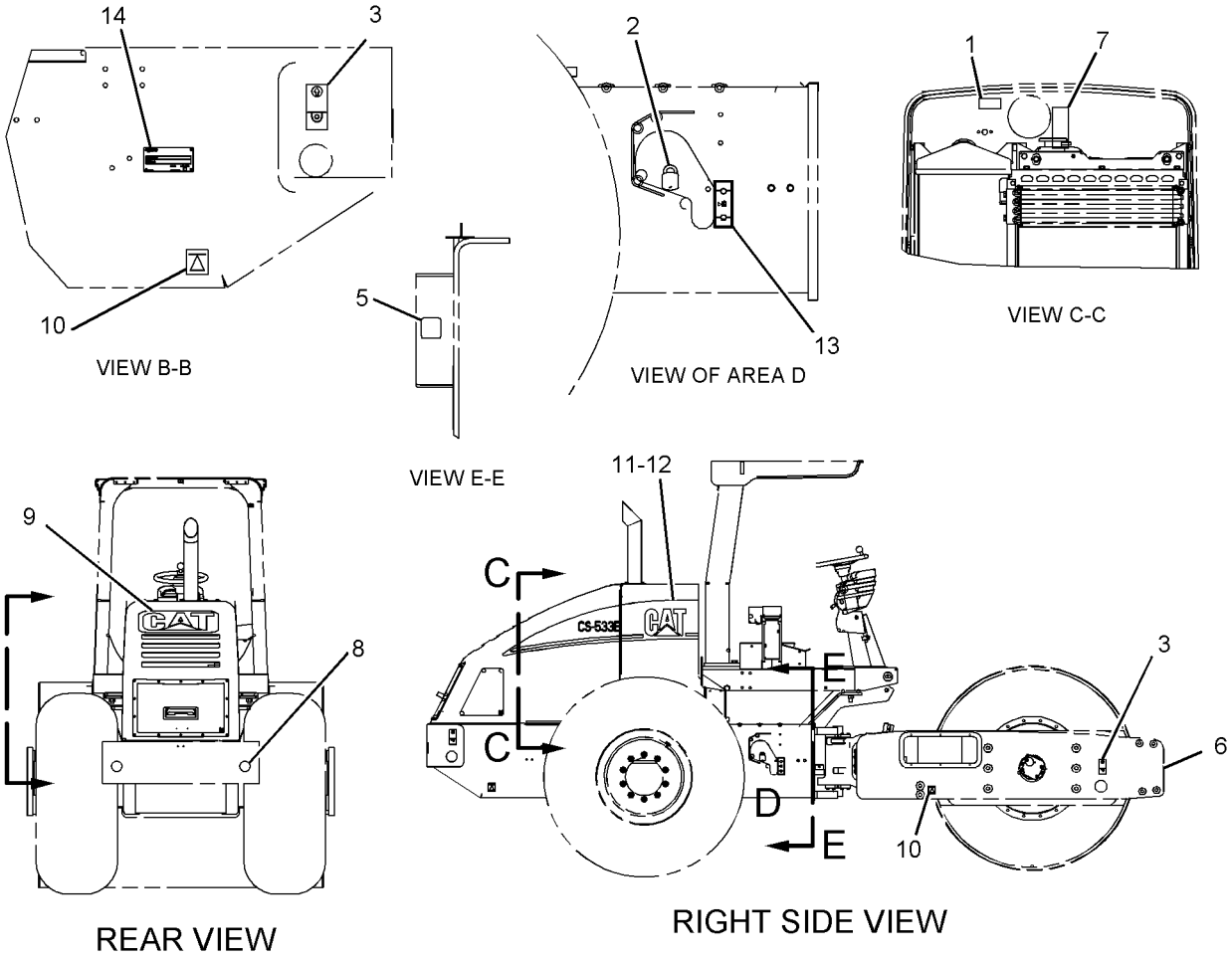

GRAPHIC #1 **<END>** g01090520

220-8539 PLATE & FILM GP–CS-533E

S/N: BZE1-UP
PART OF 242-0737 BUMPER AR
TYPE 2

SMCS-7405, 7557, 7563 **i02775621**

NOTE	REF NO	GRAPHIC REF	PART NUMBER	QTY	PART NAME 1 2 3 4 5 6 (PRODUCT LEVEL)	SEE PAGE
	1	1	**4P-6422**	1	FILM-WARNING (NO ETHER SPRAY/AIR INTAKE)	
	2	1	**246-2641**	1	PADLOCK GP	
		1	**5P-8500**	1	KEY	
	3	1	**7X-3229**	4	FILM-INSTRUCTION (LIFT EYE, TIE-DOWN LOCATION)	
	4	1	**224-7717**	1	FILM-WARNING (SEAT BELT, U.S.)	
	5	1	**158-7864**	1	FILM-IDENTIFICATION (HYDRAULIC OIL)	
C	6	1	**292-4427**	2	FILM-IDENTIFICATION (CAT HOOD)	
	7	1	**190-2938**	1	FILM-WARNING (ENG COOLANT PRESSURE, READ OMM)	
	8	1	**190-5386**	2	FILM-STRIPE (ROUND RED REFLECTIVE)	
C	9	1	**292-4428**	1	FILM-IDENTIFICATION (CATERPILLAR)	
	10	1	**214-1737**	4	FILM-INFORMATION (JACKING POINT)	
C	11	1	**304-8924**	1	FILM-STRIPE (LH)	
C	12	1	**304-8925**	1	FILM-STRIPE (RH)	
	13	1	**234-3390**	1	FILM-INFORMATION (HYDRAULIC OIL LEVEL)	
	14	1	**239-6986**	1	PLATE-IDENTIFICATION (MACHINE)	
C	15	1	**304-7855**	2	FILM-IDENTIFICATION (CS533E)	

C-CHANGE FROM PREVIOUS TYPE

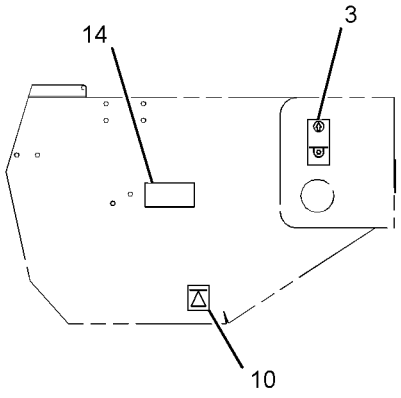

VIEW B-B

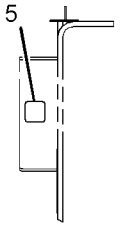

VIEW E-E

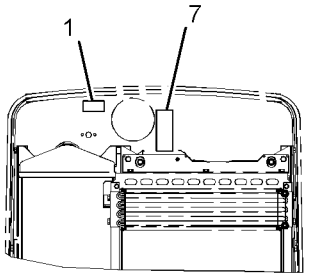

VIEW C-C

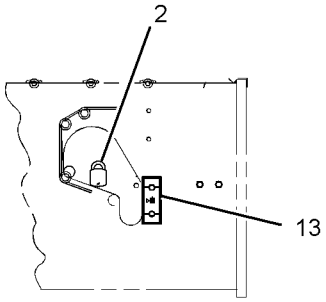

VIEW OF AREA D

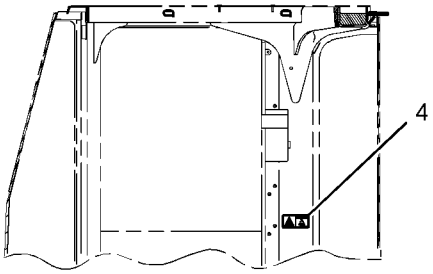

VIEW A-A
(ALTERNATE LOCATION)

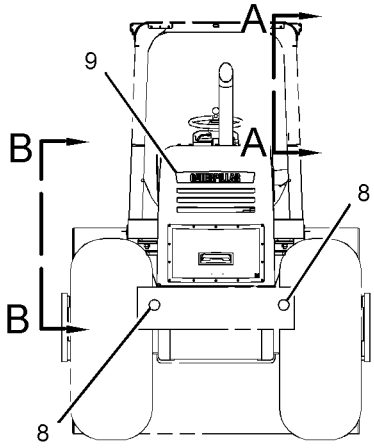

REAR VIEW

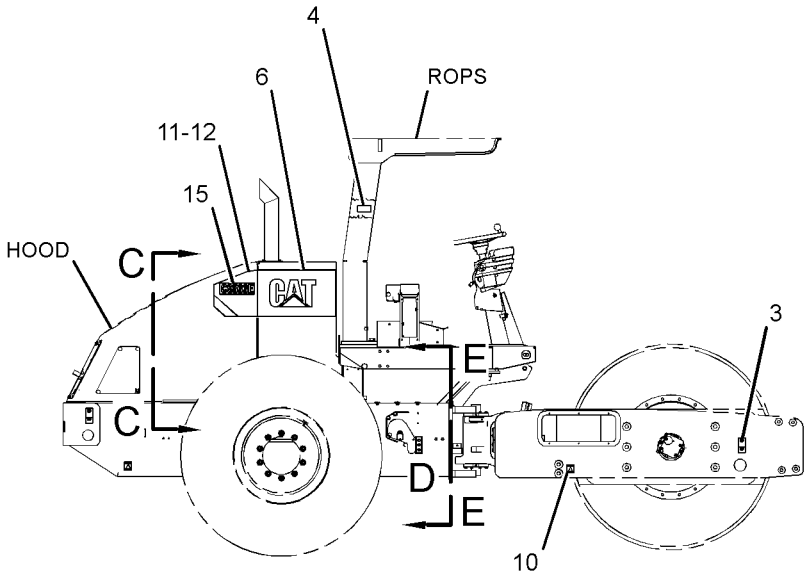

RIGHT SIDE VIEW

GRAPHIC #1 **<END>** g01424687

SERVICE EQUIPMENT AND SUPPLIES

222-9975 PLATE & FILM GP–CP-533E

S/N: BZG1-UP

PART OF 239-0796 CHASSIS AR

SMCS-7405, 7557, 7563 **i02140682**

NOTE	REF NO	GRAPHIC REF	PART NUMBER	QTY	PART NAME 1 2 3 4 5 6 (PRODUCT LEVEL)	SEE PAGE
	1	1	**4P-6422**	1	FILM-WARNING (NO ETHER SPRAY/AIR INTAKE)	
	2	1	**2Y-4071**	1	PADLOCK	
					(INCLUDES 2 KEYS)	
	3	1	**7X-3229**	4	FILM-INSTRUCTION (LIFT EYE, TIE-DOWN LOCATION)	
	4	1	**176-0786**	1	FILM (CATERPILLAR)	
	6	1	**158-7864**	1	FILM-IDENTIFICATION (HYDRAULIC OIL)	
	7	1	**190-2938**	1	FILM-WARNING (ENG COOLANT PRESSURE, READ OMM)	
	8	1	**190-5386**	2	FILM-STRIPE (ROUND RED REFLECTIVE)	
	9	1	**201-4162**	1	FILM (CAT)	
	10	1	**214-1737**	4	FILM-INFORMATION (JACKING POINT)	
	12	1	**230-4632**	1	FILM (CAT CP-533E, LH)	
	13	1	**230-4633**	1	FILM (CAT CP-533E, RH)	
	14	1	**234-3390**	1	FILM-INFORMATION (HYDRAULIC OIL LEVEL)	
	15	1	**239-6986**	1	PLATE-IDENTIFICATION (MACHINE)	

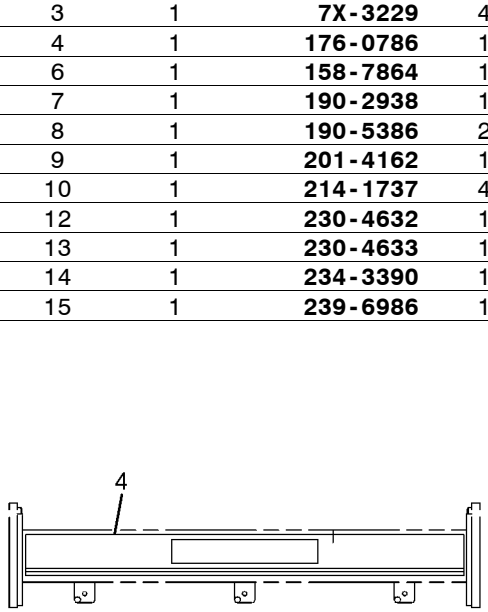

GRAPHIC #1 **<END>** g01088054

SERVICE EQUIPMENT AND SUPPLIES

223-8344 PLATE & FILM GP–CS-533E

S/N: BZE1-UP
PART OF 224-0871 BUMPER AR
AN ATTACHMENT
TYPE 1

SMCS-7405, 7557, 7563 **i02417436**

NOTE	REF NO	GRAPHIC REF	PART NUMBER	QTY	PART NAME 1 2 3 4 5 6 (PRODUCT LEVEL)	SEE PAGE
	1	1	**4P-6422**	1	FILM-WARNING (NO ETHER SPRAY/AIR INTAKE)	
	2	1	**246-2641**	1	PADLOCK GP	
		1	**5P-8500**		KEY	
					(WITH PLASTIC OVERMOLD)	
	3	1	**7X-3229**	4	FILM-INSTRUCTION (LIFT EYE, TIE-DOWN LOCATION)	
	5	1	**158-7864**	1	FILM-IDENTIFICATION (HYDRAULIC OIL)	
	6	1	**190-2938**	1	FILM-WARNING (ENG COOLANT PRESSURE, READ OMM)	
	7	1	**190-5386**	2	FILM-STRIPE (ROUND RED REFLECTIVE)	
	8	1	**201-4162**	1	FILM (CAT)	
	9	1	**214-1737**	4	FILM-INFORMATION (JACKING POINT)	
	11	1	**263-2562**	1	FILM-IDENTIFICATION (CAT LH)	
	12	1	**263-2563**	1	FILM-IDENTIFICATION (CAT RH)	
	13	1	**234-3390**	1	FILM-INFORMATION (HYDRAULIC OIL LEVEL)	
	14	1	**239-6986**	1	PLATE-IDENTIFICATION (MACHINE)	
	15	1	**224-7717**	1	FILM-WARNING (SEAT BELT, U.S.)	
	16	1	**263-2565**	2	FILM-IDENTIFICATION (CS-533E)	

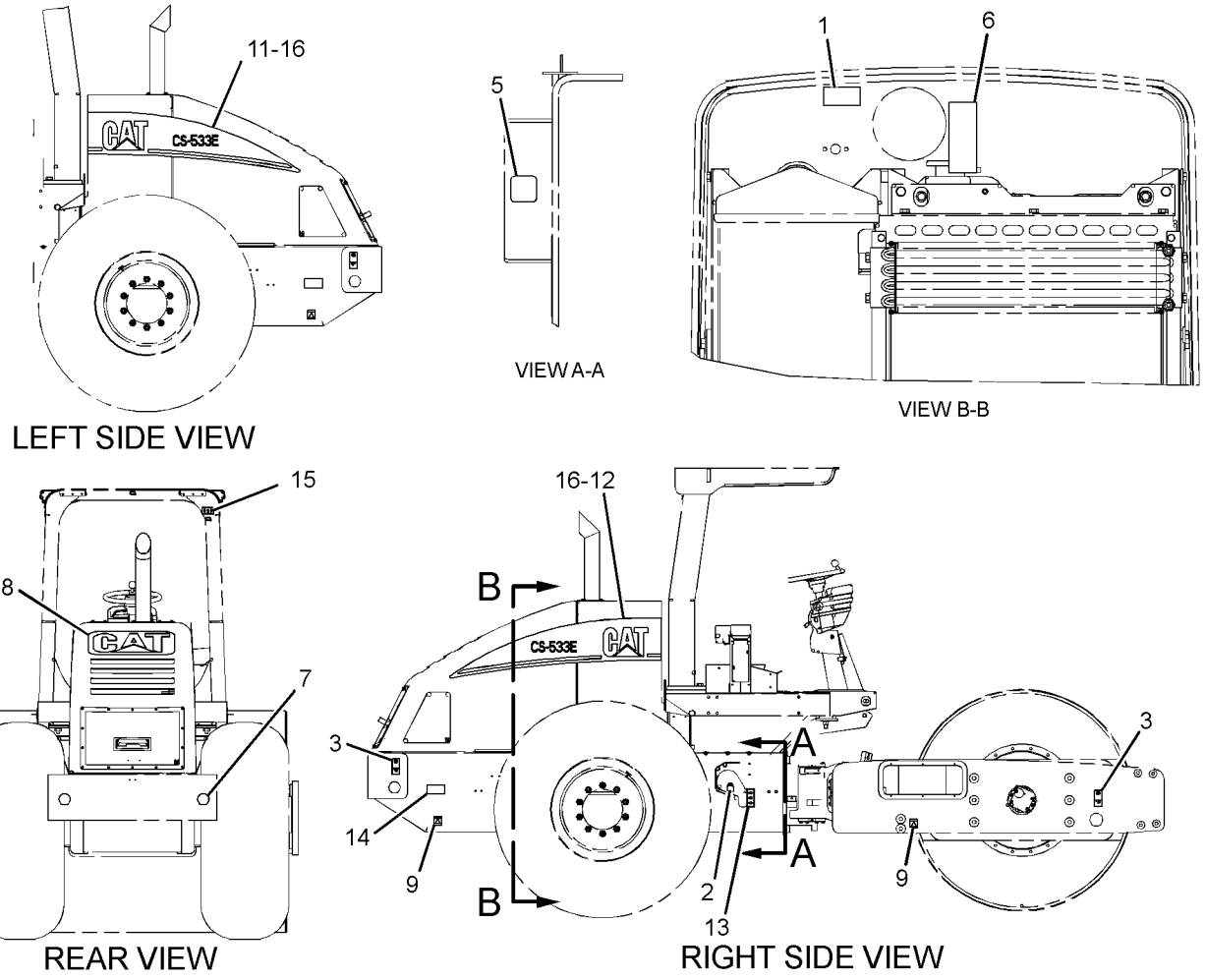

GRAPHIC #1 **<END>** g01240047

223-8344 PLATE & FILM GP–CS-533E

S/N: BZE1-UP
PART OF 224-0871 BUMPER AR
AN ATTACHMENT
TYPE 2

SMCS-7405, 7557, 7563 **i02764025**

NOTE	REF NO	GRAPHIC REF	PART NUMBER	QTY	PART NAME 1 2 3 4 5 6 (PRODUCT LEVEL)	SEE PAGE
	1	1	**4P-6422**	1	FILM-WARNING (NO ETHER SPRAY/AIR INTAKE)	
	2	1	**246-2641**	1	PADLOCK GP	
		1	**5P-8500**		KEY	
					(WITH PLASTIC OVERMOLD)	
	3	1	**7X-3229**	4	FILM-INSTRUCTION (LIFT EYE, TIE-DOWN LOCATION)	
	5	1	**158-7864**	1	FILM-IDENTIFICATION (HYDRAULIC OIL)	
	6	1	**190-2938**	1	FILM-WARNING (ENG COOLANT PRESSURE, READ OMM)	
	7	1	**190-5386**	2	FILM-STRIPE (ROUND RED REFLECTIVE)	
C	8	1	**292-4428**	1	FILM-IDENTIFICATION (CATERPILLAR)	
	9	1	**214-1737**	4	FILM-INFORMATION (JACKING POINT)	
C	11	1	**304-8924**	1	FILM-STRIPE (LH)	
C	12	1	**304-8925**	1	FILM-STRIPE (RH)	
	13	1	**234-3390**	1	FILM-INFORMATION (HYDRAULIC OIL LEVEL)	
	14	1	**239-6986**	1	PLATE-IDENTIFICATION (MACHINE)	
	15	1	**224-7717**	1	FILM-WARNING (SEAT BELT, U.S.)	
C	16	1	**304-7855**	2	FILM-IDENTIFICATION (CS533E)	
C	17	1	**292-4427**	2	FILM-IDENTIFICATION (CAT HOOD)	

C-CHANGE FROM PREVIOUS TYPE

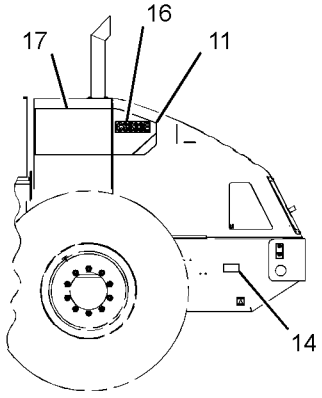

LEFT SIDE VIEW

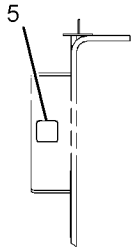

VIEW A-A

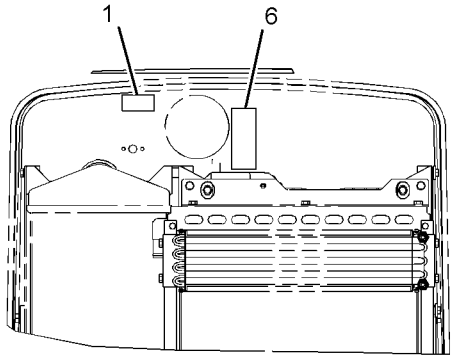

VIEW B-B

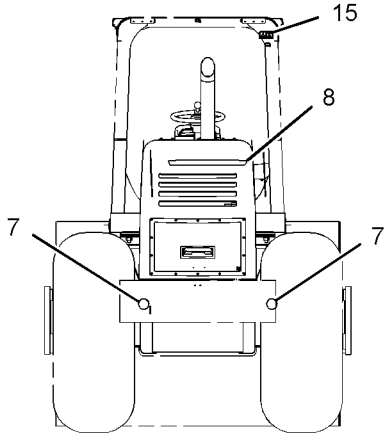

REAR VIEW

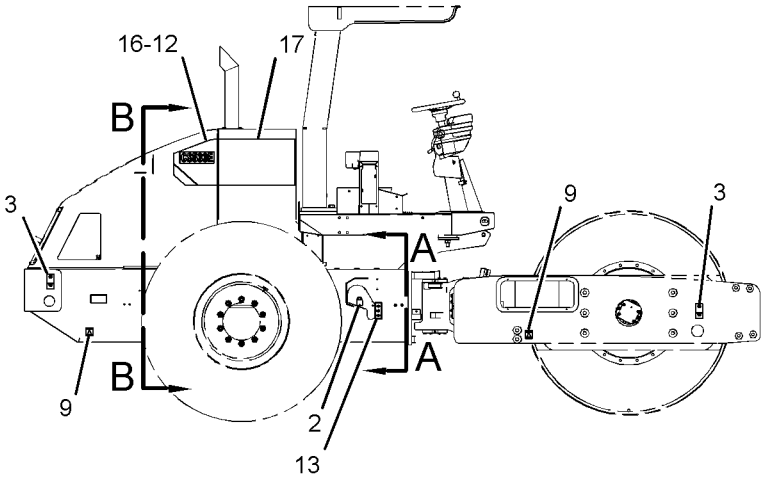

RIGHT SIDE VIEW

GRAPHIC #1 **<END>** g01407492

224-0857 PLATE & FILM GP–ENGLISH

S/N: BZE1-UP; BZG1-UP

AN ATTACHMENT

SMCS-7405, 7557, 7563 **i02068627**

NOTE	REF NO	GRAPHIC REF	PART NUMBER	QTY	PART NAME 1 2 3 4 5 6 (PRODUCT LEVEL)	SEE PAGE
	1	1	**3E-8140**	2	PLATE-WARNING (NO CLEARANCE)	
	2	1	**6V-4611**	1	FILM-WARNING (JUMP START, READ OMM)	
	3	1	**163-8783**	1	PLATE-WARNING-ROPS/FOPS	
	4	1	**169-3196**	1	PLATE-WARNING-ROPS/FOPS	
	5	1	**216-4881**	5	FILM-WARNING (READ OMM)	
	6	1	**219-0305**	2	FILM-WARNING (NO WELD, NO DRILL, READ OMM)	
	7	1	**232-4519**	1	FILM-NOTICE (SHIPPING)	

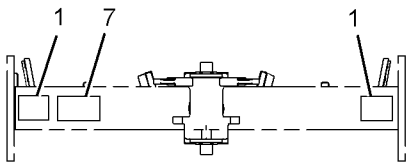

VIEW C-C

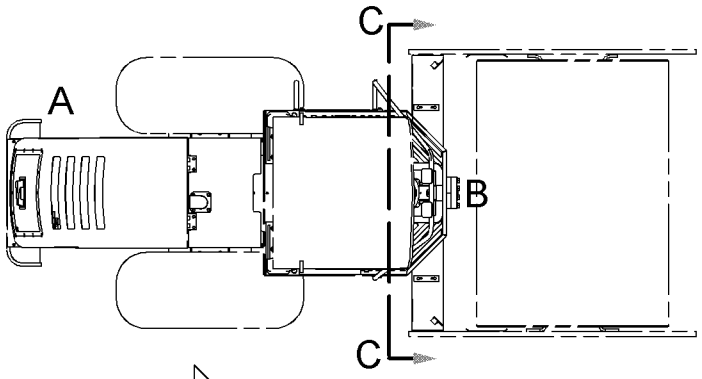

TOP VIEW

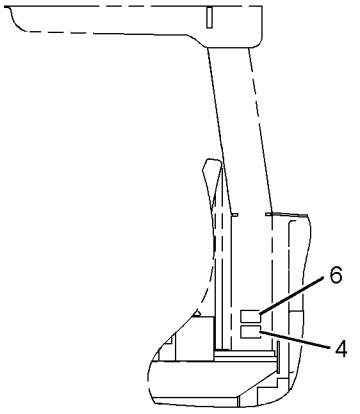

ALTERNATE MOUNTING
(2 POST)

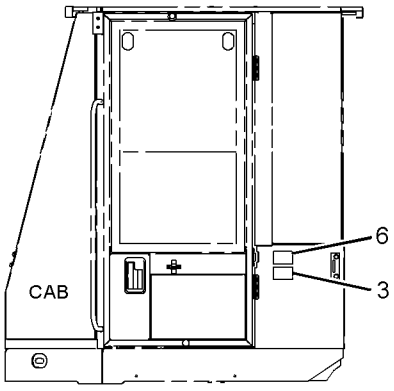

ALTERNATE MOUNTING
(CAB)

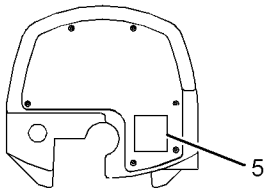

VIEW OF AREA B

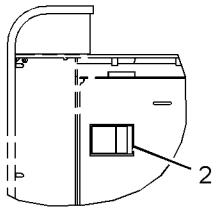

VIEW OF AREA A

GRAPHIC #1

<END>

g01064681

SERVICE EQUIPMENT AND SUPPLIES

224-0859 PLATE & FILM GP–SPANISH

S/N: BZE1-UP; BZG1-UP
AN ATTACHMENT

SMCS-7405, 7557, 7563 **i02326447**

NOTE	REF NO	GRAPHIC REF	PART NUMBER	QTY	PART NAME 1 2 3 4 5 6 (PRODUCT LEVEL)	SEE PAGE
	1	1	**6V-4613**	1	FILM-WARNING (JUMP START, READ OMM)	
	2	1	**163-8783**	1	PLATE-WARNING-ROPS/FOPS	
J	3	1	**169-3196**	1	PLATE-WARNING-ROPS/FOPS	
	4	1	**215-1446**	1	FILM-WARNING (OPERATING INSTRUCTIONS)	
	5	1	**219-0305**	1	FILM-WARNING (NO WELD, NO DRILL, READ OMM)	
	6	1	**240-2665**	2	PLATE-WARNING (NO CLEARANCE)	
	7	1	**240-9008**	1	FILM-WARNING (SEAT BELT)	
	8	1	**232-4519**	1	FILM-NOTICE (SHIPPING)	

J-USE AS REQUIRED FOR PLATFORM EQUIPPED MACHINES , CENTER ON ROPS TUBE

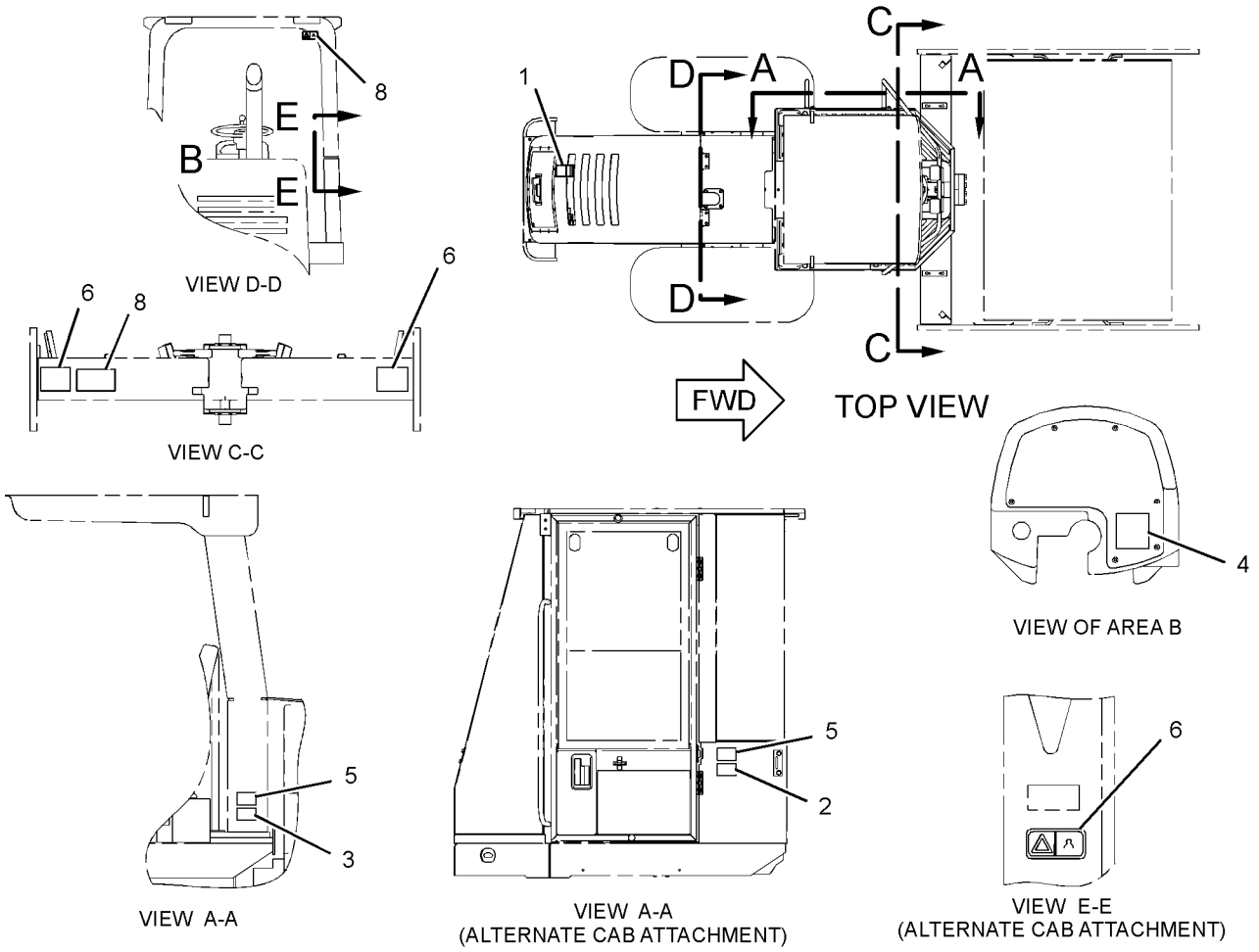

GRAPHIC #1

<END>

g01202963

SERVICE EQUIPMENT AND SUPPLIES

224-0860 PLATE & FILM GP–PORTUGUESE

S/N: BZE1-UP; BZG1-UP

AN ATTACHMENT

SMCS-7405, 7557, 7563 **i02252076**

NOTE	REF NO	GRAPHIC REF	PART NUMBER	QTY	PART NAME 1 2 3 4 5 6 (PRODUCT LEVEL)	SEE PAGE
	1	1	**6V-4614**	1	FILM-WARNING (JUMP START, READ OMM)	
	4	1	**215-1447**	1	FILM-WARNING (OPERATING INSTRUCTIONS)	
	5	1	**219-0305**	1	FILM-WARNING (NO WELD, NO DRILL, READ OMM)	
	6	1	**232-4519**	1	FILM-NOTICE (SHIPPING) (LIFTING, TIE-DOWN)	
	7	1	**240-2652**	2	PLATE-WARNING (NO CLEARANCE)	
	8	1	**240-9007**	1	FILM-WARNING (SEAT BELT)	

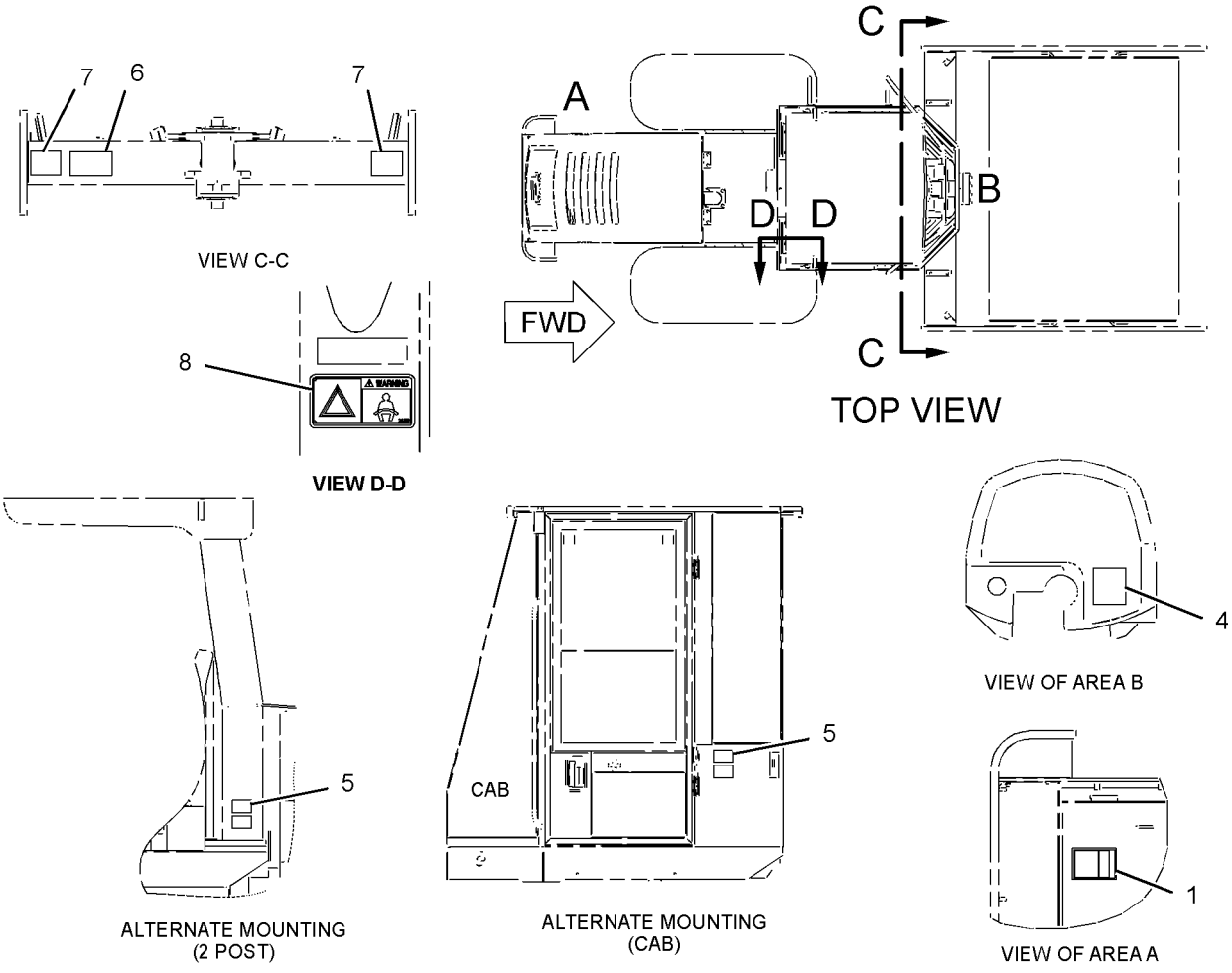

GRAPHIC #1

<END>

g01166450

PART NUMBER INDEX

Part	Page
0	
0S-1603	33
0T-0924	32
1	
1B-3925	240
1B-8736	7
	19
	21
	35
	37
	39
1G-3410	317
1G-3455	338
	342
1G-6423	293
	295
1G-6424	293
1G-6426	293
1G-6427	293
1G-6428	293
1G-6432	293
1G-7428	293
1G-7663	330
	332
1G-8878	278
1G-9959	156
	161
	198
	447
1G-9960	127
	407
	416
1H-1360	418
1H-3338	161
1K-6872	390
1L-2279	418
1L-6366	460
1M-6119	127
1M-6120	127
1P-3702	352
1P-4278	60
	61
	80
	84
1P-5765	352
1P-6522	366
	373
	411
	413
1P-6886	85
1R-1804	95
	97
	115
	117
1S-7251	127
1S-7252	127
1V-6585	418
2	
2A-4133	388
2B-0858	27
	54
2D-2631	219
	220
2G-5786	156
	161
2H-3920	370
	372
	410
	447
	448
2H-3922	149
	366
	373
2H-3923	366
	373
2K-7471	276
2L-8050	161
2L-8051	443
2L-8065	443
2M-9780	175
	177
	179
	181
	183
	200
	201
	212
	214
	272
	293
	295
	297
	299
	301
	303
	332
	352
	355
	357
2N-1931	80
2N-2371	434
	437
	440
	451
	455
2N-3480	444
	448
2P-4339	447
2S-3440	120
	121
	123
2S-3745	366
	411
2S-4078	330
	332
2T-1718	227
	229
	231
2T-3360	263
2V-7087	434
	437
	440
	451
	455
2V-7088	434
	437
	440
	451
	455
2Y-4071	489
2Y-9286	273
	274
3	
3B-4501	366
	373
	434
3B-4611	388
3B-6487	85
3B-6552	157
	162
3B-7255	157
	162
	418
3B-8485	265
	267
3D-2824	175
	177
	179
	181
	183
	200
	201
	212
	278
	291
	330
	355
	357
3D-7805	346
	349
3E-1841	366
	373
	411
	413
3E-1906	▶384
	385
3E-2028	156
	161
3E-3361	411
3E-3365	136
	213
3E-3805	397
	399
3E-4051	385
3E-4052	385
3E-4057	385
3E-4058	385
3E-4883	459
	460
3E-5464	366
	373
3E-6328	▶125
	443
	447
3E-6389	▶132
	415
3E-6731	306
	308
	311
	313
3E-6769	337
3E-8020	241
	244
	246
	248
	251
	253
3E-8140	492
3E-8320	127
3E-9862	395
3E-9865	391
	393
3F-5950	240
3F-7147	200
	201
3F-9556	427
3J-1907	175
	177
	179
	181
	183
	212
	214
	261
	272
	278
	311
	313
	315
	334
3J-7354	60
	61
	175
	177
	179
	181
	183
	200
	201
	212
	213
	214
	215
	261
	278
3K-0360	60
	61
	120
	121
	123
	212
	214
	263
	265
	267
	272
	278
	291
	330
	332

▶ **PRIMARY REFERENCE**

PART NUMBER INDEX

Part	Page
	336
	355
	357
	362
3K-0715	189
	306
	308
	311
	313
	354
3K-5761	391
	393
3K-6060	421
3L-8187	139
	140
	142
	144
	145
	370
	372
	434
	435
	437
	438
	440
	441
	444
	447
	448
	451
	452
	456
3P-1823	61
3S-2093	100
	127
	139
	140
	142
	152
	153
	154
	155
	156
	161
	366
	373
	385
	411
	413
	416
	434
	437
	440
	443
	447
	451
	455
3S-6049	127
3S-6050	127
3T-5201	397
	399
3T-5760	127

4

Part	Page
4B-1282	391
	393
4B-2043	99
	455
4B-4158	345
	348
	349
4B-4274	157
	162
	395
	444
	448
4B-5324	434
	437
	451
4E-0916	290
4E-1062	388
4E-1384	397
	399
4F-2294	150
	151
4J-5309	280
	286
4J-5351	293
	295
4J-5477	175
	177
	179
	181
	183
	200
	201
	212
	213
	214
	215
	261
	265
	267
	330
	332
	334
	395
4K-9821	85
4K-9822	85
4L-1250	391
	393
4N-9891	385
4P-6422	486
	487
	489
	490
	491
4P-7428	45
	46
	154
	157
	162
	355
	357
4P-7429	241
	244
	251

Part	Page
	253
4P-7581	102
	154
	157
	162
	444
	448
4P-8134	45
	100
	416
	434
	437
	440
	452
	456
4V-0612	418
4V-2057	265
	267
4W-5359	35

5

Part	Page
5A-3604	370
	469
5B-3180	391
	393
5B-9079	59
	63
5C-2874	157
	162
	395
5C-2890	85
	100
	157
	161
	162
	227
	229
	231
	388
	397
	399
	407
	415
	418
	421
	434
	437
	440
	444
	448
	452
	456
5C-3370	192
	193
5C-7261	84
	85
	142
	241
	244
	246
	248
	251
	253
	269
	397
	399
	403
	418
	420
	427
	435
	437
	440
	469
5C-8811	483
5C-9134	403
5C-9553	366
	373
	388
	411
	413
	421
	468
5D-0019	434
	437
	451
5D-1026	9
	11
	13
	15
	17
	60
	61
5D-9629	443
	447
5E-9892	234
5H-4909	170
5J-2974	204
	293
	295
5J-3886	306
	308
	311
	313
5J-4715	157
	162
5K-5068	157
	162
5K-9090	330
	332
5K-9179	422
	423
5P-0623	100
5P-0743	60
	61
5P-0744	127
	156
	161
5P-0747	127
5P-0761	127
5P-0767	418
5P-1076	227
	229
	231
	239
5P-1420	60
	61
	80

PART NUMBER INDEX

Part	Page	Part	Page	Part	Page	Part	Page
	84		263	5P-9186	60	6I-0456	95
5P-1442	102		290		61	6I-0501	58
	322		377	5P-9617	261	6I-0502	58
	324		379		278	6I-0517	9
	326		381	5P-9982	265	6I-0563	92
	328		388		267	6I-0572	23
5P-1506	290		438	5R-5927	80		47
5P-2321	443		441	5V-6152	290		49
5P-2545	205	5P-4484	191				71
	209		192				73
5P-2600	156		193	**6**			88
	161		345			6I-0593	92
5P-2948	85		346	6B-0933	126	6I-0594	126
5P-3454	443		348	6B-4540	390		148
5P-3741	156		349	6D-3479	84	6I-0631	34
	161	5P-4961	102	6D-4161	451	6I-0645	35
5P-3863	272		322	6E-0725	317		37
	281		324	6E-1607	283		39
	285		326		343		71
5P-3864	204		328	6E-4396	343		73
5P-4115	80	5P-5397	189	6E-4397	343	6I-0646	8
	100		344	6E-4399	343	6I-0650	37
	127	5P-5630	85	6E-4400	343		39
	157	5P-5643	367	6E-4401	343	6I-0654	92
	162		370	6F-7045	149	6I-0789	35
	227		372	6H-3616	42	6I-0846	9
	229		373		43		11
	231		410	6H-9691	339		13
	236		463	6I-0217	35		15
	241		464		37		17
	244	5P-5675	161		39	6I-0847	34
	246	5P-5687	82		47	6I-1201	9
	248	5P-5874	338		49		11
	251		342		78		13
	253	5P-5908	366		92		15
	332		411		103	6I-1497	47
	334	5P-5927	403		106		49
	388	5P-6718	47		112	6I-2933	85
	435	5P-6872	421	6I-0233	42	6I-4039	90
	437	5P-6874	422	6I-0254	9	6I-4079	47
	440		423		11	6I-4200	34
	444	5P-6994	418		13	6I-4374	9
	448	5P-7070	367		15		11
	452		373		17		13
	456	5P-7177	127		78		15
	468	5P-7483	227	6I-0260	47		17
5P-4116	74		229		49		70
	75		231		68		71
	76	5P-7701	291		69	6L-3483	156
	77	5P-7833	61		70	6P-0699	435
	80	5P-7958	80		71		438
	82		469		103		440
	84		472		106		448
	85	5P-8245	33		112		452
	90	5P-8500	409		126		456
	100		434	6I-0289	47	6R-2050	352
	127		437		49	6T-2774	443
	157		440	6I-0291	103		447
	162		451		106	6T-3643	444
	241		455		112		448
	244		486	6I-0363	47	6T-3990	144
	246		487		49		145
	248		490	6I-0364	148	6T-6066	435
	251		491	6I-0423	34		438
	253	5P-8502	409	6I-0454	126		440

► **PRIMARY REFERENCE**

PART NUMBER INDEX

Part	Page
	452
	456
6T-6329	139
	140
	142
	144
	145
	370
	372
	434
	437
	440
	443
	447
	451
	455
6T-6708	413
6V-0852	212
	214
	261
	272
	355
	357
6V-1392	367
	373
	411
	413
6V-1668	366
	373
	411
	413
6V-2689	441
6V-3507	434
	437
	451
6V-3940	345
	346
	348
	349
6V-3965	212
	214
	272
6V-3970	444
	448
6V-4356	416
6V-4357	416
6V-4611	492
6V-4613	493
6V-4614	494
6V-4635	293
	295
6V-4636	293
	295
6V-5142	337
6V-5200	317
6V-5210	373
	413
6V-5215	346
	349
6V-5217	403
6V-5326	280
	283
	286
6V-5586	273
	274
	343
6V-6580	339
	341
6V-7238	60
	61
	120
	121
	123
	330
6V-7357	100
	241
	244
	246
	248
	251
	253
6V-7419	483
6V-7420	272
6V-7636	246
	248
	251
	253
6V-7688	216
	257
	258
	259
6V-7728	367
	411
6V-7743	82
6V-7744	142
6V-8185	246
	248
	251
	253
6V-8186	150
6V-8187	100
	156
	161
	388
6V-8200	175
	177
	179
	181
	183
6V-8202	275
	472
6V-8212	452
	456
6V-8225	375
6V-8227	263
6V-8351	297
	299
	301
	303
6V-8352	281
	283
6V-8367	434
	437
	440
	451
	455
6V-8368	434
	437
	451
6V-8369	370
	372
	410
	447
6V-8374	139
	140
	142
	144
	145
	370
	372
	435
	438
	440
	441
	444
	447
	448
	452
	456
6V-8376	444
	448
6V-8377	434
	437
	451
6V-8382	434
	437
	440
	451
	455
6V-8397	212
	214
	330
	332
6V-8398	175
	177
	179
	181
	183
	200
	201
	212
	214
	263
	265
	267
	272
6V-8400	272
6V-8625	355
	357
6V-8627	334
6V-8628	175
	177
	179
	181
	183
6V-8629	212
	214
6V-8633	278
	291
6V-8637	175
	177
	179
	181
	183
	200
	201
	355
	357
6V-8638	352
6V-8639	263
	265
	267
	330
6V-8640	212
	214
6V-8641	175
	177
	179
	181
	183
	261
	334
6V-8647	200
	201
	213
	215
6V-8721	175
	177
	179
	181
	183
	200
	201
	355
	357
6V-8723	330
	332
6V-8782	265
	267
6V-8801	322
	324
	326
	328
6V-8817	434
	437
	440
	451
	455
6V-8927	139
	140
	142
	144
	145
	370
	372
	434
	437
	440
	443
	447

PART NUMBER INDEX

Part	Page
	451
	455
6V-8928	415
6V-9002	263
	291
	332
6V-9004	175
	177
	179
	181
	183
	212
	214
6V-9005	332
6V-9007	278
6V-9008	291
6V-9182	291
6V-9189	82
	137
	142
	388
6V-9491	444
	448
6V-9632	241
	244
	263
	366
	397
	411
	443
	447
6V-9746	175
	177
	179
	181
	183
	200
	201
	212
	214
	263
	278
	291
	355
	357
6V-9829	261
6V-9835	261
6V-9837	289
6V-9849	261
	267
6V-9851	352
6V-9874	212
	214
6W-5698	330
	332
6W-6005	127
6Y-6584	434
	437
	440
	451
	455
6Y-9915	45
	46

7

Part	Page
7C-0351	47
	49
7C-1224	47
	49
7C-1281	9
	11
	13
	15
	17
7C-4616	35
	37
	39
7D-7233	290
7D-8636	362
7D-8637	362
7E-0976	156
7F-2050	366
	373
7F-2060	366
	373
7I-2750	337
7J-6285	200
	201
	204
	308
	310
	311
	315
7K-1181	60
	61
	142
	154
	157
	162
	198
	290
	322
	324
	326
	328
	352
	407
	416
	418
	435
	438
	440
	444
	448
	452
	456
7L-7556	224
	226
7M-8485	191
	192
	193
	272
	291
	330
	332
	345
	346
	348

Part	Page
	349
7N-0718	127
	▶149
7N-5274	127
7N-5876	434
	437
	440
	451
	455
7N-9943	132
7R-3145	407
7R-6728	395
7R-7940	198
7R-7951	198
	290
7R-7954	416
7T-0020	132
7T-0493	443
	447
7T-1099	161
	227
	229
	231
	241
	244
	263
	443
	447
	462
	463
	483
7T-2459	205
	209
7T-3811	139
	140
	142
	447
7T-4532	384
7T-6799	434
	437
	440
	451
	455
7T-8890	476
7T-9302	447
7T-9793	370
7V-5627	463
7V-5628	127
	156
	161
	198
7V-6089	407
	416
	443
	447
	156
	161
	416
	443
7V-6659	416
	418
7V-9275	156
	161
7W-0629	85
7W-2108	397

Part	Page
	399
7W-2326	66
7W-2632	126
7W-4634	58
7W-4642	34
7W-7119	403
7X-0370	395
7X-0492	265
7X-0510	166
	167
7X-0564	395
7X-0575	265
	267
	385
7X-0578	263
7X-0579	370
	372
	410
7X-0603	102
	290
7X-0818	352
	416
	418
7X-0873	278
7X-2465	430
	459
	460
7X-2466	391
	393
7X-2478	366
	411
7X-2497	397
	399
7X-2534	407
	418
7X-2535	198
7X-2536	424
7X-2537	85
	102
	261
7X-2552	385
7X-2553	189
	238
	344
7X-2559	168
	170
7X-2561	189
	257
	258
	259
	344
7X-2562	175
	177
	179
	181
	183
	189
	344
7X-2563	256
	463
	464
7X-2565	216
	224
	255
7X-2566	216

▶ **PRIMARY REFERENCE**

PART NUMBER INDEX

Part	Page
7X-2567	428
	459
	460
7X-2571	166
	167
7X-2575	383
	462
7X-2576	255
	462
7X-2577	233
	258
	259
7X-2586	428
7X-3229	486
	487
	489
	490
	491
7X-3340	280
	283
	286
7X-3393	391
	393
7X-5305	359
7X-5315	212
	214
	261
7X-6222	156
7X-7655	80
7X-7729	90
	119
	157
	162
	227
	229
	231
	239
	241
	244
	246
	248
	251
	253
	260
	265
	267
	278
	322
	324
	326
	328
	385
	395
	416
	422
	423
7X-7739	80
7X-7877	409
7X-7915	420
7X-7958	290
7X-8009	191
7X-8831	440
	451
	455
7X-9294	189
7Y-7394	403
8B-3768	388
8C-3093	291
8C-3364	272
8C-3445	60
	61
8C-3446	60
	61
	278
8C-3451	278
8C-4586	366
	411
8C-5918	127
8C-6438	120
	121
	123
8C-6857	395
8C-6865	265
	267
	395
8C-6920	263
8C-6965	338
	342
8C-7505	170
8C-7581	434
8C-8400	212
	214
8C-8408	261
8C-8451	127
	157
	162
	198
	416
	444
	448
8C-8457	366
	373
	411
	413
8C-8722	428
	430
8C-8989	278
8C-9660	434
8D-1470	435
	438
	440
	452
	456
8E-0849	428
8E-0853	100
8E-8292	476
8E-9571	80
8F-8151	418
8H-4959	391
	393
8H-5303	149
8H-5306	149
8L-6521	391
	393
8L-8413	127
8M-3121	90
8N-0869	127
8N-1725	127
8N-9033	415
8Q-6744	142
8S-4734	166
	167
8T-0154	418
8T-0164	212
	214
8T-0267	263
	273
	274
8T-0288	330
	332
	395
8T-0289	120
	121
	123
8T-0306	480
8T-0328	120
	121
	123
8T-0337	133
	134
	135
8T-0389	127
	198
	227
	229
	231
	352
8T-1159	90
	272
	306
	313
8T-2393	175
	179
8T-2658	391
	393
8T-2659	444
	448
8T-2922	339
	341
8T-3426	383
	448
	462
8T-3490	80
	227
	229
	366
	385
	411
	483
8T-3612	75
	161
	241
	263
	388
8T-3635	463
8T-3647	416
8T-3844	290
8T-4001	197
	258
	259
	428
	430
	459
	460
8T-4121	45
	46
	80
	85
	89
	90
	119
	134
	139
	141
	142
	144
	152
	153
	157
	162
	198
	227
	229
	231
	233
	240
	272
	278
	291
	322
	324
	326
	328
	352
	377
	379
	381
	385
	388
	407
	409
	418
	435
	438
	440
	452
	456
	472
	483
8T-4122	45
	46
8T-4123	166
	167
	463
	464
8T-4131	166
	167
	224
	225
	226
	463
	464
8T-4132	45
	46
8T-4133	80
	89

8

PART NUMBER INDEX

Part	Page	Part	Page	Part	Page	Part	Page
	90		162		256		416
	119		227	8T-4189	80	8T-4198	385
	134		229		82	8T-4200	80
	139		231		84		82
	141		241		90		157
	144		244		142		162
	152		246		157		244
	153		248		162		248
	227		251		198		251
	229		253		241	8T-4205	85
	231		444		244		156
	241		448		246		161
	244		459		248		366
	246		460		251		373
	248	8T-4167	197		253		391
	251		233		290		393
	253		234		352		397
	322		255		377		399
	324		258		379		411
	326		259		381		413
	328		383		387		416
	385		428		418		421
	409		430		424		435
	418		459		435		438
	422		460		444		441
	423		462		448		452
	435	8T-4171	366	8T-4192	102		456
	438		373		154	8T-4219	227
	440		403	8T-4193	212		229
	452		411		214	8T-4222	127
	456	8T-4172	385		395		236
8T-4136	85	8T-4174	45	8T-4195	90		237
	89		46		144	8T-4223	80
	90	8T-4175	359		227		102
	142		360		229		127
	152		361		231		154
	265	8T-4180	397		233		157
	267		399		236		162
	278	8T-4181	397		237		189
	395		399		239		200
	407	8T-4182	80		241		201
	418		352		244		354
	423	8T-4183	189		246		355
	435		239		248		357
	438		355		251		435
	440		357		253		438
	452	8T-4185	241		260		441
	456		244		322		444
8T-4137	80		385		324		448
	90	8T-4186	45		326		452
	142		46		328		456
	157		90		385		463
	162		240		388		464
	198		385		409	8T-4224	74
	263		435		422		75
	377		438		423		76
	379		440		472		77
	381		452		483		80
	438		456	8T-4196	80		82
	441	8T-4187	191		119		84
8T-4138	82		192		278		137
	85		193		322		142
	100		224		324		157
	127		225		326		162
	157		226		328		244

► **PRIMARY REFERENCE**

PART NUMBER INDEX

Part	Page	Part	Page	Part	Page	Part	Page
	248		448		181		381
	251	8T-4971	397		183	8Y-6386	397
	269		399		189		399
	377	8T-4983	270		259	8Y-6388	403
	379	8T-4984	89		344	8Y-6913	478
	381	8T-4985	89	8T-6466	385	8Y-8606	444
	387	8T-4994	175	8T-6631	366		
	388		177		373		
	403		179	8T-6685	153	**9**	
	418		181		198		
	424		183		352	9B-7233	99
	435		189	8T-6703	80		434
	444		191	8T-6868	80		437
	448		192	8T-6869	100		444
	469		193		142		448
	472		258		263		451
8T-4231	283		259		269		455
8T-4244	127		344		418	9C-5344	385
	157	8T-5005	291	8T-6870	290	9D-7924	263
	162	8T-5049	306	8T-6912	102	9F-2247	240
	227		313		137	9F-5644	149
	229	8T-5360	175	8T-7547	80	9G-0002	127
	231		177		82	9G-0005	127
	435		179		84	9G-1950	366
	438		181		388		373
	441		183		403		411
	444	8T-5372	367	8T-7859	60		413
	448		373		61	9G-2761	397
	452		411	8T-7876	60		399
	456		413		61	9G-3695	440
	463	8T-5389	212		71		451
	464		214		73		455
8T-4649	234	8T-5400	483	8T-7970	330	9G-4348	156
8T-4742	397	8T-5436	198	8T-7971	355	9G-4351	443
	399		352		357	9G-7069	451
8T-4747	397	8T-5439	203	8T-8441	308	9G-8909	127
	399		216		311	9G-9154	443
8T-4779	345		218	8T-8729	100		447
	346		224	8T-8730	150	9H-6079	240
	348		225		152	9H-6832	191
	349		226	8T-8737	155		192
8T-4896	263		255		156		193
	322		256		411	9L-2685	100
	324		257		426	9N-1909	142
	326		258		427	9P-6411	246
	328		259		437		248
8T-4908	74	8T-5460	175		443		251
	75		177		447		253
	76		179	8T-8799	156	9P-7121	120
	77		181		161		121
	82		183		443		123
	84		189		447	9P-9388	422
	100		256	8T-9756	127		423
	157		257	8X-1986	225	9R-2160	161
	162		258	8X-7008	144	9R-2620	141
	263		259	8Y-4501	397	9R-3203	477
	372		344		399	9R-3204	477
	410	8T-5878	197	8Y-4807	397	9R-3205	477
8T-4956	200	8T-5913	476		399	9R-7240	120
	201	8T-5914	476	8Y-5737	366		121
	354	8T-6381	224		373		123
8T-4970	157		255		411	9R-7941	141
	162	8T-6430	175		413		144
	332		177	8Y-6377	377	9R-7942	138
	444		179		379	9R-7958	138

PART NUMBER INDEX

Part	Page
9R-7980	141
	144
9S-7583	359
	360
	361
9S-8004	306
	308
	310
	311
	313
	315
9S-8005	362
9S-8006	293
	295
	297
	299
	301
	303
9S-8008	359
	360
	361
9T-3928	306
	308
	310
	311
	313
	315
9U-0512	428
	430
9U-1950	127
9U-5922	406
9U-6993	330
	332
9W-0852	367
	411
	447
9W-7388	428
	430
	459
	460
9W-9931	459
	460
9W-9941	428
9W-9952	45
	46
9W-9953	45
	46
9X-0145	443
9X-0506	103
	141
9X-1046	435
	438
	441
	444
	448
	452
	456
9X-1386	385
9X-1439	▶133
9X-1813	147
	161
9X-2032	373
	413
9X-2040	322
	324
9X-2041	377
	452
	456
9X-2042	263
	388
	397
	399
	415
	435
	438
	441
	452
	456
	477
9X-2044	366
	373
	411
	413
9X-2045	263
	388
	403
	415
	418
	435
	438
	441
	452
	455
	459
	460
	477
	483
9X-2185	366
	373
	411
	413
9X-2289	278
9X-2480	334
9X-2488	366
	373
	411
	413
9X-2492	212
	214
	272
9X-2532	480
	482
9X-2537	338
	342
9X-2616	127
9X-3401	393
9X-3455	133
	134
9X-3463	133
	134
	135
	136
	137
9X-4174	133
	134
9X-4243	133
	134
9X-4244	133
	134
	137
9X-4381	▶134
	139
	141
9X-6378	170
9X-6385	430
9X-7344	142
9X-7377	337
9X-7378	384
	385
9X-7380	416
9X-7381	416
9X-7382	416
9X-7383	416
9X-7385	384
9X-7421	407
9X-7449	443
	447
9X-7549	200
	201
9X-7566	362
9X-7680	297
	299
	301
	303
9X-7849	138
9X-8116	370
9X-8117	372
9X-8139	138
9X-8256	82
	100
	227
	229
	231
	241
	244
	246
	248
	251
	253
	334
	403
	407
	415
	418
	421
	444
	448
	459
	460
9X-8257	189
	213
	215
	238
	344
	345
	346
	348
	349
	359
	360
	361
	385
	395
9X-8258	428
	430
9X-8486	444
	448
9X-8600	94
9X-8979	295
	301
9X-9099	435
	438
	441
	452
	456
9Y-5015	27
9Y-9236	330
	332
0	
003-9514	322
009-9258	391
	393
012-0380	161
014-0816	447
030-0060	362
030-0061	362
031-0249	444
	448
031-4155	391
	393
032-9090	19
	21
032-9091	19
	21
033-4814	157
	162
033-5879	297
	299
	301
	303
033-6041	170
033-7687	33
035-0425	156
	161
035-8017	103
	106
	112
035-8063	55
	57
035-8068	23
037-4426	366
	373
	411
	413
037-4838	366
	411
038-9317	127
054-8974	428
	430
	459
	460
061-9458	189
	191
	192
	193

▶ **PRIMARY REFERENCE**

PART NUMBER INDEX

Part	Page
	344
067-6002	23
067-6006	23
	27
067-6043	23
067-6095	63
	64
067-6179	35
	37
	39
067-6213	47
	49
067-6264	103
	106
	112
067-6265	103
	106
	112
067-6366	126
067-6873	19
	21
067-6874	19
	21
067-6897	35
067-6900	35
067-6999	103
	106
	112
069-3686	80
069-4707	170
	195
077-3637	362
077-3895	219
	220
	221
	222
077-3906	221
	222
077-4192	219
	220
	221
	222
077-6627	234
077-6630	362
077-7467	391
	393
081-3119	395
081-3698	319
	321
081-3772	395
086-0972	390
087-4772	281
	285
093-8828	195
095-0670	281
	285
095-0892	204
095-0919	204
095-0924	195
095-0941	317
095-1041	195
096-0015	295
	316
	320
096-0194	305
096-2323	397
	401
096-6166	444
	448
096-8058	205
	209
098-3602	391
	393
099-0492	241
	244
	246
	248
	251
	253
099-0857	478
	482
099-3649	388
	1
100-3143	366
	411
100-3320	156
100-3426	366
	411
100-3751	35
	37
	39
	68
	69
	78
100-4461	67
100-4830	8
	35
	37
	39
	41
	103
	106
	112
100-4838	13
	15
	17
100-4841	23
100-8451	126
101-3771	47
	49
101-3895	70
	71
102-0341	366
	373
	411
	413
102-1733	32
102-1957	34
102-8703	102
	261
102-8704	82
	183
102-8705	352
	416
102-8801	155
	434
	437
	451
	455
102-8802	100
	120
	121
	123
	125
	136
	152
	153
	154
	156
	161
	213
	215
	366
	384
	385
	411
	434
	443
	452
	456
102-8803	132
	147
	278
	330
	332
102-8804	139
	141
	142
	155
	391
	434
	437
	440
	451
	455
102-8805	156
	366
	411
	426
	427
	447
102-8806	434
	437
	440
	447
	451
	455
103-4977	156
	161
104-2091	403
104-6216	434
	437
	440
	451
	455
105-3035	293
	295
105-3036	293
105-3484	263
105-3485	297
	299
	301
105-3542	303
	434
	437
	440
	451
	455
105-9411	385
106-6340	265
	267
106-8704	154
106-8715	212
	214
106-8835	103
	106
	112
106-8916	92
	95
	97
107-0313	293
	295
107-0611	156
	161
107-1716	390
107-1721	390
107-1723	390
107-2091	390
107-3117	297
	299
	301
	303
107-4641	▶477
107-4643	▶421
107-5851	135
107-5852	135
107-5853	135
107-5854	135
107-6011	263
107-6013	443
	447
107-6050	388
107-6072	443
	447
107-6104	397
	401
107-6117	397
	399
107-6120	401
107-6125	397
107-6127	397
107-6141	263
107-6145	377
	379
	381
107-6689	▶135
	142
107-8265	278
108-1029	▶138
	144
	145
108-3565	319
	321
108-4311	377
	379
	381
108-5471	246

PART NUMBER INDEX

Part	Page
	248
	251
	253
109-0119	205
	209
109-0741	418
109-6706	265
	267
110-0514	330
	332
110-2079	425
110-4463	227
	229
	231
110-4821	177
	181
	183
110-6109	370
	372
	410
	447
110-6349	355
	357
110-7885	447
110-7887	434
	437
	440
	451
	455
110-7890	447
111-0200	397
	401
111-0204	377
	379
	381
111-0859	30
	31
111-2446	271
111-3422	103
	106
111-3423	103
	106
111-7052	175
	177
	179
	181
	183
111-7758	127
111-7875	388
111-7878	263
111-8222	8
112-4159	80
112-4529	308
112-4626	310
	315
112-4627	310
	315
112-4628	306
	308
	310
	311
	313
	315
112-4629	310
	315
112-4630	306
	308
	311
	313
112-4640	281
	285
112-4642	339
	341
112-4657	317
112-4677	339
	341
112-4678	339
	341
112-4679	339
112-4682	339
	341
112-4684	339
	341
112-4685	341
112-4686	306
	308
	311
	313
	339
	341
112-5869	483
112-6174	447
112-9609	443
112-9610	443
112-9611	443
112-9612	443
112-9783	330
	332
113-1095	390
113-1504	9
	11
	13
	15
	17
113-5100	443
113-6349	126
113-8129	78
113-8490	443
	447
114-2505	437
	452
114-2579	88
114-3140	366
	373
	411
	413
114-3469	384
114-3956	421
114-5333	385
115-1162	88
115-1552	397
	401
115-1748	99
	455
115-9680	261
116-0118	100
	156
	161
	332
	334
	385
	443
	447
116-4159	443
	447
116-4161	443
116-4684	434
	437
	451
116-5270	443
	447
116-5274	443
	447
116-5275	443
	447
116-5277	443
	448
116-6565	443
	447
116-7856	369
	405
116-9894	261
117-2978	451
	455
117-2979	451
	455
117-7240	317
117-7241	317
117-7251	317
117-7252	317
117-7273	275
118-3149	241
	244
118-3534	156
	161
118-5044	366
	373
	411
	413
118-5046	366
	411
118-6375	463
	464
118-7250	▶466
	467
	468
118-7259	370
	372
	410
118-7362	443
	447
118-9145	71
119-2073	466
119-3859	403
119-7017	147
119-8436	198
119-9706	227
	229
	231
	241
	244
	246
	248
	251
	253
120-4187	100
	▶147
120-4394	338
	342
120-6872	95
	97
	115
	117
121-0883	34
121-4459	281
	285
121-5327	451
	455
122-3608	89
122-8427	80
	246
	248
	251
	253
122-9068	317
122-9718	306
	308
	311
	313
123-7557	280
	283
	286
	▶343
123-7562	280
	281
	283
	285
	286
123-7575	343
123-7589	343
123-7590	343
123-7591	343
123-8851	366
124-0357	185
	197
124-0358	185
	197
124-0359	185
	197
124-0506	11
	13
	15
	17
124-3536	51
	53
124-3815	35
	37
	39
	103
	106
	112
124-4592	420
124-8494	366
	373
	411
	413
124-8495	366
	373
	411
	413

▶ **PRIMARY REFERENCE**

PART NUMBER INDEX

Part	Page
124-8909	212
	214
124-9636	444
124-9637	444
124-9891	295
124-9898	293
	295
124-9899	295
124-9900	295
124-9901	295
125-0380	420
125-0653	416
125-1054	359
125-3295	100
125-4572	295
125-7874	443
125-7876	393
125-8157	277
125-9134	317
126-0287	345
	348
126-0288	346
	349
126-8185	346
126-9339	345
	346
	348
	349
126-9340	345
	346
	348
	349
126-9341	346
126-9587	317
127-5588	324
	326
	328
127-8613	369
	405
127-9485	297
	299
	301
	303
128-0314	127
128-1092	293
	295
128-1093	293
128-1097	293
	295
128-1624	395
128-1899	297
	299
128-1912	297
	303
128-2034	335
128-4119	395
128-4120	395
128-5397	31
128-8617	434
	437
	440
	451
	455
129-3178	366
	373
	411
	413
129-3216	192
	193
129-5128	352
129-7184	434
	437
	440
	451
	455
129-9124	345
	346
	348
	349
130-3879	30
	31
130-3881	74
	75
130-6469	142
130-7287	418
130-9888	9
	11
	13
	15
	17
131-1474	443
131-3540	84
131-8829	87
132-3056	330
	332
132-5789	154
	156
	161
132-7084	447
132-9982	424
132-9983	424
133-1011	35
	37
	39
134-2364	263
134-4735	263
135-0708	198
	352
135-2929	▶425
	434
	437
	440
	451
	455
135-8072	339
136-1953	367
	373
	411
	413
136-3188	375
136-3190	375
136-3608	11
	13
	15
	17
136-8064	205
	209
136-8068	205
	209
136-8638	205
	209
136-8641	205
	209
136-8869	▶293
	▶295
	354
137-2170	478
	480
	482
138-2053	63
	64
138-7125	241
	244
	246
	248
	251
	253
138-8175	293
	295
	320
138-8177	293
	295
139-0234	443
	447
139-0236	443
	447
139-2036	186
	▶191
139-2787	139
139-3178	175
	177
139-3181	191
139-3280	407
140-1321	191
	192
	193
140-5846	179
	181
	183
	189
140-6316	346
	▶359
140-8260	346
140-8261	346
140-8266	191
	192
	▶345
140-8267	191
	192
	▶346
140-8714	103
	106
	112
140-8718	103
	106
	112
140-8783	126
140-9337	391
	393
140-9338	391
	393
140-9614	344
	▶354
140-9685	391
	393
141-1794	391
	393
141-8580	397
	399
141-9784	366
	373
	411
	413
141-9866	233
142-3388	74
	75
	76
	77
142-3391	74
	75
	76
	77
142-8928	330
	332
142-8937	330
	332
143-1646	127
143-4653	234
143-5926	▶428
	432
	433
143-5948	376
	▶403
143-8874	370
	372
	410
144-0195	483
144-0900	370
	372
	444
	448
144-1569	480
144-8242	265
	267
145-3812	275
145-3813	275
145-3846	322
	324
	326
	328
145-9291	263
145-9296	434
	437
	440
	451
	455
145-9297	443
	447
146-0797	385
146-3165	▶257
146-7292	360
	361
146-7512	345
	348
	349
146-8999	406
146-9006	377
	379
	381
146-9007	377

PART NUMBER INDEX

Part	Page	Part	Page	Part	Page	Part	Page
	379		201		413		209
	381		355	151-3084	205	151-7516	204
146-9501	346		357		209		205
146-9502	345	148-8328	278	151-3085	205		209
	348		291		209	151-7517	204
	349	148-8340	263	151-6282	297		205
146-9503	349		265		299		209
146-9504	345		267		301	151-7518	204
	348		330		303		205
147-0333	345	148-8345	352	151-7481	205		209
	▶360	148-8347	278		209	151-7519	205
147-1979	27	148-8351	261	151-7482	205		209
147-2645	109		267		209	151-8110	388
	110	148-8354	263	151-7483	205	151-9274	393
147-5553	92		291		209	152-0116	198
147-7370	395		332	151-7484	205	152-0277	289
148-1202	293	148-8355	332		209	152-1261	189
	295	148-8360	291	151-7485	205		344
148-1219	293	148-8364	355		209	152-1810	280
	295		357	151-7486	205		283
148-1226	293	148-8368	334		209		286
	295	148-8369	175	151-7488	205	152-3968	103
148-1235	293		177	151-7490	205		109
	295		179		209		110
148-1238	293		181	151-7491	205	152-4373	388
	295		183		209	152-6144	168
	297	148-8370	352	151-7493	205		170
	299	148-8372	175		209	153-3061	74
	301		177	151-7496	205		75
	303		179		209		76
148-1240	293		181	151-7497	205		77
	295		183		209	153-3605	388
148-1252	293		200	151-7498	205	153-3606	447
	295		201		209	153-4980	6
148-1517	100		355	151-7499	205		▶32
148-1970	293		357		209	153-4982	▶74
	295	148-8373	272	151-7500	205		▶75
148-3452	349	148-8374	330		209		432
148-6790	▶197		332	151-7501	205	153-5030	▶76
	211	148-8388	212		209		▶77
148-8305	261		214	151-7502	205		431
	278	148-8389	265		209		433
148-8316	200	148-8428	265	151-7503	205	153-6237	175
	201		267		209		177
	213	148-8430	278	151-7504	205		179
	215	148-8444	289		209		181
148-8320	265	149-0777	263	151-7505	205		183
	267	149-0779	263		209		212
148-8322	212	149-7372	198	151-7506	205		214
	214	149-9176	34		209	153-6241	278
148-8324	212	149-9933	403	151-7507	205	153-6244	212
	214	150-2511	345		209		214
148-8325	175		348	151-7508	205	153-7369	263
	177		349		209		▶269
	179	150-3033	212	151-7509	205	153-7817	377
	181		214		209		379
	183	150-5968	261	151-7510	205		▶478
	261	150-7732	9		209	154-1643	403
	334		11	151-7511	205	154-4879	261
148-8327	175	150-8015	478		209	154-4883	352
	177		480	151-7513	205	154-5212	263
	179		482		209	154-5232	330
	181	151-0894	366	151-7514	205		332
	183		373		209	154-8045	95
	200		411	151-7515	205		97

▶ **PRIMARY REFERENCE**

PART NUMBER INDEX

Part	Page
154-9025	60
	61
154-9517	395
155-2255	444
155-2260	155
	156
155-2261	150
155-2265	434
	437
	444
	451
	455
155-2270	150
	151
	152
	153
	154
	156
	366
	434
	437
	444
	451
	452
	455
	456
155-2271	155
	156
	434
	437
	444
	455
155-2272	451
155-2274	155
	156
	444
155-4170	257
155-4171	257
	258
	259
155-4774	▶476
	483
155-4777	476
155-4850	189
	344
155-5234	▶99
	440
	455
155-5779	483
155-5783	▶426
	483
155-6616	418
155-6654	293
	295
	316
	320
155-6657	293
	295
155-6663	257
	258
155-6741	418
155-7328	291
155-8961	459
156-1141	459
	460
156-3617	102
156-4449	370
	372
	410
156-5114	119
156-6175	156
	161
156-6819	411
157-0670	60
	61
157-8674	407
158-0248	136
158-0252	136
158-5089	443
	444
	448
158-7864	486
	487
	489
	490
	491
159-3027	239
159-4026	459
	460
159-5255	60
	61
159-5846	362
159-7142	428
	430
159-9405	189
	344
	▶362
159-9539	397
	401
160-1757	338
	342
160-2247	290
	416
	418
160-2248	198
160-6330	256
160-6331	256
160-6812	256
160-7197	95
	97
	106
	112
160-9412	443
161-6154	275
161-6853	261
161-9639	401
161-9640	397
	399
161-9641	397
	399
161-9642	397
	399
161-9647	397
	399
161-9916	272
162-1565	11
	13
	15
	17
162-2188	397
162-2190	397
162-2453	291
	▶335
162-2480	80
	236
162-3294	▶136
162-5372	136
163-1201	437
	440
	451
	455
163-6508	99
163-6513	336
163-8783	492
	493
163-9324	416
164-4858	▶94
	120
164-5567	212
	214
164-5590	61
164-5619	297
	299
164-6863	263
164-7556	137
165-0177	478
	482
165-0178	478
	482
165-0571	462
165-2273	61
	121
	123
165-2521	278
165-4929	191
	192
	193
165-6689	33
166-0344	293
	295
166-7177	255
	258
	259
166-7558	274
166-8068	391
	393
166-8070	391
	393
166-8071	391
	393
166-8072	391
	393
166-9098	403
166-9319	406
167-0138	▶150
	443
	448
167-0634	216
167-1192	395
167-2153	35
167-6805	306
	308
	310
	311
	313
	315
167-7418	95
167-7713	283
	286
168-2457	397
	399
168-3504	297
	299
	301
	303
168-7940	316
	320
168-7941	316
	320
168-7942	316
	320
168-7943	320
168-7944	293
	295
	316
169-0502	483
169-3196	492
	493
169-3995	397
	399
169-7442	175
	177
	179
	181
	183
170-3528	120
	121
	123
171-2208	156
	161
171-2842	391
	393
171-5286	322
172-3259	362
172-4459	383
172-4463	383
172-5267	198
	352
172-5523	198
	352
172-7615	251
173-2686	240
173-2687	240
173-2731	233
	▶240
173-7456	265
	267
174-1486	366
	411
174-9638	92
175-3722	409
175-4291	137
175-4292	137
176-0786	486
	489
176-3900	▶364
	365
176-6219	103
176-9166	263
176-9170	263

▶ PRIMARY REFERENCE

PART NUMBER INDEX

Part	Page
176-9285	204
176-9287	204
176-9288	204
176-9289	204
177-0012	205
	209
177-0013	205
	209
177-0014	205
	209
177-1809	204
177-2215	270
	352
	407
	418
177-4458	273
177-4459	273
	274
177-4658	362
177-6853	280
	283
	286
177-7155	265
	267
177-7747	281
177-8723	339
	341
177-9752	1
	2
	▶4
178-0274	198
178-1781	45
178-2593	397
	399
178-3620	84
	261
	416
178-3836	▶395
	432
	433
178-8505	80
	161
	183
180-1555	219
	220
	221
	222
180-3528	367
	373
180-3813	278
180-3871	397
	399
	▶480
180-7333	360
	361
180-7486	369
	405
180-7487	369
	405
180-7884	270
180-8576	434
	437
	440
	451
	455
180-9873	▶366
	369
	372
180-9874	410
	▶411
183-1343	42
183-3873	324
	326
	328
183-6121	80
	227
	229
	231
183-7413	142
183-7528	367
	373
	411
	413
185-0242	297
	299
	301
	303
185-0248	297
	299
	301
	303
185-0250	316
185-0253	316
185-0263	297
	299
	301
	303
185-0266	297
	299
	▶316
185-0273	316
185-0882	27
185-0884	23
185-1546	59
	63
185-5770	▶397
	▶399
	463
	464
186-0898	422
	423
186-1709	▶422
	431
186-2000	236
186-2879	236
186-2880	236
186-3169	391
	393
186-3171	391
	393
186-3380	▶390
	391
	393
186-3735	120
	121
	123
	125
	132
	136
	141
	154
	161
	213
	215
	278
	330
	332
	385
	391
	426
	427
	434
	437
	440
	447
	451
	455
186-3736	151
186-6190	▶365
	416
187-1445	330
187-2082	388
187-2120	261
187-3021	227
	229
	231
187-3030	227
	229
	231
187-5122	480
187-5123	480
187-5124	480
187-5125	480
187-5126	480
187-5127	478
	480
	482
187-5128	478
	480
	482
187-5377	478
187-5379	478
	482
187-5381	478
	482
187-5383	478
	482
187-5386	478
	482
187-8001	306
	308
	310
	311
	313
	315
187-9185	463
	464
187-9278	240
188-2008	330
188-6392	297
	299
	301
	303
188-8849	136
189-1707	367
	373
189-4652	459
	460
189-4717	297
	299
	301
	303
190-0360	141
190-2938	486
	487
	489
	490
	491
190-5386	486
	487
	489
	490
	491
190-7632	306
	308
	311
	313
	▶317
190-9732	470
	474
190-9775	94
191-2841	270
191-3040	478
	482
191-3539	275
191-3540	275
191-3553	275
191-4522	317
191-8921	375
191-8924	212
	214
192-0265	▶369
	370
192-1170	338
192-1172	338
	342
192-1173	338
	342
192-2839	317
192-4576	280
	283
	286
193-0161	103
193-4126	443
193-5892	186
	187
	188
	▶344
193-5893	189
	344
193-5894	189
	344
193-8565	443
	448
193-8566	434
	437
	451
194-1983	317
194-3710	427
194-5171	483

▶ **PRIMARY REFERENCE**

PART NUMBER INDEX

Part	Page
194-5390	92
194-6523	120
195-1411	234
195-2132	43
195-2134	43
195-2136	43
195-2221	43
195-4973	84
	438
	441
196-2036	212
	214
	272
196-4205	416
196-9444	339
	341
197-3229	388
197-3300	388
	▶391
	▶393
197-7864	335
197-8932	127
197-9155	168
	170
197-9181	391
	393
197-9238	391
	393
197-9461	391
	393
197-9695	391
	393
198-1111	391
	393
198-1506	448
198-7811	168
	170
	195
198-8645	9
198-9137	434
	437
	440
	452
	455
198-9169	11
	13
	15
	17
199-0639	168
199-0646	195
199-0653	207
	208
199-0656	195
199-0662	168
199-0669	208
199-0673	173
199-0675	195
199-0678	195
199-0680	195
199-0684	195
199-0685	195
199-0686	195
199-0687	195
199-0688	195
199-0689	195
199-0690	195
199-0691	195
199-0692	195
199-0693	195
199-0694	173
199-0695	195
199-0760	207
	208
199-0767	168
199-0778	168
	170
199-0808	173
	174
199-0858	195
199-3108	34
199-3109	34
199-9252	103
	106
199-9267	57
	71
199-9751	27
	56
	103
	106
200-0241	258
	259
200-2213	455
200-7836	246
	248
	251
	253
201-0183	432
	433
	▶485
201-1601	80
201-1919	203
	218
201-4162	486
	489
	490
201-4169	485
201-4170	485
201-5160	▶239
	431
201-5161	239
201-7671	6
	▶84
202-0679	431
	▶462
202-0949	227
	229
	231
202-1206	84
202-4172	166
	▶168
202-4736	470
	474
202-4737	470
	474
202-4739	470
	474
202-4740	470
	474
202-6535	306
	308
	310
	311
	313
	315
202-6614	137
203-0067	423
203-0203	156
	161
203-3639	▶423
	431
203-4231	80
203-4685	▶166
	▶167
	211
203-4687	218
	▶219
203-4688	218
	▶220
203-4692	166
	167
	▶204
203-4710	175
	179
	▶205
203-4718	▶218
203-4741	219
	220
	221
	222
203-5470	227
	229
	231
203-6511	▶265
	▶267
	288
203-8609	295
204-1304	▶144
204-1305	▶145
204-1321	▶139
	▶140
	431
204-1328	▶407
204-1452	319
	321
204-1453	319
204-1454	273
	274
204-1455	273
	274
	286
204-1458	281
	285
204-2135	▶276
	277
204-2799	297
	299
204-4390	▶467
204-9737	261
205-0191	209
205-0192	209
205-0706	198
	352
205-5007	338
	342
205-7407	▶271
	288
205-7700	434
	437
	440
	452
	455
206-2733	157
	162
206-3658	175
	177
	179
	181
	183
206-4881	281
	306
	308
	310
	311
	313
	315
206-5108	444
	448
206-5109	444
	448
206-5234	87
206-5235	87
206-5237	87
206-6339	277
206-6415	290
206-7017	265
	267
	▶277
206-7492	▶216
	217
	223
207-2055	335
207-2757	115
	117
207-2813	205
207-2814	205
207-2815	205
207-2816	205
207-2817	205
	209
207-2818	205
207-2819	205
207-4255	168
	170
207-4257	207
	208
207-4499	290
207-5962	207
	208
208-0368	288
	▶334
208-8760	427
209-0617	416
209-3565	338
	339
	341
	342

2

▶ PRIMARY REFERENCE

PART NUMBER INDEX

Part	Page	Part	Page	Part	Page	Part	Page
209-3855	261		483		231	218-9878	205
209-5382	198	215-1446	493	217-3189	241		209
209-5502	8	215-1447	494		244	218-9880	205
209-5503	8	215-6300	142	217-3627	127		209
209-7457	195	215-7697	281	217-4111	82	219-0305	492
209-7481	173	215-9508	95	217-4112	82		493
209-7482	173		97	217-4113	82		494
209-9219	25		115	217-4315	241	219-0616	175
	26		117		244		177
210-3097	168	215-9509	95	217-5821	470		179
210-3098	168		97		474		181
	170		115	217-6838	192		▶299
210-3099	168		117	217-8058	263	219-0617	80
	170	216-0202	352	217-8225	6	219-0943	385
210-3100	168	216-1601	207		▶80	219-4162	1
	170	216-1602	194	217-9039	95		2
210-3328	168	216-1606	207		97		▶6
	170	216-1608	170	218-0377	▶198	219-4164	1
210-4563	224	216-1609	168		288		▶211
	255		170	218-0378	351	219-4167	1
210-5487	409		▶194		▶352		2
210-5489	409	216-1610	170	218-2207	241		▶288
210-5550	▶409		▶207		244	219-4168	1
	431	216-2801	198		246		2
210-5932	194	216-4881	492		248		▶351
210-7302	170	216-7940	6		251	219-4192	▶186
211-4674	224		▶89		253	219-6487	▶137
	255	216-7953	89	218-2529	434		140
211-6574	82	216-7956	80	218-2751	1	219-7202	427
212-0854	388	216-8158	6		▶322	219-7803	258
212-5713	168		▶90		▶324	219-8834	195
	170	216-8163	90		▶326	219-8835	195
212-5993	255	216-8314	19		▶328	220-0204	387
212-6679	283		21	218-2973	▶212	220-0205	▶387
212-9428	377	216-8634	35		▶214		432
	379		37		288	220-0229	152
	381		39	218-2975	▶272	220-0777	244
212-9533	1	217-0747	6		288		248
	185		▶85	218-2976	▶278		251
	▶255	217-2536	227		288	220-1944	▶175
213-0711	434		229	218-3159	212		▶177
213-3152	217		231		▶306		187
	▶256	217-2537	241	218-3160	212	220-1945	175
213-3724	154		244		▶308		177
213-4208	297	217-2650	▶227	218-3163	▶200		179
	299		▶229		▶201		181
	301	217-2651	▶241		288		183
	303		243	218-3164	200	220-1960	6
213-4222	207	217-2652	241		▶297		▶60
	208	217-2687	241	218-3213	288		▶61
213-4258	291		244		▶289	220-2080	288
213-8609	322	217-2689	241	218-3920	▶270		▶291
	324		244		288	220-2109	212
213-8655	322	217-2728	90	218-4105	288		214
	324	217-2733	80		▶290	220-2173	198
213-9684	119	217-2945	1	218-4281	288	220-2174	198
214-1737	486		▶233		▶388	220-2297	198
	487	217-2947	233	218-4302	388	220-2298	198
	489	217-2948	224	218-5014	82	220-2309	200
	490	217-3167	241	218-8489	351		201
	491		244		▶355	220-3259	80
214-3203	8	217-3180	241		▶357	220-3813	80
214-4073	376		244	218-8490	▶310	220-3926	263
	▶415	217-3188	227		355	220-4051	▶187
214-7636	▶375		229	218-9847	391		211

▶ **PRIMARY REFERENCE**

PART NUMBER INDEX

Part	Page
220-4053	187
	▶193
220-4054	193
220-4119	45
220-4120	89
220-4133	334
	▶336
220-4165	336
220-4166	336
220-5746	85
	▶87
220-8539	223
	▶486
	▶487
220-8549	130
	▶152
	▶153
220-8703	1
	▶260
220-8754	▶238
220-8779	6
	▶45
	▶46
221-0103	82
221-0104	82
221-0800	▶179
	▶181
	▶183
	186
	188
221-1731	▶261
	288
221-2014	115
	117
221-4148	259
222-1889	193
	▶348
222-1890	193
	▶349
222-1891	348
	349
	▶361
222-1892	361
222-3102	6
	▶102
222-3594	▶385
	432
222-4326	1
	185
	▶224
222-4913	385
222-4914	385
222-4921	130
	▶156
	▶161
222-6445	80
222-6617	117
222-7037	352
222-7038	352
222-7874	322
	324
	326
	▶330
222-7921	330
	332
222-8543	385
222-8663	▶416
	432
222-9975	1
	▶489
223-3384	336
223-3945	416
223-4281	388
	▶420
223-4791	▶376
	432
	433
223-4792	376
	▶463
223-4793	376
	▶483
223-5824	▶418
	432
	433
223-5849	175
	177
	179
	181
	183
	200
	201
223-6459	416
223-6460	416
223-7825	4
	5
	▶34
223-8344	223
	▶490
	▶491
224-0857	▶492
224-0859	▶493
224-0860	▶494
224-0871	▶223
224-0872	217
	223
	▶225
224-1149	431
	▶434
	▶437
	▶440
224-1152	431
	▶443
224-2264	80
224-7717	486
	487
	490
	491
224-9392	379
	381
225-3146	126
225-3150	148
225-4317	4
	5
	▶54
225-5436	51
	53
225-5437	51
	53
225-5438	51
	53
225-5439	51
	53
225-5441	51
	53
225-5451	51
	53
225-5453	51
	53
225-5454	51
	53
225-5458	51
	53
225-5459	51
	53
225-5493	27
225-5494	27
225-5495	27
225-5496	27
225-5498	27
225-5499	27
225-5501	28
	29
225-5502	28
	29
225-5625	59
	63
225-5629	59
	63
225-5634	59
	63
225-5638	59
	63
225-5640	59
	63
225-5959	59
	63
225-5960	59
	63
225-5961	59
	63
225-5962	59
	63
225-5963	▶59
	63
	64
225-5967	7
	64
225-6004	47
225-6005	47
	49
225-6041	47
	49
225-6451	9
	11
	13
	15
	17
225-6455	9
	11
	13
225-6456	9
	11
	13
	15
	17
225-6461	9
	11
	13
	15
	17
225-6464	9
	11
	13
	15
	17
225-6477	9
	11
	13
	15
	17
225-6478	9
	11
	13
	15
	17
225-6479	9
	11
	13
	15
	17
225-6517	9
	11
225-6817	70
	71
225-6818	70
	71
225-6820	71
225-6907	68
225-6908	68
225-7713	463
225-7714	▶377
	463
225-7715	377
	379
	381
225-7716	377
	379
	381
225-7717	377
	379
	381
225-7718	377
225-7729	415
225-7738	78
225-7739	78
225-7741	78
225-7772	19
	21
225-7781	19
	21
225-7941	71
	73
225-7944	23
	71
	73
225-8016	78
225-8019	78
225-8023	192
225-8281	35
225-8282	35

▶ **PRIMARY REFERENCE**

PART NUMBER INDEX

Part	Page
225-8329	67
225-8524	92
225-8526	92
225-8533	92
225-8534	92
225-8536	92
225-8541	444
	448
225-8848	41
225-8858	23
226-0423	238
226-0912	270
226-1880	270
226-3444	415
226-3445	415
226-3465	415
226-4346	194
226-4352	168
226-4364	168
	170
226-4365	168
	170
226-4366	168
	170
226-4367	168
	170
226-4370	168
	170
226-4373	195
226-4374	195
226-4377	168
	170
226-4378	208
226-4380	173
226-4381	173
226-4382	174
226-4393	▶172
	173
226-4394	▶173
	195
226-4397	173
226-4400	168
	170
	▶195
226-6416	415
226-7758	▶141
	376
226-8346	▶370
	432
226-8763	9
226-8766	35
	37
	39
226-8767	35
	37
	39
226-8770	131
226-8773	95
	97
226-8940	▶155
	376
226-8941	155
227-0063	▶154
	432
227-0172	175
	177
	179
	181
	183
	189
	257
	258
	259
	344
227-1100	225
227-4562	92
227-4794	100
227-4799	6
	▶100
227-5446	127
227-5690	▶424
	432
	433
227-7392	375
227-8307	310
	▶338
227-9503	416
228-4841	85
228-5108	84
228-5778	102
228-7106	297
	299
	301
	303
228-7704	89
228-9108	▶146
	443
	448
229-1182	289
229-1538	80
229-1567	80
229-1641	80
229-2313	434
	437
	440
	452
	456
229-2565	227
	229
	231
229-2588	80
	▶82
229-2884	157
	161
229-2885	385
229-2886	385
229-3469	84
229-5051	168
	▶208
229-5055	195
229-5056	195
229-5092	194
229-5099	195
229-5403	▶203
229-5404	203
	▶221
229-5406	203
	▶222
229-9269	463
	464
229-9291	120
	121
	123
229-9782	152
	153
230-4178	▶1
230-4632	489
230-4633	489
230-4665	420
230-5455	434
	437
	440
	452
	456
230-6367	469
	472
230-7304	4
	5
	▶148
230-7353	4
	5
	▶58
230-7355	4
	5
	▶78
230-7470	424
230-7578	4
	▶67
230-8065	30
	31
230-8093	434
	437
	440
	452
	456
230-8094	47
	49
230-8279	71
230-8873	241
	244
230-8989	103
	106
	112
230-8995	103
	106
	112
230-8996	103
	106
	112
230-8997	103
	106
	112
230-8998	103
	106
	112
230-8999	103
	106
	112
230-9092	444
	448
230-9127	9
	11
	13
	15
	17
230-9144	9
	11
230-9152	9
	11
	13
	15
230-9196	4
	5
	▶8
230-9527	103
230-9577	418
230-9699	4
	▶30
231-0038	4
	5
	▶68
	▶69
231-0669	174
231-0670	173
	174
231-0671	173
	174
231-0689	▶174
231-0720	208
231-0748	195
231-3310	90
231-4913	▶188
231-6603	157
	161
231-8768	188
	189
	▶192
231-8815	2
	▶211
231-8816	▶2
232-0295	157
	161
232-0296	157
	161
232-0310	157
	162
232-1115	97
	115
232-1117	103
232-1295	103
	106
232-1322	27
	56
	103
232-1323	103
	106
232-1328	103
	106
	112
232-1793	103
	106
	112
232-1794	103
	106
	112
232-2551	47
232-2565	4
	5

▶ **PRIMARY REFERENCE**

PART NUMBER INDEX

Part	Page
	▶47
	▶49
232-2724	112
232-2725	103
	106
	112
232-2726	103
	106
	112
232-3126	95
	97
	112
	115
	117
	131
232-3149	103
	106
	112
232-3157	103
	106
	112
232-3158	103
232-3263	103
	106
232-3274	103
	106
	112
232-3666	35
	37
	39
232-3713	4
	5
	▶41
232-3716	4
	▶55
232-3722	▶70
	71
	73
232-3751	23
	71
	73
232-3861	57
	71
232-4226	470
	474
232-4519	492
	493
	494
232-6177	4
	▶71
232-6178	35
232-6179	4
	▶35
	▶37
232-6204	4
	5
	▶56
232-7378	4
	5
	▶66
232-7400	19
	21
232-7439	4
	▶19
232-7440	23
232-7442	4
	▶51
232-7449	25
	26
232-7519	▶27
	28
	29
232-7524	4
	▶28
232-7526	4
	▶63
232-7528	4
	▶7
232-7596	23
232-7597	23
232-7599	23
232-7600	23
232-7603	23
232-7604	▶23
	25
	26
232-7606	4
	▶25
232-9758	95
	97
	115
	117
232-9759	95
	97
	115
	117
232-9760	95
232-9762	95
233-3784	19
	21
233-3785	19
	21
233-3786	19
	21
233-3788	19
	21
233-3789	19
	21
233-3790	19
	21
233-7489	88
233-7530	470
233-7532	470
233-7533	470
	474
233-7534	470
	474
233-7535	470
	474
233-7536	470
	474
233-7537	470
	474
233-7538	470
	474
233-9417	4
	5
	▶115
	▶117
233-9526	4
233-9530	126
233-9531	126
233-9532	126
233-9533	4
	▶126
233-9534	92
233-9536	92
233-9537	92
233-9539	4
	5
	▶92
233-9614	270
233-9744	321
233-9831	95
	97
233-9832	4
	▶95
	▶97
233-9834	4
	▶131
233-9840	4
	▶42
234-0251	4
	▶9
234-0589	434
234-3390	486
	487
	489
	490
	491
234-3461	▶217
234-6828	434
234-9680	5
	▶31
234-9980	▶142
	431
235-0374	459
	460
235-0512	▶469
235-1491	472
235-1790	103
	106
	112
235-3151	469
	▶470
235-4119	▶472
235-4546	421
235-8556	1
	2
	▶288
235-8557	▶263
	288
236-1517	▶431
236-1518	▶431
236-2144	103
	106
	112
236-5056	469
	472
236-5850	289
236-6627	▶431
236-6628	▶383
	431
	▶103
	▶106
	▶109
236-7001	227
	▶243
236-7002	243
	▶244
236-7003	244
237-0284	97
	115
	117
237-0285	97
	115
	117
237-0286	97
	115
	117
237-4227	303
238-2799	4
	5
	▶73
238-5293	168
	170
238-5294	168
	170
238-8288	88
238-8560	120
238-8563	119
	▶120
	▶121
	▶123
238-8671	106
	112
238-8680	1
	2
	▶130
238-8682	▶127
	130
238-8864	95
	97
239-0641	1
	▶119
239-0649	80
239-0795	1
239-0796	▶1
	2
239-1496	1
	▶234
239-4009	▶427
	483
239-5097	227
	229
	231
239-5433	102
239-5812	120
	121
	123
239-6986	486
	487
	489
	490
	491
239-8484	214
239-8485	212
	214

▶ PRIMARY REFERENCE

PART NUMBER INDEX

Part	Page
240-0772	276
240-0773	276
240-2652	494
240-2665	493
240-4607	▶405
	432
	433
240-4672	▶410
	433
240-4683	▶372
	432
240-5535	4
	5
	▶129
240-5571	106
	112
240-9007	494
240-9008	493
240-9021	212
	214
240-9022	212
	214
240-9093	212
	214
240-9756	115
	117
241-3783	▶236
	▶237
241-8368	▶151
241-9527	226
241-9529	223
	▶226
241-9599	▶258
242-0737	▶223
242-1293	▶259
242-4289	275
242-9392	418
242-9393	418
243-4362	204
243-5693	432
	433
	▶447
243-5696	448
244-1090	153
245-3556	87
245-9831	4
	5
	▶33
246-2641	486
	487
	490
	491
247-0099	30
247-0144	78
247-4468	274
247-4941	474
247-4942	474
247-6271	260
247-6278	278
247-6479	470
247-7799	11
	13
248-1362	472
	▶474
248-4046	430
248-7650	452
	456
249-0974	73
249-1291	240
249-2456	431
	▶459
	▶460
249-7106	92
249-7388	240
249-9301	▶406
	432
	433
249-9323	▶432
249-9324	▶433
251-4336	35
	37
	39
251-6241	88
251-8338	49
252-1821	68
252-6438	27
252-6456	4
	5
	▶43
252-8737	35
252-9205	437
	440
	452
	456
252-9581	299
	301
252-9614	92
253-1847	156
	161
253-2111	156
	161
253-2479	4
	5
	▶57
253-4313	474
253-5022	207
253-9940	432
	433
	▶451
	▶455
253-9942	452
	456
254-1323	▶185
254-1347	185
	▶189
254-2269	69
254-2270	69
254-3954	27
254-4251	297
	299
	301
	303
	▶337
254-5054	▶376
	432
254-5057	376
	▶464
254-5058	▶379
	▶381
	464
254-5060	379
	381
254-8188	▶275
	306
	308
	311
	313
254-8189	▶280
	308
254-8191	308
	311
	▶339
255-0625	272
	▶305
255-6422	▶468
255-6666	310
	▶319
255-6667	▶273
	310
255-6668	▶281
	310
255-6669	319
255-6670	273
255-6876	280
	281
255-8680	▶283
	306
	313
255-8686	306
	313
	▶341
255-9138	373
	413
256-2212	273
	274
256-3845	280
	283
	286
256-4447	88
257-9290	157
	162
258-4946	28
	29
258-5194	320
259-0513	74
	76
259-1188	▶430
	432
	433
259-2646	464
259-4423	▶376
	432
	433
260-0769	305
261-0998	280
	283
	286
262-4947	100
263-2162	47
	49
263-2562	486
	490
263-2563	486
	490
263-2565	486
	490
263-6349	177
	181
	183
	▶209
267-3060	440
	455
268-0867	5
269-3101	4
	5
	▶11
	▶13
	▶15
	▶17
269-4114	399
	▶401
270-3932	209
270-3933	209
270-3934	209
270-4374	4
	5
	▶88
270-6992	115
272-0494	4
	5
272-2265	70
272-9800	138
273-2225	332
274-1512	263
274-7855	75
	77
275-1038	112
275-2452	41
275-6706	373
	413
275-9883	49
276-0076	246
	248
	251
	253
276-1243	121
	123
276-5605	23
277-3012	37
	39
277-5156	4
	5
278-5689	121
	123
278-5968	237
279-0122	121
	123
279-9876	121
	123
281-0028	140
281-4808	373
281-6366	46
284-3083	246
	248
	251
	253
284-3088	▶246
	250
284-3089	▶248
	250

▶ **PRIMARY REFERENCE**

PART NUMBER INDEX

Part	Page
284-3090	229
	▶250
284-4999	▶110
	112
284-5000	▶111
285-2277	286
286-4880	131
286-7193	443
286-9593	401
287-8573	13
	15
	17
287-8597	34
288-0422	37
	39
288-1394	51
288-1395	51
288-8880	381
	▶482
288-8884	482
289-3423	237
291-2619	89
291-3957	89
291-3959	89
291-3961	89
292-4427	487
	491
292-4428	487
	491
295-1711	37
	39
295-8965	231
	▶250
295-8966	250
	▶251
295-8969	251
296-0023	1
	▶231
296-0024	250
	▶253
296-0025	246
	248
	253
296-0027	251
	253
296-3329	214
	▶311
296-3331	214
	▶313
296-3332	▶315
	357
296-5159	183
	▶301
296-5160	201
	▶303
297-4047	3
	▶5
298-2109	216
298-7788	326
	328
299-9265	117

3

Part	Page
300-5183	129
301-4576	286
301-4622	286
301-9825	80
302-0581	92
304-7046	▶3
304-7855	487
	491
304-8764	49
304-8924	487
	491
304-8925	487
	491
306-2337	17
306-4998	121
	123
306-8127	121
	123
306-8141	▶413
308-1393	15
	17
308-3389	332
308-4728	5
	▶26
308-4729	5
	▶21
308-4730	5
	▶53
308-4731	5
	▶29
308-4732	5
	▶64
308-4733	5
	▶112
308-4764	5
	▶39
309-8618	373
309-8677	413
311-0186	407
311-6822	117
311-8547	▶373
312-5546	390
313-2545	301
	303
	▶320
313-2546	301
	303
313-2590	315
	▶321
313-2597	321
313-2635	▶274
	315
313-3391	▶285
	315
313-3392	285
313-3414	315
	▶342
313-4424	320
313-6014	342
314-2404	263
314-4014	286
314-4016	▶286
	311
314-6914	460
314-6915	460
318-1033	328
	▶332
318-8631	234
320-3072	448
320-7409	234
320-7642	326
321-2383	17
323-2978	326
	328
323-3515	37
	39
324-0444	37
	39
325-3644	167
	▶170
326-9364	328

▶ PRIMARY REFERENCE



© 2008 Caterpillar
All Rights Reserved

Printed in U.S.A.