KEBP0331
May 2013

RUTHZIL TRATOR COMERCIAL DE PEÇAS LTDA 11 97083-6812 ROLANDO CITRANGULO

Parts Manual

CS56B,CP56B,CS68B,CP68B Vibratory Soil Compactor

M4M1-Up (Machine)
M5P1-Up (Machine)
MBF1-Up (Machine)
SDT1-Up (Machine)
C6E1-Up (Engine)

Powered By C6.6 Engine

Product and Dealer Information

Note: For product identification plate locations, see the section “Product Identification Information” in the Operation and Maintenance Manual.

Delivery Date: _____

Product Information

Model: _____

Product Identification Number: _____

Engine Serial Number: _____

Transmission Serial Number: _____

Generator Serial Number: _____

Attachment Serial Numbers: _____

Attachment Information: _____

Customer Equipment Number: _____

Dealer Equipment Number: _____

Dealer Information

Name: _____ Branch: _____

Address: _____

_____

_____

	Dealer Contact	Phone Number	Hours
Sales:	_____	_____	_____
Parts:	_____	_____	_____
Service:	_____	_____	_____

MEMORANDA

TABLE OF CONTENTS

NAME	PAGE
GENERAL INFORMATION	**A4**
REPAIR ALTERNATIVES	**A7**
SUPPLEMENTAL COOLANT ADDITIVES	A8
MAINTENANCE PARTS	**A9**
INDEX	**A12**
MACHINE ARRANGEMENT	**1**
CHASSIS AR	1
COMMON AR	2
CONFIGURATION AR	3
DISTRIBUTION AR	4
ENGINE ARRANGEMENT	**6**
ENGINE AR	6
ENGINE AR-PRIMARY	6
INSTALLATION AR-ENGINE	7
BASIC ENGINE	**8**
ADAPTER GP-AUXILIARY DRIVE	8
BELT TENSIONER GP	10
CAMSHAFT GP	13
COVER GP-VALVE MECHANISM	14
CRANKSHAFT GP	16
CYLINDER BLOCK AS	17
CYLINDER BLOCK GP	18
CYLINDER HEAD AS	22
CYLINDER HEAD GP	24
DRIVE GP-FAN	26
FLYWHEEL GP	27
HOUSING GP-FLYWHEEL	28
HOUSING GP-FRONT	29
LIFTING GP-ENGINE	31
MOUNTING GP-ENGINE	32
MOUNTING GP-ENGINE FLEXIBLE	33
PAN GP-OIL	34
PISTON & ROD GP	36
PLUG GP-ENGINE	37
PULLEY GP-CRANKSHAFT	38
ROCKER ARM GP	39
SERVICE GP-ENGINE	41
VALVE MECHANISM GP	42
LUBRICATION SYSTEM	**44**
FILLER GP-ENGINE OIL	44
FILTER GP-ENGINE OIL	46
PUMP GP-ENGINE OIL	47
VALVE GP-FLUID SAMPLING	48
COOLING SYSTEM	**49**
CONNECTION GP-WATER	49
COOLER GP-ENGINE OIL	50
COOLER GP-FLTR BASE & ENG OIL	52
COOLER GP-HYDRAULIC OIL & FUEL	53
FAN & MOTOR GP	54
LINES GP-WATER	56
PUMP GP-WATER	57
RADIATOR & HYD OIL COOLER GP	59
RADIATOR GP	62
RECOVERY GP-COOLANT	63
AIR INLET AND EXHAUST SYSTEM	**64**
AFTERCOOLER GP	64
AIR CLEANER GP	65
LINES GP-AIR	67
MANIFOLD GP-INLET	69
MUFFLER & MOUNTING GP	70
TURBOCHARGER GP	71
FUEL SYSTEM	**74**
FILTER & LINES GP-FUEL	74
FILTER GP-SECONDARY FUEL	77
FILTER GP-WATER SEP & FUEL	78
INJECTOR GP-FUEL	79
LINES GP-FUEL	80
PUMP GP-FUEL INJECTION	83
TANK & MTG GP-FUEL	89
TANK GP-FUEL	90
ELECTRICAL AND STARTING SYSTEM	92
ALTERNATOR GP-CHARGING	92
BATTERY & WIRING GP	93
CONTROL & MTG GP-MACHINE	96
ELECTRICAL AR	96
ELECTRONICS GP-COMMUNICATION	96
ELECTRONICS GP-MACHINE	97
ELECTRONICS GP-MONITOR	97
GLOW PLUG GP	98
GRADE CONTROL AR	99
HARNESS AS-CAB	101
HARNESS AS-CHASSIS	102
HARNESS AS-CONSOLE	105
HARNESS AS-CONTROL	107
HARNESS AS-HEATER & AIR COND	108
HARNESS AS-LIGHTING	108
HARNESS AS-MONITOR	110
HARNESS AS-PANEL	114
HARNESS AS-PLATFORM	116
HARNESS AS-SENSOR	117
HARNESS AS-WIRING	119
INSTALLATION GP-COMMUNICATION	121
LAMP GP-FLOOD	130
LAMP GP-WARNING BEACON	131

TABLE OF CONTENTS

NAME	PAGE
LIGHTING GP-FLOOD	132
LIGHTING GP-WARNING BEACON	135
PANEL GP-CIRCUIT BREAKER	136
PANEL GP-CONTROL	138
RADIO GP-COMMUNICATION	140
SENSOR & MOUNTING GP	141
SENSOR & MTG GP-GRADE	145
SENSOR GP-PRESSURE	146
SENSOR GP-SPEED	148
SENSOR GP-TEMPERATURE	150
SENSOR GP-VIBRATORY	151
STARTING MOTOR GP-ELECTRIC	154
SWITCH GP-DISCONNECT	157
SWITCH GP-MAGNETIC	158
VALVE GP-SOLENOID	161
WARNING GP-BACKUP	162
WIRING GP-CAB	163
WIRING GP-CONSOLE	165
WIRING GP-ENGINE	166
WIRING GP-GRADE CONTROL	168
WIRING GP-LIGHTING	174
WIRING GP-MACHINE	179
WIRING GP-PLATFORM	181
WIRING GP-SENSOR	182
POWER TRAIN	**190**
AXLE & MTG GP-DRIVE	190
AXLE AR-DRIVE	193
AXLE GP-DRIVE	194
DIFFERENTIAL GP	202
DRIVE GP-DRUM	204
DRIVE GP-FINAL	209
DRUM AR-PADDED	211
DRUM AR-SMOOTH	212
DRUM GP-COMPACTOR	215
DRUM GP-PADDED	225
FLANGE GP-WHEEL	226
HOUSING GP-AXLE	227
INSTALLATION GP-DRUM	231
LINES GP-PROPEL	233
LINES GP-SHIFT	237
MOTOR & MTG GP-PROPEL	239
MOUNTING GP-WHEEL	241
PLANETARY GP-FINAL DRIVE	243
POWER TRAIN AR	245
PUMP & MTG GP-PROPEL	246
SHELL GP-PADDED	248
VALVE GP-CONTROL	254
VALVE GP-SHIFT PRESSURE	256
WHEEL & MTG GP-DRIVE	257
WHEEL & TIRE GP	258
FRAME AND BODY	**263**
COVER GP-PLATFORM	263
DOOR GP-ACCESS	264
ENCLOSURE GP-ENGINE	265
FRAME AS-REAR	268
FRAME GP-FRONT	270
FRAME GP-REAR	278
GUARD GP-LINES	280
GUARD GP-TRANSMISSION	282
HANDRAIL GP	283
HITCH GP-ARTICULATING & OSC	284
HOOD GP	286
PANEL GP-SIDE	289
SCRAPER GP-DRUM	290
SCRAPER GP-SMOOTH DRUM	299
SCREEN GP-AIR	304
STEP GP	305
BRAKING SYSTEM	**306**
CYLINDER GP-BRAKE	306
LINES GP-BRAKE	307
LINES GP-SERVICE BRAKE	309
STEERING SYSTEM	**314**
CYLINDER & MTG GP-STEERING	314
LINES GP-STEERING	316
LINES GP-STEERING CYLINDER	317
PUMP & MTG GP-STEERING	318
PUMP GP-GEAR	319
HYDRAULIC SYSTEM	**320**
ACTUATOR GP-PUMP	320
CYLINDER GP-HYDRAULIC	321
FILTER & MTG GP-HYDRAULIC	327
FILTER GP-OIL	328
FITTING GP-QUICK DISCONNECT	330
HEAD GP-PUMP	331
HYDRAULIC AR	332
HYDRAULIC AR-AUXILIARY	333
LINES GP-AUXILIARY HYDRAULIC	334
LINES GP-BLADE	339
LINES GP-HYDRAULIC OIL COOLER	343
MOTOR GP-GEAR	344
MOTOR GP-PISTON	345
PUMP & MOUNTING GP	351
PUMP GP-PISTON	355
ROTATING GP-MOTOR	363
ROTATING GP-PUMP	366
TANK & MTG GP-HYDRAULIC	370
TANK GP-HYDRAULIC	373
VALVE & MTG GP-AUXILIARY	377
VALVE & MTG GP-CONTROL	379
VALVE GP-FLUSHING	380
VALVE GP-PUMP CONTROL	381
IMPLEMENTS	**385**
BLADE AR	385
BLADE GP-LEVELING	387

TABLE OF CONTENTS

NAME	PAGE
WORK TOOLS	**389**
BLADE GP-COMPACTOR	389
VIBRATORY SYSTEM	**391**
DRIVE GP-SUPPORT & VIBRATORY	391
HOUSING GP-ECCENTRIC WEIGHT	394
HYDRAULIC AR-VIBRATORY	399
LINES GP-VIBRATORY	400
MOTOR & MTG GP-VIBRATORY	404
SENSOR AR-COMPACTION	406
SHAFT GP-ECCENTRIC WEIGHT	407
SUPPORT GP-VIBRATORY	408
OPERATOR STATION	**409**
ACCUMULATOR GP-REFRIGERANT	409
AIR CONDITIONER & MOUNTING GP	411
AIR CONDITIONER GP	412
ARM GP-WINDOW WIPER	414
CAB AR	415
CAB GP-ENCLOSED ROPS	416
CANOPY GP	418
COMPRESSOR GP-REFRIGERANT	419
CONDENSER & MTG GP-REFRIGERANT	422
CONTROL GP-BLADE	423
CONTROL GP-DIRECTION & SPEED	425
CONTROL GP-STEERING	427
COVER GP-CAB	429
COVER GP-CONSOLE	430
DOOR GP-CAB	432
DUCT GP-CAB AIR	435
FILTER GP-CAB AIR	436
FLOOR MAT GP	437
FLOOR MAT GP-CAB	438
GUARD GP-VANDALISM	439
HORN GP-ELECTRIC	440
INSTALLATION GP-RADIO	442
KIT-SEAT SUSPENSION	443
LATCH GP-CAB DOOR & WINDOW	444
LINER GP-CAB	445
LINES GP-AIR CONDITIONER	446
LINES GP-HEATER	450
LINKAGE GP	454
MIRROR GP-REAR VIEW	455
MOTOR GP-WINDOW WIPER	459
MOUNTING GP-CAB	461
MOUNTING GP-INSTRUMENT	462
MOUNTING GP-MONITOR	464
OPERATOR AR	468
PANEL GP-INSTRUMENT	472
PLATFORM GP	476
PLATFORM GP-OPERATOR	478
ROPS & PLATFORM GP	480
SCREEN GP-SUN	481
SEAT & MOUNTING GP	483
SEAT BELT GP	487
VALVE GP-WATER	491
VISOR GP-CAB	492
WINDOW GP-CAB	493
WIPER & WASHER GP-WINDOW	496
SERVICE EQUIPMENT AND SUPPLIES	**498**
CONNECTION GP-TEST	498
FASTENER GP	499
FILM GP	500
FILM GP-INTERNATIONAL	505
PLATE & FILM GP	524
PART NUMBER INDEX	**B1**

1. MACHINE IDENTIFICATION

Cat machines are identified by Product Identification Numbers (PIN). Some components included in a machine may be identified by Serial Numbers (S/N). Typical components that will be serialized include engines, transmissions, bulldozers, and rippers. The machine and engine are further identified by arrangement numbers and in some cases modification numbers. These numbers are shown on the product identification plate(s) and on the master plate in the operator's compartment.

Cat dealers need all of these numbers to determine accurate parts identification.

Effective First Quarter 2001 the Cat Product Identification Number (PIN) changed from 8 to 17 characters. In an effort to provide uniform equipment identification, Caterpillar and other construction equipment manufacturers are moving to comply with the latest version of the product identification numbering standard. Non-road machine PINs are defined by ISO 10261. The new PIN format will apply to all Cat machines and generator sets. The PIN plates and frame marking will display the 17 character PIN. The new format will look like the following:

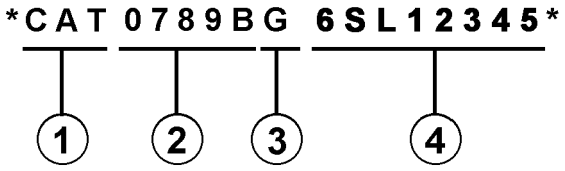

Where:

1. Caterpillar's World Manufacturing Code (characters 1-3)

2. Machine Descriptor (characters 4-8)

3. Check Character (character 9)

4. Machine Indicator Section (MIS) or Product Sequence Number (characters 10-17). These were previously referred to as the Serial Number.

Machines and generator sets produced before First Quarter 2001 will maintain their 8 character PIN format.

Components such as engines, transmissions, axles, etc. and work tools will continue to use an 8 character Serial Number (S/N).

2. ORDERING PARTS

⚠ WARNING

When replacement parts are required for this product Caterpillar recommends using Caterpillar replacement parts or parts with equivalent specifications including, but not limited to, physical dimensions, type, strength and material.

Failure to heed this warning can lead to premature failures, product damage, personal injury or death.

Quality Cat replacement parts are available from Cat dealers throughout the world. Their parts inventories are up to date and include all parts normally required to protect your investment in Cat machines. Dealers may offer repair kits or remanufactured parts to allow selection of the most effective repair alternative for a particular situation. When ordering parts, your order should specify the quantity, part number, part name, and the serial number/product identification number of the machine for which the parts are needed.

3. PARTS MANUAL ORGANIZATION

Product information in this manual is presented as "information elements" that represent all of the components for the specific model. Engine Arrangement and Seat Group are examples of information elements. The information elements are organized alphabetically by part name and secondarily by part number within each major section of the manual.

4. TABLE OF CONTENTS

A table of contents (TOC) is found at the beginning of the manual. The TOC lists each section of the manual with a complete list of all information elements organized as they appear in the manual. Page numbers are provided for quick reference to detailed parts identification illustrations and serviceable consist lists.

5. MAINTENANCE PARTS INDEX

The Maintenance Parts Index, located near the beginning of the manual, references most frequently used maintenance part numbers, providing description, quantity, usage and page number. This information is organized alphabetically by part description.

6. INDEX

The index located near the front of the manual is an alphabetical listing of all information elements included in the manual. Page numbers are provided for quick reference to detailed parts identification illustrations and serviceable consist lists.

7. PART NUMBER INDEX

A numerical index listing all part numbers and the corresponding page number(s) appears at the back of the manual.

8. CAPTIONS

Captions located at the beginning of each information element identify the part number and part name along with additional descriptive information. PIN and S/N information found in each caption should be used to select correct information for a specific machine. Field replacement options, identification of optional attachment components, and where used ("part of") information is also provided.

The first line of a caption is shown in larger type font to indicate the beginning of an information element. Captions for additional pages that may be required to illustrate an information element will be shown in standard type font and will include the term *(contd.)* .

9. NON-SERVICED PARTS

In some instances it is necessary to display non-serviced parts that are a link to a lower level serviceable consist lists. These non-serviced part numbers are shown in *italic* type indicating that they are not available.

10. PARTS LIST REFERENCE NUMBERS

Numbers shown in the Ref No column correspond to numbers used in the associated graphic(s). An alphabetic suffix may be added to a reference number to identify lower level consist items. Numbers shown in the Graphic Ref column refer to the graphic number identifier displayed in the lower left corner of each illustration. The Graphic Ref number may be used in combination with the item Ref No to determine the correct part number. There may be intentional omission of a Ref No in a consist list as information is updated to reflect the latest serviceable part numbers.

11. INDENTED PART NAMES

When a part name is indented in a parts list, it is part of (included in) the group or assembly under which it is indented.

12. ILLUSTRATION REFERENCE LETTERS

When necessary, illustrations contain reference letters (A, B, C etc.) that are intended to track lines and harnesses from one point to another. They are also used to show where to reconnect illustrations that have been separated.

13. ABBREVIATIONS AND SYMBOLS

O.D. – Outside Diameter
I.D. – Inside Diameter
A – Not Part Of This Group
B – Use As Required
C – Change From Previous Type
D – Order By The Meter
E – Order By The Centimeter
F – Not Shown
G – Order By The Inch
I – Refer To Hydraulic Information System
M – Metric Part
R – Remfg Part May Be Available
Y – Separate Illustration
Z – Not Serviced Separately

14. DESCRIPTION OF TYPE CHANGES

Type - A type is defined as any configuration change that requires an additional Information Element for an Arrangement, Group, or Assembly. If serial number breaks for types are not available, a type # (Type 1, Type 2, etc.) will be displayed in the caption. These "type" changes are identified with a "C" note (change from previous type) in the Parts List. Only the "types" that apply to this Parts Manual will be included. Additional types may exist causing "C" notes to appear on an Information Element when no other types are shown.

15.<END>

This symbol indicates the end of an information element.

NOTE:

Continuing improvement and advancement of product design may cause changes to your machine which may not be included in this publication. Whenever a question arises regarding your Cat product or this publication, please consult your Cat dealer for the latest available information.

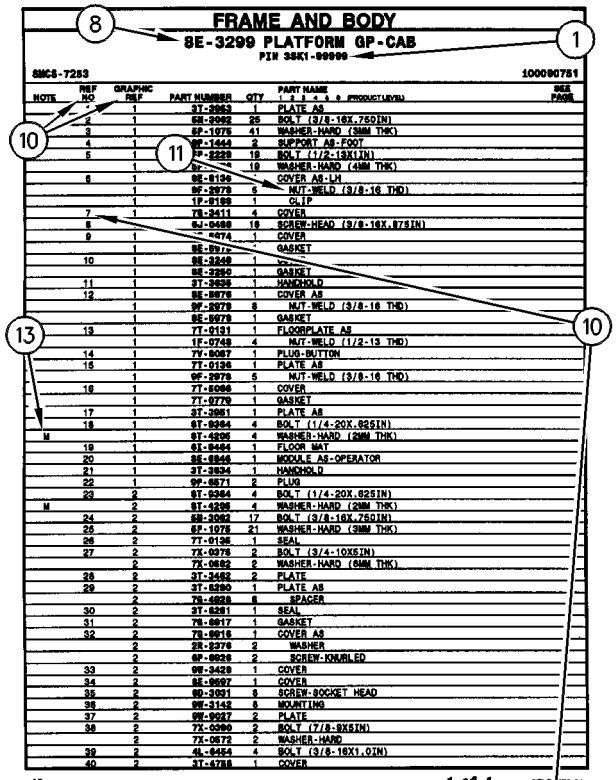

FRAME AND BODY

8E-3299 PLATFORM GP-CAB

PIN 3SK1-00999

SMCS-7283 100090751

NOTE	REF NO	GRAPHIC REF	PART NUMBER	QTY	PART NAME 1 2 3 4 5 6 (PRODUCT LEVEL)	SEE PAGE
	1	1	3T-3963	1	PLATE AS	
	2	1	6M-3982	25	BOLT (3/8-16X.75DIN)	
	3	1	5P-1078	41	WASHER-HARD (3MM THK)	
	4	1	9P-1444	2	SUPPORT AS-FOOT	
	5	1	7P-2229	18	BOLT (1/2-13X1IN)	
		1	5P-[illegible]	18	WASHER-HARD (4MM THK)	
	6	1	8E-8136	1	COVER AS-LH	
		1	9P-2979	6	NUT-WELD (3/8-16 THD)	
		1	1P-8188	1	CLIP	
	7	1	7S-3411	4	COVER	
	8		5J-0488	18	SCREW-HEAD (3/8-16X.875IN)	
	9	1	[illegible]-0474	1	COVER	
		1	8E-8976	1	GASKET	
	10	1	8E-3249	1	[illegible]	
		1	8E-3250	1	GASKET	
	11	1	3T-3935	1	HANDHOLD	
	12	1	8E-8978	1	COVER AS	
		1	9P-2979	8	NUT-WELD (3/8-16 THD)	
		1	8E-8979	1	GASKET	
	13	1	7T-0131	1	FLOORPLATE AS	
		1	1P-0748	4	NUT-WELD (1/2-13 THD)	
	14	1	7V-8067	1	PLUG-BUTTON	
	15	1	7T-0136	1	PLATE AS	
		1	9P-2979	5	NUT-WELD (3/8-16 THD)	
	16	1	7T-8066	1	COVER	
		1	7T-0779	1	GASKET	
	17	1	3T-3961	1	PLATE AS	
	18	1	6T-9364	4	BOLT (1/4-20X.625IN)	
M		1	6T-4236	4	WASHER-HARD (2MM THK)	
	19	1	6T-9494	1	FLOOR MAT	
	20	1	8E-8946	1	MODULE AS-OPERATOR	
	21	1	3T-3934	1	HANDHOLD	
	22	1	9P-8571	2	PLUG	
	23	2	6T-9364	4	BOLT (1/4-20X.625IN)	
M		2	6T-4236	4	WASHER-HARD (2MM THK)	
	24	2	6M-3982	17	BOLT (3/8-16X.75DIN)	
	25	2	5P-1078	21	WASHER-HARD (3MM THK)	
	26	2	7T-0136	1	SEAL	
	27	2	7X-0378	2	BOLT (3/4-10X5IN)	
		2	7X-0682	2	WASHER-HARD (6MM THK)	
	28	2	3T-3462	2	PLATE	
	29	2	3T-8280	1	PLATE AS	
		2	7S-4828	6	SPACER	
	30	2	3T-8281	1	SEAL	
	31	2	7S-8817	1	GASKET	
	32	2	7S-8816	1	COVER AS	
		2	2S-2376	2	WASHER	
		2	6P-8628	2	SCREW-KNURLED	
	33	2	9W-3429	1	COVER	
	34	2	8E-8697	1	COVER	
	35	2	9D-3931	8	SCREW-SOCKET HEAD	
	36	2	9W-3142	8	MOUNTING	
	37	2	9W-9927	2	PLATE	
	38	2	7X-0290	2	BOLT (7/8-9X5IN)	
		2	7X-0572	2	WASHER-HARD	
	39	2	4L-6454	4	BOLT (3/8-16X1.0IN)	
	40	2	3T-4788	1	COVER	

12 FRAME AND BODY 1 of 4 SELP4570-01

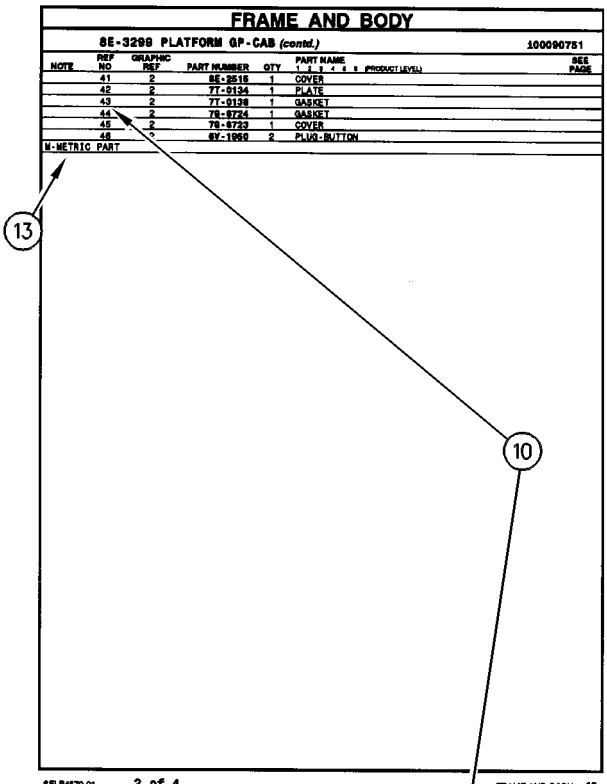

FRAME AND BODY

8E-3299 PLATFORM GP-CAB (contd.) 100090751

NOTE	REF NO	GRAPHIC REF	PART NUMBER	QTY	PART NAME 1 2 3 4 5 6 (PRODUCT LEVEL)	SEE PAGE
	41	2	8E-2516	1	COVER	
	42	2	7T-0134	1	PLATE	
	43	2	7T-0138	1	GASKET	
	44	2	7S-8724	1	GASKET	
	45	2	7S-8723	1	COVER	
	46		6V-1960	2	PLUG-BUTTON	

M-METRIC PART

SELP4570-01 2 of 4 FRAME AND BODY 13

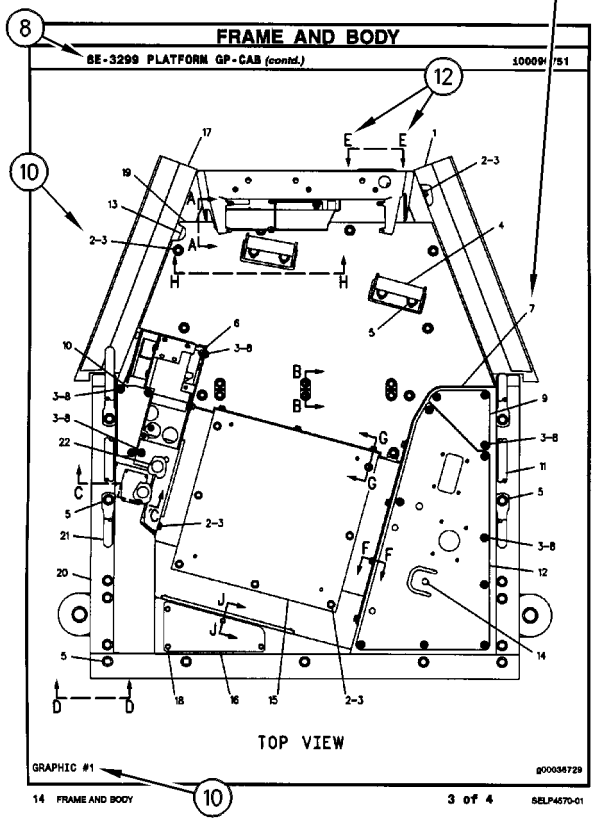

FRAME AND BODY

8E-3299 PLATFORM GP-CAB (contd.) 100090751

TOP VIEW

GRAPHIC #1 g00036729

14 FRAME AND BODY 3 of 4 SELP4570-01

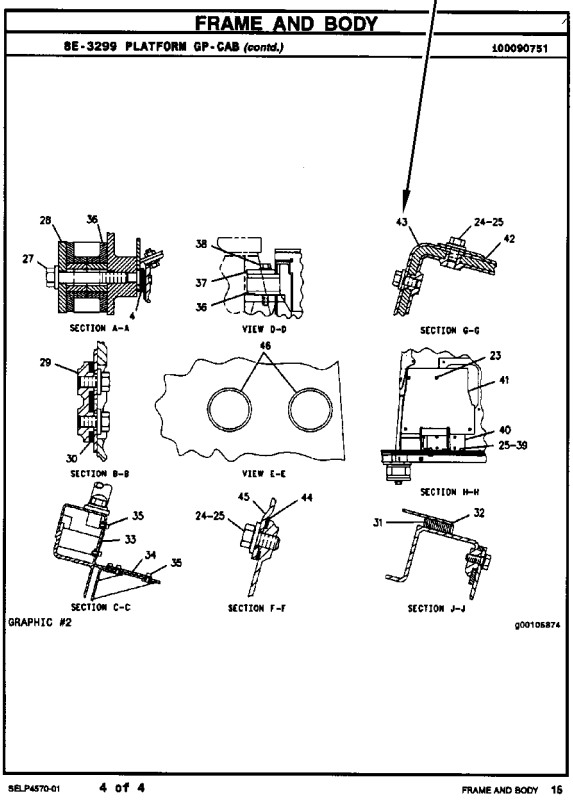

FRAME AND BODY

8E-3299 PLATFORM GP-CAB (contd.) 100090751

SECTION A-A

VIEW D-D

SECTION G-G

SECTION B-B

VIEW E-E

SECTION H-H

SECTION C-C

SECTION F-F

SECTION J-J

GRAPHIC #2 g00105874

SELP4570-01 4 of 4 FRAME AND BODY 15

REMANUFACTURED COMPONENTS

As an option when making repairs consider Cat Remanufactured Components. Components that are available through the Cat Remanufactured Program are identified three ways in the parts book:

- with the letter R in the note field of the parts list
- with an R* at the beginning of the first line of the caption
- with an *R at the end of the first line of the caption

Typical components included in the Remanufacturing Program include:

ALTERNATORS
CONNECTING RODS
CRANKSHAFTS - UNDERSIZE
CRANKSHAFTS - UPGRADE TO NEW
CYLINDER HEADS
ELECTRONIC CONTROL MODULES (ECM)
ELECTRONIC SENSORS
FUEL INJECTORS
FUEL NOZZLES
FUEL PUMPS
GOVERNORS
OIL PUMPS
PISTONS
SHORT BLOCKS
STARTERS
TURBOCHARGERS - COMPLETE
TURBOCHARGER CARTRIDGES
WATER PUMPS

Cat Remanufactured engines for many engine arrangements are also available.

SUPPLEMENTAL COOLANT ADDITIVES

CUSTOMER BENEFITS:

Protects against cavitation, foam, erosion, corrosion, and scale buildup in cooling systems.

- Provides measured coolant conditioner.

DESCRIPTION:

Additives deplete from the coolant with normal operation. For this reason, Supplemental Coolant Additives (SCA) must be added to all heavy duty coolants at regular intervals. In addition, when not using a fully formulated, pre-charged antifreeze, like Cat DEAC, an initial charge of SCA must be added to the cooling system. The amount of SCA added to the system is dependent on the capacity of the system.

The SCA for initial fill is provided as a liquid. SCA's for maintenance intervals are available in liquid form and as a spin-on element. (No Spin-on available for 3600 Family of Engines)

NOTE:

The amount of SCA added at initial fill is not the same as the amount added at maintenance intervals.

The coolant additive elements can be used with any ethylene or propylene glycol type antifreeze which meets ASTM D4985 or ASTM D5345 Specifications.

NOTE:

For use with standard heavy duty coolant only, not for use with Extended Life Coolant.

PARTS NEEDED:

Cooling System Capacity		Liquid SCA at Initial Fill	Liquid SCA at Maintenance*	Spin-on SCA Maintenance Element*
Liters	Gallons			
22-30	(6-8)	3P-2044 (1)	6V-3542 (1)	111-2370 (1)
30-38	(8-10)	3P-2044 (1) 6V-3542 (1)	111-2372 (1)	111-2369 (1)
38-49	(10-13)	3P-2044 (1) 8T-1589 (1)	111-2372 (1)	111-2369 (1)
49-64	(13-17)	3P-2044 (2)	8T-1589 (1)	9N-3368 (1)
64-83	(17-22)	3P-2044 (2) 8T-1589 (1)	111-2372 (1) 6V-3542 (1)	111-2371 (1)
83-114	(22-30)	3P-2044 (3) 8T-1589 (1)	3P-2044 (1)	9N-3718 (1)
114-163	(30-43)	3P-2044 (5)	3P-2044 (1) 6V-3542 (1)	111-2371 (2)
163-242	(43-64)	3P-2044 (8)	3P-2044 (2)	9N-3718 (2)

** Normal maintenance period is 250 hrs. See your Operation and Maintenance Manual for complete coolant maintenance instructions.*

( ) Indicates quantity required.

MAINTENANCE PARTS

DESCRIPTION	PART NUMBER	QTY	WHERE USED	PAGE
AIR INLET AND EXHAUST SYSTEM				
FILTER ELEMENT AS-AIR (PRIMARY) (STANDARD EFFICIENCY)	256-7902	1	AIR CLEANER GP	66
FILTER ELEMENT AS-AIR (SECONDARY)	256-7903	1	AIR CLEANER GP	66
BASIC ENGINE				
BELT-SERPENTINE	284-1027	1	BELT TENSIONER GP	10
BELT-SERPENTINE (FAN PULLEY)	277-8724	1	BELT TENSIONER GP	12
BELT-SERPENTINE (PULLEY)	185-1911	1	BELT TENSIONER GP	11
GASKET-COVER (VALVE MECHANISM)	317-3064	1	COVER GP-VALVE MECHANISM	14
PLUG-DRAIN (ENGINE OIL)	7C-0351	1	PAN GP-OIL	34
COOLING SYSTEM				
CAP AS-COOLANT TANK	345-1237	1	RECOVERY GP-COOLANT	63
GASKET-WATER REGULATOR	281-8744	1	CONNECTION GP-WATER	49
HOSE-RADIATOR	362-6095	1	LINES GP-WATER	56
HOSE-RADIATOR (LOWER)	383-6898	1	LINES GP-WATER	56
HOSE-RADIATOR (UPPER)	368-0666	1	LINES GP-WATER	56
ELECTRICAL AND STARTING SYSTEM				
CAP AS-FILLER (BATTERY)	123-1373	6	BATTERY & WIRING GP	94
FUSE (10-AMPERE)	113-8490	5	HARNESS AS-PANEL	114
FUSE (15-AMPERE)	113-8491	6	HARNESS AS-PANEL	114
FUSE (20-AMPERE)	113-8492	3	HARNESS AS-PANEL	114
FUSE (30-AMPERE)	274-9872	2	PANEL GP-CIRCUIT BREAKER	136
FUSE (30-AMPERE) (MAIN)	274-9872	3	PANEL GP-CIRCUIT BREAKER	136
FUSE (50-AMPERE) (POWER, 1)	274-9877	2	PANEL GP-CIRCUIT BREAKER	136
FUSE (7.5-AMPERE)	141-2760	5	HARNESS AS-PANEL	114
GLOW PLUG	361-9875	6	GLOW PLUG GP	98
KEY (BATTERY DISCONNECT)	8H-5306	1	SWITCH GP-DISCONNECT	157
LAMP (24-VOLT, 10-WATT) (DOME)	259-1286	1	WIRING GP-CAB	163
LAMP-HALOGEN (24-VOLT, 70-WATT)	351-9918	1	LAMP GP-FLOOD	130
FUEL SYSTEM				
CAP AS-FUEL (LOCKABLE, VENTED)	349-7059	1	TANK GP-FUEL	90
FILTER AS-FUEL	415-3797	1	FILTER & LINES GP-FUEL	74
FILTER AS-WATER SEP & FUEL	308-7298	1	FILTER GP-WATER SEP & FUEL	78
FILTER-FUEL (ELEMENT)	271-9385	1	FILTER GP-SECONDARY FUEL	77
FILTER-FUEL (IN-LINE)	384-8512	1	FILTER & LINES GP-FUEL	74
STRAINER-FUEL (TANK)	9P-7121	1	TANK GP-FUEL	90
HYDRAULIC SYSTEM				
BREATHER (HYDRAULIC TANK)	183-3873	1	TANK & MTG GP-HYDRAULIC	370

MAINTENANCE PARTS

DESCRIPTION	PART NUMBER	QTY	WHERE USED	PAGE
		1	TANK & MTG GP-HYDRAULIC	371
CAP AS-FILLER (HYDRAULIC TANK)	142-8937	1	TANK GP-HYDRAULIC	373
		1	TANK GP-HYDRAULIC	375
CAP-DUST	187-9008	4	FITTING GP-QUICK DISCONNECT	330
FILTER (SCREEN)	382-9259	7	PUMP GP-PISTON	355
FILTER ELEMENT AS-OIL (TRANSMISSION)	348-1861	1	FILTER GP-OIL	328
		1	FILTER GP-OIL	329
STRAINER-SUCTION	363-3445	1	TANK GP-HYDRAULIC	373
STRAINER-SUCTION (HYDRAULIC TANK)	363-3445	1	TANK GP-HYDRAULIC	375
LUBRICATION SYSTEM				
CAP-OIL FILLER (ENGINE)	130-9888	1	FILLER GP-ENGINE OIL	44
FILTER-ENGINE OIL	269-8325	1	FILTER GP-ENGINE OIL	46
MACHINE ARRANGEMENT				
SEAT BELT GP (RETRACTABLE, 51-MM (2-IN))	382-9003	1	CONFIGURATION AR	3
		1	CONFIGURATION AR	4
OPERATOR STATION				
BLADE AS-WIPER (500-MM) (REAR)	146-6433	1	WIPER & WASHER GP-WINDOW	496
BLADE AS-WIPER (700-MM) (FRONT)	6V-7419	1	WIPER & WASHER GP-WINDOW	496
CAP-VENTED (WASHER TANK)	276-3884	1	WIPER & WASHER GP-WINDOW	496
FILTER ELEMENT-CAB AIR	180-7487	1	FILTER GP-CAB AIR	436
FILTER ELEMENT-CAB AIR (ACTIVATED CHARCOAL)	282-5340	1	FILTER GP-CAB AIR	436
SEAL-INTEGRAL	327-0282	1	LINES GP-AIR CONDITIONER	446
		1	LINES GP-AIR CONDITIONER	448
	327-0283	1	LINES GP-AIR CONDITIONER	446
		1	LINES GP-AIR CONDITIONER	448
SEAT BELT GP (RETRACTABLE, 2-IN)	353-5341	1	SEAT & MOUNTING GP	485
		1	SEAT & MOUNTING GP	486
SEAT BELT GP (RETRACTABLE, 51-MM (2-IN))	258-4095	1	SEAT BELT GP	490
POWER TRAIN				
BREATHER (DRIVE AXLE)	197-9155	1	AXLE GP-DRIVE	194
		2	AXLE GP-DRIVE	196
		1	AXLE GP-DRIVE	200
PLUG AS-DRAIN (MAGNETIC)	152-6144	4	AXLE GP-DRIVE	194
PLUG AS-DRAIN (MAGNETIC) (DRIVE AXLE)	152-6144	4	AXLE GP-DRIVE	196
		5	AXLE GP-DRIVE	200
PLUG-DRAIN (FINAL DRIVE PLANETARY)	151-7516	1	PLANETARY GP-FINAL DRIVE	243
PLUG-DRAIN (FINAL DRIVE)	151-7516	1	DRIVE GP-FINAL	209

DESCRIPTION	PART NUMBER	QTY	WHERE USED	PAGE
SEAL-RECTANGULAR	1P-3702	4	LINES GP-PROPEL	233
		4	LINES GP-PROPEL	235
VIBRATORY SYSTEM				
PLUG-MAGNETIC (ECCENTRIC WEIGHT HOUSING)	5P-4484	1	HOUSING GP-ECCENTRIC WEIGHT	394
		1	HOUSING GP-ECCENTRIC WEIGHT	396
		1	HOUSING GP-ECCENTRIC WEIGHT	398
PLUG-MAGNETIC (FINAL DRIVE PLANETARY)	222-2785	1	SUPPORT GP-VIBRATORY	408
SEAL-RECTANGULAR	1P-3702	4	LINES GP-VIBRATORY	400
		4	LINES GP-VIBRATORY	402

INDEX

NAME PAGE

A

ACCUMULATOR GP-REFRIGERANT (CHARGED) 446
448
ACCUMULATOR GP-REFRIGERANT–UNCHARGED 409
ACCUMULATOR GP-REFRIGERANT–WITH DESICCANT. 410
ACTUATOR GP-HYDRAULIC (PROPEL PUMP). 355
ACTUATOR GP-PUMP 320
355
359
ACTUATOR GP-PUMP (HYDRAULIC) 320
ADAPTER GP-AUXILIARY DRIVE. 8
AFTERCOOLER GP 61
64
AIR CLEANER GP 65
66
AIR CONDITIONER & MOUNTING GP 411
AIR CONDITIONER GP 412
ALTERNATOR GP-CHARGING 92
ARM GP-WINDOW WIPER–FRONT 414
AXLE & MTG GP-DRIVE. 190
191
AXLE & MTG GP-DRIVE–WITHOUT BRAKES 192
AXLE AR-DRIVE–BRAKE. 193
AXLE AR-DRIVE–NON-BRAKE. 193
AXLE GP-DRIVE 196
AXLE GP-DRIVE–WITH BRAKES 194
AXLE GP-DRIVE–WITHOUT BRAKES 200

B

BARREL GP-PUMP 369
BARREL GP-PUMP (PISTON PUMP) 368
BASE GP-VALVE COVER & INJ HARN. 14
BATTERY & WIRING GP 93
BATTERY GP (12-VOLT, 750-CCA) 94
BELT TENSIONER GP. 10
11
12
BELT-SERPENTINE. 10
BELT-SERPENTINE (FAN PULLEY). 12
BELT-SERPENTINE (PULLEY). 11
BLADE AR. 385
386
BLADE AR–WITH BLADE 385
BLADE AR–WITHOUT BLADE 385
BLADE AS-WIPER (500-MM) (REAR) 496
BLADE AS-WIPER (700-MM) (FRONT) 496
BLADE GP-COMPACTOR 389
BLADE GP-LEVELING 387
BREATHER (DRIVE AXLE). 194
196
200

NAME PAGE

BREATHER (HYDRAULIC TANK) 370
371

C

CAB AR 415
CAB GP-ENCLOSED ROPS 416
CAMSHAFT GP 13
CANOPY GP–NON-ROPS 418
CAP AS-COOLANT TANK. 63
CAP AS-FILLER (BATTERY) 94
CAP AS-FILLER (HYDRAULIC TANK). 373
375
CAP AS-FUEL (LOCKABLE, VENTED) 90
CAP GP-FUEL FILLER. 90
CAP-DUST 330
CAP-OIL FILLER (ENGINE) 44
CAP-VENTED (WASHER TANK). 496
CHASSIS AR. 1
2
COMMON AR 2
3
COMPRESSOR GP-REFRIGERANT 419
420
CONDENSER & MTG GP-REFRIGERANT 422
CONFIGURATION AR. 3
CONFIGURATION AR–CLOTH 4
CONNECTION GP-TEST–TEST PORT 498
CONNECTION GP-WATER 49
CONTROL & MTG GP-MACHINE (COMPACTION CONTROL) (PROPEL FORCE) 5
CONTROL & MTG GP-MACHINE–PROPEL FORCE 96
CONTROL GP-BLADE 423
CONTROL GP-COMMUNICATION (PL421). 124
126
128
129
CONTROL GP-DIRECTION & SPEED. 425
426
CONTROL GP-DIRECTION & SPEED (AUTO VIBE, LEVLING BLADE) 426
CONTROL GP-STEERING. 427
CONTROL GP-UNPROGRAMMED 84
COOLER GP-ENGINE OIL 50
COOLER GP-FLTR BASE & ENG OIL 52
COOLER GP-HYDRAULIC OIL & FUEL 53
61
COVER GP-CAB 429
COVER GP-CONSOLE. 430
431
COVER GP-PLATFORM–OPEN ROPS 263
COVER GP-VALVE MECHANISM. 14
CRANKSHAFT GP. 16
CYLINDER & MTG GP-STEERING. 314
CYLINDER BLOCK AS. 17
CYLINDER BLOCK GP 18
20
CYLINDER GP-BRAKE. 306

INDEX

NAME PAGE

CYLINDER GP-HYDRAULIC 322
323
324
325
CYLINDER GP-HYDRAULIC–BLADE LIFT 321
326
CYLINDER HEAD AS 22
CYLINDER HEAD GP 24

D

DIFFERENTIAL GP 202
DISTRIBUTION AR 4
5
DOOR GP-ACCESS–HOOD SIDE, REAR, LH . . . 264
DOOR GP-CAB 432
DRIVE GP-DRUM 204
205
207
DRIVE GP-DRUM–PROPEL 208
DRIVE GP-FAN 26
DRIVE GP-FINAL 209
DRIVE GP-SUPPORT & VIBRATORY 391
392
393
DRUM AR-PADDED 211
212
DRUM AR-PADDED–WITH SHELL KIT 212
DRUM AR-SMOOTH 212
DRUM AR-SMOOTH–FLEXIBLE SCRAPER, FRONT, REAR 213
DRUM AR-SMOOTH–FRONT, REAR FLEXIBLE 214
DRUM AR-SMOOTH–STANDARD 213
DRUM AR-SMOOTH–STEEL SCRAPER, FRONT, REAR 213
DRUM AR-SMOOTH–STEEL, FRONT, REAR . . . 213
DRUM AR-SMOOTH–WITH SHELL KIT 212
DRUM GP-COMPACTOR 216
219
220
223
DRUM GP-COMPACTOR–PADDED 221
222
224
DRUM GP-COMPACTOR–PADDED SHELL 215
DRUM GP-COMPACTOR–SMOOTH 217
218
DRUM GP-PADDED 225
DUCT GP-CAB AIR 435

E

ELECTRICAL AR 96
ELECTRONICS GP-COMMUNICATION–PRODUCT LINK 300 96
ELECTRONICS GP-MACHINE 97
ELECTRONICS GP-MONITOR 97
ENCLOSURE GP-ENGINE 265

NAME PAGE

ENGINE AR 6
ENGINE AR-PRIMARY 6

F

FAN & MOTOR GP 54
FASTENER GP 499
FILLER GP-ENGINE OIL 44
FILM GP 500
501
504
FILM GP-INTERNATIONAL 505
511
514
FILM GP-INTERNATIONAL–CAB 519
522
FILM GP-INTERNATIONAL–NON-ROPS/FOPS . . 521
FILM GP-INTERNATIONAL–ROPS, FOPS 508
517
FILM GP–CP68B 503
FILM GP–CS68B 502
FILM-IDENTIFICATION (EMERGENCY STOP) . . . 472
FILM-IDENTIFICATION (FUSE, RELAY PANEL) 430
431
FILM-IDENTIFICATION (GROUP NO., SEQUENCE NO.) 412
FILM-IDENTIFICATION (INSTRUMENT PANEL) 165
FILM-IDENTIFICATION (OPERATOR CONTROLS) 425
426
FILM-INFORMATION (PRODUCT LINK, READ OMM) 511
FILM-INSTRUCTION (ENGINE START) 472
474
FILM-STRIPE (ROUND RED REFLECTIVE) 526
528
530
533
FILM-WARNING (EMERGENCY STOP) 474
FILM-WARNING (EXPLOSION, RADIO PRODUCT LINK) 511
519
FILTER (SCREEN) 355
FILTER & LINES GP-FUEL 74
FILTER & MTG GP-HYDRAULIC 327
FILTER AS-FUEL 74
FILTER AS-WATER SEP & FUEL 78
FILTER BASE & ENG OIL COOLER 52
FILTER ELEMENT AS-AIR (PRIMARY) (STANDARD EFFICIENCY) 66
FILTER ELEMENT AS-AIR (SECONDARY) 66
FILTER ELEMENT AS-OIL (TRANSMISSION) . . . 328
329
FILTER ELEMENT-CAB AIR 436
FILTER ELEMENT-CAB AIR (ACTIVATED CHARCOAL) 436
FILTER GP-CAB AIR 436
FILTER GP-ENGINE OIL 46

INDEX

NAME PAGE

FILTER GP-OIL. 328
329
FILTER GP-SECONDARY FUEL 77
FILTER GP-WATER SEP & FUEL 78
FILTER-ENGINE OIL. 46
FILTER-FUEL (ELEMENT). 77
FILTER-FUEL (IN-LINE) 74
FILTER-SECONDARY 74
FINAL DRIVE GP 209
243
244
FITTING GP. 373
375
FITTING GP-QUICK DISCONNECT 330
FLANGE GP-WHEEL 226
FLOOR MAT 437
438
FLOOR MAT GP 437
FLOOR MAT GP-CAB 438
FLYWHEEL GP 27
FRAME AS-REAR 268
FRAME GP-FRONT. 270
271
272
273
274
275
276
277
FRAME GP-REAR–ENGINE END 278
279
FUSE (10-AMPERE) 114
FUSE (15-AMPERE) 114
FUSE (20-AMPERE) 114
FUSE (30-AMPERE) 136
FUSE (30-AMPERE) (MAIN). 136
FUSE (50-AMPERE) (POWER, 1). 136
FUSE (7.5-AMPERE). 114

G

GASKET-COVER (VALVE MECHANISM) 14
GASKET-WATER REGULATOR. 49
GAUGE AS-OIL LEVEL (DIPSTICK) (ENGINE). . . 34
GAUGE GP-SIGHT 373
GAUGE GP-SIGHT (HYDRAULIC TANK OIL) . . . 375
GEAR GP-RING. 200
GEAR GP-RING (DRIVE AXLE) 194
GLOW PLUG. 98
GLOW PLUG GP. 98
GRADE CONTROL AR 99
100
GUARD GP-LINES–4-VALVE 280
281
GUARD GP-TRANSMISSION 282
GUARD GP-VANDALISM. 439

H

HANDRAIL GP 283
HARNESS AS-CAB 101
HARNESS AS-CHASSIS 102
104
179
HARNESS AS-CONSOLE 105
106
HARNESS AS-CONTROL 107
HARNESS AS-ENGINE 166
HARNESS AS-HEATER & AIR COND 108
420
HARNESS AS-LIGHTING. 108
109
133
HARNESS AS-MONITOR. 111
HARNESS AS-MONITOR–DISPLAY 112
HARNESS AS-MONITOR–GRADE CONTROL. . . 110
113
HARNESS AS-MONITOR–RECEIVER, GPS. 112
HARNESS AS-PANEL. 114
HARNESS AS-PLATFORM 116
HARNESS AS-RADIO. 442
HARNESS AS-SENSOR. 117
118
186
HARNESS AS-SENSOR (GRADE CONTROL). . . 145
HARNESS AS-SENSOR (INCLINATION). 146
HARNESS AS-SENSOR (SPEED). 182
HARNESS AS-SENSOR–PULSE WIDTH MODULATED. 117
HARNESS AS-WIRING. 119
120
HARNESS AS-WIRING (INJECTOR) 14
HARNESS AS-WIRING (PRODUCT LINK) 107
HARNESS AS-WIRING–VIBRATION FREQUENCY. 119
HEAD GP-PUMP 331
HITCH GP-ARTICULATING & OSC–SMOOTH DRUM 284
HOOD GP 286
HORN GP-ELECTRIC–CAB. 440
HORN GP-ELECTRIC–ROPS, FOPS 441
HOSE-RADIATOR 56
HOSE-RADIATOR (LOWER). 56
HOSE-RADIATOR (UPPER) 56
HOUSING GP-AXLE 229
HOUSING GP-AXLE–WITH BRAKES 227
HOUSING GP-ECCENTRIC WEIGHT. 394
395
396
397
398
HOUSING GP-FLYWHEEL. 28
HOUSING GP-FRONT 29
HYDRAULIC AR. 332
HYDRAULIC AR-AUXILIARY. 333
HYDRAULIC AR-VIBRATORY–FIXED FREQUENCY. 399

INDEX

NAME PAGE

HYDRAULIC AR-VIBRATORY–VARIABLE FREQUENCY 399

I

INDICATOR AS-AIR FILTER CHANGE 67
INJECTOR GP-FUEL 79
INSTALLATION AR-ENGINE 7
INSTALLATION GP-COMMUNICATION 129
INSTALLATION GP-COMMUNICATION–CAB 121 123
INSTALLATION GP-COMMUNICATION–PL421–OPEN CANOPY, NON-ROPS 126
INSTALLATION GP-COMMUNICATION–PL421–OPEN PLATFORM 124
INSTALLATION GP-COMMUNICATION–PL421–ROPS, FOPS 128
INSTALLATION GP-DRUM 231 232
INSTALLATION GP-RADIO 442

K

KEY (BATTERY DISCONNECT) 157
KIT-SEAT SUSPENSION 443
KIT-SENSOR (AIR PRESSURE) 84
KIT-SENSOR (AIR TEMPERATURE) 84
KIT-SENSOR (ENGINE OIL PRESSURE) 84
KIT-SENSOR (ENGINE SPEED) 84
KIT-SENSOR (FUEL RAIL PRESSURE) 84
KIT-SENSOR (WATER TEMPERATURE) 84

L

LAMP (24-VOLT, 10-WATT) (DOME) 163
LAMP GP-DOME (24-VOLT) (CAB) 163
LAMP GP-FLOOD 130
LAMP GP-WARNING BEACON 131
LAMP-HALOGEN (24-VOLT, 70-WATT) 130
LATCH GP-CAB DOOR & WINDOW 444
LIFTING GP-ENGINE 31
LIGHTING GP-FLOOD 134
LIGHTING GP-FLOOD–CAB 132 133
LIGHTING GP-WARNING BEACON 135
LINER GP-CAB 445
LINES GP-AIR 67
LINES GP-AIR CONDITIONER 446 448
LINES GP-AUXILIARY HYDRAULIC 334 336 338
LINES GP-BLADE 339 341
LINES GP-BRAKE 307
LINES GP-FUEL 80
LINES GP-HEATER 450 452
LINES GP-HYDRAULIC OIL COOLER 343
LINES GP-PROPEL 233 235
LINES GP-SERVICE BRAKE 309 311 313
LINES GP-SHIFT 237 238
LINES GP-STEERING 316
LINES GP-STEERING CYLINDER 317
LINES GP-TURBOCHARGER OIL 71
LINES GP-VIBRATORY 400 402
LINES GP-WATER 56
LINKAGE GP 454

M

MANIFOLD GP-HYDRAULIC 246
MANIFOLD GP-INLET 69
MIRROR GP-REAR VIEW 457
MIRROR GP-REAR VIEW–EXTERIOR 458
MIRROR GP-REAR VIEW–INTERIOR 455
MIRROR GP-REAR VIEW–ROPS 456
MODULE GP-DISPLAY (DP200) 472 474
MODULE GP-KEYPAD (8-BUTTON) 472 474
MOTOR & MTG GP-PROPEL–AXLE 239
MOTOR & MTG GP-PROPEL–DRUM 240
MOTOR & MTG GP-VIBRATORY 404 405
MOTOR GP-GEAR–HYDRAULIC FAN 344
MOTOR GP-PISTON 347 349
MOTOR GP-PISTON (PROPEL) 239
MOTOR GP-PISTON–PROPEL 345
MOTOR GP-WINDOW WIPER 459 460
MOTOR GP-WINDOW WIPER (24-VOLT, 2-SPEED) 459
MOUNTING GP-CAB 461
MOUNTING GP-ENGINE 32
MOUNTING GP-ENGINE FLEXIBLE 33
MOUNTING GP-INSTRUMENT 462 463
MOUNTING GP-MONITOR 464 465 466 467
MOUNTING GP-RECEIVER (TARGET) 168 170 172
MOUNTING GP-WHEEL 241 242
MUFFLER & MOUNTING GP 70
MUFFLER AS 70

INDEX

NAME PAGE

O

OPERATOR AR 470
OPERATOR AR–AIR CONDITIONER, CAB 468
OPERATOR AR–ENCLOSED ROPS CAB 471
OPERATOR AR–OPEN 469
OPERATOR AR–OPEN CANOPY, NON-ROPS 471
OPERATOR AR–ROPS 468 469
ORIFICE AS-AIR CONDITIONER 412

P

PADLOCK GP 264 370 439
PAN GP-OIL 34
PANEL GP-CIRCUIT BREAKER 136
PANEL GP-CONTROL 138
PANEL GP-INSTRUMENT 472 474
PANEL GP-SIDE 289
PISTON & ROD GP 36
PLANETARY GP-FINAL DRIVE 243
PLANETARY GP-FINAL DRIVE–AXLE 244
PLATE & FILM GP 524 525 526 528 530 533 536 537
PLATFORM GP 476
PLATFORM GP-OPERATOR 478 479
PLUG AS-DRAIN (MAGNETIC) 194
PLUG AS-DRAIN (MAGNETIC) (DRIVE AXLE) 196 200
PLUG GP-ENGINE 37
PLUG-DRAIN (ENGINE OIL) 34
PLUG-DRAIN (FINAL DRIVE PLANETARY) 243
PLUG-DRAIN (FINAL DRIVE) 209
PLUG-MAGNETIC (ECCENTRIC WEIGHT HOUSING) 394 396 398
PLUG-MAGNETIC (FINAL DRIVE PLANETARY) 408
POWER TRAIN AR 245
PROTECTION GP-FUEL SYSTEM 85
PROTECTION GP-FUEL SYSTEM (LINE, LOW PRESSURE) 80
PULLEY GP-CRANKSHAFT 38
PUMP & MOUNTING GP–FIXED FREQUENCY 351
PUMP & MOUNTING GP–VARIABLE FREQUENCY 353
PUMP & MTG GP-PROPEL 246
PUMP & MTG GP-STEERING 318
PUMP GP-ENGINE OIL 47
PUMP GP-FUEL INJECTION 83 84
PUMP GP-FUEL TRANSFER 83
PUMP GP-GEAR 319
PUMP GP-PISTON 355 361
PUMP GP-PISTON–FIXED DISPLACEMENT, 55-CC 359
PUMP GP-WATER 57

R

RADIATOR & HYD OIL COOLER GP 59 61
RADIATOR GP 61 62
RADIO GP-COMMUNICATION–PRODUCT LINK 121SR 140
RECOVERY GP-COOLANT 63
RELAY AS (24-VDC) (MAIN POWER) 136
RELAY AS (24-VOLT) 114
RELAY AS (24-VOLT) (START) 136
ROCKER ARM GP 39
ROPS & PLATFORM GP 480
ROTATING GP-MOTOR 363 364 365
ROTATING GP-PUMP 366 368 369

S

SCRAPER GP-DRUM 290 291 293 295 297 298
SCRAPER GP-SMOOTH DRUM 299 300
SCRAPER GP-SMOOTH DRUM–FLEXIBLE, FRONT, REAR 302
SCRAPER GP-SMOOTH DRUM–STEEL, FRONT, REAR 301
SCREEN GP-AIR–HOOD SIDE, REAR, LH 304
SCREEN GP-SUN 481 482
SEAL 59
SEAL GP-DUO-CONE 209
SEAL-INTEGRAL 446 448
SEAL-RECTANGULAR 233 235 400 402

INDEX

NAME	PAGE
SEAT & MOUNTING GP–CLOTH	484, 486
SEAT & MOUNTING GP–VINYL	483, 485
SEAT BELT GP	488, 489
SEAT BELT GP (RETRACTABLE, 2-IN)	485, 486
SEAT BELT GP (RETRACTABLE, 51-MM (2-IN))	3, 4, 490
SEAT BELT GP–RETRACTABLE	487
SEAT BELT GP–RETRACTABLE, 51-MM (2-IN)	490
SEAT GP-SUSPENSION	485, 486
SEAT GP-SUSPENSION (CLOTH)	484
SEAT GP-SUSPENSION (VINYL)	483
SENDER AS-FUEL LEVEL	90
SENSOR & MOUNTING GP–COMPACTION MEASUREMENT	141, 143
SENSOR & MTG GP-GRADE	145
SENSOR AR-COMPACTION	406
SENSOR AR-COMPACTION–ACCELEROMETER	406
SENSOR AS (COMPACTION)	141, 143, 184, 188
SENSOR AS-ANGLE (GRADE CONTROL)	145, 186
SENSOR AS-ANGLE (INCLINATION)	146
SENSOR GP-PRESSURE (PROPEL FORCE)	406
SENSOR GP-PRESSURE–PROPEL FORCE	146
SENSOR GP-SPEED	148, 149
SENSOR GP-SPEED (PROPEL MOTOR)	240
SENSOR GP-SPEED (SECONDARY, TIMING)	83
SENSOR GP-SPEED (STEERING MOTOR)	239
SENSOR GP-SPEED (VIBRATORY)	151, 152
SENSOR GP-TEMPERATURE	150
SENSOR GP-TEMPERATURE (HYDRAULIC OIL)	377
SENSOR GP-VIBRATORY	151, 152, 399
SENSOR GP-VIBRATORY (VARIABLE FREQUENCY)	399
SENSOR-PRESSURE (AUTODIG)	146
SENSOR-PRESSURE (OVERLOAD WARNING)	186
SENSOR-PRESSURE (WATER SEPARATOR)	78
SENSOR-TEMPERATURE (AMBIENT AIR)	179
SERVICE GP-COMMUNICATION (PRODUCT LINK 300)	96
SERVICE GP-ENGINE	41
SHAFT GP-ECCENTRIC WEIGHT	407
SHELL GP-PADDED	248, 249, 251
SHELL GP-PADDED–FIELD INSTALLED	250, 252, 253
SHROUD GP-AIR	59
SOFTWARE GP-COMMUNICATION (PRODUCT LINK 300)	96
SOFTWARE GP-MACHINE (COMPACTION MEASUREMENT)	97
SOFTWARE GP-MONITOR	97
SOFTWARE GP-MONITOR (PRODUCT LINK 121SR)	140
SOLENOID AS (PUMP CONTROL VALVE)	382, 384
SOLENOID AS (WASTEGATE)	71
SPRING AS-GAS	265
SPRING AS-GAS (DOOR WINDOW, LH)	432
SPRING AS-GAS (DOOR, LH)	432
STARTING MOTOR GP-ELECTRIC	154, 156
STEERING COLUMN GP	427
STEP GP	305
STRAINER-FUEL (TANK)	90
STRAINER-SUCTION	373
STRAINER-SUCTION (HYDRAULIC TANK)	375
SUN VISOR	492
SUPPORT GP-VIBRATORY	408
SWITCH AS (STARTER)	154
SWITCH AS-MAGNETIC (STARTER RELAY)	160
SWITCH AS-PRESSURE (AIR CONDITIONER)	448
SWITCH AS-PRESSURE (HYDRAULIC OIL)	328
SWITCH AS-PRESSURE (REFRIGERANT)	446
SWITCH AS-PUSH BUTTON (EMERGENCY STOP)	472, 474
SWITCH AS-ROCKER (24-VOLT) (AIR CONDITIONER, HEATER)	411
SWITCH AS-ROCKER (24-VOLT) (FLOODLIGHTS)	472
SWITCH AS-ROCKER (24-VOLT) (WORK LIGHTS)	474
SWITCH AS-ROCKER (HORN)	472, 474
SWITCH AS-ROCKER (PARKING BRAKE)	472, 474
SWITCH AS-ROCKER (WARNING BEACON)	472, 474
SWITCH AS-ROCKER (WIPER, WASHER, FRONT)	163
SWITCH AS-ROCKER (WIPER, WASHER, REAR)	163
SWITCH AS-START (KEY)	472, 474
SWITCH GP-DISCONNECT (BATTERY)	93
SWITCH GP-DISCONNECT–BATTERY	157
SWITCH GP-MAGNETIC	158, 159, 160

INDEX

NAME PAGE

SWITCH GP-MAGNETIC (24-VOLT) (STARTING AID) 136

T

TANK & MTG GP-FUEL 89
TANK & MTG GP-HYDRAULIC 370 371
TANK GP-COOLANT 63
TANK GP-FUEL 90
TANK GP-HYDRAULIC 373 375
TANK GP-WINDOW WASHER 496
TURBOCHARGER GP 71

V

VALVE & MTG GP-AUXILIARY 377
VALVE & MTG GP-CONTROL–SHIFT 379
VALVE AS-PRESSURE RELIEF (REFRIGERANT COMPRESSOR) 419
VALVE GP-BYPASS (HYDRAULIC OIL COOLER) 377
VALVE GP-BYPASS (HYDRAULIC OIL) 377
VALVE GP-CONTROL 254
VALVE GP-FLOW CONTROL (STEERING) 427
VALVE GP-FLUID SAMPLING–ENGINE OIL 48
VALVE GP-FLUSHING–PROPEL MOTOR 380
VALVE GP-PUMP CONTROL 381 382 384
VALVE GP-RELIEF (BLADE CONTROL) 254
VALVE GP-RELIEF (MAIN) 254
VALVE GP-RELIEF (MULTIFUNCTION) 331 355
VALVE GP-RELIEF (PUMP HEAD, CROSSOVER) 355
VALVE GP-RELIEF (PUMP HEAD) 331
VALVE GP-SHIFT PRESSURE 256 379
VALVE GP-SHUTOFF (ENGINE COOLANT) 41
VALVE GP-SHUTOFF (FUEL TANK DRAIN) 90
VALVE GP-SHUTTLE (PROPEL PUMP) 355
VALVE GP-SOLENOID 161
VALVE GP-SOLENOID (24-VOLT) (HYDRAULIC FAN MOTOR) 54
VALVE GP-SOLENOID (AXLE PROPEL PUMP) 355
VALVE GP-WATER–HEATER CONTROL 491
VALVE MECHANISM GP 42
VISOR GP-CAB 492

W

WARNING GP-BACKUP 162
WHEEL & MTG GP-DRIVE 257
WHEEL & TIRE GP 262
WHEEL & TIRE GP–LH 258 261
WHEEL & TIRE GP–RH 259 260
WINDOW GP-CAB 493 495
WIPER & WASHER GP-WINDOW 496
WIRING GP-CAB 163
WIRING GP-CONSOLE 165
WIRING GP-ENGINE 166
WIRING GP-GRADE CONTROL 168 170 172
WIRING GP-LIGHTING 174 176 178
WIRING GP-MACHINE 179
WIRING GP-PLATFORM 181
WIRING GP-SENSOR–ACCELERATOR 183
WIRING GP-SENSOR–COMPACTION MEASUREMENT 184 188
WIRING GP-SENSOR–DRUM SPEED 182
WIRING GP-SENSOR–PROPEL FORCE 186

MACHINE ARRANGEMENT

374-9723 CHASSIS AR

S/N: M4M1-UP

PART OF 374-9713 COMMON AR

SMCS-7000 **i05295476**

NOTE	PART NUMBER	QTY	PART NAME 1 2 3 4 5 6 (PRODUCT LEVEL)	SEE PAGE
Y	*374-9810*	1	ENCLOSURE GP-ENGINE	265
Y	*347-9575*	1	FRAME GP-FRONT	270
Y	*374-9780*	1	FRAME GP-REAR	278
Y	*374-9773*	1	PLATE & FILM GP	526
Y	*355-2451*	1	STEP GP	305
Y	*347-9601*	1	TANK & MTG GP-FUEL	89
Y	*374-9820*	1	TANK & MTG GP-HYDRAULIC	370

Y - SEPARATE ILLUSTRATION

<END>

374-9724 CHASSIS AR

S/N: M5P1-UP

PART OF 374-9714 COMMON AR

SMCS-7000 **i05296400**

NOTE	PART NUMBER	QTY	PART NAME 1 2 3 4 5 6 (PRODUCT LEVEL)	SEE PAGE
Y	*374-9810*	1	ENCLOSURE GP-ENGINE	265
Y	*347-9576*	1	FRAME GP-FRONT	271
Y	*374-9780*	1	FRAME GP-REAR	278
Y	*374-9774*	1	PLATE & FILM GP	528
Y	*355-2451*	1	STEP GP	305
Y	*347-9601*	1	TANK & MTG GP-FUEL	89
Y	*374-9820*	1	TANK & MTG GP-HYDRAULIC	370

Y - SEPARATE ILLUSTRATION

<END>

374-9725 CHASSIS AR

S/N: MBF1-UP

PART OF 374-9715 COMMON AR

SMCS-7000 **i05297394**

NOTE	PART NUMBER	QTY	PART NAME 1 2 3 4 5 6 (PRODUCT LEVEL)	SEE PAGE
Y	*374-9810*	1	ENCLOSURE GP-ENGINE	265
Y	*347-9579*	1	FRAME GP-FRONT	272
Y	*374-9790*	1	FRAME GP-REAR	279
Y	*374-9775*	1	PLATE & FILM GP	530
Y	*355-2451*	1	STEP GP	305
Y	*347-9601*	1	TANK & MTG GP-FUEL	89
Y	*374-9821*	1	TANK & MTG GP-HYDRAULIC	371

Y - SEPARATE ILLUSTRATION

<END>

MACHINE ARRANGEMENT

374-9726 CHASSIS AR

S/N: SDT1-UP

PART OF 374-9716 COMMON AR

SMCS-7000 **i05298359**

NOTE	PART NUMBER	QTY	PART NAME 1 2 3 4 5 6 (PRODUCT LEVEL)	SEE PAGE
Y	*374-9810*	1	ENCLOSURE GP-ENGINE	265
Y	*347-9580*	1	FRAME GP-FRONT	273
Y	*374-9790*	1	FRAME GP-REAR	279
Y	*374-9776*	1	PLATE & FILM GP	533
Y	*355-2451*	1	STEP GP	305
Y	*347-9601*	1	TANK & MTG GP-FUEL	89
Y	*374-9821*	1	TANK & MTG GP-HYDRAULIC	371

Y - SEPARATE ILLUSTRATION

<END>

374-9713 COMMON AR

S/N: M4M1-UP

SMCS-7000 **i05295461**

NOTE	PART NUMBER	QTY	PART NAME 1 2 3 4 5 6 (PRODUCT LEVEL)	SEE PAGE
Y	*374-9723*	1	CHASSIS AR	1
Y	*374-9732*	1	ELECTRICAL AR	96
Y	*374-9742*	1	HYDRAULIC AR	332
Y	*374-9752*	1	HYDRAULIC AR-AUXILIARY	333
Y	*374-9763*	1	POWER TRAIN AR	245

Y - SEPARATE ILLUSTRATION

<END>

374-9714 COMMON AR

S/N: M5P1-UP

SMCS-7000 **i05296394**

NOTE	PART NUMBER	QTY	PART NAME 1 2 3 4 5 6 (PRODUCT LEVEL)	SEE PAGE
Y	*374-9724*	1	CHASSIS AR	1
Y	*374-9732*	1	ELECTRICAL AR	96
Y	*374-9742*	1	HYDRAULIC AR	332
Y	*374-9752*	1	HYDRAULIC AR-AUXILIARY	333
Y	*374-9764*	1	POWER TRAIN AR	245

Y - SEPARATE ILLUSTRATION

<END>

374-9715 COMMON AR

S/N: MBF1-UP

SMCS-7000 **i05297389**

NOTE	PART NUMBER	QTY	PART NAME 1 2 3 4 5 6 (PRODUCT LEVEL)	SEE PAGE
Y	*374-9725*	1	CHASSIS AR	1
Y	*374-9732*	1	ELECTRICAL AR	96
Y	*374-9743*	1	HYDRAULIC AR	332
Y	*374-9752*	1	HYDRAULIC AR-AUXILIARY	333
Y	*355-4636*	1	POWER TRAIN AR	245

Y - SEPARATE ILLUSTRATION

<END>

MACHINE ARRANGEMENT

374-9716 COMMON AR

S/N: SDT1-UP

SMCS-7000 **i05298353**

NOTE	PART NUMBER	QTY	PART NAME 1 2 3 4 5 6 (PRODUCT LEVEL)	SEE PAGE
Y	*374-9726*	1	CHASSIS AR	2
Y	*374-9732*	1	ELECTRICAL AR	96
Y	*374-9756*	1	HYDRAULIC AR	332
Y	*374-9752*	1	HYDRAULIC AR-AUXILIARY	333
Y	*355-4637*	1	POWER TRAIN AR	245

Y - SEPARATE ILLUSTRATION

<END>

379-8758 CONFIGURATION AR

S/N: MBF1-UP; M4M1-UP; M5P1-UP; SDT1-UP
PART OF 415-9361, 415-9367 DISTRIBUTION AR
AN ATTACHMENT

SMCS-7000 **i05339770**

NOTE	PART NUMBER	QTY	PART NAME 1 2 3 4 5 6 (PRODUCT LEVEL)	SEE PAGE
Y	*424-5148*	1	CONTROL GP-DIRECTION & SPEED	426
Y	*379-8754*	1	COVER GP-CONSOLE	430
Y	*387-5722*	1	GUARD GP-VANDALISM	439
Y	*379-8245*	1	PANEL GP-CONTROL	138
Y	*379-8250*	1	PANEL GP-INSTRUMENT	472
Y	*380-7760*	1	SEAT & MOUNTING GP	485

Y - SEPARATE ILLUSTRATION

<END>

379-8760 CONFIGURATION AR

S/N: MBF1-UP; M4M1-UP; M5P1-UP; SDT1-UP
AN ATTACHMENT

SMCS-7000 **i05291079**

NOTE	PART NUMBER	QTY	PART NAME 1 2 3 4 5 6 (PRODUCT LEVEL)	SEE PAGE
Y	*424-5147*	1	CONTROL GP-DIRECTION & SPEED	425
Y	*379-8755*	1	COVER GP-CONSOLE	431
Y	*387-5722*	1	GUARD GP-VANDALISM	439
Y	*379-8245*	1	PANEL GP-CONTROL	138
Y	*379-8251*	1	PANEL GP-INSTRUMENT	474
Y	*356-1226*	1	SEAT & MOUNTING GP (VINYL)	483
Y	*382-9003*	1	SEAT BELT GP (RETRACTABLE, 51-MM (2-IN))	490

Y - SEPARATE ILLUSTRATION

<END>

MACHINE ARRANGEMENT

379-8761 CONFIGURATION AR–CLOTH

S/N: MBF1-UP; M4M1-UP; M5P1-UP; SDT1-UP

AN ATTACHMENT

SMCS-7000 **i05322762**

NOTE	PART NUMBER	QTY	PART NAME 1 2 3 4 5 6 (PRODUCT LEVEL)	SEE PAGE
Y	*424-5148*	1	CONTROL GP-DIRECTION & SPEED	426
Y	*379-8754*	1	COVER GP-CONSOLE	430
Y	*379-8245*	1	PANEL GP-CONTROL	138
Y	*379-8250*	1	PANEL GP-INSTRUMENT	472
Y	*380-7761*	1	SEAT & MOUNTING GP	486
Y - SEPARATE ILLUSTRATION				

<END>

379-8762 CONFIGURATION AR–CLOTH

S/N: MBF1-UP; M4M1-UP; M5P1-UP; SDT1-UP

AN ATTACHMENT

SMCS-7000 **i05322426**

NOTE	PART NUMBER	QTY	PART NAME 1 2 3 4 5 6 (PRODUCT LEVEL)	SEE PAGE
Y	*424-5147*	1	CONTROL GP-DIRECTION & SPEED	425
Y	*379-8755*	1	COVER GP-CONSOLE	431
Y	*379-8245*	1	PANEL GP-CONTROL	138
Y	*379-8251*	1	PANEL GP-INSTRUMENT	474
Y	*356-1227*	1	SEAT & MOUNTING GP (CLOTH)	484
Y	*382-9003*	1	SEAT BELT GP (RETRACTABLE, 51-MM (2-IN))	490
Y - SEPARATE ILLUSTRATION				

<END>

415-9361 DISTRIBUTION AR

S/N: M4M1-UP

AN ATTACHMENT

SMCS-7000 **i05293728**

NOTE	PART NUMBER	QTY	PART NAME 1 2 3 4 5 6 (PRODUCT LEVEL)	SEE PAGE
Y	*374-9767*	1	AXLE AR-DRIVE	193
Y	*378-8985*	1	BLADE AR (WITHOUT BLADE)	385
Y	*379-8758*	1	CONFIGURATION AR	3
Y	*360-0498*	1	DRUM AR-SMOOTH	212
Y	*377-5160*	1	ENGINE AR	6
Y	*379-6613*	1	HYDRAULIC AR-VIBRATORY	399
Y	*381-6991*	1	OPERATOR AR	470
Y	*422-4428*	1	SENSOR AR-COMPACTION (ACCELEROMETER)	406
Y	*354-5413*	1	MIRROR GP-REAR VIEW	457
Y	*324-9216*	1	MOUNTING GP-WHEEL	242
Y	*362-4940*	1	PLATE & FILM GP	524
Y	*355-2658*	1	SCREEN GP-AIR	304
Y - SEPARATE ILLUSTRATION				

<END>

MACHINE ARRANGEMENT

415-9367 DISTRIBUTION AR

S/N: M4M1-UP

AN ATTACHMENT

SMCS-7000 **i05349083**

NOTE	PART NUMBER	QTY	PART NAME 1 2 3 4 5 6 (PRODUCT LEVEL)	SEE PAGE
Y	*374-9767*	1	AXLE AR-DRIVE	193
Y	*378-8985*	1	BLADE AR (WITHOUT BLADE)	385
Y	*379-8758*	1	CONFIGURATION AR	3
Y	*360-0498*	1	DRUM AR-SMOOTH	212
Y	*377-5160*	1	ENGINE AR	6
Y	*379-6613*	1	HYDRAULIC AR-VIBRATORY	399
Y	*374-9843*	1	OPERATOR AR	468
Y	*379-8260*	1	CONTROL & MTG GP-MACHINE (COMPACTION CONTROL) (PROPEL FORCE)	96
Y	*107-4643*	1	MIRROR GP-REAR VIEW (INTERIOR)	455
Y	*324-9216*	1	MOUNTING GP-WHEEL	242
Y	*362-4940*	1	PLATE & FILM GP	524
Y	*355-2658*	1	SCREEN GP-AIR	304

Y - SEPARATE ILLUSTRATION

<END>

ENGINE ARRANGEMENT

377-5160 ENGINE AR

S/N: MBF1-UP; M4M1-UP; M5P1-UP; SDT1-UP
PART OF 415-9361, 415-9367 DISTRIBUTION AR
AN ATTACHMENT

SMCS-1000 **i05293759**

NOTE	PART NUMBER	QTY	PART NAME 1 2 3 4 5 6 (PRODUCT LEVEL)	SEE PAGE
Y	**378-4731**	1	ENGINE AR-PRIMARY	6
Y	*377-5161*	1	INSTALLATION AR-ENGINE	7

Y - SEPARATE ILLUSTRATION

<END>

378-4731 ENGINE AR-PRIMARY

S/N: C6E1-UP
116 BRAKE KW (156 BHP) AT 2200 RPM
PART OF 377-5160 ENGINE AR
AN ATTACHMENT

SMCS-1000 **i04913211**

NOTE	PART NUMBER	QTY	PART NAME 1 2 3 4 5 6 (PRODUCT LEVEL)	SEE PAGE
Y	*286-7842*	1	ADAPTER GP-AUXILIARY DRIVE	8
Y	*279-8837*	1	CAMSHAFT GP	13
Y	*281-8748*	1	CONNECTION GP-WATER	49
Y	*283-4558*	1	COOLER GP-FLTR BASE & ENG OIL	52
Y	*345-6925*	1	COVER GP-VALVE MECHANISM	14
Y	*279-8762*	1	CRANKSHAFT GP	16
Y	*279-8711*	1	CYLINDER BLOCK GP	18
Y	*279-8821*	1	CYLINDER HEAD GP	24
Y	*395-0291*	1	DRIVE GP-FAN	26
Y	*307-1843*	1	FILLER GP-ENGINE OIL	44
Y	*277-2912*	1	FILTER GP-ENGINE OIL	46
Y	*280-1394*	1	FILTER GP-SECONDARY FUEL	77
Y	*291-2526*	1	FLYWHEEL GP	27
Y	*277-4410*	1	GLOW PLUG GP	98
Y	*281-6332*	1	HOUSING GP-FLYWHEEL	28
Y	*281-8964*	1	HOUSING GP-FRONT	29
Y	*279-9653*	1	LIFTING GP-ENGINE	31
Y	*308-9075*	1	LINES GP-FUEL	80
Y	*283-4691*	1	MANIFOLD GP-INLET	69
Y	*286-7844*	1	MOUNTING GP-ENGINE	32
Y	*313-6578*	1	PAN GP-OIL	34
Y	*279-8780*	1	PISTON & ROD GP	36
Y	*277-5007*	1	PLUG GP-ENGINE	37
Y	*281-8280*	1	PULLEY GP-CRANKSHAFT	38
Y	*277-4262*	1	PUMP GP-ENGINE OIL	47
Y	*303-2926*	1	PUMP GP-FUEL INJECTION	84
Y	*277-2939*	1	PUMP GP-WATER	57
Y	*292-7884*	1	STARTING MOTOR GP-ELECTRIC	156
Y	*285-3414*	1	TURBOCHARGER GP	71
Y	*277-4694*	1	VALVE GP-FLUID SAMPLING (ENGINE OIL)	48
Y	*279-8825*	1	VALVE MECHANISM GP	42
Y	*292-8508*	1	WIRING GP-ENGINE	166
	380-3572	1	CYLINDER BLOCK GP-SHORT	
	282-2838	1	ELECTRONICS GP-ENGINE RATINGS	

Y - SEPARATE ILLUSTRATION

<END>

ENGINE ARRANGEMENT

377-5161 INSTALLATION AR-ENGINE

S/N: MBF1-UP; M4M1-UP; M5P1-UP; SDT1-UP

PART OF 377-5160 ENGINE AR

AN ATTACHMENT

SMCS-1000 **i05293761**

NOTE	PART NUMBER	QTY	PART NAME 1 2 3 4 5 6 (PRODUCT LEVEL)	SEE PAGE
Y	*377-5156*	1	AIR CLEANER GP	65
Y	*366-9145*	1	ALTERNATOR GP-CHARGING	92
Y	*349-6208*	1	FAN & MOTOR GP (SUCTION)	54
Y	*377-5168*	1	FILTER & LINES GP-FUEL	74
Y	*368-2882*	1	LINES GP-AIR	67
Y	*377-5159*	1	LINES GP-WATER	56
Y	*377-5173*	1	MOUNTING GP-ENGINE FLEXIBLE	33
Y	*377-5164*	1	MUFFLER & MOUNTING GP	70
Y	*377-5147*	1	RADIATOR & HYD OIL COOLER GP	59
Y	*381-7235*	1	RECOVERY GP-COOLANT	63
Y	*377-5162*	1	SERVICE GP-ENGINE	41

Y - SEPARATE ILLUSTRATION

<END>

286-7842 ADAPTER GP-AUXILIARY DRIVE

S/N: C6E1-UP
PART OF 378-4731 ENGINE AR-PRIMARY
AN ATTACHMENT

SMCS-1165, 1207

i04913271

NOTE	REF NO	GRAPHIC REF	PART NUMBER	QTY	PART NAME 1 2 3 4 5 6 (PRODUCT LEVEL)	SEE PAGE
	1	1	**102-2073**	1	SEAL-O-RING	
M	2	1	**102-2078**	1	BOLT (M10X1.5X25-MM)	
	3	1	**277-4223**	1	PLUG	
	4	1	**126-3212**	5	BOLT (M8X1.25X25-MM)	
	5	1	**235-1063**	1	ADAPTER AS	
	5A	1	**102-2075**	1	BEARING	
	5B	1	**235-1061**	1	GEAR (33-TEETH)	
	5C	1	**6H-3957**	1	BALL BEARING	
	5D	1	**102-2076**	1	CLIP	

M - METRIC PART

286-7842 **ADAPTER GP-AUXILIARY DRIVE (*contd.*)** **i04913271**

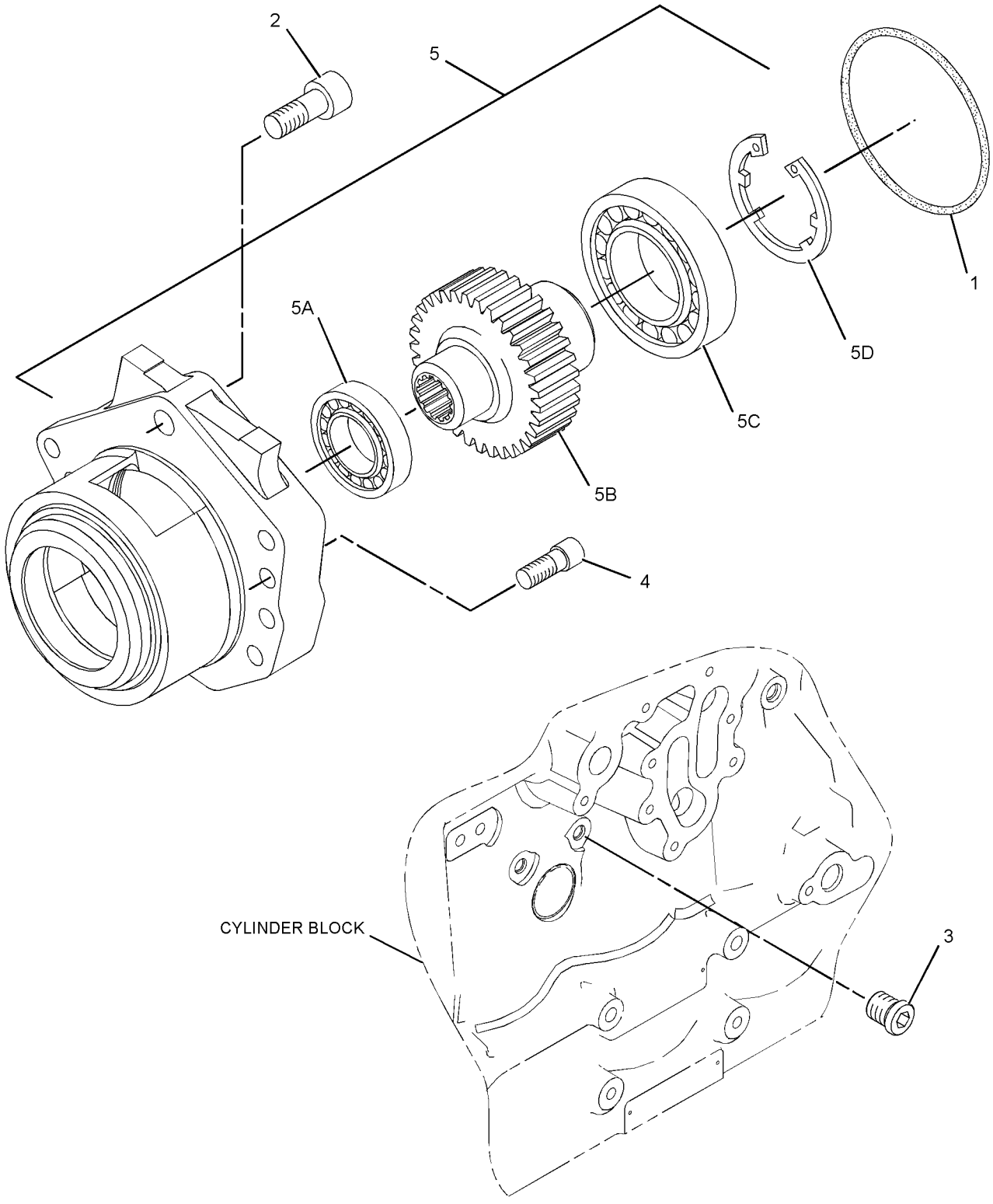

GRAPHIC #1 **<END>** g01526517

367-3669 BELT TENSIONER GP

S/N: MBF1-UP; M4M1-UP; M5P1-UP; SDT1-UP
PART OF 374-9842, 377-2157, 377-2159, 381-6991 OPERATOR AR
AN ATTACHMENT

SMCS-1357, 1358, 1397 **i05190454**

NOTE	REF NO	GRAPHIC REF	PART NUMBER	QTY	PART NAME 1 2 3 4 5 6 (PRODUCT LEVEL)	SEE PAGE
	1	1	**377-9082**	1	BELT TENSIONER	
	2	1	**284-1027**	1	BELT-SERPENTINE	

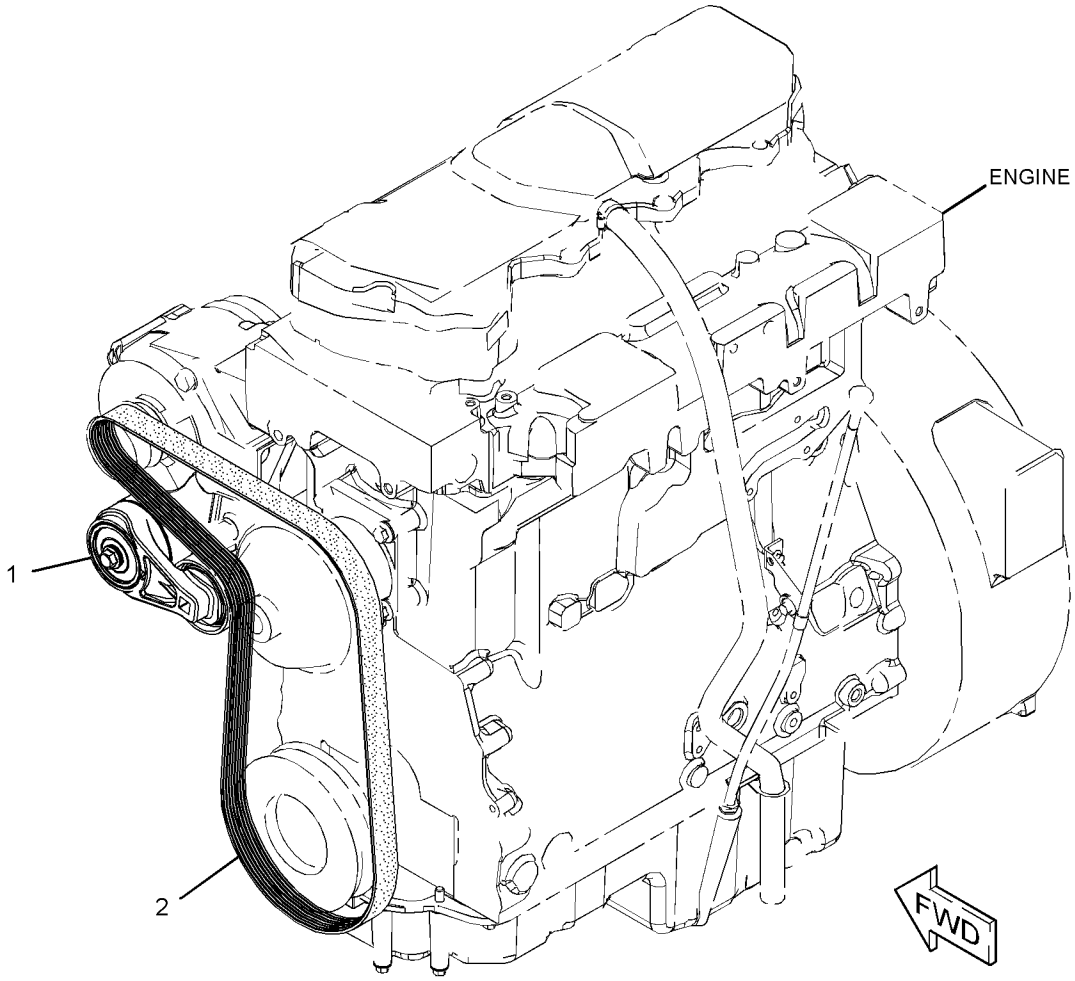

GRAPHIC #1 **<END>** g02962721

377-5153 BELT TENSIONER GP

S/N: MBF1-UP; M4M1-UP; M5P1-UP; SDT1-UP
PART OF 374-9843, 382-1438 OPERATOR AR
AN ATTACHMENT

SMCS-1357, 1358, 1397

i05190416

NOTE	REF NO	GRAPHIC REF	PART NUMBER	QTY	PART NAME 1 2 3 4 5 6 (PRODUCT LEVEL)	SEE PAGE
	1	1	**185-1911**	1	BELT-SERPENTINE (PULLEY)	
	2	1	**377-9087**	1	BELT TENSIONER	

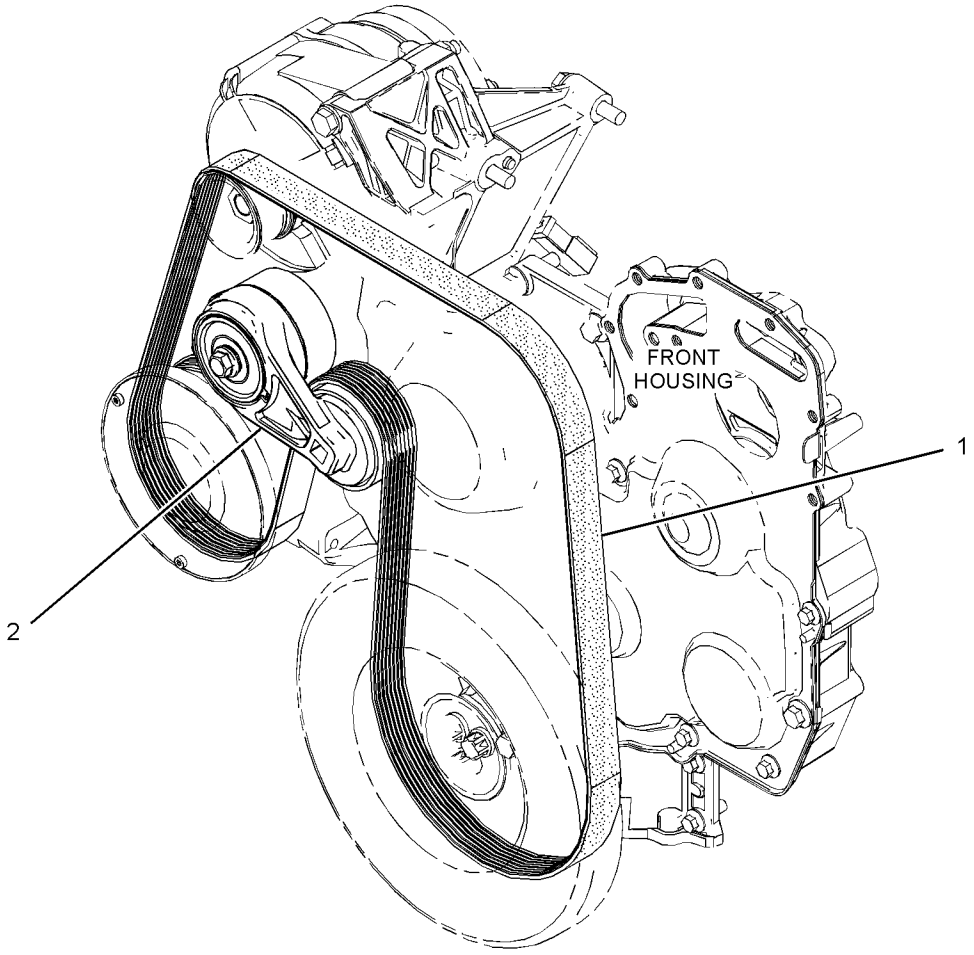

GRAPHIC #1

<END>

g02953337

387-0504 BELT TENSIONER GP

S/N: MBF1-UP; M4M1-UP; M5P1-UP; SDT1-UP
PART OF 416-2514 OPERATOR AR
AN ATTACHMENT

SMCS-1357, 1358, 1397 **i05291198**

NOTE	REF NO	GRAPHIC REF	PART NUMBER	QTY	PART NAME 1 2 3 4 5 6 (PRODUCT LEVEL)	SEE PAGE
	1	1	**377-9087**	1	BELT TENSIONER	
	2	1	**277-8724**	1	BELT-SERPENTINE (FAN PULLEY)	

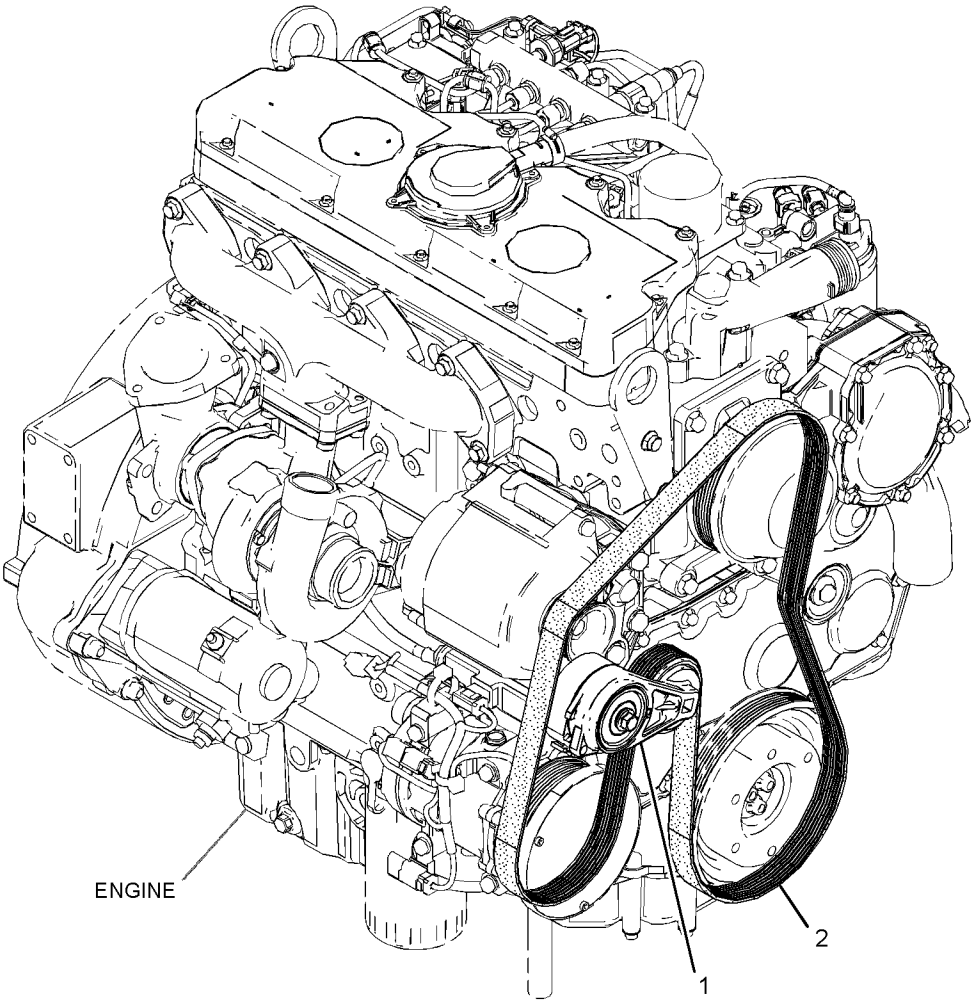

GRAPHIC #1

<END>

g03085376

279-8837 CAMSHAFT GP

S/N: C6E1-UP
PART OF 378-4731 ENGINE AR-PRIMARY
AN ATTACHMENT

SMCS-1210 **i04913273**

NOTE	REF NO	GRAPHIC REF	PART NUMBER	QTY	PART NAME 1 2 3 4 5 6 (PRODUCT LEVEL)	SEE PAGE
	1	1	**347-1132**	1	CAMSHAFT AS	
	1A	1	**1B-8736**	1	KEY-WOODRUFF	
	2	1	**278-5125**	12	TAPPET	
	3	1	**319-8426**	12	PUSHROD	

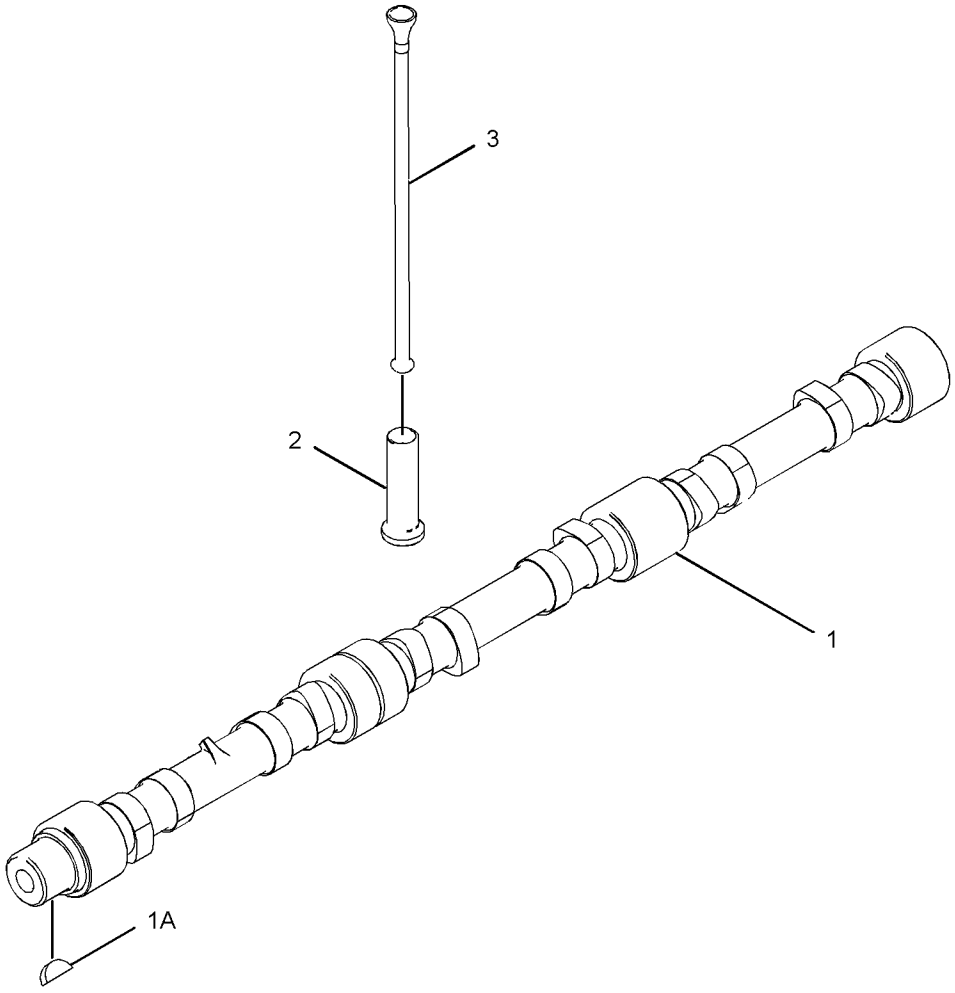

GRAPHIC #1 **<END>** g02739896

345-6925 COVER GP-VALVE MECHANISM

S/N: C6E1-UP

PART OF 378-4731 ENGINE AR-PRIMARY

AN ATTACHMENT

SMCS-1107, 1120

i04913278

NOTE	REF NO	GRAPHIC REF	PART NUMBER	QTY	PART NAME 1 2 3 4 5 6 (PRODUCT LEVEL)	SEE PAGE
	1	1	**277-5031**	9	BOLT-SPECIAL (SHOULDER)	
	2	1	**277-5067**	6	SLEEVE	
	3	1	**298-4550**	5	BOLT-SPECIAL (SHOULDER)	
	4	1	**317-2717**	1	BASE GP-VALVE COVER & INJ HARN	
	4A	1	**277-5064**	3	SEAL-O-RING	
	4B	1	**277-5065**	3	CLIP	
	4C	1	**285-1975**	3	HARNESS AS-WIRING (INJECTOR)	
	4D	1	**309-6664**	1	GASKET-COVER	
	5	1	**317-3065**	1	COVER GP-VALVE MECHANISM	
	5A	1	**317-3064**	1	GASKET-COVER (VALVE MECHANISM)	

345-6925 **COVER GP-VALVE MECHANISM (*contd.*)** **i04913278**

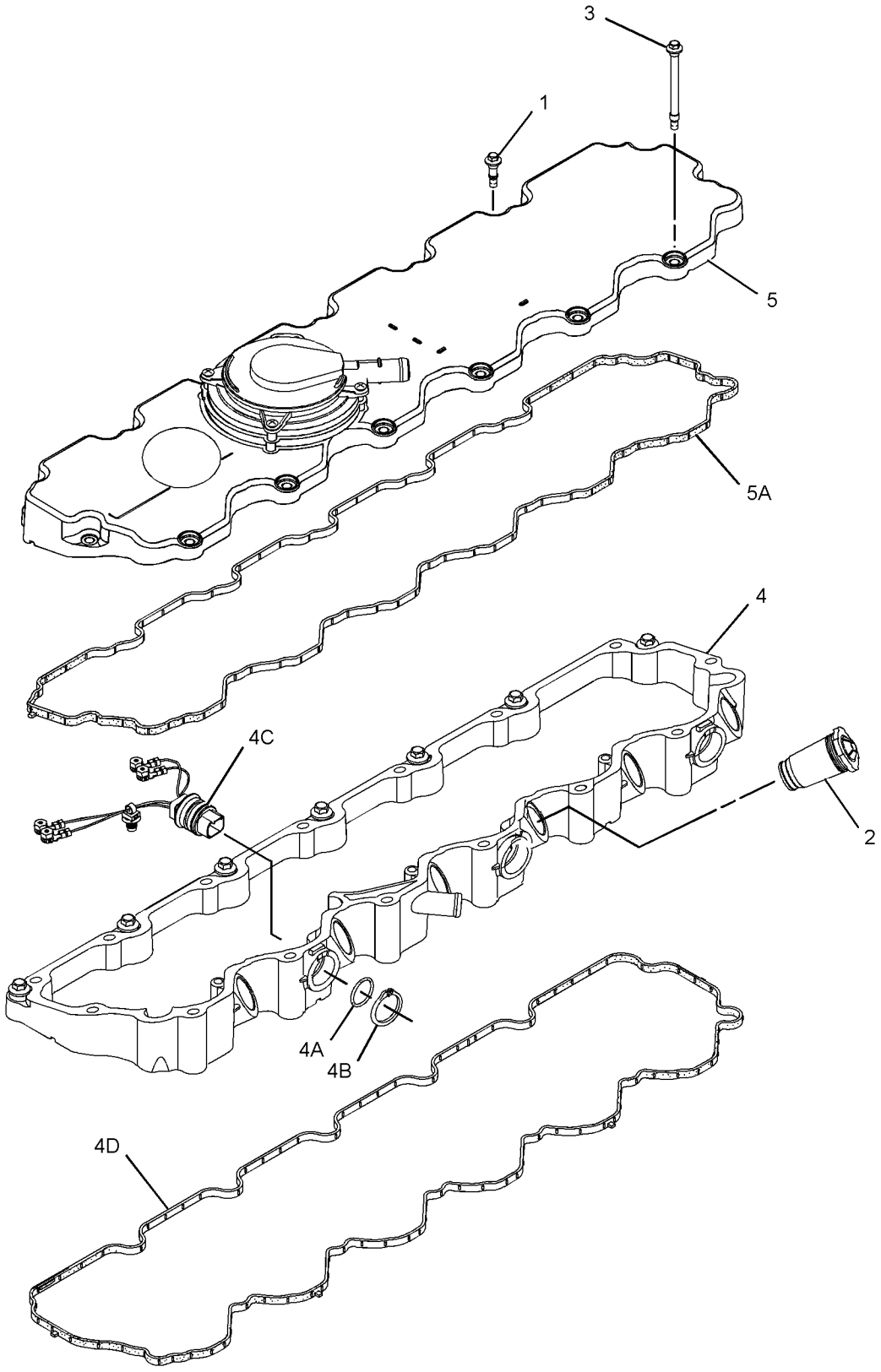

GRAPHIC #1 **<END>** g01896075

279-8762 CRANKSHAFT GP

S/N: C6E1-UP
PART OF 378-4731 ENGINE AR-PRIMARY
AN ATTACHMENT

SMCS-1202 **i04913281**

NOTE	REF NO	GRAPHIC REF	PART NUMBER	QTY	PART NAME 1 2 3 4 5 6 (PRODUCT LEVEL)	SEE PAGE
	1	1	**276-7387**	1	CRANKSHAFT AS	
	1A	1	**1B-8736**	1	KEY-WOODRUFF	
	1B	1	**225-8839**	1	DOWEL	
	1C	1	**276-7388**	1	KIT-BEARING	
	1D	1	**276-7389**	1	KIT-BEARING	
	1E	1	**276-7390**	2	WASHER-THRUST	
	1F	1	**276-7391**	1	GEAR (34-TEETH)	
	2	1	**348-9328**	1	DISC-TIMING	
	3	1	**276-7394**	3	BOLT	

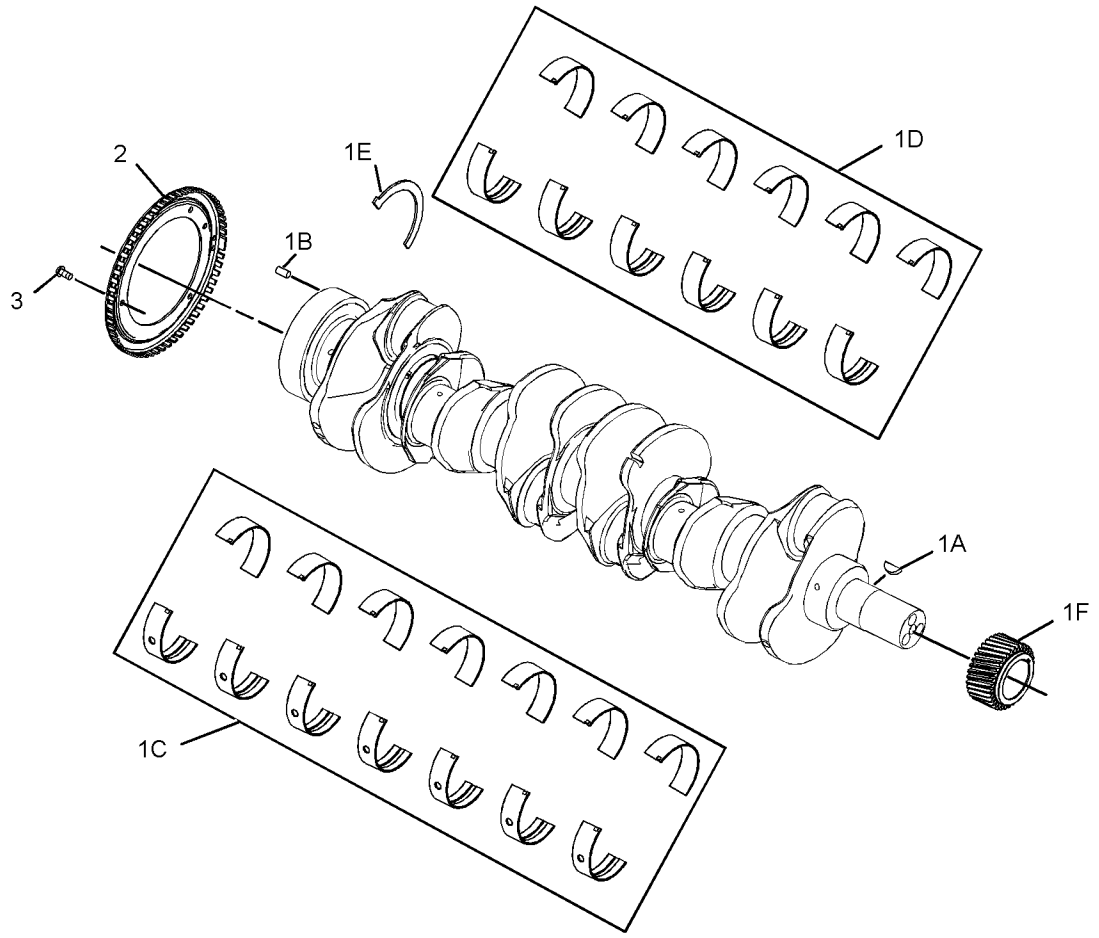

GRAPHIC #1 **<END>** g01366865

420-5231 CYLINDER BLOCK AS

S/N: C6E1-UP

PART OF 306-6845 CYLINDER BLOCK GP

AN ATTACHMENT

SMCS-1201 **i05169743**

NOTE	REF NO	GRAPHIC REF	PART NUMBER	QTY	PART NAME 1 2 3 4 5 6 (PRODUCT LEVEL)	SEE PAGE
	1	1	**067-6043**	3	PLUG-SIDE	
	2	1	**067-6823**	1	PLUG	
	3	1	**185-0884**	2	DOWEL	
	4	1	**225-8858**	1	PLUG	
	5	1	**232-7596**	1	PLUG	
	6	1	**232-7597**	2	PLUG	
	7	1	**232-7599**	2	PLUG	
	8	1	**276-5602**	6	PLUG-CORE	
	9	1	**276-5604**	1	DOWEL	

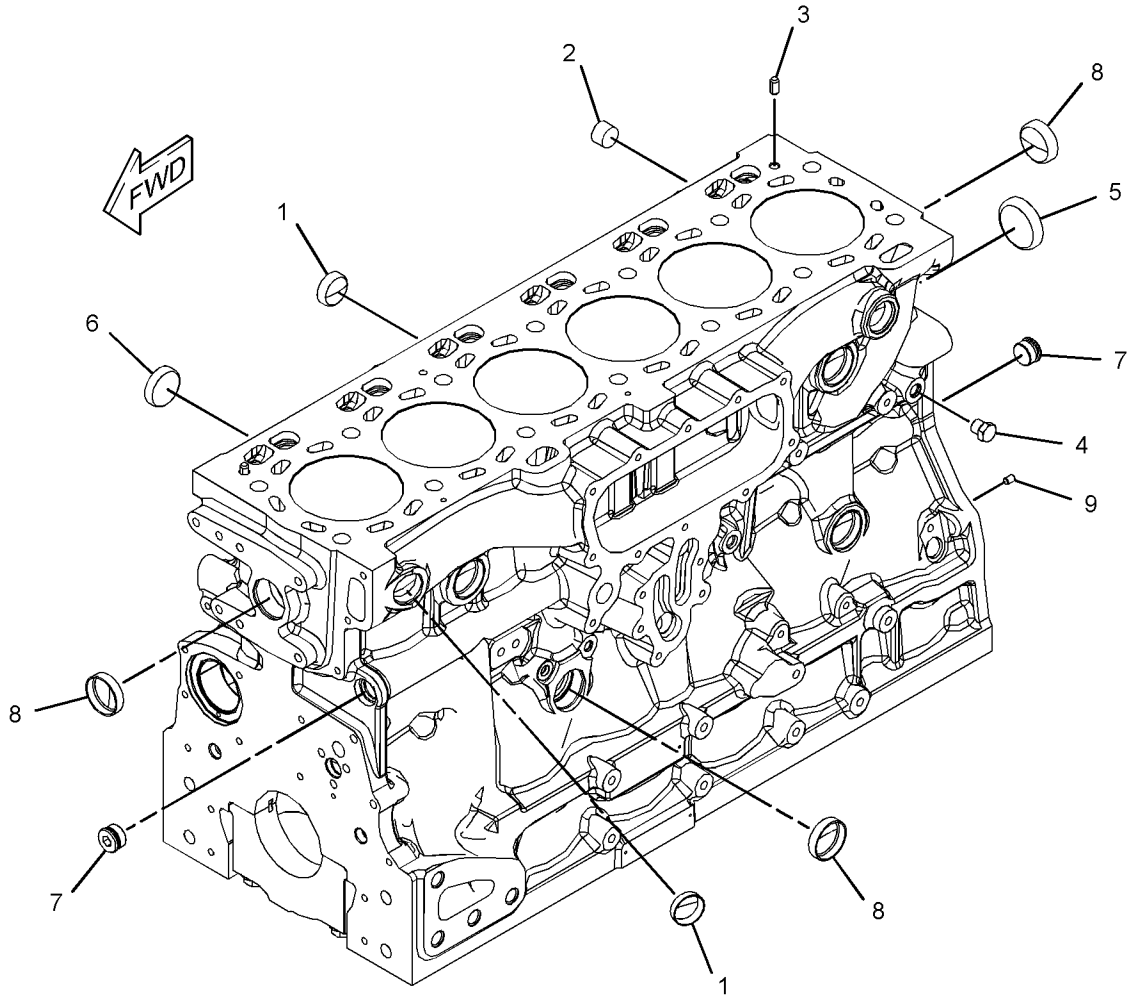

GRAPHIC #1 **<END>** g03321029

279-8711 CYLINDER BLOCK GP

S/N: C6E1-UP
PART OF 378-4731 ENGINE AR-PRIMARY
AN ATTACHMENT

SMCS-1201 **i04913282**

NOTE	REF NO	GRAPHIC REF	PART NUMBER	QTY	PART NAME 1 2 3 4 5 6 (PRODUCT LEVEL)	SEE PAGE
	1	1	**292-0886**	1	HOUSING-REAR (INCLUDES SEAL)	
M	2	1	**209-9219**	8	BOLT (M8X1.25X16-MM)	
Y	3	1	**306-6845**	1	CYLINDER BLOCK GP	20

M - METRIC PART
Y - SEPARATE ILLUSTRATION

279-8711 **CYLINDER BLOCK GP (*contd.*)** **i04913282**

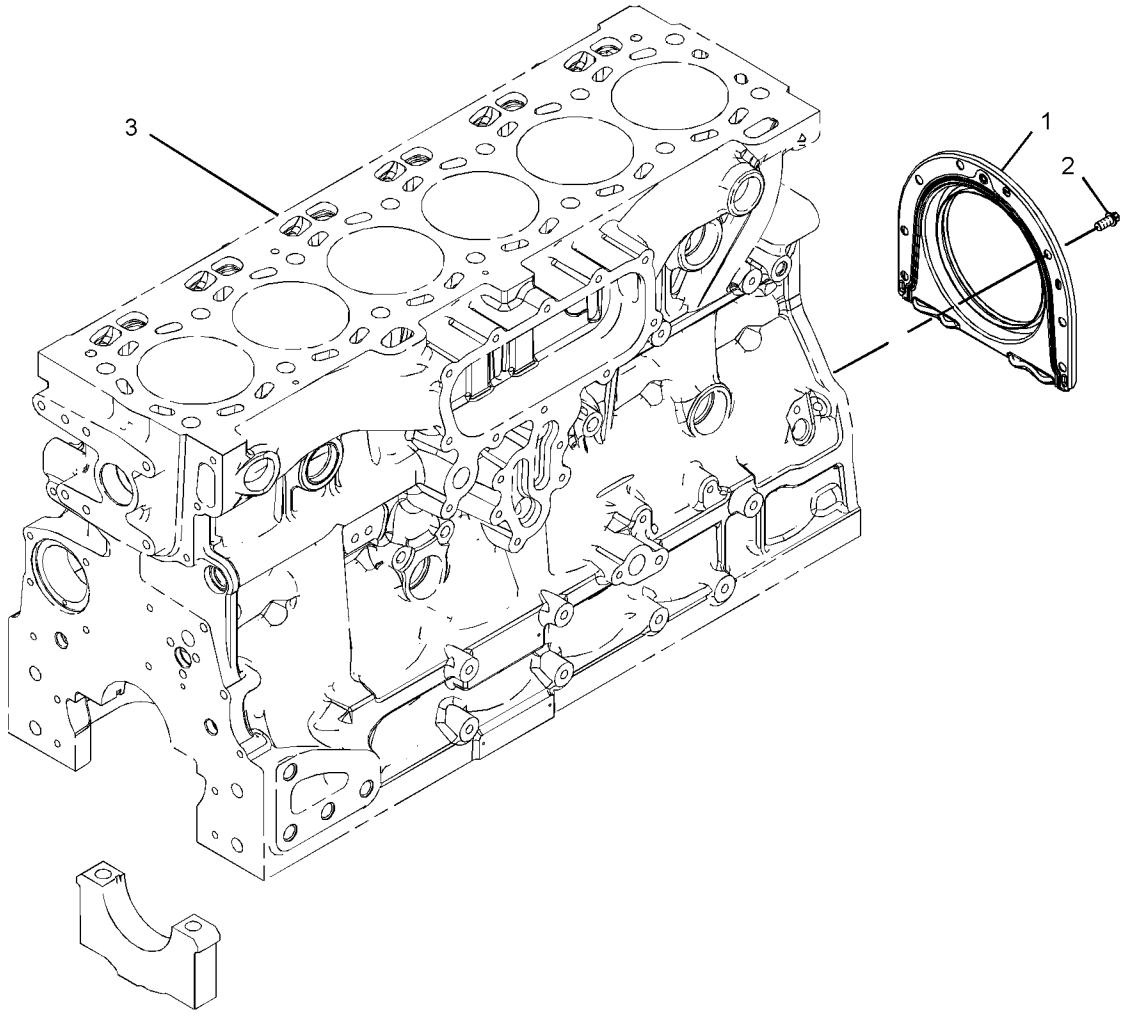

GRAPHIC #1 **<END>** g01365648

306-6845 CYLINDER BLOCK GP

S/N: C6E1-UP

PART OF 279-8711 CYLINDER BLOCK GP

AN ATTACHMENT

SMCS-1201 **i05169699**

NOTE	REF NO	GRAPHIC REF	PART NUMBER	QTY	PART NAME 1 2 3 4 5 6 (PRODUCT LEVEL)	SEE PAGE
	1	1	**2B-0858**	1	PLUG-PIPE	
	2	1	**067-6043**	5	PLUG-SIDE	
M	3	1	**100-4841**	6	BOLT (M6X1X10-MM)	
	4	1	**185-0884**	2	DOWEL	
	5	1	**225-8858**	1	PLUG	
	6	1	**232-1322**	1	PLUG	
	7	1	**232-7596**	1	PLUG	
	8	1	**232-7597**	2	PLUG	
	9	1	**232-7599**	2	PLUG	
	10	1	**276-5600**	14	BOLT-SPECIAL (BEARING CAP)	
	11	1	**276-5601**	1	BUSHING-CAMSHAFT	
	12	1	**276-5602**	6	PLUG-CORE	
	13	1	**276-5603**	1	SEAL-O-RING	
	14	1	**276-5604**	1	DOWEL	
	15	1	**276-5605**	6	JET AS-PISTON COOLING	
Y	16	1	*420-5231*	1	CYLINDER BLOCK AS	17

M - METRIC PART
Y - SEPARATE ILLUSTRATION

306-6845 **CYLINDER BLOCK GP (*contd.*)** **i05169699**

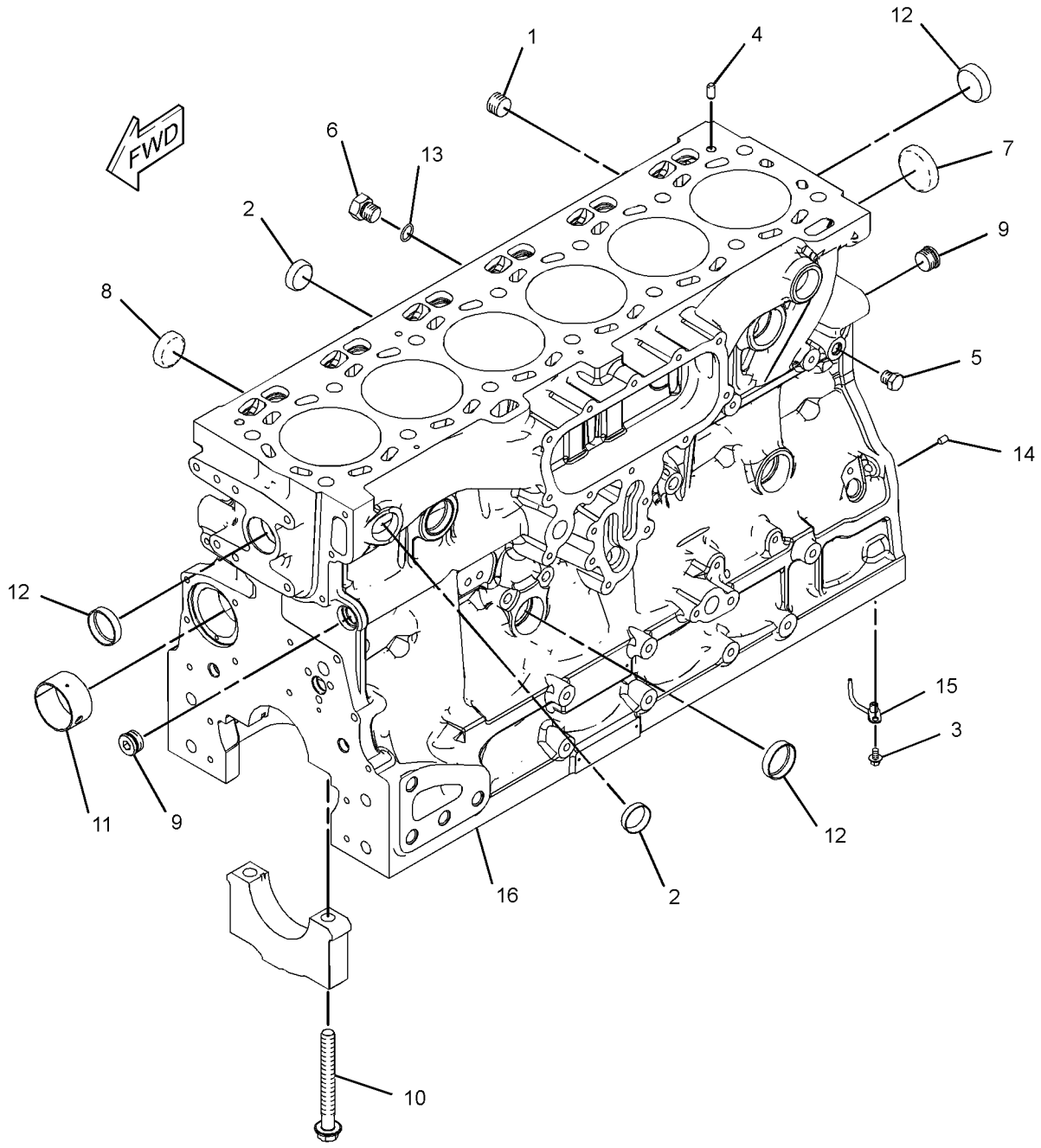

GRAPHIC #1 **<END>** g03320806

276-8115 CYLINDER HEAD AS

S/N: C6E1-UP

PART OF 279-8821 CYLINDER HEAD GP

AN ATTACHMENT

SMCS-1100, 1101

i05330957

NOTE	REF NO	GRAPHIC REF	PART NUMBER	QTY	PART NAME 1 2 3 4 5 6 (PRODUCT LEVEL)	SEE PAGE
	1	1	**2B-0858**	2	PLUG-PIPE	
	2	1	**199-9751**	1	SEAL-O-RING	
	3	1	**232-1322**	1	PLUG	
	4	1	**276-8116**	6	PLUG-CORE	
	5	1	**276-8117**	13	PLUG-CORE	
	6	1	**295-6661**	1	PLUG	
	7	1	**309-6678**	12	VALVE-INLET	
	8	1	**276-8123**	48	RETAINER	
	9	1	**339-9637**	12	VALVE-EXHAUST	
	10	1	**299-5511**	24	SEAL-VALVE STEM	
	11	1	**276-8132**	24	SPRING-VALVE	
	12	1	**276-8133**	24	CAP-VALVE	
	13	1	**377-0399**	12	INSERT-VALVE SEAT	
	14	1	**377-0400**	12	INSERT-VALVE SEAT	
	15	1	**380-2073**	24	GUIDE-VALVE	

276-8115 **CYLINDER HEAD AS (*contd.*)** **i05330957**

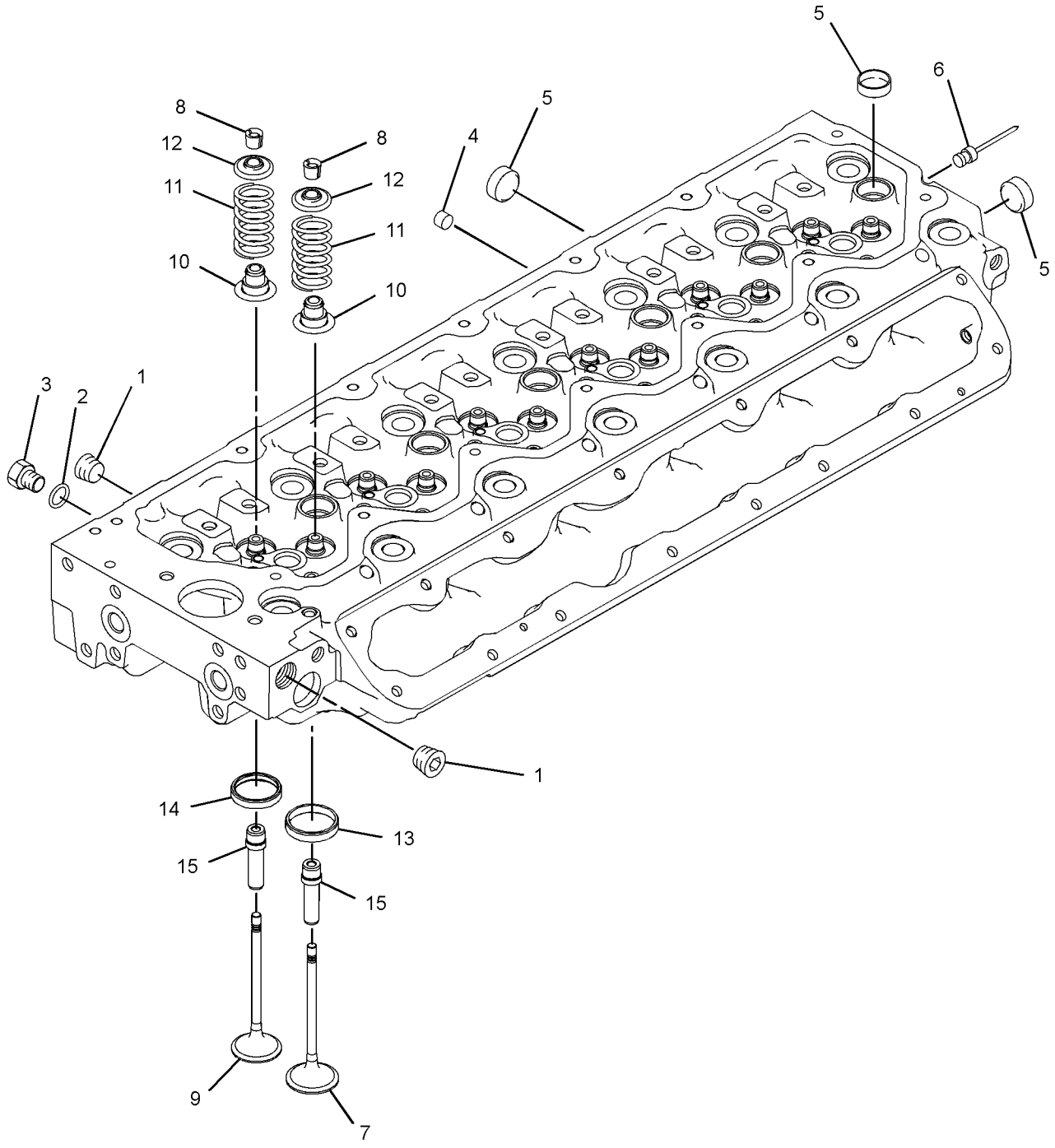

GRAPHIC #1 **<END>** g03321208

279-8821 CYLINDER HEAD GP

S/N: C6E1-UP
PART OF 378-4731 ENGINE AR-PRIMARY
AN ATTACHMENT

SMCS-1100 **i05294636**

NOTE	REF NO	GRAPHIC REF	PART NUMBER	QTY	PART NAME 1 2 3 4 5 6 (PRODUCT LEVEL)	SEE PAGE
Y	1	1	**276-8115**	1	CYLINDER HEAD AS	22
	2	1	**276-8134**	14	BOLT-SPECIAL (CYLINDER HEAD)	
	3	1	**176-3141**	1	GASKET-HEAD	
AB		1	**380-2074**	1	GASKET-CYLINDER HEAD (0.25-MM THK)	

A - NOT PART OF THIS GROUP
B - USE AS REQUIRED
Y - SEPARATE ILLUSTRATION

279-8821 **CYLINDER HEAD GP (*contd.*)** **i05294636**

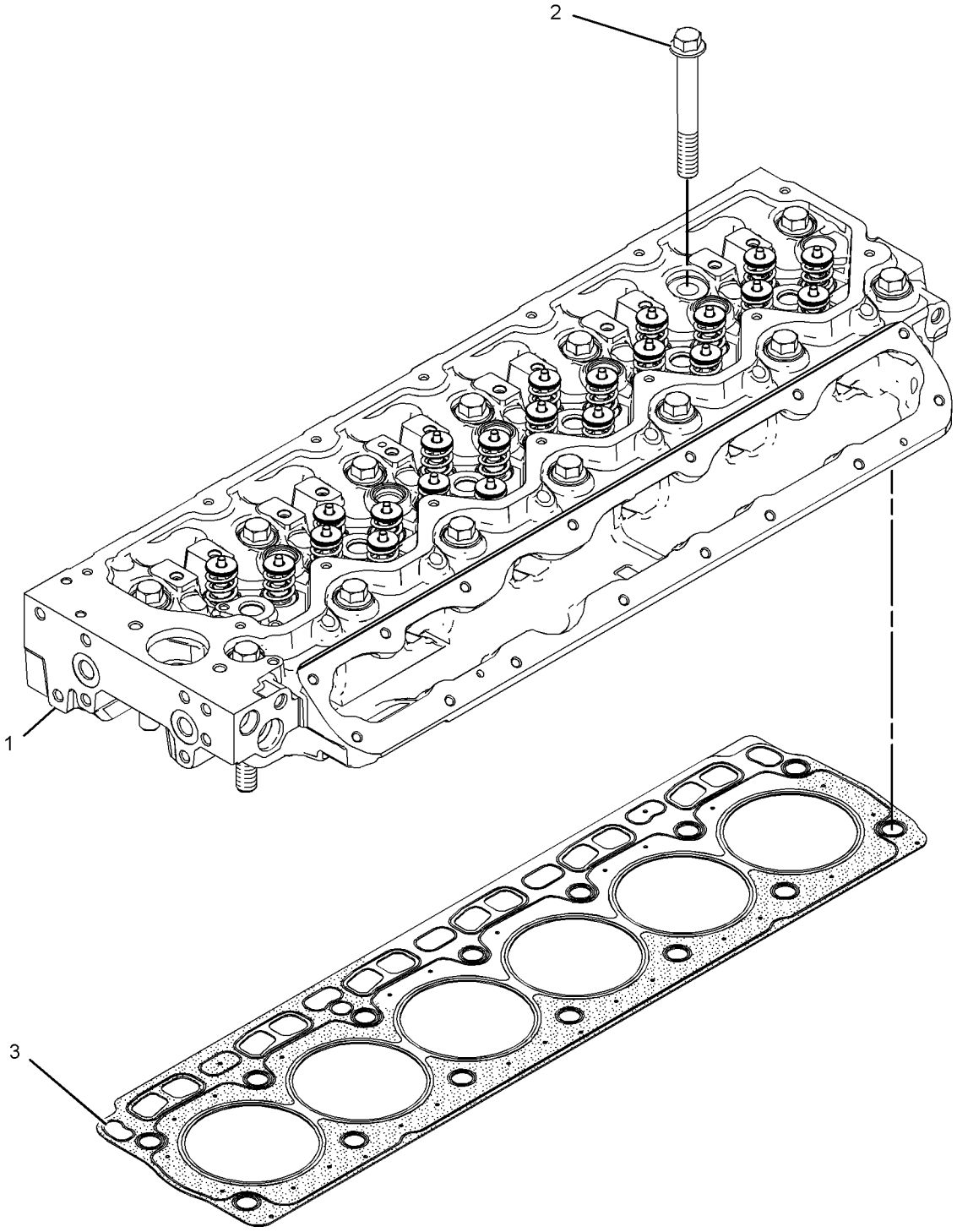

GRAPHIC #1 **<END>** g01291481

395-0291 DRIVE GP-FAN

S/N: C6E1-UP
PART OF 378-4731 ENGINE AR-PRIMARY
AN ATTACHMENT

SMCS-1359 **i04913869**

NOTE	REF NO	GRAPHIC REF	PART NUMBER	QTY	PART NAME 1 2 3 4 5 6 (PRODUCT LEVEL)	SEE PAGE
	1	1	**111-0859**	4	BOLT (M10X1.5X35-MM)	
	2	1	**284-1026**	1	PULLEY (8-GROOVE)	
	3	1	**289-8336**	1	HOUSING AS	

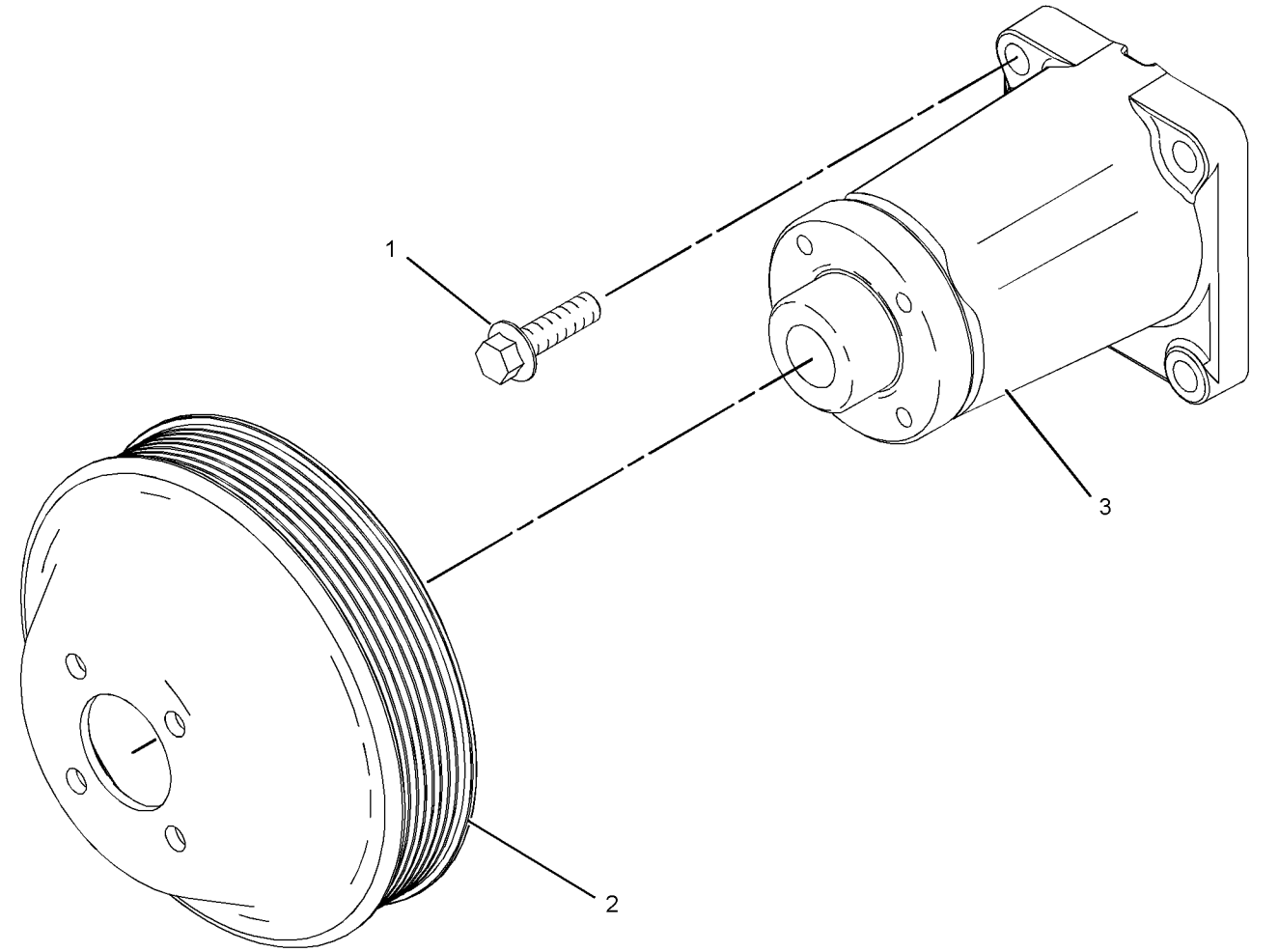

GRAPHIC #1 **<END>** g01411516

291-2526 FLYWHEEL GP

S/N: C6E1-UP
PART OF 378-4731 ENGINE AR-PRIMARY
AN ATTACHMENT

SMCS-1156 **i04913296**

NOTE	REF NO	GRAPHIC REF	PART NUMBER	QTY	PART NAME 1 2 3 4 5 6 (PRODUCT LEVEL)	SEE PAGE
	1	1	**291-2512**	1	FLYWHEEL AS	
	1A	1	**033-7687**	1	RING-STARTING MOTOR (126-TEETH)	
	2	1	**0S-1603**	12	BOLT (1/2-20X1.5-IN)	
	3	1	**5P-8245**	12	WASHER-HARD (13.5X25.5X3-MM THK)	

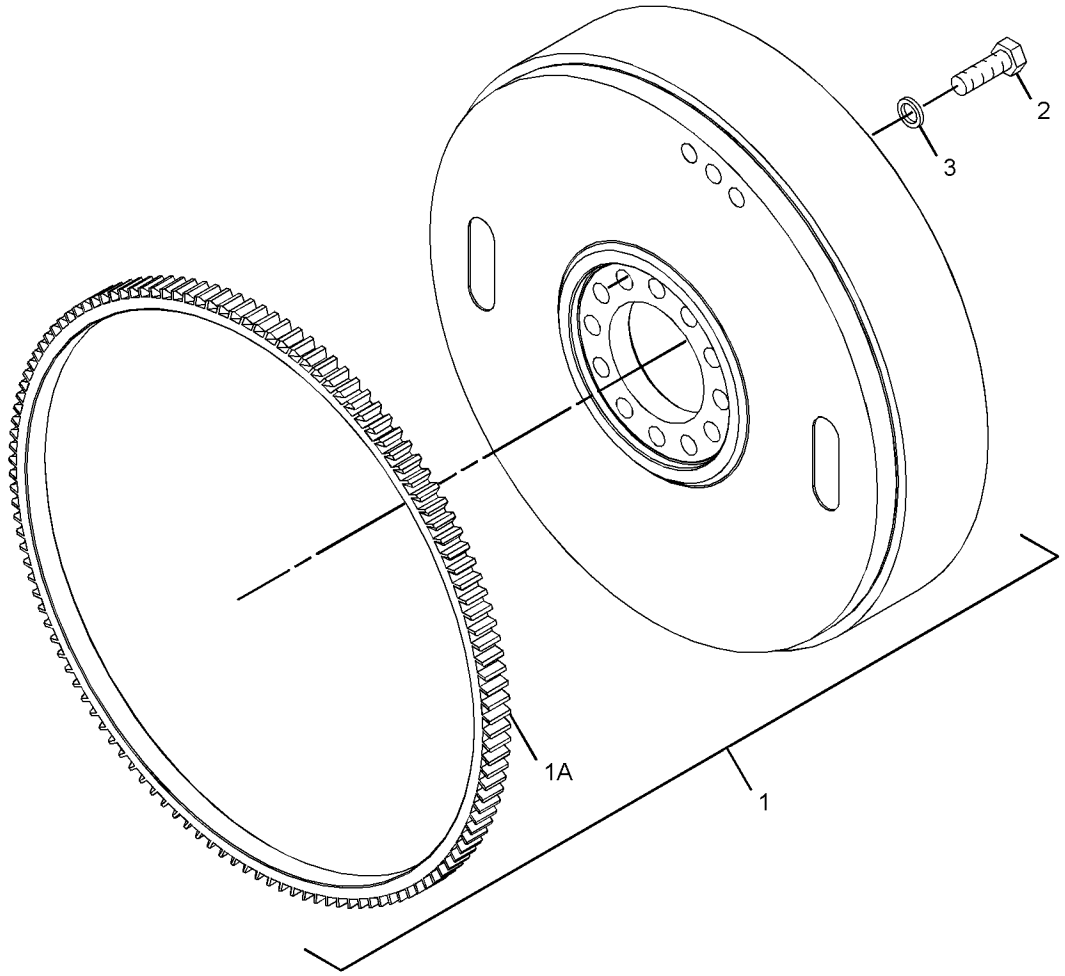

GRAPHIC #1 **<END>** g01280664

281-6332 HOUSING GP-FLYWHEEL

S/N: C6E1-UP
PART OF 378-4731 ENGINE AR-PRIMARY
AN ATTACHMENT

SMCS-1157 **i04921681**

NOTE	REF NO	GRAPHIC REF	PART NUMBER	QTY	PART NAME 1 2 3 4 5 6 (PRODUCT LEVEL)	SEE PAGE
	1	1	**281-6331**	1	HOUSING-FLYWHEEL	
M	2	1	**121-0883**	6	BOLT (M10X1.5X30-MM)	
M	3	1	**6I-0423**	2	BOLT (M12X1.75X30-MM)	
	4	1	**102-1957**	1	PLATE	
	5	1	**6I-0631**	2	BOLT (M6X1X12-MM)	
	6	1	**277-0118**	1	SEAL	
	7	1	**287-8597**	2	DOWEL	
	8	1	**375-9272**	1	PLUG	
	9	1	**199-3108**	1	PLUG	
	10	1	**199-3109**	1	PLUG	

M - METRIC PART

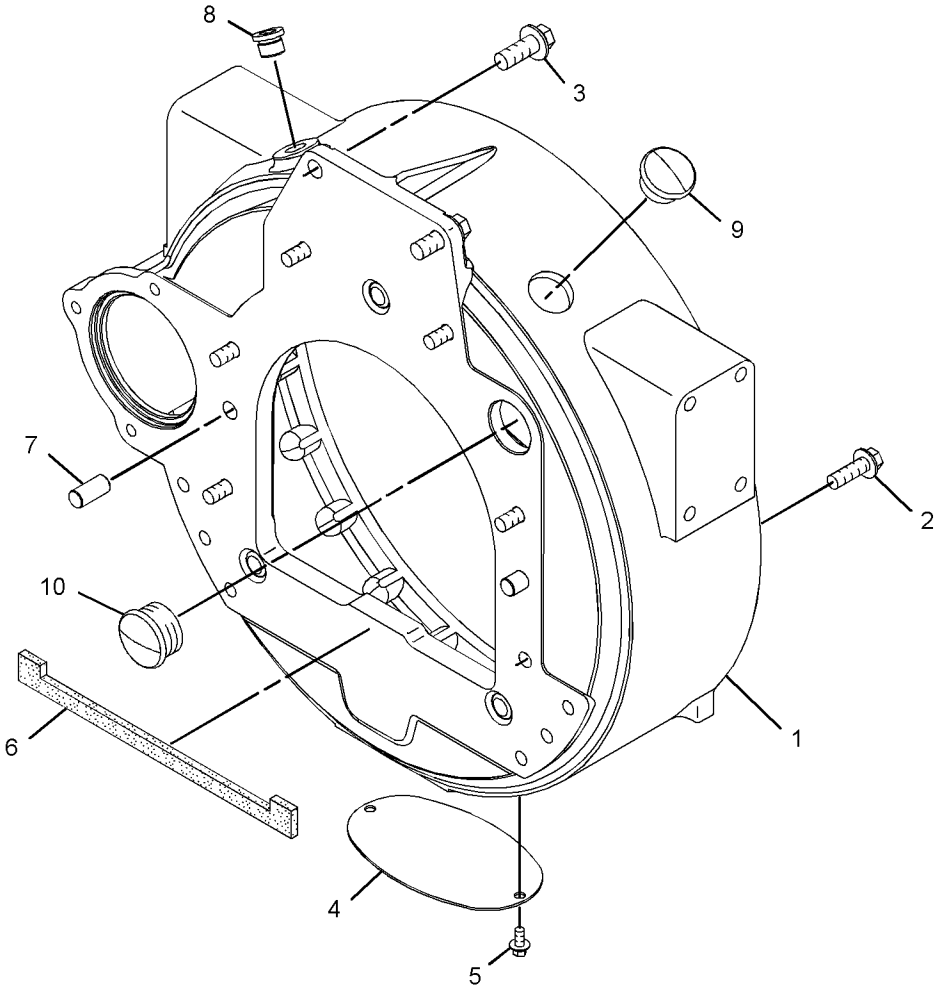

GRAPHIC #1 **<END>** g03112456

281-8964 HOUSING GP-FRONT

S/N: C6E1-UP
PART OF 378-4731 ENGINE AR-PRIMARY
AN ATTACHMENT

SMCS-1151, 1162

i04913325

NOTE	REF NO	GRAPHIC REF	PART NUMBER	QTY	PART NAME 1 2 3 4 5 6 (PRODUCT LEVEL)	SEE PAGE
	1	1	**226-8767**	1	COVER AS-FRONT	
	1A	1	**226-8766**	1	GASKET-COVER	
M	2	1	**124-3815**	9	BOLT (M8X1.25X16-MM)	
M	3	1	**100-3751**	5	BOLT (M8X1.25X65-MM)	
M	4	1	**100-4830**	1	BOLT (M10X1.5X20-MM)	
C	5	1	**359-9431**	1	GEAR-IDLER (73-TEETH)	
M	6	1	**6I-0454**	3	BOLT (M10X1.5X70-MM)	
	7	1	**216-8634**	1	GEAR-CAMSHAFT (68-TEETH)	
	8	1	**133-1011**	1	WASHER	
	9	1	**067-6179**	1	DOWEL	
	10	1	**232-3666**	1	WASHER-THRUST	
	11	1	**7C-4616**	1	BOLT (M12X1.75X45-MM)	
C	12	1	**326-5063**	1	HOUSING-FRONT	
	13	1	**277-3012**	1	GASKET-COVER	
	14	1	**277-3013**	1	SEAL	
M	15	1	**6I-0217**	6	BOLT (M8X1.25X20-MM)	
M	16	1	**6I-0645**	4	BOLT (M8X1.25X25-MM)	
M	17	1	**101-3895**	2	BOLT (M8X1.25X35-MM)	
C	18	1	**291-6517**	1	PLATE	

C - CHANGE FROM PREVIOUS TYPE
M - METRIC PART

281-8964 **HOUSING GP-FRONT (*contd.*)** **i04913325**

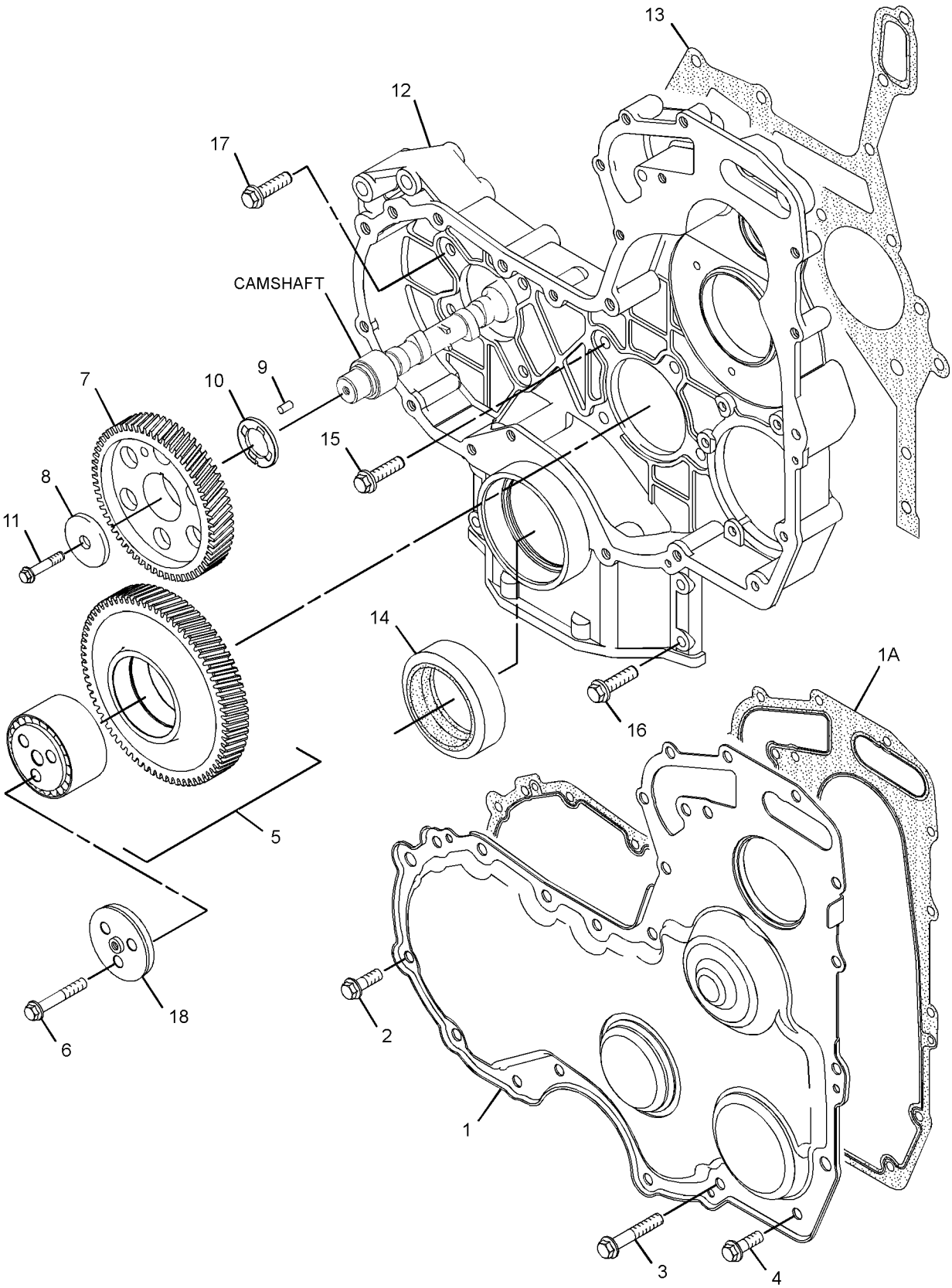

GRAPHIC #1 **<END>** g02682097

279-9653 LIFTING GP-ENGINE

S/N: C6E1-UP
PART OF 378-4731 ENGINE AR-PRIMARY
AN ATTACHMENT

SMCS-1122 **i04913260**

NOTE	REF NO	GRAPHIC REF	PART NUMBER	QTY	PART NAME 1 2 3 4 5 6 (PRODUCT LEVEL)	SEE PAGE
	1	1	**279-9651**	1	PLATE-LIFTING	
M	2	1	**6I-0654**	4	BOLT (M10X1.5X25-MM)	
	3	1	**279-9652**	1	PLATE-LIFTING	

M - METRIC PART

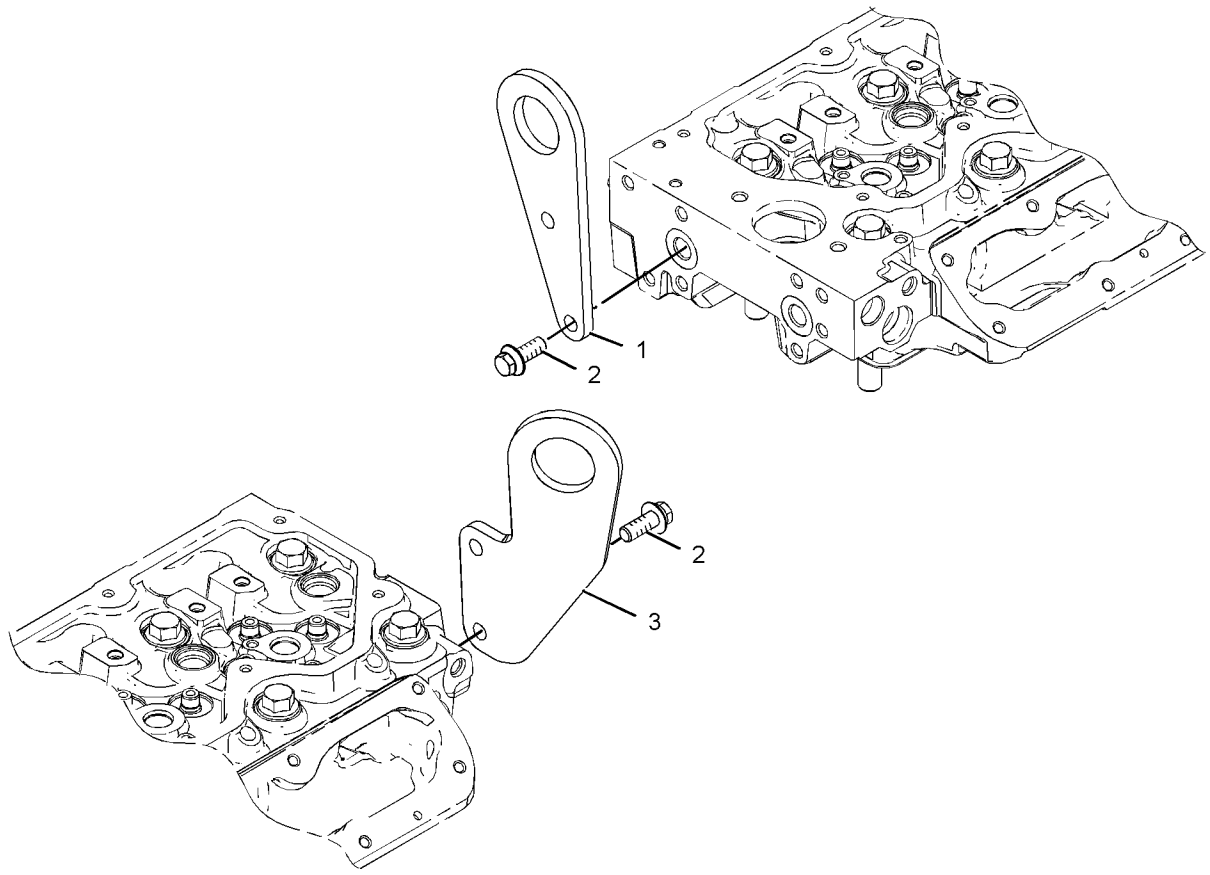

GRAPHIC #1 **<END>** g01195531

286-7844 MOUNTING GP-ENGINE

S/N: C6E1-UP
PART OF 378-4731 ENGINE AR-PRIMARY
AN ATTACHMENT

SMCS-1152 **i04913305**

NOTE	REF NO	GRAPHIC REF	PART NUMBER	QTY	PART NAME 1 2 3 4 5 6 (PRODUCT LEVEL)	SEE PAGE
	1	1	**6H-3616**	6	PLUG-PROTECTION	
	2	1	**277-4490**	2	BRACKET-MOUNTING	
	3	1	**283-8301**	2	BOLT	
	4	1	**283-8302**	6	BOLT	

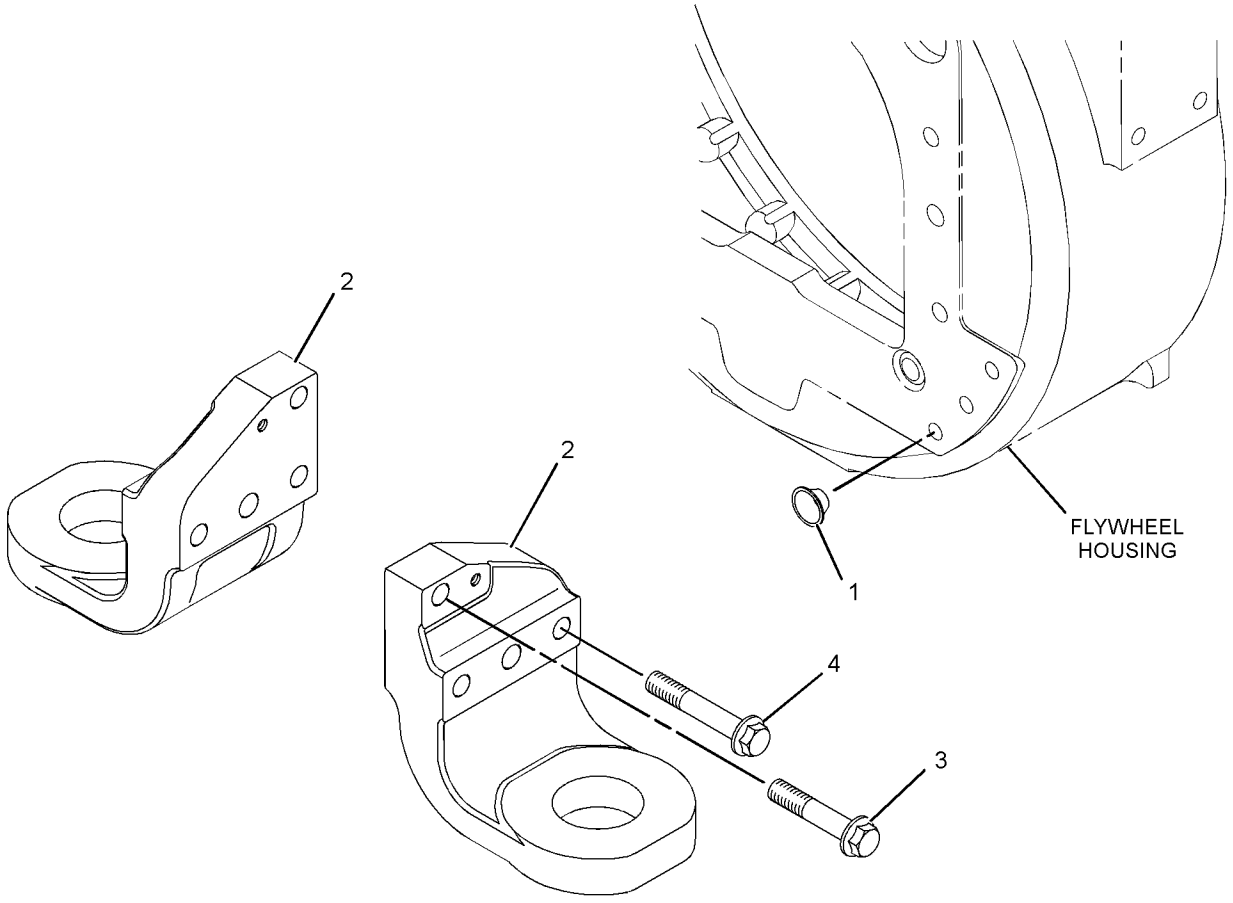

GRAPHIC #1 **<END>** g01280662

377-5173 MOUNTING GP-ENGINE FLEXIBLE

S/N: MBF1-UP; M4M1-UP; M5P1-UP; SDT1-UP
PART OF 377-5161 INSTALLATION AR-ENGINE
AN ATTACHMENT

SMCS-1152 **i05288986**

NOTE	REF NO	GRAPHIC REF	PART NUMBER	QTY	PART NAME 1 2 3 4 5 6 (PRODUCT LEVEL)	SEE PAGE
	1	1	**7C-4349**	2	MOUNT AS	
	2	1	**9W-6582**	2	SLEEVE	
	3	1	**381-7239**	2	SUPPORT-ENGINE	
	4	1	**7X-0610**	2	WASHER-HARD (20X75X6-MM THK)	
M	5	1	**7X-2566**	2	BOLT (M20X2.5X110-MM)	
M	6	1	**8C-8478**	2	BOLT (M20X2.5X140-MM)	
M	7	1	**8T-4131**	4	NUT (M20X2.5-THD)	
M	8	1	**8T-4194**	8	BOLT (M12X1.75X50-MM)	
	9	1	**8T-4223**	8	WASHER-HARD (13.5X25.5X3-MM THK)	
	10	1	**8T-4994**	8	WASHER-HARD (20X36.5X3.5-MM THK)	
	11	1	**9W-6584**	2	WASHER (20.5X114X10-MM THK)	
	12	1	**9W-9920**	2	MOUNTING AS-VIBRATION ISOLATOR	

M - METRIC PART

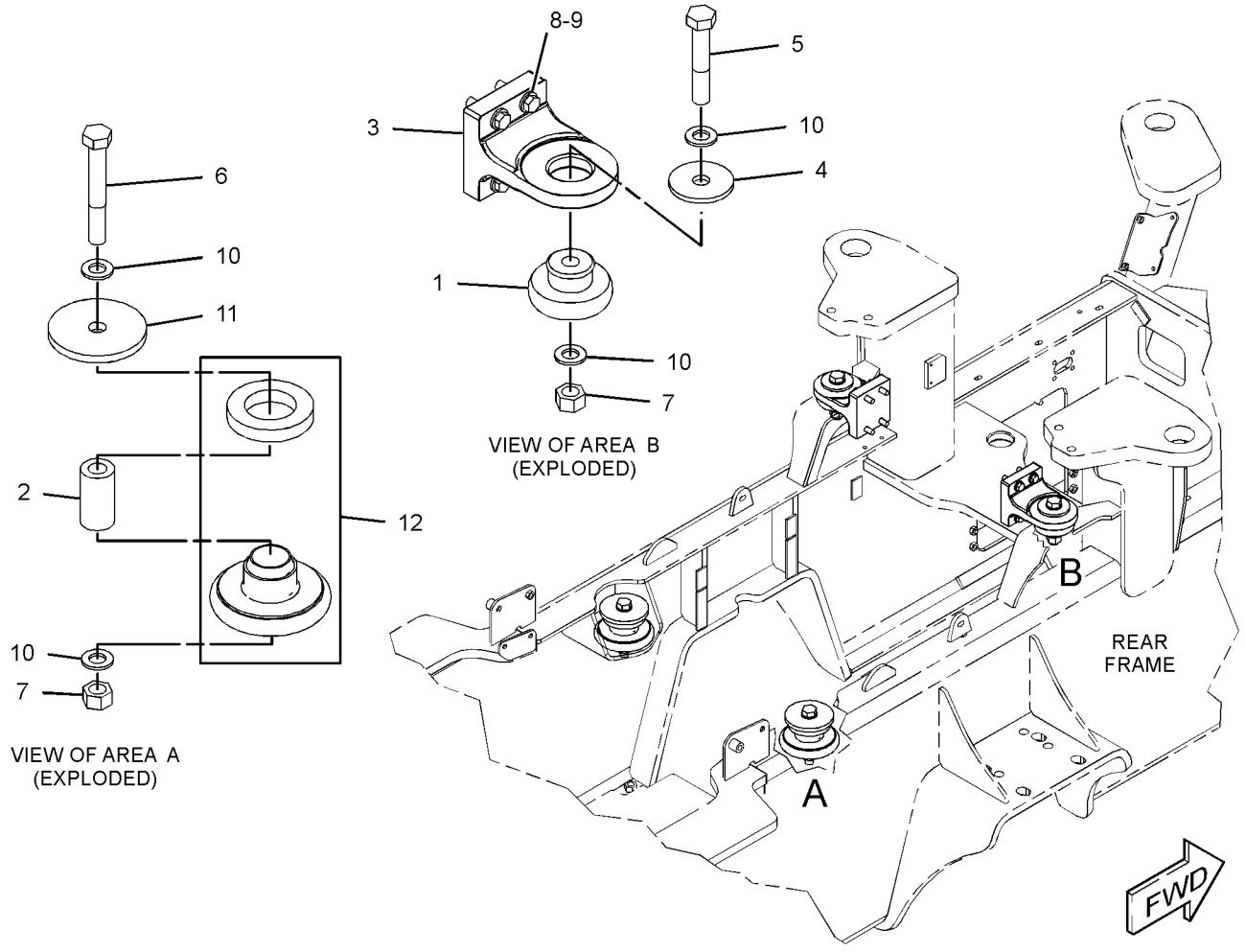

GRAPHIC #1 **<END>** g03097868

313-6578 PAN GP-OIL

S/N: C6E1-UP

PART OF 378-4731 ENGINE AR-PRIMARY

AN ATTACHMENT

SMCS-1302 **i04913306**

NOTE	REF NO	GRAPHIC REF	PART NUMBER	QTY	PART NAME 1 2 3 4 5 6 (PRODUCT LEVEL)	SEE PAGE
M	1	1	**6I-0260**	2	BOLT (M8X1.25X25-MM)	
	2	1	**354-8322**	1	PLUG	
	3	1	**6I-4681**	1	GASKET	
	4	1	**7C-0351**	1	PLUG-DRAIN (ENGINE OIL)	
M	5	1	**124-3815**	2	BOLT (M8X1.25X16-MM)	
	6	1	**275-9883**	1	SEAL	
	7	1	**275-9884**	1	GASKET	
J	8	1	**6I-4374**	30	BOLT (M8X1.25X60-MM)	
J	9	1	**6I-1090**	2	BOLT (M8X1.25X40-MM)	
	10	1	**276-0142**	6	BOLT-SPECIAL (TORX)	
	11	1	**331-4400**	1	GASKET	
	12	1	**351-2090**	1	FRAME	
	13	1	**286-8817**	1	TUBE-OIL SUCTION	
	14	1	**289-9430**	1	PAN-OIL	
	14A	1	**7C-1224**	1	INSERT	
	15	1	**313-6579**	1	TUBE AS	
	15A	1	**6I-1497**	1	SEAL	
	15B	1	**187-0555**	1	CLIP	
	16	1	**313-6580**	1	BRACKET	
	17	1	**367-3649**	1	GAUGE AS-OIL LEVEL (DIPSTICK) (ENGINE)	
	17A	1	**275-9891**	2	SEAL-O-RING	
	18	1	**351-4685**	30	LIMITER	

J - SERVICE BY COMPLETE SET ONLY
M - METRIC PART

313-6578 **PAN GP-OIL (*contd.*)** **i04913306**

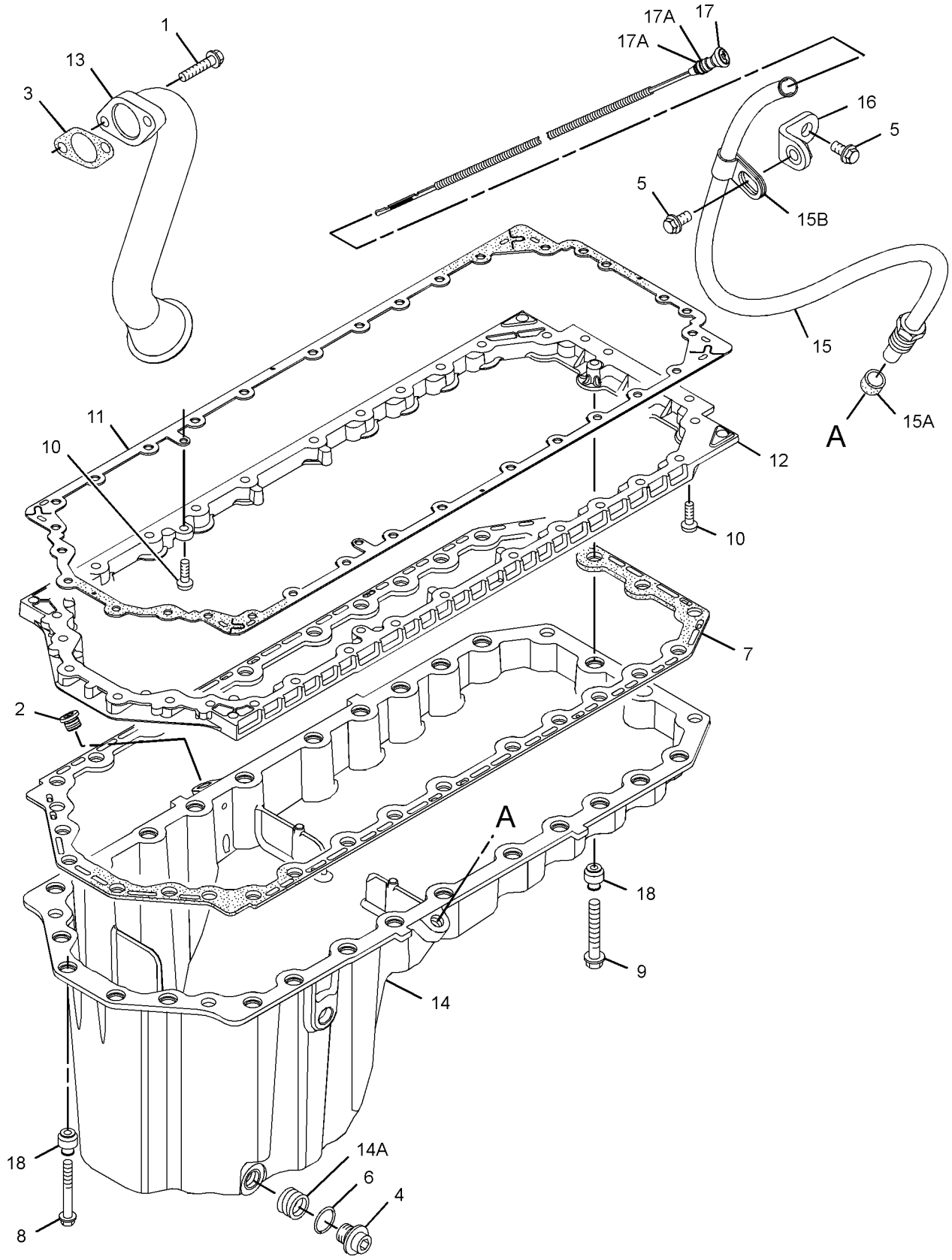

GRAPHIC #1 **<END>** g02725575

279-8780 PISTON & ROD GP

S/N: C6E1-UP
PART OF 378-4731 ENGINE AR-PRIMARY
AN ATTACHMENT

SMCS-1225 **i05293021**

NOTE	REF NO	GRAPHIC REF	PART NUMBER	QTY	PART NAME 1 2 3 4 5 6 (PRODUCT LEVEL)	SEE PAGE
	1	1	**276-7475**	6	PISTON AS	
					(EACH INCLUDES)	
	2	1	**124-3536**	2	RING-RETAINING	
AB		1	**380-2062**	1	KIT-PISTON (0.5-MM OS)	
	3	1	**276-7476**	6	KIT-PISTON RING	
AB		1	**380-2065**	1	KIT-PISTON RING (0.5-MM OS)	
BJ	4	1	**276-7479**	6	ROD AS (F)	
					–OR–	
BJ			**276-7481**	6	ROD AS (L)	
					–OR–	
BJ			**276-7483**	6	ROD AS (J)	
					(EACH ROD AS INCLUDES)	
	5	1	**225-5439**	2	BOLT-SPECIAL (CONNECTING ROD)	
	6	1	**276-7478**	1	BUSHING	

A - NOT PART OF THIS GROUP
B - USE AS REQUIRED
J - ENSURE THAT CORRECT ROD LENGTH IS FITTED

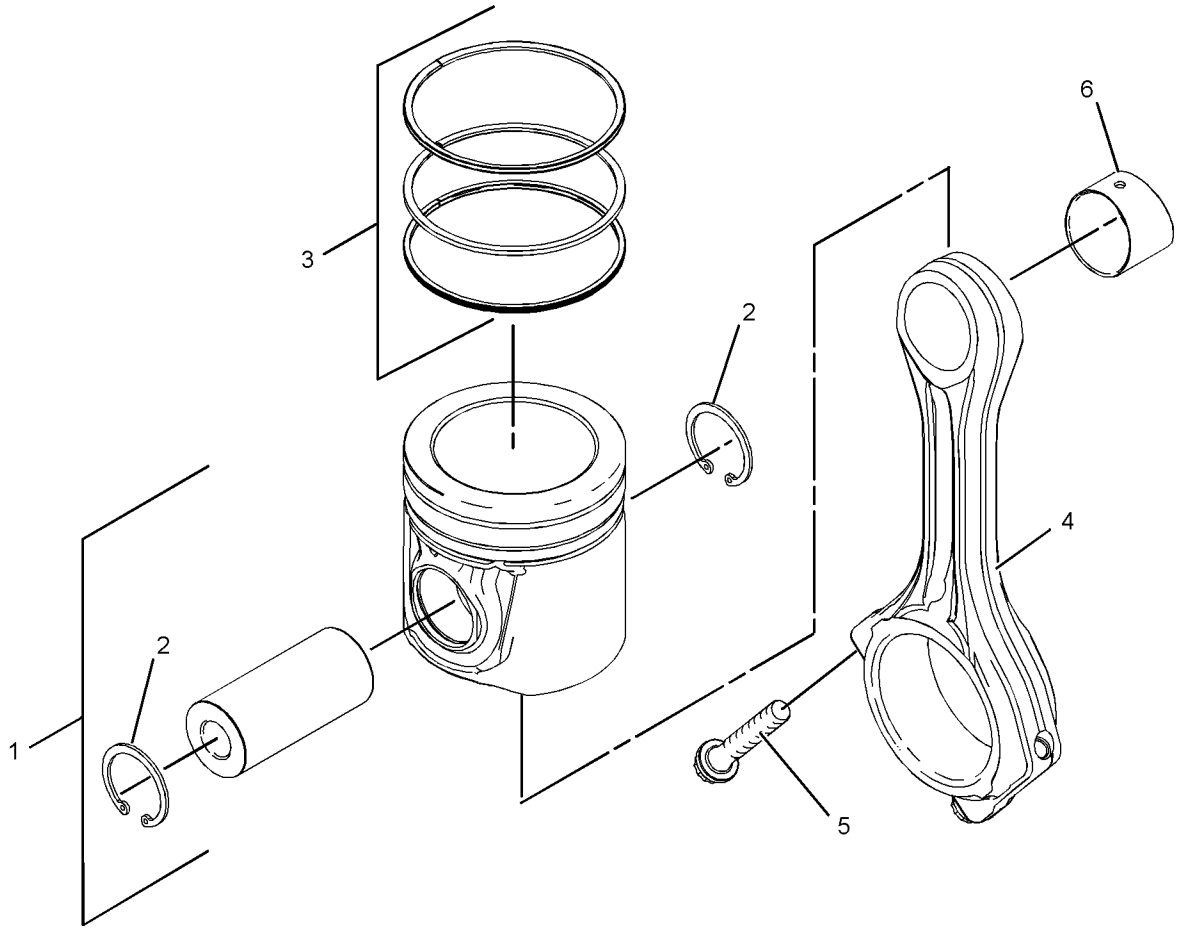

GRAPHIC #1 **<END>** g01214328

277-5007 PLUG GP-ENGINE

S/N: C6E1-UP
PART OF 378-4731 ENGINE AR-PRIMARY
AN ATTACHMENT

SMCS-1000 **i04918870**

NOTE	REF NO	GRAPHIC REF	PART NUMBER	QTY	PART NAME 1 2 3 4 5 6 (PRODUCT LEVEL)	SEE PAGE
	1	1	**2B-0858**	3	PLUG-PIPE	

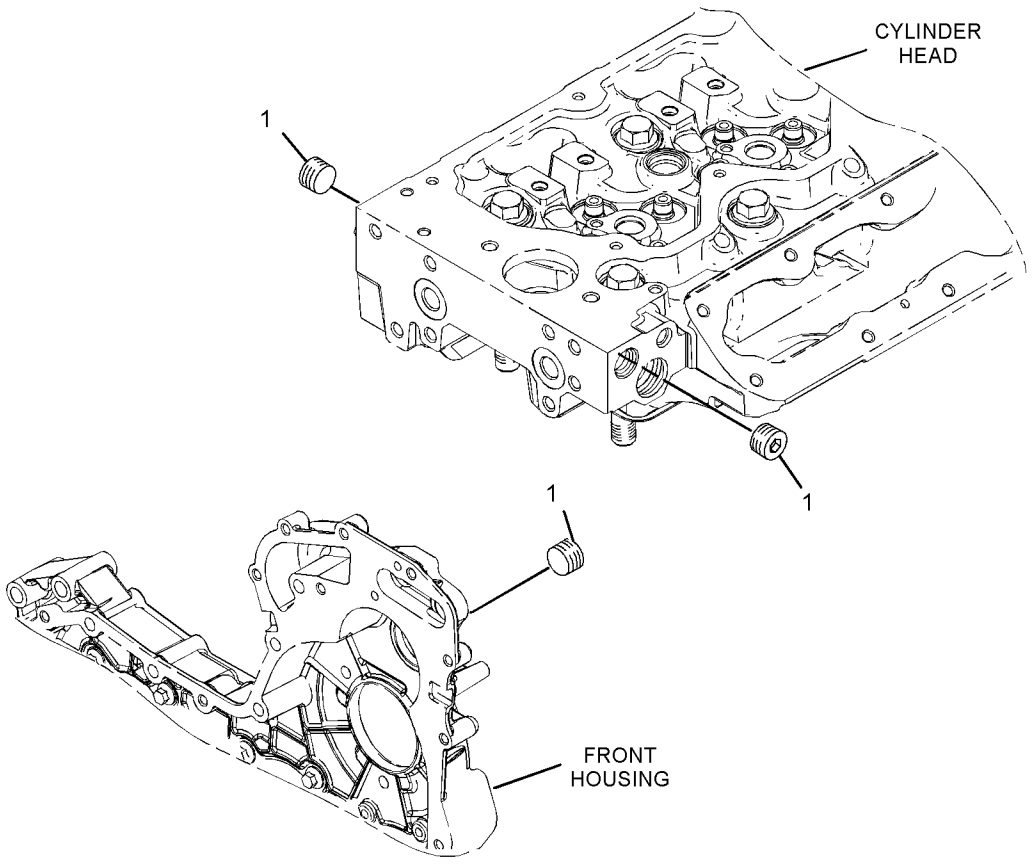

GRAPHIC #1 **<END>** g01209408

281-8280 PULLEY GP-CRANKSHAFT

S/N: C6E1-UP
PART OF 378-4731 ENGINE AR-PRIMARY
AN ATTACHMENT

SMCS-1205 **i04913264**

NOTE	REF NO	GRAPHIC REF	PART NUMBER	QTY	PART NAME 1 2 3 4 5 6 (PRODUCT LEVEL)	SEE PAGE
	1	1	**274-1930**	1	DAMPER	
	2	1	**274-1931**	1	PULLEY (8-GROOVE)	
	3	1	**274-1934**	3	BOLT-SPECIAL (TORX)	
	4	1	**274-1935**	4	BOLT	
	5	1	**355-1018**	1	HUB	
	6	1	**281-8255**	1	SPACER	
	7	1	**281-8256**	2	RING-CLAMP	
	8	1	**281-8257**	1	BLOCK-THRUST	
	9	1	**281-8258**	1	SEAL-O-RING	

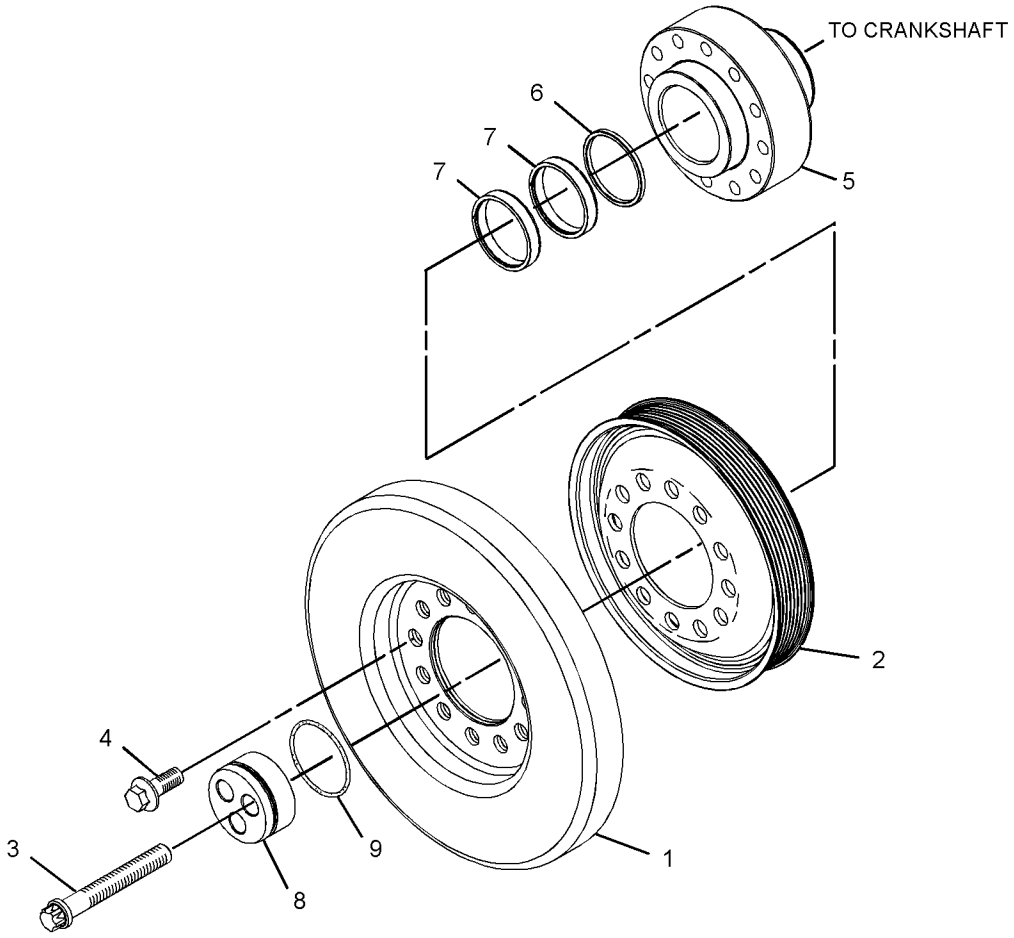

GRAPHIC #1 **<END>** g01217781

280-1911 ROCKER ARM GP

S/N: C6E1-UP

PART OF 279-8825 VALVE MECHANISM GP

AN ATTACHMENT

SMCS-1102, 1123

i04526450

NOTE	REF NO	GRAPHIC REF	PART NUMBER	QTY	PART NAME 1 2 3 4 5 6 (PRODUCT LEVEL)	SEE PAGE
	1	1	**276-9201**	1	CLIP	
	2	1	**276-9206**	5	SPRING-SHAFT	
	3	1	**276-9207**	1	SPRING-SHAFT	
	4	1	**277-5307**	1	SHAFT AS-ROCKER ARM	
	4A	1	**276-9200**	1	PLUG-SHAFT END	
	5	1	**278-5111**	6	ROCKER ARM AS	
					(EACH INCLUDES)	
	5A	1	**276-9230**	1	NUT	
	5B	1	**278-5113**	1	ADJUSTING SCREW (TORX)	
	6	1	**278-5112**	6	ROCKER ARM AS	
					(EACH INCLUDES)	
	6A	1	**276-9230**	1	NUT	
	6B	1	**278-5113**	1	ADJUSTING SCREW (TORX)	
	7	1	**280-1912**	6	BRACKET	
	8	1	**280-1913**	6	RETAINER	
	9	1	**280-1914**	12	BOLT (M8X1.25X55-MM)	

280-1911 **ROCKER ARM GP (*contd.*)** **i04526450**

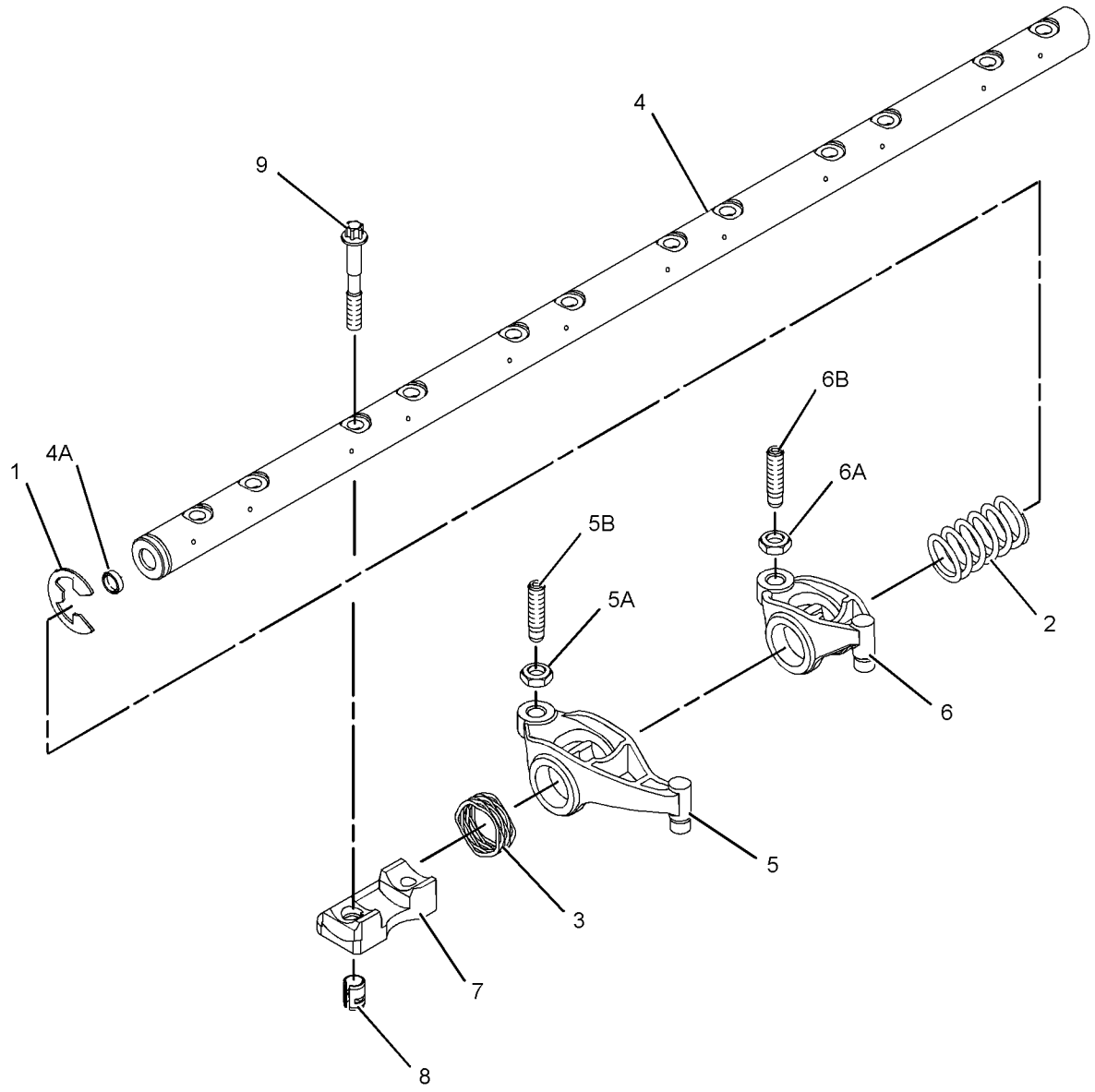

GRAPHIC #1 **<END>** g01235750

377-5162 SERVICE GP-ENGINE

S/N: MBF1-UP; M4M1-UP; M5P1-UP; SDT1-UP
PART OF 377-5161 INSTALLATION AR-ENGINE
AN ATTACHMENT

SMCS-1261, 1263, 1302, 7542 **i05288973**

NOTE	REF NO	GRAPHIC REF	PART NUMBER	QTY	PART NAME 1 2 3 4 5 6 (PRODUCT LEVEL)	SEE PAGE
	1	1	**157-0670**	1	CAP-DUST (ENGINE COOLANT)	
	2	1	**162-1565**	1	SPRING (CRANKCASE BREATHER HOSE)	
	3	1	*165-2273*	1	VALVE GP-SHUTOFF (ENGINE COOLANT)	
		1	**3K-0360**	1	SEAL-O-RING	
		1	**6V-7238**	1	VALVE-SHUTOFF	
	4	1	**198-9169**	1	HOSE	
	5	1	**154-9025**	1	VALVE-FLUID SAMPLING (SCREEN)	
	6	1	**159-5255**	1	ADAPTER	
	7	1	**3B-7764**	1	BUSHING (REDUCING)	
	8	1	**5D-1026**	2	CLAMP-BAND	
	9	1	**5P-9186**	1	SEAL-O-RING	
	10	1	**7K-1181**	2	STRAP-CABLE	
G	11	1	**423-1984**		HOSE (20.1-IN)	
	12	1	*194-2903*	1	ELBOW AS	
		1	**3K-0360**	1	SEAL-O-RING	
		1	**8T-0119**	1	ELBOW	

G - ORDER BY THE INCH

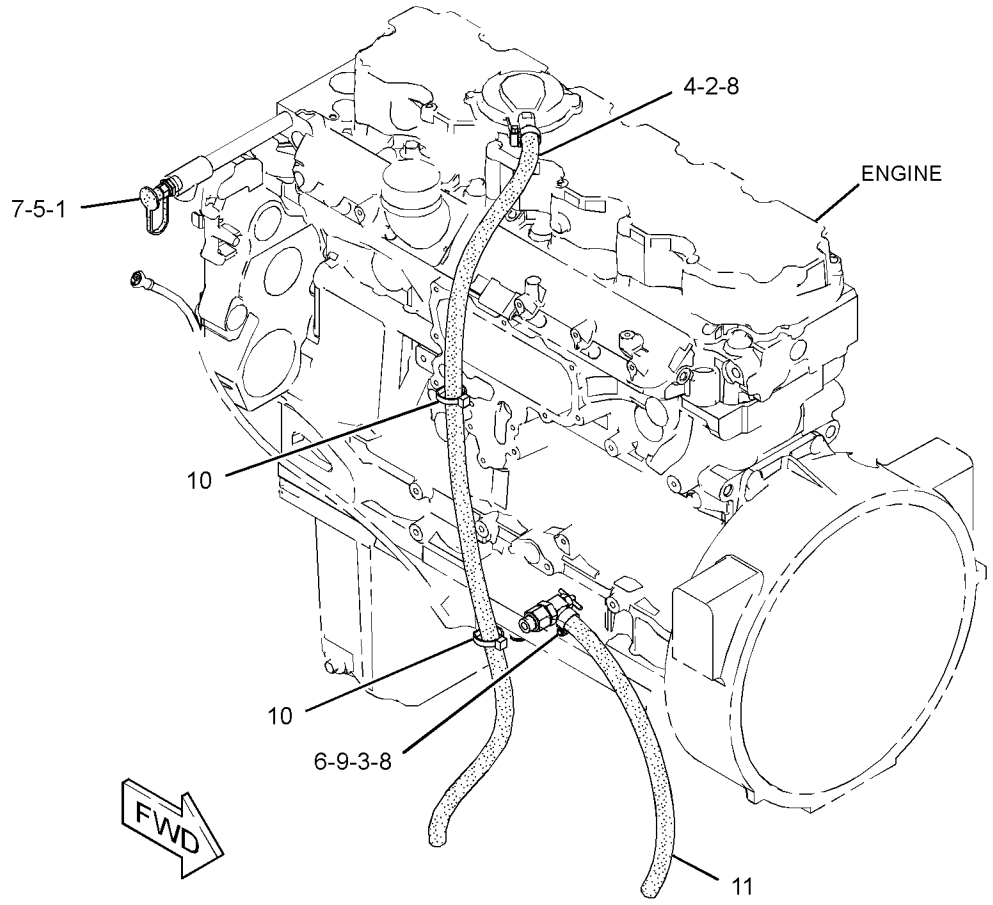

GRAPHIC #1 **<END>** g03104597

279-8825 VALVE MECHANISM GP

S/N: C6E1-UP

PART OF 378-4731 ENGINE AR-PRIMARY

AN ATTACHMENT

SMCS-1102, 1121, 1123

i04913318

NOTE	REF NO	GRAPHIC REF	PART NUMBER	QTY	PART NAME 1 2 3 4 5 6 (PRODUCT LEVEL)	SEE PAGE
	1	1	**346-4709**	12	BRIDGE GP-VALVE	
Y	2	1	**280-1911**	1	ROCKER ARM GP	39

Y - SEPARATE ILLUSTRATION

279-8825 **VALVE MECHANISM GP (*contd.*)** **i04913318**

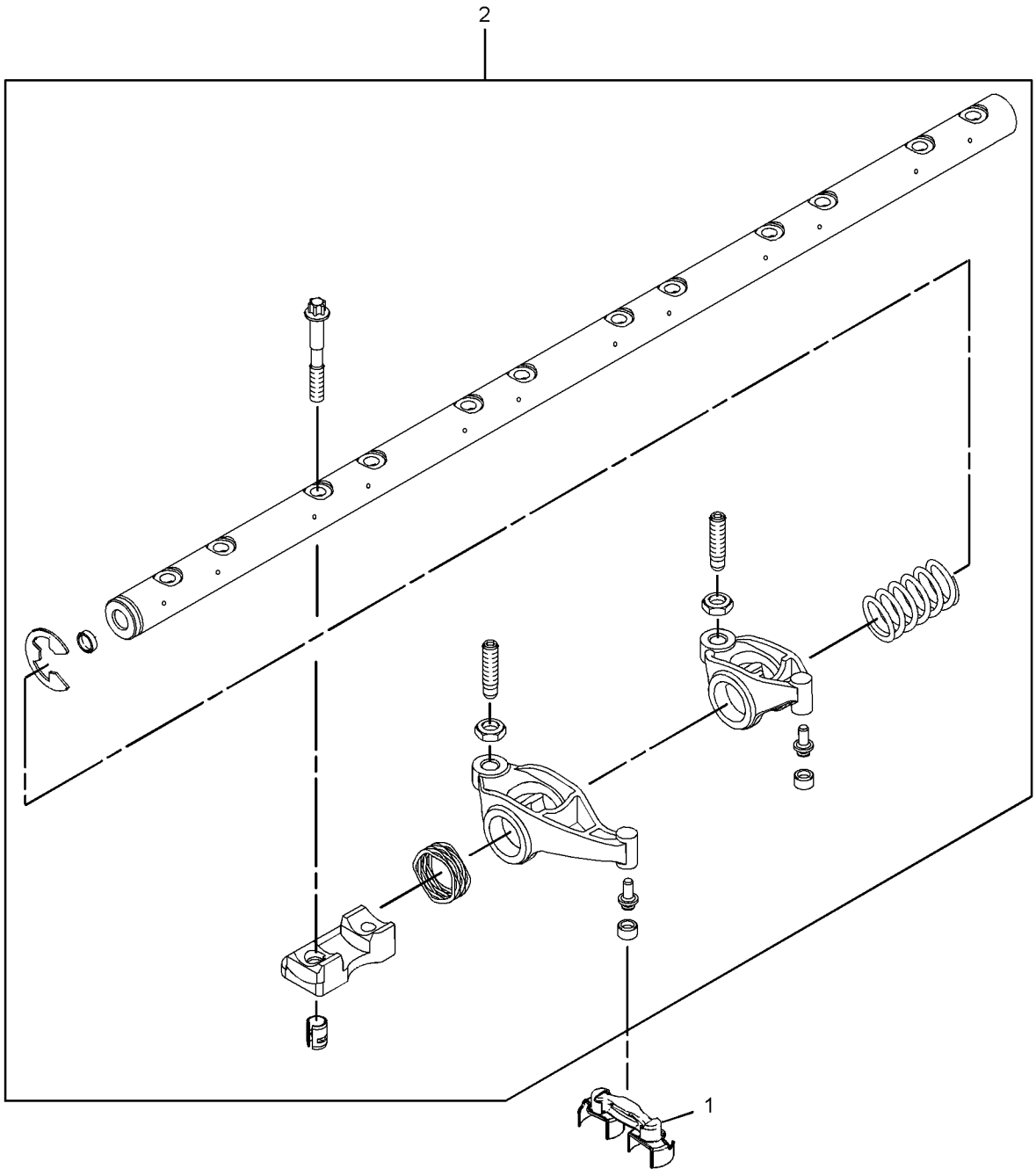

GRAPHIC #1 **<END>** g01923253

307-1843 FILLER GP-ENGINE OIL

S/N: C6E1-UP

PART OF 378-4731 ENGINE AR-PRIMARY

AN ATTACHMENT

SMCS-1316 **i04913290**

NOTE	REF NO	GRAPHIC REF	PART NUMBER	QTY	PART NAME 1 2 3 4 5 6 (PRODUCT LEVEL)	SEE PAGE
M	1	1	**6I-0217**	2	BOLT (M8X1.25X20-MM)	
M	2	1	**6I-0254**	1	BOLT (M8X1.25X30-MM)	
M	3	1	**6I-0260**	2	BOLT (M8X1.25X25-MM)	
	4	1	**6I-4374**	1	BOLT (M8X1.25X60-MM)	
	5	1	**277-1974**	1	PLATE AS	
	5A	1	**277-1975**	1	SEAL-O-RING	
	6	1	**280-1430**	1	GASKET	
	7	1	**317-3775**	1	FILLER GP-ENGINE OIL	
	7A	1	**306-2337**	1	SEAL-O-RING	
	8	1	**305-2527**	1	FILLER AS-OIL	
	8A	1	**130-9888**	1	CAP-OIL FILLER (ENGINE)	
	8B	1	**113-1504**	1	SEAL-O-RING	

M - METRIC PART

307-1843 **FILLER GP-ENGINE OIL (*contd.*)** **i04913290**

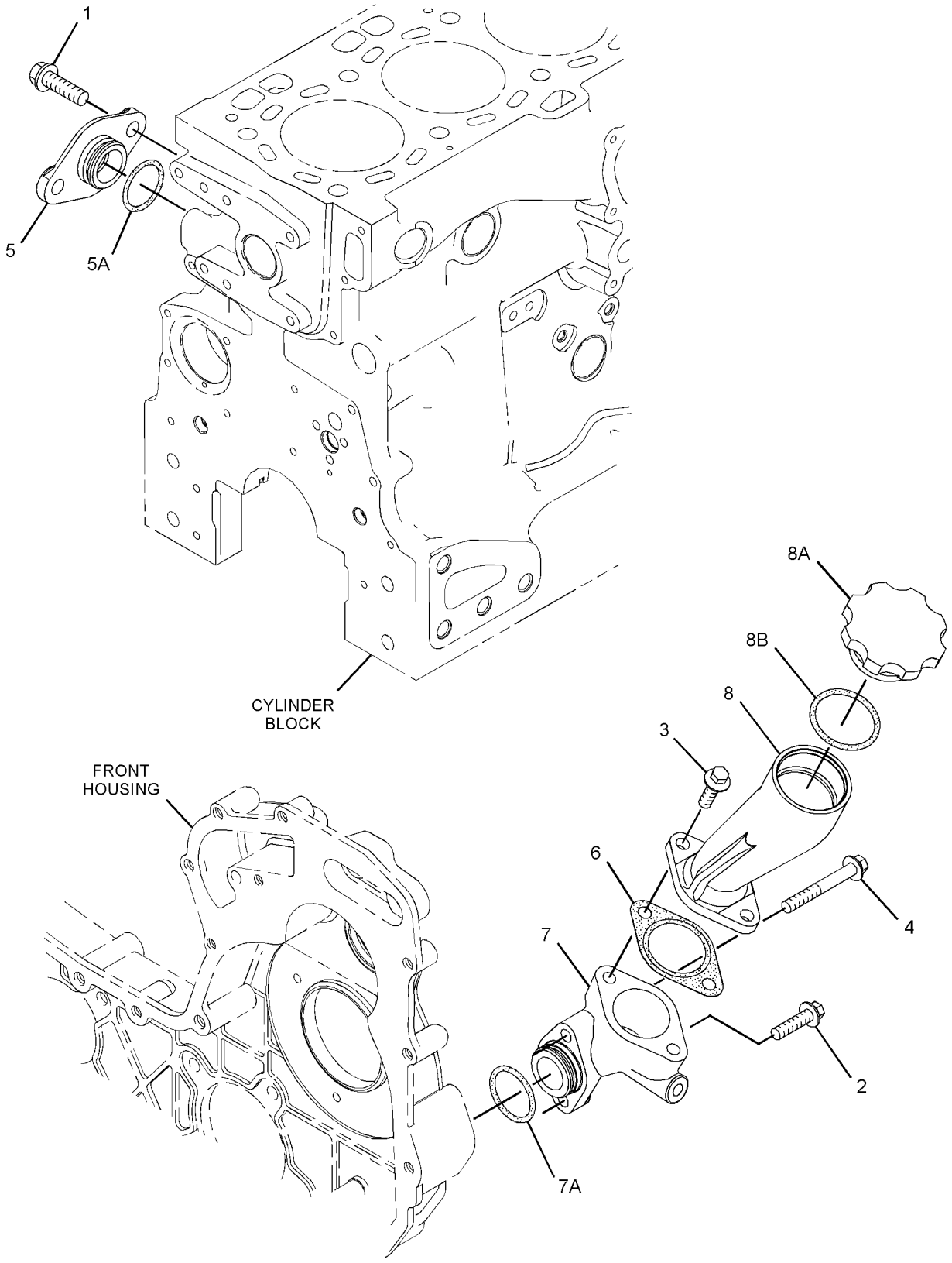

GRAPHIC #1 **<END>** g01353028

277-2912 FILTER GP-ENGINE OIL

S/N: C6E1-UP
PART OF 378-4731 ENGINE AR-PRIMARY
AN ATTACHMENT

SMCS-1306, 1308 **i04913292**

NOTE	REF NO	GRAPHIC REF	PART NUMBER	QTY	PART NAME 1 2 3 4 5 6 (PRODUCT LEVEL)	SEE PAGE
	1	1	**269-8325**	1	FILTER-ENGINE OIL	

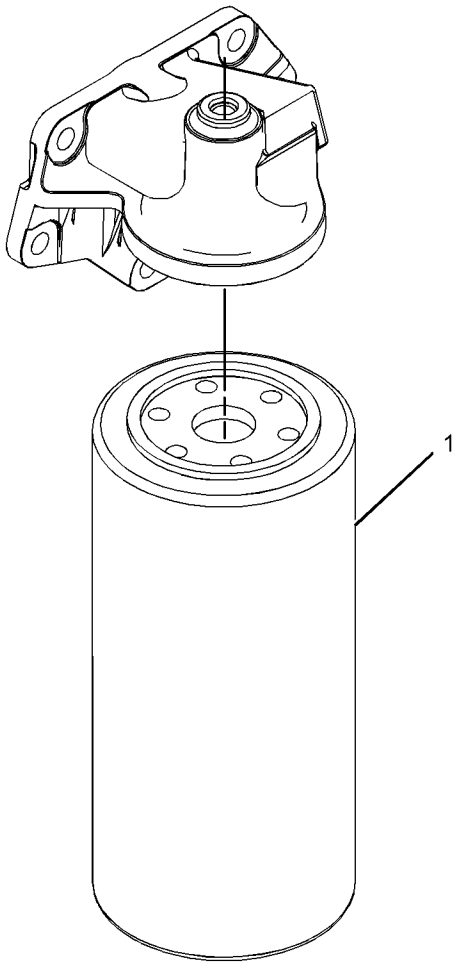

GRAPHIC #1 **<END>** g01198493

277-4262 PUMP GP-ENGINE OIL

S/N: C6E1-UP
PART OF 378-4731 ENGINE AR-PRIMARY
AN ATTACHMENT

SMCS-1304, 1315

i04670036

NOTE	REF NO	GRAPHIC REF	PART NUMBER	QTY	PART NAME 1 2 3 4 5 6 (PRODUCT LEVEL)	SEE PAGE
	1	1	**373-8014**	1	PUMP-OIL (ENGINE)	
	2	1	**6I-1090**	4	BOLT (M8X1.25X40-MM)	

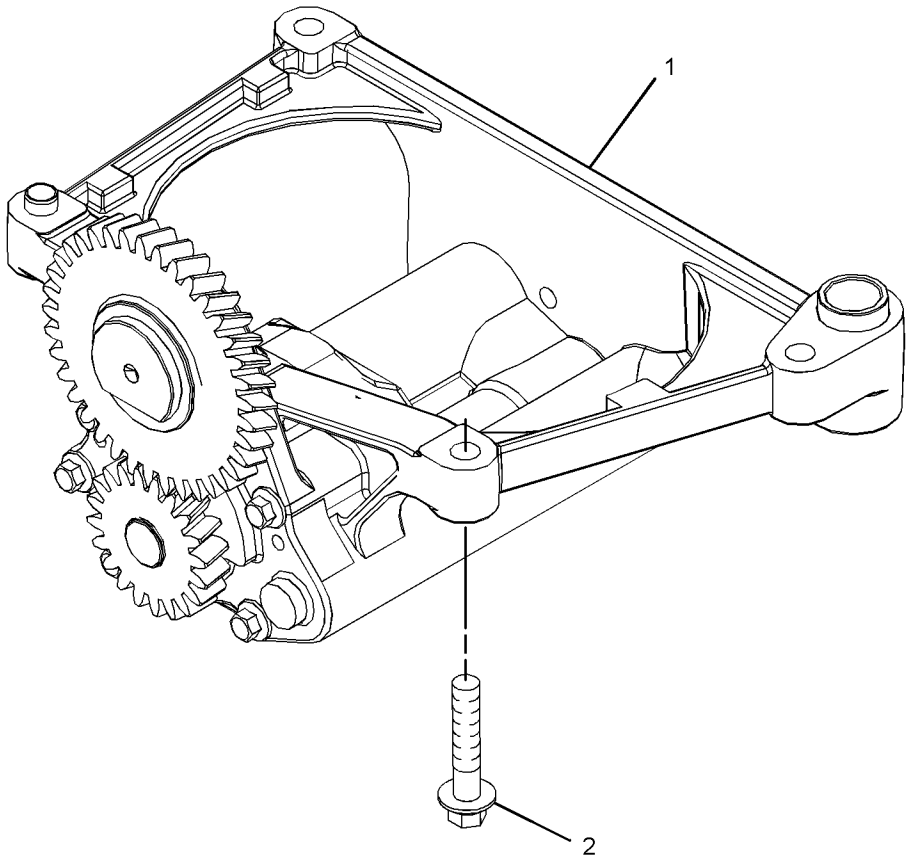

GRAPHIC #1

<END>

g02815299

277-4694 VALVE GP-FLUID SAMPLING—ENGINE OIL

S/N: C6E1-UP

PART OF 378-4731 ENGINE AR-PRIMARY

AN ATTACHMENT

SMCS-1306, 7542

i04913316

NOTE	REF NO	GRAPHIC REF	PART NUMBER	QTY	PART NAME 1 2 3 4 5 6 (PRODUCT LEVEL)	SEE PAGE
	1	1	**216-9633**	1	VALVE AS-FLUID SAMPLING (ENGINE OIL)	
	2	1	**8C-3445**	1	CAP-DUST	
	3	1	**232-3861**	1	PLUG (BLANKING)	
	4	1	**199-9267**	1	SEAL-O-RING	

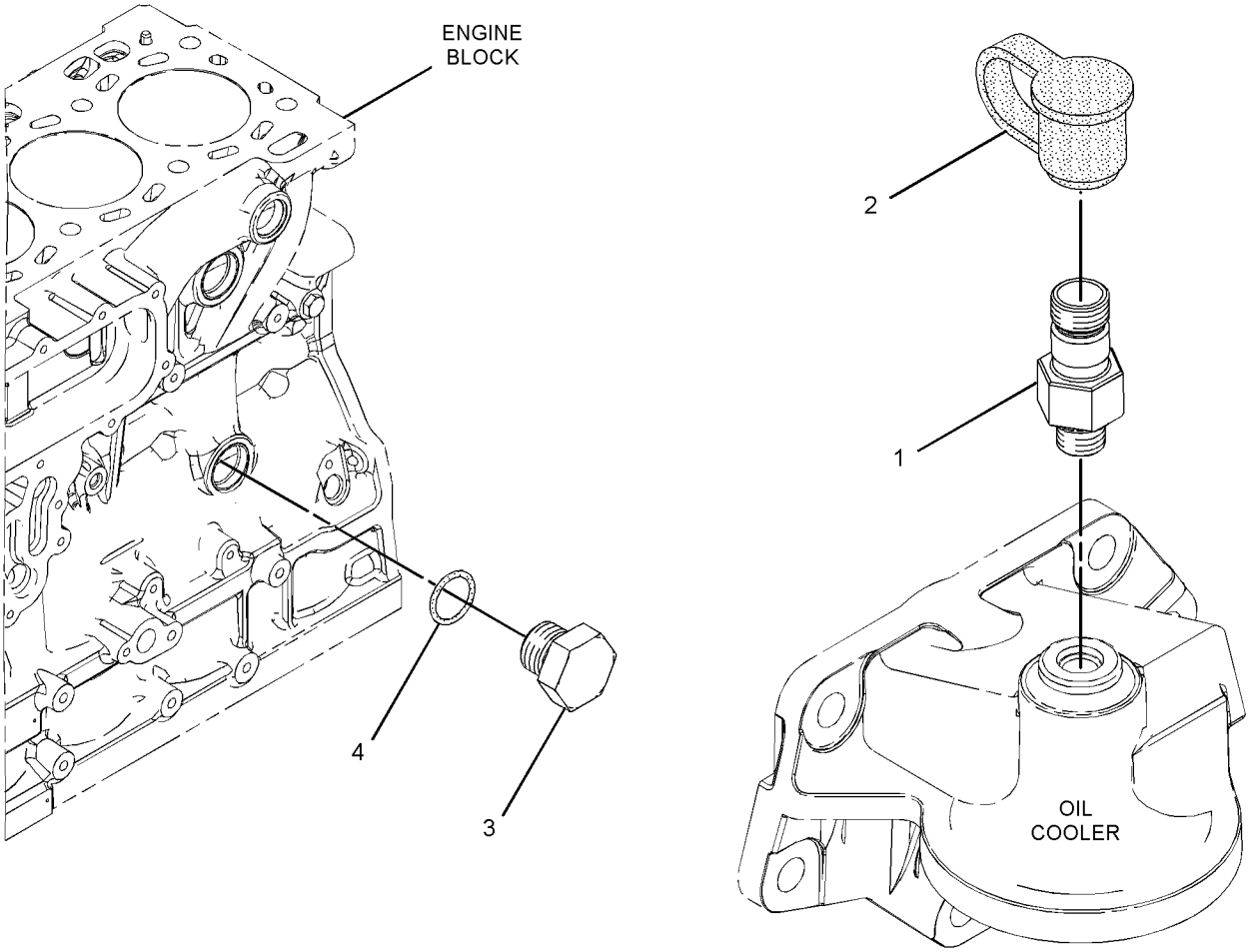

GRAPHIC #1

<END>

g01198300

281-8748 CONNECTION GP-WATER

S/N: C6E1-UP
INCLUDES WATER TEMPERATURE REGULATOR
PART OF 378-4731 ENGINE AR-PRIMARY
AN ATTACHMENT

SMCS-1380 **i05239618**

NOTE	REF NO	GRAPHIC REF	PART NUMBER	QTY	PART NAME 1 2 3 4 5 6 (PRODUCT LEVEL)	SEE PAGE
M	1	1	**103-5687**	1	BOLT (M10X1.5X85-MM)	
	2	1	**123-2899**	1	BOLT (M10X1.5X40-MM)	
	3	1	**281-8744**	1	GASKET-WATER REGULATOR	
	4	1	**367-1817**	1	CONNECTION AS (INCLUDES TEMPERATURE REGULATOR)	
	4A	1	**281-8746**	1	PLUG	
	4B	1	**281-8747**	1	SEAL-O-RING	

M - METRIC PART

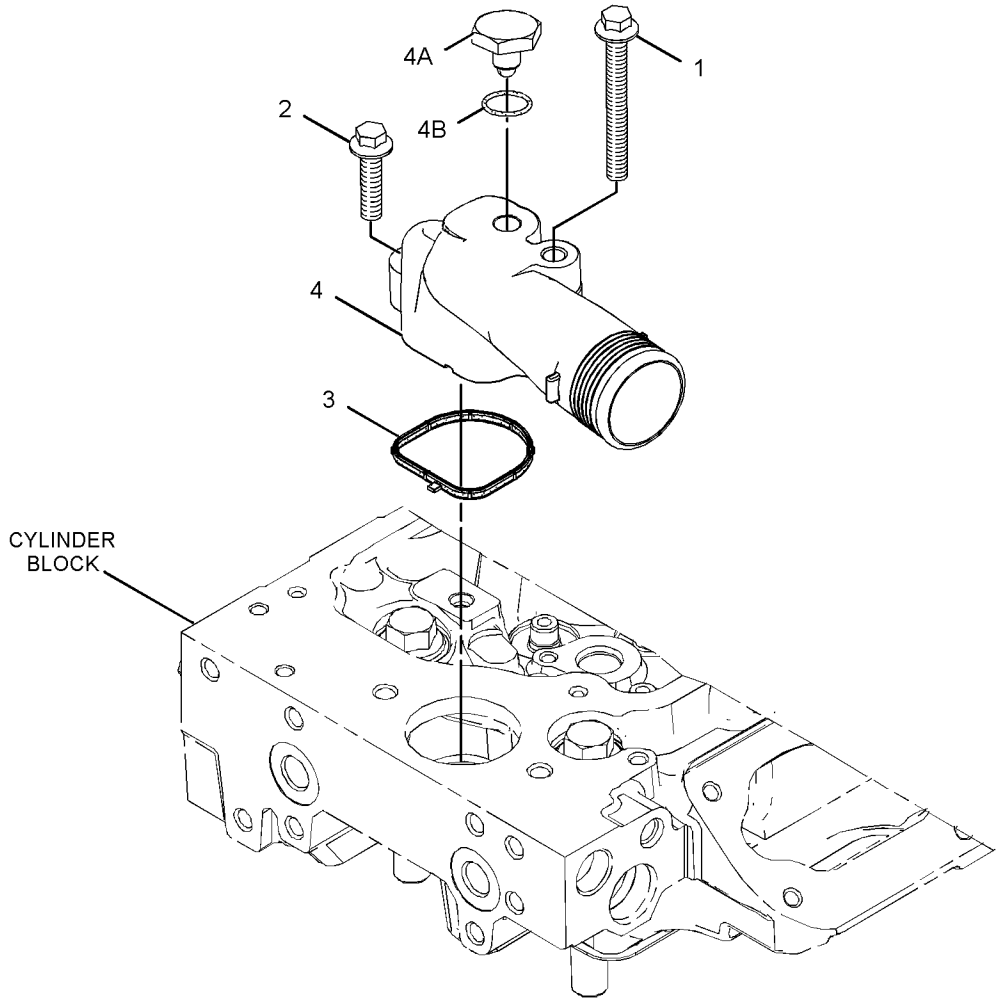

GRAPHIC #1 **<END>** g01803413

326-7401 COOLER GP-ENGINE OIL

S/N: C6E1-UP

PART OF 283-4558 COOLER GP-FLTR BASE & ENG OIL

AN ATTACHMENT

SMCS-1378 **i04526702**

NOTE	REF NO	GRAPHIC REF	PART NUMBER	QTY	PART NAME 1 2 3 4 5 6 (PRODUCT LEVEL)	SEE PAGE
M	1	1	**6I-0260**	1	BOLT (M8X1.25X25-MM)	
	2	1	**6I-4793**	6	BOLT (M8X1.25X50-MM)	
	3	1	**277-2500**	1	GASKET	
	4	1	**281-7039**	1	COOLER-OIL (ENGINE)	
	5	1	**281-7040**	1	GASKET	

M - METRIC PART

326-7401 **COOLER GP-ENGINE OIL (*contd.*)** **i04526702**

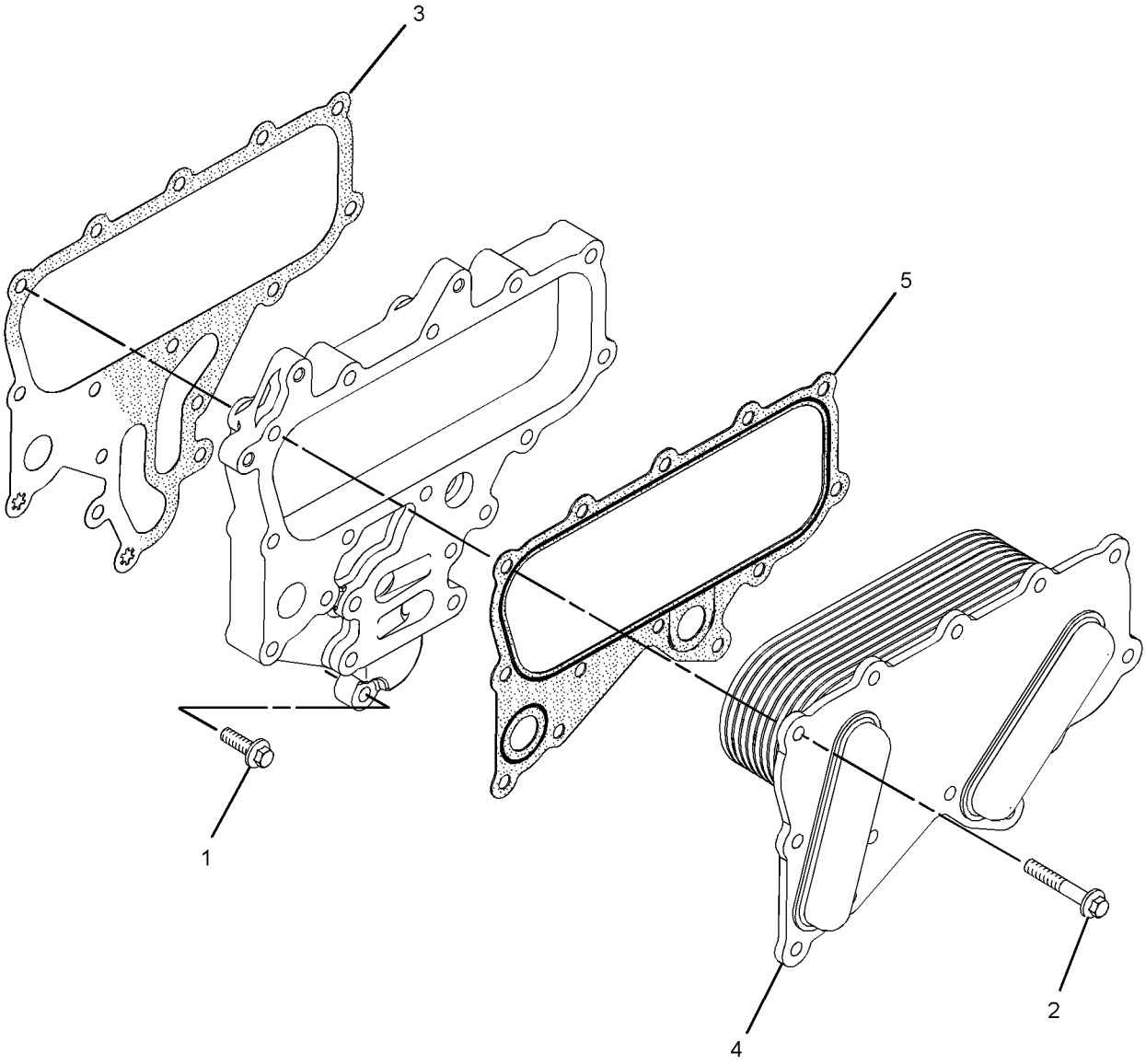

GRAPHIC #1 **<END>** g01508024

283-4558 COOLER GP-FLTR BASE & ENG OIL

S/N: C6E1-UP
PART OF 378-4731 ENGINE AR-PRIMARY
AN ATTACHMENT

SMCS-1306, 1378 **i04913276**

NOTE	REF NO	GRAPHIC REF	PART NUMBER	QTY	PART NAME 1 2 3 4 5 6 (PRODUCT LEVEL)	SEE PAGE
Y	1	1	**326-7401**	1	COOLER GP-ENGINE OIL	50
	2	1	**225-7944**	3	GASKET	
	3	1	**6I-0455**	4	BOLT (M8X1.25X55-MM)	
	4	1	**232-3751**	2	PLATE	
	5	1	**277-2537**	1	PLATE	
	6	1	**277-2538**	1	GASKET	
M	7	1	**6I-0217**	10	BOLT (M8X1.25X20-MM)	
	8	1	**6I-4793**	7	BOLT (M8X1.25X50-MM)	
	9	1	**283-4559**	1	HEAD AS-OIL FILTER	

M - METRIC PART
Y - SEPARATE ILLUSTRATION

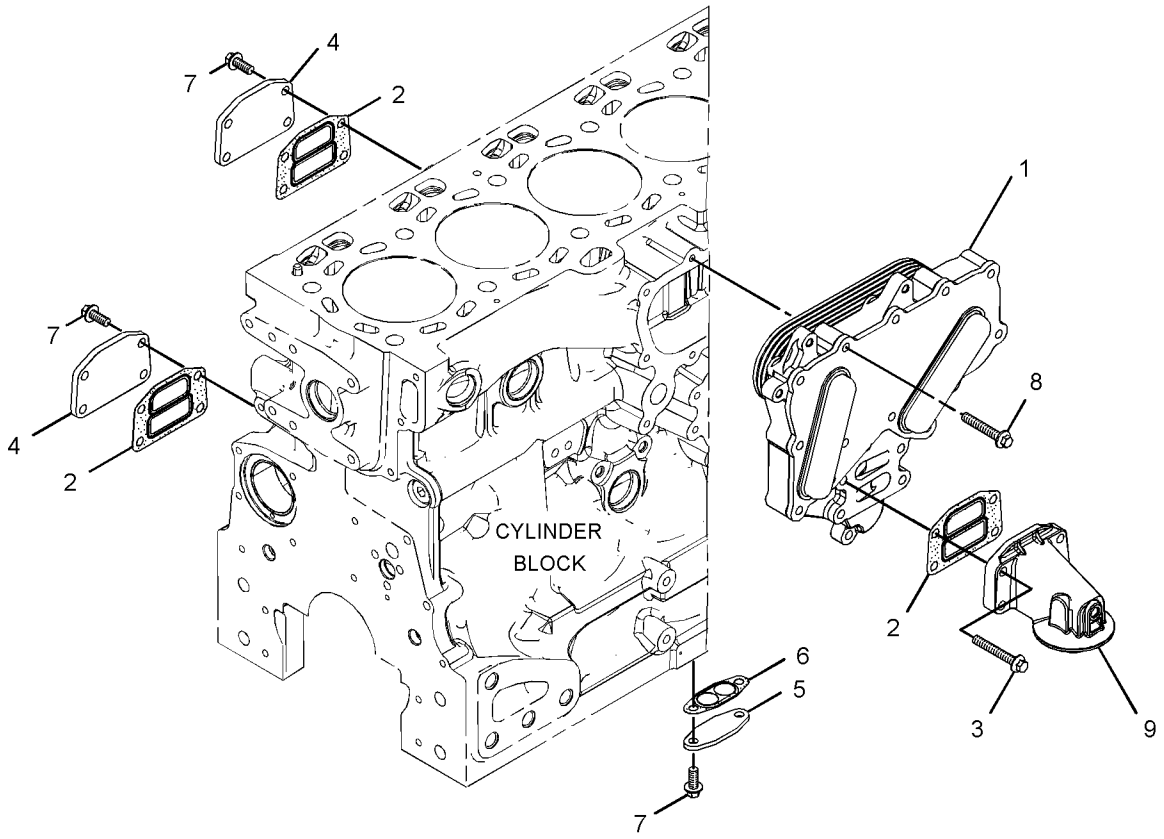

GRAPHIC #1 **<END>** g01948624

387-0513 COOLER GP-HYDRAULIC OIL & FUEL

S/N: MBF1-UP; M4M1-UP; M5P1-UP; SDT1-UP
PART OF 387-0514 RADIATOR & HYD OIL COOLER GP
AN ATTACHMENT

SMCS-1374, 1712

i05292818

NOTE	REF NO	GRAPHIC REF	PART NUMBER	QTY	PART NAME 1 2 3 4 5 6 (PRODUCT LEVEL)	SEE PAGE
M	1	1	**8T-4200**	4	BOLT (M8X1.25X16-MM)	
	2	1	**8T-4224**	8	WASHER-HARD (8.8X16X2-MM THK)	
M	3	1	**8T-4189**	4	BOLT (M8X1.25X20-MM)	
	4	1	**6V-2803**	1	SEAL	

M - METRIC PART

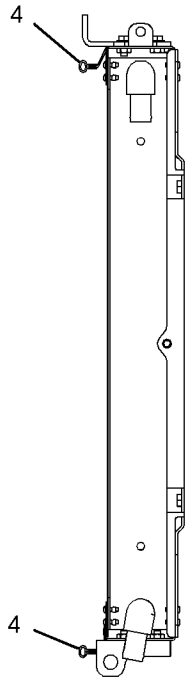

VIEW A-A

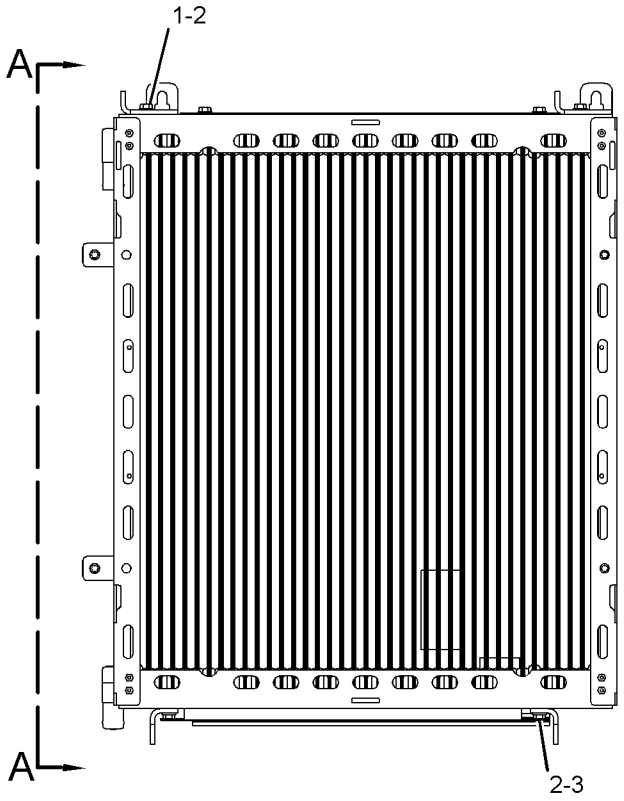

REAR VIEW

GRAPHIC #1

<END>

g03384120

349-6208 FAN & MOTOR GP

S/N: MBF1-UP; M4M1-UP; M5P1-UP; SDT1-UP
PART OF 377-5161 INSTALLATION AR-ENGINE
AN ATTACHMENT

SMCS-1356, 1360, 1386, 5057

i05292820

NOTE	REF NO	GRAPHIC REF	PART NUMBER	QTY	PART NAME 1 2 3 4 5 6 (PRODUCT LEVEL)	SEE PAGE
	1	1	**207-2746**	1	ADAPTER-FAN	
Y	2	1	**211-2092**	1	VALVE GP-SOLENOID (24-VOLT) (HYDRAULIC FAN MOTOR)	161
	3	1	**272-5409**	1	FAN AS-SUCTION (7-BLADE)	
Y	4	1	**395-0521**	1	MOTOR GP-GEAR (HYDRAULIC FAN)	344
	5	1	**396-8258**	1	GUARD AS	
M		1	**8T-3490**	2	NUT-WELD (M10X1.5-THD)	
		1	**102-8706**	1	PLATE AS	
		1	**154-4886**	1	PLATE AS	
M	6	1	**8T-4196**	8	BOLT (M10X1.5X35-MM)	
	7	1	*148-8368*	1	ELBOW AS	
		1	**3J-1907**	1	SEAL-O-RING	
		1	**4J-5477**	1	SEAL-O-RING	
		1	**6V-8627**	1	ELBOW	
	8	1	**8T-4224**	4	WASHER-HARD (8.8X16X2-MM THK)	
	9	1	**7X-7729**	8	WASHER (11X25X3-MM THK)	
	10	1	**8T-4121**	2	WASHER-HARD (11X21X2.5-MM THK)	
M	11	1	**8T-4189**	4	BOLT (M8X1.25X20-MM)	
M	12	1	**8T-0271**	2	BOLT-SOCKET HEAD (M10X1.5X35-MM)	

M - METRIC PART
Y - SEPARATE ILLUSTRATION

349-6208 **FAN & MOTOR GP (*contd.*)** **i05292820**

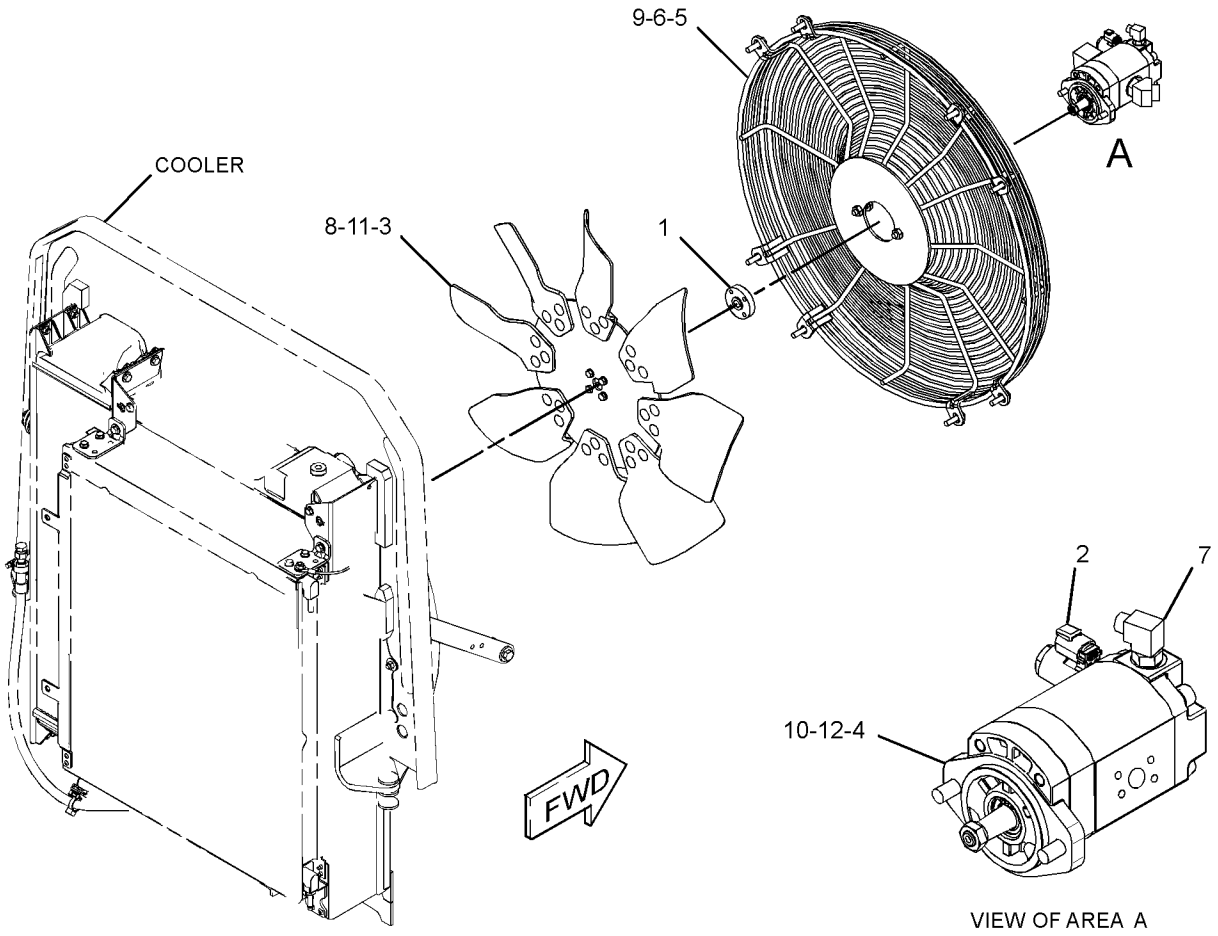

GRAPHIC #1 **<END>** g03128536

377-5159 LINES GP-WATER

S/N: MBF1-UP; M4M1-UP; M5P1-UP; SDT1-UP
PART OF 377-5161 INSTALLATION AR-ENGINE
AN ATTACHMENT

SMCS-1380 **i05293763**

NOTE	REF NO	GRAPHIC REF	PART NUMBER	QTY	PART NAME 1 2 3 4 5 6 (PRODUCT LEVEL)	SEE PAGE
	1	1	**177-2215**	3	STRAP-DUAL CLAMP	
	2	1	**327-0325**	1	STRAP-CABLE	
	3	1	**362-6095**	1	HOSE-RADIATOR	
	4	1	**368-0666**	1	HOSE-RADIATOR (UPPER)	
	5	1	**383-6898**	1	HOSE-RADIATOR (LOWER)	
	6	1	**132-5789**	1	CLIP	
	7	1	**1M-4543**	1	GROMMET	
	8	1	**1S-0178**	1	CONNECTOR-HOSE	
	9	1	**5D-1026**	2	CLAMP-BAND	
	10	1	**7K-1181**	1	STRAP-CABLE	
	11	1	**8T-4984**	4	CLAMP-HOSE	
	12	1	**9M-7958**	1	CLAMP-HOSE	
E	13	1	**8C-3681**		HOSE (212-CM)	

E - ORDER BY THE CENTIMETER

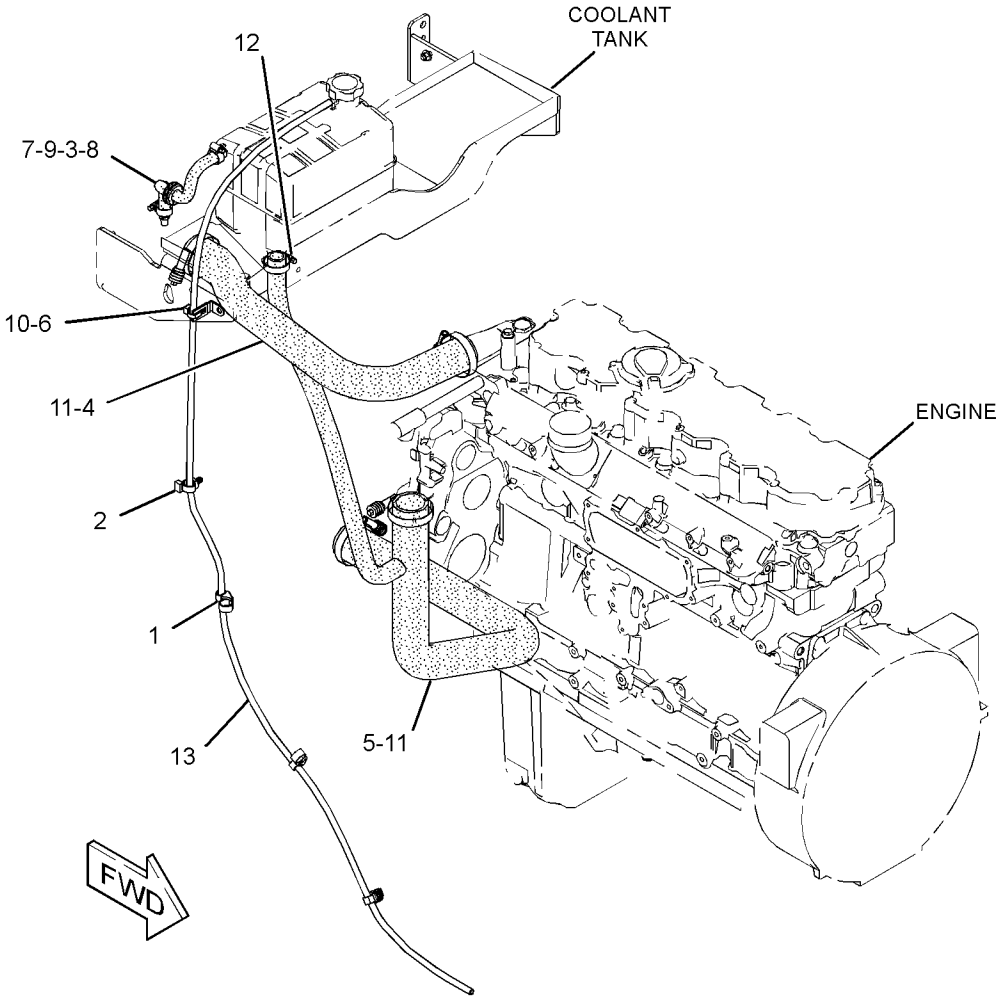

GRAPHIC #1 **<END>** g03104819

277-2939 PUMP GP-WATER

S/N: C6E1-UP
PART OF 378-4731 ENGINE AR-PRIMARY
AN ATTACHMENT

SMCS-1361 **i04568626**

NOTE	REF NO	GRAPHIC REF	PART NUMBER	QTY	PART NAME 1 2 3 4 5 6 (PRODUCT LEVEL)	SEE PAGE
C	1	1	**354-4754**	1	KIT-WATER PUMP	
	1A	1	**225-8019**	1	GASKET	
M	2	1	**6I-0254**	2	BOLT (M8X1.25X30-MM)	
	3	1	**113-8129**	2	BOLT (M8X1.25X75-MM)	
	4	1	**277-2925**	1	CONNECTION AS	
	4A	1	**225-7738**	1	SEAL-O-RING	
	4B	1	**277-2923**	1	GASKET	
M	5	1	**6I-0217**	2	BOLT (M8X1.25X20-MM)	
	6	1	**6I-0839**	5	BOLT (M8X1.25X70-MM)	

C - CHANGE FROM PREVIOUS TYPE
M - METRIC PART

277-2939 **PUMP GP-WATER (*contd.*)** **i04568626**

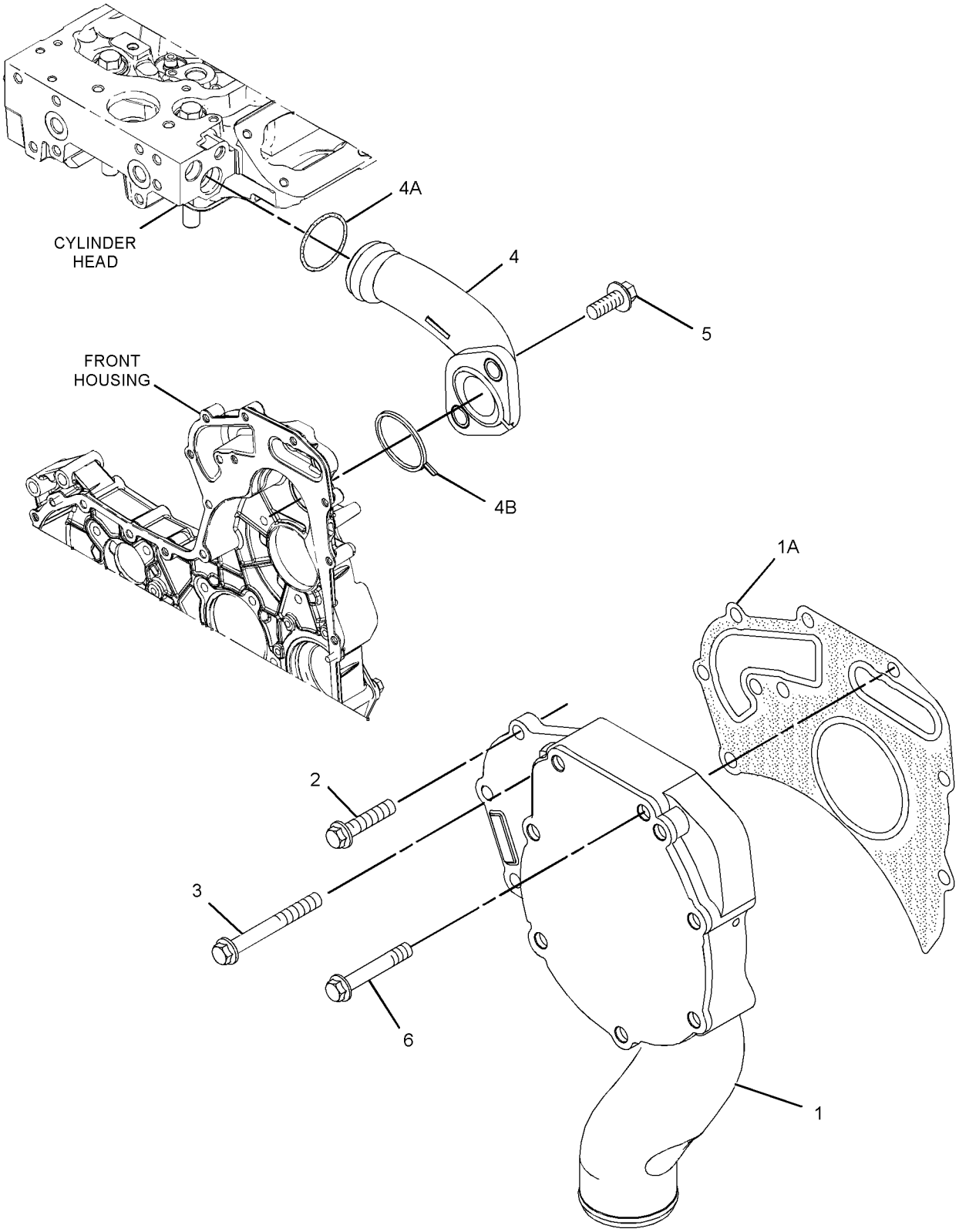

GRAPHIC #1 **<END>** g02177184

377-5147 RADIATOR & HYD OIL COOLER GP

S/N: MBF1-UP; M4M1-UP; M5P1-UP; SDT1-UP
PART OF 377-5161 INSTALLATION AR-ENGINE
AN ATTACHMENT

SMCS-1351, 1353, 1374 **i05292817**

NOTE	REF NO	GRAPHIC REF	PART NUMBER	QTY	PART NAME 1 2 3 4 5 6 (PRODUCT LEVEL)	SEE PAGE
	1	1	**7X-7655**	1	VALVE-DRAIN (RADIATOR)	
	2	1	**183-6121**	6	WASHER (10.31X38.1X4.78-MM THK)	
	3	1	**214-7536**	1	SPACER (8.3X10.8X6-MM THK)	
	4	1	**253-9770**	1	CABLE AS	
	5	1	**358-9026**	2	BRACKET	
	6	1	**362-5415**	2	SEAL	
	7	1	**362-5416**	2	SEAL	
	8	1	**362-5417**	2	SEAL	
	9	1	**364-0679**	2	PLATE	
	10	1	**365-0974**	2	SEAL	
	11	1	**365-0976**	1	SEAL	
	12	1	**365-0977**	1	SEAL	
	13	1	**368-2887**	2	SEAL	
	14	1	**368-2895**	1	PLATE	
	15	1	**368-2899**	1	SHROUD GP-AIR	
		1	**385-8495**	1	SEAL	
		1	**5P-4115**	10	WASHER-HARD (7.2X19X2-MM THK)	
		1	**162-2480**	5	RIVET	
Y	16	1	**387-0514**	1	RADIATOR & HYD OIL COOLER GP	61
	17	1	**067-2935**	1	FITTING-PIPE	
	18	1	**277-8628**	4	MOUNT	
M	19	1	**5C-7261**	1	NUT (M8X1.25-THD)	
	20	1	**5D-1026**	1	CLAMP-BAND	
	21	1	**5P-1076**	4	WASHER-HARD (13.5X30X4-MM THK)	
	22	1	**5P-4116**	2	WASHER-HARD (8.8X20.5X2-MM THK)	
	23	1	**7X-0579**	8	WASHER-HARD (8.8X25.5X2-MM THK)	
	24	1	**7X-0590**	2	WASHER-HARD (13.5X44.5X6-MM THK)	
	25	1	**8D-3932**	2	MOUNTING	
	26	1	**8T-4121**	6	WASHER-HARD (11X21X2.5-MM THK)	
M	27	1	**8T-4133**	8	NUT (M10X1.5-THD)	
M	28	1	**8T-4172**	2	BOLT (M10X1.5X80-MM)	
M	29	1	**8T-4200**	8	BOLT (M8X1.25X16-MM)	
M	30	1	**8T-4244**	4	NUT (M12X1.75-THD)	
	31	1	**8T-4896**	2	WASHER-HARD (10.2X18.5X2.5-MM THK)	
M	32	1	**8T-4908**	1	BOLT (M8X1.25X25-MM)	
M	33	1	**8T-4910**	2	BOLT (M12X1.75X60-MM)	
E	34	1	**6V-8523**		HOSE (54-CM)	
E	35	1	**9X-8699**		SEAL (256-CM)	

E - ORDER BY THE CENTIMETER
M - METRIC PART
Y - SEPARATE ILLUSTRATION

377-5147 **RADIATOR & HYD OIL COOLER GP (*contd.*)** **i05292817**

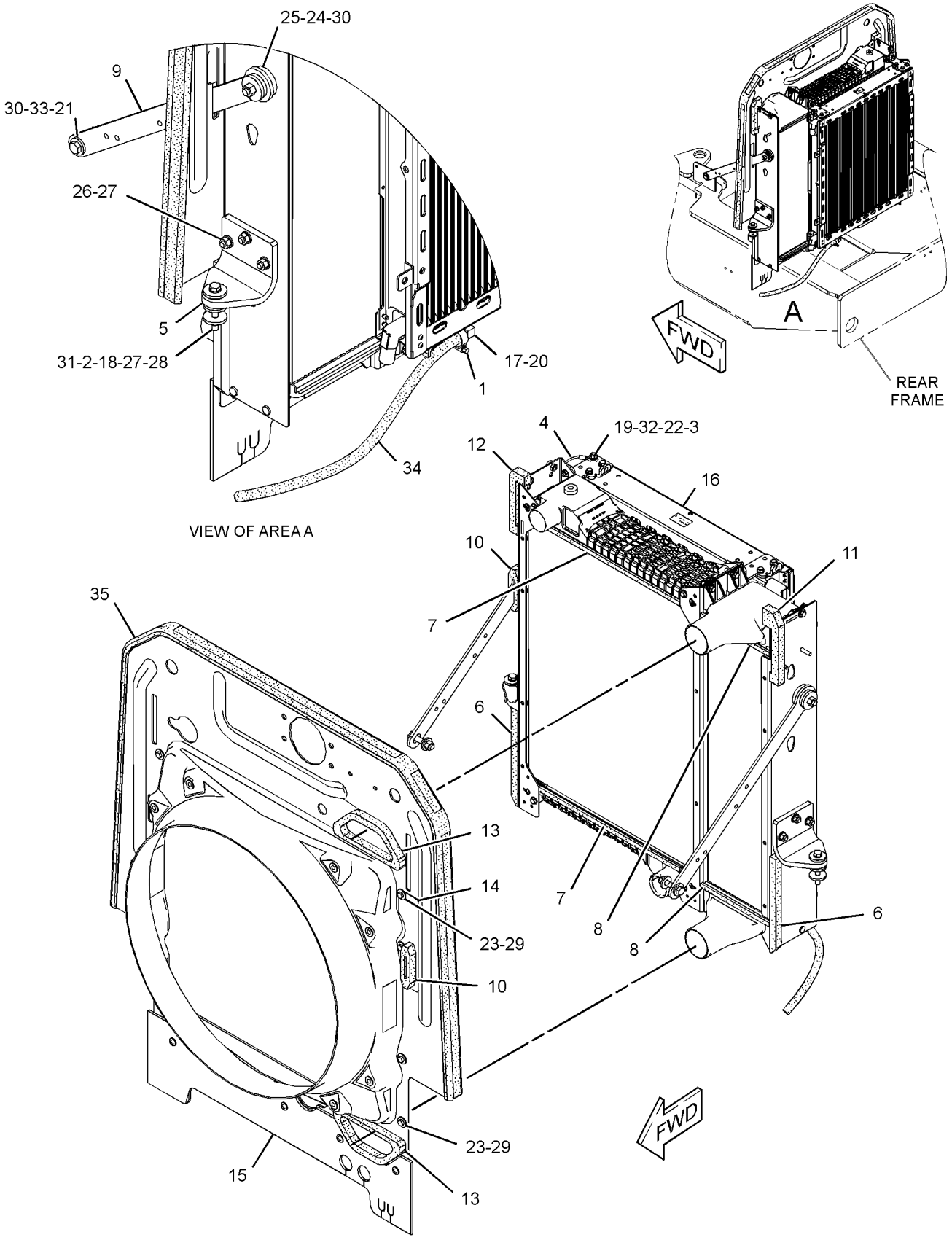

GRAPHIC #1 **<END>** g03114183

387-0514 RADIATOR & HYD OIL COOLER GP

S/N: MBF1-UP; M4M1-UP; M5P1-UP; SDT1-UP
PART OF 377-5147 RADIATOR & HYD OIL COOLER GP
AN ATTACHMENT

SMCS-1351, 1353, 1374

i05292819

NOTE	REF NO	GRAPHIC REF	PART NUMBER	QTY	PART NAME 1 2 3 4 5 6 (PRODUCT LEVEL)	SEE PAGE
Y	1	1	**368-0669**	1	AFTERCOOLER GP	64
M	2	1	**5C-7261**	6	NUT (M8X1.25-THD)	
	3	1	**8T-4224**	10	WASHER-HARD (8.8X16X2-MM THK)	
Y	4	1	**368-0668**	1	RADIATOR GP	62
Y	5	1	**387-0513**	1	COOLER GP-HYDRAULIC OIL & FUEL	53
M	6	1	**8T-4189**	2	BOLT (M8X1.25X20-MM)	
	7	1	**1U-2812**	2	SPACER (10X18X12.7-MM THK)	
M	8	1	**8T-7547**	6	BOLT (M8X1.25X30-MM)	

M - METRIC PART
Y - SEPARATE ILLUSTRATION

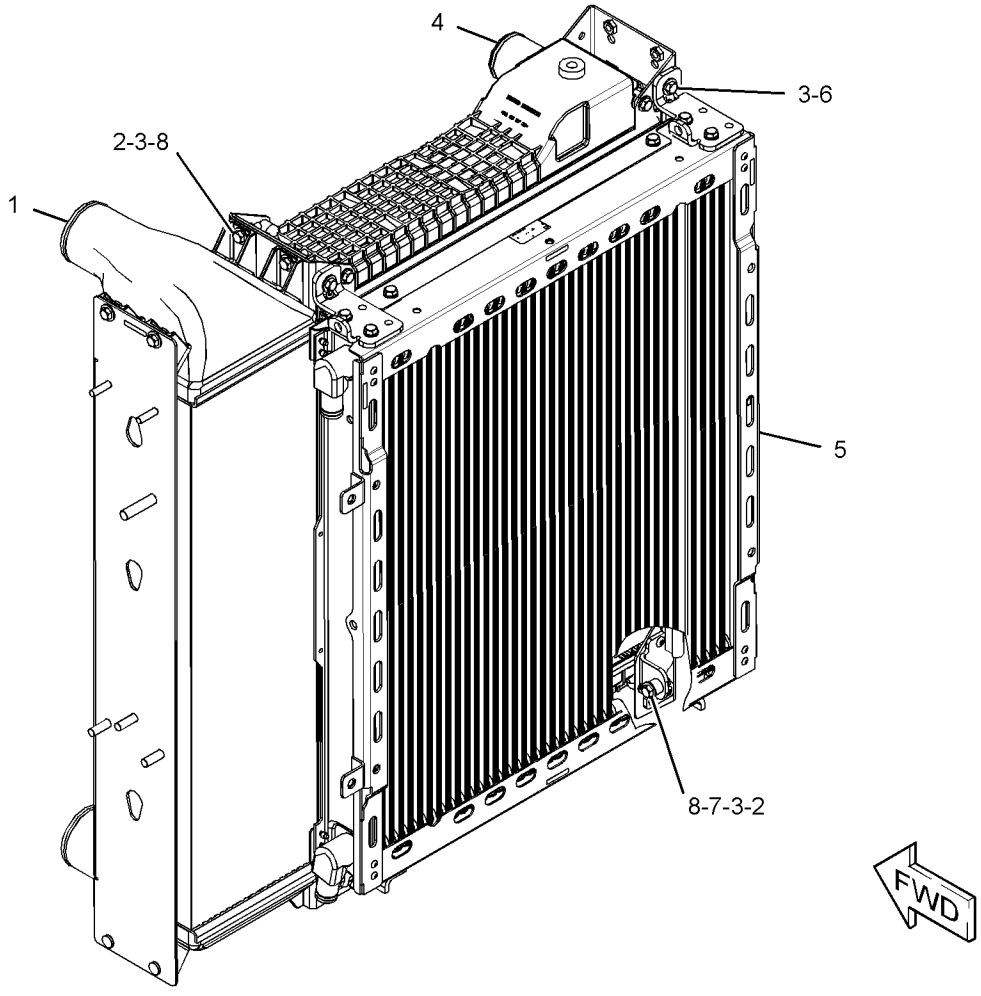

GRAPHIC #1

<END>

g03384104

368-0668 RADIATOR GP

S/N: MBF1-UP; M4M1-UP; M5P1-UP; SDT1-UP
PART OF 387-0514 RADIATOR & HYD OIL COOLER GP
AN ATTACHMENT

SMCS-1353 **i05086055**

NOTE	REF NO	GRAPHIC REF	PART NUMBER	QTY	PART NAME 1 2 3 4 5 6 (PRODUCT LEVEL)	SEE PAGE
M	1	1	**8T-4199**	8	BOLT (M8X1.25X12-MM)	
E	2	1	**122-2228**		SEAL (80-CM)	
L	3	1	**294-3155**		SEAL (7.2-DM EACH)	
D	4	1	**6V-2803**		SEAL (0.75-M EACH)	

D - ORDER BY THE METER
E - ORDER BY THE CENTIMETER
L - ORDER BY THE DECIMETER
M - METRIC PART

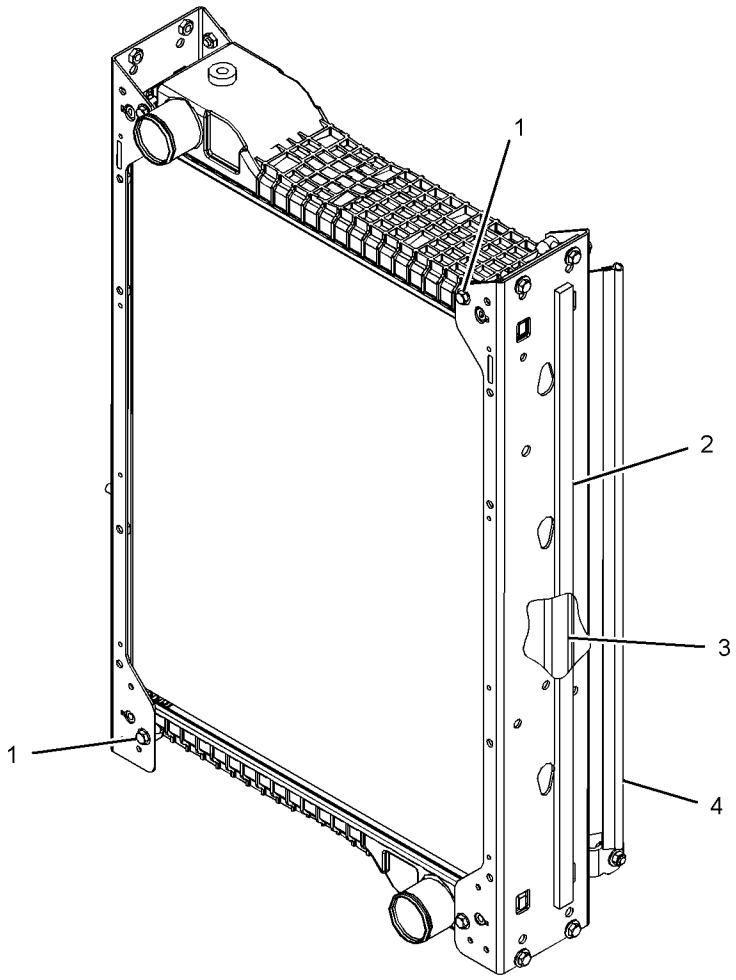

GRAPHIC #1 **<END>** g03338831

381-7235 RECOVERY GP-COOLANT

S/N: MBF1-UP; M4M1-UP; M5P1-UP; SDT1-UP
PART OF 377-5161 INSTALLATION AR-ENGINE
AN ATTACHMENT

SMCS-1354 **i05288992**

NOTE	REF NO	GRAPHIC REF	PART NUMBER	QTY	PART NAME 1 2 3 4 5 6 (PRODUCT LEVEL)	SEE PAGE
	1	1	**214-7536**	1	SPACER (8.3X10.8X6-MM THK)	
	2	1	**277-4837**	1	TANK GP-COOLANT	
		1	**345-1237**	1	CAP AS-COOLANT TANK	
	3	1	**377-5172**	1	BRACKET AS	
M		1	**8T-3612**	4	NUT-WELD (M8X1.25-THD)	
	4	1	**385-8504**	1	PLATE AS	
M		1	**8T-3490**	4	NUT-WELD (M10X1.5-THD)	
	5	1	**385-8505**	1	PLATE AS	
M		1	**8T-3490**	2	NUT-WELD (M10X1.5-THD)	
M	6	1	**5C-7261**	4	NUT (M8X1.25-THD)	
	7	1	**5P-4116**	10	WASHER-HARD (8.8X20.5X2-MM THK)	
	8	1	**7X-7729**	4	WASHER (11X25X3-MM THK)	
M	9	1	**8T-4189**	3	BOLT (M8X1.25X20-MM)	
M	10	1	**8T-4195**	4	BOLT (M10X1.5X30-MM)	
M	11	1	**8T-4200**	4	BOLT (M8X1.25X16-MM)	
	12	1	**8T-4224**	4	WASHER-HARD (8.8X16X2-MM THK)	
M	13	1	**8T-7547**	3	BOLT (M8X1.25X30-MM)	

M - METRIC PART

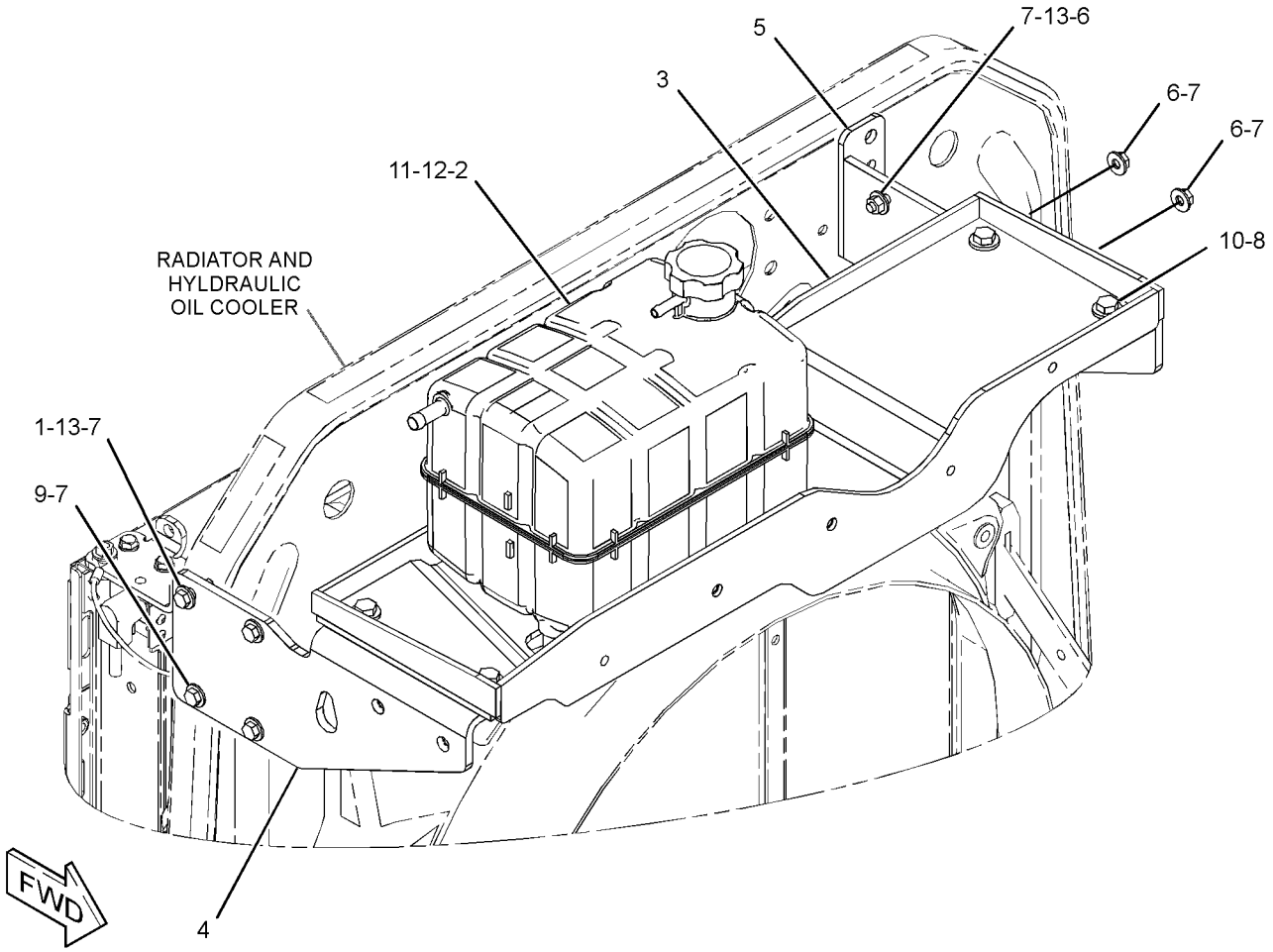

GRAPHIC #1 **<END>** g03112642

368-0669 AFTERCOOLER GP

S/N: MBF1-UP; M4M1-UP; M5P1-UP; SDT1-UP
PART OF 387-0514 RADIATOR & HYD OIL COOLER GP
AN ATTACHMENT

SMCS-1063 **i05086053**

NOTE	REF NO	GRAPHIC REF	PART NUMBER	QTY	PART NAME 1 2 3 4 5 6 (PRODUCT LEVEL)	SEE PAGE
M	1	1	**5C-7261**	4	NUT (M8X1.25-THD)	
	2	1	**8T-4224**	6	WASHER-HARD (8.8X16X2-MM THK)	
L	3	1	**294-3155**		SEAL (8-DM)	
M	4	1	**8T-4189**	2	BOLT (M8X1.25X20-MM)	

L - ORDER BY THE DECIMETER
M - METRIC PART

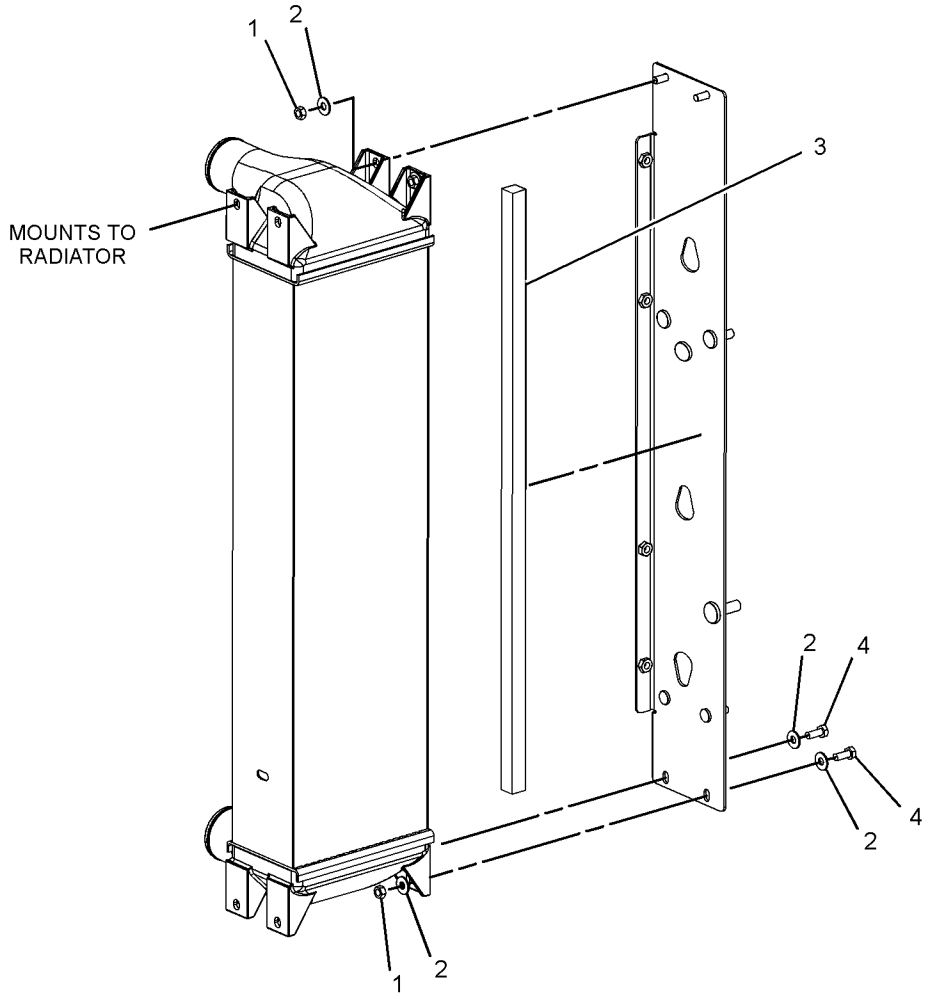

GRAPHIC #1 **<END>** g03339831

377-5156 AIR CLEANER GP

S/N: MBF1-UP; M4M1-UP; M5P1-UP; SDT1-UP
PART OF 377-5161 INSTALLATION AR-ENGINE
AN ATTACHMENT

SMCS-1051, 1054

i05288970

NOTE	REF NO	GRAPHIC REF	PART NUMBER	QTY	PART NAME 1 2 3 4 5 6 (PRODUCT LEVEL)	SEE PAGE
	1	1	**377-5149**	1	BRACKET AS	
Y	2	1	**386-2100**	1	AIR CLEANER GP	66
M	3	1	**099-3649**	2	BOLT (M8X1.25X40-MM)	
	4	1	**5P-4116**	6	WASHER-HARD (8.8X20.5X2-MM THK)	
M	5	1	**8T-4908**	4	BOLT (M8X1.25X25-MM)	

M - METRIC PART
Y - SEPARATE ILLUSTRATION

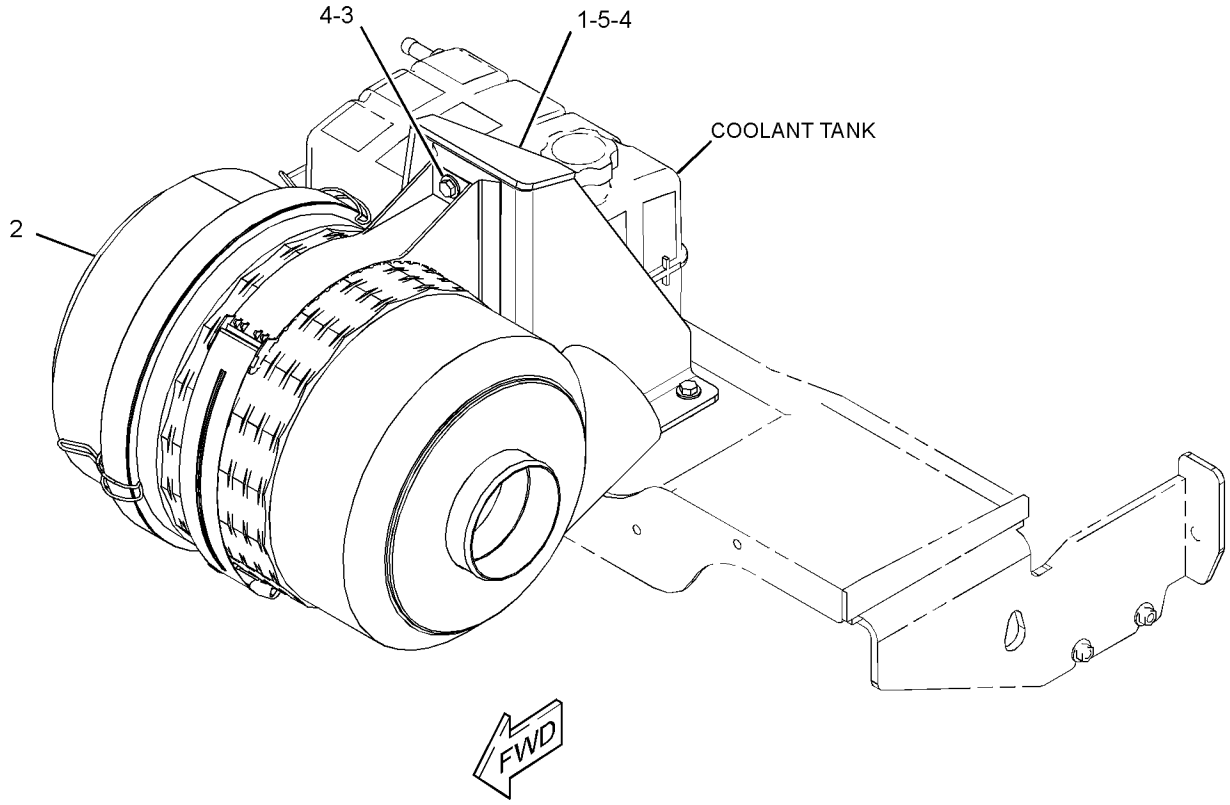

GRAPHIC #1

<END>

g03105079

386-2100 AIR CLEANER GP

S/N: MBF1-UP; M4M1-UP; M5P1-UP; SDT1-UP
PART OF 377-5156 AIR CLEANER GP
AN ATTACHMENT

SMCS-1051, 1054

i05288969

NOTE	REF NO	GRAPHIC REF	PART NUMBER	QTY	PART NAME 1 2 3 4 5 6 (PRODUCT LEVEL)	SEE PAGE
	1	1	**224-2263**	1	VALVE AS-AIR (DUST)	
	2	1	**256-7902**	1	FILTER ELEMENT AS-AIR (PRIMARY) (STANDARD EFFICIENCY)	
	3	1	**256-7903**	1	FILTER ELEMENT AS-AIR (SECONDARY)	
	4	1	**256-7904**	1	BRACKET AS (AIR CLEANER)	
	5	1	**361-3528**	1	COVER AS-AIR CLEANER	

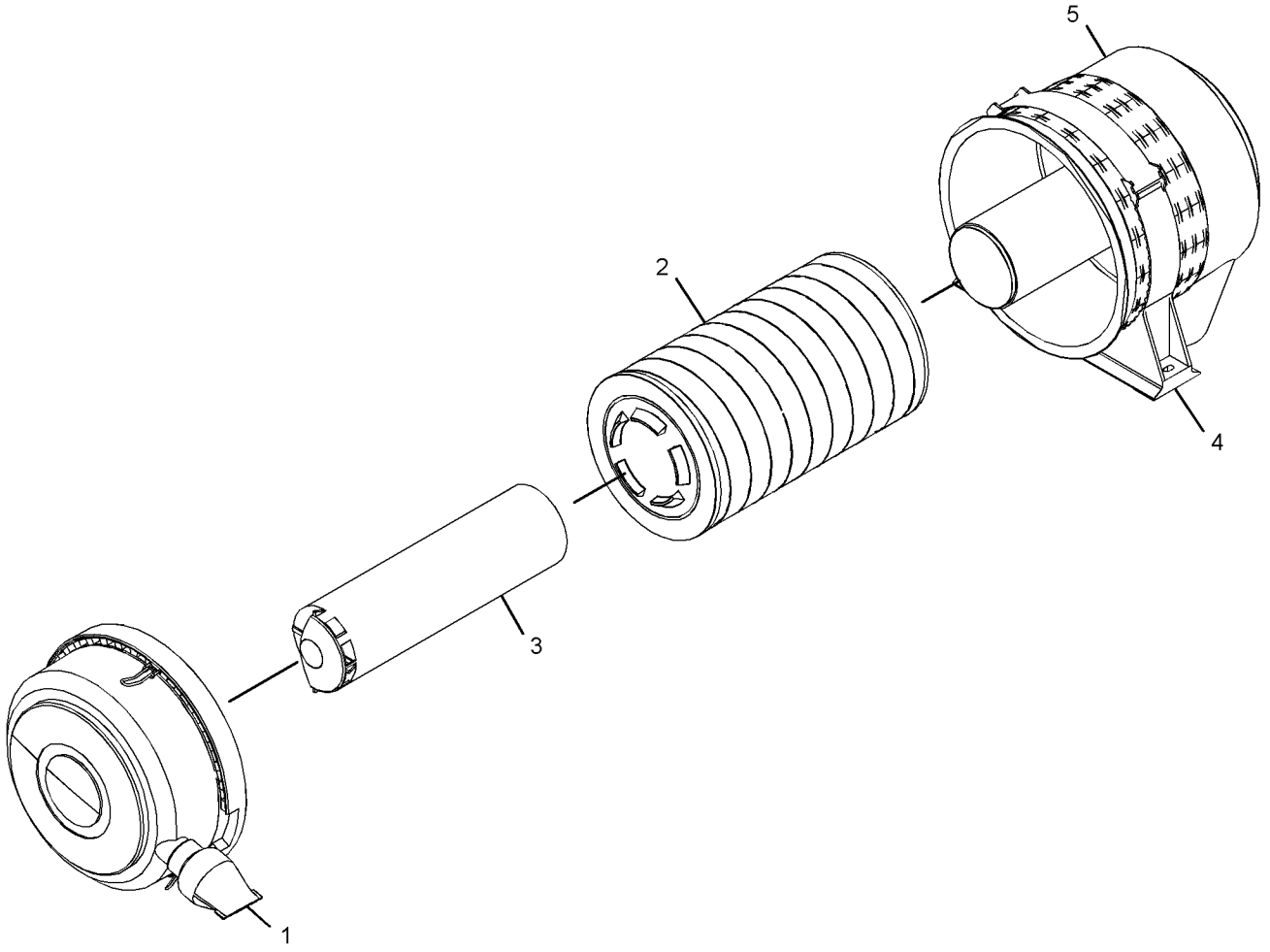

GRAPHIC #1

<END>

g03066951

368-2882 LINES GP-AIR

S/N: MBF1-UP; M4M1-UP; M5P1-UP; SDT1-UP
PART OF 377-5161 INSTALLATION AR-ENGINE
AN ATTACHMENT

SMCS-1071 **i05293762**

NOTE	REF NO	GRAPHIC REF	PART NUMBER	QTY	PART NAME 1 2 3 4 5 6 (PRODUCT LEVEL)	SEE PAGE
	1	1	**5L-3233**	1	FITTING-CONNECTOR	
	2	1	**285-8862**	1	HOSE	
	3	1	**351-1796**	1	TUBE	
	4	1	**360-5242**	1	PLATE AS	
	5	1	**362-2233**	1	DUCT-INLET	
	6	1	**363-0591**	1	INDICATOR AS-AIR FILTER CHANGE	
	7	1	**377-5177**	1	HOSE	
	8	1	**387-0510**	1	HOSE	
	9	1	**381-7155**	1	HOSE	
	10	1	**385-8497**	1	TUBE	
	11	1	**385-8498**	1	HOSE	
	12	1	**385-8501**	1	HOSE	
	13	1	**144-0367**	1	CLAMP-HOSE	
	14	1	**5P-4116**	4	WASHER-HARD (8.8X20.5X2-MM THK)	
M	15	1	**7Y-5247**	1	U-BOLT	
	16	1	**8T-4121**	2	WASHER-HARD (11X21X2.5-MM THK)	
M	17	1	**8T-4133**	2	NUT (M10X1.5-THD)	
M	18	1	**8T-4189**	4	BOLT (M8X1.25X20-MM)	
	19	1	**8T-4984**	2	CLAMP-HOSE	
	20	1	**8T-4985**	4	CLAMP-HOSE	
	21	1	**8T-4986**	4	CLAMP-HOSE	
	22	1	**8T-6703**	1	CLAMP-HOSE	
	23	1	**9X-2201**	1	CLAMP-HOSE	

M - METRIC PART

368-2882 **LINES GP-AIR (*contd.*)** **i05293762**

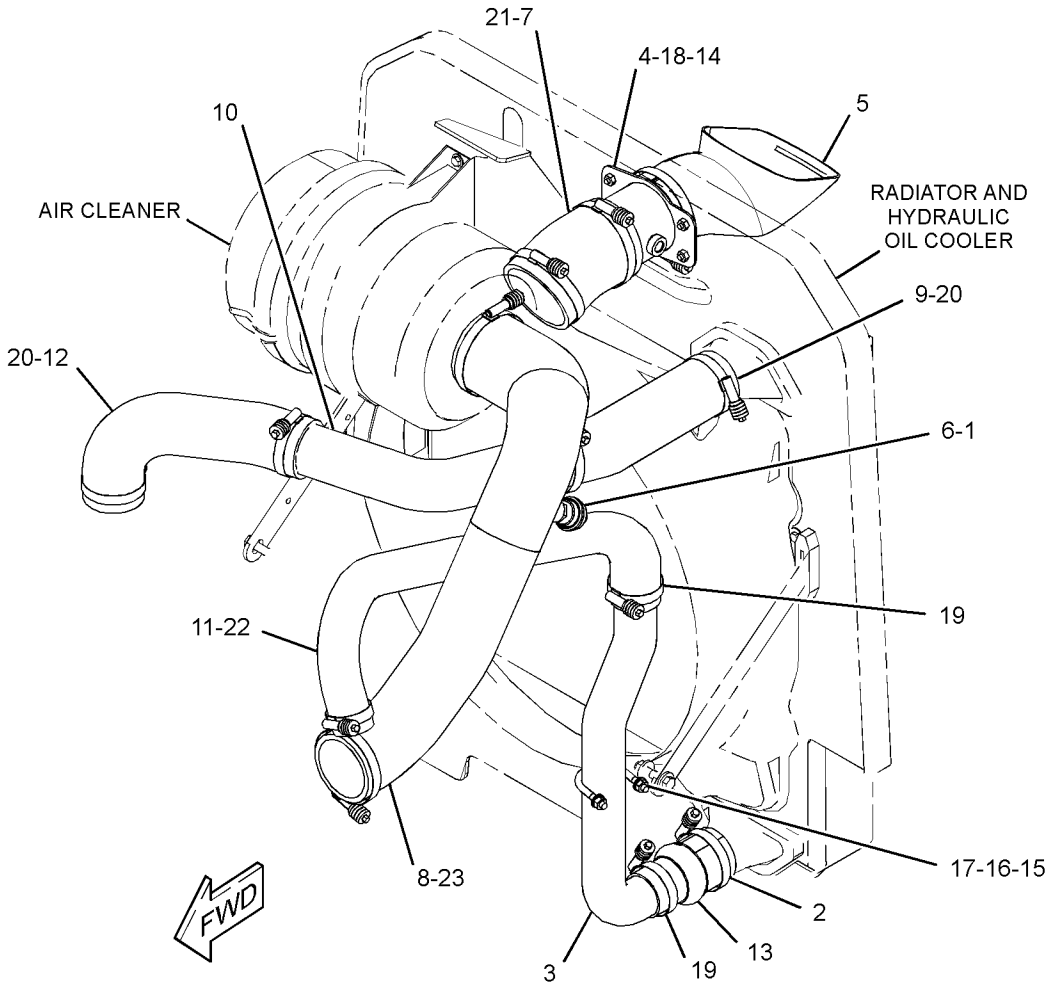

GRAPHIC #1 **<END>** g03284396

283-4691 MANIFOLD GP-INLET

S/N: C6E1-UP
PART OF 378-4731 ENGINE AR-PRIMARY
AN ATTACHMENT

SMCS-1058 **i04913262**

NOTE	REF NO	GRAPHIC REF	PART NUMBER	QTY	PART NAME 1 2 3 4 5 6 (PRODUCT LEVEL)	SEE PAGE
	1	1	**295-0912**	1	COVER AS	
	1A	1	**277-4302**	2	DOWEL	
	1B	1	**278-5128**	1	GASKET-MANIFOLD	
M	2	1	**6I-0645**	19	BOLT (M8X1.25X25-MM)	
	3	1	**277-4374**	1	ELBOW AS-AIR INLET	
	3A	1	**238-8288**	1	GASKET-INLET	

M - METRIC PART

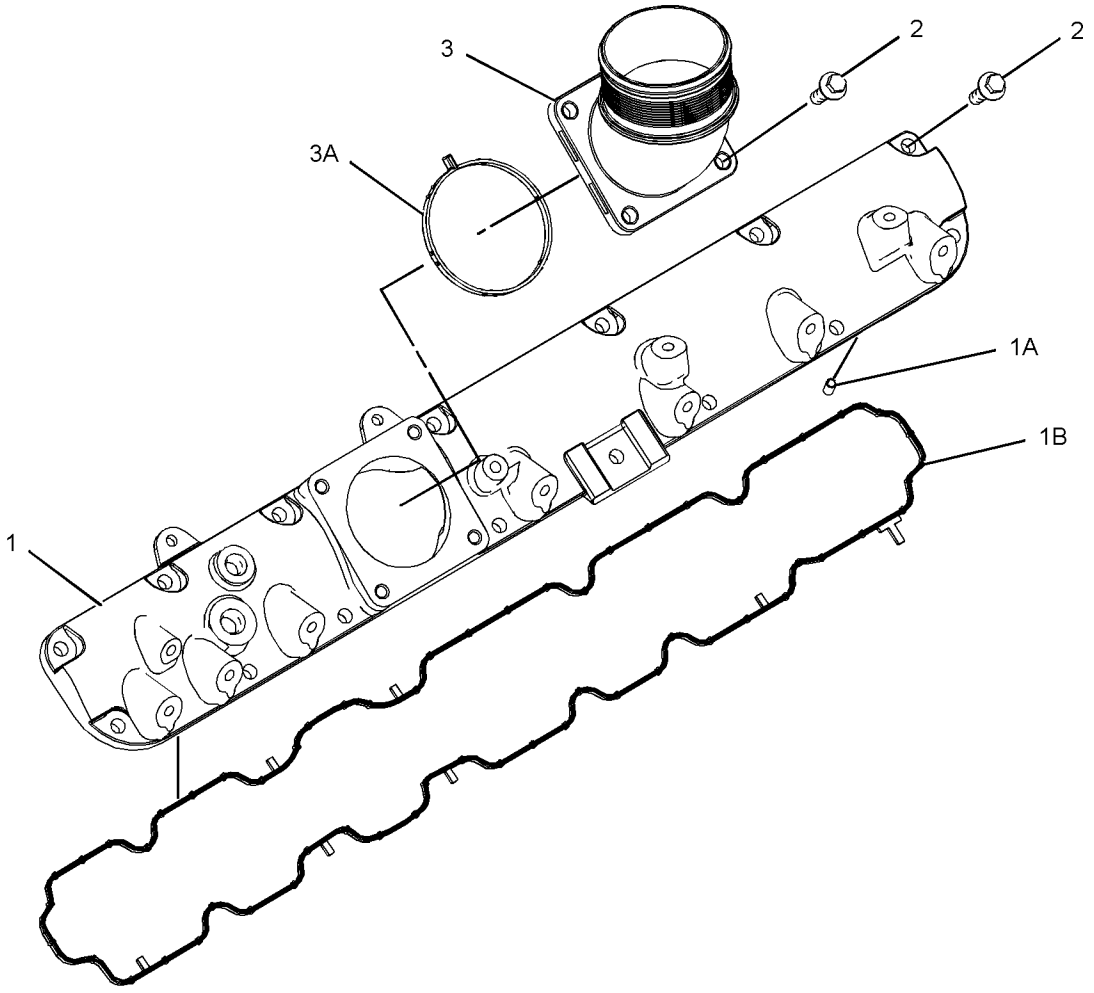

GRAPHIC #1 **<END>** g01209234

377-5164 MUFFLER & MOUNTING GP

S/N: MBF1-UP; M4M1-UP; M5P1-UP; SDT1-UP
PART OF 377-5161 INSTALLATION AR-ENGINE
AN ATTACHMENT

SMCS-1062 **i05288978**

NOTE	REF NO	GRAPHIC REF	PART NUMBER	QTY	PART NAME 1 2 3 4 5 6 (PRODUCT LEVEL)	SEE PAGE
	1	1	**280-2424**	1	ADAPTER	
	2	1	*381-7156*	1	MUFFLER AS	
		1	**368-0805**	1	BRACKET AS	
		1	**383-1509**	1	MUFFLER	
		1	**391-8373**	1	STRAP-CLAMP	
	3	1	**381-7231**	1	BELLOWS AS	
	4	1	**381-7232**	1	ELBOW-EXHAUST	
	5	1	**385-8496**	1	INSULATION (ELBOW)	
	6	1	**385-8499**	1	TUBE	
	7	1	**388-7009**	2	CLAMP-BENT BOLT	
	8	1	**388-7010**	1	CLAMP-BENT BOLT	
M	9	1	**6V-4249**	2	BOLT (M10X1.5X50-MM)	
	10	1	**6V-5839**	2	WASHER (11X21X2.5-MM THK)	
	11	1	**7X-7729**	4	WASHER (11X25X3-MM THK)	
M	12	1	**8T-4195**	4	BOLT (M10X1.5X30-MM)	

M - METRIC PART

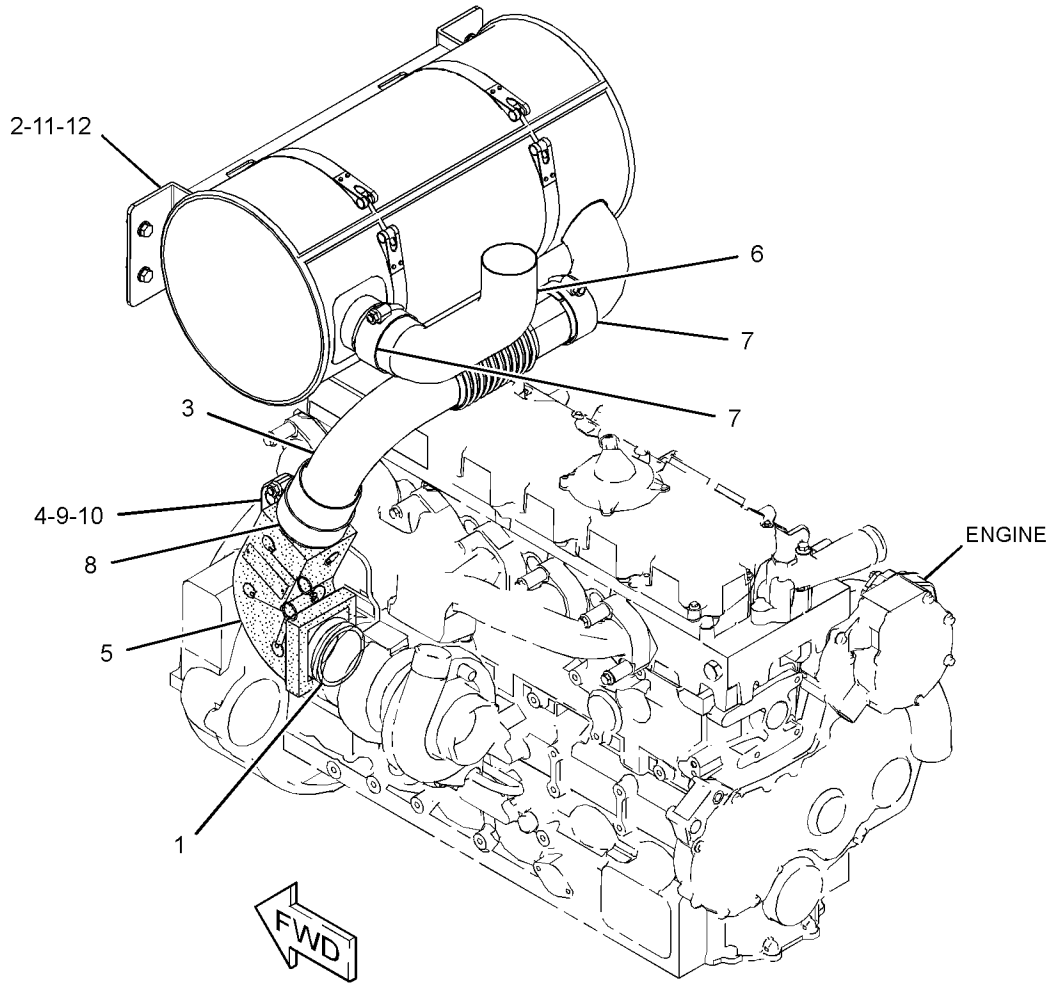

GRAPHIC #1 **<END>** g03110138

285-3414 TURBOCHARGER GP

S/N: C6E1-UP
PART OF 378-4731 ENGINE AR-PRIMARY
AN ATTACHMENT

SMCS-1052, 1053

i04913314

NOTE	REF NO	GRAPHIC REF	PART NUMBER	QTY	PART NAME 1 2 3 4 5 6 (PRODUCT LEVEL)	SEE PAGE
M	1	1	**6I-0217**	5	BOLT (M8X1.25X20-MM)	
C	2	1	**141-8589**	1	GASKET	
	3	2	**6I-0817**	1	ADAPTER	
	4	2	**9Y-9381**	1	WASHER-HARD	
M	5	2	**100-4830**	2	BOLT (M10X1.5X20-MM)	
	6	1	**238-8292**	12	BOLT-FLANGE HEAD	
	7	1	**286-7851**	12	SPACER	
	8	1	**277-9463**	1	CLAMP	
C	9	1	**6I-0563**	4	NUT (M10X1.5-THD)	
	10	1	**368-8559**	1	LINES GP-TURBOCHARGER OIL	
M	10A	1	**277-9938**	1	BOLT-SPECIAL (BANJO)	
	10B	1	**365-5823**	2	WASHER	
	10C	1	**277-9940**	1	SEAL-O-RING	
	11	1	**278-0015**	1	TUBE AS-TURBOCHARGER	
	12	1	**278-0016**	1	GASKET	
	13	1	**278-0017**	1	GASKET	
	14	2	**278-0310**	1	SOLENOID AS (WASTEGATE)	
	15	2	**278-0311**	1	TUBE AS	
	15A	2	**4B-8774**	1	NUT-FLARED	
	15B	2	**032-8047**	1	FERRULE	
	15C	2	**107-2348**	2	CLIP	
	15D	2	**133-9469**	1	CLIP	
	15E	2	**300-6520**	1	HOSE AS	
	16	2	**285-3197**	1	TUBE AS	
	16A	2	**4B-8774**	1	NUT-FLARED	
	16B	2	**032-8047**	2	FERRULE	
	16C	2	**035-8014**	1	NUT (7/16-IN)	
CR	17	1	**315-9810**	1	TURBOCHARGER GP	
	17A	1	**277-9602**	1	CLAMP	
	17B	1	**277-9603**	1	CLAMP	
	18	2	**303-2116**	6	CLIP	
	19	1	**331-8917**	1	MANIFOLD-EXHAUST	
C	20	1	**367-3340**	4	STUD	
	21	1	**279-9361**	2	GASKET-EXHAUST	

C - CHANGE FROM PREVIOUS TYPE
M - METRIC PART
R - REMFG PART MAY BE AVAILABLE

285-3414 **TURBOCHARGER GP (*contd.*)** **i04913314**

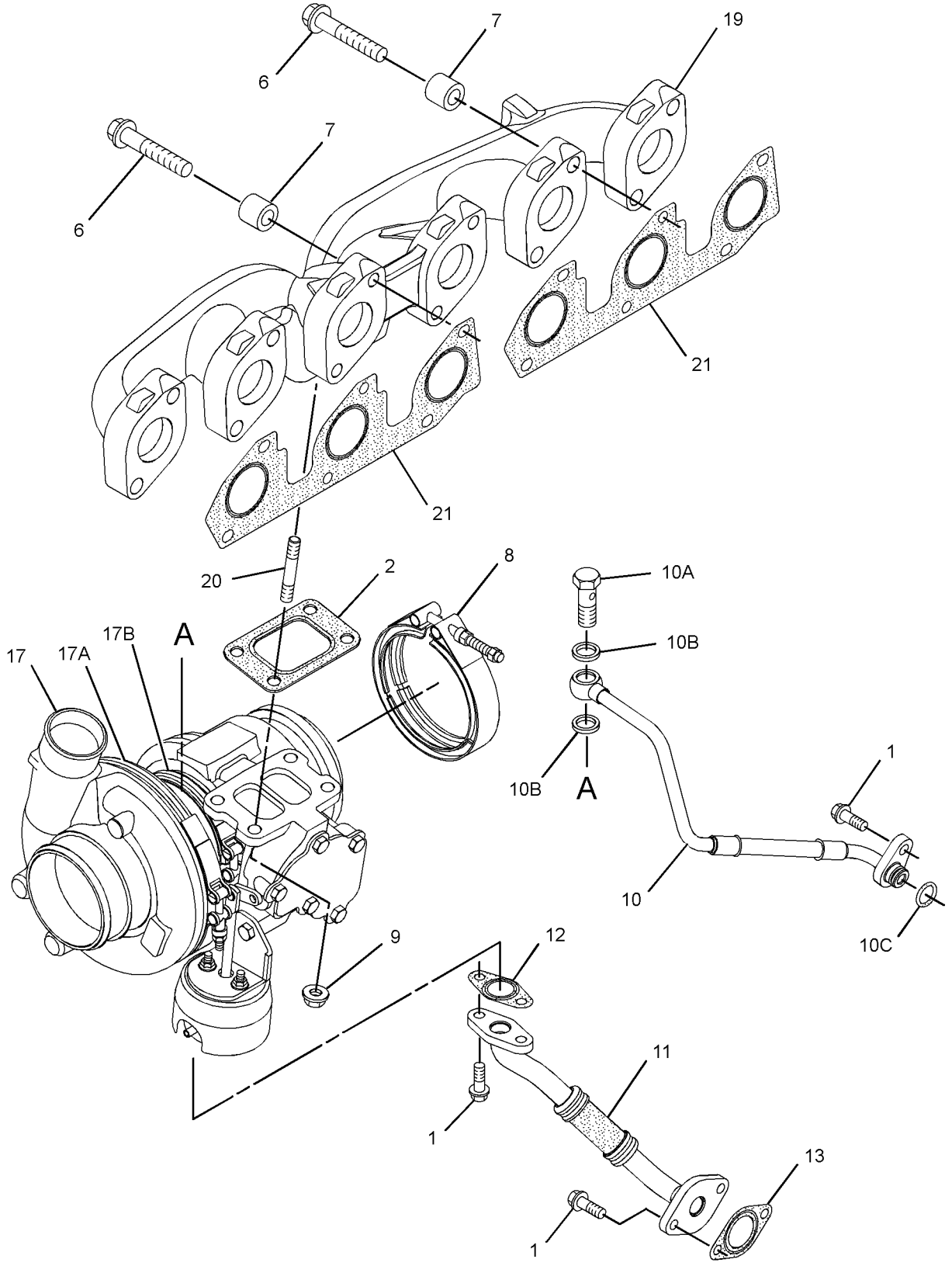

GRAPHIC #1 g01760194

285-3414 **TURBOCHARGER GP (*contd.*)** **i04913314**

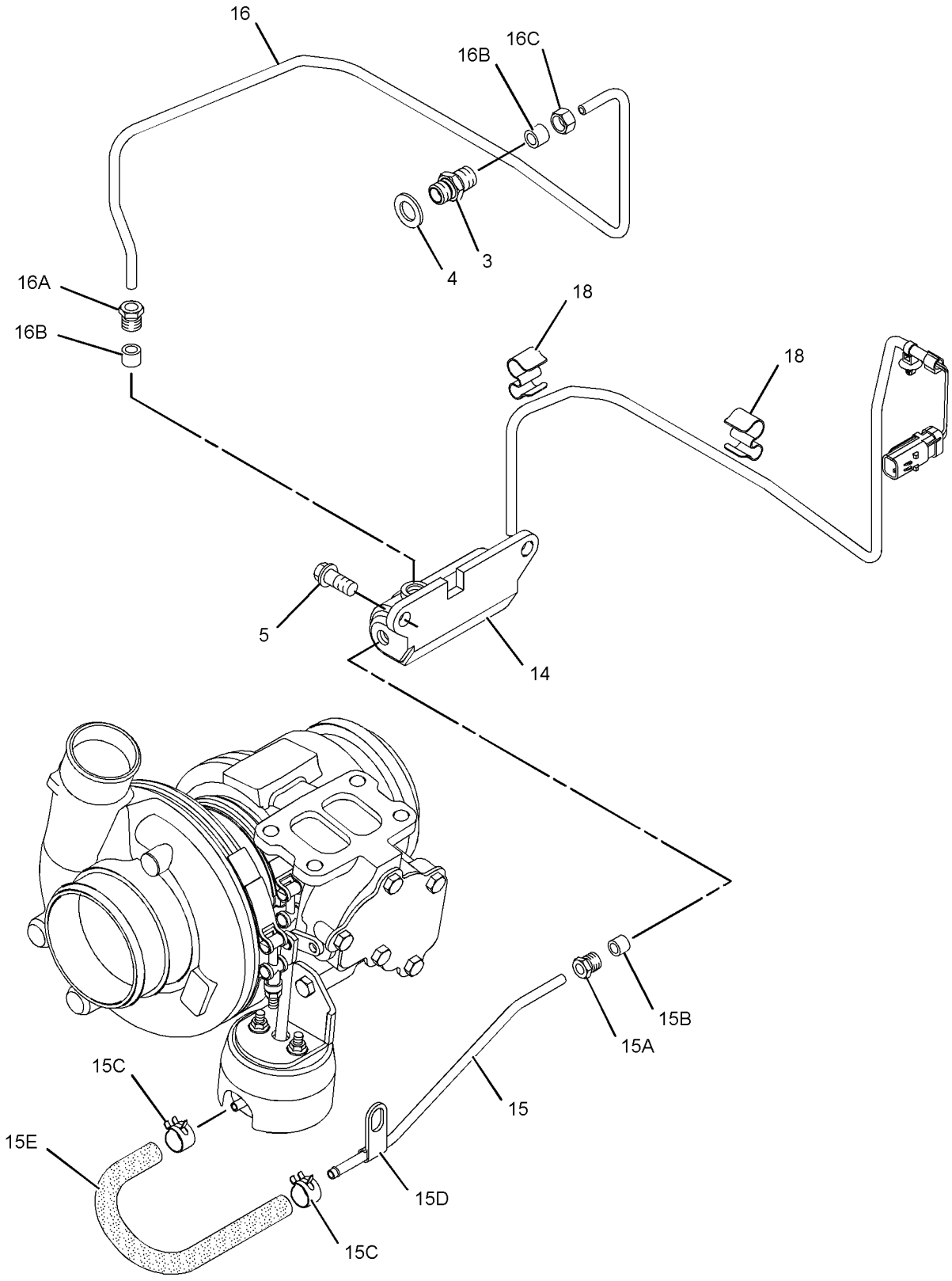

GRAPHIC #2 **<END>** g01760197

377-5168 FILTER & LINES GP-FUEL

S/N: MBF1-UP; M4M1-UP; M5P1-UP; SDT1-UP
PART OF 377-5161 INSTALLATION AR-ENGINE
AN ATTACHMENT

SMCS-1261, 1274 **i05293709**

NOTE	REF NO	GRAPHIC REF	PART NUMBER	QTY	PART NAME 1 2 3 4 5 6 (PRODUCT LEVEL)	SEE PAGE
	1	1	**3S-2093**	1	STRAP-CABLE	
	2	1	**5P-6385**	1	ELBOW	
	3	1	**102-8703**	3	PLATE-COVER	
	4	1	**133-6934**	1	SPACER (11X20X25-MM THK)	
	5	1	**177-2215**	3	STRAP-DUAL CLAMP	
	6	1	**200-6345**	1	MOUNT (DUAL SWIVEL)	
	7	1	**215-9513**	2	CONNECTOR-HOSE (FUEL LINES)	
	8	1	*244-3712*	1	PLUG AS	
		1	**9S-4191**	1	PLUG-O-RING	
		1	**214-7568**	1	SEAL-O-RING	
	9	1	**264-3518**	2	CONNECTOR-RECEPTACLE	
	10	1	**269-6650**	1	COUPLING AS	
Y	11	1	**318-8064**	1	FILTER GP-WATER SEP & FUEL	78
	12	1	**381-7237**	1	PLATE AS	
M		1	**8T-3490**	3	NUT-WELD (M10X1.5-THD)	
		1	**9R-5383**	2	BOSS (11X25X20-MM THK)	
	13	1	**381-7241**	1	BRACKET AS	
M		1	**8T-3490**	2	NUT-WELD (M10X1.5-THD)	
	14	1	**384-8512**	1	FILTER-FUEL (IN-LINE)	
	15	1	*385-5773*	2	CONNECTOR AS	
					(EACH INCLUDES)	
		1	**5P-1046**	1	CONNECTOR	
		1	**214-7568**	1	SEAL-O-RING	
	16	1	**387-0512**	1	BRACKET AS	
M		1	**8T-3490**	2	NUT-WELD (M10X1.5-THD)	
	17	1	**415-3797**	1	FILTER AS-FUEL	
M	18	1	**099-3649**	4	BOLT (M8X1.25X40-MM)	
	19	1	**132-5789**	1	CLIP	
	20	1	**156-3617**	6	CLAMP-HALF	
	21	1	**1P-4278**	4	CLAMP-HOSE	
	22	1	**215-9515**	2	CONNECTOR-HOSE (QUICK DISCONNECT)	
	23	1	**277-1873**	2	CLIP	
	24	1	**2G-8096**	2	MOUNTING	
	25	1	*332-8576*	1	ELBOW AS	
		1	**218-1755**	1	ELBOW	
		1	**228-7089**	1	SEAL-O-RING	
		1	**228-7102**	1	SEAL-O-RING	
	26	1	**5P-4325**	1	CLIP	
	27	1	**5P-4961**	8	CLAMP-HOSE	
	28	1	**7K-1181**	5	STRAP-CABLE	
M	29	1	**7X-2537**	1	BOLT (M8X1.25X35-MM)	
	30	1	**7X-7729**	2	WASHER (11X25X3-MM THK)	
	31	1	**8T-0154**	2	CLAMP-HOSE	
	32	1	**8T-4121**	8	WASHER-HARD (11X21X2.5-MM THK)	
M	33	1	**8T-4136**	2	BOLT (M10X1.5X25-MM)	
M	34	1	**8T-4137**	1	BOLT (M10X1.5X20-MM)	
M	35	1	**8T-4185**	1	BOLT (M10X1.5X50-MM)	
M	36	1	**8T-4195**	4	BOLT (M10X1.5X30-MM)	
M	37	1	**8T-4196**	2	BOLT (M10X1.5X35-MM)	
	38	1	**8T-4224**	4	WASHER-HARD (8.8X16X2-MM THK)	
E	39	1	**347-8645**		HOSE (179-CM)	
E	39A	1	**347-8645**		HOSE (21-CM)	
E	39B	1	**347-8645**		HOSE (155-CM)	
E	39C	1	**347-8645**		HOSE (32-CM)	
E	40	1	**347-8646**		HOSE (49-CM)	
E	41	1	**347-8647**		HOSE (68-CM)	

377-5168 **FILTER & LINES GP-FUEL (*contd.*)** **i05293709**

NOTE	REF NO	GRAPHIC REF	PART NUMBER	QTY	PART NAME 1 2 3 4 5 6 (PRODUCT LEVEL)	SEE PAGE
E	42	1	**360-5611**		HOSE (18-CM)	
E	42A	1	**360-5611**		HOSE (33-CM)	
E	43	1	**8C-3681**		HOSE (30-CM)	
	44	1	**5D-1026**	2	CLAMP-BAND	

E - ORDER BY THE CENTIMETER
M - METRIC PART
Y - SEPARATE ILLUSTRATION

377-5168 **FILTER & LINES GP-FUEL (*contd.*)** **i05293709**

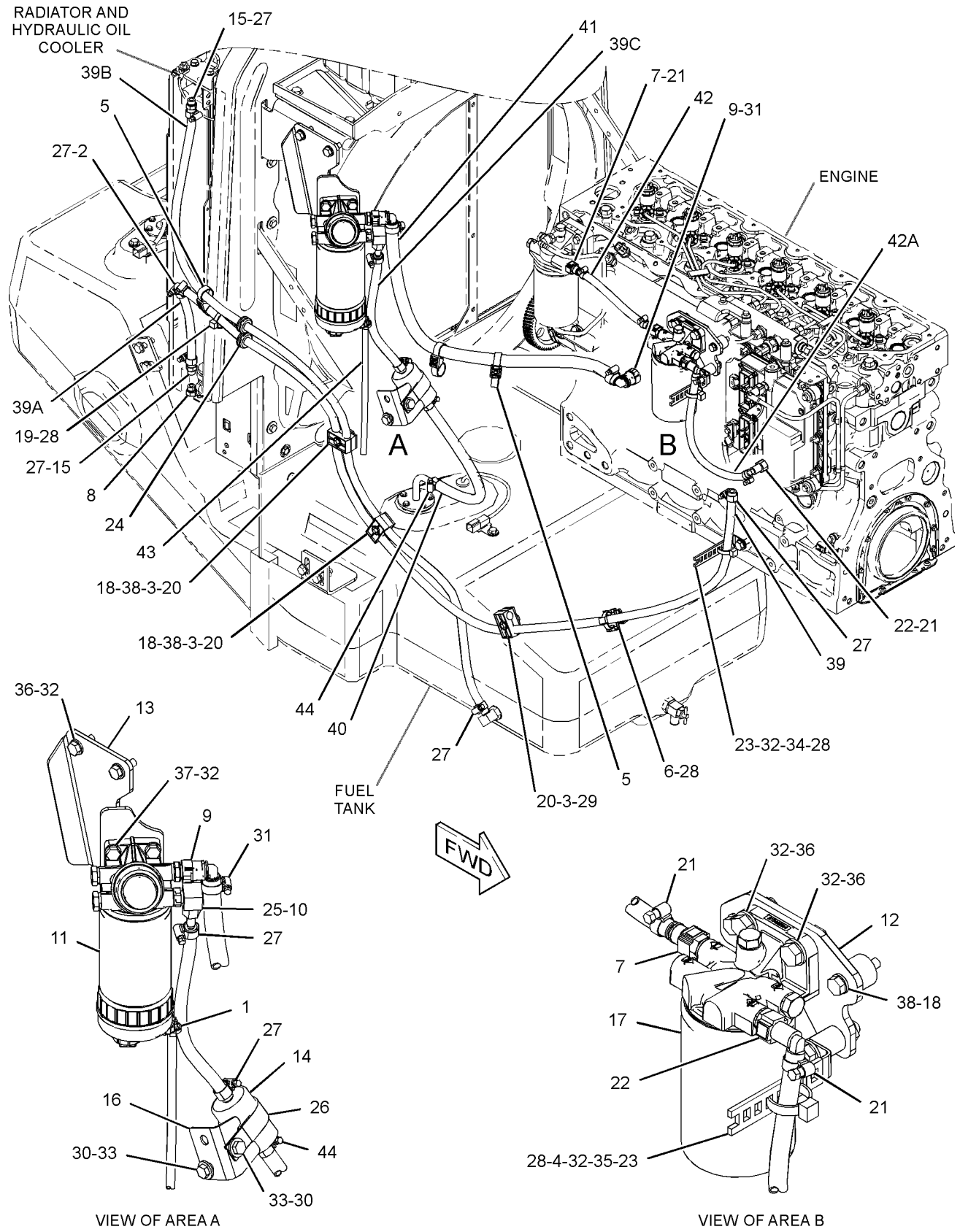

GRAPHIC #1 **<END>** g03366902

280-1394 FILTER GP-SECONDARY FUEL

S/N: C6E1-UP
PART OF 378-4731 ENGINE AR-PRIMARY
AN ATTACHMENT

SMCS-1261 **i04913294**

NOTE	REF NO	GRAPHIC REF	PART NUMBER	QTY	PART NAME 1 2 3 4 5 6 (PRODUCT LEVEL)	SEE PAGE
	1	1	**276-3905**	1	FILTER AS-FUEL (FILTER HEAD)	
	2	1	**271-9385**	1	FILTER-FUEL (ELEMENT)	

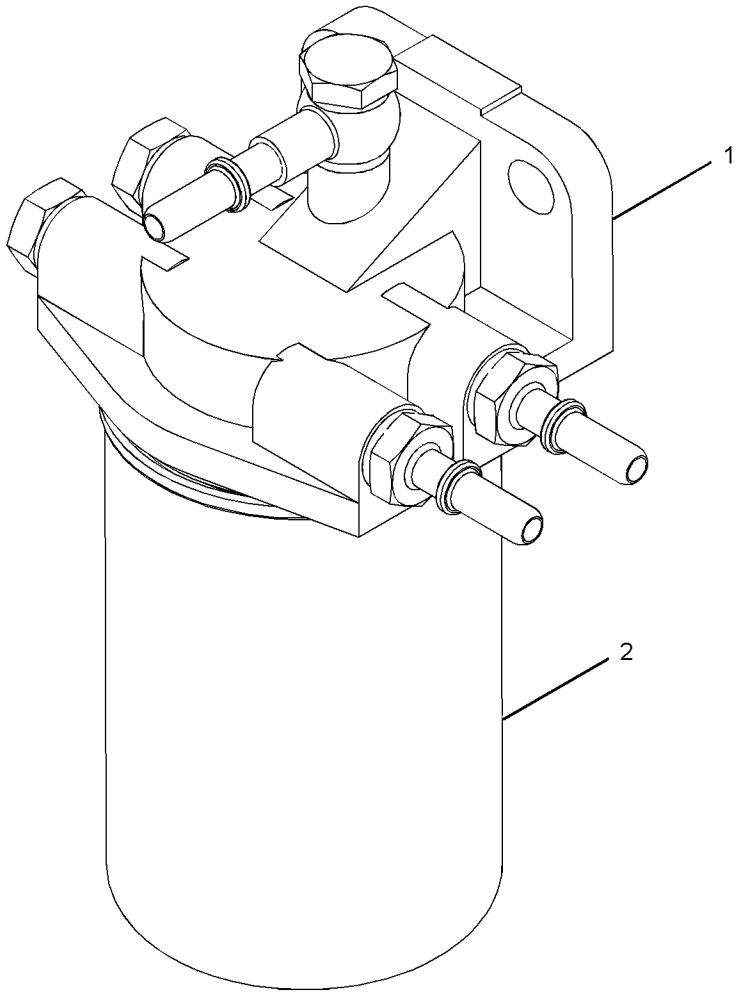

GRAPHIC #1 **<END>** g01209335

318-8064 FILTER GP-WATER SEP & FUEL

S/N: MBF1-UP; M4M1-UP; M5P1-UP; SDT1-UP
PART OF 377-5168 FILTER & LINES GP-FUEL
AN ATTACHMENT

SMCS-1261, 1263

i05189634

NOTE	REF NO	GRAPHIC REF	PART NUMBER	QTY	PART NAME 1 2 3 4 5 6 (PRODUCT LEVEL)	SEE PAGE
	1	1	**308-7576**	1	FILTER GP-WATER SEP & FUEL	
	1A	1	**308-7298**	1	FILTER AS-WATER SEP & FUEL	
	1B	1	**310-5912**	1	BOWL AS	
	2	1	**313-1663**	1	SENSOR-PRESSURE (WATER SEPARATOR)	
	3	1	**333-9694**	1	BOOT-SEAL	
	4	1	**333-9693**	1	KIT-CONNECTION (FUEL, WATER SEPARATOR)	
					(INCLUDES CONNECTORS & O-RINGS)	

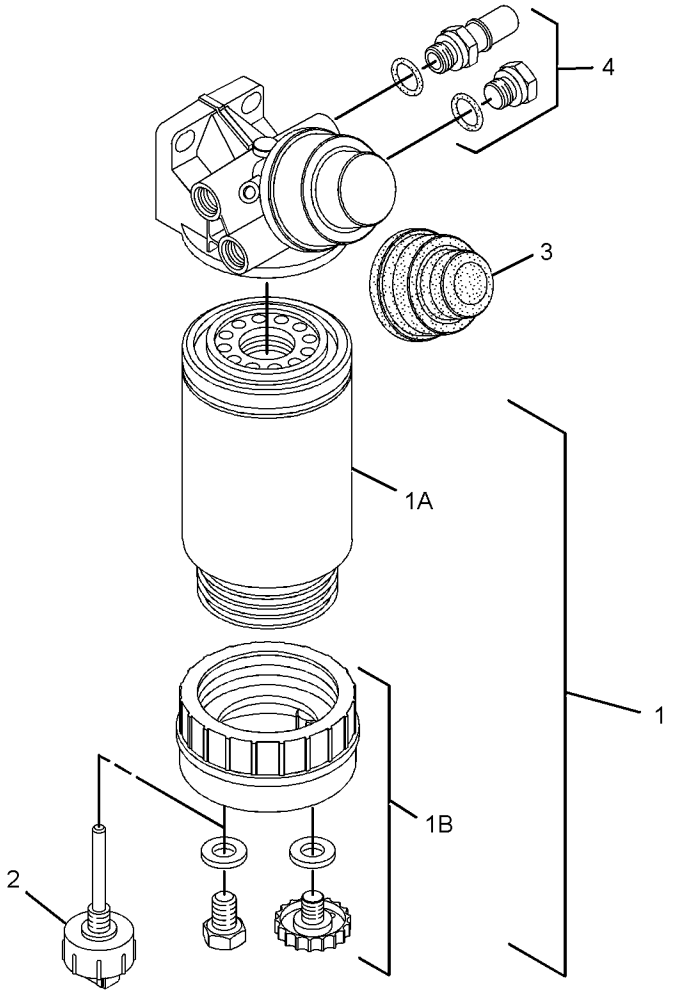

GRAPHIC #1

<END>

g01622416

292-3780 INJECTOR GP-FUEL

S/N: C6E1-UP
PART OF 303-2926 PUMP GP-FUEL INJECTION
AN ATTACHMENT

SMCS-1251, 1254, 1290, 1713

i05330938

NOTE	REF NO	GRAPHIC REF	PART NUMBER	QTY	PART NAME 1 2 3 4 5 6 (PRODUCT LEVEL)	SEE PAGE
	1	1	**287-7637**	1	WASHER	
	2	1	**274-1639**	1	SEAL	

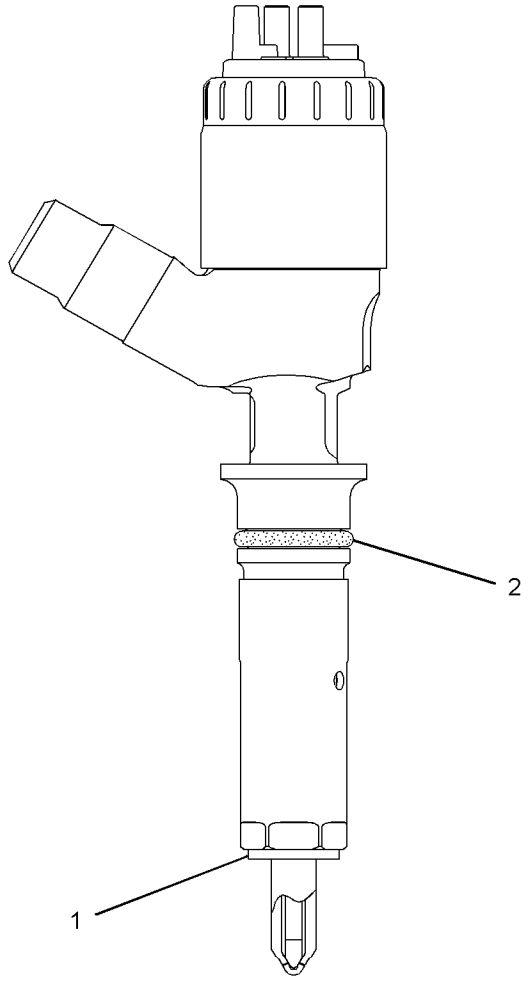

GRAPHIC #1

<END>

g01321405

308-9075 LINES GP-FUEL

S/N: C6E1-UP

PART OF 378-4731 ENGINE AR-PRIMARY

AN ATTACHMENT

SMCS-1274 **i04913304**

NOTE	REF NO	GRAPHIC REF	PART NUMBER	QTY	PART NAME 1 2 3 4 5 6 (PRODUCT LEVEL)	SEE PAGE
M	1	1	**6I-0260**	4	BOLT (M8X1.25X25-MM)	
M	2	1	**6I-0593**	2	BOLT (M10X1.5X30-MM)	
M	4	2	**6I-0654**	1	BOLT (M10X1.5X25-MM)	
	5	2	**106-8916**	1	BOLT (M6X16-MM)	
M	6	2	**124-3815**	1	BOLT (M8X16X1.25-MM)	
	7	1	**215-9509**	1	FITTING (QUICK DISCONNECT, FEMALE)	
	8	2	**216-9752**	2	WASHER	
	9	2	**232-1115**	1	CLIP-PIPE	
	10	1	**234-3063**	1	CLIP	
	11	1,2	**277-6165**	2	CONNECTION-FUEL	
	12	2	**278-0314**	1	SPACER	
	13	1	**281-9106**	1	TUBE-FUEL	
	14	2	**281-9115**	1	TUBE-FUEL	
	15	1	**287-6849**	1	BRACKET AS	
	15A	1	**232-1115**	2	CLIP-PIPE	
	16	2	**287-6853**	1	BRACKET AS	
	16A	2	**232-1115**	2	CLIP-PIPE	
	17	2	**290-5735**	1	BRACKET AS	
	17A	2	**278-0315**	1	CLIP-PIPE	
	18	2	**293-8068**	1	TUBE-FUEL	
	19	2	**293-8069**	1	TUBE-FUEL	
	20	2	**295-4670**	1	BOLT-SPECIAL (BANJO)	
	21	1	**305-6157**	1	BRACKET	
	22	2	**306-5432**	1	BRACKET	
	23	2	**308-9076**	1	BRACKET AS	
	23A	2	**232-1115**	2	CLIP-PIPE	
	24	1	**308-9077**	1	TUBE	
	25	1	**308-9078**	1	BRACKET AS	
	25A	1	**232-1115**	5	CLIP-PIPE	
	26	2	**308-9079**	1	BRACKET AS	
	26A	2	**232-1115**	2	CLIP-PIPE	
F			**278-4138**	5	PROTECTION GP-FUEL SYSTEM (LINE, LOW PRESSURE)	

F - NOT SHOWN
M - METRIC PART

308-9075 **LINES GP-FUEL (*contd.*)** **i04913304**

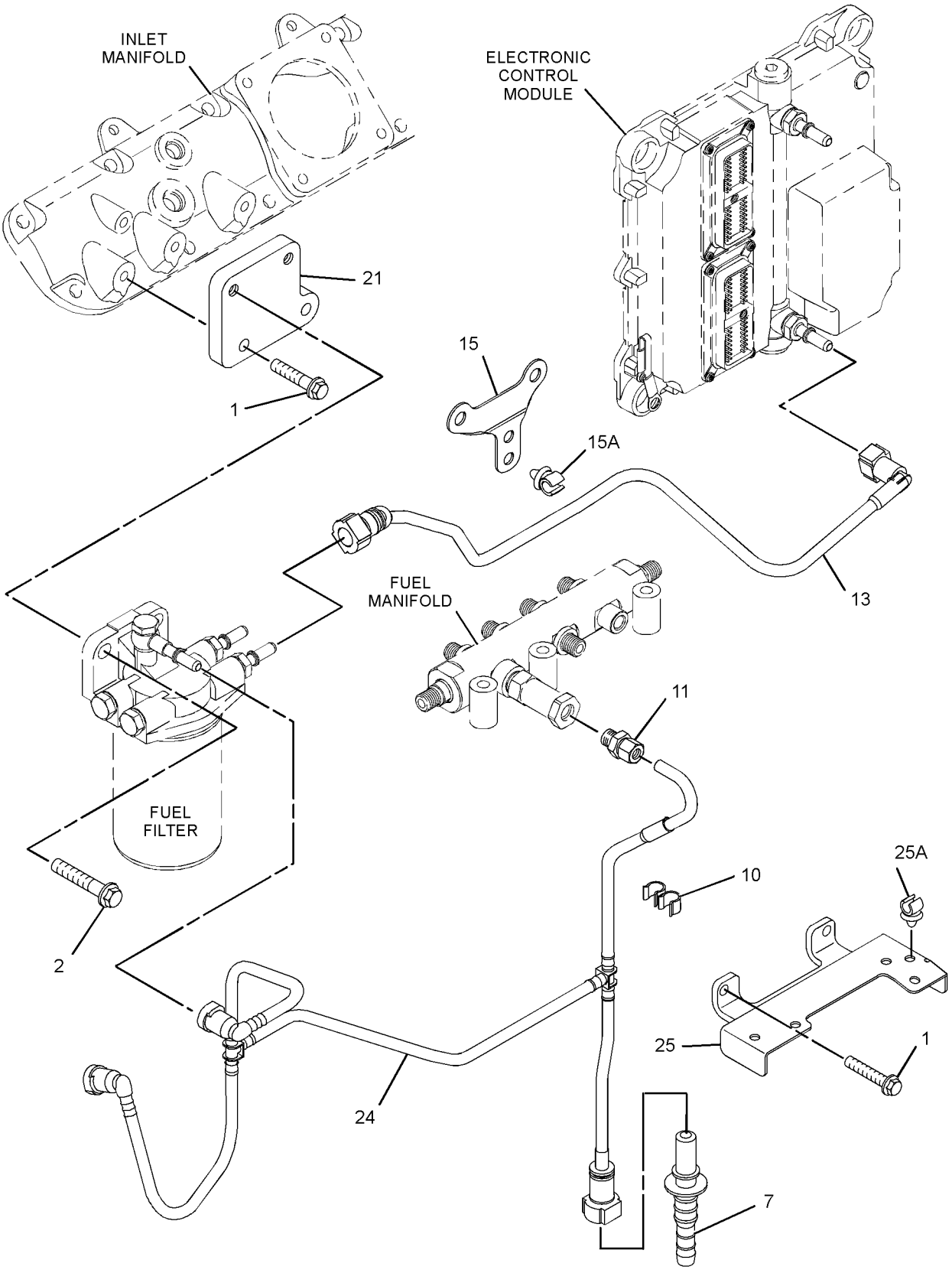

GRAPHIC #1 g01405296

308-9075 **LINES GP-FUEL (*contd.*)** **i04913304**

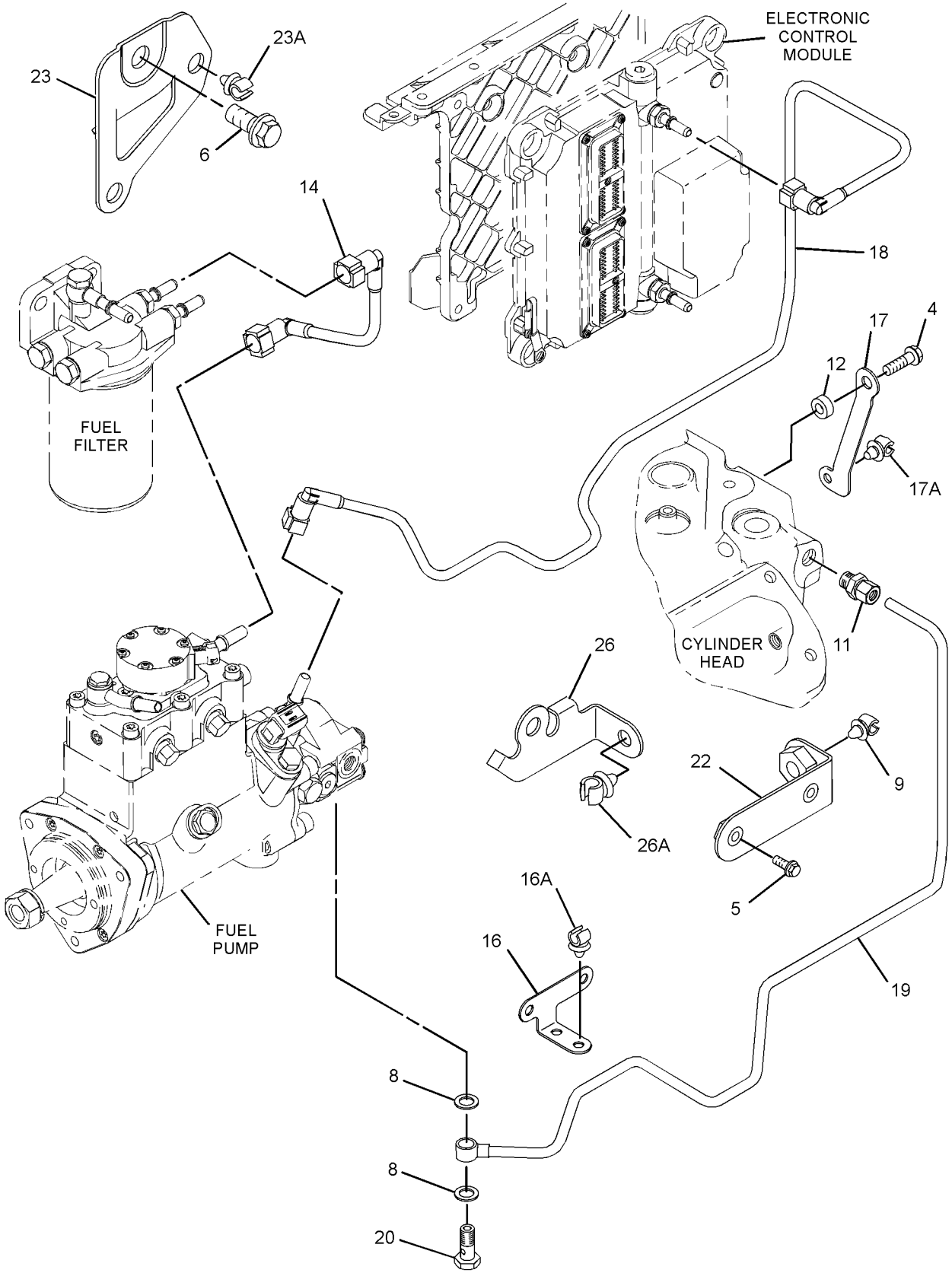

GRAPHIC #2 **<END>** g01405297

276-8398 PUMP GP-FUEL INJECTION

S/N: C6E1-UP

PART OF 303-2926 PUMP GP-FUEL INJECTION

AN ATTACHMENT

SMCS-1251, 1290

i05330940

NOTE	REF NO	GRAPHIC REF	PART NUMBER	QTY	PART NAME 1 2 3 4 5 6 (PRODUCT LEVEL)	SEE PAGE
	1	1	**228-7100**	1	SEAL-O-RING	
	2	1	**238-0120**	1	SENSOR GP-SPEED (SECONDARY, TIMING)	
	3	1	**247-6019**	1	SEAL	
	4	1	**248-1066**	1	FITTING-FUEL	
	5	1	**293-0249**	1	PUMP GP-FUEL TRANSFER	
	6	1	**117-1385**	1	SEAL-O-RING	
M	7	1	**5A-3604**	5	BOLT-SOCKET HEAD (M8X1.25X25-MM)	
	8	1	**6D-7889**	1	SEAL-O-RING	
M	9	1	**8T-4200**	1	BOLT (M8X1.25X16-MM)	

M - METRIC PART

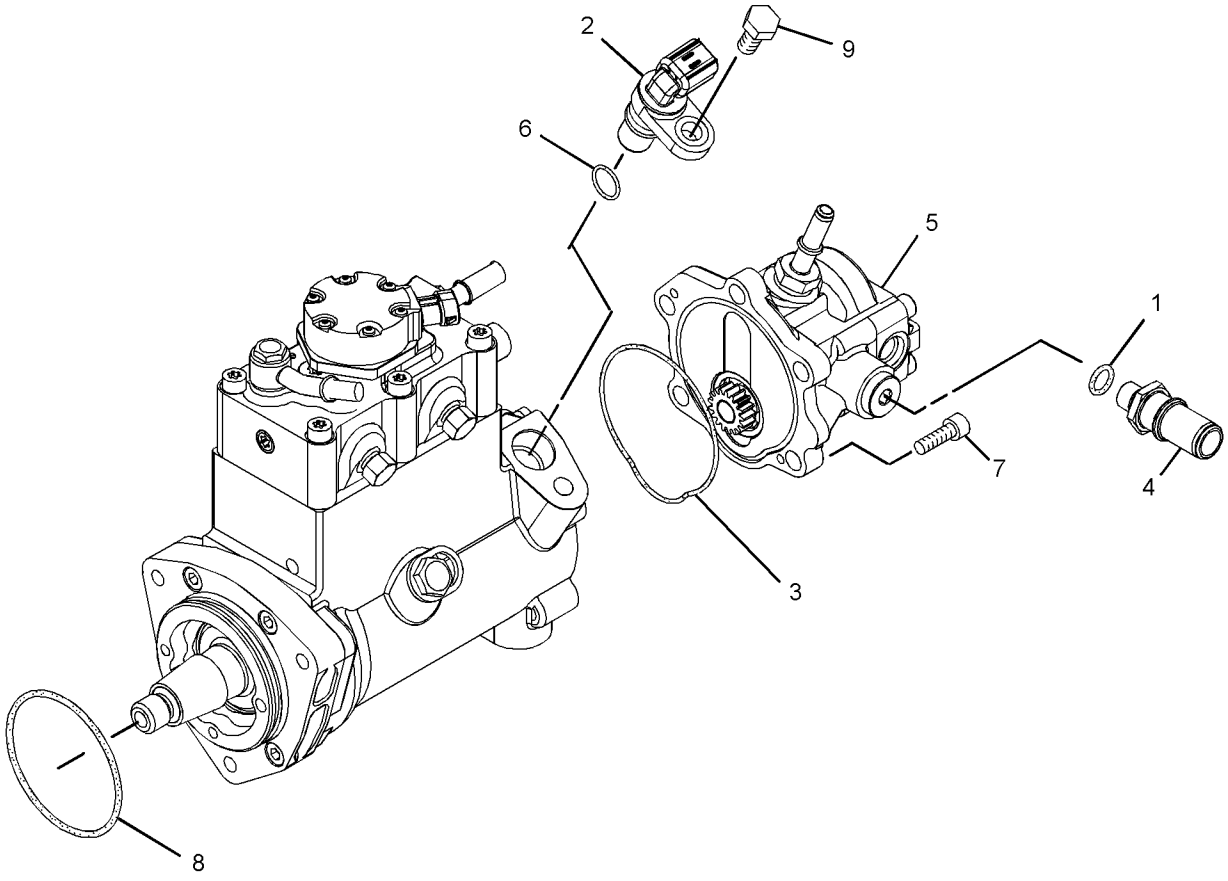

GRAPHIC #1

<END>

g01427445

303-2926 PUMP GP-FUEL INJECTION

S/N: C6E1-UP

PART OF 378-4731 ENGINE AR-PRIMARY

AN ATTACHMENT

SMCS-1251, 1290

i04913268

NOTE	REF NO	GRAPHIC REF	PART NUMBER	QTY	PART NAME 1 2 3 4 5 6 (PRODUCT LEVEL)	SEE PAGE
M	1	1,2	**6I-0217**	6	BOLT (M8X1.25X20-MM)	
M	2	1	**6I-0254**	4	BOLT (M8X1.25X30-MM)	
M	3	1	**6I-0260**	4	BOLT (M8X1.25X25-MM)	
	4	2	**6I-0456**	4	BOLT (M8X1.25X45-MM)	
	5	1	**6I-4374**	2	BOLT (M8X1.25X60-MM)	
	6	1	**6I-4793**	1	BOLT (M8X1.25X50-MM)	
	7	2	**7W-2632**	1	WASHER (8.5X16.8X1.6-MM THK)	
M	8	1	**101-3895**	1	BOLT (M8X1.25X35-MM)	
M	9	3	**124-3815**	1	BOLT (M8X1.25X16-MM)	
	10	2	**155-0576**	8	MOUNT-ISOLATION	
	11	1	**216-9752**	2	WASHER	
	12	2	**217-0099**	4	SPACER (8.2X25X2-MM THK)	
	13	1	**225-8524**	1	BOLT-SPECIAL (BANJO)	
	14	1	**230-8989**	1	GEAR-FUEL PUMP (68-TEETH)	
	15	1	**232-3149**	6	WASHER (8.35X16.85X1.55-MM THK)	
	16	1	**238-8028**	1	TIE-CABLE	
	17	1	**241-4291**	4	SCREW	
	18	1	**265-8125**	1	RAIL AS-FUEL	
	19	2	**268-6677**	1	BRACKET AS	
		2	**260-3718**	1	BRACKET	
	19A	2	**260-3939**	1	SCREW-HEX HEAD	
	20	2	**268-6678**	1	BRACKET AS	
		2	**260-3719**	1	BRACKET	
	20A	2	**260-3939**	1	SCREW-HEX HEAD	
Y	30	1	**276-8398**	1	PUMP GP-FUEL INJECTION	83
	31	1	**278-5168**	6	CLAMP-INJECTOR	
	32	1	**278-5170**	6	BOLT	
	33	1	**278-5180**	2	CLIP	
	34	2	**278-5201**	2	CONNECTION	
	35	2	**278-5202**	2	SEAL-O-RING	
	36	2	**278-5203**	4	SPACER	
	39	3	**278-5225**	1	KIT-SENSOR (ENGINE OIL PRESSURE)	
	39A	3	**278-5226**	1	SEAL-O-RING	
	40	3	**278-5228**	1	KIT-SENSOR (ENGINE SPEED)	
	40A	3	**278-5227**	1	SEAL-O-RING	
	41	3	**278-5272**	1	KIT-SENSOR (AIR TEMPERATURE)	
	41A	3	**278-5226**	1	SEAL-O-RING	
	42	3	**278-5273**	1	KIT-SENSOR (AIR PRESSURE)	
	42A	3	**199-9252**	1	SEAL-O-RING	
	43	3	**278-5307**	1	KIT-SENSOR (WATER TEMPERATURE)	
	43A	3	**199-9267**	1	SEAL-O-RING	
	44	1	**278-5308**	1	KIT-SENSOR (FUEL RAIL PRESSURE)	
	44A	1	**278-5309**	1	WASHER	
	45	1	**280-1889**	4	CLAMP	
	46	1	**280-1890**	4	CLAMP	
	47	1	**280-1891**	4	ISOLATOR	
	48	1	**282-3233**	1	BRACKET	
R	49	2	**286-3683**	1	CONTROL GP-UNPROGRAMMED	
	50	1	**287-6838**	1	BRACKET	
	51	1	**287-6839**	2	BOLT	
	52	1	**290-3910**	1	LINE-FUEL INJECTION	
	53	1	**290-3911**	1	LINE-FUEL INJECTION (CYL NO. 1)	
	54	1	**290-3912**	1	LINE-FUEL INJECTION (CYL NO. 2)	
	55	1	**290-3913**	1	LINE-FUEL INJECTION (CYL NO. 3)	
	56	1	**290-3914**	1	LINE-FUEL INJECTION (CYL NO. 4)	
	57	1	**290-3915**	1	LINE-FUEL INJECTION (CYL NO. 5)	
	58	1	**290-3916**	1	LINE-FUEL INJECTION (CYL NO. 6)	

303-2926 **PUMP GP-FUEL INJECTION (*contd.*)** **i04913268**

NOTE	REF NO	GRAPHIC REF	PART NUMBER	QTY	PART NAME 1 2 3 4 5 6 (PRODUCT LEVEL)	SEE PAGE
	59	1	**292-0848**	1	TUBE	
Y	60	1	**292-3780**	6	INJECTOR GP-FUEL	79
	60A	1	**274-1639**	1	SEAL	
	60B	1	**287-7637**	1	WASHER	
	61	2	**293-9901**	1	BRACKET	
	62	1	**300-2940**	1	BRACKET	
	63	2	**278-5209**	1	BRACKET	
	64	2	**278-5210**	1	BOLT	
F			**278-4138**	5	PROTECTION GP-FUEL SYSTEM	

F - NOT SHOWN
M - METRIC PART
R - REMFG PART MAY BE AVAILABLE
Y - SEPARATE ILLUSTRATION

303-2926 **PUMP GP-FUEL INJECTION (*contd.*)** **i04913268**

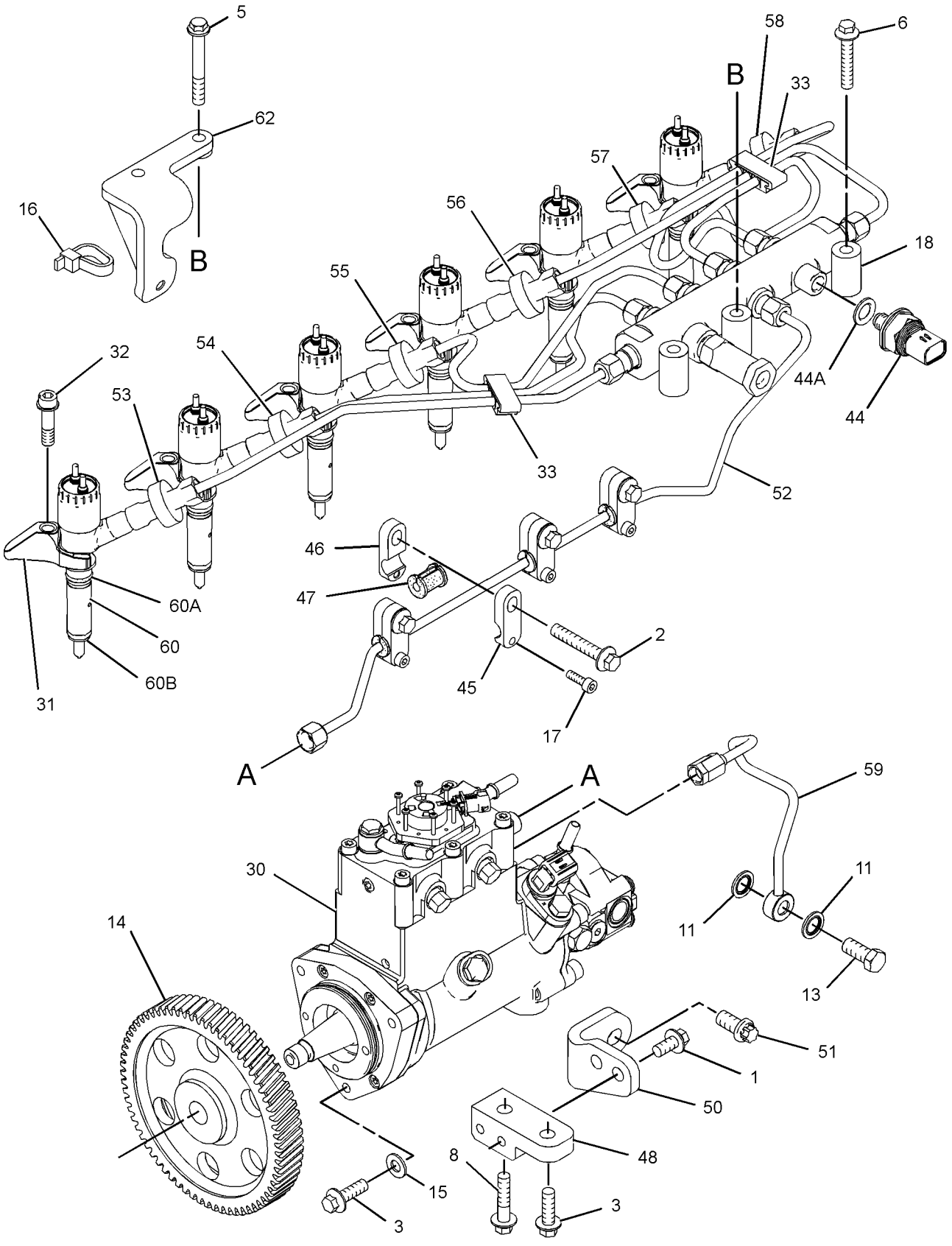

GRAPHIC #1 g01361098

303-2926 **PUMP GP-FUEL INJECTION (*contd.*)** **i04913268**

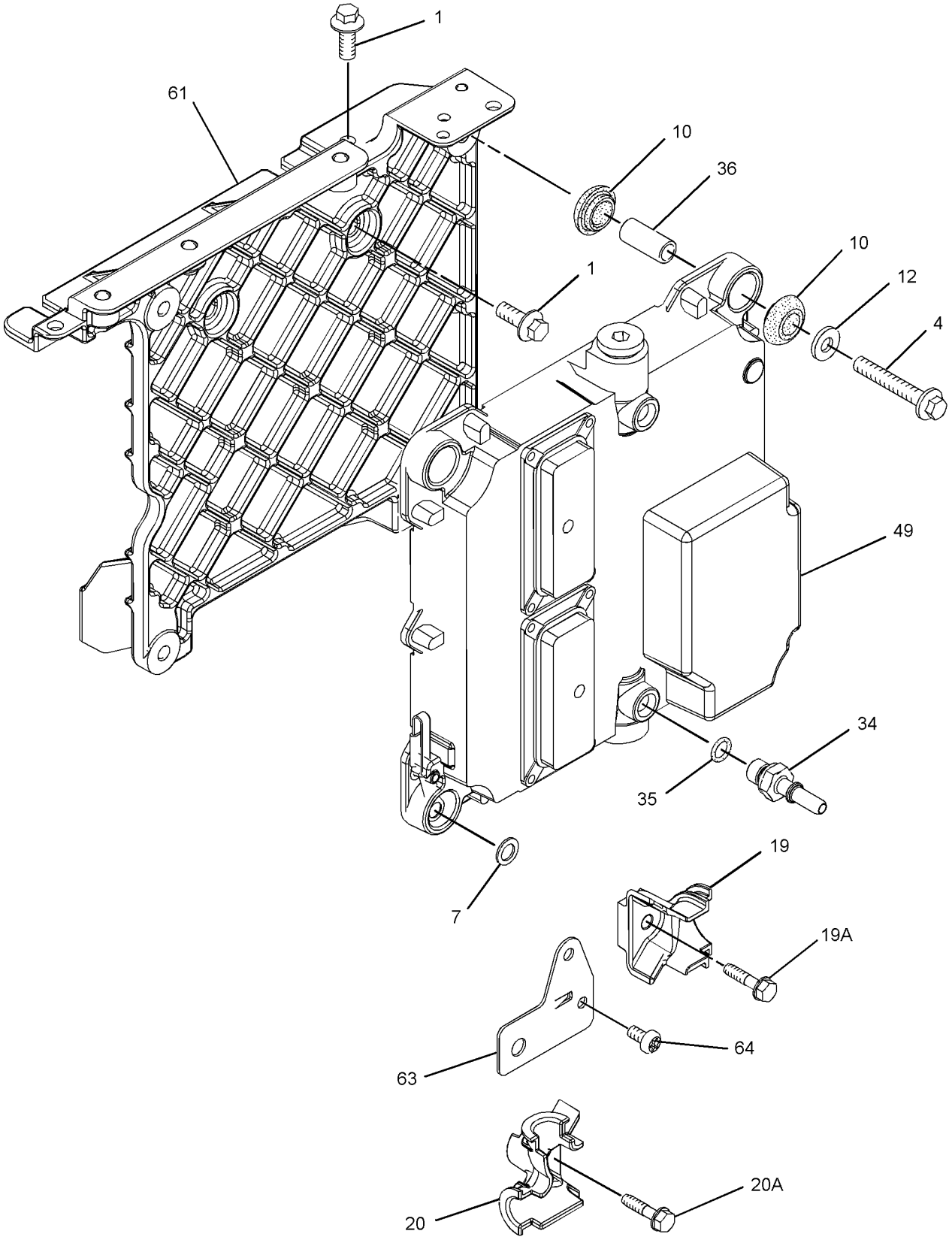

GRAPHIC #2 g01361099

303-2926 **PUMP GP-FUEL INJECTION (*contd.*)** **i04913268**

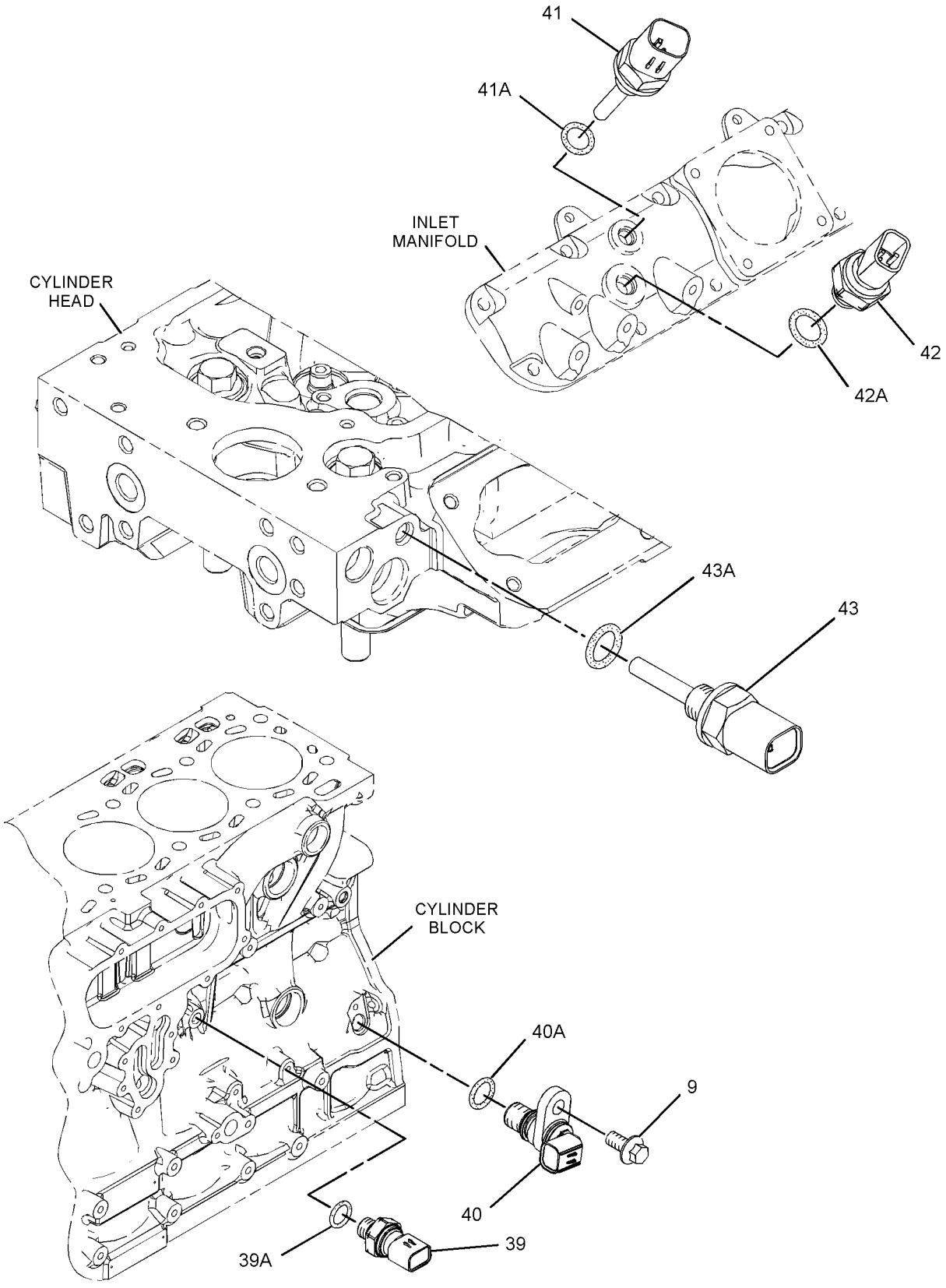

GRAPHIC #3 **<END>** g01361101

347-9601 TANK & MTG GP-FUEL

S/N: MBF1-UP; M4M1-UP; M5P1-UP; SDT1-UP

PART OF 374-9723, 374-9724, 374-9725, 374-9726 CHASSIS AR

SMCS-1273 **i05291235**

NOTE	REF NO	GRAPHIC REF	PART NUMBER	QTY	PART NAME 1 2 3 4 5 6 (PRODUCT LEVEL)	SEE PAGE
	1	1	**213-9684**	4	ANGLE	
Y	2	1	**374-9802**	1	TANK GP-FUEL	90
	3	1	**355-3204**	1	INSULATION (RH)	
	4	1	**355-3205**	1	INSULATION (LH)	
	5	1	**5P-4116**	1	WASHER-HARD (8.8X20.5X2-MM THK)	
M	6	1	**7X-2536**	1	BOLT (M8X1.25X14-MM)	
	7	1	**7X-7729**	8	WASHER (11X25X3-MM THK)	
	8	1	**8T-4121**	8	WASHER-HARD (11X21X2.5-MM THK)	
M	9	1	**8T-4133**	8	NUT (M10X1.5-THD)	
M	10	1	**8T-4196**	8	BOLT (M10X1.5X35-MM)	

M - METRIC PART
Y - SEPARATE ILLUSTRATION

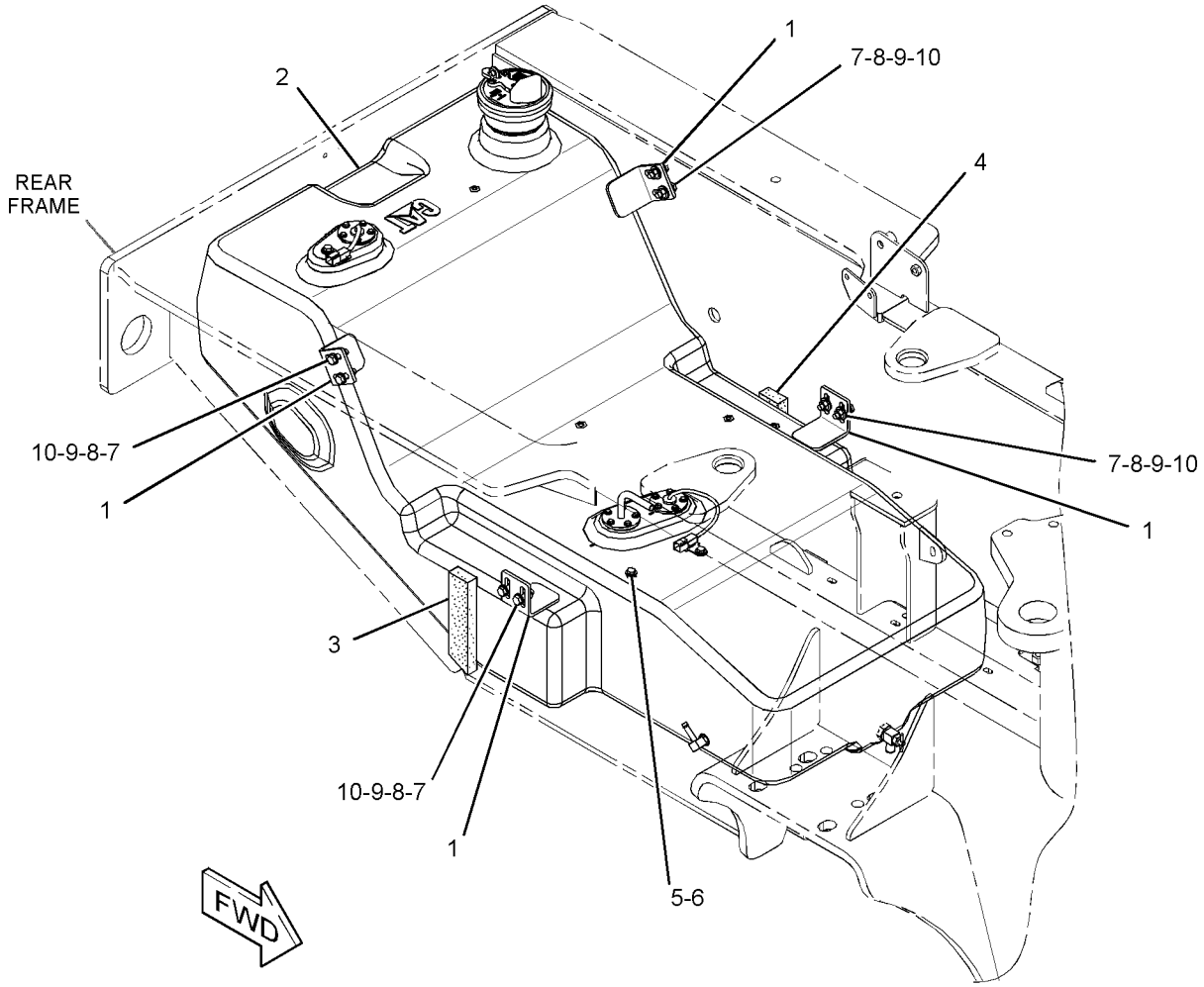

GRAPHIC #1 **<END>** g02722241

374-9802 TANK GP-FUEL

S/N: MBF1-UP; M4M1-UP; M5P1-UP; SDT1-UP
242-L (63.9-US GAL)
PART OF 347-9601 TANK & MTG GP-FUEL

SMCS-1273 **i05349080**

NOTE	REF NO	GRAPHIC REF	PART NUMBER	QTY	PART NAME 1 2 3 4 5 6 (PRODUCT LEVEL)	SEE PAGE
	1	1	**130-5300**	2	CLIP	
	2	1	*165-2273*	1	VALVE GP-SHUTOFF (FUEL TANK DRAIN)	
		1	**3K-0360**	1	SEAL-O-RING	
		1	**6V-7238**	1	VALVE-SHUTOFF (FUEL TANK DRAIN)	
	3	1	*217-8185*	1	ELBOW AS	
		1	**3K-0360**	1	SEAL-O-RING	
		1	**9X-3982**	1	ELBOW	
	4	1	**306-8127**	1	ADAPTER	
	5	1	**323-5867**	1	SENDER AS-FUEL LEVEL	
		1	**8T-8729**	2	PIN-CONNECTOR (16-GA TO 18-GA)	
		1	**102-8802**	1	KIT-RECEPTACLE (2-PIN)	
					(INCLUDES RECEPTACLE AS & WEDGE)	
	6	1	**357-7399**	1	CAP GP-FUEL FILLER	
		1	**349-7059**	1	CAP AS-FUEL (LOCKABLE, VENTED)	
		1	**9X-8600**	1	SEAL-O-RING	
		1	**350-7735**	1	KIT-CAP FILTER (FUEL TANK)	
					(INCLUDES BREATHER BODY, BREATHER GASKET, MOUNTING SCREWS & WASHERS)	
		1	**364-1995**	1	BOOT-FUEL CAP	
	7	1	**362-6458**	1	SENDER AS-FUEL LEVEL	
		1	**8T-8729**	2	PIN-CONNECTOR (16-GA TO 18-GA)	
		1	**102-8802**	1	KIT-RECEPTACLE (2-PIN)	
					(INCLUDES RECEPTACLE AS & WEDGE)	
	8	1	**374-9758**	1	TANK-FUEL	
	9	1	**374-9815**	1	TUBE AS-FUEL	
	10	1	**5P-4116**	2	WASHER-HARD (8.8X20.5X2-MM THK)	
	11	1	**6V-7699**	15	WASHER-HARD (5.5X13X1.6-MM THK)	
M	12	1	**7I-2273**	10	BOLT (M5X0.8X16-MM)	
	13	1	**8C-6438**	1	SCREW-PAN HEAD (6-20X12.7-MM)	
M	14	1	**8T-0289**	5	BOLT (M5X0.8X20-MM)	
M	15	1	**8T-4199**	2	BOLT (M8X1.25X12-MM)	
	16	1	**9P-7121**	1	STRAINER-FUEL (TANK)	
	17	1	**9R-7240**	3	GASKET	

M - METRIC PART

374-9802 **TANK GP-FUEL (*contd.*)** **i05349080**

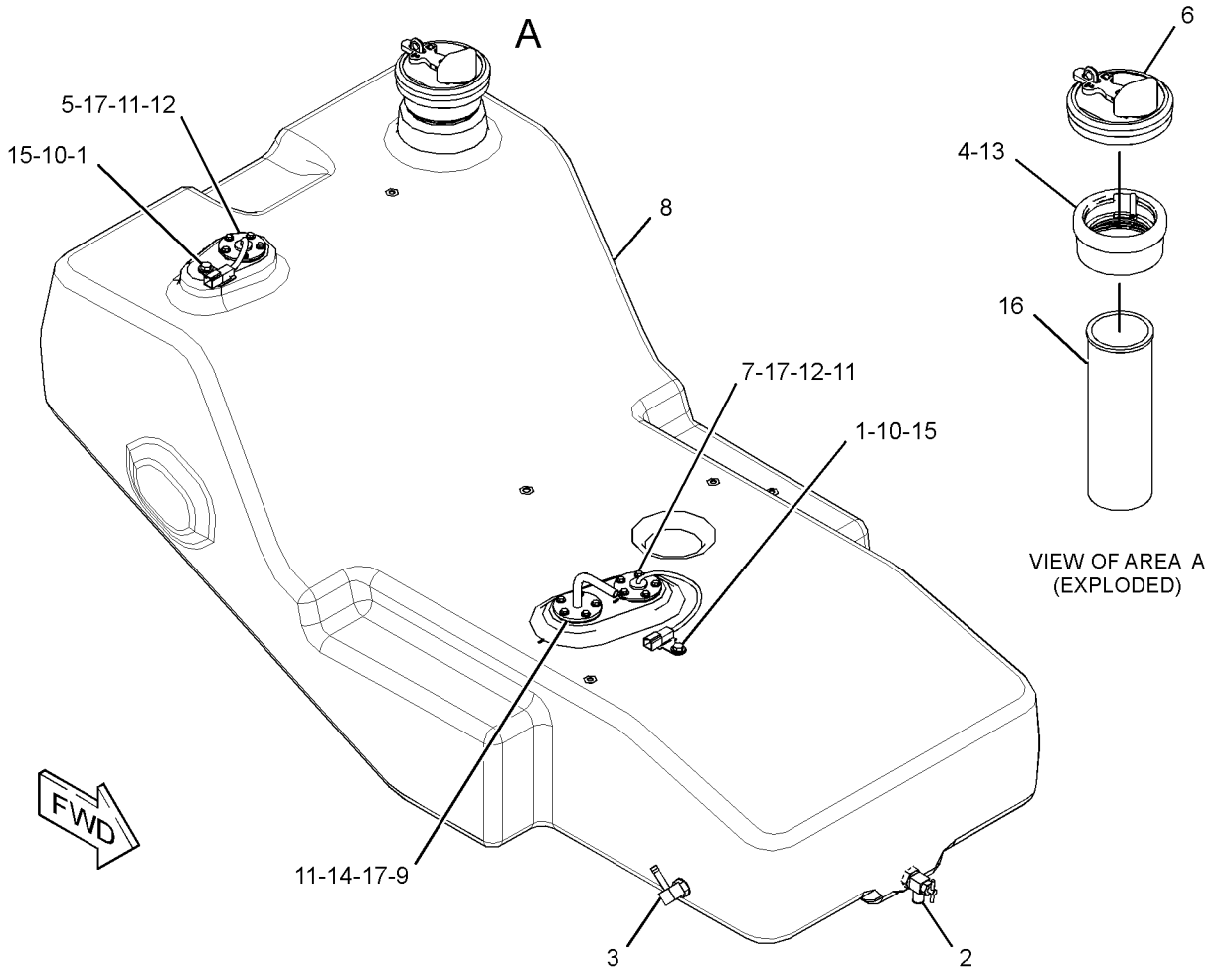

GRAPHIC #1 **<END>** g03066502

366-9145 ALTERNATOR GP-CHARGING

S/N: MBF1-UP; M4M1-UP; M5P1-UP; SDT1-UP
24-VOLT, 100-AMPERE
PART OF 377-5161 INSTALLATION AR-ENGINE
AN ATTACHMENT

SMCS-1405 **i05303914**

NOTE	REF NO	GRAPHIC REF	PART NUMBER	QTY	PART NAME 1 2 3 4 5 6 (PRODUCT LEVEL)	SEE PAGE
	1	1	**390-7340**	1	PULLEY-ALTERNATOR (8-GROOVE)	
	2	1	**286-9551**	1	BEARING-ALTERNATOR	
	3	1	**378-9640**	1	ALTERNATOR (24-VOLT, 100-AMPERE)	
	4	1	**340-2393**	1	BRACKET AS-ALTERNATOR	
		1	**161-9820**	2	PIN	
	5	1	**349-3261**	1	PLATE-TENSIONER	
M	6	1	**7X-2543**	1	BOLT (M10X1.5X120-MM)	
M	7	1	**8T-0389**	1	LOCKNUT (M10X1.5-THD)	
	8	1	**8T-4121**	8	WASHER-HARD (11X21X2.5-MM THK)	
M	9	1	**8T-4185**	2	BOLT (M10X1.5X50-MM)	
M	10	1	**8T-4195**	3	BOLT (M10X1.5X30-MM)	
M	11	1	**8T-5005**	2	BOLT (M10X1.5X70-MM)	

M - METRIC PART

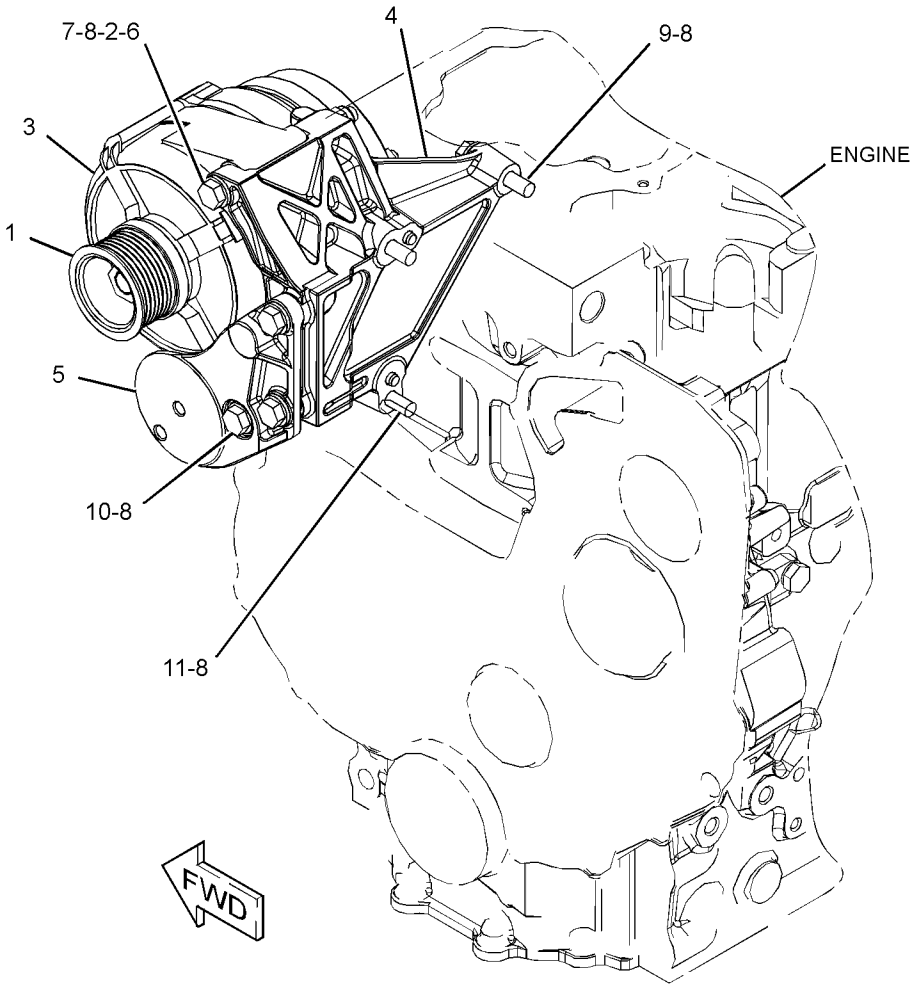

GRAPHIC #1 **<END>** g03386262

379-8247 BATTERY & WIRING GP

S/N: MBF1-UP; M4M1-UP; M5P1-UP; SDT1-UP

PART OF 374-9732 ELECTRICAL AR

SMCS-1401, 1402, 1408

i05270686

NOTE	REF NO	GRAPHIC REF	PART NUMBER	QTY	PART NAME 1 2 3 4 5 6 (PRODUCT LEVEL)	SEE PAGE
	1	1	**3E-8320**	1	PLATE-INSTRUCTION (BATTERY)	
	2	1	**6W-6005**	1	HOLD-DOWN-BATTERY	
Y	3	1	**7N-0718**	1	SWITCH GP-DISCONNECT (BATTERY)	157
	4	1	**8S-2634**	1	COVER AS	
	5	1	**102-8703**	7	PLATE-COVER	
	6	1	**111-7758**	1	ROD	
M	7	1	**154-4890**	6	BOLT-STACKING (M8X1.25X33-MM)	
	8	1	**177-2215**	4	STRAP-DUAL CLAMP	
	9	1	**183-1025**	1	STRAP AS	
	10	1	**206-0452**	6	PLATE	
	11	1	**327-0325**	1	STRAP-CABLE	
	12	1	**354-0258**	1	CABLE AS-BATTERY (POSITIVE)	
E		1	**159-8049**		CABLE (00-GA, RED) (31-CM)	
		1	**1M-6119**	1	BOLT (5/16-18X1.375-IN)	
		1	**1M-6120**	1	NUT (5/16-18-THD)	
		1	**290-2077**	1	COVER-TERMINAL (RED)	
		1	**299-6082**	1	COVER-TERMINAL (RED)	
E		1	**135-5009**		TUBE-HEAT SHRINK (32-MM DIA) (5-CM)	
		1	**274-9183**	1	TERMINAL-RING	
	13	1	**354-0260**	1	CABLE AS-BATTERY (NEGATIVE)	
E		1	**159-8050**		CABLE (00-GA, BLACK) (64-CM)	
		1	**249-9042**	1	TERMINAL AS-BATTERY	
		1	**1M-6119**	1	BOLT (5/16-18X1.375-IN)	
		1	**1M-6120**	1	NUT (5/16-18-THD)	
		1	**249-9066**	1	COVER-TERMINAL (BLACK)	
		1	**1S-7251**	1	TERMINAL-CABLE (00-GA, 1/2-IN SCREW)	
E		1	**6V-2722**		TUBE-HEAT SHRINK (25.4-MM DIA) (0.1-M)	
	14	1	**354-0261**	1	CABLE AS (GROUND)	
		1	**1S-7252**	1	TERMINAL-CABLE (00-GA, 3/8-IN SCREW)	
D		1	**6V-2722**		TUBE-HEAT SHRINK (25.4-MM DIA) (0.1-M)	
E		1	**159-8050**		CABLE (00-GA, BLACK) (57-CM)	
E		1	**135-5009**		TUBE-HEAT SHRINK (32-MM DIA) (5-CM)	
		1	**274-9183**	1	TERMINAL-RING	
	15	1	**354-0263**	1	CABLE AS-BATTERY (POSITIVE)	
E		1	**159-8049**		CABLE (00-GA, RED) (52-CM)	
		1	**249-9042**	1	TERMINAL AS-BATTERY	
		1	**1M-6119**	1	BOLT (5/16-18X1.375-IN)	
		1	**1M-6120**	1	NUT (5/16-18-THD)	
		1	**249-9066**	1	COVER-TERMINAL (BLACK)	
		1	**1M-6119**	1	BOLT (5/16-18X1.375-IN)	
		1	**1M-6120**	1	NUT (5/16-18-THD)	
		1	**290-2077**	1	COVER-TERMINAL (RED)	
	16	1	**373-4808**	1	RECEPTACLE AS	
E		1	**159-8049**		CABLE (00-GA, RED) (48-CM)	
E		1	**159-8050**		CABLE (00-GA, BLACK) (53-CM)	
		1	**301-0091**	1	COVER-TERMINAL (RED)	
		1	**1S-7251**	1	TERMINAL-CABLE (00-GA, 1/2-IN SCREW)	
		1	**4D-1248**	1	TERMINAL (00-GA, 3/8-IN SCREW)	
	17	1	**379-8286**	1	CABLE AS (POSITIVE)	
E		1	**159-8049**		CABLE (00-GA, RED) (161-CM)	
		1	**301-0091**	2	COVER-TERMINAL (RED)	
		1	*311-6112*	2	TERMINAL AS-BATTERY	
					(EACH INCLUDES)	
		1	**1S-7251**	1	TERMINAL-CABLE (00-GA, 1/2-IN SCREW)	
E		1	**351-9309**		TUBE-HEAT SHRINK (32-MM DIA) (4-CM)	
	18	1	**379-8287**	1	CABLE AS-GROUND	

379-8247 **BATTERY & WIRING GP (*contd.*)** **i05270686**

NOTE	REF NO	GRAPHIC REF	PART NUMBER	QTY	PART NAME 1 2 3 4 5 6 (PRODUCT LEVEL)	SEE PAGE
E		1	**159-8050**		CABLE (00-GA, BLACK) (179-CM)	
		1	*311-6112*	2	TERMINAL AS-BATTERY	
					(EACH INCLUDES)	
		1	**1S-7251**	1	TERMINAL-CABLE (00-GA, 1/2-IN SCREW)	
E		1	**351-9309**		TUBE-HEAT SHRINK (32-MM DIA) (4-CM)	
	19	1	**379-8289**	1	CABLE AS	
		1	**2L-8049**	1	TERMINAL-RING (6-GA, NO. 10 SCREW)	
					—OR—	
		1	**2L-8057**	1	TERMINAL-RING (8-GA, NO. 10 SCREW)	
		1	**2L-8050**	1	TERMINAL-RING (6-GA, 1/4-IN SCREW)	
					—OR—	
		1	**2L-8058**	1	TERMINAL-RING (8-GA, 1/4-IN SCREW)	
D		1	**5P-5675**		WIRE (6-GA, BLACK) (2.3-M)	
	20	1	**382-1087**	1	BRACKET AS	
	21	1	**392-6615**	1	INSULATION	
	22	1	**156-5306**	14	CLAMP-HALF	
	23	1	**303-5853**	12	CLAMP-HALF	
	24	1	**3T-5760**	2	BATTERY GP (12-VOLT, 750-CCA)	
					(EACH INCLUDES)	
		1	**123-1373**	6	CAP AS-FILLER (BATTERY)	
	25	1	**4S-1962**	1	CLIP	
	26	1	**5P-7177**	1	RETAINER	
	27	1	**6V-8188**	6	NUT (1/2-13-THD)	
	28	1	**7V-6571**	1	GROMMET	
M	29	1	**7X-2537**	7	BOLT (M8X1.25X35-MM)	
	30	1	**8C-6358**	1	BLOCK AS-JUNCTION (BATTERY)	
		1	**1D-5117**	3	NUT-JAM (1/2-13-THD)	
		1	**8T-3519**	3	BOLT-BRONZE (1/2-13X2-IN)	
M	31	1	**8T-0389**	7	LOCKNUT (M10X1.5-THD)	
	32	1	**8T-4121**	14	WASHER-HARD (11X21X2.5-MM THK)	
M	33	1	**8T-4137**	2	BOLT (M10X1.5X20-MM)	
M	34	1	**8T-4186**	6	BOLT (M10X1.5X40-MM)	
	35	1	**8T-4222**	1	WASHER-PLATED (11X32X2.5-MM THK)	
	36	1	**8T-4223**	7	WASHER-HARD (13.5X25.5X3-MM THK)	
M	37	1	**8T-4244**	1	NUT (M12X1.75-THD)	

D - ORDER BY THE METER
E - ORDER BY THE CENTIMETER
M - METRIC PART
Y - SEPARATE ILLUSTRATION

379-8247 **BATTERY & WIRING GP (*contd.*)** **i05270686**

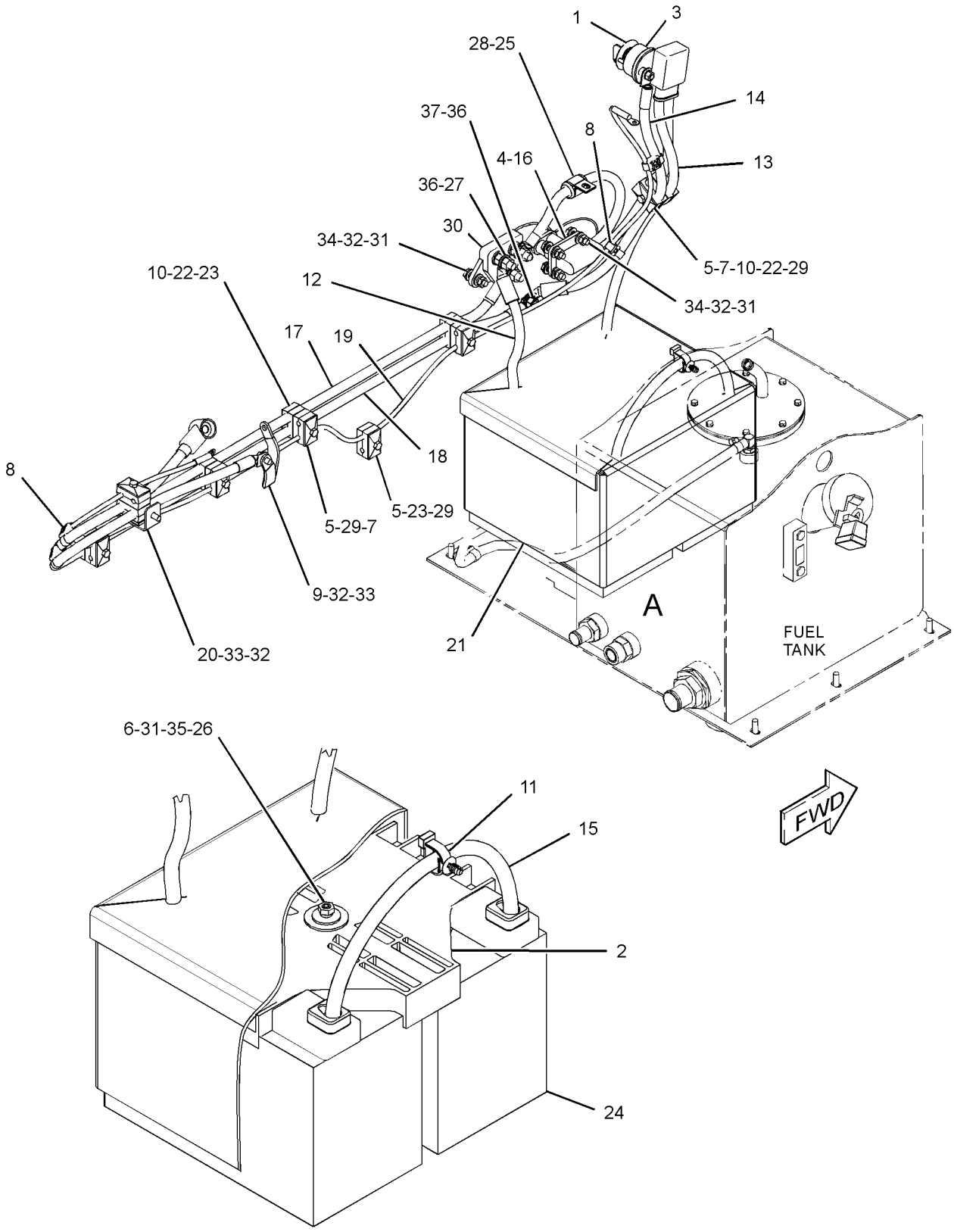

VIEW OF AREA A

GRAPHIC #1 **<END>** g03115083

379-8260 CONTROL & MTG GP-MACHINE—PROPEL FORCE

S/N: MBF1-UP; M4M1-UP; M5P1-UP; SDT1-UP
PART OF 415-9367 DISTRIBUTION AR
AN ATTACHMENT

SMCS-1931, 7600 **i05300068**

NOTE	PART NUMBER	QTY	PART NAME 1 2 3 4 5 6 (PRODUCT LEVEL)	SEE PAGE
Y	*388-7411*	1	ELECTRONICS GP-MACHINE	97
Y	*418-9844*	1	FILM GP (COMPACTION CONTROL)	504
Y	*359-7567*	1	FITTING GP-QUICK DISCONNECT	330
Y	*379-8265*	1	WIRING GP-SENSOR	186

Y - SEPARATE ILLUSTRATION

<END>

374-9732 ELECTRICAL AR

S/N: MBF1-UP; M4M1-UP; M5P1-UP; SDT1-UP
PART OF 374-9713, 374-9714, 374-9715, 374-9716 COMMON AR

SMCS-1408 **i05270683**

NOTE	PART NUMBER	QTY	PART NAME 1 2 3 4 5 6 (PRODUCT LEVEL)	SEE PAGE
Y	*379-8247*	1	BATTERY & WIRING GP	93
Y	*387-6498*	1	WARNING GP-BACKUP	162
Y	*379-8248*	1	WIRING GP-MACHINE	179
Y	*354-0270*	1	WIRING GP-SENSOR (DRUM SPEED)	182

Y - SEPARATE ILLUSTRATION

<END>

262-1421 ELECTRONICS GP-COMMUNICATION—PRODUCT LINK 300

S/N: MBF1-UP; M4M1-UP; M5P1-UP; SDT1-UP
PART OF 355-0624, 355-3038 INSTALLATION GP-COMMUNICATION
AN ATTACHMENT

SMCS-7606, 7610, 7620 **i05210535**

NOTE	PART NUMBER	QTY	PART NAME 1 2 3 4 5 6 (PRODUCT LEVEL)	SEE PAGE
	355-5105	1	SOFTWARE GP-COMMUNICATION (PRODUCT LINK 300)	
			-OR-	
	355-9764	1	SERVICE GP-COMMUNICATION (PRODUCT LINK 300)	
			(OPTIONAL SERVICE REPLACEMENT)(INCLUDES CONTROL GP & SOFTWARE)	
	7X-6315	1	STRAP AS-GROUND	
	126-7574	1	SCREW-PAN HEAD (8-32X9.52-MM)	
	134-4126	1	WASHER (4.52X8.28X0.76-MM THK)	

<END>

388-7411 ELECTRONICS GP-MACHINE

S/N: MBF1-UP; M4M1-UP; M5P1-UP; SDT1-UP
COMPACTION MEASUREMENT
PART OF 379-8260 CONTROL & MTG GP-MACHINE, 422-4428, 422-4429, 422-4430 SENSOR AR-COMPACTION, 379-8261, 379-8262 WIRING GP-SENSOR
AN ATTACHMENT

SMCS-7610, 7620 **i05289873**

NOTE	PART NUMBER	QTY	PART NAME 1 2 3 4 5 6 (PRODUCT LEVEL)	SEE PAGE
	373-4820	1	SOFTWARE GP-MACHINE (COMPACTION MEASUREMENT)	

<END>

388-7412 ELECTRONICS GP-MONITOR

S/N: MBF1-UP; M4M1-UP; M5P1-UP; SDT1-UP
PART OF 375-1604, 375-1609, 379-8395 GRADE CONTROL AR
AN ATTACHMENT

SMCS-7490, 7601, 7603, 7610, 7620 **i05272117**

NOTE	PART NUMBER	QTY	PART NAME 1 2 3 4 5 6 (PRODUCT LEVEL)	SEE PAGE
	375-0108	1	SOFTWARE GP-MONITOR	
	390-3373	1	SOFTWARE GP-MONITOR	
	420-5464	1	SOFTWARE GP-MONITOR	

<END>

388-7413 ELECTRONICS GP-MONITOR

S/N: MBF1-UP; M4M1-UP; M5P1-UP; SDT1-UP
PART OF 375-1607, 375-1612, 379-8396 GRADE CONTROL AR
AN ATTACHMENT

SMCS-7490, 7601, 7603, 7610, 7620 **i05272132**

NOTE	PART NUMBER	QTY	PART NAME 1 2 3 4 5 6 (PRODUCT LEVEL)	SEE PAGE
	382-0660	1	SOFTWARE GP-MONITOR	
			—OR—	
	375-0108	1	SOFTWARE GP-MONITOR	
			—OR—	
	420-5463	1	SOFTWARE GP-MONITOR	

<END>

277-4410 GLOW PLUG GP

S/N: C6E1-UP
PART OF 378-4731 ENGINE AR-PRIMARY
AN ATTACHMENT

SMCS-1412 **i04566901**

NOTE	REF NO	GRAPHIC REF	PART NUMBER	QTY	PART NAME 1 2 3 4 5 6 (PRODUCT LEVEL)	SEE PAGE
	1	1	**361-9875**	6	GLOW PLUG	
	2	1	**368-3150**	1	BUS BAR GP	
	2A	1	**277-4408**	1	CABLE AS	
	2B	1	**369-0473**	1	LOCKNUT	
	3	1	**100-4838**	1	BOLT (M6X20-MM)	
	4	1	**275-2428**	1	INSULATOR	
M	5	1	**5C-2890**	2	NUT (M6X1-THD)	
	6	1	**277-4409**	1	CAP	

M - METRIC PART

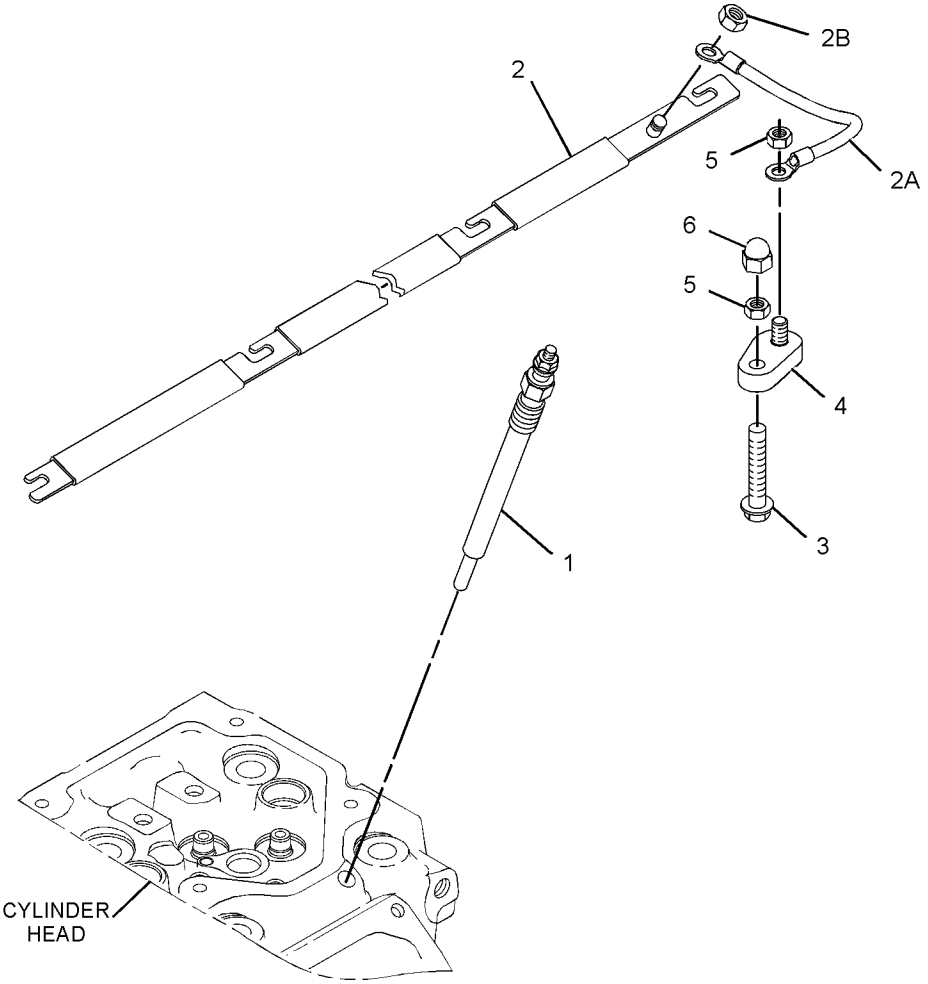

GRAPHIC #1 **<END>** g02064339

375-1604 GRADE CONTROL AR

S/N: MBF1-UP; M4M1-UP; M5P1-UP; SDT1-UP

AN ATTACHMENT

SMCS-7220 **i05272107**

NOTE	PART NUMBER	QTY	PART NAME 1 2 3 4 5 6 (PRODUCT LEVEL)	SEE PAGE
Y	*388-7412*	1	ELECTRONICS GP-MONITOR	97
Y	*375-1606*	1	MOUNTING GP-MONITOR	464
Y	*375-1605*	1	WIRING GP-GRADE CONTROL	168

Y - SEPARATE ILLUSTRATION

<END>

375-1607 GRADE CONTROL AR

S/N: MBF1-UP; M4M1-UP; M5P1-UP; SDT1-UP

AN ATTACHMENT

SMCS-7220 **i05272130**

NOTE	PART NUMBER	QTY	PART NAME 1 2 3 4 5 6 (PRODUCT LEVEL)	SEE PAGE
Y	*388-7413*	1	ELECTRONICS GP-MONITOR	97
Y	*375-1608*	1	MOUNTING GP-MONITOR	465
Y	*375-1605*	1	WIRING GP-GRADE CONTROL	168

Y - SEPARATE ILLUSTRATION

<END>

375-1609 GRADE CONTROL AR

S/N: MBF1-UP; M4M1-UP; M5P1-UP; SDT1-UP

AN ATTACHMENT

SMCS-7220 **i05272157**

NOTE	PART NUMBER	QTY	PART NAME 1 2 3 4 5 6 (PRODUCT LEVEL)	SEE PAGE
Y	*388-7412*	1	ELECTRONICS GP-MONITOR	97
Y	*375-1611*	1	MOUNTING GP-MONITOR	466
Y	*375-1610*	1	WIRING GP-GRADE CONTROL	170

Y - SEPARATE ILLUSTRATION

<END>

375-1612 GRADE CONTROL AR

S/N: MBF1-UP; M4M1-UP; M5P1-UP; SDT1-UP

AN ATTACHMENT

SMCS-7220 **i05291051**

NOTE	PART NUMBER	QTY	PART NAME 1 2 3 4 5 6 (PRODUCT LEVEL)	SEE PAGE
Y	*388-7413*	1	ELECTRONICS GP-MONITOR	97
Y	*375-1613*	1	MOUNTING GP-MONITOR (CB460)	467
Y	*375-1610*	1	WIRING GP-GRADE CONTROL (ROPS)	170

Y - SEPARATE ILLUSTRATION

<END>

379-8395 GRADE CONTROL AR

S/N: MBF1-UP; M4M1-UP; M5P1-UP; SDT1-UP

AN ATTACHMENT

SMCS-7220 **i05289904**

NOTE	PART NUMBER	QTY	PART NAME 1 2 3 4 5 6 (PRODUCT LEVEL)	SEE PAGE
Y	*388-7412*	1	ELECTRONICS GP-MONITOR	97
Y	*379-8382*	1	MOUNTING GP-INSTRUMENT	462
Y	*379-8380*	1	WIRING GP-GRADE CONTROL	172

Y - SEPARATE ILLUSTRATION

<END>

379-8396 GRADE CONTROL AR

S/N: MBF1-UP; M4M1-UP; M5P1-UP; SDT1-UP

AN ATTACHMENT

SMCS-7220 **i05289964**

NOTE	PART NUMBER	QTY	PART NAME 1 2 3 4 5 6 (PRODUCT LEVEL)	SEE PAGE
Y	*388-7413*	1	ELECTRONICS GP-MONITOR	97
Y	*379-8383*	1	MOUNTING GP-INSTRUMENT	463
Y	*379-8380*	1	WIRING GP-GRADE CONTROL	172

Y - SEPARATE ILLUSTRATION

<END>

420-1761 HARNESS AS-CAB

S/N: MBF1-UP; M4M1-UP; M5P1-UP; SDT1-UP
PART OF 352-7741 WIRING GP-CAB
AN ATTACHMENT

SMCS-1408 **i05296478**

NOTE	PART NUMBER	QTY	PART NAME 1 2 3 4 5 6 (PRODUCT LEVEL)	SEE PAGE
	123-7615	2	CONNECTOR	
	9X-3401	12	PIN-CONNECTOR (16-GA TO 18-GA)	
	155-2255	1	KIT-CONNECTING PLUG (12-PIN)	
	155-2265	2	KIT-CONNECTING PLUG (8-PIN)	
	155-2270	8	KIT-CONNECTING PLUG (2-PIN)	
	155-2271	1	KIT-CONNECTING PLUG (4-PIN)	
	155-2274	2	KIT-CONNECTING PLUG (6-PIN)	
	245-7434	3	KIT-CONNECTING PLUG (10-PIN)	
			(EACH PLUG KIT INCLUDES PLUG AS, WEDGE & INTERFACE SEAL)	
	8T-8737	22	PLUG-SEAL	
	102-8802	3	KIT-RECEPTACLE (2-PIN)	
	102-8804	1	KIT-RECEPTACLE (4-PIN)	
	102-8806	1	KIT-RECEPTACLE (8-PIN)	
	102-8801	1	KIT-RECEPTACLE (12-PIN)	
			(EACH RECEPTACLE KIT INCLUDES RECEPTACLE AS & WEDGE)	
	185-1861	23	SEAL-WIRE	
	194-5226	56	WIRE AS (16-GA)	
			—OR—	
	194-5227	56	WIRE AS (14-GA)	
	189-3158	1	SUPPRESSOR-ARC	
	5P-4571	2	TERMINAL-BLADE (14-GA TO 16-GA)	
	097-7234	2	TERMINAL-BLADE (18-GA TO 22-GA)	
	2L-8071	3	TERMINAL-RING (10-GA TO 12-GA, 1/2-IN SCREW)	
	6V-0491	4	TERMINAL-BLADE (14-GA TO 18-GA)	
	5P-2957	2	TERMINAL-BLADE (14-GA TO 16-GA)	
			—OR—	
	5P-5602	2	TERMINAL-BLADE (18-GA TO 22-GA)	
	204-1297	15	TERMINAL AS-BLADE (18-GA TO 20-GA)	
			(EACH INCLUDES)	
	235-4123	1	TERMINAL (18-GA TO 20-GA)	
E	**119-3662**		TUBE-HEAT SHRINK (10.85-MM DIA) (7-CM)	
E	**125-7874**		TUBE-HEAT SHRINK (5.72-MM DIA) (50-CM)	
E	**125-7875**		TUBE-HEAT SHRINK (7.44-MM DIA) (35-CM)	
E	**125-7876**		TUBE-HEAT SHRINK (17.78-MM DIA) (6-CM)	

E - ORDER BY THE CENTIMETER

<END>

379-8294 HARNESS AS-CHASSIS

S/N: MBF1-UP; M4M1-UP; M5P1-UP; SDT1-UP

PART OF 379-8248 WIRING GP-MACHINE

SMCS-1408 **i05272089**

NOTE	PART NUMBER	QTY	PART NAME 1 2 3 4 5 6 (PRODUCT LEVEL)	SEE PAGE
	8T-8799	6	BOOT	
	6L-3483	1	COVER-TERMINAL	
	245-1045	1	COVER	
	245-1044	2	LOCK-CONNECTOR	
	203-9000	1	PLUG AS (6-PIN)	
	203-8999	2	SEAL	
	203-9001	2	SLEEVE	
	9X-0141	1	PLUG AS-CONNECTOR (40-PIN)	
M	**3E-8557**	1	BOLT (M5X0.8X39.37-MM)	
	3E-4367	1	RING-RETAINING	
	9X-3490	2	SEAL-CONNECTOR (40-PIN)	
	155-2270	20	KIT-CONNECTING PLUG (2-PIN)	
	155-2271	2	KIT-CONNECTING PLUG (4-PIN)	
	174-0503	1	KIT-CONNECTING PLUG (3-PIN)	
			(EACH PLUG KIT INCLUDES PLUG AS, WEDGE & INTERFACE SEAL)	
	230-4011	4	PLUG AS-CONNECTOR (2-PIN)	
			(EACH INCLUDES)	
	264-7029	1	SEAL-CONNECTOR	
	245-1042	1	PLUG AS-CONNECTOR (64-PIN)	
M	**267-7207**	1	BOLT-SPECIAL	
	273-3143	1	PLUG AS-CONNECTOR	
	245-1048	35	PLUG-CONNECTOR	
	8T-8737	18	PLUG-SEAL	
	102-8802	2	KIT-RECEPTACLE (2-PIN)	
			(EACH INCLUDES RECEPTACLE AS & WEDGE)	
	134-2540	1	RESISTOR AS-CONNECTION (3-PIN)	
	240-7193	2	RESISTOR AS (500-OHM, 2-WATT)	
			(EACH INCLUDES)	
	9X-3401	2	PIN-CONNECTOR (16-GA TO 18-GA)	
	102-8802	1	KIT-RECEPTACLE (2-PIN)	
			(INCLUDES RECEPTACLE AS & WEDGE)	
	185-1861	3	SEAL-WIRE	
	203-9001	1	SLEEVE	
	7R-3354	2	SOCKET	
	180-9340	89	SOCKET-CONNECTOR (14-GA TO 18-GA)	
	267-9572	29	SOCKET-CONNECTION (18-GA)	
	189-3158	1	SUPPRESSOR-ARC	
B	**1P-0810**		TAPE-ELECTRICAL	
	158-6706	3	TERMINAL	
	5P-4571	1	TERMINAL-BLADE (14-GA TO 16-GA)	
	5P-3454	1	TERMINAL-RING (4-GA, 5/16-IN SCREW)	
	9G-4336	1	TERMINAL-RING (4-GA, 3/8-IN SCREW)	
	131-1488	2	TERMINAL AS-RING (6-GA TO 8-GA)	
			(EACH INCLUDES)	
	6H-3586	1	TERMINAL-RING (6-GA TO 8-GA, 1/4-IN SCREW)	
E	**119-3662**		TUBE-HEAT SHRINK (10.85-MM DIA) (4-CM)	
	131-1489	2	TERMINAL AS-RING (6-GA TO 8-GA)	
			(EACH INCLUDES)	
	6H-3592	1	TERMINAL-RING (6-GA TO 8-GA, 5/16-IN SCREW)	
E	**119-3662**		TUBE-HEAT SHRINK (10.85-MM DIA) (4-CM)	
	131-1492	1	TERMINAL AS-RING (6-GA TO 8-GA)	
	3K-4528	1	TERMINAL-RING (6-GA TO 8-GA, 1/2-IN SCREW)	
E	**119-3662**		TUBE-HEAT SHRINK (10.85-MM DIA) (4-CM)	
	2L-8067	2	TERMINAL-RING (10-GA TO 12-GA, 1/4-IN SCREW)	
	2L-8071	2	TERMINAL-RING (10-GA TO 12-GA, 1/2-IN SCREW)	
	7N-9017	1	TERMINAL-RING (18-GA TO 22-GA, NO. 10 SCREW)	

379-8294 **HARNESS AS-CHASSIS (*contd.*)** **i05272089**

NOTE	PART NUMBER	QTY	PART NAME 1 2 3 4 5 6 (PRODUCT LEVEL)	SEE PAGE
E	**125-7874**		TUBE-HEAT SHRINK (5.72-MM DIA) (80-CM)	
E	**125-7875**		TUBE-HEAT SHRINK (7.44-MM DIA) (15-CM)	

B - USE AS REQUIRED
E - ORDER BY THE CENTIMETER
M - METRIC PART

<END>

379-8301 HARNESS AS-CHASSIS

S/N: MBF1-UP; M4M1-UP
PART OF 422-4422, 422-4424 SENSOR & MOUNTING GP, 379-8264, 379-8266 WIRING GP-SENSOR
AN ATTACHMENT

SMCS-1408 **i05291858**

NOTE	PART NUMBER	QTY	PART NAME 1 2 3 4 5 6 (PRODUCT LEVEL)	SEE PAGE
	155-2255	1	KIT-CONNECTING PLUG (12-PIN)	
	155-2274	2	KIT-CONNECTING PLUG (6-PIN)	
			(EACH PLUG KIT INCLUDES PLUG AS, WEDGE & INTERFACE SEAL)	
	174-0503	1	KIT-CONNECTING PLUG (3-PIN)	
			(INCLUDES PLUG AS, WEDGES & INTERFACE SEAL)	
	102-8805	1	KIT-RECEPTACLE (6-PIN)	
			(INCLUDES RECEPTACLE AS & WEDGE)	
	8T-8737	17	PLUG-SEAL	
	134-2540	1	RESISTOR AS-CONNECTION (3-PIN)	
	180-9340	16	SOCKET-CONNECTOR (14-GA TO 18-GA)	
B	**1P-0810**		TAPE-ELECTRICAL	
E	**125-7874**		TUBE-HEAT SHRINK (5.72-MM DIA) (25-CM)	

B - USE AS REQUIRED
E - ORDER BY THE CENTIMETER

<END>

384-5956 HARNESS AS-CHASSIS

S/N: MBF1-UP; M4M1-UP; M5P1-UP; SDT1-UP
PART OF 388-2535 WIRING GP-CONSOLE
AN ATTACHMENT

SMCS-1408 **i05289944**

NOTE	PART NUMBER	QTY	PART NAME 1 2 3 4 5 6 (PRODUCT LEVEL)	SEE PAGE
	155-2255	2	KIT-CONNECTING PLUG (12-PIN)	
	155-2274	1	KIT-CONNECTING PLUG (6-PIN)	
			(EACH PLUG KIT INCLUDES PLUG AS, WEDGE & INTERFACE SEAL)	
	102-8805	1	KIT-RECEPTACLE (6-PIN)	
	102-8801	1	KIT-RECEPTACLE (12-PIN)	
			(EACH RECEPTACLE KIT INCLUDES RECEPTACLE AS & WEDGE)	
	9X-3401	24	PIN-CONNECTOR (16-GA TO 18-GA)	
	8T-8737	29	PLUG-SEAL	
	167-3692	1	RECEPTACLE AS-CONNECTOR (31-PIN)	
	194-5226	26	WIRE AS (16-GA)	
			—OR—	
	194-5227	26	WIRE AS (14-GA)	
	2L-8071	1	TERMINAL-RING (10-GA TO 12-GA, 1/2-IN SCREW)	
E	**125-7874**		TUBE-HEAT SHRINK (5.72-MM DIA) (20-CM)	

E - ORDER BY THE CENTIMETER

<END>

394-4791 HARNESS AS-CONSOLE

S/N: MBF1-UP; M4M1-UP; M5P1-UP; SDT1-UP
PART OF 379-8250 PANEL GP-INSTRUMENT
AN ATTACHMENT

SMCS-1408, 7451

i05289976

NOTE	PART NUMBER	QTY	PART NAME 1 2 3 4 5 6 (PRODUCT LEVEL)	SEE PAGE
	214-7404	1	CONNECTOR	
	155-2255	1	KIT-CONNECTING PLUG (12-PIN)	
	155-2256	1	KIT-CONNECTING PLUG (12-PIN)	
	155-2271	2	KIT-CONNECTING PLUG (4-PIN)	
			(EACH PLUG KIT INCLUDES PLUG AS, WEDGE & INTERFACE SEAL)	
	245-7434	4	KIT-CONNECTING PLUG (10-PIN)	
	9X-3401	24	PIN-CONNECTOR (16-GA TO 18-GA)	
	281-8811	1	PLUG AS-CONNECTOR (6-PIN)	
	264-7032	1	SEAL-CONNECTOR	
	225-3854	1	PLUG AS-CONNECTOR (31-PIN)	
	8T-8737	18	PLUG-SEAL	
	169-0705	1	SEAL	
	185-1861	31	SEAL-WIRE	
	180-9340	27	SOCKET-CONNECTOR (14-GA TO 18-GA)	
	275-0601	5	SOCKET-CONNECTOR (16-GA TO 20-GA)	
B	**1P-0810**		TAPE-ELECTRICAL	
	204-1297	26	TERMINAL AS-BLADE (18-GA TO 20-GA)	
			(EACH INCLUDES)	
	235-4123	1	TERMINAL (18-GA TO 20-GA)	
	5P-4571	2	TERMINAL-BLADE (14-GA TO 16-GA)	
E	**311-4859**		TUBE-HEAT SHRINK (5-CM)	
E	**125-7874**		TUBE-HEAT SHRINK (5.72-MM DIA) (75-CM)	

B - USE AS REQUIRED
E - ORDER BY THE CENTIMETER

<END>

435-7807 HARNESS AS-CONSOLE

S/N: MBF1-UP; M4M1-UP; M5P1-UP; SDT1-UP
PART OF 379-8251 PANEL GP-INSTRUMENT
AN ATTACHMENT

SMCS-1408, 7451

i05291110

NOTE	PART NUMBER	QTY	PART NAME 1 2 3 4 5 6 (PRODUCT LEVEL)	SEE PAGE
	9X-3401	24	PIN-CONNECTOR (16-GA TO 18-GA)	
	253-8110	1	PLUG	
	155-2256	1	KIT-CONNECTING PLUG (12-PIN)	
	155-2270	2	KIT-CONNECTING PLUG (2-PIN)	
	155-2271	2	KIT-CONNECTING PLUG (4-PIN)	
	174-0503	1	KIT-CONNECTING PLUG (3-PIN)	
			(EACH PLUG KIT INCLUDES PLUG AS, WEDGE & INTERFACE SEAL)	
	281-8811	1	PLUG AS-CONNECTOR (6-PIN)	
	264-7032	1	SEAL-CONNECTOR	
	225-3854	1	PLUG AS-CONNECTOR (31-PIN)	
	245-7434	4	KIT-CONNECTING PLUG (10-PIN)	
			(EACH INCLUDES PLUG AS, WEDGE & INTERFACE SEAL)	
	8T-8737	17	PLUG-SEAL	
	214-7404	1	CONNECTOR	
	134-2540	1	RESISTOR AS-CONNECTION (3-PIN)	
	228-4982	1	RESISTOR AS	
	102-8802	1	KIT-RECEPTACLE (2-PIN)	
			(INCLUDES RECEPTACLE AS & WEDGE)	
	6T-3610	1	RESISTOR	
	8T-8729	2	PIN-CONNECTOR (16-GA TO 18-GA)	
	169-0705	5	SEAL	
	185-1861	31	SEAL-WIRE	
	194-5226	23	WIRE AS (16-GA)	
			—OR—	
	194-5227	23	WIRE AS (14-GA)	
	283-8106	5	SOCKET-CONNECTOR (20-GA)	
	189-3158	1	SUPPRESSOR-ARC	
B	**1P-0810**		TAPE-ELECTRICAL	
	5P-4571	2	TERMINAL-BLADE (14-GA TO 16-GA)	
	204-1297	26	TERMINAL AS-BLADE (18-GA TO 20-GA)	
			(EACH INCLUDES)	
	235-4123	1	TERMINAL (18-GA TO 20-GA)	
E	**125-7874**		TUBE-HEAT SHRINK (5.72-MM DIA) (80-CM)	
E	**125-7875**		TUBE-HEAT SHRINK (7.44-MM DIA) (5-CM)	
E	**311-4859**		TUBE-HEAT SHRINK (5-CM)	

B - USE AS REQUIRED
E - ORDER BY THE CENTIMETER

<END>

318-8737 HARNESS AS-CONTROL

S/N: MBF1-UP; M4M1-UP; M5P1-UP; SDT1-UP
PART OF 355-0624, 355-3038 INSTALLATION GP-COMMUNICATION
AN ATTACHMENT

SMCS-1408 **i05270549**

NOTE	PART NUMBER	QTY	PART NAME 1 2 3 4 5 6 (PRODUCT LEVEL)	SEE PAGE
	126-1774	1	COVER-CONNECTOR	
	9X-3401	8	PIN-CONNECTOR (16-GA TO 18-GA)	
	155-2255	1	KIT-CONNECTING PLUG (12-PIN)	
			(INCLUDES PLUG AS, WEDGE & INTERFACE SEAL)	
	160-7690	1	PLUG AS-CONNECTOR (70-PIN)	
	159-9322	1	SEAL-O-RING	
	8T-8737	64	PLUG-SEAL	
	102-8801	1	KIT-RECEPTACLE (12-PIN)	
			(INCLUDES RECEPTACLE AS & ERDGE)	
	9X-3402	13	SOCKET-CONNECTOR (16-GA TO 18-GA)	
	194-5226	9	WIRE AS (16-GA)	
			—OR—	
	194-5227	9	WIRE AS (14-GA)	
	7K-1181	2	STRAP-CABLE	
E	**125-7874**		TUBE-HEAT SHRINK (5.72-MM DIA) (20-CM)	

E - ORDER BY THE CENTIMETER

<END>

433-1459 HARNESS AS-CONTROL

S/N: MBF1-UP; M4M1-UP; M5P1-UP; SDT1-UP
PART OF 433-1465, 433-1466, 433-1467, 433-1468 INSTALLATION GP-COMMUNICATION
AN ATTACHMENT

SMCS-1408 **i05291860**

NOTE	PART NUMBER	QTY	PART NAME 1 2 3 4 5 6 (PRODUCT LEVEL)	SEE PAGE
	392-4904	1	HARNESS AS-WIRING (PRODUCT LINK)	
E	**317-1204**		SLEEVE (300-CM)	
	102-8805	1	KIT-RECEPTACLE (6-PIN)	
			(INCLUDES RECEPTACLE AS & WEDGE)	
	9X-3401	11	PIN-CONNECTOR (16-GA TO 18-GA)	
			—OR—	
	126-1767	11	PIN-CONNECTOR (14-GA TO 16-GA)	
	155-2274	1	KIT-CONNECTING PLUG (6-PIN)	
			(INCLUDES PLUG AS, WEDGE & INTERFACE SEAL)	
	8T-8737	13	PLUG-SEAL	

E - ORDER BY THE CENTIMETER

<END>

391-5002 HARNESS AS-HEATER & AIR COND

S/N: MBF1-UP; M4M1-UP; M5P1-UP; SDT1-UP
PART OF 399-7742 AIR CONDITIONER GP
AN ATTACHMENT

SMCS-1408 **i05291201**

NOTE	PART NUMBER	QTY	PART NAME 1 2 3 4 5 6 (PRODUCT LEVEL)	SEE PAGE
	231-8141	1	GROMMET	
	7T-6739	1	HOUSING-PLUG	
	8T-8729	3	PIN-CONNECTOR (16-GA TO 18-GA)	
	9W-0852	5	PIN-CONNECTOR (14-GA TO 16-GA)	
	155-2270	1	KIT-CONNECTING PLUG (2-PIN)	
	155-2271	1	KIT-CONNECTING PLUG (4-PIN)	
			(EACH PLUG KIT INCLUDES PLUG AS, WEDGE & INTERFACE SEAL)	
	8T-8737	1	PLUG-SEAL	
	102-8806	1	KIT-RECEPTACLE (8-PIN)	
			(INCLUDES RECEPTACLE AS & WEDGE)	
	9X-3402	3	SOCKET-CONNECTOR (16-GA TO 18-GA)	
	126-1768	2	SOCKET-CONNECTOR (14-GA TO 16-GA)	
	192-2112	4	SOCKET-TERMINAL	
	3S-2093	6	STRAP-CABLE	
E	**8Y-8081**		TUBE-CONVOLUTED (77-CM)	
E	**125-7875**		TUBE-HEAT SHRINK (7.44-MM DIA) (5-CM)	

E - ORDER BY THE CENTIMETER

<END>

389-3981 HARNESS AS-LIGHTING

S/N: MBF1-UP; M4M1-UP; M5P1-UP; SDT1-UP
PART OF 377-2163, 416-2567 WIRING GP-LIGHTING
AN ATTACHMENT

SMCS-1408 **i05291047**

NOTE	PART NUMBER	QTY	PART NAME 1 2 3 4 5 6 (PRODUCT LEVEL)	SEE PAGE
	155-2270	6	KIT-CONNECTING PLUG (2-PIN)	
	155-2271	1	KIT-CONNECTING PLUG (4-PIN)	
			(EACH PLUG KIT INCLUDES PLUG AS, WEDGE & INTERFACE SEAL)	
	8T-8737	4	PLUG-SEAL	
	102-8802	2	KIT-RECEPTACLE (2-PIN)	
			(EACH INCLUDES RECEPTACLE AS & WEDGE)	
	180-9340	16	SOCKET-CONNECTOR (14-GA TO 18-GA)	
	131-1500	1	TERMINAL AS-RING	
	2L-8071	1	TERMINAL-RING (10-GA TO 12-GA, 1/2-IN SCREW)	
E	**125-7875**		TUBE-HEAT SHRINK (7.44-MM DIA) (4-CM)	
E	**125-7874**		TUBE-HEAT SHRINK (5.72-MM DIA) (15-CM)	
E	**125-7875**		TUBE-HEAT SHRINK (7.44-MM DIA) (5-CM)	

E - ORDER BY THE CENTIMETER

<END>

389-7491 HARNESS AS-LIGHTING

S/N: MBF1-UP; M4M1-UP; M5P1-UP; SDT1-UP
PART OF 389-7484 WIRING GP-PLATFORM
AN ATTACHMENT

SMCS-1408 **i05289948**

NOTE	PART NUMBER	QTY	PART NAME 1 2 3 4 5 6 (PRODUCT LEVEL)	SEE PAGE
	155-2255	1	KIT-CONNECTING PLUG (12-PIN)	
	155-2270	6	KIT-CONNECTING PLUG (2-PIN)	
			(EACH PLUG KIT INCLUDES PLUG AS, WEDGE & INTERFACE SEAL)	
	102-8802	2	KIT-RECEPTACLE (2-PIN)	
	102-8801	1	KIT-RECEPTACLE (12-PIN)	
			(EACH RECEPTACLE KIT INCLUDES RECEPTACLE AS & WEDGE)	
	9X-3401	4	PIN-CONNECTOR (16-GA TO 18-GA)	
	8T-8737	24	PLUG-SEAL	
	194-5226	12	WIRE AS (16-GA)	
			—OR—	
	194-5227	12	WIRE AS (14-GA)	
	2L-8071	1	TERMINAL-RING (10-GA TO 12-GA, 1/2-IN SCREW)	
E	**125-7874**		TUBE-HEAT SHRINK (5.72-MM DIA) (15-CM)	
E	**125-7875**		TUBE-HEAT SHRINK (7.44-MM DIA) (5-CM)	

E - ORDER BY THE CENTIMETER

<END>

423-3519 HARNESS AS-LIGHTING

S/N: MBF1-UP; M4M1-UP; M5P1-UP; SDT1-UP
PART OF 377-2163, 387-8187 WIRING GP-LIGHTING
AN ATTACHMENT

SMCS-1408 **i05289915**

NOTE	PART NUMBER	QTY	PART NAME 1 2 3 4 5 6 (PRODUCT LEVEL)	SEE PAGE
	9X-3401	20	PIN-CONNECTOR (16-GA TO 18-GA)	
	155-2255	1	KIT-CONNECTING PLUG (12-PIN)	
	155-2274	1	KIT-CONNECTING PLUG (6-PIN)	
			(EACH PLUG KIT INCLUDES PLUG AS, WEDGE & INTERFACE SEAL)	
	8T-8737	37	PLUG-SEAL	
	102-8805	1	KIT-RECEPTACLE (6-PIN)	
	102-8801	1	KIT-RECEPTACLE (12-PIN)	
			(EACH RECEPTACLE KIT INCLUDES RECEPTACLE AS & WEDGE)	
	167-3692	1	RECEPTACLE AS-CONNECTOR (31-PIN)	
	197-7565	1	KIT-RECEPTACLE (4-PIN)	
			(INCLUDES RECEPTACLE AS & WEDGE)	
	194-5226	14	WIRE AS (16-GA)	
			—OR—	
	194-5227	14	WIRE AS (14-GA)	
	2L-8071	1	TERMINAL-RING (10-GA TO 12-GA, 1/2-IN SCREW)	
E	**125-7874**		TUBE-HEAT SHRINK (5.72-MM DIA) (20-CM)	

E - ORDER BY THE CENTIMETER

<END>

379-8313 HARNESS AS-MONITOR—GRADE CONTROL

S/N: MBF1-UP; M4M1-UP; M5P1-UP; SDT1-UP
PART OF 379-8380 WIRING GP-GRADE CONTROL
AN ATTACHMENT

SMCS-1408, 7490

i05296479

NOTE	PART NUMBER	QTY	PART NAME 1 2 3 4 5 6 (PRODUCT LEVEL)	SEE PAGE
	155-2255	1	KIT-CONNECTING PLUG (12-PIN)	
	155-2257	2	KIT-CONNECTING PLUG (12-PIN)	
			(EACH PLUG KIT INCLUDES PLUG AS, WEDGE & INTERFACE SEAL)	
	174-0503	1	KIT-CONNECTING PLUG (3-PIN)	
			(INCLUDES PLUG AS, WEDGES & INTERFACE SEAL)	
	102-8804	1	KIT-RECEPTACLE (4-PIN)	
	102-8801	1	KIT-RECEPTACLE (12-PIN)	
	176-9299	1	KIT-RECEPTACLE (3-PIN)	
	166-5229	1	KIT-RECEPTACLE (12-PIN)	
	190-7615	1	KIT-RECEPTACLE (12-PIN)	
	194-4254	1	KIT-RECEPTACLE (8-PIN)	
			(EACH RECEPTACLE KIT INCLUDES RECEPTACLE AS & WEDGE)	
	9X-3401	24	PIN-CONNECTOR (16-GA TO 18-GA)	
	8T-8737	36	PLUG-SEAL	
	134-2540	1	RESISTOR AS-CONNECTION (3-PIN)	
	194-5226	30	WIRE AS (16-GA)	
			—OR—	
	194-5227	30	WIRE AS (14-GA)	
E	**125-7874**		TUBE-HEAT SHRINK (5.72-MM DIA) (60-CM)	

E - ORDER BY THE CENTIMETER

<END>

392-7367 HARNESS AS-MONITOR

S/N: MBF1-UP; M4M1-UP; M5P1-UP; SDT1-UP
PART OF 379-8250 PANEL GP-INSTRUMENT
AN ATTACHMENT

SMCS-1408, 7490

i05289998

NOTE	PART NUMBER	QTY	PART NAME 1 2 3 4 5 6 (PRODUCT LEVEL)	SEE PAGE
	155-2270	2	KIT-CONNECTING PLUG (2-PIN)	
			(EACH INCLUDES PLUG AS, WEDGE & INTERFACE SEAL)	
	174-0503	1	KIT-CONNECTING PLUG (3-PIN)	
			(INCLUDES PLUG AS, WEDGES & INTERFACE SEAL)	
	102-8801	1	KIT-RECEPTACLE (12-PIN)	
			(INCLUDES RECEPTACLE AS & WEDGE)	
	9X-3401	10	PIN-CONNECTOR (16-GA TO 18-GA)	
	253-8110	1	PLUG	
	8T-8737	3	PLUG-SEAL	
	228-4982	1	RESISTOR AS	
	8T-8729	2	PIN-CONNECTOR (16-GA TO 18-GA)	
	102-8802	1	KIT-RECEPTACLE (2-PIN)	
			(INCLUDES RECEPTACLE AS & WEDGE)	
	6T-3610	1	RESISTOR	
	134-2540	1	RESISTOR AS-CONNECTION (3-PIN)	
	169-0705	4	SEAL	
	194-5226	6	WIRE AS (16-GA)	
			—OR—	
	194-5227	6	WIRE AS (14-GA)	
	189-3158	1	SUPPRESSOR-ARC	
E	**125-7874**		TUBE-HEAT SHRINK (5.72-MM DIA) (10-CM)	

E - ORDER BY THE CENTIMETER

<END>

399-9415 HARNESS AS-MONITOR—RECEIVER, GPS

S/N: MBF1-UP; M4M1-UP; M5P1-UP; SDT1-UP
PART OF 375-1605, 375-1610 WIRING GP-GRADE CONTROL
AN ATTACHMENT

SMCS-1408, 7490 **i05284675**

NOTE	PART NUMBER	QTY	PART NAME 1 2 3 4 5 6 (PRODUCT LEVEL)	SEE PAGE
	9X-3401	24	PIN-CONNECTOR (16-GA TO 18-GA)	
			—OR—	
	126-1767	24	PIN-CONNECTOR (14-GA TO 16-GA)	
	155-2255	1	KIT-CONNECTING PLUG (12-PIN)	
	155-2256	1	KIT-CONNECTING PLUG (12-PIN)	
	174-0503	1	KIT-CONNECTING PLUG (3-PIN)	
	237-0166	1	KIT-CONNECTING PLUG (12-PIN)	
			(EACH PLUG KIT INCLUDES PLUG AS, WEDGE & INTERFACE SEAL)	
	8T-8737	25	PLUG-SEAL	
	102-8804	1	KIT-RECEPTACLE (4-PIN)	
	102-8806	1	KIT-RECEPTACLE (8-PIN)	
	102-8801	1	KIT-RECEPTACLE (12-PIN)	
	176-9299	1	KIT-RECEPTACLE (3-PIN)	
	190-7614	1	KIT-RECEPTACLE (12-PIN)	
			(EACH RECEPTACLE KIT INCLUDES RECEPTACLE AS & WEDGE)	
	134-2540	1	RESISTOR AS-CONNECTION (3-PIN)	
	274-3779	1	CAP-SEAL	
	194-5226	29	WIRE AS (16-GA)	
			—OR—	
	194-5227	29	WIRE AS (14-GA)	
E	**125-7874**		TUBE-HEAT SHRINK (5.72-MM DIA) (55-CM)	

E - ORDER BY THE CENTIMETER

<END>

399-9416 HARNESS AS-MONITOR—DISPLAY

S/N: MBF1-UP; M4M1-UP; M5P1-UP; SDT1-UP
PART OF 375-1606, 375-1608, 375-1611, 375-1613 MOUNTING GP-MONITOR
AN ATTACHMENT

SMCS-1408, 7490 **i05272113**

NOTE	PART NUMBER	QTY	PART NAME 1 2 3 4 5 6 (PRODUCT LEVEL)	SEE PAGE
	155-2255	2	KIT-CONNECTING PLUG (12-PIN)	
	155-2265	2	KIT-CONNECTING PLUG (8-PIN)	
	174-0503	1	KIT-CONNECTING PLUG (3-PIN)	
			(EACH PLUG KIT INCLUDES PLUG AS, WEDGE & INTERFACE SEAL)	
	248-5358	1	PLUG AS-CONNECTOR (39-PIN)	
	8T-8737	30	PLUG-SEAL	
	102-8806	1	KIT-RECEPTACLE (8-PIN)	
	102-8801	1	KIT-RECEPTACLE (12-PIN)	
			(EACH RECEPTACLE KIT INCLUDES RECEPTACLE AS & WEDGE)	
	194-5226	1	WIRE AS (16-GA)	
			—OR—	
	194-5227	1	WIRE AS (14-GA)	
B	**1P-0810**		TAPE-ELECTRICAL	
E	**125-7874**		TUBE-HEAT SHRINK (5.72-MM DIA) (35-CM)	

B - USE AS REQUIRED
E - ORDER BY THE CENTIMETER

<END>

415-7961 HARNESS AS-MONITOR—GRADE CONTROL

S/N: MBF1-UP; M4M1-UP; M5P1-UP; SDT1-UP
PART OF 379-8382, 379-8383 MOUNTING GP-INSTRUMENT
AN ATTACHMENT

SMCS-1408, 7490

i05289900

NOTE	PART NUMBER	QTY	PART NAME 1 2 3 4 5 6 (PRODUCT LEVEL)	SEE PAGE
	155-2255	2	KIT-CONNECTING PLUG (12-PIN)	
	155-2265	2	KIT-CONNECTING PLUG (8-PIN)	
	174-0503	1	KIT-CONNECTING PLUG (3-PIN)	
			(EACH PLUG KIT INCLUDES PLUG AS, WEDGE & INTERFACE SEAL)	
	248-5358	1	PLUG AS-CONNECTOR (39-PIN)	
	8T-8737	30	PLUG-SEAL	
	102-8806	1	KIT-RECEPTACLE (8-PIN)	
	102-8801	1	KIT-RECEPTACLE (12-PIN)	
			(EACH RECEPTACLE KIT INCLUDES RECEPTACLE AS & WEDGE)	
	194-5226	33	WIRE AS (16-GA)	
			—OR—	
	194-5227	33	WIRE AS (14-GA)	
B	**1P-0810**		TAPE-ELECTRICAL	
E	**125-7874**		TUBE-HEAT SHRINK (5.72-MM DIA) (35-CM)	

B - USE AS REQUIRED
E - ORDER BY THE CENTIMETER

<END>

416-0330 HARNESS AS-PANEL

S/N: MBF1-UP; M4M1-UP; M5P1-UP; SDT1-UP
PART OF 379-8245 PANEL GP-CONTROL
AN ATTACHMENT

SMCS-1408, 7451

i05290001

NOTE	PART NUMBER	QTY	PART NAME 1 2 3 4 5 6 (PRODUCT LEVEL)	SEE PAGE
	293-6119	1	BLOCK AS-FUSE	
M	**5C-2890**	1	NUT (M6X1-THD)	
	8C-3398	1	LOCKWASHER	
	8T-4205	1	WASHER-HARD (7.2X14.5X2-MM THK)	
	306-0348	1	COVER-FUSE	
	306-0351	1	SEAL-COVER	
	306-0282	1	BLOCK AS-FUSE	
M	**5C-2890**	1	NUT (M6X1-THD)	
	8C-3398	1	LOCKWASHER	
	8T-4205	1	WASHER-HARD (7.2X14.5X2-MM THK)	
	306-0350	1	COVER	
	306-0351	1	SEAL-COVER	
	113-8490	5	FUSE (10-AMPERE)	
	113-8491	6	FUSE (15-AMPERE)	
	113-8492	3	FUSE (20-AMPERE)	
	141-2760	5	FUSE (7.5-AMPERE)	
	5E-9295	2	PIN-CONNECTOR (6-GA)	
	9X-3401	38	PIN-CONNECTOR (16-GA TO 18-GA)	
	253-8110	1	PLUG	
	253-8111	1	PLUG	
	155-2274	1	KIT-CONNECTING PLUG (6-PIN)	
			(INCLUDES PLUG AS, WEDGE & INTERFACE SEAL)	
	167-3693	1	PLUG AS-CONNECTOR (31-PIN)	
	7R-2751	49	PLUG-CONNECTOR	
	8T-8737	29	PLUG-SEAL	
	9X-1343	1	RECEPTACLE AS-CONNECTOR (40-PIN)	
	203-8977	1	RECEPTACLE AS (6-PIN)	
	154-9496	1	PLATE	
	203-9000	1	PLUG AS (6-PIN)	
	203-8999	2	SEAL	
	203-9001	2	SLEEVE	
	203-9007	1	NUT (1-1/2-18-THD)	
	225-3861	1	RECEPTACLE AS (31-PIN)	
	265-4123	1	RECEPTACLE-CONNECTOR	
	248-2841	3	RELAY AS (24-VOLT)	
	203-8999	1	SEAL	
	128-4123	2	SEAL	
	128-5016	12	SEAL-CABLE	
	7R-2750	9	SEAL-CONNECTOR	
	203-9001	1	SLEEVE	
	194-5226	54	WIRE AS (16-GA)	
			—OR—	
	194-5227	54	WIRE AS (14-GA)	
	202-0313	12	TERMINAL AS	
			(EACH INCLUDES)	
	128-5016	1	SEAL-CABLE	
	202-0314	11	TERMINAL AS	
			(EACH INCLUDES)	
	128-4123	1	SEAL	
	5P-4571	2	TERMINAL-BLADE (14-GA TO 16-GA)	
	2L-8050	1	TERMINAL-RING (6-GA, 1/4-IN SCREW)	
			—OR—	
	2L-8058	1	TERMINAL-RING (8-GA, 1/4-IN SCREW)	
	2L-8054	1	TERMINAL-RING (6-GA, 1/2-IN SCREW)	
			—OR—	
	2L-8061	1	TERMINAL-RING (8-GA, 1/2-IN SCREW)	

416-0330 **HARNESS AS-PANEL (*contd.*)** **i05290001**

NOTE	PART NUMBER	QTY	PART NAME 1 2 3 4 5 6 (PRODUCT LEVEL)	SEE PAGE
	2L-8067	1	TERMINAL-RING (10-GA TO 12-GA, 1/4-IN SCREW)	
	2L-8081	1	TERMINAL-RING (14-GA TO 16-GA, 1/2-IN SCREW)	
E	**125-7874**		TUBE-HEAT SHRINK (5.72-MM DIA) (75-CM)	
E	**125-7875**		TUBE-HEAT SHRINK (7.44-MM DIA) (5-CM)	

E - ORDER BY THE CENTIMETER
M - METRIC PART

<END>

389-0481 HARNESS AS-PLATFORM

S/N: MBF1-UP; M4M1-UP; M5P1-UP; SDT1-UP
PART OF 387-8187 WIRING GP-LIGHTING
AN ATTACHMENT

SMCS-1408 **i05291088**

NOTE	PART NUMBER	QTY	PART NAME 1 2 3 4 5 6 (PRODUCT LEVEL)	SEE PAGE
	155-2270	6	KIT-CONNECTING PLUG (2-PIN)	
	155-2271	1	KIT-CONNECTING PLUG (4-PIN)	
			(EACH PLUG KIT INCLUDES PLUG AS, WEDGE & INTERFACE SEAL)	
	102-8802	2	KIT-RECEPTACLE (2-PIN)	
			(EACH KIT INCLUDES RECEPTACLE AS & WEDGE)	
	8T-8737	4	PLUG-SEAL	
	194-5226	16	WIRE AS (16-GA)	
			—OR—	
	194-5227	16	WIRE AS (14-GA)	
	131-1500	1	TERMINAL AS-RING	
	2L-8071	1	TERMINAL-RING (10-GA TO 12-GA, 1/2-IN SCREW)	
E	**125-7875**		TUBE-HEAT SHRINK (7.44-MM DIA) (4-CM)	
E	**125-7874**		TUBE-HEAT SHRINK (5.72-MM DIA) (15-CM)	
E	**125-7875**		TUBE-HEAT SHRINK (7.44-MM DIA) (5-CM)	

E - ORDER BY THE CENTIMETER

<END>

420-4997 HARNESS AS-PLATFORM

S/N: M4M1-UP; M5P1-UP
PART OF 379-8728 PLATFORM GP
AN ATTACHMENT

SMCS-1408 **i05291863**

NOTE	PART NUMBER	QTY	PART NAME 1 2 3 4 5 6 (PRODUCT LEVEL)	SEE PAGE
	155-2270	2	KIT-CONNECTING PLUG (2-PIN)	
			(EACH INCLUDES PLUG AS, WEDGE & INTERFACE SEAL)	
	102-8802	1	KIT-RECEPTACLE (2-PIN)	
			(INCLUDES RECEPTACLE AS & WEDGE)	
	126-1767	6	PIN-CONNECTOR (14-GA TO 16-GA)	
			—OR—	
	9X-3401	6	PIN-CONNECTOR (16-GA TO 18-GA)	
	8T-8737	27	PLUG-SEAL	
	167-3692	1	RECEPTACLE AS-CONNECTOR (31-PIN)	
	194-5226	4	WIRE AS (16-GA)	
			—OR—	
	194-5227	4	WIRE AS (14-GA)	
	2L-8081	1	TERMINAL-RING (14-GA TO 16-GA, 1/2-IN SCREW)	
E	**125-7874**		TUBE-HEAT SHRINK (5.72-MM DIA) (5-CM)	

E - ORDER BY THE CENTIMETER

<END>

362-4298 HARNESS AS-SENSOR—PULSE WIDTH MODULATED

S/N: M4M1-UP; M5P1-UP
PART OF 362-4296 SENSOR GP-VIBRATORY
AN ATTACHMENT

SMCS-1408 **i05291153**

NOTE	PART NUMBER	QTY	PART NAME 1 2 3 4 5 6 (PRODUCT LEVEL)	SEE PAGE
G	**122-6867**		HOSE (52-IN)	
	9X-3401	2	PIN-CONNECTOR (16-GA TO 18-GA)	
	102-8802	1	KIT-RECEPTACLE (2-PIN)	
			(INCLUDES RECEPTCALE AS & WEDGE)	
	2L-8075	2	TERMINAL-RING (14-GA TO 16-GA, NO. 8 SCREW)	
E	**119-3662**		TUBE-HEAT SHRINK (10.85-MM DIA) (6-CM)	
E	**125-7876**		TUBE-HEAT SHRINK (17.78-MM DIA) (8-CM)	

E - ORDER BY THE CENTIMETER
G - ORDER BY THE INCH

<END>

418-1430 HARNESS AS-SENSOR

S/N: MBF1-UP; M4M1-UP; M5P1-UP; SDT1-UP
PART OF 422-4423 SENSOR GP-PRESSURE, 379-8265 WIRING GP-SENSOR
AN ATTACHMENT

SMCS-1408 **i05289874**

NOTE	PART NUMBER	QTY	PART NAME 1 2 3 4 5 6 (PRODUCT LEVEL)	SEE PAGE
	155-2255	1	KIT-CONNECTING PLUG (12-PIN)	
	155-2274	1	KIT-CONNECTING PLUG (6-PIN)	
	174-0503	1	KIT-CONNECTING PLUG (3-PIN)	
			(EACH PLUG KIT INCLUDES PLUG AS, WEDGE & INTERFACE SEAL)	
	237-0227	4	PLUG AS-CONNECTOR (3-PIN)	
			(EACH INCLUDES)	
	264-7030	1	SEAL-CONNECTOR	
	8T-8737	6	PLUG-SEAL	
	134-2540	1	RESISTOR AS-CONNECTION (3-PIN)	
	194-5226	27	WIRE AS (16-GA)	
			—OR—	
	194-5227	27	WIRE AS (14-GA)	
B	**1P-0810**		TAPE-ELECTRICAL	
E	**125-7874**		TUBE-HEAT SHRINK (5.72-MM DIA) (15-CM)	
E	**125-7875**		TUBE-HEAT SHRINK (7.44-MM DIA) (10-CM)	

B - USE AS REQUIRED
E - ORDER BY THE CENTIMETER

<END>

418-7851 HARNESS AS-SENSOR

S/N: MBF1-UP; M4M1-UP; M5P1-UP; SDT1-UP
PART OF 422-4422, 422-4424 SENSOR & MOUNTING GP, 422-4423 SENSOR GP-PRESSURE
AN ATTACHMENT

SMCS-1408 **i05291843**

NOTE	PART NUMBER	QTY	PART NAME 1 2 3 4 5 6 (PRODUCT LEVEL)	SEE PAGE
	9X-3401	16	PIN-CONNECTOR (16-GA TO 18-GA)	
			—OR—	
	126-1767	16	PIN-CONNECTOR (14-GA TO 16-GA)	
	253-8112	1	PLUG	
	155-2271	1	KIT-CONNECTING PLUG (4-PIN)	
	174-0503	1	KIT-CONNECTING PLUG (3-PIN)	
			(EACH PLUG KIT INCLUDES PLUG AS, WEDGE & INTERFACE SEAL)	
	8T-8737	8	PLUG-SEAL	
	102-8804	1	KIT-RECEPTACLE (4-PIN)	
	166-5229	1	KIT-RECEPTACLE (12-PIN)	
	102-8805	1	KIT-RECEPTACLE (6-PIN)	
			(EACH RECEPTACLE KIT INCLUDES RECEPTACLES AS & WEDGE)	
	134-2540	1	RESISTOR AS-CONNECTION (3-PIN)	
	169-0705	33	SEAL	
	194-5226	5	WIRE AS (16-GA)	
			—OR—	
	194-5227	5	WIRE AS (14-GA)	
	283-8106	17	SOCKET-CONNECTOR (20-GA)	
			—OR—	
	374-8372	17	SOCKET-CONNECTOR (16-GA TO 18-GA)	
E	**125-7874**		TUBE-HEAT SHRINK (5.72-MM DIA) (20-CM)	
E	**125-7875**		TUBE-HEAT SHRINK (7.44-MM DIA) (5-CM)	

E - ORDER BY THE CENTIMETER

<END>

426-0864 HARNESS AS-SENSOR

S/N: MBF1-UP; SDT1-UP
PART OF 365-2148 SENSOR GP-VIBRATORY
AN ATTACHMENT

SMCS-1408 **i05296483**

NOTE	PART NUMBER	QTY	PART NAME 1 2 3 4 5 6 (PRODUCT LEVEL)	SEE PAGE
G	**122-6867**		HOSE (56.7-IN)	
	9X-3401	2	PIN-CONNECTOR (16-GA TO 18-GA)	
	102-8802	1	KIT-RECEPTACLE (2-PIN)	
			(INCLUDES RECEPTACLE AS & WEDGE)	
	2L-8075	2	TERMINAL-RING (14-GA TO 16-GA, NO. 8 SCREW)	
E	**125-7876**		TUBE-HEAT SHRINK (17.78-MM DIA) (8-CM)	

E - ORDER BY THE CENTIMETER
G - ORDER BY THE INCH

<END>

359-7587 HARNESS AS-WIRING

S/N: MBF1-UP; M4M1-UP; M5P1-UP; SDT1-UP
PART OF 379-8264, 379-8265, 379-8266 WIRING GP-SENSOR
AN ATTACHMENT

SMCS-1408 **i05289875**

NOTE	PART NUMBER	QTY	PART NAME 1 2 3 4 5 6 (PRODUCT LEVEL)	SEE PAGE
	9X-3401	16	PIN-CONNECTOR (16-GA TO 18-GA)	
	253-8112	1	PLUG	
	155-2271	1	KIT-CONNECTING PLUG (4-PIN)	
	174-0503	1	KIT-CONNECTING PLUG (3-PIN)	
			(EACH PLUG KIT INCLUDES PLUG AS, WEDGE & INTERFACE SEAL)	
	8T-8737	8	PLUG-SEAL	
	102-8804	1	KIT-RECEPTACLE (4-PIN)	
	102-8805	1	KIT-RECEPTACLE (6-PIN)	
	166-5229	1	KIT-RECEPTACLE (12-PIN)	
			(EACH RECEPTACLE KIT INCLUDES RECEPTACLE AS & WEDGE)	
	134-2540	1	RESISTOR AS-CONNECTION (3-PIN)	
	169-0705	33	SEAL	
	194-5226	5	WIRE AS (16-GA)	
			—OR—	
	194-5227	5	WIRE AS (14-GA)	
	374-8372	17	SOCKET-CONNECTOR (16-GA TO 18-GA)	
E	**125-7874**		TUBE-HEAT SHRINK (5.72-MM DIA) (20-CM)	
E	**125-7875**		TUBE-HEAT SHRINK (7.44-MM DIA) (5-CM)	

E - ORDER BY THE CENTIMETER

<END>

362-4297 HARNESS AS-WIRING—VIBRATION FREQUENCY

S/N: M4M1-UP; M5P1-UP
PART OF 362-4296 SENSOR GP-VIBRATORY
AN ATTACHMENT

SMCS-1408 **i05291155**

NOTE	PART NUMBER	QTY	PART NAME 1 2 3 4 5 6 (PRODUCT LEVEL)	SEE PAGE
G	**122-6867**		HOSE (49.6-IN)	
	155-2270	1	KIT-CONNECTING PLUG (2-PIN)	
			(INCLUDES PLUG AS, WEDGE & INTERFACE SEAL)	
	102-8802	1	KIT-RECEPTACLE (2-PIN)	
			(INCLUDES RECEPTACLE AS & WEDGE)	
	9X-3401	2	PIN-CONNECTOR (16-GA TO 18-GA)	
	180-9340	2	SOCKET-CONNECTOR (14-GA TO 18-GA)	
E	**119-3662**		TUBE-HEAT SHRINK (10.85-MM DIA) (6-CM)	
E	**125-7876**		TUBE-HEAT SHRINK (17.78-MM DIA) (8-CM)	

E - ORDER BY THE CENTIMETER
G - ORDER BY THE INCH

<END>

426-0862 HARNESS AS-WIRING

S/N: MBF1-UP; SDT1-UP
PART OF 365-2148 SENSOR GP-VIBRATORY
AN ATTACHMENT

SMCS-1408 **i05296482**

NOTE	PART NUMBER	QTY	PART NAME 1 2 3 4 5 6 (PRODUCT LEVEL)	SEE PAGE
G	**122-6867**		HOSE (49.6-IN)	
	9X-3401	2	PIN-CONNECTOR (16-GA TO 18-GA)	
	155-2270	1	KIT-CONNECTING PLUG (2-PIN)	
			(INCLUDES PLUG AS, WEDGE & INTERFACE SEAL)	
	102-8802	1	KIT-RECEPTACLE (2-PIN)	
			(INCLUDES RECEPTACLE AS & WEDGE)	
	194-5226	2	WIRE AS (16-GA)	
			—OR—	
	194-5227	2	WIRE AS (14-GA)	
E	**125-7876**		TUBE-HEAT SHRINK (17.78-MM DIA) (8-CM)	

E - ORDER BY THE CENTIMETER
G - ORDER BY THE INCH

<END>

355-0624 INSTALLATION GP-COMMUNICATION–CAB

S/N: MBF1-UP; M4M1-UP; M5P1-UP; SDT1-UP

AN ATTACHMENT

SMCS-1408, 1901, 1902, 5267, 7602, 7606, 7610, 7620 **i05268274**

NOTE	REF NO	GRAPHIC REF	PART NUMBER	QTY	PART NAME 1 2 3 4 5 6 (PRODUCT LEVEL)	SEE PAGE
	1	1	**8C-5607**	8	MOUNT-ISOLATION	
	2	1	**8C-5608**	4	SPACER (6.5X9.5X25.4-MM THK)	
	3	1	**9X-8256**	4	WASHER (6.6X12X2-MM THK)	
Y	4	1	*262-1421*	1	ELECTRONICS GP-COMMUNICATION (PRODUCT LINK 300)	96
	5	1	**284-8532**	1	ANTENNA AS (ROOF)	
		1	**301-0589**	1	ANTENNA (FLEXIBLE)	
		1	**355-0598**	1	NUT-SPECIAL	
Y	6	1	**318-8737**	1	HARNESS AS-CONTROL (PRODUCT LINK)	107
	7	1	**327-0325**	7	STRAP-CABLE	
Y	8	1	**336-3545**	1	RADIO GP-COMMUNICATION (PRODUCT LINK 121SR)	140
	9	1	**358-9020**	1	PLATE AS	
	10	1	**132-5789**	2	CLIP	
	11	1	**5P-4116**	4	WASHER-HARD (8.8X20.5X2-MM THK)	
	12	1	**7K-1181**	4	STRAP-CABLE	
M	13	1	**8T-4138**	4	BOLT (M6X1X20-MM)	
M	14	1	**8T-4189**	4	BOLT (M8X1.25X20-MM)	
M	15	1	**9X-2480**	4	BOLT (M6X1X45-MM)	
	16	1	**9X-6165**	4	WASHER (6.5X22X2.5-MM THK)	

M - METRIC PART
Y - SEPARATE ILLUSTRATION

355-0624 **INSTALLATION GP-COMMUNICATION (*contd.*)** **i05268274**

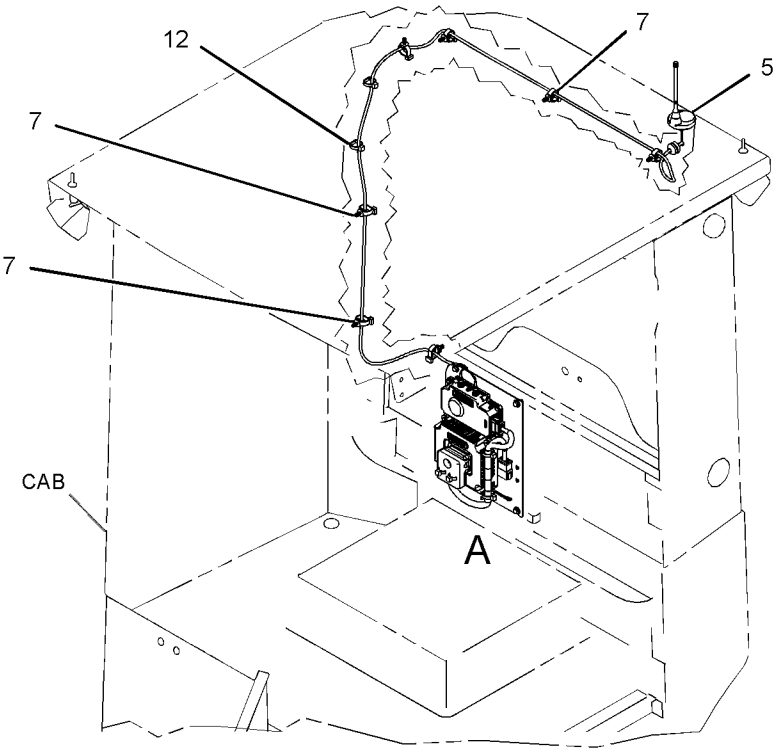

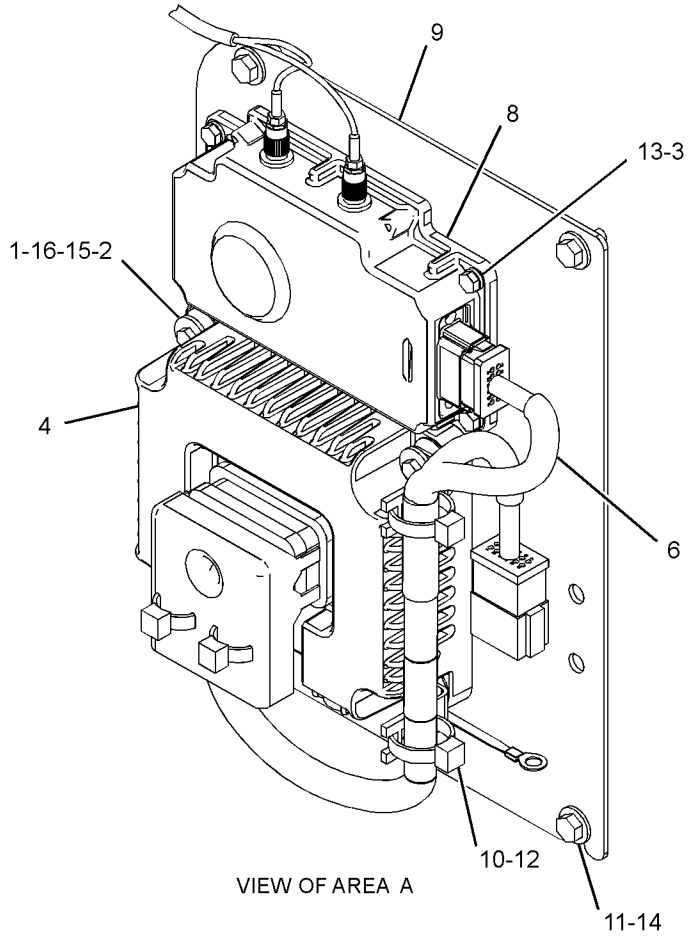



VIEW OF AREA A

GRAPHIC #1 **<END>** g03112942

355-3038 INSTALLATION GP-COMMUNICATION–CAB

S/N: MBF1-UP; M4M1-UP; M5P1-UP; SDT1-UP

AN ATTACHMENT

SMCS-1408, 1901, 1902, 5267, 7602, 7606, 7610, 7620 **i05331065**

NOTE	REF NO	GRAPHIC REF	PART NUMBER	QTY	PART NAME 1 2 3 4 5 6 (PRODUCT LEVEL)	SEE PAGE
	1	1	**8C-5607**	8	MOUNT-ISOLATION	
	2	1	**8C-5608**	4	SPACER (6.5X9.5X25.4-MM THK)	
	3	1	**9X-8256**	4	WASHER (6.6X12X2-MM THK)	
Y	4	1	*262-1421*	1	ELECTRONICS GP-COMMUNICATION (PRODUCT LINK 300)	96
	5	1	**284-8532**	1	ANTENNA AS (ROOF)	
		1	**301-0589**	1	ANTENNA (FLEXIBLE)	
		1	**355-0598**	1	NUT-SPECIAL	
Y	6	1	**318-8737**	1	HARNESS AS-CONTROL (PRODUCT LINK)	107
Y	7	1	**336-3545**	1	RADIO GP-COMMUNICATION (PRODUCT LINK 121SR)	140
	8	1	**358-9020**	1	PLATE AS	
	9	1	**132-5789**	3	CLIP	
	10	1	**5P-4116**	4	WASHER-HARD (8.8X20.5X2-MM THK)	
	11	1	**7K-1181**	7	STRAP-CABLE	
M	12	1	**8T-4138**	4	BOLT (M6X1X20-MM)	
M	13	1	**8T-4189**	4	BOLT (M8X1.25X20-MM)	
M	14	1	**9X-2480**	4	BOLT (M6X1X45-MM)	
	15	1	**9X-6165**	4	WASHER (6.5X22X2.5-MM THK)	
	16	1	**327-0325**	5	STRAP-CABLE	
	17	1	**116-5710**	1	GROMMET	

M - METRIC PART
Y - SEPARATE ILLUSTRATION

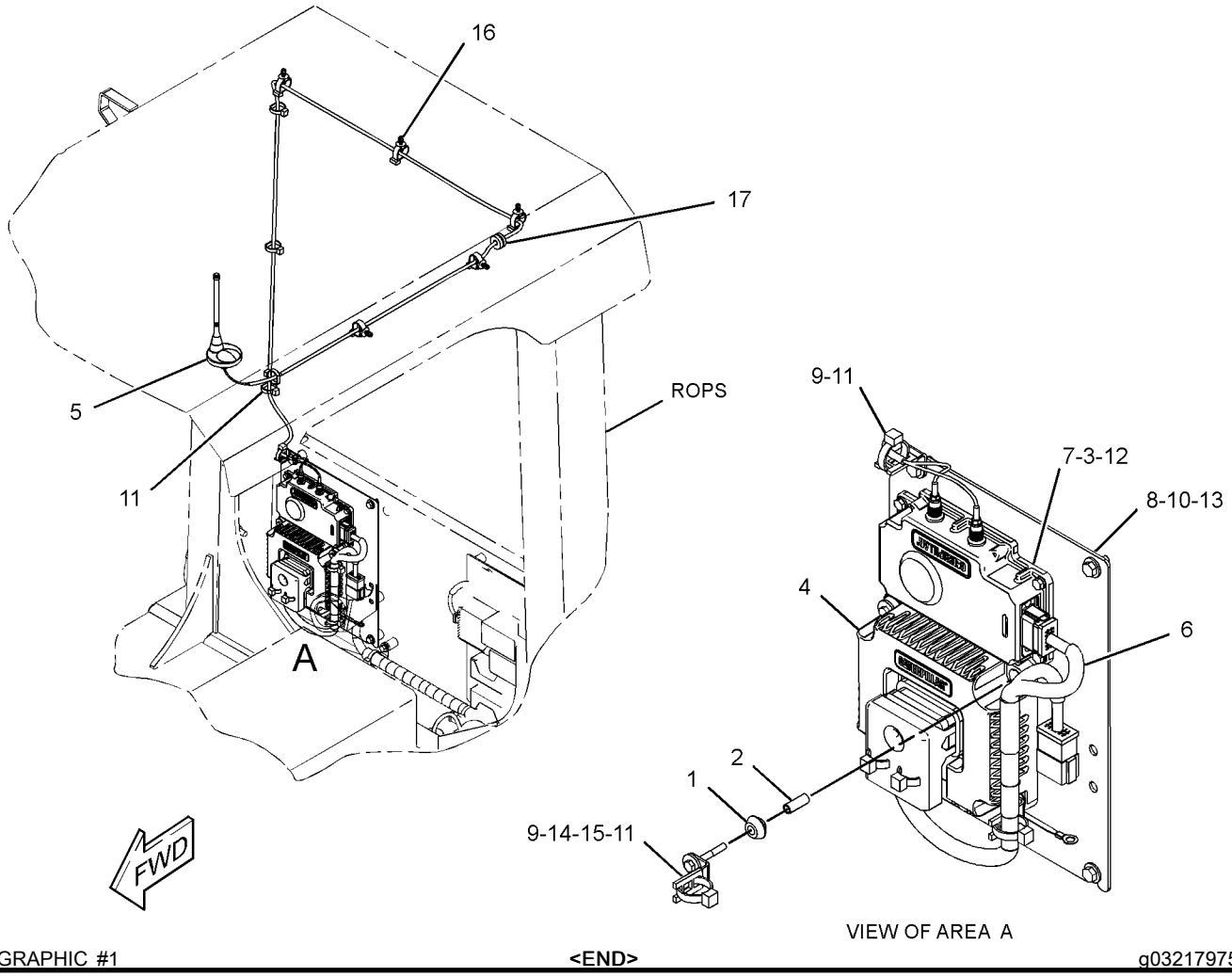

GRAPHIC #1 **<END>** g03217975

433-1465 INSTALLATION GP-COMMUNICATION–PL421–OPEN PLATFORM

S/N: MBF1-UP; M4M1-UP; M5P1-UP; SDT1-UP

AN ATTACHMENT

SMCS-1408, 1901, 1902, 5267, 7602, 7606, 7610, 7620 **i05291859**

NOTE	REF NO	GRAPHIC REF	PART NUMBER	QTY	PART NAME 1 2 3 4 5 6 (PRODUCT LEVEL)	SEE PAGE
	1	1	**327-0325**	1	STRAP-CABLE	
	2	1	**386-3004**	1	CONTROL GP-COMMUNICATION (PL421)	
	3	1	**389-0463**	1	ANTENNA AS	
	4	1	**415-8299**	1	COVER	
Y	5	1	**433-1459**	1	HARNESS AS-CONTROL	107
	6	1	**433-1461**	1	PLATE AS	
M		1	**6V-9632**	3	NUT-WELD (M6X1-THD)	
		1	**144-8344**	4	SPACER (11X19X20-MM THK)	
	7	1	**130-5300**	1	CLIP	
	8	1	**1H-3244**	2	LOCKWASHER	
M	9	1	**5C-7261**	1	NUT (M8X1.25-THD)	
	10	1	**7K-1181**	9	STRAP-CABLE	
	11	1	**7M-3361**	1	GROMMET	
M	12	1	**7X-2533**	2	BOLT (M6X1X35-MM)	
	13	1	**8T-4121**	6	WASHER-HARD (11X21X2.5-MM THK)	
M	14	1	**8T-4182**	4	BOLT (M10X1.5X45-MM)	
M	15	1	**8T-4189**	1	BOLT (M8X1.25X20-MM)	

M - METRIC PART
Y - SEPARATE ILLUSTRATION

433-1465 **INSTALLATION GP-COMMUNICATION (*contd.*)** **i05291859**

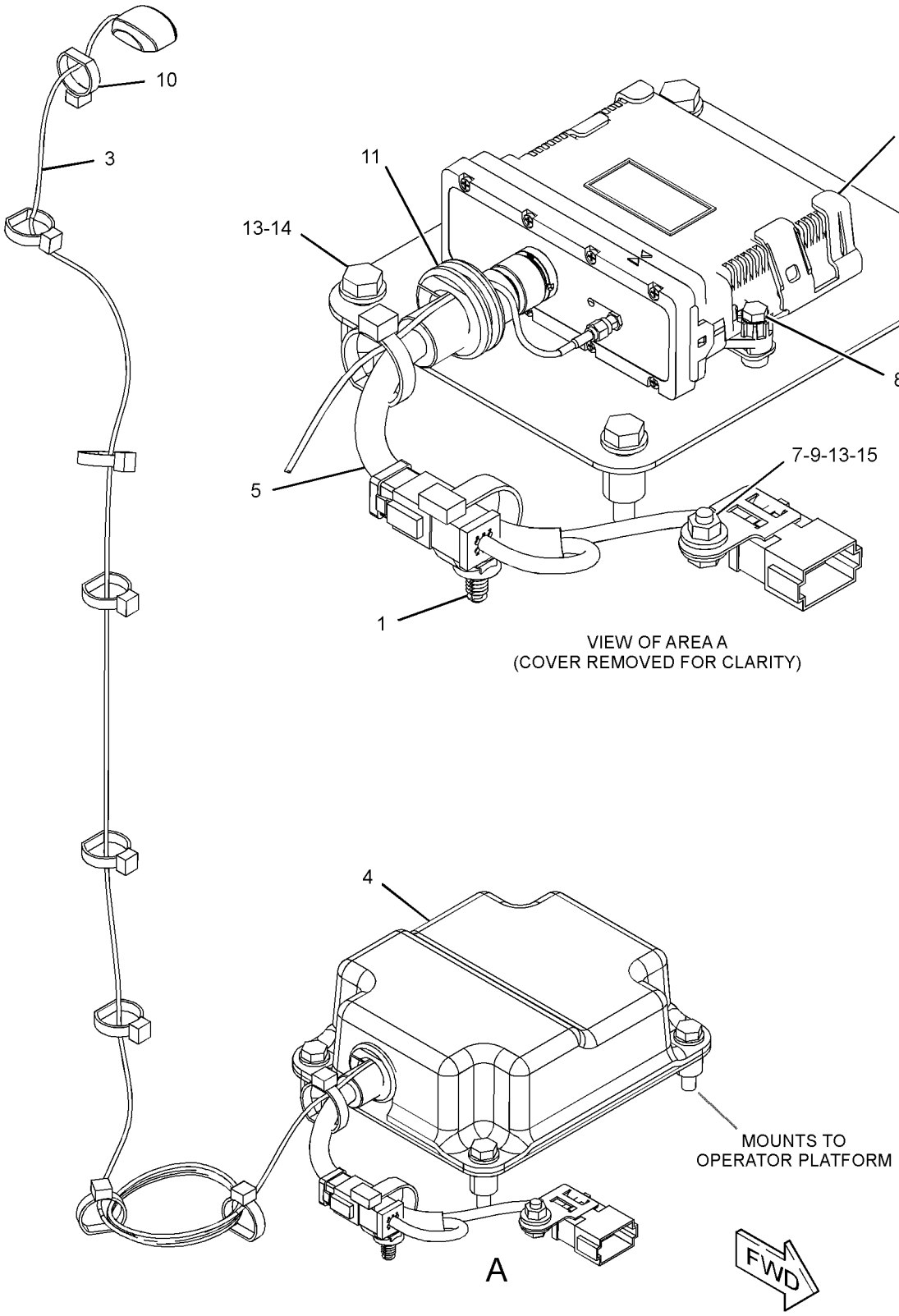

GRAPHIC #1 **<END>** g03382705

433-1466 INSTALLATION GP-COMMUNICATION–PL421–OPEN CANOPY, NON-ROPS

S/N: MBF1-UP; M4M1-UP; M5P1-UP; SDT1-UP

AN ATTACHMENT

SMCS-1408, 1901, 1902, 5267, 7602, 7606, 7610, 7620 **i05291861**

NOTE	REF NO	GRAPHIC REF	PART NUMBER	QTY	PART NAME 1 2 3 4 5 6 (PRODUCT LEVEL)	SEE PAGE
	1	1	**119-6105**	1	GROMMET	
	2	1	**327-0325**	1	STRAP-CABLE	
	3	1	**386-3004**	1	CONTROL GP-COMMUNICATION (PL421)	
		1	**390-2764**	1	BRACKET	
	4	1	**389-0463**	1	ANTENNA AS	
	5	1	**415-8299**	1	COVER	
Y	6	1	**433-1459**	1	HARNESS AS-CONTROL	107
	7	1	**433-1461**	1	PLATE AS	
M		1	**6V-9632**	3	NUT-WELD (M6X1-THD)	
		1	**144-8344**	4	SPACER (11X19X20-MM THK)	
	8	1	**130-5300**	1	CLIP	
	9	1	**1H-3244**	2	LOCKWASHER	
	10	1	**4P-7581**	1	CLIP	
M	11	1	**5C-7261**	1	NUT (M8X1.25-THD)	
	12	1	**7K-1181**	15	STRAP-CABLE	
	13	1	**7M-3361**	1	GROMMET	
M	14	1	**7X-2533**	2	BOLT (M6X1X35-MM)	
	15	1	**8T-4121**	6	WASHER-HARD (11X21X2.5-MM THK)	
M	16	1	**8T-4182**	4	BOLT (M10X1.5X45-MM)	
M	17	1	**8T-4189**	2	BOLT (M8X1.25X20-MM)	
	18	1	**8T-4224**	1	WASHER-HARD (8.8X16X2-MM THK)	

M - METRIC PART
Y - SEPARATE ILLUSTRATION

433-1466 **INSTALLATION GP-COMMUNICATION (*contd.*)** **i05291861**

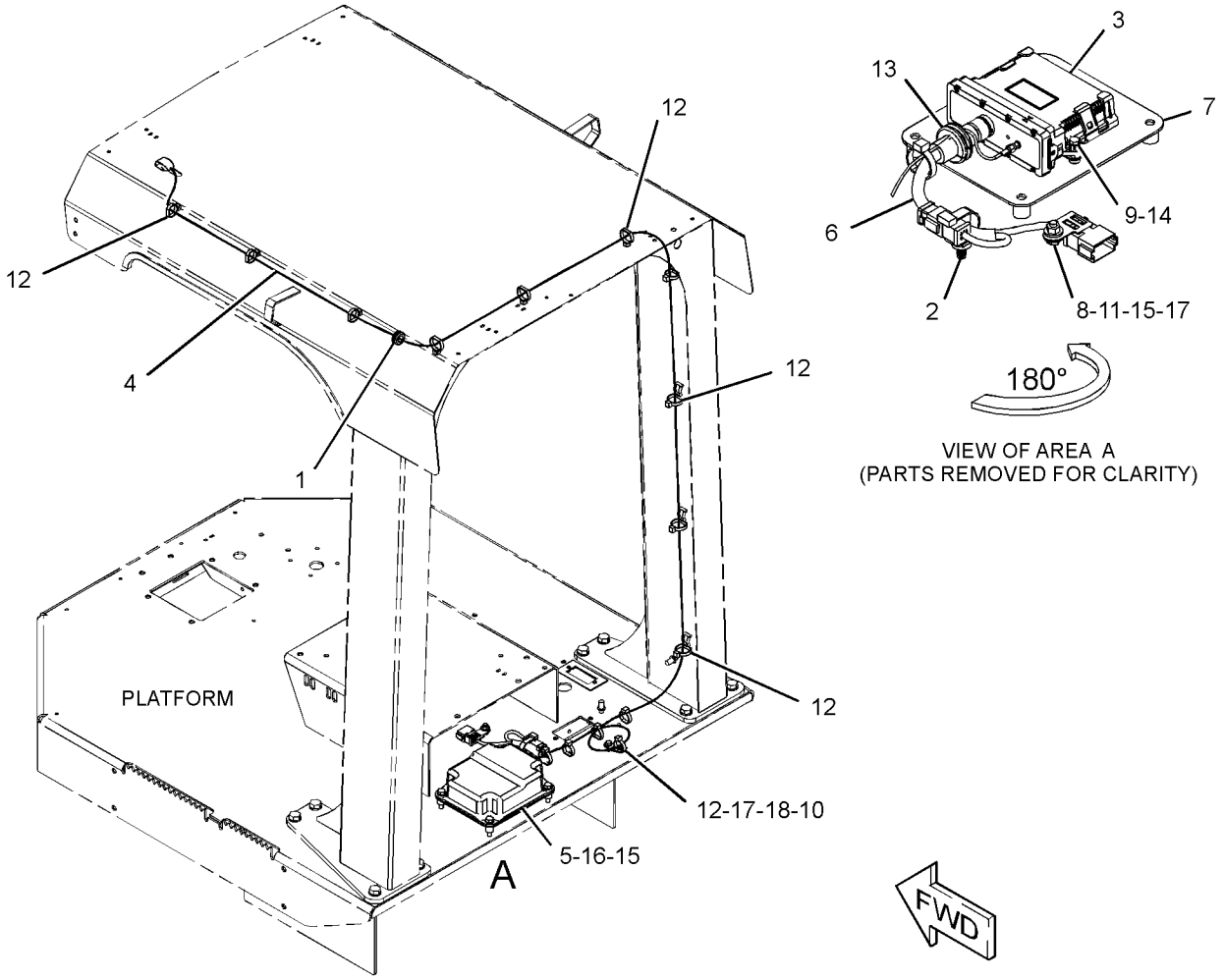

GRAPHIC #1 **<END>** g03384278

433-1467 INSTALLATION GP-COMMUNICATION–PL421–ROPS, FOPS

S/N: MBF1-UP; M4M1-UP; M5P1-UP; SDT1-UP

AN ATTACHMENT

SMCS-1408, 1901, 1902, 5267, 7602, 7606, 7610, 7620 **i05291862**

NOTE	REF NO	GRAPHIC REF	PART NUMBER	QTY	PART NAME 1 2 3 4 5 6 (PRODUCT LEVEL)	SEE PAGE
	1	1	**119-6105**	1	GROMMET	
	2	1	**327-0325**	4	STRAP-CABLE	
	3	1	**386-3004**	1	CONTROL GP-COMMUNICATION (PL421)	
		1	**390-2764**	1	BRACKET	
	4	1	**389-0463**	1	ANTENNA AS	
Y	5	1	**433-1459**	1	HARNESS AS-CONTROL	107
	6	1	**433-1462**	1	PLATE AS	
M		1	**6V-9632**	3	NUT-WELD (M6X1-THD)	
	7	1	**132-5789**	1	CLIP	
	8	1	**1H-3244**	2	LOCKWASHER	
	9	1	**5P-4116**	4	WASHER-HARD (8.8X20.5X2-MM THK)	
	10	1	**7K-1181**	10	STRAP-CABLE	
M	11	1	**7X-2533**	2	BOLT (M6X1X35-MM)	
M	12	1	**8T-4189**	4	BOLT (M8X1.25X20-MM)	

M - METRIC PART
Y - SEPARATE ILLUSTRATION

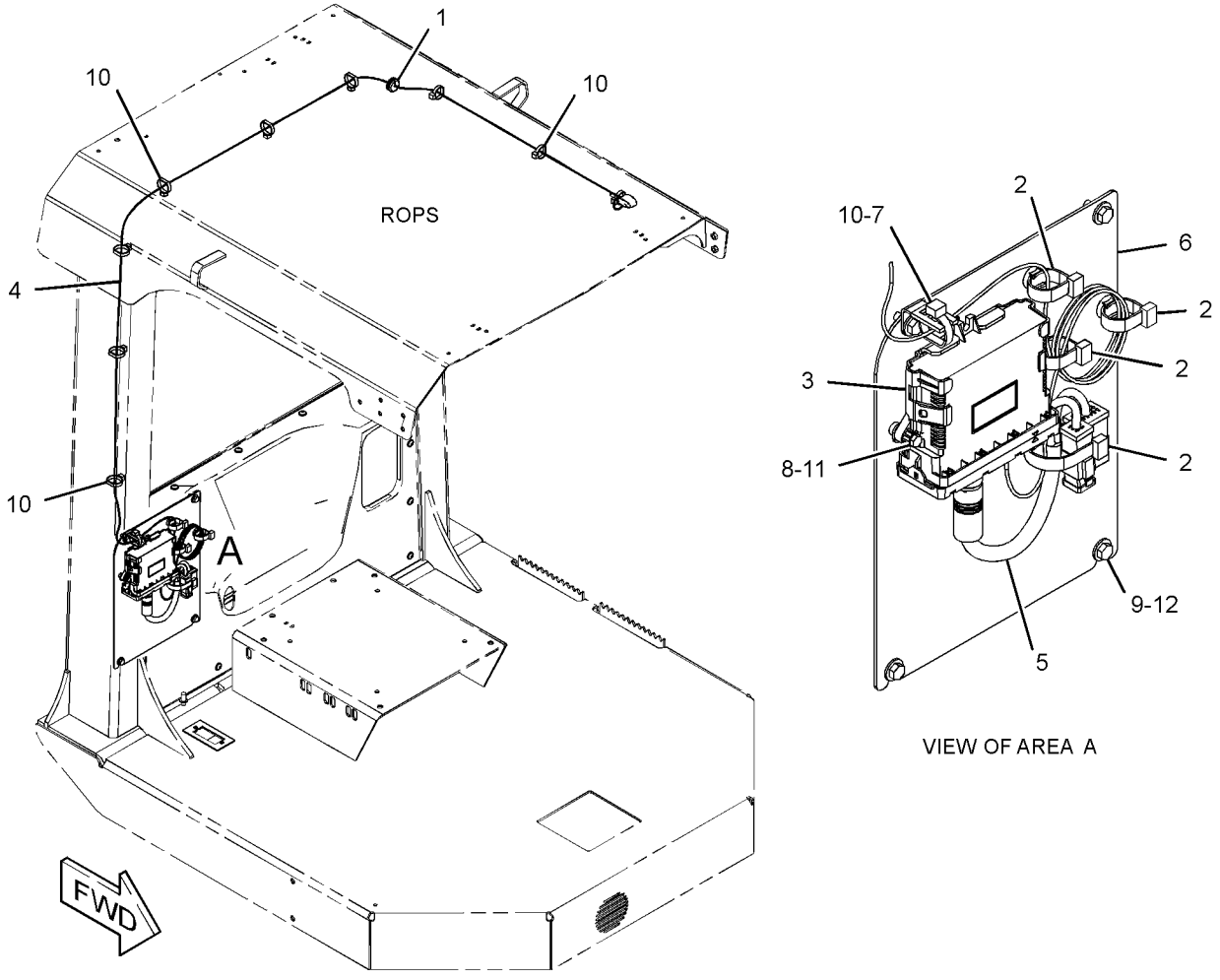

GRAPHIC #1 **<END>** g03383382

433-1468 INSTALLATION GP-COMMUNICATION

S/N: MBF1-UP; M4M1-UP; M5P1-UP; SDT1-UP

AN ATTACHMENT

SMCS-1408, 1901, 1902, 5267, 7602, 7606, 7610, 7620 **i05296476**

NOTE	REF NO	GRAPHIC REF	PART NUMBER	QTY	PART NAME 1 2 3 4 5 6 (PRODUCT LEVEL)	SEE PAGE
	1	1	**119-6105**	1	GROMMET	
	2	1	**327-0325**	4	STRAP-CABLE	
	3	1	**386-3004**	1	CONTROL GP-COMMUNICATION (PL421)	
		1	**390-2762**	1	CONTROL GP-COMMUNICATION (PL421)	
		1	**390-2764**	1	BRACKET	
	4	1	**389-0463**	1	ANTENNA AS	
Y	5	1	**433-1459**	1	HARNESS AS-CONTROL	107
	6	1	**433-1462**	1	PLATE AS	
M		1	**6V-9632**	3	NUT-WELD (M6X1-THD)	
	7	1	**1H-3244**	2	LOCKWASHER	
	8	1	**5P-4116**	4	WASHER-HARD (8.8X20.5X2-MM THK)	
	9	1	**7K-1181**	10	STRAP-CABLE	
M	10	1	**7X-2533**	2	BOLT (M6X1X35-MM)	
M	11	1	**8T-4189**	4	BOLT (M8X1.25X20-MM)	

M - METRIC PART
Y - SEPARATE ILLUSTRATION

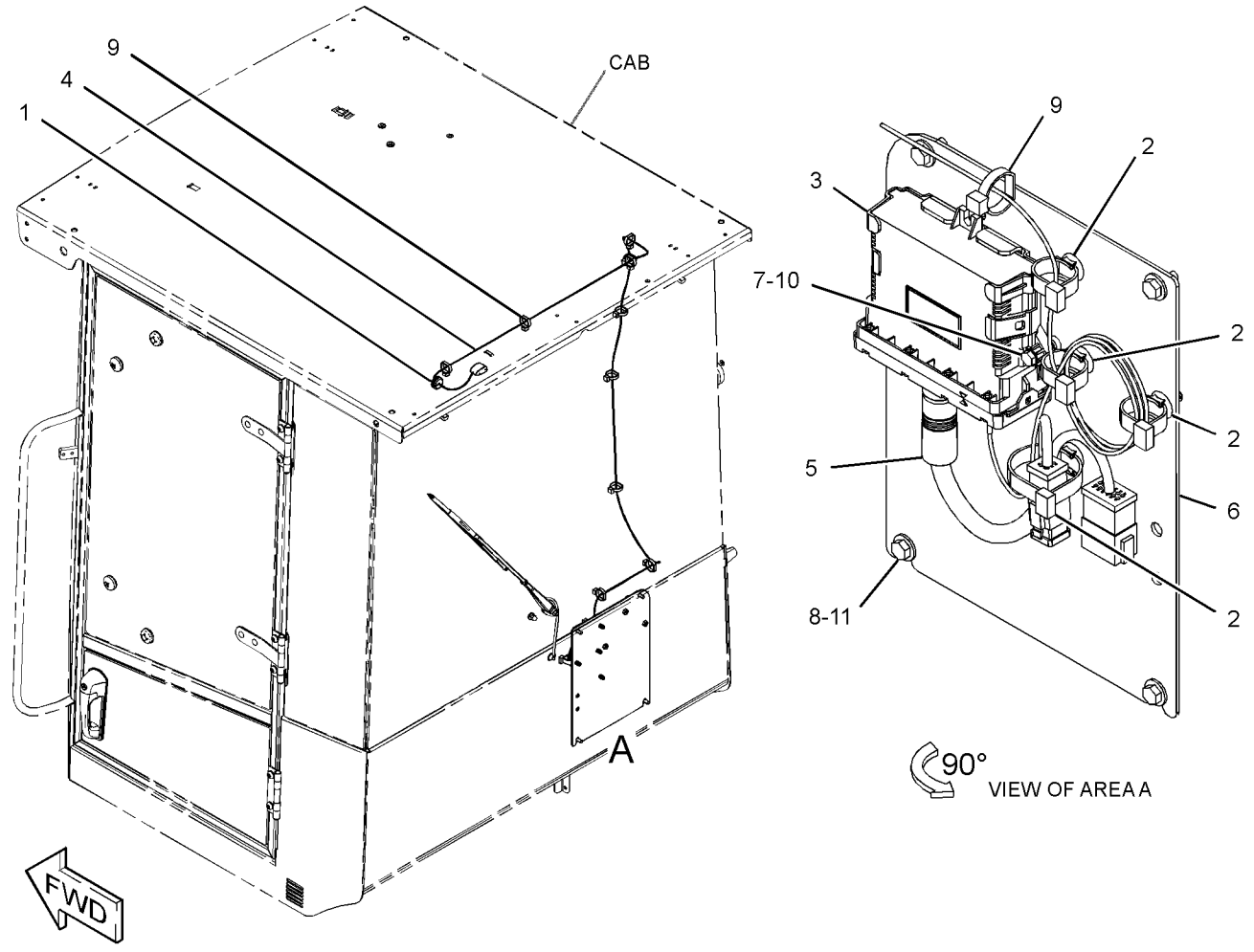

GRAPHIC #1 **<END>** g03360107

219-6487 LAMP GP-FLOOD

S/N: MBF1-UP; M4M1-UP; M5P1-UP; SDT1-UP
24-VOLT, 65-WATT
PART OF 352-7739, 355-3056, 379-8727 LIGHTING GP-FLOOD, 379-8728 PLATFORM GP
AN ATTACHMENT

SMCS-1434 **i05287559**

NOTE	REF NO	GRAPHIC REF	PART NUMBER	QTY	PART NAME 1 2 3 4 5 6 (PRODUCT LEVEL)	SEE PAGE
	1	1	**351-9918**	1	LAMP-HALOGEN (24-VOLT, 70-WATT)	
M	2	1	**8T-6912**	1	BOLT (M8X1.25X50-MM)	
M	3	1	**6V-9189**	1	LOCKNUT (M8X1.25-THD)	
	4	1	**8T-4224**	2	WASHER-HARD (8.8X16X2-MM THK)	
	5	1	**9X-4244**	2	SCREW-SPECIAL (M4X1.79X25-MM)	
	6	1	**175-4291**	1	BRACKET AS	
	7	1	**202-6614**	1	LENS AS (FLOODLIGHT)	
	8	1	**175-4292**	1	BODY AS	
	9	1	**164-7556**	1	BRACKET (LAMP RETAINING)	

M - METRIC PART

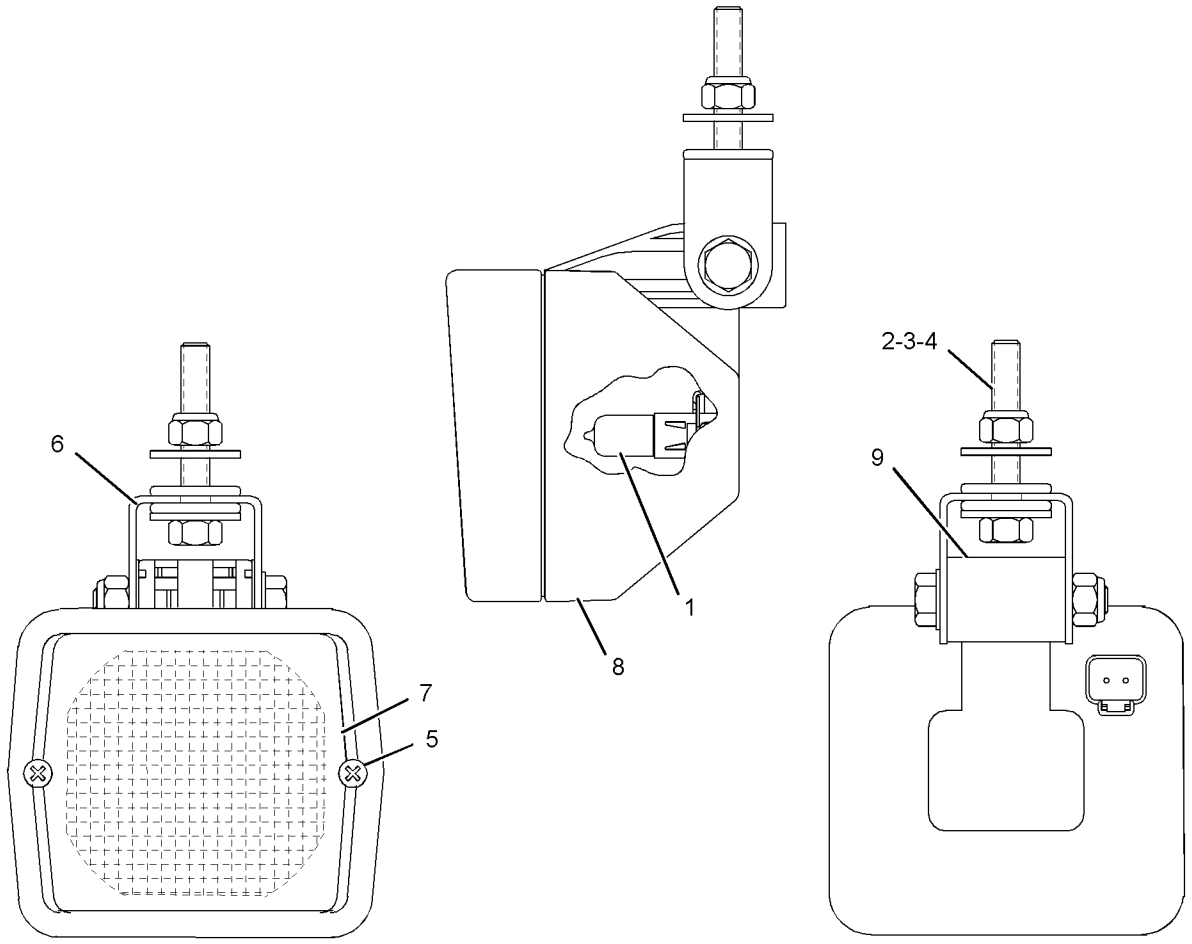

GRAPHIC #1 **<END>** g02167882

378-6901 LAMP GP-WARNING BEACON

S/N: MBF1-UP; M4M1-UP; M5P1-UP; SDT1-UP
PART OF 355-3059 LIGHTING GP-WARNING BEACON
AN ATTACHMENT

SMCS-1431 **i05218183**

NOTE	REF NO	GRAPHIC REF	PART NUMBER	QTY	PART NAME 1 2 3 4 5 6 (PRODUCT LEVEL)	SEE PAGE
	1	1	**102-8802**	1	KIT-RECEPTACLE (2-PIN)	
					(INCLUDES RECEPTACLE AS & WEDGE)	
	2	1	**8T-8729**	2	PIN-CONNECTOR (16-GA TO 18-GA)	
	3	1	**389-5708**	1	LENS (AMBER, WARNING BEACON)	
E	4	1	**9X-1386**		SLEEVE (44-CM)	

E - ORDER BY THE CENTIMETER

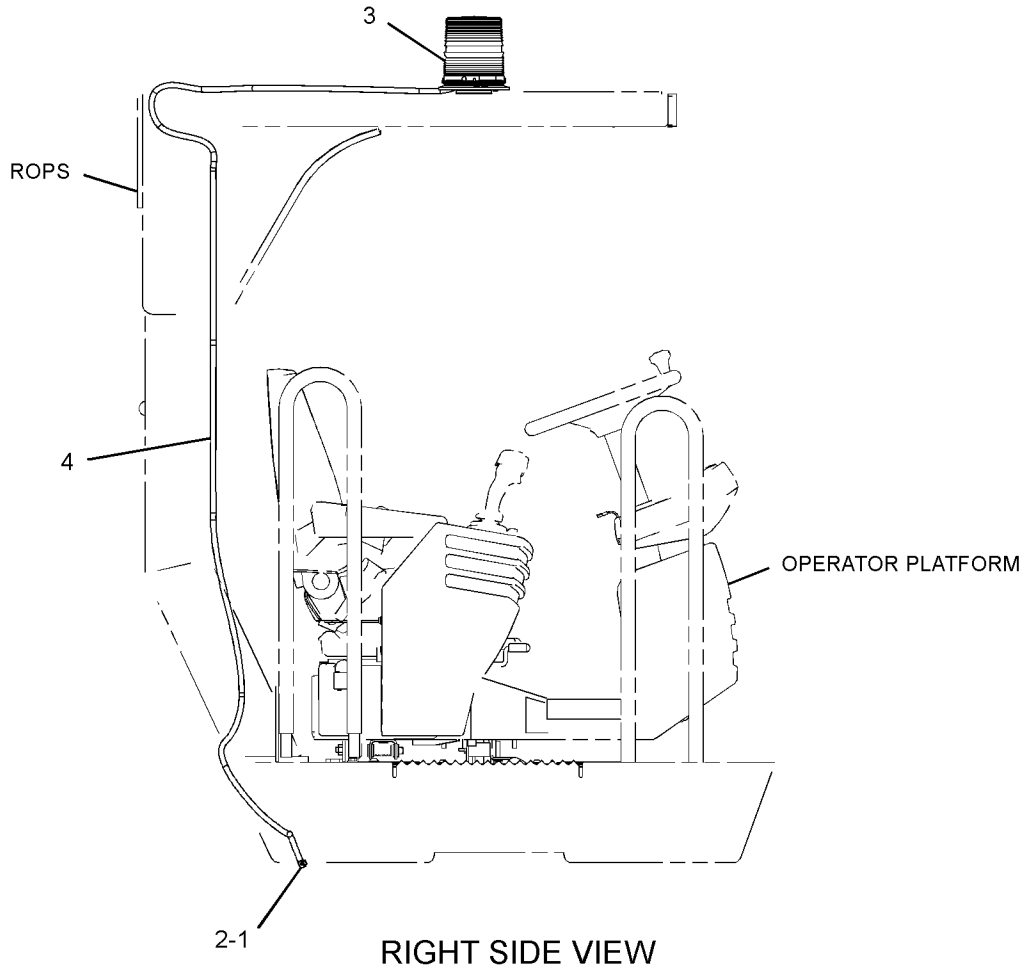

RIGHT SIDE VIEW

GRAPHIC #1

<END>

g03044236

352-7739 LIGHTING GP-FLOOD—CAB

S/N: MBF1-UP; M4M1-UP; M5P1-UP; SDT1-UP

PART OF 374-9842, 374-9843, 377-2159, 381-6991, 382-1438, 416-2513, 416-2514 OPERATOR

AR

AN ATTACHMENT

SMCS-1434 **i05291092**

NOTE	REF NO	GRAPHIC REF	PART NUMBER	QTY	PART NAME 1 2 3 4 5 6 (PRODUCT LEVEL)	SEE PAGE
Y	1	1	**219-6487**	4	LAMP GP-FLOOD (24-VOLT, 70-WATT)	130

Y - SEPARATE ILLUSTRATION

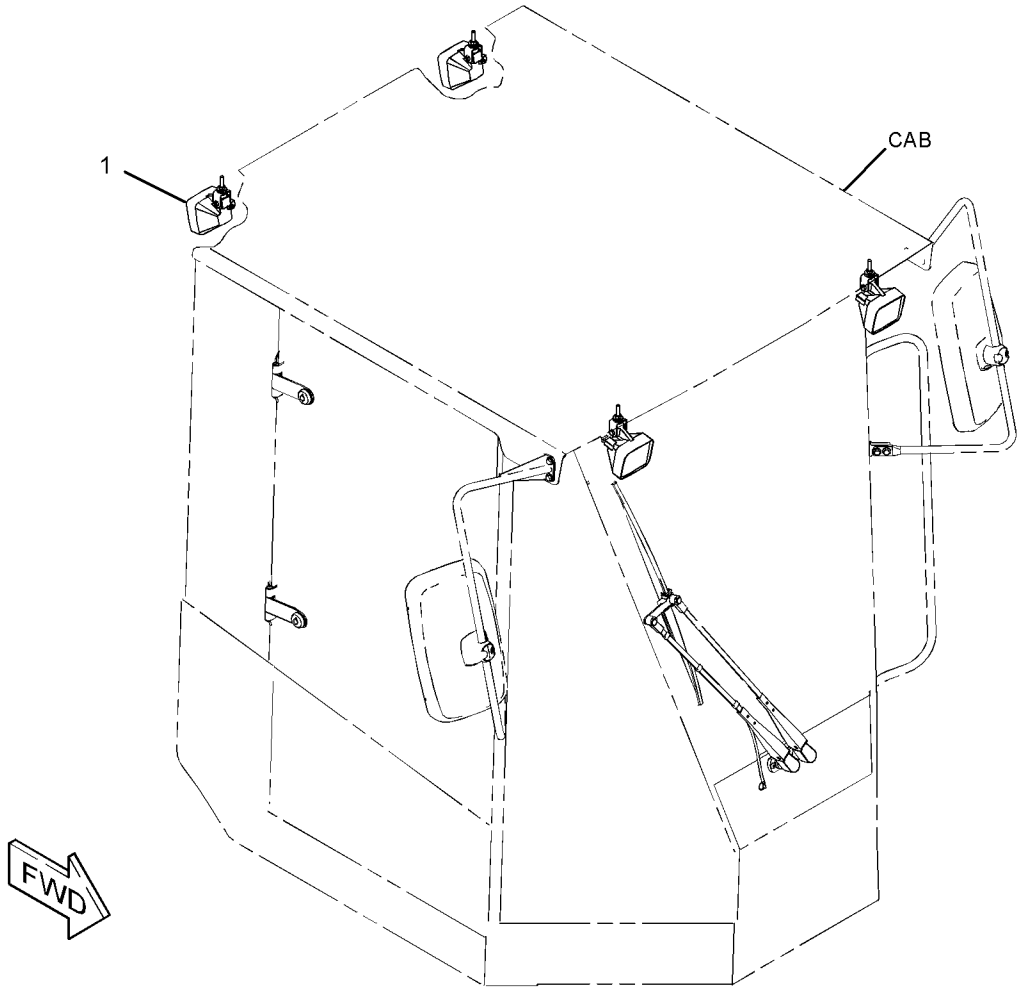

GRAPHIC #1 **<END>** g02710504

355-3056 LIGHTING GP-FLOOD–CAB

S/N: MBF1-UP; M4M1-UP; M5P1-UP; SDT1-UP

AN ATTACHMENT

SMCS-1434 **i05269430**

NOTE	REF NO	GRAPHIC REF	PART NUMBER	QTY	PART NAME 1 2 3 4 5 6 (PRODUCT LEVEL)	SEE PAGE
Y	1	1	**219-6487**	4	LAMP GP-FLOOD (24-VOLT, 70-WATT)	130
	2	1	**359-3632**	4	HARNESS AS-LIGHTING	
					(EACH INCLUDES)	
		1	**9X-3401**	2	PIN-CONNECTOR (16-GA TO 18-GA)	
		1	**155-2270**	2	KIT-CONNECTING PLUG (2-PIN)	
					(EACH INCLUDES PLUG AS, WEDGE & INTERFACE SEAL)	
		1	**102-8802**	1	KIT-RECEPTACLE (2-PIN)	
					(INCLUDES RECEPTACLE AS & WEDGE)	
		1	**194-5226**	4	WIRE AS (16-GA)	
					–OR–	
		1	**194-5227**	4	WIRE AS (14-GA)	
E		1	**125-7874**		TUBE-HEAT SHRINK (5.72-MM DIA) (10-CM)	
	3	1	**7K-1181**	4	STRAP-CABLE	

E - ORDER BY THE CENTIMETER
Y - SEPARATE ILLUSTRATION

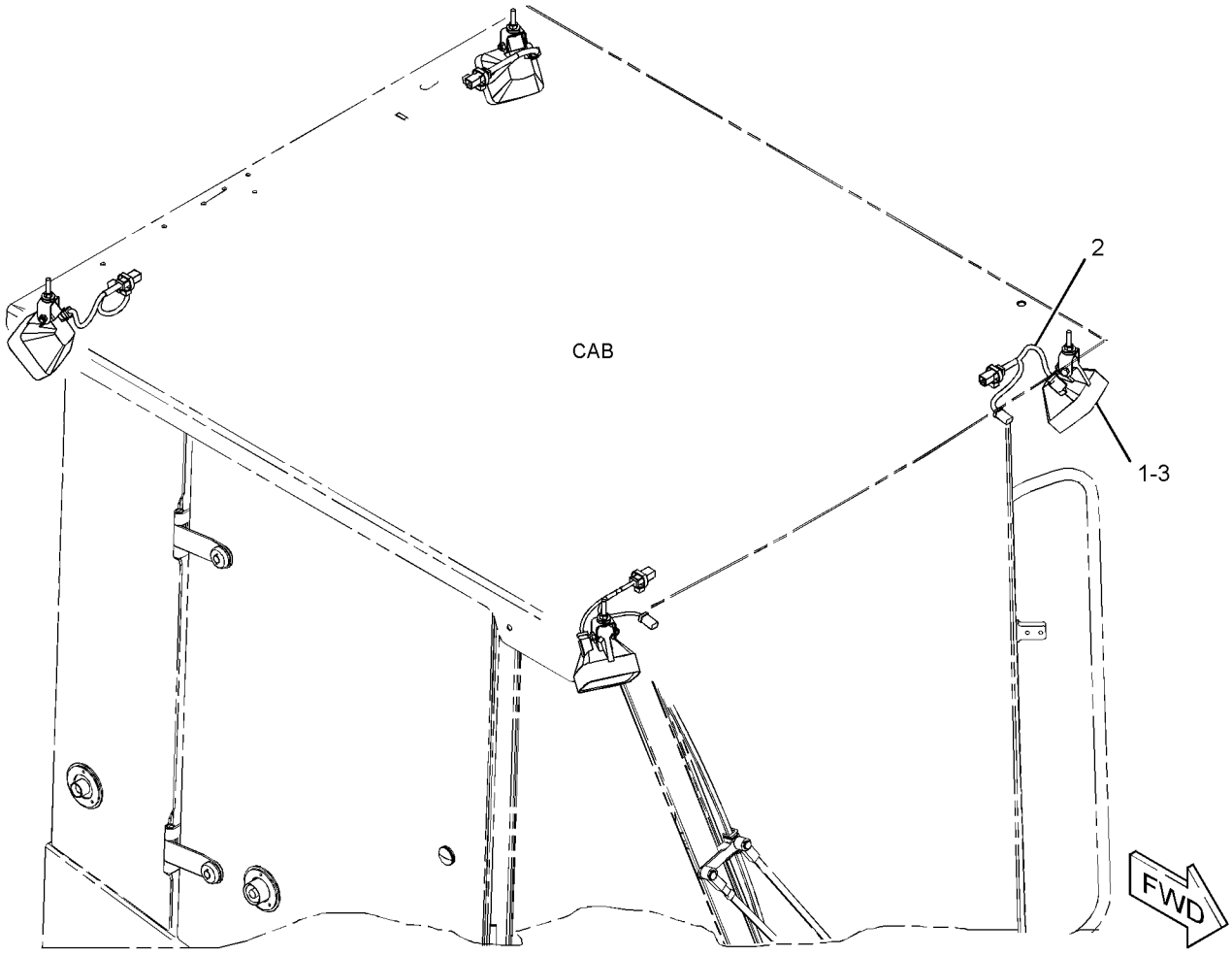

GRAPHIC #1 **<END>** g02724442

379-8727 LIGHTING GP-FLOOD

S/N: MBF1-UP; M4M1-UP; M5P1-UP; SDT1-UP
PART OF 377-2157 OPERATOR AR
AN ATTACHMENT

SMCS-1434 **i05289942**

NOTE	REF NO	GRAPHIC REF	PART NUMBER	QTY	PART NAME 1 2 3 4 5 6 (PRODUCT LEVEL)	SEE PAGE
Y	1	1	**219-6487**	4	LAMP GP-FLOOD (24-VOLT, 70-WATT)	130
	2	1	**387-4307**	1	BRACKET	
	3	1	**387-5354**	1	BRACKET AS	
	4	1	**7X-7729**	4	WASHER (11X25X3-MM THK)	
M	5	1	**8T-4196**	4	BOLT (M10X1.5X35-MM)	
M	6	1	**8T-4200**	4	BOLT (M8X1.25X16-MM)	
	7	1	**8T-4224**	4	WASHER-HARD (8.8X16X2-MM THK)	

M - METRIC PART
Y - SEPARATE ILLUSTRATION

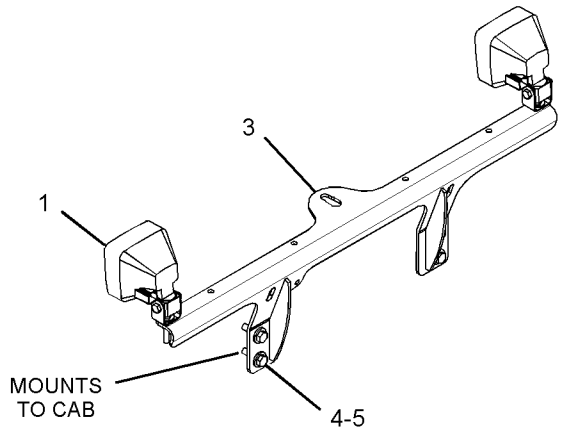

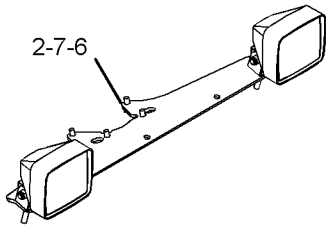



GRAPHIC #1 **<END>** g03111517

355-3059 LIGHTING GP-WARNING BEACON

S/N: MBF1-UP; M4M1-UP; M5P1-UP; SDT1-UP

AN ATTACHMENT

SMCS-1431 **i05269476**

NOTE	REF NO	GRAPHIC REF	PART NUMBER	QTY	PART NAME 1 2 3 4 5 6 (PRODUCT LEVEL)	SEE PAGE
Y	1	1	**378-6901**	1	LAMP GP-WARNING BEACON (AMBER, LED, 24-VOLT)	131
	2	1	**7K-1181**	2	STRAP-CABLE	

Y - SEPARATE ILLUSTRATION

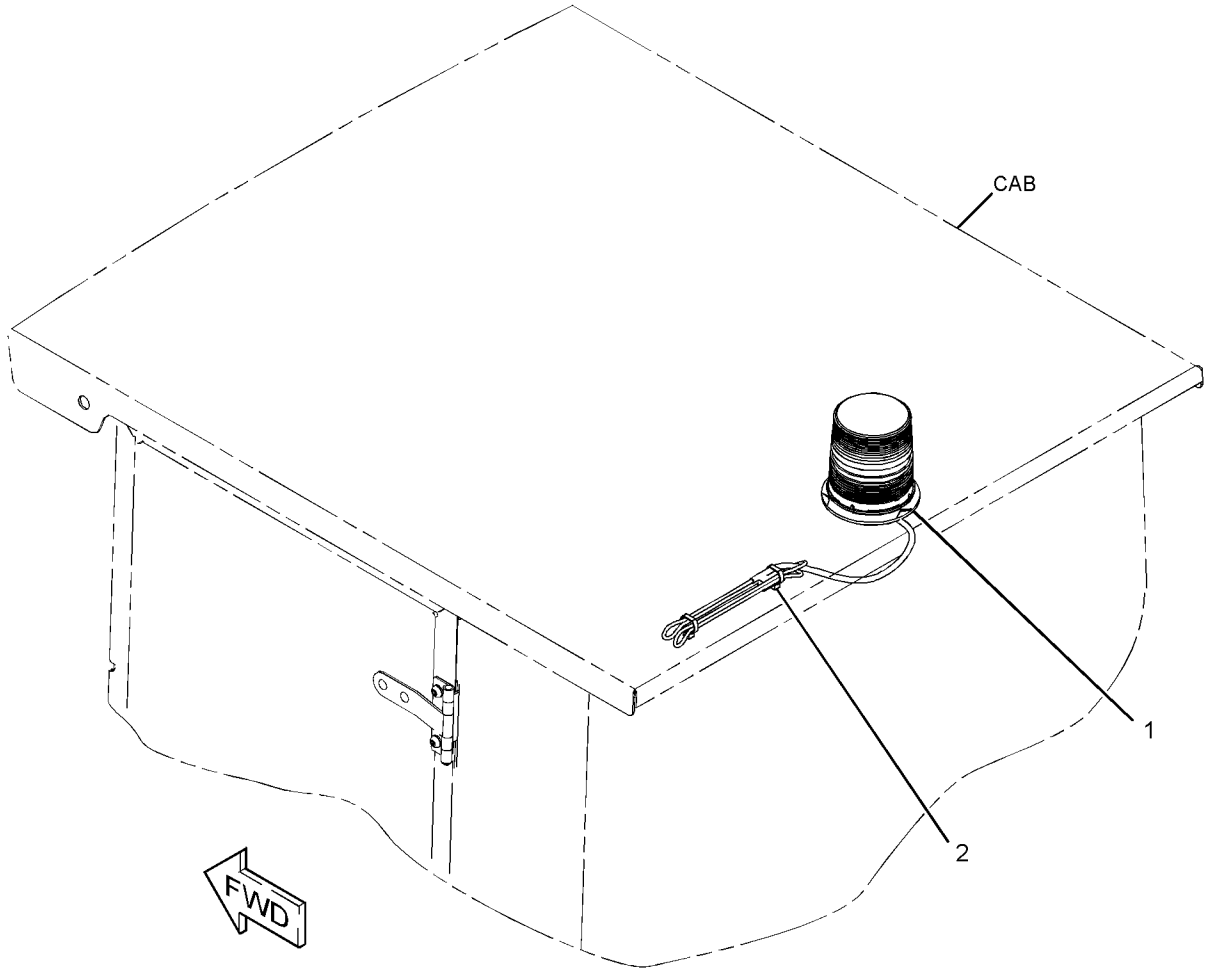

GRAPHIC #1 **<END>** g03054882

379-8291 PANEL GP-CIRCUIT BREAKER

S/N: MBF1-UP; M4M1-UP; M5P1-UP; SDT1-UP
PART OF 379-8248 WIRING GP-MACHINE

SMCS-1417, 1420 **i05270689**

NOTE	REF NO	GRAPHIC REF	PART NUMBER	QTY	PART NAME 1 2 3 4 5 6 (PRODUCT LEVEL)	SEE PAGE
	1	1	**116-0118**	1	CLIP	
Y	2	1	**118-3534**	1	SWITCH GP-MAGNETIC (24-VOLT) (STARTING AID)	158
	3	1	**273-1177**	1	RELAY AS (24-VOLT) (START)	
		1	**1H-3244**	2	LOCKWASHER	
M		1	**5C-2890**	2	NUT (M6X1-THD)	
M		1	**5C-7261**	1	NUT (M8X1.25-THD)	
		1	**8T-4205**	2	WASHER-HARD (7.2X14.5X2-MM THK)	
		1	**8T-4224**	1	WASHER-HARD (8.8X16X2-MM THK)	
		1	**264-3617**	1	LOCKWASHER	
		1	**267-5211**	1	SEAL	
		1	**267-5213**	1	COVER	
		1	**274-9872**	2	FUSE (30-AMPERE)	
	4	1	**274-9872**	3	FUSE (30-AMPERE) (MAIN)	
	5	1	**274-9877**	2	FUSE (50-AMPERE) (POWER, 1)	
	6	1	**275-0553**	1	BAR-BUS	
	7	1	**303-1256**	1	RELAY AS (24-VDC) (MAIN POWER)	
	8	1	**354-0264**	1	COVER	
	9	1	**354-0269**	1	PANEL AS-CIRCUIT BREAKER	
	10	1	*382-1084*	1	CABLE AS	
D		1	**5P-5675**		WIRE (6-GA, BLACK) (0.3-M)	
		1	**2L-8050**	2	TERMINAL-RING (6-GA, 1/4-IN SCREW)	
	11	1	**1H-3244**	4	LOCKWASHER	
M	12	1	**5C-2890**	6	NUT (M6X1-THD)	
M	13	1	**5C-7261**	2	NUT (M8X1.25-THD)	
	14	1	**5P-4115**	4	WASHER-HARD (7.2X19X2-MM THK)	
	15	1	**5P-4116**	2	WASHER-HARD (8.8X20.5X2-MM THK)	
	16	1	**7K-1181**	1	STRAP-CABLE	
M	17	1	**7X-2534**	2	BOLT (M6X1X50-MM)	
M	18	1	**8T-3991**	2	SCREW-BUTTON HEAD (M6X1X20-MM)	
M	19	1	**8T-4189**	2	BOLT (M8X1.25X20-MM)	
	20	1	**8T-4205**	4	WASHER-HARD (7.2X14.5X2-MM THK)	
	21	1	**8T-4224**	2	WASHER-HARD (8.8X16X2-MM THK)	
	22	1	**264-3617**	1	LOCKWASHER	
	23	1	**9X-8256**	2	WASHER (6.6X12X2-MM THK)	
E	24	1	**103-2543**		SEAL (3-CM EACH)	

D - ORDER BY THE METER
E - ORDER BY THE CENTIMETER
M - METRIC PART
Y - SEPARATE ILLUSTRATION

379-8291 **PANEL GP-CIRCUIT BREAKER (*contd.*)** **i05270689**

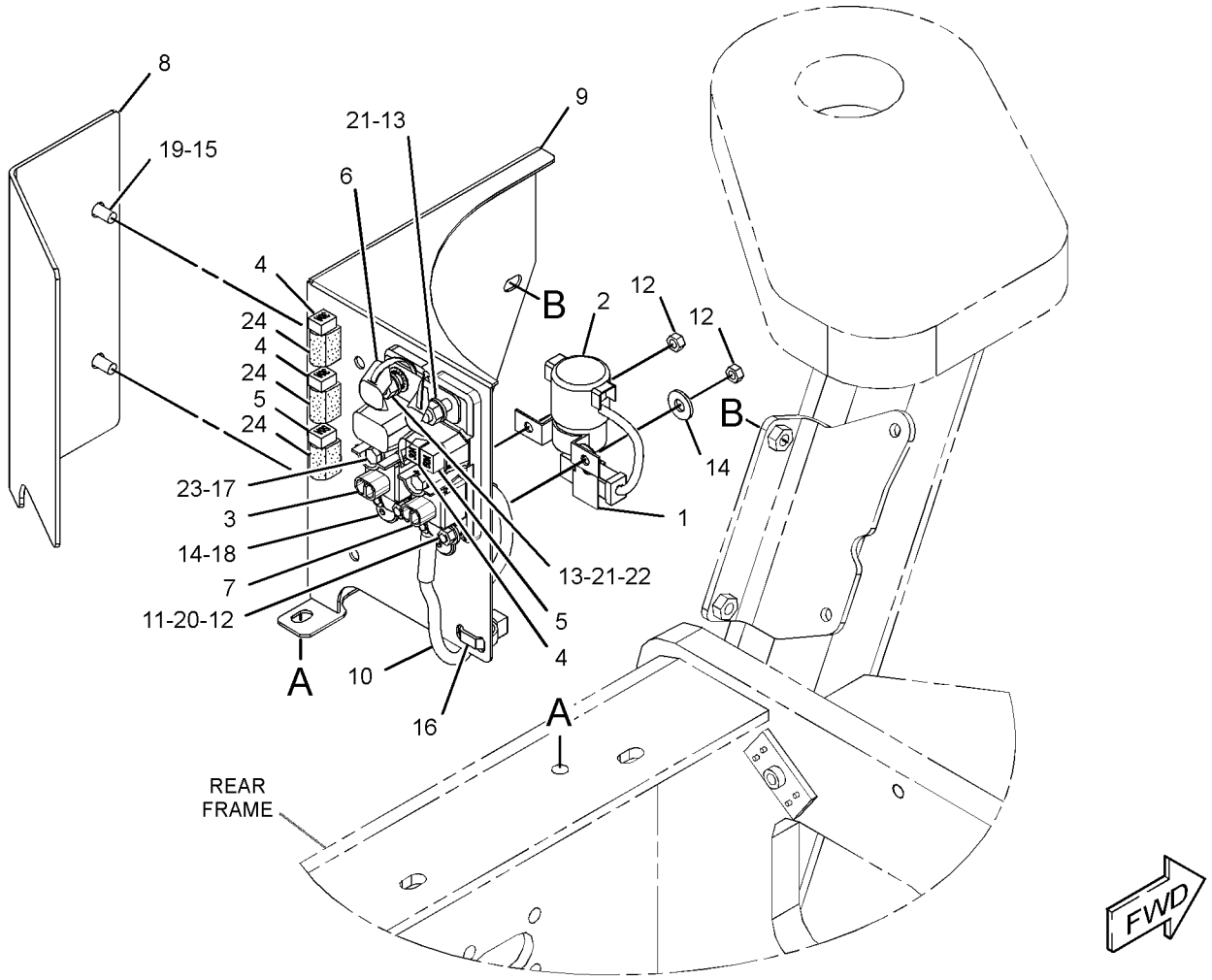

GRAPHIC #1 **<END>** g03255077

379-8245 PANEL GP-CONTROL

S/N: MBF1-UP; M4M1-UP; M5P1-UP; SDT1-UP
PART OF 379-8758, 379-8760, 379-8761, 379-8762 CONFIGURATION AR
AN ATTACHMENT

SMCS-7451 **i05339065**

NOTE	REF NO	GRAPHIC REF	PART NUMBER	QTY	PART NAME 1 2 3 4 5 6 (PRODUCT LEVEL)	SEE PAGE
	1	1	**178-7539**	1	RECEPTACLE AS (POWER SUPPLY)	
	2	1	**203-9007**	2	NUT (1-1/2-18-THD)	
	3	1	**290-5664**	1	STRAP-CABLE	
	4	1	**340-7160**	1	CONVERTER-POWER (24-VOLT TO 12-VOLT)	
	5	1	**362-3190**	1	CONTROLLER	
Y	6	1	**416-0330**	1	HARNESS AS-PANEL	114
	7	1	**384-0056**	1	PANEL AS	
M		1	**6V-9632**	7	NUT-WELD (M6X1-THD)	
	8	1	**384-0060**	1	PLATE	
	9	1	**384-0062**	1	PLATE AS	
	10	1	**096-6166**	4	WASHER-HARD (4.5X9X1-MM THK)	
	11	1	**211-0052**	1	NUT (1-11/16-18-THD)	
	12	1	**4B-4863**	8	WASHER (4.7X11X1.2-MM THK)	
M	13	1	**5C-9553**	5	BOLT (M6X1X16-MM)	
	14	1	**5P-7162**	8	SCREW-MACHINE (10-32X0.5-IN)	
	15	1	**6V-4360**	1	PLUG-BUTTON	
M	16	1	**6V-9672**	2	SCREW-MACHINE (M4X0.7X16-MM)	
	17	1	**7K-1181**	5	STRAP-CABLE	
M	18	1	**7X-2535**	2	BOLT (M6X1X60-MM)	
M	19	1	**8T-4197**	4	BOLT (M8X1.25X40-MM)	
	20	1	**9D-3769**	1	GROMMET	
	21	1	**8T-4223**	1	WASHER-HARD (13.5X25.5X3-MM THK)	
	22	1	**8T-4224**	4	WASHER-HARD (8.8X16X2-MM THK)	
M	23	1	**8T-4244**	1	NUT (M12X1.75-THD)	
	24	1	**9P-0719**	1	GROMMET	
M	25	1	**9X-1046**	2	SCREW (M4X0.7X18-MM)	
	26	1	**9X-8256**	7	WASHER (6.6X12X2-MM THK)	
	27	1	**180-9900**	1	CAP AS	
		1	**5P-7958**	1	SLEEVE-CABLE SPLICE	
		1	**8C-6354**	1	CAP-RECEPTACLE (ET CONNECTOR)	
		1	**179-9392**	1	LANYARD	

M - METRIC PART
Y - SEPARATE ILLUSTRATION

379-8245 **PANEL GP-CONTROL (*contd.*)** **i05339065**

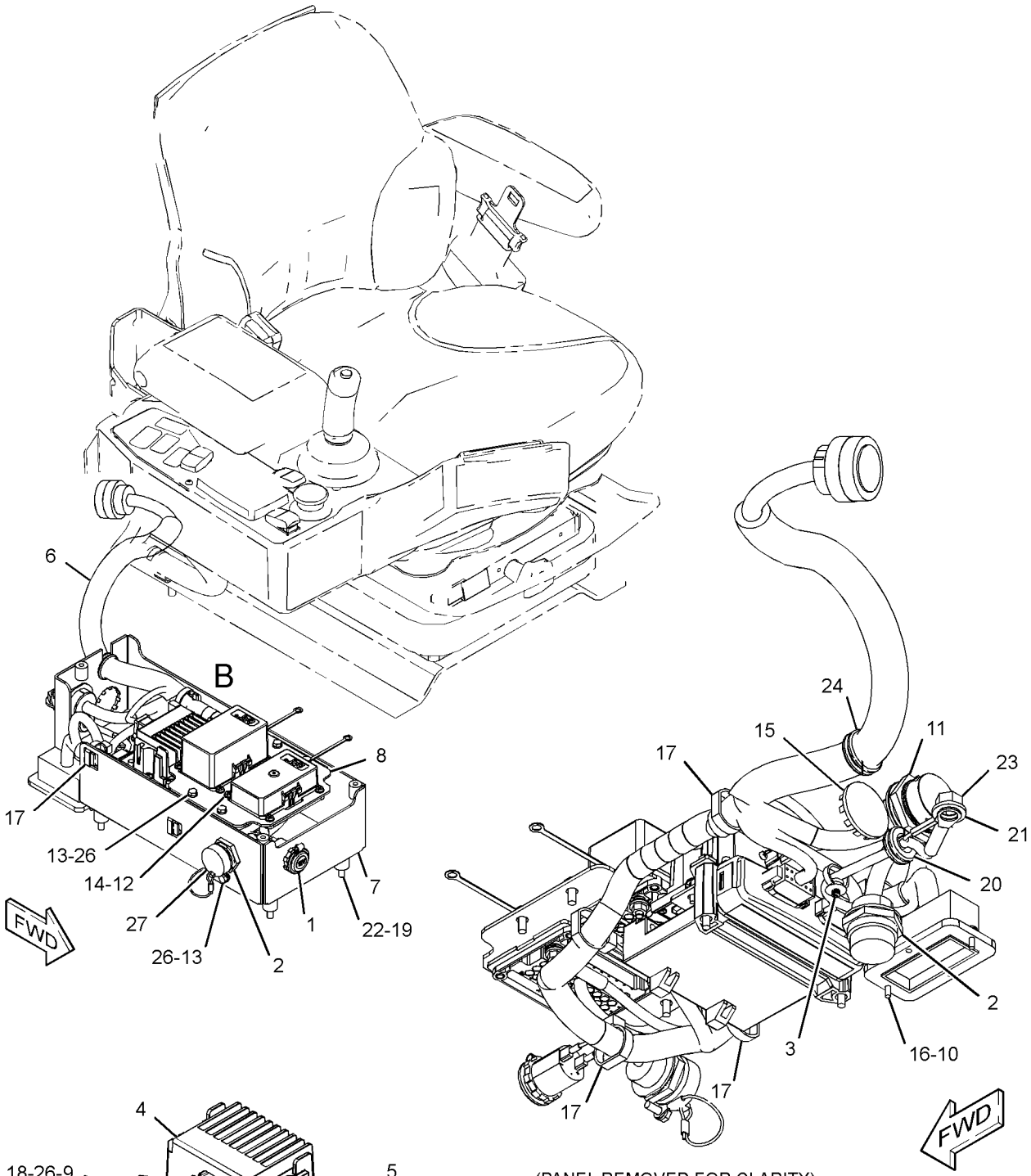

(PANEL REMOVED FOR CLARITY)

VIEW OF AREA B
(PARTS REMOVED FOR CLARITY)

GRAPHIC #1 **<END>** g03385151

336-3545 RADIO GP-COMMUNICATION–PRODUCT LINK 121SR

S/N: MBF1-UP; M4M1-UP; M5P1-UP; SDT1-UP
PART OF 355-0624, 355-3038 INSTALLATION GP-COMMUNICATION
AN ATTACHMENT

SMCS-733T **i05317645**

NOTE	PART NUMBER	QTY	PART NAME 1 2 3 4 5 6 (PRODUCT LEVEL)	SEE PAGE
	434-1356	1	SOFTWARE GP-MONITOR (PRODUCT LINK 121SR)	

<END>

422-4422 SENSOR & MOUNTING GP–COMPACTION MEASUREMENT

S/N: M4M1-UP

PART OF 422-4429 SENSOR AR-COMPACTION

AN ATTACHMENT

SMCS-1408, 1906, 1907, 1912, 1917, 1923, 1924, 430S **i05291857**

NOTE	REF NO	GRAPHIC REF	PART NUMBER	QTY	PART NAME 1 2 3 4 5 6 (PRODUCT LEVEL)	SEE PAGE
	1	1	**178-8505**	1	PLATE AS	
	2	1	**200-6345**	1	MOUNT (DUAL SWIVEL)	
	3	1	**204-2281**	2	STRAP-CABLE	
	4	1	**327-0325**	8	STRAP-CABLE	
	5	1	**362-3189**	1	CONTROLLER	
Y	6	1	**379-8301**	1	HARNESS AS-CHASSIS	104
	7	1	**390-1735**	1	SENSOR AS (COMPACTION)	
	8	1	**390-1736**	1	CABLE AS	
		1	**102-8805**	1	KIT-RECEPTACLE (6-PIN)	
					(INCLUDES RECEPTACLE AS & WEDGE)	
		1	**8T-8737**	2	PLUG-SEAL	
		1	**9X-3401**	4	PIN-CONNECTOR (16-GA TO 18-GA)	
					–OR–	
		1	**126-1767**	4	PIN-CONNECTOR (14-GA TO 16-GA)	
	9	1	**397-8613**	1	GUARD AS	
	10	1	**397-8614**	1	PLATE	
Y	11	1	**418-7851**	1	HARNESS AS-SENSOR (CONTROLLER)	118
	12	1	**130-5300**	1	CLIP	
	13	1	**132-5789**	1	CLIP	
	14	1	**132-7551**	2	SPACER (11X19X6-MM THK)	
	15	1	**1G-9960**	2	CLAMP	
	16	1	**277-1873**	2	CLIP	
	17	1	**4P-7581**	1	CLIP	
M	18	1	**5C-7261**	1	NUT (M8X1.25-THD)	
	19	1	**5P-4116**	2	WASHER-HARD (8.8X20.5X2-MM THK)	
	20	1	**7K-1181**	20	STRAP-CABLE	
M	21	1	**7X-2535**	4	BOLT (M6X1X60-MM)	
	22	1	**7X-7729**	3	WASHER (11X25X3-MM THK)	
M	23	1	**8C-7581**	2	SCREW-MACHINE (M4X0.7X8-MM)	
M	24	1	**8C-8451**	2	BOLT (M6X1X40-MM)	
M	25	1	**8T-4137**	3	BOLT (M10X1.5X20-MM)	
M	26	1	**8T-4138**	2	BOLT (M6X1X20-MM)	
M	27	1	**8T-4139**	2	BOLT (M12X1.75X30-MM)	
	28	1	**8T-4205**	7	WASHER-HARD (7.2X14.5X2-MM THK)	
	29	1	**8T-4223**	2	WASHER-HARD (13.5X25.5X3-MM THK)	
M	30	1	**8T-4908**	1	BOLT (M8X1.25X25-MM)	
	31	1	**9M-8406**	1	CLIP	
M	32	1	**9X-2480**	3	BOLT (M6X1X45-MM)	
	33	1	**9X-8256**	4	WASHER (6.6X12X2-MM THK)	

M - METRIC PART
Y - SEPARATE ILLUSTRATION

422-4422 **SENSOR & MOUNTING GP (*contd.*)** **i05291857**

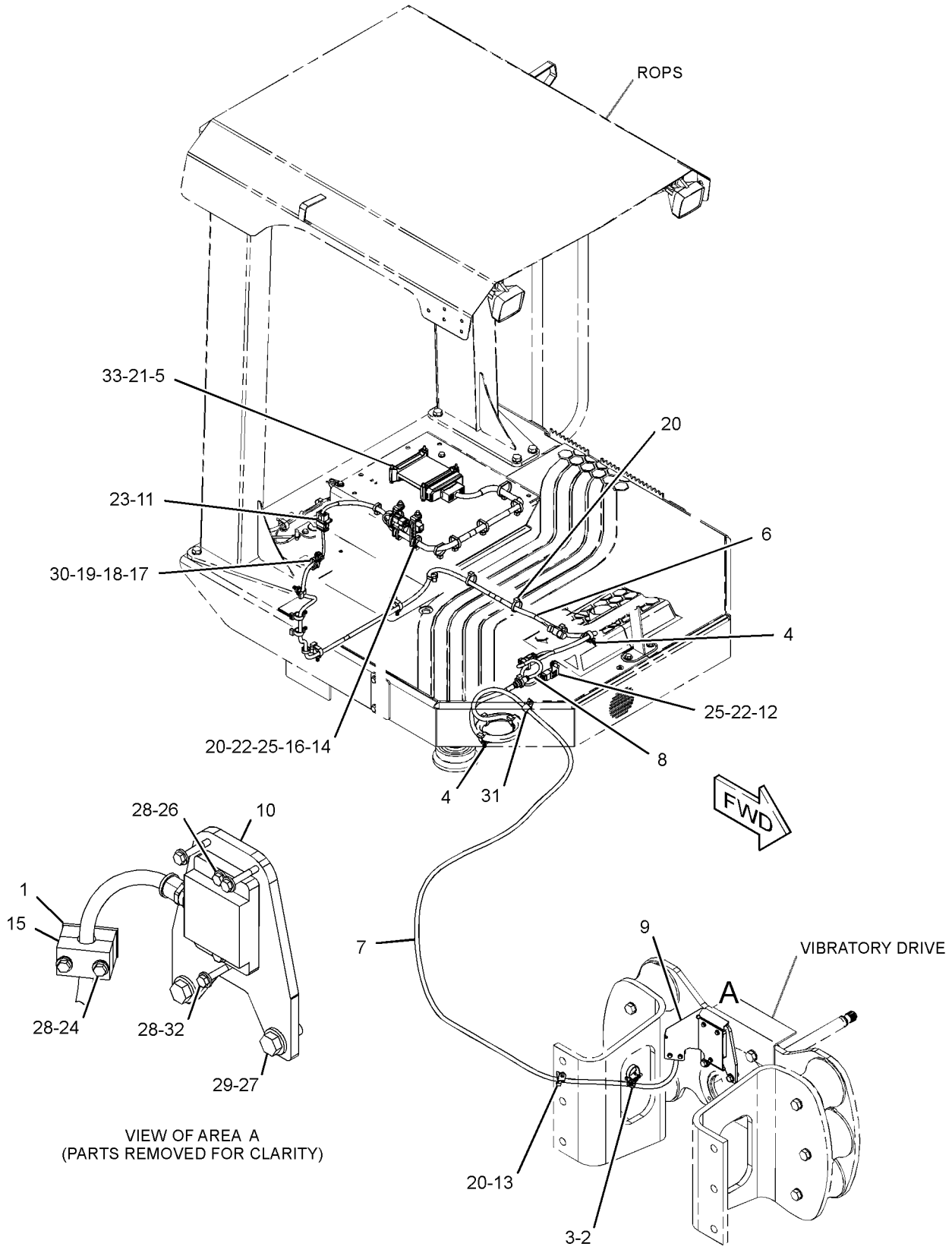

GRAPHIC #1 **<END>** g03385061

422-4424 SENSOR & MOUNTING GP–COMPACTION MEASUREMENT

S/N: MBF1-UP

PART OF 422-4430 SENSOR AR-COMPACTION

AN ATTACHMENT

SMCS-1408, 1906, 1907, 1912, 1917, 1923, 1924, 430S **i05297384**

NOTE	REF NO	GRAPHIC REF	PART NUMBER	QTY	PART NAME 1 2 3 4 5 6 (PRODUCT LEVEL)	SEE PAGE
	1	1	**178-8505**	1	PLATE AS	
	2	1	**200-6345**	1	MOUNT (DUAL SWIVEL)	
	3	1	**204-2281**	2	STRAP-CABLE	
	4	1	**327-0325**	8	STRAP-CABLE	
	5	1	**362-3189**	1	CONTROLLER	
Y	6	1	**379-8301**	1	HARNESS AS-CHASSIS	104
	7	1	**390-1735**	1	SENSOR AS (COMPACTION)	
	8	1	**390-1736**	1	CABLE AS	
		1	**102-8805**	1	KIT-RECEPTACLE (6-PIN)	
		1	**8T-8737**	2	PLUG-SEAL	
		1	**9X-3401**	1	PIN-CONNECTOR (16-GA TO 18-GA)	
					–OR–	
		1	**126-1767**	1	PIN-CONNECTOR (14-GA TO 16-GA)	
	9	1	**397-8613**	1	GUARD AS	
	10	1	**397-8615**	1	PLATE	
Y	11	1	**418-7851**	1	HARNESS AS-SENSOR	118
	12	1	**130-5300**	1	CLIP	
	13	1	**132-7551**	2	SPACER (11X19X6-MM THK)	
	14	1	**1G-9960**	2	CLAMP	
	15	1	**277-1873**	2	CLIP	
	16	1	**4P-7581**	1	CLIP	
M	17	1	**5C-7261**	1	NUT (M8X1.25-THD)	
	18	1	**5P-4116**	2	WASHER-HARD (8.8X20.5X2-MM THK)	
	19	1	**7K-1181**	19	STRAP-CABLE	
M	20	1	**7X-2535**	4	BOLT (M6X1X60-MM)	
	21	1	**7X-7729**	3	WASHER (11X25X3-MM THK)	
M	22	1	**8C-7581**	2	SCREW-MACHINE (M4X0.7X8-MM)	
M	23	1	**8C-8451**	2	BOLT (M6X1X40-MM)	
M	24	1	**8T-4137**	3	BOLT (M10X1.5X20-MM)	
M	25	1	**8T-4138**	2	BOLT (M6X1X20-MM)	
M	26	1	**8T-4139**	2	BOLT (M12X1.75X30-MM)	
	27	1	**8T-4205**	7	WASHER-HARD (7.2X14.5X2-MM THK)	
	28	1	**8T-4223**	2	WASHER-HARD (13.5X25.5X3-MM THK)	
M	29	1	**8T-4908**	1	BOLT (M8X1.25X25-MM)	
	30	1	**9M-8406**	1	CLIP	
M	31	1	**9X-2480**	3	BOLT (M6X1X45-MM)	
	32	1	**9X-8256**	4	WASHER (6.6X12X2-MM THK)	

M - METRIC PART
Y - SEPARATE ILLUSTRATION

422-4424 **SENSOR & MOUNTING GP (*contd.*)** **i05297384**

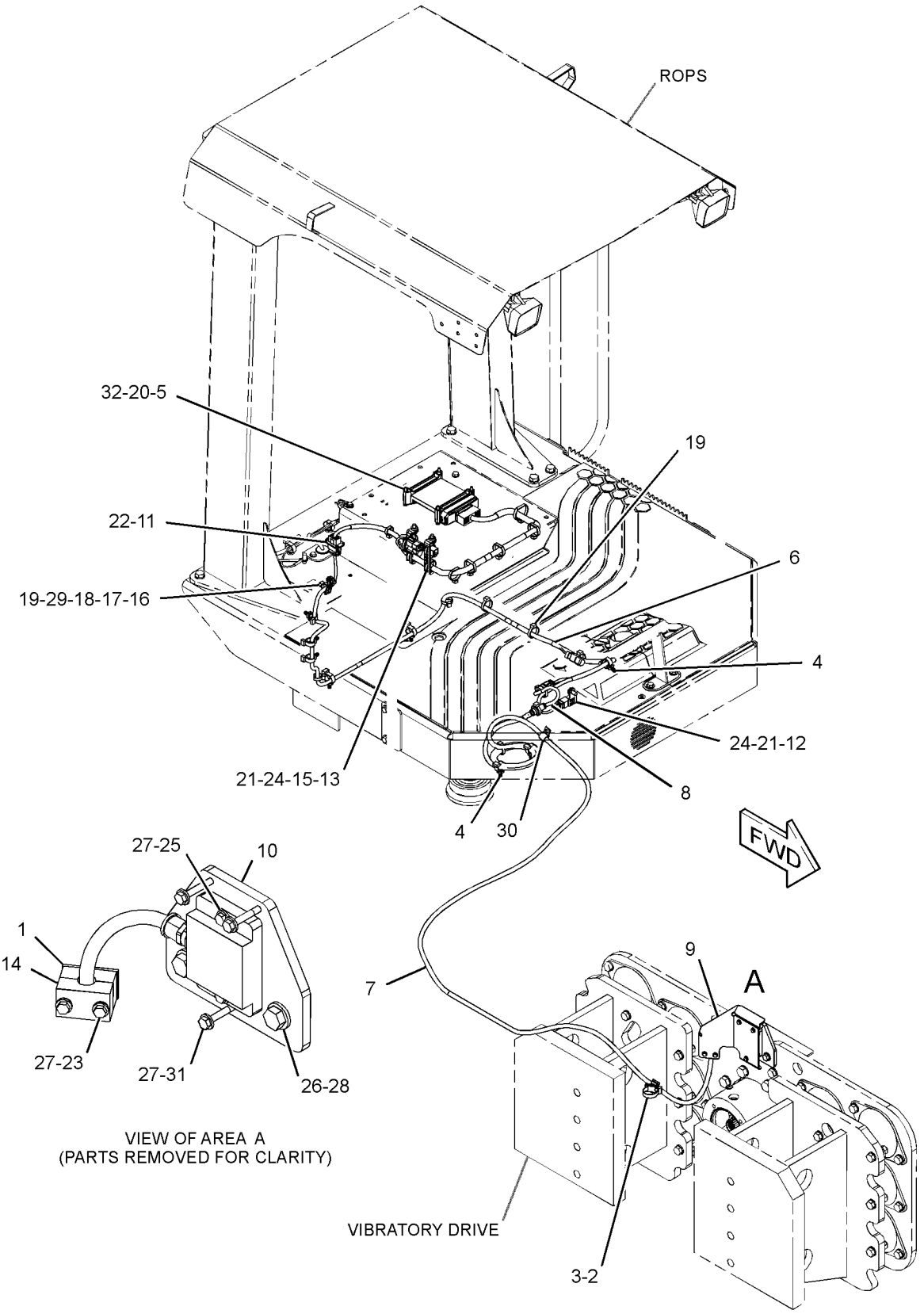

GRAPHIC #1 **<END>** g03383760

355-9380 SENSOR & MTG GP-GRADE

S/N: MBF1-UP; M4M1-UP; M5P1-UP; SDT1-UP
ACCUGRADE
AN ATTACHMENT

SMCS-7220 **i05269481**

NOTE	REF NO	GRAPHIC REF	PART NUMBER	QTY	PART NAME 1 2 3 4 5 6 (PRODUCT LEVEL)	SEE PAGE
	1	1	**334-1658**	1	SENSOR AS-ANGLE (GRADE CONTROL)	
		1	**386-0444**	1	HARNESS AS-SENSOR (GRADE CONTROL)	
		1	**9X-3401**	6	PIN-CONNECTOR (16-GA TO 18-GA)	
		1	**151-9275**	1	KIT-RECEPTACLE (6-PIN)	
					(INCLUDES RECEPTACLE AS & WEDGE)	
E		1	**112-4550**		SLEEVE (20-CM)	
	2	1	**362-4294**	1	BRACKET AS	
M	3	1	**8T-4138**	2	BOLT (M6X1X20-MM)	
	4	1	**9X-8256**	2	WASHER (6.6X12X2-MM THK)	

E - ORDER BY THE CENTIMETER
M - METRIC PART

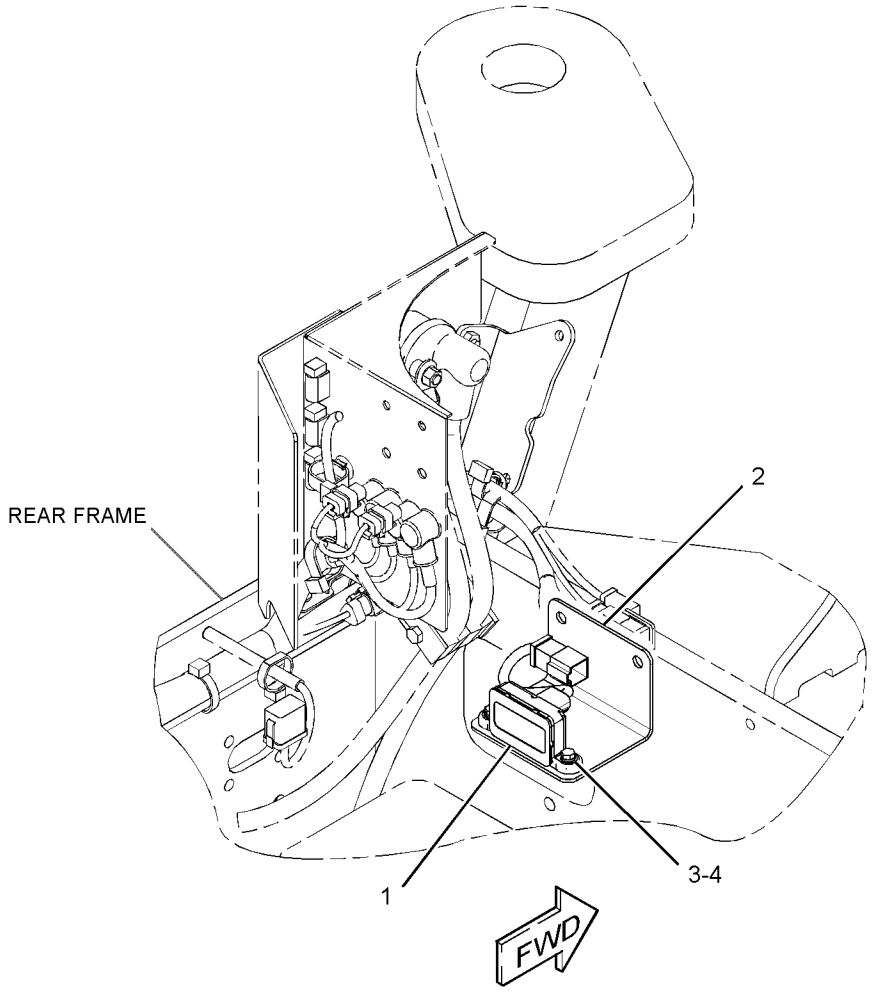

GRAPHIC #1 **<END>** g02731128

422-4423 SENSOR GP-PRESSURE–PROPEL FORCE

S/N: MBF1-UP; M4M1-UP; M5P1-UP; SDT1-UP
PART OF 422-4428 SENSOR AR-COMPACTION
AN ATTACHMENT

SMCS-1408, 1916, 1917, 1924 **i05293733**

NOTE	REF NO	GRAPHIC REF	PART NUMBER	QTY	PART NAME 1 2 3 4 5 6 (PRODUCT LEVEL)	SEE PAGE
	1	1	**3S-2093**	2	STRAP-CABLE	
	2	1	**327-0325**	9	STRAP-CABLE	
	3	1	**334-1658**	1	SENSOR AS-ANGLE (INCLINATION)	
		1	**386-0444**	1	HARNESS AS-SENSOR (INCLINATION)	
E		1	**112-4550**		SLEEVE (20-CM)	
		1	**151-9275**	1	KIT-RECEPTACLE (6-PIN)	
					(INCLUDES RECEPTACLE AS & WEDGE)	
		1	**9X-3401**	6	PIN-CONNECTOR (16-GA TO 18-GA)	
	4	1	**349-1178**	4	SENSOR-PRESSURE (AUTODIG)	
	5	1	**362-3189**	1	CONTROLLER	
	6	1	**362-4294**	1	BRACKET AS	
Y	7	1	**418-1430**	1	HARNESS AS-SENSOR (PROPEL FORCE)	117
Y	8	1	**418-7851**	1	HARNESS AS-SENSOR (CONTROLLER)	118
	9	1	**130-5300**	1	CLIP	
	10	1	**132-5789**	1	CLIP	
	11	1	**132-7551**	2	SPACER (11X19X6-MM THK)	
	12	1	*164-6874*	4	FITTING AS-ELBOW (QUICK DISCONNECT, MALE)	
					(EACH INCLUDES)	
		1	**3J-1907**	1	SEAL-O-RING	
		1	**085-7356**	1	FITTING	
	13	1	*165-6365*	1	FITTING AS	
		1	**3J-1907**	1	SEAL-O-RING	
		1	**7W-7381**	1	FITTING-OUTLET	
	14	1	**204-2281**	1	STRAP-CABLE	
	15	1	**277-1873**	2	CLIP	
	16	1	**3J-1907**	4	SEAL-O-RING	
	17	1	**4P-7581**	1	CLIP	
M	18	1	**5C-7261**	1	NUT (M8X1.25-THD)	
	19	1	**5P-4116**	2	WASHER-HARD (8.8X20.5X2-MM THK)	
	20	1	**7K-1181**	20	STRAP-CABLE	
M	21	1	**7X-2535**	4	BOLT (M6X1X60-MM)	
	22	1	**7X-7729**	3	WASHER (11X25X3-MM THK)	
M	23	1	**8C-7581**	2	SCREW-MACHINE (M4X0.7X8-MM)	
M	24	1	**8T-4137**	3	BOLT (M10X1.5X20-MM)	
M	25	1	**8T-4138**	2	BOLT (M6X1X20-MM)	
M	26	1	**8T-4908**	1	BOLT (M8X1.25X25-MM)	
	27	1	**9X-8256**	6	WASHER (6.6X12X2-MM THK)	

E - ORDER BY THE CENTIMETER
M - METRIC PART
Y - SEPARATE ILLUSTRATION

422-4423 **SENSOR GP-PRESSURE (*contd.*)** **i05293733**

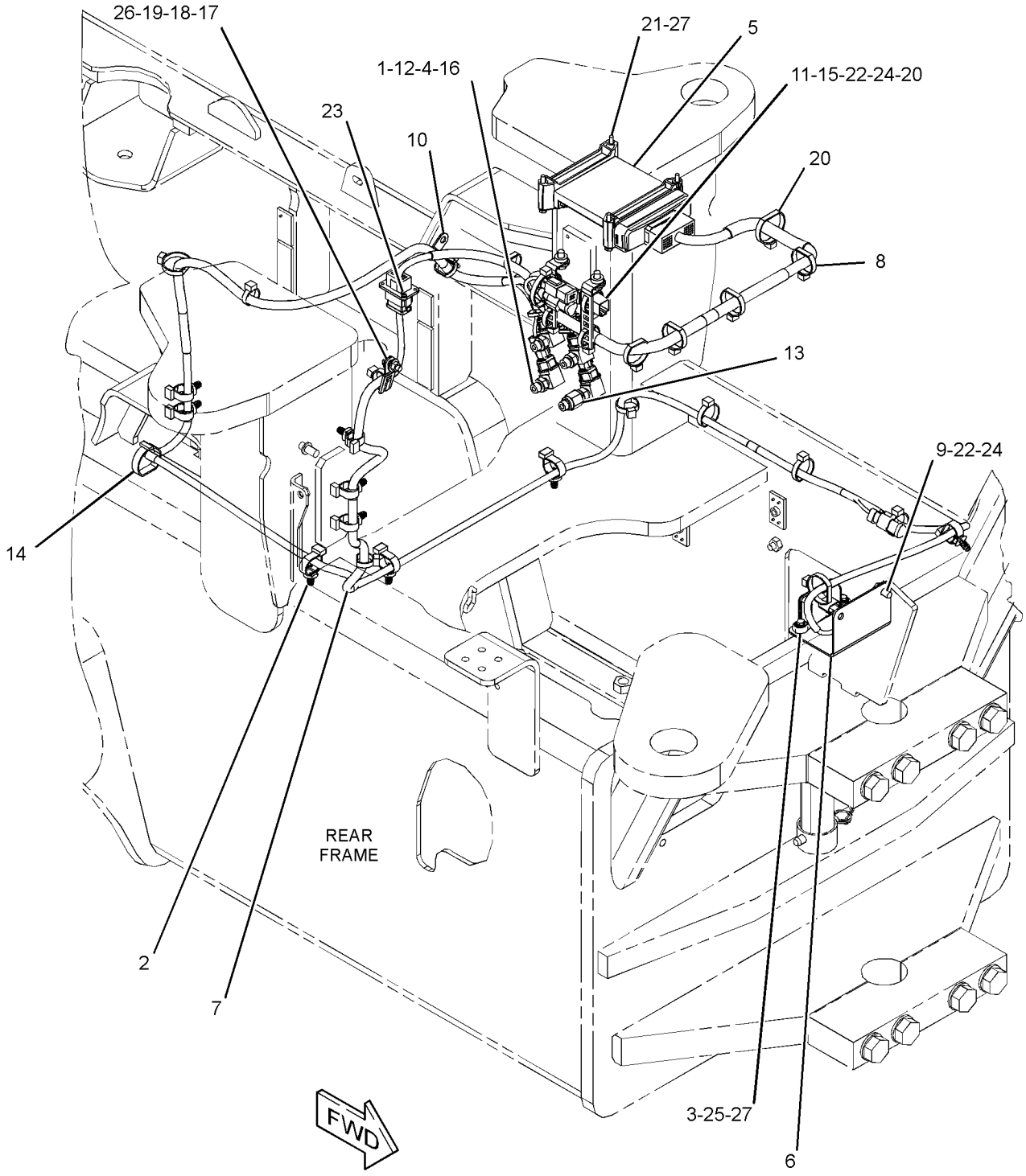

GRAPHIC #1 **<END>** g03384426

204-6204 SENSOR GP-SPEED

S/N: MBF1-UP; M4M1-UP; M5P1-UP; SDT1-UP
PART OF 355-6035 MOTOR & MTG GP-PROPEL

SMCS-1907, 4803 **i05289926**

NOTE	REF NO	GRAPHIC REF	PART NUMBER	QTY	PART NAME 1 2 3 4 5 6 (PRODUCT LEVEL)	SEE PAGE
	1	1	**6J-2245**	1	SEAL-O-RING	

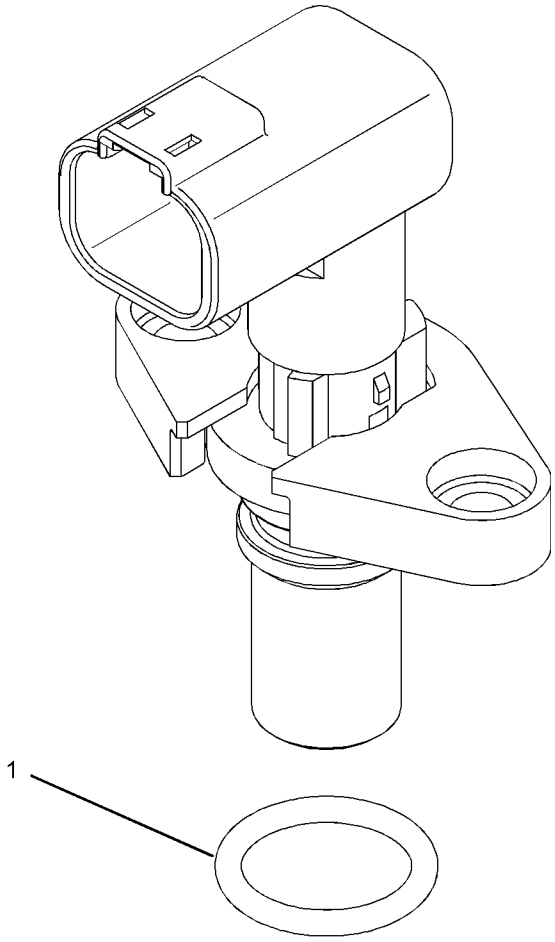

GRAPHIC #1 **<END>** g01038825

319-6491 SENSOR GP-SPEED

S/N: MBF1-UP; M4M1-UP; M5P1-UP; SDT1-UP
PART OF 354-4762 MOTOR & MTG GP-PROPEL

SMCS-1907, 4803

i05292848

NOTE	REF NO	GRAPHIC REF	PART NUMBER	QTY	PART NAME 1 2 3 4 5 6 (PRODUCT LEVEL)	SEE PAGE
	1	1	**6J-2245**	1	SEAL-O-RING	

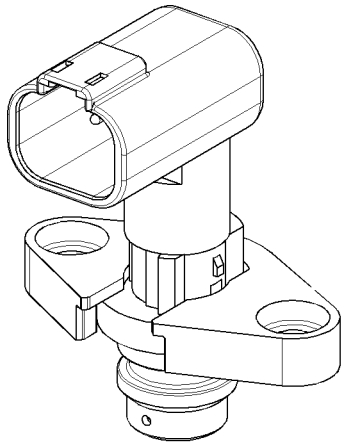

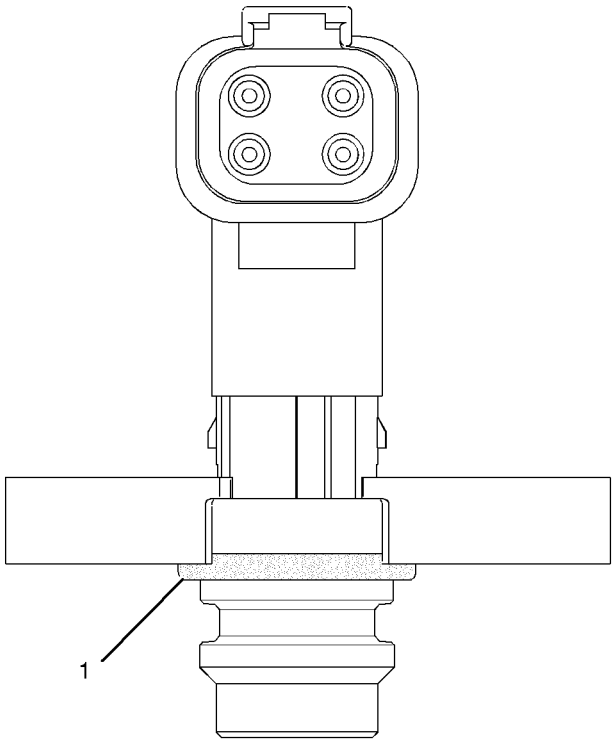

GRAPHIC #1

<END>

g01031645

145-7028 SENSOR GP-TEMPERATURE

S/N: MBF1-UP; M4M1-UP; M5P1-UP; SDT1-UP

PART OF 378-7699 VALVE & MTG GP-AUXILIARY

SMCS-1408 **i05272100**

NOTE	REF NO	GRAPHIC REF	PART NUMBER	QTY	PART NAME 1 2 3 4 5 6 (PRODUCT LEVEL)	SEE PAGE
	1	1	**102-8802**	1	KIT-RECEPTACLE (2-PIN)	
					(INCLUDES RECEPTACLE AS & WEDGE)	
J	2	1	**153-5043**		SLEEVE (3-DM)	
	3	1	**8T-8729**	2	PIN-CONNECTOR (16-GA TO 18-GA)	

J - ORDER BY THE DECIMETER

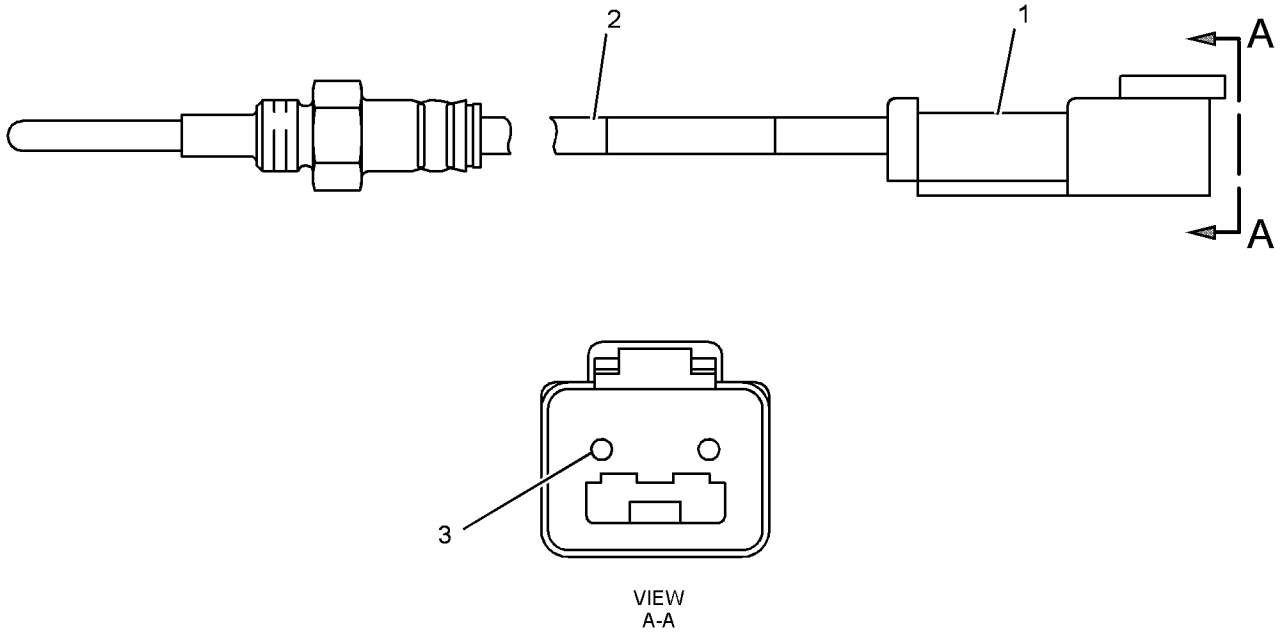

VIEW
A-A

GRAPHIC #1 **<END>** g01740798

362-4296 SENSOR GP-VIBRATORY

S/N: M4M1-UP; M5P1-UP
PART OF 379-6617 HYDRAULIC AR-VIBRATORY
AN ATTACHMENT

SMCS-7471 **i05294830**

NOTE	REF NO	GRAPHIC REF	PART NUMBER	QTY	PART NAME 1 2 3 4 5 6 (PRODUCT LEVEL)	SEE PAGE
	1	1	**7R-3145**	1	SENSOR GP-SPEED (VIBRATORY)	
	2	1	**7V-5628**	1	PLATE	
	3	1	**9X-7421**	1	SEAL-BONDED	
	4	1	**157-8674**	1	BRACKET	
	5	1	**132-5789**	1	CLIP	
	6	1	**200-6345**	1	MOUNT (DUAL SWIVEL)	
	7	1	**204-2281**	3	STRAP-CABLE	
Y	8	1	**362-4297**	1	HARNESS AS-WIRING	119
Y	9	1	**362-4298**	1	HARNESS AS-SENSOR	117
	10	1	**1G-9960**	2	CLAMP	
M	11	1	**5C-2890**	2	NUT (M6X1-THD)	
	12	1	**7K-1181**	2	STRAP-CABLE	
M	13	1	**7X-2534**	2	BOLT (M6X1X50-MM)	
	14	1	**8T-4121**	2	WASHER-HARD (11X21X2.5-MM THK)	
M	15	1	**8T-4136**	2	BOLT (M10X1.5X25-MM)	
	16	1	**9X-8256**	2	WASHER (6.6X12X2-MM THK)	

M - METRIC PART
Y - SEPARATE ILLUSTRATION

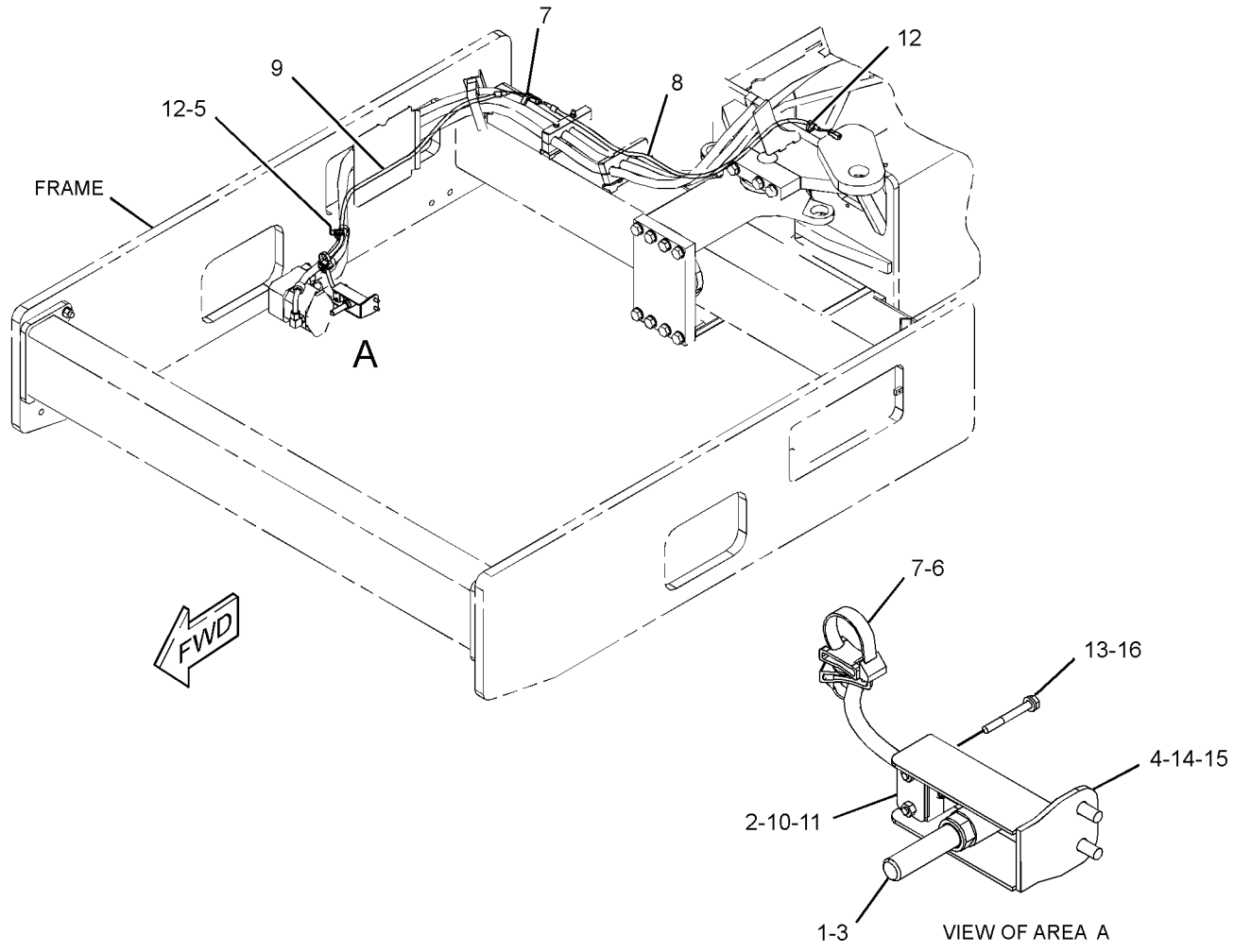

GRAPHIC #1

<END>

g03059656

365-2148 SENSOR GP-VIBRATORY

S/N: MBF1-UP; SDT1-UP
PART OF 379-6618 HYDRAULIC AR-VIBRATORY
AN ATTACHMENT

SMCS-7471 **i05299678**

NOTE	REF NO	GRAPHIC REF	PART NUMBER	QTY	PART NAME 1 2 3 4 5 6 (PRODUCT LEVEL)	SEE PAGE
	1	1	**7R-3145**	1	SENSOR GP-SPEED (VIBRATORY)	
	2	1	**7V-5628**	1	PLATE	
	3	1	**9X-7421**	1	SEAL-BONDED	
	4	1	**177-2215**	1	STRAP-DUAL CLAMP	
	5	1	**200-6345**	1	MOUNT (DUAL SWIVEL)	
	6	1	**204-2281**	2	STRAP-CABLE	
Y	7	1	**426-0862**	1	HARNESS AS-WIRING (VIBRATION FREQUENCY)	120
Y	8	1	**426-0864**	1	HARNESS AS-SENSOR (VIBRATION FREQUENCY)	118
	9	1	**367-4246**	1	BRACKET AS	
	10	1	**1G-9960**	2	CLAMP	
M	11	1	**5C-2890**	2	NUT (M6X1-THD)	
	12	1	**7K-1181**	1	STRAP-CABLE	
M	13	1	**7X-2534**	2	BOLT (M6X1X50-MM)	
	14	1	**9X-8256**	2	WASHER (6.6X12X2-MM THK)	

M - METRIC PART
Y - SEPARATE ILLUSTRATION

365-2148 **SENSOR GP-VIBRATORY (*contd.*)** **i05299678**

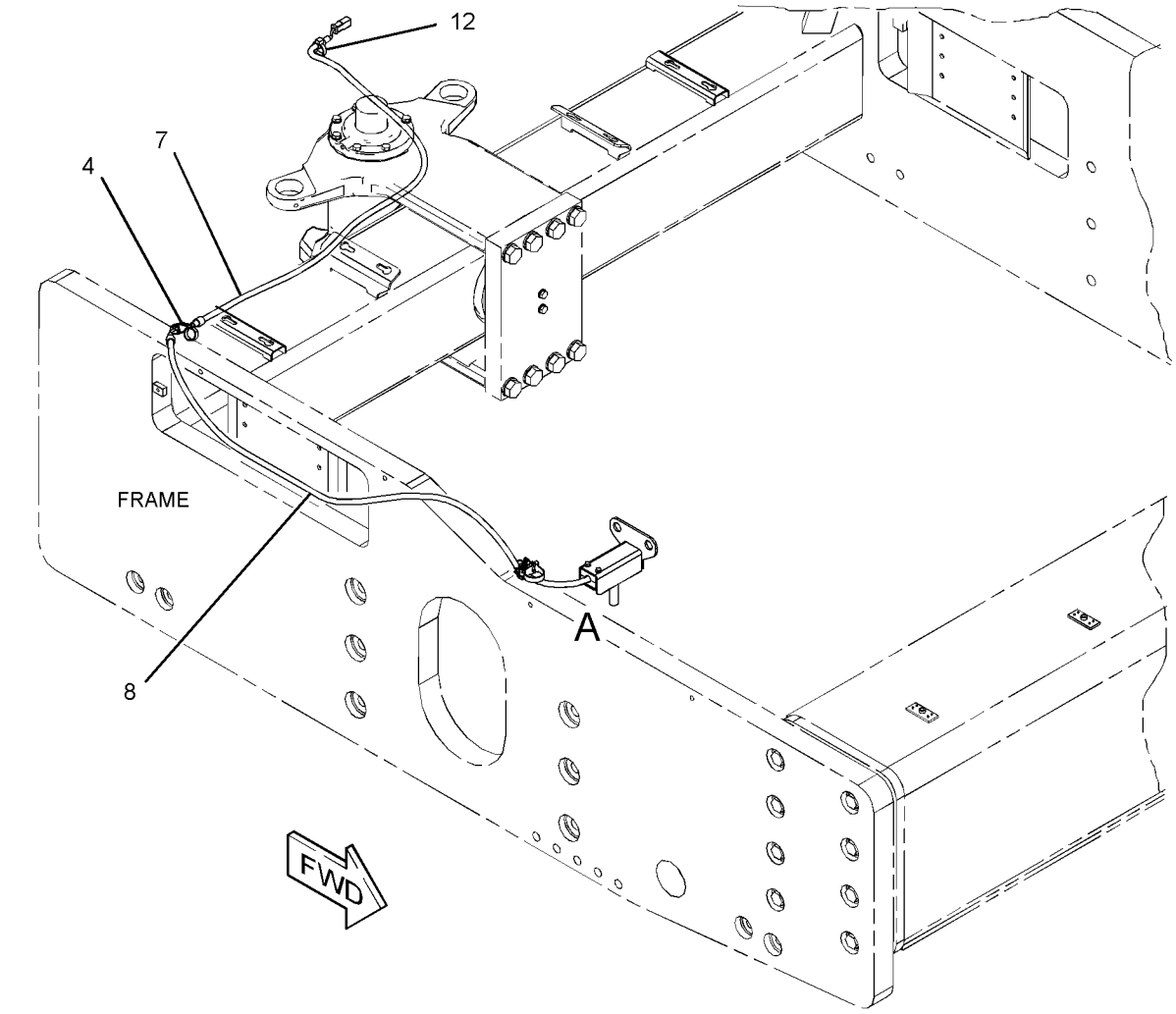

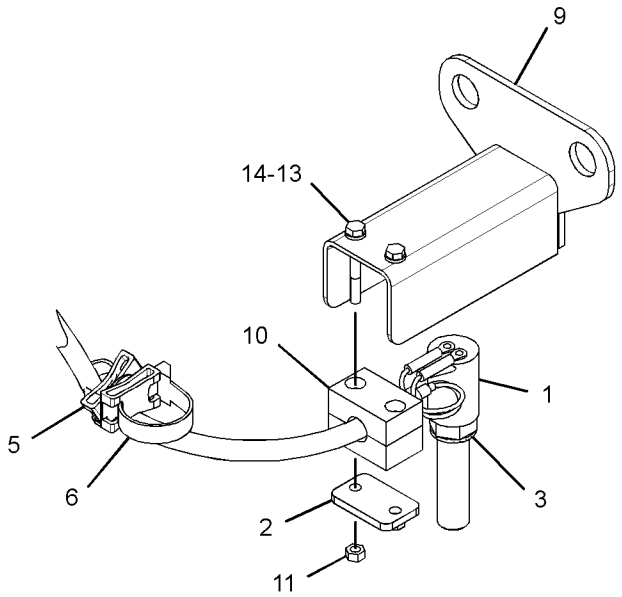

VIEW OF AREA A
(EXPLODED)

GRAPHIC #1 **<END>** g02722824

234-2637 STARTING MOTOR GP-ELECTRIC

S/N: C6E1-UP
24-VOLT
PART OF 292-7884 STARTING MOTOR GP-ELECTRIC
AN ATTACHMENT

SMCS-1453 **i05330945**

NOTE	REF NO	GRAPHIC REF	PART NUMBER	QTY	PART NAME 1 2 3 4 5 6 (PRODUCT LEVEL)	SEE PAGE
	1	1	**9X-1279**	1	CASE AS-STARTING MOTOR	
	2	1	**9X-1280**	1	ARMATURE AS	
	3	1	**242-5441**	1	DRIVE AS-STARTING MOTOR	
	4	1	**242-5443**	1	HOUSING-STARTING MOTOR	
	5	1	**242-5444**	1	SWITCH AS (STARTER)	
	6	1	**9X-1275**	1	HOLDER AS-BRUSH	
	7	1	**242-5445**	1	FRAME-STARTER	
	8	1	**8J-4455**	1	BALL	
	9	1	**7T-6090**	1	SPRING	
	10	1	**9X-1278**	1	BOOT	
	11	1	**7T-6087**	1	WASHER (15.2X40X0.5-MM THK)	
	12	1	**8T-4121**	2	WASHER-HARD (11X21X2.5-MM THK)	
M	13	1	**8T-4133**	2	NUT (M10X1.5-THD)	
M	14	1	**9X-2036**	1	SCREW-PAN HEAD	
	15	1	**3E-5153**	1	COVER-STARTING MOTOR	
	16	1	**8C-9778**	1	PLUNGER AS	
	17	1	**242-5442**	1	COVER-STARTER	
	18	1	**3E-5154**	1	BUSHING-STARTING MOTOR	
	19	1	**100-3685**	1	CAP	
	20	1	**2P-8104**	1	BEARING	
	21	1	**8L-4070**	1	BALL BEARING	
	22	1	**8F-1434**	1	LOCKWASHER	
					AVAILABLE REPAIR KIT(S):	
			9X-1282	1	KIT-STARTING MOTOR GEAR	
					(INCLUDES PINIONS, ROLLERS & RETAINER)	
			9X-1283	1	KIT-HARDWARE (STARTING MOTOR)	
					(INCLUDES NUT, BOLT & SCREW AS)	
			9X-1284	1	KIT-STARTING MOTOR SEAL	
					(INCLUDES SEALS & GASKET)	
			9X-1285	1	KIT-BRUSH (STARTING MOTOR)	
					(INCLUDES BRUSH AS & SCREW AS)	

M - METRIC PART

234-2637 **STARTING MOTOR GP-ELECTRIC (*contd.*)** **i05330945**

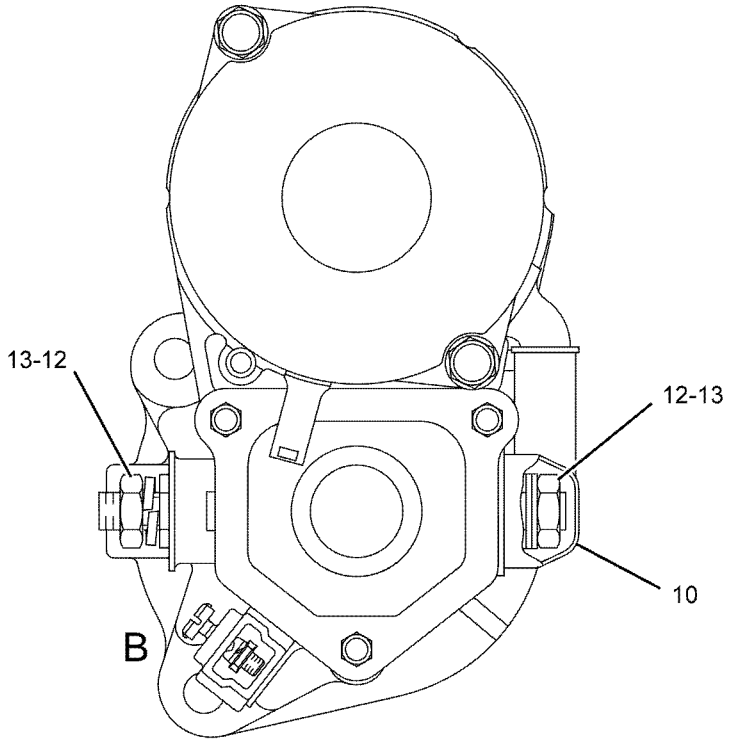

VIEW A-A

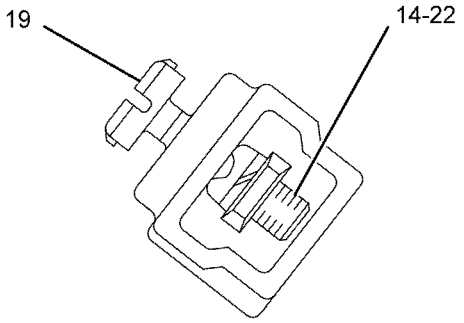

VIEW OF AREA B

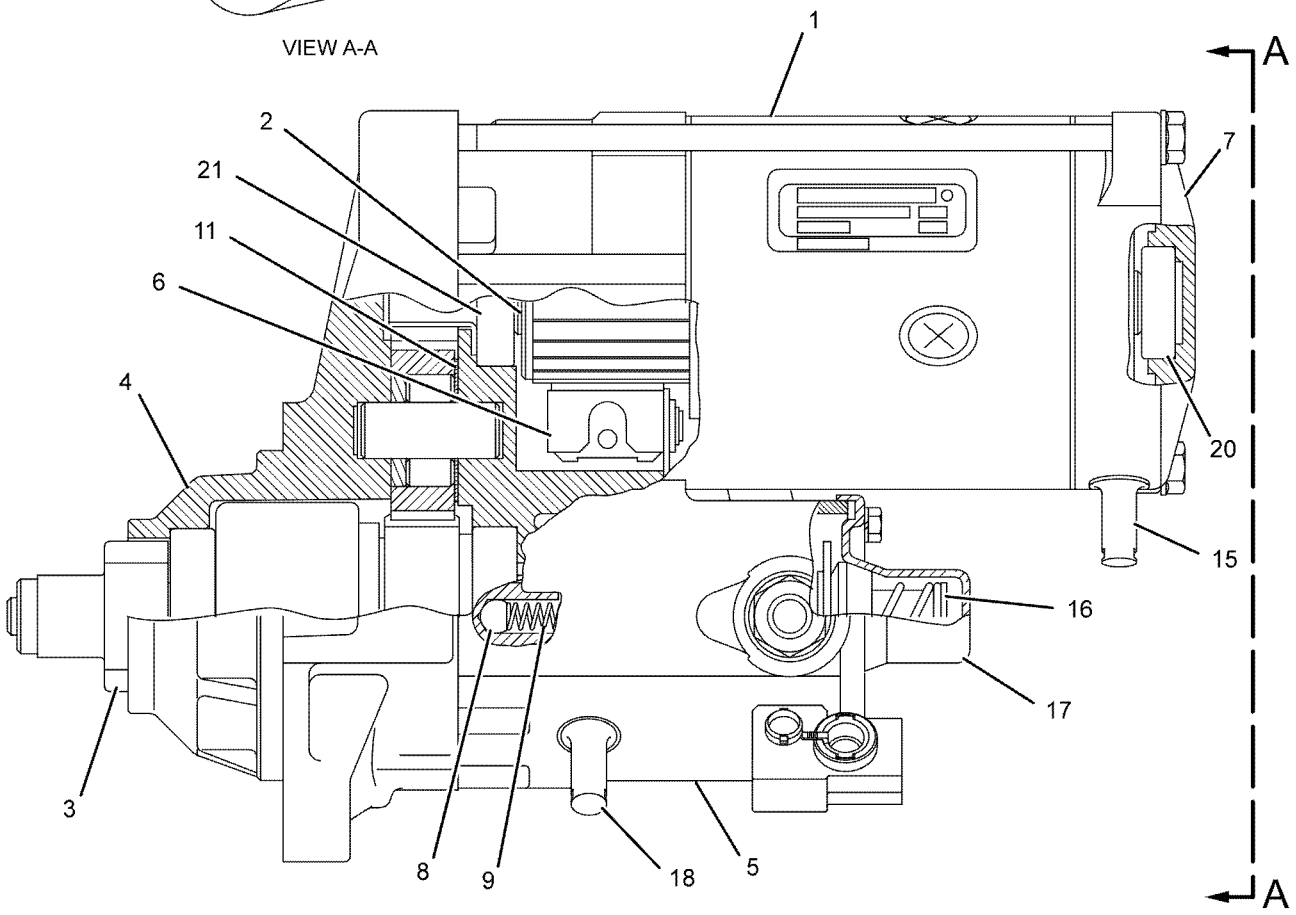

GRAPHIC #1 **<END>** g01138114

292-7884 STARTING MOTOR GP-ELECTRIC

S/N: C6E1-UP
24-VOLT, 7.5 KW
PART OF 378-4731 ENGINE AR-PRIMARY
AN ATTACHMENT

SMCS-1453 **i04913311**

NOTE	REF NO	GRAPHIC REF	PART NUMBER	QTY	PART NAME 1 2 3 4 5 6 (PRODUCT LEVEL)	SEE PAGE
YR	1	1	**234-2637**	1	STARTING MOTOR GP-ELECTRIC (24-VOLT)	154
	2	1	**7W-4540**	1	SPACER	
	3	1	**292-7760**	1	BOLT	
	4	1	**101-7178**	2	BOLT (M10X1.5X55-MM)	

R - REMFG PART MAY BE AVAILABLE
Y - SEPARATE ILLUSTRATION

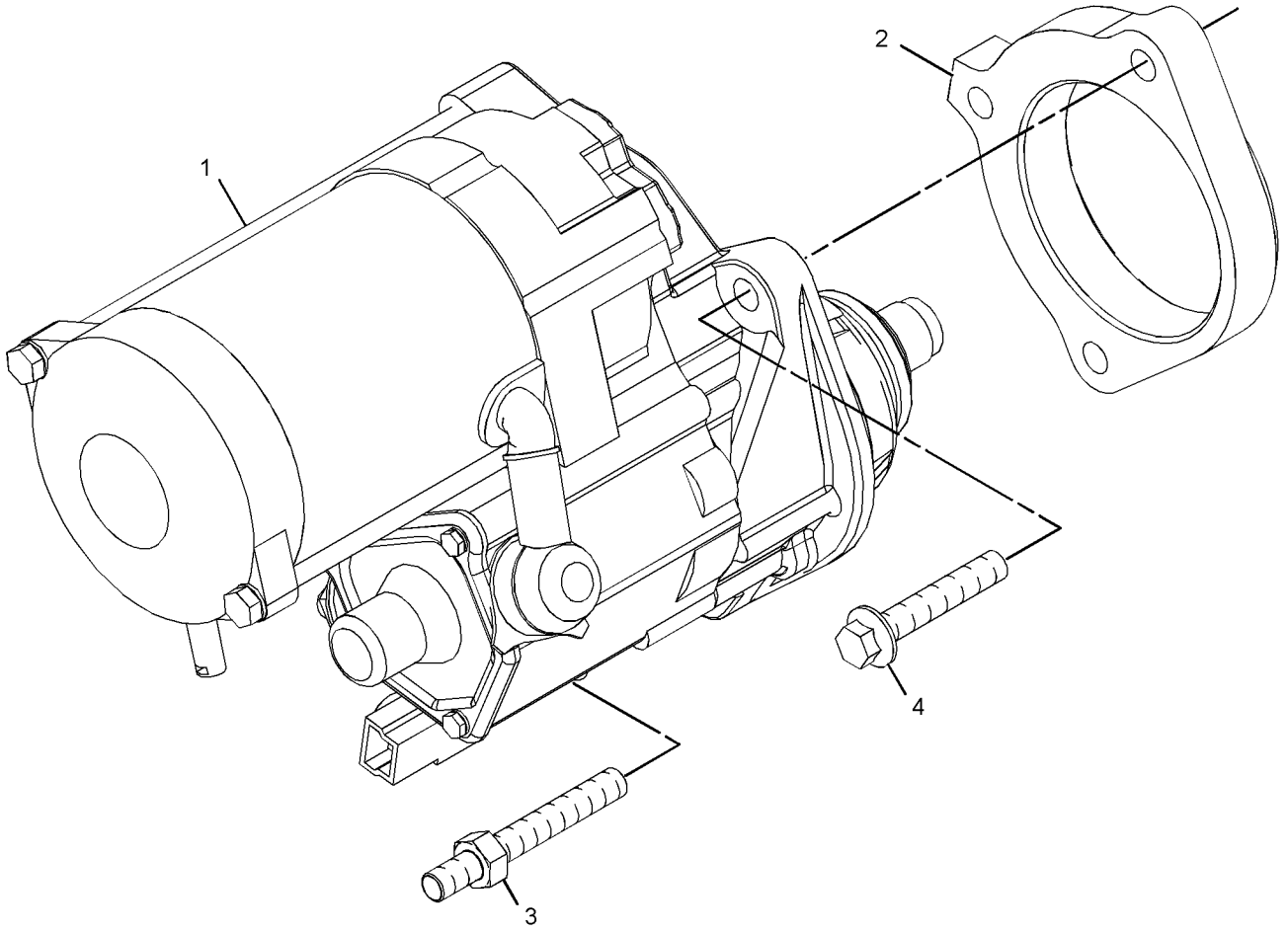

GRAPHIC #1 **<END>** g01280646

7N-0718 SWITCH GP-DISCONNECT–BATTERY

S/N: MBF1-UP; M4M1-UP; M5P1-UP; SDT1-UP
PART OF 379-8247 BATTERY & WIRING GP

SMCS-1411 **i02636136**

NOTE	REF NO	GRAPHIC REF	PART NUMBER	QTY	PART NAME 1 2 3 4 5 6 (PRODUCT LEVEL)	SEE PAGE
	1	1	**2H-3922**	2	LOCKWASHER	
	2	1	**8H-5303**	1	NUT (3/4-16-THD)	
	3	1	**9F-5644**	2	LOCKWASHER	
	4	1	**6F-7045**	2	NUT-FULL (3/8-24-THD)	
	5	1	**8H-5306**	1	KEY (BATTERY DISCONNECT)	

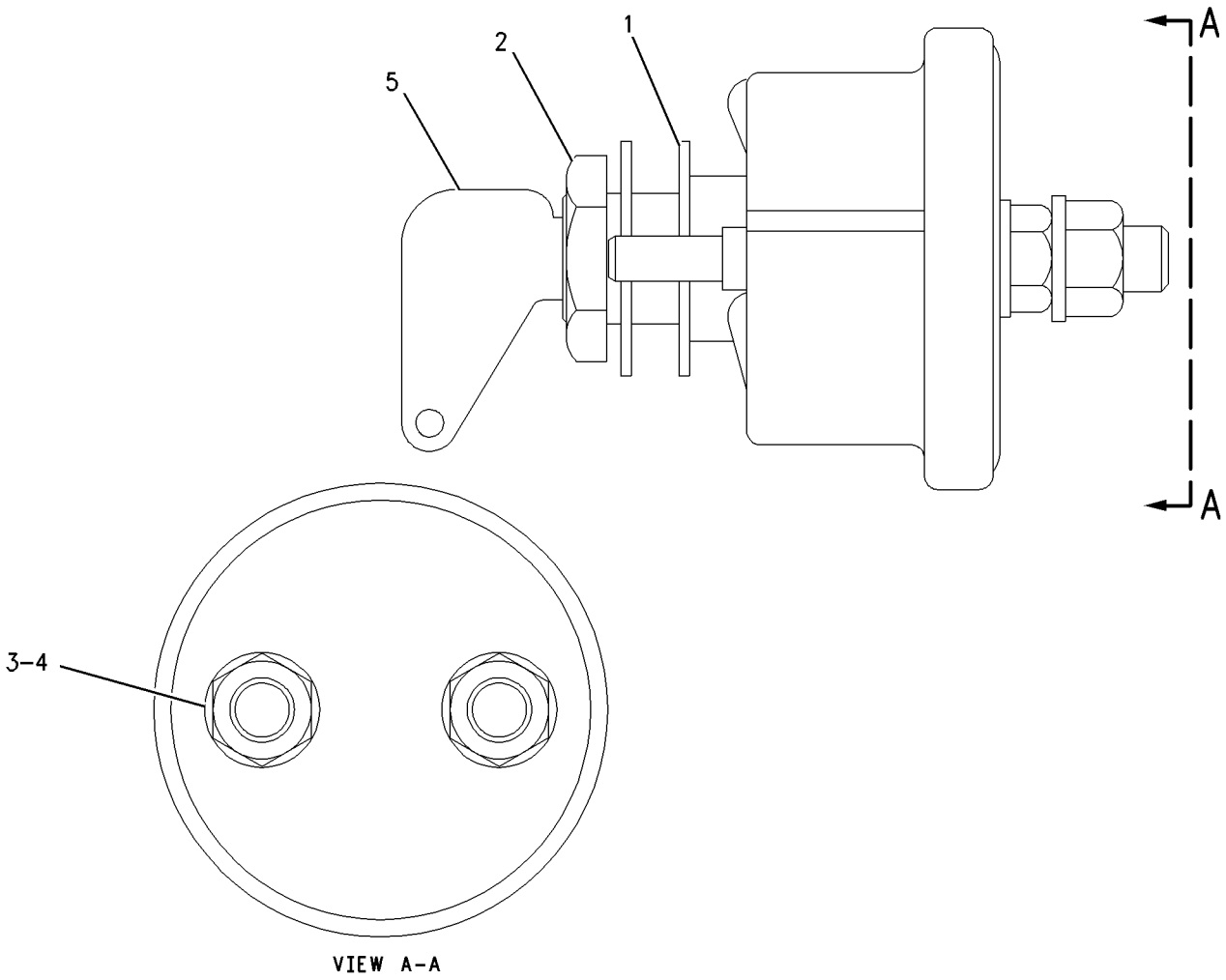

GRAPHIC #1 **<END>** g00664195

118-3534 SWITCH GP-MAGNETIC

S/N: MBF1-UP; M4M1-UP; M5P1-UP; SDT1-UP
24-VOLT
PART OF 379-8291 PANEL GP-CIRCUIT BREAKER

SMCS-7499 **i03440322**

NOTE	PART NUMBER	QTY	PART NAME 1 2 3 4 5 6 (PRODUCT LEVEL)	SEE PAGE
Y	*175-2308*	1	SWITCH GP-MAGNETIC (24-VOLT) (START RELAY)	159
			—OR—	
Y	*175-2309*	1	SWITCH GP-MAGNETIC (24-VOLT) (START RELAY)	160

Y - SEPARATE ILLUSTRATION

<END>

175-2308 SWITCH GP-MAGNETIC

S/N: MBF1-UP; M4M1-UP; M5P1-UP; SDT1-UP
24-VOLT
PART OF 118-3534 SWITCH GP-MAGNETIC

SMCS-7499 **i02529277**

NOTE	REF NO	GRAPHIC REF	PART NUMBER	QTY	PART NAME 1 2 3 4 5 6 (PRODUCT LEVEL)	SEE PAGE
	1	1	**102-8802**	1	KIT-RECEPTACLE (2-PIN)	
					(INCLUDES RECEPTACLE AS & WEDGE)	
	2	1	**186-3735**	2	PIN-CONNECTOR (16-GA TO 18-GA)	
	3	1	**1H-3338**	2	LOCKWASHER (EXTERNAL TOOTH)	
	4	1	**012-0380**	2	LOCKWASHER	
M	5	1	**5C-2890**	2	NUT (M6X1-THD)	
E	6	1	**9X-1813**		SLEEVE (16-CM)	

E - ORDER BY THE CENTIMETER
M - METRIC PART

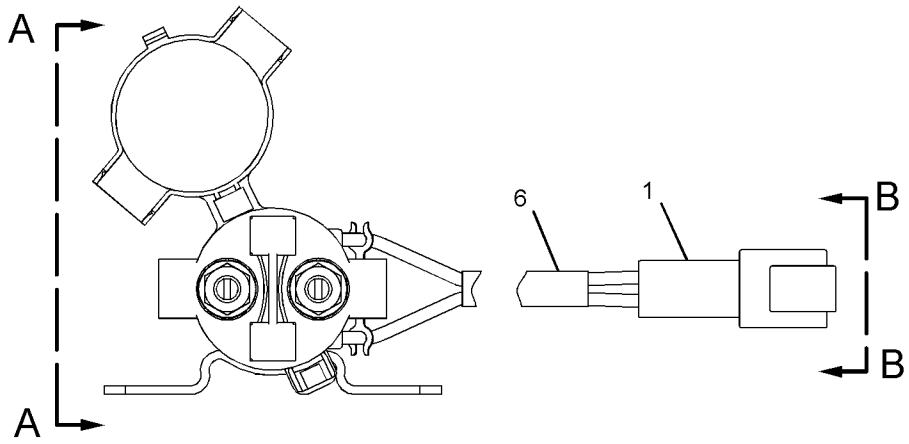

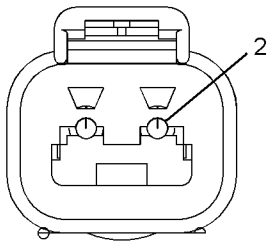

VIEW B-B

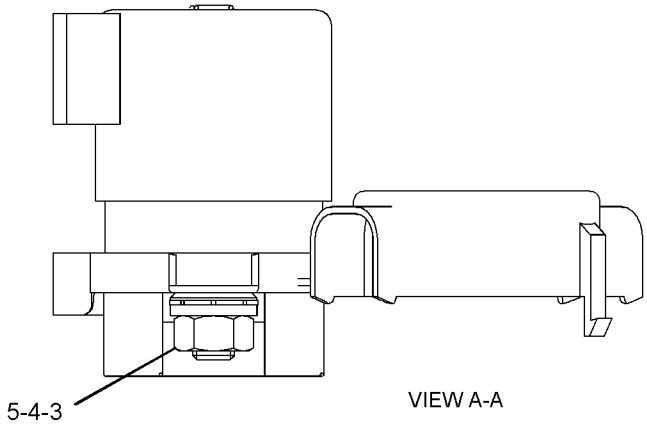

VIEW A-A

GRAPHIC #1 **<END>** g01266266

175-2309 SWITCH GP-MAGNETIC

S/N: MBF1-UP; M4M1-UP; M5P1-UP; SDT1-UP
24-VOLT
PART OF 118-3534 SWITCH GP-MAGNETIC

SMCS-7499 **i02668670**

NOTE	REF NO	GRAPHIC REF	PART NUMBER	QTY	PART NAME 1 2 3 4 5 6 (PRODUCT LEVEL)	SEE PAGE
	1	1	**117-9081**	1	SWITCH AS-MAGNETIC (STARTER RELAY)	
	1A	1	**1H-3338**	2	LOCKWASHER (EXTERNAL TOOTH)	
M	1B	1	**5C-2890**	2	NUT (M6X1-THD)	
	1C	1	**012-0380**	2	LOCKWASHER	
	2	1	**102-8802**	1	KIT-RECEPTACLE (2-PIN)	
					(INCLUDES RECEPTACLE AS & WEDGE)	
	3	1	**186-3735**	2	PIN-CONNECTOR (16-GA TO 18-GA)	
E	4	1	**9X-1813**		SLEEVE (16-CM)	

E - ORDER BY THE CENTIMETER
M - METRIC PART

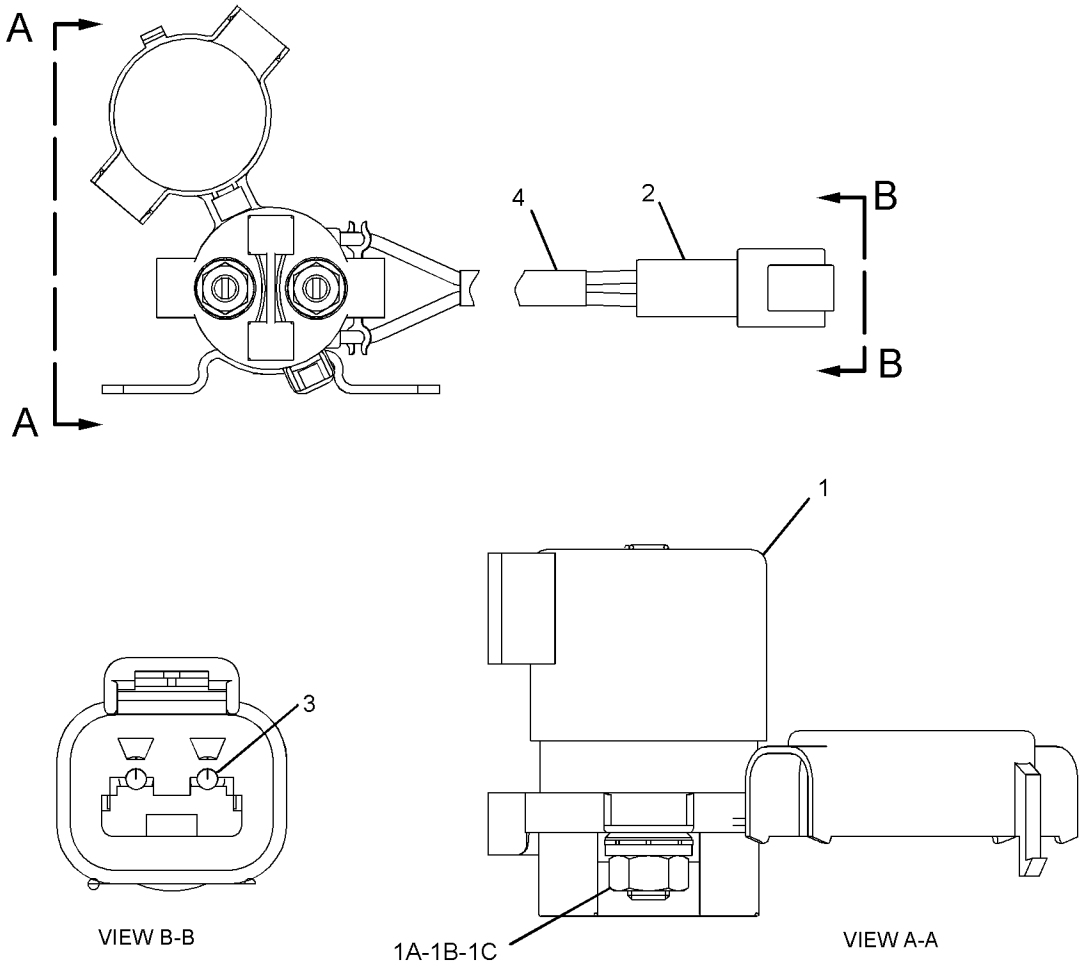

GRAPHIC #1 **<END>** g01266277

211-2092 VALVE GP-SOLENOID

S/N: MBF1-UP; M4M1-UP; M5P1-UP; SDT1-UP
24-VOLT
PART OF 349-6208 FAN & MOTOR GP
AN ATTACHMENT

SMCS-5479 **i05291090**

NOTE	REF NO	GRAPHIC REF	PART NUMBER	QTY	PART NAME 1 2 3 4 5 6 (PRODUCT LEVEL)	SEE PAGE
	1	1	**123-3132**	1	RING-BACKUP	
	2	1	**211-2093**	1	NUT (9/16-24)	
	3	1	**230-0913**	1	COIL AS (24-VOLT)	
	4	1	**033-6028**	1	SEAL-O-RING	
	5	1	**8L-2779**	1	SEAL-O-RING	

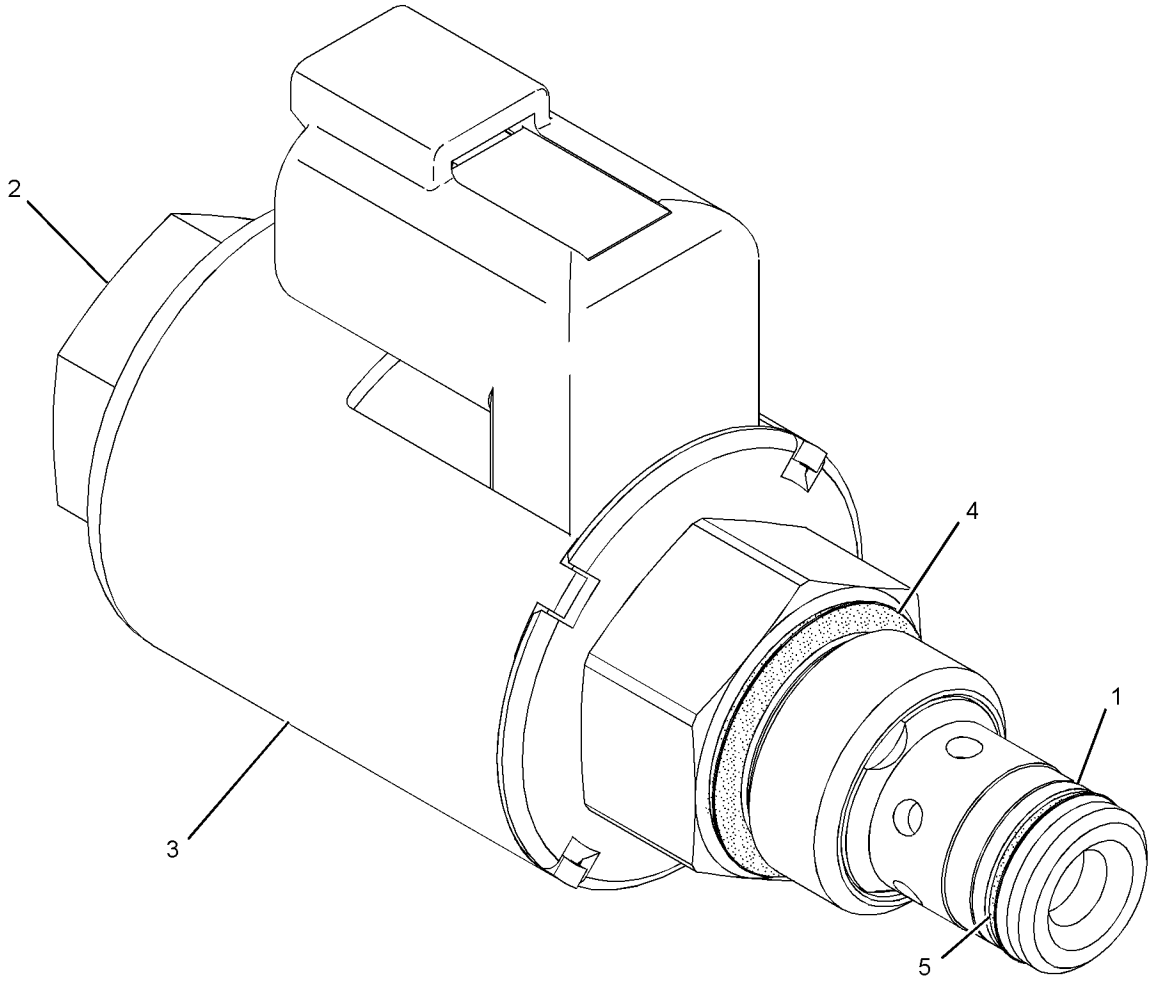

GRAPHIC #1 **<END>** g02449556

387-6498 WARNING GP-BACKUP

S/N: MBF1-UP; M4M1-UP; M5P1-UP; SDT1-UP
PART OF 374-9732 ELECTRICAL AR

SMCS-7406 **i05270692**

NOTE	REF NO	GRAPHIC REF	PART NUMBER	QTY	PART NAME 1 2 3 4 5 6 (PRODUCT LEVEL)	SEE PAGE
	1	1	**213-9100**	1	ALARM AS (BACKUP)	
		1	**8T-8729**	2	PIN-CONNECTOR (16-GA TO 18-GA)	
		1	**102-8802**	1	KIT-RECEPTACLE (2-PIN)	
					(INCLUDES RECEPTACLE AS & WEDGE)	
E		1	**9X-1813**		SLEEVE (29-CM)	
D		1	**5P-5623**		WIRE-ELECTRICAL (16-GA, BLACK) (0.8-M)	
	2	1	**130-5300**	1	CLIP	
	3	1	**6H-4005**	1	GROMMET	
	4	1	**8T-4121**	4	WASHER-HARD (11X21X2.5-MM THK)	
M	5	1	**8T-4133**	2	NUT (M10X1.5-THD)	
M	6	1	**8T-4136**	2	BOLT (M10X1.5X25-MM)	

D - ORDER BY THE METER
E - ORDER BY THE CENTIMETER
M - METRIC PART

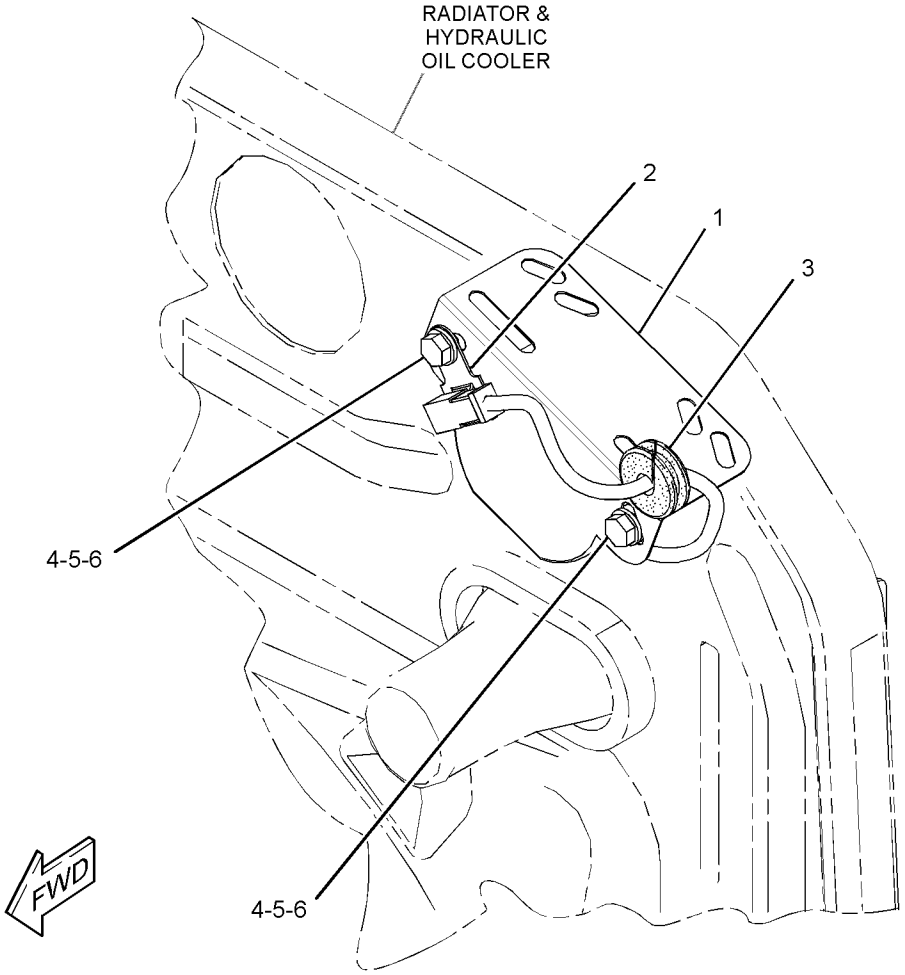

GRAPHIC #1 **<END>** g02995523

352-7741 WIRING GP-CAB

S/N: MBF1-UP; M4M1-UP; M5P1-UP; SDT1-UP
PART OF 373-3175 CAB AR
AN ATTACHMENT

SMCS-1408 **i05291174**

NOTE	REF NO	GRAPHIC REF	PART NUMBER	QTY	PART NAME 1 2 3 4 5 6 (PRODUCT LEVEL)	SEE PAGE
	1	1	**3S-2093**	6	STRAP-CABLE	
	2	1	**5P-5774**	4	PLUG	
	3	1	**107-6032**	1	LAMP GP-DOME (24-VOLT) (CAB)	
		1	**259-1286**	1	LAMP (24-VOLT, 10-WATT) (DOME)	
	4	1	**116-5710**	1	GROMMET	
	5	1	**121-5327**	1	GROMMET	
	6	1	**228-6089**	2	PLUG (ROCKER SWITCH)	
	7	1	**251-1191**	1	SWITCH AS-ROCKER (WIPER, WASHER, FRONT)	
	8	1	**251-1194**	1	SWITCH AS-ROCKER (WIPER, WASHER, REAR)	
	9	1	**327-0325**	16	STRAP-CABLE	
	10	1	**359-4533**	1	PLATE	
Y	11	1	**420-1761**	1	HARNESS AS-CAB	101
	12	1	**7K-1181**	20	STRAP-CABLE	
M	13	1	**8T-0024**	2	SCREW (M4X0.7X30-MM)	

M - METRIC PART
Y - SEPARATE ILLUSTRATION

352-7741 **WIRING GP-CAB (*contd.*)** **i05291174**

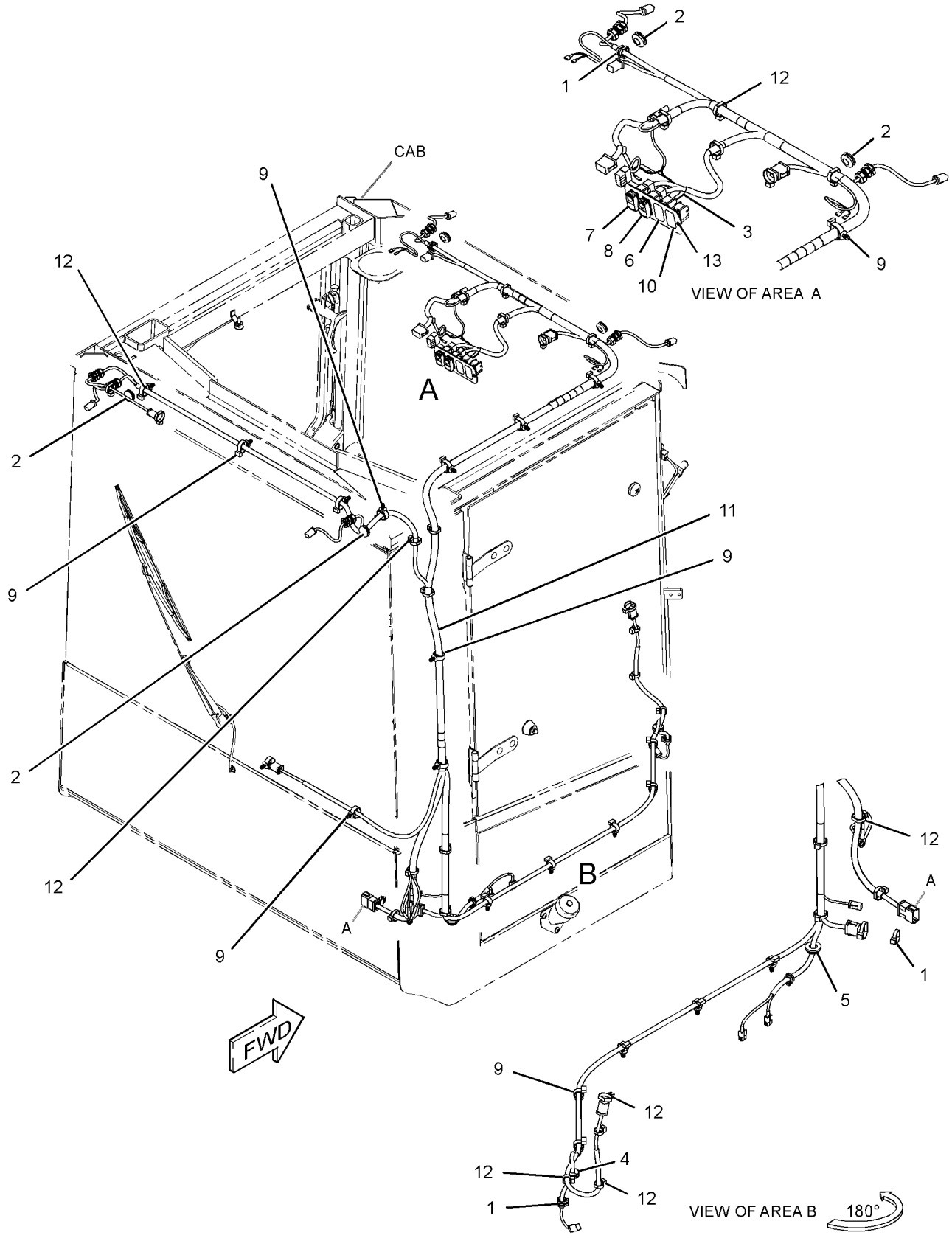

GRAPHIC #1 **<END>** g03217960

388-2535 WIRING GP-CONSOLE

S/N: MBF1-UP; M4M1-UP; M5P1-UP; SDT1-UP
PART OF 374-9842, 374-9843, 377-2159, 382-1438, 416-2514 OPERATOR AR AN ATTACHMENT

SMCS-1408 **i05289947**

NOTE	REF NO	GRAPHIC REF	PART NUMBER	QTY	PART NAME 1 2 3 4 5 6 (PRODUCT LEVEL)	SEE PAGE
	1	1	**356-0847**	1	PLATE	
	2	1	**364-2968**	1	FILM-IDENTIFICATION (INSTRUMENT PANEL)	
	3	1	**373-4806**	1	BRACKET	
	4	1	**373-4807**	1	INSULATION-SOUND SUPPRESSION	
Y	5	1	**384-5956**	1	HARNESS AS-CHASSIS	104
	6	1	**130-5300**	1	CLIP	
	7	1	**132-5789**	3	CLIP	
	8	1	**211-0052**	1	NUT (1-11/16-18-THD)	
	9	1	**5P-4116**	6	WASHER-HARD (8.8X20.5X2-MM THK)	
	10	1	**7K-1181**	5	STRAP-CABLE	
M	11	1	**8T-4189**	4	BOLT (M8X1.25X20-MM)	
	12	1	**8T-4223**	1	WASHER-HARD (13.5X25.5X3-MM THK)	
M	13	1	**8T-4244**	1	NUT (M12X1.75-THD)	
M	14	1	**8T-4908**	2	BOLT (M8X1.25X25-MM)	

M - METRIC PART
Y - SEPARATE ILLUSTRATION

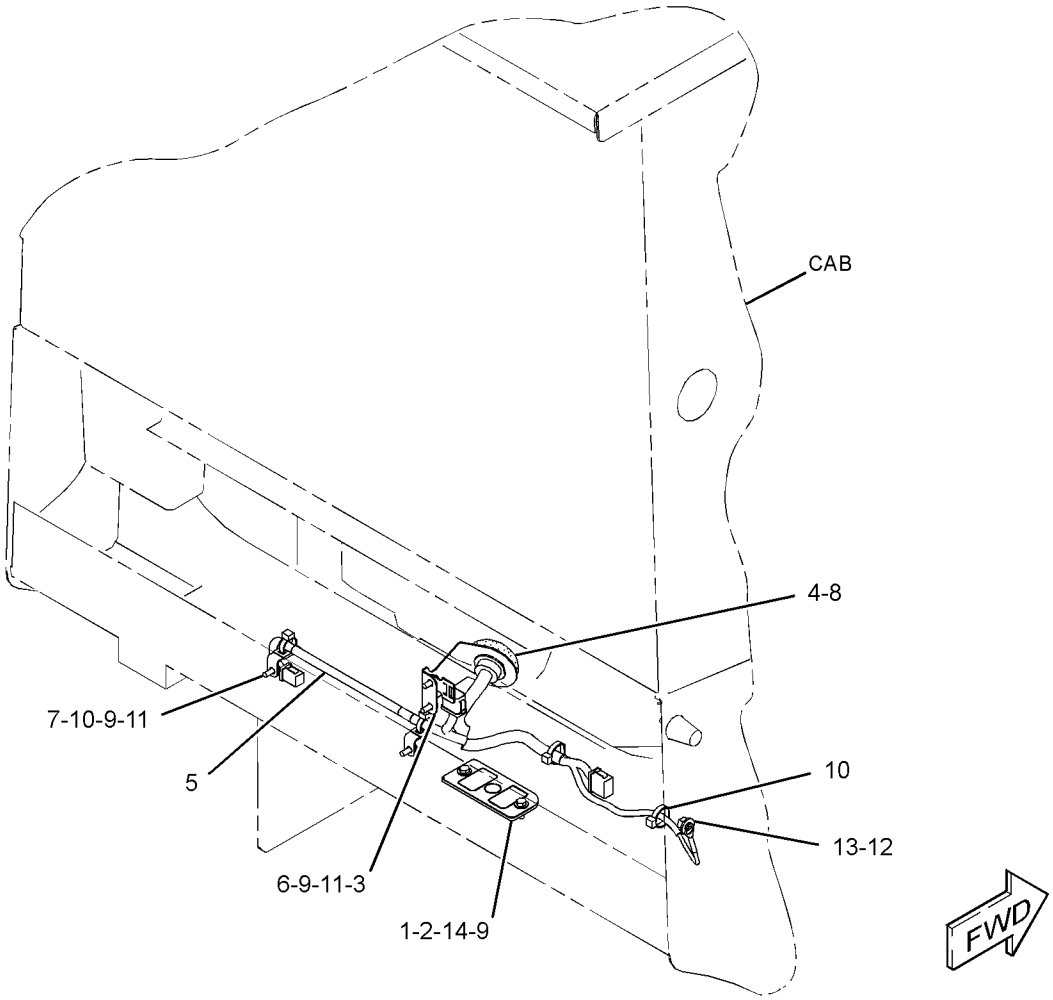

GRAPHIC #1 **<END>** g03099636

292-8508 WIRING GP-ENGINE

S/N: C6E1-UP

PART OF 378-4731 ENGINE AR-PRIMARY

AN ATTACHMENT

SMCS-1408 **i04913320**

NOTE	REF NO	GRAPHIC REF	PART NUMBER	QTY	PART NAME 1 2 3 4 5 6 (PRODUCT LEVEL)	SEE PAGE
	1	1	**277-4714**	1	PLATE	
	2	1	**217-9039**	3	STRAP-CABLE	
	3	1	**278-5209**	1	BRACKET	
	4	1	**278-5210**	1	BOLT	
	5	1	**238-8028**	1	TIE-CABLE	
	6	1	**260-5541**	1	HARNESS AS-ENGINE	

292-8508 **WIRING GP-ENGINE (*contd.*)** **i04913320**

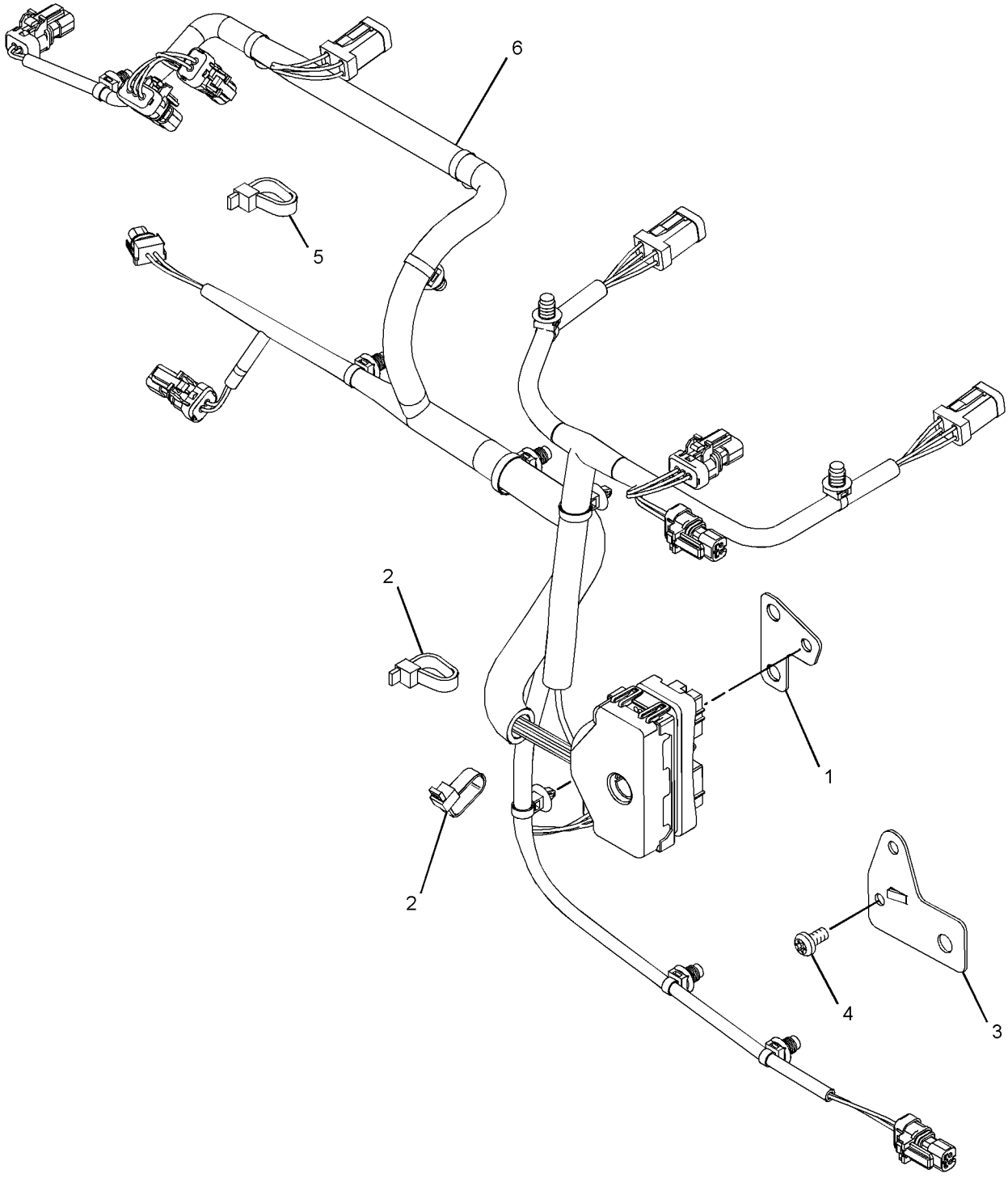

GRAPHIC #1 **<END>** g01447736

375-1605 WIRING GP-GRADE CONTROL

S/N: MBF1-UP; M4M1-UP; M5P1-UP; SDT1-UP
PART OF 375-1604, 375-1607 GRADE CONTROL AR
AN ATTACHMENT

SMCS-1408, 7220 **i05349089**

NOTE	REF NO	GRAPHIC REF	PART NUMBER	QTY	PART NAME 1 2 3 4 5 6 (PRODUCT LEVEL)	SEE PAGE
	1	1	**119-6105**	1	GROMMET	
	2	1	**252-9628**	1	MOUNTING GP-RECEIVER (TARGET)	
		1	**8R-1803**	5	WASHER (10.5X18X1-MM THK)	
M		1	**8T-9388**	4	BOLT (M10X1.5X25-MM)	
		1	**113-0693**	5	LOCKWASHER	
	3	1	**286-3017**	1	HANDLE (RECEIVER)	
	4	1	**327-0325**	11	STRAP-CABLE	
	5	1	**358-9018**	1	PLATE AS	
	6	1	**338-5535**	1	ANTENNA (GPS)	
	7	1	**362-4312**	1	CABLE AS	
	8	1	**369-9336**	1	RECEIVER-SATELLITE (GPS)	
Y	9	1	**399-9415**	1	HARNESS AS-MONITOR (RECEIVER, GPS)	112
	10	1	**417-0552**	1	BRACKET AS	
	11	1	**422-9050**	1	CAP AS-CONNECTOR	
	12	1	**096-5962**	2	WASHER-HARD (3.4X7X0.8-MM THK)	
	13	1	**117-6512**	12	GROMMET	
	14	1	**132-5789**	3	CLIP	
M	15	1	**3C-6969**	1	NUT (M3X0.5-THD)	
M	16	1	**5C-7261**	1	NUT (M8X1.25-THD)	
	17	1	**5P-4116**	9	WASHER-HARD (8.8X20.5X2-MM THK)	
M	18	1	**6V-9671**	1	SCREW-MACHINE (M3X0.5X12-MM)	
	19	1	**7K-1181**	13	STRAP-CABLE	
M	20	1	**8T-4138**	4	BOLT (M6X1X20-MM)	
M	21	1	**8T-4189**	8	BOLT (M8X1.25X20-MM)	
	22	1	**9X-8256**	4	WASHER (6.6X12X2-MM THK)	

M - METRIC PART
Y - SEPARATE ILLUSTRATION

375-1605 **WIRING GP-GRADE CONTROL (*contd.*)** **i05349089**

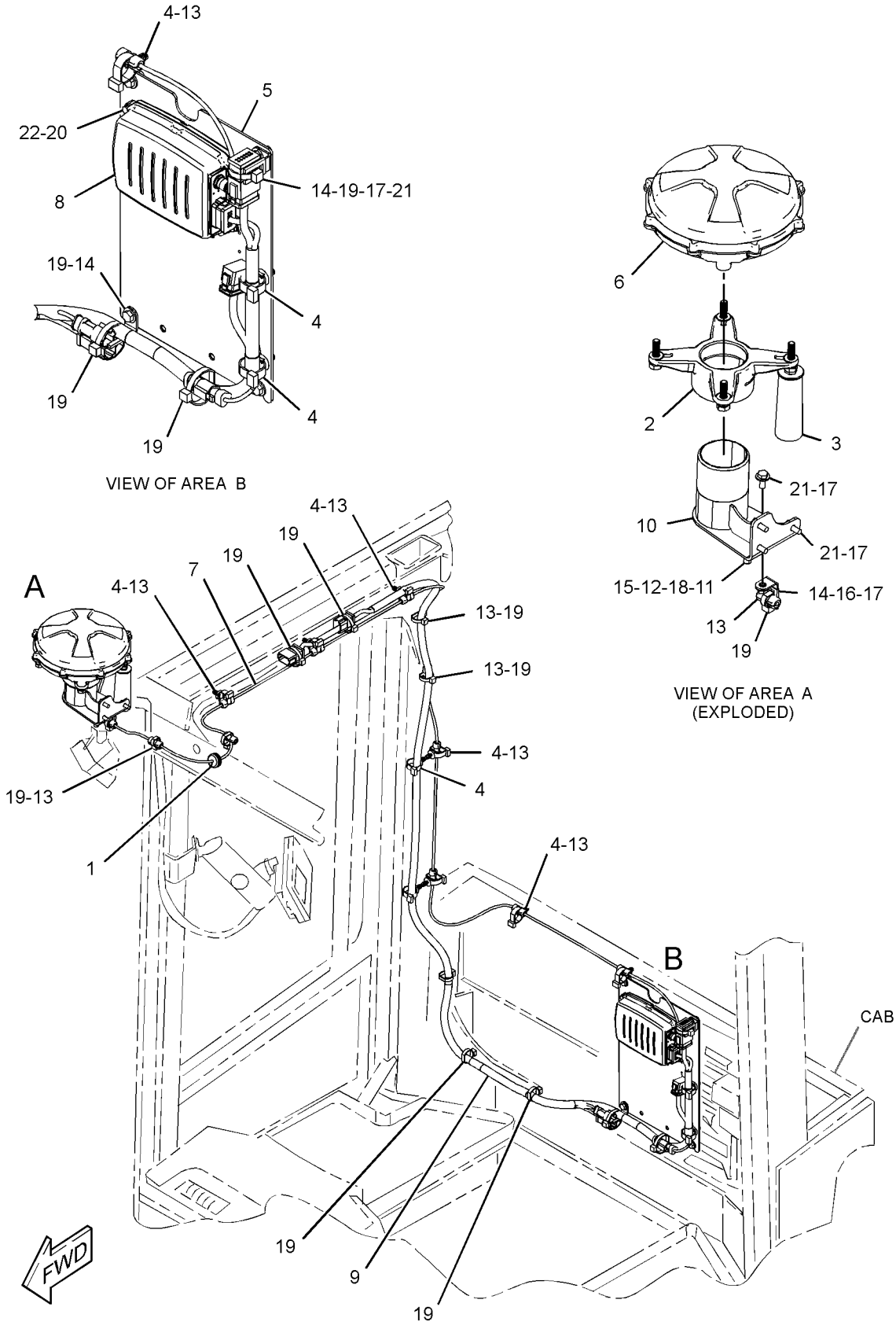

GRAPHIC #1

<END>

g03335395

375-1610 WIRING GP-GRADE CONTROL

S/N: MBF1-UP; M4M1-UP; M5P1-UP; SDT1-UP
PART OF 375-1609, 375-1612 GRADE CONTROL AR
AN ATTACHMENT

SMCS-1408, 7220 **i05349094**

NOTE	REF NO	GRAPHIC REF	PART NUMBER	QTY	PART NAME 1 2 3 4 5 6 (PRODUCT LEVEL)	SEE PAGE
	1	1	**119-6105**	1	GROMMET	
	2	1	**252-9628**	1	MOUNTING GP-RECEIVER (TARGET)	
		1	**8R-1803**	5	WASHER (10.5X18X1-MM THK)	
M		1	**8T-9388**	4	BOLT (M10X1.5X25-MM)	
		1	**113-0693**	5	LOCKWASHER	
	3	1	**286-3017**	1	HANDLE (RECEIVER)	
	4	1	**327-0325**	5	STRAP-CABLE	
	5	1	**358-9018**	1	PLATE AS	
	6	1	**362-4311**	1	CABLE AS	
	7	1	**369-9336**	1	RECEIVER-SATELLITE (GPS)	
	8	1	**338-5535**	1	ANTENNA (GPS)	
Y	9	1	**399-9415**	1	HARNESS AS-MONITOR (RECEIVER, GPS)	112
	10	1	**417-0551**	1	BRACKET AS	
	11	1	**422-9050**	1	CAP AS-CONNECTOR	
	12	1	**096-5962**	2	WASHER-HARD (3.4X7X0.8-MM THK)	
	13	1	**117-6512**	9	GROMMET	
	14	1	**132-5789**	3	CLIP	
M	15	1	**3C-6969**	1	NUT (M3X0.5-THD)	
	16	1	**4P-7581**	1	CLIP	
M	17	1	**5C-7261**	1	NUT (M8X1.25-THD)	
	18	1	**5P-4116**	9	WASHER-HARD (8.8X20.5X2-MM THK)	
M	19	1	**6V-9671**	1	SCREW-MACHINE (M3X0.5X12-MM)	
	20	1	**7K-1181**	15	STRAP-CABLE	
	21	1	**7X-4780**	1	GROMMET	
M	22	1	**8T-4138**	4	BOLT (M6X1X20-MM)	
M	23	1	**8T-4189**	8	BOLT (M8X1.25X20-MM)	
	24	1	**9X-8256**	4	WASHER (6.6X12X2-MM THK)	

M - METRIC PART
Y - SEPARATE ILLUSTRATION

375-1610 **WIRING GP-GRADE CONTROL (*contd.*)** **i05349094**

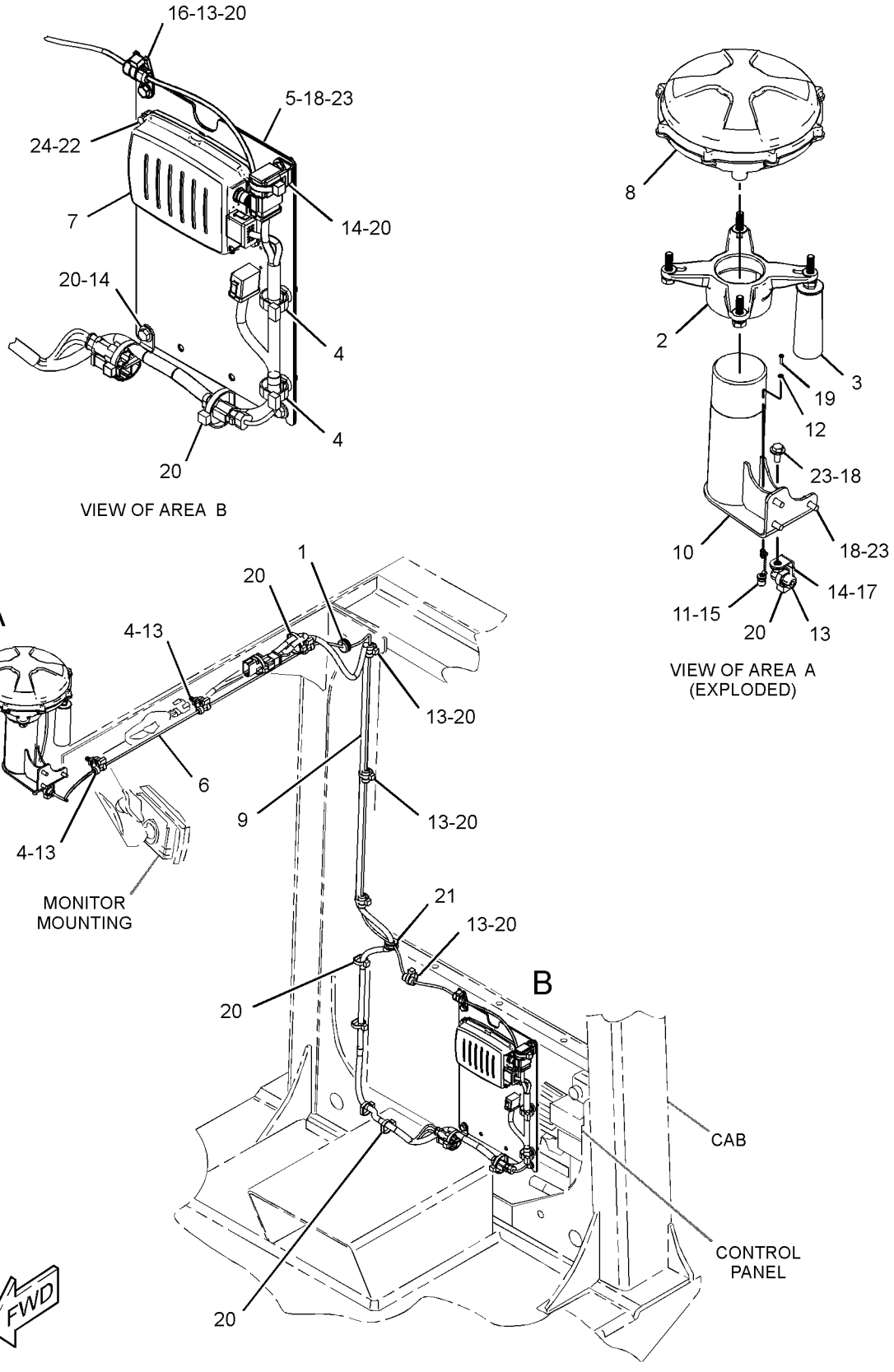

GRAPHIC #1

<END>

g03335385

379-8380 WIRING GP-GRADE CONTROL

S/N: MBF1-UP; M4M1-UP; M5P1-UP; SDT1-UP
PART OF 379-8395, 379-8396 GRADE CONTROL AR
AN ATTACHMENT

SMCS-1408, 7220 **i05289905**

NOTE	REF NO	GRAPHIC REF	PART NUMBER	QTY	PART NAME 1 2 3 4 5 6 (PRODUCT LEVEL)	SEE PAGE
	1	1	**119-6105**	2	GROMMET	
	2	1	**252-9628**	1	MOUNTING GP-RECEIVER (TARGET)	
		1	**8R-1803**	5	WASHER (10.5X18X1-MM THK)	
M		1	**8T-9388**	4	BOLT (M10X1.5X25-MM)	
		1	**113-0693**	5	LOCKWASHER	
	3	1	**286-3017**	1	HANDLE (RECEIVER)	
	4	1	**327-0325**	3	STRAP-CABLE	
	5	1	**369-9336**	1	RECEIVER-SATELLITE (GPS)	
	6	1	**365-2145**	1	BRACKET AS	
Y	7	1	**379-8313**	1	HARNESS AS-MONITOR (GRADE CONTROL)	110
	8	1	**379-8315**	1	CABLE AS	
	9	1	**379-8316**	1	CABLE AS	
	10	1	**379-8317**	1	CABLE AS	
	11	1	**379-8318**	1	CABLE AS	
	12	1	**338-5535**	1	ANTENNA (GPS)	
	13	1	**096-6166**	16	WASHER-HARD (4.5X9X1-MM THK)	
	14	1	**117-6512**	21	GROMMET	
	15	1	**132-5789**	2	CLIP	
M	16	1	**5C-2890**	4	NUT (M6X1-THD)	
M	17	1	**5C-7261**	1	NUT (M8X1.25-THD)	
	18	1	**5P-4116**	5	WASHER-HARD (8.8X20.5X2-MM THK)	
M	19	1	**6V-9672**	8	SCREW-MACHINE (M4X0.7X16-MM)	
	20	1	**7K-1181**	13	STRAP-CABLE	
M	21	1	**7X-2621**	1	BOLT (M10X1.5X12-MM)	
	22	1	**7X-7729**	1	WASHER (11X25X3-MM THK)	
M	23	1	**8C-8451**	4	BOLT (M6X1X40-MM)	
M	24	1	**8T-2659**	8	LOCKNUT (M4X0.7-THD)	
M	25	1	**8T-4189**	4	BOLT (M8X1.25X20-MM)	
	26	1	**9X-8256**	8	WASHER (6.6X12X2-MM THK)	

M - METRIC PART
Y - SEPARATE ILLUSTRATION

379-8380 **WIRING GP-GRADE CONTROL (*contd.*)** **i05289905**

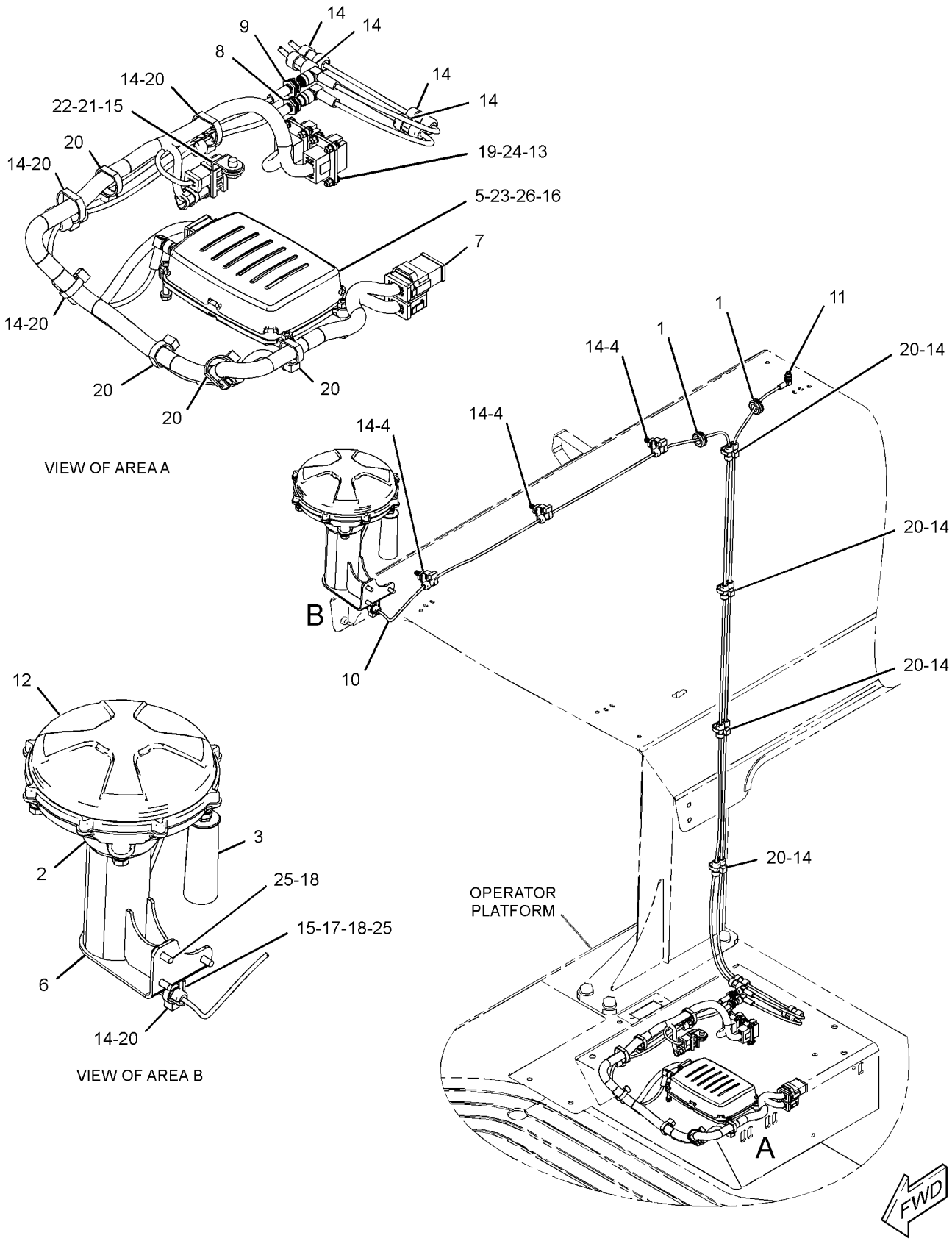

GRAPHIC #1 **<END>** g03102008

377-2163 WIRING GP-LIGHTING

S/N: MBF1-UP; M4M1-UP; M5P1-UP; SDT1-UP
PART OF 381-6991 OPERATOR AR
AN ATTACHMENT

SMCS-1408, 1429 **i05292947**

NOTE	REF NO	GRAPHIC REF	PART NUMBER	QTY	PART NAME 1 2 3 4 5 6 (PRODUCT LEVEL)	SEE PAGE
	1	1	**3S-2093**	6	STRAP-CABLE	
	2	1	**116-5710**	6	GROMMET	
	3	1	**327-0325**	15	STRAP-CABLE	
	4	1	**421-4458**	1	BRACKET AS	
M		1	**6V-9632**	12	NUT-WELD (M6X1-THD)	
		1	**421-4457**	1	BRACKET	
M		1	**8T-3635**	1	STUD-WELD (M12X1.75X34.93-MM)	
Y	5	1	**423-3519**	1	HARNESS AS-LIGHTING	109
	6	1	**389-0482**	1	PLATE	
	7	1	**389-1403**	1	WIRE AS	
	8	1	**389-3430**	1	BRACKET	
Y	9	1	**389-3981**	1	HARNESS AS-LIGHTING (FLOODLIGHT)	108
	10	1	**132-5789**	2	CLIP	
	11	1	**151-4977**	4	WASHER (4.445X9.525X1.092-MM THK)	
	12	1	**211-0052**	1	NUT (1-11/16-18-THD)	
	14	1	**4P-7581**	2	CLIP	
M	15	1	**5C-7261**	1	NUT (M8X1.25-THD)	
	16	1	**5P-4116**	8	WASHER-HARD (8.8X20.5X2-MM THK)	
	17	1	**6H-4006**	1	GROMMET	
M	18	1	**6V-9672**	2	SCREW-MACHINE (M4X0.7X16-MM)	
	19	1	**7K-1181**	9	STRAP-CABLE	
M	22	1	**8T-2659**	2	LOCKNUT (M4X0.7-THD)	
	23	1	**8T-4121**	4	WASHER-HARD (11X21X2.5-MM THK)	
M	24	1	**8T-4136**	4	BOLT (M10X1.5X25-MM)	
	25	1	**8T-4223**	1	WASHER-HARD (13.5X25.5X3-MM THK)	
M	26	1	**8T-4244**	1	NUT (M12X1.75-THD)	
M	27	1	**8T-4908**	7	BOLT (M8X1.25X25-MM)	
M	28	1	**5C-9553**	2	BOLT (M6X1X16-MM)	
E	29	1	**7X-7877**		STRIP-EDGE (42-CM)	
	30	1	**421-4455**	1	BRACKET	
	31	1	**8T-4205**	2	WASHER-HARD (7.2X14.5X2-MM THK)	

E - ORDER BY THE CENTIMETER
M - METRIC PART
Y - SEPARATE ILLUSTRATION

377-2163 **WIRING GP-LIGHTING (*contd.*)** **i05292947**

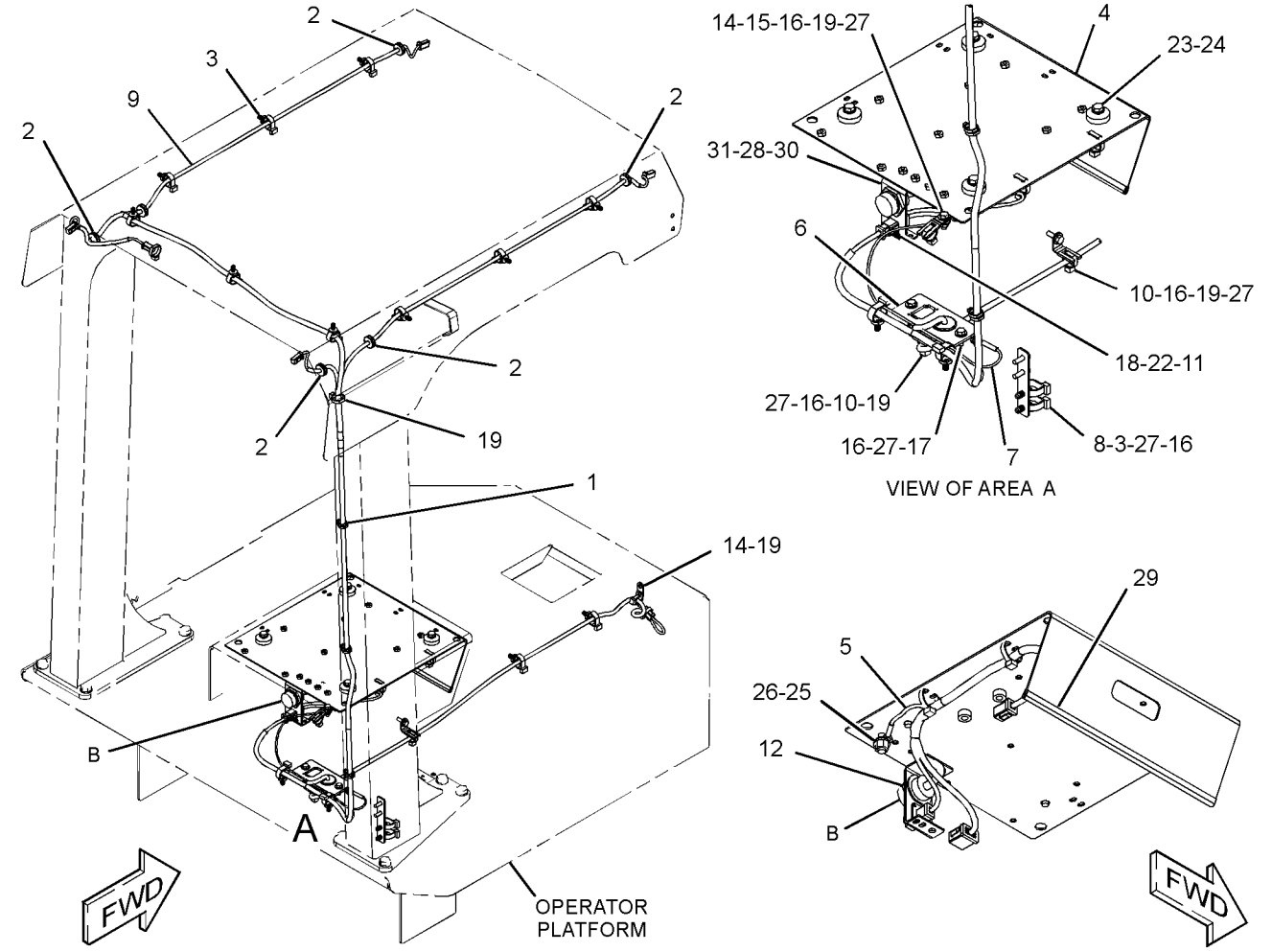

GRAPHIC #1

<END>

g03384928

387-8187 WIRING GP-LIGHTING

S/N: MBF1-UP; M4M1-UP; M5P1-UP; SDT1-UP
PART OF 377-2157 OPERATOR AR
AN ATTACHMENT

SMCS-1408, 1429 **i05328099**

NOTE	REF NO	GRAPHIC REF	PART NUMBER	QTY	PART NAME 1 2 3 4 5 6 (PRODUCT LEVEL)	SEE PAGE
	1	1	**290-7497**	1	PLATE AS	
	2	1	**327-0325**	6	STRAP-CABLE	
	3	1	**421-4458**	1	BRACKET AS	
M		1	**6V-9632**	12	NUT-WELD (M6X1-THD)	
		1	**421-4457**	1	BRACKET	
M		1	**8T-3635**	1	STUD-WELD (M12X1.75X34.93-MM)	
Y	4	1	**423-3519**	1	HARNESS AS-LIGHTING	109
Y	5	1	**389-0481**	1	HARNESS AS-PLATFORM	116
	6	1	**389-0482**	1	PLATE	
	7	1	**389-1403**	1	WIRE AS	
	8	1	**389-3430**	1	BRACKET	
	9	1	**132-5789**	6	CLIP	
	10	1	**134-3987**	3	CLIP	
	11	1	**151-4977**	4	WASHER (4.445X9.525X1.092-MM THK)	
	12	1	**211-0052**	1	NUT (1-11/16-18-THD)	
	14	1	**4P-7581**	3	CLIP	
M	15	1	**5C-7261**	2	NUT (M8X1.25-THD)	
	16	1	**5P-4116**	8	WASHER-HARD (8.8X20.5X2-MM THK)	
	17	1	**6H-4006**	2	GROMMET	
	18	1	**6V-3265**	1	CLIP	
M	19	1	**6V-9672**	2	SCREW-MACHINE (M4X0.7X16-MM)	
	20	1	**7K-1181**	21	STRAP-CABLE	
M	21	1	**5C-9553**	2	BOLT (M6X1X16-MM)	
	22	1	**8T-4205**	2	WASHER-HARD (7.2X14.5X2-MM THK)	
M	23	1	**8T-2659**	2	LOCKNUT (M4X0.7-THD)	
	24	1	**8T-4121**	4	WASHER-HARD (11X21X2.5-MM THK)	
M	25	1	**8T-4136**	4	BOLT (M10X1.5X25-MM)	
M	26	1	**8T-4189**	2	BOLT (M8X1.25X20-MM)	
M	27	1	**8T-4200**	2	BOLT (M8X1.25X16-MM)	
	28	1	**8T-4223**	1	WASHER-HARD (13.5X25.5X3-MM THK)	
	29	1	**8T-4224**	5	WASHER-HARD (8.8X16X2-MM THK)	
M	30	1	**8T-4244**	1	NUT (M12X1.75-THD)	
M	31	1	**8T-4908**	7	BOLT (M8X1.25X25-MM)	
D	32	1	**8T-3426**		CHANNEL-TRIM (0.5-M)	
	33	1	**421-4455**	1	BRACKET	

D - ORDER BY THE METER
M - METRIC PART
Y - SEPARATE ILLUSTRATION

387-8187 **WIRING GP-LIGHTING (*contd.*)** **i05328099**

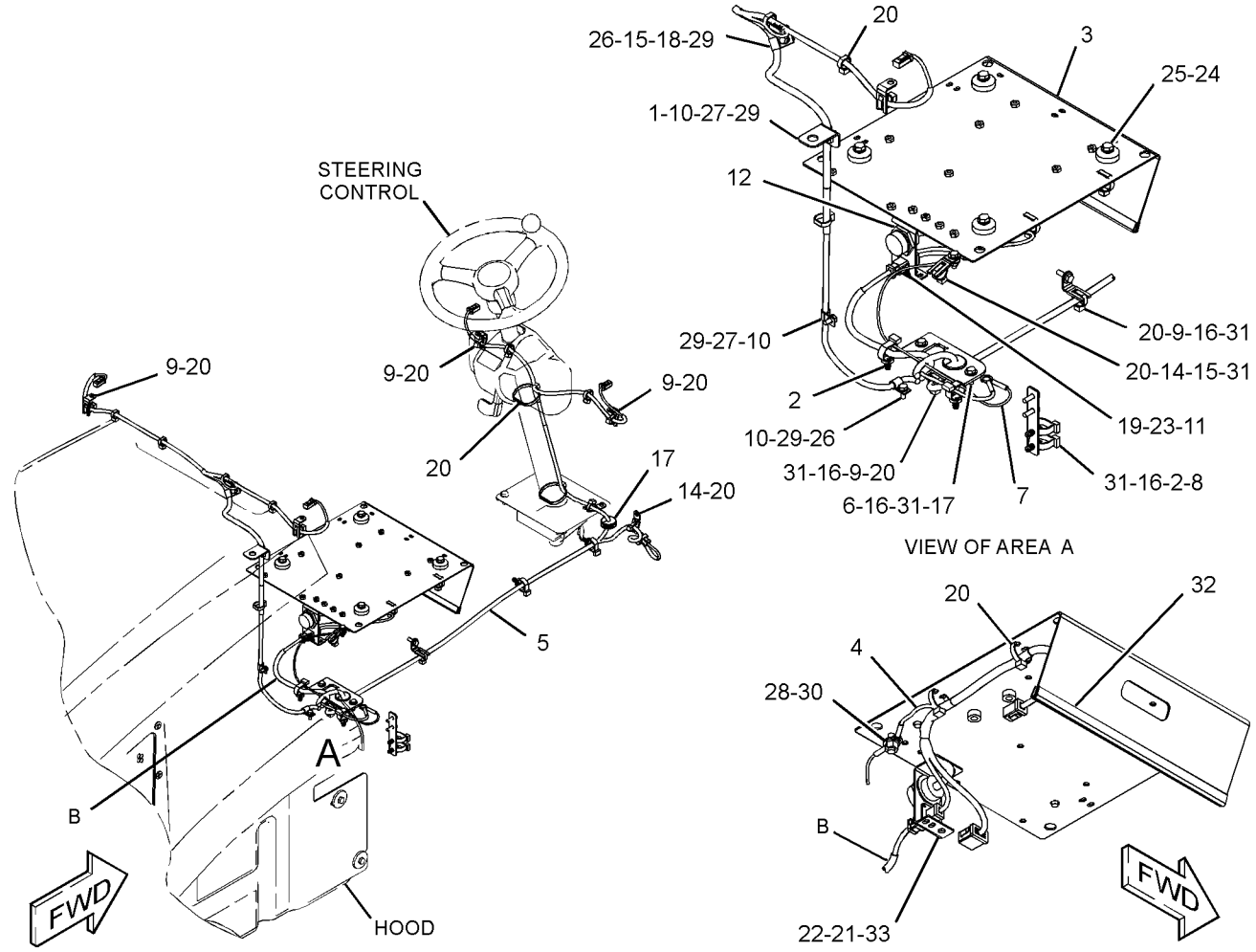

GRAPHIC #1 **<END>** g03385472

416-2567 WIRING GP-LIGHTING

S/N: MBF1-UP; M4M1-UP; M5P1-UP; SDT1-UP
PART OF 416-2513 OPERATOR AR
AN ATTACHMENT

SMCS-1408, 1429 **i05291848**

NOTE	REF NO	GRAPHIC REF	PART NUMBER	QTY	PART NAME 1 2 3 4 5 6 (PRODUCT LEVEL)	SEE PAGE
	1	1	**3S-2093**	8	STRAP-CABLE	
	2	1	**116-5710**	6	GROMMET	
	3	1	**327-0325**	13	STRAP-CABLE	
Y	4	1	**389-3981**	1	HARNESS AS-LIGHTING (FLOODLIGHT)	108
	5	1	**7K-1181**	6	STRAP-CABLE	

Y - SEPARATE ILLUSTRATION

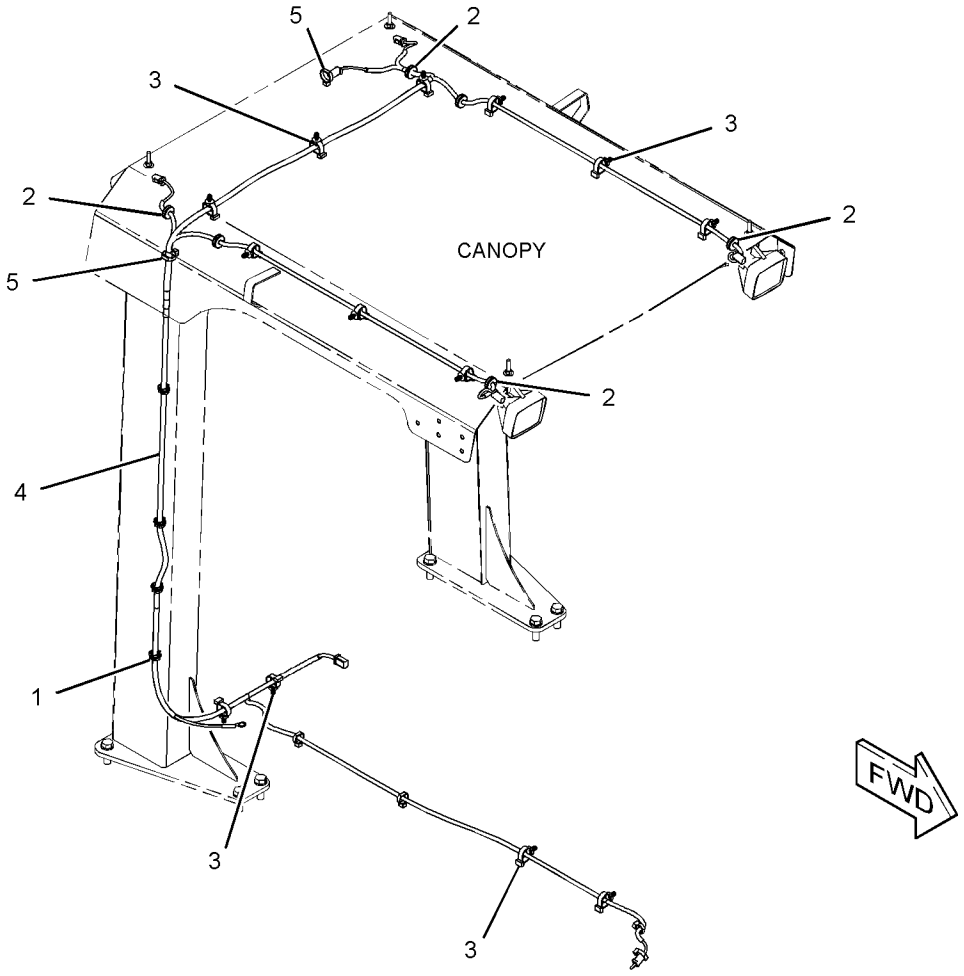

GRAPHIC #1 **<END>** g03384070

379-8248 WIRING GP-MACHINE

S/N: MBF1-UP; M4M1-UP; M5P1-UP; SDT1-UP

PART OF 374-9732 ELECTRICAL AR

SMCS-1408 **i05270687**

NOTE	REF NO	GRAPHIC REF	PART NUMBER	QTY	PART NAME 1 2 3 4 5 6 (PRODUCT LEVEL)	SEE PAGE
	1	1	**3S-2093**	6	STRAP-CABLE	
	2	1	**4S-5719**	1	SPACER (10.31X25X12.7-MM THK)	
	3	1	**6Y-6584**	1	STRAP AS-GROUND	
	4	1	**116-5710**	1	GROMMET	
	5	1	**177-2215**	3	STRAP-DUAL CLAMP	
	6	1	**200-6345**	1	MOUNT (DUAL SWIVEL)	
	7	1	**204-2281**	3	STRAP-CABLE	
	8	1	**256-6453**	1	SENSOR-TEMPERATURE (AMBIENT AIR)	
	9	1	**312-6145**	1	ANGLE	
	10	1	**327-0325**	18	STRAP-CABLE	
	11	1	**362-4303**	1	ANGLE	
	12	1	**366-4919**	1	BRACKET	
Y	13	1	*379-8291*	1	PANEL GP-CIRCUIT BREAKER	136
Y	14	1	**379-8294**	1	HARNESS AS-CHASSIS	102
	15	1	**385-4637**	1	BRACKET	
	16	1	**385-4638**	1	BRACKET	
	17	1	**130-5300**	2	CLIP	
	18	1	**132-5789**	6	CLIP	
M	19	1	**8T-7547**	1	BOLT (M8X1.25X30-MM)	
	20	1	**277-1873**	1	CLIP	
	21	1	**3K-0360**	1	SEAL-O-RING	
	22	1	**4P-7428**	1	CLIP	
	23	1	**4P-7581**	7	CLIP	
	24	1	**4P-8134**	2	CLIP	
M	25	1	**5C-7261**	2	NUT (M8X1.25-THD)	
	26	1	**5P-1076**	2	WASHER-HARD (13.5X30X4-MM THK)	
	27	1	**5P-4116**	7	WASHER-HARD (8.8X20.5X2-MM THK)	
	28	1	**7K-1181**	38	STRAP-CABLE	
	29	1	**7X-7729**	2	WASHER (11X25X3-MM THK)	
	30	1	**8T-4121**	3	WASHER-HARD (11X21X2.5-MM THK)	
M	31	1	**8T-4137**	5	BOLT (M10X1.5X20-MM)	
M	32	1	**8T-4179**	2	BOLT (M12X1.75X20-MM)	
M	33	1	**8T-4189**	3	BOLT (M8X1.25X20-MM)	
	34	1	**8T-4205**	2	WASHER-HARD (7.2X14.5X2-MM THK)	
	35	1	**8T-4223**	3	WASHER-HARD (13.5X25.5X3-MM THK)	
M	36	1	**8T-4244**	3	NUT (M12X1.75-THD)	
M	37	1	**8T-4970**	2	BOLT (M6X1X14-MM)	
M	38	1	**8T-6869**	1	BOLT (M8X1.25X60-MM)	
M	39	1	**8T-6912**	1	BOLT (M8X1.25X50-MM)	

M - METRIC PART
Y - SEPARATE ILLUSTRATION

379-8248 **WIRING GP-MACHINE (*contd.*)** **i05270687**

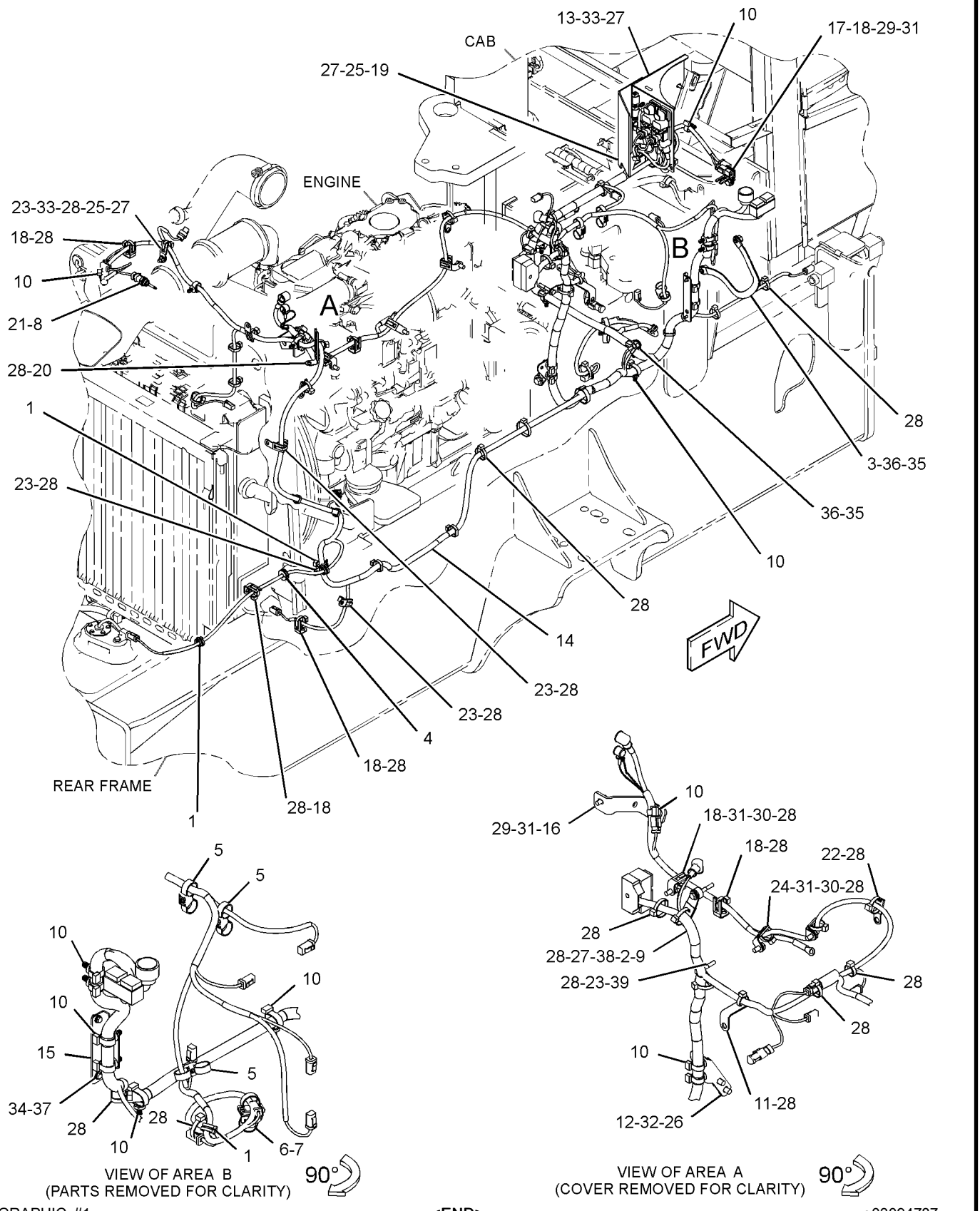

GRAPHIC #1

<END>

g03094787

389-7484 WIRING GP-PLATFORM

S/N: MBF1-UP; M4M1-UP; M5P1-UP; SDT1-UP
PART OF 374-9842, 377-2159 OPERATOR AR
AN ATTACHMENT

SMCS-1408 **i05289950**

NOTE	REF NO	GRAPHIC REF	PART NUMBER	QTY	PART NAME 1 2 3 4 5 6 (PRODUCT LEVEL)	SEE PAGE
	1	1	**3S-2093**	10	STRAP-CABLE	
	2	1	**5P-5774**	1	PLUG	
	3	1	**6S-4039**	1	GROMMET	
	4	1	**116-5710**	6	GROMMET	
	5	1	**327-0325**	14	STRAP-CABLE	
Y	6	1	**389-7491**	1	HARNESS AS-LIGHTING (FLOODLIGHT)	109
	7	1	**5P-6459**	1	GROMMET	
	8	1	**7G-7053**	1	GROMMET	
	9	1	**7K-1181**	3	STRAP-CABLE	

Y - SEPARATE ILLUSTRATION

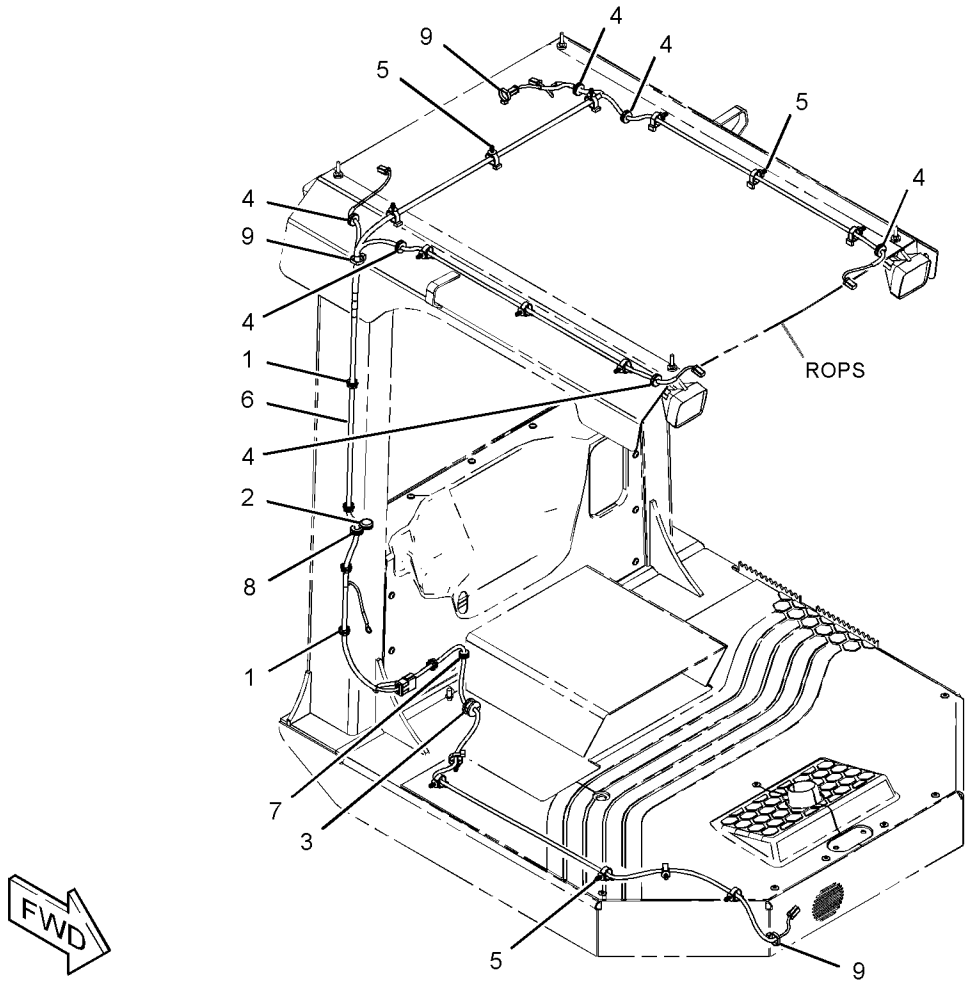

GRAPHIC #1

<END>

g03085783

354-0270 WIRING GP-SENSOR–DRUM SPEED

S/N: MBF1-UP; M4M1-UP; M5P1-UP; SDT1-UP
PART OF 374-9732 ELECTRICAL AR

SMCS-1408 **i05270684**

NOTE	REF NO	GRAPHIC REF	PART NUMBER	QTY	PART NAME 1 2 3 4 5 6 (PRODUCT LEVEL)	SEE PAGE
	1	1	**3S-2093**	2	STRAP-CABLE	
	2	1	**177-2215**	3	STRAP-DUAL CLAMP	
	3	1	**390-0881**	1	HARNESS AS-SENSOR (SPEED)	
		1	**9X-3401**	4	PIN-CONNECTOR (16-GA TO 18-GA)	
		1	**155-2271**	1	KIT-CONNECTING PLUG (4-PIN)	
					(INCLUDES PLUG AS, WEDGE & INTERFACE SEAL)	
		1	**102-8804**	1	KIT-RECEPTACLE (4-PIN)	
					(INCLUDES RECEPTACLE AS & WEDGE)	
		1	**180-9340**	4	SOCKET-CONNECTOR (14-GA TO 18-GA)	

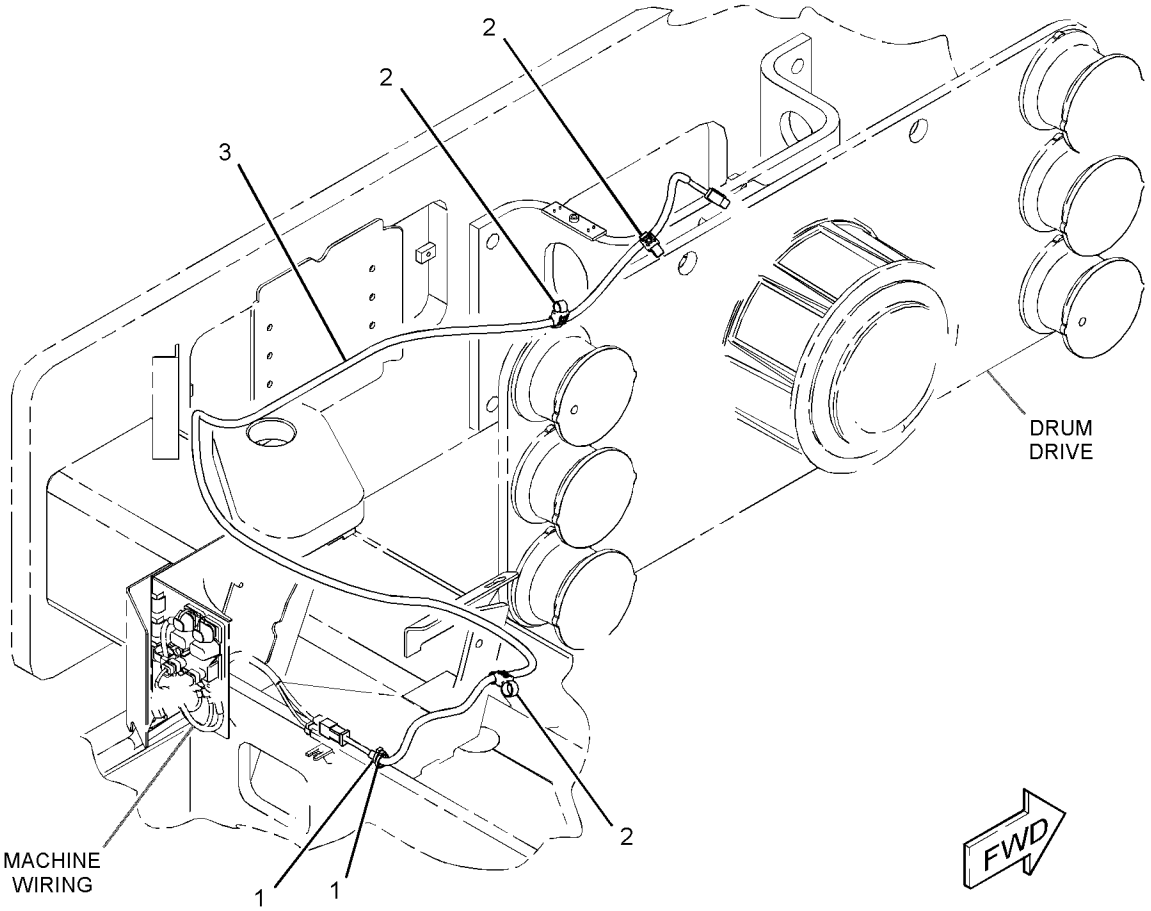

GRAPHIC #1 **<END>** g02711261

379-8261 WIRING GP-SENSOR—ACCELERATOR

S/N: M4M1-UP

AN ATTACHMENT

SMCS-1408 **i05300069**

NOTE	PART NUMBER	QTY	PART NAME 1 2 3 4 5 6 (PRODUCT LEVEL)	SEE PAGE
Y	*388-7411*	1	ELECTRONICS GP-MACHINE	97
Y	*418-9844*	1	FILM GP (COMPACTION CONTROL)	504
Y	*359-7567*	1	FITTING GP-QUICK DISCONNECT	330
Y	*379-8264*	1	WIRING GP-SENSOR	184

Y - SEPARATE ILLUSTRATION

<END>

379-8262 WIRING GP-SENSOR—ACCELERATOR

S/N: MBF1-UP

AN ATTACHMENT

SMCS-1408 **i05300079**

NOTE	PART NUMBER	QTY	PART NAME 1 2 3 4 5 6 (PRODUCT LEVEL)	SEE PAGE
Y	*388-7411*	1	ELECTRONICS GP-MACHINE	97
Y	*418-9844*	1	FILM GP (COMPACTION CONTROL)	504
Y	*359-7567*	1	FITTING GP-QUICK DISCONNECT	330
Y	*379-8266*	1	WIRING GP-SENSOR	188

Y - SEPARATE ILLUSTRATION

<END>

379-8264 WIRING GP-SENSOR—COMPACTION MEASUREMENT

S/N: M4M1-UP

PART OF 379-8261 WIRING GP-SENSOR

AN ATTACHMENT

SMCS-1408 **i05291056**

NOTE	REF NO	GRAPHIC REF	PART NUMBER	QTY	PART NAME 1 2 3 4 5 6 (PRODUCT LEVEL)	SEE PAGE
	1	1	**178-8505**	1	PLATE AS	
	2	1	**200-6345**	1	MOUNT (DUAL SWIVEL)	
	3	1	**204-2281**	2	STRAP-CABLE	
	4	1	**327-0325**	8	STRAP-CABLE	
Y	5	1	**359-7587**	1	HARNESS AS-WIRING (CONTROLLER)	119
	6	1	**362-3189**	1	CONTROLLER	
Y	7	1	**379-8301**	1	HARNESS AS-CHASSIS	104
	8	1	**390-1735**	1	SENSOR AS (COMPACTION)	
	9	1	**390-1736**	1	CABLE AS	
		1	**9X-3401**	4	PIN-CONNECTOR (16-GA TO 18-GA)	
		1	**8T-8737**	2	PLUG-SEAL	
		1	**102-8805**	1	KIT-RECEPTACLE (6-PIN)	
					(INCLUDES RECEPTACLE AS & WEDGE)	
	10	1	**396-5665**	1	PANEL AS	
M		1	**6V-9632**	4	NUT-WELD (M6X1-THD)	
M		1	**8T-3612**	1	NUT-WELD (M8X1.25-THD)	
	11	1	**397-8613**	1	GUARD AS	
		1	**6M-4465**	3	TUBE	
	12	1	**397-8614**	1	PLATE	
	13	1	**130-5300**	1	CLIP (SLOT)	
	14	1	**132-5789**	3	CLIP	
	15	1	**1G-9960**	2	CLAMP	
	16	1	**5P-4116**	5	WASHER-HARD (8.8X20.5X2-MM THK)	
	17	1	**7K-1181**	11	STRAP-CABLE	
M	18	1	**7X-2535**	4	BOLT (M6X1X60-MM)	
	19	1	**7X-7729**	1	WASHER (11X25X3-MM THK)	
M	20	1	**8C-7581**	2	SCREW-MACHINE (M4X0.7X8-MM)	
M	21	1	**8C-8451**	2	BOLT (M6X1X40-MM)	
M	22	1	**8T-4137**	1	BOLT (M10X1.5X20-MM)	
M	23	1	**8T-4138**	2	BOLT (M6X1X20-MM)	
M	24	1	**8T-4139**	2	BOLT (M12X1.75X30-MM)	
M	25	1	**8T-4189**	5	BOLT (M8X1.25X20-MM)	
	26	1	**8T-4205**	7	WASHER-HARD (7.2X14.5X2-MM THK)	
	27	1	**8T-4223**	2	WASHER-HARD (13.5X25.5X3-MM THK)	
M	28	1	**9X-2480**	3	BOLT (M6X1X45-MM)	
	29	1	**9X-8256**	4	WASHER (6.6X12X2-MM THK)	

M - METRIC PART
Y - SEPARATE ILLUSTRATION

379-8264 **WIRING GP-SENSOR (*contd.*)** **i05291056**

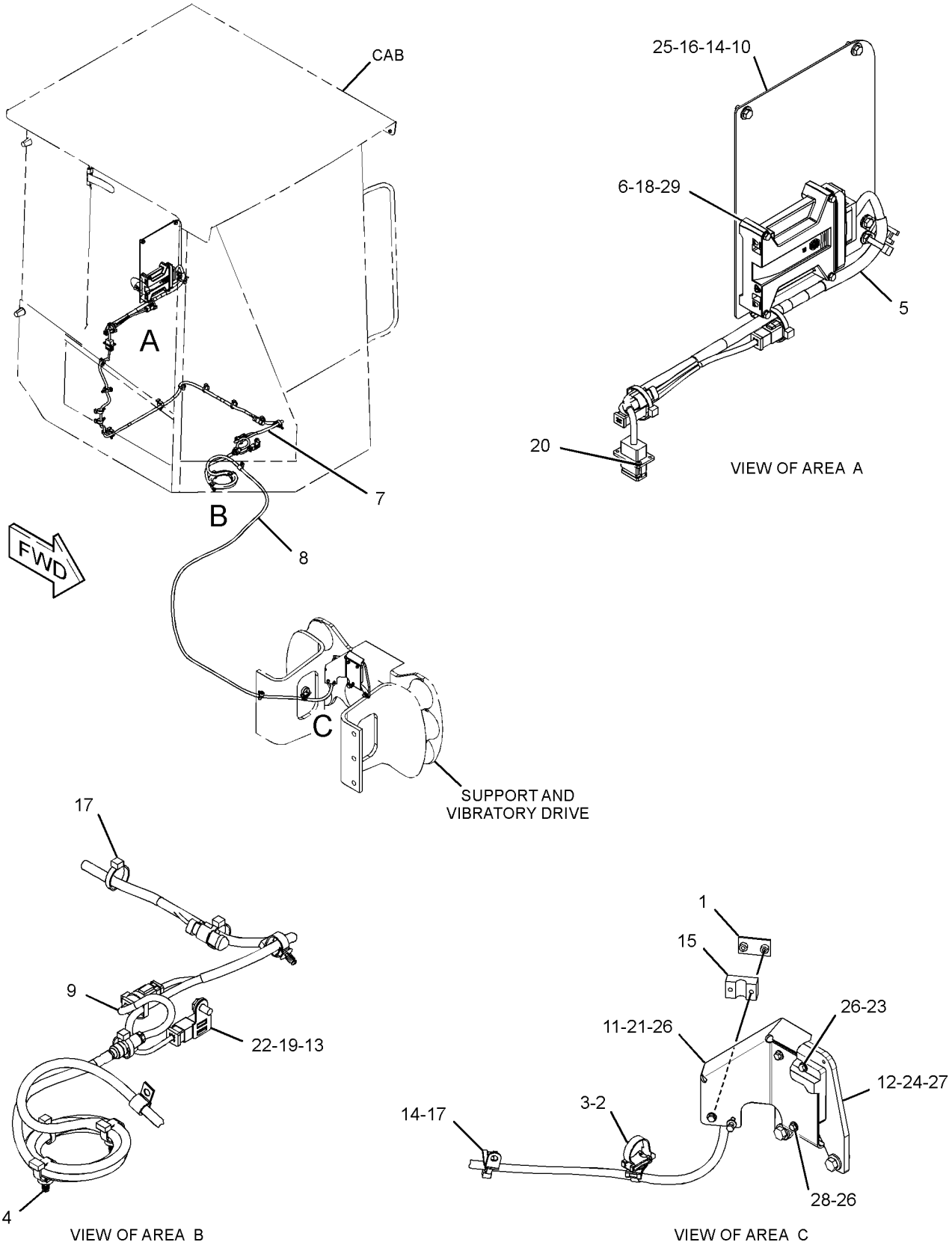

GRAPHIC #1 **<END>** g03114189

379-8265 WIRING GP-SENSOR—PROPEL FORCE

S/N: MBF1-UP; M4M1-UP; M5P1-UP; SDT1-UP
PART OF 379-8260 CONTROL & MTG GP-MACHINE
AN ATTACHMENT

SMCS-1408 **i05289878**

NOTE	REF NO	GRAPHIC REF	PART NUMBER	QTY	PART NAME 1 2 3 4 5 6 (PRODUCT LEVEL)	SEE PAGE
	1	1	**3S-2093**	2	STRAP-CABLE	
	2	1	**327-0325**	9	STRAP-CABLE	
	3	1	**334-1658**	1	SENSOR AS-ANGLE (GRADE CONTROL)	
		1	**386-0444**	1	HARNESS AS-SENSOR	
		1	**9X-3401**	6	PIN-CONNECTOR (16-GA TO 18-GA)	
		1	**151-9275**	1	KIT-RECEPTACLE (6-PIN)	
					(INCLUDES RECEPTACEL AS & WEDGE)	
E		1	**112-4550**		SLEEVE (20-CM)	
	4	1	**349-1178**	4	SENSOR-PRESSURE (OVERLOAD WARNING)	
Y	5	1	**359-7587**	1	HARNESS AS-WIRING	119
	6	1	**362-3189**	1	CONTROLLER	
	7	1	**362-4294**	1	BRACKET AS	
	8	1	**396-5665**	1	PANEL AS	
Y	9	1	**418-1430**	1	HARNESS AS-SENSOR	117
	10	1	**130-5300**	1	CLIP	
	11	1	**132-5789**	2	CLIP	
	12	1	*164-6874*	4	FITTING AS-ELBOW (QUICK DISCONNECT, MALE)	
					(EACH INCLUDES)	
		1	**3J-1907**	1	SEAL-O-RING	
		1	**085-7356**	1	FITTING	
	13	1	*165-6365*	1	FITTING AS	
		1	**3J-1907**	1	SEAL-O-RING	
		1	**7W-7381**	1	FITTING-OUTLET	
	14	1	**204-2281**	1	STRAP-CABLE	
	15	1	**3J-1907**	4	SEAL-O-RING	
	16	1	**5P-4116**	5	WASHER-HARD (8.8X20.5X2-MM THK)	
	17	1	**7K-1181**	13	STRAP-CABLE	
M	18	1	**7X-2535**	4	BOLT (M6X1X60-MM)	
	19	1	**7X-7729**	1	WASHER (11X25X3-MM THK)	
M	20	1	**8C-7581**	2	SCREW-MACHINE (M4X0.7X8-MM)	
M	21	1	**8T-4137**	1	BOLT (M10X1.5X20-MM)	
M	22	1	**8T-4138**	2	BOLT (M6X1X20-MM)	
M	23	1	**8T-4189**	5	BOLT (M8X1.25X20-MM)	
	24	1	**9X-8256**	6	WASHER (6.6X12X2-MM THK)	

E - ORDER BY THE CENTIMETER
M - METRIC PART
Y - SEPARATE ILLUSTRATION

379-8265 **WIRING GP-SENSOR (*contd.*)** **i05289878**

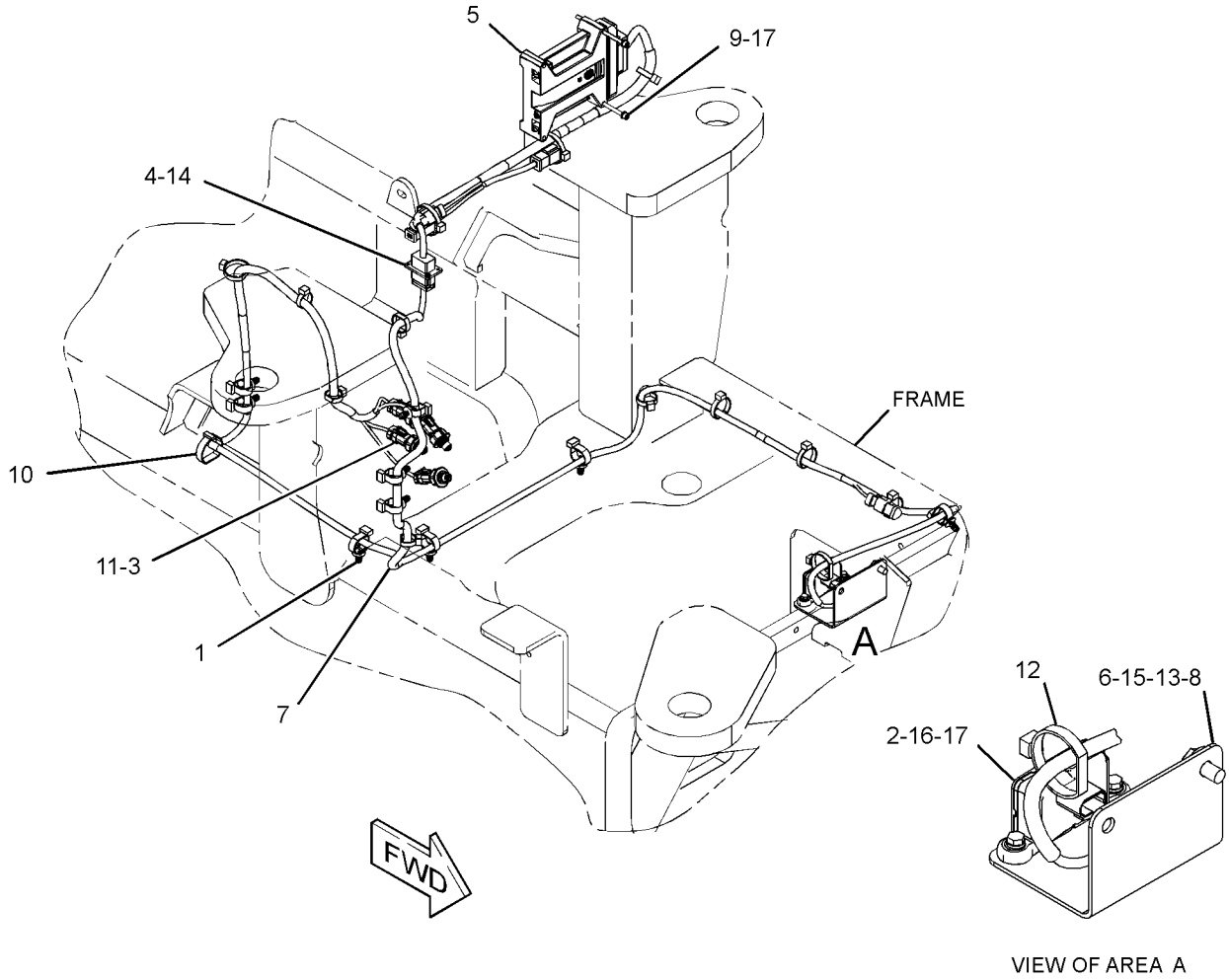

GRAPHIC #1 **<END>** g03093721

379-8266 WIRING GP-SENSOR—COMPACTION MEASUREMENT

S/N: MBF1-UP

PART OF 379-8262 WIRING GP-SENSOR

AN ATTACHMENT

SMCS-1408 **i05289890**

NOTE	REF NO	GRAPHIC REF	PART NUMBER	QTY	PART NAME 1 2 3 4 5 6 (PRODUCT LEVEL)	SEE PAGE
	1	1	**178-8505**	1	PLATE AS	
	2	1	**200-6345**	1	MOUNT (DUAL SWIVEL)	
	3	1	**204-2281**	2	STRAP-CABLE	
	4	1	**327-0325**	8	STRAP-CABLE	
Y	5	1	**359-7587**	1	HARNESS AS-WIRING	119
	6	1	**362-3189**	1	CONTROLLER	
Y	7	1	**379-8301**	1	HARNESS AS-CHASSIS	104
	8	1	**390-1735**	1	SENSOR AS (COMPACTION)	
	9	1	**390-1736**	1	CABLE AS	
		1	**102-8805**	1	KIT-RECEPTACLE (6-PIN)	
					(INCLUDES RECEPTACLE AS & WEDGE)	
		1	**8T-8737**	2	PLUG-SEAL	
		1	**9X-3401**	4	PIN-CONNECTOR (16-GA TO 18-GA)	
	10	1	**396-5665**	1	PANEL AS	
M		1	**6V-9632**	4	NUT-WELD (M6X1-THD)	
M		1	**8T-3612**	1	NUT-WELD (M8X1.25-THD)	
	11	1	**397-8613**	1	GUARD AS	
		1	**6M-4465**	3	TUBE	
	12	1	**397-8615**	1	PLATE	
	13	1	**130-5300**	1	CLIP	
	14	1	**132-5789**	2	CLIP	
	15	1	**1G-9960**	2	CLAMP	
	16	1	**5P-4116**	5	WASHER-HARD (8.8X20.5X2-MM THK)	
	17	1	**7K-1181**	12	STRAP-CABLE	
M	18	1	**7X-2535**	4	BOLT (M6X1X60-MM)	
	19	1	**7X-7729**	1	WASHER (11X25X3-MM THK)	
M	20	1	**8C-7581**	2	SCREW-MACHINE (M4X0.7X8-MM)	
M	21	1	**8C-8451**	2	BOLT (M6X1X40-MM)	
M	22	1	**8T-4137**	1	BOLT (M10X1.5X20-MM)	
M	23	1	**8T-4138**	2	BOLT (M6X1X20-MM)	
M	24	1	**8T-4139**	2	BOLT (M12X1.75X30-MM)	
M	25	1	**8T-4189**	5	BOLT (M8X1.25X20-MM)	
	26	1	**8T-4205**	7	WASHER-HARD (7.2X14.5X2-MM THK)	
	27	1	**8T-4223**	2	WASHER-HARD (13.5X25.5X3-MM THK)	
	28	1	**9M-8406**	1	CLIP	
M	29	1	**9X-2480**	3	BOLT (M6X1X45-MM)	
	30	1	**9X-8256**	4	WASHER (6.6X12X2-MM THK)	

M - METRIC PART
Y - SEPARATE ILLUSTRATION

379-8266 **WIRING GP-SENSOR (*contd.*)** **i05289890**

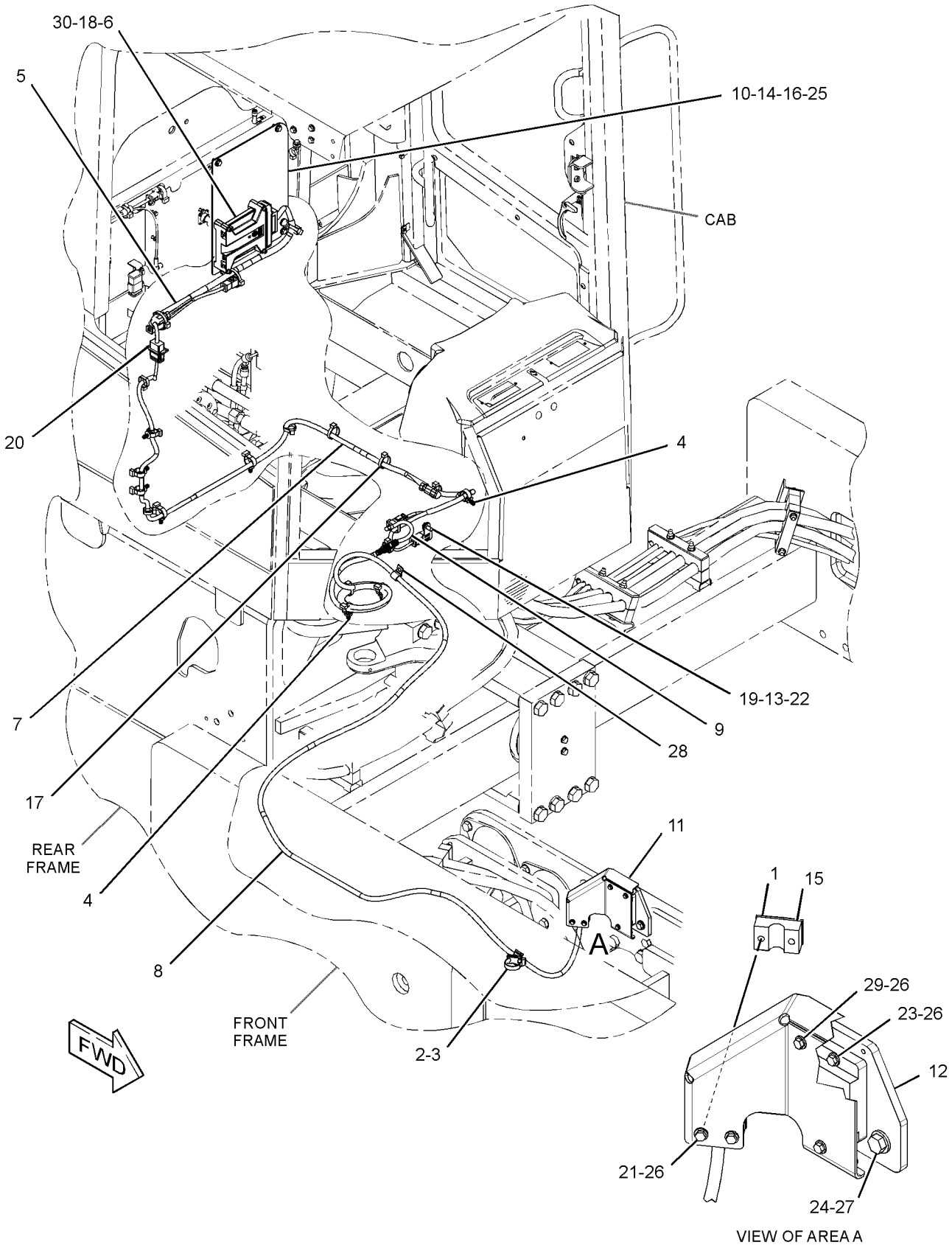

GRAPHIC #1 **<END>** g03098337

286-0402 AXLE & MTG GP-DRIVE

S/N: MBF1-UP; M4M1-UP; M5P1-UP
PART OF 374-9769 AXLE AR-DRIVE, 355-4636 POWER TRAIN AR
ALSO AN ATTACHMENT

SMCS-3278 **i05269530**

NOTE	REF NO	GRAPHIC REF	PART NUMBER	QTY	PART NAME 1 2 3 4 5 6 (PRODUCT LEVEL)	SEE PAGE
Y	1	1	**203-4692**	1	PLANETARY GP-FINAL DRIVE (AXLE)	243
Y	2	1	*286-0873*	1	AXLE GP-DRIVE (WITH BRAKES)	194
	3	1	**7X-0510**	6	WASHER-HARD (15.5X29X3-MM THK)	
M	4	1	**7X-2571**	8	BOLT (M20X2.5X240-MM)	
	5	1	**8S-4734**	6	BOLT (9/16-12X2-IN)	
	6	1	**8T-4123**	16	WASHER (22X35X3.5-MM THK)	
M	7	1	**8T-4131**	8	NUT (M20X2.5-THD)	

M - METRIC PART
Y - SEPARATE ILLUSTRATION

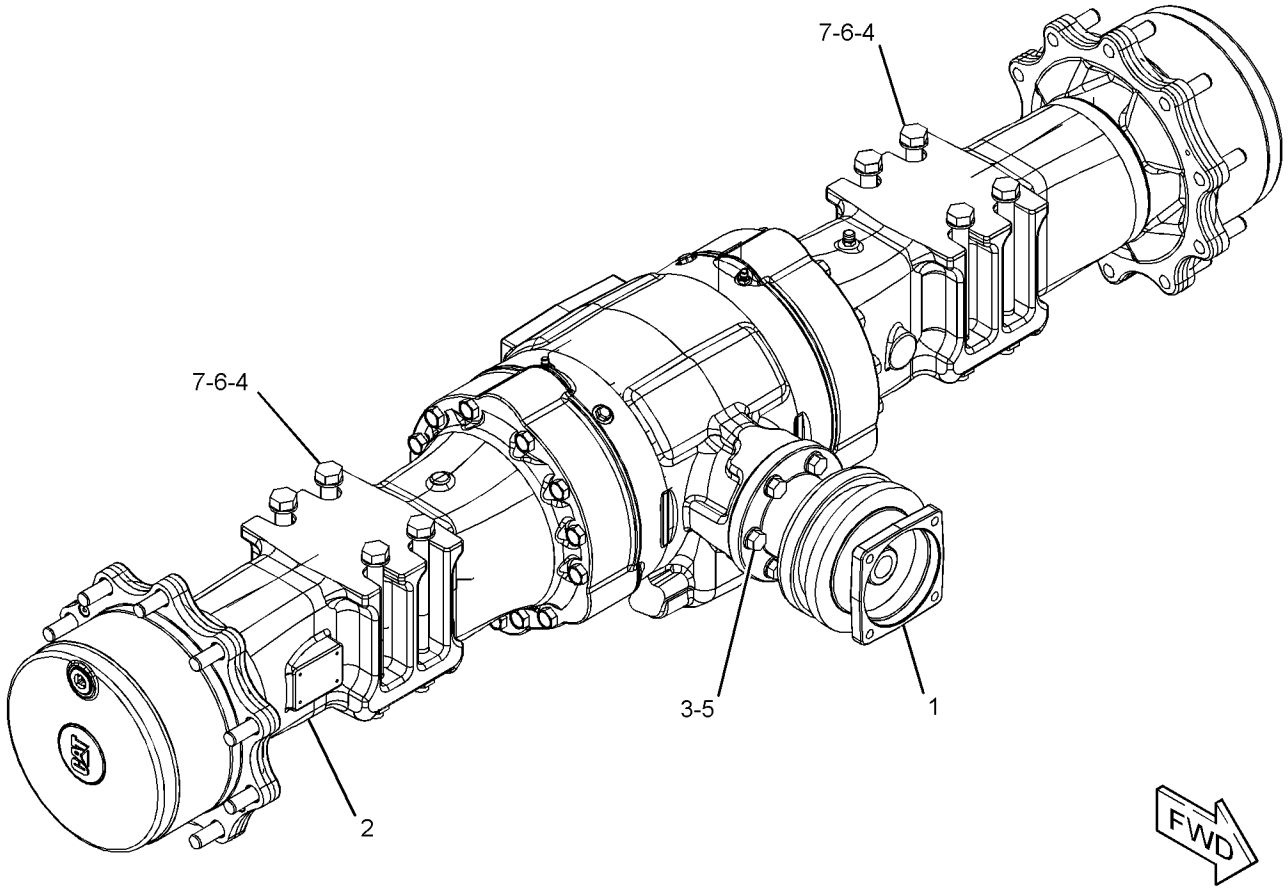

GRAPHIC #1 **<END>** g01395209

286-0403 AXLE & MTG GP-DRIVE

S/N: SDT1-UP

PART OF 355-4637 POWER TRAIN AR

SMCS-3278 **i05298355**

NOTE	REF NO	GRAPHIC REF	PART NUMBER	QTY	PART NAME 1 2 3 4 5 6 (PRODUCT LEVEL)	SEE PAGE
Y	1	1	**203-4692**	1	PLANETARY GP-FINAL DRIVE (AXLE)	243
	2	1	**214-2319**	2	PLATE	
Y	3	1	*286-0874*	1	AXLE GP-DRIVE (REAR)	196
	4	1	**068-6405**	16	WASHER (26X63.5X6-MM THK)	
	5	1	**7X-0510**	6	WASHER-HARD (15.5X29X3-MM THK)	
	6	1	**8S-4734**	6	BOLT (9/16-12X2-IN)	
M	7	1	**8T-4001**	8	NUT (M24X3-THD)	
M	8	1	**9X-8477**	8	BOLT (M24X3X280-MM)	

M - METRIC PART
Y - SEPARATE ILLUSTRATION

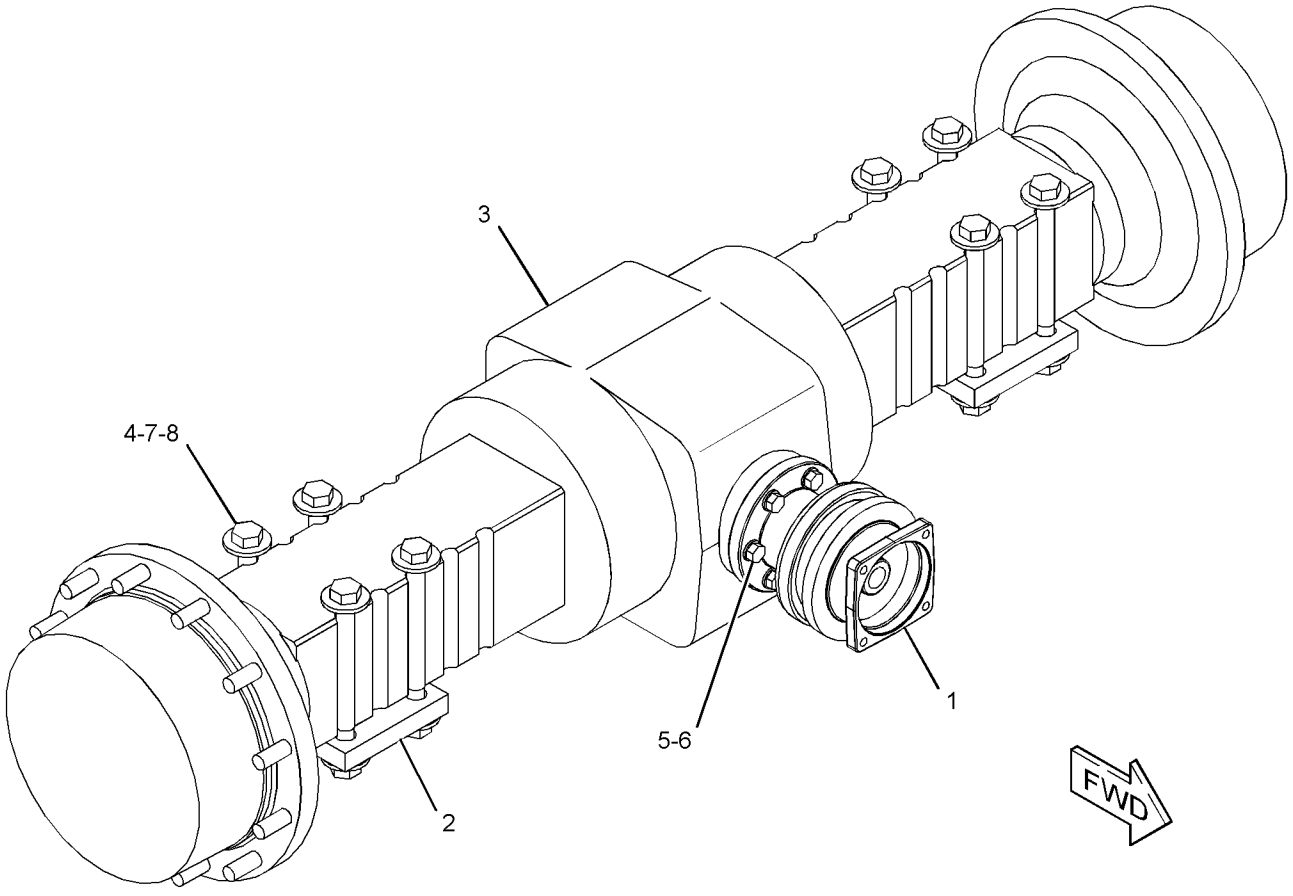

GRAPHIC #1 **<END>** g01394653

315-3120 AXLE & MTG GP-DRIVE—WITHOUT BRAKES

S/N: M4M1-UP; M5P1-UP
PART OF 374-9767 AXLE AR-DRIVE
AN ATTACHMENT

SMCS-3278 **i05295440**

NOTE	REF NO	GRAPHIC REF	PART NUMBER	QTY	PART NAME 1 2 3 4 5 6 (PRODUCT LEVEL)	SEE PAGE
Y	1	1	**203-4692**	1	PLANETARY GP-FINAL DRIVE (AXLE)	243
Y	2	1	*315-1260*	1	AXLE GP-DRIVE (WITHOUT BRAKES)	200
	3	1	**7X-0510**	6	WASHER-HARD (15.5X29X3-MM THK)	
M	4	1	**7X-2571**	8	BOLT (M20X2.5X240-MM)	
	5	1	**8S-4734**	6	BOLT (9/16-12X2-IN)	
	6	1	**8T-4123**	16	WASHER (22X35X3.5-MM THK)	
M	7	1	**8T-4131**	8	NUT (M20X2.5-THD)	

M - METRIC PART
Y - SEPARATE ILLUSTRATION

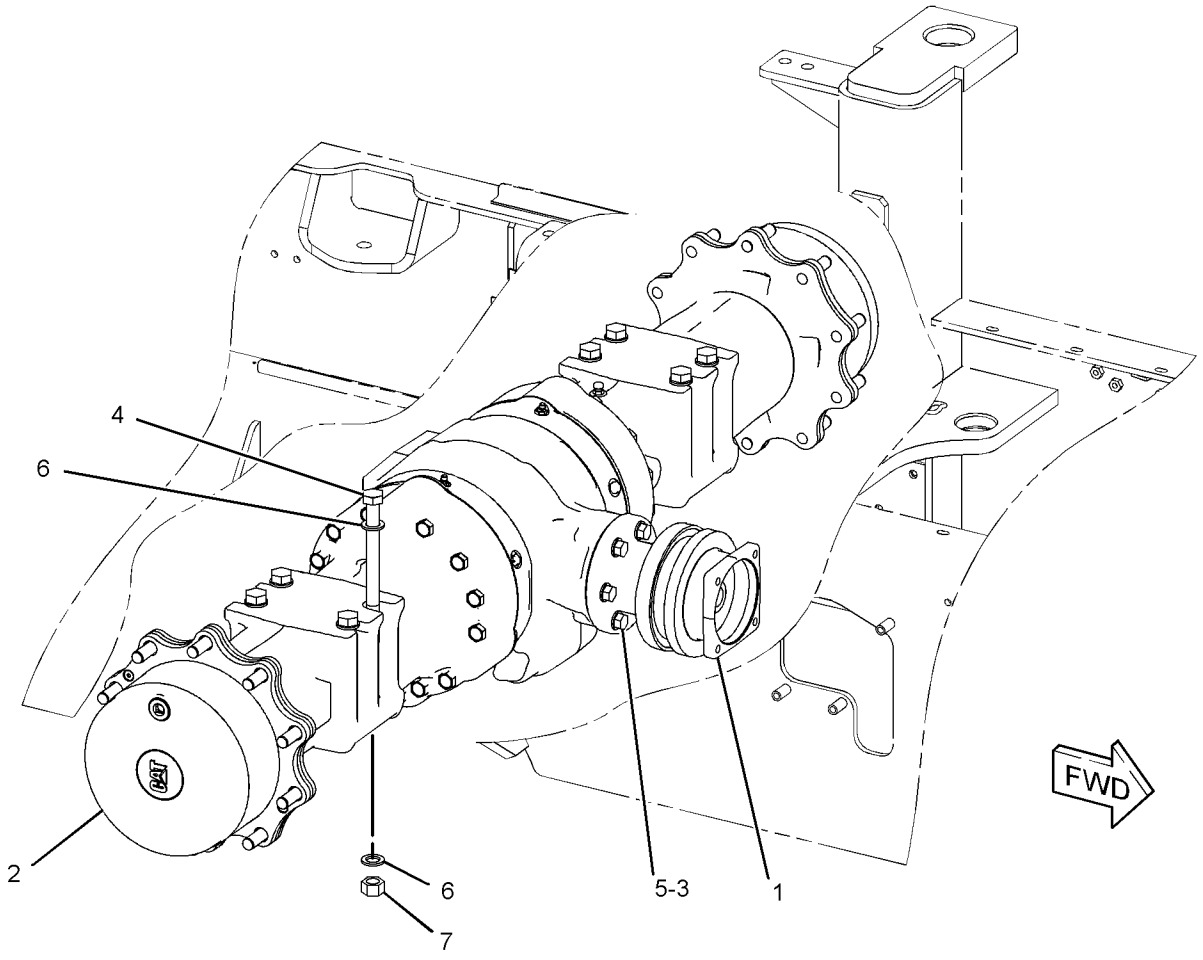

GRAPHIC #1 **<END>** g01442900

374-9767 AXLE AR-DRIVE–NON-BRAKE

S/N: M4M1-UP; M5P1-UP
PART OF 415-9361, 415-9367 DISTRIBUTION AR
AN ATTACHMENT

SMCS-3013, 3278 **i05295436**

NOTE	PART NUMBER	QTY	PART NAME 1 2 3 4 5 6 (PRODUCT LEVEL)	SEE PAGE
Y	*315-3120*	1	AXLE & MTG GP-DRIVE (WITHOUT BRAKES)	192
Y	*379-6581*	1	LINES GP-SERVICE BRAKE	313

Y - SEPARATE ILLUSTRATION

<END>

374-9769 AXLE AR-DRIVE–BRAKE

S/N: M4M1-UP; M5P1-UP
AN ATTACHMENT

SMCS-3013, 3278 **i05295442**

NOTE	PART NUMBER	QTY	PART NAME 1 2 3 4 5 6 (PRODUCT LEVEL)	SEE PAGE
Y	*286-0402*	1	AXLE & MTG GP-DRIVE (WITH BRAKES)	190
Y	*379-6583*	1	LINES GP-BRAKE	307

Y - SEPARATE ILLUSTRATION

<END>

286-0873 AXLE GP-DRIVE—WITH BRAKES

S/N: MBF1-UP; M4M1-UP; M5P1-UP
PART OF 286-0402 AXLE & MTG GP-DRIVE
ALSO AN ATTACHMENT

SMCS-3278 **i05306012**

NOTE	REF NO	GRAPHIC REF	PART NUMBER	QTY	PART NAME 1 2 3 4 5 6 (PRODUCT LEVEL)	SEE PAGE
M	1	1	**8C-7505**	4	SCREW-FLAT HEAD (M8X1.25X20-MM)	
	2	1	**9X-6378**	2	RING-RETAINING	
	3	1	**210-3098**	2	SEAL	
	4	1	**197-9155**	1	BREATHER (DRIVE AXLE)	
	5	1	**198-7811**	2	DOWEL	
	6	1	**152-6144**	4	PLUG AS-DRAIN (MAGNETIC)	
					(EACH INCLUDES)	
		1	**6V-6228**	1	SEAL-O-RING	
	7	1	**210-3099**	2	SLEEVE	
	8	1	**210-3100**	2	BUSHING	
	9	1	**199-0786**	8	PLATE	
	10	1	**199-0787**	6	PIN	
	11	1	**210-3328**	2	SHAFT-AXLE	
	12	1	**212-5713**	2	PLUG AS	
					(EACH INCLUDES)	
		1	**033-6041**	1	SEAL-O-RING	
Y	13	1	*226-4353*	2	FLANGE GP-WHEEL	226
	14	1	*226-4352*	2	GEAR GP-RING (DRIVE AXLE)	
					(EACH INCLUDES)	
		1	**199-0767**	1	GEAR-RING (81-TEETH)	
		1	**199-0778**	1	RING-SNAP	
		1	**226-4364**	1	HUB	
Y	15	1	*226-4390*	1	HOUSING GP-AXLE (WITH BRAKES)	227
	16	1	**226-4377**	2	SHAFT-AXLE	
Y	17	1	*229-5051*	2	PLANETARY GP-FINAL DRIVE (AXLE)	244
	18	1	**226-4366**	2	NUT-SPANNER	
	19	1	**226-4365**	2	WASHER-TAB	
	20	1	**226-4367**	2	SPACER (110X123X22.99-MM THK)	
	21	1	**226-4370**	6	BOLT-SELF-LOCKING	
	22	1	**238-5291**	6	DISC-BRAKE	
	23	1	**238-5292**	2	HUB-BRAKE	
	24	1	**238-5293**	1	HOUSING-AXLE (LH)	
	25	1	**238-5294**	1	HOUSING-AXLE (RH)	
	26	1	**5H-4909**	2	SEAL-O-RING	
M	28	1	**7X-2559**	26	BOLT (M16X2X160-MM)	
BF			**1U-8846**		SEALANT-GASKET	

B - USE AS REQUIRED
F - NOT SHOWN
M - METRIC PART
Y - SEPARATE ILLUSTRATION

286-0873 **AXLE GP-DRIVE (*contd.*)** **i05306012**

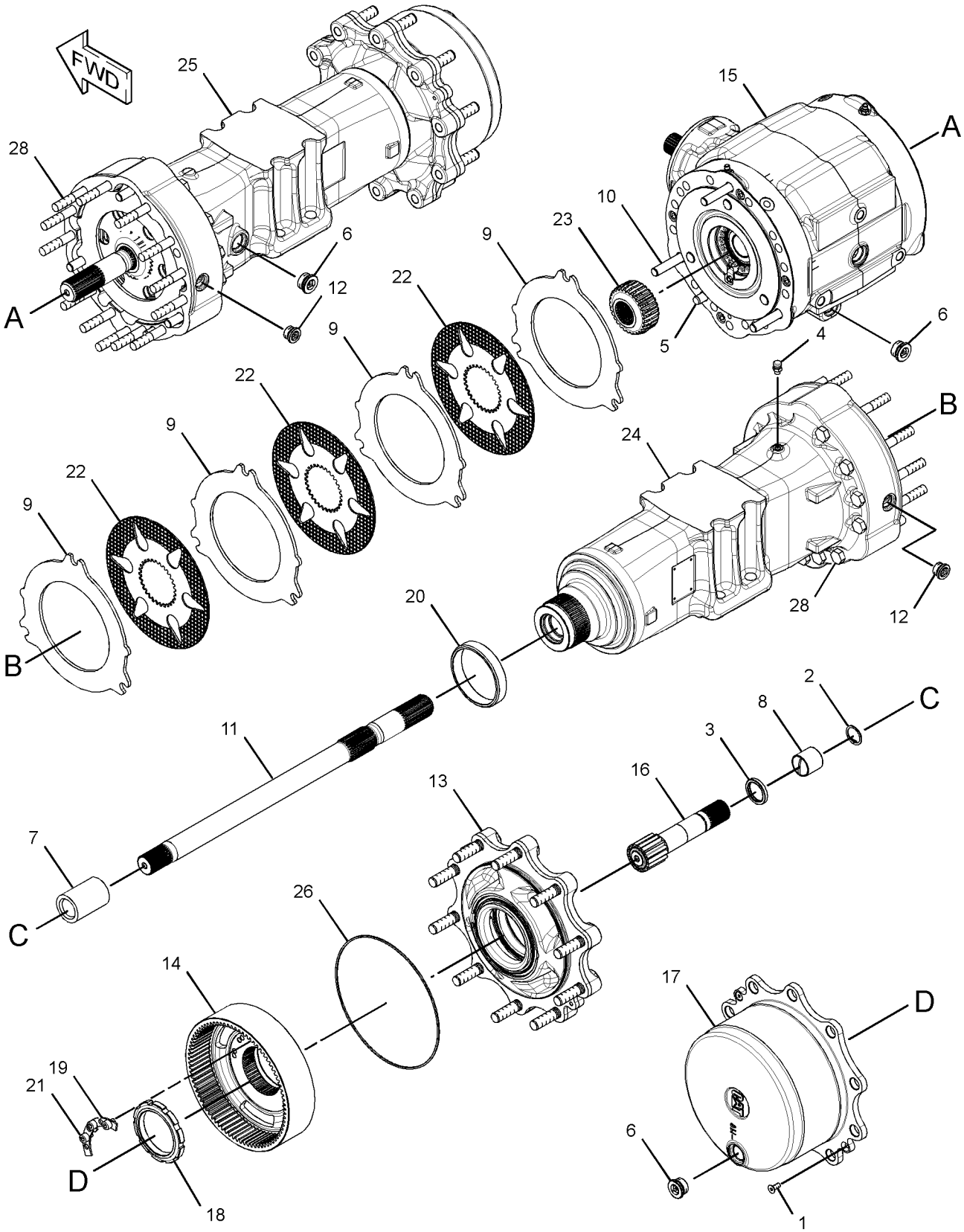

GRAPHIC #1 **<END>** g03384728

286-0874 AXLE GP-DRIVE

S/N: SDT1-UP

PART OF 286-0403 AXLE & MTG GP-DRIVE

SMCS-3278 **i05298358**

NOTE	REF NO	GRAPHIC REF	PART NUMBER	QTY	PART NAME 1 2 3 4 5 6 (PRODUCT LEVEL)	SEE PAGE
M	1	1	**157-0949**	4	SCREW-FLAT HEAD (M10X1.5X25-MM)	
	2	2	**223-4295**	24	BOLT (M14X2X140-MM)	
M	3	2	**8C-3413**	4	BOLT-SOCKET HEAD (M12X1.75X120-MM)	
	4	1	**207-4255**	1	PLUG	
	5	1	**121-0319**	4	CONE-BEARING	
	6	1	**230-8914**	2	SEAL-O-RING	
	7	2	**226-4373**	1	SPACER (45X73X18-MM THK)	
	8	2	**230-8916**	2	BEARING	
	9	2	**095-1041**	1	BEARING AS	
	10	2	**9W-2105**	1	CONE	
	11	2	**210-0932**	6	SEAL-O-RING	
	12	2	**4M-8303**	4	SEAL-O-RING	
	13	2	**2D-0598**	1	SEAL-O-RING	
	14	2	**5H-6734**	1	SEAL-O-RING	
	15	1	**4D-6695**	2	SEAL-O-RING	
	16	2	**2R-0239**	8	SEAL-O-RING	
	17	2	**211-3148**	3	COVER	
	18	1	**197-9155**	2	BREATHER (DRIVE AXLE)	
	19	2	**230-8919**	2	NUT-RING	
B	20	2	**230-8932**	1	SHIM (2.5-MM THK)	
B		2	**230-8933**	1	SHIM (2.6-MM THK)	
B		2	**230-8934**	1	SHIM (2.7-MM THK)	
B		2	**230-8935**	1	SHIM (2.8-MM THK)	
B		2	**230-8936**	1	SHIM (2.9-MM THK)	
B		2	**230-8937**	1	SHIM (3-MM THK)	
B		2	**230-8920**	1	SHIM (3.1-MM THK)	
B		2	**230-8921**	1	SHIM (3.2-MM THK)	
B		2	**230-8922**	1	SHIM (3.3-MM THK)	
B		2	**230-8923**	1	SHIM (3.4-MM THK)	
	21	2	**230-8969**	2	SUPPORT-BEARING	
	22	2	**230-8970**	2	PISTON-BRAKE	
	23	2	**230-8971**	2	DISC	
	24	2	**230-8972**	2	HOUSING	
	25	2	**231-0666**	2	SPACER (248X270X2-MM THK)	
J	26	2	**231-0731**	1	KIT-DIFFERENTIAL (DRIVE AXLE)	
					(ALSO INCLUDES SPIDER GEARS & SIDE GEARS)	
L	27	1	**231-0732**	1	KIT-FINAL DRIVE PLANETARY (DRIVE AXLE)	
					(ALSO INCLUDES HOUSING)	
N	28	2	**231-0733**	1	KIT-BEVEL GEAR (DRIVE AXLE)	
					(ALSO INCLUDES BEVEL GEAR SET)	
S	29	1	**231-0734**	1	KIT-FLANGE (DRIVE AXLE)	
					(ALSO INCLUDES FLANGE)	
	30	2	**230-8924**	8	BLOCK	
	31	2	**230-8925**	10	DISC	
	32	2	**230-8926**	2	BLOCK	
L	33	1	**199-0669**	2	PLUG (THRUST)	
	34	2	**199-0670**	2	SCREW-PURGE	
N	35	2	**209-7457**	1	NUT (M45X1.5-THD)	
J	36	2	**230-8927**	4	WASHER	
	37	2	**230-8968**	2	CYLINDER-BRAKE	
M	38	1	**169-1637**	20	BOLT (M14X1.5X65-MM)	
S	39	1	**230-8930**	24	STUD	
	40	1	**2U-6038**	4	CUP-BEARING	
	41	2	**199-0673**	2	BUSHING	
	42	2	**214-6278**	10	BOLT (M14X2X100-MM)	
	43	2	**209-7458**	2	DOWEL	
	44	1	**198-7815**	2	BUSHING	
	45	1	**152-6144**	4	PLUG AS-DRAIN (MAGNETIC) (DRIVE AXLE)	

286-0874 **AXLE GP-DRIVE (*contd.*)** **i05298358**

NOTE	REF NO	GRAPHIC REF	PART NUMBER	QTY	PART NAME 1 2 3 4 5 6 (PRODUCT LEVEL)	SEE PAGE
					(EACH INCLUDES)	
		1	**6V-6228**	1	SEAL-O-RING	
N	46	2	**229-5055**	1	WASHER	
N	47	2	**230-8939**	1	SPACER	
N	48	2	**199-0678**	1	WASHER (45.5X55X2-MM THK)	
	49	1	**230-8940**	2	SEAL	
M	50	1	**6V-4248**	12	BOLT (M10X1.5X25-MM)	
M	51	2	**199-0695**	2	BOLT (M6X1X14-MM)	
	52	2	**230-8942**	6	BRAKE DISC	
	53	2	**230-8967**	1	HOUSING	
	54	2	**230-8966**	2	SHAFT	
	55	2	**230-8945**	6	PLATE	
	56	2	**230-8946**	2	SUPPORT	
	57	2	**230-8964**	1	HOUSING	
	58	1	**230-8948**	12	BEARING	
	59	1	**230-8949**	6	GEAR-PLANETARY (29-TEETH)	
	60	1	**230-8950**	2	SHAFT	
	61	1	**230-8951**	2	GEAR-RING	
	62	2	**170-4825**	2	SEAL-O-RING	
	63	1	**230-8953**	2	HUB-RING GEAR	
	64	2	**230-8954**	2	WASHER (148X170X2-MM THK)	
	65	2	**230-8955**	6	PIN	
	66	1	**230-8956**	6	WASHER	
	67	1	**230-8957**	2	SLEEVE	
	68	1	**230-8958**	2	CLIP	
	69	1	**230-8959**	20	SLEEVE	
	70	2	**230-8960**	2	SPRING	
	71	2	**230-8961**	6	SCREW (M16X1.5X55-MM)	
M	72	2	**8T-3980**	6	NUT (M16X1.5-THD)	
J	73	2	**230-8943**	2	SHAFT	
	74	2	**9W-2106**	1	CUP	

B - USE AS REQUIRED
J - KIT MARKED J SERVICES PARTS MARKED J
L - KIT MARKED L SERVICES PARTS MARKED L
M - METRIC PART
N - KIT MARKED N SERVICES PARTS MARKED N
S - KIT MARKED S SERVICES PARTS MARKED S

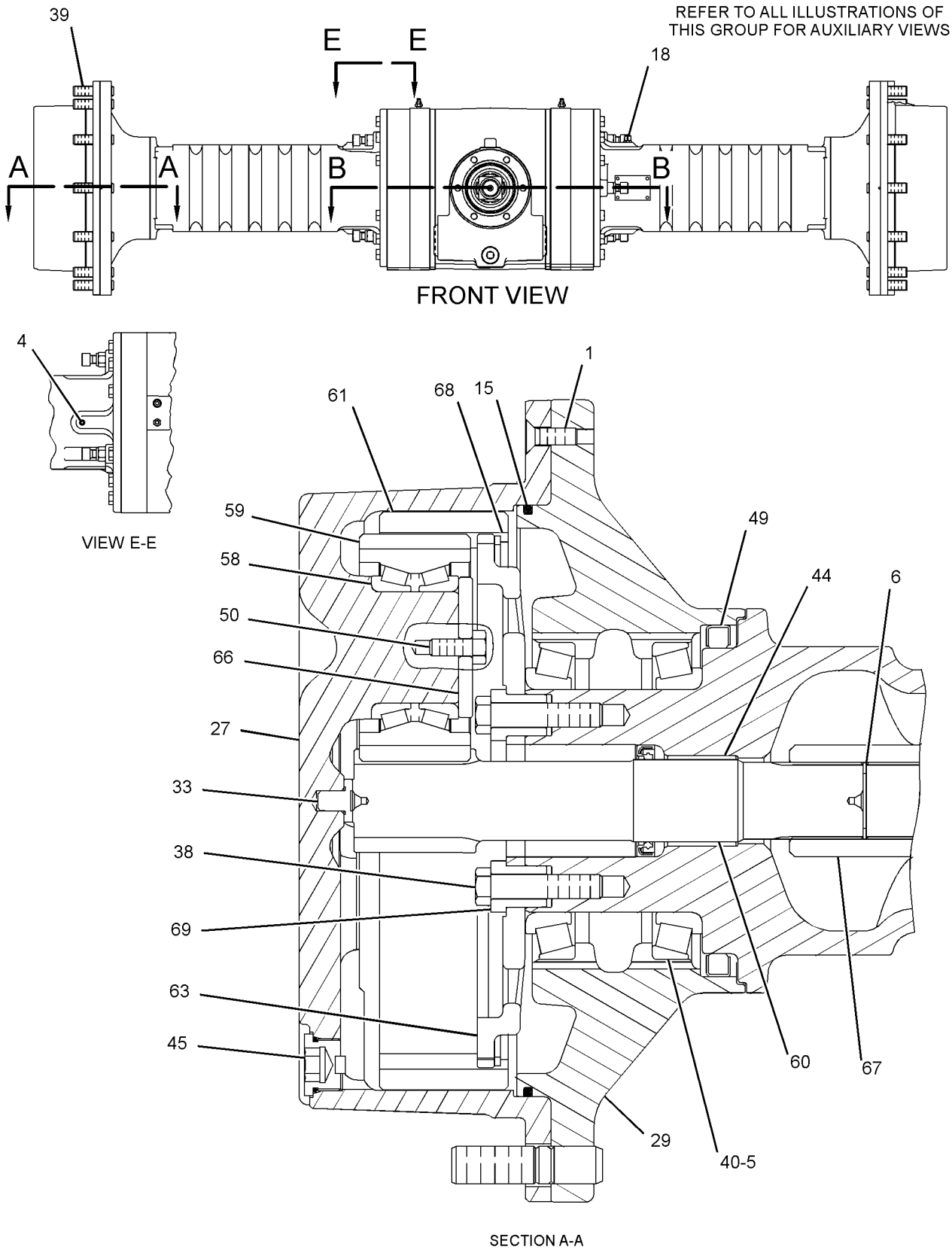

GRAPHIC #1 g01948880

286-0874 **AXLE GP-DRIVE (*contd.*)** **i05298358**

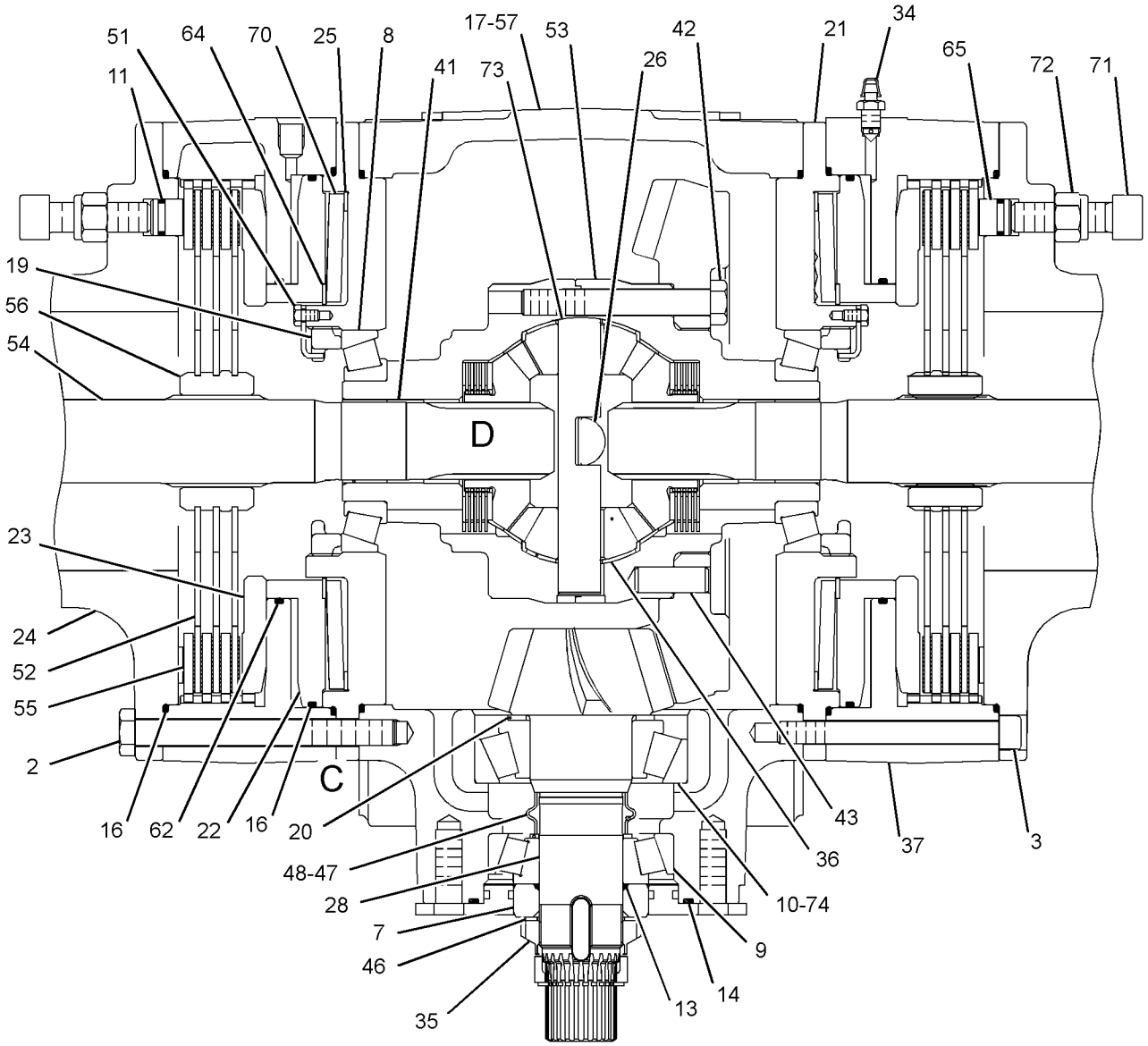

SECTION B-B

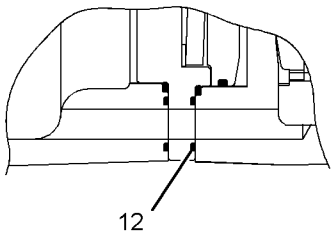

VIEW OF AREA C

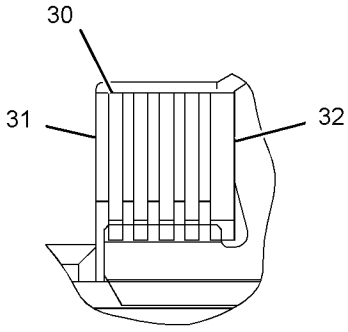

VIEW OF AREA D

GRAPHIC #2 **<END>** g02184834

315-1260 AXLE GP-DRIVE—WITHOUT BRAKES

S/N: M4M1-UP; M5P1-UP
PART OF 315-3120 AXLE & MTG GP-DRIVE
AN ATTACHMENT

SMCS-3278 **i05292860**

NOTE	REF NO	GRAPHIC REF	PART NUMBER	QTY	PART NAME 1 2 3 4 5 6 (PRODUCT LEVEL)	SEE PAGE
	1	1	**207-4255**	2	PLUG	
	2	1	**210-3098**	2	SEAL	
	3	1	**197-9155**	1	BREATHER (DRIVE AXLE)	
	4	1	**198-7811**	2	DOWEL	
	5	1	**152-6144**	5	PLUG AS-DRAIN (MAGNETIC) (DRIVE AXLE)	
					(EACH INCLUDES)	
		1	**6V-6228**	1	SEAL-O-RING	
	6	1	**210-3099**	2	SLEEVE	
	7	1	**210-3100**	2	BUSHING	
	8	1	**210-3328**	2	SHAFT-AXLE	
	9	1	**212-5713**	2	PLUG AS	
					(EACH INCLUDES)	
		1	**033-6041**	1	SEAL-O-RING	
	10	1	*226-4352*	2	GEAR GP-RING	
					(EACH INCLUDES)	
		1	**199-0767**	1	GEAR-RING (81-TEETH)	
		1	**199-0778**	1	RING-SNAP	
		1	**226-4364**	1	HUB	
Y	11	1	*226-4353*	2	FLANGE GP-WHEEL	226
Y	12	1	*226-4400*	1	HOUSING GP-AXLE (WITHOUT BRAKES)	229
	13	1	**226-4377**	2	SHAFT-AXLE	
Y	14	1	*229-5051*	2	PLANETARY GP-FINAL DRIVE	244
	15	1	**226-4366**	2	NUT-SPANNER	
	16	1	**226-4365**	2	WASHER-TAB	
	17	1	**226-4367**	2	SPACER (110X123X22.99-MM THK)	
	18	1	**226-4370**	6	BOLT-SELF-LOCKING	
	19	1	**238-5293**	1	HOUSING-AXLE (LH)	
	20	1	**238-5294**	1	HOUSING-AXLE (RH)	
M	21	1	**8C-7505**	4	SCREW-FLAT HEAD (M8X1.25X20-MM)	
	22	1	**9X-6378**	2	RING-RETAINING	
	23	1	**5H-4909**	2	SEAL-O-RING	
M	25	1	**7X-2559**	26	BOLT (M16X2X160-MM)	
B	26	1	**069-4707**		SEALANT (GASKET)	

B - USE AS REQUIRED
M - METRIC PART
Y - SEPARATE ILLUSTRATION

315-1260 **AXLE GP-DRIVE (*contd.*)** **i05292860**

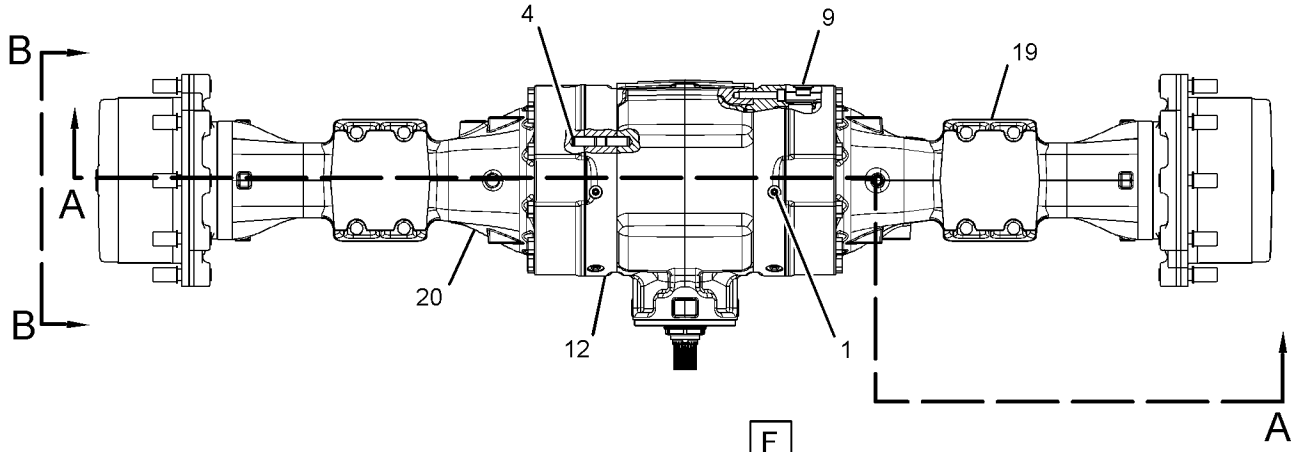

TOP VIEW

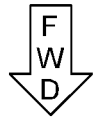

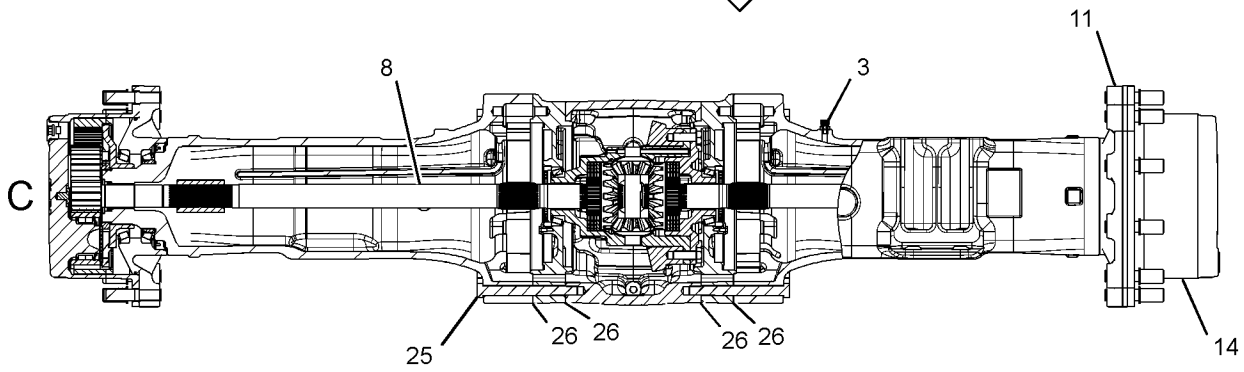

SECTION A-A

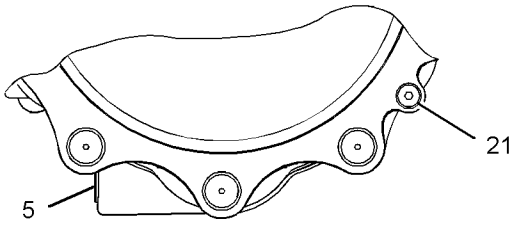

VIEW B-B

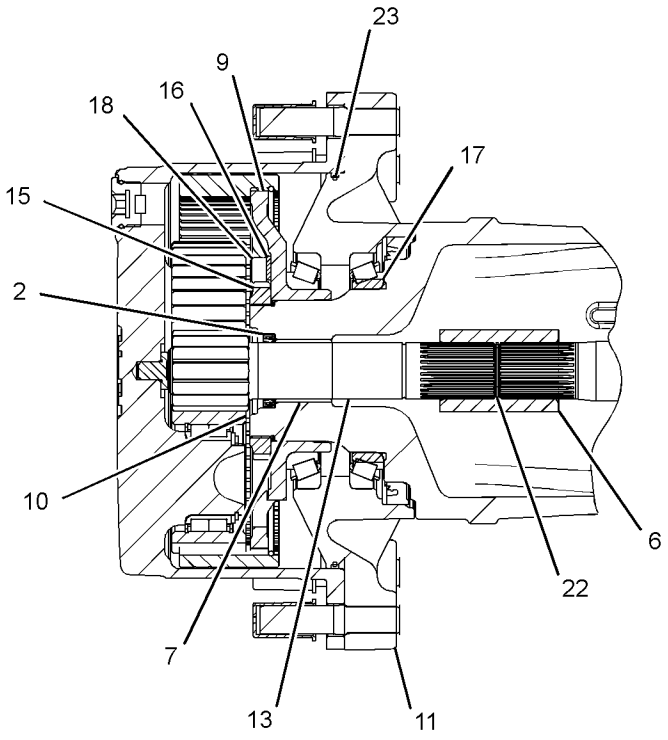

VIEW OF AREA C

GRAPHIC #1 **<END>** g01450795

226-4394 DIFFERENTIAL GP

S/N: MBF1-UP; M4M1-UP; M5P1-UP
PART OF 226-4390, 226-4400 HOUSING GP-AXLE
ALSO AN ATTACHMENT

SMCS-3258, 3283, 3284 **i03036105**

NOTE	REF NO	GRAPHIC REF	PART NUMBER	QTY	PART NAME 1 2 3 4 5 6 (PRODUCT LEVEL)	SEE PAGE
	1	1	**199-0673**	2	BUSHING	
	2	1	**199-0694**	12	BOLT (M14X2X40-MM)	
J	3	1	**199-0808**	1	PIN	
	4	1	**209-7481**	2	DISC-FRICTION	
	5	1	**209-7482**	6	DISC-FRICTION	
	6	1	**226-4397**	8	PLATE	
	7	1	**226-4380**	1	HOUSING	
	8	1	**226-4381**	1	COVER	
J	9	1	**231-0670**	1	SHAFT	
J	10	1	**231-0671**	2	WASHER-THRUST	
					AVAILABLE REPAIR KIT(S):	
J			**231-0689**	1	DIFFERENTIAL GP (KIT)	
					(ALSO INCLUDES SIDE GEARS & SPIDER GEARS)	

J - PARTS MARKED J INCLUDED IN KIT MARKED J

226-4394 **DIFFERENTIAL GP (*contd.*)** **i03036105**

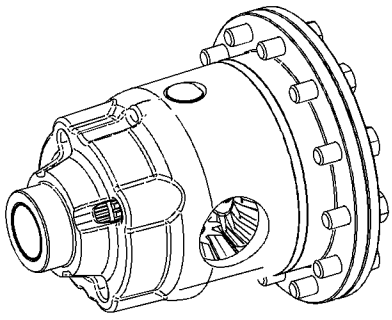

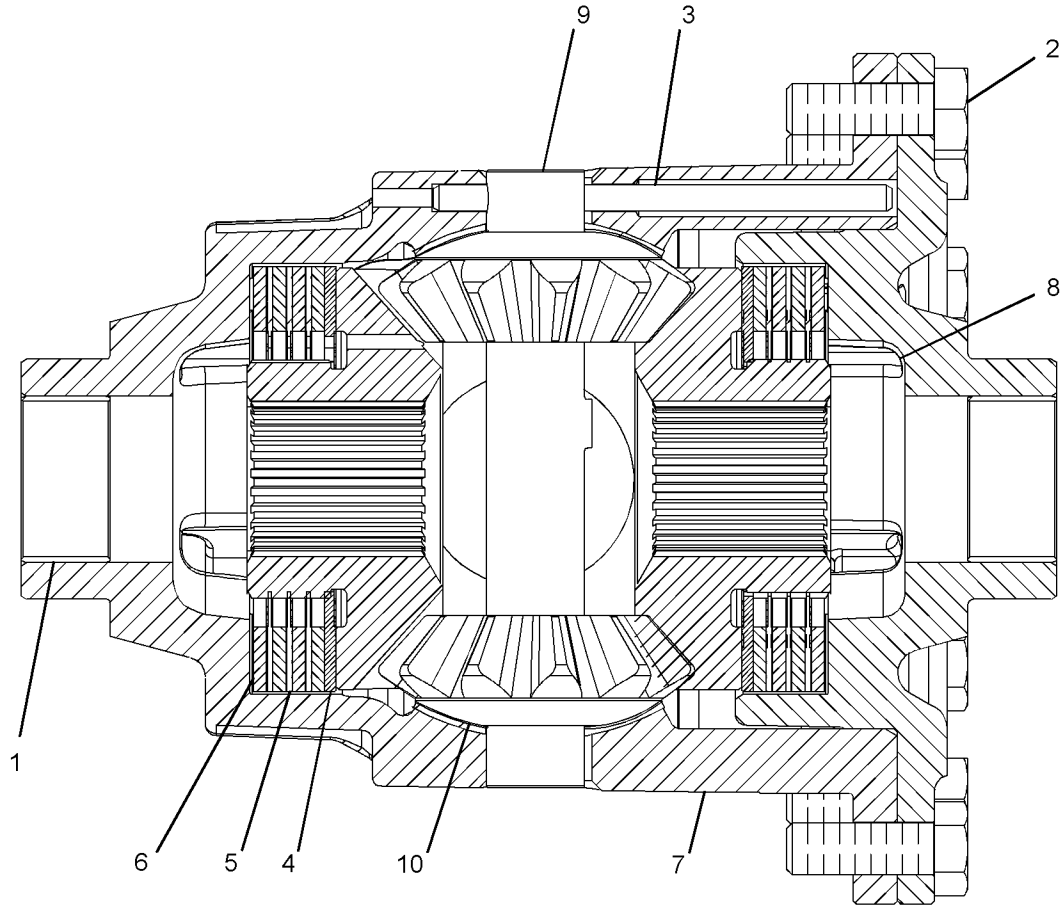

GRAPHIC #1 **<END>** g01359045

356-1417 DRIVE GP-DRUM

S/N: M4M1-UP

PART OF 374-9763 POWER TRAIN AR

SMCS-4050, 4351, 5058 **i05337059**

NOTE	REF NO	GRAPHIC REF	PART NUMBER	QTY	PART NAME 1 2 3 4 5 6 (PRODUCT LEVEL)	SEE PAGE
	1	1	**230-4120**	1	PLATE	
Y	2	1	**358-9474**	1	DRIVE GP-FINAL (WITHOUT MOTOR)	209
	3	1	**227-0172**	8	MOUNT	
	4	1	**359-6646**	1	PLATE AS	
		1	**154-4887**	1	PLATE AS	
M	5	1	**7X-2562**	8	BOLT (M20X2.5X45-MM)	
	6	1	**8T-4123**	40	WASHER (22X35X3.5-MM THK)	
M	7	1	**8T-5460**	8	BOLT (M20X2.5X40-MM)	
M	8	1	**8T-6430**	24	BOLT (M20X2.5X50-MM)	

M - METRIC PART
Y - SEPARATE ILLUSTRATION

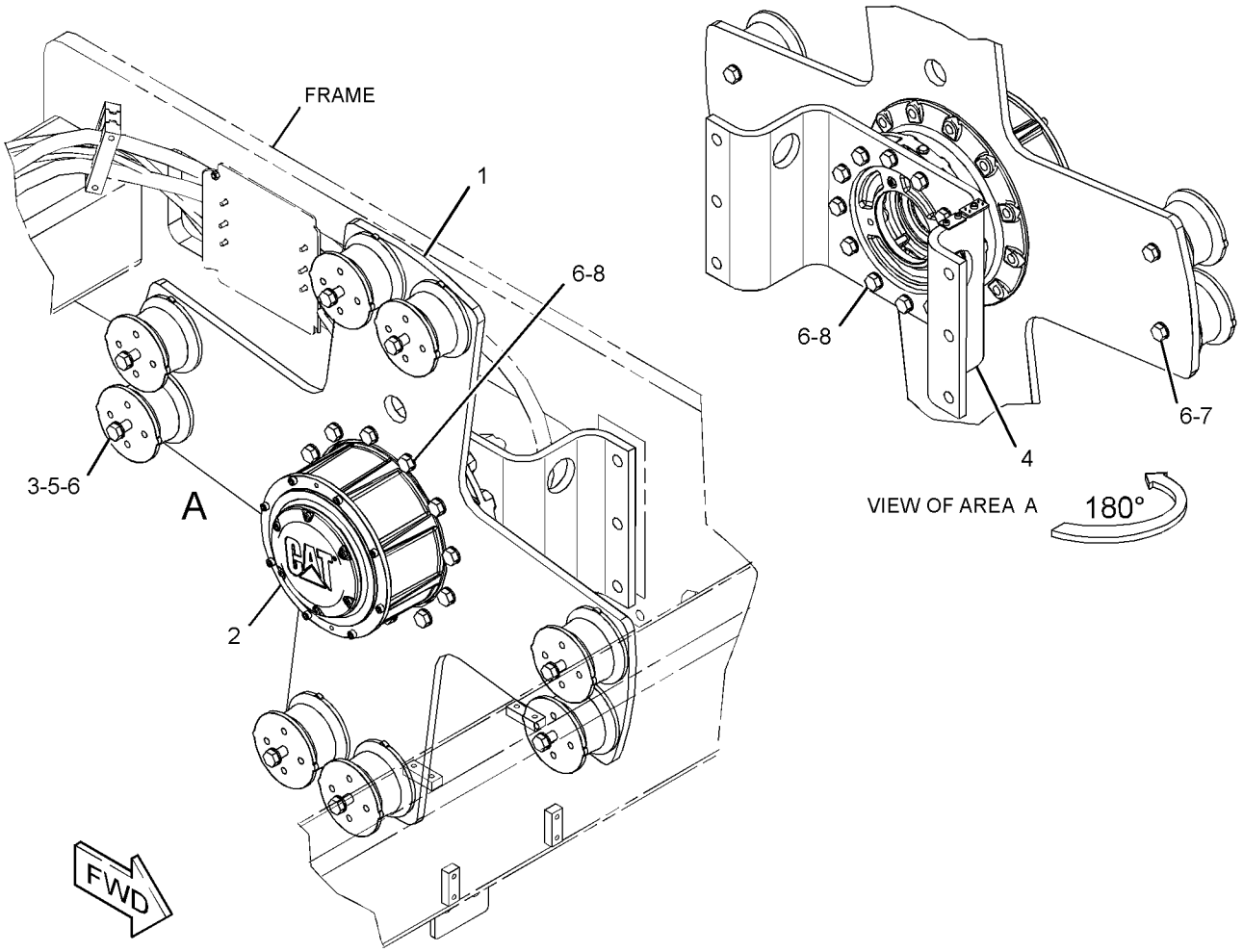

GRAPHIC #1 **<END>** g02717849

356-1812 DRIVE GP-DRUM

S/N: SDT1-UP

PART OF 355-4637 POWER TRAIN AR

SMCS-4050, 4351, 5058 **i05298357**

NOTE	REF NO	GRAPHIC REF	PART NUMBER	QTY	PART NAME 1 2 3 4 5 6 (PRODUCT LEVEL)	SEE PAGE
	1	1	**168-7536**	1	PLATE-DRUM DRIVE	
Y	2	1	**358-9474**	1	DRIVE GP-FINAL	209
	3	1	**235-5027**	10	MOUNT	
	4	1	**361-4967**	1	PLATE AS	
M	5	1	**7X-2562**	10	BOLT (M20X2.5X45-MM)	
M	6	1	**7X-2563**	12	BOLT (M20X2.5X60-MM)	
	7	1	**8T-4123**	32	WASHER (22X35X3.5-MM THK)	
	8	1	**8T-5439**	12	WASHER-HARD (21.5X45X6-MM THK)	
M	9	1	**8T-5460**	10	BOLT (M20X2.5X40-MM)	
M	10	1	**8T-6430**	12	BOLT (M20X2.5X50-MM)	

M - METRIC PART
Y - SEPARATE ILLUSTRATION

356-1812 **DRIVE GP-DRUM (*contd.*)** **i05298357**

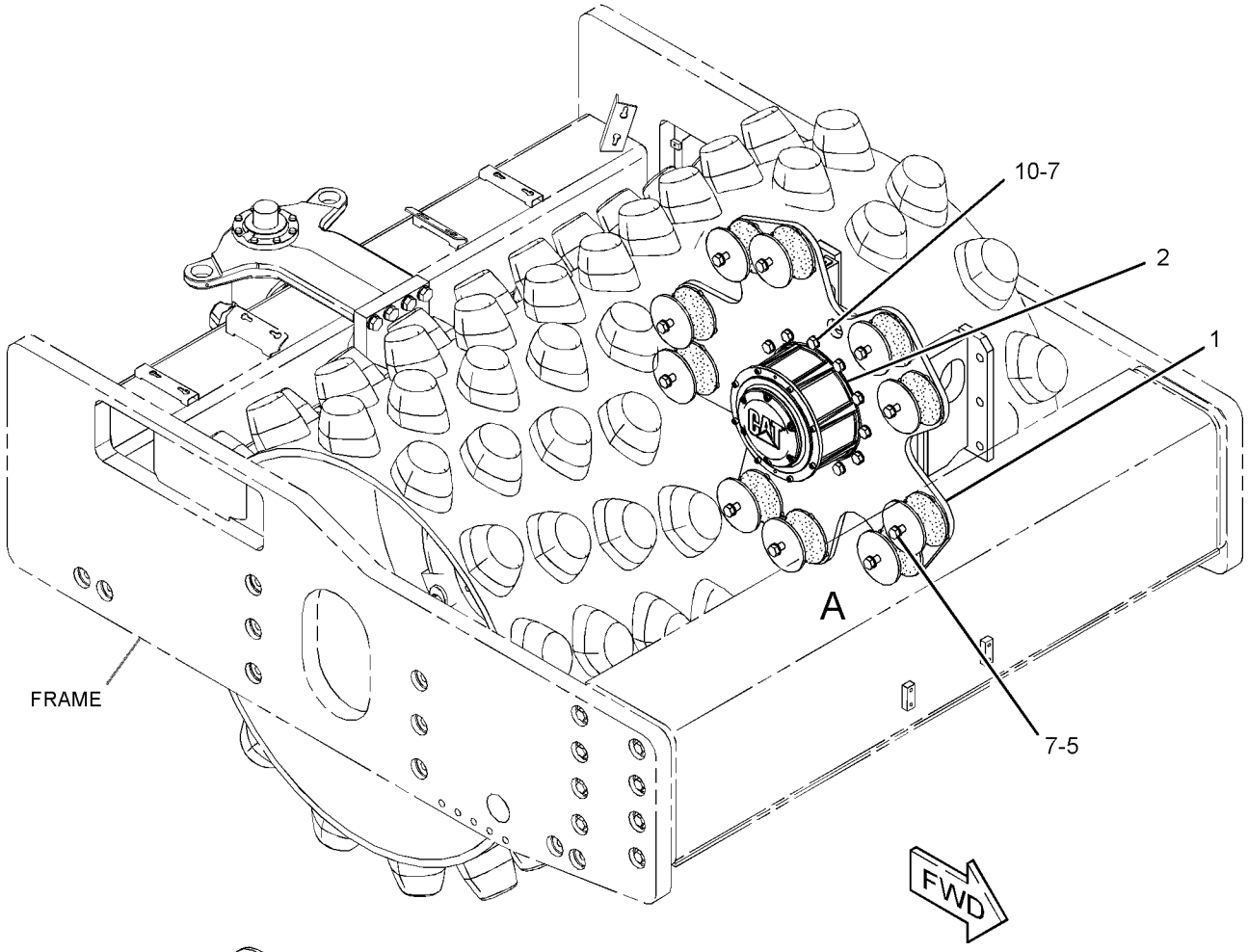

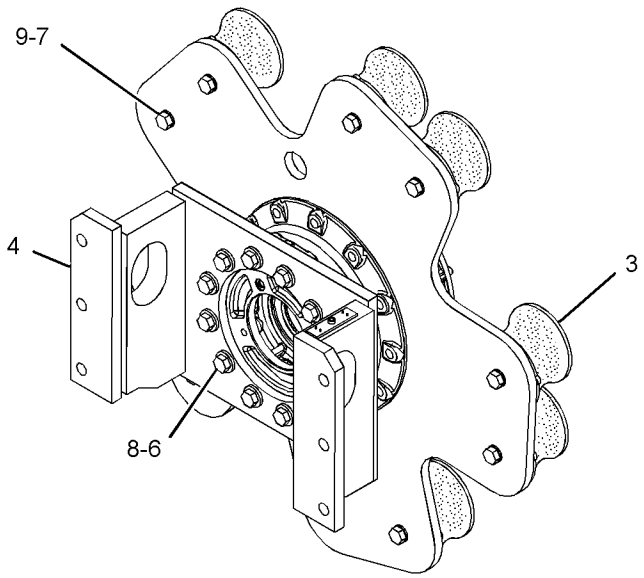

VIEW OF AREA A 180°

GRAPHIC #1 **<END>** g02724521

356-1872 DRIVE GP-DRUM

S/N: M5P1-UP

PART OF 374-9764 POWER TRAIN AR

SMCS-4050, 4351, 5058 **i05296440**

NOTE	REF NO	GRAPHIC REF	PART NUMBER	QTY	PART NAME 1 2 3 4 5 6 (PRODUCT LEVEL)	SEE PAGE
	1	1	**140-5846**	1	PLATE-DRUM DRIVE	
Y	2	1	**358-9474**	1	DRIVE GP-FINAL (WITHOUT MOTOR)	209
	3	1	**227-0172**	8	MOUNT	
	4	1	**359-6646**	1	PLATE AS	
M	5	1	**7X-2562**	8	BOLT (M20X2.5X45-MM)	
	6	1	**8T-4123**	40	WASHER (22X35X3.5-MM THK)	
M	7	1	**8T-5460**	8	BOLT (M20X2.5X40-MM)	
M	8	1	**8T-6430**	24	BOLT (M20X2.5X50-MM)	

M - METRIC PART
Y - SEPARATE ILLUSTRATION

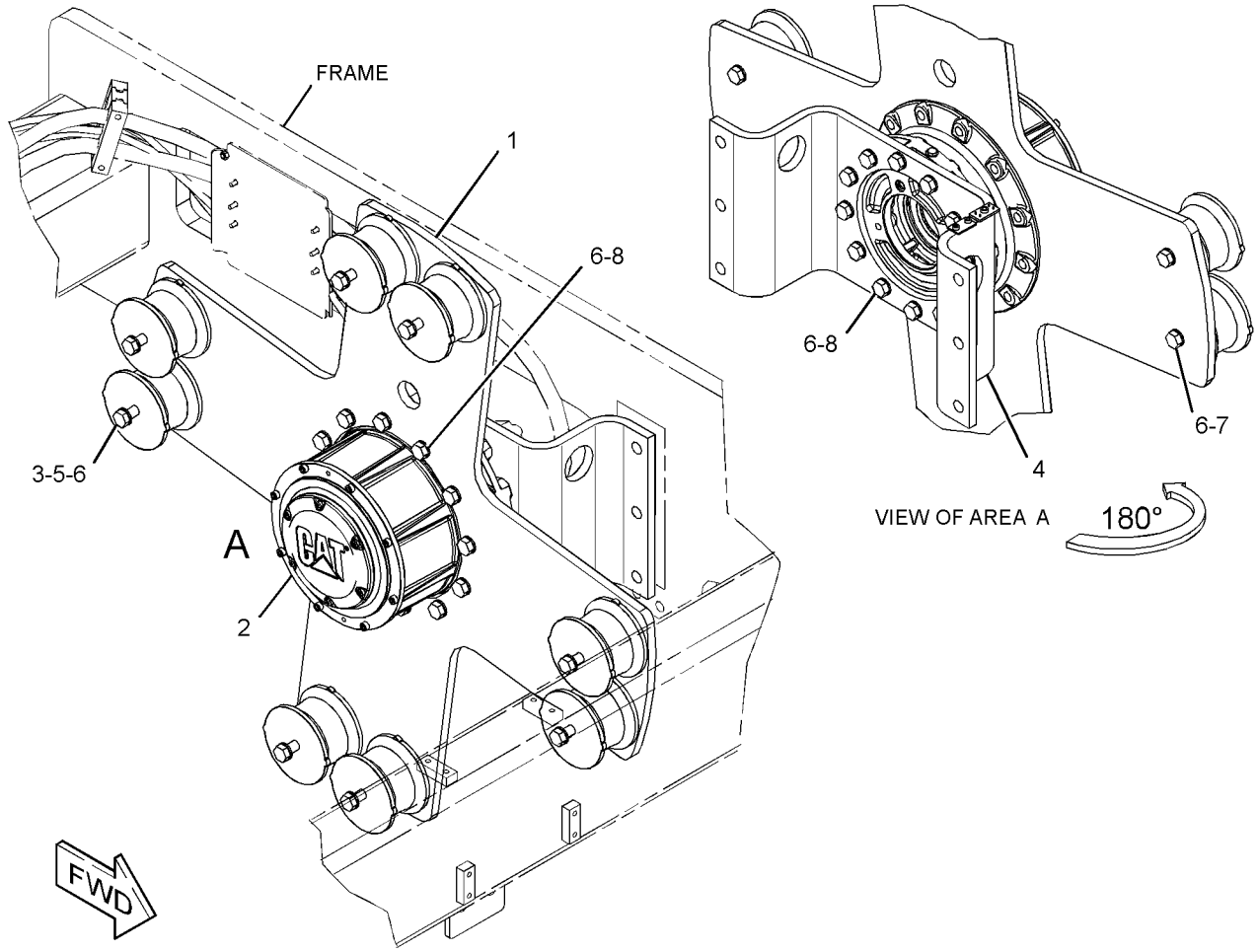

GRAPHIC #1 **<END>** g02717930

361-4789 DRIVE GP-DRUM–PROPEL

S/N: MBF1-UP

PART OF 355-4636 POWER TRAIN AR

SMCS-4050, 4351, 5058 **i05297393**

NOTE	REF NO	GRAPHIC REF	PART NUMBER	QTY	PART NAME 1 2 3 4 5 6 (PRODUCT LEVEL)	SEE PAGE
	1	1	**140-2370**	1	PLATE-DRUM DRIVE	
Y	2	1	**358-9474**	1	DRIVE GP-FINAL (WITHOUT MOTOR)	209
	3	1	**227-0172**	10	MOUNT	
	4	1	**361-4967**	1	PLATE AS	
M	5	1	**7X-2562**	10	BOLT (M20X2.5X45-MM)	
M	6	1	**7X-2563**	12	BOLT (M20X2.5X60-MM)	
	7	1	**8T-4123**	32	WASHER (22X35X3.5-MM THK)	
	9	1	**8T-5439**	12	WASHER-HARD (21.5X45X6-MM THK)	
M	10	1	**8T-5460**	10	BOLT (M20X2.5X40-MM)	
M	11	1	**8T-6430**	12	BOLT (M20X2.5X50-MM)	

M - METRIC PART
Y - SEPARATE ILLUSTRATION

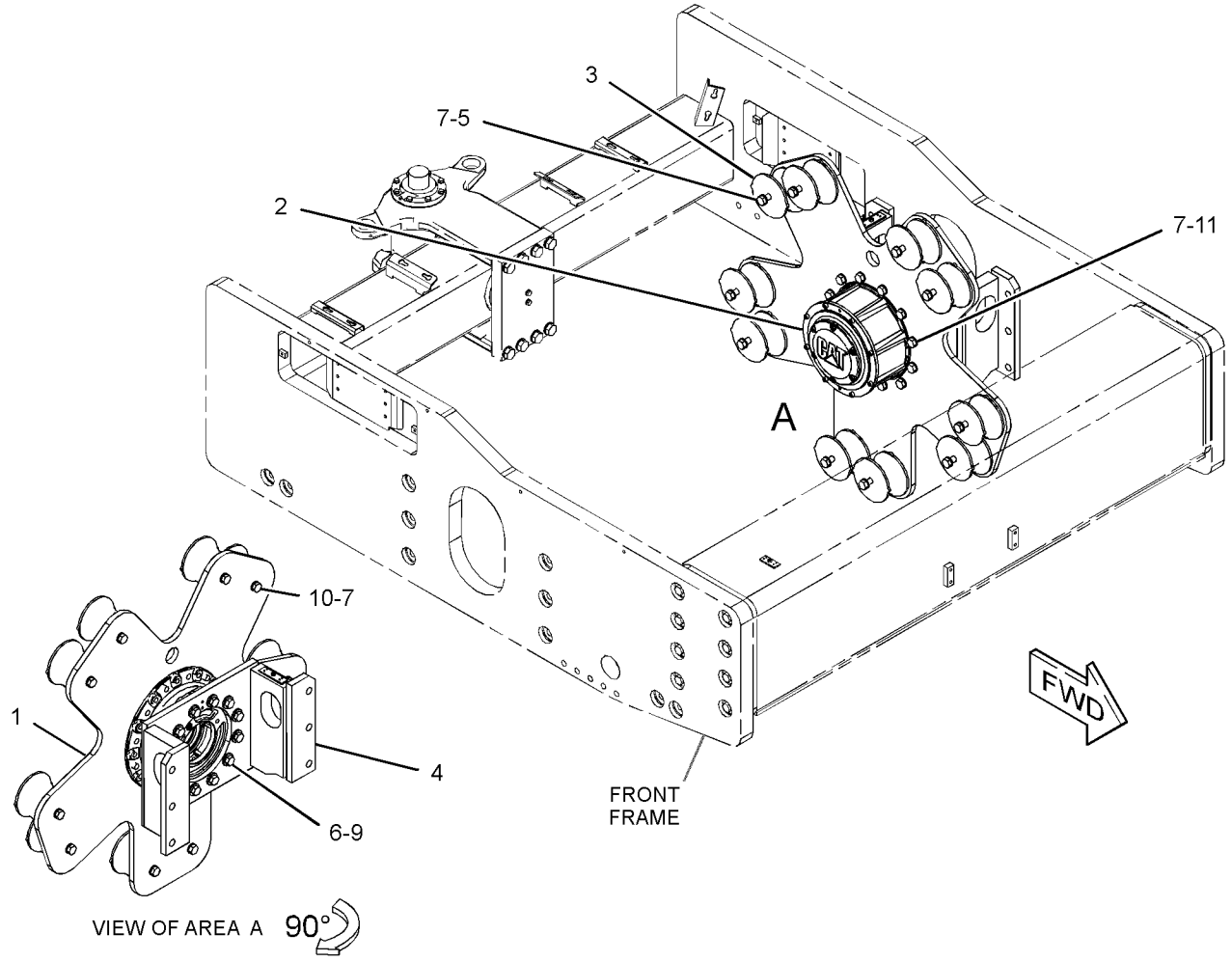

GRAPHIC #1 **<END>** g03359504

358-9474 DRIVE GP-FINAL

S/N: MBF1-UP; M4M1-UP; M5P1-UP; SDT1-UP

PART OF 356-1417, 356-1812, 356-1872, 361-4789 DRIVE GP-DRUM

SMCS-4050, 4051 **i05269612**

NOTE	REF NO	GRAPHIC REF	PART NUMBER	QTY	PART NAME 1 2 3 4 5 6 (PRODUCT LEVEL)	SEE PAGE
	1	1	**7U-3538**	1	RING-RETAINING	
	2	1	**371-1922**	1	DISC-RETAINING	
	3	1	**205-0192**	1	SEAL-BRAKE	
	4	1	**207-2817**	16	SPRING	
	5	1	**371-1921**	1	PISTON-BRAKE	
	6	1	**205-0191**	1	SEAL-BRAKE	
	7	1	**136-8068**	7	DISC-MIDDLE	
	8	1	**136-8064**	6	DISC-FRICTION	
	9	1	**388-5001**	1	HUB	
	10	1	**151-7518**	2	PLUG	
	11	1	**7T-2459**	1	SEAL GP-DUO-CONE	
		1	**7T-2457**	2	RING-TORIC	
	12	1	**421-5646**	1	RING-GUIDE	
	13	1	**371-1920**	1	COUPLING	
	14	1	**136-8641**	1	SEAL-O-RING	
	15	1	**151-7517**	1	SEAL-O-RING	
	16	1	**191-2287**	1	PAD	
	17	1	**371-2170**	1	SHAFT-INPUT	
	18	1	**371-1928**	1	COVER	
M	19	1	**237-5121**	6	BOLT-SOCKET HEAD (M8X1.25X16-MM)	
	20	1	**371-2171**	1	GEAR-RING	
	21	1	**243-0716**	1	GEAR-RING	
M	22	1	**9X-6032**	8	BOLT-SOCKET HEAD (M10X1.5X30-MM)	
	23	1	**2D-6533**	1	SEAL-O-RING	
M	24	1	**095-0707**	6	BOLT (M16X2X120-MM)	
	25	1	**151-7490**	6	BUSHING	
	26	1	**387-4403**	1	DISC-RETAINING	
	27	1	**151-3085**	2	CUP	
	28	1	**151-3084**	2	CONE	
	29	1	**151-7516**	1	PLUG-DRAIN (FINAL DRIVE)	
					AVAILABLE REPAIR KIT(S):	
J			**371-2173**	1	KIT-GEAR (THIRD STAGE)	
					(INCLUDES PARTS MARKED " J " IN THE GRAPHIC)	
H			**371-2174**	1	KIT-GEAR (SECOND STAGE)	
					(INCLUDES PARTS MARKED " H " IN THE GRAPHIC)	
L			**371-2172**	1	KIT-GEAR (FIRST STAGE)	
					(INCLUDES PARTS MARKED " L " IN THE GRAPHIC)	

H - KIT MARKED H SERVICES PARTS MARKED H
J - KIT MARKED J SERVICES PARTS MARKED J
L - KIT MARKED L SERVICES PARTS MARKED L
M - METRIC PART

358-9474 **DRIVE GP-FINAL (*contd.*)** **i05269612**

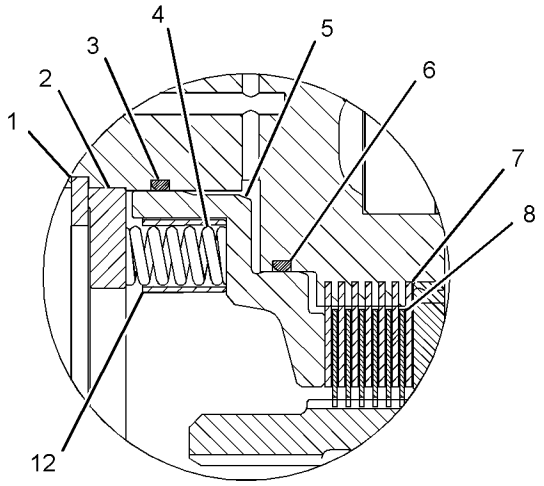

VIEW OF AREA B

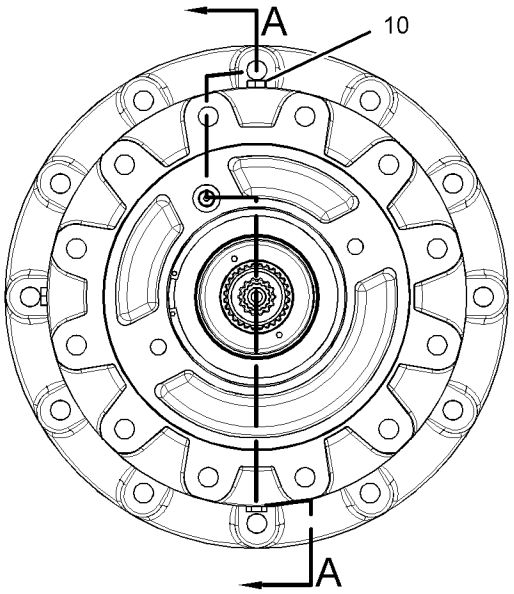

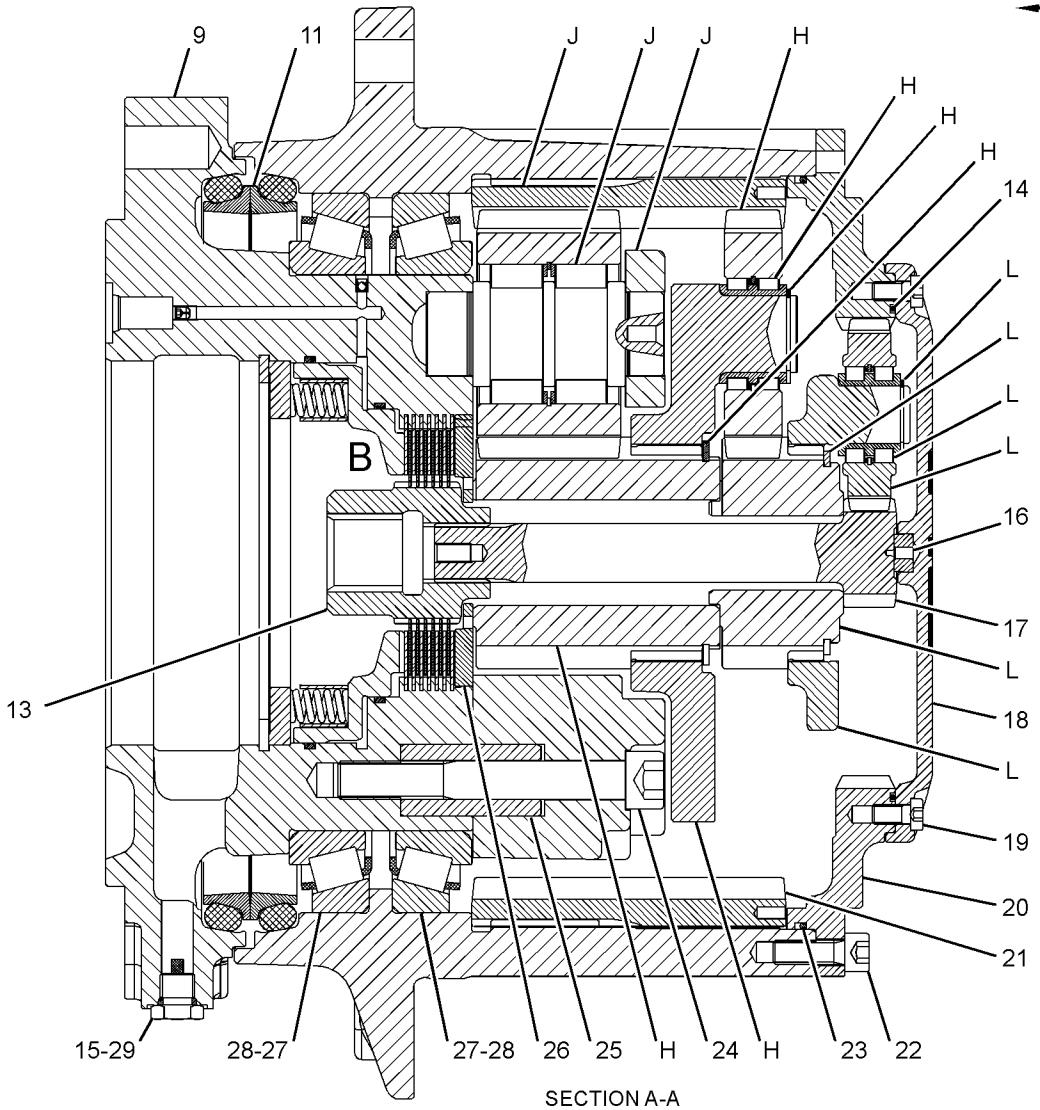

SECTION A-A

GRAPHIC #1 **<END>** g03385624

347-9690 DRUM AR-PADDED

S/N: SDT1-UP

AN ATTACHMENT

SMCS-6605 **i05297424**

NOTE	PART NUMBER	QTY	PART NAME 1 2 3 4 5 6 (PRODUCT LEVEL)	SEE PAGE
Y	*361-8022*	1	DRUM GP-COMPACTOR	221
Y	*396-3826*	1	SCRAPER GP-DRUM	298

Y - SEPARATE ILLUSTRATION

<END>

359-1406 DRUM AR-PADDED

S/N: M5P1-UP

AN ATTACHMENT

SMCS-6605 **i05291868**

NOTE	PART NUMBER	QTY	PART NAME 1 2 3 4 5 6 (PRODUCT LEVEL)	SEE PAGE
Y	*361-8020*	1	DRUM GP-COMPACTOR	219
Y	*396-3825*	1	SCRAPER GP-DRUM	297

Y - SEPARATE ILLUSTRATION

<END>

360-0497 DRUM AR-PADDED

S/N: M5P1-UP

AN ATTACHMENT

SMCS-6605 **i05291887**

NOTE	PART NUMBER	QTY	PART NAME 1 2 3 4 5 6 (PRODUCT LEVEL)	SEE PAGE
Y	*361-8021*	1	DRUM GP-COMPACTOR	220
Y	*396-3825*	1	SCRAPER GP-DRUM	297

Y - SEPARATE ILLUSTRATION

<END>

360-0508 DRUM AR-PADDED

S/N: SDT1-UP

AN ATTACHMENT

SMCS-6605 **i05298350**

NOTE	PART NUMBER	QTY	PART NAME 1 2 3 4 5 6 (PRODUCT LEVEL)	SEE PAGE
Y	*361-8023*	1	DRUM GP-COMPACTOR (PADDED)	222
Y	*396-3826*	1	SCRAPER GP-DRUM	298

Y - SEPARATE ILLUSTRATION

<END>

377-2939 DRUM AR-PADDED—WITH SHELL KIT

S/N: M4M1-UP
AN ATTACHMENT

SMCS-6605 **i05293751**

NOTE	PART NUMBER	QTY	PART NAME 1 2 3 4 5 6 (PRODUCT LEVEL)	SEE PAGE
Y	*377-2945*	1	DRUM GP-COMPACTOR	223
Y	*392-9649*	1	SCRAPER GP-DRUM	293

Y - SEPARATE ILLUSTRATION

<END>

377-2940 DRUM AR-PADDED

S/N: MBF1-UP
AN ATTACHMENT

SMCS-6605 **i05297366**

NOTE	PART NUMBER	QTY	PART NAME 1 2 3 4 5 6 (PRODUCT LEVEL)	SEE PAGE
Y	*377-2946*	1	DRUM GP-COMPACTOR	224
Y	*392-9650*	1	SCRAPER GP-DRUM	295

Y - SEPARATE ILLUSTRATION

<END>

359-1407 DRUM AR-SMOOTH—WITH SHELL KIT

S/N: M4M1-UP
AN ATTACHMENT

SMCS-6605 **i05294847**

NOTE	PART NUMBER	QTY	PART NAME 1 2 3 4 5 6 (PRODUCT LEVEL)	SEE PAGE
Y	*360-0522*	1	DRUM GP-COMPACTOR (PADDED SHELL)	215
Y	*392-9649*	1	SCRAPER GP-DRUM (PADDED)	293

Y - SEPARATE ILLUSTRATION

<END>

360-0498 DRUM AR-SMOOTH

S/N: M4M1-UP
PART OF 415-9361, 415-9367 DISTRIBUTION AR
AN ATTACHMENT

SMCS-6605 **i05294859**

NOTE	PART NUMBER	QTY	PART NAME 1 2 3 4 5 6 (PRODUCT LEVEL)	SEE PAGE
Y	*361-8016*	1	DRUM GP-COMPACTOR (SMOOTH)	217
Y	*384-5878*	1	SCRAPER GP-SMOOTH DRUM	299

Y - SEPARATE ILLUSTRATION

<END>

360-0499 DRUM AR-SMOOTH—STEEL SCRAPER, FRONT, REAR

S/N: M4M1-UP

AN ATTACHMENT

SMCS-6605 **i05295423**

NOTE	PART NUMBER	QTY	PART NAME 1 2 3 4 5 6 (PRODUCT LEVEL)	SEE PAGE
Y	*361-8016*	1	DRUM GP-COMPACTOR (SMOOTH)	217
Y	*390-0607*	1	SCRAPER GP-SMOOTH DRUM	301

Y - SEPARATE ILLUSTRATION

<END>

360-0500 DRUM AR-SMOOTH—FLEXIBLE SCRAPER, FRONT, REAR

S/N: M4M1-UP

AN ATTACHMENT

SMCS-6605 **i05295424**

NOTE	PART NUMBER	QTY	PART NAME 1 2 3 4 5 6 (PRODUCT LEVEL)	SEE PAGE
Y	*361-8016*	1	DRUM GP-COMPACTOR (SMOOTH)	217
Y	*390-0608*	1	SCRAPER GP-SMOOTH DRUM	302

Y - SEPARATE ILLUSTRATION

<END>

360-0501 DRUM AR-SMOOTH—STANDARD

S/N: MBF1-UP

AN ATTACHMENT

SMCS-6605 **i05296498**

NOTE	PART NUMBER	QTY	PART NAME 1 2 3 4 5 6 (PRODUCT LEVEL)	SEE PAGE
Y	*361-8017*	1	DRUM GP-COMPACTOR (SMOOTH)	218
Y	*384-5914*	1	SCRAPER GP-SMOOTH DRUM	300

Y - SEPARATE ILLUSTRATION

<END>

360-0502 DRUM AR-SMOOTH—STEEL, FRONT, REAR

S/N: MBF1-UP

AN ATTACHMENT

SMCS-6605 **i05296511**

NOTE	PART NUMBER	QTY	PART NAME 1 2 3 4 5 6 (PRODUCT LEVEL)	SEE PAGE
Y	*361-8017*	1	DRUM GP-COMPACTOR (SMOOTH)	218
Y	*390-0611*	1	SCRAPER GP-DRUM	290

Y - SEPARATE ILLUSTRATION

<END>

360-0503 DRUM AR-SMOOTH—FRONT, REAR FLEXIBLE

S/N: MBF1-UP

AN ATTACHMENT

SMCS-6605 **i05296538**

NOTE	PART NUMBER	QTY	PART NAME 1 2 3 4 5 6 (PRODUCT LEVEL)	SEE PAGE
Y	*361-8017*	1	DRUM GP-COMPACTOR (SMOOTH)	218
Y	*390-0612*	1	SCRAPER GP-DRUM	291

Y - SEPARATE ILLUSTRATION

<END>

360-0522 DRUM GP-COMPACTOR–PADDED SHELL

S/N: M4M1-UP
PART OF 359-1407 DRUM AR-SMOOTH
AN ATTACHMENT

SMCS-6605 **i05294848**

NOTE	REF NO	GRAPHIC REF	PART NUMBER	QTY	PART NAME 1 2 3 4 5 6 (PRODUCT LEVEL)	SEE PAGE
Y	1	1	*360-9870*	1	SHELL GP-PADDED	248
	2	1	**361-3470**	1	DRUM AS-SMOOTH	

Y - SEPARATE ILLUSTRATION

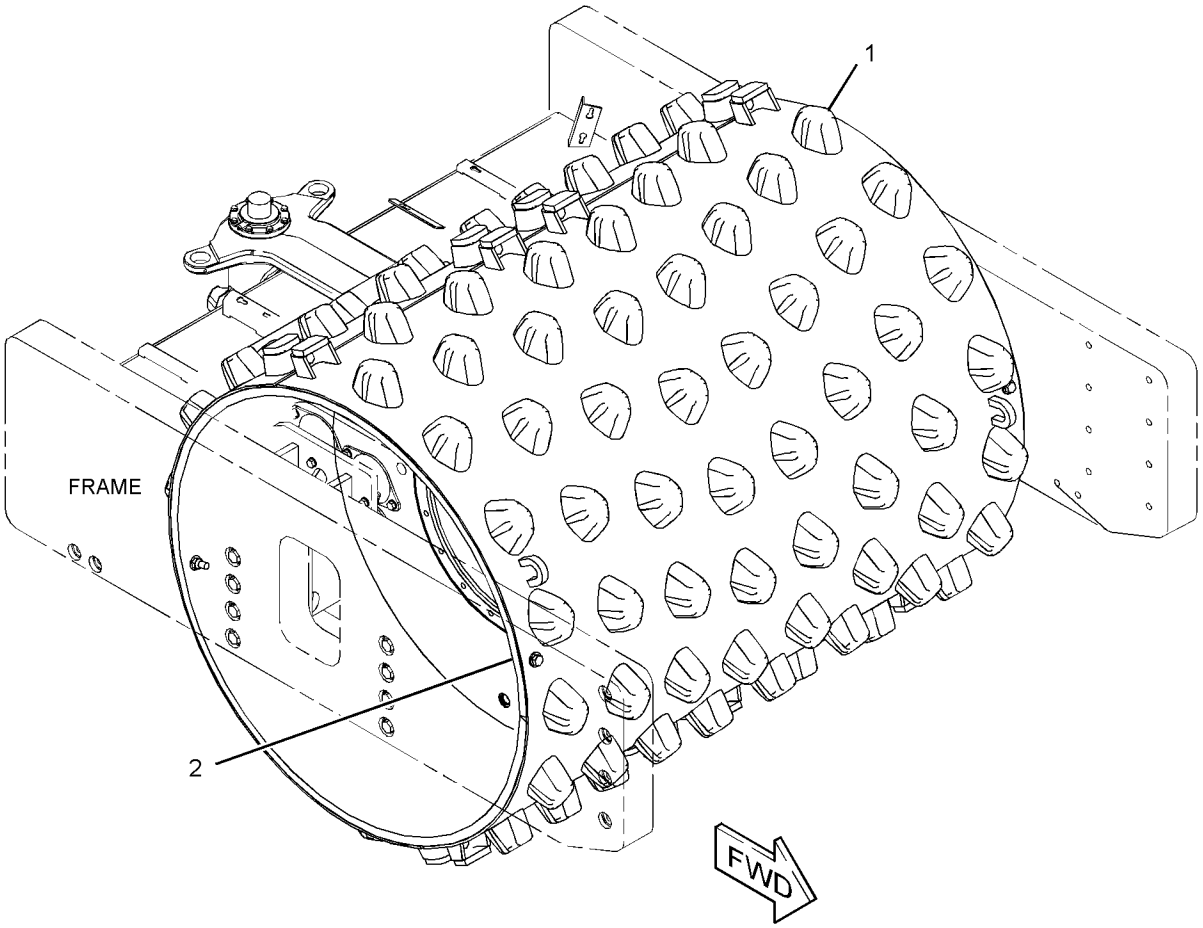

GRAPHIC #1 **<END>** g02717643

360-0528 DRUM GP-COMPACTOR

S/N: MBF1-UP

PART OF 360-0504 DRUM GP-PADDED

AN ATTACHMENT

SMCS-6605 **i05297363**

NOTE	REF NO	GRAPHIC REF	PART NUMBER	QTY	PART NAME 1 2 3 4 5 6 (PRODUCT LEVEL)	SEE PAGE
Y	1	1	*360-9870*	1	SHELL GP-PADDED	248
	2	1	**361-3473**	1	DRUM AS-SMOOTH	

Y - SEPARATE ILLUSTRATION

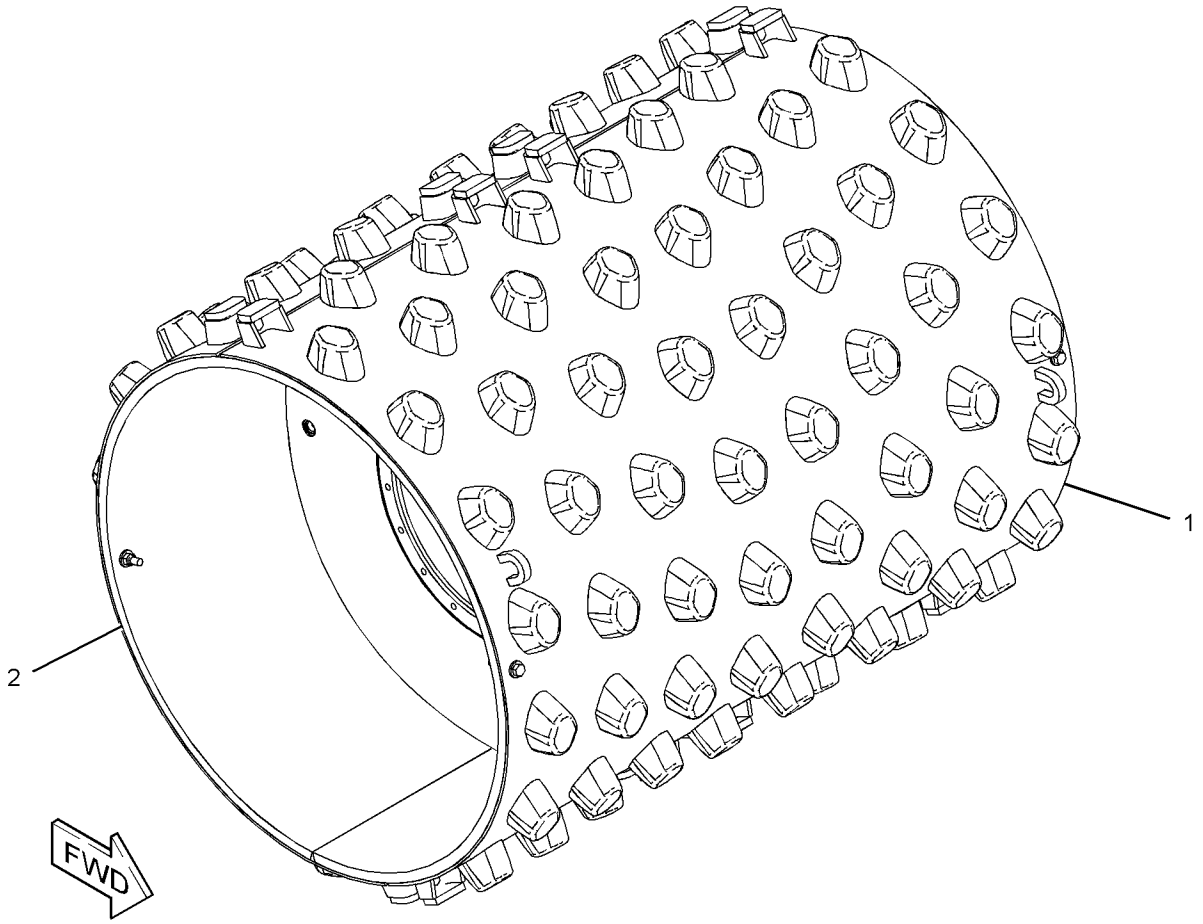

GRAPHIC #1 **<END>** g02731168

361-8016 DRUM GP-COMPACTOR–SMOOTH

S/N: M4M1-UP

PART OF 360-0498, 360-0499, 360-0500 DRUM AR-SMOOTH

AN ATTACHMENT

SMCS-6605 **i05294860**

NOTE	REF NO	GRAPHIC REF	PART NUMBER	QTY	PART NAME 1 2 3 4 5 6 (PRODUCT LEVEL)	SEE PAGE
	1	1	**361-3470**	1	DRUM AS-SMOOTH	

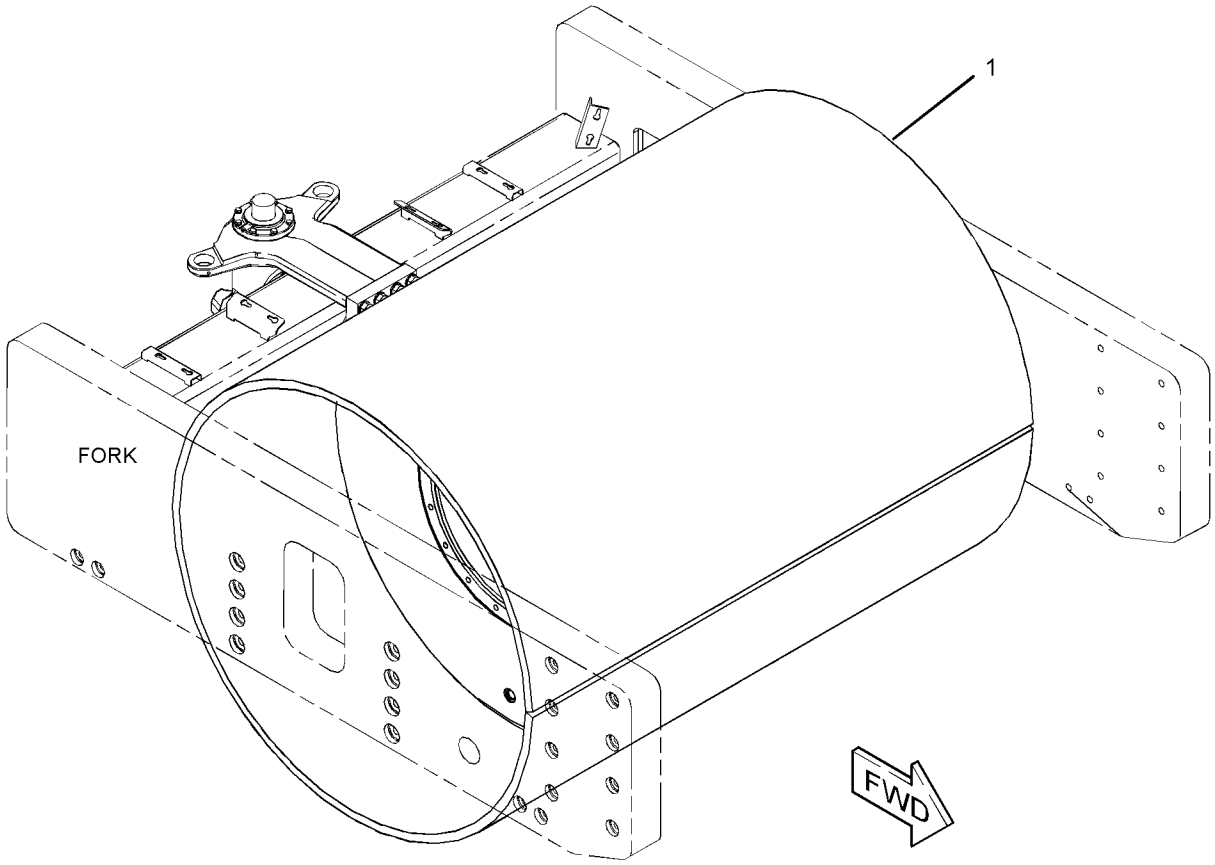

GRAPHIC #1 **<END>** g02717966

361-8017 DRUM GP-COMPACTOR–SMOOTH

S/N: MBF1-UP

PART OF 360-0501, 360-0502, 360-0503 DRUM AR-SMOOTH

AN ATTACHMENT

SMCS-6605 **i05296499**

NOTE	REF NO	GRAPHIC REF	PART NUMBER	QTY	PART NAME 1 2 3 4 5 6 (PRODUCT LEVEL)	SEE PAGE
	1	1	**361-3473**	1	DRUM AS-SMOOTH	

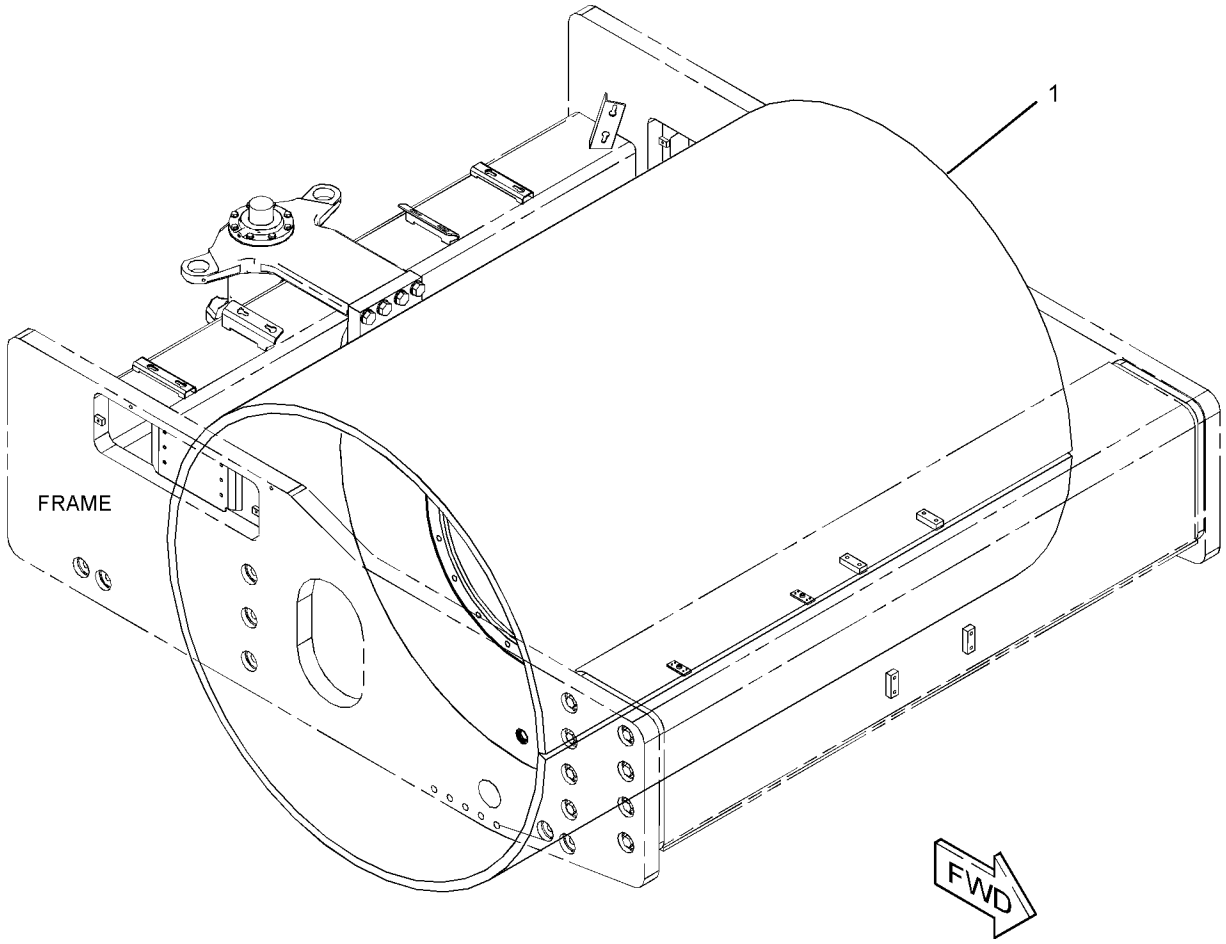

GRAPHIC #1 **<END>** g02721402

361-8020 DRUM GP-COMPACTOR

S/N: M5P1-UP

PART OF 359-1406 DRUM AR-PADDED

AN ATTACHMENT

SMCS-6605 **i05291873**

NOTE	REF NO	GRAPHIC REF	PART NUMBER	QTY	PART NAME 1 2 3 4 5 6 (PRODUCT LEVEL)	SEE PAGE
	1	1	**361-3471**	1	DRUM AS-PADDED	

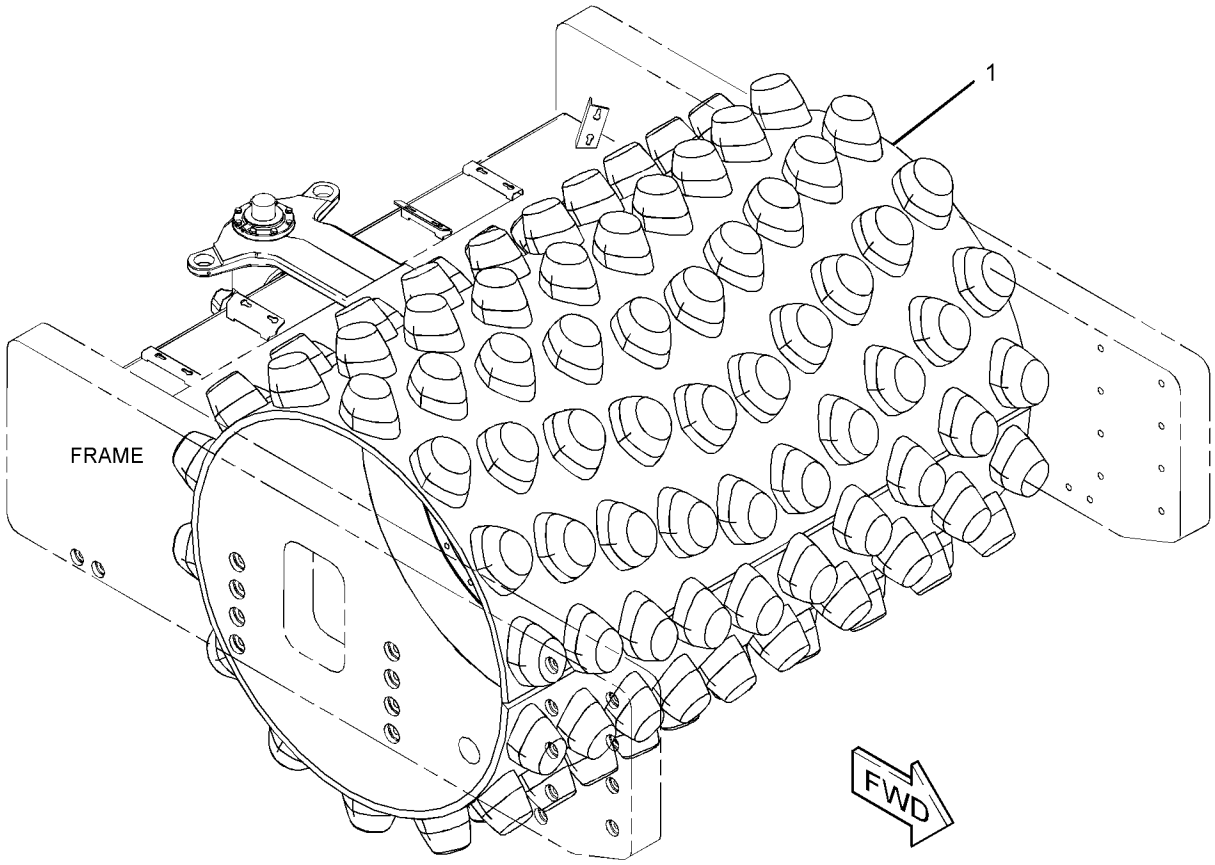

GRAPHIC #1 **<END>** g02718007

361-8021 DRUM GP-COMPACTOR

S/N: M5P1-UP

PART OF 360-0497 DRUM AR-PADDED

AN ATTACHMENT

SMCS-6605 **i05291888**

NOTE	REF NO	GRAPHIC REF	PART NUMBER	QTY	PART NAME 1 2 3 4 5 6 (PRODUCT LEVEL)	SEE PAGE
	1	1	**361-3472**	1	DRUM AS-PADDED	

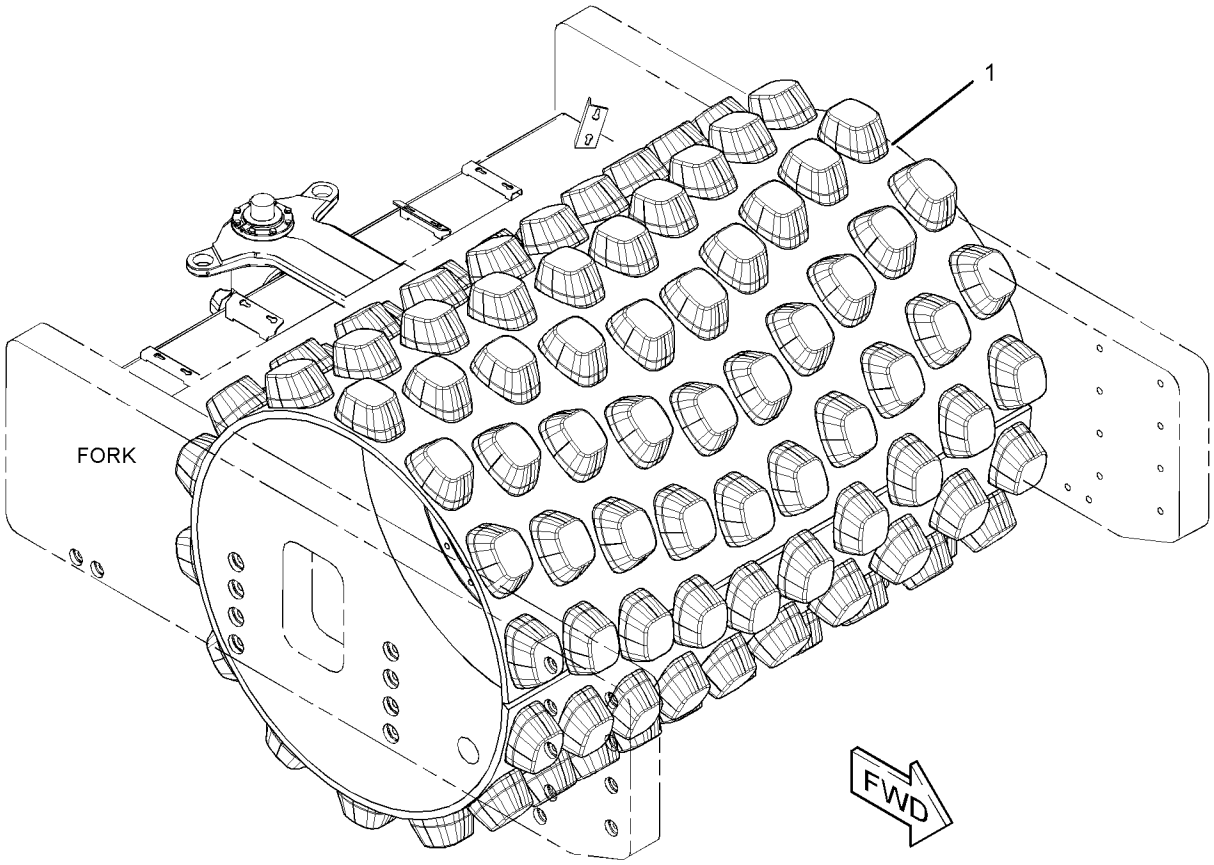

GRAPHIC #1 **<END>** g02718025

361-8022 DRUM GP-COMPACTOR–PADDED

S/N: SDT1-UP

PART OF 347-9690 DRUM AR-PADDED

AN ATTACHMENT

SMCS-6605 **i05297426**

NOTE	REF NO	GRAPHIC REF	PART NUMBER	QTY	PART NAME 1 2 3 4 5 6 (PRODUCT LEVEL)	SEE PAGE
	1	1	**357-6252**	1	DRUM AS-PADDED	

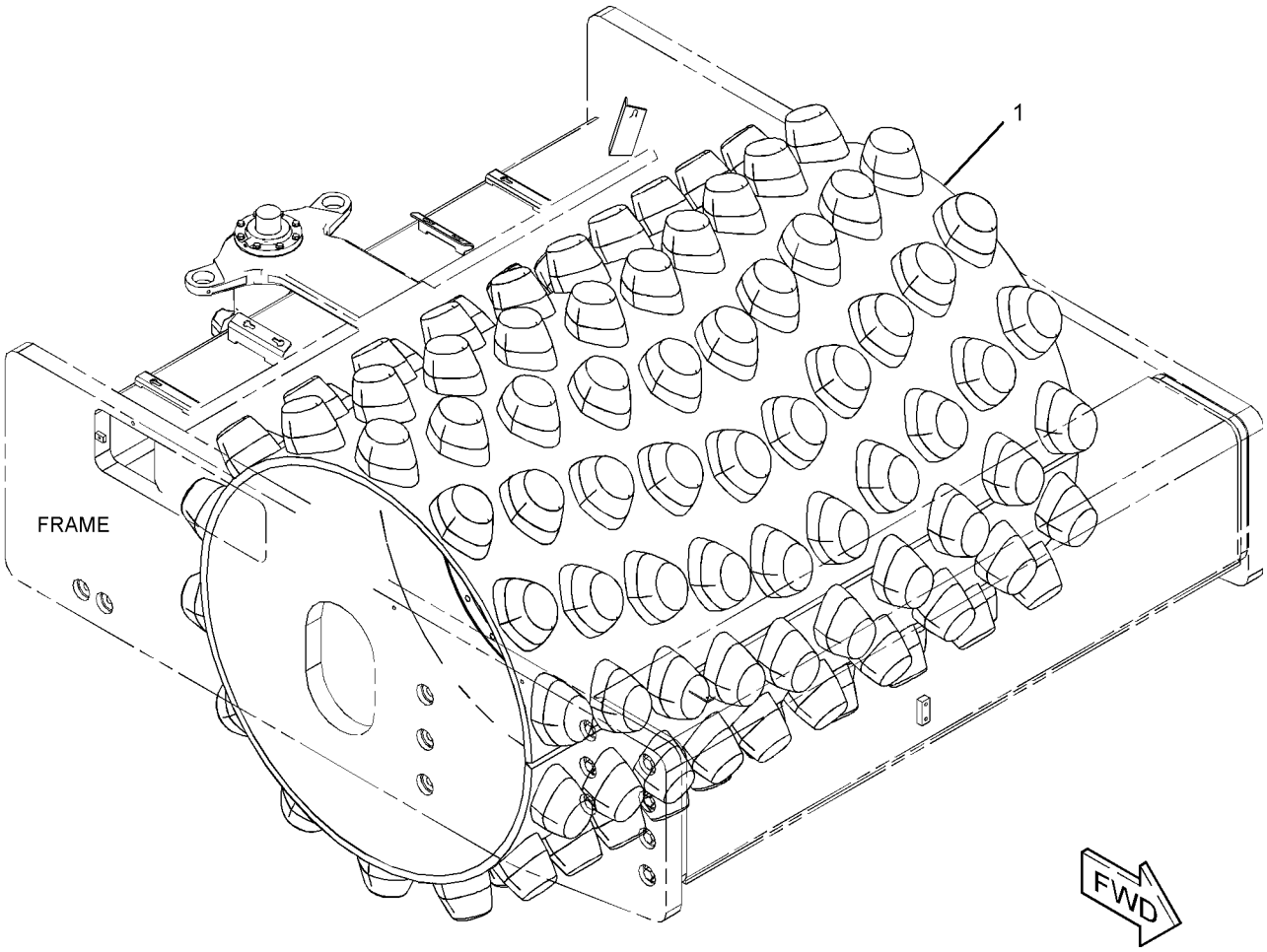

GRAPHIC #1 **<END>** g02721414

361-8023 DRUM GP-COMPACTOR–PADDED

S/N: SDT1-UP

PART OF 360-0508 DRUM AR-PADDED

AN ATTACHMENT

SMCS-6605 **i05298351**

NOTE	REF NO	GRAPHIC REF	PART NUMBER	QTY	PART NAME 1 2 3 4 5 6 (PRODUCT LEVEL)	SEE PAGE
	1	1	**362-1502**	1	DRUM AS-PADDED	

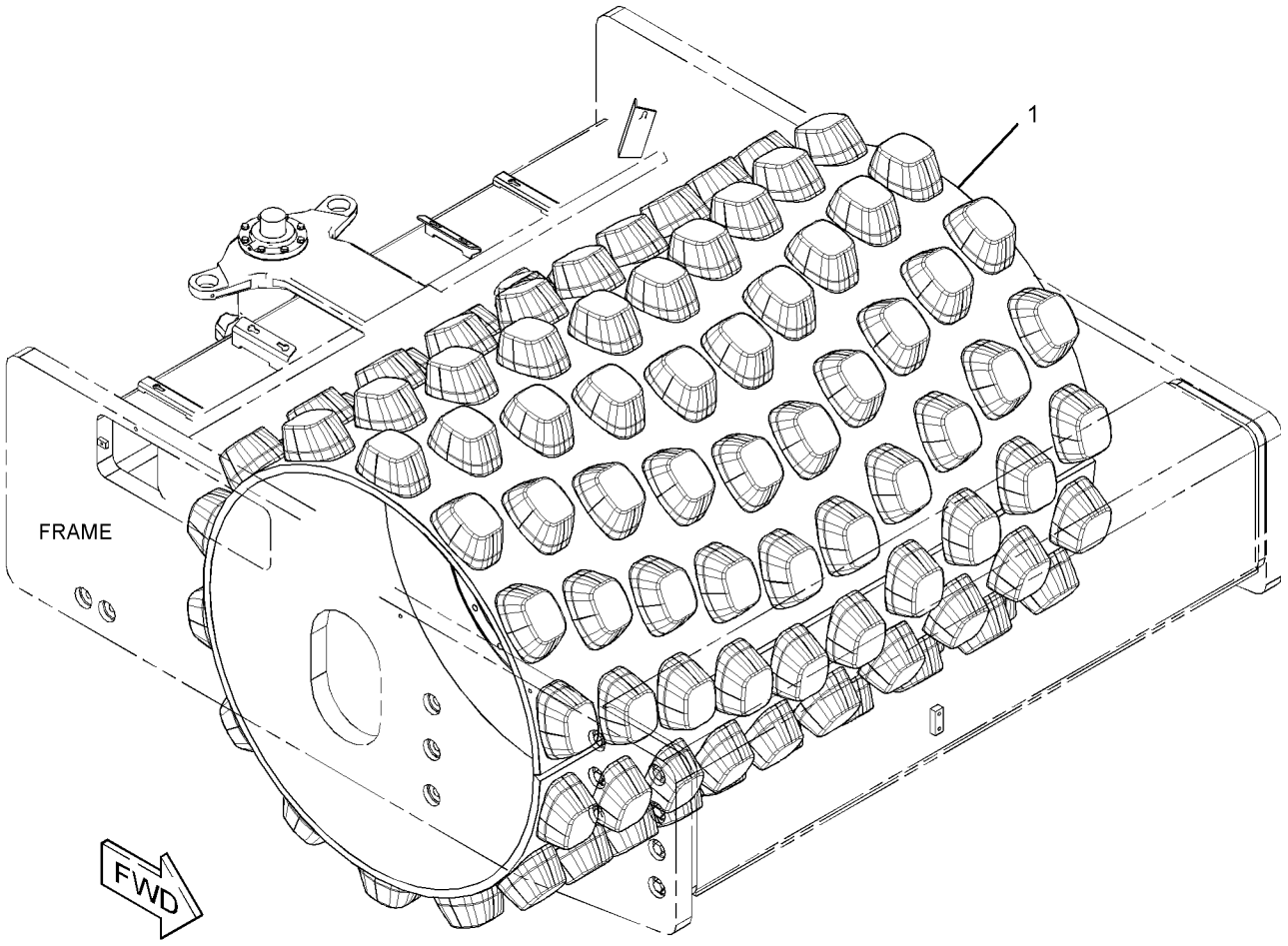

GRAPHIC #1 **<END>** g02721625

377-2945 DRUM GP-COMPACTOR

S/N: M4M1-UP

PART OF 377-2939 DRUM AR-PADDED

AN ATTACHMENT

SMCS-6605 **i05293754**

NOTE	REF NO	GRAPHIC REF	PART NUMBER	QTY	PART NAME 1 2 3 4 5 6 (PRODUCT LEVEL)	SEE PAGE
	1	1	**361-3470**	1	DRUM AS-SMOOTH	
Y	2	1	*372-6359*	1	SHELL GP-PADDED	249

Y - SEPARATE ILLUSTRATION

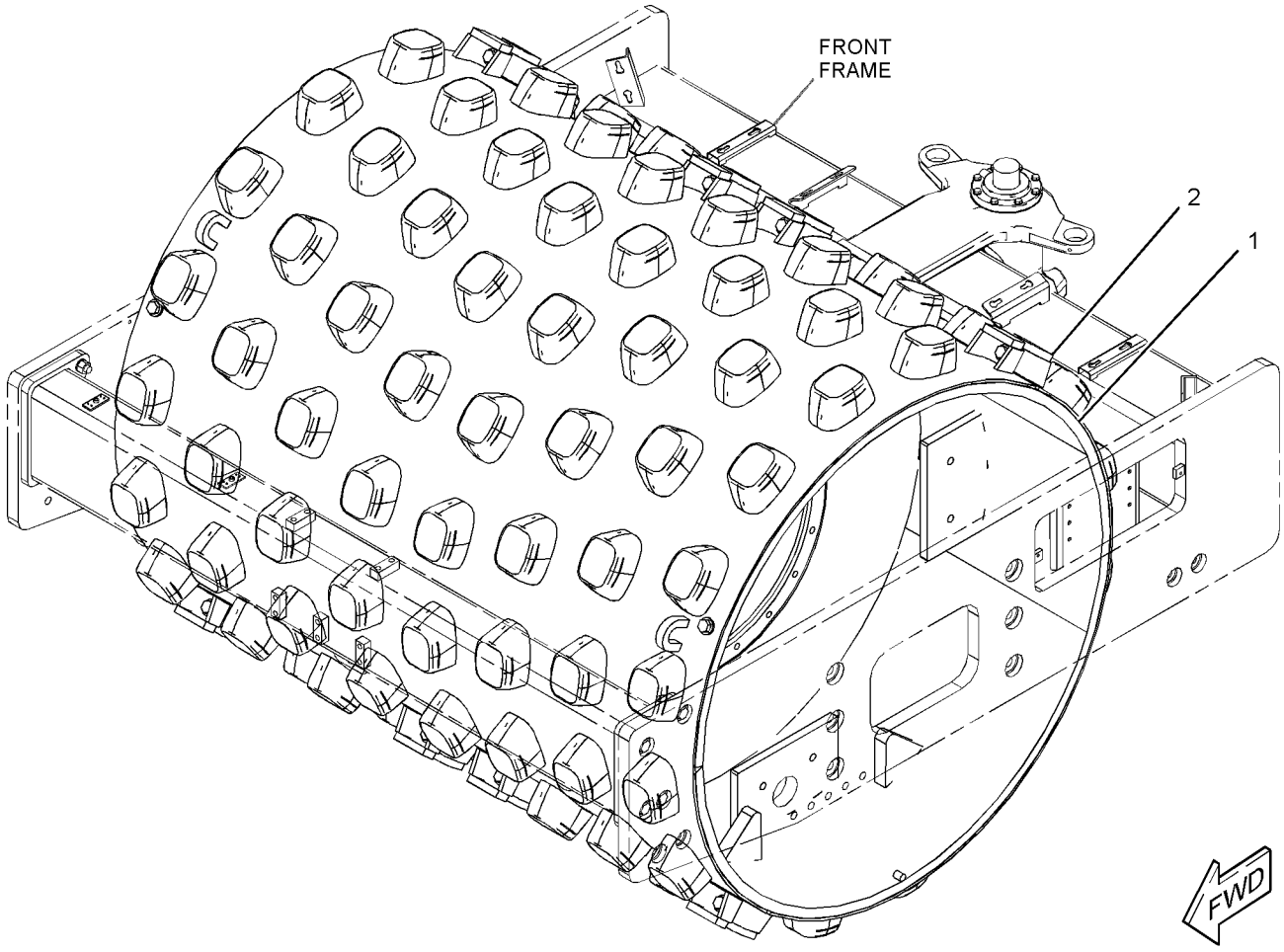

GRAPHIC #1 **<END>** g03098680

377-2946 DRUM GP-COMPACTOR–PADDED

S/N: MBF1-UP

PART OF 377-2940 DRUM AR-PADDED

AN ATTACHMENT

SMCS-6605 **i05297373**

NOTE	REF NO	GRAPHIC REF	PART NUMBER	QTY	PART NAME 1 2 3 4 5 6 (PRODUCT LEVEL)	SEE PAGE
	1	1	**361-3473**	1	DRUM AS-SMOOTH	
Y	2	1	*372-6359*	1	SHELL GP-PADDED	249

Y - SEPARATE ILLUSTRATION

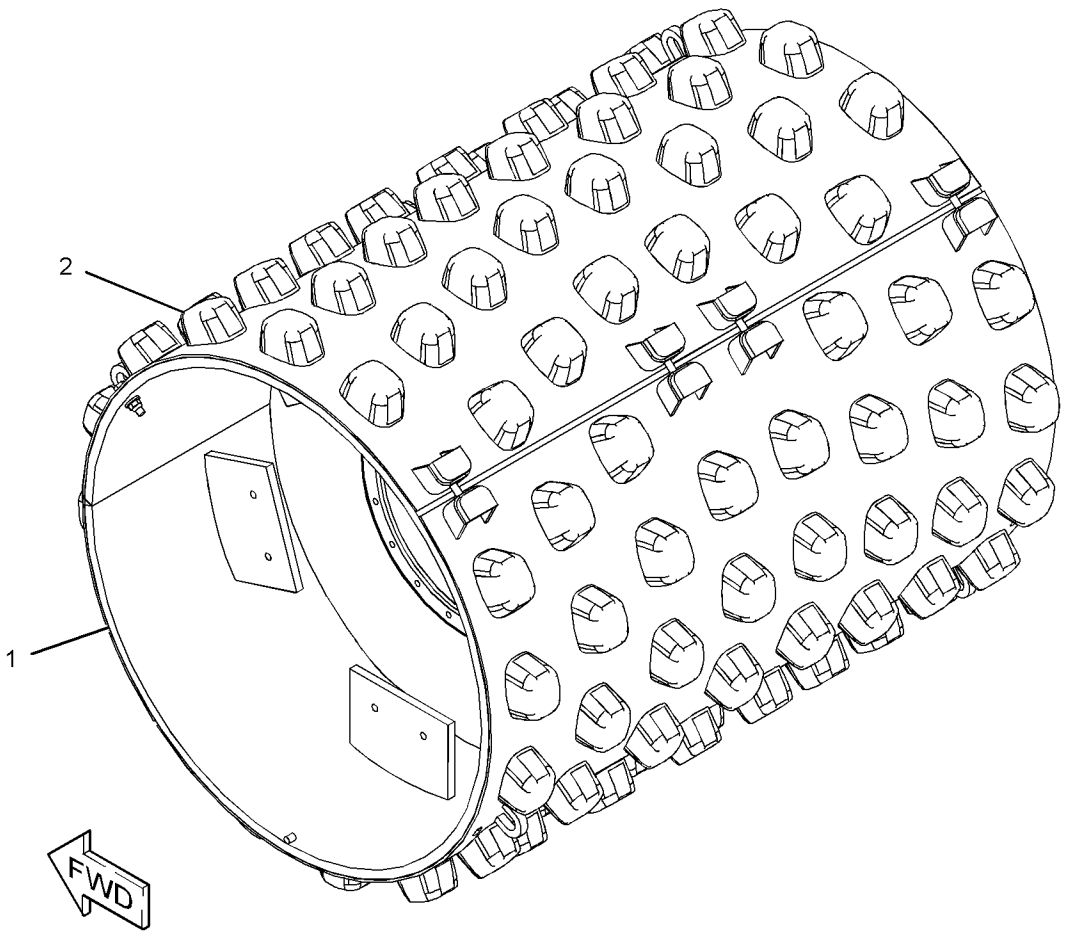

GRAPHIC #1 **<END>** g03110403

360-0504 DRUM GP-PADDED

S/N: MBF1-UP

AN ATTACHMENT

SMCS-6605 **i05297362**

NOTE	PART NUMBER	QTY	PART NAME 1 2 3 4 5 6 (PRODUCT LEVEL)	SEE PAGE
Y	*360-0528*	1	DRUM GP-COMPACTOR (PADDED)	216
Y	*392-9650*	1	SCRAPER GP-DRUM	295

Y - SEPARATE ILLUSTRATION

<END>

226-4353 FLANGE GP-WHEEL

S/N: MBF1-UP; M4M1-UP; M5P1-UP
PART OF 286-0873, 315-1260 AXLE GP-DRIVE
ALSO AN ATTACHMENT

SMCS-4057 **i05292869**

NOTE	REF NO	GRAPHIC REF	PART NUMBER	QTY	PART NAME 1 2 3 4 5 6 (PRODUCT LEVEL)	SEE PAGE
	1	1	**199-0718**	2	BEARING	
	2	1	**229-5092**	1	SEAL	
	3	1	**231-0719**	1	KIT-WHEEL FLANGE	
	3A	1	**226-4346**	10	STUD	

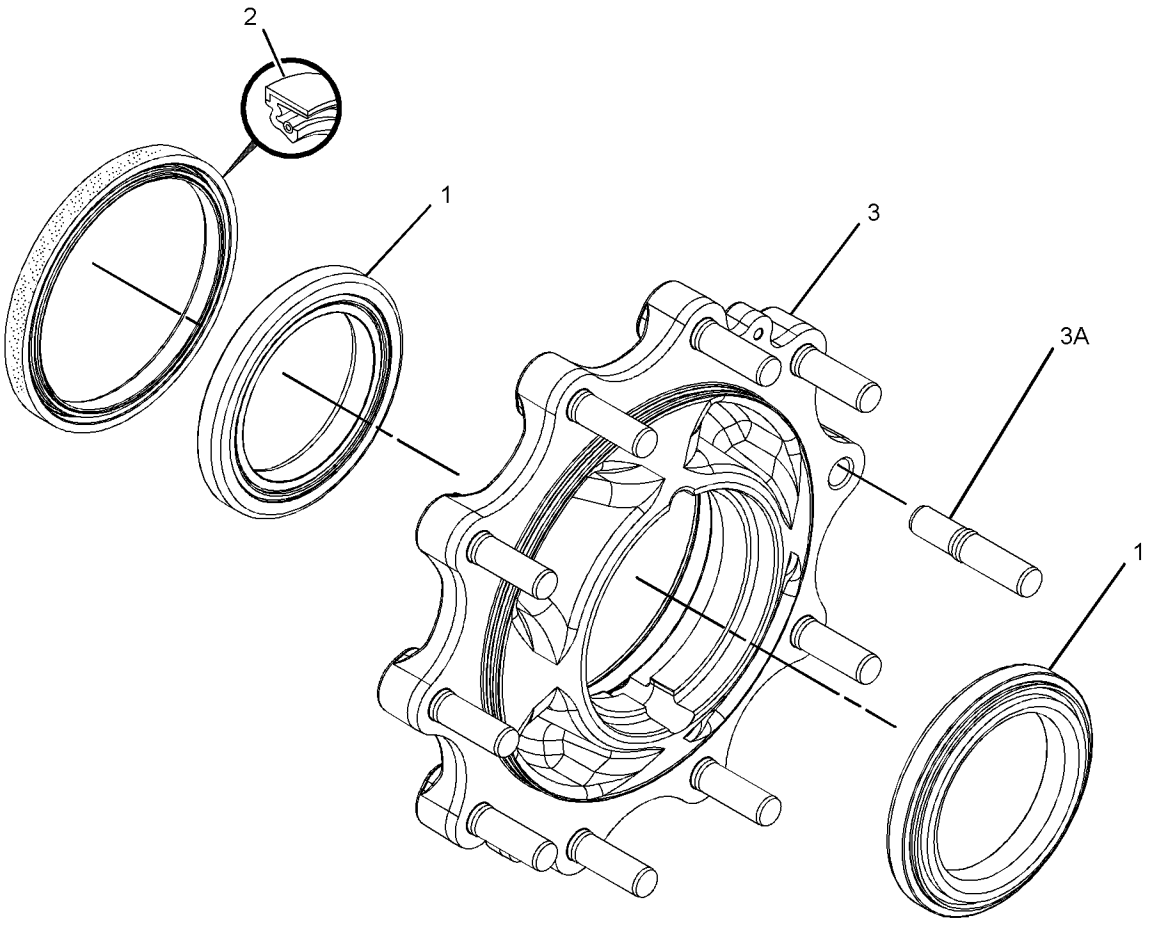

GRAPHIC #1 **<END>** g01810335

226-4390 HOUSING GP-AXLE—WITH BRAKES

S/N: MBF1-UP; M4M1-UP; M5P1-UP
PART OF 286-0873 AXLE GP-DRIVE
ALSO AN ATTACHMENT

SMCS-3260 **i05254226**

NOTE	REF NO	GRAPHIC REF	PART NUMBER	QTY	PART NAME 1 2 3 4 5 6 (PRODUCT LEVEL)	SEE PAGE
	1	1	**095-1041**	1	BEARING AS	
	2	1	**198-7811**	2	DOWEL	
	3	1	**199-0656**	2	CUP & CONE AS	
	4	1	**199-0675**	2	NUT (M104X2-THD)	
J	5	1	**199-0678**	2	WASHER (45.5X55X2-MM THK)	
J	6	1	**199-0680**	1	SPACER (47X50X19.2-MM THK)	
J	7	1	**209-7457**	1	NUT (M45X1.5-THD)	
	8	1	**226-4373**	1	SPACER (45X73X18-MM THK)	
	9	1	**226-4374**	1	HOUSING-CENTER	
	10	1	**226-4385**	4	BRAKE DISC	
	11	1	**226-4386**	2	PISTON-BRAKE	
	12	1	**226-4387**	2	NUT (TAPERED ROLLER)	
Y	13	1	*226-4392*	2	CYLINDER GP-BRAKE	306
Y	14	1	**226-4394**	1	DIFFERENTIAL GP	202
J	16	1	**229-5055**	1	WASHER	
	17	1	**093-8828**	1	BEARING AS	
M	18	1	**095-0674**	8	BOLT-SOCKET HEAD (M12X1.75X65-MM)	
M	19	1	**199-0695**	2	BOLT (M6X1X14-MM)	
	20	1	**2D-0598**	1	SEAL-O-RING	
	21	1	**5H-6734**	1	SEAL-O-RING	
B	22	1	**1U-8846**		SEALANT-GASKET	
B	23	1	**199-0684**	1	SHIM (2.5-MM THK)	
B		1	**199-0685**	1	SHIM (2.6-MM THK)	
B		1	**199-0686**	1	SHIM (2.7-MM THK)	
B		1	**199-0687**	1	SHIM (2.8-MM THK)	
B		1	**199-0688**	1	SHIM (2.9-MM THK)	
B		1	**199-0689**	1	SHIM (3-MM THK)	
B		1	**199-0690**	1	SHIM (3.1-MM THK)	
B		1	**199-0691**	1	SHIM (3.2-MM THK)	
B		1	**199-0692**	1	SHIM (3.3-MM THK)	
B		1	**199-0693**	1	SHIM (3.4-MM THK)	
					AVAILABLE REPAIR KIT(S):	
J			**229-5099**	1	KIT-GEAR (AXLE HOUSING)	
					(ALSO INCLUDES BEVEL GEAR & PINION)	

B - USE AS REQUIRED
J - KIT MARKED J SERVICES PARTS MARKED J
M - METRIC PART
Y - SEPARATE ILLUSTRATION

226-4390 **HOUSING GP-AXLE (*contd.*)** **i05254226**

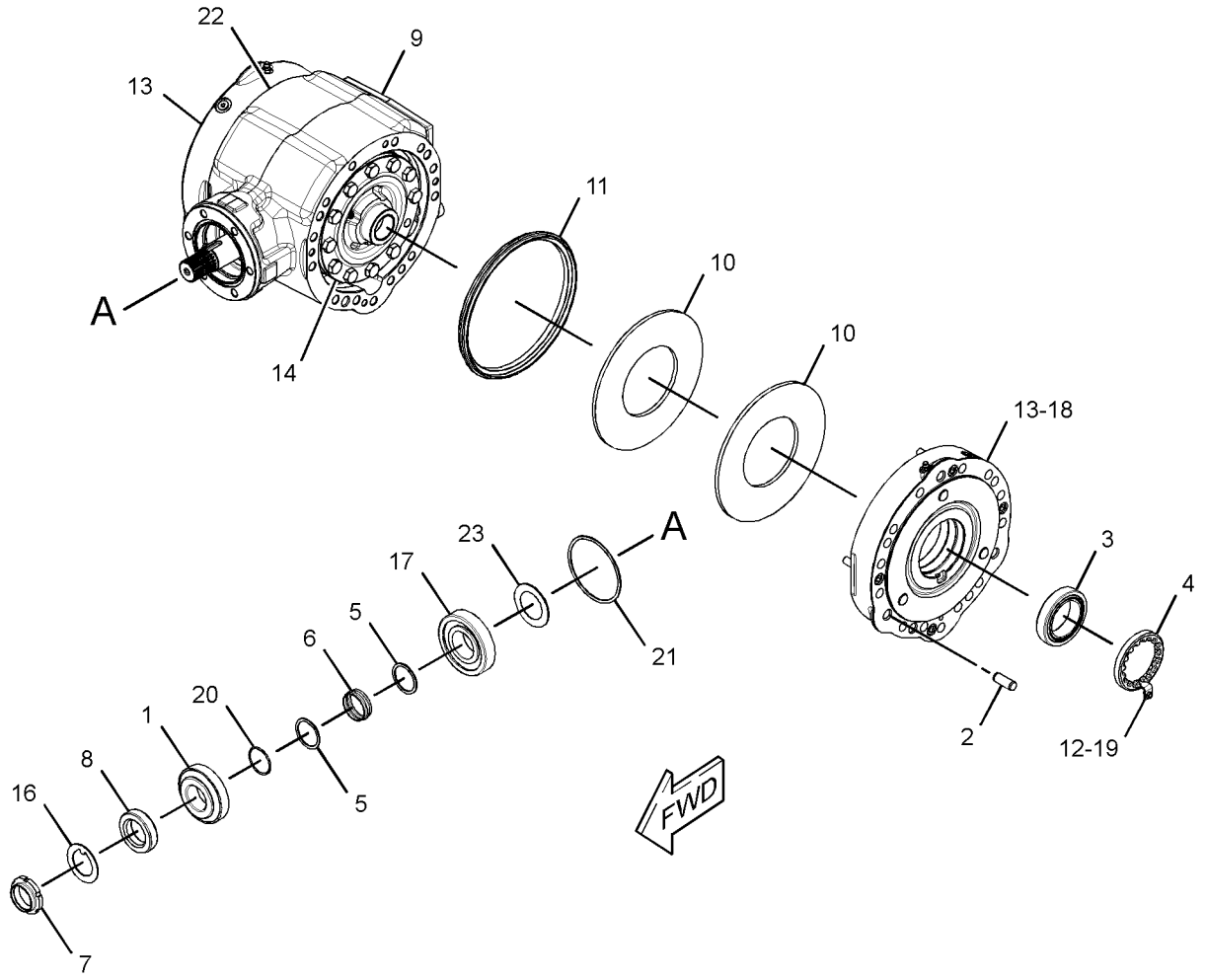

GRAPHIC #1 **<END>** g02187615

226-4400 HOUSING GP-AXLE

S/N: M4M1-UP; M5P1-UP
PART OF 315-1260 AXLE GP-DRIVE
AN ATTACHMENT

SMCS-3260 **i04534393**

NOTE	REF NO	GRAPHIC REF	PART NUMBER	QTY	PART NAME 1 2 3 4 5 6 (PRODUCT LEVEL)	SEE PAGE
M	1	1	**095-0674**	4	BOLT-SOCKET HEAD (M12X1.75X65-MM)	
	2	1	**199-0656**	2	CUP & CONE AS	
J	3	1	**209-7457**	1	NUT (M45X1.5-THD)	
	4	1	**198-7811**	2	DOWEL	
	5	1	**199-0675**	2	NUT (M104X2-THD)	
J	6	1	**229-5055**	1	WASHER	
J	7	1	**199-0678**	2	WASHER (45.5X55X2-MM THK)	
J	8	1	**199-0680**	1	SPACER (47X50X19.2-MM THK)	
B	9	1	**199-0684**	1	SHIM (2.5-MM THK)	
B		1	**199-0685**	1	SHIM (2.6-MM THK)	
B		1	**199-0686**	1	SHIM (2.7-MM THK)	
B		1	**199-0687**	1	SHIM (2.8-MM THK)	
B		1	**199-0688**	1	SHIM (2.9-MM THK)	
B		1	**199-0689**	1	SHIM (3-MM THK)	
B		1	**199-0690**	1	SHIM (3.1-MM THK)	
B		1	**199-0691**	1	SHIM (3.2-MM THK)	
B		1	**199-0692**	1	SHIM (3.3-MM THK)	
B		1	**199-0693**	1	SHIM (3.4-MM THK)	
M	10	1	**199-0695**	2	BOLT (M6X1X14-MM)	
	12	1	**199-0858**	2	RETAINER	
	13	1	**095-1041**	1	BEARING AS	
	14	1	**093-8828**	1	BEARING AS	
	15	1	**219-8834**	1	CYLINDER-BRAKE	
	16	1	**219-8835**	1	CYLINDER-BRAKE	
Y	17	1	**226-4394**	1	DIFFERENTIAL GP (RIGHT AXLE HOUSING)	202
	19	1	**226-4374**	1	HOUSING-CENTER	
	20	1	**226-4373**	1	SPACER (45X73X18-MM THK)	
	22	1	**5H-6734**	1	SEAL-O-RING	
	24	1	**2D-0598**	1	SEAL-O-RING	
					AVAILABLE REPAIR KIT(S):	
J			**229-5099**	1	KIT-GEAR (AXLE HOUSING)	
					(ALSO INCLUDES BEVEL GEAR & PINION)	

B - USE AS REQUIRED
J - KIT MARKED J SERVICES PART(S) MARKED J
M - METRIC PART
Y - SEPARATE ILLUSTRATION

226-4400 **HOUSING GP-AXLE (*contd.*)** **i04534393**

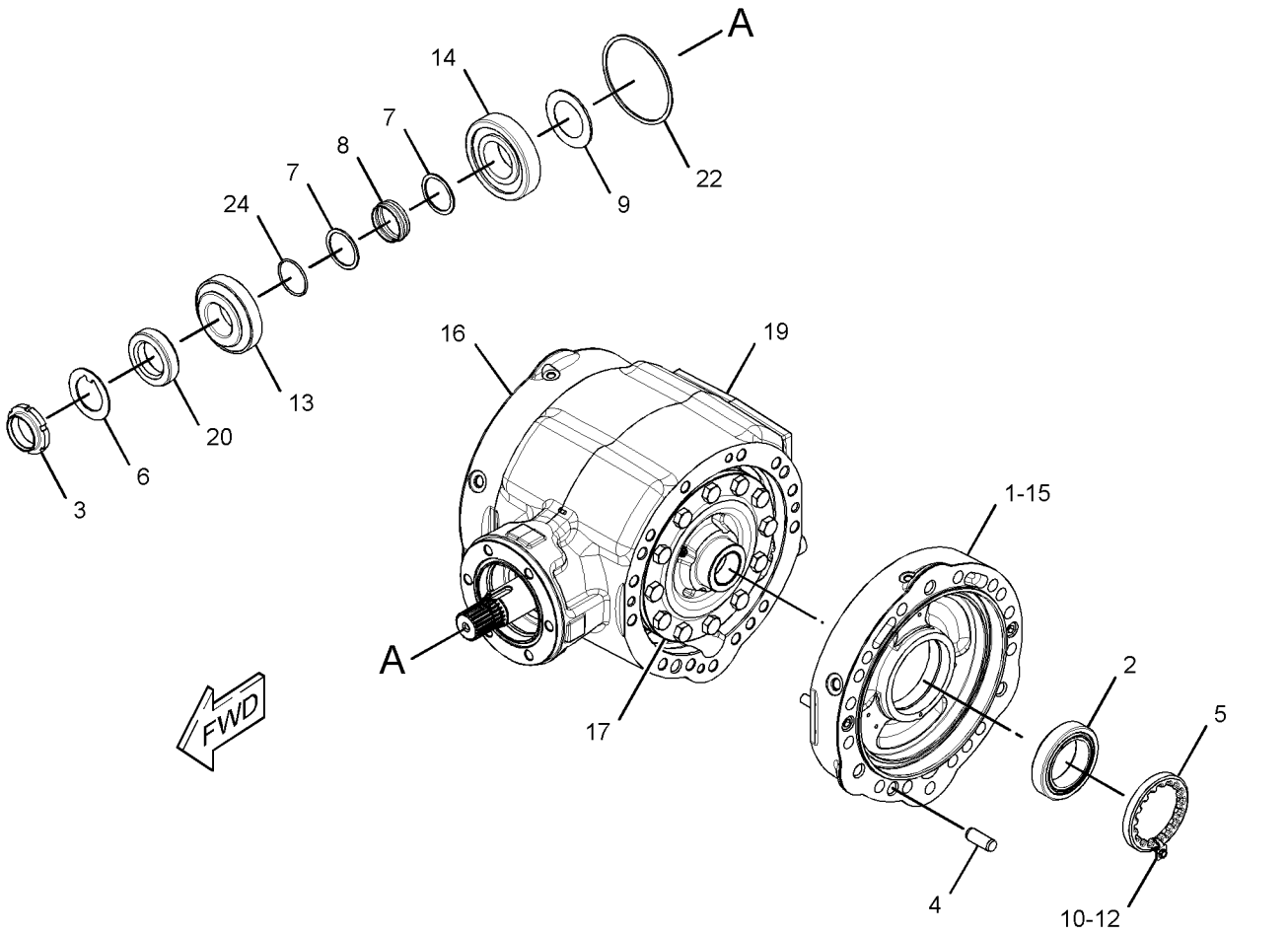

GRAPHIC #1 **<END>** g02717774

356-2065 INSTALLATION GP-DRUM

S/N: M4M1-UP; M5P1-UP

PART OF 374-9763, 374-9764 POWER TRAIN AR

SMCS-6605 **i05291286**

NOTE	REF NO	GRAPHIC REF	PART NUMBER	QTY	PART NAME 1 2 3 4 5 6 (PRODUCT LEVEL)	SEE PAGE
	1	1	**363-4162**	2	PLATE	
B	2	1	**373-6323**	4	PLATE	
B	3	1	**373-6330**	4	PLATE	
B	4	1	**373-6333**	4	PLATE	
M	5	1	**7X-2577**	12	BOLT (M24X3X90-MM)	
M	6	1	**8T-4001**	12	NUT (M24X3-THD)	
	7	1	**8T-4167**	12	WASHER-HARD (26X44X4-MM THK)	

B - USE AS REQUIRED
M - METRIC PART

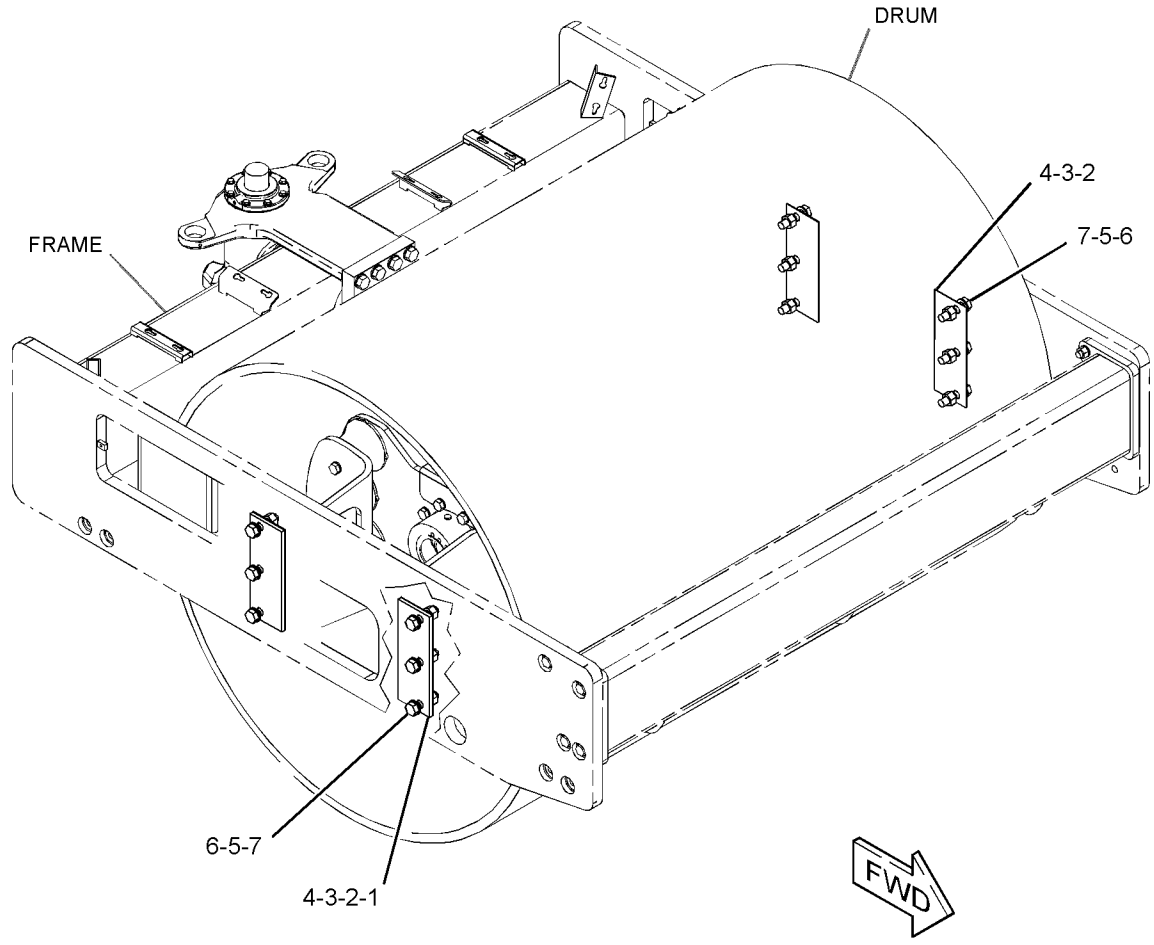

GRAPHIC #1 **<END>** g02720789

356-2066 INSTALLATION GP-DRUM

S/N: MBF1-UP; SDT1-UP

PART OF 355-4636, 355-4637 POWER TRAIN AR

SMCS-6605 **i05269661**

NOTE	REF NO	GRAPHIC REF	PART NUMBER	QTY	PART NAME 1 2 3 4 5 6 (PRODUCT LEVEL)	SEE PAGE
	1	1	**363-4162**	2	PLATE	
B	2	1	**304-1761**	2	SPACER (1.6-MM THK)	
B	3	1	**304-1762**	2	SPACER (2-MM THK)	
B	4	1	**304-1763**	2	SPACER (3-MM THK)	
B	5	1	**373-6323**	2	PLATE	
B	6	1	**373-6330**	2	PLATE	
B	7	1	**373-6333**	2	PLATE	
M	8	1	**8T-4001**	12	NUT (M24X3-THD)	
	9	1	**8T-4167**	12	WASHER-HARD (26X44X4-MM THK)	
M	10	1	**8T-6380**	12	BOLT (M24X3X130-MM)	

B - USE AS REQUIRED
M - METRIC PART

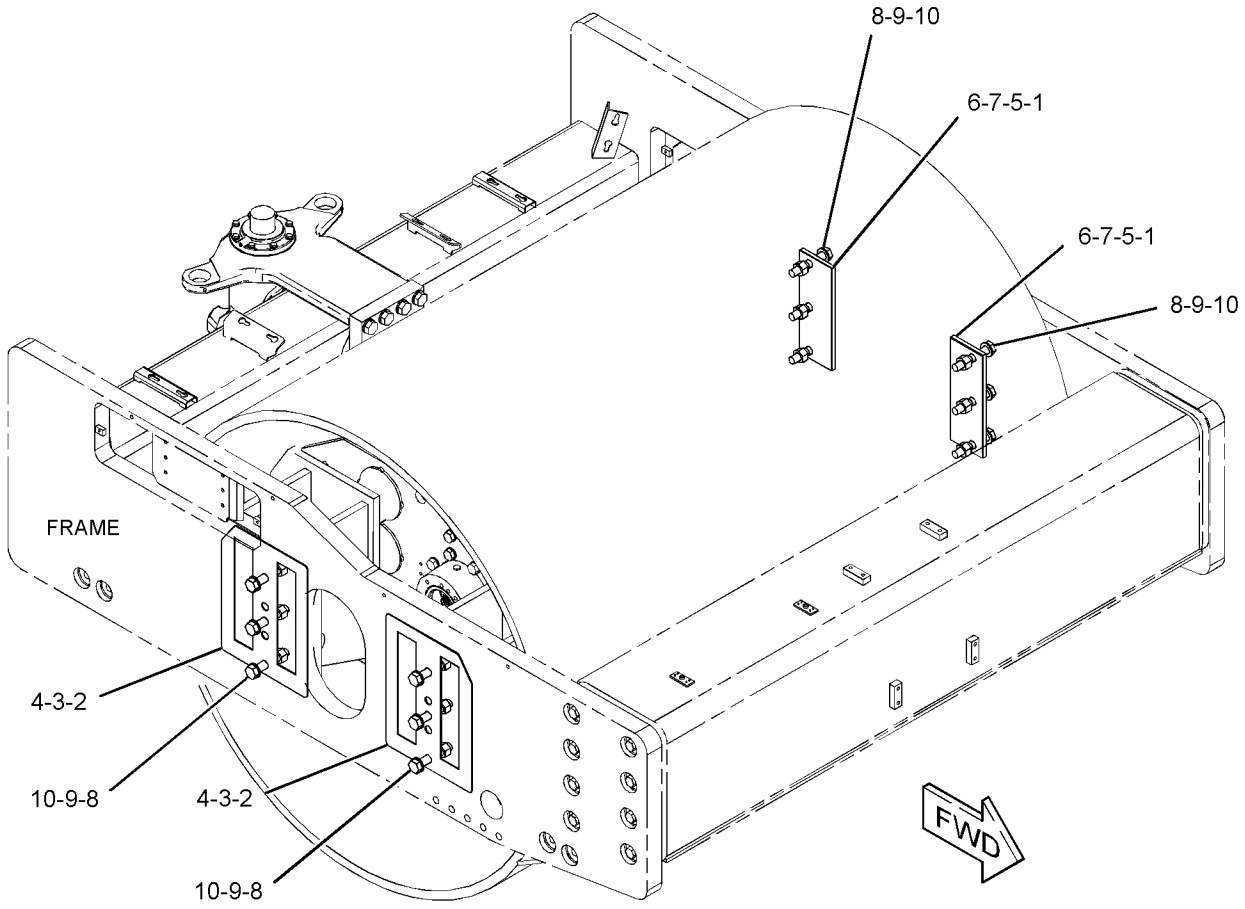

GRAPHIC #1 **<END>** g02723815

377-4596 LINES GP-PROPEL

S/N: M4M1-UP; M5P1-UP

PART OF 374-9742 HYDRAULIC AR

SMCS-3154 **i05295519**

NOTE	REF NO	GRAPHIC REF	PART NUMBER	QTY	PART NAME 1 2 3 4 5 6 (PRODUCT LEVEL)	SEE PAGE
	1	1	**177-2215**	3	STRAP-DUAL CLAMP	
	2	1	**207-4499**	1	PLATE-COVER	
I	3	1	**254-7033**	1	HOSE AS	
	4	1	**359-1780**	3	STRIP	
	5	1	**359-5211**	1	COVER	
	6	1	**372-8302**	1	STRIP	
I	7	1	**380-2920**	1	HOSE AS	
I	8	1	**380-2922**	1	HOSE AS	
I	9	1	**380-2923**	1	HOSE AS	
	10	1	**381-0908**	2	CLAMP	
	11	1	**381-0909**	1	CLAMP	
	12	1	**381-0910**	1	CLAMP	
	13	1	**381-0911**	1	CLAMP	
	14	1	**381-0912**	6	CLAMP	
I	15	1	**385-3825**	1	HOSE AS	
I	16	1	**392-9638**	1	HOSE AS	
I	17	1	**416-6240**	1	HOSE AS	
I	18	1	**416-6241**	1	HOSE AS	
M	19	1	**131-3540**	6	LOCKNUT (M8X1.25-THD)	
	20	1	**1P-3702**	4	SEAL-RECTANGULAR	
	21	1	**1P-5765**	8	FLANGE-HALF	
	22	1	**258-4608**	2	CLAMP-HALF	
	23	1	**285-9066**	1	BOLT (M8X1.25X65-MM)	
	24	1	**5P-4116**	15	WASHER-HARD (8.8X20.5X2-MM THK)	
	25	1	**5S-7383**	16	BOLT (3/8-16X1.75-IN)	
M	26	1	**8T-0389**	8	LOCKNUT (M10X1.5-THD)	
	27	1	**8T-4121**	16	WASHER-HARD (11X21X2.5-MM THK)	
M	28	1	**8T-4200**	2	BOLT (M8X1.25X16-MM)	
	29	1	**8T-4896**	16	WASHER-HARD (10.2X18.5X2.5-MM THK)	
M	30	1	**8T-5436**	2	BOLT (M10X1.5X130-MM)	
M	31	1	**8T-6685**	6	BOLT (M10X1.5X110-MM)	
M	32	1	**8T-6869**	4	BOLT (M8X1.25X60-MM)	
M	33	1	**8T-6912**	2	BOLT (M8X1.25X50-MM)	

I - REFER TO HYDRAULIC INFORMATION SYSTEM
M - METRIC PART

377-4596 **LINES GP-PROPEL (*contd.*)** **i05295519**

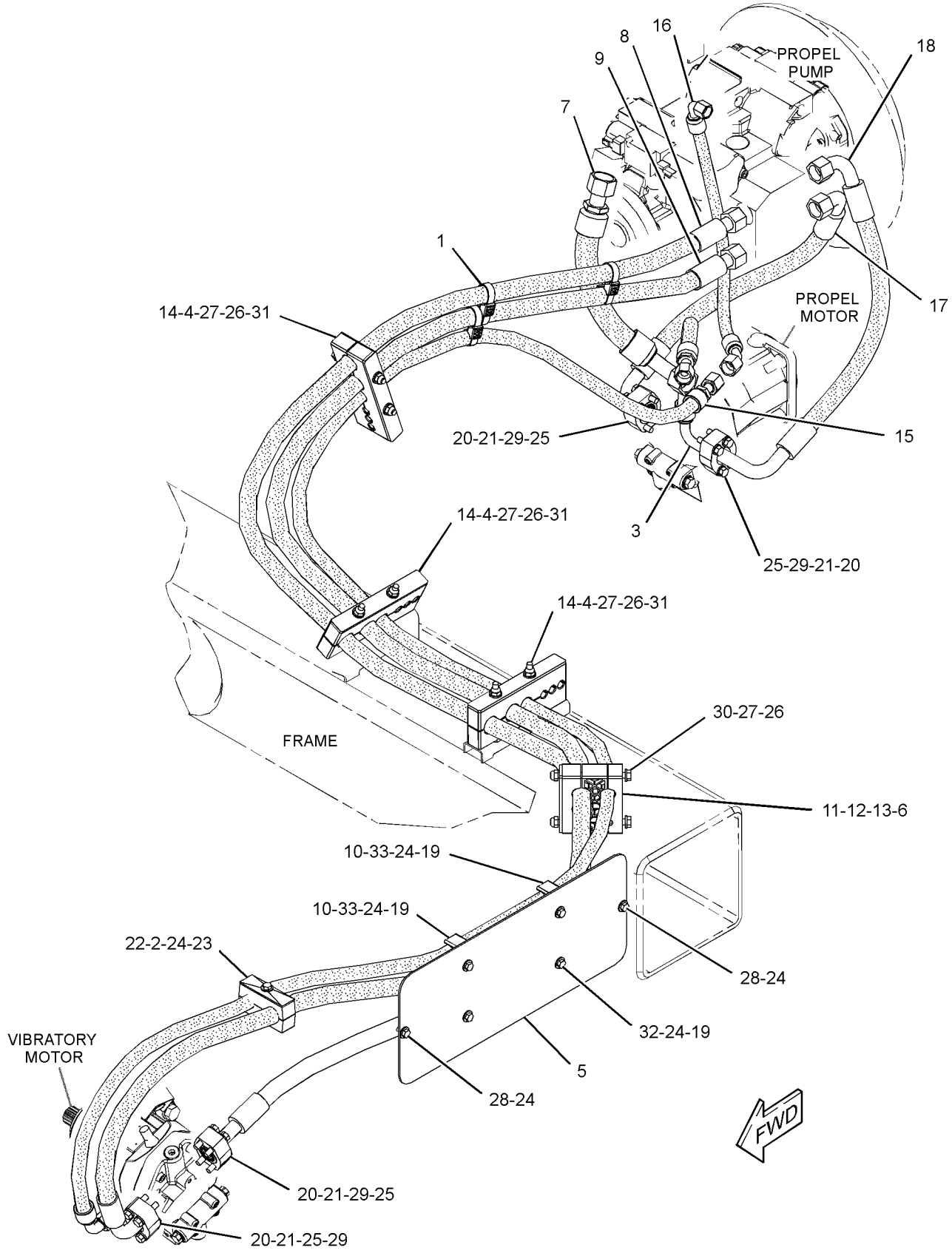

GRAPHIC #1 **<END>** g03072797

377-4597 LINES GP-PROPEL

S/N: MBF1-UP; SDT1-UP

PART OF 374-9743, 374-9756 HYDRAULIC AR

SMCS-3154 **i05297401**

NOTE	REF NO	GRAPHIC REF	PART NUMBER	QTY	PART NAME 1 2 3 4 5 6 (PRODUCT LEVEL)	SEE PAGE
	1	1	**143-9644**	1	PLATE-RETAINER	
	2	1	**177-2215**	3	STRAP-DUAL CLAMP	
	3	1	**207-4499**	1	PLATE-COVER	
I	4	1	**254-7033**	1	HOSE AS	
	5	1	**359-1780**	3	STRIP	
	6	1	**362-3054**	1	COVER	
	7	1	**372-8302**	1	STRIP	
I	8	1	**380-2920**	1	HOSE AS	
I	9	1	**380-3871**	1	HOSE AS	
	10	1	**381-0908**	2	CLAMP	
	11	1	**381-0909**	1	CLAMP	
	12	1	**381-0910**	1	CLAMP	
	13	1	**381-0911**	1	CLAMP	
	14	1	**381-0912**	6	CLAMP	
I	15	1	**383-9682**	1	HOSE AS	
I	16	1	**383-9683**	1	HOSE AS	
I	17	1	**392-9638**	1	HOSE AS	
I	18	1	**416-6240**	1	HOSE AS	
I	19	1	**416-6241**	1	HOSE AS	
M	20	1	**131-3540**	6	LOCKNUT (M8X1.25-THD)	
	21	1	**1P-3702**	4	SEAL-RECTANGULAR	
	22	1	**1P-5765**	8	FLANGE-HALF	
	23	1	**206-1511**	2	CLAMP-HALF	
	24	1	**258-4608**	2	CLAMP-HALF	
	25	1	**285-9066**	1	BOLT (M8X1.25X65-MM)	
	26	1	**5P-4116**	16	WASHER-HARD (8.8X20.5X2-MM THK)	
	27	1	**5S-7383**	16	BOLT (3/8-16X1.75-IN)	
M	28	1	**7X-2534**	1	BOLT (M6X1X50-MM)	
M	29	1	**8T-0389**	8	LOCKNUT (M10X1.5-THD)	
	30	1	**8T-4121**	16	WASHER-HARD (11X21X2.5-MM THK)	
M	31	1	**8T-4200**	2	BOLT (M8X1.25X16-MM)	
	32	1	**8T-4896**	16	WASHER-HARD (10.2X18.5X2.5-MM THK)	
M	33	1	**8T-5436**	2	BOLT (M10X1.5X130-MM)	
M	34	1	**8T-6685**	6	BOLT (M10X1.5X110-MM)	
M	35	1	**8T-6869**	4	BOLT (M8X1.25X60-MM)	
M	36	1	**8T-6912**	2	BOLT (M8X1.25X50-MM)	
M	37	1	**9X-2480**	1	BOLT (M6X1X45-MM)	

I - REFER TO HYDRAULIC INFORMATION SYSTEM
M - METRIC PART

377-4597 **LINES GP-PROPEL (*contd.*)** **i05297401**

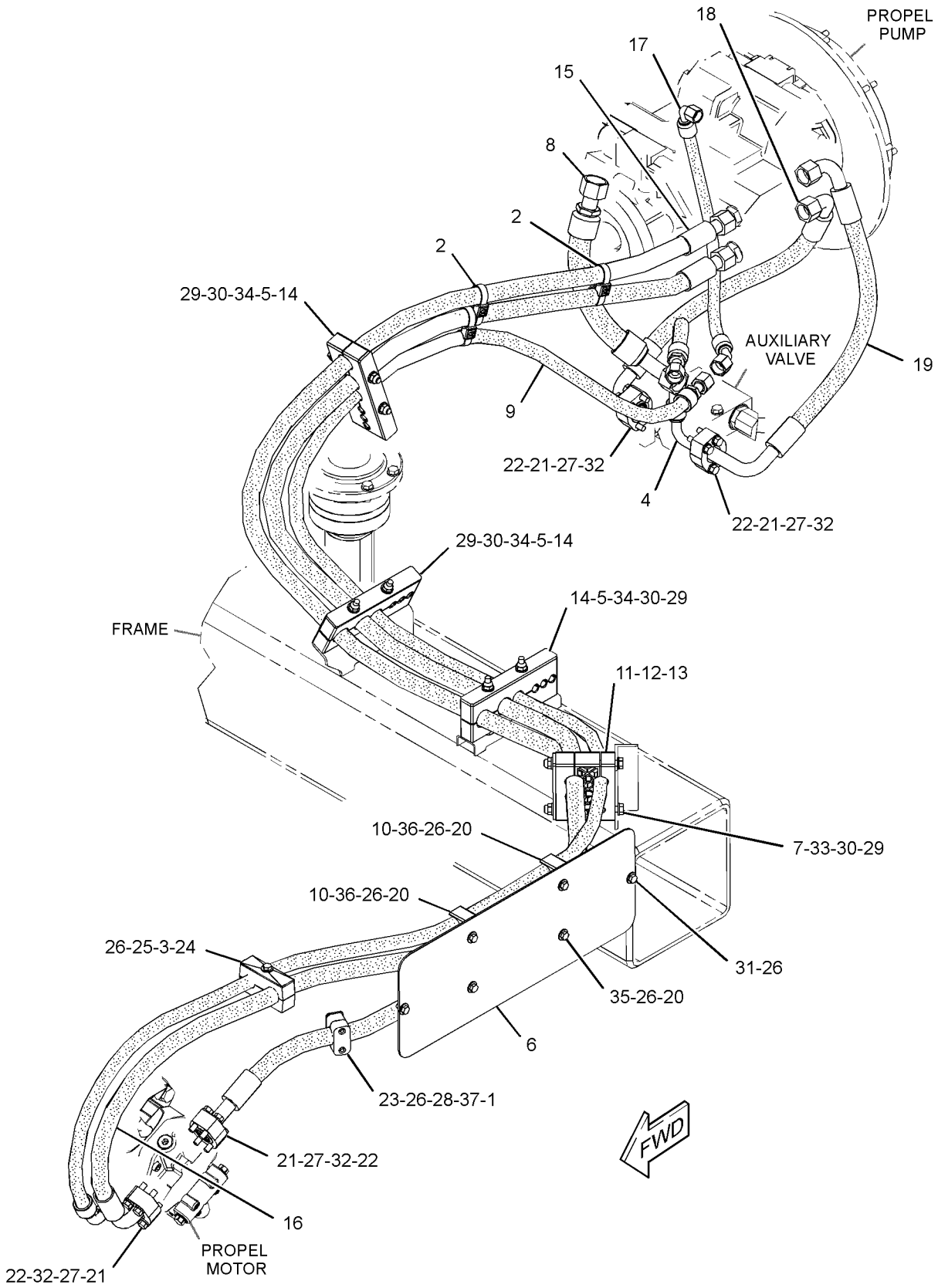

GRAPHIC #1 **<END>** g03091619

377-4610 LINES GP-SHIFT

S/N: M4M1-UP; M5P1-UP

PART OF 374-9742 HYDRAULIC AR

SMCS-3154 **i05295522**

NOTE	REF NO	GRAPHIC REF	PART NUMBER	QTY	PART NAME 1 2 3 4 5 6 (PRODUCT LEVEL)	SEE PAGE
I	1	1	**131-6468**	1	HOSE AS	
	2	1	**177-2215**	5	STRAP-DUAL CLAMP	
	3	1	**200-6345**	1	MOUNT (DUAL SWIVEL)	
I	4	1	**375-3663**	1	HOSE AS	
I	5	1	**417-3109**	1	HOSE AS	
I	6	1	**417-3110**	1	HOSE AS	
	7	1	**204-2281**	2	STRAP-CABLE	

I - REFER TO HYDRAULIC INFORMATION SYSTEM

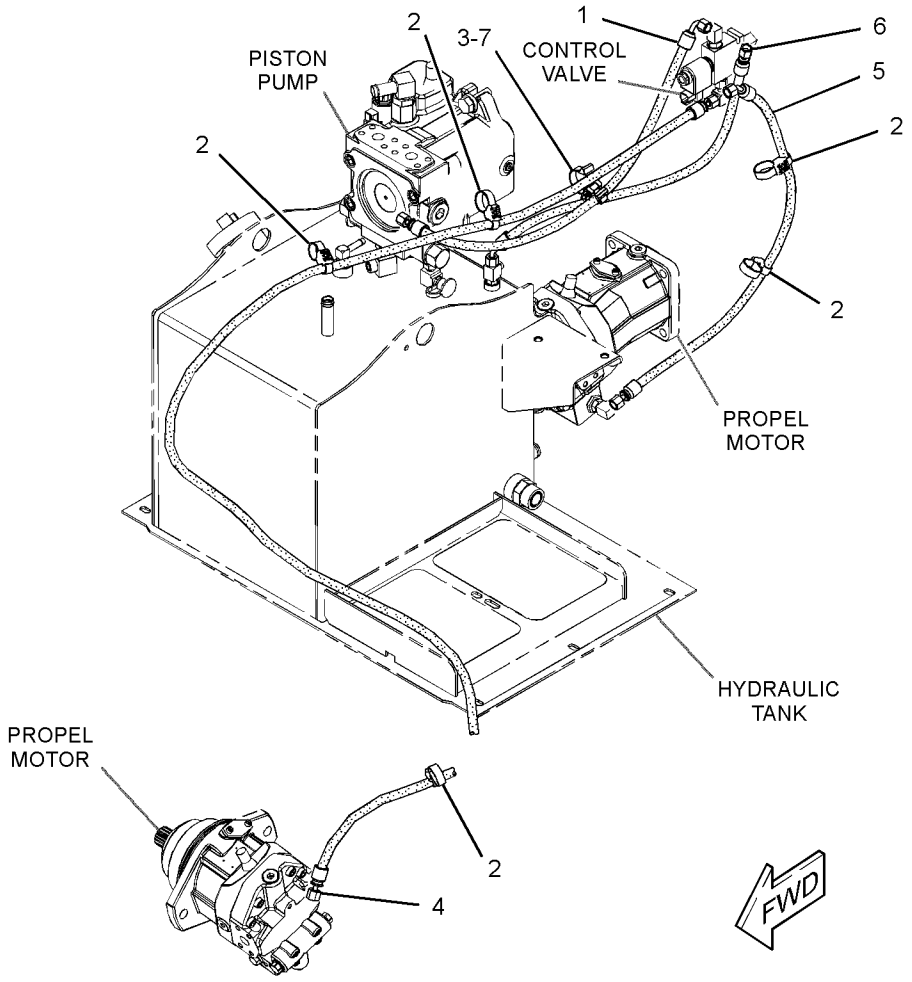

GRAPHIC #1 **<END>** g03074626

377-4611 LINES GP-SHIFT

S/N: MBF1-UP; SDT1-UP

PART OF 374-9743, 374-9756 HYDRAULIC AR

SMCS-3154 **i05270803**

NOTE	REF NO	GRAPHIC REF	PART NUMBER	QTY	PART NAME 1 2 3 4 5 6 (PRODUCT LEVEL)	SEE PAGE
I	1	1	**131-6468**	1	HOSE AS	
	2	1	**177-2215**	4	STRAP-DUAL CLAMP	
	3	1	**200-6345**	1	MOUNT (DUAL SWIVEL)	
I	4	1	**375-4041**	1	HOSE AS	
I	5	1	**417-3109**	1	HOSE AS	
I	6	1	**417-3110**	1	HOSE AS	
	7	1	**204-2281**	2	STRAP-CABLE	
	8	1	**4D-6466**	1	CLIP	

I - REFER TO HYDRAULIC INFORMATION SYSTEM

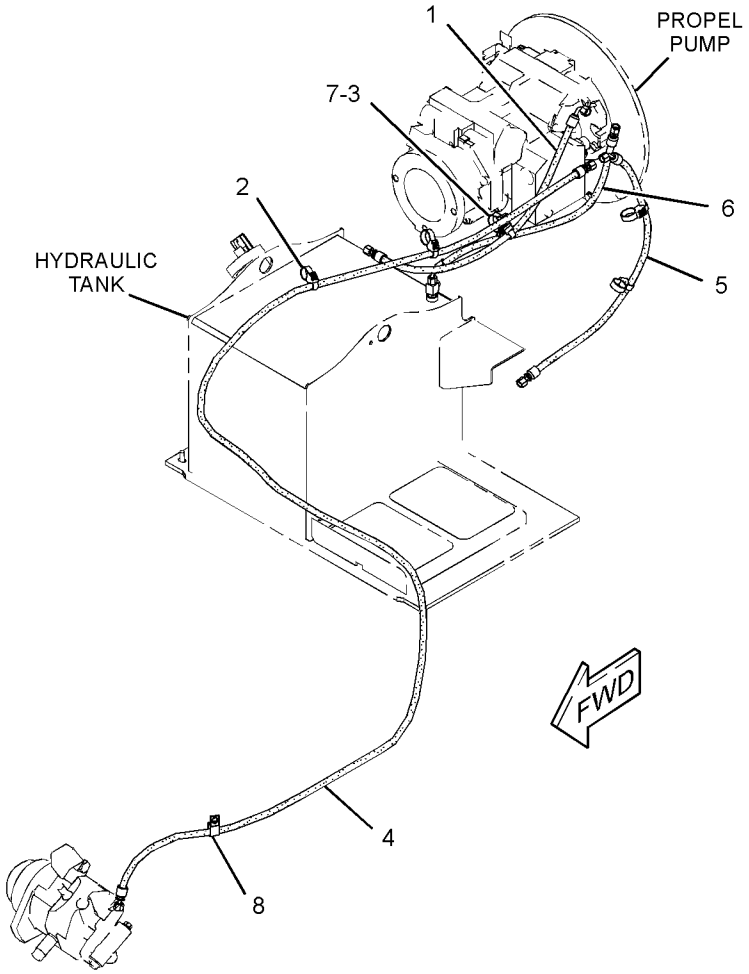

GRAPHIC #1 **<END>** g03089718

354-4762 MOTOR & MTG GP-PROPEL–AXLE

S/N: MBF1-UP; M4M1-UP; M5P1-UP; SDT1-UP
PART OF 374-9742, 374-9743, 374-9756 HYDRAULIC AR

SMCS-4351, 5058 **i05270694**

NOTE	REF NO	GRAPHIC REF	PART NUMBER	QTY	PART NAME 1 2 3 4 5 6 (PRODUCT LEVEL)	SEE PAGE
Y	1	1	**319-6491**	1	SENSOR GP-SPEED (STEERING MOTOR)	149
Y	2	1	**353-5925**	1	MOTOR GP-PISTON (PROPEL)	347
	3	1	*148-8341*	1	CONNECTOR AS	
		1	**3D-2824**	1	SEAL-O-RING	
		1	**6V-8713**	1	CONNECTOR	
		1	**7J-9108**	1	SEAL-O-RING	
	4	1	*148-8368*	1	ELBOW AS	
		1	**3J-1907**	1	SEAL-O-RING	
		1	**4J-5477**	1	SEAL-O-RING	
		1	**6V-8627**	1	ELBOW	
	5	1	*148-8393*	1	ELBOW AS	
		1	**6V-9852**	1	ELBOW	
		1	**7J-9108**	1	SEAL-O-RING	
M	6	1	**191-8920**	2	BOLT-SOCKET HEAD (M6X1X12-MM)	
	7	1	**7J-6285**	1	SEAL-O-RING	
	8	1	**8T-4223**	4	WASHER-HARD (13.5X25.5X3-MM THK)	
	9	1	**8T-8919**	4	BOLT (1/2-13X1.75-IN)	

M - METRIC PART
Y - SEPARATE ILLUSTRATION

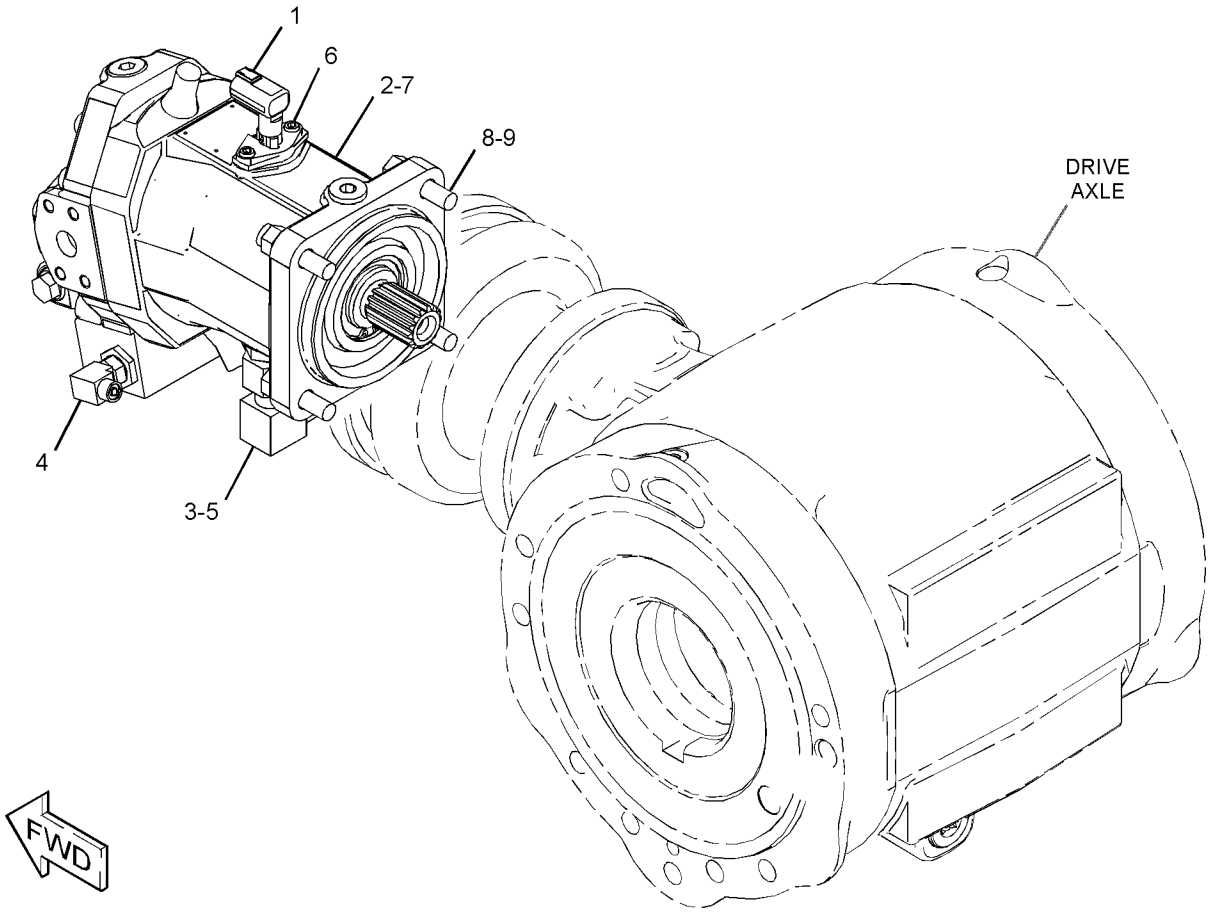

GRAPHIC #1 **<END>** g02730619

355-6035 MOTOR & MTG GP-PROPEL–DRUM

S/N: MBF1-UP; M4M1-UP; M5P1-UP; SDT1-UP
PART OF 374-9742, 374-9743, 374-9756 HYDRAULIC AR

SMCS-4351, 5058 **i05270703**

NOTE	REF NO	GRAPHIC REF	PART NUMBER	QTY	PART NAME 1 2 3 4 5 6 (PRODUCT LEVEL)	SEE PAGE
Y	1	1	**204-6204**	1	SENSOR GP-SPEED (PROPEL MOTOR)	148
	2	1	*241-6228*	1	CONNECTOR AS	
		1	**3K-0360**	1	SEAL-O-RING	
		1	**7J-9108**	1	SEAL-O-RING	
		1	**156-9791**	1	CONNECTOR-SPECIAL	
Y	3	1	**353-5924**	1	MOTOR GP-PISTON (PROPEL)	345
	4	1	**366-7854**	1	BRACKET AS	
	5	1	**111-7052**	1	SEAL-O-RING	
	6	1	*150-3033*	1	ELBOW AS	
		1	**3J-1907**	1	SEAL-O-RING	
		1	**4J-5477**	1	SEAL-O-RING	
		1	**8T-0164**	1	ELBOW	
M	7	1	**191-8920**	2	BOLT-SOCKET HEAD (M6X1X12-MM)	
M	8	1	**7X-2553**	2	BOLT (M16X2X40-MM)	
	9	1	**8T-4121**	2	WASHER-HARD (11X21X2.5-MM THK)	
M	10	1	**8T-4195**	2	BOLT (M10X1.5X30-MM)	
	11	1	**9X-8257**	2	WASHER (17.5X30X3.5-MM THK)	

M - METRIC PART
Y - SEPARATE ILLUSTRATION

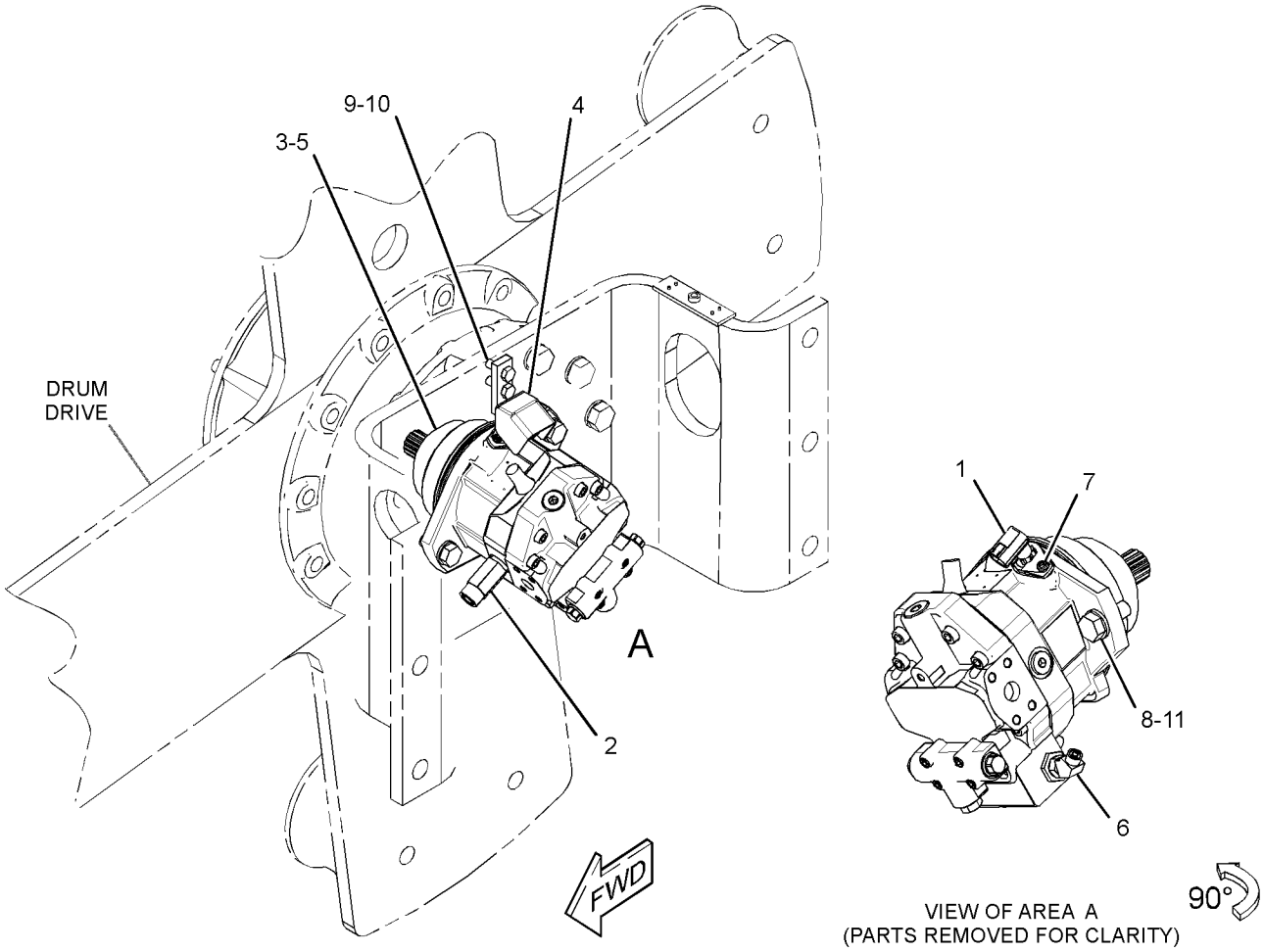

GRAPHIC #1 **<END>** g02730592

268-4033 MOUNTING GP-WHEEL

S/N: SDT1-UP
AN ATTACHMENT

SMCS-4201 **i05297420**

NOTE	REF NO	GRAPHIC REF	PART NUMBER	QTY	PART NAME 1 2 3 4 5 6 (PRODUCT LEVEL)	SEE PAGE
M	1	1	**108-2079**	24	NUT (M22X1.5-THD)	
Y	2	1	*268-4034*	1	WHEEL & TIRE GP (LH)	258
Y	3	1	*268-4035*	1	WHEEL & TIRE GP (RH)	259
	4	1	**8C-6913**	24	WASHER-HARD (24X41.5X4-MM THK)	

M - METRIC PART
Y - SEPARATE ILLUSTRATION

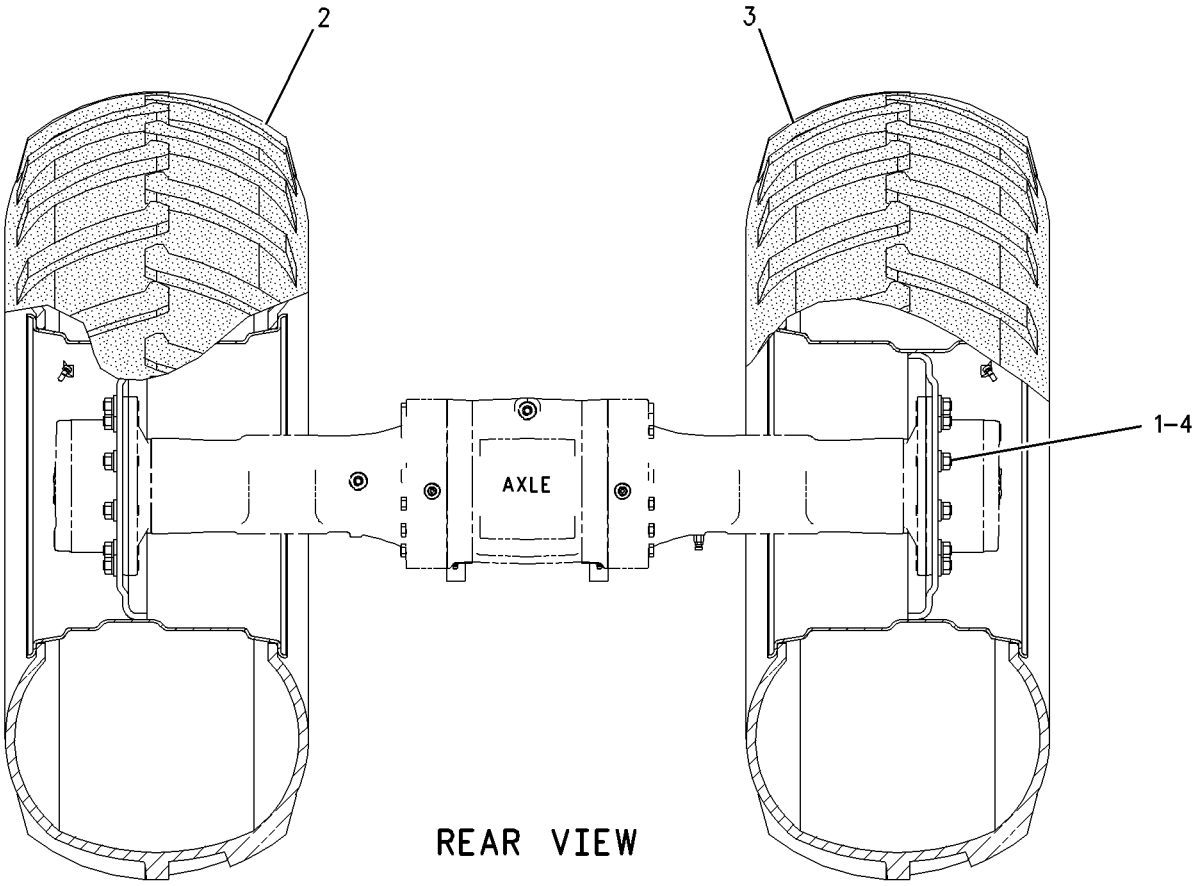

GRAPHIC #1 **<END>** g00917041

324-9216 MOUNTING GP-WHEEL

S/N: MBF1-UP; M4M1-UP
PART OF 415-9361, 415-9367 DISTRIBUTION AR
AN ATTACHMENT

SMCS-4201 **i03057084**

NOTE	REF NO	GRAPHIC REF	PART NUMBER	QTY	PART NAME 1 2 3 4 5 6 (PRODUCT LEVEL)	SEE PAGE
M	1	1	**201-1919**	20	NUT (M20X1.5-THD)	
Y	2	1	*324-9214*	2	WHEEL & TIRE GP	262
	3	1	**8T-5439**	20	WASHER-HARD (21.5X45X6-MM THK)	

M - METRIC PART
Y - SEPARATE ILLUSTRATION

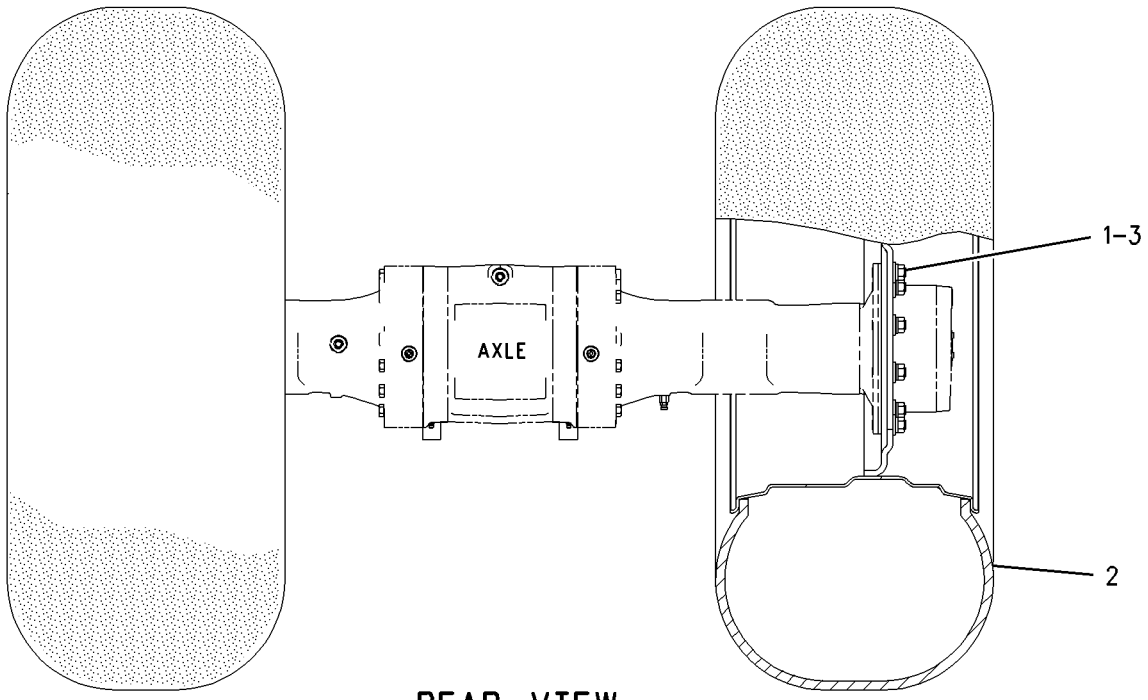

REAR VIEW

GRAPHIC #1 **<END>** g00917025

203-4692 PLANETARY GP-FINAL DRIVE

S/N: MBF1-UP; M4M1-UP; M5P1-UP; SDT1-UP
PART OF 286-0402, 286-0403, 315-3120 AXLE & MTG GP-DRIVE
ALSO AN ATTACHMENT

SMCS-4050 **i05269535**

NOTE	REF NO	GRAPHIC REF	PART NUMBER	QTY	PART NAME 1 2 3 4 5 6 (PRODUCT LEVEL)	SEE PAGE
	1	1	**5J-2974**	1	SEAL-O-RING	
	2	1	**243-4362**	1	PLUG	
	3	1	**176-9287**	4	PIN-PLANETARY	
	4	1	**176-9288**	8	WASHER-PLANETARY	
	5	1	**176-9289**	152	BEARING AS-NEEDLE	
	6	1	**177-1809**	8	BOLT-SOCKET HEAD (M8X1.25X65-MM)	
	7	1	**151-7518**	2	PLUG	
	8	1	**151-7517**	3	SEAL-O-RING	
	9	1	**095-0919**	4	RING-RETAINING	
	10	1	**176-9285**	1	COVER	
	11	1	**151-7516**	1	PLUG-DRAIN (FINAL DRIVE PLANETARY)	
	12	1	**5P-3864**	2	SEAL-O-RING	
	13	1	**095-0892**	2	PIN-SPRING	

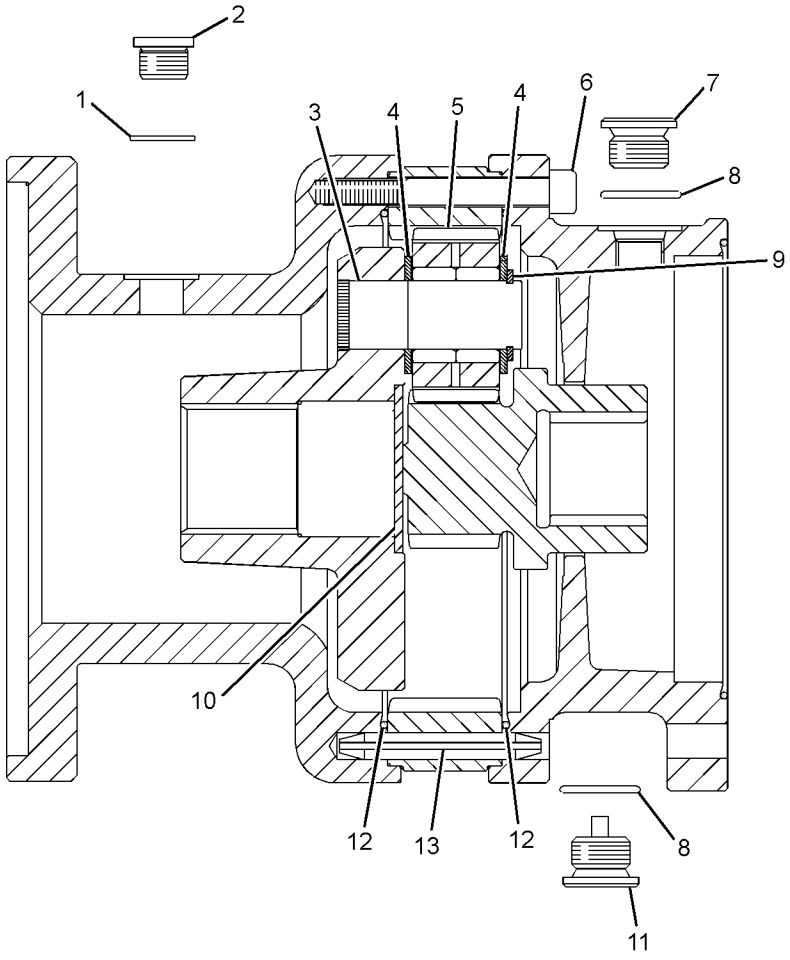

GRAPHIC #1 **<END>** g02041793

229-5051 PLANETARY GP-FINAL DRIVE–AXLE

S/N: MBF1-UP; M4M1-UP; M5P1-UP
PART OF 286-0873, 315-1260 AXLE GP-DRIVE
ALSO AN ATTACHMENT

SMCS-4050 **i05254227**

NOTE	REF NO	GRAPHIC REF	PART NUMBER	QTY	PART NAME 1 2 3 4 5 6 (PRODUCT LEVEL)	SEE PAGE
	1	1	**199-0653**	3	RING-RETAINING	
	2	1	**207-4257**	6	RING-RETAINER	
	3	1	**231-0720**	1	KIT-PLANETARY CARRIER	
					(ALSO INCLUDES CARRIER)	
	3A	1	**199-0669**	1	PLUG (THRUST)	
	4	1	**199-0760**	3	BEARING	
	5	1	**213-4222**	3	WASHER (50.1X61X2.5-MM THK)	
	6	1	**207-5962**	6	WASHER (65X72X2-MM THK)	
	7	1	**226-4378**	3	GEAR-PLANETARY (31-TEETH)	

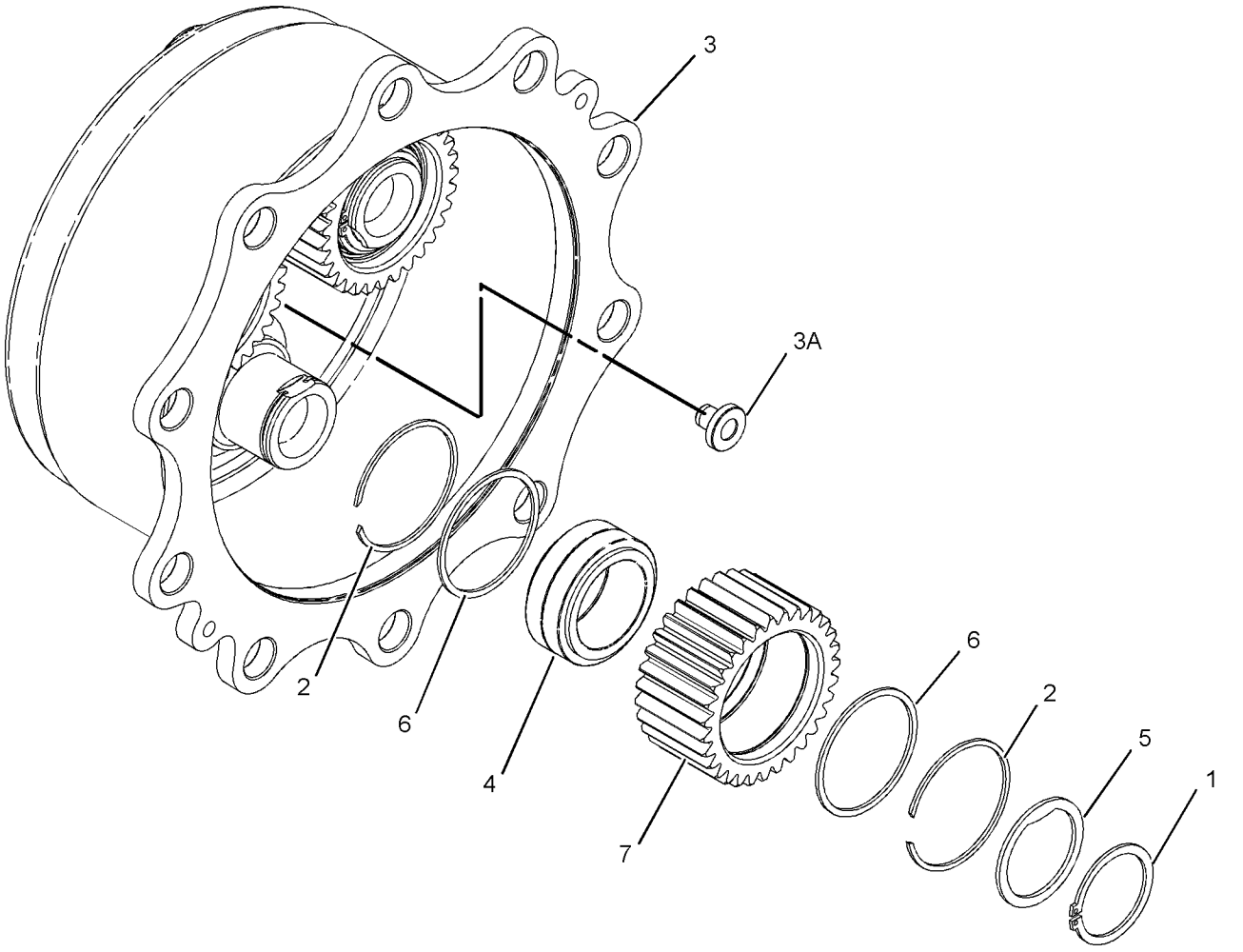

GRAPHIC #1 **<END>** g01201180

355-4636 POWER TRAIN AR

S/N: MBF1-UP

PART OF 374-9715 COMMON AR

SMCS-3000, 4000 **i05297391**

NOTE	PART NUMBER	QTY	PART NAME 1 2 3 4 5 6 (PRODUCT LEVEL)	SEE PAGE
Y	*286-0402*	1	AXLE & MTG GP-DRIVE (WITH BRAKES)	190
Y	*361-4789*	1	DRIVE GP-DRUM	208
Y	*355-4635*	1	DRIVE GP-SUPPORT & VIBRATORY	391
Y	*355-8954*	1	HOUSING GP-ECCENTRIC WEIGHT	394
Y	*356-2066*	1	INSTALLATION GP-DRUM	232

Y - SEPARATE ILLUSTRATION

<END>

355-4637 POWER TRAIN AR

S/N: SDT1-UP

PART OF 374-9716 COMMON AR

SMCS-3000, 4000 **i05298354**

NOTE	PART NUMBER	QTY	PART NAME 1 2 3 4 5 6 (PRODUCT LEVEL)	SEE PAGE
Y	*286-0403*	1	AXLE & MTG GP-DRIVE	191
Y	*356-1812*	1	DRIVE GP-DRUM	205
Y	*356-1806*	1	DRIVE GP-SUPPORT & VIBRATORY	393
Y	*355-8954*	1	HOUSING GP-ECCENTRIC WEIGHT	394
Y	*356-2066*	1	INSTALLATION GP-DRUM	232

Y - SEPARATE ILLUSTRATION

<END>

374-9763 POWER TRAIN AR

S/N: M4M1-UP

PART OF 374-9713 COMMON AR

SMCS-3000, 4000 **i05295553**

NOTE	PART NUMBER	QTY	PART NAME 1 2 3 4 5 6 (PRODUCT LEVEL)	SEE PAGE
Y	*356-1417*	1	DRIVE GP-DRUM	204
Y	*356-1421*	1	DRIVE GP-SUPPORT & VIBRATORY	392
Y	*355-8954*	1	HOUSING GP-ECCENTRIC WEIGHT	394
Y	*356-2065*	1	INSTALLATION GP-DRUM	231

Y - SEPARATE ILLUSTRATION

<END>

374-9764 POWER TRAIN AR

S/N: M5P1-UP

PART OF 374-9714 COMMON AR

SMCS-3000, 4000 **i05296403**

NOTE	PART NUMBER	QTY	PART NAME 1 2 3 4 5 6 (PRODUCT LEVEL)	SEE PAGE
Y	*356-1872*	1	DRIVE GP-DRUM	207
Y	*356-1421*	1	DRIVE GP-SUPPORT & VIBRATORY	392
Y	*355-8954*	1	HOUSING GP-ECCENTRIC WEIGHT	394
Y	*356-2065*	1	INSTALLATION GP-DRUM	231

Y - SEPARATE ILLUSTRATION

<END>

377-0676 PUMP & MTG GP-PROPEL

S/N: MBF1-UP; M4M1-UP; M5P1-UP; SDT1-UP
PART OF 374-9742, 374-9743, 374-9756 HYDRAULIC AR

SMCS-3203, 3204, 5070 **i05270737**

NOTE	REF NO	GRAPHIC REF	PART NUMBER	QTY	PART NAME 1 2 3 4 5 6 (PRODUCT LEVEL)	SEE PAGE
	1	1	**3E-4895**	1	FLANGE	
	2	1	**5L-8894**	8	BOLT-SOCKET HEAD (3/8-24X1.5-IN)	
	3	1	**118-2076**	1	PLATE-ADAPTER	
	4	1	**292-3172**	1	HUB AS	
M		1	**8T-2393**	1	BOLT-SOCKET HEAD (M16X2X60-MM)	
Y	5	1	**351-8597**	1	PUMP GP-PISTON	355
	6	1	*416-6176*	1	MANIFOLD GP-HYDRAULIC	
		1	**357-0324**	2	PLUG-ORIFICE	
		1	*366-4695*	4	PLUG AS	
					(EACH INCLUDES)	
		1	**3J-1907**	1	SEAL-O-RING	
		1	**360-3679**	1	PLUG-CONNECTOR	
		1	**416-6175**	1	MANIFOLD	
	7	1	**130-5300**	3	CLIP	
	8	1	**132-5789**	2	CLIP	
	9	1	*148-8327*	5	CONNECTOR AS	
					(EACH INCLUDES)	
		1	**3D-2824**	1	SEAL-O-RING	
		1	**6V-8637**	1	CONNECTOR	
		1	**6V-9746**	1	SEAL-O-RING	
	10	1	*148-8362*	1	ELBOW AS	
		1	**3D-2824**	1	SEAL-O-RING	
		1	**5K-9090**	1	SEAL-O-RING	
		1	**8T-6684**	1	ELBOW	
	11	1	*155-7321*	1	ADAPTER AS	
		1	**3D-2824**	1	SEAL-O-RING	
		1	**6V-1722**	1	ADAPTER-O-RING	
	12	1	*164-5561*	1	ADAPTER AS	
		1	**2M-9780**	1	SEAL-O-RING	
		1	**5P-1042**	1	ADAPTER-O-RING	
	13	1	**1P-3703**	4	SEAL-RECTANGULAR	
	14	1	**268-1522**	1	CONNECTOR	
	15	1	**3K-0360**	1	SEAL-O-RING	
	16	1	**6V-8398**	1	SEAL-O-RING	
	17	1	**8T-4121**	28	WASHER-HARD (11X21X2.5-MM THK)	
M	18	1	**8T-4178**	16	BOLT (M10X1.5X90-MM)	
M	19	1	**8T-4183**	4	BOLT (M12X1.75X40-MM)	
M	20	1	**8T-4196**	12	BOLT (M10X1.5X35-MM)	
	21	1	**8T-7971**	4	WASHER-HARD (13.5X25.5X5-MM THK)	

M - METRIC PART
Y - SEPARATE ILLUSTRATION

377-0676 **PUMP & MTG GP-PROPEL (*contd.*)** **i05270737**

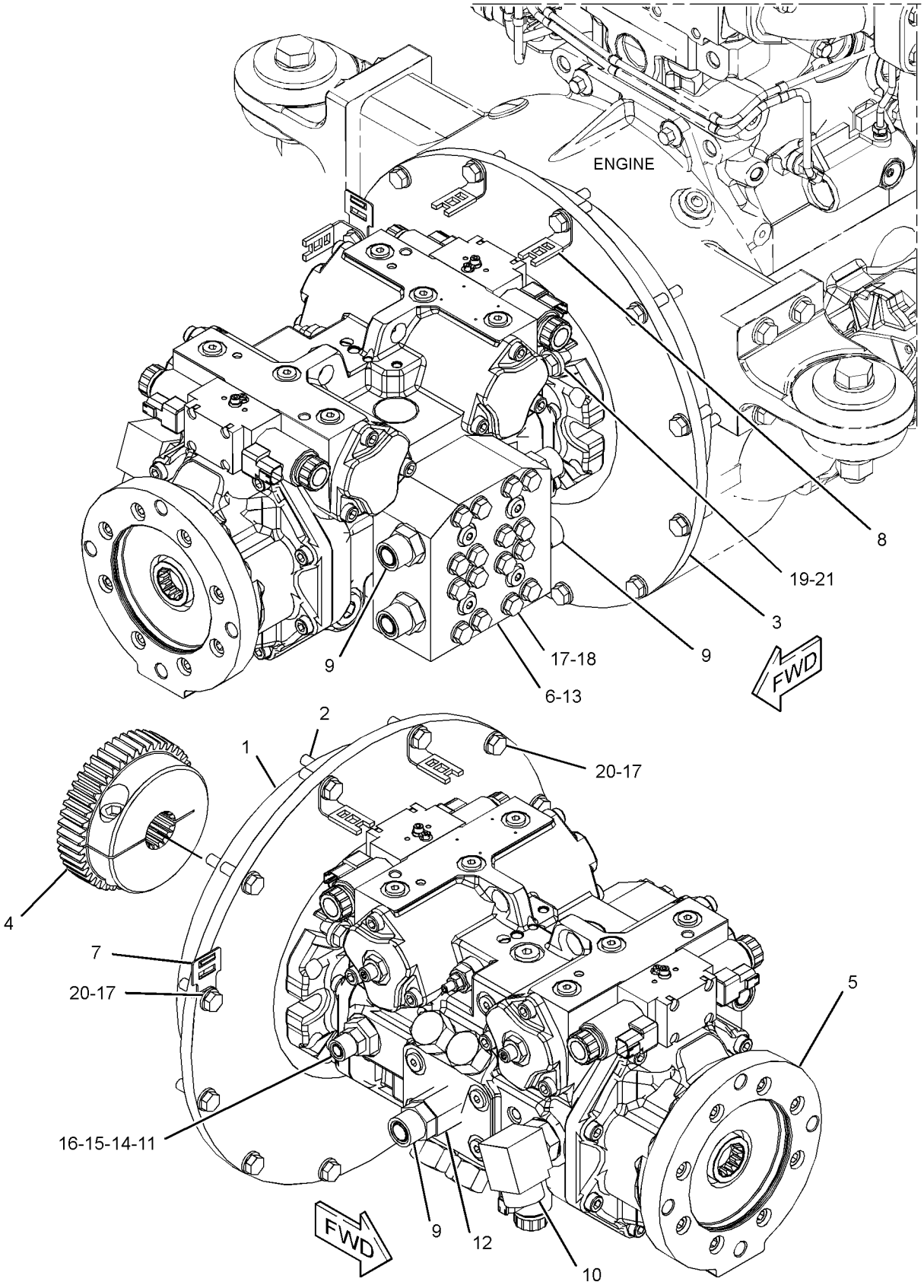

GRAPHIC #1 **<END>** g03346714

360-9870 SHELL GP-PADDED

S/N: MBF1-UP; M4M1-UP

PART OF 360-0522, 360-0528 DRUM GP-COMPACTOR, 390-1058, 390-1061 SHELL GP-PADDED AN ATTACHMENT

SMCS-6605 **i05269689**

NOTE	REF NO	GRAPHIC REF	PART NUMBER	QTY	PART NAME 1 2 3 4 5 6 (PRODUCT LEVEL)	SEE PAGE
	1	1	**423-4324**	2	SHELL AS	
M	2	1	**6V-7688**	10	LOCKNUT (M20X2.5-THD)	
M	3	1	**7X-2564**	2	BOLT (M20X2.5X90-MM)	
M	4	1	**7X-2566**	8	BOLT (M20X2.5X110-MM)	
	5	1	**8T-5439**	20	WASHER-HARD (21.5X45X6-MM THK)	

M - METRIC PART

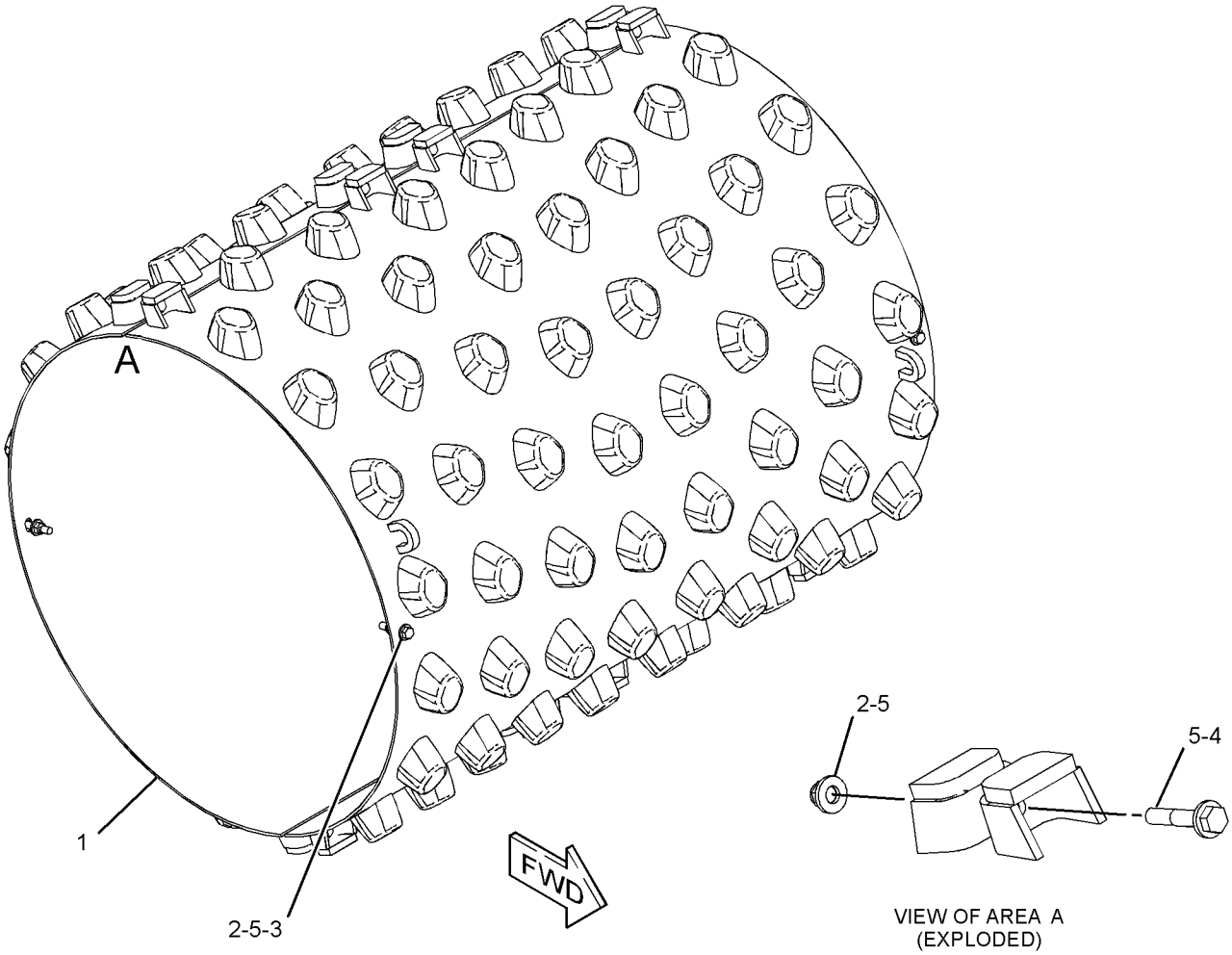

GRAPHIC #1 **<END>** g02731754

372-6359 SHELL GP-PADDED

S/N: MBF1-UP; M4M1-UP

PART OF 377-2945, 377-2946 DRUM GP-COMPACTOR, 416-1351, 416-1355 SHELL GP-PADDED AN ATTACHMENT

SMCS-6605 **i05288872**

NOTE	REF NO	GRAPHIC REF	PART NUMBER	QTY	PART NAME 1 2 3 4 5 6 (PRODUCT LEVEL)	SEE PAGE
	1	1	**422-8831**	2	SHELL AS	
M	2	1	**6V-7688**	10	LOCKNUT (M20X2.5-THD)	
M	3	1	**7X-2564**	2	BOLT (M20X2.5X90-MM)	
M	4	1	**7X-2566**	8	BOLT (M20X2.5X110-MM)	
	5	1	**8T-5439**	20	WASHER-HARD (21.5X45X6-MM THK)	

M - METRIC PART

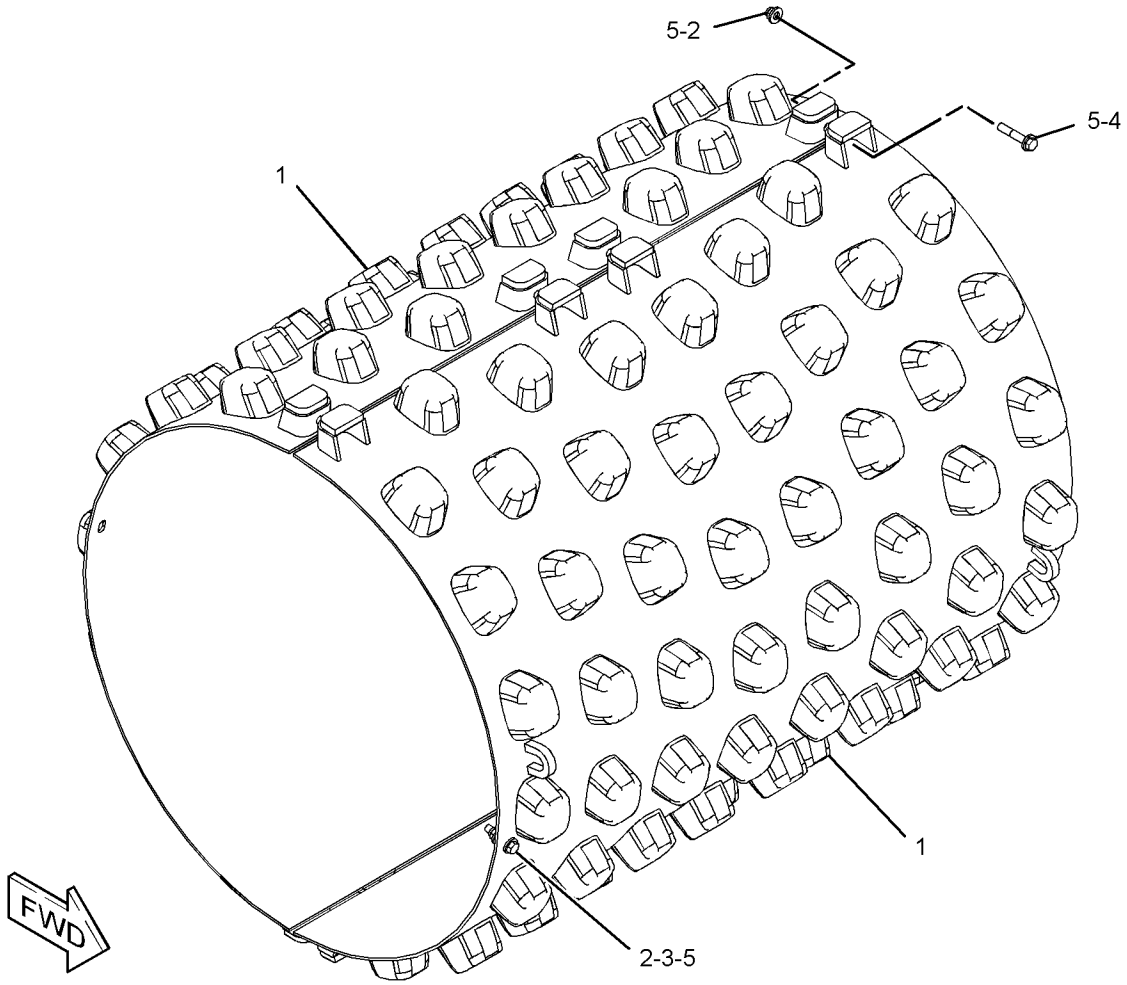

GRAPHIC #1 **<END>** g03101979

390-1058 SHELL GP-PADDED—FIELD INSTALLED

S/N: M4M1-UP

AN ATTACHMENT

SMCS-6605 **i05291036**

NOTE	REF NO	GRAPHIC REF	PART NUMBER	QTY	PART NAME 1 2 3 4 5 6 (PRODUCT LEVEL)	SEE PAGE
Y	1	1	*360-9870*	1	SHELL GP-PADDED	248
Y	2	1	*392-9649*	1	SCRAPER GP-DRUM	293

Y - SEPARATE ILLUSTRATION

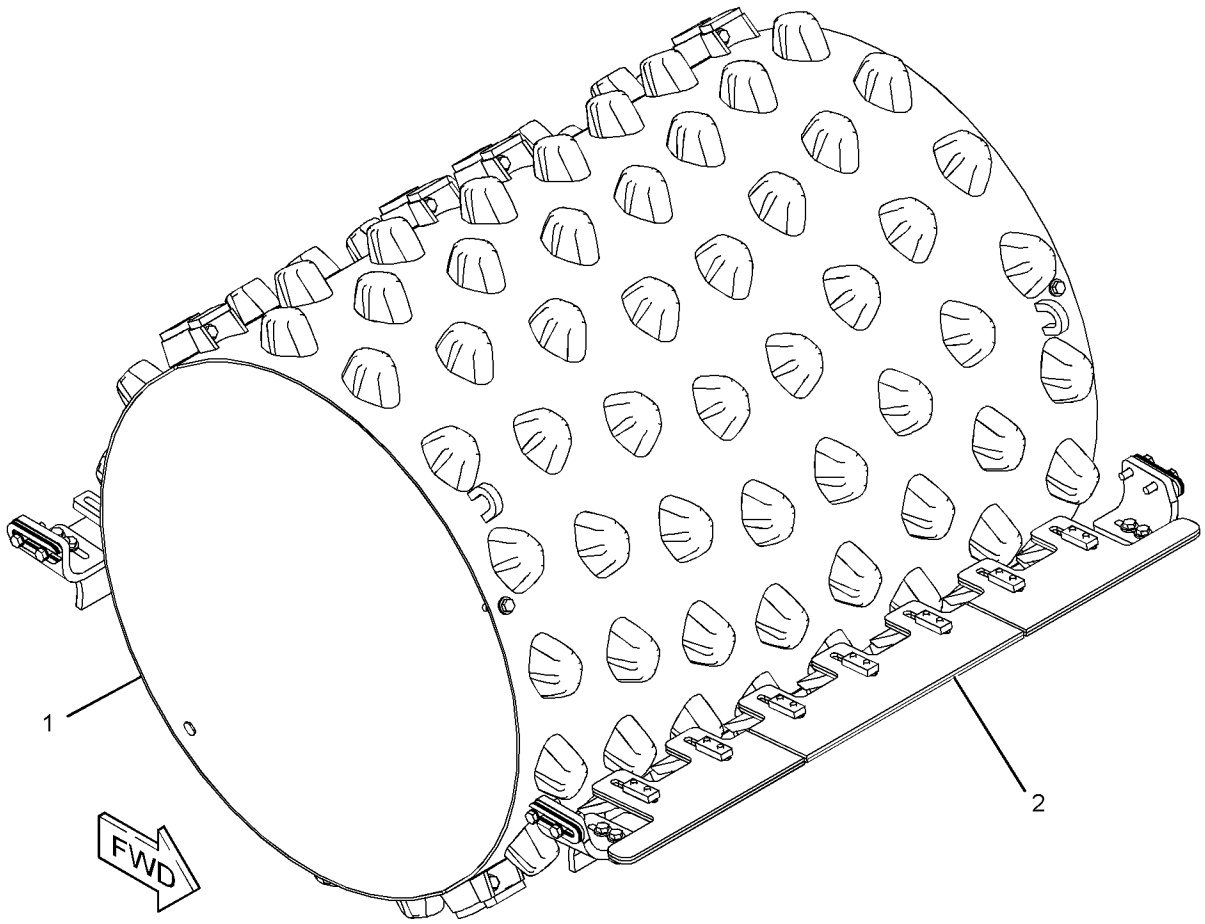

GRAPHIC #1 **<END>** g03072899

390-1061 SHELL GP-PADDED

S/N: MBF1-UP

AN ATTACHMENT

SMCS-6605 **i05296327**

NOTE	REF NO	GRAPHIC REF	PART NUMBER	QTY	PART NAME 1 2 3 4 5 6 (PRODUCT LEVEL)	SEE PAGE
Y	1	1	*360-9870*	1	SHELL GP-PADDED	248
Y	2	1	*392-9650*	1	SCRAPER GP-DRUM	295

Y - SEPARATE ILLUSTRATION

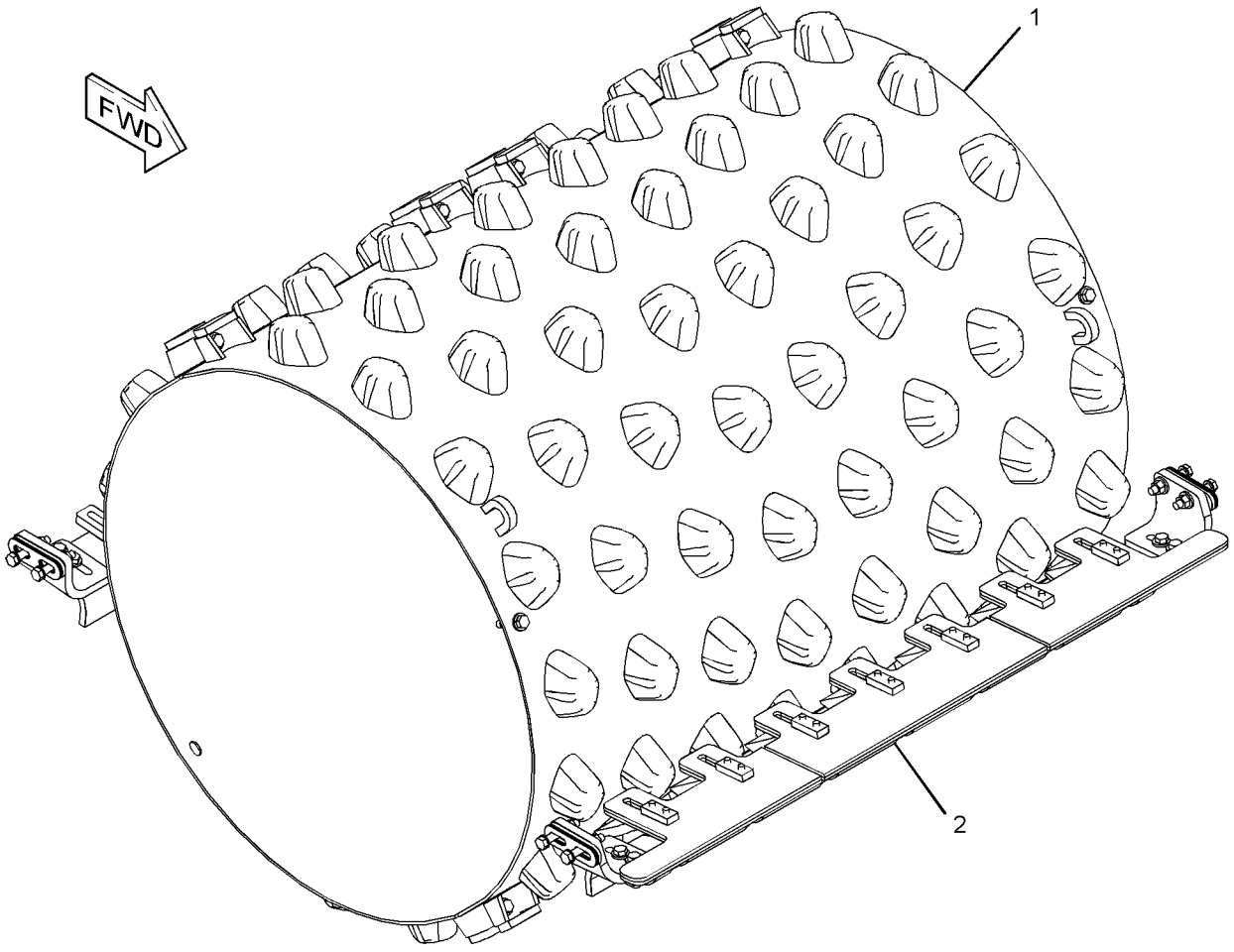

GRAPHIC #1 **<END>** g03057656

416-1351 SHELL GP-PADDED—FIELD INSTALLED

S/N: M4M1-UP

AN ATTACHMENT

SMCS-6605 **i05291034**

NOTE	REF NO	GRAPHIC REF	PART NUMBER	QTY	PART NAME 1 2 3 4 5 6 (PRODUCT LEVEL)	SEE PAGE
Y	1	1	*372-6359*	1	SHELL GP-PADDED	249
Y	2	1	*392-9649*	1	SCRAPER GP-DRUM	293

Y - SEPARATE ILLUSTRATION

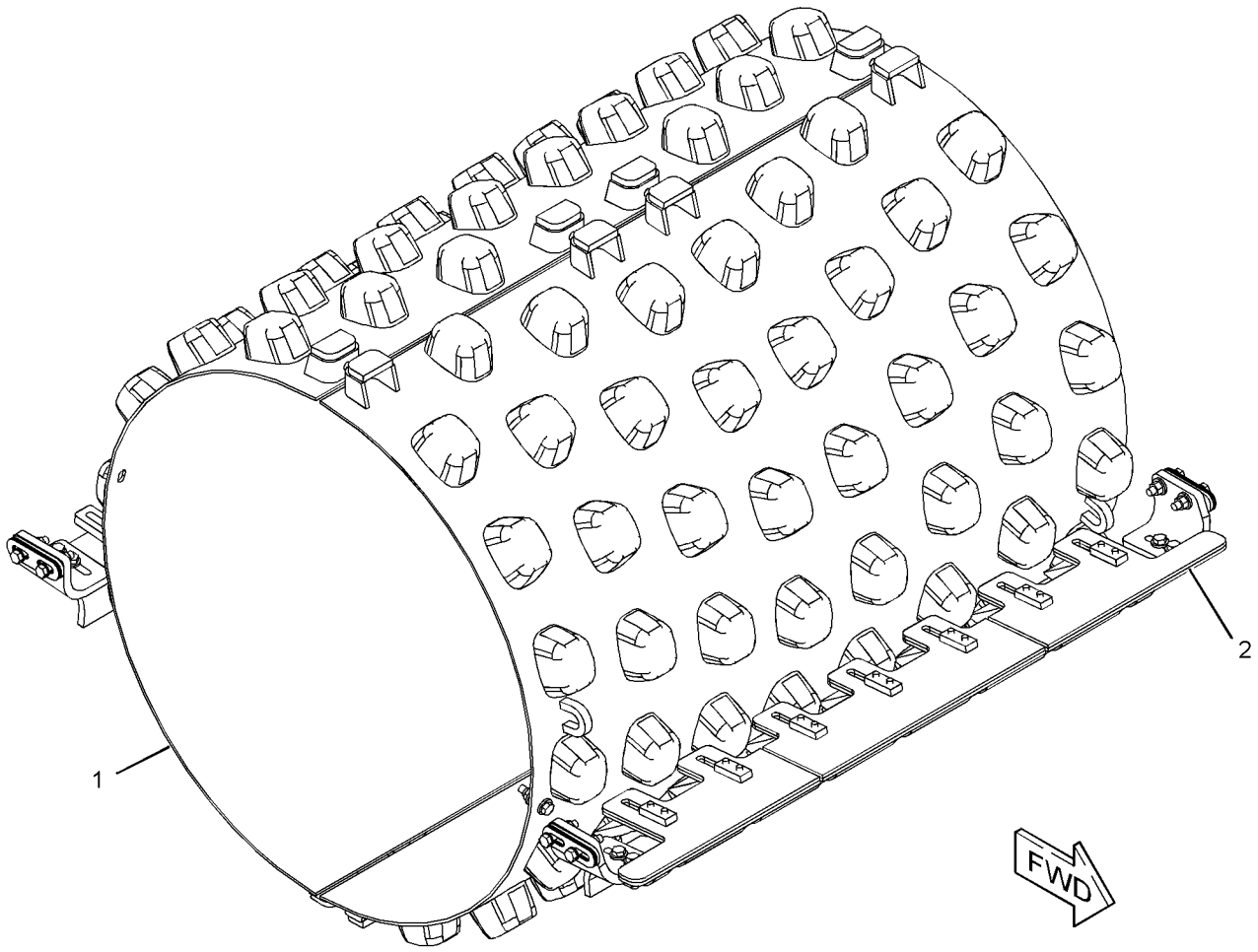

GRAPHIC #1 **<END>** g03083877

416-1355 SHELL GP-PADDED—FIELD INSTALLED

S/N: MBF1-UP

AN ATTACHMENT

SMCS-6605 **i05296328**

NOTE	REF NO	GRAPHIC REF	PART NUMBER	QTY	PART NAME 1 2 3 4 5 6 (PRODUCT LEVEL)	SEE PAGE
Y	1	1	*372-6359*	1	SHELL GP-PADDED	249
Y	2	1	*392-9650*	1	SCRAPER GP-DRUM	295

Y - SEPARATE ILLUSTRATION

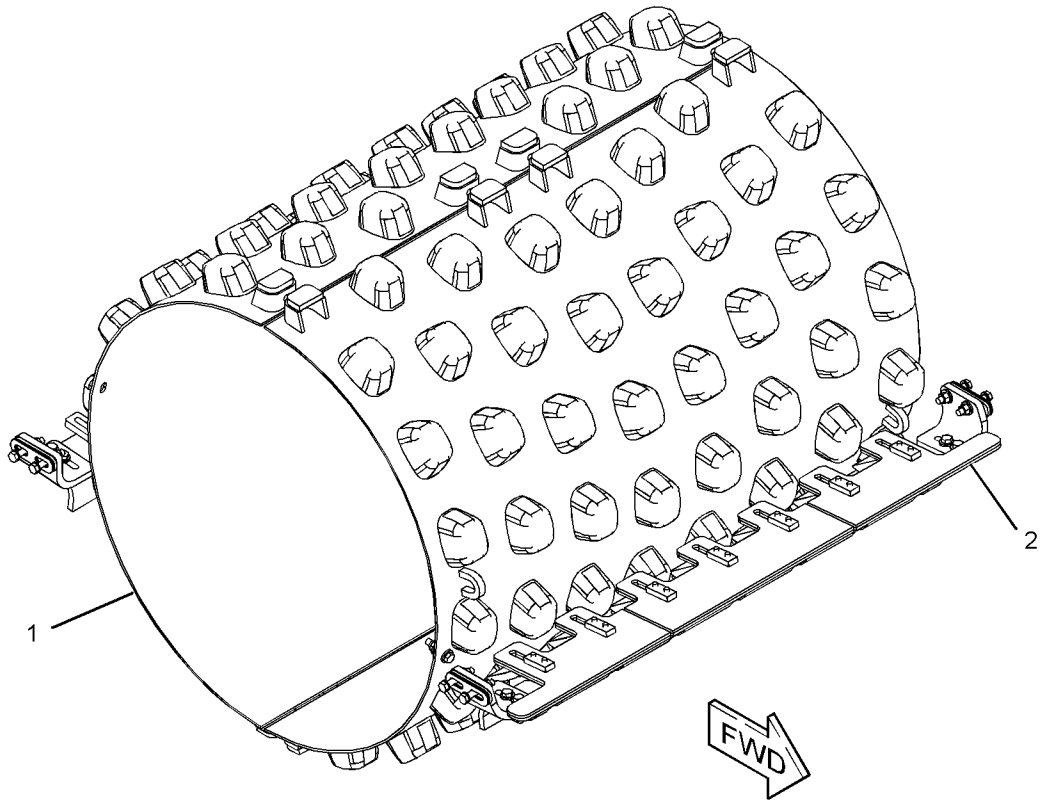

GRAPHIC #1 **<END>** g03085019

347-3248 VALVE GP-CONTROL

S/N: MBF1-UP; M4M1-UP; M5P1-UP; SDT1-UP
PART OF 379-0028 CONTROL GP-BLADE
AN ATTACHMENT

SMCS-5070 **i05291091**

NOTE	REF NO	GRAPHIC REF	PART NUMBER	QTY	PART NAME 1 2 3 4 5 6 (PRODUCT LEVEL)	SEE PAGE
	1	1	**8T-6902**	1	CLIP	
	2	1	**8J-8308**	1	PIN-ROLL	
	3	1	**8F-5758**	1	SCREW (1/4-20X0.375-IN)	
	4	1	**9T-0556**	1	SEAL	
	5	1	**6E-4189**	1	SPACER	
	6	1	**3P-0647**	2	SEAL-O-RING	
	7	1	**9T-2098**	2	RETAINER	
	8	1	**119-7119**	1	SPRING	
	9	1	**5H-1472**	4	BALL	
	10	1	**9T-7648**	1	CAP-SPOOL	
	11	1	**9T-7644**	1	SPACER	
	12	1	**9M-5590**	1	BALL	
	13	1	**9T-7643**	1	RING	
	14	1	**9T-7646**	1	END-DETENT	
	15	1	**9T-7647**	1	SLEEVE-DETENT	
	16	1	**9T-0548**	1	SPRING	
	17	1	**4L-7124**	1	BOLT (1/4-20X1.25-IN)	
	18	1	**2M-9780**	1	SEAL-O-RING	
	19	1	**8F-6711**	2	SEAL-O-RING	
	20	1	**9T-0554**	1	CAP	
	21	1	**218-8375**	2	LINK	
	22	1	**218-8374**	1	PIN	
	23	1	**9T-0546**	1	SPRING	
	24	1	**9T-0553**	1	VALVE	
	25	1	**5S-0003**	4	NUT (5/16-18-THD)	
	26	1	**6V-8183**	2	NUT-FULL (3/8-24-THD)	
	27	1	**9T-7628**	1	HOUSING-OUTLET	
	28	1	**8I-5077**	2	PLUG	
	29	1	**8I-5078**	2	SEAL-O-RING	
	30	1	**394-8249**	1	VALVE GP-RELIEF (BLADE CONTROL)	
		1	**160-5656**	1	SEAL-O-RING	
	31	1	**257-3575**	2	TIE ROD	
	32	1	**302-5980**	1	TIE ROD	
	33	1	**383-1412**	1	VALVE GP-RELIEF (MAIN)	
		1	**160-5656**	1	SEAL-O-RING	

347-3248 **VALVE GP-CONTROL (*contd.*)** **i05291091**

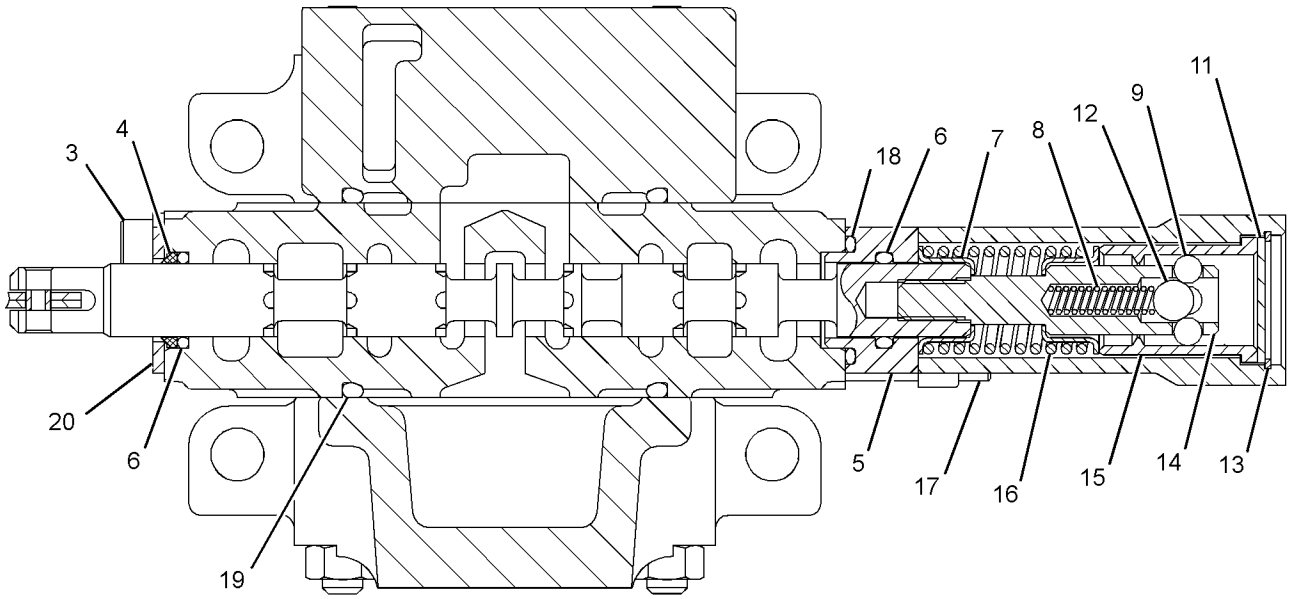

VIEW OF AREA B
(SECTIONED)

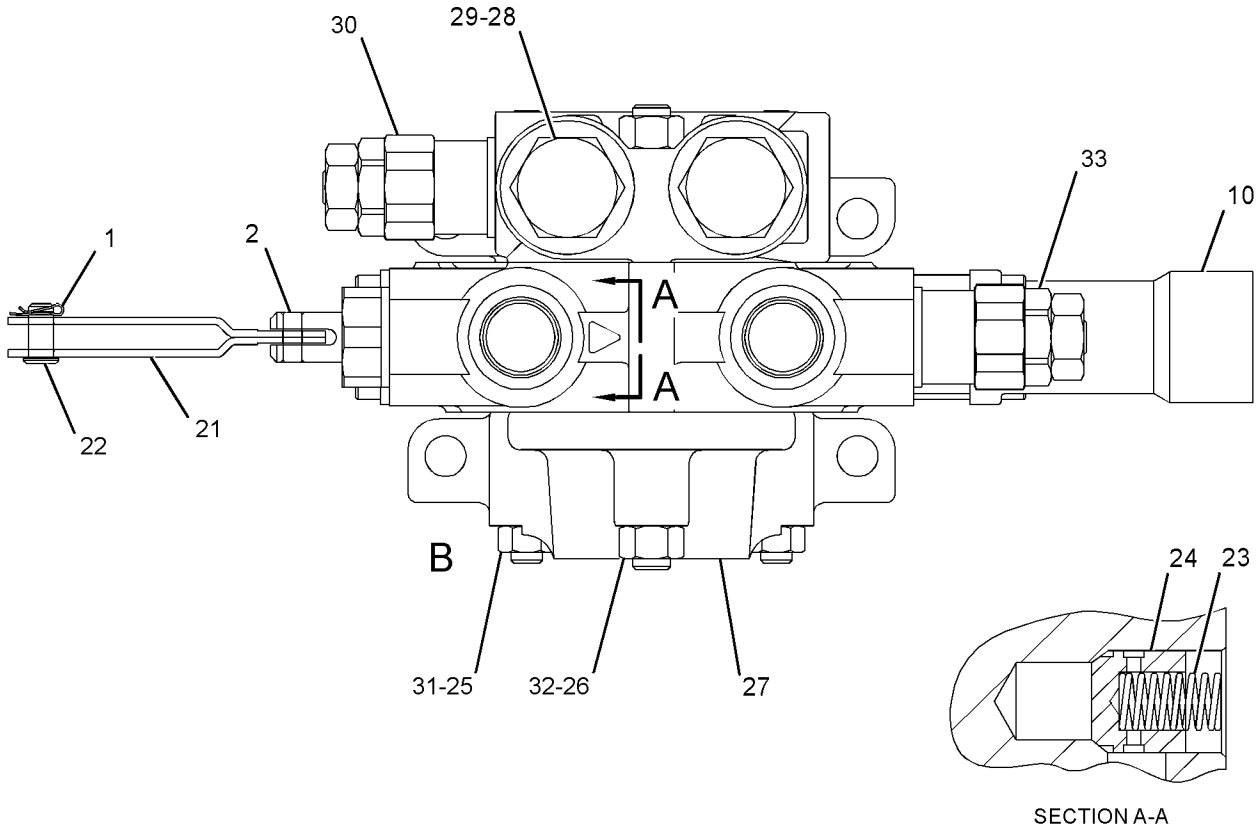

SECTION A-A

GRAPHIC #1 **<END>** g03101858

276-2609 VALVE GP-SHIFT PRESSURE

S/N: MBF1-UP; M4M1-UP; M5P1-UP; SDT1-UP
PART OF 377-4608 VALVE & MTG GP-CONTROL

SMCS-3073, 3157 **i05272090**

NOTE	REF NO	GRAPHIC REF	PART NUMBER	QTY	PART NAME 1 2 3 4 5 6 (PRODUCT LEVEL)	SEE PAGE
					(NO SERVICED PARTS)	

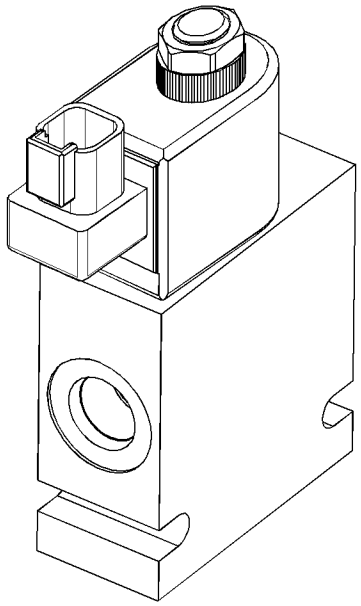

GRAPHIC #1 **<END>** g02540307

268-4040 WHEEL & MTG GP-DRIVE

S/N: MBF1-UP; M4M1-UP; M5P1-UP
AN ATTACHMENT

SMCS-4199, 7553 **i03055820**

NOTE	REF NO	GRAPHIC REF	PART NUMBER	QTY	PART NAME 1 2 3 4 5 6 (PRODUCT LEVEL)	SEE PAGE
M	1	1	**201-1919**	20	NUT (M20X1.5-THD)	
Y	2	1	*268-4044*	1	WHEEL & TIRE GP (LH)	261
Y	3	1	*268-4041*	1	WHEEL & TIRE GP (RH)	260
	4	1	**8T-5439**	20	WASHER-HARD (21.5X45X6-MM THK)	

M - METRIC PART
Y - SEPARATE ILLUSTRATION

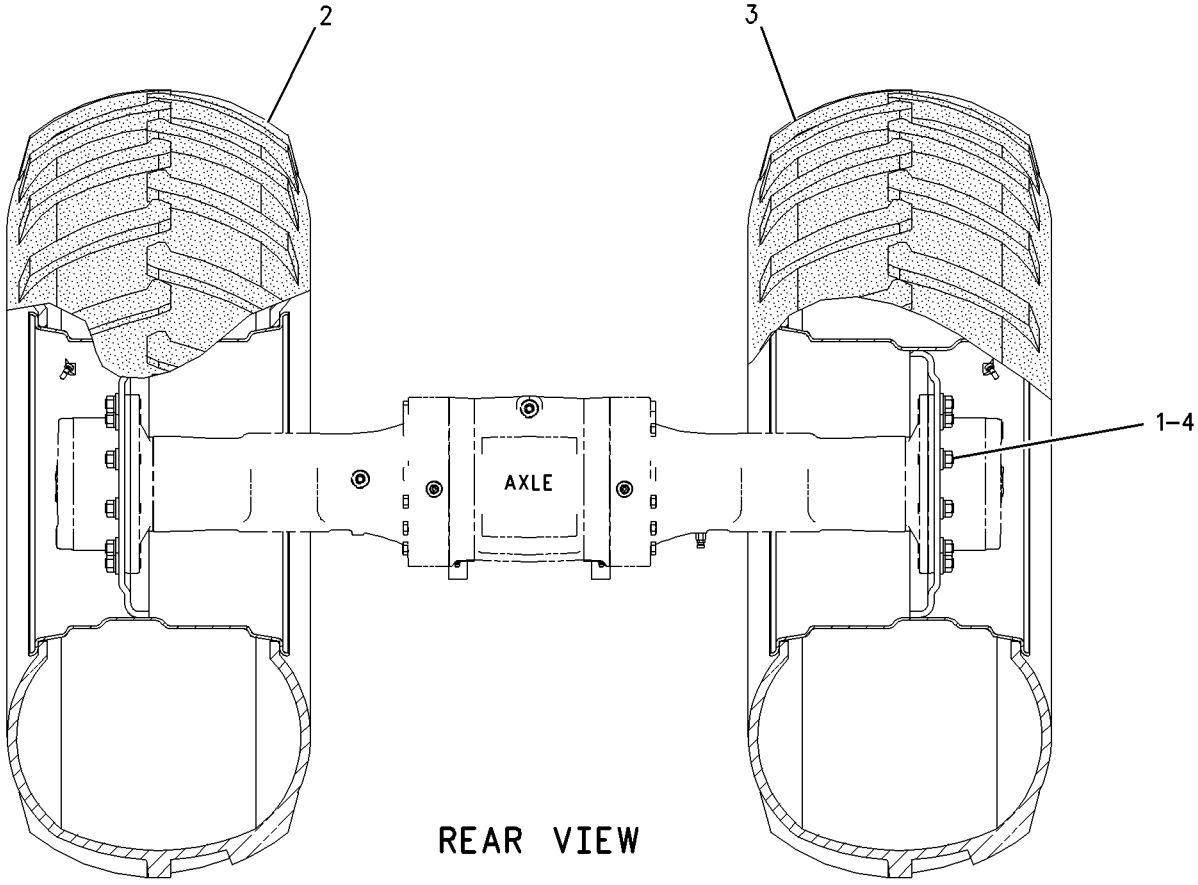

GRAPHIC #1 **<END>** g00917041

268-4034 WHEEL & TIRE GP–LH

S/N: SDT1-UP

PART OF 268-4033 MOUNTING GP-WHEEL

AN ATTACHMENT

SMCS-4202 **i05297422**

NOTE	REF NO	GRAPHIC REF	PART NUMBER	QTY	PART NAME 1 2 3 4 5 6 (PRODUCT LEVEL)	SEE PAGE
	1	1	*180-1555*	1	TIRE (23.1-26)	
	2	1	**077-3895**	1	CAP-VALVE STEM	
	3	1	**077-3906**	1	NUT-VALVE STEM	
	4	1	**077-4192**	1	VALVE	
	5	1	**216-0259**	1	WHEEL AS	

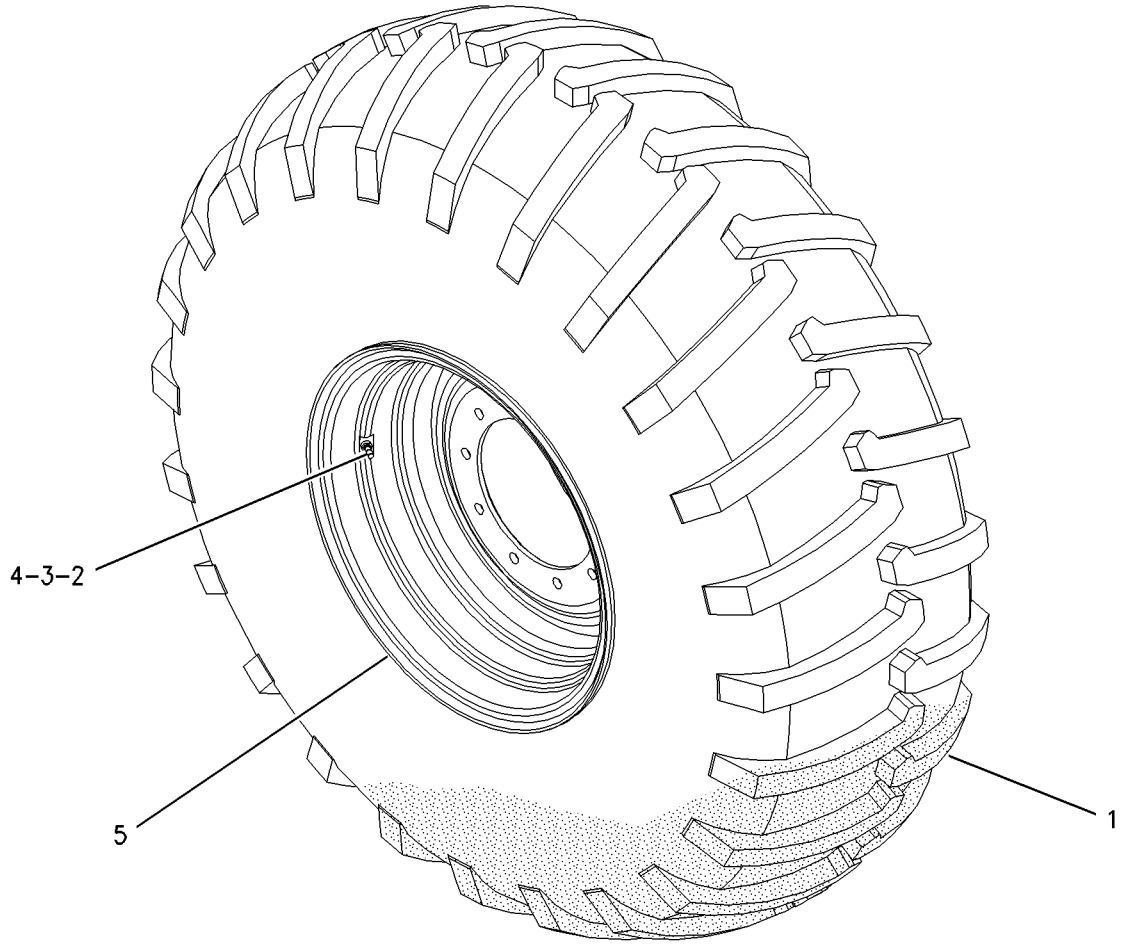

GRAPHIC #1 **<END>** g00917055

268-4035 WHEEL & TIRE GP–RH

S/N: SDT1-UP
PART OF 268-4033 MOUNTING GP-WHEEL
AN ATTACHMENT

SMCS-4202 **i05297423**

NOTE	REF NO	GRAPHIC REF	PART NUMBER	QTY	PART NAME 1 2 3 4 5 6 (PRODUCT LEVEL)	SEE PAGE
	1	1	*180-1555*	1	TIRE (23.1-26)	
	2	1	**077-3895**	1	CAP-VALVE STEM	
	3	1	**077-3906**	1	NUT-VALVE STEM	
	4	1	**077-4192**	1	VALVE	
	5	1	**216-0259**	1	WHEEL AS	

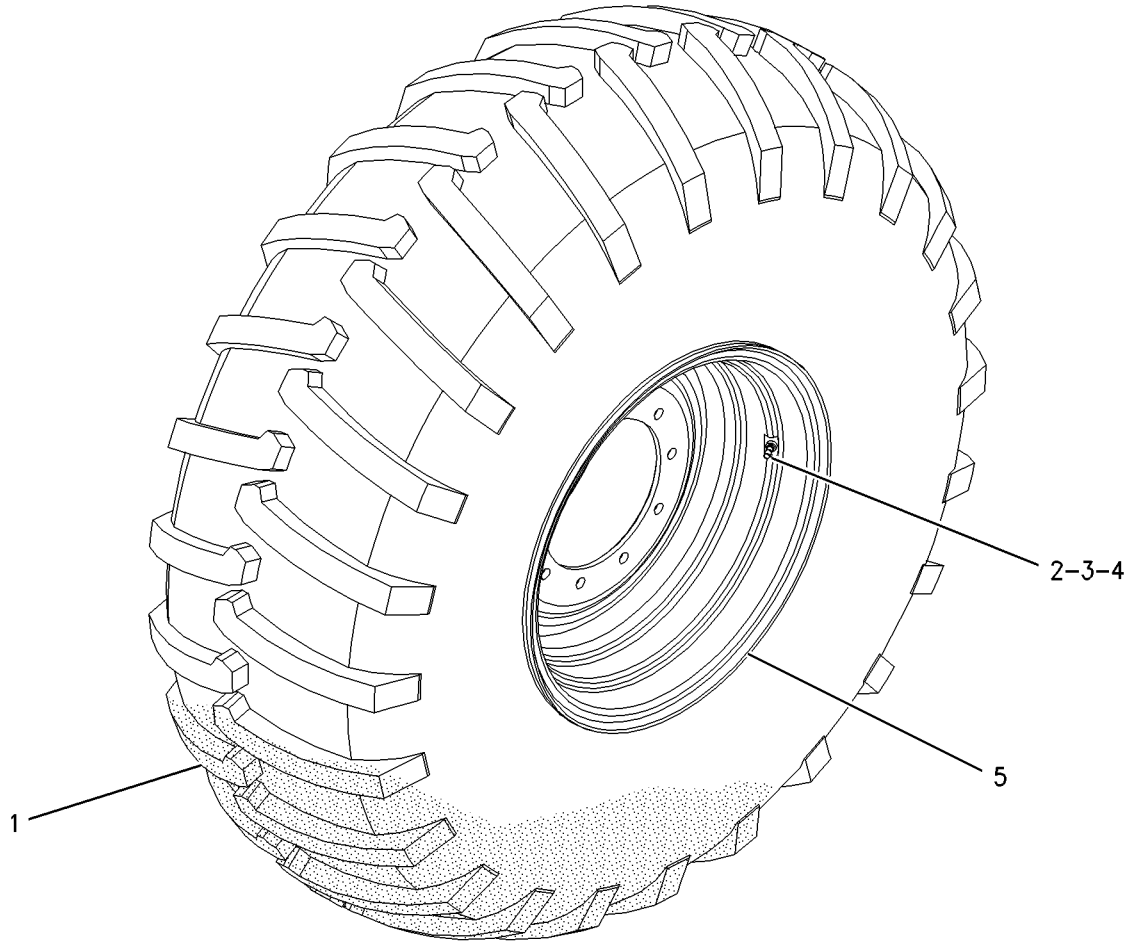

GRAPHIC #1 **<END>** g00917061

268-4041 WHEEL & TIRE GP–RH

S/N: MBF1-UP; M4M1-UP; M5P1-UP
PART OF 268-4040 WHEEL & MTG GP-DRIVE
AN ATTACHMENT

SMCS-4202 **i03436362**

NOTE	REF NO	GRAPHIC REF	PART NUMBER	QTY	PART NAME 1 2 3 4 5 6 (PRODUCT LEVEL)	SEE PAGE
	1	1	*268-4028*	1	TIRE-TUBELESS (23.1-26)	
	2	1	**077-3895**	1	CAP-VALVE STEM	
	3	1	**077-3906**	1	NUT-VALVE STEM	
	4	1	**077-4192**	1	VALVE	
	5	1	**203-4741**	1	WHEEL AS	

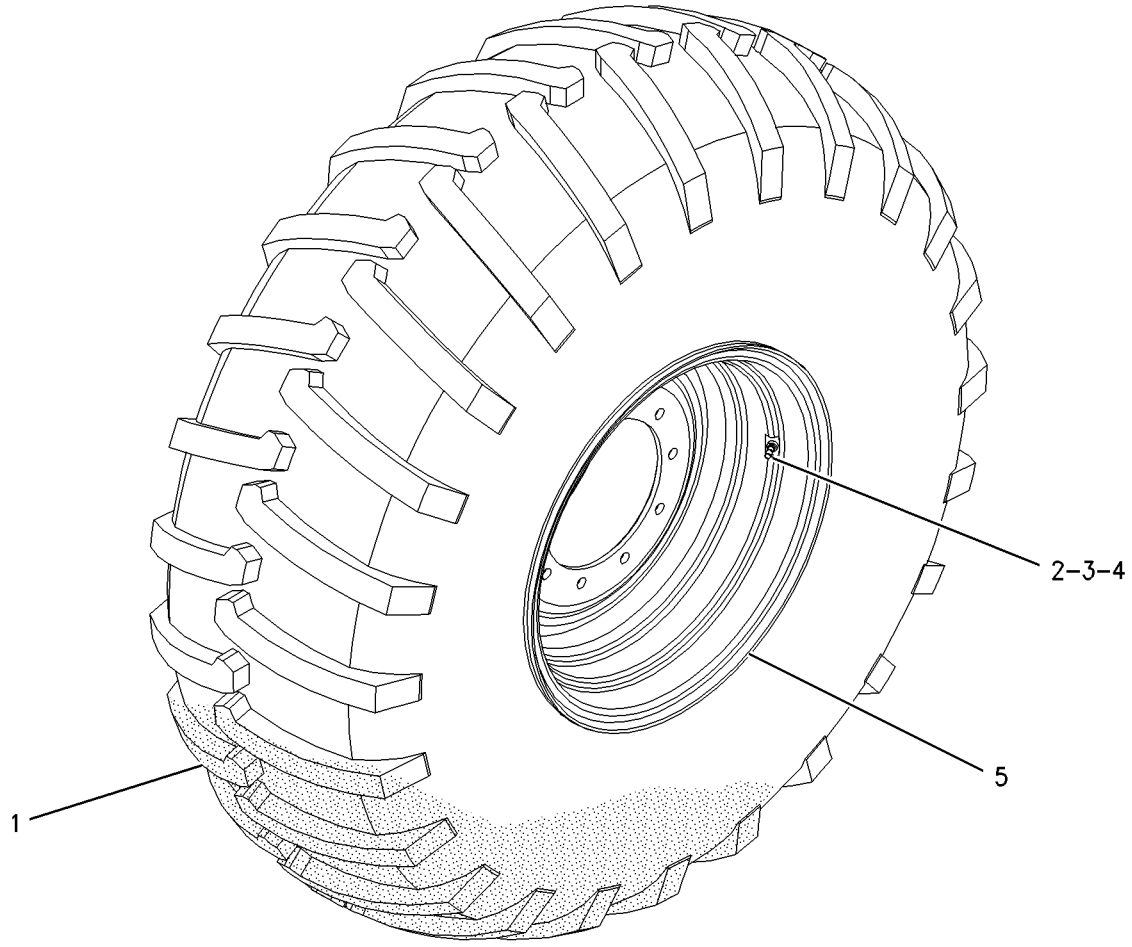

GRAPHIC #1 **<END>** g00917061

268-4044 WHEEL & TIRE GP–LH

S/N: MBF1-UP; M4M1-UP; M5P1-UP
PART OF 268-4040 WHEEL & MTG GP-DRIVE
AN ATTACHMENT

SMCS-4202 **i03436363**

NOTE	REF NO	GRAPHIC REF	PART NUMBER	QTY	PART NAME 1 2 3 4 5 6 (PRODUCT LEVEL)	SEE PAGE
	1	1	*268-4028*	1	TIRE-TUBELESS (23.1-26)	
	2	1	**077-3895**	1	CAP-VALVE STEM	
	3	1	**2D-2631**	1	NUT (0.482-26-THD)	
	4	1	**077-4192**	1	VALVE	
	5	1	**203-4741**	1	WHEEL AS	

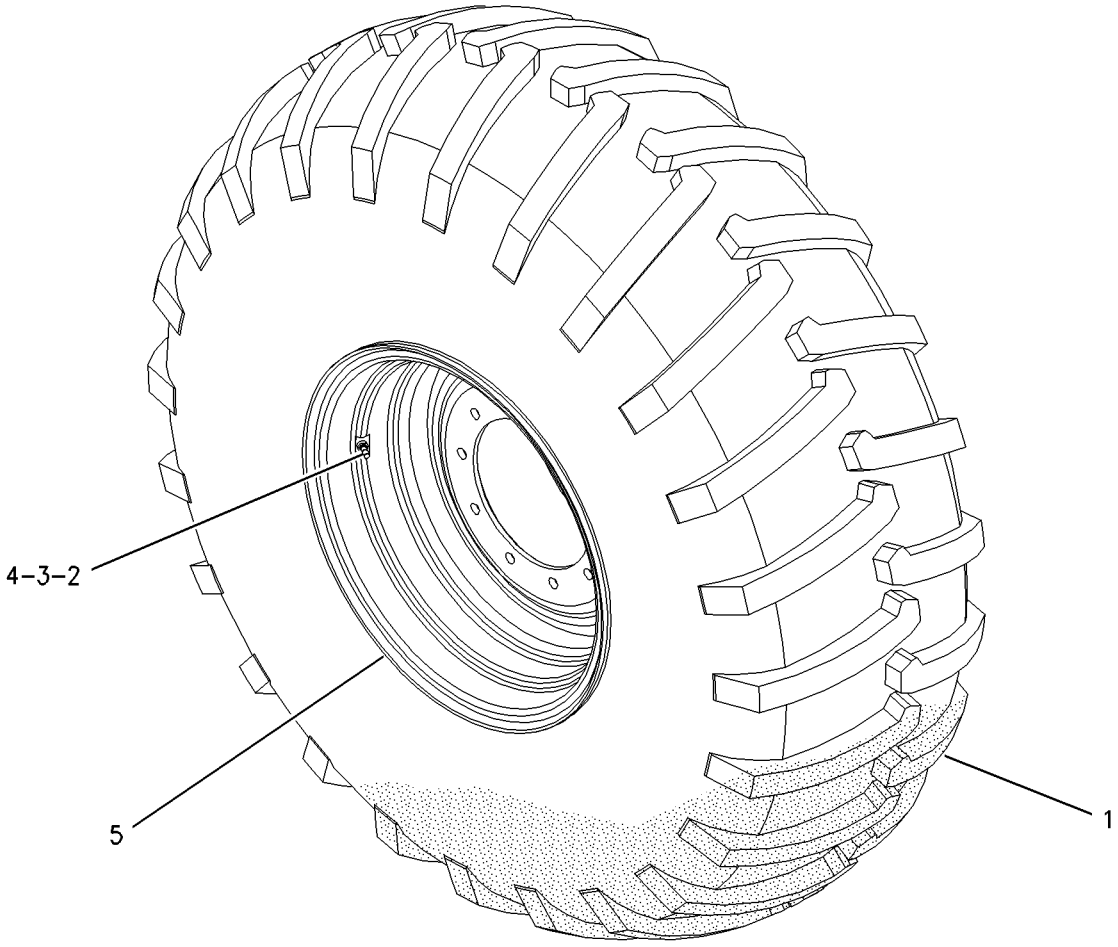

GRAPHIC #1 **<END>** g00917055

324-9214 WHEEL & TIRE GP

S/N: MBF1-UP; M4M1-UP
PART OF 324-9216 MOUNTING GP-WHEEL
AN ATTACHMENT

SMCS-4202 **i03640996**

NOTE	REF NO	GRAPHIC REF	PART NUMBER	QTY	PART NAME 1 2 3 4 5 6 (PRODUCT LEVEL)	SEE PAGE
	1	1	**077-3895**	1	CAP-VALVE STEM	
	2	1	**2D-2631**	1	NUT (0.482-26-THD)	
	3	1	**077-4192**	1	VALVE (STEM)	
	4	1	**343-4268**	1	WHEEL AS	
	5	1	*324-9213*	1	TIRE (23.1-26)	

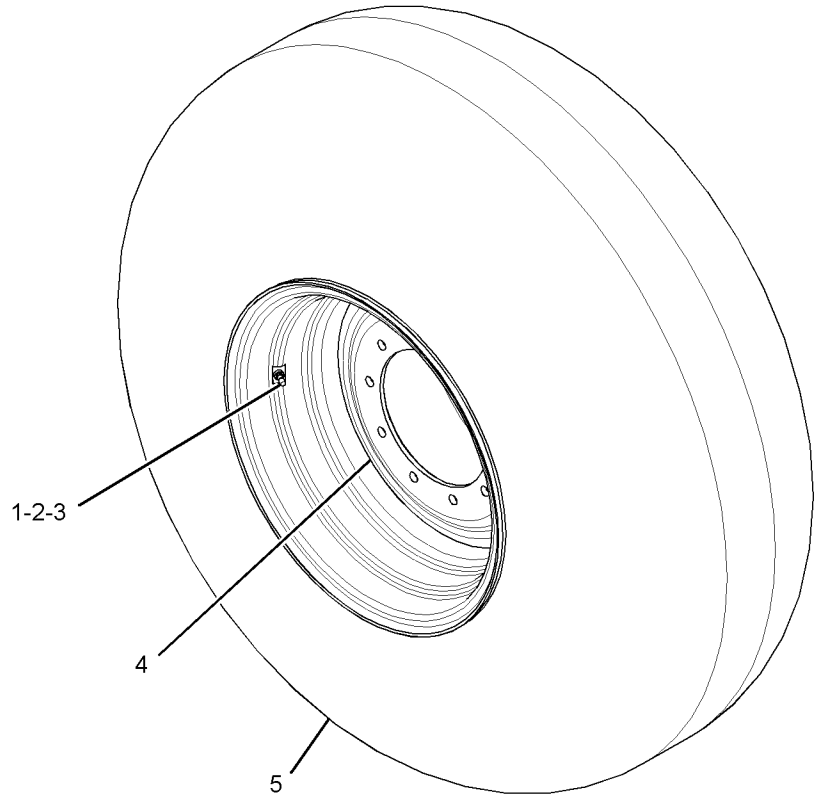

GRAPHIC #1 **<END>** g01558316

377-9353 COVER GP-PLATFORM–OPEN ROPS

S/N: MBF1-UP; M4M1-UP; M5P1-UP; SDT1-UP
PART OF 374-9842, 377-2159 OPERATOR AR
AN ATTACHMENT

SMCS-7253 **i05289946**

NOTE	REF NO	GRAPHIC REF	PART NUMBER	QTY	PART NAME 1 2 3 4 5 6 (PRODUCT LEVEL)	SEE PAGE
	1	1	**276-0753**	1	CAP-PLUG	
	2	1	**384-5431**	1	COVER	
	3	1	**399-2752**	1	COVER	
	4	1	**096-6166**	2	WASHER-HARD (4.5X9X1-MM THK)	
M	5	1	**3E-8020**	16	SCREW-TRUSS HEAD (M6X1X25-MM)	
M	6	1	**6V-9672**	2	SCREW-MACHINE (M4X0.7X16-MM)	
	7	1	**9X-2038**	16	WASHER (7X19X2-MM THK)	

M - METRIC PART

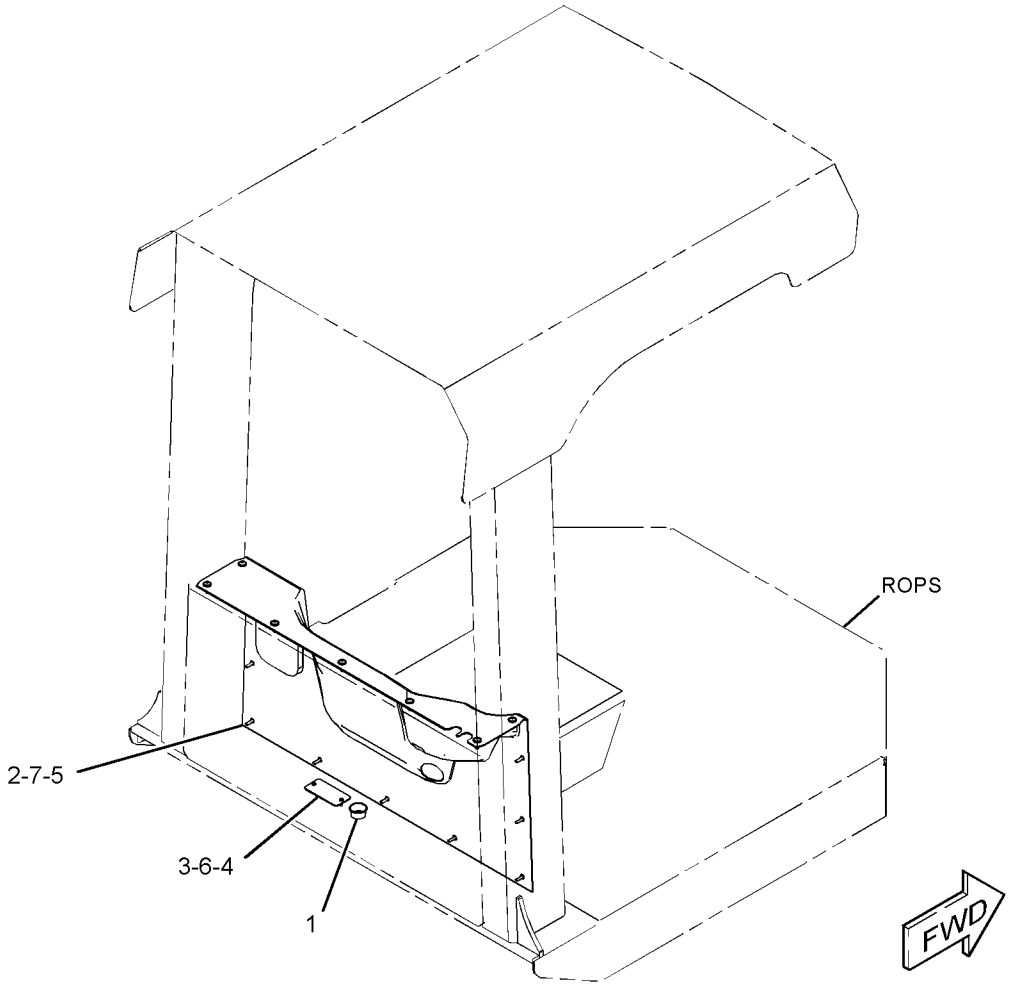

GRAPHIC #1 **<END>** g03098688

355-2659 DOOR GP-ACCESS—HOOD SIDE, REAR, LH

S/N: MBF1-UP; M4M1-UP; M5P1-UP; SDT1-UP

AN ATTACHMENT

SMCS-7273 **i05268337**

NOTE	REF NO	GRAPHIC REF	PART NUMBER	QTY	PART NAME 1 2 3 4 5 6 (PRODUCT LEVEL)	SEE PAGE
	1	1	**246-2641**	1	PADLOCK GP	
		1	**5P-8500**	1	KEY	
	2	1	**125-8176**	1	CAM-LATCH	
	3	1	**206-0500**	1	LATCH AS	
	4	1	**369-4522**	1	DOOR AS-ACCESS	
		1	**177-2064**	1	HINGE	
M	5	1	**5C-2890**	9	NUT (M6X1-THD)	
M	6	1	**8T-4138**	9	BOLT (M6X1X20-MM)	
	7	1	**9X-6165**	18	WASHER (6.5X22X2.5-MM THK)	

M - METRIC PART

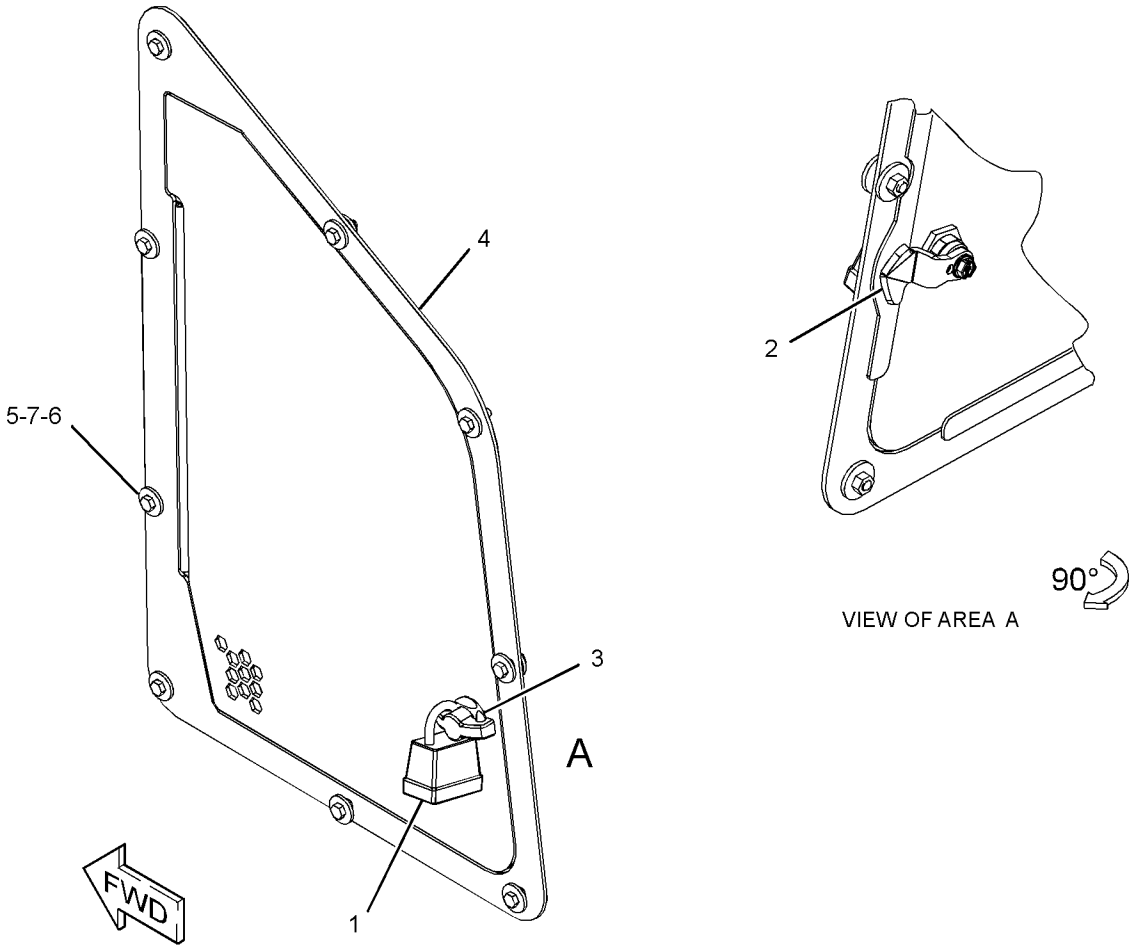

GRAPHIC #1 **<END>** g03043943

374-9810 ENCLOSURE GP-ENGINE

S/N: MBF1-UP; M4M1-UP; M5P1-UP; SDT1-UP

PART OF 374-9723, 374-9724, 374-9725, 374-9726 CHASSIS AR

SMCS-7263 **i05336995**

NOTE	REF NO	GRAPHIC REF	PART NUMBER	QTY	PART NAME 1 2 3 4 5 6 (PRODUCT LEVEL)	SEE PAGE
	1	2	**089-7968**	1	WASHER (13X27.5X2.5-MM THK)	
	2	2	**110-4463**	1	STRIKER AS	
	3	2	**124-6569**	2	FASTENER	
	4	2	**135-5049**	1	CABLE AS	
		2	**5P-7958**	1	SLEEVE-CABLE SPLICE	
	5	2	**202-0949**	1	STRAP AS	
	6	2	**280-3991**	2	STUD-BALL	
	7	2	**280-3992**	4	CLIP-RETAINING	
	8	2	**291-4374**	1	PIN	
	9	1	**322-5217**	1	PIPE AS-EXHAUST	
	10	2	**345-7767**	1	BRACKET AS	
	11	2	**354-0319**	2	SPRING AS-GAS	
Y	12	1	*355-3180*	1	HOOD GP	286
	13	2	**356-1744**	1	PANEL (LH)	
	14	1	**356-1745**	1	PANEL (RH)	
	15	1	**386-5625**	1	GASKET	
	16	2	**363-6034**	1	SUPPORT	
	17	1	**374-9811**	1	SUPPORT AS	
		1	**7T-1099**	2	LINK	
M		1	**8T-3490**	6	NUT-WELD (M10X1.5-THD)	
		1	**355-8941**	6	NUT-WELD (M16X2-THD)	
		1	**8R-3857**	1	BOSS (M8X1.25X12-MM)	
	18	2	**374-9812**	1	SHIELD AS	
	19	2	**374-9813**	1	INSULATION	
	20	2	**374-9818**	1	STRUT AS (LH)	
	21	2	**374-9819**	1	STRUT AS (RH)	
	22	2	**374-9835**	1	INSULATION (LH)	
	23	2	**374-9836**	1	INSULATION (RH)	
	24	1	**374-9837**	1	INSULATION	
	25	2	**089-7338**	1	SLEEVE	
	26	1,2	**115-6433**	6	WASHER (11X50X6-MM THK)	
	27	2	**4J-5140**	1	SEAL-O-RING	
M	28	2	**5C-9553**	1	BOLT (M6X1X16-MM)	
	29	2	**5P-4115**	1	WASHER-HARD (7.2X19X2-MM THK)	
	30	2	**5P-4116**	3	WASHER-HARD (8.8X20.5X2-MM THK)	
M	31	2	**7X-2555**	4	BOLT (M16X2X80-MM)	
	32	2	**7X-7729**	12	WASHER (11X25X3-MM THK)	
M	33	2	**8T-0389**	2	LOCKNUT (M10X1.5-THD)	
	34	2	**8T-4121**	2	WASHER-HARD (11X21X2.5-MM THK)	
	35	2	**8T-4122**	4	WASHER-HARD (17X32X3.5-MM THK)	
M	36	2	**8T-4133**	3	NUT (M10X1.5-THD)	
M	37	2	**8T-4138**	1	BOLT (M6X1X20-MM)	
M	38	2	**8T-4186**	4	BOLT (M10X1.5X40-MM)	
M	39	2	**8T-4189**	3	BOLT (M8X1.25X20-MM)	
M	40	1	**8T-4193**	2	BOLT (M16X2X50-MM)	
M	41	1,2	**8T-4195**	6	BOLT (M10X1.5X30-MM)	
M	42	2	**8T-4196**	1	BOLT (M10X1.5X35-MM)	
M	43	2	**8T-4244**	1	NUT (M12X1.75-THD)	
M	44	2	**8T-6466**	2	BOLT (M10X1.5X60-MM)	
M	45	1	**9X-2039**	4	SCREW-TRUSS HEAD (M10X1.5X35-MM)	
	46	2	**9X-8256**	1	WASHER (6.6X12X2-MM THK)	
	47	1	**9X-8257**	2	WASHER (17.5X30X3.5-MM THK)	
D	48	1	**5P-7483**		SEAL (0.7-M EACH)	
D	49	1	**6V-2803**		SEAL (0.2-M EACH)	
E	50	2	**9X-8699**		SEAL (151-CM EACH)	
D	51	2	**5P-5687**		SEAL (0.2-M EACH)	

374-9810 **ENCLOSURE GP-ENGINE (*contd.*)** **i05336995**

NOTE	REF NO	GRAPHIC REF	PART NUMBER	QTY	PART NAME 1 2 3 4 5 6 (PRODUCT LEVEL)	SEE PAGE

D - ORDER BY THE METER
E - ORDER BY THE CENTIMETER
M - METRIC PART
Y - SEPARATE ILLUSTRATION

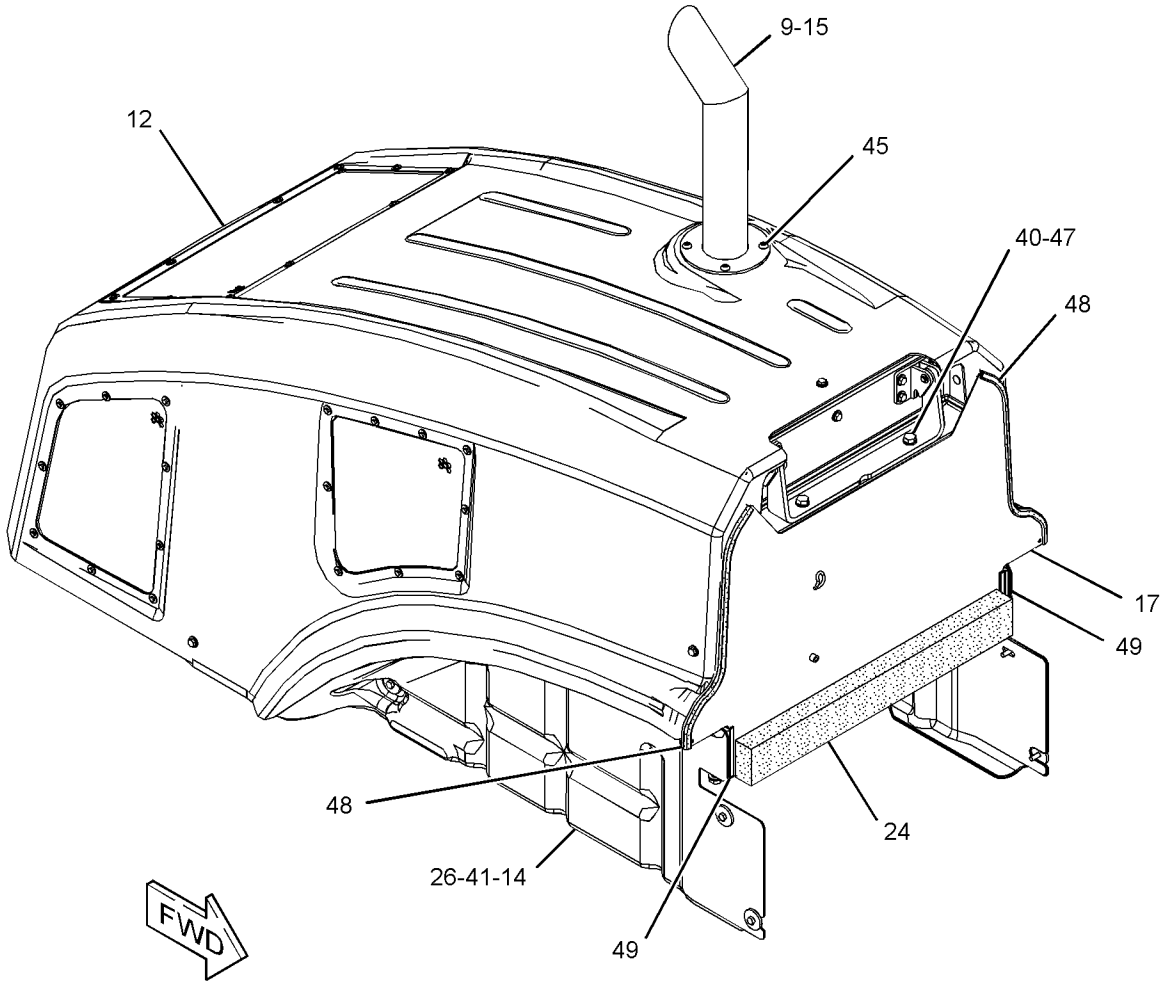

GRAPHIC #1 g03119656

374-9810 **ENCLOSURE GP-ENGINE (*contd.*)** **i05336995**

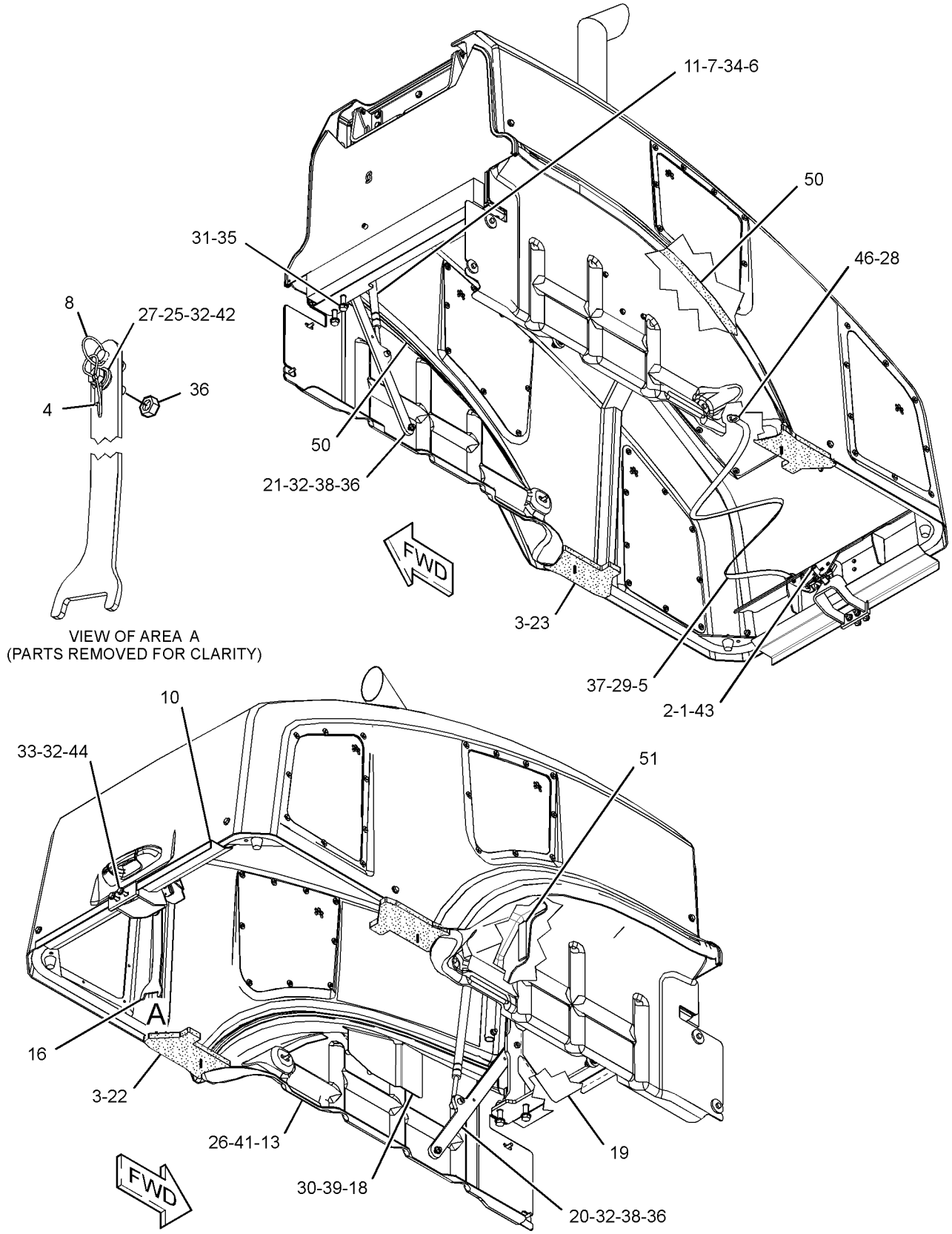

GRAPHIC #2 **<END>** g03119659

374-9781 FRAME AS-REAR

S/N: M4M1-UP; M5P1-UP

PART OF 374-9780 FRAME GP-REAR

SMCS-7051 **i05295487**

NOTE	REF NO	GRAPHIC REF	PART NUMBER	QTY	PART NAME 1 2 3 4 5 6 (PRODUCT LEVEL)	SEE PAGE
	1	1	*356-1703*	1	BRACKET AS	
	2	1	*356-1719*	1	BRACKET AS	
					(EACH BRACKET AS INCLUDES)	
M		1	**8T-3612**	2	NUT-WELD (M8X1.25-THD)	
	3	1	*356-1723*	1	BRACKET AS	
	4	1	*356-1724*	1	BRACKET AS	
					(EACH BRACKET AS INCLUDES)	
		1	**2U-9526**	1	BOSS	
M		1	**8T-3490**	1	NUT-WELD (M10X1.5-THD)	
	5	1	**102-8704**	3	PLATE AS	
	6	1	**154-4887**	2	PLATE AS	
	7	1	**7T-1099**	5	LINK	
	8	1	**8R-3857**	2	BOSS (M8X1.25X12-MM)	
M	9	1	**8T-3635**	2	STUD-WELD (M12X1.75X34.93-MM)	
M	10	1	**9R-2613**	1	BOSS-WELD (M10X1.5X25-MM)	
M	11	1	**9R-2672**	2	BOSS-THREADED (M10X1.5-THD)	

M - METRIC PART

374-9781 **FRAME AS-REAR (*contd.*)** **i05295487**

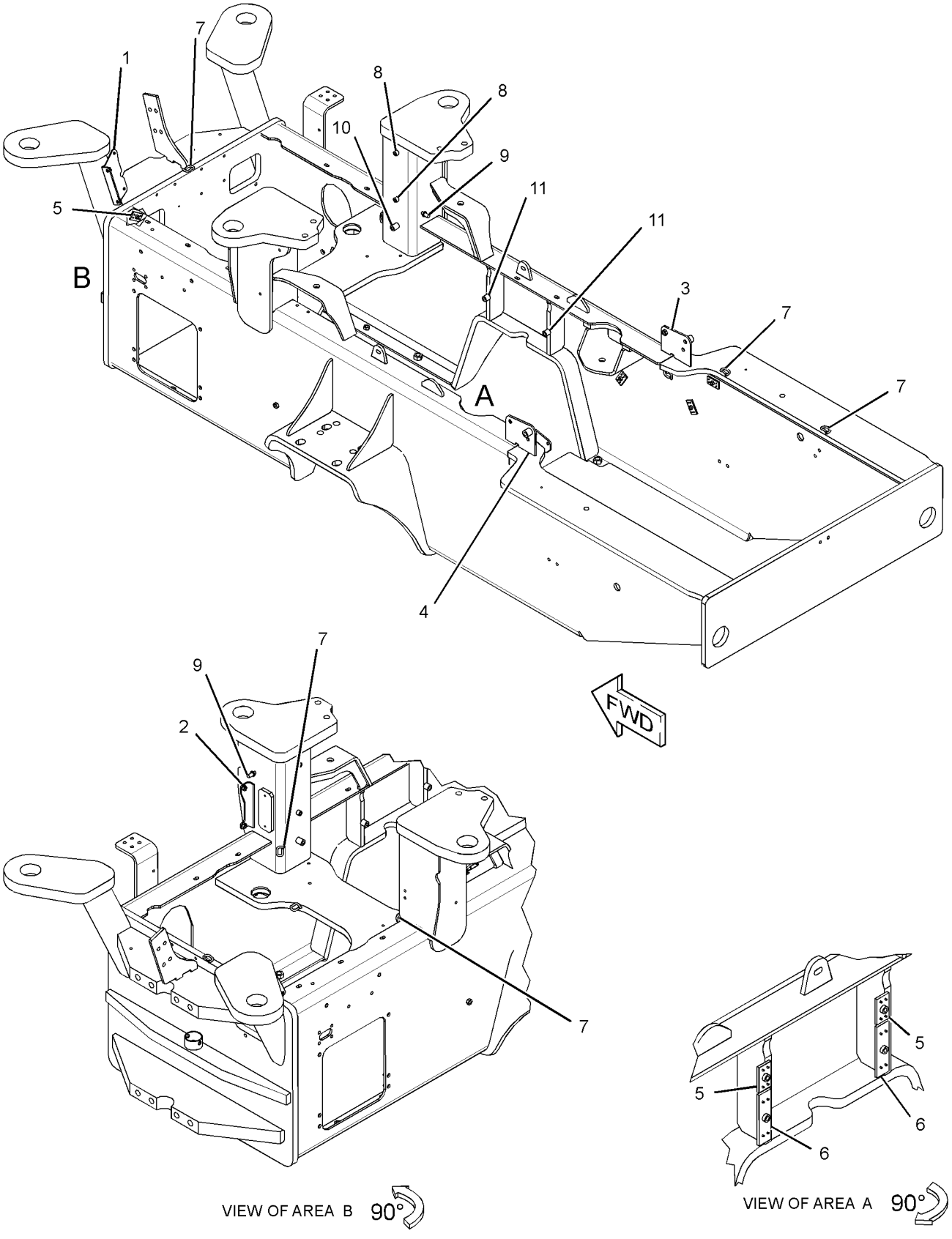

GRAPHIC #1 **<END>** g03075636

347-9575 FRAME GP-FRONT

S/N: M4M1-UP

PART OF 374-9723 CHASSIS AR

SMCS-7050, 7051 **i05295477**

NOTE	REF NO	GRAPHIC REF	PART NUMBER	QTY	PART NAME 1 2 3 4 5 6 (PRODUCT LEVEL)	SEE PAGE
Y	1	1	*141-9864*	1	HITCH GP-ARTICULATING & OSC (SMOOTH DRUM)	284
	2	1	**141-9866**	1	PLATE-END	
Y	3	1	*361-3986*	1	FRAME GP-FRONT	276
M	4	1	**7X-2577**	8	BOLT (M24X3X90-MM)	
	5	1	**8T-4121**	2	WASHER-HARD (11X21X2.5-MM THK)	
	6	1	**8T-4167**	8	WASHER-HARD (26X44X4-MM THK)	
M	7	1	**8T-4195**	2	BOLT (M10X1.5X30-MM)	

M - METRIC PART
Y - SEPARATE ILLUSTRATION

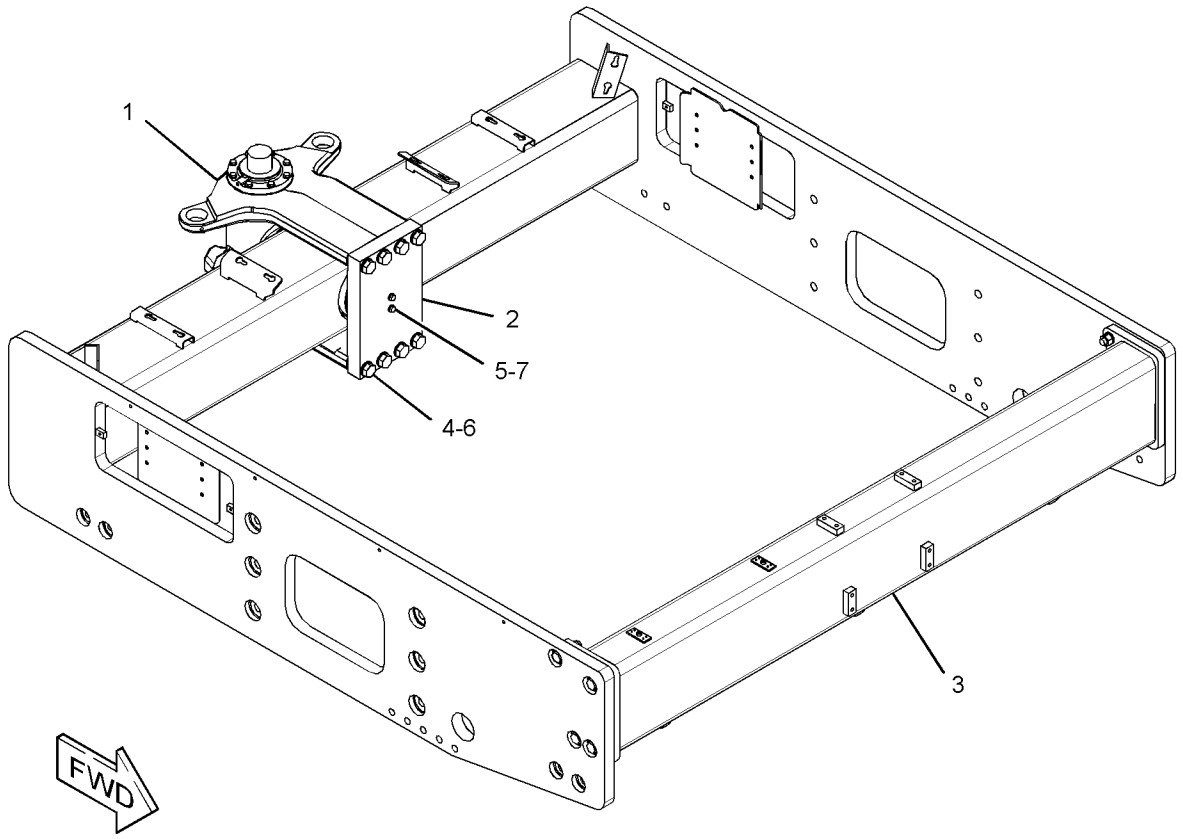

GRAPHIC #1 **<END>** g02717442

347-9576 FRAME GP-FRONT

S/N: M5P1-UP

PART OF 374-9724 CHASSIS AR

SMCS-7050, 7051 **i05296405**

NOTE	REF NO	GRAPHIC REF	PART NUMBER	QTY	PART NAME 1 2 3 4 5 6 (PRODUCT LEVEL)	SEE PAGE
Y	1	1	*141-9864*	1	HITCH GP-ARTICULATING & OSC (SMOOTH DRUM)	284
	2	1	**141-9866**	1	PLATE-END	
Y	3	1	*361-3987*	1	FRAME GP-FRONT	277
M	4	1	**7X-2577**	8	BOLT (M24X3X90-MM)	
	5	1	**8T-4121**	2	WASHER-HARD (11X21X2.5-MM THK)	
	6	1	**8T-4167**	8	WASHER-HARD (26X44X4-MM THK)	
M	7	1	**8T-4195**	2	BOLT (M10X1.5X30-MM)	

M - METRIC PART
Y - SEPARATE ILLUSTRATION

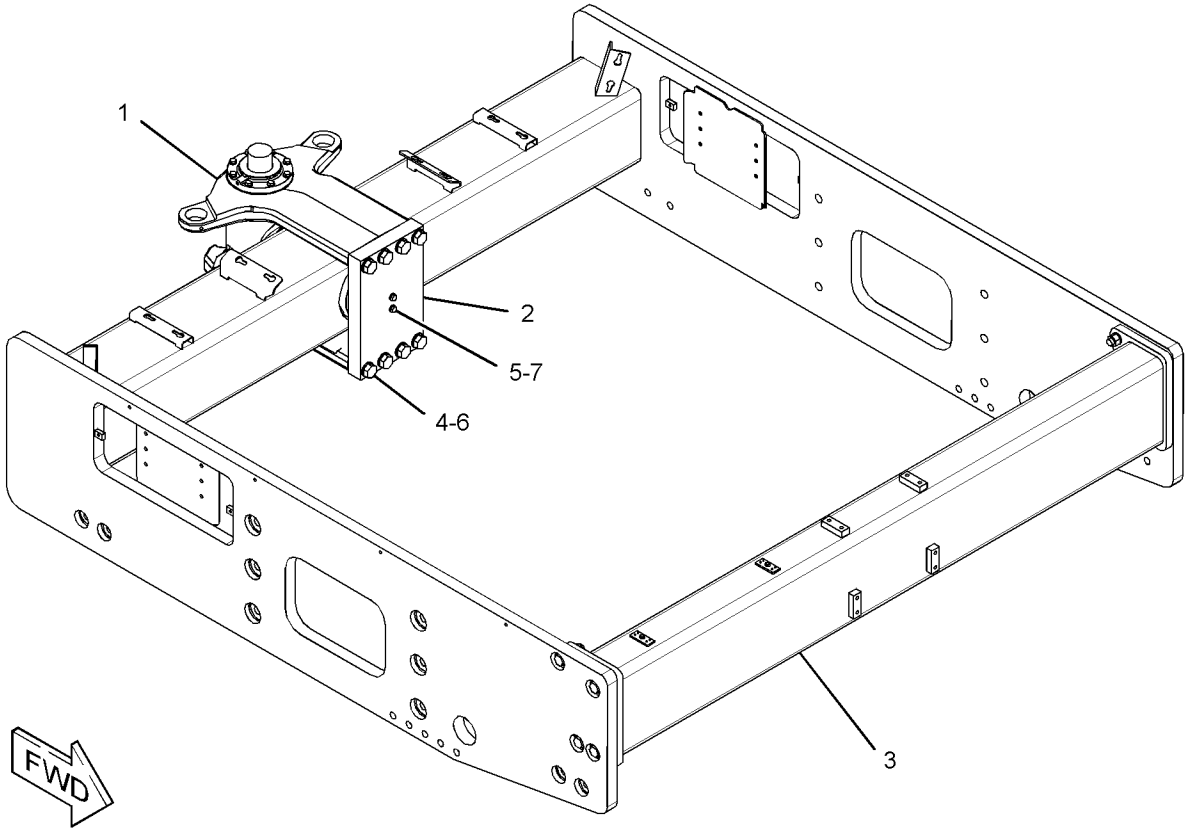

GRAPHIC #1 **<END>** g02717453

347-9579 FRAME GP-FRONT

S/N: MBF1-UP

PART OF 374-9725 CHASSIS AR

SMCS-7050, 7051 **i05297395**

NOTE	REF NO	GRAPHIC REF	PART NUMBER	QTY	PART NAME 1 2 3 4 5 6 (PRODUCT LEVEL)	SEE PAGE
Y	1	1	*141-9864*	1	HITCH GP-ARTICULATING & OSC (SMOOTH DRUM)	284
	2	1	**141-9866**	1	PLATE-END	
Y	3	1	*355-8452*	1	FRAME GP-FRONT	274
M	4	1	**7X-2577**	8	BOLT (M24X3X90-MM)	
	5	1	**8T-4121**	2	WASHER-HARD (11X21X2.5-MM THK)	
	6	1	**8T-4167**	8	WASHER-HARD (26X44X4-MM THK)	
M	7	1	**8T-4195**	2	BOLT (M10X1.5X30-MM)	

M - METRIC PART
Y - SEPARATE ILLUSTRATION

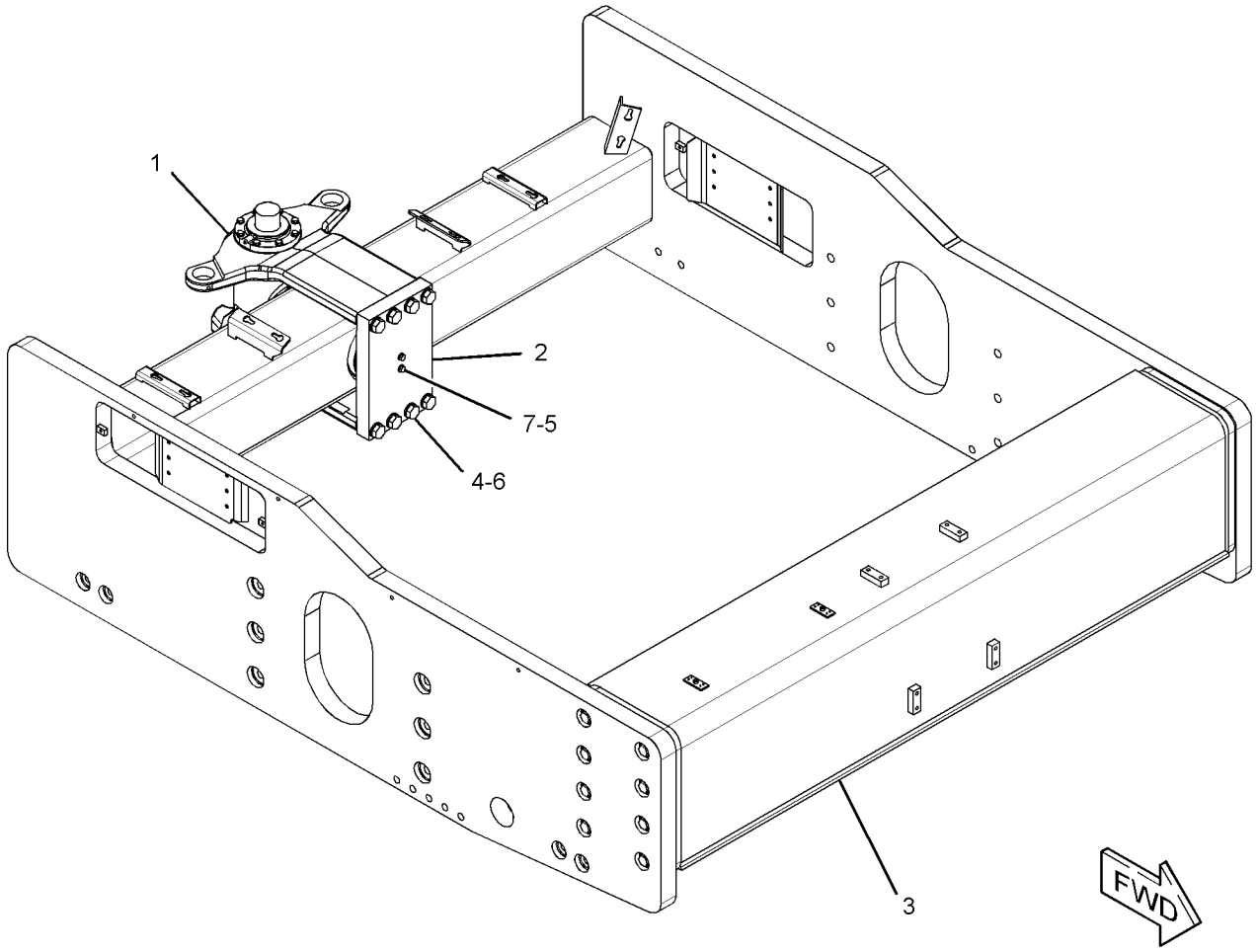

GRAPHIC #1 **<END>** g02716119

347-9580 FRAME GP-FRONT

S/N: SDT1-UP

PART OF 374-9726 CHASSIS AR

SMCS-7050, 7051 **i05298360**

NOTE	REF NO	GRAPHIC REF	PART NUMBER	QTY	PART NAME 1 2 3 4 5 6 (PRODUCT LEVEL)	SEE PAGE
Y	1	1	*141-9864*	1	HITCH GP-ARTICULATING & OSC (SMOOTH DRUM)	284
	2	1	**141-9866**	1	PLATE-END	
Y	3	1	*358-3893*	1	FRAME GP-FRONT	275
M	4	1	**7X-2577**	8	BOLT (M24X3X90-MM)	
	5	1	**8T-4121**	2	WASHER-HARD (11X21X2.5-MM THK)	
	6	1	**8T-4167**	8	WASHER-HARD (26X44X4-MM THK)	
M	7	1	**8T-4195**	2	BOLT (M10X1.5X30-MM)	

M - METRIC PART
Y - SEPARATE ILLUSTRATION

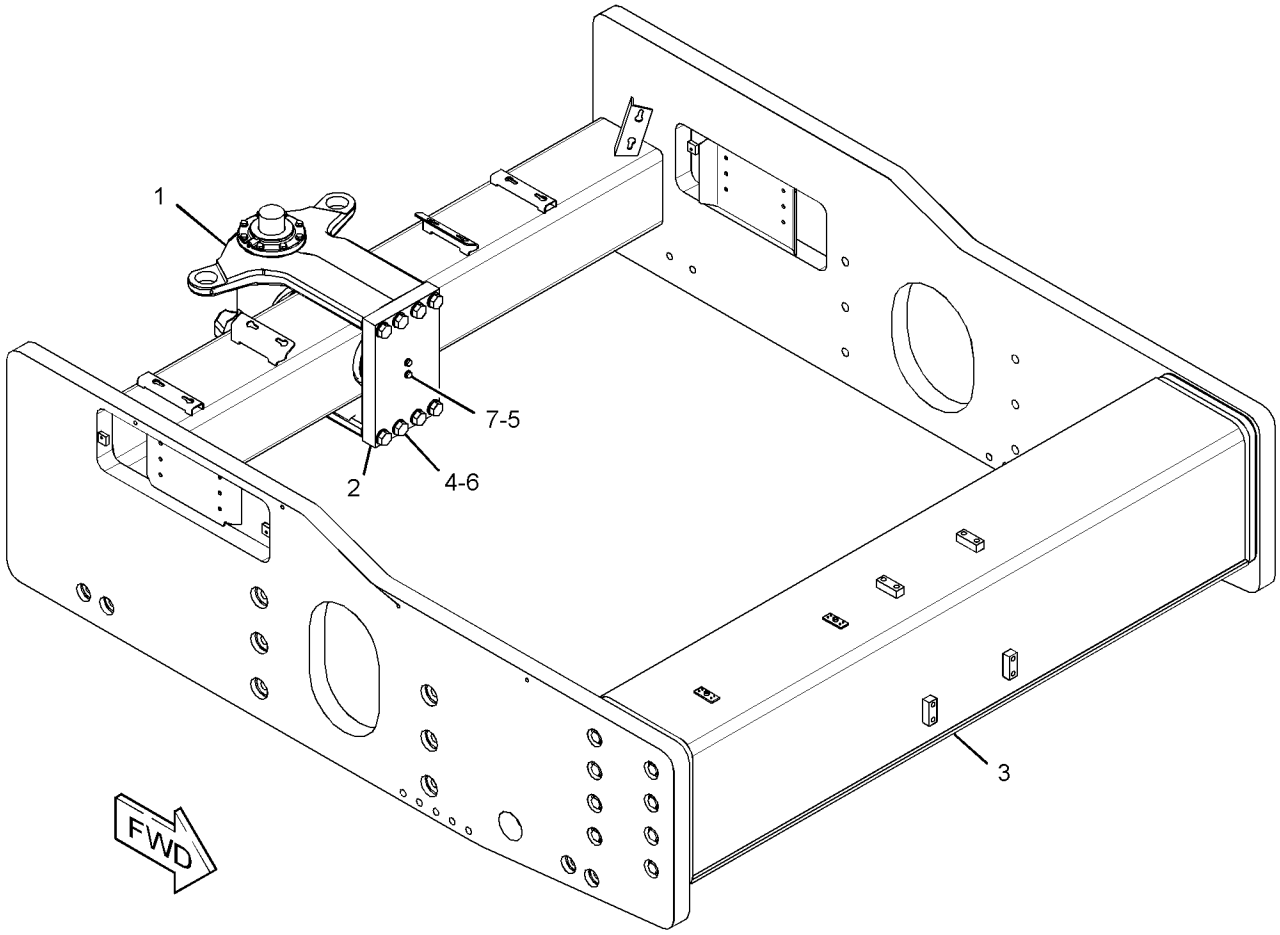

GRAPHIC #1 **<END>** g02728567

355-8452 FRAME GP-FRONT

S/N: MBF1-UP

PART OF 347-9579 FRAME GP-FRONT

SMCS-7050, 7051 **i05297397**

NOTE	REF NO	GRAPHIC REF	PART NUMBER	QTY	PART NAME 1 2 3 4 5 6 (PRODUCT LEVEL)	SEE PAGE
	1	1	**373-2735**	1	YOKE AS	
	2	1	**388-1285**	1	BUMPER AS	
		1	**355-8941**	6	NUT-WELD (M16X2-THD)	
		1	**102-8706**	2	PLATE AS	
B	3	1	**373-3388**	4	SHIM (2-MM THK)	
M	4	1	**7X-2565**	16	BOLT (M20X2.5X100-MM)	
	5	1	**8T-4123**	16	WASHER (22X35X3.5-MM THK)	

B - USE AS REQUIRED
M - METRIC PART

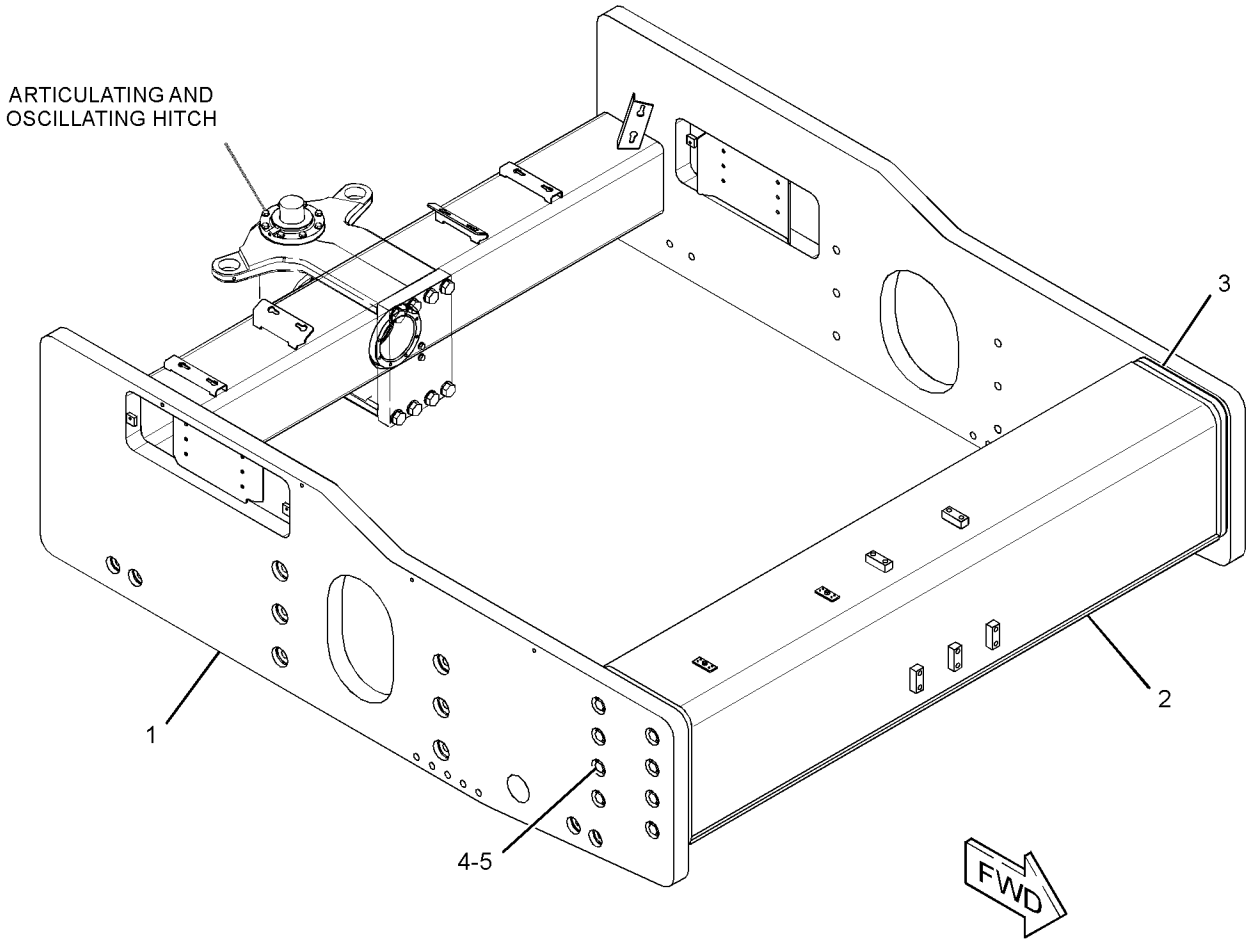

GRAPHIC #1 **<END>** g02723950

358-3893 FRAME GP-FRONT

S/N: SDT1-UP

PART OF 347-9580 FRAME GP-FRONT

SMCS-7050, 7051

i05298362

NOTE	REF NO	GRAPHIC REF	PART NUMBER	QTY	PART NAME 1 2 3 4 5 6 (PRODUCT LEVEL)	SEE PAGE
	1	1	**373-2735**	1	YOKE AS	
	2	1	**388-1284**	1	BUMPER AS	
		1	**102-8706**	2	PLATE AS	
B	3	1	**373-3388**	4	SHIM (2-MM THK)	
M	4	1	**7X-2565**	16	BOLT (M20X2.5X100-MM)	
	5	1	**8T-4123**	16	WASHER (22X35X3.5-MM THK)	

B - USE AS REQUIRED
M - METRIC PART

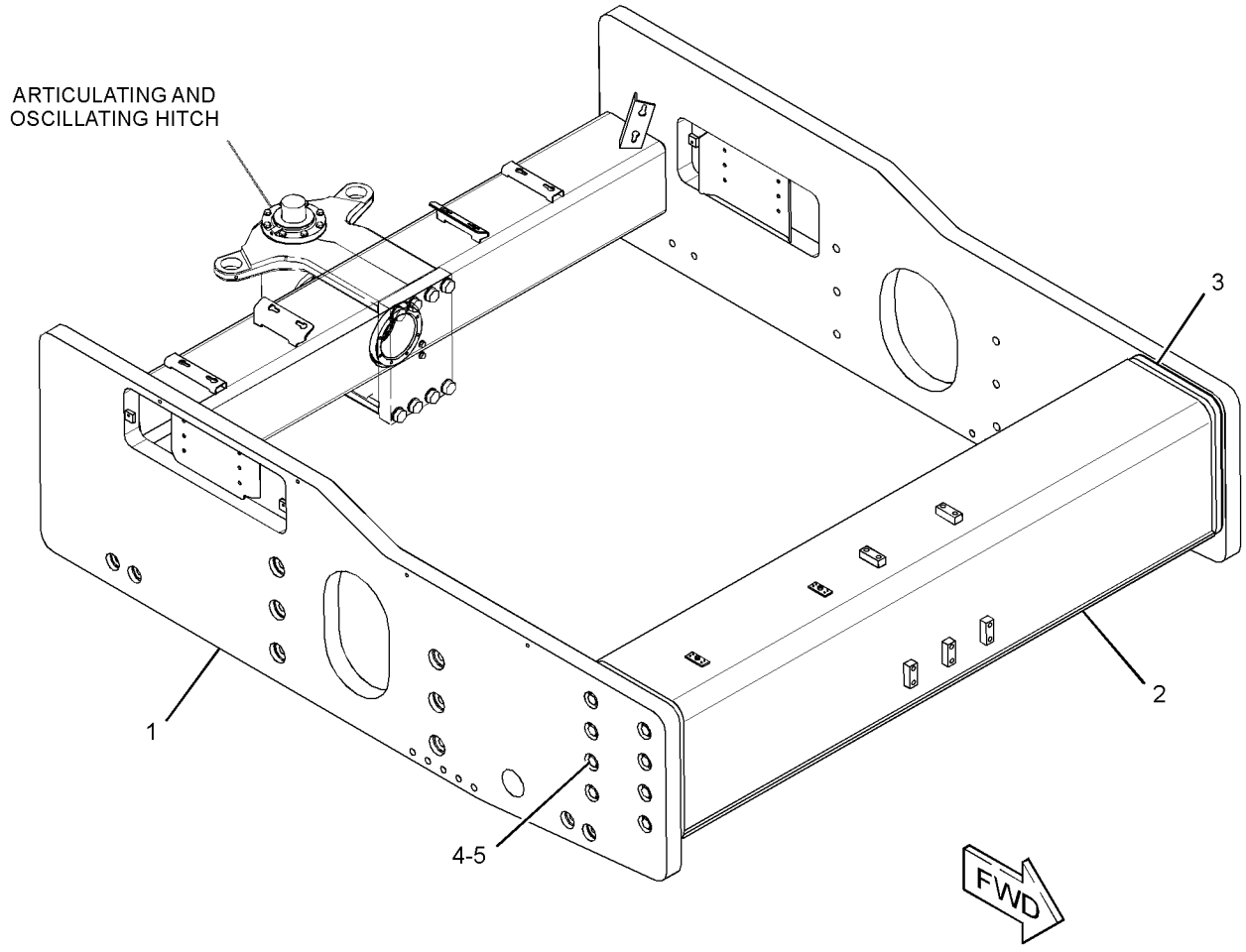

GRAPHIC #1

<END>

g02723887

361-3986 FRAME GP-FRONT

S/N: M4M1-UP

PART OF 347-9575 FRAME GP-FRONT

SMCS-7050, 7051 **i05295483**

NOTE	REF NO	GRAPHIC REF	PART NUMBER	QTY	PART NAME 1 2 3 4 5 6 (PRODUCT LEVEL)	SEE PAGE
	1	1	**373-2732**	1	YOKE AS	
	2	1	*384-5082*	1	BUMPER AS	
		1	**373-2747**	1	BUMPER AS	
		1	**384-5042**	3	PLATE AS	
	3	1	**8T-4123**	10	WASHER (22X35X3.5-MM THK)	
M	4	1	**8T-4131**	2	NUT (M20X2.5-THD)	
M	5	1	**8T-4187**	8	BOLT (M20X2.5X80-MM)	

M - METRIC PART

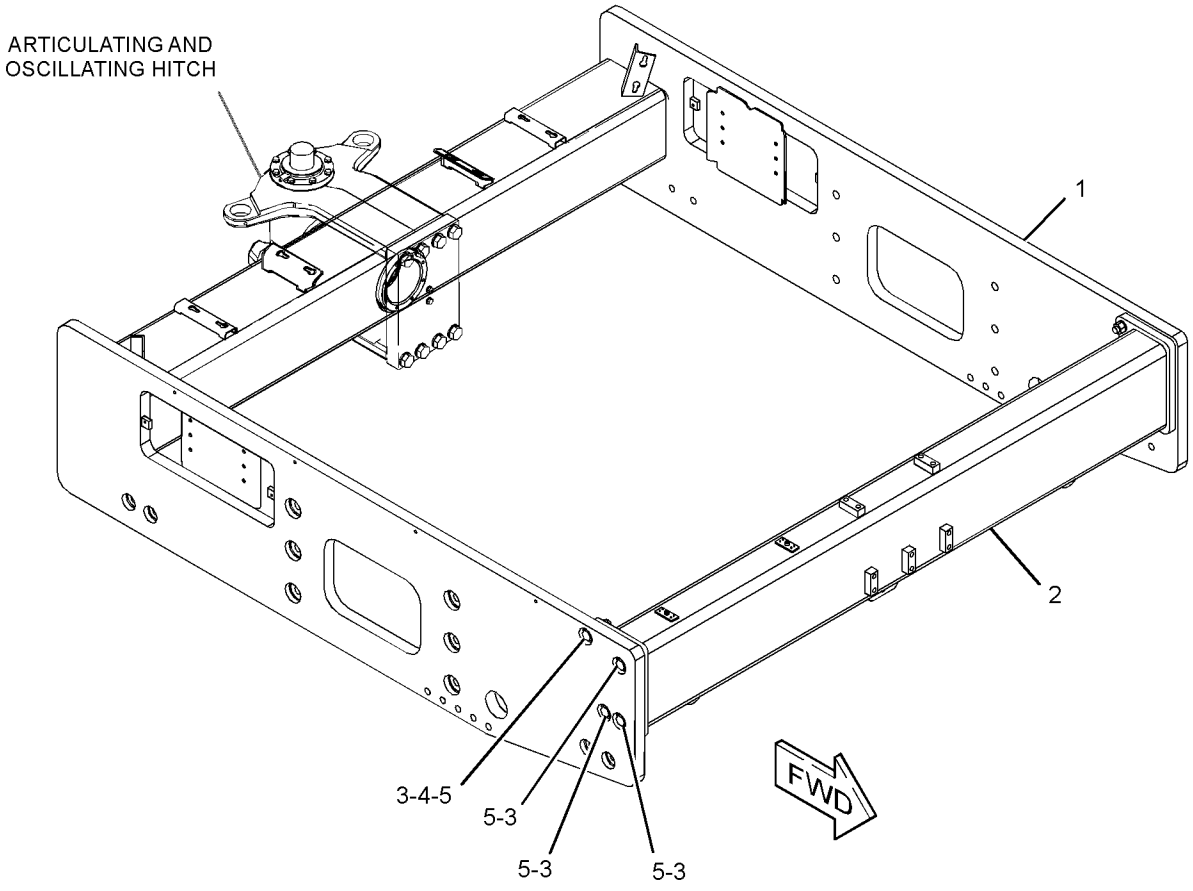

GRAPHIC #1 **<END>** g02718222

361-3987 FRAME GP-FRONT

S/N: M5P1-UP

PART OF 347-9576 FRAME GP-FRONT

SMCS-7050, 7051 **i05296413**

NOTE	REF NO	GRAPHIC REF	PART NUMBER	QTY	PART NAME 1 2 3 4 5 6 (PRODUCT LEVEL)	SEE PAGE
	1	1	**373-2732**	1	YOKE AS	
	2	1	**373-2747**	1	BUMPER AS	
	3	1	**8T-4123**	10	WASHER (22X35X3.5-MM THK)	
M	4	1	**8T-4131**	2	NUT (M20X2.5-THD)	
M	5	1	**8T-4187**	8	BOLT (M20X2.5X80-MM)	

M - METRIC PART

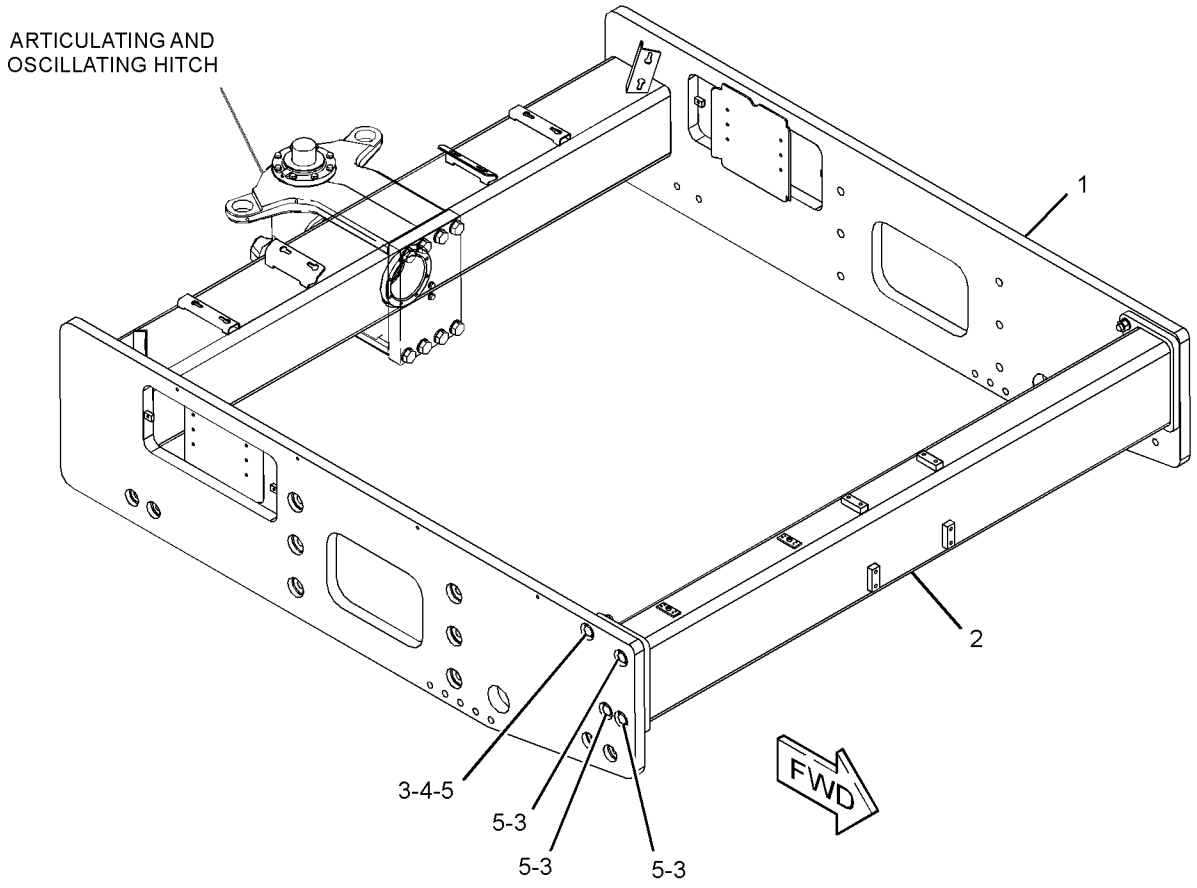

GRAPHIC #1 **<END>** g02717657

374-9780 FRAME GP-REAR—ENGINE END

S/N: M4M1-UP; M5P1-UP

PART OF 374-9723, 374-9724 CHASSIS AR

SMCS-7050, 7051 **i05295481**

NOTE	REF NO	GRAPHIC REF	PART NUMBER	QTY	PART NAME 1 2 3 4 5 6 (PRODUCT LEVEL)	SEE PAGE
	1	1	**5E-9892**	1	PIN	
M	2	1	**077-6627**	2	SCREW-DRIVE (NO 12X12.7-MM)	
	3	1	**143-4653**	2	CLAMP	
	4	1	**195-1411**	1	CHAIN	
	5	1	**356-1735**	1	COVER	
	6	1	**359-2018**	1	PIN AS	
Y	7	1	**374-9781**	1	FRAME AS-REAR	268
	8	1	**8T-4121**	4	WASHER-HARD (11X21X2.5-MM THK)	
	9	1	**8T-4167**	8	WASHER-HARD (26X44X4-MM THK)	
M	10	1	**8T-4196**	4	BOLT (M10X1.5X35-MM)	
M	11	1	**8T-4649**	8	BOLT (M24X3X140-MM)	

M - METRIC PART
Y - SEPARATE ILLUSTRATION

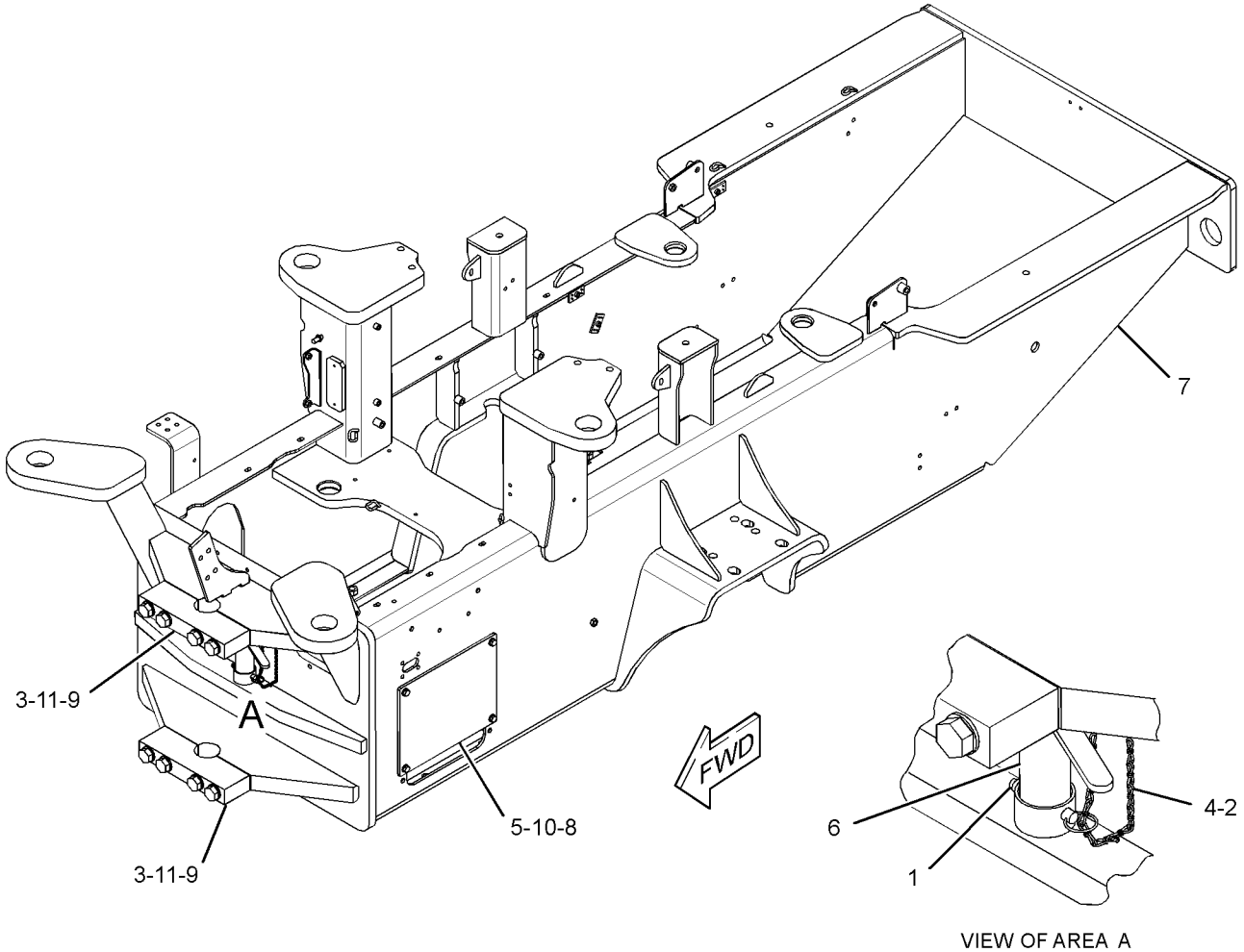

GRAPHIC #1 **<END>** g03074177

374-9790 FRAME GP-REAR–ENGINE END

S/N: MBF1-UP; SDT1-UP

PART OF 374-9725, 374-9726 CHASSIS AR

SMCS-7050, 7051 **i05270663**

NOTE	REF NO	GRAPHIC REF	PART NUMBER	QTY	PART NAME 1 2 3 4 5 6 (PRODUCT LEVEL)	SEE PAGE
	1	1	**5E-9892**	1	PIN	
M	2	1	**077-6627**	2	SCREW-DRIVE (NO 12X12.7-MM)	
	3	1	**143-4653**	2	CLAMP	
	4	1	**195-1411**	1	CHAIN	
	5	1	**356-1700**	1	COVER	
	6	1	**359-2018**	1	PIN AS	
	7	1	**374-9791**	1	FRAME AS-REAR	
	8	1	**8T-4121**	4	WASHER-HARD (11X21X2.5-MM THK)	
	9	1	**8T-4167**	8	WASHER-HARD (26X44X4-MM THK)	
M	10	1	**8T-4196**	4	BOLT (M10X1.5X35-MM)	
M	11	1	**8T-4649**	8	BOLT (M24X3X140-MM)	

M - METRIC PART

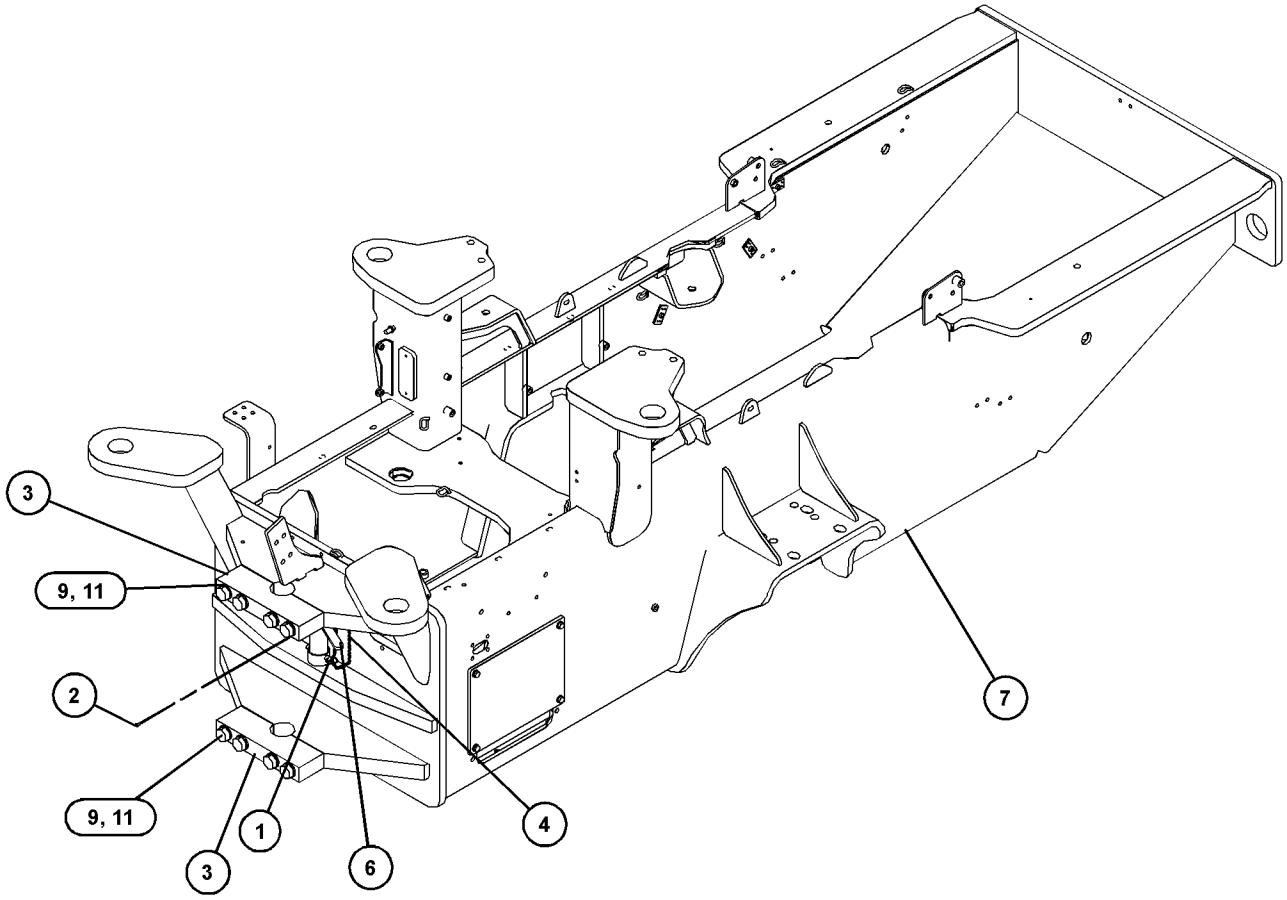

GRAPHIC #1 **<END>** g03092676

364-7712 GUARD GP-LINES–4-VALVE

S/N: M4M1-UP; M5P1-UP
PART OF 374-9842 OPERATOR AR
AN ATTACHMENT

SMCS-7167 **i05291041**

NOTE	REF NO	GRAPHIC REF	PART NUMBER	QTY	PART NAME 1 2 3 4 5 6 (PRODUCT LEVEL)	SEE PAGE
	1	1	**7K-1181**	48	STRAP-CABLE	
	2	1	**365-0638**	6	GUARD-HOSE	
	3	1	**365-0639**	6	GUARD-HOSE	
	4	1	**365-0640**	12	GUARD-HOSE	

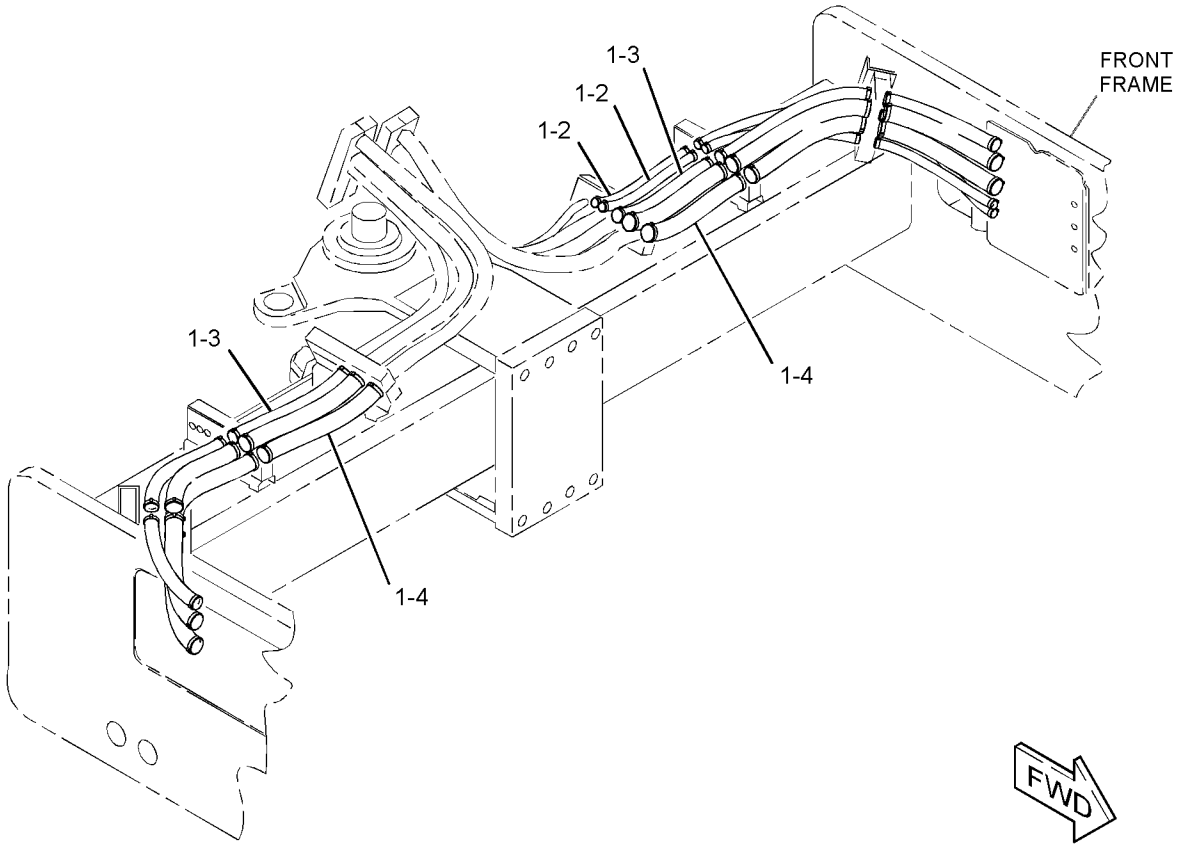

GRAPHIC #1 **<END>** g02710688

418-5189 GUARD GP-LINES–4-VALVE

S/N: MBF1-UP; M4M1-UP; M5P1-UP; SDT1-UP
PART OF 377-2157, 377-2159, 381-6991 OPERATOR AR
AN ATTACHMENT

SMCS-7167 **i05287575**

NOTE	REF NO	GRAPHIC REF	PART NUMBER	QTY	PART NAME 1 2 3 4 5 6 (PRODUCT LEVEL)	SEE PAGE
	1	1	**7K-1181**	48	STRAP-CABLE	
	2	1	**365-0638**	6	GUARD-HOSE	
	3	1	**365-0639**	5	GUARD-HOSE	
	4	1	**365-0640**	10	GUARD-HOSE	
G	5	1	**160-2248**		SLEEVE-ABRASION (17.7-IN EACH)	
G	6	1	**160-2246**		SLEEVE-ABRASION (19.3-IN)	

G - ORDER BY THE INCH

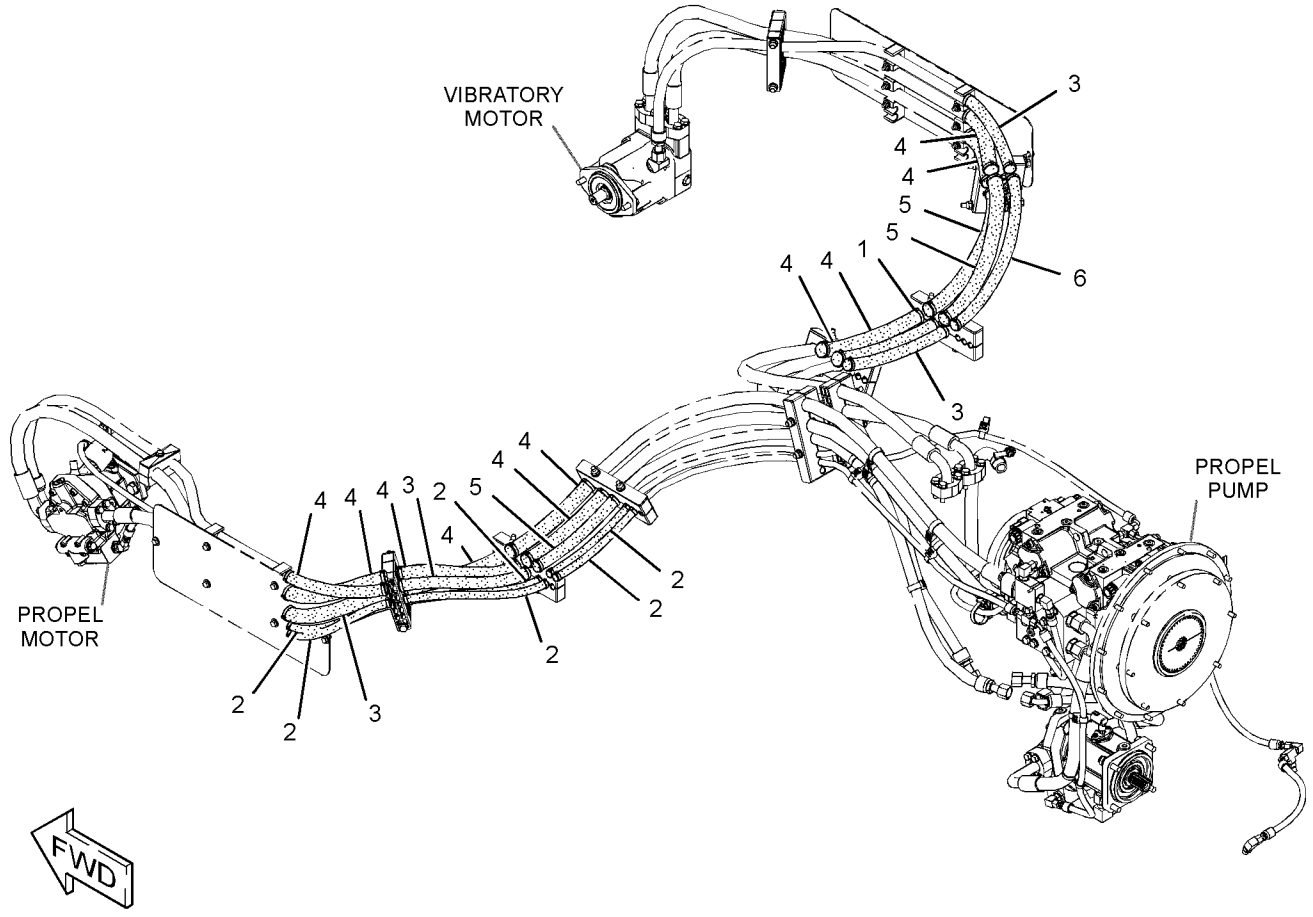

GRAPHIC #1 **<END>** g03085464

355-2660 GUARD GP-TRANSMISSION

S/N: MBF1-UP; M4M1-UP; M5P1-UP; SDT1-UP

AN ATTACHMENT

SMCS-7153 **i05268347**

NOTE	REF NO	GRAPHIC REF	PART NUMBER	QTY	PART NAME 1 2 3 4 5 6 (PRODUCT LEVEL)	SEE PAGE
	1	1	**416-9692**	1	GUARD-TRANSMISSION	
	2	1	**3E-9411**	4	WASHER-HARD (17.5X38X6-MM THK)	
M	3	1	**7X-2553**	4	BOLT (M16X2X40-MM)	

M - METRIC PART

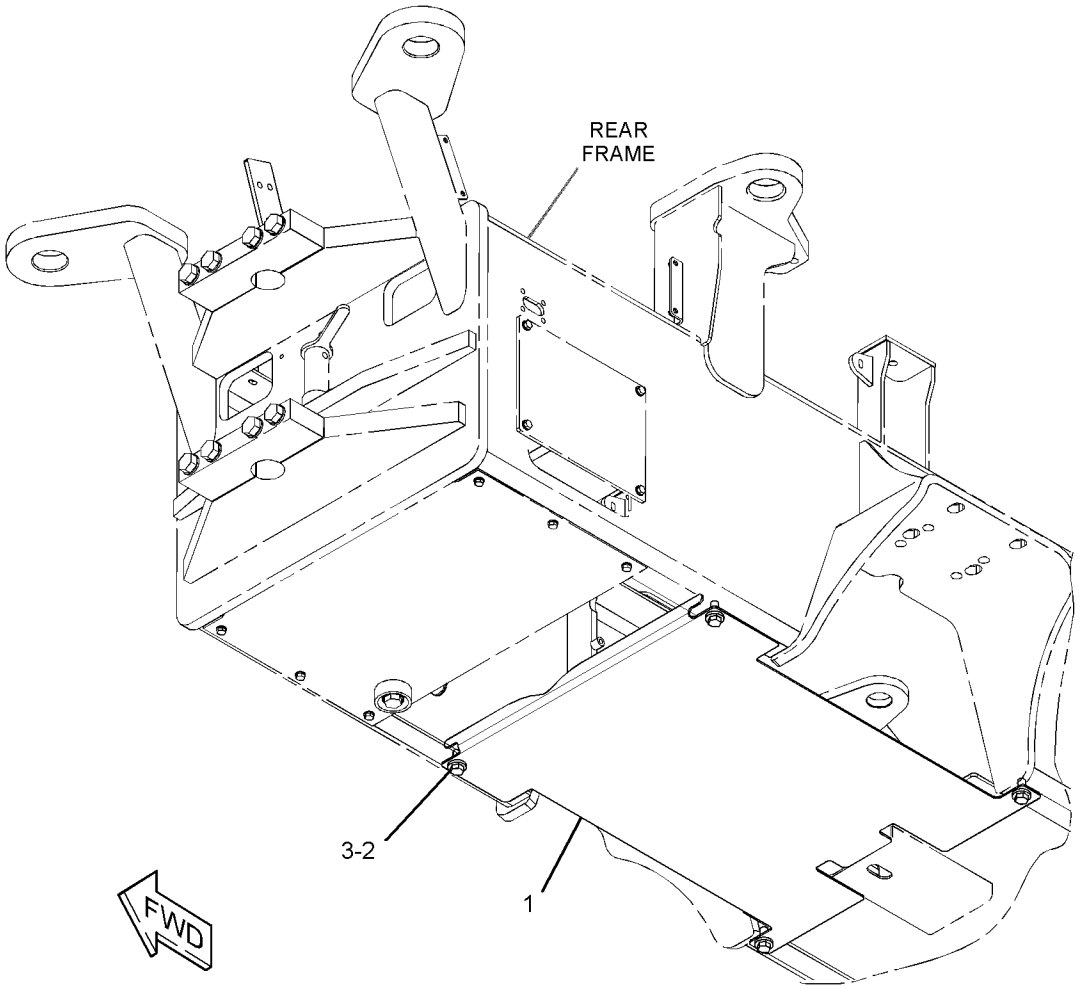

GRAPHIC #1 **<END>** g02724504

354-5409 HANDRAIL GP

S/N: MBF1-UP; M4M1-UP; M5P1-UP; SDT1-UP
PART OF 374-9842, 377-2157, 377-2159, 381-6991 OPERATOR AR
AN ATTACHMENT

SMCS-7256 **i05287547**

NOTE	REF NO	GRAPHIC REF	PART NUMBER	QTY	PART NAME 1 2 3 4 5 6 (PRODUCT LEVEL)	SEE PAGE
	1	1	**356-4443**	1	HANDHOLD AS	
	2	1	**373-3013**	1	HANDHOLD AS	
	3	1	**7X-7729**	8	WASHER (11X25X3-MM THK)	
M	4	1	**8T-4195**	8	BOLT (M10X1.5X30-MM)	

M - METRIC PART

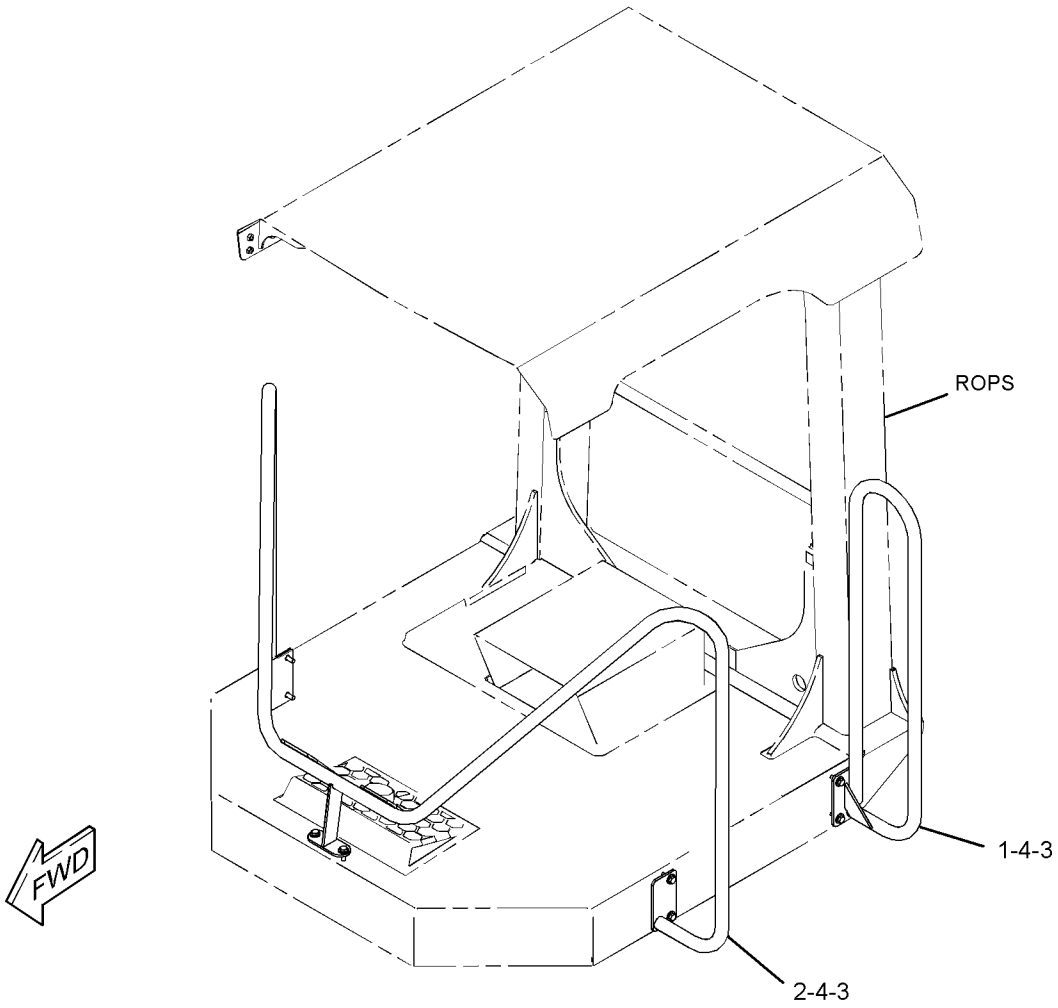

GRAPHIC #1 **<END>** g02707658

141-9864 HITCH GP-ARTICULATING & OSC—SMOOTH DRUM

S/N: MBF1-UP; M4M1-UP; M5P1-UP; SDT1-UP

PART OF 347-9575, 347-9576, 347-9579, 347-9580 FRAME GP-FRONT

SMCS-7057, 7113 **i05270563**

NOTE	REF NO	GRAPHIC REF	PART NUMBER	QTY	PART NAME 1 2 3 4 5 6 (PRODUCT LEVEL)	SEE PAGE
	1	1	**2P-4471**	2	LOCKNUT	
	2	1	**9C-9219**	2	NUT-SPECIAL	
	3	1	**9H-6079**	4	SEAL-LIP TYPE	
	4	1	**249-7387**	1	HITCH	
	5	1	**141-9865**	4	CAP-BEARING	
	6	1	**162-5395**	1	SHAFT (OSCILLATION)	
	7	1	**162-5394**	1	SHAFT (ARTICULATION)	
	8	1	**185-8756**	2	SPACER (77X93X5-MM THK)	
	9	1	**143-7356**	4	BEARING-TAPERED ROLLER	
	10	1	**2H-3935**	4	SEAL-O-RING	
	11	1	**8T-4121**	32	WASHER-HARD (11X21X2.5-MM THK)	
M	12	1	**8T-4195**	32	BOLT (M10X1.5X30-MM)	
	13	1	**9F-2247**	4	PLUG-PIPE	

M - METRIC PART

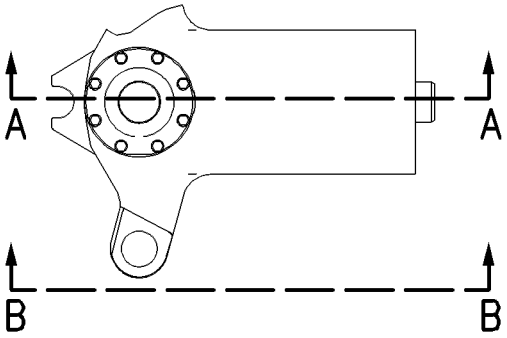

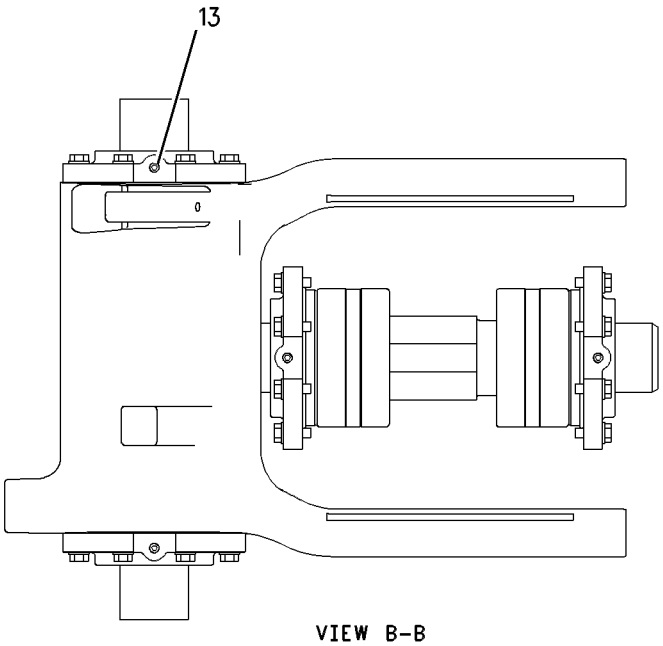

VIEW B-B

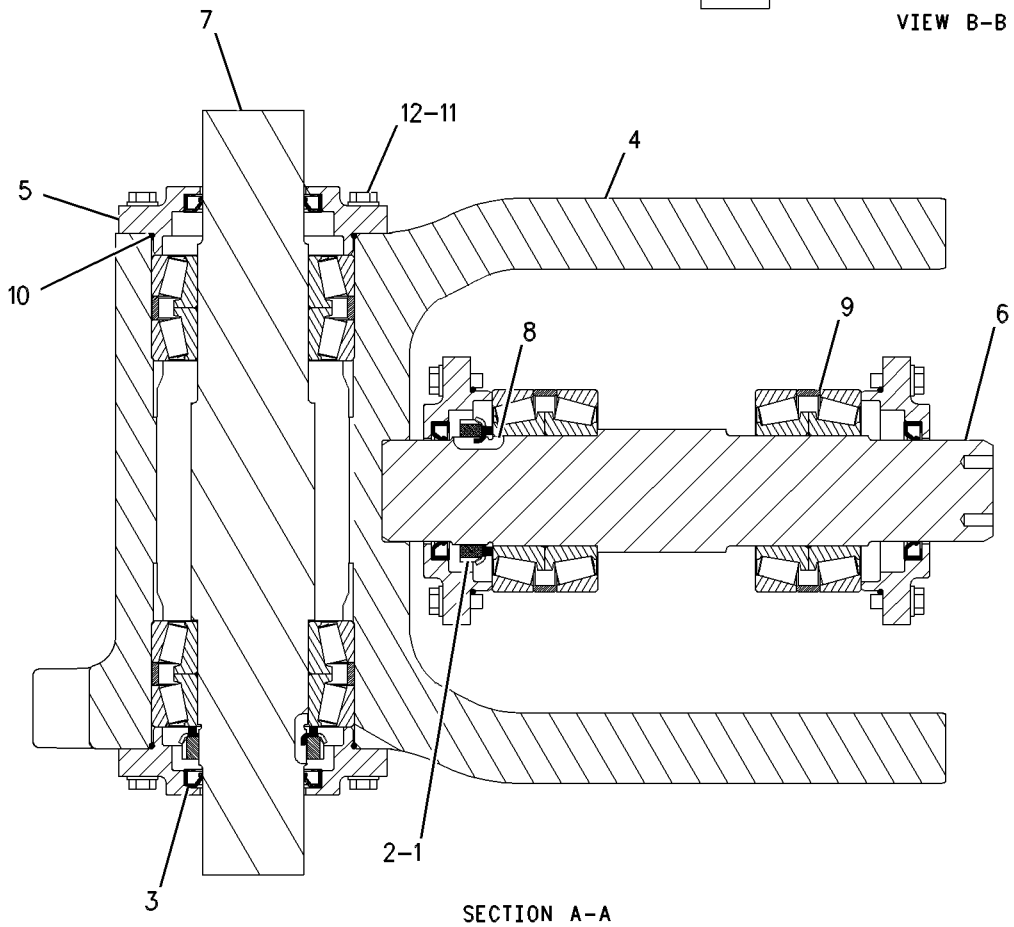

SECTION A-A

GRAPHIC #1 **<END>** g00475131

355-3180 HOOD GP

S/N: MBF1-UP; M4M1-UP; M5P1-UP; SDT1-UP
PART OF 374-9810 ENCLOSURE GP-ENGINE

SMCS-7251 **i05270667**

NOTE	REF NO	GRAPHIC REF	PART NUMBER	QTY	PART NAME 1 2 3 4 5 6 (PRODUCT LEVEL)	SEE PAGE
	1	2	**4B-4278**	8	WASHER (10.2X20.5X1.6-MM THK)	
	2	2	**4E-1384**	2	BUMPER-CONICAL	
	3	1	**6V-7636**	1	PIN AS-SPRING	
	4	1	**122-8427**	1	SPACER (9X14X3.5-MM THK)	
	5	2	**147-3719**	2	PLUG-BUTTON	
	6	2	**177-3405**	2	PIN	
	7	1	**218-2207**	1	LATCH AS-DOOR	
	8	1	**220-8262**	1	ROD	
	9	2	**280-3991**	2	STUD-BALL	
	10	1	**336-6672**	1	HANDLE AS (PULL)	
	11	2	**355-3186**	1	SUPPORT	
	12	1	**355-3190**	1	HOOD AS	
	13	2	**417-4364**	1	INSULATION	
	14	2	**356-1741**	2	HINGE AS	
	15	1	**386-5619**	1	LEVER	
	16	2	**386-5625**	1	GASKET	
	17	2	**358-3876**	1	FRAME AS-HOOD	
	18	2	**374-9817**	1	TAB	
	19	2	**417-4365**	1	INSULATION	
	20	2	**7X-0579**	6	WASHER-HARD (8.8X25.5X2-MM THK)	
	21	2	**3B-4611**	2	PIN-COTTER	
M	22	1,2	**5C-2890**	37	NUT (M6X1-THD)	
M	23	2	**5C-7261**	2	NUT (M8X1.25-THD)	
	24	1	**5P-4116**	2	WASHER-HARD (8.8X20.5X2-MM THK)	
	25	2	**4K-9429**	3	RIVET-POP	
M	26	1	**6V-7357**	4	BOLT (M6X1X25-MM)	
	27	1	**6V-8185**	1	NUT (1/4-20-THD)	
	28	2	**7X-7729**	24	WASHER (11X25X3-MM THK)	
M	29	2	**8T-0389**	8	LOCKNUT (M10X1.5-THD)	
	30	2	**8T-4121**	6	WASHER-HARD (11X21X2.5-MM THK)	
M	31	1,2	**8T-4138**	41	BOLT (M6X1X20-MM)	
M	32	1	**8T-4189**	1	BOLT (M8X1.25X20-MM)	
M	33	2	**8T-4195**	8	BOLT (M10X1.5X30-MM)	
M	34	2	**8T-4196**	4	BOLT (M10X1.5X35-MM)	
M	35	2	**8T-4200**	6	BOLT (M8X1.25X16-MM)	
	36	2	**8T-4224**	2	WASHER-HARD (8.8X16X2-MM THK)	
M	37	2	**8T-6466**	4	BOLT (M10X1.5X60-MM)	
	38	1,2	**9X-6165**	74	WASHER (6.5X22X2.5-MM THK)	
	39	1	**9X-8256**	8	WASHER (6.6X12X2-MM THK)	
	40	1	**355-3181**	1	SCREEN	
	41	1	**355-3183**	1	SCREEN	
	42	1,2	**355-3184**	2	SCREEN	
D	43	2	**6V-2803**		SEAL (0.9-M EACH)	
D	44	2	**5P-5687**		SEAL (0.2-M EACH)	
D	44A	2	**5P-5687**		SEAL (0.9-M EACH)	
D	44B	2	**5P-5687**		SEAL (0.1-M EACH)	
D	44C	2	**5P-5687**		SEAL (0.8-M)	

D - ORDER BY THE METER
M - METRIC PART

355-3180 **HOOD GP (*contd.*)** **i05270667**

REFER TO ALL ILLUSTRATIONS OF
THIS GROUP FOR AUXILIARY VIEWS

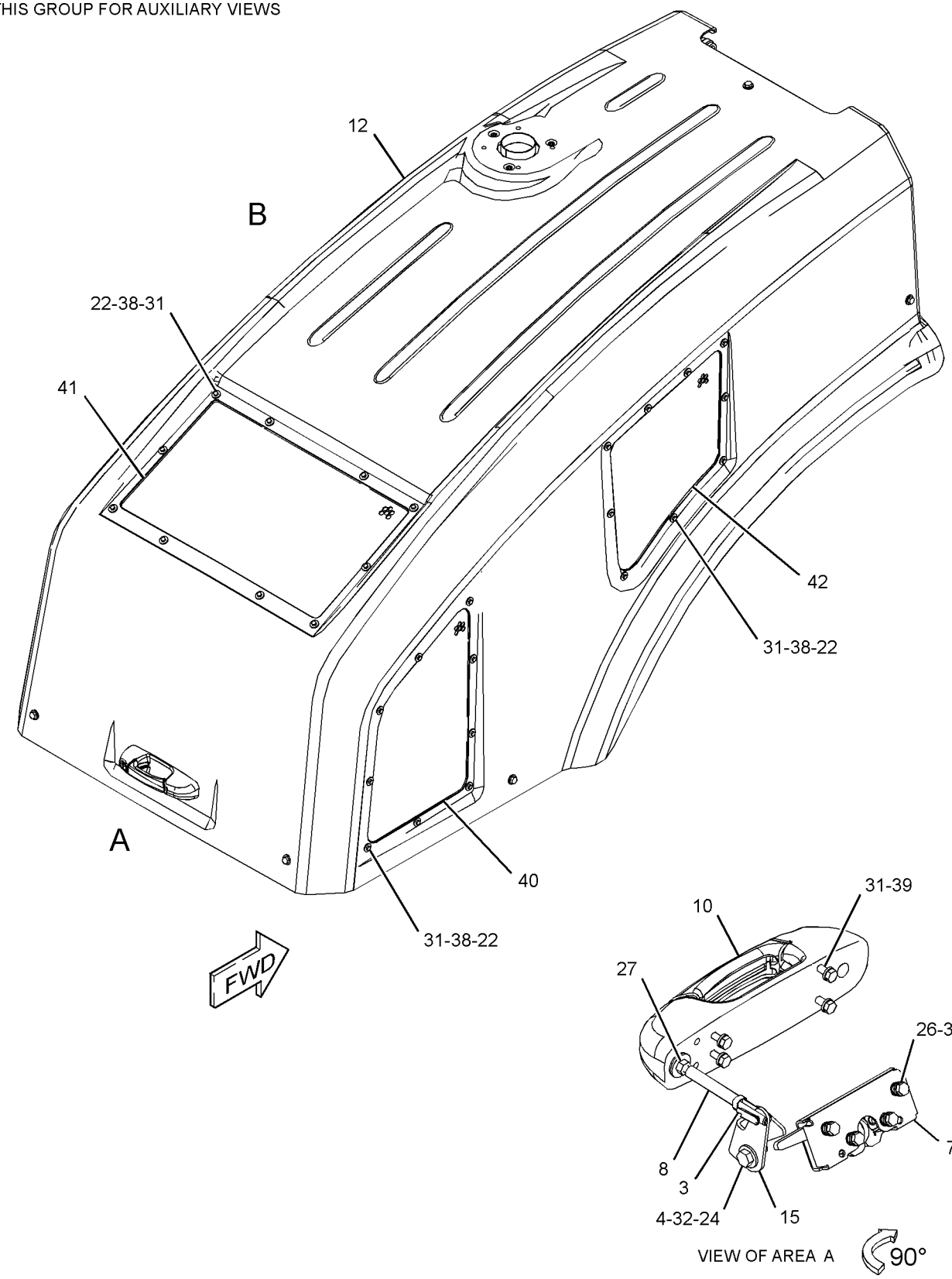

GRAPHIC #1

g03054459

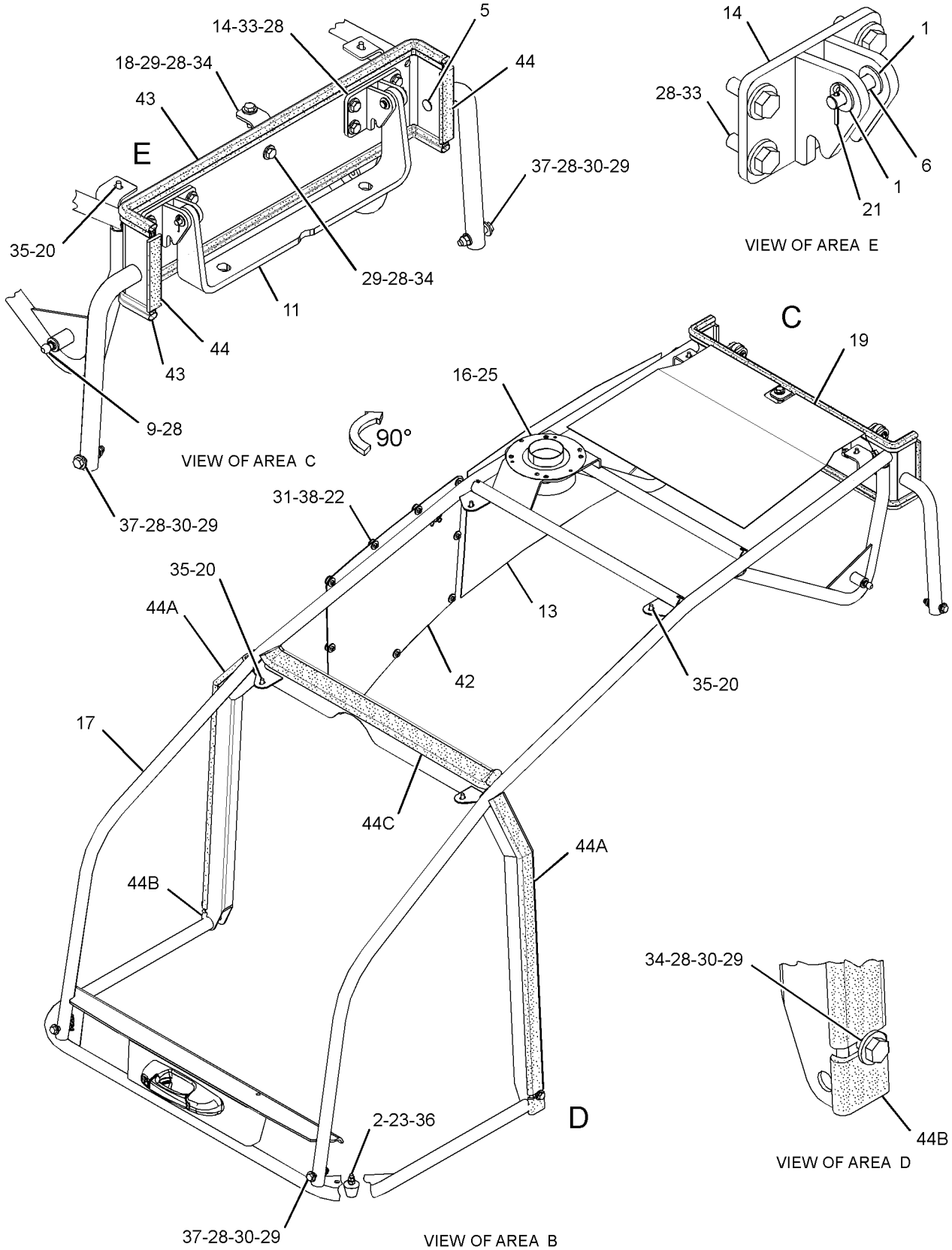

GRAPHIC #2

<END>

g03054460

362-7689 PANEL GP-SIDE

S/N: MBF1-UP; M4M1-UP; M5P1-UP; SDT1-UP
PART OF 374-9842, 377-2159 OPERATOR AR
AN ATTACHMENT

SMCS-7267 **i05287599**

NOTE	REF NO	GRAPHIC REF	PART NUMBER	QTY	PART NAME 1 2 3 4 5 6 (PRODUCT LEVEL)	SEE PAGE
	1	1	**361-6907**	1	SEAL-RH	
	2	1	**361-6908**	1	SEAL-LH	
	3	1	**361-7024**	1	GUARD AS (LH)	
	4	1	**361-7093**	1	GUARD AS (RH)	
	5	1	**5P-4116**	6	WASHER-HARD (8.8X20.5X2-MM THK)	
	6	1	**8T-4121**	4	WASHER-HARD (11X21X2.5-MM THK)	
M	7	1	**8T-4196**	4	BOLT (M10X1.5X35-MM)	
M	8	1	**8T-4908**	6	BOLT (M8X1.25X25-MM)	

M - METRIC PART

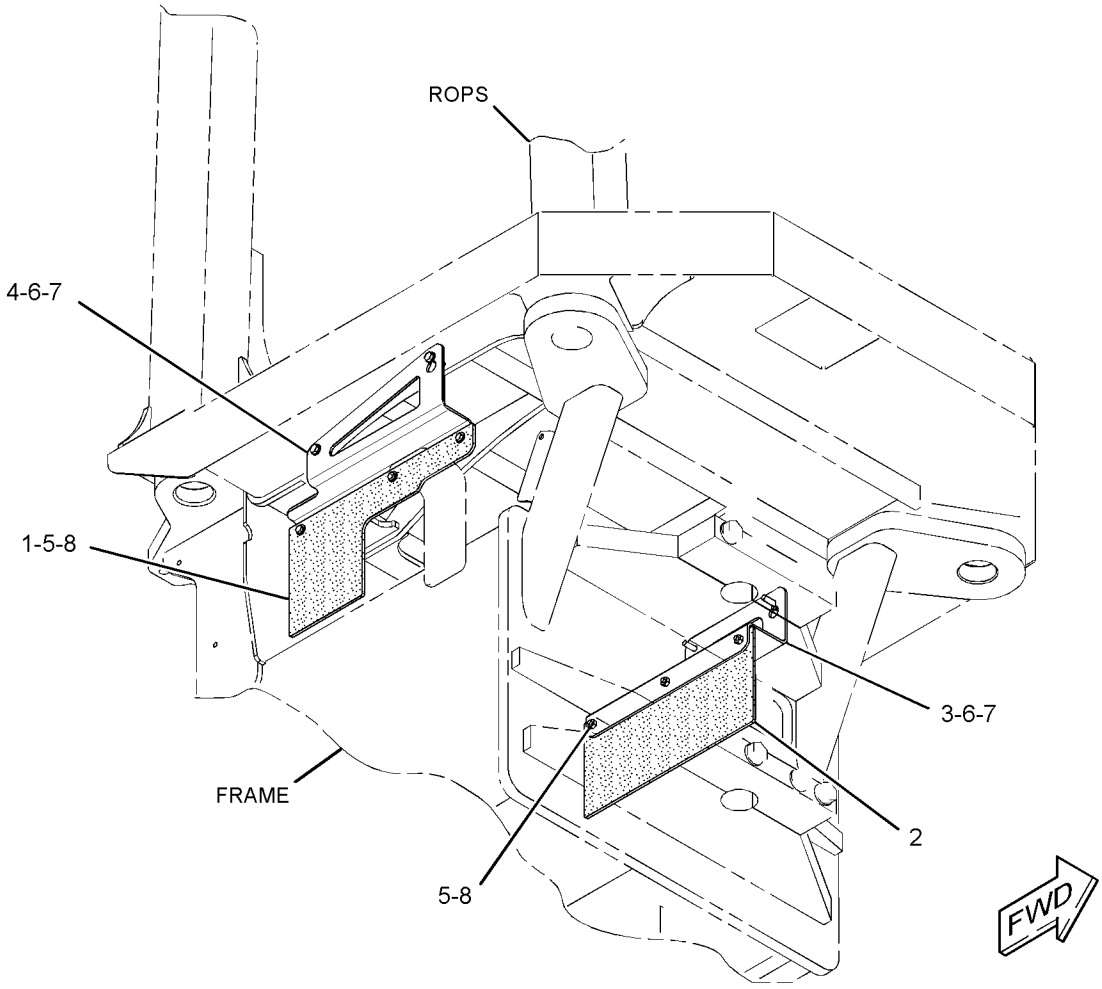

GRAPHIC #1 **<END>** g02713690

390-0611 SCRAPER GP-DRUM

S/N: MBF1-UP
PART OF 360-0502 DRUM AR-SMOOTH
AN ATTACHMENT

SMCS-6607 **i05269489**

NOTE	REF NO	GRAPHIC REF	PART NUMBER	QTY	PART NAME 1 2 3 4 5 6 (PRODUCT LEVEL)	SEE PAGE
	1	1	**227-0172**	6	MOUNT	
	2	1	**384-2551**	3	PLATE	
	3	1	**384-2811**	6	BRACKET	
	4	1	**384-5849**	2	SCRAPER	
	5	1	**396-8977**	1	SHIM (8-MM THK)	
B	6	1	**396-8982**	4	SHIM (1.6-MM THK)	
	7	1	**390-0888**	1	SCRAPER AS	
	8	1	**090-8865**	6	SPACER (17X40X3-MM THK)	
M	9	1	**176-5311**	6	LOCKNUT (M16X2-THD)	
M	10	1	**193-8340**	6	BOLT-CARRIAGE (M16X2X65-MM)	
M	11	1	**7X-2561**	12	BOLT (M20X2.5X35-MM)	
M	12	1	**7X-2566**	4	BOLT (M20X2.5X110-MM)	
	13	1	**8T-4122**	6	WASHER-HARD (17X32X3.5-MM THK)	
	14	1	**8T-4123**	16	WASHER (22X35X3.5-MM THK)	
M	15	1	**8T-4131**	4	NUT (M20X2.5-THD)	
M	16	1	**8T-4140**	6	BOLT (M16X2X60-MM)	
	17	1	**8T-5439**	4	WASHER-HARD (21.5X45X6-MM THK)	

B - USE AS REQUIRED
M - METRIC PART

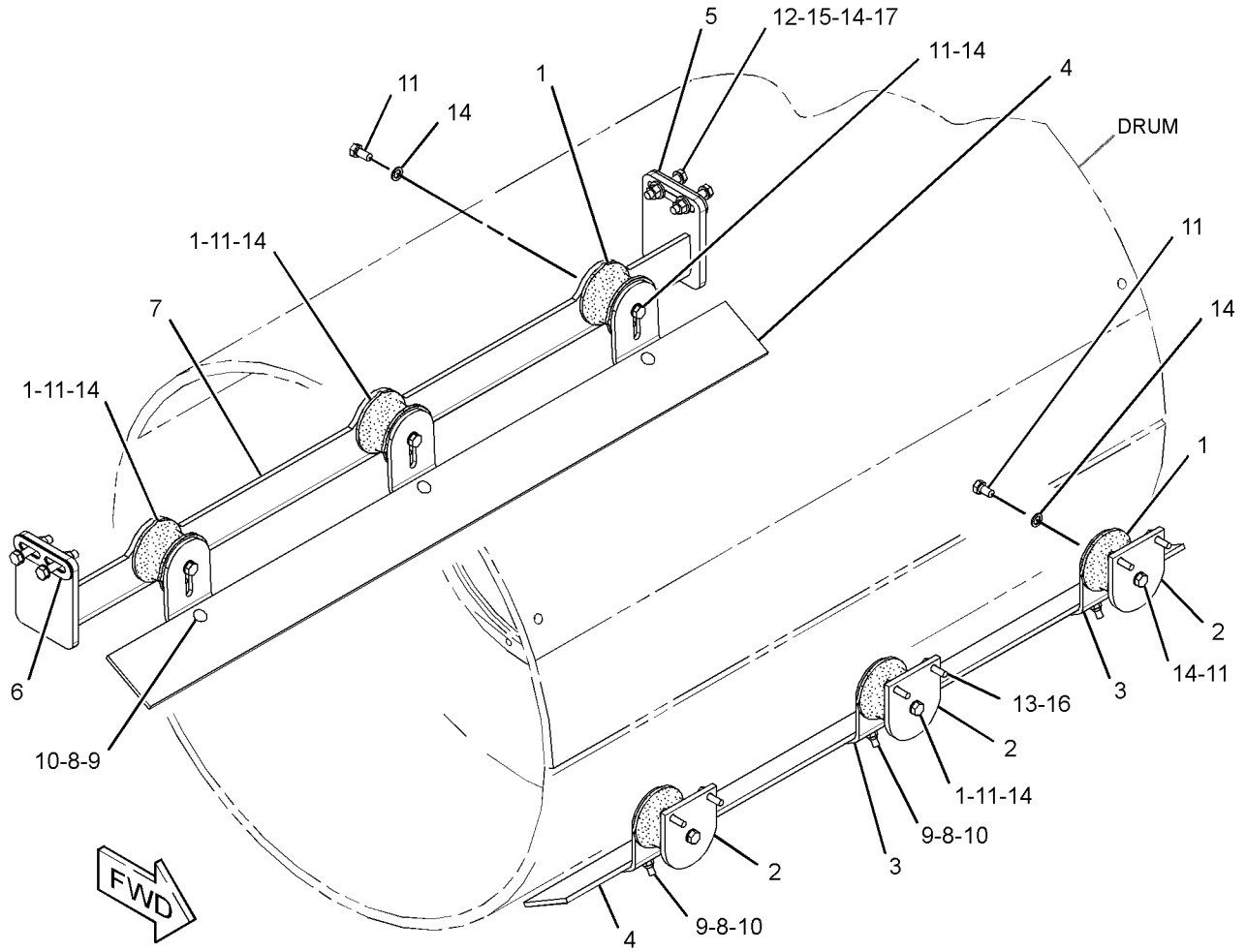

GRAPHIC #1 **<END>** g03188736

390-0612 SCRAPER GP-DRUM

S/N: MBF1-UP
PART OF 360-0503 DRUM AR-SMOOTH
AN ATTACHMENT

SMCS-6607 **i05269492**

NOTE	REF NO	GRAPHIC REF	PART NUMBER	QTY	PART NAME 1 2 3 4 5 6 (PRODUCT LEVEL)	SEE PAGE
	1	1	**227-0172**	6	MOUNT	
	2	1	**364-1946**	4	PLATE	
	3	1	**364-1947**	2	SCRAPER (FLEXIBLE)	
	4	1	**365-2496**	2	PLATE	
	5	1	**384-2551**	3	PLATE	
	6	1	**384-2811**	6	BRACKET	
	7	1	**396-8977**	1	SHIM (8-MM THK)	
B	8	1	**396-8982**	4	SHIM (1.6-MM THK)	
	9	1	**390-0888**	1	SCRAPER AS	
	10	1	**090-8865**	18	SPACER (17X40X3-MM THK)	
M	11	1	**176-5311**	18	LOCKNUT (M16X2-THD)	
M	12	1	**193-8340**	18	BOLT-CARRIAGE (M16X2X65-MM)	
M	13	1	**7X-2561**	12	BOLT (M20X2.5X35-MM)	
M	14	1	**7X-2566**	4	BOLT (M20X2.5X110-MM)	
	15	1	**8T-4122**	6	WASHER-HARD (17X32X3.5-MM THK)	
	16	1	**8T-4123**	16	WASHER (22X35X3.5-MM THK)	
M	17	1	**8T-4131**	4	NUT (M20X2.5-THD)	
M	18	1	**8T-4140**	6	BOLT (M16X2X60-MM)	
	19	1	**8T-5439**	4	WASHER-HARD (21.5X45X6-MM THK)	

B - USE AS REQUIRED
M - METRIC PART

390-0612 **SCRAPER GP-DRUM (*contd.*)** **i05269492**

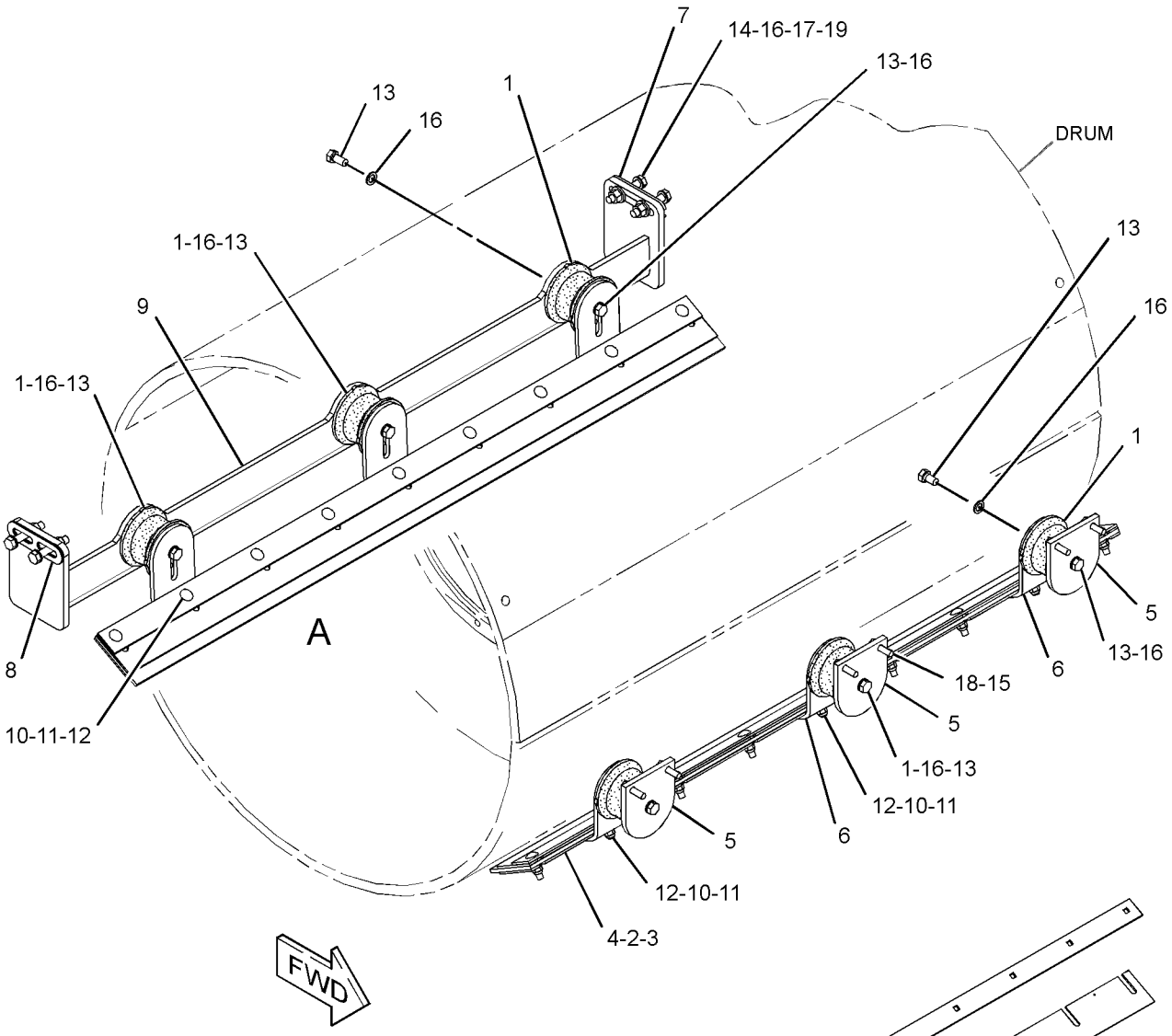

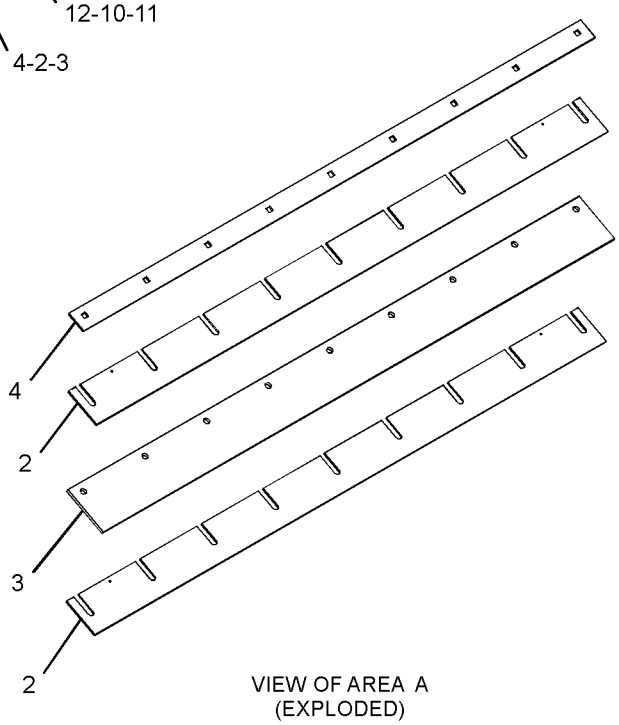

VIEW OF AREA A
(EXPLODED)

GRAPHIC #1 **<END>** g03188157

392-9649 SCRAPER GP-DRUM

S/N: M4M1-UP

PART OF 377-2939 DRUM AR-PADDED, 359-1407 DRUM AR-SMOOTH, 390-1058, 416-1351 SHELL GP-PADDED

AN ATTACHMENT

SMCS-6607 **i05291035**

NOTE	REF NO	GRAPHIC REF	PART NUMBER	QTY	PART NAME 1 2 3 4 5 6 (PRODUCT LEVEL)	SEE PAGE
	1	1	**270-9406**	14	SCRAPER	
	2	1	**392-4182**	4	PLATE-SCRAPER	
	3	1	**392-9640**	2	BAR AS	
	4	1	**392-9641**	14	BLOCK	
	5	1	**392-9643**	2	PLATE-SCRAPER	
	6	1	**396-3822**	4	SHIM (10-MM THK)	
	7	1	**396-3823**	4	SHIM (3-MM THK)	
	8	1	**396-3824**	16	SHIM (1.6-MM THK)	
	9	1	**396-8908**	1	BRACKET	
	10	1	**396-8909**	1	BRACKET	
	11	1	**396-8910**	1	BRACKET	
	12	1	**396-8911**	1	BRACKET	
M	13	1	**7X-2557**	14	BOLT (M16X2X140-MM)	
M	14	1	**7X-2558**	14	BOLT (M16X2X150-MM)	
M	15	1	**7X-2565**	8	BOLT (M20X2.5X100-MM)	
	16	1	**8T-4123**	8	WASHER (22X35X3.5-MM THK)	
M	17	1	**8T-4131**	8	NUT (M20X2.5-THD)	
M	18	1	**8T-4187**	8	BOLT (M20X2.5X80-MM)	
	19	1	**8T-5439**	16	WASHER-HARD (21.5X45X6-MM THK)	
	20	1	**9X-8257**	28	WASHER (17.5X30X3.5-MM THK)	

M - METRIC PART

392-9649 **SCRAPER GP-DRUM (*contd.*)** **i05291035**

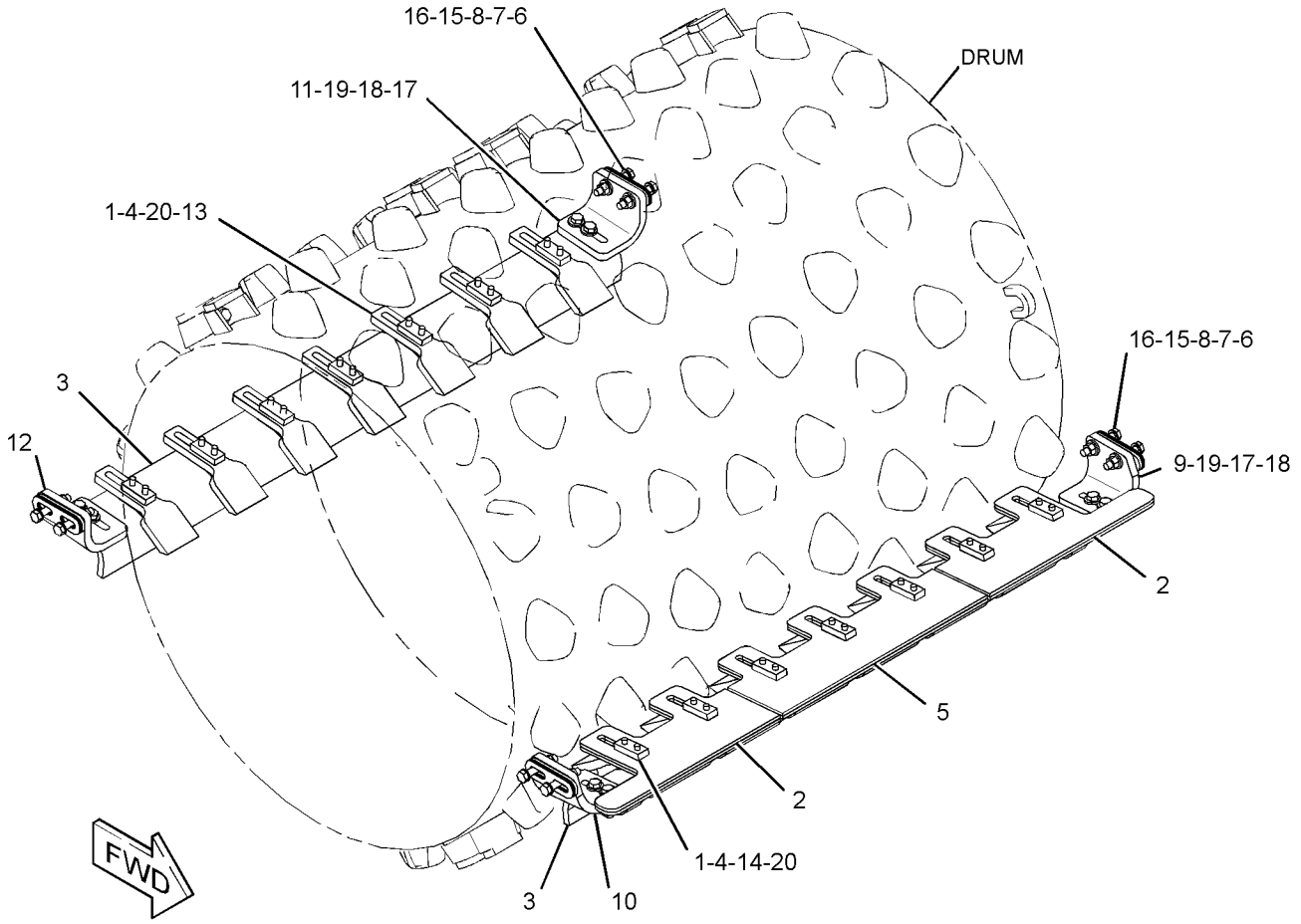

GRAPHIC #1 **<END>** g03073698

392-9650 SCRAPER GP-DRUM

S/N: MBF1-UP

PART OF 377-2940 DRUM AR-PADDED, 360-0504 DRUM GP-PADDED, 390-1061, 416-1355 SHELL GP-PADDED

AN ATTACHMENT

SMCS-6607 **i05269499**

NOTE	REF NO	GRAPHIC REF	PART NUMBER	QTY	PART NAME 1 2 3 4 5 6 (PRODUCT LEVEL)	SEE PAGE
	1	1	**270-9406**	14	SCRAPER	
	2	1	**392-4182**	4	PLATE-SCRAPER	
	3	1	**392-9640**	2	BAR AS	
	4	1	**392-9641**	14	BLOCK	
	5	1	**392-9643**	2	PLATE-SCRAPER	
B	6	1	**396-3822**	4	SHIM (10-MM THK)	
B	7	1	**396-3823**	4	SHIM (3-MM THK)	
B	8	1	**396-3824**	16	SHIM (1.6-MM THK)	
	9	1	**396-8908**	1	BRACKET	
	10	1	**396-8909**	1	BRACKET	
	11	1	**396-8910**	1	BRACKET	
	12	1	**396-8911**	1	BRACKET	
M	13	1	**7X-2557**	14	BOLT (M16X2X140-MM)	
M	14	1	**7X-2558**	14	BOLT (M16X2X150-MM)	
	15	1	**8T-4123**	8	WASHER (22X35X3.5-MM THK)	
M	16	1	**8T-4131**	8	NUT (M20X2.5-THD)	
M	17	1	**8T-4187**	8	BOLT (M20X2.5X80-MM)	
	18	1	**8T-5439**	16	WASHER-HARD (21.5X45X6-MM THK)	
M	19	1	**8T-6381**	8	BOLT (M20X2.5X120-MM)	
	20	1	**9X-8257**	28	WASHER (17.5X30X3.5-MM THK)	

B - USE AS REQUIRED
M - METRIC PART

392-9650 **SCRAPER GP-DRUM (*contd.*)** **i05269499**

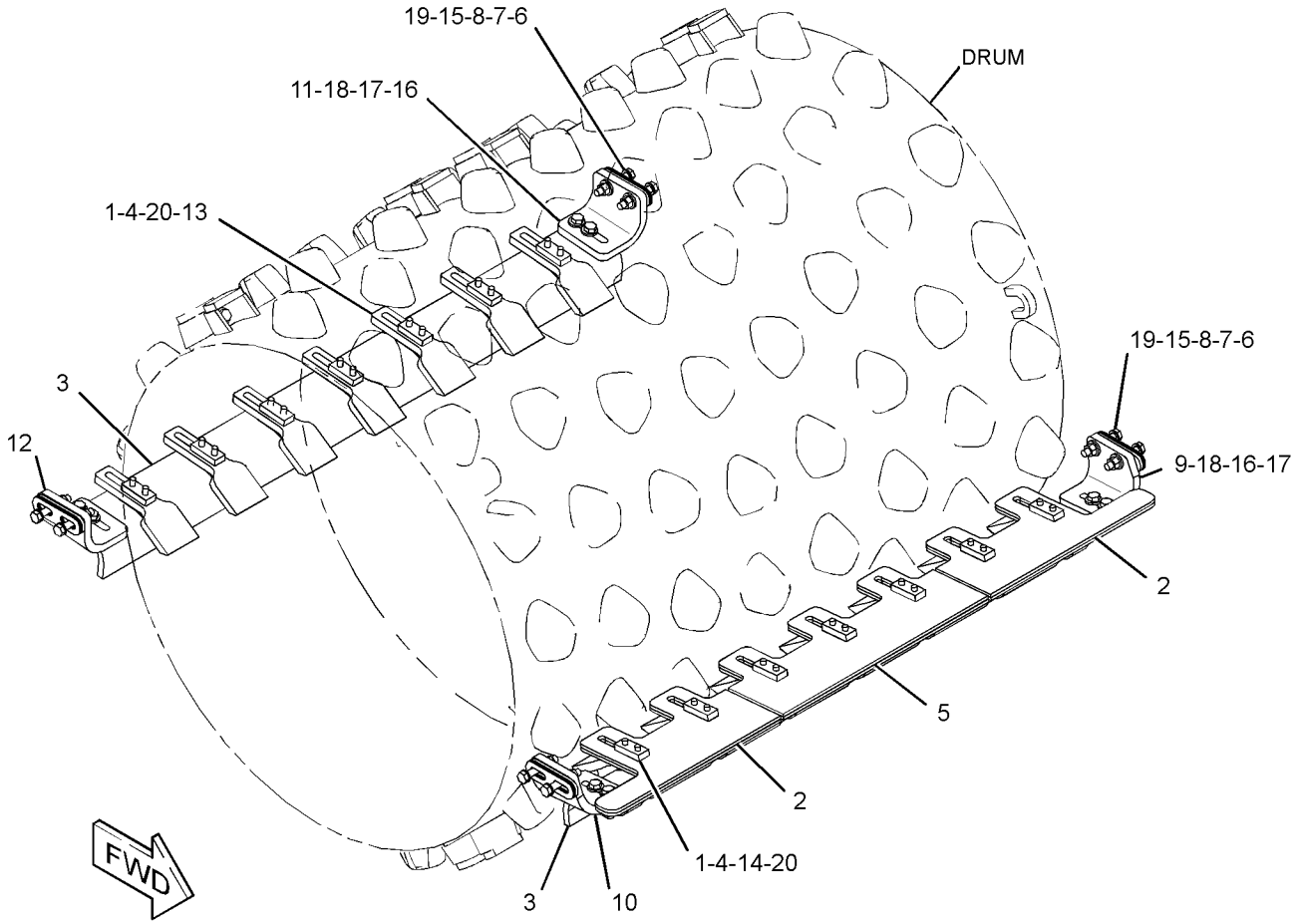

GRAPHIC #1 **<END>** g03062018

396-3825 SCRAPER GP-DRUM

S/N: M5P1-UP
PART OF 359-1406, 360-0497 DRUM AR-PADDED
AN ATTACHMENT

SMCS-6607 **i05291877**

NOTE	REF NO	GRAPHIC REF	PART NUMBER	QTY	PART NAME 1 2 3 4 5 6 (PRODUCT LEVEL)	SEE PAGE
	1	1	**373-5820**	18	SCRAPER	
	2	1	**392-4187**	2	BAR AS	
	3	1	**396-3822**	4	SHIM (10-MM THK)	
B	4	1	**396-3823**	4	SHIM (3-MM THK)	
B	5	1	**396-3824**	16	SHIM (1.6-MM THK)	
	6	1	**396-8904**	1	BRACKET	
	7	1	**396-8905**	1	BRACKET	
	8	1	**396-8906**	1	BRACKET	
	9	1	**396-8907**	1	BRACKET	
	10	1	**7X-0583**	36	WASHER-HARD (17X45X6-MM THK)	
M	11	1	**7X-2475**	36	BOLT (M16X2X130-MM)	
M	12	1	**7X-2565**	8	BOLT (M20X2.5X100-MM)	
	13	1	**8T-4123**	8	WASHER (22X35X3.5-MM THK)	
M	14	1	**8T-4131**	8	NUT (M20X2.5-THD)	
M	15	1	**8T-4187**	8	BOLT (M20X2.5X80-MM)	
	16	1	**8T-5439**	16	WASHER-HARD (21.5X45X6-MM THK)	

B - USE AS REQUIRED
M - METRIC PART

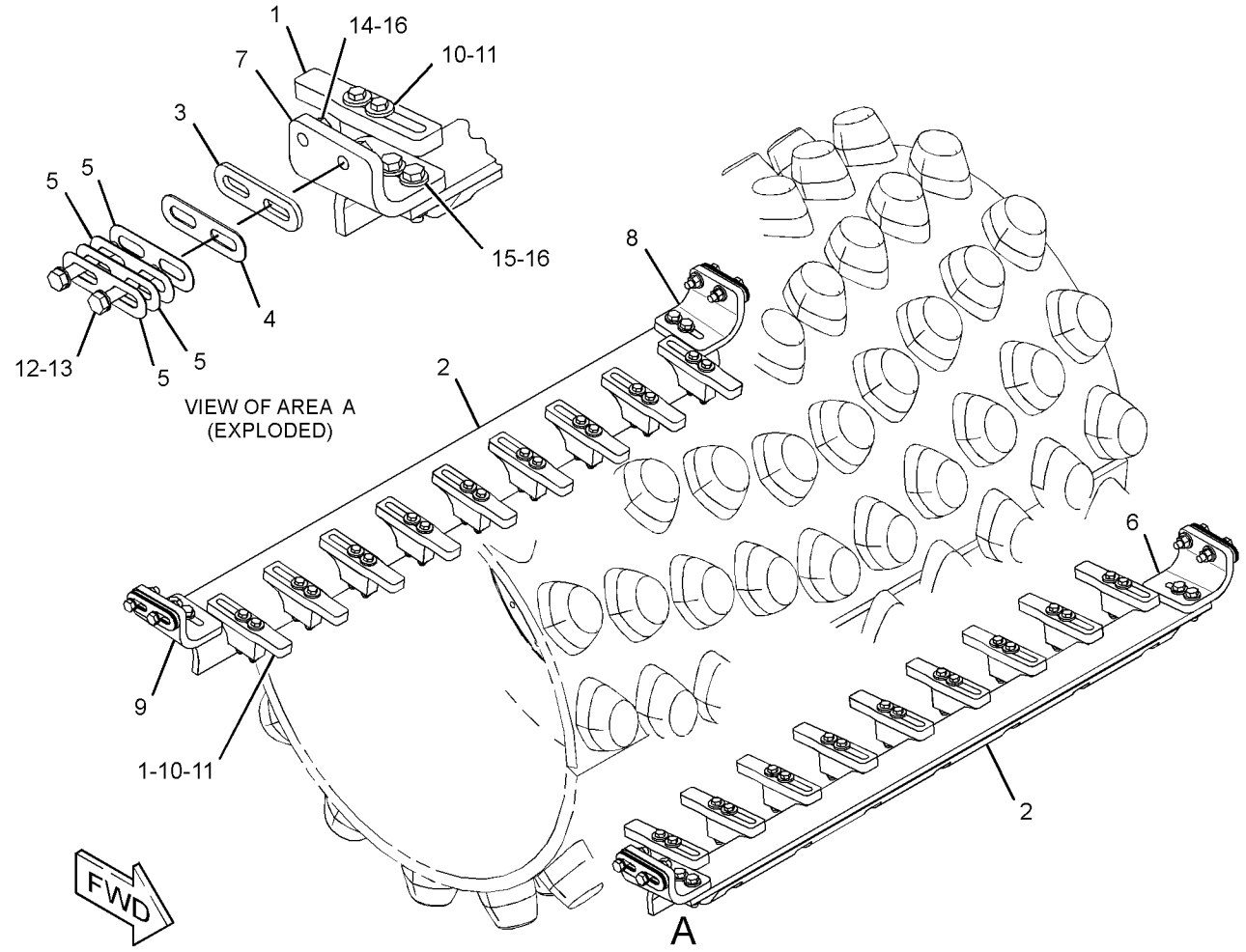

GRAPHIC #1 **<END>** g02985859

396-3826 SCRAPER GP-DRUM

S/N: SDT1-UP

PART OF 347-9690, 360-0508 DRUM AR-PADDED

AN ATTACHMENT

SMCS-6607 **i05297427**

NOTE	REF NO	GRAPHIC REF	PART NUMBER	QTY	PART NAME 1 2 3 4 5 6 (PRODUCT LEVEL)	SEE PAGE
	1	1	**373-5820**	18	SCRAPER	
	2	1	**392-4187**	2	BAR AS	
	3	1	**396-3822**	4	SHIM (10-MM THK)	
B	4	1	**396-3823**	4	SHIM (3-MM THK)	
B	5	1	**396-3824**	16	SHIM (1.6-MM THK)	
	6	1	**396-8904**	1	BRACKET	
	7	1	**396-8905**	1	BRACKET	
	8	1	**396-8906**	1	BRACKET	
	9	1	**396-8907**	1	BRACKET	
	10	1	**7X-0583**	36	WASHER-HARD (17X45X6-MM THK)	
M	11	1	**7X-2475**	36	BOLT (M16X2X130-MM)	
	12	1	**8T-4123**	8	WASHER (22X35X3.5-MM THK)	
M	13	1	**8T-4131**	8	NUT (M20X2.5-THD)	
M	14	1	**8T-4187**	8	BOLT (M20X2.5X80-MM)	
	15	1	**8T-5439**	16	WASHER-HARD (21.5X45X6-MM THK)	
M	16	1	**8T-6381**	8	BOLT (M20X2.5X120-MM)	

B - USE AS REQUIRED
M - METRIC PART

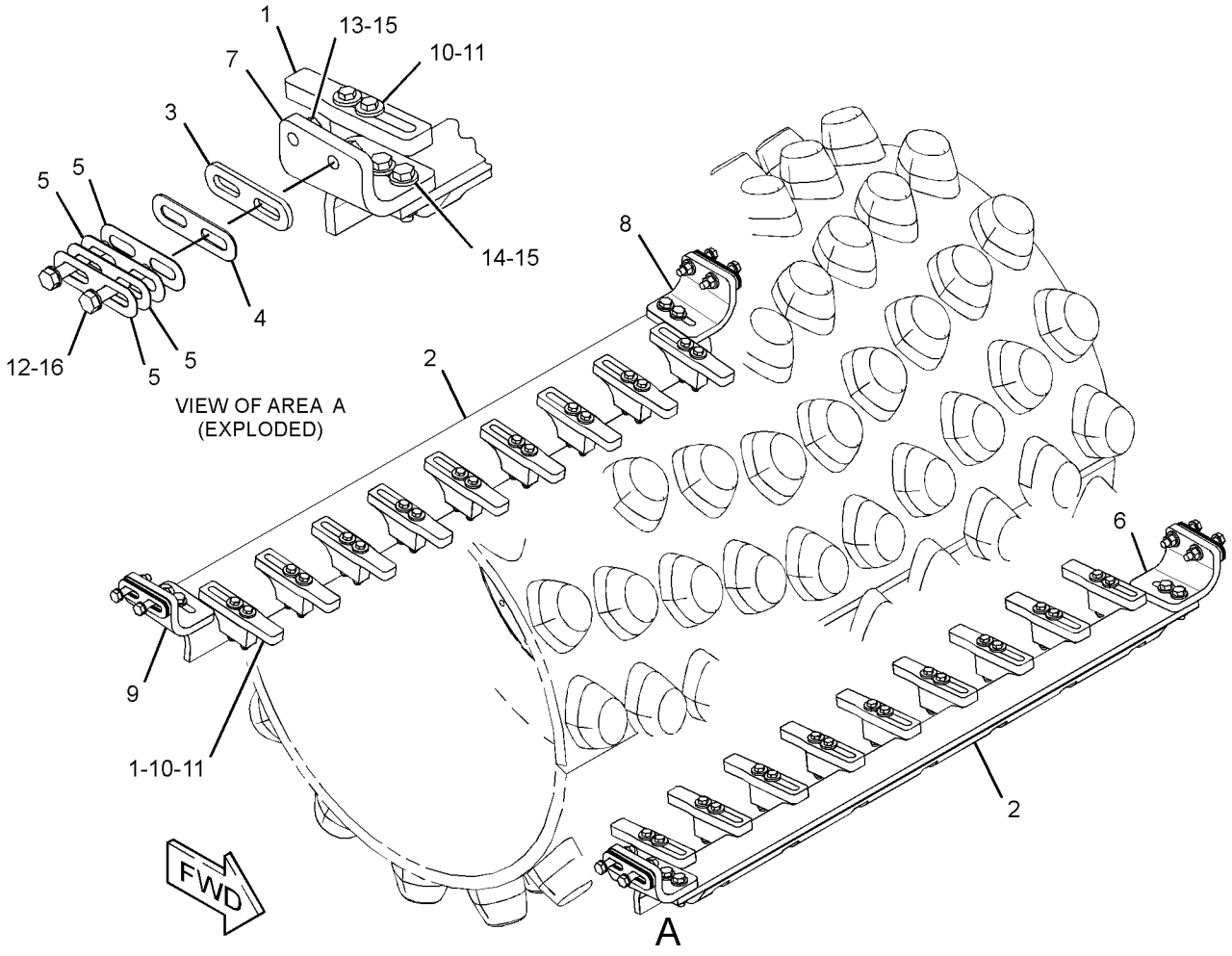

GRAPHIC #1 **<END>** g02984442

384-5878 SCRAPER GP-SMOOTH DRUM

S/N: M4M1-UP
PART OF 360-0498 DRUM AR-SMOOTH
AN ATTACHMENT

SMCS-6607 **i05291217**

NOTE	REF NO	GRAPHIC REF	PART NUMBER	QTY	PART NAME 1 2 3 4 5 6 (PRODUCT LEVEL)	SEE PAGE
	1	1	**227-0172**	3	MOUNT	
	2	1	**384-2548**	3	PLATE	
	3	1	**384-2550**	1	SCRAPER-DRUM (STEEL)	
	4	1	**384-5043**	3	BRACKET	
M	5	1	**176-5311**	3	LOCKNUT (M16X2-THD)	
M	6	1	**193-8340**	3	BOLT-CARRIAGE (M16X2X65-MM)	
M	7	1	**7X-2561**	6	BOLT (M20X2.5X35-MM)	
	8	1	**8T-4122**	9	WASHER-HARD (17X32X3.5-MM THK)	
M	9	1	**8T-4140**	6	BOLT (M16X2X60-MM)	
	10	1	**8T-4123**	6	WASHER (22X35X3.5-MM THK)	

M - METRIC PART

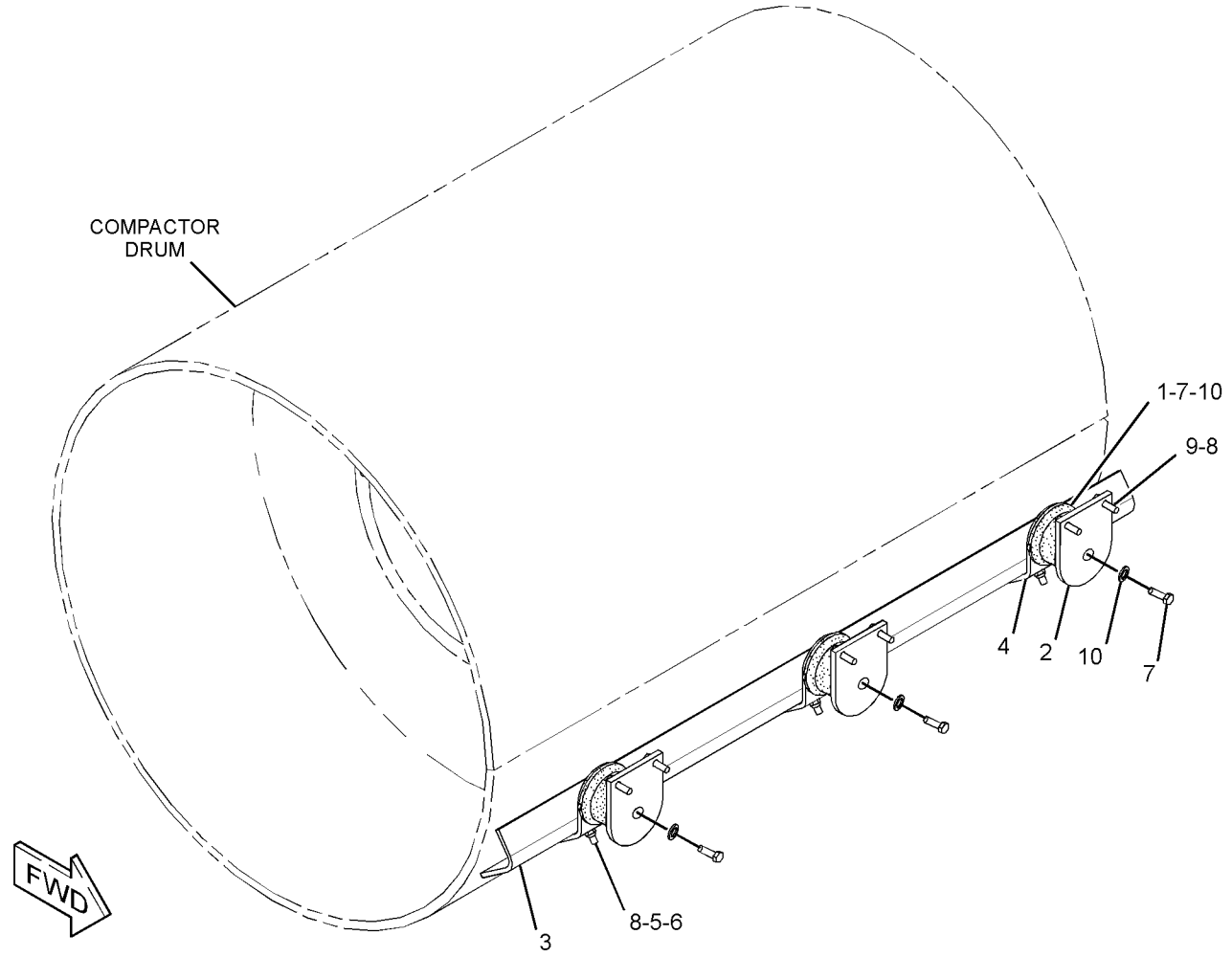

GRAPHIC #1 **<END>** g03189036

384-5914 SCRAPER GP-SMOOTH DRUM

S/N: MBF1-UP

PART OF 360-0501 DRUM AR-SMOOTH

AN ATTACHMENT

SMCS-6607 **i05269485**

NOTE	REF NO	GRAPHIC REF	PART NUMBER	QTY	PART NAME 1 2 3 4 5 6 (PRODUCT LEVEL)	SEE PAGE
	1	1	**227-0172**	3	MOUNT	
	2	1	**384-2549**	3	BRACKET	
	3	1	**384-2550**	1	SCRAPER-DRUM (STEEL)	
	4	1	**384-2551**	3	PLATE	
M	5	1	**176-5311**	3	LOCKNUT (M16X2-THD)	
M	6	1	**193-8340**	3	BOLT-CARRIAGE (M16X2X65-MM)	
M	7	1	**7X-2561**	6	BOLT (M20X2.5X35-MM)	
	8	1	**8T-4122**	9	WASHER-HARD (17X32X3.5-MM THK)	
	9	1	**8T-4123**	6	WASHER (22X35X3.5-MM THK)	
M	10	1	**8T-4140**	6	BOLT (M16X2X60-MM)	

M - METRIC PART

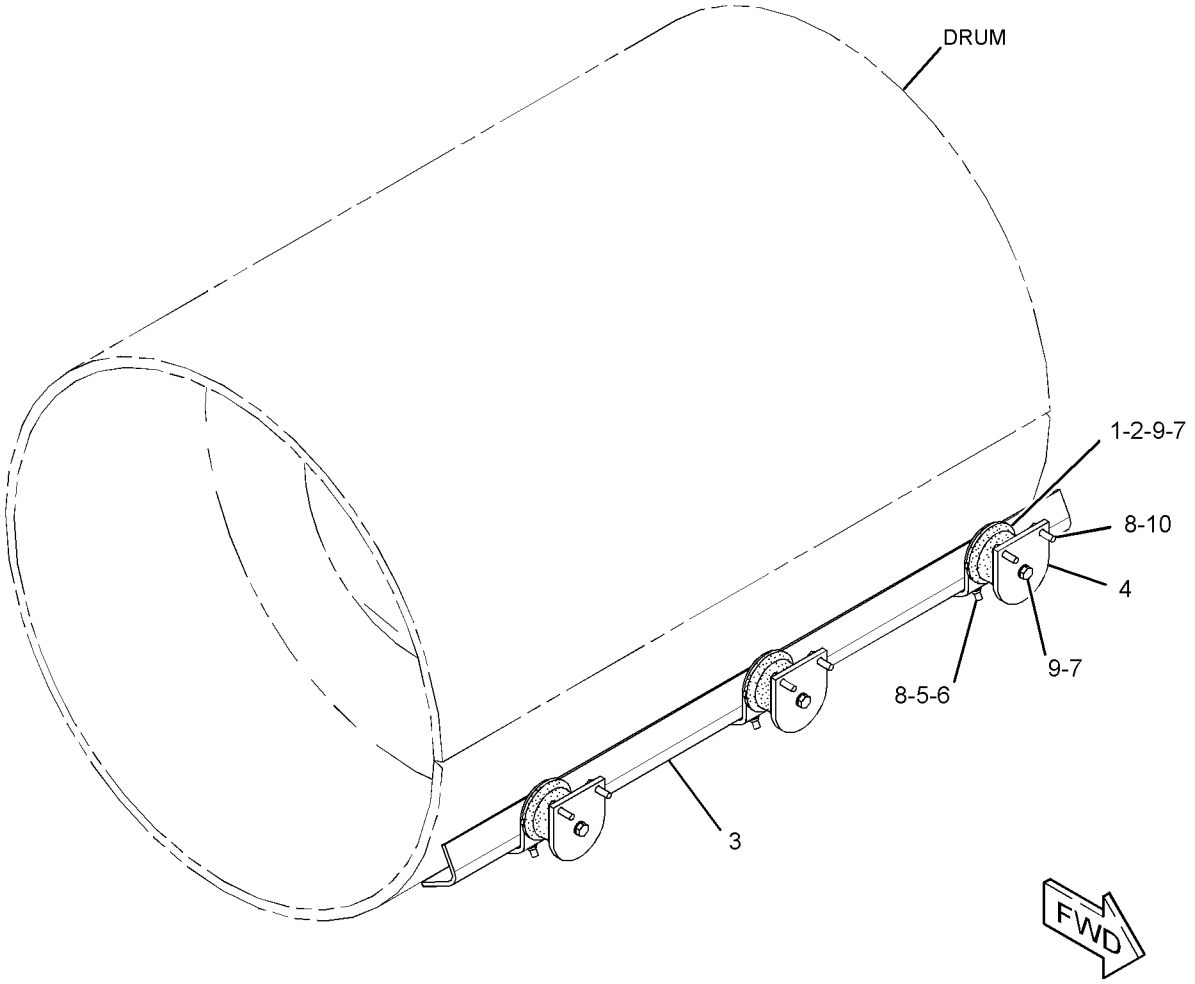

GRAPHIC #1 **<END>** g03189000

390-0607 SCRAPER GP-SMOOTH DRUM–STEEL, FRONT, REAR

S/N: M4M1-UP
PART OF 360-0499 DRUM AR-SMOOTH
AN ATTACHMENT

SMCS-6607 **i05291218**

NOTE	REF NO	GRAPHIC REF	PART NUMBER	QTY	PART NAME 1 2 3 4 5 6 (PRODUCT LEVEL)	SEE PAGE
	1	1	**227-0172**	6	MOUNT	
	2	1	**384-2548**	3	PLATE	
	3	1	**384-2811**	3	BRACKET	
	4	1	**384-5048**	3	BRACKET	
	5	1	**384-5849**	2	SCRAPER	
	6	1	**390-0888**	1	SCRAPER AS	
	7	1	**396-8977**	1	SHIM (8-MM THK)	
B	8	1	**396-8982**	4	SHIM (1.6-MM THK)	
	9	1	**090-8865**	6	SPACER (17X40X3-MM THK)	
M	10	1	**176-5311**	6	LOCKNUT (M16X2-THD)	
M	11	1	**193-8340**	6	BOLT-CARRIAGE (M16X2X65-MM)	
M	12	1	**7X-2561**	12	BOLT (M20X2.5X35-MM)	
	13	1	**8T-4122**	6	WASHER-HARD (17X32X3.5-MM THK)	
	14	1	**8T-4123**	16	WASHER (22X35X3.5-MM THK)	
M	15	1	**8T-4131**	4	NUT (M20X2.5-THD)	
M	16	1	**8T-4140**	6	BOLT (M16X2X60-MM)	
M	17	1	**8T-4187**	4	BOLT (M20X2.5X80-MM)	
	18	1	**8T-5439**	4	WASHER-HARD (21.5X45X6-MM THK)	

B - USE AS REQUIRED
M - METRIC PART

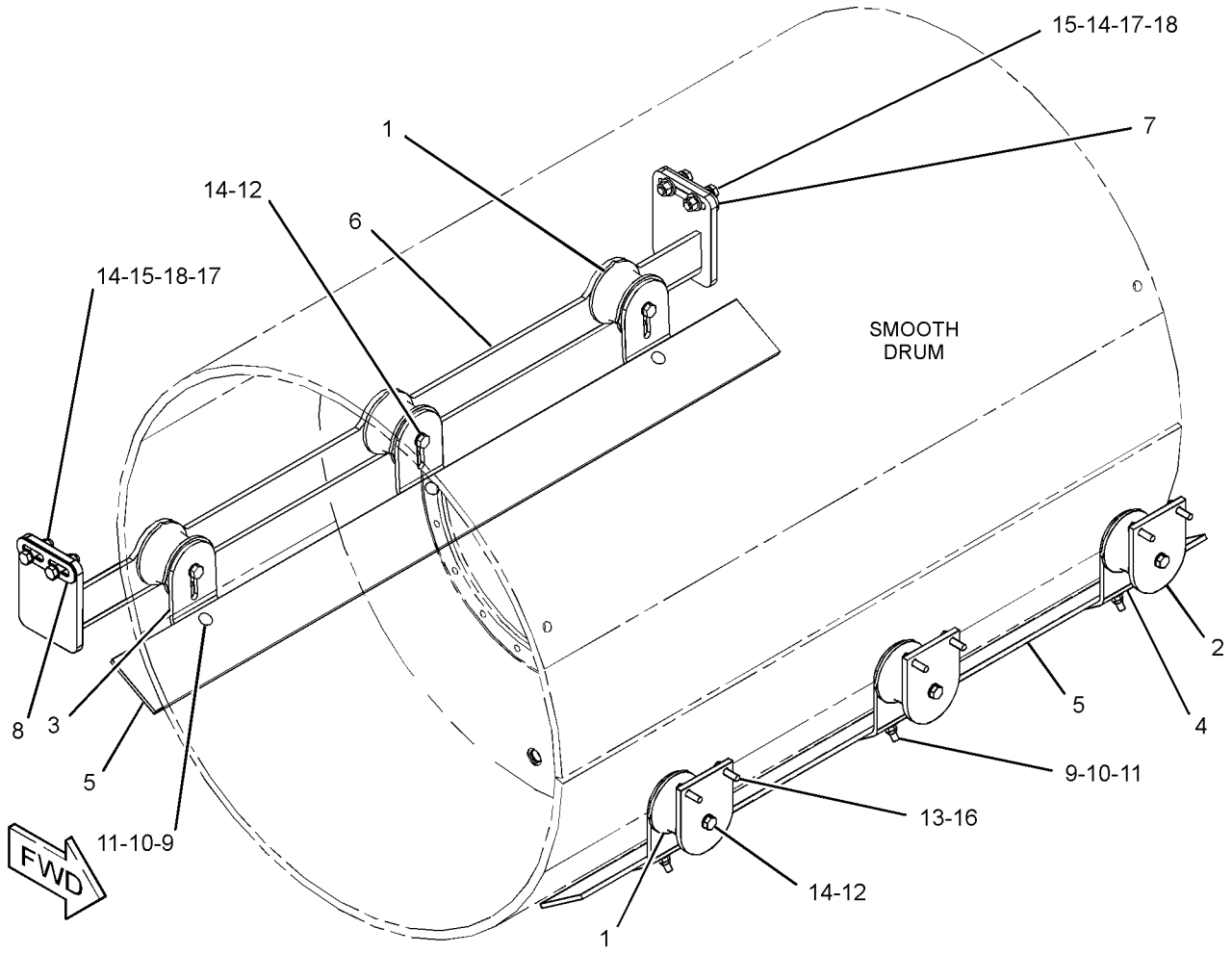

GRAPHIC #1 **<END>** g03188898

390-0608 SCRAPER GP-SMOOTH DRUM–FLEXIBLE, FRONT, REAR

S/N: M4M1-UP
PART OF 360-0500 DRUM AR-SMOOTH
AN ATTACHMENT

SMCS-6607 **i05291219**

NOTE	REF NO	GRAPHIC REF	PART NUMBER	QTY	PART NAME 1 2 3 4 5 6 (PRODUCT LEVEL)	SEE PAGE
	1	1	**227-0172**	6	MOUNT	
	2	1	**364-1946**	4	PLATE	
	3	1	**364-1947**	2	SCRAPER (FLEXIBLE)	
	4	1	**365-2496**	2	PLATE	
	5	1	**384-2548**	3	PLATE	
	6	1	**384-2811**	3	BRACKET	
	7	1	**384-5048**	3	BRACKET	
	8	1	**390-0888**	1	SCRAPER AS	
	9	1	**396-8977**	1	SHIM (8-MM THK)	
B	10	1	**396-8982**	4	SHIM (1.6-MM THK)	
	11	1	**090-8865**	18	SPACER (17X40X3-MM THK)	
M	12	1	**176-5311**	18	LOCKNUT (M16X2-THD)	
M	13	1	**193-8340**	18	BOLT-CARRIAGE (M16X2X65-MM)	
M	14	1	**7X-2561**	12	BOLT (M20X2.5X35-MM)	
	15	1	**8T-4122**	6	WASHER-HARD (17X32X3.5-MM THK)	
	16	1	**8T-4123**	16	WASHER (22X35X3.5-MM THK)	
M	17	1	**8T-4131**	4	NUT (M20X2.5-THD)	
M	18	1	**8T-4140**	6	BOLT (M16X2X60-MM)	
M	19	1	**8T-4187**	4	BOLT (M20X2.5X80-MM)	
	20	1	**8T-5439**	4	WASHER-HARD (21.5X45X6-MM THK)	

B - USE AS REQUIRED
M - METRIC PART

390-0608 **SCRAPER GP-SMOOTH DRUM (*contd.*)** **i05291219**

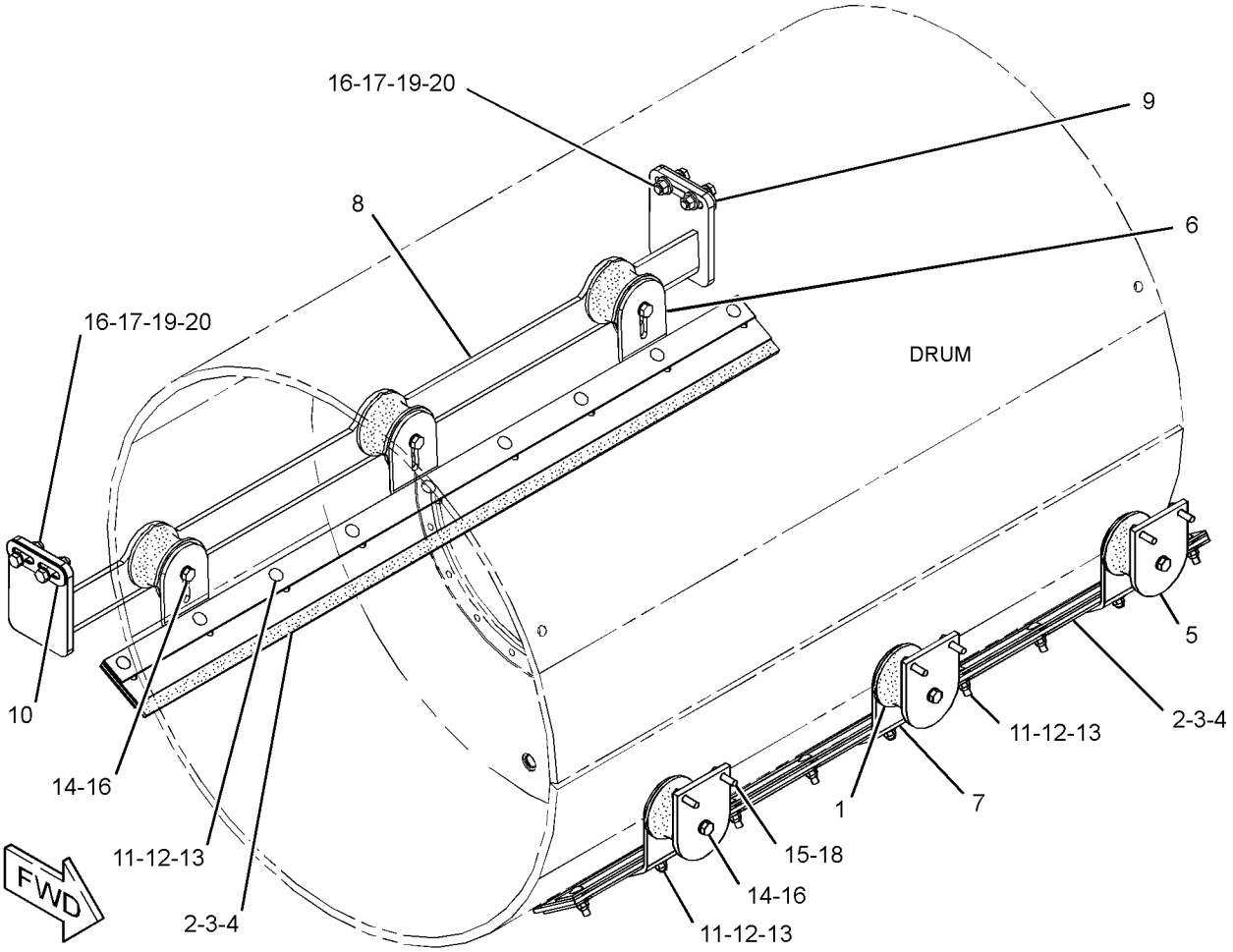

GRAPHIC #1 **<END>** g03188857

355-2658 SCREEN GP-AIR—HOOD SIDE, REAR, LH

S/N: MBF1-UP; M4M1-UP; M5P1-UP; SDT1-UP
PART OF 415-9361, 415-9367 DISTRIBUTION AR
AN ATTACHMENT

SMCS-7273 **i05268330**

NOTE	REF NO	GRAPHIC REF	PART NUMBER	QTY	PART NAME 1 2 3 4 5 6 (PRODUCT LEVEL)	SEE PAGE
	1	1	**355-3181**	1	SCREEN	
M	2	1	**5C-2890**	9	NUT (M6X1-THD)	
M	3	1	**8T-4138**	9	BOLT (M6X1X20-MM)	
	4	1	**9X-6165**	18	WASHER (6.5X22X2.5-MM THK)	

M - METRIC PART

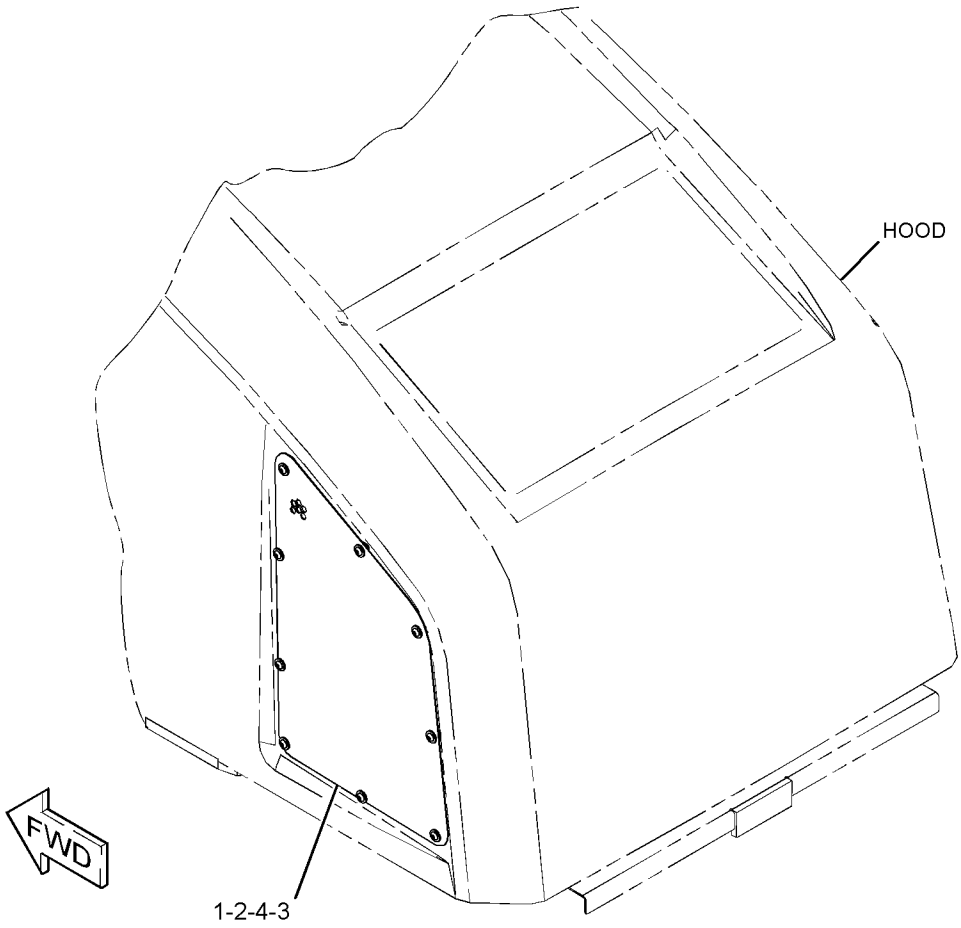

GRAPHIC #1 **<END>** g03044598

355-2451 STEP GP

S/N: MBF1-UP; M4M1-UP; M5P1-UP; SDT1-UP
PART OF 374-9723, 374-9724, 374-9725, 374-9726 CHASSIS AR

SMCS-7254 **i05270659**

NOTE	REF NO	GRAPHIC REF	PART NUMBER	QTY	PART NAME 1 2 3 4 5 6 (PRODUCT LEVEL)	SEE PAGE
	1	1	**357-4843**	1	STEP AS	
	2	1	**7X-7729**	4	WASHER (11X25X3-MM THK)	
M	3	1	**8T-4196**	4	BOLT (M10X1.5X35-MM)	

M - METRIC PART

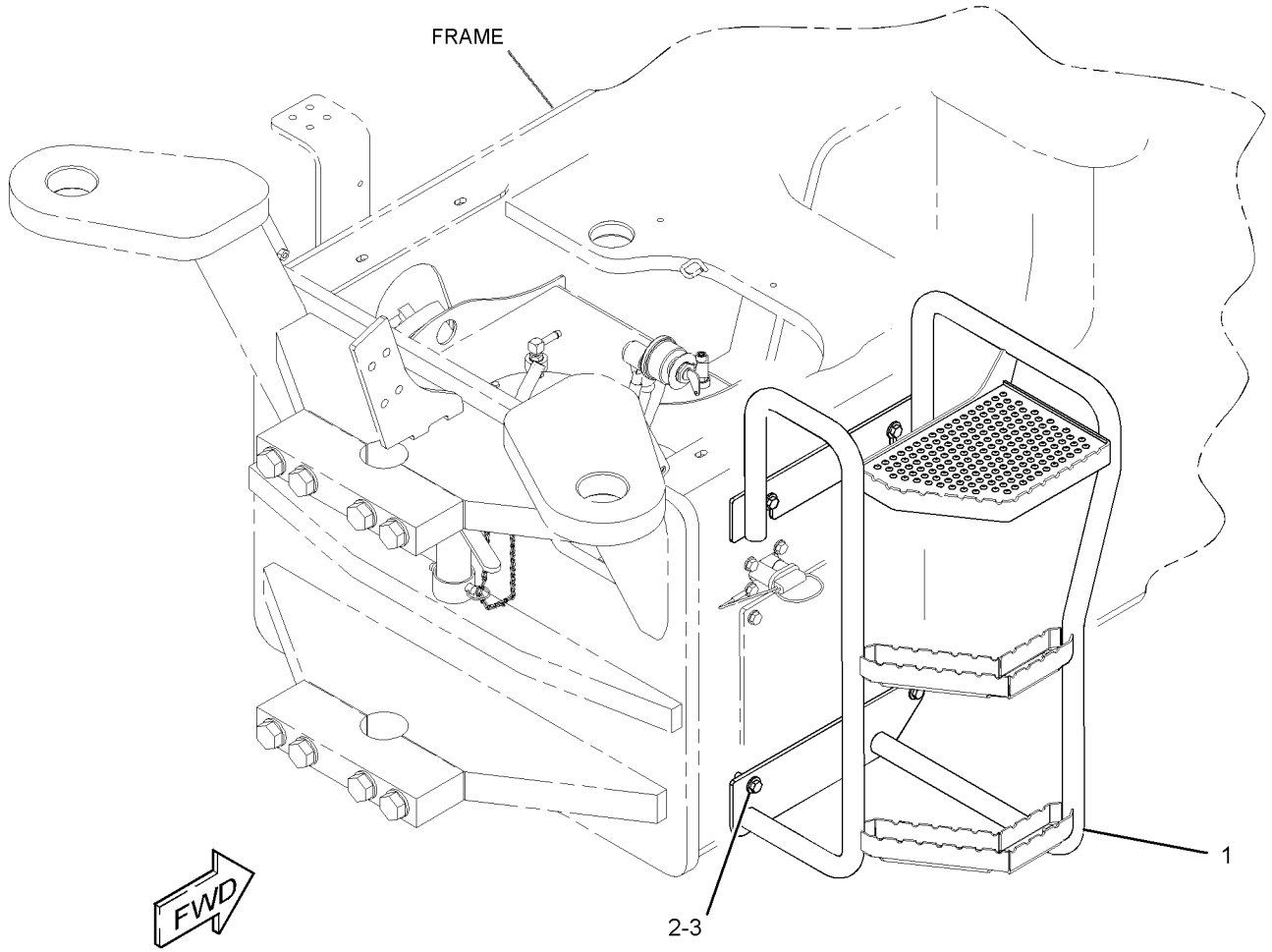

GRAPHIC #1 **<END>** g02720112

226-4392 CYLINDER GP-BRAKE

S/N: MBF1-UP; M4M1-UP; M5P1-UP
PART OF 226-4390 HOUSING GP-AXLE
ALSO AN ATTACHMENT

SMCS-4262, 4277 **i05254229**

NOTE	REF NO	GRAPHIC REF	PART NUMBER	QTY	PART NAME 1 2 3 4 5 6 (PRODUCT LEVEL)	SEE PAGE
	1	1	**199-0670**	1	SCREW-PURGE	
	2	1	**107-3117**	3	SEAL-O-RING	
	3	1	**226-4383**	1	CYLINDER-BRAKE	
	4	1	**226-4384**	1	PISTON-BRAKE	
	5	1	**226-4388**	1	SEAL-O-RING	
	6	1	**226-4389**	1	SEAL-O-RING	
	7	1	**226-4391**	3	PIN	
	8	1	**229-5062**	3	PLUG	
	9	1	**033-6041**	3	SEAL-O-RING	
	10	1	**3J-1907**	1	SEAL-O-RING	
	11	1	**9S-8004**	1	PLUG-O-RING	

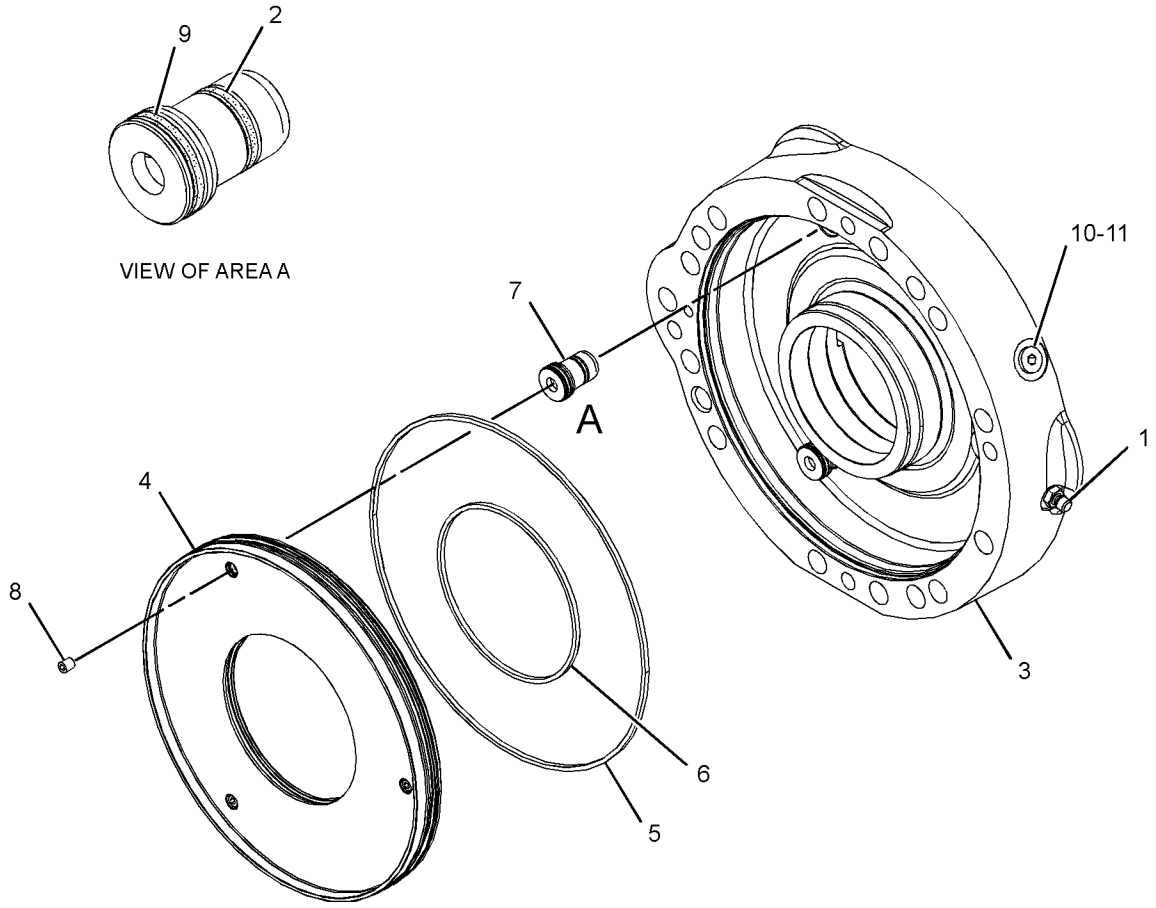

GRAPHIC #1 **<END>** g02760818

379-6583 LINES GP-BRAKE

S/N: M4M1-UP; M5P1-UP
PART OF 374-9769 AXLE AR-DRIVE
AN ATTACHMENT

SMCS-4257 **i05295443**

NOTE	REF NO	GRAPHIC REF	PART NUMBER	QTY	PART NAME 1 2 3 4 5 6 (PRODUCT LEVEL)	SEE PAGE
	1	1	**177-2215**	3	STRAP-DUAL CLAMP	
I	2	1	**189-3224**	1	HOSE AS	
	3	1	**200-6345**	1	MOUNT (DUAL SWIVEL)	
	4	1	**204-2281**	2	STRAP-CABLE	
I	5	1	**272-5007**	1	HOSE AS	
I	6	1	**386-0524**	1	HOSE AS	
	7	1	*148-8325*	1	CONNECTOR AS	
		1	**3J-1907**	1	SEAL-O-RING	
		1	**4J-5477**	1	SEAL-O-RING	
		1	**6V-8641**	1	CONNECTOR	
	8	1	*148-8368*	2	ELBOW AS	
					(EACH INCLUDES)	
		1	**3J-1907**	1	SEAL-O-RING	
		1	**4J-5477**	1	SEAL-O-RING	
		1	**6V-8627**	1	ELBOW	
	9	1	*148-8423*	1	TEE AS	
		1	**3J-1907**	1	SEAL-O-RING	
		1	**4J-5477**	1	SEAL-O-RING	
		1	**8T-3311**	1	TEE	
	10	1	*150-3033*	1	ELBOW AS	
		1	**3J-1907**	1	SEAL-O-RING	
		1	**4J-5477**	1	SEAL-O-RING	
		1	**8T-0164**	1	ELBOW	
	11	1	*150-5968*	1	TEE AS	
		1	**4J-5477**	2	SEAL-O-RING	
		1	**6V-9835**	1	TEE-SWIVEL	

I - REFER TO HYDRAULIC INFORMATION SYSTEM

379-6583 **LINES GP-BRAKE (*contd.*)** **i05295443**

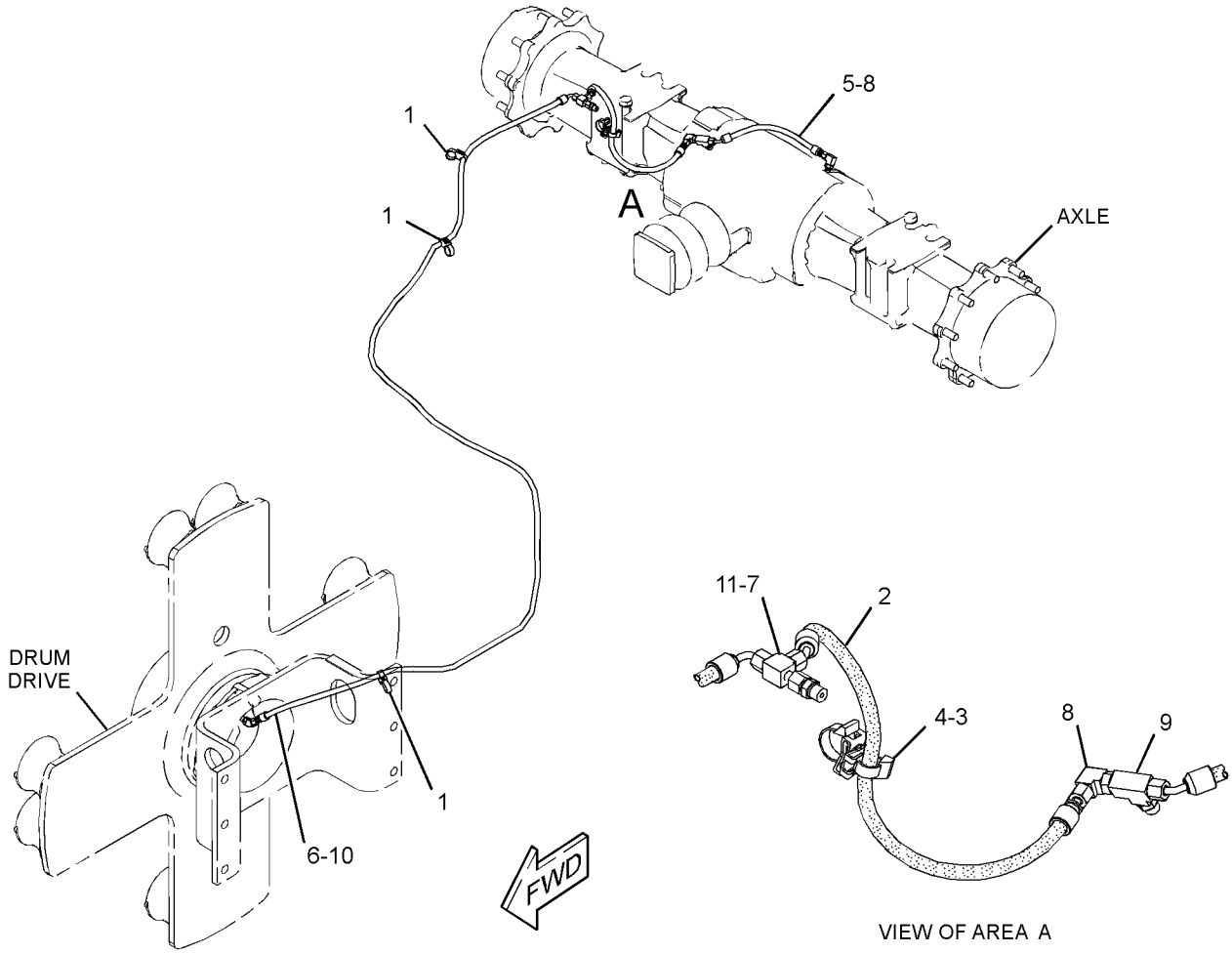

GRAPHIC #1 **<END>** g03091517

378-7704 LINES GP-SERVICE BRAKE

S/N: MBF1-UP

PART OF 374-9743 HYDRAULIC AR

SMCS-4257 **i05270807**

NOTE	REF NO	GRAPHIC REF	PART NUMBER	QTY	PART NAME 1 2 3 4 5 6 (PRODUCT LEVEL)	SEE PAGE
	1	1	**177-2215**	3	STRAP-DUAL CLAMP	
I	2	1	**189-3224**	1	HOSE AS	
	3	1	**200-6345**	1	MOUNT (DUAL SWIVEL)	
	4	1	**204-2281**	2	STRAP-CABLE	
I	5	1	**272-5007**	1	HOSE AS	
I	6	1	**386-1822**	1	HOSE AS	
	7	1	*148-8325*	1	CONNECTOR AS	
			3J-1907	1	SEAL-O-RING	
			4J-5477	1	SEAL-O-RING	
			6V-8641	1	CONNECTOR	
	8	1	*148-8368*	2	ELBOW AS	
					(EACH INCLUDES)	
			3J-1907	1	SEAL-O-RING	
			4J-5477	1	SEAL-O-RING	
			6V-8627	1	ELBOW	
	9	1	*148-8423*	1	TEE AS	
			3J-1907	1	SEAL-O-RING	
			4J-5477	1	SEAL-O-RING	
			8T-3311	1	TEE	
	10	1	*150-3033*	1	ELBOW AS	
			3J-1907	1	SEAL-O-RING	
			4J-5477	1	SEAL-O-RING	
			8T-0164	1	ELBOW	
	11	1	*150-5968*	1	TEE AS	
			4J-5477	2	SEAL-O-RING	
			6V-9835	1	TEE-SWIVEL	

I - REFER TO HYDRAULIC INFORMATION SYSTEM

378-7704 **LINES GP-SERVICE BRAKE (*contd.*)** **i05270807**

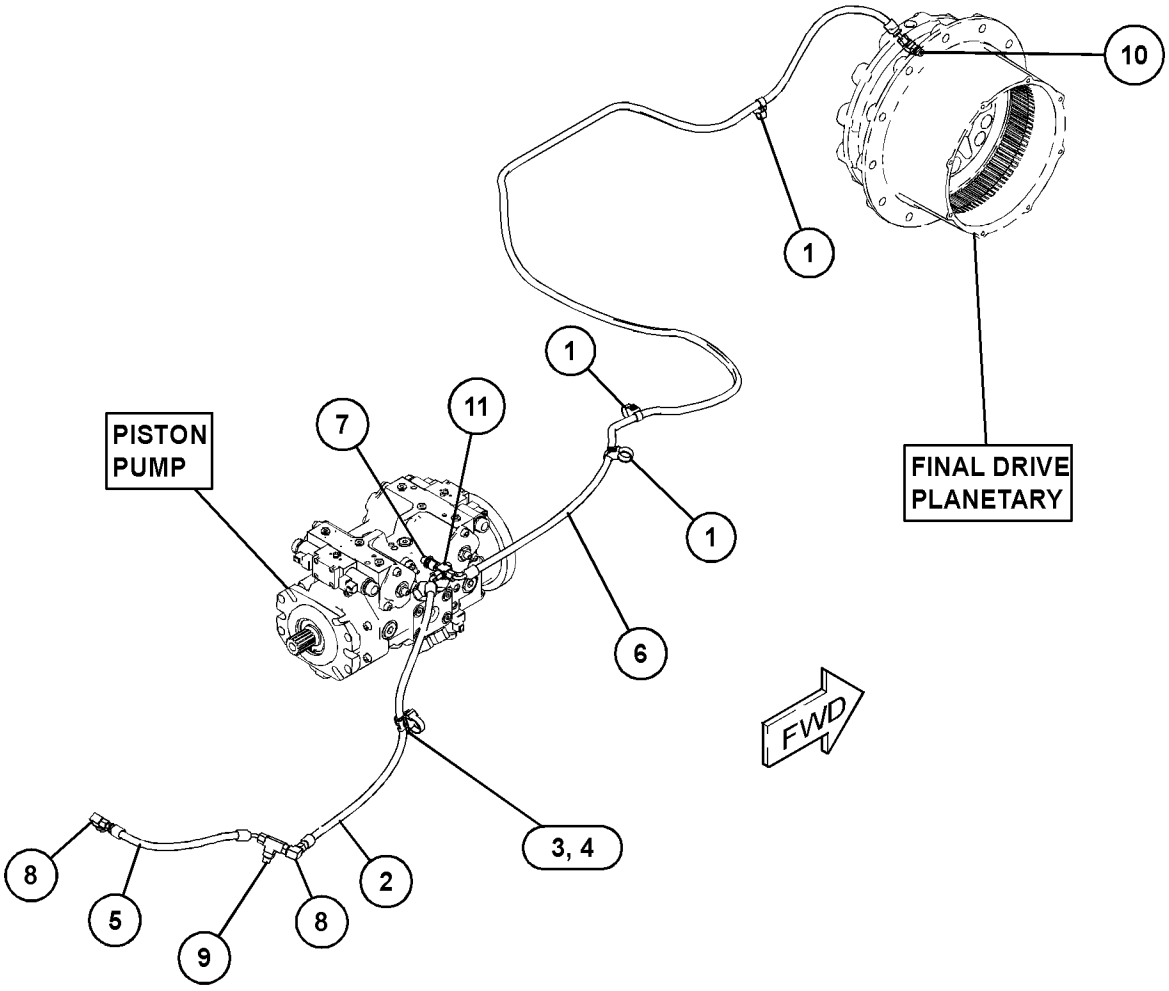

GRAPHIC #1 **<END>** g03091918

378-7705 LINES GP-SERVICE BRAKE

S/N: SDT1-UP

PART OF 374-9756 HYDRAULIC AR

SMCS-4257 **i05298370**

NOTE	REF NO	GRAPHIC REF	PART NUMBER	QTY	PART NAME 1 2 3 4 5 6 (PRODUCT LEVEL)	SEE PAGE
	1	1	**177-2215**	3	STRAP-DUAL CLAMP	
	2	1	**200-6345**	1	MOUNT (DUAL SWIVEL)	
	3	1	**204-2281**	2	STRAP-CABLE	
I	4	1	**272-5007**	1	HOSE AS	
I	5	1	**386-1822**	1	HOSE AS	
I	6	1	**386-1823**	1	HOSE AS	
	7	1	*148-8325*	2	CONNECTOR AS	
					(EACH INCLUDES)	
		1	**3J-1907**	1	SEAL-O-RING	
		1	**4J-5477**	1	SEAL-O-RING	
		1	**6V-8641**	1	CONNECTOR	
	8	1	*148-8368*	1	ELBOW AS	
		1	**3J-1907**	1	SEAL-O-RING	
		1	**4J-5477**	1	SEAL-O-RING	
		1	**6V-8627**	1	ELBOW	
	9	1	*148-8448*	1	TEE AS	
		1	**4J-5477**	2	SEAL-O-RING	
		1	**6V-9842**	1	TEE-SWIVEL	
	10	1	*150-3033*	1	ELBOW AS	
		1	**3J-1907**	1	SEAL-O-RING	
		1	**4J-5477**	1	SEAL-O-RING	
		1	**8T-0164**	1	ELBOW	
	11	1	*150-5968*	1	TEE AS	
		1	**4J-5477**	2	SEAL-O-RING	
		1	**6V-9835**	1	TEE-SWIVEL	

I - REFER TO HYDRAULIC INFORMATION SYSTEM

378-7705 **LINES GP-SERVICE BRAKE (*contd.*)** **i05298370**

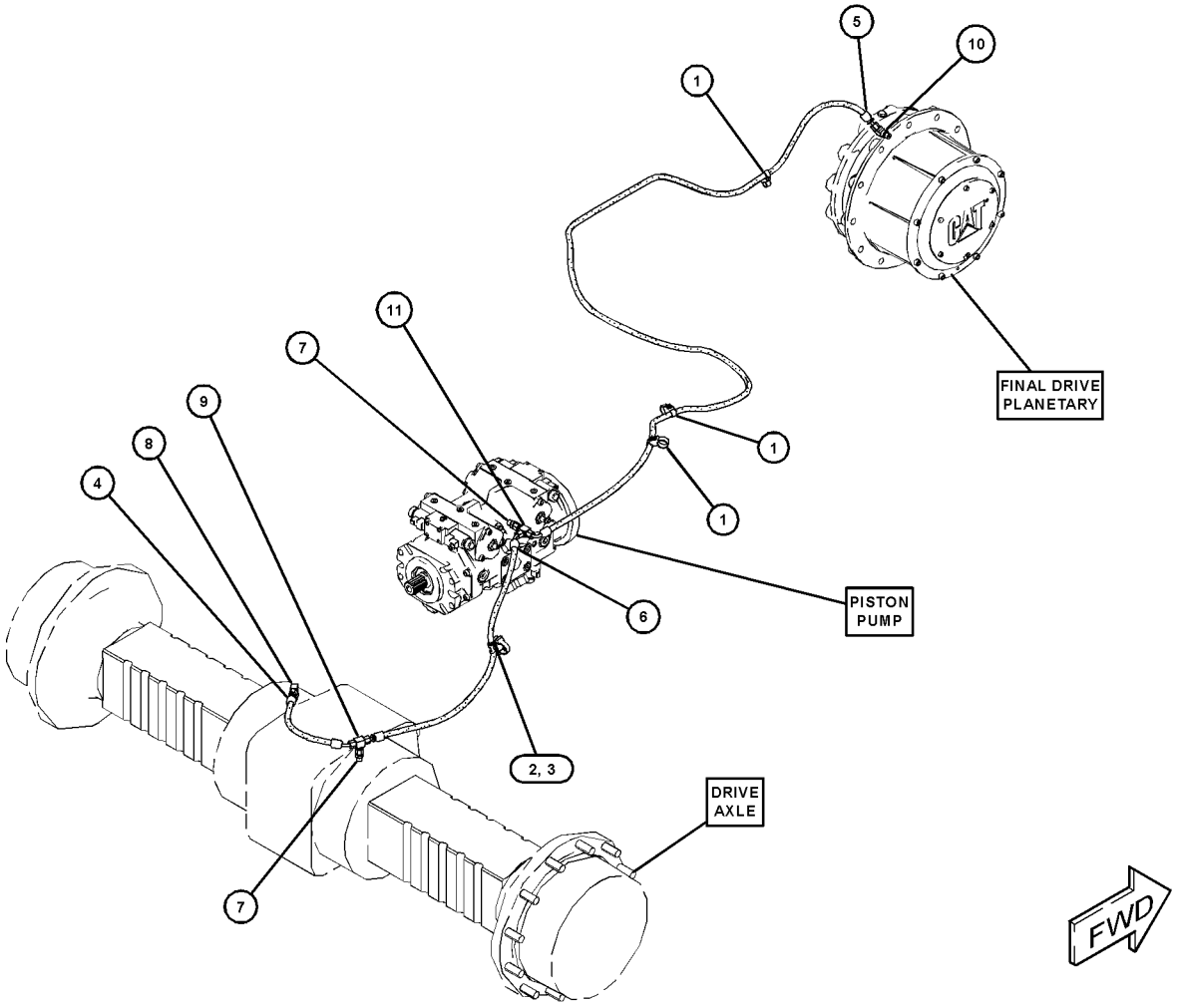

GRAPHIC #1 **<END>** g03111797

379-6581 LINES GP-SERVICE BRAKE

S/N: M4M1-UP; M5P1-UP
PART OF 374-9767 AXLE AR-DRIVE
AN ATTACHMENT

SMCS-4257 **i05295439**

NOTE	REF NO	GRAPHIC REF	PART NUMBER	QTY	PART NAME 1 2 3 4 5 6 (PRODUCT LEVEL)	SEE PAGE
	1	1	**177-2215**	3	STRAP-DUAL CLAMP	
I	2	1	**386-1819**	1	HOSE AS	
	3	1	*148-8325*	1	CONNECTOR AS	
		1	**3J-1907**	1	SEAL-O-RING	
		1	**4J-5477**	1	SEAL-O-RING	
		1	**6V-8641**	1	CONNECTOR	
	4	1	*150-3033*	1	ELBOW AS	
		1	**3J-1907**	1	SEAL-O-RING	
		1	**4J-5477**	1	SEAL-O-RING	
		1	**8T-0164**	1	ELBOW	

I - REFER TO HYDRAULIC INFORMATION SYSTEM

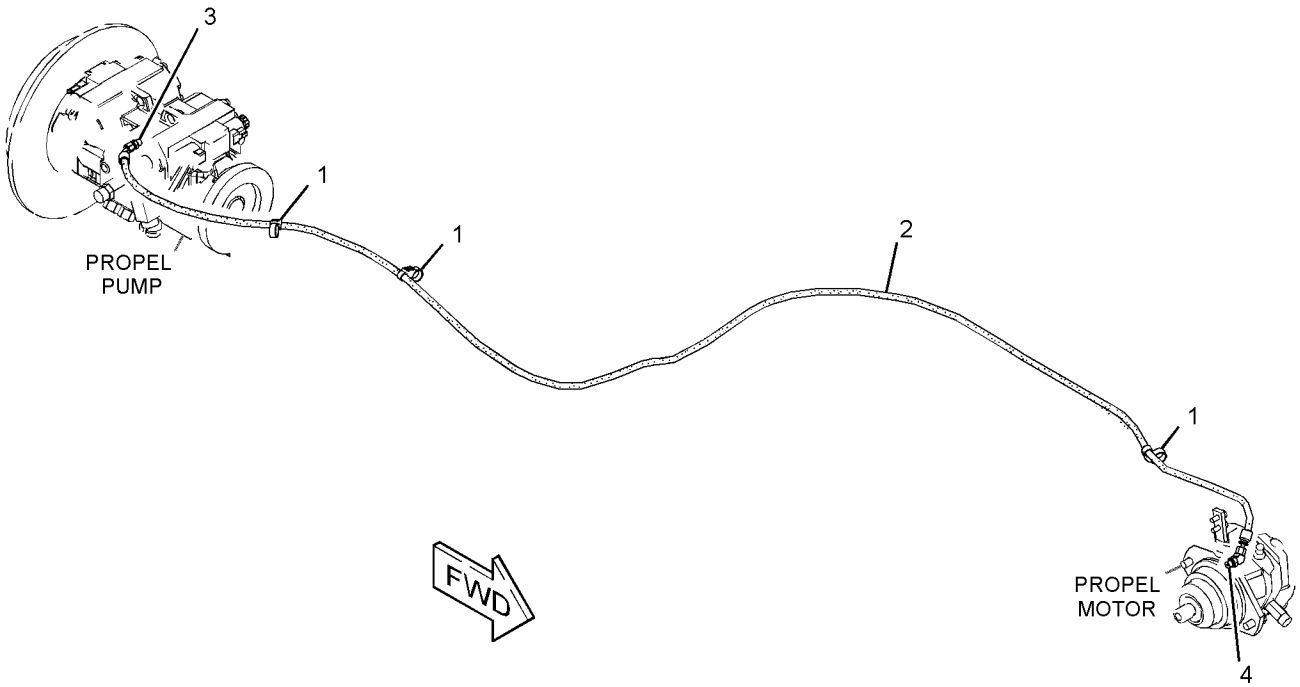

GRAPHIC #1 **<END>** g03100936

355-2895 CYLINDER & MTG GP-STEERING

S/N: MBF1-UP; M4M1-UP; M5P1-UP; SDT1-UP
PART OF 374-9752 HYDRAULIC AR-AUXILIARY

SMCS-4303 **i05289959**

NOTE	REF NO	GRAPHIC REF	PART NUMBER	QTY	PART NAME 1 2 3 4 5 6 (PRODUCT LEVEL)	SEE PAGE
	1	1	**3B-8485**	2	FITTING-GREASE	
	2	1	**3B-8490**	2	FITTING-GREASE	
	3	1	**4V-2057**	4	BEARING-SPHERICAL	
	4	1	**106-6340**	4	SPACER (10.74X17.14X7-MM THK)	
	5	1	**393-9129**	2	PIN AS	
I	6	1	**145-8293**	2	HOSE AS	
	7	1	*148-8337*	2	CONNECTOR AS	
					(EACH INCLUDES)	
		1	**4J-5477**	1	SEAL-O-RING	
		1	**8C-6866**	1	CONNECTOR	
Y	8	1	**356-2015**	2	CYLINDER GP-HYDRAULIC (STEERING)	323
	9	1	**393-9128**	2	PIN AS	
	10	1	*148-8444*	2	TEE AS-SWIVEL	
					(EACH INCLUDES)	
		1	**6V-8398**	2	SEAL-O-RING	
		1	**6V-9837**	1	TEE-SWIVEL	
	11	1	**4J-5477**	2	SEAL-O-RING	
	12	1	**4L-6454**	4	BOLT (3/8-16X1-IN)	
	13	1	**5P-1075**	4	WASHER-HARD (10.2X22.5X3-MM THK)	
	14	1	**6V-8398**	4	SEAL-O-RING	
	15	1	**7X-5331**	2	ELBOW	

I - REFER TO HYDRAULIC INFORMATION SYSTEM
Y - SEPARATE ILLUSTRATION

355-2895 **CYLINDER & MTG GP-STEERING (*contd.*)** **i05289959**

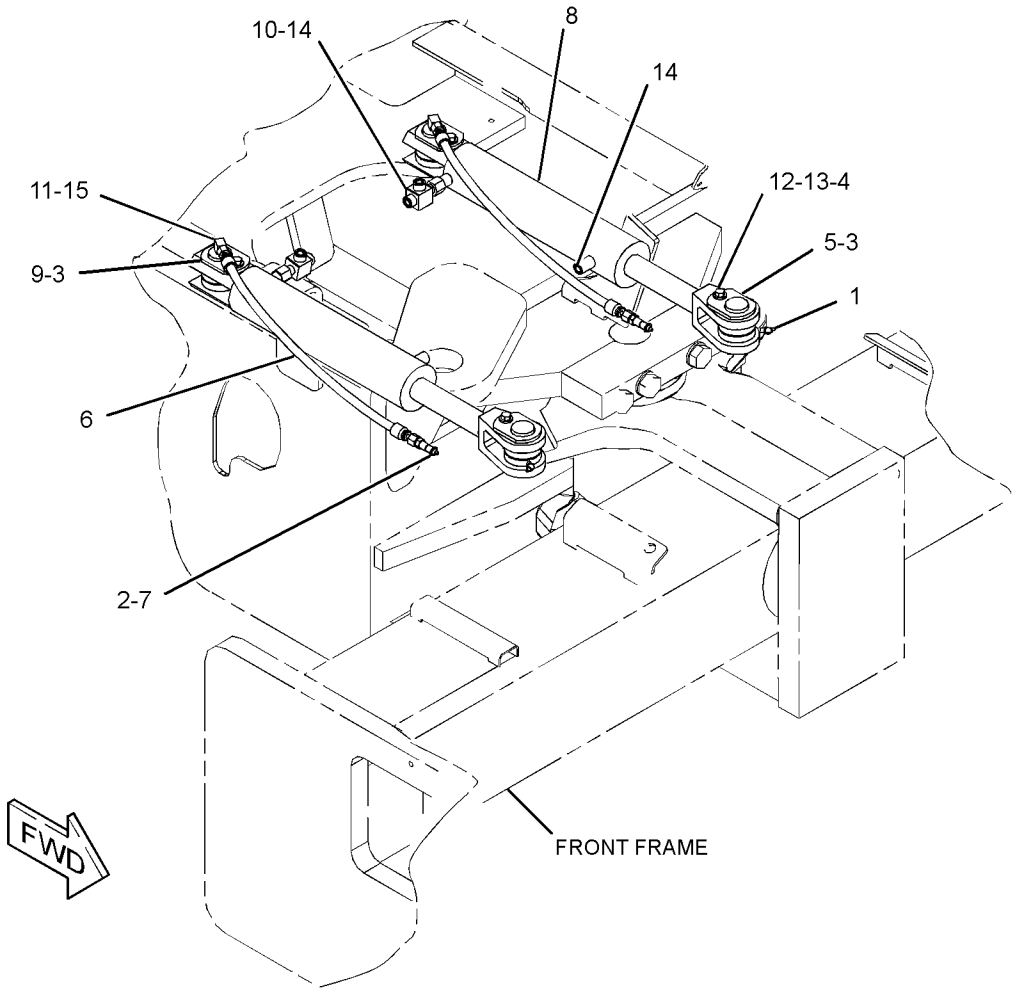

GRAPHIC #1 **<END>** g03048996

378-7694 LINES GP-STEERING

S/N: MBF1-UP; M4M1-UP; M5P1-UP; SDT1-UP

PART OF 374-9752 HYDRAULIC AR-AUXILIARY

SMCS-4304 **i05295549**

NOTE	REF NO	GRAPHIC REF	PART NUMBER	QTY	PART NAME 1 2 3 4 5 6 (PRODUCT LEVEL)	SEE PAGE
	1	1	**102-8705**	1	PLATE	
	2	1	**177-2215**	5	STRAP-DUAL CLAMP	
	3	1	**200-6345**	1	MOUNT (DUAL SWIVEL)	
	4	1	**204-2281**	2	STRAP-CABLE	
M	5	1	**206-0451**	1	BOLT-STACKING (M8X1.25X44-MM)	
	6	1	**206-0452**	1	PLATE	
	7	1	**241-0624**	2	BODY-CLAMP	
I	8	1	**360-9724**	1	HOSE AS	
	9	1	**360-9728**	1	BRACKET AS	
I	10	1	**384-1783**	1	HOSE AS	
I	11	1	**384-1784**	1	HOSE AS	
I	12	1	**384-1785**	1	HOSE AS	
	13	1	**8V-5718**	2	CLAMP	
	14	1	**6D-4636**	1	CLIP	
M	15	1	**7X-0818**	1	BOLT (M8X1.25X45-MM)	
	16	1	**8T-4121**	1	WASHER-HARD (11X21X2.5-MM THK)	
M	17	1	**8T-4182**	1	BOLT (M10X1.5X45-MM)	
	18	1	**130-1433**	1	SPACER (11X25X17-MM THK)	

I - REFER TO HYDRAULIC INFORMATION SYSTEM
M - METRIC PART

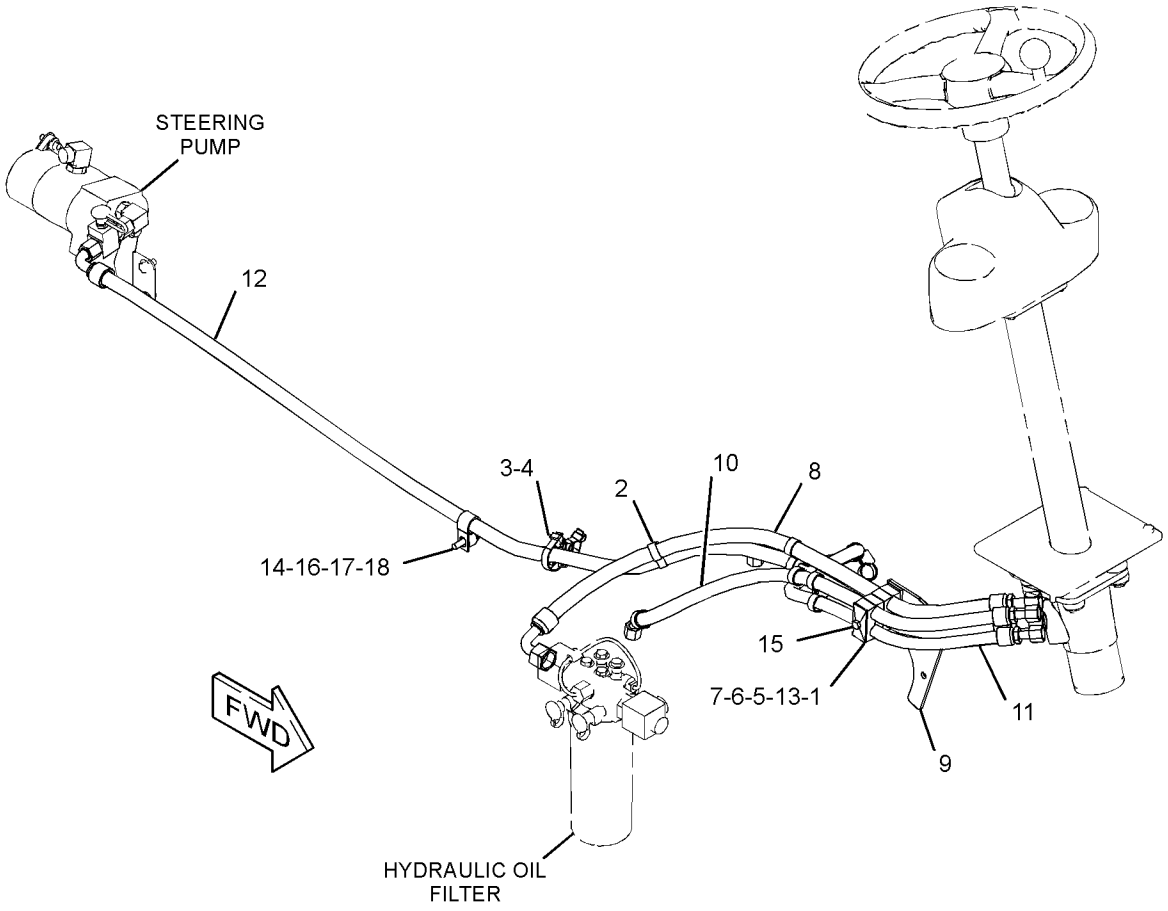

GRAPHIC #1 **<END>** g03334984

353-2830 LINES GP-STEERING CYLINDER

S/N: MBF1-UP; M4M1-UP; M5P1-UP; SDT1-UP
PART OF 374-9752 HYDRAULIC AR-AUXILIARY

SMCS-4304 **i05272083**

NOTE	REF NO	GRAPHIC REF	PART NUMBER	QTY	PART NAME 1 2 3 4 5 6 (PRODUCT LEVEL)	SEE PAGE
I	1	1	**364-1428**	2	HOSE AS	

I - REFER TO HYDRAULIC INFORMATION SYSTEM

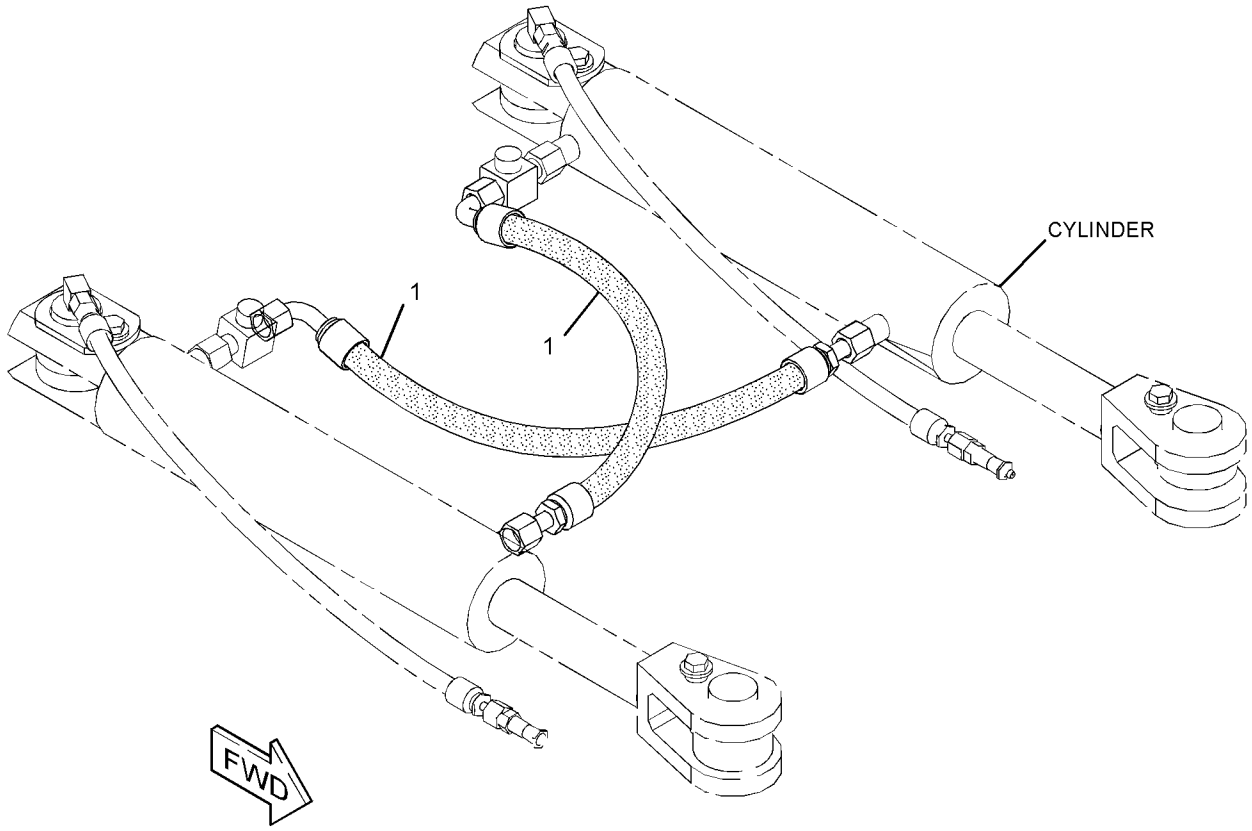

GRAPHIC #1 **<END>** g02730728

380-1395 PUMP & MTG GP-STEERING

S/N: MBF1-UP; M4M1-UP; M5P1-UP; SDT1-UP
PART OF 374-9752 HYDRAULIC AR-AUXILIARY

SMCS-4306 **i05272101**

NOTE	REF NO	GRAPHIC REF	PART NUMBER	QTY	PART NAME 1 2 3 4 5 6 (PRODUCT LEVEL)	SEE PAGE
	1	1	*148-8447*	1	TEE AS-SWIVEL	
		1	**7J-9108**	1	SEAL-O-RING	
		1	**7X-0872**	1	TEE-SWIVEL	
Y	2	1	**352-3675**	1	PUMP GP-GEAR	319
	3	1	**389-9459**	1	BRACKET	
M	4	1	**136-4183**	2	BOLT-12 POINT HEAD (M10X1.5X30-MM)	
	5	1	*148-8390*	2	ELBOW AS	
					(EACH INCLUDES)	
		1	**2M-9780**	1	SEAL-O-RING	
		1	**6V-8626**	1	ELBOW	
		1	**7J-9108**	1	SEAL-O-RING	
	6	1	*164-5567*	1	COUPLER AS-QUICK DISCONNECT (MALE)	
		1	**6V-3965**	1	FITTING (QUICK DISCONNECT)	
		1	**214-7568**	1	SEAL-O-RING	
	7	1	**6D-1004**	1	GASKET	
	8	1	**6V-0852**	1	CAP-DUST (HYDRAULIC OIL)	
	9	1	**7X-7729**	4	WASHER (11X25X3-MM THK)	
	10	1	**8T-4121**	2	WASHER-HARD (11X21X2.5-MM THK)	
M	11	1	**8T-4137**	4	BOLT (M10X1.5X20-MM)	

M - METRIC PART
Y - SEPARATE ILLUSTRATION

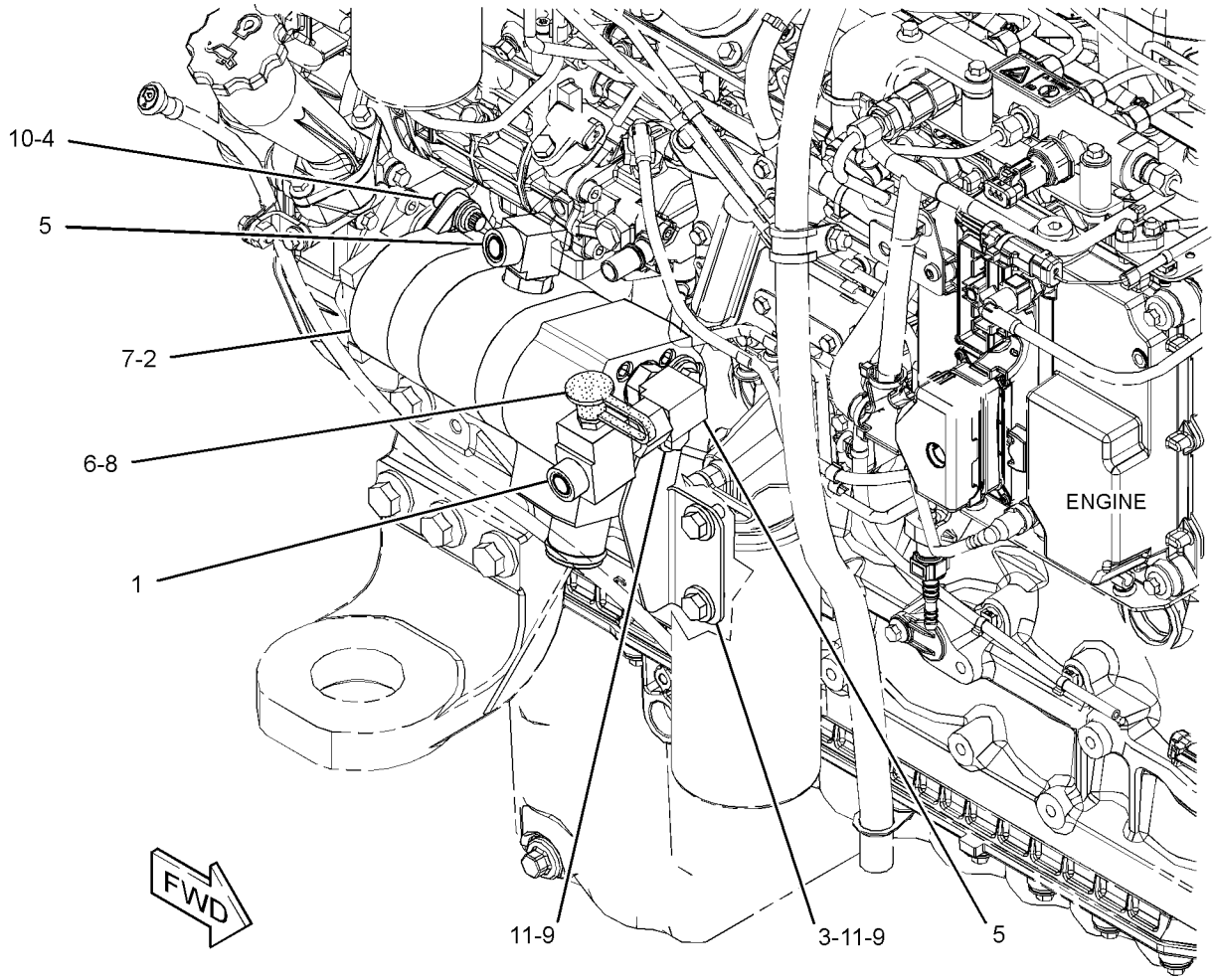

GRAPHIC #1 **<END>** g03105407

352-3675 PUMP GP-GEAR

S/N: MBF1-UP; M4M1-UP; M5P1-UP; SDT1-UP

PART OF 380-1395 PUMP & MTG GP-STEERING

SMCS-4306 **i05272205**

NOTE	REF NO	GRAPHIC REF	PART NUMBER	QTY	PART NAME 1 2 3 4 5 6 (PRODUCT LEVEL)	SEE PAGE
					(NO BREAKDOWN OF SERVICEABLE PARTS AVAILABLE AT TIME OF PUBLICATION)	

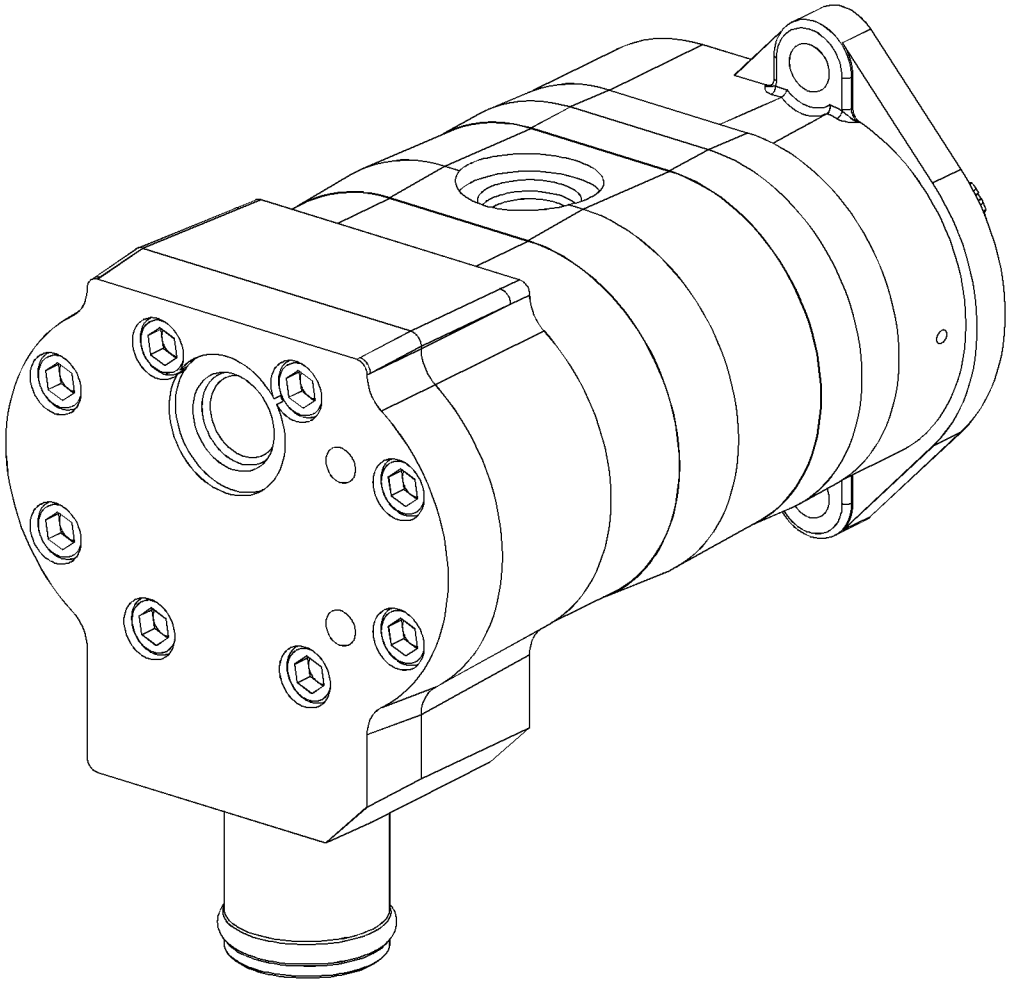

GRAPHIC #1 **<END>** g03117139

373-2000 ACTUATOR GP-PUMP

S/N: MBF1-UP; M4M1-UP; M5P1-UP; SDT1-UP
PART OF 389-8426 PUMP GP-PISTON
AN ATTACHMENT

SMCS-5070, 5078 **i05294843**

NOTE	REF NO	GRAPHIC REF	PART NUMBER	QTY	PART NAME 1 2 3 4 5 6 (PRODUCT LEVEL)	SEE PAGE
	1	1	**145-3812**	2	RING	
	2	1	**145-3813**	2	RING-SEAL	
	3	1	**384-8359**	1	ACTUATOR GP-PUMP (HYDRAULIC)	
		1	**117-7273**	1	SEAL-O-RING	
		1	**161-6154**	1	SEAL-O-RING	
M	4	1	**160-8499**	1	NUT (M12X1.5-THD)	
M	5	1	**8T-1158**	4	BOLT-SOCKET HEAD (M8X1.25X20-MM)	

M - METRIC PART

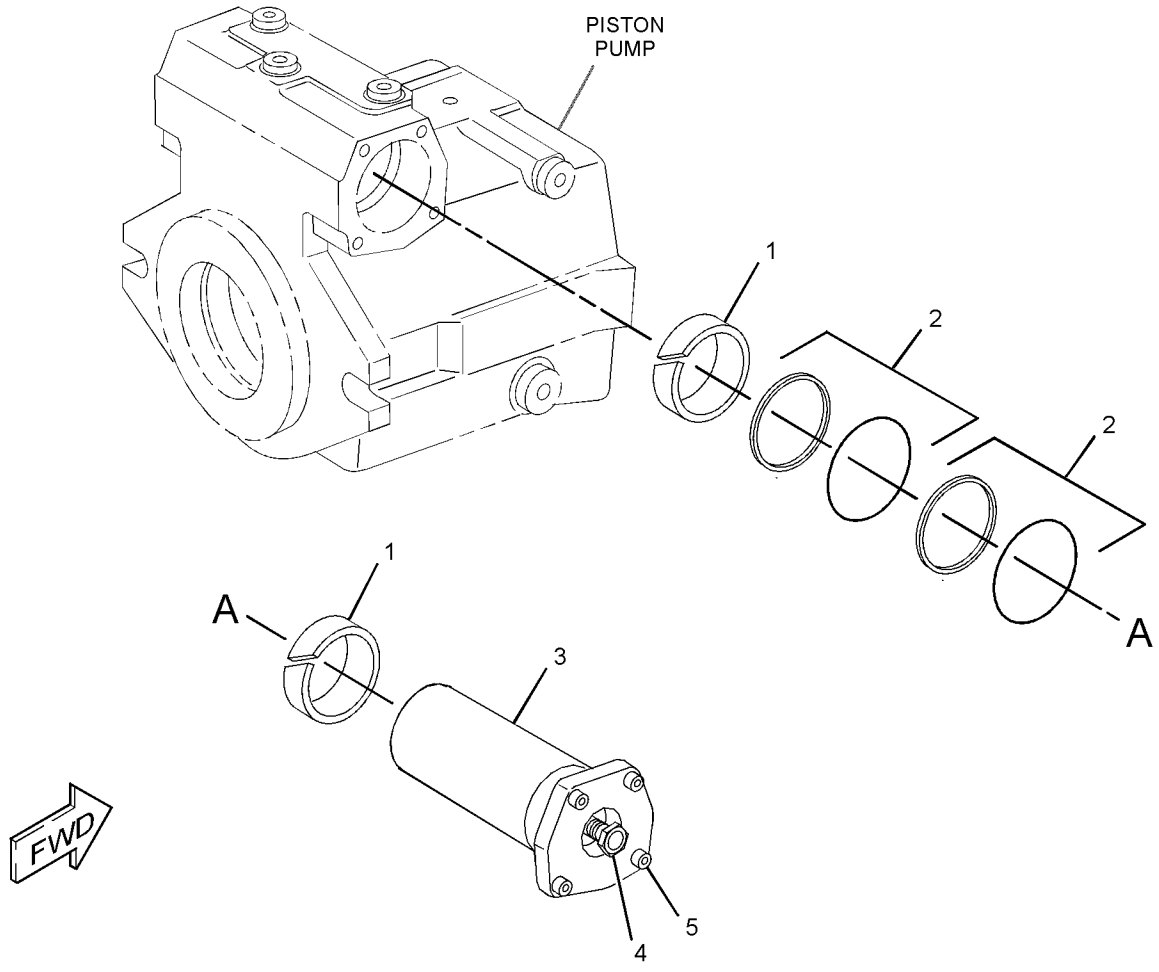

GRAPHIC #1 **<END>** g03063118

286-9158 CYLINDER GP-HYDRAULIC—BLADE LIFT

S/N: MBF1-UP; M4M1-UP; M5P1-UP; SDT1-UP
82.6-MM (3.3-IN) BORE X 508-MM (20-IN) STROKE
PART OF 419-9380 CYLINDER GP-HYDRAULIC
AN ATTACHMENT

SMCS-4303, 5102 **i05289955**

NOTE	REF NO	GRAPHIC REF	PART NUMBER	QTY	PART NAME 1 2 3 4 5 6 (PRODUCT LEVEL)	SEE PAGE
	1	1	**6H-9049**	1	FITTING	
	2	1	**2D-8652**	1	BEARING	
	3	1	**6J-5730**	1	LOCKNUT (1-1/8-12-THD)	
					AVAILABLE REPAIR KIT(S):	
			369-4721	1	KIT-SEAL (BLADE CYLINDER)	
					(INCLUDES O-RING SEALS, BACKUP RING, WIPER SEAL, PISTON SEAL, WEAR RINGS & SEAL)	

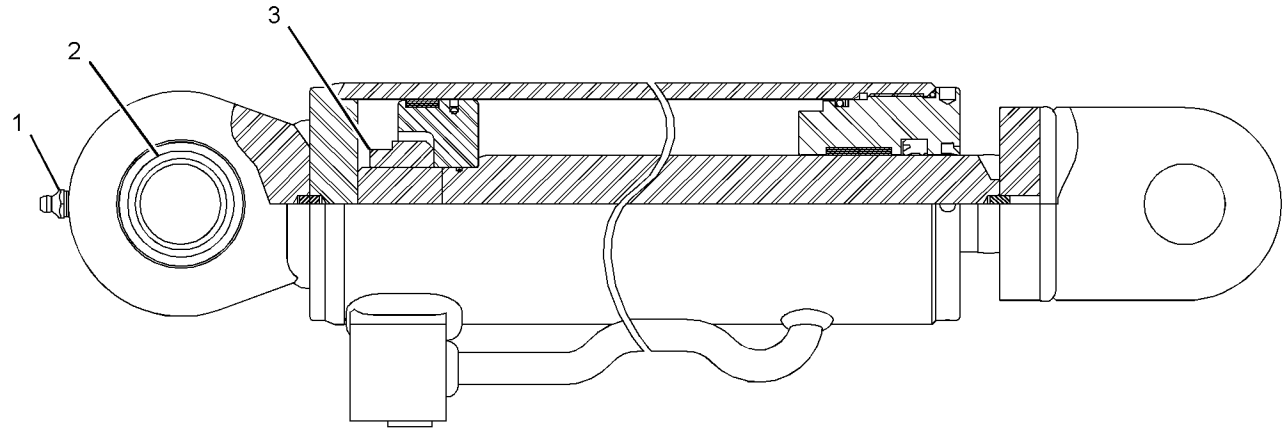

GRAPHIC #1 **<END>** g02722485

348-4918 CYLINDER GP-HYDRAULIC

S/N: MBF1-UP; M4M1-UP; M5P1-UP; SDT1-UP
80-MM (3.15-IN) BORE X 305-MM (12-IN) STROKE
FIELD REPLACEMENT ORDER 356-2015—PAGE: 323
PART OF 356-2015 CYLINDER GP-HYDRAULIC

SMCS-4303, 5102 **i04125852**

NOTE	REF NO	GRAPHIC REF	PART NUMBER	QTY	PART NAME 1 2 3 4 5 6 (PRODUCT LEVEL)	SEE PAGE
					(NO BREAKDOWN OF SERVICEABLE PARTS AVAILABLE AT TIME OF PUBLICATION)	

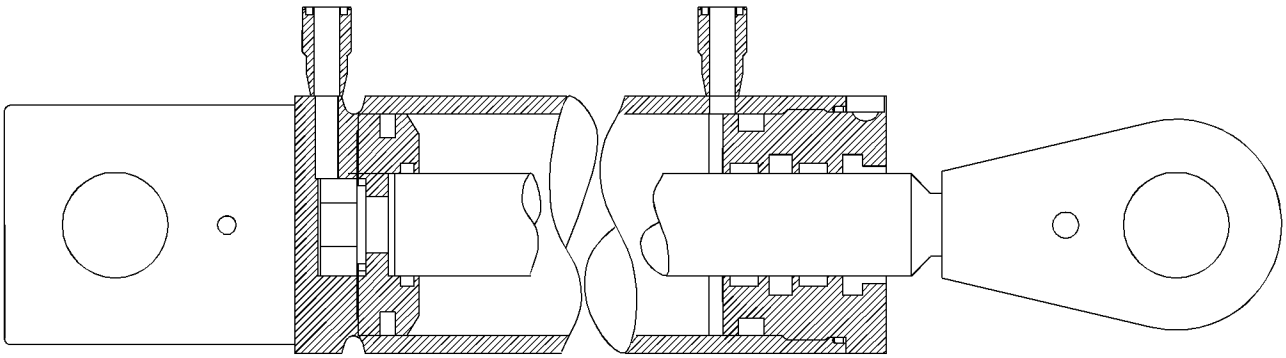

GRAPHIC #1 **<END>** g01865233

356-2015 CYLINDER GP-HYDRAULIC

S/N: MBF1-UP; M4M1-UP; M5P1-UP; SDT1-UP
80-MM (3.2-IN) BORE X 305-MM (12-IN) STROKE
FIELD REPLACEMENT FOR 348-4918—PAGE: 322, 415-1860—PAGE: 324
PART OF 355-2895 CYLINDER & MTG GP-STEERING

SMCS-4303, 5102 **i05317094**

NOTE	PART NUMBER	QTY	PART NAME 1 2 3 4 5 6 (PRODUCT LEVEL)	SEE PAGE
Y	**415-1860**	1	CYLINDER GP-HYDRAULIC (STEERING)	324
			—OR—	
Y	*348-4918*	1	CYLINDER GP-HYDRAULIC (STEERING)	322

Y - SEPARATE ILLUSTRATION

<END>

415-1860 CYLINDER GP-HYDRAULIC

S/N: MBF1-UP; M4M1-UP; M5P1-UP; SDT1-UP
80-MM (3.2-IN) BORE X 304.8-MM (12-IN) STROKE
FIELD REPLACEMENT ORDER 356-2015—PAGE: 323
PART OF 356-2015 CYLINDER GP-HYDRAULIC

SMCS-4303, 5102 **i05317034**

NOTE	REF NO	GRAPHIC REF	PART NUMBER	QTY	PART NAME 1 2 3 4 5 6 (PRODUCT LEVEL)	SEE PAGE
					AVAILABLE REPAIR KIT(S):	
			437-1330	1	KIT-SEAL (HYDRAULIC CYLINDER)	
					(INCLUDES O-RING SEALS, BACKUP-RING, SEALS, WIPER & WEAR RINGS)	

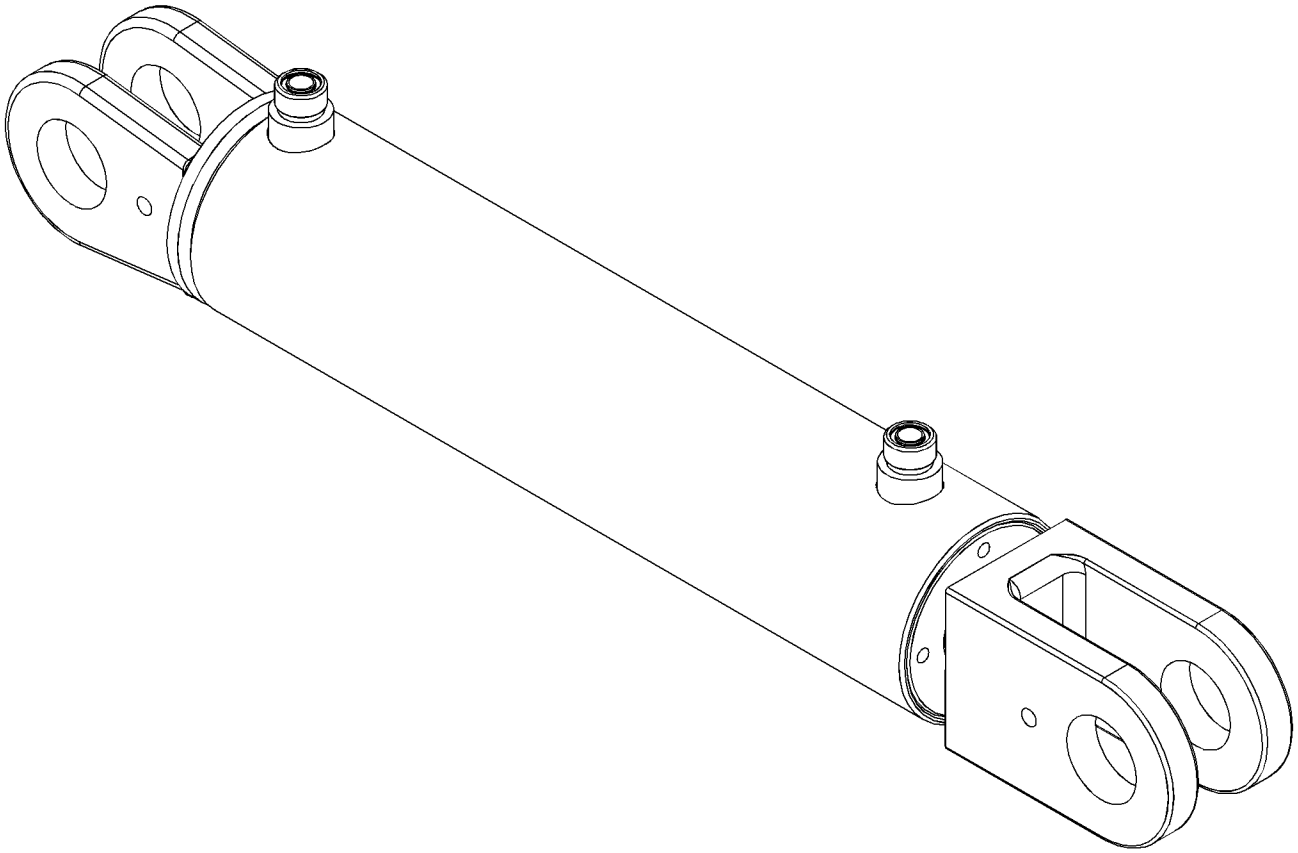

GRAPHIC #1 **<END>** g03360120

419-0018 CYLINDER GP-HYDRAULIC

S/N: MBF1-UP; M4M1-UP; M5P1-UP; SDT1-UP
85-MM (3.4-IN) BORE X 508-MM (20-IN) STORKE
FIELD REPLACEMENT ORDER 419-9380—PAGE: 326
PART OF 419-9380 CYLINDER GP-HYDRAULIC
AN ATTACHMENT

SMCS-4303, 5102 **i05289956**

NOTE	REF NO	GRAPHIC REF	PART NUMBER	QTY	PART NAME 1 2 3 4 5 6 (PRODUCT LEVEL)	SEE PAGE
	1	1	**6H-9049**	1	FITTING	
	2	1	**2D-8652**	1	BEARING	
					AVAILABLE REPAIR KIT(S):	
J			**423-2858**	1	KIT-SEAL	

J - (INCLUDES PARTS MARKED J IN GRAPHIC)

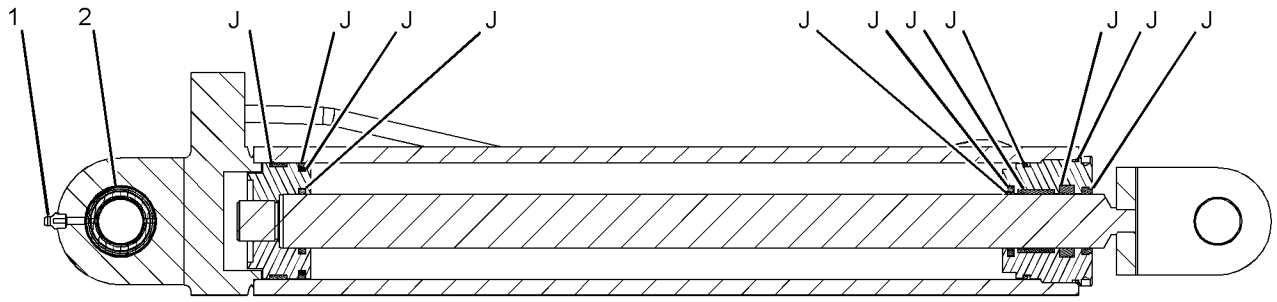

GRAPHIC #1 **<END>** g03344687

419-9380 CYLINDER GP-HYDRAULIC—BLADE LIFT

S/N: MBF1-UP; M4M1-UP; M5P1-UP; SDT1-UP
82.6-MM (3.3-IN) BORE X 508-MM (20-IN) STROKE
FIELD REPLACEMENT FOR 419-0018—PAGE: 325
PART OF 361-9529 BLADE GP-COMPACTOR, 357-4866 BLADE GP-LEVELING
AN ATTACHMENT

SMCS-4303, 5102 **i05289841**

NOTE	PART NUMBER	QTY	PART NAME 1 2 3 4 5 6 (PRODUCT LEVEL)	SEE PAGE
Y	**286-9158**	1	CYLINDER GP-HYDRAULIC (BLADE LIFT)	321
			—OR—	
Y	**419-0018**	1	CYLINDER GP-HYDRAULIC (BLADE LIFT)	325

Y - SEPARATE ILLUSTRATION

<END>

353-2255 FILTER & MTG GP-HYDRAULIC

S/N: MBF1-UP; M4M1-UP; M5P1-UP; SDT1-UP
PART OF 374-9752 HYDRAULIC AR-AUXILIARY

SMCS-5068 **i05272080**

NOTE	REF NO	GRAPHIC REF	PART NUMBER	QTY	PART NAME 1 2 3 4 5 6 (PRODUCT LEVEL)	SEE PAGE
	1	1	**6V-0852**	1	CAP-DUST	
	2	1	**8C-3451**	1	CAP-DUST	
	3	1	**327-0325**	1	STRAP-CABLE	
Y	4	1	*346-5575*	1	FILTER GP-OIL (HYDRAULIC)	328
	5	1	*148-8442*	2	TEE AS	
					(EACH INCLUDES)	
		1	**6V-9746**	2	SEAL-O-RING	
		1	**7M-8485**	1	SEAL-O-RING	
		1	**8T-1685**	1	TEE	
	6	1	*164-5567*	1	COUPLER AS-QUICK DISCONNECT (MALE)	
		1	**6V-3965**	1	FITTING (QUICK DISCONNECT)	
		1	**214-7568**	1	SEAL-O-RING	
	7	1	*164-5590*	1	VALVE GP-FLUID SAMPLING (HYDRAULIC OIL)	
		1	**3J-7354**	1	SEAL-O-RING	
		1	**8C-3446**	1	VALVE-FLUID SAMPLING (HYDRAULIC OIL)	
	8	1	**6V-3265**	1	CLIP	
	9	1	**7X-7729**	4	WASHER (11X25X3-MM THK)	
M	10	1	**8T-4136**	4	BOLT (M10X1.5X25-MM)	

M - METRIC PART
Y - SEPARATE ILLUSTRATION

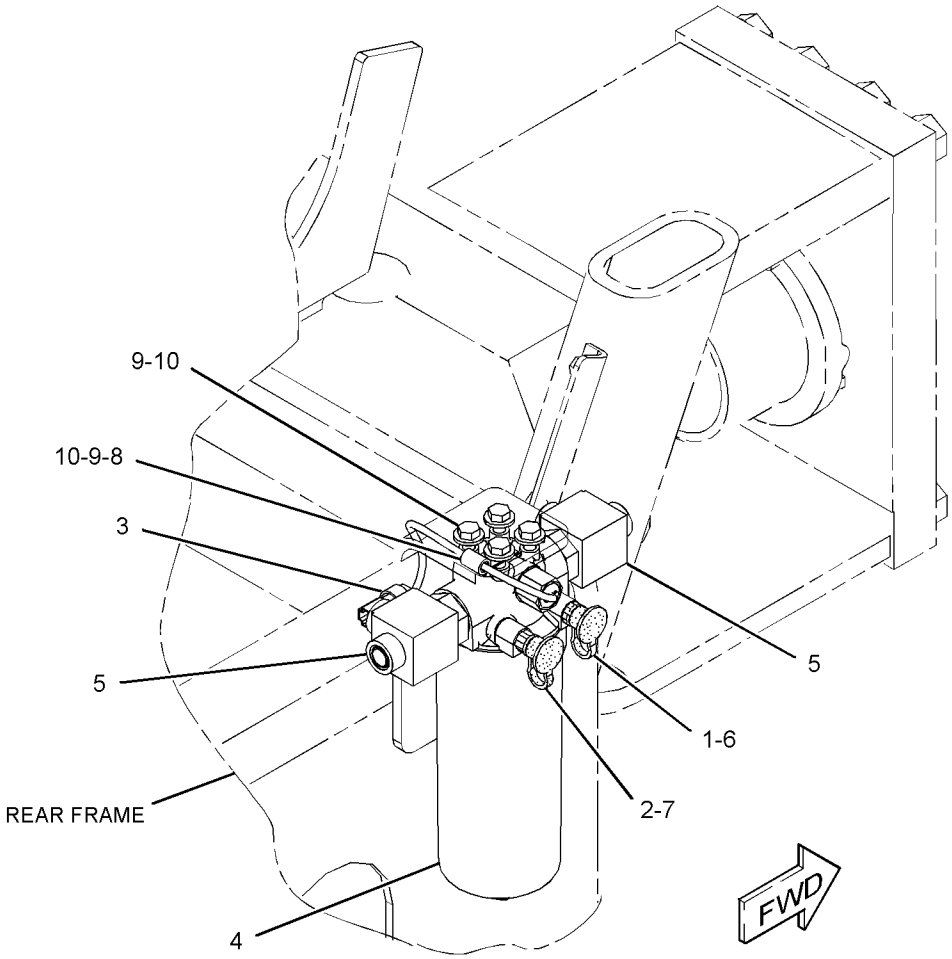

GRAPHIC #1 **<END>** g02730862

346-5575 FILTER GP-OIL

S/N: MBF1-UP; M4M1-UP; M5P1-UP; SDT1-UP
PART OF 353-2255 FILTER & MTG GP-HYDRAULIC

SMCS-5068 **i05289925**

NOTE	REF NO	GRAPHIC REF	PART NUMBER	QTY	PART NAME 1 2 3 4 5 6 (PRODUCT LEVEL)	SEE PAGE
	1	1	**348-1047**	1	BASE AS-FILTER	
		1	**6V-5048**	1	SEAL-O-RING	
		1	**9S-4182**	1	PLUG-O-RING	
		1	**9S-4191**	1	PLUG-O-RING	
		1	**214-7568**	1	SEAL-O-RING	
	2	1	**349-6097**	1	SWITCH AS-PRESSURE (HYDRAULIC OIL)	
		1	**033-6033**	1	SEAL-O-RING	
		1	**206-9295**	1	SEAL-O-RING	
Y	3	1	**349-6211**	1	FILTER GP-OIL (HYDRAULIC, TRANSMISSION)	329
	4	1	**095-1671**	1	SEAL-O-RING	
	5	1	**348-1861**	1	FILTER ELEMENT AS-OIL (TRANSMISSION)	
		1	**095-1671**	1	SEAL-O-RING	

Y - SEPARATE ILLUSTRATION

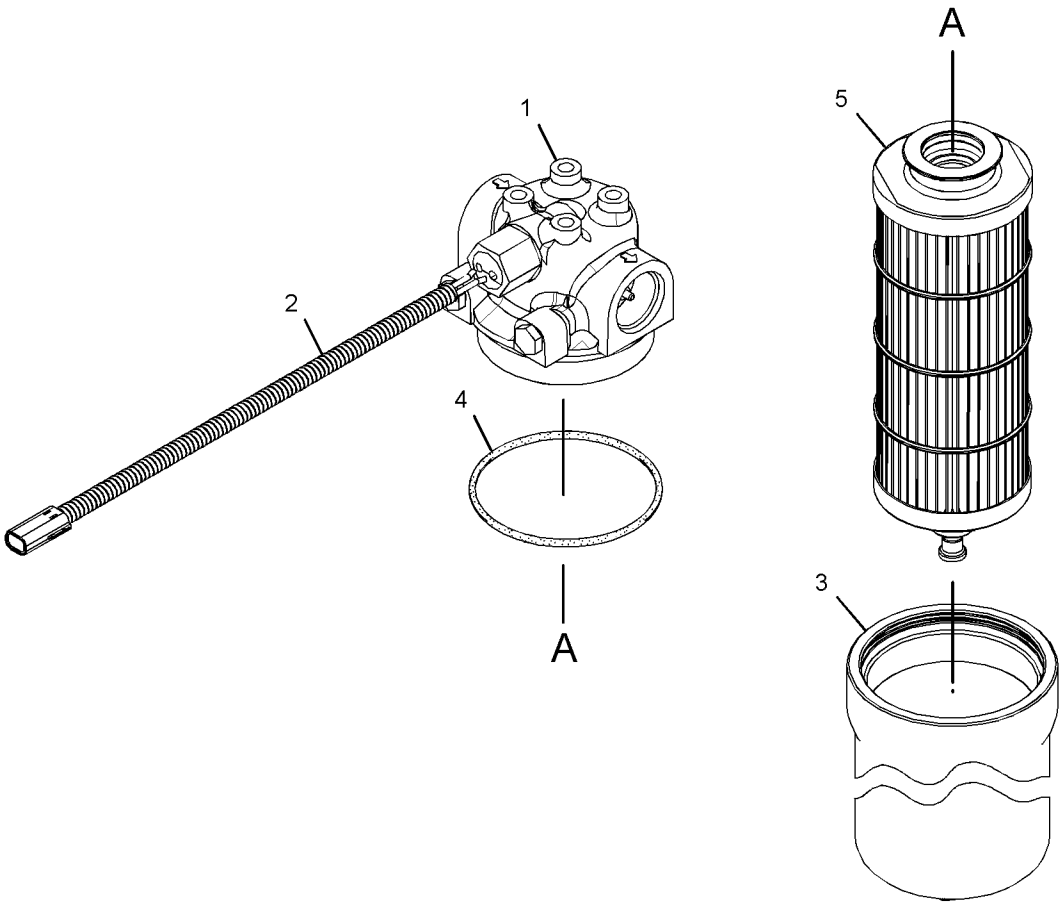

GRAPHIC #1 **<END>** g02638297

349-6211 FILTER GP-OIL

S/N: MBF1-UP; M4M1-UP; M5P1-UP; SDT1-UP
HYDRAULIC, TRANSMISSION
PART OF 346-5575 FILTER GP-OIL

SMCS-5068 **i05296480**

NOTE	REF NO	GRAPHIC REF	PART NUMBER	QTY	PART NAME 1 2 3 4 5 6 (PRODUCT LEVEL)	SEE PAGE
	1	1	**348-1861**	1	FILTER ELEMENT AS-OIL (TRANSMISSION)	
		1	**095-1671**	1	SEAL-O-RING	
	2	1	**352-1755**	1	TUBE-CENTER	
	3	1	**095-1671**	1	SEAL-O-RING	
	4	1	**6V-5048**	1	SEAL-O-RING	
	5	1	**9S-8002**	1	PLUG-O-RING (7/16-20-THD)	
					PARTS SHOWN IN GRAPHIC(S) WITHOUT A REFERENCE NUMBER ARE NOT SERVICED SEPARATELY	

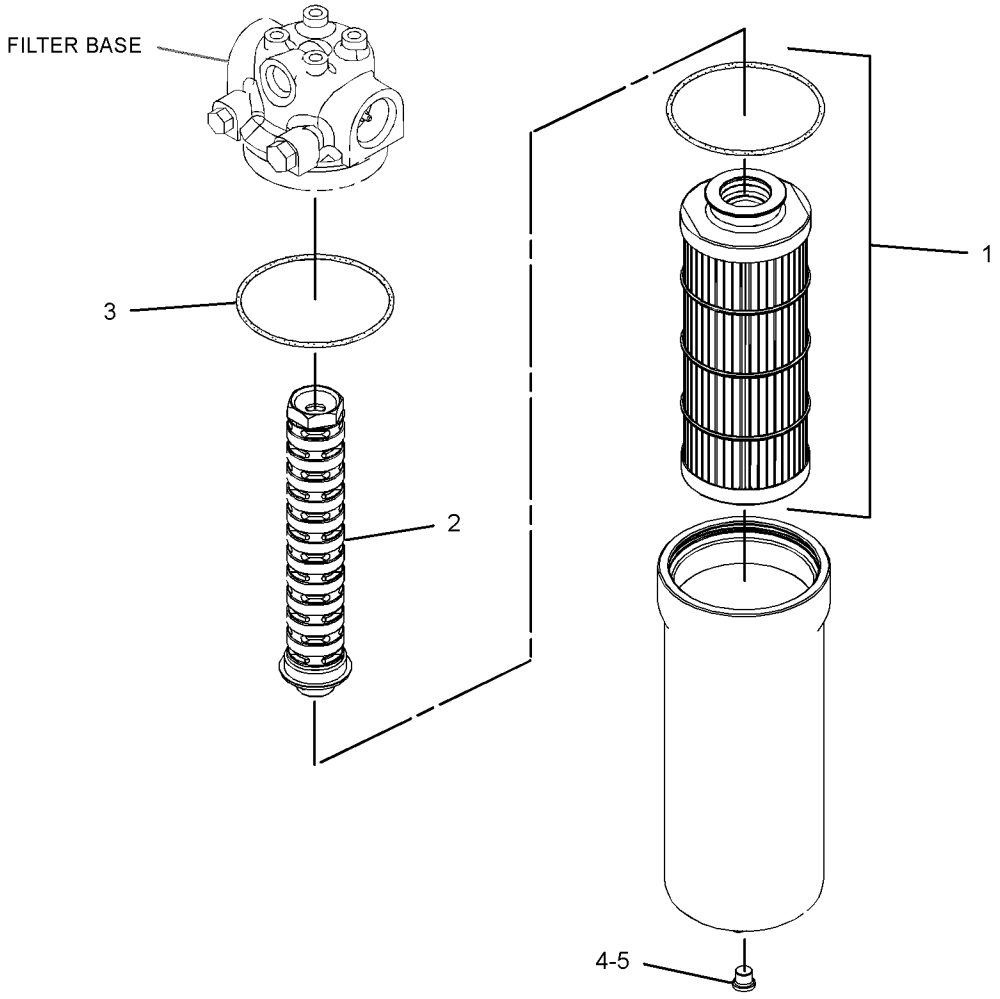

GRAPHIC #1 **<END>** g02627820

359-7567 FITTING GP-QUICK DISCONNECT

S/N: MBF1-UP; M4M1-UP; M5P1-UP; SDT1-UP
PART OF 364-8297 CONNECTION GP-TEST, 379-8260 CONTROL & MTG GP-MACHINE, 422-4428, 422-4429, 422-4430 SENSOR AR-COMPACTION, 379-8261, 379-8262 WIRING GP-SENSOR AN ATTACHMENT

SMCS-5057 **i05269503**

NOTE	REF NO	GRAPHIC REF	PART NUMBER	QTY	PART NAME 1 2 3 4 5 6 (PRODUCT LEVEL)	SEE PAGE
	1	1	**187-9008**	4	CAP-DUST	
	2	1	**187-3547**	4	COUPLER AS-QUICK DISCONNECT	
					(EACH INCLUDES)	
		1	**3J-1907**	1	SEAL-O-RING	

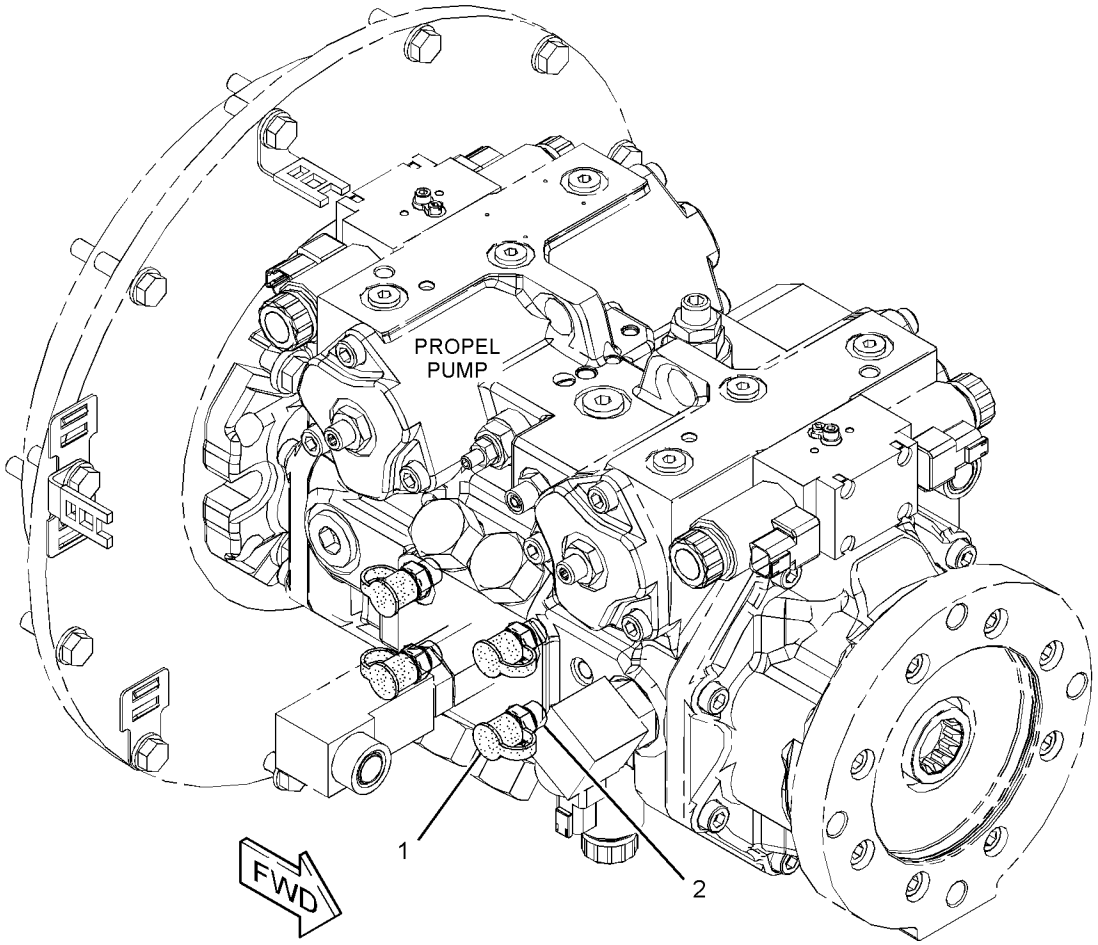

GRAPHIC #1 **<END>** g02723860

382-6085 HEAD GP-PUMP

S/N: MBF1-UP; M4M1-UP; M5P1-UP; SDT1-UP
PART OF 389-8425, 389-8426 PUMP GP-PISTON
AN ATTACHMENT

SMCS-3222, 5070

i05294829

NOTE	REF NO	GRAPHIC REF	PART NUMBER	QTY	PART NAME 1 2 3 4 5 6 (PRODUCT LEVEL)	SEE PAGE
	1	1	**192-4576**	1	BEARING-ROLLER	
	2	1	**161-6154**	2	SEAL-O-RING	
	3	1	**5W-1250**	2	PIN	
	4	1	**9T-3930**	1	PLUG AS	
		1	**187-8002**	1	SEAL	
M	5	1	**7X-3340**	4	BOLT-SOCKET HEAD (M14X2X75-MM)	
	6	1	**233-5621**	2	VALVE GP-RELIEF (MULTIFUNCTION)	
					(EACH INCLUDES)	
		1	**6V-5326**	1	SEAL-O-RING	
		1	**112-4719**	1	RING-BACKUP	
	7	1	**3J-7354**	2	SEAL-O-RING	
	8	1	**112-4628**	2	SCREW	
	9	1	**2D-6392**	1	SEAL-O-RING	
	10	1	**087-4772**	1	PLUG-O-RING	
	11	1	**345-1252**	1	VALVE GP-RELIEF (PUMP HEAD)	
		1	**6V-5326**	1	SEAL-O-RING	
		1	**177-7747**	1	RING	

M - METRIC PART

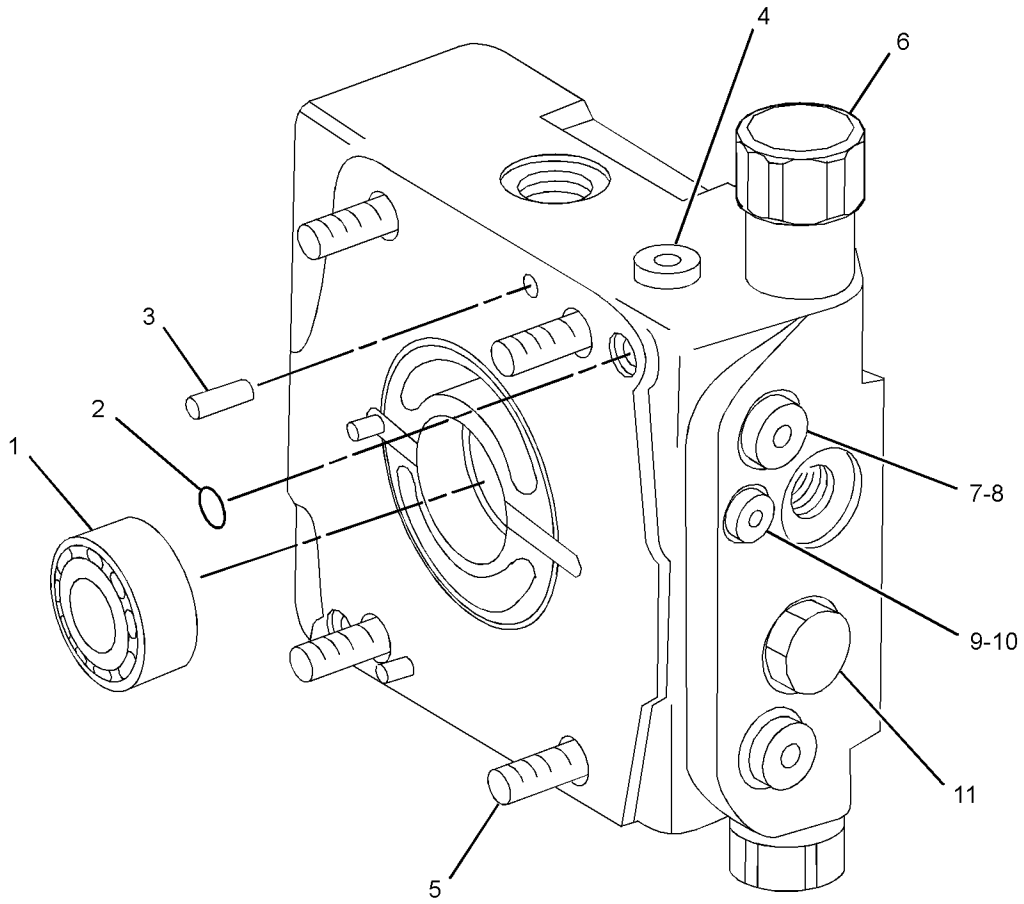

GRAPHIC #1

<END>

g03065596

HYDRAULIC SYSTEM

374-9742 HYDRAULIC AR

S/N: M4M1-UP; M5P1-UP

PART OF 374-9713, 374-9714 COMMON AR

SMCS-5050 **i05295513**

NOTE	PART NUMBER	QTY	PART NAME 1 2 3 4 5 6 (PRODUCT LEVEL)	SEE PAGE
Y	*377-4596*	1	LINES GP-PROPEL	233
Y	*377-4610*	1	LINES GP-SHIFT	237
Y	*377-4601*	1	LINES GP-VIBRATORY	400
Y	*354-4762*	1	MOTOR & MTG GP-PROPEL (AXLE)	239
Y	*355-6035*	1	MOTOR & MTG GP-PROPEL (DRUM)	240
Y	*355-6031*	1	MOTOR & MTG GP-VIBRATORY	404
Y	*377-0676*	1	PUMP & MTG GP-PROPEL	246
Y	*377-4608*	1	VALVE & MTG GP-CONTROL (SHIFT)	379

Y - SEPARATE ILLUSTRATION

<END>

374-9743 HYDRAULIC AR

S/N: MBF1-UP

PART OF 374-9715 COMMON AR

SMCS-5050 **i05297399**

NOTE	PART NUMBER	QTY	PART NAME 1 2 3 4 5 6 (PRODUCT LEVEL)	SEE PAGE
Y	*377-4597*	1	LINES GP-PROPEL	235
Y	*378-7704*	1	LINES GP-SERVICE BRAKE	309
Y	*377-4611*	1	LINES GP-SHIFT	238
Y	*377-4602*	1	LINES GP-VIBRATORY	402
Y	*354-4762*	1	MOTOR & MTG GP-PROPEL (AXLE PROPEL)	239
Y	*355-6035*	1	MOTOR & MTG GP-PROPEL (DRUM PROPEL)	240
Y	*362-0993*	1	MOTOR & MTG GP-VIBRATORY	405
Y	*377-0676*	1	PUMP & MTG GP-PROPEL	246
Y	*377-4608*	1	VALVE & MTG GP-CONTROL (SHIFT)	379

Y - SEPARATE ILLUSTRATION

<END>

374-9756 HYDRAULIC AR

S/N: SDT1-UP

PART OF 374-9716 COMMON AR

SMCS-5050 **i05298369**

NOTE	PART NUMBER	QTY	PART NAME 1 2 3 4 5 6 (PRODUCT LEVEL)	SEE PAGE
Y	*377-4597*	1	LINES GP-PROPEL	235
Y	*378-7705*	1	LINES GP-SERVICE BRAKE	311
Y	*377-4611*	1	LINES GP-SHIFT	238
Y	*377-4602*	1	LINES GP-VIBRATORY	402
Y	*354-4762*	1	MOTOR & MTG GP-PROPEL (AXLE)	239
Y	*355-6035*	1	MOTOR & MTG GP-PROPEL (DRUM)	240
Y	*362-0993*	1	MOTOR & MTG GP-VIBRATORY	405
Y	*377-0676*	1	PUMP & MTG GP-PROPEL	246
Y	*377-4608*	1	VALVE & MTG GP-CONTROL (SHIFT)	379

Y - SEPARATE ILLUSTRATION

<END>

374-9752 HYDRAULIC AR-AUXILIARY

S/N: MBF1-UP; M4M1-UP; M5P1-UP; SDT1-UP

PART OF 374-9713, 374-9714, 374-9715, 374-9716 COMMON AR

SMCS-5050 **i05295547**

NOTE	PART NUMBER	QTY	PART NAME 1 2 3 4 5 6 (PRODUCT LEVEL)	SEE PAGE
Y	*350-7082*	1	CONTROL GP-STEERING	427
Y	*355-2895*	1	CYLINDER & MTG GP-STEERING	314
Y	*353-2255*	1	FILTER & MTG GP-HYDRAULIC	327
Y	*378-7695*	1	LINES GP-HYDRAULIC OIL COOLER	343
Y	*378-7694*	1	LINES GP-STEERING	316
Y	*353-2830*	1	LINES GP-STEERING CYLINDER	317
Y	*380-1395*	1	PUMP & MTG GP-STEERING	318
Y	*378-7699*	1	VALVE & MTG GP-AUXILIARY	377

Y - SEPARATE ILLUSTRATION

<END>

378-8883 LINES GP-AUXILIARY HYDRAULIC

S/N: MBF1-UP; M4M1-UP; M5P1-UP; SDT1-UP
PART OF 378-8982, 378-8983 BLADE AR
AN ATTACHMENT

SMCS-5057 **i05294812**

NOTE	REF NO	GRAPHIC REF	PART NUMBER	QTY	PART NAME 1 2 3 4 5 6 (PRODUCT LEVEL)	SEE PAGE
	1	1	**7Y-3729**	1	FLANGE-SPECIAL	
	2	1	**138-4572**	1	COVER	
	3	1	**177-2215**	6	STRAP-DUAL CLAMP	
	4	1	**178-3620**	2	STRAP-DUAL CLAMP	
I	5	1	**308-5214**	1	HOSE AS	
	6	1	**122-6908**	1	HOSE-HYDRAULIC	
I	7	1	**380-8303**	1	HOSE AS	
I	8	1	**384-4111**	1	HOSE AS	
I	9	1	**397-9359**	1	HOSE AS	
I	10	1	**398-1070**	1	HOSE AS	
I	11	1	**421-2388**	1	HOSE AS	
	12	1	*171-6723*	1	ELBOW AS	
		1	**6V-9746**	1	SEAL-O-RING	
		1	**8T-8899**	1	ELBOW	
	13	1	**1P-3702**	1	SEAL-RECTANGULAR	
	14	1	**211-2668**	2	CLAMP-HALF	
	15	1	**4J-5267**	1	SEAL-O-RING	
	16	1	**5P-4325**	2	CLIP	
	17	1	**6V-1889**	1	CLIP	
	18	1	**6V-9746**	1	SEAL-O-RING	
	19	1	**7V-6571**	1	GROMMET	
	20	1	**7X-7729**	2	WASHER (11X25X3-MM THK)	
	21	1	**8C-3205**	2	FLANGE-HALF	
M	22	1	**8T-0271**	8	BOLT-SOCKET HEAD (M10X1.5X35-MM)	
	23	1	**8T-4121**	8	WASHER-HARD (11X21X2.5-MM THK)	
M	24	1	**8T-4137**	2	BOLT (M10X1.5X20-MM)	
	25	1	**8T-6703**	2	CLAMP-HOSE	
M	26	1	**8T-6912**	1	BOLT (M8X1.25X50-MM)	

I - REFER TO HYDRAULIC INFORMATION SYSTEM
M - METRIC PART

378-8883 **LINES GP-AUXILIARY HYDRAULIC (*contd.*)** **i05294812**

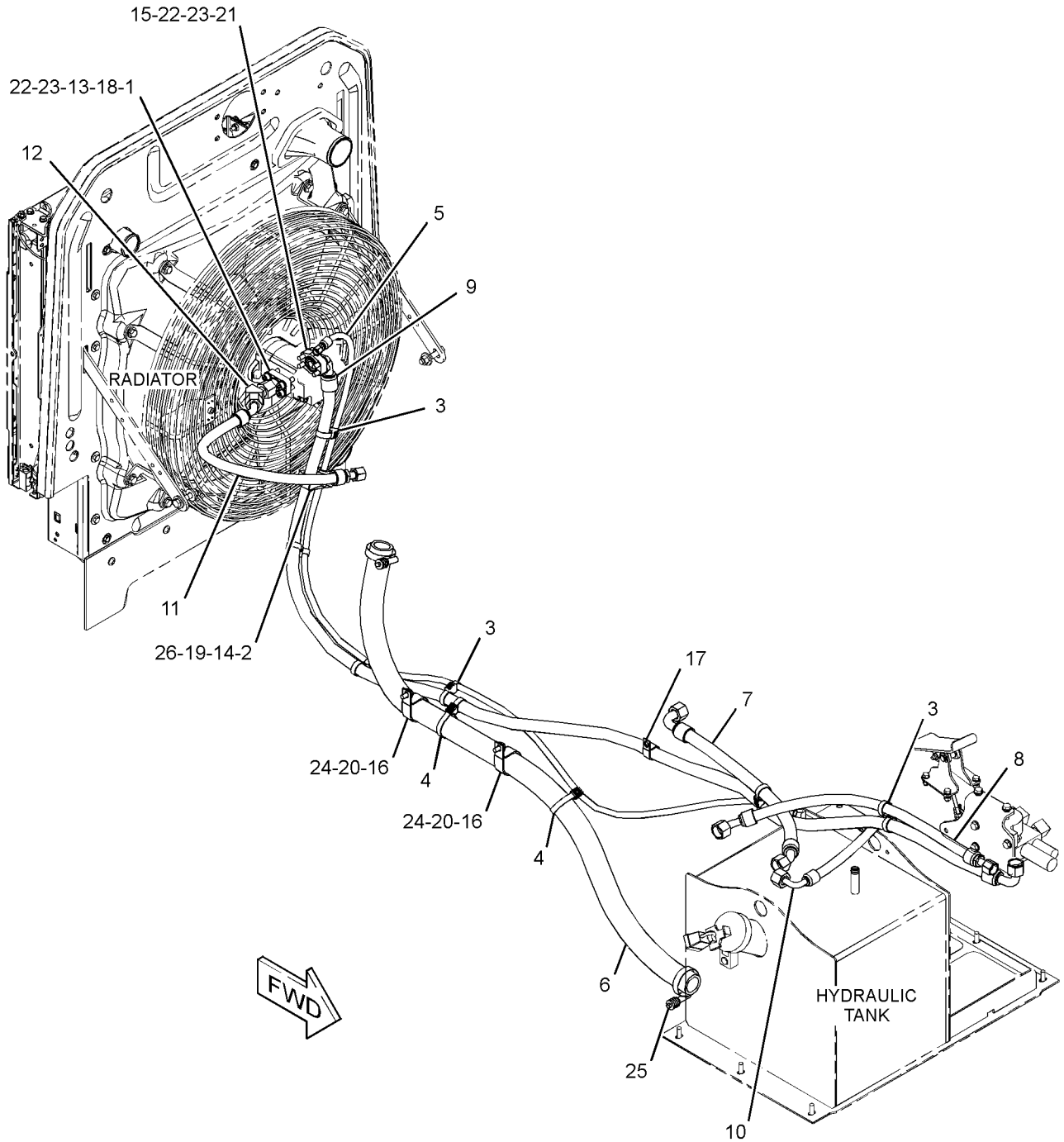

GRAPHIC #1 **<END>** g03384008

378-9026 LINES GP-AUXILIARY HYDRAULIC

S/N: MBF1-UP; M4M1-UP; M5P1-UP; SDT1-UP
PART OF 378-8985 BLADE AR
AN ATTACHMENT

SMCS-5057 **i05294815**

NOTE	REF NO	GRAPHIC REF	PART NUMBER	QTY	PART NAME 1 2 3 4 5 6 (PRODUCT LEVEL)	SEE PAGE
	1	1	**7Y-3729**	1	FLANGE-SPECIAL	
	2	1	**138-4572**	1	COVER	
	3	1	**177-2215**	4	STRAP-DUAL CLAMP	
	4	1	**178-3620**	2	STRAP-DUAL CLAMP	
I	5	1	**308-5214**	1	HOSE AS	
	6	1	*380-8109*	1	HOSE	
I	7	1	**380-8303**	1	HOSE AS	
I	8	1	**396-4593**	1	HOSE AS	
I	9	1	**398-1070**	1	HOSE AS	
I	10	1	**421-2388**	1	HOSE AS	
	11	1	*171-6723*	1	ELBOW AS	
		1	**6V-9746**	1	SEAL-O-RING	
		1	**8T-8899**	1	ELBOW	
	12	1	**1P-3702**	1	SEAL-RECTANGULAR	
	13	1	**211-2668**	2	CLAMP-HALF	
	14	1	**4J-5267**	1	SEAL-O-RING	
	15	1	**5P-4325**	2	CLIP	
	16	1	**6V-1889**	1	CLIP	
	17	1	**6V-9746**	1	SEAL-O-RING	
	18	1	**7V-6571**	1	GROMMET	
	19	1	**7X-7729**	2	WASHER (11X25X3-MM THK)	
	20	1	**8C-3205**	2	FLANGE-HALF	
M	21	1	**8T-0271**	8	BOLT-SOCKET HEAD (M10X1.5X35-MM)	
	22	1	**8T-4121**	8	WASHER-HARD (11X21X2.5-MM THK)	
M	23	1	**8T-4137**	2	BOLT (M10X1.5X20-MM)	
	24	1	**8T-6703**	2	CLAMP-HOSE	
M	25	1	**8T-6912**	1	BOLT (M8X1.25X50-MM)	

I - REFER TO HYDRAULIC INFORMATION SYSTEM
M - METRIC PART

378-9026 **LINES GP-AUXILIARY HYDRAULIC (*contd.*)** **i05294815**

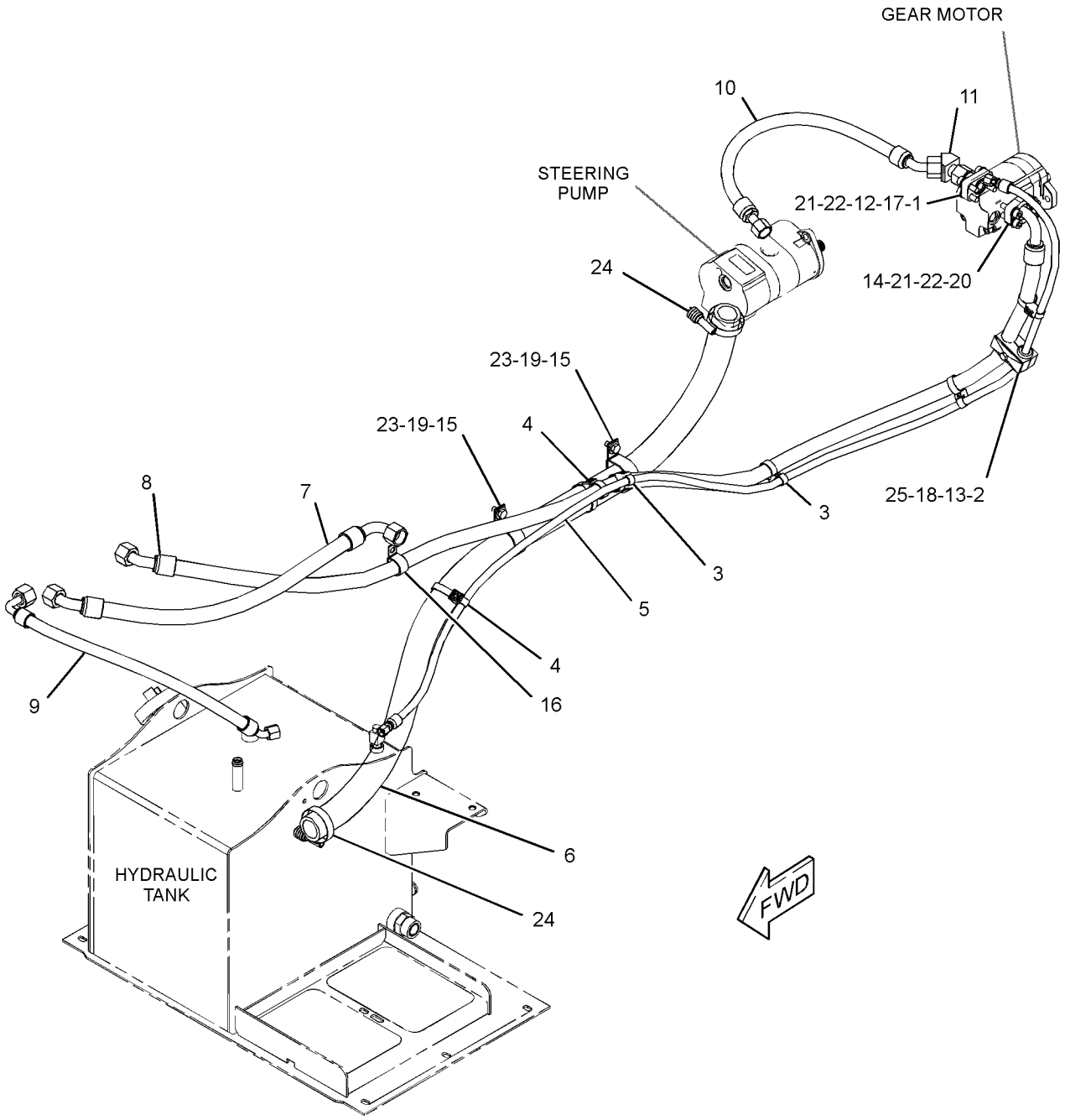

GRAPHIC #1 **<END>** g03383580

433-3673 LINES GP-AUXILIARY HYDRAULIC

S/N: MBF1-UP; M4M1-UP; M5P1-UP; SDT1-UP
PART OF 433-4458, 433-4459 BLADE AR
AN ATTACHMENT

SMCS-5057 **i05293740**

NOTE	REF NO	GRAPHIC REF	PART NUMBER	QTY	PART NAME 1 2 3 4 5 6 (PRODUCT LEVEL)	SEE PAGE
	1	1	**177-2215**	6	STRAP-DUAL CLAMP	
	2	1	**178-3620**	1	STRAP-DUAL CLAMP	
I	3	1	**384-4111**	1	HOSE AS	
I	4	1	**397-9359**	1	HOSE AS	
	5	1	**4J-5267**	1	SEAL-O-RING	
	6	1	**6V-1889**	1	CLIP	

I - REFER TO HYDRAULIC INFORMATION SYSTEM

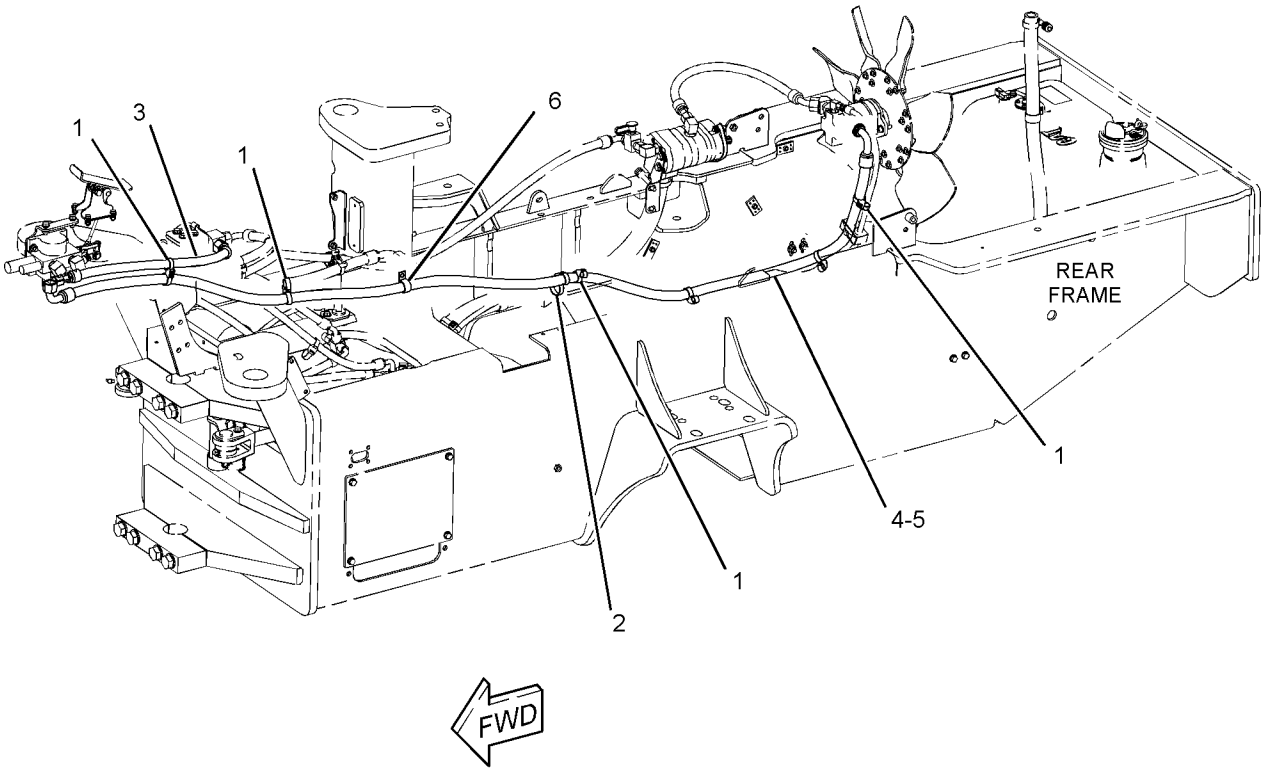

GRAPHIC #1 **<END>** g03383997

378-8881 LINES GP-BLADE

S/N: M4M1-UP; M5P1-UP
PART OF 378-8982, 433-4458 BLADE AR
AN ATTACHMENT

SMCS-5057 **i05293734**

NOTE	REF NO	GRAPHIC REF	PART NUMBER	QTY	PART NAME 1 2 3 4 5 6 (PRODUCT LEVEL)	SEE PAGE
	1	1	**7K-1181**	12	STRAP-CABLE	
	2	1	**102-8705**	6	PLATE	
	3	1	**204-4990**	2	PLATE AS	
	4	1	**204-4991**	1	BAR AS	
	5	1	**360-6952**	1	PLATE AS	
	6	1	**360-7425**	1	BRACKET	
	7	1	**360-7426**	1	COVER	
	8	1	**365-0639**	6	GUARD-HOSE	
I	9	1	**384-4299**	2	HOSE AS	
	10	1	**384-4301**	1	BRACKET AS	
		1	**102-8706**	1	PLATE AS	
	11	1	**8V-5718**	24	CLAMP	
	12	1	*164-5567*	2	COUPLER AS-QUICK DISCONNECT (MALE)	
					(EACH INCLUDES)	
		1	**6V-3965**	1	FITTING (QUICK DISCONNECT)	
		1	**214-7568**	1	SEAL-O-RING	
	13	1	*164-5608*	2	CONNECTOR AS	
					(EACH INCLUDES)	
		1	**3K-0360**	1	SEAL-O-RING	
		1	**6V-8398**	1	SEAL-O-RING	
		1	**8T-1687**	1	CONNECTOR	
	14	1	**5P-4116**	10	WASHER-HARD (8.8X20.5X2-MM THK)	
	15	1	**6V-0852**	2	CAP-DUST	
M	16	1	**7X-0818**	7	BOLT (M8X1.25X45-MM)	
M	17	1	**8T-6869**	9	BOLT (M8X1.25X60-MM)	

I - REFER TO HYDRAULIC INFORMATION SYSTEM
M - METRIC PART

378-8881 **LINES GP-BLADE (*contd.*)** **i05293734**

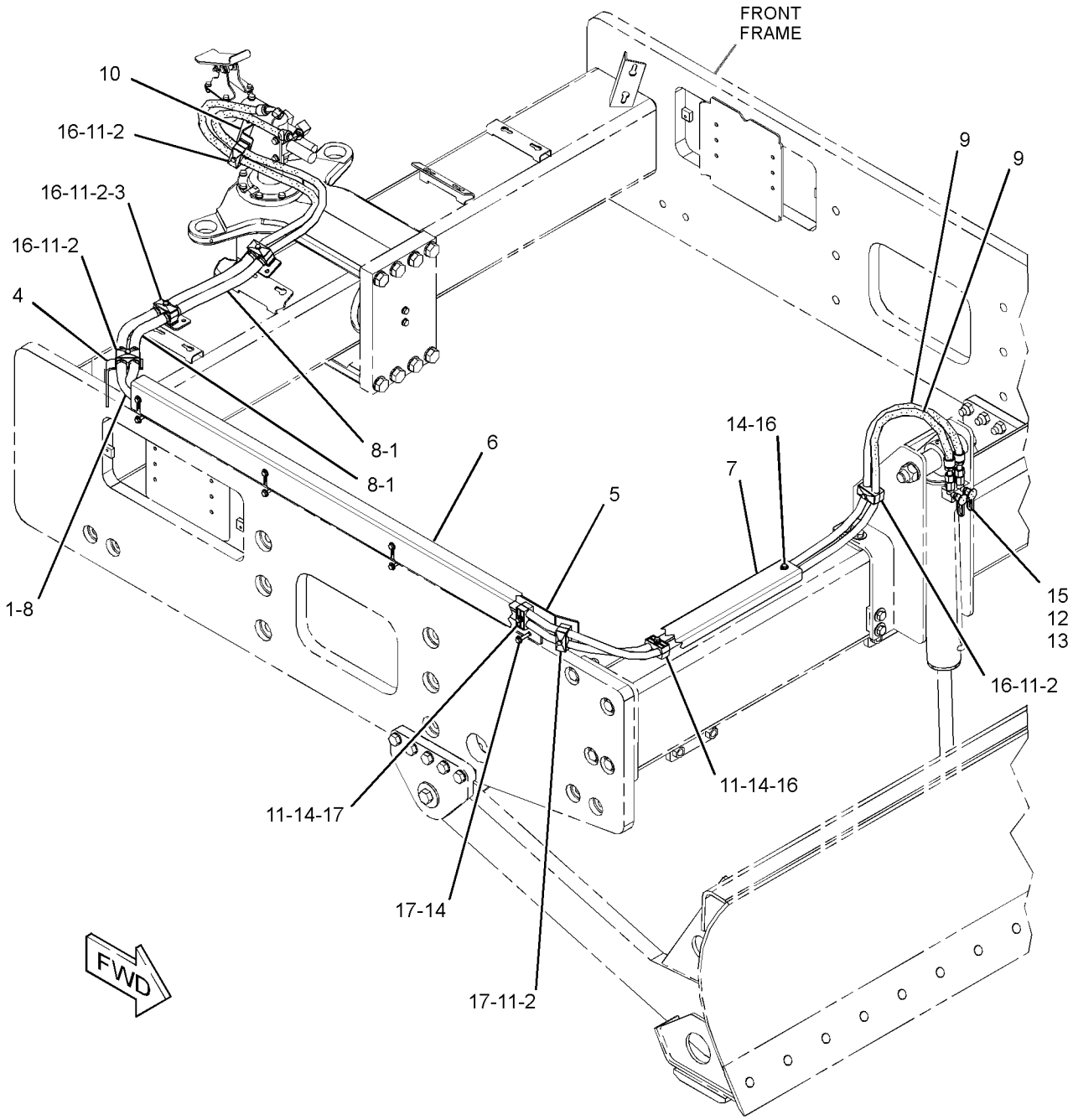

GRAPHIC #1 **<END>** g03101937

378-8882 LINES GP-BLADE

S/N: MBF1-UP; SDT1-UP
PART OF 378-8983, 433-4459 BLADE AR
AN ATTACHMENT

SMCS-5057 **i05289843**

NOTE	REF NO	GRAPHIC REF	PART NUMBER	QTY	PART NAME 1 2 3 4 5 6 (PRODUCT LEVEL)	SEE PAGE
	1	1	**7K-1181**	12	STRAP-CABLE	
	2	1	**102-8705**	6	PLATE	
	3	1	**204-4990**	2	PLATE AS	
	4	1	**225-9202**	1	BAR AS	
		1	**102-8706**	1	PLATE AS	
	5	1	**360-7426**	1	COVER	
	6	1	**362-0479**	1	PLATE AS	
	7	1	**362-0480**	1	BRACKET	
	8	1	**365-0639**	4	GUARD-HOSE	
	9	1	**375-5494**	2	GUARD-HOSE	
	10	1	**384-4301**	1	BRACKET AS	
		1	**102-8706**	1	PLATE AS	
I	11	1	**384-7058**	2	HOSE AS	
	12	1	**8V-5718**	24	CLAMP	
	13	1	*164-5567*	2	COUPLER AS-QUICK DISCONNECT (MALE)	
					(EACH INCLUDES)	
		1	**6V-3965**	1	FITTING (QUICK DISCONNECT)	
		1	**214-7568**	1	SEAL-O-RING	
	14	1	*164-5608*	2	CONNECTOR AS	
					(EACH INCLUDES)	
		1	**3K-0360**	1	SEAL-O-RING	
		1	**6V-8398**	1	SEAL-O-RING	
		1	**8T-1687**	1	CONNECTOR	
	15	1	**5P-4116**	10	WASHER-HARD (8.8X20.5X2-MM THK)	
	16	1	**6V-0852**	2	CAP-DUST	
M	17	1	**7X-0818**	7	BOLT (M8X1.25X45-MM)	
M	18	1	**8T-3647**	4	BOLT (M8X1.25X80-MM)	
M	19	1	**8T-6869**	5	BOLT (M8X1.25X60-MM)	

I - REFER TO HYDRAULIC INFORMATION SYSTEM
M - METRIC PART

378-8882 **LINES GP-BLADE (*contd.*)** **i05289843**

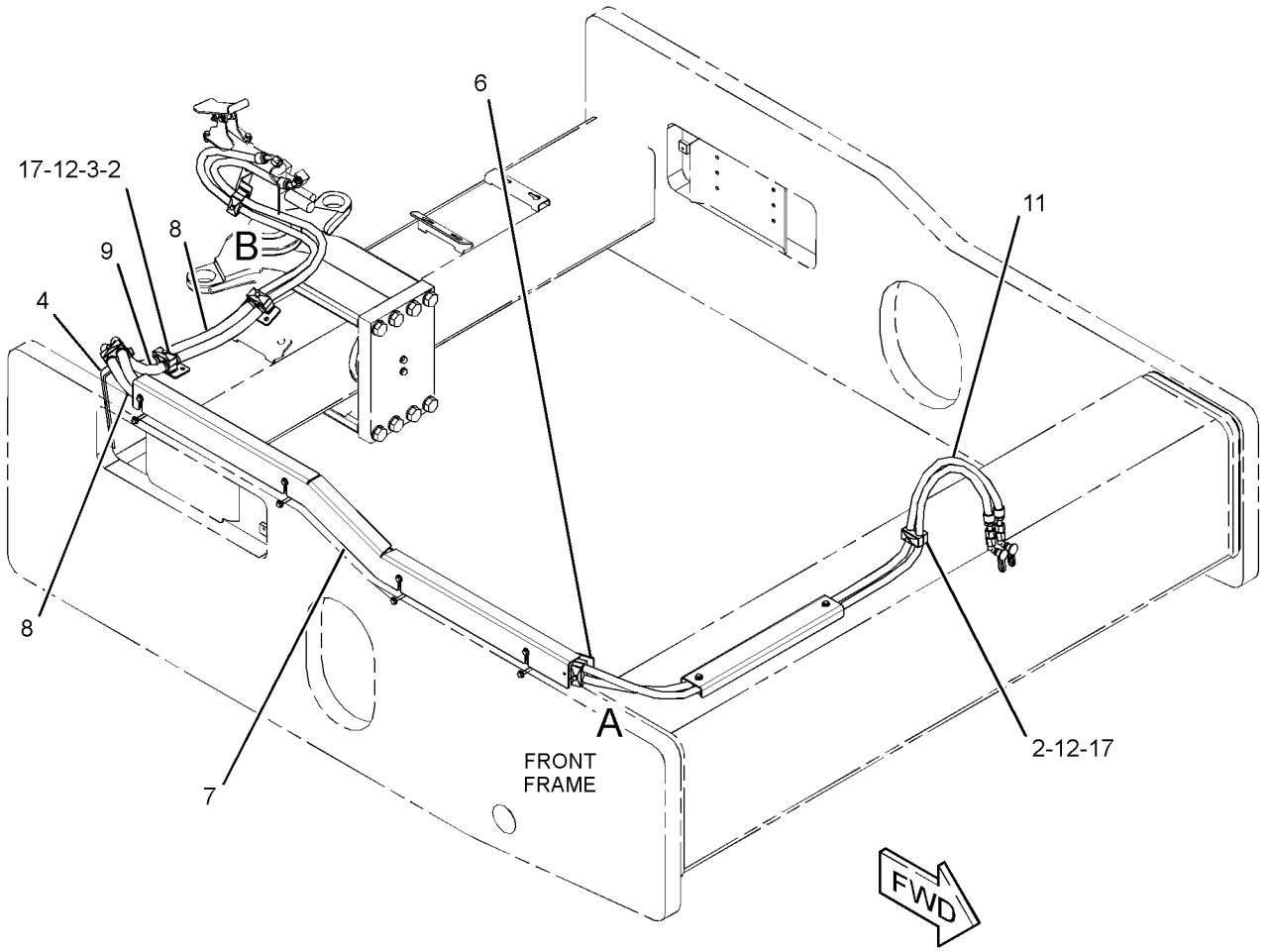

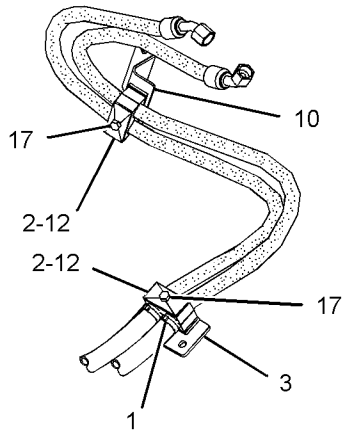

VIEW OF AREA B

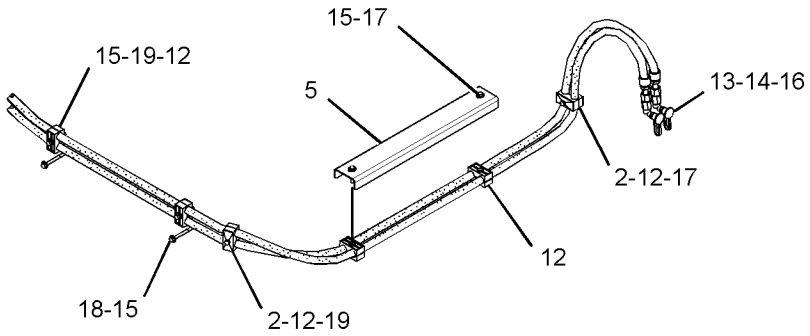

VIEW OF AREA A
(BRACKET REMOVED FOR CLARITY)

GRAPHIC #1 **<END>** g03112556

378-7695 LINES GP-HYDRAULIC OIL COOLER

S/N: MBF1-UP; M4M1-UP; M5P1-UP; SDT1-UP
PART OF 374-9752 HYDRAULIC AR-AUXILIARY

SMCS-1374, 5057 **i05295550**

NOTE	REF NO	GRAPHIC REF	PART NUMBER	QTY	PART NAME 1 2 3 4 5 6 (PRODUCT LEVEL)	SEE PAGE
	1	1	**7X-7958**	4	CLAMP-HOSE	
	2	1	*177-1061*	1	ELBOW AS	
		1	**5K-9090**	1	SEAL-O-RING	
		1	**142-0038**	1	ELBOW	
	3	1	**207-4499**	3	PLATE-COVER	
	4	1	**311-8367**	1	PLATE	
I	5	1	**379-9513**	1	HOSE AS	
M	6	1	**096-5866**	1	BOLT (M8X1.25X75-MM)	
	7	1	**206-6415**	6	CLAMP-HALF	
	8	1	**5P-4116**	2	WASHER-HARD (8.8X20.5X2-MM THK)	
	9	1	**7D-7233**	1	CLIP	
M	10	1	**8T-4189**	1	BOLT (M8X1.25X20-MM)	
M	11	1	**8T-6869**	2	BOLT (M8X1.25X60-MM)	
E	12	1	**5P-1506**		HOSE (308-CM)	
E	12A	1	**5P-1506**		HOSE (218-CM)	

E - ORDER BY THE CENTIMETER
I - REFER TO HYDRAULIC INFORMATION SYSTEM
M - METRIC PART

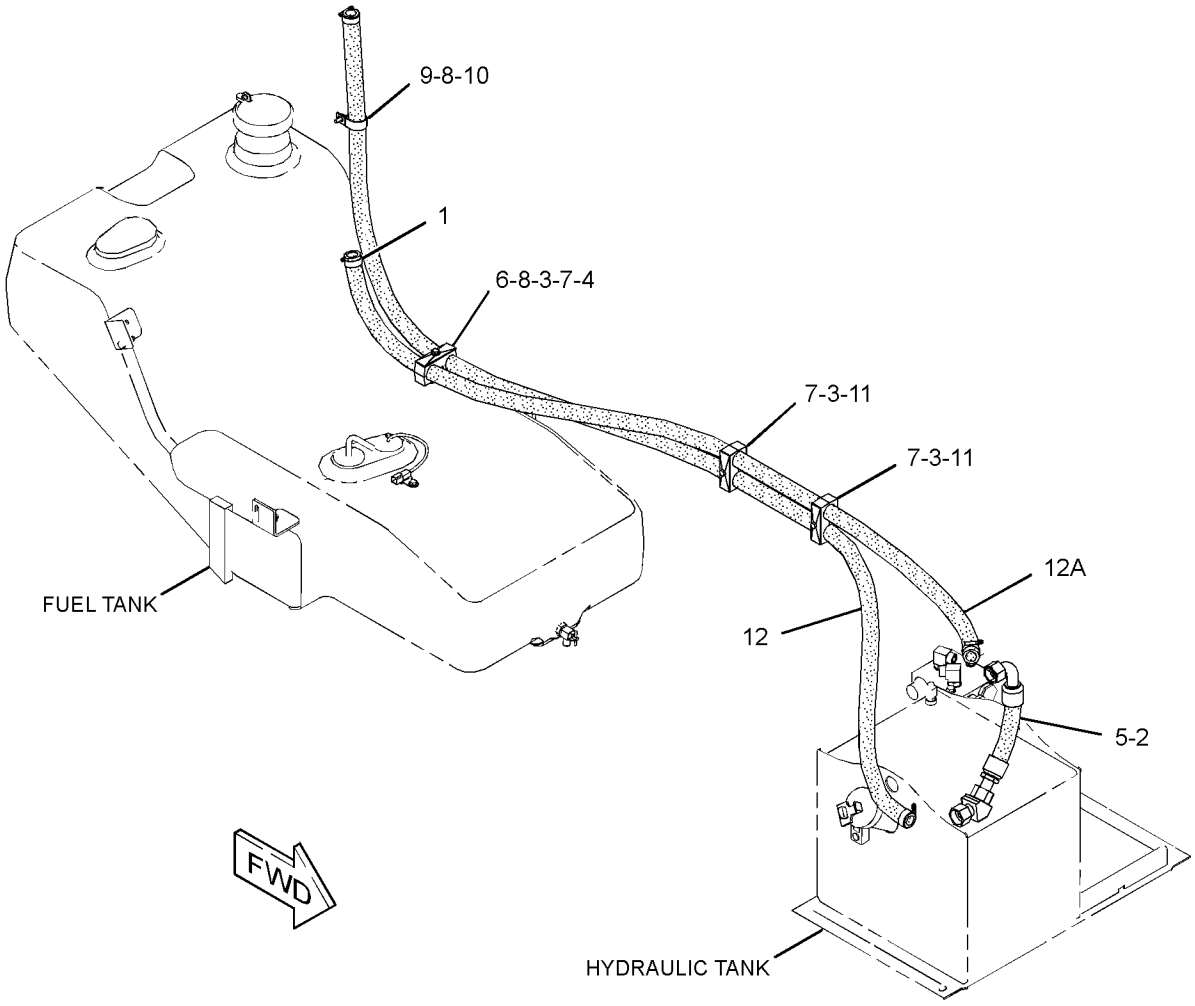

GRAPHIC #1 **<END>** g03109903

395-0521 MOTOR GP-GEAR—HYDRAULIC FAN

S/N: MBF1-UP; M4M1-UP; M5P1-UP; SDT1-UP
PART OF 349-6208 FAN & MOTOR GP
AN ATTACHMENT

SMCS-1386, 5061 **i05288917**

NOTE	REF NO	GRAPHIC REF	PART NUMBER	QTY	PART NAME 1 2 3 4 5 6 (PRODUCT LEVEL)	SEE PAGE
M	1	1	**160-8499**	1	NUT (M12X1.5-THD)	
	2	1	**9T-2005**	1	WASHER	
	3	1	**3E-4333**	1	KEY-WOODRUFF	
	4	1	**095-0939**	1	RING-RETAINING	
M	5	1	**3E-8028**	4	BOLT-SOCKET HEAD (M10X1.5X150-MM)	
J	6	1	**095-0919**	1	RING-RETAINING	
	7	1	**8T-4896**	4	WASHER-HARD (10.2X18.5X2.5-MM THK)	
					PARTS SHOWN IN GRAPHIC(S) WITHOUT A REFERENCE NUMBER ARE NOT SERVICED SEPARATELY	
					AVAILABLE REPAIR KIT(S):	
J			**380-8573**	1	KIT-SEAL (GEAR MOTOR)	
					(ALSO INCLUDES PARTS MARKED J ON THE GRAPHIC)	

J - KIT MARKED J SERVICE PART MARKED J
M - METRIC PART

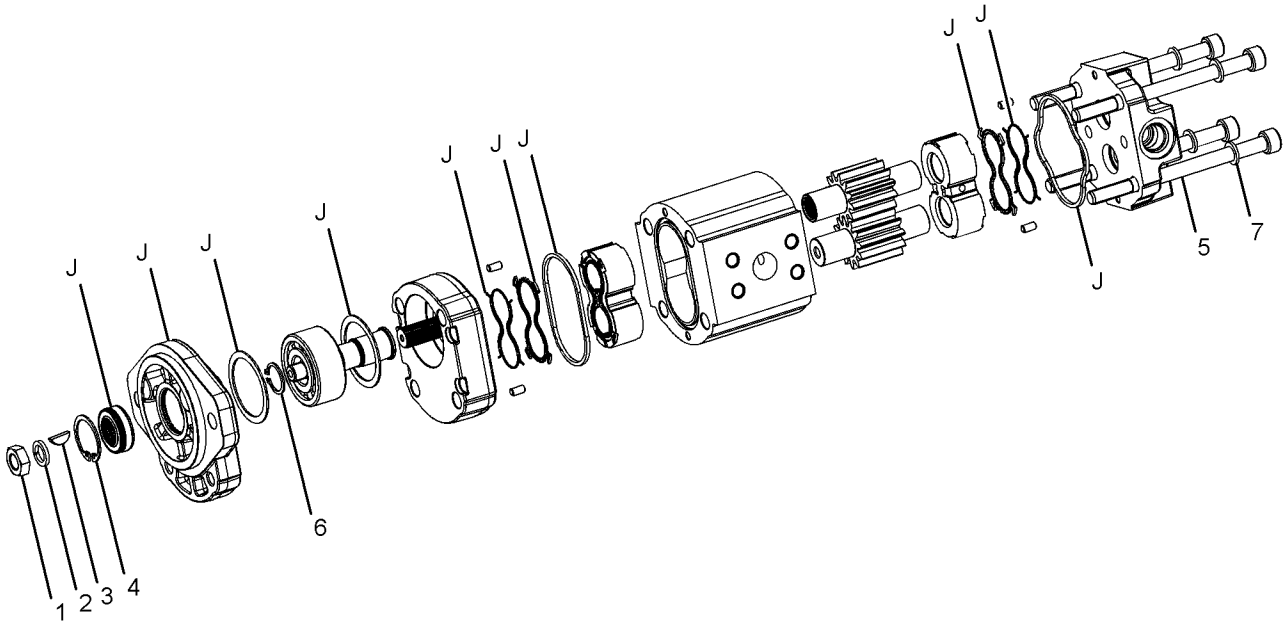

GRAPHIC #1 **<END>** g03202860

353-5924 MOTOR GP-PISTON—PROPEL

S/N: MBF1-UP; M4M1-UP; M5P1-UP; SDT1-UP

PART OF 355-6035 MOTOR & MTG GP-PROPEL

SMCS-5058 **i05270704**

NOTE	REF NO	GRAPHIC REF	PART NUMBER	QTY	PART NAME 1 2 3 4 5 6 (PRODUCT LEVEL)	SEE PAGE
	1	1	**9S-8005**	2	PLUG-O-RING	
	2	1	**3K-0360**	2	SEAL-O-RING	
	3	1	**141-0305**	1	SETSCREW	
J	4	1	**191-3539**	2	NUT-SEAL	
Y	5	1	**378-9277**	1	ROTATING GP-MOTOR (PROPEL)	365
	6	1	**139-7754**	1	PLUG	
J	7	1	**109-3203**	1	SEAL-O-RING	
	8	1	**137-4607**	1	PISTON-STROKING	
M	9	1	**8T-9515**	6	BOLT-SOCKET HEAD (M10X1.5X40-MM)	
M	10	1	**8T-0341**	2	BOLT-SOCKET HEAD (M10X1.5X60-MM)	
J	11	1	**033-6039**	3	SEAL-O-RING	
Y	12	1	**369-4728**	1	VALVE GP-FLUSHING (PROPEL MOTOR)	380
	13	1	**139-7751**	1	SLEEVE-VALVE	
J	14	1	**107-3117**	1	SEAL-O-RING	
	15	1	**139-7756**	1	PLUG	
	16	1	**139-7753**	1	SPRING	
	17	1	**137-4602**	1	SPOOL	
	18	1	**123-5798**	3	SEAT	
	19	1	**139-7755**	2	VALVE (PROPEL MOTOR)	
	20	1	**123-5799**	3	SEAT	
J	21	1	**9T-3928**	2	PLUG AS	
	22	1	**192-3292**	1	PIN	
	23	1	**241-4007**	1	SCREW-LOCK	
	24	1	**258-0134**	2	DOWEL	
	25	1	**135-2652**	1	SEAL-O-RING	
	26	1	**137-4605**	1	CONNECTOR-REDUCING	
	27	1	**137-4606**	1	PIN-LENS	
J	28	1	**2H-9247**	1	SEAL-O-RING	
M	29	1	**9X-6405**	1	SETSCREW-SOCKET (M10X1.5X60-MM)	
J	30	1	**7X-1553**	1	SEAL-LIP TYPE	
J	31	1	**141-0224**	1	SHIM (3-MM THK)	
	32	1	**8T-9598**	1	RING-RETAINING	
					AVAILABLE REPAIR KIT(S):	
J			**382-9269**	1	KIT-SEAL (PROPEL MOTOR)	
					(ALSO INCLUDES PLUG, O-RING & PLUG FITTING)	

J - KIT MARKED J SERVICES PARTS MARKED J
M - METRIC PART
Y - SEPARATE ILLUSTRATION

353-5924 **MOTOR GP-PISTON (*contd.*)** **i05270704**

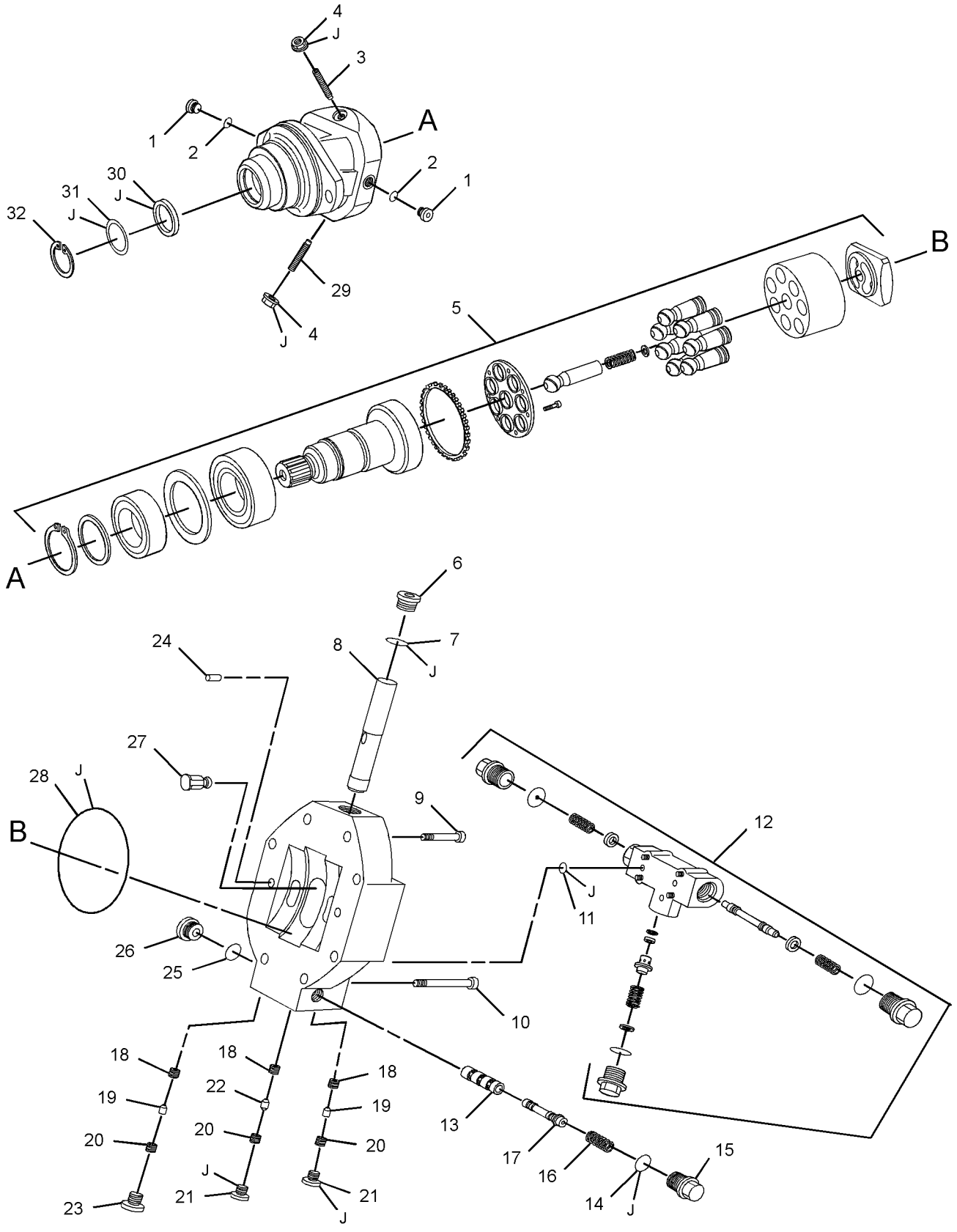

GRAPHIC #1 **<END>** g02774496

353-5925 MOTOR GP-PISTON

S/N: MBF1-UP; M4M1-UP; M5P1-UP; SDT1-UP
PART OF 354-4762 MOTOR & MTG GP-PROPEL

SMCS-5058 **i05330275**

NOTE	REF NO	GRAPHIC REF	PART NUMBER	QTY	PART NAME 1 2 3 4 5 6 (PRODUCT LEVEL)	SEE PAGE
	1	1	**8T-9598**	1	RING-RETAINING	
	2	1	**141-8006**	1	SHAFT	
	3	1	**9S-8006**	1	PLUG-O-RING	
	4	1	**6V-4589**	1	SEAL-O-RING	
	5	1	**9S-8008**	1	PLUG-O-RING	
	6	1	**6V-5050**	1	SEAL-O-RING	
	7	1	**141-0305**	1	SETSCREW	
J	8	1	**191-3539**	2	NUT-SEAL	
	9	1	**313-7040**	1	ROTATING GP-MOTOR (PROPEL)	
					(INCLUDES PARTS MARKED "K" IN GRAPHIC)	
	10	1	**139-7754**	1	PLUG	
J	11	1	**109-3203**	1	SEAL-O-RING	
	12	1	**137-4607**	1	PISTON-STROKING	
M	13	1	**8T-9515**	6	BOLT-SOCKET HEAD (M10X1.5X40-MM)	
M	14	1	**8T-0341**	2	BOLT-SOCKET HEAD (M10X1.5X60-MM)	
J	15	1	**033-6039**	3	SEAL-O-RING	
Y	16	1	**369-4728**	1	VALVE GP-FLUSHING (PROPEL MOTOR)	380
	17	1	**139-7756**	1	PLUG	
J	18	1	**107-3117**	1	SEAL-O-RING	
	19	1	**139-7753**	1	SPRING	
	20	1	**137-4602**	1	SPOOL	
	21	1	**139-7751**	1	SLEEVE-VALVE	
	22	1	**123-5798**	3	SEAT	
	23	1	**123-5799**	3	SEAT	
	24	1	**139-7757**	2	PLUG	
	25	1	**9S-8004**	1	PLUG-O-RING	
	26	1	**214-7568**	1	SEAL-O-RING	
	27	1	**139-7755**	3	VALVE (PROPEL)	
	28	1	**258-0134**	1	DOWEL	
J	29	1	**033-6041**	1	SEAL-O-RING	
	30	1	**137-4605**	1	CONNECTOR-REDUCING	
	31	1	**192-3292**	1	PIN	
	32	1	**137-4606**	1	PIN-LENS	
	33	1	**6V-7351**	1	SEAL-O-RING	
M	34	1	**9X-6405**	1	SETSCREW-SOCKET (M10X1.5X60-MM)	
J	35	1	**7X-1553**	1	SEAL-LIP TYPE	
					AVAILABLE REPAIR KIT(S):	
J			**369-4729**	1	KIT-SEAL (PISTON MOTOR)	
					(INCLUDES SEALS, NUTS, O-RINGS, BACKUP RINGS & PARTS MARKED J IN THE GRAPHIC)	

J - KIT MARKED J SERVICES PARTS MARKED J
M - METRIC PART
Y - SEPARATE ILLUSTRATION

353-5925 **MOTOR GP-PISTON (*contd.*)** **i05330275**

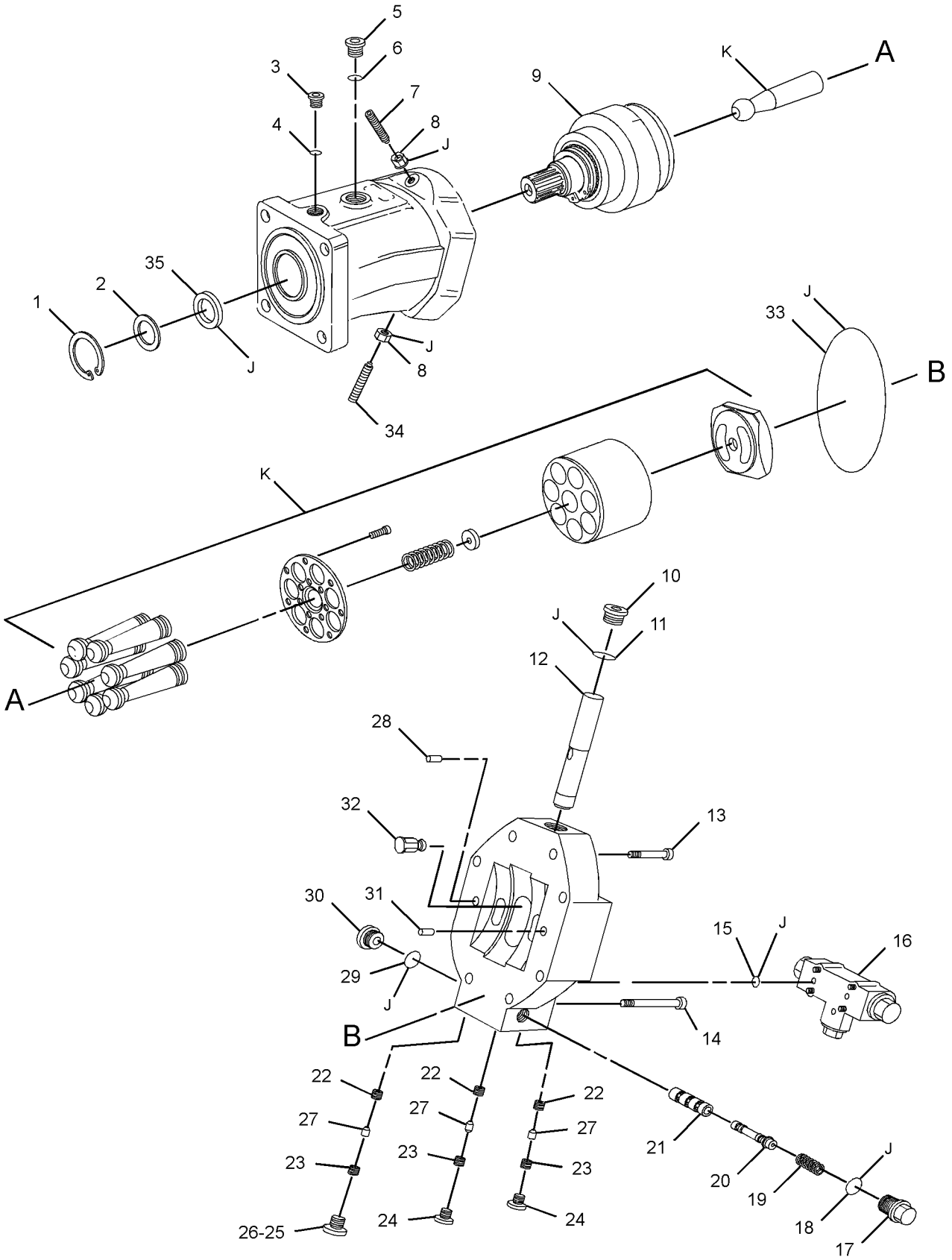

GRAPHIC #1 **<END>** g02765660

357-7420 MOTOR GP-PISTON

S/N: MBF1-UP; M4M1-UP; M5P1-UP; SDT1-UP

PART OF 355-6031, 362-0993 MOTOR & MTG GP-VIBRATORY

SMCS-5058 **i05295524**

NOTE	REF NO	GRAPHIC REF	PART NUMBER	QTY	PART NAME 1 2 3 4 5 6 (PRODUCT LEVEL)	SEE PAGE
	1	1	**335-8226**	1	RETAINING RING	
	2	1	**258-0139**	1	SEAL-SHAFT	
	3	1	**185-0280**	1	PLATE	
	4	1	**335-8219**	1	BEARING-ROLLER	
	5	1	**209-6063**	1	SHAFT	
	6	1	**335-8217**	1	SHIM	
	7	1	**168-2203**	1	SHIM-SHAFT	
	8	1	**335-8220**	1	BEARING-ROLLER	
	9	1	**276-3188**	1	SEAL-O-RING	
	10	1	**124-9891**	2	PLUG	
	11	1	**107-3117**	2	SEAL-O-RING	
	12	1	**124-9899**	2	SPACER	
M	13	1	**095-0690**	4	BOLT-SOCKET HEAD (M14X2X60-MM)	
	14	1	**335-8229**	1	PIN	
	15	1	**373-2010**	1	ORIFICE	
	16	1	**124-9901**	1	SPRING	
	17	1	**125-4572**	1	RING-RETAINING	
	18	1	**1G-6423**	1	VALVE-PISTON	
	19	1	**6V-8351**	1	SEAL-O-RING	
	20	1	**124-9898**	1	PLUG	
Y	21	1	**185-0275**	1	ROTATING GP-MOTOR (VIBRATORY)	364
	22	1	**185-0278**	1	SWASHPLATE	
	23	1	**9T-9529**	2	PIN	
	24	1	**335-8230**	1	PLUG	
	25	1	**2M-9780**	1	SEAL-O-RING	

PARTS SHOWN IN GRAPHIC(S) WITHOUT A REFERENCE NUMBER ARE NOT SERVICED SEPARATELY

M - METRIC PART
Y - SEPARATE ILLUSTRATION

357-7420 **MOTOR GP-PISTON (*contd.*)** **i05295524**

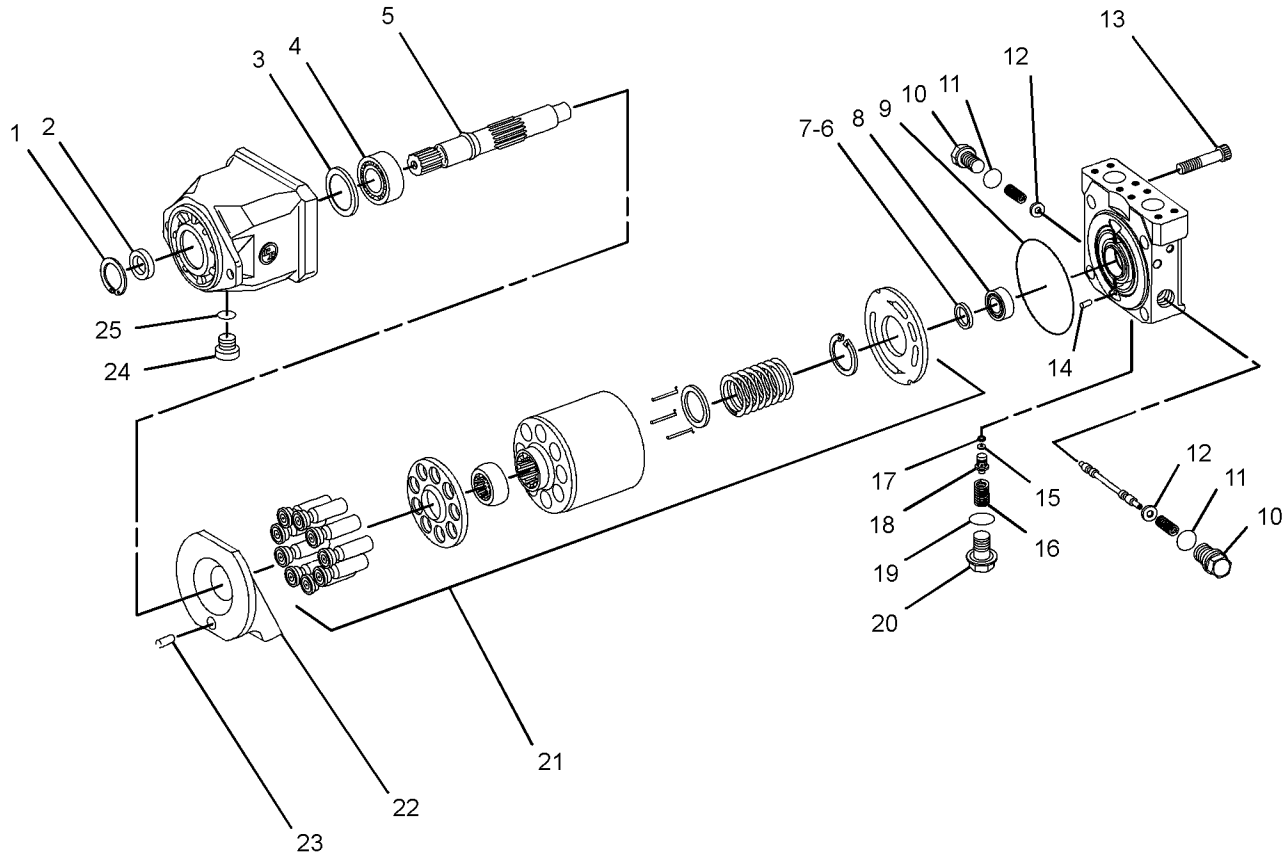

GRAPHIC #1 **<END>** g03052216

379-6602 PUMP & MOUNTING GP—FIXED FREQUENCY

S/N: MBF1-UP; M4M1-UP; M5P1-UP; SDT1-UP
PART OF 379-6613 HYDRAULIC AR-VIBRATORY
AN ATTACHMENT

SMCS-5070, 5073, 5084

i05294827

NOTE	REF NO	GRAPHIC REF	PART NUMBER	QTY	PART NAME 1 2 3 4 5 6 (PRODUCT LEVEL)	SEE PAGE
	1	1	**6V-0852**	2	CAP-DUST	
	2	1	**7X-5315**	1	FITTING AS (QUICK DISCONNECT)	
	3	1	**6E-5063**	2	CAP AS	
	4	1	*153-9910*	1	ELBOW AS	
		1	**6V-5063**	1	SEAL-O-RING	
		1	**032-8487**	1	ELBOW	
	5	1	*164-6874*	1	FITTING AS-ELBOW (QUICK DISCONNECT, MALE)	
		1	**3J-1907**	1	SEAL-O-RING	
		1	**085-7356**	1	FITTING	
Y	6	1	**389-8425**	1	PUMP GP-PISTON (FIXED DISPLACEMENT, 55-CC)	359
	7	1	*148-8325*	1	CONNECTOR AS	
		1	**3J-1907**	1	SEAL-O-RING	
		1	**4J-5477**	1	SEAL-O-RING	
		1	**6V-8641**	1	CONNECTOR	
	8	1	*148-8340*	1	CONNECTOR AS	
		1	**3K-0360**	1	SEAL-O-RING	
		1	**6V-8398**	1	SEAL-O-RING	
		1	**6V-8639**	1	CONNECTOR	
	9	1	*148-8351*	1	ELBOW AS	
		1	**4J-5477**	1	SEAL-O-RING	
		1	**6V-9849**	1	ELBOW	
	10	1	*148-8370*	1	ELBOW AS	
		1	**6V-8398**	1	SEAL-O-RING	
		1	**6V-9851**	1	ELBOW	
	11	1	*150-4047*	1	ADAPTER AS	
		1	**3J-7354**	1	SEAL-O-RING	
		1	**8T-2353**	1	ADAPTER	
	12	1	*164-5561*	1	ADAPTER AS	
		1	**2M-9780**	1	SEAL-O-RING	
		1	**5P-1042**	1	ADAPTER-O-RING	
	13	1	*164-5567*	1	COUPLER AS-QUICK DISCONNECT (MALE)	
		1	**6V-3965**	1	FITTING (QUICK DISCONNECT)	
		1	**214-7568**	1	SEAL-O-RING	
	14	1	*287-7341*	1	ELBOW AS	
		1	**3J-7354**	1	SEAL-O-RING	
		1	**124-8909**	1	ELBOW	
	15	1	**3E-4356**	2	WASHER-HARD (17.5X30X6-MM THK)	
	16	1	**7J-6285**	1	SEAL-O-RING	
M	17	1	**8T-7338**	2	BOLT (M16X2X45-MM)	

M - METRIC PART
Y - SEPARATE ILLUSTRATION

379-6602 **PUMP & MOUNTING GP (*contd.*)** **i05294827**

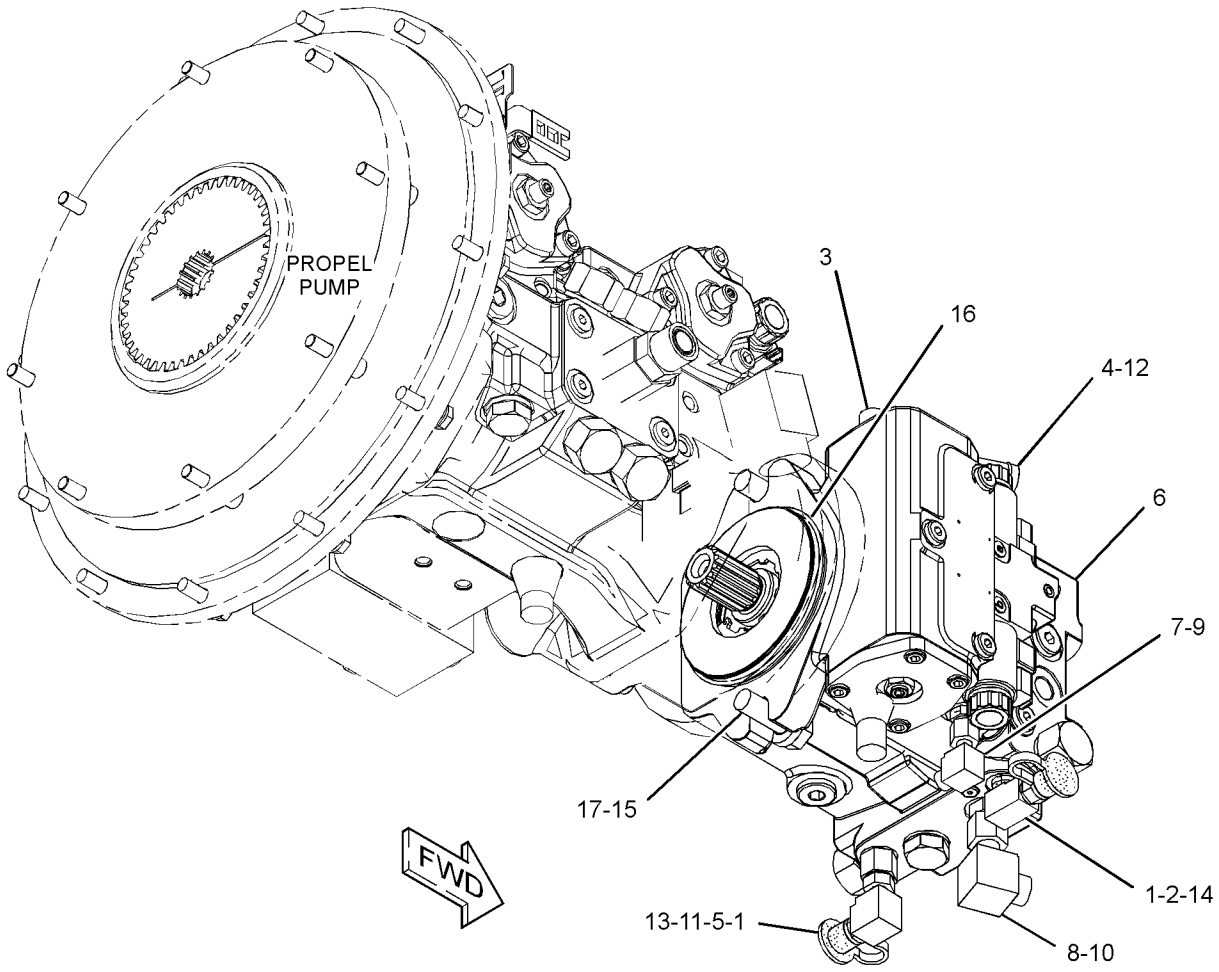

GRAPHIC #1 **<END>** g03072716

379-6606 PUMP & MOUNTING GP—VARIABLE FREQUENCY

S/N: MBF1-UP; M4M1-UP; M5P1-UP; SDT1-UP
PART OF 379-6617, 379-6618 HYDRAULIC AR-VIBRATORY
AN ATTACHMENT

SMCS-5070, 5073, 5084

i05294838

NOTE	REF NO	GRAPHIC REF	PART NUMBER	QTY	PART NAME 1 2 3 4 5 6 (PRODUCT LEVEL)	SEE PAGE
	1	1	**6V-0852**	2	CAP-DUST	
	2	1	**7X-5315**	1	FITTING AS (QUICK DISCONNECT)	
	3	1	*153-9910*	1	ELBOW AS	
		1	**6V-5063**	1	SEAL-O-RING	
		1	**032-8487**	1	ELBOW	
	4	1	*164-6874*	1	FITTING AS-ELBOW (QUICK DISCONNECT, MALE)	
		1	**3J-1907**	1	SEAL-O-RING	
		1	**085-7356**	1	FITTING	
Y	5	1	**389-8426**	1	PUMP GP-PISTON	361
	6	1	*148-8325*	1	CONNECTOR AS	
		1	**3J-1907**	1	SEAL-O-RING	
		1	**4J-5477**	1	SEAL-O-RING	
		1	**6V-8641**	1	CONNECTOR	
	7	1	*148-8340*	1	CONNECTOR AS	
		1	**3K-0360**	1	SEAL-O-RING	
		1	**6V-8398**	1	SEAL-O-RING	
		1	**6V-8639**	1	CONNECTOR	
	8	1	*148-8351*	1	ELBOW AS	
		1	**4J-5477**	1	SEAL-O-RING	
		1	**6V-9849**	1	ELBOW	
	9	1	*148-8370*	1	ELBOW AS	
		1	**6V-8398**	1	SEAL-O-RING	
		1	**6V-9851**	1	ELBOW	
	10	1	*150-4047*	1	ADAPTER AS	
		1	**3J-7354**	1	SEAL-O-RING	
		1	**8T-2353**	1	ADAPTER	
	11	1	*164-5561*	1	ADAPTER AS	
		1	**2M-9780**	1	SEAL-O-RING	
		1	**5P-1042**	1	ADAPTER-O-RING	
	12	1	*164-5567*	1	COUPLER AS-QUICK DISCONNECT (MALE)	
		1	**6V-3965**	1	FITTING (QUICK DISCONNECT)	
		1	**214-7568**	1	SEAL-O-RING	
	13	1	*287-7341*	1	ELBOW AS	
		1	**3J-7354**	1	SEAL-O-RING	
		1	**124-8909**	1	ELBOW	
	14	1	**3E-4356**	2	WASHER-HARD (17.5X30X6-MM THK)	
	15	1	**7J-6285**	1	SEAL-O-RING	
M	16	1	**8T-7338**	2	BOLT (M16X2X45-MM)	

M - METRIC PART
Y - SEPARATE ILLUSTRATION

379-6606 **PUMP & MOUNTING GP (*contd.*)** **i05294838**

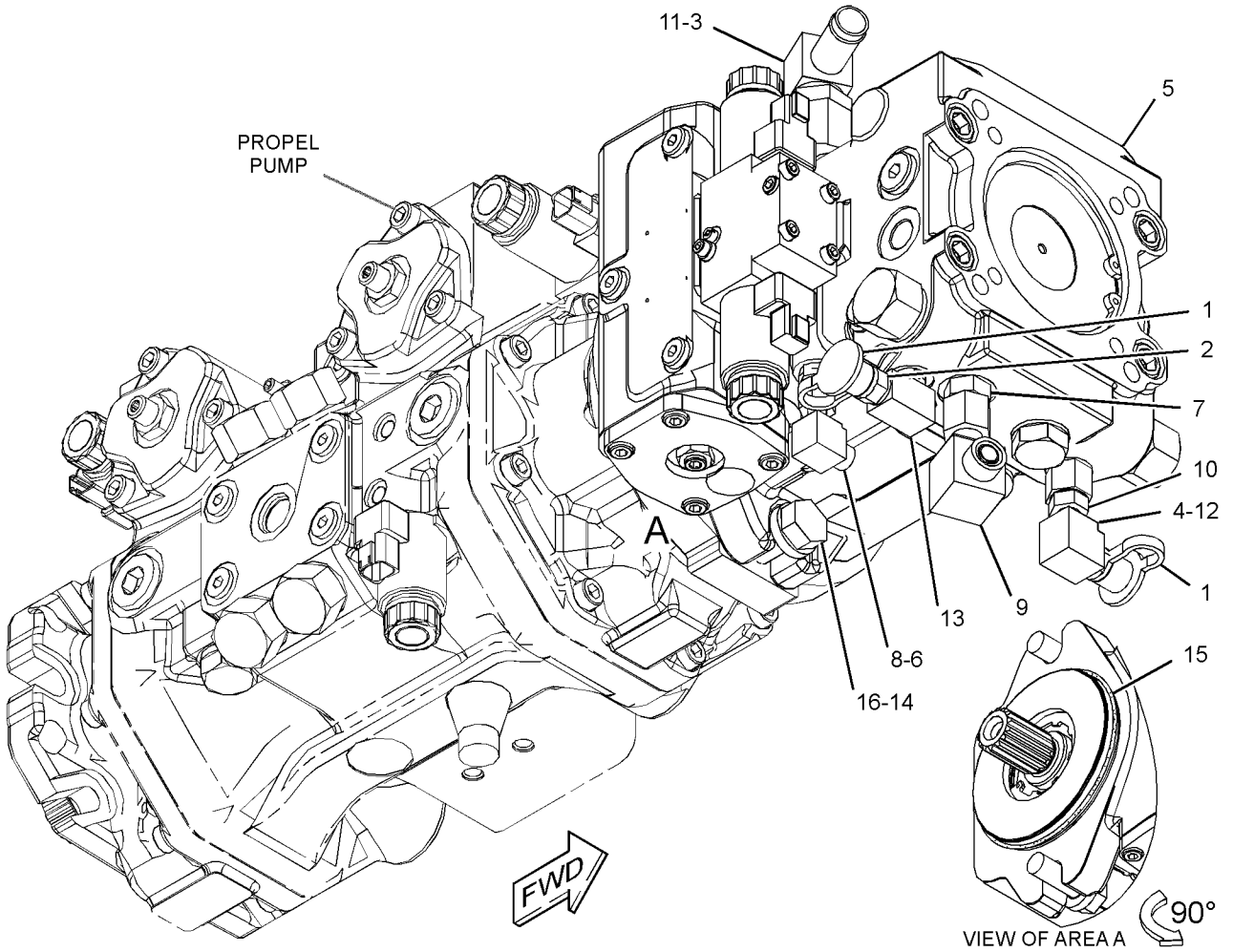

GRAPHIC #1 **<END>** g03074296

351-8597 PUMP GP-PISTON

S/N: MBF1-UP; M4M1-UP; M5P1-UP; SDT1-UP
PART OF 377-0676 PUMP & MTG GP-PROPEL

SMCS-5070 **i05270738**

NOTE	REF NO	GRAPHIC REF	PART NUMBER	QTY	PART NAME 1 2 3 4 5 6 (PRODUCT LEVEL)	SEE PAGE
Y	1	1	**382-9228**	2	VALVE GP-PUMP CONTROL (PROPEL)	384
	2	1	**382-9226**	2	ACTUATOR GP-HYDRAULIC (PROPEL PUMP)	
					(EACH INCLUDES)	
		1	**5W-3670**	1	NUT (M14X1.5-THD)	
M		1	**6V-3938**	6	BOLT (M10X1.5X20-MM)	
		1	**180-2391**	2	SEAL-O-RING	
		1	**382-9243**	1	ACTUATOR GP-PUMP	
	3	1	**382-9246**	1	VALVE GP-SHUTTLE (PROPEL PUMP)	
	4	1,3	**4H-6520**	2	SEAL-O-RING	
M	5	1,3	**101-7404**	16	BOLT-SOCKET HEAD (M10X1.5X30-MM)	
Y	6	1	**382-9224**	1	ROTATING GP-PUMP (PROPEL)	368
	7	1,3	**199-2136**	4	PIN	
	8	1,3	**123-7574**	4	SCREW-LOCK	
	9	2,3	**9S-8004**	12	PLUG-O-RING	
	10	3	**233-5621**	4	VALVE GP-RELIEF (MULTIFUNCTION)	
					(EACH INCLUDES)	
		3	**6V-5326**	1	SEAL-O-RING	
		3	**112-4719**		RING-BACKUP	
	11	3	**112-4627**	1	SCREW-LOCK	
	12	3	**9T-9529**	2	PIN	
	13	3	**382-9259**	7	FILTER (SCREEN)	
	14	3	**382-9247**	1	VALVE GP-SOLENOID (AXLE PROPEL PUMP)	
		3	**382-9272**	1	VALVE GP-SOLENOID (AXLE PROPEL PUMP)	
		3	**033-6043**	1	SEAL-O-RING	
		3	**217-3875**	1	SEAL-O-RING	
	15	3	**382-9244**	1	VALVE GP-RELIEF (MULTIFUNCTION)	
		3	**6V-5326**	1	SEAL-O-RING	
	16	2	**4M-0189**	1	SEAL-O-RING	
	17	2	**351-1768**	1	SEAL-O-RING	
	18	2	**382-9257**	2	BUSHING-BEARING	
	19	1,2	**382-9258**	2	BUSHING	
	20	2	**221-0069**	1	NUT	
	21	2	**382-9251**	1	SCREW-ECCENTRIC	
	22	3	**382-9256**	4	RING-GUIDE	
	23	3	**382-9255**	4	KIT-SEAL	
					(EACH INCLUDES O-RING SEAL & SEAL CARRIER)	
	24	1,3	**6R-7579**	2	PIN	
	25	2	**112-4629**	1	SCREW	
	26	2	**382-9245**	1	VALVE GP-RELIEF (PUMP HEAD, CROSSOVER)	
		2	**8U-6850**	1	SEAL-O-RING	
		2	**258-0144**	1	LOCKNUT-SCREW	
M	27	1	**8T-1159**	8	BOLT-SOCKET HEAD (M10X1.5X25-MM)	
Y	28	1	**382-9225**	1	ROTATING GP-PUMP (DRUM PROPEL)	369

M - METRIC PART
Y - SEPARATE ILLUSTRATION

351-8597 **PUMP GP-PISTON (*contd.*)** **i05270738**

REFER TO ALL ILLUSTRATIONS OF
THIS GROUP FOR AUXILIARY VIEWS

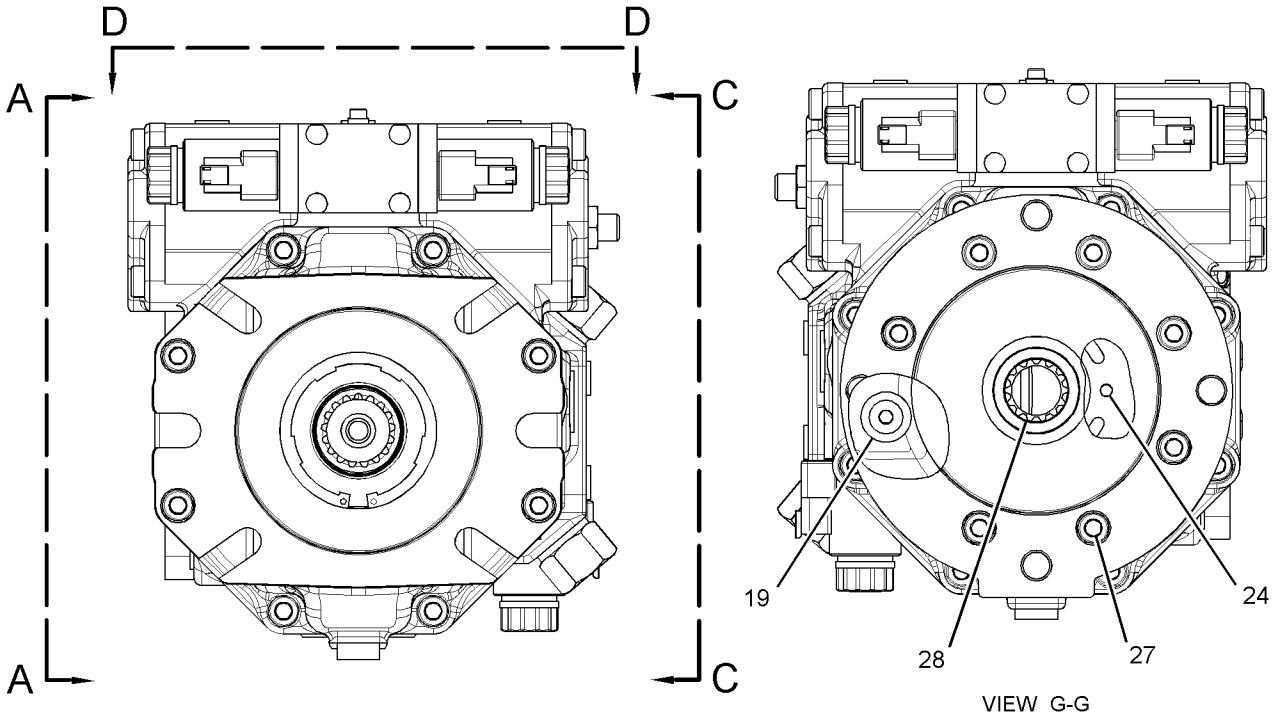

VIEW G-G

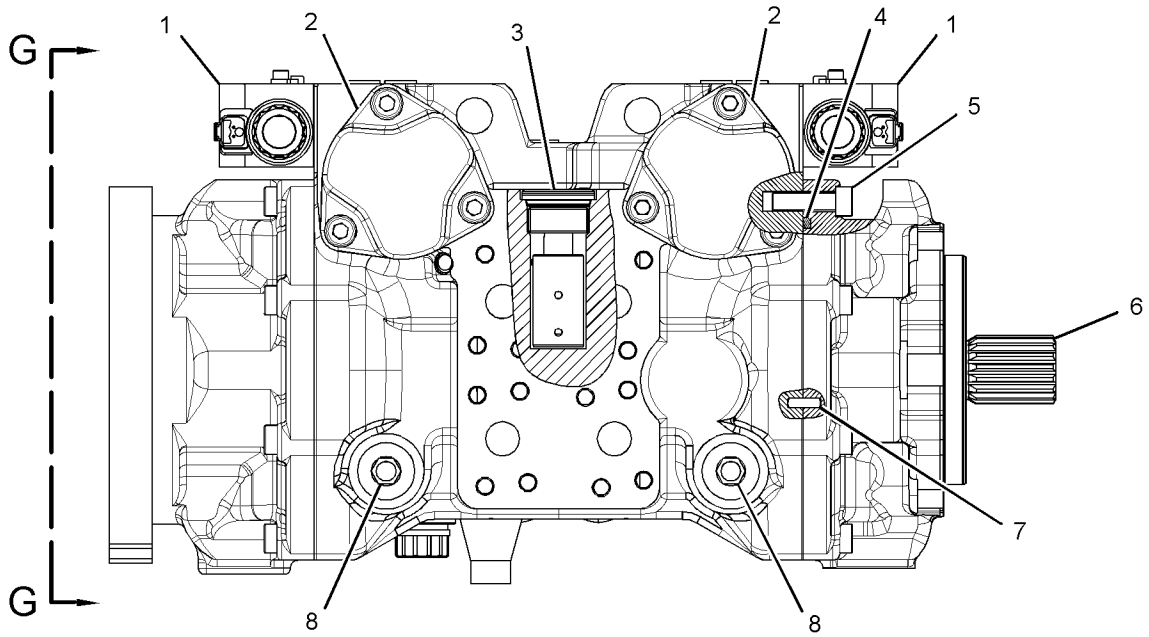

VIEW A-A

GRAPHIC #1 g03046201

351-8597 **PUMP GP-PISTON (*contd.*)** **i05270738**

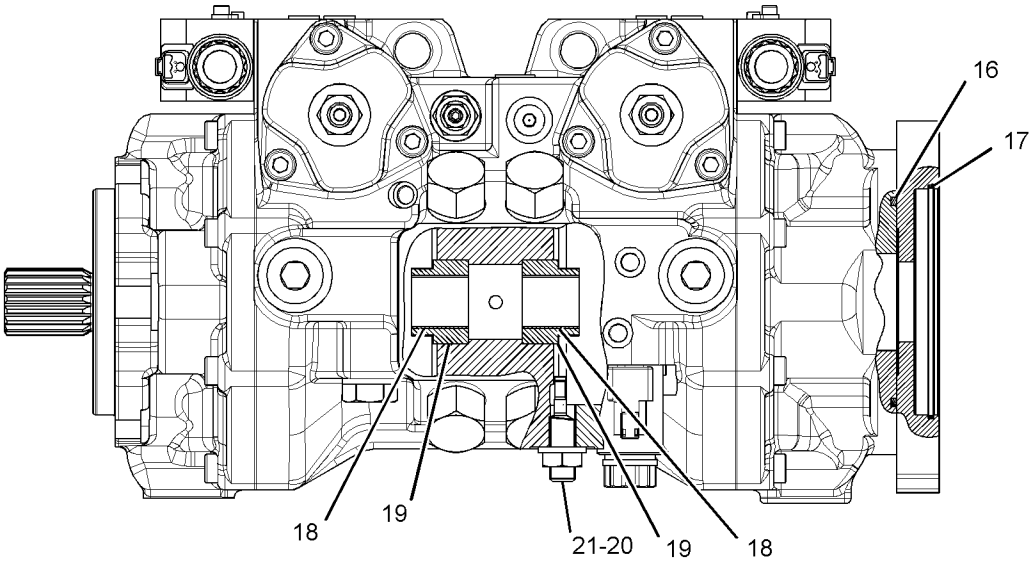

SECTION E-E

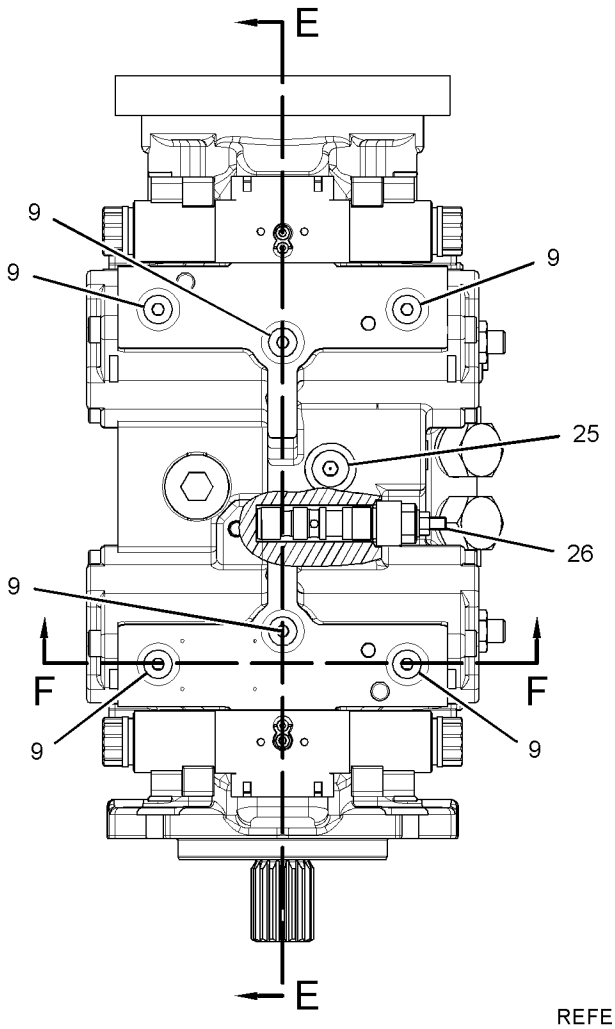

VIEW D-D

REFER TO ALL ILLUSTRATIONS OF THIS GROUP FOR AUXILIARY VIEWS

GRAPHIC #2

g03046203

351-8597 **PUMP GP-PISTON (*contd.*)** **i05270738**

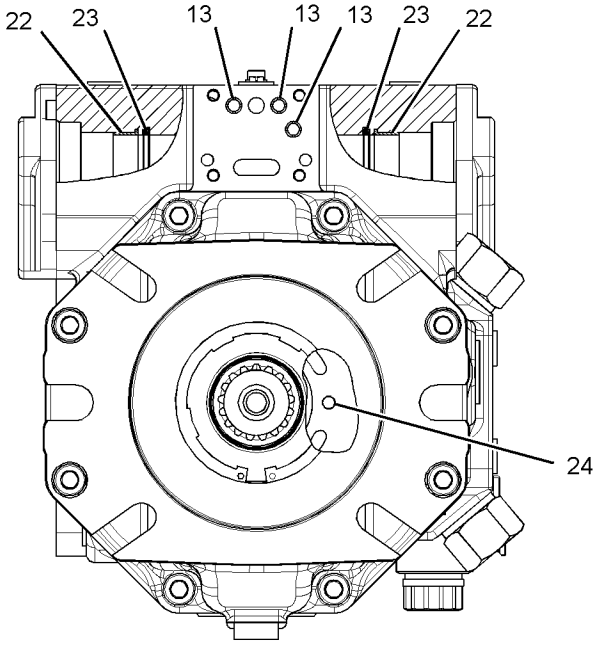

VIEW F-F

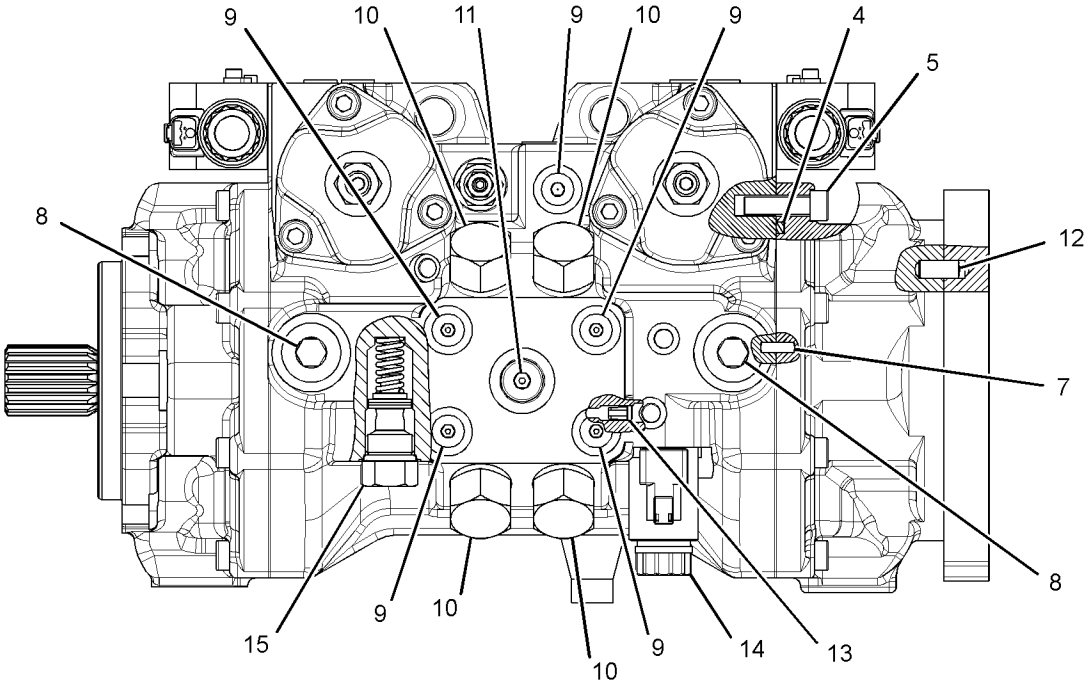

VIEW C-C

GRAPHIC #3 **<END>** g03046205

389-8425 PUMP GP-PISTON—FIXED DISPLACEMENT, 55-CC

S/N: MBF1-UP; M4M1-UP; M5P1-UP; SDT1-UP
PART OF 379-6602 PUMP & MOUNTING GP
AN ATTACHMENT

SMCS-5070 **i05294828**

NOTE	REF NO	GRAPHIC REF	PART NUMBER	QTY	PART NAME 1 2 3 4 5 6 (PRODUCT LEVEL)	SEE PAGE
	1	1	**197-4938**	2	ORIFICE	
	2	1	**112-4628**	3	SCREW	
Y	3	1	**320-2377**	1	VALVE GP-PUMP CONTROL	381
	4	1	**167-6805**	2	PIN	
Y	5	1	**190-7632**	1	ROTATING GP-PUMP	366
	6	1	**5J-3886**	1	SEAL-O-RING	
	7	1	**202-6535**	1	PIN	
Y	8	1	**382-6085**	1	HEAD GP-PUMP	331
	9	1	**3K-0360**	3	SEAL-O-RING	
	10	1	**112-4629**	3	SCREW	
	11	1	**6V-5391**	1	SEAL-O-RING	
	12	1	**8T-5049**	1	SEAL-O-RING	
	13	1	**095-0946**	1	RING-RETAINING	
	14	1	**7M-8485**	1	SEAL-O-RING	
	15	1	**112-4630**	1	SCREW (1-5/16-THD)	
	16	1	**3J-1907**	1	SEAL-O-RING	
	17	1	**9S-8004**	1	PLUG-O-RING	
	19	1	**112-4627**	2	SCREW-LOCK	
	20	1	**2M-9780**	2	SEAL-O-RING	
	21	1	**122-9718**	1	PIN	
	22	1	**9T-3928**	1	PLUG AS	
		1	**187-8001**	1	SEAL	
	23	1	**3J-7354**	3	SEAL-O-RING	
	24	1	**191-3540**	2	PIN-THREADED	
	25	1	**145-3812**	2	RING	
	26	1	**145-3813**	2	RING-SEAL	
	27	1	**385-9424**	1	ACTUATOR GP-PUMP	
		1	**117-7273**	1	SEAL-O-RING	
		1	**161-6154**	1	SEAL-O-RING	
M	28	1	**160-8499**	1	NUT (M12X1.5-THD)	
M	29	1	**8T-1158**	4	BOLT-SOCKET HEAD (M8X1.25X20-MM)	
	30	1	**191-3539**	2	NUT-SEAL	
					PARTS SHOWN IN GRAPHIC(S) WITHOUT A REFERENCE NUMBER ARE NOT SERVICED SEPARATELY	
					AVAILABLE REPAIR KIT(S):	
			361-3937	1	KIT-SEAL (PISTON PUMP)	
					(INCLUDES O-RING SEALS, NUTS, RETAINER RING, BACKUP RINGS, RING ASSEMBLIES, RING & SHAFT SEAL)	

M - METRIC PART
Y - SEPARATE ILLUSTRATION

389-8425 **PUMP GP-PISTON (*contd.*)** **i05294828**

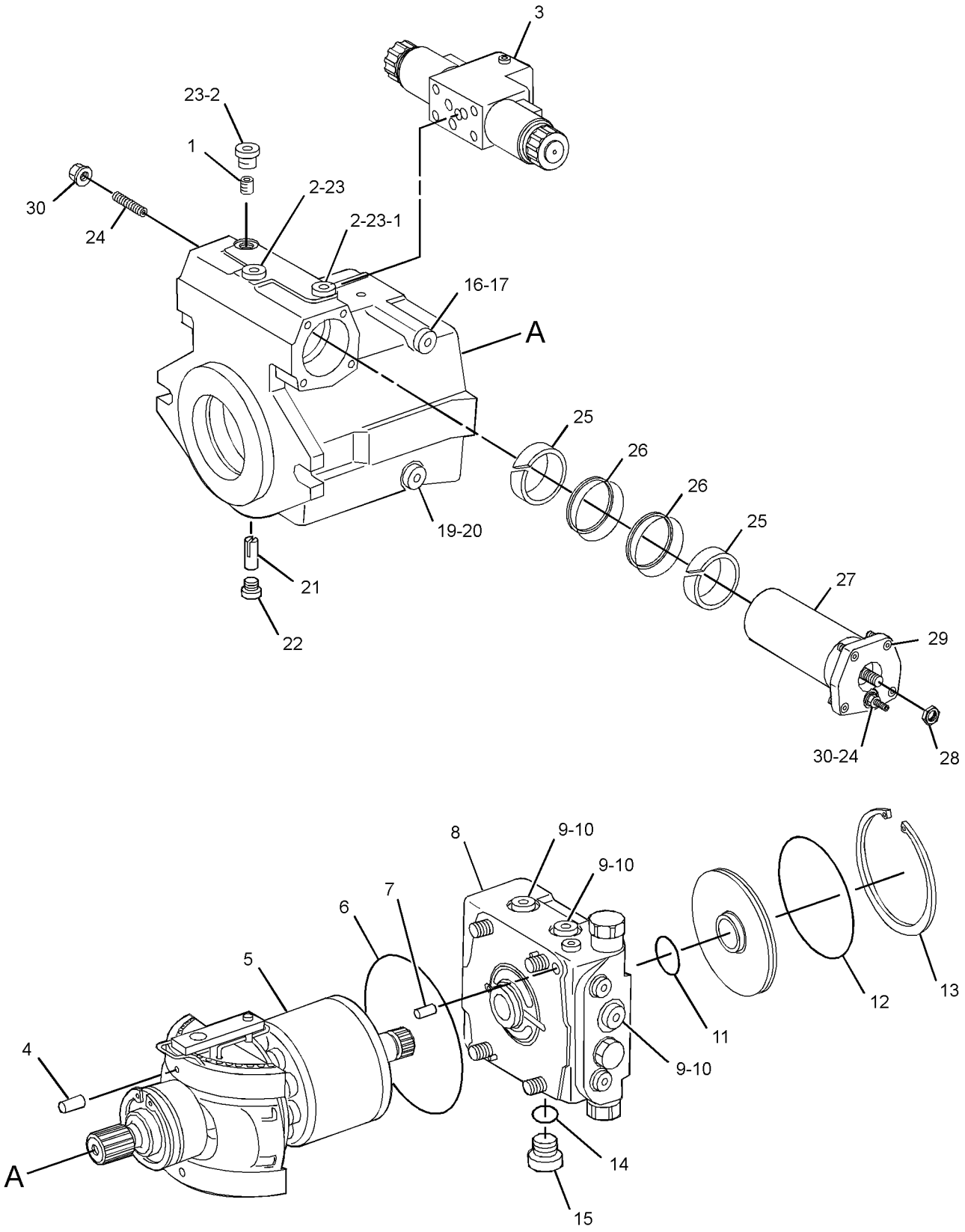

GRAPHIC #1 **<END>** g03358627

389-8426 PUMP GP-PISTON

S/N: MBF1-UP; M4M1-UP; M5P1-UP; SDT1-UP
PART OF 379-6606 PUMP & MOUNTING GP
AN ATTACHMENT

SMCS-5070 **i05294839**

NOTE	REF NO	GRAPHIC REF	PART NUMBER	QTY	PART NAME 1 2 3 4 5 6 (PRODUCT LEVEL)	SEE PAGE
	1	1	**197-4938**	2	ORIFICE	
	2	1	**112-4628**	3	SCREW	
Y	3	1	**361-3935**	1	VALVE GP-PUMP CONTROL (PISTON)	382
	4	1	**167-6805**	2	PIN	
Y	5	1	**190-7632**	1	ROTATING GP-PUMP (VIBRATORY)	366
	6	1	**5J-3886**	1	SEAL-O-RING	
	7	1	**202-6535**	1	PIN	
Y	8	1	**382-6085**	1	HEAD GP-PUMP	331
	9	1	**3K-0360**	3	SEAL-O-RING	
	10	1	**112-4629**	3	SCREW	
	11	1	**6V-5391**	1	SEAL-O-RING	
	12	1	**8T-5049**	1	SEAL-O-RING	
	13	1	**095-0946**	1	RING-RETAINING	
	14	1	**7M-8485**	1	SEAL-O-RING	
	15	1	**112-4630**	1	SCREW (1-5/16-THD)	
	16	1	**3J-1907**	1	SEAL-O-RING	
	17	1	**9S-8004**	1	PLUG-O-RING	
Y	18	1	**373-2000**	1	ACTUATOR GP-PUMP	320
	19	1	**112-4627**	2	SCREW-LOCK	
	20	1	**2M-9780**	2	SEAL-O-RING	
	21	1	**122-9718**	1	PIN	
	22	1	**9T-3928**	1	PLUG AS	
		1	**187-8001**	1	SEAL	
	23	1	**3J-7354**	3	SEAL-O-RING	
					PARTS SHOWN IN GRAPHIC(S) WITHOUT A REFERENCE NUMBER ARE NOT SERVICED SEPARATELY	
					AVAILABLE REPAIR KIT(S):	
			361-3937	1	KIT-SEAL (PISTON PUMP)	
					(INCLUDES O-RING SEALS, NUTS, RETAINER RING, BACKUP RINGS, RING ASSEMBLIES, RING & SHAFT SEAL)	

Y - SEPARATE ILLUSTRATION

389-8426 **PUMP GP-PISTON (*contd.*)** **i05294839**

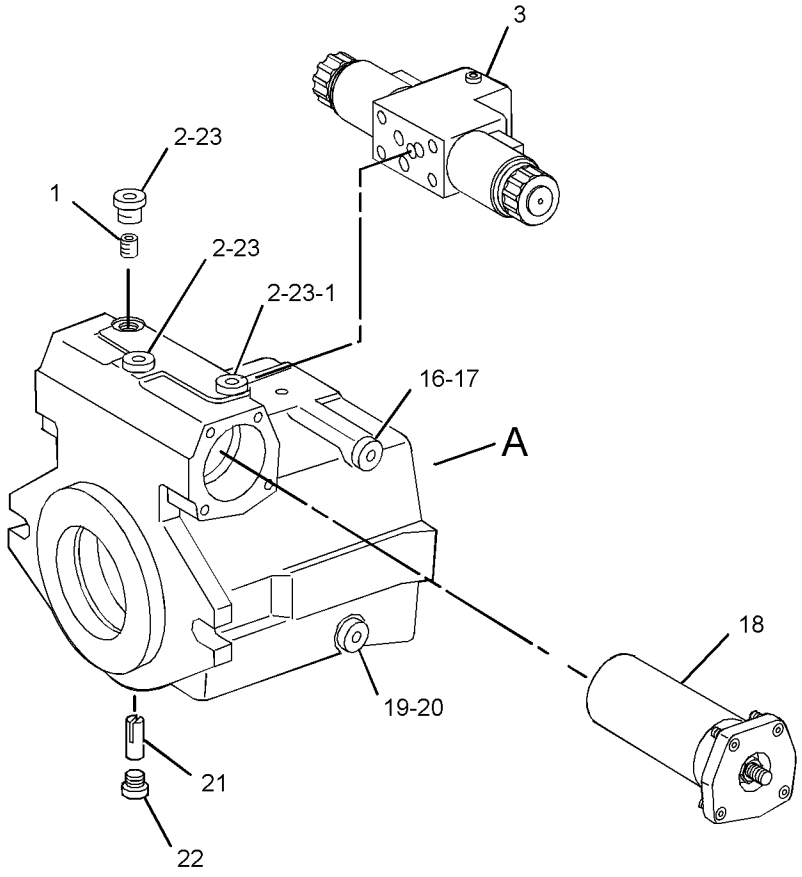

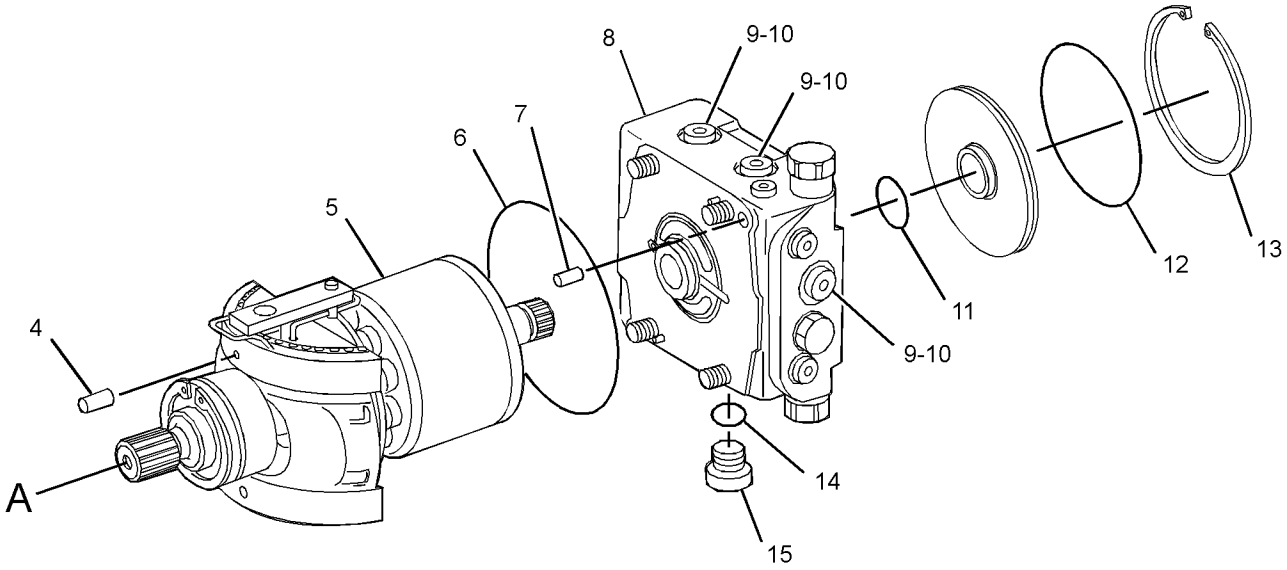

GRAPHIC #1 **<END>** g03065442

137-4581 ROTATING GP-MOTOR

S/N: MBF1-UP; M4M1-UP; M5P1-UP; SDT1-UP
PART OF 378-9277 ROTATING GP-MOTOR

SMCS-5058 **i03875944**

NOTE	REF NO	GRAPHIC REF	PART NUMBER	QTY	PART NAME 1 2 3 4 5 6 (PRODUCT LEVEL)	SEE PAGE
	1	1	**137-4584**	7	PISTON	
	2	1	**6E-6336**	1	BARREL	
	3	1	**6E-6349**	1	PLATE-RETAINING	
	4	1	**7R-3711**	1	LENS-CONTROL	

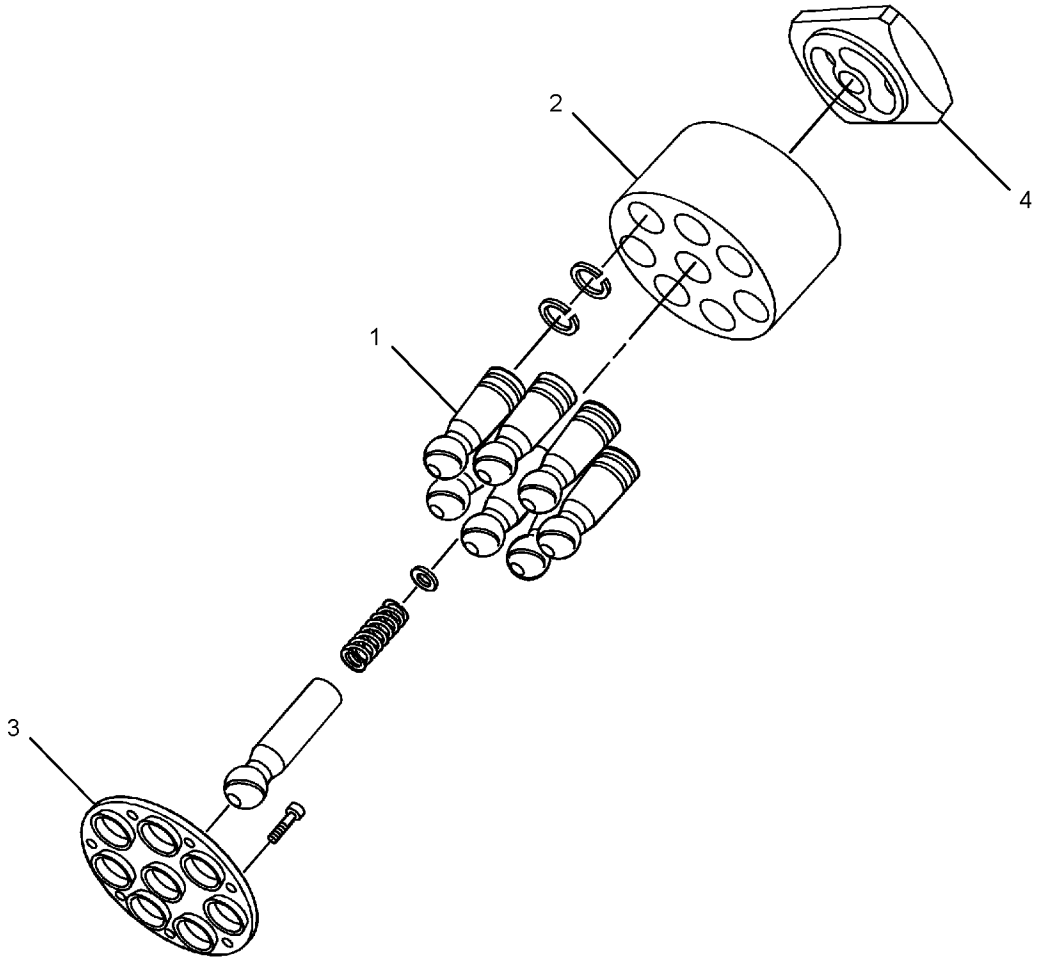

GRAPHIC #1 **<END>** g02138009

185-0275 ROTATING GP-MOTOR

S/N: MBF1-UP; M4M1-UP; M5P1-UP; SDT1-UP

PART OF 357-7420 MOTOR GP-PISTON

SMCS-5058 **i05295527**

NOTE	REF NO	GRAPHIC REF	PART NUMBER	QTY	PART NAME 1 2 3 4 5 6 (PRODUCT LEVEL)	SEE PAGE
	1	1	**168-3379**	3	PIN	
	2	1	**168-3382**	1	WASHER (42-MM ODX2.7-MM THK)	
	3	1	**185-0292**	1	SPRING	
	4	1	**6V-7723**	1	RING-RETAINING	
	5	1	**185-0287**	1	PLATE-VALVE	
	6	1	**185-0289**	1	BARREL	
	7	1	**168-3384**	9	PISTON AS-PUMP	
	8	1	**168-3378**	1	BEARING-SPHERICAL	
	9	1	**168-3385**	1	PLATE-RETRACTION	

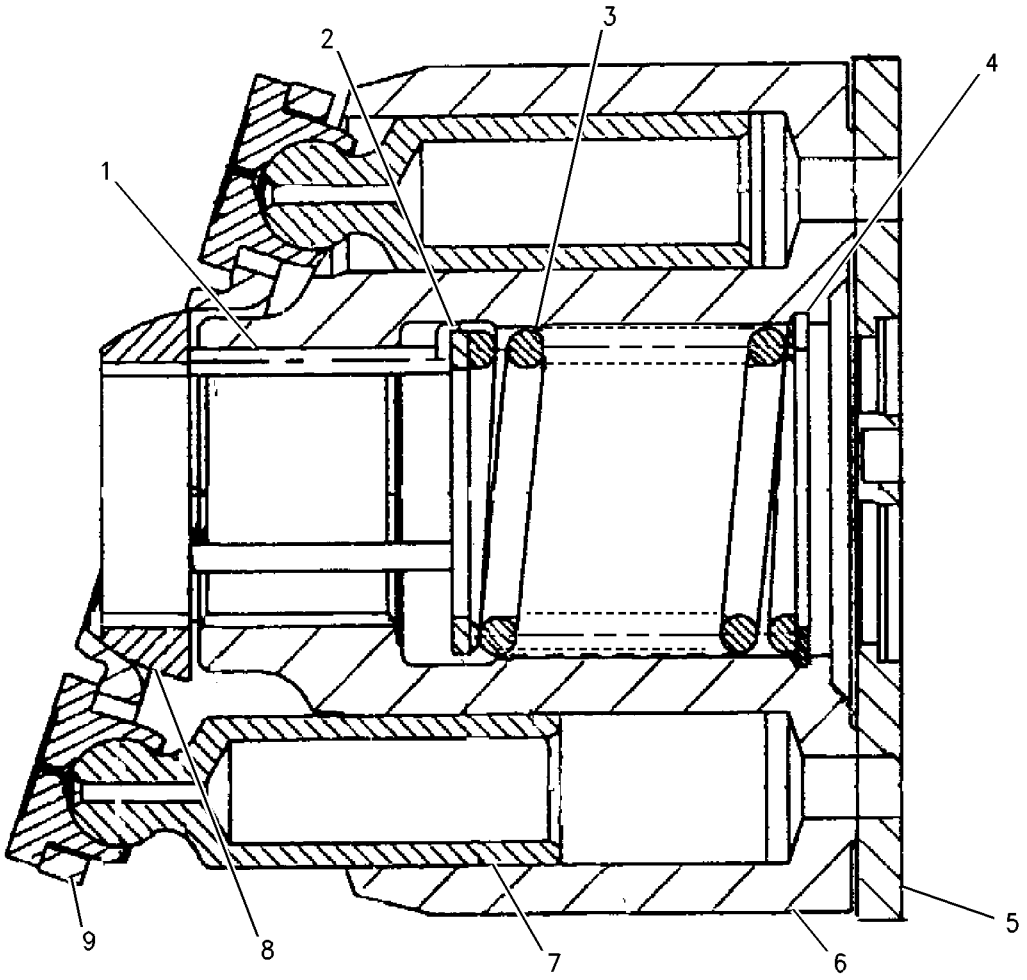

GRAPHIC #1 **<END>** g00790134

378-9277 ROTATING GP-MOTOR

S/N: MBF1-UP; M4M1-UP; M5P1-UP; SDT1-UP

PART OF 353-5924 MOTOR GP-PISTON

SMCS-5058 **i05270707**

NOTE	REF NO	GRAPHIC REF	PART NUMBER	QTY	PART NAME 1 2 3 4 5 6 (PRODUCT LEVEL)	SEE PAGE
	1	1	**8T-4241**	1	RING-RETAINING (EXTERNAL)	
	2	1	**141-0244**	1	BEARING AS	
	3	1	**133-8929**	1	BEARING AS	
Y	4	1	**137-4581**	1	ROTATING GP-MOTOR (PROPEL)	363
	5	1	**234-2872**	1	SHIM (3.90-MM THK)	
B	6	1	**141-0235**	1	SHIM (2.65-MM THK)	
B	7	1	**141-0236**	1	SHIM (2.7-MM THK)	
B	8	1	**141-0237**	1	SHIM (2.75-MM THK)	
B	9	1	**141-0238**	1	SHIM (2.8-MM THK)	
B	10	1	**141-0239**	1	SHIM (2.85-MM THK)	
B	11	1	**141-0240**	1	SHIM (2.9-MM THK)	
B	12	1	**141-0241**	1	SHIM (2.95-MM THK)	
B	13	1	**141-0242**	1	SHIM (3-MM THK)	
					PARTS SHOWN IN GRAPHIC(S) WITHOUT A REFERENCE NUMBER ARE NOT SERVICED SEPARATELY	

B - USE AS REQUIRED
Y - SEPARATE ILLUSTRATION

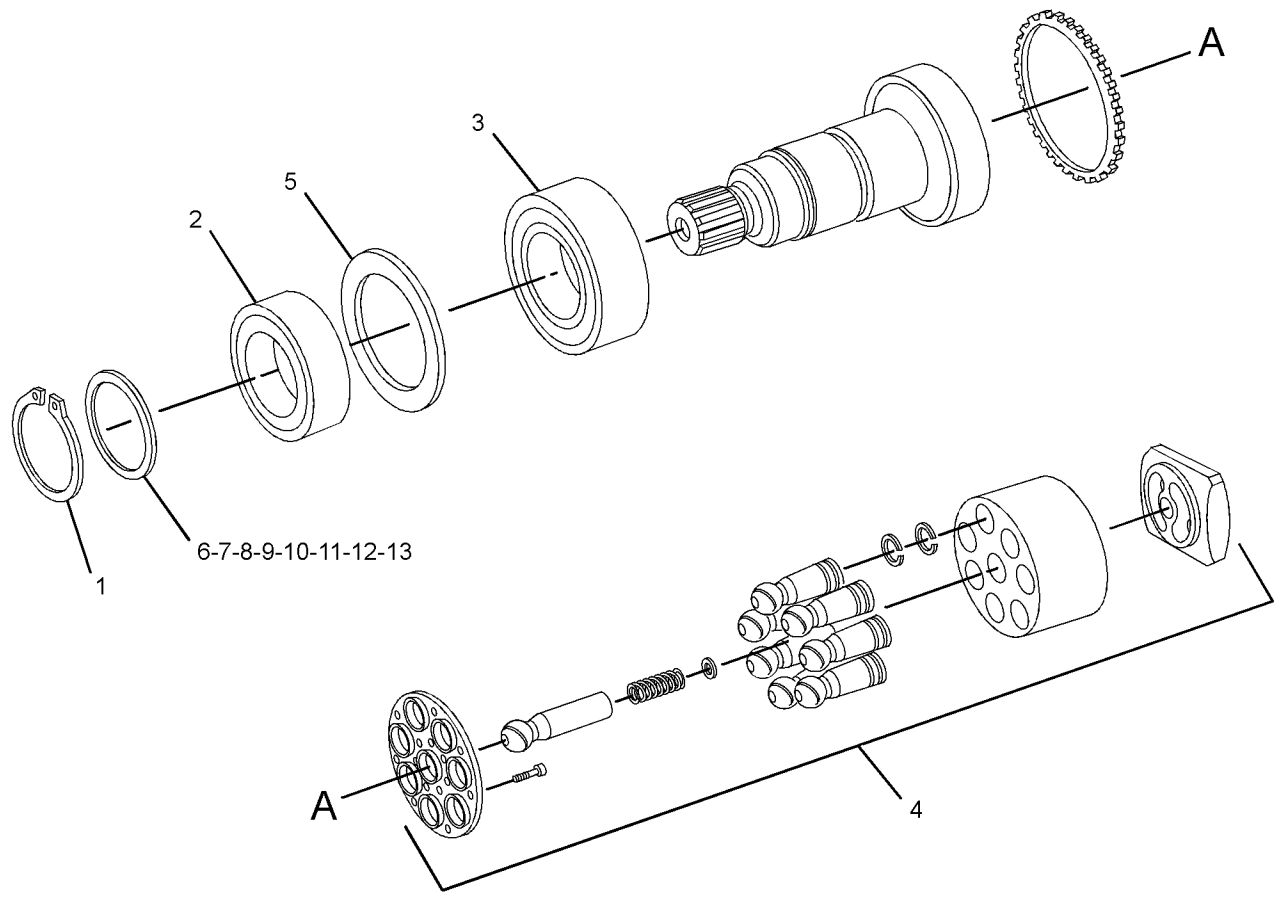

GRAPHIC #1 **<END>** g02772461

190-7632 ROTATING GP-PUMP

S/N: MBF1-UP; M4M1-UP; M5P1-UP; SDT1-UP
PART OF 389-8425, 389-8426 PUMP GP-PISTON
AN ATTACHMENT

SMCS-5070 **i02571923**

NOTE	REF NO	GRAPHIC REF	PART NUMBER	QTY	PART NAME 1 2 3 4 5 6 (PRODUCT LEVEL)	SEE PAGE
	1	1	**194-1983**	1	SEAL-SHAFT	
	2	1	**191-4522**	1	SHAFT	
	3	1	**6V-5200**	1	RING-RETAINING	
	4	1	**122-9068**	1	WIRE	
	5	1	**117-7241**	1	PLATE	
	6	1	**112-4657**	1	PIN	
	7	1	**192-2839**	1	KIT-ROTATOR	
					(INCLUDES CYLINDER, PLATES, PINS, PISTONS, RETAINER, RING, SHIM & SPRING)	
	8	1	**117-7240**	1	CRADLE	
	9	1	**1G-3410**	1	WIRE	
	10	1	**6E-0725**	2	ROLLER	
	11	1	**117-7252**	1	CAGE	
	12	1	**125-9134**	1	BEARING	
	13	1	**117-7251**	1	BEARING	
	14	1	**126-9587**	1	RING-RETAINING	
	15	1	**095-0941**	1	RING-RETAINING	

190-7632 **ROTATING GP-PUMP (*contd.*)** **i02571923**

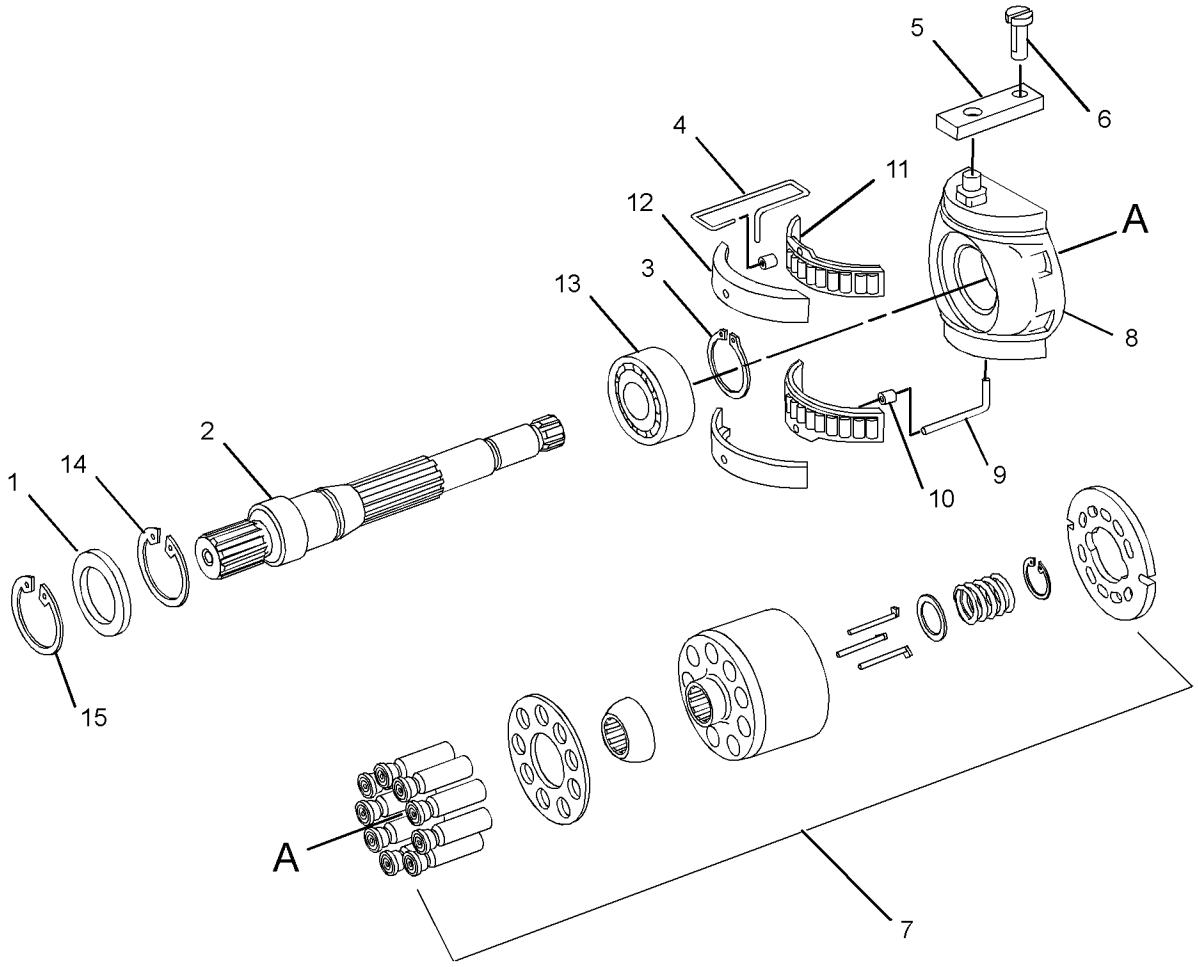

GRAPHIC #1 **<END>** g01289060

382-9224 ROTATING GP-PUMP

S/N: MBF1-UP; M4M1-UP; M5P1-UP; SDT1-UP
PART OF 351-8597 PUMP GP-PISTON

SMCS-5070 **i05270739**

NOTE	REF NO	GRAPHIC REF	PART NUMBER	QTY	PART NAME 1 2 3 4 5 6 (PRODUCT LEVEL)	SEE PAGE
	1	1	**142-9439**	1	BEARING AS	
	2	1	**382-9239**	1	LINER-BEARING	
	3	1	**382-9236**	1	PLATE-CONTROL	
	4	1	**382-9233**	1	BARREL GP-PUMP (PISTON PUMP)	
	4A	1	**382-9241**	1	BEARING-SPHERICAL	
	4B	1	**8C-3312**	1	RING-RETAINING	
	5	1	**382-9240**	1	BEARING-CRADLE	
	6	1	**6V-5201**	1	RING-RETAINING	
	7	1	**382-9234**	1	KIT-SEAL (PISTON PUMP)	
					(INCLUDES RETAINER RING & SHAFT SEAL)	

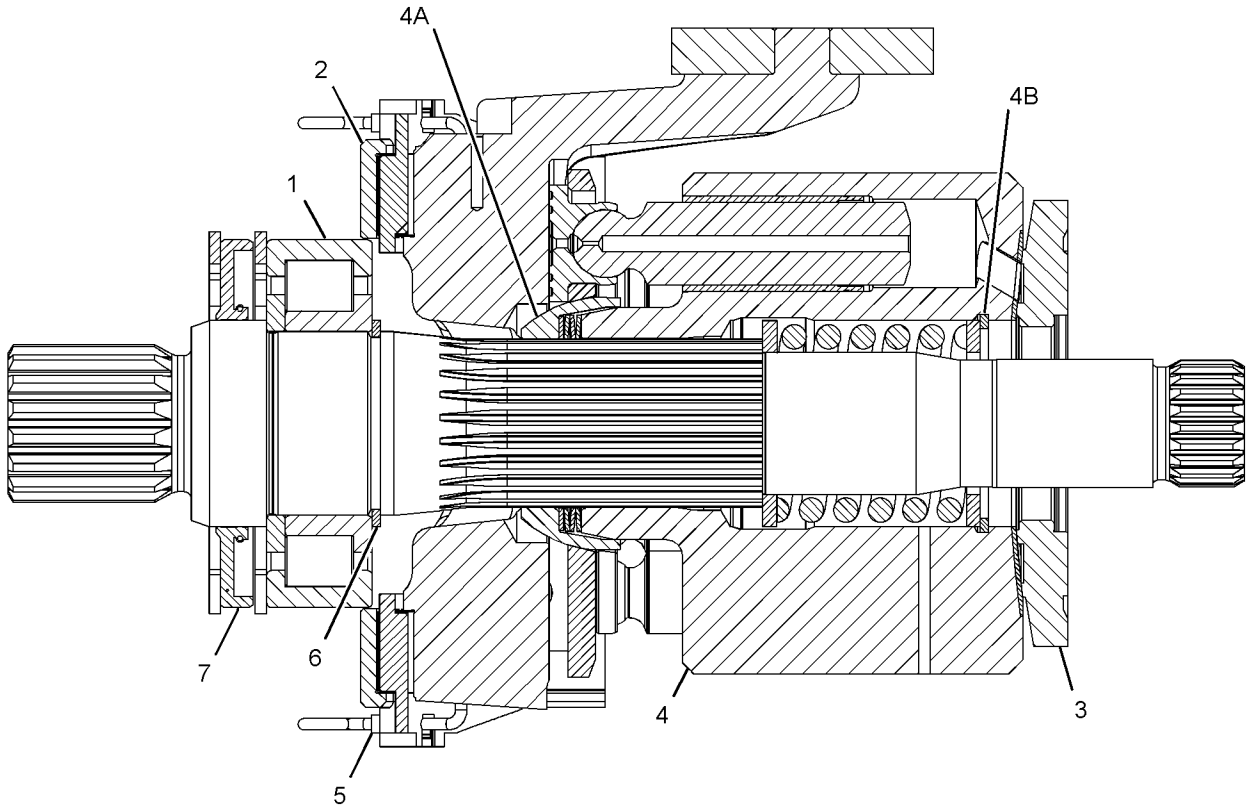

GRAPHIC #1 **<END>** g03058985

382-9225 ROTATING GP-PUMP

S/N: MBF1-UP; M4M1-UP; M5P1-UP; SDT1-UP
PART OF 351-8597 PUMP GP-PISTON

SMCS-5070 **i05270747**

NOTE	REF NO	GRAPHIC REF	PART NUMBER	QTY	PART NAME 1 2 3 4 5 6 (PRODUCT LEVEL)	SEE PAGE
	1	1	**159-9854**	1	RING-RETAINING	
	2	1	**142-9439**	1	BEARING AS	
	3	1	**382-9239**	1	LINER-BEARING	
	4	1	**6V-5201**	1	RING-RETAINING	
	5	1	**382-9242**	1	PLATE-CONTROL	
	6	1	**382-9233**	1	BARREL GP-PUMP	
	6A	1	**382-9241**	1	BEARING-SPHERICAL	
	6B	1	**8C-3312**	1	RING-RETAINING	
	7	1	**382-9240**	1	BEARING-CRADLE	

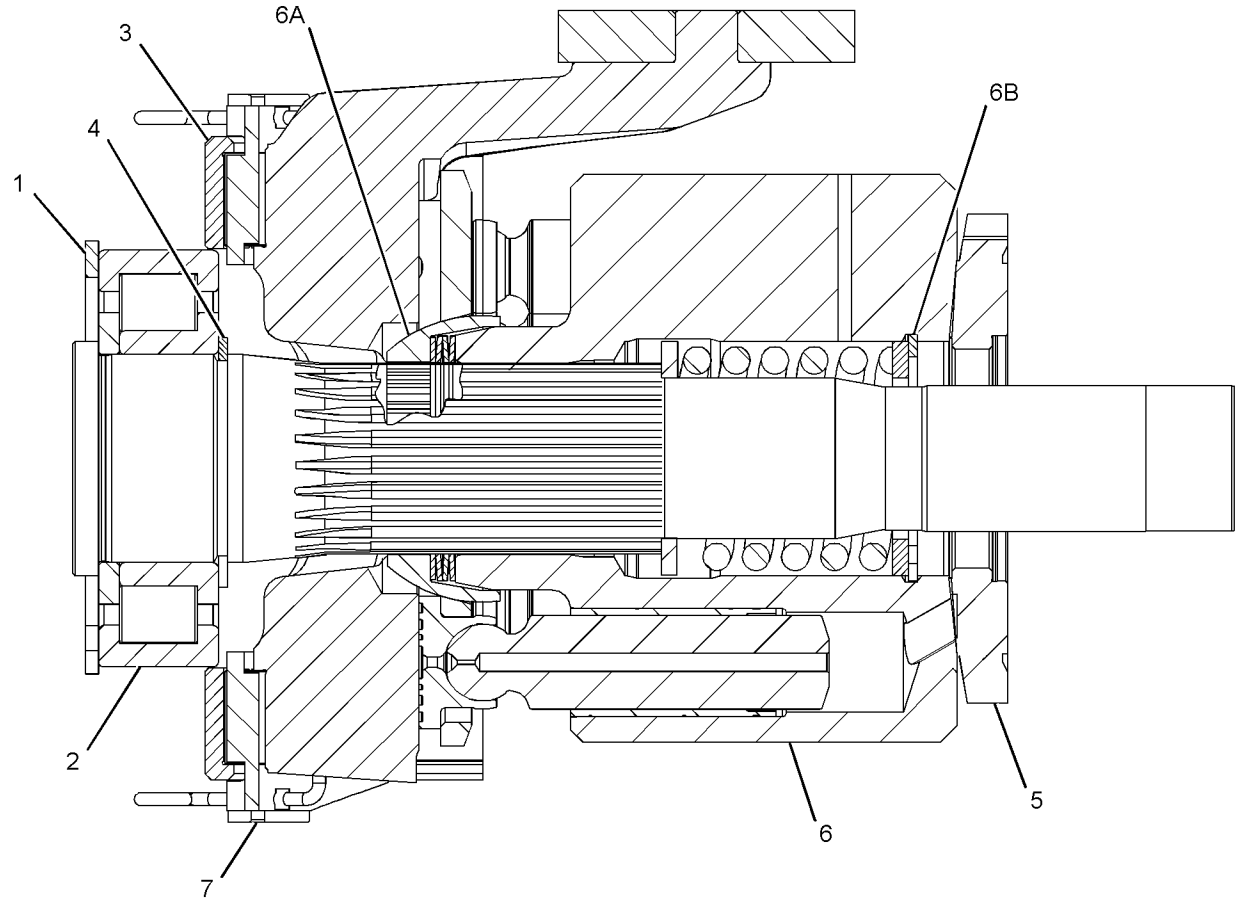

GRAPHIC #1 **<END>** g03058956

374-9820 TANK & MTG GP-HYDRAULIC

S/N: M4M1-UP; M5P1-UP

PART OF 374-9723, 374-9724 CHASSIS AR

SMCS-5056 **i05295482**

NOTE	REF NO	GRAPHIC REF	PART NUMBER	QTY	PART NAME 1 2 3 4 5 6 (PRODUCT LEVEL)	SEE PAGE
	1	1	**5P-4961**	2	CLAMP-HOSE	
	2	1	**246-2641**	1	PADLOCK GP	
		1	**5P-8500**	1	KEY	
	3	1	**145-3846**	1	INSERT-NYLON	
	4	1	**178-3620**	1	STRAP-DUAL CLAMP	
	5	1	**183-3873**	1	BREATHER (HYDRAULIC TANK)	
	6	1	**200-6345**	1	MOUNT (DUAL SWIVEL)	
	7	1	**327-0325**	2	STRAP-CABLE	
Y	8	1	*374-9822*	1	TANK GP-HYDRAULIC	373
	9	1	**127-5588**	1	COUPLING-REDUCER	
	10	1	**8T-4121**	6	WASHER-HARD (11X21X2.5-MM THK)	
M	11	1	**8T-4195**	6	BOLT (M10X1.5X30-MM)	
E	12	1	**5P-1442**		HOSE (177-CM)	
	13	1	**7K-1181**	3	STRAP-CABLE	

E - ORDER BY THE CENTIMETER
M - METRIC PART
Y - SEPARATE ILLUSTRATION

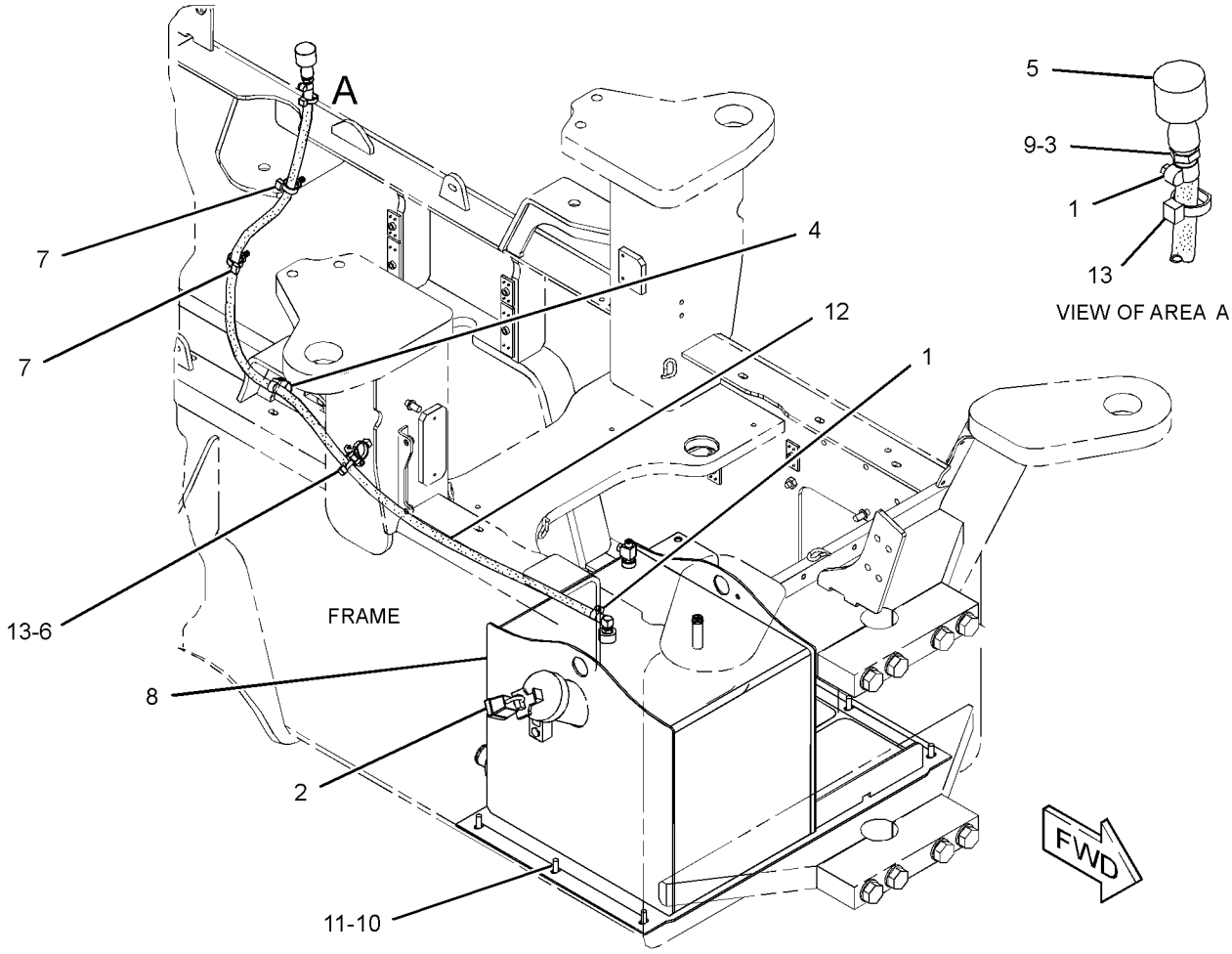

GRAPHIC #1 **<END>** g03072656

374-9821 TANK & MTG GP-HYDRAULIC

S/N: MBF1-UP; SDT1-UP

PART OF 374-9725, 374-9726 CHASSIS AR

SMCS-5056 **i05270668**

NOTE	REF NO	GRAPHIC REF	PART NUMBER	QTY	PART NAME 1 2 3 4 5 6 (PRODUCT LEVEL)	SEE PAGE
	1	1	**5P-4961**	2	CLAMP-HOSE	
	2	1	**246-2641**	1	PADLOCK GP	
		1	**5P-8500**	1	KEY	
	3	1	**145-3846**	1	INSERT-NYLON	
	4	1	**178-3620**	1	STRAP-DUAL CLAMP	
	5	1	**183-3873**	1	BREATHER (HYDRAULIC TANK)	
	6	1	**200-6345**	1	MOUNT (DUAL SWIVEL)	
	7	1	**327-0325**	2	STRAP-CABLE	
Y	8	1	*374-9823*	1	TANK GP-HYDRAULIC	375
	9	1	**127-5588**	1	COUPLING-REDUCER	
	10	1	**8T-4121**	6	WASHER-HARD (11X21X2.5-MM THK)	
M	11	1	**8T-4196**	6	BOLT (M10X1.5X35-MM)	
G	12	1	**423-1982**		HOSE (70-IN)	
	13	1	**7K-1181**	3	STRAP-CABLE	

G - ORDER BY THE INCH
M - METRIC PART
Y - SEPARATE ILLUSTRATION

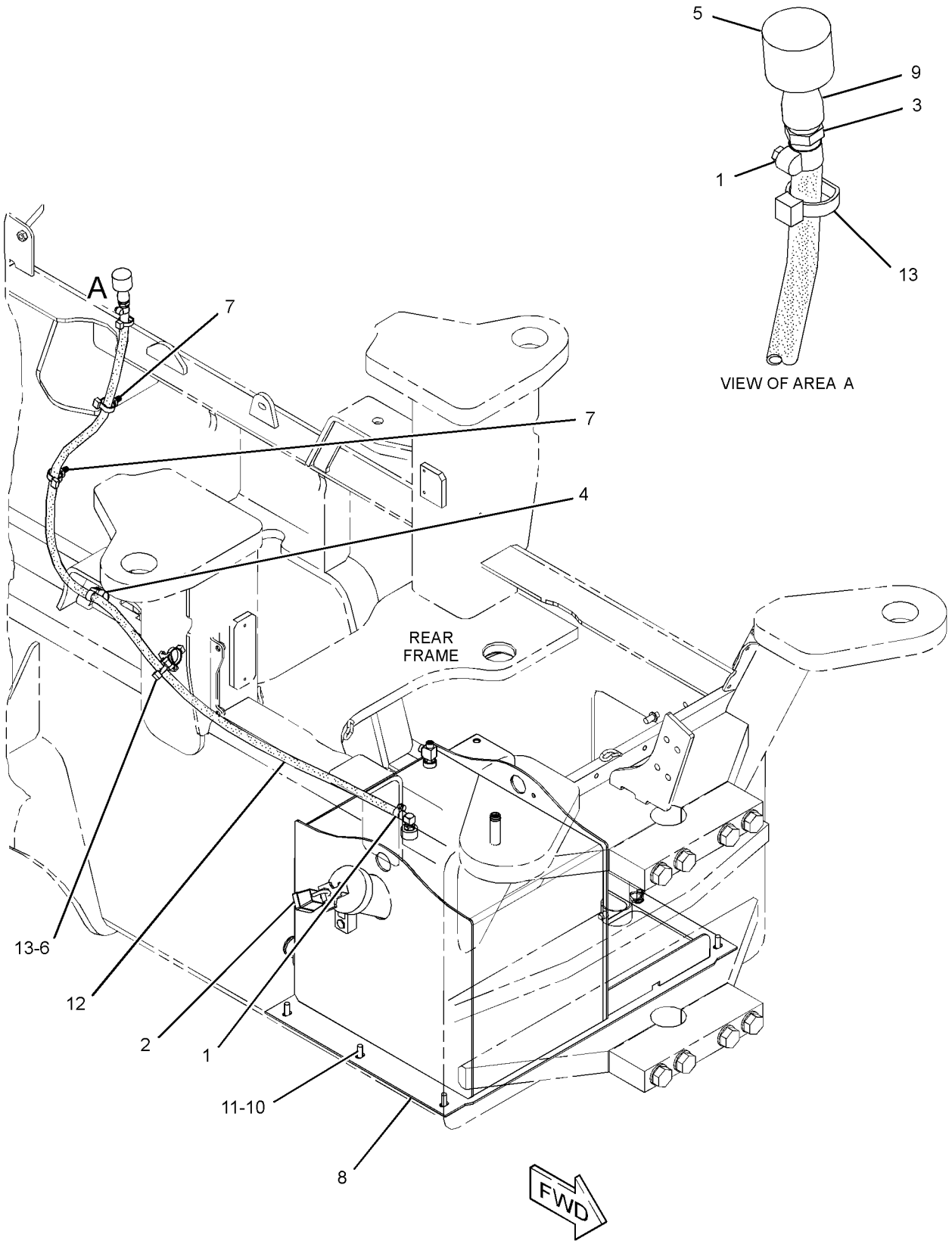

GRAPHIC #1 **<END>** g03089602

374-9822 TANK GP-HYDRAULIC

S/N: M4M1-UP; M5P1-UP

PART OF 374-9820 TANK & MTG GP-HYDRAULIC

SMCS-5056 **i05295488**

NOTE	REF NO	GRAPHIC REF	PART NUMBER	QTY	PART NAME 1 2 3 4 5 6 (PRODUCT LEVEL)	SEE PAGE
	1	1	**5P-4924**	1	ELBOW	
	2	1	*9U-6994*	1	FITTING GP	
		1	**5P-4362**	1	CONNECTOR	
		1	**7M-8485**	1	SEAL-O-RING	
	3	1	*9U-6996*	1	CONNECTOR AS	
		1	**5P-1947**	1	CONNECTOR	
		1	**6K-6307**	1	SEAL-O-RING	
	4	1	**142-8937**	1	CAP AS-FILLER (HYDRAULIC TANK)	
	5	1	*250-1476*	1	TEE AS	
		1	**086-9035**	1	TEE	
		1	**3J-1907**	1	SEAL-O-RING	
		1	**4J-5477**	2	SEAL-O-RING	
	6	1	**265-5644**	1	GAUGE GP-SIGHT	
	7	1	**363-3445**	1	STRAINER-SUCTION	
		1	**030-4606**	1	SEAL-O-RING	
	8	1	**374-9824**	1	TANK AS-HYDRAULIC	
	9	1	**374-9830**	2	TREAD-NONSKID	
	10	1	*148-8335*	1	CONNECTOR AS	
		1	**5K-9090**	1	SEAL-O-RING	
		1	**6V-8635**	1	CONNECTOR	
		1	**7M-8485**	1	SEAL-O-RING	
	11	1	*241-6185*	1	PLUG AS	
		1	**3D-2824**	1	SEAL-O-RING	
		1	**5P-9436**	1	PLUG	
	12	1	**3J-1907**	1	SEAL-O-RING	

374-9822 **TANK GP-HYDRAULIC (*contd.*)** **i05295488**

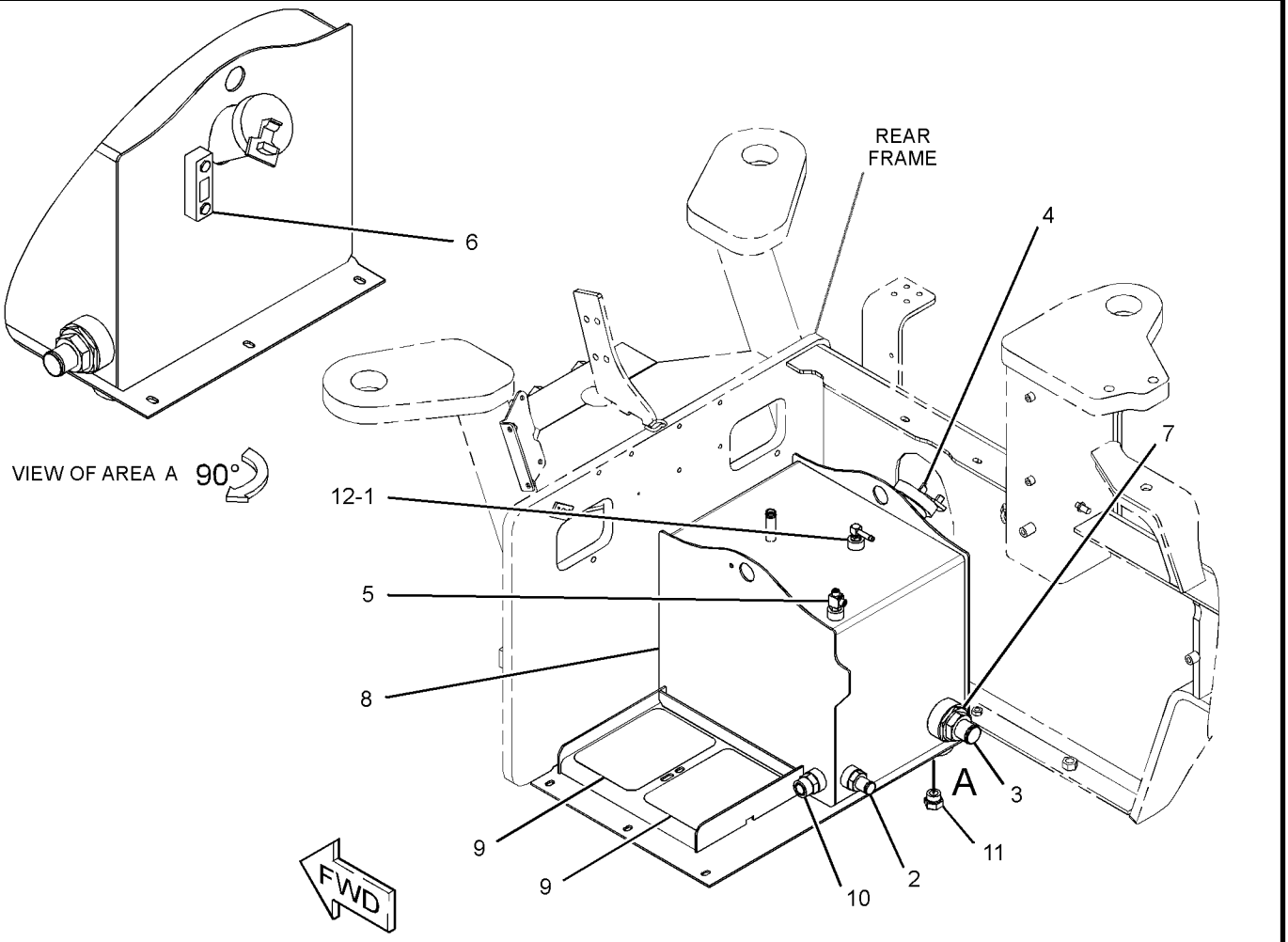

GRAPHIC #1 **<END>** g03074057

374-9823 TANK GP-HYDRAULIC

S/N: MBF1-UP; SDT1-UP

PART OF 374-9821 TANK & MTG GP-HYDRAULIC

SMCS-5056 **i05270681**

NOTE	REF NO	GRAPHIC REF	PART NUMBER	QTY	PART NAME 1 2 3 4 5 6 (PRODUCT LEVEL)	SEE PAGE
	1	1	**5P-4924**	1	ELBOW	
	2	1	*9U-6994*	1	FITTING GP	
		1	**5P-4362**	1	CONNECTOR	
		1	**7M-8485**	1	SEAL-O-RING	
	3	1	*9U-6996*	1	CONNECTOR AS	
		1	**5P-1947**	1	CONNECTOR	
		1	**6K-6307**	1	SEAL-O-RING	
	4	1	**142-8937**	1	CAP AS-FILLER (HYDRAULIC TANK)	
	5	1	**265-5644**	1	GAUGE GP-SIGHT (HYDRAULIC TANK OIL)	
	6	1	**363-3445**	1	STRAINER-SUCTION (HYDRAULIC TANK)	
		1	**030-4606**	1	SEAL-O-RING	
	7	1	**374-9825**	1	TANK AS-HYDRAULIC	
	8	1	**374-9830**	2	TREAD-NONSKID	
	9	1	*148-8335*	1	CONNECTOR AS	
		1	**5K-9090**	1	SEAL-O-RING	
		1	**6V-8635**	1	CONNECTOR	
		1	**7M-8485**	1	SEAL-O-RING	
	10	1	*250-1476*	1	TEE AS	
		1	**3J-1907**	1	SEAL-O-RING	
		1	**4J-5477**	2	SEAL-O-RING	
		1	**086-9035**	1	TEE	
	11	1	*241-6185*	1	PLUG AS	
		1	**3D-2824**	1	SEAL-O-RING	
		1	**5P-9436**	1	PLUG	
	12	1	**3J-1907**	1	SEAL-O-RING	

374-9823 **TANK GP-HYDRAULIC (*contd.*)** **i05270681**

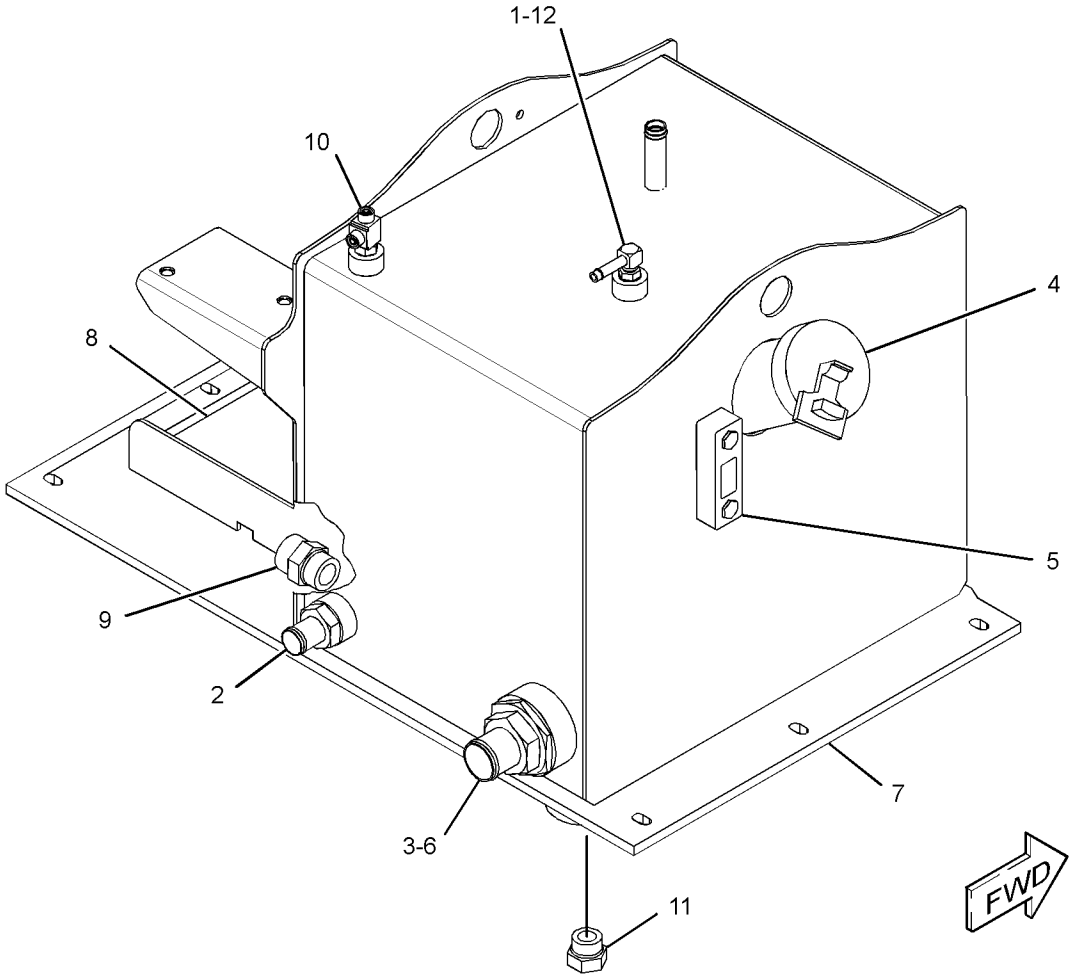

GRAPHIC #1 **<END>** g03098596

378-7699 VALVE & MTG GP-AUXILIARY

S/N: MBF1-UP; M4M1-UP; M5P1-UP; SDT1-UP
PART OF 374-9752 HYDRAULIC AR-AUXILIARY

SMCS-5051 **i05272099**

NOTE	REF NO	GRAPHIC REF	PART NUMBER	QTY	PART NAME 1 2 3 4 5 6 (PRODUCT LEVEL)	SEE PAGE
Y	1	1	**145-7028**	1	SENSOR GP-TEMPERATURE (HYDRAULIC OIL)	150
	2	1	*358-9497*	1	VALVE GP-BYPASS (HYDRAULIC OIL)	
		1	**128-2034**	1	VALVE GP-BYPASS (HYDRAULIC OIL COOLER)	
		1	**207-2055**	1	GASKET	
		1	**358-8236**	1	BODY-VALVE	
	3	1	*148-8335*	2	CONNECTOR AS	
					(EACH INCLUDES)	
		1	**5K-9090**	1	SEAL-O-RING	
		1	**6V-8635**	1	CONNECTOR	
		1	**7M-8485**	1	SEAL-O-RING	
	4	1	*148-8390*	1	ELBOW AS	
		1	**2M-9780**	1	SEAL-O-RING	
		1	**6V-8626**	1	ELBOW	
		1	**7J-9108**	1	SEAL-O-RING	
	5	1	*150-3050*	1	CONNECTOR AS	
		1	**6V-7486**	1	CONNECTOR	
		1	**7M-8485**	1	SEAL-O-RING	
	6	1	*153-6232*	1	ELBOW AS	
		1	**3D-2824**	1	SEAL-O-RING	
		1	**7J-9108**	1	SEAL-O-RING	
		1	**8T-0120**	1	ELBOW	
	7	1	*155-3503*	1	TEE AS	
		1	**2M-9780**	1	SEAL-O-RING	
		1	**6V-8776**	1	TEE-FACE SEAL	
		1	**7J-9108**	2	SEAL-O-RING	
	8	1	**7J-0204**	1	SEAL-O-RING	
	9	1	**8T-4121**	2	WASHER-HARD (11X21X2.5-MM THK)	
M	10	1	**8T-5005**	2	BOLT (M10X1.5X70-MM)	

M - METRIC PART
Y - SEPARATE ILLUSTRATION

378-7699 **VALVE & MTG GP-AUXILIARY (*contd.*)** **i05272099**

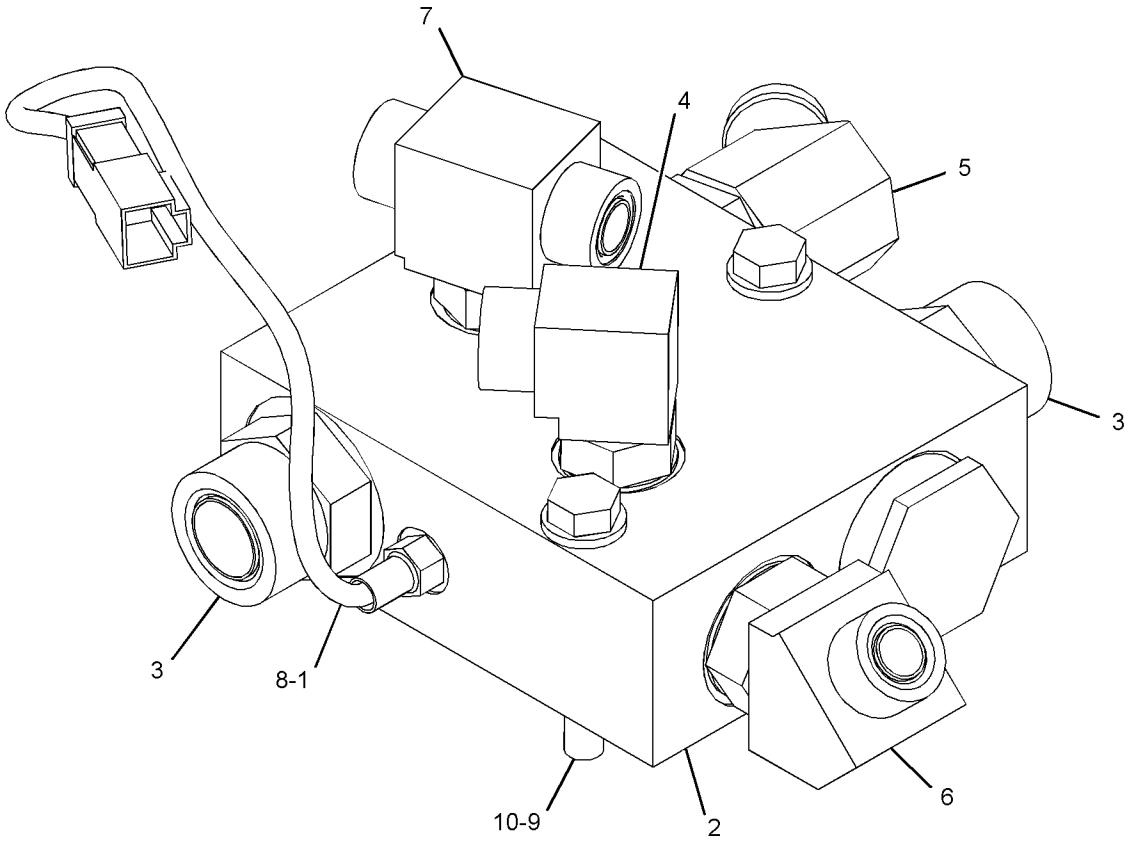

GRAPHIC #1 **<END>** g03104425

377-4608 VALVE & MTG GP-CONTROL–SHIFT

S/N: MBF1-UP; M4M1-UP; M5P1-UP; SDT1-UP
PART OF 374-9742, 374-9743, 374-9756 HYDRAULIC AR

SMCS-5051 **i05270800**

NOTE	REF NO	GRAPHIC REF	PART NUMBER	QTY	PART NAME 1 2 3 4 5 6 (PRODUCT LEVEL)	SEE PAGE
Y	1	1	**276-2609**	1	VALVE GP-SHIFT PRESSURE	256
	2	1	*148-8325*	1	CONNECTOR AS	
		1	**3J-1907**	1	SEAL-O-RING	
		1	**4J-5477**	1	SEAL-O-RING	
		1	**6V-8641**	1	CONNECTOR	
	3	1	*148-8368*	2	ELBOW AS	
					(EACH INCLUDES)	
		1	**3J-1907**	1	SEAL-O-RING	
		1	**4J-5477**	1	SEAL-O-RING	
		1	**6V-8627**	1	ELBOW	
	4	1	*148-8448*	1	TEE AS	
		1	**4J-5477**	2	SEAL-O-RING	
		1	**6V-9842**	1	TEE-SWIVEL	
M	5	1	**8C-8451**	2	BOLT (M6X1X40-MM)	
	6	1	**9X-8256**	2	WASHER (6.6X12X2-MM THK)	

M - METRIC PART
Y - SEPARATE ILLUSTRATION

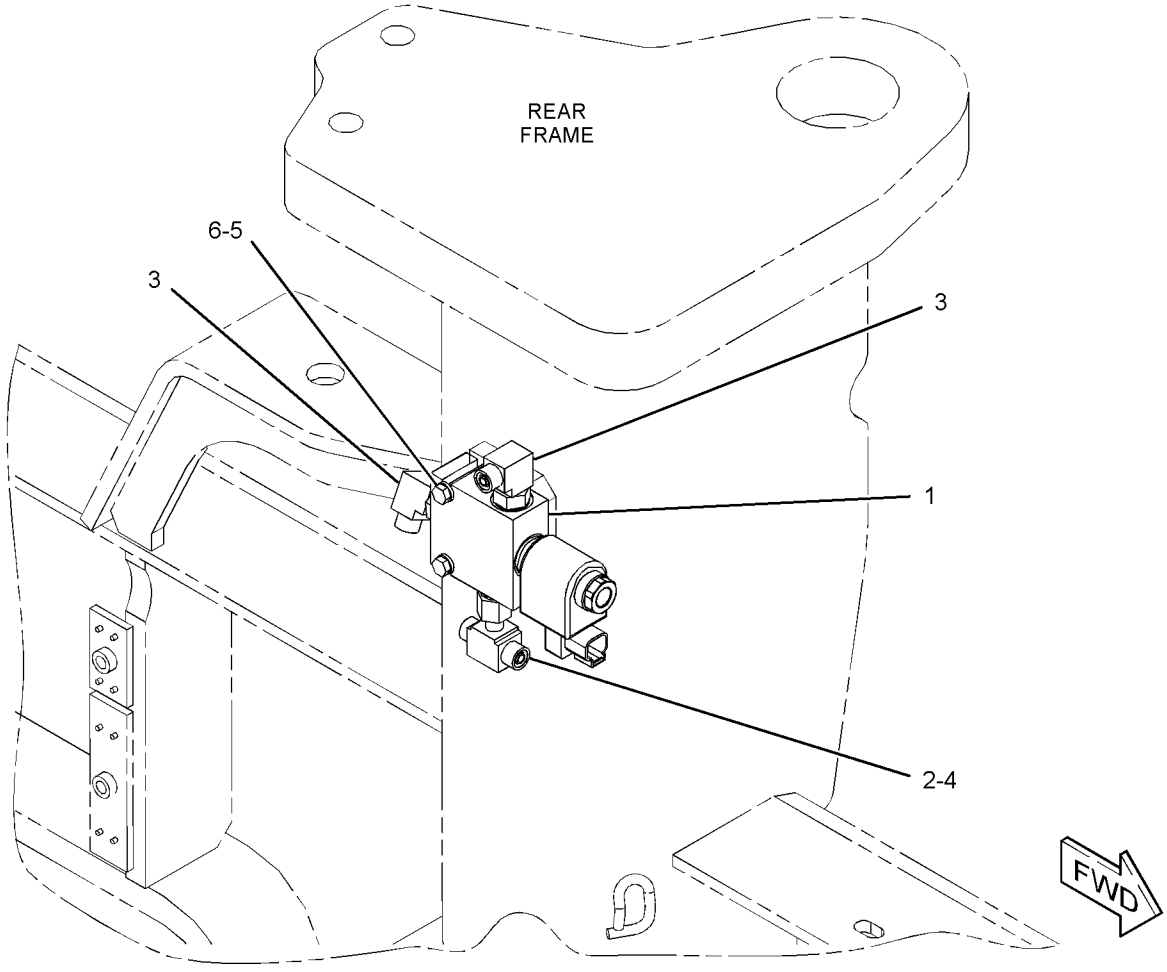

GRAPHIC #1 **<END>** g03078936

369-4728 VALVE GP-FLUSHING–PROPEL MOTOR

S/N: MBF1-UP; M4M1-UP; M5P1-UP; SDT1-UP
PART OF 353-5924, 353-5925 MOTOR GP-PISTON

SMCS-5051, 5058, 5066 **i05270705**

NOTE	REF NO	GRAPHIC REF	PART NUMBER	QTY	PART NAME 1 2 3 4 5 6 (PRODUCT LEVEL)	SEE PAGE
	1	1	**124-9899**	2	SPACER	
	2	1	**139-7761**	1	SPOOL	
	3	1	**124-9900**	2	SPRING	
	4	1	**124-9891**	2	PLUG	
	5	1	**5J-2974**	2	SEAL-O-RING	
	6	1	**124-9898**	1	PLUG	
	7	1	**124-9906**	1	SHIM (0.5-MM THK)	
	8	1	**124-9904**	1	SHIM (1-MM THK)	
	9	1	**124-9905**	1	SHIM (0.3-MM THK)	
	10	1	**124-9901**	1	SPRING	
	11	1	**6V-8351**	1	SEAL-O-RING	
	12	1	**124-9896**	1	VALVE-PISTON (PROPEL MOTOR)	
	13	1	**373-2010**	1	ORIFICE	
	14	1	**125-4572**	1	RING-RETAINING	
M	15	1	**8T-8442**	4	BOLT-SOCKET HEAD (M6X1X30-MM)	

M - METRIC PART

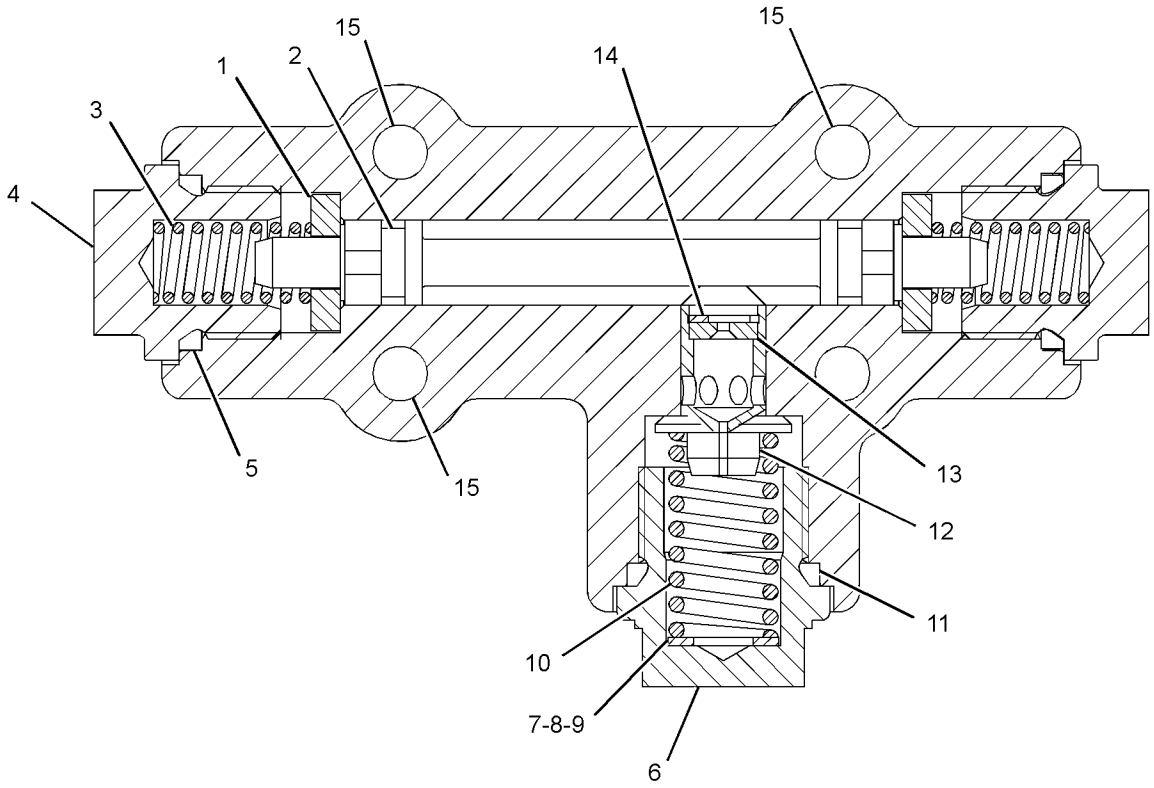

GRAPHIC #1 **<END>** g02770620

320-2377 VALVE GP-PUMP CONTROL

S/N: MBF1-UP; M4M1-UP; M5P1-UP; SDT1-UP
PART OF 389-8425 PUMP GP-PISTON
AN ATTACHMENT

SMCS-5455 **i05291083**

NOTE	REF NO	GRAPHIC REF	PART NUMBER	QTY	PART NAME 1 2 3 4 5 6 (PRODUCT LEVEL)	SEE PAGE
	1	1	**321-5984**	2	COIL-SOLENOID	
	2	1	**160-1757**	1	PLUG	
M	3	1	**8C-6965**	3	BOLT-SOCKET HEAD (M6X1X45-MM)	
	4	1	**192-1173**	1	BODY	
M	5	1	**9X-2537**	2	BOLT-SOCKET HEAD (M6X1X70-MM)	
	6	1	**106-5618**	2	SPRING	
	7	1	**192-1172**	2	RETAINER	
	8	1	**5P-5874**	1	SEAL-O-RING	
	9	1	**120-4394**	2	PLUG-BREAK OFF	
	10	1	**209-3565**	1	SEAL	
					PARTS SHOWN IN GRAPHIC(S) WITHOUT A REFERENCE NUMBER ARE NOT SERVICED SEPARATELY	

M - METRIC PART

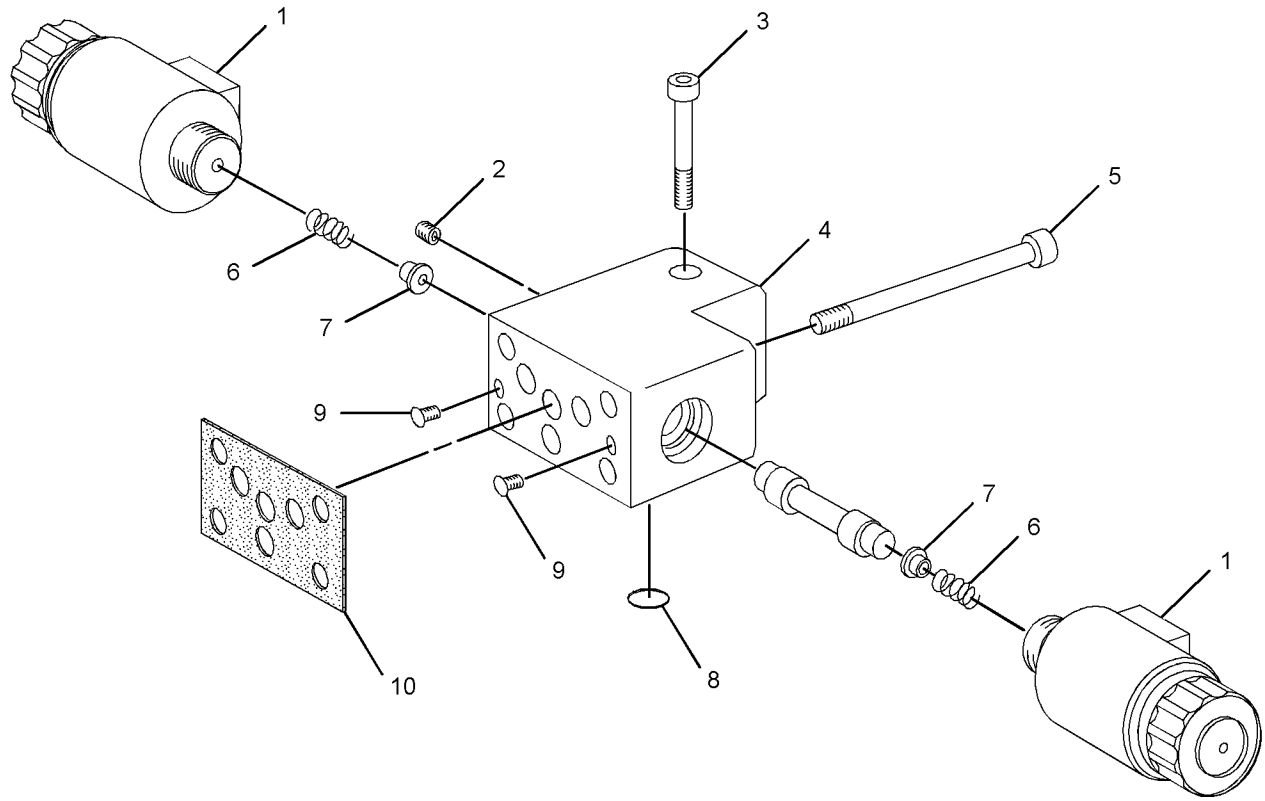

GRAPHIC #1 **<END>** g01526452

361-3935 VALVE GP-PUMP CONTROL

S/N: MBF1-UP; M4M1-UP; M5P1-UP; SDT1-UP
PART OF 389-8426 PUMP GP-PISTON
AN ATTACHMENT

SMCS-5455 **i05294842**

NOTE	REF NO	GRAPHIC REF	PART NUMBER	QTY	PART NAME 1 2 3 4 5 6 (PRODUCT LEVEL)	SEE PAGE
J	1	1	**209-3565**	1	SEAL	
B	2	1	**233-9808**	1	SHIM (0.6-MM THK)	
B	3	1	**216-4554**	1	SHIM (1.4-MM THK)	
B	4	1	**216-4553**	1	SHIM (1.2-MM THK)	
B	5	1	**216-4552**	1	SHIM (1-MM THK)	
B	6	1	**216-4551**	1	SHIM (0.8-MM THK)	
B	7	1	**216-4555**	1	SHIM (1.6-MM THK)	
	8	1	**202-6535**	2	PIN	
	9	1	**316-5999**	2	SOLENOID AS (PUMP CONTROL VALVE)	
	10	1	**215-8014**	1	KIT-LEVER	
					(INCLUDES LEVERS)	
	11	1	**301-3424**	1	KIT-COVER	
					(INCLUDES COVER, FILTER, O-RING SEALS & SEALS)	
M	12	1	**8T-2922**	4	BOLT-SOCKET HEAD (M6X1X65-MM)	
M	13	1	**196-9445**	1	BOLT-SOCKET HEAD (M6X1X45-MM)	
J	14	1	**352-4703**	1	GASKET	
	15	1	**277-6631**	1	SPRING	
	16	1	**215-8010**	1	SHIM (3-MM THK)	
	17	1	**215-8011**	1	BOLT-SPECIAL	
	18	1	**337-9102**	1	PIN-ECCENTRIC	
J	19	1	**6H-9691**	1	SEAL-O-RING	
					PARTS SHOWN IN GRAPHIC(S) WITHOUT A REFERENCE NUMBER ARE NOT SERVICED SEPARATELY	
					AVAILABLE REPAIR KIT(S):	
J			**361-3937**	1	KIT-SEAL	
					(ALSO INCLUDES O-RING SEALS, NUTS, RETAINING RING, BACKUP RINGS, RING AS, RING, SHAFT SEAL, SEALS, GASKET & PARTS	
					MARKED J IN THE GRAPHIC)	

B - USE AS REQUIRED
J - KIT MARKED J SERVICES PARTS MARKED J
M - METRIC PART

361-3935 **VALVE GP-PUMP CONTROL (*contd.*)** **i05294842**

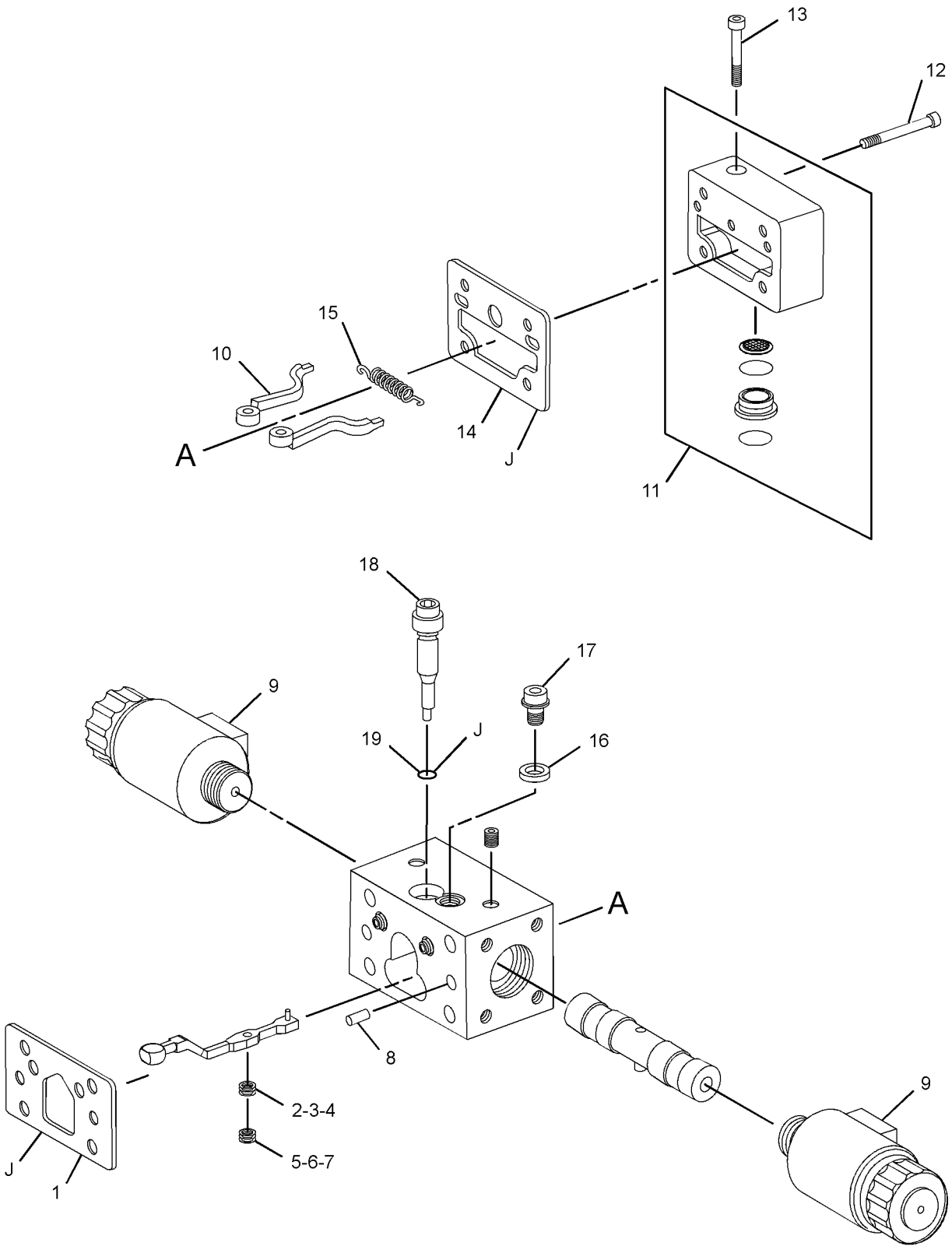

GRAPHIC #1 **<END>** g02431557

382-9228 VALVE GP-PUMP CONTROL

S/N: MBF1-UP; M4M1-UP; M5P1-UP; SDT1-UP
PART OF 351-8597 PUMP GP-PISTON

SMCS-5455 **i05270748**

NOTE	REF NO	GRAPHIC REF	PART NUMBER	QTY	PART NAME 1 2 3 4 5 6 (PRODUCT LEVEL)	SEE PAGE
	1	1	**316-5999**	2	SOLENOID AS (PUMP CONTROL VALVE)	
	2	1	**202-6535**	2	PIN	
	3	1	**382-9274**	1	GASKET	
	4	1	**382-9276**	1	GASKET	
	5	1	**215-8011**	1	BOLT-SPECIAL	
	6	1	**9N-1749**	1	SEAL-O-RING	
B	7	1	**233-9808**	1	SHIM (0.6-MM THK)	
B	8	1	**216-4553**	1	SHIM (1.2-MM THK)	
B	9	1	**216-4552**	1	SHIM (1-MM THK)	
B	10	1	**216-4555**	1	SHIM (1.6-MM THK)	
B	11	1	**216-4554**	1	SHIM (1.4-MM THK)	
B	12	1	**216-4551**	1	SHIM (0.8-MM THK)	
M	13	1	**8T-9534**	4	BOLT (M6X1X50-MM)	

B - USE AS REQUIRED
M - METRIC PART

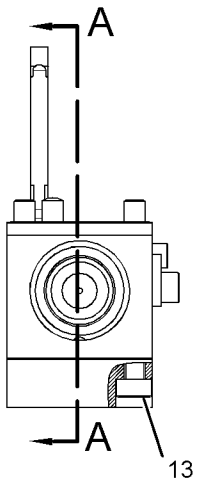

VIEW C-C

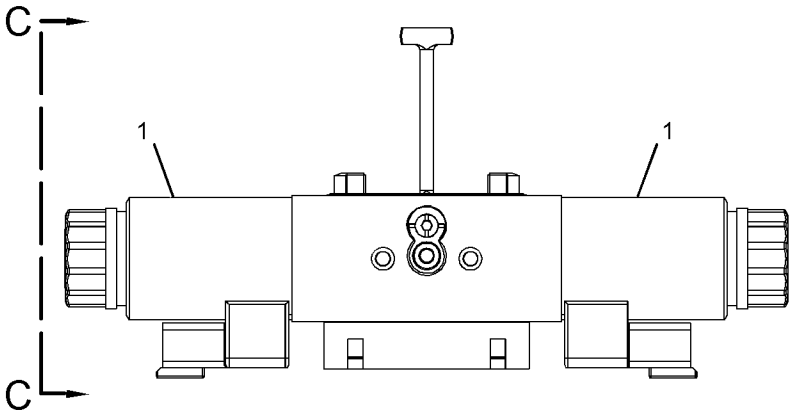

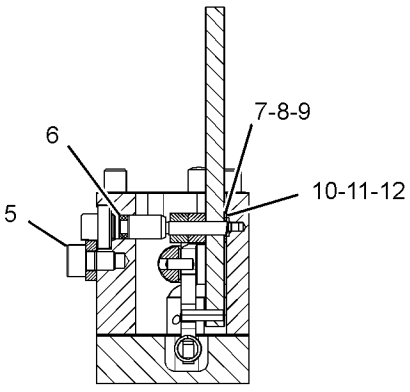

SECTION B-B

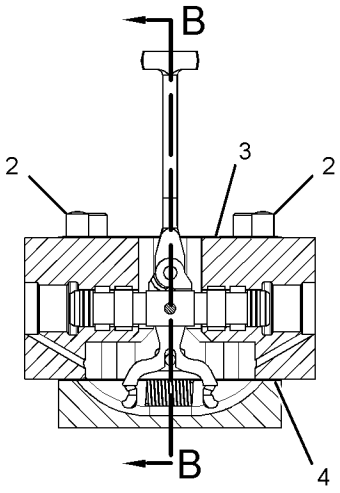

SECTION A-A

GRAPHIC #1 **<END>** g03057296

378-8982 BLADE AR—WITHOUT BLADE

S/N: M4M1-UP; M5P1-UP
AN ATTACHMENT

SMCS-6060 **i05294810**

NOTE	PART NUMBER	QTY	PART NAME 1 2 3 4 5 6 (PRODUCT LEVEL)	SEE PAGE
Y	*361-9529*	1	BLADE GP-COMPACTOR	389
Y	*379-0028*	1	CONTROL GP-BLADE	423
Y	*378-8883*	1	LINES GP-AUXILIARY HYDRAULIC	334
Y	*378-8881*	1	LINES GP-BLADE	339

Y - SEPARATE ILLUSTRATION

<END>

378-8983 BLADE AR—WITH BLADE

S/N: MBF1-UP; SDT1-UP
AN ATTACHMENT

SMCS-6060 **i05297375**

NOTE	PART NUMBER	QTY	PART NAME 1 2 3 4 5 6 (PRODUCT LEVEL)	SEE PAGE
Y	*357-4866*	1	BLADE GP-LEVELING	387
Y	*379-0028*	1	CONTROL GP-BLADE	423
Y	*378-8883*	1	LINES GP-AUXILIARY HYDRAULIC	334
Y	*378-8882*	1	LINES GP-BLADE	341

Y - SEPARATE ILLUSTRATION

<END>

378-8985 BLADE AR—WITHOUT BLADE

S/N: MBF1-UP; M4M1-UP; M5P1-UP; SDT1-UP
PART OF 415-9361, 415-9367 DISTRIBUTION AR
AN ATTACHMENT

SMCS-6060 **i05294811**

NOTE	PART NUMBER	QTY	PART NAME 1 2 3 4 5 6 (PRODUCT LEVEL)	SEE PAGE
Y	*374-9675*	1	FASTENER GP	499
Y	*378-9026*	1	LINES GP-AUXILIARY HYDRAULIC	336

Y - SEPARATE ILLUSTRATION

<END>

433-4458 BLADE AR

S/N: M4M1-UP; M5P1-UP
AN ATTACHMENT

SMCS-6060 **i05293732**

NOTE	PART NUMBER	QTY	PART NAME 1 2 3 4 5 6 (PRODUCT LEVEL)	SEE PAGE
Y	*361-9529*	1	BLADE GP-COMPACTOR	389
Y	*379-0028*	1	CONTROL GP-BLADE	423
Y	*433-3673*	1	LINES GP-AUXILIARY HYDRAULIC (BLADE)	338
Y	*378-8881*	1	LINES GP-BLADE	339

Y - SEPARATE ILLUSTRATION

<END>

433-4459 BLADE AR

S/N: MBF1-UP; SDT1-UP
AN ATTACHMENT

SMCS-6060 **i05297388**

NOTE	REF NO	GRAPHIC REF	PART NUMBER	QTY	PART NAME 1 2 3 4 5 6 (PRODUCT LEVEL)	SEE PAGE
Y	1	1	*357-4866*	1	BLADE GP-LEVELING	387
Y	2	1	*378-8882*	1	LINES GP-BLADE	341
Y	3	1	*379-0028*	1	CONTROL GP-BLADE	423
Y	4	1	*433-3673*	1	LINES GP-AUXILIARY HYDRAULIC (BLADE)	338

Y - SEPARATE ILLUSTRATION

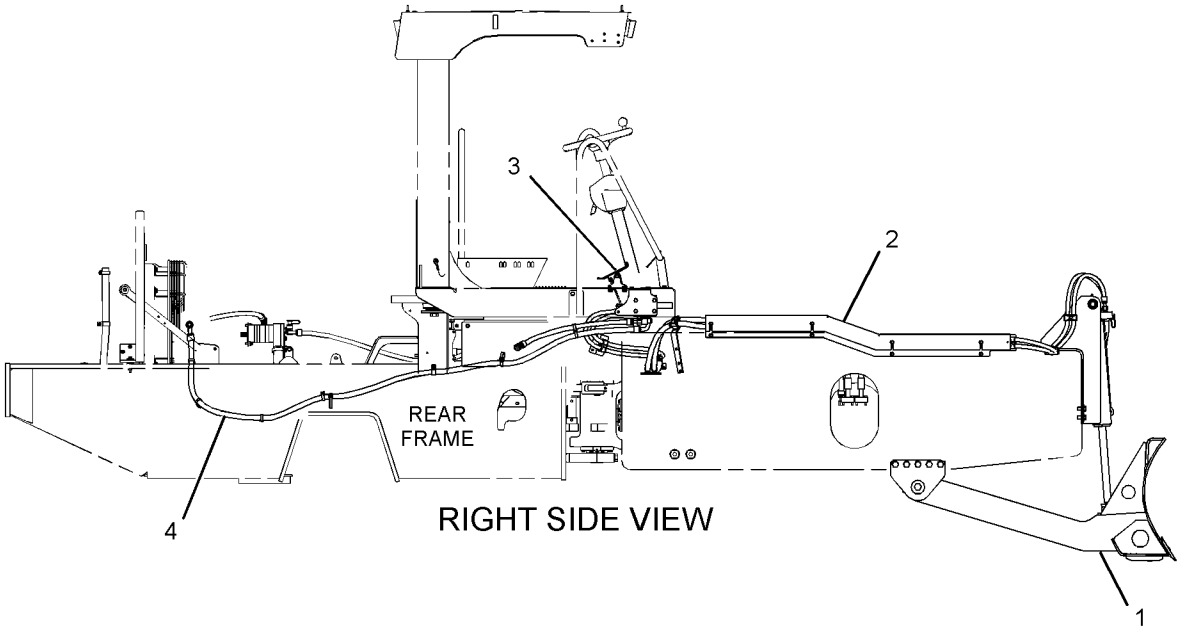

RIGHT SIDE VIEW

GRAPHIC #1 **<END>** g03384089

357-4866 BLADE GP-LEVELING

S/N: MBF1-UP; SDT1-UP
PART OF 378-8983, 433-4459 BLADE AR
AN ATTACHMENT

SMCS-6060 **i05289842**

NOTE	REF NO	GRAPHIC REF	PART NUMBER	QTY	PART NAME 1 2 3 4 5 6 (PRODUCT LEVEL)	SEE PAGE
	1	1	**1D-4649**	1	BOLT (1-1/4-7X10-IN)	
	2	1	**2J-5997**	2	LOCKNUT (1-1/4-7-THD)	
	3	1	**3B-8489**	3	FITTING-GREASE	
	4	1	**3E-9861**	24	LOCKNUT (5/8-11-THD)	
M	5	1	**6V-7676**	2	NUT (M24X3-THD)	
	6	1	**7X-8086**	4	SUPPORT AS-BLADE	
B	7	1	**7X-8087**	4	SHIM (1.52-MM THK)	
	8	1	**7X-8093**	2	SPACER (60.3X75X9.65-MM THK)	
	9	1	**7X-8115**	4	WASHER (25.4X76.2X6.35-MM THK)	
	10	1	**8G-4189**	2	BEARING-SELF-ALIGNING	
	11	1	**9X-6496**	4	RING-RETAINING	
	12	1	**077-5470**	1	BUSHING-TERMINAL	
Y	13	1	**419-9380**	1	CYLINDER GP-HYDRAULIC (BLADE LIFT)	326
	14	1	**362-0148**	2	TUBE	
	15	1	**362-0149**	2	SPACER (60X72X32-MM THK)	
	16	1	**362-0150**	1	MOUNT AS	
	17	1	**364-1950**	1	BLADE AS	
	18	1	**364-1956**	2	EDGE-CUTTING	
	19	1	**090-8865**	10	SPACER (17X40X3-MM THK)	
	20	1	**146-3148**	2	EDGE-CUTTING	
	21	1	**4F-3654**	16	BOLT-PLOW (5/8-11X2-IN)	
	22	1	**4F-3656**	8	BOLT-PLOW (5/8-11X2.5-IN)	
M	23	1	**6V-7688**	10	LOCKNUT (M20X2.5-THD)	
	24	1	**7X-0429**	1	BOLT (1-1/4-7X4.5-IN)	
	25	1	**7X-0533**	4	WASHER-HARD (34X55X6-MM THK)	
M	26	1	**7X-2465**	2	BOLT (M24X3X180-MM)	
M	27	1	**7X-2488**	10	BOLT (M20X2.5X160-MM)	
	28	1	**8T-4122**	24	WASHER-HARD (17X32X3.5-MM THK)	
	29	1	**8T-4123**	10	WASHER (22X35X3.5-MM THK)	
M	30	1	**8T-4779**	10	BOLT (M16X2X35-MM)	

B - USE AS REQUIRED
M - METRIC PART
Y - SEPARATE ILLUSTRATION

357-4866 **BLADE GP-LEVELING (*contd.*)** **i05289842**

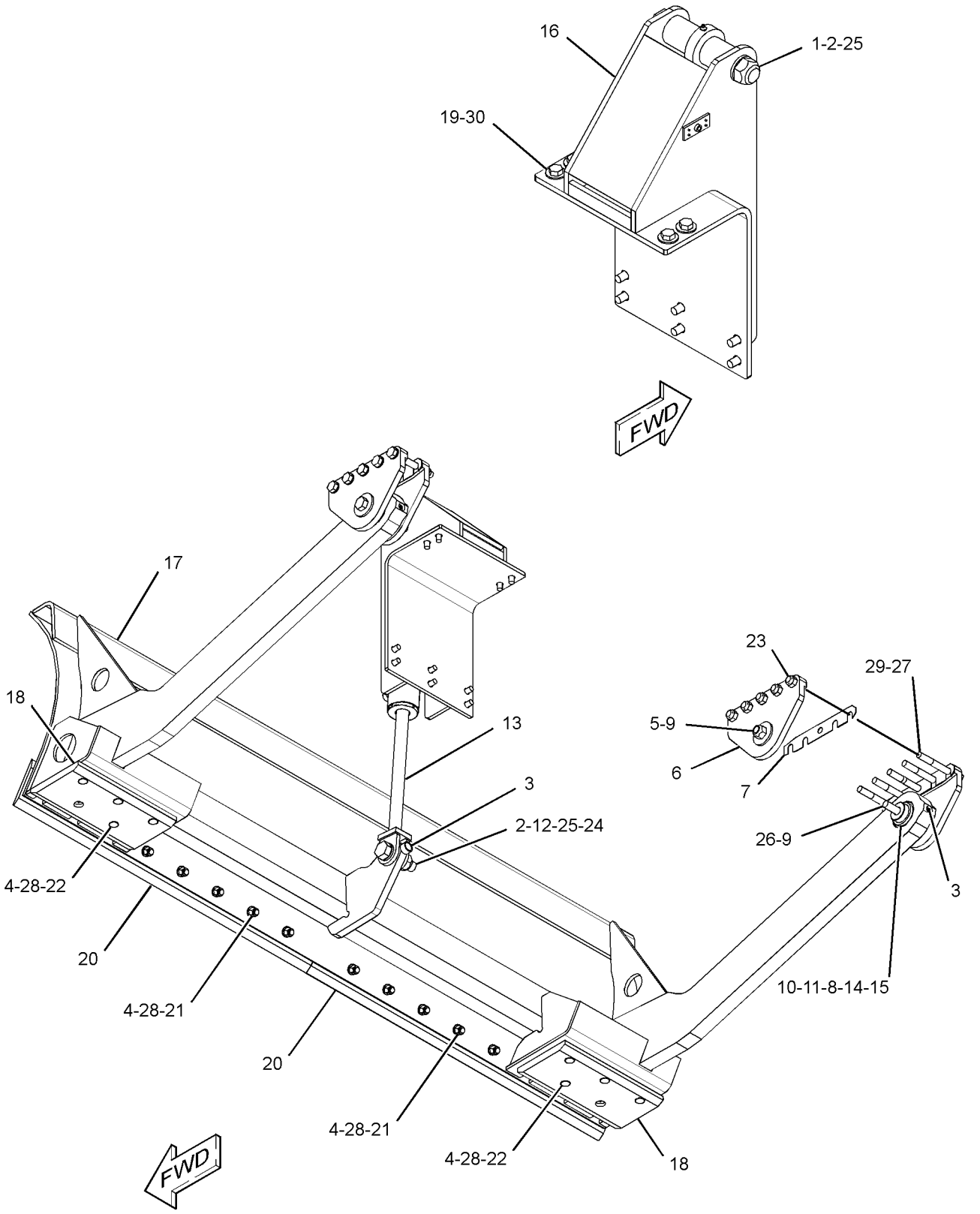

GRAPHIC #1 **<END>** g02730890

361-9529 BLADE GP-COMPACTOR

S/N: M4M1-UP; M5P1-UP
PART OF 378-8982, 433-4458 BLADE AR
AN ATTACHMENT

SMCS-6060 **i05293742**

NOTE	REF NO	GRAPHIC REF	PART NUMBER	QTY	PART NAME 1 2 3 4 5 6 (PRODUCT LEVEL)	SEE PAGE
	1	1	**1D-4649**	1	BOLT (1-1/4-7X10-IN)	
	2	1	**2J-5997**	2	LOCKNUT (1-1/4-7-THD)	
	3	1	**3B-8489**	3	FITTING-GREASE	
	4	1	**3E-9861**	24	LOCKNUT (5/8-11-THD)	
M	5	1	**6V-7676**	2	NUT (M24X3-THD)	
	6	1	**7X-8086**	4	SUPPORT AS-BLADE	
B	7	1	**7X-8087**	4	SHIM (1.52-MM THK)	
	8	1	**7X-8092**	2	TUBE	
	9	1	**7X-8093**	4	SPACER (60.3X75X9.65-MM THK)	
	10	1	**7X-8115**	4	WASHER (25.4X76.2X6.35-MM THK)	
	11	1	**8G-4189**	2	BEARING-SELF-ALIGNING	
	12	1	**9X-6496**	4	RING-RETAINING	
	13	1	**077-5470**	1	BUSHING-TERMINAL	
Y	14	1	**419-9380**	1	CYLINDER GP-HYDRAULIC (BLADE LIFT)	326
	15	1	**351-7975**	1	MOUNT AS	
	16	1	**357-4867**	1	BLADE AS	
	17	1	**364-1956**	2	EDGE-CUTTING	
	18	1	**090-8865**	10	SPACER (17X40X3-MM THK)	
	19	1	**146-3148**	2	EDGE-CUTTING	
	20	1	**4F-3654**	16	BOLT-PLOW (5/8-11X2-IN)	
	21	1	**4F-3656**	8	BOLT-PLOW (5/8-11X2.5-IN)	
M	22	1	**6V-7688**	10	LOCKNUT (M20X2.5-THD)	
	23	1	**7X-0429**	1	BOLT (1-1/4-7X4.5-IN)	
	24	1	**7X-0533**	4	WASHER-HARD (34X55X6-MM THK)	
M	25	1	**8C-3290**	2	BOLT (M24X3X150-MM)	
M	26	1	**8C-8478**	10	BOLT (M20X2.5X140-MM)	
	27	1	**8T-4122**	24	WASHER-HARD (17X32X3.5-MM THK)	
	28	1	**8T-4123**	10	WASHER (22X35X3.5-MM THK)	
M	29	1	**8T-4779**	10	BOLT (M16X2X35-MM)	

B - USE AS REQUIRED
M - METRIC PART
Y - SEPARATE ILLUSTRATION

361-9529 **BLADE GP-COMPACTOR (*contd.*)** **i05293742**

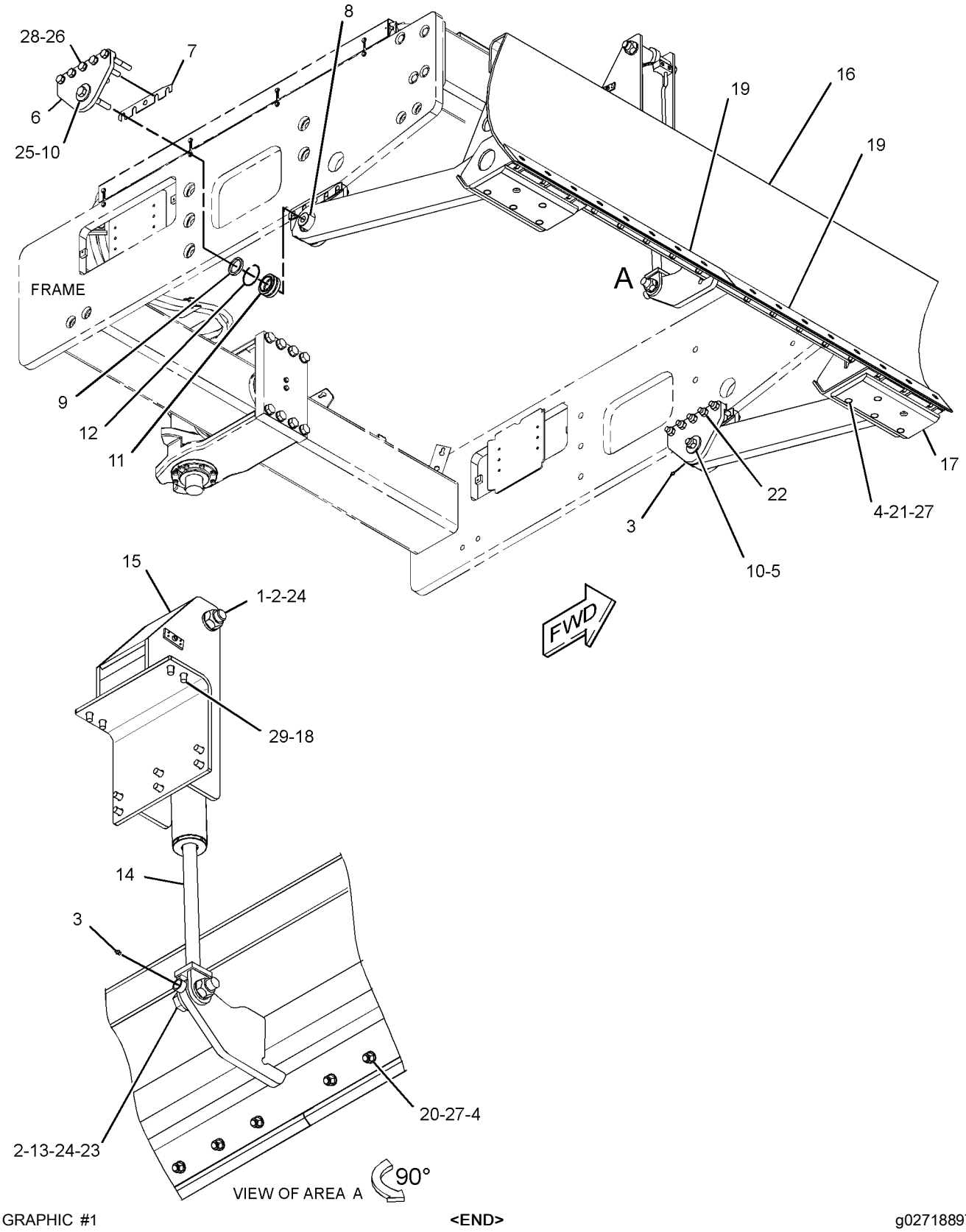

GRAPHIC #1 **<END>** g02718897

355-4635 DRIVE GP-SUPPORT & VIBRATORY

S/N: MBF1-UP

PART OF 355-4636 POWER TRAIN AR

SMCS-6605, 6606 **i05297392**

NOTE	REF NO	GRAPHIC REF	PART NUMBER	QTY	PART NAME 1 2 3 4 5 6 (PRODUCT LEVEL)	SEE PAGE
	1	1	**141-2074**	1	PLATE	
	2	1	**145-3361**	1	PLATE AS	
	3	1	**145-3362**	1	PLATE AS	
	4	1	**155-4850**	1	SHAFT AS	
Y	5	1	**159-9405**	1	SUPPORT GP-VIBRATORY	408
	6	1	**227-0172**	10	MOUNT	
	7	1	**372-8209**	1	PLATE AS	
	8	1	**061-9458**	1	SEAL-O-RING	
	9	1	**5P-5397**	1	SEAL-O-RING	
M	10	1	**7X-2553**	8	BOLT (M16X2X40-MM)	
M	11	1	**7X-2562**	18	BOLT (M20X2.5X45-MM)	
	12	1	**8T-4123**	30	WASHER (22X35X3.5-MM THK)	
M	13	1	**8T-5460**	10	BOLT (M20X2.5X40-MM)	
M	14	1	**8T-6430**	2	BOLT (M20X2.5X50-MM)	
	15	1	**9X-8257**	8	WASHER (17.5X30X3.5-MM THK)	

M - METRIC PART
Y - SEPARATE ILLUSTRATION

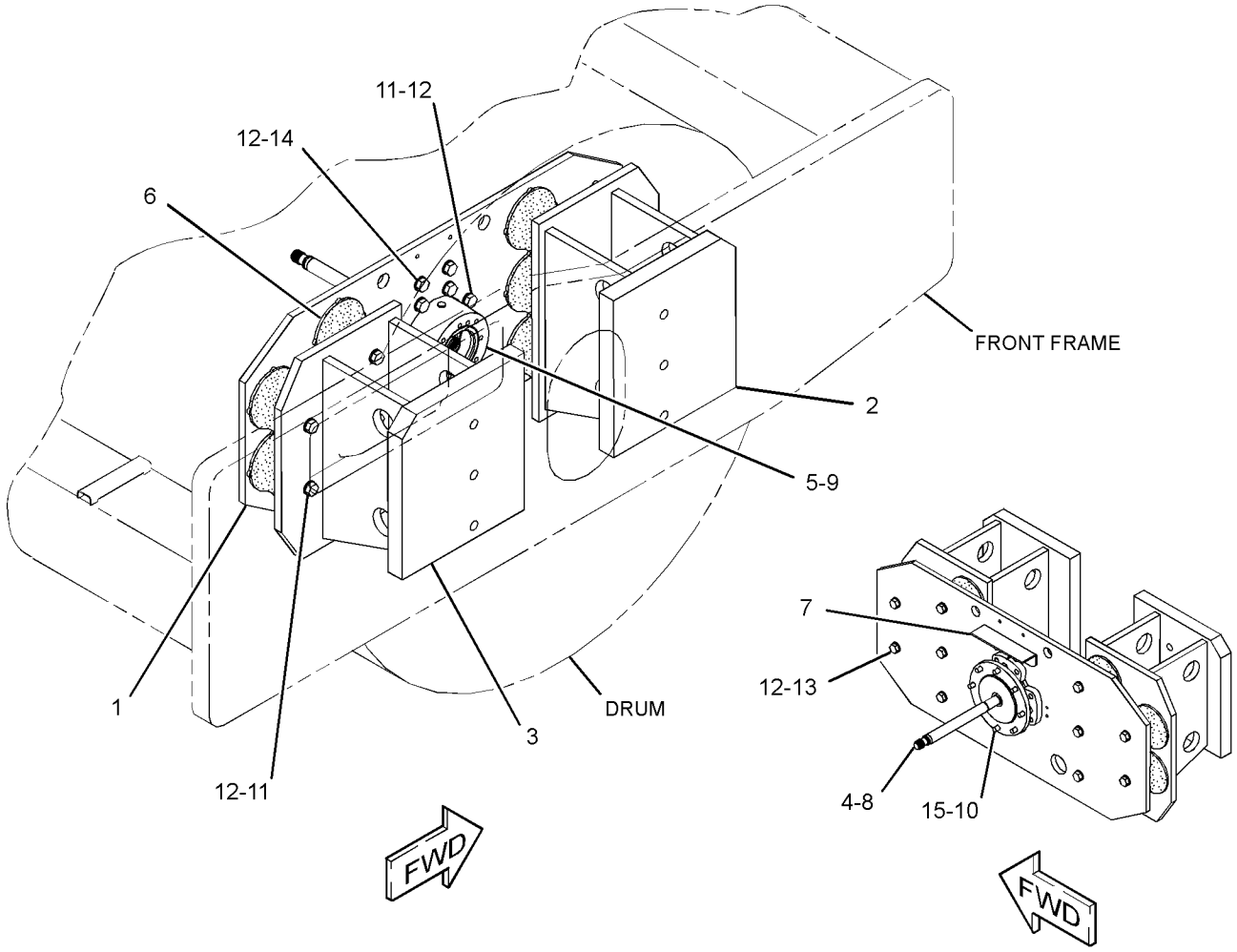

GRAPHIC #1 **<END>** g02730905

356-1421 DRIVE GP-SUPPORT & VIBRATORY

S/N: M4M1-UP; M5P1-UP

PART OF 374-9763, 374-9764 POWER TRAIN AR

SMCS-6605, 6606 **i05291285**

NOTE	REF NO	GRAPHIC REF	PART NUMBER	QTY	PART NAME 1 2 3 4 5 6 (PRODUCT LEVEL)	SEE PAGE
	1	1	**152-1261**	1	BRACKET	
	2	1	**155-4850**	1	SHAFT AS	
Y	3	1	**159-9405**	1	SUPPORT GP-VIBRATORY	408
	4	1	**344-1401**	1	PLATE	
	5	1	**227-0172**	6	MOUNT	
	6	1	**362-3218**	2	BRACKET	
	7	1	**061-9458**	1	SEAL-O-RING	
	8	1	**5P-5397**	1	SEAL-O-RING	
M	9	1	**7X-2553**	8	BOLT (M16X2X40-MM)	
	10	1	**8T-4123**	20	WASHER (22X35X3.5-MM THK)	
M	11	1	**8T-5460**	12	BOLT (M20X2.5X40-MM)	
M	12	1	**8T-6430**	8	BOLT (M20X2.5X50-MM)	
	13	1	**9X-8257**	8	WASHER (17.5X30X3.5-MM THK)	

M - METRIC PART
Y - SEPARATE ILLUSTRATION

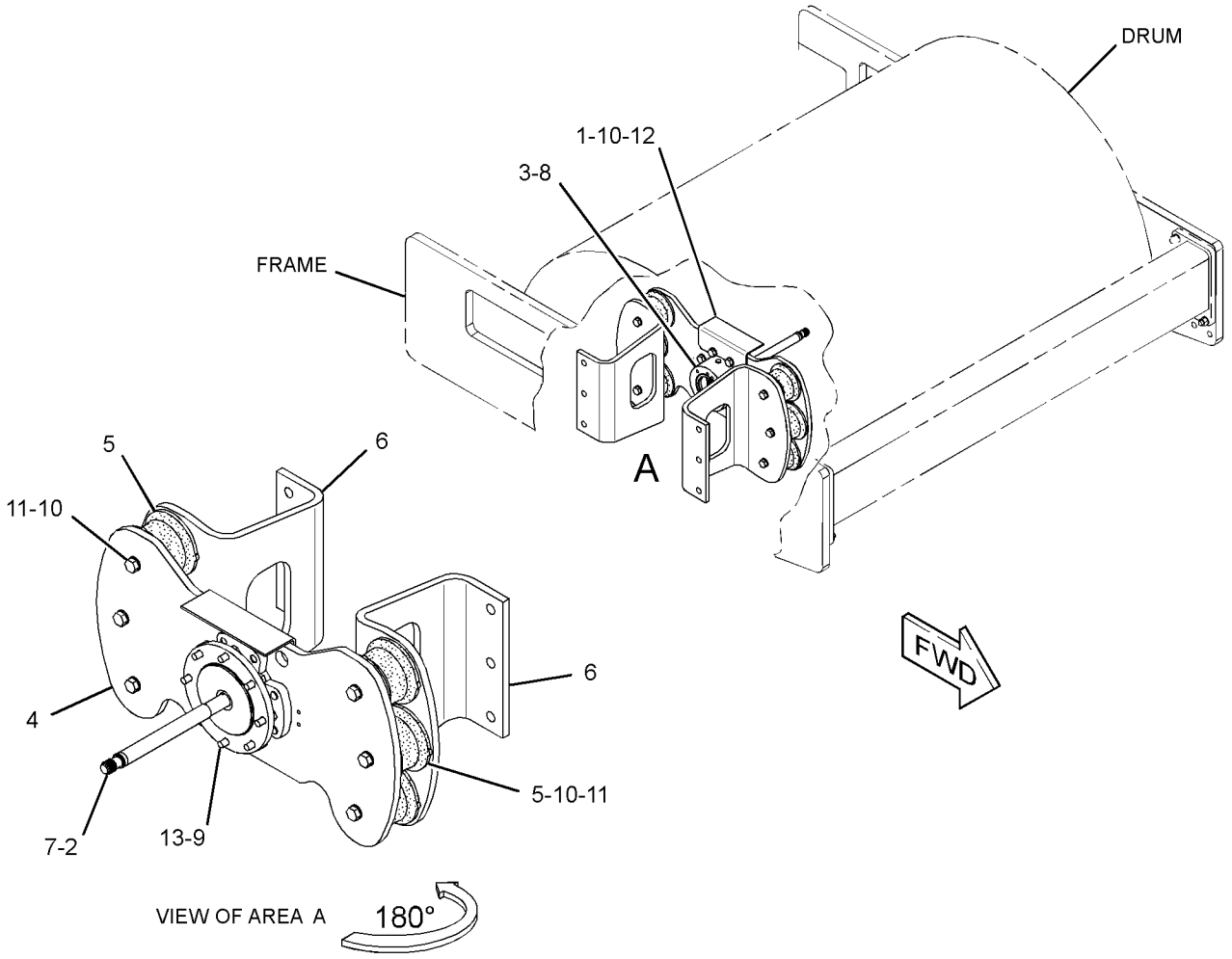

GRAPHIC #1 **<END>** g02715419

356-1806 DRIVE GP-SUPPORT & VIBRATORY

S/N: SDT1-UP

PART OF 355-4637 POWER TRAIN AR

SMCS-6605, 6606 **i05298356**

NOTE	REF NO	GRAPHIC REF	PART NUMBER	QTY	PART NAME 1 2 3 4 5 6 (PRODUCT LEVEL)	SEE PAGE
	1	1	**155-4850**	1	SHAFT AS	
Y	2	1	**159-9405**	1	SUPPORT GP-VIBRATORY	408
	3	1	**219-2305**	1	PLATE	
	4	1	**219-2306**	1	PLATE AS	
	5	1	**219-2307**	1	PLATE AS	
	6	1	**235-5027**	10	MOUNT	
	7	1	**372-8209**	1	PLATE AS	
	8	1	**061-9458**	1	SEAL-O-RING	
	9	1	**5P-5397**	1	SEAL-O-RING	
M	10	1	**6V-6787**	2	BOLT (M20X2.5X55-MM)	
M	11	1	**7X-2553**	8	BOLT (M16X2X40-MM)	
M	12	1	**7X-2562**	18	BOLT (M20X2.5X45-MM)	
	13	1	**8T-4123**	30	WASHER (22X35X3.5-MM THK)	
M	14	1	**8T-5460**	10	BOLT (M20X2.5X40-MM)	
	15	1	**9X-8257**	8	WASHER (17.5X30X3.5-MM THK)	

M - METRIC PART
Y - SEPARATE ILLUSTRATION

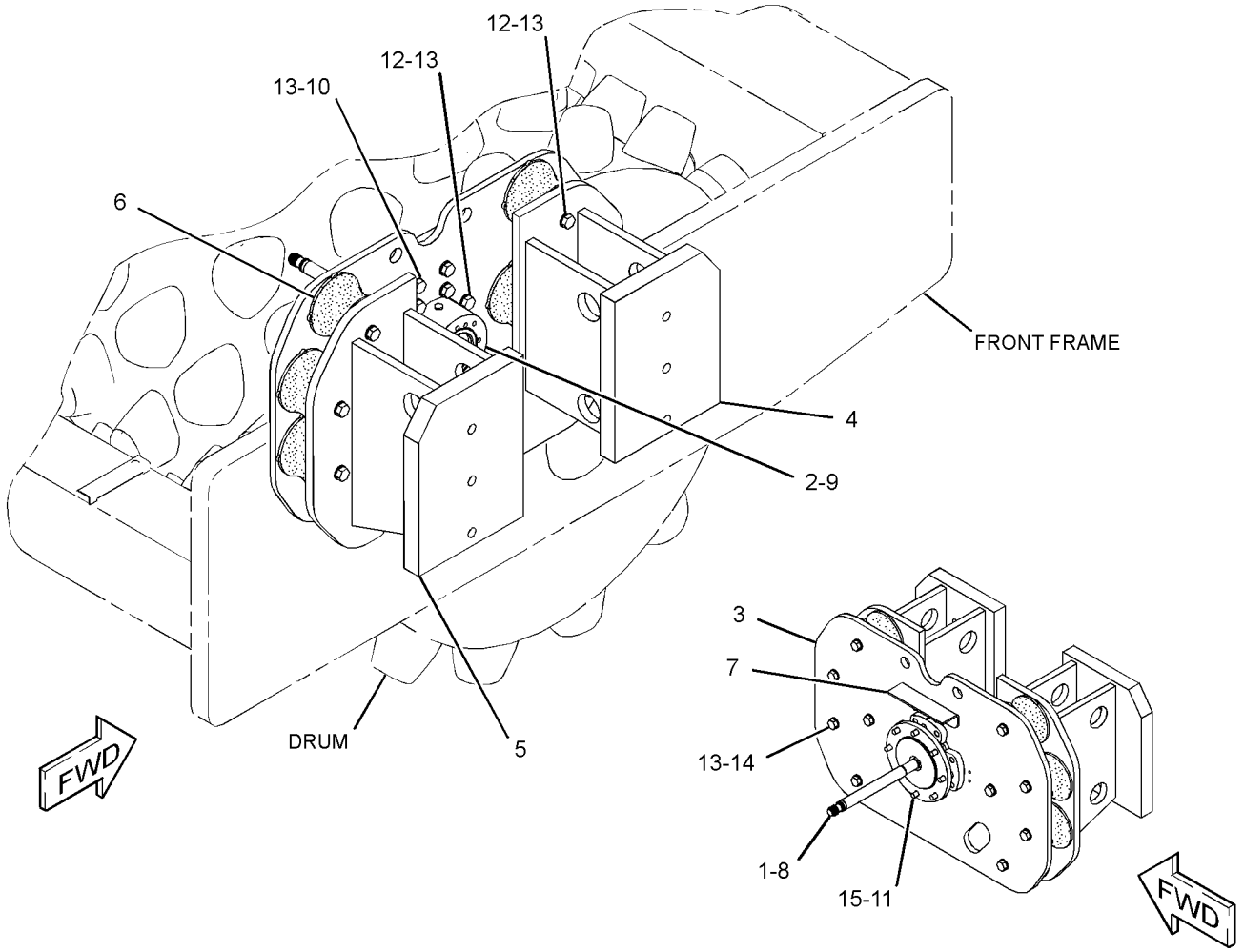

GRAPHIC #1 **<END>** g03053438

355-8954 HOUSING GP-ECCENTRIC WEIGHT

S/N: MBF1-UP; M4M1-UP; M5P1-UP; SDT1-UP

PART OF 355-4636, 355-4637, 374-9763, 374-9764 POWER TRAIN AR

SMCS-6606 **i05295558**

NOTE	REF NO	GRAPHIC REF	PART NUMBER	QTY	PART NAME 1 2 3 4 5 6 (PRODUCT LEVEL)	SEE PAGE
	1	1	**140-1321**	1	SHAFT	
	2	1	*165-4929*	1	PLUG AS (MAGNETIC)	
		1	**5P-4484**	1	PLUG-MAGNETIC (ECCENTRIC WEIGHT HOUSING)	
		1	**7M-8485**	1	SEAL-O-RING	
Y	3	1	*355-8955*	1	HOUSING GP-ECCENTRIC WEIGHT (LH)	395
Y	4	1	*355-8957*	1	HOUSING GP-ECCENTRIC WEIGHT (RH)	397
	5	1	**061-9458**	2	SEAL-O-RING	
	6	1	**8T-4123**	36	WASHER (22X35X3.5-MM THK)	
M	7	1	**8T-4187**	36	BOLT (M20X2.5X80-MM)	
	8	1	**9H-6832**	2	SEAL-O-RING	

M - METRIC PART
Y - SEPARATE ILLUSTRATION

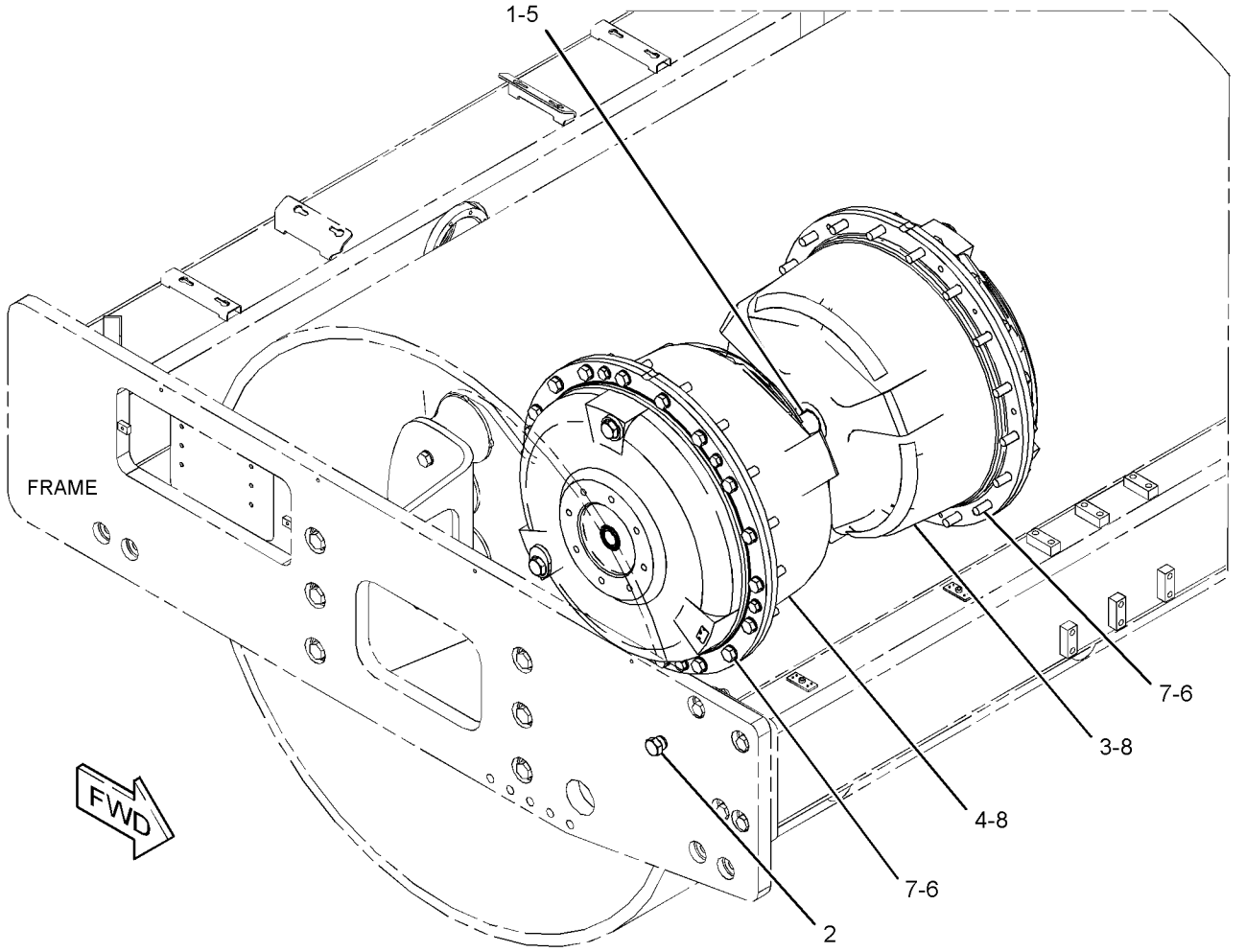

GRAPHIC #1 **<END>** g02720886

355-8955 HOUSING GP-ECCENTRIC WEIGHT

S/N: MBF1-UP; M4M1-UP; M5P1-UP; SDT1-UP

PART OF 355-8954 HOUSING GP-ECCENTRIC WEIGHT

SMCS-6606 **i05295563**

NOTE	REF NO	GRAPHIC REF	PART NUMBER	QTY	PART NAME 1 2 3 4 5 6 (PRODUCT LEVEL)	SEE PAGE
Y	1	1	*355-8956*	1	HOUSING GP-ECCENTRIC WEIGHT	396

Y - SEPARATE ILLUSTRATION

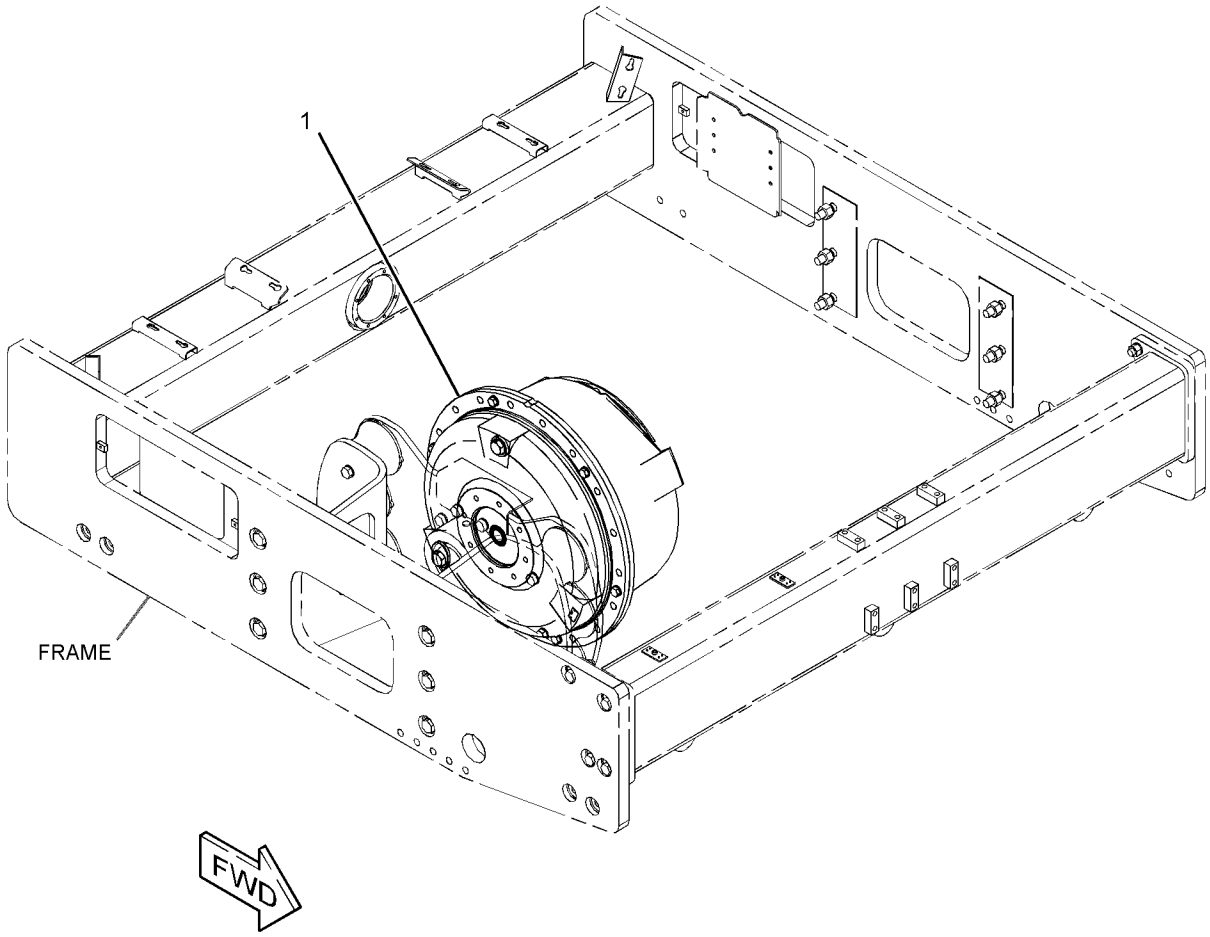

GRAPHIC #1 **<END>** g02721068

355-8956 HOUSING GP-ECCENTRIC WEIGHT

S/N: MBF1-UP; M4M1-UP; M5P1-UP; SDT1-UP

PART OF 355-8955 HOUSING GP-ECCENTRIC WEIGHT

SMCS-6606 **i05295569**

NOTE	REF NO	GRAPHIC REF	PART NUMBER	QTY	PART NAME 1 2 3 4 5 6 (PRODUCT LEVEL)	SEE PAGE
	1	1	**4B-4158**	2	SCREW-DRIVE (NO 4X0.25-IN)	
	2	1	**126-0288**	1	SHAFT	
	3	1	**126-9339**	4	SEAL	
	4	1	**126-9340**	2	BEARING	
	5	1	**146-7512**	1	PLATE-IDENTIFICATION (ECCENTRIC WEIGHT)	
	6	1	**146-9502**	1	HOUSING-BEARING	
	7	1	**146-9503**	1	HOUSING-BEARING	
	8	1	**148-3452**	1	FLANGE	
	9	1	**150-2511**	1	SLEEVE	
	10	1	*165-4929*	2	PLUG AS (MAGNETIC)	
					(EACH INCLUDES)	
		1	**5P-4484**	1	PLUG-MAGNETIC (ECCENTRIC WEIGHT HOUSING)	
		1	**7M-8485**	1	SEAL-O-RING	
Y	11	1	**355-8959**	1	SHAFT GP-ECCENTRIC WEIGHT	407
	12	1	**129-9124**	1	SEAL-O-RING	
	13	1	**3D-7805**	2	SEAL-O-RING	
M	14	1	**8T-4200**	8	BOLT (M8X1.25X16-MM)	
M	15	1	**8T-4779**	6	BOLT (M16X2X35-MM)	
M	16	1	**8T-4908**	8	BOLT (M8X1.25X25-MM)	
	17	1	**9X-8257**	6	WASHER (17.5X30X3.5-MM THK)	

M - METRIC PART
Y - SEPARATE ILLUSTRATION

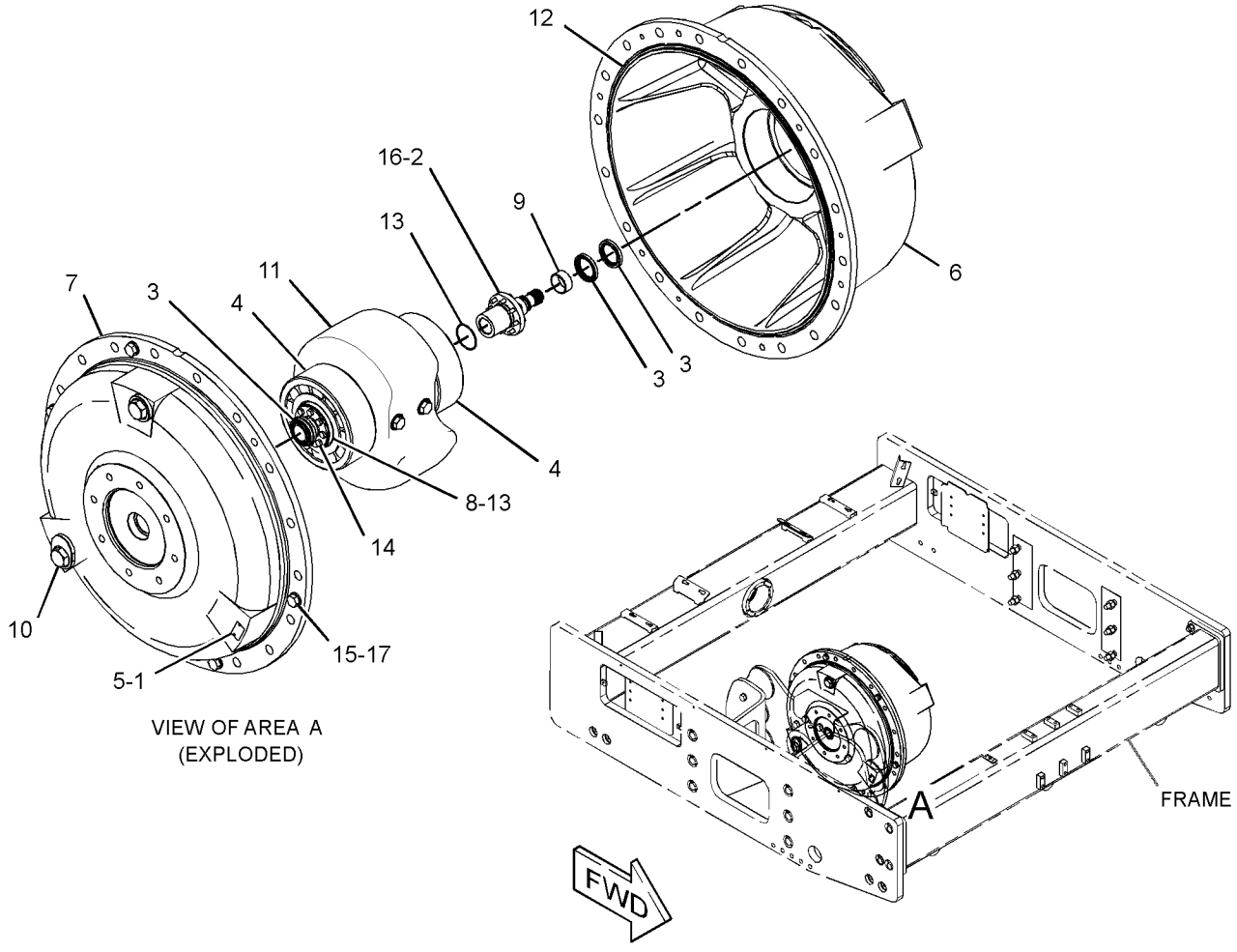

GRAPHIC #1 **<END>** g02721161

355-8957 HOUSING GP-ECCENTRIC WEIGHT

S/N: MBF1-UP; M4M1-UP; M5P1-UP; SDT1-UP

PART OF 355-8954 HOUSING GP-ECCENTRIC WEIGHT

SMCS-6606 **i05295564**

NOTE	REF NO	GRAPHIC REF	PART NUMBER	QTY	PART NAME 1 2 3 4 5 6 (PRODUCT LEVEL)	SEE PAGE
Y	1	1	*355-8958*	1	HOUSING GP-ECCENTRIC WEIGHT	398

Y - SEPARATE ILLUSTRATION

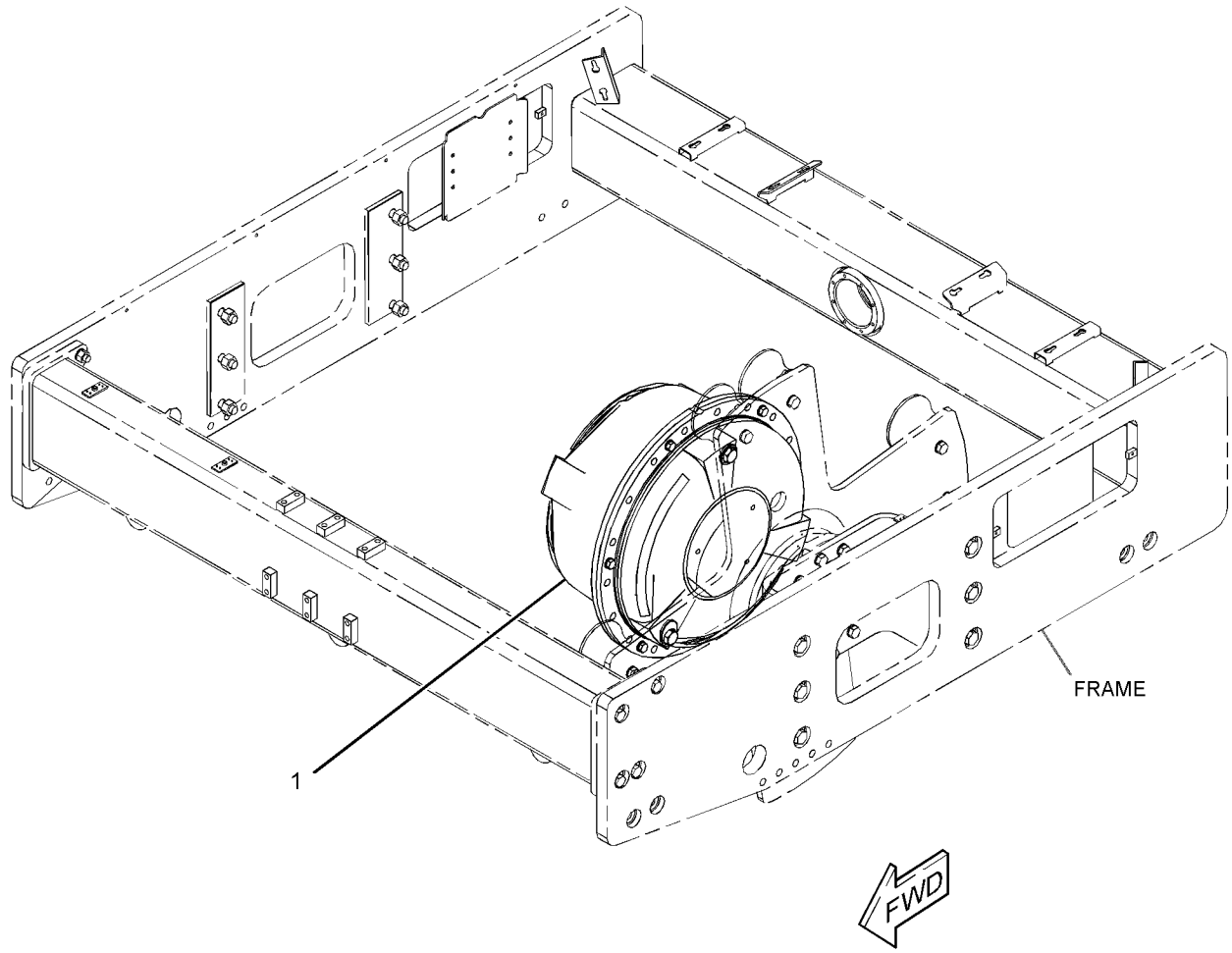

GRAPHIC #1 **<END>** g02721186

355-8958 HOUSING GP-ECCENTRIC WEIGHT

S/N: MBF1-UP; M4M1-UP; M5P1-UP; SDT1-UP

PART OF 355-8957 HOUSING GP-ECCENTRIC WEIGHT

SMCS-6606 **i05295588**

NOTE	REF NO	GRAPHIC REF	PART NUMBER	QTY	PART NAME 1 2 3 4 5 6 (PRODUCT LEVEL)	SEE PAGE
	1	1	**4B-4158**	2	SCREW-DRIVE (NO 4X0.25-IN)	
	2	1	**126-0287**	1	SHAFT	
	3	1	**126-9339**	2	SEAL	
	4	1	**126-9340**	2	BEARING	
	5	1	**146-7512**	1	PLATE-IDENTIFICATION (ECCENTRIC WEIGHT)	
	6	1	**146-9502**	1	HOUSING-BEARING	
	7	1	**146-9504**	1	HOUSING-BEARING	
	8	1	**150-2511**	1	SLEEVE	
	9	1	*165-4929*	2	PLUG AS (MAGNETIC)	
					(EACH INCLUDES)	
		1	**5P-4484**	1	PLUG-MAGNETIC (ECCENTRIC WEIGHT HOUSING)	
		1	**7M-8485**	1	SEAL-O-RING	
Y	10	1	**355-8959**	1	SHAFT GP-ECCENTRIC WEIGHT	407
	11	1	**129-9124**	1	SEAL-O-RING	
M	12	1	**8T-4779**	6	BOLT (M16X2X35-MM)	
M	13	1	**8T-4908**	8	BOLT (M8X1.25X25-MM)	
	14	1	**9X-8257**	6	WASHER (17.5X30X3.5-MM THK)	

M - METRIC PART
Y - SEPARATE ILLUSTRATION

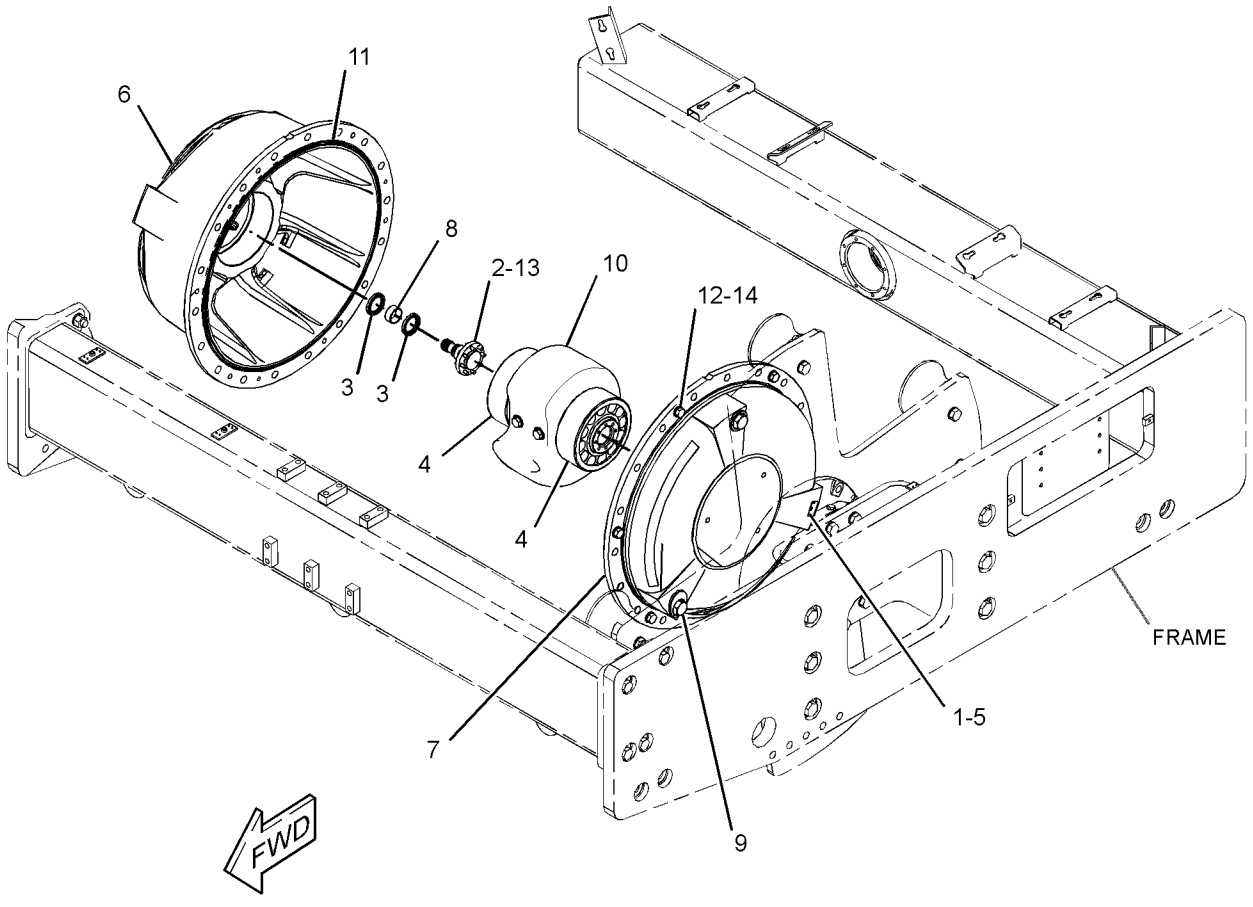

GRAPHIC #1 **<END>** g02721221

379-6613 HYDRAULIC AR-VIBRATORY—FIXED FREQUENCY

S/N: MBF1-UP; M4M1-UP; M5P1-UP; SDT1-UP
PART OF 415-9361, 415-9367 DISTRIBUTION AR
AN ATTACHMENT

SMCS-5050 **i05294817**

NOTE	PART NUMBER	QTY	PART NAME 1 2 3 4 5 6 (PRODUCT LEVEL)	SEE PAGE
Y	*379-6602*	1	PUMP & MOUNTING GP (FIXED FREQUENCY)	351

Y - SEPARATE ILLUSTRATION

<END>

379-6617 HYDRAULIC AR-VIBRATORY—VARIABLE FREQUENCY

S/N: M4M1-UP; M5P1-UP
AN ATTACHMENT

SMCS-5050 **i05294818**

NOTE	PART NUMBER	QTY	PART NAME 1 2 3 4 5 6 (PRODUCT LEVEL)	SEE PAGE
Y	*379-6606*	1	PUMP & MOUNTING GP	353
Y	*362-4296*	1	SENSOR GP-VIBRATORY (VARIABLE FREQUENCY)	151

Y - SEPARATE ILLUSTRATION

<END>

379-6618 HYDRAULIC AR-VIBRATORY—VARIABLE FREQUENCY

S/N: MBF1-UP; SDT1-UP
AN ATTACHMENT

SMCS-5050 **i05297376**

NOTE	PART NUMBER	QTY	PART NAME 1 2 3 4 5 6 (PRODUCT LEVEL)	SEE PAGE
Y	*379-6606*	1	PUMP & MOUNTING GP (VARIABLE FREQUENCY)	353
Y	*365-2148*	1	SENSOR GP-VIBRATORY	152

Y - SEPARATE ILLUSTRATION

<END>

VIBRATORY SYSTEM

377-4601 LINES GP-VIBRATORY

S/N: M4M1-UP; M5P1-UP

PART OF 374-9742 HYDRAULIC AR

SMCS-5057 **i05295520**

NOTE	REF NO	GRAPHIC REF	PART NUMBER	QTY	PART NAME 1 2 3 4 5 6 (PRODUCT LEVEL)	SEE PAGE
	1	1	**177-2215**	2	STRAP-DUAL CLAMP	
	2	1	**359-1780**	2	STRIP	
	3	1	**359-5211**	1	COVER	
	4	1	**372-8302**	1	STRIP	
I	5	1	**380-2979**	1	HOSE AS	
I	6	1	**380-2980**	1	HOSE AS	
	7	1	**381-0908**	2	CLAMP	
	8	1	**381-0909**	1	CLAMP	
	9	1	**381-0910**	1	CLAMP	
	10	1	**381-0911**	1	CLAMP	
	11	1	**381-0912**	6	CLAMP	
I	12	1	**385-3858**	1	HOSE AS	
	13	1	**391-8933**	2	STRIP	
	14	1	**392-3371**	2	CLAMP	
M	15	1	**131-3540**	6	LOCKNUT (M8X1.25-THD)	
	16	1	**159-1503**	2	CLAMP-HOSE	
	17	1	**1P-3702**	4	SEAL-RECTANGULAR	
	18	1	**5P-4116**	14	WASHER-HARD (8.8X20.5X2-MM THK)	
M	19	1	**7X-2543**	2	BOLT (M10X1.5X120-MM)	
M	20	1	**7X-2544**	2	BOLT (M10X1.5X104-MM)	
M	21	1	**8T-0389**	10	LOCKNUT (M10X1.5-THD)	
	22	1	**8T-4121**	36	WASHER-HARD (11X21X2.5-MM THK)	
M	23	1	**8T-4182**	16	BOLT (M10X1.5X45-MM)	
M	24	1	**8T-4200**	2	BOLT (M8X1.25X16-MM)	
M	25	1	**8T-6685**	6	BOLT (M10X1.5X110-MM)	
M	26	1	**8T-6869**	4	BOLT (M8X1.25X60-MM)	
M	27	1	**8T-6912**	2	BOLT (M8X1.25X50-MM)	
	28	1	**8T-9403**	8	FLANGE-HALF	
G	29	1	**122-6905**		HOSE-HYDRAULIC (20.1-IN)	

G - ORDER BY THE INCH
I - REFER TO HYDRAULIC INFORMATION SYSTEM
M - METRIC PART

377-4601 **LINES GP-VIBRATORY (*contd.*)** **i05295520**

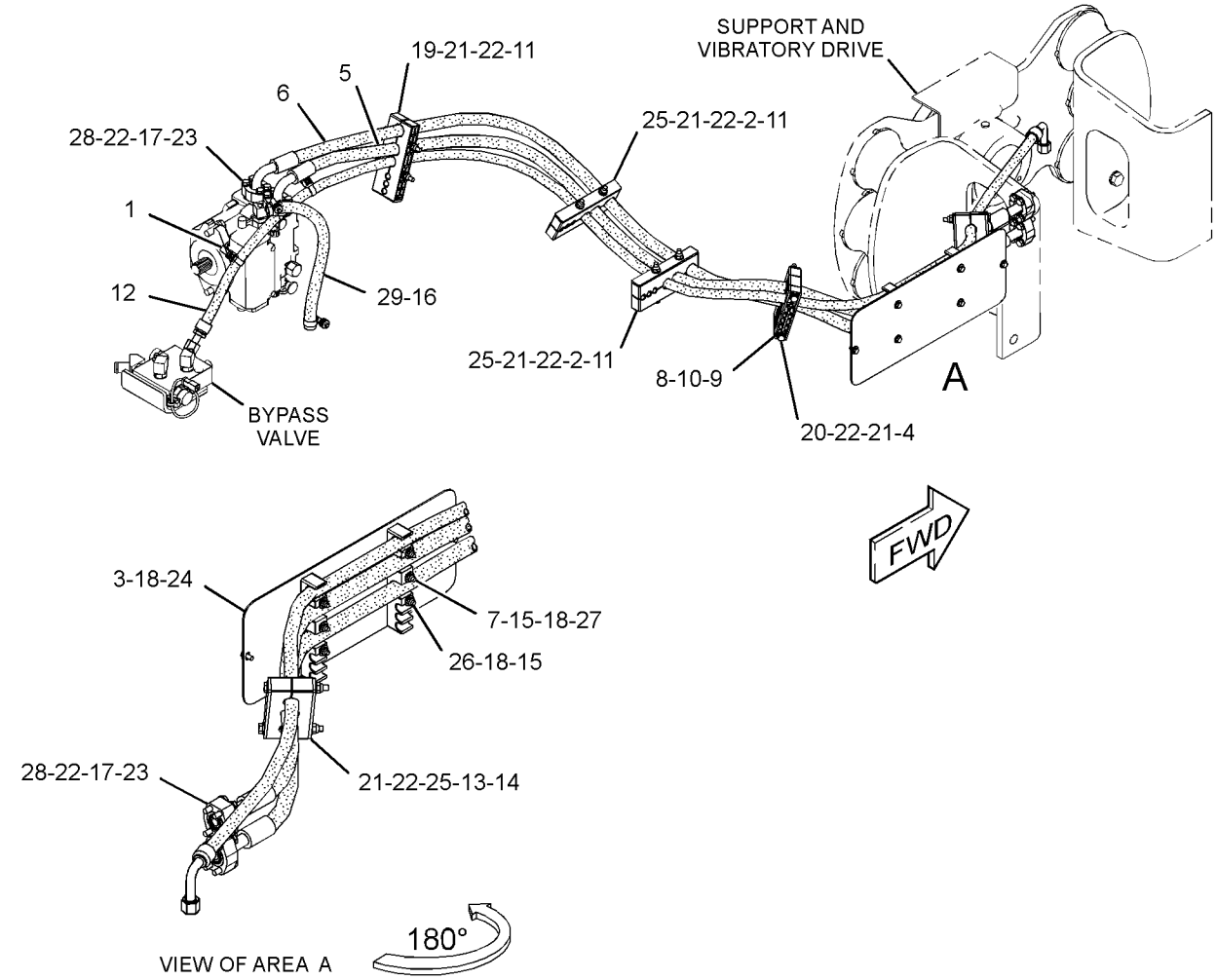

GRAPHIC #1 **<END>** g03080158

377-4602 LINES GP-VIBRATORY

S/N: MBF1-UP; SDT1-UP

PART OF 374-9743, 374-9756 HYDRAULIC AR

SMCS-5057 **i05297402**

NOTE	REF NO	GRAPHIC REF	PART NUMBER	QTY	PART NAME 1 2 3 4 5 6 (PRODUCT LEVEL)	SEE PAGE
	1	1	**177-2215**	2	STRAP-DUAL CLAMP	
	2	1	**359-1780**	2	STRIP	
	3	1	**372-8302**	3	STRIP	
	4	1	**373-6411**	1	COVER	
	5	1	**381-0907**	2	CLAMP	
	6	1	**381-0909**	2	CLAMP	
	7	1	**381-0910**	2	CLAMP	
	8	1	**381-0911**	2	CLAMP	
	9	1	**381-0912**	6	CLAMP	
I	10	1	**383-2664**	1	HOSE AS	
I	11	1	**383-2665**	1	HOSE AS	
I	12	1	**383-3661**	1	HOSE AS	
M	13	1	**131-3540**	6	LOCKNUT (M8X1.25-THD)	
	14	1	**159-1503**	2	CLAMP-HOSE	
	15	1	**1P-3702**	4	SEAL-RECTANGULAR	
	16	1	**5P-4116**	14	WASHER-HARD (8.8X20.5X2-MM THK)	
M	17	1	**7X-2543**	2	BOLT (M10X1.5X120-MM)	
M	18	1	**7X-2544**	2	BOLT (M10X1.5X104-MM)	
M	19	1	**8T-0389**	10	LOCKNUT (M10X1.5-THD)	
	20	1	**8T-4121**	36	WASHER-HARD (11X21X2.5-MM THK)	
M	21	1	**8T-4182**	16	BOLT (M10X1.5X45-MM)	
M	22	1	**8T-4200**	2	BOLT (M8X1.25X16-MM)	
M	23	1	**8T-5436**	2	BOLT (M10X1.5X130-MM)	
M	24	1	**8T-6685**	4	BOLT (M10X1.5X110-MM)	
M	25	1	**8T-6869**	4	BOLT (M8X1.25X60-MM)	
M	26	1	**8T-6912**	2	BOLT (M8X1.25X50-MM)	
	27	1	**8T-9403**	8	FLANGE-HALF	
G	28	1	**122-6905**		HOSE-HYDRAULIC (20.1-IN)	

G - ORDER BY THE INCH
I - REFER TO HYDRAULIC INFORMATION SYSTEM
M - METRIC PART

377-4602 **LINES GP-VIBRATORY (*contd.*)** **i05297402**

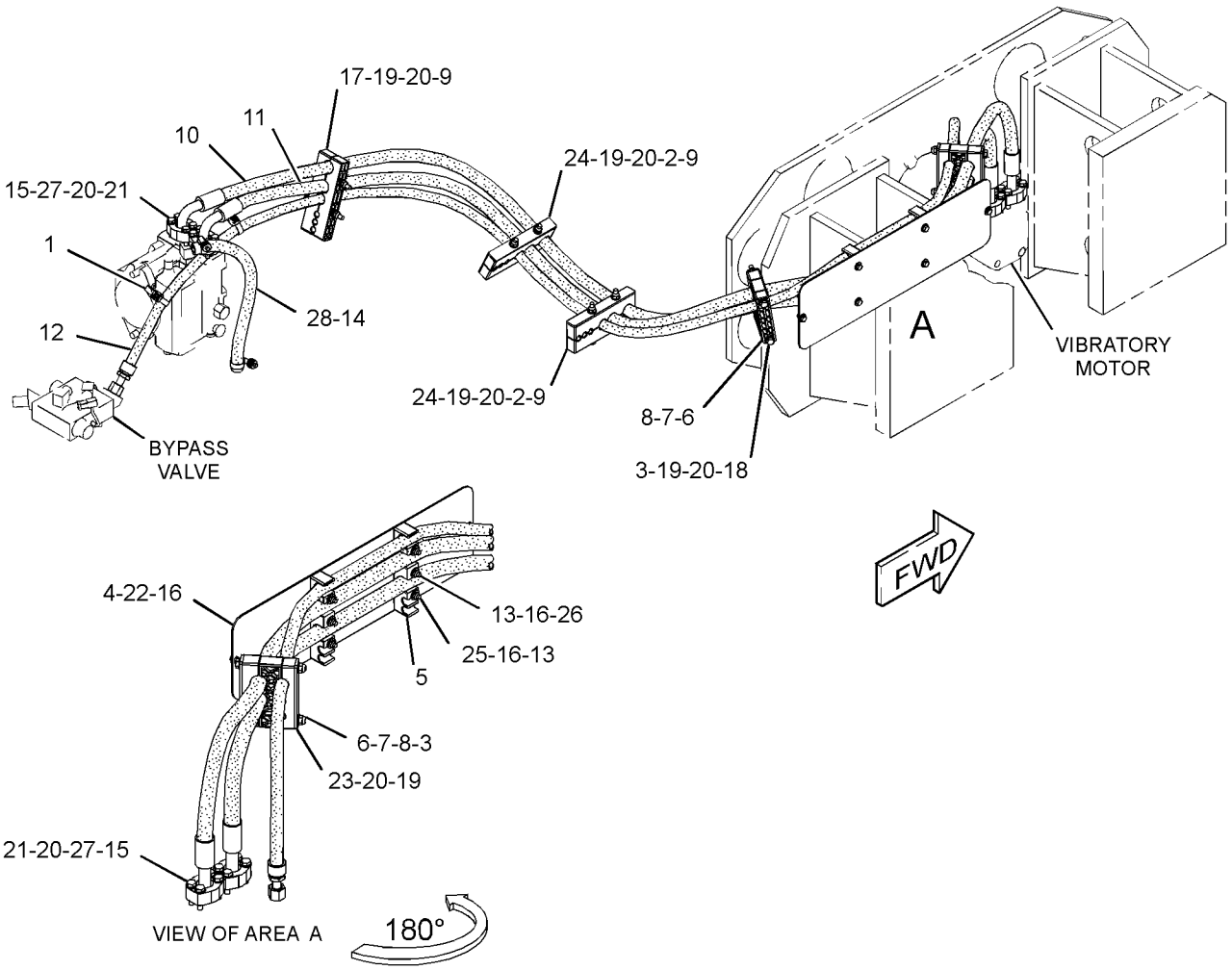

GRAPHIC #1 **<END>** g03090230

355-6031 MOTOR & MTG GP-VIBRATORY

S/N: M4M1-UP; M5P1-UP

PART OF 374-9742 HYDRAULIC AR

SMCS-5058, 5651 **i05295518**

NOTE	REF NO	GRAPHIC REF	PART NUMBER	QTY	PART NAME 1 2 3 4 5 6 (PRODUCT LEVEL)	SEE PAGE
Y	1	1	**357-7420**	1	MOTOR GP-PISTON (VIBRATORY)	349
	2	1	*148-8390*	1	ELBOW AS	
		1	**2M-9780**	1	SEAL-O-RING	
		1	**6V-8626**	1	ELBOW	
		1	**7J-9108**	1	SEAL-O-RING	
	3	1	**3K-0715**	1	SEAL-O-RING	
	4	1	**8T-4223**	2	WASHER-HARD (13.5X25.5X3-MM THK)	
M	5	1	**8T-4956**	2	BOLT (M12X1.75X35-MM)	

M - METRIC PART
Y - SEPARATE ILLUSTRATION

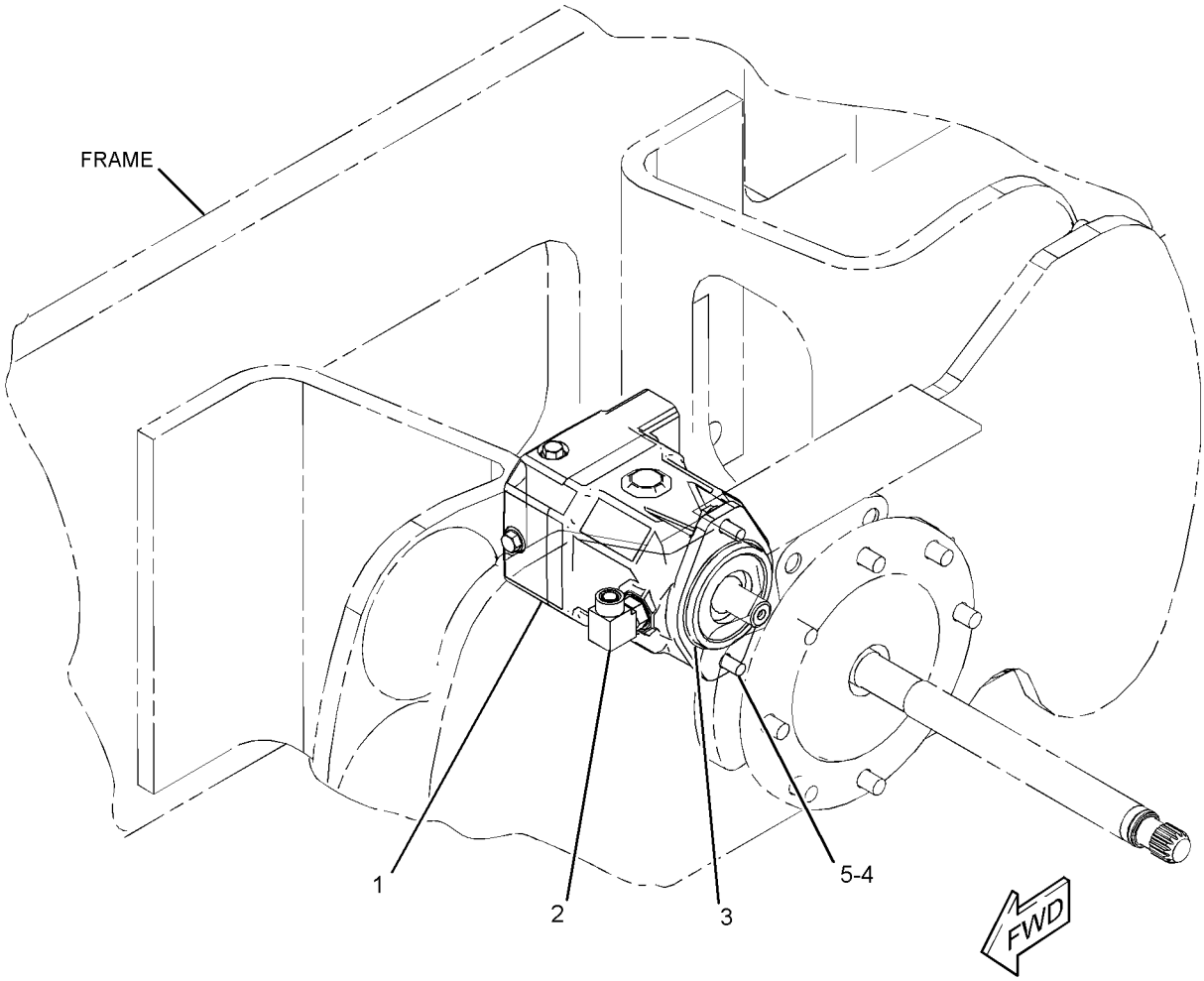

GRAPHIC #1 **<END>** g02709008

362-0993 MOTOR & MTG GP-VIBRATORY

S/N: MBF1-UP; SDT1-UP

PART OF 374-9743, 374-9756 HYDRAULIC AR

SMCS-5058, 5651 **i05297400**

NOTE	REF NO	GRAPHIC REF	PART NUMBER	QTY	PART NAME 1 2 3 4 5 6 (PRODUCT LEVEL)	SEE PAGE
Y	1	1	**357-7420**	1	MOTOR GP-PISTON (VIBRATORY)	349
	2	1	*155-3504*	1	ELBOW AS	
		1	**2M-9780**	1	SEAL-O-RING	
		1	**6V-9003**	1	ELBOW	
		1	**7J-9108**	1	SEAL-O-RING	
	3	1	**3K-0715**	1	SEAL-O-RING	
	4	1	**8T-4223**	2	WASHER-HARD (13.5X25.5X3-MM THK)	
M	5	1	**8T-4956**	2	BOLT (M12X1.75X35-MM)	

M - METRIC PART
Y - SEPARATE ILLUSTRATION

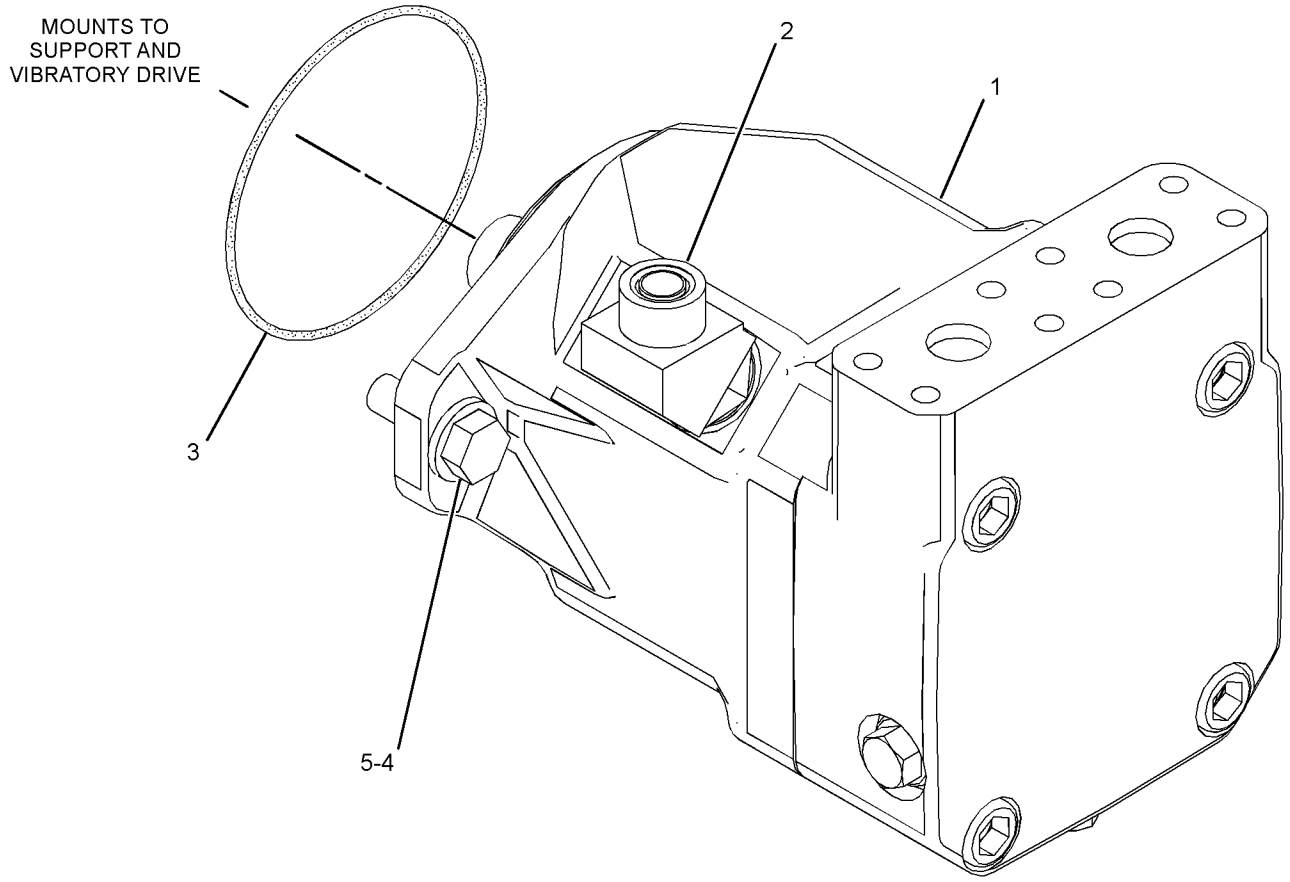

GRAPHIC #1 **<END>** g02723126

422-4428 SENSOR AR-COMPACTION—ACCELEROMETER

S/N: MBF1-UP; M4M1-UP; M5P1-UP; SDT1-UP
PART OF 415-9361 DISTRIBUTION AR
AN ATTACHMENT

SMCS-7852 **i05300070**

NOTE	PART NUMBER	QTY	PART NAME 1 2 3 4 5 6 (PRODUCT LEVEL)	SEE PAGE
Y	*388-7411*	1	ELECTRONICS GP-MACHINE	97
Y	*418-9844*	1	FILM GP (COMPACTION CONTROL)	504
Y	*359-7567*	1	FITTING GP-QUICK DISCONNECT	330
Y	*422-4423*	1	SENSOR GP-PRESSURE (PROPEL FORCE)	146

Y - SEPARATE ILLUSTRATION

<END>

422-4429 SENSOR AR-COMPACTION—ACCELEROMETER

S/N: M4M1-UP
AN ATTACHMENT

SMCS-7852 **i05299694**

NOTE	PART NUMBER	QTY	PART NAME 1 2 3 4 5 6 (PRODUCT LEVEL)	SEE PAGE
Y	*388-7411*	1	ELECTRONICS GP-MACHINE	97
Y	*418-9844*	1	FILM GP (COMPACTION CONTROL)	504
Y	*359-7567*	1	FITTING GP-QUICK DISCONNECT	330
Y	*422-4422*	1	SENSOR & MOUNTING GP (COMPACTION MEASUREMENT)	141

Y - SEPARATE ILLUSTRATION

<END>

422-4430 SENSOR AR-COMPACTION

S/N: MBF1-UP
AN ATTACHMENT

SMCS-7852 **i05297382**

NOTE	PART NUMBER	QTY	PART NAME 1 2 3 4 5 6 (PRODUCT LEVEL)	SEE PAGE
Y	*388-7411*	1	ELECTRONICS GP-MACHINE	97
Y	*418-9844*	1	FILM GP (COMPACTION CONTROL)	504
Y	*359-7567*	1	FITTING GP-QUICK DISCONNECT	330
Y	*422-4424*	1	SENSOR & MOUNTING GP	143

Y - SEPARATE ILLUSTRATION

<END>

355-8959 SHAFT GP-ECCENTRIC WEIGHT

S/N: MBF1-UP; M4M1-UP; M5P1-UP; SDT1-UP

PART OF 355-8956, 355-8958 HOUSING GP-ECCENTRIC WEIGHT

SMCS-6645 **i05295596**

NOTE	REF NO	GRAPHIC REF	PART NUMBER	QTY	PART NAME 1 2 3 4 5 6 (PRODUCT LEVEL)	SEE PAGE
B	1	1	**180-7333**		SHOT (STEEL) (11-KG)	
	2	1	**9S-7583**	1	PLUG	
	3	1	**146-7292**	1	SHAFT	
M	4	1	**8T-4175**	2	BOLT (M16X2X90-MM)	
	5	1	**9X-8257**	2	WASHER (17.5X30X3.5-MM THK)	

B - USE AS REQUIRED
M - METRIC PART

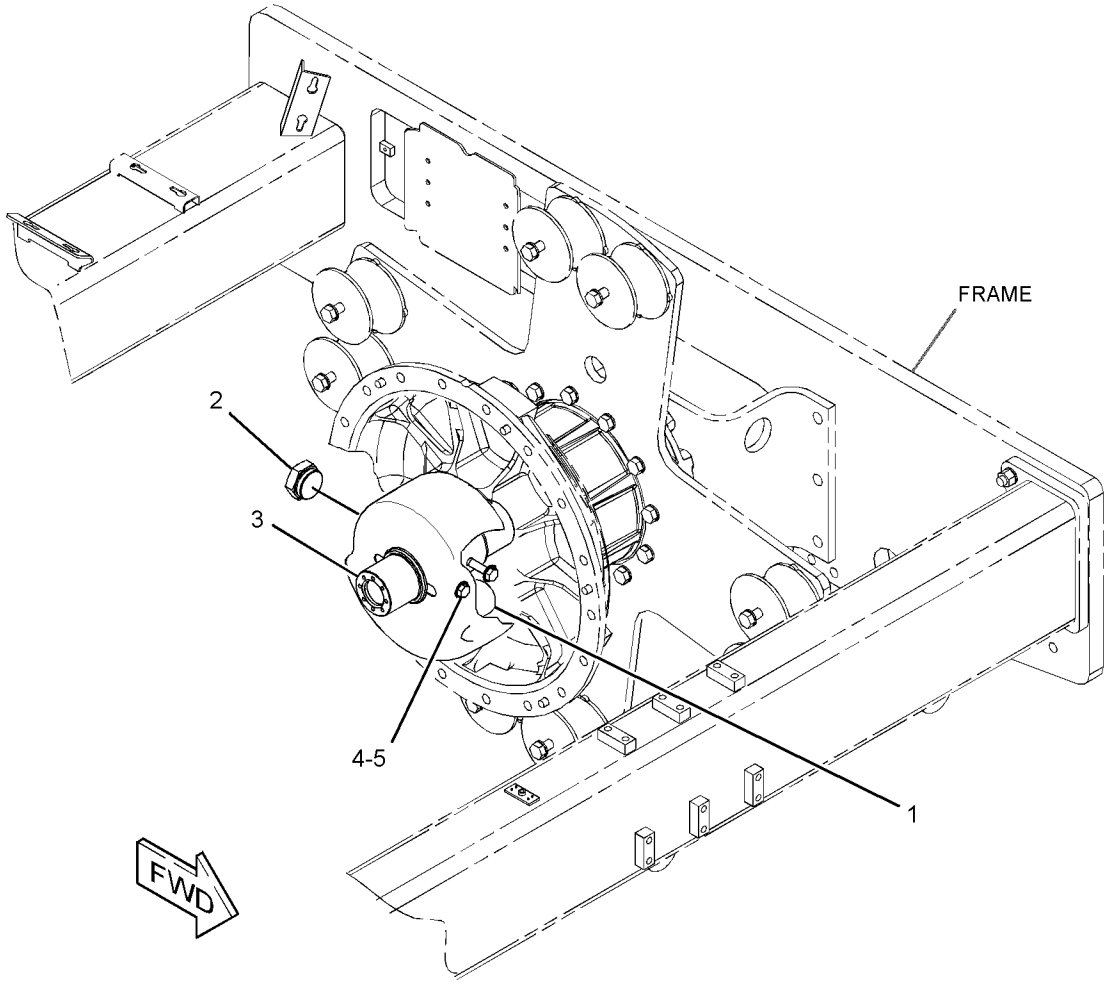

GRAPHIC #1 **<END>** g02721243

159-9405 SUPPORT GP-VIBRATORY

S/N: MBF1-UP; M4M1-UP; M5P1-UP; SDT1-UP

PART OF 355-4635, 356-1421, 356-1806 DRIVE GP-SUPPORT & VIBRATORY

SMCS-5656 **i05288699**

NOTE	REF NO	GRAPHIC REF	PART NUMBER	QTY	PART NAME 1 2 3 4 5 6 (PRODUCT LEVEL)	SEE PAGE
	1	1	**077-3637**	1	SEAL	
	2	1	**077-6630**	1	SEAL	
	3	1	**177-4658**	1	NUT-BEARING	
	4	1	**030-0061**	1	CONE-BEARING	
	5	1	**030-0060**	1	CUP-BEARING	
	6	1	**222-2785**	1	PLUG-MAGNETIC (FINAL DRIVE PLANETARY)	
	7	1	**7D-8636**	1	CONE-BEARING	
	8	1	**7D-8637**	1	CUP-BEARING	
	9	1	**9S-8005**	3	PLUG-O-RING	
	10	1	**3K-0360**	3	SEAL-O-RING	
	11	1	**9X-7566**	1	SEAL-O-RING	
	12	1	**172-3259**	1	ADAPTER	
	13	1	**6W-4749**	1	WASHER (75.5X106X5-MM THK)	

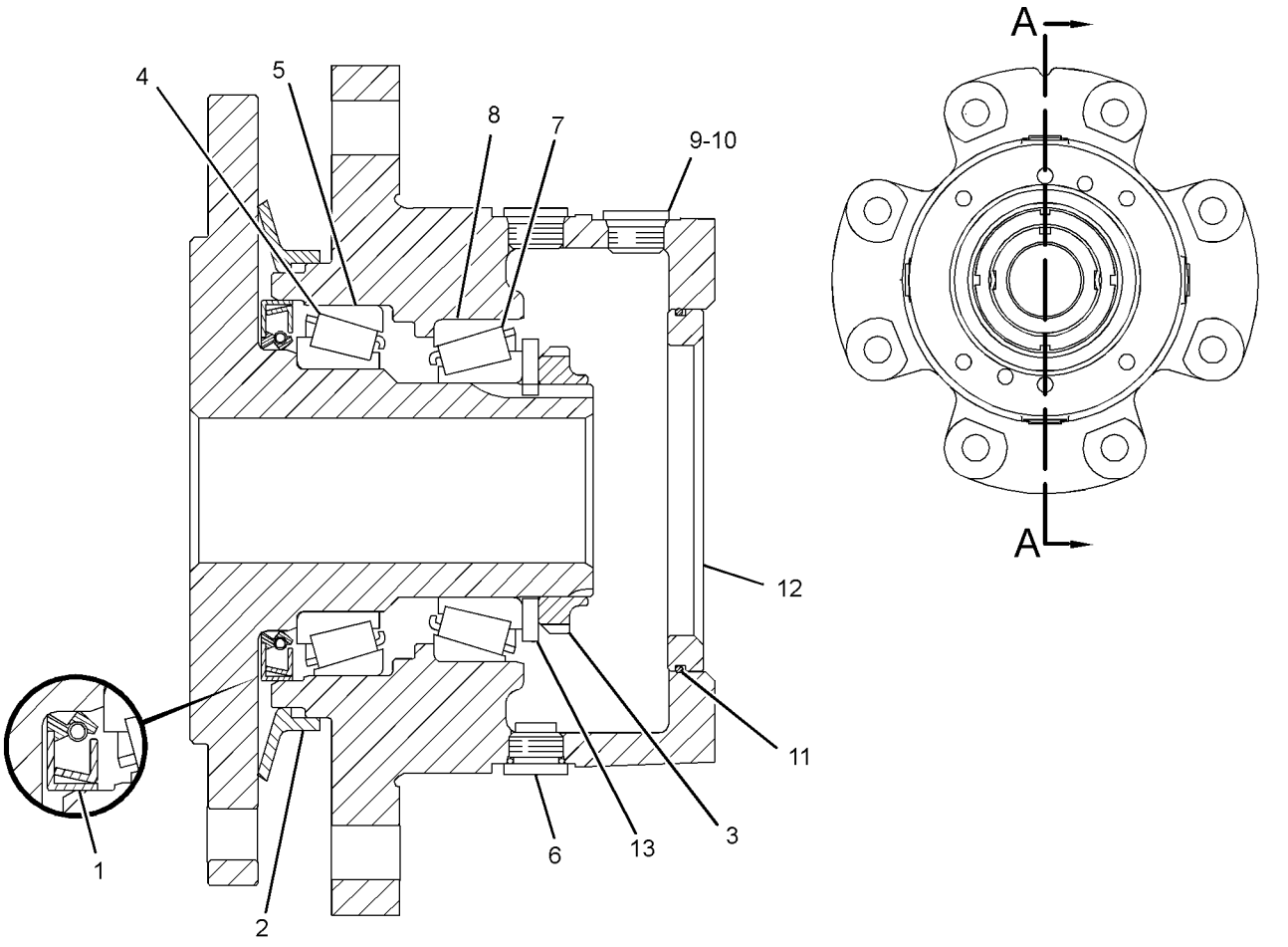

SECTION A-A

GRAPHIC #1 **<END>** g01686555

176-3900 ACCUMULATOR GP-REFRIGERANT–UNCHARGED

S/N: MBF1-UP; M4M1-UP; M5P1-UP; SDT1-UP
PART OF 186-6190 ACCUMULATOR GP-REFRIGERANT
AN ATTACHMENT

SMCS-7320 **i04905684**

NOTE	REF NO	GRAPHIC REF	PART NUMBER	QTY	PART NAME 1 2 3 4 5 6 (PRODUCT LEVEL)	SEE PAGE
					(NO SERVICED PARTS)	

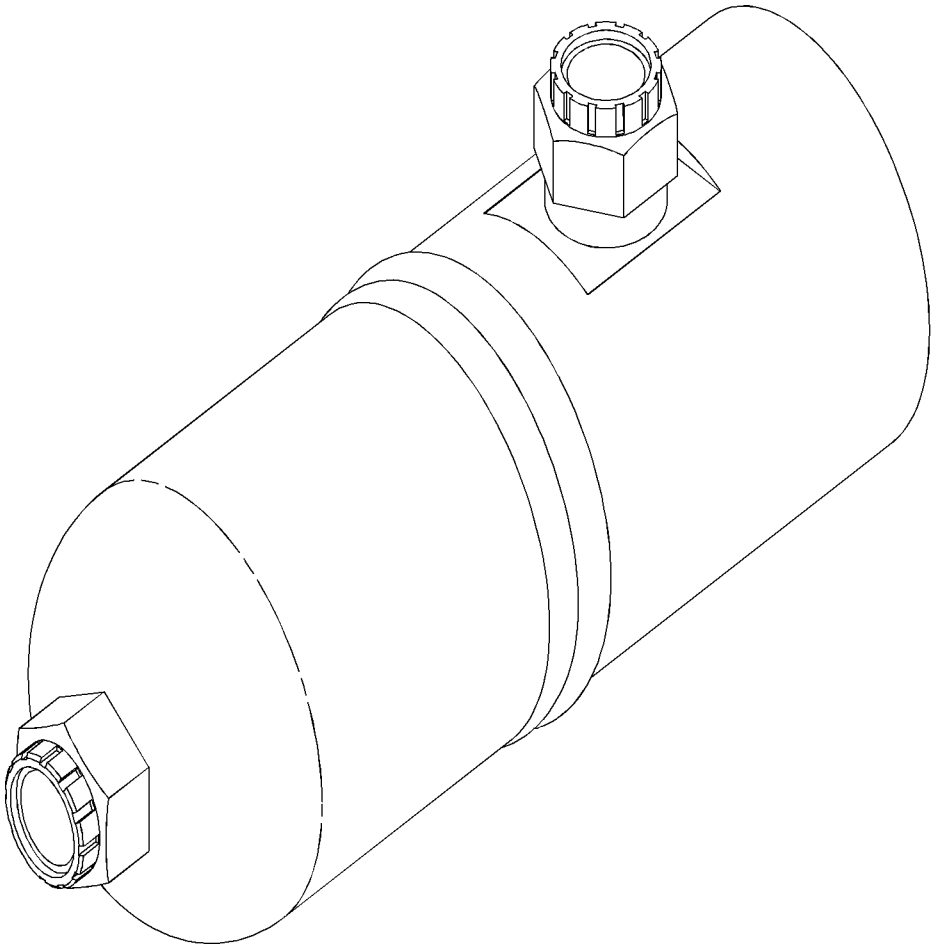

GRAPHIC #1 **<END>** g01035076

186-6190 ACCUMULATOR GP-REFRIGERANT—WITH DESICCANT

S/N: MBF1-UP; M4M1-UP; M5P1-UP; SDT1-UP
FIELD REPLACEMENT ORDER 176-3900—PAGE: 409
PART OF 379-8744 LINES GP-AIR CONDITIONER
AN ATTACHMENT

SMCS-7320 **i04817903**

NOTE	REF NO	GRAPHIC REF	PART NUMBER	QTY	PART NAME 1 2 3 4 5 6 (PRODUCT LEVEL)	SEE PAGE
Y	1	1	**176-3900**	1	ACCUMULATOR GP-REFRIGERANT (WITH DESICCANT)	409

Y - SEPARATE ILLUSTRATION

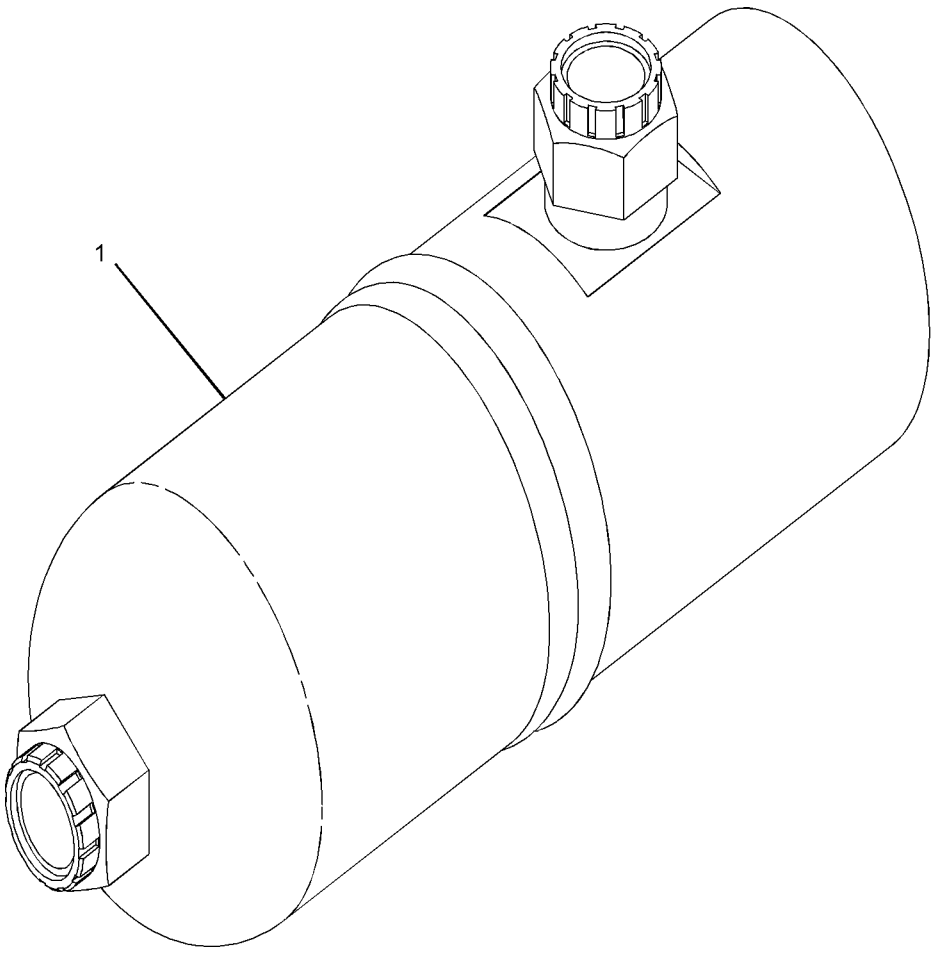

GRAPHIC #1 **<END>** g01034976

426-1914 AIR CONDITIONER & MOUNTING GP

S/N: MBF1-UP; M4M1-UP; M5P1-UP; SDT1-UP
PART OF 374-9843, 382-1438, 416-2514 OPERATOR AR
AN ATTACHMENT

SMCS-7320 **i05291854**

NOTE	REF NO	GRAPHIC REF	PART NUMBER	QTY	PART NAME 1 2 3 4 5 6 (PRODUCT LEVEL)	SEE PAGE
	1	1	**118-7259**	1	GASKET	
	2	1	**236-2295**	2	TUBE AS	
	3	1	**236-4610**	1	SWITCH AS-ROCKER (24-VOLT) (AIR CONDITIONER, HEATER)	
	4	1	**267-5243**	1	PANEL AS	
		1	**271-7312**	1	KNOB	
		1	**285-7415**	1	KNOB	
Y	5	1	**399-7742**	1	AIR CONDITIONER GP	412
	6	1	**7X-0579**	11	WASHER-HARD (8.8X25.5X2-MM THK)	
M	7	1	**8T-0024**	2	SCREW (M4X0.7X30-MM)	
M	8	1	**8T-4908**	11	BOLT (M8X1.25X25-MM)	
D	9	1	**5P-5643**		SEAL (0.8-M EACH)	

D - ORDER BY THE METER
M - METRIC PART
Y - SEPARATE ILLUSTRATION

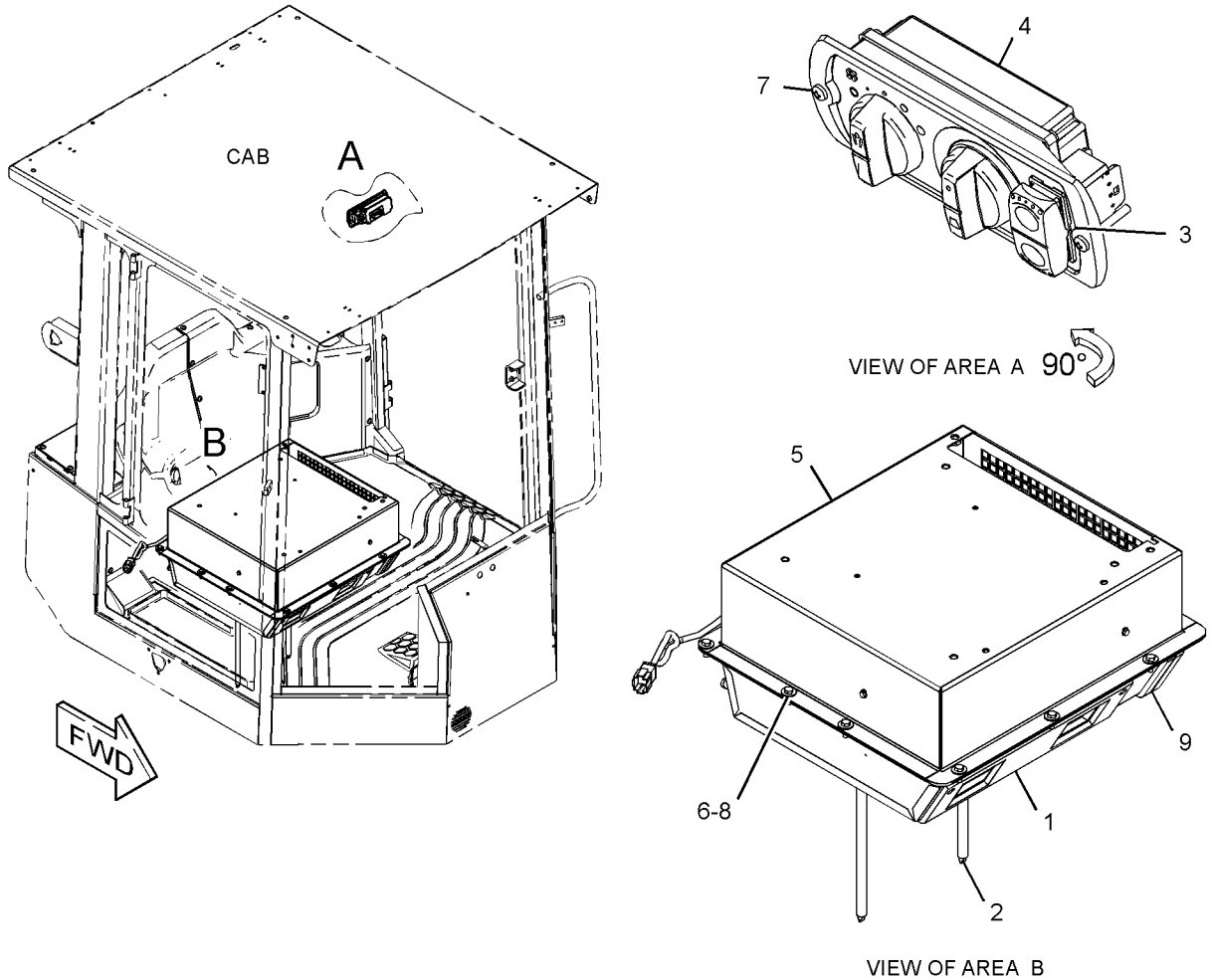

GRAPHIC #1

<END>

g03383264

399-7742 AIR CONDITIONER GP

S/N: MBF1-UP; M4M1-UP; M5P1-UP; SDT1-UP
PART OF 426-1914 AIR CONDITIONER & MOUNTING GP
AN ATTACHMENT

SMCS-7320 **i05291852**

NOTE	REF NO	GRAPHIC REF	PART NUMBER	QTY	PART NAME 1 2 3 4 5 6 (PRODUCT LEVEL)	SEE PAGE
	1	1	**3E-5464**	1	THERMOSTAT (HVAC)	
	2	1	**8C-3756**	1	FILM-IDENTIFICATION (GROUP NO., SEQUENCE NO.)	
	3	1	**114-3140**	1	GROMMET	
	4	1	**183-7528**	1	COIL AS-HEATER	
	5	1	**257-5030**	1	GUARD	
	6	1	**275-6706**	1	MOTOR AS-BLOWER (24-VOLT)	
		1	**102-8802**	1	KIT-RECEPTACLE (2-PIN)	
					(INCLUDES RECEPTACLE AS & WEDGE)	
		1	**9W-0852**	2	PIN-CONNECTOR (14-GA TO 16-GA)	
Y	7	1	**277-7116**	1	VALVE GP-WATER (HEATER CONTROL)	491
	8	1	**277-7766**	1	PLATE AS	
	9	1	**277-7767**	1	PLATE AS	
	10	1	**277-7787**	1	PLATE AS	
	11	1	**277-7790**	1	PLATE	
	12	1	**277-7792**	1	PLATE	
	13	1	**277-7793**	1	COVER AS	
	14	1	**280-7785**	1	GROMMET	
	15	1	**349-5835**	1	RESISTOR AS	
	16	1	**391-4983**	1	CASE AS	
Y	17	1	**391-5002**	1	HARNESS AS-HEATER & AIR COND	108
	18	1	**396-5842**	1	COIL AS-EVAPORATOR	
		1	**189-1707**	1	ORIFICE AS-AIR CONDITIONER	
		1	**328-3316**	1	COIL AS	
M	19	1	**5C-2890**	2	NUT (M6X1-THD)	
M	20	1	**5C-9553**	13	BOLT (M6X1X16-MM)	
M	21	1	**8T-4171**	2	BOLT (M6X1X12-MM)	
	22	1	**8T-4205**	17	WASHER-HARD (7.2X14.5X2-MM THK)	
	23	1	**8T-6631**	2	SCREW-MACHINE (8-32X0.5-IN)	
	24	1	**9X-2488**	4	CLAMP-HOSE	
E	25	1	**136-1953**		HOSE (18-CM)	
E	25A	1	**136-1953**		HOSE (25-CM)	
					AVAILABLE REPAIR KIT(S):	
			317-3348	1	KIT-SEAL (AIR CONDITIONER)	
					(INCLUDES GASKETS & SEAL)	

E - ORDER BY THE CENTIMETER
M - METRIC PART
Y - SEPARATE ILLUSTRATION

399-7742 **AIR CONDITIONER GP (*contd.*)** **i05291852**

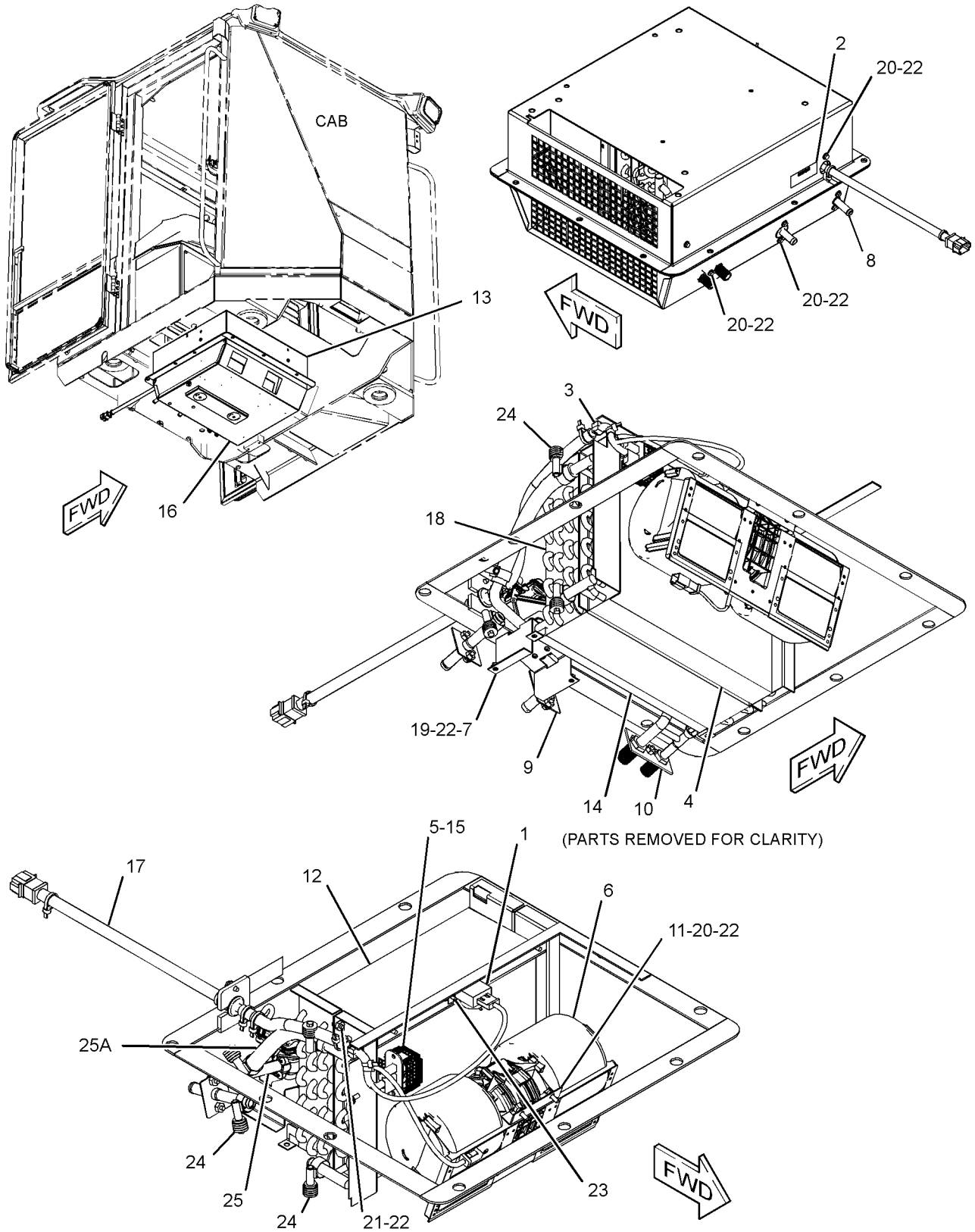

GRAPHIC #1 **<END>** g03385416

214-7636 ARM GP-WINDOW WIPER–FRONT

S/N: MBF1-UP; M4M1-UP; M5P1-UP; SDT1-UP
PART OF 373-3180 WIPER & WASHER GP-WINDOW
AN ATTACHMENT

SMCS-7305 **i05218251**

NOTE	REF NO	GRAPHIC REF	PART NUMBER	QTY	PART NAME 1 2 3 4 5 6 (PRODUCT LEVEL)	SEE PAGE
M	1	1	**191-8921**	4	BOLT-SOCKET HEAD (M6X1X25-MM)	
	2	1	**227-7392**	4	WASHER (6.3X10.3X0.4-MM THK)	
	3	1	**344-5673**	4	NUT (M6X1-THD)	
	4	1	**136-3190**	1	NOZZLE AS-WASHER	
	5	1	**136-3188**	3	CLIP	
E	6	1	**194-5171**		HOSE (92-CM)	

E - ORDER BY THE CENTIMETER
M - METRIC PART

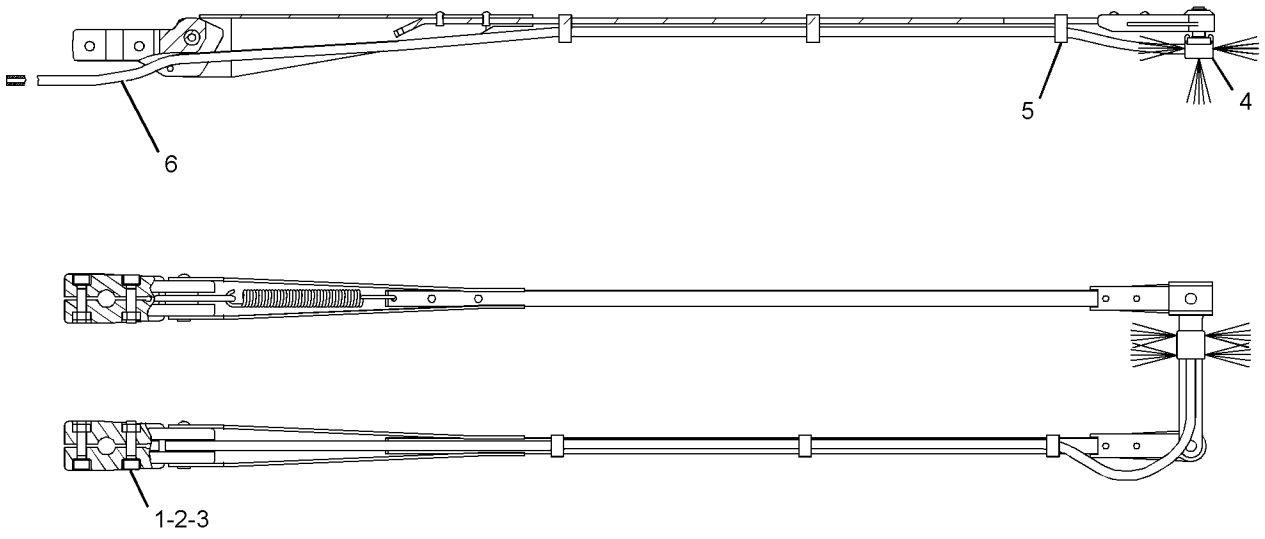

GRAPHIC #1 **<END>** g03093436

373-3175 CAB AR

S/N: MBF1-UP; M4M1-UP; M5P1-UP; SDT1-UP
PART OF 374-9843, 382-1438, 416-2514 OPERATOR AR
AN ATTACHMENT

SMCS-7301 **i05291173**

NOTE	PART NUMBER	QTY	PART NAME 1 2 3 4 5 6 (PRODUCT LEVEL)	SEE PAGE
Y	*373-3211*	1	CAB GP-ENCLOSED ROPS	416
Y	*373-3178*	1	DUCT GP-CAB AIR	435
Y	*373-3179*	1	INSTALLATION GP-RADIO	442
Y	*374-0675*	1	LINER GP-CAB	445
Y	*373-3180*	1	WIPER & WASHER GP-WINDOW (FRONT)	496
Y	*352-7741*	1	WIRING GP-CAB	163

Y - SEPARATE ILLUSTRATION

<END>

373-3211 CAB GP-ENCLOSED ROPS

S/N: MBF1-UP; M4M1-UP; M5P1-UP; SDT1-UP
PART OF 373-3175 CAB AR
AN ATTACHMENT

SMCS-7301 **i05297367**

NOTE	REF NO	GRAPHIC REF	PART NUMBER	QTY	PART NAME 1 2 3 4 5 6 (PRODUCT LEVEL)	SEE PAGE
M	1	1	**170-4057**	2	INSERT-THREADED (M6X1-THD)	
	2	1	**4E-8722**	11	NUT (RETAINER)	
	3	1	**373-3043**	1	CAB AS	
Y	4	1	**373-3151**	1	WINDOW GP-CAB (RH)	493
Y	5	1	*373-3153*	1	WINDOW GP-CAB (LH)	495
Y	6	1	**373-3162**	1	DOOR GP-CAB	432
	7	1	**374-6716**	2	COVER	
	8	1	**195-0936**	3	INSERT-THREADED (M6X1-THD)	
M	9	1	**195-0937**	8	INSERT-THREADED (M8X1.25-THD)	
	10	1	**195-0938**	2	INSERT-THREADED (M8X1.25-THD)	
	11	1	**367-2481**	6	CAP	

M - METRIC PART
Y - SEPARATE ILLUSTRATION

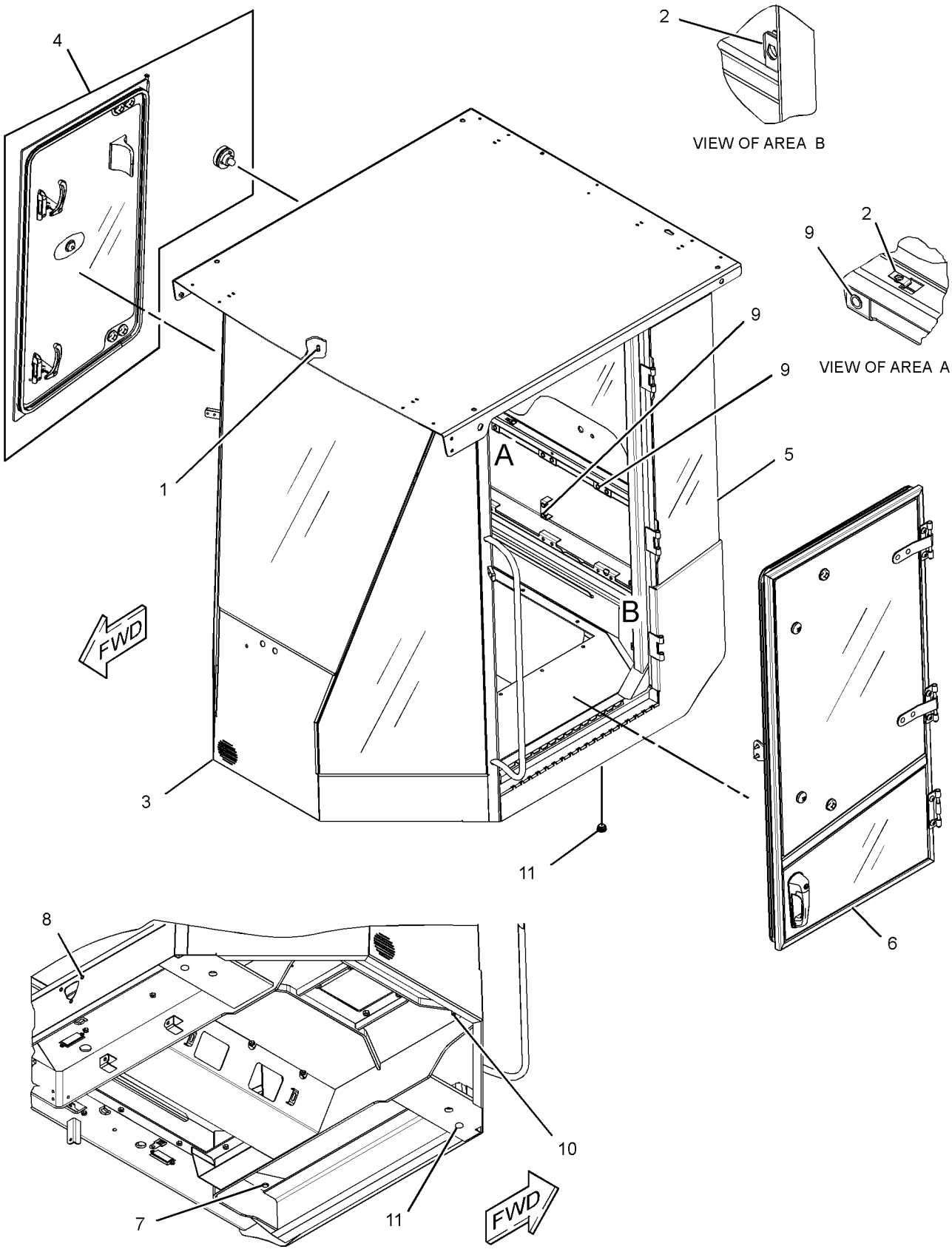

GRAPHIC #1 **<END>** g03052436

416-2526 CANOPY GP—NON-ROPS

S/N: MBF1-UP; M4M1-UP; M5P1-UP; SDT1-UP
PART OF 416-2513 OPERATOR AR
AN ATTACHMENT

SMCS-7302 **i05291847**

NOTE	REF NO	GRAPHIC REF	PART NUMBER	QTY	PART NAME 1 2 3 4 5 6 (PRODUCT LEVEL)	SEE PAGE
	1	1	**381-6967**	1	CANOPY AS	
M	2	1	**8T-4193**	8	BOLT (M16X2X50-MM)	
	3	1	**9X-8257**	8	WASHER (17.5X30X3.5-MM THK)	

M - METRIC PART

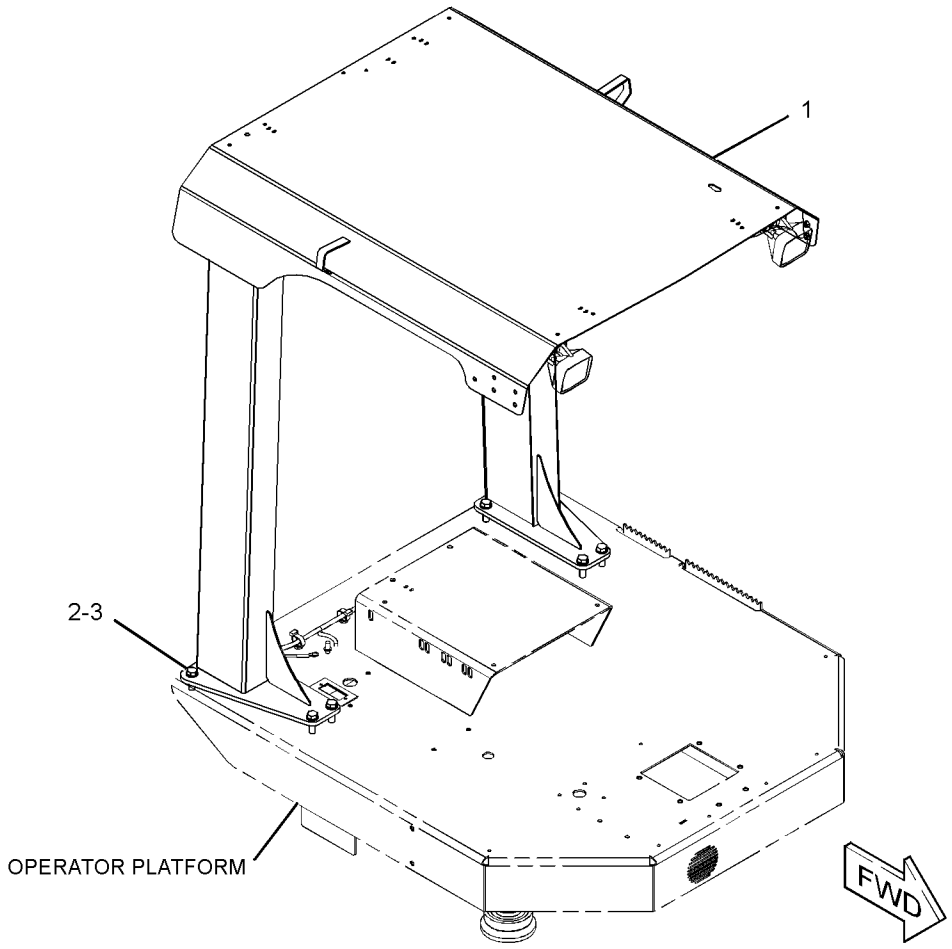

GRAPHIC #1 **<END>** g03383320

320-1291 COMPRESSOR GP-REFRIGERANT

S/N: MBF1-UP; M4M1-UP; M5P1-UP; SDT1-UP
PART OF 379-8748 COMPRESSOR GP-REFRIGERANT
AN ATTACHMENT

SMCS-1802 **i05190440**

NOTE	REF NO	GRAPHIC REF	PART NUMBER	QTY	PART NAME 1 2 3 4 5 6 (PRODUCT LEVEL)	SEE PAGE
	1	1	**102-8802**	1	KIT-RECEPTACLE (2-PIN)	
					(INCLUDES RECEPTACLE AS & WEDGE)	
	2	1	**314-4018**	1	VALVE AS-PRESSURE RELIEF (REFRIGERANT COMPRESSOR)	
	3	1	**126-1767**	2	PIN-CONNECTOR (14-GA TO 16-GA)	
	4	1	**7T-4532**	1	PLUG AS	

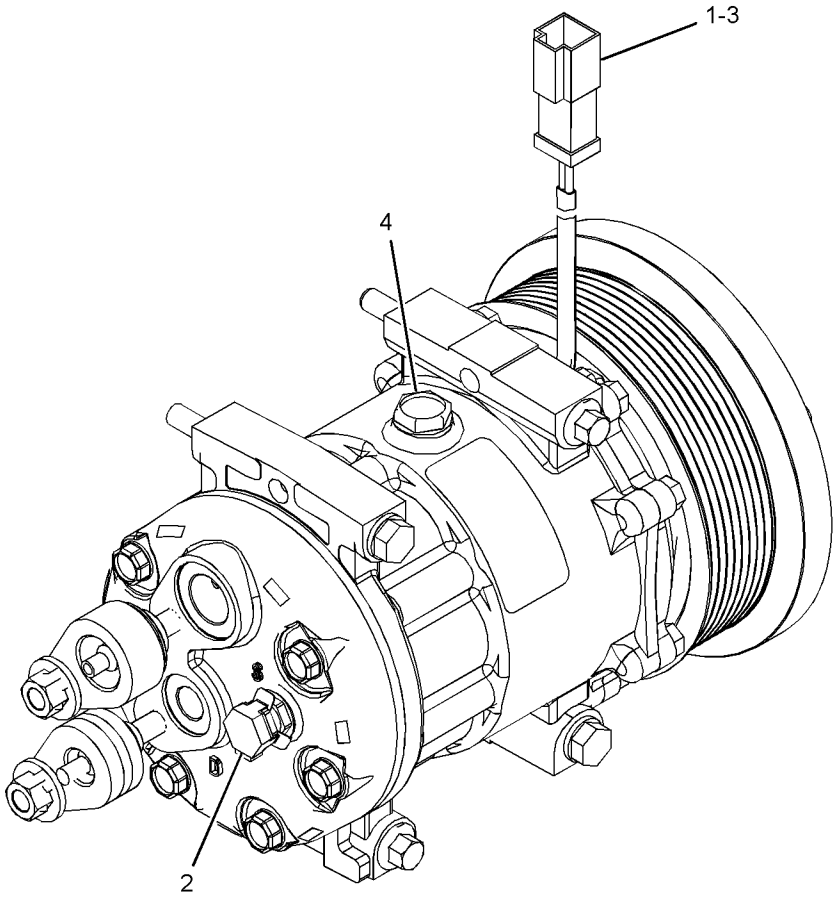

GRAPHIC #1 **<END>** g02214255

379-8748 COMPRESSOR GP-REFRIGERANT

S/N: MBF1-UP; M4M1-UP; M5P1-UP; SDT1-UP
PART OF 374-9843, 382-1438, 416-2514 OPERATOR AR
AN ATTACHMENT

SMCS-1802 **i05190438**

NOTE	REF NO	GRAPHIC REF	PART NUMBER	QTY	PART NAME 1 2 3 4 5 6 (PRODUCT LEVEL)	SEE PAGE
	1	1	**116-0118**	2	CLIP	
Y	2	1	**320-1291**	1	COMPRESSOR GP-REFRIGERANT	419
	3	1	**383-6896**	1	BRACKET	
	4	1	**386-4045**	1	HARNESS AS-HEATER & AIR COND	
		1	**9X-3401**	2	PIN-CONNECTOR (16-GA TO 18-GA)	
		1	**155-2270**	3	KIT-CONNECTING PLUG (2-PIN)	
					(EACH INCLUDES PLUG AS, WEDGE & INTERFACE SEAL)	
		1	**102-8802**	1	KIT-RECEPTACLE (2-PIN)	
					(INCLUDES RECEPTACLE AS & WEDGE)	
		1	**180-9340**	6	SOCKET-CONNECTOR (14-GA TO 18-GA)	
		1	**189-3158**	1	SUPPRESSOR-ARC	
E		1	**125-7874**		TUBE-HEAT SHRINK (5.72-MM DIA) (10-CM)	
	5	1	**132-5789**	1	CLIP	
	6	1	**4P-8134**	1	CLIP	
	7	1	**7K-1181**	2	STRAP-CABLE	
M	8	1	**7X-2538**	4	BOLT (M8X1.25X100-MM)	
M	9	1	**7X-2553**	2	BOLT (M16X2X40-MM)	
	10	1	**7X-7729**	1	WASHER (11X25X3-MM THK)	
M	11	1	**8T-4195**	1	BOLT (M10X1.5X30-MM)	
	12	1	**8T-4224**	4	WASHER-HARD (8.8X16X2-MM THK)	
	13	1	**9X-8257**	2	WASHER (17.5X30X3.5-MM THK)	

E - ORDER BY THE CENTIMETER
M - METRIC PART
Y - SEPARATE ILLUSTRATION

379-8748 **COMPRESSOR GP-REFRIGERANT (*contd.*)** **i05190438**

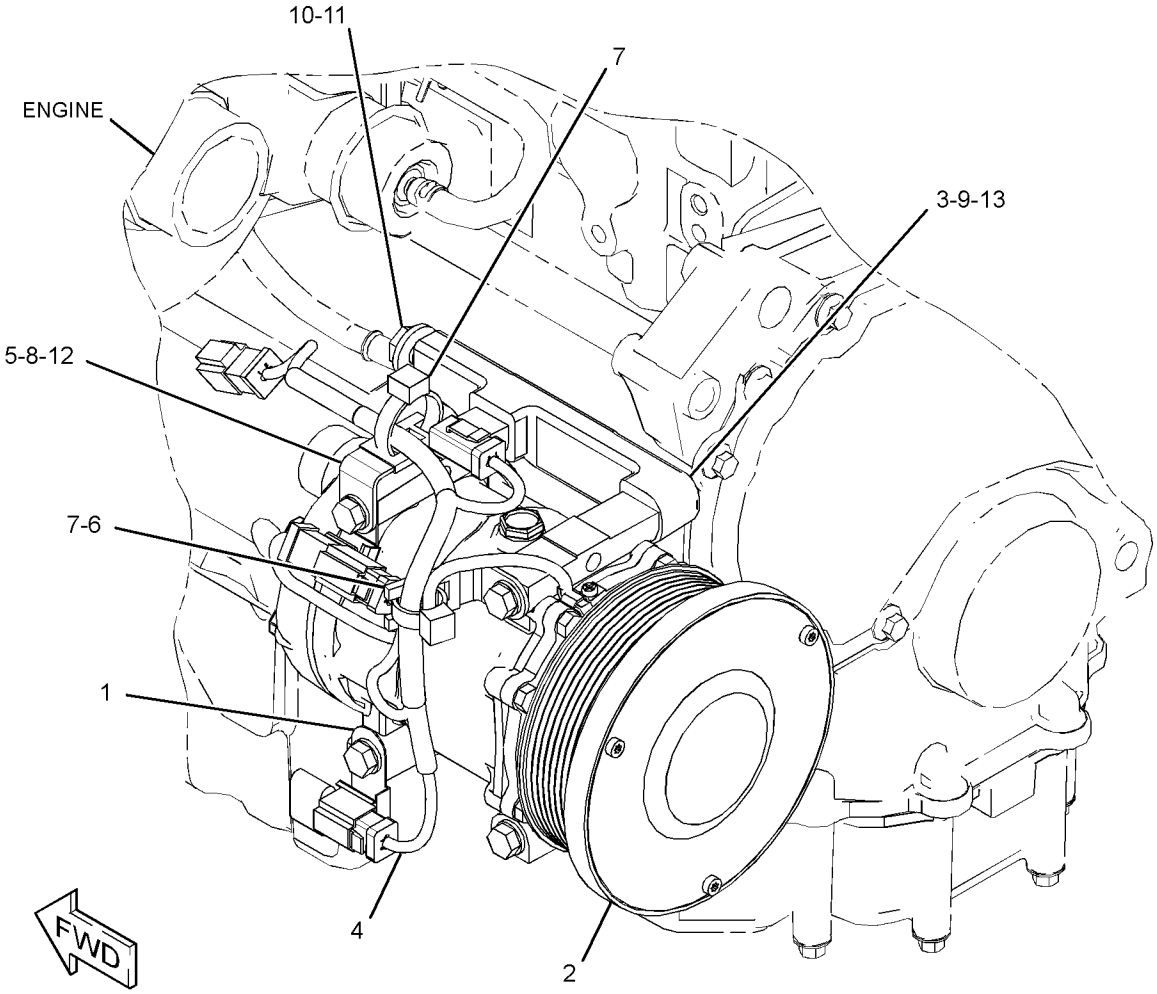

GRAPHIC #1 **<END>** g02952837

262-0942 CONDENSER & MTG GP-REFRIGERANT

S/N: MBF1-UP; M4M1-UP; M5P1-UP; SDT1-UP
PART OF 374-9843, 382-1438, 416-2514 OPERATOR AR
AN ATTACHMENT

SMCS-1805 **i05291172**

NOTE	REF NO	GRAPHIC REF	PART NUMBER	QTY	PART NAME 1 2 3 4 5 6 (PRODUCT LEVEL)	SEE PAGE
	1	1	**290-2789**	1	CONDENSER AS-REFRIGERANT	
	2	1	**5P-4116**	4	WASHER-HARD (8.8X20.5X2-MM THK)	
M	3	1	**8T-4908**	4	BOLT (M8X1.25X25-MM)	

M - METRIC PART

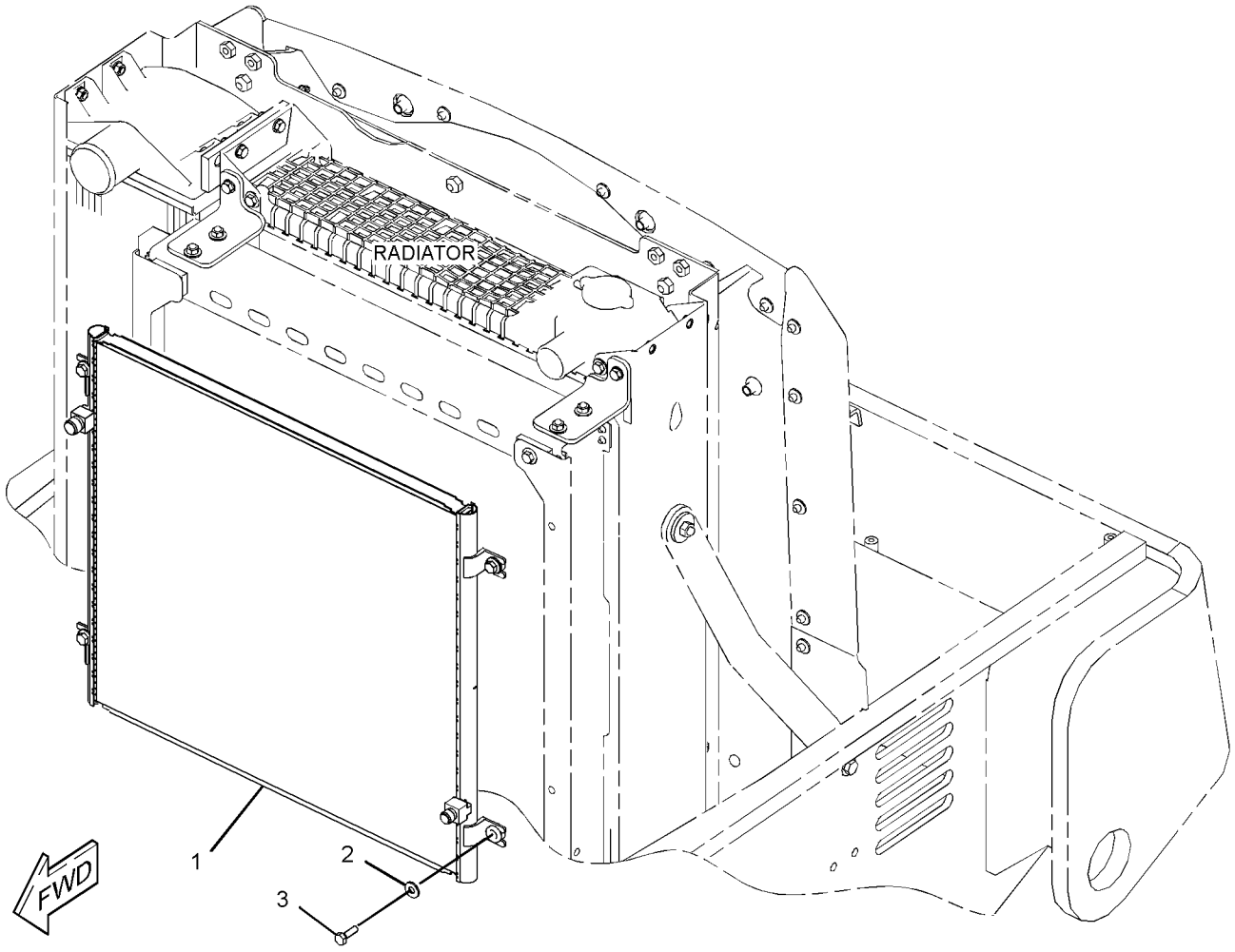

GRAPHIC #1 **<END>** g01399470

379-0028 CONTROL GP-BLADE

S/N: MBF1-UP; M4M1-UP; M5P1-UP; SDT1-UP
PART OF 378-8982, 378-8983, 433-4458, 433-4459 BLADE AR
AN ATTACHMENT

SMCS-5063 **i05290022**

NOTE	REF NO	GRAPHIC REF	PART NUMBER	QTY	PART NAME 1 2 3 4 5 6 (PRODUCT LEVEL)	SEE PAGE
	1	1	**2R-0364**	3	RING-RETAINING	
	2	1	**9R-8165**	4	BEARING	
	3	1	**172-8253**	1	LEVER AS	
	4	1	**183-3244**	2	PLATE	
	5	1	**183-3603**	1	PLATE AS	
	6	1	**197-8440**	1	PIN	
Y	7	1	*292-5040*	1	LINKAGE GP	454
Y	8	1	**347-3248**	1	VALVE GP-CONTROL (BLADE)	254
	9	1	**385-3822**	1	BRACKET AS	
M		1	**8T-3490**	2	NUT-WELD (M10X1.5-THD)	
	10	1	*148-8322*	1	CONNECTOR AS	
		1	**2M-9780**	1	SEAL-O-RING	
		1	**6V-8640**	1	CONNECTOR	
		1	**6V-9746**	1	SEAL-O-RING	
	11	1	*148-8364*	2	ELBOW AS	
					(EACH INCLUDES)	
		1	**3K-0360**	1	SEAL-O-RING	
		1	**6V-8398**	1	SEAL-O-RING	
		1	**6V-8625**	1	ELBOW	
	12	1	*148-8390*	1	ELBOW AS	
		1	**2M-9780**	1	SEAL-O-RING	
		1	**6V-8626**	1	ELBOW	
		1	**7J-9108**	1	SEAL-O-RING	
M	13	1	**5C-7261**	4	NUT (M8X1.25-THD)	
M	14	1	**6V-9189**	2	LOCKNUT (M8X1.25-THD)	
M	15	1	**7X-2537**	1	BOLT (M8X1.25X35-MM)	
	16	1	**8T-4121**	10	WASHER-HARD (11X21X2.5-MM THK)	
M	17	1	**8T-4133**	4	NUT (M10X1.5-THD)	
M	18	1	**8T-4186**	4	BOLT (M10X1.5X40-MM)	
M	19	1	**8T-4195**	2	BOLT (M10X1.5X30-MM)	
	20	1	**8T-4224**	10	WASHER-HARD (8.8X16X2-MM THK)	
M	21	1	**8T-4908**	4	BOLT (M8X1.25X25-MM)	

M - METRIC PART
Y - SEPARATE ILLUSTRATION

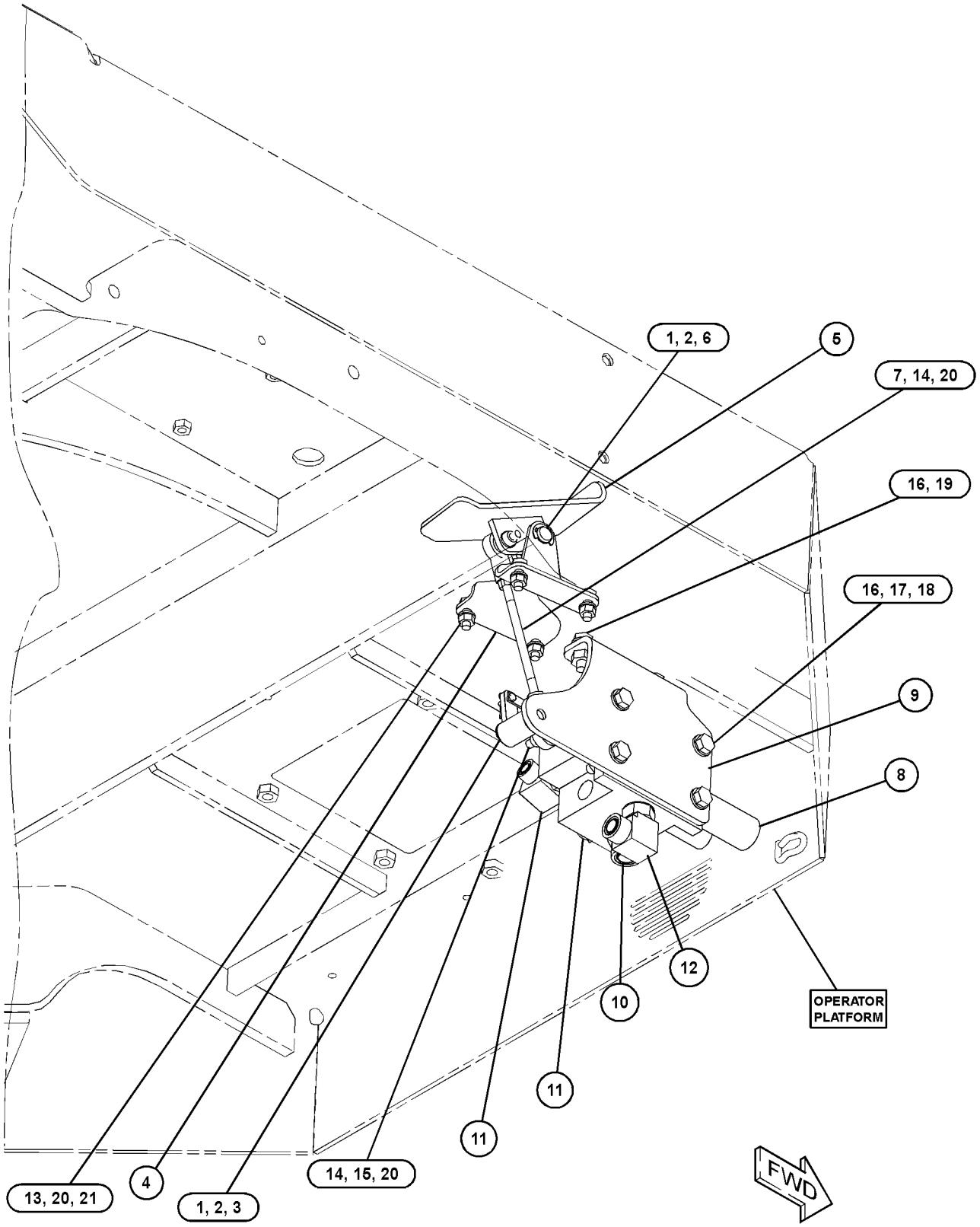

GRAPHIC #1 **<END>** g03110597

424-5147 CONTROL GP-DIRECTION & SPEED

S/N: MBF1-UP; M4M1-UP; M5P1-UP; SDT1-UP
PART OF 379-8760, 379-8762 CONFIGURATION AR
AN ATTACHMENT

SMCS-3065, 5462

i05291082

NOTE	REF NO	GRAPHIC REF	PART NUMBER	QTY	PART NAME 1 2 3 4 5 6 (PRODUCT LEVEL)	SEE PAGE
	1	1	**392-0120**	1	CONTROL GP-DIRECTION & SPEED	
M		1	**9X-2045**	4	SCREW-TRUSS HEAD (M6X1X20-MM)	
		1	**383-1403**	1	KIT-CONTROL HANDLE	
					(INCLUDES SET SCREWS, HOUSING GRIPS, LOOM SWITCH, ROCKER SWITCH, BOOT, SCREWS, SEAL & LEVER)	
		1	**383-1408**	1	BOOT	
	2	1	**419-0170**	1	FILM-IDENTIFICATION (OPERATOR CONTROLS)	

M - METRIC PART

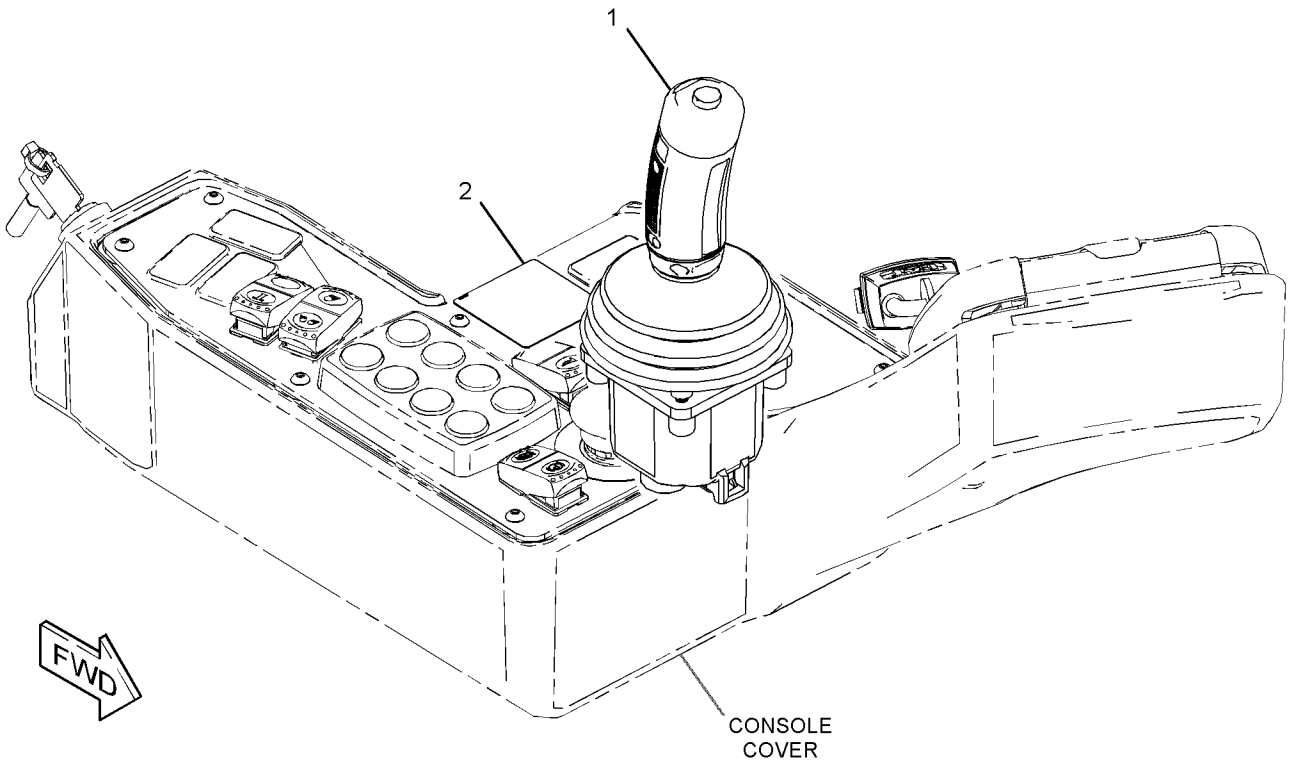

GRAPHIC #1

<END>

g03385587

424-5148 CONTROL GP-DIRECTION & SPEED

S/N: MBF1-UP; M4M1-UP; M5P1-UP; SDT1-UP
PART OF 379-8758, 379-8761 CONFIGURATION AR
AN ATTACHMENT

SMCS-3065, 5462 **i05290014**

NOTE	REF NO	GRAPHIC REF	PART NUMBER	QTY	PART NAME 1 2 3 4 5 6 (PRODUCT LEVEL)	SEE PAGE
	1	1	**392-0120**	1	CONTROL GP-DIRECTION & SPEED (AUTO VIBE, LEVLING BLADE)	
M		1	**9X-2045**	4	SCREW-TRUSS HEAD (M6X1X20-MM)	
		1	**383-1408**	1	BOOT	
		1	**383-1403**	1	KIT-CONTROL HANDLE (INCLUDES HOUSING GRIPS, LOOM SWITCH, ROCKER SWITCH, SCREWS, SEAL, BOOT & LEVER)	
	2	1	**419-0170**	1	FILM-IDENTIFICATION (OPERATOR CONTROLS)	

M - METRIC PART

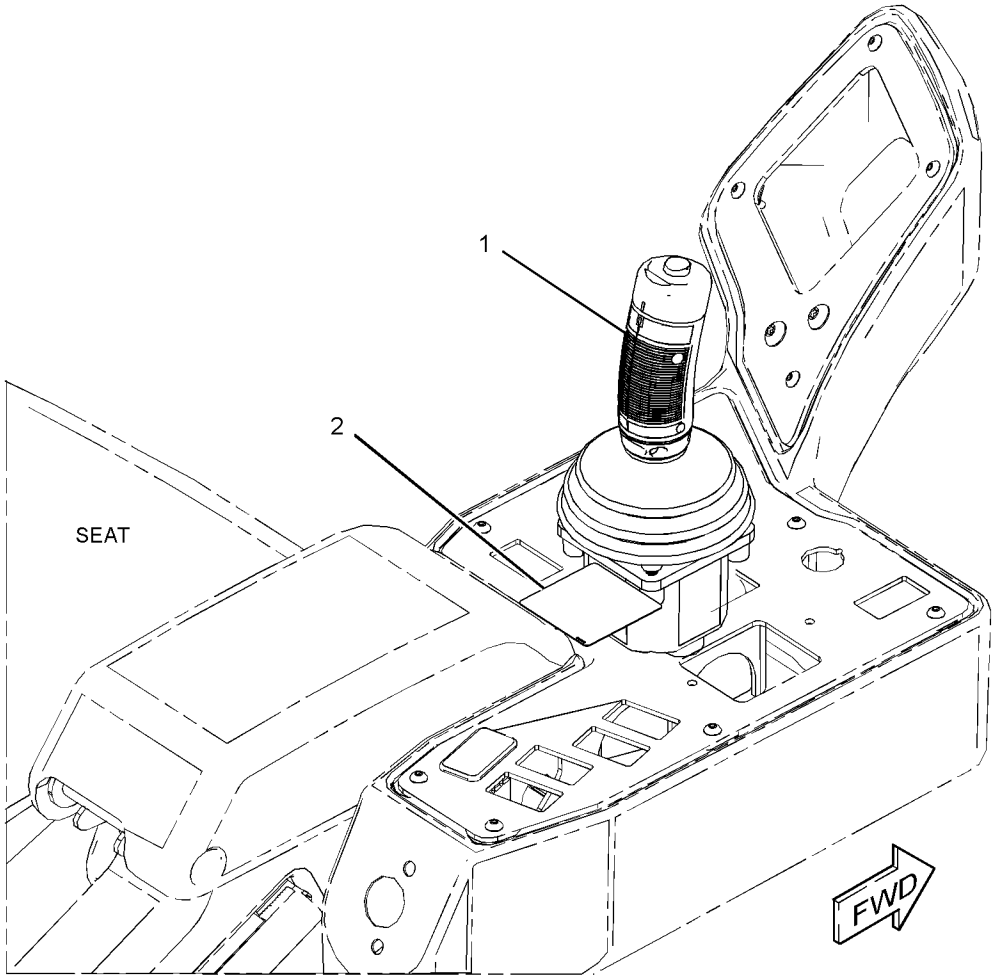

GRAPHIC #1 **<END>** g03382575

350-7082 CONTROL GP-STEERING

S/N: MBF1-UP; M4M1-UP; M5P1-UP; SDT1-UP

PART OF 374-9752 HYDRAULIC AR-AUXILIARY

SMCS-4309, 4310, 4343 **i05272076**

NOTE	REF NO	GRAPHIC REF	PART NUMBER	QTY	PART NAME 1 2 3 4 5 6 (PRODUCT LEVEL)	SEE PAGE
	1	1	**8R-2916**	1	COVER AS (CAT STEERING WHEEL)	
	2	1	**8R-2918**	1	KNOB AS (STEERING WHEEL)	
M		1	**8T-4244**	1	NUT (M12X1.75-THD)	
	3	1	**9D-7924**	4	MOUNTING	
	4	1	**314-2404**	1	BOOT	
	5	1	**353-5936**	1	VALVE GP-FLOW CONTROL (STEERING)	
	6	1	**420-4376**	1	STEERING COLUMN GP	
		1	**423-3507**	1	KIT-SPRING	
					(INCLUDES SPRINGS)	
		1	**423-3508**	1	KIT-LEVER	
					(INCLUDES TILT LEVER AS, CAM, THRUST BERAING, SPACER, FRICTION WASHERS, WAVE WASHER, BOLT & NUT)	
	7	1	**356-7646**	1	GUARD AS	
	8	1	**361-2564**	1	COVER	
	9	1	**363-5911**	1	STEERING WHEEL AS	
		1	**363-6423**	1	PLUG	
	10	1	**372-6013**	1	SUPPORT AS	
M	11	1	**8T-6466**	4	BOLT (M10X1.5X60-MM)	
M	12	1	**101-7401**	4	BOLT-SOCKET HEAD (M10X1.5X20-MM)	
	13	1	*148-8340*	2	CONNECTOR AS	
					(EACH INCLUDES)	
		1	**3K-0360**	1	SEAL-O-RING	
		1	**6V-8398**	1	SEAL-O-RING	
		1	**6V-8639**	1	CONNECTOR	
	14	1	*148-8342*	2	CONNECTOR AS	
					(EACH INCLUDES)	
		1	**3K-0360**	1	SEAL-O-RING	
		1	**6V-8632**	1	CONNECTOR	
		1	**7J-9108**	1	SEAL-O-RING	
M	15	1	**174-8131**	3	SCREW-TRUSS HEAD (M4X0.7X12-MM)	
M	16	1	**6V-8227**	1	NUT (M18X1.5-THD)	
	17	1	**7X-0578**	8	WASHER-HARD (10.2X32X2.5-MM THK)	
	18	1	**8T-4121**	8	WASHER-HARD (11X21X2.5-MM THK)	
M	19	1	**8T-4136**	4	BOLT (M10X1.5X25-MM)	
M	20	1	**8T-4138**	4	BOLT (M6X1X20-MM)	
M	21	1	**8T-4195**	4	BOLT (M10X1.5X30-MM)	
	22	1	**8T-4205**	4	WASHER-HARD (7.2X14.5X2-MM THK)	
	23	1	**8T-4896**	4	WASHER-HARD (10.2X18.5X2.5-MM THK)	

M - METRIC PART

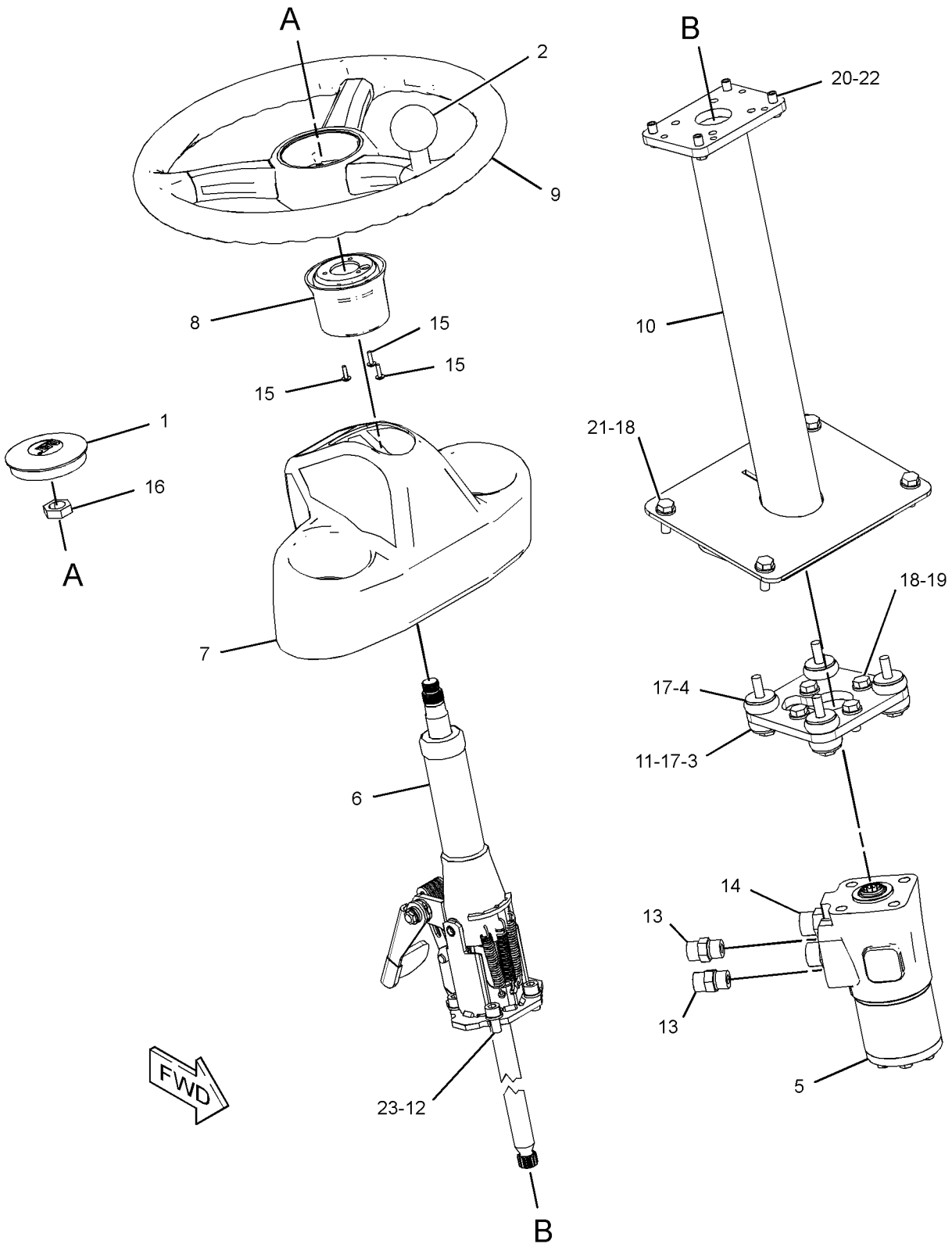

GRAPHIC #1 **<END>** g02734276

379-9698 COVER GP-CAB

S/N: MBF1-UP; M4M1-UP; M5P1-UP; SDT1-UP
PART OF 374-9843, 382-1438, 416-2514 OPERATOR AR
AN ATTACHMENT

SMCS-7301 **i05291196**

NOTE	REF NO	GRAPHIC REF	PART NUMBER	QTY	PART NAME 1 2 3 4 5 6 (PRODUCT LEVEL)	SEE PAGE
	1	1	**276-0753**	1	CAP-PLUG	
	2	1	**358-3208**	1	COVER GP-CAB	
		1	**4E-8722**	5	NUT (RETAINER)	
	3	1	**367-0756**	1	BOX-STORAGE	
	4	1	**384-5430**	1	COVER	
	5	1	**389-9513**	1	SEAL	
	6	1	**393-8997**	1	INSULATION	
	7	1	**393-8998**	1	INSULATION	
	8	1	**399-2752**	1	COVER	
	9	1	**096-6166**	2	WASHER-HARD (4.5X9X1-MM THK)	
M	10	1	**3E-8020**	11	SCREW-TRUSS HEAD (M6X1X25-MM)	
	11	1	**5P-4116**	4	WASHER-HARD (8.8X20.5X2-MM THK)	
M	12	1	**6V-9672**	2	SCREW-MACHINE (M4X0.7X16-MM)	
	13	1	**8C-6438**	2	SCREW-PAN HEAD (6-20X12.7-MM)	
M	14	1	**8T-4908**	4	BOLT (M8X1.25X25-MM)	
	15	1	**9X-2038**	16	WASHER (7X19X2-MM THK)	
M	16	1	**9X-2045**	5	SCREW-TRUSS HEAD (M6X1X20-MM)	

M - METRIC PART

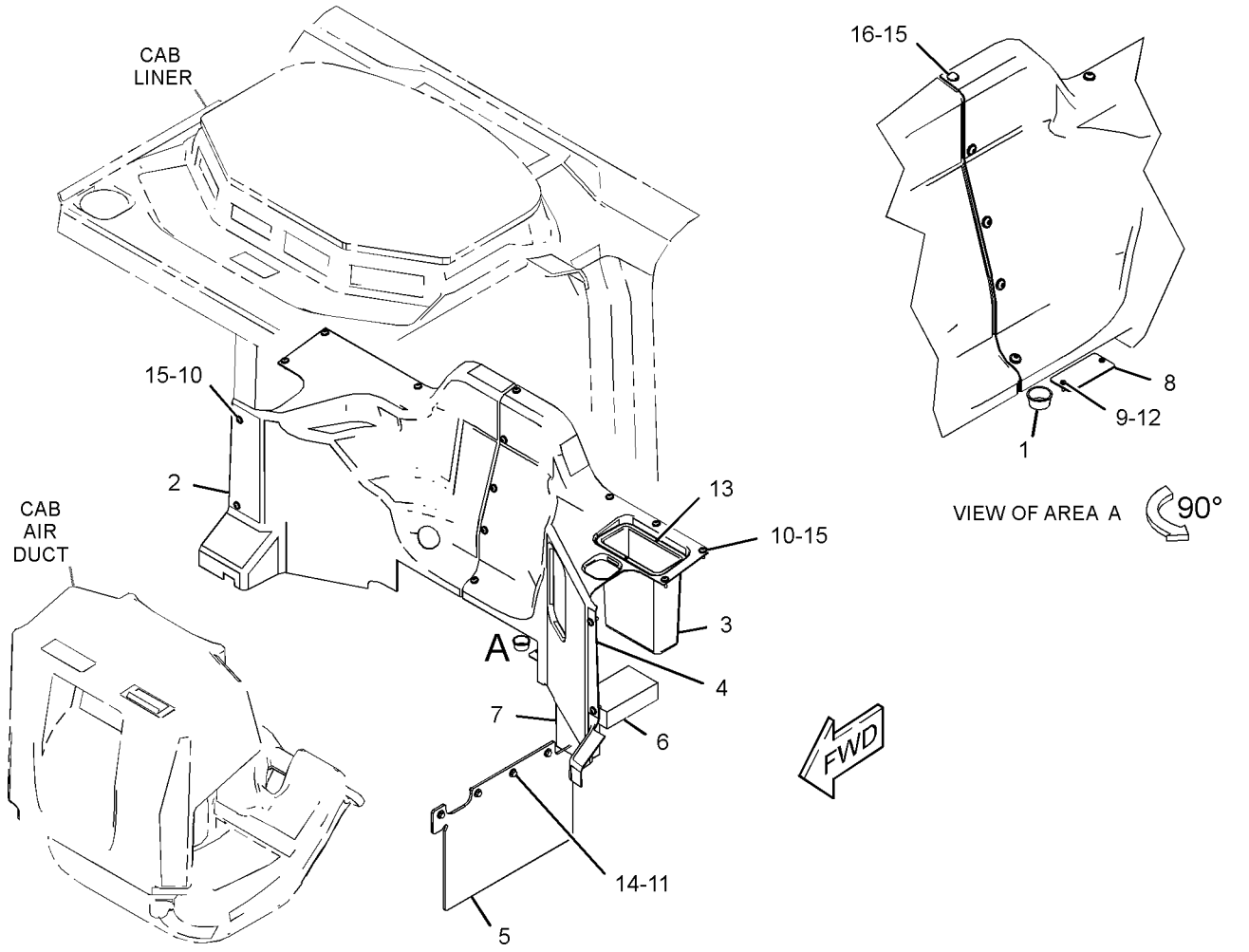

GRAPHIC #1 **<END>** g03102419

379-8754 COVER GP-CONSOLE

S/N: MBF1-UP; M4M1-UP; M5P1-UP; SDT1-UP
PART OF 379-8758, 379-8761 CONFIGURATION AR
AN ATTACHMENT

SMCS-5258 **i05322960**

NOTE	REF NO	GRAPHIC REF	PART NUMBER	QTY	PART NAME 1 2 3 4 5 6 (PRODUCT LEVEL)	SEE PAGE
	1	1	**382-3493**	1	PLATE	
	2	1	**383-3463**	1	COVER	
	3	1	**384-0055**	1	COVER	
	4	1	**385-5394**	1	BRACKET AS	
M		1	**6V-9632**	8	NUT-WELD (M6X1-THD)	
M		1	**8T-3612**	4	NUT-WELD (M8X1.25-THD)	
	5	1	**385-5667**	1	BRACKET AS	
M		1	**6V-9632**	4	NUT-WELD (M6X1-THD)	
M		1	**8T-6462**	2	BOSS-WELD (M10X1.5X25-MM)	
	6	1	**154-8079**	13	NUT-RETAINER (U-TYPE)	
M	7	1	**193-2685**	12	SCREW-TRUSS HEAD (M6X1X20-MM)	
	8	1	**314-3025**	3	SCREW-THUMB (M6X1X16-MM)	
	9	1	**5P-5774**	1	PLUG	
	10	1	**7X-7729**	4	WASHER (11X25X3-MM THK)	
M	11	1	**8T-4136**	4	BOLT (M10X1.5X25-MM)	
M	12	1	**9X-1046**	13	SCREW (M4X0.7X18-MM)	
	13	1	**419-0064**	1	FILM-IDENTIFICATION (FUSE, RELAY PANEL)	

M - METRIC PART

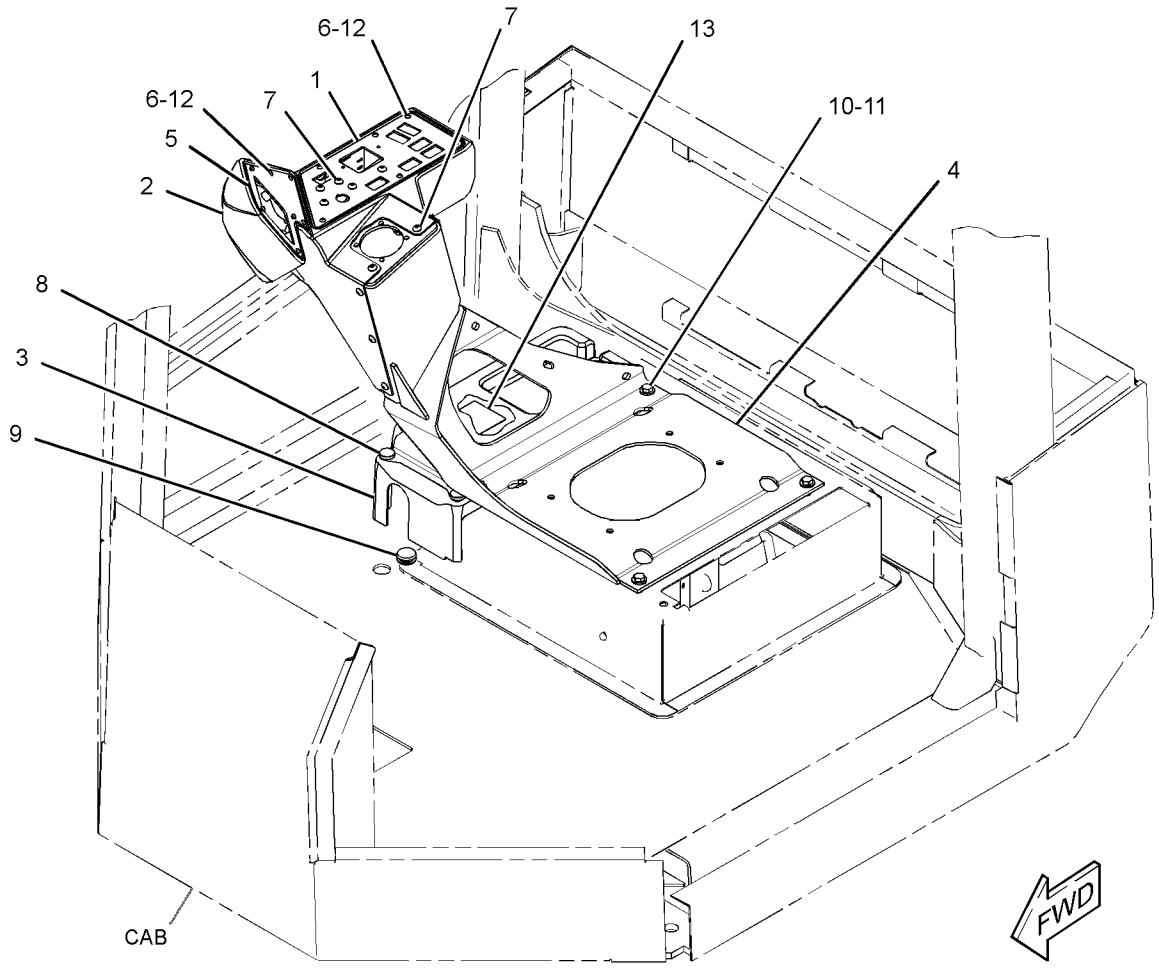

GRAPHIC #1 **<END>** g03386215

379-8755 COVER GP-CONSOLE

S/N: MBF1-UP; M4M1-UP; M5P1-UP; SDT1-UP
PART OF 379-8760, 379-8762 CONFIGURATION AR
AN ATTACHMENT

SMCS-5258 **i05322937**

NOTE	REF NO	GRAPHIC REF	PART NUMBER	QTY	PART NAME 1 2 3 4 5 6 (PRODUCT LEVEL)	SEE PAGE
	1	1	**367-0760**	1	COVER	
	2	1	**367-2020**	1	BRACKET AS	
	3	1	**368-3063**	1	PLATE	
	4	1	**384-0055**	1	COVER	
	5	1	**399-8077**	1	PLATE	
	6	1	**415-2458**	2	PLATE	
	7	1	**154-8079**	13	NUT-RETAINER (U-TYPE)	
	8	1	**172-8591**	2	NUT-SPRING (M6X1-THD)	
	9	1	**314-3025**	3	SCREW-THUMB (M6X1X16-MM)	
M	10	1	**5C-2890**	4	NUT (M6X1-THD)	
	11	1	**5P-5774**	1	PLUG	
	12	1	**7X-7729**	4	WASHER (11X25X3-MM THK)	
M	13	1	**8T-6466**	4	BOLT (M10X1.5X60-MM)	
	14	1	**8Y-1816**	4	SPACER (12.5X25X25-MM THK)	
M	15	1	**9X-1046**	13	SCREW (M4X0.7X18-MM)	
M	16	1	**9X-2044**	2	SCREW-TRUSS HEAD (M6X1X16-MM)	
	17	1	**9X-8256**	4	WASHER (6.6X12X2-MM THK)	
	18	1	**419-0064**	1	FILM-IDENTIFICATION (FUSE, RELAY PANEL)	

M - METRIC PART

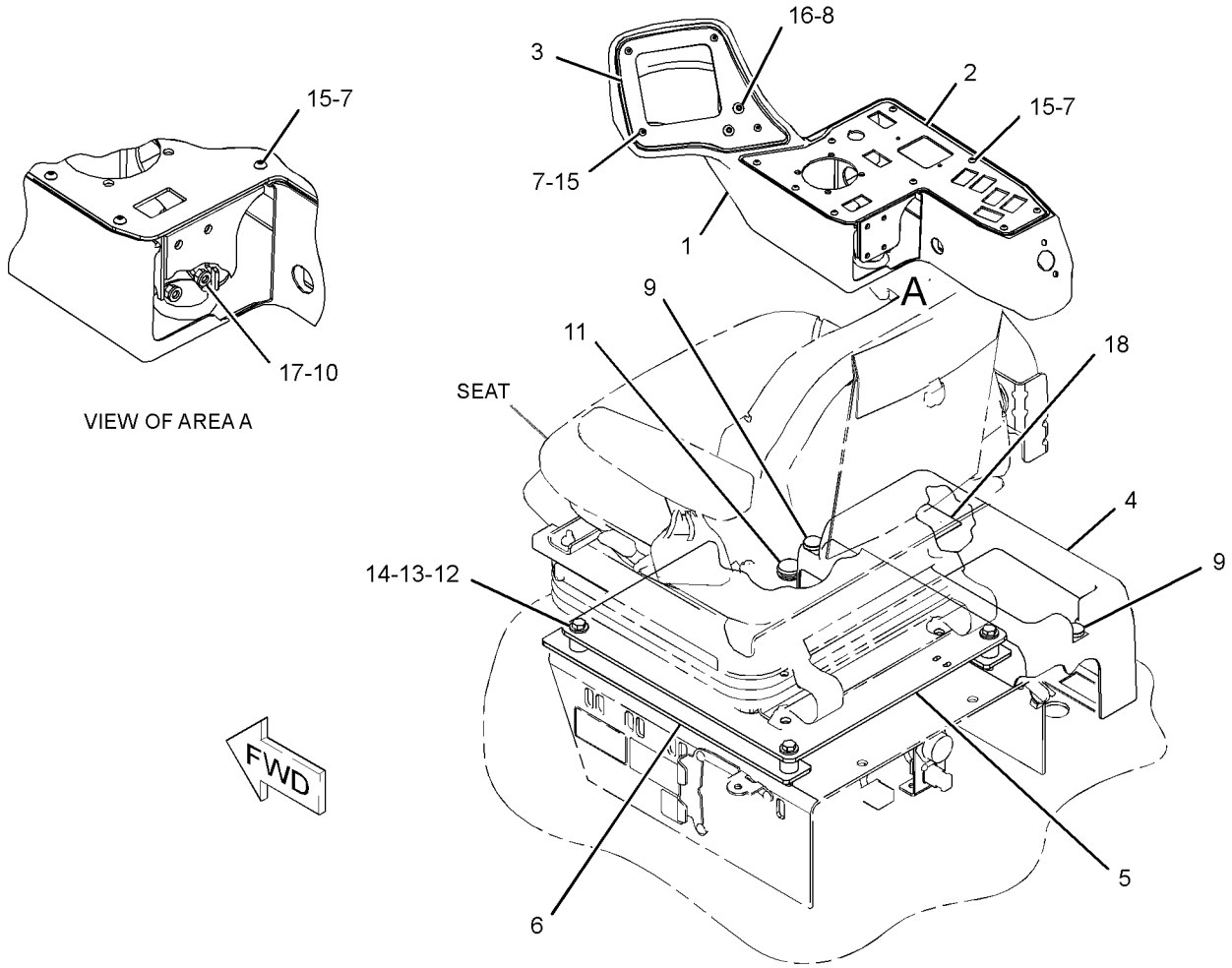

VIEW OF AREA A

GRAPHIC #1 **<END>** g03386173

373-3162 DOOR GP-CAB

S/N: MBF1-UP; M4M1-UP; M5P1-UP; SDT1-UP
PART OF 373-3211 CAB GP-ENCLOSED ROPS
AN ATTACHMENT

SMCS-7308 **i05297516**

NOTE	REF NO	GRAPHIC REF	PART NUMBER	QTY	PART NAME 1 2 3 4 5 6 (PRODUCT LEVEL)	SEE PAGE
	1	1	**172-8591**	4	NUT-SPRING (M6X1-THD)	
	2	1	**6V-7636**	2	PIN AS-SPRING	
	3	1	**8S-7803**	3	RING-RETAINING	
	4	1	**8T-2444**	4	STUD-BALL	
	5	1	**8Y-6377**	1	STRIKER	
	6	1	**090-9554**	2	STUD-BALL	
	7	1	**090-9555**	2	CLIP	
	8	1	**111-0204**	1	PLATE AS	
M	9	1	**128-6866**	4	BOLT-ROUND HEAD (M8X1.25X25-MM)	
	10	1	**129-8542**	2	RETAINER	
	11	1	**129-8545**	10	WASHER (13X40X3-MM THK)	
M	12	1	**136-4192**	2	BOLT (M6X1X35-MM)	
	13	1	**159-4946**	2	KEEPER	
	14	1	**177-4877**	2	SHIM (1-MM THK)	
J	15	1	**252-1862**	1	HANDLE AS (PULL)	
	16	1	**252-1863**	1	GASKET	
	17	1	**252-8286**	2	SPACER (6.5X10.5X11.5-MM THK)	
	18	1	**257-6170**	1	SPACER (6.5X14X7.5-MM THK)	
	19	1	**257-6205**	2	SPACER (10.5X14.5X12-MM THK)	
	20	1	**257-6206**	1	SPACER (14X18X12-MM THK)	
	21	1	**269-2890**	1	CLEVIS	
	22	1	**089-7436**	1	PIN-SPRING	
	23	1	**292-5614**	1	BELLCRANK	
Y	24	1	**299-6986**	2	LATCH GP-CAB DOOR & WINDOW (LH)	444
	25	1	**328-4984**	1	LATCH AS-DOOR (LH)	
	26	1	**354-6353**	3	HINGE	
E	27	1	**3E-3805**		SEAL (471.5-CM)	
E	27A	1	**3E-3805**		SEAL (355.5-CM)	
	28	1	**354-6357**	1	SPACER (2.8X15.88X44-MM THK)	
	29	1	**388-5605**	1	LINKAGE AS	
		1	**6V-8185**	1	NUT (1/4-20-THD)	
		1	**108-5471**	1	CLEVIS	
	30	1	**372-4427**	8	CAP AS	
	31	1	**372-7549**	1	SPRING AS-GAS (DOOR, LH)	
	32	1	**373-3163**	2	PLATE-HINGE	
	33	1	**373-3164**	1	GLASS	
	34	1	**373-3166**	1	COVER	
	35	1	**373-3167**	1	COVER	
	36	1	**373-3169**	1	DOOR AS-ACCESS	
	37	1	**378-8424**	2	SPRING AS-GAS (DOOR WINDOW, LH)	
	38	1	**378-9120**	2	BRACKET	
	39	1	**384-5892**	1	GLASS	
	40	1	**108-4311**	1	SCREW-MACHINE (3/8-16X0.75-IN)	
M	41	1	**5C-7261**	10	NUT (M8X1.25-THD)	
	42	1	**5P-4116**	2	WASHER-HARD (8.8X20.5X2-MM THK)	
	43	1	**6V-5839**	6	WASHER (11X21X2.5-MM THK)	
M	44	1	**6V-7357**	5	BOLT (M6X1X25-MM)	
	45	1	**8T-4224**	4	WASHER-HARD (8.8X16X2-MM THK)	
M	46	1	**8T-4908**	2	BOLT (M8X1.25X25-MM)	
M	47	1	**8T-4971**	2	BOLT (M6X1X30-MM)	
M	49	1	**8T-7547**	2	BOLT (M8X1.25X30-MM)	
M	50	1	**9X-1046**	4	SCREW (M4X0.7X18-MM)	
	51	1	**9X-2038**	6	WASHER (7X19X2-MM THK)	
M	52	1	**9X-2040**	6	SCREW-TRUSS HEAD (M10X1.5X25-MM)	
M	53	1	**9X-2044**	2	SCREW-TRUSS HEAD (M6X1X16-MM)	

373-3162 **DOOR GP-CAB (*contd.*)** **i05297516**

NOTE	REF NO	GRAPHIC REF	PART NUMBER	QTY	PART NAME 1 2 3 4 5 6 (PRODUCT LEVEL)	SEE PAGE
M	54	1	**9X-2045**	4	SCREW-TRUSS HEAD (M6X1X20-MM)	
	55	1	**9X-8256**	7	WASHER (6.6X12X2-MM THK)	

E - ORDER BY THE CENTIMETER
J - REQUIRES CORPORATE KEY
M - METRIC PART
Y - SEPARATE ILLUSTRATION

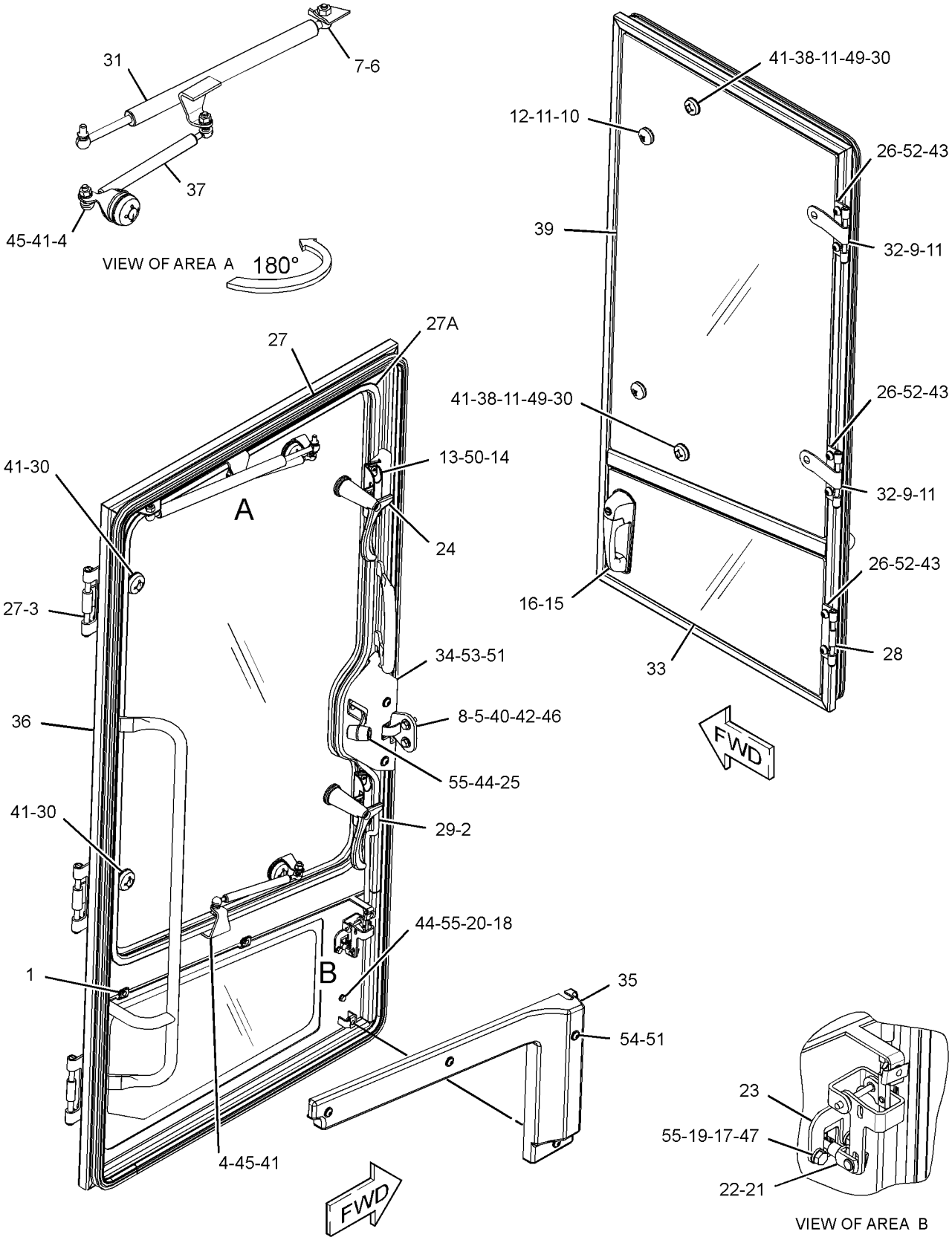

GRAPHIC #1 **<END>** g03051557

373-3178 DUCT GP-CAB AIR

S/N: MBF1-UP; M4M1-UP; M5P1-UP; SDT1-UP
PART OF 373-3175 CAB AR
AN ATTACHMENT

SMCS-734D **i05291175**

NOTE	REF NO	GRAPHIC REF	PART NUMBER	QTY	PART NAME 1 2 3 4 5 6 (PRODUCT LEVEL)	SEE PAGE
	1	1	**172-8591**	4	NUT-SPRING	
	2	1	**8Y-6388**	2	LOUVER AS-VENT	
	3	1	**8Y-7446**	8	SCREW-PAN HEAD	
	4	1	**104-2091**	4	SCREW-FLAT HEAD (6-20X0.5-IN)	
	5	1	**164-8473**	4	LOUVER AS	
	6	1	**396-4107**	1	DUCT	
	7	1	**357-8362**	1	DUCT AS	
	8	1	**362-3588**	2	BRACKET	
	9	1	**380-9611**	4	PLATE	
	10	1	**101-2867**	4	WASHER-HARD (7.2X25X2-MM THK)	
	11	1	**5P-4116**	2	WASHER-HARD (8.8X20.5X2-MM THK)	
M	12	1	**7X-2533**	4	BOLT (M6X1X35-MM)	
M	13	1	**8T-4908**	2	BOLT (M8X1.25X25-MM)	
M	14	1	**9X-2042**	3	SCREW-TRUSS HEAD (M6X1X12-MM)	
D	15	1	**5P-5927**		SEAL (1-M EACH)	
D	15A	1	**5P-5927**		SEAL (0.5-M EACH)	

D - ORDER BY THE METER
M - METRIC PART

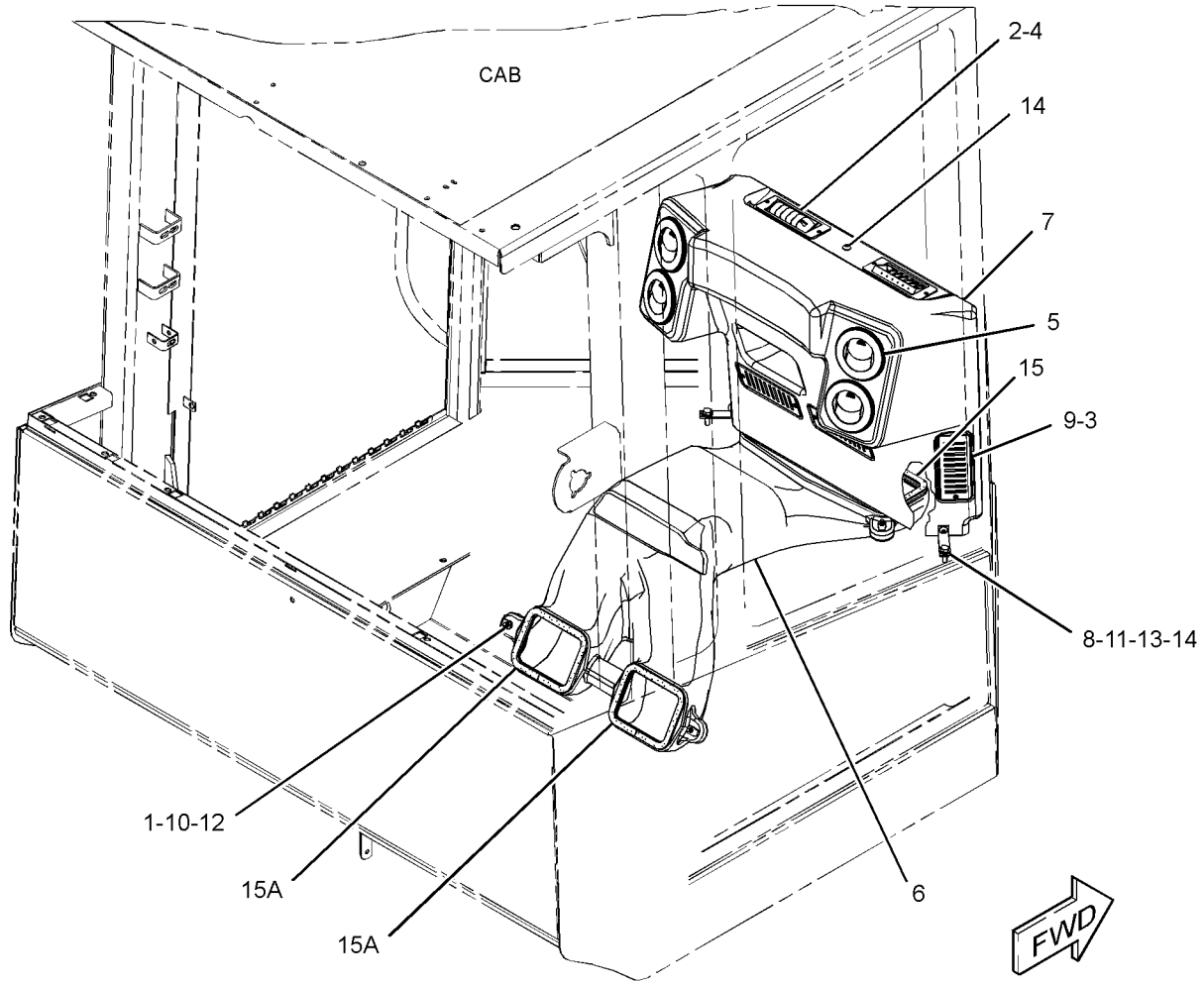

GRAPHIC #1 **<END>** g02723208

240-4607 FILTER GP-CAB AIR

S/N: MBF1-UP; M4M1-UP; M5P1-UP; SDT1-UP
PART OF 374-9843, 382-1438, 416-2514 OPERATOR AR
AN ATTACHMENT

SMCS-7342 **i03436402**

NOTE	REF NO	GRAPHIC REF	PART NUMBER	QTY	PART NAME 1 2 3 4 5 6 (PRODUCT LEVEL)	SEE PAGE
	1	1	**116-7856**	2	KNOB	
	2	1	**127-8613**	1	GASKET	
	3	1	**180-7486**	1	COVER AS	
	4	1	**180-7487**	1	FILTER ELEMENT-CAB AIR	
					—OR—	
		1	**282-5340**	1	FILTER ELEMENT-CAB AIR (ACTIVATED CHARCOAL)	

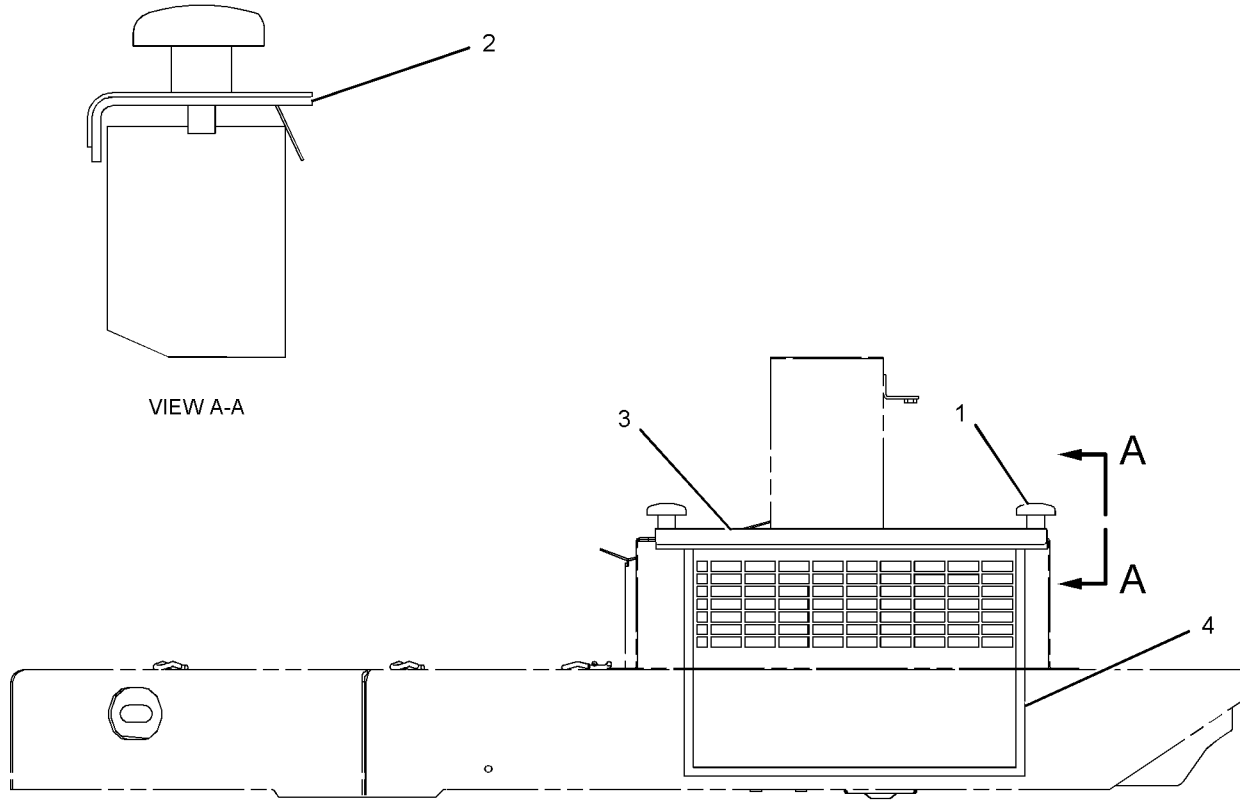

LEFT SIDE VIEW

GRAPHIC #1 **<END>** g01095833

376-0651 FLOOR MAT GP

S/N: MBF1-UP; M4M1-UP; M5P1-UP; SDT1-UP
PART OF 374-9842, 377-2157, 377-2159, 381-6991 OPERATOR AR
AN ATTACHMENT

SMCS-726M **i05287557**

NOTE	REF NO	GRAPHIC REF	PART NUMBER	QTY	PART NAME 1 2 3 4 5 6 (PRODUCT LEVEL)	SEE PAGE
	1	1	**234-0091**	3	RIVET	
	2	1	**384-2792**	1	FLOOR MAT	
		1	**376-0652**	1	FLOOR MAT	

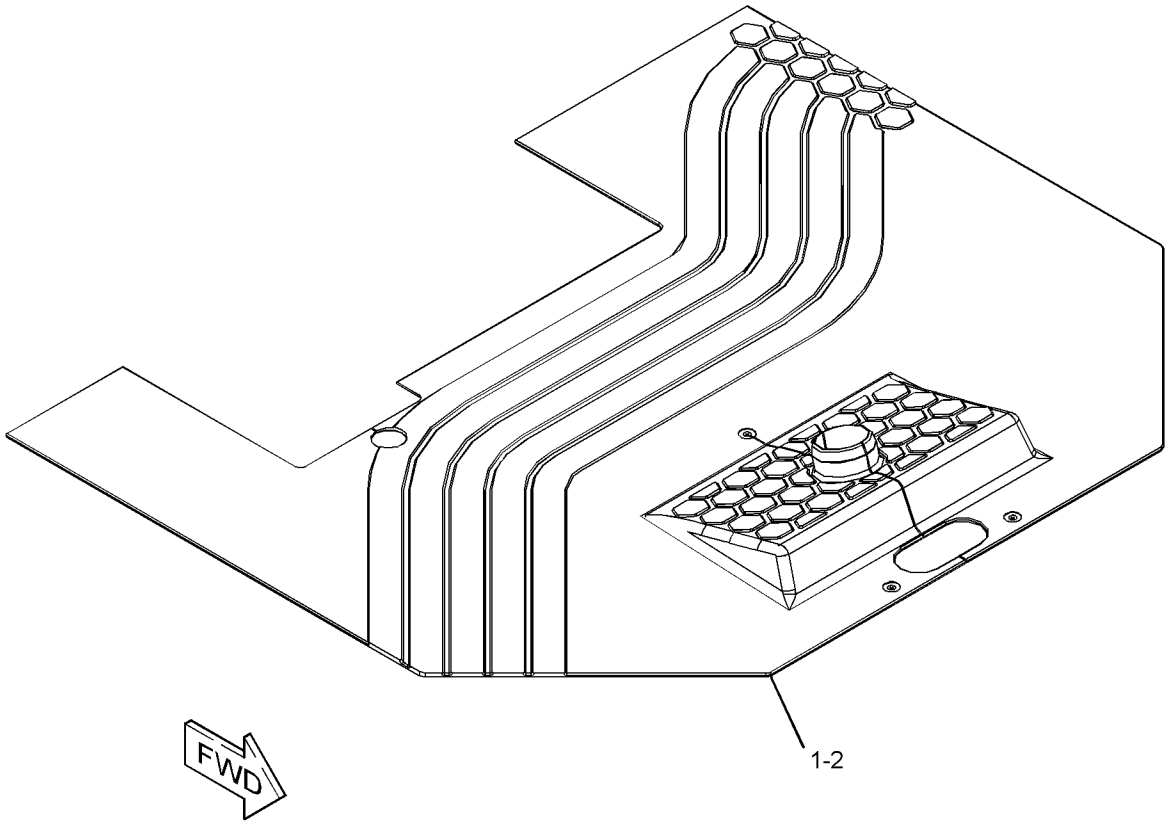

GRAPHIC #1 **<END>** g03284898

381-9071 FLOOR MAT GP-CAB

S/N: MBF1-UP; M4M1-UP; M5P1-UP; SDT1-UP
PART OF 374-9843, 382-1438, 416-2514 OPERATOR AR
AN ATTACHMENT

SMCS-726M **i05291197**

NOTE	REF NO	GRAPHIC REF	PART NUMBER	QTY	PART NAME 1 2 3 4 5 6 (PRODUCT LEVEL)	SEE PAGE
	1	1	**384-3857**	1	FLOOR MAT	
	2	1	**384-3859**	1	INSULATION	

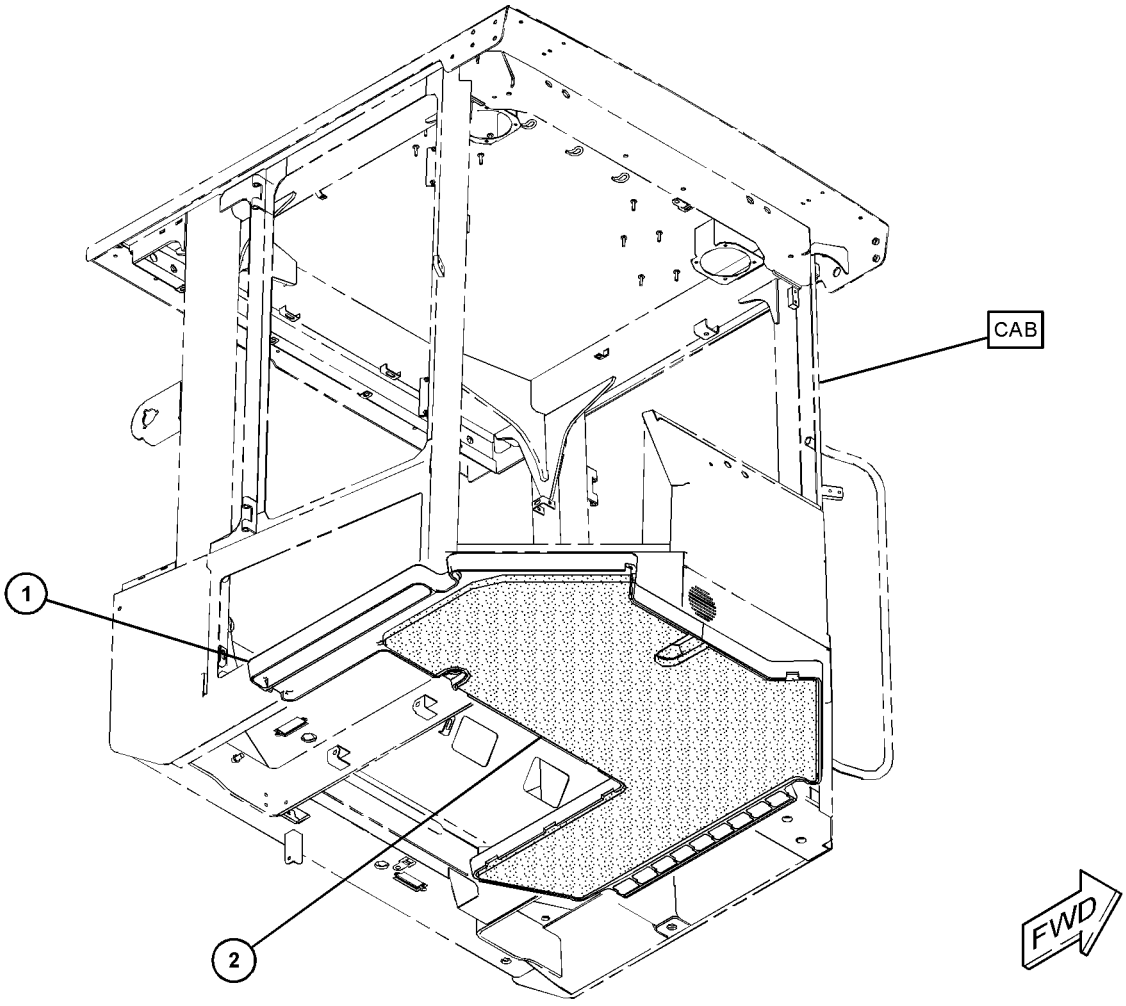

GRAPHIC #1 **<END>** g03120822

387-5722 GUARD GP-VANDALISM

S/N: MBF1-UP; M4M1-UP; M5P1-UP; SDT1-UP
PART OF 379-8758, 379-8760 CONFIGURATION AR
AN ATTACHMENT

SMCS-7315 **i05289967**

NOTE	REF NO	GRAPHIC REF	PART NUMBER	QTY	PART NAME 1 2 3 4 5 6 (PRODUCT LEVEL)	SEE PAGE
	1	1	**246-2641**	1	PADLOCK GP	
		1	**5P-8500**	1	KEY	
	2	1	**387-5730**	2	BRACKET	
	3	1	**387-5732**	1	GUARD	
M	4	1	**5C-2890**	3	NUT (M6X1-THD)	
M	5	1	**9X-2045**	3	SCREW-TRUSS HEAD (M6X1X20-MM)	
	6	1	**9X-8256**	3	WASHER (6.6X12X2-MM THK)	

M - METRIC PART

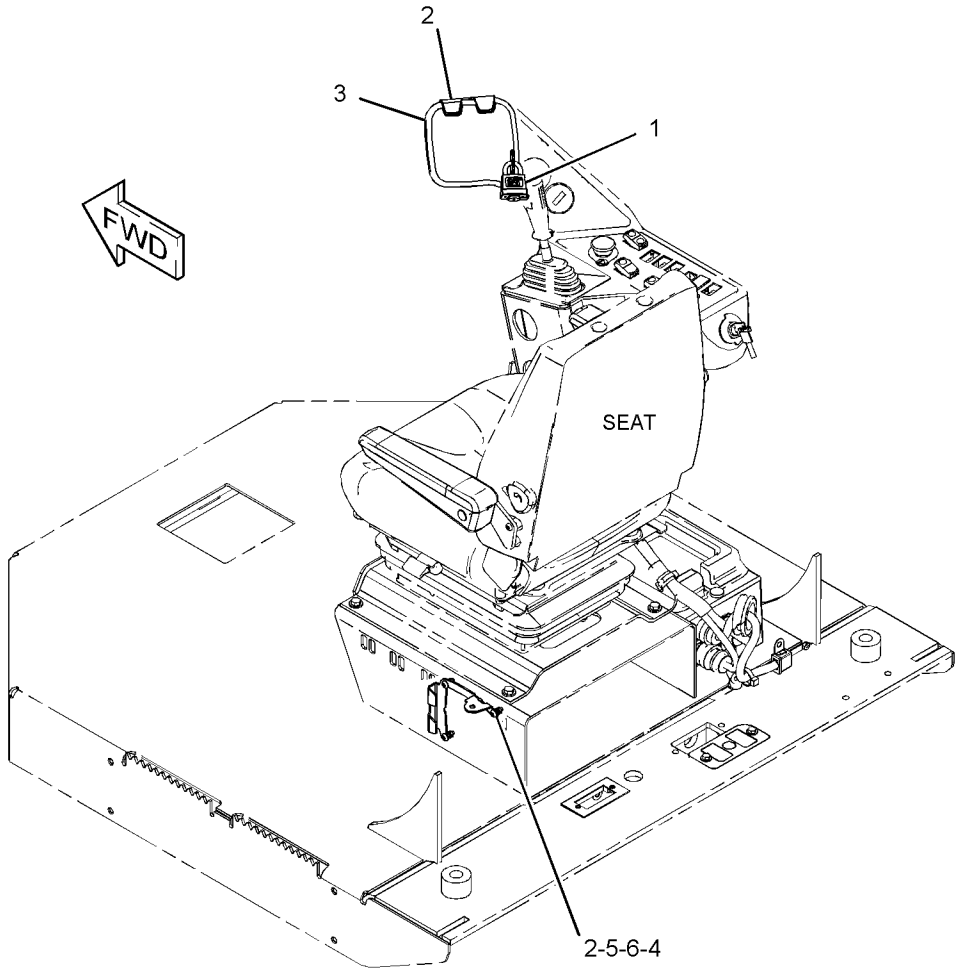

GRAPHIC #1 **<END>** g03057256

352-7747 HORN GP-ELECTRIC—CAB

S/N: MBF1-UP; M4M1-UP; M5P1-UP; SDT1-UP
24-VOLT
PART OF 374-9843, 382-1438, 416-2514 OPERATOR AR
AN ATTACHMENT

SMCS-7402 **i05190303**

NOTE	REF NO	GRAPHIC REF	PART NUMBER	QTY	PART NAME 1 2 3 4 5 6 (PRODUCT LEVEL)	SEE PAGE
	1	1	**163-1201**	1	HORN AS (24-VOLT, LOW TONE) (FRONT, LH)	
	2	1	**8T-4121**	1	WASHER-HARD (11X21X2.5-MM THK)	
M	3	1	**8T-4137**	1	BOLT (M10X1.5X20-MM)	

M - METRIC PART

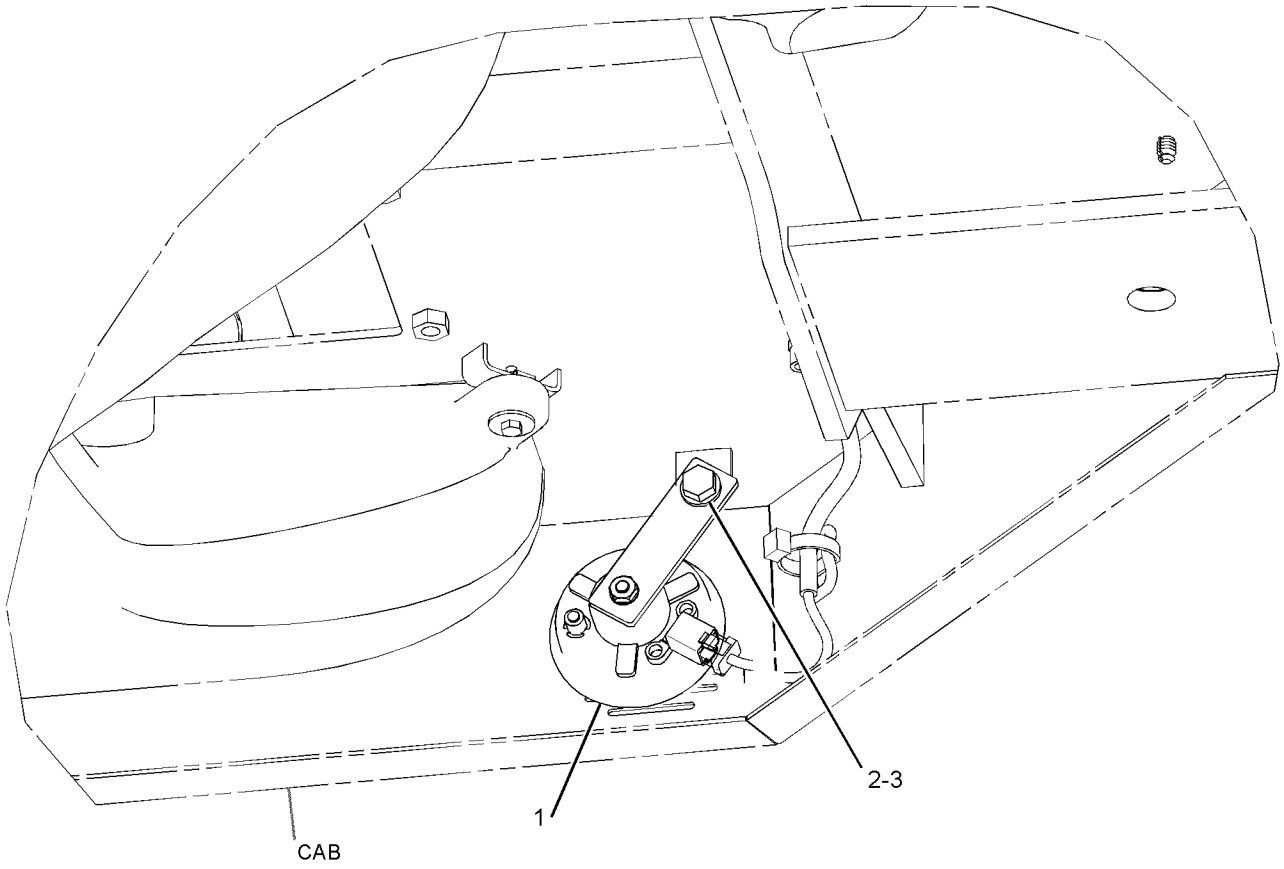

REAR VIEW
(LOWER RIGHT)

GRAPHIC #1 **<END>** g03202604

355-5140 HORN GP-ELECTRIC—ROPS, FOPS

S/N: MBF1-UP; M4M1-UP; M5P1-UP; SDT1-UP
24-VOLT
PART OF 374-9842, 377-2157, 377-2159, 381-6991 OPERATOR AR
AN ATTACHMENT

SMCS-7402 **i05287549**

NOTE	REF NO	GRAPHIC REF	PART NUMBER	QTY	PART NAME 1 2 3 4 5 6 (PRODUCT LEVEL)	SEE PAGE
	1	1	**163-1201**	1	HORN AS (24-VOLT, LOW TONE) (FRONT, LH)	
	2	1	**8T-4121**	1	WASHER-HARD (11X21X2.5-MM THK)	
M	3	1	**8T-4137**	1	BOLT (M10X1.5X20-MM)	

M - METRIC PART

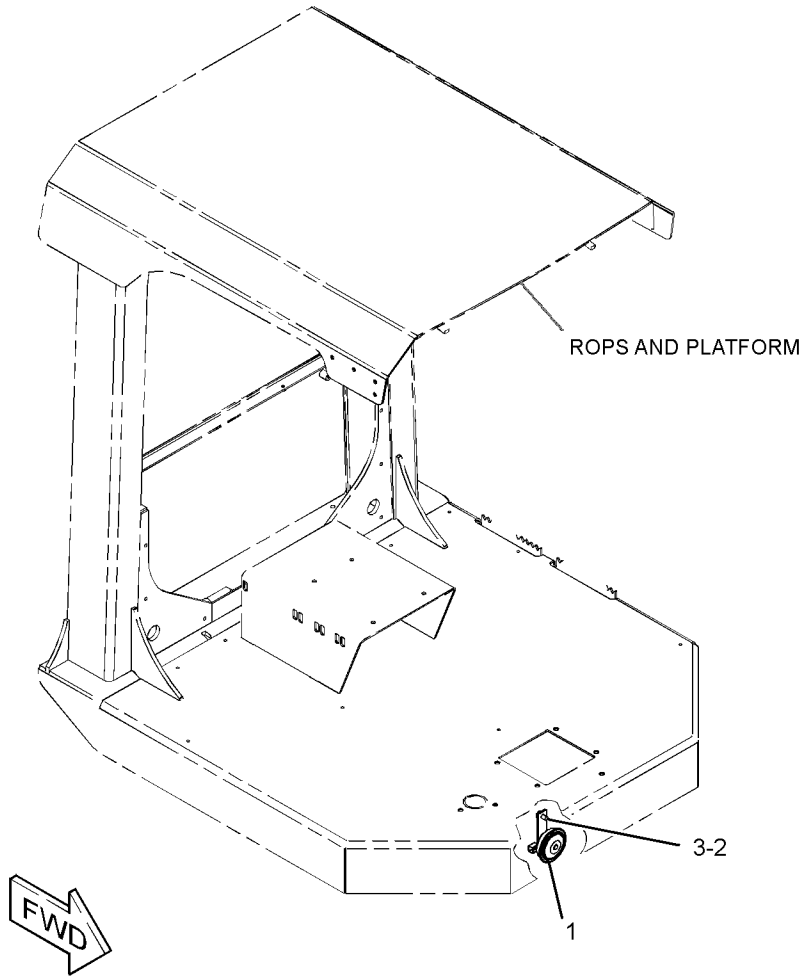

GRAPHIC #1 **<END>** g03202863

373-3179 INSTALLATION GP-RADIO

S/N: MBF1-UP; M4M1-UP; M5P1-UP; SDT1-UP
PART OF 373-3175 CAB AR
AN ATTACHMENT

SMCS-1408, 7338 **i05291176**

NOTE	REF NO	GRAPHIC REF	PART NUMBER	QTY	PART NAME 1 2 3 4 5 6 (PRODUCT LEVEL)	SEE PAGE
	1	1	**7Y-5293**	2	NUT-SPEED	
	2	1	**200-5728**	1	HARNESS AS-RADIO	
		1	**8T-8729**	7	PIN-CONNECTOR (16-GA TO 18-GA)	
		1	**8T-8737**	1	PLUG-SEAL	
		1	**160-3518**	1	KIT-RECEPTACLE (8-PIN)	
					(INCLUDES RECEPTACLE AS & WEDGE)	
		1	**172-8037**	1	CONNECTOR (RADIO)	
		1	**172-8039**	11	TERMINAL (RADIO)	
	3	1	**354-6410**	1	BRACKET	
M	4	1	**5C-2890**	4	NUT (M6X1-THD)	
	5	1	**5P-4115**	4	WASHER-HARD (7.2X19X2-MM THK)	
	6	1	**5P-8524**	4	GROMMET	

M - METRIC PART

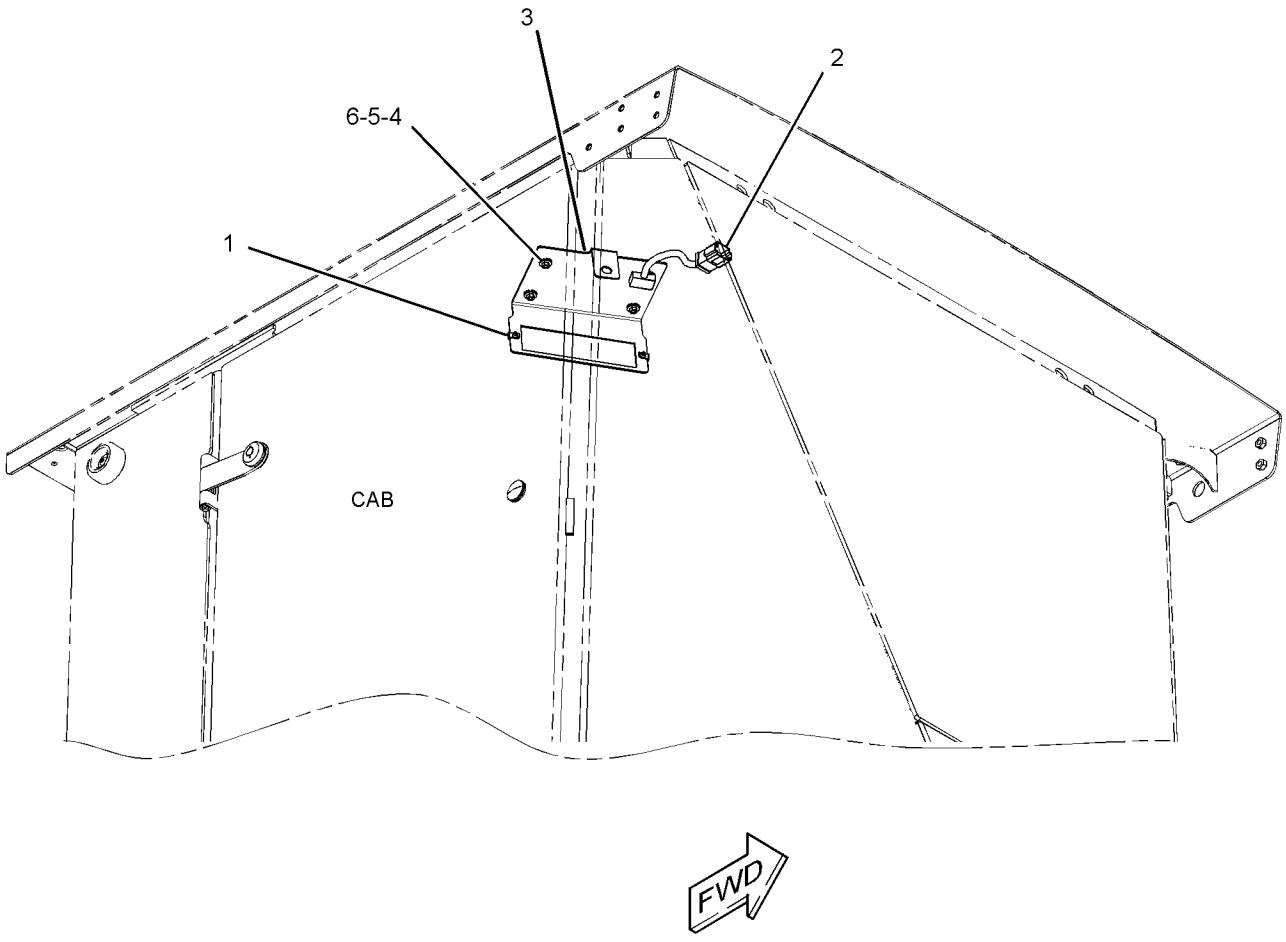

GRAPHIC #1 **<END>** g02723073

421-1607 KIT-SEAT SUSPENSION

S/N: MBF1-UP; M4M1-UP; M5P1-UP; SDT1-UP

FIELD INSTALLATION

SMCS-7312, 7324 **i05293747**

NOTE	REF NO	GRAPHIC REF	PART NUMBER	QTY	PART NAME 1 2 3 4 5 6 (PRODUCT LEVEL)	SEE PAGE
M	1	1	**166-1222**	4	SCREW-BUTTON HEAD (M8X1.25X30-MM)	
M	2	1	**9X-2616**	2	SCREW-SOCKET (M8X1.25X16-MM)	
M	3	1	**131-3540**	14	LOCKNUT (M8X1.25-THD)	
	4	1	**193-5164**	14	WASHER (3/8 FLAT)	
M	5	1	**7Y-7394**	8	SCREW-BUTTON HEAD (M8X1.25X25-MM)	

M - METRIC PART

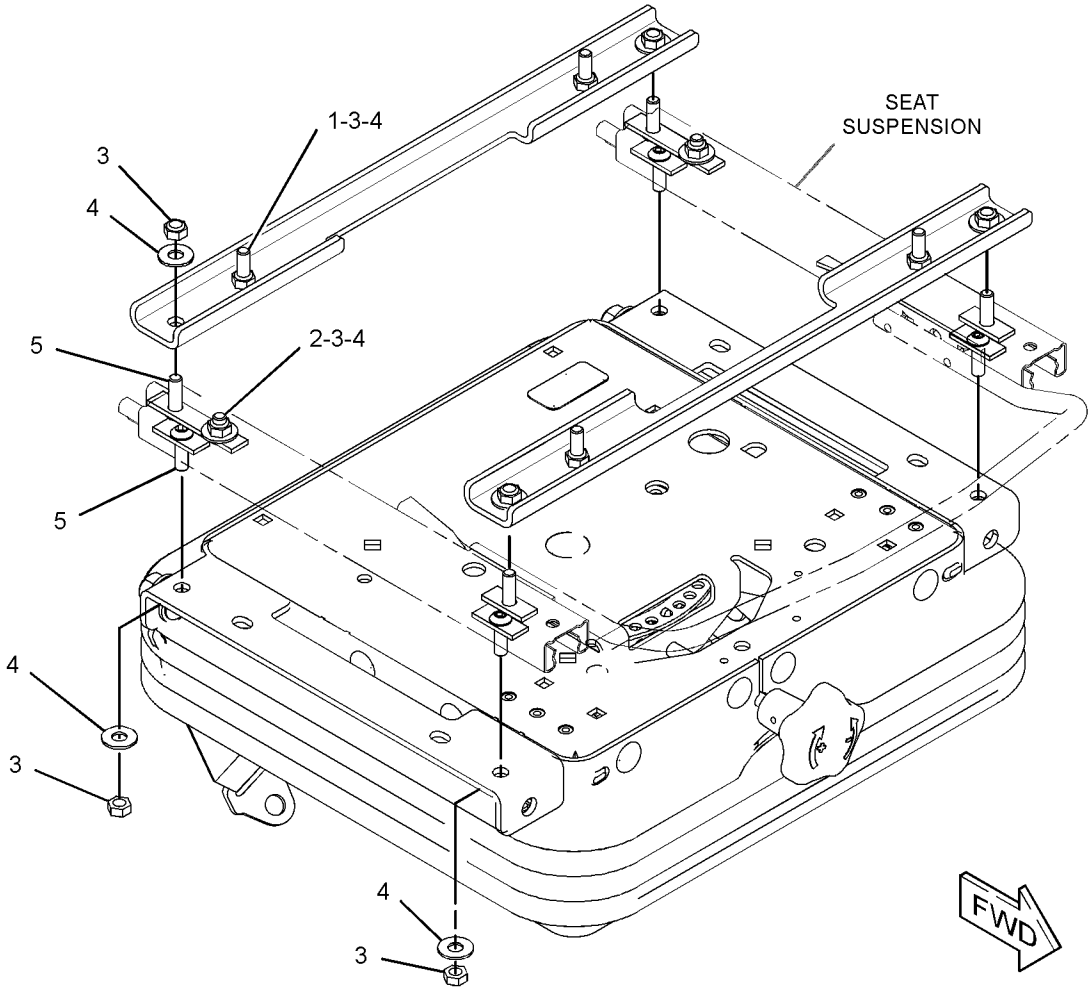

GRAPHIC #1 **<END>** g03202641

299-6986 LATCH GP-CAB DOOR & WINDOW

S/N: MBF1-UP; M4M1-UP; M5P1-UP; SDT1-UP
PART OF 373-3162 DOOR GP-CAB, 373-3151 WINDOW GP-CAB
AN ATTACHMENT

SMCS-7308, 7310 **i05190394**

NOTE	REF NO	GRAPHIC REF	PART NUMBER	QTY	PART NAME 1 2 3 4 5 6 (PRODUCT LEVEL)	SEE PAGE
M	1	1	**161-6984**	1	SCREW-TRUSS HEAD (M5X0.8X20-MM)	
	2	1	**161-6987**	1	WASHER-HARD (5.2X16X1.5-MM THK)	
	3	1	**161-9294**	1	SPRING-FLAT WIRE	
M	4	1	**162-6556**	1	LOCKNUT (M6X1-THD)	
M	5	1	**5C-2874**	1	NUT (M5X0.8-THD)	

M - METRIC PART

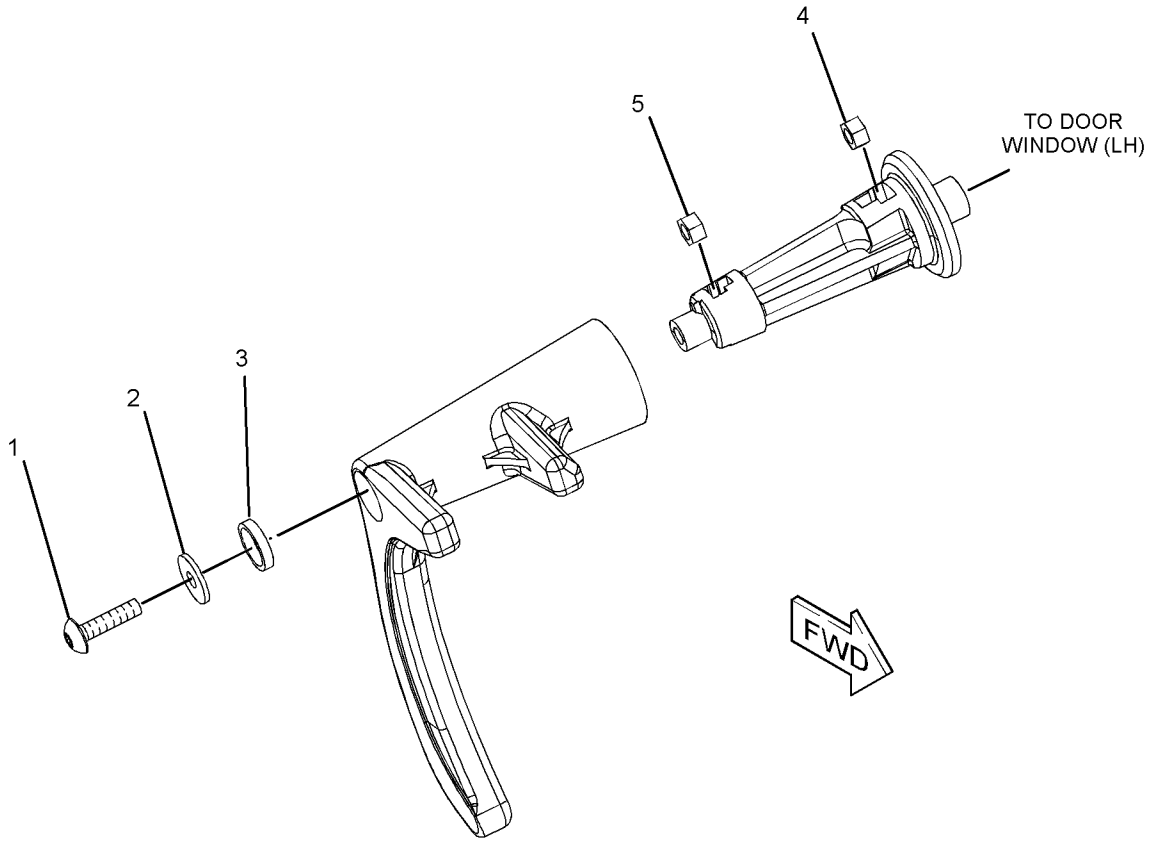

GRAPHIC #1 **<END>** g01384201

374-0675 LINER GP-CAB

S/N: MBF1-UP; M4M1-UP; M5P1-UP; SDT1-UP
PART OF 373-3175 CAB AR
AN ATTACHMENT

SMCS-7301, 7329

i05297369

NOTE	REF NO	GRAPHIC REF	PART NUMBER	QTY	PART NAME 1 2 3 4 5 6 (PRODUCT LEVEL)	SEE PAGE
	1	1	**172-8591**	22	NUT-SPRING (M6X1-THD)	
	2	1	**6V-8928**	1	HOOK-COAT	
	3	1	**7Y-5293**	14	NUT-SPEED	
	4	1	**9U-8263**	2	COVER	
	5	1	**101-3055**	2	COVER-SPEAKER	
	6	1	**359-4530**	1	INSULATION	
	7	1	**364-0868**	2	PLATE	
	8	1	**373-3005**	1	COVER	
	9	1	**373-3006**	1	COVER	
	10	1	**374-0640**	1	COVER	
	11	1	**374-0641**	1	HEADLINER	
	12	1	**101-2867**	4	WASHER-HARD (7.2X25X2-MM THK)	
M	13	1	**8T-0024**	12	SCREW (M4X0.7X30-MM)	
M	14	1	**9X-2045**	17	SCREW-TRUSS HEAD (M6X1X20-MM)	
M	15	1	**9X-2046**	3	SCREW-TRUSS HEAD (M6X1X35-MM)	
M	16	1	**3E-8020**	2	SCREW-TRUSS HEAD (M6X1X25-MM)	

M - METRIC PART

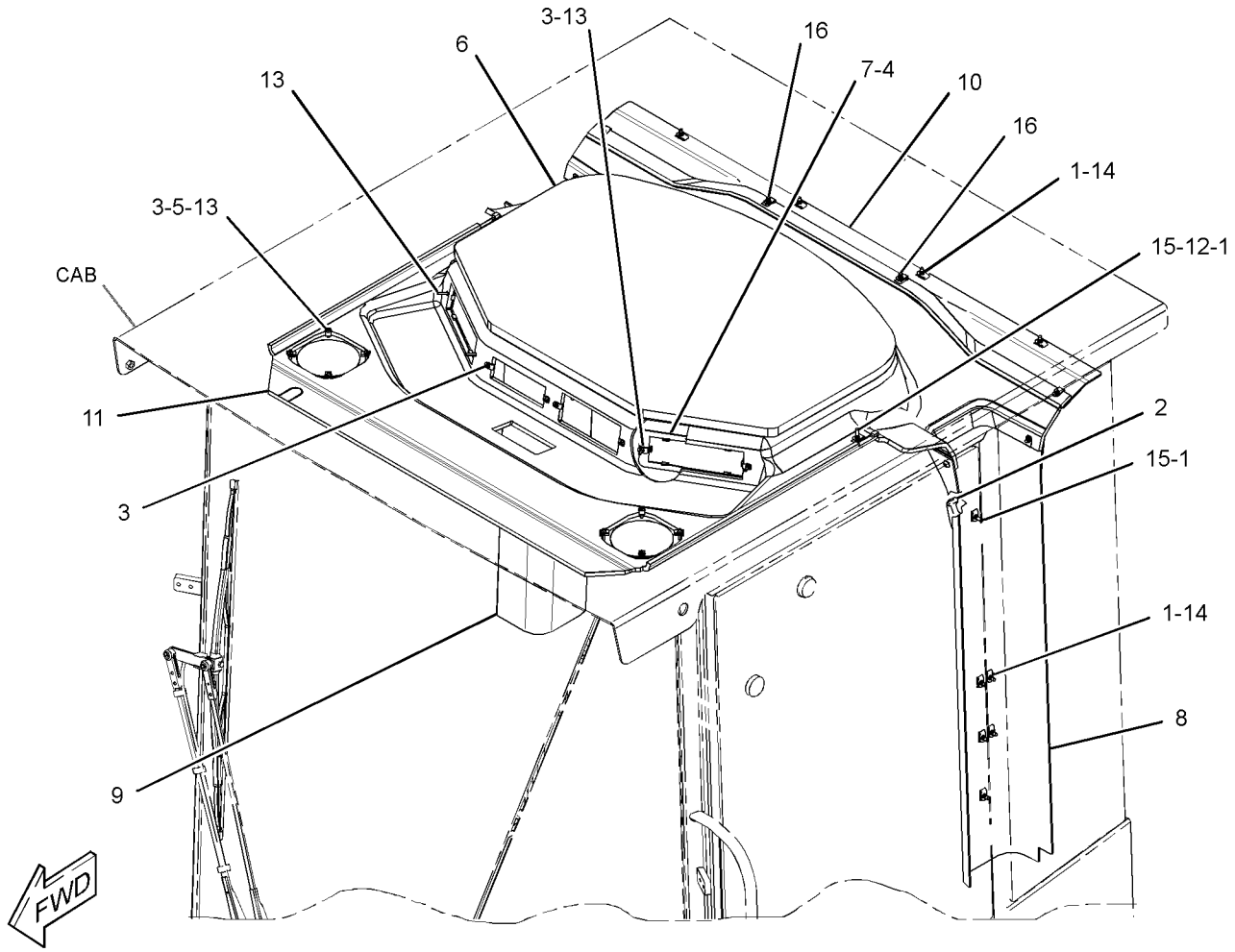

GRAPHIC #1

<END>

g03053766

379-8743 LINES GP-AIR CONDITIONER

S/N: MBF1-UP; M4M1-UP; M5P1-UP; SDT1-UP
PART OF 416-2514 OPERATOR AR
AN ATTACHMENT

SMCS-1808, 7320 **i05314810**

NOTE	REF NO	GRAPHIC REF	PART NUMBER	QTY	PART NAME 1 2 3 4 5 6 (PRODUCT LEVEL)	SEE PAGE
	1	1	**5P-3928**	1	COUPLING AS-REFRIGERANT (SELF-SEALING) (LOW PRESSURE)	
	2	1	**5P-3929**	1	COUPLING AS-REFRIGERANT (SELF-SEALING) (LOW SIDE)	
	3	1	**5P-3948**	1	COUPLING AS-REFRIGERANT (SELF-SEALING) (HIGH SIDE)	
	4	1	**5P-4106**	1	NUT (1-7/16-16-THD)	
	5	1	**7K-3176**	1	COUPLING AS-REFRIGERANT (SELF-SEALING) (HIGH PRESSURE)	
	6	1	**7K-3304**	1	NUT-JAM (1-20-THD)	
	7	1	**102-8703**	1	PLATE-COVER	
	8	1	**110-6393**	1	PLATE-INSTRUCTION (AIR CONDITIONER)	
	9	1	**149-6371**	1	SWITCH AS-PRESSURE (REFRIGERANT)	
		1	**102-8802**	1	KIT-RECEPTACLE (2-PIN)	
					(INCLUDES RECEPATCLE AS & WEDGE)	
		1	**8T-8729**	2	PIN-CONNECTOR (16-GA TO 18-GA)	
	10	1	**177-2215**	3	STRAP-DUAL CLAMP	
M	11	1	**178-3336**	2	NUT-HEX FLANGE (M8X1.25-THD)	
	12	1	**186-6190**	1	ACCUMULATOR GP-REFRIGERANT (CHARGED)	
	13	1	**311-8367**	1	PLATE	
	14	1	**327-0282**	1	SEAL-INTEGRAL	
	15	1	**327-0283**	1	SEAL-INTEGRAL	
	16	1	**362-6754**	1	BRACKET AS	
I	17	1	**362-9617**	1	HOSE AS	
I	18	1	**363-0311**	1	HOSE AS	
I	19	1	**363-0320**	1	HOSE AS	
I	20	1	**363-0373**	1	HOSE AS	
	21	1	**381-6651**	1	HOSE AS	
	22	1	**382-1486**	1	HOSE AS	
	23	1	**067-3045**	1	CLIP	
	24	1	**142-4443**	1	CLIP	
	25	1	**232-0231**	2	CLAMP-HALF	
	26	1	**2H-3924**	1	LOCKWASHER	
	27	1	**3S-8664**	1	CLIP	
M	28	1	**5C-7261**	1	NUT (M8X1.25-THD)	
	29	1	**5P-4107**	1	WASHER (38.48X63.5X1.4-MM THK)	
	30	1	**5P-4116**	8	WASHER-HARD (8.8X20.5X2-MM THK)	
	31	1	**6V-4356**	1	CLIP (SLOT)	
	32	1	**6V-4357**	1	CLIP (TAB)	
M	33	1	**7X-2536**	1	BOLT (M8X1.25X14-MM)	
	34	1	**7X-7729**	1	WASHER (11X25X3-MM THK)	
M	35	1	**8T-4196**	1	BOLT (M10X1.5X35-MM)	
M	36	1	**8T-6912**	1	BOLT (M8X1.25X50-MM)	
M	37	1	**8T-7547**	3	BOLT (M8X1.25X30-MM)	
	38	1	**9X-7378**	1	SEAL-O-RING	
	39	1	**9X-7380**	1	SEAL-O-RING	
	40	1	**9X-7381**	2	SEAL-O-RING	
	41	1	**9X-7382**	1	SEAL-O-RING	
	42	1	**9X-7383**	4	SEAL-O-RING	
	43	1	**9X-7384**	2	SEAL-O-RING	
	44	1	**178-3620**	7	STRAP-DUAL CLAMP	

I - REFER TO HYDRAULIC INFORMATION SYSTEM
M - METRIC PART

379-8743 **LINES GP-AIR CONDITIONER (*contd.*)** **i05314810**

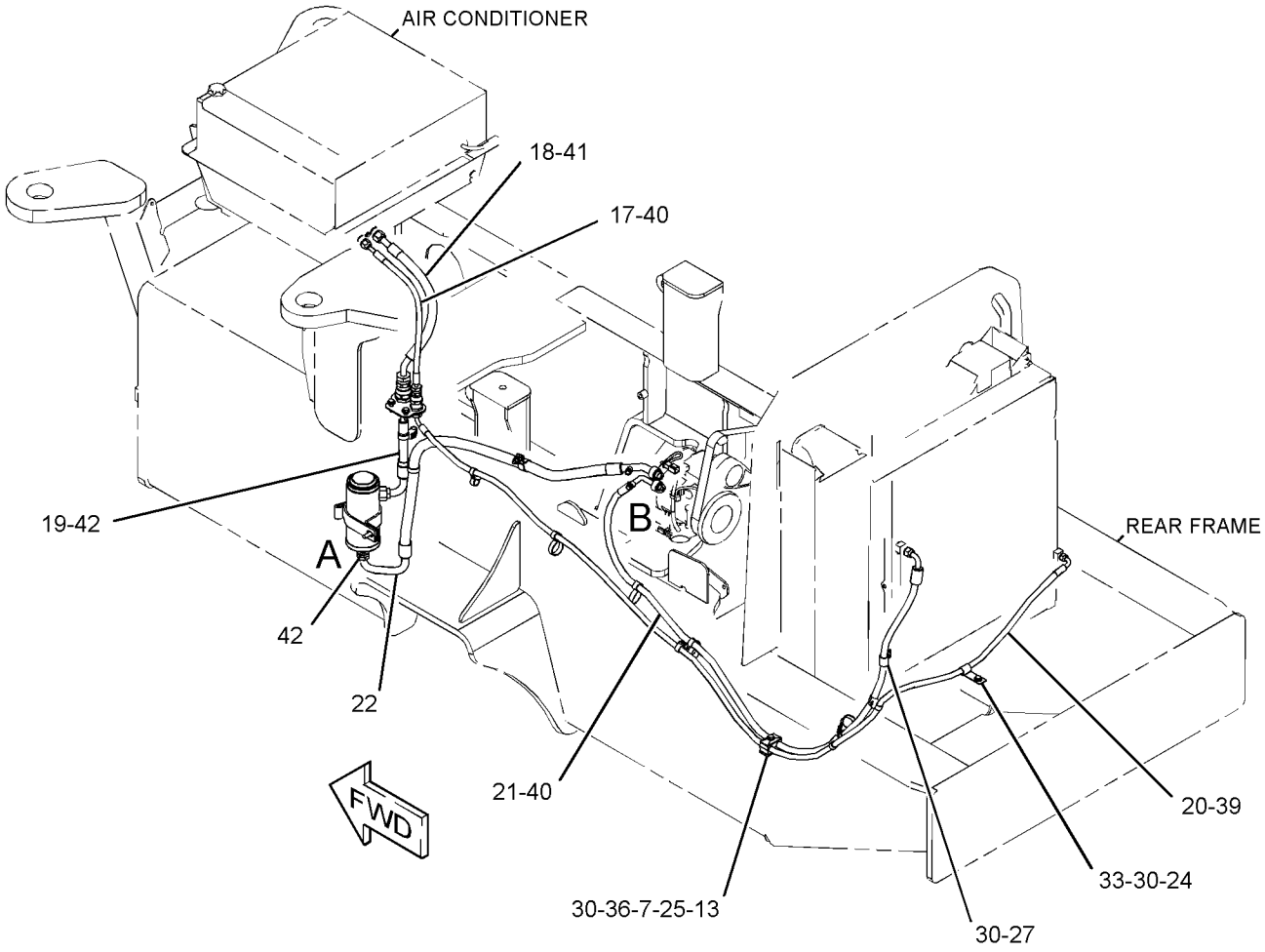

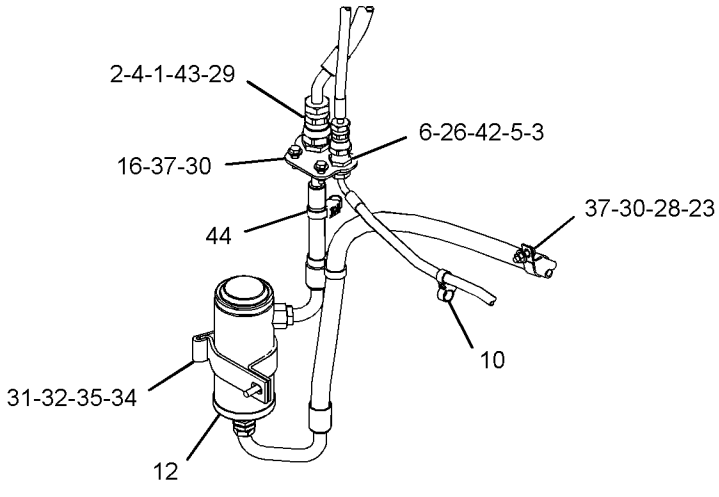

VIEW OF AREA A

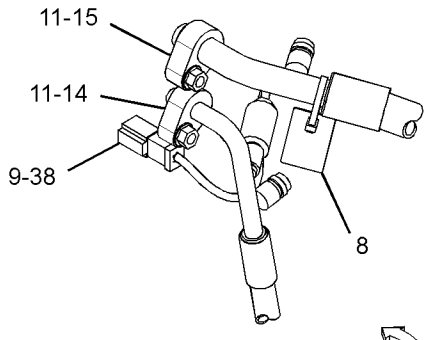

VIEW OF AREA B 180°

GRAPHIC #1 **<END>** g03383825

OPERATOR STATION

379-8744 LINES GP-AIR CONDITIONER

S/N: MBF1-UP; M4M1-UP; M5P1-UP; SDT1-UP
PART OF 374-9843, 382-1438 OPERATOR AR
AN ATTACHMENT

SMCS-1808, 7320 **i05314855**

NOTE	REF NO	GRAPHIC REF	PART NUMBER	QTY	PART NAME 1 2 3 4 5 6 (PRODUCT LEVEL)	SEE PAGE
	1	1	**5P-3928**	1	COUPLING AS-REFRIGERANT (SELF-SEALING)	
	2	1	**5P-3929**	1	COUPLING AS-REFRIGERANT (SELF-SEALING)	
	3	1	**5P-3948**	1	COUPLING AS-REFRIGERANT (SELF-SEALING)	
	4	1	**5P-4106**	1	NUT (1-7/16-16-THD)	
	5	1	**7K-3176**	1	COUPLING AS-REFRIGERANT (SELF-SEALING)	
	6	1	**7K-3304**	1	NUT-JAM (1-20-THD)	
	7	1	**102-8703**	1	PLATE-COVER	
	8	1	**110-6393**	1	PLATE-INSTRUCTION (AIR CONDITIONER)	
	9	1	**149-6371**	1	SWITCH AS-PRESSURE (AIR CONDITIONER)	
		1	**102-8802**	1	KIT-RECEPTACLE (2-PIN)	
					(INCLUDES RECEPTACLE AS & WEDGE)	
		1	**8T-8729**	2	PIN-CONNECTOR (16-GA TO 18-GA)	
	10	1	**177-2215**	4	STRAP-DUAL CLAMP	
M	11	1	**178-3336**	2	NUT-HEX FLANGE (M8X1.25-THD)	
Y	12	1	**186-6190**	1	ACCUMULATOR GP-REFRIGERANT (CHARGED)	410
	13	1	**311-8367**	1	PLATE	
	14	1	**327-0282**	1	SEAL-INTEGRAL	
	15	1	**327-0283**	1	SEAL-INTEGRAL	
	16	1	**362-6754**	1	BRACKET AS	
I	17	1	**362-9617**	1	HOSE AS	
I	18	1	**363-0311**	1	HOSE AS	
I	19	1	**363-0320**	1	HOSE AS	
I	20	1	**363-0373**	1	HOSE AS	
	21	1	**382-1359**	1	HOSE AS	
	22	1	**386-1479**	1	HOSE AS	
	23	1	**198-4766**	1	WASHER-HARD (11X25X10-MM THK)	
	24	1	**232-0231**	2	CLAMP-HALF	
	25	1	**245-8842**	1	CLIP	
	26	1	**2H-3924**	1	LOCKWASHER	
	27	1	**3S-8664**	1	CLIP	
	28	1	**5P-4107**	1	WASHER (38.48X63.5X1.4-MM THK)	
	29	1	**5P-4116**	8	WASHER-HARD (8.8X20.5X2-MM THK)	
	30	1	**6V-1889**	1	CLIP	
	31	1	**6V-4356**	1	CLIP (SLOT)	
	32	1	**6V-4357**	1	CLIP (TAB)	
M	33	1	**7X-2536**	1	BOLT (M8X1.25X14-MM)	
	34	1	**7X-7729**	1	WASHER (11X25X3-MM THK)	
M	35	1	**8T-4196**	1	BOLT (M10X1.5X35-MM)	
M	36	1	**8T-6912**	1	BOLT (M8X1.25X50-MM)	
M	37	1	**8T-7329**	1	BOLT (M8X1.25X55-MM)	
M	38	1	**8T-7547**	2	BOLT (M8X1.25X30-MM)	
	39	1	**9X-7378**	1	SEAL-O-RING	
	40	1	**9X-7380**	1	SEAL-O-RING	
	41	1	**9X-7381**	2	SEAL-O-RING	
	42	1	**9X-7382**	1	SEAL-O-RING	
	43	1	**9X-7383**	4	SEAL-O-RING	
	44	1	**9X-7384**	2	SEAL-O-RING	
	45	1	**178-3620**	5	STRAP-DUAL CLAMP	

I - REFER TO HYDRAULIC INFORMATION SYSTEM
M - METRIC PART
Y - SEPARATE ILLUSTRATION

379-8744 **LINES GP-AIR CONDITIONER (*contd.*)** **i05314855**

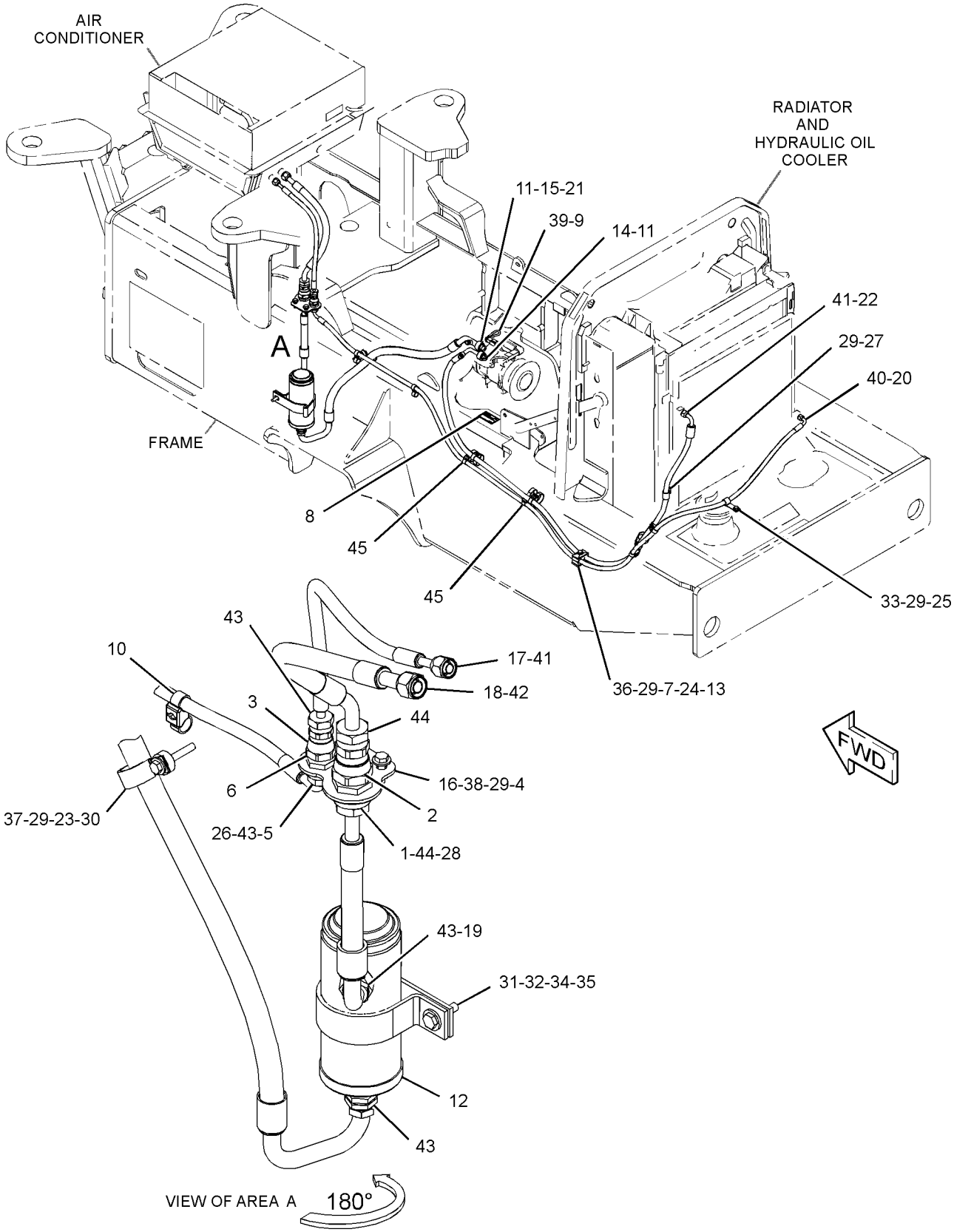

GRAPHIC #1 **<END>** g03385673

379-8742 LINES GP-HEATER

S/N: MBF1-UP; M4M1-UP; M5P1-UP; SDT1-UP
PART OF 416-2514 OPERATOR AR
AN ATTACHMENT

SMCS-1380, 1812, 7304 **i05291193**

NOTE	REF NO	GRAPHIC REF	PART NUMBER	QTY	PART NAME 1 2 3 4 5 6 (PRODUCT LEVEL)	SEE PAGE
	1	1	**1Y-0413**	1	TEE	
	2	1	**6P-8855**	2	TUBE	
	3	1	**8T-0154**	8	CLAMP-HOSE	
	4	1	**033-3168**	2	ELBOW	
	5	1	**177-2215**	3	STRAP-DUAL CLAMP	
	6	1	**200-6345**	1	MOUNT (DUAL SWIVEL)	
	7	1	**204-2281**	2	STRAP-CABLE	
	8	1	**242-4310**	1	FITTING	
M	9	1	**5C-7261**	2	NUT (M8X1.25-THD)	
	10	1	**5P-4116**	4	WASHER-HARD (8.8X20.5X2-MM THK)	
	11	1	**6D-4247**	3	CLIP	
M	12	1	**7X-2543**	1	BOLT (M10X1.5X120-MM)	
	13	1	**7X-7729**	2	WASHER (11X25X3-MM THK)	
M	14	1	**8T-4189**	1	BOLT (M8X1.25X20-MM)	
	15	1	**9L-3560**	1	ELBOW	
M	16	1	**8T-7547**	1	BOLT (M8X1.25X30-MM)	
	17	1	**8X-7893**	1	PIPE	
E	18	1	**5P-0767**		HOSE (62-CM)	
E	18A	1	**5P-0767**		HOSE (107-CM)	
E	18B	1	**5P-0767**		HOSE (140-CM)	
E	18C	1	**5P-0767**		HOSE (38-CM)	

E - ORDER BY THE CENTIMETER
M - METRIC PART

379-8742 **LINES GP-HEATER (*contd.*)** **i05291193**

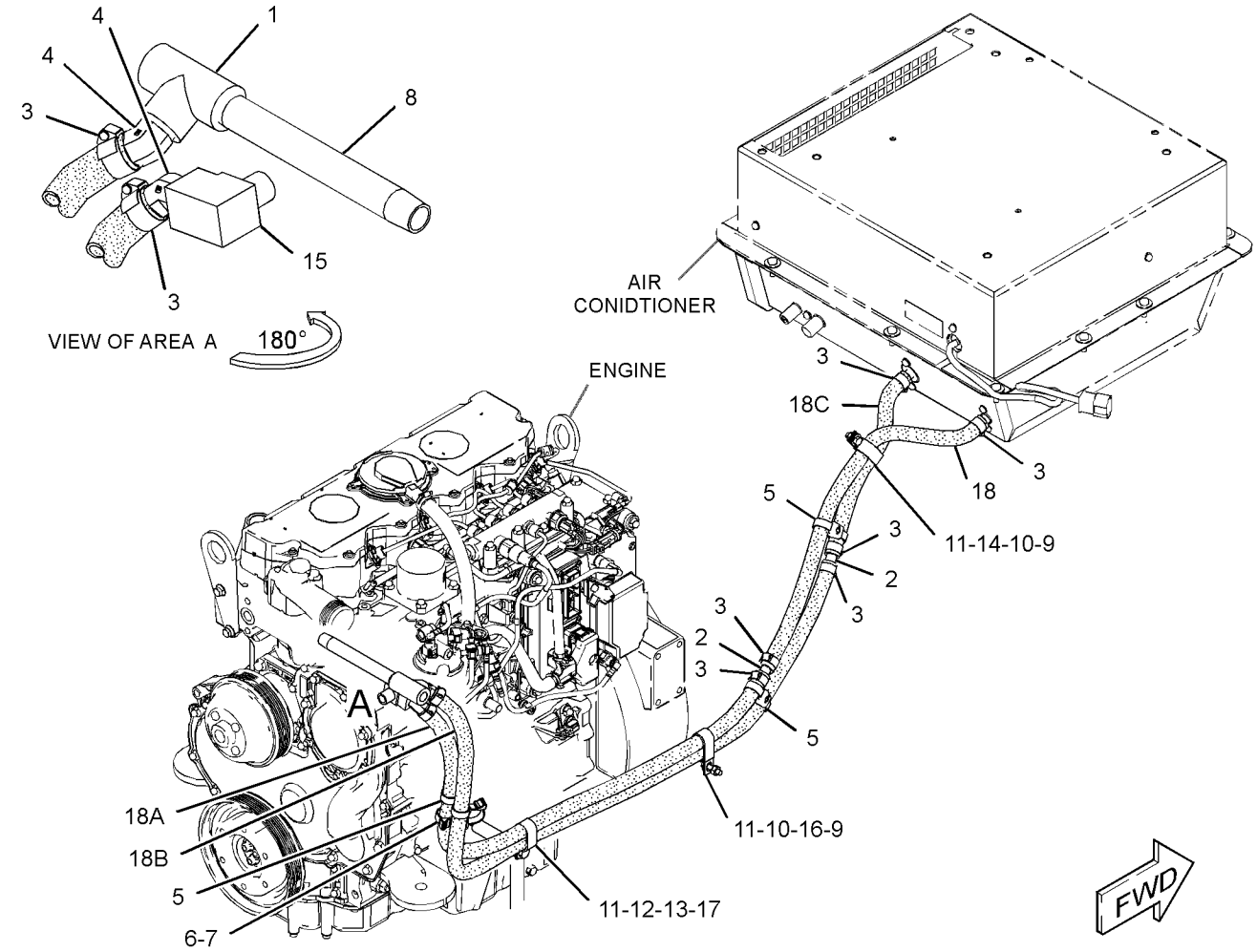

GRAPHIC #1 **<END>** g03100979

382-1439 LINES GP-HEATER

S/N: MBF1-UP; M4M1-UP; M5P1-UP; SDT1-UP
PART OF 374-9843, 382-1438 OPERATOR AR
AN ATTACHMENT

SMCS-1380, 1812, 7304 **i05295457**

NOTE	REF NO	GRAPHIC REF	PART NUMBER	QTY	PART NAME 1 2 3 4 5 6 (PRODUCT LEVEL)	SEE PAGE
	1	1	**1Y-0413**	1	TEE	
	2	1	**6P-8855**	2	TUBE	
	3	1	**7W-4669**	1	ADAPTER	
	4	1	**8T-0154**	8	CLAMP-HOSE	
	5	1	**033-3168**	1	ELBOW	
	6	1	**177-2215**	4	STRAP-DUAL CLAMP	
	7	1	**242-4310**	1	FITTING	
	8	1	**6D-4247**	1	CLIP	
	9	1	**6D-7573**	1	CLIP	
M	10	1	**7X-2543**	1	BOLT (M10X1.5X120-MM)	
	11	1	**7X-7729**	1	WASHER (11X25X3-MM THK)	
	12	1	**8T-4121**	1	WASHER-HARD (11X21X2.5-MM THK)	
	13	1	**8T-4223**	1	WASHER-HARD (13.5X25.5X3-MM THK)	
M	14	1	**8T-4910**	1	BOLT (M12X1.75X60-MM)	
	15	1	**8X-7893**	1	PIPE	
	16	1	**9L-3560**	1	ELBOW	
E	17	1	**5P-0767**		HOSE (31-CM)	
E	17A	1	**5P-0767**		HOSE (34-CM)	
E	17B	1	**5P-0767**		HOSE (137-CM)	
E	17C	1	**5P-0767**		HOSE (123-CM)	

E - ORDER BY THE CENTIMETER
M - METRIC PART

382-1439 **LINES GP-HEATER (*contd.*)** **i05295457**

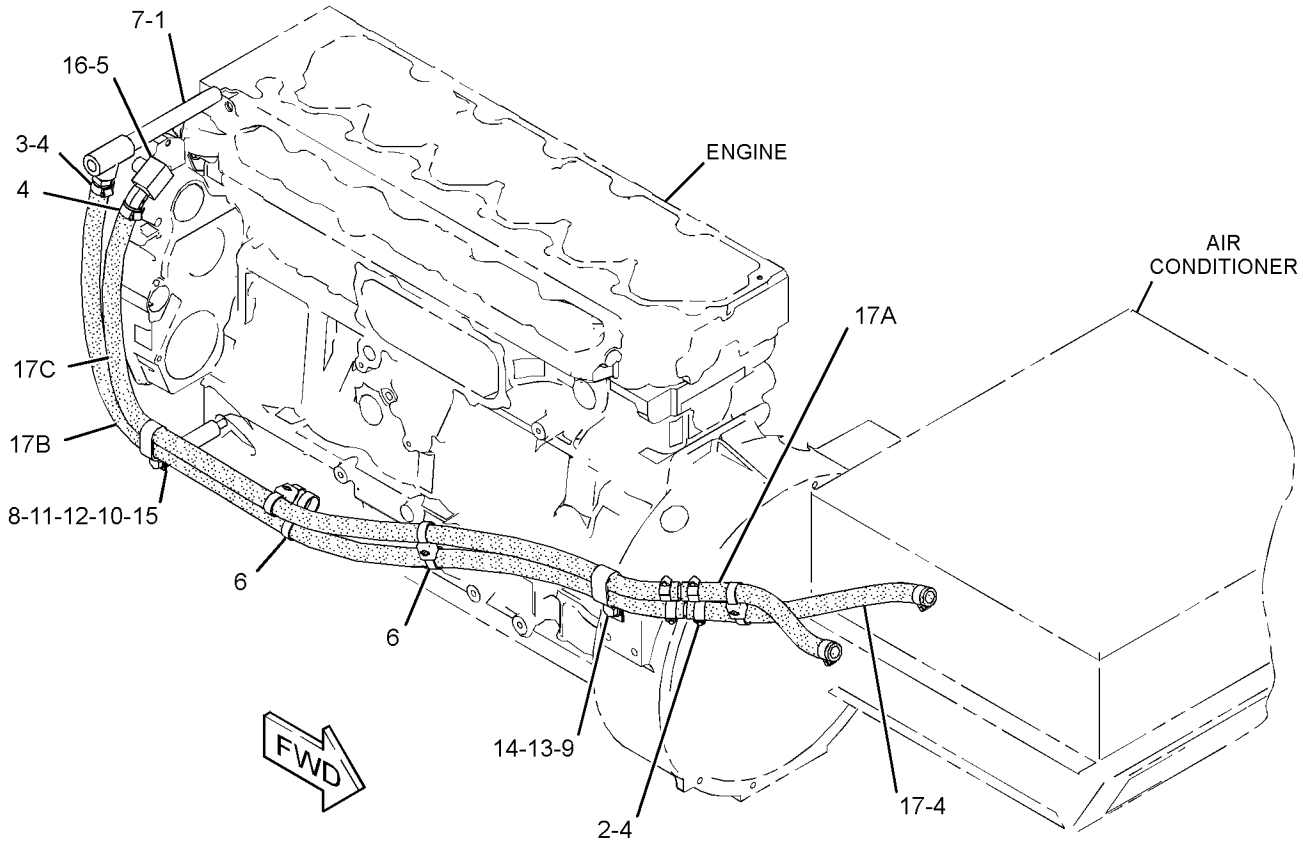

GRAPHIC #1 **<END>** g03109459

292-5040 LINKAGE GP

S/N: MBF1-UP; M4M1-UP; M5P1-UP; SDT1-UP
PART OF 379-0028 CONTROL GP-BLADE
AN ATTACHMENT

SMCS-3065 **i05290026**

NOTE	REF NO	GRAPHIC REF	PART NUMBER	QTY	PART NAME 1 2 3 4 5 6 (PRODUCT LEVEL)	SEE PAGE
	1	1	**7X-7915**	1	ROD END (RH)	
	2	1	**124-4592**	1	ROD END (LH)	
	3	1	**292-5041**	1	ROD	
M	4	1	**125-0380**	1	NUT-HEX (M8X1.25-THD, LH)	
M	5	1	**5C-7261**	1	NUT (M8X1.25-THD)	

M - METRIC PART

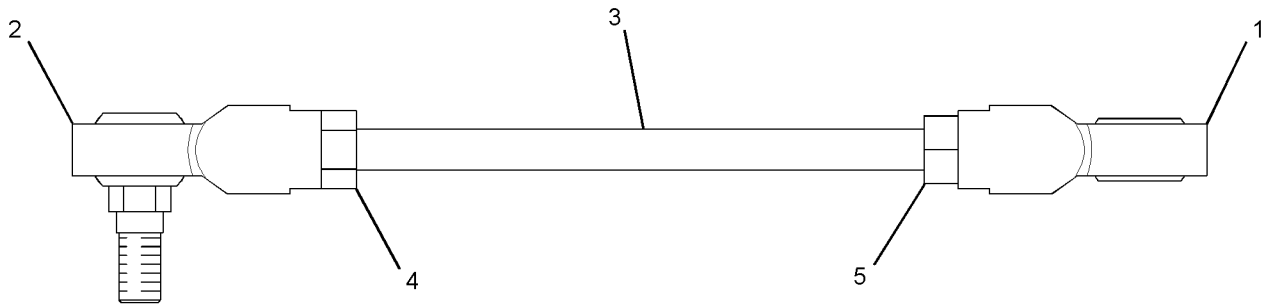

GRAPHIC #1 **<END>** g01394549

107-4643 MIRROR GP-REAR VIEW—INTERIOR

S/N: MBF1-UP; M4M1-UP; M5P1-UP; SDT1-UP
PART OF 415-9367 DISTRIBUTION AR
AN ATTACHMENT

SMCS-7319 **i03043888**

NOTE	REF NO	GRAPHIC REF	PART NUMBER	QTY	PART NAME 1 2 3 4 5 6 (PRODUCT LEVEL)	SEE PAGE
	1	1	**5P-6872**	2	MIRROR AS	
	2	1	**114-3956**	2	PLATE	
M	3	1	**5C-9553**	4	BOLT (M6X1X16-MM)	
	4	1	**8T-4205**	4	WASHER-HARD (7.2X14.5X2-MM THK)	
	5	1	**3K-6060**	2	LOCKNUT (3/8-16-THD)	
	6	1	**235-4546**	2	NUT-JAM (3/8-16-THD)	
F			**9X-8256**	4	WASHER (6.6X12X2-MM THK)	
FM			**5C-2890**	2	NUT (M6X1-THD)	
FM			**5C-9553**	2	BOLT (M6X1X16-MM)	

F - NOT SHOWN
M - METRIC PART

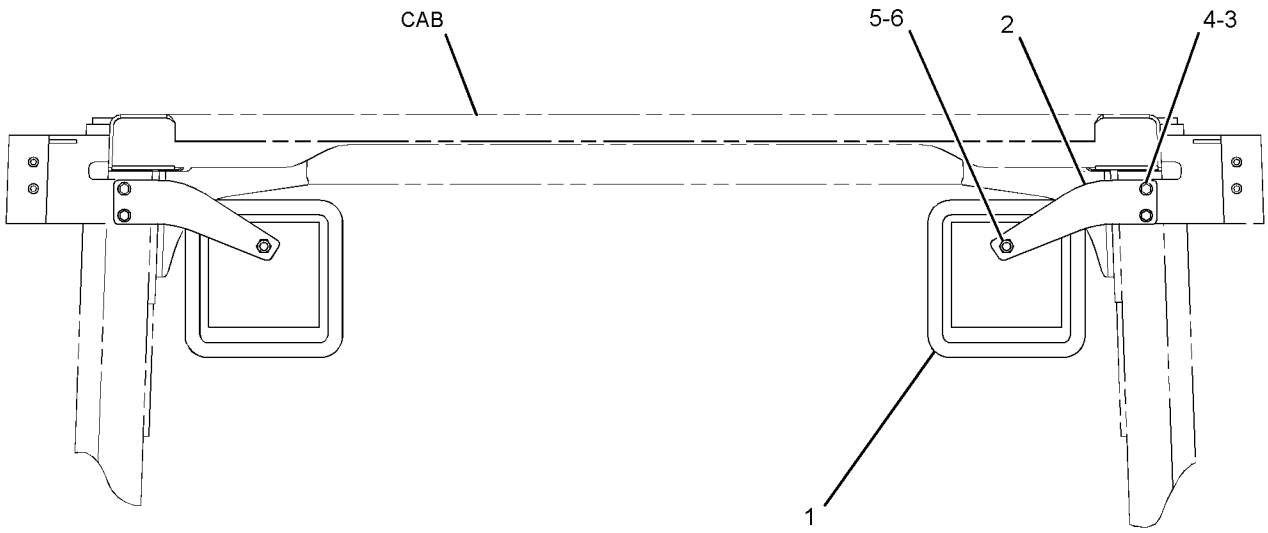

FRONT VIEW

GRAPHIC #1 **<END>** g01427257

186-1709 MIRROR GP-REAR VIEW–ROPS

S/N: MBF1-UP; M4M1-UP; M5P1-UP; SDT1-UP
PART OF 374-9842, 377-2159, 381-6991, 416-2513 OPERATOR AR
AN ATTACHMENT

SMCS-7319 **i03045330**

NOTE	REF NO	GRAPHIC REF	PART NUMBER	QTY	PART NAME 1 2 3 4 5 6 (PRODUCT LEVEL)	SEE PAGE
	1	1	**5K-9179**	1	BOLT-ROUND HEAD (3/8-16X11-IN)	
	2	1	**5P-6874**	1	MIRROR	
	3	1	**9P-9388**	1	KNOB	
	4	1	**186-0898**	1	BRACKET	
	5	1	**7X-7729**	4	WASHER (11X25X3-MM THK)	
M	6	1	**8T-4133**	2	NUT (M10X1.5-THD)	
M	7	1	**8T-4195**	2	BOLT (M10X1.5X30-MM)	

M - METRIC PART

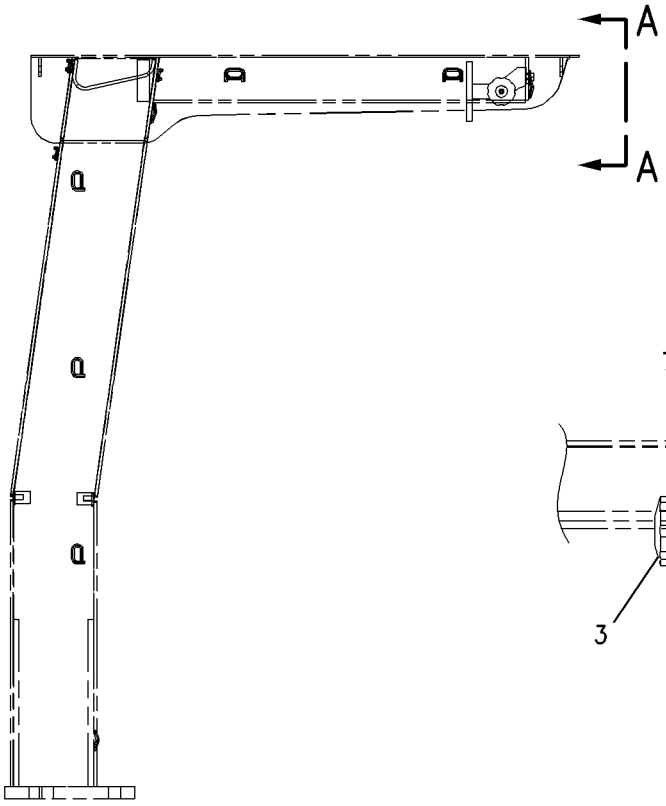

RIGHT SIDE VIEW

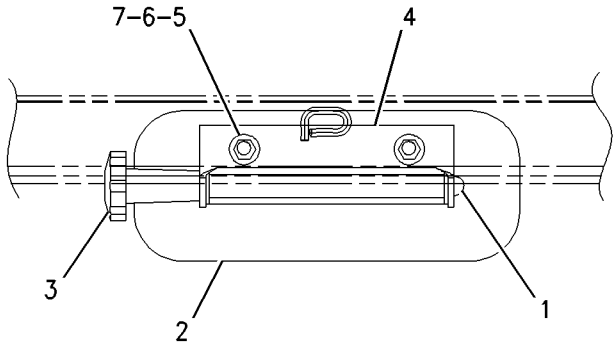

VIEW A–A

GRAPHIC #1 **<END>** g00672669

354-5413 MIRROR GP-REAR VIEW

S/N: MBF1-UP; M4M1-UP; M5P1-UP; SDT1-UP
PART OF 415-9361 DISTRIBUTION AR
AN ATTACHMENT

SMCS-7319 **i05268270**

NOTE	REF NO	GRAPHIC REF	PART NUMBER	QTY	PART NAME 1 2 3 4 5 6 (PRODUCT LEVEL)	SEE PAGE
	1	1	**269-2163**	1	BRACKET AS-MIRROR (LH)	
	2	1	**269-2164**	1	BRACKET AS-MIRROR (RH)	
	3	1	**348-5709**	2	MIRROR AS	
	4	1	**5P-4116**	4	WASHER-HARD (8.8X20.5X2-MM THK)	
M	5	1	**8T-4908**	4	BOLT (M8X1.25X25-MM)	

M - METRIC PART

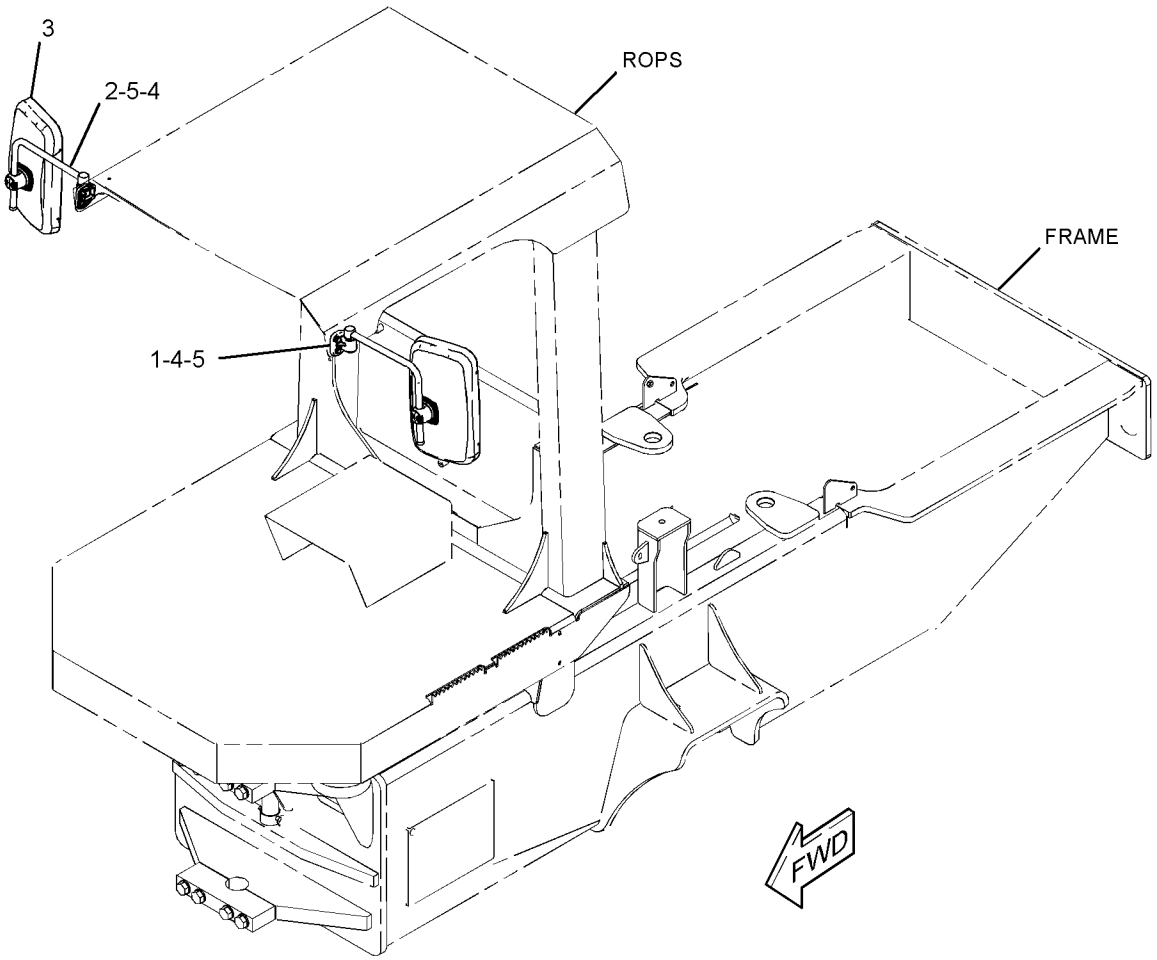

GRAPHIC #1 **<END>** g02711878

373-3735 MIRROR GP-REAR VIEW–EXTERIOR

S/N: MBF1-UP; M4M1-UP; M5P1-UP; SDT1-UP
PART OF 374-9843, 382-1438, 416-2514 OPERATOR AR
AN ATTACHMENT

SMCS-7319 **i05291191**

NOTE	REF NO	GRAPHIC REF	PART NUMBER	QTY	PART NAME 1 2 3 4 5 6 (PRODUCT LEVEL)	SEE PAGE
	1	1	**185-3874**	2	MIRROR AS	
	2	1	**220-4050**	2	MIRROR (EXTERIOR, REAR)	
	3	1	**378-8004**	1	BRACKET AS	
	4	1	**378-8006**	1	BRACKET AS	
	5	1	**5P-4116**	8	WASHER-HARD (8.8X20.5X2-MM THK)	
M	6	1	**8T-4189**	8	BOLT (M8X1.25X20-MM)	

M - METRIC PART

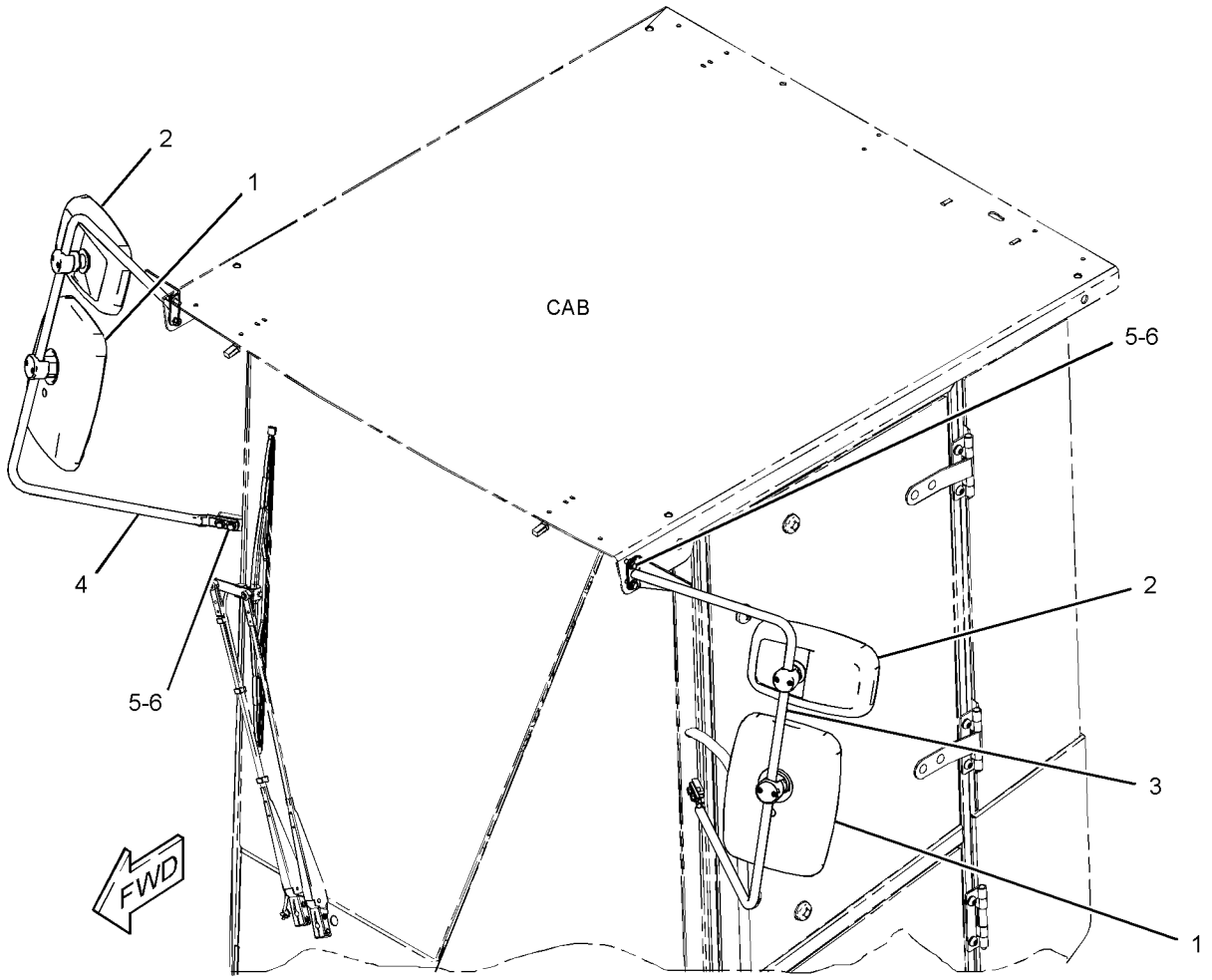

GRAPHIC #1 **<END>** g02722788

220-2064 MOTOR GP-WINDOW WIPER

S/N: MBF1-UP; M4M1-UP; M5P1-UP; SDT1-UP
PART OF 373-3180 WIPER & WASHER GP-WINDOW
AN ATTACHMENT

SMCS-7305 **i05309689**

NOTE	REF NO	GRAPHIC REF	PART NUMBER	QTY	PART NAME 1 2 3 4 5 6 (PRODUCT LEVEL)	SEE PAGE
	1	1	**135-0611**	1	MOTOR GP-WINDOW WIPER (24-VOLT, 2-SPEED)	
		1	**8T-8737**	1	PLUG-SEAL	
		1	**102-8805**	1	KIT-RECEPTACLE (6-PIN)	
					(INCLUDES RECEPTACLE AS & WEDGE)	
		1	**8T-8729**	5	PIN-CONNECTOR (16-GA TO 18-GA)	
	2	1	**206-5823**	2	CAP	

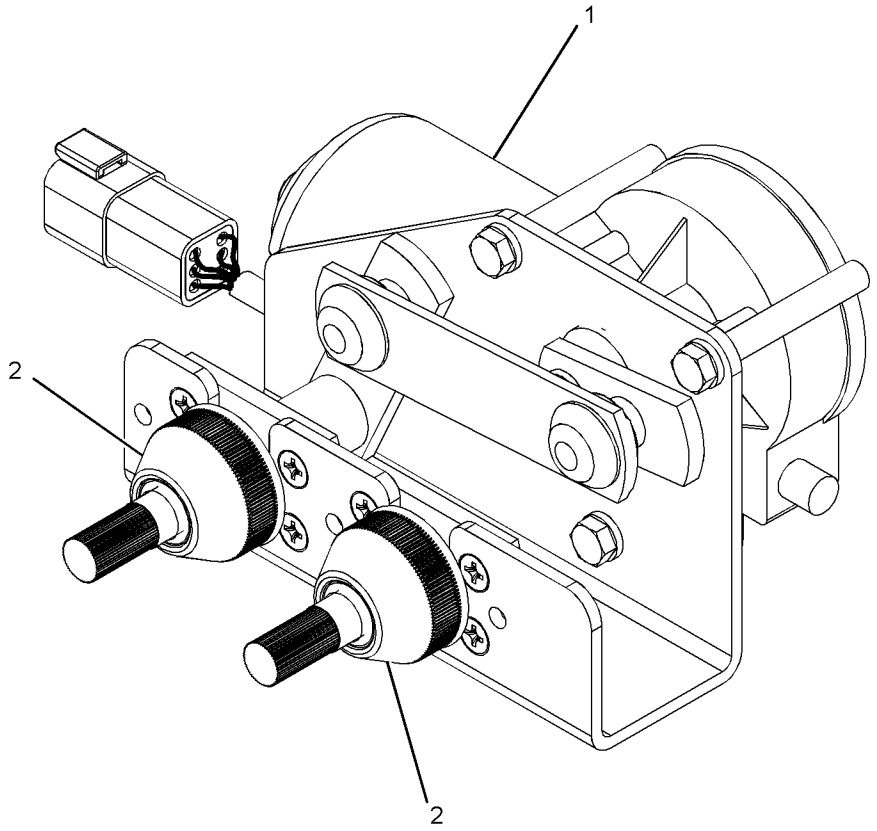

GRAPHIC #1 **<END>** g02740716

359-7628 MOTOR GP-WINDOW WIPER

S/N: MBF1-UP; M4M1-UP; M5P1-UP; SDT1-UP
24-VOLT
PART OF 373-3180 WIPER & WASHER GP-WINDOW
AN ATTACHMENT

SMCS-7305 **i05190352**

NOTE	REF NO	GRAPHIC REF	PART NUMBER	QTY	PART NAME 1 2 3 4 5 6 (PRODUCT LEVEL)	SEE PAGE
	1	1	**8T-8729**	5	PIN-CONNECTOR (16-GA TO 18-GA)	
	2	1	**8T-8737**	1	PLUG-SEAL	
	3	1	**102-8805**	1	KIT-RECEPTACLE (6-PIN)	
					(INCLUDES RECEPTACLE AS & WEDGE)	
	4	1	**263-3823**	1	CAP-WIPER	
	5	1	**3F-9556**	1	LOCKWASHER	
M	6	1	**5C-7261**	1	NUT (M8X1.25-THD)	

M - METRIC PART

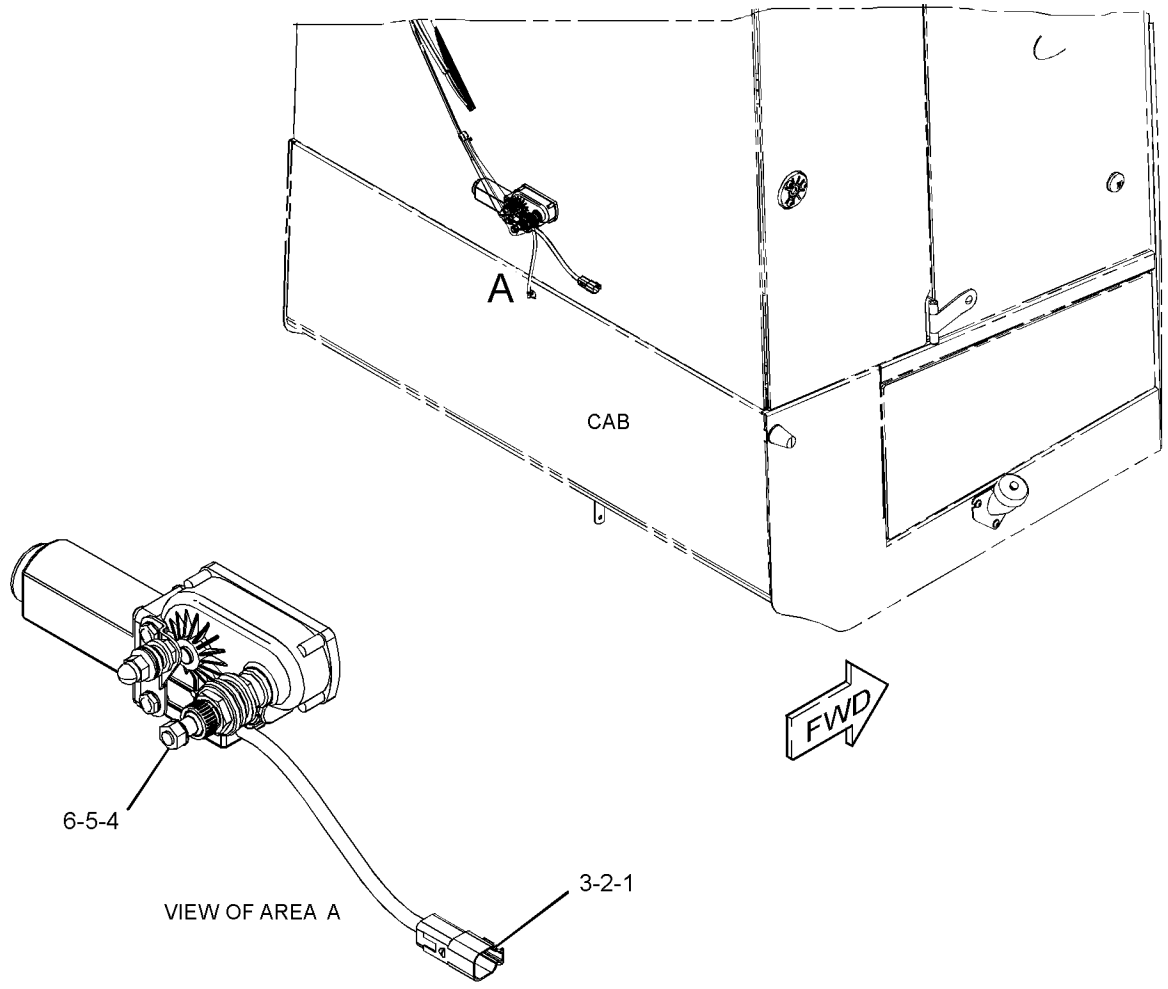

GRAPHIC #1 **<END>** g02724290

352-7748 MOUNTING GP-CAB

S/N: MBF1-UP; M4M1-UP; M5P1-UP; SDT1-UP
PART OF 374-9842, 374-9843, 377-2157, 377-2159, 381-6991, 382-1438 OPERATOR AR AN ATTACHMENT

SMCS-7266, 7301

i05287545

NOTE	REF NO	GRAPHIC REF	PART NUMBER	QTY	PART NAME 1 2 3 4 5 6 (PRODUCT LEVEL)	SEE PAGE
	1	1	**9W-7388**	4	WASHER (26X144X12-MM THK)	
	2	1	**342-2382**	8	MOUNT	
M	3	1	**7X-2465**	4	BOLT (M24X3X180-MM)	
	4	1	**8T-4167**	4	WASHER-HARD (26X44X4-MM THK)	

M - METRIC PART

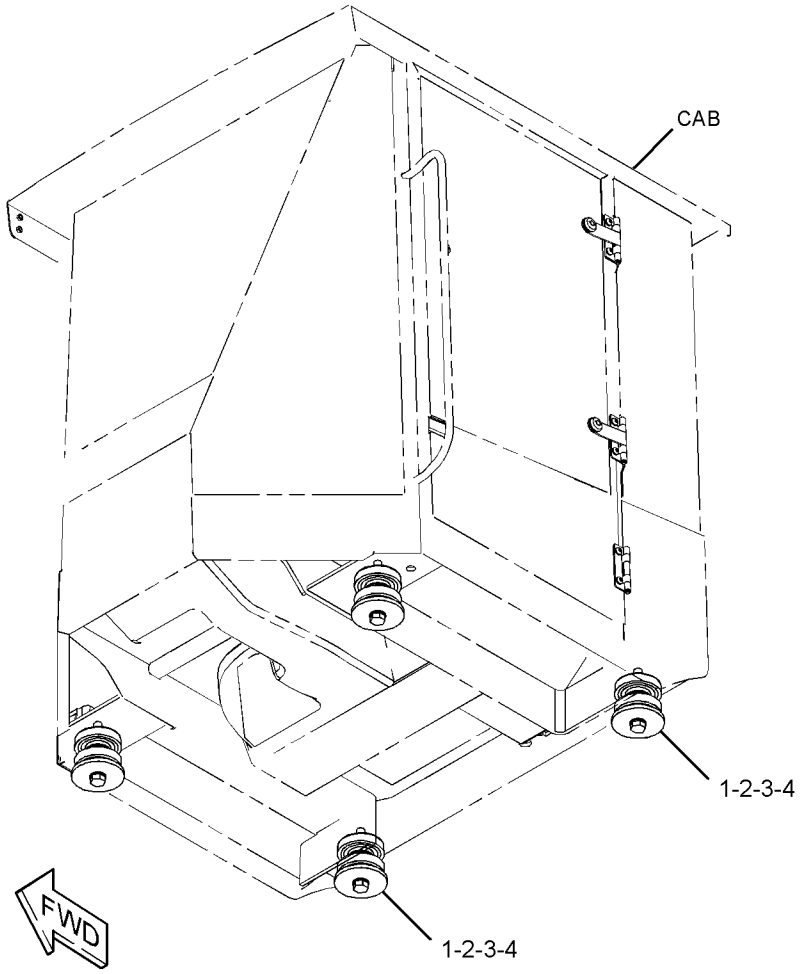

GRAPHIC #1

<END>

g02714397

379-8382 MOUNTING GP-INSTRUMENT

S/N: MBF1-UP; M4M1-UP; M5P1-UP; SDT1-UP
PART OF 379-8395 GRADE CONTROL AR
AN ATTACHMENT

SMCS-7451 **i05349508**

NOTE	REF NO	GRAPHIC REF	PART NUMBER	QTY	PART NAME 1 2 3 4 5 6 (PRODUCT LEVEL)	SEE PAGE
	1	1	**263-6699**	1	CONNECTOR-RECEPTACLE (STORAGE)	
	2	1	**295-1920**	1	CLAMP	
	3	1	**295-1921**	2	BALL	
	4	1	**327-0325**	5	STRAP-CABLE	
	5	1	**374-8040**	1	DISPLAY	
Y	6	1	**415-7961**	1	HARNESS AS-MONITOR	113
	7	1	**096-5962**	8	WASHER-HARD (3.4X7X0.8-MM THK)	
M	8	1	**3C-6969**	4	NUT (M3X0.5-THD)	
M	9	1	**5C-2874**	4	NUT (M5X0.8-THD)	
M	10	1	**6V-9671**	4	SCREW-MACHINE (M3X0.5X12-MM)	
	11	1	**7K-1181**	6	STRAP-CABLE	
M	12	1	**8T-0289**	4	BOLT (M5X0.8X20-MM)	
M	13	1	**8T-0325**	4	BOLT (M5X0.8X14-MM)	
	14	1	**8T-0328**	12	WASHER-HARD (5.5X10X1-MM THK)	

M - METRIC PART
Y - SEPARATE ILLUSTRATION

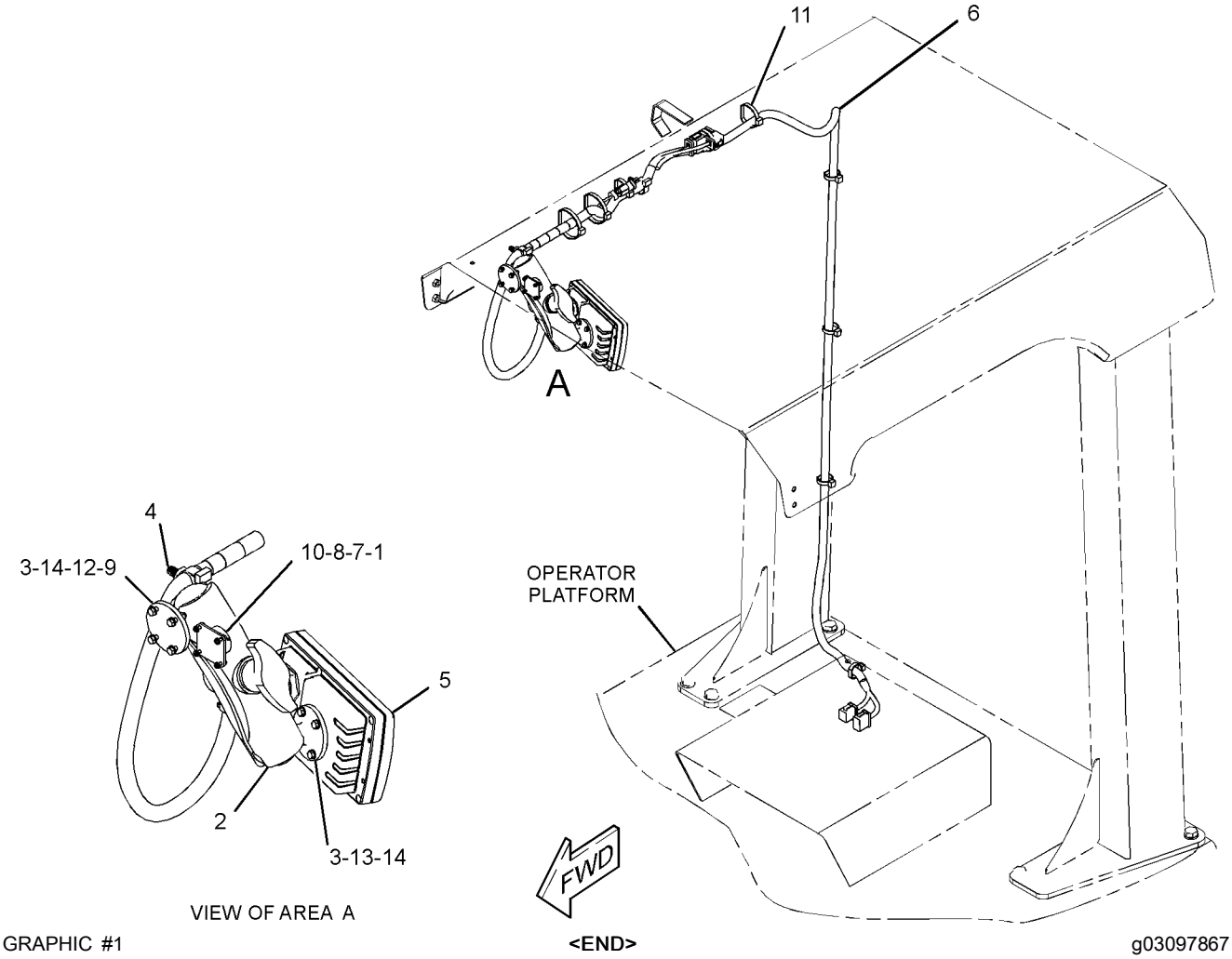

GRAPHIC #1

<END>

g03097867

379-8383 MOUNTING GP-INSTRUMENT

S/N: MBF1-UP; M4M1-UP; M5P1-UP; SDT1-UP
PART OF 379-8396 GRADE CONTROL AR
AN ATTACHMENT

SMCS-7451 **i05349511**

NOTE	REF NO	GRAPHIC REF	PART NUMBER	QTY	PART NAME 1 2 3 4 5 6 (PRODUCT LEVEL)	SEE PAGE
	1	1	**263-6699**	1	CONNECTOR-RECEPTACLE (STORAGE)	
	2	1	**295-1920**	1	CLAMP	
	3	1	**295-1921**	2	BALL	
	4	1	**327-0325**	5	STRAP-CABLE	
	5	1	**344-0524**	1	MODULE-DISPLAY	
Y	6	1	**415-7961**	1	HARNESS AS-MONITOR	113
	7	1	**096-5962**	8	WASHER-HARD (3.4X7X0.8-MM THK)	
M	8	1	**3C-6969**	4	NUT (M3X0.5-THD)	
M	9	1	**5C-2874**	4	NUT (M5X0.8-THD)	
M	10	1	**6V-9671**	4	SCREW-MACHINE (M3X0.5X12-MM)	
	11	1	**7K-1181**	6	STRAP-CABLE	
M	12	1	**8T-0289**	4	BOLT (M5X0.8X20-MM)	
M	13	1	**8T-0325**	4	BOLT (M5X0.8X14-MM)	
	14	1	**8T-0328**	12	WASHER-HARD (5.5X10X1-MM THK)	

M - METRIC PART
Y - SEPARATE ILLUSTRATION

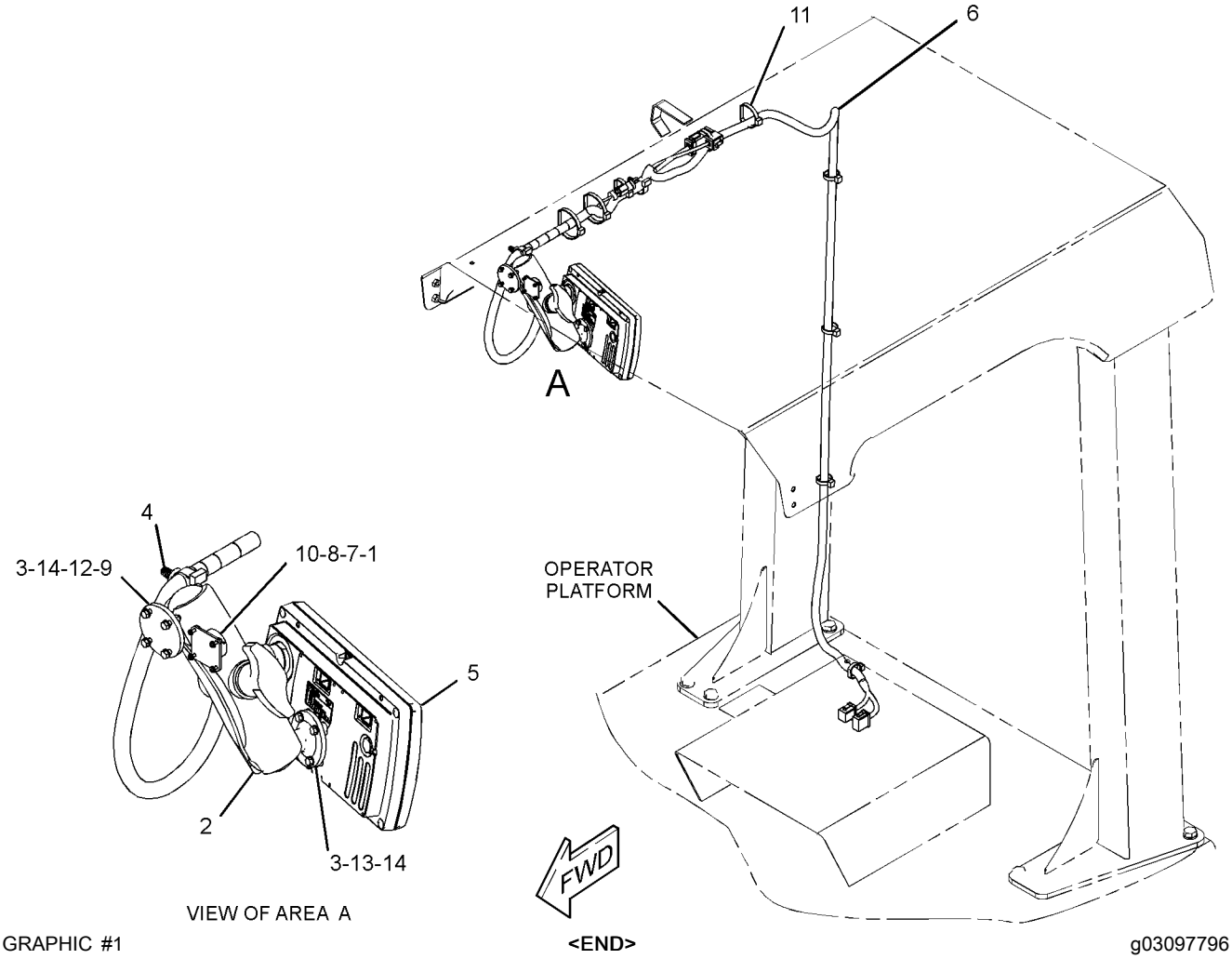

VIEW OF AREA A

GRAPHIC #1

<END>

g03097796

OPERATOR STATION

375-1606 MOUNTING GP-MONITOR

S/N: MBF1-UP; M4M1-UP; M5P1-UP; SDT1-UP
PART OF 375-1604 GRADE CONTROL AR
AN ATTACHMENT

SMCS-7220, 7490 **i05349105**

NOTE	REF NO	GRAPHIC REF	PART NUMBER	QTY	PART NAME 1 2 3 4 5 6 (PRODUCT LEVEL)	SEE PAGE
	1	1	**263-6699**	1	CONNECTOR-RECEPTACLE (STORAGE)	
	2	1	**295-1920**	1	CLAMP	
	3	1	**295-1921**	2	BALL	
	4	1	**327-0325**	4	STRAP-CABLE	
	5	1	**374-8040**	1	DISPLAY	
	6	1	**358-0776**	1	BRACKET	
Y	7	1	**399-9416**	1	HARNESS AS-MONITOR (DISPLAY)	112
	8	1	**096-5962**	8	WASHER-HARD (3.4X7X0.8-MM THK)	
M	9	1	**3C-6969**	4	NUT (M3X0.5-THD)	
M	10	1	**5C-2874**	4	NUT (M5X0.8-THD)	
M	11	1	**5C-9553**	2	BOLT (M6X1X16-MM)	
M	12	1	**6V-9671**	4	SCREW-MACHINE (M3X0.5X12-MM)	
	13	1	**7K-1181**	3	STRAP-CABLE	
	14	1	**7X-4780**	1	GROMMET	
M	15	1	**8T-0289**	4	BOLT (M5X0.8X20-MM)	
M	16	1	**8T-0325**	4	BOLT (M5X0.8X14-MM)	
	17	1	**8T-0328**	12	WASHER-HARD (5.5X10X1-MM THK)	
	18	1	**8T-4205**	2	WASHER-HARD (7.2X14.5X2-MM THK)	

M - METRIC PART
Y - SEPARATE ILLUSTRATION

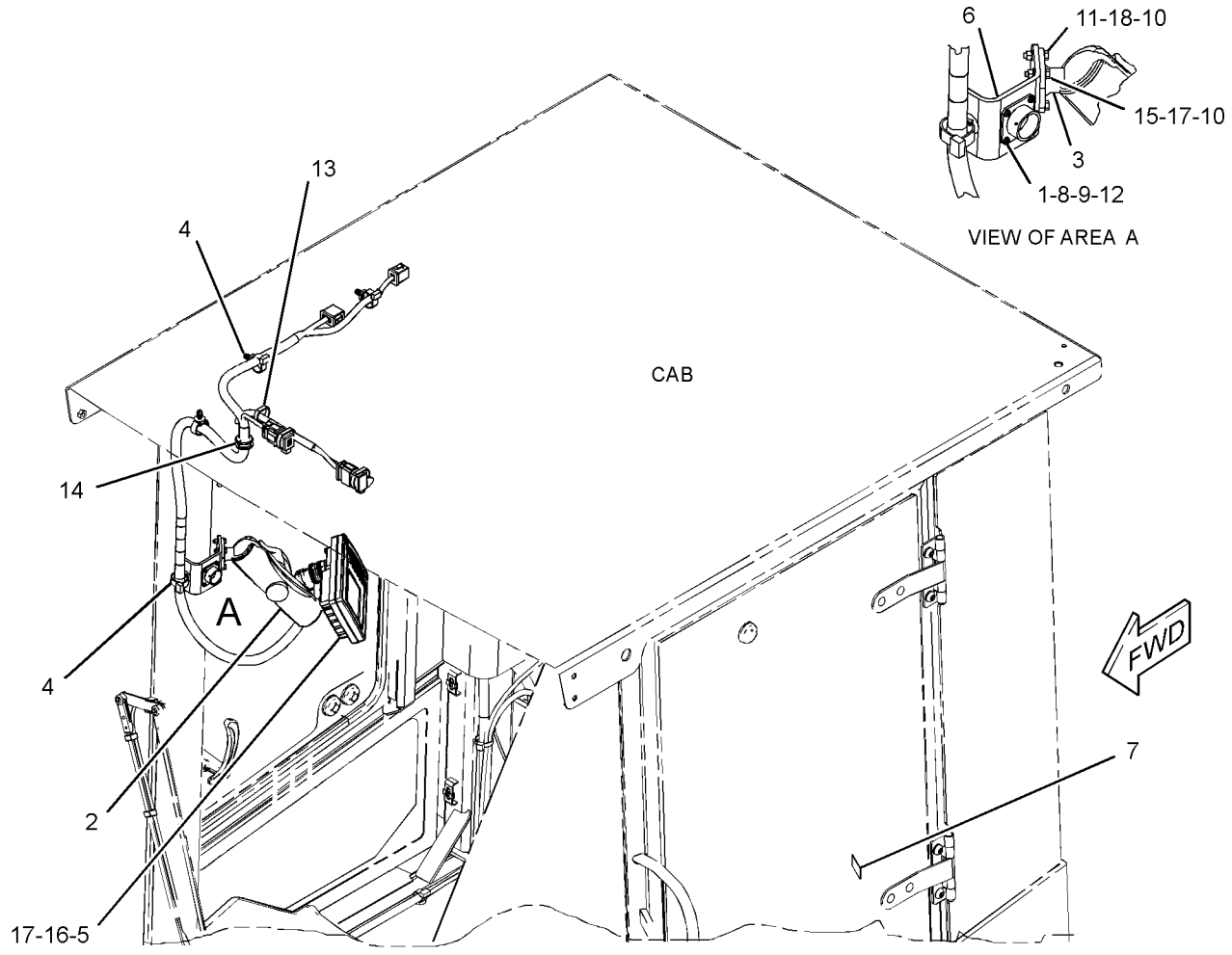

GRAPHIC #1 **<END>** g03335459

375-1608 MOUNTING GP-MONITOR

S/N: MBF1-UP; M4M1-UP; M5P1-UP; SDT1-UP
PART OF 375-1607 GRADE CONTROL AR
AN ATTACHMENT

SMCS-7220, 7490 **i05349106**

NOTE	REF NO	GRAPHIC REF	PART NUMBER	QTY	PART NAME 1 2 3 4 5 6 (PRODUCT LEVEL)	SEE PAGE
	1	1	**263-6699**	1	CONNECTOR-RECEPTACLE (STORAGE)	
	2	1	**295-1920**	1	CLAMP	
	3	1	**295-1921**	2	BALL	
	4	1	**327-0325**	4	STRAP-CABLE	
	5	1	**344-0524**	1	MODULE-DISPLAY	
	6	1	**358-0776**	1	BRACKET	
Y	7	1	**399-9416**	1	HARNESS AS-MONITOR (DISPLAY)	112
	8	1	**096-5962**	8	WASHER-HARD (3.4X7X0.8-MM THK)	
M	9	1	**3C-6969**	4	NUT (M3X0.5-THD)	
M	10	1	**5C-2874**	4	NUT (M5X0.8-THD)	
M	11	1	**5C-9553**	2	BOLT (M6X1X16-MM)	
M	12	1	**6V-9671**	4	SCREW-MACHINE (M3X0.5X12-MM)	
	13	1	**7K-1181**	3	STRAP-CABLE	
	14	1	**7X-4780**	1	GROMMET	
M	15	1	**8T-0289**	4	BOLT (M5X0.8X20-MM)	
M	16	1	**8T-0325**	4	BOLT (M5X0.8X14-MM)	
	17	1	**8T-0328**	12	WASHER-HARD (5.5X10X1-MM THK)	
	18	1	**8T-4205**	2	WASHER-HARD (7.2X14.5X2-MM THK)	

M - METRIC PART
Y - SEPARATE ILLUSTRATION

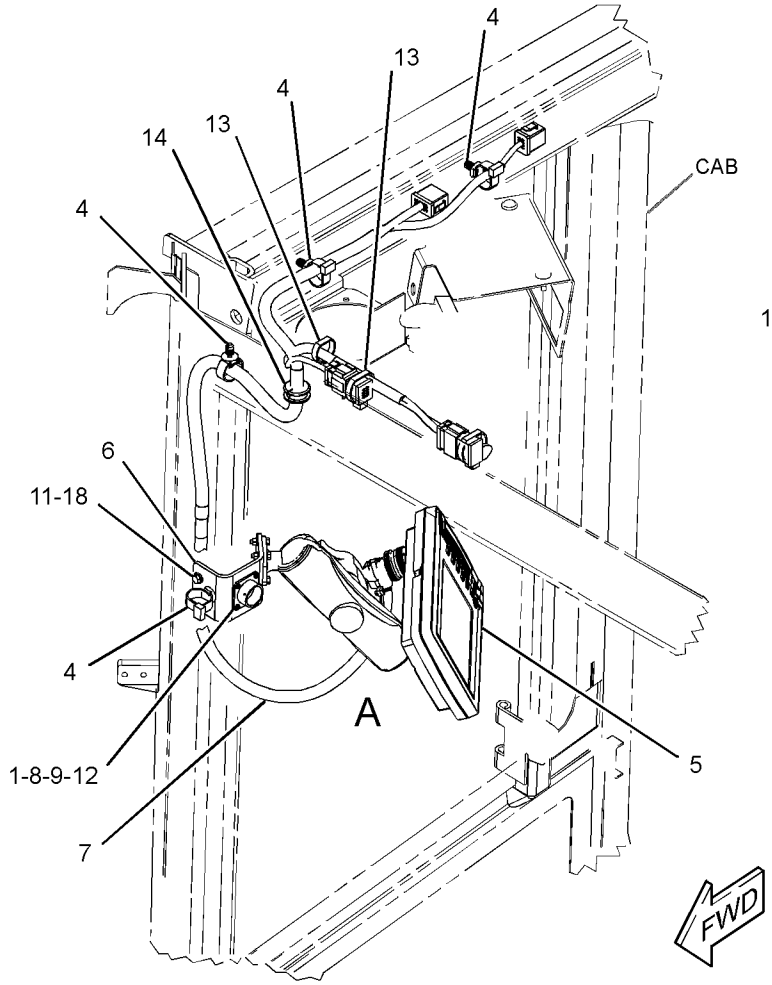

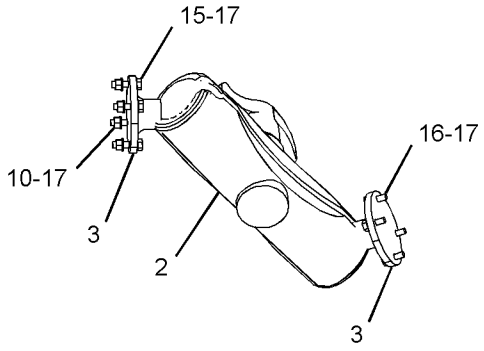

VIEW OF AREA A
(PARTS REMOVED FOR CLARITY)

GRAPHIC #1 **<END>** g02966258

375-1611 MOUNTING GP-MONITOR

S/N: MBF1-UP; M4M1-UP; M5P1-UP; SDT1-UP
PART OF 375-1609 GRADE CONTROL AR
AN ATTACHMENT

SMCS-7220, 7490 **i05349110**

NOTE	REF NO	GRAPHIC REF	PART NUMBER	QTY	PART NAME 1 2 3 4 5 6 (PRODUCT LEVEL)	SEE PAGE
	1	1	**263-6699**	1	CONNECTOR-RECEPTACLE (STORAGE)	
	2	1	**295-1920**	1	CLAMP	
	3	1	**295-1921**	2	BALL	
	4	1	**327-0325**	2	STRAP-CABLE	
	5	1	**374-8040**	1	DISPLAY	
Y	6	1	**399-9416**	1	HARNESS AS-MONITOR (DISPLAY)	112
	7	1	**096-5962**	8	WASHER-HARD (3.4X7X0.8-MM THK)	
M	8	1	**3C-6969**	4	NUT (M3X0.5-THD)	
M	9	1	**5C-2874**	4	NUT (M5X0.8-THD)	
M	10	1	**6V-9671**	4	SCREW-MACHINE (M3X0.5X12-MM)	
	11	1	**7K-1181**	4	STRAP-CABLE	
M	12	1	**8T-0289**	4	BOLT (M5X0.8X20-MM)	
M	13	1	**8T-0325**	4	BOLT (M5X0.8X14-MM)	
	14	1	**8T-0328**	12	WASHER-HARD (5.5X10X1-MM THK)	

M - METRIC PART
Y - SEPARATE ILLUSTRATION

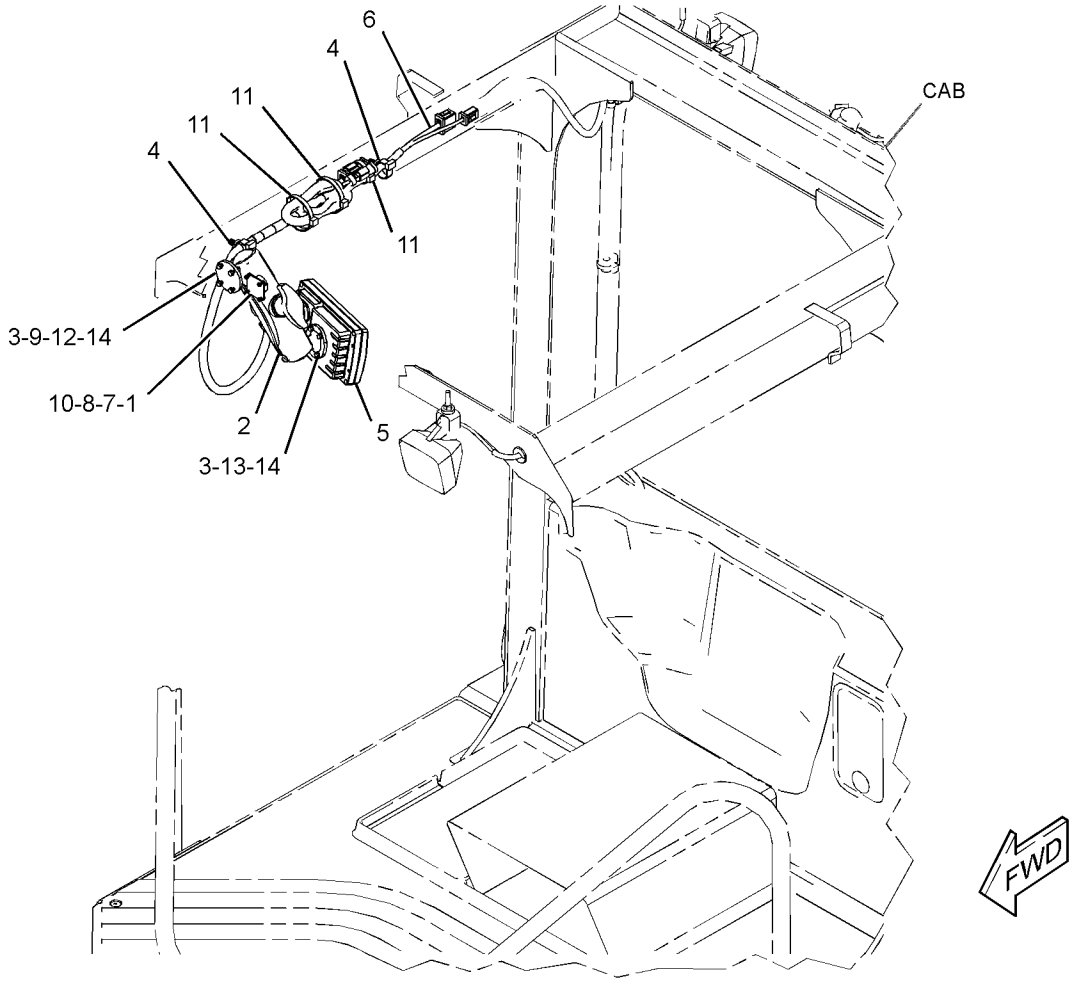

GRAPHIC #1 **<END>** g02772456

375-1613 MOUNTING GP-MONITOR

S/N: MBF1-UP; M4M1-UP; M5P1-UP; SDT1-UP
PART OF 375-1612 GRADE CONTROL AR
AN ATTACHMENT

SMCS-7220, 7490 **i05349117**

NOTE	REF NO	GRAPHIC REF	PART NUMBER	QTY	PART NAME 1 2 3 4 5 6 (PRODUCT LEVEL)	SEE PAGE
	1	1	**263-6699**	1	CONNECTOR-RECEPTACLE (STORAGE)	
	2	1	**295-1920**	1	CLAMP	
	3	1	**295-1921**	2	BALL	
	4	1	**327-0325**	2	STRAP-CABLE	
	5	1	**344-0524**	1	MODULE-DISPLAY	
Y	6	1	**399-9416**	1	HARNESS AS-MONITOR (DISPLAY)	112
	7	1	**096-5962**	8	WASHER-HARD (3.4X7X0.8-MM THK)	
M	8	1	**3C-6969**	4	NUT (M3X0.5-THD)	
M	9	1	**5C-2874**	4	NUT (M5X0.8-THD)	
M	10	1	**6V-9671**	4	SCREW-MACHINE (M3X0.5X12-MM)	
	11	1	**7K-1181**	4	STRAP-CABLE	
M	12	1	**8T-0289**	4	BOLT (M5X0.8X20-MM)	
M	13	1	**8T-0325**	4	BOLT (M5X0.8X14-MM)	
	14	1	**8T-0328**	12	WASHER-HARD (5.5X10X1-MM THK)	

M - METRIC PART
Y - SEPARATE ILLUSTRATION

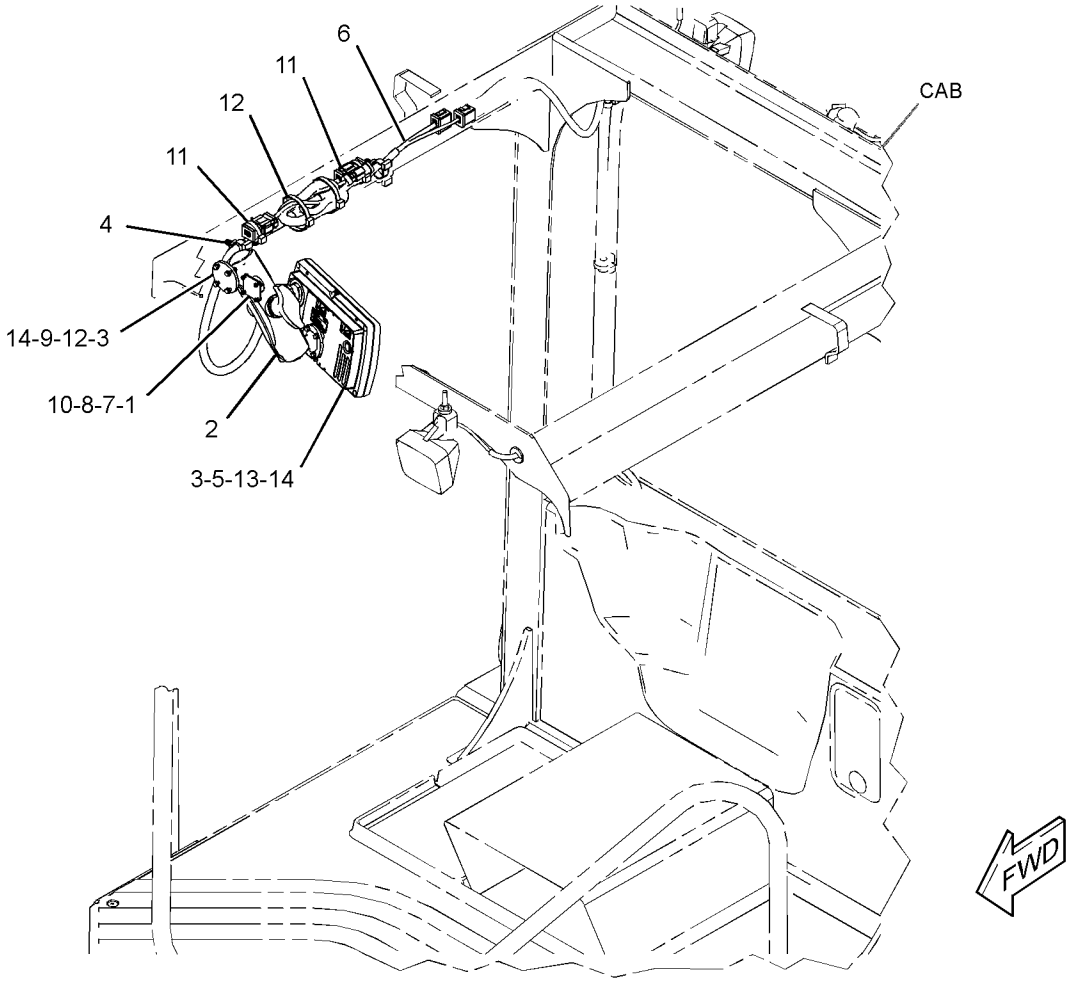

GRAPHIC #1 **<END>** g02966204

OPERATOR STATION

374-9842 OPERATOR AR—ROPS

S/N: M4M1-UP; M5P1-UP

AN ATTACHMENT

SMCS-7301 **i05295452**

NOTE	PART NUMBER	QTY	PART NAME 1 2 3 4 5 6 (PRODUCT LEVEL)	SEE PAGE
Y	*367-3669*	1	BELT TENSIONER GP	10
Y	*377-9353*	1	COVER GP-PLATFORM	263
Y	*374-9844*	1	FILM GP-INTERNATIONAL	517
Y	*376-0651*	1	FLOOR MAT GP	437
Y	*364-7712*	1	GUARD GP-LINES	280
Y	*354-5409*	1	HANDRAIL GP	283
Y	*355-5140*	1	HORN GP-ELECTRIC (ROPS)	441
Y	*352-7739*	1	LIGHTING GP-FLOOD (CAB)	132
Y	*186-1709*	1	MIRROR GP-REAR VIEW (OPEN ROPS)	456
Y	*352-7748*	1	MOUNTING GP-CAB	461
Y	*362-7689*	1	PANEL GP-SIDE	289
Y	*382-1409*	1	ROPS & PLATFORM GP	480
Y	*388-2535*	1	WIRING GP-CONSOLE	165
Y	*389-7484*	1	WIRING GP-PLATFORM	181

Y - SEPARATE ILLUSTRATION

<END>

374-9843 OPERATOR AR—AIR CONDITIONER, CAB

S/N: M4M1-UP; M5P1-UP

PART OF 415-9367 DISTRIBUTION AR

AN ATTACHMENT

SMCS-7301 **i05295455**

NOTE	PART NUMBER	QTY	PART NAME 1 2 3 4 5 6 (PRODUCT LEVEL)	SEE PAGE
Y	*426-1914*	1	AIR CONDITIONER & MOUNTING GP	411
Y	*377-5153*	1	BELT TENSIONER GP	11
Y	*373-3175*	1	CAB AR	415
Y	*379-8748*	1	COMPRESSOR GP-REFRIGERANT	420
Y	*262-0942*	1	CONDENSER & MTG GP-REFRIGERANT	422
Y	*379-9698*	1	COVER GP-CAB	429
Y	*374-9845*	1	FILM GP-INTERNATIONAL	519
Y	*240-4607*	1	FILTER GP-CAB AIR	436
Y	*381-9071*	1	FLOOR MAT GP-CAB	438
Y	*352-7747*	1	HORN GP-ELECTRIC	440
Y	*352-7739*	1	LIGHTING GP-FLOOD (CAB)	132
Y	*379-8744*	1	LINES GP-AIR CONDITIONER	448
Y	*382-1439*	1	LINES GP-HEATER	452
Y	*373-3735*	1	MIRROR GP-REAR VIEW	458
Y	*352-7748*	1	MOUNTING GP-CAB	461
Y	*388-2535*	1	WIRING GP-CONSOLE	165

Y - SEPARATE ILLUSTRATION

<END>

OPERATOR STATION

377-2157 OPERATOR AR—OPEN

S/N: MBF1-UP; M4M1-UP; M5P1-UP; SDT1-UP

AN ATTACHMENT

SMCS-7301 **i05291089**

NOTE	PART NUMBER	QTY	PART NAME 1 2 3 4 5 6 (PRODUCT LEVEL)	SEE PAGE
Y	*367-3669*	1	BELT TENSIONER GP (WITHOUT AIR CONDITIONER)	10
Y	*374-9746*	1	FILM GP-INTERNATIONAL	505
Y	*376-0651*	1	FLOOR MAT GP	437
Y	*418-5189*	1	GUARD GP-LINES (4-VALVE)	281
Y	*354-5409*	1	HANDRAIL GP	283
Y	*355-5140*	1	HORN GP-ELECTRIC (ROPS)	441
Y	*379-8727*	1	LIGHTING GP-FLOOD	134
Y	*352-7748*	1	MOUNTING GP-CAB	461
Y	*379-8465*	1	PLATFORM GP-OPERATOR	478
Y	*387-8187*	1	WIRING GP-LIGHTING	176

Y - SEPARATE ILLUSTRATION

<END>

377-2159 OPERATOR AR—ROPS

S/N: MBF1-UP; SDT1-UP

AN ATTACHMENT

SMCS-7301 **i05291087**

NOTE	PART NUMBER	QTY	PART NAME 1 2 3 4 5 6 (PRODUCT LEVEL)	SEE PAGE
Y	*367-3669*	1	BELT TENSIONER GP (WITHOUT AIR CONDITIONER)	10
Y	*377-9353*	1	COVER GP-PLATFORM (OPEN ROPS)	263
Y	*374-9747*	1	FILM GP-INTERNATIONAL	508
Y	*376-0651*	1	FLOOR MAT GP	437
Y	*418-5189*	1	GUARD GP-LINES (4-VALVE)	281
Y	*354-5409*	1	HANDRAIL GP	283
Y	*355-5140*	1	HORN GP-ELECTRIC (ROPS)	441
Y	*352-7739*	1	LIGHTING GP-FLOOD (CAB)	132
Y	*186-1709*	1	MIRROR GP-REAR VIEW (OPEN ROPS)	456
Y	*352-7748*	1	MOUNTING GP-CAB	461
Y	*362-7689*	1	PANEL GP-SIDE	289
Y	*382-1409*	1	ROPS & PLATFORM GP	480
Y	*388-2535*	1	WIRING GP-CONSOLE	165
Y	*389-7484*	1	WIRING GP-PLATFORM	181

Y - SEPARATE ILLUSTRATION

<END>

OPERATOR STATION

381-6991 OPERATOR AR

S/N: MBF1-UP; M4M1-UP; M5P1-UP; SDT1-UP
PART OF 415-9361 DISTRIBUTION AR
AN ATTACHMENT

SMCS-7301 **i05291163**

NOTE	PART NUMBER	QTY	PART NAME 1 2 3 4 5 6 (PRODUCT LEVEL)	SEE PAGE
Y	*367-3669*	1	BELT TENSIONER GP	10
Y	*374-9749*	1	FILM GP-INTERNATIONAL	514
Y	*376-0651*	1	FLOOR MAT GP	437
Y	*418-5189*	1	GUARD GP-LINES	281
Y	*354-5409*	1	HANDRAIL GP	283
Y	*355-5140*	1	HORN GP-ELECTRIC (ROPS)	441
Y	*352-7739*	1	LIGHTING GP-FLOOD (CAB)	132
Y	*186-1709*	1	MIRROR GP-REAR VIEW (OPEN ROPS)	456
Y	*352-7748*	1	MOUNTING GP-CAB	461
Y	*381-6966*	1	PLATFORM GP-OPERATOR	479
Y	*377-2163*	1	WIRING GP-LIGHTING	174

Y - SEPARATE ILLUSTRATION

<END>

382-1438 OPERATOR AR

S/N: MBF1-UP; SDT1-UP
AN ATTACHMENT

SMCS-7301 **i05297380**

NOTE	PART NUMBER	QTY	PART NAME 1 2 3 4 5 6 (PRODUCT LEVEL)	SEE PAGE
Y	*426-1914*	1	AIR CONDITIONER & MOUNTING GP	411
Y	*377-5153*	1	BELT TENSIONER GP	11
Y	*373-3175*	1	CAB AR	415
Y	*379-8748*	1	COMPRESSOR GP-REFRIGERANT	420
Y	*262-0942*	1	CONDENSER & MTG GP-REFRIGERANT	422
Y	*379-9698*	1	COVER GP-CAB	429
Y	*374-9748*	1	FILM GP-INTERNATIONAL	511
Y	*240-4607*	1	FILTER GP-CAB AIR	436
Y	*381-9071*	1	FLOOR MAT GP-CAB	438
Y	*352-7747*	1	HORN GP-ELECTRIC	440
Y	*352-7739*	1	LIGHTING GP-FLOOD (CAB)	132
Y	*379-8744*	1	LINES GP-AIR CONDITIONER	448
Y	*382-1439*	1	LINES GP-HEATER	452
Y	*373-3735*	1	MIRROR GP-REAR VIEW	458
Y	*352-7748*	1	MOUNTING GP-CAB	461
Y	*388-2535*	1	WIRING GP-CONSOLE	165

Y - SEPARATE ILLUSTRATION

<END>

416-2513 OPERATOR AR—OPEN CANOPY, NON-ROPS

S/N: MBF1-UP; M4M1-UP; M5P1-UP; SDT1-UP

AN ATTACHMENT

SMCS-7301 **i05291845**

NOTE	PART NUMBER	QTY	PART NAME 1 2 3 4 5 6 (PRODUCT LEVEL)	SEE PAGE
Y	*416-2526*	1	CANOPY GP (NON-ROPS)	418
Y	*416-2581*	1	FILM GP-INTERNATIONAL (NON-ROPS/FOPS)	521
Y	*352-7739*	1	LIGHTING GP-FLOOD (CAB)	132
Y	*186-1709*	1	MIRROR GP-REAR VIEW (OPEN ROPS)	456
Y	*416-2567*	1	WIRING GP-LIGHTING	178

Y - SEPARATE ILLUSTRATION

<END>

416-2514 OPERATOR AR—ENCLOSED ROPS CAB

S/N: MBF1-UP; M4M1-UP; M5P1-UP; SDT1-UP

AN ATTACHMENT

SMCS-7301 **i05291851**

NOTE	PART NUMBER	QTY	PART NAME 1 2 3 4 5 6 (PRODUCT LEVEL)	SEE PAGE
Y	*373-3175*	1	CAB AR	415
Y	*426-1914*	1	AIR CONDITIONER & MOUNTING GP	411
Y	*387-0504*	1	BELT TENSIONER GP	12
Y	*379-8748*	1	COMPRESSOR GP-REFRIGERANT	420
Y	*262-0942*	1	CONDENSER & MTG GP-REFRIGERANT	422
Y	*379-9698*	1	COVER GP-CAB	429
Y	*416-2637*	1	FILM GP-INTERNATIONAL	522
Y	*240-4607*	1	FILTER GP-CAB AIR	436
Y	*381-9071*	1	FLOOR MAT GP-CAB	438
Y	*352-7747*	1	HORN GP-ELECTRIC	440
Y	*352-7739*	1	LIGHTING GP-FLOOD (CAB)	132
Y	*379-8743*	1	LINES GP-AIR CONDITIONER	446
Y	*379-8742*	1	LINES GP-HEATER	450
Y	*373-3735*	1	MIRROR GP-REAR VIEW	458
Y	*388-2535*	1	WIRING GP-CONSOLE	165

Y - SEPARATE ILLUSTRATION

<END>

379-8250 PANEL GP-INSTRUMENT

S/N: MBF1-UP; M4M1-UP; M5P1-UP; SDT1-UP
PART OF 379-8758, 379-8761 CONFIGURATION AR
AN ATTACHMENT

SMCS-7451 **i05289999**

NOTE	REF NO	GRAPHIC REF	PART NUMBER	QTY	PART NAME 1 2 3 4 5 6 (PRODUCT LEVEL)	SEE PAGE
D	1	1	**6V-2689**		TUBE-HEAT SHRINK (6.35-MM DIA) (0.1-M)	
	2	1	**3S-2093**	1	STRAP-CABLE	
	3	1	**5P-8500**	2	KEY	
	4	1	**110-7887**	1	SWITCH AS-START (KEY)	
		1	**7T-6799**	1	NUT-MOUNTING (1-32-THD)	
		1	**8T-8729**	4	PIN-CONNECTOR (16-GA TO 18-GA)	
		1	**102-8804**	1	KIT-RECEPTACLE (4-PIN)	
					(INCLUDES RECEPTACLE AS & WEDGE)	
	5	1	**128-8617**	1	PLATE AS	
	6	1	**129-7184**	1	FILM-INSTRUCTION (ENGINE START)	
	7	1	**222-7890**	1	SWITCH AS-ROCKER (PARKING BRAKE)	
	8	1	**228-6089**	3	PLUG (ROCKER SWITCH)	
	9	1	**232-1792**	1	HORN	
	10	1	**254-9108**	1	SWITCH AS-ROCKER (WARNING BEACON)	
	11	1	**261-4907**	1	SWITCH AS-ROCKER (24-VOLT) (FLOODLIGHTS)	
	12	1	**263-1490**	1	SWITCH AS-ROCKER (HORN)	
	13	1	**357-8407**	1	MODULE GP-DISPLAY (DP200)	
M		1	**155-4098**	4	SCREW-BUTTON HEAD (M3X0.5X1-MM)	
	14	1	**363-6756**	1	MODULE GP-KEYPAD (8-BUTTON)	
		1	**8F-1326**	2	WASHER (4.2X9.5X0.8-MM THK)	
M		1	**8T-2659**	2	LOCKNUT (M4X0.7-THD)	
	15	1	**367-9470**	1	SWITCH AS-PUSH BUTTON (EMERGENCY STOP)	
		1	**102-8804**	1	KIT-RECEPTACLE (4-PIN)	
					(INCLUDES RECEPTACLE AS & WEDGE)	
		1	**9X-3401**	4	PIN-CONNECTOR (16-GA TO 18-GA)	
Y	16	1	**392-7367**	1	HARNESS AS-MONITOR	111
	17	1	**393-5114**	1	FILM-IDENTIFICATION (EMERGENCY STOP)	
Y	18	1	**394-4791**	1	HARNESS AS-CONSOLE	105
	19	1	**130-5300**	1	CLIP	
	20	1	**132-5789**	2	CLIP	
M	21	1	**193-2685**	1	SCREW-TRUSS HEAD (M6X1X20-MM)	
	22	1	**352-3970**	1	CLIP	
	23	1	**4P-7581**	1	CLIP	
M	24	1	**5C-2890**	2	NUT (M6X1-THD)	
	25	1	**5P-4116**	1	WASHER-HARD (8.8X20.5X2-MM THK)	
	26	1	**7K-1181**	14	STRAP-CABLE	
M	27	1	**8T-4137**	2	BOLT (M10X1.5X20-MM)	
	28	1	**8T-4205**	2	WASHER-HARD (7.2X14.5X2-MM THK)	
	29	1	**9X-7462**	1	GROMMET	
	30	1	**8T-4121**	2	WASHER-HARD (11X21X2.5-MM THK)	

D - ORDER BY THE METER
M - METRIC PART
Y - SEPARATE ILLUSTRATION

379-8250 **PANEL GP-INSTRUMENT (*contd.*)** **i05289999**

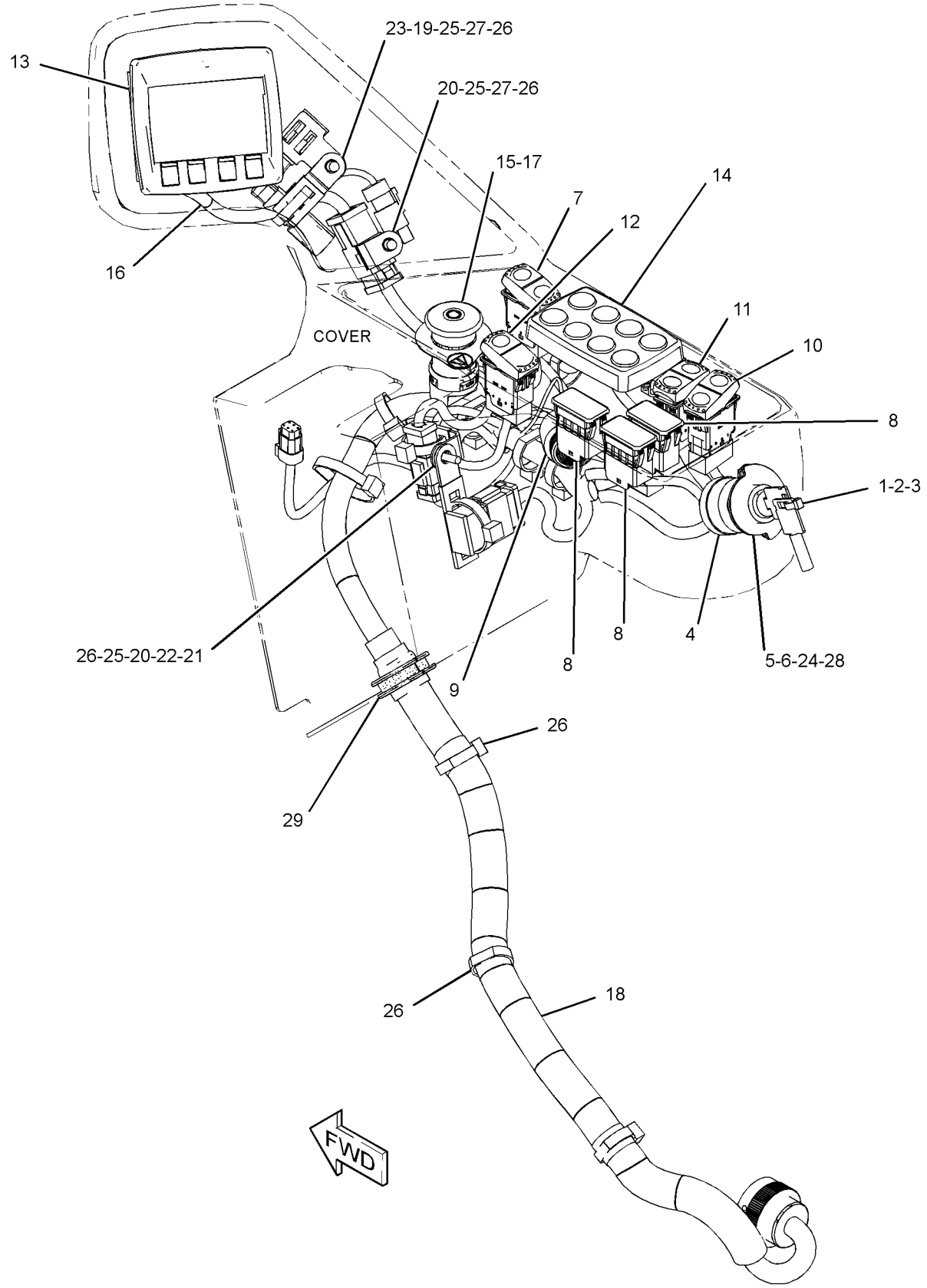

GRAPHIC #1 **<END>** g03098687

379-8251 PANEL GP-INSTRUMENT

S/N: MBF1-UP; M4M1-UP; M5P1-UP; SDT1-UP
PART OF 379-8760, 379-8762 CONFIGURATION AR
AN ATTACHMENT

SMCS-7451 **i05304073**

NOTE	REF NO	GRAPHIC REF	PART NUMBER	QTY	PART NAME 1 2 3 4 5 6 (PRODUCT LEVEL)	SEE PAGE
	1	1	**3S-2093**	2	STRAP-CABLE	
	2	1	**5P-8500**	2	KEY	
D	3	1	**6V-2689**		TUBE-HEAT SHRINK (6.35-MM DIA) (0.1-M)	
J	4	1	**110-7887**	1	SWITCH AS-START (KEY)	
		1	**7T-6799**	1	NUT-MOUNTING (1-32-THD)	
		1	**8T-8729**	4	PIN-CONNECTOR (16-GA TO 18-GA)	
		1	**102-8804**	1	KIT-RECEPTACLE (4-PIN)	
					(INCLUDES RECEPTACLE AS & WEDGE)	
	5	1	**128-8617**	1	PLATE AS	
	6	1	**129-7184**	1	FILM-INSTRUCTION (ENGINE START)	
	7	1	**222-7890**	1	SWITCH AS-ROCKER (PARKING BRAKE)	
	8	1	**228-6089**	4	PLUG (ROCKER SWITCH)	
	9	1	**232-1792**	1	HORN	
	10	1	**254-9108**	1	SWITCH AS-ROCKER (WARNING BEACON)	
	11	1	**261-4907**	1	SWITCH AS-ROCKER (24-VOLT) (WORK LIGHTS)	
	12	1	**263-1490**	1	SWITCH AS-ROCKER (HORN)	
	13	1	**290-5664**	1	STRAP-CABLE	
	14	1	**357-8407**	1	MODULE GP-DISPLAY (DP200)	
M		1	**155-4098**	4	SCREW-BUTTON HEAD (M3X0.5X1-MM)	
	15	1	**363-6756**	1	MODULE GP-KEYPAD (8-BUTTON)	
		1	**8F-1326**	2	WASHER (4.2X9.5X0.8-MM THK)	
M		1	**8T-2659**	2	LOCKNUT (M4X0.7-THD)	
	16	1	**367-9470**	1	SWITCH AS-PUSH BUTTON (EMERGENCY STOP)	
		1	**102-8804**	1	KIT-RECEPTACLE (4-PIN)	
					(INCLUDES RECEPTACLE AS & WEDGE)	
		1	**9X-3401**	4	PIN-CONNECTOR (16-GA TO 18-GA)	
	17	1	**368-4778**	1	FILM-WARNING (EMERGENCY STOP)	
Y	18	1	**435-7807**	1	HARNESS AS-CONSOLE	106
	19	1	**117-8929**	2	WASHER (6.6X22X2-MM THK)	
	20	1	**132-5789**	2	CLIP	
M	21	1	**5C-2890**	2	NUT (M6X1-THD)	
	22	1	**7K-1181**	12	STRAP-CABLE	
	23	1	**8T-4205**	2	WASHER-HARD (7.2X14.5X2-MM THK)	
M	24	1	**9X-2044**	1	SCREW-TRUSS HEAD (M6X1X16-MM)	

D - ORDER BY THE METER
J - REQUIRES CORPORATE KEY
M - METRIC PART
Y - SEPARATE ILLUSTRATION

379-8251 **PANEL GP-INSTRUMENT (*contd.*)** **i05304073**

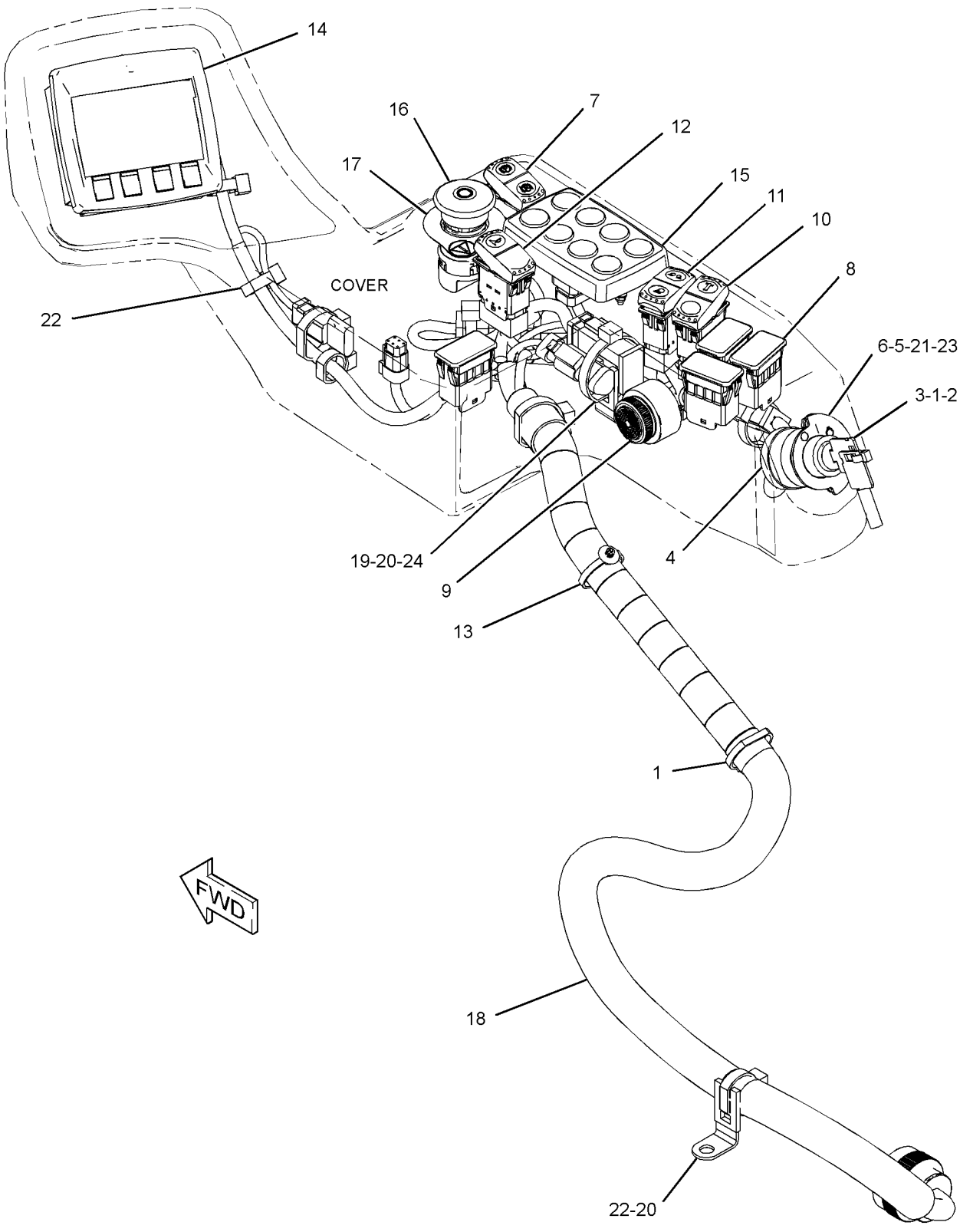

GRAPHIC #1 **<END>** g03385539

OPERATOR STATION

379-8728 PLATFORM GP

S/N: M4M1-UP; M5P1-UP

AN ATTACHMENT

SMCS-7253, 7254 **i05291864**

NOTE	REF NO	GRAPHIC REF	PART NUMBER	QTY	PART NAME 1 2 3 4 5 6 (PRODUCT LEVEL)	SEE PAGE
	1	1	**163-1201**	1	HORN AS (24-VOLT, LOW TONE)	
Y	2	1	**219-6487**	1	LAMP GP-FLOOD (24-VOLT, 70-WATT)	130
	3	1	**381-8213**	1	PLATFORM AS	
M		1	**8T-3490**	9	NUT-WELD (M10X1.5-THD)	
M		1	**8T-3612**	4	NUT-WELD (M8X1.25-THD)	
M		1	**8T-3635**	2	STUD-WELD (M12X1.75X34.93-MM)	
Y	4	1	**420-4997**	1	HARNESS AS-PLATFORM	116
	5	1	**4P-7581**	1	CLIP	
	6	1	**7K-1181**	9	STRAP-CABLE	
M	7	1	**8T-4001**	4	NUT (M24X3-THD)	
	8	1	**8T-4121**	6	WASHER-HARD (11X21X2.5-MM THK)	
M	9	1	**8T-4133**	4	NUT (M10X1.5-THD)	
	10	1	**8T-4167**	4	WASHER-HARD (26X44X4-MM THK)	
M	11	1	**8T-4195**	1	BOLT (M10X1.5X30-MM)	
	12	1	**8T-4223**	1	WASHER-HARD (13.5X25.5X3-MM THK)	
M	13	1	**8T-4244**	1	NUT (M12X1.75-THD)	

M - METRIC PART
Y - SEPARATE ILLUSTRATION

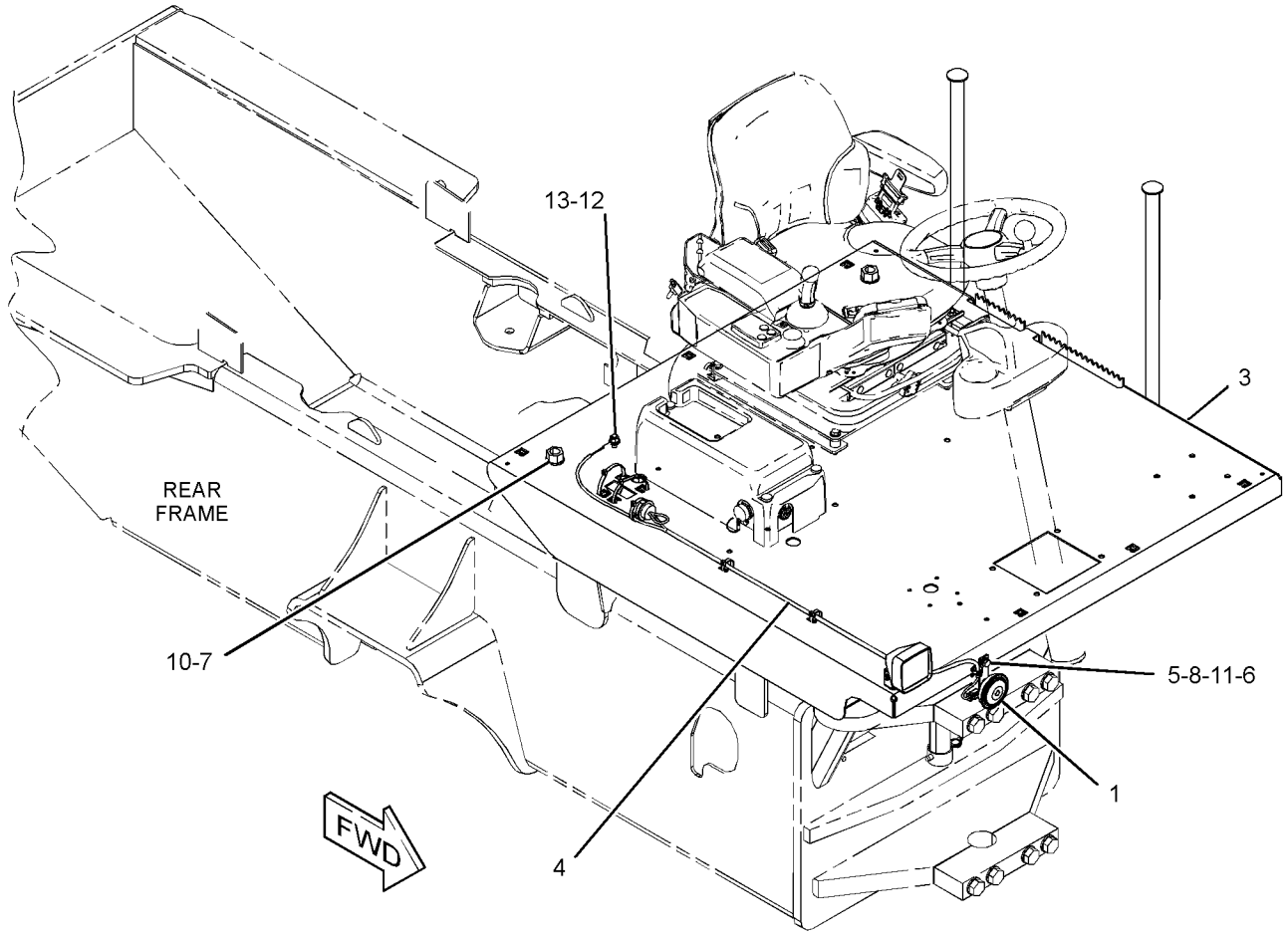

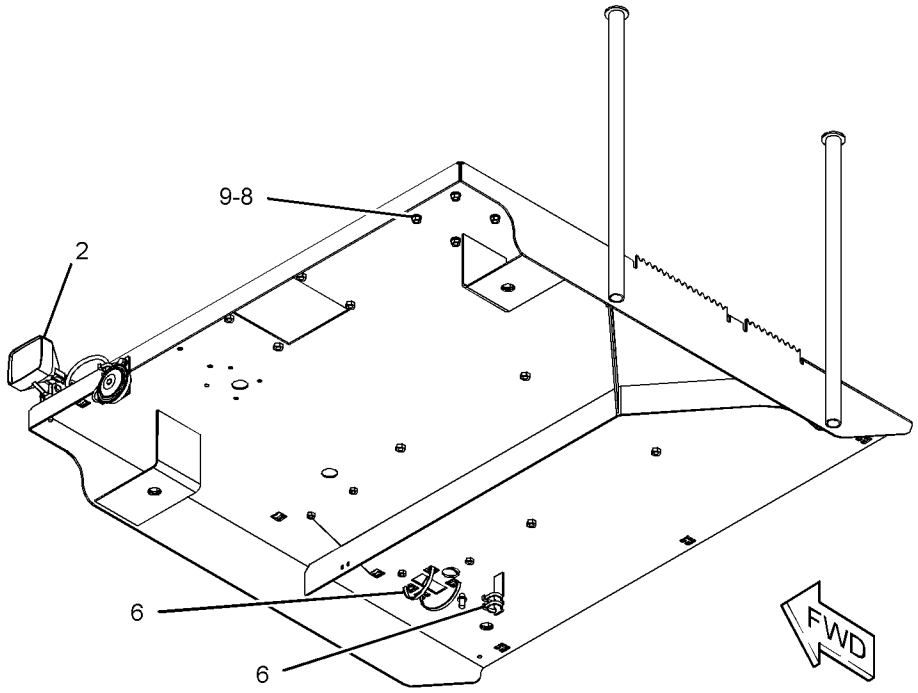

GRAPHIC #1 **<END>** g03360663

OPERATOR STATION

379-8465 PLATFORM GP-OPERATOR

S/N: MBF1-UP; M4M1-UP; M5P1-UP; SDT1-UP
PART OF 377-2157 OPERATOR AR
AN ATTACHMENT

SMCS-7253 **i05287558**

NOTE	REF NO	GRAPHIC REF	PART NUMBER	QTY	PART NAME 1 2 3 4 5 6 (PRODUCT LEVEL)	SEE PAGE
	1	1	**378-4306**	1	FLOORPLATE AS	
	2	1	**383-8357**	1	SEAL-RH	
	3	1	**383-8358**	1	SEAL-LH	
	4	1	**5P-4116**	8	WASHER-HARD (8.8X20.5X2-MM THK)	
M	5	1	**8T-4001**	2	NUT (M24X3-THD)	
	6	1	**8T-4167**	2	WASHER-HARD (26X44X4-MM THK)	
M	7	1	**8T-4908**	8	BOLT (M8X1.25X25-MM)	

M - METRIC PART

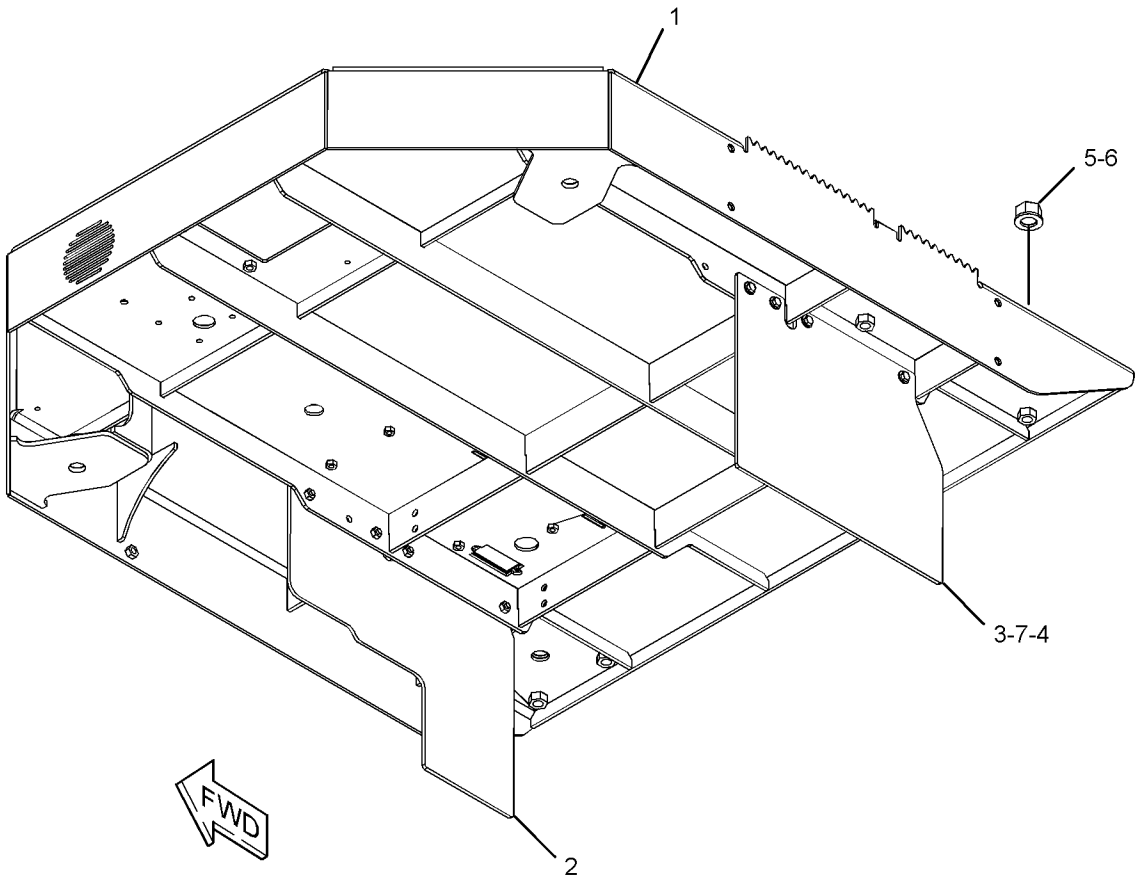

GRAPHIC #1 **<END>** g03114436

381-6966 PLATFORM GP-OPERATOR

S/N: MBF1-UP; M4M1-UP; M5P1-UP; SDT1-UP
PART OF 381-6991 OPERATOR AR
AN ATTACHMENT

SMCS-7253 **i05291045**

NOTE	REF NO	GRAPHIC REF	PART NUMBER	QTY	PART NAME 1 2 3 4 5 6 (PRODUCT LEVEL)	SEE PAGE
	1	1	**378-4306**	1	FLOORPLATE AS	
M		1	**8T-3490**	17	NUT-WELD (M10X1.5-THD)	
M		1	**8T-3612**	19	NUT-WELD (M8X1.25-THD)	
M		1	**8T-3635**	2	STUD-WELD (M12X1.75X34.93-MM)	
		1	**354-0132**	2	INSERT-HEX (M4X0.7-THD)	
		1	**355-8941**	8	NUT-WELD (M16X2-THD)	
	2	1	**381-6967**	1	CANOPY AS	
		1	**7T-1099**	4	LINK	
M		1	**8T-3612**	7	NUT-WELD (M8X1.25-THD)	
M		1	**8T-3635**	1	STUD-WELD (M12X1.75X34.93-MM)	
	3	1	**383-8357**	1	SEAL-RH	
	4	1	**383-8358**	1	SEAL-LH	
	5	1	**5P-4116**	8	WASHER-HARD (8.8X20.5X2-MM THK)	
M	6	1	**8T-4193**	8	BOLT (M16X2X50-MM)	
M	7	1	**8T-4908**	8	BOLT (M8X1.25X25-MM)	
	8	1	**9X-8257**	8	WASHER (17.5X30X3.5-MM THK)	
D	9	1	**8T-3426**		CHANNEL-TRIM (0.9-M)	

D - ORDER BY THE METER
M - METRIC PART

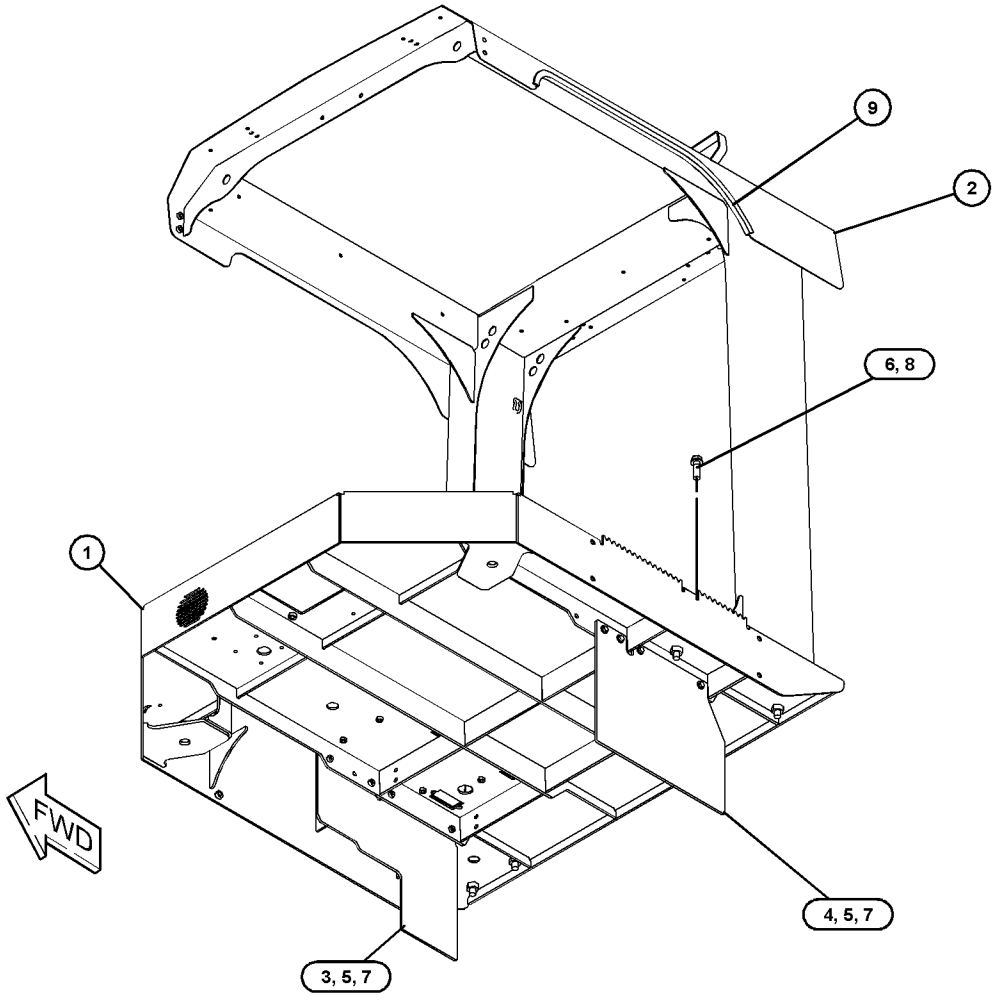

GRAPHIC #1 **<END>** g03112076

382-1409 ROPS & PLATFORM GP

S/N: MBF1-UP; M4M1-UP; M5P1-UP; SDT1-UP
PART OF 374-9842, 377-2159 OPERATOR AR
AN ATTACHMENT

SMCS-7253, 7323 **i05289945**

NOTE	REF NO	GRAPHIC REF	PART NUMBER	QTY	PART NAME 1 2 3 4 5 6 (PRODUCT LEVEL)	SEE PAGE
	1	1	**382-3691**	1	ROPS AS	
M	2	1	**195-0937**	6	INSERT-THREADED (M8X1.25-THD)	
	3	1	**354-0132**	4	INSERT-HEX (M4X0.7-THD)	
D	4	1	**8T-3426**		CHANNEL-TRIM (0.9-M)	

D - ORDER BY THE METER
M - METRIC PART

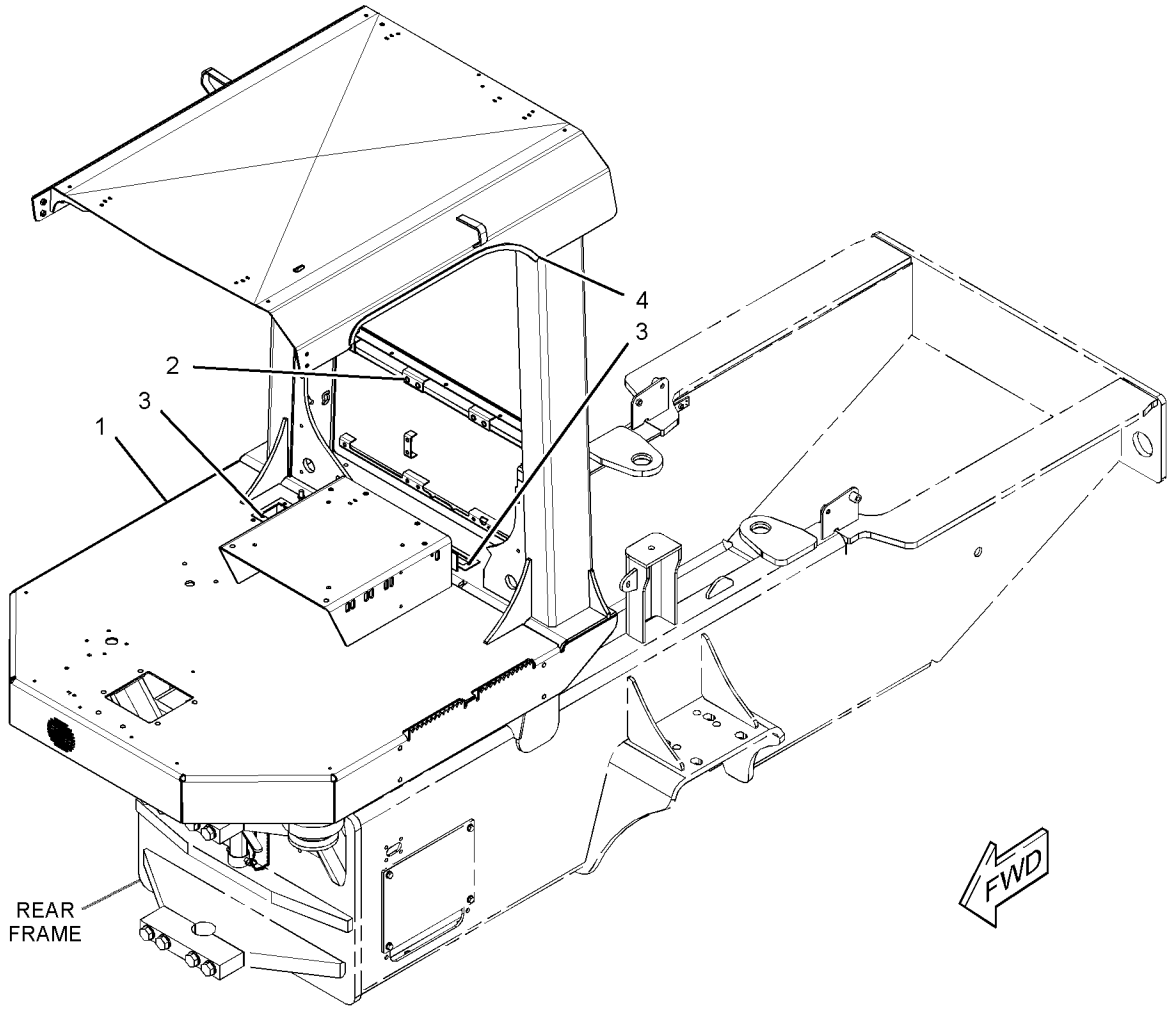

GRAPHIC #1 **<END>** g03114977

118-7250 SCREEN GP-SUN

S/N: MBF1-UP; M4M1-UP; M5P1-UP; SDT1-UP
PART OF 204-4390 SCREEN GP-SUN
AN ATTACHMENT

SMCS-7165 **i03044920**

NOTE	REF NO	GRAPHIC REF	PART NUMBER	QTY	PART NAME 1 2 3 4 5 6 (PRODUCT LEVEL)	SEE PAGE
F			**119-2073**	2	HOOK-RETAINER	

F - NOT SHOWN

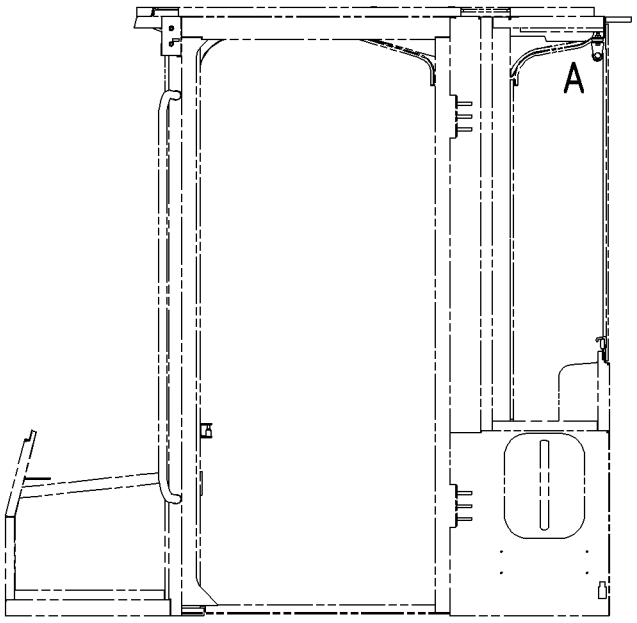

LEFT SIDE VIEW

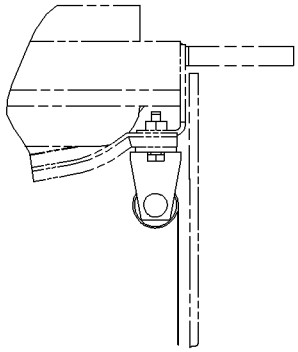

VIEW OF AREA A

GRAPHIC #1 **<END>** g00869480

OPERATOR STATION

204-4390 SCREEN GP-SUN

S/N: MBF1-UP; M4M1-UP; M5P1-UP; SDT1-UP

AN ATTACHMENT

SMCS-7165 **i03044903**

NOTE	PART NUMBER	QTY	PART NAME 1 2 3 4 5 6 (PRODUCT LEVEL)	SEE PAGE
Y	**118-7250**	1	SCREEN GP-SUN	481

Y - SEPARATE ILLUSTRATION

<END>

356-1226 SEAT & MOUNTING GP—VINYL

S/N: MBF1-UP; M4M1-UP; M5P1-UP; SDT1-UP
PART OF 379-8760 CONFIGURATION AR
AN ATTACHMENT

SMCS-7312 **i05291114**

NOTE	REF NO	GRAPHIC REF	PART NUMBER	QTY	PART NAME 1 2 3 4 5 6 (PRODUCT LEVEL)	SEE PAGE
	1	1	**5P-7958**	1	SLEEVE-CABLE SPLICE	
	2	1	**415-0040**	1	SEAT GP-SUSPENSION (VINYL)	
M	3	1	**3T-0852**	2	LOCKNUT (M8X1.25-THD)	
	4	1	**5P-1076**	4	WASHER-HARD (13.5X30X4-MM THK)	
	5	1	**5P-4116**	4	WASHER-HARD (8.8X20.5X2-MM THK)	
M	6	1	**8T-4183**	2	BOLT (M12X1.75X40-MM)	
M	7	1	**8T-7547**	2	BOLT (M8X1.25X30-MM)	
M	8	1	**8T-8549**	2	LOCKNUT (M12X1.75-THD)	

M - METRIC PART

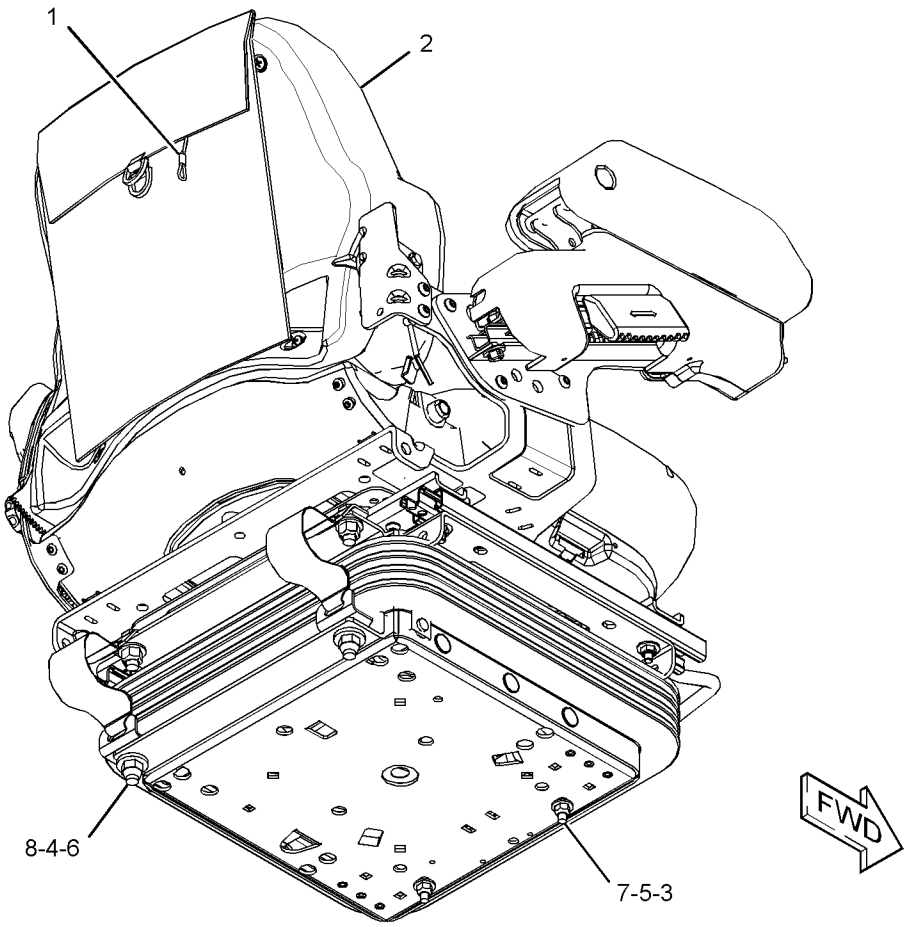

GRAPHIC #1 **<END>** g03112257

356-1227 SEAT & MOUNTING GP—CLOTH

S/N: MBF1-UP; M4M1-UP; M5P1-UP; SDT1-UP
PART OF 379-8762 CONFIGURATION AR
AN ATTACHMENT

SMCS-7312 **i05291129**

NOTE	REF NO	GRAPHIC REF	PART NUMBER	QTY	PART NAME 1 2 3 4 5 6 (PRODUCT LEVEL)	SEE PAGE
	1	1	**5P-7958**	1	SLEEVE-CABLE SPLICE	
	2	1	**415-0041**	1	SEAT GP-SUSPENSION (CLOTH)	
M	3	1	**3T-0852**	2	LOCKNUT (M8X1.25-THD)	
	4	1	**5P-1076**	4	WASHER-HARD (13.5X30X4-MM THK)	
	5	1	**5P-4116**	4	WASHER-HARD (8.8X20.5X2-MM THK)	
M	6	1	**8T-4183**	2	BOLT (M12X1.75X40-MM)	
M	7	1	**8T-7547**	2	BOLT (M8X1.25X30-MM)	
M	8	1	**8T-8549**	2	LOCKNUT (M12X1.75-THD)	

M - METRIC PART

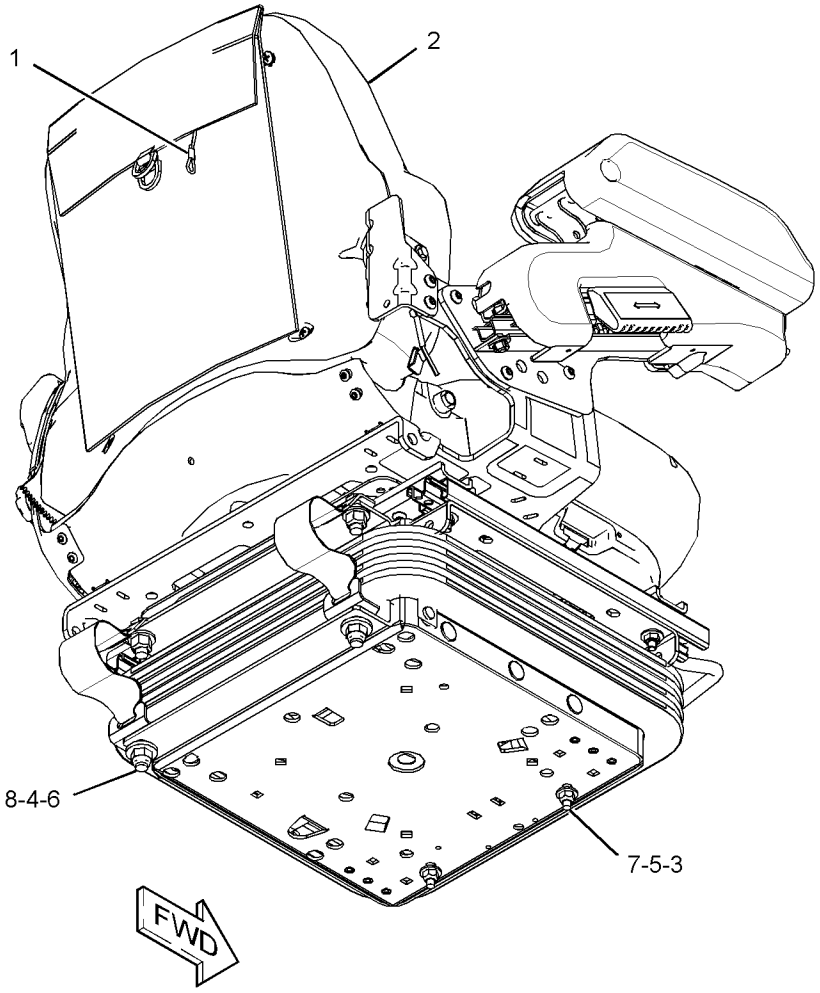

GRAPHIC #1 **<END>** g03050156

380-7760 SEAT & MOUNTING GP—VINYL

S/N: MBF1-UP; M4M1-UP; M5P1-UP; SDT1-UP
PART OF 379-8758 CONFIGURATION AR
AN ATTACHMENT

SMCS-7312 **i05322213**

NOTE	REF NO	GRAPHIC REF	PART NUMBER	QTY	PART NAME 1 2 3 4 5 6 (PRODUCT LEVEL)	SEE PAGE
	1	1	**5P-7958**	1	SLEEVE-CABLE SPLICE	
Y	2	1	**353-5341**	1	SEAT BELT GP (RETRACTABLE, 2-IN)	488
	3	1	**387-5607**	1	SEAT GP-SUSPENSION	
	4	1	**8T-4224**	4	WASHER-HARD (8.8X16X2-MM THK)	
M	5	1	**5A-3604**	4	BOLT-SOCKET HEAD (M8X1.25X25-MM)	

M - METRIC PART
Y - SEPARATE ILLUSTRATION

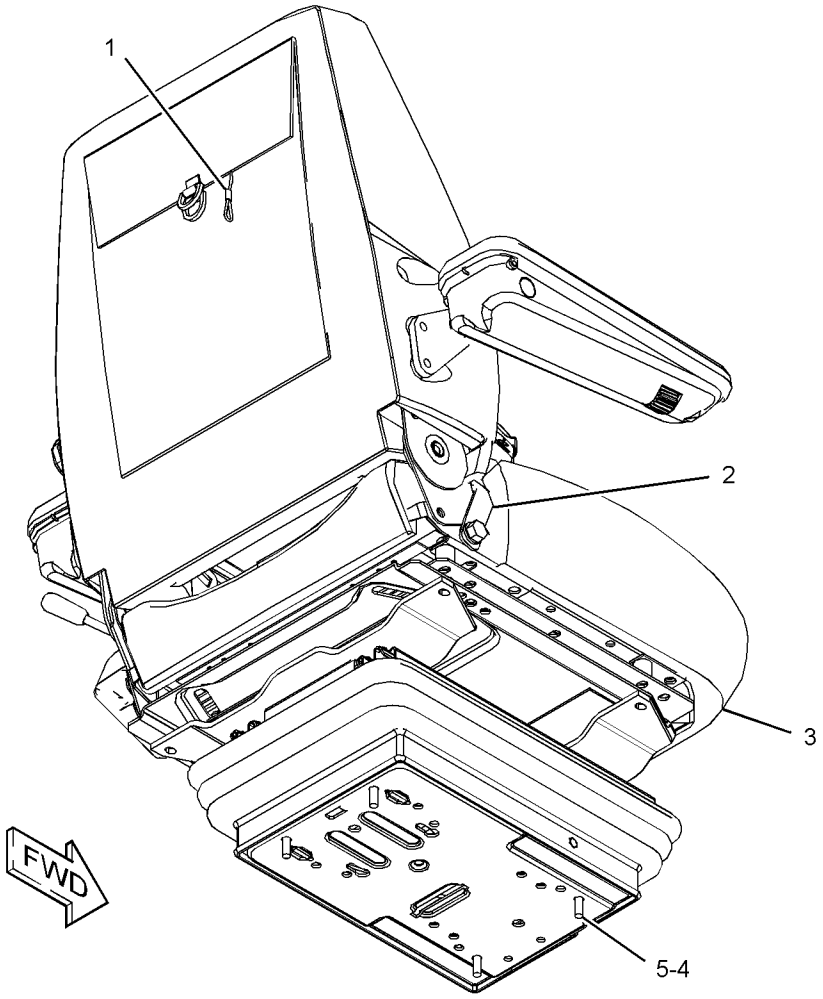

GRAPHIC #1 **<END>** g03091136

380-7761 SEAT & MOUNTING GP—CLOTH

S/N: MBF1-UP; M4M1-UP; M5P1-UP; SDT1-UP
PART OF 379-8761 CONFIGURATION AR
AN ATTACHMENT

SMCS-7312 **i05301432**

NOTE	REF NO	GRAPHIC REF	PART NUMBER	QTY	PART NAME 1 2 3 4 5 6 (PRODUCT LEVEL)	SEE PAGE
	1	1	**5P-7958**	1	SLEEVE-CABLE SPLICE	
Y	2	1	**353-5341**	1	SEAT BELT GP (RETRACTABLE, 2-IN)	488
	3	1	**387-5608**	1	SEAT GP-SUSPENSION	
	4	1	**8T-4224**	4	WASHER-HARD (8.8X16X2-MM THK)	
M	5	1	**5A-3604**	4	BOLT-SOCKET HEAD (M8X1.25X25-MM)	

M - METRIC PART
Y - SEPARATE ILLUSTRATION

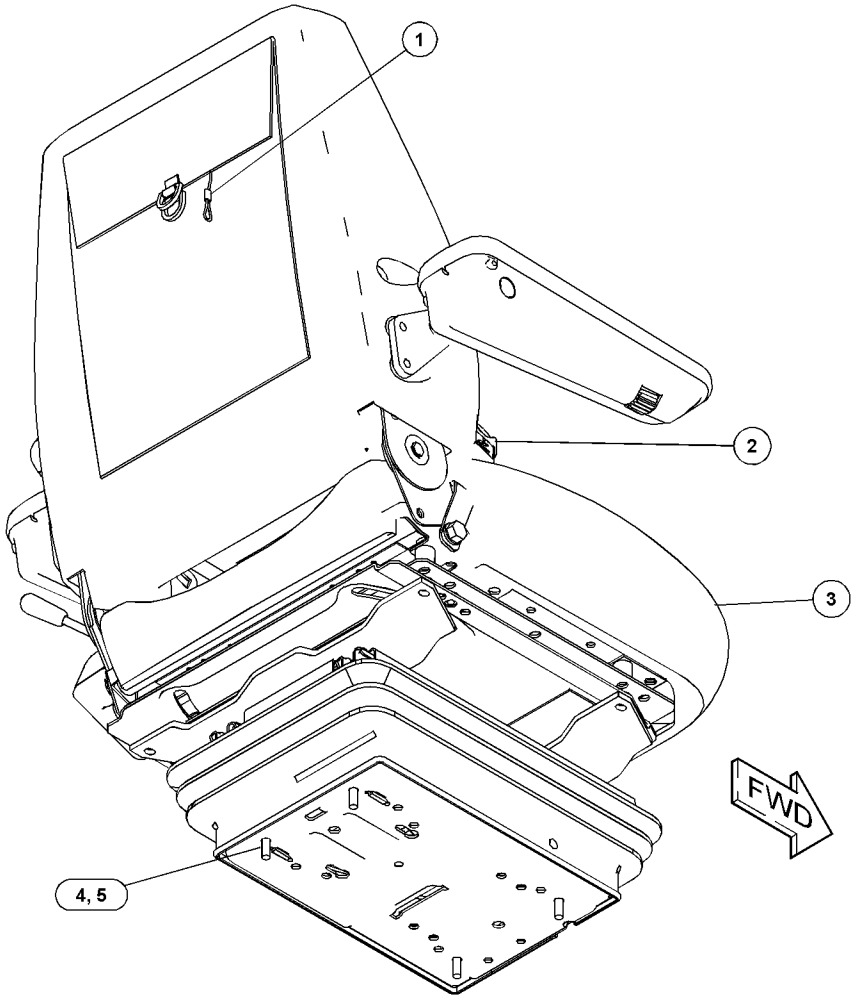

GRAPHIC #1 **<END>** g03098876

258-4095 SEAT BELT GP–RETRACTABLE

S/N: MBF1-UP; M4M1-UP; M5P1-UP; SDT1-UP
51-MM (2-IN)
PART OF 382-9003 SEAT BELT GP
AN ATTACHMENT

SMCS-7327 **i04544358**

NOTE	REF NO	GRAPHIC REF	PART NUMBER	QTY	PART NAME 1 2 3 4 5 6 (PRODUCT LEVEL)	SEE PAGE
F			**2D-6412**	2	WASHER (7/16X15/16X1/4-IN THK)	
F			**8S-0934**	2	LOCKNUT-FLANGE (7/16-20-THD)	
F			**8S-4723**	2	BOLT (7/16-20X1.5-IN)	
F			**8T-4223**	2	WASHER-HARD (13.5X25.5X3-MM THK)	

F - NOT SHOWN

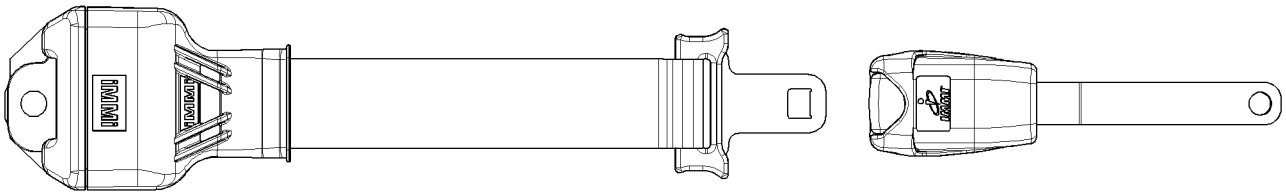

GRAPHIC #1 **<END>** g01345229

353-5341 SEAT BELT GP

S/N: MBF1-UP; M4M1-UP; M5P1-UP; SDT1-UP
FIELD REPLACEMENT ORDER 353-5342—PAGE: 489
PART OF 380-7760, 380-7761 SEAT & MOUNTING GP
AN ATTACHMENT

SMCS-7327 **i05289969**

NOTE	REF NO	GRAPHIC REF	PART NUMBER	QTY	PART NAME 1 2 3 4 5 6 (PRODUCT LEVEL)	SEE PAGE
	1	1	**0T-0244**	1	BOLT (7/16-20X1.25-IN)	
	2	1	**0T-0489**	1	BOLT (7/16-20X2-IN)	
	3	1	**8T-5360**	3	WASHER (12X22.5X2.5-MM THK)	
	4	1	**275-7803**	1	SPACER (11.7X19.8X25.4-MM THK)	

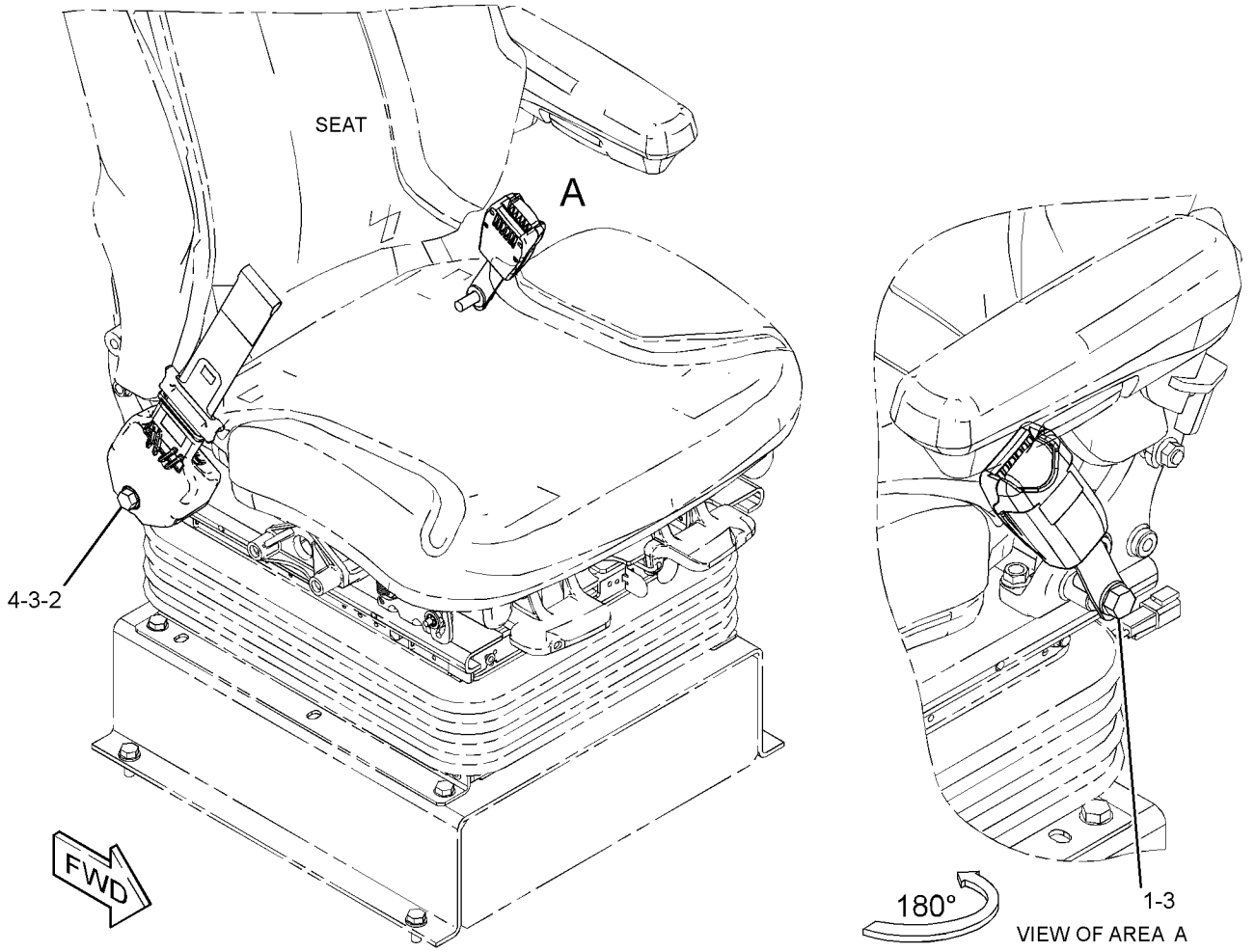

GRAPHIC #1 **<END>** g02379557

353-5342 SEAT BELT GP

S/N: MBF1-UP; M4M1-UP; M5P1-UP; SDT1-UP

FIELD REPLACEMENT FOR 353-5341—PAGE: 488

SMCS-7327 **i05330405**

NOTE	REF NO	GRAPHIC REF	PART NUMBER	QTY	PART NAME 1 2 3 4 5 6 (PRODUCT LEVEL)	SEE PAGE
	1	1	**0T-0244**	1	BOLT (7/16-20X1.25-IN)	
	2	1	**0T-0489**	1	BOLT (7/16-20X2-IN)	
	3	1	**8T-5360**	3	WASHER (12X22.5X2.5-MM THK)	
	4	1	**275-7803**	1	SPACER (11.7X19.8X25.4-MM THK)	

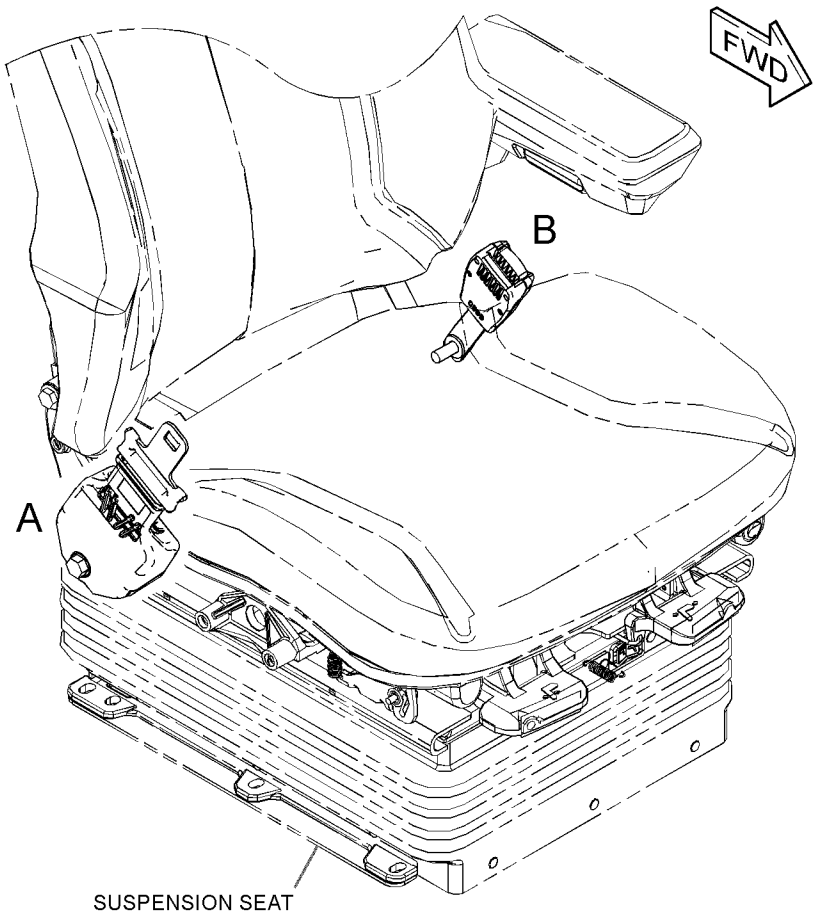

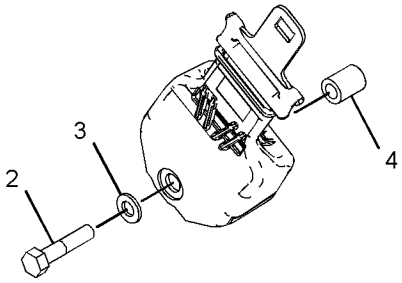

VIEW OF AREA A

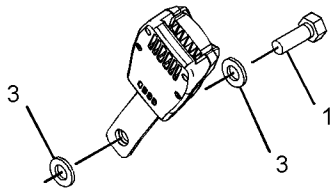

VIEW OF AREA B

GRAPHIC #1 **<END>** g02383977

382-9003 SEAT BELT GP—RETRACTABLE, 51-MM (2-IN)

S/N: MBF1-UP; M4M1-UP; M5P1-UP; SDT1-UP
PART OF 379-8760, 379-8762 CONFIGURATION AR
AN ATTACHMENT

SMCS-7327 **i05291085**

NOTE	REF NO	GRAPHIC REF	PART NUMBER	QTY	PART NAME 1 2 3 4 5 6 (PRODUCT LEVEL)	SEE PAGE
Y	1	1	**258-4095**	1	SEAT BELT GP (RETRACTABLE, 51-MM (2-IN))	487
	2	1	**1L-9080**	2	BOLT (7/16-20X1.5-IN)	
	3	1	**7X-0507**	2	WASHER-HARD (12X22.5X5-MM THK)	
	4	1	**8S-0934**	2	LOCKNUT-FLANGE (7/16-20-THD)	
	5	1	**8T-4223**	2	WASHER-HARD (13.5X25.5X3-MM THK)	

Y - SEPARATE ILLUSTRATION

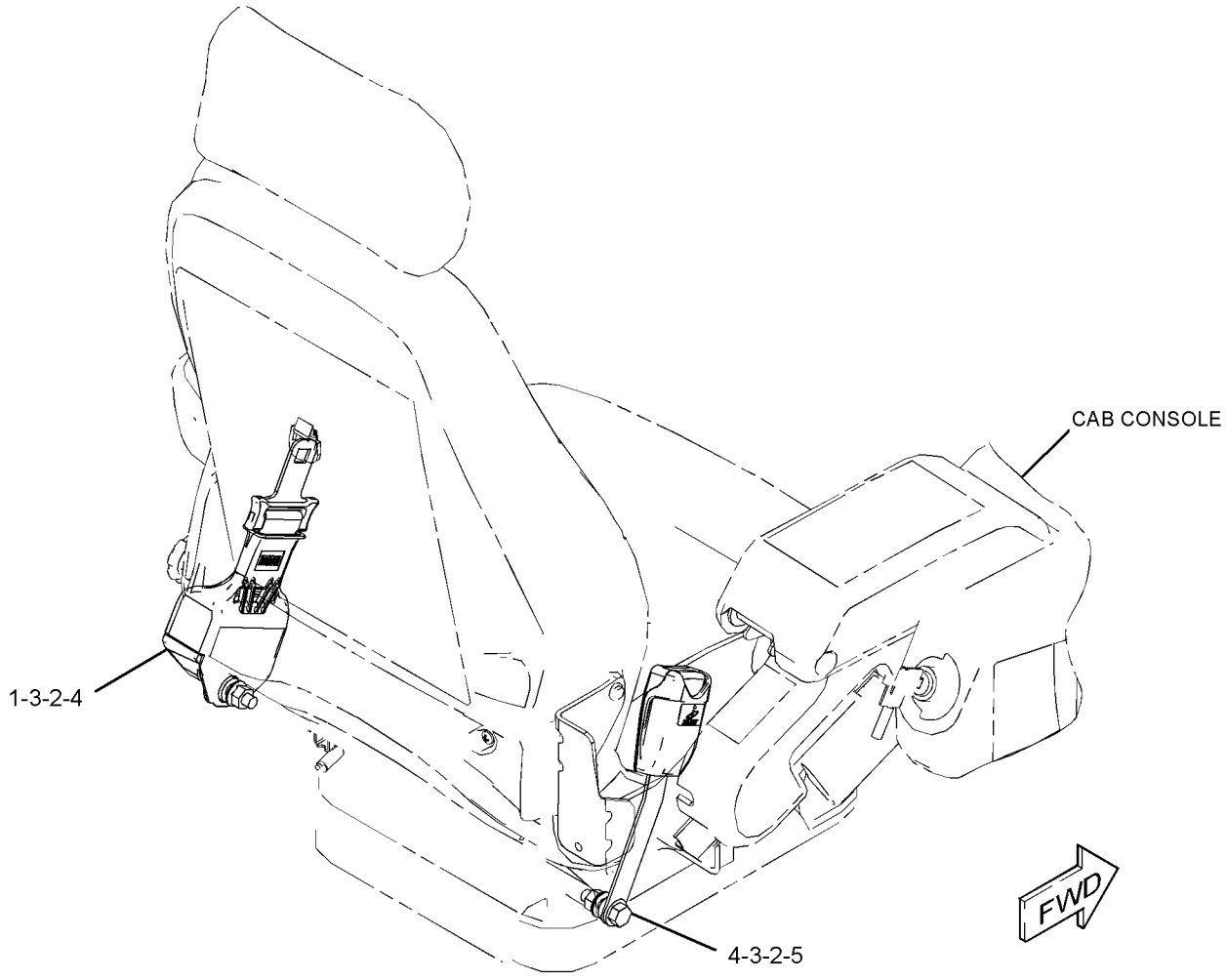

GRAPHIC #1 **<END>** g02739816

277-7116 VALVE GP-WATER–HEATER CONTROL

S/N: MBF1-UP; M4M1-UP; M5P1-UP; SDT1-UP
PART OF 399-7742 AIR CONDITIONER GP
AN ATTACHMENT

SMCS-1800, 7304, 7320 **i05291200**

NOTE	REF NO	GRAPHIC REF	PART NUMBER	QTY	PART NAME 1 2 3 4 5 6 (PRODUCT LEVEL)	SEE PAGE
	1	1	**9X-2185**	7	SCREW (8-15X0.44-IN)	
	2	1	**131-3093**	1	BUSHING	
	3	1	**248-6772**	8	SCREW-MACHINE (8-16X7.75-IN)	
	4	1	**268-8769**	1	VALVE AS-WATER	
	5	1	**277-7769**	1	TUBE	
	6	1	**277-7770**	1	TUBE	
	7	1	**277-7789**	1	PLATE	
	8	1	**279-0850**	1	ACTUATOR (ELECTRONIC)	
	9	1	**4M-6582**	2	SEAL-O-RING	

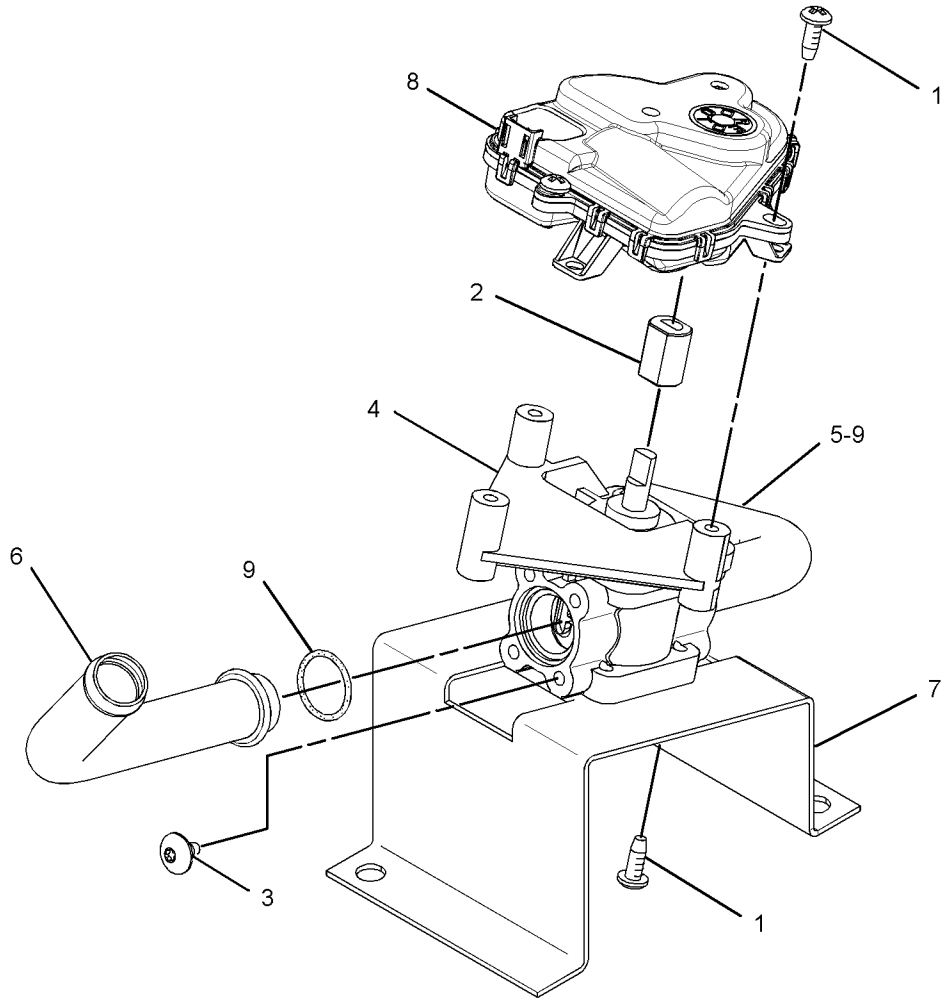

GRAPHIC #1 **<END>** g01404281

107-4641 VISOR GP-CAB

S/N: MBF1-UP; M4M1-UP; M5P1-UP; SDT1-UP

AN ATTACHMENT

SMCS-7301 **i03043782**

NOTE	REF NO	GRAPHIC REF	PART NUMBER	QTY	PART NAME 1 2 3 4 5 6 (PRODUCT LEVEL)	SEE PAGE
	1	1	**9R-3203**	2	PLATE	
	2	1	**9R-3204**	1	PLATE AS	
M		1	**6V-9632**	2	NUT-WELD (M6X1-THD)	
	3	1	**9R-3205**	1	VISOR AS	
M	4	1	**9X-2042**	2	SCREW-TRUSS HEAD (M6X1X12-MM)	
M	5	1	**9X-2045**	2	SCREW-TRUSS HEAD (M6X1X20-MM)	

M - METRIC PART

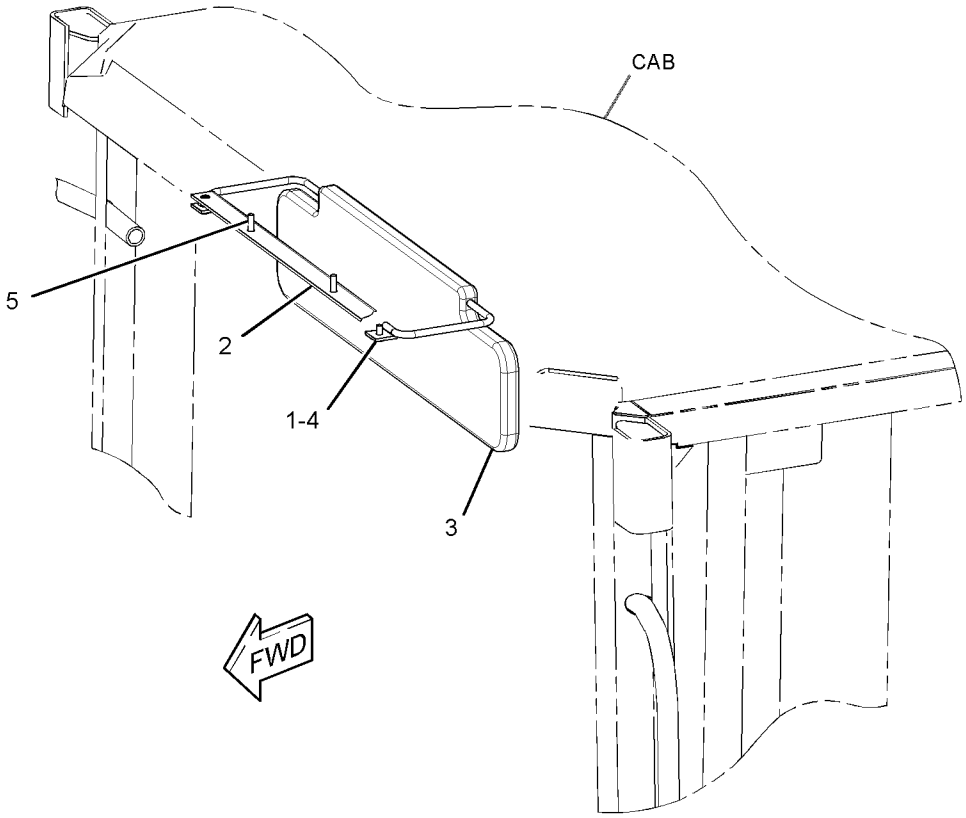

GRAPHIC #1 **<END>** g01552093

373-3151 WINDOW GP-CAB

S/N: MBF1-UP; M4M1-UP; M5P1-UP; SDT1-UP
PART OF 373-3211 CAB GP-ENCLOSED ROPS
AN ATTACHMENT

SMCS-7310 **i05297514**

NOTE	REF NO	GRAPHIC REF	PART NUMBER	QTY	PART NAME 1 2 3 4 5 6 (PRODUCT LEVEL)	SEE PAGE
	1	1	**8S-7803**	2	RING-RETAINING	
	2	1	**100-7608**	1	HANDLE	
M	3	1	**128-6866**	4	BOLT-ROUND HEAD (M8X1.25X25-MM)	
	4	1	**129-8542**	2	RETAINER	
	5	1	**129-8545**	8	WASHER (13X40X3-MM THK)	
M	6	1	**136-4192**	2	BOLT (M6X1X35-MM)	
	7	1	**159-4946**	2	KEEPER	
B	8	1	**177-4877**	2	SHIM (1-MM THK)	
Y	9	1	**299-6986**	2	LATCH GP-CAB DOOR & WINDOW (RH)	444
	10	1	**354-6358**	2	PIN-HINGE	
	11	1	**371-4356**	1	LATCH AS	
	12	1	**371-4357**	1	LATCH AS	
	13	1	**372-4427**	4	CAP AS	
	14	1	**372-4428**	1	SEAL	
	15	1	**373-2034**	1	PLATE	
	16	1	**373-3163**	2	PLATE-HINGE	
	17	1	**384-5890**	1	GLASS	
	18	1	**384-5891**	1	PLATE	
M	19	1	**5C-7261**	4	NUT (M8X1.25-THD)	
M	20	1	**9X-1046**	4	SCREW (M4X0.7X18-MM)	
M	21	1	**9X-2046**	3	SCREW-TRUSS HEAD (M6X1X35-MM)	
E	22	1	**3E-3805**		SEAL (355-CM)	

B - USE AS REQUIRED
E - ORDER BY THE CENTIMETER
M - METRIC PART
Y - SEPARATE ILLUSTRATION

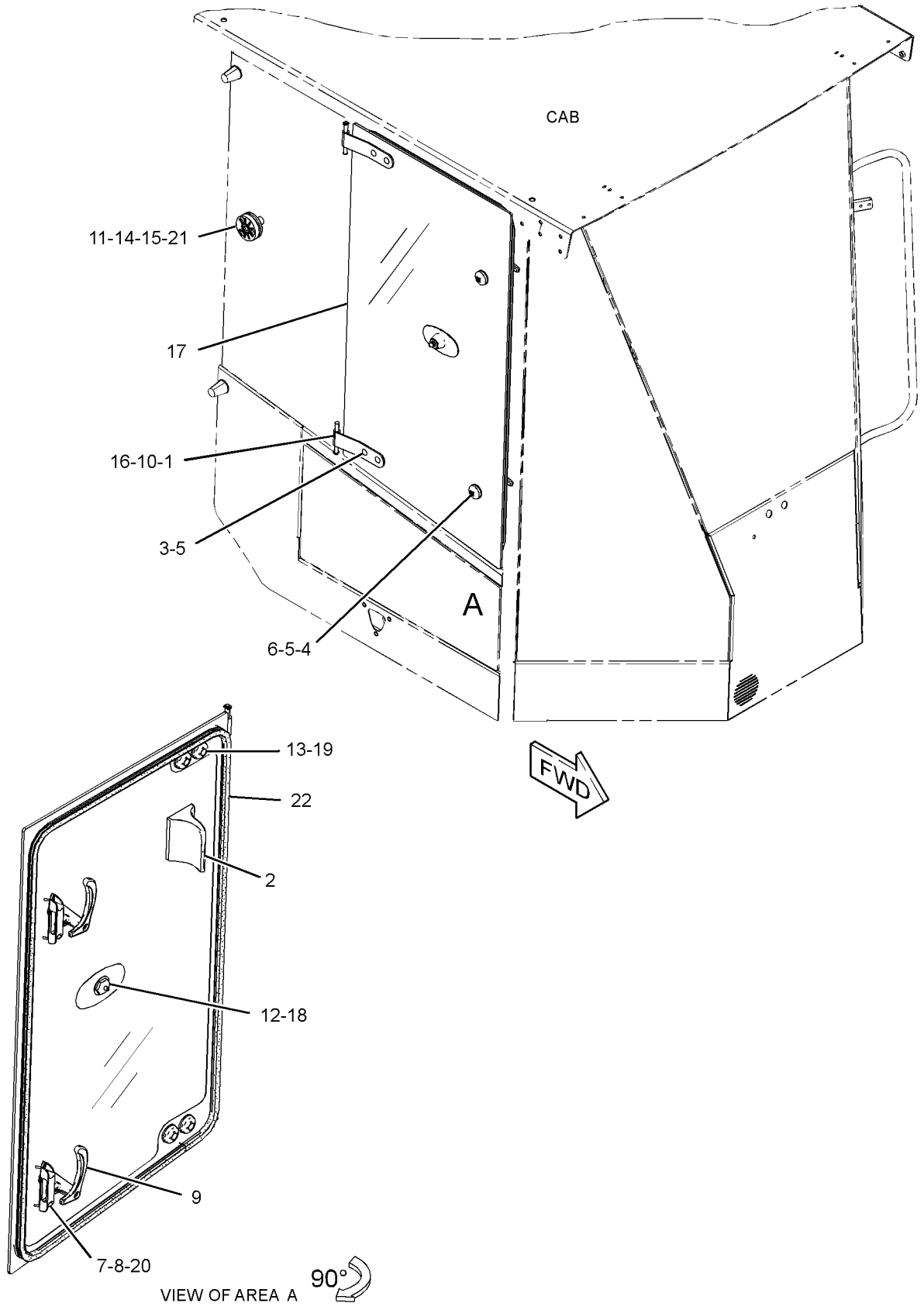

GRAPHIC #1 **<END>** g02724265

373-3153 WINDOW GP-CAB

S/N: MBF1-UP; M4M1-UP; M5P1-UP; SDT1-UP
PART OF 373-3211 CAB GP-ENCLOSED ROPS
AN ATTACHMENT

SMCS-7310 **i05297515**

NOTE	REF NO	GRAPHIC REF	PART NUMBER	QTY	PART NAME 1 2 3 4 5 6 (PRODUCT LEVEL)	SEE PAGE
	1	1	**109-5008**	2	BUMPER-CONICAL	
	2	1	**129-8545**	3	WASHER (13X40X3-MM THK)	
M	3	1	**5C-7261**	1	NUT (M8X1.25-THD)	
	4	1	**354-6394**	1	WASHER (7X40X4-MM THK)	
	5	1	**373-3157**	1	GLASS-REAR	
	6	1	**373-3158**	1	GLASS-FRONT	
	7	1	**373-3159**	1	GLASS-FRONT	
	8	1	**373-3160**	1	GLASS-FRONT	
	9	1	**373-3161**	1	GLASS-FRONT	
	10	1	**375-2676**	1	GLASS-SIDE	
	11	1	**375-2677**	1	GLASS-SIDE	

M - METRIC PART

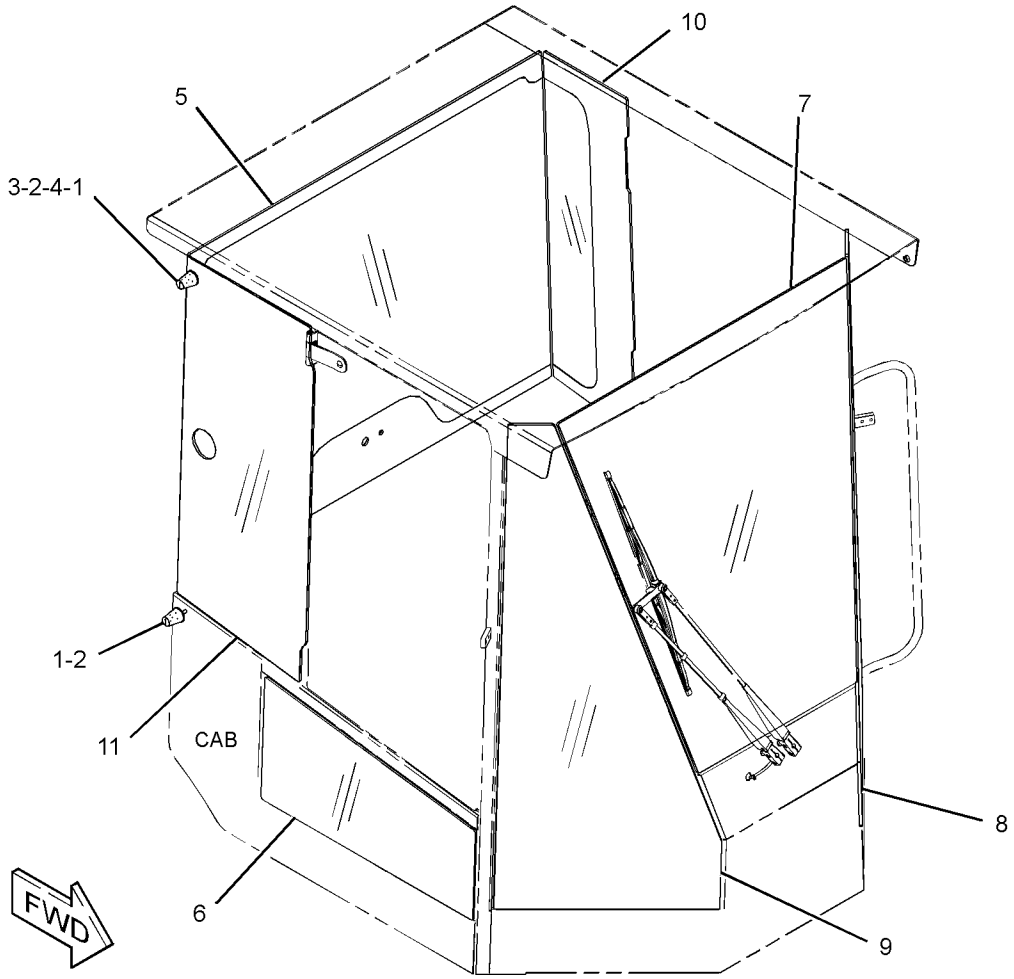

GRAPHIC #1 **<END>** g02723337

373-3180 WIPER & WASHER GP-WINDOW

S/N: MBF1-UP; M4M1-UP; M5P1-UP; SDT1-UP
PART OF 373-3175 CAB AR
AN ATTACHMENT

SMCS-7305, 7306 **i05291177**

NOTE	REF NO	GRAPHIC REF	PART NUMBER	QTY	PART NAME 1 2 3 4 5 6 (PRODUCT LEVEL)	SEE PAGE
	1	1	**3S-2093**	13	STRAP-CABLE	
	2	1	**6V-7419**	1	BLADE AS-WIPER (700-MM) (FRONT)	
	3	1	**7K-1181**	1	STRAP-CABLE	
	4	1	**7Y-3474**	2	VALVE AS-CHECK (WINDOW WASHER)	
	5	1	**8T-5400**	2	CONNECTOR AS	
	6	1	**112-5869**	1	ARM AS-WINDOW WIPER (REAR)	
E		1	**194-5171**		HOSE (43-CM)	
		1	**305-9192**	1	NOZZLE AS-WASHER	
	7	1	**146-6433**	1	BLADE AS-WIPER (500-MM) (REAR)	
Y	8	1	**214-7636**	1	ARM GP-WINDOW WIPER (FRONT)	414
Y	9	1	*220-2064*	1	MOTOR GP-WINDOW WIPER (FRONT)	459
	10	1	**240-2172**	1	SPOUT	
	11	1	**276-3884**	1	CAP-VENTED (WASHER TANK)	
	12	1	**336-7699**	2	CLAMP	
Y	13	1	**359-7628**	1	MOTOR GP-WINDOW WIPER (REAR)	460
	14	1	**359-9944**	1	TANK GP-WINDOW WASHER	
		1	**7T-8891**	2	PUMP AS-WASHER	
		1	**8E-8293**	2	GROMMET	
		1	**254-5683**	1	CAP	
	15	1	**114-6658**	3	WASHER (6.5X17X1-MM THK)	
	16	1	**156-0283**	2	WASHER-HARD (8.4X35X2.5-MM THK)	
M	17	1	**8T-5093**	2	BOLT-LOCKING (M8X1.25X25-MM)	
M	18	1	**9X-2045**	3	SCREW-TRUSS HEAD (M6X1X20-MM)	
E	19	1	**8I-1362**		HOSE (21.5-CM)	
E	20	1	**144-0195**		HOSE (9-CM)	
E	20A	1	**144-0195**		HOSE (15-CM)	
E	20B	1	**144-0195**		HOSE (201.5-CM)	
E	20C	1	**144-0195**		HOSE (136.5-CM)	
E	21	1	**194-5171**		HOSE (43-CM)	

E - ORDER BY THE CENTIMETER
M - METRIC PART
Y - SEPARATE ILLUSTRATION

373-3180 **WIPER & WASHER GP-WINDOW (*contd.*)** **i05291177**

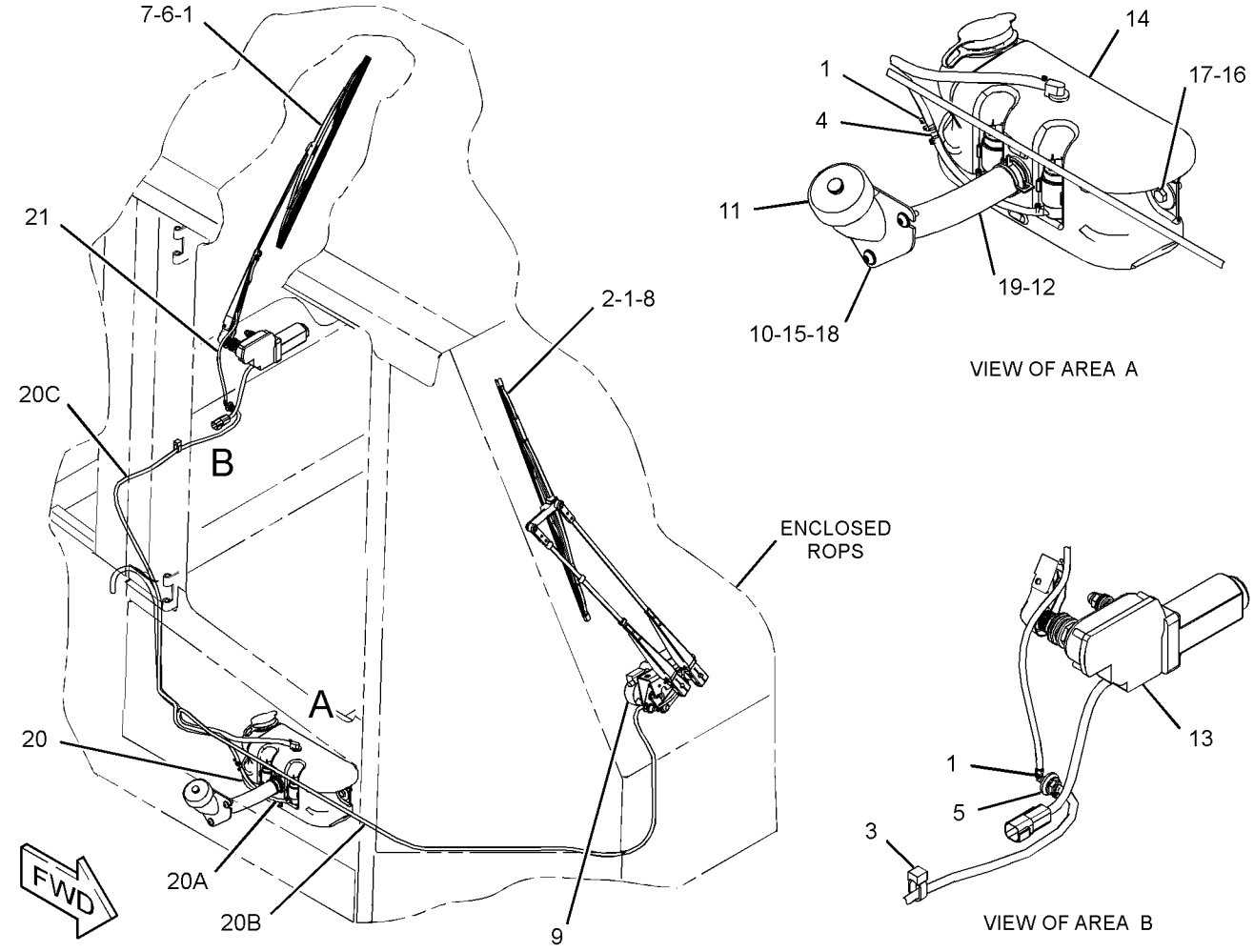

GRAPHIC #1

<END>

g02731898

SERVICE EQUIPMENT AND SUPPLIES

364-8297 CONNECTION GP-TEST–TEST PORT

S/N: MBF1-UP; M4M1-UP; M5P1-UP; SDT1-UP

AN ATTACHMENT

SMCS-0599, 0784 **i05269501**

NOTE	PART NUMBER	QTY	PART NAME 1 2 3 4 5 6 (PRODUCT LEVEL)	SEE PAGE
Y	*359-7567*	1	FITTING GP-QUICK DISCONNECT (PRESSURE TAP)	330

Y - SEPARATE ILLUSTRATION

<END>

374-9675 FASTENER GP

S/N: MBF1-UP; M4M1-UP; M5P1-UP; SDT1-UP
PART OF 378-8985 BLADE AR
AN ATTACHMENT

SMCS-7553 **i05289848**

NOTE	REF NO	GRAPHIC REF	PART NUMBER	QTY	PART NAME 1 2 3 4 5 6 (PRODUCT LEVEL)	SEE PAGE
M	1	1	**8T-4190**	10	BOLT (M16X2X25-MM)	
	2	1	**9X-8257**	10	WASHER (17.5X30X3.5-MM THK)	

M - METRIC PART

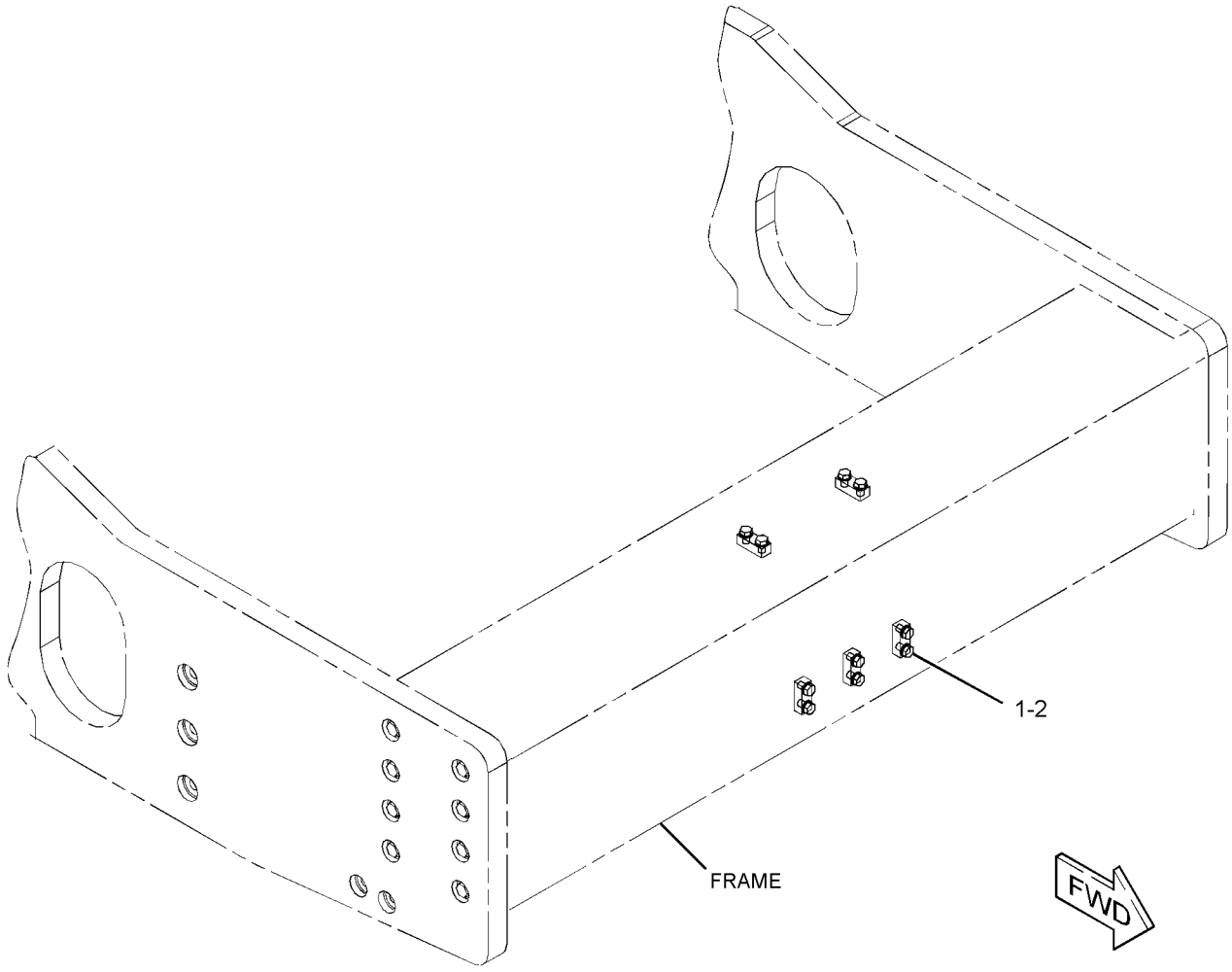

GRAPHIC #1 **<END>** g02708357

SERVICE EQUIPMENT AND SUPPLIES

364-7603 FILM GP

S/N: M4M1-UP

PART OF 374-9773 PLATE & FILM GP

SMCS-7405, 7557 **i05295484**

NOTE	REF NO	GRAPHIC REF	PART NUMBER	QTY	PART NAME 1 2 3 4 5 6 (PRODUCT LEVEL)	SEE PAGE
	1	1	**364-2985**	1	FILM-IDENTIFICATION (CAT CS56B, RH)	
	2	1	**364-2986**	1	FILM-IDENTIFICATION (CAT CS56B, LH)	
	3	1	**364-3005**	1	FILM-IDENTIFICATION (CAT) (FRONT)	
	4	1	**364-3006**	1	FILM-IDENTIFICATION (CAT) (REAR)	

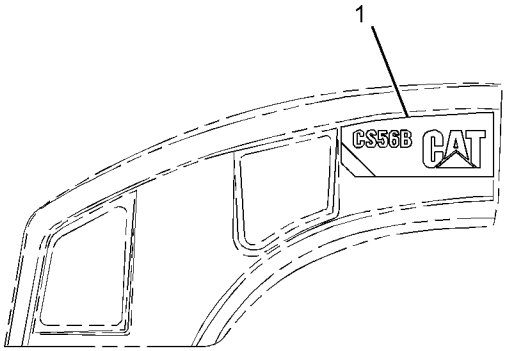

RIGHT SIDE VIEW

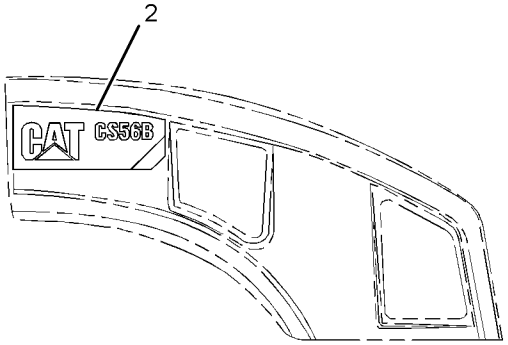

LEFT SIDE VIEW

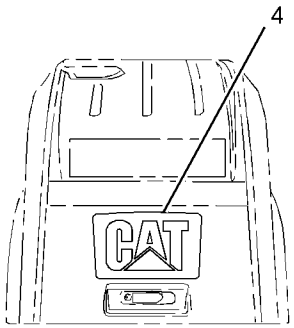

REAR VIEW

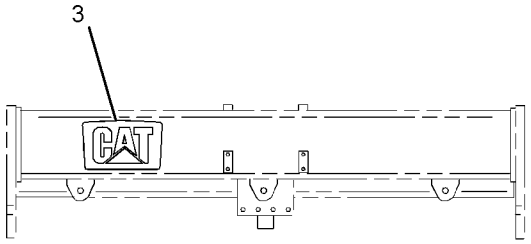

FRONT VIEW

GRAPHIC #1 **<END>** g02717684

364-7604 FILM GP

S/N: M5P1-UP

PART OF 374-9774 PLATE & FILM GP

SMCS-7405, 7557

i05296415

NOTE	REF NO	GRAPHIC REF	PART NUMBER	QTY	PART NAME 1 2 3 4 5 6 (PRODUCT LEVEL)	SEE PAGE
	1	1	**364-2987**	1	FILM-IDENTIFICATION (CAT CP56B, RH)	
	2	1	**364-2988**	1	FILM-IDENTIFICATION (CAT CP56B, LH)	
	3	1	**364-3005**	1	FILM-IDENTIFICATION (CAT) (FRONT)	
	4	1	**364-3006**	1	FILM-IDENTIFICATION (CAT) (REAR)	

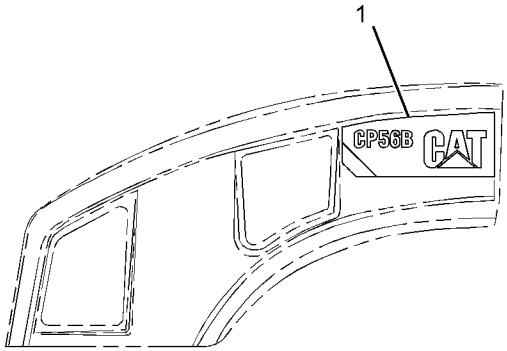

RIGHT SIDE VIEW

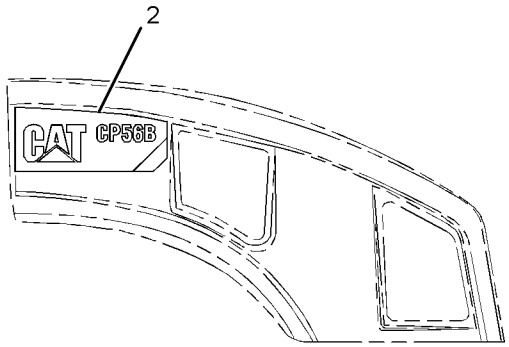

LEFT SIDE VIEW

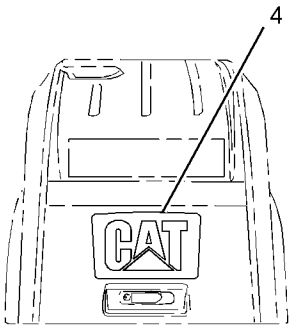

REAR VIEW

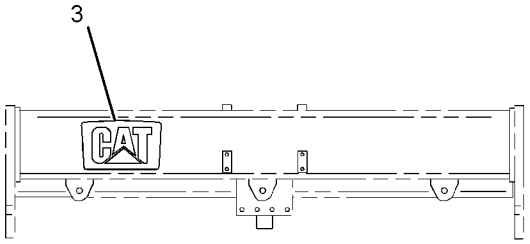

FRONT VIEW

GRAPHIC #1

<END>

g02717680

364-7607 FILM GP–CS68B

S/N: MBF1-UP

PART OF 374-9775 PLATE & FILM GP

SMCS-7405, 7557

i05297398

NOTE	REF NO	GRAPHIC REF	PART NUMBER	QTY	PART NAME 1 2 3 4 5 6 (PRODUCT LEVEL)	SEE PAGE
	1	1	**364-2993**	1	FILM-IDENTIFICATION (CAT CS68B, RH)	
	2	1	**364-2994**	1	FILM-IDENTIFICATION (CAT CS68B, LH)	
	3	1	**364-3005**	1	FILM-IDENTIFICATION (CAT) (FRONT)	
	4	1	**364-3006**	1	FILM-IDENTIFICATION (CAT) (REAR)	

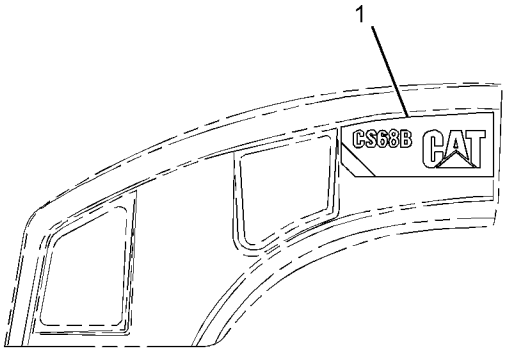

RIGHT SIDE VIEW

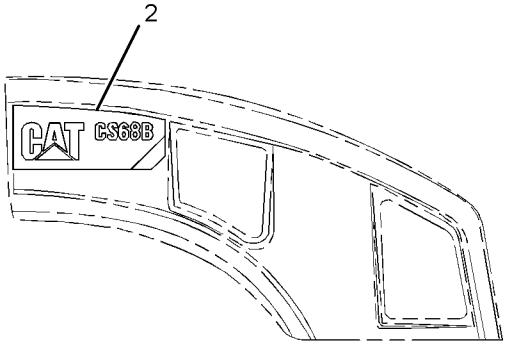

LEFT SIDE VIEW

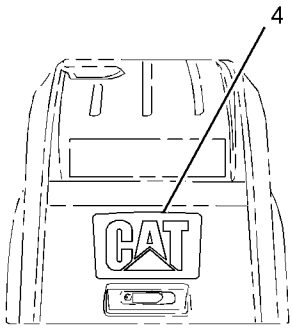

REAR VIEW

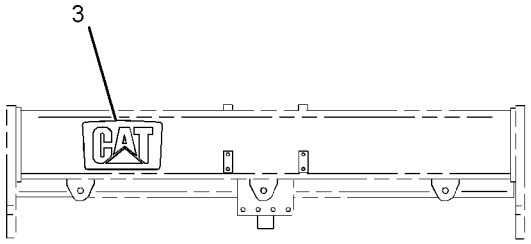

FRONT VIEW

GRAPHIC #1

<END>

g02717685

364-7608 FILM GP–CP68B

S/N: SDT1-UP

PART OF 374-9776 PLATE & FILM GP

SMCS-7405, 7557

i05298364

NOTE	REF NO	GRAPHIC REF	PART NUMBER	QTY	PART NAME 1 2 3 4 5 6 (PRODUCT LEVEL)	SEE PAGE
	1	1	**364-2995**	1	FILM-IDENTIFICATION (CAT CP68B, RH)	
	2	1	**364-2996**	1	FILM-IDENTIFICATION (CAT CP68B, LH)	
	3	1	**364-3005**	1	FILM-IDENTIFICATION (CAT) (FRONT)	
	4	1	**364-3006**	1	FILM-IDENTIFICATION (CAT) (REAR)	

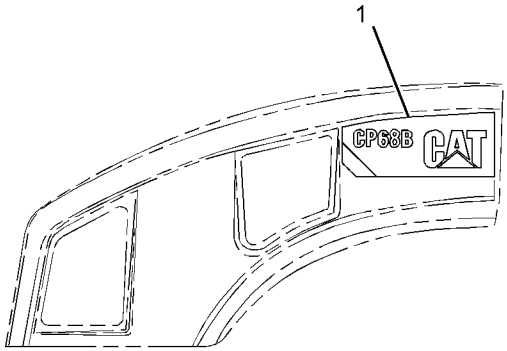

RIGHT SIDE VIEW

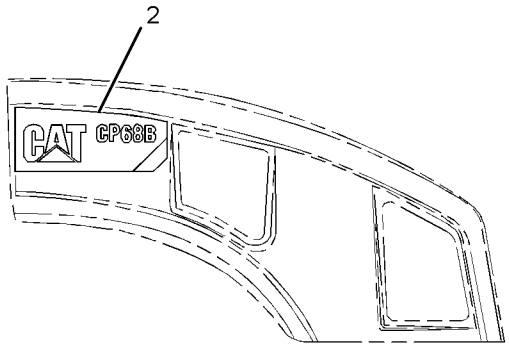

LEFT SIDE VIEW

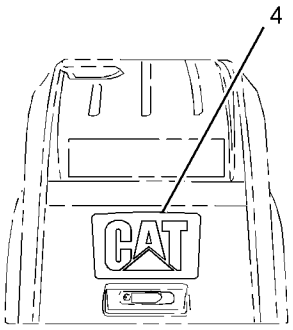

REAR VIEW

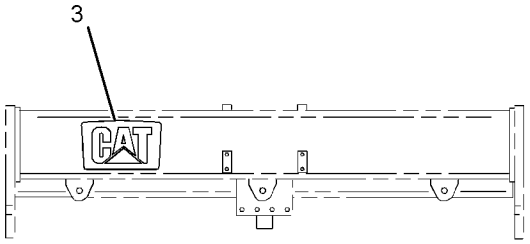

FRONT VIEW

GRAPHIC #1

<END>

g02717686

SERVICE EQUIPMENT AND SUPPLIES

418-9844 FILM GP

S/N: MBF1-UP; M4M1-UP; M5P1-UP; SDT1-UP
PART OF 379-8260 CONTROL & MTG GP-MACHINE, 422-4428, 422-4429, 422-4430 SENSOR AR-COMPACTION, 379-8261, 379-8262 WIRING GP-SENSOR
AN ATTACHMENT

SMCS-7405, 7557 **i05289872**

NOTE	REF NO	GRAPHIC REF	PART NUMBER	QTY	PART NAME 1 2 3 4 5 6 (PRODUCT LEVEL)	SEE PAGE
	1	1	**399-2413**	2	FILM-IDENTIFICATION (COMPACTION CONTROL)	

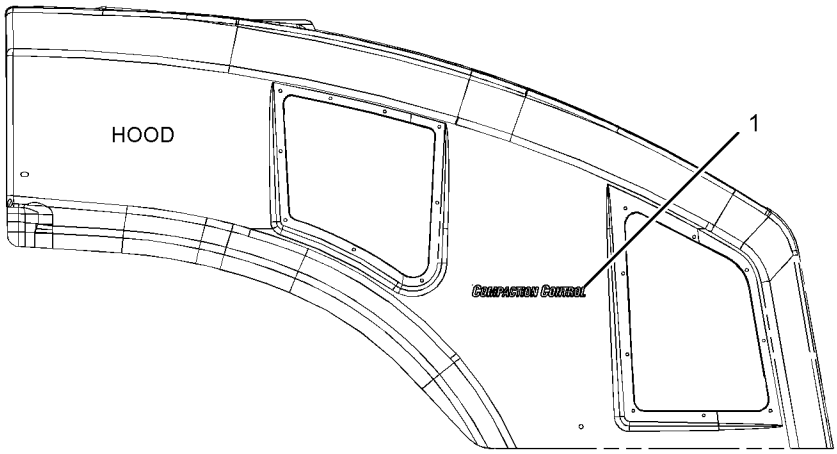

LEFT SIDE VIEW

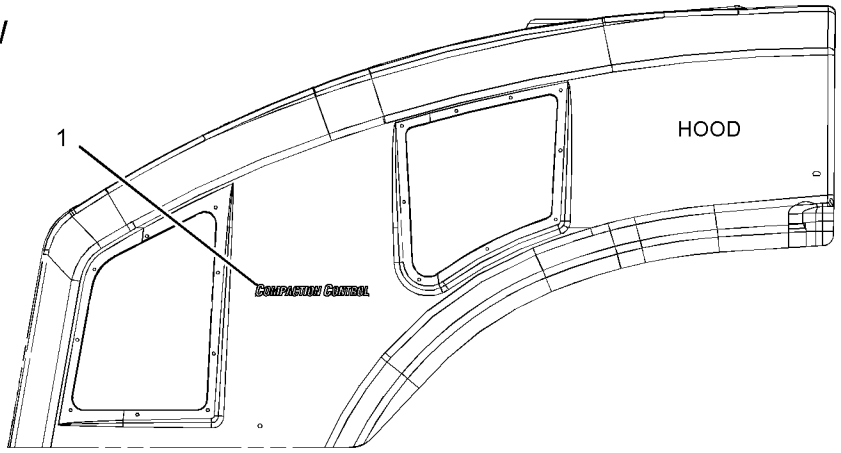

RIGHT SIDE VIEW

GRAPHIC #1 **<END>** g03355087

374-9746 FILM GP-INTERNATIONAL

S/N: MBF1-UP; M4M1-UP; M5P1-UP; SDT1-UP
PART OF 377-2157 OPERATOR AR
AN ATTACHMENT

SMCS-7557 **i05287553**

NOTE	REF NO	GRAPHIC REF	PART NUMBER	QTY	PART NAME 1 2 3 4 5 6 (PRODUCT LEVEL)	SEE PAGE
	1	2	**221-8045**	1	FILM-WARNING (SEAT BELT, INTERNATIONAL)	
	2	1	**222-7944**	1	FILM-WARNING (DO NOT OPERATE, READ OMM, INTL)	
	3	1	**224-8946**	1	FILM-WARNING (NO ETHER SPRAY/AIR INTK, INTL)	
	4	2	**225-0312**	1	FILM-WARNING (JUMP START, READ OMM, INTL)	
	5	2	**225-4257**	1	FILM-WARNING (HOT FLUID UNDER PRESS)	
	6	2	**226-1240**	2	FILM-WARNING (CRUSH HAZARD, STAY BACK, INTL)	
	7	2	**226-1274**	2	FILM-WARNING (CRUSH HAZARD, READ OMM, INTL)	
B	8	2	**230-1341**	1	FILM-WARNING (PRODUCT LINK RADIO, INTL)	
B	9	2	**307-0047**	1	FILM-INFORMATION (PRODUCT LINK, READ OMM)	
	10	2	**367-0844**	1	FILM-INSTRUCTION (FUEL, READ OMM)	
	11	2	**301-3004**	1	FILM-INSTRUCTION (MAXIMUM COOLANT LEVEL)	
	12	2	**301-3005**	1	FILM-INSTRUCTION (MINIMUM COOLANT LEVEL)	

B - USE AS REQUIRED

374-9746 **FILM GP-INTERNATIONAL (*contd.*)** **i05287553**

REFER TO ALL ILLUSTRATIONS OF THIS GROUP FOR AUXILIARY VIEWS

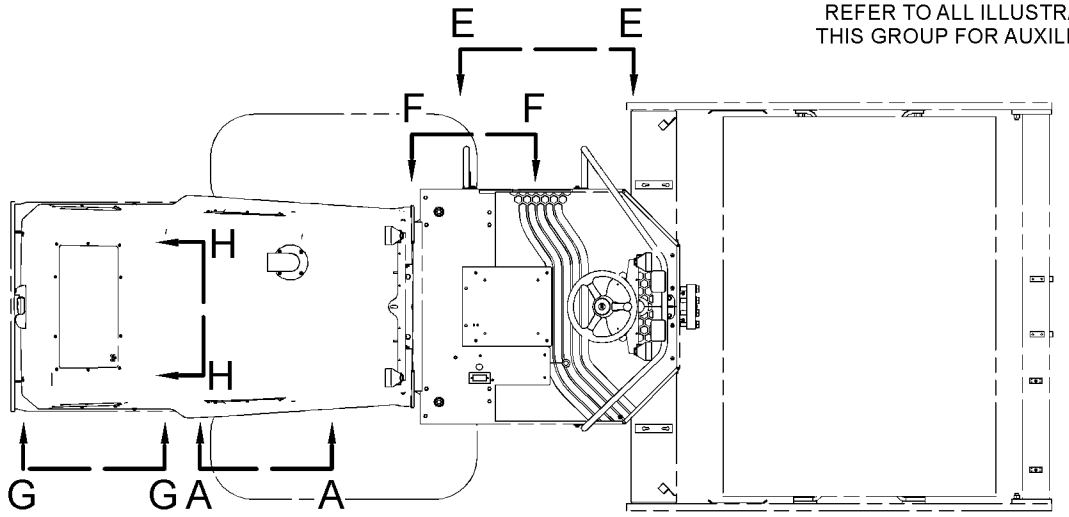

TOP VIEW FWD

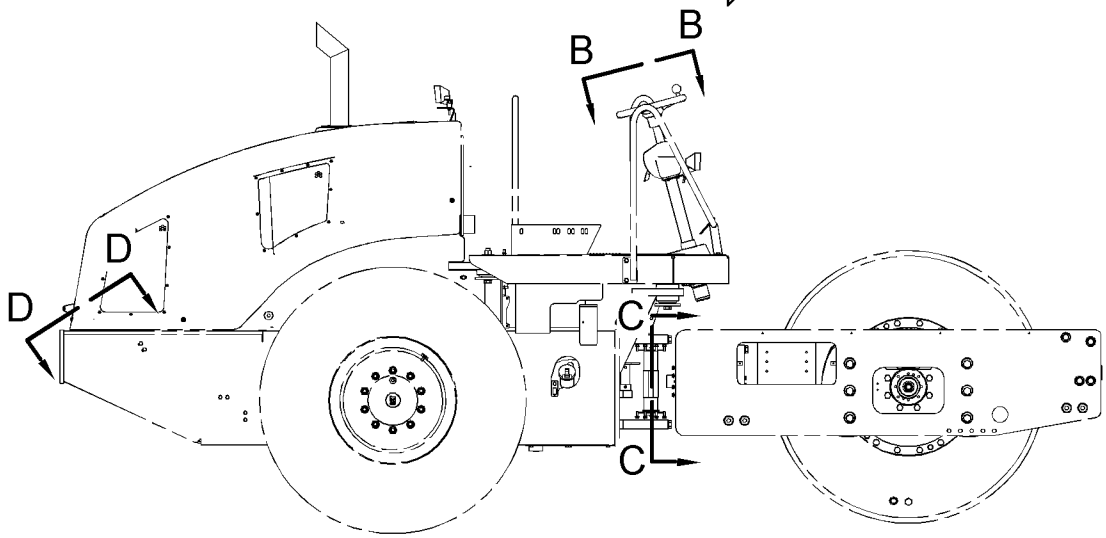

RIGHT SIDE VIEW

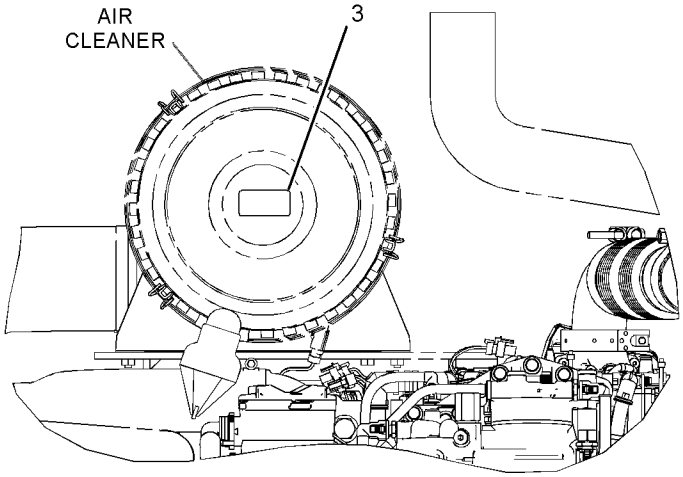

VIEW A-A

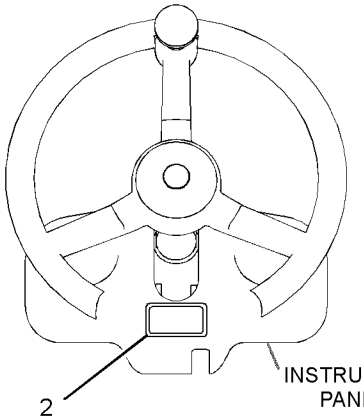

VIEW B-B

GRAPHIC #1 g03115120

374-9746 **FILM GP-INTERNATIONAL (*contd.*)** **i05287553**

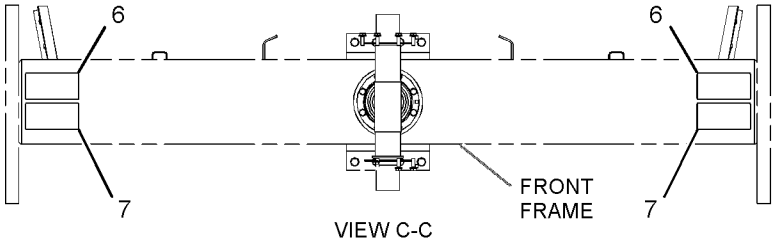

VIEW C-C

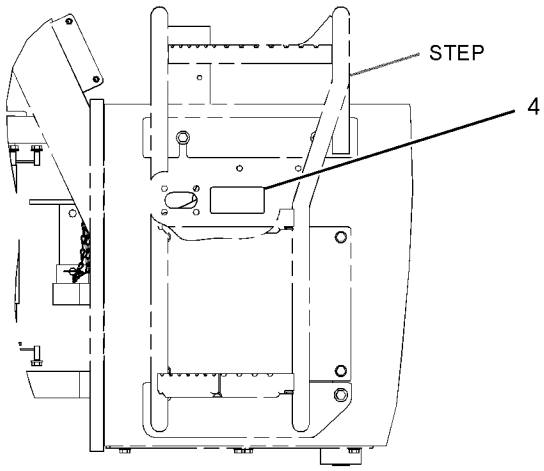

VIEW E-E

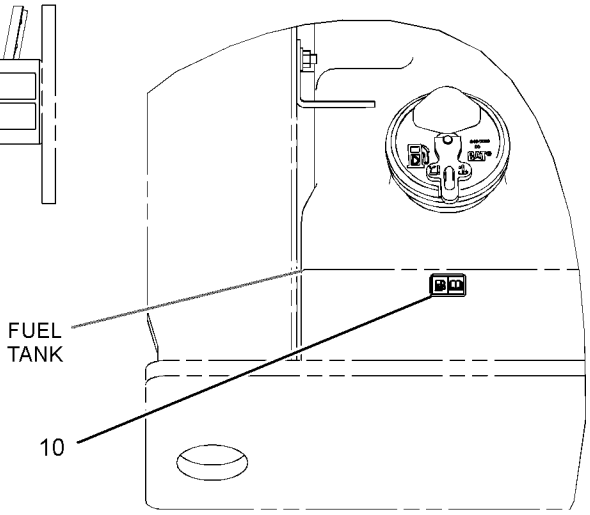

VIEW D-D

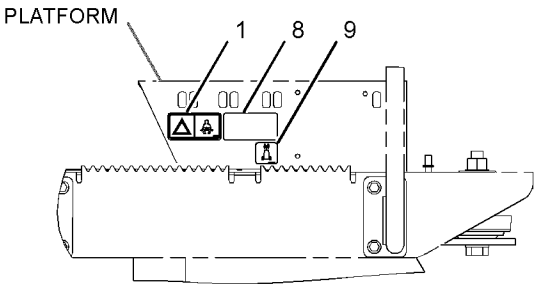

VIEW F-F

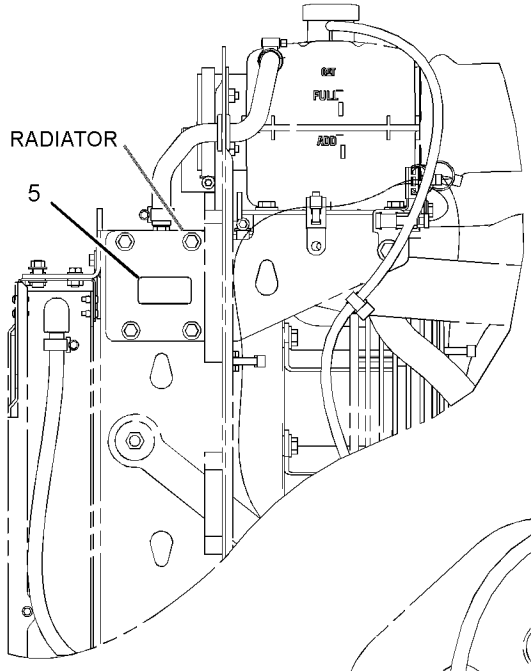

VIEW G-G

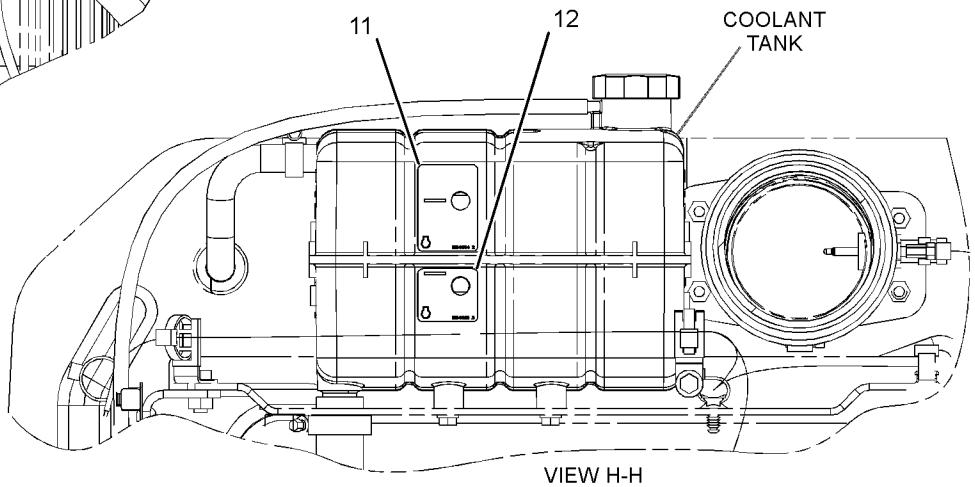

VIEW H-H

GRAPHIC #2 **<END>** g03115116

374-9747 FILM GP-INTERNATIONAL–ROPS, FOPS

S/N: MBF1-UP; SDT1-UP
PART OF 377-2159 OPERATOR AR
AN ATTACHMENT

SMCS-7557 **i05287603**

NOTE	REF NO	GRAPHIC REF	PART NUMBER	QTY	PART NAME 1 2 3 4 5 6 (PRODUCT LEVEL)	SEE PAGE
	1	1	**219-0305**	1	FILM-WARNING (NO WELD, NO DRILL, READ OMM)	
	2	2	**221-8045**	1	FILM-WARNING (SEAT BELT, INTERNATIONAL)	
	3	2	**222-7944**	1	FILM-WARNING (DO NOT OPERATE, READ OMM, INTL)	
	4	1	**224-8946**	1	FILM-WARNING (NO ETHER SPRAY/AIR INTK, INTL)	
	5	1	**225-0312**	1	FILM-WARNING (JUMP START, READ OMM, INTL)	
	6	1	**225-4257**	1	FILM-WARNING (HOT FLUID UNDER PRESS)	
	7	2	**226-1240**	2	FILM-WARNING (CRUSH HAZARD, STAY BACK, INTL)	
	8	2	**226-1274**	2	FILM-WARNING (CRUSH HAZARD, READ OMM, INTL)	
B	9	2	**230-1341**	1	FILM-WARNING (PRODUCT LINK RADIO, INTL)	
B	10	2	**307-0047**	1	FILM-INFORMATION (PRODUCT LINK, READ OMM)	
	11	1	**301-3004**	1	FILM-INSTRUCTION (MAXIMUM COOLANT LEVEL)	
	12	1	**301-3005**	1	FILM-INSTRUCTION (MINIMUM COOLANT LEVEL)	
	13	1	**364-3009**	1	FILM-WARNING (ROPS, FOPS, READ OMM)	
	14	2	**367-0844**	1	FILM-INSTRUCTION (FUEL, READ OMM)	

B - USE AS REQUIRED

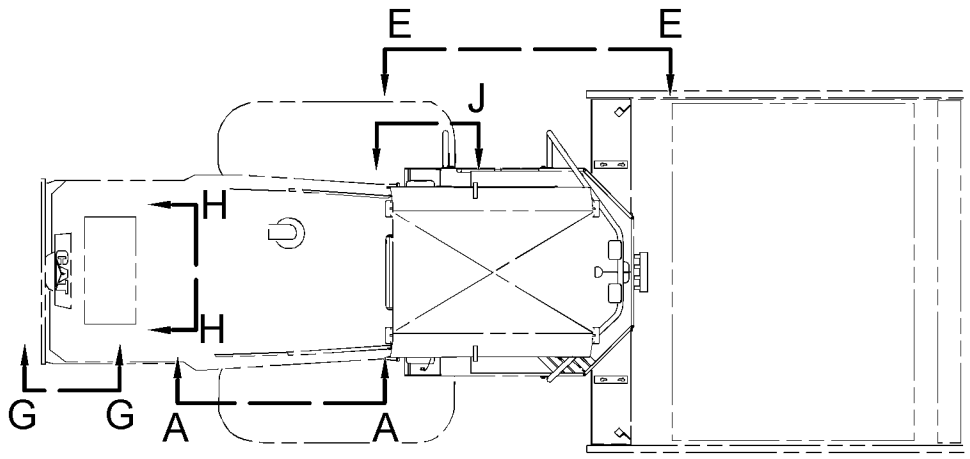

TOP VIEW FWD

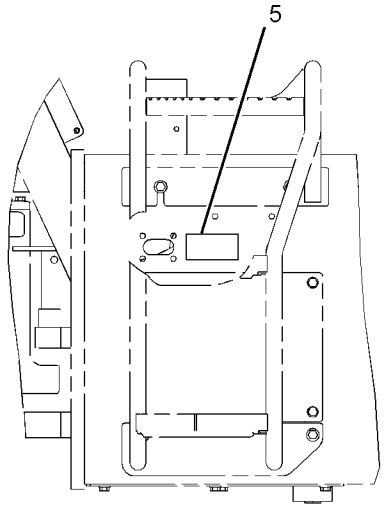

VIEW E-E

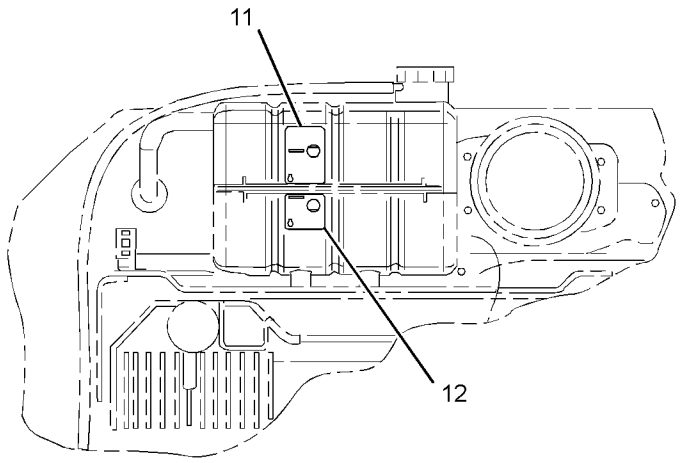

VIEW H-H

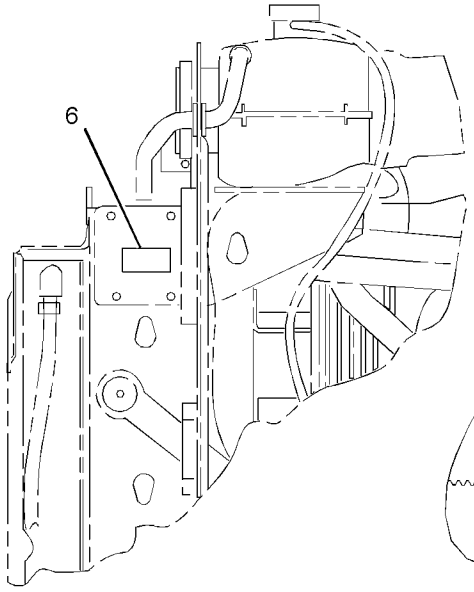

VIEW G-G

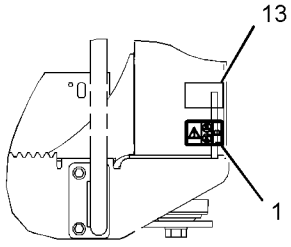

VIEW J

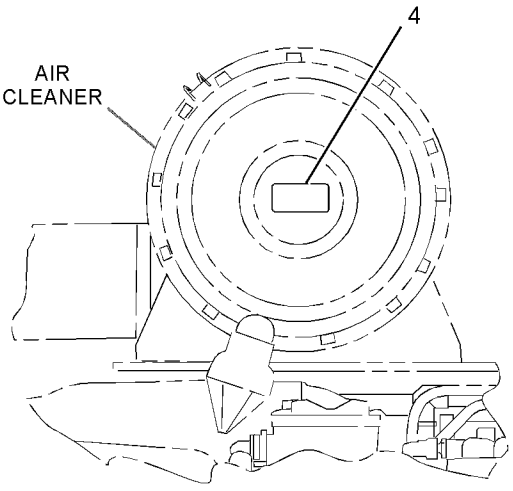

VIEW A-A

GRAPHIC #1

g03084645

374-9747 **FILM GP-INTERNATIONAL (*contd.*)** **i05287603**

REFER TO ALL ILLUSTRATIONS OF
THIS GROUP FOR AUXILIARY VIEWS

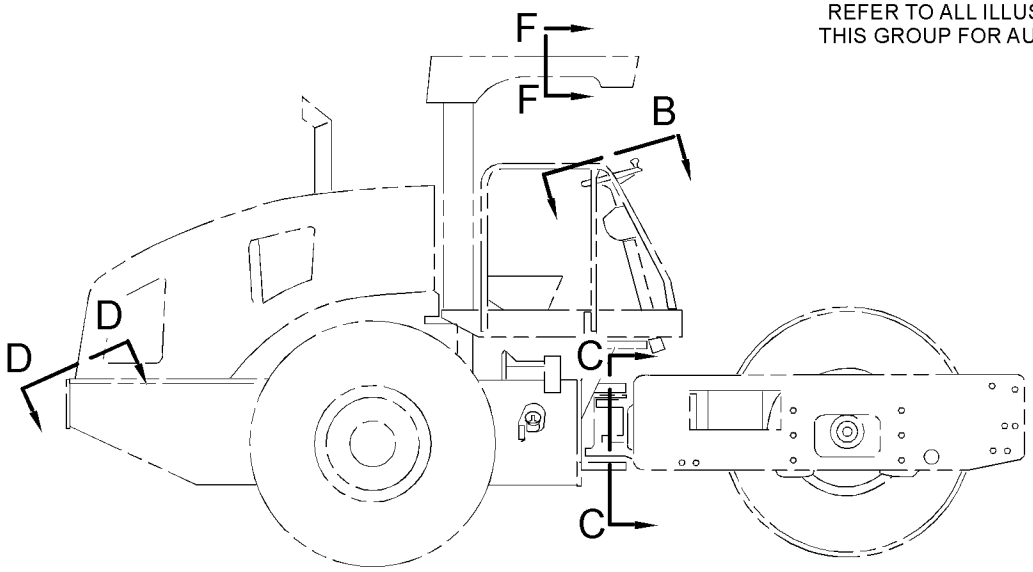

RIGHT SIDE VIEW

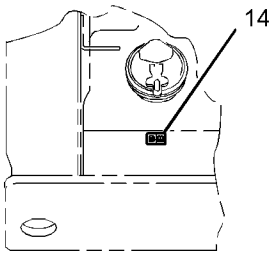

VIEW D-D

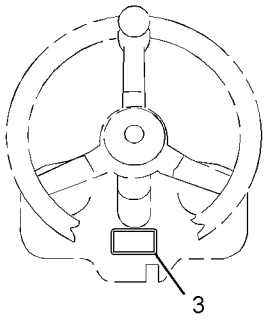

VIEW B

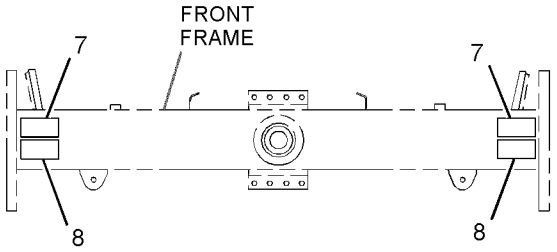

VIEW C-C

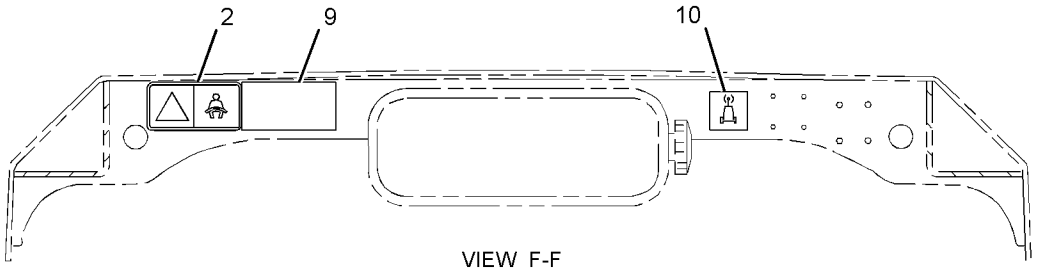

VIEW F-F

GRAPHIC #2 **<END>** g03084636

374-9748 FILM GP-INTERNATIONAL

S/N: MBF1-UP; SDT1-UP
PART OF 382-1438 OPERATOR AR
AN ATTACHMENT

SMCS-7557 **i05296470**

NOTE	REF NO	GRAPHIC REF	PART NUMBER	QTY	PART NAME 1 2 3 4 5 6 (PRODUCT LEVEL)	SEE PAGE
	1	2	**302-4390**	1	FILM-WARNING (CRUSH HAZARD, FASTEN SEAT BELT)	
	2	2	**205-4933**	1	FILM-IDENTIFICATION (SECONDARY EXIT)	
	3	2	**219-0305**	1	FILM-WARNING (NO WELD, NO DRILL, READ OMM)	
	4	1	**222-7944**	1	FILM-WARNING (DO NOT OPERATE, READ OMM, INTL)	
	5	1	**224-8946**	1	FILM-WARNING (NO ETHER SPRAY/AIR INTK, INTL)	
	6	2	**225-0312**	1	FILM-WARNING (JUMP START, READ OMM, INTL)	
	7	2	**225-4257**	1	FILM-WARNING (HOT FLUID UNDER PRESS)	
	8	2	**274-4284**	1	FILM-WARNING (EXPLOSION, RADIO PRODUCT LINK)	
	9	2	**226-1240**	2	FILM-WARNING (CRUSH HAZARD, STAY BACK, INTL)	
	10	2	**226-1274**	2	FILM-WARNING (CRUSH HAZARD, READ OMM, INTL)	
	11	2	**301-3004**	1	FILM-INSTRUCTION (MAXIMUM COOLANT LEVEL)	
	12	2	**301-3005**	1	FILM-INSTRUCTION (MINIMUM COOLANT LEVEL)	
	13	2	**307-0047**	1	FILM-INFORMATION (PRODUCT LINK, READ OMM)	
	14	2	**364-3009**	1	FILM-WARNING (ROPS, FOPS, READ OMM)	
	15	2	**367-0844**	1	FILM-INSTRUCTION (FUEL, READ OMM)	

REFER TO ALL ILLUSTRATIONS OF THIS GROUP FOR AUXILIARY VIEWS

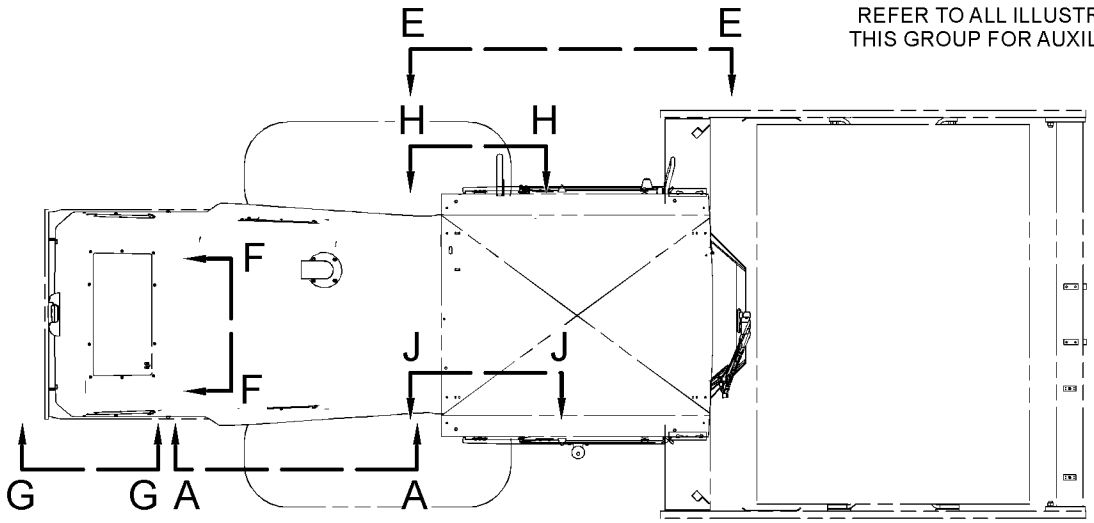

TOP VIEW FWD

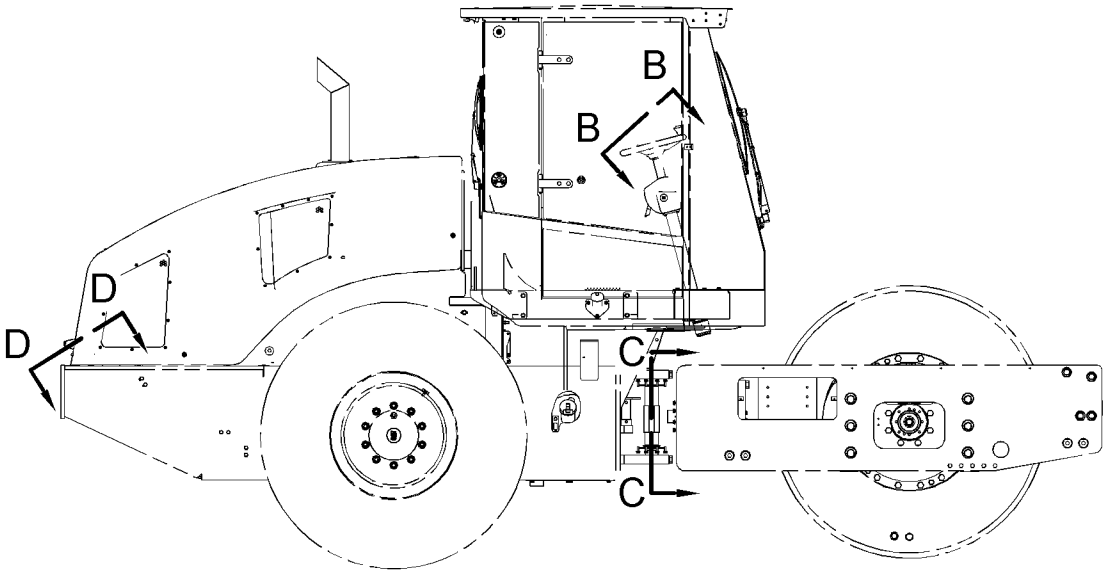

RIGHT SIDE VIEW

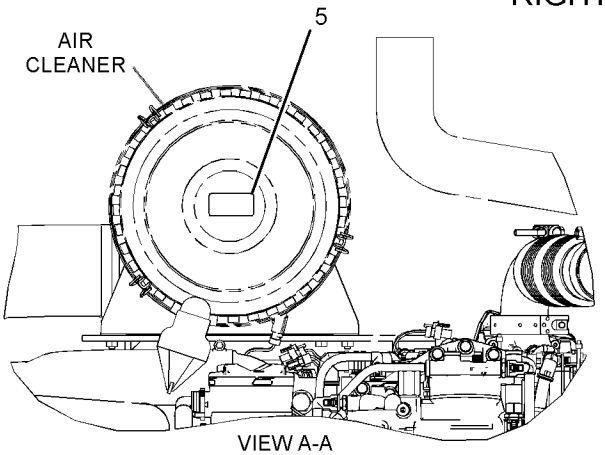

VIEW A-A

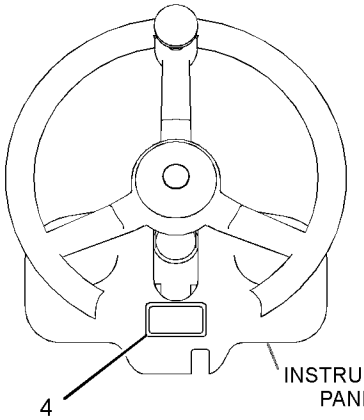

VIEW B-B

GRAPHIC #1 g03116046

374-9748 **FILM GP-INTERNATIONAL (*contd.*)** **i05296470**

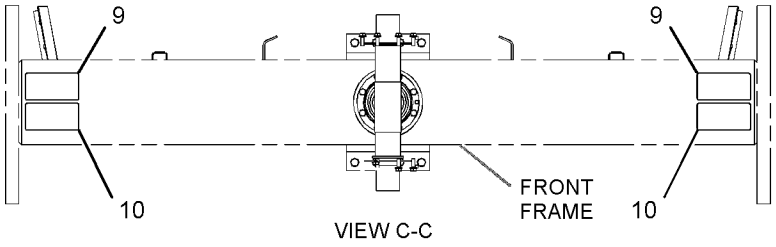

VIEW C-C

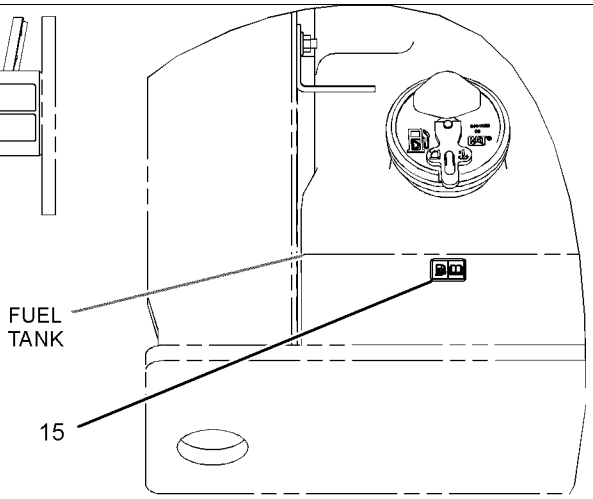

VIEW D-D

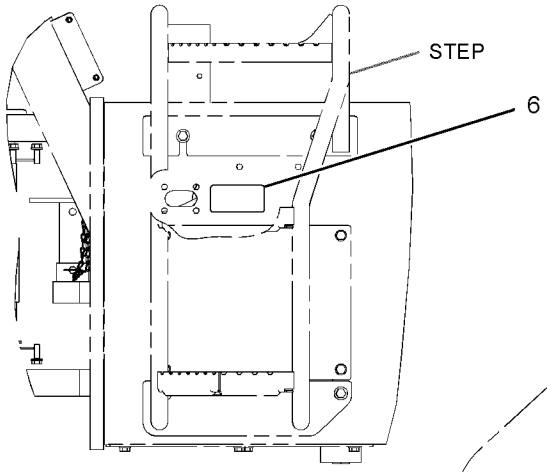

VIEW E-E

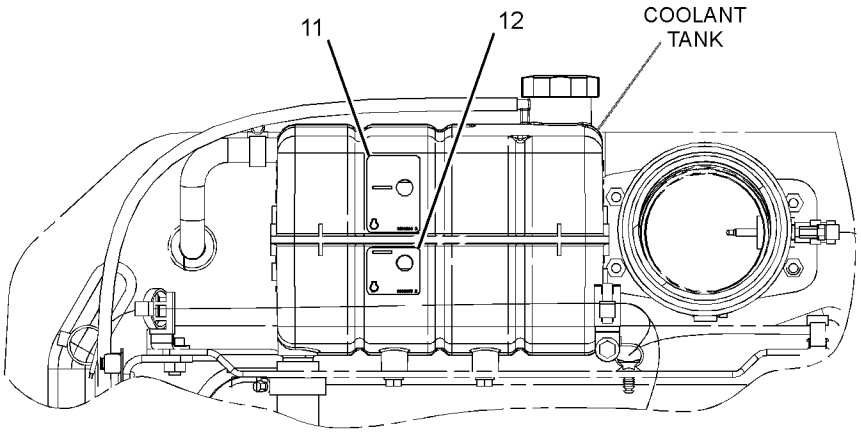

VIEW F-F

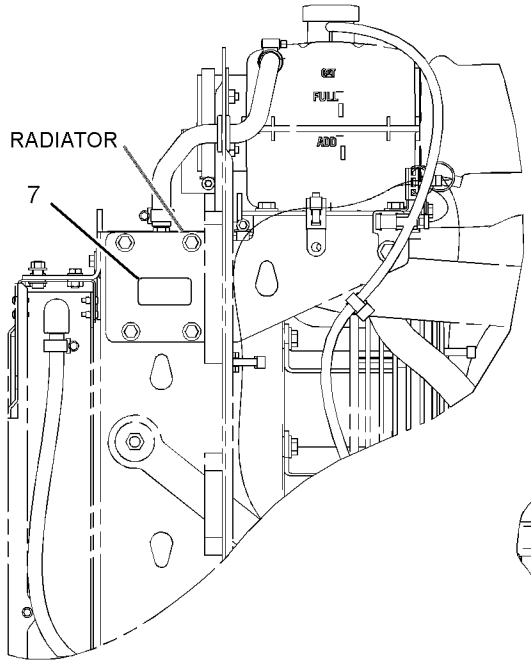

VIEW G-G
GRAPHIC #2

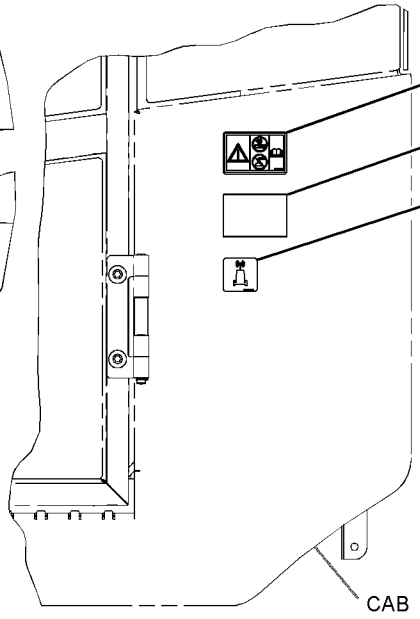

VIEW H-H

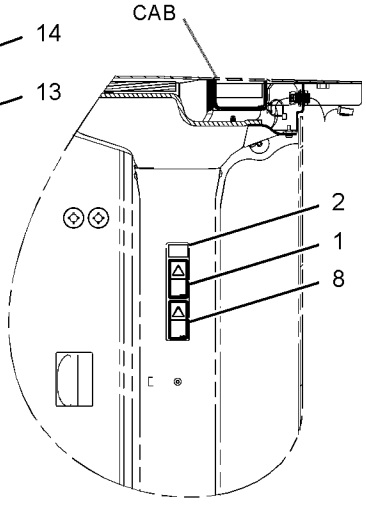

VIEW J-J

<END>

g03116048

374-9749 FILM GP-INTERNATIONAL

S/N: MBF1-UP; M4M1-UP; M5P1-UP; SDT1-UP
PART OF 381-6991 OPERATOR AR
AN ATTACHMENT

SMCS-7557 **i05291043**

NOTE	REF NO	GRAPHIC REF	PART NUMBER	QTY	PART NAME 1 2 3 4 5 6 (PRODUCT LEVEL)	SEE PAGE
	1	2	**221-8045**	1	FILM-WARNING (SEAT BELT, INTERNATIONAL)	
	2	1	**222-7944**	1	FILM-WARNING (DO NOT OPERATE, READ OMM, INTL)	
	3	1	**224-8946**	1	FILM-WARNING (NO ETHER SPRAY/AIR INTK, INTL)	
	4	2	**225-0312**	1	FILM-WARNING (JUMP START, READ OMM, INTL)	
	5	2	**225-4257**	1	FILM-WARNING (HOT FLUID UNDER PRESS)	
	6	2	**226-1240**	2	FILM-WARNING (CRUSH HAZARD, STAY BACK, INTL)	
	7	2	**226-1274**	2	FILM-WARNING (CRUSH HAZARD, READ OMM, INTL)	
B	8	2	**230-1341**	1	FILM-WARNING (PRODUCT LINK RADIO, INTL)	
B	9	2	**307-0047**	1	FILM-INFORMATION (PRODUCT LINK, READ OMM)	
	10	2	**367-0844**	1	FILM-INSTRUCTION (FUEL, READ OMM)	
	11	2	**301-3004**	1	FILM-INSTRUCTION (MAXIMUM COOLANT LEVEL)	
	12	2	**301-3005**	1	FILM-INSTRUCTION (MINIMUM COOLANT LEVEL)	
	13	2	**390-2406**	1	FILM-IDENTIFICATION (NON-ROPS/FOPS)	

B - USE AS REQUIRED

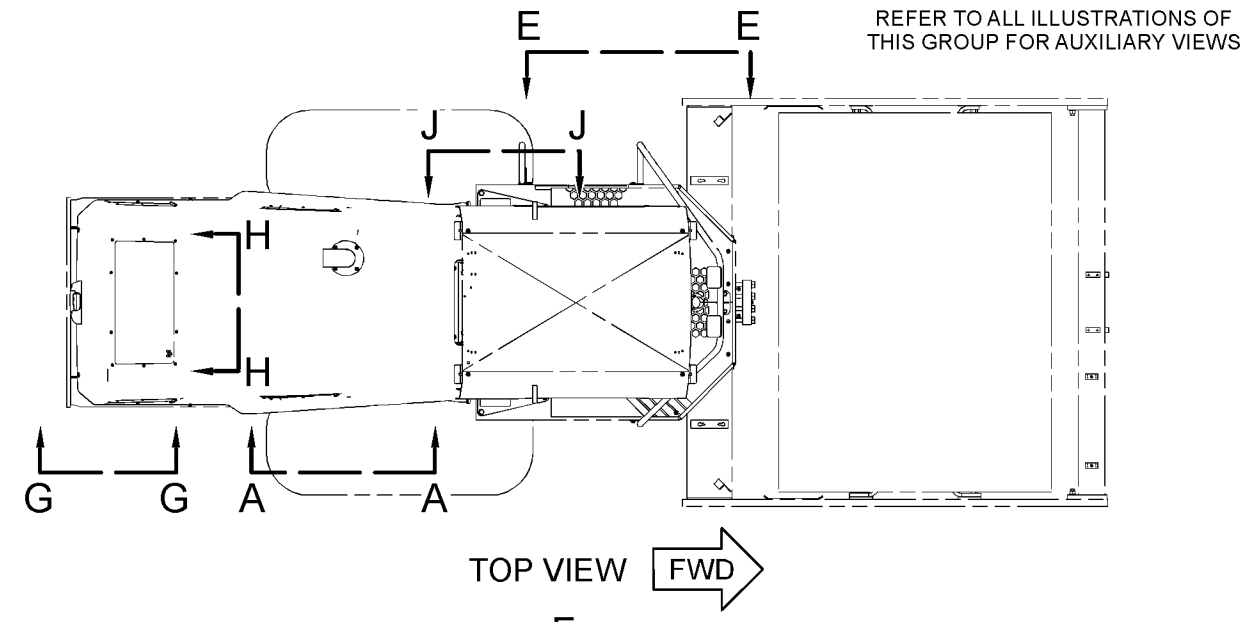

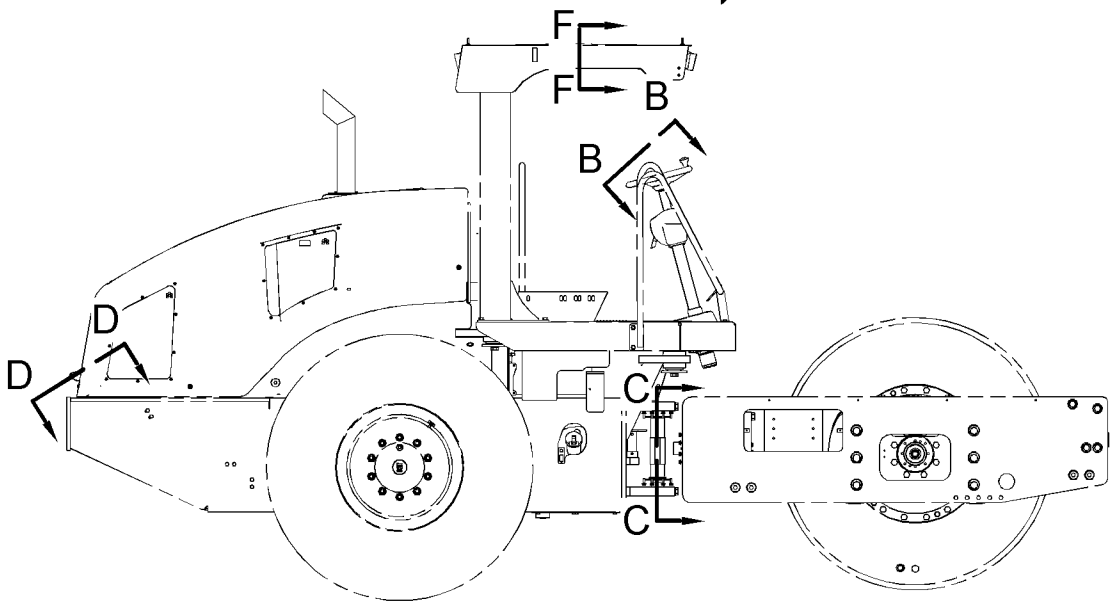

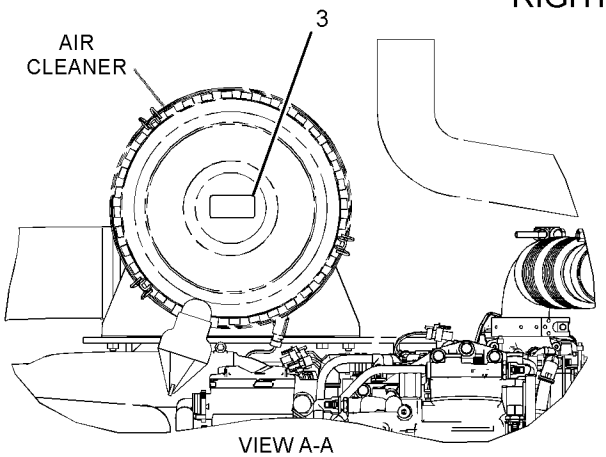

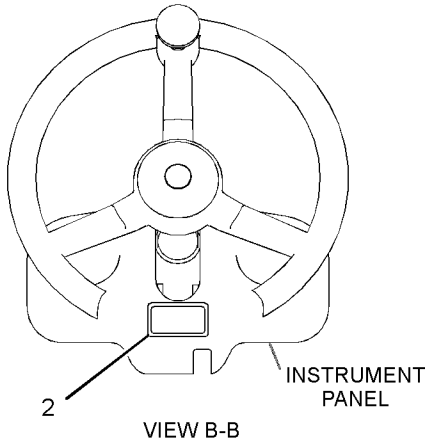

GRAPHIC #1 g03116256

374-9749 **FILM GP-INTERNATIONAL (*contd.*)** **i05291043**

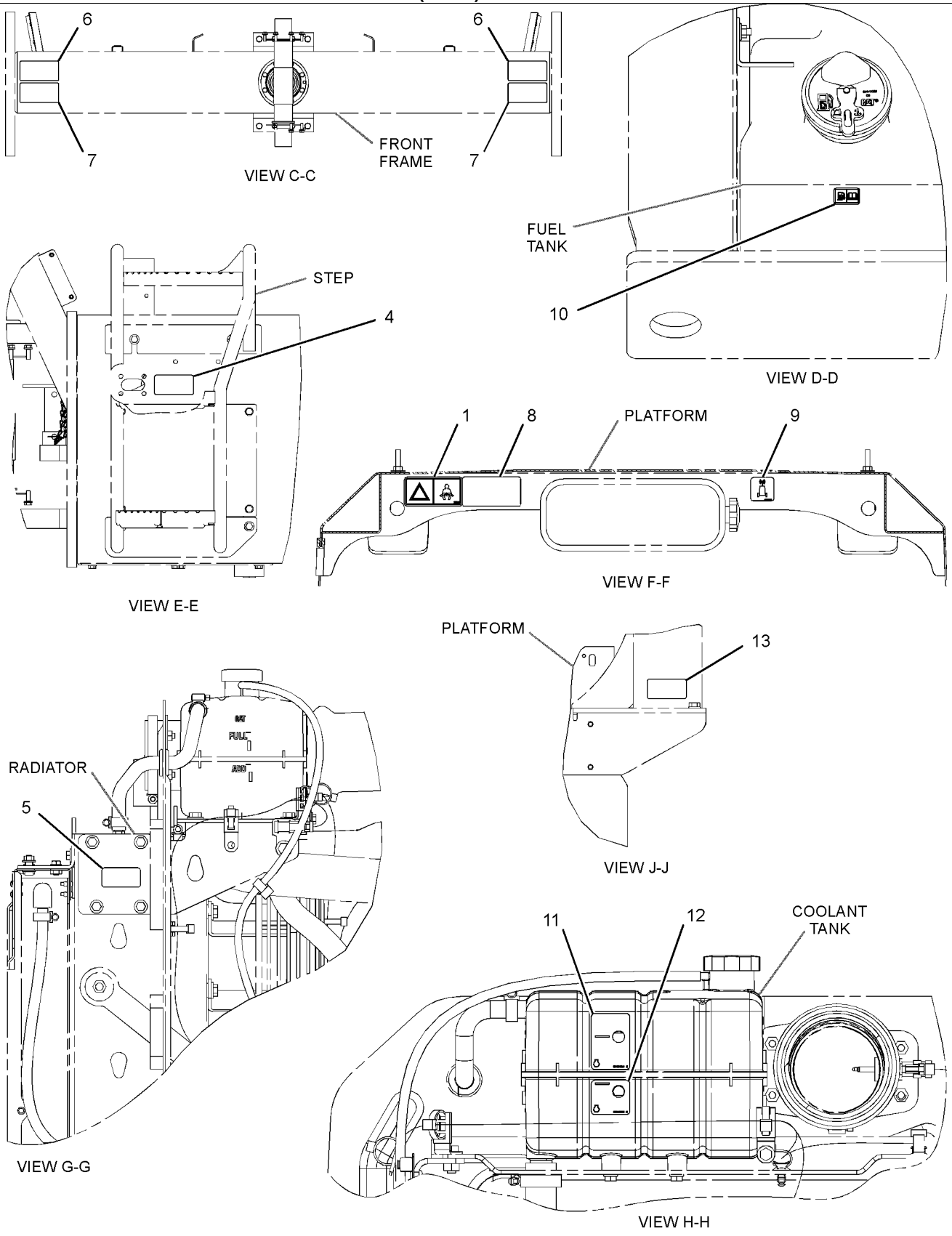

GRAPHIC #2 **<END>** g03116257

374-9844 FILM GP-INTERNATIONAL–ROPS, FOPS

S/N: M4M1-UP; M5P1-UP
PART OF 374-9842 OPERATOR AR
AN ATTACHMENT

SMCS-7557 **i05291050**

NOTE	REF NO	GRAPHIC REF	PART NUMBER	QTY	PART NAME 1 2 3 4 5 6 (PRODUCT LEVEL)	SEE PAGE
	1	2	**219-0305**	1	FILM-WARNING (NO WELD, NO DRILL, READ OMM)	
	2	2	**221-8045**	1	FILM-WARNING (SEAT BELT, INTERNATIONAL)	
	3	1	**222-7944**	1	FILM-WARNING (DO NOT OPERATE, READ OMM, INTL)	
	4	2	**224-8946**	1	FILM-WARNING (NO ETHER SPRAY/AIR INTK, INTL)	
	5	2	**225-0312**	1	FILM-WARNING (JUMP START, READ OMM, INTL)	
	6	2	**225-4257**	1	FILM-WARNING (HOT FLUID UNDER PRESS)	
	7	2	**226-1240**	2	FILM-WARNING (CRUSH HAZARD, STAY BACK, INTL)	
	8	2	**226-1274**	2	FILM-WARNING (CRUSH HAZARD, READ OMM, INTL)	
	9	2	**230-1341**	1	FILM-WARNING (PRODUCT LINK RADIO, INTL)	
	10	2	**307-0047**	1	FILM-INFORMATION (PRODUCT LINK, READ OMM)	
	11	2	**301-3004**	1	FILM-INSTRUCTION (MAXIMUM COOLANT LEVEL)	
	12	2	**301-3005**	1	FILM-INSTRUCTION (MINIMUM COOLANT LEVEL)	
	13	2	**364-3008**	1	FILM-WARNING (ROPS, FOPS, READ OMM)	
	14	1	**367-0844**	1	FILM-INSTRUCTION (FUEL, READ OMM)	

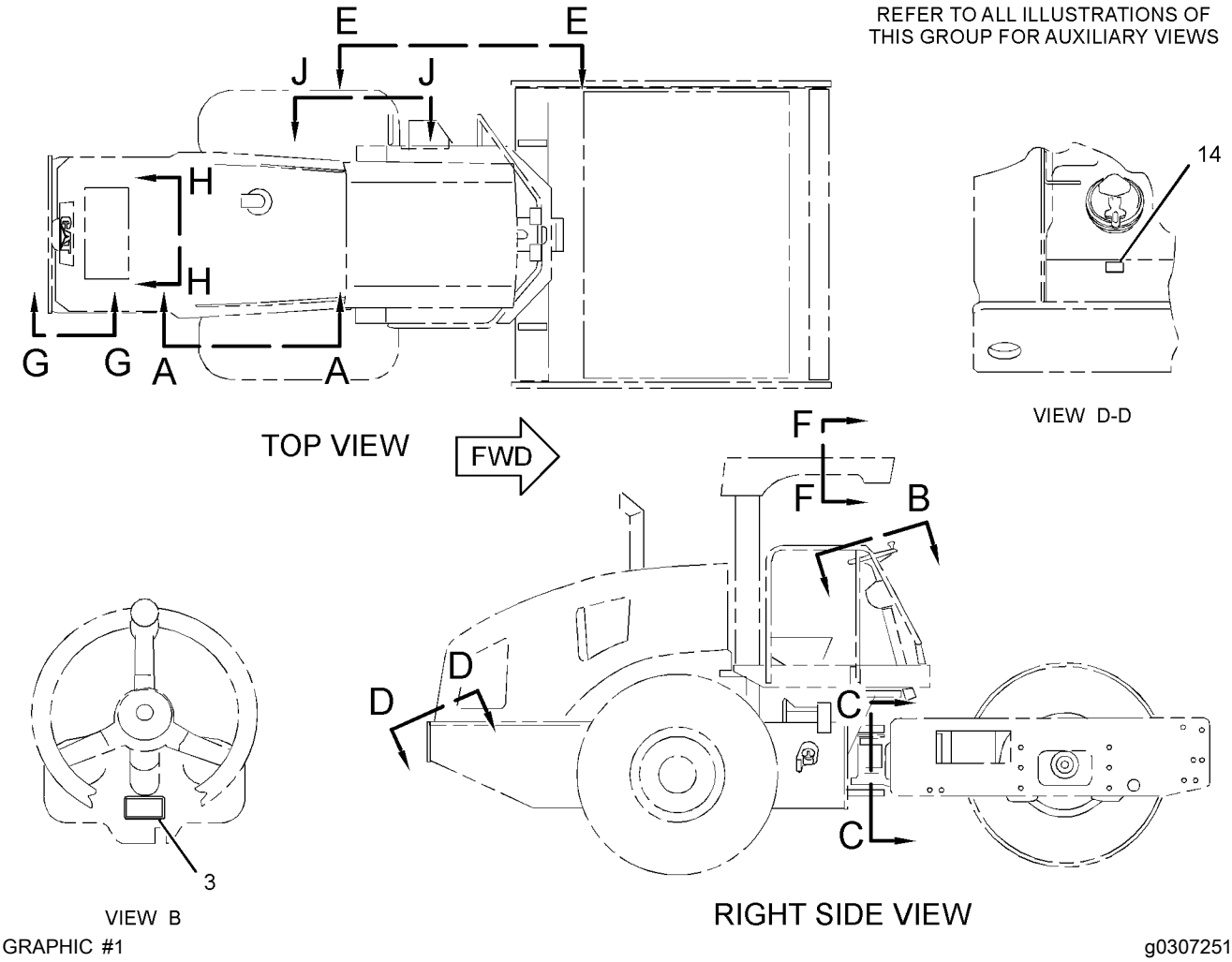

GRAPHIC #1 g03072516

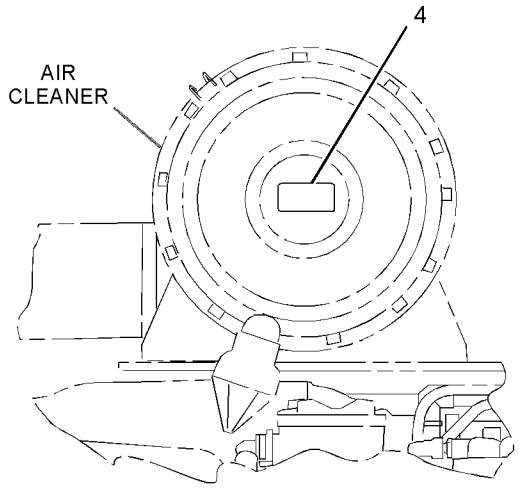

VIEW A-A

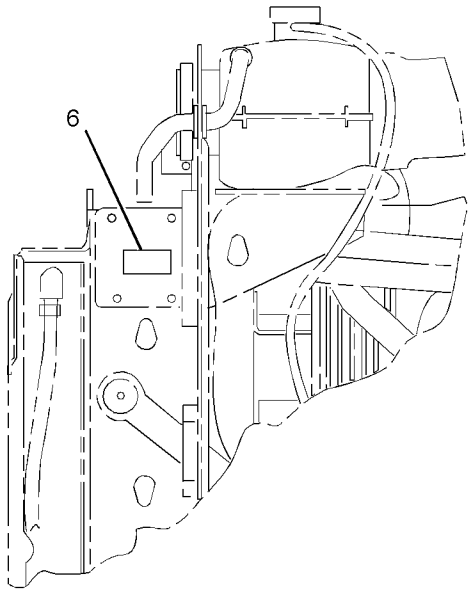

VIEW G-G

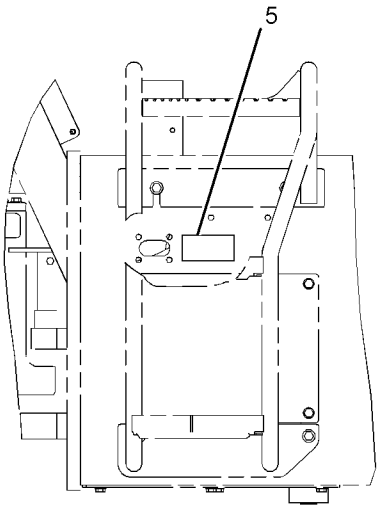

VIEW E-E

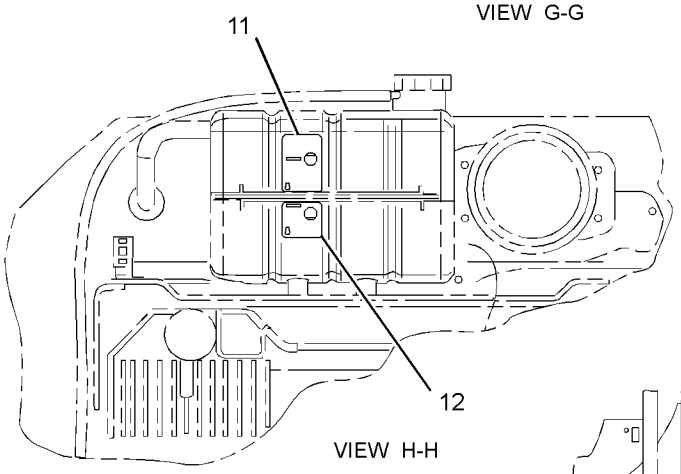

VIEW H-H

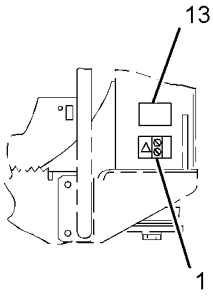

VIEW J-J

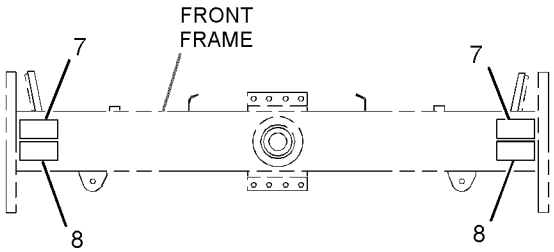

VIEW C-C

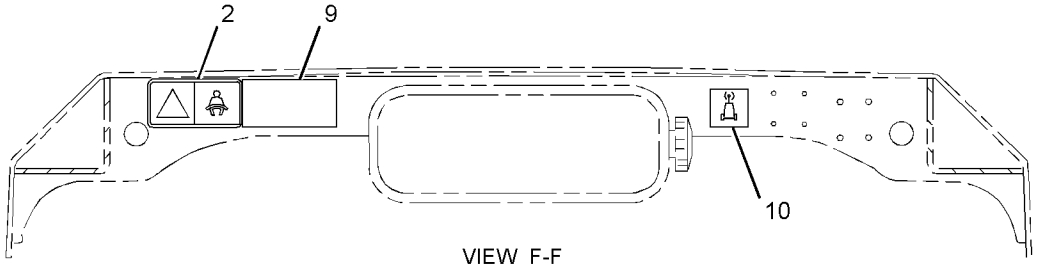

VIEW F-F

GRAPHIC #2 **<END>** g03072518

374-9845 FILM GP-INTERNATIONAL–CAB

S/N: M4M1-UP; M5P1-UP
PART OF 374-9843 OPERATOR AR
AN ATTACHMENT

SMCS-7557 **i05291192**

NOTE	REF NO	GRAPHIC REF	PART NUMBER	QTY	PART NAME 1 2 3 4 5 6 (PRODUCT LEVEL)	SEE PAGE
	1	2	**302-4390**	1	FILM-WARNING (CRUSH HAZARD, FASTEN SEAT BELT)	
	2	2	**205-4933**	1	FILM-IDENTIFICATION (SECONDARY EXIT)	
	3	2	**219-0305**	1	FILM-WARNING (NO WELD, NO DRILL, READ OMM)	
	4	1	**222-7944**	1	FILM-WARNING (DO NOT OPERATE, READ OMM, INTL)	
	5	2	**224-8946**	1	FILM-WARNING (NO ETHER SPRAY/AIR INTK, INTL)	
	6	2	**225-0312**	1	FILM-WARNING (JUMP START, READ OMM, INTL)	
	7	2	**225-4257**	1	FILM-WARNING (HOT FLUID UNDER PRESS)	
	8	2	**274-4284**	1	FILM-WARNING (EXPLOSION, RADIO PRODUCT LINK)	
	9	2	**226-1240**	2	FILM-WARNING (CRUSH HAZARD, STAY BACK, INTL)	
	10	2	**226-1274**	2	FILM-WARNING (CRUSH HAZARD, READ OMM, INTL)	
	11	2	**301-3004**	1	FILM-INSTRUCTION (MAXIMUM COOLANT LEVEL)	
	12	2	**301-3005**	1	FILM-INSTRUCTION (MINIMUM COOLANT LEVEL)	
	13	2	**307-0047**	1	FILM-INFORMATION (PRODUCT LINK, READ OMM)	
	14	2	**364-3008**	1	FILM-WARNING (ROPS, FOPS, READ OMM)	
	15	1	**367-0844**	1	FILM-INSTRUCTION (FUEL, READ OMM)	

REFER TO ALL ILLUSTRATIONS OF THIS GROUP FOR AUXILIARY VIEWS

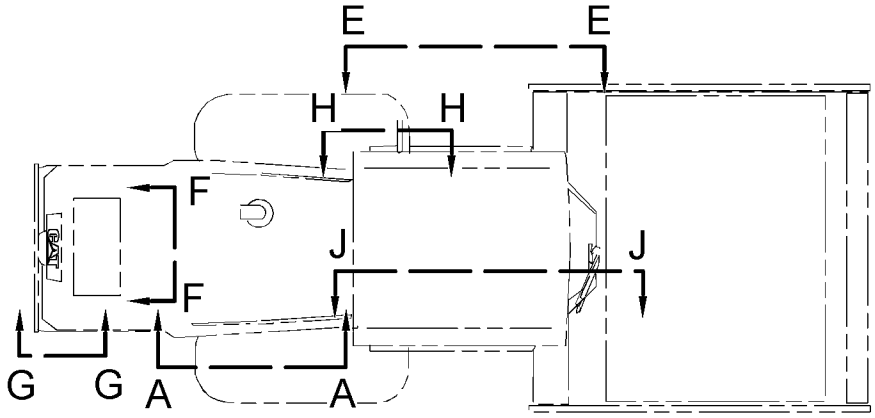

TOP VIEW

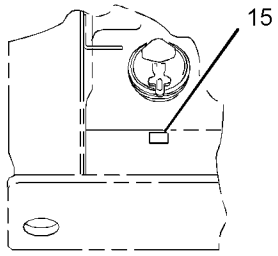

VIEW D-D

FWD

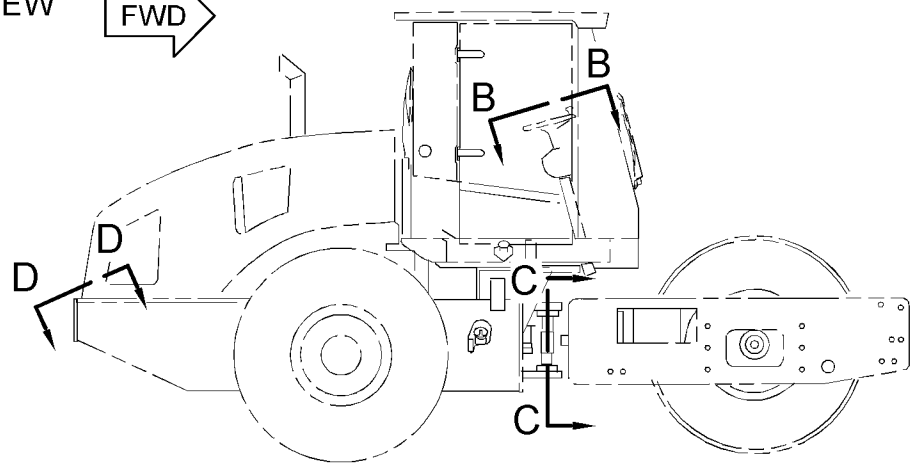

RIGHT SIDE VIEW

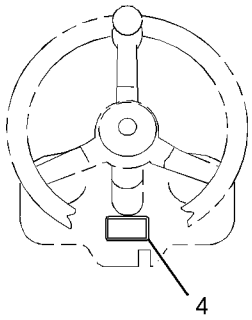

VIEW B-B

GRAPHIC #1

g03072304

374-9845 **FILM GP-INTERNATIONAL (*contd.*)** **i05291192**

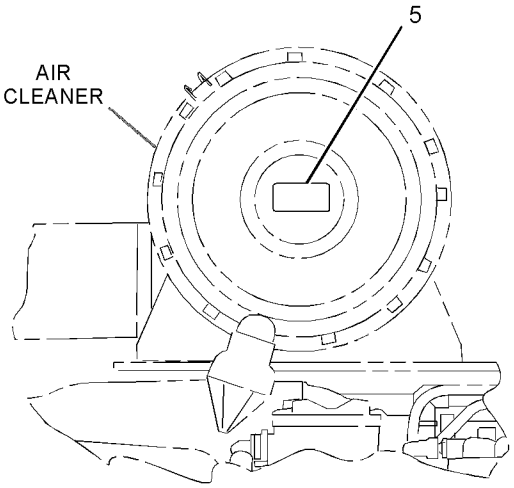

VIEW A-A

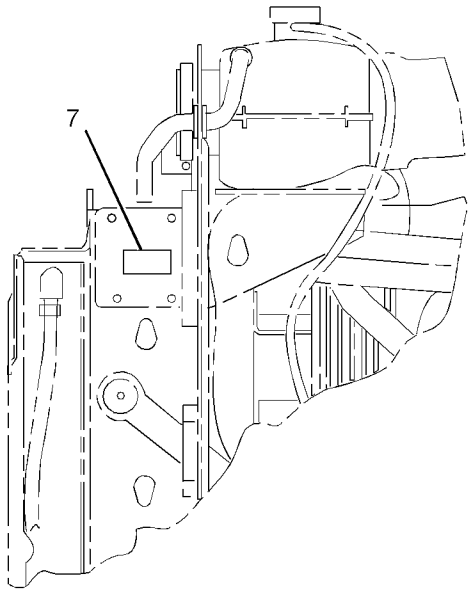

VIEW G-G

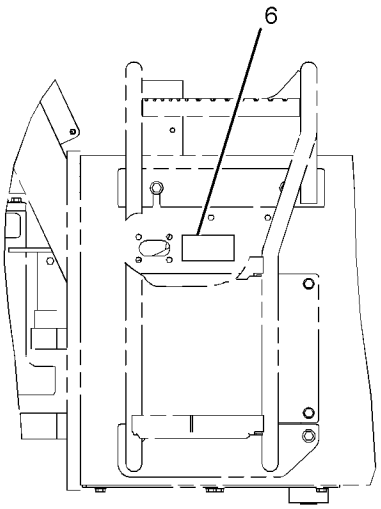

VIEW E-E

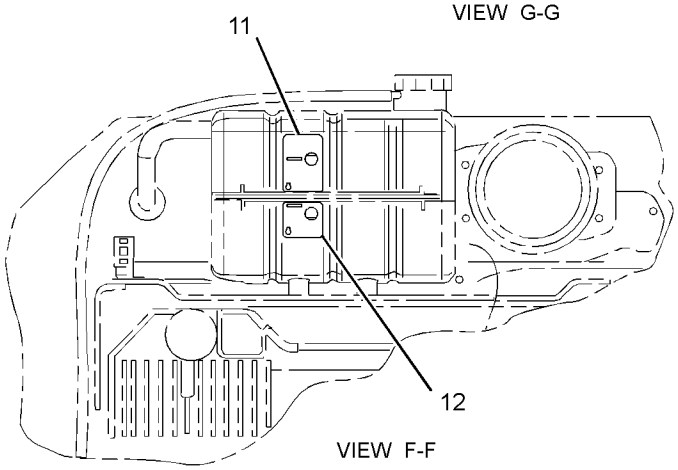

VIEW F-F

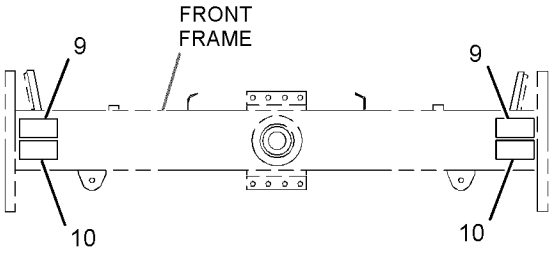

VIEW C-C

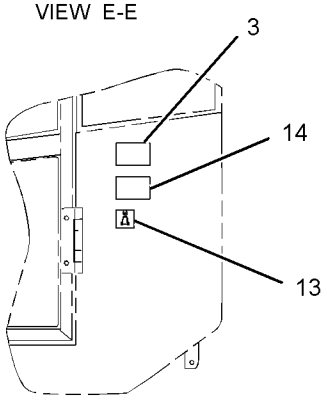

VIEW H-H

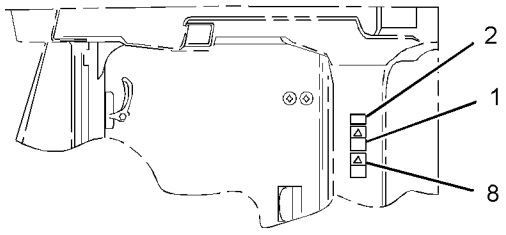

VIEW J-J

GRAPHIC #2 **<END>** g03072305

416-2581 FILM GP-INTERNATIONAL—NON-ROPS/FOPS

S/N: MBF1-UP; M4M1-UP; M5P1-UP; SDT1-UP
PART OF 416-2513 OPERATOR AR
AN ATTACHMENT

SMCS-7557 **i05291849**

NOTE	REF NO	GRAPHIC REF	PART NUMBER	QTY	PART NAME 1 2 3 4 5 6 (PRODUCT LEVEL)	SEE PAGE
	1	1	**221-8045**	1	FILM-WARNING (SEAT BELT, INTERNATIONAL)	
	2	1	**390-2406**	1	FILM-IDENTIFICATION (NON-ROPS/FOPS)	

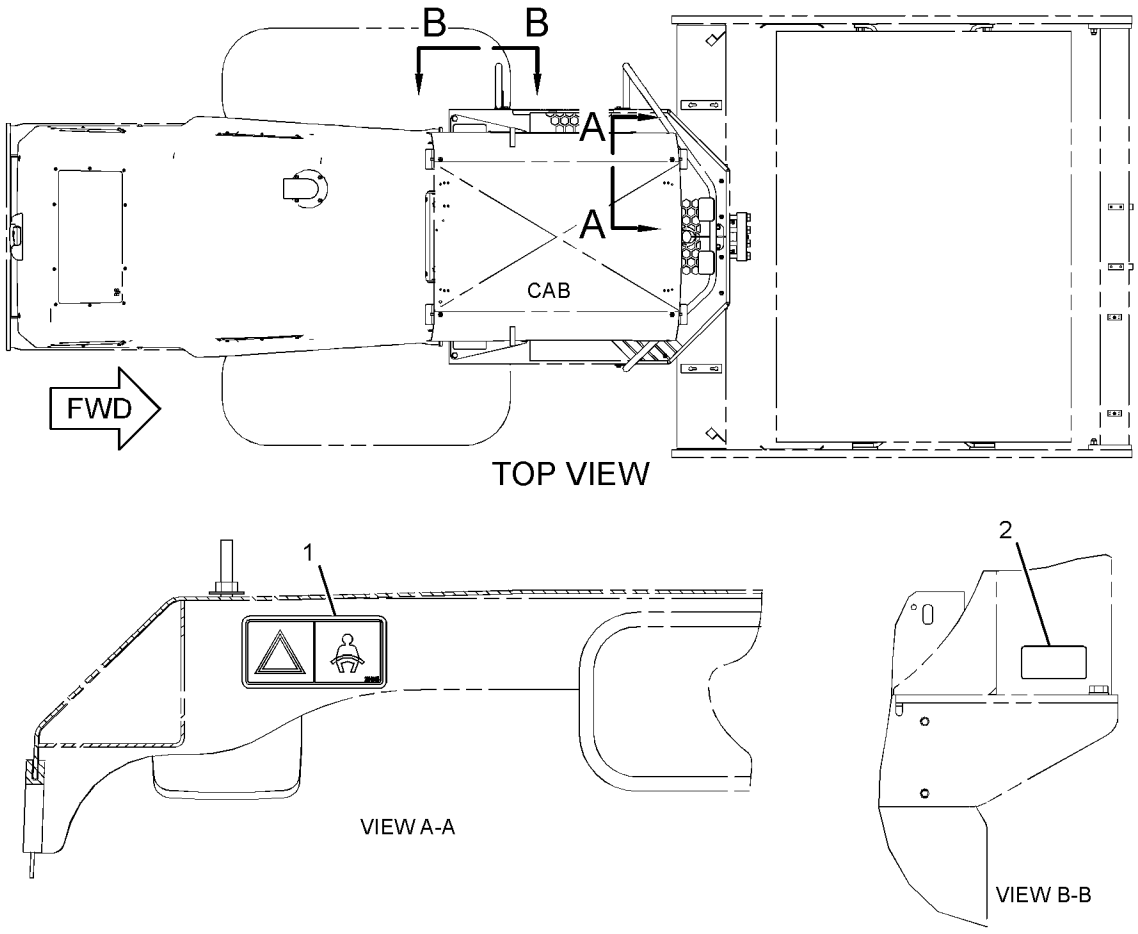

GRAPHIC #1 **<END>** g03385088

416-2637 FILM GP-INTERNATIONAL–CAB

S/N: MBF1-UP; M4M1-UP; M5P1-UP; SDT1-UP

PART OF 416-2514 OPERATOR AR

AN ATTACHMENT

SMCS-7557 **i05291853**

NOTE	REF NO	GRAPHIC REF	PART NUMBER	QTY	PART NAME 1 2 3 4 5 6 (PRODUCT LEVEL)	SEE PAGE
	1	1	**302-4390**	1	FILM-WARNING (CRUSH HAZARD, FASTEN SEAT BELT)	
	2	1	**205-4933**	1	FILM-IDENTIFICATION (SECONDARY EXIT)	
	3	1	**219-0305**	1	FILM-WARNING (NO WELD, NO DRILL, READ OMM)	
	4	1	**364-3008**	1	FILM-WARNING (ROPS, FOPS, READ OMM)	

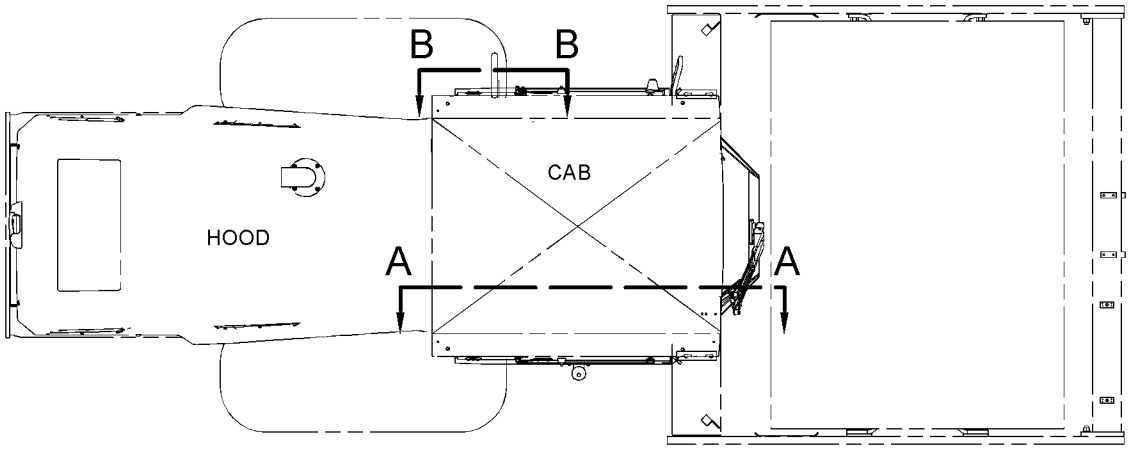

TOP VIEW FWD

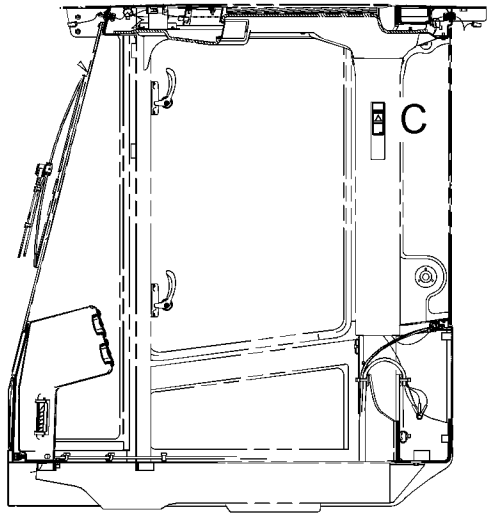

VIEW A-A

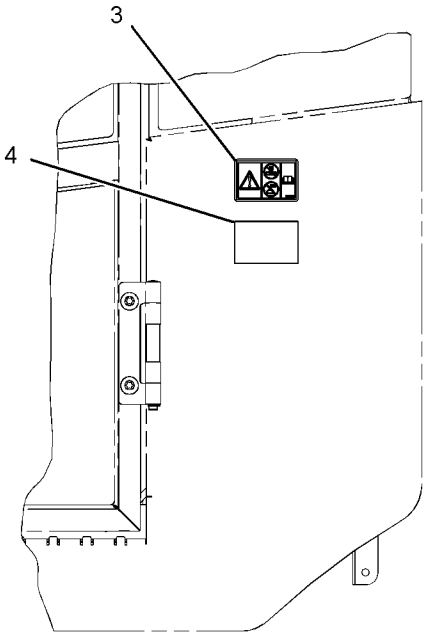

VIEW B-B

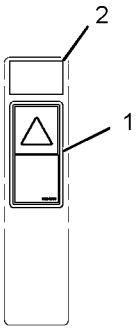

VIEW OF AREA C

GRAPHIC #1 **<END>** g03384900

362-4940 PLATE & FILM GP

S/N: MBF1-UP; M4M1-UP; M5P1-UP; SDT1-UP
PART OF 415-9361, 415-9367 DISTRIBUTION AR
AN ATTACHMENT

SMCS-7405, 7557, 7563 **i05269500**

NOTE	REF NO	GRAPHIC REF	PART NUMBER	QTY	PART NAME 1 2 3 4 5 6 (PRODUCT LEVEL)	SEE PAGE
	1	1	**158-7864**	1	FILM-IDENTIFICATION (HYDRAULIC OIL)	

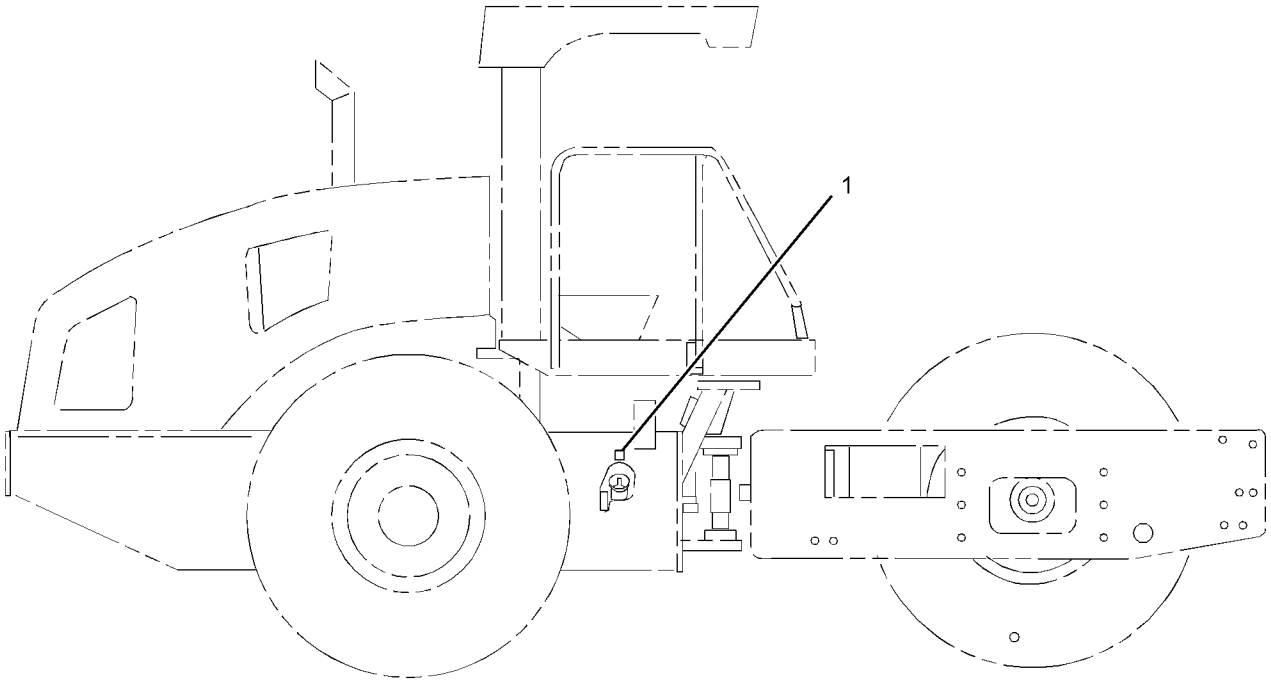

RIGHT SIDE VIEW

GRAPHIC #1 **<END>** g02717674

374-9755 PLATE & FILM GP

S/N: MBF1-UP; M4M1-UP; M5P1-UP; SDT1-UP

AN ATTACHMENT

SMCS-7405, 7557, 7563 **i05272106**

NOTE	REF NO	GRAPHIC REF	PART NUMBER	QTY	PART NAME 1 2 3 4 5 6 (PRODUCT LEVEL)	SEE PAGE
	1	1	**158-7864**	1	FILM-IDENTIFICATION (HYDRAULIC OIL)	

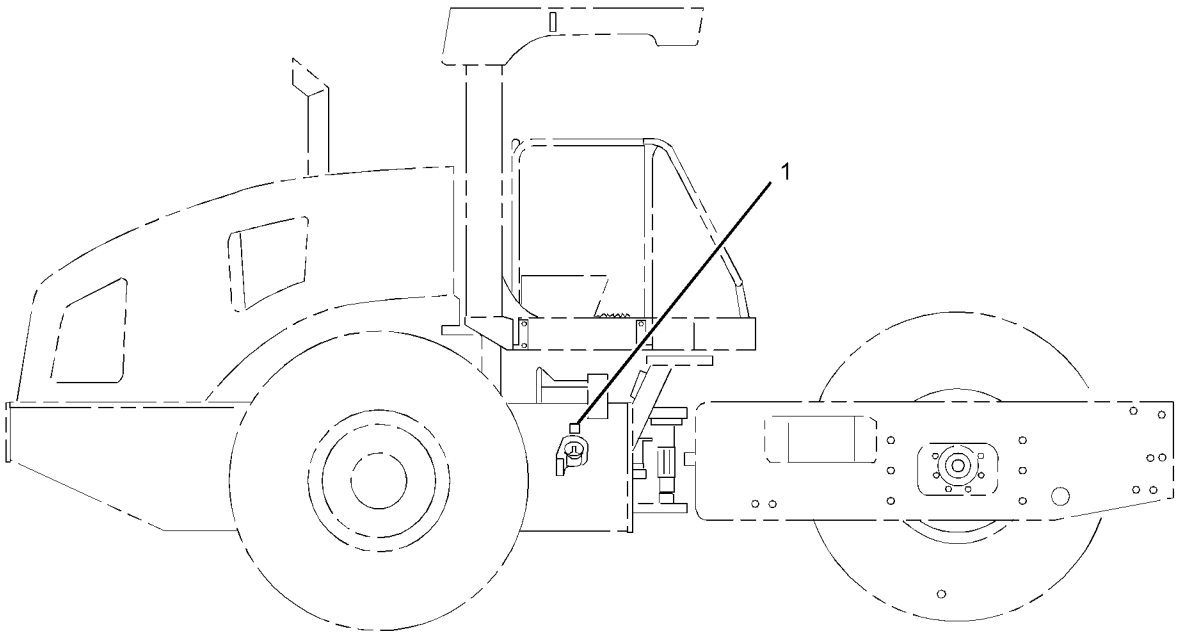

RIGHT SIDE VIEW

GRAPHIC #1 **<END>** g03044577

374-9773 PLATE & FILM GP

S/N: M4M1-UP

PART OF 374-9723 CHASSIS AR

SMCS-7405, 7557, 7563 **i05295479**

NOTE	REF NO	GRAPHIC REF	PART NUMBER	QTY	PART NAME 1 2 3 4 5 6 (PRODUCT LEVEL)	SEE PAGE
	1	2	**1P-2807**	2	FILM-IDENTIFICATION (LIFT EYE LOCATION)	
	2	2	**7X-3229**	2	FILM-IDENTIFICATION (LIFT EYE, TIE-DOWN LOCATION)	
	3	1	**7X-7644**	2	FILM-INFORMATION (TIE-DOWN)	
	4	2	**146-6747**	1	FILM-INFORMATION (24-VOLT)	
	5	2	**190-5386**	3	FILM-STRIPE (ROUND RED REFLECTIVE)	
	6	1,2	**214-1737**	4	FILM-INFORMATION (JACKING POINT)	
Y	7	1	*364-7603*	1	FILM GP	500
	8	2	**239-6986**	1	PLATE-SERIAL NUMBER (MACHINE)	
	9	2	**276-2604**	1	FILM-INSTRUCTION (BELT ROUTING)	
	10	2	**279-6497**	2	FILM-INSTRUCTION (GREASE, READ OMM)	
	11	1	**367-1981**	1	FILM-IDENTIFICATION (FUSE)	

Y - SEPARATE ILLUSTRATION

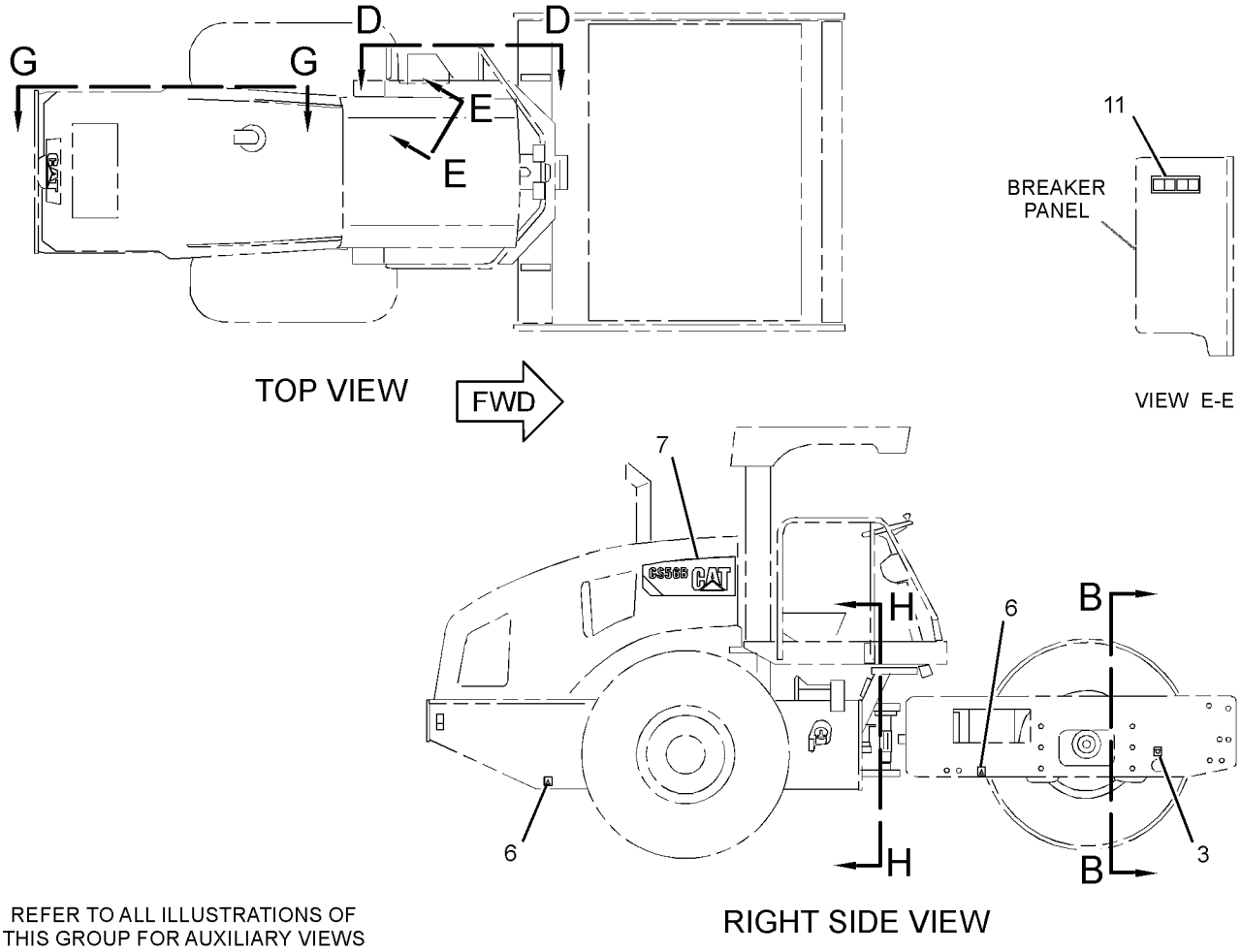

REFER TO ALL ILLUSTRATIONS OF THIS GROUP FOR AUXILIARY VIEWS

GRAPHIC #1

g03071297

374-9773 **PLATE & FILM GP (*contd.*)** **i05295479**

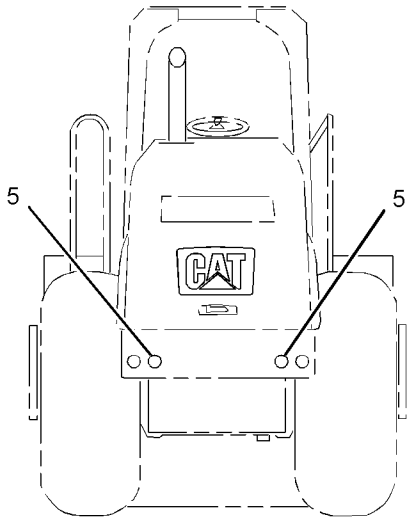

REAR VIEW

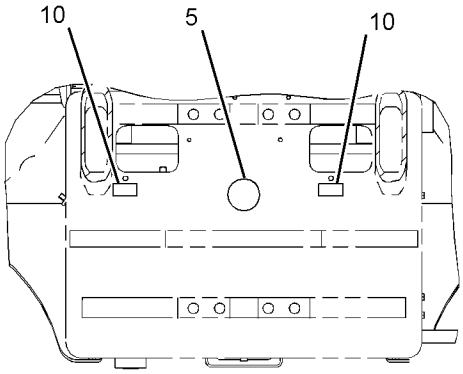

VIEW H-H

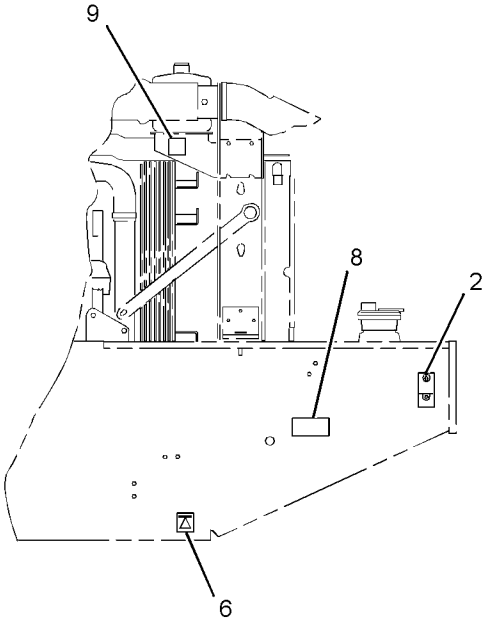

VIEW G-G

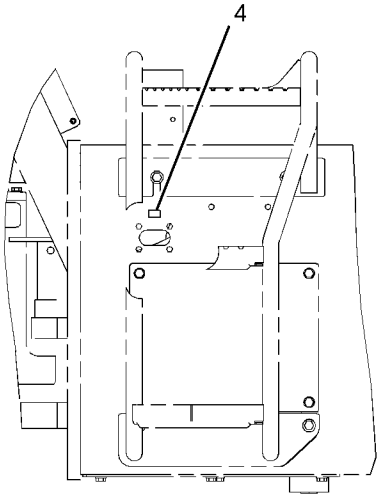

VIEW D-D

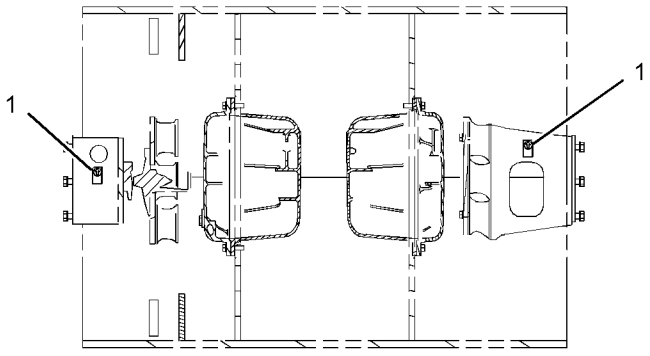

VIEW B-B

GRAPHIC #2 **<END>** g03071298

374-9774 PLATE & FILM GP

S/N: M5P1-UP

PART OF 374-9724 CHASSIS AR

SMCS-7405, 7557, 7563 **i05296406**

NOTE	REF NO	GRAPHIC REF	PART NUMBER	QTY	PART NAME 1 2 3 4 5 6 (PRODUCT LEVEL)	SEE PAGE
	1	2	**1P-2807**	2	FILM-IDENTIFICATION (LIFT EYE LOCATION)	
	2	2	**7X-3229**	2	FILM-IDENTIFICATION (LIFT EYE, TIE-DOWN LOCATION)	
	3	1	**7X-7644**	2	FILM-INFORMATION (TIE-DOWN)	
	4	2	**146-6747**	1	FILM-INFORMATION (24-VOLT)	
	5	2	**190-5386**	3	FILM-STRIPE (ROUND RED REFLECTIVE)	
	6	1,2	**214-1737**	4	FILM-INFORMATION (JACKING POINT)	
	7	1	**367-1981**	1	FILM-IDENTIFICATION (FUSE)	
	8	2	**239-6986**	1	PLATE-SERIAL NUMBER (MACHINE)	
	9	2	**276-2604**	1	FILM-INSTRUCTION (BELT ROUTING)	
	10	2	**279-6497**	2	FILM-INSTRUCTION (GREASE, READ OMM)	
Y	11	2	*364-7604*	1	FILM GP (CP56B)	501

Y - SEPARATE ILLUSTRATION

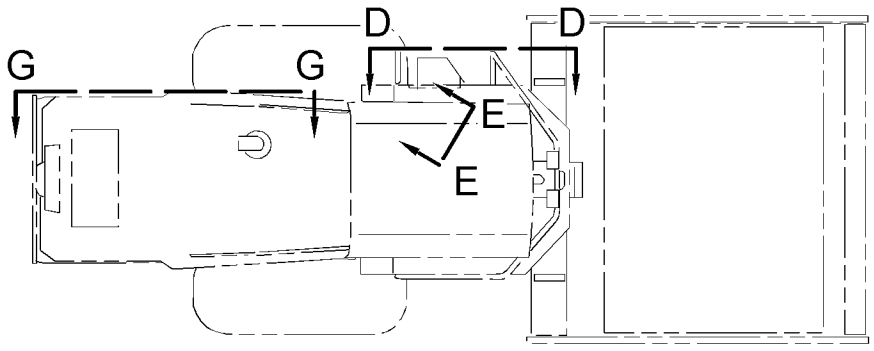

TOP VIEW

FWD

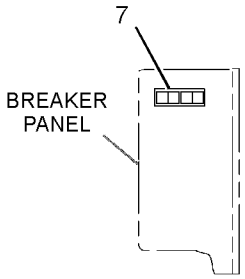

VIEW E-E

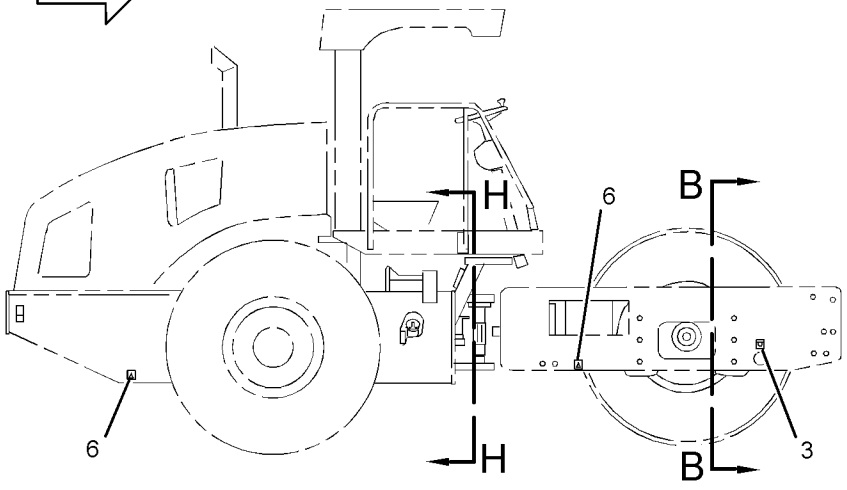

RIGHT SIDE VIEW

REFER TO ALL ILLUSTRATIONS OF THIS GROUP FOR AUXILIARY VIEWS

GRAPHIC #1

g03078997

374-9774 **PLATE & FILM GP (*contd.*)** **i05296406**

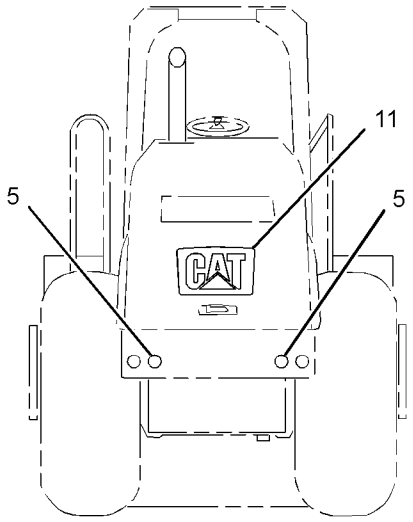

REAR VIEW

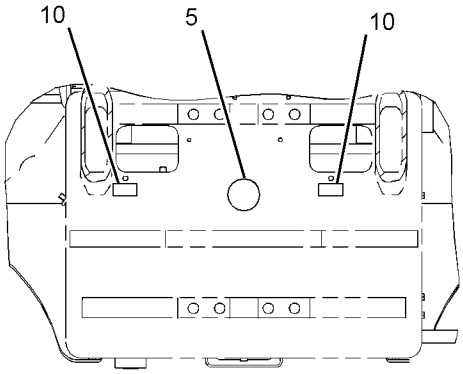

VIEW H-H

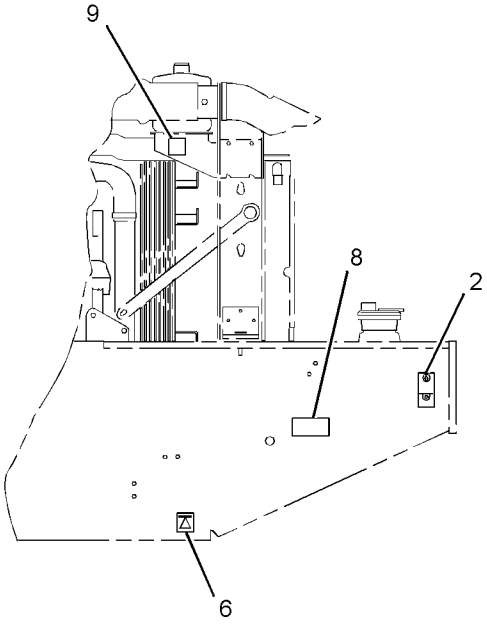

VIEW G-G

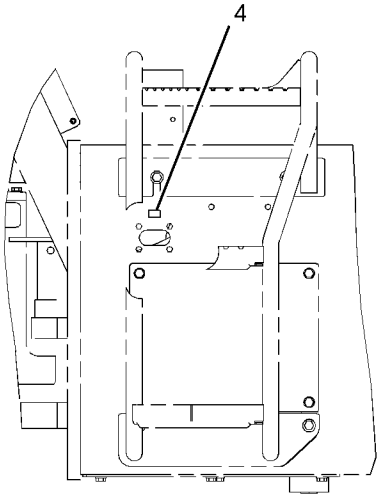

VIEW D-D

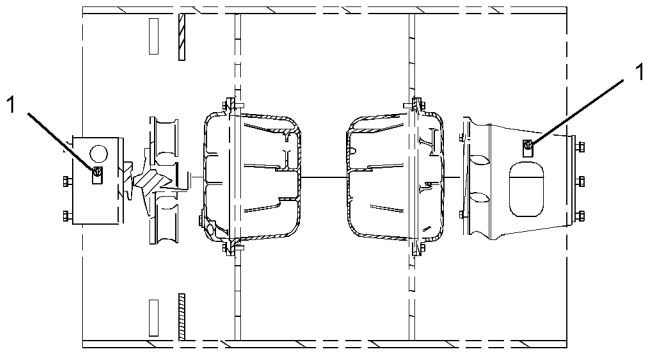

VIEW B-B

GRAPHIC #2 **<END>** g03078825

374-9775 PLATE & FILM GP

S/N: MBF1-UP

PART OF 374-9725 CHASSIS AR

SMCS-7405, 7557, 7563 **i05297396**

NOTE	REF NO	GRAPHIC REF	PART NUMBER	QTY	PART NAME 1 2 3 4 5 6 (PRODUCT LEVEL)	SEE PAGE
	1	2	**1P-2807**	2	FILM-IDENTIFICATION (LIFT EYE LOCATION)	
	2	1	**7X-3229**	2	FILM-IDENTIFICATION (LIFT EYE, TIE-DOWN LOCATION)	
	3	1	**7X-7644**	2	FILM-INFORMATION (TIE-DOWN)	
	4	2	**146-6747**	1	FILM-INFORMATION (24-VOLT)	
	5	1,2	**190-5386**	3	FILM-STRIPE (ROUND RED REFLECTIVE)	
	6	1	**214-1737**	6	FILM-INFORMATION (JACKING POINT)	
	7	2	**367-1981**	1	FILM-IDENTIFICATION (FUSE)	
	8	1	**239-6986**	1	PLATE-SERIAL NUMBER (MACHINE)	
	9	1	**276-2604**	1	FILM-INSTRUCTION (BELT ROUTING)	
	10	2	**279-6497**	2	FILM-INSTRUCTION (GREASE, READ OMM)	
Y	11	1	*364-7607*	1	FILM GP (CS68B)	502
					PARTS SHOWN IN GRAPHIC(S) WITHOUT A REFERENCE NUMBER ARE NOT SERVICED SEPARATELY	

Y - SEPARATE ILLUSTRATION

374-9775 **PLATE & FILM GP (*contd.*)** **i05297396**

REFER TO ALL ILLUSTRATIONS OF
THIS GROUP FOR AUXILIARY VIEWS

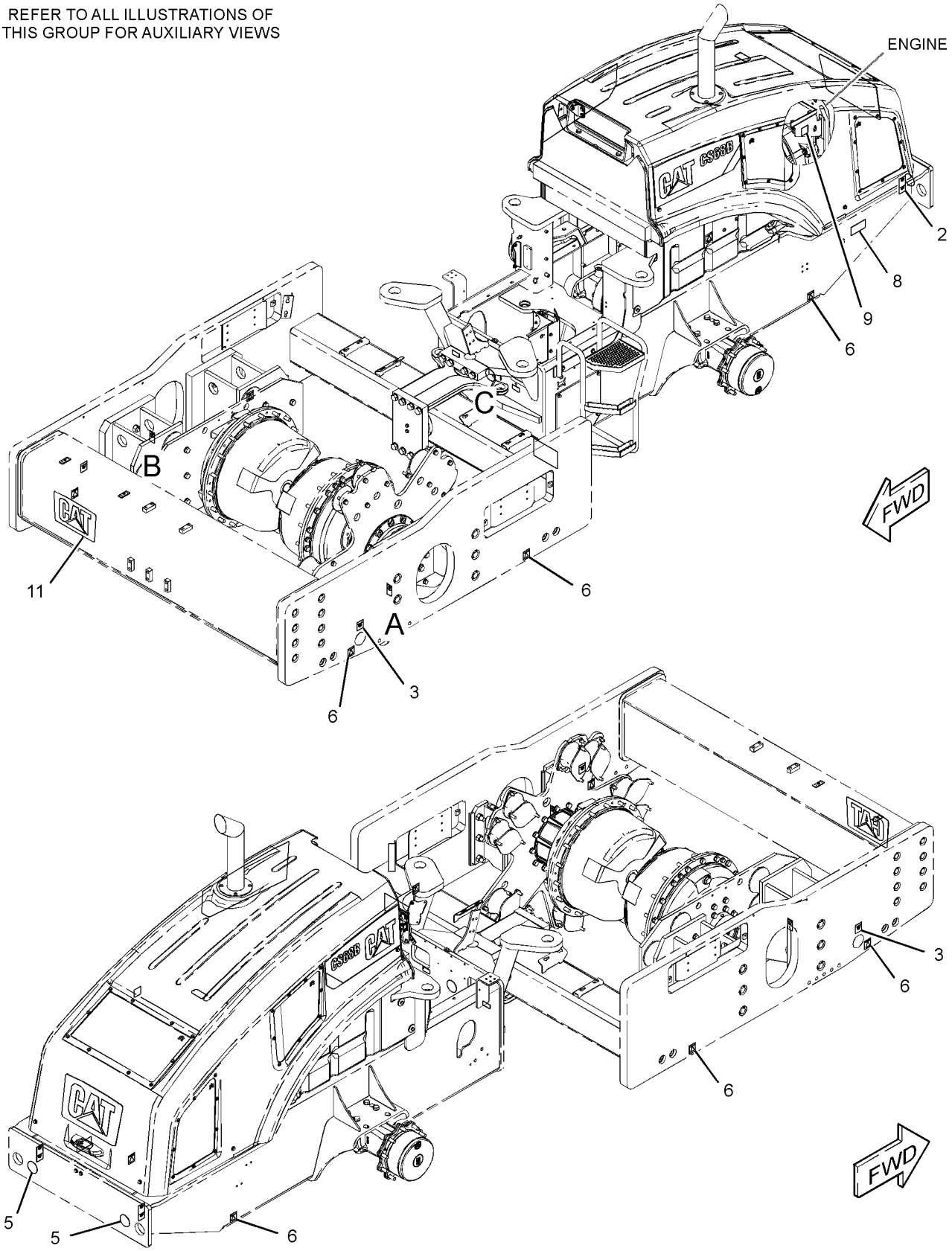

GRAPHIC #1 g03078557

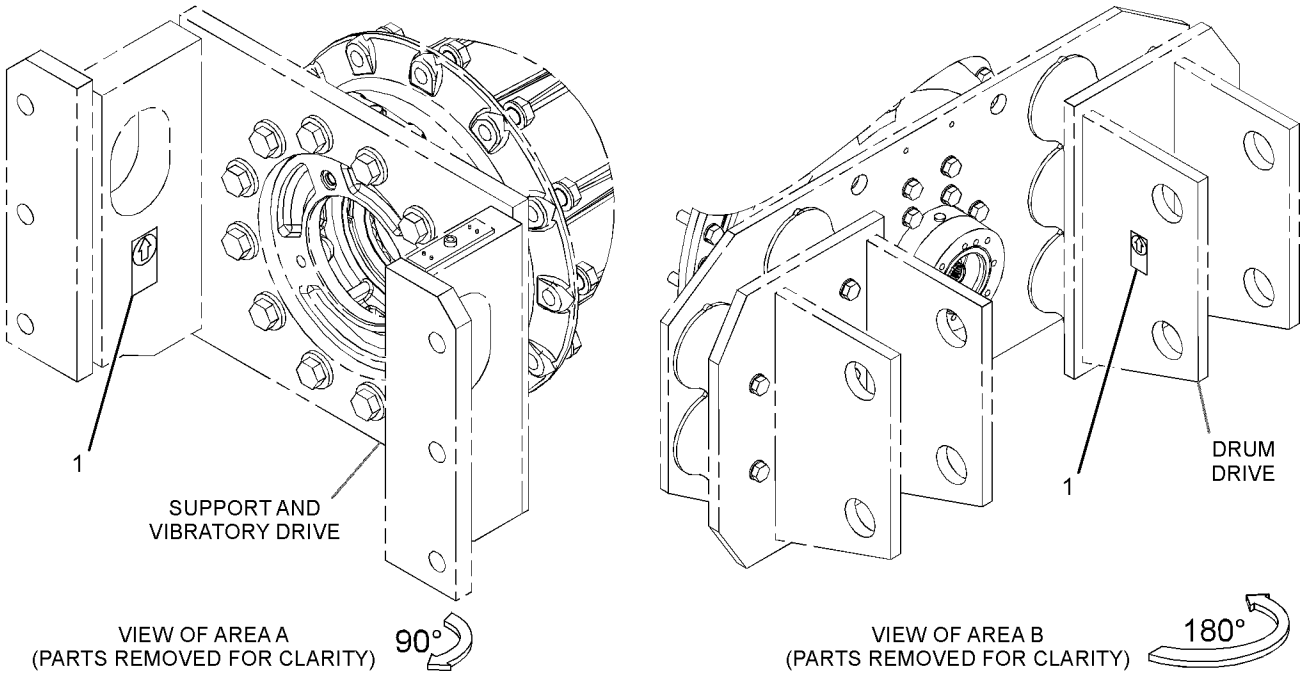

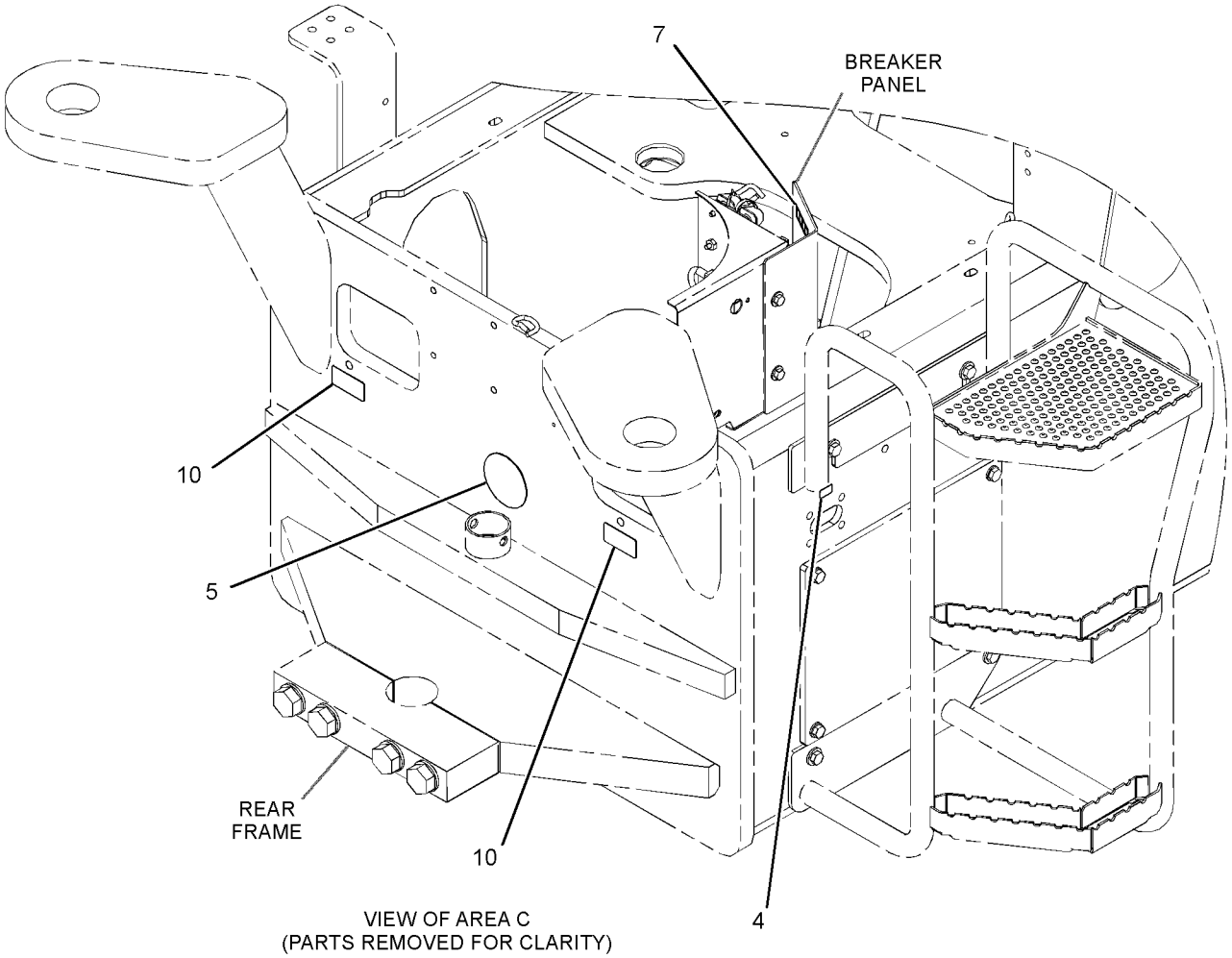

GRAPHIC #2 **<END>** g03078560

374-9776 PLATE & FILM GP

S/N: SDT1-UP

PART OF 374-9726 CHASSIS AR

SMCS-7405, 7557, 7563 **i05298361**

NOTE	REF NO	GRAPHIC REF	PART NUMBER	QTY	PART NAME 1 2 3 4 5 6 (PRODUCT LEVEL)	SEE PAGE
	1	2	**1P-2807**	2	FILM-IDENTIFICATION (LIFT EYE LOCATION) (MEDIUM)	
	2	2	**7X-3229**	2	FILM-IDENTIFICATION (LIFT EYE, TIE-DOWN LOCATION)	
	3	1	**7X-7644**	2	FILM-INFORMATION (TIE-DOWN)	
	4	2	**146-6747**	1	FILM-INFORMATION (24-VOLT)	
	5	2	**190-5386**	3	FILM-STRIPE (ROUND RED REFLECTIVE)	
	6	1,2	**214-1737**	6	FILM-INFORMATION (JACKING POINT)	
	7	1	**367-1981**	1	FILM-IDENTIFICATION (FUSE)	
	8	2	**239-6986**	1	PLATE-SERIAL NUMBER (MACHINE)	
	9	2	**276-2604**	1	FILM-INSTRUCTION (BELT ROUTING)	
	10	2	**279-6497**	2	FILM-INSTRUCTION (GREASE, READ OMM)	
Y	11	2	*364-7608*	1	FILM GP (CP68B)	503

Y - SEPARATE ILLUSTRATION

REFER TO ALL ILLUSTRATIONS OF
THIS GROUP FOR AUXILIARY VIEWS

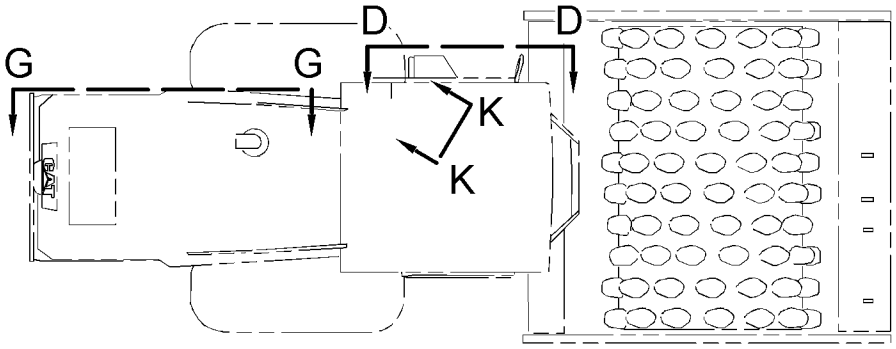

TOP VIEW FWD

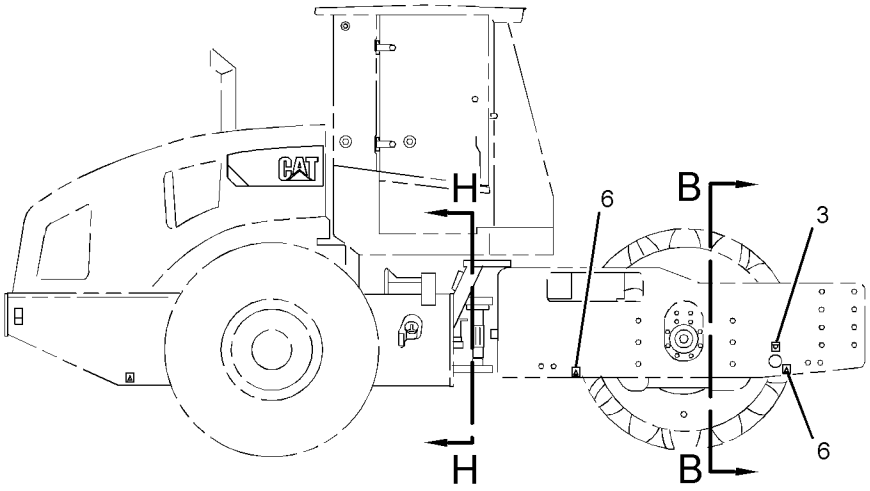

RIGHT SIDE VIEW

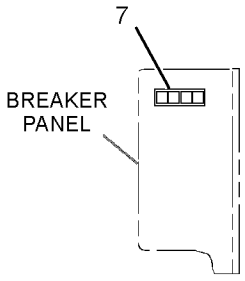

VIEW K-K

GRAPHIC #1 g03113784

374-9776 **PLATE & FILM GP (*contd.*)** **i05298361**

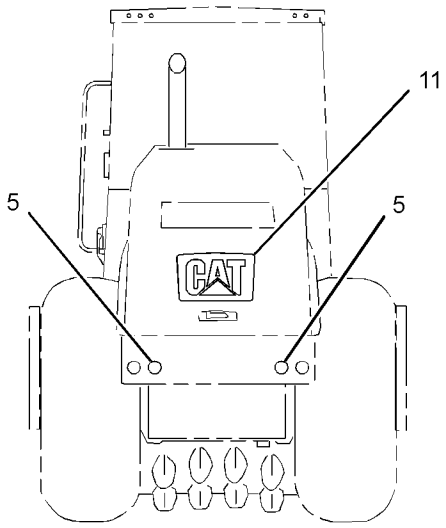

REAR VIEW

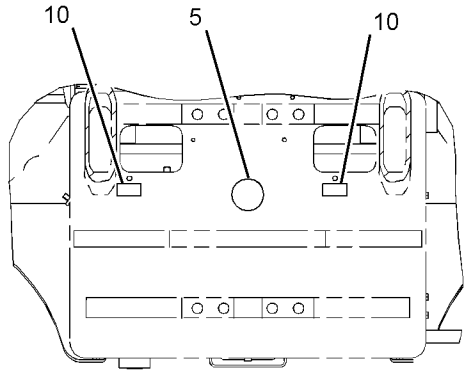

VIEW H-H

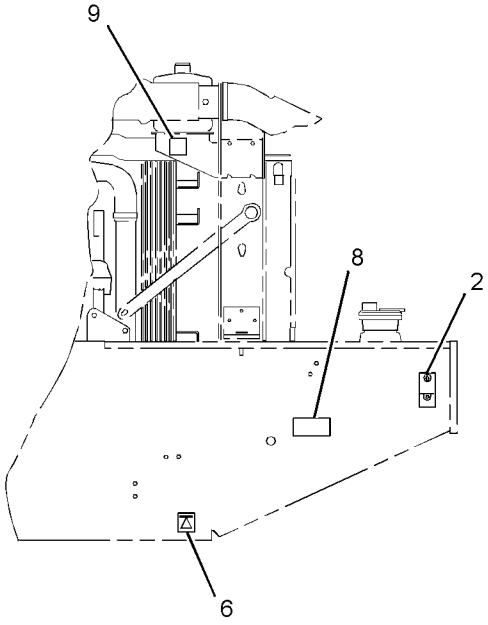

VIEW G-G

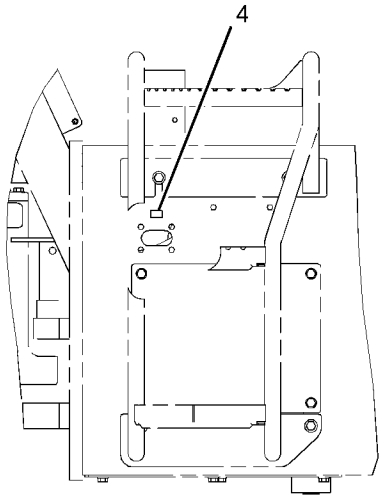

VIEW D-D

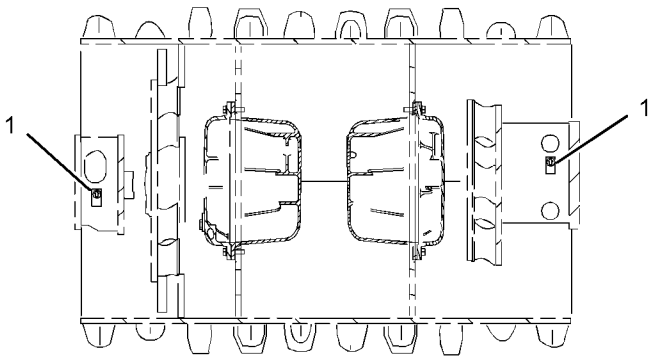

VIEW B-B

GRAPHIC #2 **<END>** g03113797

374-9839 PLATE & FILM GP

S/N: MBF1-UP; M4M1-UP; M5P1-UP; SDT1-UP

AN ATTACHMENT

SMCS-7405, 7557, 7563 **i05293725**

NOTE	REF NO	GRAPHIC REF	PART NUMBER	QTY	PART NAME 1 2 3 4 5 6 (PRODUCT LEVEL)	SEE PAGE
	1	1	**172-1241**	1	FILM-IDENTIFICATION (LIFT EYE, TIE-DOWN LOCATION)	

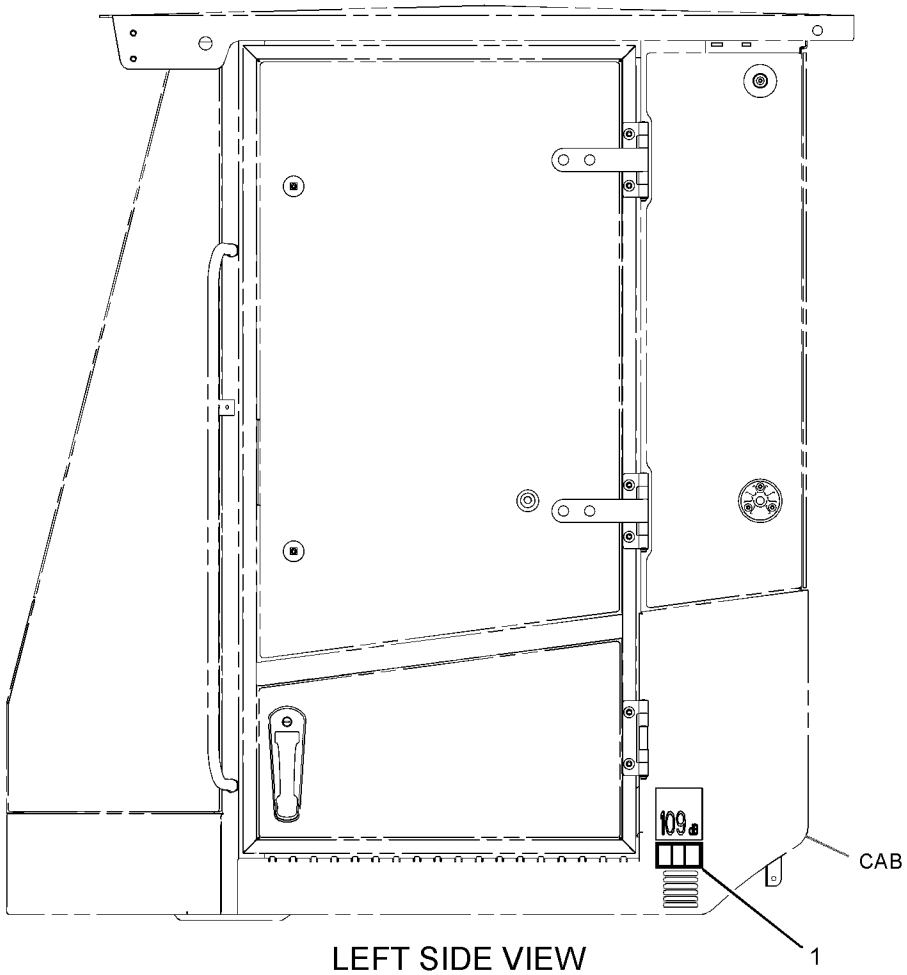

LEFT SIDE VIEW

GRAPHIC #1 **<END>** g03363141

439-5275 PLATE & FILM GP

S/N: MBF1-UP; M4M1-UP; M5P1-UP; SDT1-UP

AN ATTACHMENT

SMCS-7405, 7557, 7563 **i05335974**

NOTE	REF NO	GRAPHIC REF	PART NUMBER	QTY	PART NAME 1 2 3 4 5 6 (PRODUCT LEVEL)	SEE PAGE
	1	1	**392-8754**	1	PLATE-SERIAL NUMBER	

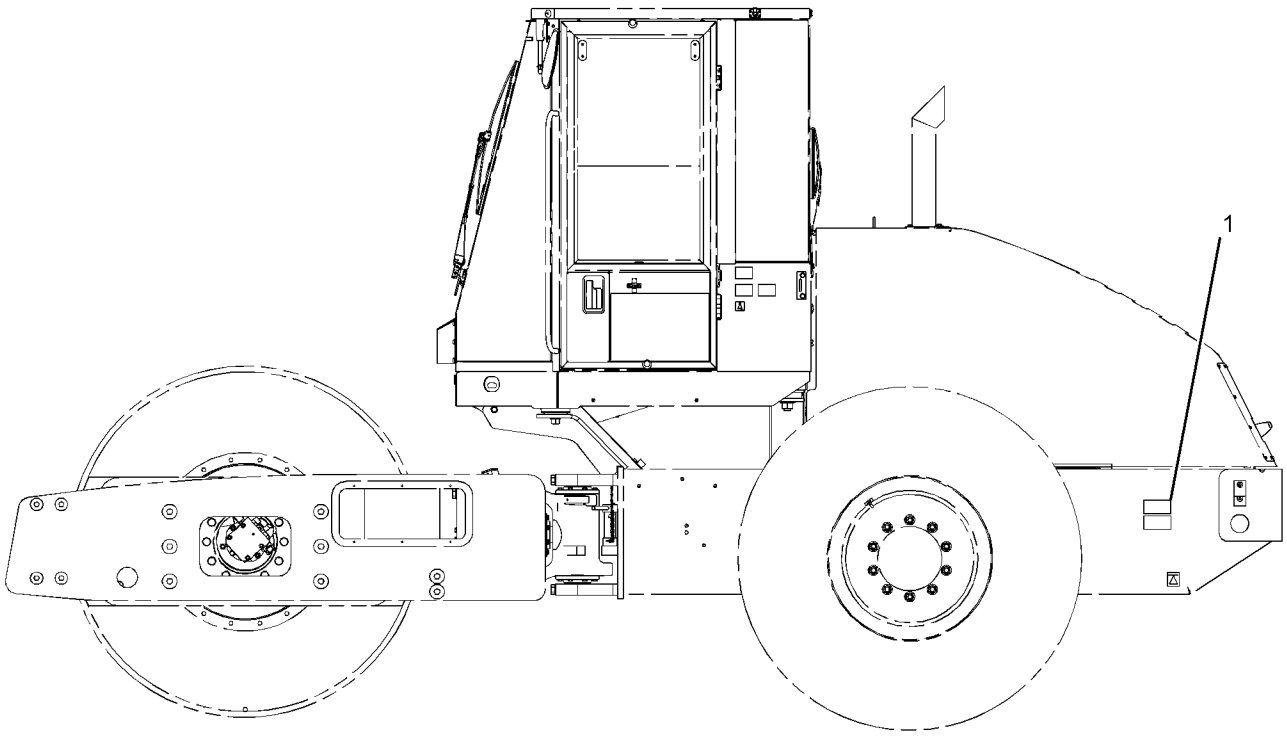

LEFT SIDE VIEW

GRAPHIC #1 **<END>** g03384339

PART NUMBER INDEX

Part	Page
0	
0S-1603	27
0T-0244	488
	489
0T-0489	488
	489
1	
1B-8736	13
	16
1D-4649	387
	389
1D-5117	94
1G-3410	366
1G-6423	349
1G-9960	141
	143
	151
	152
	184
	188
1H-3244	124
	126
	128
	129
	136
1H-3338	159
	160
1L-9080	490
1M-4543	56
1M-6119	93
1M-6120	93
1P-0810	102
	104
	105
	106
	112
	113
	117
1P-2807	526
	528
	530
	533
1P-3702	233
	235
	334
	336
	400
	402
1P-3703	246
1P-4278	74
1P-5765	233
	235
1S-0178	56
1S-7251	93
	94
1S-7252	93
1U-2812	61
1U-8846	194
	227
1Y-0413	450
	452
2	
2B-0858	20
	22
	37
2D-0598	196
	227
	229
2D-2631	261
	262
2D-6392	331
2D-6412	487
2D-6533	209
2D-8652	321
	325
2G-8096	74
2H-3922	157
2H-3924	446
	448
2H-3935	284
2H-9247	345
2J-5997	387
	389
2L-8049	94
2L-8050	94
	114
	136
2L-8054	114
2L-8057	94
2L-8058	94
	114
2L-8061	114
2L-8067	102
	115
2L-8071	101
	102
	104
	108
	109
	116
2L-8075	117
	118
2L-8081	115
	116
2M-9780	246
	254
	318
	349
	351
	353
	359
	361
	377
	404
	405
	423
2P-4471	284
2P-8104	154
2R-0239	196
2R-0364	423
2U-6038	196
2U-9526	268
3	
3B-4611	286
3B-7764	41
3B-8485	314
3B-8489	387
	389
3B-8490	314
3C-6969	168
	170
	462
	463
	464
	465
	466
	467
3D-2824	239
	246
	373
	375
	377
3D-7805	396
3E-3805	432
	493
3E-4333	344
3E-4356	351
	353
3E-4367	102
3E-4895	246
3E-5153	154
3E-5154	154
3E-5464	412
3E-8020	263
	429
	445
3E-8028	344
3E-8320	93
3E-8557	102
3E-9411	282
3E-9861	387
	389
3F-9556	460
3J-1907	54
	146
	186
	239
	240
	246
	306
	307
	309
	311
	313
	330
	351
	353
	359
	361
	373
	375
	379
3J-7354	327
	331
	351
	353
	359
	361
3K-0360	41
	90
	179
	240
	246
	339
	341
	345
	351
	353
	359
	361
	408
	423
	427
3K-0715	404
	405
3K-4528	102
3K-6060	455
3P-0647	254
3S-2093	74
	108
	146
	163
	174
	178
	179
	181
	182
	186
	472
	474
	496
3S-8664	446
	448
3T-0852	483
	484
3T-5760	94
4	
4B-4158	396
	398
4B-4278	286
4B-4863	138
4B-8774	71
4D-1248	93
4D-6466	238
4D-6695	196
4E-1384	286
4E-8722	416
	429
4F-3654	387
	389
4F-3656	387
	389
4H-6520	355
4J-5140	265
4J-5267	334
	336
	338
4J-5477	54
	239
	240
	307
	309
	311
	313
	314
	351
	353
	373
	375
	379
4K-9429	286
4L-6454	314
4L-7124	254
4M-0189	355
4M-6582	491
4M-8303	196
4P-7428	179
4P-7581	126
	141
	143
	146
	170
	174
	176
	179
	472
	476
4P-8134	179
	420

► **PRIMARY REFERENCE**

PART NUMBER INDEX

Part	Page
4S-1962	94
4S-5719	179
4V-2057	314
5	
5A-3604	83
	485
	486
5C-2874	444
	462
	463
	464
	465
	466
	467
5C-2890	98
	114
	136
	151
	152
	159
	160
	172
	264
	286
	304
	412
	431
	439
	442
	455
	472
	474
5C-7261	59
	61
	63
	64
	124
	126
	136
	141
	143
	146
	168
	170
	172
	174
	176
	179
	286
	423
	432
	446
	450
	454
	460
	493
	495
5C-9553	138
	174
	176
	265
	412
	455
	464
	465
5D-1026	41
	56
	59
	75
5E-9295	114
5E-9892	278
	279
5H-1472	254
5H-4909	194
	200
5H-6734	196
	227
	229
5J-2974	243
	380
5J-3886	359
	361
5K-9090	246
	343
	373
	375
	377
5K-9179	456
5L-3233	67
5L-8894	246
5P-0767	450
	452
5P-1042	246
	351
	353
5P-1046	74
5P-1075	314
5P-1076	59
	179
	483
	484
5P-1442	370
5P-1506	343
5P-1947	373
	375
5P-2957	101
5P-3454	102
5P-3864	243
5P-3928	446
	448
5P-3929	446
	448
5P-3948	446
	448
5P-4106	446
	448
5P-4107	446
	448
5P-4115	59
	136
	265
	442
5P-4116	59
	63
	65
	67
	89
	90
	121
	123
	128
	129
	136
	141
	143
	146
	165
	168
	170
	172
	174
	176
	179
	184
	186
	188
	233
	235
	265
	286
	289
	339
	341
	343
	400
	402
	422
	429
	432
	435
	446
	448
	450
	457
	458
	472
	478
	479
	483
	484
5P-4325	74
	334
	336
5P-4362	373
	375
5P-4484	394
	396
	398
5P-4571	101
	102
	105
	106
	114
5P-4924	373
	375
5P-4961	74
	370
	371
5P-5397	391
	392
	393
5P-5602	101
5P-5623	162
5P-5643	411
5P-5675	94
	136
5P-5687	265
	286
5P-5774	163
	181
	430
	431
5P-5874	381
5P-5927	435
5P-6385	74
5P-6459	181
5P-6872	455
5P-6874	456
5P-7162	138
5P-7177	94
5P-7483	265
5P-7958	138
	265
	483
	484
	485
	486
5P-8245	27
5P-8500	264
	370
	371
	439
	472
	474
5P-8524	442
5P-9186	41
5P-9436	373
	375
5S-0003	254
5S-7383	233
	235
5W-1250	331
5W-3670	355
6	
6D-1004	318
6D-4247	450
	452
6D-4636	316
6D-7573	452
6D-7889	83
6E-0725	366
6E-4189	254
6E-5063	351
6E-6336	363
6E-6349	363
6F-7045	157
6H-3586	102
6H-3592	102
6H-3616	32
6H-3957	8
6H-4005	162
6H-4006	174
	176
6H-9049	321
	325
6H-9691	382
6I-0217	29
	44
	52
	57
	71
	84
6I-0254	44
	57
	84
6I-0260	34
	44
	50
	80
	84
6I-0423	28
6I-0454	29
6I-0455	52
6I-0456	84
6I-0563	71
6I-0593	80
6I-0631	28
6I-0645	29
	69
6I-0654	31
	80
6I-0817	71
6I-0839	57
6I-1090	34
	47
6I-1497	34
6I-4374	34
	44

PART NUMBER INDEX

Part	Page
	84
6I-4681	34
6I-4793	50
	52
	84
6J-2245	148
	149
6J-5730	321
6K-6307	373
	375
6L-3483	102
6M-4465	184
	188
6P-8855	450
	452
6R-7579	355
6S-4039	181
6T-3610	106
	111
6V-0491	101
6V-0852	318
	327
	339
	341
	351
	353
6V-1722	246
6V-1889	334
	336
	338
	448
6V-2689	472
	474
6V-2722	93
6V-2803	53
	62
	265
	286
6V-3265	176
	327
6V-3938	355
6V-3965	318
	327
	339
	341
	351
	353
6V-4248	197
6V-4249	70
6V-4356	446
	448
6V-4357	446
	448
6V-4360	138
6V-4589	347
6V-5048	328
	329
6V-5050	347
6V-5063	351
	353
6V-5200	366
6V-5201	368
	369
6V-5326	331
	355
6V-5391	359
	361
6V-5839	70
	432
6V-6228	194
	197
	200
6V-6787	393
6V-7238	41
	90
6V-7351	347
6V-7357	286
	432
6V-7419	496
6V-7486	377
6V-7636	286
	432
6V-7676	387
	389
6V-7688	248
	249
	387
	389
6V-7699	90
6V-7723	364
6V-8183	254
6V-8185	286
	432
6V-8188	94
6V-8227	427
6V-8351	349
	380
6V-8398	246
	314
	339
	341
	351
	353
	423
	427
6V-8523	59
6V-8625	423
6V-8626	318
	377
	404
	423
6V-8627	54
	239
	307
	309
	311
	379
6V-8632	427
6V-8635	373
	375
	377
6V-8637	246
6V-8639	351
	353
	427
6V-8640	423
6V-8641	307
	309
	311
	313
	351
	353
	379
6V-8713	239
6V-8776	377
6V-8928	445
6V-9003	405
6V-9189	130
	423
6V-9632	124
	126
	128
	129
	138
	174
	176
	184
	188
	430
	492
6V-9671	168
	170
	462
	463
	464
	465
	466
	467
6V-9672	138
	172
	174
	176
	263
	429
6V-9746	246
	327
	334
	336
	423
6V-9835	307
	309
	311
6V-9837	314
6V-9842	311
	379
6V-9849	351
	353
6V-9851	351
	353
6V-9852	239
6W-4749	408
6W-6005	93
6Y-6584	179
7	
7C-0351	34
7C-1224	34
7C-4349	33
7C-4616	29
7D-7233	343
7D-8636	408
7D-8637	408
7G-7053	181
7I-2273	90
7J-0204	377
7J-6285	239
	351
	353
7J-9108	239
	240
	318
	377
	404
	405
	423
	427
7K-1181	41
	56
	74
	107
	121
	123
	124
	126
	128
	129
	133
	135
	136
	138
	141
	143
	146
	151
	152
	163
	165
	168
	170
	172
	174
	176
	178
	179
	181
	184
	186
	188
	280
	281
	339
	341
	370
	371
	420
	462
	463
	464
	465
	466
	467
	472
	474
	476
	496
7K-3176	446
	448
7K-3304	446
	448
7M-3361	124
	126
7M-8485	327
	359
	361
	373
	375
	377
	394
	396
	398
7N-0718	93
	157
7N-9017	102
7R-2750	114
7R-2751	114
7R-3145	151
	152
7R-3354	102
7R-3711	363
7T-1099	265
	268
	479
7T-2457	209
7T-2459	209
7T-4532	419
7T-6087	154
7T-6090	154
7T-6739	108
7T-6799	472
	474
7T-8891	496
7U-3538	209
7V-5628	151

► **PRIMARY REFERENCE**

PART NUMBER INDEX

Part	Page
	152
7V-6571	94
	334
	336
7W-2632	84
7W-4540	156
7W-4669	452
7W-7381	146
	186
7X-0429	387
	389
7X-0507	490
7X-0510	190
	191
	192
7X-0533	387
	389
7X-0578	427
7X-0579	59
	286
	411
7X-0583	297
	298
7X-0590	59
7X-0610	33
7X-0818	316
	339
	341
7X-0872	318
7X-1553	345
	347
7X-2465	387
	461
7X-2475	297
	298
7X-2488	387
7X-2533	124
	126
	128
	129
	435
7X-2534	136
	151
	152
	235
7X-2535	138
	141
	143
	146
	184
	186
	188
7X-2536	89
	446
	448
7X-2537	74
	94
	423
7X-2538	420
7X-2543	92
	400
	402
	450
	452
7X-2544	400
	402
7X-2553	240
	282
	391
	392
	393
	420
7X-2555	265
7X-2557	293
	295
7X-2558	293
	295
7X-2559	194
	200
7X-2561	290
	291
	299
	300
	301
	302
7X-2562	204
	205
	207
	208
	391
	393
7X-2563	205
	208
7X-2564	248
	249
7X-2565	274
	275
	293
	297
7X-2566	33
	248
	249
	290
	291
7X-2571	190
	192
7X-2577	231
	270
	271
	272
	273
7X-2621	172
7X-3229	526
	528
	530
	533
7X-3340	331
7X-4780	170
	464
	465
7X-5315	351
	353
7X-5331	314
7X-6315	96
7X-7644	526
	528
	530
	533
7X-7655	59
7X-7729	54
	63
	70
	74
	89
	134
	141
	143
	146
	172
	179
	184
	186
	188
	265
	283
	286
	305
	318
	327
	334
	336
	420
	430
	431
	446
	448
	450
	452
	456
7X-7877	174
7X-7915	454
7X-7958	343
7X-8086	387
	389
7X-8087	387
	389
7X-8092	389
7X-8093	387
	389
7X-8115	387
	389
7Y-3474	496
7Y-3729	334
	336
7Y-5247	67
7Y-5293	442
	445
7Y-7394	443
	389
8C-9778	154
8D-3932	59
8E-8293	496
8F-1326	472
	474
8F-1434	154
8F-5758	254
8F-6711	254
8G-4189	387
	389
8H-5303	157
8H-5306	157
8I-1362	496
8I-5077	254
8I-5078	254
8J-4455	154
8J-8308	254
8L-2779	161
8L-4070	154
8R-1803	168
	170
	172
8R-2916	427
8R-2918	427
8R-3857	265
	268
8S-0934	487
	490
8S-2634	93
8S-4723	487
8S-4734	190
	191
	192
8S-7803	432
	493
8T-0024	163
	411
	445
8T-0119	41
8T-0120	377
8T-0154	74
	450
	452
8T-0164	240
	307
	309
	311
	313
8T-0271	54
	334
	336
8T-0289	90
	462
	463
	464
	465
	466
	467
8T-0325	462
	463
	464
	465
	466
	467
8T-0328	462
	463
	464
	465
	466
	467
8T-0341	345
	347
8T-0389	92

8

Part	Page
8C-3205	334
	336
8C-3290	389
8C-3312	368
	369
8C-3398	114
8C-3413	196
8C-3445	48
8C-3446	327
8C-3451	327
8C-3681	56
	75
8C-3756	412
8C-5607	121
	123
8C-5608	121
	123
8C-6354	138
8C-6358	94
8C-6438	90
	429
8C-6866	314
8C-6913	241
8C-6965	381
8C-7505	194
	200
8C-7581	141
	143
	146
	184
	186
	188
8C-8451	141
	143
	172
	184
	188
	379
8C-8478	33

PART NUMBER INDEX

Part	Page
	94
	233
	235
	265
	286
	400
	402
8T-1158	320
	359
8T-1159	355
8T-1685	327
8T-1687	339
	341
8T-2353	351
	353
8T-2393	246
8T-2444	432
8T-2659	172
	174
	176
	472
	474
8T-2922	382
8T-3311	307
	309
8T-3426	176
	479
	480
8T-3490	54
	63
	74
	265
	268
	423
	476
	479
8T-3519	94
8T-3612	63
	184
	188
	268
	430
	476
	479
8T-3635	174
	176
	268
	476
	479
8T-3647	341
8T-3980	197
8T-3991	136
8T-4001	191
	231
	232
	476
	478
8T-4121	54
	59
	67
	74
	89
	92
	94
	124
	126
	151
	154
	162
	174
	176
	179
	233
	235
	240
	246
	265
	270
	271
	272
	273
	278
	279
	284
	286
	289
	316
	318
	334
	336
	370
	371
	377
	400
	402
	423
	427
	440
	441
	452
	472
	476
8T-4122	265
	290
	291
	299
	300
	301
	302
	387
	389
8T-4123	190
	192
	204
	205
	207
	208
	274
	275
	276
	277
	290
	291
	293
	295
	297
	298
	299
	300
	301
	302
	387
	389
	391
	392
	393
	394
8T-4131	33
	190
	192
	276
	277
	290
	291
	293
	295
	297
	298
	301
	302
8T-4133	59
	67
	89
	154
	162
	265
	423
	456
	476
8T-4136	74
	151
	162
	174
	176
	327
	427
	430
8T-4137	74
	94
	141
	143
	146
	179
	184
	186
	188
	318
	334
	336
	440
	441
	472
8T-4138	121
	123
	141
	143
	145
	146
	168
	170
	184
	186
	188
	264
	265
	286
	304
	427
8T-4139	141
	143
	184
	188
8T-4140	290
	291
	299
	300
	301
	302
8T-4167	231
	232
	270
	271
	272
	273
	278
	279
	461
	476
	478
8T-4171	412
8T-4172	59
8T-4175	407
8T-4178	246
8T-4179	179
8T-4182	124
	126
	316
	400
	402
8T-4183	246
	483
	484
8T-4185	74
	92
8T-4186	94
	265
	423
8T-4187	276
	277
	293
	295
	297
	298
	301
	302
	394
8T-4189	53
	54
	61
	63
	64
	67
	121
	123
	124
	126
	128
	129
	136
	165
	168
	170
	172
	176
	179
	184
	186
	188
	265
	286
	343
	450
	458
8T-4190	499
8T-4193	265
	418
	479
8T-4194	33
8T-4195	63
	70
	74
	92
	240
	265
	270
	271
	272
	273
	283
	284
	286
	370
	420
	423
	427
	456

► **PRIMARY REFERENCE**

PART NUMBER INDEX

Part	Page
	476
8T-4196	54
	74
	89
	134
	246
	265
	278
	279
	286
	289
	305
	371
	446
	448
8T-4197	138
8T-4199	62
	90
8T-4200	53
	59
	63
	83
	134
	176
	233
	235
	286
	396
	400
	402
8T-4205	114
	136
	141
	143
	174
	176
	179
	184
	188
	412
	427
	455
	464
	465
	472
	474
8T-4222	94
8T-4223	33
	94
	138
	141
	143
	165
	174
	176
	179
	184
	188
	239
	404
	405
	452
	476
	487
	490
8T-4224	53
	54
	61
	63
	64
	74
	126
	130
	134
	136
	138
	176
	286
	420
	423
	432
	485
	486
8T-4241	365
8T-4244	59
	94
	138
	165
	174
	176
	179
	265
	427
	476
8T-4649	278
	279
8T-4779	387
	389
	396
	398
8T-4896	59
	233
	235
	344
	427
8T-4908	59
	65
	141
	143
	146
	165
	174
	176
	289
	396
	398
	411
	422
	423
	429
	432
	435
	457
	478
	479
8T-4910	59
	452
8T-4956	404
	405
8T-4970	179
8T-4971	432
8T-4984	56
	67
8T-4985	67
8T-4986	67
8T-4994	33
8T-5005	92
	377
8T-5049	359
	361
8T-5093	496
8T-5360	488
	489
8T-5400	496
8T-5436	233
	235
	402
8T-5439	205
	208
	242
	248
	249
	257
	290
	291
	293
	295
	297
	298
	301
	302
8T-5460	204
	205
	207
	208
	391
	392
	393
8T-6380	232
8T-6381	295
	298
8T-6430	204
	205
	207
	208
	391
	392
8T-6462	430
8T-6466	265
	286
	427
	431
8T-6631	412
8T-6684	246
8T-6685	233
	235
	400
	402
8T-6703	67
	334
	336
8T-6869	179
	233
	235
	339
	341
	343
	400
	402
8T-6902	254
8T-6912	130
	179
	233
	235
	334
	336
	400
	402
	446
	448
8T-7329	448
8T-7338	351
	353
8T-7547	61
	63
	179
	432
	446
	448
	450
	483
	484
8T-7971	246
8T-8442	380
8T-8549	483
	484
8T-8729	90
	106
	108
	111
	131
	150
	162
	442
	446
	448
	459
	460
	472
	474
8T-8737	101
	102
	104
	105
	106
	107
	108
	109
	110
	111
	112
	113
	114
	116
	117
	118
	119
	141
	143
	184
	188
	442
	459
	460
8T-8799	102
8T-8899	334
	336
8T-8919	239
8T-9388	168
	170
	172
8T-9403	400
	402
8T-9515	345
	347
8T-9534	384
8T-9598	345
	347
8U-6850	355
8V-5718	316
	339
	341
8X-7893	450
	452
8Y-1816	431
8Y-6377	432
8Y-6388	435
8Y-7446	435
8Y-8081	108
9	
9C-9219	284
9D-3769	138

PART NUMBER INDEX

Part	Page
9D-7924	427
9F-2247	284
9F-5644	157
9G-4336	102
9H-6079	284
9H-6832	394
9L-3560	450
	452
9M-5590	254
9M-7958	56
9M-8406	141
	143
	188
9N-1749	384
9P-0719	138
9P-7121	90
9P-9388	456
9R-2613	268
9R-2672	268
9R-3203	492
9R-3204	492
9R-3205	492
9R-5383	74
9R-7240	90
9R-8165	423
9S-4182	328
9S-4191	74
	328
9S-7583	407
9S-8002	329
9S-8004	306
	347
	355
	359
	361
9S-8005	345
	408
9S-8006	347
9S-8008	347
9T-0546	254
9T-0548	254
9T-0553	254
9T-0554	254
9T-0556	254
9T-2005	344
9T-2098	254
9T-3928	345
	359
	361
9T-3930	331
9T-7628	254
9T-7643	254
9T-7644	254
9T-7646	254
9T-7647	254
9T-7648	254
9T-9529	349
	355
9U-6994	373
	375
9U-6996	373
	375
9U-8263	445
9W-0852	108
	412
9W-2105	196
9W-2106	197
9W-6582	33
9W-6584	33
9W-7388	461
9W-9920	33
9X-0141	102
9X-1046	138
	430
	431
	432
	493
9X-1275	154
9X-1278	154
9X-1279	154
9X-1280	154
9X-1282	154
9X-1283	154
9X-1284	154
9X-1285	154
9X-1343	114
9X-1386	131
9X-1813	159
	160
	162
9X-2036	154
9X-2038	263
	429
	432
9X-2039	265
9X-2040	432
9X-2042	435
	492
9X-2044	431
	432
	474
9X-2045	425
	426
	429
	433
	439
	445
	492
	496
9X-2046	445
	493
9X-2185	491
9X-2201	67
9X-2480	121
	123
	141
	143
	184
	188
	235
9X-2488	412
9X-2537	381
9X-2616	443
9X-3401	101
	102
	104
	105
	106
	107
	109
	110
	111
	112
	114
	116
	117
	118
	119
	120
	133
	141
	143
	145
	146
	182
	184
	186
	188
	420
	472
	474
9X-3402	107
	108
9X-3490	102
9X-3982	90
9X-4244	130
9X-6032	209
9X-6165	121
	123
	264
	286
	304
9X-6378	194
	200
9X-6405	345
	347
9X-6496	387
	389
9X-7378	446
	448
9X-7380	446
	448
9X-7381	446
	448
9X-7382	446
	448
9X-7383	446
	448
9X-7384	446
	448
9X-7421	151
	152
9X-7462	472
9X-7566	408
9X-8256	121
	123
	136
	138
	141
	143
	145
	146
	151
	152
	168
	170
	172
	184
	186
	188
	265
	286
	379
	431
	433
	439
	455
9X-8257	240
	265
	293
	295
	391
	392
	393
	396
	398
	407
	418
	420
	479
	499
9X-8477	191
9X-8600	90
9X-8699	59
	265
9Y-9381	71

0

Part	Page
012-0380	159
	160
030-0060	408
030-0061	408
030-4606	373
	375
032-8047	71
032-8487	351
	353
033-3168	450
	452
033-6028	161
033-6033	328
033-6039	345
	347
033-6041	194
	200
	306
	347
033-6043	355
033-7687	27
035-8014	71
061-9458	391
	392
	393
	394
067-2935	59
067-3045	446
067-6043	17
	20
067-6179	29
067-6823	17
068-6405	191
069-4707	200
077-3637	408
077-3895	258
	259
	260
	261
	262
077-3906	258
	259
	260
077-4192	258
	259
	260
	261
	262
077-5470	387
	389
077-6627	278
	279
077-6630	408
085-7356	146
	186
	351
	353
086-9035	373
	375
087-4772	331
089-7338	265
089-7436	432
089-7968	265
090-8865	290
	291

► **PRIMARY REFERENCE**

PART NUMBER INDEX

Part	Page
	301
	302
	387
	389
090-9554	432
090-9555	432
093-8828	227
	229
095-0674	227
	229
095-0690	349
095-0707	209
095-0892	243
095-0919	243
	344
095-0939	344
095-0941	366
095-0946	359
	361
095-1041	196
	227
	229
095-1671	328
	329
096-5866	343
096-5962	168
	170
	462
	463
	464
	465
	466
	467
096-6166	138
	172
	263
	429
097-7234	101
099-3649	65
	74
1	
100-3685	154
100-3751	29
100-4830	29
	71
100-4838	98
100-4841	20
100-7608	493
101-2867	435
	445
101-3055	445
101-3895	29
	84
101-7178	156
101-7401	427
101-7404	355
102-1957	28
102-2073	8
102-2075	8
102-2076	8
102-2078	8
102-8703	74
	93
	446
	448
102-8704	268
102-8705	316
	339
	341
102-8706	54
	274
	275
	339
	341
102-8801	101
	104
	107
	109
	110
	111
	112
	113
102-8802	90
	101
	102
	106
	108
	109
	111
	116
	117
	118
	119
	120
	131
	133
	150
	159
	160
	162
	412
	419
	420
	446
	448
102-8804	101
	110
	112
	118
	119
	182
	472
	474
102-8805	104
	107
	109
	118
	119
	141
	143
	184
	188
	459
	460
102-8806	101
	108
	112
	113
103-2543	136
103-5687	49
104-2091	435
106-5618	381
106-6340	314
106-8916	80
107-2348	71
107-3117	306
	345
	347
	349
107-4641	▶492
107-4643	5
	▶455
107-6032	163
108-2079	241
108-4311	432
108-5471	432
109-3203	345
	347
109-5008	495
110-4463	265
110-6393	446
	448
110-7887	472
	474
111-0204	432
111-0859	26
111-7052	240
111-7758	93
112-4550	145
	146
	186
112-4627	355
	359
	361
112-4628	331
	359
	361
112-4629	355
	359
	361
112-4630	359
	361
112-4657	366
112-4719	331
	355
112-5869	496
113-0693	168
	170
	172
113-1504	44
113-8129	57
113-8490	114
113-8491	114
113-8492	114
114-3140	412
114-3956	455
114-6658	496
115-6433	265
116-0118	136
	420
116-5710	123
	163
	174
	178
	179
	181
116-7856	436
117-1385	83
117-6512	168
	170
	172
117-7240	366
117-7241	366
117-7251	366
117-7252	366
117-7273	320
	359
117-8929	474
117-9081	160
118-2076	246
118-3534	136
	▶158
118-7250	▶481
	482
118-7259	411
119-2073	481
119-3662	101
	102
	117
	119
119-6105	126
	128
	129
	168
	170
	172
119-7119	254
120-4394	381
121-0319	196
121-0883	28
121-5327	163
122-2228	62
122-6867	117
	118
	119
	120
122-6905	400
	402
122-6908	334
122-8427	286
122-9068	366
122-9718	359
	361
123-1373	94
123-2899	49
123-3132	161
123-5798	345
	347
123-5799	345
	347
123-7574	355
123-7615	101
124-3536	36
124-3815	29
	34
	80
	84
124-4592	454
124-6569	265
124-8909	351
	353
124-9891	349
	380
124-9896	380
124-9898	349
	380
124-9899	349
	380
124-9900	380
124-9901	349
	380
124-9904	380
124-9905	380
124-9906	380
125-0380	454
125-4572	349
	380
125-7874	101
	103
	104
	105
	106
	107
	108
	109
	110
	111
	112
	113
	115
	116
	117

PART NUMBER INDEX

Part	Page
	118
	119
	133
	420
125-7875	101
	103
	106
	108
	109
	115
	116
	117
	118
	119
125-7876	101
	117
	118
	119
	120
125-8176	264
125-9134	366
126-0287	398
126-0288	396
126-1767	107
	112
	116
	118
	141
	143
	419
126-1768	108
126-1774	107
126-3212	8
126-7574	96
126-9339	396
	398
126-9340	396
	398
126-9587	366
127-5588	370
	371
127-8613	436
128-2034	377
128-4123	114
128-5016	114
128-6866	432
	493
128-8617	472
	474
129-7184	472
	474
129-8542	432
	493
129-8545	432
	493
	495
129-9124	396
	398
130-1433	316
130-5300	90
	124
	126
	141
	143
	146
	162
	165
	179
	184
	186
	188
	246
	472
130-9888	44
131-1488	102
131-1489	102
131-1492	102
131-1500	108
	116
131-3093	491
131-3540	233
	235
	400
	402
	443
131-6468	237
	238
132-5789	56
	74
	121
	123
	128
	141
	146
	151
	165
	168
	170
	172
	174
	176
	179
	184
	186
	188
	246
	420
	472
132-7551	141
	143
	146
133-1011	29
133-6934	74
133-8929	365
133-9469	71
134-2540	102
	104
	106
	110
	111
	112
	117
	118
	119
134-3987	176
134-4126	96
135-0611	459
135-2652	345
135-5009	93
135-5049	265
136-1953	412
136-3188	414
136-3190	414
136-4183	318
136-4192	432
	493
136-8064	209
136-8068	209
136-8641	209
137-4581	▶363
	365
137-4584	363
137-4602	345
	347
137-4605	345
	347
137-4606	345
	347
137-4607	345
	347
138-4572	334
	336
139-7751	345
	347
139-7753	345
	347
139-7754	345
	347
139-7755	345
	347
139-7756	345
	347
139-7757	347
139-7761	380
140-1321	394
140-2370	208
140-5846	207
141-0224	345
141-0235	365
141-0236	365
141-0237	365
141-0238	365
141-0239	365
141-0240	365
141-0241	365
141-0242	365
141-0244	365
141-0305	345
	347
141-2074	391
141-2760	114
141-8006	347
141-8589	71
141-9864	270
	271
	272
	273
	▶284
141-9865	284
141-9866	270
	271
	272
	273
142-0038	343
142-4443	446
142-8937	373
	375
142-9439	368
	369
143-4653	278
	279
143-7356	284
143-9644	235
144-0195	496
144-0367	67
144-8344	124
	126
145-3361	391
145-3362	391
145-3812	320
	359
145-3813	320
	359
145-3846	370
	371
145-7028	▶150
	377
145-8293	314
146-3148	387
	389
146-6433	496
146-6747	526
	528
	530
	533
146-7292	407
146-7512	396
	398
146-9502	396
	398
146-9503	396
146-9504	398
147-3719	286
148-3452	396
148-8322	423
148-8325	307
	309
	311
	313
	351
	353
	379
148-8327	246
148-8335	373
	375
	377
148-8337	314
148-8340	351
	353
	427
148-8341	239
148-8342	427
148-8351	351
	353
148-8362	246
148-8364	423
148-8368	54
	239
	307
	309
	311
	379
148-8370	351
	353
148-8390	318
	377
	404
	423
148-8393	239
148-8423	307
	309
148-8442	327
148-8444	314
148-8447	318
148-8448	311
	379
149-6371	446
	448
150-2511	396
	398
150-3033	240
	307
	309
	311
	313
150-3050	377
150-4047	351
	353
150-5968	307
	309
	311
151-3084	209
151-3085	209
151-4977	174
	176

► **PRIMARY REFERENCE**

PART NUMBER INDEX

Part	Page
151-7490	209
151-7516	209
	243
151-7517	209
	243
151-7518	209
	243
151-9275	145
	146
	186
152-1261	392
152-6144	194
	196
	200
153-5043	150
153-6232	377
153-9910	351
	353
154-4886	54
154-4887	204
	268
154-4890	93
154-8079	430
	431
154-9025	41
154-9496	114
155-0576	84
155-2255	101
	104
	105
	107
	109
	110
	112
	113
	117
155-2256	105
	106
	112
155-2257	110
155-2265	101
	112
	113
155-2270	101
	102
	106
	108
	109
	111
	116
	119
	120
	133
	420
155-2271	101
	102
	105
	106
	108
	116
	118
	119
	182
155-2274	101
	104
	107
	109
	114
	117
155-3503	377
155-3504	405
155-4098	472
	474
155-4850	391
	392
	393
155-7321	246
156-0283	496
156-3617	74
156-5306	94
156-9791	240
157-0670	41
157-0949	196
157-8674	151
158-6706	102
158-7864	524
	525
159-1503	400
	402
159-4946	432
	493
159-5255	41
159-8049	93
159-8050	93
	94
159-9322	107
159-9405	391
	392
	393
	▶408
159-9854	369
160-1757	381
160-2246	281
160-2248	281
160-3518	442
160-5656	254
160-7690	107
160-8499	320
	344
	359
161-6154	320
	331
	359
161-6984	444
161-6987	444
161-9294	444
161-9820	92
162-1565	41
162-2480	59
162-5394	284
162-5395	284
162-6556	444
163-1201	440
	441
	476
164-5561	246
	351
	353
164-5567	318
	327
	339
	341
	351
	353
164-5590	327
164-5608	339
	341
164-6874	146
	186
	351
	353
164-7556	130
164-8473	435
165-2273	41
	90
165-4929	394
	396
	398
165-6365	146
	186
166-1222	443
166-5229	110
	118
	119
167-3692	104
	109
	116
167-3693	114
167-6805	359
	361
168-2203	349
168-3378	364
168-3379	364
168-3382	364
168-3384	364
168-3385	364
168-7536	205
169-0705	105
	106
	111
	118
	119
169-1637	196
170-4057	416
170-4825	197
171-6723	334
	336
172-1241	536
172-3259	408
172-8037	442
172-8039	442
172-8253	423
172-8591	431
	432
	435
	445
174-0503	102
	104
	106
	110
	111
	112
	113
	117
	118
	119
174-8131	427
175-2308	158
	▶159
175-2309	158
	▶160
175-4291	130
175-4292	130
176-3141	24
176-3900	▶409
	410
176-5311	290
	291
	299
	300
	301
	302
176-9285	243
176-9287	243
176-9288	243
176-9289	243
176-9299	110
	112
177-1061	343
177-1809	243
177-2064	264
177-2215	56
	74
	93
	152
	179
	182
	233
	235
	237
	238
	307
	309
	311
	313
	316
	334
	336
	338
	400
	402
	446
	448
	450
	452
177-3405	286
177-4658	408
177-4877	432
	493
177-7747	331
178-3336	446
	448
178-3620	334
	336
	338
	370
	371
	446
	448
178-7539	138
178-8505	141
	143
	184
	188
179-9392	138
180-1555	258
	259
180-2391	355
180-7333	407
180-7486	436
180-7487	436
180-9340	102
	104
	105
	108
	119
	182
	420
180-9900	138
183-1025	93
183-3244	423
183-3603	423
183-3873	370
	371
183-6121	59
183-7528	412
185-0275	349
	▶364
185-0278	349
185-0280	349
185-0287	364
185-0289	364
185-0292	364
185-0884	17
	20
185-1861	101

PART NUMBER INDEX

Part	Page
	102
	105
	106
185-1911	11
185-3874	458
185-8756	284
186-0898	456
186-1709	▶456
	468
	469
	470
	471
186-3735	159
	160
186-6190	▶410
	446
	448
187-0555	34
187-3547	330
187-8001	359
	361
187-8002	331
187-9008	330
189-1707	412
189-3158	101
	102
	106
	111
	420
189-3224	307
	309
190-5386	526
	528
	530
	533
190-7614	112
190-7615	110
190-7632	359
	361
	▶366
191-2287	209
191-3539	345
	347
	359
191-3540	359
191-4522	366
191-8920	239
	240
191-8921	414
192-1172	381
192-1173	381
192-2112	108
192-2839	366
192-3292	345
	347
192-4576	331
193-2685	430
	472
193-5164	443
193-8340	290
	291
	299
	300
	301
	302
194-1983	366
194-2903	41
194-4254	110
194-5171	414
	496
194-5226	101
	104
	106
	107
	109
	110
	111
	112
	113
	114
	116
	117
	118
	119
	120
	133
194-5227	101
	104
	106
	107
	109
	110
	111
	112
	113
	114
	116
	117
	118
	119
	120
	133
195-0936	416
195-0937	416
	480
195-0938	416
195-1411	278
	279
196-9445	382
197-4938	359
	361
197-7565	109
197-8440	423
197-9155	194
	196
	200
198-4766	448
198-7811	194
	200
	227
	229
198-7815	196
198-9169	41
199-0653	244
199-0656	227
	229
199-0669	196
	244
199-0670	196
	306
199-0673	196
	202
199-0675	227
	229
199-0678	197
	227
	229
199-0680	227
	229
199-0684	227
	229
199-0685	227
	229
199-0686	227
	229
199-0687	227
	229
199-0688	227
	229
199-0689	227
	229
199-0690	227
	229
199-0691	227
	229
199-0692	227
	229
199-0693	227
	229
199-0694	202
199-0695	197
	227
	229
199-0718	226
199-0760	244
199-0767	194
	200
199-0778	194
	200
199-0786	194
199-0787	194
199-0808	202
199-0858	229
199-2136	355
199-3108	28
199-3109	28
199-9252	84
199-9267	48
	84
199-9751	22
2	
200-5728	442
200-6345	74
	141
	143
	151
	152
	179
	184
	188
	237
	238
	307
	309
	311
	316
	370
	371
	450
201-1919	242
	257
202-0313	114
202-0314	114
202-0949	265
202-6535	359
	361
	382
	384
202-6614	130
203-4692	190
	191
	192
	▶243
203-4741	260
	261
203-8977	114
203-8999	102
	114
203-9000	102
	114
203-9001	102
	114
203-9007	114
	138
204-1297	101
	105
	106
204-2281	141
	143
	146
	151
	152
	179
	184
	186
	188
	237
	238
	307
	309
	311
	316
	450
204-4390	▶482
204-4990	339
	341
204-4991	339
204-6204	▶148
	240
205-0191	209
205-0192	209
205-4933	511
	519
	522
206-0451	316
206-0452	93
	316
206-0500	264
206-1511	235
206-5823	459
206-6415	343
206-9295	328
207-2055	377
207-2746	54
207-2817	209
207-4255	196
	200
207-4257	244
207-4499	233
	235
	343
207-5962	244
209-3565	381
	382
209-6063	349
209-7457	196
	227
	229
209-7458	196
209-7481	202
209-7482	202
209-9219	18
210-0932	196
210-3098	194
	200
210-3099	194
	200
210-3100	194
	200
210-3328	194
	200
211-0052	138

PART NUMBER INDEX

Part	Page
	165
	174
	176
211-2092	54
	▶161
211-2093	161
211-2668	334
	336
211-3148	196
212-5713	194
	200
213-4222	244
213-9100	162
213-9684	89
214-1737	526
	528
	530
	533
214-2319	191
214-6278	196
214-7404	105
	106
214-7536	59
	63
214-7568	74
	318
	327
	328
	339
	341
	347
	351
	353
214-7636	▶414
	496
215-8010	382
215-8011	382
	384
215-8014	382
215-9509	80
215-9513	74
215-9515	74
216-0259	258
	259
216-4551	382
	384
216-4552	382
	384
216-4553	382
	384
216-4554	382
	384
216-4555	382
	384
216-8634	29
216-9633	48
216-9752	80
	84
217-0099	84
217-3875	355
217-8185	90
217-9039	166
218-1755	74
218-2207	286
218-8374	254
218-8375	254
219-0305	508
	511
	517
	519
	522
219-2305	393
219-2306	393
219-2307	393
219-6487	▶130
	132
	133
	134
	476
219-8834	229
219-8835	229
220-2064	▶459
	496
220-4050	458
220-8262	286
221-0069	355
221-8045	505
	508
	514
	517
	521
222-2785	408
222-7890	472
	474
222-7944	505
	508
	511
	514
	517
	519
223-4295	196
224-2263	66
224-8946	505
	508
	511
	514
	517
	519
225-0312	505
	508
	511
	514
	517
	519
225-3854	105
	106
225-3861	114
225-4257	505
	508
	511
	514
	517
	519
225-5439	36
225-7738	57
225-7944	52
225-8019	57
225-8524	84
225-8839	16
225-8858	17
	20
225-9202	341
226-1240	505
	508
	511
	514
	517
	519
226-1274	505
	508
	511
	514
	517
	519
226-4346	226
226-4352	194
	200
226-4353	194
	200
	▶226
226-4364	194
	200
226-4365	194
	200
226-4366	194
	200
226-4367	194
	200
226-4370	194
	200
226-4373	196
	227
	229
226-4374	227
	229
226-4377	194
	200
226-4378	244
226-4380	202
226-4381	202
226-4383	306
226-4384	306
226-4385	227
226-4386	227
226-4387	227
226-4388	306
226-4389	306
226-4390	194
	▶227
226-4391	306
226-4392	227
	▶306
226-4394	▶202
	227
	229
226-4397	202
226-4400	200
	▶229
226-8766	29
226-8767	29
227-0172	204
	207
	208
	290
	291
	299
	300
	301
	302
	391
	392
227-7392	414
228-4982	106
	111
228-6089	163
	472
	474
228-7089	74
228-7100	83
228-7102	74
229-5051	194
	200
	▶244
229-5055	197
	227
	229
229-5062	306
229-5092	226
229-5099	227
	229
230-0913	161
230-1341	505
	508
	514
	517
230-4011	102
230-4120	204
230-8914	196
230-8916	196
230-8919	196
230-8920	196
230-8921	196
230-8922	196
230-8923	196
230-8924	196
230-8925	196
230-8926	196
230-8927	196
230-8930	196
230-8932	196
230-8933	196
230-8934	196
230-8935	196
230-8936	196
230-8937	196
230-8939	197
230-8940	197
230-8942	197
230-8943	197
230-8945	197
230-8946	197
230-8948	197
230-8949	197
230-8950	197
230-8951	197
230-8953	197
230-8954	197
230-8955	197
230-8956	197
230-8957	197
230-8958	197
230-8959	197
230-8960	197
230-8961	197
230-8964	197
230-8966	197
230-8967	197
230-8968	196
230-8969	196
230-8970	196
230-8971	196
230-8972	196
230-8989	84
231-0666	196
231-0670	202
231-0671	202
231-0689	202
231-0719	226
231-0720	244
231-0731	196
231-0732	196
231-0733	196
231-0734	196
231-8141	108
232-0231	446
	448
232-1115	80
232-1322	20
	22
232-1792	472
	474
232-3149	84
232-3666	29
232-3751	52
232-3861	48
232-7596	17

PART NUMBER INDEX

Part	Page
	20
232-7597	17
	20
232-7599	17
	20
233-5621	331
	355
233-9808	382
	384
234-0091	437
234-2637	▶154
	156
234-2872	365
234-3063	80
235-1061	8
235-1063	8
235-4123	101
	105
	106
235-4546	455
235-5027	205
	393
236-2295	411
236-4610	411
237-0166	112
237-0227	117
237-5121	209
238-0120	83
238-5291	194
238-5292	194
238-5293	194
	200
238-5294	194
	200
238-8028	84
	166
238-8288	69
238-8292	71
239-6986	526
	528
	530
	533
240-2172	496
240-4607	▶436
	468
	470
	471
240-7193	102
241-0624	316
241-4007	345
241-4291	84
241-6185	373
	375
241-6228	240
242-4310	450
	452
242-5441	154
242-5442	154
242-5443	154
242-5444	154
242-5445	154
243-0716	209
243-4362	243
244-3712	74
245-1042	102
245-1044	102
245-1045	102
245-1048	102
245-7434	101
	105
	106
245-8842	448
246-2641	264
	370
	371
	439
247-6019	83
248-1066	83
248-2841	114
248-5358	112
	113
248-6772	491
249-7387	284
249-9042	93
249-9066	93
250-1476	373
	375
251-1191	163
251-1194	163
252-1862	432
252-1863	432
252-8286	432
252-9628	168
	170
	172
253-8110	106
	111
	114
253-8111	114
253-8112	118
	119
253-9770	59
254-5683	496
254-7033	233
	235
254-9108	472
	474
256-6453	179
256-7902	66
256-7903	66
256-7904	66
257-3575	254
257-5030	412
257-6170	432
257-6205	432
257-6206	432
258-0134	345
	347
258-0139	349
258-0144	355
258-4095	▶487
	490
258-4608	233
	235
259-1286	163
260-3718	84
260-3719	84
260-3939	84
260-5541	166
261-4907	472
	474
262-0942	▶422
	468
	470
	471
262-1421	▶96
	121
	123
263-1490	472
	474
263-3823	460
263-6699	462
	463
	464
	465
	466
	467
264-3518	74
264-3617	136
264-7029	102
264-7030	117
264-7032	105
	106
265-4123	114
265-5644	373
	375
265-8125	84
267-5211	136
267-5213	136
267-5243	411
267-7207	102
267-9572	102
268-1522	246
268-4028	260
	261
268-4033	▶241
268-4034	241
	▶258
268-4035	241
	▶259
268-4040	▶257
268-4041	257
	▶260
268-4044	257
	▶261
268-6677	84
268-6678	84
268-8769	491
269-2163	457
269-2164	457
269-2890	432
269-6650	74
269-8325	46
270-9406	293
	295
271-7312	411
271-9385	77
272-5007	307
	309
	311
272-5409	54
273-1177	136
273-3143	102
274-1639	79
	85
274-1930	38
274-1931	38
274-1934	38
274-1935	38
274-3779	112
274-4284	511
	519
274-9183	93
274-9872	136
274-9877	136
275-0553	136
275-0601	105
275-2428	98
275-6706	412
275-7803	488
	489
275-9883	34
275-9884	34
275-9891	34
276-0142	34
276-0753	263
	429
276-2604	526
	528
	530
	533
276-2609	▶256
	379
276-3188	349
276-3884	496
276-3905	77
276-5600	20
276-5601	20
276-5602	17
	20
276-5603	20
276-5604	17
	20
276-5605	20
276-7387	16
276-7388	16
276-7389	16
276-7390	16
276-7391	16
276-7394	16
276-7475	36
276-7476	36
276-7478	36
276-7479	36
276-7481	36
276-7483	36
276-8115	▶22
	24
276-8116	22
276-8117	22
276-8123	22
276-8132	22
276-8133	22
276-8134	24
276-8398	▶83
	84
276-9200	39
276-9201	39
276-9206	39
276-9207	39
276-9230	39
277-0118	28
277-1873	74
	141
	143
	146
	179
277-1974	44
277-1975	44
277-2500	50
277-2537	52
277-2538	52
277-2912	6
	▶46
277-2923	57
277-2925	57
277-2939	6
	▶57
277-3012	29
277-3013	29
277-4223	8
277-4262	6
	▶47
277-4302	69
277-4374	69
277-4408	98
277-4409	98
277-4410	6
	▶98
277-4490	32
277-4694	6
	▶48
277-4714	166
277-4837	63
277-5007	6
	▶37

▶ **PRIMARY REFERENCE**

PART NUMBER INDEX

Part	Page
277-5031	14
277-5064	14
277-5065	14
277-5067	14
277-5307	39
277-6165	80
277-6631	382
277-7116	412
	►491
277-7766	412
277-7767	412
277-7769	491
277-7770	491
277-7787	412
277-7789	491
277-7790	412
277-7792	412
277-7793	412
277-8628	59
277-8724	12
277-9463	71
277-9602	71
277-9603	71
277-9938	71
277-9940	71
278-0015	71
278-0016	71
278-0017	71
278-0310	71
278-0311	71
278-0314	80
278-0315	80
278-4138	80
	85
278-5111	39
278-5112	39
278-5113	39
278-5125	13
278-5128	69
278-5168	84
278-5170	84
278-5180	84
278-5201	84
278-5202	84
278-5203	84
278-5209	85
	166
278-5210	85
	166
278-5225	84
278-5226	84
278-5227	84
278-5228	84
278-5272	84
278-5273	84
278-5307	84
278-5308	84
278-5309	84
279-0850	491
279-6497	526
	528
	530
	533
279-8711	6
	►18
279-8762	6
	►16
279-8780	6
	►36
279-8821	6
	►24
279-8825	6
	►42
279-8837	6
	►13
279-9361	71
279-9651	31
279-9652	31
279-9653	6
	►31
280-1394	6
	►77
280-1430	44
280-1889	84
280-1890	84
280-1891	84
280-1911	►39
	42
280-1912	39
280-1913	39
280-1914	39
280-2424	70
280-3991	265
	286
280-3992	265
280-7785	412
281-6331	28
281-6332	6
	►28
281-7039	50
281-7040	50
281-8255	38
281-8256	38
281-8257	38
281-8258	38
281-8280	6
	►38
281-8744	49
281-8746	49
281-8747	49
281-8748	6
	►49
281-8811	105
	106
281-8964	6
	►29
281-9106	80
281-9115	80
282-2838	6
282-3233	84
282-5340	436
283-4558	6
	►52
283-4559	52
283-4691	6
	►69
283-8106	106
	118
283-8301	32
283-8302	32
284-1026	26
284-1027	10
284-8532	121
	123
285-1975	14
285-3197	71
285-3414	6
	►71
285-7415	411
285-8862	67
285-9066	233
	235
286-0402	►190
	193
	245
286-0403	►191
	245
286-0873	190
	►194
286-0874	191
	►196
286-3017	168
	170
	172
286-3683	84
286-7842	6
	►8
286-7844	6
	►32
286-7851	71
286-8817	34
286-9158	►321
	326
286-9551	92
287-6838	84
287-6839	84
287-6849	80
287-6853	80
287-7341	351
	353
287-7637	79
	85
287-8597	28
289-8336	26
289-9430	34
290-2077	93
290-2789	422
290-3910	84
290-3911	84
290-3912	84
290-3913	84
290-3914	84
290-3915	84
290-3916	84
290-5664	138
	474
290-5735	80
290-7497	176
291-2512	27
291-2526	6
	►27
291-4374	265
291-6517	29
292-0848	85
292-0886	18
292-3172	246
292-3780	►79
	85
292-5040	423
	►454
292-5041	454
292-5614	432
292-7760	156
292-7884	6
	►156
292-8508	6
	►166
293-0249	83
293-6119	114
293-8068	80
293-8069	80
293-9901	85
294-3155	62
	64
295-0912	69
295-1920	462
	463
	464
	465
	466
	467
295-1921	462
	463
	464
	465
	466
	467
295-4670	80
295-6661	22
298-4550	14
299-5511	22
299-6082	93
299-6986	432
	►444
	493

3

Part	Page
300-2940	85
300-6520	71
301-0091	93
301-0589	121
	123
301-3004	505
	508
	511
	514
	517
	519
301-3005	505
	508
	511
	514
	517
	519
301-3424	382
302-4390	511
	519
	522
302-5980	254
303-1256	136
303-2116	71
303-2926	6
	►84
303-5853	94
304-1761	232
304-1762	232
304-1763	232
305-2527	44
305-6157	80
305-9192	496
306-0282	114
306-0348	114
306-0350	114
306-0351	114
306-2337	44
306-5432	80
306-6845	18
	►20
306-8127	90
307-0047	505
	508
	511
	514
	517
	519
307-1843	6
	►44
308-5214	334
	336
308-7298	78
308-7576	78
308-9075	6
	►80

PART NUMBER INDEX

Part	Page
308-9076	80
308-9077	80
308-9078	80
308-9079	80
309-6664	14
309-6678	22
310-5912	78
311-4859	105
	106
311-6112	93
	94
311-8367	343
	446
	448
312-6145	179
313-1663	78
313-6578	6
	▶34
313-6579	34
313-6580	34
313-7040	347
314-2404	427
314-3025	430
	431
314-4018	419
315-1260	192
	▶200
315-3120	▶192
	193
315-9810	71
316-5999	382
	384
317-1204	107
317-2717	14
317-3064	14
317-3065	14
317-3348	412
317-3775	44
318-8064	74
	▶78
318-8737	▶107
	121
	123
319-6491	▶149
	239
319-8426	13
320-1291	▶419
	420
320-2377	359
	▶381
321-5984	381
322-5217	265
323-5867	90
324-9213	262
324-9214	242
	▶262
324-9216	4
	5
	▶242
326-5063	29
326-7401	▶50
	52
327-0282	446
	448
327-0283	446
	448
327-0325	56
	93
	121
	123
	124
	126
	128
	129
	141
	143
	146
	163
	168
	170
	172
	174
	176
	178
	179
	181
	184
	186
	188
	327
	370
	371
	462
	463
	464
	465
	466
	467
328-3316	412
328-4984	432
331-4400	34
331-8917	71
332-8576	74
333-9693	78
333-9694	78
334-1658	145
	146
	186
335-8217	349
335-8219	349
335-8220	349
335-8226	349
335-8229	349
335-8230	349
336-3545	121
	123
	▶140
336-6672	286
336-7699	496
337-9102	382
338-5535	168
	170
	172
339-9637	22
340-2393	92
340-7160	138
342-2382	461
343-4268	262
344-0524	463
	465
	467
344-1401	392
344-5673	414
345-1237	63
345-1252	331
345-6925	6
	▶14
345-7767	265
346-4709	42
346-5575	327
	▶328
347-1132	13
347-3248	▶254
	423
347-8645	74
347-8646	74
347-8647	74
347-9575	1
	▶270
347-9576	1
	▶271
347-9579	1
	▶272
347-9580	2
	▶273
347-9601	1
	2
	▶89
347-9690	▶211
348-1047	328
348-1861	328
	329
348-4918	▶322
	323
348-5709	457
348-9328	16
349-1178	146
	186
349-3261	92
349-5835	412
349-6097	328
349-6208	7
	▶54
349-6211	328
	▶329
349-7059	90
350-7082	333
	▶427
350-7735	90
351-1768	355
351-1796	67
351-2090	34
351-4685	34
351-7975	389
351-8597	246
	▶355
351-9309	93
	94
351-9918	130
352-1755	329
352-3675	318
	▶319
352-3970	472
352-4703	382
352-7739	▶132
	468
	469
	470
	471
352-7741	▶163
	415
352-7747	▶440
	468
	470
	471
352-7748	▶461
	468
	469
	470
353-2255	▶327
	333
353-2830	▶317
	333
353-5341	485
	486
	▶488
353-5342	▶489
353-5924	240
	▶345
353-5925	239
	▶347
353-5936	427
354-0132	479
	480
354-0258	93
354-0260	93
354-0261	93
354-0263	93
354-0264	136
354-0269	136
354-0270	96
	▶182
354-0319	265
354-4754	57
354-4762	▶239
	332
354-5409	▶283
	468
	469
	470
354-5413	4
	▶457
354-6353	432
354-6357	432
354-6358	493
354-6394	495
354-6410	442
354-8322	34
355-0598	121
	123
355-0624	▶121
355-1018	38
355-2451	1
	2
	▶305
355-2658	4
	5
	▶304
355-2659	▶264
355-2660	▶282
355-2895	▶314
	333
355-3038	▶123
355-3056	▶133
355-3059	▶135
355-3180	265
	▶286
355-3181	286
	304
355-3183	286
355-3184	286
355-3186	286
355-3190	286
355-3204	89
355-3205	89
355-4635	245
	▶391
355-4636	2
	▶245
355-4637	3
	▶245
355-5105	96
355-5140	▶441
	468
	469
	470
355-6031	332
	▶404
355-6035	▶240
	332
355-8452	272
	▶274
355-8941	265
	274
	479
355-8954	245

▶ **PRIMARY REFERENCE**

PART NUMBER INDEX

Part	Page
	▶394
355-8955	394
	▶395
355-8956	395
	▶396
355-8957	394
	▶397
355-8958	397
	▶398
355-8959	396
	398
	▶407
355-9380	▶145
355-9764	96
356-0847	165
356-1226	3
	▶483
356-1227	4
	▶484
356-1417	▶204
	245
356-1421	245
	▶392
356-1700	279
356-1703	268
356-1719	268
356-1723	268
356-1724	268
356-1735	278
356-1741	286
356-1744	265
356-1745	265
356-1806	245
	▶393
356-1812	▶205
	245
356-1872	▶207
	245
356-2015	314
	▶323
356-2065	▶231
	245
356-2066	▶232
	245
356-4443	283
356-7646	427
357-0324	246
357-4843	305
357-4866	385
	386
	▶387
357-4867	389
357-6252	221
357-7399	90
357-7420	▶349
	404
	405
357-8362	435
357-8407	472
	474
358-0776	464
	465
358-3208	429
358-3876	286
358-3893	273
	▶275
358-8236	377
358-9018	168
	170
358-9020	121
	123
358-9026	59
358-9474	204
	205
	207
	208
	▶209
358-9497	377
359-1406	▶211
359-1407	▶212
359-1780	233
	235
	400
	402
359-2018	278
	279
359-3632	133
359-4530	445
359-4533	163
359-5211	233
	400
359-6646	204
	207
359-7567	96
	183
	▶330
	406
	498
359-7587	▶119
	184
	186
	188
359-7628	▶460
	496
359-9431	29
359-9944	496
360-0497	▶211
360-0498	4
	5
	▶212
360-0499	▶213
360-0500	▶213
360-0501	▶213
360-0502	▶213
360-0503	▶214
360-0504	▶225
360-0508	▶211
360-0522	212
	▶215
360-0528	▶216
	225
360-3679	246
360-5242	67
360-5611	75
360-6952	339
360-7425	339
360-7426	339
	341
360-9724	316
360-9728	316
360-9870	215
	216
	▶248
	250
	251
361-2564	427
361-3470	215
	217
	223
361-3471	219
361-3472	220
361-3473	216
	218
	224
361-3528	66
361-3935	361
	▶382
361-3937	359
	361
	382
361-3986	270
	▶276
361-3987	271
	▶277
361-4789	▶208
	245
361-4967	205
	208
361-6907	289
361-6908	289
361-7024	289
361-7093	289
361-8016	212
	213
	▶217
361-8017	213
	214
	▶218
361-8020	211
	▶219
361-8021	211
	▶220
361-8022	211
	▶221
361-8023	211
	▶222
361-9529	385
	▶389
361-9875	98
362-0148	387
362-0149	387
362-0150	387
362-0479	341
362-0480	341
362-0993	332
	▶405
362-1502	222
362-2233	67
362-3054	235
362-3189	141
	143
	146
	184
	186
	188
362-3190	138
362-3218	392
362-3588	435
362-4294	145
	146
	186
362-4296	▶151
	399
362-4297	▶119
	151
362-4298	▶117
	151
362-4303	179
362-4311	170
362-4312	168
362-4940	4
	5
	▶524
362-5415	59
362-5416	59
362-5417	59
362-6095	56
362-6458	90
362-6754	446
	448
362-7689	▶289
	468
	469
362-9617	446
	448
363-0311	446
	448
363-0320	446
	448
363-0373	446
	448
363-0591	67
363-3445	373
	375
363-4162	231
	232
363-5911	427
363-6034	265
363-6423	427
363-6756	472
	474
364-0679	59
364-0868	445
364-1428	317
364-1946	291
	302
364-1947	291
	302
364-1950	387
364-1956	387
	389
364-1995	90
364-2968	165
364-2985	500
364-2986	500
364-2987	501
364-2988	501
364-2993	502
364-2994	502
364-2995	503
364-2996	503
364-3005	500
	501
	502
	503
364-3006	500
	501
	502
	503
364-3008	517
	519
	522
364-3009	508
	511
364-7603	▶500
	526
364-7604	▶501
	528
364-7607	▶502
	530
364-7608	▶503
	533
364-7712	▶280
	468
364-8297	▶498
365-0638	280
	281
365-0639	280
	281
	339
	341
365-0640	280
	281
365-0974	59
365-0976	59
365-0977	59

PART NUMBER INDEX

Part	Page
365-2145	172
365-2148	▶152
	399
365-2496	291
	302
365-5823	71
366-4695	246
366-4919	179
366-7854	240
366-9145	7
	▶92
367-0756	429
367-0760	431
367-0844	505
	508
	511
	514
	517
	519
367-1817	49
367-1981	526
	528
	530
	533
367-2020	431
367-2481	416
367-3340	71
367-3649	34
367-3669	▶10
	468
	469
	470
367-4246	152
367-9470	472
	474
368-0666	56
368-0668	61
	▶62
368-0669	61
	▶64
368-0805	70
368-2882	7
	▶67
368-2887	59
368-2895	59
368-2899	59
368-3063	431
368-3150	98
368-4778	474
368-8559	71
369-0473	98
369-4522	264
369-4721	321
369-4728	345
	347
	▶380
369-4729	347
369-9336	168
	170
	172
371-1920	209
371-1921	209
371-1922	209
371-1928	209
371-2170	209
371-2171	209
371-2172	209
371-2173	209
371-2174	209
371-4356	493
371-4357	493
372-4427	432
	493
372-4428	493
372-6013	427
372-6359	223
	224
	▶249
	252
	253
372-7549	432
372-8209	391
	393
372-8302	233
	235
	400
	402
373-2000	▶320
	361
373-2010	349
	380
373-2034	493
373-2732	276
	277
373-2735	274
	275
373-2747	276
	277
373-3005	445
373-3006	445
373-3013	283
373-3043	416
373-3151	416
	▶493
373-3153	416
	▶495
373-3157	495
373-3158	495
373-3159	495
373-3160	495
373-3161	495
373-3162	416
	▶432
373-3163	432
	493
373-3164	432
373-3166	432
373-3167	432
373-3169	432
373-3175	▶415
	468
	470
	471
373-3178	415
	▶435
373-3179	415
	▶442
373-3180	415
	▶496
373-3211	415
	▶416
373-3388	274
	275
373-3735	▶458
	468
	470
	471
373-4806	165
373-4807	165
373-4808	93
373-4820	97
373-5820	297
	298
373-6323	231
	232
373-6330	231
	232
373-6333	231
	232
373-6411	402
373-8014	47
374-0640	445
374-0641	445
374-0675	415
	▶445
374-6716	416
374-8040	462
	464
	466
374-8372	118
	119
374-9675	385
	▶499
374-9713	▶2
374-9714	▶2
374-9715	▶2
374-9716	▶3
374-9723	▶1
	2
374-9724	▶1
	2
374-9725	▶1
	2
374-9726	▶2
	3
374-9732	2
	3
	▶96
374-9742	2
	▶332
374-9743	2
	▶332
374-9746	469
	▶505
374-9747	469
	▶508
374-9748	470
	▶511
374-9749	470
	▶514
374-9752	2
	3
	▶333
374-9755	▶525
374-9756	3
	▶332
374-9758	90
374-9763	2
	▶245
374-9764	2
	▶245
374-9767	4
	5
	▶193
374-9769	▶193
374-9773	1
	▶526
374-9774	1
	▶528
374-9775	1
	▶530
374-9776	2
	▶533
374-9780	1
	▶278
374-9781	▶268
	278
374-9790	1
	2
	▶279
374-9791	279
374-9802	89
	▶90
374-9810	1
	2
	▶265
374-9811	265
374-9812	265
374-9813	265
374-9815	90
374-9817	286
374-9818	265
374-9819	265
374-9820	1
	▶370
374-9821	1
	2
	▶371
374-9822	370
	▶373
374-9823	371
	▶375
374-9824	373
374-9825	375
374-9830	373
	375
374-9835	265
374-9836	265
374-9837	265
374-9839	▶536
374-9842	▶468
374-9843	5
	▶468
374-9844	468
	▶517
374-9845	468
	▶519
375-0108	97
375-1604	▶99
375-1605	99
	▶168
375-1606	99
	▶464
375-1607	▶99
375-1608	99
	▶465
375-1609	▶99
375-1610	99
	▶170
375-1611	99
	▶466
375-1612	▶99
375-1613	99
	▶467
375-2676	495
375-2677	495
375-3663	237
375-4041	238
375-5494	341
375-9272	28
376-0651	▶437
	468
	469
	470
376-0652	437
377-0399	22
377-0400	22
377-0676	▶246
	332
377-2157	▶469
377-2159	▶469
377-2163	▶174
	470
377-2939	▶212
377-2940	▶212
377-2945	212

▶ **PRIMARY REFERENCE**

PART NUMBER INDEX

Part	Page
	▶223
377-2946	212
	▶224
377-4596	▶233
	332
377-4597	▶235
	332
377-4601	332
	▶400
377-4602	332
	▶402
377-4608	332
	▶379
377-4610	▶237
	332
377-4611	▶238
	332
377-5147	7
	▶59
377-5149	65
377-5153	▶11
	468
	470
377-5156	7
	▶65
377-5159	7
	▶56
377-5160	4
	5
	▶6
377-5161	6
	▶7
377-5162	7
	▶41
377-5164	7
	▶70
377-5168	7
	▶74
377-5172	63
377-5173	7
	▶33
377-5177	67
377-9082	10
377-9087	11
	12
377-9353	▶263
	468
	469
378-4306	478
	479
378-4731	▶6
378-6901	▶131
	135
378-7694	▶316
	333
378-7695	333
	▶343
378-7699	333
	▶377
378-7704	▶309
	332
378-7705	▶311
	332
378-8004	458
378-8006	458
378-8424	432
378-8881	▶339
	385
378-8882	▶341
	385
	386
378-8883	▶334
	385
378-8982	▶385
378-8983	▶385
378-8985	4
	5
	▶385
378-9026	▶336
	385
378-9120	432
378-9277	345
	▶365
378-9640	92
379-0028	385
	386
	▶423
379-6581	193
	▶313
379-6583	193
	▶307
379-6602	▶351
	399
379-6606	▶353
	399
379-6613	4
	5
	▶399
379-6617	▶399
379-6618	▶399
379-8245	3
	4
	▶138
379-8247	▶93
	96
379-8248	96
	▶179
379-8250	3
	4
	▶472
379-8251	3
	4
	▶474
379-8260	5
	▶96
379-8261	▶183
379-8262	▶183
379-8264	183
	▶184
379-8265	96
	▶186
379-8266	183
	▶188
379-8286	93
379-8287	93
379-8289	94
379-8291	▶136
	179
379-8294	▶102
	179
379-8301	▶104
	141
	143
	184
	188
379-8313	▶110
	172
379-8315	172
379-8316	172
379-8317	172
379-8318	172
379-8380	100
	▶172
379-8382	100
	▶462
379-8383	100
	▶463
379-8395	▶100
379-8396	▶100
379-8465	469
	▶478
379-8727	▶134
	469
379-8728	▶476
379-8742	▶450
	471
379-8743	▶446
	471
379-8744	▶448
	468
	470
	471
379-8748	▶420
	468
	470
	471
379-8754	3
	4
	▶430
379-8755	3
	4
	▶431
379-8758	▶3
	4
	5
379-8760	▶3
379-8761	▶4
379-8762	▶4
379-9513	343
379-9698	▶429
	468
	470
	471
380-1395	▶318
	333
380-2062	36
380-2065	36
380-2073	22
380-2074	24
380-2920	233
	235
380-2922	233
380-2923	233
380-2979	400
380-2980	400
380-3572	6
380-3871	235
380-7760	3
	▶485
380-7761	4
	▶486
380-8109	336
380-8303	334
	336
380-8573	344
380-9611	435
381-0907	402
381-0908	233
	235
	400
381-0909	233
	235
	400
	402
381-0910	233
	235
	400
	402
381-0911	233
	235
	400
	402
381-0912	233
	235
	400
	402
381-6651	446
381-6966	470
	▶479
381-6967	418
	479
381-6991	4
	▶470
381-7155	67
381-7156	70
381-7231	70
381-7232	70
381-7235	7
	▶63
381-7237	74
381-7239	33
381-7241	74
381-8213	476
381-9071	▶438
	468
	470
	471
382-0660	97
382-1084	136
382-1087	94
382-1359	448
382-1409	468
	469
	▶480
382-1438	▶470
382-1439	▶452
	468
	470
382-1486	446
382-3493	430
382-3691	480
382-6085	▶331
	359
	361
382-9003	3
	4
	▶490
382-9224	355
	▶368
382-9225	355
	▶369
382-9226	355
382-9228	355
	▶384
382-9233	368
	369
382-9234	368
382-9236	368
382-9239	368
	369
382-9240	368
	369
382-9241	368
	369
382-9242	369
382-9243	355
382-9244	355
382-9245	355
382-9246	355
382-9247	355
382-9251	355
382-9255	355
382-9256	355
382-9257	355
382-9258	355
382-9259	355

▶ PRIMARY REFERENCE

PART NUMBER INDEX

Part	Page
382-9269	345
382-9272	355
382-9274	384
382-9276	384
383-1403	425
	426
383-1408	425
	426
383-1412	254
383-1509	70
383-2664	402
383-2665	402
383-3463	430
383-3661	402
383-6896	420
383-6898	56
383-8357	478
	479
383-8358	478
	479
383-9682	235
383-9683	235
384-0055	430
	431
384-0056	138
384-0060	138
384-0062	138
384-1783	316
384-1784	316
384-1785	316
384-2548	299
	301
	302
384-2549	300
384-2550	299
	300
384-2551	290
	291
	300
384-2792	437
384-2811	290
	291
	301
	302
384-3857	438
384-3859	438
384-4111	334
	338
384-4299	339
384-4301	339
	341
384-5042	276
384-5043	299
384-5048	301
	302
384-5082	276
384-5430	429
384-5431	263
384-5849	290
	301
384-5878	212
	▶299
384-5890	493
384-5891	493
384-5892	432
384-5914	213
	▶300
384-5956	▶104
	165
384-7058	341
384-8359	320
384-8512	74
385-3822	423
385-3825	233
385-3858	400
385-4637	179
385-4638	179
385-5394	430
385-5667	430
385-5773	74
385-8495	59
385-8496	70
385-8497	67
385-8498	67
385-8499	70
385-8501	67
385-8504	63
385-8505	63
385-9424	359
386-0444	145
	146
	186
386-0524	307
386-1479	448
386-1819	313
386-1822	309
	311
386-1823	311
386-2100	65
	▶66
386-3004	124
	126
	128
	129
386-4045	420
386-5619	286
386-5625	265
	286
387-0504	▶12
	471
387-0510	67
387-0512	74
387-0513	▶53
	61
387-0514	59
	▶61
387-4307	134
387-4403	209
387-5354	134
387-5607	485
387-5608	486
387-5722	3
	▶439
387-5730	439
387-5732	439
387-6498	96
	▶162
387-8187	▶176
	469
388-1284	275
388-1285	274
388-2535	▶165
	468
	469
	470
	471
388-5001	209
388-5605	432
388-7009	70
388-7010	70
388-7411	96
	▶97
388-7412	▶97
	99
	100
388-7413	▶97
	99
	100
389-0463	124
	126
	128
	129
389-0481	▶116
	176
389-0482	174
	176
389-1403	174
	176
389-3430	174
	176
389-3981	▶108
	174
	178
389-5708	131
389-7484	▶181
	468
	469
389-7491	▶109
	181
389-8425	351
	▶359
389-8426	353
	▶361
389-9459	318
389-9513	429
390-0607	213
	▶301
390-0608	213
	▶302
390-0611	213
	▶290
390-0612	214
	▶291
390-0881	182
390-0888	290
	291
	301
	302
390-1058	▶250
390-1061	▶251
390-1735	141
	143
	184
	188
390-1736	141
	143
	184
	188
390-2406	514
	521
390-2762	129
390-2764	126
	128
	129
390-3373	97
390-7340	92
391-4983	412
391-5002	▶108
	412
391-8373	70
391-8933	400
392-0120	425
	426
392-3371	400
392-4182	293
	295
392-4187	297
	298
392-4904	107
392-6615	94
392-7367	▶111
	472
392-8754	537
392-9638	233
	235
392-9640	293
	295
392-9641	293
	295
392-9643	293
	295
392-9649	212
	250
	252
	▶293
392-9650	212
	225
	251
	253
	▶295
393-5114	472
393-8997	429
393-8998	429
393-9128	314
393-9129	314
394-4791	▶105
	472
394-8249	254
395-0291	6
	▶26
395-0521	54
	▶344
396-3822	293
	295
	297
	298
396-3823	293
	295
	297
	298
396-3824	293
	295
	297
	298
396-3825	211
	▶297
396-3826	211
	▶298
396-4107	435
396-4593	336
396-5665	184
	186
	188
396-5842	412
396-8258	54
396-8904	297
	298
396-8905	297
	298
396-8906	297
	298
396-8907	297
	298
396-8908	293
	295
396-8909	293
	295
396-8910	293
	295
396-8911	293
	295
396-8977	290
	291
	301

▶ **PRIMARY REFERENCE**

PART NUMBER INDEX

Part	Page
	302
396-8982	290
	291
	301
	302
397-8613	141
	143
	184
	188
397-8614	141
	184
397-8615	143
	188
397-9359	334
	338
398-1070	334
	336
399-2413	504
399-2752	263
	429
399-7742	411
	▶412
399-8077	431
399-9415	▶112
	168
	170
399-9416	▶112
	464
	465
	466
	467

4

Part	Page
415-0040	483
415-0041	484
415-1860	323
	▶324
415-2458	431
415-3797	74
415-7961	▶113
	462
	463
415-8299	124
	126
415-9361	▶4
415-9367	▶5
416-0330	▶114
	138
416-1351	▶252
416-1355	▶253
416-2513	▶471
416-2514	▶471
416-2526	▶418
	471
416-2567	▶178
	471
416-2581	471
	▶521
416-2637	471
	▶522
416-6175	246
416-6176	246
416-6240	233
	235
416-6241	233
	235
416-9692	282
417-0551	170
417-0552	168
417-3109	237
	238
417-3110	237
	238
417-4364	286
417-4365	286
418-1430	▶117
	146
	186
418-5189	▶281
	469
	470
418-7851	▶118
	141
	143
	146
418-9844	96
	183
	406
	▶504
419-0018	▶325
	326
419-0064	430
	431
419-0170	425
	426
419-9380	▶326
	387
	389
420-1761	▶101
	163
420-4376	427
420-4997	▶116
	476
420-5231	▶17
	20
420-5463	97
420-5464	97
421-1607	▶443
421-2388	334
	336
421-4455	174
	176
421-4457	174
	176
421-4458	174
	176
421-5646	209
422-4422	▶141
	406
422-4423	▶146
	406
422-4424	▶143
	406
422-4428	4
	▶406
422-4429	▶406
422-4430	▶406
422-8831	249
422-9050	168
	170
423-1982	371
423-1984	41
423-2858	325
423-3507	427
423-3508	427
423-3519	▶109
	174
	176
423-4324	248
424-5147	3
	4
	▶425
424-5148	3
	4
	▶426
426-0862	▶120
	152
426-0864	▶118
	152
426-1914	▶411
	468
	470
	471
433-1459	▶107
	124
	126
	128
	129
433-1461	124
	126
433-1462	128
	129
433-1465	▶124
433-1466	▶126
433-1467	▶128
433-1468	▶129
433-3673	▶338
	385
	386
433-4458	▶385
433-4459	▶386
434-1356	140
435-7807	▶106
	474
437-1330	324
439-5275	▶537



©2013 Caterpillar
All Rights Reserved

CAT, CATERPILLAR, their respective logos, “Caterpillar Yellow”, and the POWER EDGE trade dress as well as corporate and product identity used herein, are trademarks of Caterpillar and may not be used without permission.

KEBP0331

CS56B,CP56B,CS68B,CP68B Vibratory Soil Compactor

M4M1-UP
M5P1-UP
MBF1-UP
SDT1-UP