TABLE OF CONTENTS

02-01	SOPORTE DEL MOTOR
02-02	ENGINE OIL SUPPLY LINES
02-03	FILTRO DE AIRE
02-04	EXHAUST SYSTEM - MUFFLER
02-05	RADIADOR Y CONEXIONES
02-05A	CONJUNTO DO RADIADOR
02-06	PACKAGE SEALS - ENGINE
02-07	PACKAGE SEALS - ENGINE
02-08	COVER - CYLINDER HEAD
02-09	COVER - CYLINDER HEAD
02-10	CYLINDER HEAD
02-11	CYLINDER HEAD
02-12	CYLINDER BLOCK
02-13	CYLINDER BLOCK
02-14	OIL PAN
02-15	CAMSHAFT - VALVE MECHANISM
02-16	CAMSHAFT - VALVE MECHANISM
02-17	PISTONS AND CRANKSHAFT
02-18	ENGINE FLYWHEEL HOUSING
02-19	ENGINE FLYWHEEL HOUSING
02-20	ENGINE MOUNTING
02-21	INTAKE PIPE
02-22	EXHAUST PIPE
02-23	BREATHER
02-24	WATER PUMP SYSTEM
02-25	ENGINE WATER CIRCUIT - THERMOSTAT
02-26	ENGINE WATER CIRCUIT
02-27	BELT AND VENTILATOR - FAN GUARD
02-28	TURBOCHARGER
02-29	OIL COOLER - ENGINE
02-30	OIL PUMP
02-31	OIL CIRCUIT
02-32	EXHAUST GAS RECIRCULATION SYSTEM
02-33	BRACKET - FAN GUARD
03-01	DEPOSITO DE COMBUSTIBLE
03-02	LINEA DE COMBUSTIBLE
03-03	BOMBA DE REABASTECIMENTO DE COMBUSTÍVEL - OPCIONAL
03-04	FUEL SYSTEM - FUEL INJECTION PUMP
03-05	FUEL SYSTEM
03-06	FUEL FILTER
03-07	FUEL SYSTEM
04-01	ELECTRICAL ACCESSORIES - ENGINE
04-02	ELECTRICAL ACCESSORIES - ENGINE
04-03	ELECTRICAL ACCESSORIES - ENGINE
04-04	ELECTRICAL ACCESSORIES - ENGINE
04-04A	BRACKET
04-05	CONJUNTO DE FIOS, PRINCIPAIS - CHASSI, ESTRUTURA INFERIOR
04-05A	CONJUNTO DE FIOS, PRINCIPAIS - GRAMPOS E RETENTORES
04-06	CONJUNTO DE FIOS, PRINCIPAIS - PAINEL DE RELÉS
04-07	ELECTRICO - CABINA
04-08	ALARME SONORO DO DESLOCAMENTO

TABLE OF CONTENTS

04-09	CONVERTIDOR
04-10	SISTEMA ELÉTRICO DA CABINA - LIMPADOR, PÁRA-BRISA
04-11	HORN
04-12	LAMP, WORK
04-13	CONTROLADOR
04-14	BATERIA - CABOS
04-15	RADIO
04-16	LIMPADOR DE PÁRA-BRISA
05-01	CHASIS PORTADOR
05-02	GUIDE, CHAIN
05-03	COBERTURA DO CHASSI, INFERIOR
05-04	CORRENTES DA ESTEIRA, 600 MM (23-5/8 IN)
05-05	CORRENTES DA ESTEIRA, 700 MM (27-5/8 IN)
05-06	ORUGA - POLIA LOUCA
05-07	ORUGA - AJUSTADOR
05-08	ORUGA - ROLO, SUPERIOR
05-09	ORUGA - ROLO, INFERIOR
06-01	TRACK DRIVE ASSY
06-02	MOTOR - CONJUNTO DE ENGRENAGENS, REDUÇÃO
06-03	MOTOR - TRAÇÃO DA ESTEIRA
06-04	MOTOR - DESLOCAMENTO, ADMISSÃO E SAÍDA
06-05	HIDRAULICA - TRAÇÃO DA ESTEIRA
06-06	HIDRAULICA - DESLOCAMENTO
06-07	HYDRAULICS - TRAVEL CONTROL, SINGLE PEDAL
08-01	DEPOSITO HIDRAULICO
08-02	RESERVATÓRIO HIDRÁULICO - INTERRUPTOR DE PRESSÃO
08-03	CONJUNTO DA BOMBA, HIDRÁULICA - PADRÃO - ACOPLAMENTO
08-04	CONJUNTO DA BOMBA, HIDRÁULICA - COM HIDRÁULICA AUXILIAR - ACOPLAMENTO
08-05	HIDRAULICA - LINHA DE SUCÇÃO DA BOMBA
08-06	HIDRAULICA - ALIMENTAÇÃO DA VÁLVULA DE CONTROLE
08-07	HIDRAULICA - RETORNO DO RESERVATÓRIO
08-08	HIDRAULICA - LINHA DE DRENAGEM
08-09	HIDRAULICA - OSCILAÇÃO
08-10	HIDRAULICA - LANÇA
08-11	HIDRAULICA - BRAÇO E CAÇAMBA
08-12	HIDRAULICA - LINHA DO BRAÇO DO CILINDRO
08-13	HIDRAULICA - CUCHARA
08-14	HYDRAULIC LINES - ARM - OPTIONAL
08-15	LINHAS DO CONTROLE PILOTO, DESLOCAMENTO - STANDARD
08-16	LINHAS DO CONTROLE PILOTO, ACESSÓRIO - STANDARD
08-17	LINEAS DE CONTROLE PILOTO, PARTIÇÃO - STANDARD
08-18	LINEAS DE CONTROLE PILOTO, VALVULA DE CONTROL - STANDARD
08-19	LINHAS DO CONTROLE PILOTO, DESLOCAMENTO - MANEIRA DOIS
08-20	LINHAS DO CONTROLE PILOTO, ACESSÓRIO - MANEIRA DOIS
08-21	LINEAS DE CONTROL PILOTO, PARTICIÓN - MANERA DOS
08-22	LINEAS DE CONTROLE PILOTO, VALVULA DE CONTROL - MANEIRA DOIS
08-23	HIDRAULICA - PRESSÃO PILOTO, LINHAS DE RETORNO
08-24	HIDRAULICA - PRESSÃO PILOTO, LINHAS DE RETORNO
08-25	HIDRAULICA - PRESSÃO PILOTO, LINHAS DE RETORNO

TABLE OF CONTENTS

08-26	CIRCUITO DE AÇÃO ÚNICA DO SISTEMA HIDRÁULICO AUXILIAR ACIONADO POR PEDAL
08-27	CIRCUITO DE AÇÃO ÚNICA DO SISTEMA HIDRÁULICO AUXILIAR ACIONADO POR PEDAL
08-28	CIRCUITO DE AÇÃO ÚNICA DO SISTEMA HIDRÁULICO AUXILIAR ACIONADO MANUALMENTE
08-29	CIRCUITO DE AÇÃO ÚNICA DO SISTEMA HIDRÁULICO AUXILIAR ACIONADO MANUALMENTE
08-30	HYDRAULIC LINES - BOOM - OPTIONAL
08-31	HYDRAULIC LINES - ARM (2.23M) - OPTIONAL
08-32	HYDRAULICS, AUXILIARY - MULTI-PURPOSE + 3 WAY VALVE, PEDAL ACTIVATED
08-33	HYDRAULICS, AUXILIARY - MULTI-PURPOSE + 3 WAY VALVE, PEDAL ACTIVATED
08-34	HYDRAULICS, AUXILIARY - MULTI-PURPOSE + 3 WAY VALVE, PEDAL ACTIVATED
08-35	HYDRAULICS, AUXILIARY - MULTI-PURPOSE + 3 WAY VALVE, TRIGGER ACTIVATED
08-36	HYDRAULICS, AUXILIARY - MULTI-PURPOSE + 3 WAY VALVE, TRIGGER ACTIVATED
08-37	HYDRAULICS, AUXILIARY - MULTI-PURPOSE + 3 WAY VALVE, TRIGGER ACTIVATED
08-38	SISTEMA HIDRÁULICO AUXILIAR - CIRCUITO EM SEGUNDO ATIVO, PEDAL ATIVADO
08-39	HYDRAULICS, AUXILIARY - SECOND ACTING CIRCUIT, HAND OPERATED
08-40	SEGUNDA LINHA DA OPÇÃO, BRAÇO DE 2,70 METER (8FT 10 IN)
08-41	SEGUNDA LINHA DA OPÇÃO, BRAÇO DE 3,10 METER (10 FT 2 IN)
08-42	PLUG
08-43	PLUG
08-44	PLUG
08-45	PLUG
08-46	PLUG
08-47	PLUG
08-48	PLUG
08-49	PLUG
08-50	PLUG
08-51	SOPORTE - MOTOR DE OSCILAÇÃO
08-52	MOTOR ASSY - SWING
08-53	GEAR ASSY, REDUCTION - MOTOR, SWING
08-54	HIDRAULICA - JUNTA, CENTRO DE ROTAÇÃO,
08-55	KLJ10580 VALVULA DE CONTROL - SUPORTE
08-56	KLJ10590 VALVULA DE CONTROL - SUPORTE
08-57	KLJ10580 CONJUNTO DE LA VALVULA - CONTROLE
08-58	KLJ10580 CONJUNTO DE LA VALVULA - CONTROLE
08-59	KLJ10580 CONJUNTO DE LA VALVULA - CONTROLE
08-60	KLJ10580 CONJUNTO DE LA VALVULA - CONTROLE
08-61	KLJ10590 CONJUNTO DE LA VALVULA - CONTROLE
08-62	KLJ10590 CONJUNTO DE LA VALVULA - CONTROLE
08-63	KLJ10590 CONJUNTO DE LA VALVULA - CONTROLE
08-64	KLJ10590 CONJUNTO DE LA VALVULA - CONTROLE
08-65	KLJ10590 CONJUNTO DE LA VALVULA - CONTROLE
08-69	VÁLVULA, ALÍVIO DA ABERTURA - SISTEMA HIDRÁULICO AUXILIAR
08-70	ALMOFADA DA VÁLVULA - LINHAS DO CONTROLE PILOTO
08-72	VALVULA DE CONTROL - DESLOCAMENTO
08-73	SOLENOIDE DE LA VALVULA - PRESSÃO PILOTO, LINHAS DE RETORNO

TABLE OF CONTENTS

08-74	VALVE, SOLENOID - MULTI-PURPOSE + 3 WAY VALVE, PEDAL ACTIVATED
08-75	VALVE ASSY - PEDAL CONTROL
08-77	VALVE ASSY, DIRECTIONAL
08-78	VÁLVULA, SHUT-OFF
08-79	CONJUNTO DE LA VALVULA - CONTROLE DE PÉ
08-81	SOLENÓIDE DA VÁLVULA - SISTEMA HIDRÁULICO AUXILIAR
08-82	VALVE, REMOTE CONTROL
08-83	CONJUNTO DO CILINDRO, LANÇA, LADO DIREITO
08-84	CONJUNTO DO CILINDRO, LANÇA, LADO ESQUERDO
08-85	CONJUNTO DE CILINDRO - BRAÇO
08-86	CONJUNTO DO CILINDRO, BALDE
08-87	KLJ10570 CONJUNTO DA BOMBA, HIDRÁULICA - PISTÃO
08-88	KLJ10570 PUMP ASSY, HYDRAULIC - GEAR PUMP ASSY
08-89	KLJ10570 PUMP ASSY, HYDRAULIC - VALVE ASSY
08-90	KLJ10570 CONJUNTO DA BOMBA, HIDRÁULICA - REGULADOR
08-91	KLJ10570 CONJUNTO DA BOMBA, HIDRÁULICA - REGULADOR
08-92	KLJ10610 CONJUNTO DA BOMBA, HIDRÁULICA - PISTÃO
08-93	KLJ10610 PUMP ASSY, HYDRAULIC - GEAR PUMP ASSY
08-94	KLJ10610 PUMP ASSY, HYDRAULIC - VALVE ASSY
08-96	KLJ10610 CONJUNTO DA BOMBA, HIDRÁULICA - REGULADOR
08-97	KLJ10610 CONJUNTO DA BOMBA, HIDRÁULICA - REGULADOR
08-98	GEAR PUMP ASSY
08-99	KITS, FREE SWING
09-01	ROLAMENTO DA MESA GIRATÓRIA
09-02	MESA GIRATÓRIA
09-03	MESA GIRATÓRIA - COBERTURAS DE ACESSO
09-04	CONTRAPESO - À PROVA DE SOM
09-05	ESTRUTURAS, COBERTURAS - ISOLAMENTO
09-06	PORTA DE ACESSO - ISOLAMENTO
09-07	CAPÔ, MOTOR - ISOLAMENTO
09-08	CAIXA DE ARMAZENAMENTO - ISOLAMENTO
09-09	CONTROLES - COMPARTIMENTO DO OPERADOR
09-10	CONTROLE DA VÁLVULA DE SERVIÇO - DIREITA
09-11	CONTROLE DA VÁLVULA DE SERVIÇO - ESQUERDA
09-12	TAPETE DO PISO - COMPARTIMENTO DO OPERADOR
09-13	TAPETE DO PISO - COMPARTIMENTO DO OPERADOR - MODELOS COM HIDRÁULICA AUXILIAR ATIVADA PEDAL
09-14	CARRINHO TRASEIRO
09-15	SEAT MECHANICAL
09-15A	SEAT AND MOUNTING
09-15B	OPERATORS COMPARTMENT - SEAT AND CONTROL ARM MOUNTING
09-16	OPERATORS COMPARTMENT - BOX - GUIDE, SLIDE
09-17	OPERATORS COMPARTMENT - HAND CONTROL ARM, LEFT
09-18	OPERATORS COMPARTMENT - HAND CONTROL ARM, RIGHT
09-19	CORRENTE DO CÃO
09-20	AIRE ACONDICIONADO - DUTOS
09-21	SISTEMA DE AIRE ACONDICIONADO
09-22	AIRE ACONDICIONADO - EVAPORADOR
09-23	AIRE ACONDICIONADO - CONDENSADOR E DESUMIDIFICADOR DO RECEPTOR
09-24	CABINA - AIRE ACONDICIONADO
09-25	AIRE ACONDICIONADO - CONDENSADOR E DESUMIDIFICADOR DO RECEPTOR

TABLE OF CONTENTS

09-26		CABINA - LADO VIDRO E UNIDADE DE CONTROLE ELETRÔNICO
09-27		CABINE - ABAIXE O VIDRO E HANDRAILS DIANTEIROS E TRASEIROS
09-28		PORTA DA CABINA
09-29		CABINA - TETO, JANELA DE ABRIR
09-30		CABINA - JANELAS, DIANTEIRAS
09-31		CABINA - RETROVISOR, VISTA TRASEIRA
09-32		PROTEÇÕES, ESCOVA -
09-33		PROTEÇÕES, ESCOVA - GRADE DIANTEIRA DA CABINA
09-33A		VANDAL GUARD - WINDOW, FRONT
09-34		DEFLETOR DE CHUVA
09-35		PLUMA
09-36		CIRCUITO DE LUBRIFICAÇÃO - PLUMA
09-37		CILINDRO DA LANÇA - SUPORTE
09-38	00	GRAMPO - LANÇA
09-38	01	GRAMPO - LANÇA
09-38	02	GRAMPO - LANÇA
09-38	03	GRAMPO - LANÇA
09-39		CILINDRO DO BRAÇO - SUPORTE
09-39	00	GRAMPO - BRAÇO
09-39	01	GRAMPO - BRAÇO
09-40		GATO DE CUCHARA - SUPORTE
09-42		BUCKETS, ESCO - GENERAL PURPOSE BUCKETS
09-43		BUCKETS, ESCO - HEAVY DUTY BUCKETS
09-44		BUCKETS, ESCO - DITCH CLEANING BUCKETS
09-45		ADESIVOS - COMPARTIMENTO DO OPERADOR
09-46		CALCOMANIAS
09-47		CALCOMANIAS
09-48		CALCOMANIAS - ATENÇÃO
09-49		CALCOMANIAS
09-50		CALCOMANIAS
09-51		CALCOMANIAS
09-52		CALCOMANIAS
09-53	00	ARM (3.05M) - OPTIONAL
09-54	00	ARM (2.23M) - OPTIONAL
09-55	00	ARM (2.62M) - OPTIONAL
09-56		BUCKET LINKAGE, MODELS WITH AUXILIARY HYDRAULICS
09-57		BUCKET LINKAGE, MODELS WITHOUT AUXILIARY HYDRAULICS

SECTION INDEX
Motor

02-01	SOPORTE DEL MOTOR
02-02	ENGINE OIL SUPPLY LINES
02-03	FILTRO DE AIRE
02-04	EXHAUST SYSTEM - MUFFLER
02-05	RADIADOR Y CONEXIONES
02-05A	CONJUNTO DO RADIADOR
02-06	PACKAGE SEALS - ENGINE
02-07	PACKAGE SEALS - ENGINE
02-08	COVER - CYLINDER HEAD
02-09	COVER - CYLINDER HEAD
02-10	CYLINDER HEAD
02-11	CYLINDER HEAD
02-12	CYLINDER BLOCK
02-13	CYLINDER BLOCK
02-14	OIL PAN
02-15	CAMSHAFT - VALVE MECHANISM
02-16	CAMSHAFT - VALVE MECHANISM
02-17	PISTONS AND CRANKSHAFT
02-18	ENGINE FLYWHEEL HOUSING
02-19	ENGINE FLYWHEEL HOUSING
02-20	ENGINE MOUNTING
02-21	INTAKE PIPE
02-22	EXHAUST PIPE
02-23	BREATHER
02-24	WATER PUMP SYSTEM
02-25	ENGINE WATER CIRCUIT - THERMOSTAT
02-26	ENGINE WATER CIRCUIT
02-27	BELT AND VENTILATOR - FAN GUARD
02-28	TURBOCHARGER
02-29	OIL COOLER - ENGINE
02-30	OIL PUMP
02-31	OIL CIRCUIT
02-32	EXHAUST GAS RECIRCULATION SYSTEM
02-33	BRACKET - FAN GUARD

SOPORTE DEL MOTOR

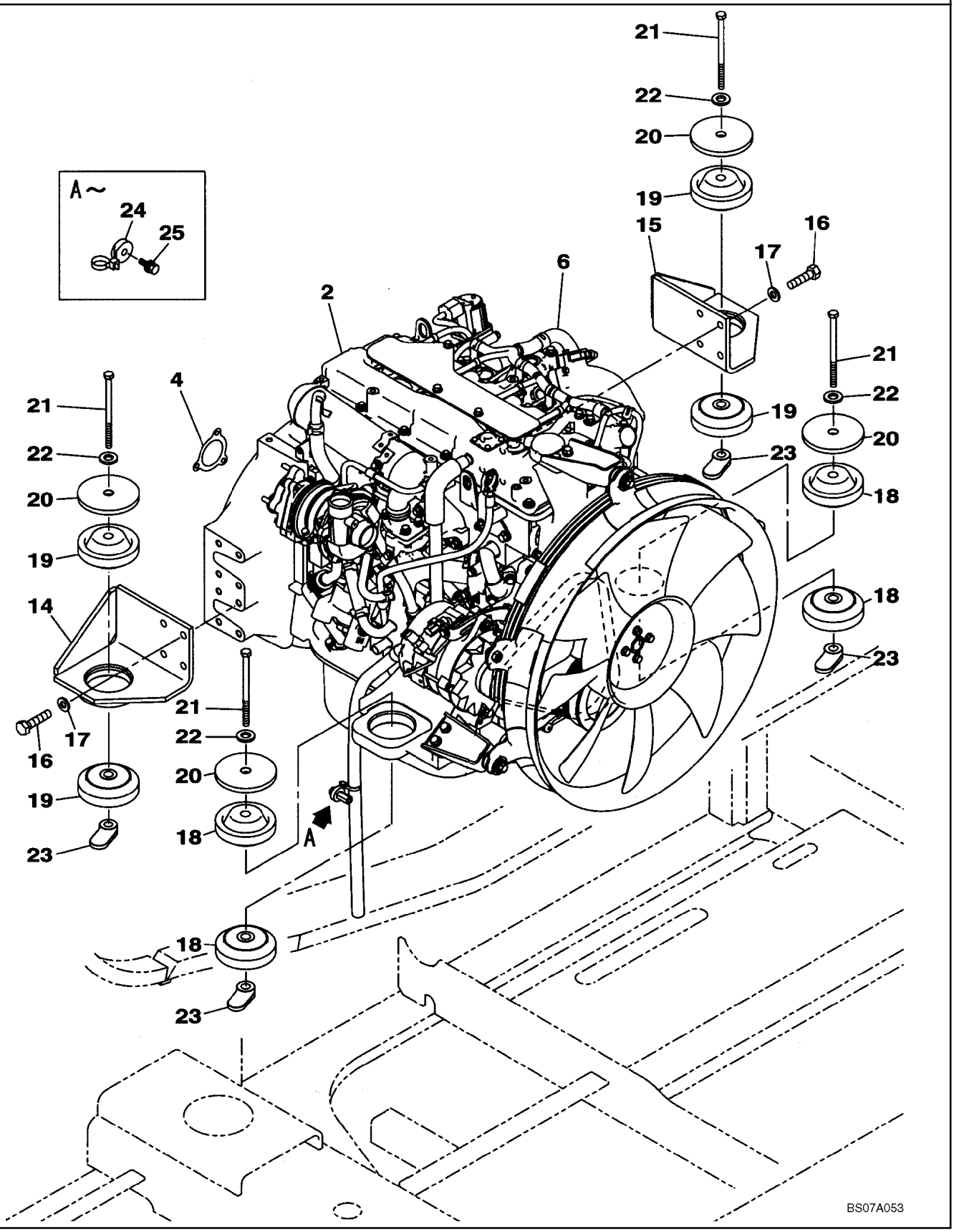

SOPORTE DEL MOTOR

REF	FN	PART NUMBER	YR/SN	QTY	DESCRIPTION
2		KLH10850		1	MOTOR, See Figures 02-06 - 02-33, 03-04 - 03-07, 04-01 - 04-04A
4		167913A1		1	JUNTA, Exhaust
6		KLH10620		1	CHICOTE, Engine
14		KNH10420		1	SUPORTE DO MOTOR
15		KNH10430		1	SUPORTE DO MOTOR
16		627-12035		8	PARAFUSO, Hex, M12 x 35, 10.9
17		150811A1		8	ARRUELA PLANA
18		KNH10410		4	"SILENTBLOC"
19		KNH10400		4	"SILENTBLOC"
20		KRH10190		4	PLACA
21		827-16130		4	PARAFUSO, Hex, M16 x 130, 10.9
22		150814A1		4	ARRUELA PLANA
23		KRH1251		4	PORCA
24		KHR2584		1	BRACADEIRA
25		KHJ1215		1	PARAFUSO

ENGINE OIL SUPPLY LINES

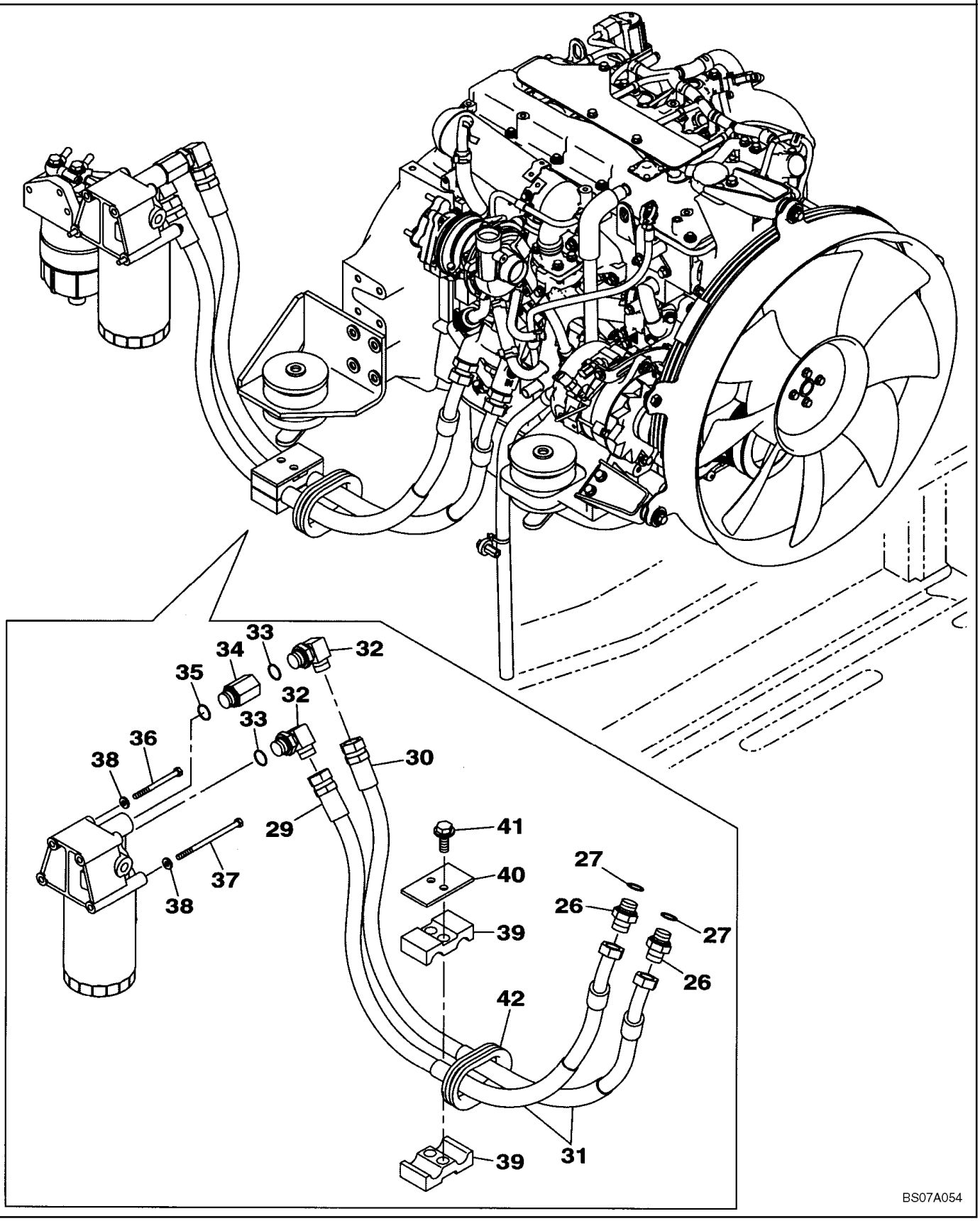

ENGINE OIL SUPPLY LINES

REF	FN	PART NUMBER	YR/SN	QTY	DESCRIPTION
26		151654A1		2	CONEXÃO, 3/4" NPT O-Ring x 3/4" NPT, Incl. 27
27		154503A1		1	ANEL O
29		KLH10210		1	MANGUEIRA CONJUNTO, 1250 mm (49-1/4 in)
30		KLH10220		1	MANGUEIRA CONJUNTO, 1350 mm (53-1/8 in)
31		KBR0819		2	PECA FLEXIVEL
32		157580A1		2	COTOVELO, 90º, 3/4" O-Ring x 3/4", Incl. 33
33		154503A1		1	ANEL O
34		152012A1		1	CONECTOR, Incl. 35
35		154503A1		1	ANEL O
36		102R008Y110R		2	PARAFUSO
37		KHH0515		2	PARAFUSO
38		153081A1		4	ARRUELA PLANA
39		KRH10200		2	BRACADEIRA
40		KRH10210		1	PLACA
41		166052A1		2	PARAFUSO
42		KNJ2988		1	JUNTAS

FILTRO DE AIRE

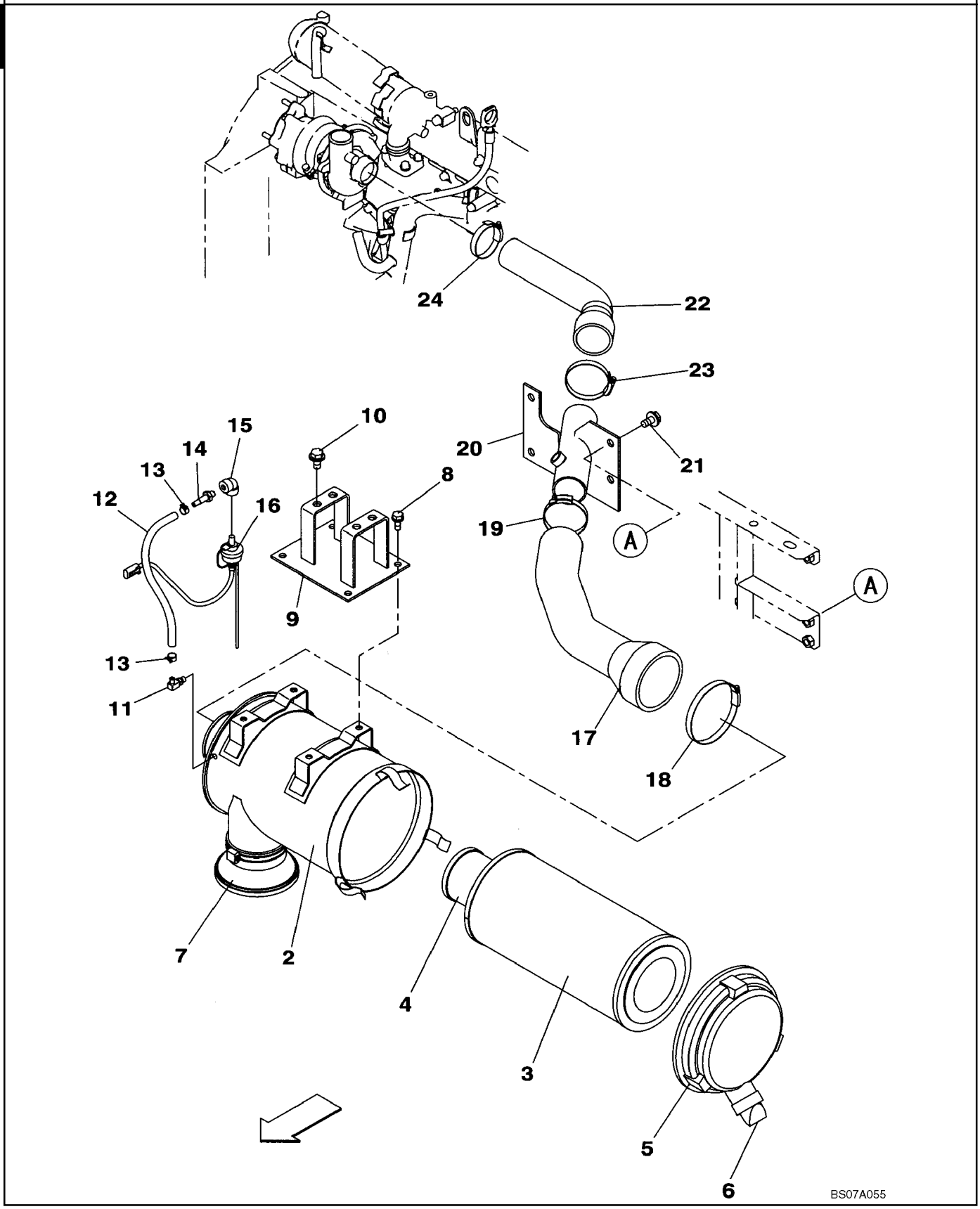

FILTRO DE AIRE

REF	FN	PART NUMBER	YR/SN	QTY	DESCRIPTION
		KLH10150		1	FILTRO CONJ, Incl. 2 - 7
2		NSS		1	BOLETIM INFORMATIVO, Body
3		KLH10550		1	FILTRO DE AR, Outer
4		KLH10560		1	FILTRO DE AR, Inner
5		KLH10570		1	TAMPA
6		KBH0924		1	VALVULA
7		165437A1		1	TAMPA DO RESERVATÓRIO
8		166052A1		4	PARAFUSO
9		KLH10720		1	SUPORTE
10		152718A1		4	PARAFUSO
11		KRH1237		1	COTOVELO
12		157169A1		1	MANGUEIRA
13		165951A1		2	PRENDEDOR, 300 mm (11-13/16 in)
14		KRH1236		1	ANEL DE VEDACAO
15		165818A1		1	COTOVELO
16		KHH10330		1	SENSOR
17		KLH10510		1	MANGOTE
18		150545A1		1	BRACADEIRA
19		150736A1		1	BRACADEIRA
20		KLH10870		1	SUPORTE
21		152718A1		4	PARAFUSO
22		KNH10370		1	MANGOTE
23		150736A1		1	BRACADEIRA
24		165793A1		1	BRACADEIRA

EXHAUST SYSTEM - MUFFLER

1

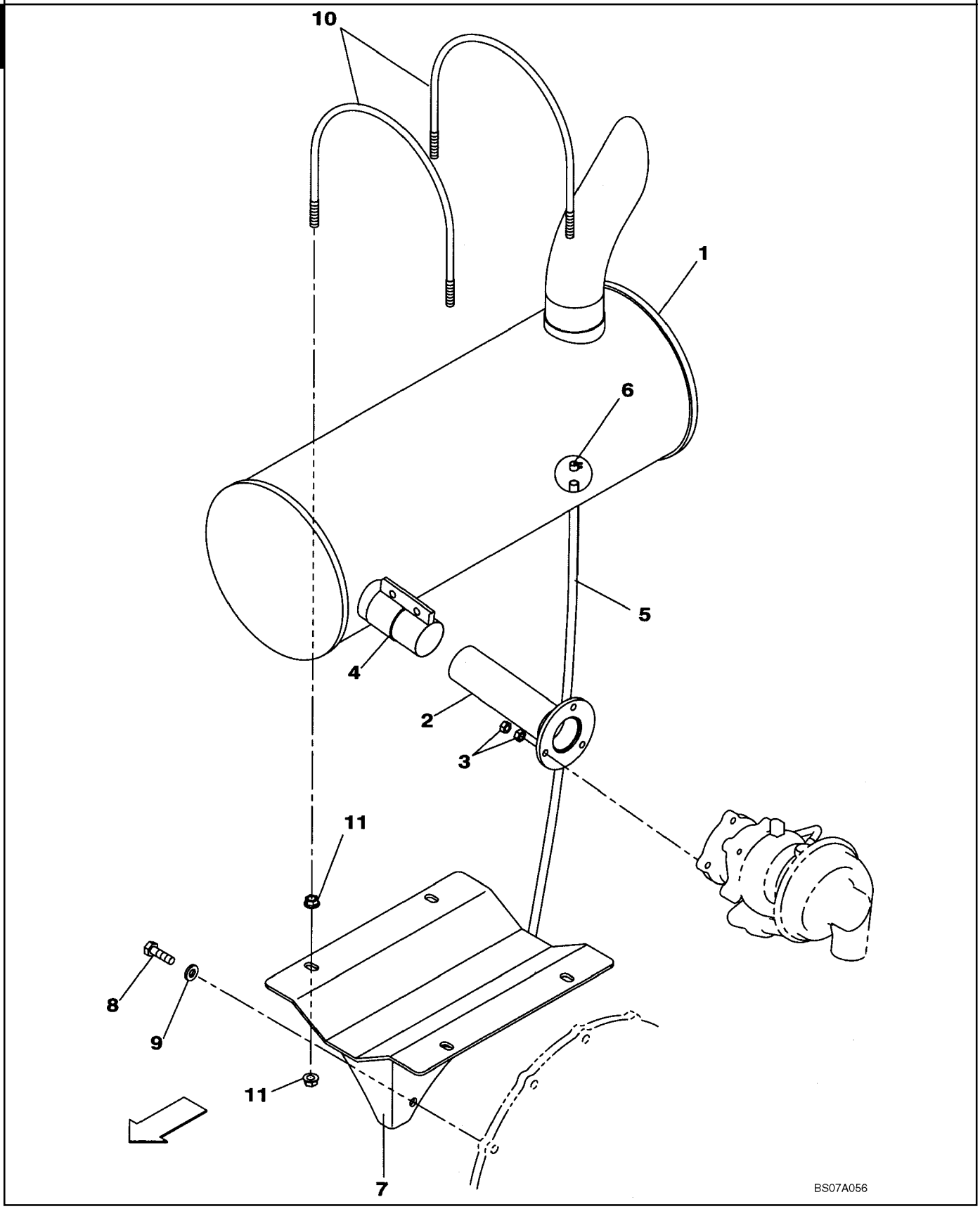

EXHAUST SYSTEM - MUFFLER

REF	FN	PART NUMBER	YR/SN	QTY	DESCRIPTION
1		KLH10140		1	SILENCIOSO
2		KLH10390		1	TUBO ESCAPE
3		829-1408		6	PORCA, M8, Cl 10
4		KEH0326		1	PRENDEDOR
5		157478A1		1	TUBO
6		165952A1		1	ARGOLA DE FIXACAO
7		KLH10400		1	SUPORTE
8		627-10035		3	PARAFUSO, Hex, M10 x 35, 10.9, Full Thd
9		150409A1		3	ARRUELA PLANA
10		KHH11390		2	MOLA-TRAVA
11		KHH11440		8	PORCA

RADIADOR Y CONEXIONES

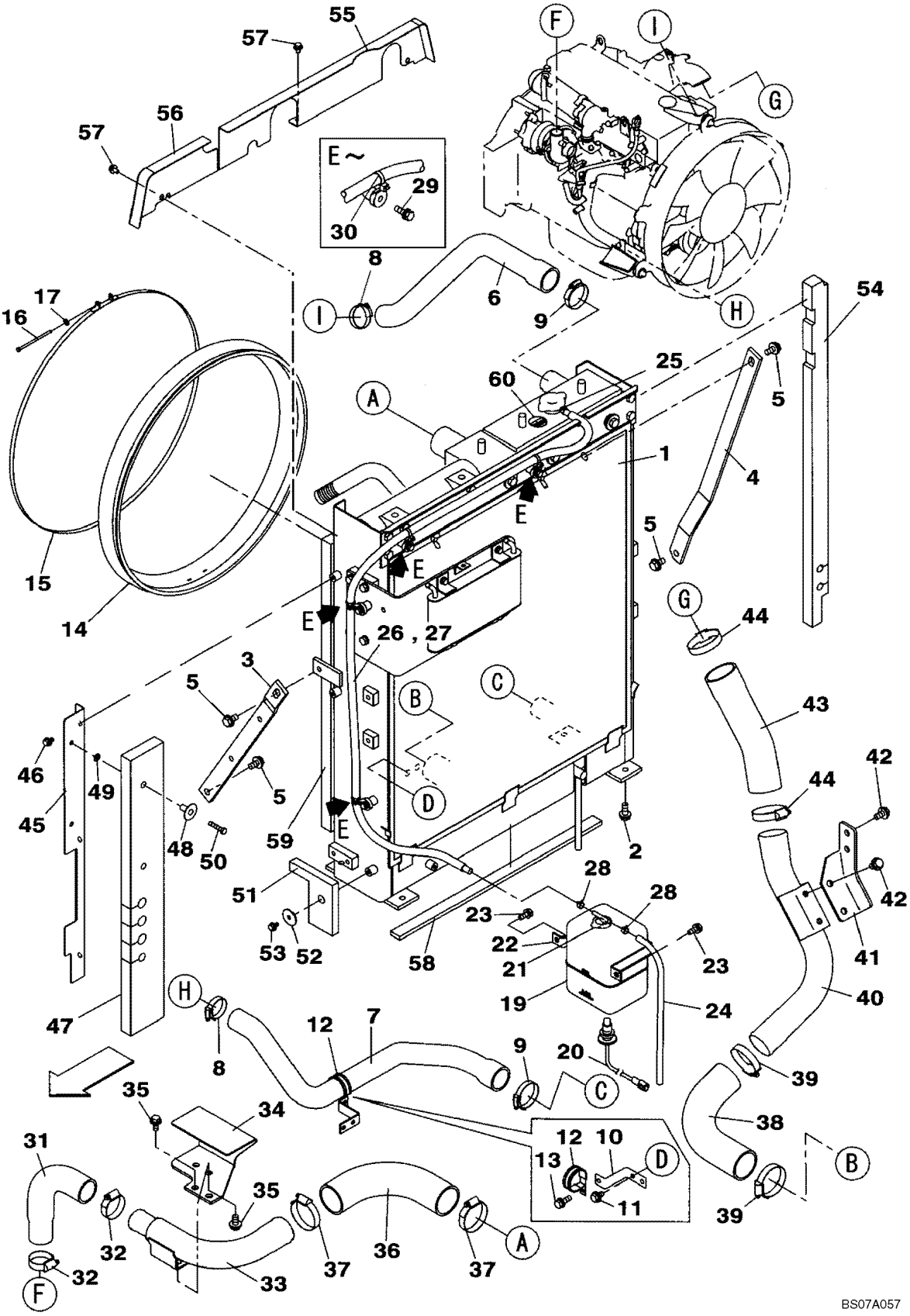

BS07A057

RADIADOR Y CONEXIONES

REF	FN	PART NUMBER	YR/SN	QTY	DESCRIPTION
1		KNH10450		1	RADIADOR ARREFECIMENTO, See Figure 02-05A
2		166352A1		4	PARAFUSO
3		KLH10890		1	APOIO
4		KLH10240		1	APOIO
5		152718A1		4	PARAFUSO
6		KNH10210		1	MANGOTE
7		KLH10260		1	MANGOTE
8		165792A1		2	BRACADEIRA
9		165793A1		2	BRACADEIRA
10		KLH10270		1	SUPORTE
11		166345A1		2	PARAFUSO
12		KLH10280		1	BRACADEIRA
13		KHJ1215		1	PARAFUSO
14		KLH10900		1	JUNTAS
15		KLH10300		1	ARGOLA DE FIXACAO
16		KRH1377		1	PARAFUSO
17		895-11005		1	ARRUELA PLANA, M5 x 10 x 1
		KHH10840		1	RESERVATÓRIO DE VÁCUO
19		NSS		1	BOLETIM INFORMATIVO, Tank
20		161740A1		1	INTERRUPTOR
21		KHH10860		1	TAPÓN PLÁSTICO
22		KRH1270		1	SUPORTE
23		166052A1		2	PARAFUSO
24		KHH11740		1	MANGUEIRA
25		165951A1		1	PRENDEDOR
26		KHH0517		1	MANGUEIRA
27		KBR0838		1	TUBO ISOLANTE
28		165951A1		2	PRENDEDOR
29		KHJ1215		4	PARAFUSO
30		KHR2584		4	BRACADEIRA
31		KLH10310		1	MANGOTE
32		164966A1		2	COLAR
33		KNH10230		1	CONDUTO DE AR
34		KLH10790		1	SUPORTE
35		152718A1		4	PARAFUSO

RADIADOR Y CONEXIONES

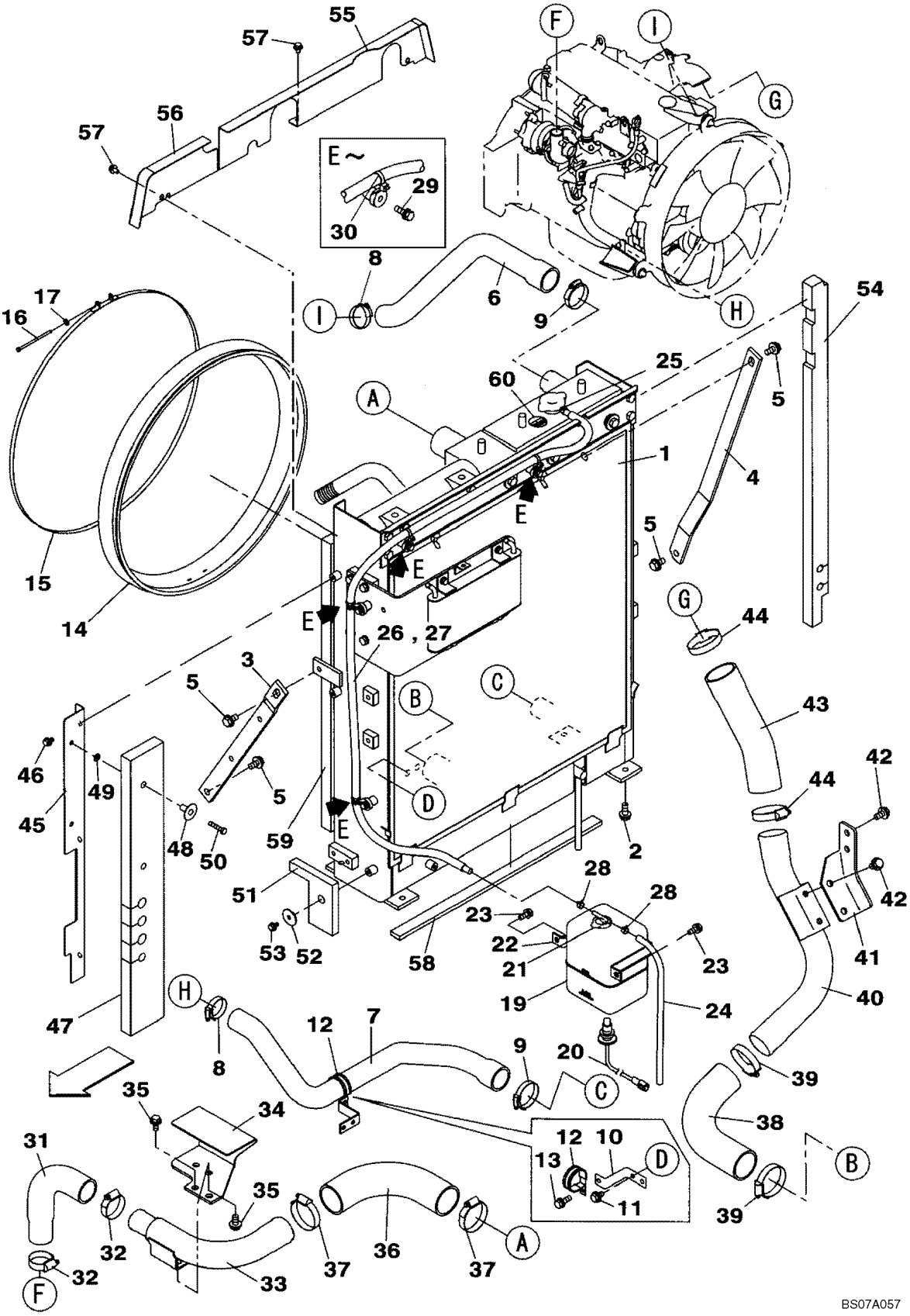

RADIADOR Y CONEXIONES

REF	FN	PART NUMBER	YR/SN	QTY	DESCRIPTION
36		KLH10320		1	MANGOTE
37		164967A1		2	BRACADEIRA
38		KLH10330		1	MANGOTE
39		164967A1		2	BRACADEIRA
40		KLH10360		1	CONDUTO DE AR
41		KLH10380		1	SUPORTE
42		152718A1		4	PARAFUSO
43		KLH10340		1	MANGOTE
44		164967A1		2	BRACADEIRA
45		KLH10410		1	SUPORTE
46		166345A1		3	PARAFUSO
47		KLH10430		1	COBRE-JUNTA
48		KHH0358		2	PRENDEDOR
49		895-11008		2	ARRUELA PLANA, M8 x 16 x 1.6
50		827-8040		2	PARAFUSO, Hex, M8 x 40, 10.9
51		KLH10440		1	COBRE-JUNTA
52		163356A1		1	ARRUELA PLANA
53		166345A1		1	PARAFUSO
54		KLH10800		1	COBRE-JUNTA
55		KLH10740		1	SUPORTE
56		KLH10750		1	SUPORTE
57		166345A1		6	PARAFUSO
58		KLH10480		1	COBRE-JUNTA
59		KLH10880		1	COBRE-JUNTA
60		162468A1		1	DECALCOMANIA

CONJUNTO DO RADIADOR

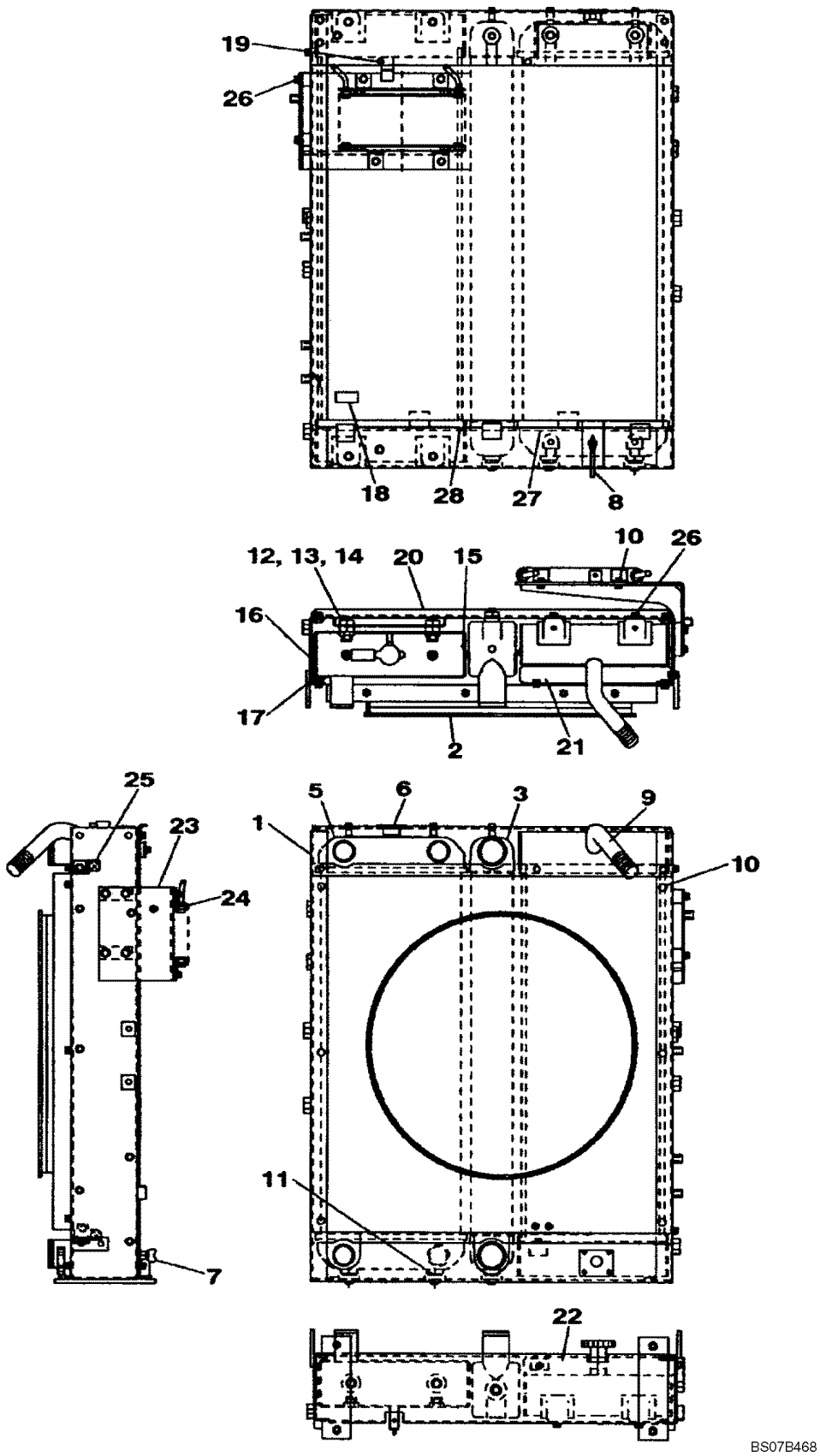

CONJUNTO DO RADIADOR

REF	FN	PART NUMBER	YR/SN	QTY	DESCRIPTION
		KNH10450		1	RADIADOR ARREFECIMENTO, Incl. 1 - 28
1		LT001670		1	CHASSI, Frame
2		LG006180		1	COBERTURA
3		LN002010		1	RESFRIADOR
		LN002020		1	RADIADOR ARREFECIMENTO, Incl. 5 - 8
5		NSS		1	BOLETIM INFORMATIVO, Radiator
6		LR015830		1	TAMPAO, Cap
7		LK00283		1	TORNEIRA
8		LK00284		1	TUBO FLEXÍVEL
9		LN002040		1	ARREFECEDOR
10		LA011210		18	PARAFUSO, Bolt
11		LQ000370		3	JUNTAS, Rubber
12		LQ000380		3	JUNTAS, Rubber
13		LH005030		3	BRAÇADEIRA, Collar
14		LA011220		3	PARAFUSO, Bolt
15		LE015320		2	COBRE-JUNTA, Packing
16		TE00881		2	COBRE-JUNTA, Packing
17		LE015330		1	COBRE-JUNTA, Packing
18		LJ015240		2	FILTRO, Filter
19		LUG0096		2	PARAFUSO
20		LS003460		1	SUPORTE, Bracket
21		LS003470		1	SUPORTE, Bracket
22		LS003480		1	SUPORTE, Bracket
23		LS003490		1	SUPORTE, Bracket
24		LN002050		1	RADIADOR
25		LE015340		2	COBRE-JUNTA, Packing
26		LA011230		8	PARAFUSO, Bolt
27		LE015350		2	COBRE-JUNTA, Packing
28		LE015360		1	COBRE-JUNTA, Packing

PACKAGE SEALS - ENGINE

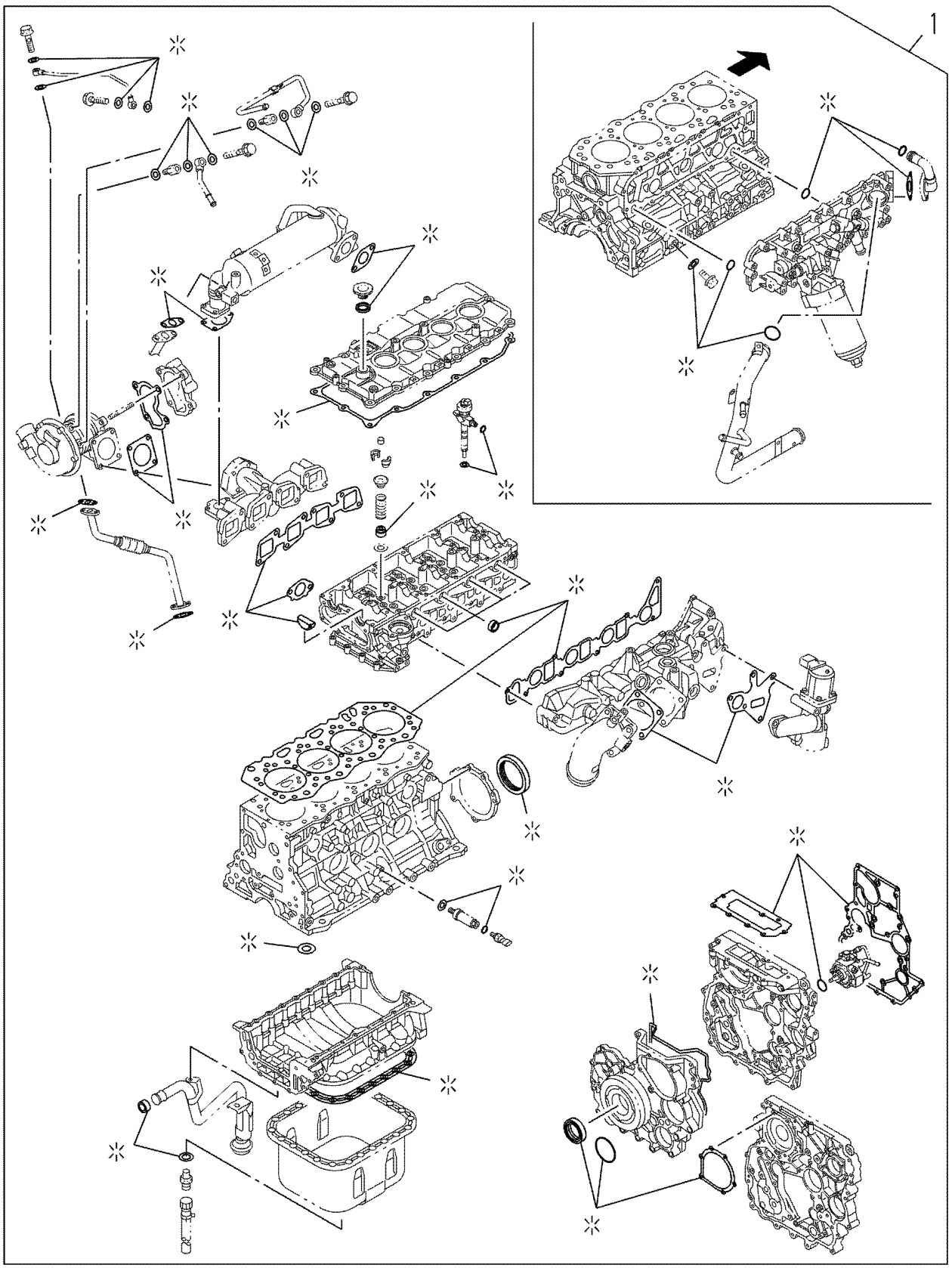

BS07B424

PACKAGE SEALS - ENGINE

REF	FN	PART NUMBER	YR/SN	QTY	DESCRIPTION
1		87595254		1	JUNTA, T=1.475
1		87595256		1	JUNTA, T=1.525
1		87595259		1	JUNTA, T=1.575

PACKAGE SEALS - ENGINE

1

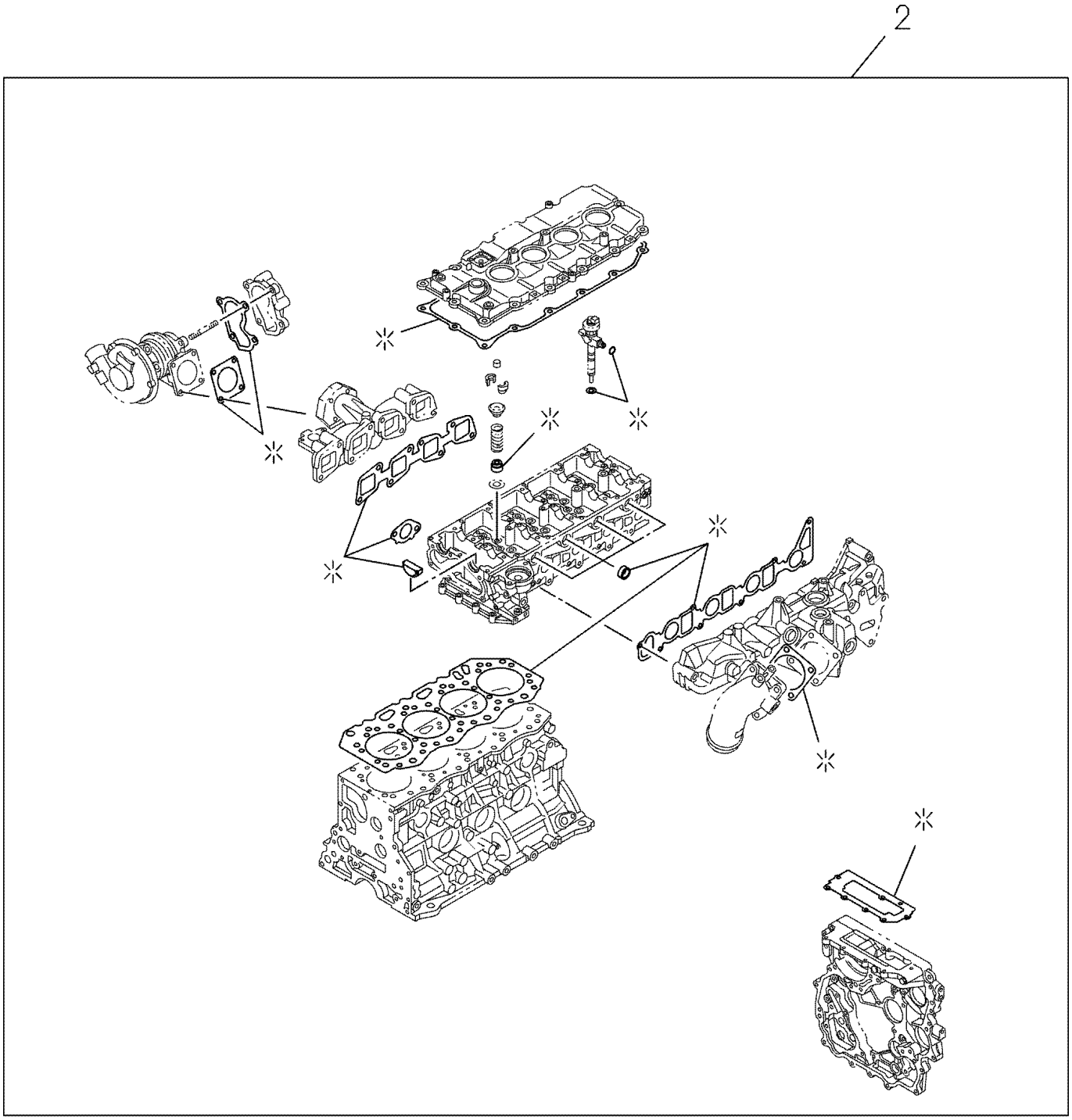

BS07B425

PACKAGE SEALS - ENGINE

REF	FN	PART NUMBER	YR/SN	QTY	DESCRIPTION
2		87595260		1	JUNTA, T=1.475
2		87595262		1	JUNTA, T=1.525
2		87595264		1	JUNTA, T=1.575

COVER - CYLINDER HEAD

1

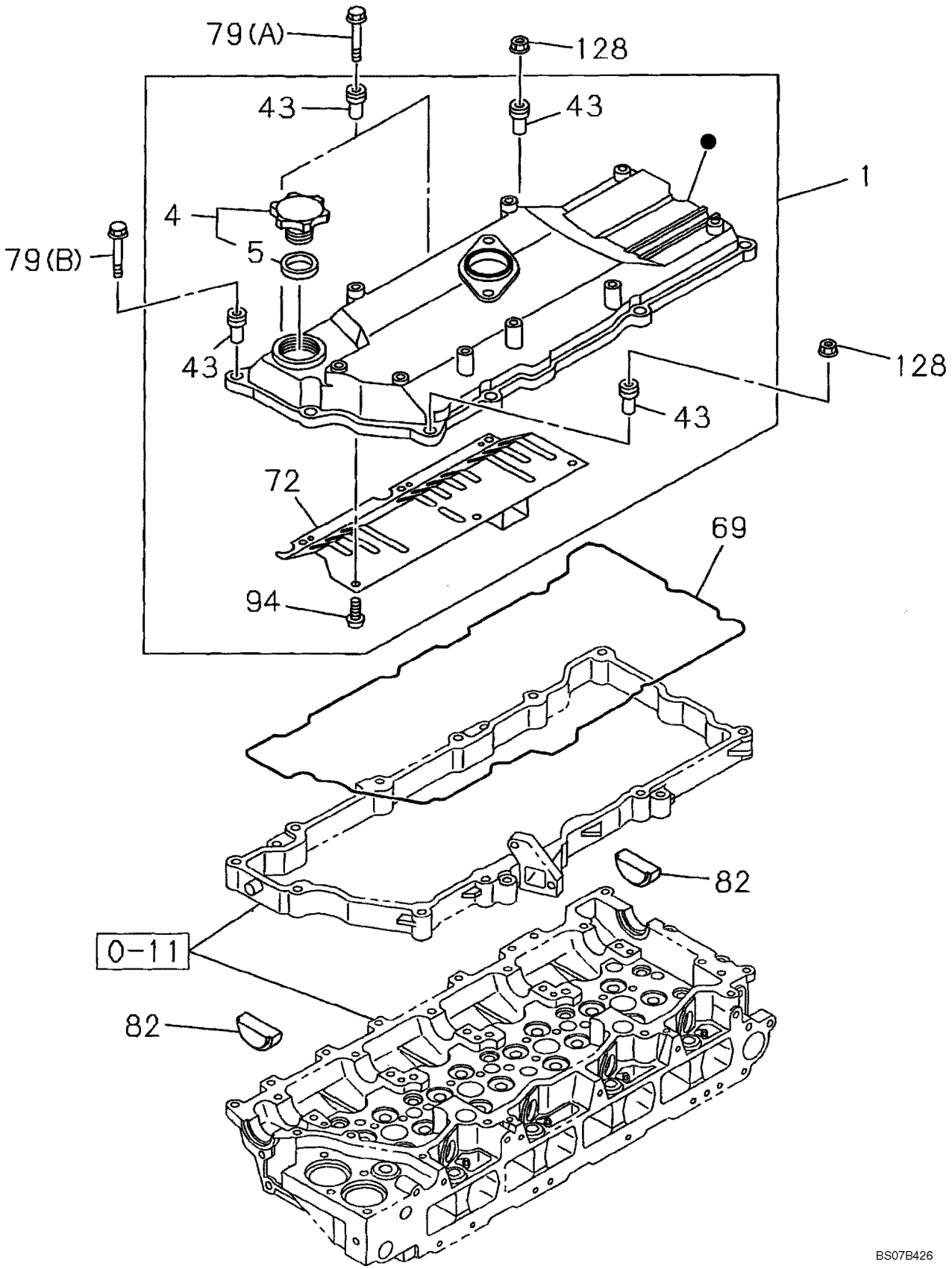

COVER - CYLINDER HEAD

REF	FN	PART NUMBER	YR/SN	QTY	DESCRIPTION
0-11		REF		1	INSTRUCAO, See Figure 02-10
1		87595244		1	TAMPA VALVULA, Incl. 4, 43, 72, 94
4		288798A1		1	TAMPA RESERVATORIO, Incl. 5
5		72109500		1	ANEL DE VEDACAO
43		87384321		11	JUNTAS
69		87595255		1	JUNTA
72		438070A1		1	PLACA
79A		87595258		2	PARAFUSO
79B		87595261		7	PARAFUSO
82		72109530		2	BUJÃO
94		87595263		6	PARAFUSO
128		87595271		2	PORCA

COVER - CYLINDER HEAD

1

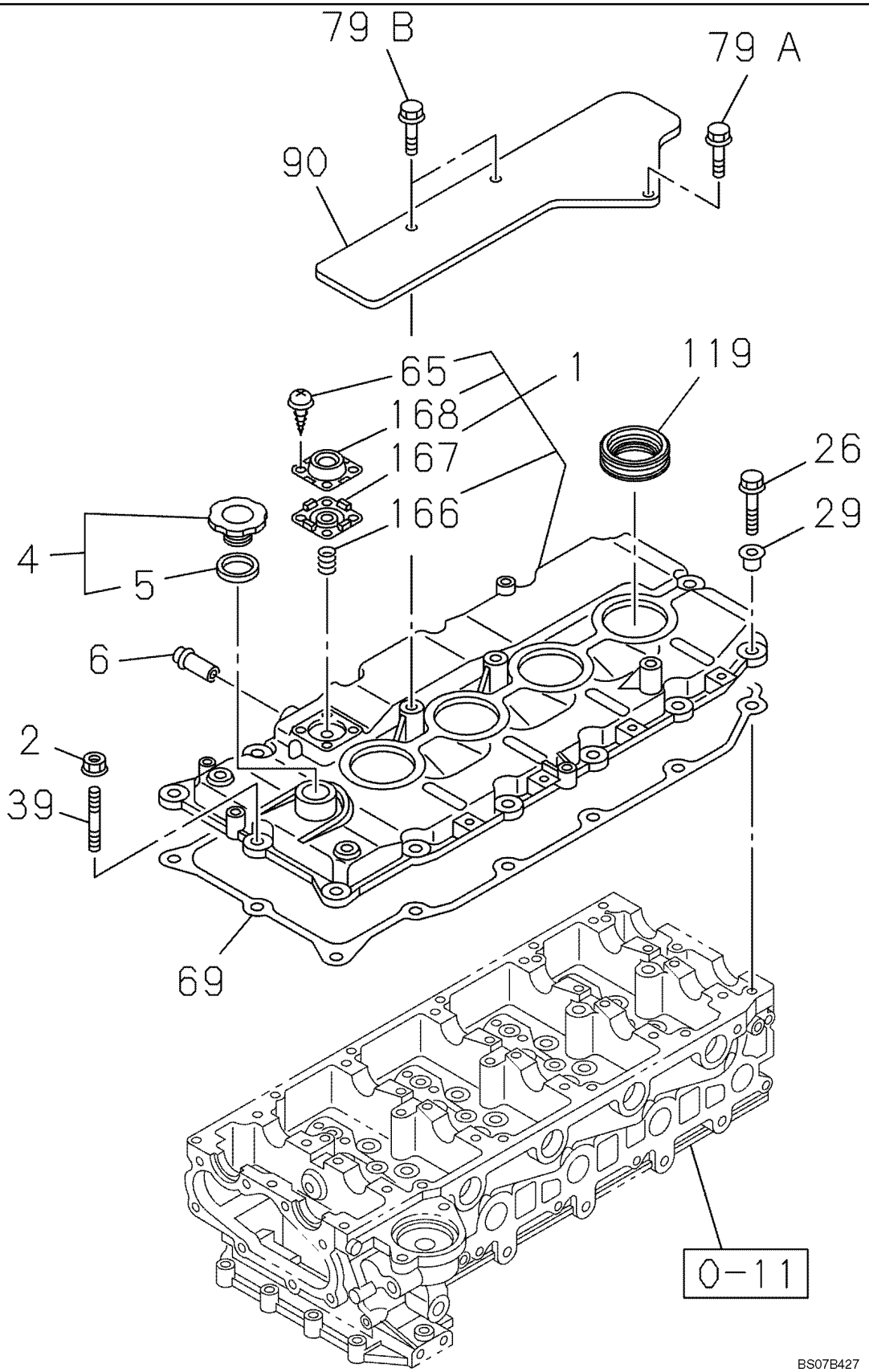

COVER - CYLINDER HEAD

REF	FN	PART NUMBER	YR/SN	QTY	DESCRIPTION
0-11		REF		1	INSTRUCAO, See Figure 02-10
1		87595265		1	TAMPA, Incl. 65, 166 - 168
2		87595267			PORCA
4		353965A1		1	TAMPA RESERVATORIO, Incl. 5
5		353966A1		2	ANEL DE VEDAÇÃO
6		87595269		1	TUBO DE INTRODUÇÃO
26		87595272		13	PARAFUSO
29		87595273		14	JUNTAS
39		87595274		1	PRISIONEIRO
65		87595289		4	PARAFUSO DE REGULAGEM
69		87595291		1	JUNTA
79A		87595292		1	PARAFUSO
79B		87595323		2	PARAFUSO
90		87595356		1	TAMPA
119		87595387		4	TAMPA
166		NSS		1	BOLETIM INFORMATIVO, Spring
167		87595390		1	DIAFRAGMA
168		87595391		1	TAMPA

CYLINDER HEAD

1

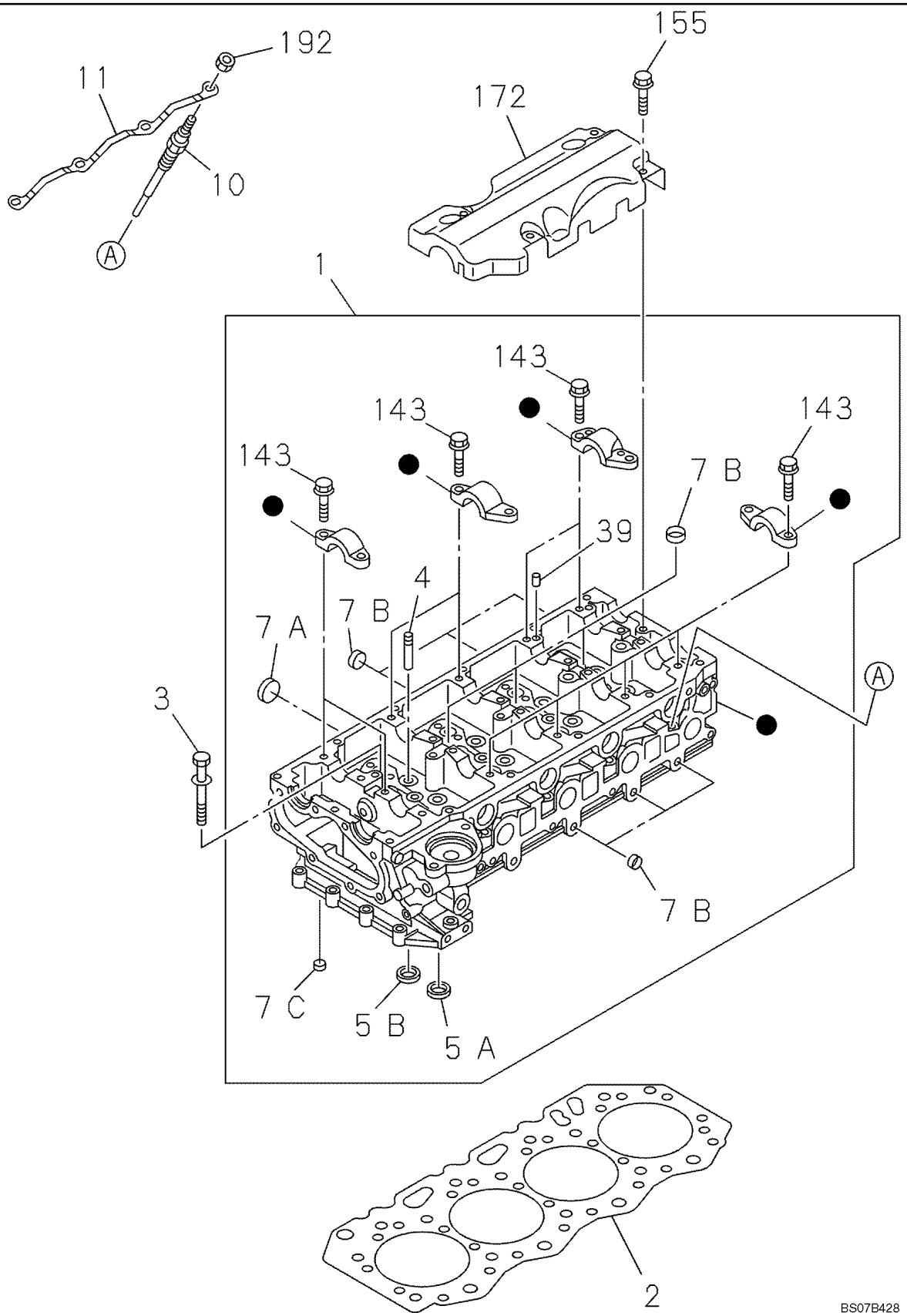

CYLINDER HEAD

REF	FN	PART NUMBER	YR/SN	QTY	DESCRIPTION
1		87595392		1	CABEÇOTE, Incl. 4, 5A, 5B, 7A - 7C, 39, 143; Also See Figure 02-11
2		87595394		1	JUNTA
2		87595407		1	JUNTA
2		87595412		1	JUNTA
3		87595413		18	PARAFUSO
4		87595424		16	GUIA DE VÁLVULA
5A		87595425		8	ASSENTO VALVULA
5B		87595431		8	ASSENTO VALVULA
7A		87384455		2	COPA
7B		76609741		13	BUJÃO
7C		87595433		7	COPA
10		438043A1		4	BUJÃO
11		87595811		1	CONECTOR
39		87595819		20	GRÃO
143		87595822		20	PARAFUSO
155		87595825		4	PARAFUSO
172		87595827		1	PLACA
192		87595807		4	PORCA

CYLINDER HEAD

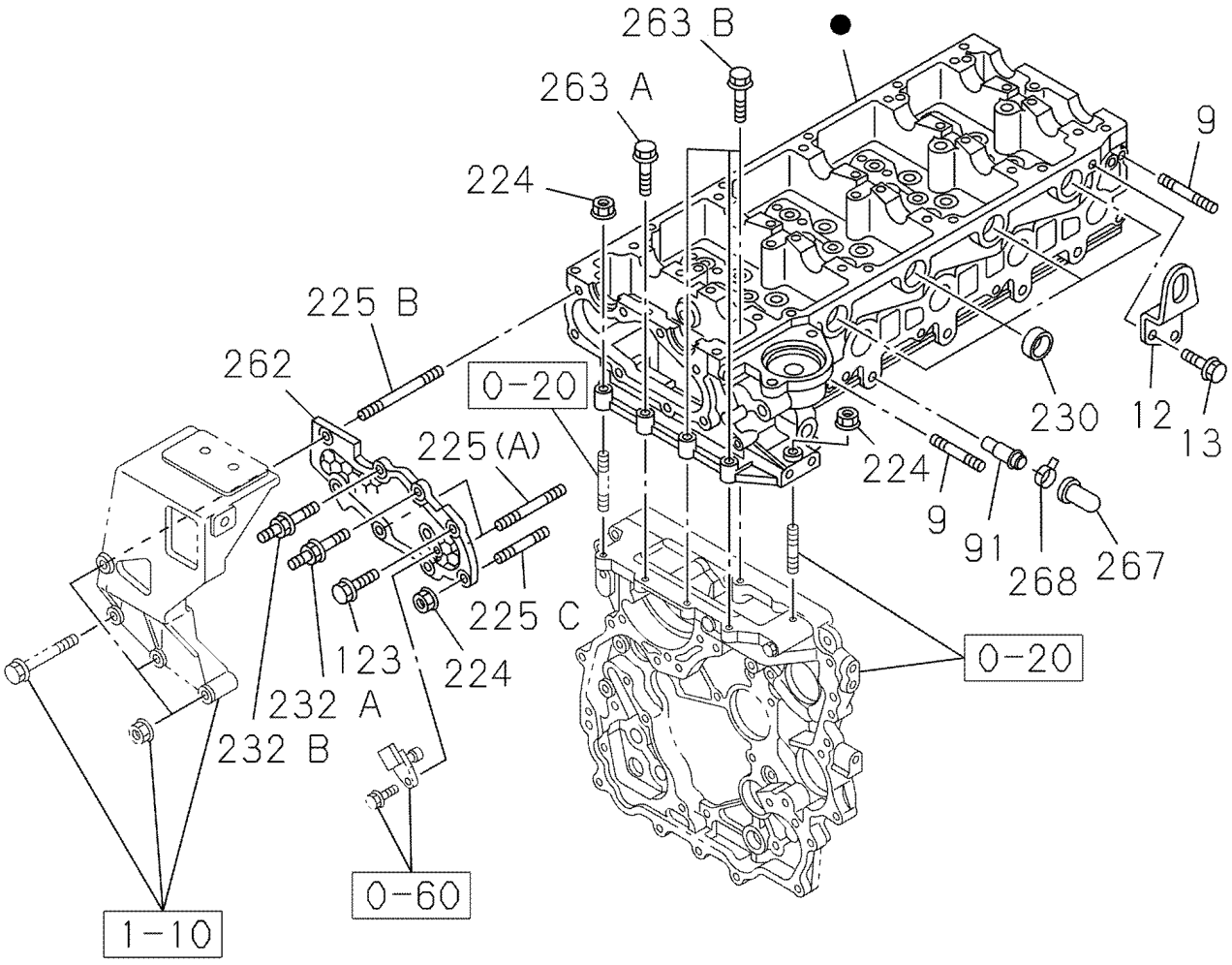

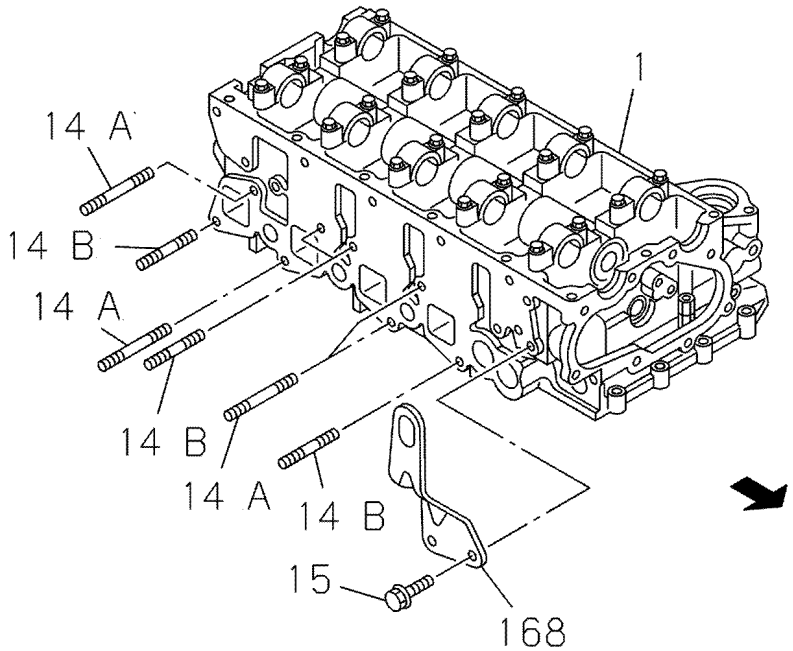

BS07B429

CYLINDER HEAD

REF	FN	PART NUMBER	YR/SN	QTY	DESCRIPTION
0-20		REF		1	INSTRUCAO, See Figure 02-18
0-60		REF		1	INSTRUCAO, See Figure 04-02
1-10		REF		1	INSTRUCAO, See Figure 02-33
9		87595444		2	PRISIONEIRO
12		87595812		1	ICADOR
13		87595292		2	PARAFUSO
14A		87683440		4	PRISIONEIRO, Replaces 87595814
14B		87595815		4	PRISIONEIRO
15		87595817		2	PARAFUSO
91		87595820		1	TUBO DE INTRODUÇÃO
123		87595821		1	PARAFUSO
168		87595826		1	ICADOR
224		87595428		3	PORCA
225A		87595833		2	PRISIONEIRO
225B		87595834		1	PRISIONEIRO
225C		87595835		1	PRISIONEIRO
230		437881A1		4	JUNTA
232A		87595836		1	PRISIONEIRO
232B		87595837		1	PRISIONEIRO
262		87595838		1	TAMPA
263A		87595839		1	PARAFUSO
263B		87595258		3	PARAFUSO
267		87595843		1	BUJÃO
268		86990039		1	FIXADOR

CYLINDER BLOCK

1

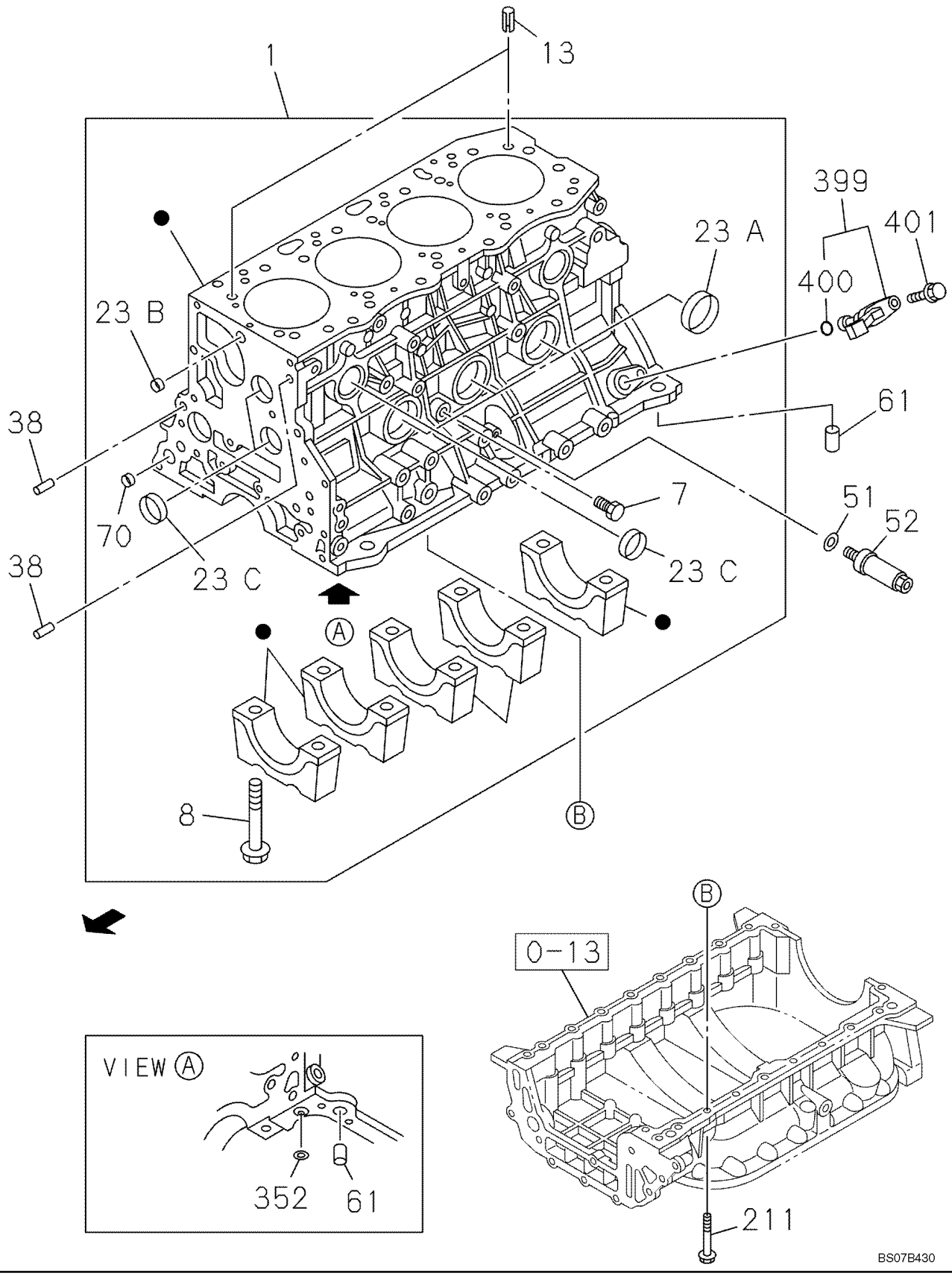

CYLINDER BLOCK

REF	FN	PART NUMBER	YR/SN	QTY	DESCRIPTION
0-13		REF		1	INSTRUCAO, See Figure 02-14
1		87595845		1	BLOCO DE CILINDROS, Incl. 23A, 23B, 23C, 70; Also See Figure 02-13
7		355138A1		2	BUJÃO
8		353948A1		10	PARAFUSO
13		355142A1		2	GRÃO
23A		76609741		2	BUJÃO
23B		87595849		4	COPA
23C		355144A1		2	ANEL
38		87379458		2	PINO
51		87595851		1	JUNTA
52		87595852		1	GRAXEIRA
61		355160A1		2	BUJÃO
70		353962A1		6	BUJÃO
211		87595918		19	PARAFUSO
352		87595924		1	JUNTA
399		87595926		1	SENSOR, Incl. 400
400		87595936		1	JUNTA
401		87595938		1	PARAFUSO

CYLINDER BLOCK

1

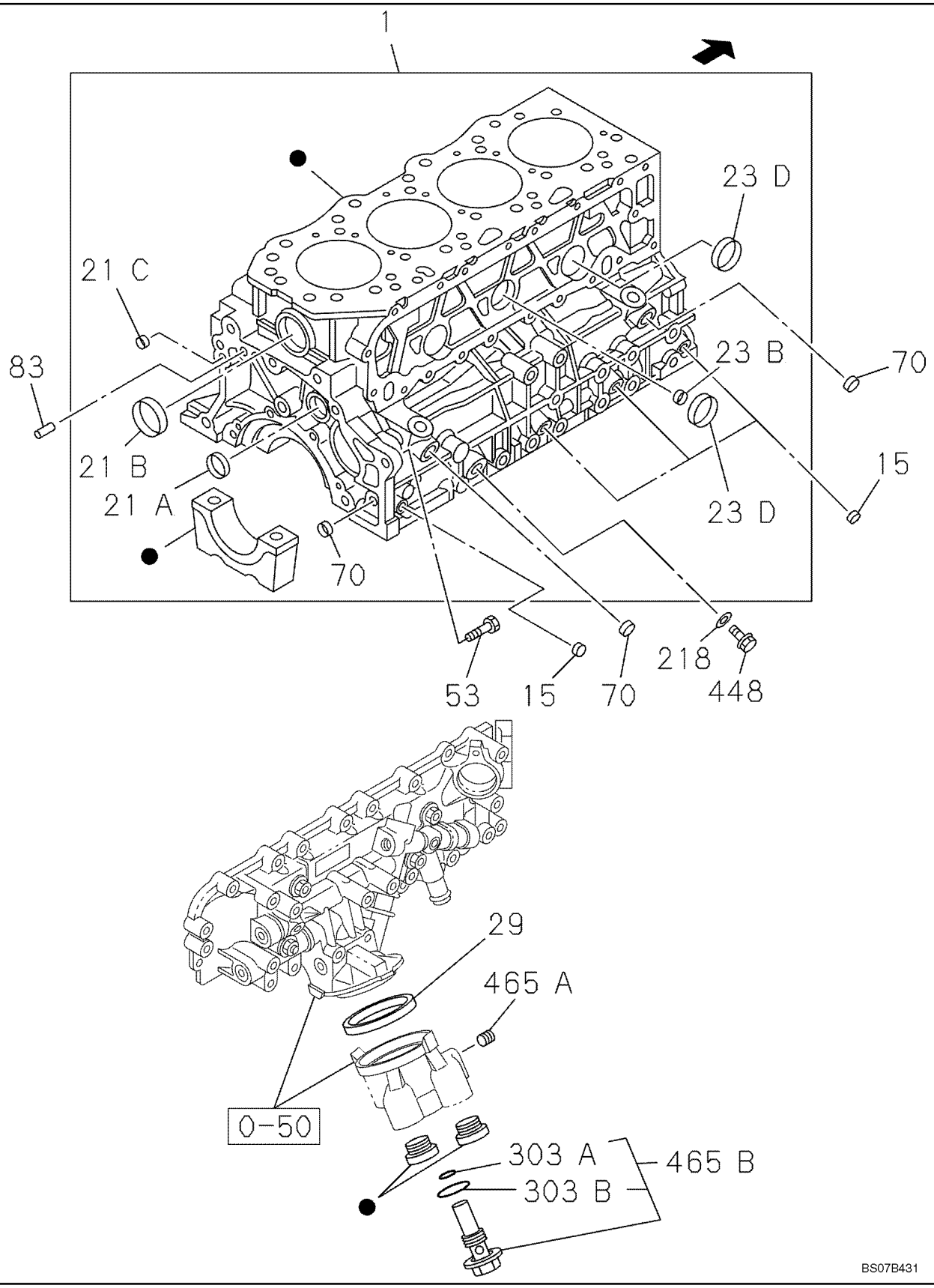

CYLINDER BLOCK

REF	FN	PART NUMBER	YR/SN	QTY	DESCRIPTION
0-50		REF		1	INSTRUCAO, See Figure 02-29
1		87595845		1	BLOCO DE CILINDROS, Incl. 21A, 21B, 21C, 23B, 23D, 70; Also See Figure 02-12
15		87595846		5	BUJÃO
21A		289414A1		1	PRATO
21B		355145A1		1	ANEL
21C		355144A1		1	ANEL
23B		87595849		4	COPA
23D		87398694		3	COPA
29		87595850		1	JUNTA
53		72961772		1	PARAFUSO
70		353962A1		6	BUJÃO
83		87595916		1	PINO
218		87601524		1	JUNTA
303A		87595920		1	JUNTA
303B		87595923		1	JUNTA
448		87643313		1	BUJÃO, Replaces 87595940
465A		87595941		1	BUJÃO
465B		87595942		1	BUJÃO, Incl. 303A, 303B

OIL PAN

1

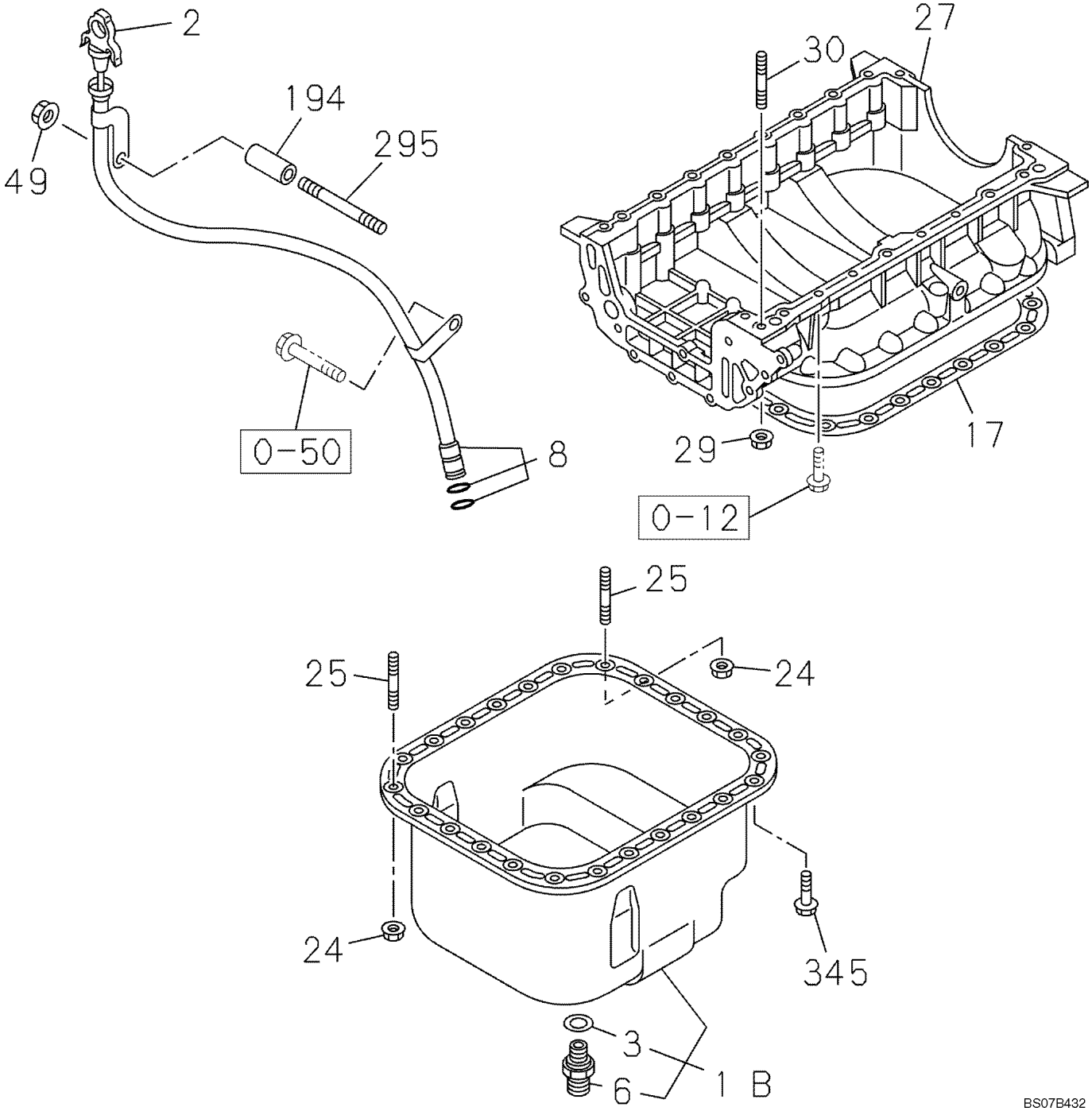

OIL PAN

REF	FN	PART NUMBER	YR/SN	QTY	DESCRIPTION
0-12		REF		1	INSTRUCAO, See Figure 02-12
0-50		REF		1	INSTRUCAO, See Figure 02-29
1B		87595943		1	CÁRTER DE ÓLEO, Incl. 3, 6
2		87595944		1	INDICADOR DE NÍVEL
3		87393862		1	JUNTA
6		87393863		1	BUJÃO
8		87595988		1	TUBO
17		87595992		1	JUNTA
24		87595428		2	PORCA
25		87683471		2	PRISIONEIRO, Replaces 87596000
27		87596002		1	BLOCO MOTOR
29		87595428		1	PORCA
30		87596348		1	PRISIONEIRO
49		426067A1		1	PORCA, Replaces 87596349
194		87596350		1	ESPAÇADOR
295		87596371		1	PRISIONEIRO
345		87595866		22	PARAFUSO

CAMSHAFT - VALVE MECHANISM

1

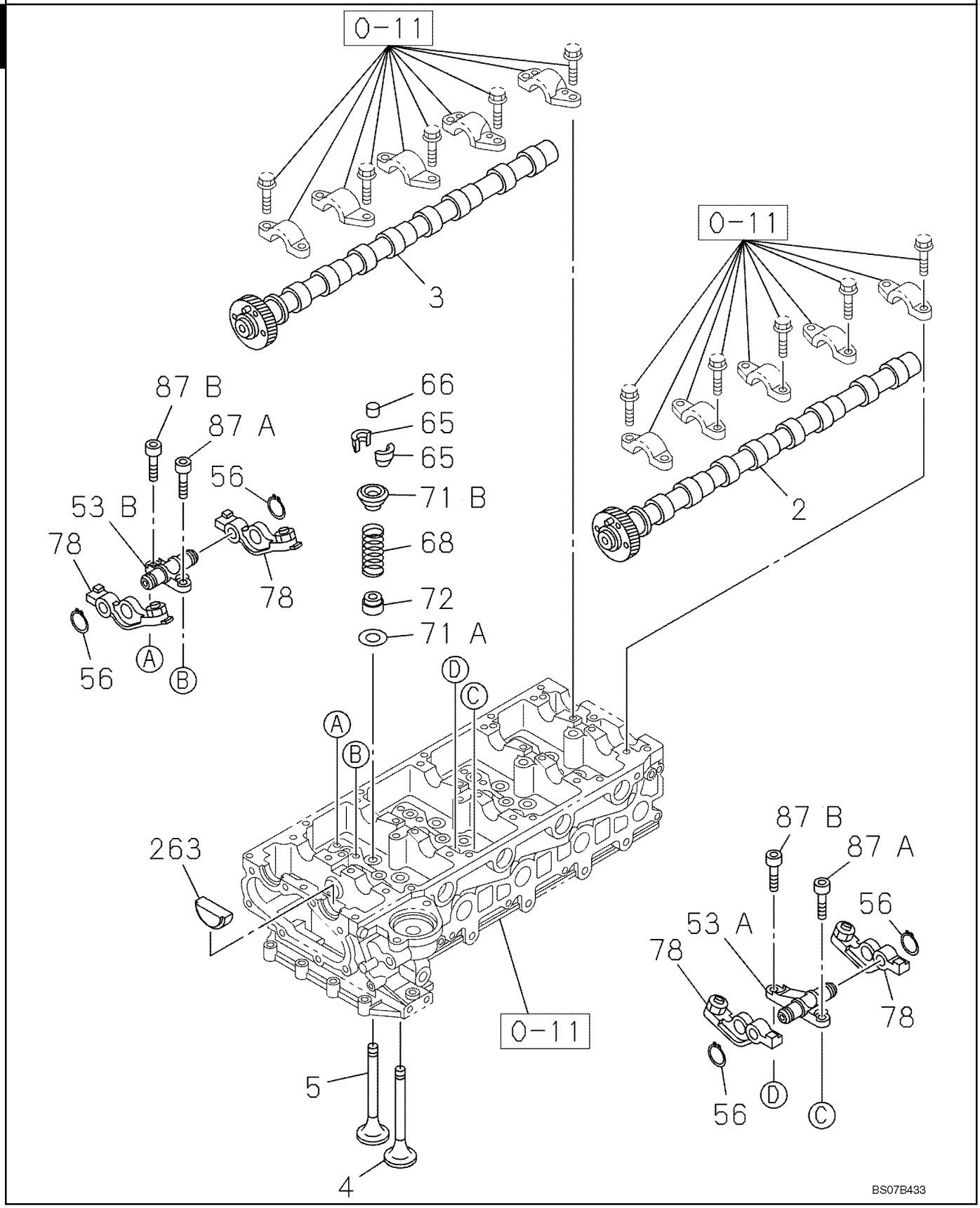

CAMSHAFT - VALVE MECHANISM

REF	FN	PART NUMBER	YR/SN	QTY	DESCRIPTION
0-11		REF			INSTRUCAO, See Figure 02-10
2		87596372		1	EIXO EXCÊNTRICO
3		87596374		1	EIXO EXCÊNTRICO
4		87596386		8	VÁLVULA DE ADMISSÃO
5		87596387		8	VÁLVULA DE ESCAPE
53A		87596389		4	EIXO
53B		87596393		4	EIXO
56		87596397		18	ANEL-ELÁSTICO
65		87596410		32	BRAÇADEIRA
66		87596420		16	BUJÃO
68		87596427		16	MOLA VALVULA
71A		87596434		16	ASSENTO VALVULA
71B		87596436		16	ASSENTO VALVULA
72		87596441		16	ANEL DE VEDACAO
78		87596443		18	BRACO DO BOLANCIM
87A		87596445		8	PARAFUSO
87B		87596446		8	PARAFUSO
263		87596541		4	JUNTA

CAMSHAFT - VALVE MECHANISM

1

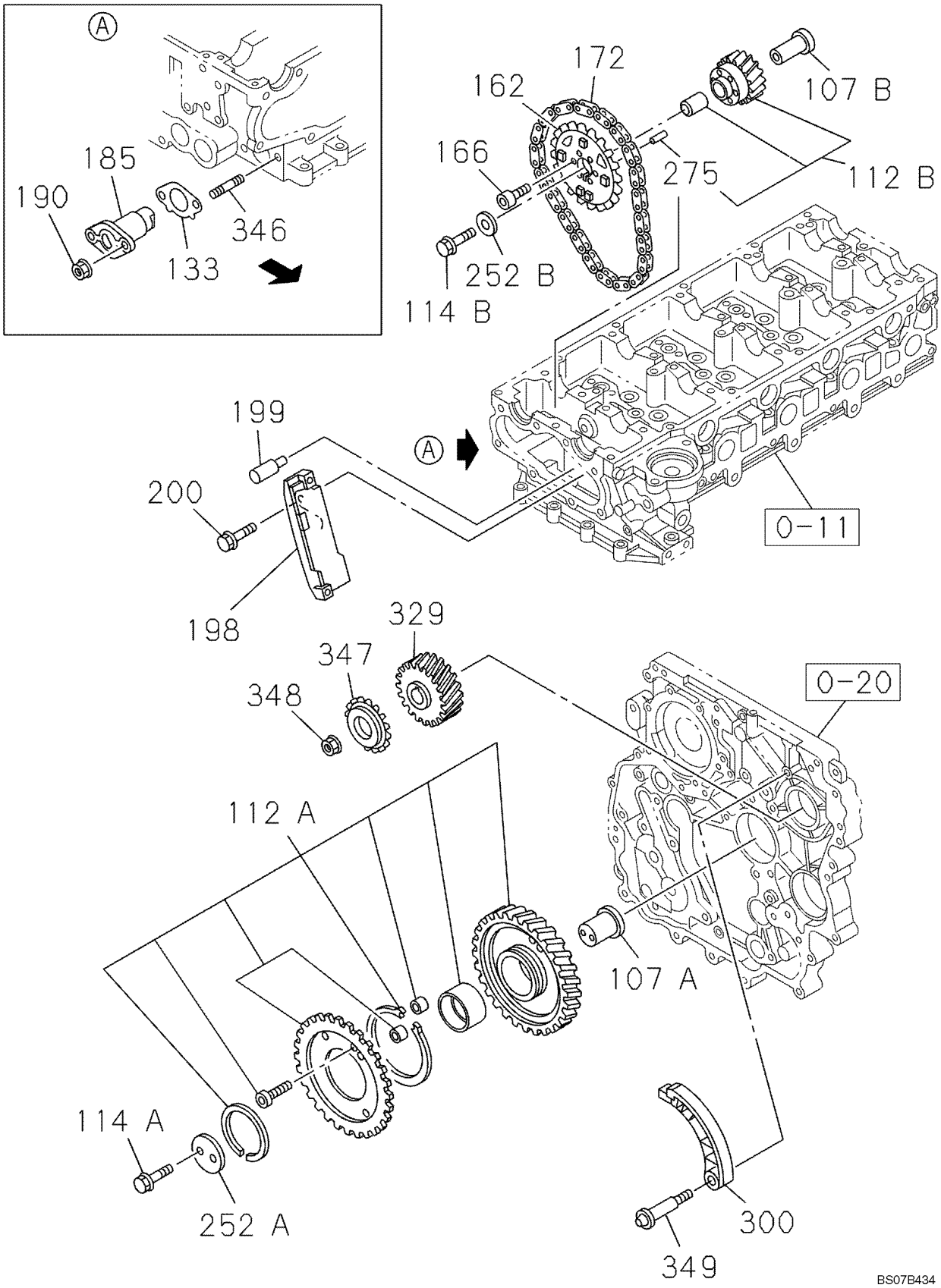

CAMSHAFT - VALVE MECHANISM

REF	FN	PART NUMBER	YR/SN	QTY	DESCRIPTION
0-11		REF			INSTRUCAO, See Figure 02-10
0-20		REF			INSTRUCAO, See Figure 02-18
107A		87596448		1	EIXO INTERMEDIÁRIO
107B		87596449		1	EIXO INTERMEDIÁRIO
112A		87596451		1	ENGRENAGEM
112B		87596461		1	ENGRENAGEM, Incl. 275
114A		87596463		2	PARAFUSO
114B		87596465		1	PARAFUSO
133		87596467		1	JUNTA
162		87596470		1	RODA DENTADA
166		87596472		6	PARAFUSO
172		87596480		1	CORRENTE
185		87596483		1	TENSIONADOR
190		87595267		2	PORCA
198		87596517		1	GUIA
199		87596521		1	JATO
200		87596528		2	PARAFUSO
252A		87596538		1	FLANGE
252B		87596540		1	FLANGE
275		288594A1		1	PINO
300		87596557		1	ALAVANCA
329		87596571		1	ENGRENAGEM
347		87596602		1	RODA DENTADA
348		87596616		1	PORCA
349		87596619		1	PINO

PISTONS AND CRANKSHAFT

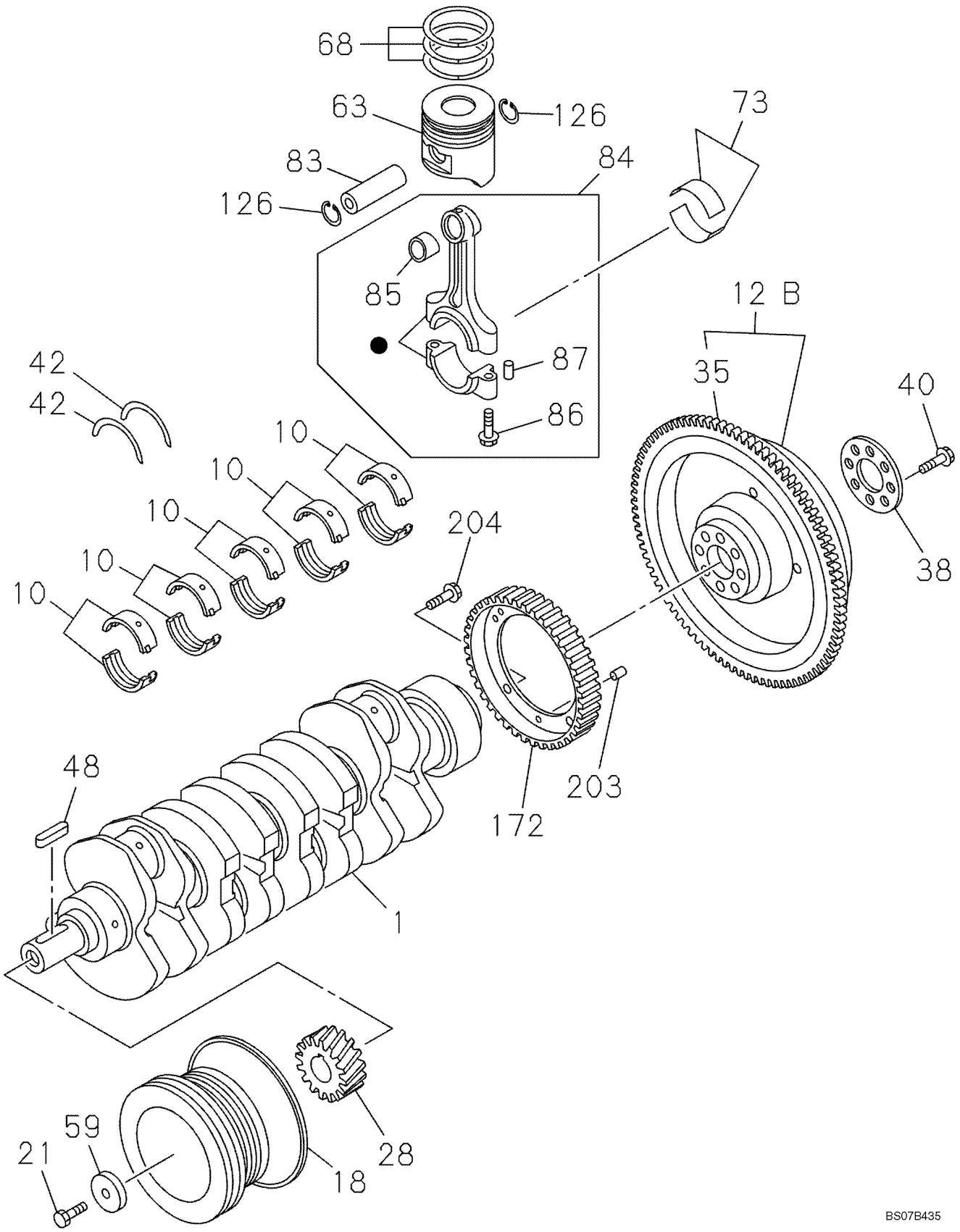

PISTONS AND CRANKSHAFT

REF	FN	PART NUMBER	YR/SN	QTY	DESCRIPTION
1		87596623		1	VIRABREQUIM
10		87596625		5	CASQUILHO VIRABREQUI
10		87596636		5	CASQUILHO VIRABREQUI
10		87596638		5	CASQUILHO VIRABREQUI
10		87596640		5	CASQUILHO VIRABREQUI
10		87596642		5	CASQUILHO VIRABREQUI
12B		87596647		1	VOLANTE DE MOTOR, Incl. 35
18		87596648		1	POLIA
21		355117A1		1	PARAFUSO
28		87596887		1	ENGRENAGEM
35		87596889		1	ENGRENAGEM
38		355113A1		1	PLACA
40		87596891		8	PARAFUSO
42		87596895		2	ARRUELA PLANA
48		86990175		1	CHAVETA
59		355119A1		1	ARRUELA PLANA
63		87596896		4	PISTÃO
63		87596901		4	PISTÃO
63		87596903		4	PISTÃO
68		87596906		4	JOGO DE PISTAO
73		87594036		4	JOGO DE ROLAMENTOS
83		87596909		4	PINO
84		87596910		4	BIELA DE PISTÃO, Incl. 85 - 87
85		87596913		4	BUCHA
86		86990183		8	PARAFUSO
87		86990184		8	PORCA
126		86990181		8	ANEL
172		87596934		1	ROTOR
203		86990184		1	PORCA
204		87596937		3	PARAFUSO

ENGINE FLYWHEEL HOUSING

1

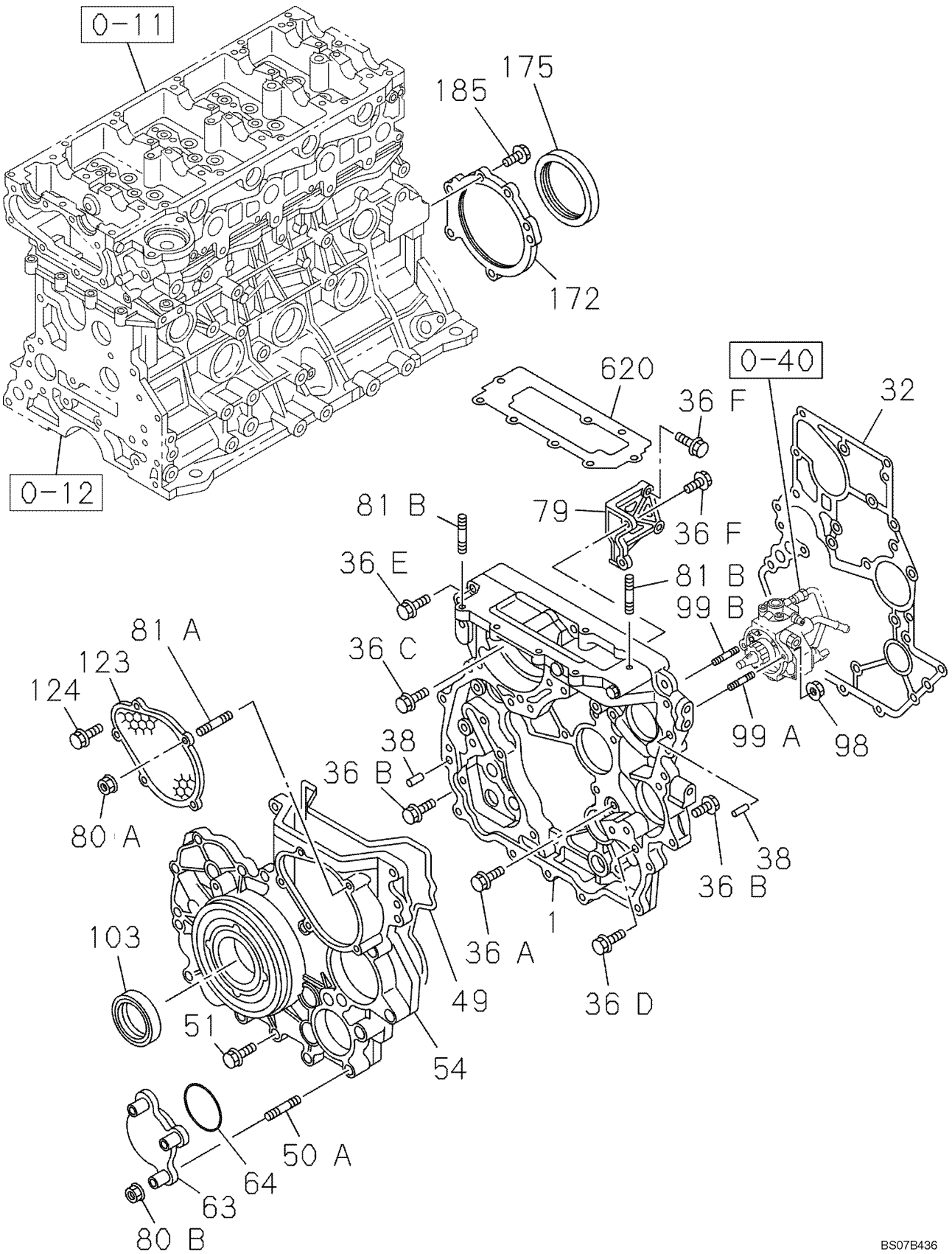

ENGINE FLYWHEEL HOUSING

REF	FN	PART NUMBER	YR/SN	QTY	DESCRIPTION
0-11		REF		1	INSTRUCAO, See Figure 02-10
0-12		REF		1	INSTRUCAO, See Figure 02-12
0-40		REF		1	INSTRUCAO, See Figure 03-04
1		87596939		1	ESTOJO
32		87596945		1	JUNTA
36A		87595866		1	PARAFUSO
36B		87595292		16	PARAFUSO
36C		87595463		1	PARAFUSO
36D		87595806		2	PARAFUSO
36E		87595839		1	PARAFUSO
36F		87596055		3	PARAFUSO
38		87379458		2	PINO
49		87596967		1	JUNTA
50A		87596974		5	PRISIONEIRO
51		87596979		14	PARAFUSO
54		87596984		1	TAMPA
63		87596985		1	TAMPA
64		87596993		1	JUNTA
79		87597000		1	SUPORTE
80A		87595267		1	PORCA
80B		87595267		1	PORCA
81A		87683451		2	PRISIONEIRO, Replaces 87597001
81B		87597006		2	PRISIONEIRO
98		87595428		2	PORCA
99A		87597074		1	PRISIONEIRO
99B		87597075		1	PRISIONEIRO
103		87597076		1	ANEL DE VEDACAO
123		87597078		1	TAMPA
124		87595938		3	PARAFUSO
172		87597081		1	ANEL
175		355280A1		1	VEDADOR DE OLEO
185		87595918		5	PARAFUSO
620		87597632		1	JUNTA
620		87597643		1	JUNTA
620		87597645		1	JUNTA

ENGINE FLYWHEEL HOUSING

1

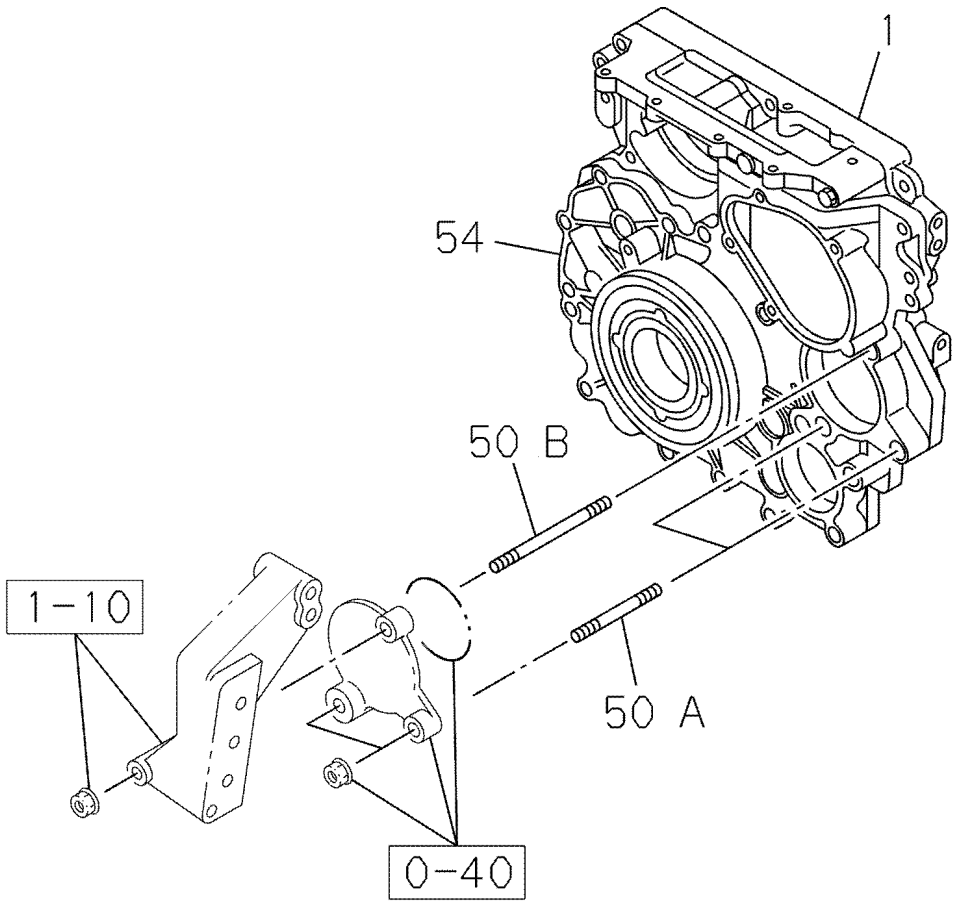

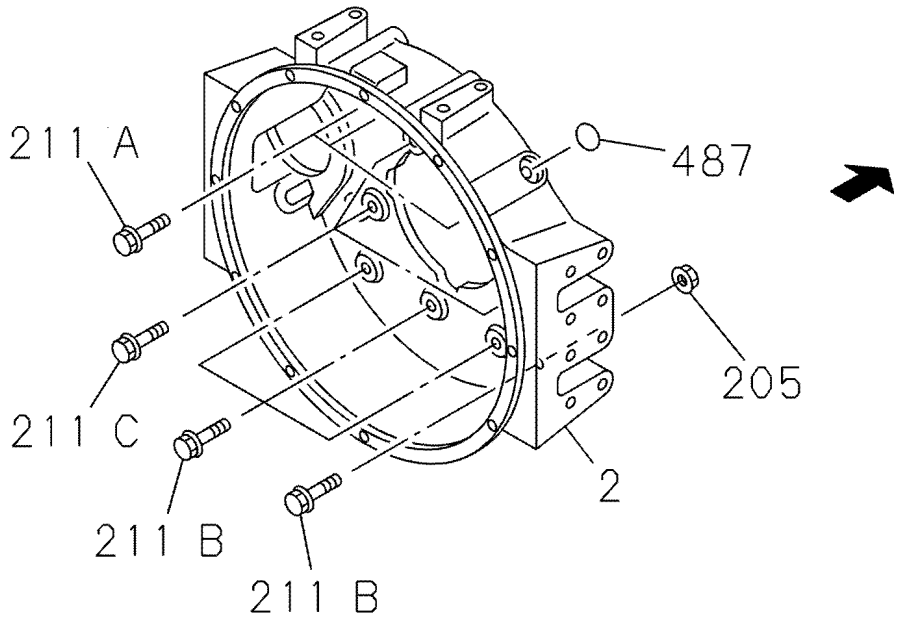

BS07B437

ENGINE FLYWHEEL HOUSING

REF	FN	PART NUMBER	YR/SN	QTY	DESCRIPTION
0-40		REF		1	INSTRUCAO, See Figure 03-04
1-10		REF		1	INSTRUCAO, See Figure 02-33
1		87596939		1	ESTOJO
2		87596941		1	ALOJAMENTO
50A		87596974		5	PRISIONEIRO
50B		87596976		1	PRISIONEIRO
54		87596984		1	TAMPA
205		87596885		1	PORCA
211A		87597112		3	PARAFUSO
211B		87597117		4	PARAFUSO
211C		355282A1		3	PARAFUSO
487		86989867		1	TAMPA

ENGINE MOUNTING

1

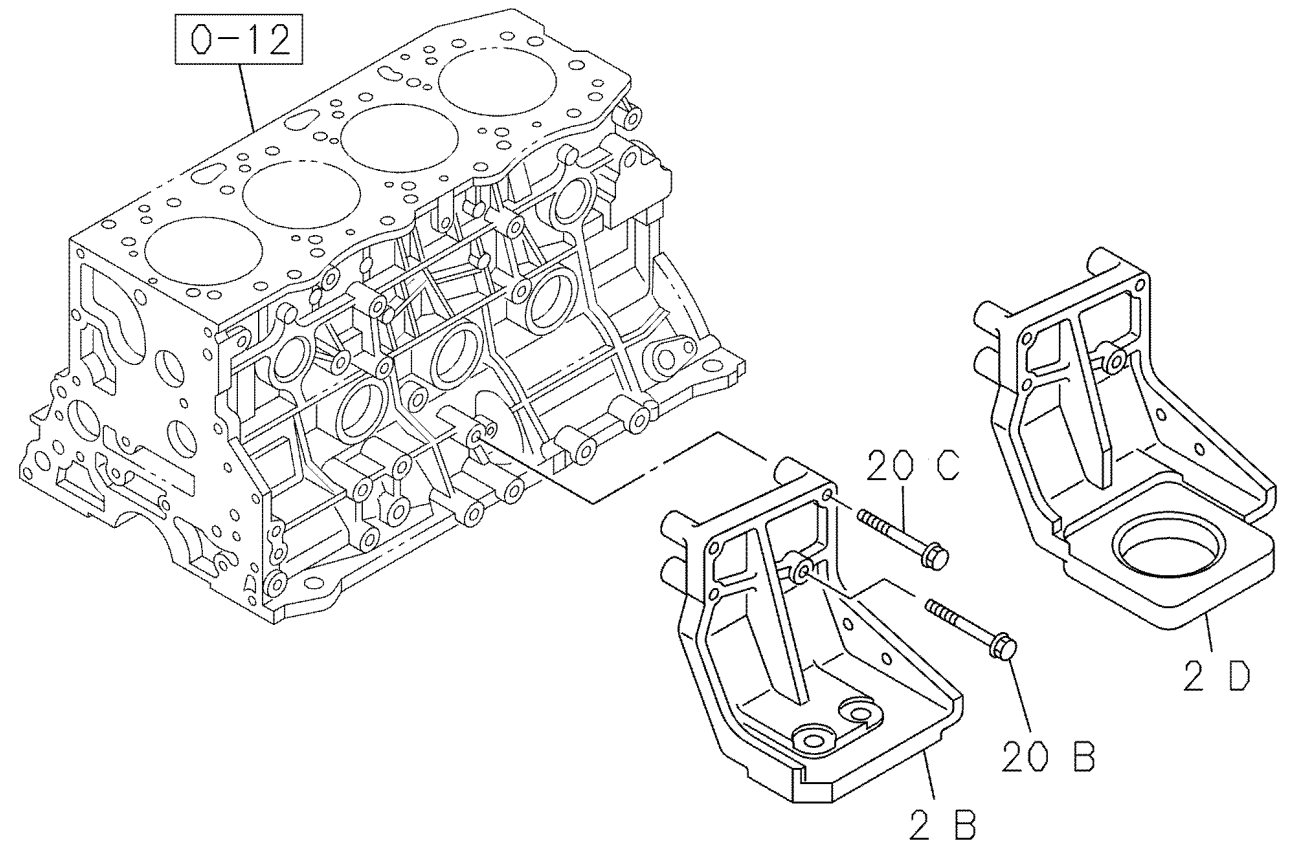

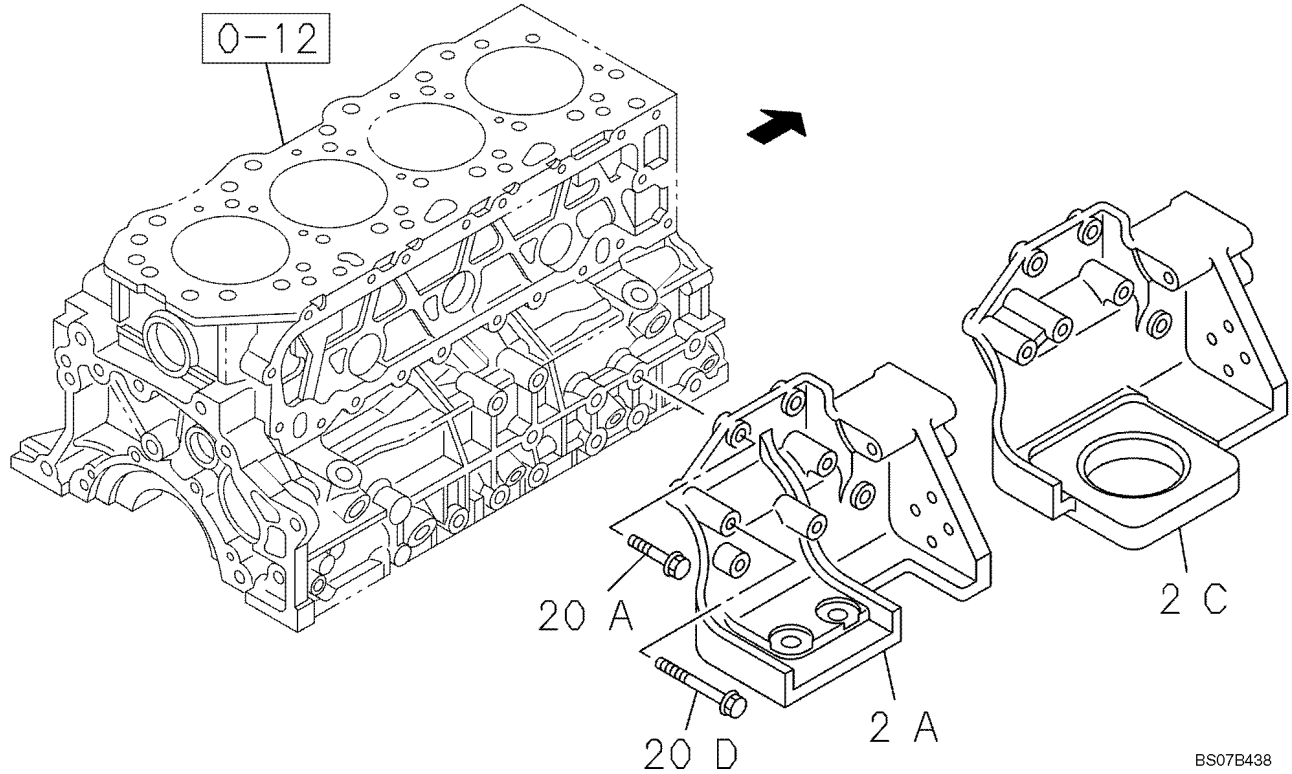

ENGINE MOUNTING

REF	FN	PART NUMBER	YR/SN	QTY	DESCRIPTION
0-12		REF		1	INSTRUCAO, See Figure 02-12
2A		87597647		1	SUPORTE
2B		87597649		1	SUPORTE
2C		87597651		2	PARAFUSO
20A		87597652		1	PARAFUSO
20B		87597653		3	PARAFUSO
20C		87597655		2	PARAFUSO

INTAKE PIPE

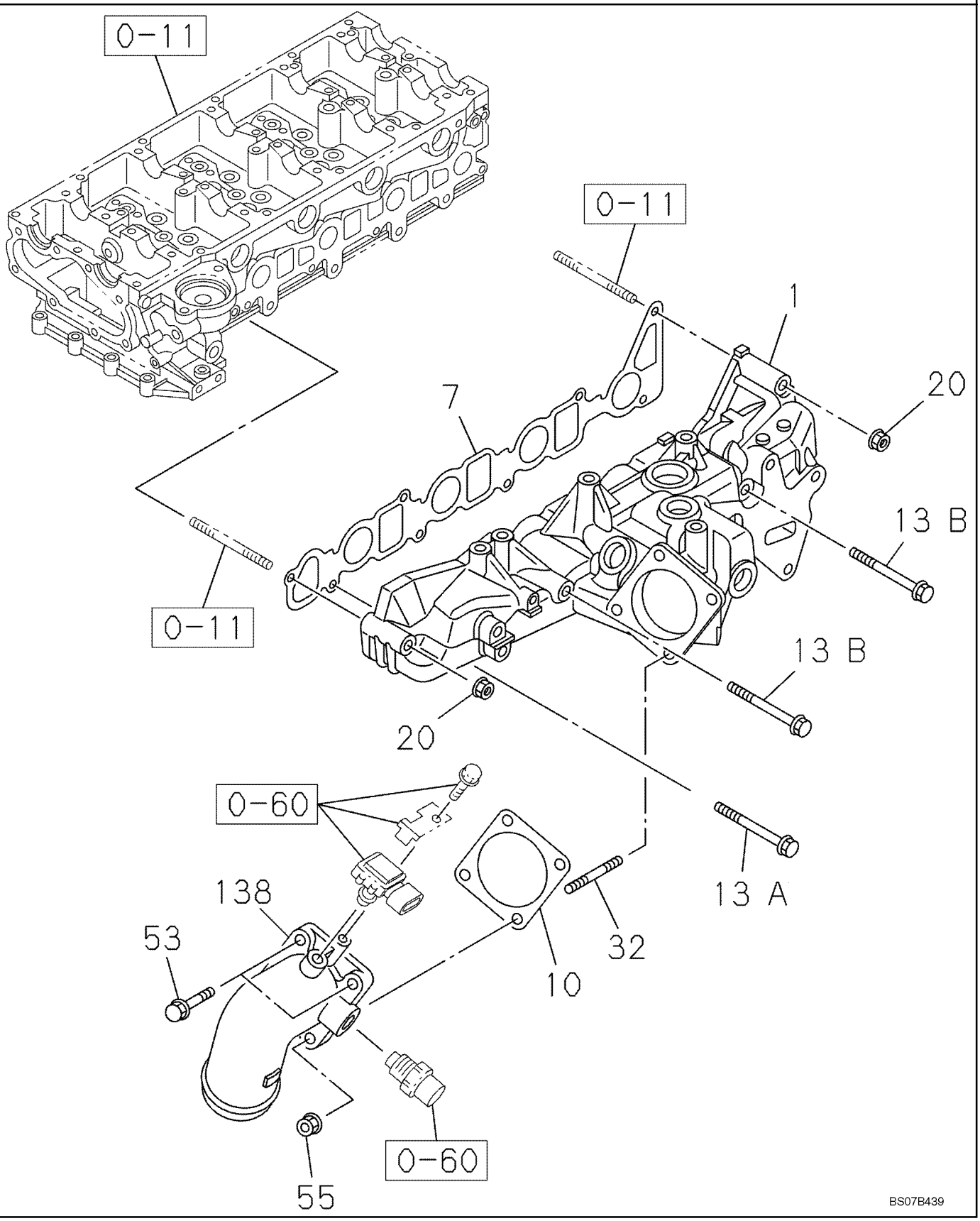

INTAKE PIPE

REF	FN	PART NUMBER	YR/SN	QTY	DESCRIPTION
0-11		REF		1	INSTRUCAO, See Figure 02-10
0-60		REF		1	INSTRUCAO, See Figire 04-02
1		87597656		1	COLETOR DE ADMISSÃO
7		87597657		1	JUNTA
10		87597658		1	JUNTA
13A		87596527		4	PARAFUSO
13B		87597677		2	PARAFUSO
20		87595428		2	PORCA
32		87597678		2	PRISIONEIRO
53		87595272		2	PARAFUSO
55		87597680		2	PORCA
138		87597681		1	TUBO DE INTRODUÇÃO

EXHAUST PIPE

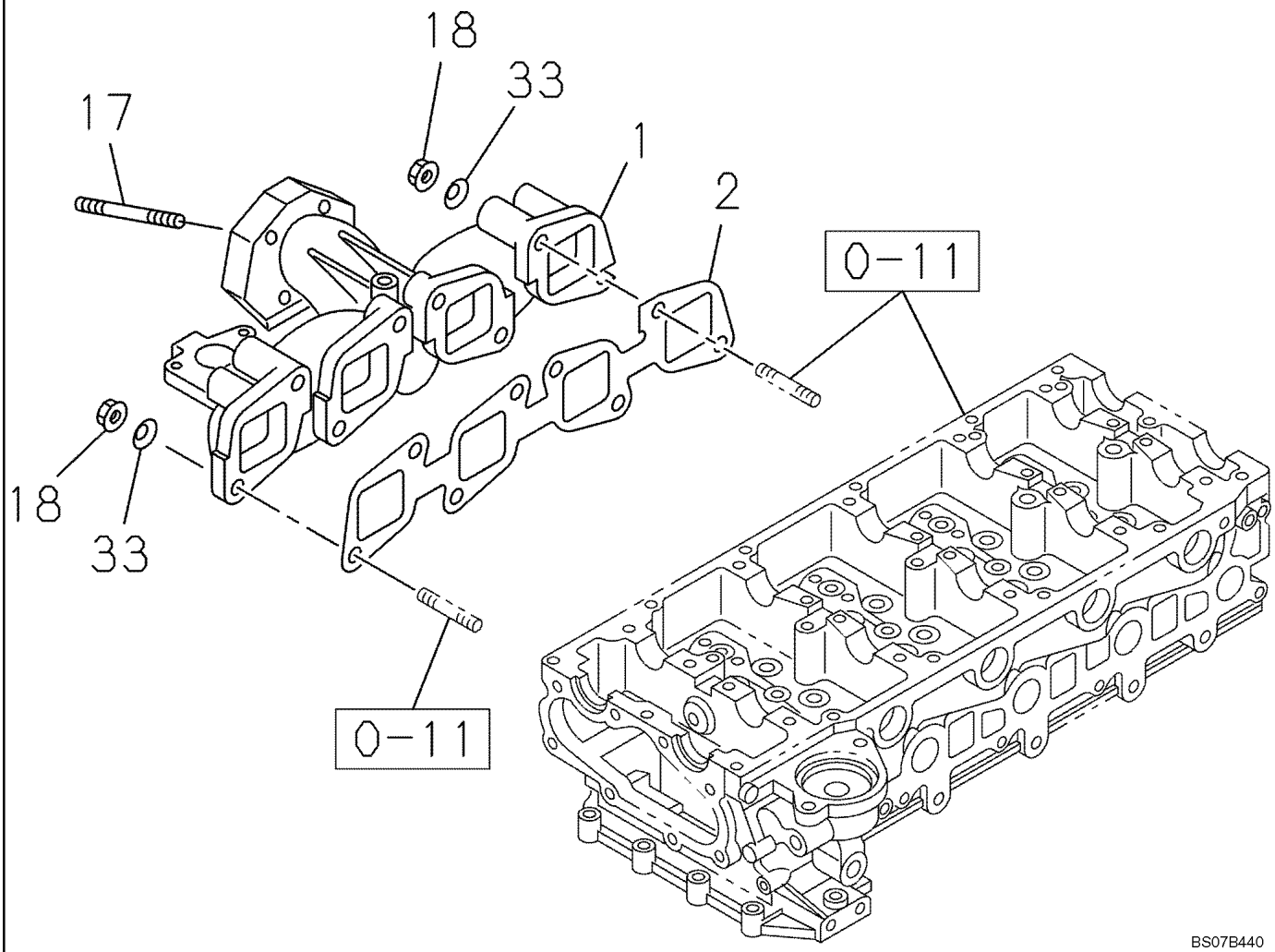

EXHAUST PIPE

REF	FN	PART NUMBER	YR/SN	QTY	DESCRIPTION
0-11		REF		1	INSTRUCAO, See Figure 02-10
1		87597682		1	COLECTOR DE ESCAPE
2		87597684		1	JUNTA
17		87683454		4	PRISIONEIRO, Replaces 87597685
18		87597686		8	PORCA
33		87597687		8	ARRUELA PLANA

BREATHER

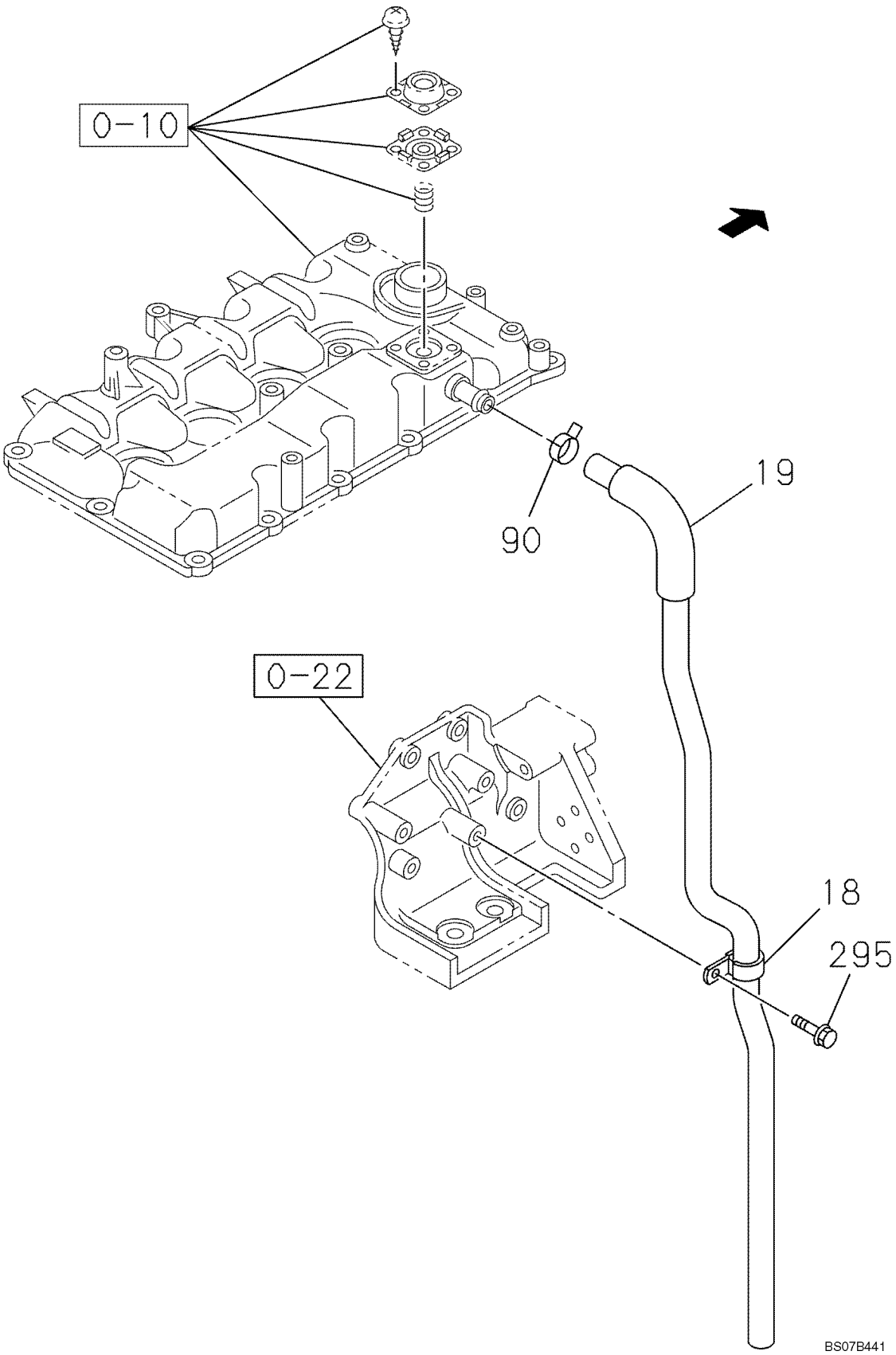

BREATHER

REF	FN	PART NUMBER	YR/SN	QTY	DESCRIPTION
0-10		REF		1	INSTRUCAO, See Figure 02-08
0-22		REF		1	INSTRUCAO, See Figure 02-20
18		87597688		1	FIXADOR
19		86989891		1	MANGUEIRA
90		86989893		1	FIXADOR
295		87595292		1	PARAFUSO

WATER PUMP SYSTEM

1

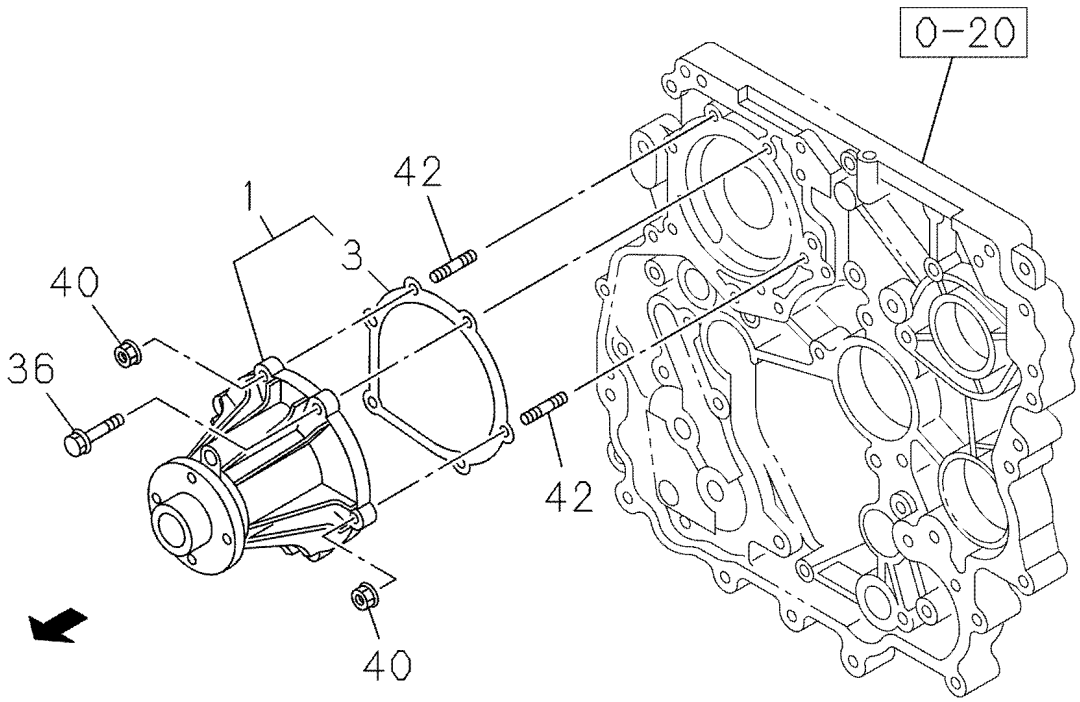

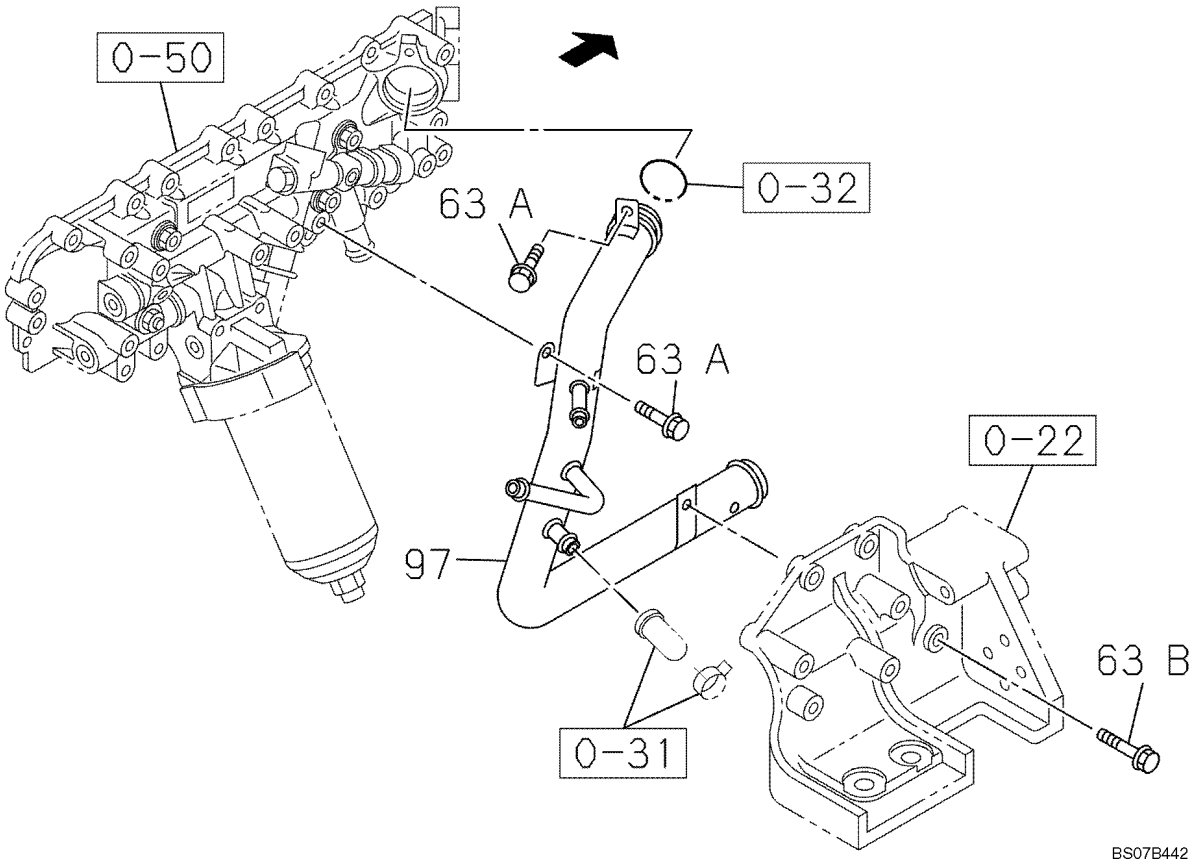

WATER PUMP SYSTEM

REF	FN	PART NUMBER	YR/SN	QTY	DESCRIPTION
0-20		REF		1	INSTRUCAO, See Figure 02-18
0-22		REF		1	INSTRUCAO, See Figure 02-20
0-31		REF		1	INSTRUCAO, See Figure 02-25
0-32		REF		1	INSTRUCAO, See Figure 02-26
0-50		REF		1	INSTRUCAO, See Figure 02-29
1		87597704		1	BOMBA DE ÁGUA
3		87597706		1	JUNTA
36		87595839		4	PARAFUSO
40		87595428		2	PORCA
42		87597716		2	PRISIONEIRO
63A		87595866		2	PARAFUSO
63B		87596055		1	PARAFUSO
97		87597722		1	TUBO DE INTRODUÇÃO

ENGINE WATER CIRCUIT - THERMOSTAT

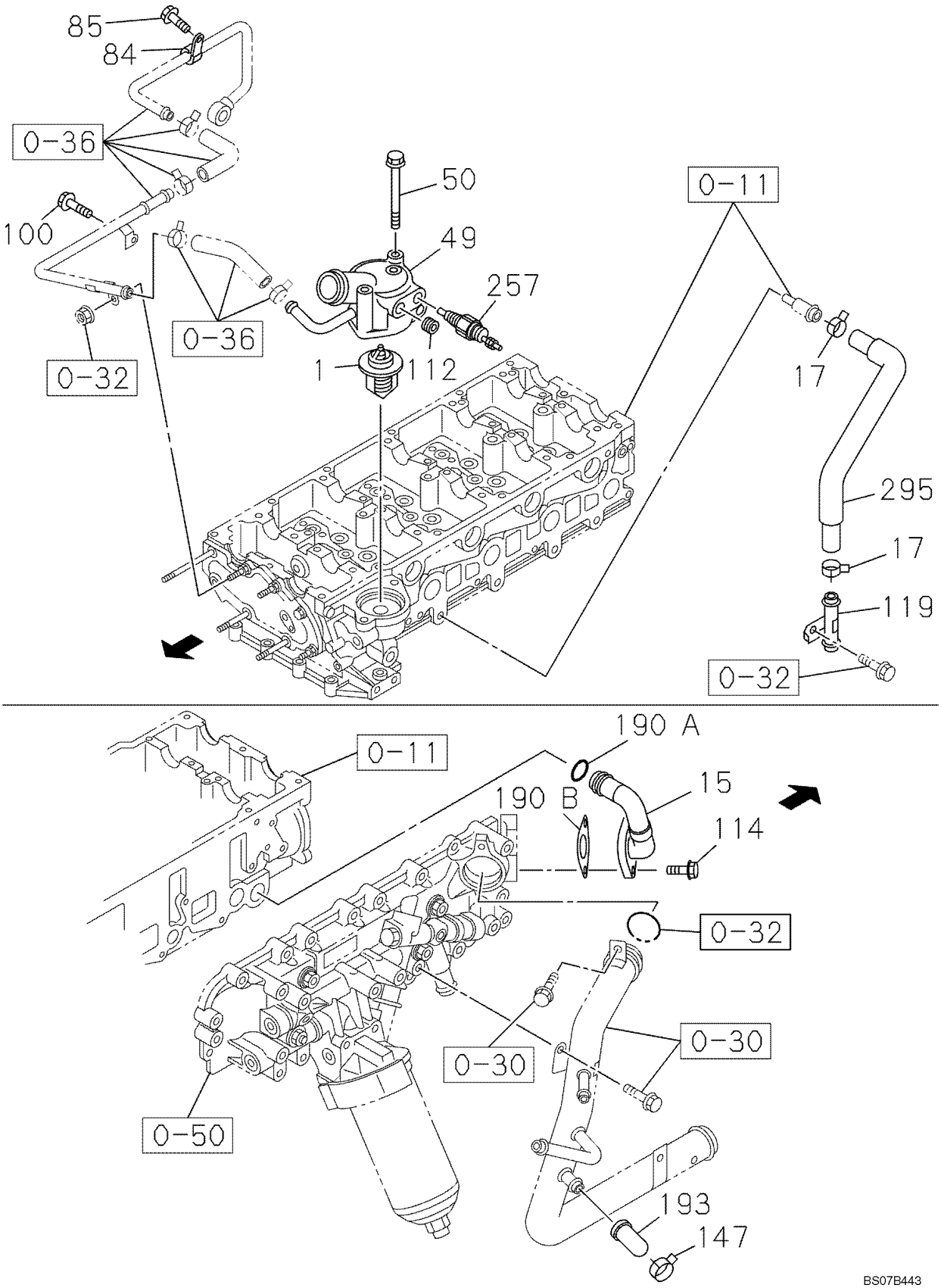

ENGINE WATER CIRCUIT - THERMOSTAT

REF	FN	PART NUMBER	YR/SN	QTY	DESCRIPTION
0-11		REF		1	INSTRUCAO, See Figure 02-10
0-30		REF		1	INSTRUCAO, See Figure 02-24
0-32		REF		1	INSTRUCAO, See Figure 02-26
0-36		REF		1	INSTRUCAO, See Figure 02-28
0-50		REF		1	INSTRUCAO, See Figure 02-29
1		87597723		1	TERMOSTATO
15		87597726		1	TUBO DE INTRODUÇÃO
17		86990039		2	FIXADOR
49		87597728		1	TUBO DE INTRODUÇÃO
50		87597729		2	PARAFUSO
84		87597732		1	FIXADOR
85		87595952		1	PARAFUSO
100		87595952		1	PARAFUSO
112		289415A1		1	BUJÃO
114		87595918		2	PARAFUSO
119		87597733		1	TUBO DE INTRODUÇÃO
147		86990039		1	FIXADOR
190A		87597773		1	JUNTA
190B		87597775		1	JUNTA
193		87595843		1	BUJÃO
257		87602437		1	INTERRUPTOR
295		87631924		1	MANGOTE

ENGINE WATER CIRCUIT

1

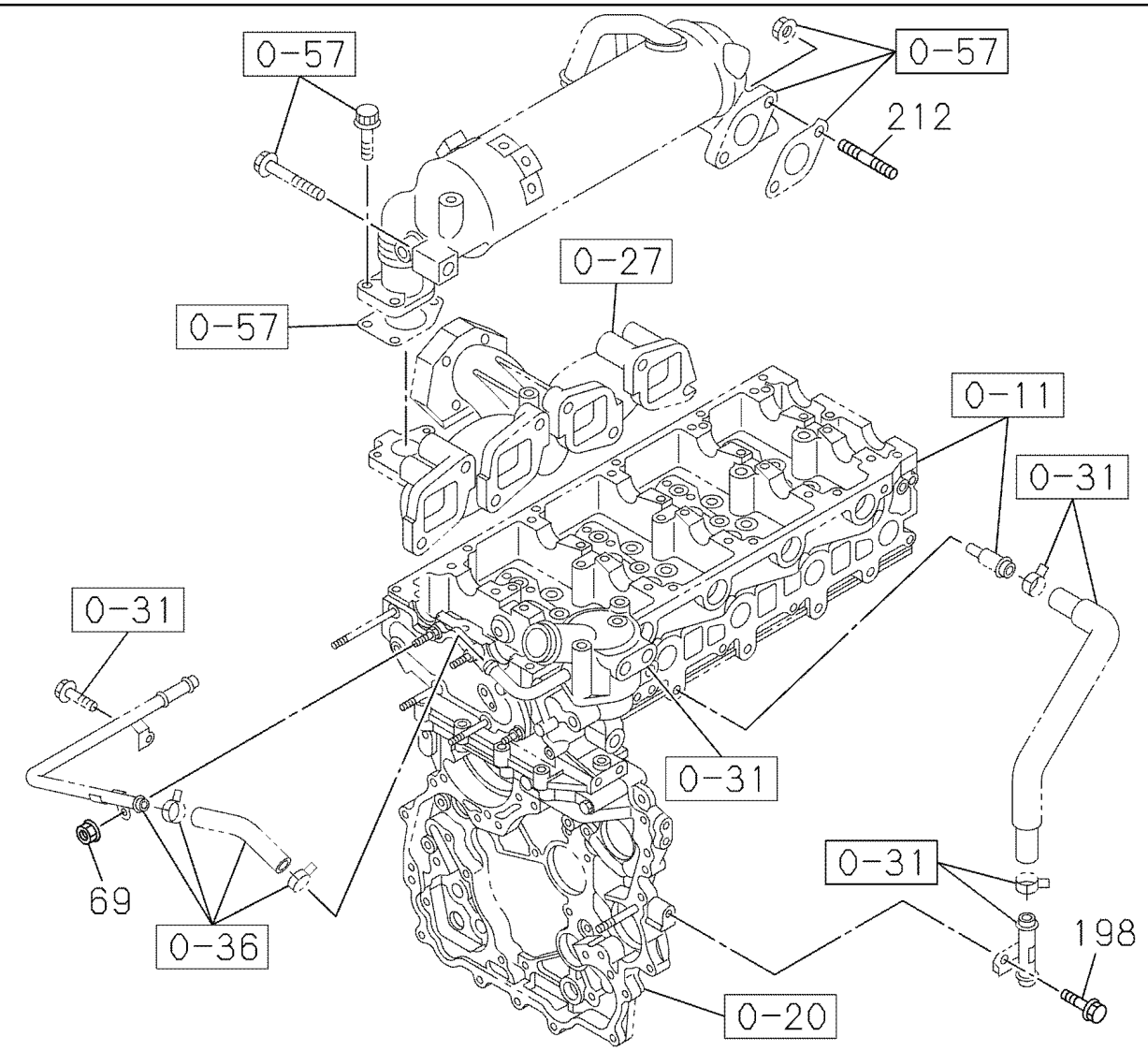

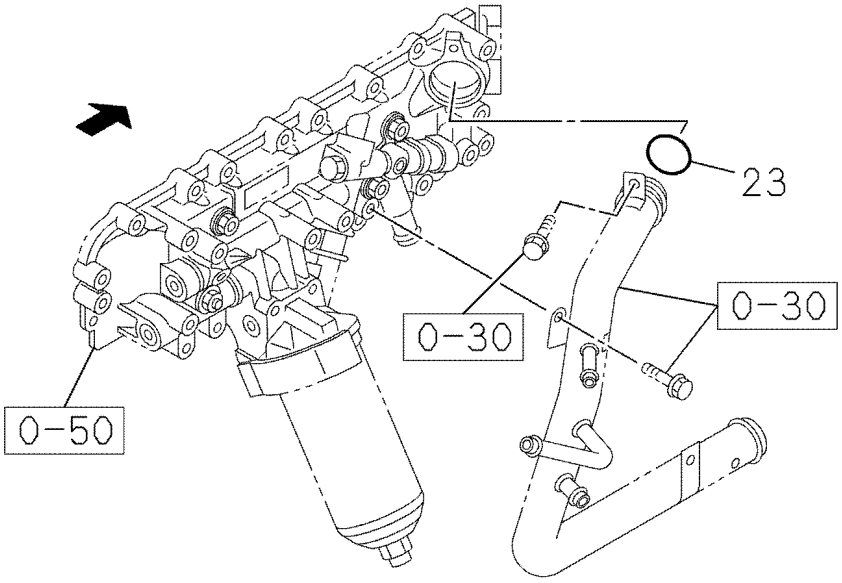

BS07B444

ENGINE WATER CIRCUIT

REF	FN	PART NUMBER	YR/SN	QTY	DESCRIPTION
0-11		REF		1	INSTRUCAO, See Figure 02-10
0-20		REF		1	INSTRUCAO, See Figure 02-18
0-27		REF		1	INSTRUCAO, See Figure 02-22
0-30		REF		1	INSTRUCAO, See Figure 02-24
0-31		REF		1	INSTRUCAO, See Figure 02-25
0-36		REF		1	INSTRUCAO, See Figure 02-28
0-50		REF		1	INSTRUCAO, See Figure 02-29
0-57		REF		1	INSTRUCAO, See Figure 02-32
23		87597837		1	JUNTA
69		87595267		1	PORCA
198		87595866		1	PARAFUSO
212		87597209		2	PRISIONEIRO

BELT AND VENTILATOR - FAN GUARD

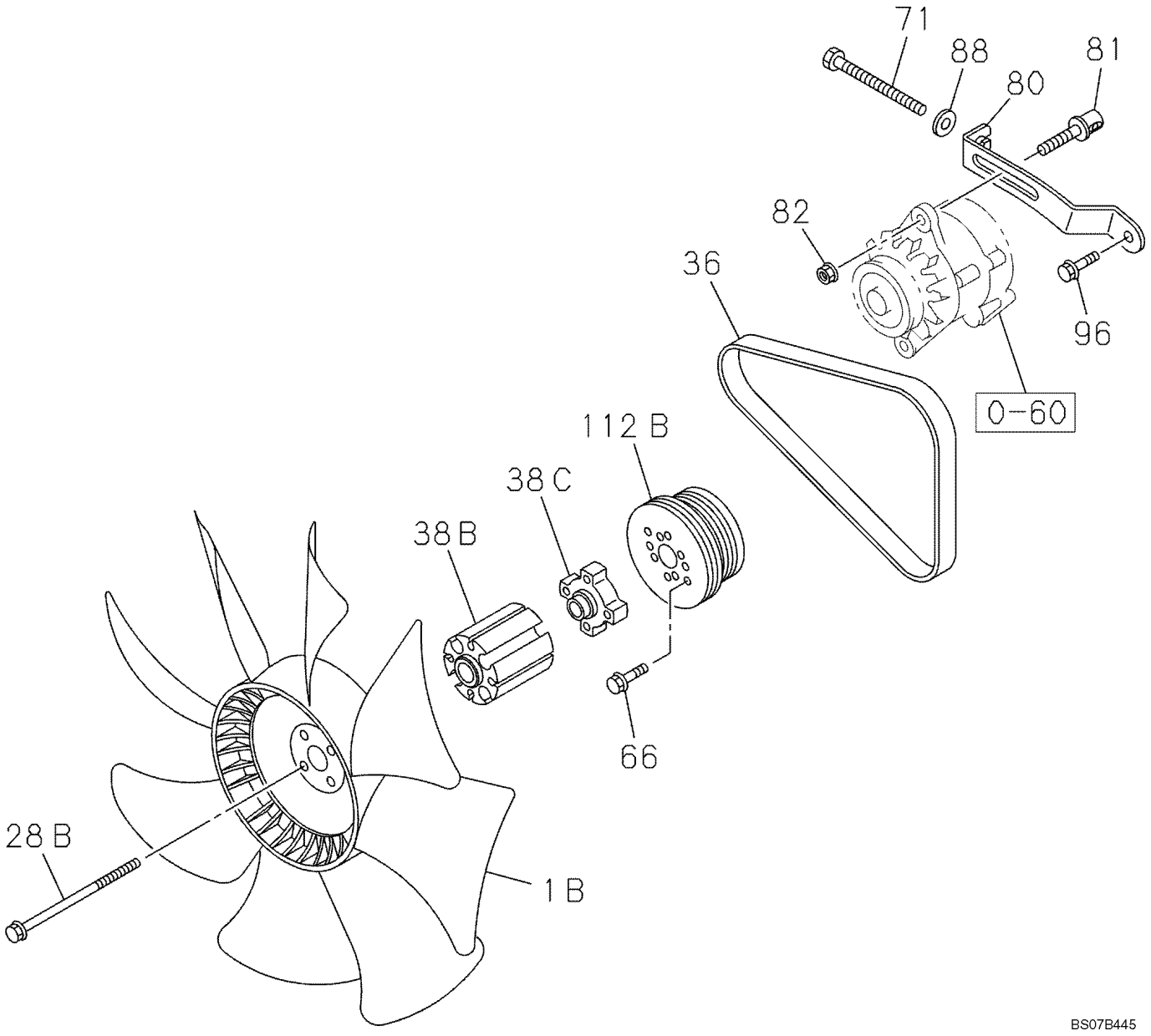

BELT AND VENTILATOR - FAN GUARD

REF	FN	PART NUMBER	YR/SN	QTY	DESCRIPTION
0-60		REF		1	INSTRUCAO, See Figure 04-01
1B		72951944		1	VENTILADOR
28B		87597848		4	PARAFUSO
36		87588086		1	CORREIA
38B		87597868		1	ESPAÇADOR
38C		87597869		1	ESPAÇADOR
66		87597871		2	PARAFUSO
71		87597873		1	PARAFUSO
80		87597875		1	PLACA
81		86990047		1	PARAFUSO
82		87595428		1	PORCA
88		87597736		1	ARRUELA PLANA
96		87595868		1	PARAFUSO
112B		87597963		1	POLIA
327		419722A1		6	ARRUELA PLANA, Not Illustrated, Replaces 87597971

TURBOCHARGER

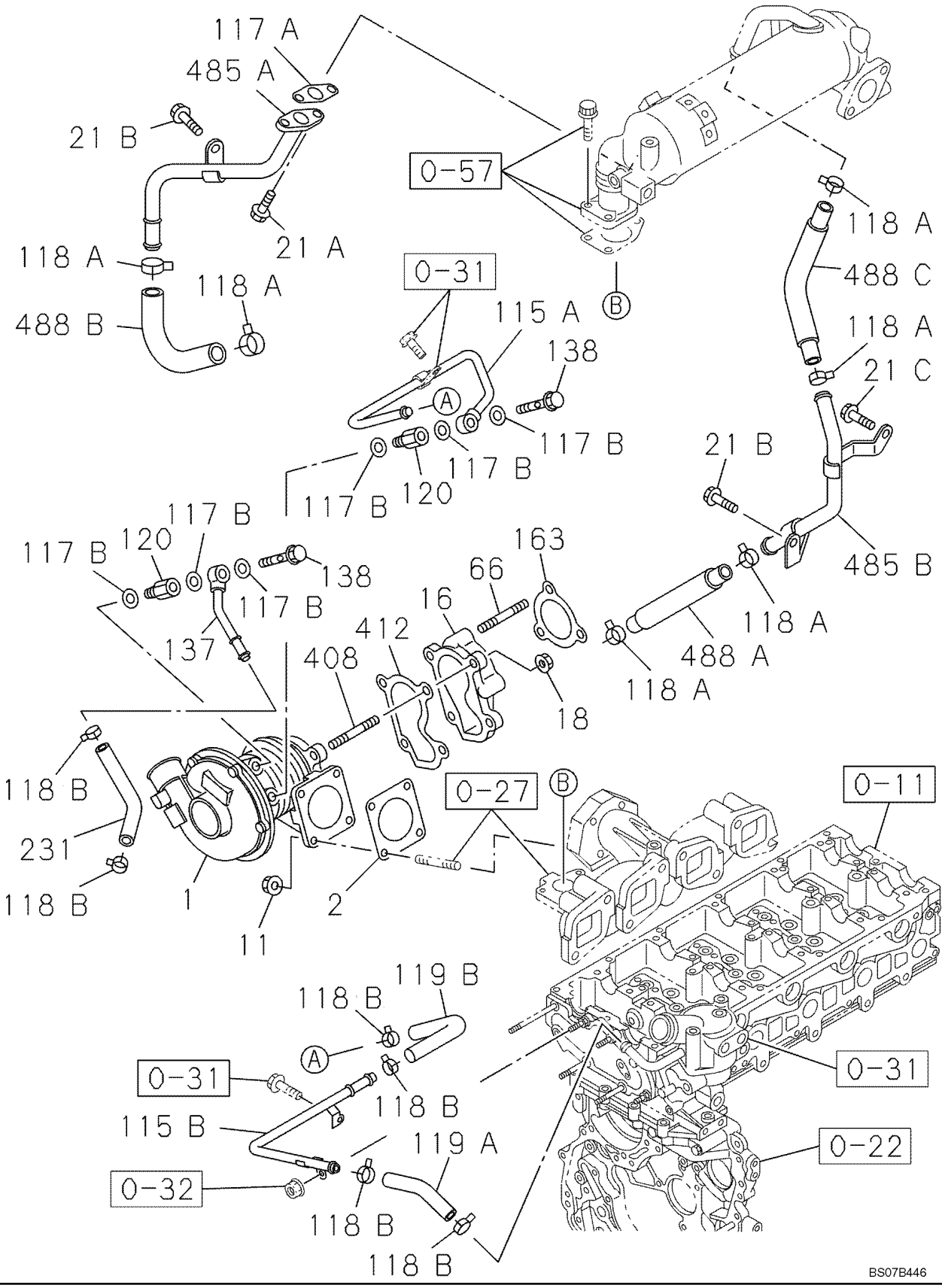

TURBOCHARGER

REF	FN	PART NUMBER	YR/SN	QTY	DESCRIPTION
0-11		REF		1	INSTRUCAO, See Figure 02-10
0-22		REF		1	INSTRUCAO, See Figure 02-20
0-27		REF		1	INSTRUCAO, See Figure 02-22
0-31		REF		1	INSTRUCAO, See Figure 02-25
0-32		REF		1	INSTRUCAO, See Figure 02-26
0-57		REF		1	INSTRUCAO, See Figure 02-32
1		87560082		1	TURBOCOMPRESSOR
2		87598283		1	JUNTA
11		87598285		4	PORCA
16		87598287		1	ADAPTADOR
18		87598285		4	PORCA
21A		87598288		2	PARAFUSO
21B		87595866		2	PARAFUSO, ; Replaces 87595805
21C		87595866		1	PARAFUSO
66		72110623		3	PRISIONEIRO
115A		87598294		1	TUBO DE INTRODUÇÃO
115B		87598295		1	TUBO DE INTRODUÇÃO
117A		87598297		1	JUNTA
117B		288854A1		6	JUNTA
118A		86990039		6	FIXADOR
118B		87643334		6	FIXADOR, Replaces 87598302
119A		87598303		1	MANGOTE
119B		87598304		1	MANGOTE
120		87598305		2	ADAPTADOR
137		87598306		1	TUBO DE INTRODUÇÃO
138		87598307		2	PARAFUSO
163		76600543		1	JUNTA
231		87598313		1	MANGOTE
408		87683454		4	PRISIONEIRO, Replaces 87597685
412		87598320		1	JUNTA
485A		87598322		1	TUBO DE INTRODUÇÃO
485B		87598323		1	TUBO DE INTRODUÇÃO
488A		87378567		1	MANGOTE
488B		87598327		1	MANGOTE
488C		87598328		1	MANGOTE

OIL COOLER - ENGINE

1

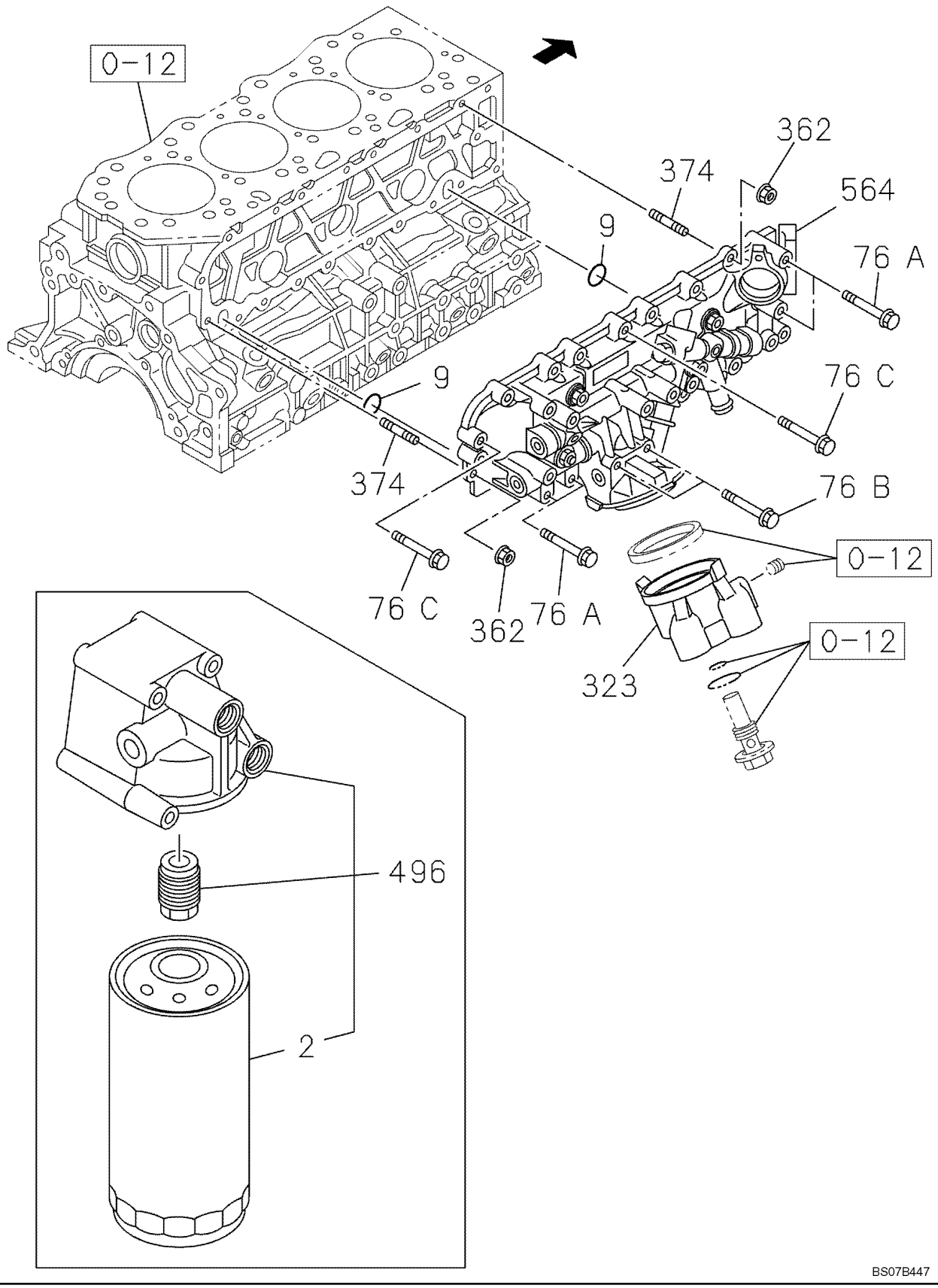

BS07B447

OIL COOLER - ENGINE

REF	FN	PART NUMBER	YR/SN	QTY	DESCRIPTION
0-12		REF		1	INSTRUCAO, See Figure 02-12
2		87379813		2	FILTRO DE ÓLEO
9		87598856		2	JUNTA
76A		87596527		4	PARAFUSO
76B		87598860		2	PARAFUSO
76C		87595258		12	PARAFUSO
323		87598861		1	TAMPA
362		87595428		2	PORCA
374		87596030		2	PRISIONEIRO
496		87365563		1	FILTRO CONJ, Incl. 2
564		87598862		1	RADIADOR

OIL PUMP

1

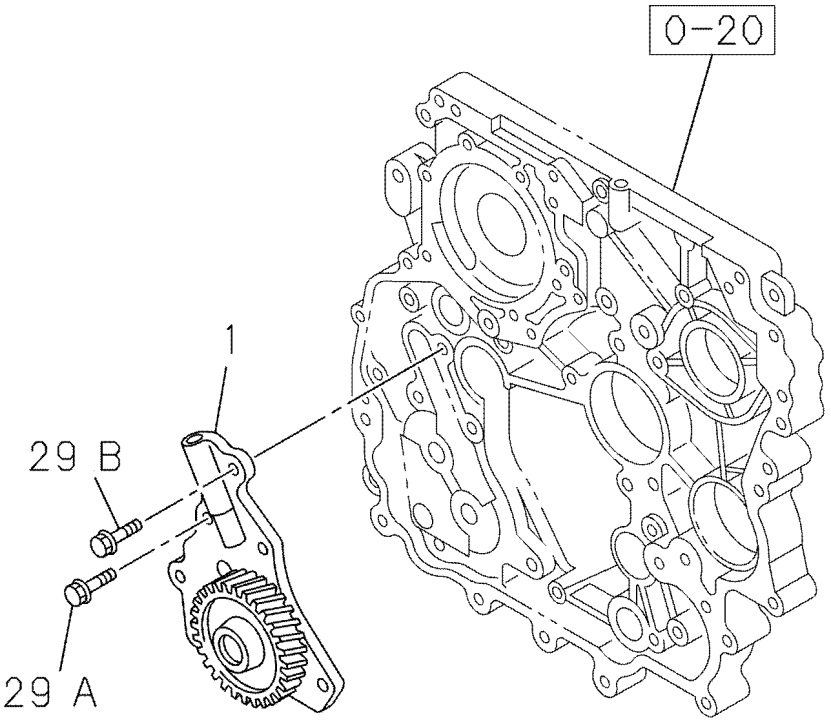

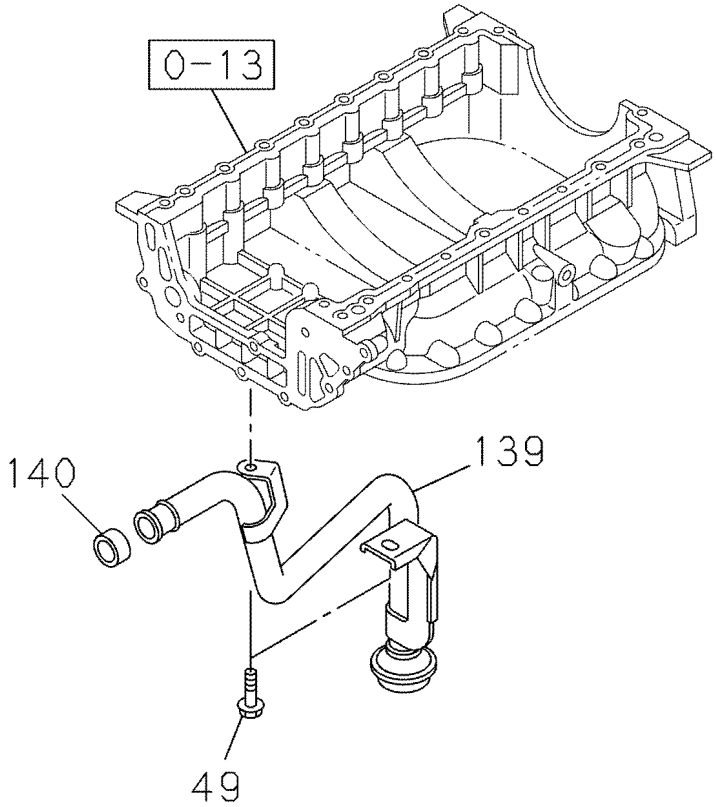

BS07B448

OIL PUMP

REF	FN	PART NUMBER	YR/SN	QTY	DESCRIPTION
0-13		REF		1	INSTRUCAO, See Figure 02-14
0-20		REF		1	INSTRUCAO, See Figure 02-18
1		87598864		1	BOMBA DE ÓLEO
29A		87596042		4	PARAFUSO
29B		87595806		2	PARAFUSO
49		87595866		2	PARAFUSO
139		87598930		1	TUBO DE INTRODUÇÃO
140		87598932		1	JUNTA

OIL CIRCUIT

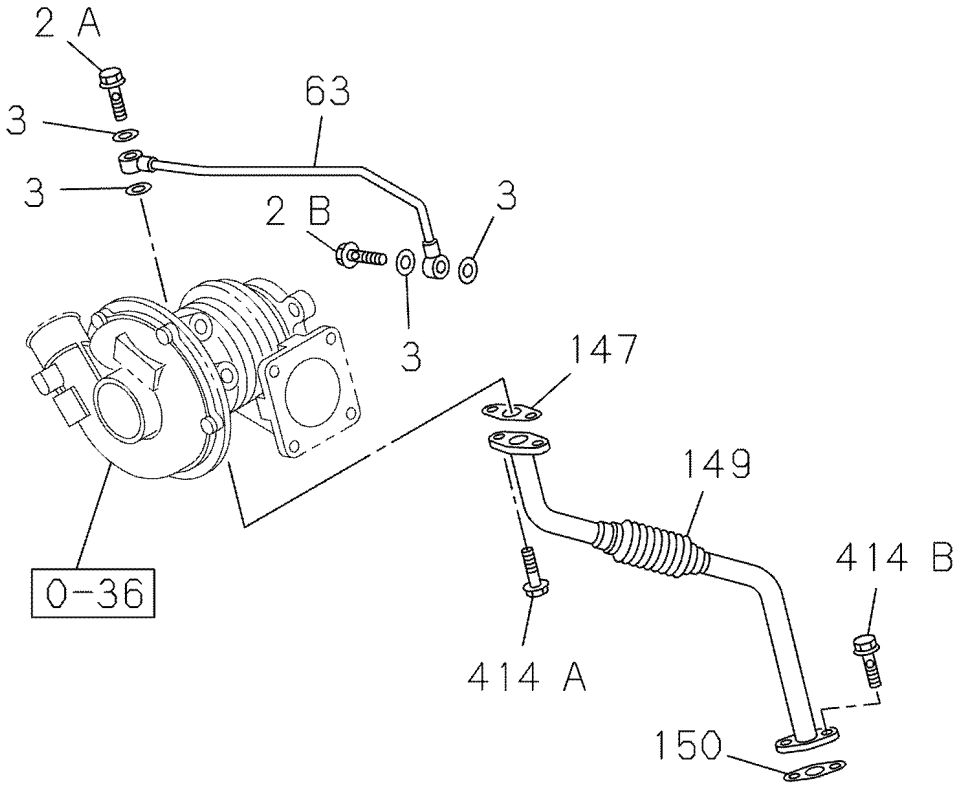

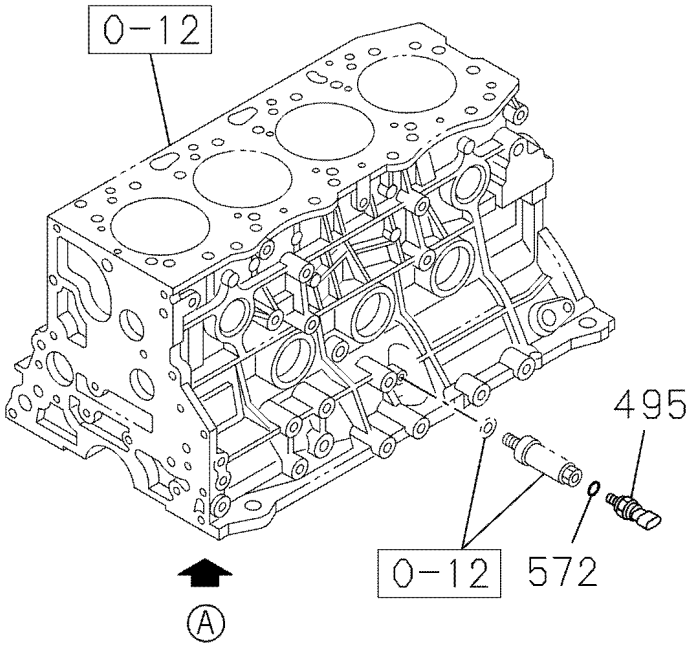

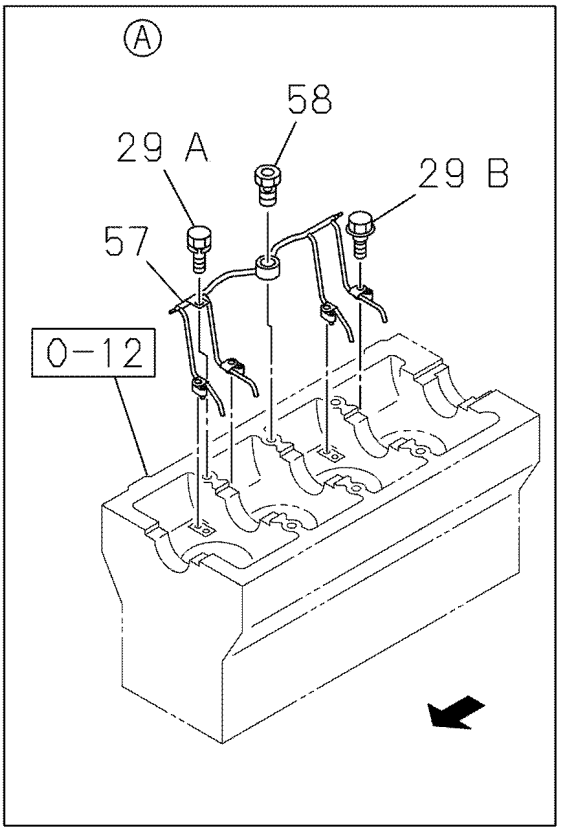

BS07B449

OIL CIRCUIT

REF	FN	PART NUMBER	YR/SN	QTY	DESCRIPTION
0-12		REF		1	INSTRUCAO, See Figure 02-12
0-36		REF		1	INSTRUCAO, See Figure 02-28
2A		87598933		1	PARAFUSO
2B		289842A1		1	PARAFUSO
3		76552228		4	JUNTA
29A		87554883		1	PARAFUSO, Replaces 87598934 & 87643329
29B		87598936		4	PARAFUSO
57		87598937		1	TUBO DE INTRODUÇÃO
58		87598938		1	VÁLVULA DE SOBRE-PRESSÃO
63		87598940		1	TUBO DE INTRODUÇÃO
147		87598941		1	JUNTA
149		87598944		1	TUBO DE INTRODUÇÃO
150		87599292		1	JUNTA
414A		87599306		2	PARAFUSO
414B		87595868		2	PARAFUSO
495		87597867		1	SENSOR
572		87559647		1	JUNTA

EXHAUST GAS RECIRCULATION SYSTEM

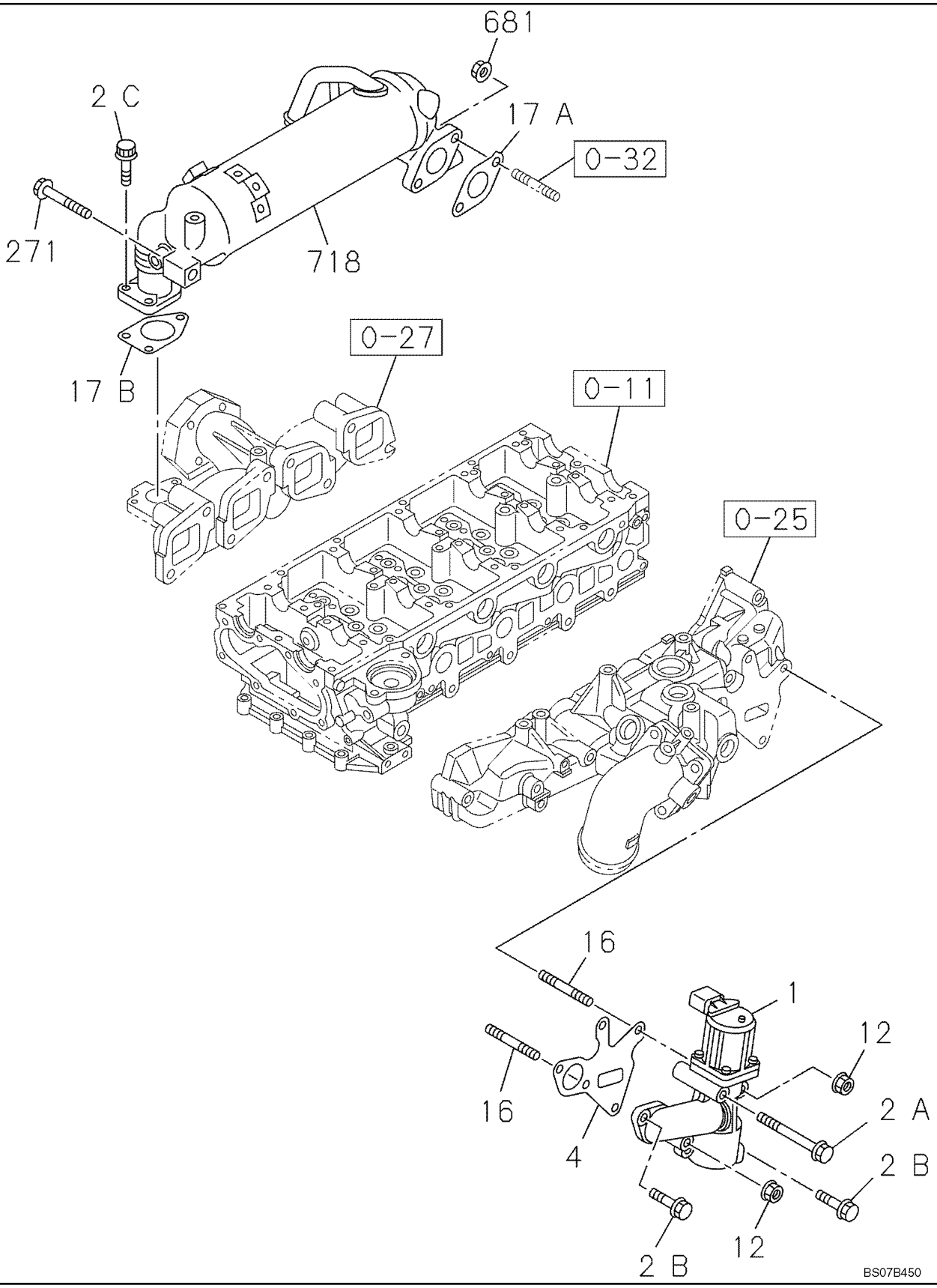

EXHAUST GAS RECIRCULATION SYSTEM

REF	FN	PART NUMBER	YR/SN	QTY	DESCRIPTION
0-11		REF		1	INSTRUCAO, See Figure 02-10
0-25		REF		1	INSTRUCAO, See Figure 02-21
0-27		REF		1	INSTRUCAO, See Figure 02-22
0-32		REF		1	INSTRUCAO, See Figure 02-26
1		87599337		1	VALVULA
2A		87597729		1	PARAFUSO
2B		87595918		2	PARAFUSO
2C		87599344		3	PARAFUSO
4		87599350		1	JUNTA
12		87595428		2	PORCA
16		87595833		2	PRISIONEIRO
17A		87599415		1	JUNTA
17B		87599416		1	JUNTA
271		87599417		1	PARAFUSO
681		87595428		2	PORCA
718		87599418		1	RADIADOR

BRACKET - FAN GUARD

1

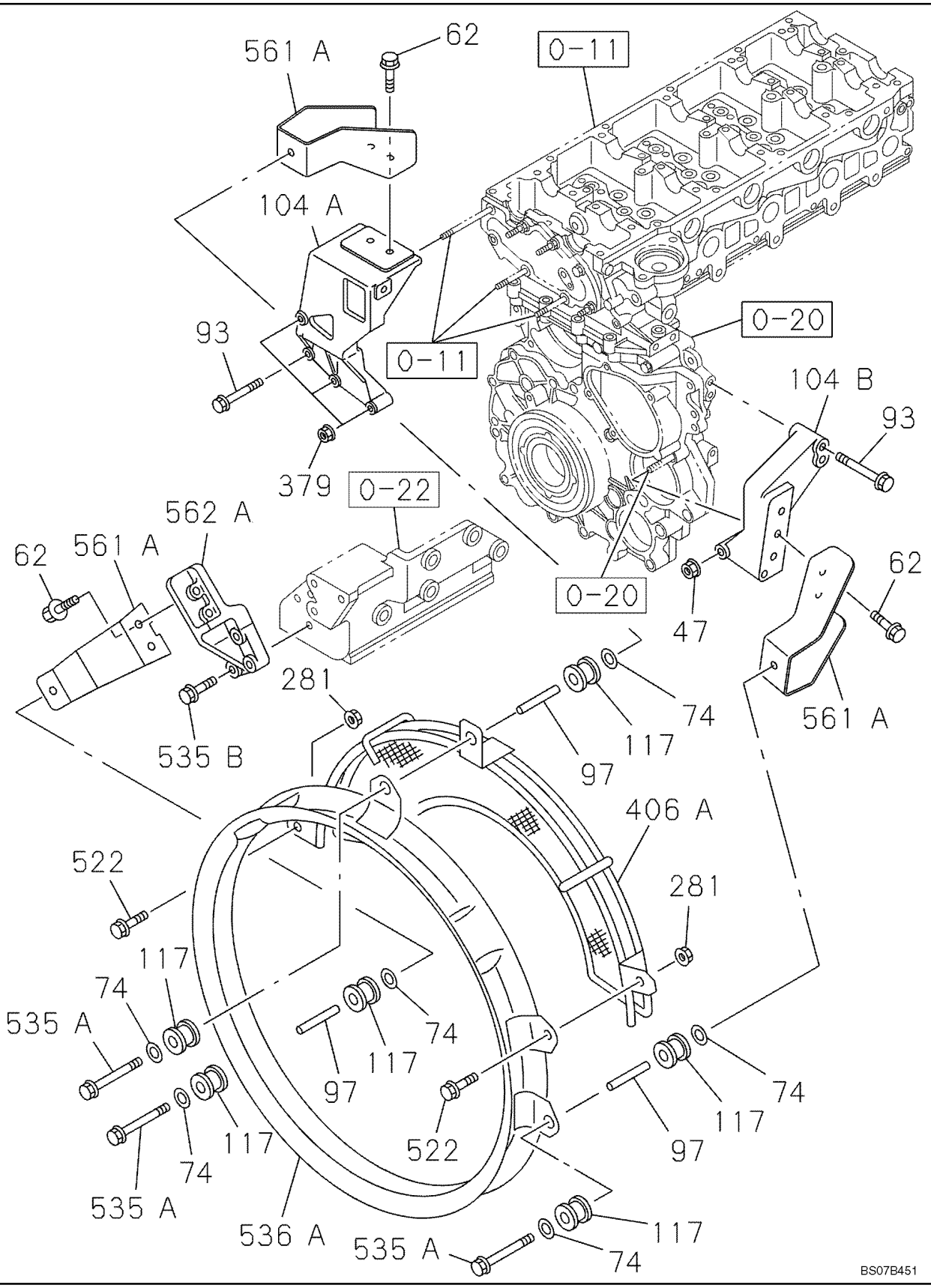

BRACKET - FAN GUARD

REF	FN	PART NUMBER	YR/SN	QTY	DESCRIPTION
0-11		REF		1	INSTRUCAO, See Figure 02-10
0-20		REF		1	INSTRUCAO, See Figure 02-18
0-22		REF		1	INSTRUCAO, See Figure 02-20
47		87595428		1	PORCA
62		87600499		6	PARAFUSO
74		419722A1		6	ARRUELA PLANA, Replaces 87597971
93		87596874		3	PARAFUSO
97		419731A1		3	TUBO
104A		87600522		1	SUPORTE
104B		87600526		1	SUPORTE
117		419726A1		6	ARRUELA DE BORRACHA
379		87595428		3	PORCA
406A		87600596		1	PROTEÇÃO
522		87597884		2	PARAFUSO
535A		87597887		3	PARAFUSO
535B		87595806		4	PARAFUSO
536A		87600598		1	COBERTURA
561A		87600600		2	APOIO
562A		87601011		1	SUPORTE

SECTION INDEX
Sistema de Combustível

03-01	DEPOSITO DE COMBUSTIBLE
03-02	LINEA DE COMBUSTIBLE
03-03	BOMBA DE REABASTECIMENTO DE COMBUSTÍVEL - OPCIONAL
03-04	FUEL SYSTEM - FUEL INJECTION PUMP
03-05	FUEL SYSTEM
03-06	FUEL FILTER
03-07	FUEL SYSTEM

03-01		p1	06/07

DEPOSITO DE COMBUSTIBLE

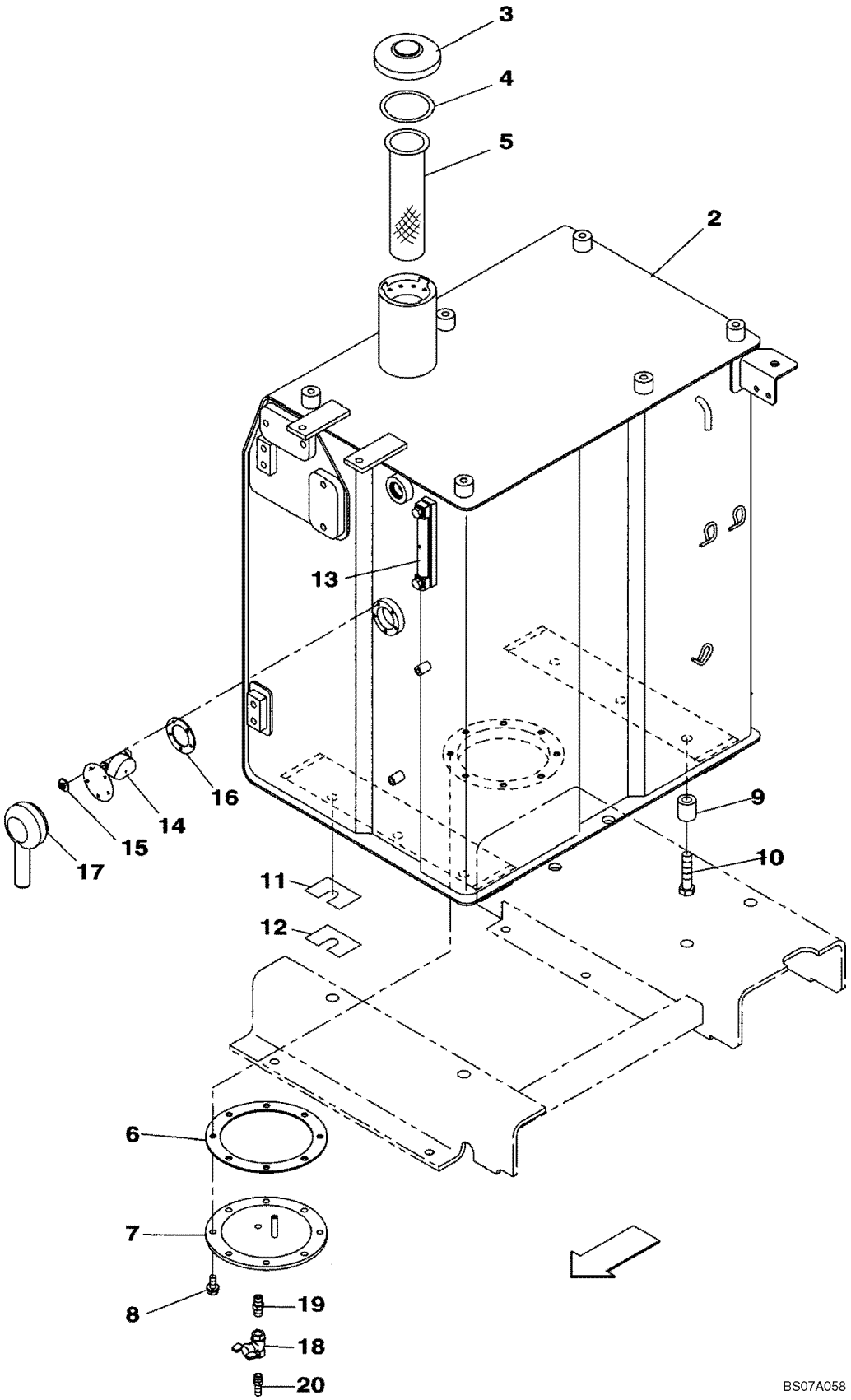

DEPOSITO DE COMBUSTIBLE

REF	FN	PART NUMBER	YR/SN	QTY	DESCRIPTION
		KLH10770		1	RESERVATÓRIO COMBUSTÍVEL, Incl. 2 - 8
2		NSS		1	BOLETIM INFORMATIVO, Tank
3		150492A1		1	TAMPA DO RESERVATÓRIO, Incl. 4
4		163804A1		1	JUNTA
5		KHH10060		1	FILTRO, Fuel
6		151322A1		1	ANEL DE VEDAÇÃO
7		KRH11460		1	TAMPA
8		166052A1		8	PARAFUSO
9		153357A1		6	ESPAÇADOR
10		827-16070		6	PARAFUSO, Hex, M16 x 70, 10.9
11		150166A1		X	CALCO DE AFINACAO, 0,80 mm (0,032 in)
12		150479A1		X	CALCO DE AFINACAO, 2,00 mm (0,079 in)
13		KHH12090		1	HASTE DE NÍVEL, Replaces 159478A1
14		KHR10670		1	SENSOR
15		151688A1		5	PARAFUSO
16		152591A1		1	ANEL DE VEDAÇÃO
17		159698A1		1	TAMPA
18		158923A1		1	VALVULA DE DRENO
19		150847A1		1	CONEXÃO
20		157929A1		1	CONEXAO

2

LINEA DE COMBUSTIBLE

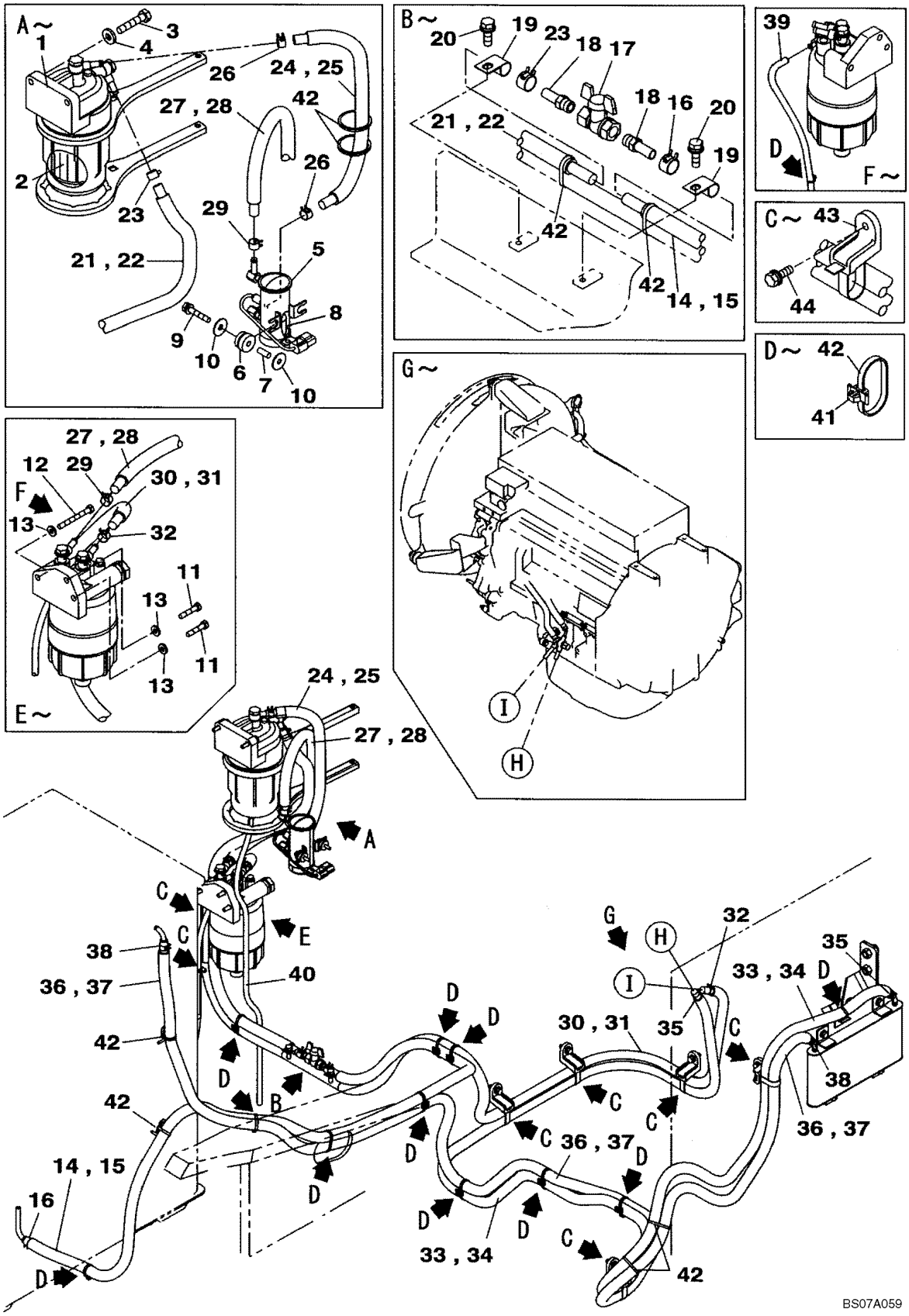

LINEA DE COMBUSTIBLE

REF	FN	PART NUMBER	YR/SN	QTY	DESCRIPTION
1		KHH12020		1	FILTRO CONJ, Incl. 1A - 2B, Replaces KHH10550
1A		158678A1		4	JUNTA, Not Illustrated; Replaces KHH10570
1B		158676A1		1	JUNTA, Not Illustrated; Replaces KHH10580
2		KHH12030		1	FILTRO DE COMBUSTÍVEL, Incl. 2A, 2B, Replaces KHH10590
2A		LBQ5245		1	ANEL "O", Not Illustrated
2B		KHH10600		1	ANEL DE VEDACAO, Not Illustrated
3		827-8040		2	PARAFUSO, Hex, M8 x 40, 10.9
4		153081A1		2	ARRUELA PLANA
5		KHH11880		1	BOMBA DE ALIMENTACAO, Incl. 6 - 8; Replaces KHH10460
6		KHH10470		2	CASQUILHO ISOLADOR
7		KHH10480		2	BRACADEIRA
8		KHH11890		1	FILTRO TELA, Replaces KHH10490
8A		KHH11900		1	JUNTA, Not Illustrated
9		162057A1		2	PARAFUSO
10		150529A1		4	ARRUELA ESPECIAL
11		827-8040		2	PARAFUSO, Hex, M8 x 40, 10.9
12		102R008Y075R		1	PARAFUSO
13		153081A1		3	ARRUELA PLANA
14		KHH0422		1	MANGUEIRA
15		KHR13390		1	TUBO PLASTICO
16		KHH0405		2	ARGOLA DE FIXACAO
17		158923A1		1	VALVULA DE DRENO
18		157929A1		2	CONEXAO
19		162148A1		2	FIXADOR
20		KHJ1215		2	PARAFUSO
21		KHH11600		1	MANGUEIRA
22		150774A1		1	MANGUEIRA RÍGIDA
23		KHH0405		2	ARGOLA DE FIXACAO
24		KHH11010		1	MANGUEIRA
25		150476A1		1	TUBO ISOLANTE
26		KHH0405		2	ARGOLA DE FIXACAO
27		KHH11020		1	MANGUEIRA
28		150488A1		1	TUBO

2

LINEA DE COMBUSTIBLE

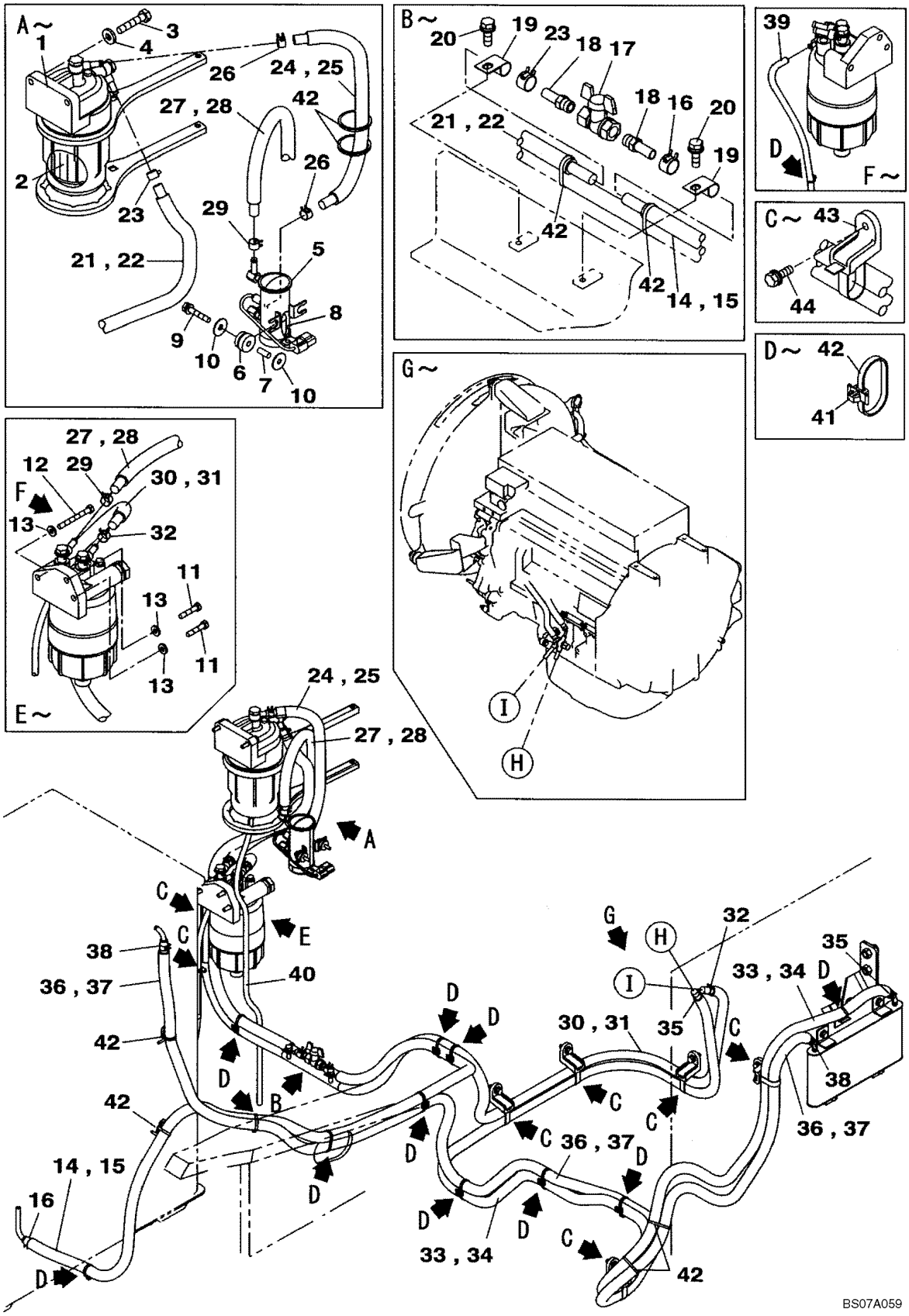

LINEA DE COMBUSTIBLE

REF	FN	PART NUMBER	YR/SN	QTY	DESCRIPTION
29		KHH0405		2	ARGOLA DE FIXACAO
30		KHH0483		1	MANGUEIRA
31		158068A1		1	PECA FLEXIVEL
32		KHH0405		2	ARGOLA DE FIXACAO
33		KHH11610		1	MANGUEIRA
34		KHR15910		1	TUBO PLASTICO
35		KHH0405		2	ARGOLA DE FIXACAO
36		KHH11050		1	MANGUEIRA
37		KHR15910		1	TUBO PLASTICO
38		KHH0405		2	ARGOLA DE FIXACAO
39		KHH10820		1	TUBO PLASTICO
40		KHH10290		1	TUBO
41		KHR10220		12	ARGOLA DE FIXACAO
42		150496A1		AR	ARGOLA DE FIXACAO
43		KHR2581		7	BRACADEIRA
44		KHJ1215		7	PARAFUSO

BOMBA DE REABASTECIMENTO DE COMBUSTÍVEL - OPCIONAL

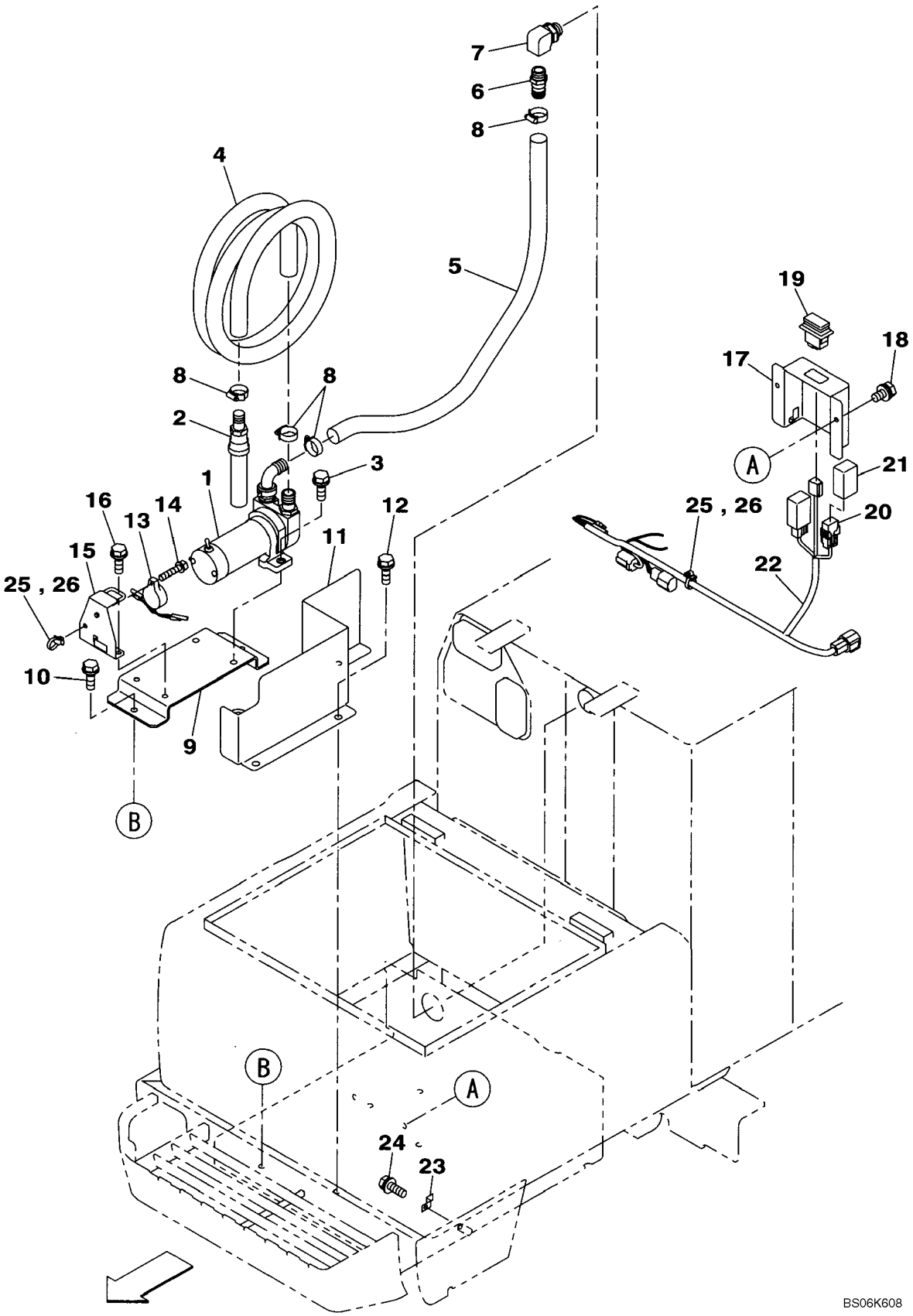

BOMBA DE REABASTECIMENTO DE COMBUSTÍVEL - OPCIONAL

REF	FN	PART NUMBER	YR/SN	QTY	DESCRIPTION
1		KHR12840		1	BOMBA DE ALIMENTAÇÃO
2		KHR12430		1	SECÇÃO DE VÁLVULAS
3		166347A1		2	PARAFUSO
4		KHR11460		1	MANGUEIRA, 4000 mm (157-1/2 in)
5		KHR12910		1	MANGUEIRA, 1200 mm (47-1/4 in)
6		KHR11480		1	GRAXEIRA
7		KHJ2320		1	COTOVELO
8		157917A1		4	FIXADOR
9		KHR12860		1	SUPORTE
10		166351A1		2	PARAFUSO
11		KHR15090		1	TAMPA
12		166351A1		3	PARAFUSO
13		KHR4024		1	ALARME
14		KHR1832		1	PARAFUSO ESPECIAL
15		KHR12880		1	SUPORTE
16		166345A1		2	PARAFUSO
17		KHR15080		1	TAMPA
18		159602A1		2	PARAFUSO
19		KHR12900		1	INTERRUPTOR
20		KHR3802		2	CONECTADOR
21		159904A1		2	TAMPA
22		KHR15101		1	CHICOTE
23		KHR16450		1	FIXADOR
24		KHJ1215		1	PARAFUSO
25		KHR10220		2	ARGOLA DE FIXACAO
26		150496A1		2	ARGOLA DE FIXACAO

FUEL SYSTEM - FUEL INJECTION PUMP

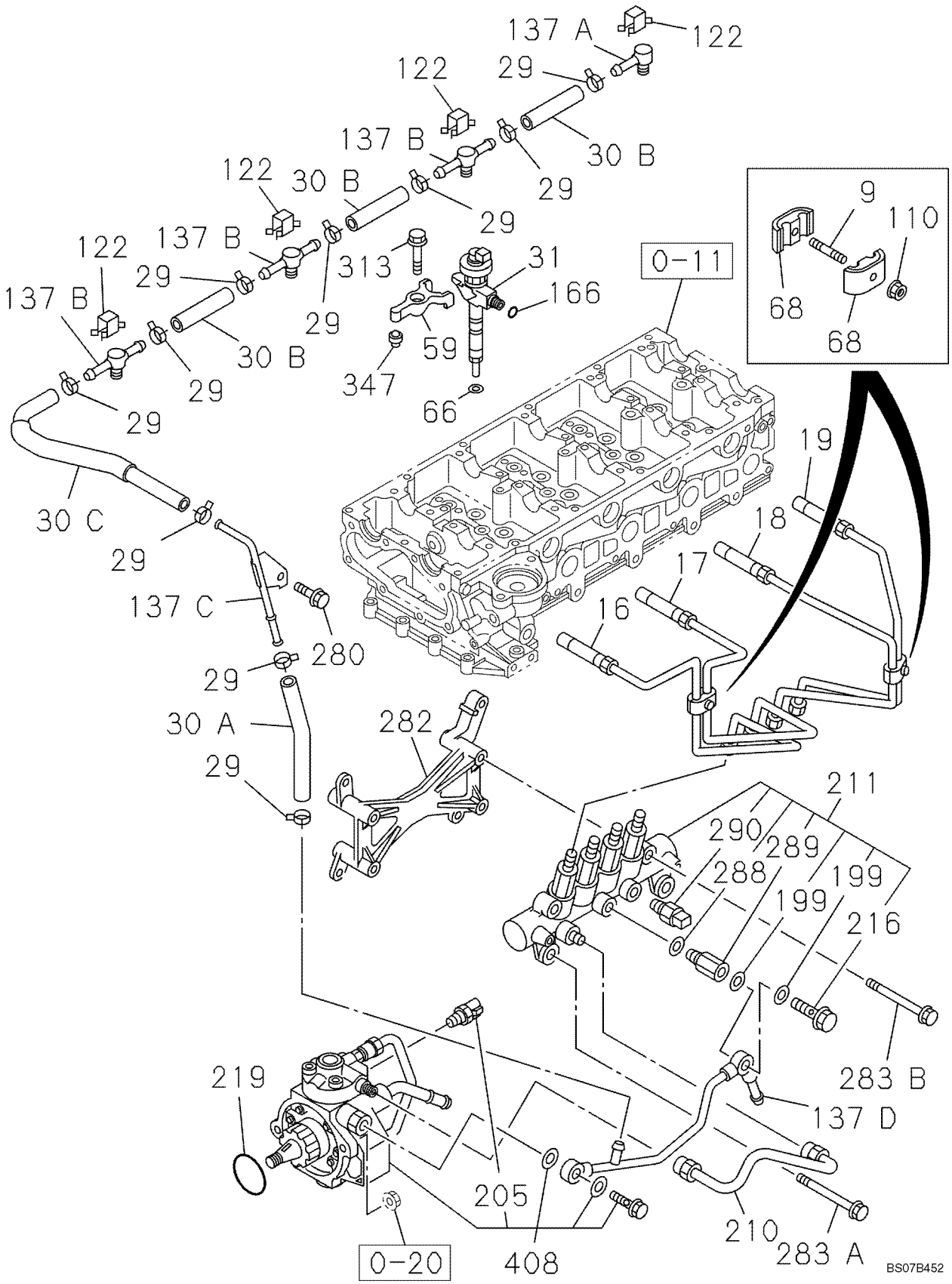

FUEL SYSTEM - FUEL INJECTION PUMP

REF	FN	PART NUMBER	YR/SN	QTY	DESCRIPTION
0-11		REF		1	INSTRUCAO, See Figure 02-10
0-20		REF		1	INSTRUCAO, See Figure 02-18
9		87598331		2	PRISIONEIRO
16		87598333		1	TUBO INJECAO
17		87598369		1	TUBO INJECAO
18		87598371		1	TUBO INJECAO
19		87598372		1	TUBO INJECAO
29		87670091		10	FIXADOR, Replaces 87393879
30A		87598379		1	MANGOTE
30B		87598381		3	MANGOTE
30C		87598383		1	MANGOTE
31		87560084		4	INJETOR
59		87598413		4	BRACADEIRA
66		87598415		4	JUNTA
68		87598417		4	FIXADOR
110		87596880		2	PORCA
122		87598421		4	FIXADOR
137A		87598425		1	TUBO DE RETORNO
137B		87598426		3	TUBO DE RETORNO
137C		87598440		1	TUBO DE RETORNO
137D		87598441		1	TUBO DE RETORNO
166		87598442		4	JUNTA
199		87379800		2	JUNTA
210		87598480		1	TUBO INJECAO
211		87598481		1	COLECTOR
216		87643316		1	ANEL, Replaces 87598483
219		87602515		1	JUNTA
280		87595866		1	PARAFUSO, Replaces 87595805
282		87643341		1	SUPORTE, Replaces 87598839
283A		87596527		2	PARAFUSO
283B		87598840		2	PARAFUSO
288		87385803		1	JUNTA
289		87598842		1	VÁLVULA CALIBRADA
290		87385814		1	SENSOR
313		87598844		4	PARAFUSO

FUEL SYSTEM - FUEL INJECTION PUMP

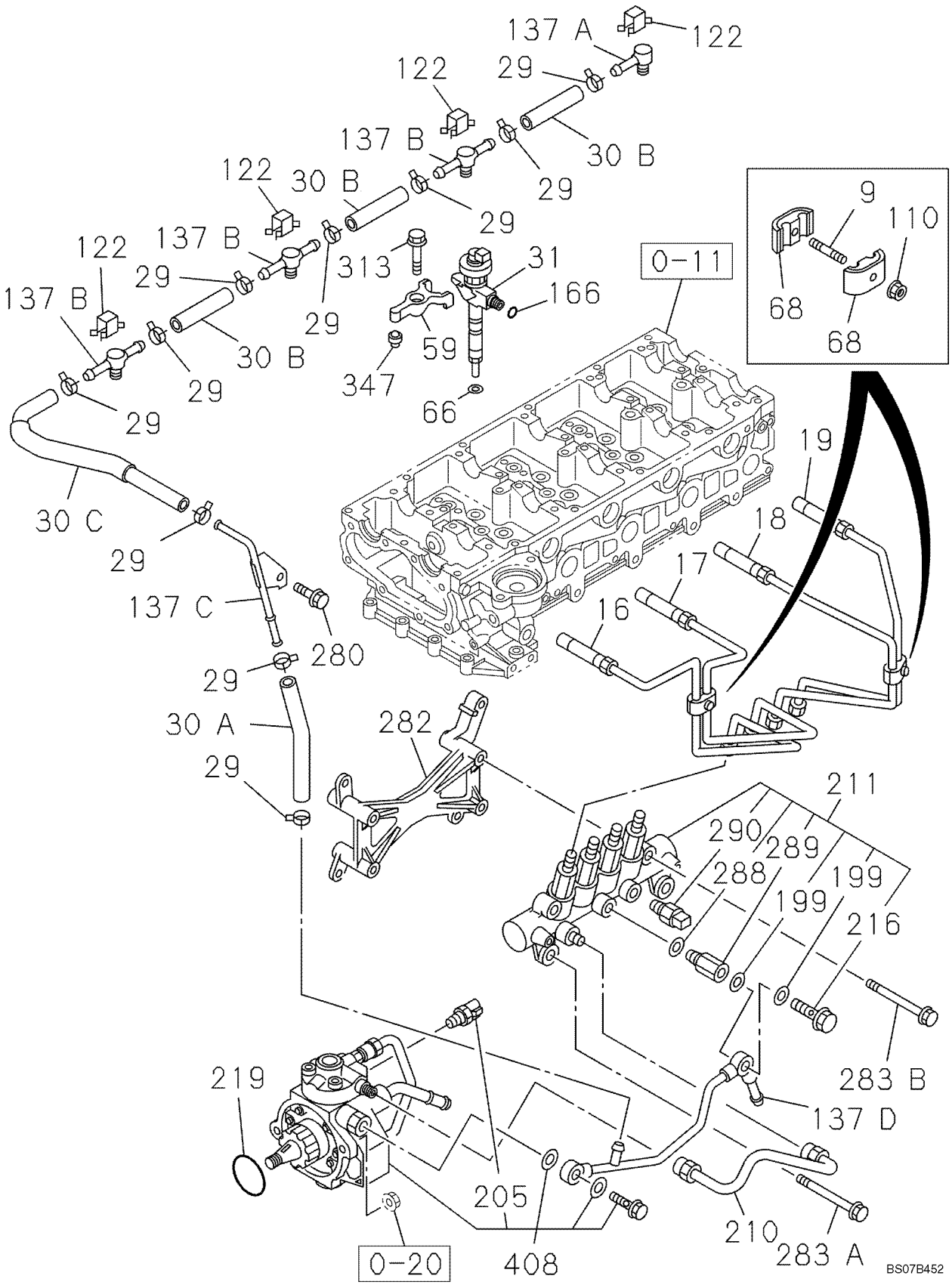

FUEL SYSTEM - FUEL INJECTION PUMP

REF	FN	PART NUMBER	YR/SN	QTY	DESCRIPTION
347		87598847		4	PINO
408		87560086		1	BOMBA INJETORA

FUEL SYSTEM

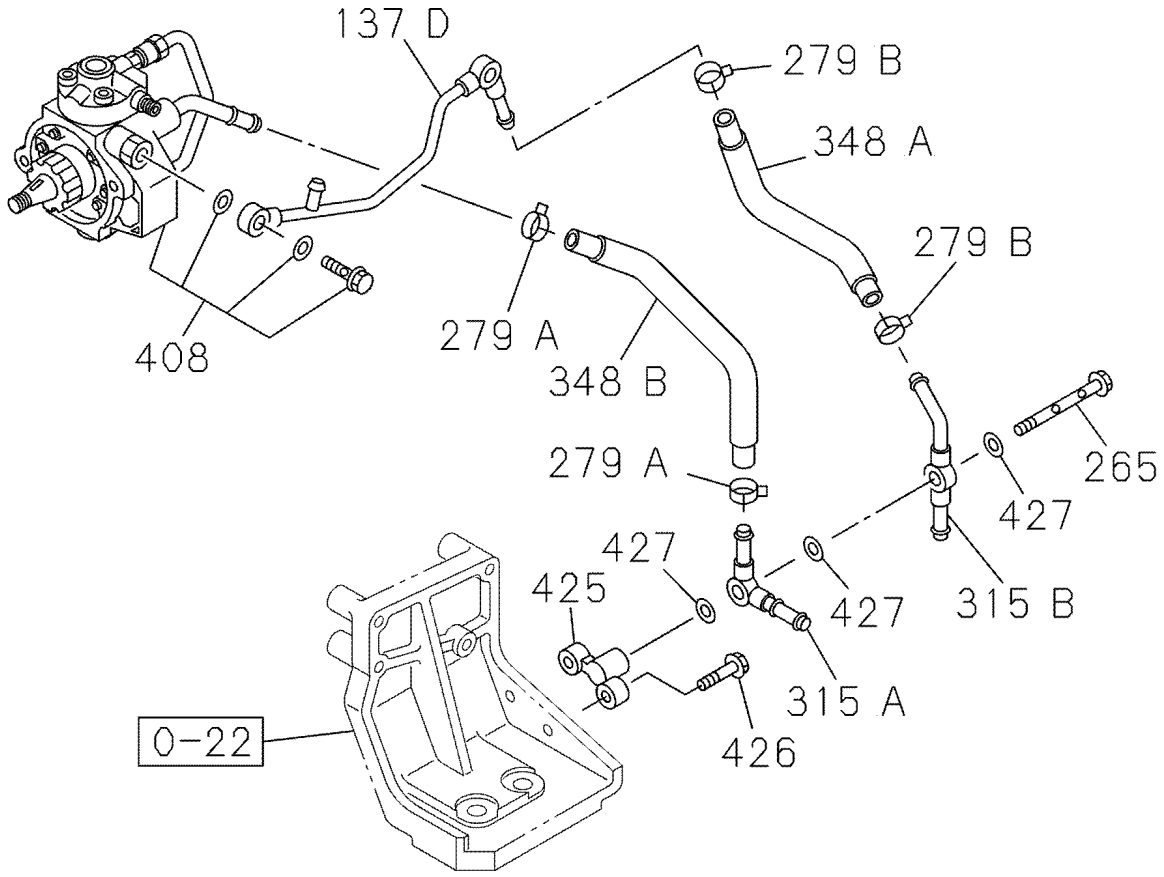

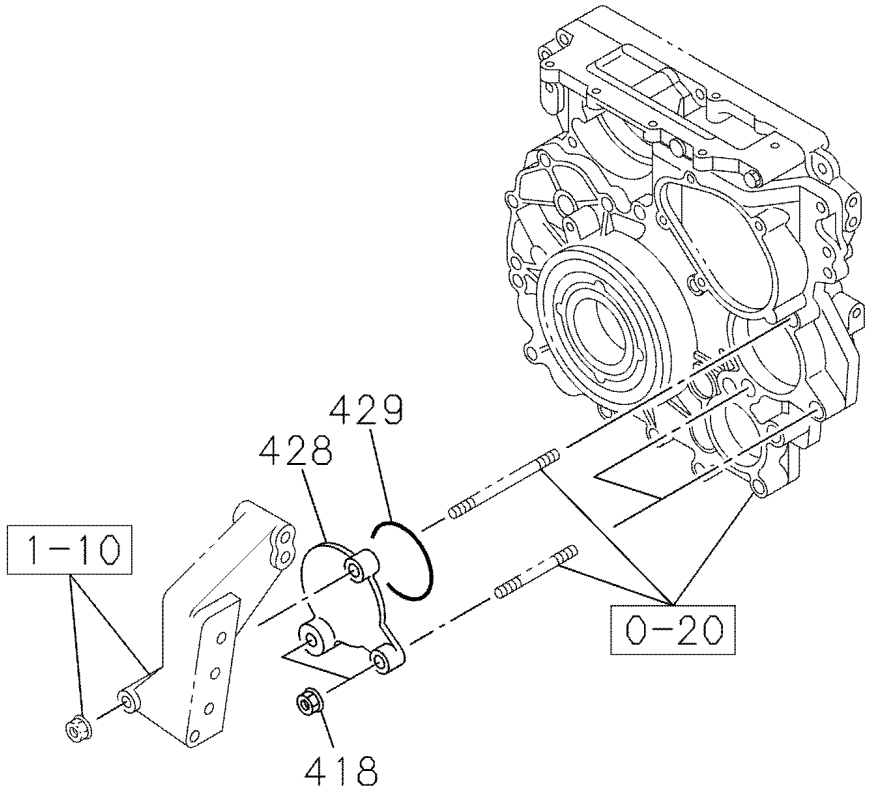

BS07B453

FUEL SYSTEM

REF	FN	PART NUMBER	YR/SN	QTY	DESCRIPTION
0-20		REF		1	INSTRUCAO, See Figure 02-18
0-22		REF		1	INSTRUCAO, See Figure 02-20
1-10		REF		1	INSTRUCAO, See Figure 02-33
137D		87598441		1	TUBO DE RETORNO
265		87616586		1	PARAFUSO OCO
279A		87598832		2	FIXADOR
279B		87598834		2	FIXADOR
315A		87598845		1	TUBO DE INTRODUÇÃO
315B		87598846		1	TUBO DE INTRODUÇÃO
348A		87598849		1	MANGOTE
348B		87598851		1	MANGOTE
408		87560086		1	BOMBA INJETORA
418		87595428		2	PORCA
425		87598852		1	SUPORTE
426		87595918		2	PARAFUSO
427		87559647		3	JUNTA
428		87598853		1	TAMPA
429		87598854		1	JUNTA

FUEL FILTER

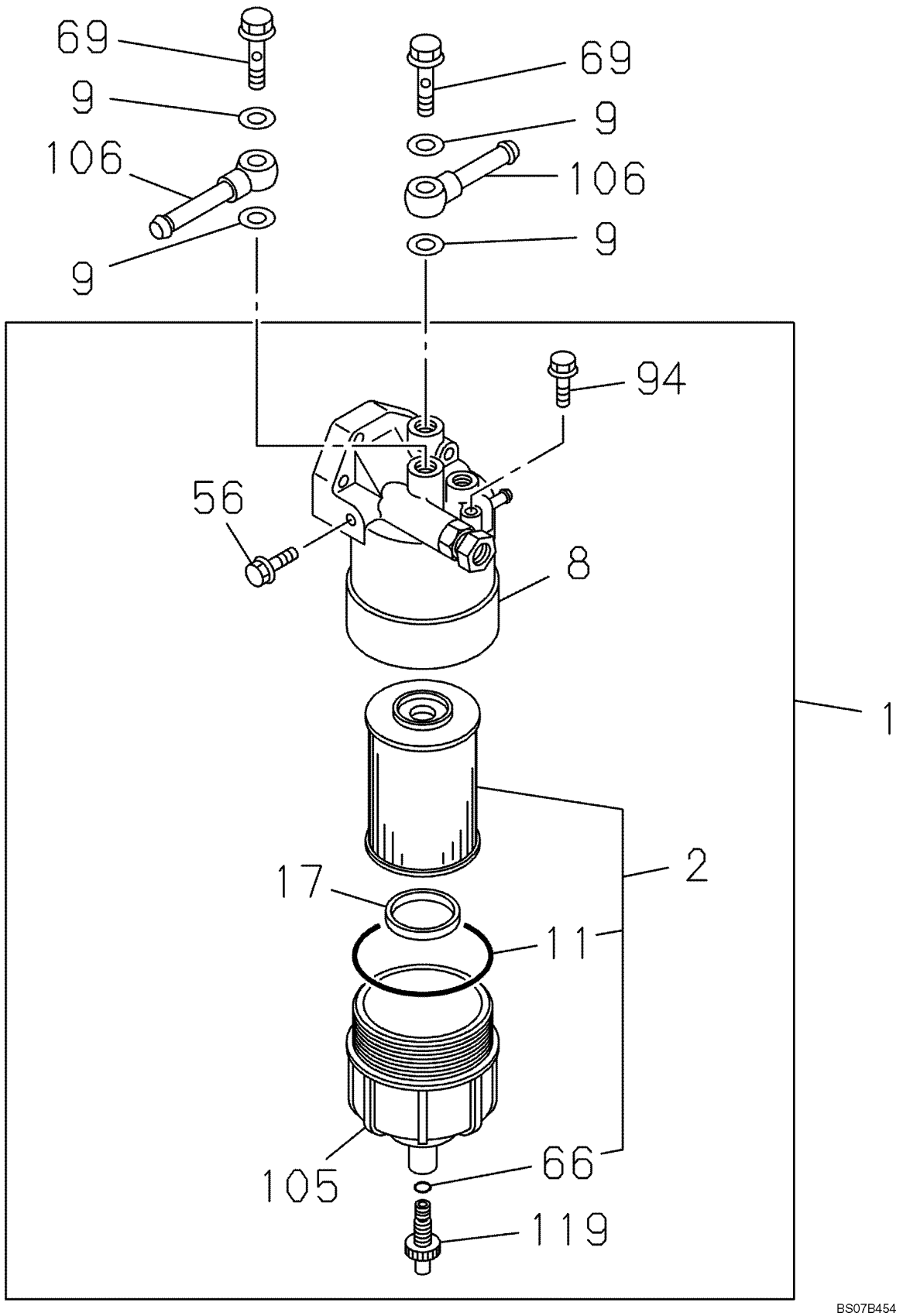

FUEL FILTER

REF	FN	PART NUMBER	YR/SN	QTY	DESCRIPTION
1		87379042		1	FILTRO DE COMBUSTÍVEL, Incl. 2, 8, 17, 56, 94, 105, 119
2		87365565		1	FILTRO DE COMBUSTÍVEL, Incl. 11, 66
8		87596942		1	TAMPA FILTRO
9		426200A1		4	JUNTA
11		87379063		1	JUNTA
17		87379072		1	FLUTUADOR
56		87596955		1	BUJÃO
66		87379078		1	BUJÃO
69		87379797		2	PARAFUSO
94		87596944		1	BUJÃO
105		87596956		1	ESTOJO
106		87379793		2	TUBO DE ASPIRACAO
119		87386020		1	BUJÃO

ART NOT AVAILABLE

FUEL SYSTEM

REF	FN	PART NUMBER	YR/SN	QTY	DESCRIPTION
294		87598855		2	BUJÃO

SECTION INDEX
Sistema Elétrico

04-01	ELECTRICAL ACCESSORIES - ENGINE
04-02	ELECTRICAL ACCESSORIES - ENGINE
04-03	ELECTRICAL ACCESSORIES - ENGINE
04-04	ELECTRICAL ACCESSORIES - ENGINE
04-04A	BRACKET
04-05	CONJUNTO DE FIOS, PRINCIPAIS - CHASSI, ESTRUTURA INFERIOR
04-05A	CONJUNTO DE FIOS, PRINCIPAIS - GRAMPOS E RETENTORES
04-06	CONJUNTO DE FIOS, PRINCIPAIS - PAINEL DE RELÉS
04-07	ELECTRICO - CABINA
04-08	ALARME SONORO DO DESLOCAMENTO
04-09	CONVERTIDOR
04-10	SISTEMA ELÉTRICO DA CABINA - LIMPADOR, PÁRA-BRISA
04-11	HORN
04-12	LAMP, WORK
04-13	CONTROLADOR
04-14	BATERIA - CABOS
04-15	RADIO
04-16	LIMPADOR DE PÁRA-BRISA

ELECTRICAL ACCESSORIES - ENGINE

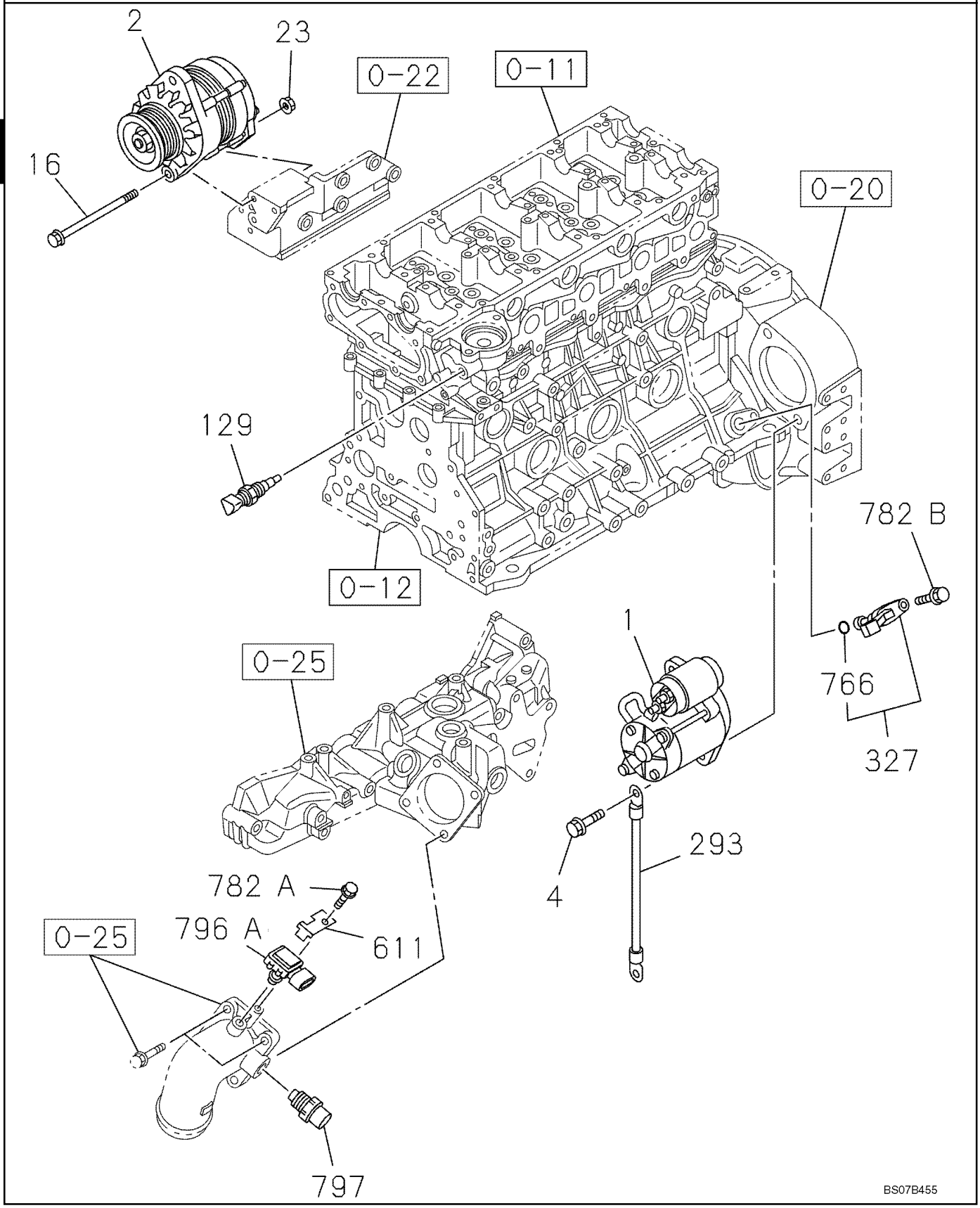

ELECTRICAL ACCESSORIES - ENGINE

REF	FN	PART NUMBER	YR/SN	QTY	DESCRIPTION
0-11		REF		1	INSTRUCAO, See Figure 02-10
0-12		REF		1	INSTRUCAO, See Figure 02-12
0-20		REF		1	INSTRUCAO, See Figure 02-18
0-22		REF		1	INSTRUCAO, See Figure 02-20
0-25		REF		1	INSTRUCAO, See Figure 02-21
1		87560087		1	MOTOR DE PARTIDA
2		87709229		1	ALTERNADOR, GENERATOR, Replaces 87560088
4		87597117		2	PARAFUSO
16		87599818		1	PARAFUSO
23		426067A1		1	PORCA, Replaces 87596349
129		87386231		1	INTERRUPTOR SONDA
293		86990207		1	CABO
327		87595926		1	SENSOR, Incl. 766
611		87599841		1	SUPORTE
766		87595936		1	JUNTA
782A		87595952		1	PARAFUSO
782B		87595938		1	PARAFUSO
796A		87600394		1	SENSOR
797		87378549		1	SENSOR

ELECTRICAL ACCESSORIES - ENGINE

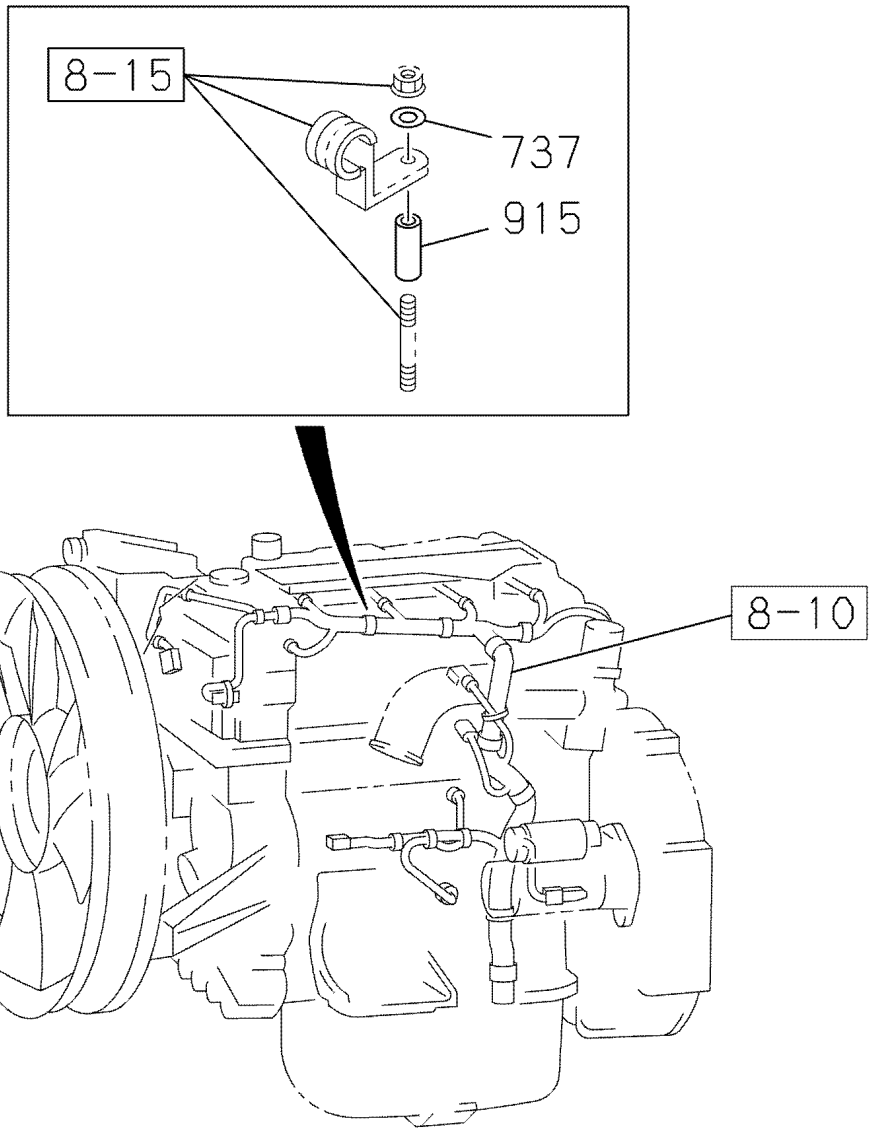

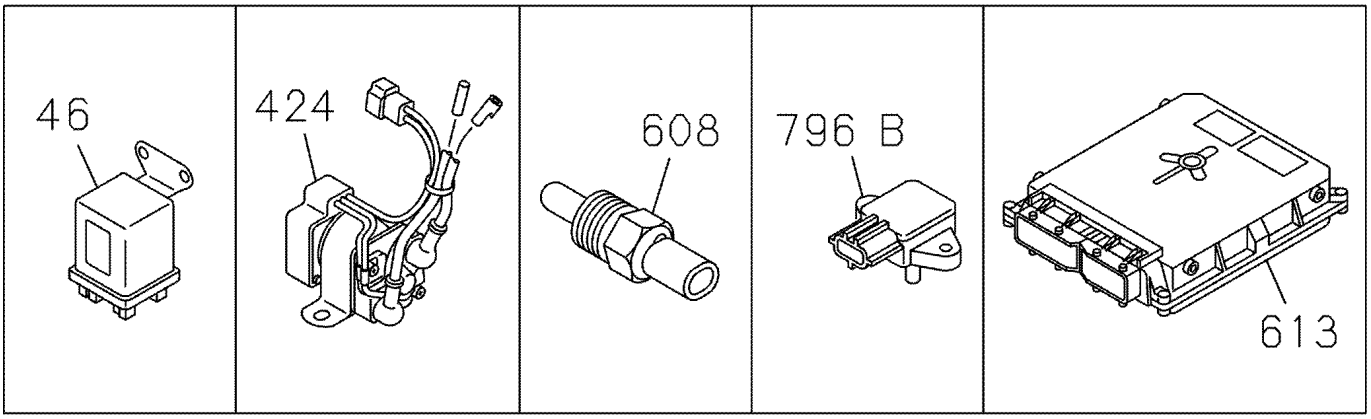

BS07B456

ELECTRICAL ACCESSORIES - ENGINE

REF	FN	PART NUMBER	YR/SN	QTY	DESCRIPTION
8-10		REF		1	INSTRUCAO, See Figure 04-04
8-15		REF		1	INSTRUCAO, See Figure 04-04A
46		87378549		1	SENSOR
424		72217466		1	CONECTADOR
608		87378549		1	SENSOR
613		87600312		1	CENTRAL ELETRÔNICA
737		87600313		1	ARRUELA PLANA
796B		87379337		1	SENSOR
915		87600421		1	ESPAÇADOR

ELECTRICAL ACCESSORIES - ENGINE

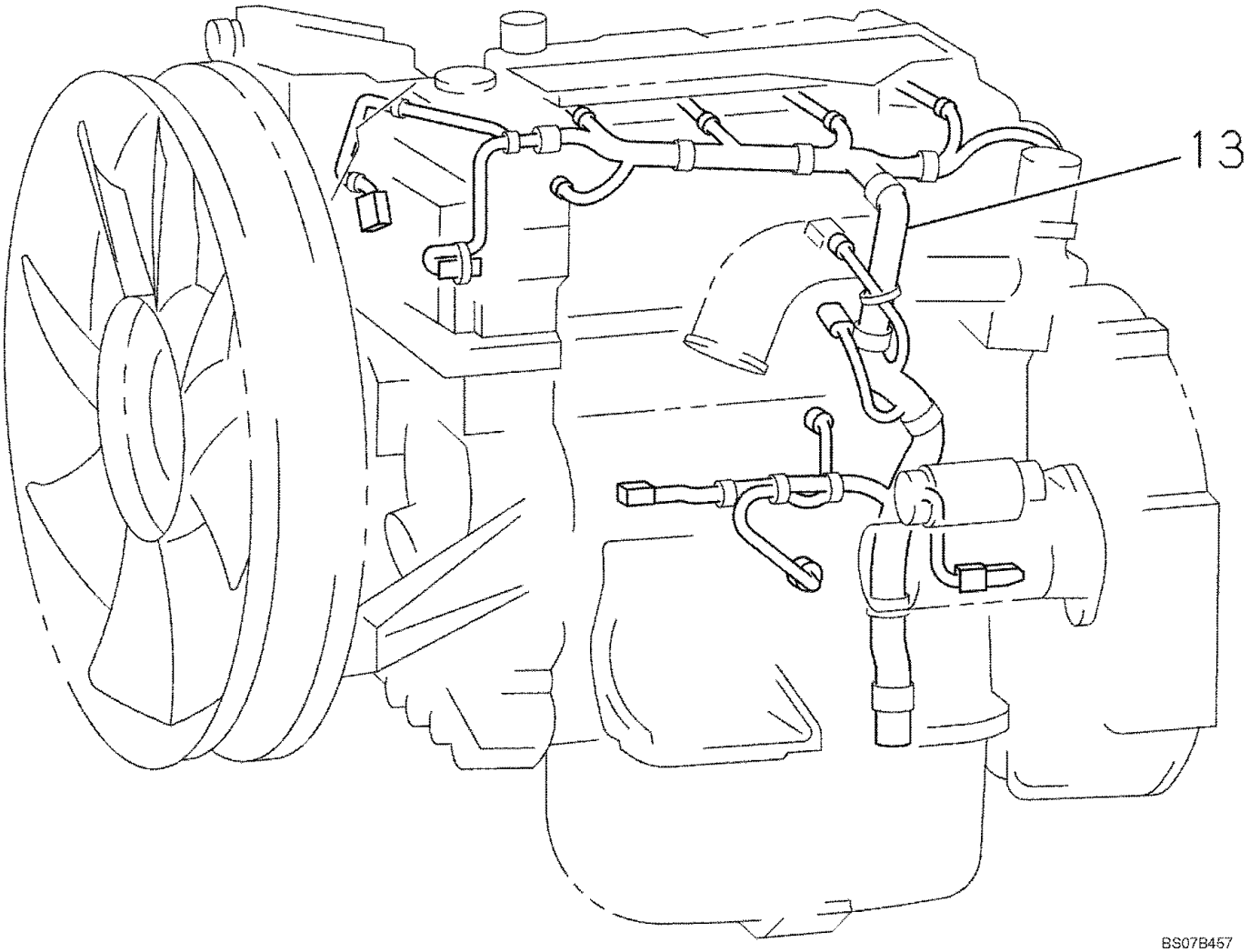

ELECTRICAL ACCESSORIES - ENGINE

REF	FN	PART NUMBER	YR/SN	QTY	DESCRIPTION
13		87601012		1	CHICOTE

ELECTRICAL ACCESSORIES - ENGINE

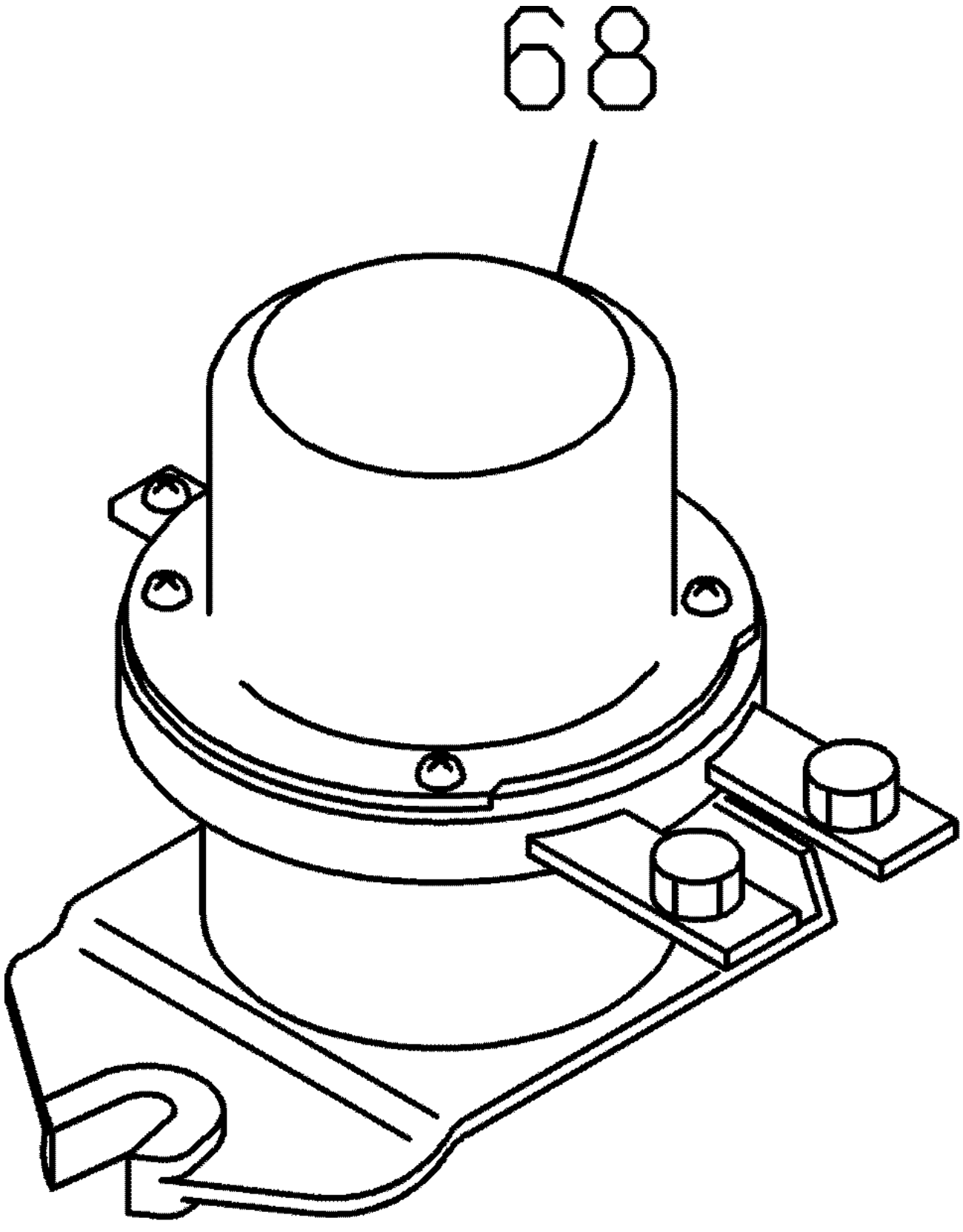

ELECTRICAL ACCESSORIES - ENGINE

REF	FN	PART NUMBER	YR/SN	QTY	DESCRIPTION
68		76592282		1	TELE-INTERRUPTOR

BRACKET

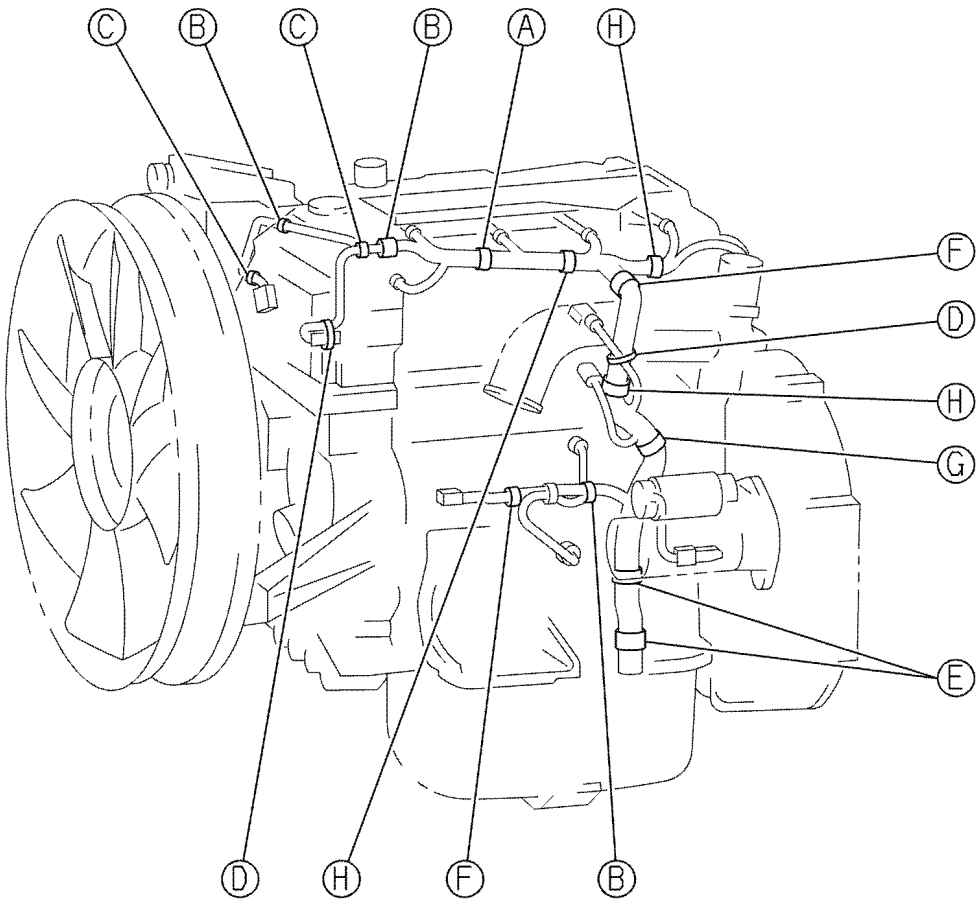

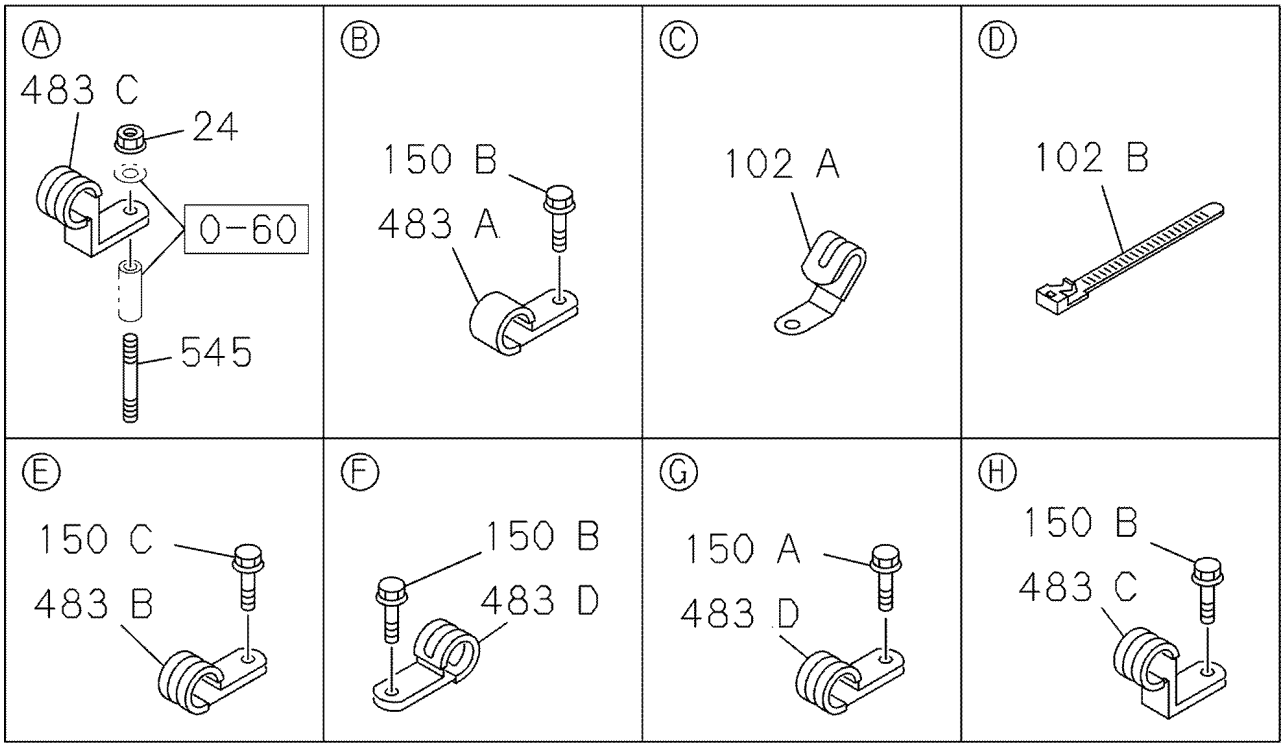

BS07B458

BRACKET

REF	FN	PART NUMBER	YR/SN	QTY	DESCRIPTION
0-60		REF		1	INSTRUCAO, See Figure 04-01
24		87595428		1	PORCA
102A		87380213		2	FIXADOR
102B		87601030		2	FIXADOR
150A		87595952		1	PARAFUSO
150B		87595866		8	PARAFUSO, Replaces 87595805
150C		87601042		2	PARAFUSO
483A		87601054		1	FIXADOR
483B		87601055		2	FIXADOR
483C		87380212		2	FIXADOR
483D		87386274		3	FIXADOR
483G		87601122		1	FIXADOR, Not Illustrated
545		87601159		1	PRISIONEIRO

CONJUNTO DE FIOS, PRINCIPAIS - CHASSI, ESTRUTURA INFERIOR

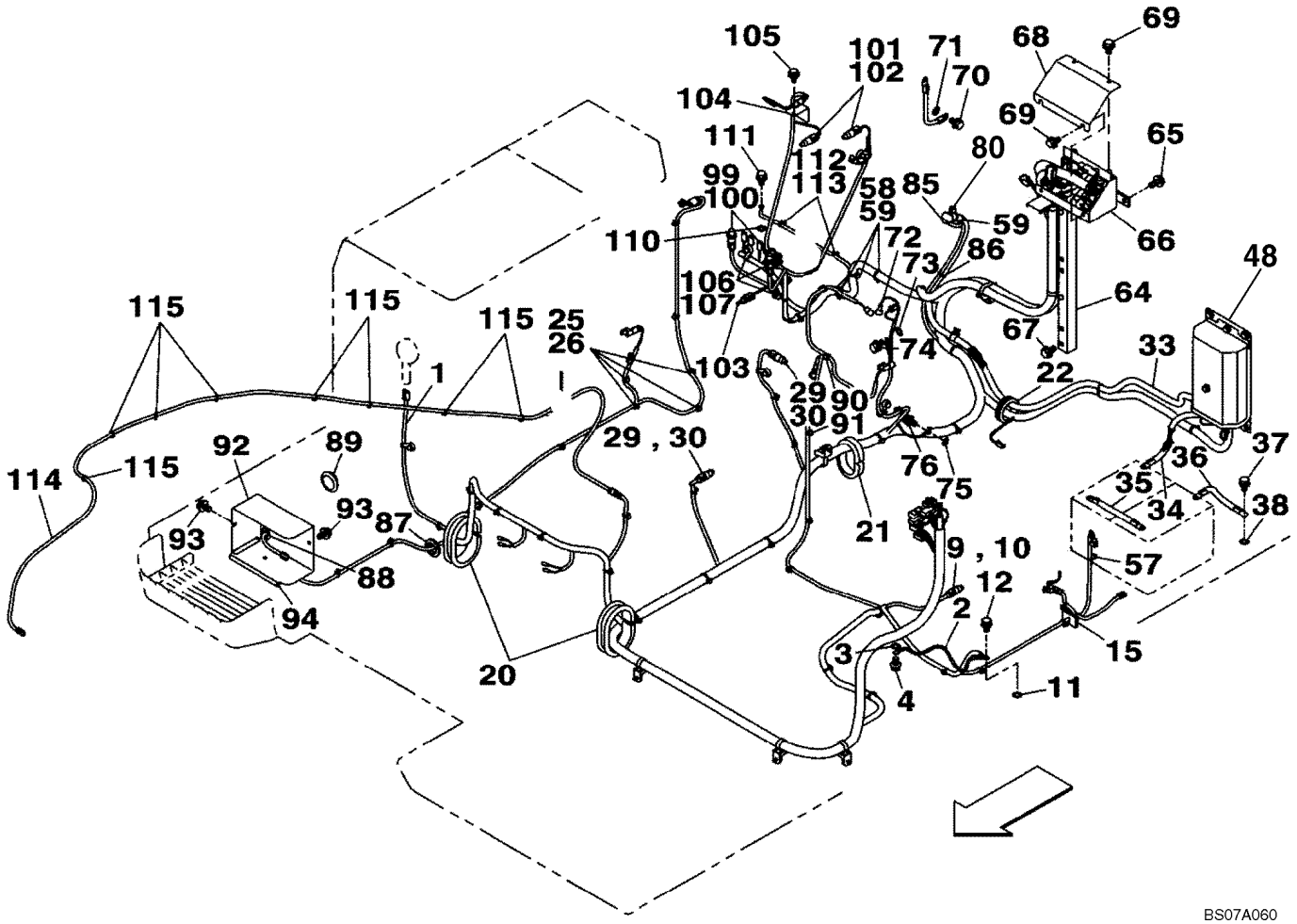

BS07A060

CONJUNTO DE FIOS, PRINCIPAIS - CHASSI, ESTRUTURA INFERIOR

REF	FN	PART NUMBER	YR/SN	QTY	DESCRIPTION
1		KLR10280		1	CHICOTE
2		KHR11090		1	CABO, MASSA
3		893-11008		1	ARRUELA-TRAVA, Ext Tooth, M8
4		167518A1		1	PARAFUSO
9		KHR10300		1	SENSOR, Incl. 10
10		154467A1		1	ANEL "O"
11		893-11008		1	ARRUELA-TRAVA, Ext Tooth, M8
12		167518A1		1	PARAFUSO
15		KLR10260		1	COBRE-JUNTA
20		160414A1		2	PARA-CHOQUE
21		152579A1		1	COXIM
22		152117A1		1	CASQUILHO ISOLADOR
25		KHR10220		4	ARGOLA DE FIXACAO
26		150496A1		4	ARGOLA DE FIXACAO
29		KHR10300		2	SENSOR, Incl. 30
30		154467A1		1	ANEL "O"
33		KHR12920		1	CABO ELÉTRICO, Battery
34		KHR13910		1	CABO ELÉTRICO, Battery
35		KHR15070		1	CABO ELÉTRICO, Battery
36		KHR11080		1	CABO ELÉTRICO, Battery
37		167518A1		1	PARAFUSO
38		893-11008		1	ARRUELA-TRAVA, Ext Tooth, M8
48		REF		1	INSTRUCAO, Relay and Cover; See Figure 04-06
57		150496A1		1	ARGOLA DE FIXACAO
58		KHR10220		3	ARGOLA DE FIXACAO
59		150496A1		4	ARGOLA DE FIXACAO
64		KLR10190		1	SUPORTE CONJUNTO
65		152718A1		3	PARAFUSO
66		KLR10170		1	SUPORTE
67		152718A1		2	PARAFUSO
68		KLR10180		1	TAMPA
69		166345A1		4	PARAFUSO
70		KHJ2298		1	PARAFUSO
71		893-11010		1	ARRUELA-TRAVA, Ext Tooth, M10
72		159179A1		1	TAMPÃO

CONJUNTO DE FIOS, PRINCIPAIS - CHASSI, ESTRUTURA INFERIOR

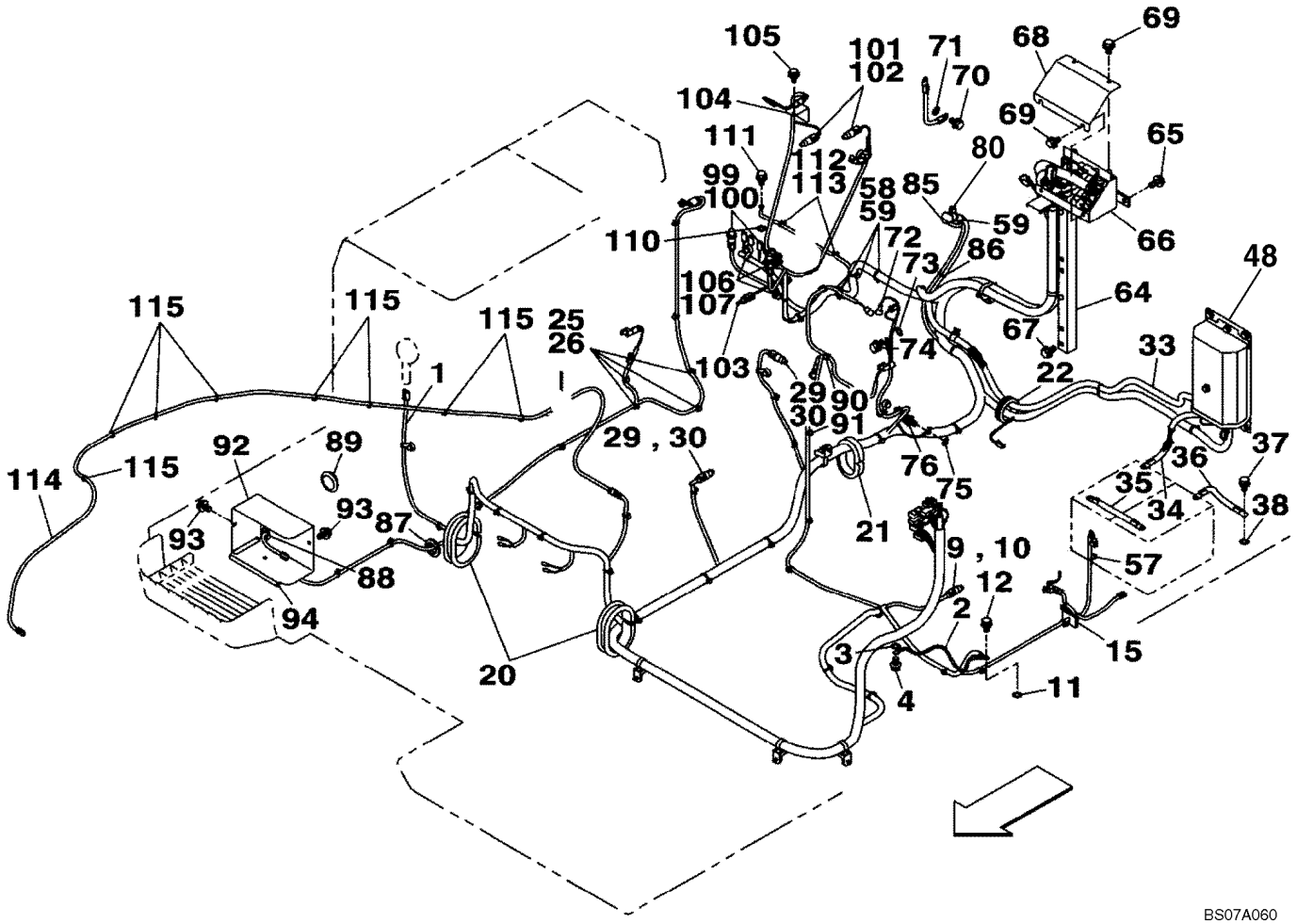

BS07A060

CONJUNTO DE FIOS, PRINCIPAIS - CHASSI, ESTRUTURA INFERIOR

REF	FN	PART NUMBER	YR/SN	QTY	DESCRIPTION
73		893-11006		1	ARRUELA-TRAVA, Ext Tooth, M6
74		156559A1		1	PARAFUSO
75		893-11008		1	ARRUELA-TRAVA, Ext Tooth, M8
76		167518A1		1	PARAFUSO
80		REF		1	INSTRUCAO, Cap; See Figure 04-06
85		159179A1		1	TAMPÃO
86		150496A1		2	ARGOLA DE FIXACAO
87		165984A1		1	CASQUILHO ISOLADOR
88		159656A1		1	CASQUILHO ISOLADOR
89		KHN11510		1	CASQUILHO ISOLADOR
90		KHR10220		1	ARGOLA DE FIXACAO
91		150496A1		1	ARGOLA DE FIXACAO
92		KHR14420		1	SUPORTE
93		166345A1		2	PARAFUSO
94		KHR14920		1	COBRE-JUNTA
99		KHR10290		2	SENSOR, Incl. 100
100		UCP0101		1	ANEL "O"
101		KHR10300		2	SENSOR, Incl. 102
102		154467A1		1	ANEL "O"
103		KHR2433		1	SENSOR
104		KLR10230		1	SUPORTE
105		166345A1		1	PARAFUSO
106		KHR2584		2	BRACADEIRA
107		KHJ1215		2	PARAFUSO
110		893-11008		1	ARRUELA-TRAVA, Ext Tooth, M8
111		167518A1		1	PARAFUSO
112		KHR10220		2	ARGOLA DE FIXACAO
113		150496A1		2	ARGOLA DE FIXACAO
114		KHR11160		1	CHICOTE DE FIOS
115		150496A1		10	ARGOLA DE FIXACAO

3

CONJUNTO DE FIOS, PRINCIPAIS - GRAMPOS E RETENTORES

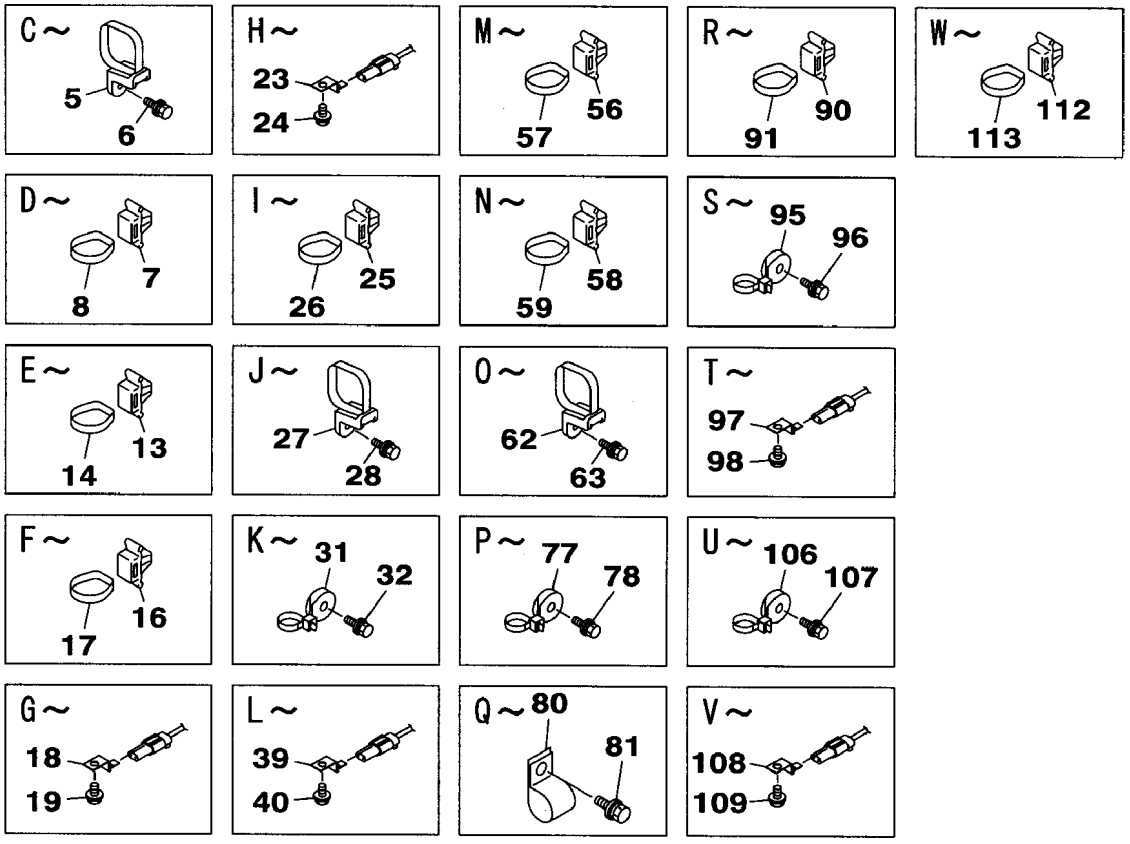

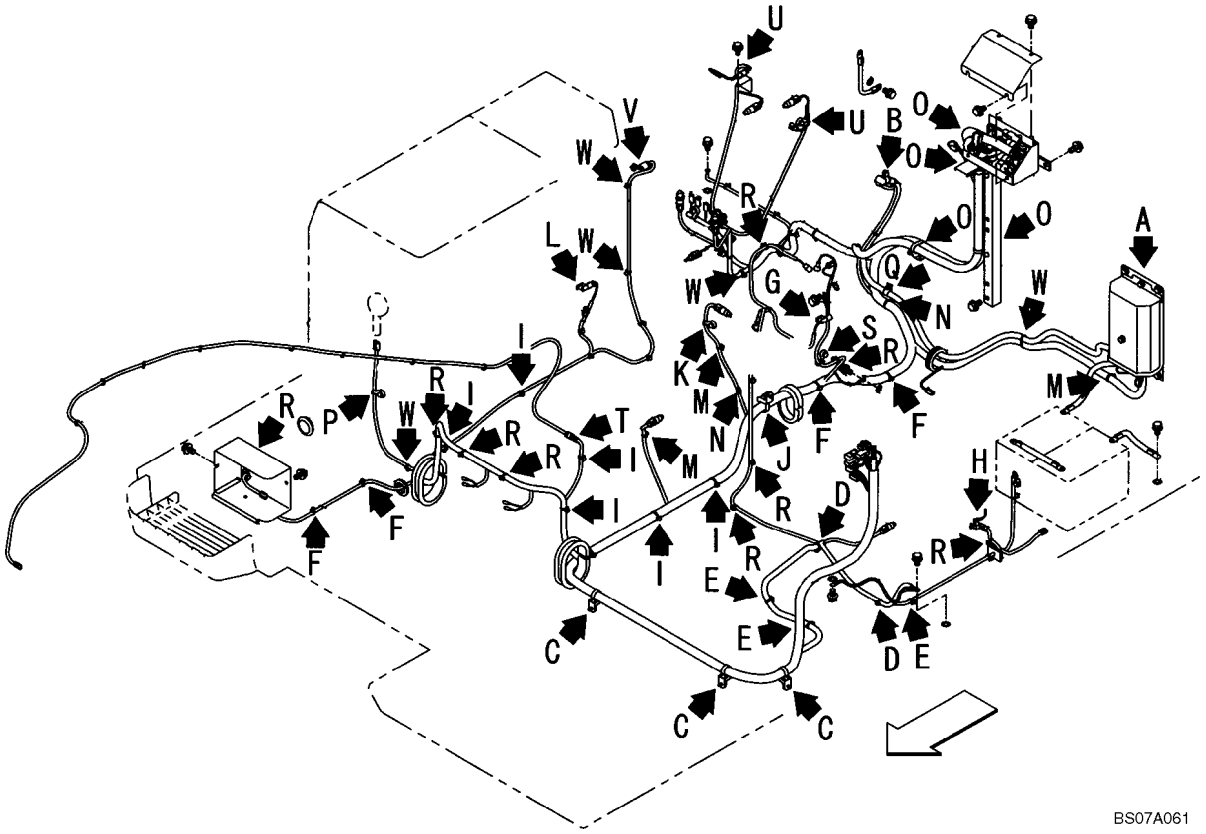

CONJUNTO DE FIOS, PRINCIPAIS - GRAMPOS E RETENTORES

REF	FN	PART NUMBER	YR/SN	QTY	DESCRIPTION
1		KLR10280		1	CHICOTE
5		KHR2581		3	BRACADEIRA
6		KHJ1215		3	PARAFUSO
7		KHR10220		2	ARGOLA DE FIXACAO
8		150496A1		2	ARGOLA DE FIXACAO
13		KHR10220		5	ARGOLA DE FIXACAO
14		150496A1		5	ARGOLA DE FIXACAO
16		KHR10220		4	ARGOLA DE FIXACAO
17		150496A1		4	ARGOLA DE FIXACAO
18		158962A1		1	FIXADOR
19		167518A1		1	PARAFUSO
23		158962A1		1	FIXADOR
24		167518A1		1	PARAFUSO
25		KHR10220		7	ARGOLA DE FIXACAO
26		KHR2581		7	BRACADEIRA
27		KHR2581		1	BRACADEIRA
28		KHJ1215		1	PARAFUSO
31		KHR2584		1	BRACADEIRA
32		KHJ1215		1	PARAFUSO
39		158962A1		1	FIXADOR
40		167518A1		1	PARAFUSO
56		KHR10220		3	ARGOLA DE FIXACAO
57		150496A1		3	ARGOLA DE FIXACAO
58		KHR10220		2	ARGOLA DE FIXACAO
59		150496A1		2	ARGOLA DE FIXACAO
62		KHR2581		4	BRACADEIRA
63		KHJ1215		4	PARAFUSO
77		KHR2584		1	BRACADEIRA
78		KHJ1215		1	PARAFUSO
80		162150A1		1	BRACADEIRA
81		167518A1		1	PARAFUSO
90		KHR10220		9	ARGOLA DE FIXACAO
91		150496A1		9	ARGOLA DE FIXACAO
95		KHR2584		1	BRACADEIRA
96		KHJ1215		1	PARAFUSO

3

CONJUNTO DE FIOS, PRINCIPAIS - GRAMPOS E RETENTORES

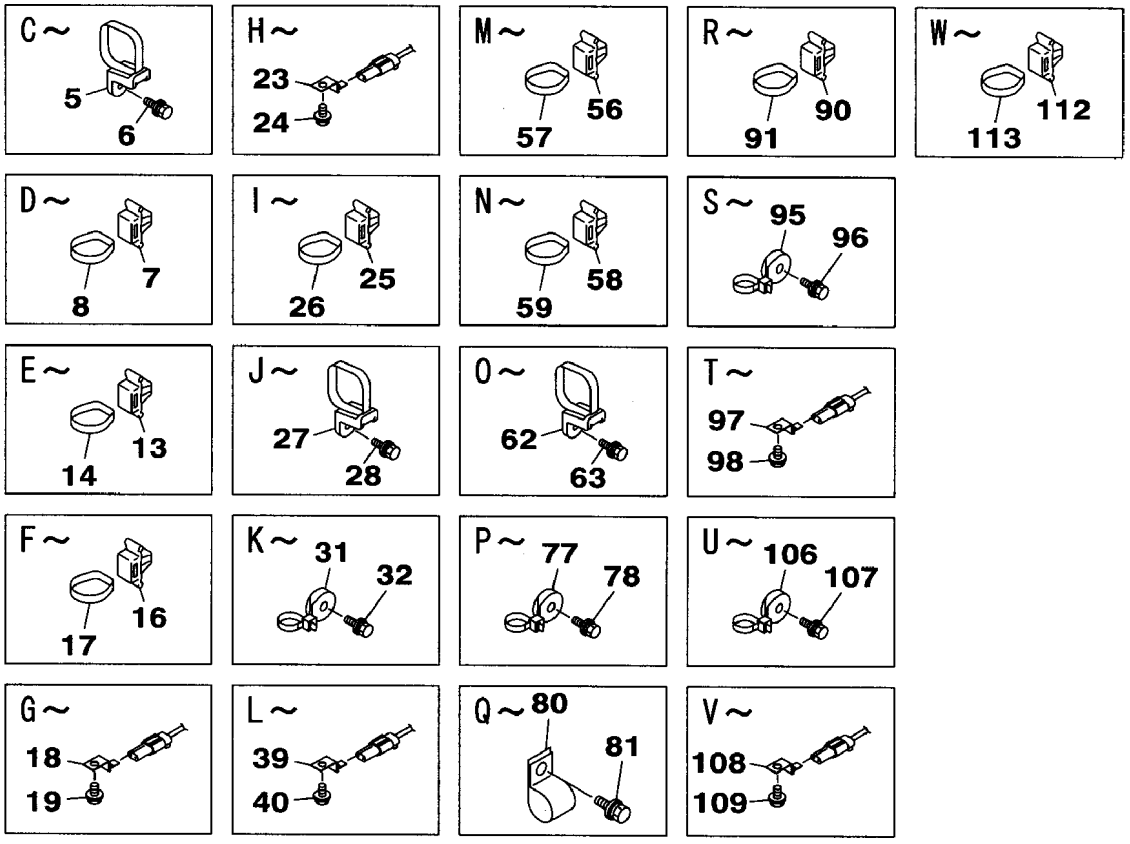

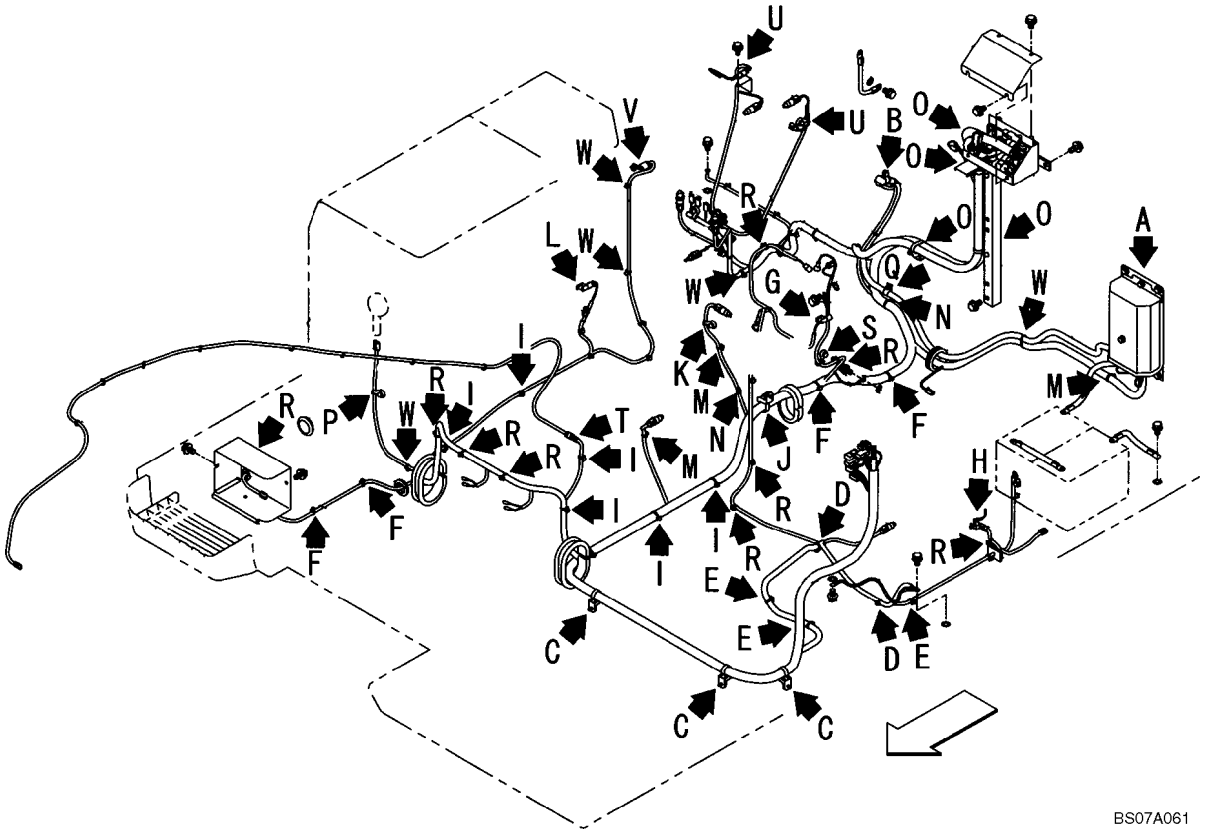

CONJUNTO DE FIOS, PRINCIPAIS - GRAMPOS E RETENTORES

REF	FN	PART NUMBER	YR/SN	QTY	DESCRIPTION
97		158962A1		1	FIXADOR
98		167518A1		1	PARAFUSO
106		KHR2584		3	BRACADEIRA
107		KHJ1215		3	PARAFUSO
108		KHR16450		1	FIXADOR
109		167518A1		1	PARAFUSO
112		KHR10220		5	ARGOLA DE FIXACAO
113		150496A1		5	ARGOLA DE FIXACAO

CONJUNTO DE FIOS, PRINCIPAIS - PAINEL DE RELÉS

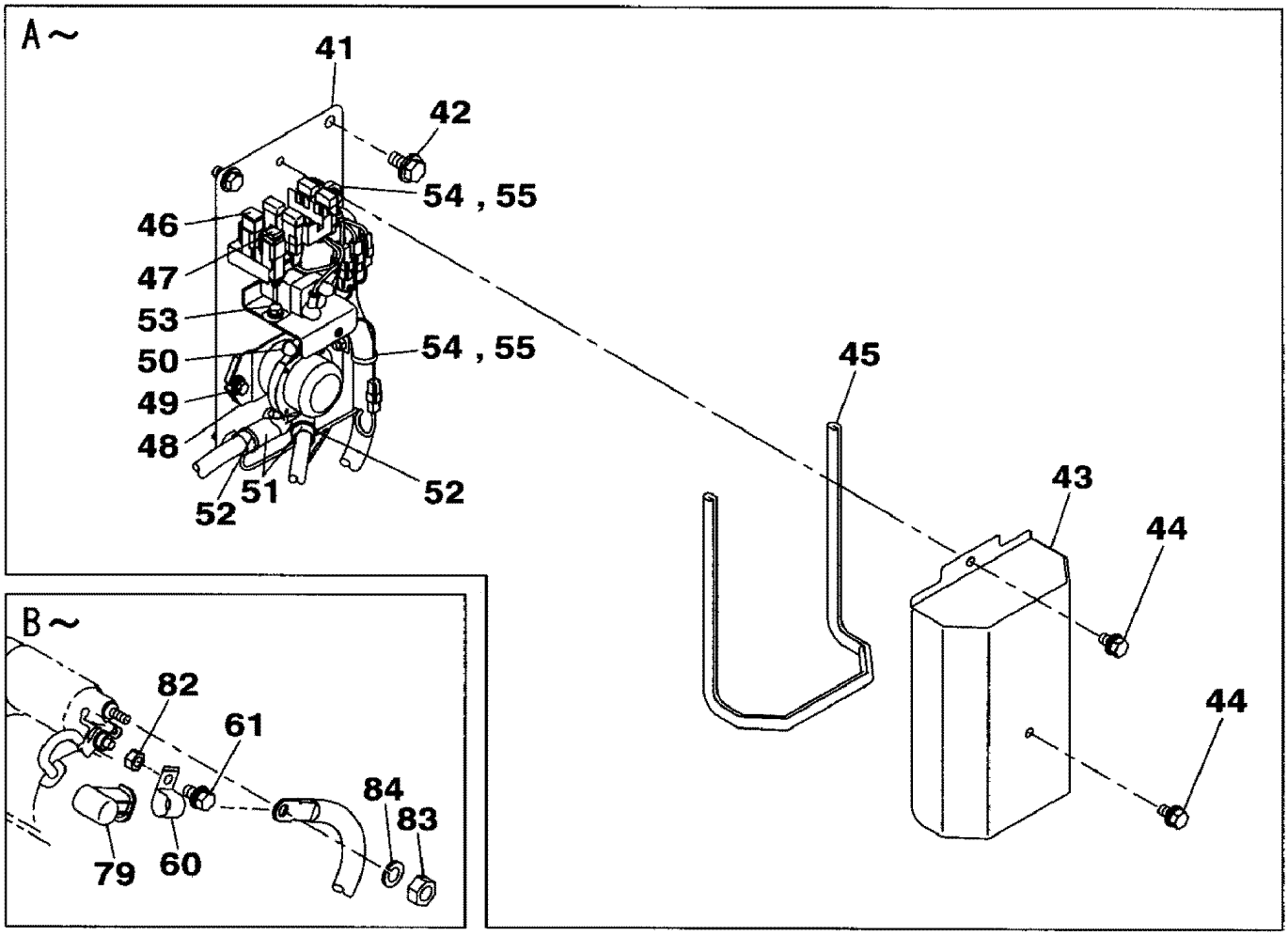

BS07A062

CONJUNTO DE FIOS, PRINCIPAIS - PAINEL DE RELÉS

REF	FN	PART NUMBER	YR/SN	QTY	DESCRIPTION
41		KHR14980		1	SUPORTE
42		152718A1		4	PARAFUSO
43		KHR19120		1	TAMPA, Replaces KHR14991
44		KHJ1215		2	PARAFUSO, Replaces 167518A1
45		KHN18060		1	COBRE-JUNTA
46		159902A1		1	FUSÍVEL
47		KHR3850		1	FUSÍVEL
48		159897A1		1	CONECTADOR
49		KHJ1215		2	PARAFUSO
50		159171A1		2	TAMPA DO RESERVATÓRIO
51		162212A1		2	TAMPA DO RESERVATÓRIO
52		150067A1		2	ARGOLA DE FIXACAO
53		167518A1		2	PARAFUSO
54		KHR2584		2	BRACADEIRA
55		KHJ1215		2	PARAFUSO
60		KHR10220		1	ARGOLA DE FIXACAO
61		167518A1		1	PARAFUSO
79		KHR4114		1	PROTETOR
82		829-1408		1	PORCA, M8, Cl 10
83		829-1408		1	PORCA, M8, Cl 10
84		183-108VR		1	ARRUELA MOLA

ELECTRICO - CABINA

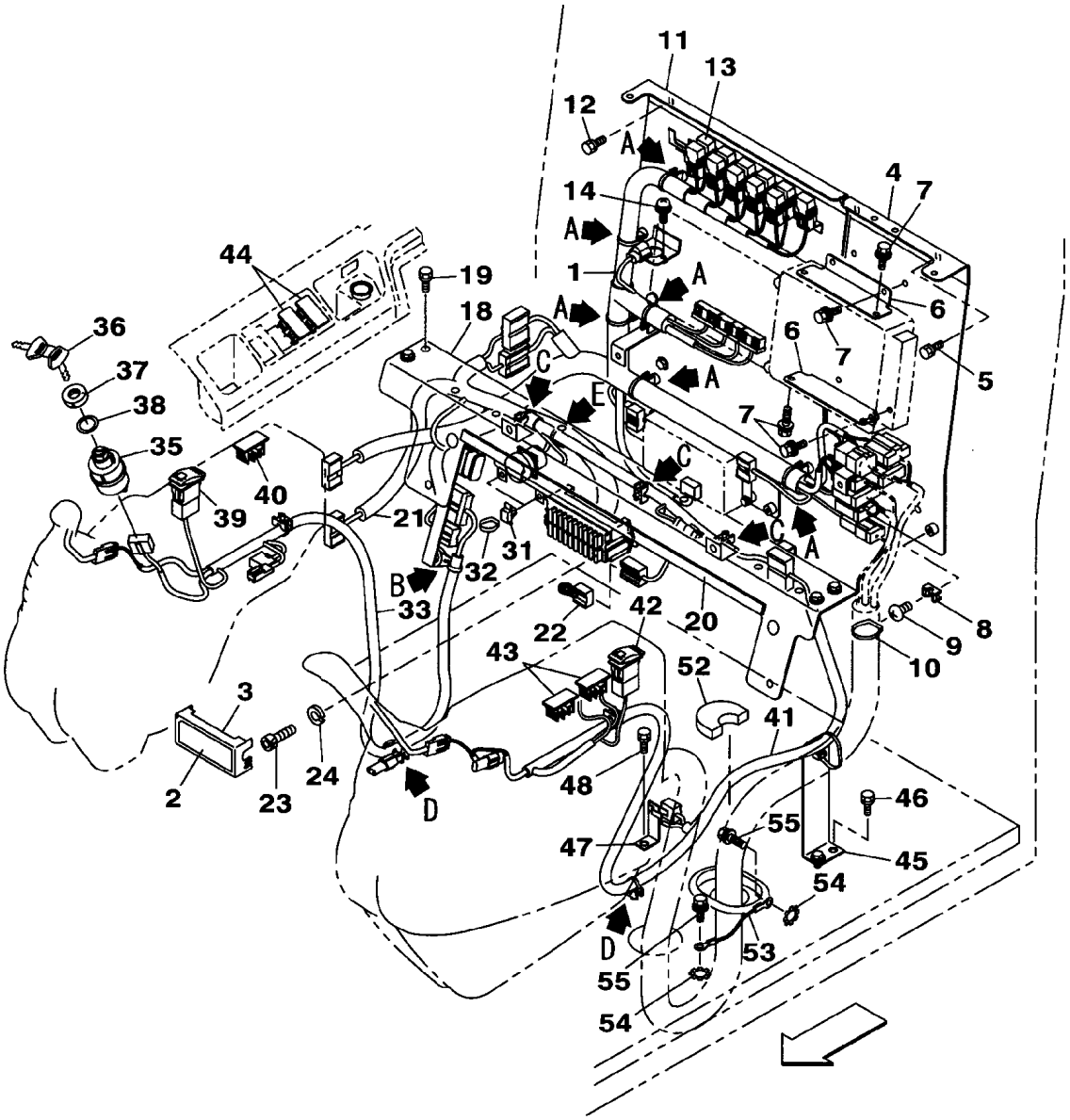

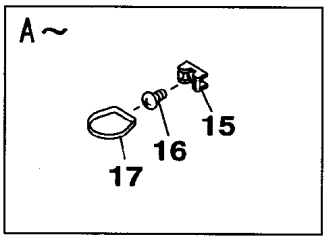

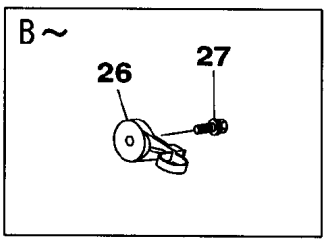

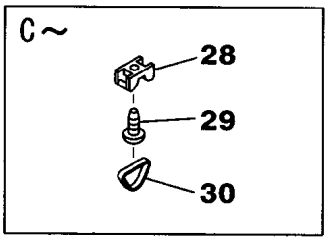

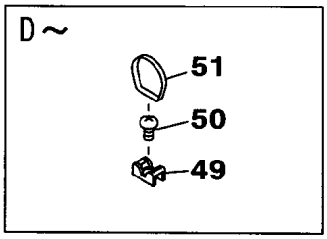

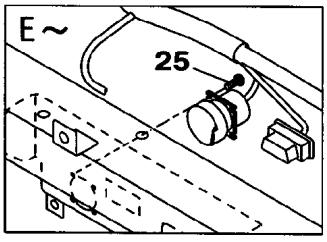

BS06K493

ELECTRICO - CABINA

REF	FN	PART NUMBER	YR/SN	QTY	DESCRIPTION
1		KHR16002		1	CHICOTE DE FIOS, HARNESS, WIRE, Replaces KHR16001
2		KHP12180		1	DECALCOMANIA
3		KHR15940		1	TAMPA
4		KHR13450		1	SUPORTE
5		166345A1		4	PARAFUSO
6		KHR13480		2	SUPORTE
7		159602A1		8	PARAFUSO
8		150860A1		1	BRACADEIRA
9		840-168		1	PARAFUSO, Cross Pan Hd, M6 x 8
10		150496A1		1	ARGOLA DE FIXACAO
11		KHR13460		1	SUPORTE
12		166345A1		4	PARAFUSO
13		KHR3802		11	CONECTADOR
14		157538A1		2	PARAFUSO
15		150860A1		6	BRACADEIRA
16		840-168		6	PARAFUSO, Cross Pan Hd, M6 x 8
17		150496A1		6	ARGOLA DE FIXACAO
18		KHR13472		1	SUPORTE, Replaces KHR13471
19		166345A1		4	PARAFUSO
20		KHR14230		1	JUNTA
21		KHR15992		1	CHICOTE DE FIOS, Incl. 22, Replaces KHR15991
22		KHR15950		1	CHICOTE DE FIOS
23		108R006Y020R		2	PARAFUSO
24		892-11006		2	ARRUELA-TRAVA, M6
25		145N003S008R		4	PARAFUSO
26		KHR2583		2	BRACADEIRA
27		159602A1		2	PARAFUSO
28		150860A1		4	BRACADEIRA
29		840-168		4	PARAFUSO, Cross Pan Hd, M6 x 8
30		150496A1		4	ARGOLA DE FIXACAO
31		KHR10220		2	ARGOLA DE FIXACAO, If Used
32		150496A1		2	ARGOLA DE FIXACAO, If Used
33		KHR16111		1	CHICOTE DE FIOS

ELECTRICO - CABINA

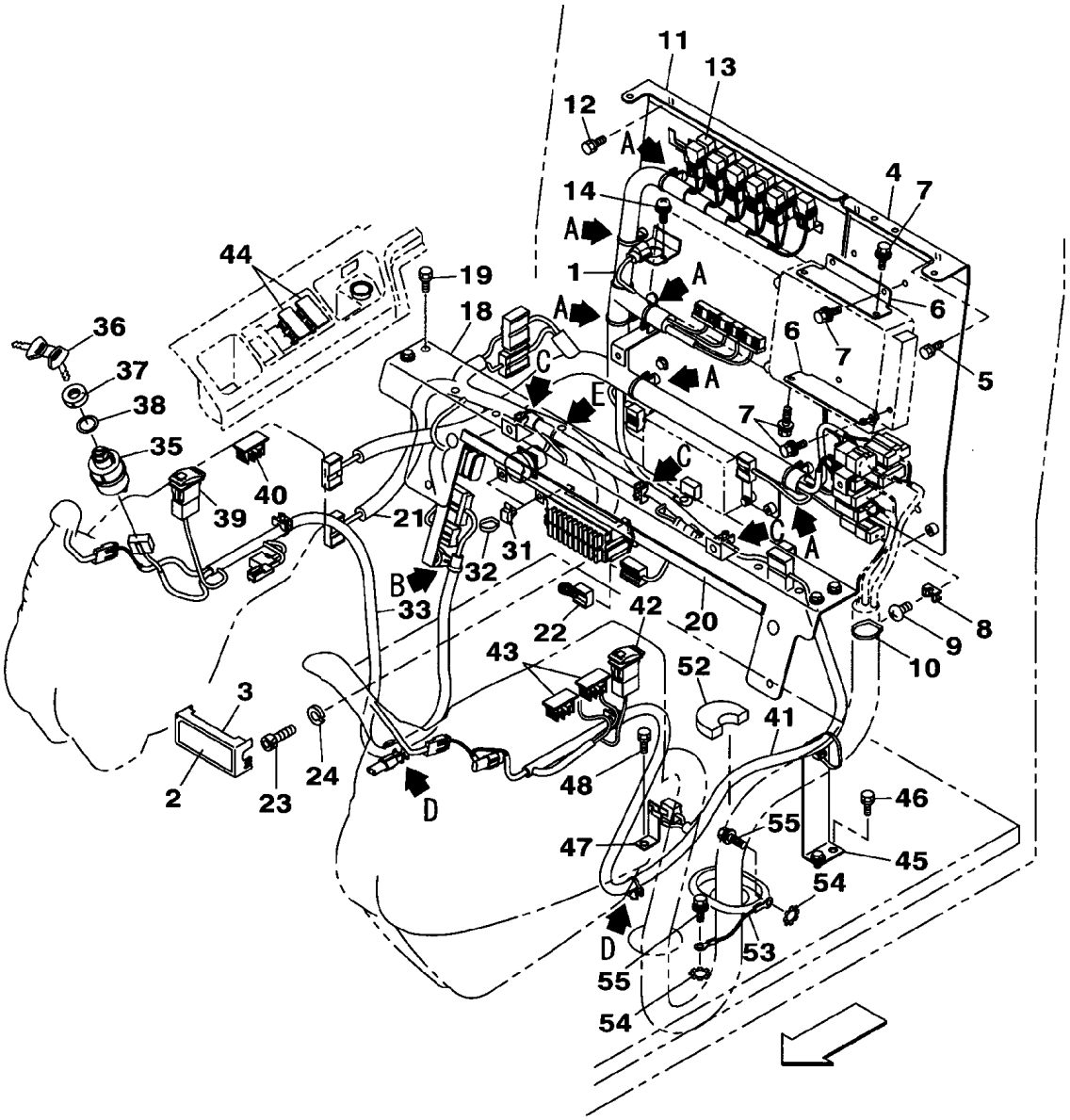

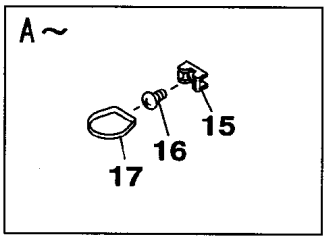

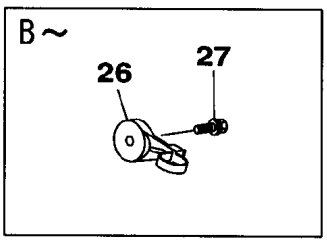

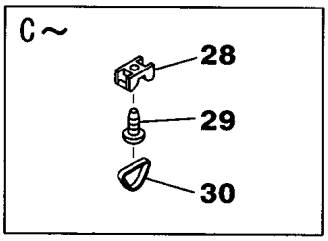

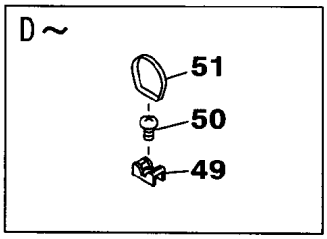

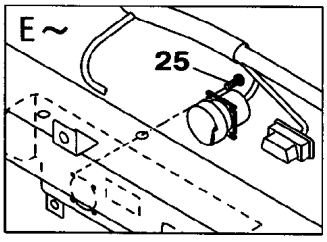

BS06K493

ELECTRICO - CABINA

REF	FN	PART NUMBER	YR/SN	QTY	DESCRIPTION
		KHR20050		1	COMUTADOR, SWITCH, IGNITION, Incl. 35 - 38, Replaces KHR3270
35		KHR3078		1	COMUTADOR
36		KHR20070		2	CHAVE DE PARTIDA, KEY CASE, Replaces 150979A1
37		KHR3080		1	TAMPA DO RESERVATÓRIO
38		KHR3081		1	ARRUELA PLANA
39		KHR15850		1	INTERRUPTOR
40		KHR10390		1	TAMPA DO RESERVATÓRIO
41		KHR16121		1	CHICOTE DE FIOS
42		KHR14050		1	INTERRUPTOR
43		KHR10390		2	TAMPA DO RESERVATÓRIO
44		KHR10390		2	TAMPA DO RESERVATÓRIO
45		KHR13490		1	SUPORTE
46		166345A1		2	PARAFUSO
47		KHR13500		1	SUPORTE
48		166345A1		1	PARAFUSO
49		150860A1		2	BRACADEIRA
50		840-168		2	PARAFUSO, Cross Pan Hd, M6 x 8
51		150496A1		2	ARGOLA DE FIXACAO
52		KHJ14620		1	JUNTA
53		KHR11240		1	CABO, MASSA
54		893-11008		2	ARRUELA-TRAVA, Ext Tooth, M8
55		167518A1		2	PARAFUSO
57		167518A1		1	PARAFUSO, Not Illustrated
56		KHR3748		1	FIXADOR, Not Illustrated

ALARME SONORO DO DESLOCAMENTO

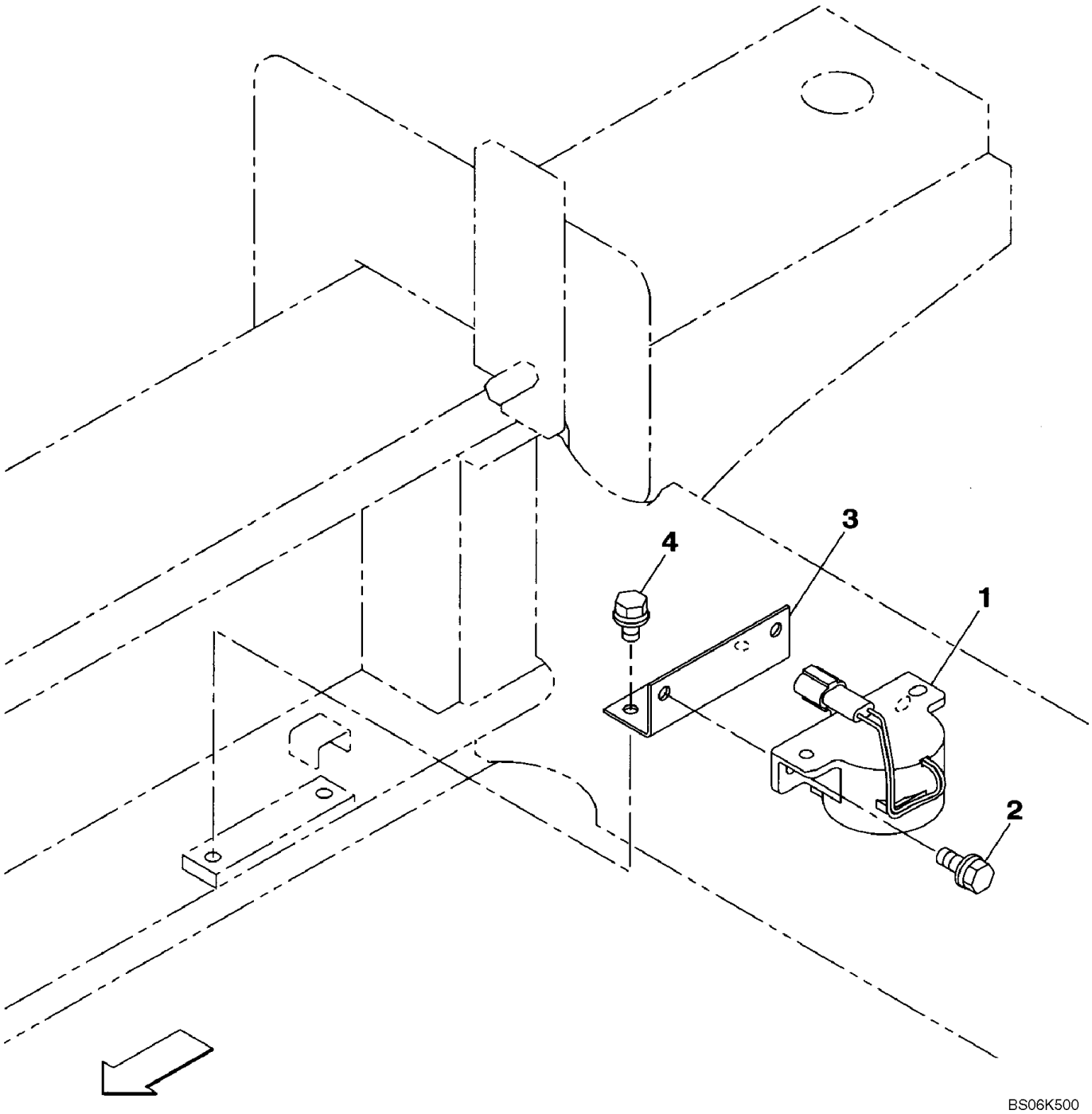

ALARME SONORO DO DESLOCAMENTO

REF	FN	PART NUMBER	YR/SN	QTY	DESCRIPTION
1		KHR3852		1	ALARME, Travel
2		159602A1		2	PARAFUSO
3		KHR15120		1	SUPORTE
4		156559A1		2	PARAFUSO

CONVERTIDOR

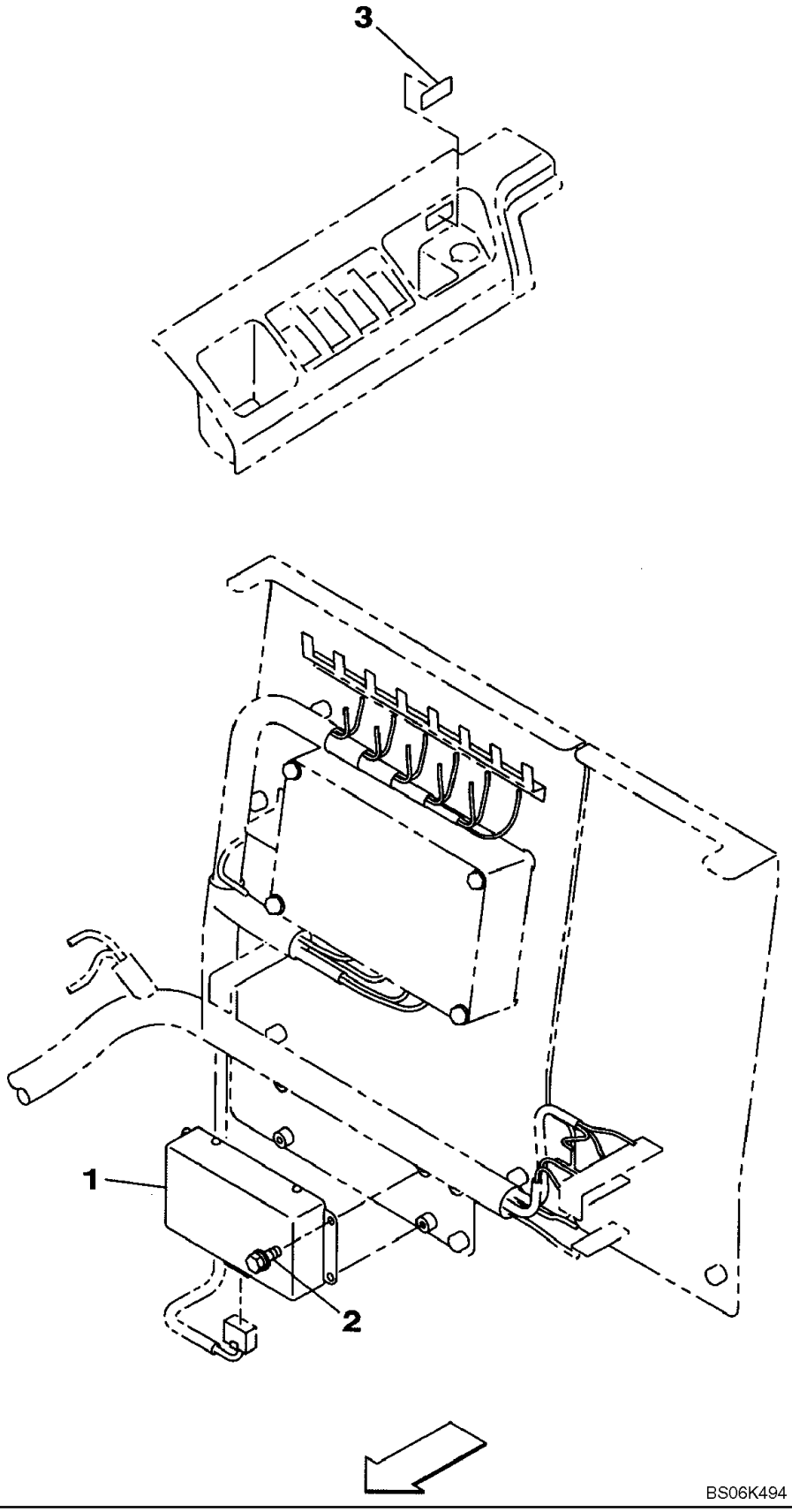

BS06K494

CONVERTIDOR

REF	FN	PART NUMBER	YR/SN	QTY	DESCRIPTION
1		167181A1		1	TRANSFORMADOR
2		159602A1		4	PARAFUSO
3		KHP1803		1	DECALCOMANIA

SISTEMA ELÉTRICO DA CABINA - LIMPADOR, PÁRA-BRISA

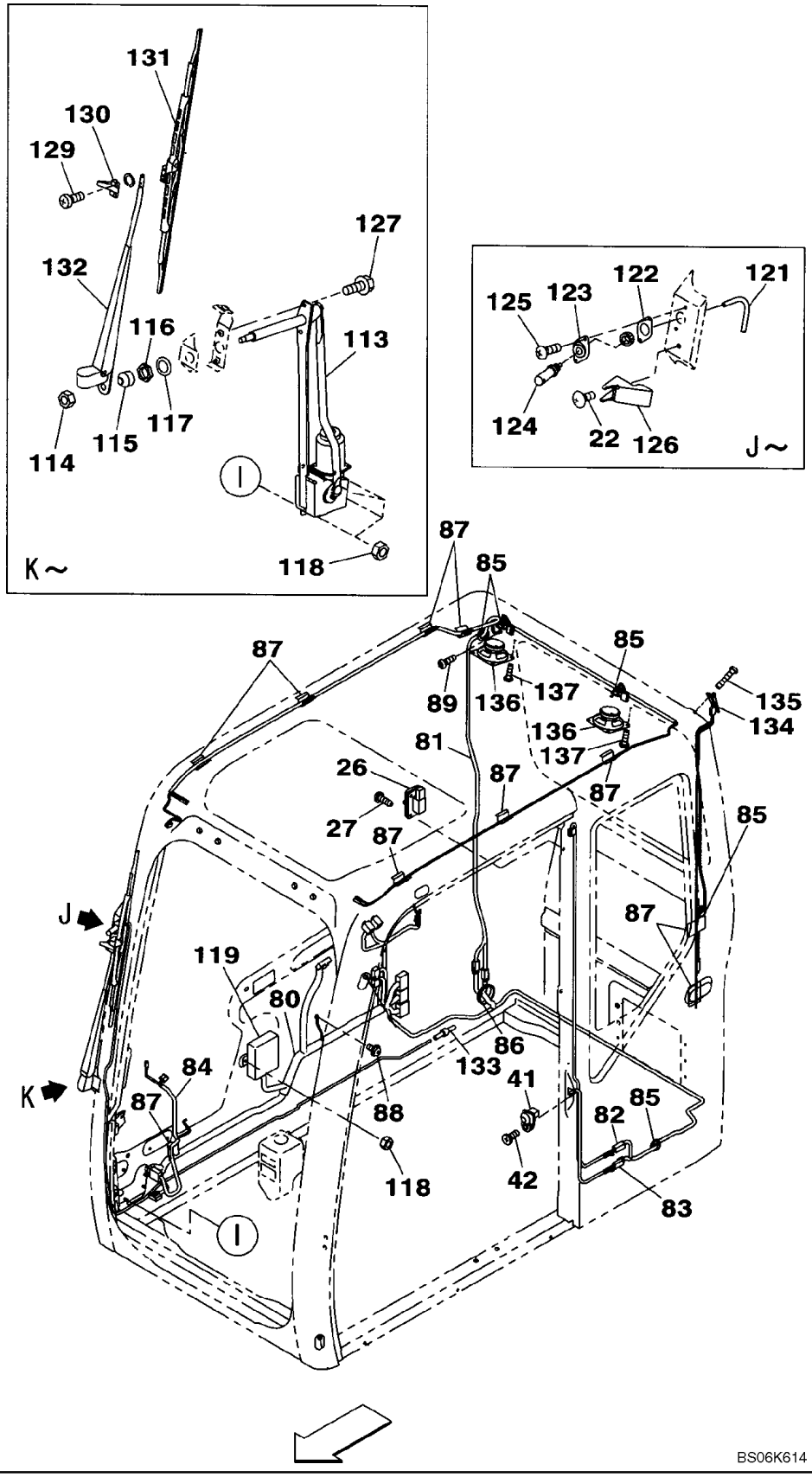

SISTEMA ELÉTRICO DA CABINA - LIMPADOR, PÁRA-BRISA

REF	FN	PART NUMBER	YR/SN	QTY	DESCRIPTION
		KHN14520		1	CABINE, Incl. 22 - 137; Also Includes Parts On Figures 09-26, 09-27, 09-29, 09-30
22		KHN2768		1	PARAFUSO
26		KHN2714		1	LAMPADA TETO
27		KHN2687		2	PARAFUSO
41		KHR2950		1	INTERRUPTOR, Limit; See Figure 09-29 For Additional Limit Switch
42		KHN2713		1	PARAFUSO
80		KHN15050		1	CHICOTE
81		KHN15060		1	CHICOTE
82		KHN15070		1	CHICOTE
83		KHN15080		1	CHICOTE
84		KHN15090		1	CHICOTE
85		KHN2709		7	CASQUILHO ISOLADOR
86		161360A1		1	PROTECTOR CONJUNTO
87		KHN2712		10	BOTÃO DE IMPULSO
88		KHN2719		1	PARAFUSO
89		KHN16240		1	PARAFUSO
113		KHN16020		1	KIT DE REPARO, Incl. 114 - 117
114		KHN2740		1	PORCA
115		KHN2739		1	TAMPA DO RESERVATÓRIO
116		KHN2738		1	PORCA
117		KHN2737		1	ARRUELA PLANA
118		KHN16030		8	PORCA
119		KHN3392		1	CENTRAL ELETRÔNICA
		KHN16040		1	PULVERIZADOR, Incl. 121 - 124
121		KHN16050		1	TUBO
122		KHN14180		1	JUNTA, Packing
123		KHN16060		1	ADAPTADOR
124		KHN2746		1	ANEL DE ENCAIXE
125		KHN16070		2	PARAFUSO
126		KHN16080		1	SUPORTE
127		KHN2756		1	PARAFUSO
		KHN16090		1	BRAÇO LIMP. PÁRA-BRISA, Incl. 129 - 132
129		KHN2733		1	PARAFUSO

SISTEMA ELÉTRICO DA CABINA - LIMPADOR, PÁRA-BRISA

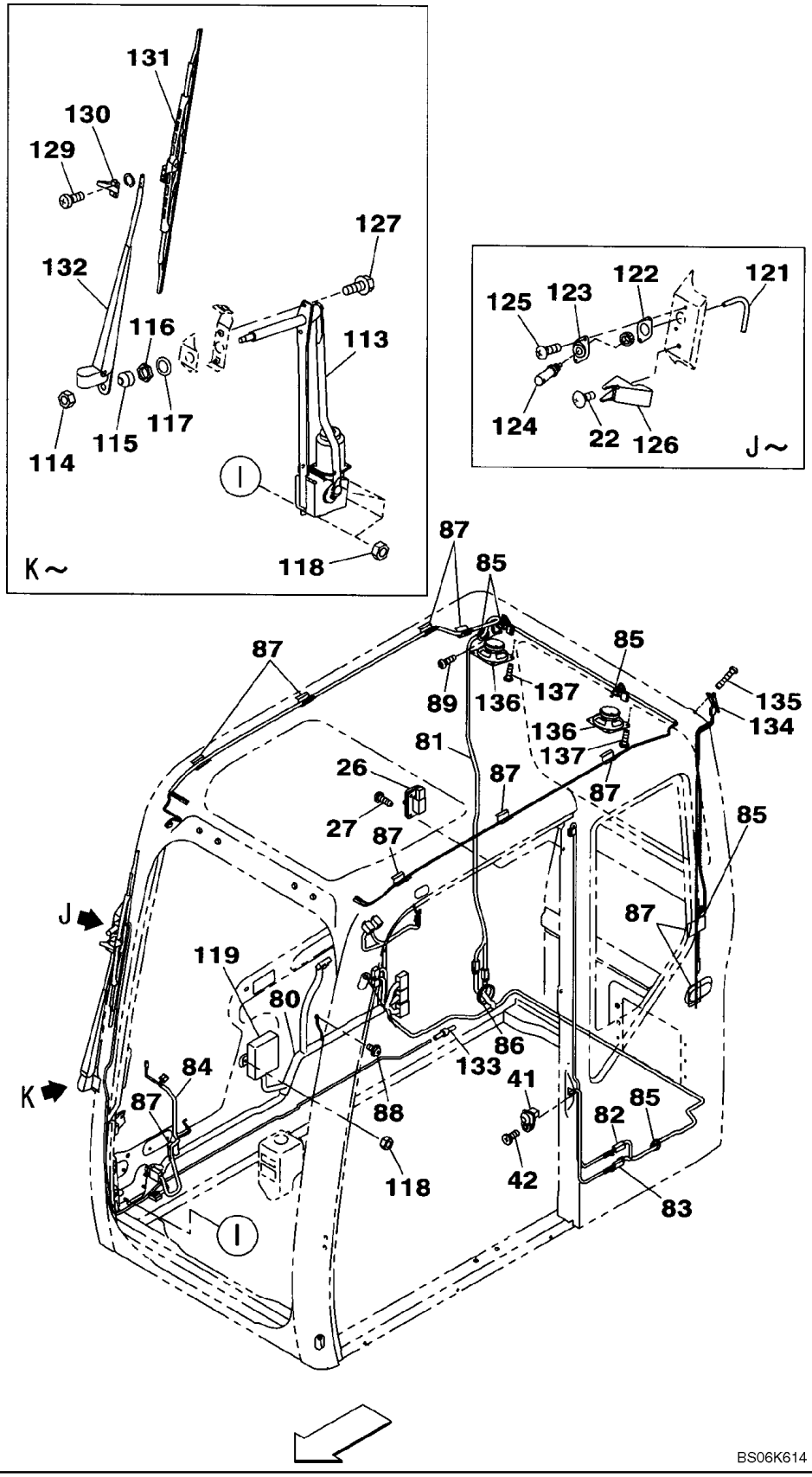

SISTEMA ELÉTRICO DA CABINA - LIMPADOR, PÁRA-BRISA

REF	FN	PART NUMBER	YR/SN	QTY	DESCRIPTION
130		KHN2732		1	ADAPTADOR
131		KHN16820		1	LIMPADOR DE PARABRIS
132		KHN16830		1	BRAÇO LIMP. PÁRA-BRISA
133		KHN16100		1	JUNTA DE BORRACHA
134		KHN16340		1	ANTENA ELÉTRICA
135		KHN16110		1	PARAFUSO
136		KHN18250		2	ALTO-FALANTE, Replaces CAP2284
137		KHN2716		8	PARAFUSO
138		159543A1		1	ESPAÇADOR, Not Illustrated

HORN

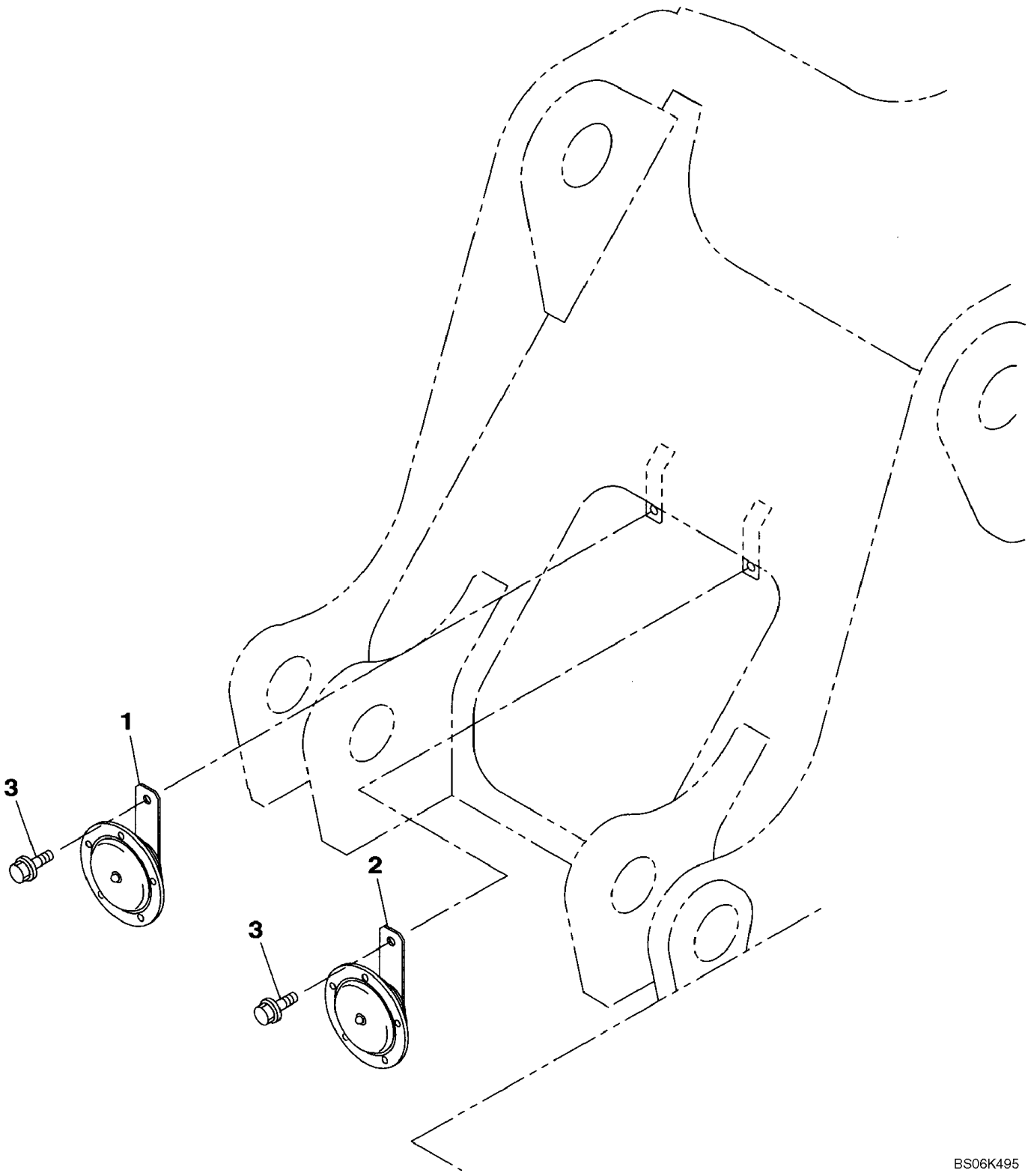

HORN

REF	FN	PART NUMBER	YR/SN	QTY	DESCRIPTION
1		KHR2427		1	BUZINA
2		KHR2428		1	BUZINA
3		166345A1		2	PARAFUSO

LAMP, WORK

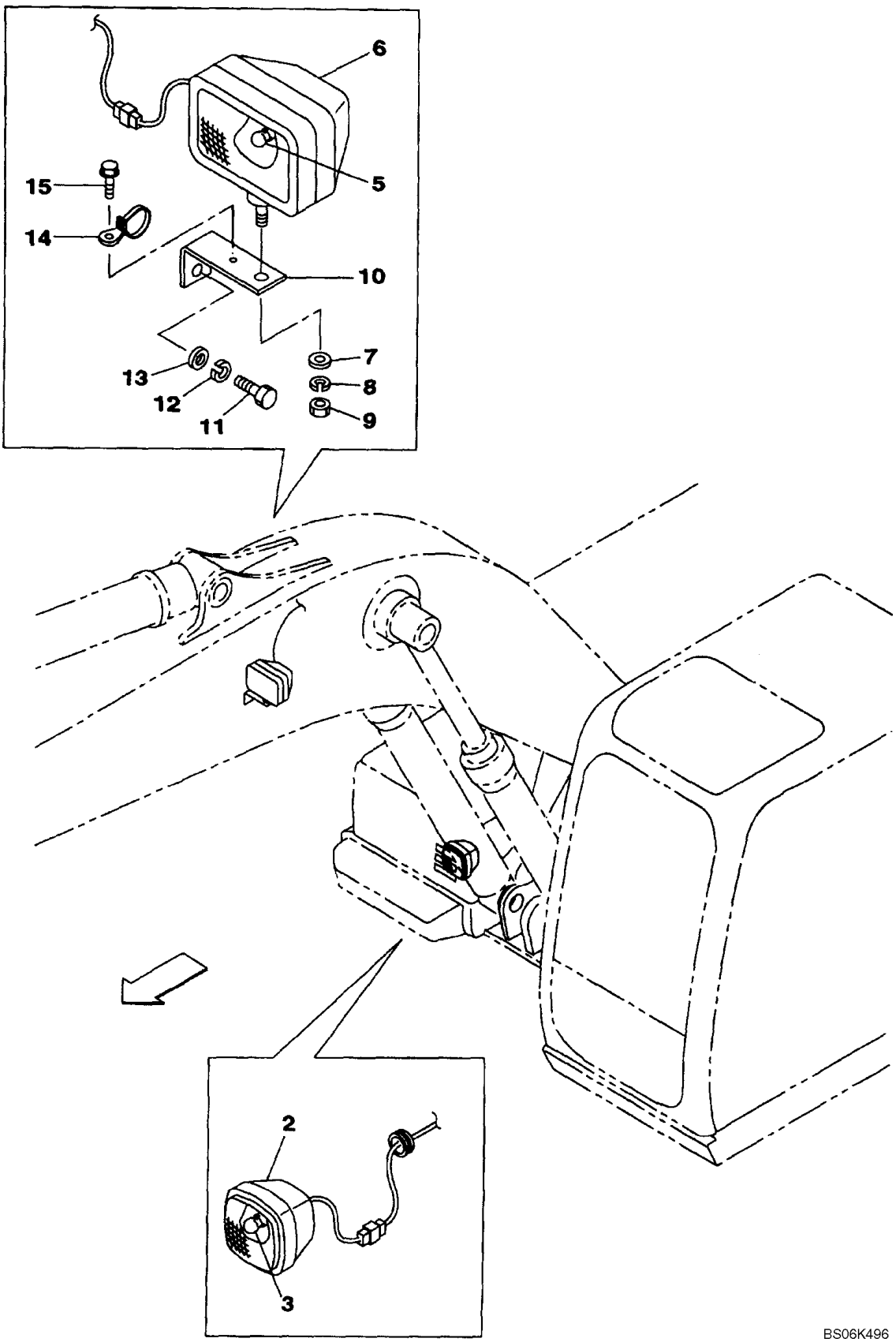

BS06K496

LAMP, WORK

REF	FN	PART NUMBER	YR/SN	QTY	DESCRIPTION
		KHR2475		1	FAROL TRASEIRO, Incl. 2, 3
2		KHR2476		1	LANTERNA
3		KHR2477		1	LÂMPADA
		159598A1		1	LÂMPADA DE INSPEÇÃO, Incl. 5 - 9
5		152812A1		1	LÂMPADA
6		159615A1		1	FAROL
7		896-11014		1	ARRUELA PLANA, M12 x 28.5 x 3, HT
8		892-16014		1	ARRUELA PLANA, M14, Hvy
9		167034A1		1	PORCA
10		150834A1		1	BRACADEIRA
11		627-16035		1	PARAFUSO, Hex, M16 x 35, 10.9
12		892-11016		1	ARRUELA-TRAVA, M16
13		896-11016		1	ARRUELA PLANA, M17.5 x 30 x 4, HT
14		KHR2583		1	BRACADEIRA
15		159906A1		1	PARAFUSO

CONTROLADOR

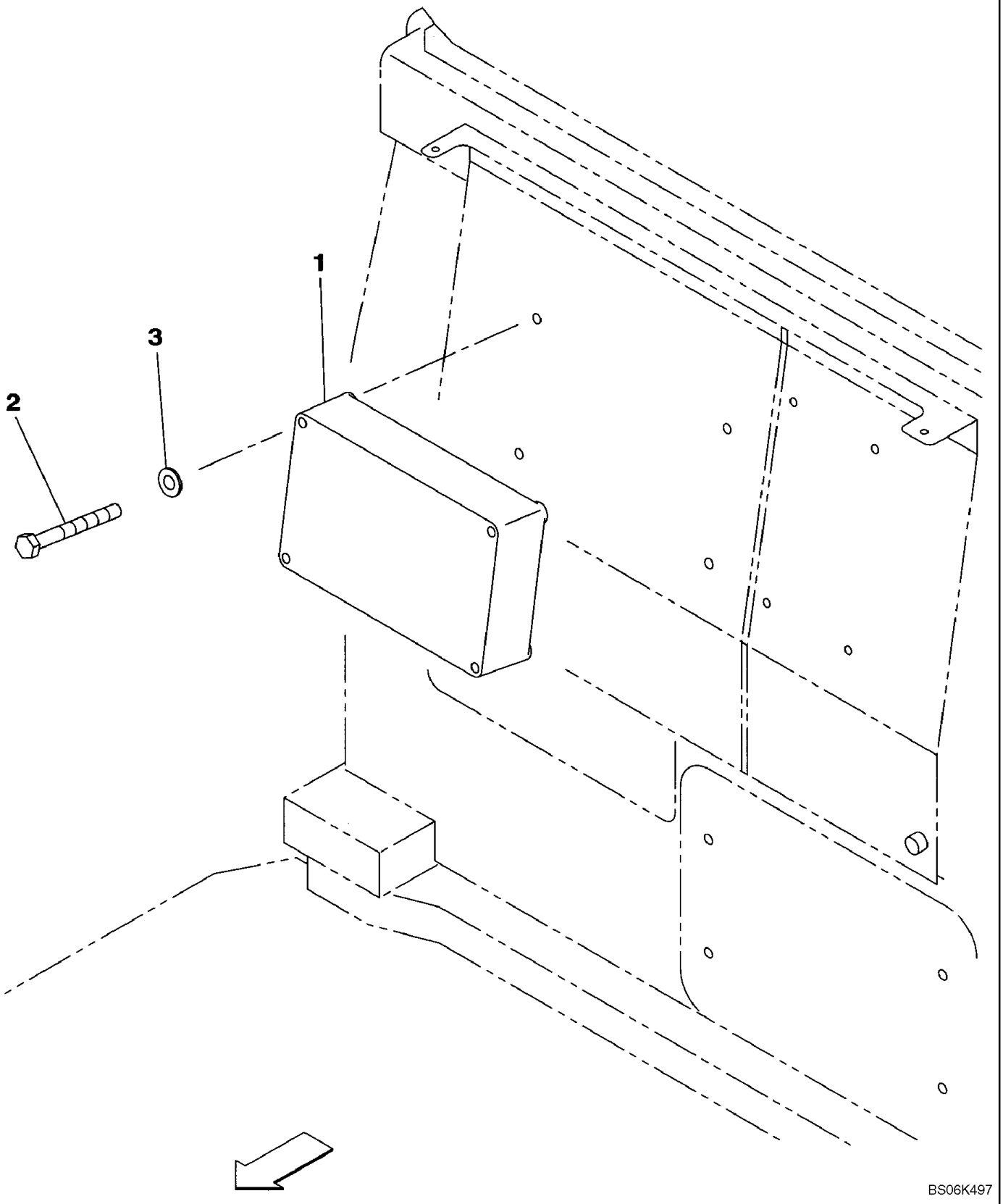

CONTROLADOR

REF	FN	PART NUMBER	YR/SN	QTY	DESCRIPTION
1		KHR10021		1	CENTRAL ELETRÔNICA, Replaces KHR10020
2		827-8070		4	PARAFUSO, Hex, M8 x 70, 10.9
3		895-11008		4	ARRUELA PLANA, M8 x 16 x 1.6

BATERIA - CABOS

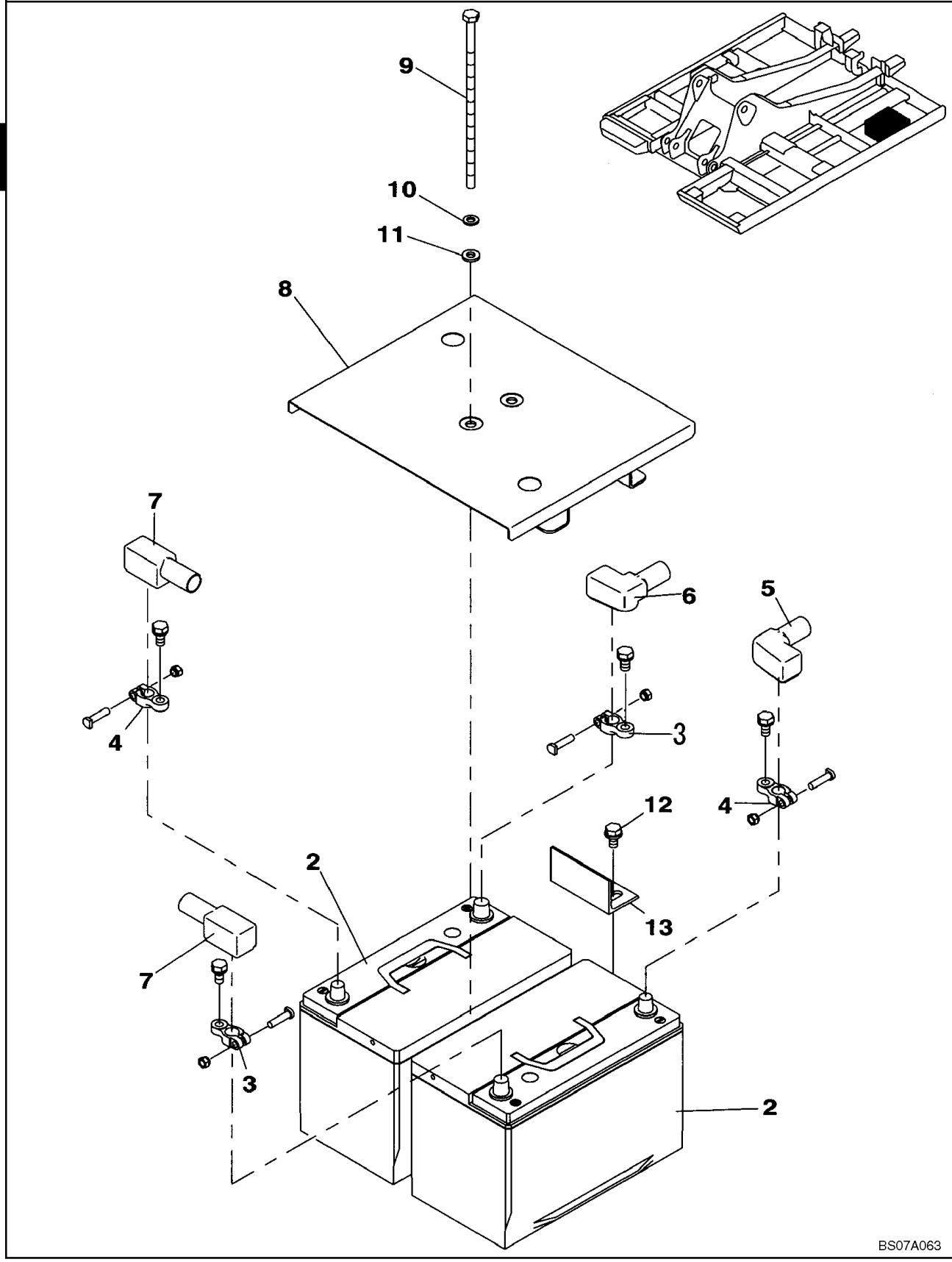

BATERIA - CABOS

REF	FN	PART NUMBER	YR/SN	QTY	DESCRIPTION
		KHR3943		2	BATERIA T. HUMIDA, Incl. 2 - 4
2		KHR3950		1	BATERIA T. HUMIDA
3		158403A1		1	TERMINAL
4		150455A1		1	SUPORTE DE BRACADEIR
5		150364A1		1	TAMPA DO RESERVATÓRIO
6		166116A1		1	GUARDA PO
7		KHR2636		2	TAMPA DO RESERVATÓRIO
8		KLR10270		1	SUPORTE
9		KHR0095		2	PARAFUSO
10		892-11010		2	ARRUELA-TRAVA, M10
11		150409A1		2	ARRUELA PLANA
12		166351A1		1	PARAFUSO
13		KRJ5983		2	SUPORTE

RADIO

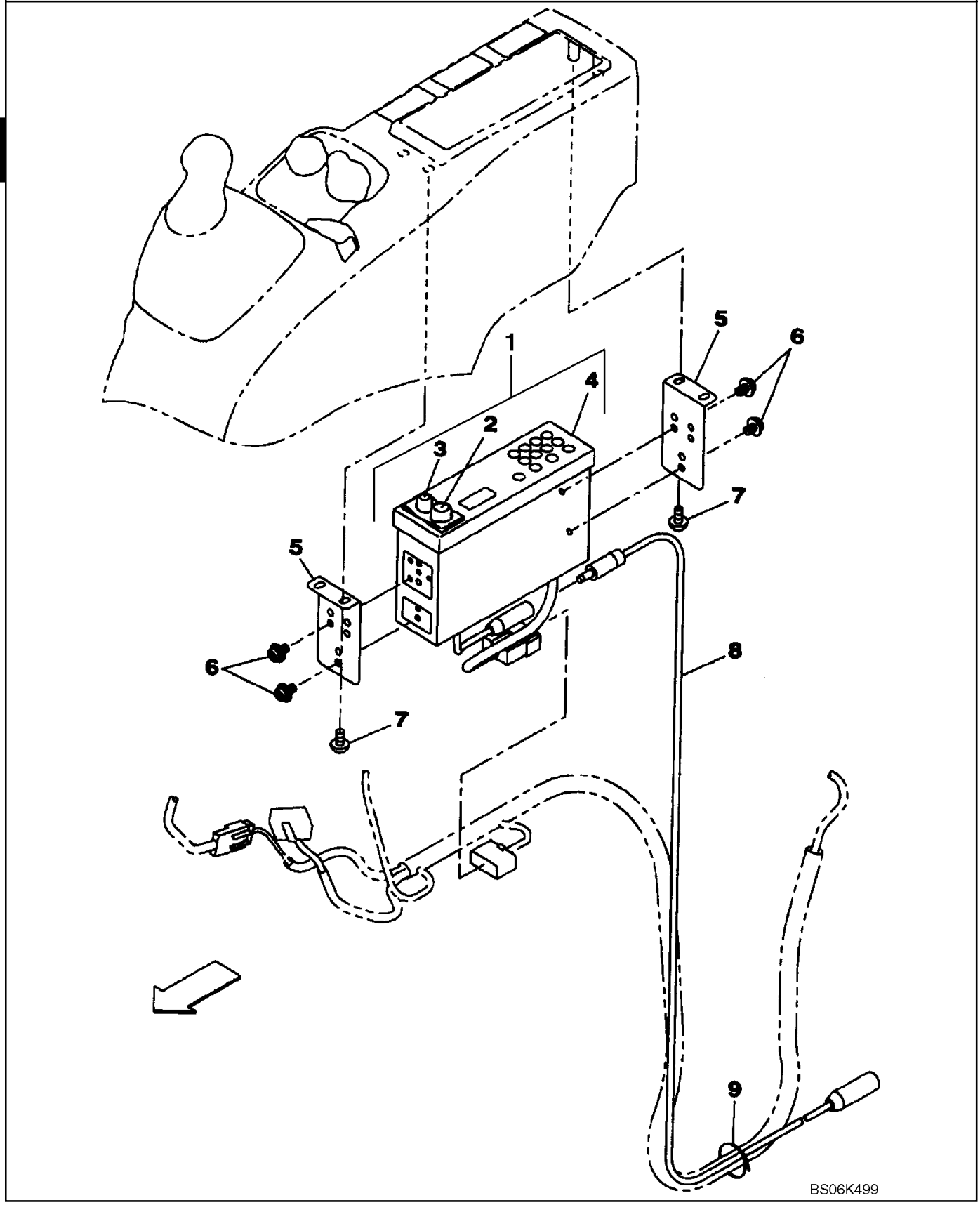

RADIO

REF	FN	PART NUMBER	YR/SN	QTY	DESCRIPTION
1		KHR15570		1	RÁDIO, Incl. 2 - 4
2		KHR3332		1	MANÍPULO
3		KHR3333		1	MANÍPULO
4		KHR15580		1	ENCHIMENTO
5		KHR15640		2	SUPORTE
6		157537A1		4	PARAFUSO
7		KHR2735		4	PARAFUSO
8		KHR10970		1	CABO ELÉTRICO
9		150496A1		5	ARGOLA DE FIXACAO

LIMPADOR DE PÁRA-BRISA

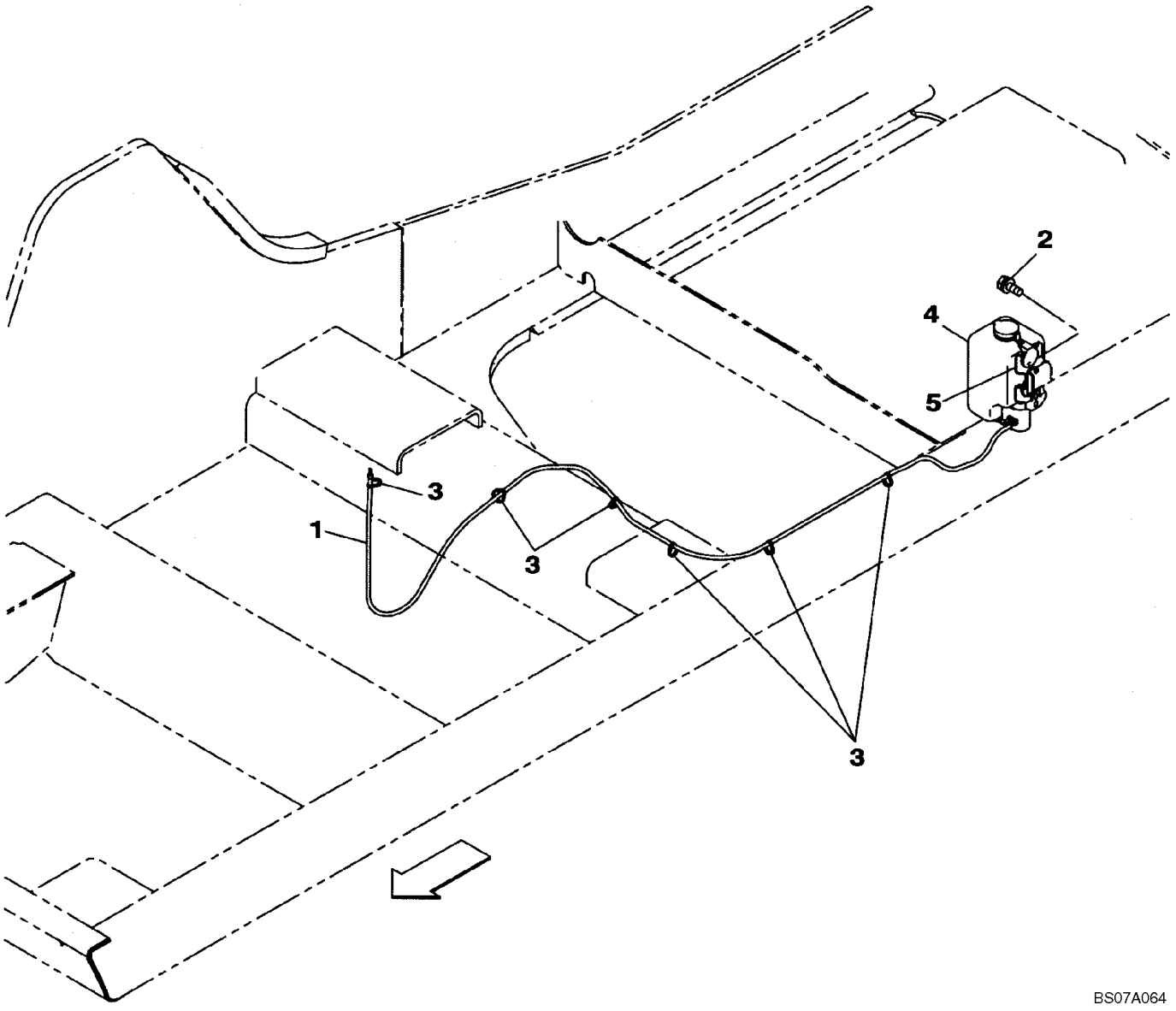

LIMPADOR DE PÁRA-BRISA

REF	FN	PART NUMBER	YR/SN	QTY	DESCRIPTION
1		156911A1		1	TUBO PLASTICO, 2000 mm (78-3/4 in); Cut From 162127A1
2		159602A1		4	PARAFUSO
3		150496A1		6	ARGOLA DE FIXACAO, 250 mm (10 in)
4		KHR3261		1	ARRUELA PLANA
5		KLR10400		1	SUPORTE

SECTION INDEX
Esteiras/Direção

05-01	CHASIS PORTADOR
05-02	GUIDE, CHAIN
05-03	COBERTURA DO CHASSI, INFERIOR
05-04	CORRENTES DA ESTEIRA, 600 MM (23-5/8 IN)
05-05	CORRENTES DA ESTEIRA, 700 MM (27-5/8 IN)
05-06	ORUGA - POLIA LOUCA
05-07	ORUGA - AJUSTADOR
05-08	ORUGA - ROLO, SUPERIOR
05-09	ORUGA - ROLO, INFERIOR

CHASIS PORTADOR

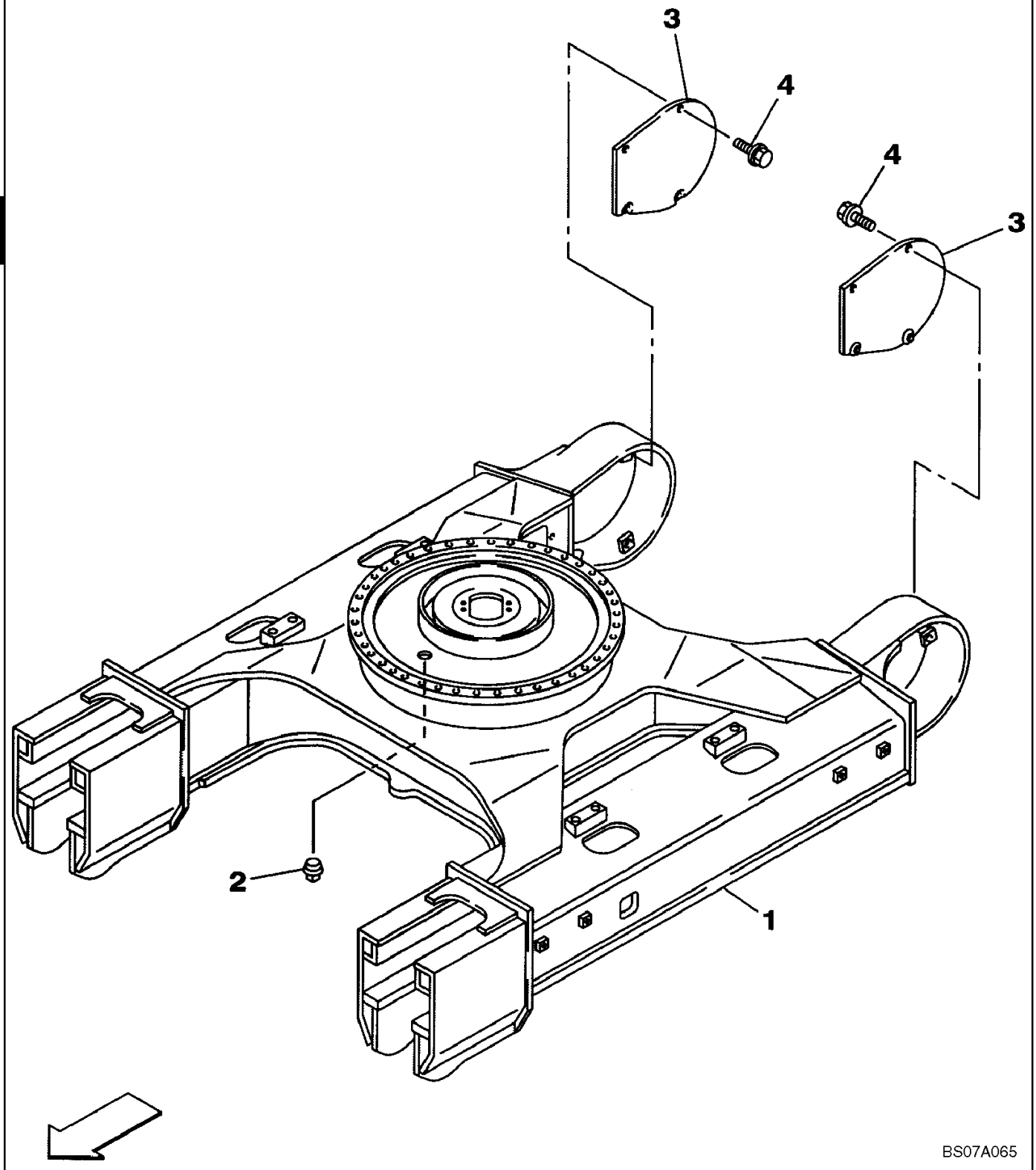

CHASIS PORTADOR

REF	FN	PART NUMBER	YR/SN	QTY	DESCRIPTION
1		KLA10390		1	ESTRUTURA, Undercarriage
2		157221A1		1	BUJÃO
3		KRA1553		2	TAMPA, Motor
4		158919A1		8	PARAFUSO

GUIDE, CHAIN

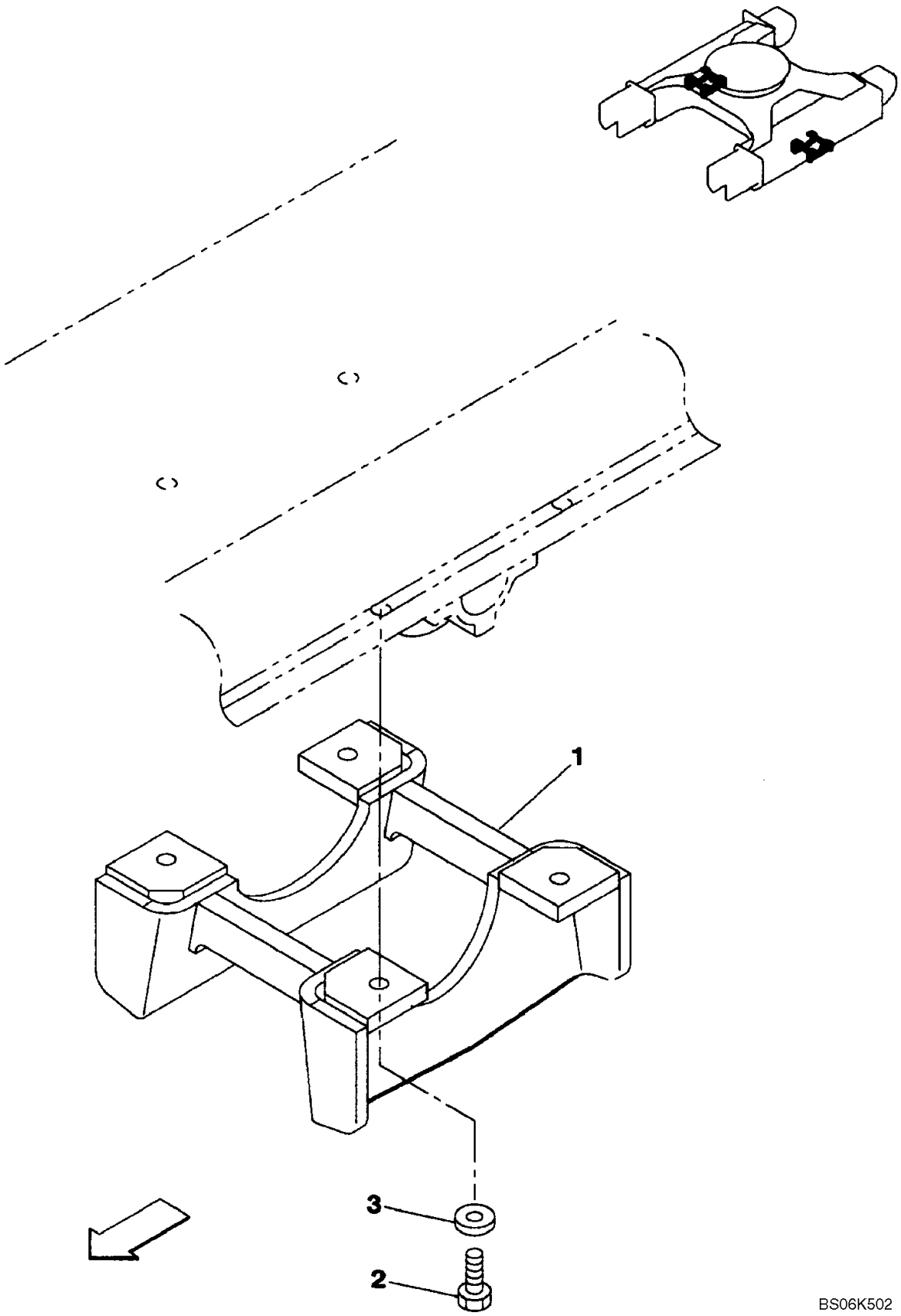

GUIDE, CHAIN

REF	FN	PART NUMBER	YR/SN	QTY	DESCRIPTION
1		KRA11240		2-6	GUIA
2		167067A1		8-24	PARAFUSO
3		157546A1		8-24	ARRUELA PLANA

COBERTURA DO CHASSI, INFERIOR

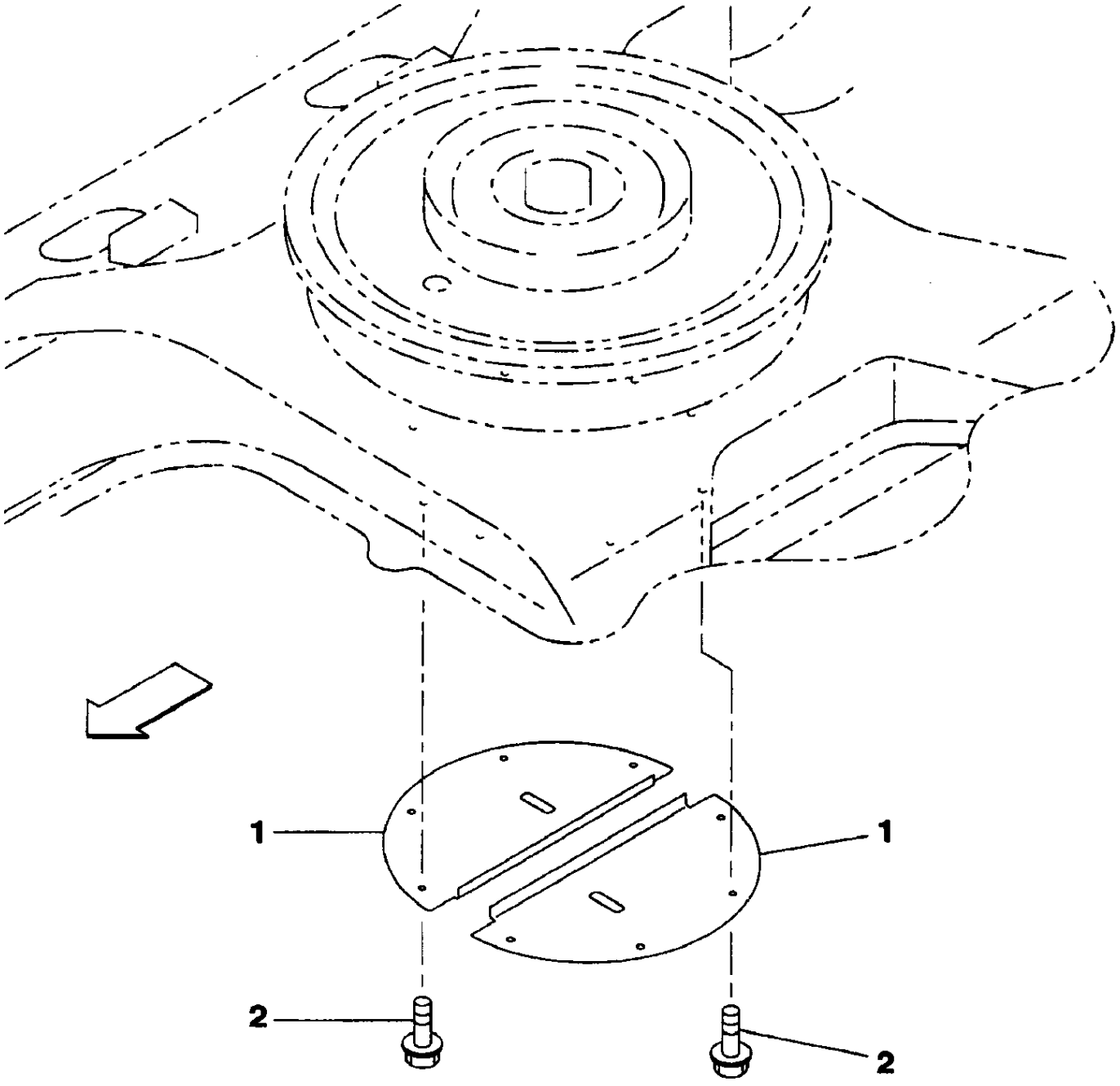

BS06K503

COBERTURA DO CHASSI, INFERIOR

REF	FN	PART NUMBER	YR/SN	QTY	DESCRIPTION
1		KRA10400		2	TAMPA, Undercarriage, Turning Joint Protection
2		166352A1		8	PARAFUSO

CORRENTES DA ESTEIRA, 600 MM (23-5/8 IN)

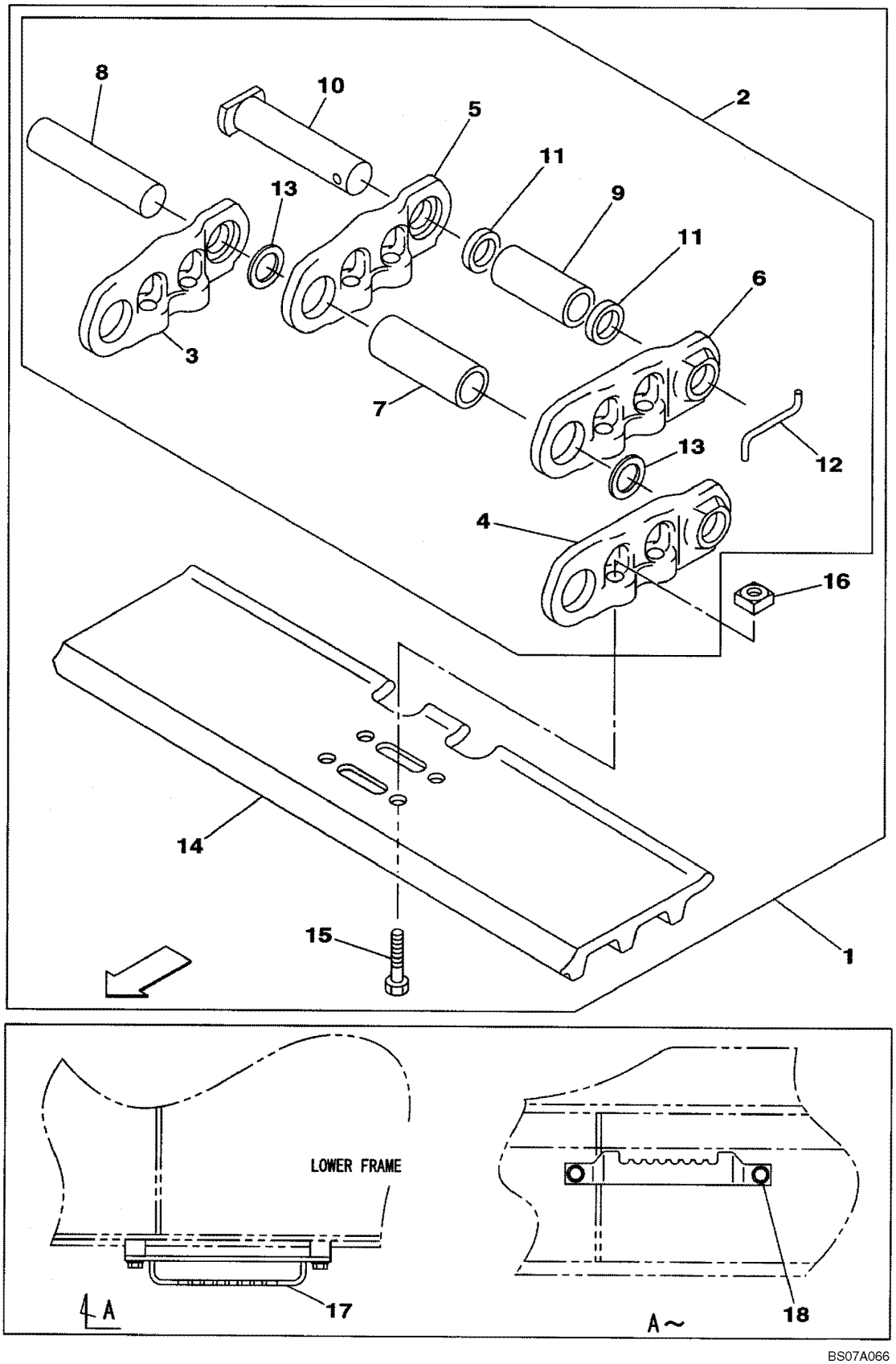

CORRENTES DA ESTEIRA, 600 MM (23-5/8 IN)

REF	FN	PART NUMBER	YR/SN	QTY	DESCRIPTION
1		KLA10340		2	CORRENTE CONJUNTO, Incl. 2 - 16
2		KLA10350		1	CORRENTE CONJUNTO, Incl. 3 - 13
3		KRA1807		43	ELO, Right Hand
4		KRA1808		43	ELO, Left Hand
5		KRA1809		1	ELO, Right Hand
6		KRA1810		1	CORRENTE DE LIGACAO, Left Hand
7		KRA1811		43	BUCHA
8		KRA11110		43	PINO
9		KRA1569		1	BUCHA
10		159676A1		1	PINO COM CABECA
11		159673A1		2	ANEL ESPACADOR
12		159677A1		1	PINO
13		KRA1814		86	GUARDA-PÓ
14		161298A1		44	SAPATA, Width 600 mm (23-5/8 in)
15		159668A1		176	PARAFUSO
16		159669A1		176	PORCA
17		KHA0046		4	ESTRIBO
18		105R020Y050R		8	PARAFUSO

CORRENTES DA ESTEIRA, 700 MM (27-5/8 IN)

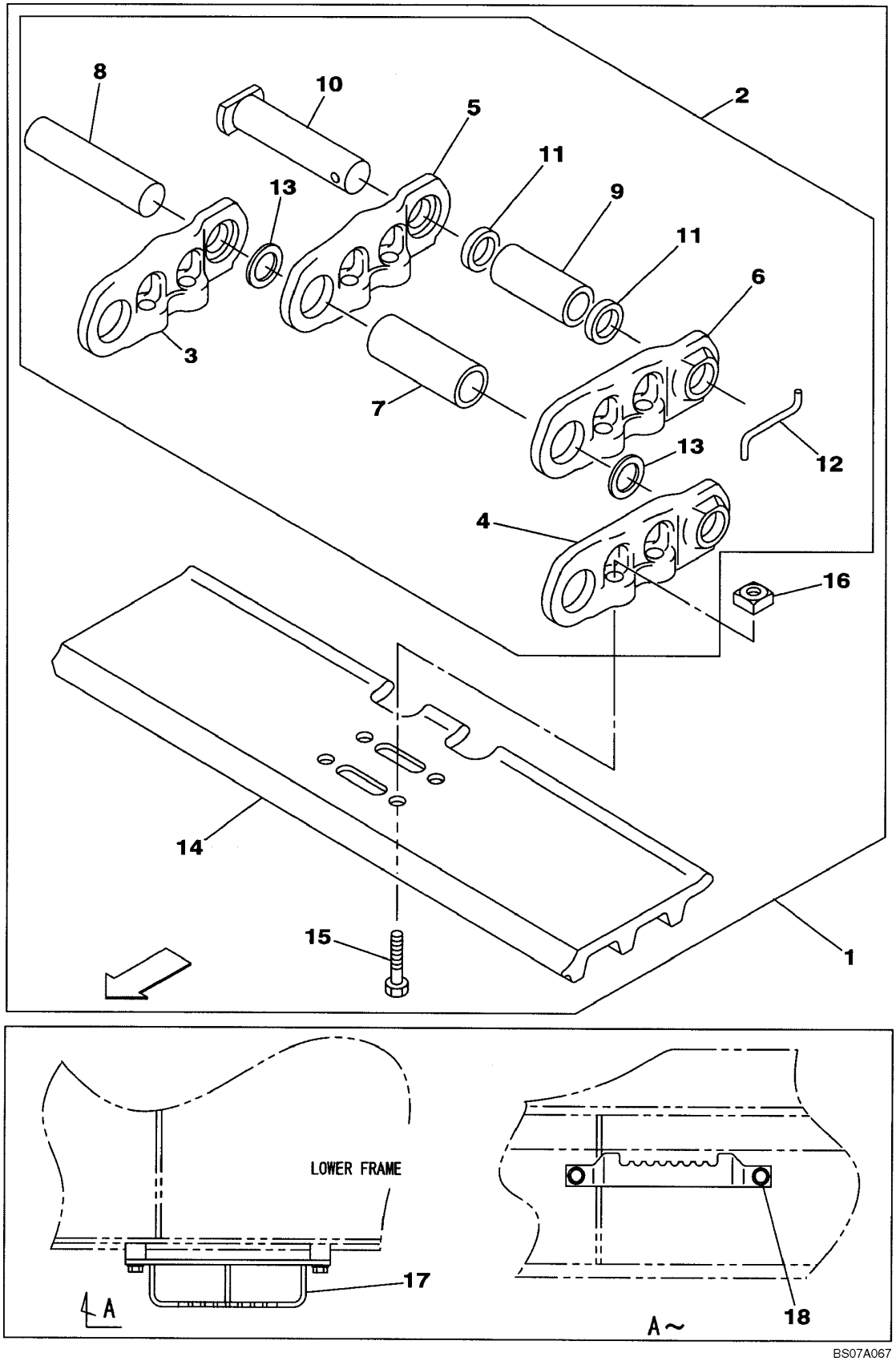

BS07A067

CORRENTES DA ESTEIRA, 700 MM (27-5/8 IN)

REF	FN	PART NUMBER	YR/SN	QTY	DESCRIPTION
1		KLA10350		2	CORRENTE CONJUNTO, Incl. 2 - 16
2		KLA10350		2	CORRENTE CONJUNTO, Incl. 3 - 13
3		KRA1807		43	ELO, Right Hand
4		KRA1808		43	ELO, Left Hand
5		KRA1809		1	ELO, Right Hand
6		KRA1810		1	CORRENTE DE LIGACAO, Left Hand
7		KRA1811		43	BUCHA
8		KRA11110		43	PINO
9		KRA1569		1	BUCHA
10		159676A1		1	PINO COM CABECA
11		159673A1		2	ANEL ESPACADOR
12		159677A1		1	PINO
13		KRA1814		86	GUARDA-PÓ
14		161298A1		44	SAPATA, Width 700 mm (27-5/8 in)
15		159668A1		176	PARAFUSO
16		159669A1		176	PORCA
17		KHA0047		4	ESTRIBO
18		105R020Y050R		8	PARAFUSO

ORUGA - POLIA LOUCA

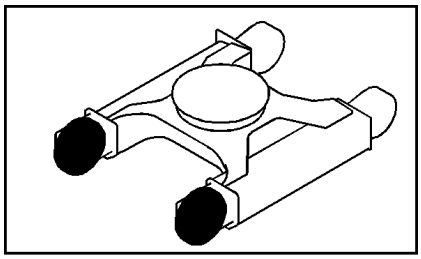

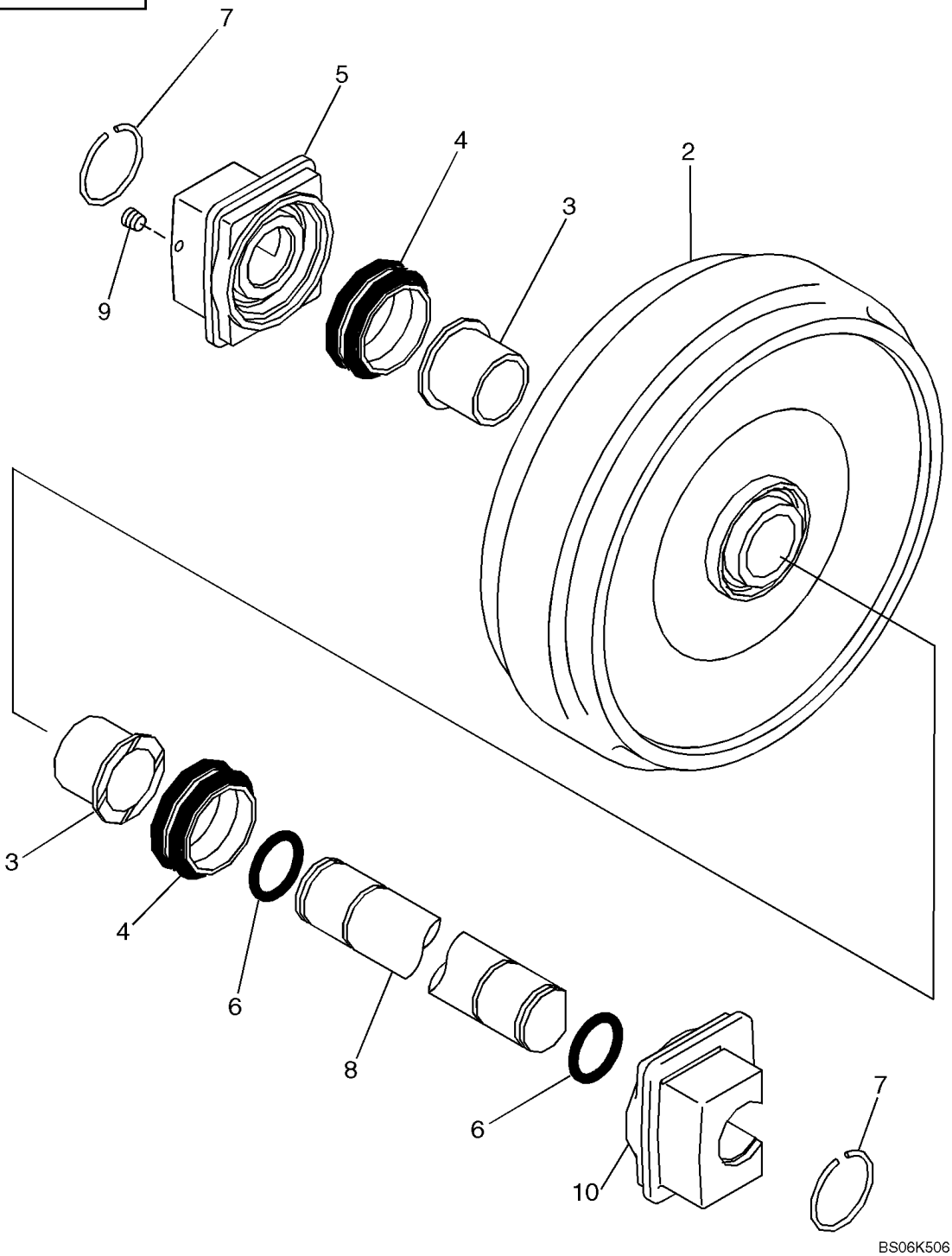

ORUGA - POLIA LOUCA

REF	FN	PART NUMBER	YR/SN	QTY	DESCRIPTION
		KRA1767		2	POLIA DE RETORNO, Pulley; Incl. 2 - 10
2		KRA1768		1	POLIA DE RETORNO
3		160427A1		2	ANEL
4		160397A1		2	ANEL DE VEDAÇÃO
5		160426A1		1	CUBO
6		154639A1		2	ANEL O
7		150597A1		2	BRACADEIRA
8		160408A1		1	EIXO DA RODA
9		150821A1		1	BUJÃO
10		KRA1594		1	CUBO

ORUGA - AJUSTADOR

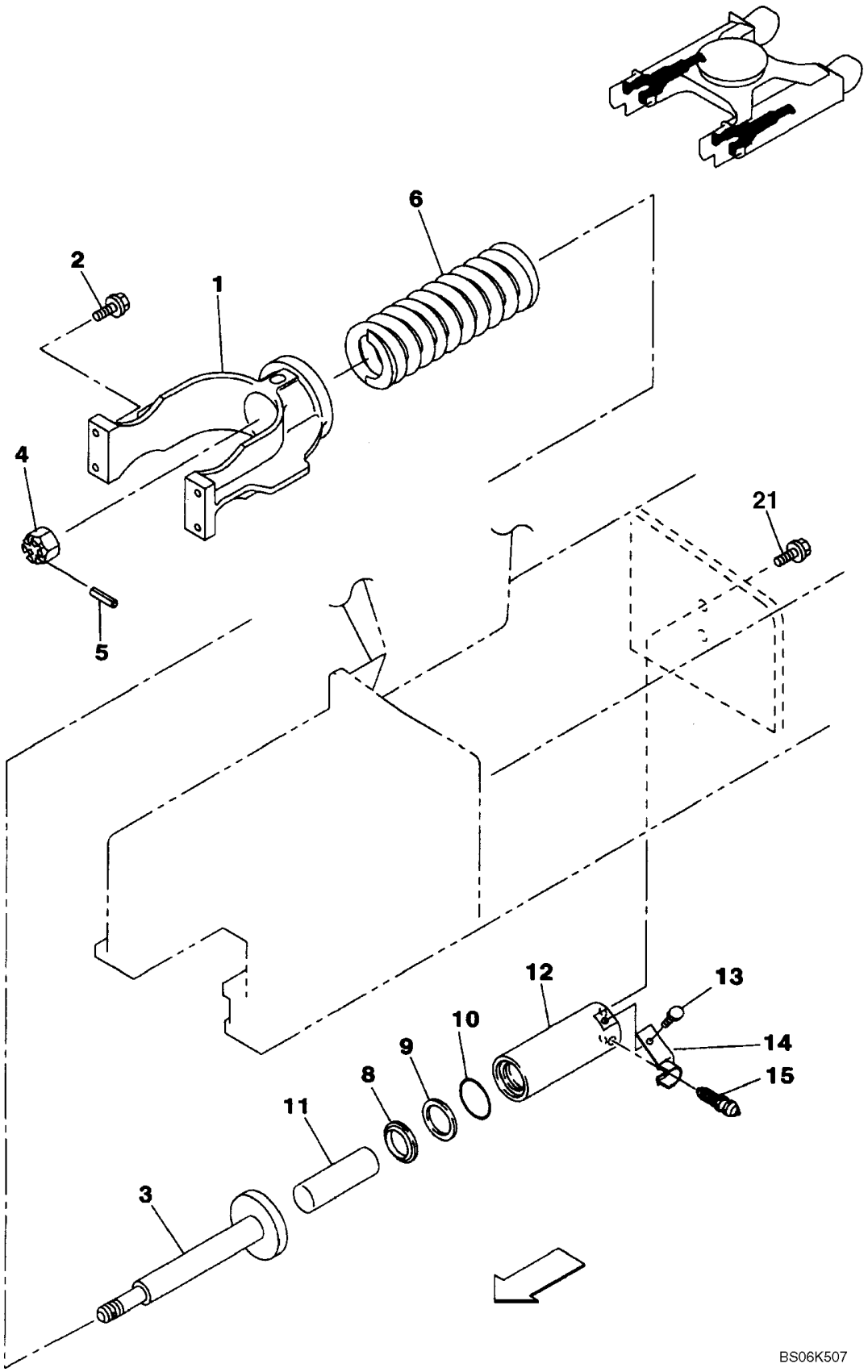

ORUGA - AJUSTADOR

REF	FN	PART NUMBER	YR/SN	QTY	DESCRIPTION
1		KLA0152		2	GARFO
2		165929A1		8	PARAFUSO
3		KLA10500		2	HASTE ROSCADA
4		283647A1		1	PORCA
5		738-1880		2	PINO DE FIXAÇÃO, M8 x 80, Slotted
6		KLA10040		2	MOLA DE TRACAO
		KBA1118		2	AMORTECEDOR, Track Adjuster; Incl. 8 - 15
8		151686A1		1	ANEL DE VEDAÇÃO
9		KHA10100		1	VEDADOR ESPECIAL
10		150271A1		1	ANEL O
11		KBA1119		1	PISTAO DO CILINDRO
12		KBA1120		1	TUBO
13		166351A1		1	PARAFUSO
14		KBA1121		1	BRACADEIRA
15		150107A1		1	GRAXEIRA, Incl. 16 - 20; Component Parts Not Illustrated
16		150897A1		1	ESFERA
17		150112A1		1	ASSENTO
18		150115A1		1	MOLA
19		150120A1		1	TAMPA DO RESERVATÓRIO
20		153630A1		1	GRAXEIRA
21		165930A1		4	PARAFUSO

ORUGA - ROLO, SUPERIOR

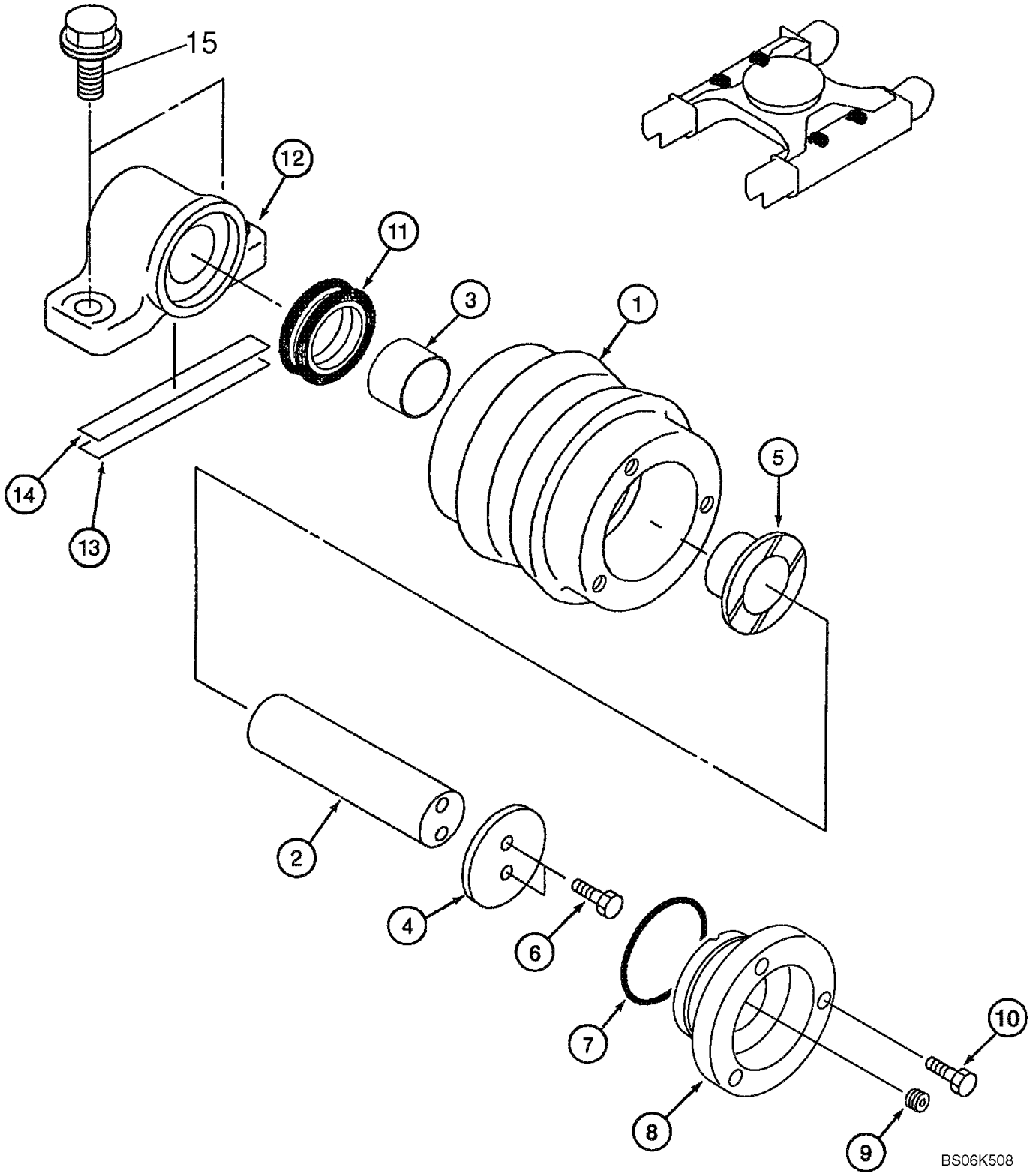

ORUGA - ROLO, SUPERIOR

REF	FN	PART NUMBER	YR/SN	QTY	DESCRIPTION
		KRA1717-W		4	ROLETE PARA ESTEIRA, After Market
		KRA1717		4	ROLETE PARA ESTEIRA, Incl. 1 - 12
1		KRA1718		1	ROLETE PARA ESTEIRA
2		159692A1		1	EIXO DA RODA
3		158777A1		1	BUCHA
4		159685A1		1	PLACA ENCOSTO
5		158776A1		1	BUCHA
6		626-10016		2	PARAFUSO, Hex, M10 x 16, 10.9, Full Thd
7		154667A1		1	ANEL O
8		KRA1719		1	TAMPA
9		150821A1		1	BUJÃO
10		627-8025		3	PARAFUSO, Hex, M8 x 25, 10.9
11		159399A1		1	ANEL DE VEDAÇÃO
12		161713A1		1	BRACADEIRA
13		162197A1		4	CALCO DE AFINACAO
14		150009A1		4	CALCO DE AFINACAO
15		105R020Y050R		8	PARAFUSO

ORUGA - ROLO, INFERIOR

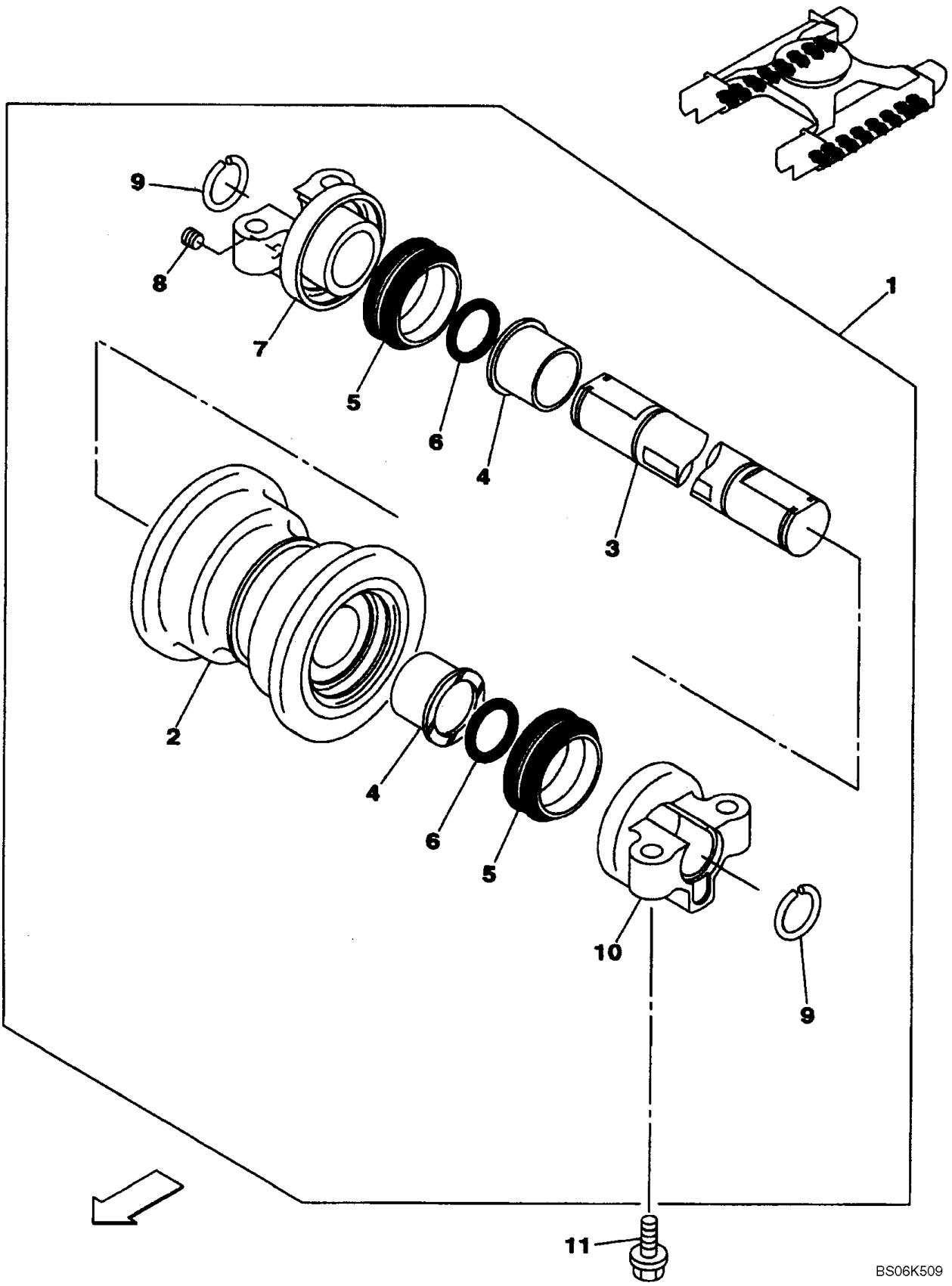

ORUGA - ROLO, INFERIOR

REF	FN	PART NUMBER	YR/SN	QTY	DESCRIPTION
1		KRA10360		14	ROLETE PARA ESTEIRA, Incl. 2 - 10
2		NSS		1	BOLETIM INFORMATIVO, Roller, Track
3		KRA11260		1	EIXO
4		160423A1		2	BUCHA
5		152736A1		2	ANEL DE VEDAÇÃO
6		152422A1		2	ANEL O
7		160422A1		1	BRAÇADEIRA
8		150821A1		1	BUJÃO
9		150597A1		2	BRACADEIRA
10		KRA1595		1	BRAÇADEIRA
11		165932A1		56	PARAFUSO

SECTION INDEX
Trem de Potência

06-01	TRACK DRIVE ASSY
06-02	MOTOR - CONJUNTO DE ENGRENAGENS, REDUÇÃO
06-03	MOTOR - TRAÇÃO DA ESTEIRA
06-04	MOTOR - DESLOCAMENTO, ADMISSÃO E SAÍDA
06-05	HIDRAULICA - TRAÇÃO DA ESTEIRA
06-06	HIDRAULICA - DESLOCAMENTO
06-07	HYDRAULICS - TRAVEL CONTROL, SINGLE PEDAL

TRACK DRIVE ASSY

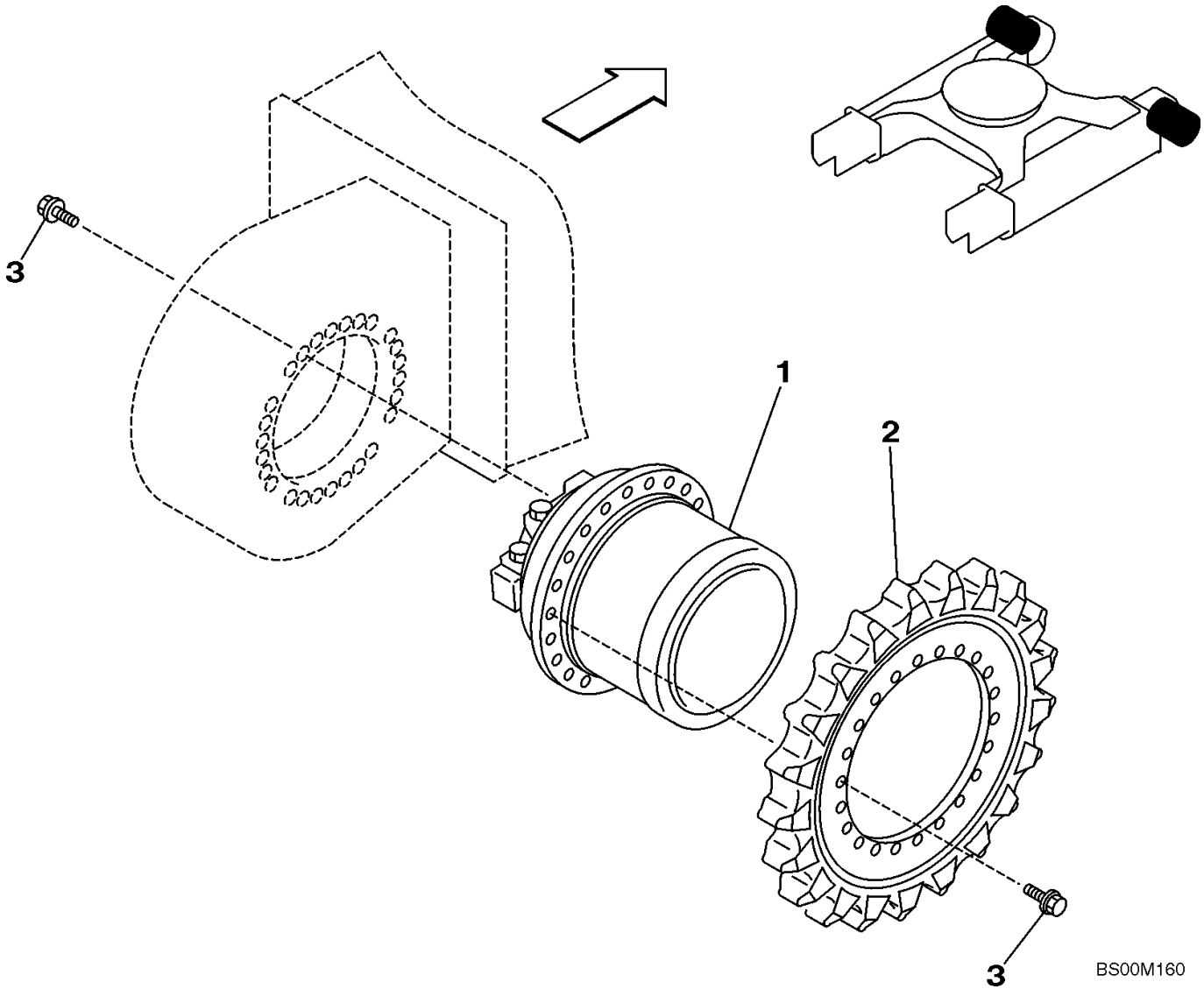

TRACK DRIVE ASSY

REF	FN	PART NUMBER	YR/SN	QTY	DESCRIPTION
1		KLA10030		2	MOTOR REDUTOR, Travel; See Figures 06-02 - 06-04
2		KRA10160		2	RODA DENTADA
3		165930A1		100	PARAFUSO

MOTOR - CONJUNTO DE ENGRENAGENS, REDUÇÃO

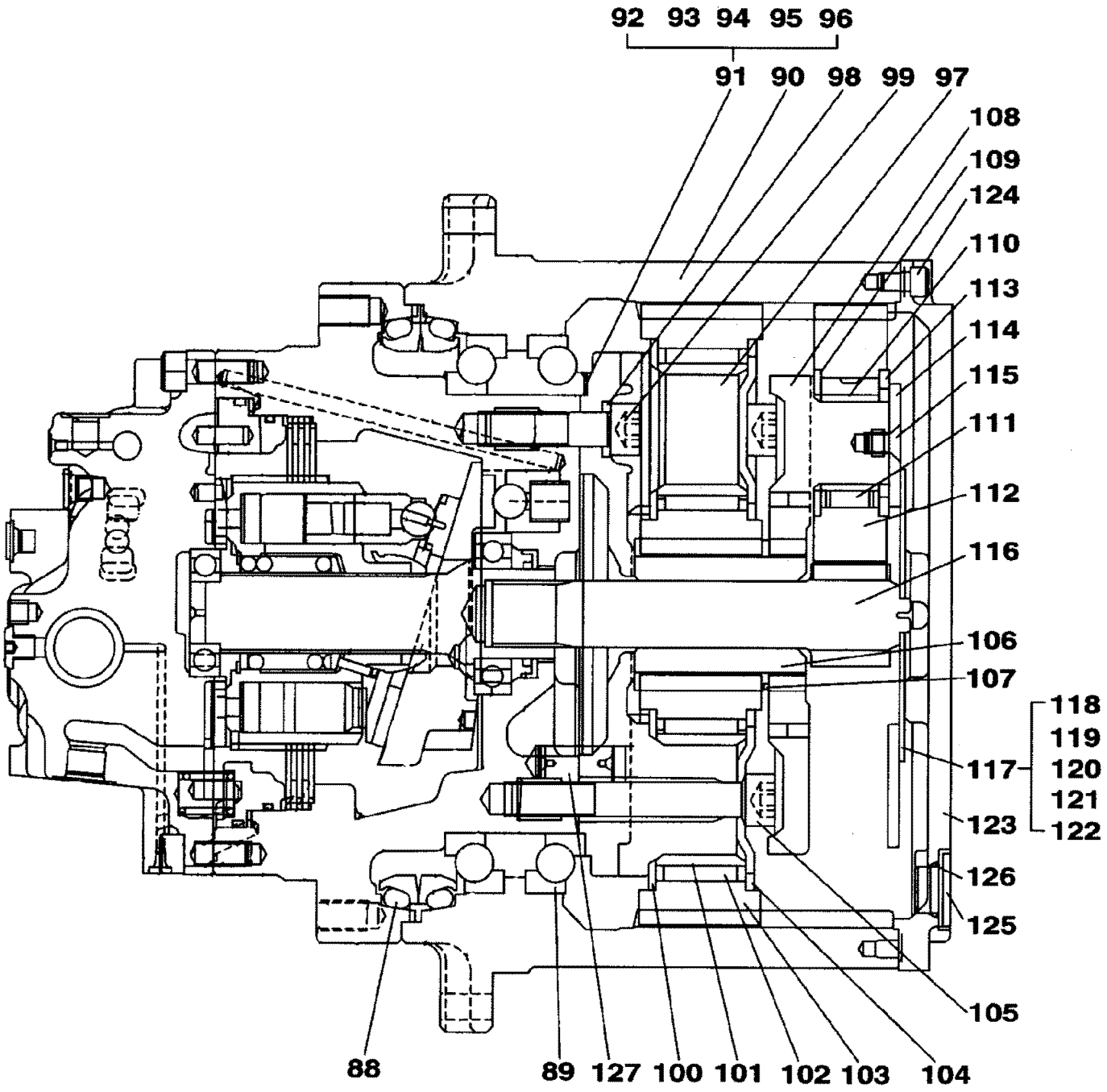

MOTOR - CONJUNTO DE ENGRENAGENS, REDUÇÃO

REF	FN	PART NUMBER	YR/SN	QTY	DESCRIPTION
		KLA10030		1	MOTOR REDUTOR, Includes All Parts On Figures 06-02 - 06-04
		LN002060		1	REDUÇÃO, Reduction Gear; Incl. 88 - 127, Also Includes Ref 2, 66 On Figures 06-03
88		LE01126		2	JUNTA
89		LB00548		2	ROLAMENTO
90		NSS		1	BOLETIM INFORMATIVO, Housing
91		LH00254		1	CALCO DE AFINACAO, Incl. 92 - 96
92		NSS		1	BOLETIM INFORMATIVO, Shim, 0.05 mm
93		NSS		1	BOLETIM INFORMATIVO, Shim, 0.1 mm
94		NSS		1	BOLETIM INFORMATIVO, Shim, 0.3 mm
95		NSS		1	BOLETIM INFORMATIVO, Shim, 0.5 mm
96		NSS		1	BOLETIM INFORMATIVO, Shim, 1.0 mm
97		LS003500		1	SUPORTE, Holder
98		LA00702		6	ARRUELA PLANA
99		LA00703		6	PARAFUSO
100		LR00583		3	PLACA
101		LB00549		3	PISTA DE ROLAMENTO
102		LB011790		3	ROLAMENTO
103		LC00163		3	ENGRENAGEM SOLAR
104		LR015040		3	PLACA ENCOSTO
105		LA00704		3	PARAFUSO
106		LC002880		1	ENGRENAGEM SOLAR
107		LA00705		1	ANEL TRAVA
108		LS003350		1	SUPORTE
109		LR00585		3	PLACA
110		LB011800		3	ROLAMENTO
111		LB011810		3	ROLAMENTO
112		LC002890		3	SATÉLITE
113		LR00586		3	PLACA
114		LR015050		1	PLACA ENCOSTO
115		LV00029		3	PARAFUSO
116		LC002900		1	ENGRENAGEM
117		LR00588		1	DISCO, Incl. 118 - 122
118		NSS		1	BOLETIM INFORMATIVO, Plate, Thrust; 3.6 mm

MOTOR - CONJUNTO DE ENGRENAGENS, REDUÇÃO

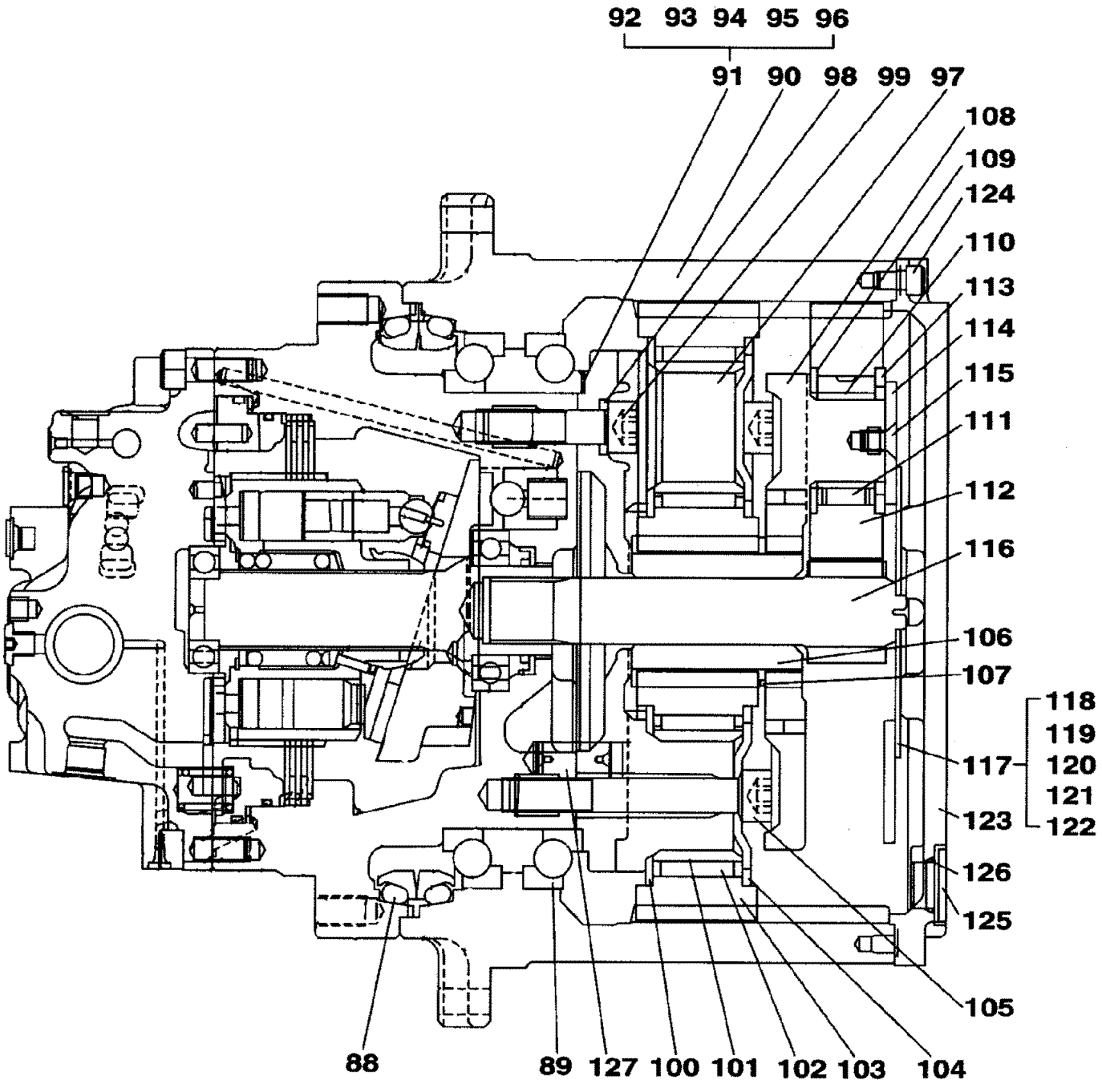

MOTOR - CONJUNTO DE ENGRENAGENS, REDUÇÃO

REF	FN	PART NUMBER	YR/SN	QTY	DESCRIPTION
119		NSS		1	BOLETIM INFORMATIVO, Plate, Thrust; 2.3 mm
120		NSS		1	BOLETIM INFORMATIVO, Plate, Thrust; 2.8 mm
121		NSS		1	BOLETIM INFORMATIVO, Plate, Thrust; 3.0 mm
122		NSS		1	BOLETIM INFORMATIVO, Plate, Thrust; 3.2 mm
123		LW00316		1	TAMPA
124		108R010Z016N		16	PARAFUSO
125		165681A1		3	BUJÃO
126		154503A1		3	ANEL O
127		160104A1		4	PINO
		LZ006890		1	JOGO DE JUNTAS, Incl. 88, 126

MOTOR - TRAÇÃO DA ESTEIRA

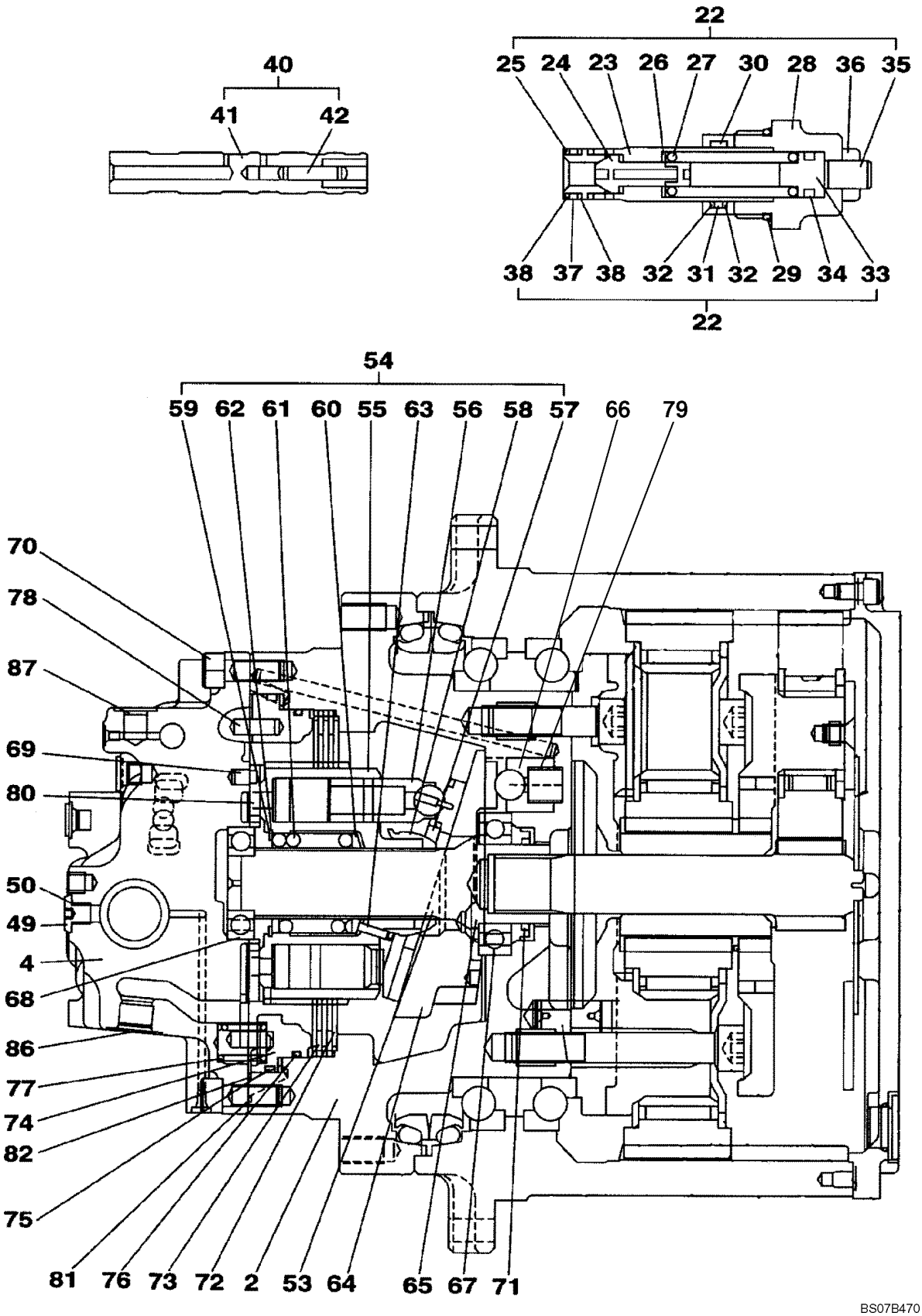

BS07B470

MOTOR - TRAÇÃO DA ESTEIRA

REF	FN	PART NUMBER	YR/SN	QTY	DESCRIPTION
		KLA10030		1	MOTOR REDUTOR, Includes All Parts On Figures 06-02 - 06-04
		NSS		1	BOLETIM INFORMATIVO, Motor, Piston; Incl. 2 - 87; Also Includes Parts On Figure 06-02
2		NSS		1	BOLETIM INFORMATIVO, Flange
4		NSS		1	BOLETIM INFORMATIVO, Plate
22		160565A1		2	VALVULA, Incl. 23 - 38
23		NSS		1	BOLETIM INFORMATIVO, Housing
24		NSS		1	BOLETIM INFORMATIVO, Poppet
25		NSS		1	BOLETIM INFORMATIVO, Poppet
26		NSS		1	BOLETIM INFORMATIVO, Seat, Spring
27		NSS		1	BOLETIM INFORMATIVO, Spring
28		NSS		1	BOLETIM INFORMATIVO, Plug
29		155225A1		1	ANEL O
30		NSS		1	BOLETIM INFORMATIVO, Piston
31		154495A1		1	ANEL O
32		153977A1		2	VEDADOR ESPECIAL
33		NSS		1	BOLETIM INFORMATIVO, Guide, Spring
34		NSS		1	BOLETIM INFORMATIVO, O-Ring
35		NSS		1	BOLETIM INFORMATIVO, Screw
36		NSS		1	BOLETIM INFORMATIVO, Nut
37		154479A1		1	ANEL O
38		153964A1		2	VEDADOR ESPECIAL
40		NSS		1	BOLETIM INFORMATIVO, Spool Assy; Incl. 41, 42
41		NSS		1	BOLETIM INFORMATIVO, Spool
42		NSS		1	BOLETIM INFORMATIVO, Spool
49		161773A1		4	BUJÃO
50		154467A1		4	ANEL "O"
53		LB00545		1	EIXO
54		LS003330		1	CORPO DE CILINDRO, Incl. 54 - 62
55		NSS		1	BOLETIM INFORMATIVO, Block, Cylinder
56		NSS		9	BOLETIM INFORMATIVO, Piston
57		NSS		1	BOLETIM INFORMATIVO, Retainer
58		NSS		1	BOLETIM INFORMATIVO, Holder
59		160103A1		1	ANEL TRAVA

MOTOR - TRAÇÃO DA ESTEIRA

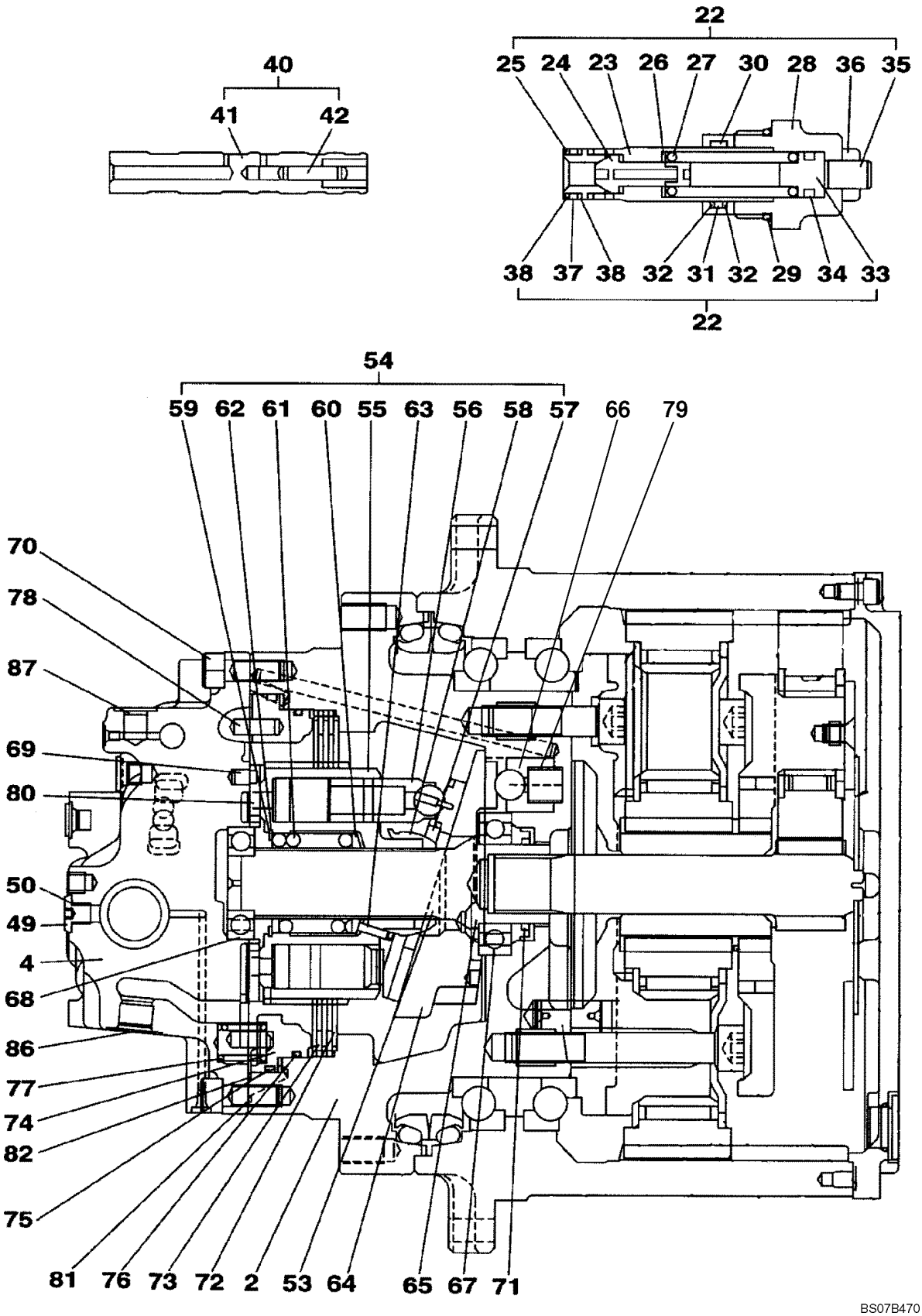

BS07B470

MOTOR - TRAÇÃO DA ESTEIRA

REF	FN	PART NUMBER	YR/SN	QTY	DESCRIPTION
60		160203A1		1	ASSENTO MOLA
61		160590A1		1	MOLA
62		158113A1		1	BRAÇADEIRA
63		155631A1		3	PINO
64		LR015970		1	PLACA, Plate
65		155950A1		2	ESFERA
66		NSS		2	BOLETIM INFORMATIVO, Piston
67		LB00546		1	ROLAMENTO
68		LB00547		1	ROLAMENTO
69		LA010950		1	PINO
70		108R014Z035N		10	PARAFUSO
71		LE014680		1	VEDADOR DE OLEO
72		LR015020		3	PLACA
73		165696A1		2	PLACA
74		LJ014600		1	PISTÃO
75		165720A1		1	ANEL DE VEDAÇÃO
76		165721A1		1	ANEL DE VEDAÇÃO
77		156090A1		8	MOLA
78		160097A1		4	PINO
79		160592A1		2	MOLA
80		LR015030		1	PLACA
81		154463A1		4	ANEL O
82		155220A1		1	ANEL O
86		NSS		1	BOLETIM INFORMATIVO, Plug
87		NSS		1	BOLETIM INFORMATIVO, Plug
		LZ007960		1	JOGO DE JUNTAS, Incl. 29, 31, 32, 37, 38, 50, 71, 75, 76, 81, 82; Also Includes Parts On Figure 06-04
		LZ008650		1	KIT DE REPARO, Incl. 2, 66
		LZ008660		1	KIT DE REPARO, Incl. 40 - 42, 49, 50; Also Includes Parts On Figure 06-04

MOTOR - DESLOCAMENTO, ADMISSÃO E SAÍDA

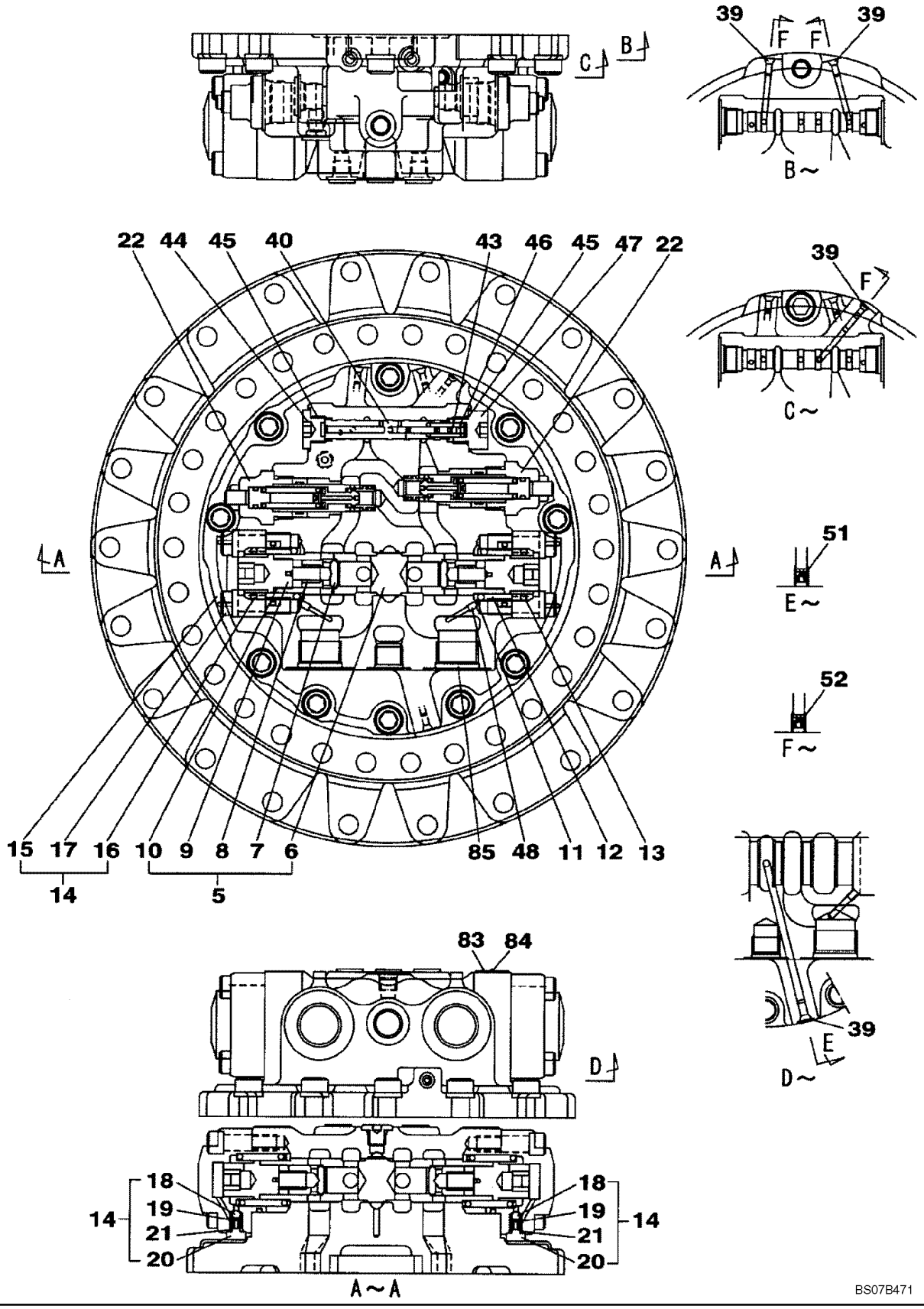

MOTOR - DESLOCAMENTO, ADMISSÃO E SAÍDA

REF	FN	PART NUMBER	YR/SN	QTY	DESCRIPTION
		KLA10030		1	MOTOR REDUTOR, Includes All Parts On Figures 06-02 - 06-04
		NSS		1	BOLETIM INFORMATIVO, Motor, Piston; Includes 5 - 86; Also Includes Parts On Figures 06-02, 06-03
5		NSS		1	BOLETIM INFORMATIVO, Spool Assy; Incl. 6 - 10
6		NSS		1	BOLETIM INFORMATIVO, Spool
7		NSS		2	BOLETIM INFORMATIVO, Valve, Check
8		NSS		2	BOLETIM INFORMATIVO, Spring
9		NSS		2	BOLETIM INFORMATIVO, Plug
10		154495A1		2	ANEL O
11		156110A1		2	ASSENTO MOLA
12		LG006200		2	MOLA, Spring
13		LR015850		2	ASSENTO MOLA, Seat, Spring
14		LR015840		2	BUJÃO, Cap Assy; Incl. 15 - 21
15		NSS		1	BOLETIM INFORMATIVO, Cap
16		154589A1		1	ANEL O
17		861-12040		4	PARAFUSO, Hex Soc Hd, M12 x 40, 12.9, Bolt
18		155976A1		1	ESFERA, Ball
19		156106A1		1	MOLA, Spring
20		NSS		1	BOLETIM INFORMATIVO, Plug
21		154455A1		1	ANEL "O"
22		160565A1		2	VALVULA, See Figure 06-03
39		NSS		4	BOLETIM INFORMATIVO, Plug
40		NSS		1	BOLETIM INFORMATIVO, Spool; See Figure 06-03
43		LG00343		1	MOLA DE COMPRESAO
44		LK00329		1	BUJÃO
45		154487A1		2	ANEL "O"
46		LS00127		1	GUIA
47		LK00306		1	BUJÃO
48		NSS		2	BOLETIM INFORMATIVO, Orifice
51		156872A1		4	ORIFICIO
52		164485A1		3	ORIFICIO
83		NSS		1	BOLETIM INFORMATIVO, Name Plate
84		NSS		2	BOLETIM INFORMATIVO, Screw
85		NSS		2	BOLETIM INFORMATIVO, Plug

MOTOR - DESLOCAMENTO, ADMISSÃO E SAÍDA

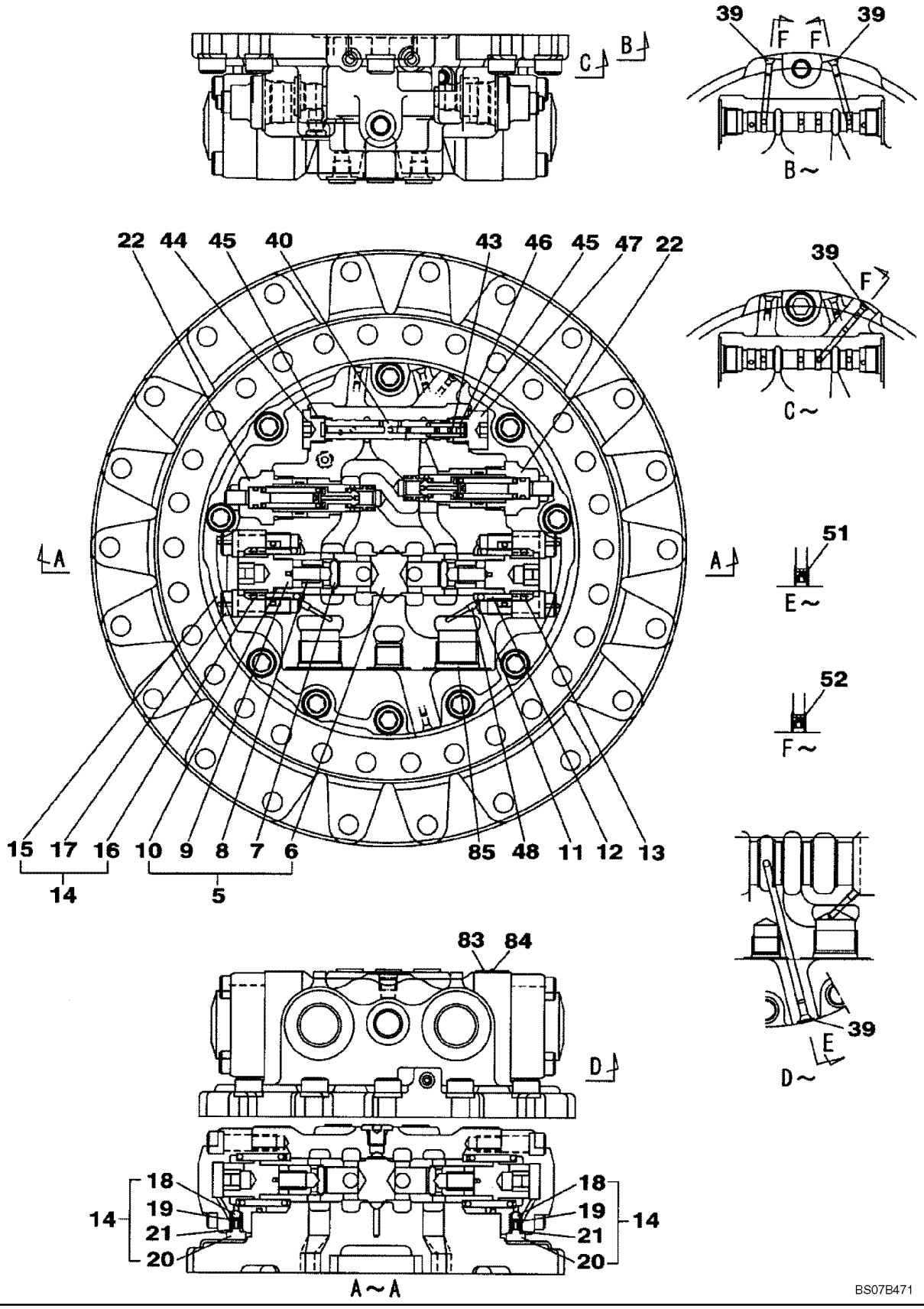

MOTOR - DESLOCAMENTO, ADMISSÃO E SAÍDA

REF	FN	PART NUMBER	YR/SN	QTY	DESCRIPTION
		LZ007960		1	JOGO DE JUNTAS, Incl. 10, 16, 21, 45; Also Includes Parts On Figure 06-03
		LZ008650		1	KIT DE REPARO, Incl. 5 - 10, 39, 40, 48, 51; Also Includes Parts On Figure 06-03

HIDRAULICA - TRAÇÃO DA ESTEIRA

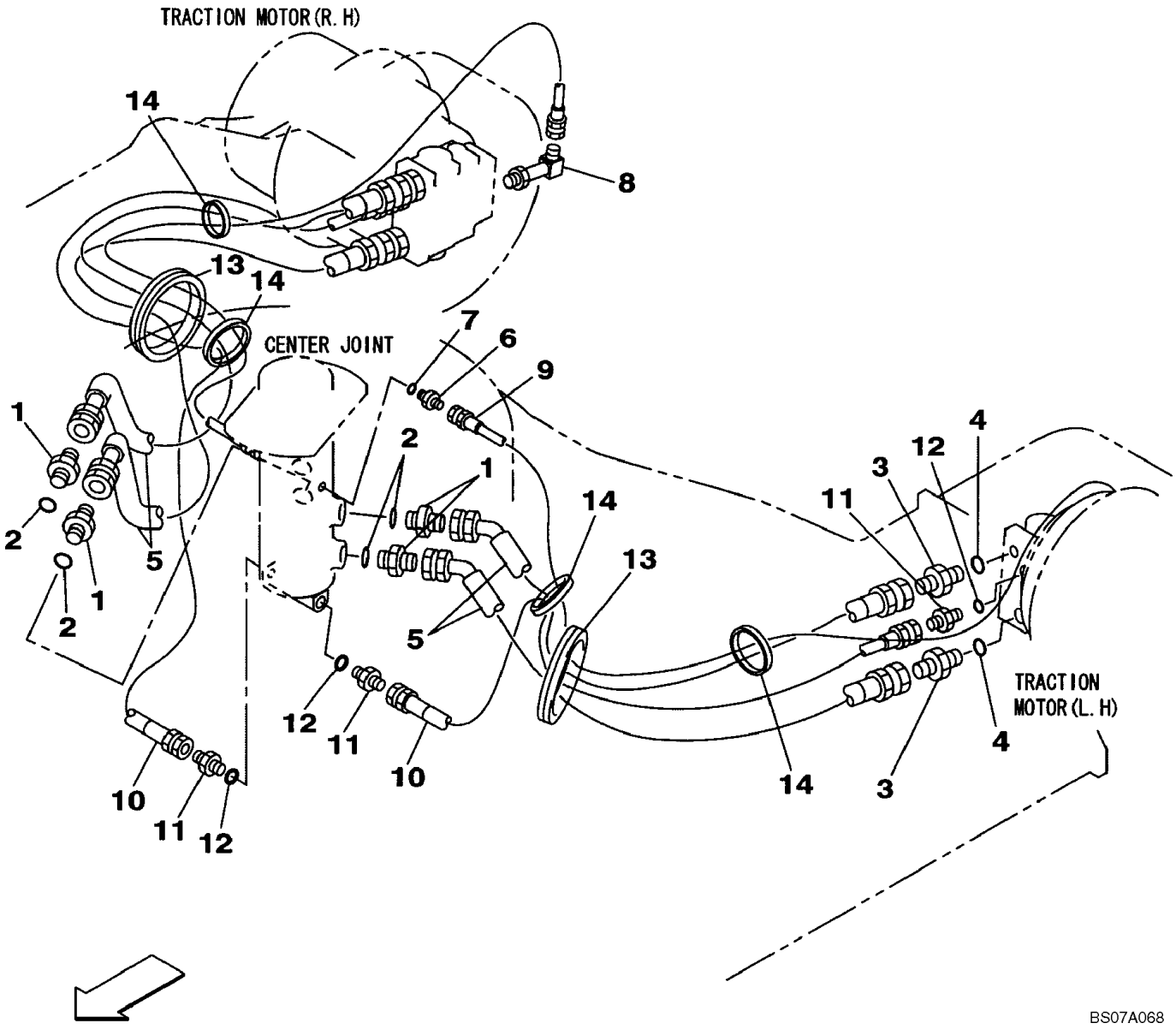

HIDRAULICA - TRAÇÃO DA ESTEIRA

REF	FN	PART NUMBER	YR/SN	QTY	DESCRIPTION
1		151654A1		4	CONEXÃO, 3/4" NPT O-Ring x 3/4" NPT, Incl. 2
2		154503A1		1	ANEL O
3		169040A1		4	ADAPTADOR, Incl. 4
4		154523A1		1	ANEL O
5		KLA10210		4	MANGUEIRA CONJUNTO, 1800 mm (70-7/8 in)
6		152127A1		2	CONEXÃO, 1/4" NPT O-Ring x 1/4" NPT, Incl. 7
7		154467A1		1	ANEL "O"
8		KHJ1178		2	COTOVELO
9		KAJ3096		2	MANGUEIRA CONJUNTO, 2350 mm (92-1/2 in)
10		KHJ1144		2	MANGUEIRA CONJUNTO
11		151650A1		4	CONEXÃO, 1/2" NPT O-Ring x 1/2" NPT, Incl. 12
12		154487A1		1	ANEL "O"
13		150876A1		2	PARA-CHOQUE
14		150071A1		4	ARGOLA DE FIXACAO

HIDRAULICA - DESLOCAMENTO

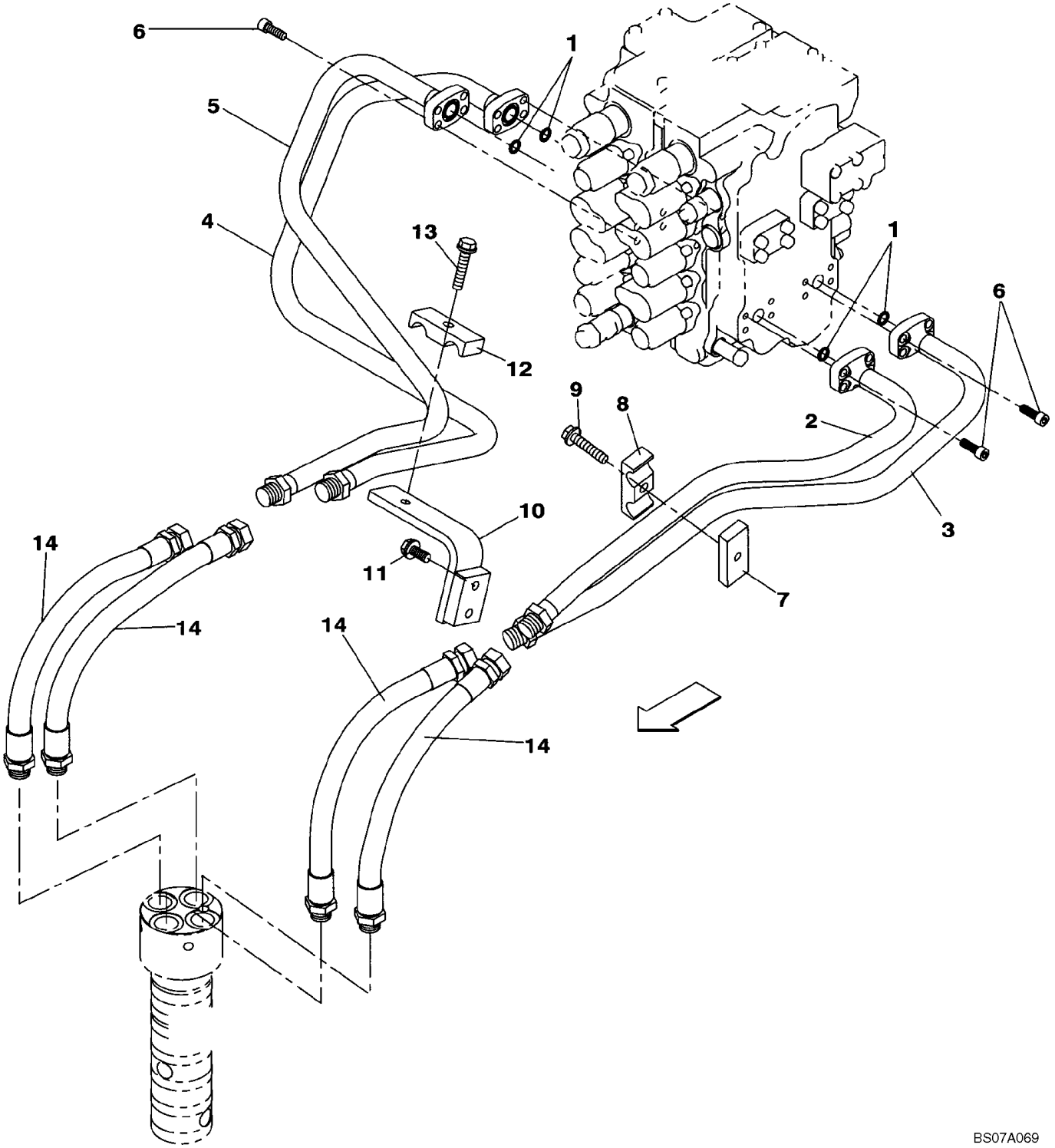

HIDRAULICA - DESLOCAMENTO

REF	FN	PART NUMBER	YR/SN	QTY	DESCRIPTION
1		155210A1		4	ANEL O
2		KLJ11080		1	TUBULAÇÃO HIDRAULICO
3		KLJ11090		1	TUBULAÇÃO HIDRAULICO
4		KLJ11100		1	TUBULAÇÃO HIDRAULICO
5		KLJ11110		1	TUBULAÇÃO HIDRAULICO
6		862-10030		16	PARAFUSO, Hex Soc Hd, M10 x 30, 12.9
7		KRJ10720		1	PLACA
8		152085A1		1	BRACADEIRA
9		167183A1		1	PARAFUSO
10		KLJ11120		1	SUPORTE
11		166352A1		2	PARAFUSO
12		152085A1		1	BRACADEIRA
13		167813A1		1	TAMPA
14		KLJ10680		4	MANGUEIRA CONJUNTO, 470 mm (18-1/2 in)

HYDRAULICS - TRAVEL CONTROL, SINGLE PEDAL

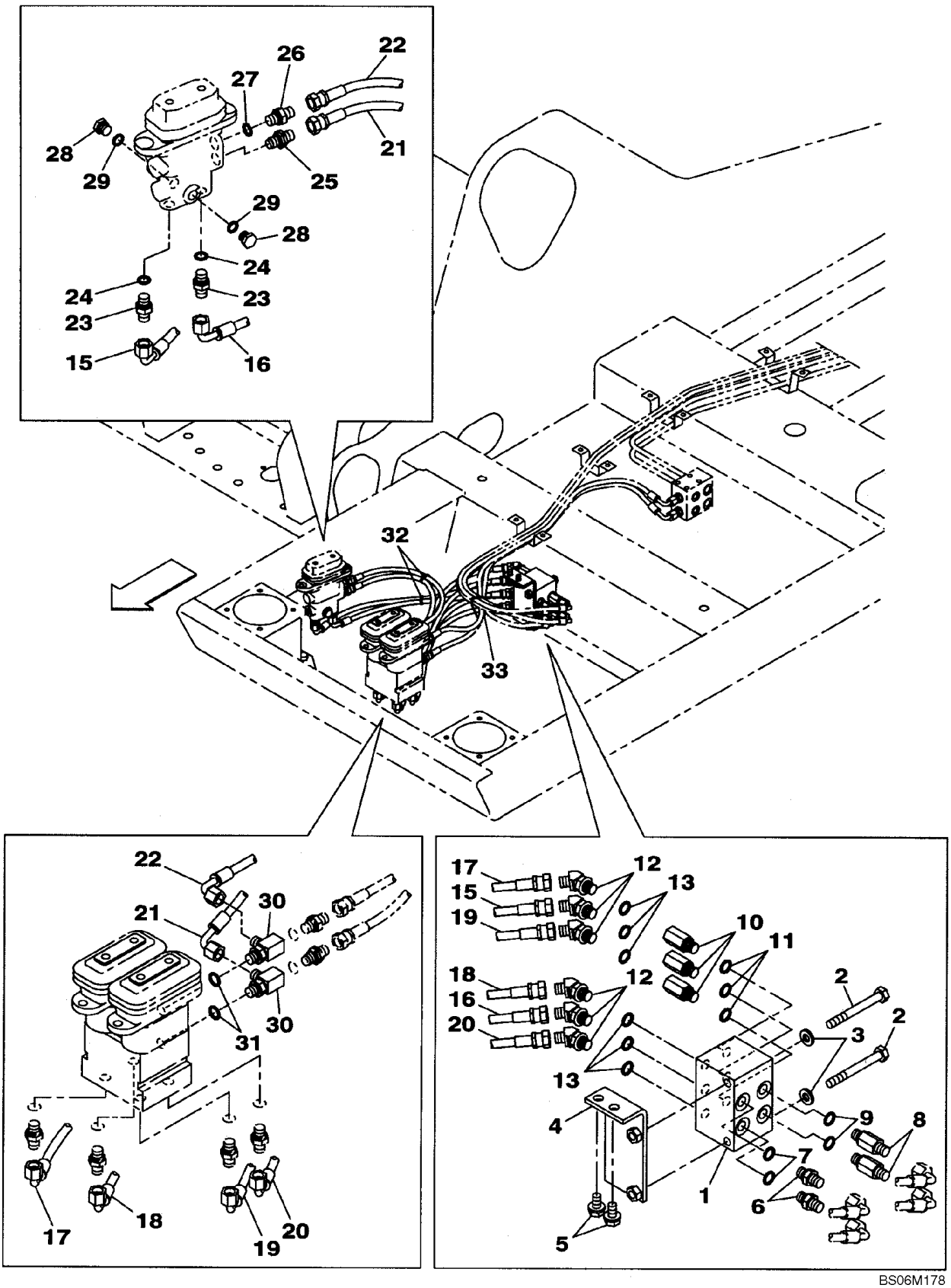

BS06M178

HYDRAULICS - TRAVEL CONTROL, SINGLE PEDAL

REF	FN	PART NUMBER	YR/SN	QTY	DESCRIPTION
1		160355A1		1	VALVULA, See Figure 08-75
2		827-10090		2	PARAFUSO, Hex, M10 x 90, 10.9
3		150409A1		2	ARRUELA PLANA, 10,5 x 21 x 3,2 mm
4		KBJ2886		1	BRACADEIRA
5		166351A1		2	PARAFUSO
6		152127A1		2	CONEXÃO, 1/4" NPT O-Ring x 1/4" NPT, Incl. 7
7		154467A1		1	ANEL "O"
8		162554A1		2	CONEXAO, Incl. 9
9		154467A1		1	ANEL "O"
10		162525A1		3	PRISIONEIRO, Incl. 11
11		154467A1		1	ANEL "O"
12		150933A1		6	COTOVELO, Incl. 13
13		154467A1		1	ANEL "O"
15		KHJ2239		1	MANGUEIRA
16		KHJ2179		1	MANGUEIRA CONJUNTO
17		KHJ2181		1	MANGUEIRA CONJUNTO
18		KHJ2343		1	MANGUEIRA CONJUNTO
19		KHJ2181		1	MANGUEIRA CONJUNTO
20		KHJ2343		1	MANGUEIRA CONJUNTO
21		KHJ2180		1	MANGUEIRA
22		KHJ2180		1	MANGUEIRA
23		152127A1		2	CONEXÃO, 1/4" NPT O-Ring x 1/4" NPT, Incl. 24
24		154467A1		1	ANEL "O"
25		161841A1		1	CONEXÃO
26		152127A1		1	CONEXÃO, 1/4" NPT O-Ring x 1/4" NPT, Incl. 27
27		154467A1		1	ANEL "O"
28		159002A1		2	BUJÃO, Incl. 29
29		154467A1		1	ANEL "O"
30		KHJ2773		2	TEE, Incl. 31
31		154467A1		1	ANEL "O"
32		150496A1		3	ARGOLA DE FIXACAO
33		150498A1		1	ARGOLA DE FIXACAO

SECTION INDEX
Sistema Hidráulico

08-01	DEPOSITO HIDRAULICO
08-02	RESERVATÓRIO HIDRÁULICO - INTERRUPTOR DE PRESSÃO
08-03	CONJUNTO DA BOMBA, HIDRÁULICA - PADRÃO - ACOPLAMENTO
08-04	CONJUNTO DA BOMBA, HIDRÁULICA - COM HIDRÁULICA AUXILIAR - ACOPLAMENTO
08-05	HIDRAULICA - LINHA DE SUCÇÃO DA BOMBA
08-06	HIDRAULICA - ALIMENTAÇÃO DA VÁLVULA DE CONTROLE
08-07	HIDRAULICA - RETORNO DO RESERVATÓRIO
08-08	HIDRAULICA - LINHA DE DRENAGEM
08-09	HIDRAULICA - OSCILAÇÃO
08-10	HIDRAULICA - LANÇA
08-11	HIDRAULICA - BRAÇO E CAÇAMBA
08-12	HIDRAULICA - LINHA DO BRAÇO DO CILINDRO
08-13	HIDRAULICA - CUCHARA
08-14	HYDRAULIC LINES - ARM - OPTIONAL
08-15	LINHAS DO CONTROLE PILOTO, DESLOCAMENTO - STANDARD
08-16	LINHAS DO CONTROLE PILOTO, ACESSÓRIO - STANDARD
08-17	LINEAS DE CONTROLE PILOTO, PARTIÇÃO - STANDARD
08-18	LINEAS DE CONTROLE PILOTO, VALVULA DE CONTROL - STANDARD
08-19	LINHAS DO CONTROLE PILOTO, DESLOCAMENTO - MANEIRA DOIS
08-20	LINHAS DO CONTROLE PILOTO, ACESSÓRIO - MANEIRA DOIS
08-21	LINEAS DE CONTROL PILOTO, PARTICIÓN - MANERA DOS
08-22	LINEAS DE CONTROLE PILOTO, VALVULA DE CONTROL - MANEIRA DOIS
08-23	HIDRAULICA - PRESSÃO PILOTO, LINHAS DE RETORNO
08-24	HIDRAULICA - PRESSÃO PILOTO, LINHAS DE RETORNO
08-25	HIDRAULICA - PRESSÃO PILOTO, LINHAS DE RETORNO
08-26	CIRCUITO DE AÇÃO ÚNICA DO SISTEMA HIDRÁULICO AUXILIAR ACIONADO POR PEDAL
08-27	CIRCUITO DE AÇÃO ÚNICA DO SISTEMA HIDRÁULICO AUXILIAR ACIONADO POR PEDAL
08-28	CIRCUITO DE AÇÃO ÚNICA DO SISTEMA HIDRÁULICO AUXILIAR ACIONADO MANUALMENTE
08-29	CIRCUITO DE AÇÃO ÚNICA DO SISTEMA HIDRÁULICO AUXILIAR ACIONADO MANUALMENTE
08-30	HYDRAULIC LINES - BOOM - OPTIONAL
08-31	HYDRAULIC LINES - ARM (2.23M) - OPTIONAL
08-32	HYDRAULICS, AUXILIARY - MULTI-PURPOSE + 3 WAY VALVE, PEDAL ACTIVATED
08-33	HYDRAULICS, AUXILIARY - MULTI-PURPOSE + 3 WAY VALVE, PEDAL ACTIVATED
08-34	HYDRAULICS, AUXILIARY - MULTI-PURPOSE + 3 WAY VALVE, PEDAL ACTIVATED
08-35	HYDRAULICS, AUXILIARY - MULTI-PURPOSE + 3 WAY VALVE, TRIGGER ACTIVATED
08-36	HYDRAULICS, AUXILIARY - MULTI-PURPOSE + 3 WAY VALVE, TRIGGER ACTIVATED
08-37	HYDRAULICS, AUXILIARY - MULTI-PURPOSE + 3 WAY VALVE, TRIGGER ACTIVATED
08-38	SISTEMA HIDRÁULICO AUXILIAR - CIRCUITO EM SEGUNDO ATIVO, PEDAL ATIVADO
08-39	HYDRAULICS, AUXILIARY - SECOND ACTING CIRCUIT, HAND OPERATED
08-40	SEGUNDA LINHA DA OPÇÃO, BRAÇO DE 2,70 METER (8FT 10 IN)
08-41	SEGUNDA LINHA DA OPÇÃO, BRAÇO DE 3,10 METER (10 FT 2 IN)
08-42	PLUG
08-43	PLUG

SECTION INDEX
Sistema Hidráulico

08-44	PLUG
08-45	PLUG
08-46	PLUG
08-47	PLUG
08-48	PLUG
08-49	PLUG
08-50	PLUG
08-51	SOPORTE - MOTOR DE OSCILAÇÃO
08-52	MOTOR ASSY - SWING
08-53	GEAR ASSY, REDUCTION - MOTOR, SWING
08-54	HIDRAULICA - JUNTA, CENTRO DE ROTAÇÃO,
08-55	KLJ10580 VALVULA DE CONTROL - SUPORTE
08-56	KLJ10590 VALVULA DE CONTROL - SUPORTE
08-57	KLJ10580 CONJUNTO DE LA VALVULA - CONTROLE
08-58	KLJ10580 CONJUNTO DE LA VALVULA - CONTROLE
08-59	KLJ10580 CONJUNTO DE LA VALVULA - CONTROLE
08-60	KLJ10580 CONJUNTO DE LA VALVULA - CONTROLE
08-61	KLJ10590 CONJUNTO DE LA VALVULA - CONTROLE
08-62	KLJ10590 CONJUNTO DE LA VALVULA - CONTROLE
08-63	KLJ10590 CONJUNTO DE LA VALVULA - CONTROLE
08-64	KLJ10590 CONJUNTO DE LA VALVULA - CONTROLE
08-65	KLJ10590 CONJUNTO DE LA VALVULA - CONTROLE
08-69	VÁLVULA, ALÍVIO DA ABERTURA - SISTEMA HIDRÁULICO AUXILIAR
08-70	ALMOFADA DA VÁLVULA - LINHAS DO CONTROLE PILOTO
08-72	VALVULA DE CONTROL - DESLOCAMENTO
08-73	SOLENOIDE DE LA VALVULA - PRESSÃO PILOTO, LINHAS DE RETORNO
08-74	VALVE, SOLENOID - MULTI-PURPOSE + 3 WAY VALVE, PEDAL ACTIVATED
08-75	VALVE ASSY - PEDAL CONTROL
08-77	VALVE ASSY, DIRECTIONAL
08-78	VÁLVULA, SHUT-OFF
08-79	CONJUNTO DE LA VALVULA - CONTROLE DE PÉ
08-81	SOLENÓIDE DA VÁLVULA - SISTEMA HIDRÁULICO AUXILIAR
08-82	VALVE, REMOTE CONTROL
08-83	CONJUNTO DO CILINDRO, LANÇA, LADO DIREITO
08-84	CONJUNTO DO CILINDRO, LANÇA, LADO ESQUERDO
08-85	CONJUNTO DE CILINDRO - BRAÇO
08-86	CONJUNTO DO CILINDRO, BALDE
08-87	KLJ10570 CONJUNTO DA BOMBA, HIDRÁULICA - PISTÃO
08-88	KLJ10570 PUMP ASSY, HYDRAULIC - GEAR PUMP ASSY
08-89	KLJ10570 PUMP ASSY, HYDRAULIC - VALVE ASSY
08-90	KLJ10570 CONJUNTO DA BOMBA, HIDRÁULICA - REGULADOR
08-91	KLJ10570 CONJUNTO DA BOMBA, HIDRÁULICA - REGULADOR
08-92	KLJ10610 CONJUNTO DA BOMBA, HIDRÁULICA - PISTÃO
08-93	KLJ10610 PUMP ASSY, HYDRAULIC - GEAR PUMP ASSY
08-94	KLJ10610 PUMP ASSY, HYDRAULIC - VALVE ASSY
08-96	KLJ10610 CONJUNTO DA BOMBA, HIDRÁULICA - REGULADOR
08-97	KLJ10610 CONJUNTO DA BOMBA, HIDRÁULICA - REGULADOR
08-98	GEAR PUMP ASSY
08-99	KITS, FREE SWING

DEPOSITO HIDRAULICO

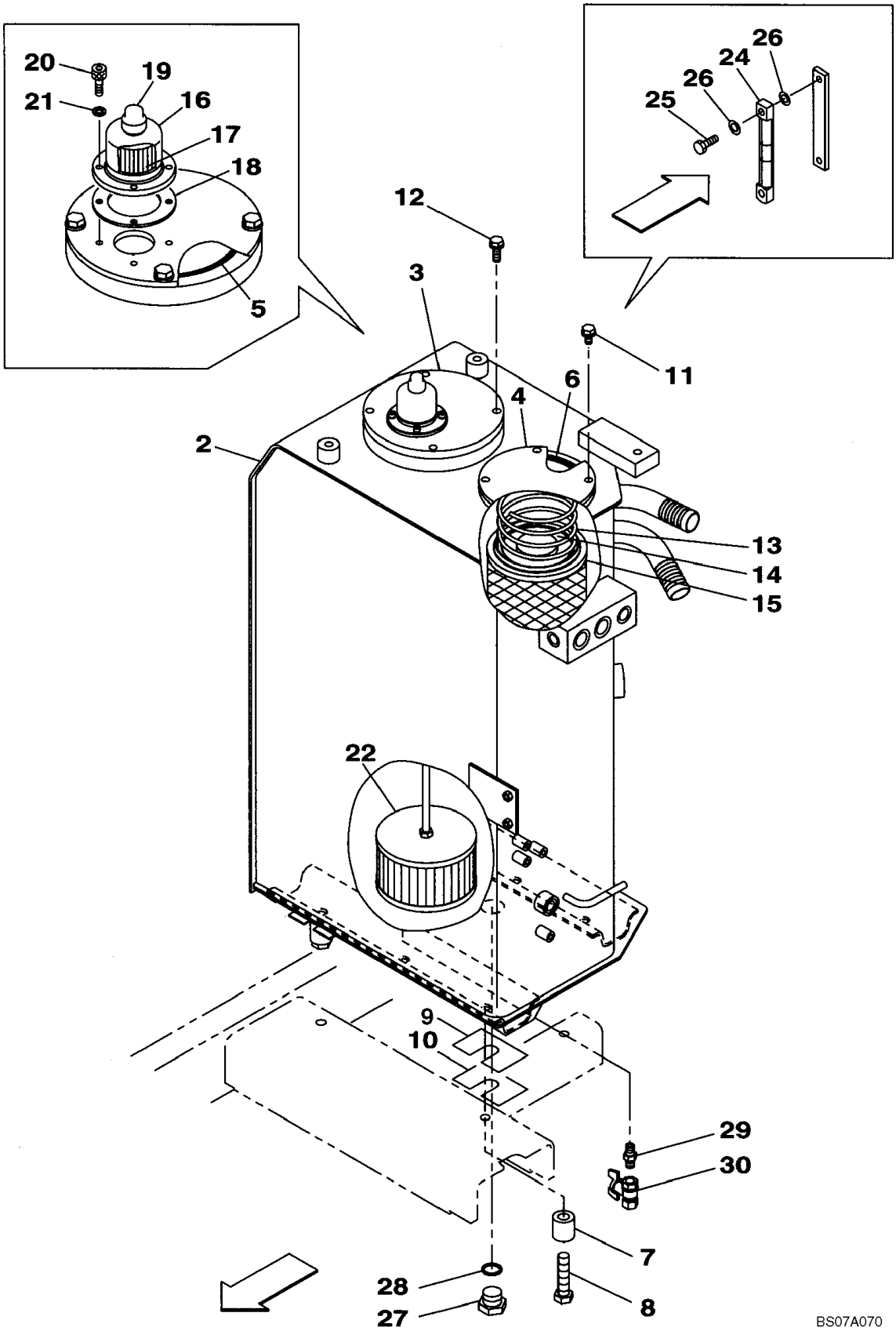

DEPOSITO HIDRAULICO

REF	FN	PART NUMBER	YR/SN	QTY	DESCRIPTION
		KNJ12060		1	RESERVATORIO DE OLEO, Incl. 2 - 6
2		NSS		1	BOLETIM INFORMATIVO, Tank, Oil
3		KRJ15380		1	TAMPA
4		KLJ10620		1	TAMPA
5		154837A1		1	ANEL O
6		154776A1		1	ANEL O
7		153357A1		4	ESPAÇADOR
8		827-16070		4	PARAFUSO, Hex, M16 x 70, 10.9
9		150166A1		1	CALCO DE AFINACAO
10		150479A1		1	CALCO DE AFINACAO
11		166351A1		4	PARAFUSO
12		166347A1		4	PARAFUSO
13		KNJ2569		1	MOLA
14		153191A1		1	VALVULA
15		KNJ13890		1	FILTRO, OLEO HIDRAULICO
16		KHJ1491		1	RESPIRO, Incl. 17 - 19
17		159702A1		1	FILTRO, OLEO HIDRAULICO
18		159703A1		1	JUNTA
19		KHJ1492		1	TAMPA DO RESERVATÓRIO
20		862-6016		4	PARAFUSO, Hex Soc Hd, M6 x 16, 12.9
21		892-11006		4	ARRUELA-TRAVA, M6
22		KNJ10660		1	FILTRO, OLEO HIDRAULICO
		163560A1		1	VISOR DE NIVEL, Incl. 24 - 26
24		163561A1		1	GABARITO
25		159492A1		2	PARAFUSO
26		159493A1		4	VEDADOR
27		152924A1		1	BUJÃO, Incl. 28
28		154503A1		1	ANEL O
29		150847A1		1	CONEXÃO
30		158923A1		1	VALVULA DE DRENO

RESERVATÓRIO HIDRÁULICO - INTERRUPTOR DE PRESSÃO

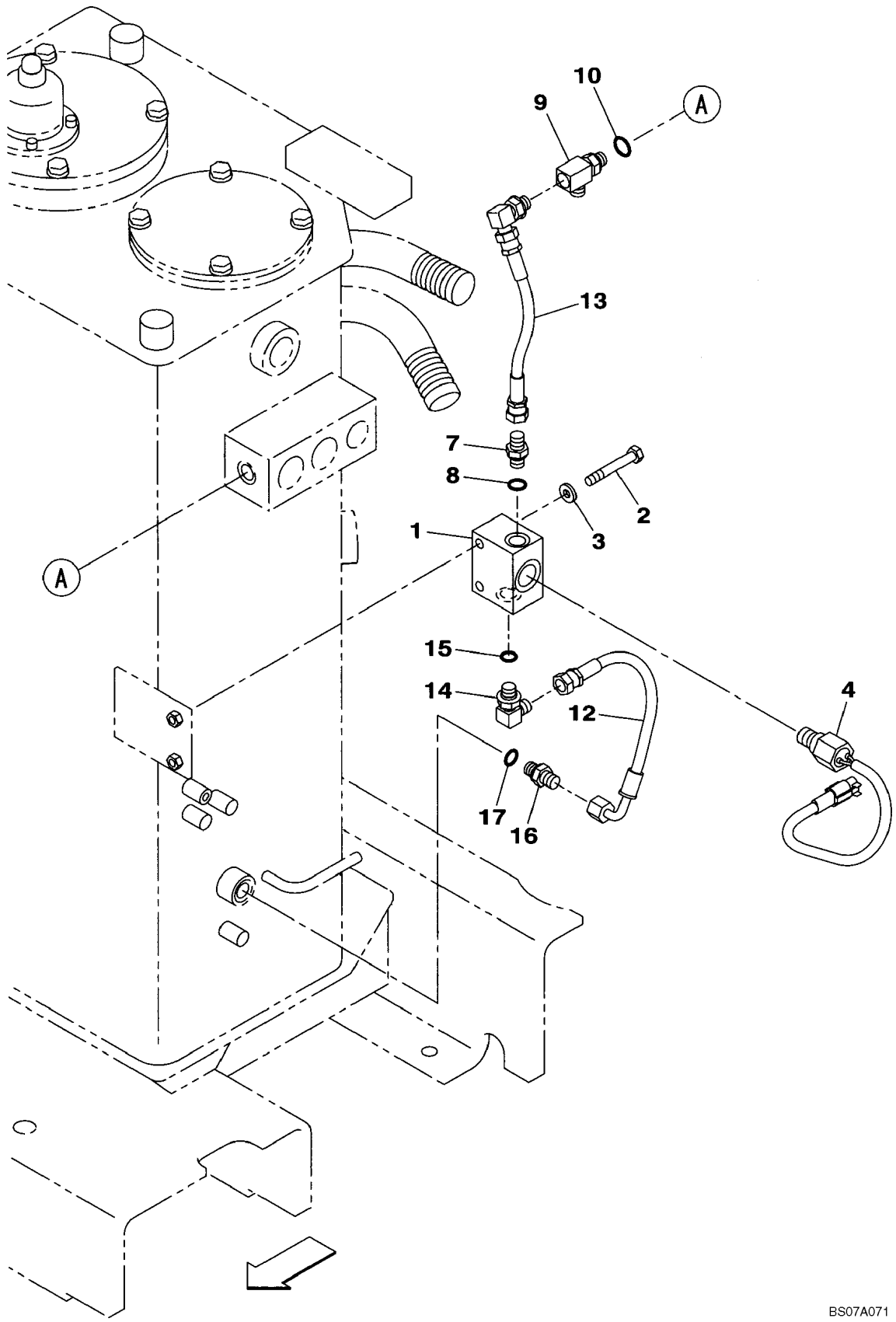

RESERVATÓRIO HIDRÁULICO - INTERRUPTOR DE PRESSÃO

REF	FN	PART NUMBER	YR/SN	QTY	DESCRIPTION
1		KHJ11730		1	VALVULA COLETORA
2		827-8055		2	PARAFUSO, Hex, M8 x 55, 10.9
3		153081A1		2	ARRUELA PLANA
4		KHR14470		1	INTERRUPTOR, Pressure
7		152127A1		1	CONEXÃO, 1/4" NPT O-Ring x 1/4" NPT, Incl. 8
8		154467A1		1	ANEL "O"
9		KHJ2773		1	TEE, Incl. 10
10		154467A1		1	ANEL "O"
12		KHJ2292		1	MANGUEIRA CONJUNTO, 280 mm (11 in)
13		KHJ16270		1	MANGUEIRA CONJUNTO, 210 mm (8-1/4 in)
14		150913A1		1	COTOVELO, 90º, 1/4" O-Ring x 1/4", Incl. 15
15		154467A1		1	ANEL "O"
16		152127A1		1	CONEXÃO, 1/4" NPT O-Ring x 1/4" NPT, Incl. 17
17		154467A1		1	ANEL "O"

CONJUNTO DA BOMBA, HIDRÁULICA - PADRÃO - ACOPLAMENTO

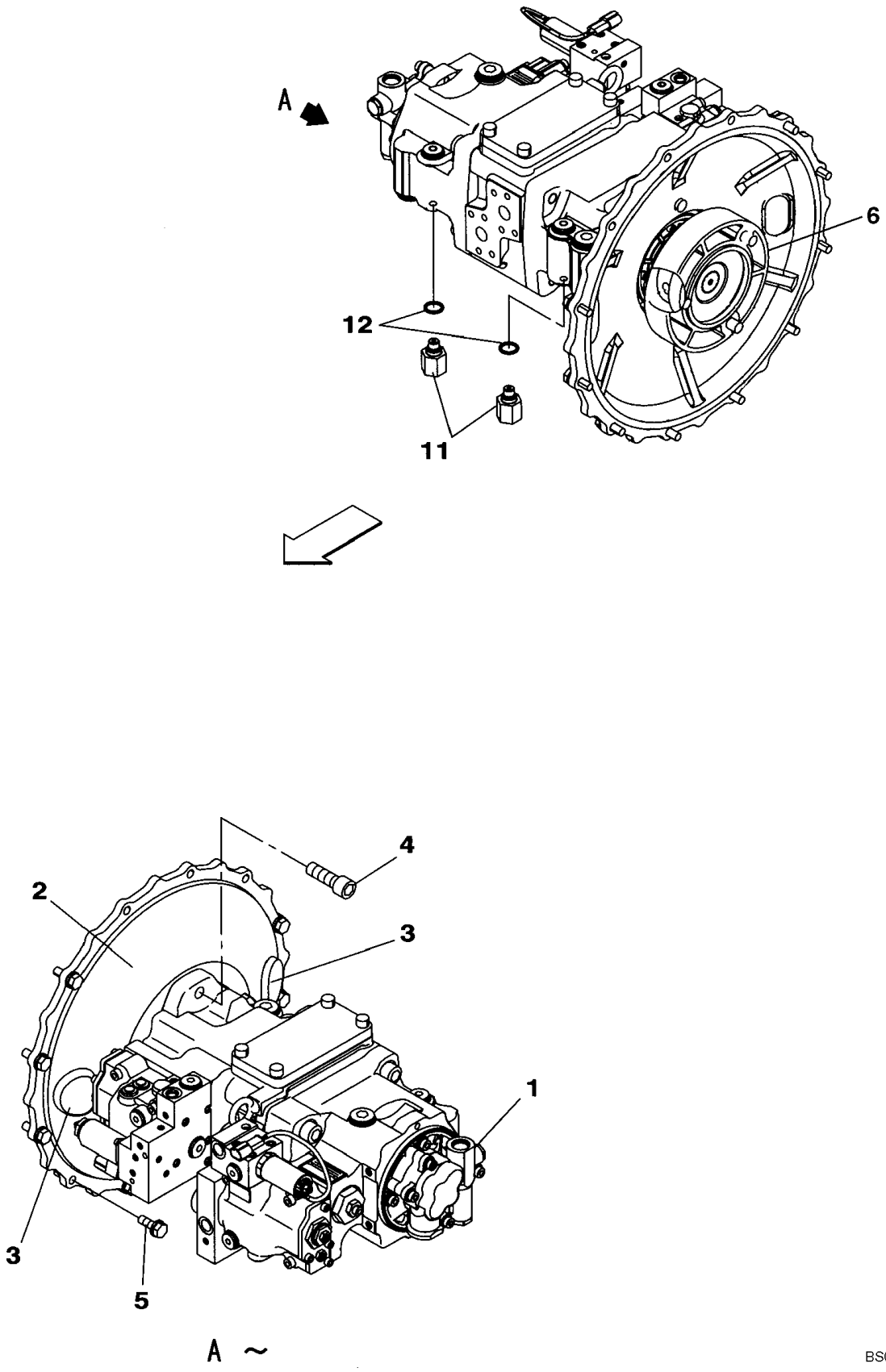

BS07A072

CONJUNTO DA BOMBA, HIDRÁULICA - PADRÃO - ACOPLAMENTO

REF	FN	PART NUMBER	YR/SN	QTY	DESCRIPTION
1		KLJ10570		1	BOMBA HIDRÁULICA, See Figure 08-87 - 08-91
2		KNJ11750		1	FLANGE
3		KHJ2656		2	CASQUILHO ISOLADOR
4		108R016Y045R		2	PARAFUSO
5		166347A1		9	PARAFUSO
6		KMJ2660		1	ACOPLAMENTO FLANGE
11		KHJ18180		2	PRISIONEIRO, Incl. 12, Replaces KHJ11380
12		154467A1		1	ANEL "O"

CONJUNTO DA BOMBA, HIDRÁULICA - COM HIDRÁULICA AUXILIAR - ACOPLAMENTO

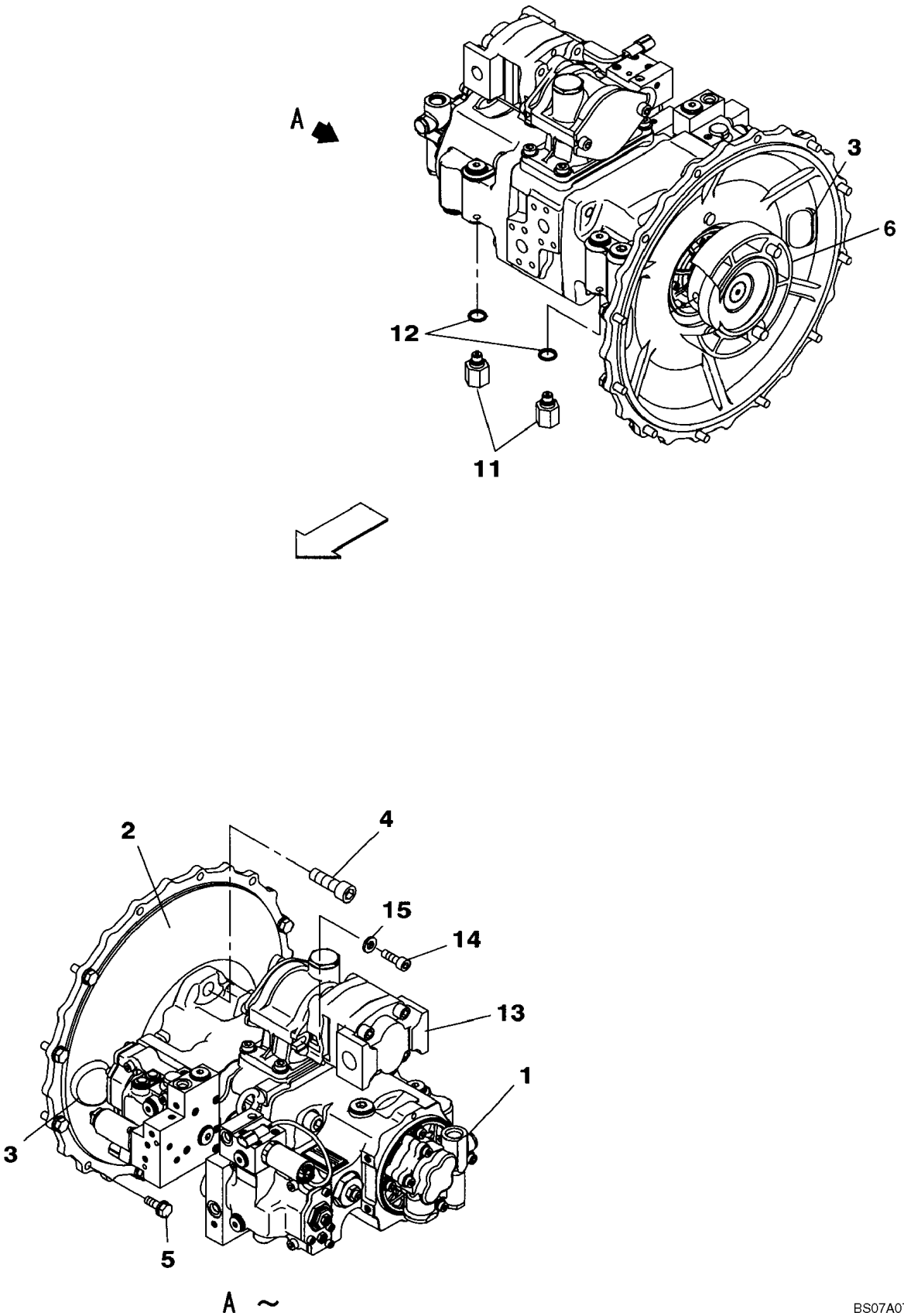

BS07A073

CONJUNTO DA BOMBA, HIDRÁULICA - COM HIDRÁULICA AUXILIAR - ACOPLAMENTO

REF	FN	PART NUMBER	YR/SN	QTY	DESCRIPTION
1		KLJ10610		1	BOMBA HIDRÁULICA, See Figure 08-92 - 08-97
2		KNJ11750		1	FLANGE
3		KHJ2656		2	CASQUILHO ISOLADOR
4		108R016Y045R		2	PARAFUSO
5		166347A1		9	PARAFUSO
6		KMJ2660		1	ACOPLAMENTO FLANGE
11		KHJ18180		2	PRISIONEIRO, Incl. 12, Replaces KHJ11380
12		154467A1		1	ANEL "O"
13		KNJ10650		1	BOMBA HIDRÁULICA, See Figure 08-98
14		862-10030		2	PARAFUSO, Hex Soc Hd, M10 x 30, 12.9
15		150409A1		2	ARRUELA PLANA
16		154697A1		1	ANEL O, Not Illustrated

HIDRAULICA - LINHA DE SUCÇÃO DA BOMBA

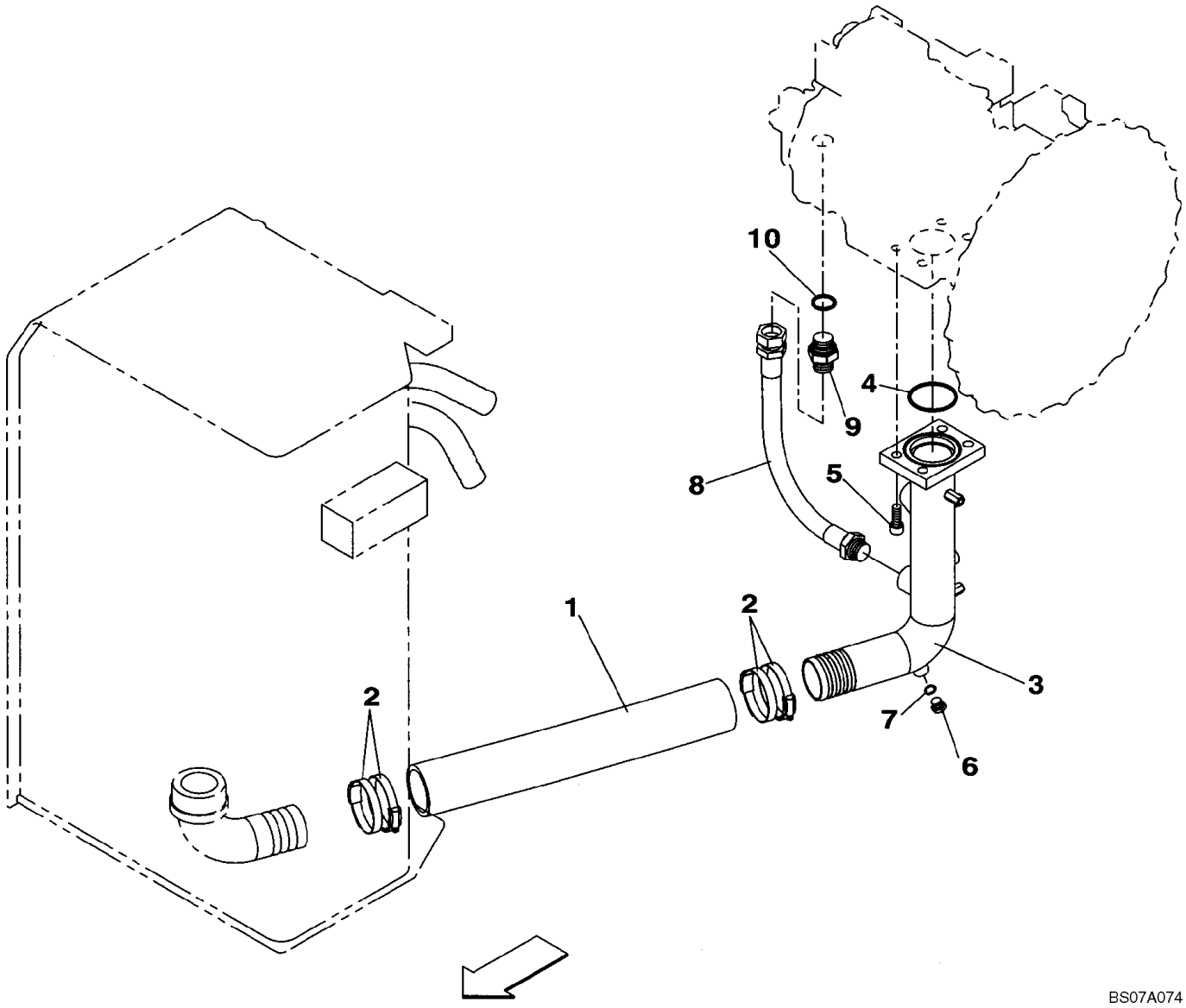

HIDRAULICA - LINHA DE SUCÇÃO DA BOMBA

REF	FN	PART NUMBER	YR/SN	QTY	DESCRIPTION
1		KHJ2418		1	MANGUEIRA CONJUNTO
2		150893A1		4	PRENDEDOR
3		KNJ13880		1	TUBULAÇÃO HIDRAULICO
4		154681A1		1	ANEL O
5		862-12030		4	PARAFUSO, Hex Soc Hd, M12 x 30, 12.9
6		159002A1		1	BUJÃO, Incl. 7
7		154467A1		1	ANEL "O"
8		KRJ5483		1	MANGUEIRA CONJUNTO, 400 mm (15-3/4 in)
9		151654A1		1	CONEXÃO, 3/4" NPT O-Ring x 3/4" NPT, Incl. 10
10		154503A1		1	ANEL O

HIDRAULICA - ALIMENTAÇÃO DA VÁLVULA DE CONTROLE

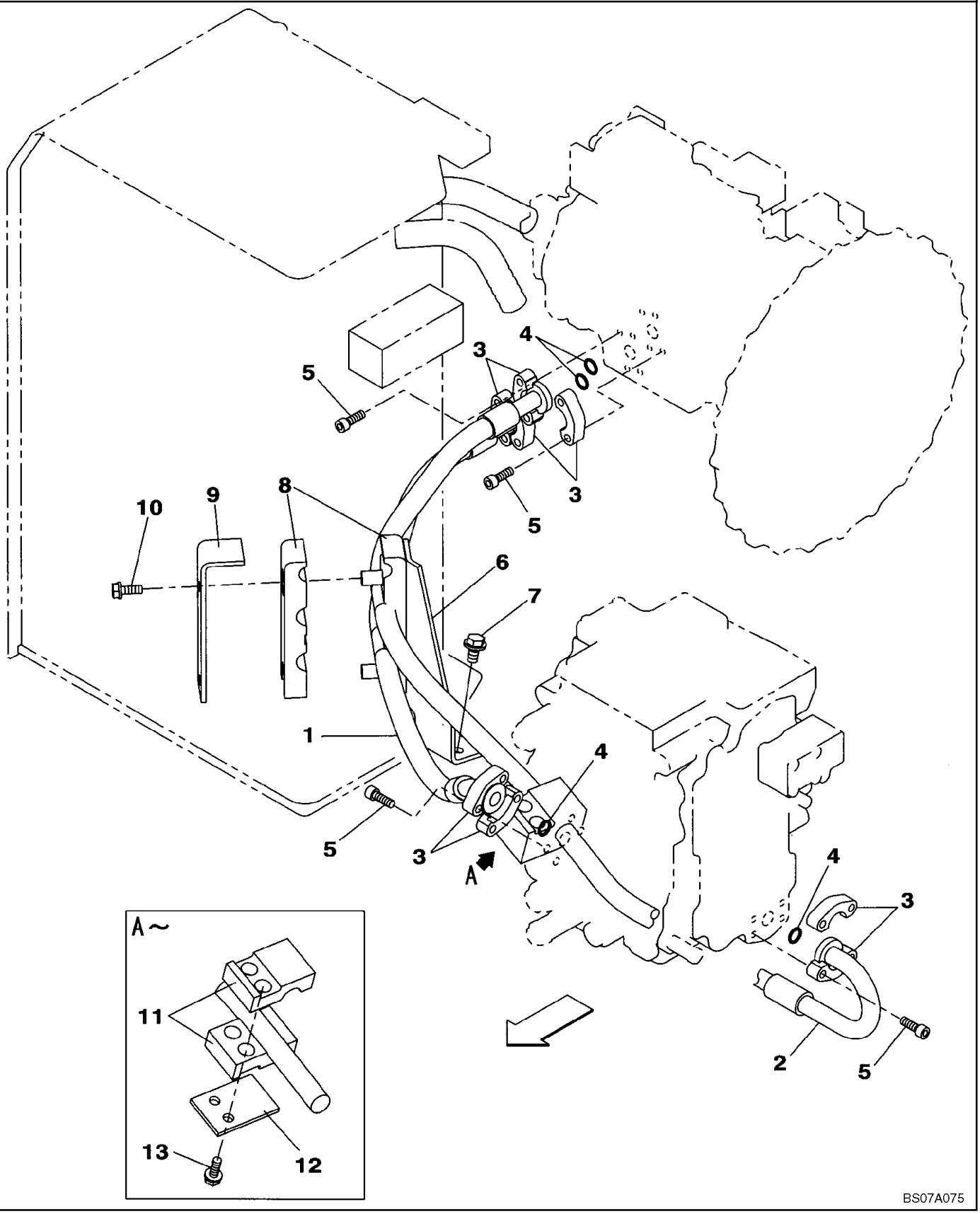

HIDRAULICA - ALIMENTAÇÃO DA VÁLVULA DE CONTROLE

REF	FN	PART NUMBER	YR/SN	QTY	DESCRIPTION
1		KNJ11480		1	MANGUEIRA CONJUNTO, 980 mm (38-9/16 in)
2		KNJ11490		1	MANGUEIRA CONJUNTO, 1200 mm (47-1/4 in)
3		152598A1		8	SEMI-COLAR, Split
4		155210A1		4	ANEL O
5		862-10030		16	PARAFUSO, Hex Soc Hd, M10 x 30, 12.9
6		KNJ12590		1	SUPORTE
7		152718A1		2	PARAFUSO
8		KNJ11500		2	BRACADEIRA
9		KRJ10810		1	PLACA
10		166347A1		2	PARAFUSO
11		KNJ11510		2	BRACADEIRA
12		KNJ11520		1	PLACA
13		166347A1		2	PARAFUSO

HIDRAULICA - RETORNO DO RESERVATÓRIO

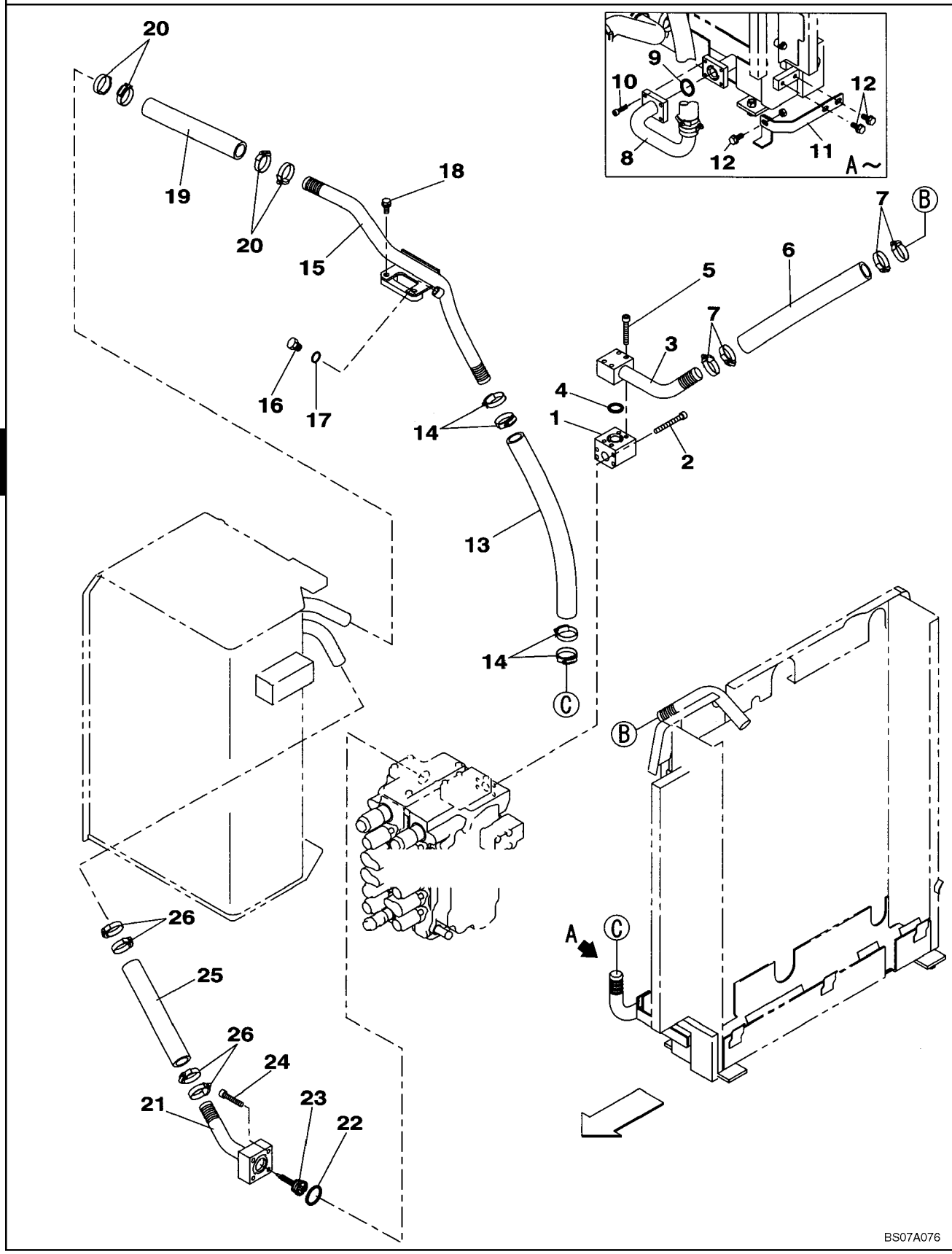

HIDRAULICA - RETORNO DO RESERVATÓRIO

REF	FN	PART NUMBER	YR/SN	QTY	DESCRIPTION
1		KNJ13970		1	VALVULA COLETORA
2		862-10085		4	PARAFUSO, Hex Soc Hd, M10 x 85, 12.9
3		KNJ13990		1	TUBULAÇÃO HIDRAULICO
4		154549A1		1	ANEL O
5		862-10065		4	PARAFUSO, Hex Soc Hd, M10 x 65, 12.9
6		KNJ0255		1	MANGUEIRA CONJUNTO, 400 mm (15-3/4 in)
7		150885A1		4	BRACADEIRA
8		KNJ12100		1	TUBULAÇÃO HIDRAULICO
9		154549A1		1	ANEL O
10		862-8030		4	PARAFUSO, Hex Soc Hd, M8 x 30, 12.9
11		KNJ12310		1	SUPORTE
12		166052A1		3	PARAFUSO
13		KAJ2984		1	MANGUEIRA CONJUNTO, 540 mm (21-1/4 in)
14		150885A1		4	BRACADEIRA
15		KNJ14000		1	TUBULAÇÃO HIDRAULICO
17		150031A1		1	ANEL O
18		166052A1		2	PARAFUSO
19		KHJ13450		1	MANGUEIRA CONJUNTO, 300 mm (11-13/16 in)
20		150885A1		4	BRACADEIRA
21		KNJ12120		1	TUBULAÇÃO HIDRAULICO
22		154609A1		1	ANEL O
23		KHJ16030		1	VALVULA CHECAGEM
24		862-10055		4	PARAFUSO, Hex Soc Hd, M10 x 55, 12.9
25		KHJ13450		1	MANGUEIRA CONJUNTO, 300 mm (11-13/16 in)
26		150885A1		4	BRACADEIRA

HIDRAULICA - LINHA DE DRENAGEM

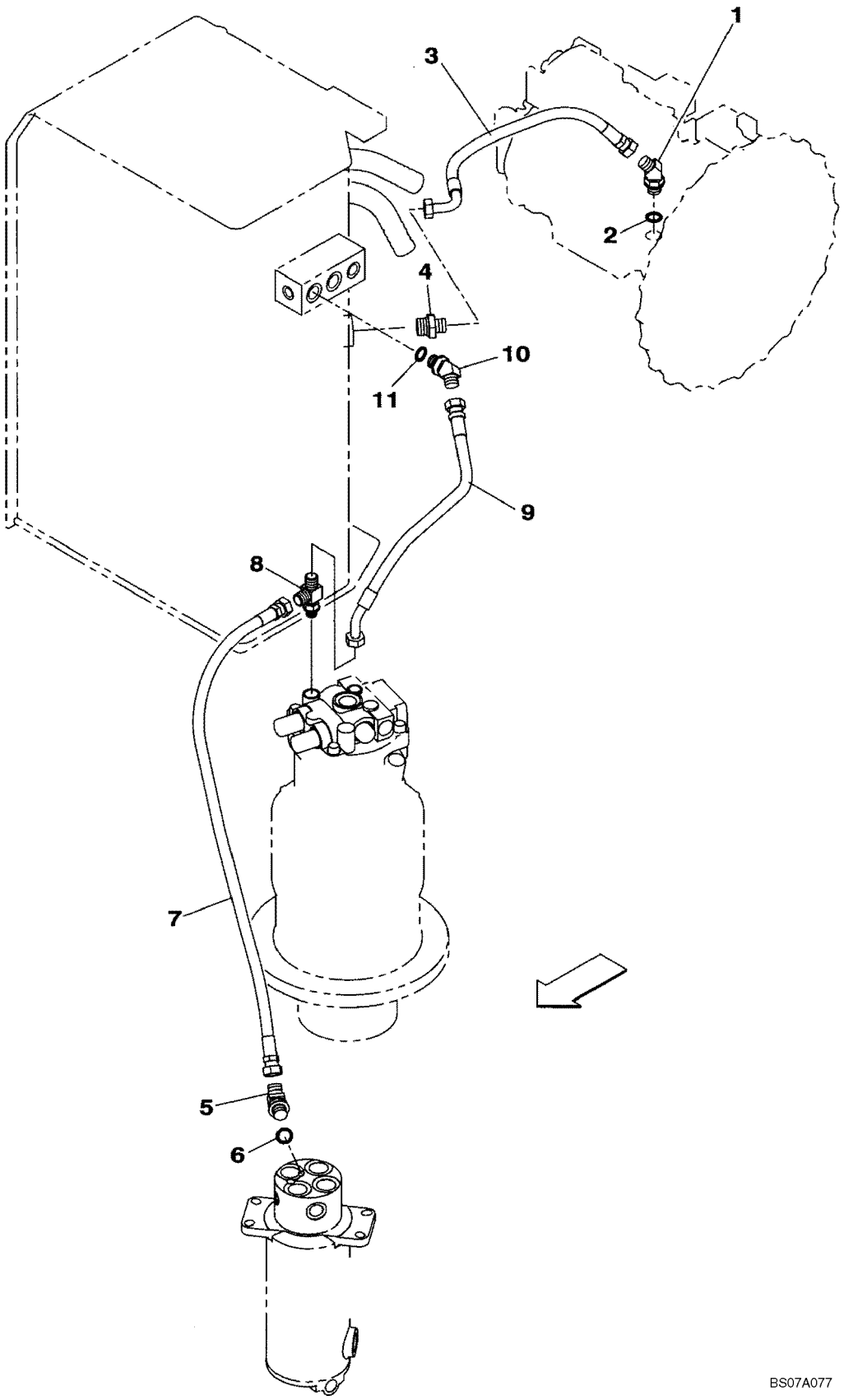

HIDRAULICA - LINHA DE DRENAGEM

REF	FN	PART NUMBER	YR/SN	QTY	DESCRIPTION
1		157585A1		1	COTOVELO, Incl. 2
2		154487A1		1	ANEL "O"
3		MPJ5386		1	MANGUEIRA CONJUNTO, 500 mm (19-11/16 in)
4		168988A1		1	ADAPTADOR
5		157585A1		1	COTOVELO, Incl. 6
6		154487A1		1	ANEL "O"
7		163805A1		1	MANGUEIRA CONJUNTO, 900 mm (35-1/2 in)
8		KHJ14010		1	TEE
9		KNJ2343		1	MANGUEIRA CONJUNTO
10		157585A1		1	COTOVELO, Incl. 11
11		154487A1		1	ANEL "O"

HIDRAULICA - OSCILAÇÃO

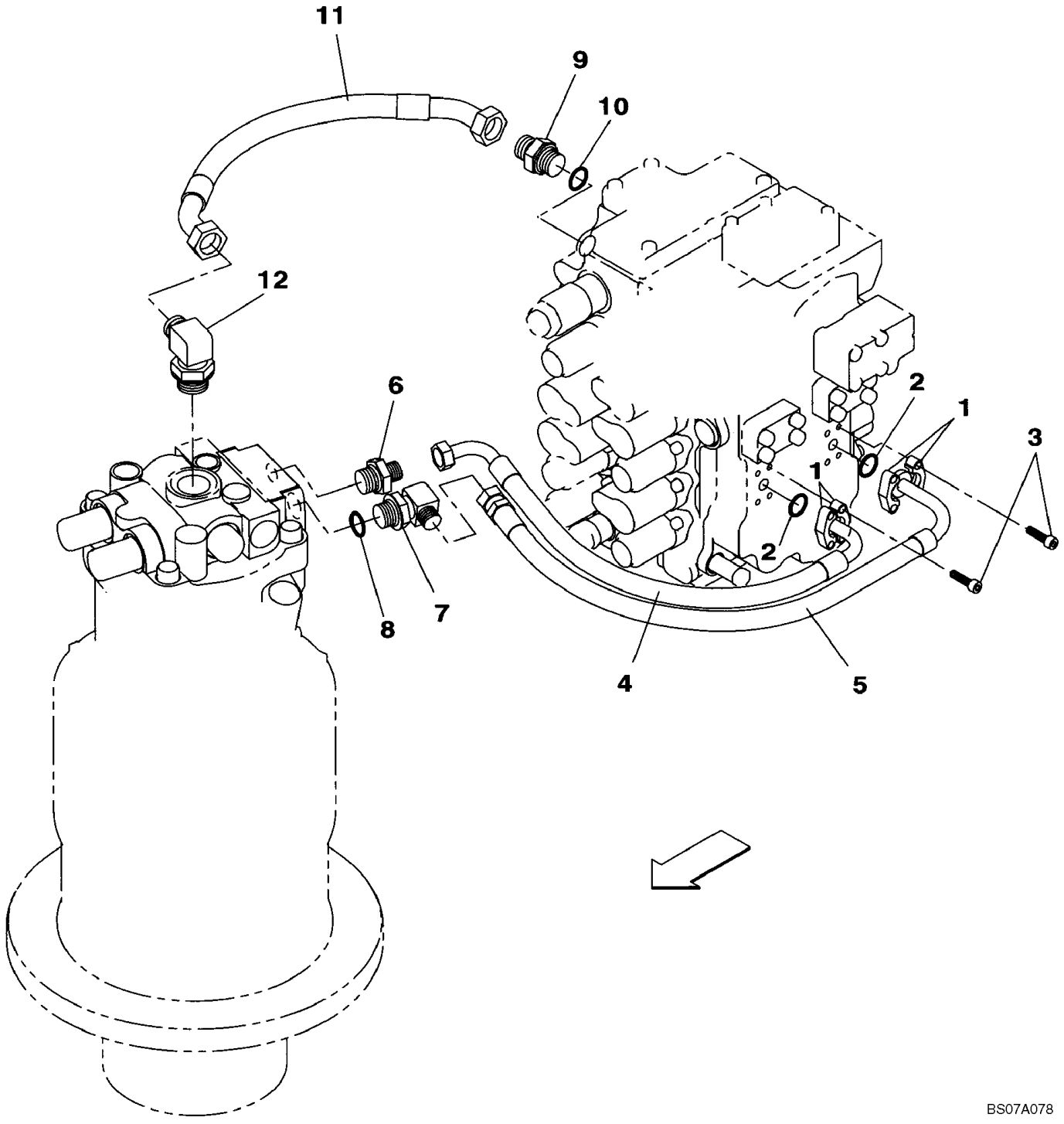

HIDRAULICA - OSCILAÇÃO

REF	FN	PART NUMBER	YR/SN	QTY	DESCRIPTION
1		161080A1		4	FLANGE, Split
2		161096A1		2	ANEL O
3		862-8030		8	PARAFUSO, Hex Soc Hd, M8 x 30, 12.9
4		KLJ10630		1	MANGUEIRA CONJUNTO, 570 mm (22-1/2 in)
5		KLJ10640		1	MANGUEIRA CONJUNTO, 670 mm (26-3/8 in)
6		168988A1		1	ADAPTADOR
7		157936A1		1	COTOVELO, Incl. 8
8		150542A1		1	ANEL O
9		151654A1		1	CONEXÃO, 3/4" NPT O-Ring x 3/4" NPT, Incl. 10
10		150542A1		1	ANEL O
11		KLJ11180		1	MANGUEIRA CONJUNTO
12		169174A1		1	COTOVELO

HIDRAULICA - LANÇA

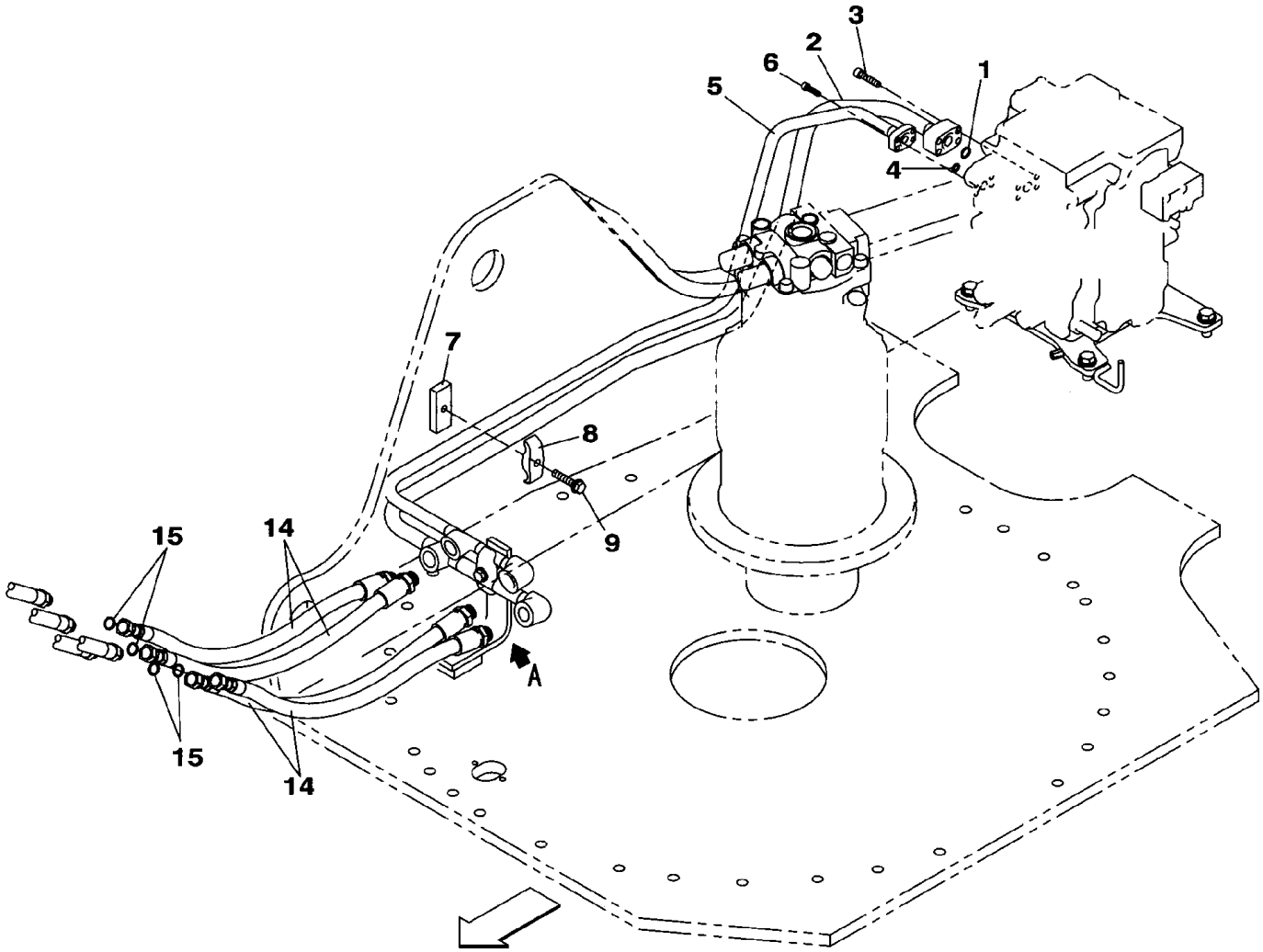

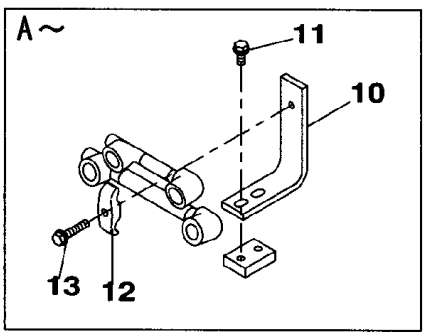

BS07A079

HIDRAULICA - LANÇA

REF	FN	PART NUMBER	YR/SN	QTY	DESCRIPTION
1		161096A1		1	ANEL O
2		KLJ10770		1	TUBULAÇÃO HIDRAULICO
3		862-8030		4	PARAFUSO, Hex Soc Hd, M8 x 30, 12.9
4		155210A1		1	ANEL O
5		KLJ10780		1	TUBULAÇÃO HIDRAULICO
6		862-10045		4	PARAFUSO, Hex Soc Hd, M10 x 45, 12.9
7		KRJ10720		1	PLACA
8		KNJ2519		1	BRACADEIRA
9		167183A1		1	PARAFUSO
10		KRJ10900		1	SUPORTE
11		166352A1		2	PARAFUSO
12		KNJ2519		1	BRACADEIRA
13		167183A1		1	PARAFUSO
14		KLJ11700		4	MANGUEIRA CONJUNTO, Replaces KLJ10660
15		KHJ2587		4	ANEL "O"

HIDRAULICA - BRAÇO E CAÇAMBA

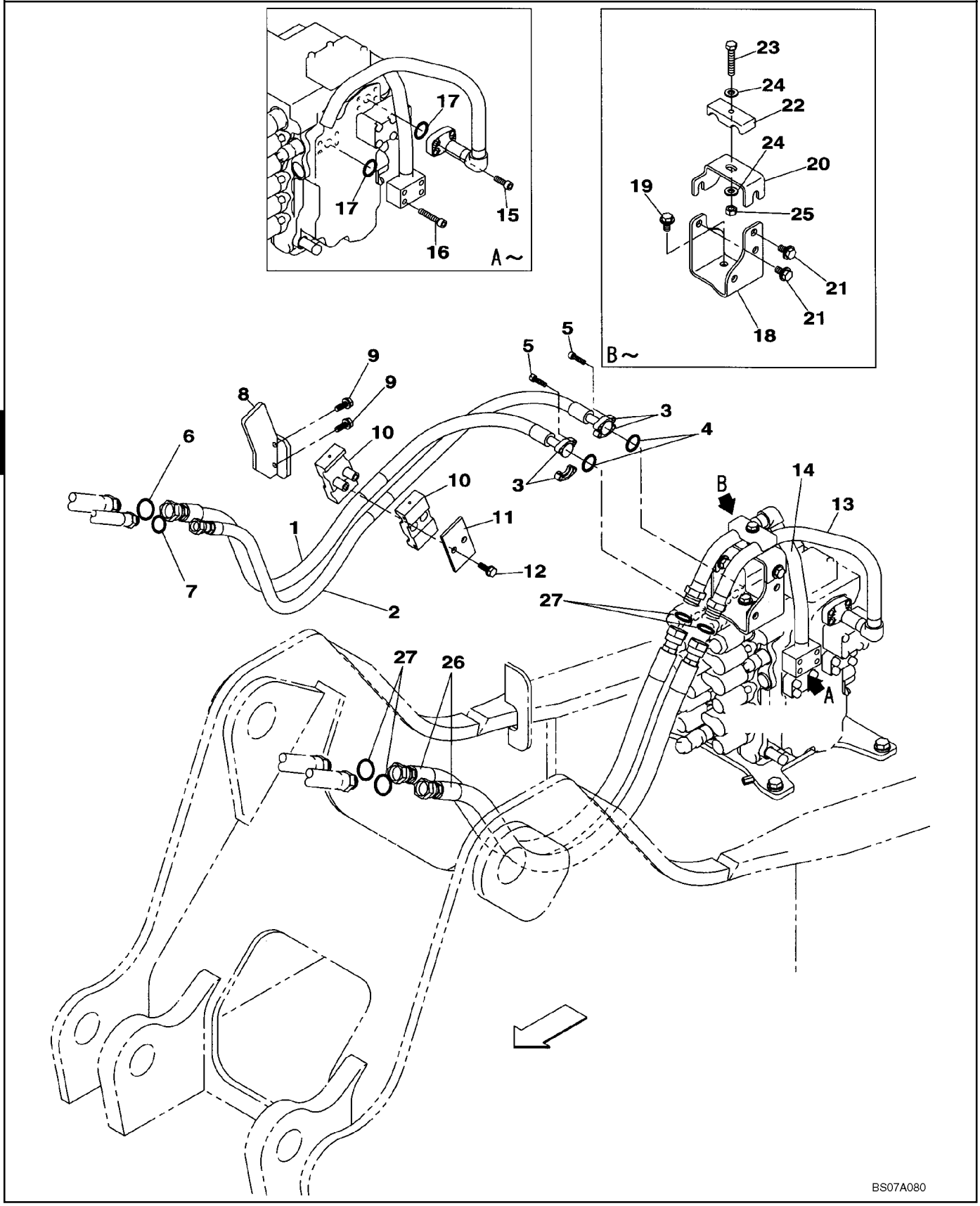

HIDRAULICA - BRAÇO E CAÇAMBA

REF	FN	PART NUMBER	YR/SN	QTY	DESCRIPTION
1		KLJ10700		1	MANGUEIRA CONJUNTO, 1380 mm (54-5/16 in)
2		KLJ10710		1	MANGUEIRA CONJUNTO, 1540 mm (60-5/8 in)
3		161080A1		4	FLANGE, Split
4		161096A1		2	ANEL O
5		862-8030		8	PARAFUSO, Hex Soc Hd, M8 x 30, 12.9
6		KHJ1360		1	ANEL O
7		155204A1		1	ANEL O
8		KLJ10720		1	SUPORTE
9		166347A1		2	PARAFUSO
10		KLJ10730		2	BRACADEIRA
11		KRH10210		1	PLACA
12		166347A1		2	PARAFUSO
13		KNJ11550		1	TUBULAÇÃO HIDRAULICO
14		KNJ11560		1	TUBULAÇÃO HIDRAULICO
15		862-10030		4	PARAFUSO, Hex Soc Hd, M10 x 30, 12.9
16		862-10055		4	PARAFUSO, Hex Soc Hd, M10 x 55, 12.9
17		155210A1		2	ANEL O
18		KNJ11580		1	SUPORTE
19		152718A1		2	PARAFUSO
20		KNJ11590		1	SUPORTE
21		152718A1		2	PARAFUSO
22		152085A1		1	BRACADEIRA
23		827-12065		1	PARAFUSO, Hex, M12 x 65, 10.9
24		150811A1		2	ARRUELA PLANA
25		829-1412		1	PORCA, M12, Cl 10
26		KLJ10750		2	MANGUEIRA CONJUNTO, 1090 mm (42-7/8 in)
27		KHJ1360		4	ANEL O

HIDRAULICA - LINHA DO BRAÇO DO CILINDRO

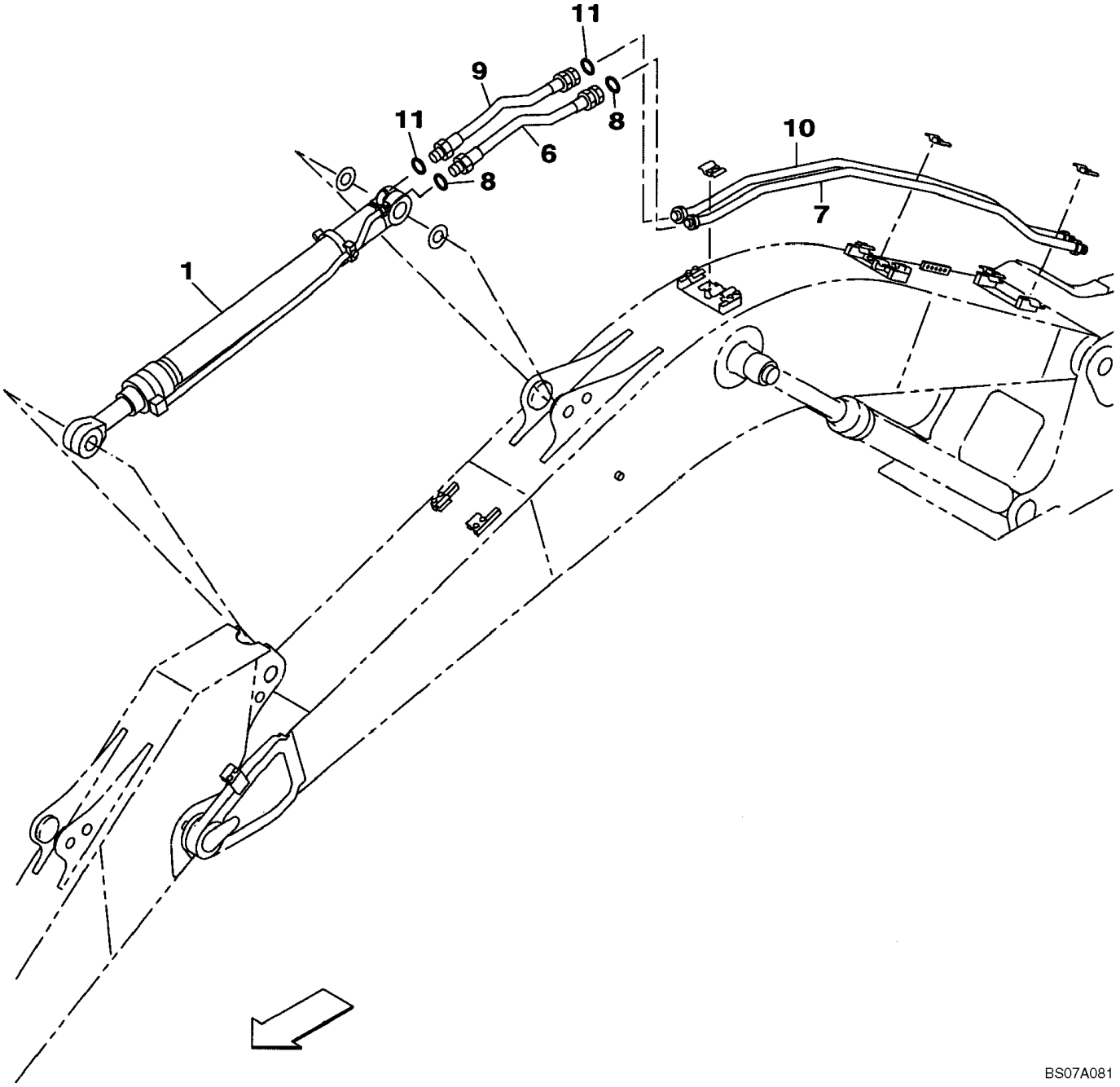

HIDRAULICA - LINHA DO BRAÇO DO CILINDRO

REF	FN	PART NUMBER	YR/SN	QTY	DESCRIPTION
1		KLV11040		1	CILINDRO HIDRÁULICO, Arm; See Figure 08-85
6		KLV11420		1	MANGUEIRA CONJUNTO, 900 mm (35-7/16 in)
7		KLV12500Y2		1	TUBULAÇÃO HIDRAULICO
8		KHJ1360		2	ANEL O
9		KLV11420		1	MANGUEIRA CONJUNTO, 900 mm (35-7/16 in)
10		KLV12500Y2		1	TUBULAÇÃO HIDRAULICO
11		KHJ1360		2	ANEL O

HIDRAULICA - CUCHARA

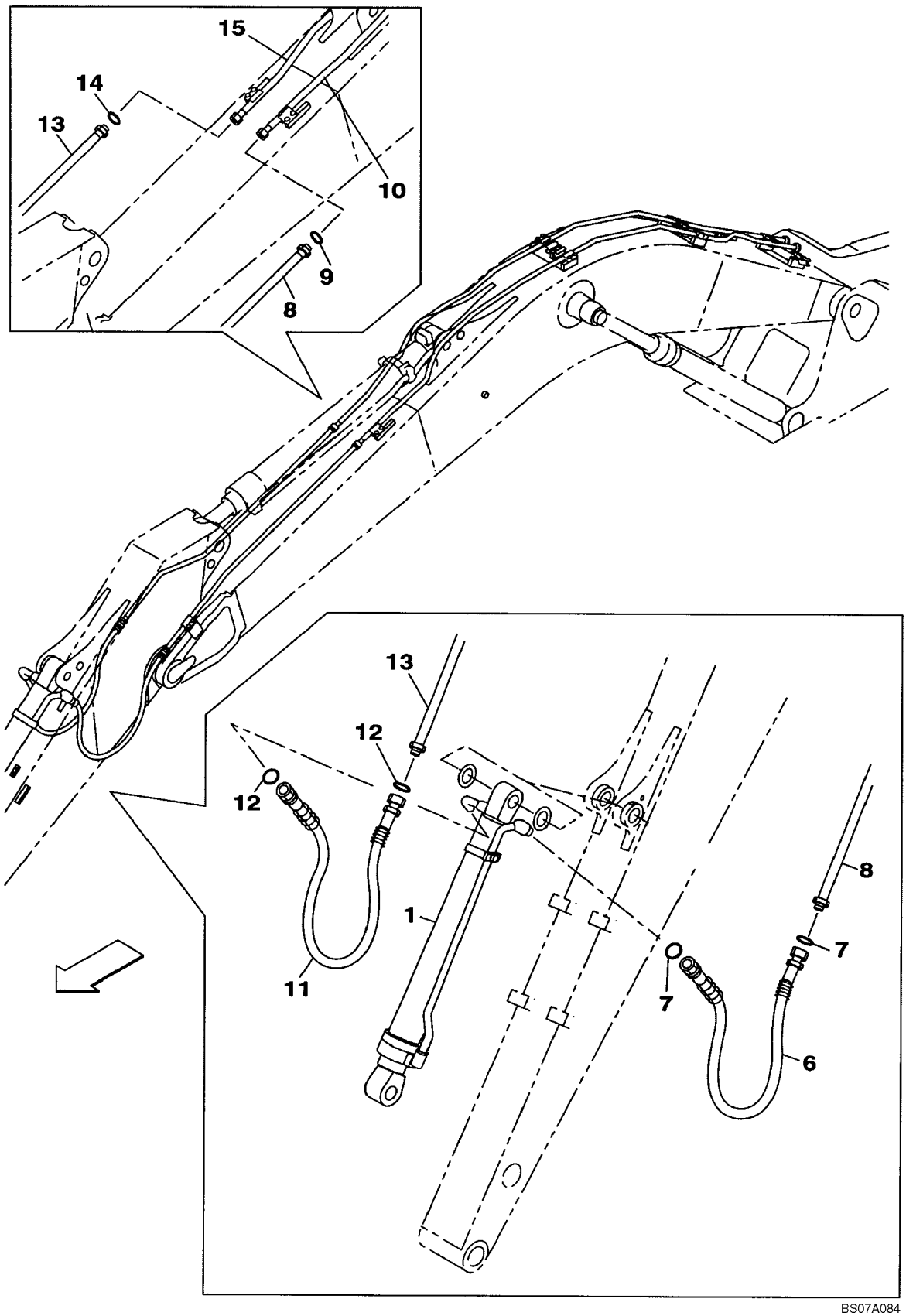

HIDRAULICA - CUCHARA

REF	FN	PART NUMBER	YR/SN	QTY	DESCRIPTION
1		KLV11080		1	MOTOR RECONDICIONADO, See Figure 08-86
6		KLV11470		1	MANGUEIRA CONJUNTO, 1200 mm (47-1/4 in)
7		KHJ1360		2	ANEL O
8		KLV12530Y2		1	TUBULAÇÃO HIDRAULICO
9		KHJ1360		1	ANEL O
10		KLV12510Y2		1	TUBULAÇÃO HIDRAULICO
11		KLV11470		1	MANGUEIRA CONJUNTO
12		KHJ1360		2	ANEL O
13		KLV12540Y2		1	TUBULAÇÃO HIDRAULICO
14		KHJ1360		1	ANEL O
15		KLV12520Y2		1	TUBULAÇÃO HIDRAULICO

HYDRAULIC LINES - ARM - OPTIONAL

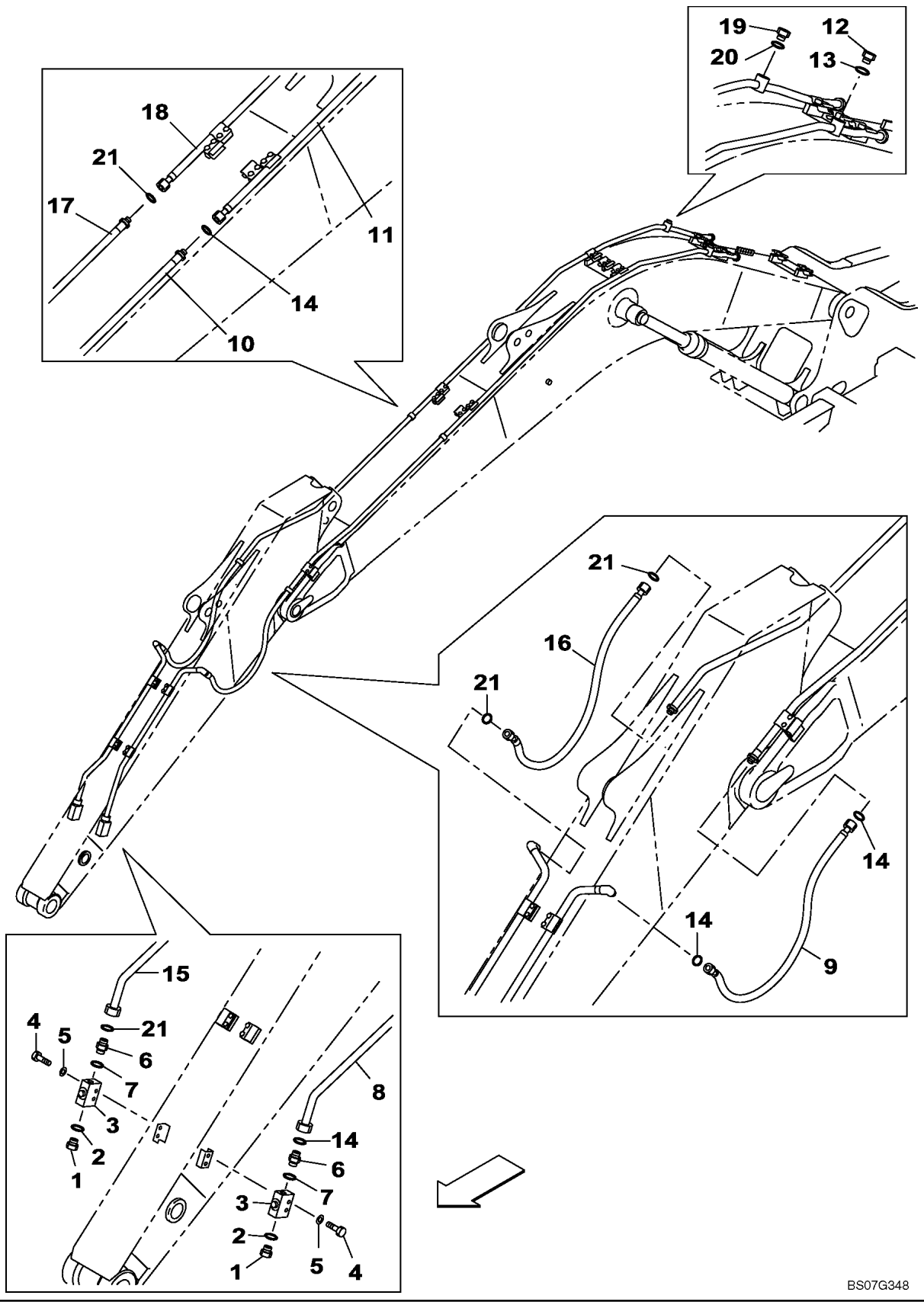

HYDRAULIC LINES - ARM - OPTIONAL

REF	FN	PART NUMBER	YR/SN	QTY	DESCRIPTION
		{KG0LV195}			HYDRAULIC LINES - ARM - OPTIONAL
1		152924A1		2	BUJÃO, Incls. Ref. 2
2		154503A1		2	ANEL O
3		KHV10710		2	VALVULA DE PARADA
4		827-12075		4	PARAFUSO, Hex, M12 x 75, 10.9
5		150811A1		4	ARRUELA PLANA
6		KHJ1348		2	ADAPTADOR, Incls. Ref. 7
7		154503A1		2	ANEL O
8		KLV12400Y2		1	TUBULAÇÃO HIDRAULICO, L
9		KNV13720		1	MANGUEIRA CONJUNTO, 1200 mm
10		KLV12380Y2		1	TUBULAÇÃO HIDRAULICO, L
11		KLV13700		1	TUBULAÇÃO HIDRAULICO, L
12		152924A1		1	BUJÃO, Incls. Ref. 13
13		154503A1		1	ANEL O
14		KHJ1360		4	ANEL O
15		KLV12410Y2		1	TUBULAÇÃO HIDRAULICO, R
16		KNV13720		1	MANGUEIRA CONJUNTO, 1200 mm
17		KLV12390Y2		1	TUBULAÇÃO HIDRAULICO, R
18		KLV13710		1	TUBULAÇÃO HIDRAULICO, R
19		152924A1		1	BUJÃO, Incls. Ref. 20
20		154503A1		1	ANEL O
21		KHJ1360		4	ANEL O

LINHAS DO CONTROLE PILOTO, DESLOCAMENTO - STANDARD

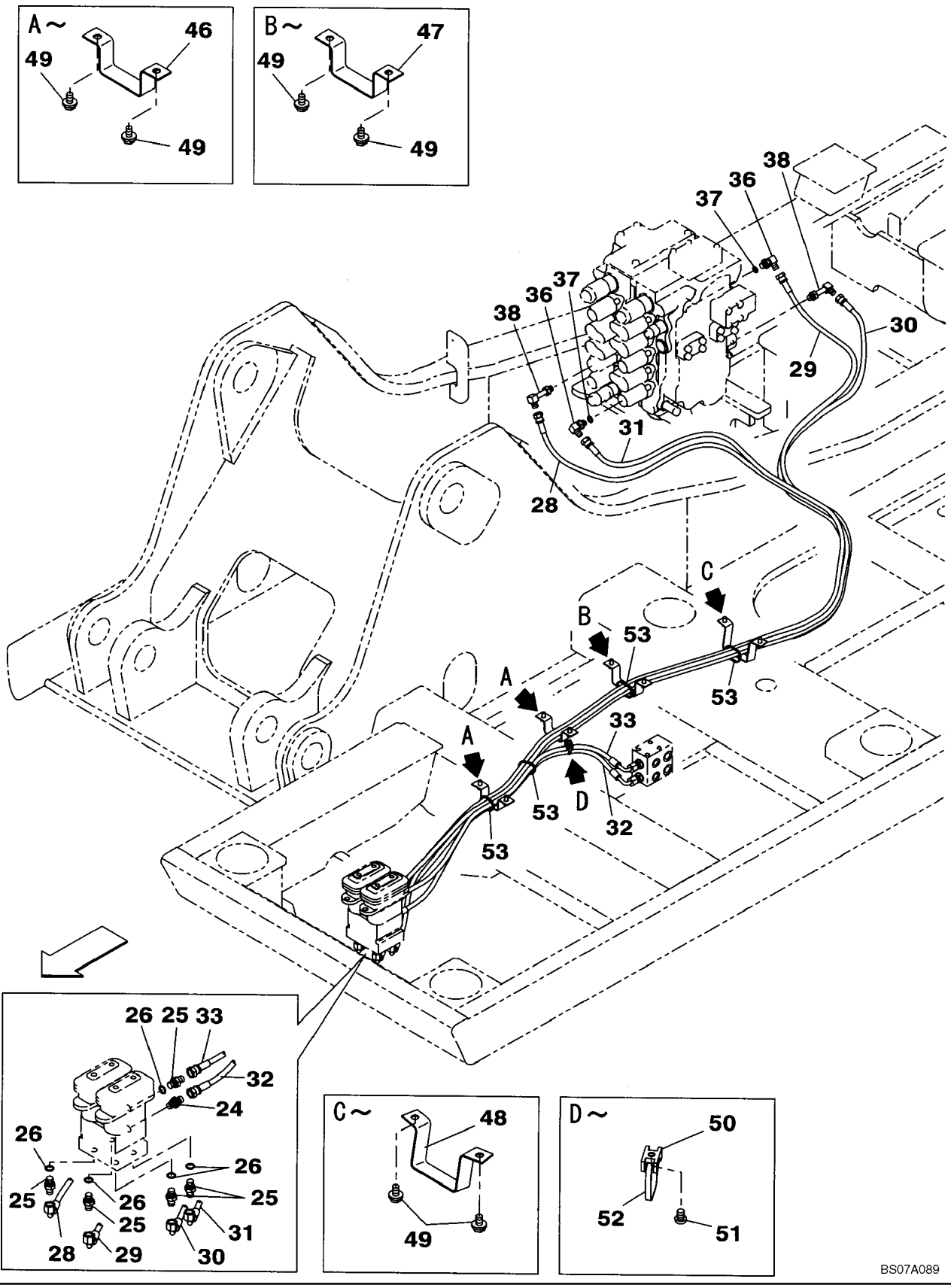

LINHAS DO CONTROLE PILOTO, DESLOCAMENTO - STANDARD

REF	FN	PART NUMBER	YR/SN	QTY	DESCRIPTION
24		161841A1		1	CONEXÃO
25		152127A1		5	CONEXÃO, 1/4" NPT O-Ring x 1/4" NPT, Incl. 26
26		154467A1		1	ANEL "O"
28		KHJ2165		1	MANGUEIRA CONJUNTO, 2900 mm (114-3/16 in)
29		KHJ2198		1	MANGUEIRA CONJUNTO, 2850 mm (112-3/16 in)
30		KHJ2340		1	MANGUEIRA CONJUNTO, 2750 mm (108-1/4 in)
31		KHJ2147		1	MANGUEIRA CONJUNTO, 2700 mm (106-1/4 in)
32		KHJ2249		1	MANGUEIRA CONJUNTO, 950 mm (37-3/8 in)
33		KHJ2249		1	MANGUEIRA CONJUNTO, 950 mm (37-3/8 in)
36		150913A1		2	COTOVELO, 90º, 1/4" O-Ring x 1/4", Incl. 37
37		154467A1		1	ANEL "O"
38		KHJ1178		2	COTOVELO
46		KHJ1220		2	BRACADEIRA
47		KHJ13770		1	BRACADEIRA
48		KHJ13760		1	BRACADEIRA
49		166345A1		8	PARAFUSO
50		150860A1		1	BRACADEIRA
51		840-168		1	PARAFUSO, Cross Pan Hd, M6 x 8
52		150496A1		1	ARGOLA DE FIXACAO
53		150498A1		4	ARGOLA DE FIXACAO

LINHAS DO CONTROLE PILOTO, ACESSÓRIO - STANDARD

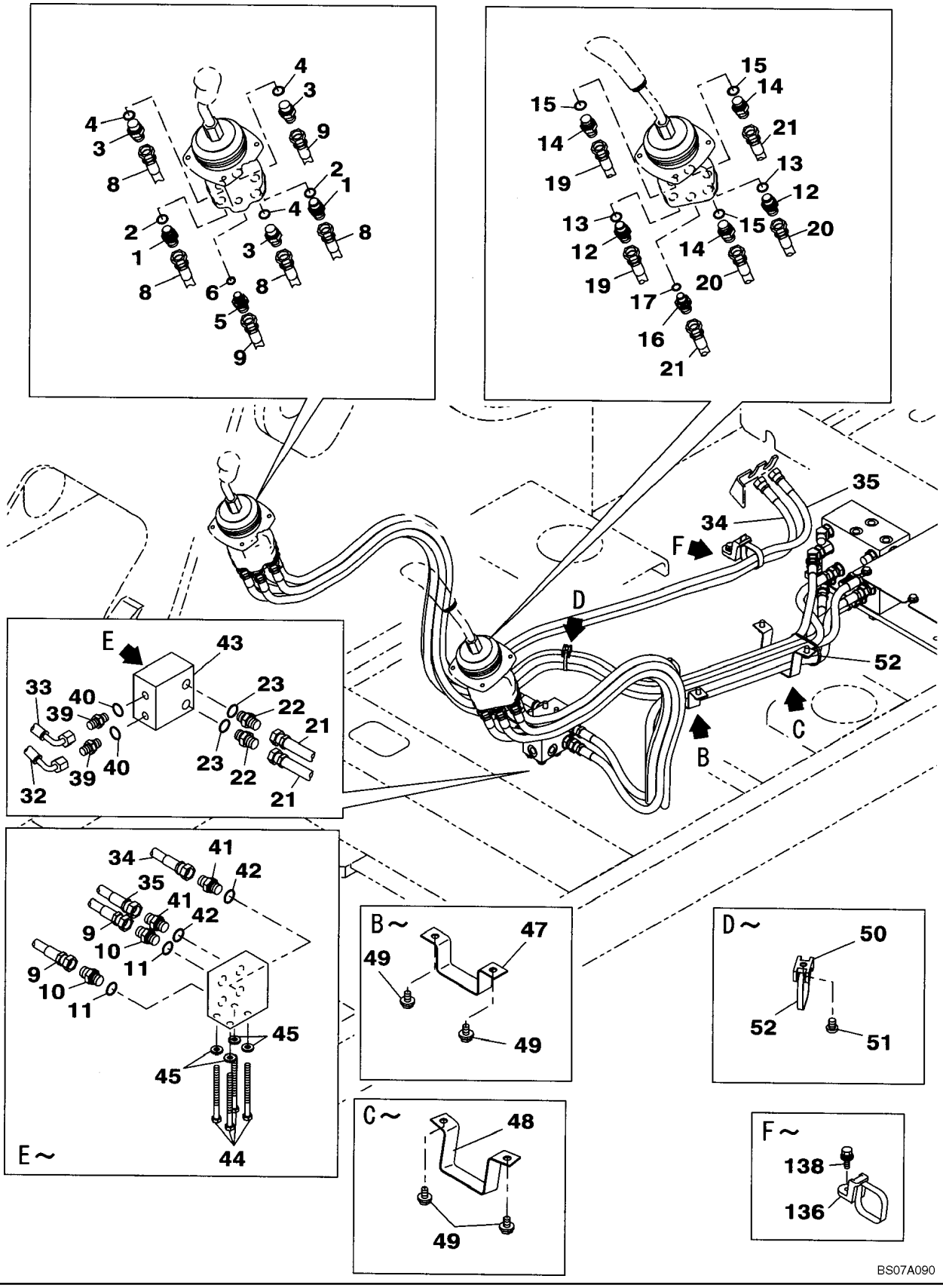

LINHAS DO CONTROLE PILOTO, ACESSÓRIO - STANDARD

REF	FN	PART NUMBER	YR/SN	QTY	DESCRIPTION
1		KHJ1402		2	ADAPTADOR, Incl. 2
2		154475A1		1	ANEL "O"
3		152128A1		3	CONEXÃO, 3/8" NPT O-Ring x 3/8" NPT, Incl. 4
4		154475A1		1	ANEL "O"
5		161842A1		1	ADAPTADOR, Incl. 6
6		154467A1		1	ANEL "O"
8		159211A1		4	MANGUEIRA CONJUNTO, 2000 mm (78-3/4 in)
9		159213A1		2	MANGUEIRA CONJUNTO, 1150 mm (45-1/4 in)
10		152128A1		2	CONEXÃO, 3/8" NPT O-Ring x 3/8" NPT, Incl. 11
11		154475A1		1	ANEL "O"
12		KHJ1402		2	ADAPTADOR, Incl. 13
13		154475A1		1	ANEL "O"
14		152128A1		3	CONEXÃO, 3/8" NPT O-Ring x 3/8" NPT, Incl. 15
15		154475A1		1	ANEL "O"
16		161842A1		1	ADAPTADOR, Incl. 17
17		154467A1		1	ANEL "O"
19		159217A1		2	MANGUEIRA CONJUNTO, 1850 mm (72-7/8 in)
20		KRJ4381		2	MANGUEIRA CONJUNTO, 1800 mm (70-7/8 in)
21		159213A1		2	MANGUEIRA CONJUNTO, 1150 mm (45-3/8 in)
22		152128A1		2	CONEXÃO, 3/8" NPT O-Ring x 3/8" NPT, Incl. 23
23		154475A1		1	ANEL "O"
32		KHJ2249		1	MANGUEIRA CONJUNTO, 950 mm (37-3/8 in)
33		KHJ2249		1	MANGUEIRA CONJUNTO, 950 mm (37-3/8 in)
34		KHJ13810		1	MANGUEIRA CONJUNTO, 1150 mm (45-3/8 in)
35		KHJ2307		1	MANGUEIRA CONJUNTO, 1200 mm (47-1/4 in)
39		152127A1		2	CONEXÃO, 1/4" NPT O-Ring x 1/4" NPT, Incl. 40
40		154467A1		1	ANEL "O"
41		152128A1		2	CONEXÃO, 3/8" NPT O-Ring x 3/8" NPT, Incl. 42
42		154475A1		1	ANEL "O"
43		KRJ5903		1	COLECTOR
44		828-8100		4	PARAFUSO, Hex, M8 x 100, 10.9
45		153081A1		4	ARRUELA PLANA
47		KHJ13770		1	BRACADEIRA
48		KHJ13760		1	BRACADEIRA
49		166345A1		4	PARAFUSO

LINHAS DO CONTROLE PILOTO, ACESSÓRIO - STANDARD

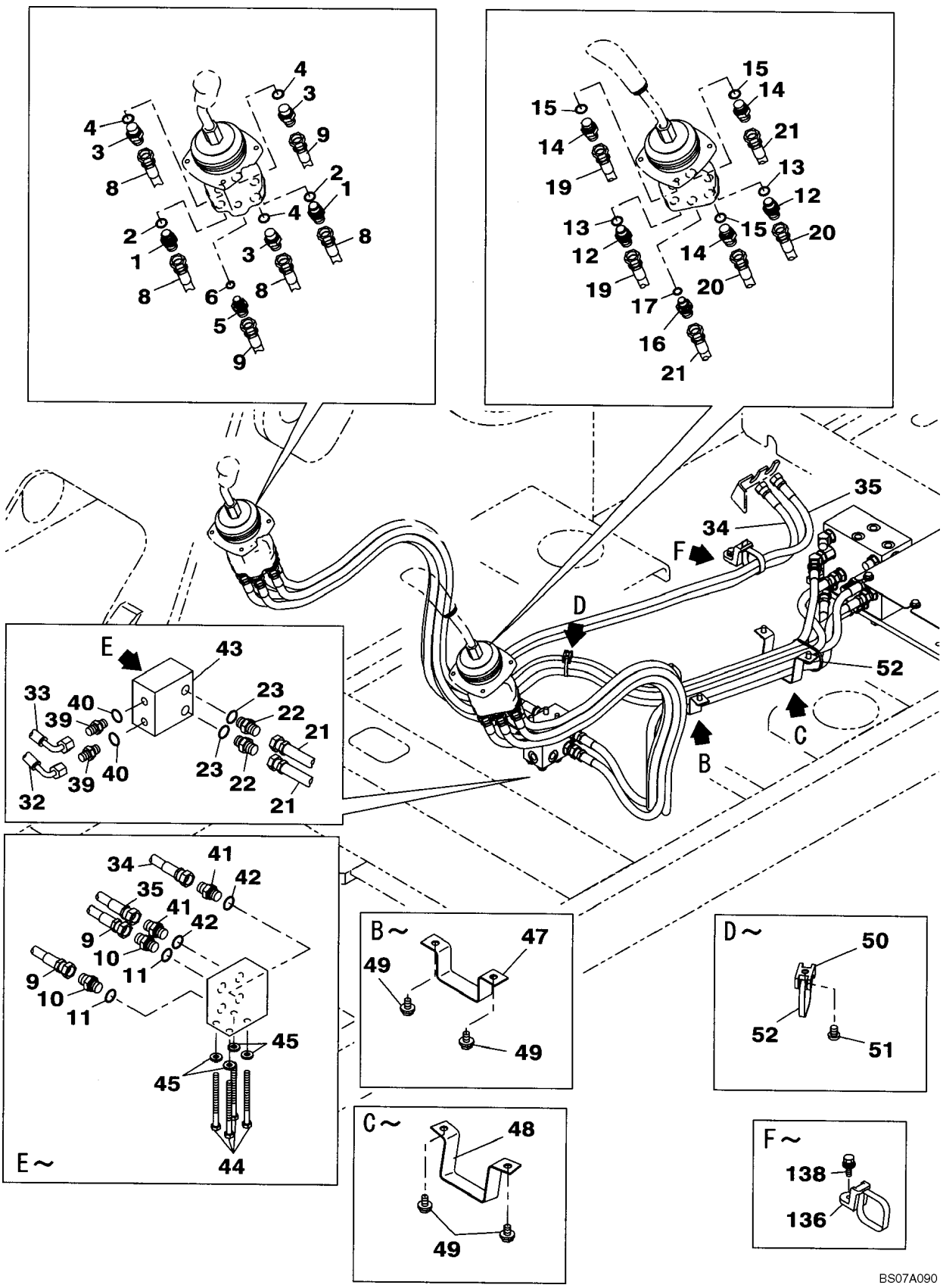

LINHAS DO CONTROLE PILOTO, ACESSÓRIO - STANDARD

REF	FN	PART NUMBER	YR/SN	QTY	DESCRIPTION
50		150860A1		1	BRACADEIRA
51		840-168		1	PARAFUSO, Cross Pan Hd, M6 x 8
52		150496A1		2	ARGOLA DE FIXACAO
136		KHR2581		1	BRACADEIRA
138		KHJ1215		1	PARAFUSO

LINEAS DE CONTROLE PILOTO, PARTIÇÃO - STANDARD

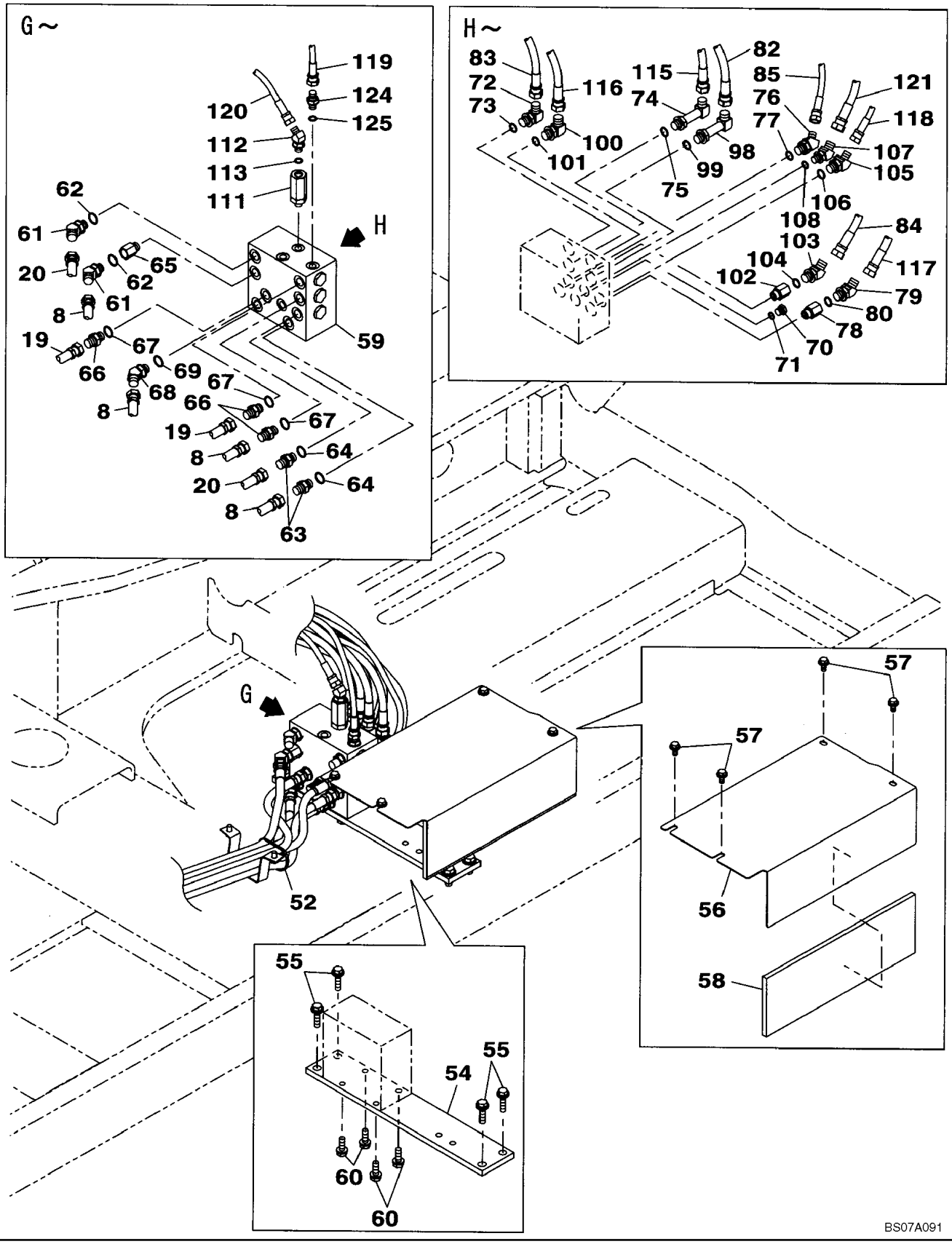

LINEAS DE CONTROLE PILOTO, PARTIÇÃO - STANDARD

REF	FN	PART NUMBER	YR/SN	QTY	DESCRIPTION
8		159211A1		4	MANGUEIRA CONJUNTO, 2000 mm (78-3/4 in)
19		159217A1		2	MANGUEIRA CONJUNTO, 1850 mm (72-7/8 in)
20		KRJ4381		2	MANGUEIRA CONJUNTO, 1800 mm (70-7/8 in)
52		150496A1		1	ARGOLA DE FIXACAO
54		KHJ13750		1	SUPORTE
55		166352A1		4	PARAFUSO
56		KLJ11230		1	TAMPA
57		166350A1		4	PARAFUSO
58		KLJ11240		1	COBRE-JUNTA
59		KNJ13790		1	SECÇÃO DE VÁLVULAS, See Figure 08-70
60		166347A1		4	PARAFUSO
61		157584A1		2	COTOVELO, Incl. 62
62		154475A1		1	ANEL "O"
63		152128A1		2	CONEXÃO, 3/8" NPT O-Ring x 3/8" NPT, Incl. 64
64		154475A1		1	ANEL "O"
65		KHJ13790		1	PRISIONEIRO
66		152128A1		3	CONEXÃO, 3/8" NPT O-Ring x 3/8" NPT, Incl. 67
67		154475A1		1	ANEL "O"
68		157584A1		1	COTOVELO, Incl. 69
69		154475A1		1	ANEL "O"
70		159002A1		1	BUJÃO, Incl. 71
71		154467A1		1	ANEL "O"
72		150916A1		1	COTOVELO, 90º, 3/8" O-Ring x 3/8", Incl. 73
73		154475A1		1	ANEL "O"
74		KHJ1442		1	COTOVELO, Incl. 75
75		154475A1		1	ANEL "O"
76		KHJ1445		1	COTOVELO, Incl. 77
77		154475A1		1	ANEL "O"
78		KHJ13790		1	PRISIONEIRO
79		157584A1		1	COTOVELO, Incl. 80
80		154475A1		1	ANEL "O"
82		KHJ2307		1	MANGUEIRA CONJUNTO, 1200 mm (47-1/4 in)
83		KHJ11530		1	MANGUEIRA CONJUNTO, 1250 mm (49-1/4 in)
84		KHJ11590		1	MANGUEIRA CONJUNTO, 1400 mm (55-1/8 in)
85		KHJ16190		1	MANGUEIRA CONJUNTO, 1100 mm (43-5/16 in)

LINEAS DE CONTROLE PILOTO, PARTIÇÃO - STANDARD

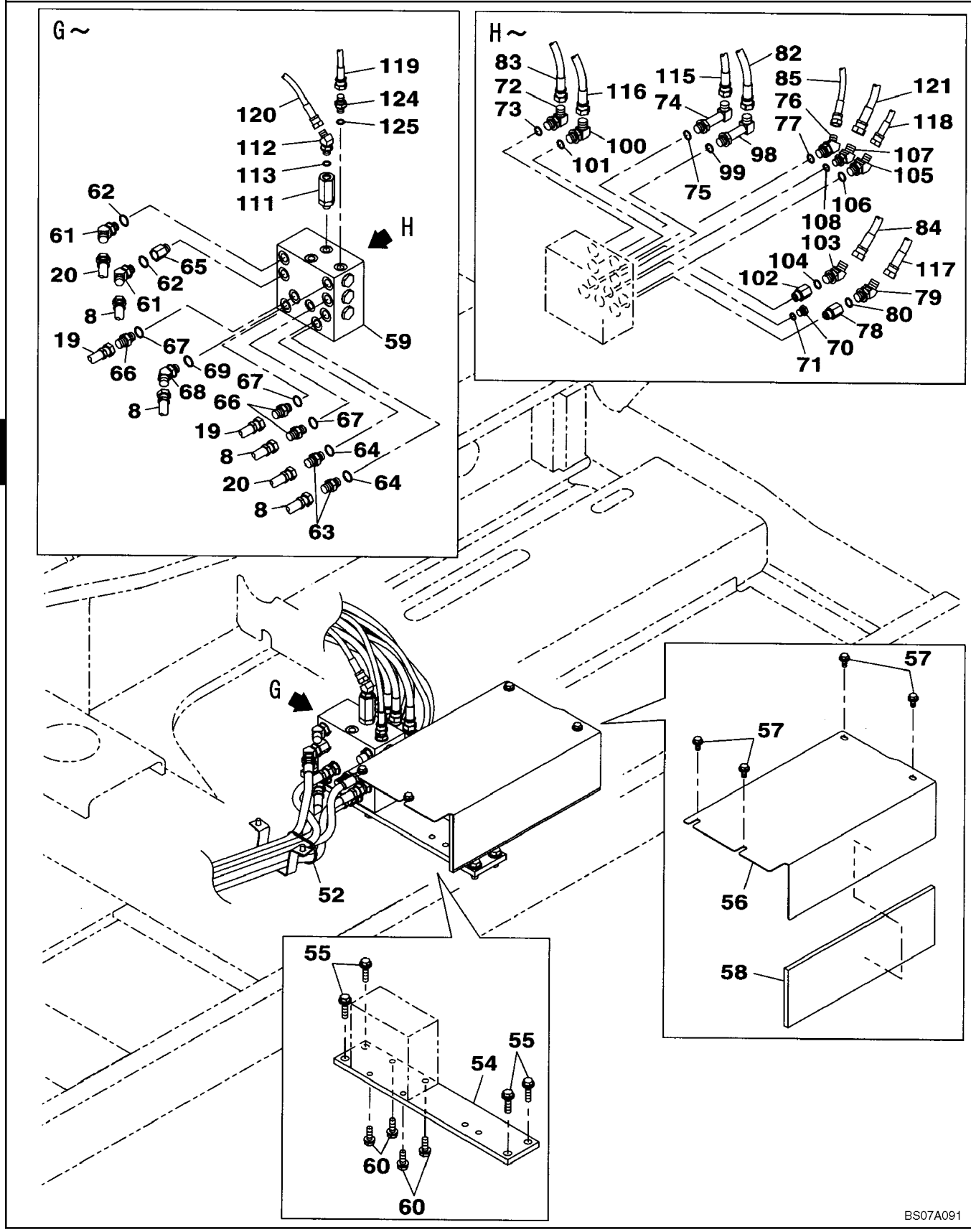

LINEAS DE CONTROLE PILOTO, PARTIÇÃO - STANDARD

REF	FN	PART NUMBER	YR/SN	QTY	DESCRIPTION
98		KHJ1442		1	COTOVELO, Incl. 99
99		154475A1		1	ANEL "O"
100		150916A1		1	COTOVELO, 90º, 3/8" O-Ring x 3/8", Incl. 101
101		154475A1		1	ANEL "O"
102		KHJ13790		1	PRISIONEIRO
103		157584A1		1	COTOVELO, Incl. 104
104		154475A1		1	ANEL "O"
105		KHJ1445		1	COTOVELO, Incl. 106
106		154475A1		1	ANEL "O"
107		150933A1		1	COTOVELO, Incl. 108
108		154467A1		1	ANEL "O"
111		KHJ10790		1	FILTRO, OLEO HIDRAULICO
112		150933A1		1	COTOVELO, Incl. 113
113		154467A1		1	ANEL "O"
115		KHJ16210		1	MANGUEIRA CONJUNTO, 1450 mm (57 in)
116		KHJ2624		1	MANGUEIRA, 1200 mm (47-1/4 in)
117		KHJ11590		1	MANGUEIRA CONJUNTO, 1400 mm (55-1/8 in)
118		KHJ2146		1	MANGUEIRA CONJUNTO, 1200 mm (47-1/4 in)
119		KHJ2477		1	MANGUEIRA CONJUNTO, 1900 mm (63 in)
120		KHJ2089		1	MANGUEIRA CONJUNTO, 900 mm (35-7/16 in)
121		KHJ11590		1	MANGUEIRA CONJUNTO, 1400 mm (55-1/8 in)
124		152127A1		1	CONEXÃO, 1/4" NPT O-Ring x 1/4" NPT, Incl. 125
125		154467A1		1	ANEL "O"

LINEAS DE CONTROLE PILOTO, VALVULA DE CONTROL - STANDARD

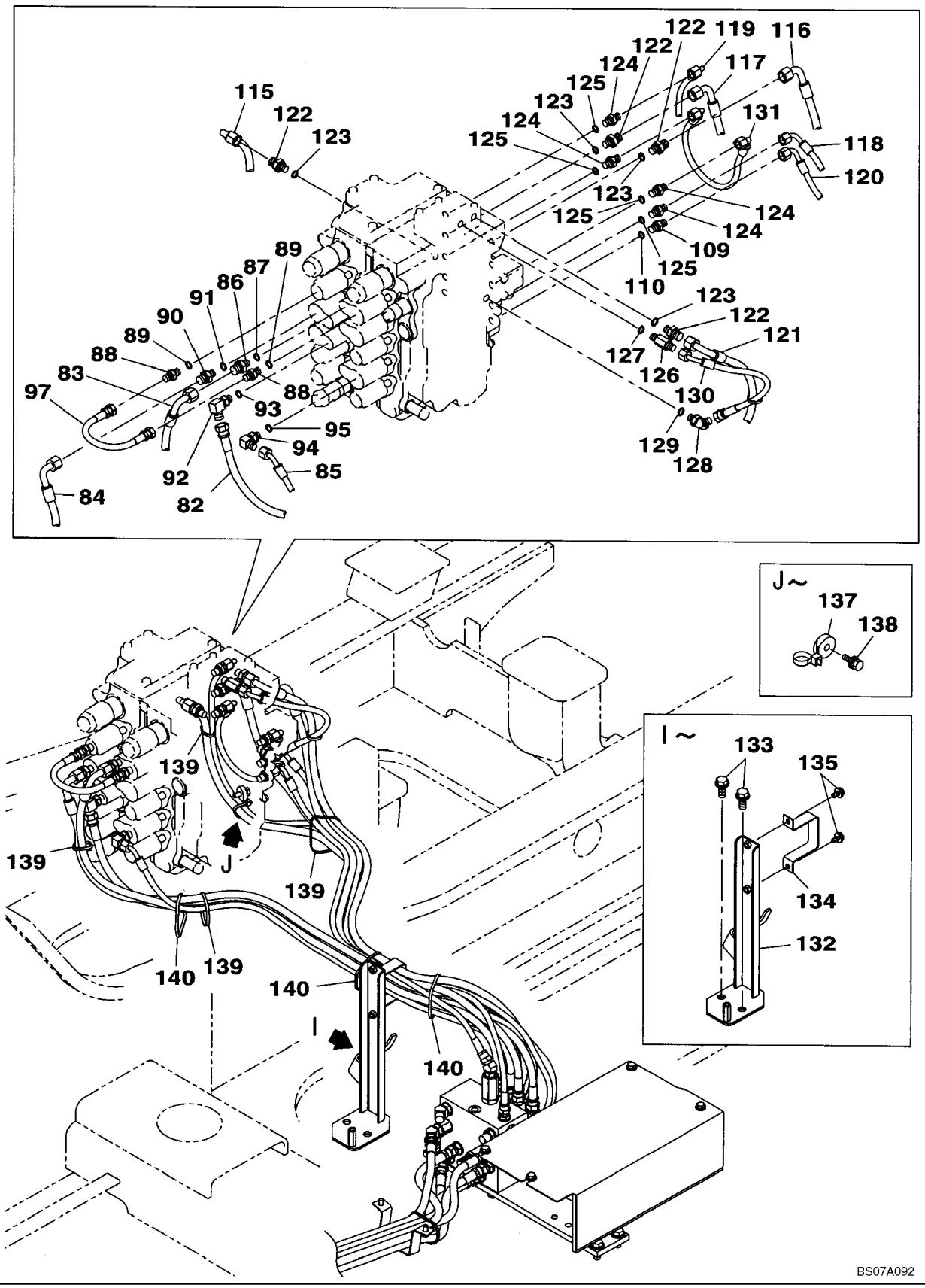

BS07A092

8

LINEAS DE CONTROLE PILOTO, VALVULA DE CONTROL - STANDARD

REF	FN	PART NUMBER	YR/SN	QTY	DESCRIPTION
82		KHJ2307		1	MANGUEIRA CONJUNTO, 1200 mm (47-1/4 in)
83		KHJ11530		1	MANGUEIRA CONJUNTO, 1250 mm (49-1/4 in)
84		KHJ11590		1	MANGUEIRA CONJUNTO, 1400 mm (55-1/8 in)
85		KHJ16190		1	MANGUEIRA CONJUNTO, 1100 mm (43-5/16 in)
86		152747A1		1	ADAPTADOR, Incl. 87
87		154467A1		1	ANEL "O"
88		152127A1		2	CONEXÃO, 1/4" NPT O-Ring x 1/4" NPT, Incl. 89
89		154467A1		1	ANEL "O"
90		152747A1		1	ADAPTADOR, Incl. 91
91		154467A1		1	ANEL "O"
92		153559A1		1	COTOVELO, Incl. 93
93		154467A1		1	ANEL "O"
94		150913A1		1	COTOVELO, 90º, 1/4" O-Ring x 1/4", Incl. 95
95		154467A1		1	ANEL "O"
97		KHJ2419		1	MANGUEIRA CONJUNTO
109		152127A1		1	CONEXÃO, 1/4" NPT O-Ring x 1/4" NPT, Incl. 110
110		154467A1		1	ANEL "O"
115		KHJ16210		1	MANGUEIRA CONJUNTO, 1450 mm (57 in)
116		KHJ2624		1	MANGUEIRA, 1200 mm (47-1/4 in)
117		KHJ11590		1	MANGUEIRA CONJUNTO, 1400 mm (55-1/8 in)
118		KHJ2146		1	MANGUEIRA CONJUNTO, 1200 mm (47-1/4 in)
119		KHJ2477		1	MANGUEIRA CONJUNTO, 1900 mm (63 in)
120		KHJ2089		1	MANGUEIRA CONJUNTO, 900 mm (35-7/16 in)
121		KHJ11590		1	MANGUEIRA CONJUNTO, 1400 mm (55-1/8 in)
122		152747A1		3-4	ADAPTADOR, Incl. 123
123		154467A1		1	ANEL "O"
124		152127A1		4-5	CONEXÃO, 1/4" NPT O-Ring x 1/4" NPT, Incl. 125
125		154467A1		1	ANEL "O"
126		162554A1		1	CONEXAO, Incl. 127
127		154467A1		1	ANEL "O"
128		150933A1		1	COTOVELO, Incl. 129
129		154467A1		1	ANEL "O"
130		KHJ16200		1	MANGUEIRA CONJUNTO, 400 mm (15-3/4 in)
131		KHJ13820		1	MANGUEIRA CONJUNTO, 420 mm (16-1/2 in)
132		KNJ11780		1	SUPORTE

LINEAS DE CONTROLE PILOTO, VALVULA DE CONTROL - STANDARD

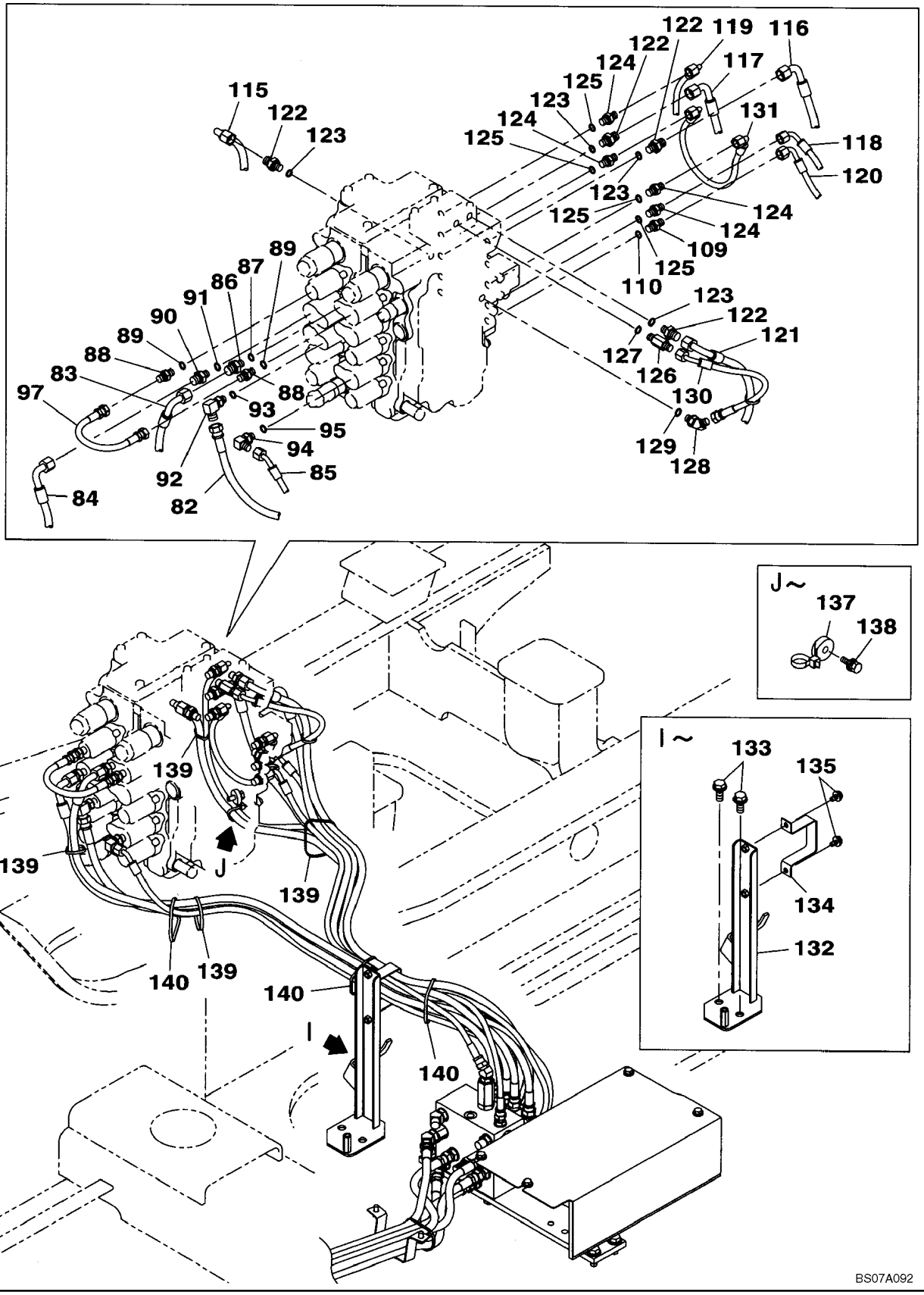

BS07A092

8

LINEAS DE CONTROLE PILOTO, VALVULA DE CONTROL - STANDARD

REF	FN	PART NUMBER	YR/SN	QTY	DESCRIPTION
133		166352A1		2	PARAFUSO
134		161095A1		1	BRACADEIRA
135		166345A1		2	PARAFUSO
137		KHR2584		1	BRACADEIRA
138		KHJ1215		1	PARAFUSO
139		150496A1		4	ARGOLA DE FIXACAO
140		150498A1		3	ARGOLA DE FIXACAO

LINHAS DO CONTROLE PILOTO, DESLOCAMENTO - MANEIRA DOIS

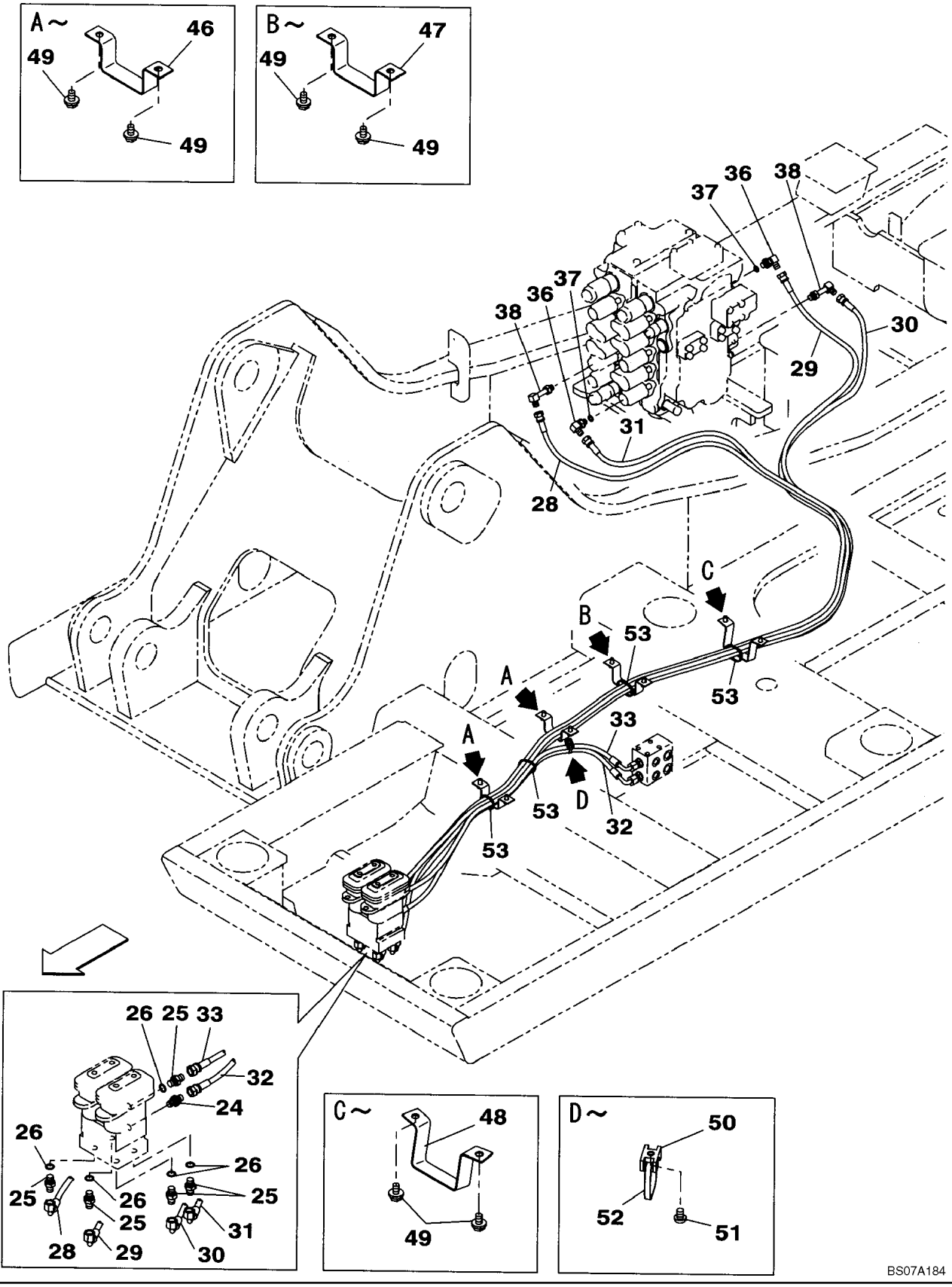

LINHAS DO CONTROLE PILOTO, DESLOCAMENTO - MANEIRA DOIS

REF	FN	PART NUMBER	YR/SN	QTY	DESCRIPTION
24		161841A1		1	CONEXÃO
25		152127A1		5	CONEXÃO, 1/4" NPT O-Ring x 1/4" NPT, Incl. 26
26		154467A1		1	ANEL "O"
28		KHJ2165		1	MANGUEIRA CONJUNTO, 2900 mm (114-3/16 in)
29		KHJ2198		1	MANGUEIRA CONJUNTO, 2850 mm (112-3/16 in)
30		KHJ2340		1	MANGUEIRA CONJUNTO, 2750 mm (108-1/4 in)
31		KHJ2147		1	MANGUEIRA CONJUNTO, 2700 mm (106-1/4 in)
32		KHJ2249		1	MANGUEIRA CONJUNTO, 950 mm (37-3/8 in)
33		KHJ2249		1	MANGUEIRA CONJUNTO, 950 mm (37-3/8 in)
36		150913A1		2	COTOVELO, 90º, 1/4" O-Ring x 1/4", Incl. 37
37		154467A1		1	ANEL "O"
38		KHJ1178		2	COTOVELO
46		KHJ1220		2	BRACADEIRA
47		KHJ13770		1	BRACADEIRA
48		KHJ13760		1	BRACADEIRA
49		166345A1		8	PARAFUSO
50		150860A1		1	BRACADEIRA
51		840-168		1	PARAFUSO, Cross Pan Hd, M6 x 8
52		150496A1		1	ARGOLA DE FIXACAO
53		150498A1		4	ARGOLA DE FIXACAO

LINHAS DO CONTROLE PILOTO, ACESSÓRIO - MANEIRA DOIS

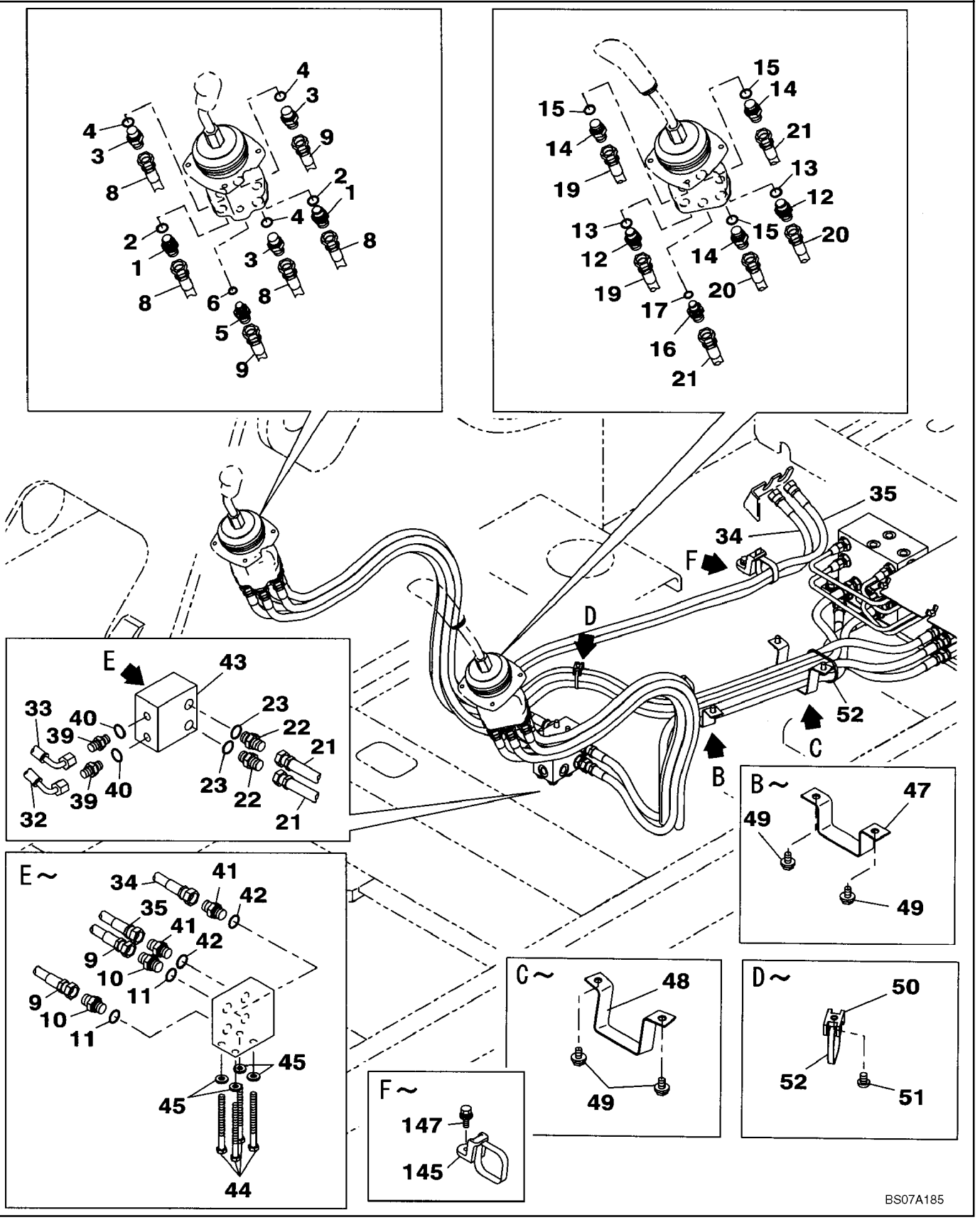

LINHAS DO CONTROLE PILOTO, ACESSÓRIO - MANEIRA DOIS

REF	FN	PART NUMBER	YR/SN	QTY	DESCRIPTION
1		KHJ1402		2	ADAPTADOR, Incl. 2
2		154475A1		1	ANEL "O"
3		152128A1		3	CONEXÃO, 3/8" NPT O-Ring x 3/8" NPT, Incl. 4
4		154475A1		1	ANEL "O"
5		161842A1		1	ADAPTADOR, Incl. 6
6		154467A1		1	ANEL "O"
8		159211A1		4	MANGUEIRA CONJUNTO, 2000 mm (78-3/4 in)
9		159213A1		2	MANGUEIRA CONJUNTO, 1150 mm (45-1/4 in)
10		152128A1		2	CONEXÃO, 3/8" NPT O-Ring x 3/8" NPT, Incl. 11
11		154475A1		1	ANEL "O"
12		KHJ1402		2	ADAPTADOR, Incl. 13
13		154475A1		1	ANEL "O"
14		152128A1		3	CONEXÃO, 3/8" NPT O-Ring x 3/8" NPT, Incl. 15
15		154475A1		1	ANEL "O"
16		161842A1		1	ADAPTADOR, Incl. 17
17		154467A1		1	ANEL "O"
19		159217A1		2	MANGUEIRA CONJUNTO, 1850 mm (72-7/8 in)
20		KRJ4381		2	MANGUEIRA CONJUNTO, 1800 mm (70-7/8 in)
21		159213A1		2	MANGUEIRA CONJUNTO, 1150 mm (45-3/8 in)
22		152128A1		2	CONEXÃO, 3/8" NPT O-Ring x 3/8" NPT, Incl. 23
23		154475A1		1	ANEL "O"
32		KHJ2249		1	MANGUEIRA CONJUNTO, 950 mm (37-3/8 in)
33		KHJ2249		1	MANGUEIRA CONJUNTO, 950 mm (37-3/8 in)
34		KHJ13810		1	MANGUEIRA CONJUNTO, 1150 mm (45-3/8 in)
35		KHJ2307		1	MANGUEIRA CONJUNTO, 1200 mm (47-1/4 in)
39		152127A1		2	CONEXÃO, 1/4" NPT O-Ring x 1/4" NPT, Incl. 40
40		154467A1		1	ANEL "O"
41		152128A1		2	CONEXÃO, 3/8" NPT O-Ring x 3/8" NPT, Incl. 42
42		154475A1		1	ANEL "O"
43		KRJ5903		1	COLECTOR
44		828-8100		4	PARAFUSO, Hex, M8 x 100, 10.9
45		153081A1		4	ARRUELA PLANA
47		KHJ13770		1	BRACADEIRA
48		KHJ13760		1	BRACADEIRA
49		166345A1		4	PARAFUSO

LINHAS DO CONTROLE PILOTO, ACESSÓRIO - MANEIRA DOIS

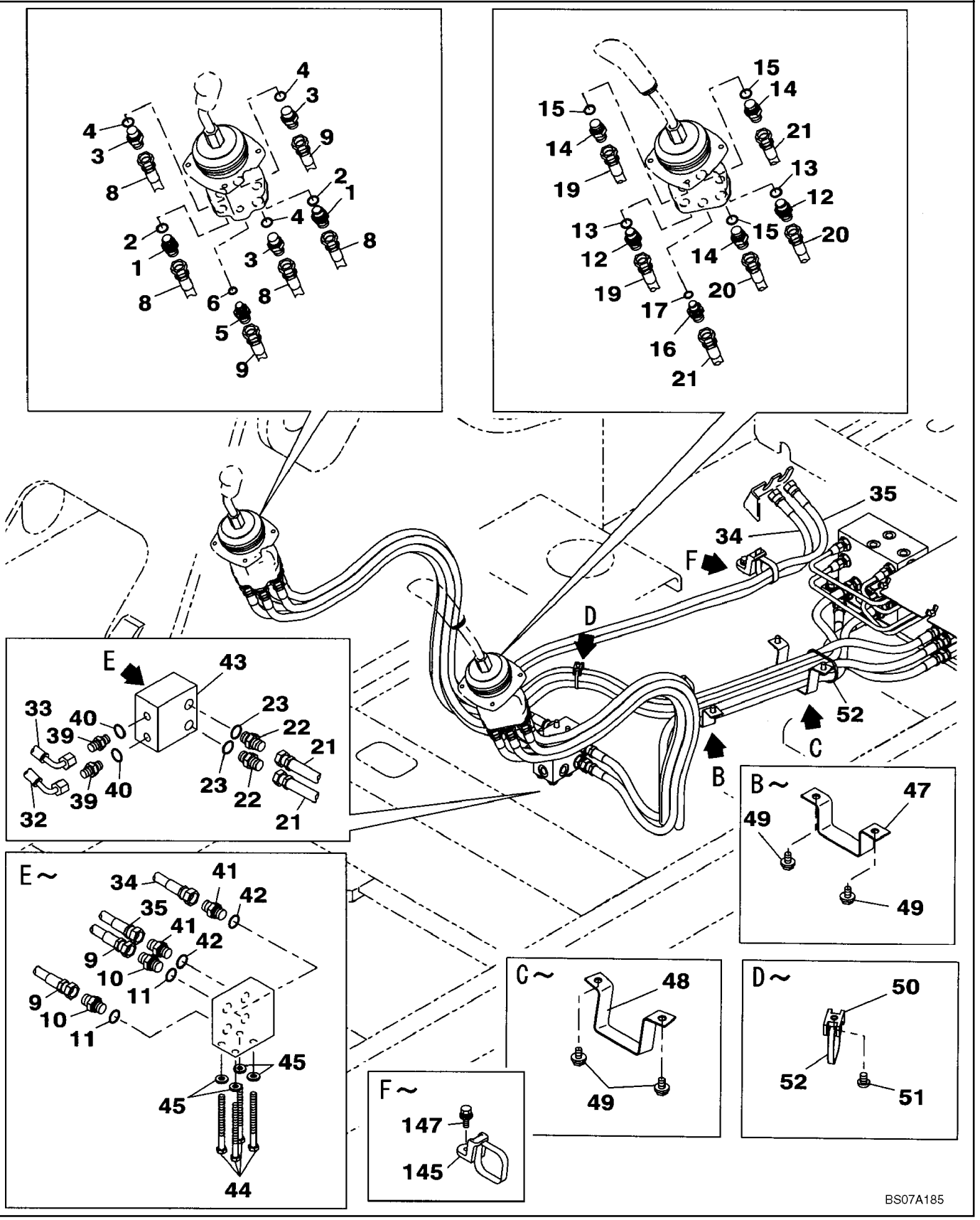

LINHAS DO CONTROLE PILOTO, ACESSÓRIO - MANEIRA DOIS

REF	FN	PART NUMBER	YR/SN	QTY	DESCRIPTION
50		150860A1		1	BRACADEIRA
51		840-168		1	PARAFUSO, Cross Pan Hd, M6 x 8
52		150496A1		2	ARGOLA DE FIXACAO
145		KHR2581		1	BRACADEIRA
147		KHJ1215		1	PARAFUSO

08-21		p1	03/07

LINEAS DE CONTROL PILOTO, PARTICIÓN - MANERA DOS

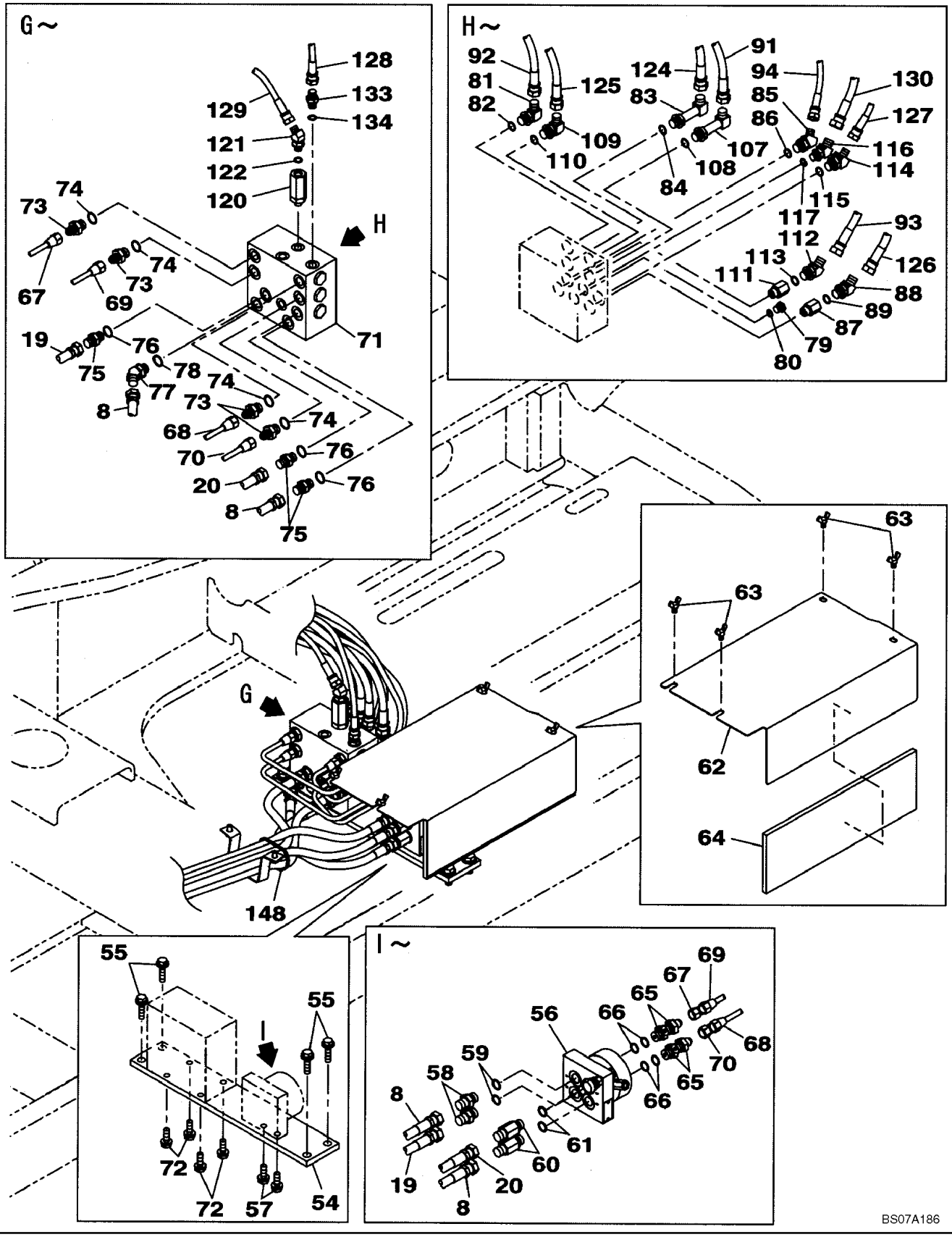

BS07A186

8

LINEAS DE CONTROL PILOTO, PARTICIÓN - MANERA DOS

REF	FN	PART NUMBER	YR/SN	QTY	DESCRIPTION
8		159211A1		4	MANGUEIRA CONJUNTO, 2000 mm (78-3/4 in)
19		159217A1		2	MANGUEIRA CONJUNTO, 1850 mm (72-7/8 in)
20		KRJ4381		2	MANGUEIRA CONJUNTO, 1800 mm (70-7/8 in)
54		KHJ13750		1	SUPORTE
55		166352A1		4	PARAFUSO
56		KHJ12080		1	BLOCO DE COMANDO
57		166347A1		2	PARAFUSO
58		152128A1		2	CONEXÃO, 3/8" NPT O-Ring x 3/8" NPT, Incl. 59
59		154475A1		1	ANEL "O"
60		159226A1		2	ADAPTADOR, Incl. 61
61		154475A1		1	ANEL "O"
62		KLJ11230		1	TAMPA
63		KHN17030		4	PARAFUSO ESPECIAL, Wing
64		KLJ11240		1	COBRE-JUNTA
65		KHJ1821		4	GRAXEIRA, Incl. 66
66		154475A1		1	ANEL "O"
67		KHJ15400		1	TUBULAÇÃO HIDRAULICO
68		KHJ15390		1	TUBULAÇÃO HIDRAULICO
69		KHJ15410		1	TUBULAÇÃO HIDRAULICO
70		KHJ15420		1	TUBULAÇÃO HIDRAULICO
71		KNJ13790		1	SECÇÃO DE VÁLVULAS, See Figure 08-70
72		166347A1		4	PARAFUSO
73		KHJ1821		4	GRAXEIRA, Incl. 74
74		154475A1		1	ANEL "O"
75		152128A1		3	CONEXÃO, 3/8" NPT O-Ring x 3/8" NPT, Incl. 76
76		154475A1		1	ANEL "O"
77		157584A1		1	COTOVELO, Incl. 78
78		154475A1		1	ANEL "O"
79		159002A1		1	BUJÃO, Incl. 80
80		154467A1		1	ANEL "O"
81		KHJ1442		1	COTOVELO, Incl. 82
82		154475A1		1	ANEL "O"
83		KHJ1445		1	COTOVELO, Incl. 84
84		154475A1		1	ANEL "O"
85		KHJ1445		1	COTOVELO, Incl. 86

LINEAS DE CONTROL PILOTO, PARTICIÓN - MANERA DOS

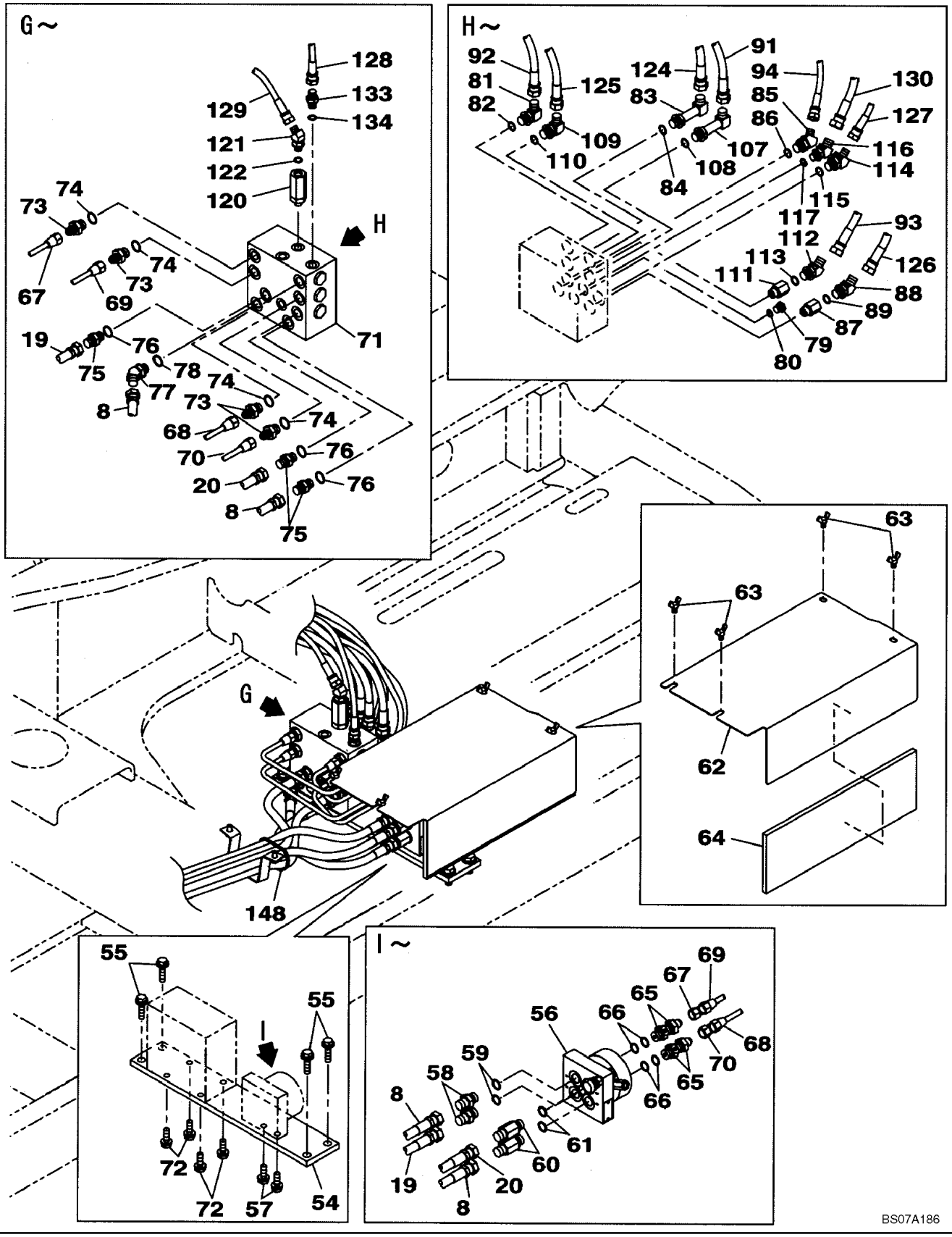

LINEAS DE CONTROL PILOTO, PARTICIÓN - MANERA DOS

REF	FN	PART NUMBER	YR/SN	QTY	DESCRIPTION
86		154475A1		1	ANEL "O"
87		KHJ13790		1	PRISIONEIRO
88		157584A1		1	COTOVELO, Incl. 89
89		154475A1		1	ANEL "O"
91		KHJ2307		1	MANGUEIRA CONJUNTO, 1200 mm (47-1/4 in)
92		KHJ11530		1	MANGUEIRA CONJUNTO, 1250 mm (49-1/4 in)
93		KHJ11590		1	MANGUEIRA CONJUNTO, 1400 mm (55-1/8 in)
94		KHJ16190		1	MANGUEIRA CONJUNTO, 1100 mm (43-5/16 in)
107		KHJ1442		1	COTOVELO, Incl. 108
108		154475A1		1	ANEL "O"
109		150916A1		1	COTOVELO, 90º, 3/8" O-Ring x 3/8", Incl. 110
110		154475A1		1	ANEL "O"
111		KHJ13790		1	PRISIONEIRO
112		157584A1		1	COTOVELO, Incl. 113
113		154475A1		1	ANEL "O"
114		KHJ1445		1	COTOVELO, Incl. 115
115		154475A1		1	ANEL "O"
116		150933A1		1	COTOVELO, Incl. 117
117		154467A1		1	ANEL "O"
120		KHJ10790		1	FILTRO, OLEO HIDRAULICO
121		150933A1		1	COTOVELO, Incl. 122
122		154467A1		1	ANEL "O"
124		KHJ16210		1	MANGUEIRA CONJUNTO, 1450 mm (57 in)
125		KHJ2624		1	MANGUEIRA, 1200 mm (47-1/4 in)
126		KHJ11590		1	MANGUEIRA CONJUNTO, 1400 mm (55-1/8 in)
127		KHJ2146		1	MANGUEIRA CONJUNTO, 1200 mm (47-1/4 in)
128		KHJ2477		1	MANGUEIRA CONJUNTO, 1900 mm (63 in)
129		KHJ2089		1	MANGUEIRA CONJUNTO, 900 mm (35-7/16 in)
130		KHJ11170		1	MANGUEIRA CONJUNTO
133		152127A1		1	CONEXÃO, 1/4" NPT O-Ring x 1/4" NPT, Incl. 134
134		154467A1		1	ANEL "O"
148		150496A1		1	ARGOLA DE FIXACAO

LINEAS DE CONTROLE PILOTO, VALVULA DE CONTROL - MANEIRA DOIS

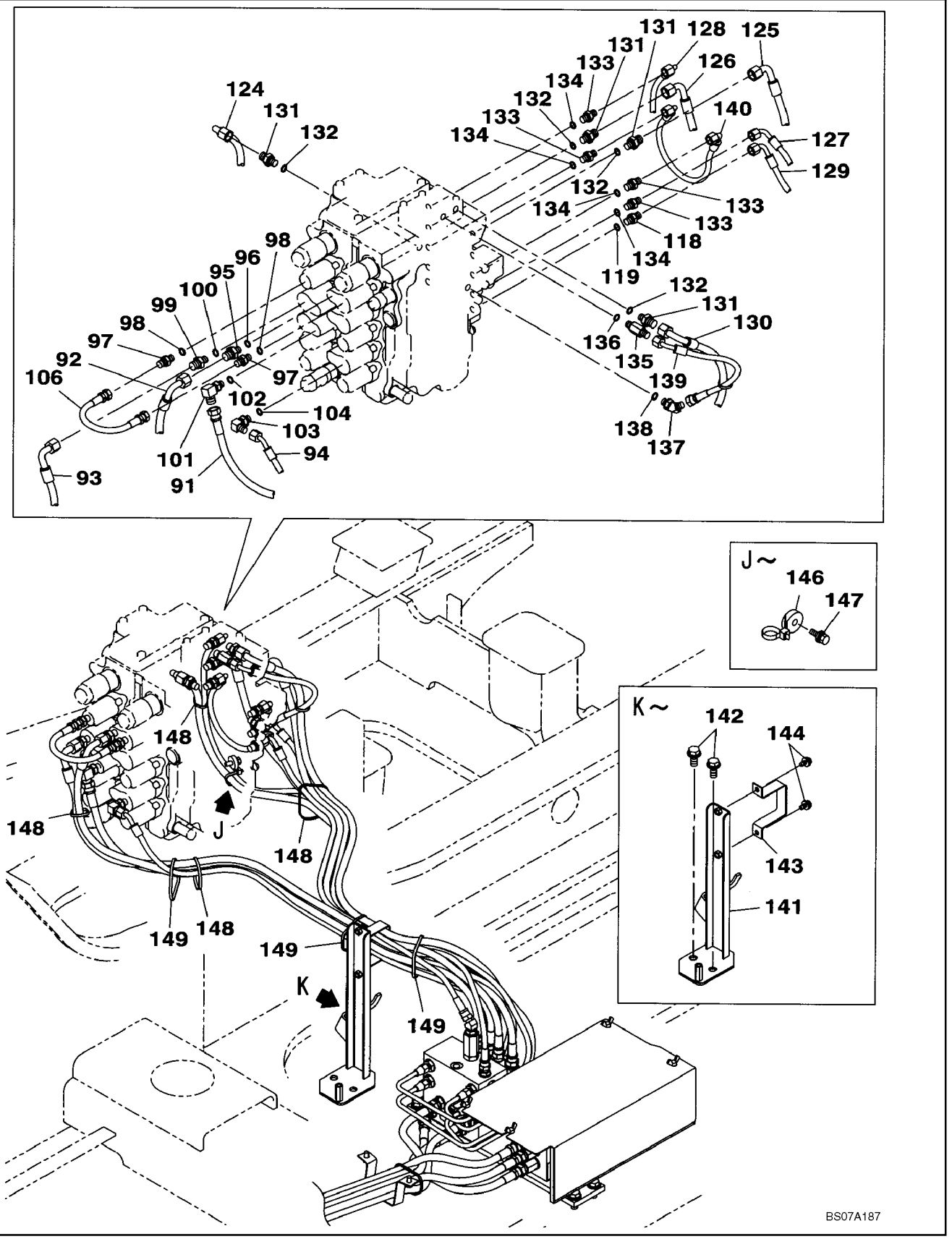

LINEAS DE CONTROLE PILOTO, VALVULA DE CONTROL - MANEIRA DOIS

REF	FN	PART NUMBER	YR/SN	QTY	DESCRIPTION
91		KHJ2307		1	MANGUEIRA CONJUNTO, 1200 mm (47-1/4 in)
92		KHJ11530		1	MANGUEIRA CONJUNTO, 1250 mm (49-1/4 in)
93		KHJ11590		1	MANGUEIRA CONJUNTO, 1400 mm (55-1/8 in)
94		KHJ16190		1	MANGUEIRA CONJUNTO, 1100 mm (43-5/16 in)
95		152747A1		1	ADAPTADOR, Incl. 96
96		154467A1		1	ANEL "O"
97		152127A1		2	CONEXÃO, 1/4" NPT O-Ring x 1/4" NPT, Incl. 98
98		154467A1		1	ANEL "O"
99		152747A1		1	ADAPTADOR, Incl. 100
100		154467A1		1	ANEL "O"
101		153559A1		1	COTOVELO, Incl. 102
102		154467A1		1	ANEL "O"
103		150913A1		1	COTOVELO, 90º, 1/4" O-Ring x 1/4", Incl. 104
104		154467A1		1	ANEL "O"
106		KHJ2419		1	MANGUEIRA CONJUNTO
118		152127A1		1	CONEXÃO, 1/4" NPT O-Ring x 1/4" NPT, Incl. 119
119		154467A1		1	ANEL "O"
124		KHJ16210		1	MANGUEIRA CONJUNTO, 1450 mm (57 in)
125		KHJ2624		1	MANGUEIRA, 1200 mm (47-1/4 in)
126		KHJ11590		1	MANGUEIRA CONJUNTO, 1400 mm (55-1/8 in)
127		KHJ2146		1	MANGUEIRA CONJUNTO, 1200 mm (47-1/4 in)
128		KHJ2477		1	MANGUEIRA CONJUNTO, 1900 mm (63 in)
129		KHJ2089		1	MANGUEIRA CONJUNTO, 900 mm (35-7/16 in)
130		KHJ11590		1	MANGUEIRA CONJUNTO, 1400 mm (55-1/8 in)
131		152747A1		3-4	ADAPTADOR, Incl. 132
132		154467A1		1	ANEL "O"
133		152127A1		4-5	CONEXÃO, 1/4" NPT O-Ring x 1/4" NPT, Incl. 134
134		154467A1		1	ANEL "O"
135		162554A1		1	CONEXAO, Incl. 136
136		154467A1		1	ANEL "O"
137		150933A1		1	COTOVELO, Incl. 138
138		154467A1		1	ANEL "O"
139		KHJ16200		1	MANGUEIRA CONJUNTO, 400 mm (15-3/4 in)
140		KHJ13820		1	MANGUEIRA CONJUNTO, 420 mm (16-1/2 in)
141		KNJ11780		1	SUPORTE

LINEAS DE CONTROLE PILOTO, VALVULA DE CONTROL - MANEIRA DOIS

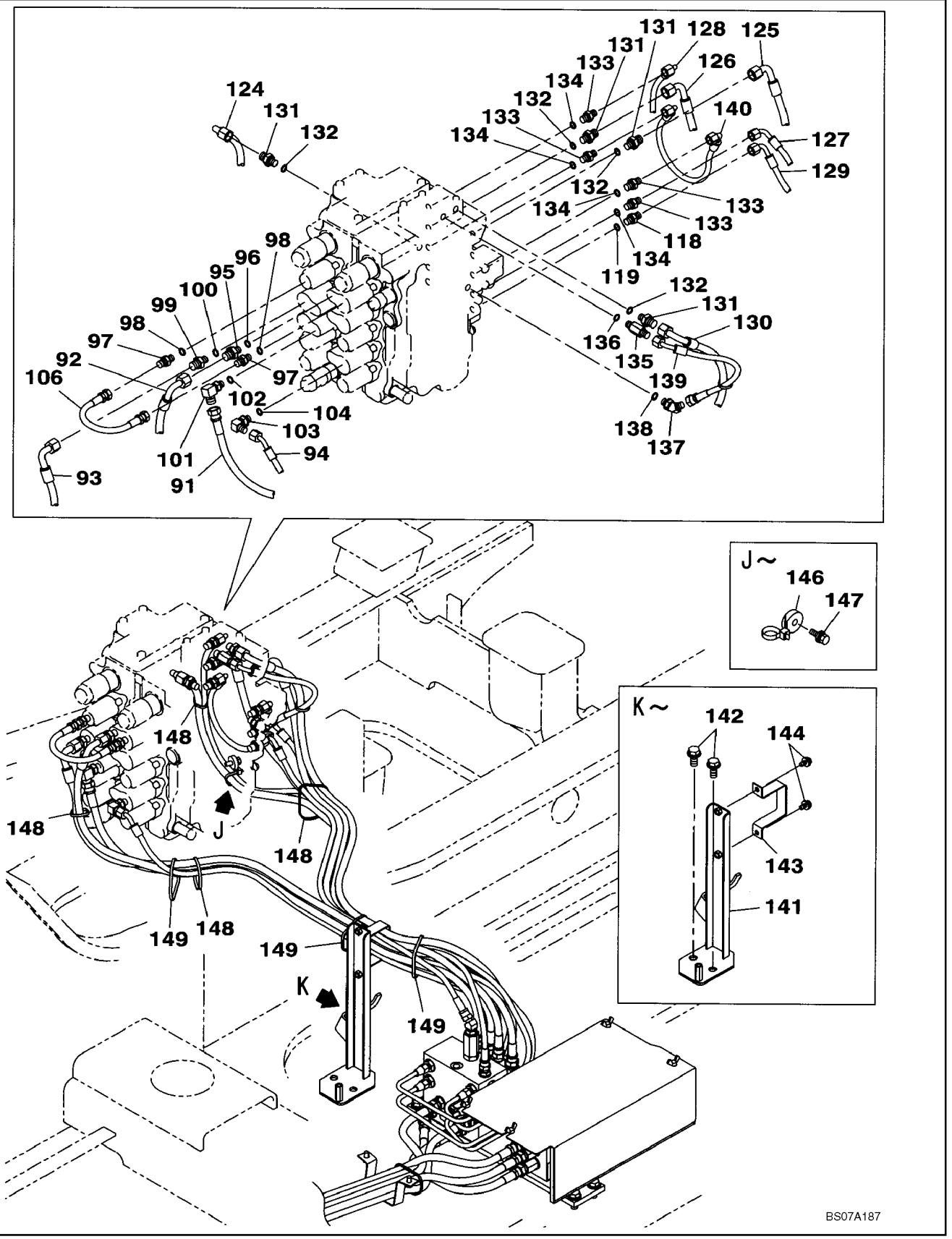

LINEAS DE CONTROLE PILOTO, VALVULA DE CONTROL - MANEIRA DOIS

REF	FN	PART NUMBER	YR/SN	QTY	DESCRIPTION
142		166352A1		2	PARAFUSO
143		161095A1		1	BRACADEIRA
144		166345A1		2	PARAFUSO
146		KHR2584		1	BRACADEIRA
147		KHJ1215		1	PARAFUSO
148		150496A1		4	ARGOLA DE FIXACAO
149		150498A1		3	ARGOLA DE FIXACAO

HIDRAULICA - PRESSÃO PILOTO, LINHAS DE RETORNO

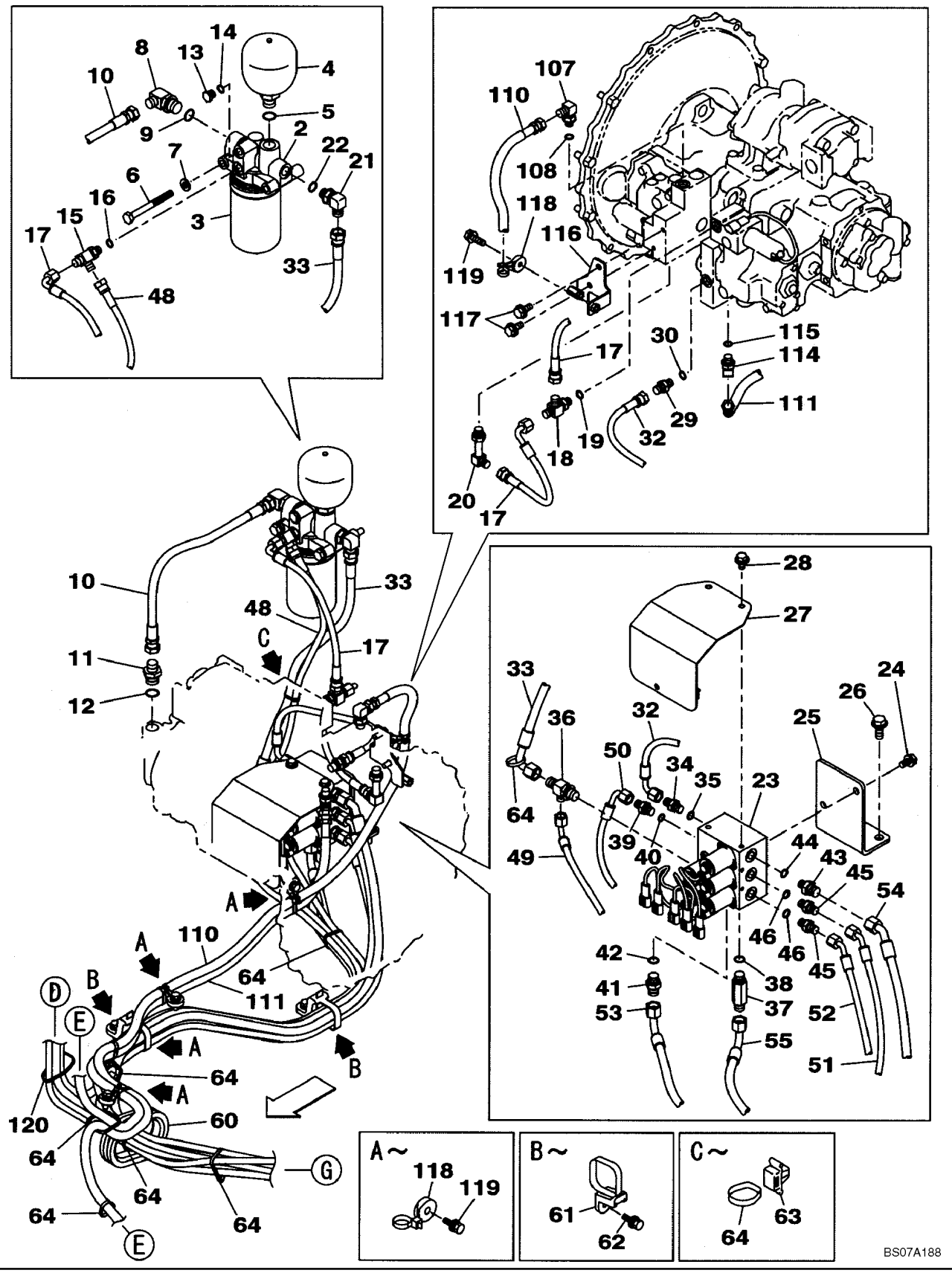

HIDRAULICA - PRESSÃO PILOTO, LINHAS DE RETORNO

REF	FN	PART NUMBER	YR/SN	QTY	DESCRIPTION
		KHJ10930		1	ACUMULADOR, Incl. 2 - 5
2		KHJ10940		1	VALVULA COLETORA, Incl. 3
3		KHJ10950		1	FILTRO, OLEO HIDRAULICO
4		KHJ2359		1	ACUMULADOR, Incl. 5
5		154487A1		1	ANEL "O"
6		814-10100		2	PARAFUSO, Hex, M10 x 100, 8.8
7		150409A1		2	ARRUELA PLANA
8		157935A1		1	COTOVELO, Incl. 9
9		154487A1		1	ANEL "O"
10		KHJ1306		1	MANGUEIRA CONJUNTO, 550 mm (21-5/8)
11		161084A1		1	ADAPTADOR, Incl. 12
12		154487A1		1	ANEL "O"
13		159002A1		1	BUJÃO, Incl. 14
14		154467A1		1	ANEL "O"
15		159497A1		1	TEE, Incl. 16
16		154467A1		1	ANEL "O"
17		KHJ2238		2	MANGUEIRA CONJUNTO, 320 mm (12-5/8 in)
18		159497A1		1	TEE, Incl. 19
19		154467A1		1	ANEL "O"
20		KHJ1178		1	COTOVELO
21		150916A1		1	COTOVELO, 90º, 3/8" O-Ring x 3/8", Incl. 22
22		154475A1		1	ANEL "O"
23		KHJ14520		1	ELETRO VALVULA, See Figure 08-73
24		166351A1		2	PARAFUSO
25		KNJ13630		1	SUPORTE
26		166352A1		2	PARAFUSO
27		KHJ16220		1	TAMPA
28		166345A1		2	PARAFUSO
29		152127A1		1	CONEXÃO, 1/4" NPT O-Ring x 1/4" NPT, Incl. 30
30		154467A1		1	ANEL "O"
32		KHJ2179		1	MANGUEIRA CONJUNTO, 450 mm (17-3/4 in)
33		KHJ2412		1	MANGUEIRA CONJUNTO, 650 mm (25-5/8 in)
34		152127A1		1	CONEXÃO, 1/4" NPT O-Ring x 1/4" NPT, Incl. 35
35		154467A1		1	ANEL "O"
36		163422A1		1	TEE

HIDRAULICA - PRESSÃO PILOTO, LINHAS DE RETORNO

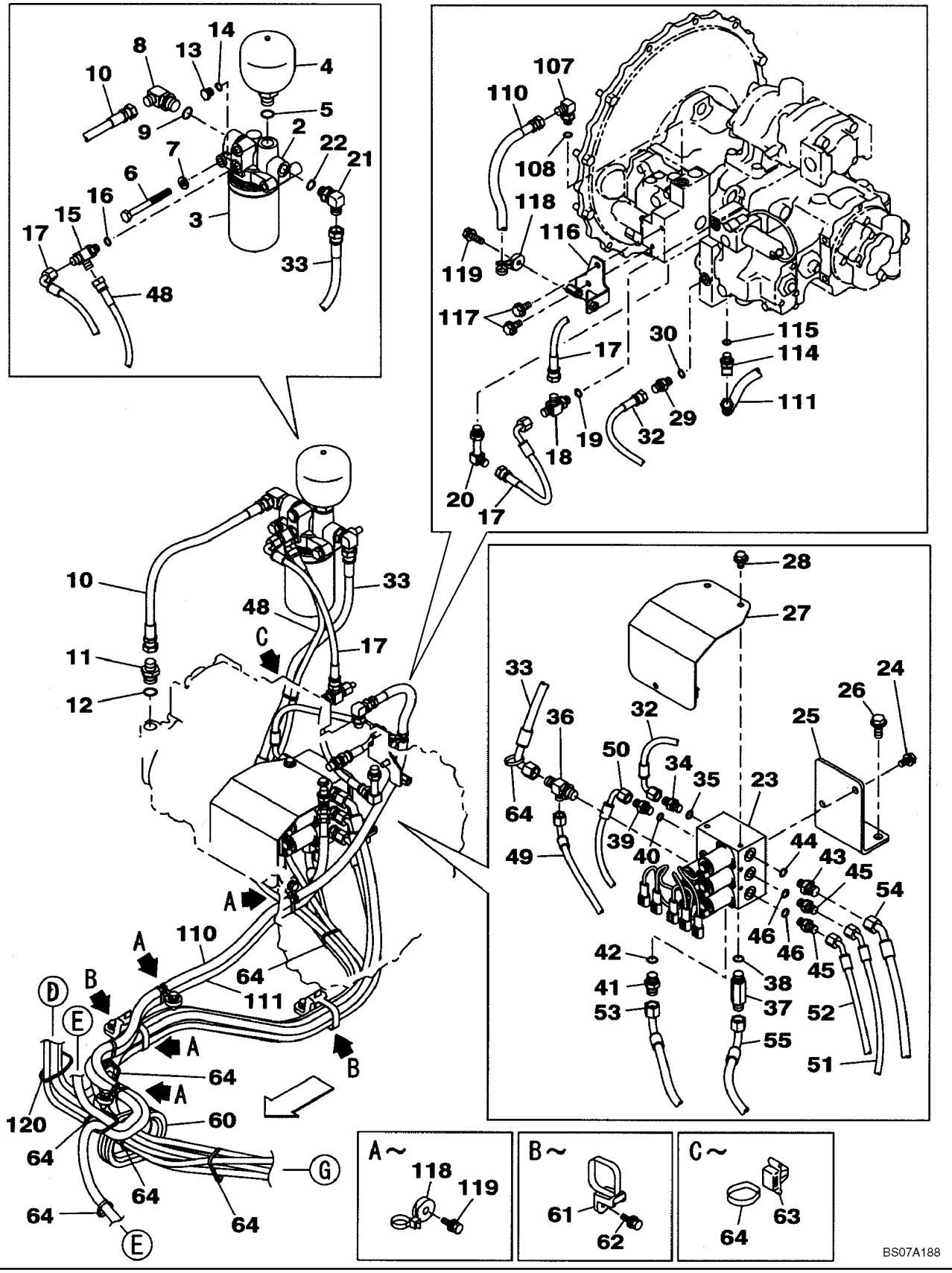

HIDRAULICA - PRESSÃO PILOTO, LINHAS DE RETORNO

REF	FN	PART NUMBER	YR/SN	QTY	DESCRIPTION
37		KAJ2351		1	CONEXAO
38		154475A1		1	ANEL "O"
39		152127A1		1	CONEXÃO, 1/4" NPT O-Ring x 1/4" NPT, Incl. 40
40		154467A1		1	ANEL "O"
41		152128A1		1	CONEXÃO, 3/8" NPT O-Ring x 3/8" NPT, Incl. 42
42		154475A1		1	ANEL "O"
43		152747A1		1	ADAPTADOR, Incl. 44
44		154467A1		1	ANEL "O"
45		152127A1		2	CONEXÃO, 1/4" NPT O-Ring x 1/4" NPT, Incl. 46
46		154467A1		1	ANEL "O"
48		KHJ2080		1	MANGUEIRA CONJUNTO, 3150 mm (124 in)
49		KHJ2134		1	MANGUEIRA CONJUNTO
50		KHJ2581		1	MANGUEIRA CONJUNTO, 3100 mm (122 in)
51		KHJ16240		1	MANGUEIRA CONJUNTO, 2600 mm (102-3/8 in)
52		KHJ16250		1	MANGUEIRA CONJUNTO, 3250 mm (127-15/16 in)
53		KHJ2107		1	MANGUEIRA CONJUNTO, 2400 mm (94-1/2 in)
54		KHJ16230		1	MANGUEIRA CONJUNTO, 3200 mm (126 in)
55		KHJ16260		1	MANGUEIRA CONJUNTO, 1750 mm (68-7/8 in)
60		KNJ2988		1	JUNTAS
61		KHR2581		2	BRACADEIRA
62		KHJ1215		2	PARAFUSO
63		KHR10220		1	ARGOLA DE FIXACAO
64		150496A1		AR	ARGOLA DE FIXACAO
107		150913A1		1	COTOVELO, 90º, 1/4" O-Ring x 1/4", Incl. 108
108		154467A1		1	ANEL "O"
110		KHJ17040		1	MANGUEIRA CONJUNTO
111		KHJ17050		1	MANGUEIRA CONJUNTO
114		150933A1		1	COTOVELO, Incl. 115
115		154467A1		1	ANEL "O"
116		KNJ12210		1	SUPORTE
117		166350A1		2	PARAFUSO
118		KHR2584		5	BRACADEIRA
119		KHJ1215		5	PARAFUSO
120		150496A1		1	ARGOLA DE FIXACAO

HIDRAULICA - PRESSÃO PILOTO, LINHAS DE RETORNO

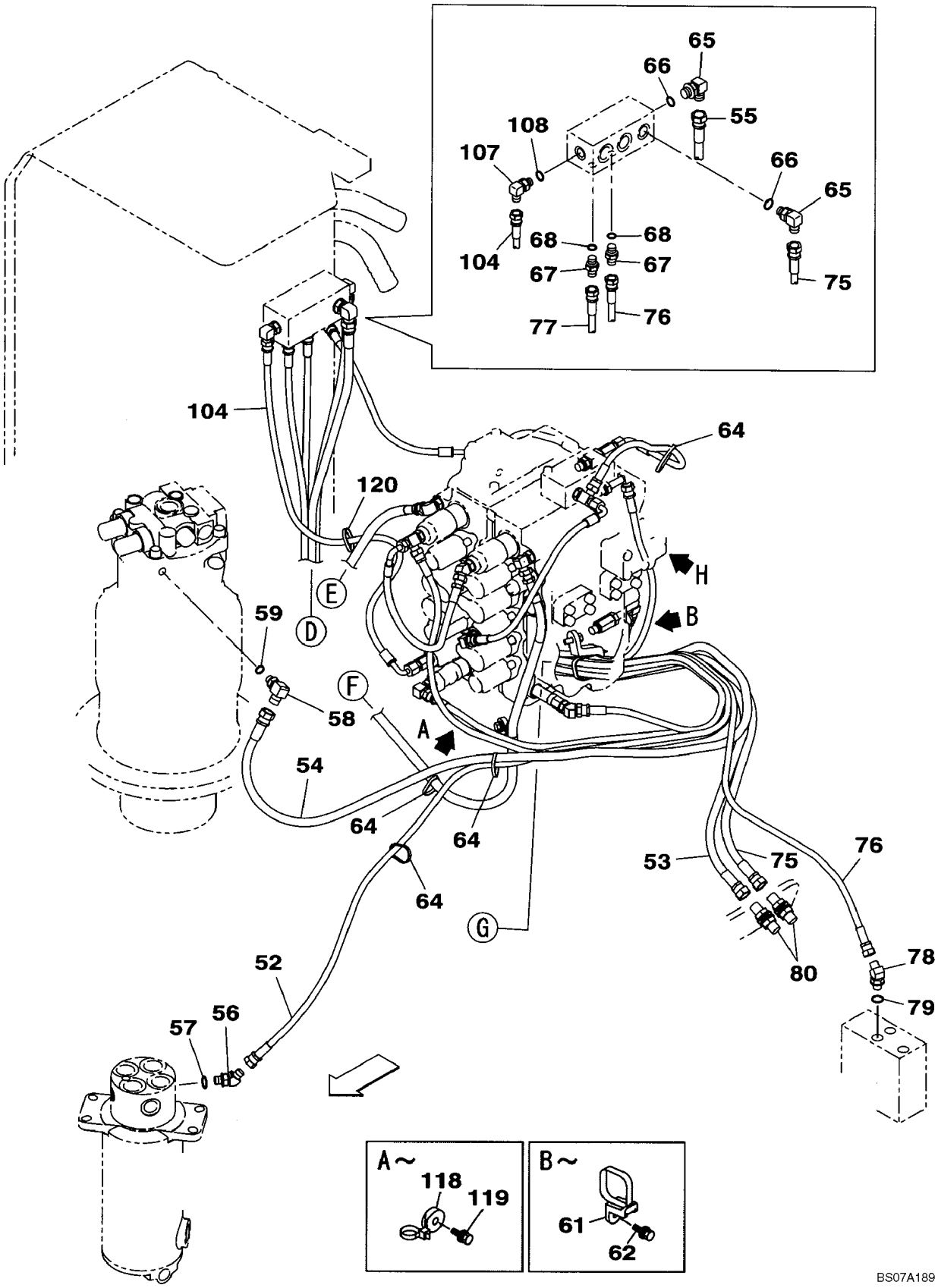

HIDRAULICA - PRESSÃO PILOTO, LINHAS DE RETORNO

REF	FN	PART NUMBER	YR/SN	QTY	DESCRIPTION
52		KHJ16250		1	MANGUEIRA CONJUNTO, 3250 mm (127-15/16 in)
53		KHJ2107		1	MANGUEIRA CONJUNTO, 2400 mm (94-1/2 in)
54		KHJ16230		1	MANGUEIRA CONJUNTO, 3200 mm (126 in)
55		KHJ16260		1	MANGUEIRA CONJUNTO, 1750 mm (68-7/8 in)
56		150933A1		1	COTOVELO, Incl. 57
57		154467A1		1	ANEL "O"
58		153559A1		1	COTOVELO, Incl. 59
59		154467A1		1	ANEL "O"
61		KHR2581		1	BRACADEIRA
62		KHJ1215		1	PARAFUSO
64		150496A1		AR	ARGOLA DE FIXACAO
65		150916A1		2	COTOVELO, 90º, 3/8" O-Ring x 3/8", Incl. 66
66		154475A1		1	ANEL "O"
67		152127A1		2	CONEXÃO, 1/4" NPT O-Ring x 1/4" NPT, Incl. 68
68		154467A1		1	ANEL "O"
75		KHJ13670		1	MANGUEIRA CONJUNTO, 1950 mm (76-3/4 in)
76		KHJ2067		1	MANGUEIRA CONJUNTO, 2200 mm (86-5/8 in)
77		KHJ2310		1	MANGUEIRA CONJUNTO, 1350 mm (53-1/8 in)
78		150933A1		1	COTOVELO, Incl. 79
79		154467A1		1	ANEL "O"
80		162826A1		2	ADAPTADOR
104		KHJ2088		1	MANGUEIRA CONJUNTO, 850 mm (33-1/2 in)
107		150913A1		1	COTOVELO, 90º, 1/4" O-Ring x 1/4", Incl. 108
108		154467A1		1	ANEL "O"
118		KHR2584		1	BRACADEIRA
119		KHJ1215		1	PARAFUSO
120		150496A1		1	ARGOLA DE FIXACAO

HIDRAULICA - PRESSÃO PILOTO, LINHAS DE RETORNO

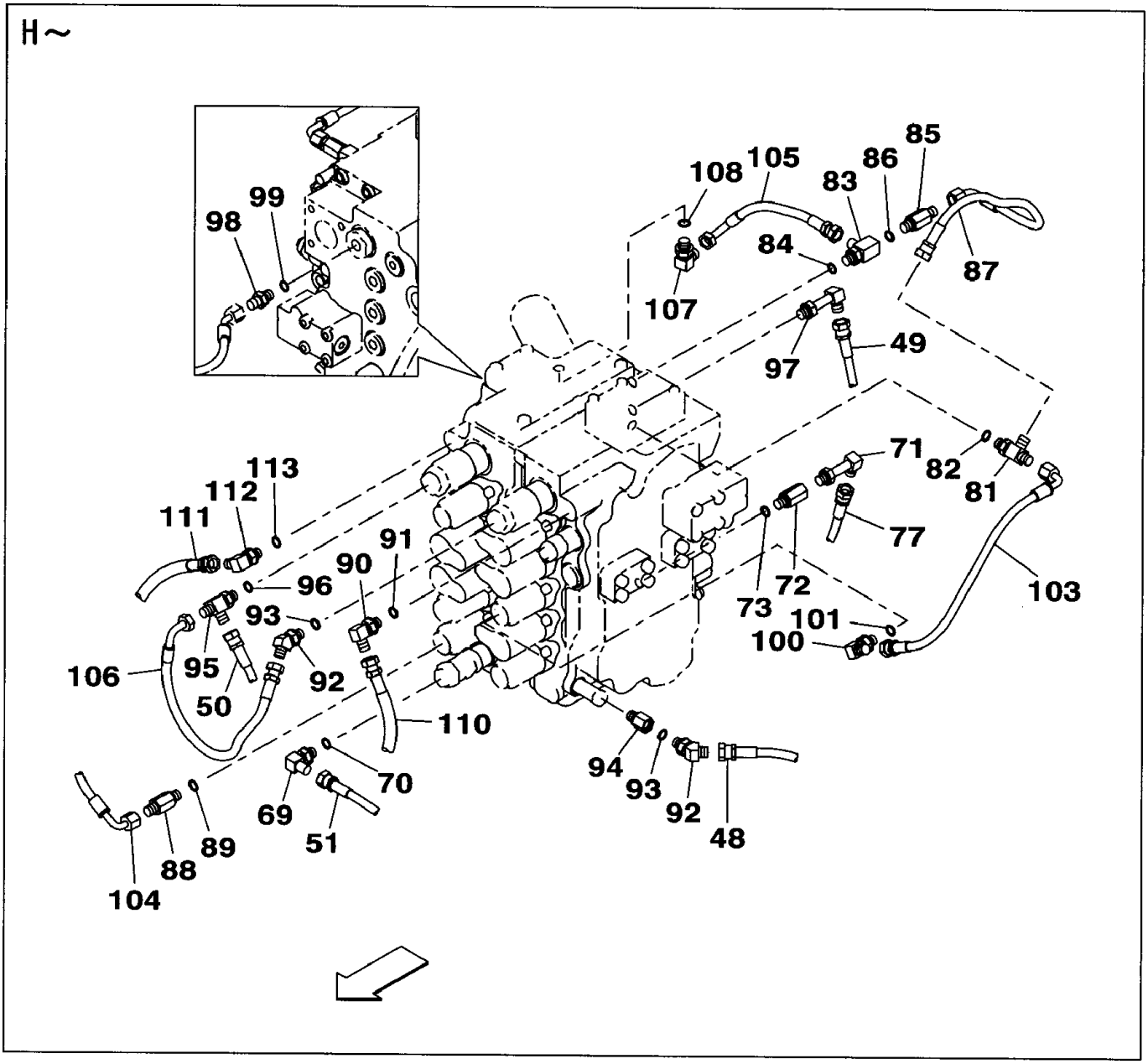

BS07A190

HIDRAULICA - PRESSÃO PILOTO, LINHAS DE RETORNO

REF	FN	PART NUMBER	YR/SN	QTY	DESCRIPTION
48		KHJ2080		1	MANGUEIRA CONJUNTO, 3150 mm (124 in)
49		KHJ2134		1	MANGUEIRA CONJUNTO
50		KHJ2581		1	MANGUEIRA CONJUNTO, 3100 mm (122 in)
51		KHJ16240		1	MANGUEIRA CONJUNTO, 2600 mm (102-3/8 in)
69		150913A1		1	COTOVELO, 90º, 1/4" O-Ring x 1/4", Incl. 70
70		154467A1		1	ANEL "O"
71		KHJ1178		1	COTOVELO
72		162525A1		1	PRISIONEIRO, Incl. 73
73		154467A1		1	ANEL "O"
77		KHJ2310		1	MANGUEIRA CONJUNTO, 1350 mm (53-1/8 in)
81		159497A1		1	TEE, Incl. 82
82		154467A1		1	ANEL "O"
83		KHJ2773		1	TEE, Incl. 84
84		154467A1		1	ANEL "O"
85		162554A1		1	CONEXAO, Incl. 86
86		154467A1		1	ANEL "O"
87		KHJ2179		1	MANGUEIRA CONJUNTO, 450 mm (17-3/4 in)
88		162554A1		1	CONEXAO, Incl. 89
89		154467A1		1	ANEL "O"
90		150913A1		1	COTOVELO, 90º, 1/4" O-Ring x 1/4", Incl. 91
91		154467A1		1	ANEL "O"
92		150933A1		2	COTOVELO, Incl. 93
93		154467A1		1	ANEL "O"
94		162525A1		1	PRISIONEIRO, Replaces KHJ13640
95		159497A1		1	TEE, Incl. 96
96		154467A1		1	ANEL "O"
97		KHJ1178		1	COTOVELO
98		162554A1		1	CONEXAO, Incl. 99
99		154467A1		1	ANEL "O"
100		150913A1		1	COTOVELO, 90º, 1/4" O-Ring x 1/4", Incl. 101
101		154467A1		1	ANEL "O"
103		KHJ2342		1	MANGUEIRA CONJUNTO, 380 mm (15 in)
104		KHJ2088		1	MANGUEIRA CONJUNTO, 850 mm (33-1/2 in)
105		168806A1		1	MANGUEIRA CONJUNTO, 230 mm (9 in)
106		168728A1		1	MANGUEIRA CONJUNTO

HIDRAULICA - PRESSÃO PILOTO, LINHAS DE RETORNO

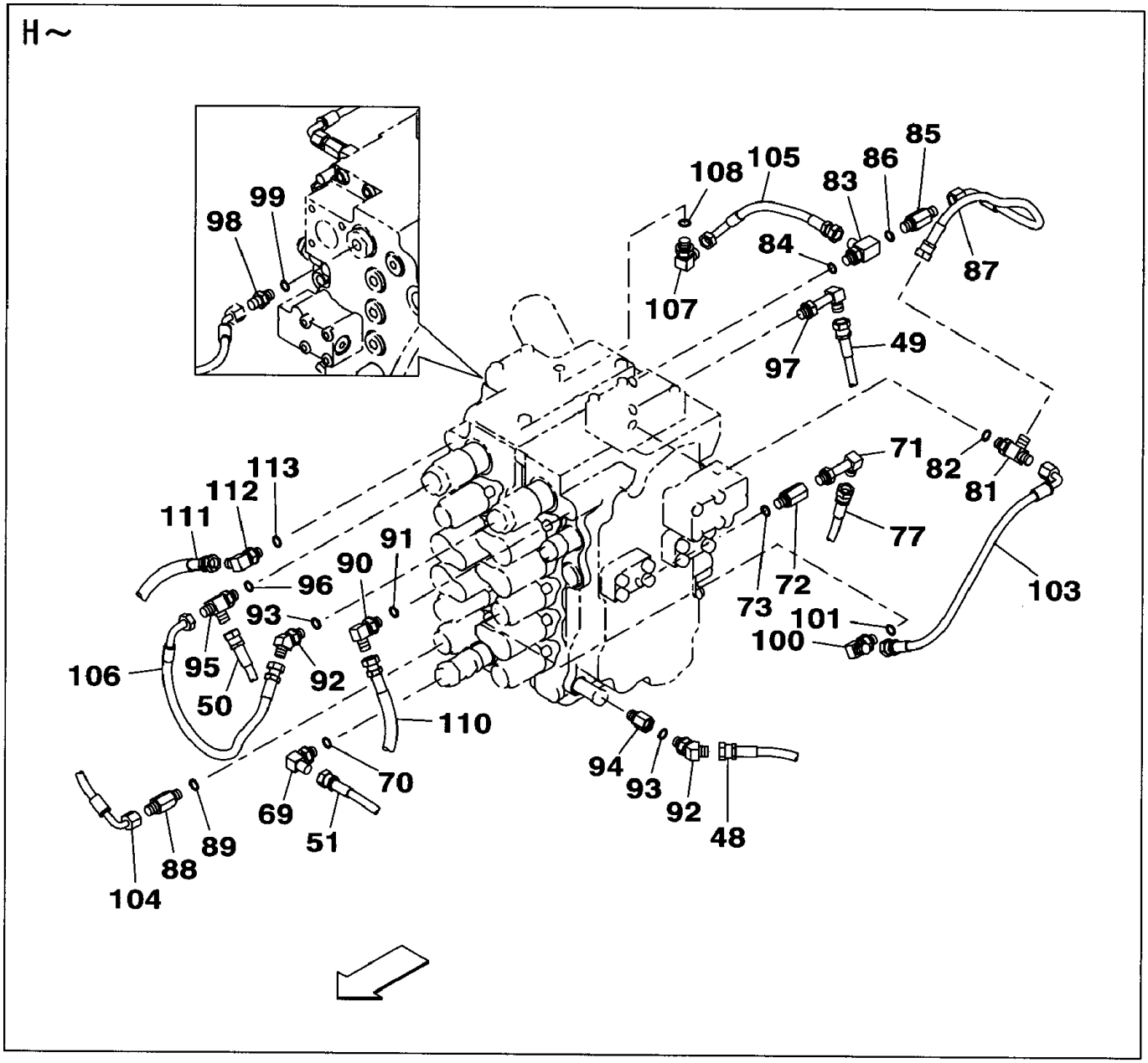

BS07A190

HIDRAULICA - PRESSÃO PILOTO, LINHAS DE RETORNO

REF	FN	PART NUMBER	YR/SN	QTY	DESCRIPTION
107		150913A1		1	COTOVELO, 90º, 1/4" O-Ring x 1/4", Incl. 108
108		154467A1		1	ANEL "O"
110		KHJ17040		1	MANGUEIRA CONJUNTO
111		KHJ17050		1	MANGUEIRA CONJUNTO
112		150913A1		1	COTOVELO, 90º, 1/4" O-Ring x 1/4", Incl. 113
113		154467A1		1	ANEL "O"

CIRCUITO DE AÇÃO ÚNICA DO SISTEMA HIDRÁULICO AUXILIAR ACIONADO POR PEDAL

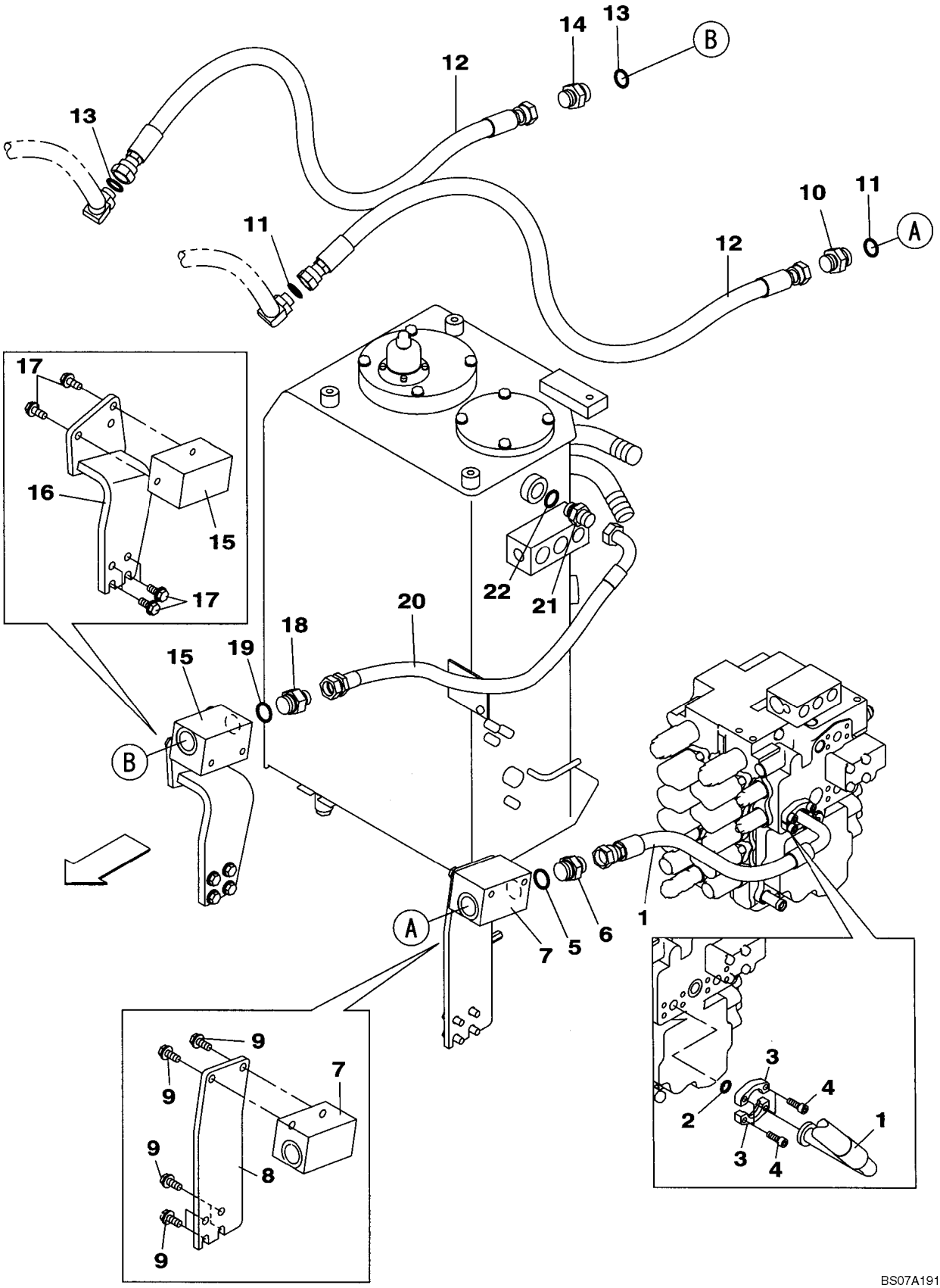

CIRCUITO DE AÇÃO ÚNICA DO SISTEMA HIDRÁULICO AUXILIAR ACIONADO POR PEDAL

REF	FN	PART NUMBER	YR/SN	QTY	DESCRIPTION
1		KLJ10980		1	MANGUEIRA CONJUNTO, 650 mm (33-7/8 in)
2		155210A1		1	ANEL O
3		153458A1		2	FLANGE, Split
4		862-10030		4	PARAFUSO, Hex Soc Hd, M10 x 30, 12.9
5		KHJ1360		1	ANEL O
6		KHJ1941		1	CONEXAO
7		KRJ12170		1	VALVULA COLETORA
8		KRJ11470		1	SUPORTE
9		166352A1		6	PARAFUSO
10		KHJ1941		1	CONEXAO
11		KHJ1360		2	ANEL O
12		KLJ11690		2	MANGUEIRA CONJUNTO, 1460 mm (57-1/2 in), Replaces KLJ11340
13		KHJ1360		2	ANEL O
14		KHJ1941		1	CONEXAO
15		KRJ12170		1	VALVULA COLETORA
16		KRJ16050		1	SUPORTE
17		166352A1		6	PARAFUSO
18		169040A1		1	ADAPTADOR, Incl. 19
19		154523A1		1	ANEL O
20		KBJ1683		1	MANGUEIRA CONJUNTO, 680 mm (26-3/4 in)
21		151654A1		1	CONEXÃO, 3/4" NPT O-Ring x 3/4" NPT, Incl. 22
22		154503A1		1	ANEL O

CIRCUITO DE AÇÃO ÚNICA DO SISTEMA HIDRÁULICO AUXILIAR ACIONADO POR PEDAL

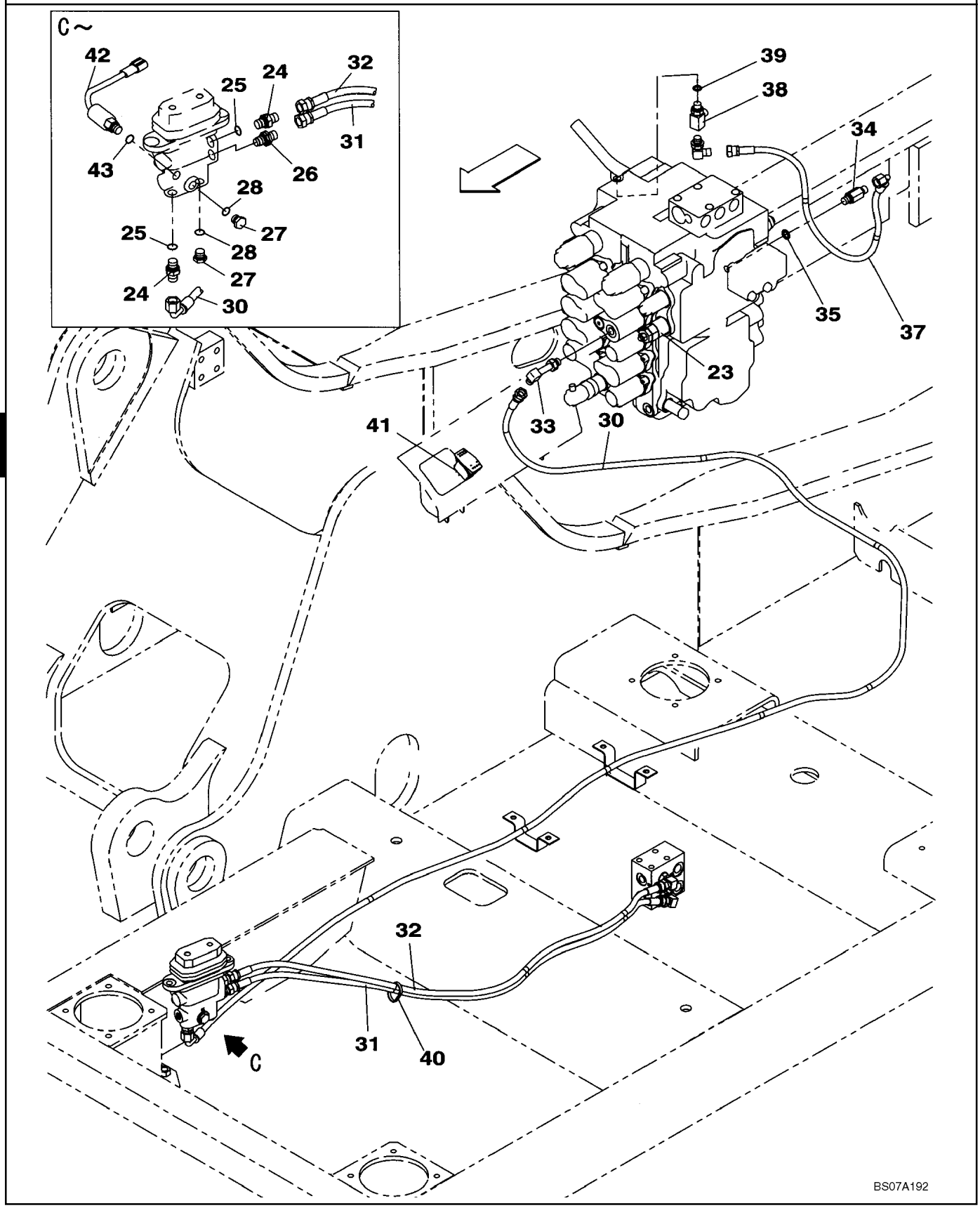

CIRCUITO DE AÇÃO ÚNICA DO SISTEMA HIDRÁULICO AUXILIAR ACIONADO POR PEDAL

REF	FN	PART NUMBER	YR/SN	QTY	DESCRIPTION
23		KNJ2732		1	VÁLVULA DE SOBRE-PRESSÃO
24		152127A1		2	CONEXÃO, 1/4" NPT O-Ring x 1/4" NPT, Incl. 25
25		154467A1		1	ANEL "O"
26		161841A1		1	CONEXÃO
27		159002A1		2	BUJÃO, Incl. 28
28		154467A1		1	ANEL "O"
30		KHJ2198		1	MANGUEIRA CONJUNTO, 2850 mm (112-3/16 in)
31		KHJ2050		1	MANGUEIRA CONJUNTO, 1000 mm (39-3/8 in)
32		KHJ2050		1	MANGUEIRA CONJUNTO, 1000 mm (39-3/8 in)
33		KHJ1178		1	COTOVELO
34		162554A1		1	CONEXAO, Incl. 35
35		154467A1		1	ANEL "O"
37		KHJ2195		1	MANGUEIRA CONJUNTO, 680 mm (26-3/4 in)
38		KHJ2773		1	TEE, Incl. 39
39		154467A1		1	ANEL "O"
40		150496A1		1	ARGOLA DE FIXACAO
41		KHR14060		1	INTERRUPTOR
42		KHR10820		1	INTERRUPTOR, Incl. 43
43		154467A1		1	ANEL "O"

CIRCUITO DE AÇÃO ÚNICA DO SISTEMA HIDRÁULICO AUXILIAR ACIONADO MANUALMENTE

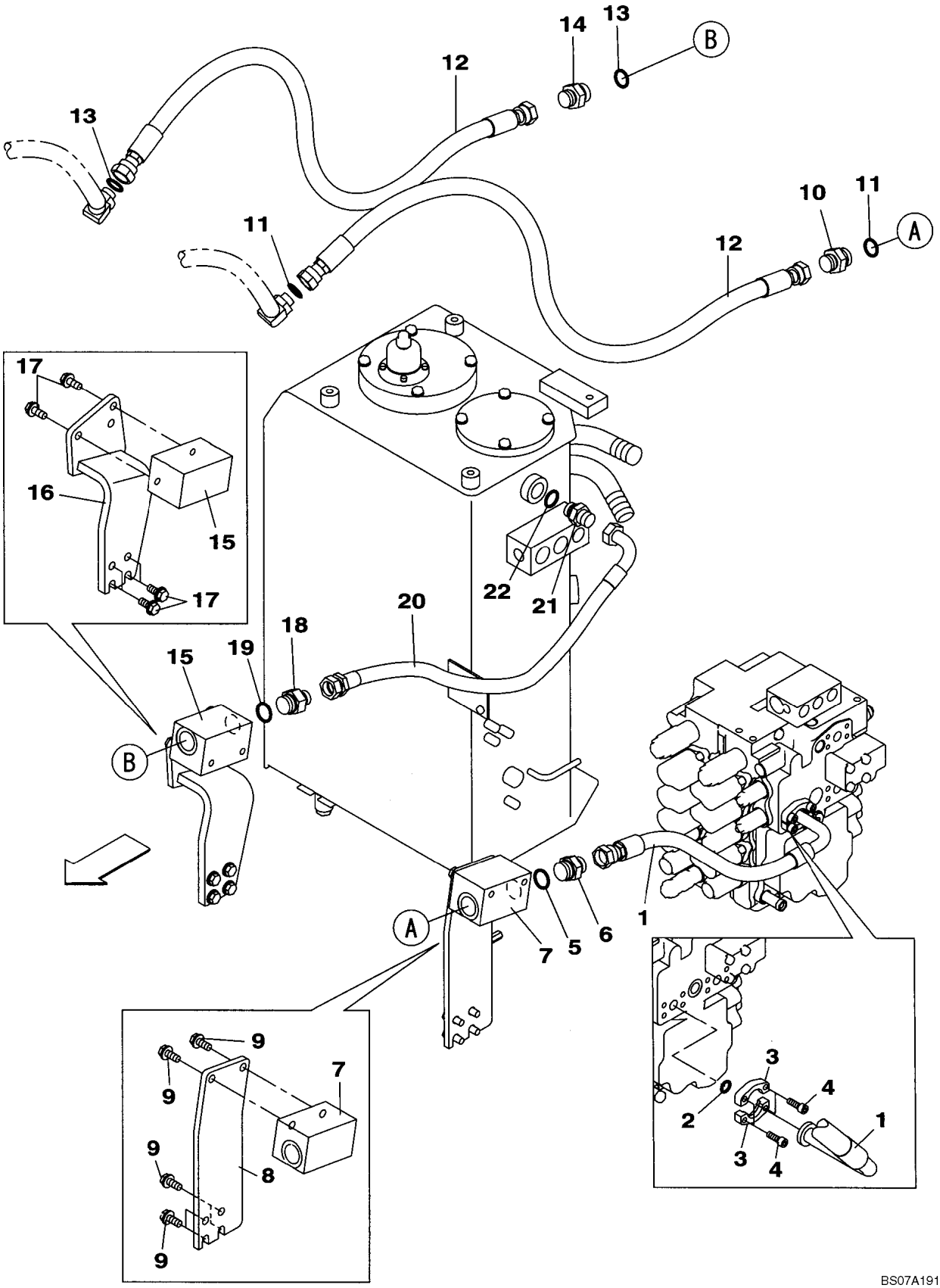

CIRCUITO DE AÇÃO ÚNICA DO SISTEMA HIDRÁULICO AUXILIAR ACIONADO MANUALMENTE

REF	FN	PART NUMBER	YR/SN	QTY	DESCRIPTION
1		KLJ10980		1	MANGUEIRA CONJUNTO, 650 mm (33-7/8 in)
2		155210A1		1	ANEL O
3		153458A1		2	FLANGE, Split
4		862-10030		4	PARAFUSO, Hex Soc Hd, M10 x 30, 12.9
5		KHJ1360		1	ANEL O
6		KHJ1941		1	CONEXAO
7		KRJ12170		1	VALVULA COLETORA
8		KRJ11470		1	SUPORTE
9		166352A1		6	PARAFUSO
10		KHJ1941		1	CONEXAO
11		KHJ1360		2	ANEL O
12		KLJ11690		2	MANGUEIRA CONJUNTO, 1460 mm (57-1/2 in), Replaces KLJ11340
13		KHJ1360		2	ANEL O
14		KHJ1941		1	CONEXAO
15		KRJ12170		1	VALVULA COLETORA
16		KRJ16050		1	SUPORTE
17		166352A1		6	PARAFUSO
18		169040A1		1	ADAPTADOR, Incl. 19
19		154523A1		1	ANEL O
20		KBJ1683		1	MANGUEIRA CONJUNTO, 680 mm (26-3/4 in)
21		151654A1		1	CONEXÃO, 3/4" NPT O-Ring x 3/4" NPT, Incl. 22
22		154503A1		1	ANEL O

CIRCUITO DE AÇÃO ÚNICA DO SISTEMA HIDRÁULICO AUXILIAR ACIONADO MANUALMENTE

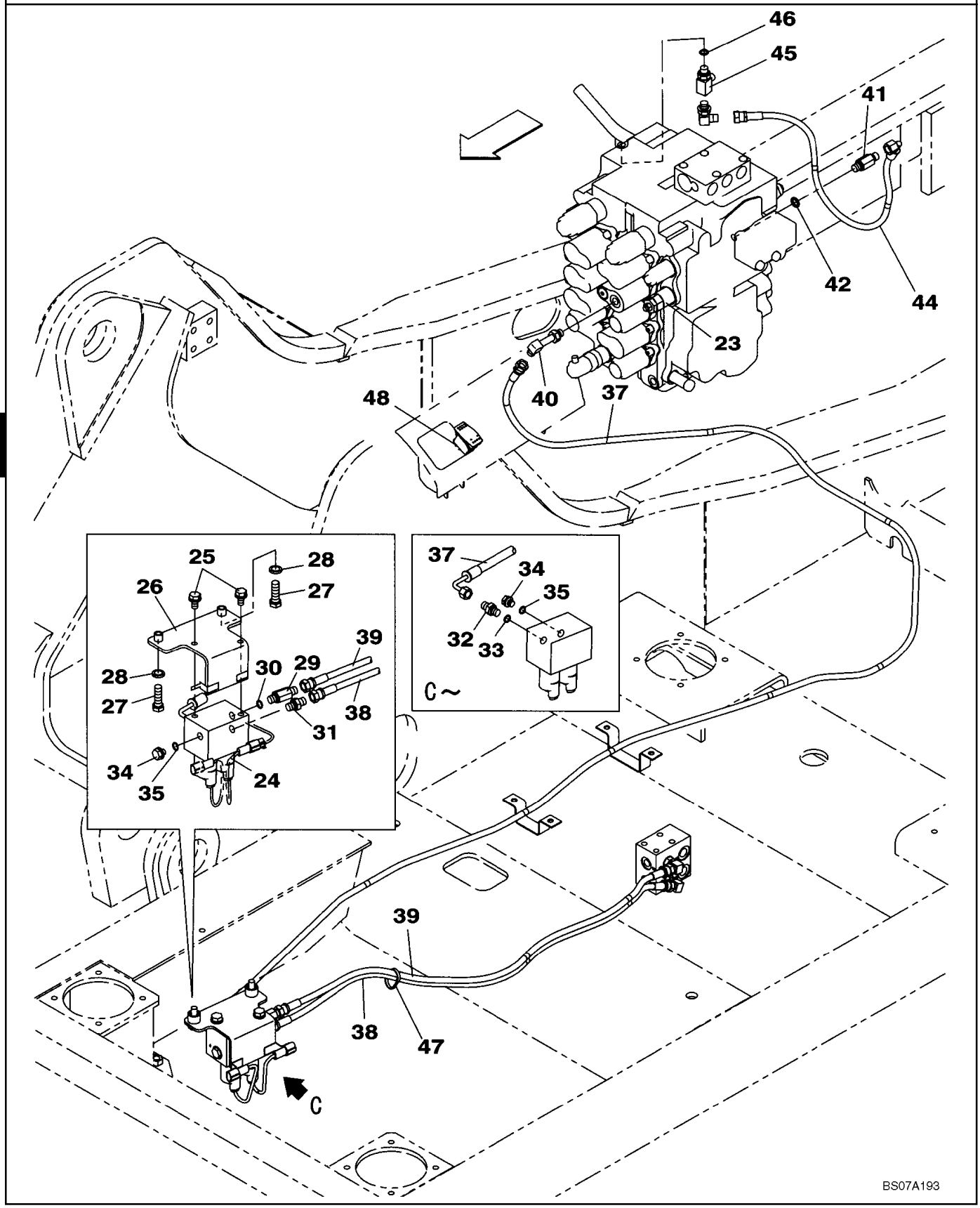

CIRCUITO DE AÇÃO ÚNICA DO SISTEMA HIDRÁULICO AUXILIAR ACIONADO MANUALMENTE

REF	FN	PART NUMBER	YR/SN	QTY	DESCRIPTION
23		KNJ2732		1	VÁLVULA DE SOBRE-PRESSÃO
24		KHJ14000		1	SECÇÃO DE VÁLVULAS, See Figure 08-81
25		166351A1		2	PARAFUSO
26		KHJ14680		1	SUPORTE
27		627-10035		2	PARAFUSO, Hex, M10 x 35, 10.9, Full Thd
28		150409A1		2	ARRUELA PLANA
29		162554A1		1	CONEXAO, Incl. 30
30		154467A1		1	ANEL "O"
31		161841A1		1	CONEXÃO
32		152127A1		1	CONEXÃO, 1/4" NPT O-Ring x 1/4" NPT, Incl. 33
33		154467A1		1	ANEL "O"
34		159002A1		2	BUJÃO, Incl. 35
35		154467A1		1	ANEL "O"
37		KHJ2198		1	MANGUEIRA CONJUNTO, 2850 mm (112-3/16 in)
38		KHJ15180		1	MANGUEIRA CONJUNTO, 950 mm (37-3/8 in)
39		KHJ2049		1	MANGUEIRA CONJUNTO, 900 mm (35-7/16 in)
40		KHJ1178		1	COTOVELO
41		162554A1		1	CONEXAO, Incl. 42
42		154467A1		1	ANEL "O"
44		KHJ2195		1	MANGUEIRA CONJUNTO, 680 mm (26-3/4 in)
45		KHJ2773		1	TEE, Incl. 46
46		154467A1		1	ANEL "O"
47		150496A1		1	ARGOLA DE FIXACAO
48		KHR14060		1	INTERRUPTOR

HYDRAULIC LINES - BOOM - OPTIONAL

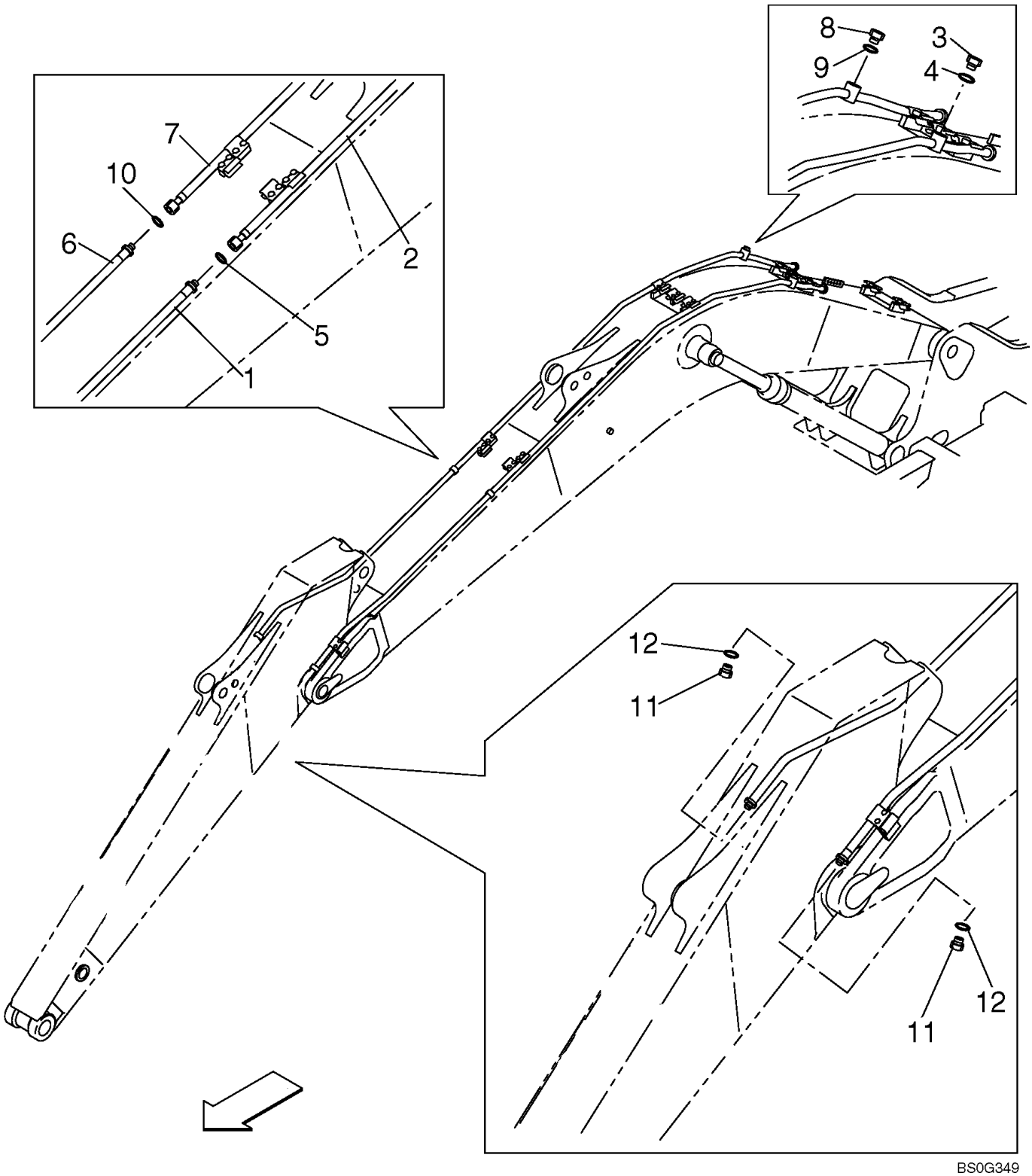

HYDRAULIC LINES - BOOM - OPTIONAL

REF	FN	PART NUMBER	YR/SN	QTY	DESCRIPTION
		{KG0LV221}			HYDRAULIC LINES - BOOM - OPTIONAL
1		KLV12380Y2		1	TUBULAÇÃO HIDRAULICO, L
2		KLV13700		1	TUBULAÇÃO HIDRAULICO, L
3		152924A1		1	BUJÃO, Incls. Ref. 4
4		154503A1		1	ANEL O
5		KHJ1360		1	ANEL O
6		KLV12390Y2		1	TUBULAÇÃO HIDRAULICO, R
7		KLV13710		1	TUBULAÇÃO HIDRAULICO, R
8		152924A1		1	BUJÃO, Incls. Ref. 9
9		154503A1		1	ANEL O
10		KHJ1360		1	ANEL O
11		KHJ1898		2	BUJÃO
12		KHJ1360		2	ANEL O

HYDRAULIC LINES - ARM (2.23M) - OPTIONAL

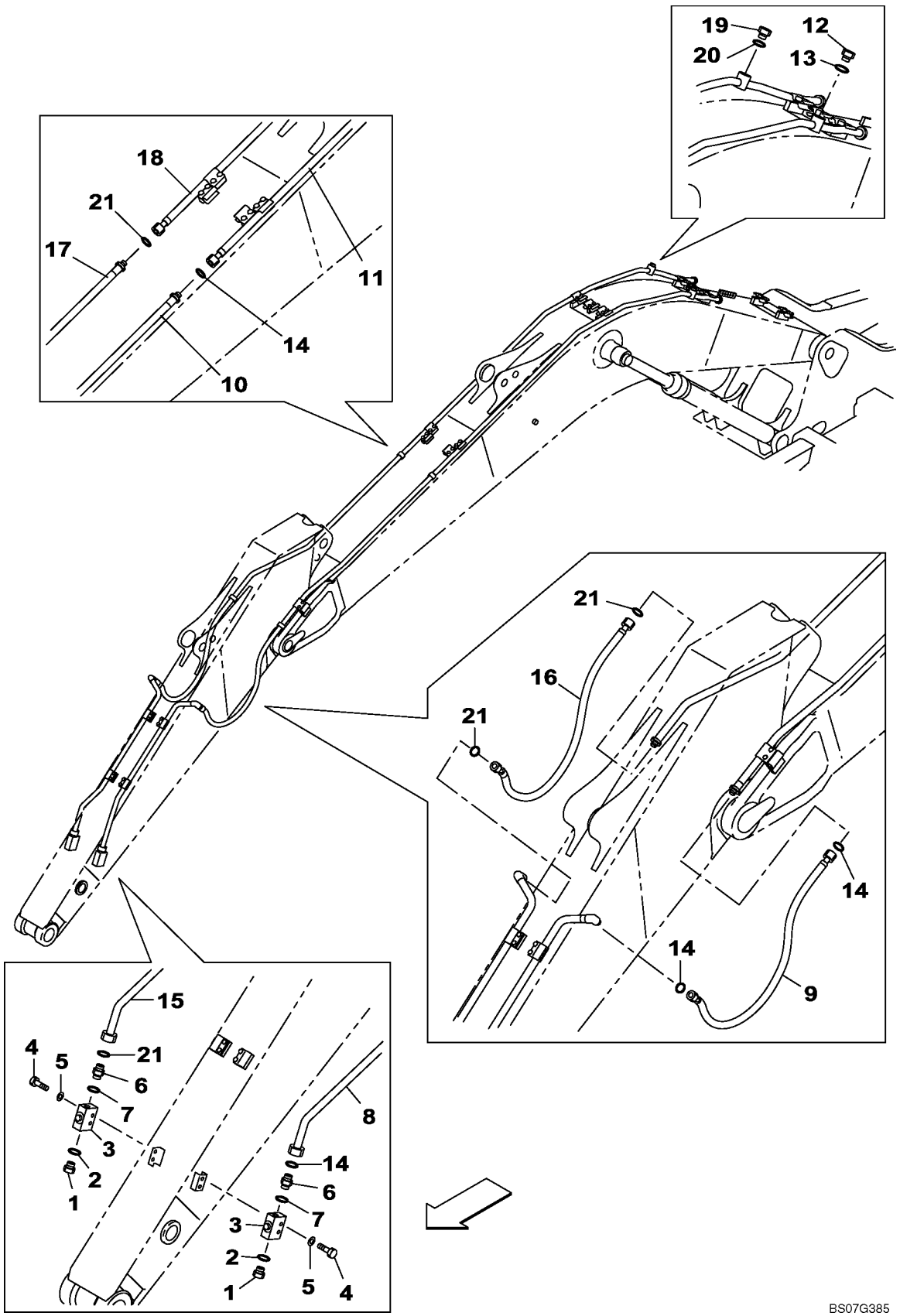

HYDRAULIC LINES - ARM (2.23M) - OPTIONAL

REF	FN	PART NUMBER	YR/SN	QTY	DESCRIPTION
1		152924A1		2	BUJÃO, Incls. Ref. 2
2		154503A1		2	ANEL O
3		KHV10710		2	VALVULA DE PARADA
4		827-12075		4	PARAFUSO, Hex, M12 x 75, 10.9
5		150811A1		4	ARRUELA PLANA
6		KHJ1348		2	ADAPTADOR, Incls. Ref. 7
7		154503A1		2	ANEL O
8		KLV12720		1	TUBULAÇÃO HIDRAULICO, L
9		KNV13720		1	MANGUEIRA CONJUNTO, 1200 mm
10		KLV12380Y2		1	TUBULAÇÃO HIDRAULICO, L
11		KLV13700		1	TUBULAÇÃO HIDRAULICO, L
12		152924A1		1	BUJÃO, Incls. Ref. 13
13		154503A1		1	ANEL O
14		KHJ1360		4	ANEL O
15		KLV12730		1	TUBULAÇÃO HIDRAULICO, R
16		KNV13720		1	MANGUEIRA CONJUNTO, 1200 mm
17		KLV12390Y2		1	TUBULAÇÃO HIDRAULICO, R
18		KLV13710		1	TUBULAÇÃO HIDRAULICO, R
19		152924A1		1	BUJÃO, Incls. Ref. 20
20		154503A1		1	ANEL O
21		KHJ1360		4	ANEL O

HYDRAULICS, AUXILIARY - MULTI-PURPOSE + 3 WAY VALVE, PEDAL ACTIVATED

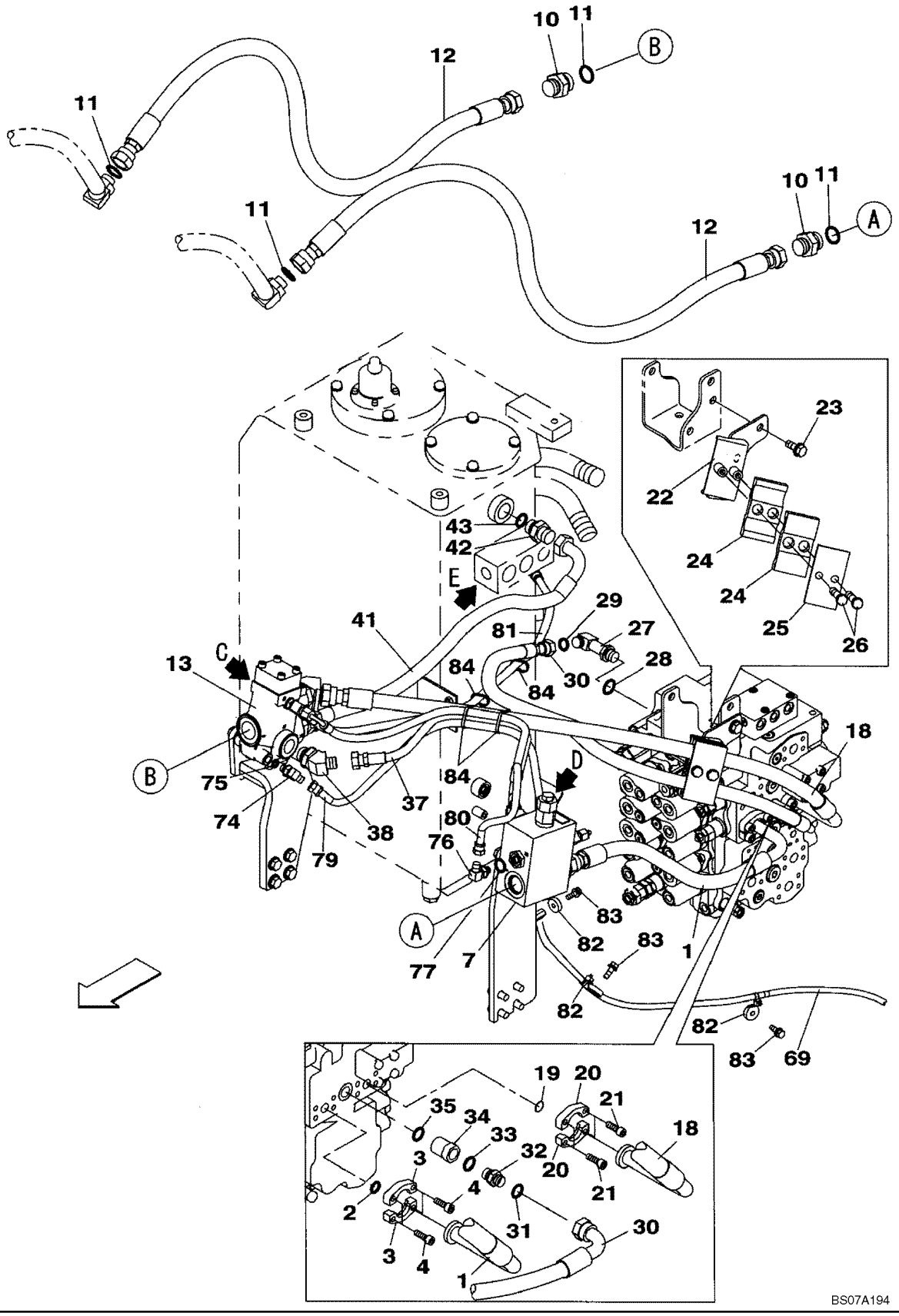

HYDRAULICS, AUXILIARY - MULTI-PURPOSE + 3 WAY VALVE, PEDAL ACTIVATED

REF	FN	PART NUMBER	YR/SN	QTY	DESCRIPTION
1		KLJ10980		1	MANGUEIRA CONJUNTO, 650 mm (33-7/8 in)
2		155210A1		1	ANEL O
3		153458A1		2	FLANGE, Split
4		862-10030		4	PARAFUSO, Hex Soc Hd, M10 x 30, 12.9
7		KHJ10410		1	SECÇÃO DE VÁLVULAS, See Figure 08-78
10		KHJ1941		2	CONEXAO
11		KHJ1360		4	ANEL O
12		KLJ11690		2	MANGUEIRA CONJUNTO, 1460 mm (57-1/2 in), Replaces KLJ11340
13		KHJ10420		1	SECÇÃO DE VÁLVULAS, See Figure 08-77
18		KLJ11350		1	MANGUEIRA CONJUNTO, 1140 mm (44-7/8 in)
19		155210A1		1	ANEL O
20		153458A1		2	FLANGE, Split
21		862-10030		4	PARAFUSO, Hex Soc Hd, M10 x 30, 12.9
22		KNJ14020		1	SUPORTE
23		166352A1		2	PARAFUSO
24		KLJ10730		2	BRACADEIRA
25		KRH10210		1	PLACA
26		166347A1		2	PARAFUSO
27		KHJ14690		1	COTOVELO, Incl. 28
28		154487A1		1	ANEL "O"
29		155204A1		1	ANEL O
30		KNJ12880		1	MANGUEIRA CONJUNTO, 930 mm (36-5/8 in)
31		155204A1		1	ANEL O
32		KHJ14710		1	ADAPTADOR, Incl. 33
33		154487A1		1	ANEL "O"
34		KHJ14720		1	VALVULA CHECAGEM, Incl. 35
35		154495A1		1	ANEL O
37		KAJ2882		1	MANGUEIRA CONJUNTO
38		KHJ2243		1	COTOVELO
41		KBJ1683		1	MANGUEIRA CONJUNTO, 680 mm (26-3/4 in)
42		151654A1		1	CONEXÃO, 3/4" NPT O-Ring x 3/4" NPT, Incl. 43
43		154503A1		1	ANEL O
44		KRJ11540		1	MANGUEIRA CONJUNTO, 670 mm (26-3/8 in)
69		KHJ16300		1	MANGUEIRA CONJUNTO, 3650 mm (143-11/16 in)

HYDRAULICS, AUXILIARY - MULTI-PURPOSE + 3 WAY VALVE, PEDAL ACTIVATED

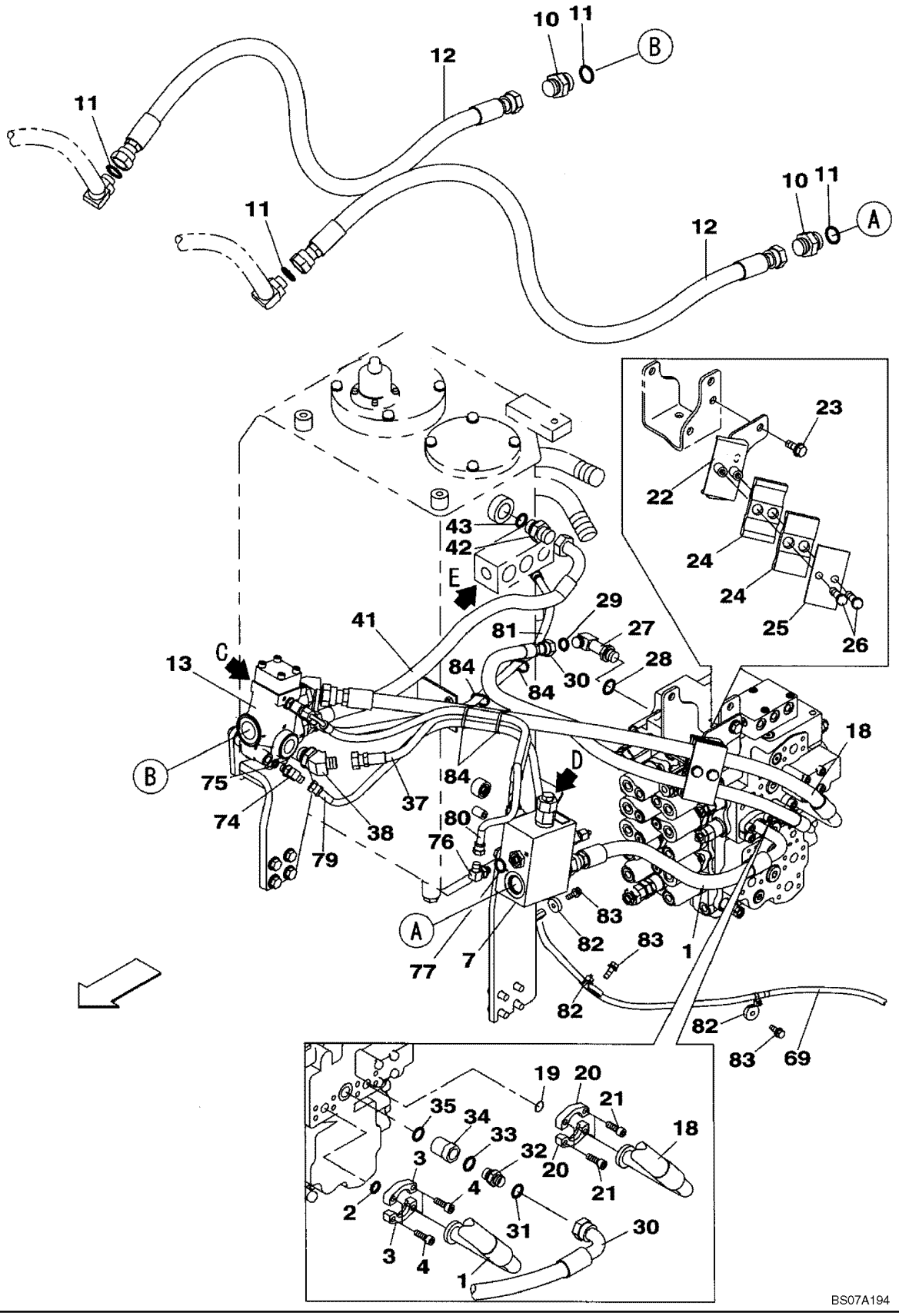

HYDRAULICS, AUXILIARY - MULTI-PURPOSE + 3 WAY VALVE, PEDAL ACTIVATED

REF	FN	PART NUMBER	YR/SN	QTY	DESCRIPTION
74		150933A1		1	COTOVELO, Incl. 75
75		154467A1		1	ANEL "O"
76		150913A1		1	COTOVELO, 90º, 1/4" O-Ring x 1/4", Incl. 77
77		154467A1		1	ANEL "O"
79		KHJ16860		1	MANGUEIRA CONJUNTO, 950 mm (37-3/8 in), Replaces KHJ2249
80		KHJ16880		1	MANGUEIRA CONJUNTO, 1100 mm (43-5/16 in), Replaces KHJ2092
81		KHJ2049		1	MANGUEIRA CONJUNTO, 900 mm (35-7/16 in)
82		KHR2584		3	BRACADEIRA
83		KHJ1215		3	PARAFUSO
84		150496A1		AR	ARGOLA DE FIXACAO

HYDRAULICS, AUXILIARY - MULTI-PURPOSE + 3 WAY VALVE, PEDAL ACTIVATED

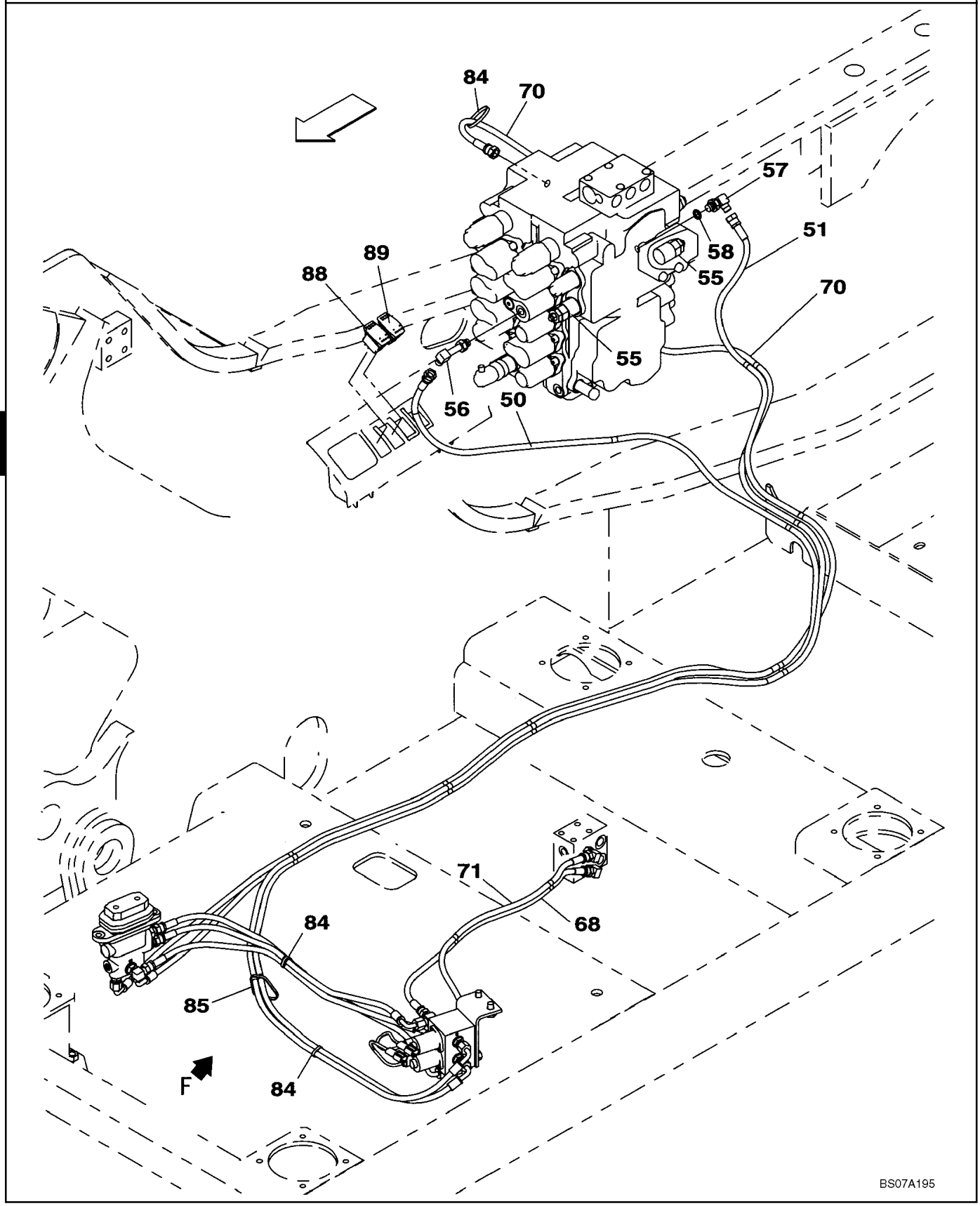

HYDRAULICS, AUXILIARY - MULTI-PURPOSE + 3 WAY VALVE, PEDAL ACTIVATED

REF	FN	PART NUMBER	YR/SN	QTY	DESCRIPTION
50		KHJ2198		1	MANGUEIRA CONJUNTO, 2850 mm (114-3/16 in)
51		KHJ2340		1	MANGUEIRA CONJUNTO, 2750 mm (108-1/4 in)
55		KNJ2732		2	VÁLVULA DE SOBRE-PRESSÃO
56		KHJ1178		1	COTOVELO
57		150913A1		1	COTOVELO, 90º, 1/4" O-Ring x 1/4", Incl. 58
58		154467A1		1	ANEL "O"
68		KHJ2047		1	MANGUEIRA CONJUNTO, 650 mm (25-5/8 in)
70		KHJ16310		1	MANGUEIRA CONJUNTO, 3850 mm (151-9/16 in)
71		KHJ2086		1	MANGUEIRA CONJUNTO, 700 mm (27-9/16 in)
84		150496A1		AR	ARGOLA DE FIXACAO
85		150498A1		1	ARGOLA DE FIXACAO
88		KHR14450		1	INTERRUPTOR
89		KHR14460		1	INTERRUPTOR

HYDRAULICS, AUXILIARY - MULTI-PURPOSE + 3 WAY VALVE, PEDAL ACTIVATED

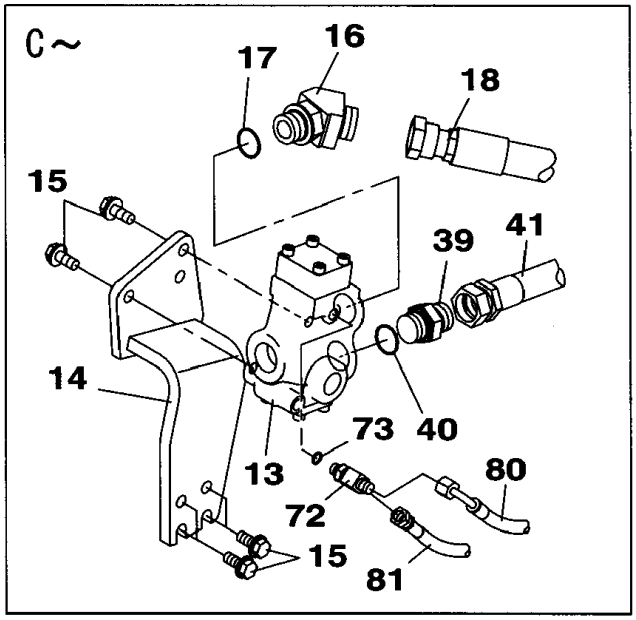

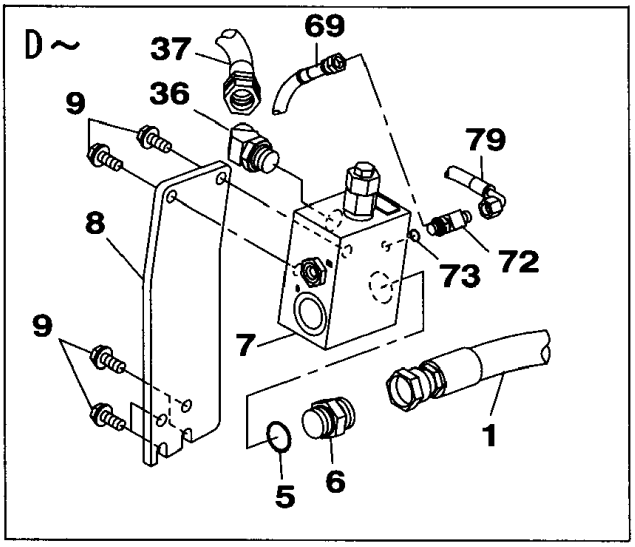

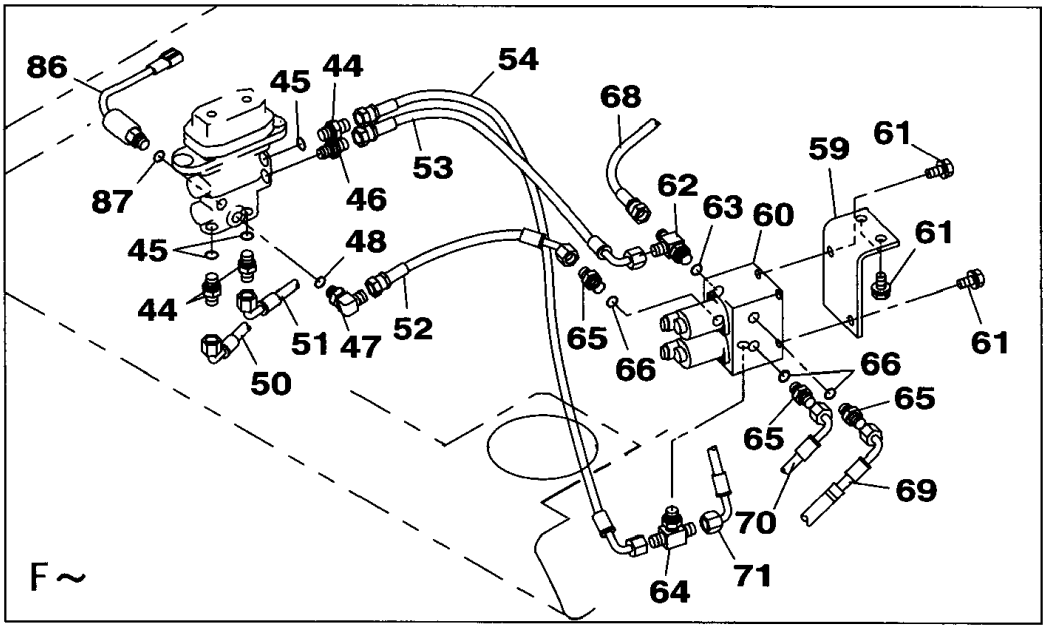

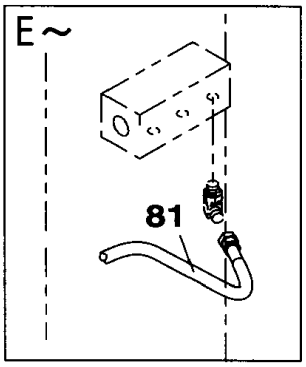

BS07A196

HYDRAULICS, AUXILIARY - MULTI-PURPOSE + 3 WAY VALVE, PEDAL ACTIVATED

REF	FN	PART NUMBER	YR/SN	QTY	DESCRIPTION
1		KLJ10980		1	MANGUEIRA CONJUNTO, 650 mm (33-7/8 in)
5		KHJ1360		1	ANEL O
6		KHJ1941		1	CONEXAO
7		KHJ10410		1	SECÇÃO DE VÁLVULAS, See Figure 08-78
8		KRJ11470		1	SUPORTE
9		166352A1		6	PARAFUSO
13		KHJ10420		1	SECÇÃO DE VÁLVULAS, See Figure 08-77
14		KRJ16050		1	SUPORTE
15		166352A1		6	PARAFUSO
16		KHJ16290		1	COTOVELO
17		KHJ1360		1	ANEL O
18		KLJ11350		1	MANGUEIRA CONJUNTO, 1140 mm (44-7/8 in)
36		KHJ2243		1	COTOVELO
37		KAJ2882		1	MANGUEIRA CONJUNTO
39		169040A1		1	ADAPTADOR, Incl. 40
40		155211A1		1	ANEL "O"
41		KBJ1683		1	MANGUEIRA CONJUNTO, 680 mm (26-3/4 in)
44		152127A1		3	CONEXÃO, 1/4" NPT O-Ring x 1/4" NPT, Incl. 45
45		154467A1		1	ANEL "O"
46		161841A1		1	CONEXÃO
47		150913A1		1	COTOVELO, 90º, 1/4" O-Ring x 1/4", Incl. 48
48		154467A1		1	ANEL "O"
50		KHJ2198		1	MANGUEIRA CONJUNTO, 2850 mm (114-3/16 in)
51		KHJ2340		1	MANGUEIRA CONJUNTO, 2750 mm (108-1/4 in)
52		KHJ2244		1	MANGUEIRA CONJUNTO, 600 mm (23-5/8 in)
53		KHJ2085		1	MANGUEIRA CONJUNTO, 600 mm (23-5/8 in)
54		KHJ2194		1	MANGUEIRA CONJUNTO, 650 mm (25-5/8 in)
59		KHJ11510		1	SUPORTE
60		KHJ14780		1	SECÇÃO DE VÁLVULAS, See Figure 08-74
61		166351A1		4	PARAFUSO
62		159497A1		1	TEE, Incl. 63
63		154467A1		1	ANEL "O"
64		167321A1		1	TEE
65		152127A1		3	CONEXÃO, 1/4" NPT O-Ring x 1/4" NPT, Incl. 66
66		154467A1		1	ANEL "O"

HYDRAULICS, AUXILIARY - MULTI-PURPOSE + 3 WAY VALVE, PEDAL ACTIVATED

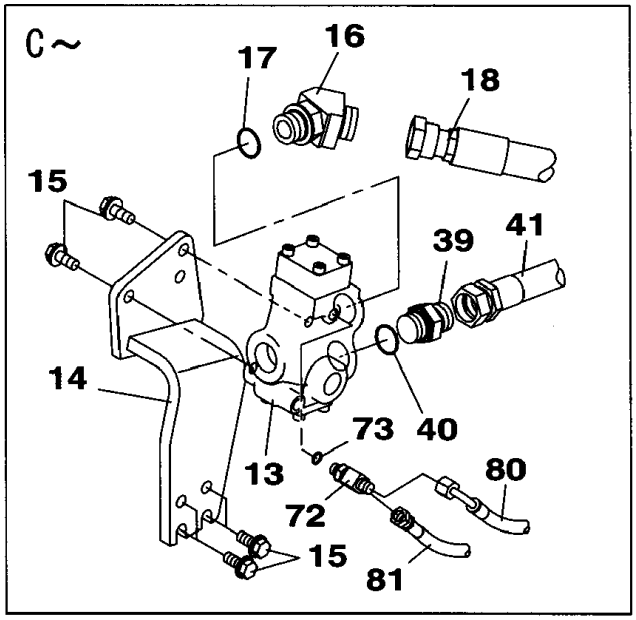

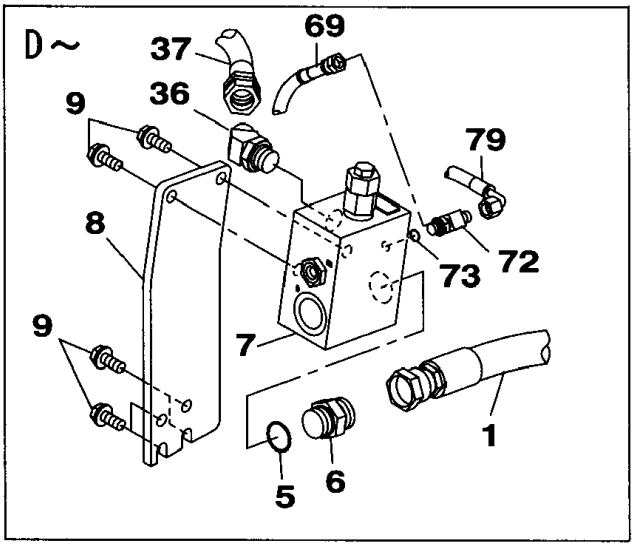

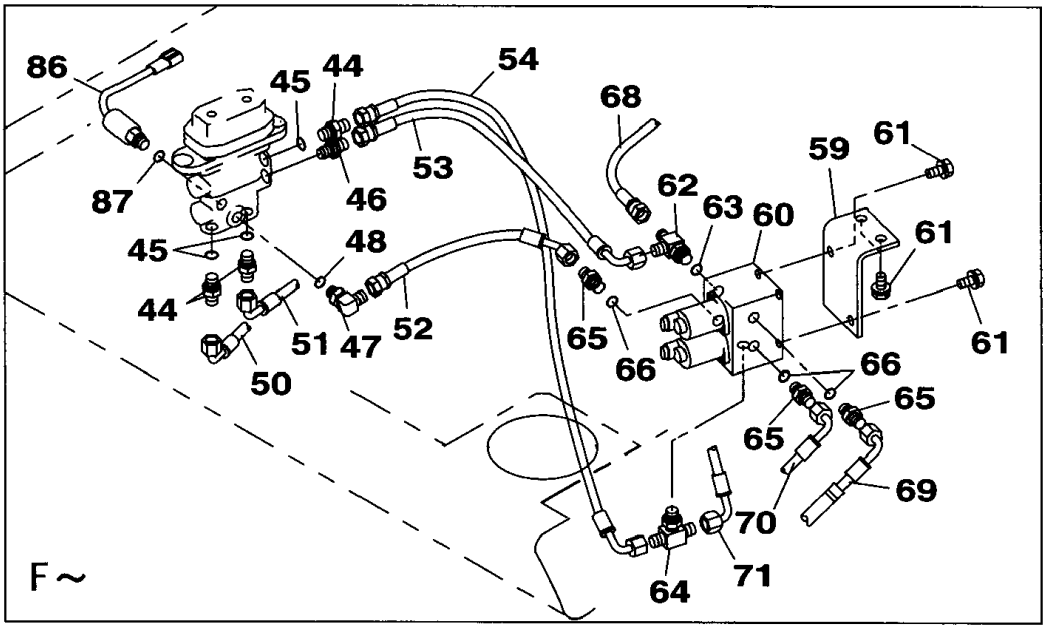

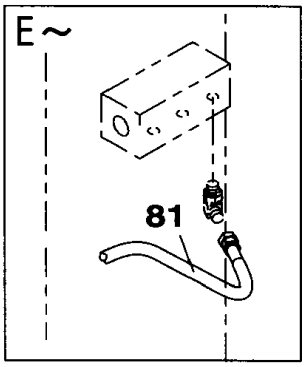

BS07A196

HYDRAULICS, AUXILIARY - MULTI-PURPOSE + 3 WAY VALVE, PEDAL ACTIVATED

REF	FN	PART NUMBER	YR/SN	QTY	DESCRIPTION
68		KHJ2047		1	MANGUEIRA CONJUNTO, 650 mm (25-5/8 in)
69		KHJ16300		1	MANGUEIRA CONJUNTO, 3650 mm (143-11/16 in)
70		KHJ16310		1	MANGUEIRA CONJUNTO, 3850 mm (151-9/16 in)
71		KHJ2086		1	MANGUEIRA CONJUNTO, 700 mm (27-9/16 in)
72		159497A1		2	TEE, Incl. 73
73		154467A1		1	ANEL "O"
79		KHJ16860		1	MANGUEIRA CONJUNTO, 950 mm (37-3/8 in), Replaces KHJ2249
80		KHJ16880		1	MANGUEIRA CONJUNTO, 1100 mm (43-5/16 in), Replaces KHJ2092
81		KHJ2049		1	MANGUEIRA CONJUNTO, 900 mm (35-7/16 in)
86		KHR10820		1	INTERRUPTOR, Incl. 87
87		154467A1		1	ANEL "O"
103		154467A1		1	ANEL "O"

HYDRAULICS, AUXILIARY - MULTI-PURPOSE + 3 WAY VALVE, TRIGGER ACTIVATED

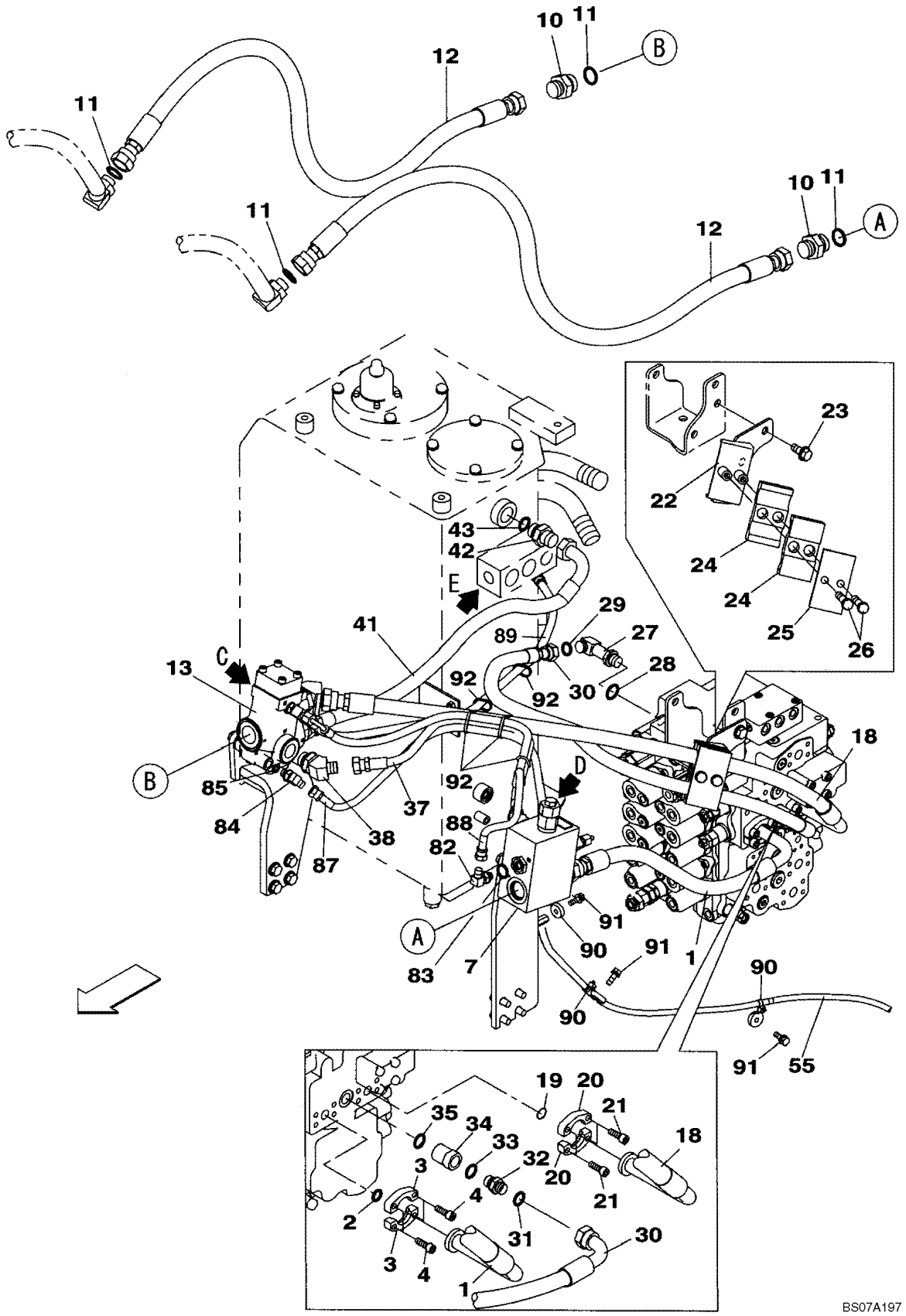

HYDRAULICS, AUXILIARY - MULTI-PURPOSE + 3 WAY VALVE, TRIGGER ACTIVATED

REF	FN	PART NUMBER	YR/SN	QTY	DESCRIPTION
1		KLJ10980		1	MANGUEIRA CONJUNTO, 650 mm (33-7/8 in)
2		155210A1		1	ANEL O
3		153458A1		2	FLANGE, Split
4		862-10030		4	PARAFUSO, Hex Soc Hd, M10 x 30, 12.9
7		KHJ10410		1	SECÇÃO DE VÁLVULAS, See Figure 08-78
10		KHJ1941		2	CONEXAO
11		KHJ1360		4	ANEL O
12		KLJ11690		2	MANGUEIRA CONJUNTO, 1460 mm (57-1/2 in), Replaces KLJ11340
13		KHJ10420		1	SECÇÃO DE VÁLVULAS, See Figure 08-77
18		KLJ11350		1	MANGUEIRA CONJUNTO, 1140 mm (44-7/8 in)
19		155210A1		1	ANEL O
20		153458A1		2	FLANGE, Split
21		862-10030		4	PARAFUSO, Hex Soc Hd, M10 x 30, 12.9
22		KNJ14020		1	SUPORTE
23		166352A1		2	PARAFUSO
24		KLJ10730		2	BRACADEIRA
25		KRH10210		1	PLACA
26		166347A1		2	PARAFUSO
27		KHJ14690		1	COTOVELO, Incl. 28
28		154487A1		1	ANEL "O"
29		155204A1		1	ANEL O
30		KNJ12880		1	MANGUEIRA CONJUNTO, 930 mm (36-5/8 in)
31		155204A1		1	ANEL O
32		KHJ14710		1	ADAPTADOR, Incl. 33
33		154487A1		1	ANEL "O"
34		KHJ14720		1	VALVULA CHECAGEM, Incl. 35
35		154495A1		1	ANEL O
37		KAJ2882		1	MANGUEIRA CONJUNTO
38		KHJ2243		1	COTOVELO
41		KBJ1683		1	MANGUEIRA CONJUNTO, 680 mm (26-3/4 in)
42		151654A1		1	CONEXÃO, 3/4" NPT O-Ring x 3/4" NPT, Incl. 43
43		154503A1		1	ANEL O
55		KHJ11500		1	MANGUEIRA CONJUNTO, 3600 mm (141-3/4 in)
82		150913A1		1	COTOVELO, 90º, 1/4" O-Ring x 1/4", Incl. 83

HYDRAULICS, AUXILIARY - MULTI-PURPOSE + 3 WAY VALVE, TRIGGER ACTIVATED

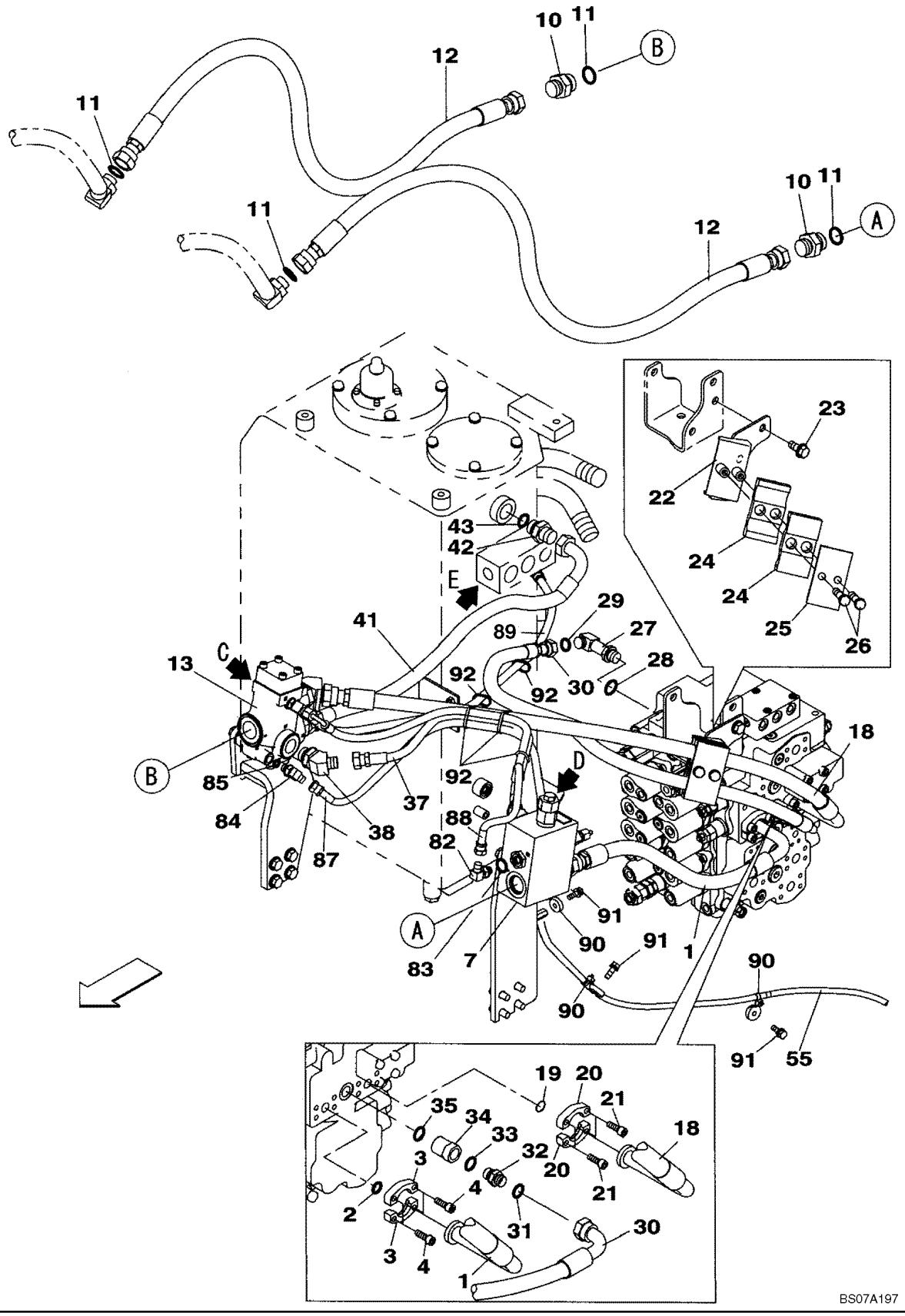

HYDRAULICS, AUXILIARY - MULTI-PURPOSE + 3 WAY VALVE, TRIGGER ACTIVATED

REF	FN	PART NUMBER	YR/SN	QTY	DESCRIPTION
83		154467A1		1	ANEL "O"
84		150933A1		1	COTOVELO, Incl. 85
85		154467A1		1	ANEL "O"
87		KHJ16860		1	MANGUEIRA CONJUNTO, 950 mm (37-3/8 in), Replaces KHJ2249
88		KHJ16880		1	MANGUEIRA CONJUNTO, 1100 mm (43-5/16 in), Replaces KHJ2092
89		KHJ2049		1	MANGUEIRA CONJUNTO, 900 mm (35-7/16 in)
90		KHR2584		3	BRACADEIRA
91		KHJ1215		3	PARAFUSO
92		150496A1		AR	ARGOLA DE FIXACAO

HYDRAULICS, AUXILIARY - MULTI-PURPOSE + 3 WAY VALVE, TRIGGER ACTIVATED

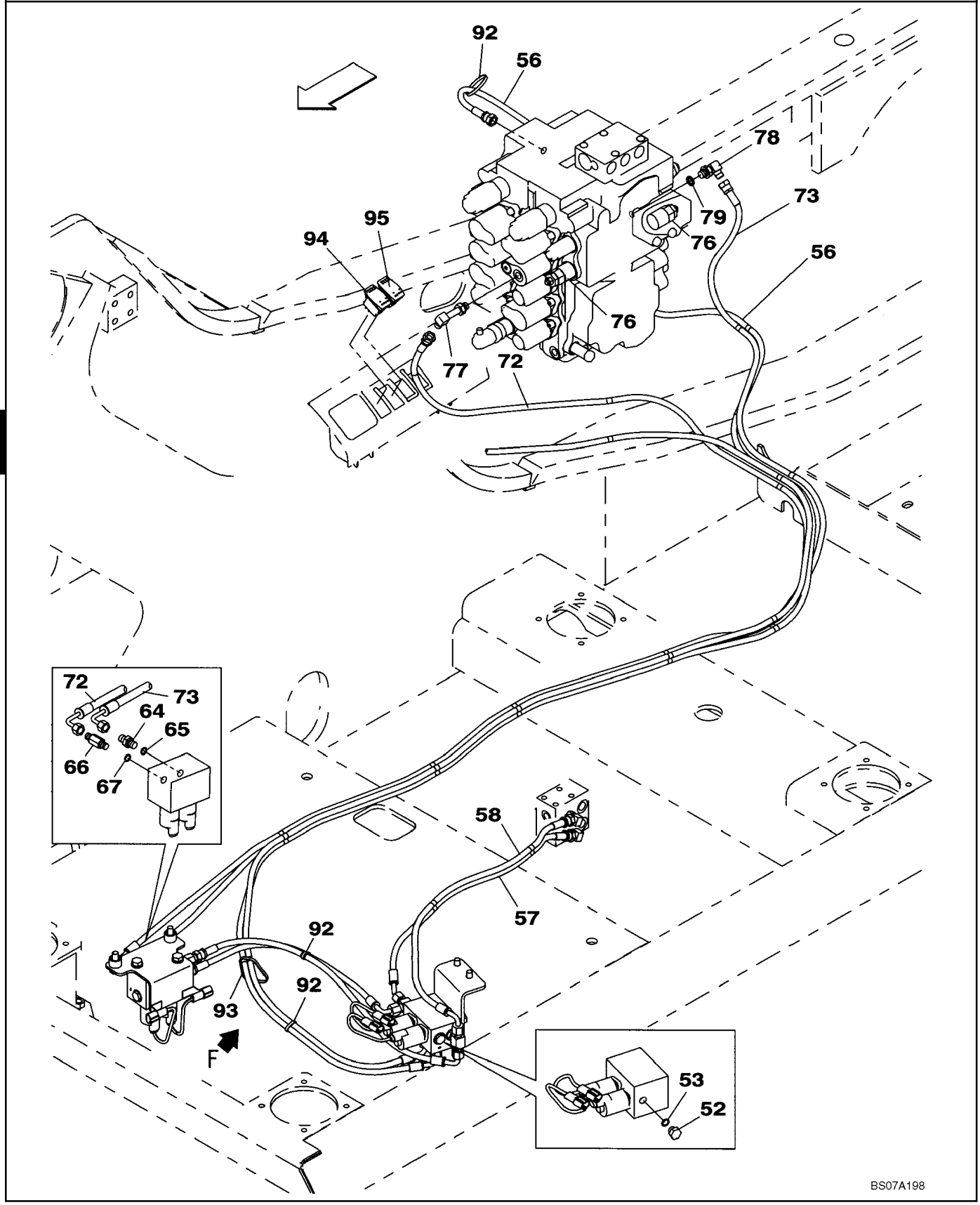

HYDRAULICS, AUXILIARY - MULTI-PURPOSE + 3 WAY VALVE, TRIGGER ACTIVATED

REF	FN	PART NUMBER	YR/SN	QTY	DESCRIPTION
52		159002A1		1	BUJÃO, Incl. 53
53		154467A1		1	ANEL "O"
56		KHJ15160		1	MANGUEIRA CONJUNTO, 3800 mm (149-5/8 in)
57		KHJ14650		1	MANGUEIRA CONJUNTO, 650 mm (33-7/8 in)
58		KHJ2048		1	MANGUEIRA CONJUNTO, 800 mm (31-1/2 in)
64		152127A1		1	CONEXÃO, 1/4" NPT O-Ring x 1/4" NPT, Incl. 65
65		154467A1		1	ANEL "O"
66		162554A1		1	CONEXAO, Incl. 67
67		154467A1		1	ANEL "O"
72		KHJ2198		1	MANGUEIRA CONJUNTO, 2850 mm (112-3/16 in)
73		KHJ2165		1	MANGUEIRA CONJUNTO, 2700 mm (106-9/32 in)
76		KNJ2732		2	VÁLVULA DE SOBRE-PRESSÃO
77		KHJ1178		1	COTOVELO
78		150913A1		1	COTOVELO, 90º, 1/4" O-Ring x 1/4", Incl. 79
79		154467A1		1	ANEL "O"
92		150496A1		X	ARGOLA DE FIXACAO
93		150498A1		1	ARGOLA DE FIXACAO
94		KHR14450		1	INTERRUPTOR
95		KHR14460		1	INTERRUPTOR

HYDRAULICS, AUXILIARY - MULTI-PURPOSE + 3 WAY VALVE, TRIGGER ACTIVATED

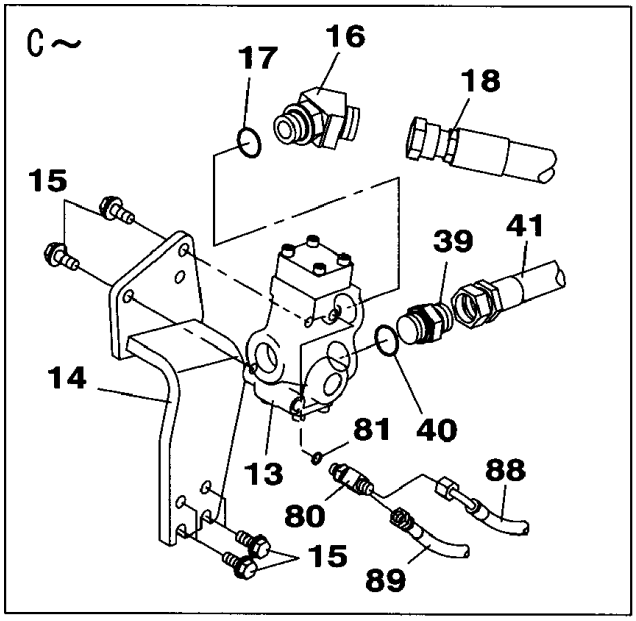

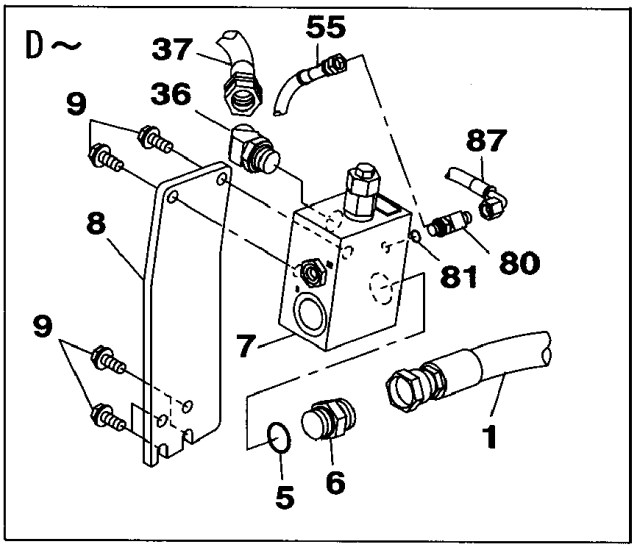

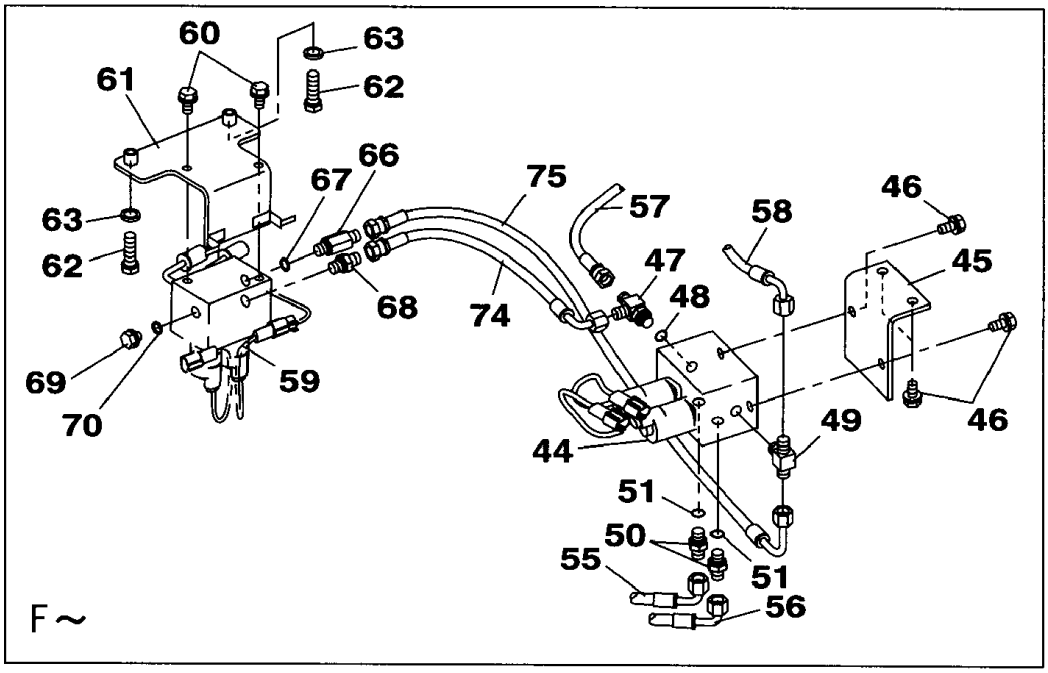

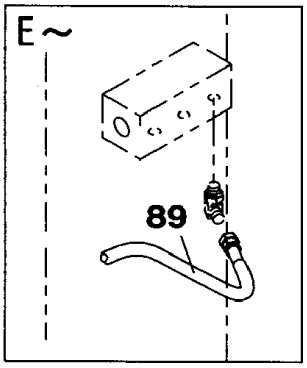

BS07A199

HYDRAULICS, AUXILIARY - MULTI-PURPOSE + 3 WAY VALVE, TRIGGER ACTIVATED

REF	FN	PART NUMBER	YR/SN	QTY	DESCRIPTION
1		KLJ10980		1	MANGUEIRA CONJUNTO, 650 mm (33-7/8 in)
5		KHJ1360		1	ANEL O
6		KHJ1941		1	CONEXAO
7		KHJ10410		1	SECÇÃO DE VÁLVULAS, See Figure 08-78
8		KRJ11470		1	SUPORTE
9		166352A1		6	PARAFUSO
13		KHJ10420		1	SECÇÃO DE VÁLVULAS, See Figure 08-77
14		KRJ16050		1	SUPORTE
15		166352A1		6	PARAFUSO
16		KHJ16290		1	COTOVELO
17		KHJ1360		1	ANEL O
18		KLJ11350		1	MANGUEIRA CONJUNTO, 1140 mm (44-7/8 in)
36		KHJ2243		1	COTOVELO
37		KAJ2882		1	MANGUEIRA CONJUNTO
39		169040A1		1	ADAPTADOR, Incl. 40
40		155211A1		1	ANEL "O"
41		KBJ1683		1	MANGUEIRA CONJUNTO, 680 mm (26-3/4 in)
44		KHJ14000		1	SECÇÃO DE VÁLVULAS, See Figure 08-81
45		KHJ14670		1	SUPORTE
46		166351A1		2	PARAFUSO
47		159497A1		1	TEE, Incl. 48
48		154467A1		1	ANEL "O"
49		167321A1		1	TEE
50		152127A1		2	CONEXÃO, 1/4" NPT O-Ring x 1/4" NPT, Incl. 51
51		154467A1		1	ANEL "O"
55		KHJ11500		1	MANGUEIRA CONJUNTO, 3600 mm (141-3/4 in)
56		KHJ15160		1	MANGUEIRA CONJUNTO, 3800 mm (149-5/8 in)
57		KHJ14650		1	MANGUEIRA CONJUNTO, 650 mm (33-7/8 in)
58		KHJ2048		1	MANGUEIRA CONJUNTO, 800 mm (31-1/2 in)
59		KHJ14000		1	SECÇÃO DE VÁLVULAS, See Figure 08-81
60		166351A1		2	PARAFUSO
61		KHJ14680		1	SUPORTE
62		627-10035		2	PARAFUSO, Hex, M10 x 35, 10.9, Full Thd
63		150409A1		2	ARRUELA PLANA
66		162554A1		1	CONEXAO, Incl. 67

HYDRAULICS, AUXILIARY - MULTI-PURPOSE + 3 WAY VALVE, TRIGGER ACTIVATED

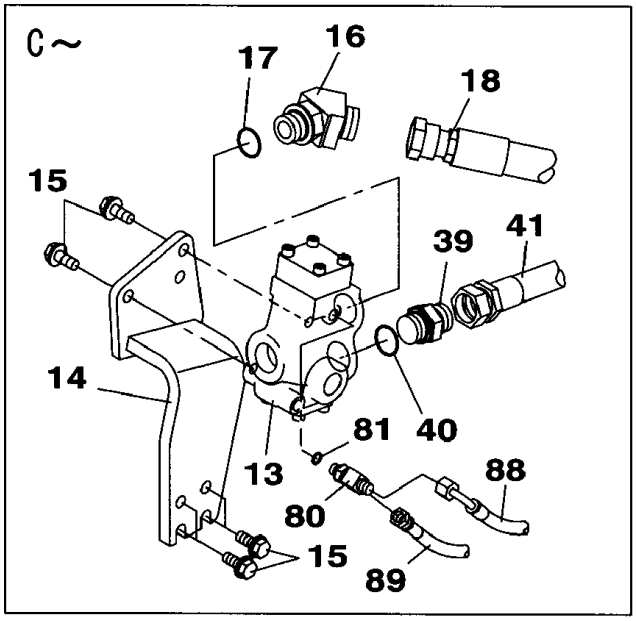

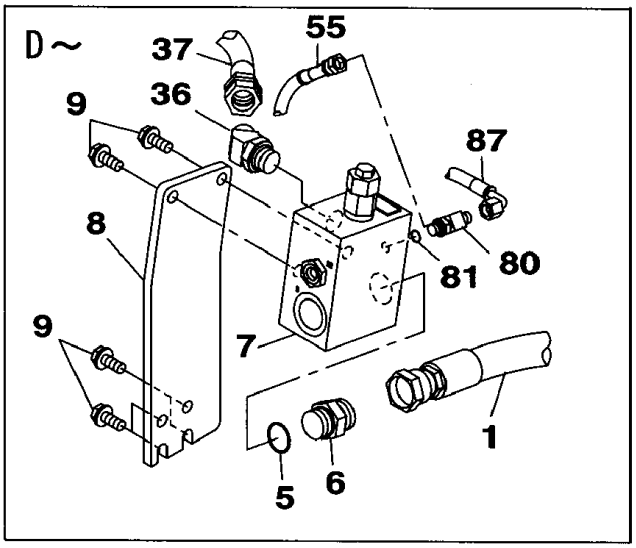

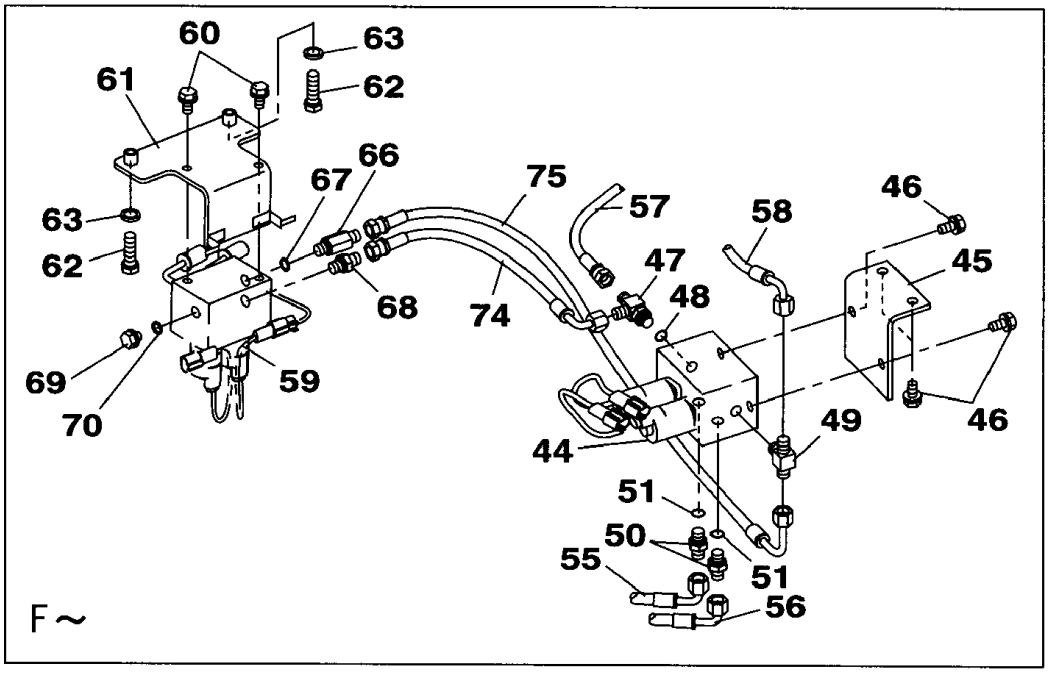

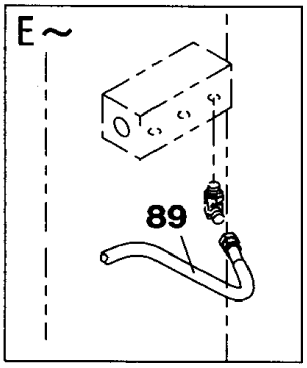

BS07A199

HYDRAULICS, AUXILIARY - MULTI-PURPOSE + 3 WAY VALVE, TRIGGER ACTIVATED

REF	FN	PART NUMBER	YR/SN	QTY	DESCRIPTION
67		154467A1		1	ANEL "O"
68		161841A1		1	CONEXÃO
69		159002A1		1	BUJÃO, Incl. 70
70		154467A1		1	ANEL "O"
74		KHJ2180		1	MANGUEIRA, 500 mm (19-11/16 in)
75		KHJ2194		1	MANGUEIRA CONJUNTO, 650 mm (25-5/8 in)
80		159497A1		2	TEE, Incl. 81
81		154467A1		1	ANEL "O"
87		KHJ16860		1	MANGUEIRA CONJUNTO, 950 mm (37-3/8 in), Repaces KHJ2249
88		KHJ16880		1	MANGUEIRA CONJUNTO, 1100 mm (43-5/16 in), Replaces KHJ2092
89		KHJ2049		1	MANGUEIRA CONJUNTO, 900 mm (35-7/16 in)

SISTEMA HIDRÁULICO AUXILIAR - CIRCUITO EM SEGUNDO ATIVO, PEDAL ATIVADO

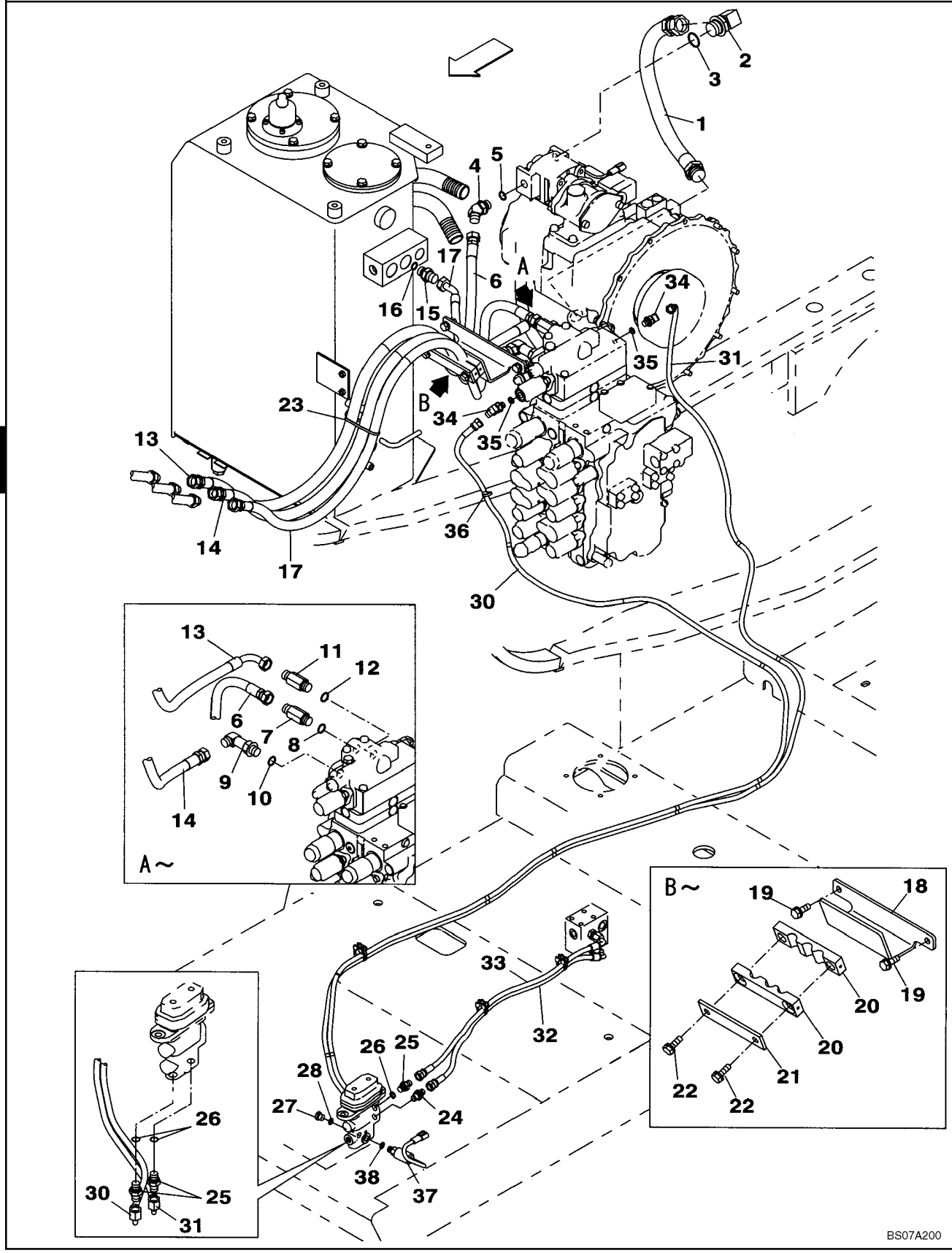

SISTEMA HIDRÁULICO AUXILIAR - CIRCUITO EM SEGUNDO ATIVO, PEDAL ATIVADO

REF	FN	PART NUMBER	YR/SN	QTY	DESCRIPTION
1		KNJ13140		1	MANGUEIRA CONJUNTO, 570 mm (22-7/16 in)
2		157581A1		1	COTOVELO, 90º, 1" O-Ring x 1", Incl. 3
3		154523A1		1	ANEL O
4		157585A1		1	COTOVELO, Incl. 5
5		154487A1		1	ANEL "O"
6		KLJ11520		1	MANGUEIRA CONJUNTO, 1180 mm (46-7/16 in)
7		159361A1		1	ADAPTADOR, Incl. 8
8		154487A1		1	ANEL "O"
9		KHJ1044		1	COTOVELO, Incl. 10
10		154487A1		1	ANEL "O"
11		159361A1		1	ADAPTADOR, Incl. 12
12		154487A1		1	ANEL "O"
13		KLJ11130		1	MANGUEIRA CONJUNTO, 1490 mm (58-5/8 in)
14		KLJ11140		1	MANGUEIRA CONJUNTO, 1380 mm (54-5/16 in)
15		151650A1		1	CONEXÃO, 1/2" NPT O-Ring x 1/2" NPT, Incl. 16
16		154487A1		1	ANEL "O"
17		KLJ11150		1	MANGUEIRA CONJUNTO, 1690 mm (66-1/2 in)
18		KLJ11160		1	SUPORTE
19		166347A1		2	PARAFUSO
20		KRJ11580		2	COLAR
21		KNJ13200		1	PLACA
22		166347A1		2	PARAFUSO
23		150496A1		1	ARGOLA DE FIXACAO
24		161841A1		1	CONEXÃO
25		152127A1		3	CONEXÃO, 1/4" NPT O-Ring x 1/4" NPT, Incl. 26
26		154467A1		1	ANEL "O"
27		159002A1		1	BUJÃO, Incl. 28
28		154467A1		1	ANEL "O"
30		KHJ12230		1	MANGUEIRA CONJUNTO, 3450 mm (135-13/16 in)
31		KHJ11500		1	MANGUEIRA CONJUNTO, 3600 mm (141-3/4 in)
32		KHJ2088		1	MANGUEIRA CONJUNTO, 850 mm (33-15/32 in)
33		KHJ2088		1	MANGUEIRA CONJUNTO, 850 mm (33-15/32 in)
34		150933A1		2	COTOVELO, Incl. 35
35		154467A1		1	ANEL "O"
36		150496A1		1	ARGOLA DE FIXACAO

SISTEMA HIDRÁULICO AUXILIAR - CIRCUITO EM SEGUNDO ATIVO, PEDAL ATIVADO

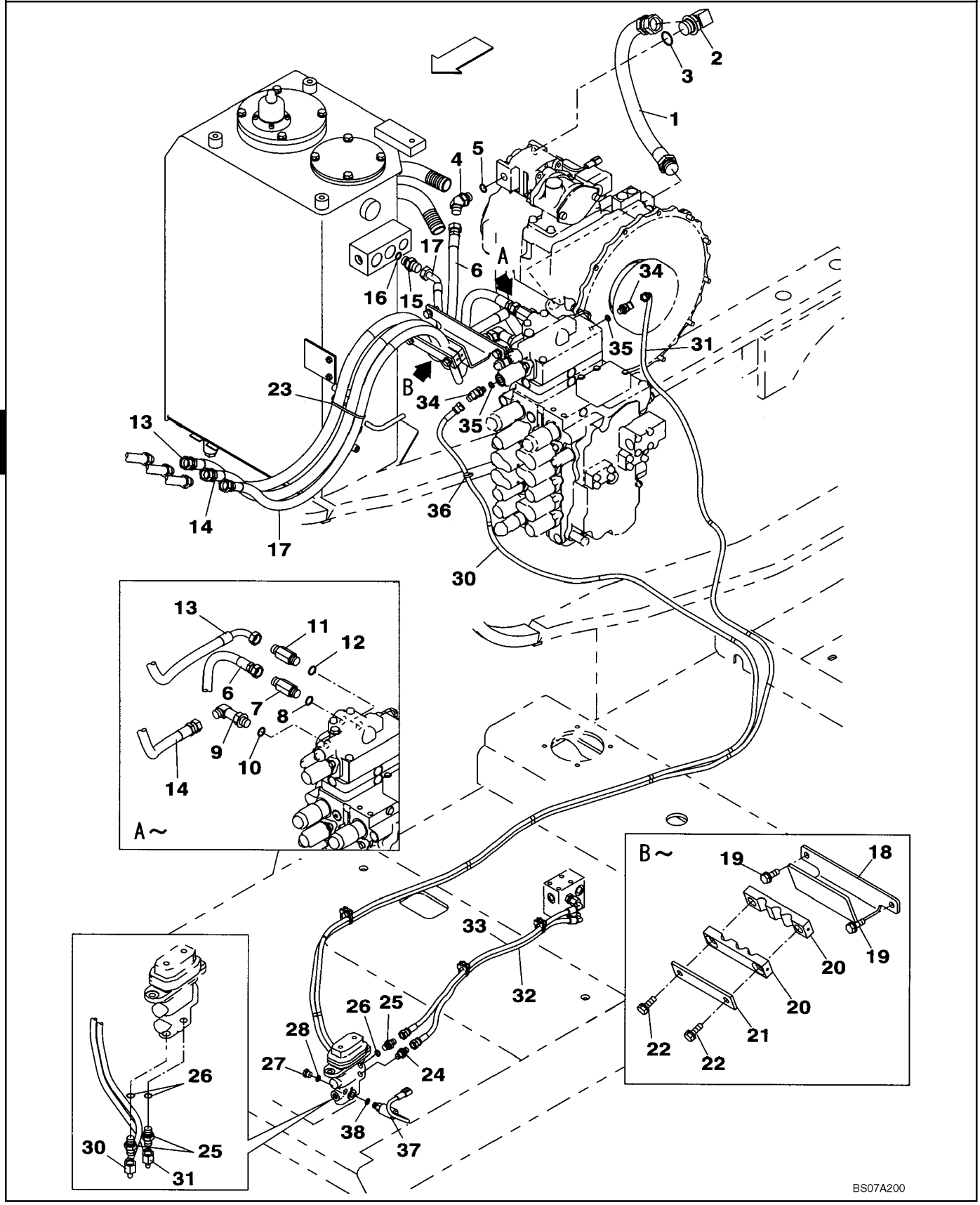

SISTEMA HIDRÁULICO AUXILIAR - CIRCUITO EM SEGUNDO ATIVO, PEDAL ATIVADO

REF	FN	PART NUMBER	YR/SN	QTY	DESCRIPTION
37		KHR10820		1	INTERRUPTOR, Incl. 38
38		154467A1		1	ANEL "O"

HYDRAULICS, AUXILIARY - SECOND ACTING CIRCUIT, HAND OPERATED

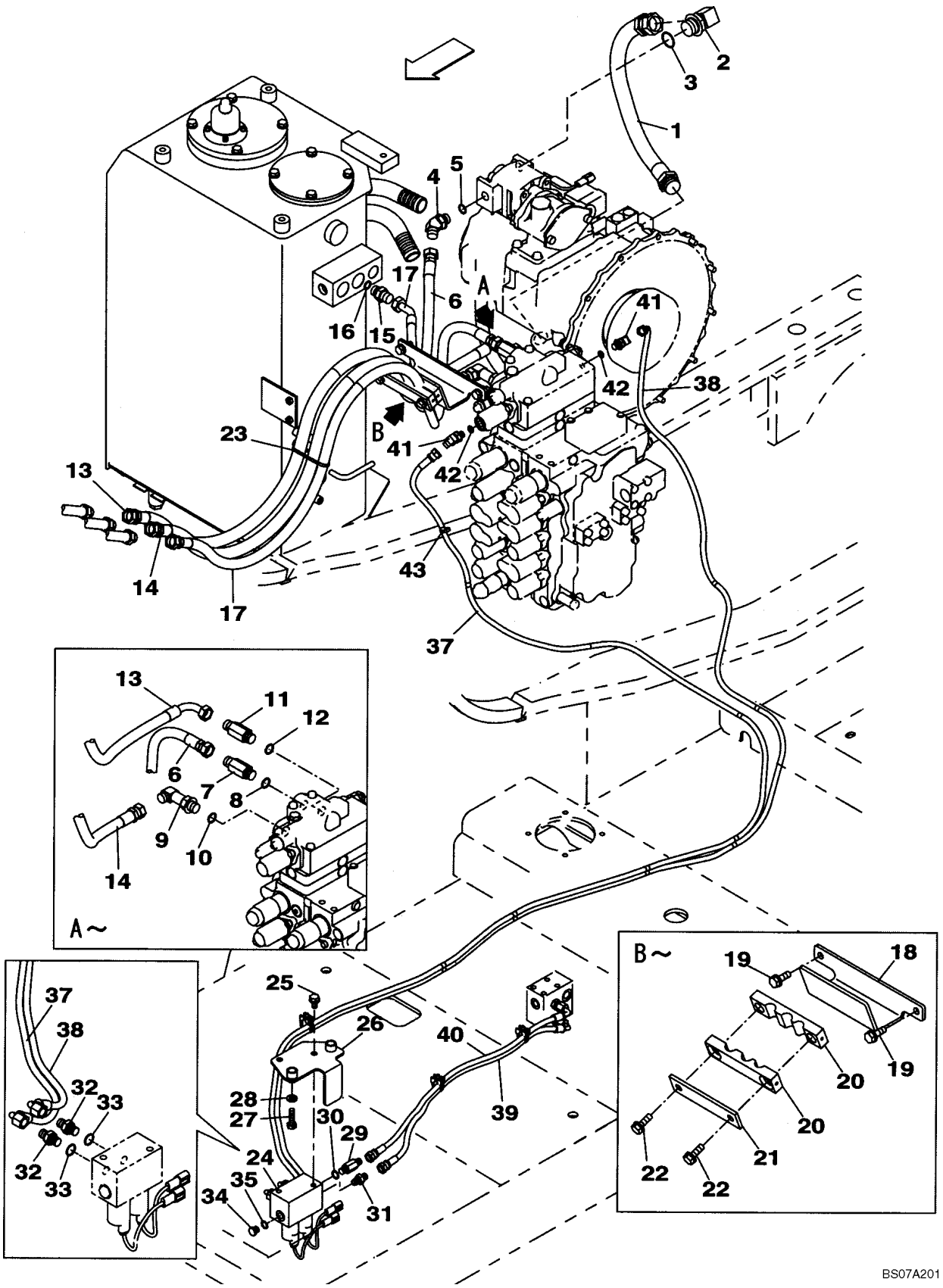

HYDRAULICS, AUXILIARY - SECOND ACTING CIRCUIT, HAND OPERATED

REF	FN	PART NUMBER	YR/SN	QTY	DESCRIPTION
1		KNJ13140		1	MANGUEIRA CONJUNTO, 570 mm (22-7/16 in)
2		157581A1		1	COTOVELO, 90º, 1" O-Ring x 1", Incl. 3
3		154523A1		1	ANEL O
4		157585A1		1	COTOVELO, Incl. 5
5		154487A1		1	ANEL "O"
6		KLJ11520		1	MANGUEIRA CONJUNTO, 1180 mm (46-7/16 in)
7		159361A1		1	ADAPTADOR, Incl. 8
8		154487A1		1	ANEL "O"
9		KHJ1044		1	COTOVELO, Incl. 10
10		154487A1		1	ANEL "O"
11		159361A1		1	ADAPTADOR, Incl. 12
12		154487A1		1	ANEL "O"
13		KLJ11130		1	MANGUEIRA CONJUNTO, 1490 mm (58-5/8 in)
14		KLJ11140		1	MANGUEIRA CONJUNTO, 1380 mm (54-5/16 in)
15		151650A1		1	CONEXÃO, 1/2" NPT O-Ring x 1/2" NPT, Incl. 16
16		154487A1		1	ANEL "O"
17		KLJ11150		1	MANGUEIRA CONJUNTO, 1690 mm (66-1/2 in)
18		KLJ11160		1	SUPORTE
19		166347A1		2	PARAFUSO
20		KRJ11580		2	COLAR
21		KNJ13200		1	PLACA
22		166347A1		2	PARAFUSO
23		150496A1		1	ARGOLA DE FIXACAO
24		KHJ14000		1	SECÇÃO DE VÁLVULAS, See Figure 08-81
25		166351A1		2	PARAFUSO
26		KHJ15190		1	SUPORTE
27		627-10035		2	PARAFUSO, Hex, M10 x 35, 10.9, Full Thd
28		150409A1		2	ARRUELA PLANA
29		162554A1		1	CONEXAO, Incl. 30
30		154467A1		1	ANEL "O"
31		161841A1		1	CONEXÃO
32		152127A1		2	CONEXÃO, 1/4" NPT O-Ring x 1/4" NPT, Incl. 33
33		154467A1		1	ANEL "O"
34		159002A1		1	BUJÃO, Incl. 35
35		154467A1		1	ANEL "O"

HYDRAULICS, AUXILIARY - SECOND ACTING CIRCUIT, HAND OPERATED

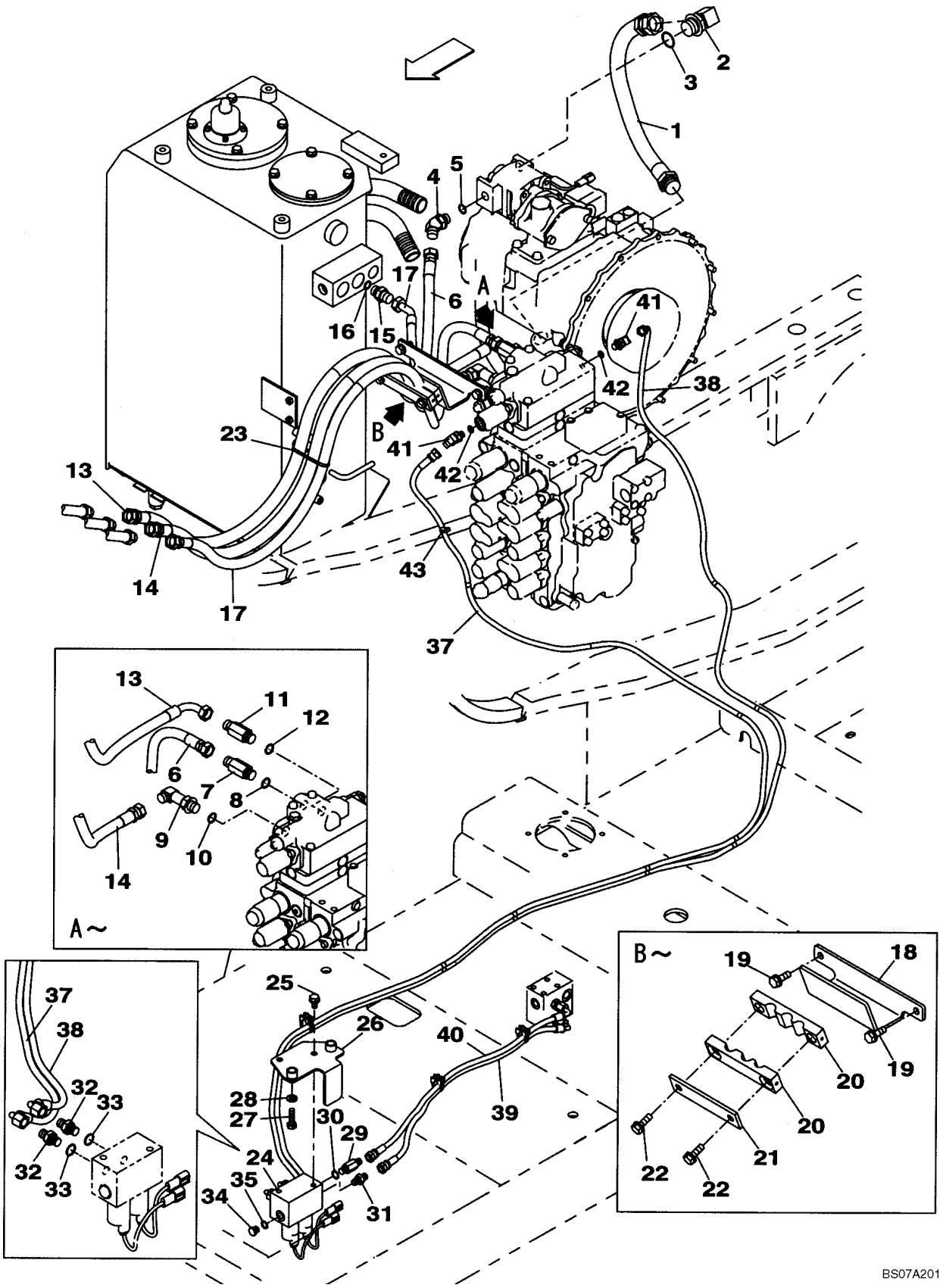

HYDRAULICS, AUXILIARY - SECOND ACTING CIRCUIT, HAND OPERATED

REF	FN	PART NUMBER	YR/SN	QTY	DESCRIPTION
37		KHJ12230		1	MANGUEIRA CONJUNTO, 3450 mm (135-13/16 in)
38		KHJ11500		1	MANGUEIRA CONJUNTO, 3600 mm (141-3/5 in)
39		KHJ2088		1	MANGUEIRA CONJUNTO, 850 mm (33-15/32 in)
40		KHJ2088		1	MANGUEIRA CONJUNTO, 850 mm (33-15/32 in)
41		150933A1		1	COTOVELO, Incl. 42
42		154467A1		1	ANEL "O"
43		150496A1		1	ARGOLA DE FIXACAO

08-40		p1	01/07

SEGUNDA LINHA DA OPÇÃO, BRAÇO DE 2,70 METER (8FT 10 IN)

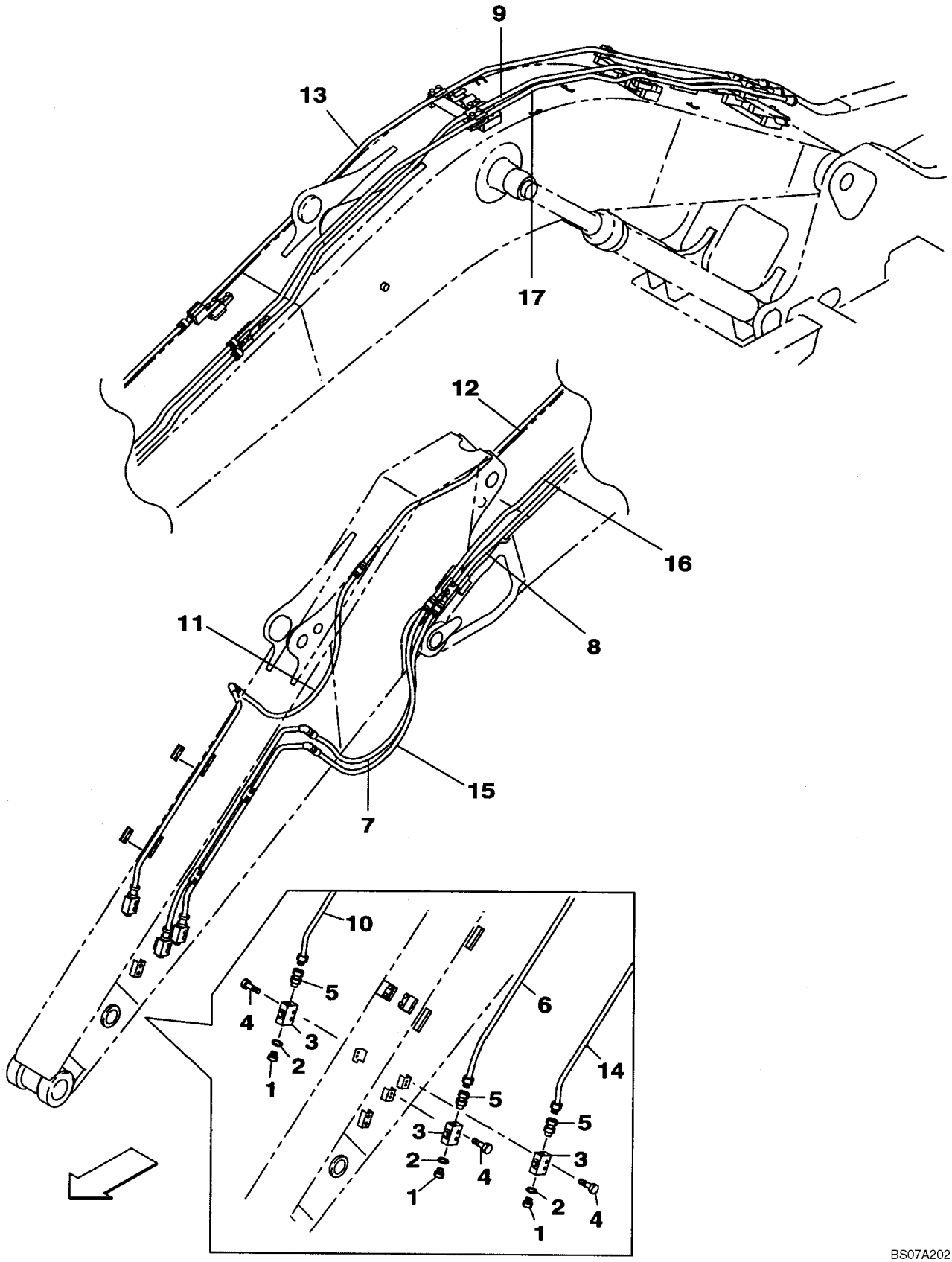

BS07A202

SEGUNDA LINHA DA OPÇÃO, BRAÇO DE 2,70 METER (8FT 10 IN)

REF	FN	PART NUMBER	YR/SN	QTY	DESCRIPTION
1		159085A1		3	BUJÃO, Incl. 2
2		154487A1		1	ANEL "O"
3		KHV10440		3	VALVULA DE PARADA
4		167183A1		6	PARAFUSO
5		KHJ1939		3	CONEXAO
6		KLV12470		1	TUBULAÇÃO HIDRAULICO
7		168535A1		1	MANGUEIRA CONJUNTO
8		KLV12450		1	TUBULAÇÃO HIDRAULICO
9		KLV12420		1	TUBULAÇÃO HIDRAULICO
10		KLV12480		1	TUBULAÇÃO HIDRAULICO
11		168535A1		1	MANGUEIRA CONJUNTO
12		KLV12460		1	TUBULAÇÃO HIDRAULICO
13		KLV12430		1	TUBULAÇÃO HIDRAULICO
14		KLV12490		1	TUBULAÇÃO HIDRAULICO
15		KLV11700		1	MANGUEIRA CONJUNTO
16		KLV12450		1	TUBULAÇÃO HIDRAULICO
17		KLV12440		1	TUBULAÇÃO HIDRAULICO

SEGUNDA LINHA DA OPÇÃO, BRAÇO DE 3,10 METER (10 FT 2 IN)

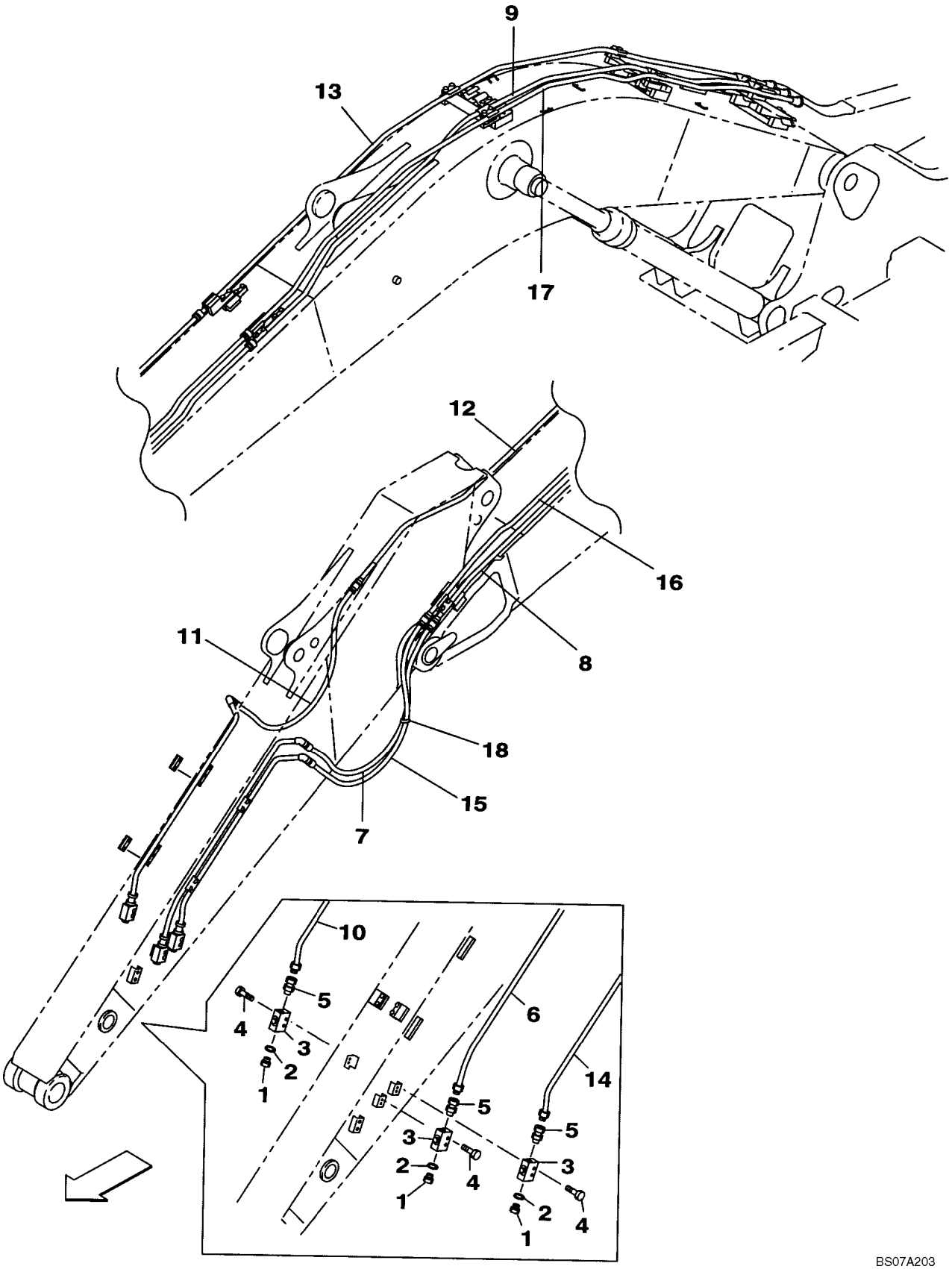

BS07A203

SEGUNDA LINHA DA OPÇÃO, BRAÇO DE 3,10 METER (10 FT 2 IN)

REF	FN	PART NUMBER	YR/SN	QTY	DESCRIPTION
1		159085A1		3	BUJÃO, Incl. 2
2		154487A1		1	ANEL "O"
3		KHV10440		3	VALVULA DE PARADA
4		167183A1		6	PARAFUSO
5		KHJ1939		3	CONEXAO
6		KLV12470		1	TUBULAÇÃO HIDRAULICO
7		KLV12930		1	MANGUEIRA CONJUNTO
8		KLV12450		1	TUBULAÇÃO HIDRAULICO
9		KLV12420		1	TUBULAÇÃO HIDRAULICO
10		KLV12480		1	TUBULAÇÃO HIDRAULICO
11		KLV12930		1	MANGUEIRA CONJUNTO
12		KLV12460		1	TUBULAÇÃO HIDRAULICO
13		KLV12430		1	TUBULAÇÃO HIDRAULICO
14		KLV12490		1	TUBULAÇÃO HIDRAULICO
15		KLV12940		1	MANGUEIRA CONJUNTO
16		KLV12450		1	TUBULAÇÃO HIDRAULICO
17		KLV12440		1	TUBULAÇÃO HIDRAULICO
18		150496A1		AR	ARGOLA DE FIXACAO

PLUG

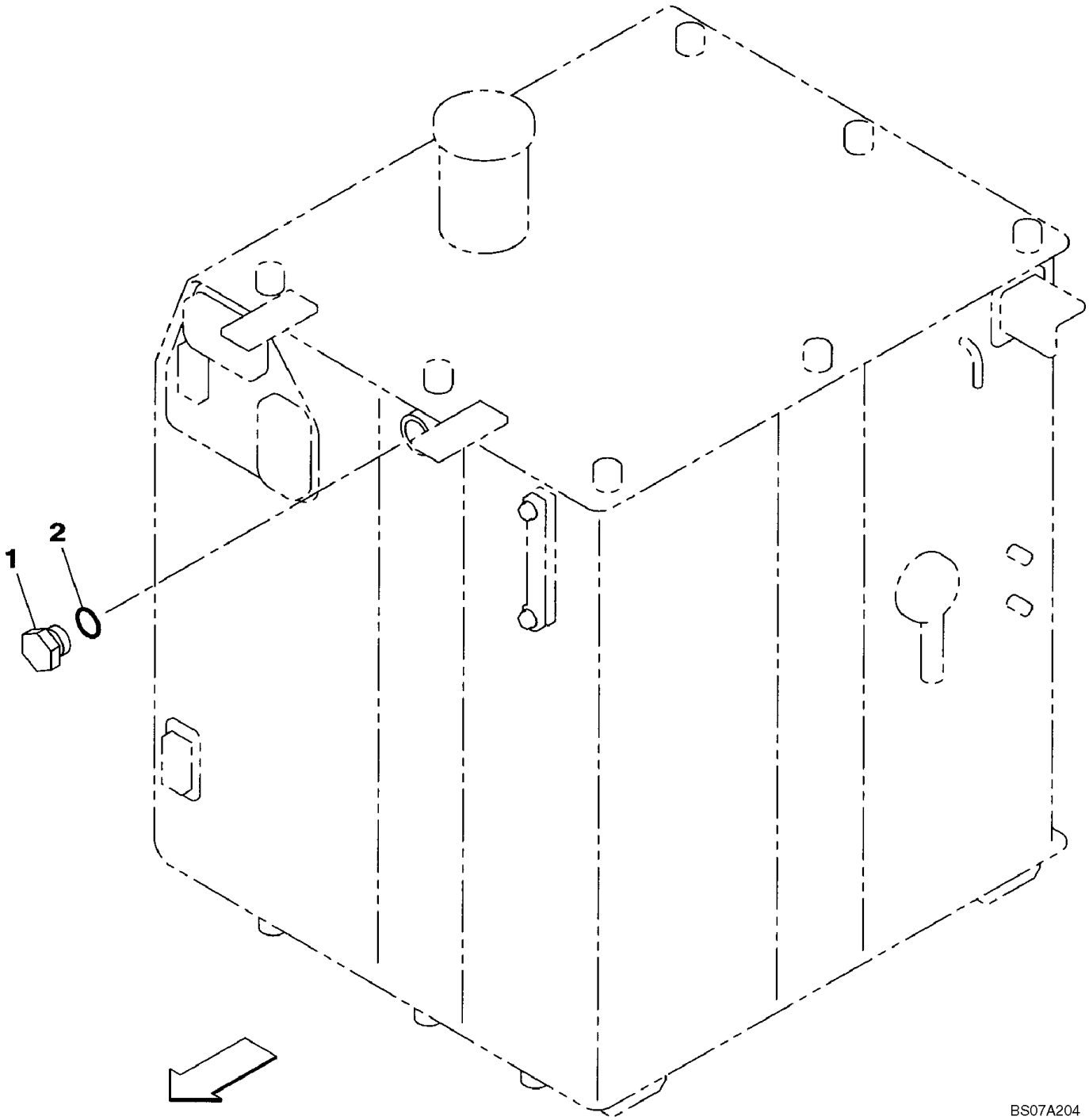

PLUG

REF	FN	PART NUMBER	YR/SN	QTY	DESCRIPTION
1		152924A1		1	BUJÃO, Incl. 2
2		154503A1		1	ANEL O

PLUG

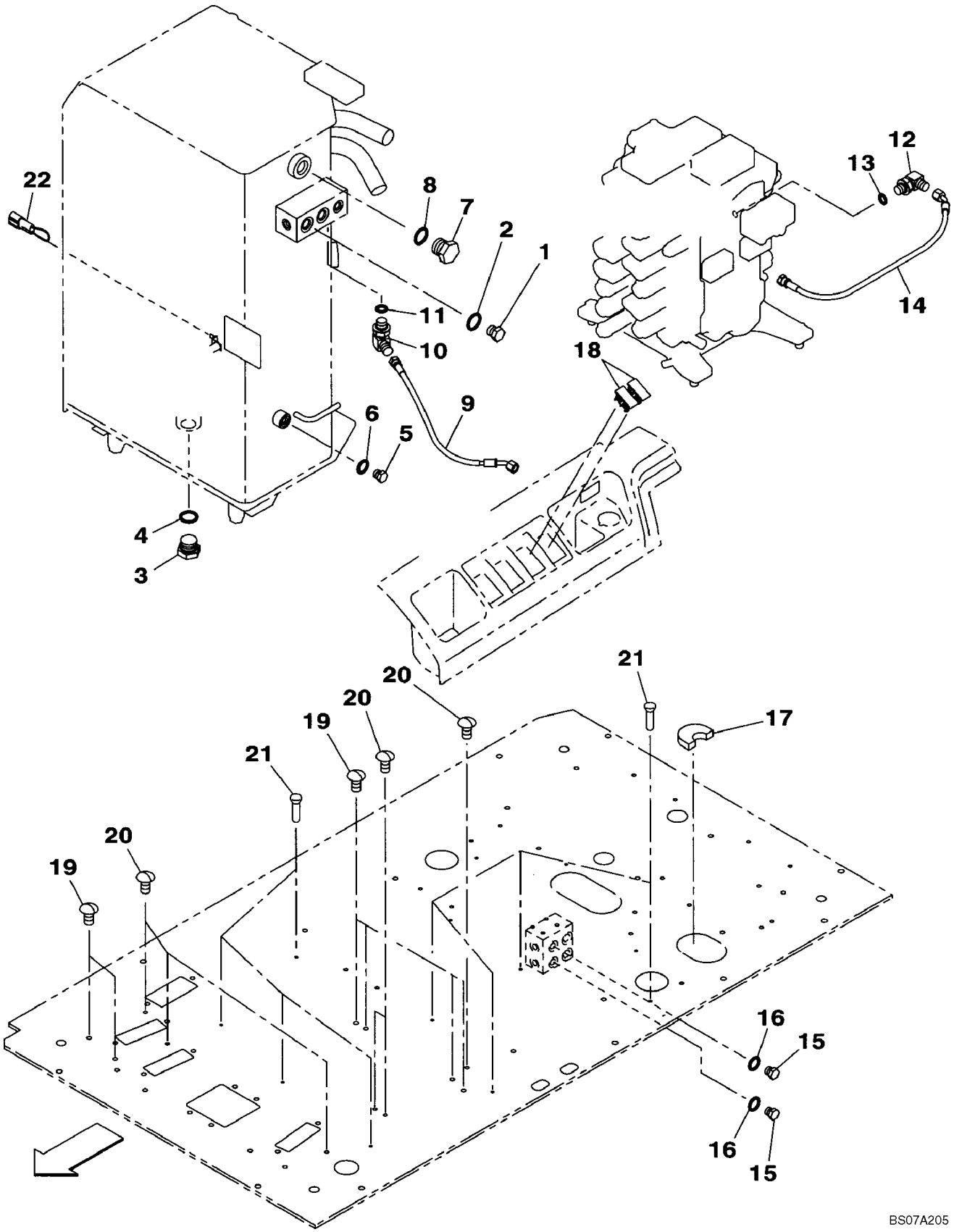

PLUG

REF	FN	PART NUMBER	YR/SN	QTY	DESCRIPTION
1		159085A1		1	BUJÃO, Incl. 2
2		154487A1		1	ANEL "O"
3		152924A1		1	BUJÃO, Incl. 4
4		154503A1		1	ANEL O
5		159002A1		1	BUJÃO, Incl. 6
6		154467A1		1	ANEL "O"
7		162659A1		1	BUJÃO, Incl. 8
8		154523A1		1	ANEL O
9		KHJ2034		1	MANGUEIRA CONJUNTO, 430 mm (16-15/16 in)
10		150913A1		1	COTOVELO, 90º, 1/4" O-Ring x 1/4", Incl. 11
11		154467A1		1	ANEL "O"
12		150913A1		1	COTOVELO, 90º, 1/4" O-Ring x 1/4", Incl. 13
13		154467A1		1	ANEL "O"
14		KHJ2241		1	MANGUEIRA CONJUNTO, 580 mm (22-13/16 in)
15		159002A1		2	BUJÃO, Incl. 16
16		154467A1		1	ANEL "O"
17		KHJ14620		1	JUNTA
18		KHR10390		2	TAMPA DO RESERVATÓRIO
19		KHJ15060		6	TAMPA DO RESERVATÓRIO
20		KHJ15080		6	TAMPA DO RESERVATÓRIO
21		KHJ15070		8	TAMPA DO RESERVATÓRIO
22		KHR16740		1	CHICOTE DE FIOS

PLUG

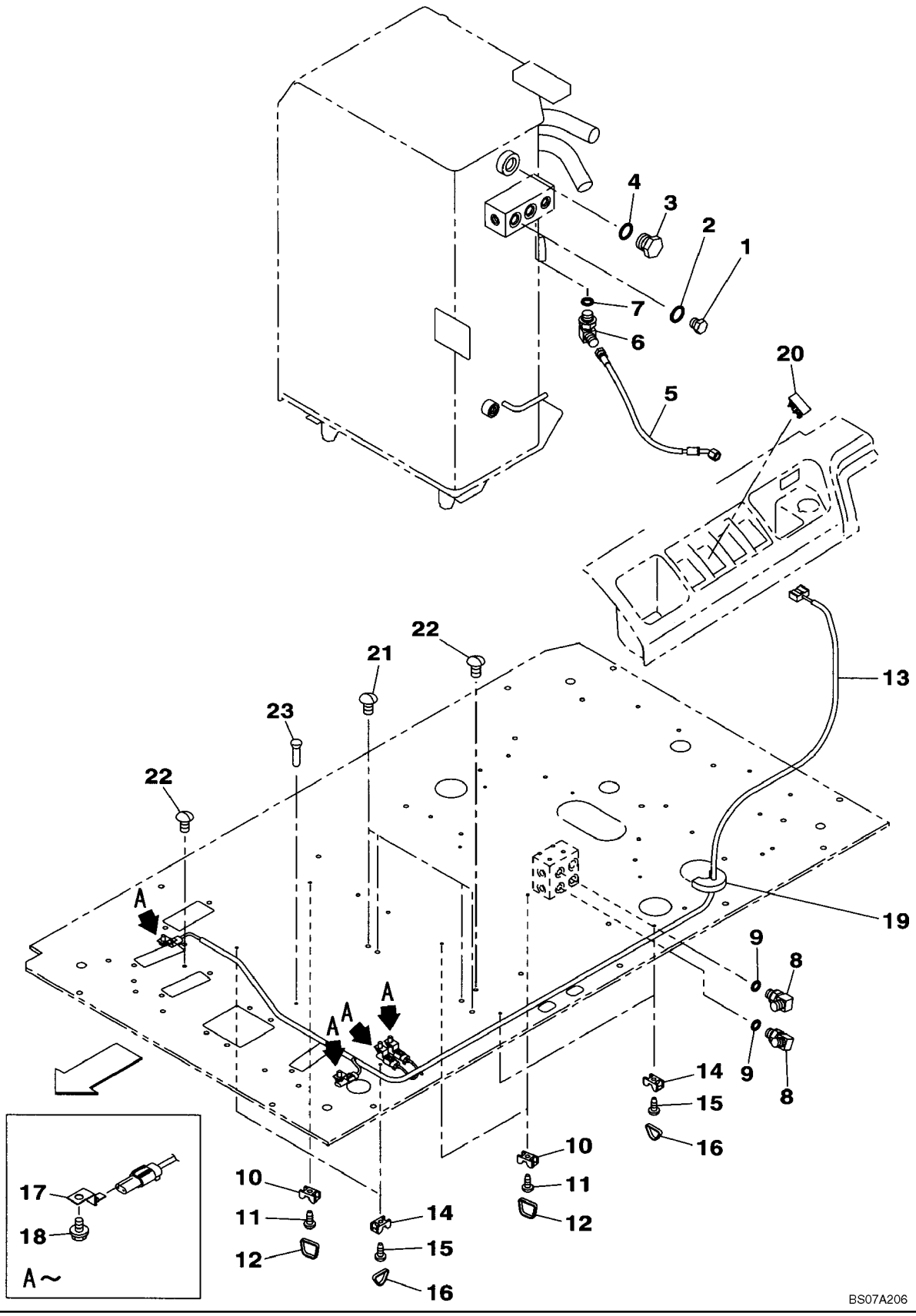
4
3
2
1
7
6
5
20
22
21
23
22
13
19
9
8
9
8
14
15
16
10
11
12
A
A
A
A
17
18
A~
10
11
12
14
15
16
BS07A206

PLUG

REF	FN	PART NUMBER	YR/SN	QTY	DESCRIPTION
1		159085A1		1	BUJÃO, Incl. 2
2		154487A1		1	ANEL "O"
3		162659A1		1	BUJÃO, Incl. 4
4		154523A1		1	ANEL O
5		KHJ2034		1	MANGUEIRA CONJUNTO, 430 mm (16-15/16 in)
6		150913A1		1	COTOVELO, 90º, 1/4" O-Ring x 1/4", Incl. 7
7		154467A1		1	ANEL "O"
8		150913A1		2	COTOVELO, 90º, 1/4" O-Ring x 1/4", Incl. 9
9		154467A1		1	ANEL "O"
10		150860A1		3	BRACADEIRA
11		840-168		3	PARAFUSO, Cross Pan Hd, M6 x 8
12		150496A1		3	ARGOLA DE FIXACAO
13		KHR15960		1	CHICOTE DE FIOS
14		150860A1		4	BRACADEIRA
15		840-168		4	PARAFUSO, Cross Pan Hd, M6 x 8
16		150496A1		4	ARGOLA DE FIXACAO
17		158962A1		4	FIXADOR
18		166345A1		4	PARAFUSO
19		KHJ14640		1	JUNTA
20		KHR10390		1	TAMPA DO RESERVATÓRIO
21		KHJ15060		4	TAMPA DO RESERVATÓRIO
22		KHJ15080		2	TAMPA DO RESERVATÓRIO
23		KHJ15070		1	TAMPA DO RESERVATÓRIO

PLUG

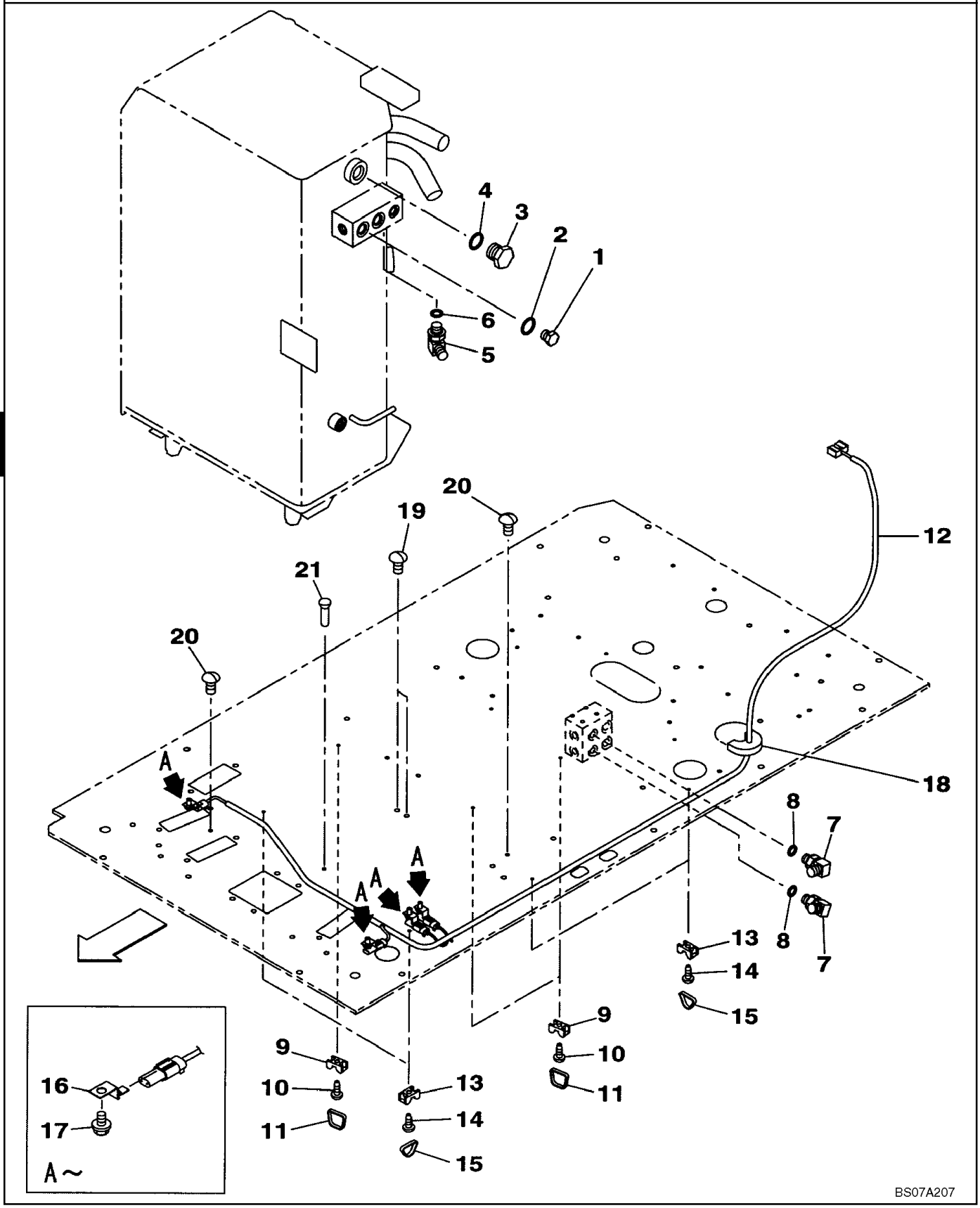
4
3
2
1
6
5
20
19
21
20
12
18
A
A
A
A
8
7
8
7
13
14
15
9
10
11
13
14
15
9
10
11
16
17
A ~
BS07A207

PLUG

REF	FN	PART NUMBER	YR/SN	QTY	DESCRIPTION
1		159085A1		1	BUJÃO, Incl. 2
2		154487A1		1	ANEL "O"
3		162659A1		1	BUJÃO, Incl. 4
4		154523A1		1	ANEL O
5		150913A1		1	COTOVELO, 90º, 1/4" O-Ring x 1/4", Incl. 6
6		154467A1		1	ANEL "O"
7		150913A1		2	COTOVELO, 90º, 1/4" O-Ring x 1/4", Incl. 8
8		154467A1		1	ANEL "O"
9		150860A1		3	BRACADEIRA
10		145N006S008R		3	PARAFUSO
11		150496A1		3	ARGOLA DE FIXACAO
12		KHR15960		1	CHICOTE DE FIOS
13		150860A1		4	BRACADEIRA
14		145N006S008R		4	PARAFUSO
15		150496A1		4	ARGOLA DE FIXACAO
16		158962A1		4	FIXADOR
17		166345A1		4	PARAFUSO
18		KHJ14640		1	JUNTA
19		KHJ15060		2	TAMPA DO RESERVATÓRIO
20		KHJ15080		2	TAMPA DO RESERVATÓRIO
21		KHJ15070		1	TAMPA DO RESERVATÓRIO

PLUG

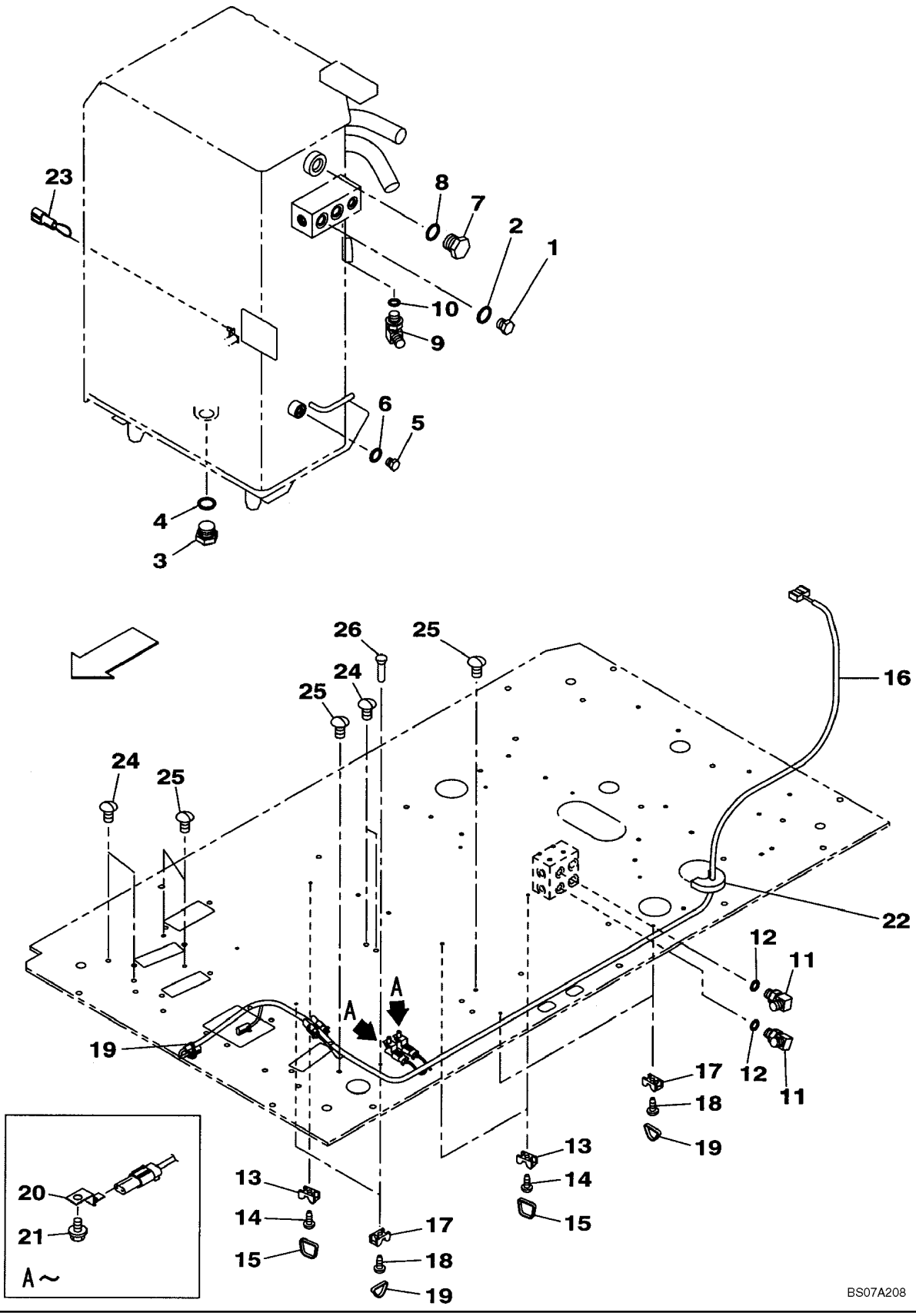
23
8
7
2
1
10
9
6
5
4
3
26
25
24
25
24
25
16
22
12
11
12
11
A
A
19
17
18
19
13
14
15
13
14
15
17
18
19
20
21
A ~
BS07A208

PLUG

REF	FN	PART NUMBER	YR/SN	QTY	DESCRIPTION
1		159085A1		1	BUJÃO, Incl. 2
2		154487A1		1	ANEL "O"
3		152924A1		1	BUJÃO, Incl. 4
4		154503A1		1	ANEL O
5		159002A1		1	BUJÃO, Incl. 6
6		154467A1		1	ANEL "O"
7		162659A1		1	BUJÃO, Incl. 8
8		154523A1		1	ANEL O
9		159002A1		1	BUJÃO, Incl. 10
10		154467A1		1	ANEL "O"
11		150913A1		2	COTOVELO, 90º, 1/4" O-Ring x 1/4", Incl. 12
12		154467A1		1	ANEL "O"
13		150860A1		3	BRACADEIRA
14		145N006S008R		3	PARAFUSO
15		150496A1		3	ARGOLA DE FIXACAO
16		KHR15960		1	CHICOTE DE FIOS
17		150860A1		4	BRACADEIRA
18		145N006S008R		4	PARAFUSO
19		150496A1		5	ARGOLA DE FIXACAO
20		158962A1		2	FIXADOR
21		166345A1		2	PARAFUSO
22		KHJ14640		1	JUNTA
23		KHR16740		1	CHICOTE DE FIOS
24		KHJ15060		4	TAMPA DO RESERVATÓRIO
25		KHJ15080		4	TAMPA DO RESERVATÓRIO
26		KHJ15070		1	TAMPA DO RESERVATÓRIO

PLUG

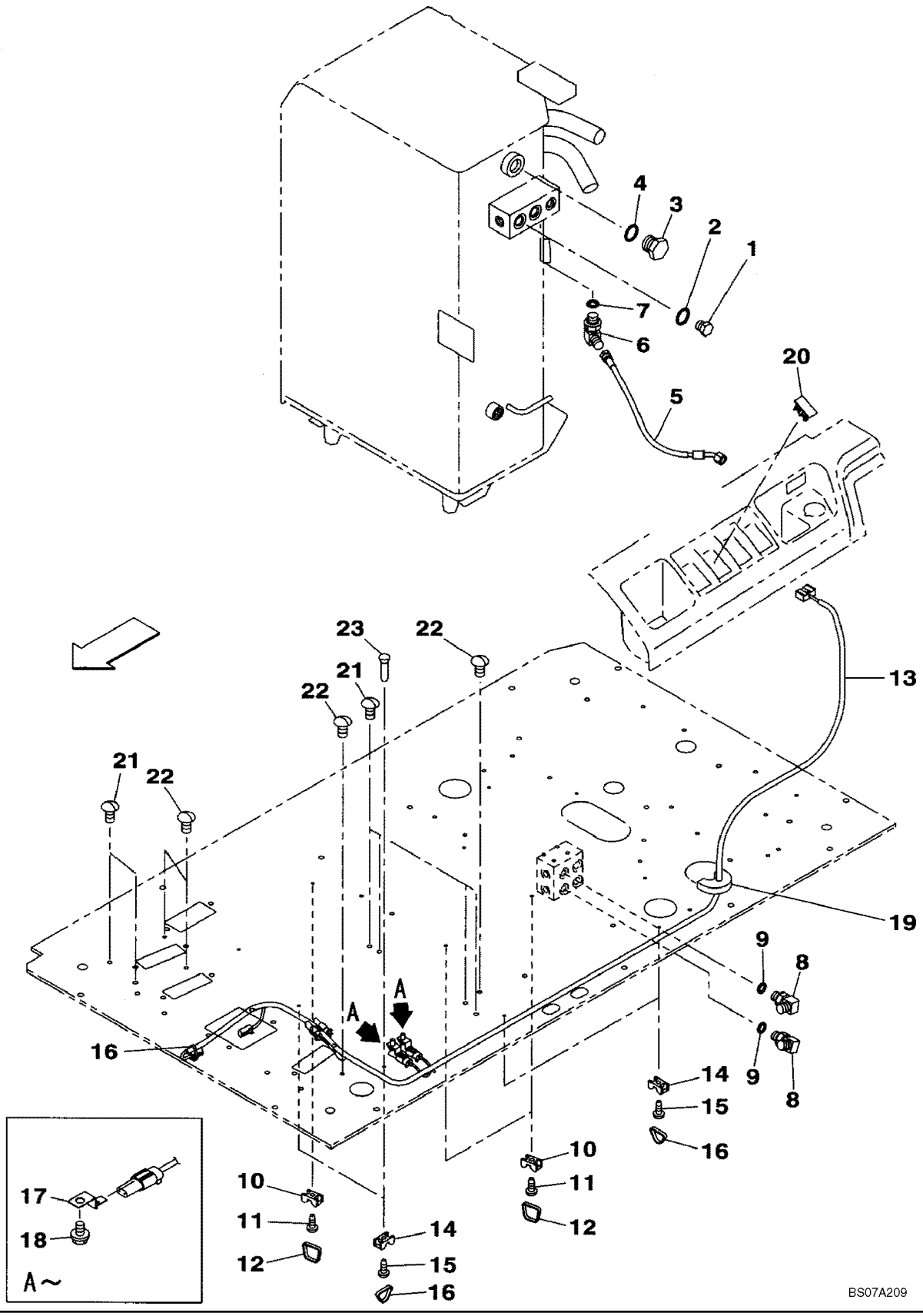
4
3
2
1
7
6
5
20
23
22
21
22
13
21
22
19
9
8
A
A
16
9
8
14
15
16
10
11
12
17
18
A~
10
11
12
14
15
16
BS07A209

PLUG

REF	FN	PART NUMBER	YR/SN	QTY	DESCRIPTION
1		159085A1		1	BUJÃO, Incl. 2
2		154487A1		1	ANEL "O"
3		162659A1		1	BUJÃO, Incl. 4
4		154523A1		1	ANEL O
5		KHJ2034		1	MANGUEIRA CONJUNTO, 430 mm (16-15/16 in)
6		150913A1		1	COTOVELO, 90º, 1/4" O-Ring x 1/4", Incl. 7
7		154467A1		1	ANEL "O"
8		150913A1		2	COTOVELO, 90º, 1/4" O-Ring x 1/4", Incl. 9
9		154467A1		1	ANEL "O"
10		150860A1		3	BRACADEIRA
11		145N006S008R		3	PARAFUSO
12		150496A1		3	ARGOLA DE FIXACAO
13		KHR15960		1	CHICOTE DE FIOS
14		150860A1		4	BRACADEIRA
15		145N006S008R		4	PARAFUSO
16		150496A1		5	ARGOLA DE FIXACAO
17		158962A1		2	FIXADOR
18		166345A1		2	PARAFUSO
19		KHJ14640		1	JUNTA
20		KHR10390		1	TAMPA DO RESERVATÓRIO
21		KHJ15060		6	TAMPA DO RESERVATÓRIO
22		KHJ15080		4	TAMPA DO RESERVATÓRIO
23		KHJ15070		1	TAMPA DO RESERVATÓRIO

PLUG

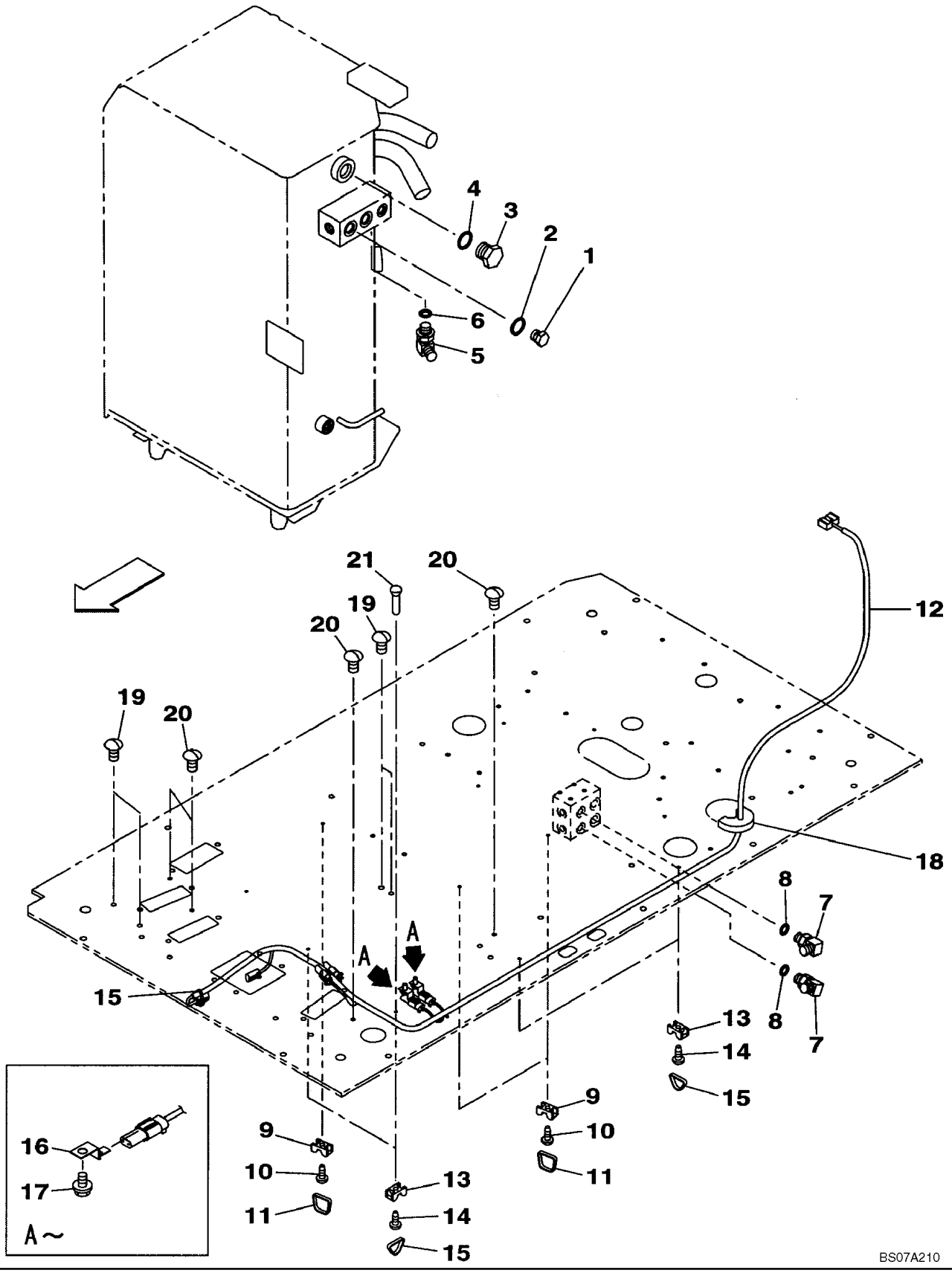
4
3
2
1
6
5
21
20
19
20
12
19
20
18
8
7
A
A
15
8
7
13
14
15
9
10
11
9
10
11
13
14
15
16
17
A~
BS07A210

PLUG

REF	FN	PART NUMBER	YR/SN	QTY	DESCRIPTION
1		159085A1		1	BUJÃO, Incl. 2
2		154487A1		1	ANEL "O"
3		162659A1		1	BUJÃO, Incl. 4
4		154523A1		1	ANEL O
5		150913A1		1	COTOVELO, 90º, 1/4" O-Ring x 1/4", Incl. 6
6		154467A1		1	ANEL "O"
7		150913A1		2	COTOVELO, 90º, 1/4" O-Ring x 1/4", Incl. 8
8		154467A1		1	ANEL "O"
9		150860A1		3	BRACADEIRA
10		145N006S008R		3	PARAFUSO
11		150496A1		3	ARGOLA DE FIXACAO
12		KHR15960		1	CHICOTE DE FIOS
13		150860A1		4	BRACADEIRA
14		145N006S008R		4	PARAFUSO
15		150496A1		5	ARGOLA DE FIXACAO
16		158962A1		2	FIXADOR
17		166345A1		2	PARAFUSO
18		KHJ14640		1	JUNTA
19		KHJ15060		4	TAMPA DO RESERVATÓRIO
20		KHJ15080		4	TAMPA DO RESERVATÓRIO
21		KHJ15070		1	TAMPA DO RESERVATÓRIO

PLUG

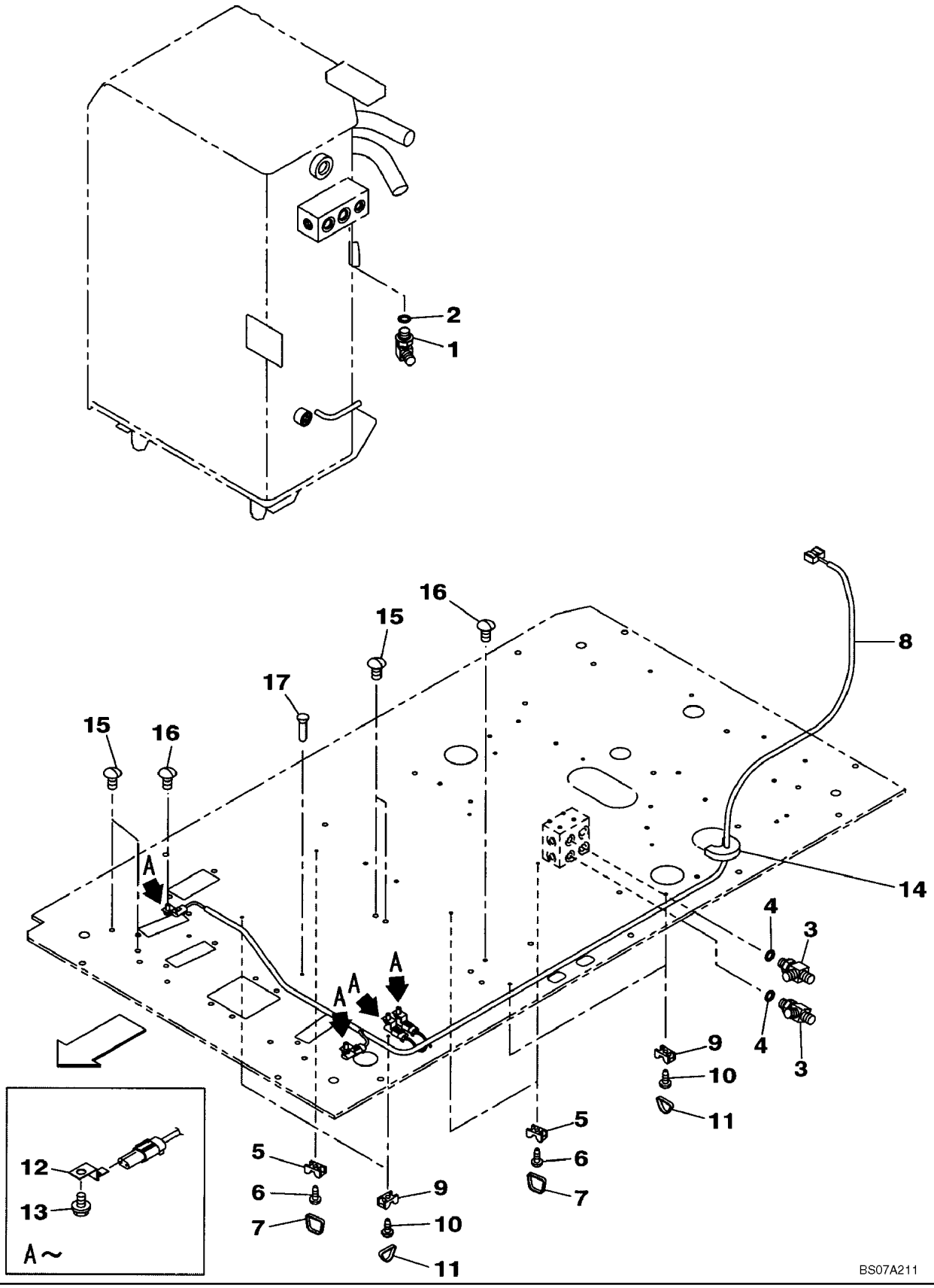
2
1
16
15
17
8
15
16
A
14
4
3
A
A
A
9
10
11
5
6
7
5
6
7
9
10
11
12
13
A~
BS07A211

PLUG

REF	FN	PART NUMBER	YR/SN	QTY	DESCRIPTION
1		150913A1		1	COTOVELO, 90º, 1/4" O-Ring x 1/4", Incl. 2
2		154467A1		1	ANEL "O"
3		159497A1		2	TEE, Incl. 4
4		154467A1		1	ANEL "O"
5		150860A1		3	BRACADEIRA
6		145N006S008R		3	PARAFUSO
7		150496A1		3	ARGOLA DE FIXACAO
8		KHR15060		1	CHICOTE DE FIOS
9		150860A1		4	BRACADEIRA
10		145N006S008R		4	PARAFUSO
11		150496A1		4	ARGOLA DE FIXACAO
12		158962A1		4	FIXADOR
13		166345A1		4	PARAFUSO
14		KHJ14640		1	JUNTA
15		KHJ15060		4	TAMPA DO RESERVATÓRIO
16		KHJ15080		2	TAMPA DO RESERVATÓRIO
17		KHJ15070		1	TAMPA DO RESERVATÓRIO

PLUG

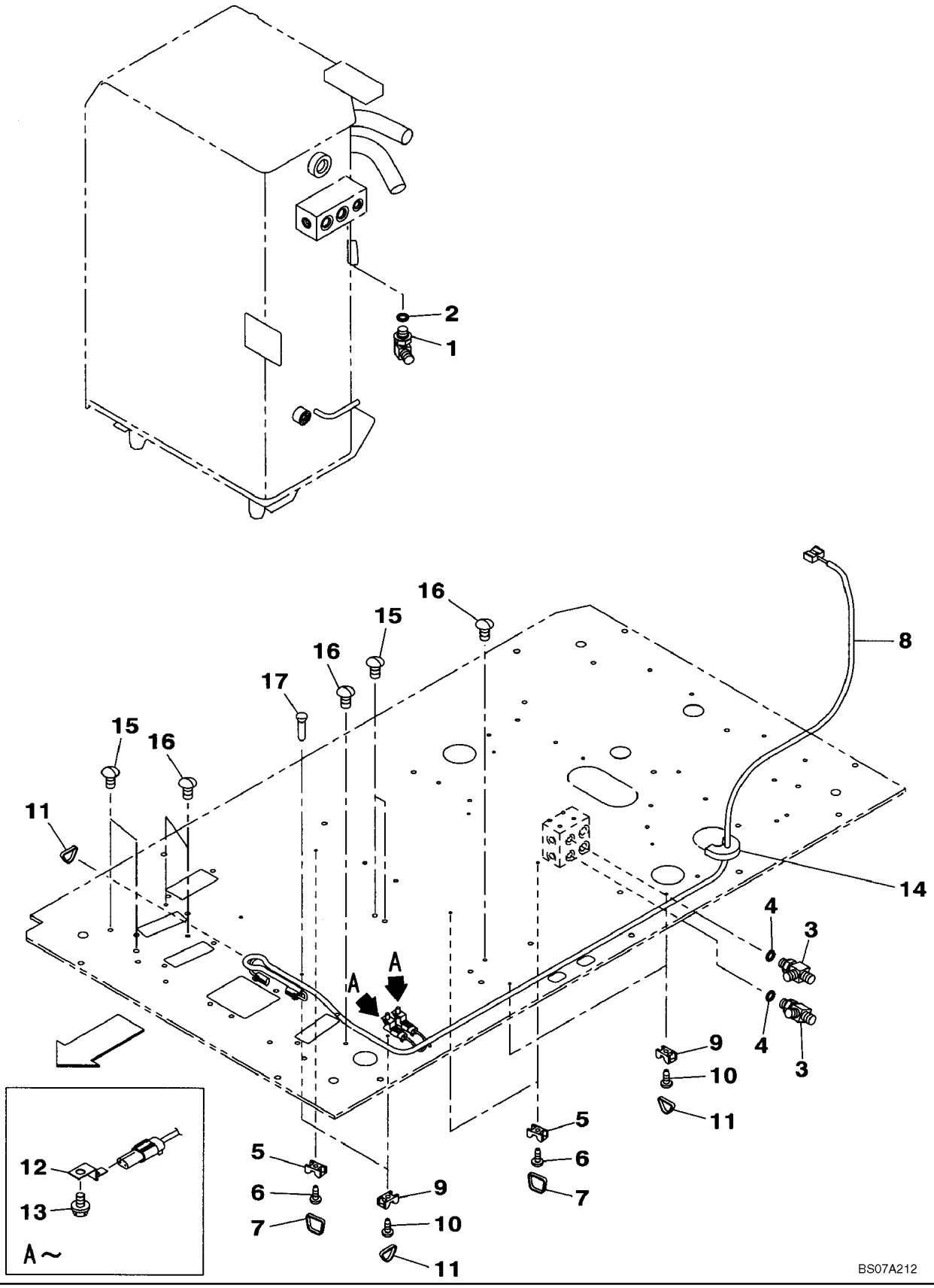
2
1
16
15
16
17
15
16
11
8
14
4
3
4
3
A
A
9
10
11
5
6
7
5
6
7
9
10
11
12
13
A~
BS07A212

PLUG

REF	FN	PART NUMBER	YR/SN	QTY	DESCRIPTION
1		150913A1		1	COTOVELO, 90º, 1/4" O-Ring x 1/4", Incl. 2
2		154467A1		1	ANEL "O"
3		159497A1		2	TEE, Incl. 4
4		154467A1		1	ANEL "O"
5		150860A1		3	BRACADEIRA
6		145N006S008R		3	PARAFUSO
7		150496A1		3	ARGOLA DE FIXACAO
8		KHR15960		1	CHICOTE DE FIOS
9		150860A1		4	BRACADEIRA
10		145N006S008R		4	PARAFUSO
11		150496A1		5	ARGOLA DE FIXACAO
12		158962A1		2	FIXADOR
13		166345A1		2	PARAFUSO
14		KHJ14640		1	JUNTA
15		KHJ15060		4	TAMPA DO RESERVATÓRIO
16		KHJ15080		4	TAMPA DO RESERVATÓRIO
17		KHJ15070		1	TAMPA DO RESERVATÓRIO

08-51		p1	01/07

SOPORTE - MOTOR DE OSCILAÇÃO

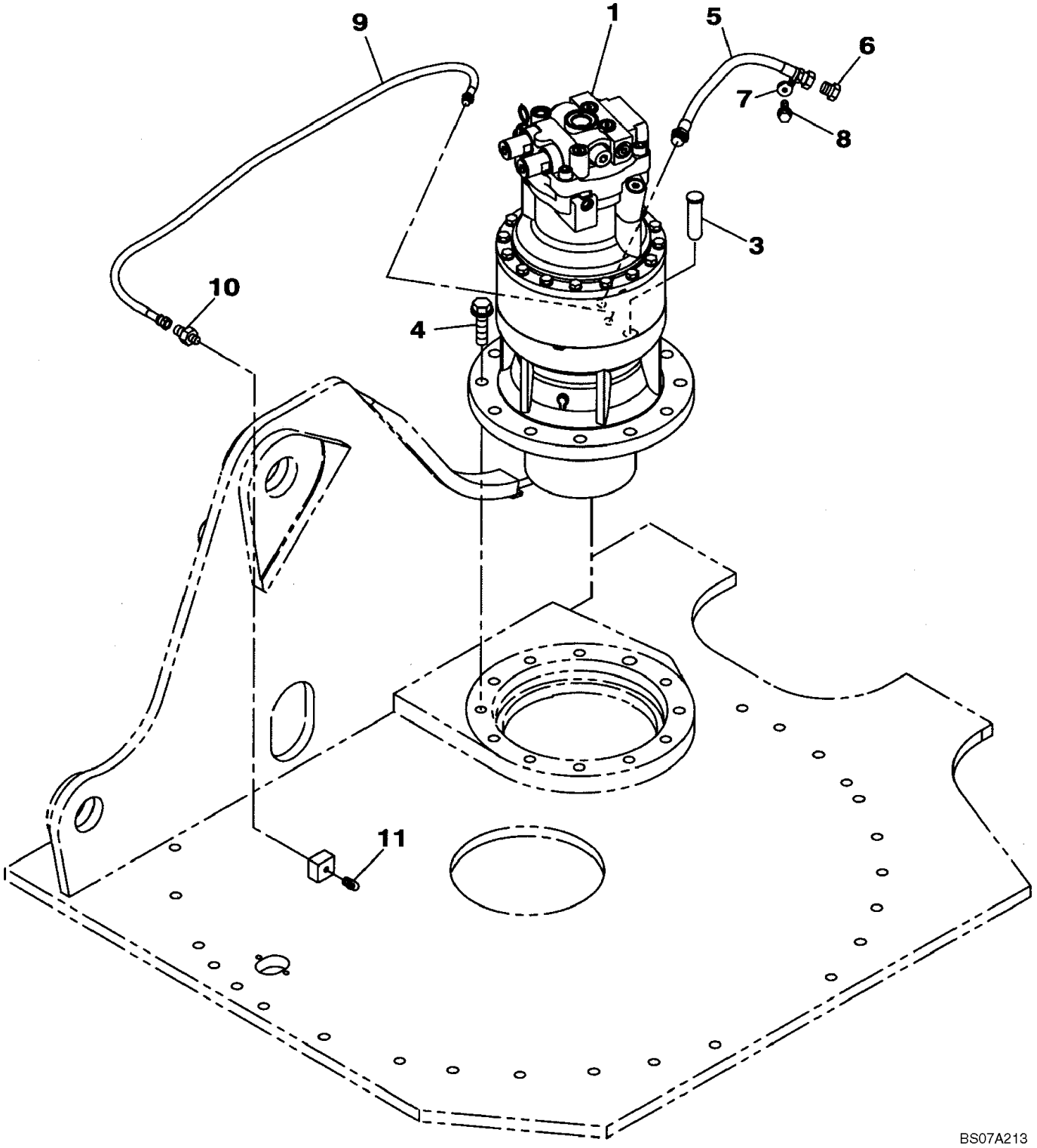

SOPORTE - MOTOR DE OSCILAÇÃO

REF	FN	PART NUMBER	YR/SN	QTY	DESCRIPTION
1		KLC10020		1	MOTOR REDUTOR, See Figure 08-52, 08-53
3		158955A1		1	PINO COM CABECA
4		166354A1		11	PARAFUSO
5		KRJ16100		1	MANGUEIRA CONJUNTO, 470 mm (18-1/2 in)
6		KHP0578		1	BUJÃO
7		KHR2584		1	BRACADEIRA
8		KHR2584		1	BRACADEIRA
9		KHJ16120		1	MANGUEIRA CONJUNTO, 1250 mm (49-1/4 in)
10		KRJ4050		1	ADAPTADOR
11		153912A1		1	GRAXEIRA, 90º, 1/8"-27 NPT x 21.5mm lg

MOTOR ASSY - SWING

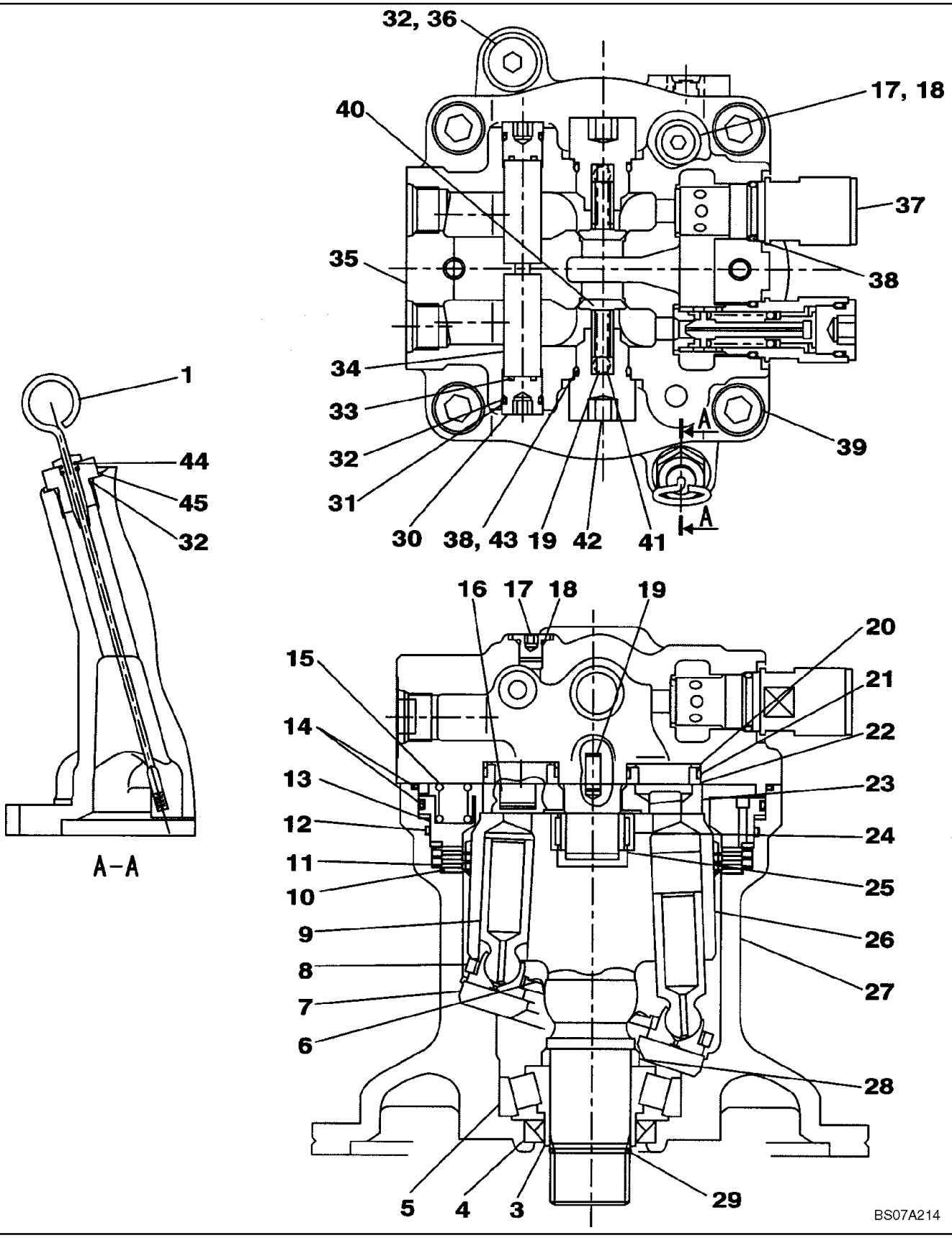

MOTOR ASSY - SWING

REF	FN	PART NUMBER	YR/SN	QTY	DESCRIPTION
		KLC10020		1	MOTOR REDUTOR, Incl. 1 - 45; Also Includes Parts On Figure 08-53
1		KRC10030		1	HASTE DE NÍVEL
		LJ014660		1	MOTOR HIDRÁULICO, Incl. 3 - 45
3		155620A1		1	ESPAÇADOR
4		155106A1		1	ANEL DE VEDAÇÃO
5		156133A1		1	ROLAMENTO
6		156080A1		1	MOLA
7		155616A1		1	PLACA
8		155617A1		1	PLACA
9		TIP0002145		9	PISTÃO
10		155619A1		3	PLACA
11		155618A1		3	PLACA
12		155198A1		1	ANEL O
13		LPM0116		1	PISTÃO
14		155199A1		2	ANEL O
15		156082A1		20	MOLA
16		LJ00723		2	PISTÃO
17		160306A1		3	TAMPA DO RESERVATÓRIO
18		154467A1		3	ANEL "O"
19		160101A1		2	PINO
20		LG00337		4	MOLA
21		LE00776		4	ANEL
22		LB00544		4	BUCHA
23		LR014920		1	PLACA
24		156134A1		1	ROLAMENTO
25		155614A1		1	ANEL-TRAVA
26		TIP0002146		1	CORPO DE CILINDRO
27		TIP0002136		1	ALOJAMENTO
28		165745A1		1	BRAÇADEIRA
29		155613A1		1	ANEL-TRAVA
30		LZC0156		2	TAMPA DO RESERVATÓRIO
31		166176A1		2	VEDADOR ESPECIAL
32		154487A1		4	ANEL "O"
33		154471A1		2	ANEL O

MOTOR ASSY - SWING

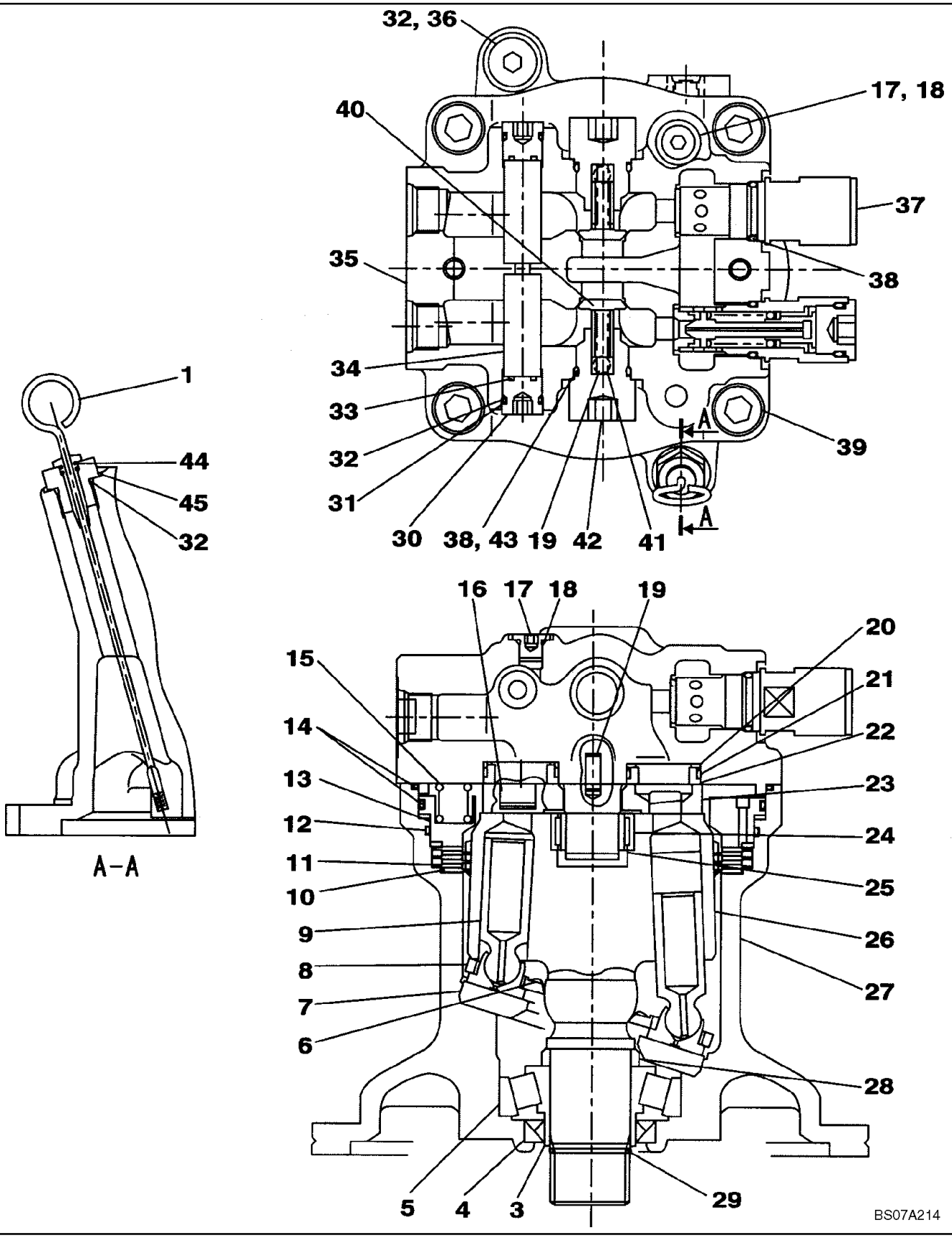

MOTOR ASSY - SWING

REF	FN	PART NUMBER	YR/SN	QTY	DESCRIPTION
34		LK005600		2	BUJÃO
35		TIP0002137		1	ALOJAMENTO
36		160903A1		1	TAMPA DO RESERVATÓRIO
37		KRC0184		2	VÁLVULA DE SOBRE-PRESSÃO, Incl. 155990A1 Shim Kit
		155990A1		1	JOGO DE CALCOS, Not Illustrated
38		154515A1		4	ANEL O
39		863-16060		4	PARAFUSO, Hex Soc Hd, M16 x 60, 12.9
40		155944A1		2	ÊMBOLO, Check Valve
41		156079A1		2	MOLA
42		156305A1		2	TAMPA DO RESERVATÓRIO
43		153991A1		2	VEDADOR ESPECIAL
44		155201A1		1	ANEL O
45		LR00895		1	TAMPA DO RESERVATÓRIO

GEAR ASSY, REDUCTION - MOTOR, SWING

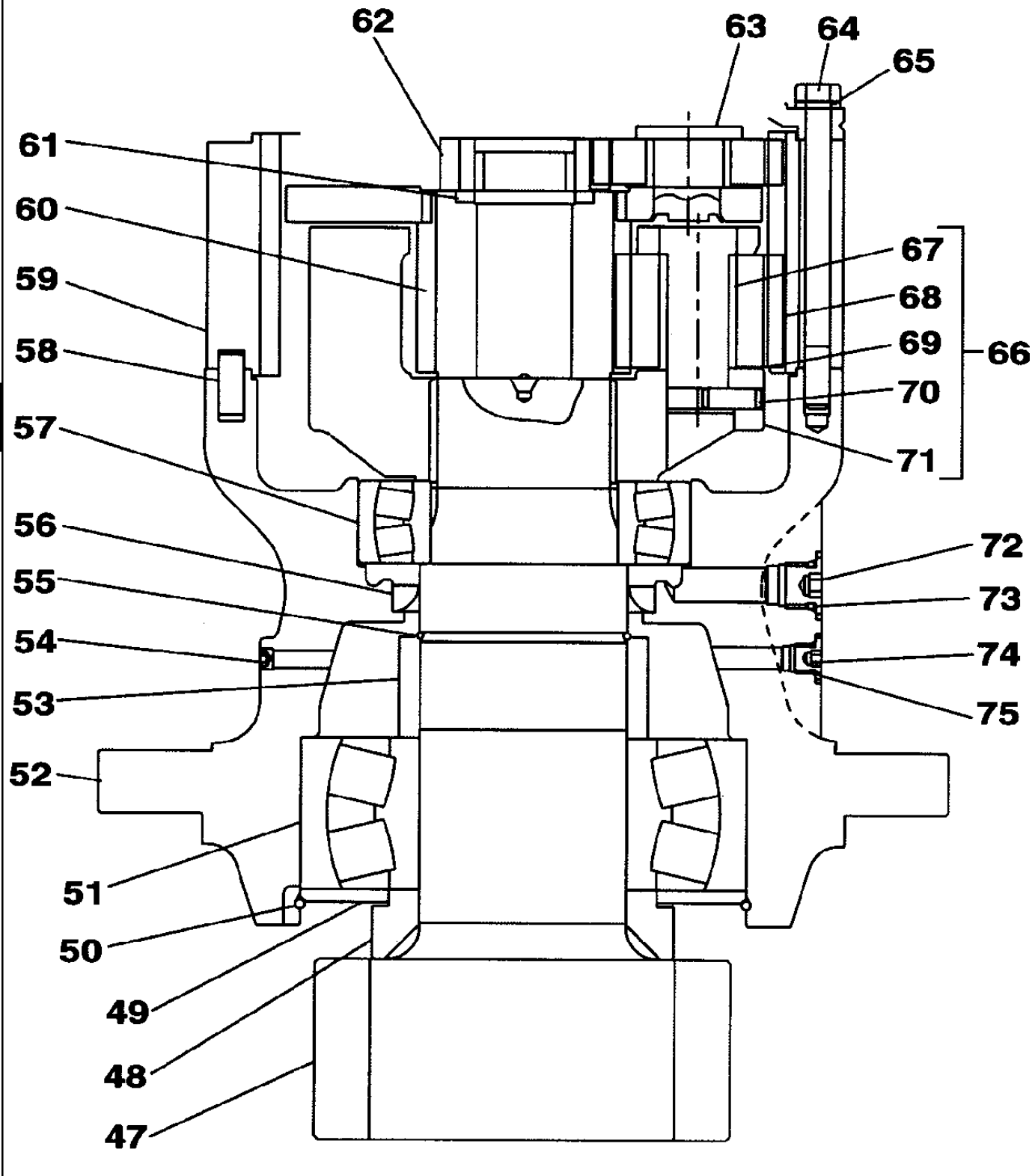

GEAR ASSY, REDUCTION - MOTOR, SWING

REF	FN	PART NUMBER	YR/SN	QTY	DESCRIPTION
		KLC10020		1	MOTOR REDUTOR, Incl. 47 - 75; Also Includes Parts On Figure 08-52
		LN001970		1	REDUÇÃO, Incl. 47 - 75
47		LB011880		1	EIXO
48		160548A1		1	BRAÇADEIRA
49		156356A1		1	PLACA
50		155685A1		1	ANEL TRAVA
51		156157A1		1	ROLAMENTO ROLETES
52		LW005020		1	ALOJAMENTO
53		LH00337		1	BRAÇADEIRA
54		LK00053		1	BUJÃO
55		155686A1		1	ANEL TRAVA
56		155107A1		1	ANEL DE VEDAÇÃO
57		160611A1		1	ROLAMENTO ROLETES
58		155621A1		4	PINO
59		LC00221		1	COROA DENTADA
60		160520A1		1	ENGRENAGEM
61		160047A1		1	PLACA ENCOSTO
62		161806A1		1	ENGRENAGEM SOLAR
63		LS00237		1	SUPORTE
64		LA00069		16	PARAFUSO
65		892-10012		16	ARRUELA-TRAVA, M12
66		168437A1		1	SUPORTE, Gear, Planetary; Incl. 67 - 71
67		NSS		3	BOLETIM INFORMATIVO, Shaft
68		LC00149		3	PLANETÁRIO
69		155383A1		3	ARRUELA
70		LA00068		3	PINO
71		LS00190		1	SUPORTE
72		160903A1		1	TAMPA DO RESERVATÓRIO
73		154487A1		1	ANEL "O"
74		160306A1		1	TAMPA DO RESERVATÓRIO
75		154467A1		1	ANEL "O"

HIDRAULICA - JUNTA, CENTRO DE ROTAÇÃO,

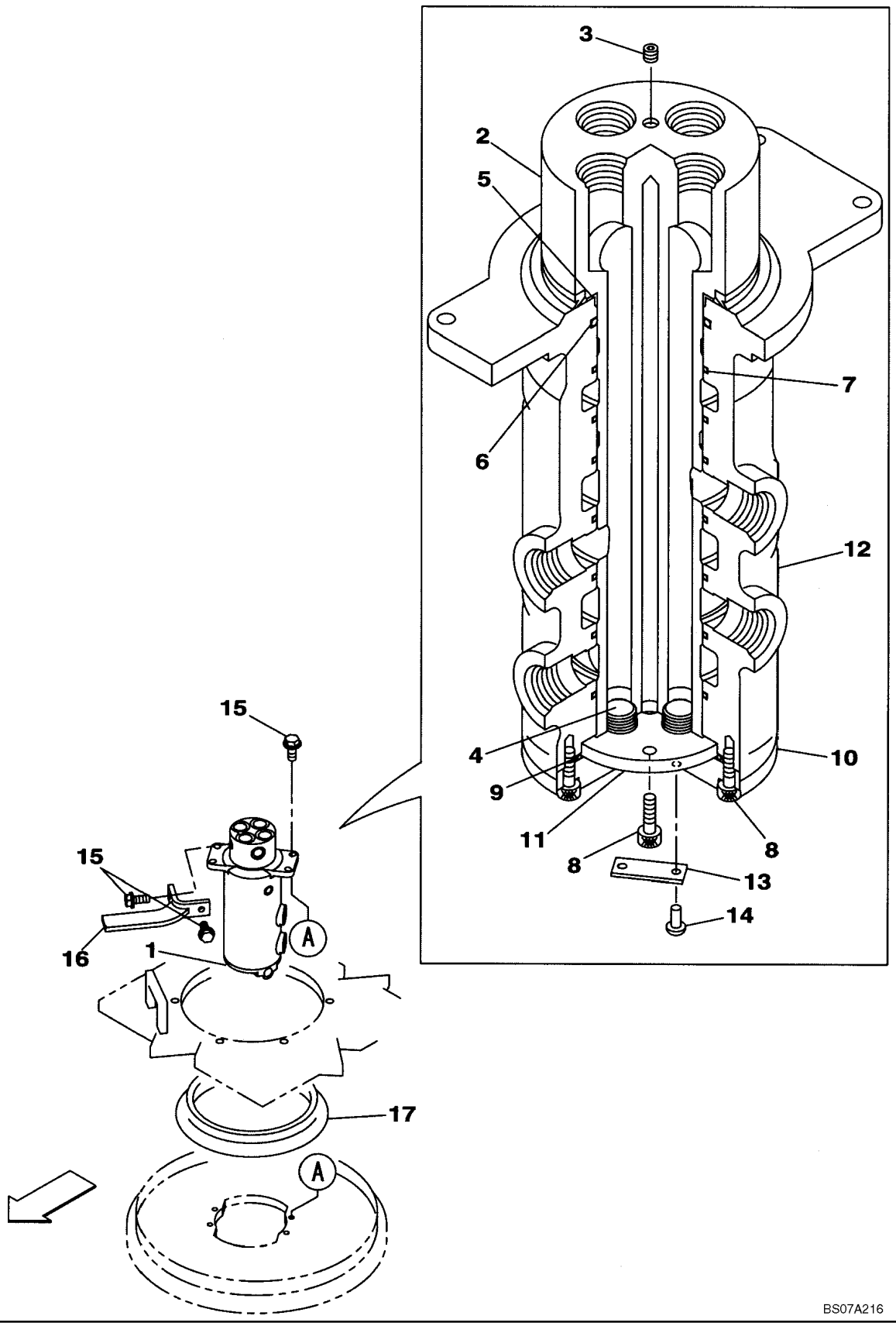

HIDRAULICA - JUNTA, CENTRO DE ROTAÇÃO,

REF	FN	PART NUMBER	YR/SN	QTY	DESCRIPTION
1		KRA11190		1	JUNTA GIRATORIA, Incl. 2 - 14
2		KRA11200		1	EIXO, Incl. 3, 4
3		150821A1		1	BUJÃO
4		150829A1		4	BUJÃO
5		151814A1		1	ANEL DE VEDAÇÃO
6		KHA10130		1	ANEL "O", Replaces 154688A1
7		168295A1		7	ANEL VEDADOR
8		862-8025		8	PARAFUSO, Hex Soc Hd, M8 x 25, 12.9
9		154721A1		1	ANEL O
10		KRA1874		1	TAMPA
11		KRA10380		1	PLACA ENCOSTO
12		KRA1872		1	ROTOR
13		152593A1		1	EMBLEMA DE MODELO
14		86542114		2	PARAFUSO, Drive, #2 x 3/16"
15		166352A1		6	PARAFUSO
16		KNA11070		1	TRINCO
17		KRA11090		1	ANEL VEDADOR

KLJ10580 VALVULA DE CONTROL - SUPORTE

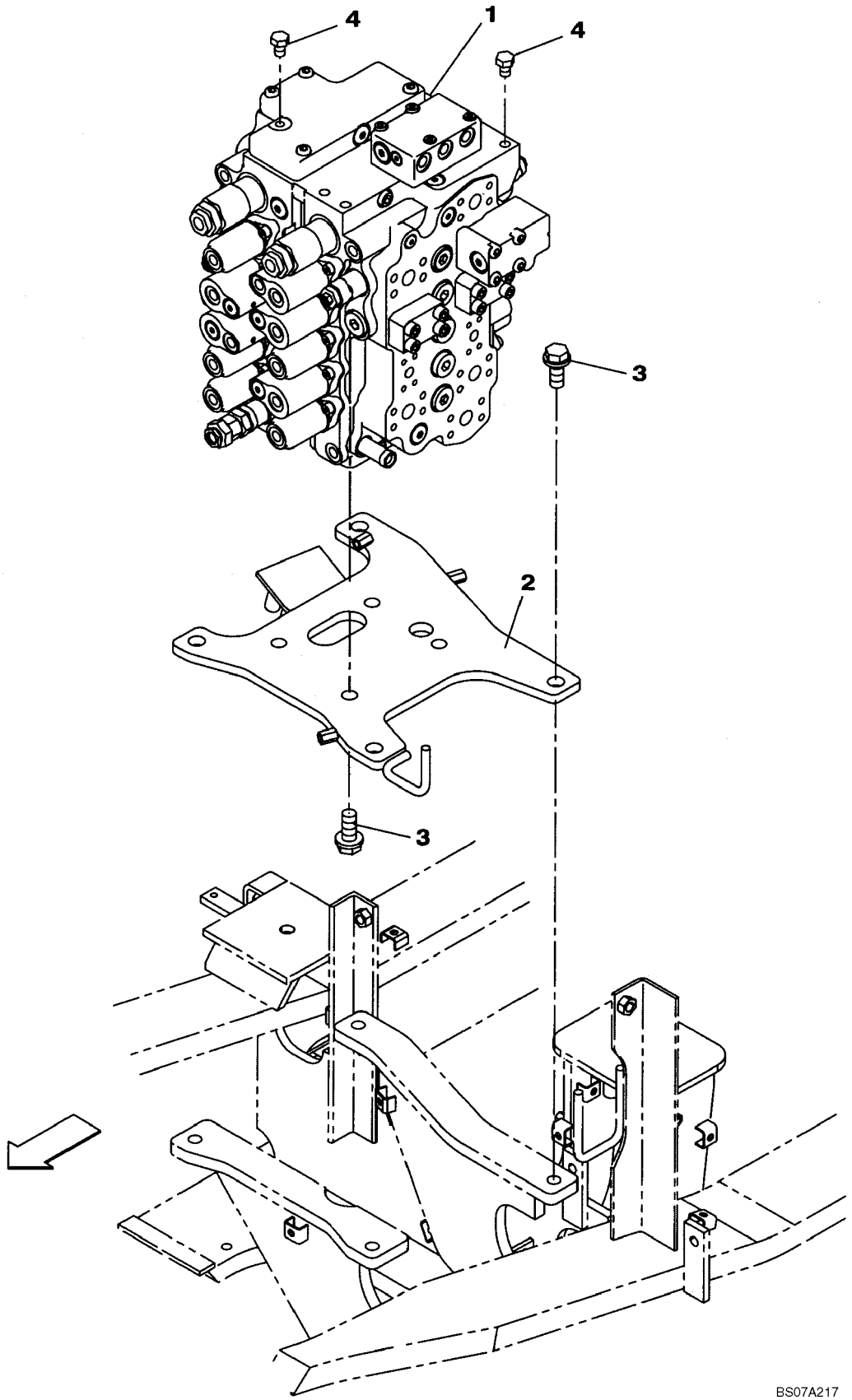

KLJ10580 VALVULA DE CONTROL - SUPORTE

REF	FN	PART NUMBER	YR/SN	QTY	DESCRIPTION
1		KLJ10580		1	DISTRIBUIDOR, See Figures 08-57 - 08-60
2		KLJ11070		1	SUPORTE
3		166373A1		8	PARAFUSO
4		102R012Y016R		2	PARAFUSO

KLJ10590 VALVULA DE CONTROL - SUPORTE

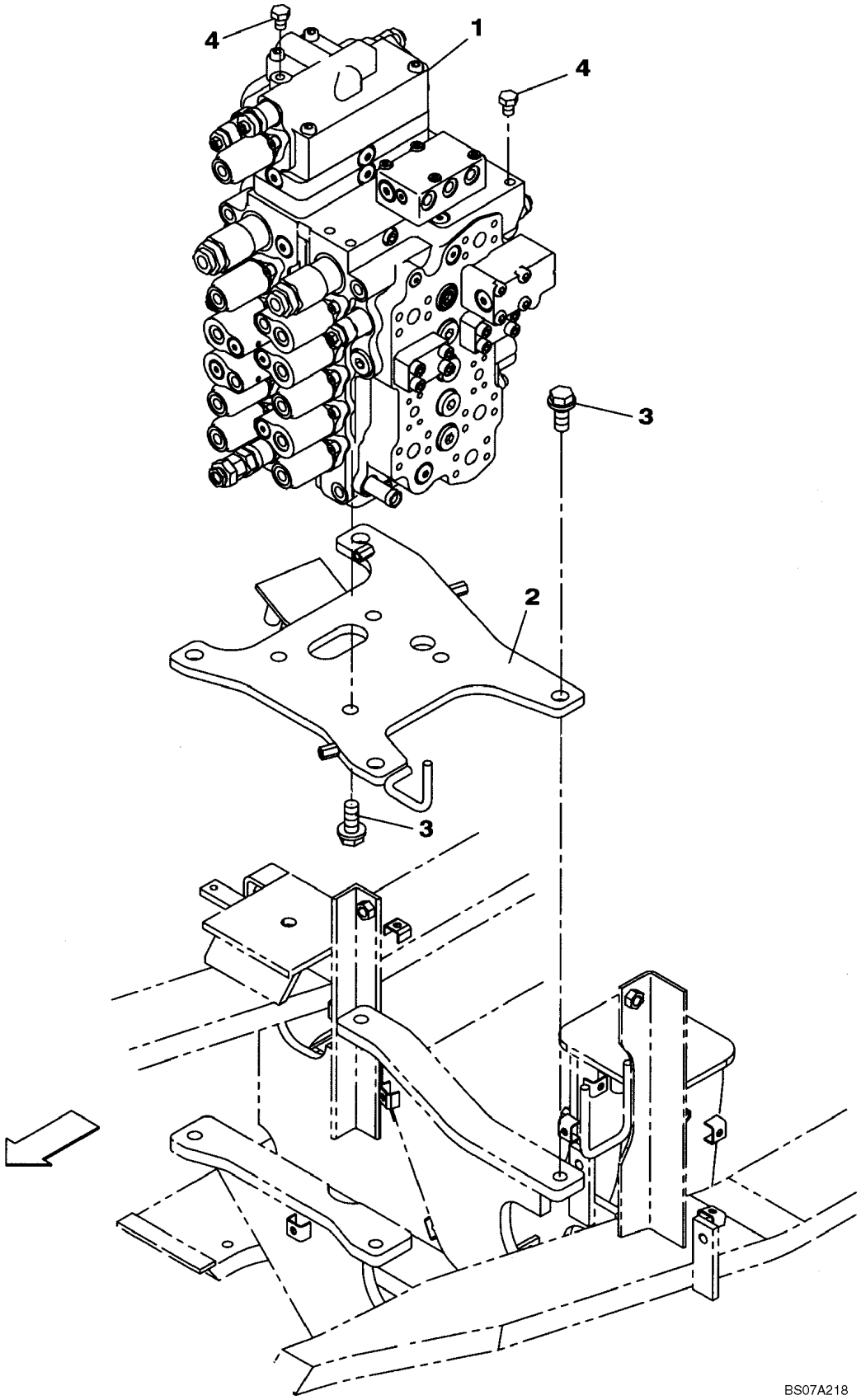

KLJ10590 VALVULA DE CONTROL - SUPORTE

REF	FN	PART NUMBER	YR/SN	QTY	DESCRIPTION
1		KLJ10590		1	DISTRIBUIDOR, See Figure 08-61 - 08-65
2		KLJ11070		1	SUPORTE
3		166373A1		8	PARAFUSO
4		102R012Y016R		2	PARAFUSO

KLJ10580 CONJUNTO DE LA VALVULA - CONTROLE

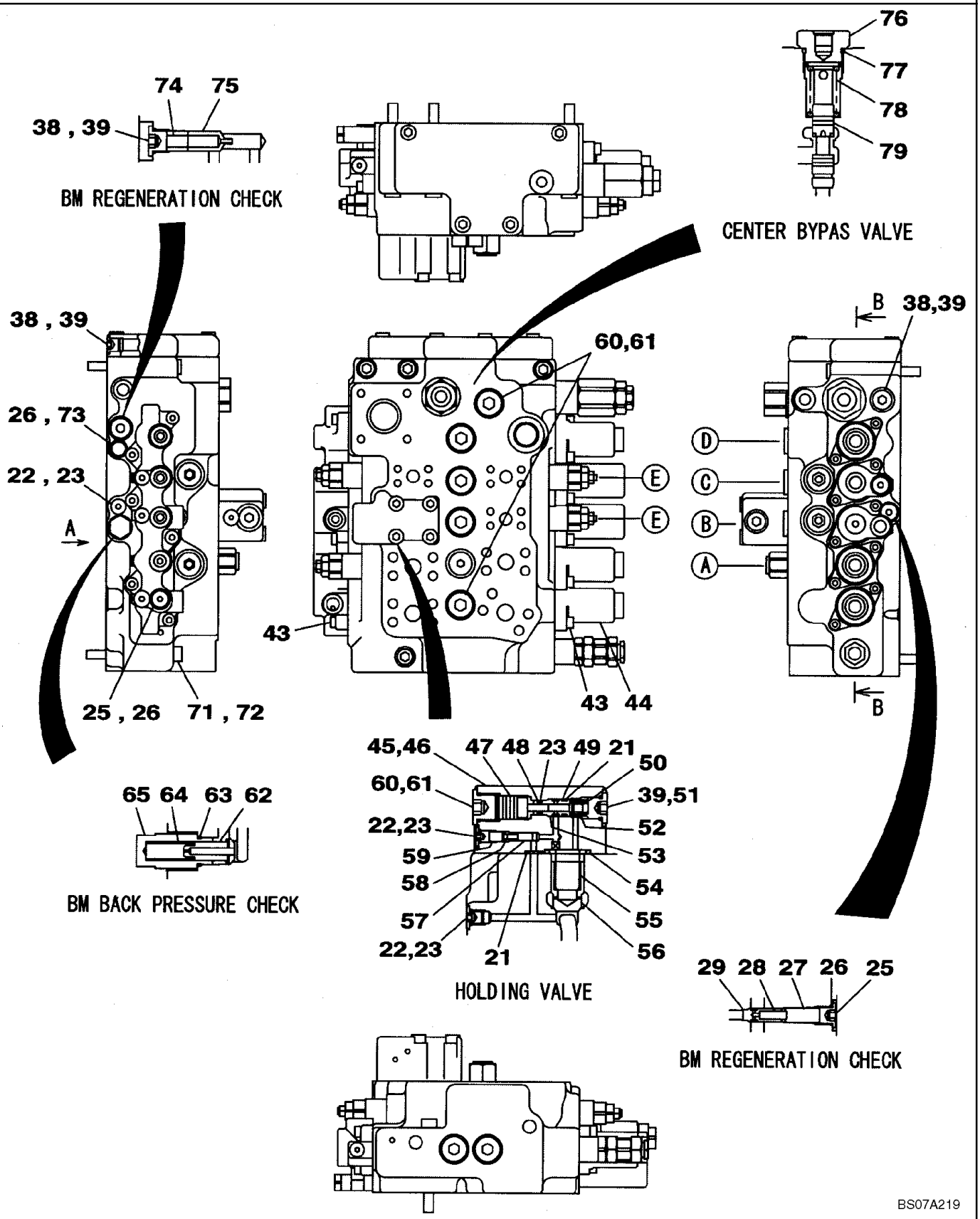

KLJ10580 CONJUNTO DE LA VALVULA - CONTROLE

REF	FN	PART NUMBER	YR/SN	QTY	DESCRIPTION
		KLJ10580		1	DISTRIBUIDOR, Includes All Parts On Figures 08-57 - 08-60
21		154463A1		2	ANEL O
22		160902A1		3	TAMPA DO RESERVATÓRIO
23		154455A1		4	ANEL "O"
25		160306A1		2	TAMPA DO RESERVATÓRIO
26		154467A1		3	ANEL "O"
27		LH00237		1	ESPAÇADOR
28		LG00322		1	MOLA DE COMPRESAO
29		LJ00700		1	VALVULA CHECAGEM
38		156263A1		3	TAMPA DO RESERVATÓRIO
39		154475A1		4	ANEL "O"
43		108R008Z025B		16	PARAFUSO
44		LW005150		3	TAMPA DO RESERVATÓRIO
45		LW005160		1	TAMPA DO RESERVATÓRIO
46		861-10060		4	PARAFUSO, Hex Soc Hd, M10 x 60, 12.9
47		LJ014930		1	PISTÃO
48		153946A1		1	VEDADOR ESPECIAL
49		153952A1		1	VEDADOR ESPECIAL
50		LG00323		1	MOLA DE COMPRESAO
51		LR00560		1	TAMPA DO RESERVATÓRIO
52		LJ00702		1	VALVULA
53		LH00239		1	MANGUEIRA RÍGIDA
54		154523A1		1	ANEL O
55		160948A1		1	MOLA
56		160914A1		1	VALVULA
57		155915A1		1	VALVULA
58		LG006120		1	MOLA
59		LH00240		1	ESPAÇADOR
60		160903A1		3	TAMPA DO RESERVATÓRIO
61		154487A1		6	ANEL "O"
62		LJ014940		1	VÁLVULA DE SOBRE-PRESSÃO
63		155222A1		1	ANEL O
64		LG006130		1	MOLA
65		LR015570		1	BUJÃO

KLJ10580 CONJUNTO DE LA VALVULA - CONTROLE

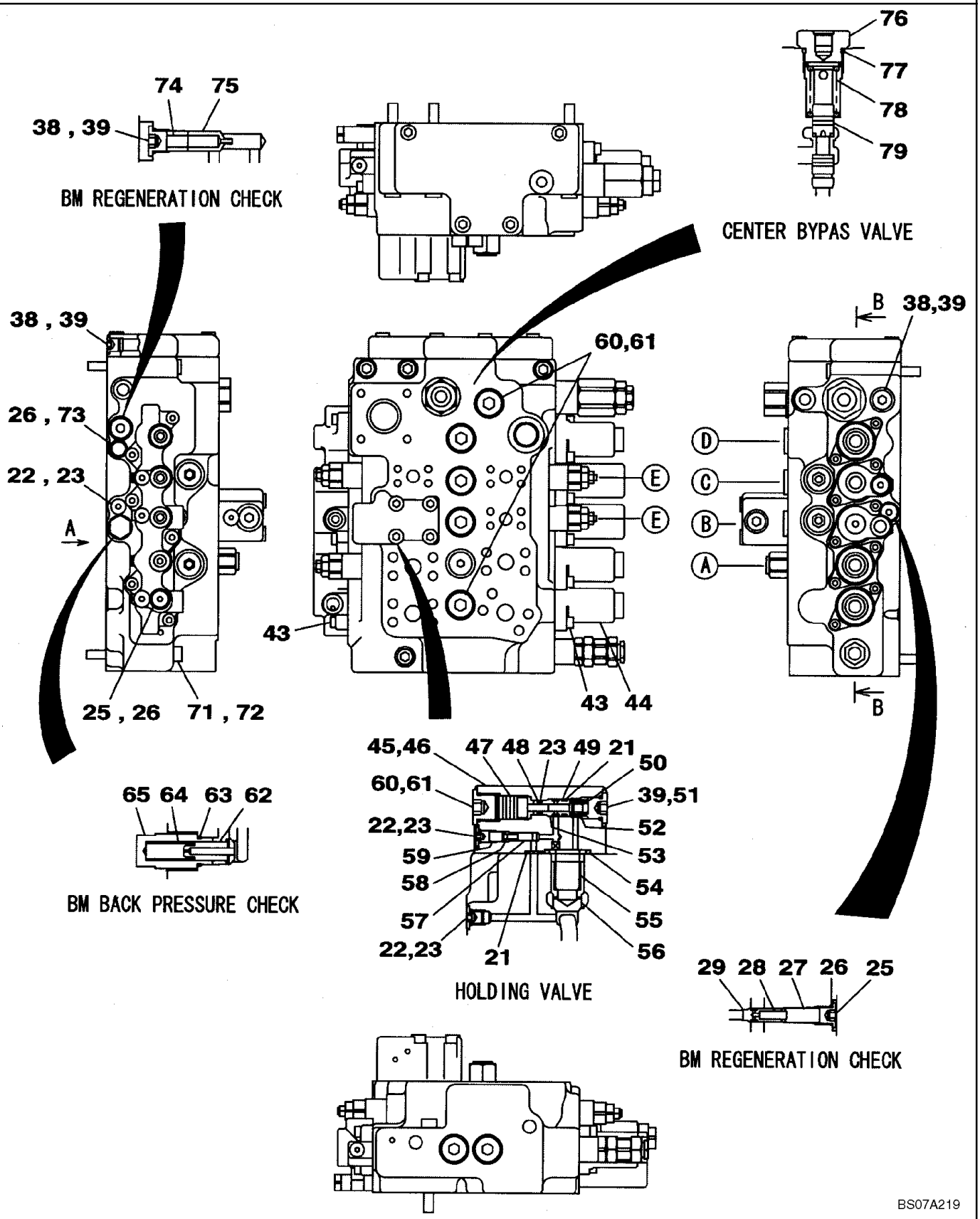

8

KLJ10580 CONJUNTO DE LA VALVULA - CONTROLE

REF	FN	PART NUMBER	YR/SN	QTY	DESCRIPTION
71		863-12100		4	PARAFUSO, Hex Soc Hd, M12 x 100, 12.9
72		892-10012		4	ARRUELA-TRAVA, M12
73		LB012000		1	BUCHA
74		LG00326		1	MOLA DE COMPRESAO
75		LJ00710		1	VALVULA CHECAGEM
76		LR015580		1	BUJÃO
77		164739A1		1	ANEL "O"
78		LG006140		1	MOLA
79		LJ014950		1	CARRETO

KLJ10580 CONJUNTO DE LA VALVULA - CONTROLE

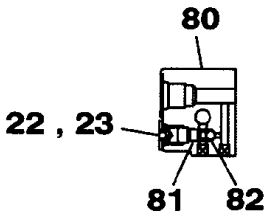

COVER SECTION

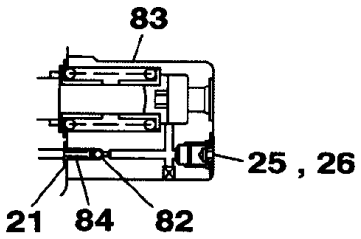

COVER SECTION

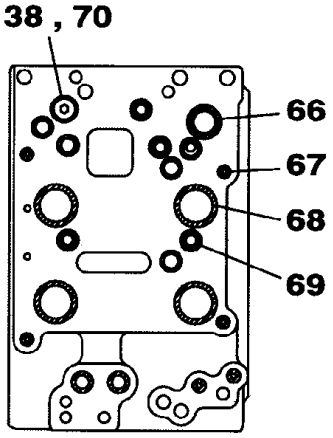

A VIEW

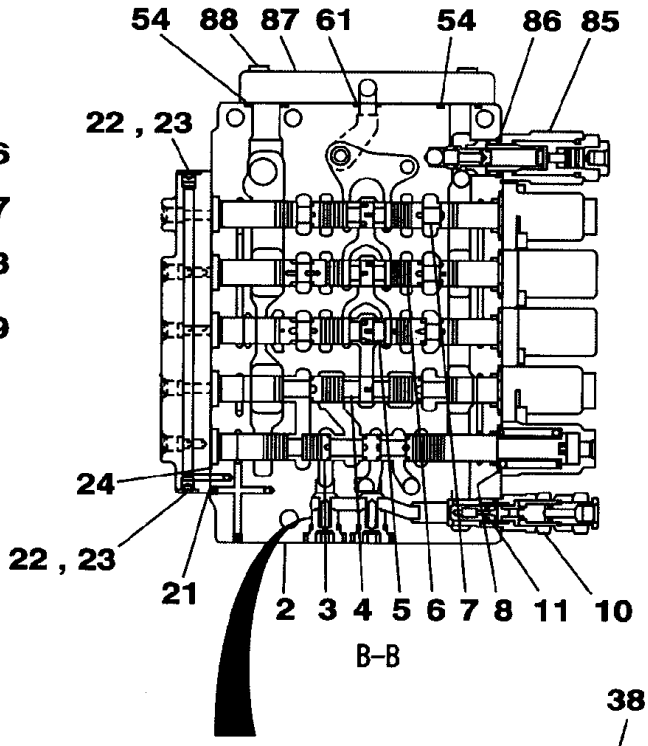

B-B

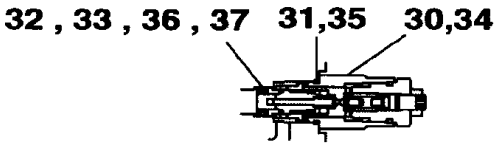

Ⓔ OVERLOAD RELIEF VALVE

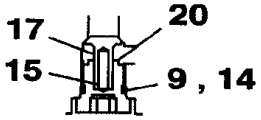

CHECK VALVE

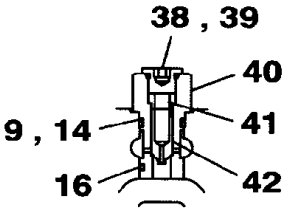

Ⓐ CHECK VALVE

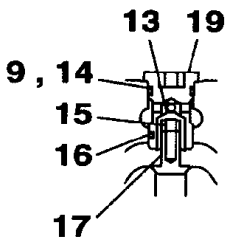

Ⓑ CHECK VALVE

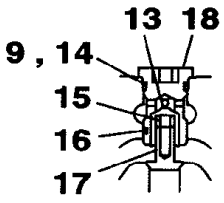

Ⓒ CHECK VALVE

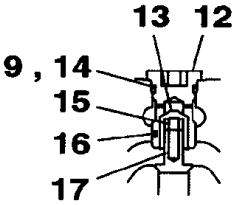

Ⓓ CHECK VALVE

BS07A220

KLJ10580 CONJUNTO DE LA VALVULA - CONTROLE

REF	FN	PART NUMBER	YR/SN	QTY	DESCRIPTION
		KLJ10580		1	DISTRIBUIDOR, Includes All Parts On Figures 08-57 - 08-60
2		NSS		1	BOLETIM INFORMATIVO, Housing, Valve
3		NSS		1	BOLETIM INFORMATIVO, Spool
4		NSS		1	BOLETIM INFORMATIVO, Spool
5		NSS		1	BOLETIM INFORMATIVO, Spool
6		NSS		1	BOLETIM INFORMATIVO, Spool
7		NSS		1	BOLETIM INFORMATIVO, Spool
8		160806A1		5	ANEL O
9		154495A1		6	ANEL O
10		LJ00800		1	VÁLVULA DE SOBRE-PRESSÃO, Incl. 11
11		154495A1		1	ANEL O
12		LR01104		1	TAMPA DO RESERVATÓRIO
13		155920A1		3	VALVULA CHECAGEM
14		153976A1		6	VEDADOR ESPECIAL
15		156027A1		5	MOLA
16		155295A1		4	ESFERA
17		LJ014920		5	VÁLVULA DE SOBRE-PRESSÃO
18		LR015550		1	BUJÃO
19		160918A1		1	TAMPA DO RESERVATÓRIO
20		LR015560		2	BUJÃO
21		154463A1		2	ANEL O
22		160902A1		3	TAMPA DO RESERVATÓRIO
23		154455A1		3	ANEL "O"
24		160805A1		5	ANEL O
25		160306A1		1	TAMPA DO RESERVATÓRIO
26		154467A1		1	ANEL "O"
30		LJ00704		3	POPPET, Incl. 31 - 33
31		154495A1		1	ANEL O
32		154402A1		1	VEDADOR ESPECIAL
33		155063A1		1	ANEL O
34		LJ00704		1	POPPET, Incl. 35 - 37
35		154495A1		1	ANEL O
36		154402A1		1	VEDADOR ESPECIAL
37		155063A1		1	ANEL O

KLJ10580 CONJUNTO DE LA VALVULA - CONTROLE

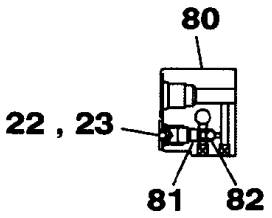

COVER SECTION

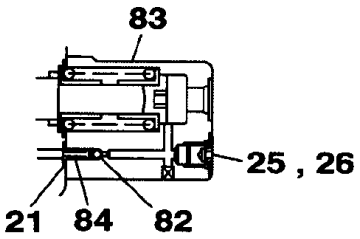

COVER SECTION

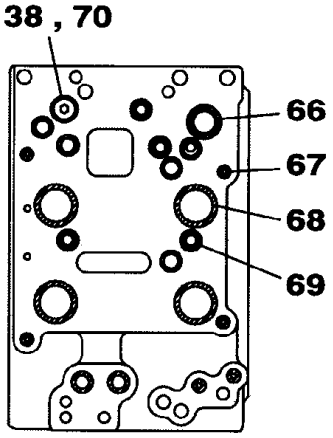

A VIEW

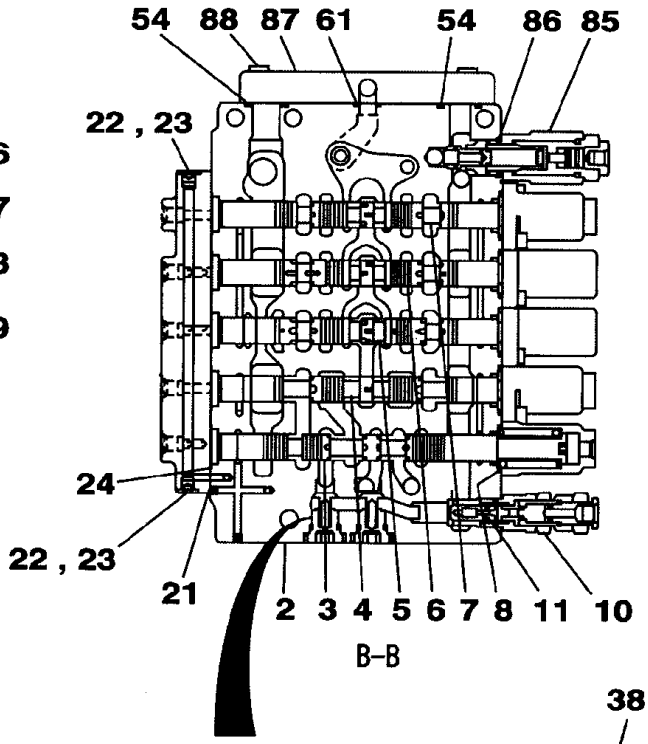

B-B

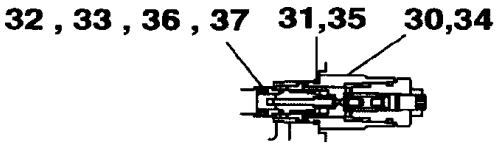

Ⓔ OVERLOAD RELIEF VALVE

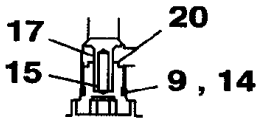

CHECK VALVE

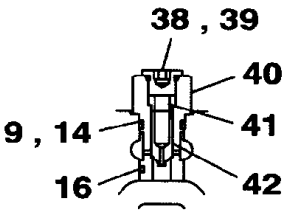

Ⓐ CHECK VALVE

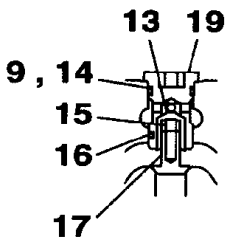

Ⓑ CHECK VALVE

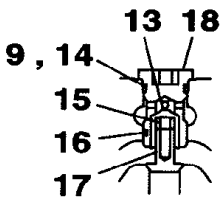

Ⓒ CHECK VALVE

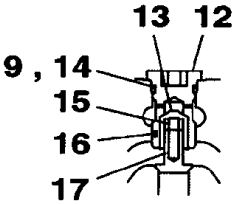

Ⓓ CHECK VALVE

BS07A220

KLJ10580 CONJUNTO DE LA VALVULA - CONTROLE

REF	FN	PART NUMBER	YR/SN	QTY	DESCRIPTION
38		156263A1		2	TAMPA DO RESERVATÓRIO
39		154475A1		1	ANEL "O"
40		LR00561		1	TAMPA DO RESERVATÓRIO
41		160947A1		1	MOLA
42		LJ00705		1	VALVULA CHECAGEM
54		154523A1		2	ANEL O
61		154487A1		1	ANEL "O"
66		154525A1		1	ANEL "O"
67		154465A1		6	ANEL "O"
68		LBQ7222		4	ANEL "O"
69		154489A1		11	ANEL O
70		154477A1		1	ANEL "O"
80		LW005170		1	TAMPA DO RESERVATÓRIO
81		LK005720		3	BUJÃO
82		LX00007		5	ESFERA
83		LW005180		2	TAMPA DO RESERVATÓRIO
84		LK005730		2	BUJÃO
85		LJ014960		1	VÁLVULA DE SOBRE-PRESSÃO, Incl. 86
86		154523A1		1	ANEL O
87		LR015620		1	PLACA
88		861-10035		4	PARAFUSO, Hex Soc Hd, M10 x 35, 12.9

KLJ10580 CONJUNTO DE LA VALVULA - CONTROLE

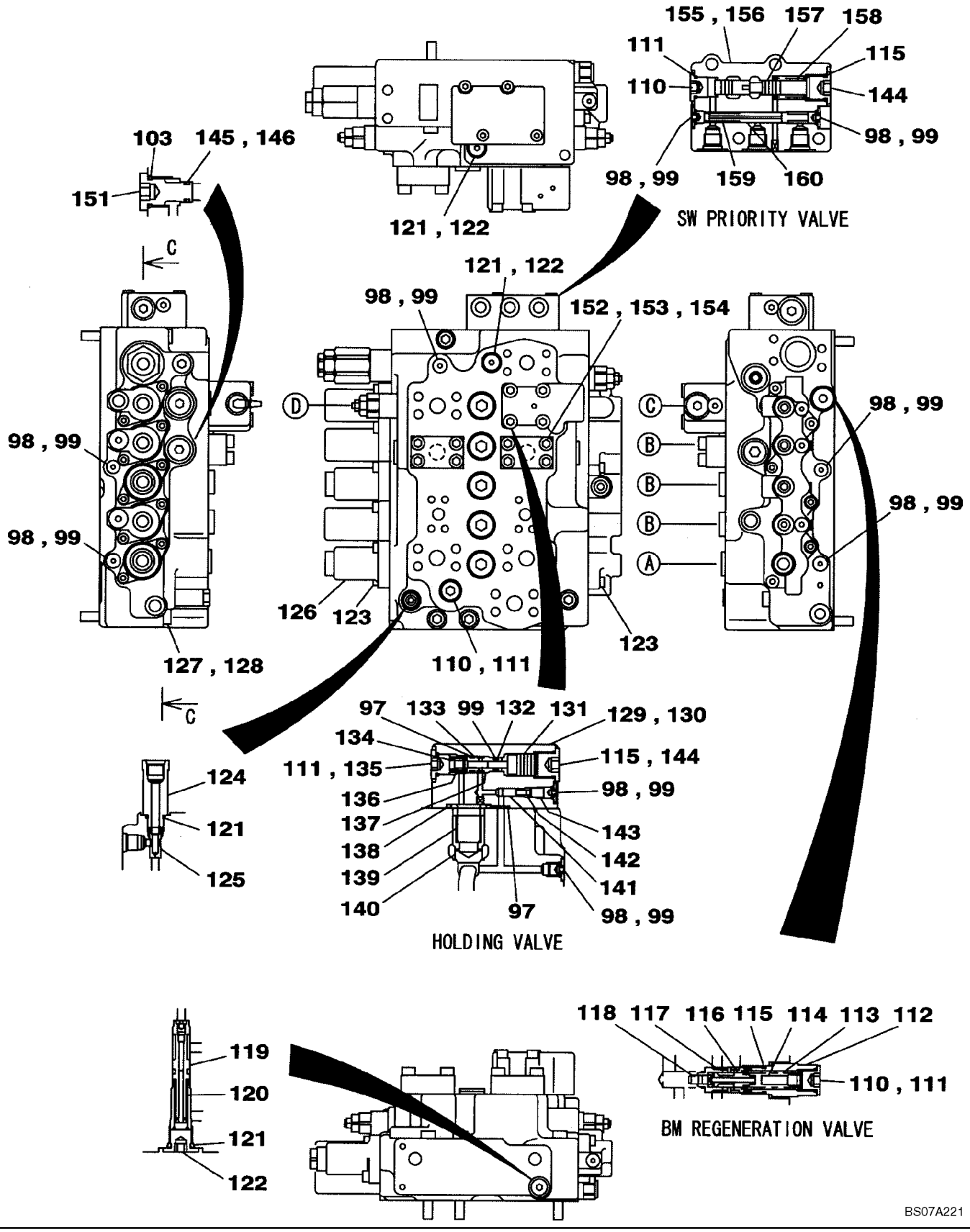

KLJ10580 CONJUNTO DE LA VALVULA - CONTROLE

REF	FN	PART NUMBER	YR/SN	QTY	DESCRIPTION
		KLJ10580		1	DISTRIBUIDOR, Includes All Parts On Figures 08-57 - 08-60
97		154463A1		2	ANEL O
98		160902A1		14	TAMPA DO RESERVATÓRIO
99		154455A1		15	ANEL "O"
103		154495A1		2	ANEL O
110		156263A1		3	TAMPA DO RESERVATÓRIO
111		154475A1		4	ANEL "O"
112		LR015590		1	BUJÃO
113		LG00325		1	MOLA DE COMPRESAO
114		LS003420		1	GUIA
115		154487A1		3	ANEL "O"
116		LJ014970		1	CARRETO
117		LH005000		1	BUCHA
118		160906A1		1	PISTÃO
119		LJ014980		1	CARRETO
120		LG006150		1	MOLA
121		154467A1		6	ANEL "O"
122		160306A1		5	TAMPA DO RESERVATÓRIO
123		108R008Z025B		16	PARAFUSO
124		LB012000		1	BUCHA
125		LJ014990		1	ORIFICIO
126		LW005150		2	TAMPA DO RESERVATÓRIO
127		863-12100		4	PARAFUSO, Hex Soc Hd, M12 x 100, 12.9
128		892-10012		4	ARRUELA-TRAVA, M12
129		LW005160		1	TAMPA DO RESERVATÓRIO
130		861-10060		4	PARAFUSO, Hex Soc Hd, M10 x 60, 12.9
131		LJ014930		1	PISTÃO
132		153946A1		1	VEDADOR ESPECIAL
133		153952A1		1	VEDADOR ESPECIAL
134		LG00323		1	MOLA DE COMPRESAO
135		LR00560		1	TAMPA DO RESERVATÓRIO
136		LJ00702		1	VALVULA
137		LH00239		1	MANGUEIRA RÍGIDA
138		154523A1		1	ANEL O

KLJ10580 CONJUNTO DE LA VALVULA - CONTROLE

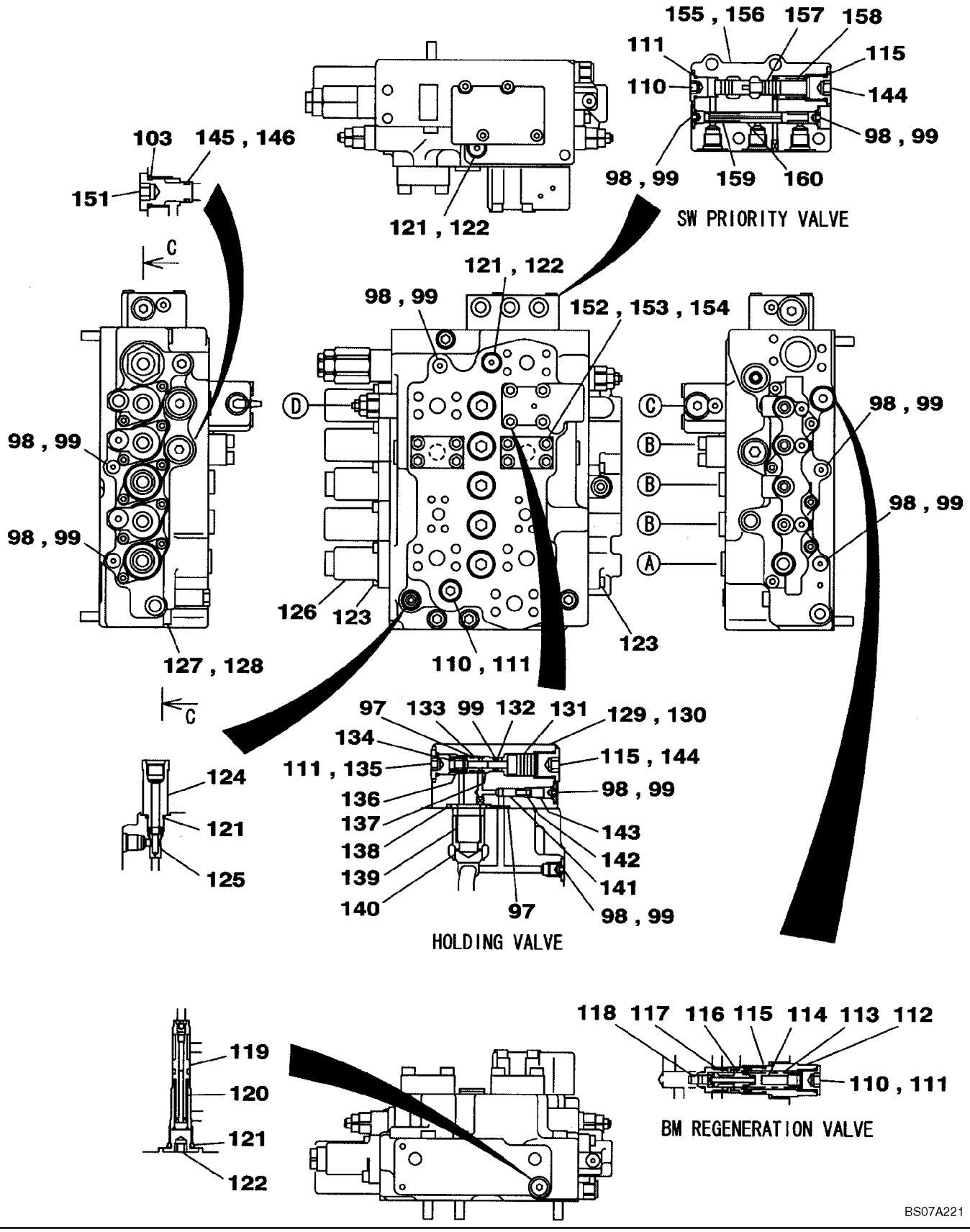

KLJ10580 CONJUNTO DE LA VALVULA - CONTROLE

REF	FN	PART NUMBER	YR/SN	QTY	DESCRIPTION
139		160948A1		1	MOLA
140		160914A1		1	VALVULA
141		155915A1		1	VALVULA
142		LG006120		1	MOLA
143		LH00240		1	ESPAÇADOR
144		160903A1		2	TAMPA DO RESERVATÓRIO
145		155063A1		2	ANEL O
146		154402A1		2	VEDADOR ESPECIAL
151		LR00564		2	TAMPA DO RESERVATÓRIO
152		LH005010		2	FLANGE
153		155210A1		2	ANEL O
154		861-10035		8	PARAFUSO, Hex Soc Hd, M10 x 35, 12.9
155		LJ015000		1	VALVULA COLETORA
156		863-8050		4	PARAFUSO, Hex Soc Hd, M8 x 50, 10.9
157		LJ00707		1	CARRETO
158		LG00324		1	MOLA DE COMPRESAO
159		LG00329		1	MOLA DE COMPRESAO
160		LJ00714		1	CARRETO

KLJ10580 CONJUNTO DE LA VALVULA - CONTROLE

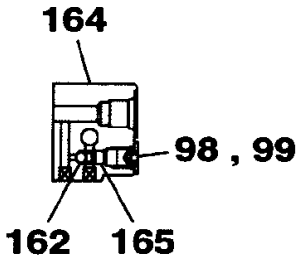

COVER SECTION

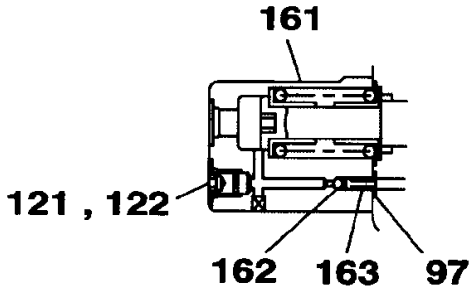

COVER SECTION

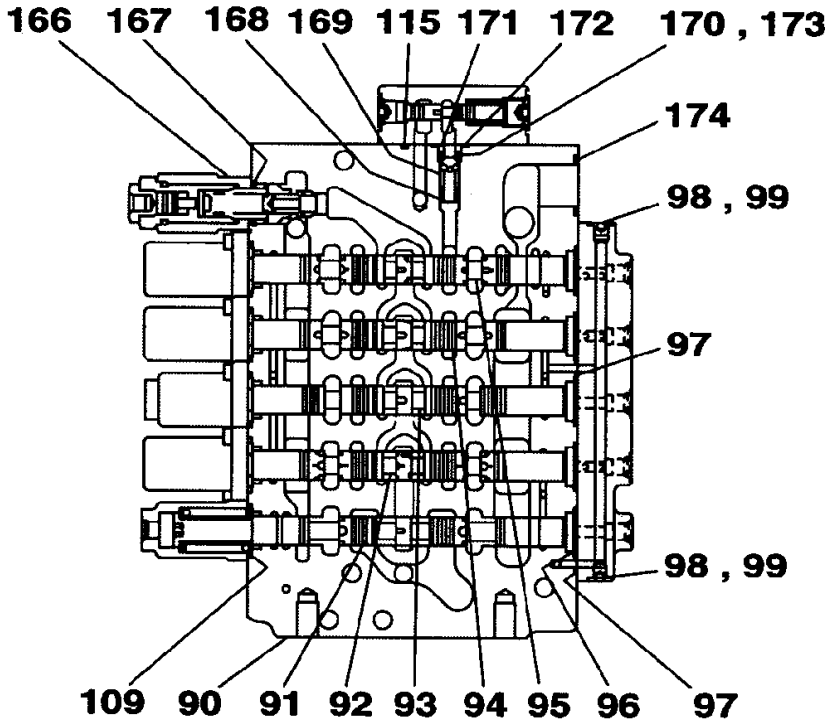

C-C

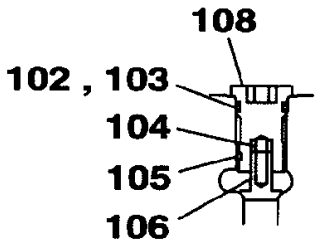

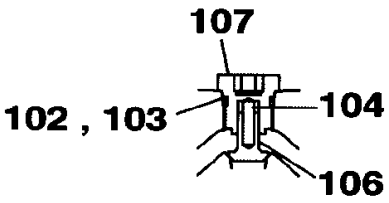

Ⓑ CHECK VALVE

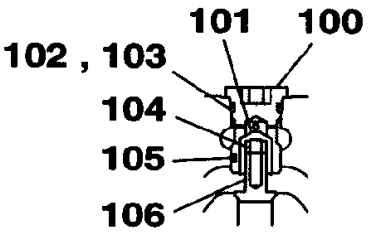

Ⓒ CHECK VALVE

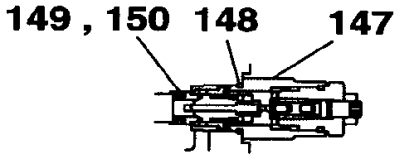

Ⓓ OVERLOAD RELIEF VALVE

BS07A222

KLJ10580 CONJUNTO DE LA VALVULA - CONTROLE

REF	FN	PART NUMBER	YR/SN	QTY	DESCRIPTION
		KLJ10580		1	DISTRIBUIDOR, Includes All Parts On Figures 08-57 - 08-60
90		NSS		1	BOLETIM INFORMATIVO, Housing, Valve
91		NSS		1	BOLETIM INFORMATIVO, Spool, Valve
92		NSS		1	BOLETIM INFORMATIVO, Spool, Valve
93		NSS		1	BOLETIM INFORMATIVO, Spool, Valve
94		NSS		1	BOLETIM INFORMATIVO, Spool, Valve
95		NSS		1	BOLETIM INFORMATIVO, Spool, Valve
96		160805A1		5	ANEL O
97		154463A1		7	ANEL O
98		160902A1		3	TAMPA DO RESERVATÓRIO
99		154455A1		3	ANEL "O"
100		LR00565		1	TAMPA DO RESERVATÓRIO
101		155920A1		1	VALVULA CHECAGEM
102		153976A1		5	VEDADOR ESPECIAL
103		154495A1		5	ANEL O
104		156027A1		5	MOLA
105		155295A1		2	ESFERA
106		LJ014920		6	VÁLVULA DE SOBRE-PRESSÃO
107		LR015560		3	BUJÃO
108		160974A1		1	TAMPA DO RESERVATÓRIO
109		160806A1		5	ANEL O
115		154487A1		1	ANEL "O"
121		154467A1		1	ANEL "O"
122		160306A1		1	TAMPA DO RESERVATÓRIO
147		LJ00704		2	POPPET, Incl. 148 - 150
148		154495A1		1	ANEL O
149		154495A1		1	ANEL O
150		155063A1		1	ANEL O
161		LW005180		3	TAMPA DO RESERVATÓRIO
162		LX00007		6	ESFERA
163		LK005730		3	BUJÃO
164		LW005190		1	TAMPA DO RESERVATÓRIO
165		LK005720		3	BUJÃO
166		LJ014960		1	VÁLVULA DE SOBRE-PRESSÃO

KLJ10580 CONJUNTO DE LA VALVULA - CONTROLE

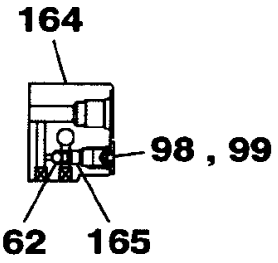

COVER SECTION

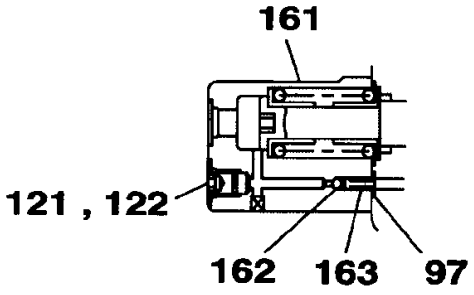

COVER SECTION

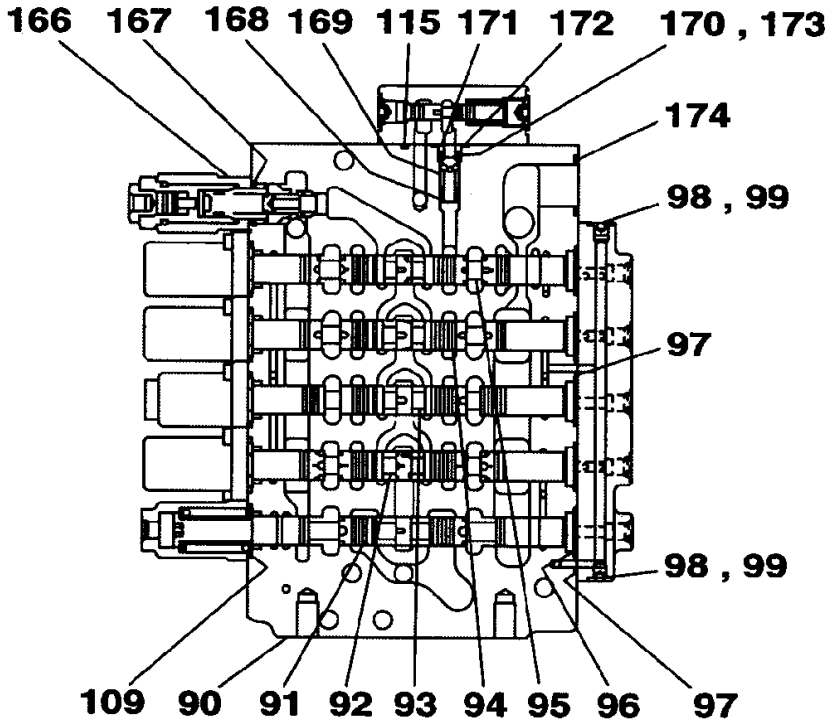

C-C

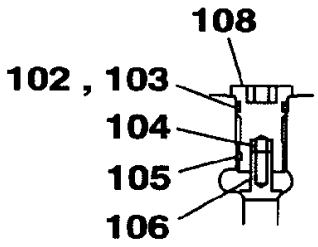

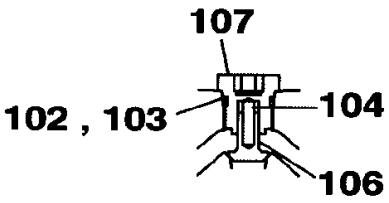

Ⓑ CHECK VALVE

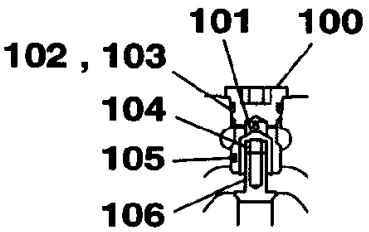

Ⓒ CHECK VALVE

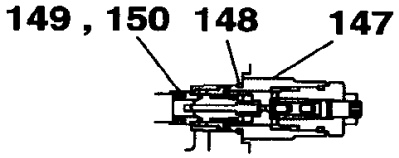

Ⓓ OVERLOAD RELIEF VALVE

BS07A222

KLJ10580 CONJUNTO DE LA VALVULA - CONTROLE

REF	FN	PART NUMBER	YR/SN	QTY	DESCRIPTION
167		154523A1		1	ANEL O
168		LSC0204		1	MOLA
169		LPC0125		1	VALVULA CHECAGEM
170		154471A1		1	ANEL O
171		LR00556		1	ASSENTO
172		154491A1		1	ANEL O
173		153958A1		1	VEDADOR ESPECIAL
174		LBQ6222		1	ANEL O

KLJ10590 CONJUNTO DE LA VALVULA - CONTROLE

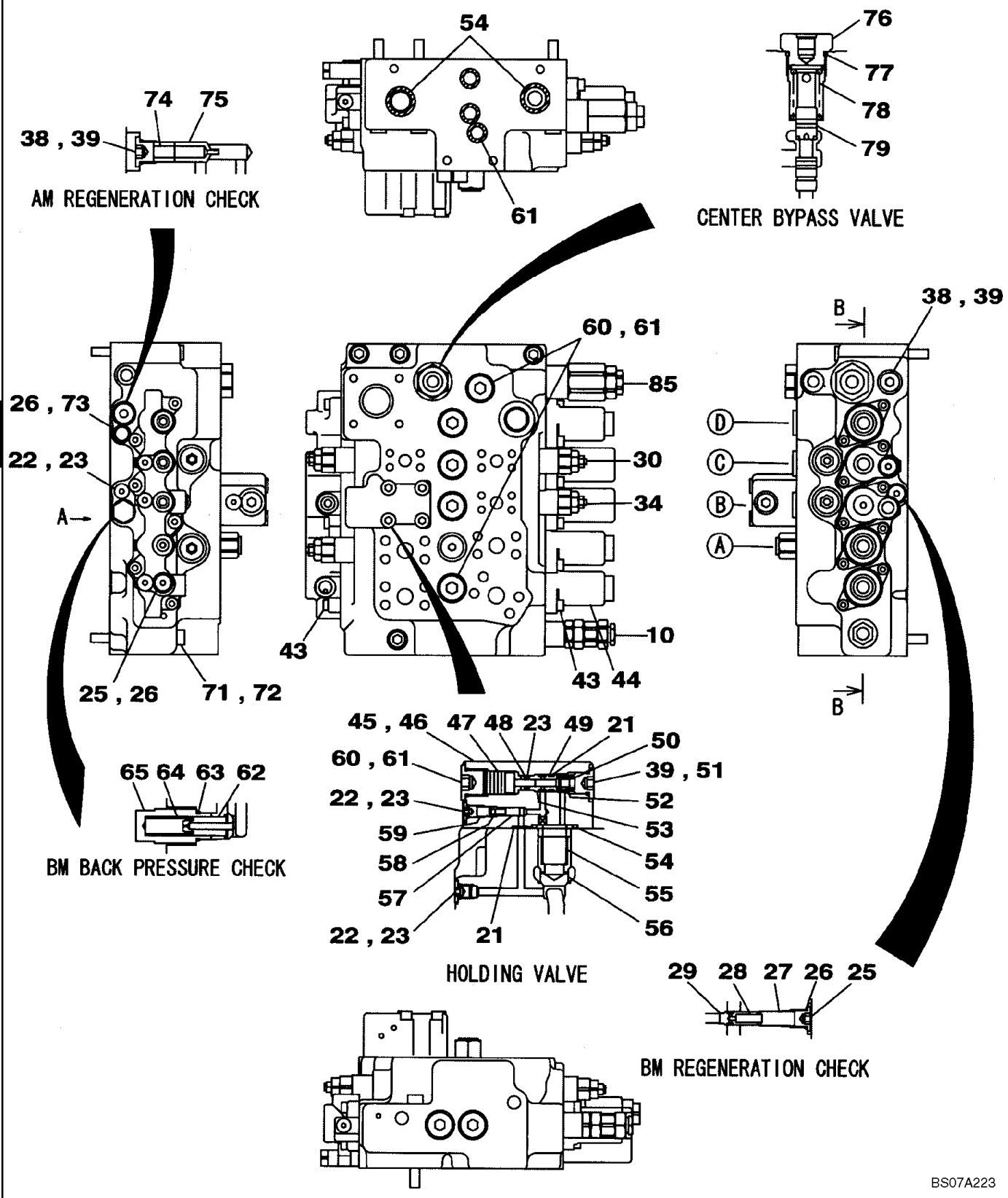

KLJ10590 CONJUNTO DE LA VALVULA - CONTROLE

REF	FN	PART NUMBER	YR/SN	QTY	DESCRIPTION
		KLJ10590		1	DISTRIBUIDOR, Includes All Parts On Figures 08-61 - 08-65
10		LJ00800		1	VÁLVULA DE SOBRE-PRESSÃO
21		154463A1		2	ANEL O
22		160902A1		3	TAMPA DO RESERVATÓRIO
23		154455A1		4	ANEL "O"
25		160306A1		2	TAMPA DO RESERVATÓRIO
26		154467A1		3	ANEL "O"
27		LH00237		1	ESPAÇADOR
28		LG00322		1	MOLA DE COMPRESAO
29		LJ00700		1	VALVULA CHECAGEM
30		LJ00704		3	POPPET, See Figure 08-62
34		LJ00704		1	POPPET, See Figure 08-62
38		156263A1		4	TAMPA DO RESERVATÓRIO
39		154475A1		3	ANEL "O"
43		108R008Z025B		16	PARAFUSO
44		LW005150		3	TAMPA DO RESERVATÓRIO
45		LW005160		1	TAMPA DO RESERVATÓRIO
46		861-10060		4	PARAFUSO, Hex Soc Hd, M10 x 60, 12.9
47		LJ014930		1	PISTÃO
48		153946A1		1	VEDADOR ESPECIAL
49		153952A1		1	VEDADOR ESPECIAL
50		LG00323		1	MOLA DE COMPRESAO
51		LR00560		1	TAMPA DO RESERVATÓRIO
52		LJ00702		1	VALVULA
53		LH00239		1	MANGUEIRA RÍGIDA
54		154523A1		1	ANEL O
55		160948A1		1	MOLA
56		160914A1		1	VALVULA
57		155915A1		1	VALVULA
58		LG006120		1	MOLA
59		LH00240		1	ESPAÇADOR
60		160903A1		3	TAMPA DO RESERVATÓRIO
61		154487A1		6	ANEL "O"
62		LJ014940		1	VÁLVULA DE SOBRE-PRESSÃO

KLJ10590 CONJUNTO DE LA VALVULA - CONTROLE

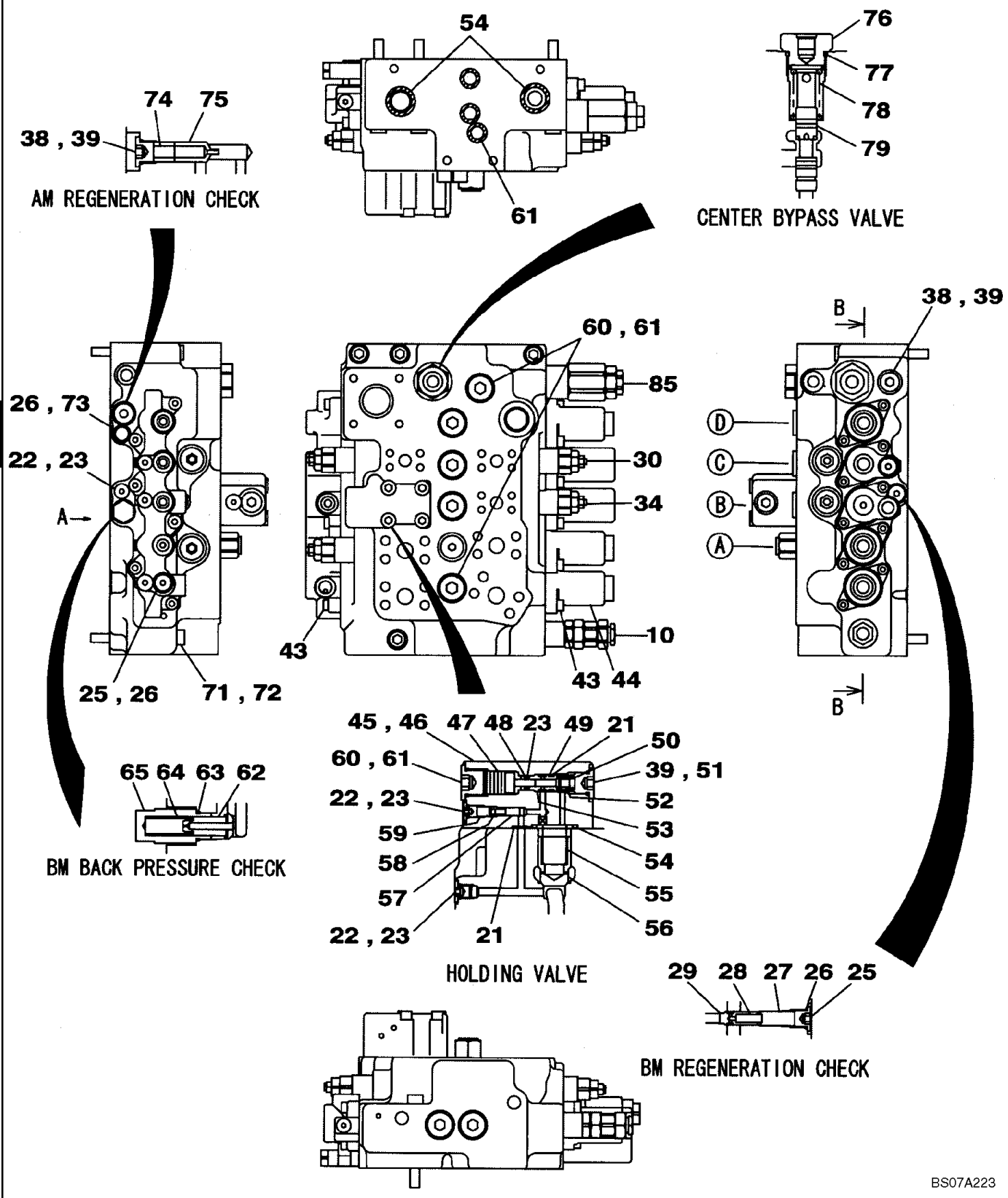

KLJ10590 CONJUNTO DE LA VALVULA - CONTROLE

REF	FN	PART NUMBER	YR/SN	QTY	DESCRIPTION
63		155222A1		1	ANEL O
64		LG006130		1	MOLA
65		LR015570		1	BUJÃO
71		863-12100		4	PARAFUSO, Hex Soc Hd, M12 x 100, 12.9
72		892-10012		4	ARRUELA-TRAVA, M12
73		LB012000		1	BUCHA
74		LG00326		1	MOLA DE COMPRESAO
75		LJ00710		1	VALVULA CHECAGEM
76		LR015580		1	BUJÃO
77		164739A1		1	ANEL "O"
78		LG006140		1	MOLA
79		LJ014950		1	CARRETO

KLJ10590 CONJUNTO DE LA VALVULA - CONTROLE

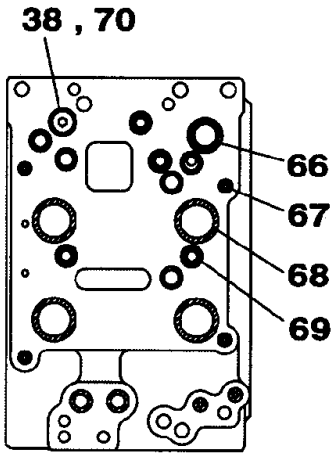

A VIEW

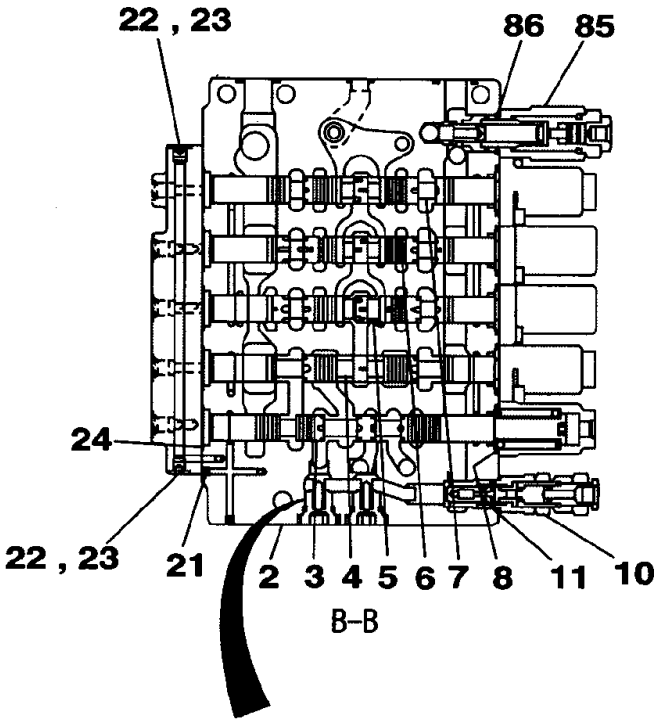

B-B

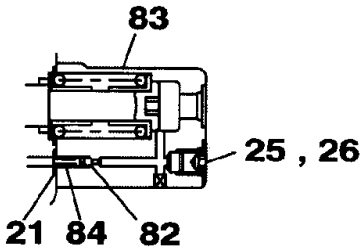

COVER SECTION

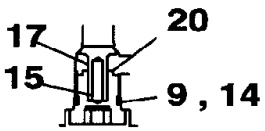

CHECK VALVE

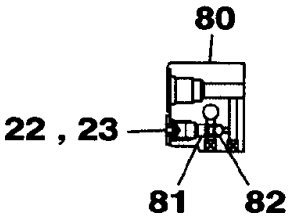

COVER SECTION

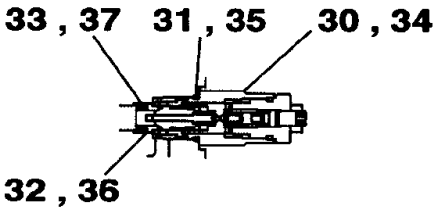

OVERLOAD RELIEF VALVE

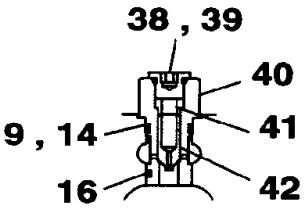

Ⓐ CHECK VALVE

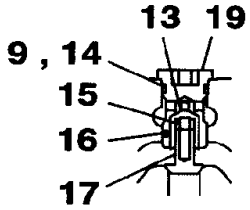

Ⓑ CHECK VALVE

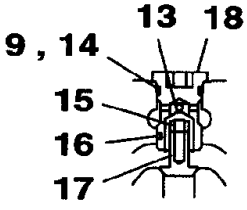

Ⓒ CHECK VALVE

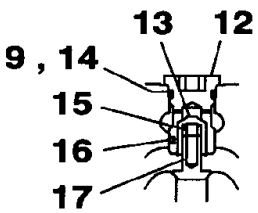

Ⓓ CHECK VALVE

BS07A224

KLJ10590 CONJUNTO DE LA VALVULA - CONTROLE

REF	FN	PART NUMBER	YR/SN	QTY	DESCRIPTION
		KLJ10590		1	DISTRIBUIDOR, Includes All Parts On Figures 08-63 - 08-68
2		NSS		1	BOLETIM INFORMATIVO, Housing, Valve
3		NSS		1	BOLETIM INFORMATIVO, Spool
4		NSS		1	BOLETIM INFORMATIVO, Spool
5		NSS		1	BOLETIM INFORMATIVO, Spool
6		NSS		1	BOLETIM INFORMATIVO, Spool
7		NSS		1	BOLETIM INFORMATIVO, Spool
8		160806A1		5	ANEL O
9		154495A1		6	ANEL O
10		LJ00800		1	VÁLVULA DE SOBRE-PRESSÃO, Incl. 11
11		154495A1		1	ANEL O
12		LR01104		1	TAMPA DO RESERVATÓRIO
13		155920A1		3	VALVULA CHECAGEM
14		153976A1		6	VEDADOR ESPECIAL
15		156027A1		5	MOLA
16		155295A1		4	ESFERA
17		LJ014920		5	VÁLVULA DE SOBRE-PRESSÃO
18		LR015550		1	BUJÃO
19		160918A1		1	TAMPA DO RESERVATÓRIO
20		LR015560		2	BUJÃO
21		154463A1		2	ANEL O
22		160902A1		3	TAMPA DO RESERVATÓRIO
23		154455A1		3	ANEL "O"
24		160805A1		5	ANEL O
25		160306A1		1	TAMPA DO RESERVATÓRIO
26		154467A1		1	ANEL "O"
30		LJ00704		3	POPPET, Incl. 31 - 33
31		154495A1		1	ANEL O
32		154402A1		1	VEDADOR ESPECIAL
33		155063A1		1	ANEL O
34		LJ00704		1	POPPET, Incl. 35 - 37
35		154495A1		1	ANEL O
36		154402A1		1	VEDADOR ESPECIAL
37		155063A1		1	ANEL O

KLJ10590 CONJUNTO DE LA VALVULA - CONTROLE

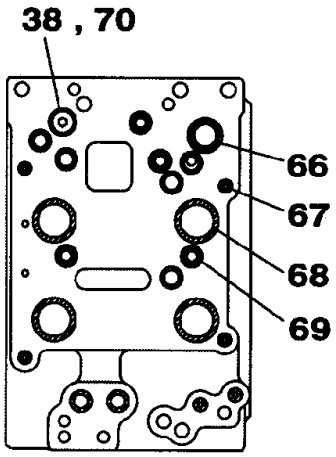

A VIEW

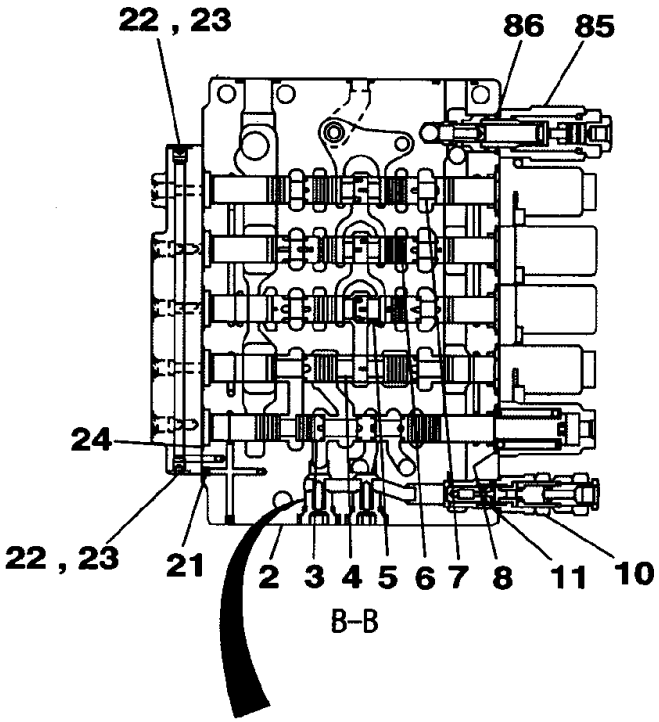

B-B

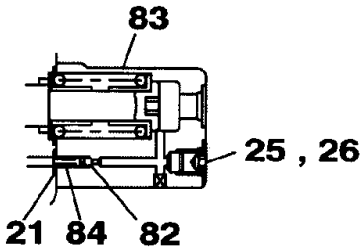

COVER SECTION

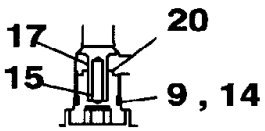

CHECK VALVE

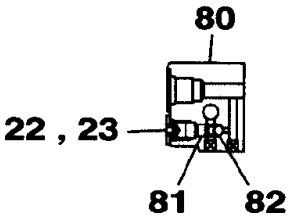

COVER SECTION

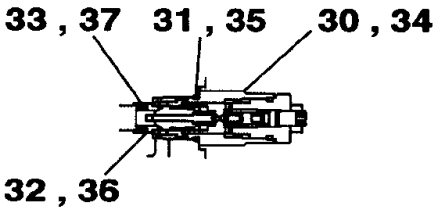

OVERLOAD RELIEF VALVE

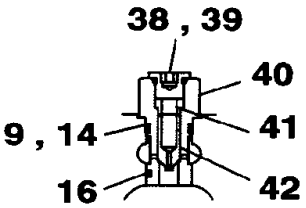

Ⓐ CHECK VALVE

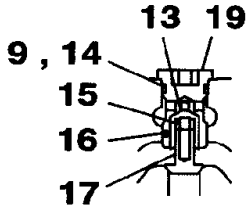

Ⓑ CHECK VALVE

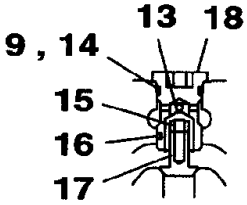

Ⓒ CHECK VALVE

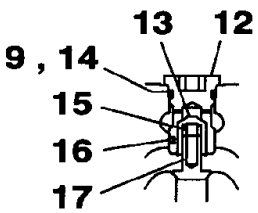

Ⓓ CHECK VALVE

BS07A224

8

KLJ10590 CONJUNTO DE LA VALVULA - CONTROLE

REF	FN	PART NUMBER	YR/SN	QTY	DESCRIPTION
38		156263A1		2	TAMPA DO RESERVATÓRIO
39		154475A1		1	ANEL "O"
40		LR00561		1	TAMPA DO RESERVATÓRIO
41		160947A1		1	MOLA
42		LJ00705		1	VALVULA CHECAGEM
66		154525A1		1	ANEL "O"
67		154465A1		6	ANEL "O"
68		LBQ7222		4	ANEL "O"
69		154489A1		11	ANEL O
70		154477A1		1	ANEL "O"
80		LW005170		1	TAMPA DO RESERVATÓRIO
81		LK005720		3	BUJÃO
82		LX00007		5	ESFERA
83		LW005180		2	TAMPA DO RESERVATÓRIO
84		LK005730		2	BUJÃO
85		LJ014960		1	VÁLVULA DE SOBRE-PRESSÃO, Incl. 86
86		154523A1		1	ANEL O

KLJ10590 CONJUNTO DE LA VALVULA - CONTROLE

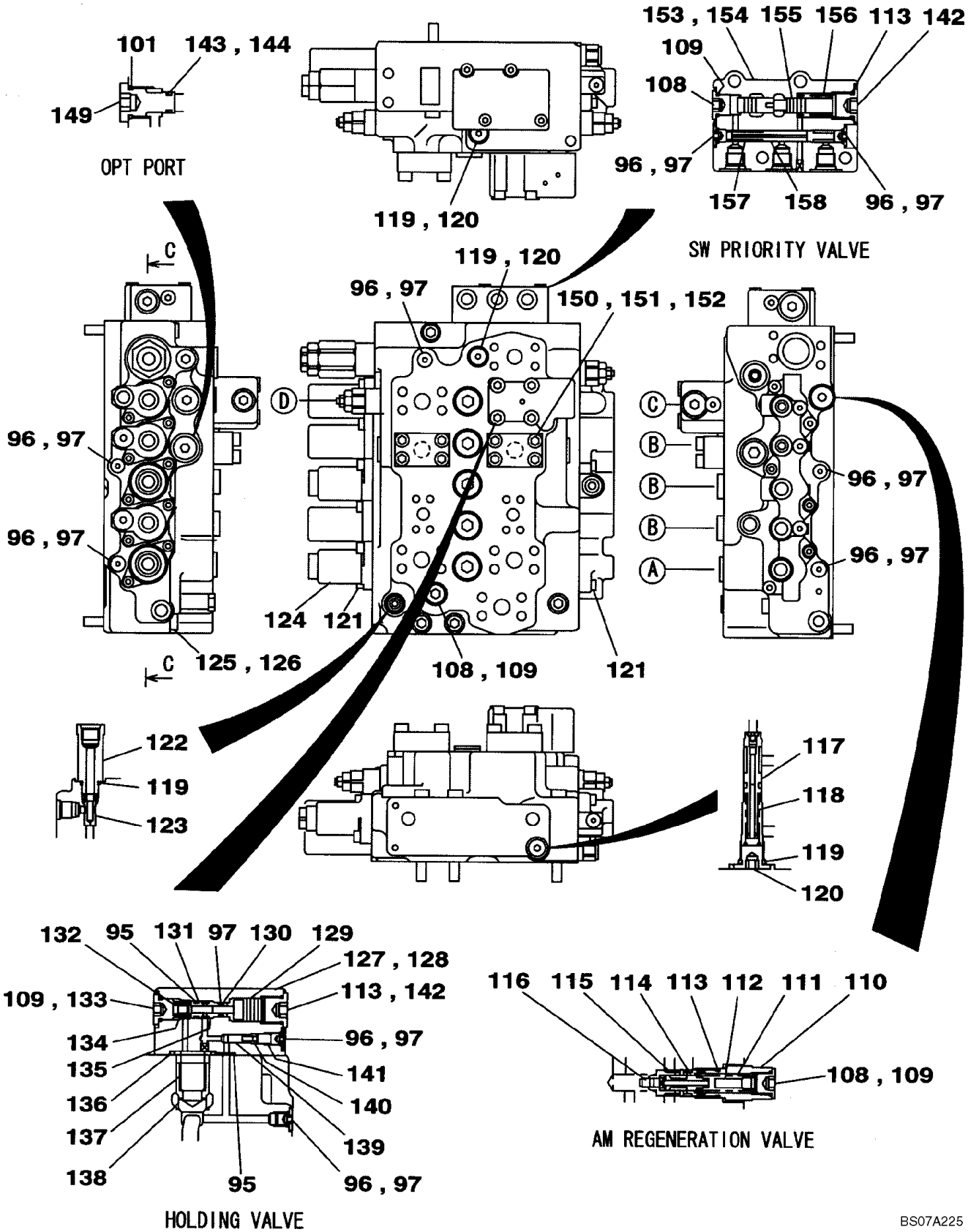

BS07A225

8

KLJ10590 CONJUNTO DE LA VALVULA - CONTROLE

REF	FN	PART NUMBER	YR/SN	QTY	DESCRIPTION
		KLJ10590		1	DISTRIBUIDOR, Includes All Parts On Figures 08-63 - 08-68
95		154463A1		2	ANEL O
96		160902A1		14	TAMPA DO RESERVATÓRIO
97		154455A1		15	ANEL "O"
101		154495A1		5	ANEL O
108		156263A1		3	TAMPA DO RESERVATÓRIO
109		154475A1		4	ANEL "O"
110		LR015590		1	BUJÃO
111		LG00325		1	MOLA DE COMPRESAO
112		LS003420		1	GUIA
113		154487A1		3	ANEL "O"
114		LJ014970		1	CARRETO
115		LH005000		1	BUCHA
116		160906A1		1	PISTÃO
117		LJ014980		1	CARRETO
118		LG006150		1	MOLA
119		154467A1		6	ANEL "O"
120		160306A1		5	TAMPA DO RESERVATÓRIO
121		108R008Z025B		16	PARAFUSO
122		LB012000		1	BUCHA
123		LJ014990		1	ORIFICIO
124		LW005150		2	TAMPA DO RESERVATÓRIO
125		863-12100		4	PARAFUSO, Hex Soc Hd, M12 x 100, 12.9
126		892-10012		4	ARRUELA-TRAVA, M12
127		LW005160		1	TAMPA DO RESERVATÓRIO
128		861-10060		4	PARAFUSO, Hex Soc Hd, M10 x 60, 12.9
129		LJ014930		1	PISTÃO
130		153946A1		1	VEDADOR ESPECIAL
131		153952A1		1	VEDADOR ESPECIAL
132		LG00323		1	MOLA DE COMPRESAO
133		LR00560		1	TAMPA DO RESERVATÓRIO
134		LJ00702		1	VALVULA
135		LH00239		1	MANGUEIRA RÍGIDA
136		154523A1		1	ANEL O

KLJ10590 CONJUNTO DE LA VALVULA - CONTROLE

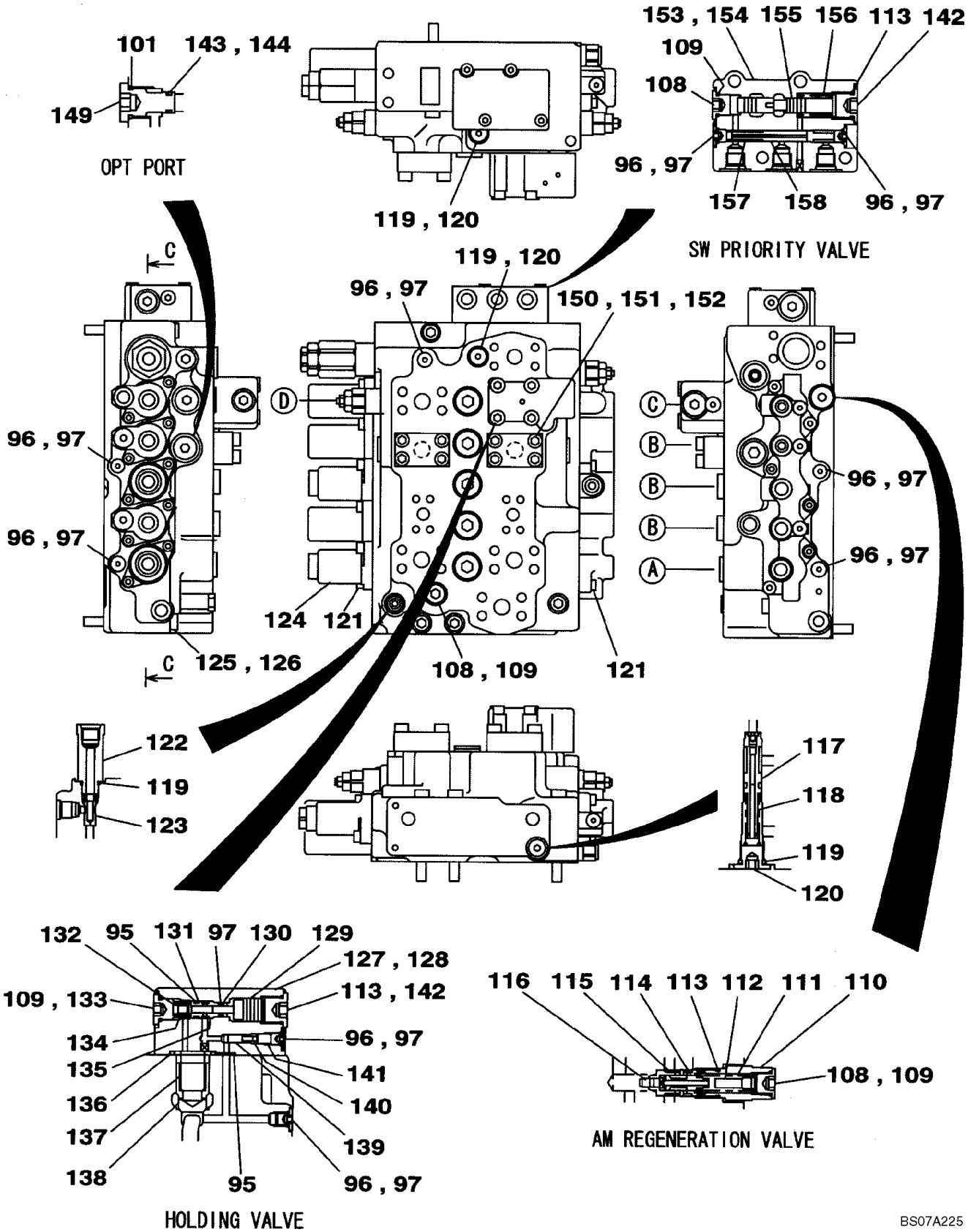

BS07A225

8

KLJ10590 CONJUNTO DE LA VALVULA - CONTROLE

REF	FN	PART NUMBER	YR/SN	QTY	DESCRIPTION
137		160948A1		1	MOLA
138		160914A1		1	VALVULA
139		155915A1		1	VALVULA
140		LG006120		1	MOLA
141		LH00240		1	ESPAÇADOR
142		160903A1		2	TAMPA DO RESERVATÓRIO
143		155063A1		2	ANEL O
144		154402A1		2	VEDADOR ESPECIAL
149		LR00564		2	TAMPA DO RESERVATÓRIO
150		LH005010		2	FLANGE
151		155210A1		2	ANEL O
152		861-10035		8	PARAFUSO, Hex Soc Hd, M10 x 35, 12.9
153		LJ015000		1	VALVULA COLETORA
154		863-8050		4	PARAFUSO, Hex Soc Hd, M8 x 50, 10.9
155		LJ00707		1	CARRETO
156		LG00324		1	MOLA DE COMPRESAO
157		LG00329		1	MOLA DE COMPRESAO
158		LJ00714		1	CARRETO

KLJ10590 CONJUNTO DE LA VALVULA - CONTROLE

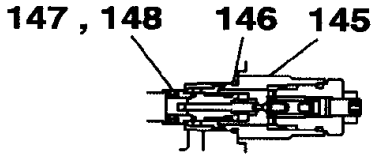

Ⓓ OVERLOAD RELIEF VALVE

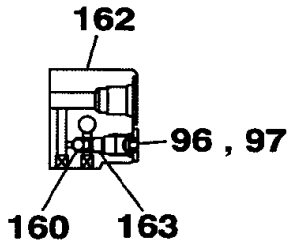

COVER SECTION

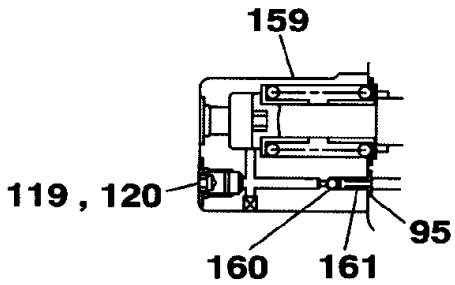

COVER SECTION

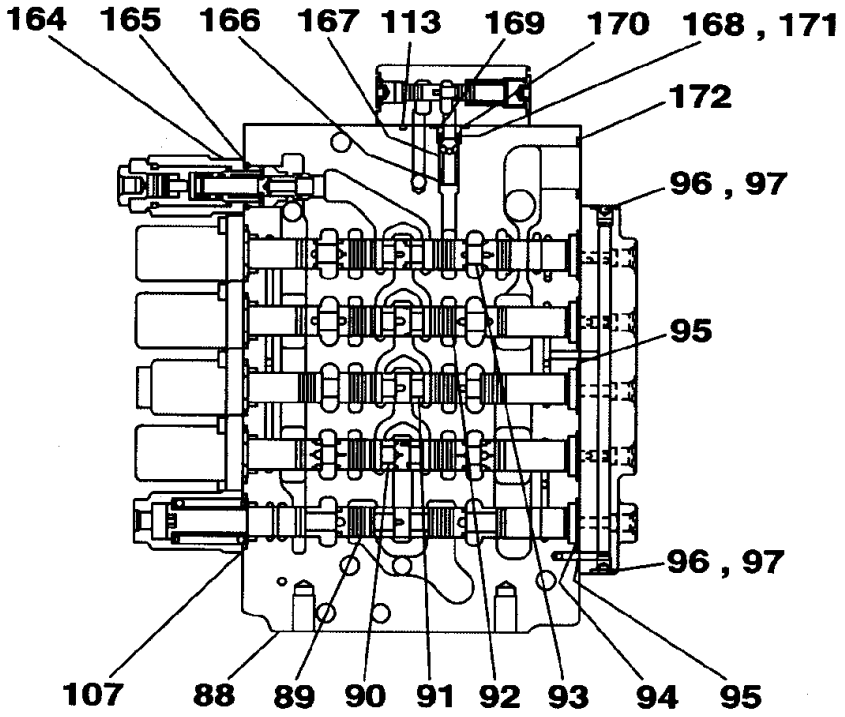

C-C

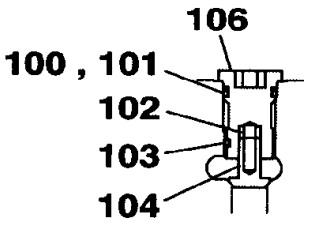

Ⓐ CHECK VALVE

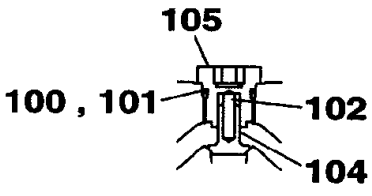

Ⓑ CHECK VALVE

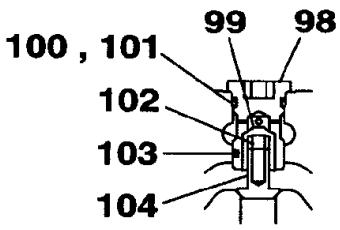

Ⓒ CHECK VALVE

BS07A226

8

KLJ10590 CONJUNTO DE LA VALVULA - CONTROLE

REF	FN	PART NUMBER	YR/SN	QTY	DESCRIPTION
		KLJ10590		1	DISTRIBUIDOR, Includes All Parts On Figures 08-63 - 08-68
88		NSS		1	BOLETIM INFORMATIVO, Housing, Valve
89		NSS		1	BOLETIM INFORMATIVO, Spool, Valve
90		NSS		1	BOLETIM INFORMATIVO, Spool, Valve
91		NSS		1	BOLETIM INFORMATIVO, Spool, Valve
92		NSS		1	BOLETIM INFORMATIVO, Spool, Valve
93		NSS		1	BOLETIM INFORMATIVO, Spool, Valve
94		160805A1		5	ANEL O
95		154463A1		7	ANEL O
96		160902A1		3	TAMPA DO RESERVATÓRIO
97		154455A1		3	ANEL "O"
98		LR00565		1	TAMPA DO RESERVATÓRIO
99		155920A1		1	VALVULA CHECAGEM
100		153976A1		5	VEDADOR ESPECIAL
101		154495A1		5	ANEL O
102		156027A1		5	MOLA
103		155295A1		2	ESFERA
104		LJ014920		6	VÁLVULA DE SOBRE-PRESSÃO
105		LR015560		3	BUJÃO
106		160974A1		1	TAMPA DO RESERVATÓRIO
107		160806A1		5	ANEL O
113		154487A1		1	ANEL "O"
119		154467A1		1	ANEL "O"
120		160306A1		1	TAMPA DO RESERVATÓRIO
145		LJ00704		2	POPPET, Incl. 146 - 148
146		154495A1		1	ANEL O
147		154495A1		1	ANEL O
148		155063A1		1	ANEL O
159		LW005180		3	TAMPA DO RESERVATÓRIO
160		LX00007		6	ESFERA
161		LK005730		3	BUJÃO
162		LW005190		1	TAMPA DO RESERVATÓRIO
163		LK005720		3	BUJÃO
164		LJ014960		1	VÁLVULA DE SOBRE-PRESSÃO

KLJ10590 CONJUNTO DE LA VALVULA - CONTROLE

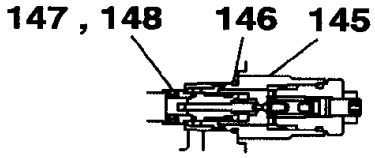

Ⓓ OVERLOAD RELIEF VALVE

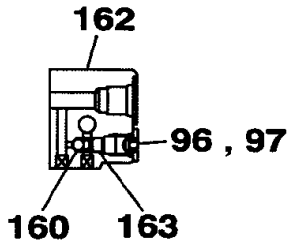

COVER SECTION

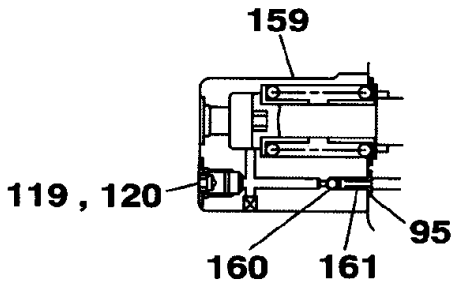

COVER SECTION

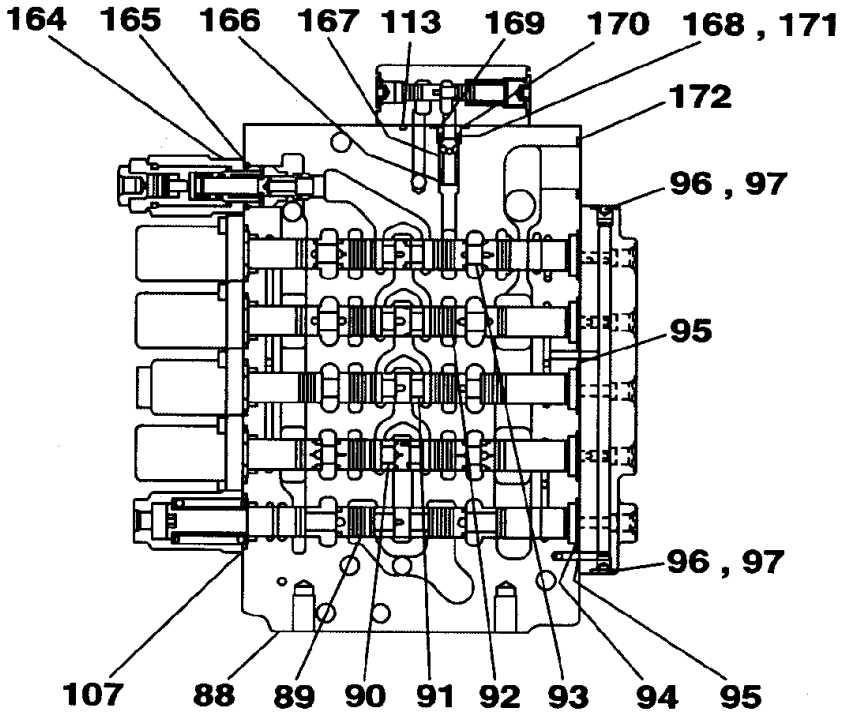

C-C

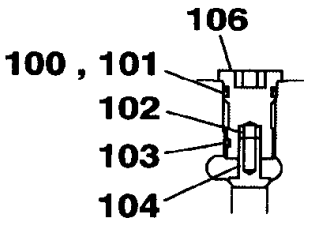

Ⓐ CHECK VALVE

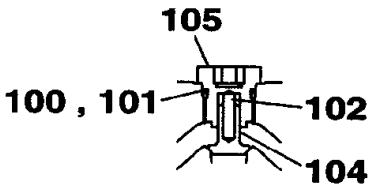

Ⓑ CHECK VALVE

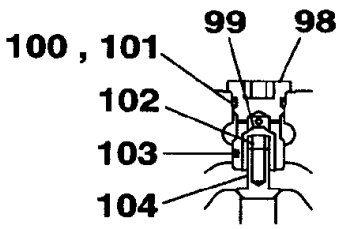

Ⓒ CHECK VALVE

BS07A226

8

KLJ10590 CONJUNTO DE LA VALVULA - CONTROLE

REF	FN	PART NUMBER	YR/SN	QTY	DESCRIPTION
165		154523A1		1	ANEL O
166		LSC0204		1	MOLA
167		LPC0125		1	VALVULA CHECAGEM
168		154471A1		1	ANEL O
169		LR00556		1	ASSENTO
170		154491A1		1	ANEL O
171		153958A1		1	VEDADOR ESPECIAL
172		LBQ6222		1	ANEL O

KLJ10590 CONJUNTO DE LA VALVULA - CONTROLE

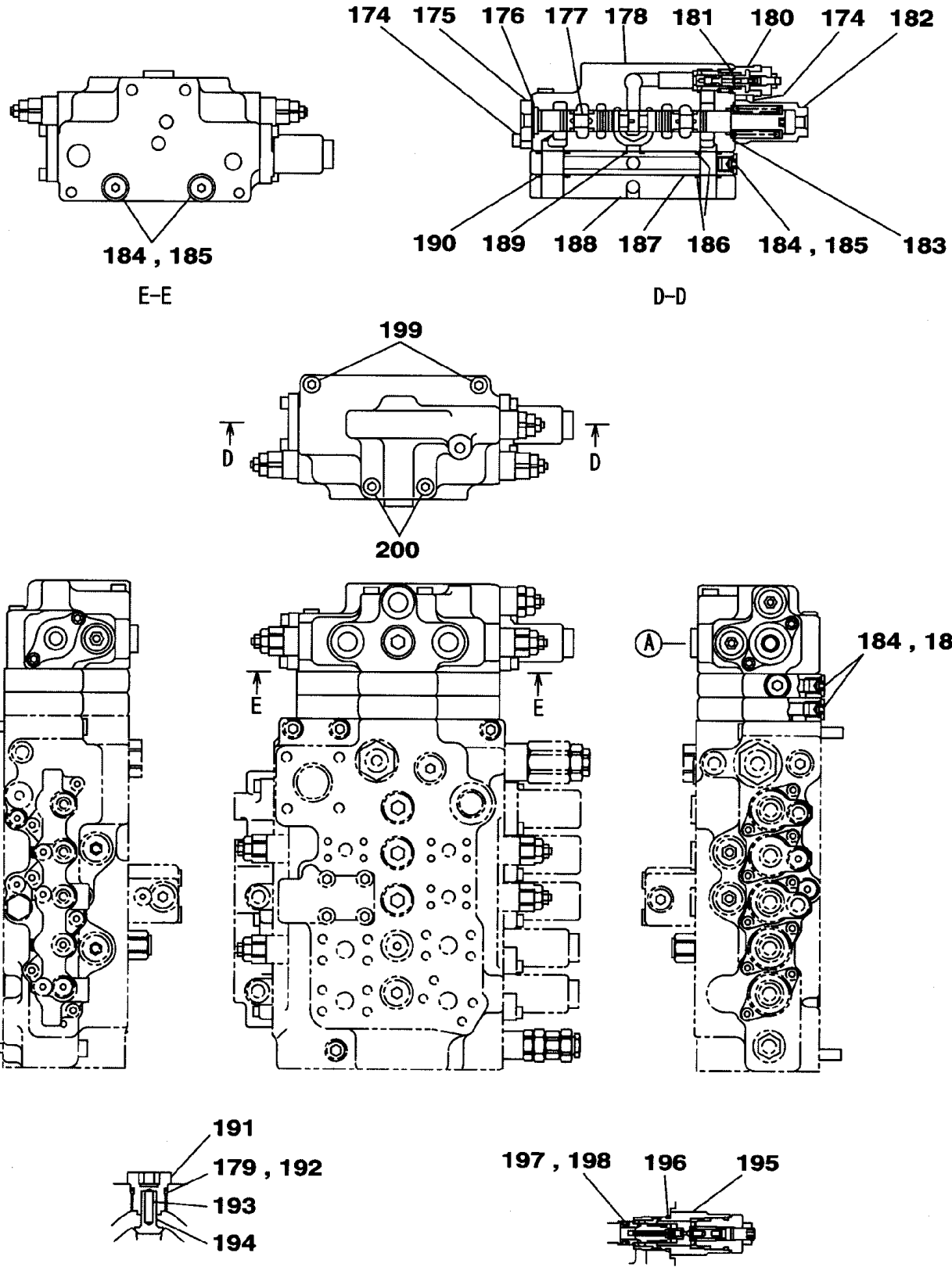

8

KLJ10590 CONJUNTO DE LA VALVULA - CONTROLE

REF	FN	PART NUMBER	YR/SN	QTY	DESCRIPTION
		KLJ10590		1	DISTRIBUIDOR, Includes All Parts On Figures 08-63 - 08-68
174		108R008Z025B		4	PARAFUSO
175		160850A1		1	PRENDEDOR
176		160805A1		1	ANEL O
177		NSS		1	BOLETIM INFORMATIVO, Spool, Valve
178		NSS		1	BOLETIM INFORMATIVO, Housing, Valve
179		154495A1		1	ANEL O
180		LJ00701		1	VÁLVULA DE SOBRE-PRESSÃO, Incl. 181
181		154495A1		1	ANEL O
182		LW005150		1	TAMPA DO RESERVATÓRIO
183		160806A1		1	ANEL O
184		156263A1		5	TAMPA DO RESERVATÓRIO
185		154475A1		5	ANEL "O"
186		154499A1		2	ANEL O
187		LR015600		1	PLACA
188		LR015610		1	PLACA
189		154487A1		2	ANEL "O"
190		154523A1		2	ANEL O
191		LR015560		1	BUJÃO
192		153976A1		1	VEDADOR ESPECIAL
193		156027A1		1	MOLA
194		LJ014920		1	VÁLVULA DE SOBRE-PRESSÃO
195		LJ00704		1	POPPET, Incl. 196 - 198
196		154495A1		1	ANEL O
197		154402A1		1	VEDADOR ESPECIAL
198		155063A1		1	ANEL O
199		108R010Z120R		2	PARAFUSO
200		LA011160		2	PARAFUSO

VÁLVULA, ALÍVIO DA ABERTURA - SISTEMA HIDRÁULICO AUXILIAR

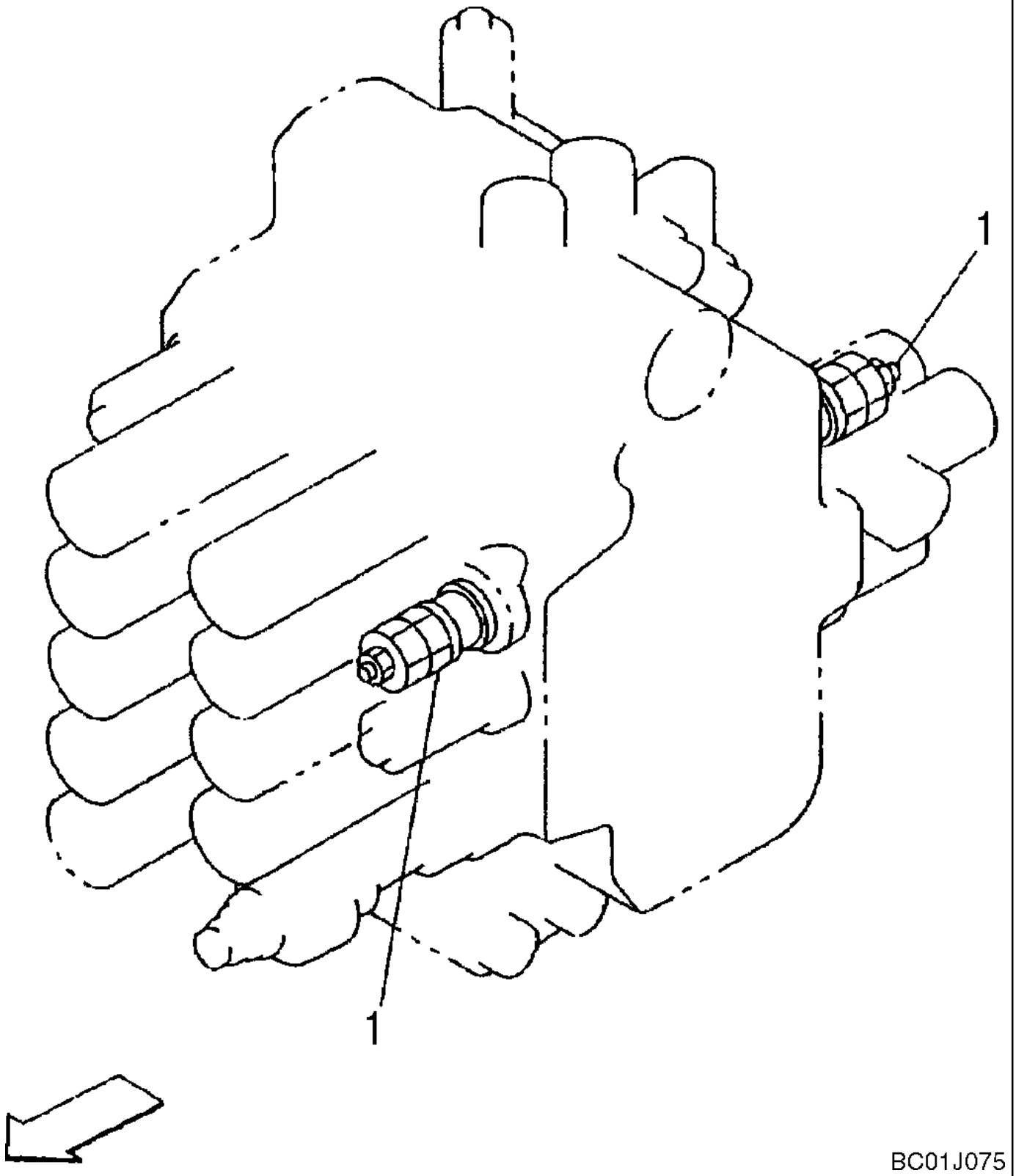

VÁLVULA, ALÍVIO DA ABERTURA - SISTEMA HIDRÁULICO AUXILIAR

REF	FN	PART NUMBER	YR/SN	QTY	DESCRIPTION
1		155745A1		2	VÁLVULA DE SOBRE-PRESSÃO, Relief; Incl. 2 - 7; Component Parts Not Illustrated
2		154463A1		1	ANEL O
3		164906A1		1	ANEL O
4		155223A1		2	ANEL O
5		159977A1		1	ANEL O
6		164905A1		2	VEDADOR ESPECIAL
7		159979A1		2	ANEL

ALMOFADA DA VÁLVULA - LINHAS DO CONTROLE PILOTO

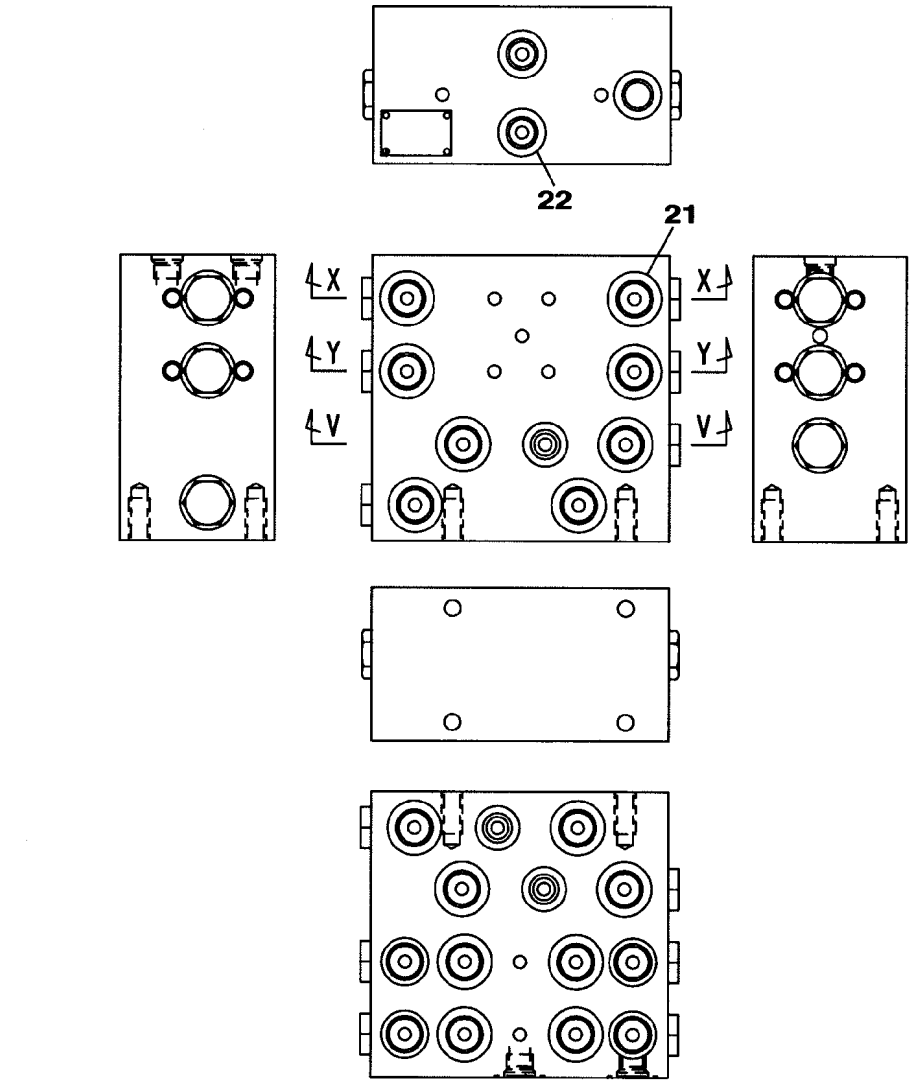

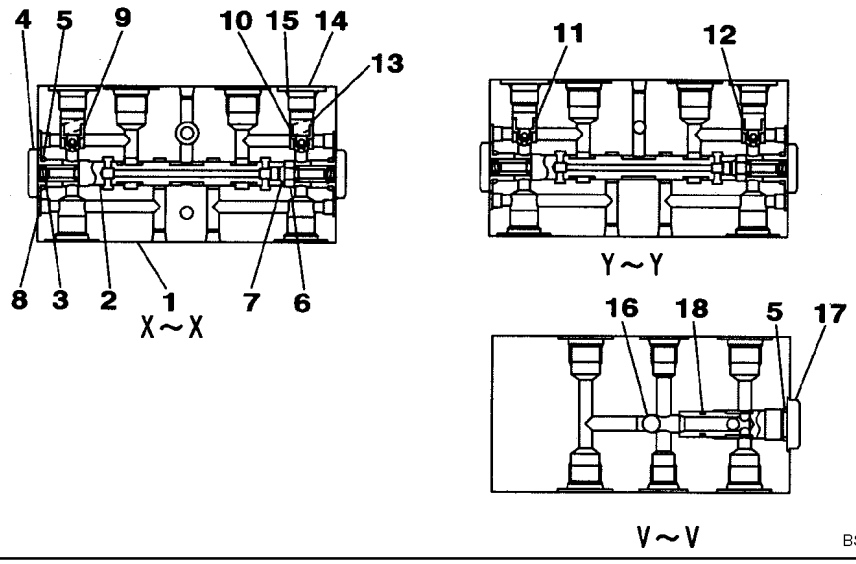

BS07A228

ALMOFADA DA VÁLVULA - LINHAS DO CONTROLE PILOTO

REF	FN	PART NUMBER	YR/SN	QTY	DESCRIPTION
		KNJ13790		1	SECÇÃO DE VÁLVULAS, Incl. 1 - 22
1		NSS		1	BOLETIM INFORMATIVO, Body
2		NSS		2	BOLETIM INFORMATIVO, Spool, Valve
3		160256A1		4	MOLA
4		160073A1		4	BUJÃO
5		154474A1		6	ANEL O
6		160072A1		2	PARAFUSO
7		154446A1		2	ANEL O
8		LLC0156		18	BUJÃO
9		LJ014410		1	VÁLVULA DE SOBRE-PRESSÃO
10		LJ014410		1	VÁLVULA DE SOBRE-PRESSÃO
11		LJ014410		1	VÁLVULA DE SOBRE-PRESSÃO
12		LJ014670		1	VÁLVULA DE SOBRE-PRESSÃO
13		LG005960		4	MOLA DE COMPRESAO
14		LK005550		4	BUJÃO
15		154467A1		4	ANEL "O"
16		LB011510		2	ESFERA
17		LK005560		2	BUJÃO
18		154462A1		2	ANEL O
21		LLC0153		16	BUJÃO
22		LLC0152		6	BUJÃO

VALVULA DE CONTROL - DESLOCAMENTO

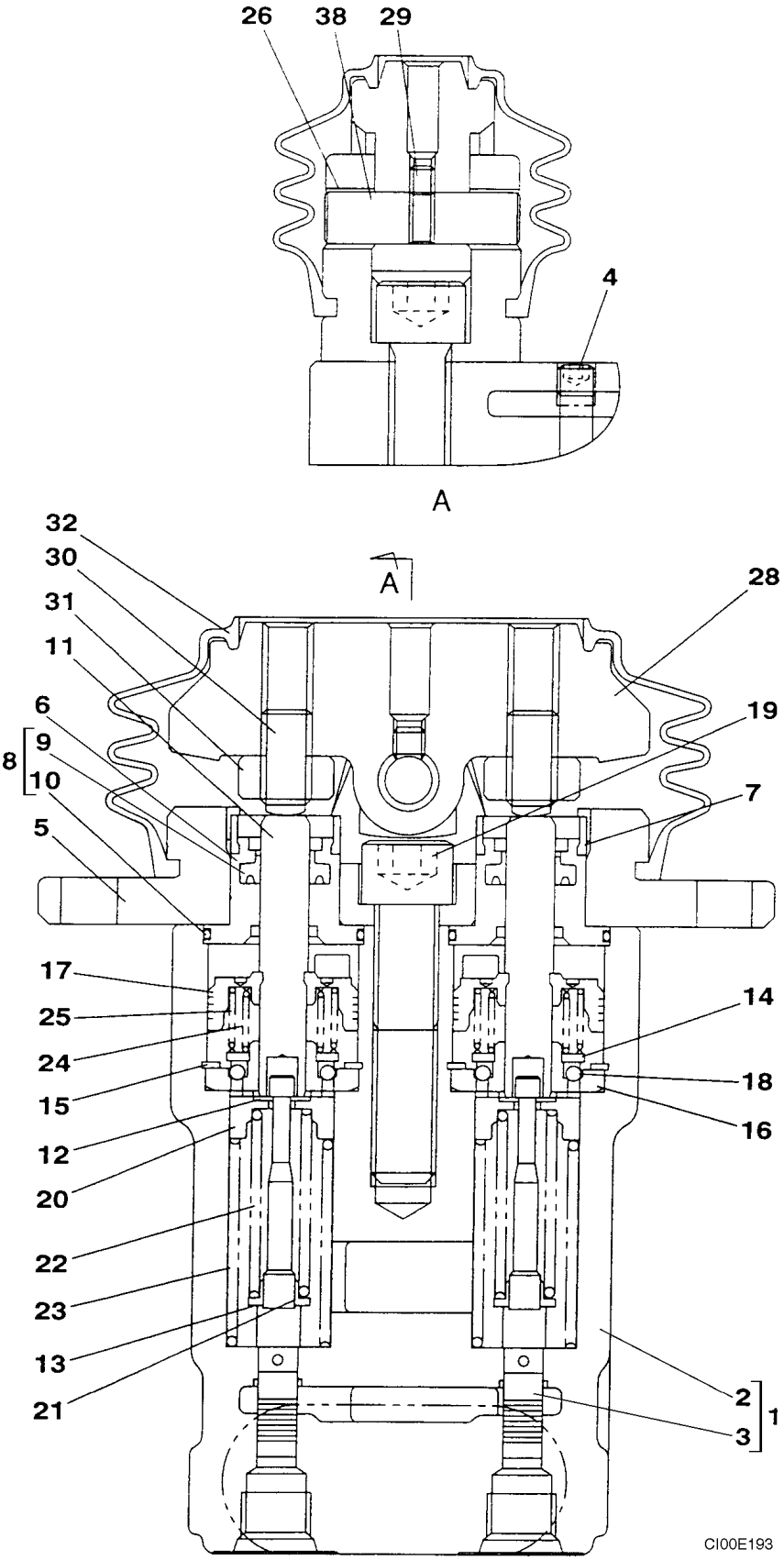

VALVULA DE CONTROL - DESLOCAMENTO

REF	FN	PART NUMBER	YR/SN	QTY	DESCRIPTION
		KRJ5803		1	BLOCO DE COMANDO, Incl. 1 - 32
1		165203A1		1	JOGO DE PEÇAS, Incl. 2, 3
2		NSS		1	BOLETIM INFORMATIVO, Body
3		LSC0235		4	CARRETO
4		LK00003		2	BUJÃO
5		165211A1		2	TAMPA
6		165197A1		4	BUJÃO
7		165210A1		4	TAMPA DO RESERVATÓRIO
8		LE00768		1	JUNTA, Incl. 9, 10
9		165195A1		4	EMBALAGEM
10		166804A1		4	ANEL O
11		165229A1		4	HASTE DE IMPULSO
12		LA00056		8	ARRUELA PLANA
13		LA00057		4	ARRUELA PLANA
14		165205A1		4	ASSENTO MOLA
15		165198A1		4	ANEL TRAVA
16		165196A1		4	BUCHA
17		165199A1		4	PISTÃO
18		165200A1		12	ESFERA
19		862-12055		2	PARAFUSO, Hex Soc Hd, M12 x 55, 12.9
20		165277A1		4	MOLA
21		160283A1		4	ARRUELA PLANA
22		LG00330		4	MOLA DE COMPRESAO
23		160250A1		4	MOLA
24		165277A1		4	MOLA
25		165208A1		4	ASSENTO
26		160035A1		4	BUCHA
27		160022A1		2	EIXO
28		160090A1		2	CAME
29		LUC0103		2	PARAFUSO
30		160282A1		4	PARAFUSO
31		160281A1		4	PORCA
32		160001A1		2	FOLE

SOLENOIDE DE LA VALVULA - PRESSÃO PILOTO, LINHAS DE RETORNO

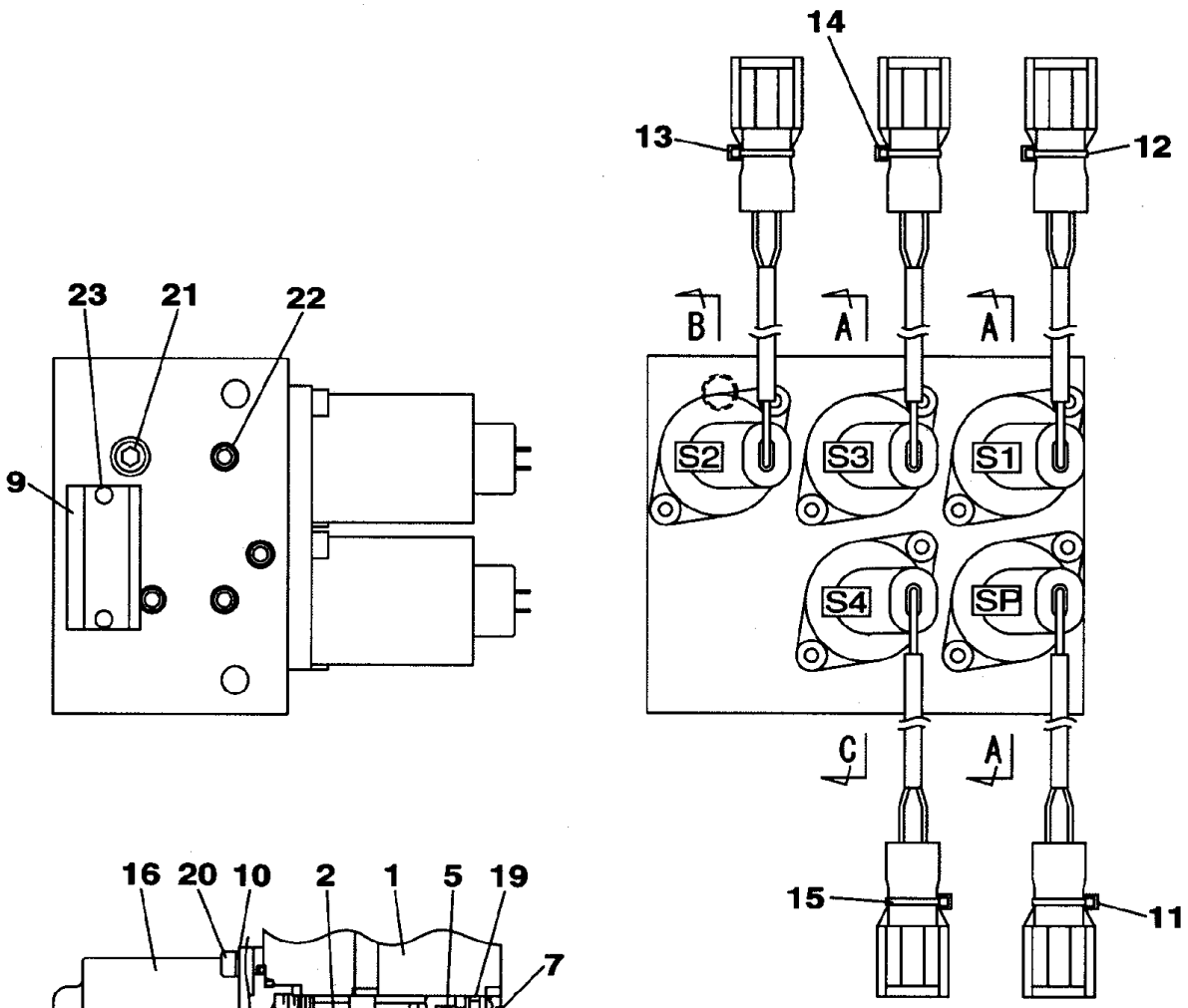

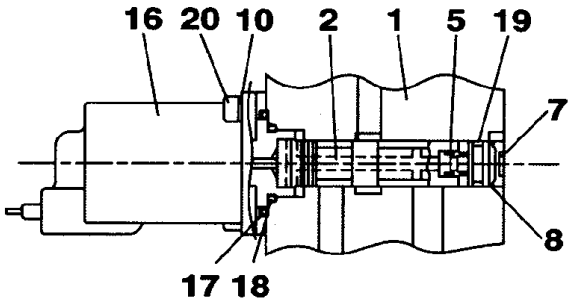

A ~ A

SP , S1 , S3

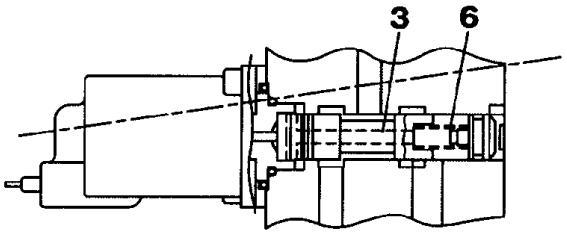

B ~ B

S2

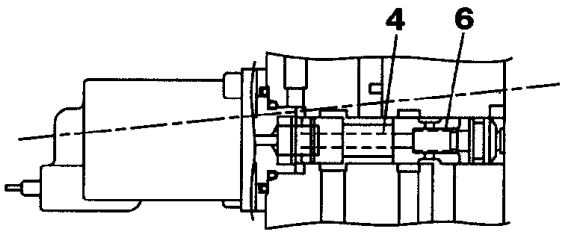

C ~ C

S4

BS06M224

SOLENOIDE DE LA VALVULA - PRESSÃO PILOTO, LINHAS DE RETORNO

REF	FN	PART NUMBER	YR/SN	QTY	DESCRIPTION
		KHJ14520		1	ELETRO VALVULA, Incl. 1 - 23
1		NSS		1	BOLETIM INFORMATIVO, Body
2		NSS		3	BOLETIM INFORMATIVO, Spool
3		NSS		1	BOLETIM INFORMATIVO, Spool
4		NSS		1	BOLETIM INFORMATIVO, Spool
5		LG006010		3	MOLA DE COMPRESAO
6		LG006020		2	MOLA DE COMPRESAO
7		LR015080		5	ADAPTADOR
8		LA010960		5	ANEL
9		NSS		1	BOLETIM INFORMATIVO, Name Plate
10		LA010970		10	ARRUELA MOLA
11		LD001470		1	ARGOLA DE FIXACAO
12		LD001450		1	ARGOLA DE FIXACAO
13		LD001440		1	ARGOLA DE FIXACAO
14		LD001490		1	ARGOLA DE FIXACAO
15		LD001460		1	ARGOLA DE FIXACAO
16		LL001140		5	SOLEMOID, Incl. 17, 18
17		155188A1		1	ANEL O
18		154487A1		1	ANEL "O"
19		154463A1		5	ANEL O
20		LA010980		10	PARAFUSO
21		LK005630		6	BUJÃO
22		LK005640		11	BUJÃO
23		NSS		2	BOLETIM INFORMATIVO, Rivet

VALVE, SOLENOID - MULTI-PURPOSE + 3 WAY VALVE, PEDAL ACTIVATED

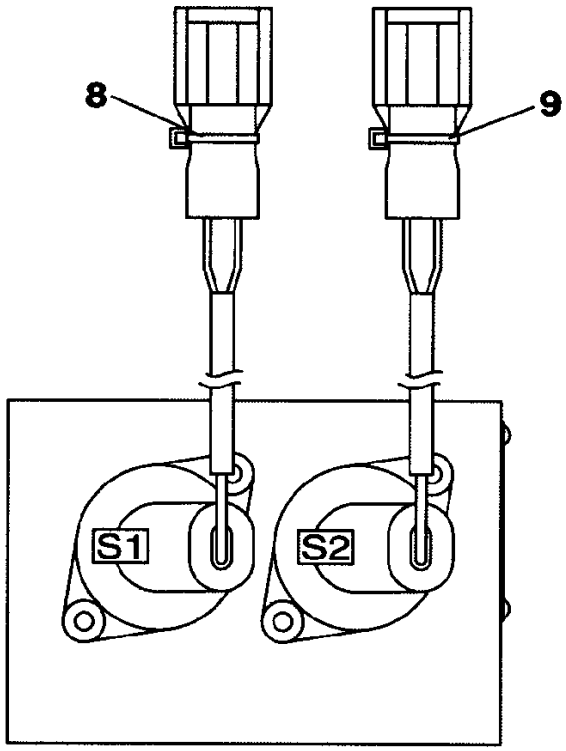

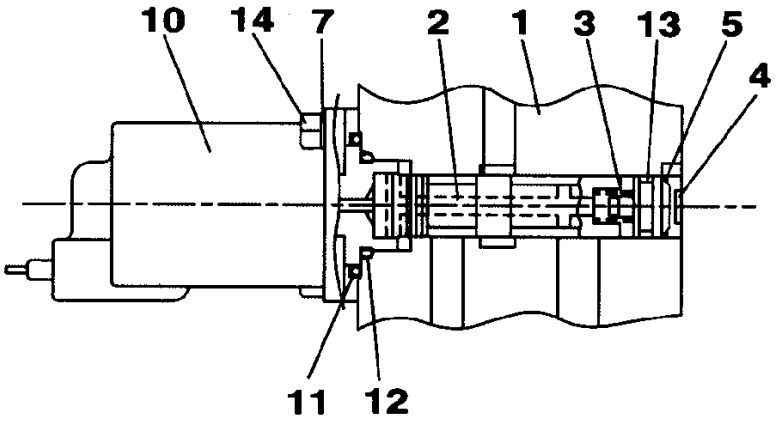

S1 , S2

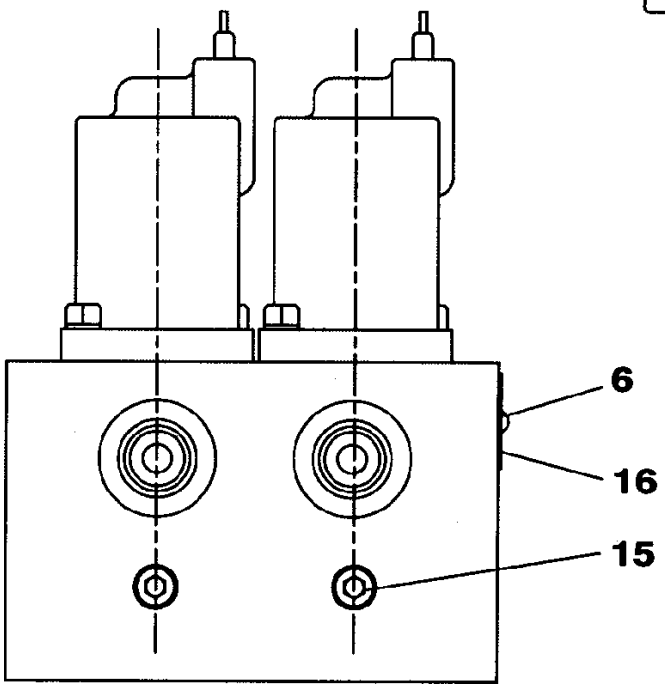

BS06M225

VALVE, SOLENOID - MULTI-PURPOSE + 3 WAY VALVE, PEDAL ACTIVATED

REF	FN	PART NUMBER	YR/SN	QTY	DESCRIPTION
		KHJ14780		1	SECÇÃO DE VÁLVULAS, Incl. 1 - 16
1		NSS		1	BOLETIM INFORMATIVO, Body
2		NSS		2	BOLETIM INFORMATIVO, Spool
3		LG006010		2	MOLA DE COMPRESAO
4		LR015080		2	ADAPTADOR
5		LA010960		2	ANEL
6		NSS		1	BOLETIM INFORMATIVO, Name Plate
7		LA010970		4	ARRUELA MOLA
8		LD001470		1	ARGOLA DE FIXACAO
9		LD001450		1	ARGOLA DE FIXACAO
10		LL001140		2	SOLEMOID, Incl. 11, 12
11		155188A1		2	ANEL O
12		154487A1		2	ANEL "O"
13		154463A1		2	ANEL O
14		LA010980		4	PARAFUSO
15		LK005630		2	BUJÃO
16		NSS		2	BOLETIM INFORMATIVO, Rivet

VALVE ASSY - PEDAL CONTROL

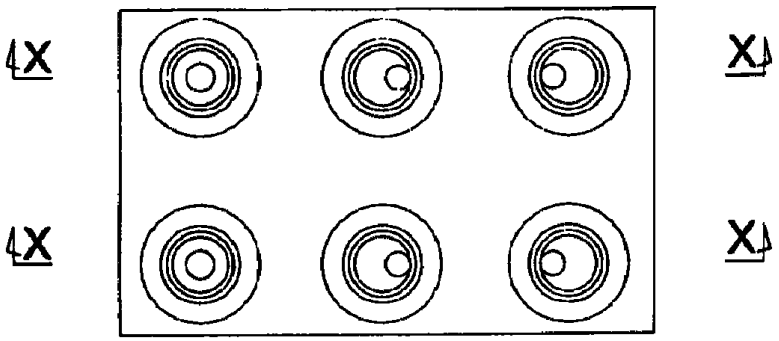

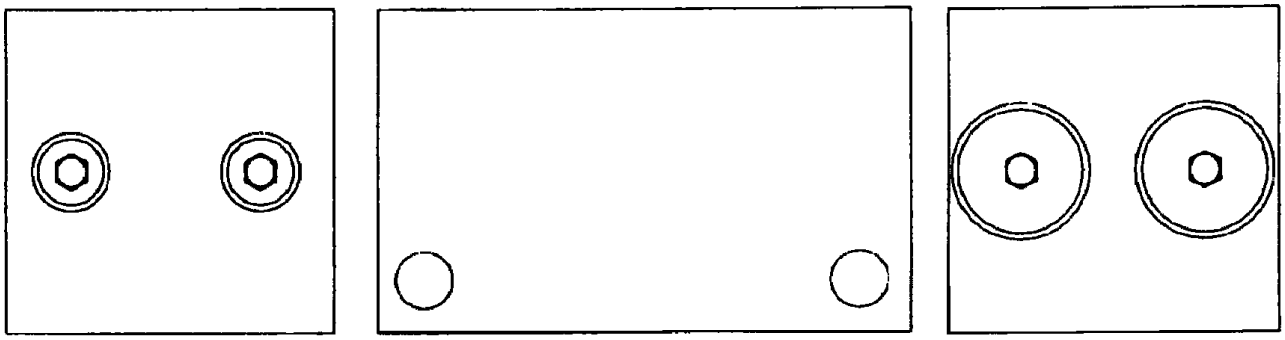

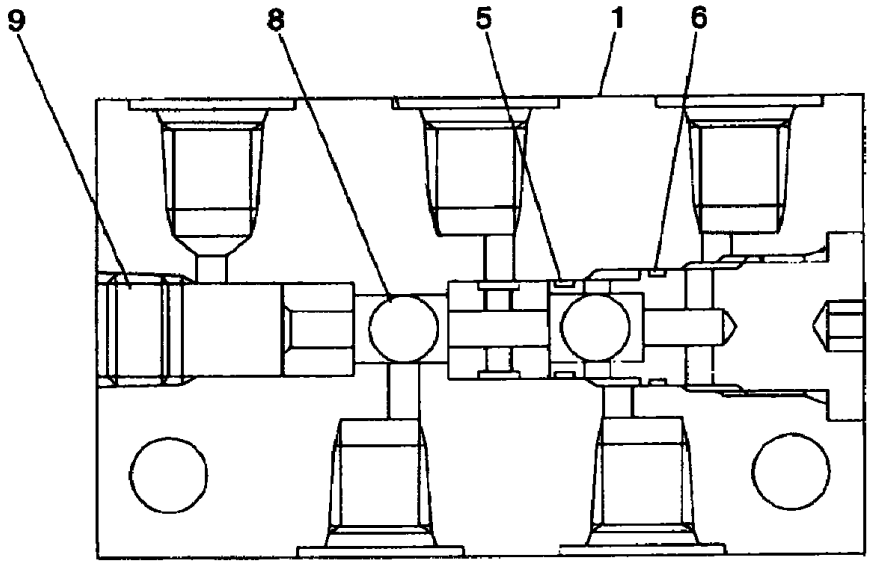

X - X

BS00N028

VALVE ASSY - PEDAL CONTROL

REF	FN	PART NUMBER	YR/SN	QTY	DESCRIPTION
		160355A1		1	VALVULA, Regulator, Incl. 1 - 9
1		NSS		1	BOLETIM INFORMATIVO, Body
5		164449A1		2	ANEL O
6		164448A1		2	ANEL O
7		154486A1		2	ANEL O
8		NSS		4	BOLETIM INFORMATIVO, Ball
9		NSS		2	BOLETIM INFORMATIVO, Plug

VALVE ASSY, DIRECTIONAL

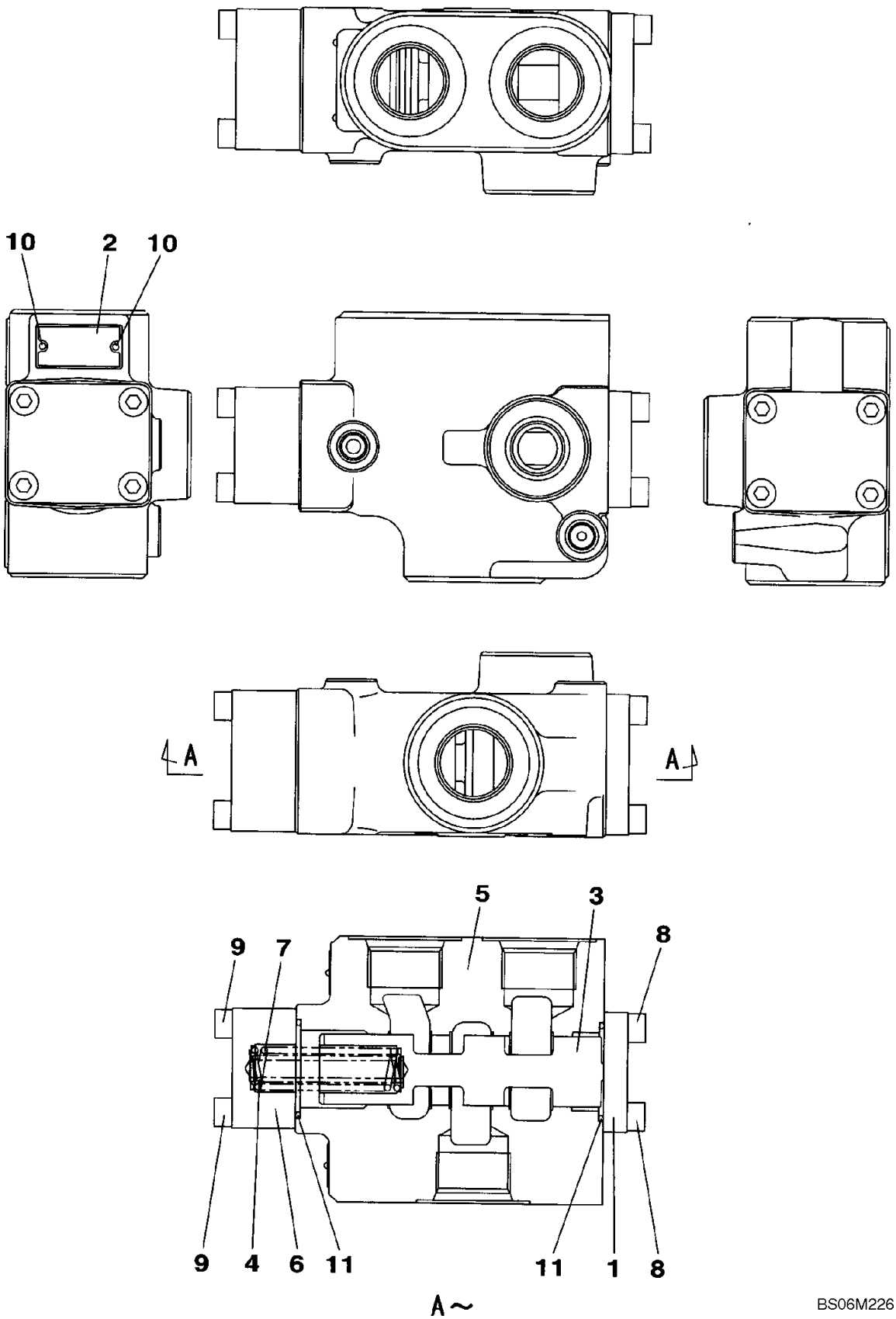

BS06M226

VALVE ASSY, DIRECTIONAL

REF	FN	PART NUMBER	YR/SN	QTY	DESCRIPTION
		KHJ10420		1	SECÇÃO DE VÁLVULAS, Incl. 1 - 11
1		LW004960		1	TAMPA
2		NSS		1	BOLETIM INFORMATIVO, Name Plate
3		NSS		1	BOLETIM INFORMATIVO, Spool
4		LG005800		1	MOLA DE COMPRESAO
5		NSS		1	BOLETIM INFORMATIVO, Body
6		LW004970		1	TAMPA
7		LG005810		1	MOLA DE COMPRESAO
8		108R008Y025N		4	PARAFUSO
9		108R008Y045R		4	PARAFUSO
10		LA00769		2	REBITE
11		154569A1		2	ANEL O

VÁLVULA, SHUT-OFF

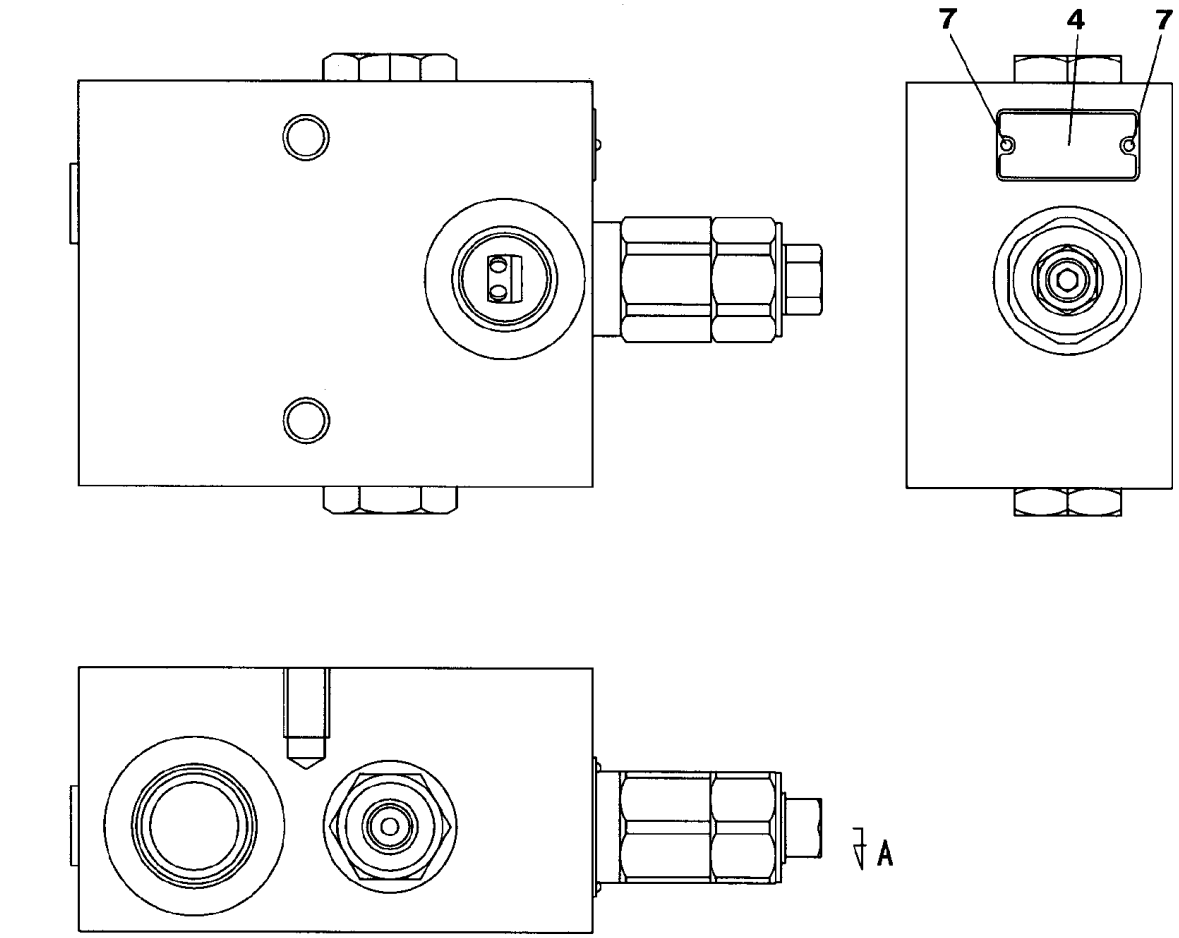

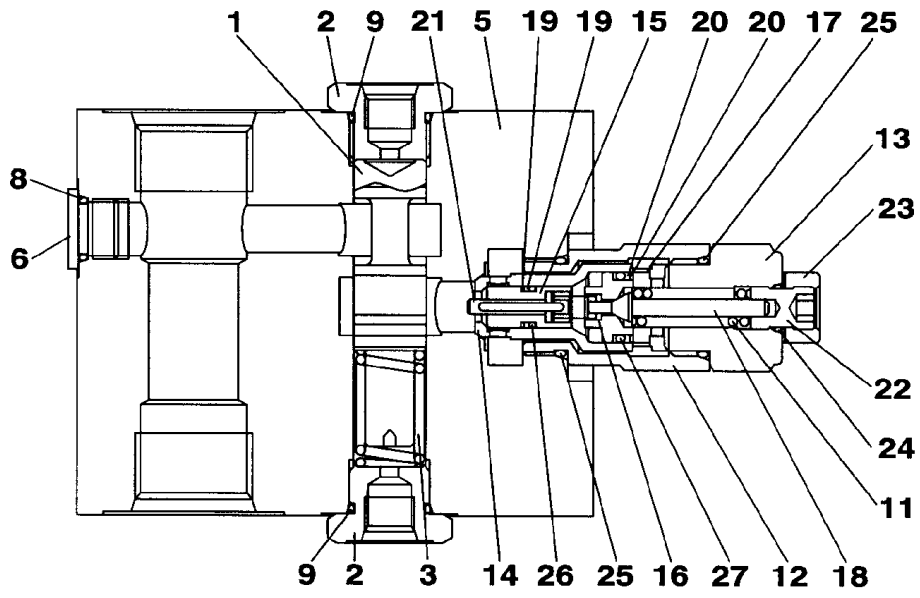

BS06M227

VÁLVULA, SHUT-OFF

REF	FN	PART NUMBER	YR/SN	QTY	DESCRIPTION
		KHJ10410		1	SECÇÃO DE VÁLVULAS, Incl. 1 - 27
1		TIP0002072		1	CARRETO
2		LK005490		2	BUJÃO
3		LG005790		1	MOLA DE COMPRESAO
4		NSS		1	BOLETIM INFORMATIVO, Name Plate
5		TIP0002073		1	CORPO
6		155515A1		1	BUJÃO
7		LA00769		2	REBITE
8		154475A1		1	ANEL "O"
9		154491A1		2	ANEL O
		KHJ15850		1	VÁLVULA DE SOBRE-PRESSÃO, Incl. 11 - 27
11		NSS		1	BOLETIM INFORMATIVO, Spring, Compression
12		NSS		1	BOLETIM INFORMATIVO, Adapter
13		NSS		1	BOLETIM INFORMATIVO, Body
14		NSS		1	BOLETIM INFORMATIVO, Poppet
15		NSS		1	BOLETIM INFORMATIVO, Poppet
16		NSS		1	BOLETIM INFORMATIVO, Spring
17		NSS		1	BOLETIM INFORMATIVO, Spring
18		NSS		1	BOLETIM INFORMATIVO, Valve, Needle
19		NSS		2	BOLETIM INFORMATIVO, Ring, Backup
20		NSS		2	BOLETIM INFORMATIVO, Ring, Backup
21		NSS		1	BOLETIM INFORMATIVO, Pin
22		NSS		1	BOLETIM INFORMATIVO, Screw
23		165150A1		1	PORCA
24		154463A1		1	ANEL O
25		155223A1		2	ANEL O
26		154457A1		1	ANEL O
27		154481A1		1	ANEL O

CONJUNTO DE LA VALVULA - CONTROLE DE PÉ

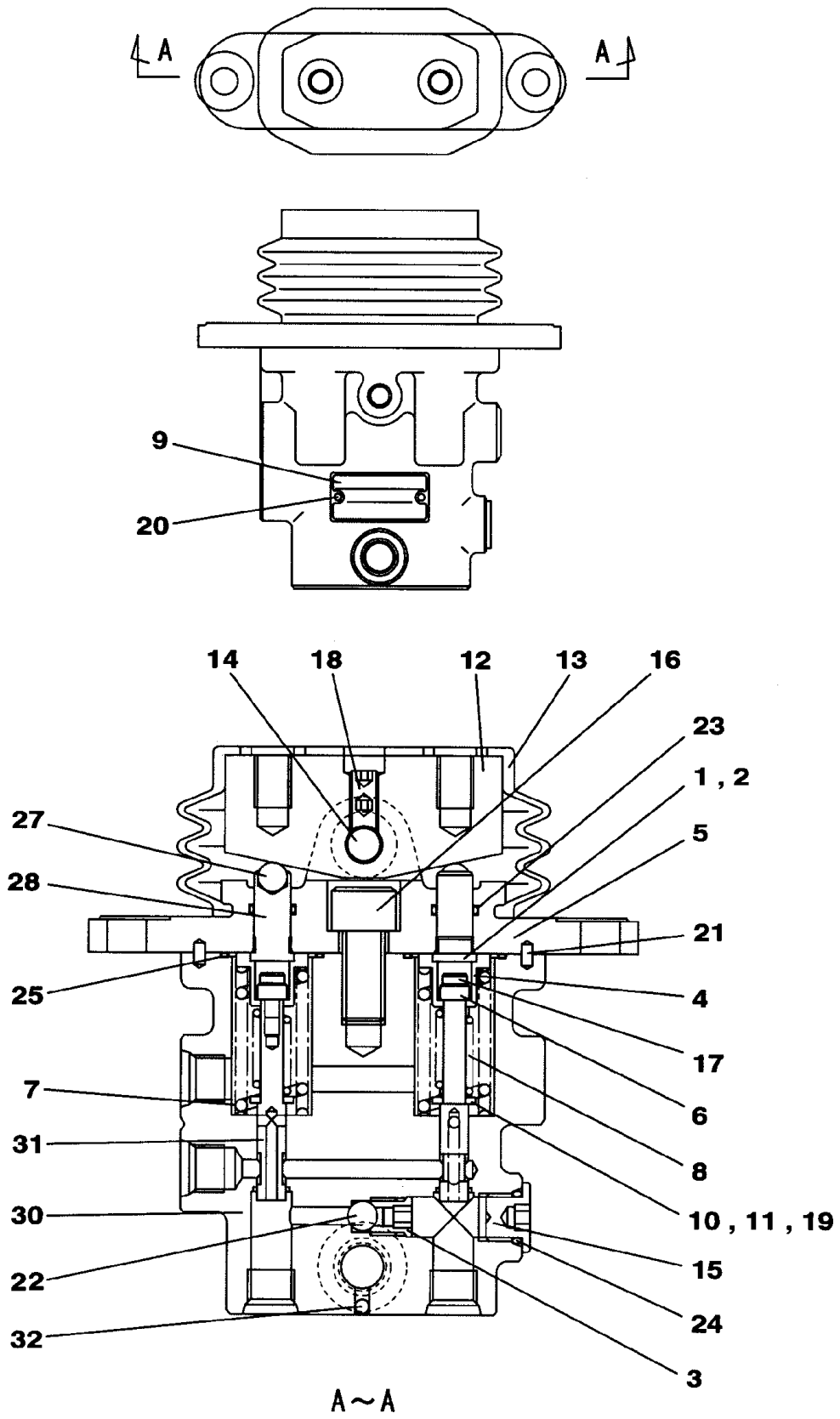

CONJUNTO DE LA VALVULA - CONTROLE DE PÉ

REF	FN	PART NUMBER	YR/SN	QTY	DESCRIPTION
		KHJ10450		1	BLOCO DE COMANDO, Incl. 1 - 32
1		155570A1		2	CALCO DE AFINACAO
2		155571A1		2	CALCO DE AFINACAO
3		LSC0192		1	ASSENTO MOLA
4		160848A1		2	MANGUEIRA RÍGIDA
5		156280A1		1	TAMPA
6		160849A1		2	BRAÇADEIRA
7		160946A1		2	MOLA
8		LG00345		2	MOLA DE COMPRESAO
9		NSS		1	BOLETIM INFORMATIVO, Name Plate
10		LH00029		2	CALCO DE AFINACAO
11		LH00255		2	CALCO DE AFINACAO
12		TF00005		1	CAME
13		LQ00025		1	COIFA
14		LA00706		1	PINO
15		160083A1		1	BUJÃO
16		861-12025		1	PARAFUSO, Hex Soc Hd, M12 x 25, 12.9
17		156179A1		2	PARAFUSO
18		878-1088		2	JOGO PARAFUSO, Hex Soc, M8 x 8, Cup Pt
19		156178A1		2	ARRUELA PLANA
20		LA00769		2	REBITE
21		LA010650		2	PINO
22		167013A1		1	ESFERA
23		154462A1		2	ANEL O
24		154467A1		1	ANEL "O"
25		156903A1		2	ANEL O
		155754A1		2	VALVULA, Incl. 27, 28
27		NSS		2	BOLETIM INFORMATIVO, Ball, Steel
28		NSS		2	BOLETIM INFORMATIVO, Pusher
		LR014520		1	ALOJAMENTO, Incl. 30 - 32
30		NSS		1	BOLETIM INFORMATIVO, Body
31		NSS		2	BOLETIM INFORMATIVO, Spool
32		NSS		1	BOLETIM INFORMATIVO, Ball

SOLENÓIDE DA VÁLVULA - SISTEMA HIDRÁULICO AUXILIAR

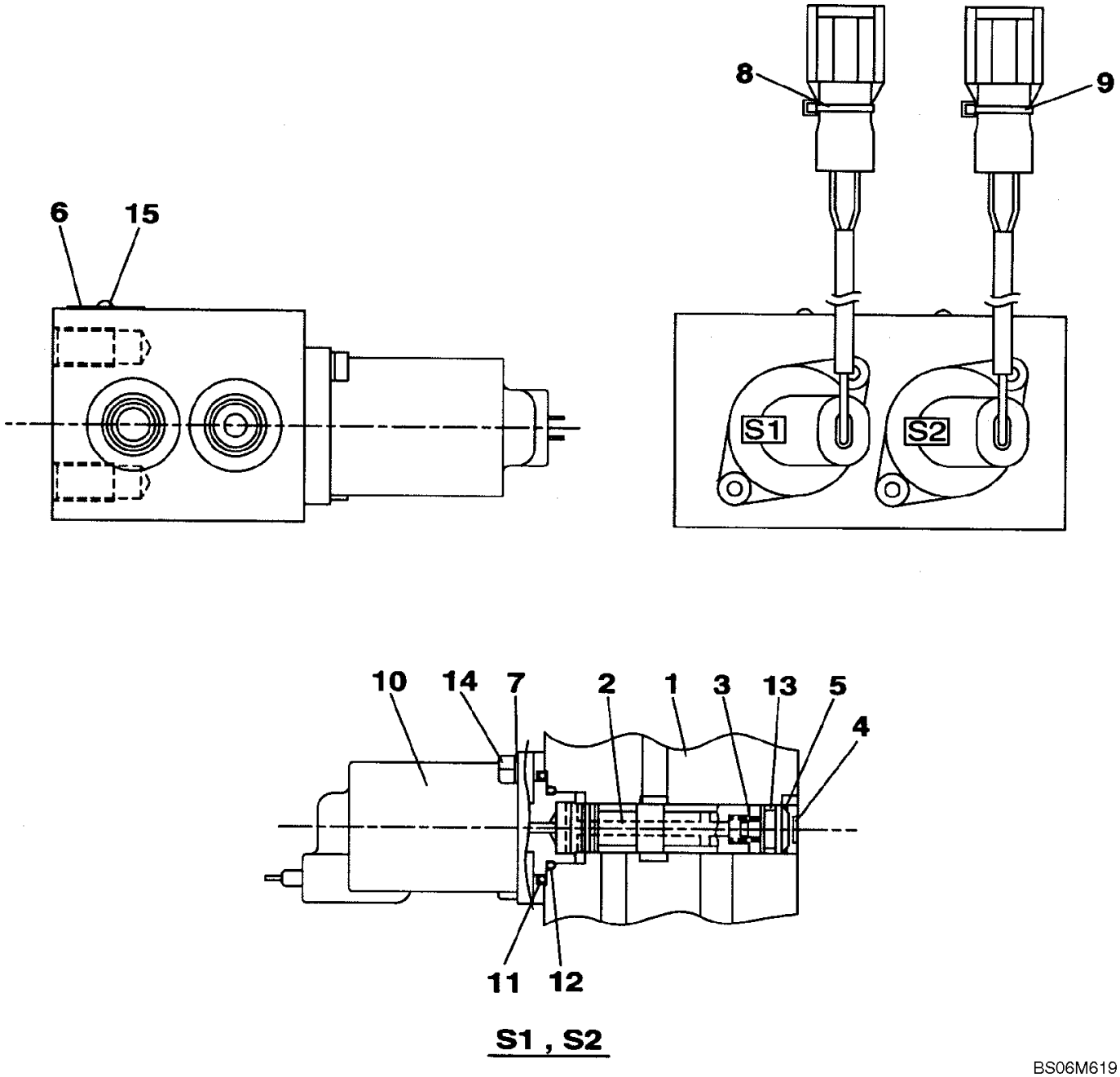

S1 , S2

BS06M619

SOLENÓIDE DA VÁLVULA - SISTEMA HIDRÁULICO AUXILIAR

REF	FN	PART NUMBER	YR/SN	QTY	DESCRIPTION
		KHJ14000		1	SECÇÃO DE VÁLVULAS, Incl. 1 - 15
1		NSS		1	BOLETIM INFORMATIVO, Body
2		NSS		2	BOLETIM INFORMATIVO, Spool
3		LG006010		2	MOLA DE COMPRESAO
4		LR015080		2	ADAPTADOR
5		LA010960		2	ANEL
6		NSS		1	BOLETIM INFORMATIVO, Name Plate
7		LA010970		4	ARRUELA MOLA
8		LD001470		1	ARGOLA DE FIXACAO
9		LD001450		1	ARGOLA DE FIXACAO
10		LL001140		2	SOLEMOID
11		155188A1		2	ANEL O
12		154487A1		2	ANEL "O"
13		154463A1		2	ANEL O
14		LA010980		4	PARAFUSO
15		NSS		2	BOLETIM INFORMATIVO, Rivet

VALVE, REMOTE CONTROL

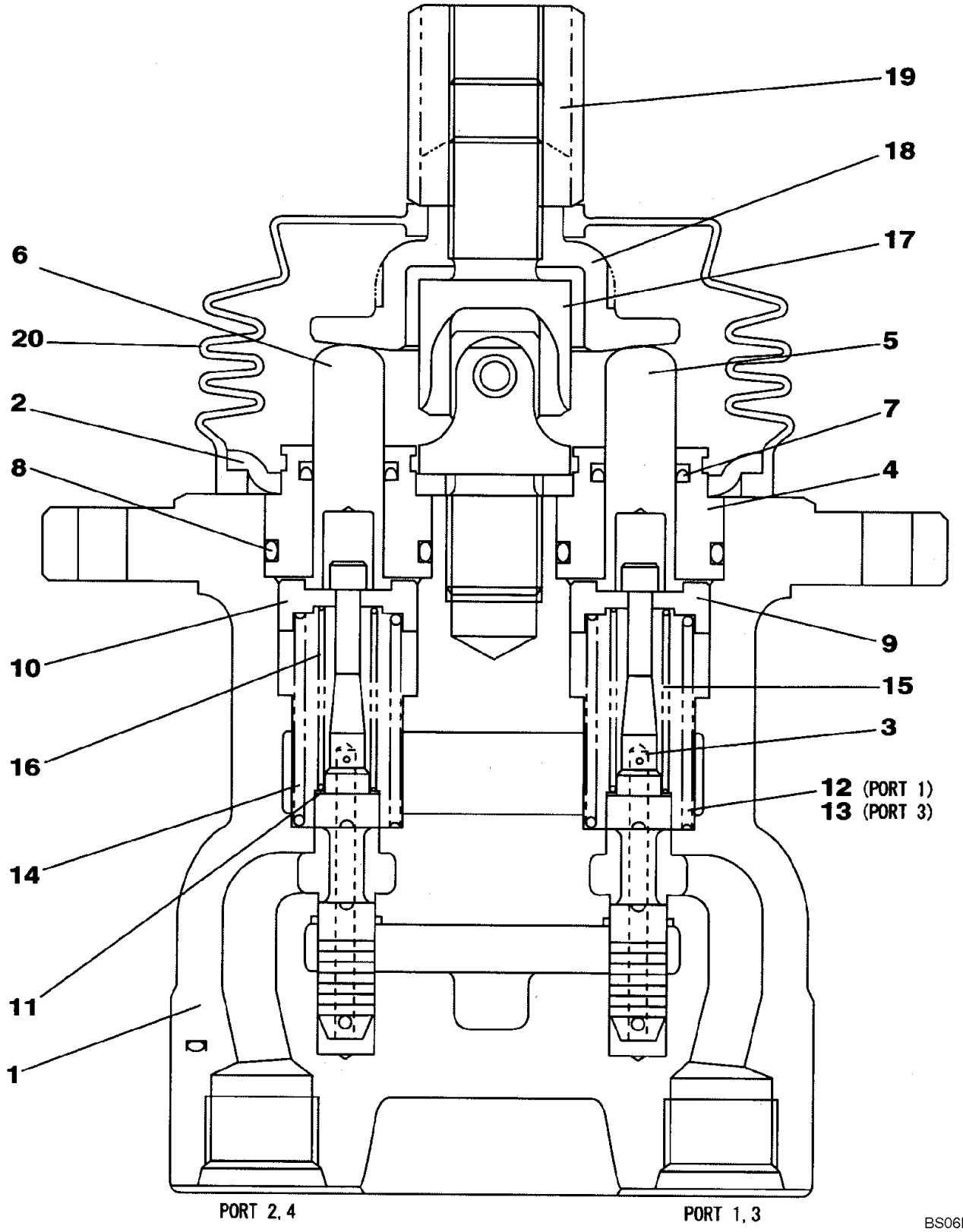

VALVE, REMOTE CONTROL

REF	FN	PART NUMBER	YR/SN	QTY	DESCRIPTION
		KHJ13290		1	BLOCO DE COMANDO, Incl. 1 - 20
1		NSS		1	BOLETIM INFORMATIVO, Body
2		LR00537		1	PLACA
3		NSS		4	BOLETIM INFORMATIVO, Spool
4		160070A1		4	BUJÃO
5		160026A1		2	ALAVANCA DE CONTROLE
6		160027A1		2	ALAVANCA DE CONTROLE
7		CDP0818		4	ANEL DE VEDAÇÃO
8		154491A1		4	ANEL O
9		LR00538		2	ASSENTO MOLA
10		LR00539		2	ASSENTO MOLA
11		LA00057		4	ARRUELA PLANA
12		LG005470		1	MOLA
13		LG005480		1	MOLA
14		LG005490		2	MOLA
15		LG00312		2	MOLA DE COMPRESAO
16		LG00313		2	MOLA DE COMPRESAO
17		155255A1		1	COTOVELO
18		LR00540		1	PLACA
19		156165A1		1	PORCA
20		LQ00024		1	FOLE

CONJUNTO DO CILINDRO, LANÇA, LADO DIREITO

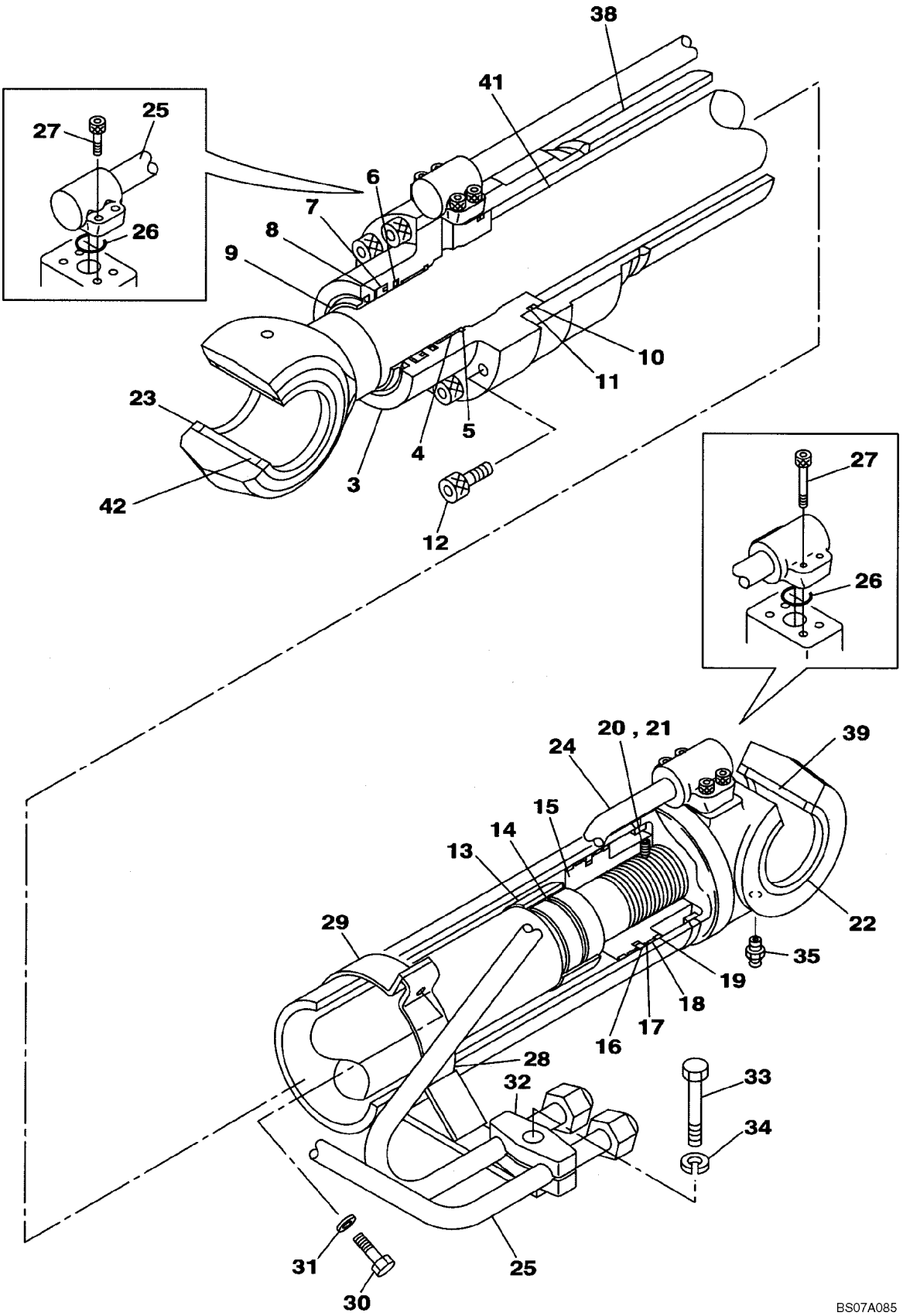

CONJUNTO DO CILINDRO, LANÇA, LADO DIREITO

REF	FN	PART NUMBER	YR/SN	QTY	DESCRIPTION
		KLV10960		1	CILINDRO HIDRÁULICO, Incl. 3 - 42
3		LU00102		1	TAMPA CILINDRO
4		155430A1		1	BUCHA
5		155696A1		1	ANEL TRAVA
6		LE014950		1	ANEL
7		LE014960		1	ANEL "O"
8		155241A1		1	VEDADOR ESPECIAL
9		158033A1		1	VEDADOR EIXO
10		154741A1		1	ANEL O
11		160812A1		1	VEDADOR ESPECIAL
12		161059A1		10	PARAFUSO
13		LE014970		1	ANEL VEDADOR
14		LE00726		1	ANEL
15		LJ014800		1	PISTÃO
16		160824A1		1	VEDADOR CONJUNTO
17		160813A1		2	VEDADOR ESPECIAL
18		LE014980		2	ANEL RASPADOR
19		160827A1		2	ANEL
20		156223A1		1	JOGO PARAFUSO
21		155977A1		1	ESFERA
22		164446A1		2	VEDADOR EIXO
23		160483A1		2	VEDADOR ESPECIAL
24		LR015350		1	TUBULAÇÃO HIDRAULICO
25		LR015360		1	TUBULAÇÃO HIDRAULICO
26		154528A1		2	ANEL O
27		87016471		8	PARAFUSO, Hex Soc Hd, M10 x 30, 12.9
28		LD001530		1	TIRA DE FIXACAO
29		160999A1		1	TIRA
30		158131A1		2	PARAFUSO
31		156227A1		2	ARRUELA PLANA
32		160871A1		2	SEMI- FLANGE
33		LA00683		1	PARAFUSO
34		892-10012		1	ARRUELA-TRAVA, M12
35		153630A1		1	GRAXEIRA
		LZ008110		1	LUVO CILINDRO, Incl. 38, 39

CONJUNTO DO CILINDRO, LANÇA, LADO DIREITO

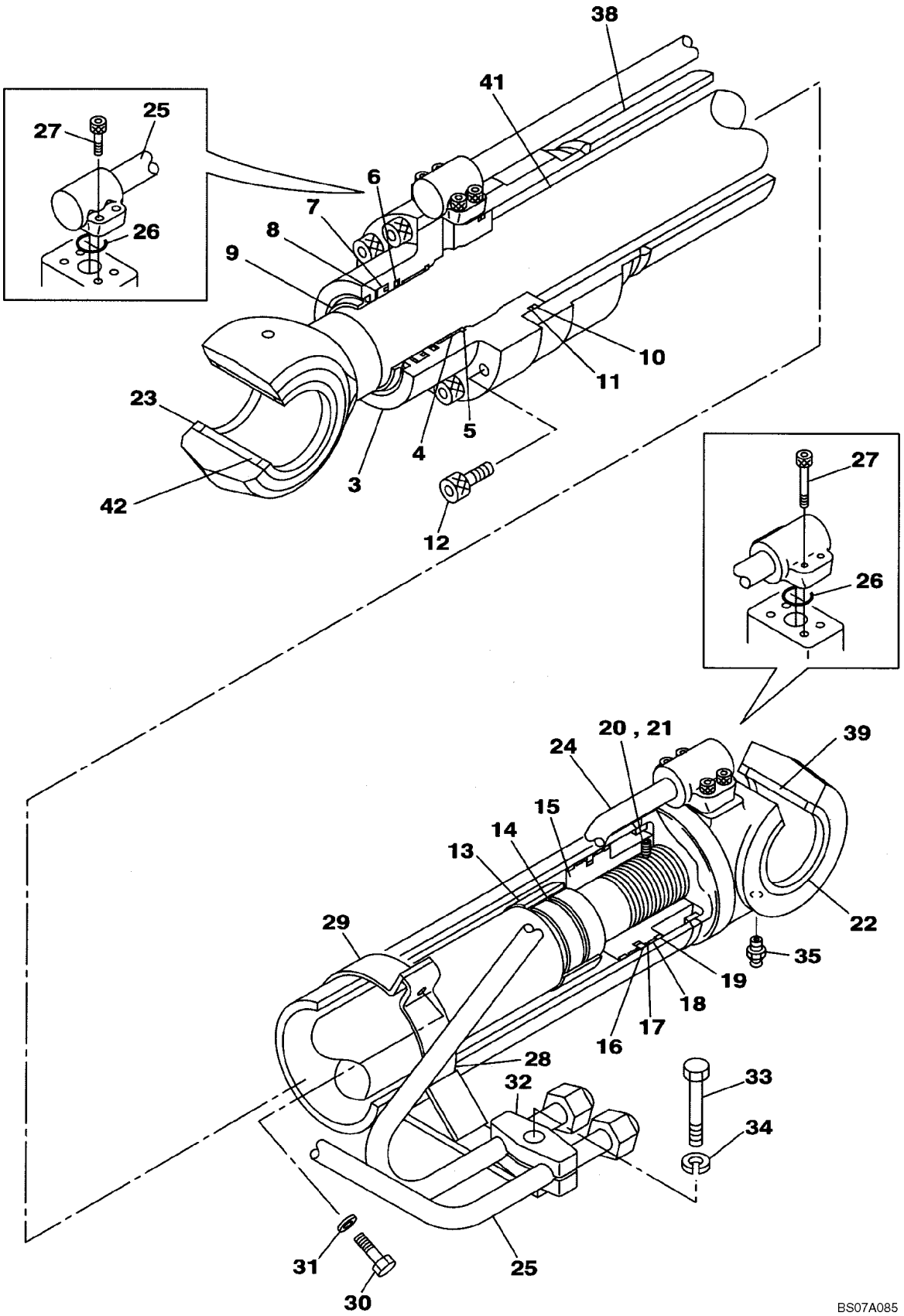

CONJUNTO DO CILINDRO, LANÇA, LADO DIREITO

REF	FN	PART NUMBER	YR/SN	QTY	DESCRIPTION
38		NSS		1	BOLETIM INFORMATIVO, Tube, Cylinder
39		KLV10050		1	CASTILHO ALTO LUBRIF
		LZ008120		1	HASTE CILINDRO, Incl. 41, 42
41		NSS		1	BOLETIM INFORMATIVO, Rod, Piston
42		KRV1388		1	CASTILHO ALTO LUBRIF
		LZ008100		1	JOGO DE JUNTAS, Kit; Incl. 6 - 11, 14, 16 - 19

CONJUNTO DO CILINDRO, LANÇA, LADO ESQUERDO

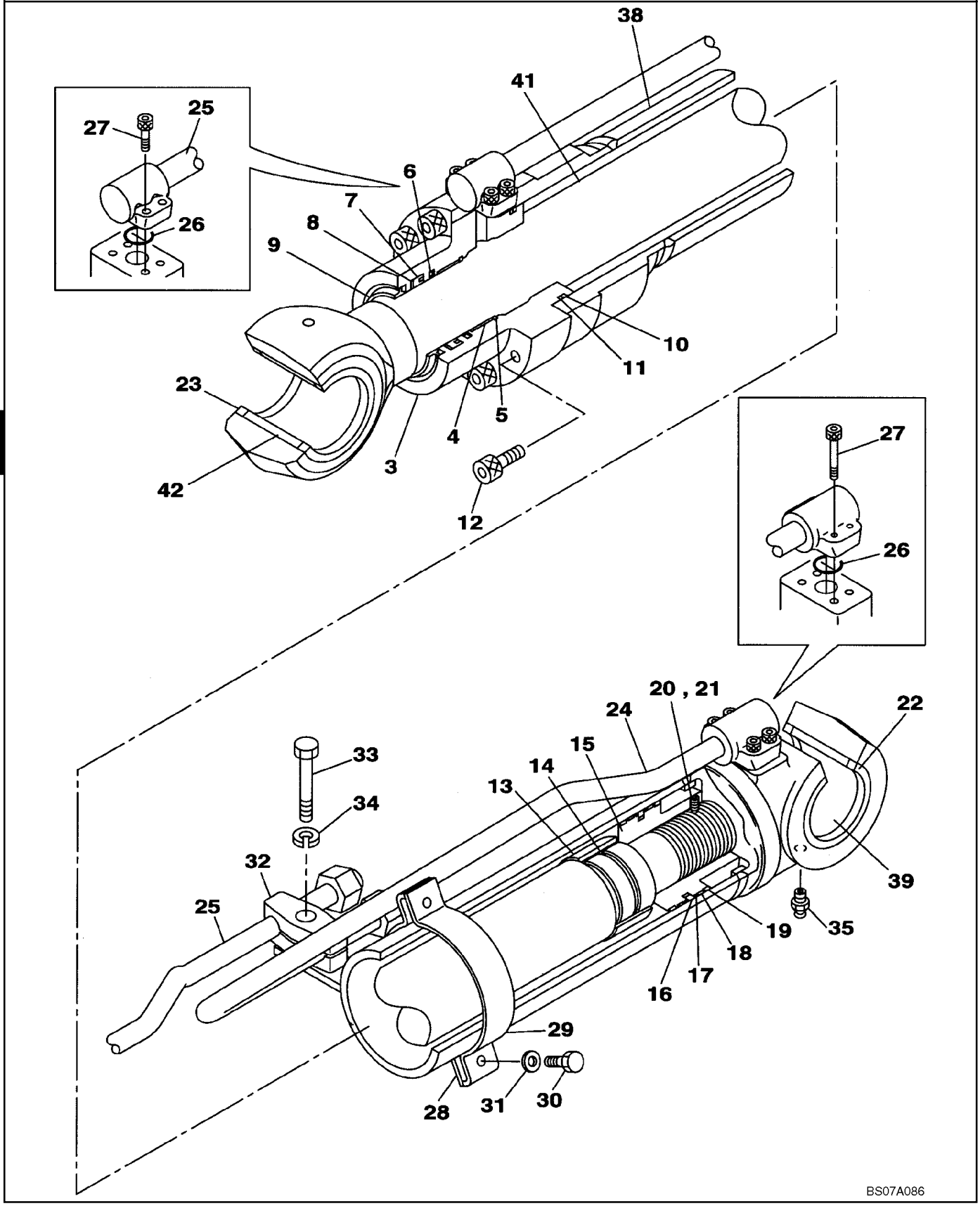

CONJUNTO DO CILINDRO, LANÇA, LADO ESQUERDO

REF	FN	PART NUMBER	YR/SN	QTY	DESCRIPTION
		KLV10980		1	CILINDRO HIDRÁULICO, Incl. 3 - 42
3		LU00102		1	TAMPA CILINDRO
4		155430A1		1	BUCHA
5		155696A1		1	ANEL TRAVA
6		LE014950		1	ANEL
7		LE014960		1	ANEL "O"
8		155241A1		1	VEDADOR ESPECIAL
9		158033A1		1	VEDADOR EIXO
1		154741A1		1	ANEL O
11		160812A1		1	VEDADOR ESPECIAL
12		161059A1		10	PARAFUSO
13		LE014970		1	ANEL VEDADOR
14		LE00726		1	ANEL
15		LJ014800		1	PISTÃO
16		160824A1		1	VEDADOR CONJUNTO
17		160813A1		2	VEDADOR ESPECIAL
18		LE014980		2	ANEL RASPADOR
19		160827A1		2	ANEL
20		156223A1		1	JOGO PARAFUSO
21		155977A1		1	ESFERA
22		164446A1		2	VEDADOR EIXO
23		160483A1		2	VEDADOR ESPECIAL
24		LR015370		1	TUBULAÇÃO HIDRAULICO
25		LR015380		1	TUBULAÇÃO HIDRAULICO
26		154528A1		2	ANEL O
27		87016471		8	PARAFUSO, Hex Soc Hd, M10 x 30, 12.9
28		LD001530		1	TIRA DE FIXACAO
29		160999A1		1	TIRA
30		158131A1		2	PARAFUSO
31		156227A1		2	ARRUELA PLANA
32		160871A1		2	SEMI- FLANGE
33		LA00683		1	PARAFUSO
34		892-10012		1	ARRUELA-TRAVA, M12
35		153630A1		1	GRAXEIRA
		LZ008110		1	LUVO CILINDRO, Incl. 38, 39

CONJUNTO DO CILINDRO, LANÇA, LADO ESQUERDO

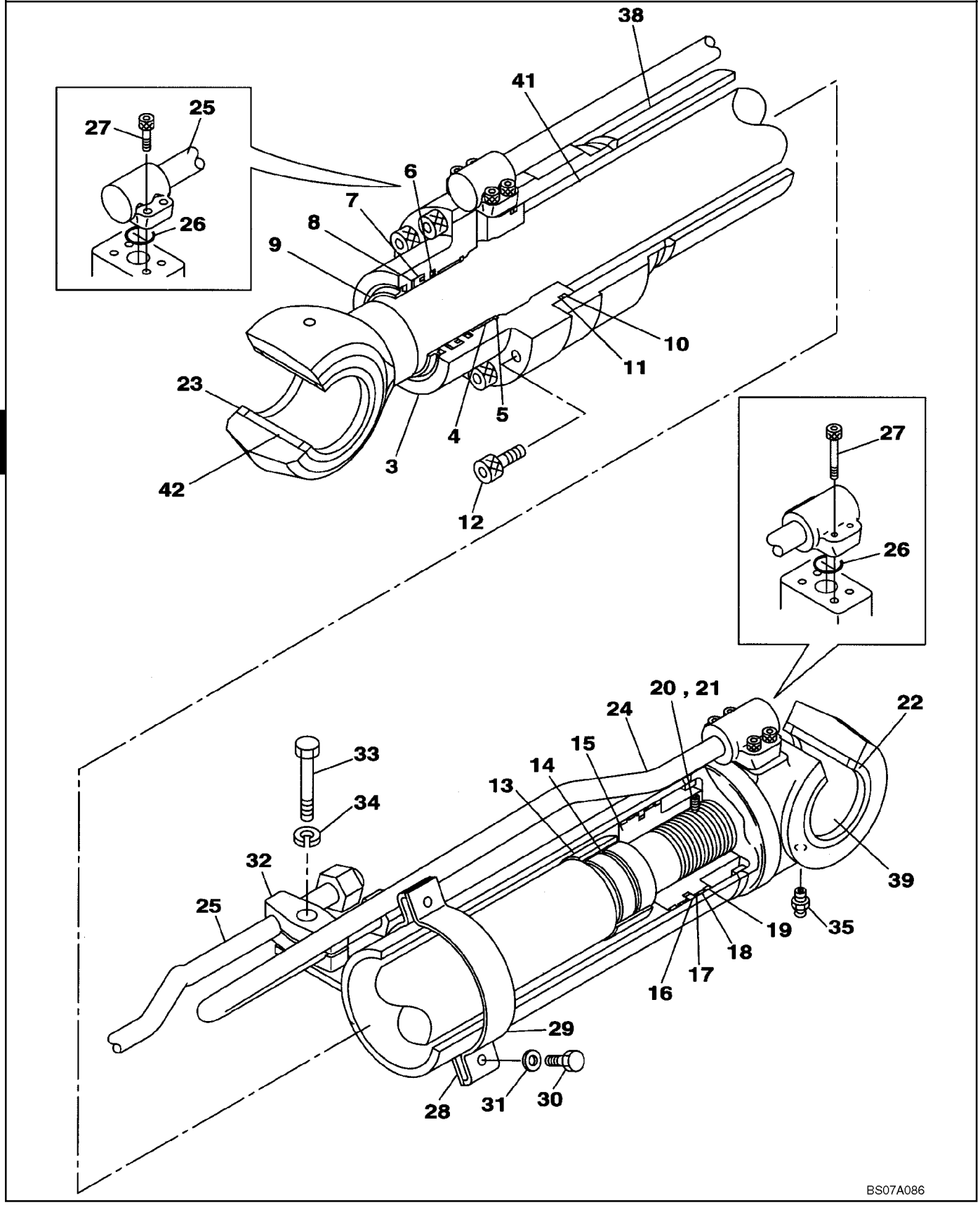

CONJUNTO DO CILINDRO, LANÇA, LADO ESQUERDO

REF	FN	PART NUMBER	YR/SN	QTY	DESCRIPTION
38		NSS		1	BOLETIM INFORMATIVO, Tube, Cylinder
39		KLV10050		1	CASTILHO ALTO LUBRIF
		LZ008120		1	HASTE CILINDRO, Incl. 41, 42
41		NSS		1	BOLETIM INFORMATIVO, Rod, Piston
42		KRV1388		1	CASTILHO ALTO LUBRIF
		LZ008100		1	JOGO DE JUNTAS, Incl. 6 - 11, 14, 16 - 19

CONJUNTO DE CILINDRO - BRAÇO

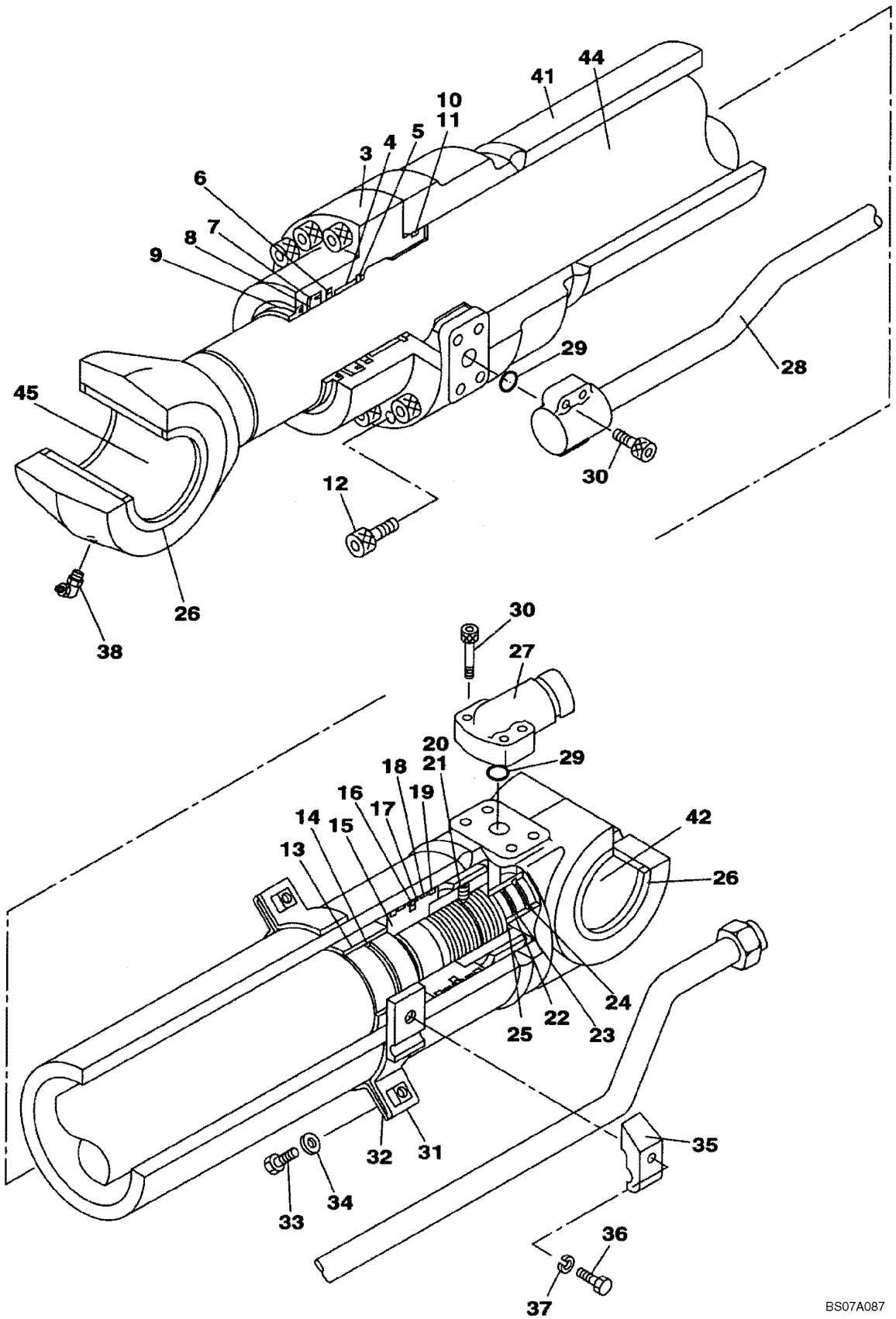

CONJUNTO DE CILINDRO - BRAÇO

REF	FN	PART NUMBER	YR/SN	QTY	DESCRIPTION
		KLV11040		1	CILINDRO HIDRÁULICO, Arm, Incl. 3 - 45
3		LU00118		1	TAMPA CILINDRO
4		160050A1		1	BUCHA
5		155713A1		1	ANEL TRAVA
6		LE014990		1	ANEL VEDADOR
7		LE015000		1	ANEL "O"
8		155249A1		1	VEDADOR ESPECIAL
9		161877A1		1	VEDADOR ESPECIAL
10		154761A1		1	ANEL O
11		155240A1		1	VEDADOR ESPECIAL
12		161059A1		12	PARAFUSO
13		161878A1		1	BUCHA
14		LE00707		1	ANEL
15		LJ014870		1	PISTÃO
16		155311A1		1	ANEL DE VEDAÇÃO
17		160509A1		2	VEDADOR ESPECIAL
18		LE015040		2	ANEL RASPADOR
19		155306A1		2	VEDADOR CILINDRO
20		156223A1		1	JOGO PARAFUSO
21		155977A1		1	ESFERA
22		161879A1		1	ANEL
23		LE00690		1	JUNTA
24		160556A1		2	BATENTE
25		160557A1		1	ANEL TRAVA
26		160483A1		4	VEDADOR ESPECIAL
27		LR012210		1	PRENDEDOR
28		LR015470		1	TUBULAÇÃO HIDRAULICO
29		154528A1		2	ANEL O
30		87016471		8	PARAFUSO, Hex Soc Hd, M10 x 30, 12.9
31		LD001350		1	TIRA DE FIXACAO
32		161928A1		1	TIRA
33		158131A1		2	PARAFUSO
34		156227A1		2	ARRUELA PLANA
35		155717A1		1	BRACADEIRA
36		628-12055		1	PARAFUSO, Hex, M12 x 55, 10.9, Full Thd

CONJUNTO DE CILINDRO - BRAÇO

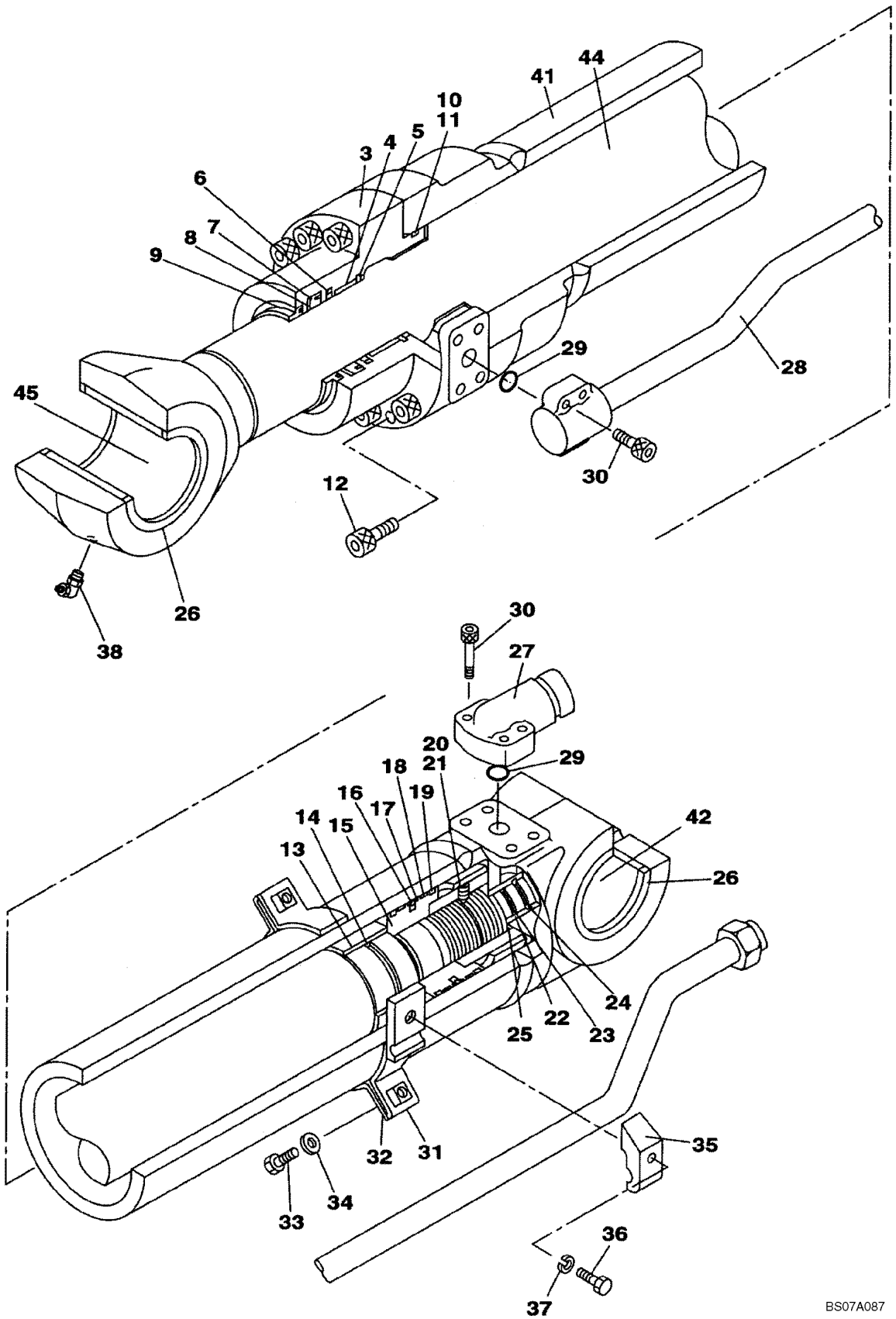

CONJUNTO DE CILINDRO - BRAÇO

REF	FN	PART NUMBER	YR/SN	QTY	DESCRIPTION
37		892-10012		1	ARRUELA-TRAVA, M12
38		153912A1		1	GRAXEIRA, 90º, 1/8"-27 NPT x 21.5mm lg
		LZ008190		1	LUVO CILINDRO, Incl. 41, 42
41		NSS		1	BOLETIM INFORMATIVO
42		KLV10060		1	CASTILHO ALTO LUBRIF
		LZ008200		1	HASTE CILINDRO, Incl. 44, 45
44		NSS		1	BOLETIM INFORMATIVO
45		KLV10060		1	CASTILHO ALTO LUBRIF
		LZ008180		1	JOGO DE JUNTAS, Incl. 6 - 11, 14, 16 - 19, 23

08-86		p1	02/07

CONJUNTO DO CILINDRO, BALDE

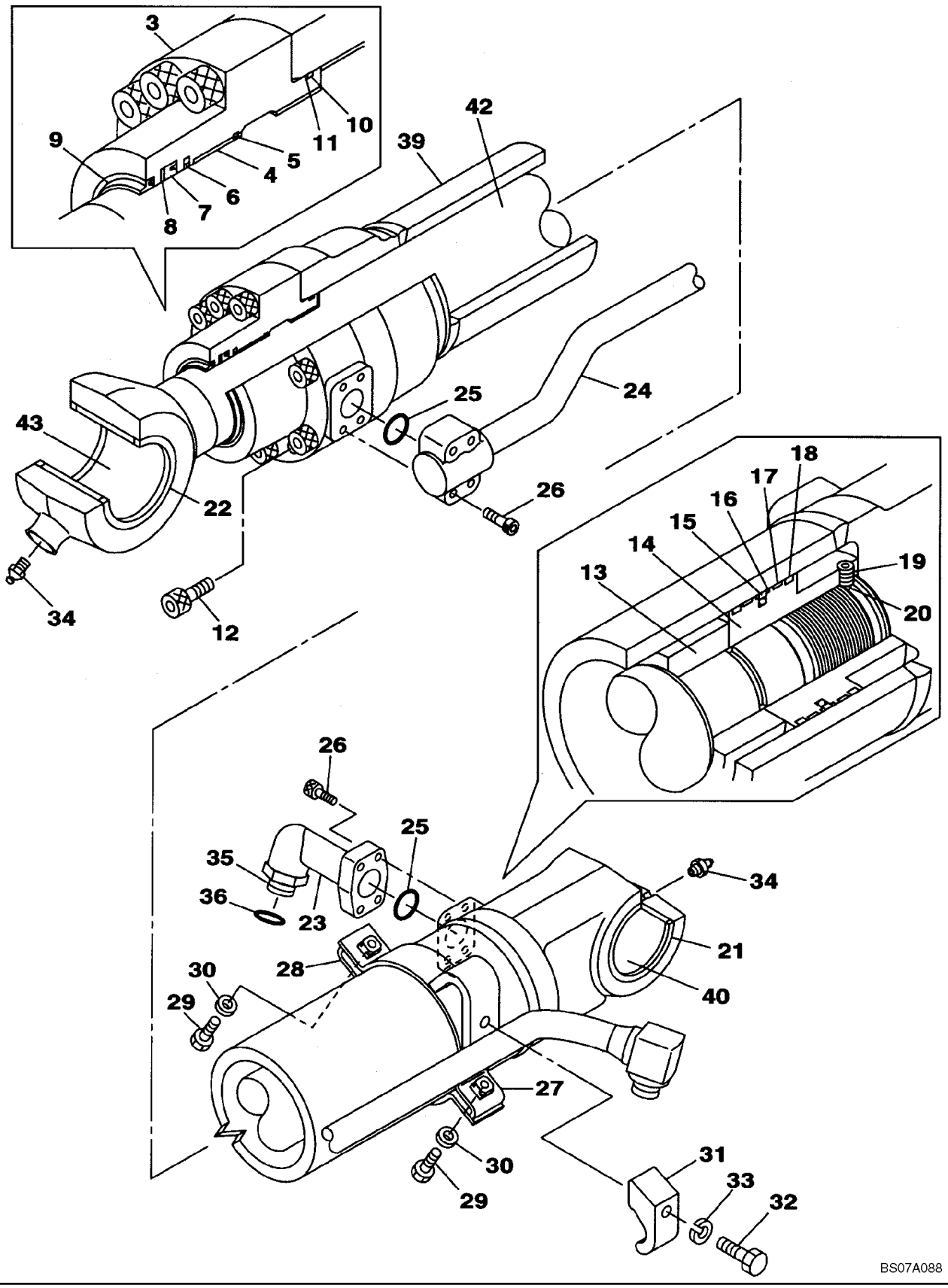

CONJUNTO DO CILINDRO, BALDE

REF	FN	PART NUMBER	YR/SN	QTY	DESCRIPTION
		KLV11080		1	MOTOR RECONDICIONADO, Incl. 3 - 43
3		LU00120		1	TAMPA CILINDRO
4		160843A1		1	BUCHA
5		160870A1		1	VEDADOR ESPECIAL
6		LE015050		1	ANEL
7		LE015060		1	ANEL "O"
8		160808A1		1	VEDADOR ESPECIAL
9		160783A1		1	VEDADOR EIXO
10		154721A1		1	ANEL O
11		161880A1		1	VEDADOR ESPECIAL
12		108R014Z065N		12	PARAFUSO
13		LE015070		1	ANEL VEDADOR
14		LJ014880		1	PISTÃO
15		155330A1		1	ANEL DE VEDAÇÃO
16		161881A1		2	VEDADOR ESPECIAL
17		LE015080		2	ANEL RASPADOR
18		161883A1		2	VEDADOR ESPECIAL
19		156222A1		1	PARAFUSO
20		155976A1		1	ESFERA
21		164445A1		2	ANEL
22		160482A1		2	ANEL DE VEDAÇÃO
23		155516A1		1	TUBO CONJUNTO
24		LR015490		1	TUBULAÇÃO HIDRAULICO
25		154528A1		2	ANEL O
26		87016471		8	PARAFUSO, Hex Soc Hd, M10 x 30, 12.9
27		LD00070		1	SUPORTE FIXACAO
28		LZU0095		1	TIRA
29		158131A1		2	PARAFUSO
30		156227A1		2	ARRUELA PLANA
31		155717A1		1	BRACADEIRA
32		628-12055		1	PARAFUSO, Hex, M12 x 55, 10.9, Full Thd
33		892-10012		1	ARRUELA-TRAVA, M12
34		153630A1		2	GRAXEIRA
35		LK005460		1	GRAXEIRA
36		154503A1		1	ANEL O

CONJUNTO DO CILINDRO, BALDE

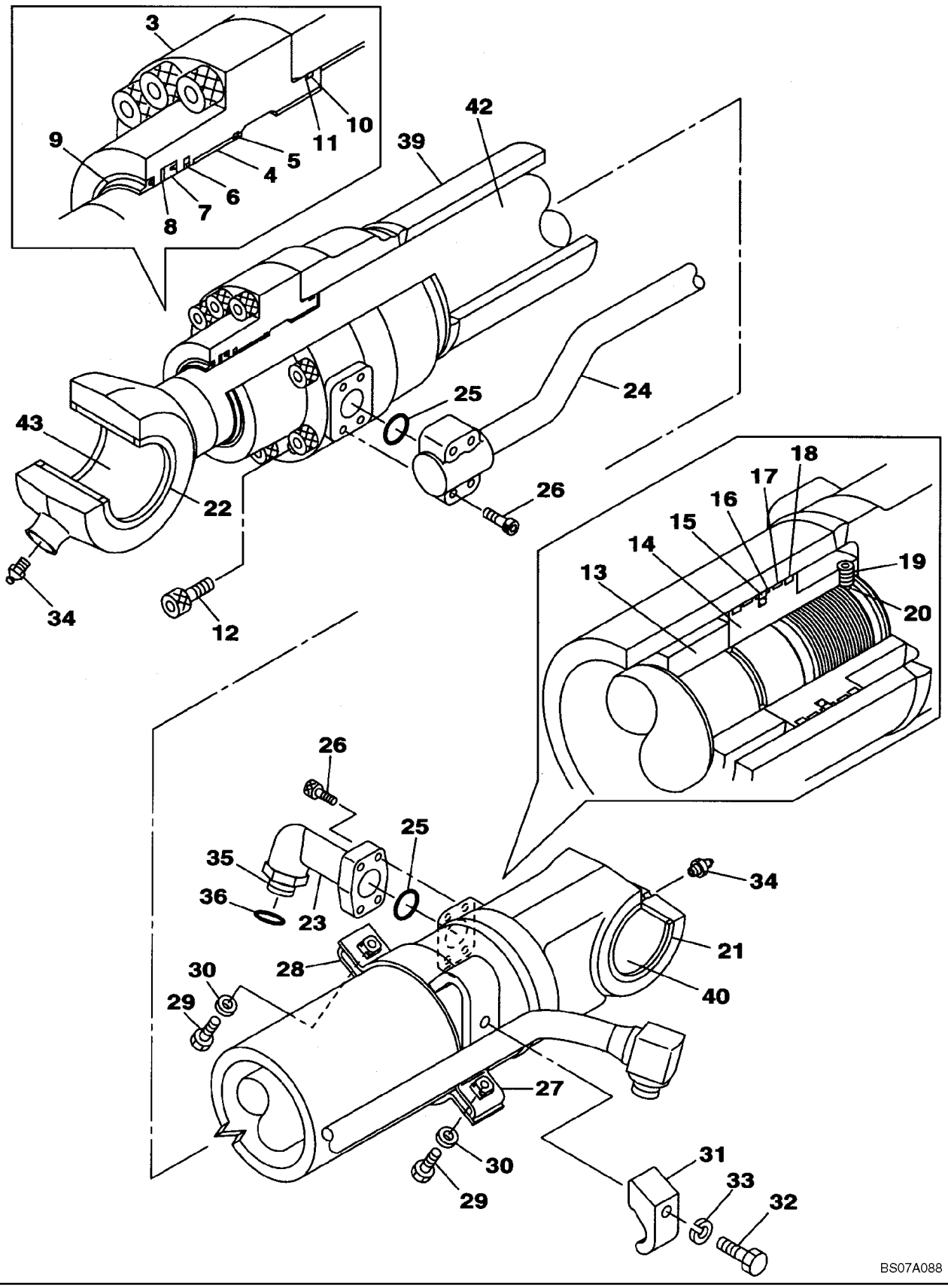

CONJUNTO DO CILINDRO, BALDE

REF	FN	PART NUMBER	YR/SN	QTY	DESCRIPTION
		LZ008220		1	LUVO CILINDRO, Incl. 39, 40
39		NSS		1	BOLETIM INFORMATIVO, Tube, Cylinder
40		KLV10070		1	CASTILHO ALTO LUBRIF
		LZ008230		1	HASTE CILINDRO, Incl. 42, 43
42		NSS		1	BOLETIM INFORMATIVO, Rod
43		KNV1140		1	CASTILHO ALTO LUBRIF
		LZ008210		1	JOGO DE JUNTAS, Incl. 6 - 11, 15 - 18

KLJ10570 CONJUNTO DA BOMBA, HIDRÁULICA - PISTÃO

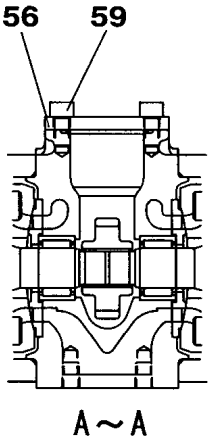

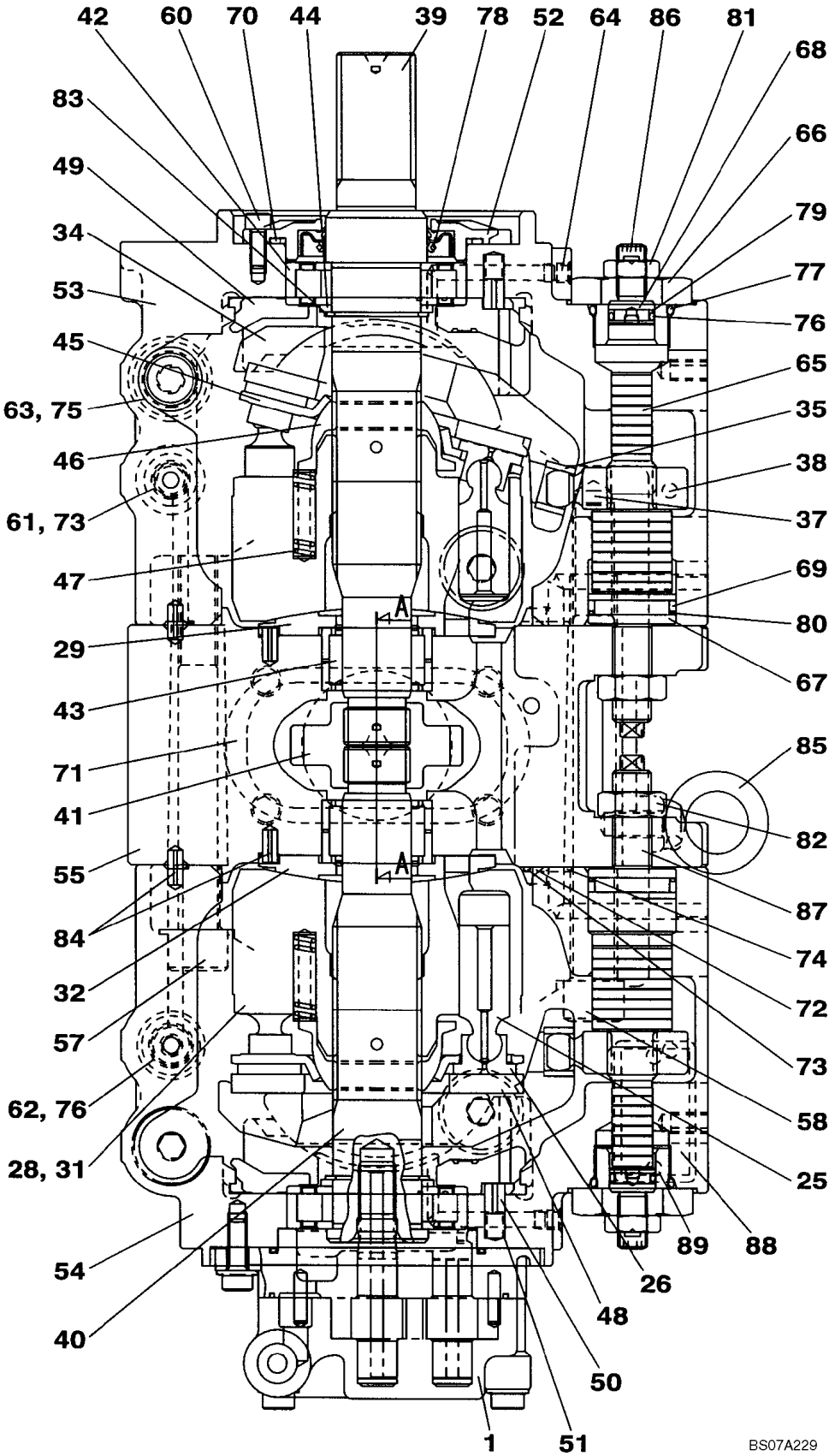

KLJ10570 CONJUNTO DA BOMBA, HIDRÁULICA - PISTÃO

REF	FN	PART NUMBER	YR/SN	QTY	DESCRIPTION
		KLJ10570		1	BOMBA HIDRÁULICA, Includes All Parts On Figure 08-87 - 08-91
1		LJ015050		1	BOMBA HIDRÁULICA, See Figure 08-88
		LJ015060		2	PISTÃO, Incl. 25, 26
25		NSS		9	BOLETIM INFORMATIVO, Piston
26		NSS		9	BOLETIM INFORMATIVO, Shoe
		LJ015070		1	CORPO DE CILINDRO, Incl. 28, 29
28		NSS		1	BOLETIM INFORMATIVO, Block, Cylinder
29		NSS		1	BOLETIM INFORMATIVO, Plate
		LJ015080		1	CORPO DE CILINDRO, Incl. 31, 32
31		NSS		1	BOLETIM INFORMATIVO, Block, Cylinder
32		NSS		1	BOLETIM INFORMATIVO, Plate
		LR015660		2	PLACA, Incl. 34, 35
34		NSS		1	BOLETIM INFORMATIVO, Plate
35		NSS		1	BOLETIM INFORMATIVO, Bushing
		LA011170		1	PINO, Incl. 37, 38
37		NSS		1	BOLETIM INFORMATIVO, Pin
38		NSS		1	BOLETIM INFORMATIVO, Pin
39		LB012050		1	EIXO
40		LB012060		1	EIXO
41		LC003020		1	ENGRENAGEM
42		LB012040		2	JOGO DE ANÉIS +0,8
43		LB012030		2	ROLAMENTO
44		TH00018		2	ESPAÇADOR
45		LR015670		2	PLACA
46		LB012070		2	BUCHA
47		156960A1		12	MOLA
48		LR015680		2	PLACA, Shoe
49		LS003430		2	SUPORTE
50		LA011180		2	PINO
51		LG006160		2	MOLA
52		LW005220		1	TAMPA
53		LW005230		1	ALOJAMENTO
54		LW005240		1	ALOJAMENTO
55		LJ015090		1	BLOCO

KLJ10570 CONJUNTO DA BOMBA, HIDRÁULICA - PISTÃO

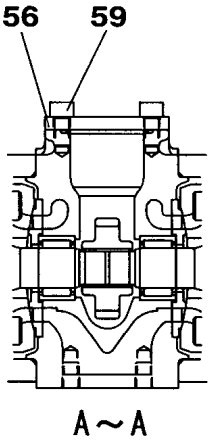

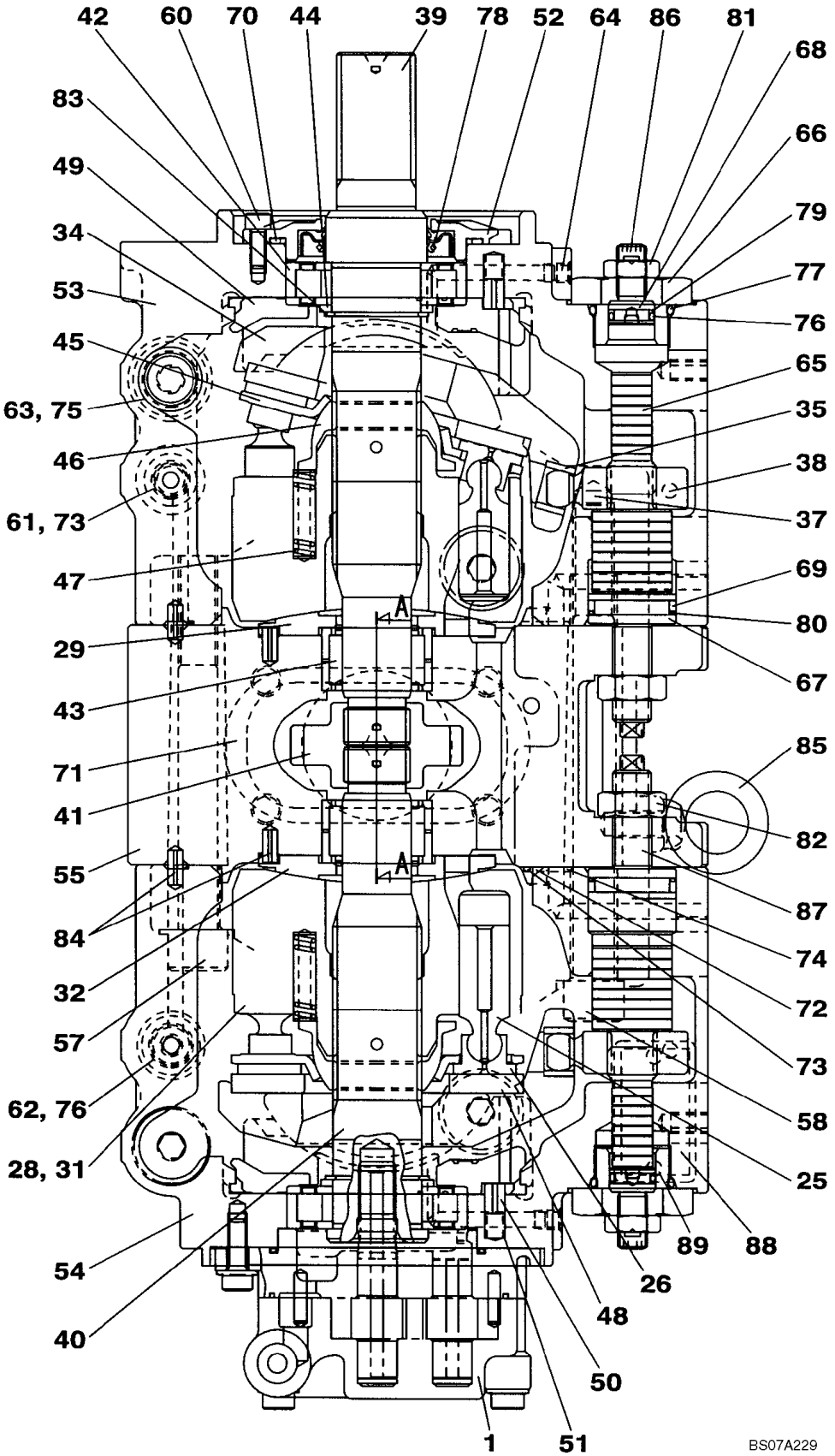

KLJ10570 CONJUNTO DA BOMBA, HIDRÁULICA - PISTÃO

REF	FN	PART NUMBER	YR/SN	QTY	DESCRIPTION
56		LW00397		1	TAMPA
57		LA011190		2	PARAFUSO
58		LA011200		2	PARAFUSO
59		863-10020		4	PARAFUSO, Hex Soc Hd, M10 x 20, 12.9
60		861-6016		4	PARAFUSO, Hex Soc Hd, M6 x 16, 12.9
61		LK00015		2	BUJÃO
62		LK00008		2	BUJÃO
63		LK00038		4	BUJÃO
64		LK00003		9	BUJÃO
65		LJ015100		2	PISTÃO
66		LK005750		2	BUJÃO
67		TG00219		2	LIMITADOR
68		LG006170		2	LIMITADOR
69		LE014710		2	ANEL "O"
70		LE013530		1	ANEL "O"
71		LE013510		1	ANEL "O"
72		LE00606		2	ANEL O
73		LE013410		6	ANEL "O"
74		LE013470		12	ANEL "O"
75		LE01177		4	ANEL "O"
76		LE013490		4	ANEL "O"
77		LE015260		2	ANEL "O"
78		TE01038		1	VEDADOR DE OLEO
79		153961A1		2	VEDADOR ESPECIAL
80		154002A1		2	VEDADOR ESPECIAL
81		164R012VR		2	PORCA
82		164R016VR		2	PORCA
83		800-1135		2	ANEL, M35, Ext
84		338W060Z014B		4	PINO TRAVA
85		126R010SR		2	ANEL
86		LV000490		2	PARAFUSO
87		TV00002		2	PARAFUSO
88		NSS		1	BOLETIM INFORMATIVO, Name Plate
89		LA00027		2	REBITE

KLJ10570 PUMP ASSY, HYDRAULIC - GEAR PUMP ASSY

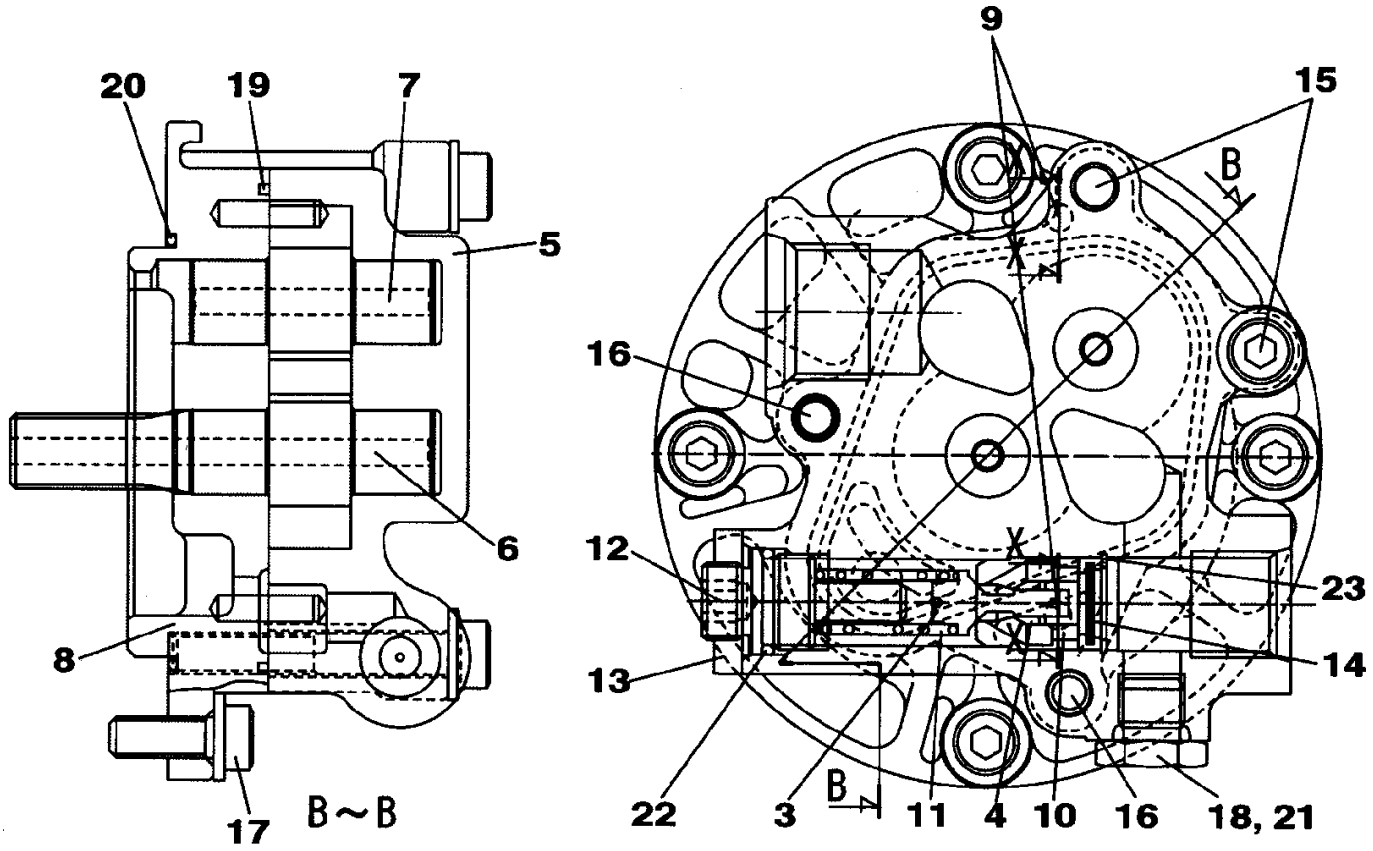

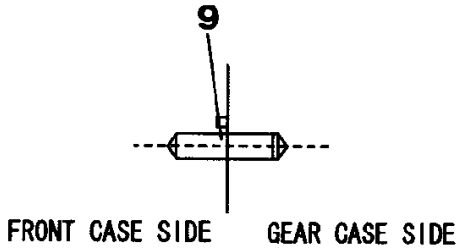

X-X

BS07A230

KLJ10570 PUMP ASSY, HYDRAULIC - GEAR PUMP ASSY

REF	FN	PART NUMBER	YR/SN	QTY	DESCRIPTION
		KLJ10570		1	BOMBA HIDRÁULICA, Includes All Parts On Figure 08-87 - 08-91
		LJ015050		1	BOMBA HIDRÁULICA, Incl. 3 - 23
		LC003010		1	ENGRENAGEM, Incl. 3 - 9
3		NSS		1	BOLETIM INFORMATIVO, Poppet
4		NSS		1	BOLETIM INFORMATIVO, Seat
5		NSS		1	BOLETIM INFORMATIVO, Case, Gear
6		NSS		1	BOLETIM INFORMATIVO, Gear
7		NSS		1	BOLETIM INFORMATIVO, Gear
8		NSS		1	BOLETIM INFORMATIVO, Case
9		NSS		2	BOLETIM INFORMATIVO, Pin
10		LE01175		1	ANEL
11		LG00536		1	MOLA
12		LF00043		1	AJUSTADOR
13		163662A1		1	CONTRA PORCA
14		163663A1		1	FILTRO
15		163664A1		2	PARAFUSO
16		163665A1		2	PARAFUSO
17		163666A1		4	PARAFUSO
18		155496A1		1	BUJÃO
19		163667A1		1	ANEL DE VEDAÇÃO
20		LE015250		1	ANEL "O"
21		154467A1		1	ANEL "O"
22		154483A1		1	ANEL O
23		163668A1		1	ANEL-TRAVA

KLJ10570 PUMP ASSY, HYDRAULIC - VALVE ASSY

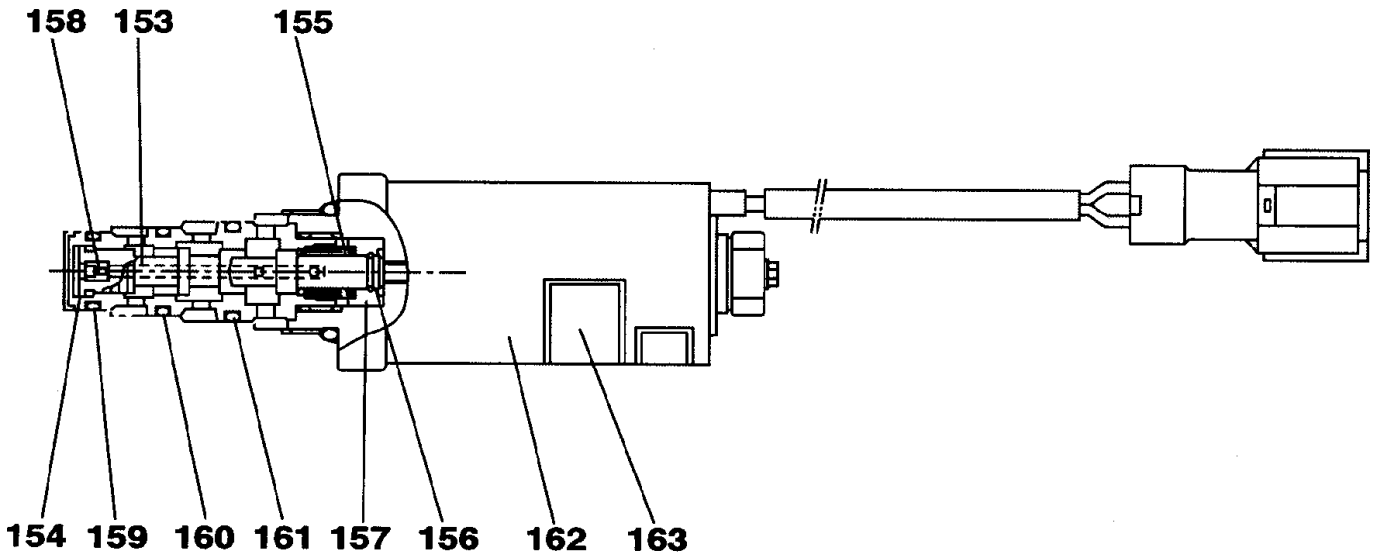

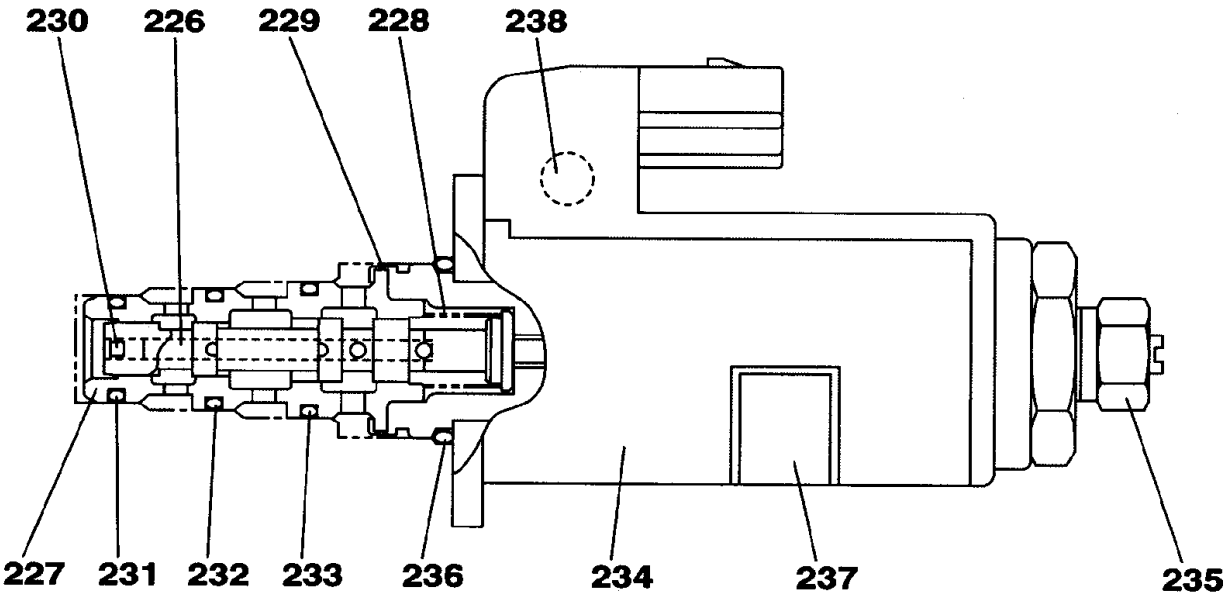

BS07A231

KLJ10570 PUMP ASSY, HYDRAULIC - VALVE ASSY

REF	FN	PART NUMBER	YR/SN	QTY	DESCRIPTION
		KLJ10570		1	BOMBA HIDRÁULICA, Includes All Parts On Figure 08-87 - 08-91
		LJ00684		1	VALVULA, Incl. 153 - 163
153		NSS		1	BOLETIM INFORMATIVO, Spool, Valve
154		NSS		1	BOLETIM INFORMATIVO, Sleeve
155		NSS		1	BOLETIM INFORMATIVO, Spring, Compression
156		NSS		1	BOLETIM INFORMATIVO, Ring
157		NSS		1	BOLETIM INFORMATIVO, Seat, Spring
158		NSS		1	BOLETIM INFORMATIVO, Orifice
159		155203A1		1	ANEL O
160		155204A1		1	ANEL O
161		160652A1		1	ANEL "O"
162		LL00055		1	SOLEMOID
163		NSS		1	BOLETIM INFORMATIVO, Name Plate
226		NSS		1	BOLETIM INFORMATIVO, Spool
227		NSS		1	BOLETIM INFORMATIVO, Sleeve
228		NSS		1	BOLETIM INFORMATIVO, Spring
229		NSS		1	BOLETIM INFORMATIVO, Ring
230		NSS		1	BOLETIM INFORMATIVO, Orifice
231		155203A1		1	ANEL O
232		155204A1		1	ANEL O
233		160652A1		1	ANEL "O"
234		NSS		1	BOLETIM INFORMATIVO, Solenoid
235		LA010930		1	PORCA
236		154491A1		1	ANEL O
237		NSS		1	BOLETIM INFORMATIVO, Name Plate
238		NSS		1	BOLETIM INFORMATIVO, Name Plate

KLJ10570 CONJUNTO DA BOMBA, HIDRÁULICA - REGULADOR

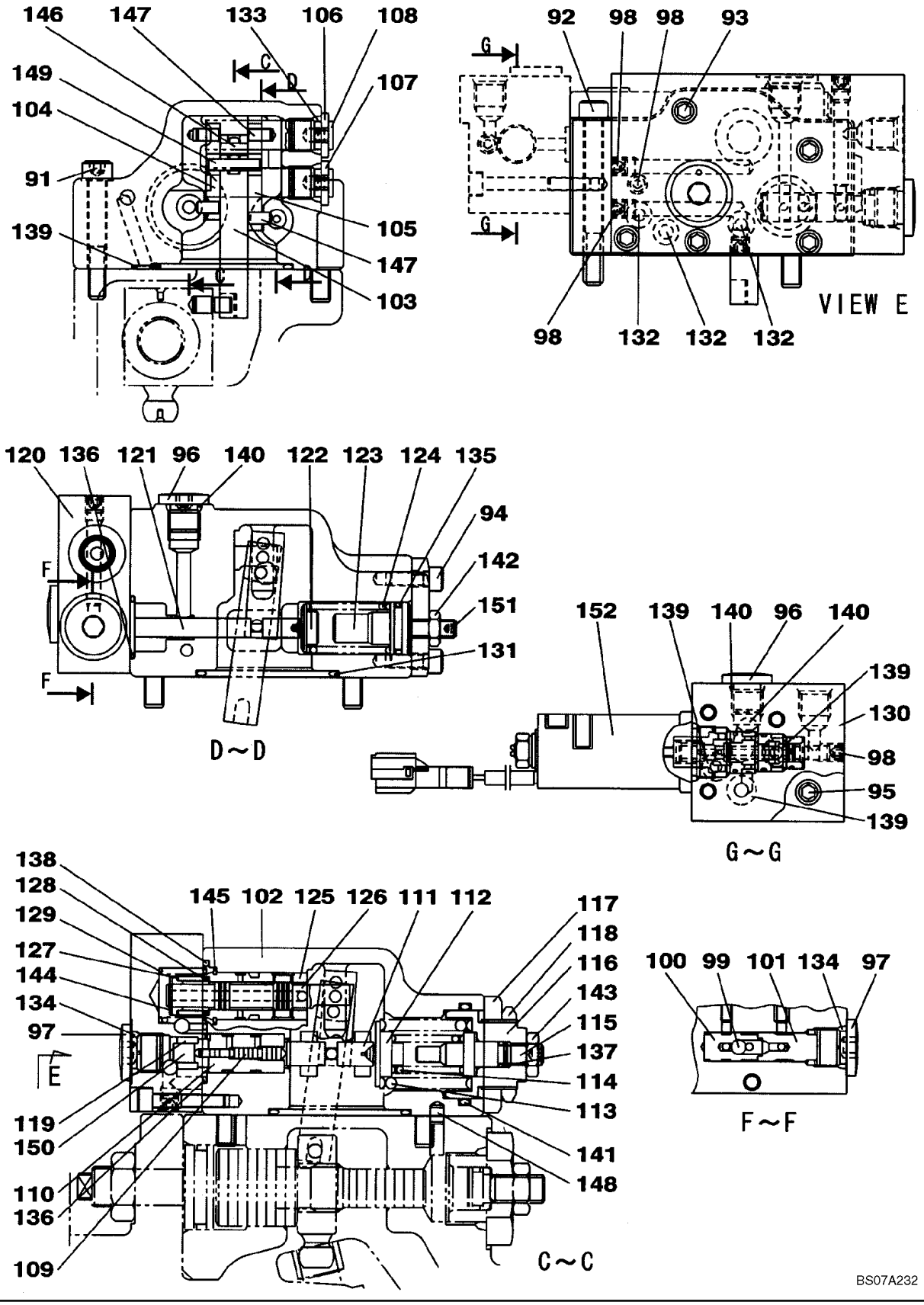

8

KLJ10570 CONJUNTO DA BOMBA, HIDRÁULICA - REGULADOR

REF	FN	PART NUMBER	YR/SN	QTY	DESCRIPTION
		KLJ10570		1	BOMBA HIDRÁULICA, Includes All Parts On Figure 08-87 - 08-91
		LJ015110		1	REGULADOR, Incl. 91 - 152
91		108R008Z050N		2	PARAFUSO
92		861-8070		2	PARAFUSO, Hex Soc Hd, M8 x 70, 12.9
93		861-6030		5	PARAFUSO, Hex Soc Hd, M6 x 30, 12.9
94		862-6016		4	PARAFUSO, Hex Soc Hd, M6 x 16, 12.9
95		861-6045		4	PARAFUSO, Hex Soc Hd, M6 x 45, 12.9
96		LK00015		2	BUJÃO
97		LK00008		2	BUJÃO
98		LK00003		8	BUJÃO
99		NSS		1	BOLETIM INFORMATIVO, Ball
100		NSS		1	BOLETIM INFORMATIVO, Seat
101		NSS		1	BOLETIM INFORMATIVO, Seat
102		NSS		1	BOLETIM INFORMATIVO, Case
103		NSS		1	BOLETIM INFORMATIVO, Lever
104		NSS		1	BOLETIM INFORMATIVO, Lever
105		NSS		1	BOLETIM INFORMATIVO, Lever
106		NSS		1	BOLETIM INFORMATIVO, Plug
107		NSS		1	BOLETIM INFORMATIVO, Plug
108		NSS		2	BOLETIM INFORMATIVO, Plug
109		NSS		1	BOLETIM INFORMATIVO, Piston
110		NSS		1	BOLETIM INFORMATIVO, Case
111		NSS		1	BOLETIM INFORMATIVO, Rod
112		NSS		1	BOLETIM INFORMATIVO, Seat, Spring
113		NSS		1	BOLETIM INFORMATIVO, Spring
114		NSS		1	BOLETIM INFORMATIVO, Spring
115		NSS		1	BOLETIM INFORMATIVO, Seat, Spring
116		NSS		1	BOLETIM INFORMATIVO, Screw
117		NSS		1	BOLETIM INFORMATIVO, Cover
118		NSS		1	BOLETIM INFORMATIVO, Nut
119		NSS		1	BOLETIM INFORMATIVO, Sleeve
120		NSS		1	BOLETIM INFORMATIVO, Cover
121		NSS		1	BOLETIM INFORMATIVO, Piston
122		NSS		1	BOLETIM INFORMATIVO, Seat, Sping

KLJ10570 CONJUNTO DA BOMBA, HIDRÁULICA - REGULADOR

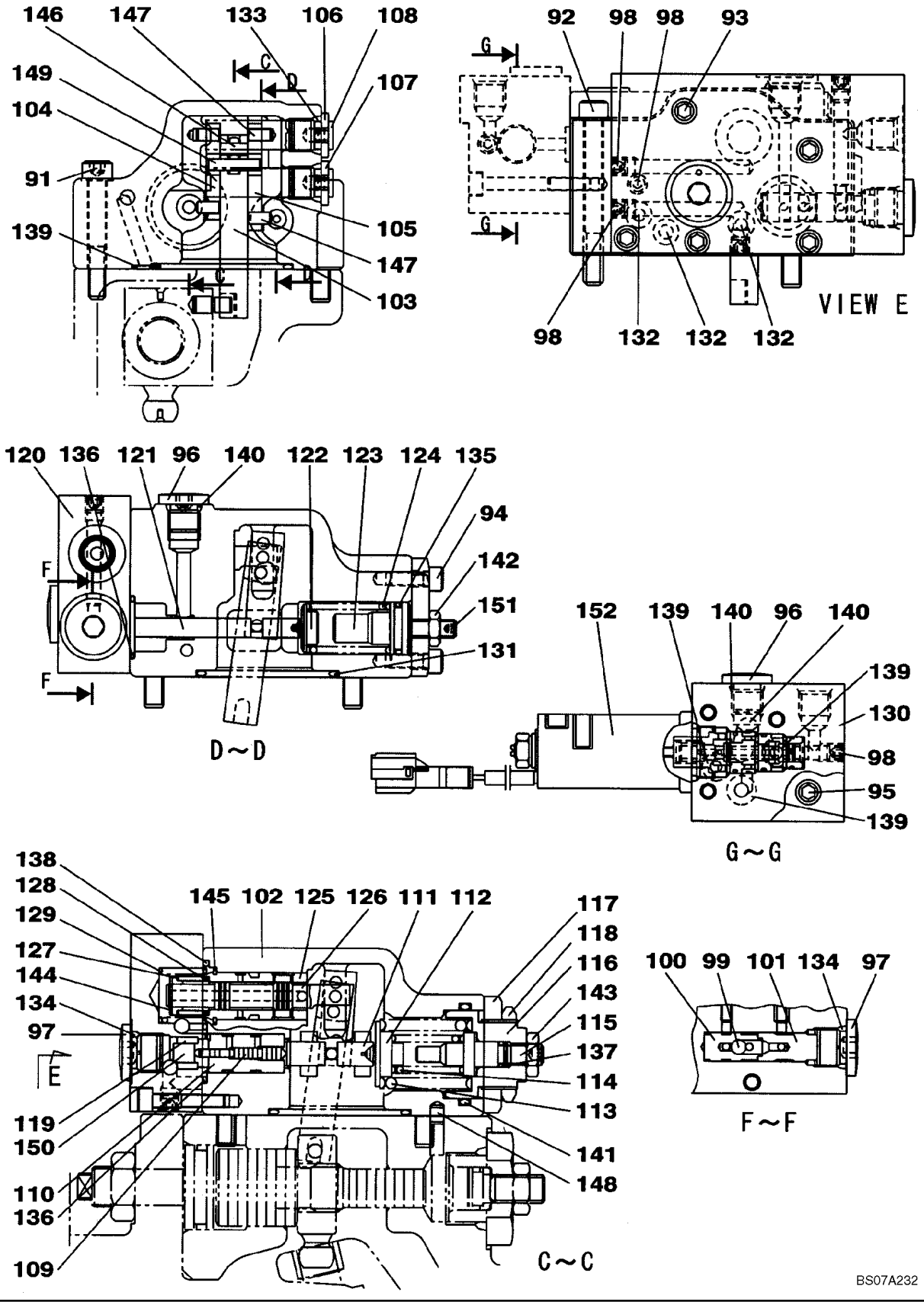

KLJ10570 CONJUNTO DA BOMBA, HIDRÁULICA - REGULADOR

REF	FN	PART NUMBER	YR/SN	QTY	DESCRIPTION
123		NSS		1	BOLETIM INFORMATIVO, Shaft
124		NSS		1	BOLETIM INFORMATIVO, Spring
125		NSS		1	BOLETIM INFORMATIVO, Sleeve
126		NSS		1	BOLETIM INFORMATIVO, Spool
127		NSS		1	BOLETIM INFORMATIVO, Seat, Spring
128		NSS		1	BOLETIM INFORMATIVO, Spring
129		NSS		1	BOLETIM INFORMATIVO, Spring
130		NSS		1	BOLETIM INFORMATIVO, Case
131		LE015270		1	ANEL "O"
132		LE013470		7	ANEL "O"
133		LE014730		2	ANEL "O"
134		LE013490		2	ANEL "O"
135		LE01177		1	ANEL "O"
136		LE00608		2	ANEL O
137		LE013540		1	ANEL "O"
138		LE013380		1	ANEL "O"
139		LE013540		5	ANEL "O"
140		LE013410		3	ANEL "O"
141		LE015280		1	ANEL "O"
142		LA00065		1	PORCA
143		LA010640		1	PORCA
144		800-1110		1	ANEL, M10, Ext
145		NSS		1	BOLETIM INFORMATIVO, Ring, Snap
146		NSS		1	BOLETIM INFORMATIVO, Pin
147		NSS		1	BOLETIM INFORMATIVO, Pin
148		NSS		1	BOLETIM INFORMATIVO, Pin
149		NSS		2	BOLETIM INFORMATIVO, Pin
150		NSS		1	BOLETIM INFORMATIVO, Pin
151		LA00759		1	PARAFUSO
152		LJ00684		1	VALVULA, See Figure 08-89

KLJ10570 CONJUNTO DA BOMBA, HIDRÁULICA - REGULADOR

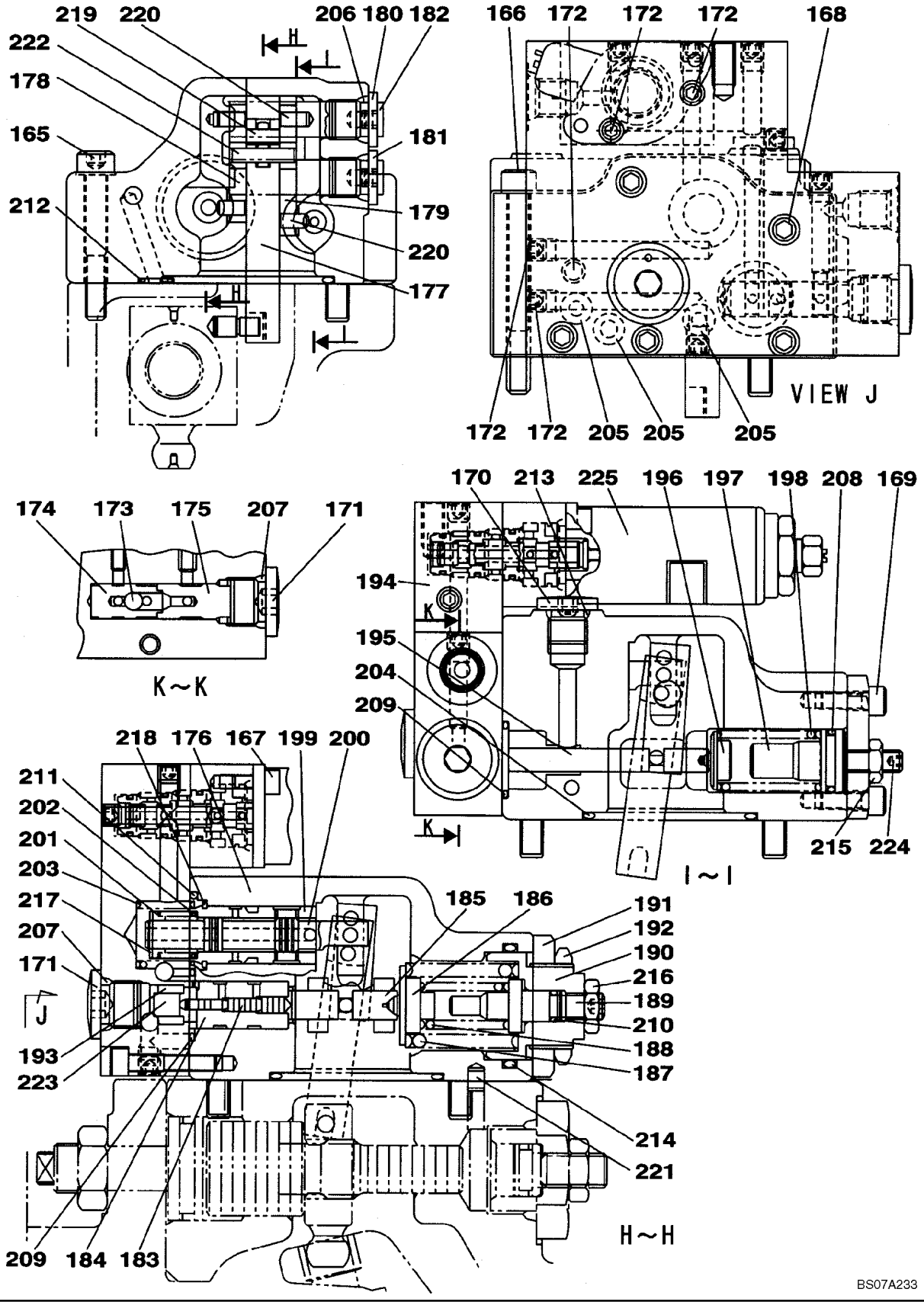

KLJ10570 CONJUNTO DA BOMBA, HIDRÁULICA - REGULADOR

REF	FN	PART NUMBER	YR/SN	QTY	DESCRIPTION
		KLJ10570		1	BOMBA HIDRÁULICA, Includes All Parts On Figure 08-87 - 08-91
		LJ015120		1	REGULADOR, Incl. 165 - 225
165		108R008Z050N		2	PARAFUSO
166		861-8070		2	PARAFUSO, Hex Soc Hd, M8 x 70, 12.9
167		LA010920		2	PARAFUSO
168		861-6030		5	PARAFUSO, Hex Soc Hd, M6 x 30, 12.9
169		861-6016		4	PARAFUSO, Hex Soc Hd, M6 x 16, 12.9
170		LK00015		1	BUJÃO
171		LK00008		2	BUJÃO
172		LK00003		15	BUJÃO
173		NSS		1	BOLETIM INFORMATIVO, Ball
174		NSS		1	BOLETIM INFORMATIVO, Seat
175		NSS		1	BOLETIM INFORMATIVO, Seat
176		NSS		1	BOLETIM INFORMATIVO, Case
177		NSS		1	BOLETIM INFORMATIVO, Lever
178		NSS		1	BOLETIM INFORMATIVO, Lever
179		NSS		1	BOLETIM INFORMATIVO, Lever
180		NSS		1	BOLETIM INFORMATIVO, Plug
181		NSS		1	BOLETIM INFORMATIVO, Plug
182		NSS		2	BOLETIM INFORMATIVO, Plug
183		NSS		1	BOLETIM INFORMATIVO, Piston
184		NSS		1	BOLETIM INFORMATIVO, Case
185		NSS		1	BOLETIM INFORMATIVO, Rod
186		NSS		1	BOLETIM INFORMATIVO, Seat, Spring
187		NSS		1	BOLETIM INFORMATIVO, Spring
188		NSS		1	BOLETIM INFORMATIVO, Spring
189		NSS		1	BOLETIM INFORMATIVO, Seat, Spring
190		NSS		1	BOLETIM INFORMATIVO, Screw
191		NSS		1	BOLETIM INFORMATIVO, Cover
192		NSS		1	BOLETIM INFORMATIVO, Nut
193		NSS		1	BOLETIM INFORMATIVO, Sleeve
194		NSS		1	BOLETIM INFORMATIVO, Cover
195		NSS		1	BOLETIM INFORMATIVO, Piston
196		NSS		1	BOLETIM INFORMATIVO, Seat, Sping

KLJ10570 CONJUNTO DA BOMBA, HIDRÁULICA - REGULADOR

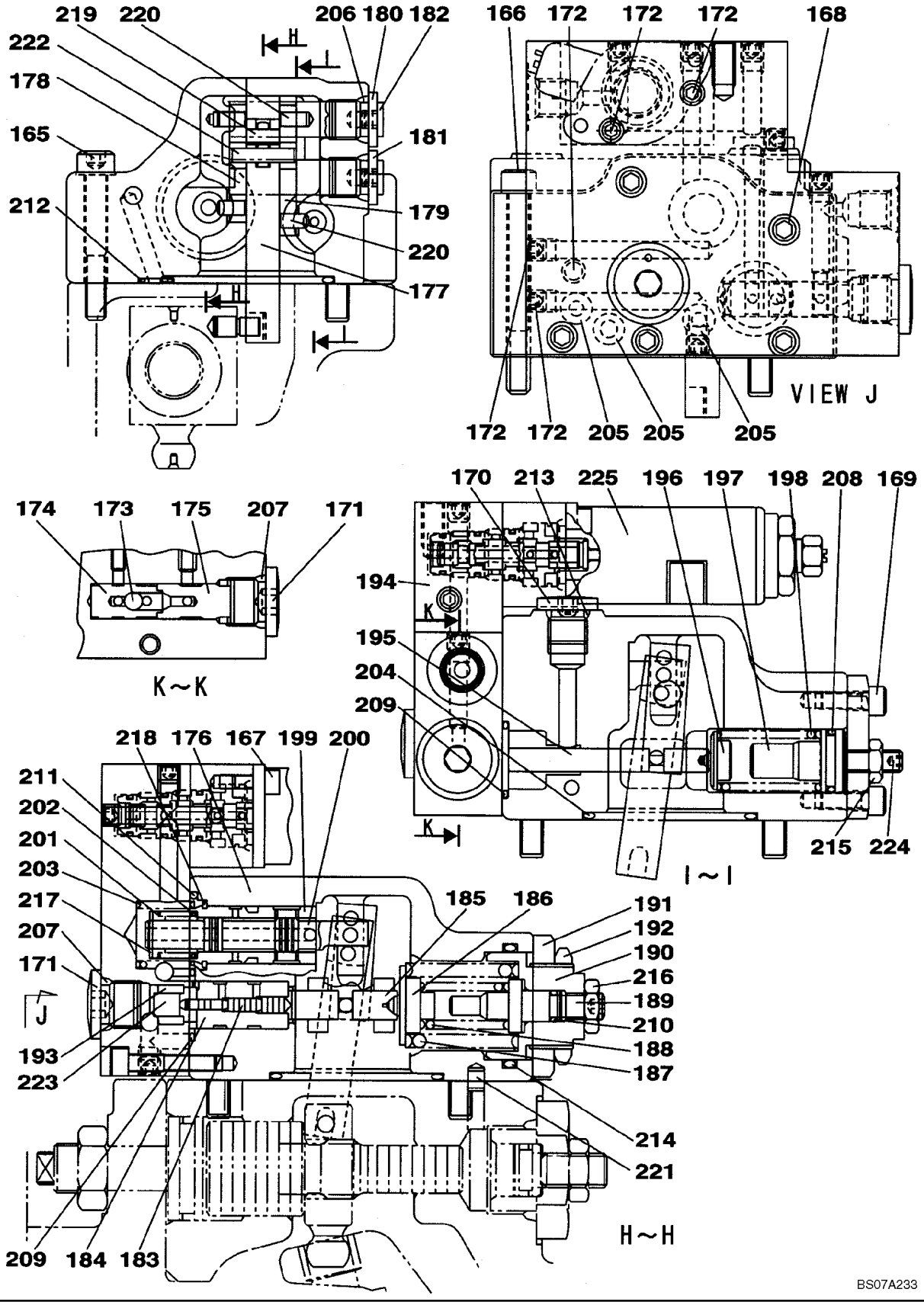

8

KLJ10570 CONJUNTO DA BOMBA, HIDRÁULICA - REGULADOR

REF	FN	PART NUMBER	YR/SN	QTY	DESCRIPTION
197		NSS		1	BOLETIM INFORMATIVO, Shaft
198		NSS		1	BOLETIM INFORMATIVO, Spring
199		NSS		1	BOLETIM INFORMATIVO, Sleeve
200		NSS		1	BOLETIM INFORMATIVO, Spool
201		NSS		1	BOLETIM INFORMATIVO, Seat, Spring
202		NSS		1	BOLETIM INFORMATIVO, Spring
203		NSS		1	BOLETIM INFORMATIVO, Spring
204		LE015270		1	ANEL "O"
205		LE013470		7	ANEL "O"
206		LE014730		2	ANEL "O"
207		LE013490		2	ANEL "O"
208		LE01177		1	ANEL "O"
209		LE00608		2	ANEL O
210		LE013540		1	ANEL "O"
211		LE013380		1	ANEL "O"
212		LE013540		2	ANEL "O"
213		LE013410		1	ANEL "O"
214		LE015280		1	ANEL "O"
215		LA00065		1	PORCA
216		LA010640		1	PORCA
217		800-1110		1	ANEL, M10, Ext
218		NSS		1	BOLETIM INFORMATIVO, Ring, Snap
219		NSS		1	BOLETIM INFORMATIVO, Pin
220		NSS		4	BOLETIM INFORMATIVO, Pin
221		NSS		1	BOLETIM INFORMATIVO, Pin
222		NSS		1	BOLETIM INFORMATIVO, Pin
223		NSS		1	BOLETIM INFORMATIVO, Pin
224		LA00759		1	PARAFUSO
225		NSS		1	BOLETIM INFORMATIVO, Valve, See Figure 08-89

KLJ10610 CONJUNTO DA BOMBA, HIDRÁULICA - PISTÃO

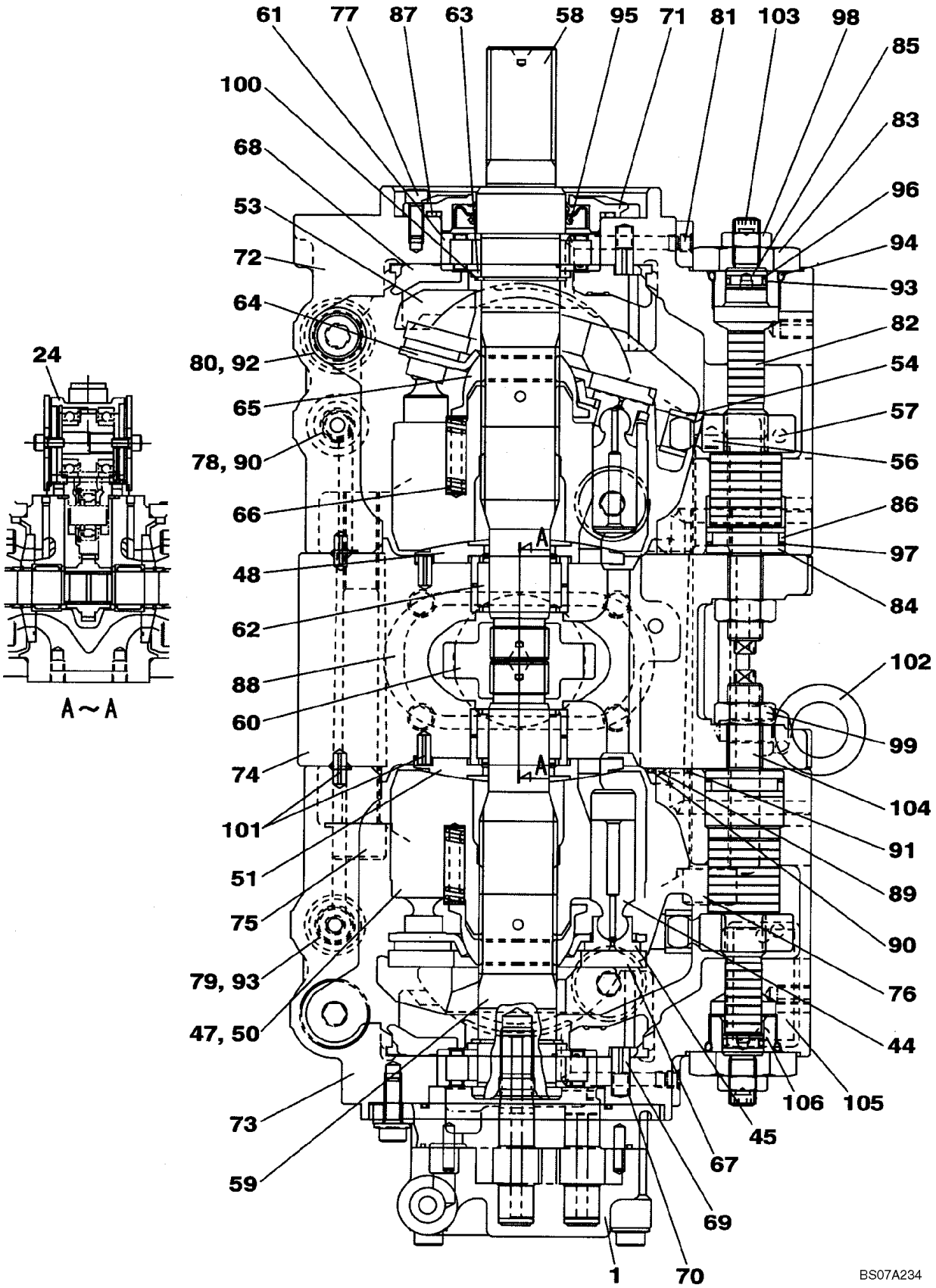

KLJ10610 CONJUNTO DA BOMBA, HIDRÁULICA - PISTÃO

REF	FN	PART NUMBER	YR/SN	QTY	DESCRIPTION
		KLJ10610		1	BOMBA HIDRÁULICA, Includes All Parts On Figure 08-92 - 08-97
1		LJ015050		1	BOMBA HIDRÁULICA, See Figure 08-93
		LC003030		1	ENGRENAGEM, See Figure 08-93
		LJ015060		2	PISTÃO, Incl. 44, 45
44		NSS		9	BOLETIM INFORMATIVO, Piston
45		NSS		9	BOLETIM INFORMATIVO, Shoe
		LJ015070		1	CORPO DE CILINDRO, Incl. 47, 48
47		NSS		1	BOLETIM INFORMATIVO, Block, Cylinder
48		NSS		1	BOLETIM INFORMATIVO, Plate
		LJ015080		1	CORPO DE CILINDRO, Incl. 50, 51
50		NSS		1	BOLETIM INFORMATIVO, Block, Cylinder
51		NSS		1	BOLETIM INFORMATIVO, Plate
		LR015660		2	PLACA, Incl. 53, 54
53		NSS		1	BOLETIM INFORMATIVO, Plate
54		NSS		1	BOLETIM INFORMATIVO, Bushing
		LA011170		1	PINO, Incl. 56, 57
56		NSS		1	BOLETIM INFORMATIVO, Pin
57		NSS		1	BOLETIM INFORMATIVO, Pin
58		LB012050		1	EIXO
59		LB012060		1	EIXO
60		LC003020		1	ENGRENAGEM
61		LB012040		2	JOGO DE ANÉIS +0,8
62		LB012030		2	ROLAMENTO
63		TH00018		2	ESPAÇADOR
64		LR015670		2	PLACA
65		LB012070		2	BUCHA
66		156960A1		12	MOLA
67		LR015680		2	PLACA, Shoe
68		LS003430		2	SUPORTE
69		LA011180		2	PINO
70		LG006160		2	MOLA
71		LW005220		1	TAMPA
72		LW005230		1	ALOJAMENTO
73		LW005240		1	ALOJAMENTO

KLJ10610 CONJUNTO DA BOMBA, HIDRÁULICA - PISTÃO

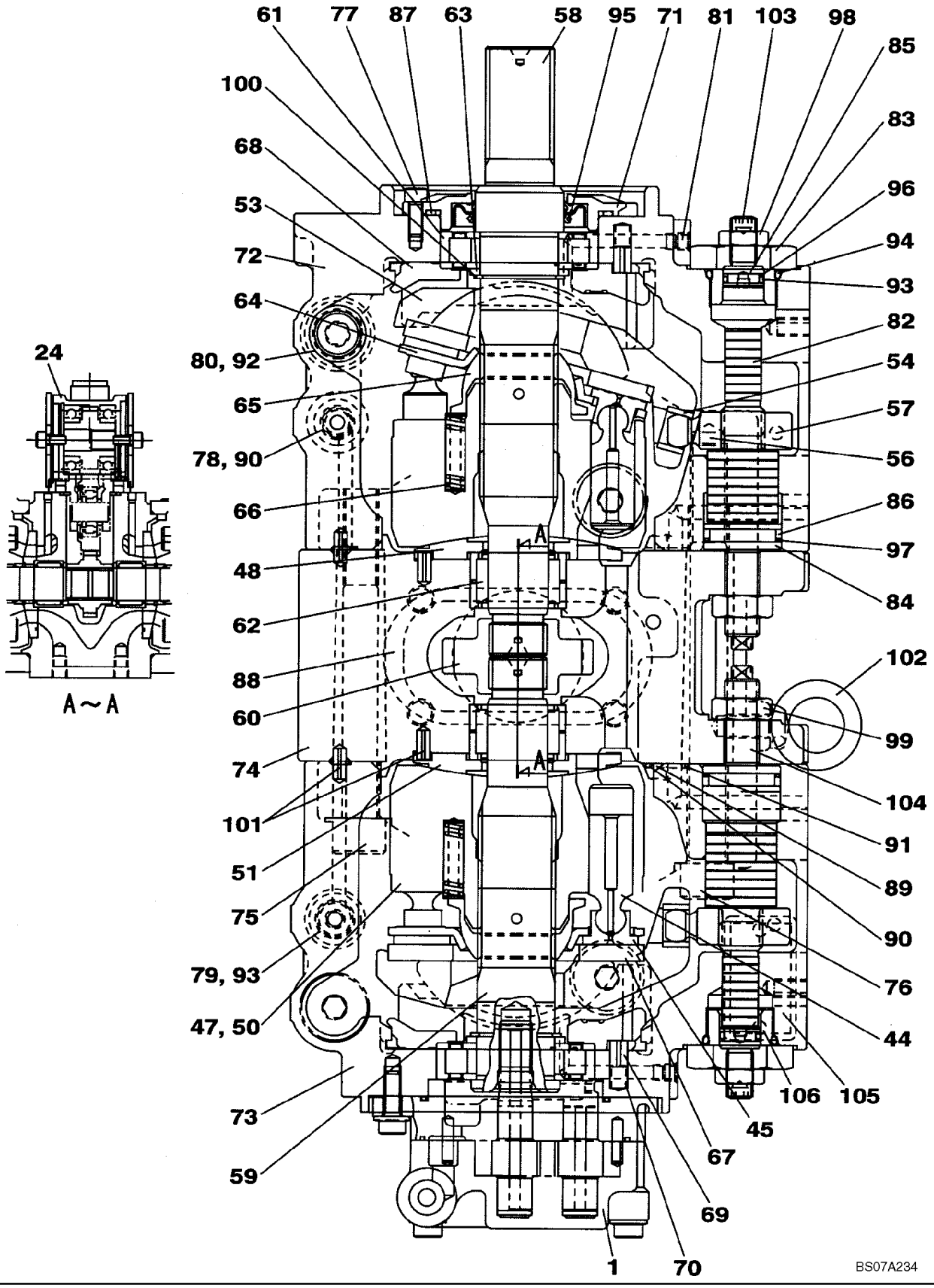

KLJ10610 CONJUNTO DA BOMBA, HIDRÁULICA - PISTÃO

REF	FN	PART NUMBER	YR/SN	QTY	DESCRIPTION
74		LJ015090		1	BLOCO
75		LA011190		2	PARAFUSO
76		LA011200		2	PARAFUSO
77		861-6016		4	PARAFUSO, Hex Soc Hd, M6 x 16, 12.9
78		LK00015		2	BUJÃO
79		LK00008		2	BUJÃO
80		LK00038		4	BUJÃO
81		LK00003		9	BUJÃO
82		LJ015100		2	PISTÃO
83		LK005750		2	BUJÃO
84		TG00219		2	LIMITADOR
85		LG006170		2	LIMITADOR
86		LE014710		2	ANEL "O"
87		LE013530		1	ANEL "O"
88		LE013510		1	ANEL "O"
89		LE00606		2	ANEL O
90		LE013410		6	ANEL "O"
91		LE013470		12	ANEL "O"
92		LE01177		4	ANEL "O"
93		LE013490		4	ANEL "O"
94		LE015260		2	ANEL "O"
95		TE01038		1	VEDADOR DE OLEO
96		153961A1		2	VEDADOR ESPECIAL
97		154002A1		2	VEDADOR ESPECIAL
98		164R012VR		2	PORCA
99		164R016VR		2	PORCA
100		800-1135		2	ANEL, M35, Ext
101		338W060Z014B		4	PINO TRAVA
102		126R010SR		2	ANEL
103		LV000490		2	PARAFUSO
104		TV00002		2	PARAFUSO
105		NSS		1	BOLETIM INFORMATIVO, Name Plate
106		LA00027		2	REBITE

KLJ10610 PUMP ASSY, HYDRAULIC - GEAR PUMP ASSY

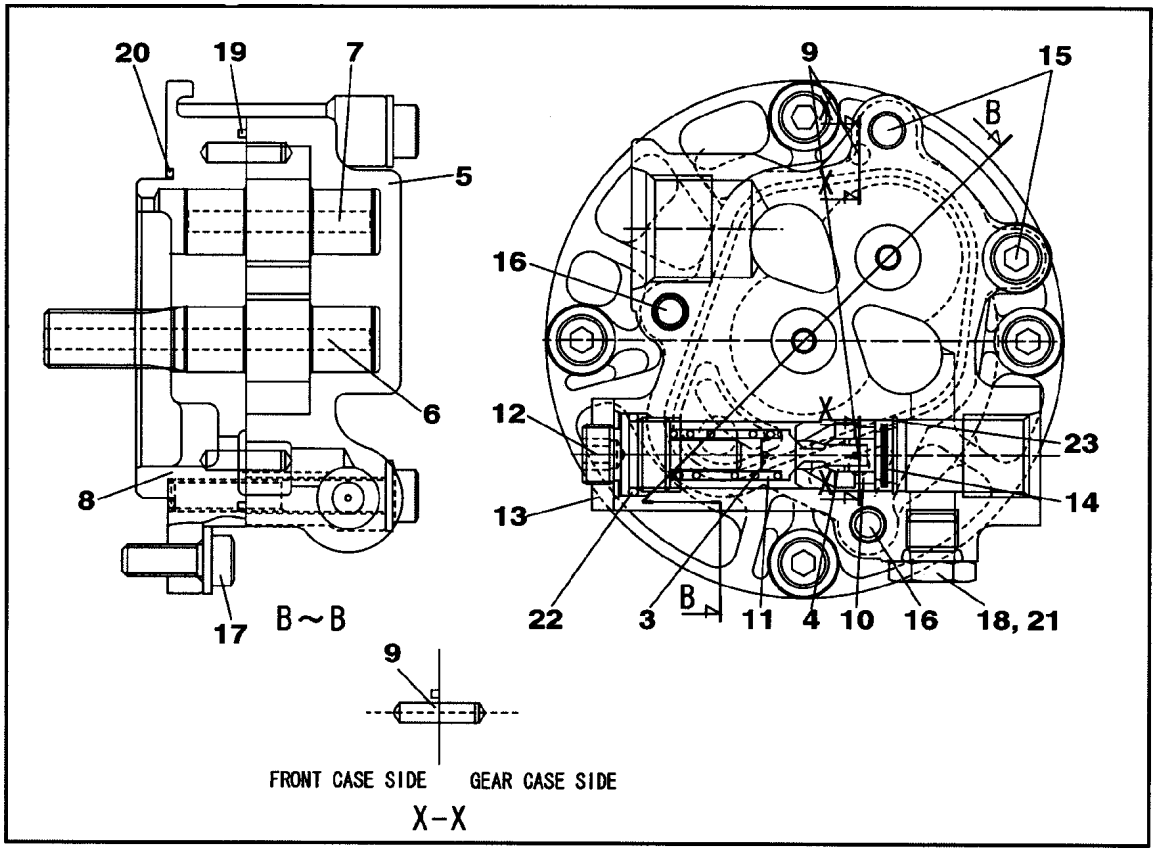

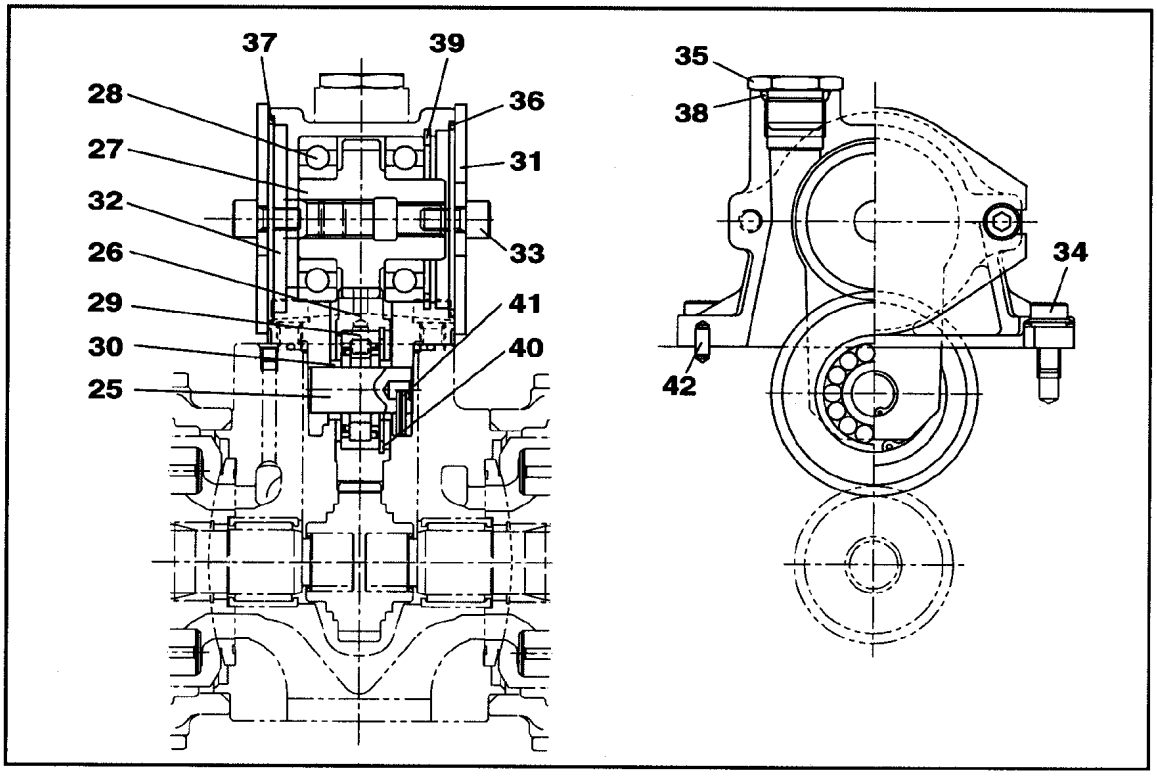

BS07A235

8

KLJ10610 PUMP ASSY, HYDRAULIC - GEAR PUMP ASSY

REF	FN	PART NUMBER	YR/SN	QTY	DESCRIPTION
		KLJ10610		1	BOMBA HIDRÁULICA, Includes All Parts On Figure 08-92 - 08-97
		LJ015050		1	BOMBA HIDRÁULICA, Incl. 3 - 23
		LC003010		1	ENGRENAGEM, Incl. 3 - 9
3		NSS		1	BOLETIM INFORMATIVO, Poppet
4		NSS		1	BOLETIM INFORMATIVO, Seat
5		NSS		1	BOLETIM INFORMATIVO, Case, Gear
6		NSS		1	BOLETIM INFORMATIVO, Gear
7		NSS		1	BOLETIM INFORMATIVO, Gear
8		NSS		1	BOLETIM INFORMATIVO, Case
9		NSS		2	BOLETIM INFORMATIVO, Pin
10		LE01175		1	ANEL
11		LG00536		1	MOLA
12		LF00043		1	AJUSTADOR
13		163662A1		1	CONTRA PORCA
14		163663A1		1	FILTRO
15		163664A1		2	PARAFUSO
16		163665A1		2	PARAFUSO
17		163666A1		4	PARAFUSO
18		155496A1		1	BUJÃO
19		163667A1		1	ANEL DE VEDAÇÃO
20		LE015250		1	ANEL "O"
21		154467A1		1	ANEL "O"
22		154483A1		1	ANEL O
23		163668A1		1	ANEL-TRAVA
		LC003030		1	ENGRENAGEM, Incl. 25 - 42
25		NSS		1	BOLETIM INFORMATIVO, Shaft, Idler
26		NSS		1	BOLETIM INFORMATIVO, Gear, Pinion
27		NSS		1	BOLETIM INFORMATIVO, Gear, Pinion
28		NSS		2	BOLETIM INFORMATIVO, Bearing, Roller
29		NSS		1	BOLETIM INFORMATIVO, Bearing, Roller
30		NSS		2	BOLETIM INFORMATIVO, Spacer
31		NSS		2	BOLETIM INFORMATIVO, Cover
32		NSS		1	BOLETIM INFORMATIVO, Case
33		863-10020		4	PARAFUSO, Hex Soc Hd, M10 x 20, 12.9

KLJ10610 PUMP ASSY, HYDRAULIC - GEAR PUMP ASSY

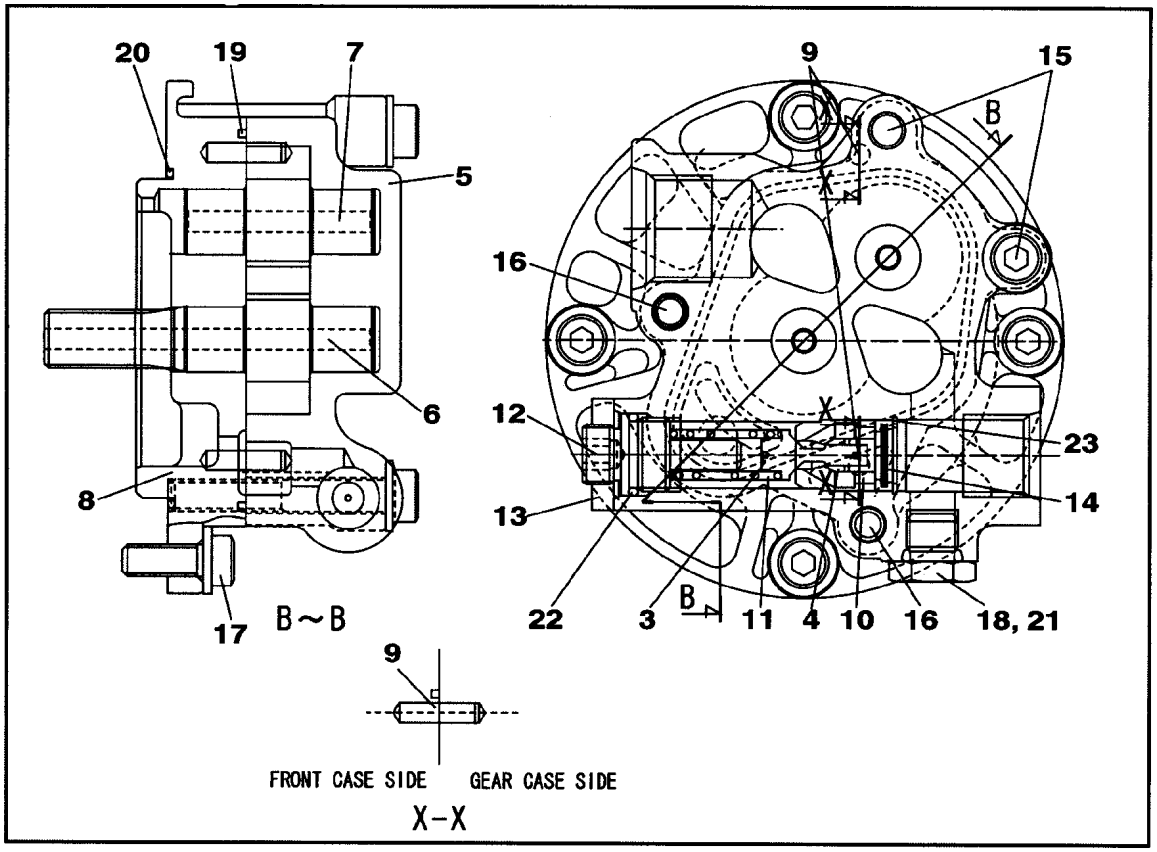

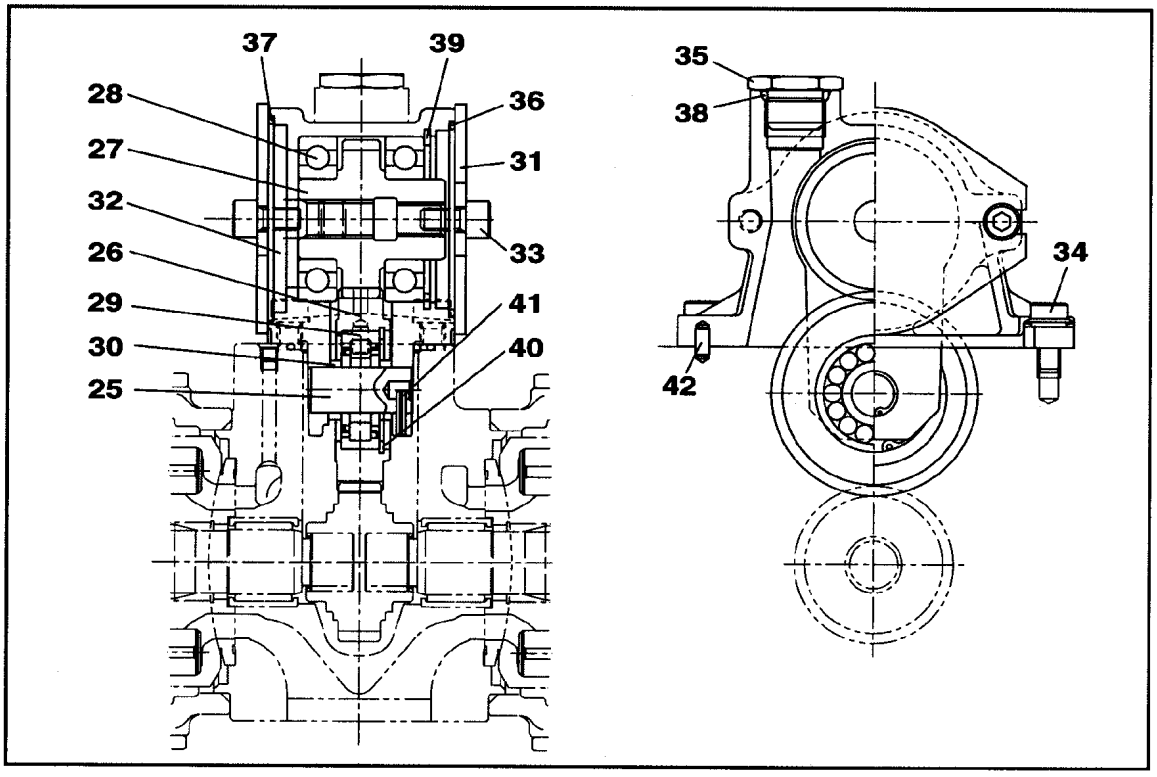

BS07A235

8

KLJ10610 PUMP ASSY, HYDRAULIC - GEAR PUMP ASSY

REF	FN	PART NUMBER	YR/SN	QTY	DESCRIPTION
34		LA00691		4	PARAFUSO
35		155471A1		1	BUJÃO
36		154689A1		1	ANEL O
37		154697A1		1	ANEL O
38		154503A1		1	ANEL O
39		NSS		1	BOLETIM INFORMATIVO, Ring, Snap
40		NSS		1	BOLETIM INFORMATIVO, Ring, Snap
41		LA010900		1	PINO
42		NSS		2	BOLETIM INFORMATIVO, Pin

KLJ10610 PUMP ASSY, HYDRAULIC - VALVE ASSY

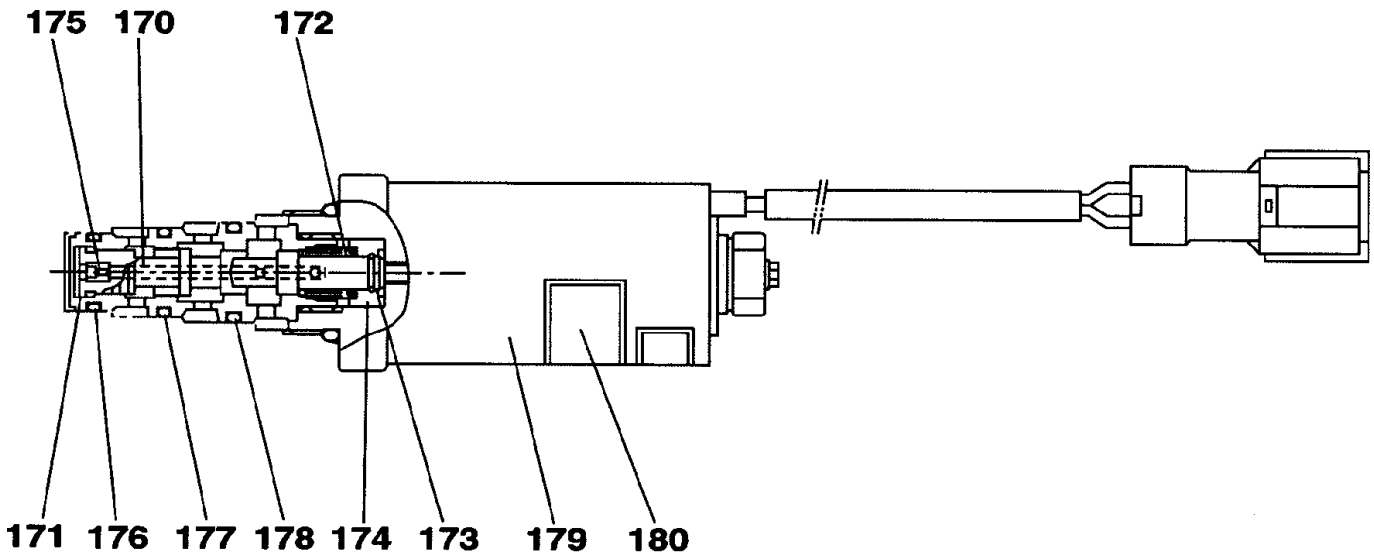

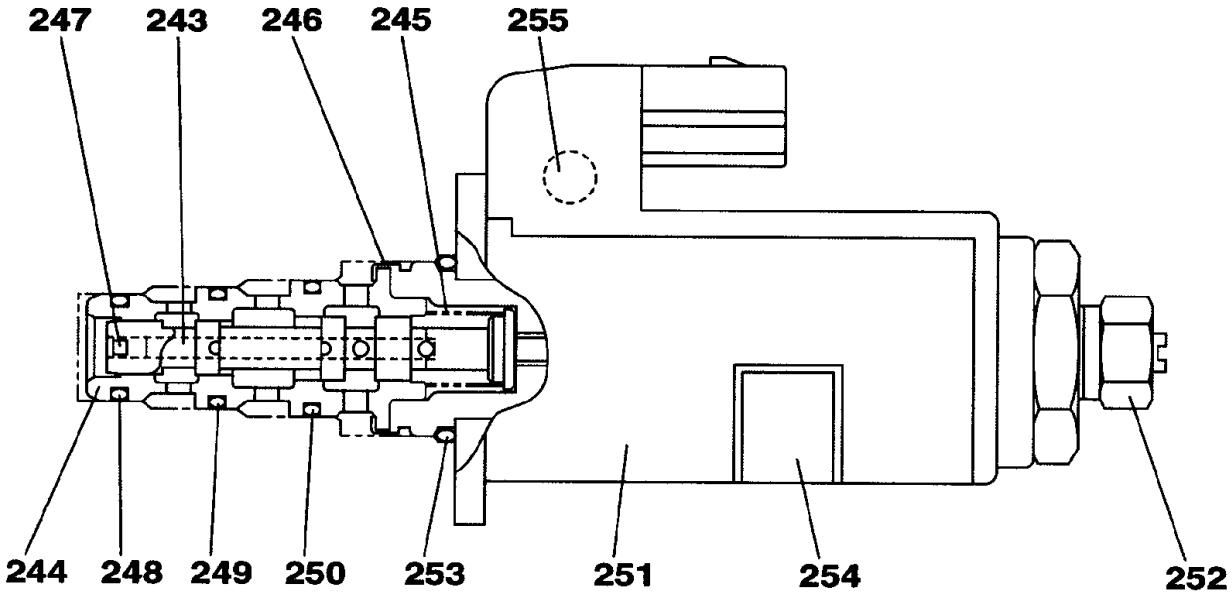

BS07A236

KLJ10610 PUMP ASSY, HYDRAULIC - VALVE ASSY

REF	FN	PART NUMBER	YR/SN	QTY	DESCRIPTION
		KLJ10610		1	BOMBA HIDRÁULICA, Includes All Parts On Figure 08-92 - 08-97
		LJ00684		1	VALVULA, Incl. 170 - 180
170		NSS		1	BOLETIM INFORMATIVO, Spool, Valve
171		NSS		1	BOLETIM INFORMATIVO, Sleeve
172		NSS		1	BOLETIM INFORMATIVO, Spring, Compression
173		NSS		1	BOLETIM INFORMATIVO, Ring
174		NSS		1	BOLETIM INFORMATIVO, Seat, Spring
175		NSS		1	BOLETIM INFORMATIVO, Orifice
176		155203A1		1	ANEL O
177		155204A1		1	ANEL O
178		160652A1		1	ANEL "O"
179		LL00055		1	SOLEMOID
180		NSS		1	BOLETIM INFORMATIVO, Name Plate
243		NSS		1	BOLETIM INFORMATIVO, Spool
244		NSS		1	BOLETIM INFORMATIVO, Sleeve
245		NSS		1	BOLETIM INFORMATIVO, Spring
246		NSS		1	BOLETIM INFORMATIVO, Ring
247		NSS		1	BOLETIM INFORMATIVO, Orifice
248		155203A1		1	ANEL O
249		155204A1		1	ANEL O
250		160652A1		1	ANEL "O"
251		NSS		1	BOLETIM INFORMATIVO, Solenoid
252		LA010930		1	PORCA
253		154491A1		1	ANEL O
254		NSS		1	BOLETIM INFORMATIVO, Name Plate
255		NSS		1	BOLETIM INFORMATIVO, Name Plate

KLJ10610 CONJUNTO DA BOMBA, HIDRÁULICA - REGULADOR

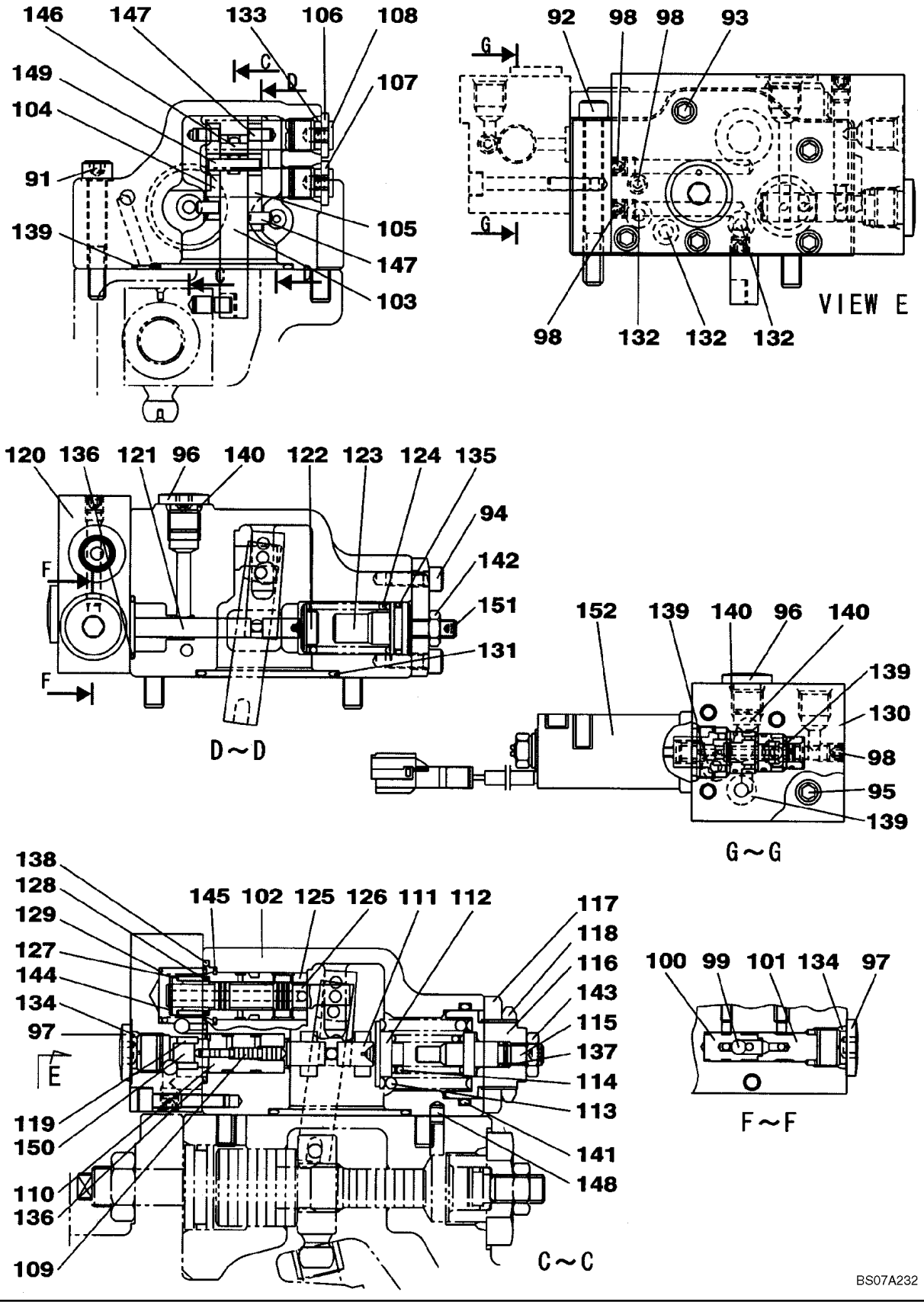

KLJ10610 CONJUNTO DA BOMBA, HIDRÁULICA - REGULADOR

REF	FN	PART NUMBER	YR/SN	QTY	DESCRIPTION
		KLJ10610		1	BOMBA HIDRÁULICA, Includes All Parts On Figure 08-92 - 08-97
		LJ015110		1	REGULADOR, Incl. 91 - 152
91		108R008Z050N		2	PARAFUSO
92		861-8070		2	PARAFUSO, Hex Soc Hd, M8 x 70, 12.9
93		861-6030		5	PARAFUSO, Hex Soc Hd, M6 x 30, 12.9
94		862-6016		4	PARAFUSO, Hex Soc Hd, M6 x 16, 12.9
95		861-6045		4	PARAFUSO, Hex Soc Hd, M6 x 45, 12.9
96		LK00015		2	BUJÃO
97		LK00008		2	BUJÃO
98		LK00003		8	BUJÃO
99		NSS		1	BOLETIM INFORMATIVO, Ball
100		NSS		1	BOLETIM INFORMATIVO, Seat
101		NSS		1	BOLETIM INFORMATIVO, Seat
102		NSS		1	BOLETIM INFORMATIVO, Case
103		NSS		1	BOLETIM INFORMATIVO, Lever
104		NSS		1	BOLETIM INFORMATIVO, Lever
105		NSS		1	BOLETIM INFORMATIVO, Lever
106		NSS		1	BOLETIM INFORMATIVO, Plug
107		NSS		1	BOLETIM INFORMATIVO, Plug
108		NSS		2	BOLETIM INFORMATIVO, Plug
109		NSS		1	BOLETIM INFORMATIVO, Piston
110		NSS		1	BOLETIM INFORMATIVO, Case
111		NSS		1	BOLETIM INFORMATIVO, Rod
112		NSS		1	BOLETIM INFORMATIVO, Seat, Spring
113		NSS		1	BOLETIM INFORMATIVO, Spring
114		NSS		1	BOLETIM INFORMATIVO, Spring
115		NSS		1	BOLETIM INFORMATIVO, Seat, Spring
116		NSS		1	BOLETIM INFORMATIVO, Screw
117		NSS		1	BOLETIM INFORMATIVO, Cover
118		NSS		1	BOLETIM INFORMATIVO, Nut
119		NSS		1	BOLETIM INFORMATIVO, Sleeve
120		NSS		1	BOLETIM INFORMATIVO, Cover
121		NSS		1	BOLETIM INFORMATIVO, Piston
122		NSS		1	BOLETIM INFORMATIVO, Seat, Sping

KLJ10610 CONJUNTO DA BOMBA, HIDRÁULICA - REGULADOR

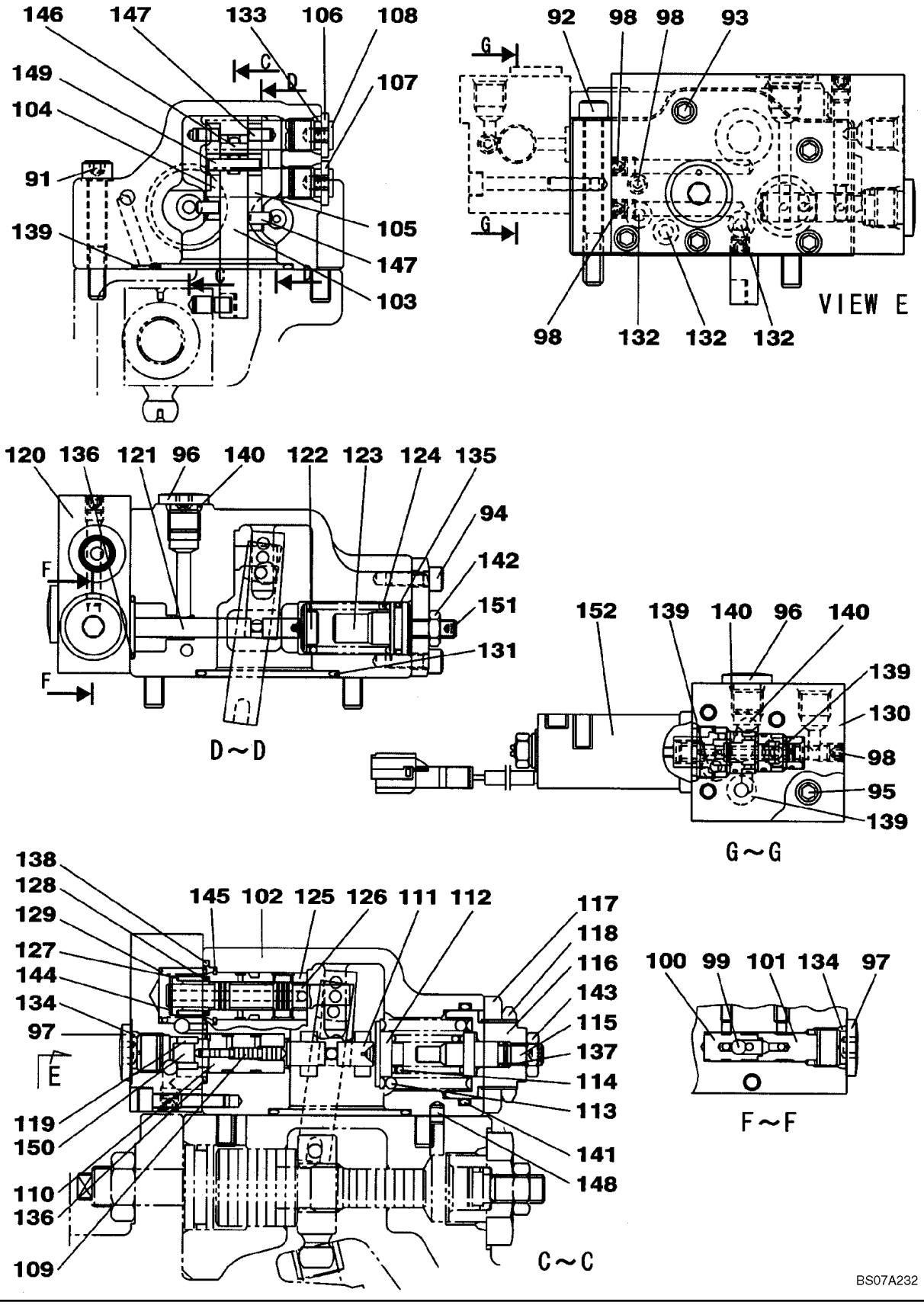

KLJ10610 CONJUNTO DA BOMBA, HIDRÁULICA - REGULADOR

REF	FN	PART NUMBER	YR/SN	QTY	DESCRIPTION
123		NSS		1	BOLETIM INFORMATIVO, Shaft
124		NSS		1	BOLETIM INFORMATIVO, Spring
125		NSS		1	BOLETIM INFORMATIVO, Sleeve
126		NSS		1	BOLETIM INFORMATIVO, Spool
127		NSS		1	BOLETIM INFORMATIVO, Seat, Spring
128		NSS		1	BOLETIM INFORMATIVO, Spring
129		NSS		1	BOLETIM INFORMATIVO, Spring
130		NSS		1	BOLETIM INFORMATIVO, Case
131		LE015270		1	ANEL "O"
132		LE013470		7	ANEL "O"
133		LE014730		2	ANEL "O"
134		LE013490		2	ANEL "O"
135		LE01177		1	ANEL "O"
136		LE00608		2	ANEL O
137		LE013540		1	ANEL "O"
138		LE013380		1	ANEL "O"
139		LE013540		5	ANEL "O"
140		LE013410		3	ANEL "O"
141		LE015280		1	ANEL "O"
142		LA00065		1	PORCA
143		LA010640		1	PORCA
144		800-1110		1	ANEL, M10, Ext
145		NSS		1	BOLETIM INFORMATIVO, Ring, Snap
146		NSS		1	BOLETIM INFORMATIVO, Pin
147		NSS		1	BOLETIM INFORMATIVO, Pin
148		NSS		1	BOLETIM INFORMATIVO, Pin
149		NSS		2	BOLETIM INFORMATIVO, Pin
150		NSS		1	BOLETIM INFORMATIVO, Pin
151		LA00759		1	PARAFUSO
152		LJ00684		1	VALVULA, See Figure 08-94, REF 243 - 255

KLJ10610 CONJUNTO DA BOMBA, HIDRÁULICA - REGULADOR

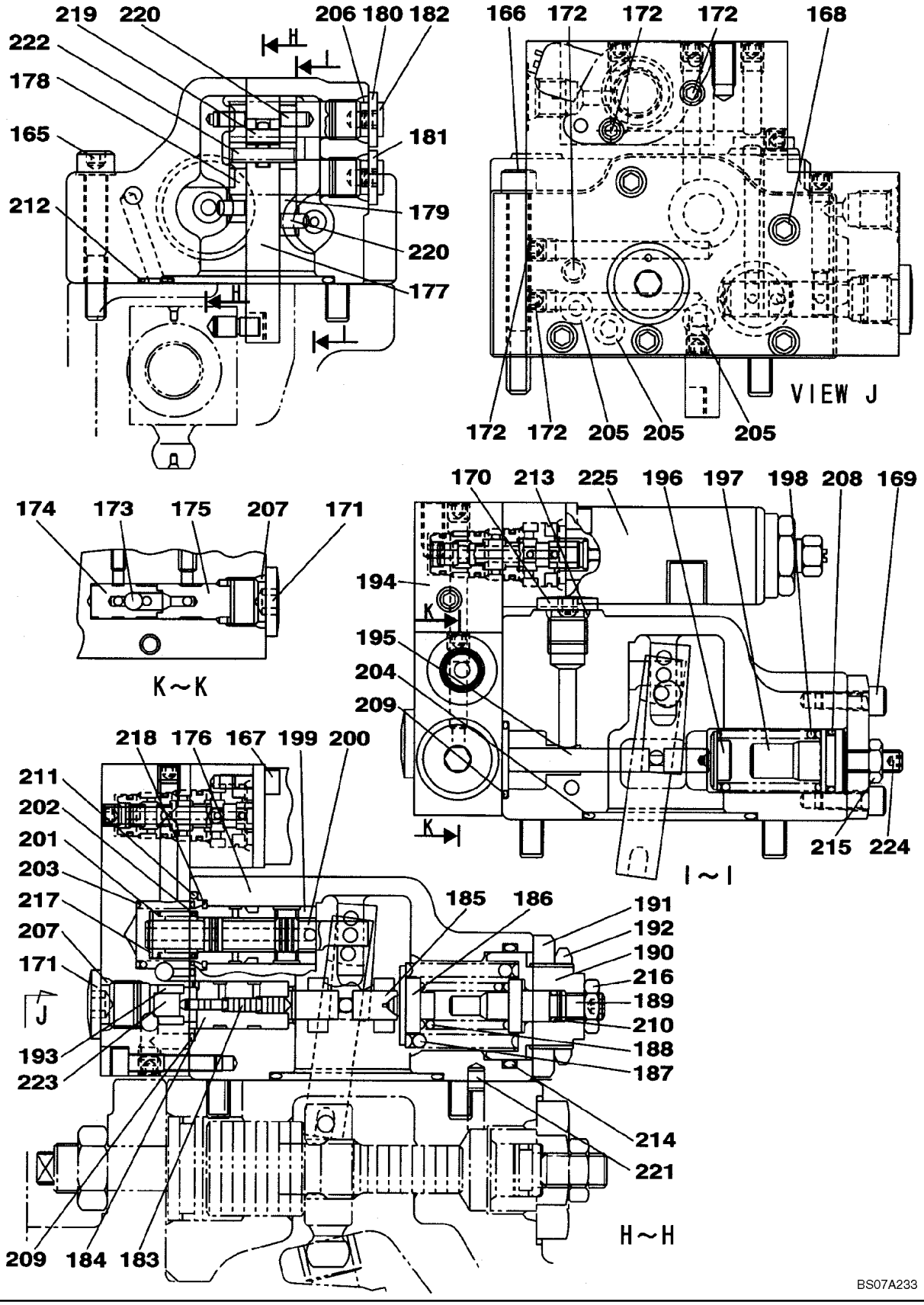

KLJ10610 CONJUNTO DA BOMBA, HIDRÁULICA - REGULADOR

REF	FN	PART NUMBER	YR/SN	QTY	DESCRIPTION
		KLJ10610		1	BOMBA HIDRÁULICA, Includes All Parts On Figure 08-92 - 08-97
		LJ015120		1	REGULADOR, Incl. 165 - 225
165		108R008Z050N		2	PARAFUSO
166		861-8070		2	PARAFUSO, Hex Soc Hd, M8 x 70, 12.9
167		LA010920		2	PARAFUSO
168		861-6030		5	PARAFUSO, Hex Soc Hd, M6 x 30, 12.9
169		861-6016		4	PARAFUSO, Hex Soc Hd, M6 x 16, 12.9
170		LK00015		1	BUJÃO
171		LK00008		2	BUJÃO
172		LK00003		15	BUJÃO
173		NSS		1	BOLETIM INFORMATIVO, Ball
174		NSS		1	BOLETIM INFORMATIVO, Seat
175		NSS		1	BOLETIM INFORMATIVO, Seat
176		NSS		1	BOLETIM INFORMATIVO, Case
177		NSS		1	BOLETIM INFORMATIVO, Lever
178		NSS		1	BOLETIM INFORMATIVO, Lever
179		NSS		1	BOLETIM INFORMATIVO, Lever
180		NSS		1	BOLETIM INFORMATIVO, Plug
181		NSS		1	BOLETIM INFORMATIVO, Plug
182		NSS		2	BOLETIM INFORMATIVO, Plug
183		NSS		1	BOLETIM INFORMATIVO, Piston
184		NSS		1	BOLETIM INFORMATIVO, Case
185		NSS		1	BOLETIM INFORMATIVO, Rod
186		NSS		1	BOLETIM INFORMATIVO, Seat, Spring
187		NSS		1	BOLETIM INFORMATIVO, Spring
188		NSS		1	BOLETIM INFORMATIVO, Spring
189		NSS		1	BOLETIM INFORMATIVO, Seat, Spring
190		NSS		1	BOLETIM INFORMATIVO, Screw
191		NSS		1	BOLETIM INFORMATIVO, Cover
192		NSS		1	BOLETIM INFORMATIVO, Nut
193		NSS		1	BOLETIM INFORMATIVO, Sleeve
194		NSS		1	BOLETIM INFORMATIVO, Cover
195		NSS		1	BOLETIM INFORMATIVO, Piston
196		NSS		1	BOLETIM INFORMATIVO, Seat, Sping

KLJ10610 CONJUNTO DA BOMBA, HIDRÁULICA - REGULADOR

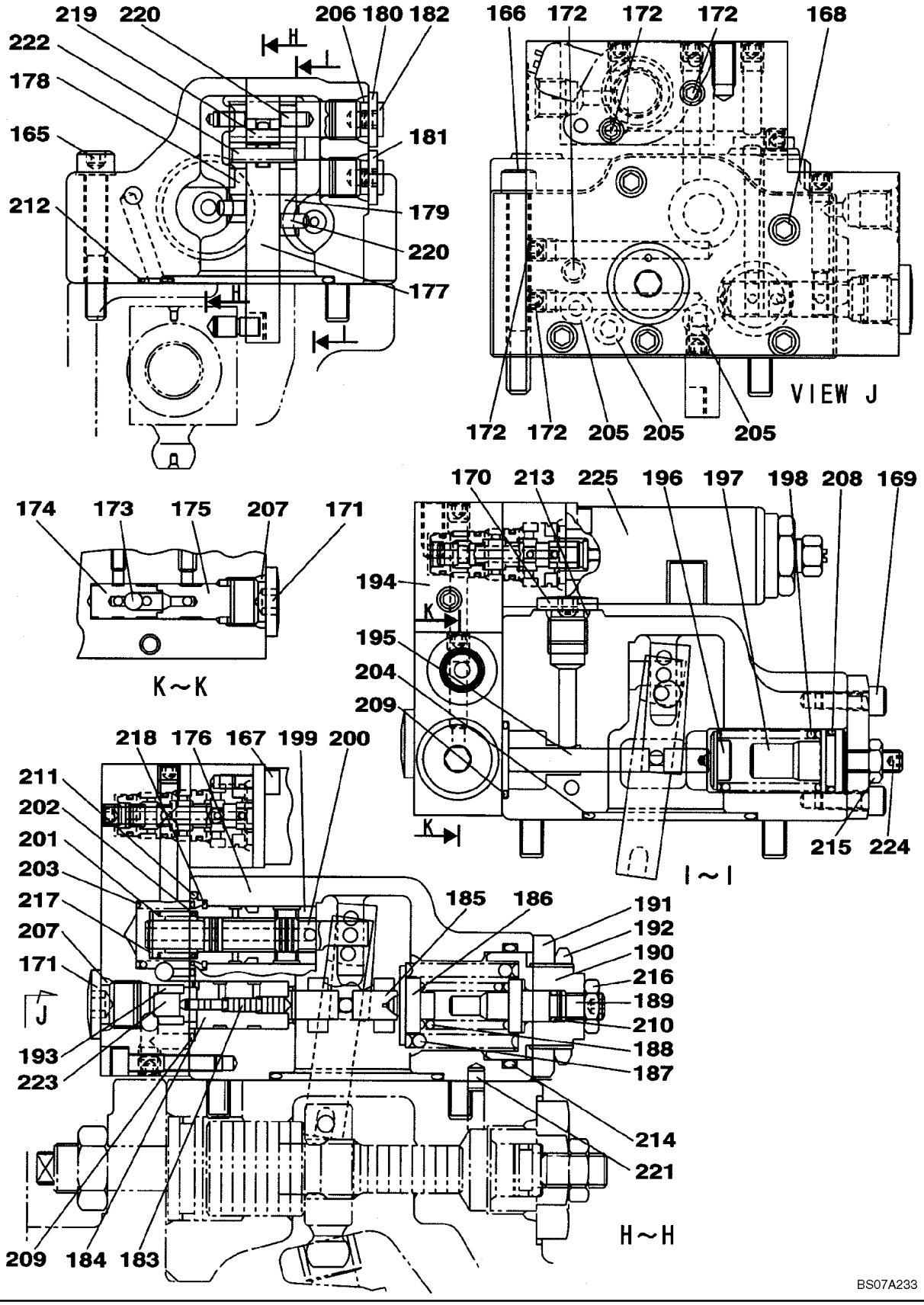

KLJ10610 CONJUNTO DA BOMBA, HIDRÁULICA - REGULADOR

REF	FN	PART NUMBER	YR/SN	QTY	DESCRIPTION
197		NSS		1	BOLETIM INFORMATIVO, Shaft
198		NSS		1	BOLETIM INFORMATIVO, Spring
199		NSS		1	BOLETIM INFORMATIVO, Sleeve
200		NSS		1	BOLETIM INFORMATIVO, Spool
201		NSS		1	BOLETIM INFORMATIVO, Seat, Spring
202		NSS		1	BOLETIM INFORMATIVO, Spring
203		NSS		1	BOLETIM INFORMATIVO, Spring
204		LE015270		1	ANEL "O"
205		LE013470		7	ANEL "O"
206		LE014730		2	ANEL "O"
207		LE013490		2	ANEL "O"
208		LE01177		1	ANEL "O"
209		LE00608		2	ANEL O
210		LE013540		1	ANEL "O"
211		LE013380		1	ANEL "O"
212		LE013540		2	ANEL "O"
213		LE013410		1	ANEL "O"
214		LE015280		1	ANEL "O"
215		LA00065		1	PORCA
216		LA010640		1	PORCA
217		800-1110		1	ANEL, M10, Ext
218		NSS		1	BOLETIM INFORMATIVO, Ring, Snap
219		NSS		1	BOLETIM INFORMATIVO, Pin
220		NSS		4	BOLETIM INFORMATIVO, Pin
221		NSS		1	BOLETIM INFORMATIVO, Pin
222		NSS		1	BOLETIM INFORMATIVO, Pin
223		NSS		1	BOLETIM INFORMATIVO, Pin
224		LA00759		1	PARAFUSO
225		NSS		1	BOLETIM INFORMATIVO, Valve, See Figure 08-89

GEAR PUMP ASSY

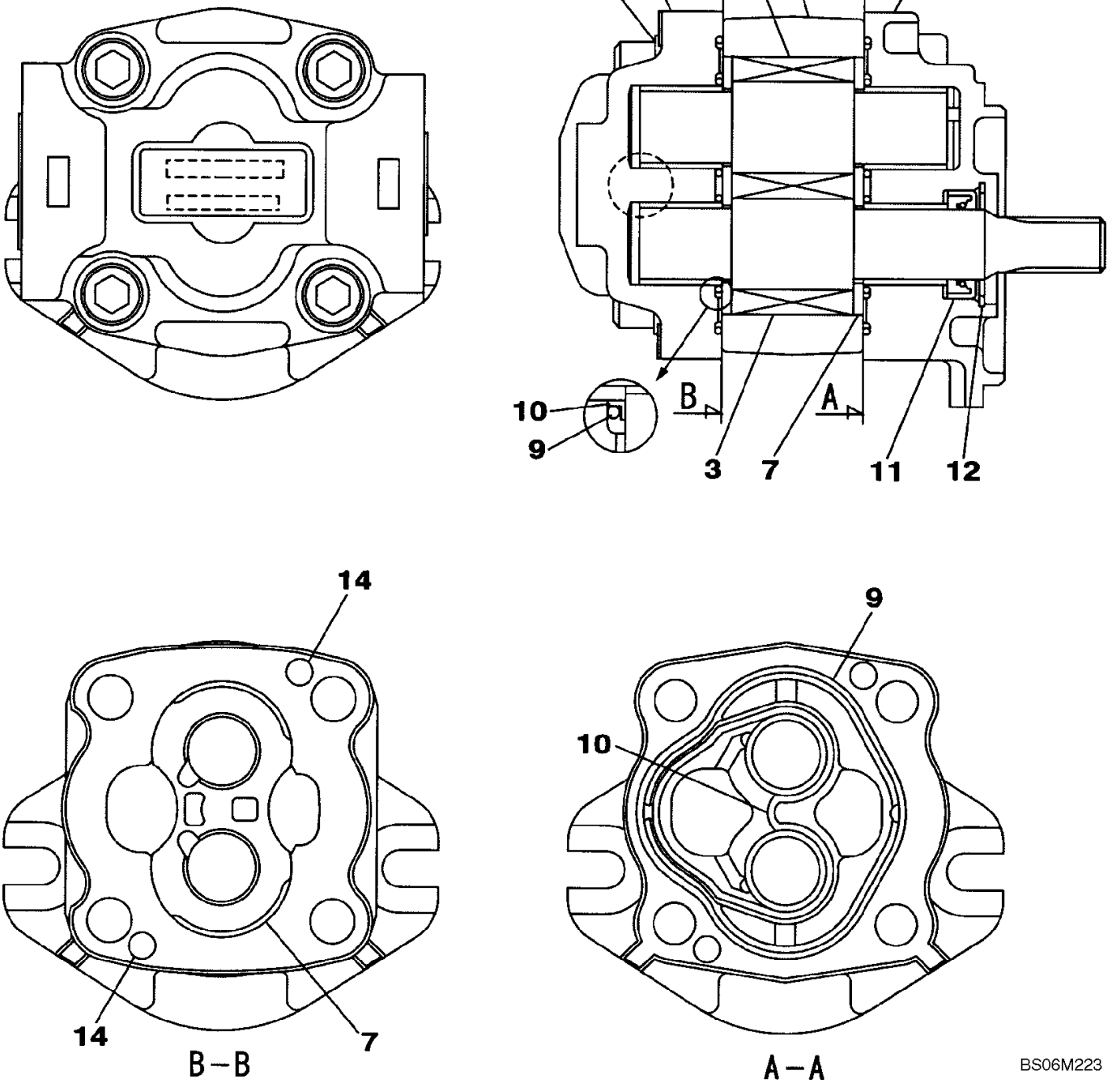

GEAR PUMP ASSY

REF	FN	PART NUMBER	YR/SN	QTY	DESCRIPTION
		KNJ10650		1	BOMBA HIDRÁULICA, Gear, Incl. 1 - 14
1		NSS		1	BOLETIM INFORMATIVO, Plate
2		LC002960		1	PAR DE ENGRENAGENS, Incl. 3, 4
3		NSS		1	BOLETIM INFORMATIVO, Gear
4		NSS		1	BOLETIM INFORMATIVO, Gear
5		LH004940		1	FLANGE
6		LW005070		1	TAMPA
7		LR015150		2	PLACA
8		LZ008000		1	KIT DE REPARO, Incl. 9 - 12
9		LAP0032		2	ANEL DE VEDACAO
10		LBP0073		2	VEDADOR ESPECIAL
11		LAP0033		1	ANEL DE VEDACAO
12		LMP0257		1	ANEL
13		LA011050		4	PARAFUSO
14		LA011060		4	PINO

KITS, FREE SWING

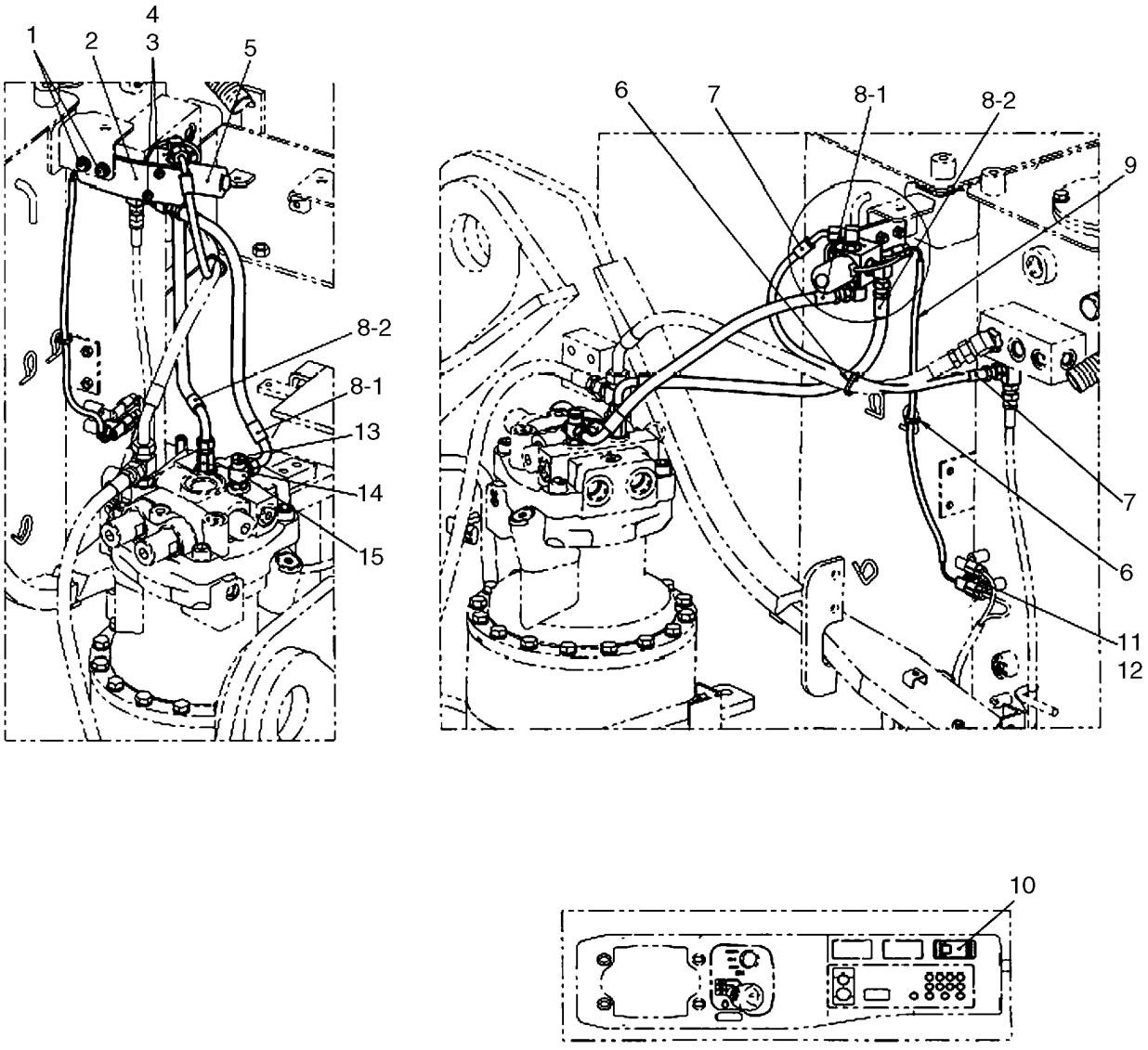

BS07N427

KITS, FREE SWING

REF	FN	PART NUMBER	YR/SN	QTY	DESCRIPTION
1		167182A1		2	PARAFUSO
2		KLJ11570		1	SUPORTE
3		627-6016		2	PARAFUSO, Hex, M6 x 16, 10.9
4		183-106VR		2	ARRUELA MOLA
5		159205A1		1	VALVULA
6		150496A1		2	ARGOLA DE FIXACAO
7		KHJ12100		1	MANGUEIRA CONJUNTO
		NSS		1	BOLETIM INFORMATIVO, HOSE ASSY. Incl. 8-1, 8-2
8-1		KHJ16960		1	MANGUEIRA CONJUNTO
8-2		KHJ16960		1	MANGUEIRA CONJUNTO
9		KRR10370		1	CHICOTE
10		KHR16140		1	INTERRUPTOR
11		158962A1		1	FIXADOR
12		167518A1		1	PARAFUSO
13		159002A1		1	BUJÃO
14		162554A1		1	CONEXAO
15		KHJ11640		1	ORIFICIO
16		150913A1		3	COTOVELO, 90º, 1/4" O-Ring x 1/4"
17		KHJ2773		1	TEE

SECTION INDEX
Chassi/Acessórios

09-01		ROLAMENTO DA MESA GIRATÓRIA
09-02		MESA GIRATÓRIA
09-03		MESA GIRATÓRIA - COBERTURAS DE ACESSO
09-04		CONTRAPESO - À PROVA DE SOM
09-05		ESTRUTURAS, COBERTURAS - ISOLAMENTO
09-06		PORTA DE ACESSO - ISOLAMENTO
09-07		CAPÔ, MOTOR - ISOLAMENTO
09-08		CAIXA DE ARMAZENAMENTO - ISOLAMENTO
09-09		CONTROLES - COMPARTIMENTO DO OPERADOR
09-10		CONTROLE DA VÁLVULA DE SERVIÇO - DIREITA
09-11		CONTROLE DA VÁLVULA DE SERVIÇO - ESQUERDA
09-12		TAPETE DO PISO - COMPARTIMENTO DO OPERADOR
09-13		TAPETE DO PISO - COMPARTIMENTO DO OPERADOR - MODELOS COM HIDRÁULICA AUXILIAR ATIVADA PEDAL
09-14		CARRINHO TRASEIRO
09-15		SEAT MECHANICAL
09-15A		SEAT AND MOUNTING
09-15B		OPERATORS COMPARTMENT - SEAT AND CONTROL ARM MOUNTING
09-16		OPERATORS COMPARTMENT - BOX - GUIDE, SLIDE
09-17		OPERATORS COMPARTMENT - HAND CONTROL ARM, LEFT
09-18		OPERATORS COMPARTMENT - HAND CONTROL ARM, RIGHT
09-19		CORRENTE DO CÃO
09-20		AIRE ACONDICIONADO - DUTOS
09-21		SISTEMA DE AIRE ACONDICIONADO
09-22		AIRE ACONDICIONADO - EVAPORADOR
09-23		AIRE ACONDICIONADO - CONDENSADOR E DESUMIDIFICADOR DO RECEPTOR
09-24		CABINA - AIRE ACONDICIONADO
09-25		AIRE ACONDICIONADO - CONDENSADOR E DESUMIDIFICADOR DO RECEPTOR
09-26		CABINA - LADO VIDRO E UNIDADE DE CONTROLE ELETRÔNICO
09-27		CABINE - ABAIXE O VIDRO E HANDRAILS DIANTEIROS E TRASEIROS
09-28		PORTA DA CABINA
09-29		CABINA - TETO, JANELA DE ABRIR
09-30		CABINA - JANELAS, DIANTEIRAS
09-31		CABINA - RETROVISOR, VISTA TRASEIRA
09-32		PROTEÇÕES, ESCOVA -
09-33		PROTEÇÕES, ESCOVA - GRADE DIANTEIRA DA CABINA
09-33A		VANDAL GUARD - WINDOW, FRONT
09-34		DEFLETOR DE CHUVA
09-35		PLUMA
09-36		CIRCUITO DE LUBRIFICAÇÃO - PLUMA
09-37		CILINDRO DA LANÇA - SUPORTE
09-38	00	GRAMPO - LANÇA
09-38	01	GRAMPO - LANÇA
09-38	02	GRAMPO - LANÇA
09-38	03	GRAMPO - LANÇA
09-39		CILINDRO DO BRAÇO - SUPORTE
09-39	00	GRAMPO - BRAÇO
09-39	01	GRAMPO - BRAÇO
09-40		GATO DE CUCHARA - SUPORTE
09-42		BUCKETS, ESCO - GENERAL PURPOSE BUCKETS
09-43		BUCKETS, ESCO - HEAVY DUTY BUCKETS

SECTION INDEX
Chassi/Acessórios

09-44		BUCKETS, ESCO - DITCH CLEANING BUCKETS
09-45		ADESIVOS - COMPARTIMENTO DO OPERADOR
09-46		CALCOMANIAS
09-47		CALCOMANIAS
09-48		CALCOMANIAS - ATENÇÃO
09-49		CALCOMANIAS
09-50		CALCOMANIAS
09-51		CALCOMANIAS
09-52		CALCOMANIAS
09-53	00	ARM (3.05M) - OPTIONAL
09-54	00	ARM (2.23M) - OPTIONAL
09-55	00	ARM (2.62M) - OPTIONAL
09-56		BUCKET LINKAGE, MODELS WITH AUXILIARY HYDRAULICS
09-57		BUCKET LINKAGE, MODELS WITHOUT AUXILIARY HYDRAULICS

ROLAMENTO DA MESA GIRATÓRIA

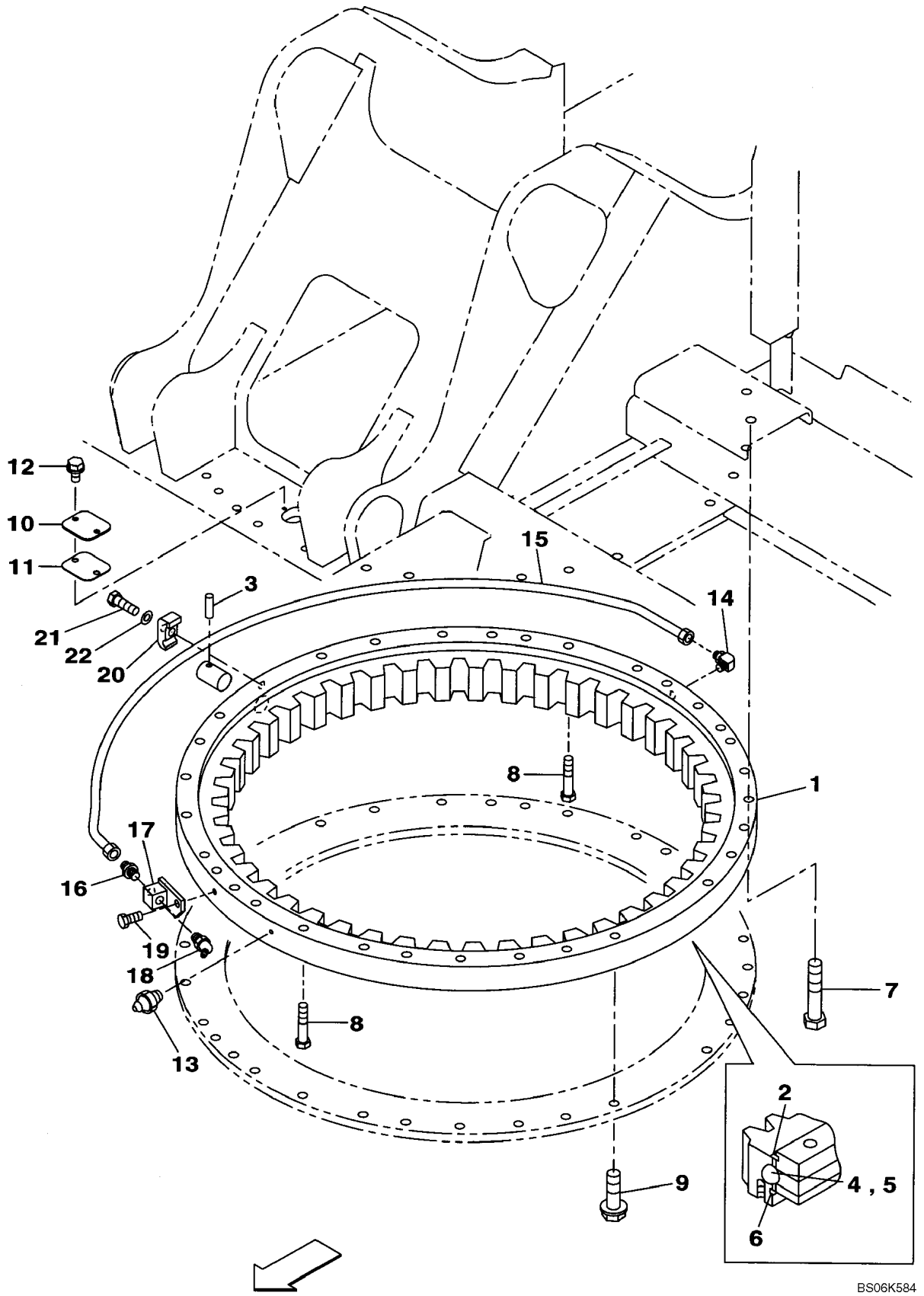

ROLAMENTO DA MESA GIRATÓRIA

REF	FN	PART NUMBER	YR/SN	QTY	DESCRIPTION
1		KRB11710		1	COROA DENTADA, Incl. 2 - 6
2		KRB1273		1	ANEL DE VEDAÇÃO
3		160433A1		1	GRÃO
4		150980A1		120	ROLAMENTO
5		163865A1		120	ESPAÇADOR
6		KRB1274		1	ANEL DE VEDAÇÃO
7		827-20100		29	PARAFUSO, Hex, M20 x 100, 10.9
8		165900A1		2	PARAFUSO
9		166353A1		36	PARAFUSO
10		KAB0604		1	TAMPA
11		KAB0623		1	EMBALAGEM
12		166351A1		2	PARAFUSO
13		153630A1		1	GRAXEIRA
14		152627A1		1	COTOVELO
15		KRB10720		1	TUBULAÇÃO HIDRAULICO
16		152599A1		1	CONECTOR
17		KRB10730		1	VALVULA COLETORA
18		153631A1		1	GRAXEIRA, 1/8"-27 NPT
19		166345A1		1	PARAFUSO
20		168377A1		1	BRACADEIRA
21		627-8030		1	PARAFUSO, Hex, M8 x 30, 10.9
22		153081A1		1	ARRUELA PLANA

MESA GIRATÓRIA

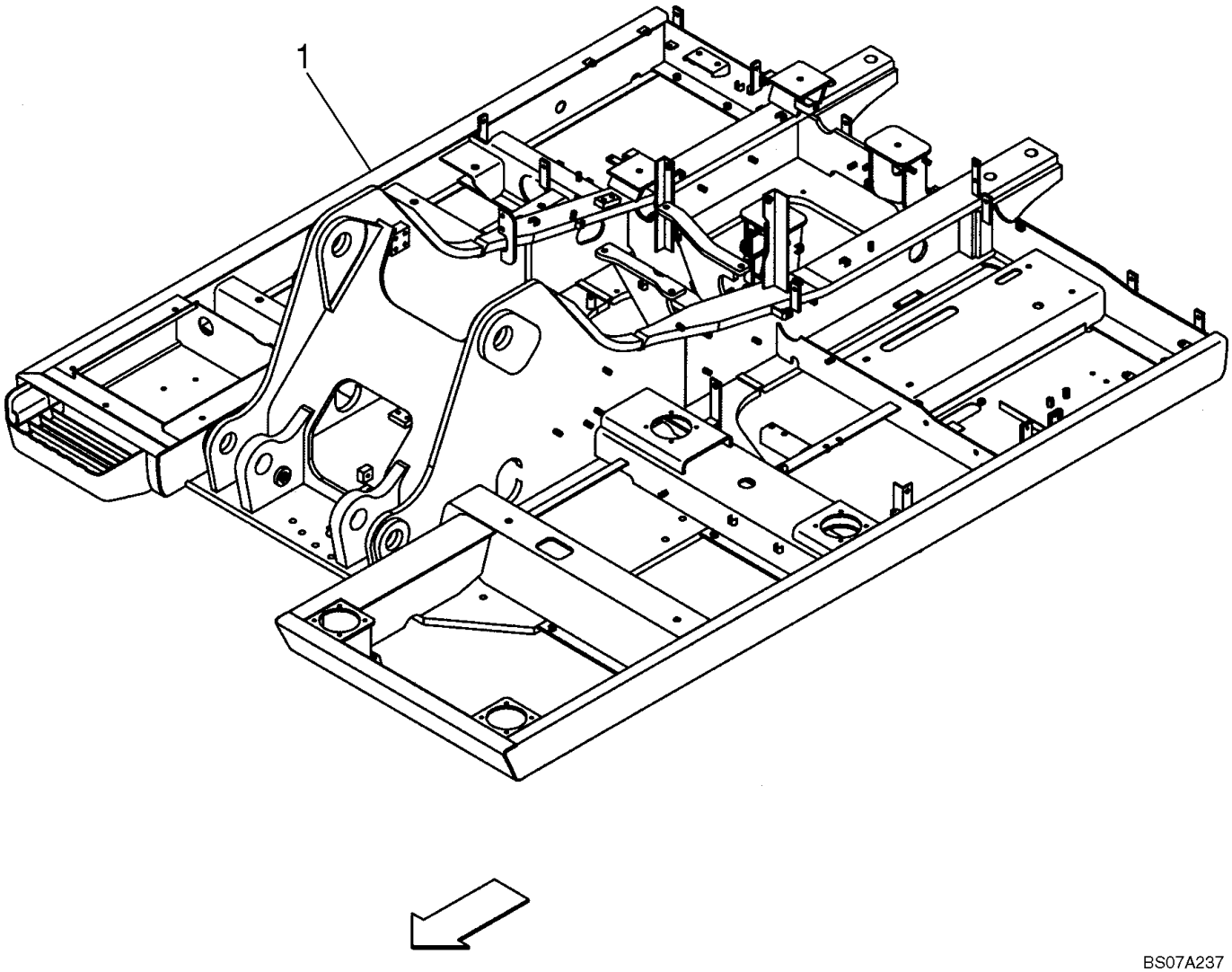

BS07A237

MESA GIRATÓRIA

REF	FN	PART NUMBER	YR/SN	QTY	DESCRIPTION
1		KLB10470		1	ESTRUTURA, Revolving

MESA GIRATÓRIA - COBERTURAS DE ACESSO

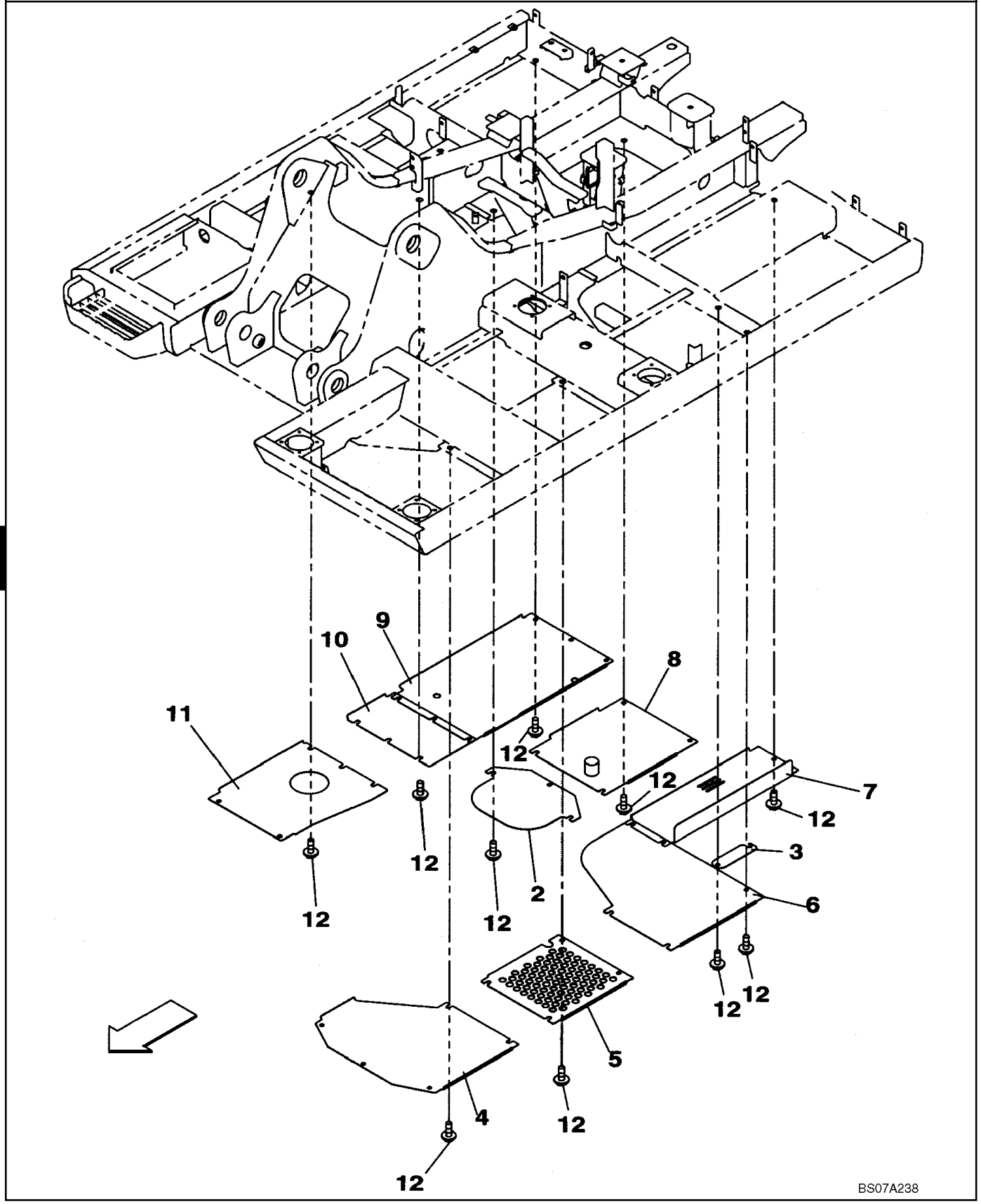

MESA GIRATÓRIA - COBERTURAS DE ACESSO

REF	FN	PART NUMBER	YR/SN	QTY	DESCRIPTION
2		KLB10250		1	TAMPA
3		KLB10310		1	TAMPA
4		KLB10610		1	TAMPA
5		KLB10620		1	TAMPA
6		KLB10630		1	TAMPA
7		KLB10640		1	TAMPA
8		KLB10650		1	TAMPA
9		KLB10660		1	TAMPA
10		KLB10670		1	TAMPA
11		KLB10680		1	TAMPA
12		158919A1		39	PARAFUSO

09-04		p1	01/07

CONTRAPESO - À PROVA DE SOM

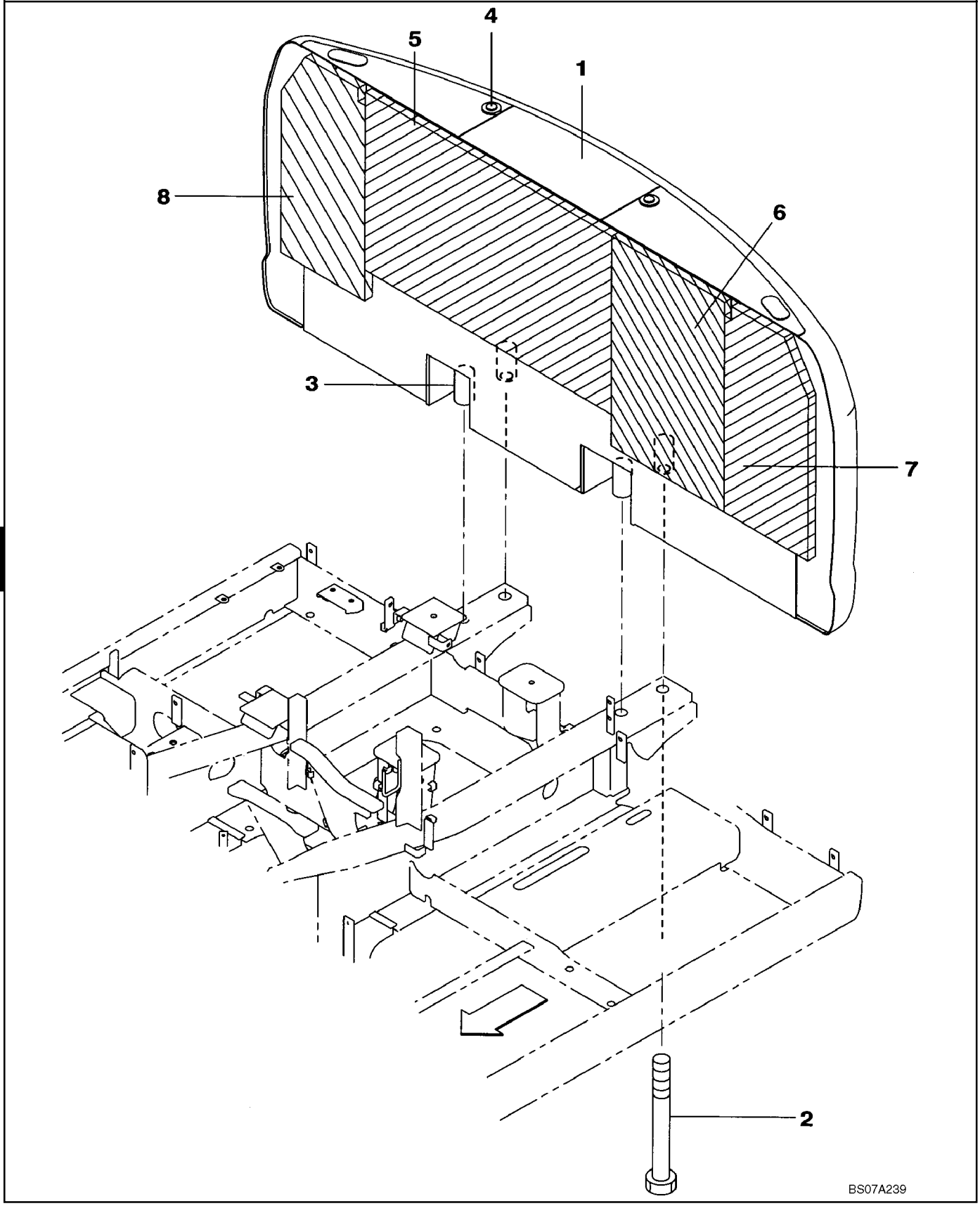

10

CONTRAPESO - À PROVA DE SOM

REF	FN	PART NUMBER	YR/SN	QTY	DESCRIPTION
1		KLB10450		1	CONTRAPESOS
2		KHB10390		4	PARAFUSO
3		KRB10590		4	ESPAÇADOR
4		150129A1		2	BUJÃO
5		KLB10540		1	ANTI FRICCIONADOR
6		KLB10550		1	ANTI FRICCIONADOR
7		KLB10560		1	ANTI FRICCIONADOR
8		KLB10570		1	ANTI FRICCIONADOR

ESTRUTURAS, COBERTURAS - ISOLAMENTO

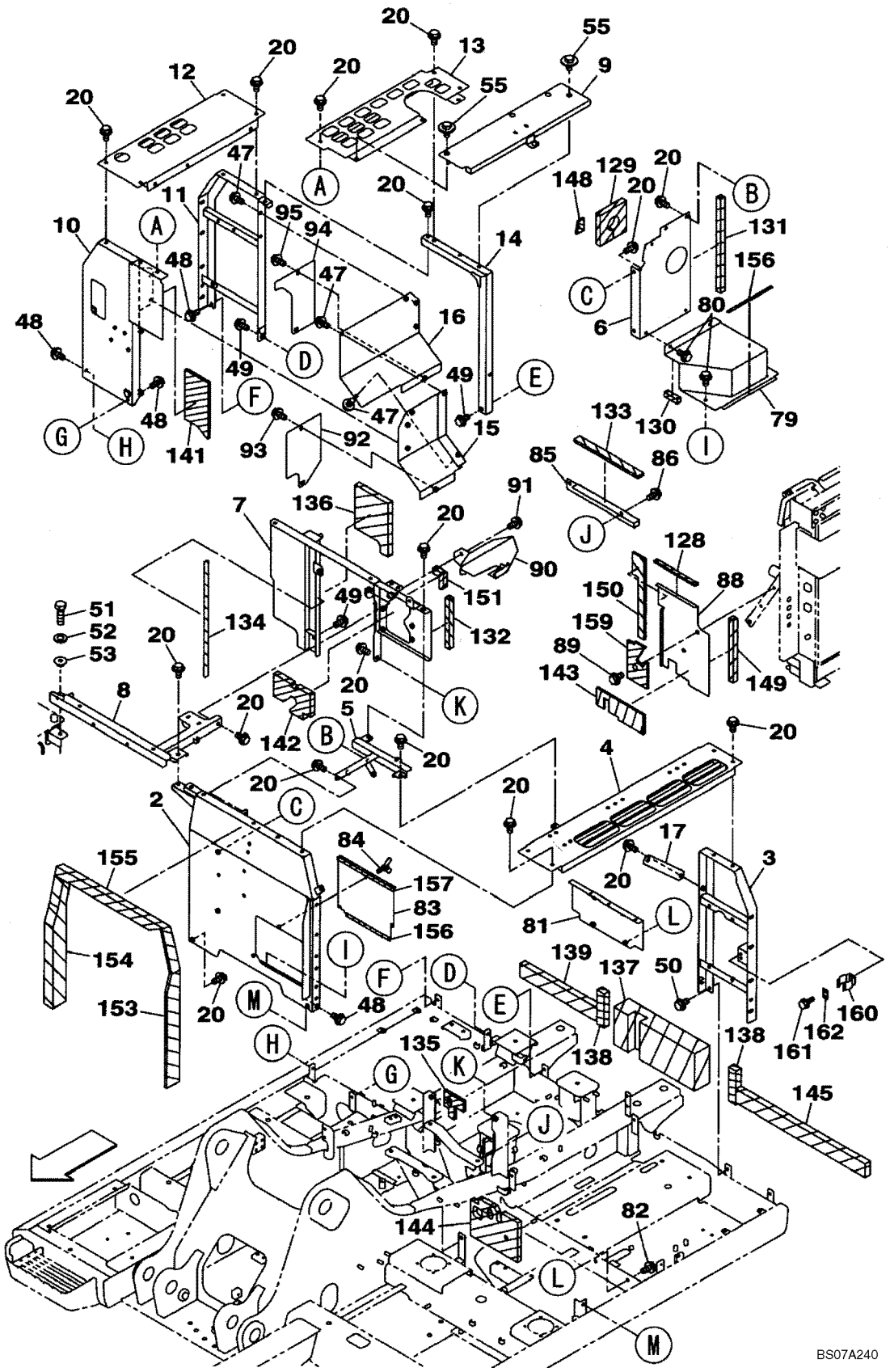

ESTRUTURAS, COBERTURAS - ISOLAMENTO

REF	FN	PART NUMBER	YR/SN	QTY	DESCRIPTION
					UPPER STRUCTURE
2		KLN10910		1	SUPORTE CONJUNTO
3		KLN10920		1	SUPORTE CONJUNTO
4		KLN10930		1	PENEIRA
5		KLN10940		1	SUPORTE CONJUNTO
6		KLN10950		1	TAMPA
7		KLN10980		1	SUPORTE CONJUNTO
8		KLN10990		1	SUPORTE CONJUNTO
9		KLN11000		1	SUPORTE CONJUNTO
10		KLN11030		1	SUPORTE CONJUNTO
11		KLN11040		1	SUPORTE CONJUNTO
12		KLN11050		1	SUPORTE CONJUNTO
13		KLN11060		1	SUPORTE CONJUNTO
14		KLN11070		1	SUPORTE CONJUNTO
15		KLN11120		1	TAMPA
16		KLN11130		1	TAMPA
17		KLN11230		1	SUPORTE
20		152718A1		32	PARAFUSO
47		152718A1		5	PARAFUSO
48		152718A1		4	PARAFUSO
49		152718A1		3	PARAFUSO
50		152718A1		2	PARAFUSO
51		627-12040		1	PARAFUSO, Hex, M12 x 40, 10.9, Full Thd, Replaces 166352A1
52		KHN18020		1	ESPAÇADOR, Replaces 162409A1
53		KHN18030		1	ARRUELA PLANA, Replaces KHN2061
55		KHN12020		4	PARAFUSO
79		KLN10960		1	TAMPA
80		166350A1		4	PARAFUSO
81		KLN10970		1	SUPORTE
82		152718A1		2	PARAFUSO
83		KHN12760		1	TAMPA
84		KHN17030		3	PARAFUSO ESPECIAL
85		KLN10290		1	TAMPA
86		152718A1		2	PARAFUSO

ESTRUTURAS, COBERTURAS - ISOLAMENTO

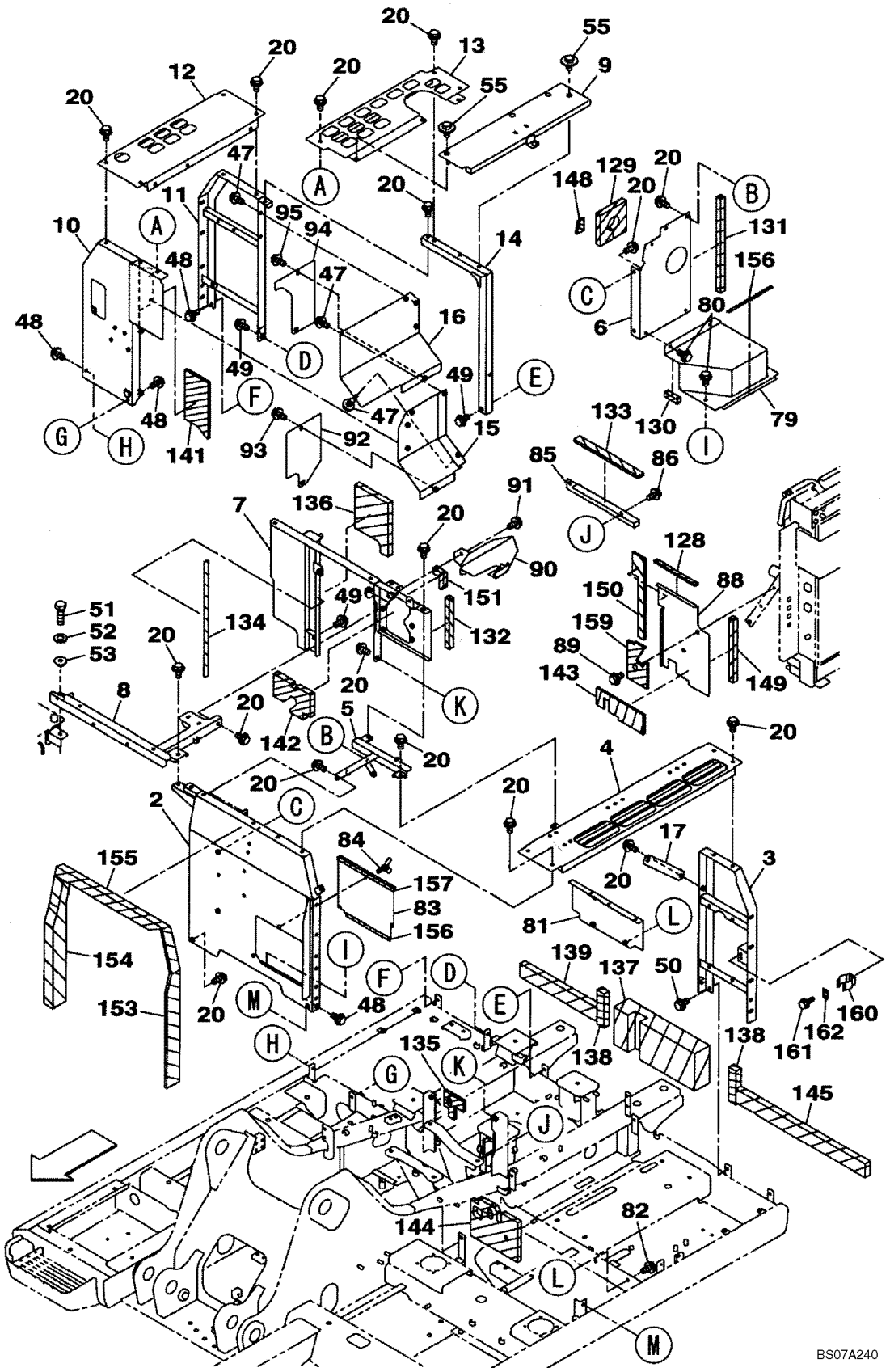

ESTRUTURAS, COBERTURAS - ISOLAMENTO

REF	FN	PART NUMBER	YR/SN	QTY	DESCRIPTION
88		KLN11020		1	TAMPA
89		152718A1		2	PARAFUSO
90		KNN10870		1	TAMPA
91		152718A1		2	PARAFUSO
92		KLN11140		1	TAMPA
93		152718A1		2	PARAFUSO
94		KLN11150		1	TAMPA
95		152718A1		2	PARAFUSO
128		KMN2063		1	JUNTA
129		KLN10410		1	ANTI FRICCIONADOR
130		KLN10420		1	COBRE-JUNTA
131		KLN10430		1	COBRE-JUNTA
132		KLN10460		1	COBRE-JUNTA
133		KLN10520		1	COBRE-JUNTA
134		KLN10530		1	COBRE-JUNTA
135		KLN10540		1	COBRE-JUNTA
136		KLN10550		1	ANTI FRICCIONADOR
137		KLN10560		1	ANTI FRICCIONADOR
138		KLN10580		2	COBRE-JUNTA
139		KLN10590		1	ANTI FRICCIONADOR
141		KLN11170		1	ANTI FRICCIONADOR
142		KLN11180		1	ANTI FRICCIONADOR
143		KLN11190		1	COBRE-JUNTA
144		KLN11200		1	ANTI FRICCIONADOR
145		KLN11210		2	ANTI FRICCIONADOR
148		KLN11270		1	COBRE-JUNTA
149		KNN10720		1	COBRE-JUNTA
150		KNN10730		1	COBRE-JUNTA
151		KNN10880		1	COBRE-JUNTA
153		KLN11280		1	ANTI FRICCIONADOR, Replaces KRN12770
154		KRN14200		1	COBRE-JUNTA
155		KRN14210		1	COBRE-JUNTA
156		KRN14530		2	COBRE-JUNTA
157		KRN14540		1	COBRE-JUNTA
159		KLN11290		1	ANTI FRICCIONADOR, Seal, Cushion

ESTRUTURAS, COBERTURAS - ISOLAMENTO

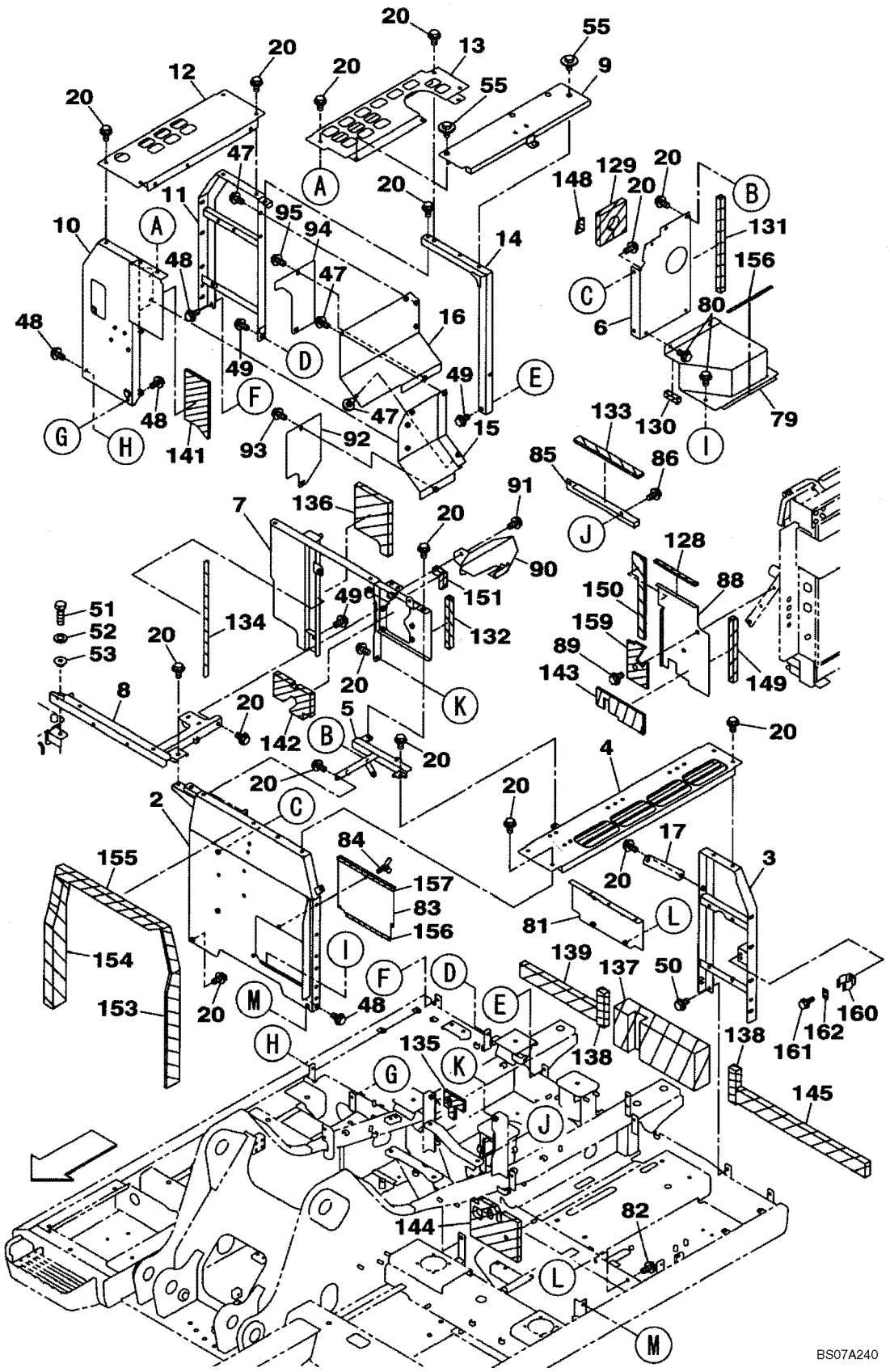

ESTRUTURAS, COBERTURAS - ISOLAMENTO

REF	FN	PART NUMBER	YR/SN	QTY	DESCRIPTION
160		152772A1		1	SUPORTE, Grease Gun
161		166350A1		2	PARAFUSO
162		KHN3548		1	PLACA

PORTA DE ACESSO - ISOLAMENTO

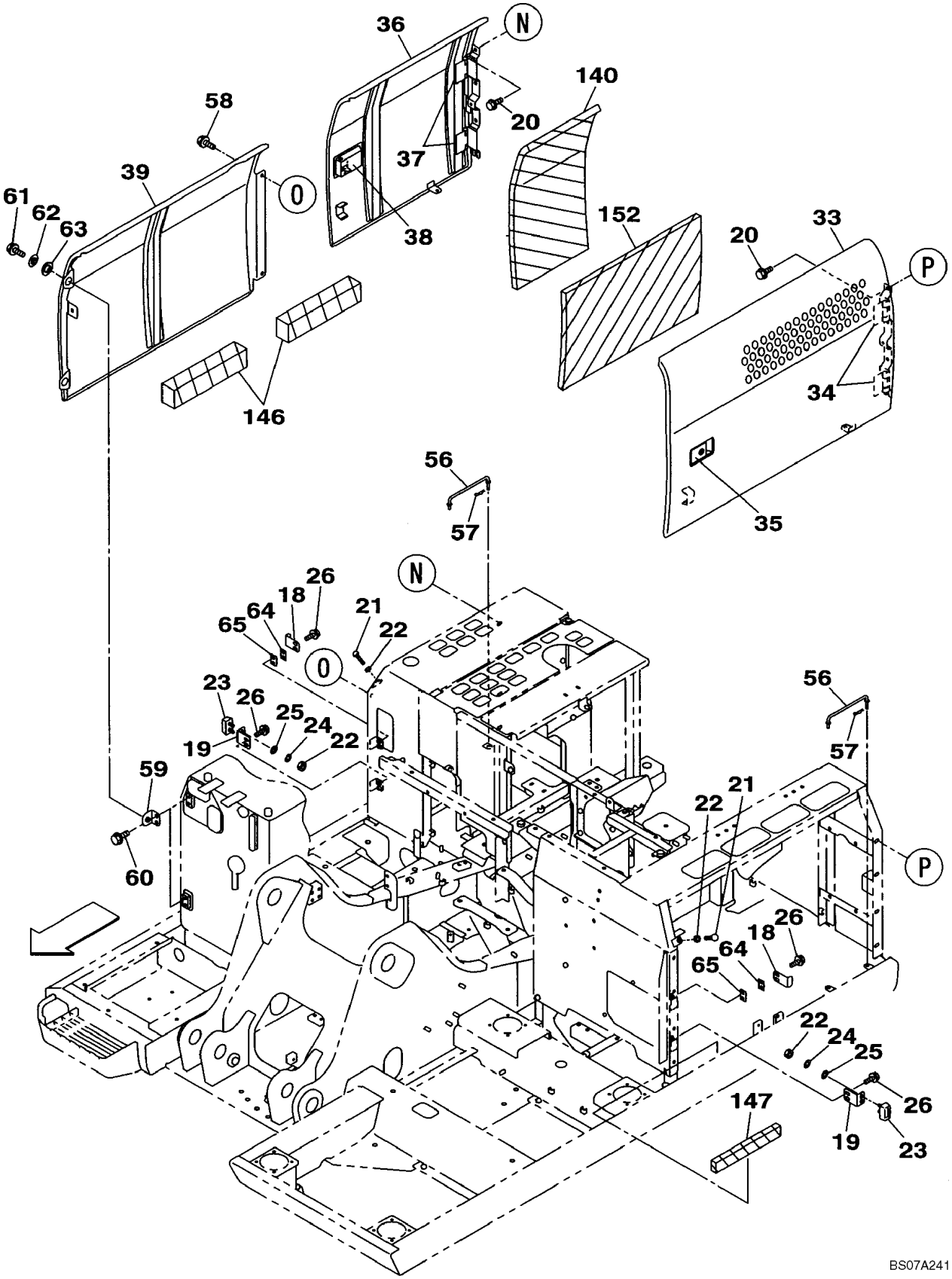

PORTA DE ACESSO - ISOLAMENTO

REF	FN	PART NUMBER	YR/SN	QTY	DESCRIPTION
18		KHN11940		2	SUPORTE
19		KHN12660		2	SUPORTE
20		152718A1		4	PARAFUSO
21		159091A1		2	BATENTE
22		829-1410		6	PORCA, M10, Cl 10
23		KRN2098		2	BATENTE
24		895-11010		4	ARRUELA PLANA, M10 x 20 x 2
25		892-11010		4	ARRUELA-TRAVA, M10
26		166347A1		8	PARAFUSO
33		KLN10880Y2		1	PORTA VISITA, Side Door; Incl. 34, 35, Replaces KLN10880
34		KHN12560		2	DOBRADIÇA
35		150938A1		1	TRAVA
36		KLN10890Y2		1	PORTA VISITA, Side Door, Incl. 37, 38, Replaces KLN10890
37		KHN12560		2	DOBRADIÇA
38		150938A1		1	TRAVA
39		KLN10900Y2		1	TAMPA
56		KRN10420		2	HASTE
57		153181A1		2	GRAMPO
58		152718A1		2	PARAFUSO
59		KHN12670		2	SUPORTE
60		152718A1		4	PARAFUSO
61		166352A1		2	PARAFUSO
62		162409A1		2	ARRUELA PLANA
63		KHN2061		2	ARRUELA PLANA
64		152719A1		2	CALCO DE AFINACAO
65		158749A1		2	CALCO DE AFINACAO
140		KLN11160		1	ANTI FRICCIONADOR
146		KLN11220		2	ANTI FRICCIONADOR
147		KLN11240		1	COBRE-JUNTA
152		KRN12710		1	ANTI FRICCIONADOR

CAPÔ, MOTOR - ISOLAMENTO

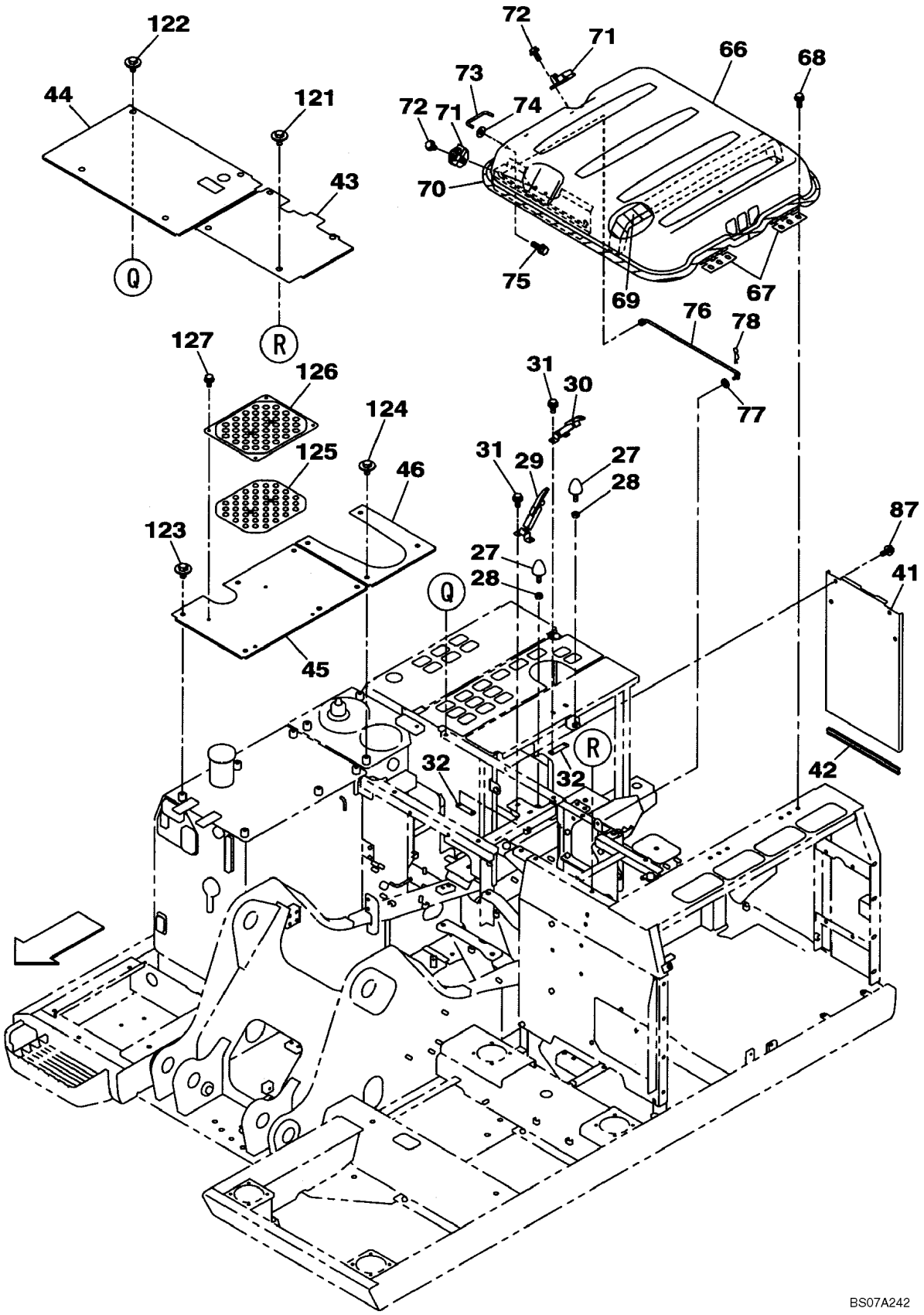

CAPÔ, MOTOR - ISOLAMENTO

REF	FN	PART NUMBER	YR/SN	QTY	DESCRIPTION
27		151108A1		2	BATENTE
28		KBH0446		2	PORCA
29		152423A1		1	BRACADEIRA
30		150709A1		1	BRACADEIRA
31		166350A1		4	PARAFUSO
32		KHN16780		4	PLACA
41		KLN11010		1	TAMPA
42		HKH0048		1	ANEL DE VEDAÇÃO
43		KLN11080G1		1	TAMPA
44		KLN11090G1		1	TAMPA
45		KLN11100G1		1	TAMPA
46		KLN11110G1		1	TAMPA
66		KNN10960G1		1	CAPO DE MOTOR, Engine Hood; Incl. 67, Replaces KNN10960
67		KHN2143		2	DOBRADICA
68		152718A1		6	PARAFUSO
69		KNN11030		1	COBRE-JUNTA
70		KHN16790		1	JUNTA
71		150785A1		2	LINGUETA
72		166350A1		4	PARAFUSO
73		KHN2537		1	MANILHA
74		KHN2538		2	ARRUELA PLANA
75		159906A1		2	PARAFUSO
76		KNN11020		1	APOIO
77		150409A1		1	ARRUELA PLANA
87		152718A1		4	PARAFUSO
121		KHN12020		4	PARAFUSO
122		KHN12020		4	PARAFUSO
123		KHN12020		6	PARAFUSO
124		KHN12020		4	PARAFUSO
125		KHN10940		1	BUJÃO DE BORRACHA
126		KHN13510		1	TAMPA
126		KHN13540		4	PARAFUSO

09-08		p1	01/07

CAIXA DE ARMAZENAMENTO - ISOLAMENTO

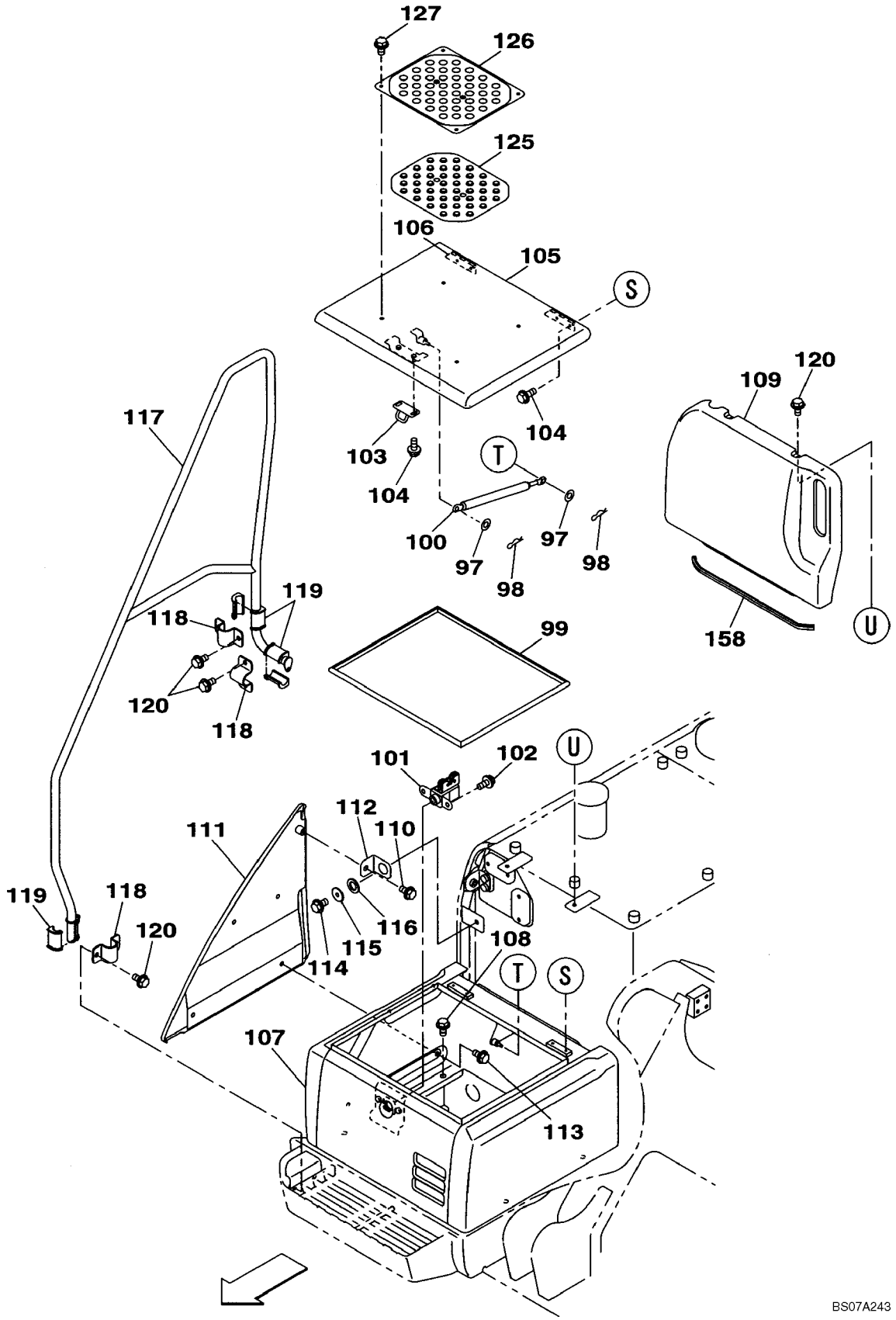

10

CAIXA DE ARMAZENAMENTO - ISOLAMENTO

REF	FN	PART NUMBER	YR/SN	QTY	DESCRIPTION
97		895-11008		2	ARRUELA PLANA, M8 x 16 x 1.6
98		153077A1		2	GRAMPO
99		KTN1391		1	JUNTAS
100		KHN13720		1	AMORTECEDOR DE VIBAÇÃO
101		KHN12730		1	FECHADURA
102		166351A1		2	PARAFUSO
103		KHN12740		1	SUPORTE
104		166350A1		2	PARAFUSO
105		KNN10380G1		1	TAMPA, Incl. 106
106		KHN3390		2	DOBRADIÇA
107		KNN10370G1		1	TAMPA
108		152718A1		5	PARAFUSO
109		KNN10390		1	TAMPA
110		152718A1		2	PARAFUSO
111		KHN12710		1	TAMPA
112		KHN12720		1	SUPORTE
113		152718A1		5	PARAFUSO
114		166352A1		1	PARAFUSO
115		162409A1		1	ARRUELA PLANA
116		KHN2061		1	ARRUELA PLANA
117		KHN12680		1	APOIO
118		KHN12690		3	BRACADEIRA
119		KHN12700		6	BRACADEIRA
120		152718A1		6	PARAFUSO
125		KHN10940		1	BUJÃO DE BORRACHA
126		KHN13510B1		1	TAMPA
127		KHN13540		4	PARAFUSO
158		KHR14920		1	COBRE-JUNTA

CONTROLES - COMPARTIMENTO DO OPERADOR

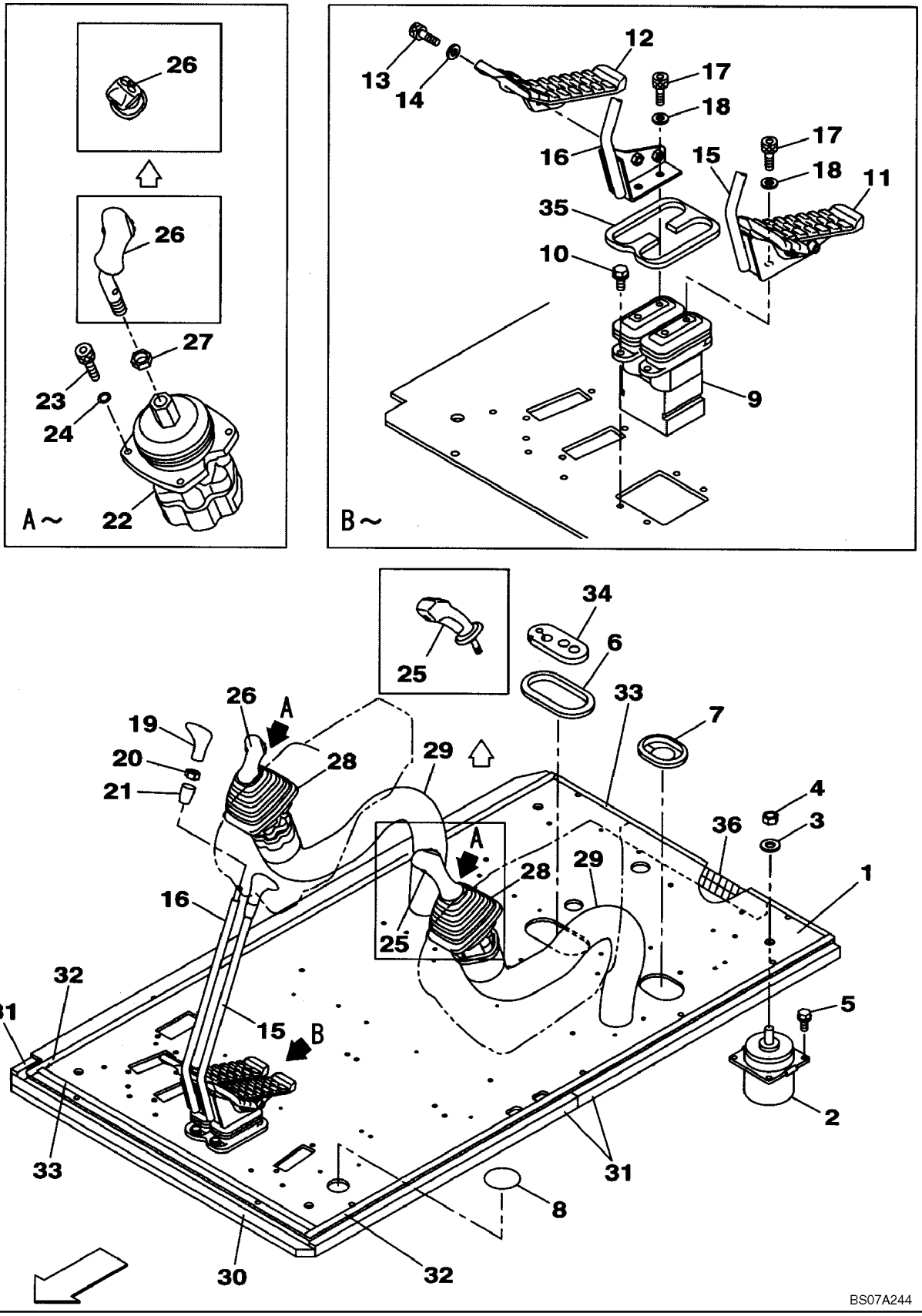

CONTROLES - COMPARTIMENTO DO OPERADOR

REF	FN	PART NUMBER	YR/SN	QTY	DESCRIPTION
1		KHJ14080		1	PISO
2		KHJ12900		4	"SILENTBLOC"
3		150714A1		4	ARRUELA PLANA
4		829-1416		4	PORCA, M16, Cl 10
5		KHN3029		16	PARAFUSO
6		KHJ1375		1	CASQUILHO ISOLADOR
7		162625A1		1	CASQUILHO ISOLADOR
8		KHJ14570		1	CASQUILHO ISOLADOR
9		KRJ5803		1	BLOCO DE COMANDO, See Figure 08-72
10		166052A1		4	PARAFUSO
11		KHJ13840		1	PEDAL, Left Hand
12		KHJ13830		1	PEDAL, Right Hand
13		KHJ1820		4	PARAFUSO
14		150604A1		4	ARRUELA PLANA
15		KHJ14430		1	ALAVANCA DE CONTROLE, Left Hand
16		KHJ14440		1	ALAVANCA DE CONTROLE, Right Hand
17		165404A1		4	PARAFUSO
18		150604A1		4	ARRUELA PLANA
19		KHJ2896		2	MANILHA, Granite Black
20		150373A1		2	PORCA
21		KHJ2897		2	ESPAÇADOR, Granite Black
22		KHJ13290		2	BLOCO DE COMANDO, See Figure 08-82
23		108R006Y020R		8	PARAFUSO
24		892-11006		8	ARRUELA-TRAVA, M6
25		KHJ16150		1	MACANETA
26		KHJ16140		1	MACANETA
27		151154A1		2	PORCA
28		KHN16760		2	FOLE
29		KHJ14470		2	PROTETOR DE MANGUEIR
30		KHJ10640		1	COBRE-JUNTA
31		KHJ12660		3	COBRE-JUNTA
32		KHJ13580		2	COBRE-JUNTA
33		KHJ13590		2	COBRE-JUNTA
34		KHJ13560		1	COBRE-JUNTA
35		KHJ13910		1	COBRE-JUNTA

CONTROLES - COMPARTIMENTO DO OPERADOR

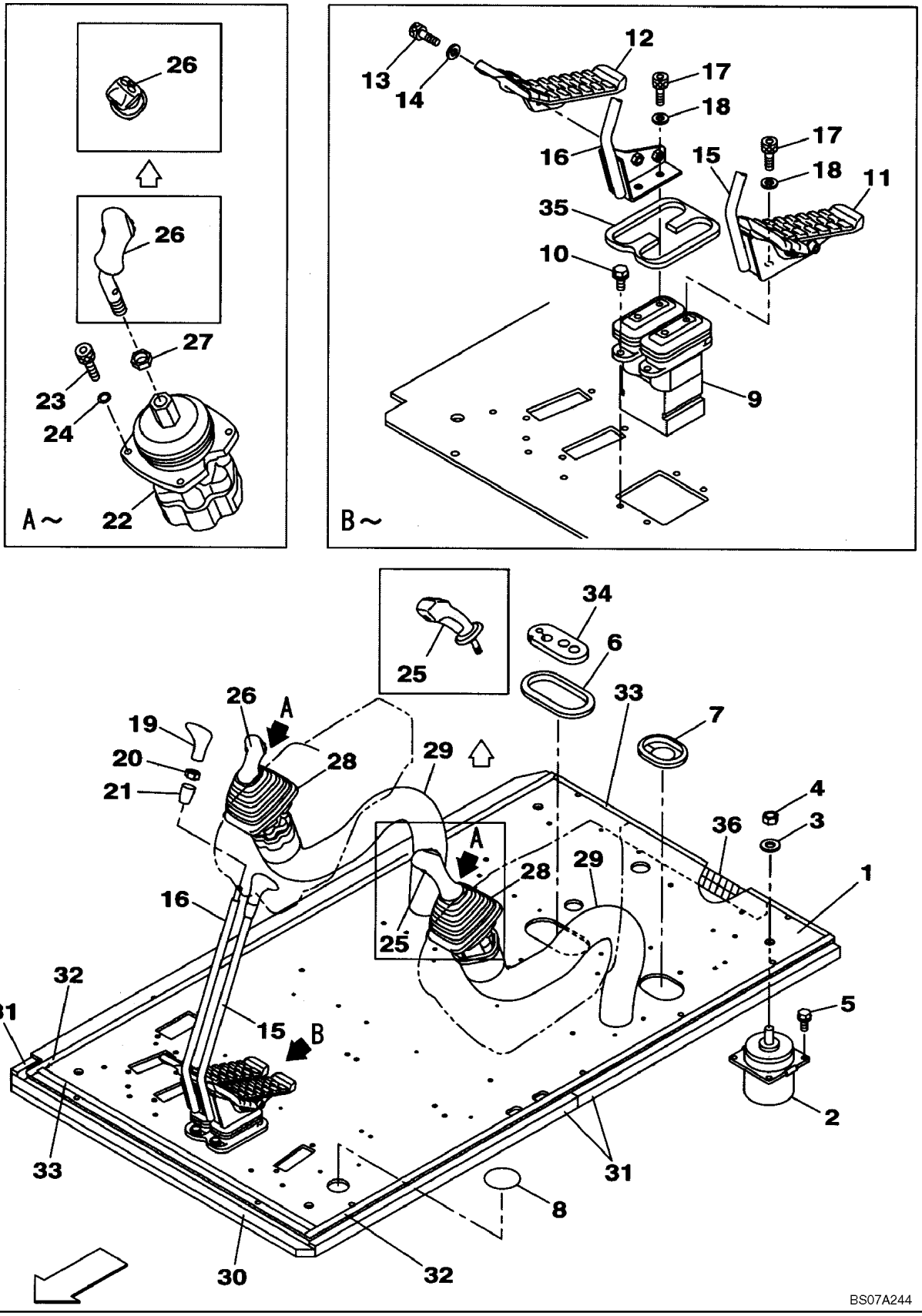

CONTROLES - COMPARTIMENTO DO OPERADOR

REF	FN	PART NUMBER	YR/SN	QTY	DESCRIPTION
36		KLN0257		1	JUNTA

CONTROLE DA VÁLVULA DE SERVIÇO - DIREITA

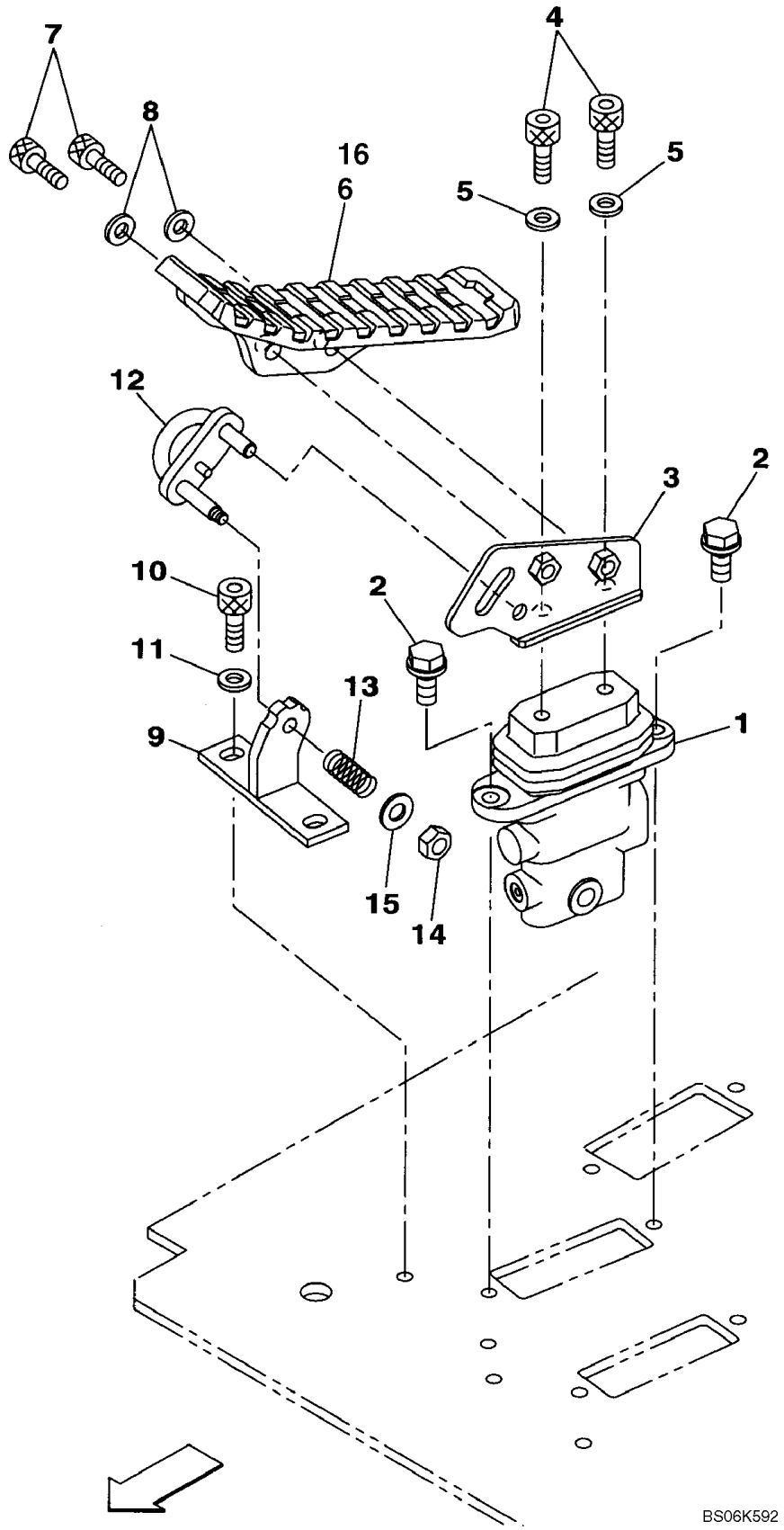

CONTROLE DA VÁLVULA DE SERVIÇO - DIREITA

REF	FN	PART NUMBER	YR/SN	QTY	DESCRIPTION
1		KHJ10450		1	BLOCO DE COMANDO, See Figure 08-79
2		166052A1		2	PARAFUSO, M10 x 25; 10,9
3		KHJ10691		1	SUPORTE
4		165404A1		2	PARAFUSO
5		150604A1		2	ARRUELA PLANA
6		KHJ13850		1	PEDAL
7		KHJ1820		2	PARAFUSO
8		150604A1		2	ARRUELA PLANA
9		KHJ10711		1	SUPORTE
10		108R010Y016R		2	PARAFUSO
11		150604A1		2	ARRUELA PLANA
12		KHJ10701		1	ALAVANCA DE CONTROLE
13		KHJ10721		1	MOLA
14		157740A1		1	PORCA
15		159500A1		1	ARRUELA PLANA
16		163782A1		1	TAMPA

CONTROLE DA VÁLVULA DE SERVIÇO - ESQUERDA

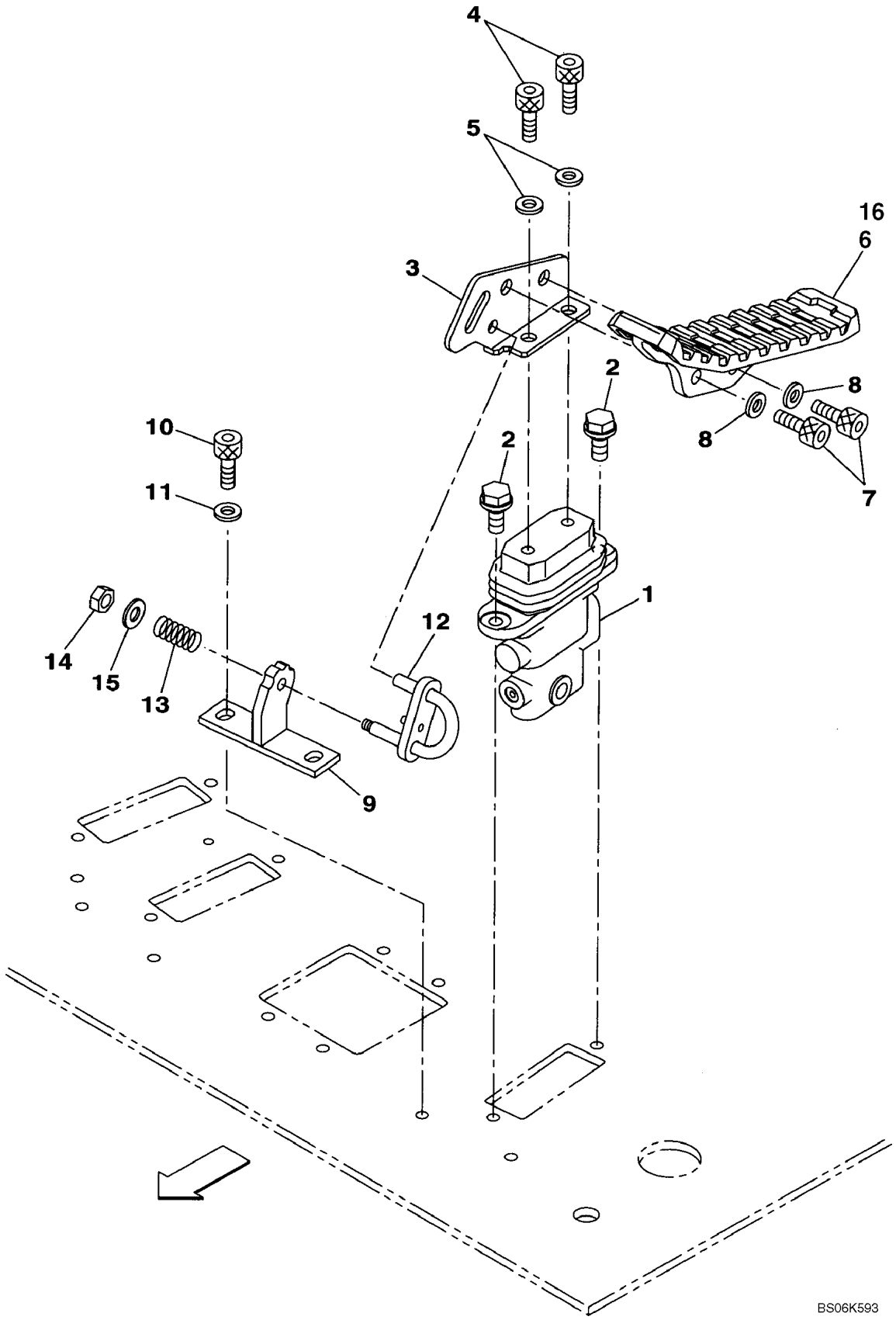

CONTROLE DA VÁLVULA DE SERVIÇO - ESQUERDA

REF	FN	PART NUMBER	YR/SN	QTY	DESCRIPTION
1		KHJ10450		1	BLOCO DE COMANDO, See Figure 08-79
2		166052A1		2	PARAFUSO, M10 x 25; 10,9
3		KHJ10681		1	SUPORTE
4		165404A1		2	PARAFUSO
5		150604A1		2	ARRUELA PLANA
6		KHJ13850		1	PEDAL
7		KHJ1820		2	PARAFUSO
8		150604A1		2	ARRUELA PLANA
9		KHJ10711		1	SUPORTE
10		108R010Y016R		2	PARAFUSO
11		150604A1		2	ARRUELA PLANA
12		KHJ10701		1	ALAVANCA DE CONTROLE
13		KHJ10721		1	MOLA
14		157740A1		1	PORCA
15		159500A1		1	ARRUELA PLANA
16		163782A1		1	TAMPA

09-12		p1	01/07

TAPETE DO PISO - COMPARTIMENTO DO OPERADOR

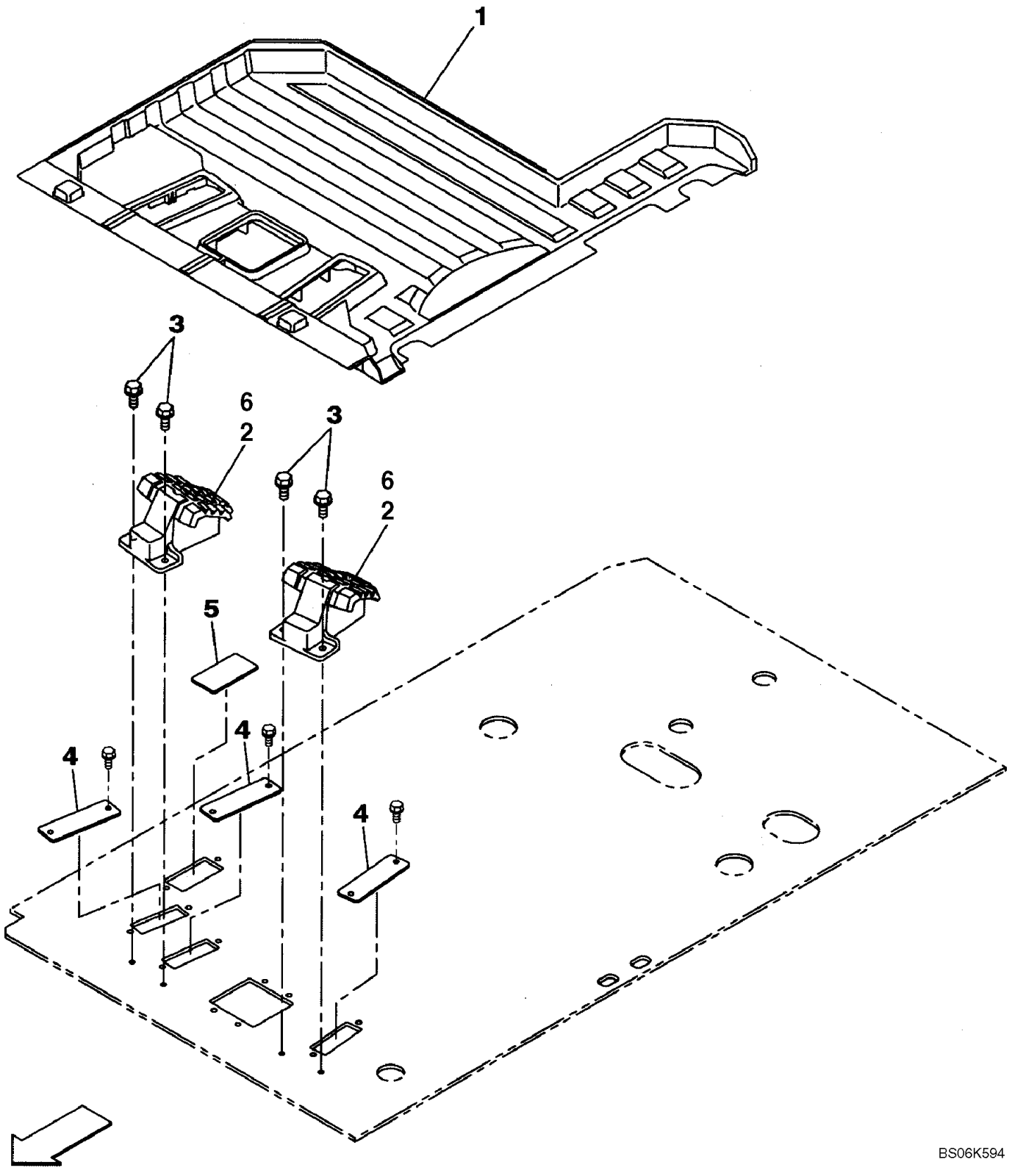

10

TAPETE DO PISO - COMPARTIMENTO DO OPERADOR

REF	FN	PART NUMBER	YR/SN	QTY	DESCRIPTION
1		KHJ14990		1	TAPETE DE ASSOALHO
2		KHJ13860		2	APOIA-PÉ
3		166052A1		4	PARAFUSO
4		KHJ14550		3	CASQUILHO ISOLADOR
5		KHJ14560		1	CASQUILHO ISOLADOR
6		KHP1400		2	TAMPA

09-13		p1	01/07

TAPETE DO PISO - COMPARTIMENTO DO OPERADOR - MODELOS COM HIDRÁULICA AUXILIAR ATIVADA PEDAL

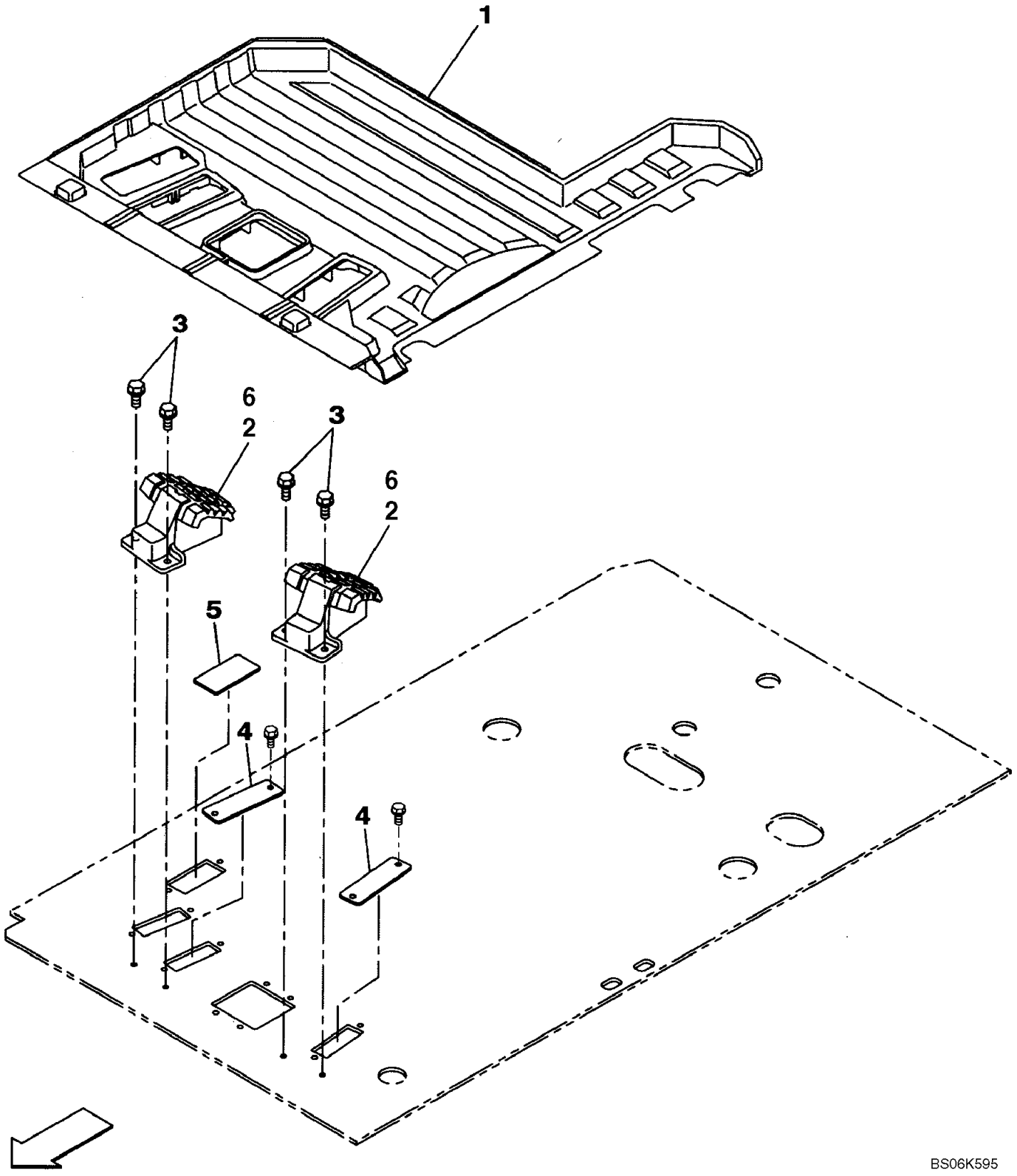

TAPETE DO PISO - COMPARTIMENTO DO OPERADOR - MODELOS COM HIDRÁULICA AUXILIAR ATIVADA PEDAL

REF	FN	PART NUMBER	YR/SN	QTY	DESCRIPTION
1		KHJ15020		1	TAPETE DE ASSOALHO
2		KHJ13860		2	APOIA-PÉ
3		166052A1		4	PARAFUSO
4		KHJ14550		2	CASQUILHO ISOLADOR
5		KHJ14560		1	CASQUILHO ISOLADOR
6		KHP1400		2	TAMPA

CARRINHO TRASEIRO

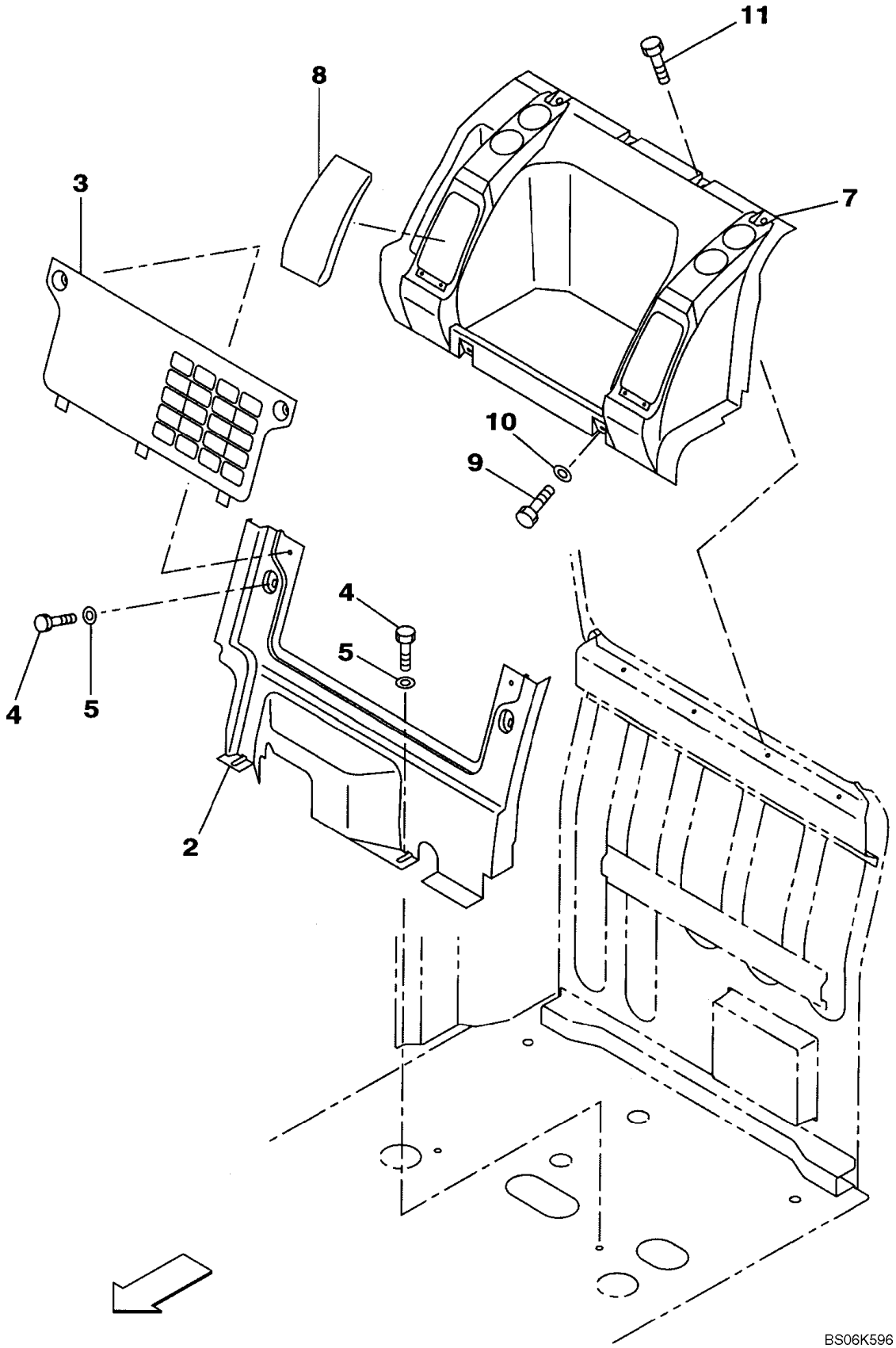

CARRINHO TRASEIRO

REF	FN	PART NUMBER	YR/SN	QTY	DESCRIPTION
		KHN13871		1	ENCHIMENTO, 2 Piece; Incl. 2, 3; Replaces KHN13870
2		NSS		1	BOLETIM INFORMATIVO, Trim
3		NSS		1	BOLETIM INFORMATIVO, Cover, Rear
4		KHN2309		4	PARAFUSO
5		KHN2312		4	ARRUELA PLANA
		KHN12960		1	ENCHIMENTO, Incl. 7, 8
7		KHN12150		1	ENCHIMENTO
8		KHN13790		2	TAMPA
9		KHN2309		2	PARAFUSO
10		KHN2312		2	ARRUELA PLANA
11		KHN2132		4	PARAFUSO, Hex Flg Hd, M6 x 16

SEAT MECHANICAL

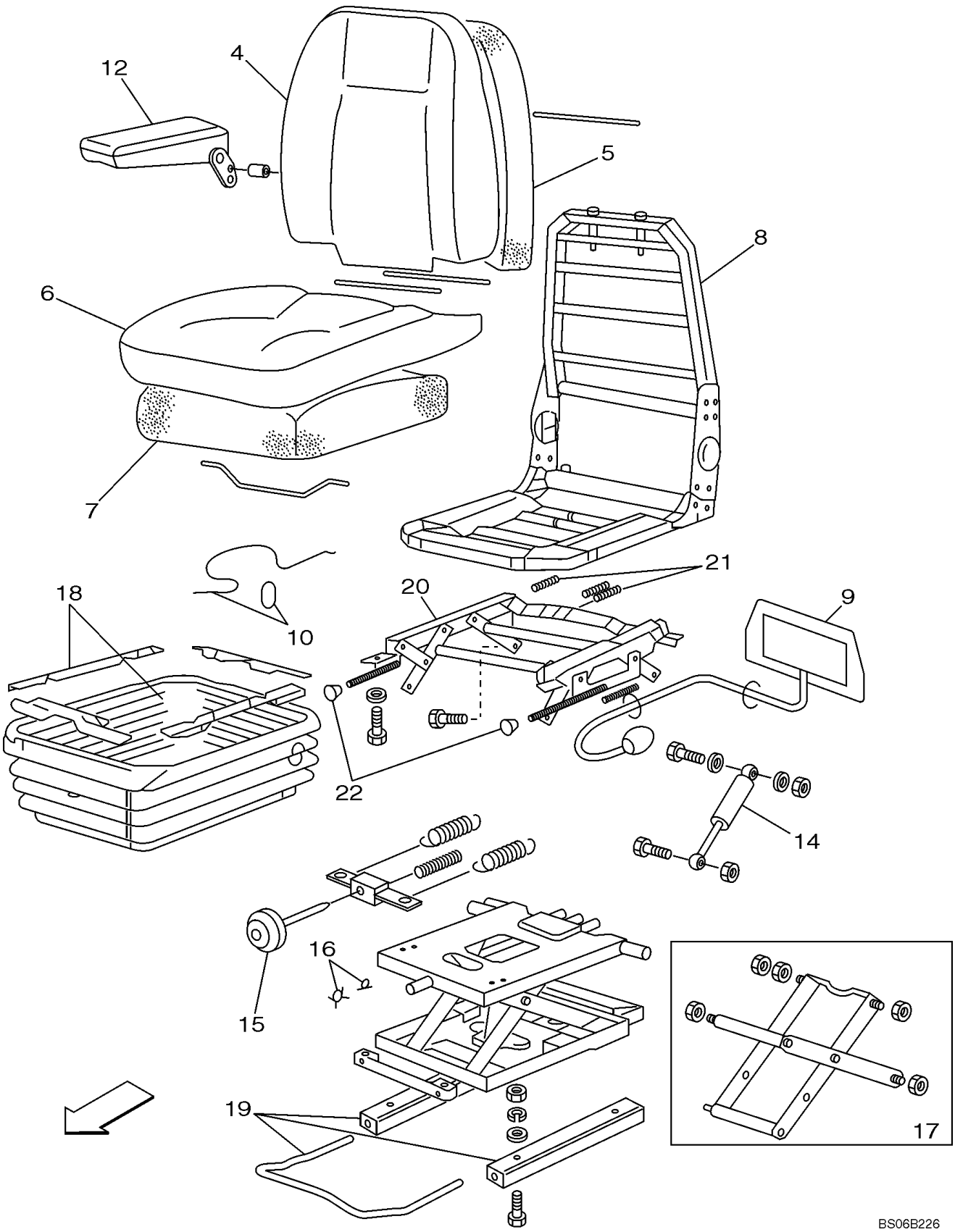

SEAT MECHANICAL

REF	FN	PART NUMBER	YR/SN	QTY	DESCRIPTION
		87344650		1	ASSENTO/POLTRONA, Incl. 4 - 22; Also Includes Ref 2, Figure 09-15A
4		87350972		1	TAMPA ASSENTO
5		9969293		1	COXIM
6		87350973		1	TAMPA ASSENTO
7		9969295		1	COXIM
8		307043A1		1	ESTRUTURA CHASSI
9		307044A1		1	JOGO, Pneumatic Lumbar
10		71456224		1	CABO, Recliner Cable
12		307048A1		1	DESCANCA BRACO CONJU, Right Hand and Left Hand
		307049A1		1	JOGO, Suspension; Incl. 14 - 17
14		L4143253		1	JOGO DE PEÇAS, Suspension Damper
15		B2447086		1	JOGO DE PEÇAS, Weight Adjuster
16		307050A1		1	JOGO, Suspension Bump Stop
17		307051A1		1	JOGO, Bearing
18		307052A1		1	JOGO, Suspension Cover
19		307053A1		1	JOGO, Slide Rail
		307045A1		1	JOGO, Height Riser; Inc. 20 - 22
20		NSS		1	BOLETIM INFORMATIVO, Support
21		307046A1		1	JOGO, Height Riser Springs
22		307047A1		1	JOGO DE PEÇAS, Knobs

SEAT AND MOUNTING

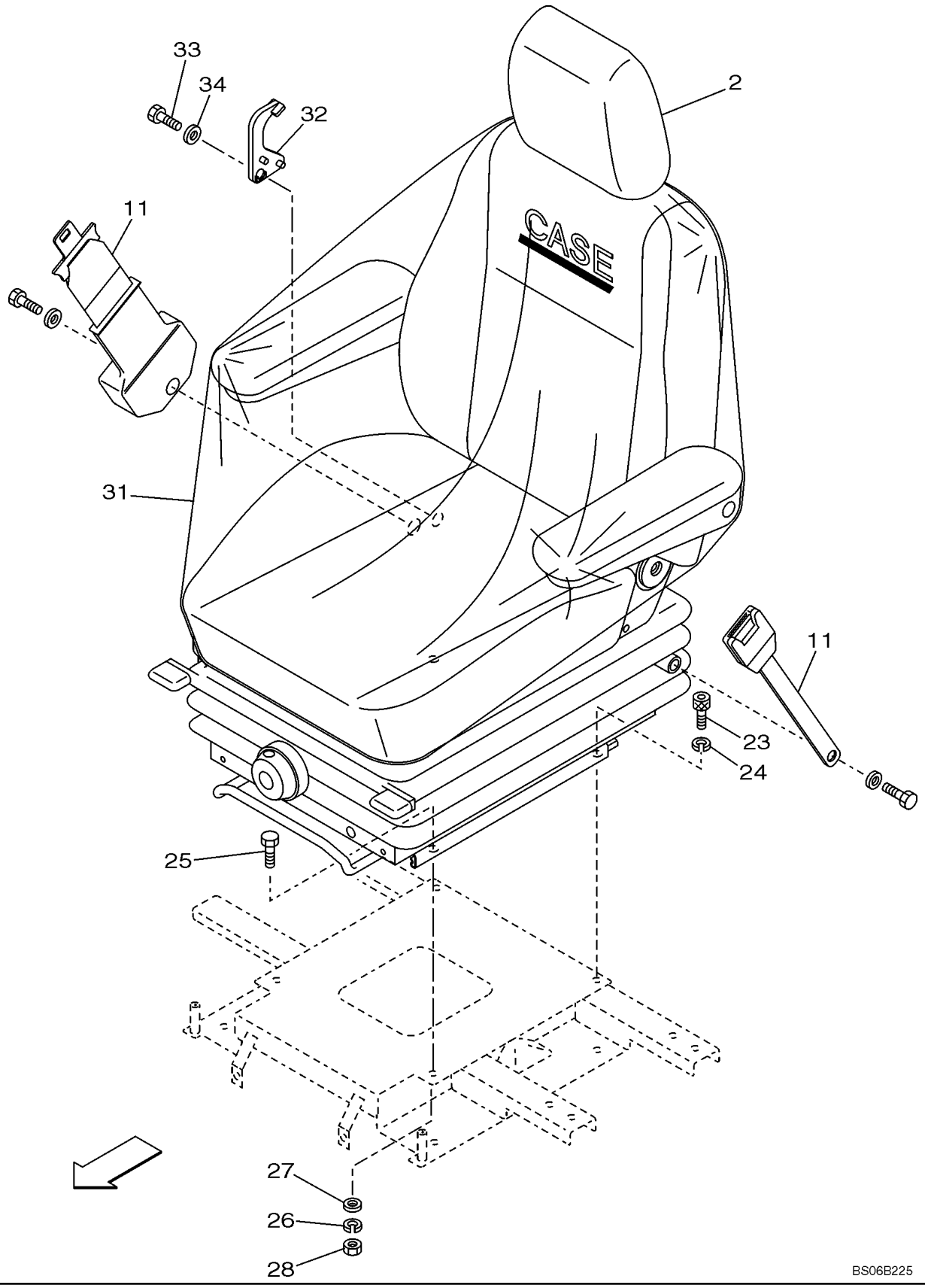

SEAT AND MOUNTING

REF	FN	PART NUMBER	YR/SN	QTY	DESCRIPTION
2		87350977		1	APOIA-CABEÇA
11		304621A1		1	CINTO DE SEGURANÇA, Seat Belt; Includes Hardware
23		863-8020		2	PARAFUSO, Hex Soc Hd, M8 x 20, 12.9
24		892-11008		2	ARRUELA-TRAVA, M8
25		614-8020		2	PARAFUSO, Hex, M8 x 20, 8.8
26		829-1408		2	PORCA, M8, Cl 10
27		895-11008		2	ARRUELA PLANA, M8 x 16 x 1.6
28		183-108VR		2	ARRUELA MOLA
31		87344650		1	ASSENTO/POLTRONA, See Figure 09-15, Also Includes REF 2
32		KHN3003		1	BLOQUEIO
33		414-720		1	PARAFUSO, Hex, 7/16"-20 x 1 1/4", G5, Full Thd
34		150811A1		1	ARRUELA PLANA, M12

OPERATORS COMPARTMENT - SEAT AND CONTROL ARM MOUNTING

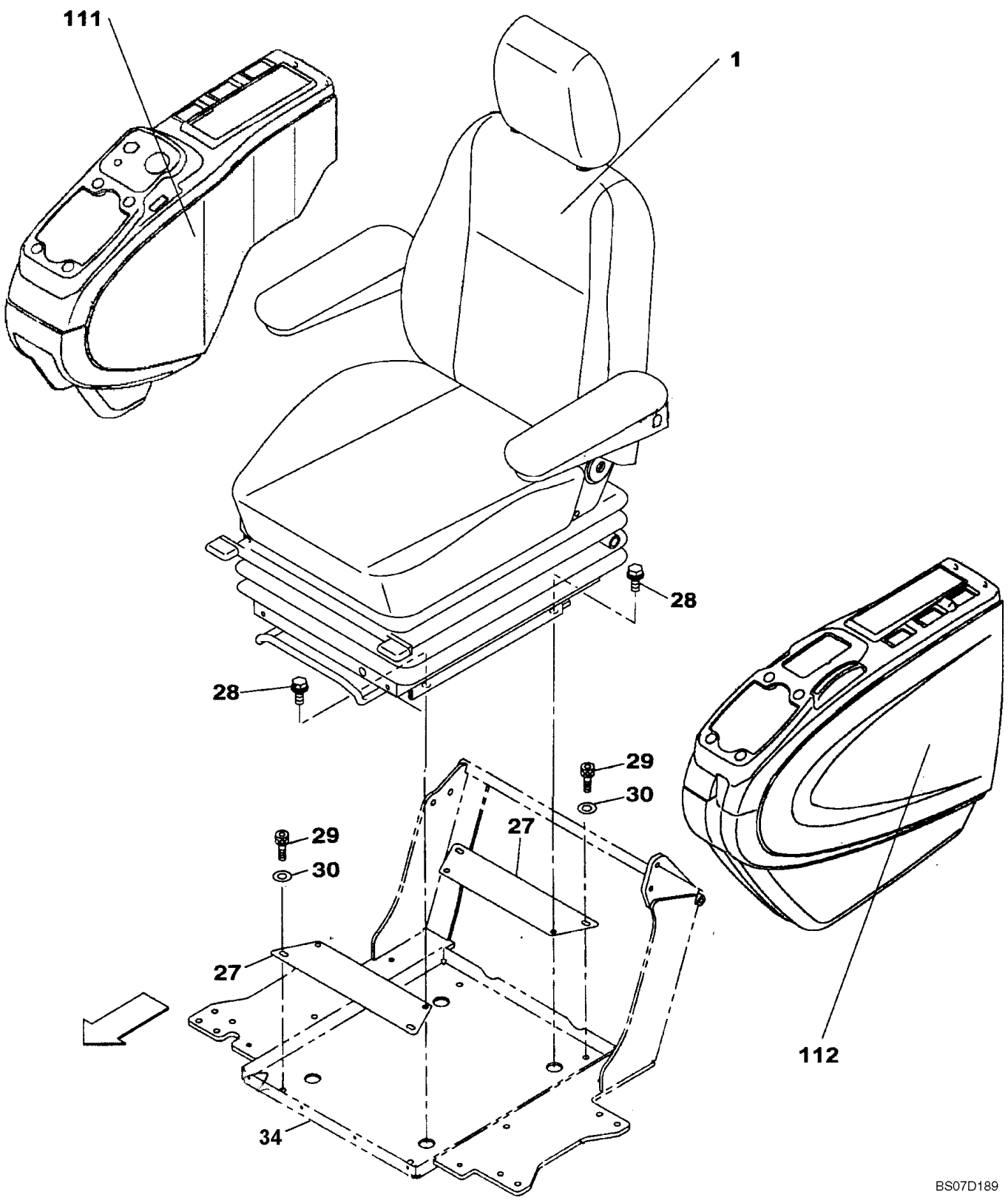

OPERATORS COMPARTMENT - SEAT AND CONTROL ARM MOUNTING

REF	FN	PART NUMBER	YR/SN	QTY	DESCRIPTION
1	1	REF		1	INSTRUCAO
27		KHN13530		2	PLACA
28		166350A1		4	PARAFUSO, M8 x 20
29		864-8020		4	PARAFUSO, Hex Soc Hd, M8 x 20, 8.8
30		892-11008		4	ARRUELA-TRAVA, M8
34	2	REF		1	INSTRUCAO
111	3	REF		1	INSTRUCAO, Right
112	4	REF		1	INSTRUCAO, Left

(1) See Figure(s) 09-022-00 01
(2) See Figure(s) 09-021-00 01
(3) See Figure(s) 09-020-00 01
(4) See Figure(s) 09-019-00 01

OPERATORS COMPARTMENT - BOX - GUIDE, SLIDE

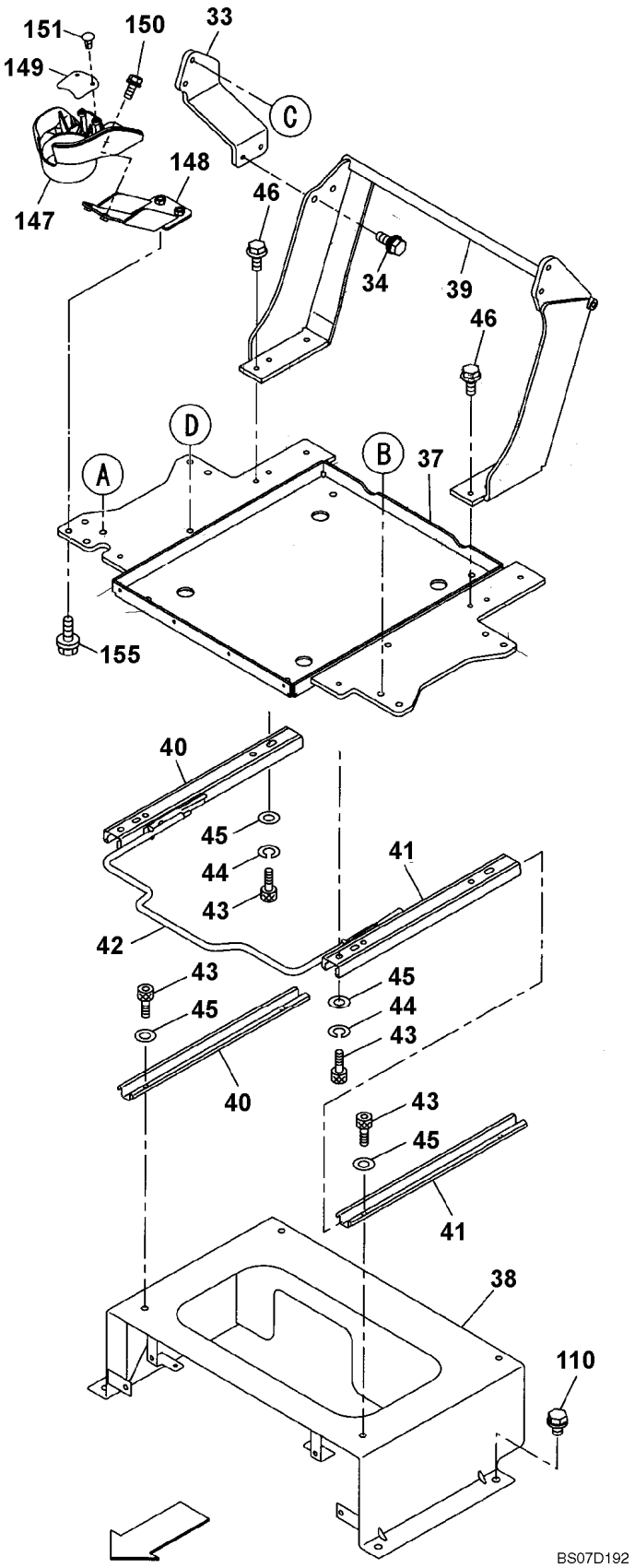

OPERATORS COMPARTMENT - BOX - GUIDE, SLIDE

REF	FN	PART NUMBER	YR/SN	QTY	DESCRIPTION
33		KHN15150		1	SUPORTE
34		KHN18230		2	PLACA DE FUNDO
37		KHN13391		1	PLACA DE FUNDO
38		KHN13401		1	GUIA DESLIZANTE
39		KHN18240		1	SUPORTE
40		KHN13420		1	GUIA DESLIZANTE
41		KHN13430		1	GUIA DESLIZANTE
42		KHN13411		1	GUIA DESLIZANTE
43		108R008Y016R		8	PARAFUSO
44		183-108VR		4	ARRUELA MOLA
45		895-11008		8	ARRUELA PLANA, M8 x 16 x 1.6
46		166345A1		4	PARAFUSO
110		166346A1		4	PARAFUSO
147		KHN12400		1	SUPORTE CONJUNTO
148		KHN14750		1	PLACA
149		KHN14760		1	PLACA
150		KHN2132		2	PARAFUSO, Hex Flg Hd, M6 x 16
151		KHN2470		2	FIXADOR
155		KHN17270		2	PARAFUSO

09-17		p1	07/07

OPERATORS COMPARTMENT - HAND CONTROL ARM, LEFT

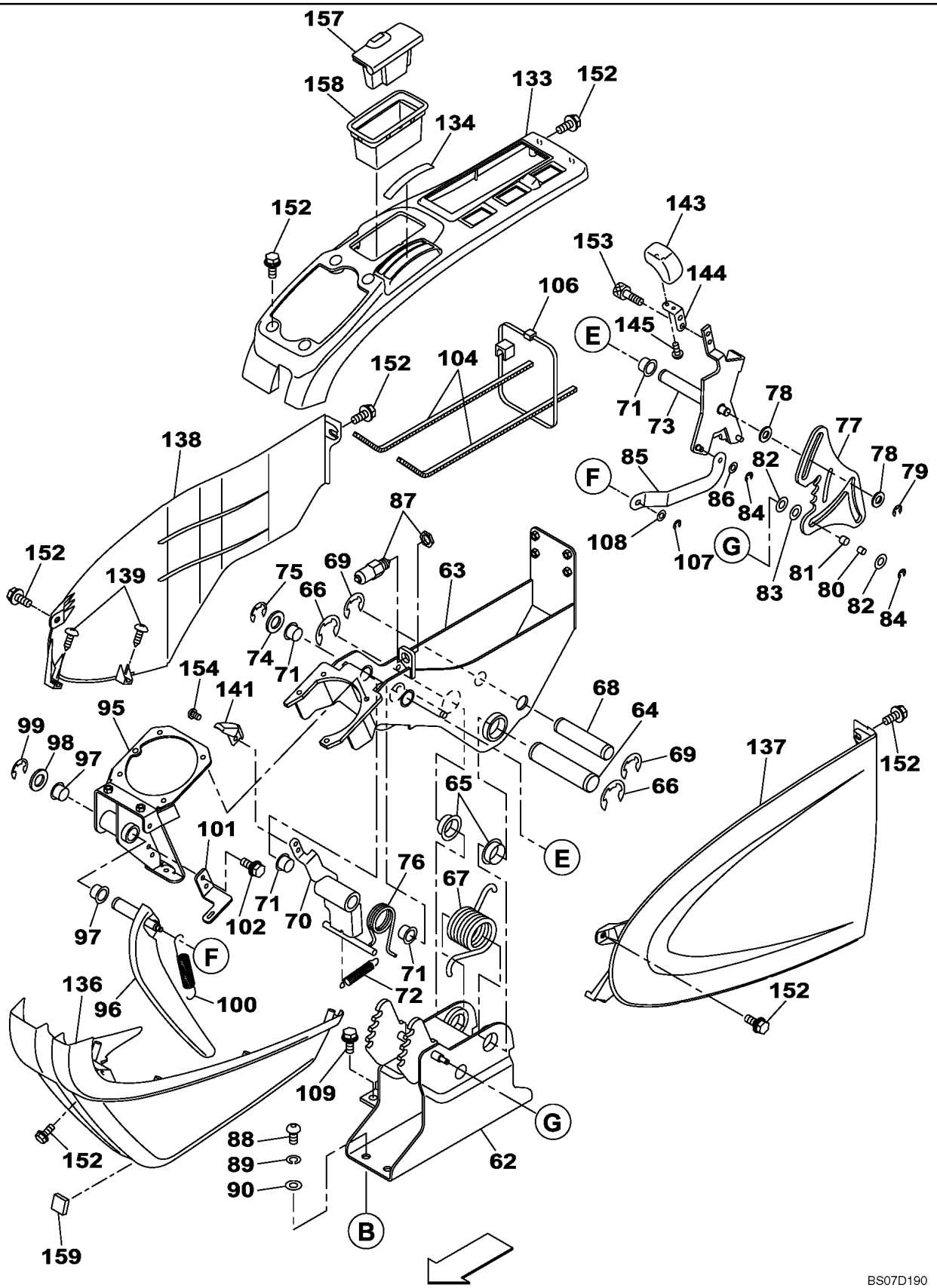

10

OPERATORS COMPARTMENT - HAND CONTROL ARM, LEFT

REF	FN	PART NUMBER	YR/SN	QTY	DESCRIPTION
62		KHN13251		1	SUPORTE CONJUNTO
63		KHN13261		1	SUPORTE CONJUNTO
64		KHN10740		1	PINO
65		KHN2261		2	BUCHA
66		KHN2272		2	ANEL
67		KHN13231		1	MOLA
68		KHN13210		1	PINO
69		KHN2397		2	ANEL
70		KHN13271		1	DISPARADOR
71		KHN2249		4	BUCHA
72		KHN13240		1	MOLA
73		KHN13281		1	DISPARADOR
74		896-11016		1	ARRUELA PLANA, M17.5 x 30 x 4, HT
75		KHN2270		1	ANEL
76		KHN13290		1	MOLA
77		KHN13301		1	PLACA
78		895-11010		2	ARRUELA PLANA, M10 x 20 x 2
79		378J0080Z		1	ANEL
80		KHN13310		1	BUCHA
81		KHN13320		1	ROLO
82		KHN0482		2	ARRUELA PLANA
83		150409A1		1	ARRUELA PLANA
84		378J0050Z		2	ANEL
85		KHN13341		1	DISPARADOR
86		895-11006		1	ARRUELA PLANA, M6
87		KHR14930		1	INTERRUPTOR
88		KHJ1632		8	PARAFUSO
89		892-11010		8	ARRUELA-TRAVA, M10
90		895-11010		8	ARRUELA PLANA, M10 x 20 x 2
95		KHN14880		1	SUPORTE
96		KHN13331		1	ALAVANCA
97		KHN2249		2	BUCHA
98		896-11016		1	ARRUELA PLANA, M17.5 x 30 x 4, HT
99		KHN2270		1	ANEL
100		KHN13350		1	MOLA

OPERATORS COMPARTMENT - HAND CONTROL ARM, LEFT

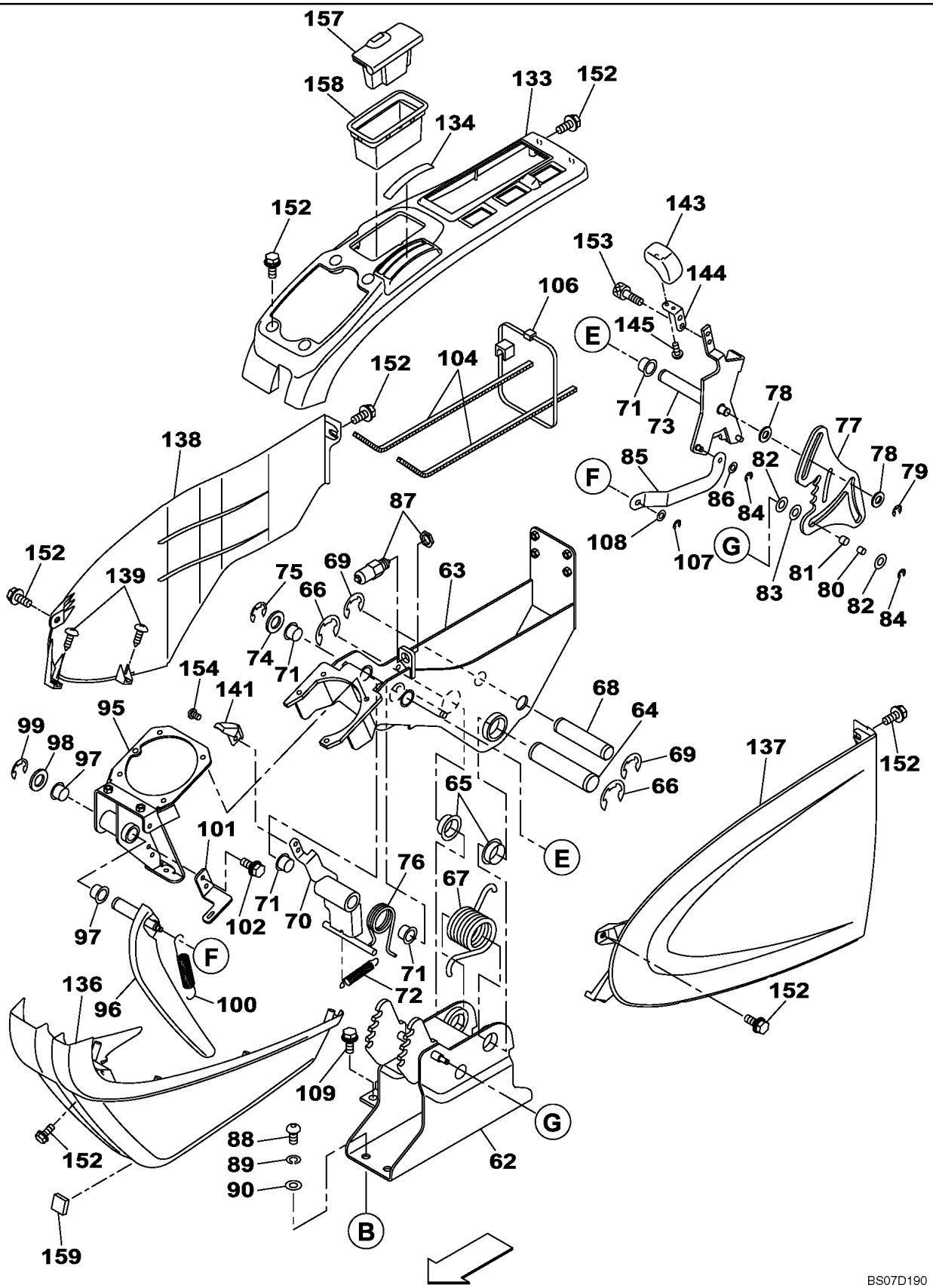

OPERATORS COMPARTMENT - HAND CONTROL ARM, LEFT

REF	FN	PART NUMBER	YR/SN	QTY	DESCRIPTION
101		KHN16810		1	SUPORTE
102		KHN2132		2	PARAFUSO, Hex Flg Hd, M6 x 16
104		KHN17070		2	PROTEÇÃO, 320 mm
106		KHN17050		6	FIXADOR
107		378J0050Z		1	ANEL
108		895-11006		1	ARRUELA PLANA, M6
109		166346A1		2	PARAFUSO
111		378J0050Z		1	ANEL
112		895-11006		1	ARRUELA PLANA, M6
133		KHN12250		1	PRATELEIRA
134		KHN16770		1	PROTETOR DE BUJÃO
136		KHN12290		1	ENCHIMENTO
137		KHN13740		1	ENCHIMENTO
138		KHN12350		1	ENCHIMENTO
139		KHN2737		6	ARRUELA PLANA
141		KHN12370		1	ALAVANCA
143		KHN17080		1	MACANETA, Replaces KHN12380
144		KHN17090		1	SUPORTE
145		KHR2733		2	PARAFUSO
152		KHN2132		18	PARAFUSO, Hex Flg Hd, M6 x 16
153		KHN17280		2	PARAFUSO
154		162068A1		4	PARAFUSO
157		KHN2058		1	CINZEIRO
158		KHN2336		1	ALOJAMENTO
159		KHN17560		1	COBRE-JUNTA

09-18		p1	04/07

OPERATORS COMPARTMENT - HAND CONTROL ARM, RIGHT

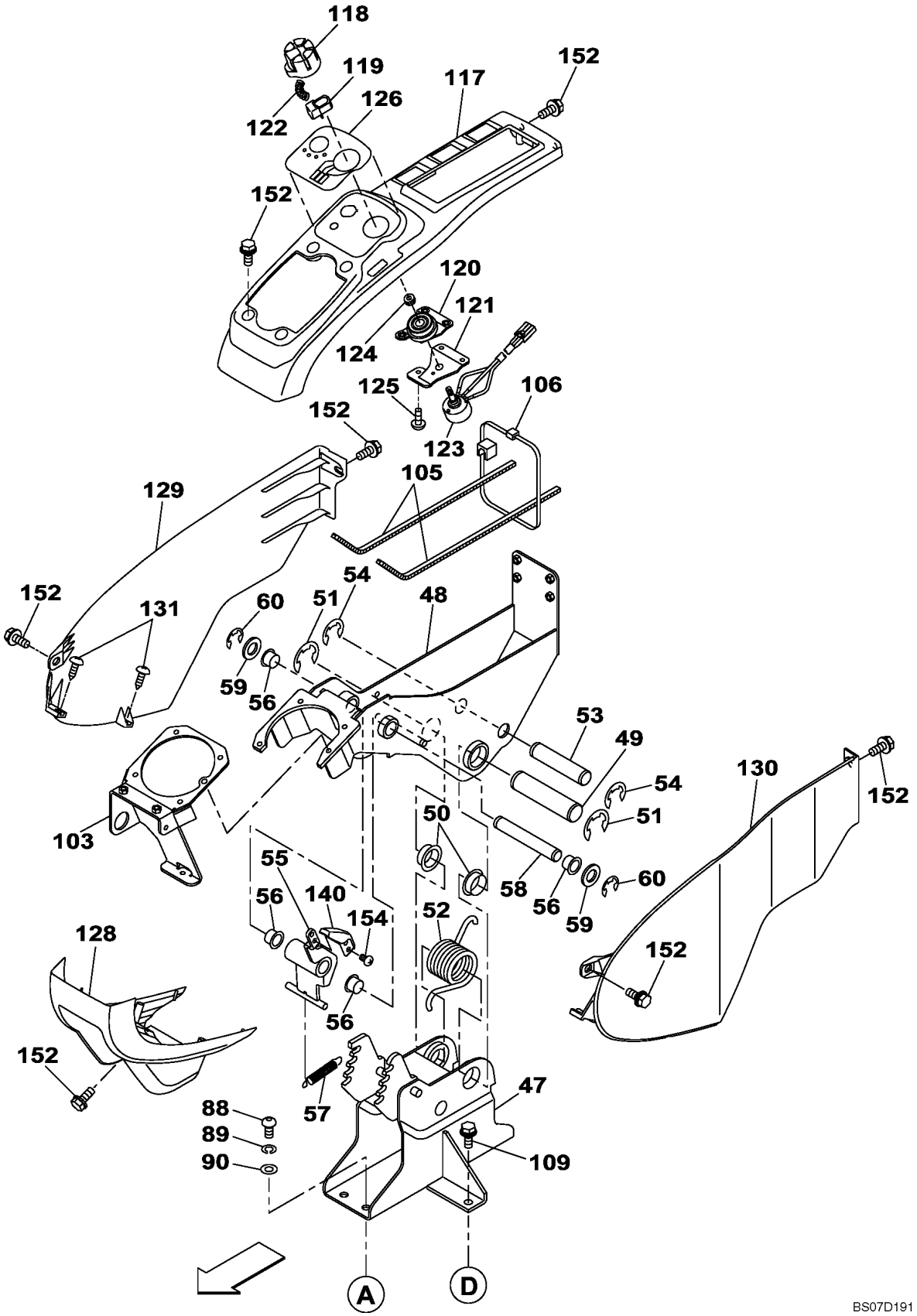

10

OPERATORS COMPARTMENT - HAND CONTROL ARM, RIGHT

REF	FN	PART NUMBER	YR/SN	QTY	DESCRIPTION
47		KHN13181		1	PARAFUSO
48		KHN13191		1	SUPORTE CONJUNTO
49		KHN10740		1	PINO
50		KHN2261		2	BUCHA
51		KHN2272		2	ANEL
52		KHN13231		1	MOLA
53		KHN13210		1	PINO
54		KHN2397		2	ANEL
55		KHN13201		1	DISPARADOR
56		KHN2249		4	BUCHA
57		KHN13240		1	MOLA
58		KHN13220		1	PINO
59		896-11016		2	ARRUELA PLANA, M17.5 x 30 x 4, HT
60		KHN2270		2	ANEL
88		KHJ1632		8	PARAFUSO
89		892-11010		8	ARRUELA-TRAVA, M10
90		895-11010		8	ARRUELA PLANA, M10 x 20 x 2
103		KHN14871		1	SUPORTE, R
105		KHN17060		2	PROTEÇÃO, 290 mm
106		KHN17050		6	FIXADOR
109		166346A1		2	PARAFUSO
117		KHN12230		1	ENCHIMENTO
118		KHN15100		1	BOTÃO
119		KHN15110		1	BOTÃO
120		KHN15120		1	SUPORTE
121		KHN15130		1	SUPORTE
122		KHN15140		1	COTOVELO
123		KHR2751		1	INTERRUPTOR
124		KHR2741		1	EMBALAGEM
125		KHR2737		3	PARAFUSO
126		KHN14071		1	TAMPA
128		KHN12270		1	ENCHIMENTO
129		KHN12310		1	ENCHIMENTO
130		KHN12330		1	ENCHIMENTO
131		KHR2737		4	PARAFUSO

OPERATORS COMPARTMENT - HAND CONTROL ARM, RIGHT

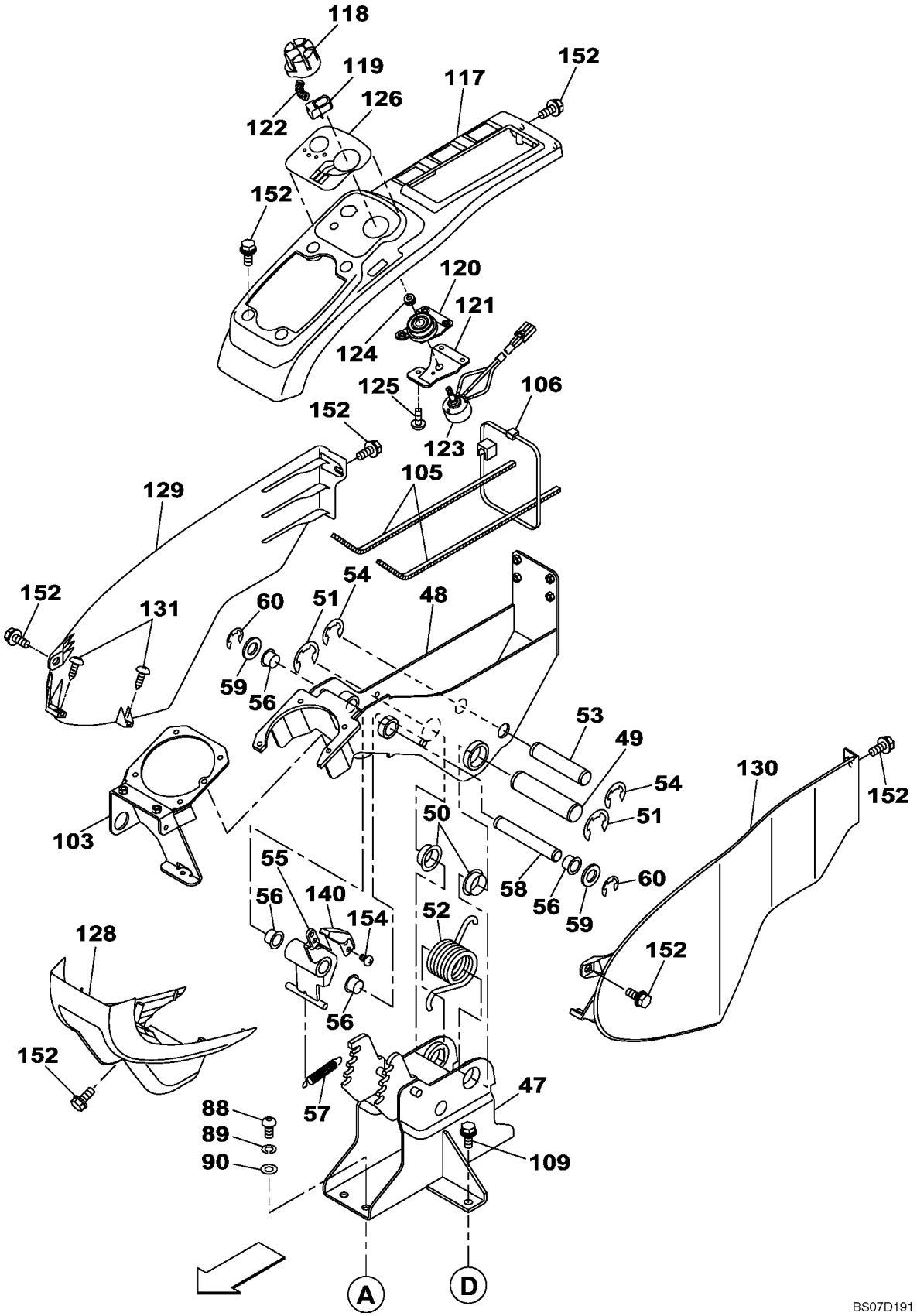

OPERATORS COMPARTMENT - HAND CONTROL ARM, RIGHT

REF	FN	PART NUMBER	YR/SN	QTY	DESCRIPTION
140		KHN12360		1	ALAVANCA
152		KHN2132		18	PARAFUSO, Hex Flg Hd, M6 x 16
154		162068A1		4	PARAFUSO

CORRENTE DO CÃO

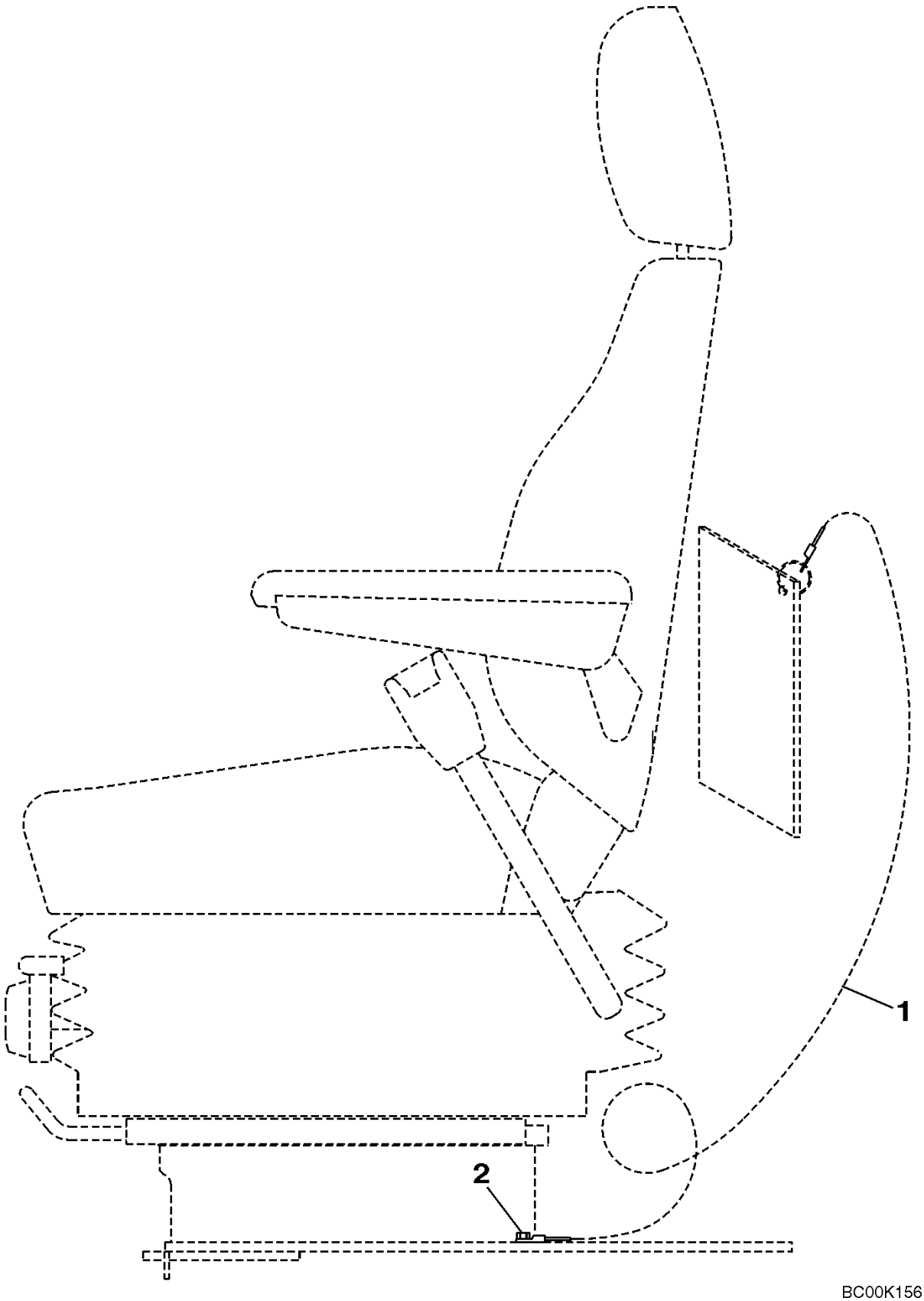

CORRENTE DO CÃO

REF	FN	PART NUMBER	YR/SN	QTY	DESCRIPTION
1		159895A1		1	CABO
2		156559A1		1	PARAFUSO

AIRE ACONDICIONADO - DUTOS

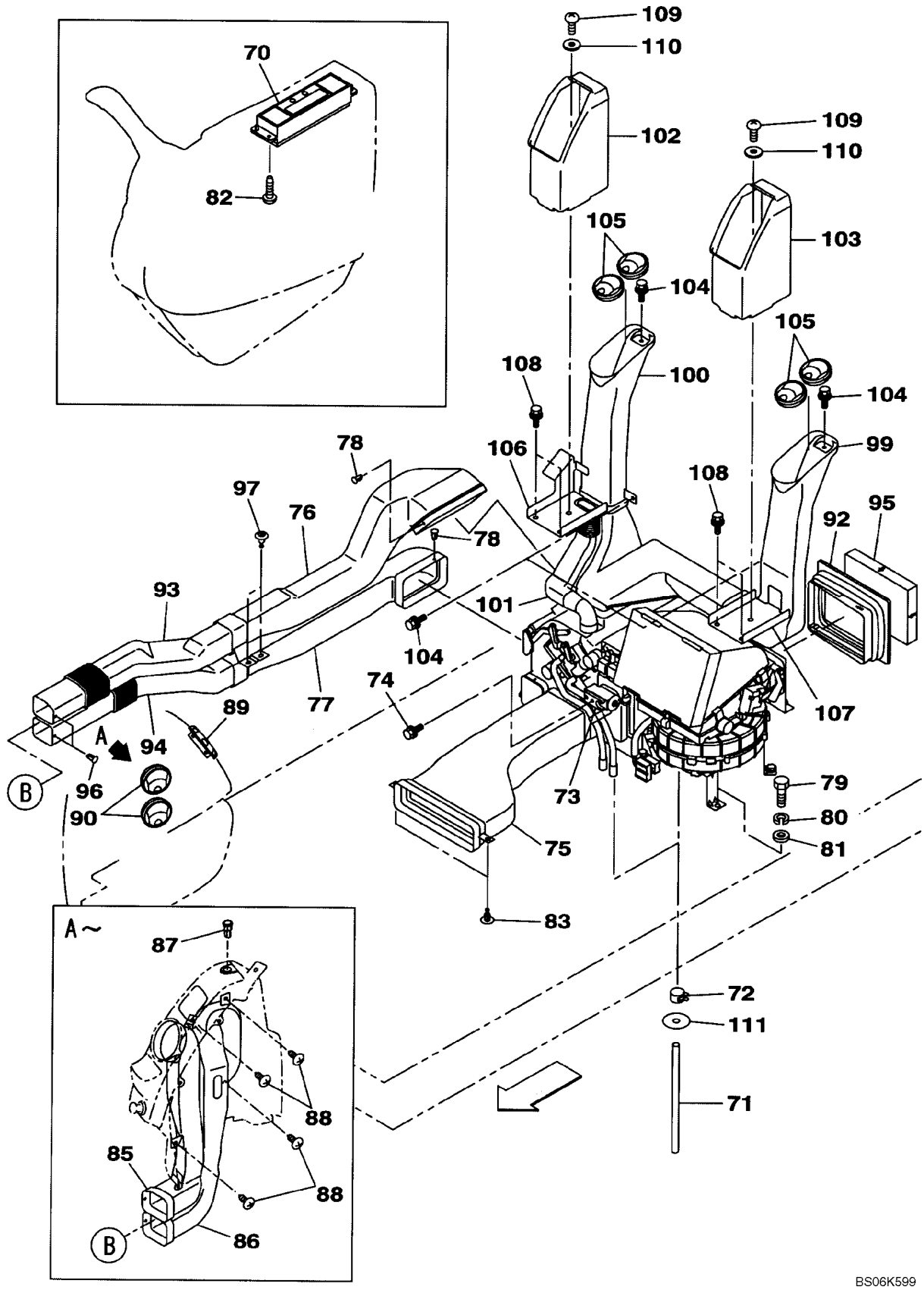

AIRE ACONDICIONADO - DUTOS

REF	FN	PART NUMBER	YR/SN	QTY	DESCRIPTION
70		KHR12510		1	PAINEL DE INSTRUMENTOS
71		KHR3574		2	MANGUEIRA
72		159622A1		2	ARGOLA DE FIXACAO
73		KHR10420		1	PLACA
74		KHR2464		1	PARAFUSO
75		KHR13190		1	CONDUTO DE AR
76		KHR13220		1	CONDUTO DE AR
77		KHR13250		1	CONDUTO DE AR
78		KHR2986		2	PINO
79		627-10016		6	PARAFUSO, Hex, M10 x 16, 10.9, Full Thd
80		892-11010		6	ARRUELA-TRAVA, M10
81		895-11010		6	ARRUELA PLANA, M10 x 20 x 2
82		KHR2737		4	PARAFUSO
83		KHR13950		2	FIXADOR
85		KHR13200		1	CONDUTO DE AR
86		KHR13230		1	CONDUTO DE AR
87		KHR10540		1	SENSOR
88		KHR2739		4	PARAFUSO
89		KHR10870		1	PENEIRA
90		KHR10880		2	PENEIRA
92		KHR13180		1	CONDUTO DE AR
93		KHR13210		1	CONDUTO DE AR
94		KHR13240		1	CONDUTO DE AR
95		KHR13340		1	FILTRO, CABINA
96		KHR2986		2	PINO
97		KHR13950		2	FIXADOR
99		KHR13270		1	CONDUTO DE AR
100		KHR13280		1	CONDUTO DE AR
101		KHR13290		1	CONDUTO DE AR
102		KHR13300		1	ALOJAMENTO
103		KHR13310		1	ALOJAMENTO
104		KHN2132		4	PARAFUSO, Hex Flg Hd, M6 x 16
105		KHR10880		4	PENEIRA
106		KHR15780		1	SUPORTE
107		KHR15790		1	SUPORTE

AIRE ACONDICIONADO - DUTOS

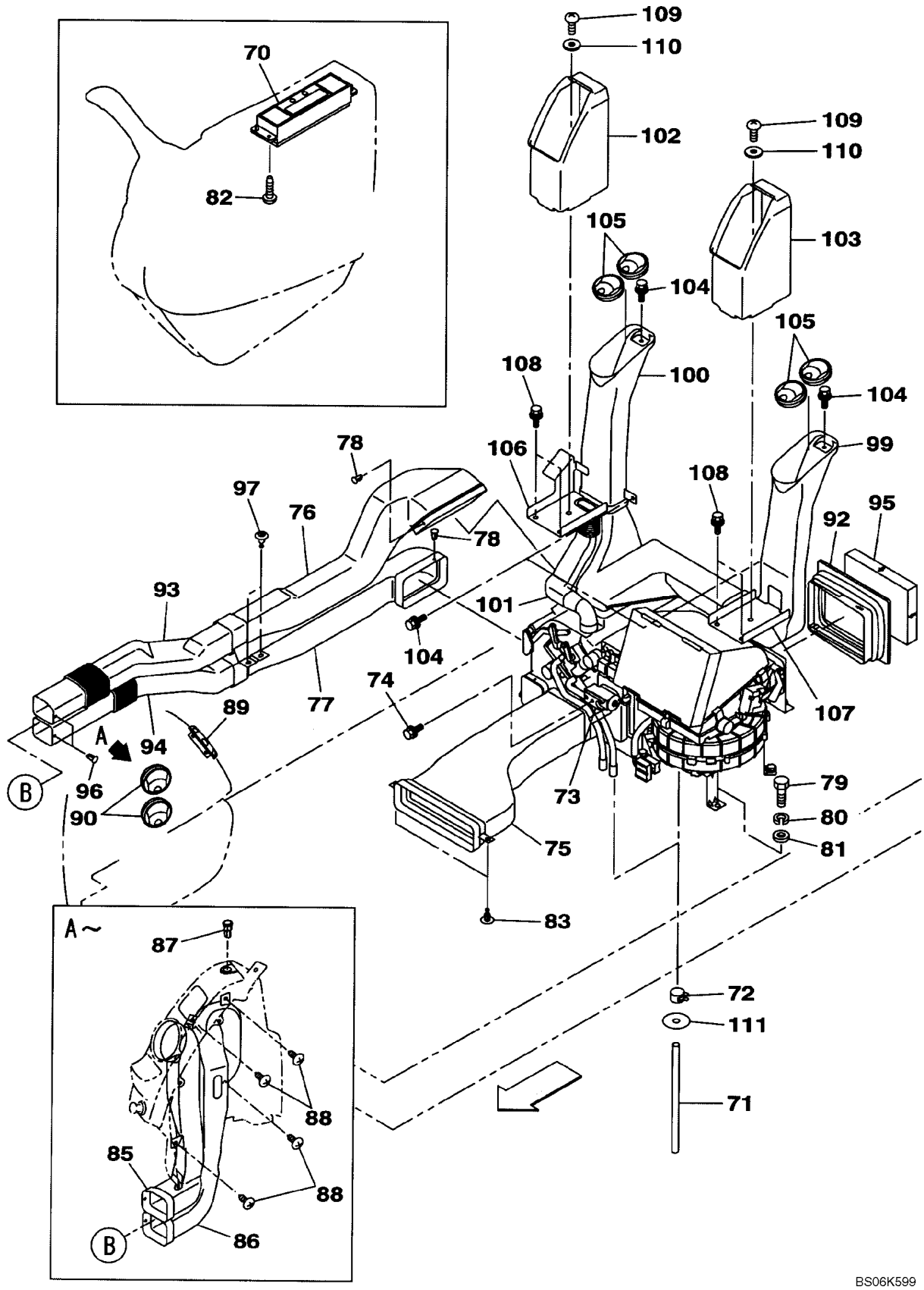

AIRE ACONDICIONADO - DUTOS

REF	FN	PART NUMBER	YR/SN	QTY	DESCRIPTION
108		166345A1		4	PARAFUSO
109		158404A1		2	BUJÃO DE DRENO
110		KHN2312		2	ARRUELA PLANA
111		KHJ14580		2	CASQUILHO ISOLADOR
112		KHN18100		1	COBRE-JUNTA, Not Illustrated

SISTEMA DE AIRE ACONDICIONADO

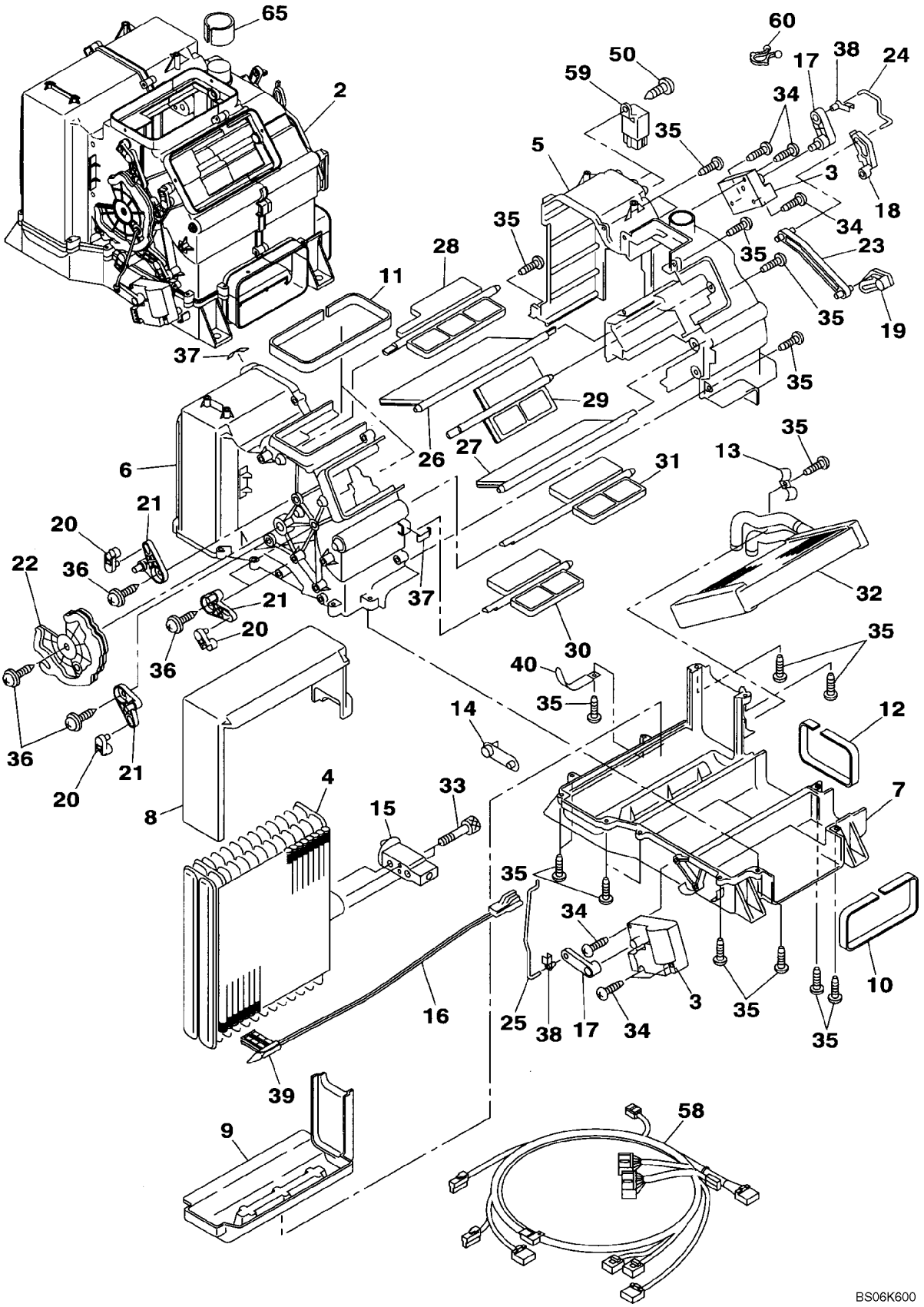

SISTEMA DE AIRE ACONDICIONADO

REF	FN	PART NUMBER	YR/SN	QTY	DESCRIPTION
		KHR13320		1	CLIMATIZADOR, Incl. 3 - 65; Also Includes Parts On Figure 09-22
3		KHR13610		2	MOTOR ELÉTRICO
4		KHR13620		1	CONDENSADOR
5		KHR13630		1	CAIXA/CARCAÇA
6		KHR13640		1	CAIXA/CARCAÇA
7		KHR13650		1	CAIXA/CARCAÇA
8		KHR4116		1	PROTECCAO, EXT.
9		KHR4117		1	PROTECCAO, EXT.
10		KHR2837		1	EMBALAGEM
11		KHR2815		2	JUNTA ADESIVA
12		KHR2816		1	JUNTA ADESIVA
13		KHR2818		1	BRACADEIRA
14		KHR15860		1	TAMPA
15		KHR13660		1	SECÇÃO DE VÁLVULAS
16		KHR13670		1	SENSOR
17		KHR13680		2	ALAVANCA
18		KHR2820		1	ALAVANCA
19		KHR2821		1	ALAVANCA
20		KHR2822		4	ALAVANCA
21		KHR2823		4	ALAVANCA
22		KHR2824		1	CAME
23		KHR2825		1	ALAVANCA DE CONTROLE
24		KHR13690		1	ESPIGA
25		KHR13700		1	ESPIGA
26		KHR2828		1	OBTURADOR
27		KHR2829		1	OBTURADOR
28		KHR2830		1	OBTURADOR
29		KHR2831		1	OBTURADOR
30		KHR2832		1	OBTURADOR
31		KHR2833		1	OBTURADOR
32		KHR13710		1	UNIDADE DE AQUECIMENTO
33		KHR2861		2	PARAFUSO
34		KHR13720		6	PARAFUSO
35		KHR2857		18	PARAFUSO

SISTEMA DE AIRE ACONDICIONADO

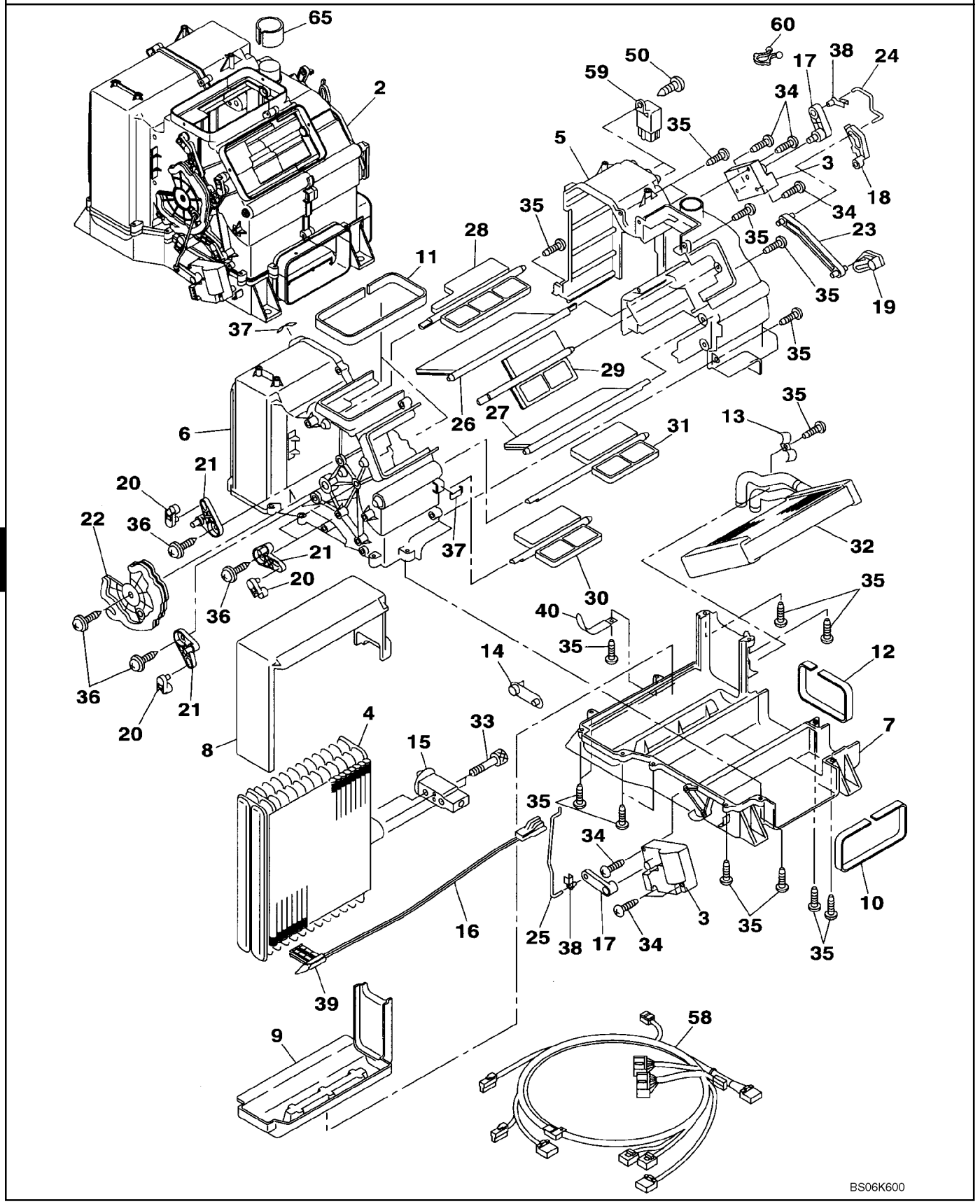

SISTEMA DE AIRE ACONDICIONADO

REF	FN	PART NUMBER	YR/SN	QTY	DESCRIPTION
36		KHR2862		5	PARAFUSO
37		KHR2805		2	BRACADEIRA
38		KHR2806		2	SUPORTE
39		KHR2807		2	SUPORTE
40		KHR2808		1	BRACADEIRA
50		KHR2856		2	PARAFUSO
58		KHR13780		1	CHICOTE DE FIOS
59		KHR2836		2	CONECTADOR
60		KHR2854		1	BRACADEIRA
65		KHR3230		1	BUCHA

AIRE ACONDICIONADO - EVAPORADOR

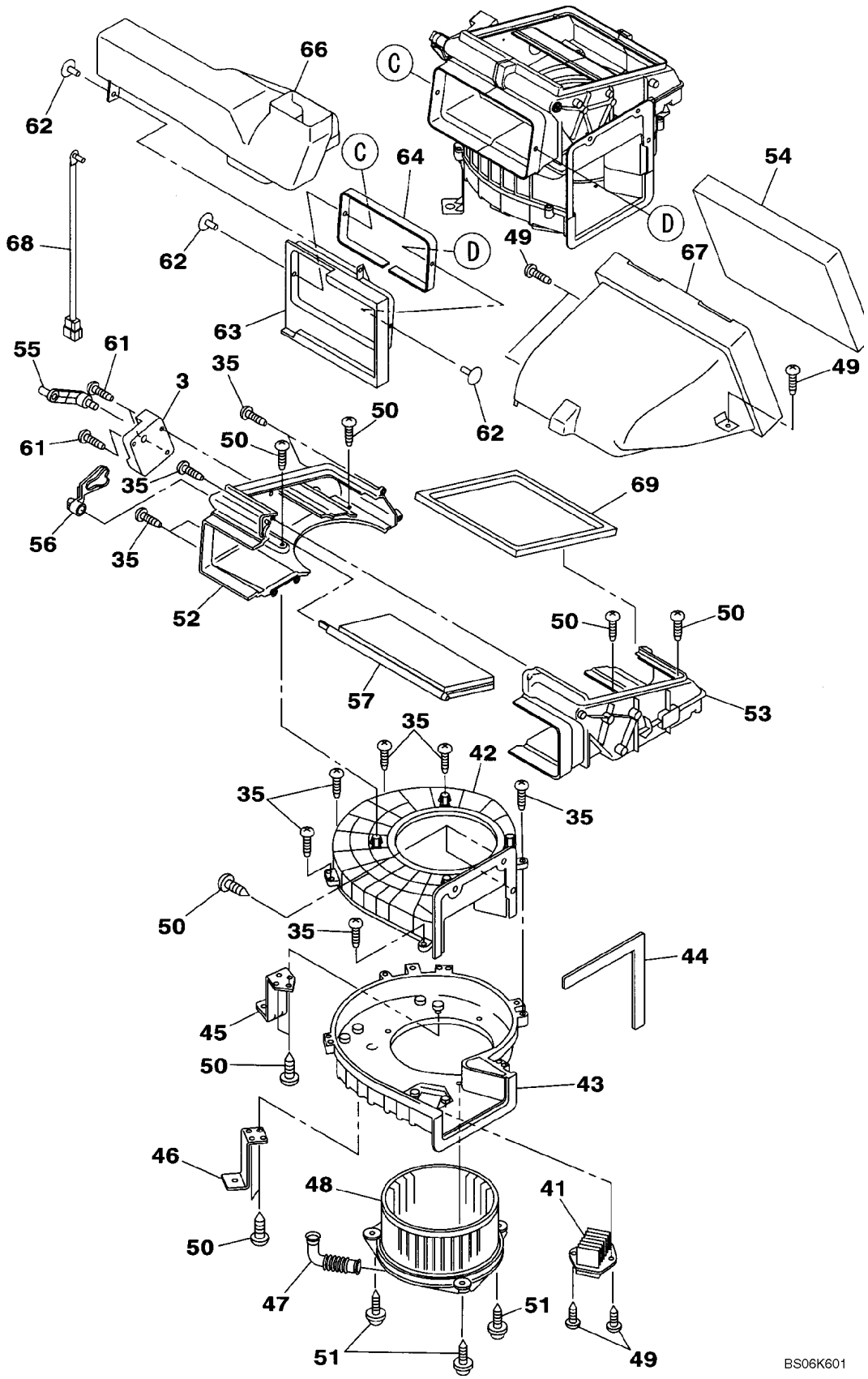

AIRE ACONDICIONADO - EVAPORADOR

REF	FN	PART NUMBER	YR/SN	QTY	DESCRIPTION
		KHR13320		1	CLIMATIZADOR, Incl. 3 - 69; Also Includes Parts On Figure 09-21
3		KHR13610		1	MOTOR ELÉTRICO
35		KHR2857		11	PARAFUSO
41		KHR13730		1	CENTRAL ELETRÔNICA
42		KHR2841		1	ALOJAMENTO
43		KHR2842		1	ALOJAMENTO
44		KHR15870		1	JUNTA ADESIVA
45		KHR2860		1	BRACADEIRA
46		KHR2843		1	BRACADEIRA
47		KHR2844		1	MANGUEIRA CONJUNTO
48		KHR2845		1	MOTOR ELÉTRICO
49		KHR2855		5	PARAFUSO
50		KHR2856		11	PARAFUSO
51		KHR2858		3	PARAFUSO
52		KHR13740		1	CAIXA/CARCAÇA
53		KHR13750		1	CAIXA/CARCAÇA
54		KHR13330		1	FILTRO, CABINA
55		KHR13760		1	ALAVANCA
56		KHR13770		1	ALAVANCA
57		KHR2851		1	OBTURADOR
61		KHR15880		3	PARAFUSO
62		KHR2773		3	FIXADOR
63		KHR2771		1	CONDUTO
64		KHR3229		1	ANEL DE VEDAÇÃO
66		KHR13260		1	CONDUTO DE AR
67		KHR13170		1	CONDUTO DE AR
68		KHR13790		1	SENSOR
69		KHR15890		1	JUNTA ADESIVA

AIRE ACONDICIONADO - CONDENSADOR E DESUMIDIFICADOR DO RECEPTOR

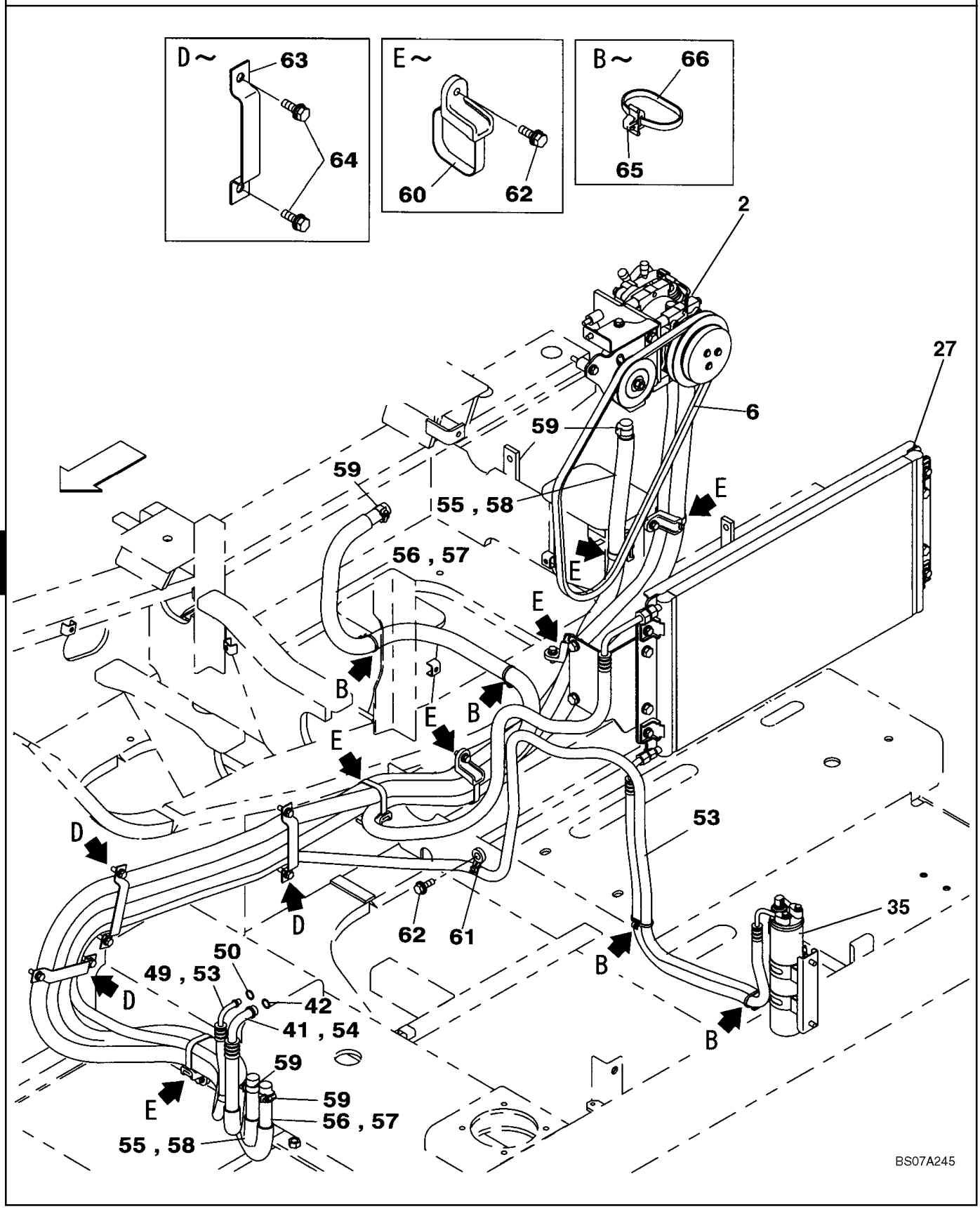

AIRE ACONDICIONADO - CONDENSADOR E DESUMIDIFICADOR DO RECEPTOR

REF	FN	PART NUMBER	YR/SN	QTY	DESCRIPTION
2		KHR3197		1	COMPRESSOR, See Figure 09-24
6		KHR13570		1	CORREIA
27		KHR13070		1	CONDENSADOR, See Figure 09-25
35		KHR13590		1	DESIDRATADOR, See Figure 09-25
41		KHR12670		1	MANGUEIRA CONJUNTO, Incl. 42, 43
42		169052A1		2	ANEL O
43		KHR3054		1	TAMPA DO RESERVATÓRIO, Not Illustrated, See Figure 09-24
49		KHR12700		1	MANGUEIRA CONJUNTO, Incl. 50
50		169054A1		2	ANEL O
53		151175A1		1	PROTETOR DE MANGUEIR
54		166130A1		1	TUBO PLASTICO
55		KHR12970		1	MANGUEIRA
56		KHR16200		1	MANGUEIRA
57		166129A1		1	TUBO
58		166129A1		1	TUBO
59		KRJ1062		4	FIXADOR
60		KHR2581		6	BRACADEIRA
61		KHR2584		1	BRACADEIRA
62		KHJ1215		7	PARAFUSO
63		KHJ11090		3	BRACADEIRA
64		KHJ1215		6	PARAFUSO
65		KHR10220		4	ARGOLA DE FIXACAO
66		150496A1		1	ARGOLA DE FIXACAO

CABINA - AIRE ACONDICIONADO

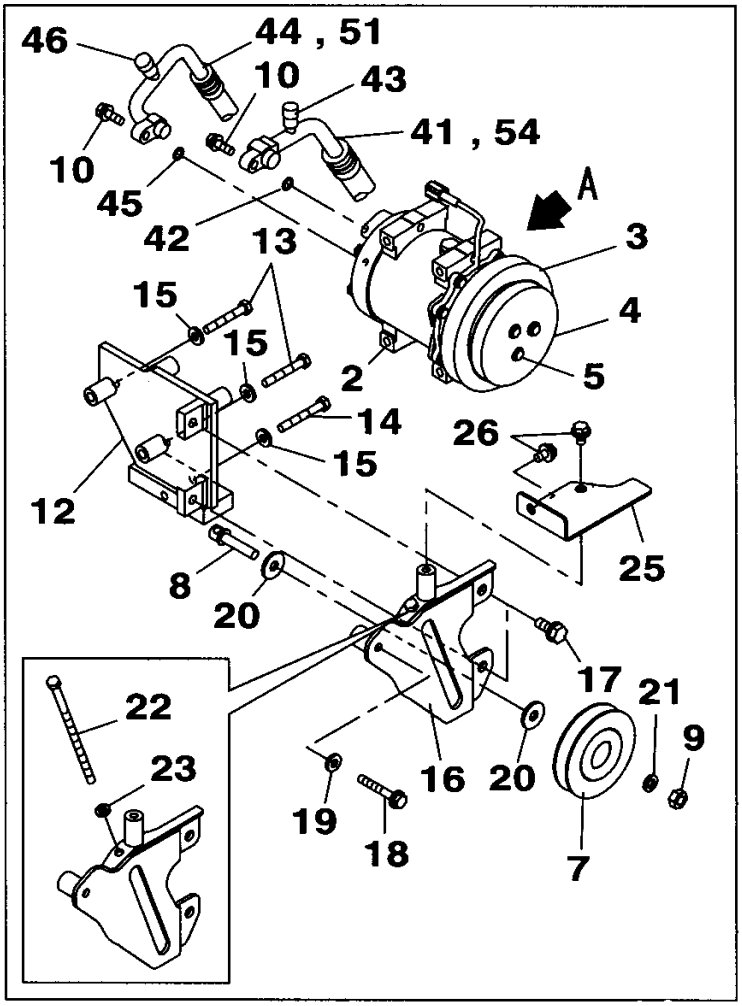

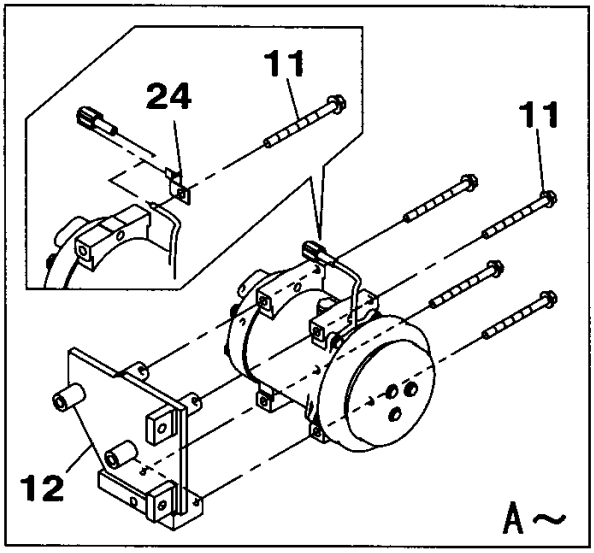

BS07A246

CABINA - AIRE ACONDICIONADO

REF	FN	PART NUMBER	YR/SN	QTY	DESCRIPTION
2		KHR3197		1	COMPRESSOR, Incl. 3 - 5
3		KHR3198		1	EMBREAGEM
4		KHR3974		1	TAMPA DE PROTECAO
5		KHR3975		3	PARAFUSO
7		KHR11760		1	POLIA
8		157299A1		1	EIXO
9		157292A1		1	PORCA
10		162457A1		2	PARAFUSO
11		KAR0921		4	PARAFUSO
12		KNR10510		1	SUPORTE
13		827-8055		2	PARAFUSO, Hex, M8 x 55, 10.9
14		827-8060		1	PARAFUSO, Hex, M8 x 60, 10.9
15		153081A1		3	ARRUELA PLANA
16		KNR10520		1	SUPORTE
17		166052A1		2	PARAFUSO
18		827-8055		1	PARAFUSO, Hex, M8 x 55, 10.9
19		153081A1		1	ARRUELA PLANA
20		151977A1		2	ARRUELA PLANA
21		892-11010		1	ARRUELA-TRAVA, M10
22		KHR3171		1	PARAFUSO
23		183-108VR		1	ARRUELA MOLA
24		158962A1		1	FIXADOR
25		KNR10660		1	TAMPA
26		166345A1		2	PARAFUSO
41		KHR12670		1	MANGUEIRA CONJUNTO, Incl. 42, 43
42		169052A1		2	ANEL O
43		KHR3054		1	TAMPA DO RESERVATÓRIO
44		KHR12680		1	MANGUEIRA CONJUNTO, Incl. 45, 46
45		169053A1		2	ANEL O
46		KHR3053		1	TAMPA DO RESERVATÓRIO
51		158067A1		1	PECA FLEXIVEL
54		166130A1		1	TUBO PLASTICO

AIRE ACONDICIONADO - CONDENSADOR E DESUMIDIFICADOR DO RECEPTOR

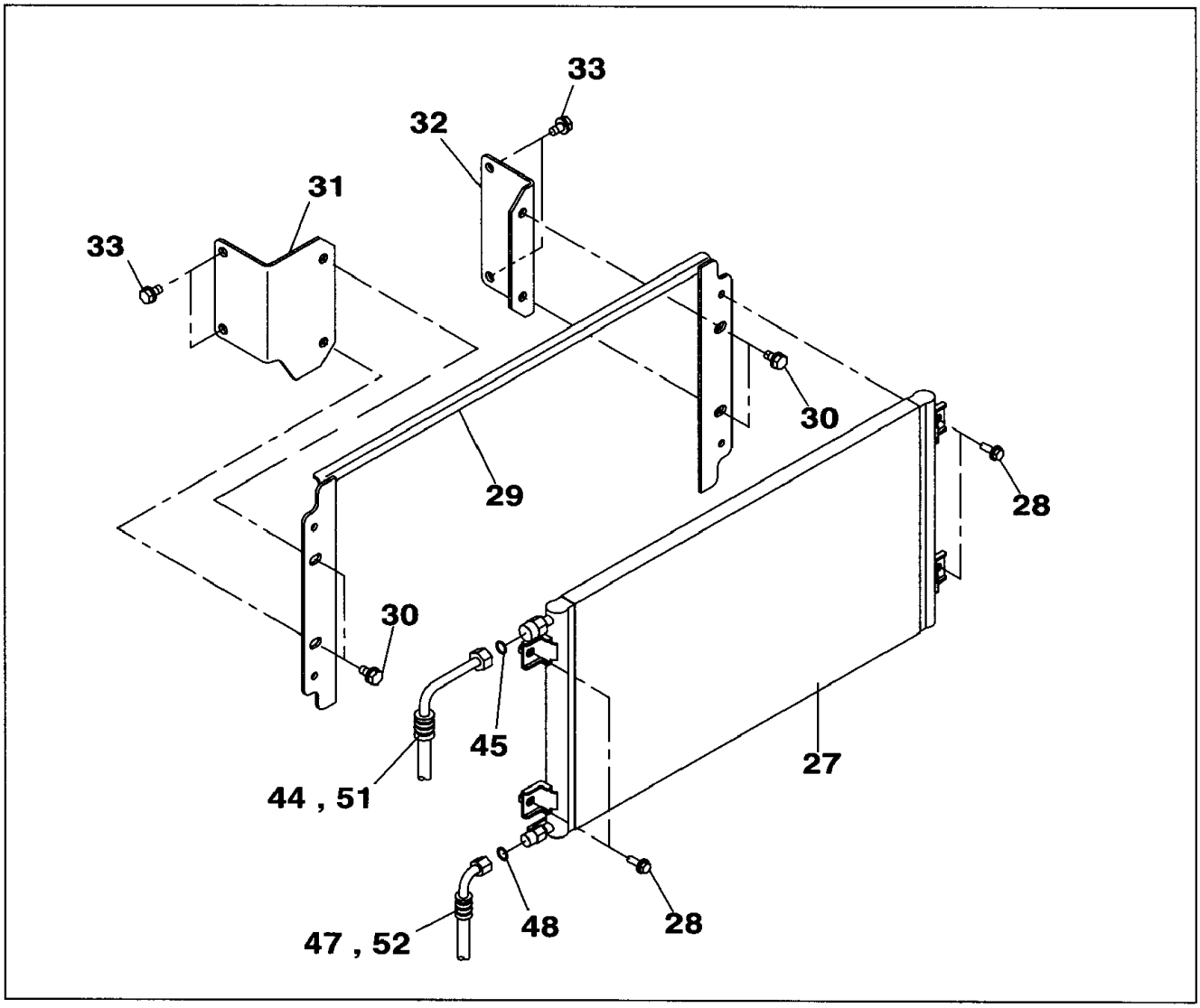

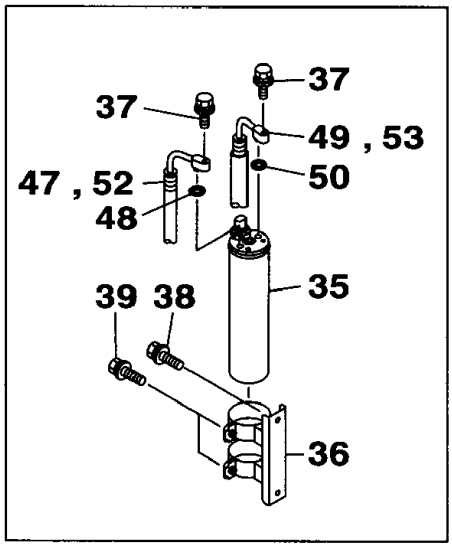

BS07A247

AIRE ACONDICIONADO - CONDENSADOR E DESUMIDIFICADOR DO RECEPTOR

REF	FN	PART NUMBER	YR/SN	QTY	DESCRIPTION
					CONDENSER
27		KHR13070		1	CONDENSADOR
28		167182A1		4	PARAFUSO
29		KLR10200		1	SUPORTE
30		166351A1		4	PARAFUSO
24		KLR10210		1	SUPORTE
25		KLR10220		1	SUPORTE
26		166351A1		4	PARAFUSO
					EVAPORATOR
35		KHR13590		1	DESIDRATADOR
36		KHR13600		1	SUPORTE
37		162043A1		2	PARAFUSO
38		167518A1		2	PARAFUSO
39		159906A1		2	PARAFUSO
44		KHR12680		1	MANGUEIRA CONJUNTO, Incl. 45, 46
45		169053A1		2	ANEL O
46		KHR3053		1	TAMPA DO RESERVATÓRIO, Not Illustrated; See Figure 09-24
47		KHR12690		1	MANGUEIRA CONJUNTO, Incl. 48
48		169054A1		2	ANEL O
49		KHR12700		1	MANGUEIRA CONJUNTO, Incl. 50
50		169054A1		2	ANEL O
51		158067A1		1	PECA FLEXIVEL
52		150773A1		1	PROTETOR DE MANGUEIR
53		151175A1		1	PROTETOR DE MANGUEIR

CABINA - LADO VIDRO E UNIDADE DE CONTROLE ELETRÔNICO

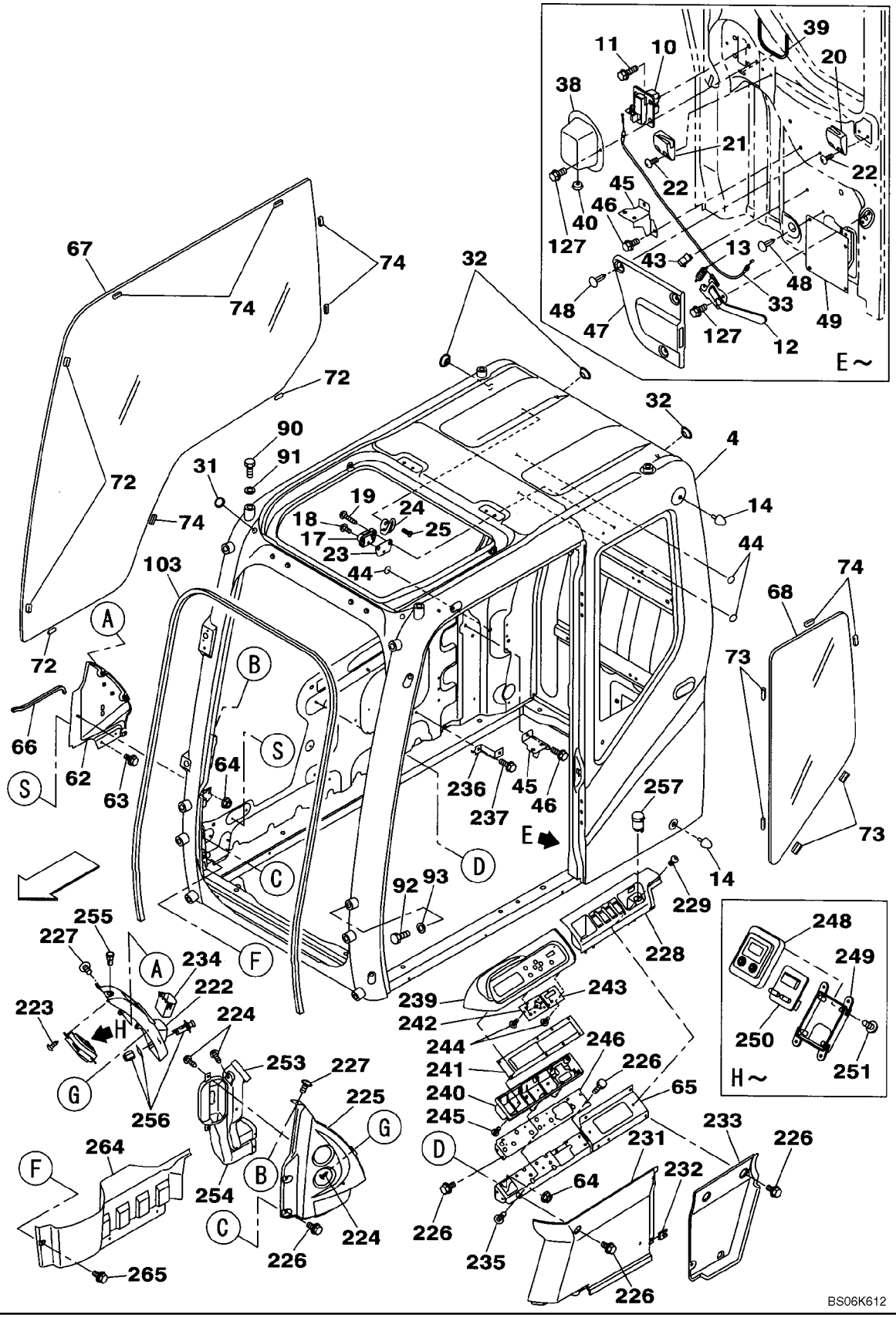

CABINA - LADO VIDRO E UNIDADE DE CONTROLE ELETRÔNICO

REF	FN	PART NUMBER	YR/SN	QTY	DESCRIPTION
		KHN16500		1	CABINE, Includes All Parts On Figures 04-10, 09-26 - 09-30
		KHN14520		1	CABINE, Incl. 4 - 127; Also Includes Parts On Figures 04-10, 09-27, 09-29, 09-30
4		KHN16550		1	ESTRUTURA CABINA
10		161384A1		1	MANILHA
11		KHN2688		4	PARAFUSO
12		KHN14170		1	ALAVANCA
13		KHN16400		1	MOLA
14		KHN2704		2	BATENTE
17		KHN14220		1	SUPORTE
18		KHN2682		1	PARAFUSO
19		KHN2681		2	PARAFUSO
20		KHN14230		1	SUPORTE
21		KHN14240		1	SUPORTE
22		KHN2768		4	PARAFUSO
23		KHN2722		1	PLACA
24		KHN14250		1	GANCHO
25		KHN14260		2	PARAFUSO
31		KHN14300		1	CASQUILHO ISOLADOR
32		KHN14310		3	CASQUILHO ISOLADOR
33		KHN14320		1	CONTROLE DE CURVA
38		KHN2723		1	TAMPA CONJUNTO
39		161385A1		1	ANEL DE VEDAÇÃO
40		161383A1		1	CASQUILHO ISOLADOR
43		161381A1		1	BRACADEIRA
44		KHN14350		3	JUNTA DE BORRACHA
45		KHN14360		2	SUPORTE
46		CDP1373		4	PARAFUSO
47		KHN14370		1	TAMPA
48		KHN14380		4	FIXADOR
49		KHN14390		1	ENCHIMENTO
62		KHN14701		1	TAMPA, COVER, Replaces KHN14700
63		KHN14710		2	PARAFUSO
64		161453A1		7	PORCA

CABINA - LADO VIDRO E UNIDADE DE CONTROLE ELETRÔNICO

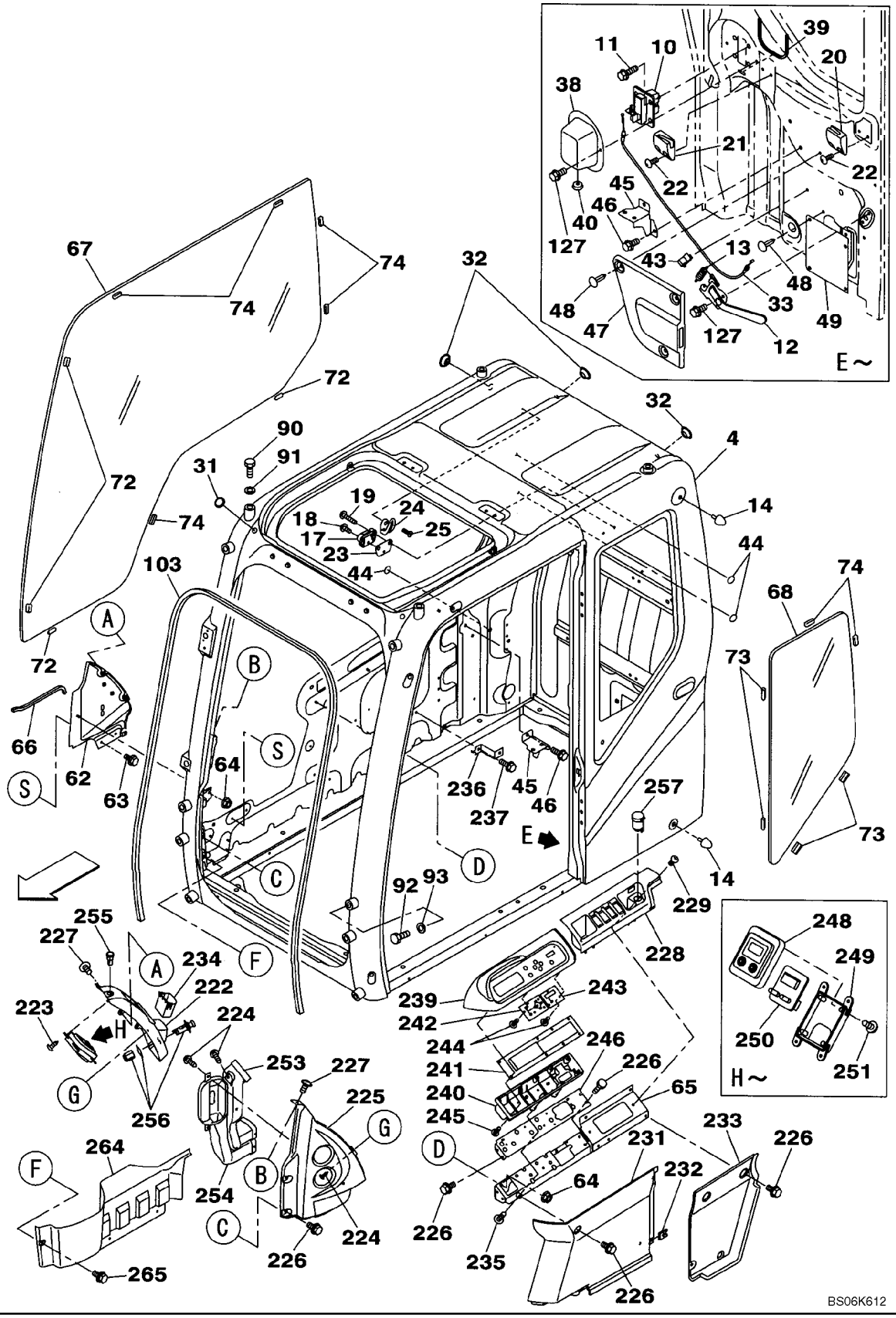

CABINA - LADO VIDRO E UNIDADE DE CONTROLE ELETRÔNICO

REF	FN	PART NUMBER	YR/SN	QTY	DESCRIPTION
65		KHN14730		1	SUPORTE
66		KHN16270		1	COBRE-JUNTA
67		KHN14890		1	JANELA
68		KHN14910		1	PARA-BRISA
72		KHN14970		4	ESPAÇADOR
73		KHN14980		4	ESPAÇADOR
74		KHN14990		7	ESPAÇADOR
90		KHN16280		4	PARAFUSO
91		KHN16290		4	ARRUELA PLANA
92		KHN16300		8	PARAFUSO
93		KHN16310		8	ARRUELA PLANA
103		KHN15930		1	VEDADOR
127		KHN2756		6	PARAFUSO
222		KHN12870		1	ENCHIMENTO
223		KHN16120		4	PARAFUSO
224		KHN16130		8	PARAFUSO
225		KHN12070		1	ENCHIMENTO
226		KHN14710		15	PARAFUSO
227		KHN16140		3	PARAFUSO
228		KHN13780		1	ENCHIMENTO
229		KHN2682		2	PARAFUSO
231		KHN12100		1	ENCHIMENTO
232		KHN16430		1	PORCA
233		KHN12120		1	ENCHIMENTO
234		KHN12880		1	ALOJAMENTO
235		KHN16150		6	PARAFUSO
236		KHN16160		1	SUPORTE
237		KHN2756		1	PARAFUSO
		KHR15201		1	INSTRUM. INDIC. MULTIPLA, ELECTRONIC UNIT, CONTROL Incl. 239 - 245, Replaces KHR15200
239		KHR15270		1	CAIXA/CARCAÇA
240		KHR15230		1	CAIXA/CARCAÇA
241		KHR15241		1	CENTRAL ELETRÔNICA
242		KHR15250		1	CIRCUITO ELECTRICO
243		KHR15260		1	CIRCUITO ELECTRICO

CABINA - LADO VIDRO E UNIDADE DE CONTROLE ELETRÔNICO

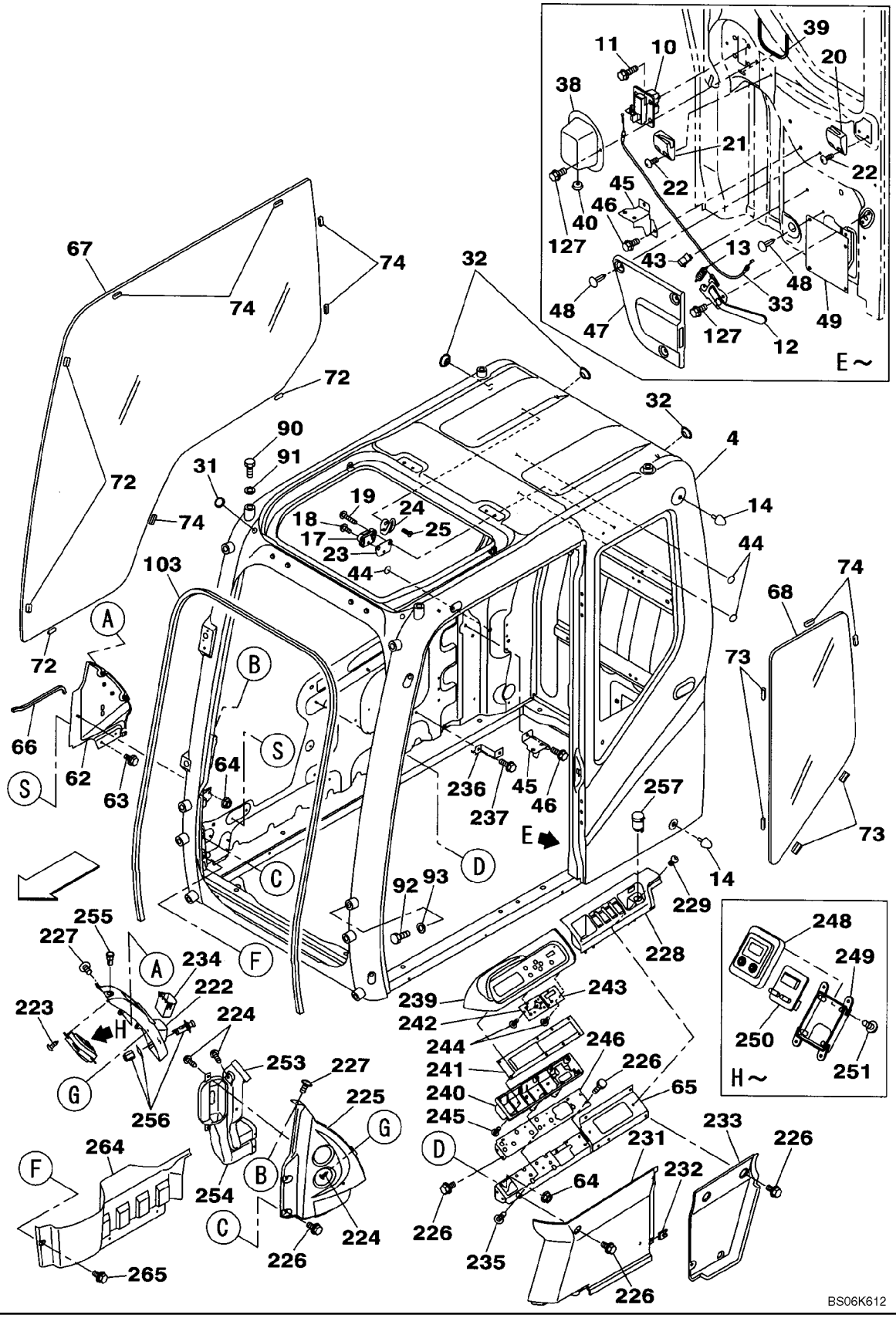

CABINA - LADO VIDRO E UNIDADE DE CONTROLE ELETRÔNICO

REF	FN	PART NUMBER	YR/SN	QTY	DESCRIPTION
244		KHR3213		9	PARAFUSO
245		161859A1		8	PARAFUSO
246		KHR15170		1	SUPORTE
		KHR10060		1	RELÓGIO, Incl. 248 - 251
248		KHR13810		1	CAIXA/CARCAÇA
249		KHR13820		1	CAIXA/CARCAÇA
250		KHR13830		1	CIRCUITO ELECTRICO
251		KHR13840		4	PARAFUSO
		KHR10540		1	SENSOR, Incl. 253 - 255
253		KHR13200		1	CONDUTO DE AR
254		KHR13230		1	CONDUTO DE AR
255		KHR10540		1	SENSOR
256		KHR11210		1	ACENDEDOR DE CIGARROS
257		KHR2501		1	SOQUETE
264		KHN13760		1	ENCHIMENTO, If Used
265		KHN2132		3	PARAFUSO, Hex Flg Hd, M6 x 16, If Used

CABINE - ABAIXE O VIDRO E HANDRAILS DIANTEIROS E TRASEIROS

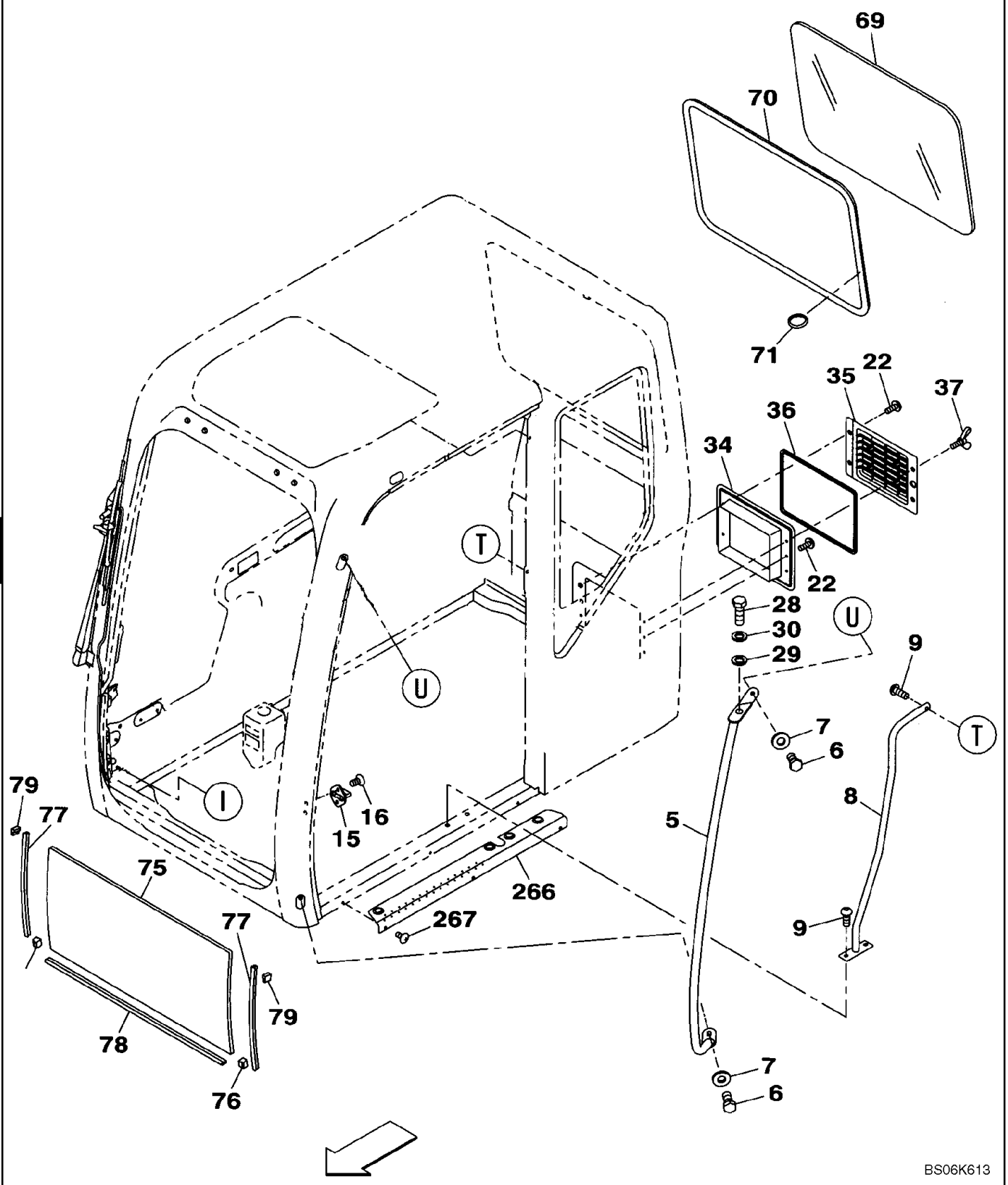

CABINE - ABAIXE O VIDRO E HANDRAILS DIANTEIROS E TRASEIROS

REF	FN	PART NUMBER	YR/SN	QTY	DESCRIPTION
		KHN14520		1	CABINE, Incl. 5 - 79; Also Includes Parts On Figures 04-10, 09-26, 09-29, 09-30
5		KHN14110		1	CORRIMÃO
6		KHN14120		2	PARAFUSO
7		KHN14130		2	ARRUELA PLANA
8		KHN14150		1	CORRIMÃO
9		KHN14160		3	PARAFUSO
15		KHN14200		1	BATENTE
16		KHN2702		2	PARAFUSO
22		KHN2768		3	PARAFUSO
28		KHN14270		1	PARAFUSO
29		KHN14280		1	ARRUELA PLANA
30		KHN14290		1	ARRUELA PLANA
34		KHN2769		1	TAMPA
35		KHN14330		1	TAMPA
36		KHN2771		1	JUNTA
37		KHN14340		2	PARAFUSO
69		KHN14930		1	JANELA
70		KHN14950		1	BUJÃO DE BORRACHA
71		KHN14960		1	ANEL
75		KHN15000		1	JANELA
76		KHN15010		2	LIMITADOR
77		KHN15020		2	TRILHO CONJUNTO
78		KHN15030		1	VEDADOR
79		KHN15040		2	COBRE-JUNTA
266		KHN13630		1	PROTEÇÃO
267		KHN13640		3	PARAFUSO

PORTA DA CABINA

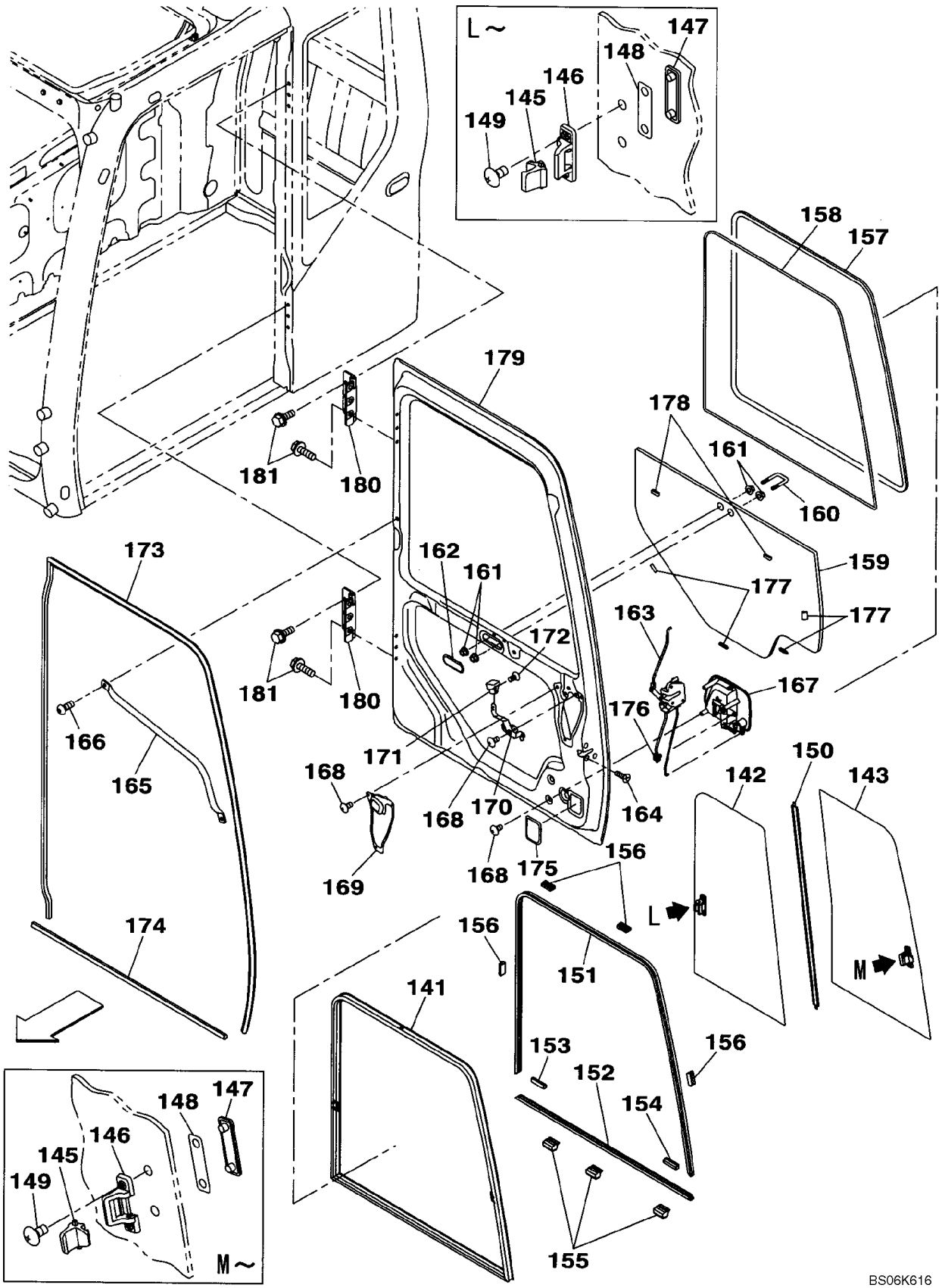

10

PORTA DA CABINA

REF	FN	PART NUMBER	YR/SN	QTY	DESCRIPTION
		KHN13860		1	PORTA, Incl. 141 - 181
		KHN15350		1	JANELA, Incl. 141 - 154
141		KHN15370		1	ESTRUTURA PARA-BRISA
142		KHN15380		1	JANELA
143		KHN15400		1	JANELA
		KHN15420		2	FECHADURA, Incl. 145 - 149
145		KHN16350		1	FECHADURA
146		KHN16360		1	FECHADURA
147		KHN16370		1	PRENDEDOR
148		KHN15260		2	PLACA
149		KHN16390		4	PARAFUSO
150		KHN15430		1	JUNTA DE BORRACHA
151		KHN15440		1	GUIA DESLIZANTE
152		KHN15450		1	GUIA DESLIZANTE
153		KHN15460		1	LIMITADOR
154		KHN15470		1	LIMITADOR
155		KHN15480		3	ESPAÇADOR
156		KHN1507		4	ESPAÇADOR
157		KHN15490		1	JUNTA
158		KHN15500		1	COBRE-JUNTA
159		KHN15510		1	JANELA
160		KHN15530		1	GANCHO
161		KHN2808		4	PORCA
162		KHN16320		1	TAMPA
163		KHN15540		1	FECHADURA
164		KHN15550		3	PARAFUSO
165		KHN15560		1	CORRIMÃO
166		KHN14160		2	PARAFUSO
167		KHN15570		1	MANILHA
168		KHN2682		8	PARAFUSO
169		KHN15580		1	TAMPA
170		KHN15590		1	MANILHA
171		KHN15600		1	MANÍPULO
172		KHN15610		2	PARAFUSO
173		KHN15620		1	VEDADOR

PORTA DA CABINA

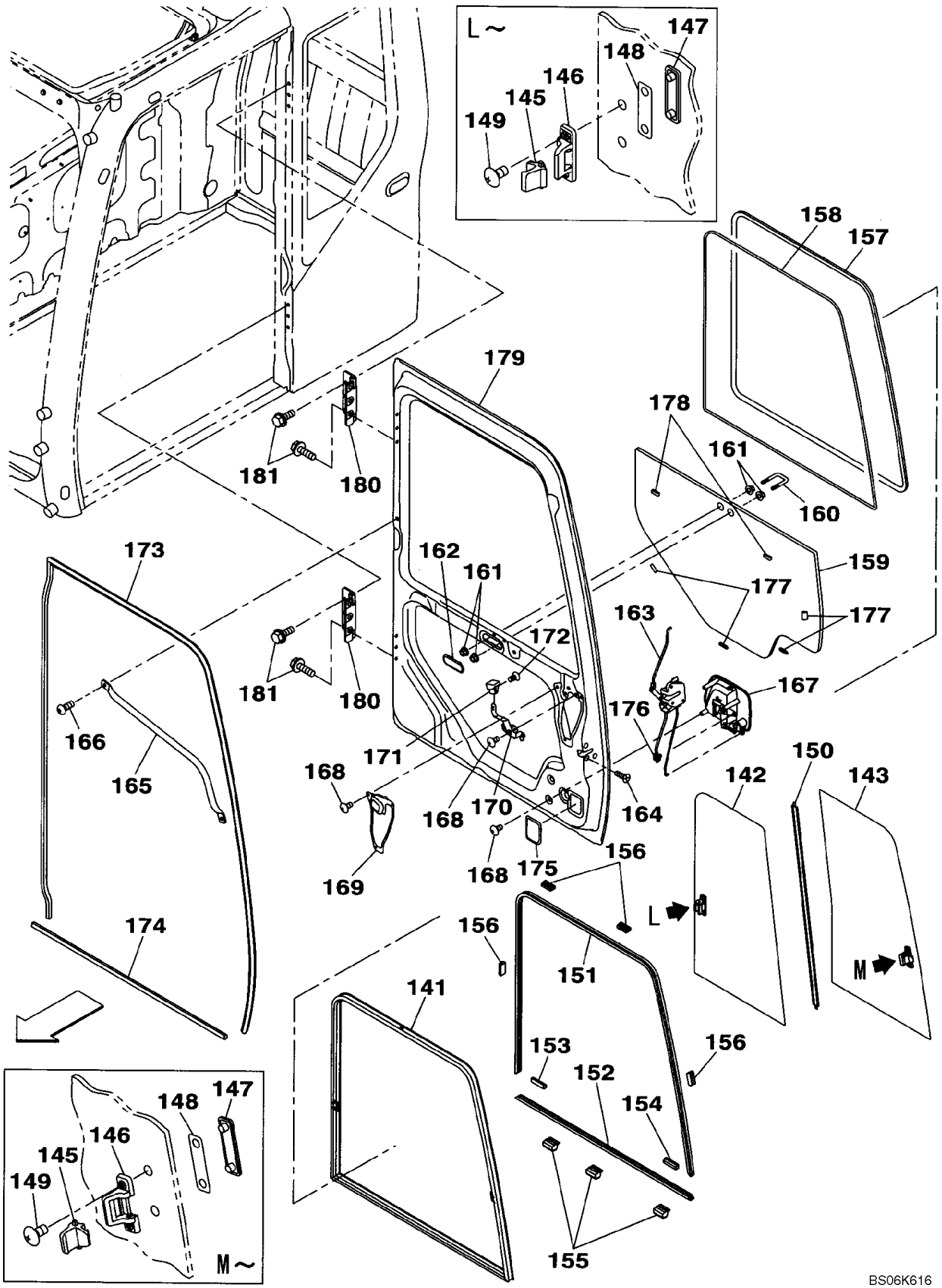

PORTA DA CABINA

REF	FN	PART NUMBER	YR/SN	QTY	DESCRIPTION
174		KHN15630		1	VEDADOR
175		KHN15640		1	TAMPA
176		KHN15650		1	JUNTA DE BORRACHA
177		KHN14980		4	ESPAÇADOR
178		KHN14990		2	ESPAÇADOR
179		KHN16580		1	PORTA
180		KHN2907		2	DOBRADIÇA, Replaces KHN14983
181		KHN2850		12	PARAFUSO, Replaces KHN14984

CABINA - TETO, JANELA DE ABRIR

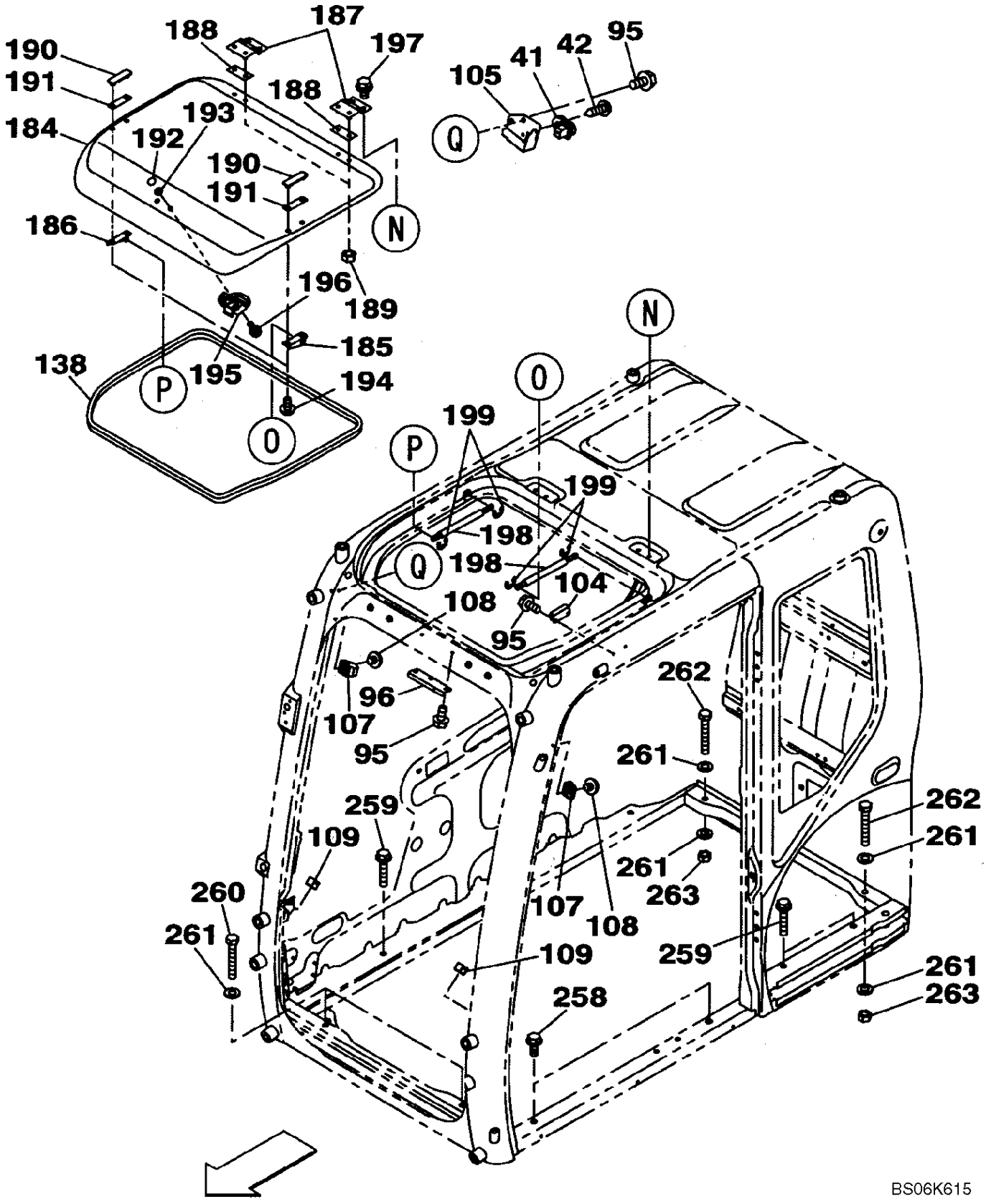

CABINA - TETO, JANELA DE ABRIR

REF	FN	PART NUMBER	YR/SN	QTY	DESCRIPTION
		KHN14520		1	CABINE, Incl. 41 - 138; Also Includes Parts On Figures 04-10, 09-26, 09-27, 09-30
41		KHR2950		1	INTERRUPTOR, Limit
42		KHN2713		1	PARAFUSO
95		KHN15690		7	PARAFUSO
96		KHN15870		1	BATENTE
104		KHN15940		1	LIMITADOR
105		KHN15950		1	SUPORTE
107		KHN15960		2	LIMITADOR
108		KHN15970		2	PARAFUSO
109		KHN15980		2	LIMITADOR
138		KHN15340		1	COBRE-JUNTA
		KHN13700		1	ALÇAPÃO, Roof Window Assy; Incl. 184 - 199
		KHN15180		1	ALÇAPÃO, Incl. 184 - 196
184		KHN15190		1	JANELA
185		KHN15200		1	SUPORTE
186		KHN15210		1	SUPORTE
187		KHN15220		2	DOBRADIÇA
188		KHN15230		4	PRENDEDOR
189		KHN15240		4	PORCA
190		KHN15250		2	PRENDEDOR
191		KHN15260		2	PLACA
192		KHN15270		2	PRENDEDOR
193		KHN15280		2	PRENDEDOR
194		KHN15290		4	PARAFUSO
195		KHN15300		1	FECHADURA
196		KHN15310		2	PARAFUSO
197		KHN15320		4	PARAFUSO
198		KHN2827		2	COMPASSO
199		KHN2828		4	ANEL
258		166352A1		2	PARAFUSO
259		167183A1		4	PARAFUSO
260		827-12075		2	PARAFUSO, Hex, M12 x 75, 10.9
261		150811A1		6	ARRUELA PLANA
262		KHN11930		2	PARAFUSO

CABINA - TETO, JANELA DE ABRIR

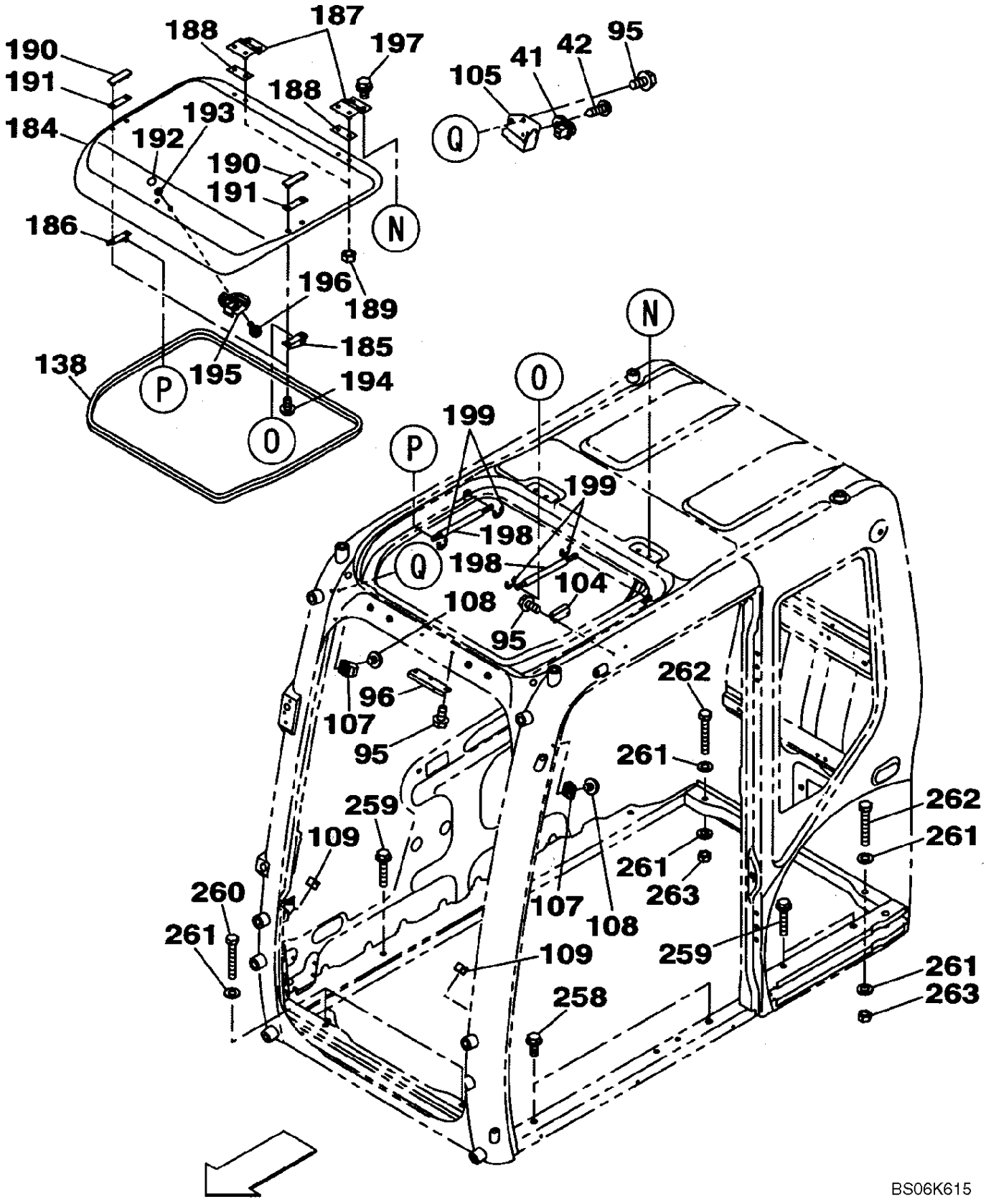

CABINA - TETO, JANELA DE ABRIR

REF	FN	PART NUMBER	YR/SN	QTY	DESCRIPTION
263		829-1412		2	PORCA, M12, Cl 10

09-30		p1	01/07

CABINA - JANELAS, DIANTEIRAS

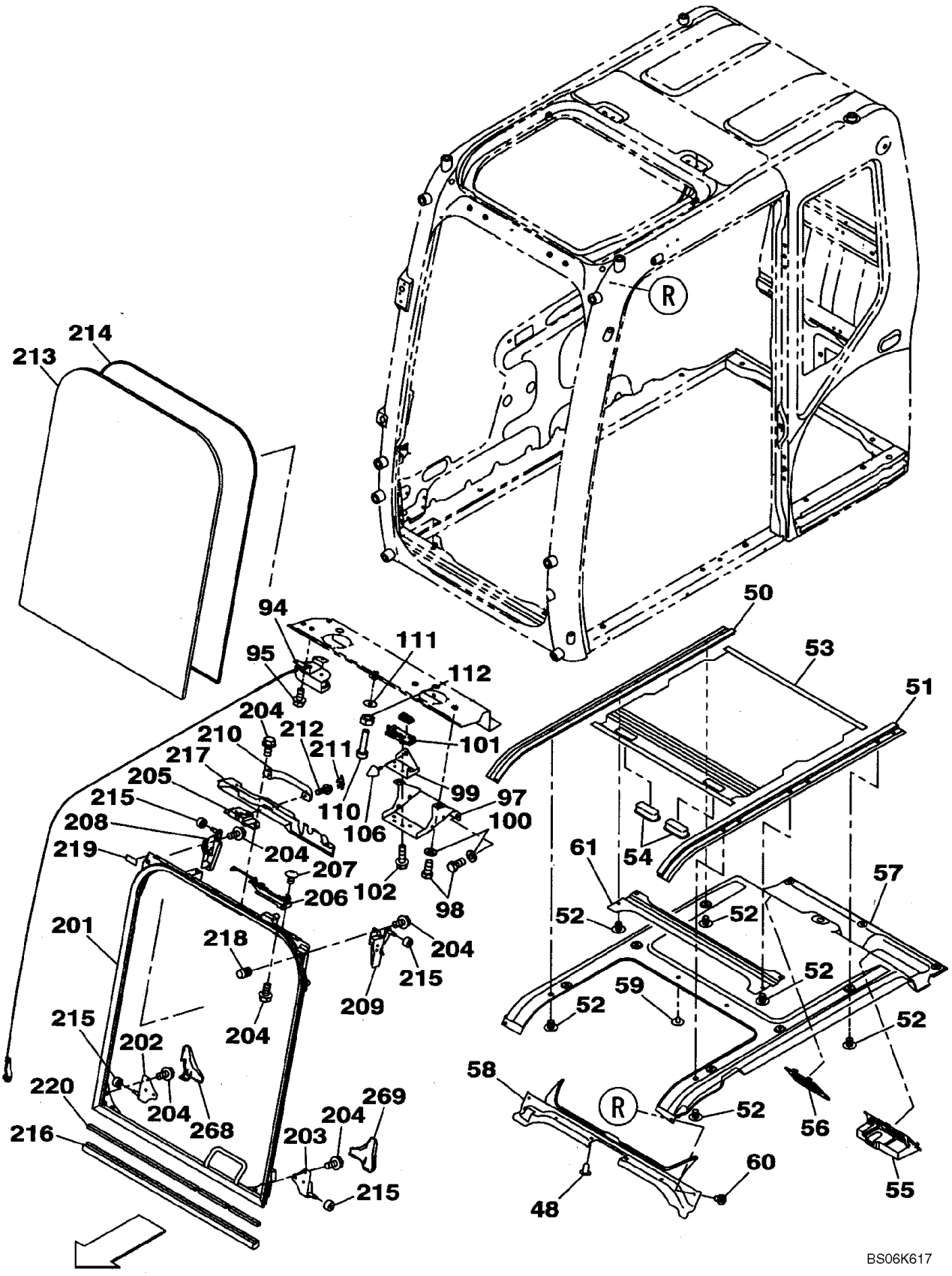

10

CABINA - JANELAS, DIANTEIRAS

REF	FN	PART NUMBER	YR/SN	QTY	DESCRIPTION
		KHN14520		1	CABINE, Incl. 48 - 112, 268, 269; Also Includes Parts On Figures 04-10, 09-26, 09-27, 09-29
48		KHN14380		7	FIXADOR
50		KHN14540		1	GUIA DESLIZANTE
51		KHN14550		1	GUIA DESLIZANTE
52		KHN14570		6	PARAFUSO
53		KHN14580		1	PÁRA-SOL
54		KHN14590		2	MANILHA
55		KHN14600		1	TAMPA
56		KHN14610		1	PENEIRA
57		KHN14620		1	SAPATA
58		KHN14630		1	TAMPA
59		KHN14640		11	FIXADOR
60		KHN14650		2	PARAFUSO
61		KHN14680		1	SUPORTE
94		KHN15860		1	MOLA
95		KHN15690		2	PARAFUSO
97		KHN15880		1	SUPORTE
98		KHN15890		4	PARAFUSO
99		KHN15900		1	SUPORTE
100		KHN15910		4	ARRUELA PLANA
101		KHN15920		1	GANCHO
102		KHN2686		3	PARAFUSO
106		KHN16330		1	LIMITADOR
110		KHN15990		1	LIMITADOR
111		KHN16000		1	ARRUELA PLANA
112		KHN16010		1	PORCA
		KHN13680		1	JANELA CONJUNTO, Incl. 201 - 220
201		KHN15660		1	ESTRUTURA PARA-BRISA
202		KHN15670		1	APOIO
203		KHN15680		1	APOIO
204		KHN15690		14	PARAFUSO
205		KHN15700		1	FECHADURA
206		KHN15710		1	ALAVANCA
207		KHN15720		2	PARAFUSO

CABINA - JANELAS, DIANTEIRAS

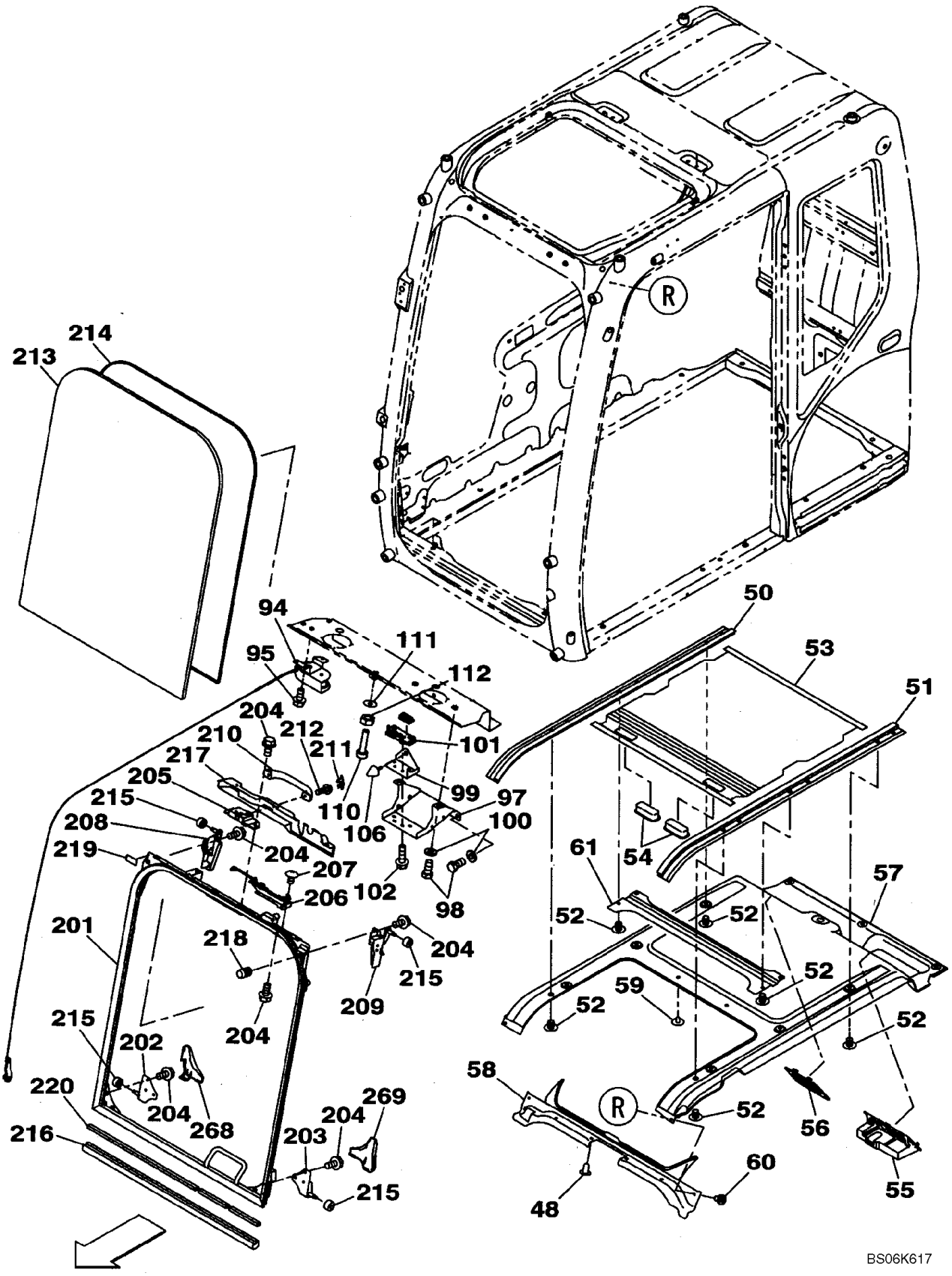

CABINA - JANELAS, DIANTEIRAS

REF	FN	PART NUMBER	YR/SN	QTY	DESCRIPTION
208		KHN15730		1	ELO
209		KHN15740		1	ELO
210		KHN15750		1	MANILHA
211		KHN15760		2	TAMPA DO RESERVATÓRIO
212		KHN15770		2	PARAFUSO
213		KHN15780		1	PARA-BRISA
214		KHN15790		1	COBRE-JUNTA
215		KHN15800		4	ROLO
216		KHN15810		1	COBRE-JUNTA
217		KHN15820		1	TAMPA
218		KHN15830		1	LIMITADOR
219		KHN15840		1	VEDADOR
220		KHN15850		1	COBRE-JUNTA
268		KHN16220		1	TAMPA
269		KHN16230		1	TAMPA

09-31		p1	06/07

CABINA - RETROVISOR, VISTA TRASEIRA

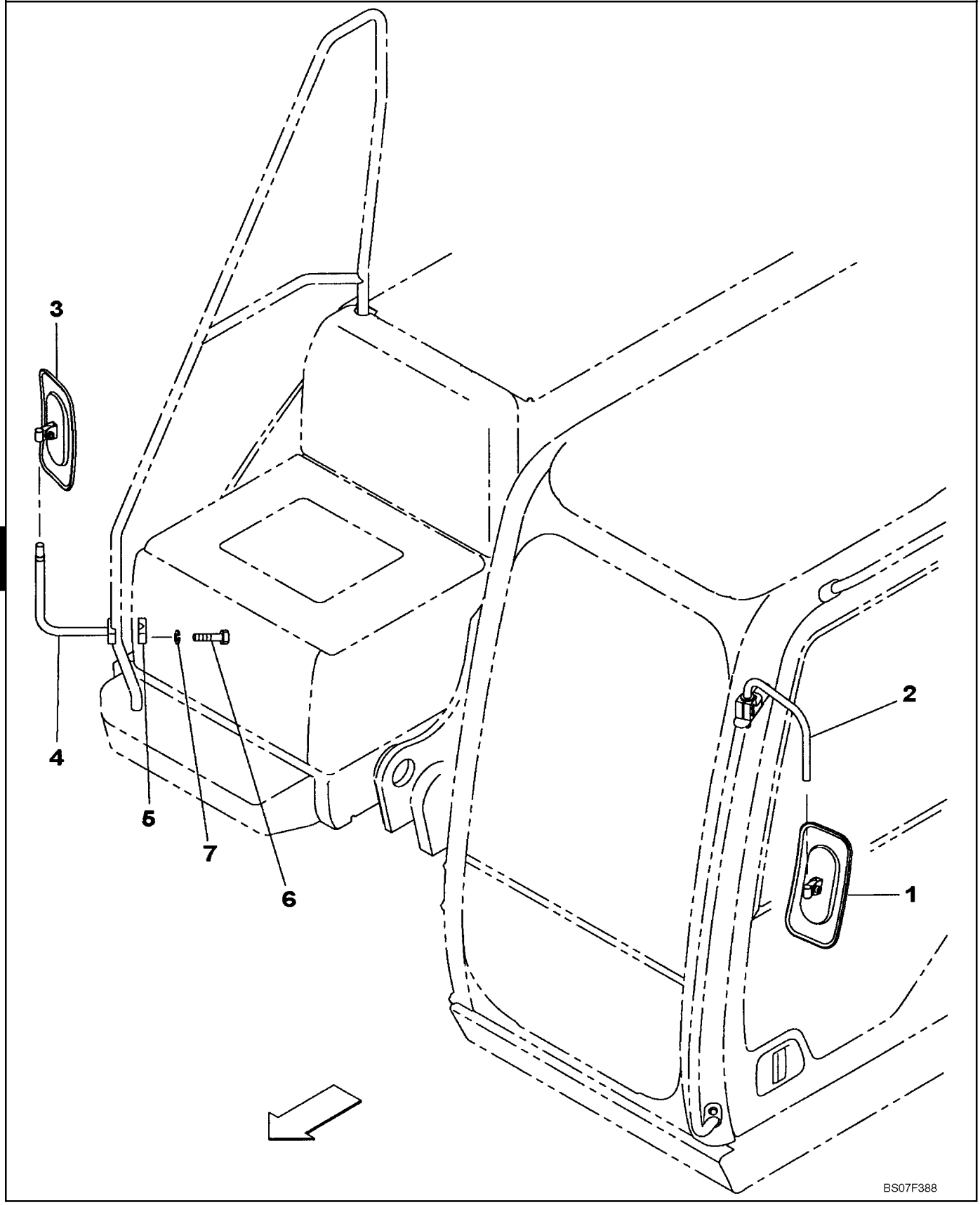

10

CABINA - RETROVISOR, VISTA TRASEIRA

REF	FN	PART NUMBER	YR/SN	QTY	DESCRIPTION
1		KHP13190		2	ESPELHO RETROVISOR, Replaces 151025A1
2		KHP11350		1	SUPORTE
3		KHP13190		2	ESPELHO RETROVISOR, Replaces 151025A1
4		169337A1		2	SUPORTE
5		169338A1		2	BRACADEIRA
6		827-10045		4	PARAFUSO, Hex, M10 x 45, 10.9
7		892-11010		4	ARRUELA-TRAVA, M10

09-32		p1	01/07

PROTEÇÕES, ESCOVA -

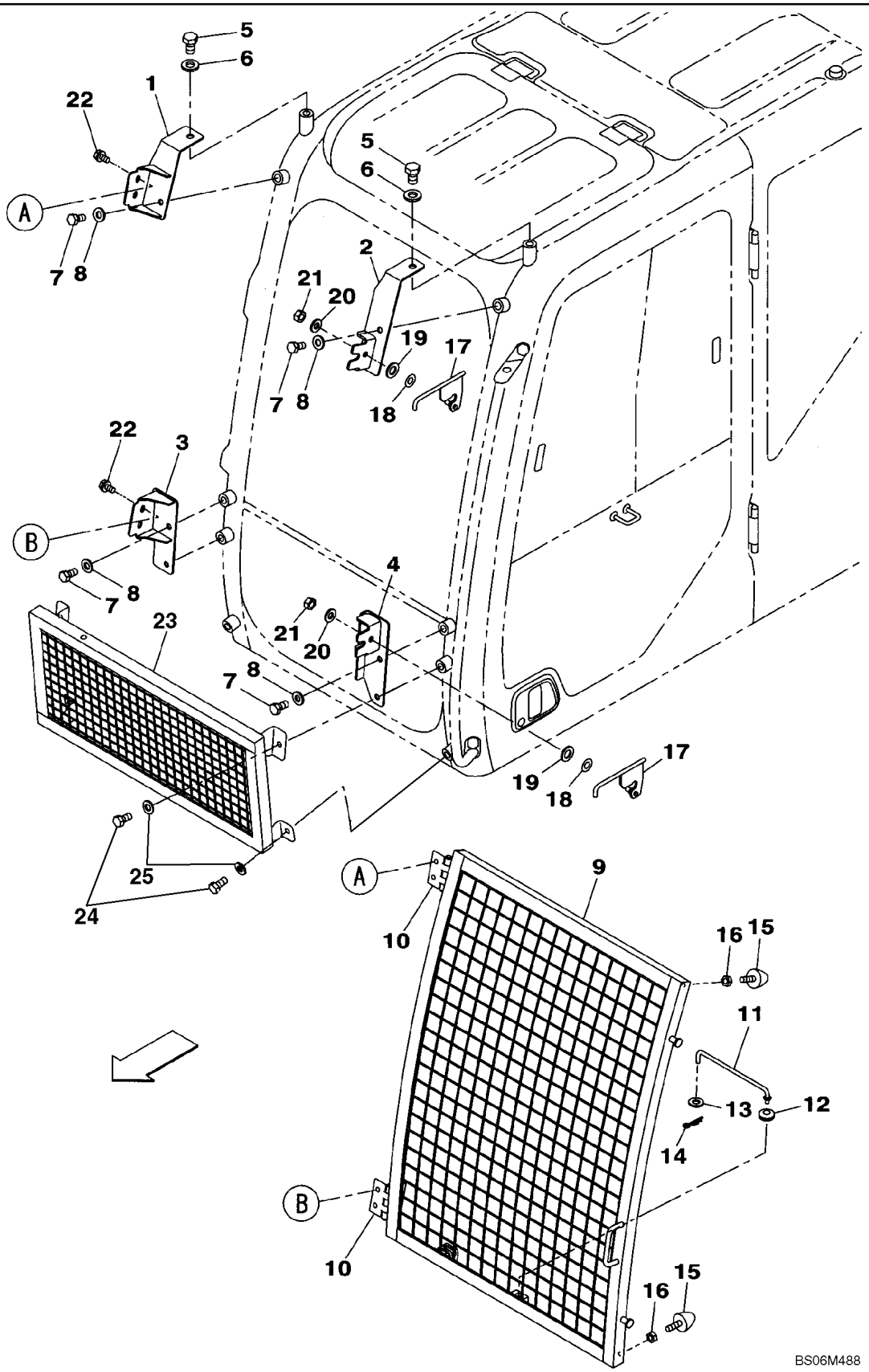

10

PROTEÇÕES, ESCOVA -

REF	FN	PART NUMBER	YR/SN	QTY	DESCRIPTION
1		KHN16931		1	SUPORTE, Replaces KHN16930
2		KHN16940		1	SUPORTE
3		KHN16950		1	SUPORTE
4		KHN16960		1	SUPORTE
5		102R016Y025R		2	PARAFUSO
6		150814A1		2	ARRUELA PLANA
7		627-12025		4	PARAFUSO, Hex, M12 x 25, 10.9
8		150811A1		4	ARRUELA PLANA
9		KHN16861		1	PÁRA-BARRO, Incl. 10; Replaces KHN16860
10		KHN16890		2	DOBRADIÇA
11		KHN16910		1	APOIO
12		KHN16920		1	CASQUILHO ISOLADOR
13		895-11010		1	ARRUELA PLANA, M10 x 20 x 2
14		153181A1		1	GRAMPO
15		151108A1		2	BATENTE
16		KBH0446		2	PORCA
17		KHN16970		2	ALAVANCA
18		896-11016		2	ARRUELA PLANA, M17.5 x 30 x 4, HT
19		157560A1		2	ARRUELA PLANA
20		150811A1		2	ARRUELA PLANA
21		829-1412		2	PORCA, M12, Cl 10
22		166351A1		4	PARAFUSO
23		KHN14810		1	PÁRA-BARRO
24		627-12025		4	PARAFUSO, Hex, M12 x 25, 10.9
25		150811A1		4	ARRUELA PLANA

09-33		p1	01/07

PROTEÇÕES, ESCOVA - GRADE DIANTEIRA DA CABINA

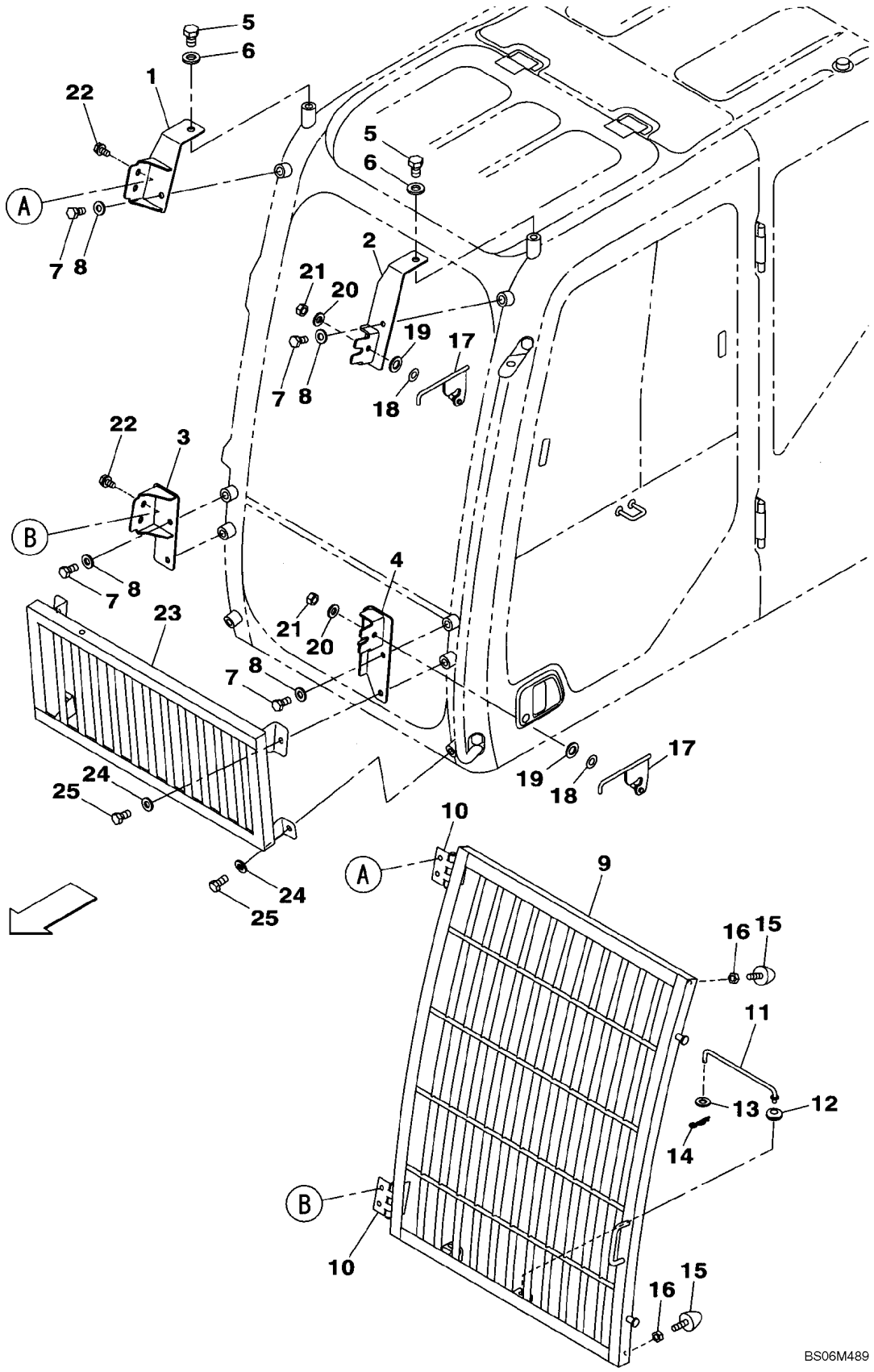

10

PROTEÇÕES, ESCOVA - GRADE DIANTEIRA DA CABINA

REF	FN	PART NUMBER	YR/SN	QTY	DESCRIPTION
1		KHN16931		1	SUPORTE, Replaces KHN16930
2		KHN16940		1	SUPORTE
3		KHN16950		1	SUPORTE
4		KHN16960		1	SUPORTE
5		102R016Y025R		2	PARAFUSO
6		150814A1		2	ARRUELA PLANA
7		627-12025		4	PARAFUSO, Hex, M12 x 25, 10.9
8		150811A1		4	ARRUELA PLANA
9		KHN16871		1	PÁRA-BARRO, Incl. 10; Replaces KHN16870
10		KHN16890		2	DOBRADIÇA
11		KHN16910		1	APOIO
12		KHN16920		1	CASQUILHO ISOLADOR
13		895-11010		1	ARRUELA PLANA, M10 x 20 x 2
14		153181A1		1	GRAMPO
15		151108A1		2	BATENTE
16		KBH0446		2	PORCA
17		KHN16970		2	ALAVANCA
18		896-11016		2	ARRUELA PLANA, M17.5 x 30 x 4, HT
19		157560A1		2	ARRUELA PLANA
20		150811A1		2	ARRUELA PLANA
21		829-1412		2	PORCA, M12, Cl 10
22		166351A1		4	PARAFUSO
23		KHN16880		1	PÁRA-BARRO
24		150811A1		4	ARRUELA PLANA
25		627-12025		4	PARAFUSO, Hex, M12 x 25, 10.9

09-33A		p1	04/07

VANDAL GUARD - WINDOW, FRONT

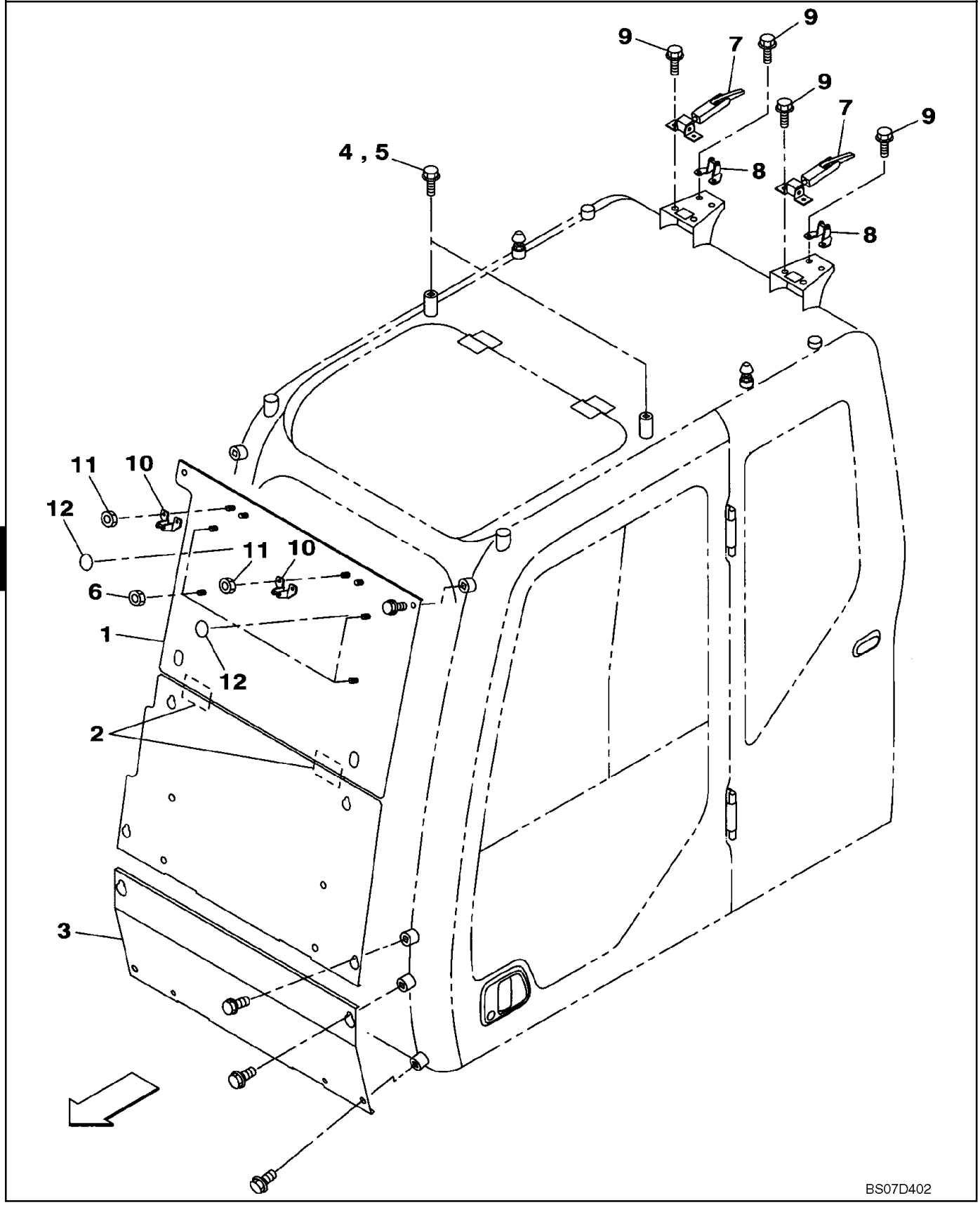

VANDAL GUARD - WINDOW, FRONT

REF	FN	PART NUMBER	YR/SN	QTY	DESCRIPTION
1		KHN13890		1	TAMPA
2		152590A1		2	DOBRADIÇA
3		KHN13900		1	TAMPA
4		166351A1		2	PARAFUSO
5		KHN14470		2	ESPAÇADOR
6		150469A1		4	PORCA
7		150854A1		2	LINGUETA
8		150856A1		2	LINGUETA
9		166350A1		8	PARAFUSO
10		150856A1		2	LINGUETA
11		150469A1		4	PORCA
12		151756A1		2	PLACA

09-34		p1	02/07

DEFLETOR DE CHUVA

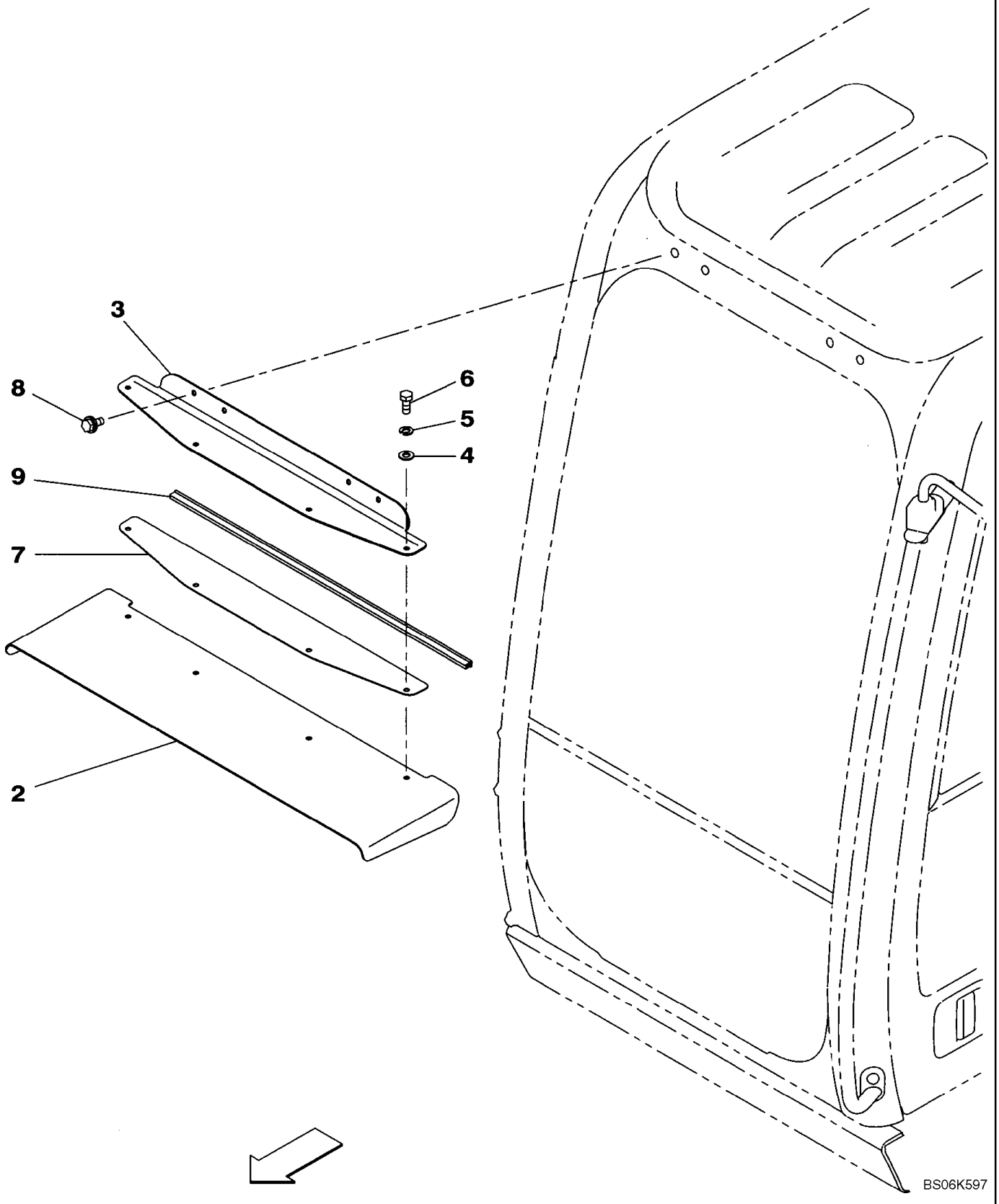

DEFLETOR DE CHUVA

REF	FN	PART NUMBER	YR/SN	QTY	DESCRIPTION
2		KHN11900		1	DEFLETOR
3		KHN13600		1	SUPORTE
4		895-11008		4	ARRUELA PLANA, M8 x 16 x 1.6
5		183-108VR		4	ARRUELA MOLA
6		627-8020		4	PARAFUSO, Hex, M8 x 20, 10.9
7		KHN11920		1	SUPORTE
8		166350A1		4	PARAFUSO
9		KHN2901		1	JUNTA

PLUMA

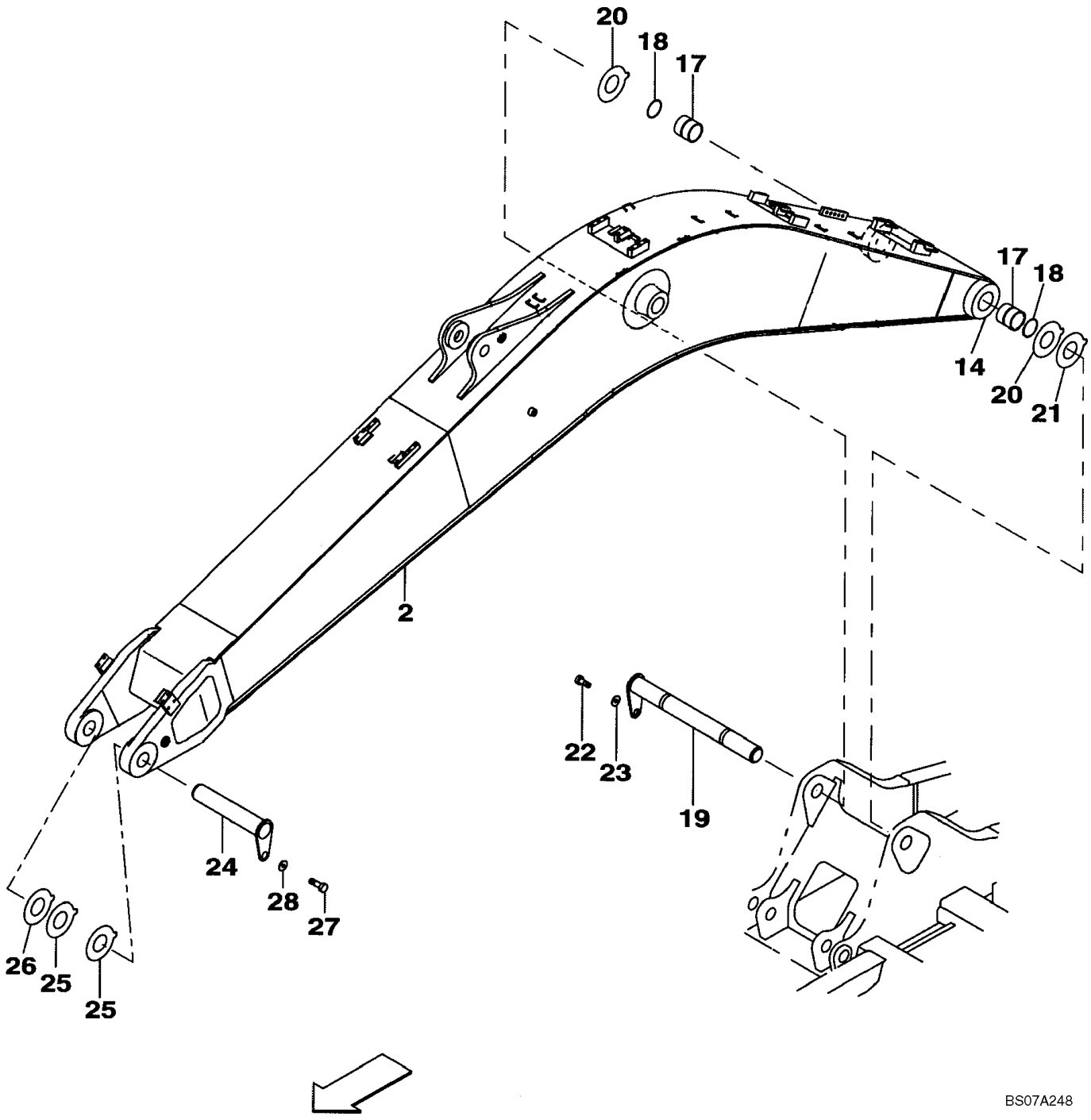

PLUMA

REF	FN	PART NUMBER	YR/SN	QTY	DESCRIPTION
		KLV11960		1	BRACO LANCA, Incl. 2, 17, 18
2		NSS		1	BOLETIM INFORMATIVO, Boom
17		KRV1388		2	CASTILHO ALTO LUBRIF
18		159647A1		2	ANEL DE VEDAÇÃO
19		KLV12580		1	PINO
20		KLV11140		2	CALCO DE AFINACAO
21		KLV11150		1	CALCO DE AFINACAO
22		627-12025		1	PARAFUSO, Hex, M12 x 25, 10.9
23		157141A1		1	ARRUELA PLANA
24		KLV11270		1	PINO
25		KLV11140		2	CALCO DE AFINACAO
26		KLV11150		1	CALCO DE AFINACAO
27		627-12025		1	PARAFUSO, Hex, M12 x 25, 10.9
28		157141A1		1	ARRUELA PLANA

CIRCUITO DE LUBRIFICAÇÃO - PLUMA

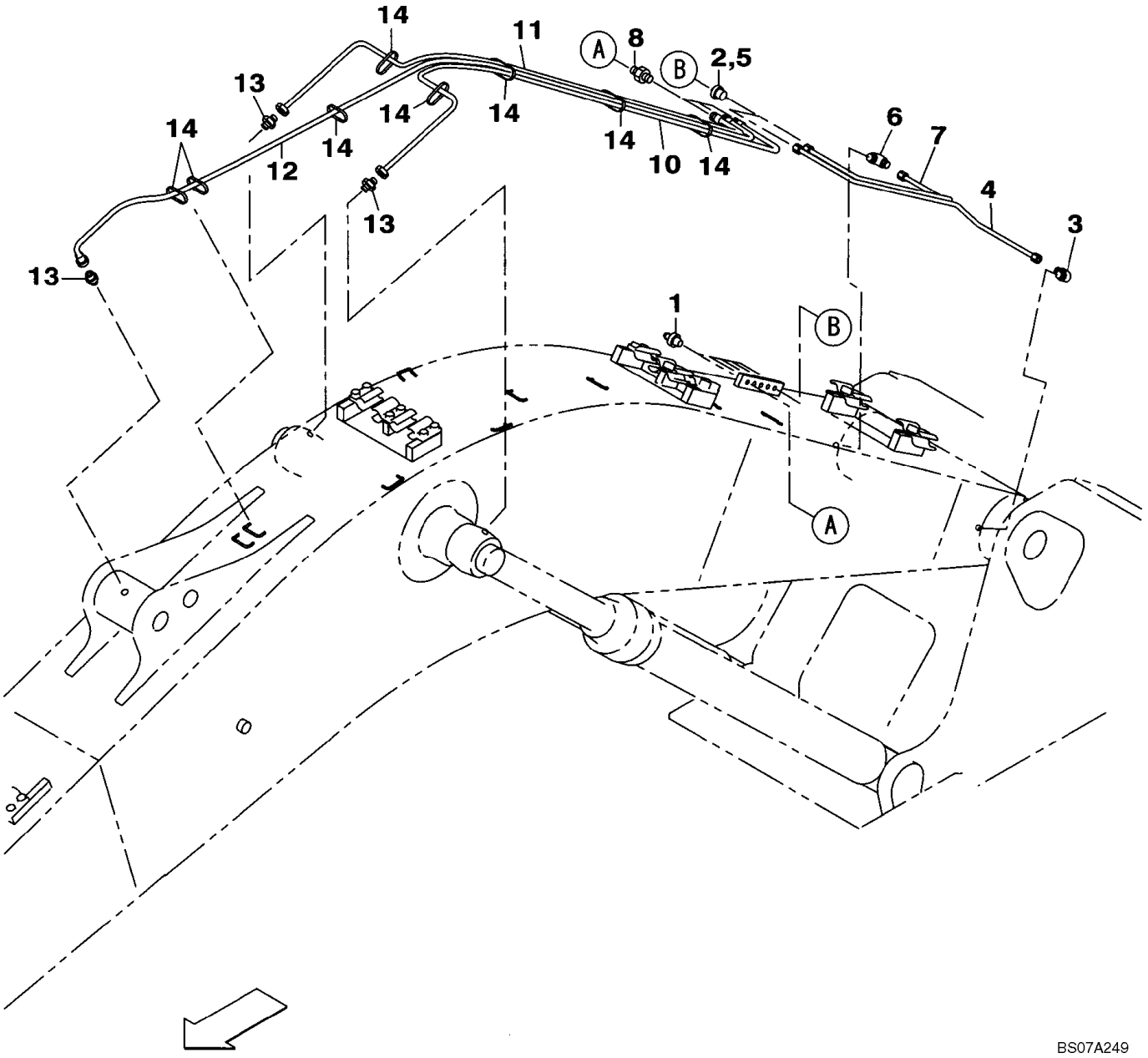

CIRCUITO DE LUBRIFICAÇÃO - PLUMA

REF	FN	PART NUMBER	YR/SN	QTY	DESCRIPTION
1		153630A1		5	GRAXEIRA
2		152599A1		1	CONECTOR
3		152627A1		1	COTOVELO
4		KLV12550		1	TUBULAÇÃO HIDRAULICO
5		152599A1		1	CONECTOR
6		152627A1		1	COTOVELO
7		KLV12560		1	TUBULAÇÃO HIDRAULICO
8		KRJ4050		3	ADAPTADOR
10		KHJ2071		1	MANGUEIRA CONJUNTO
11		KHJ2072		1	MANGUEIRA CONJUNTO
12		KHJ2081		1	MANGUEIRA CONJUNTO
13		153603A1		3	ADAPTADOR
14		150067A1		9	ARGOLA DE FIXACAO

CILINDRO DA LANÇA - SUPORTE

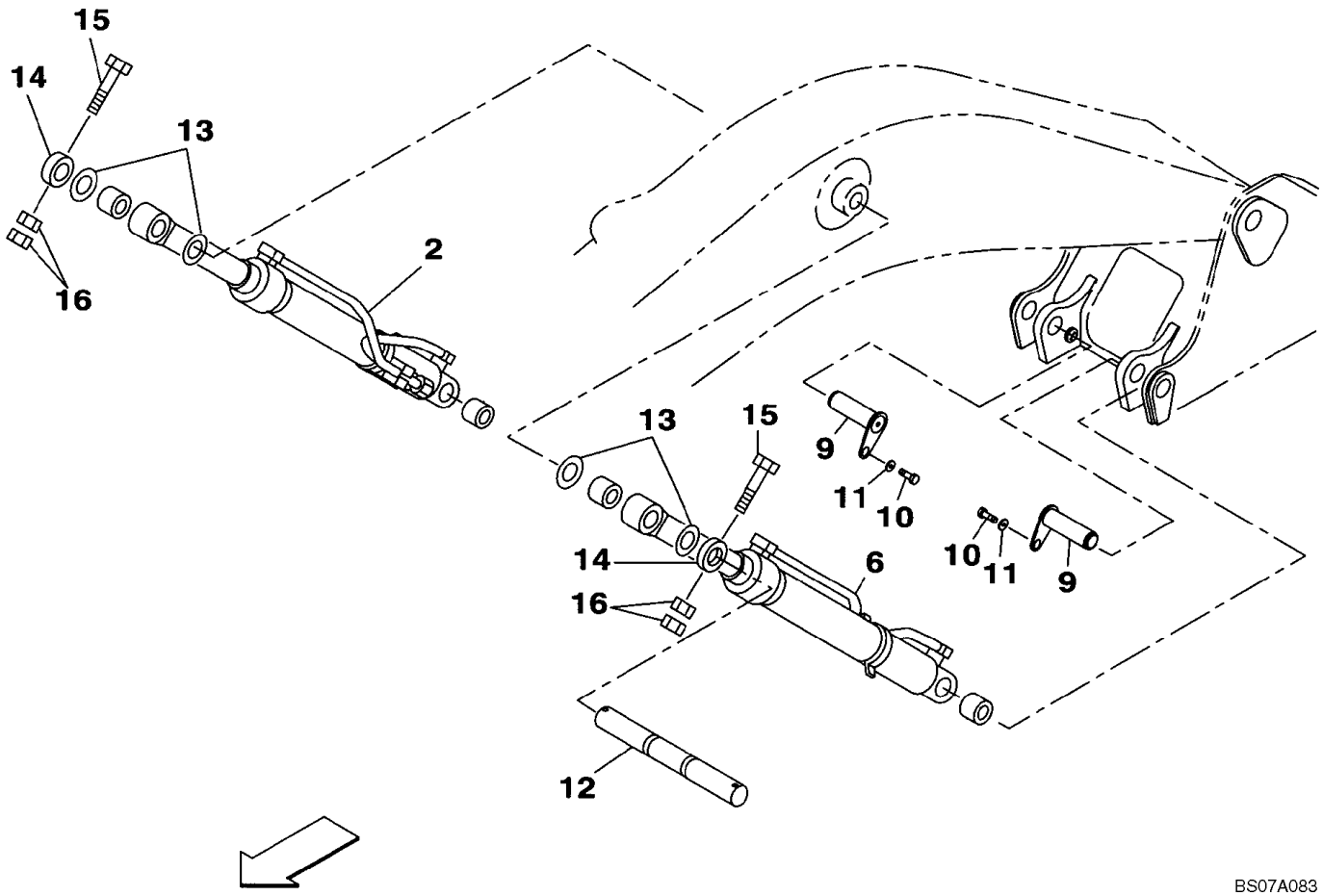

BS07A083

CILINDRO DA LANÇA - SUPORTE

REF	FN	PART NUMBER	YR/SN	QTY	DESCRIPTION
2		KLV10960		1	CILINDRO HIDRÁULICO, Right Hand; See Figure 08-83
6		KLV10980		1	CILINDRO HIDRÁULICO, Left Hand; See Figure 08-84
9		KLV11300		2	PINO
10		627-12025		2	PARAFUSO, Hex, M12 x 25, 10.9
11		157141A1		2	ARRUELA PLANA
12		KLV10100		1	PINO
13		161294A1		4	CALCO DE AFINACAO
14		150138A1		2	BRAÇADEIRA
15		514-1112		2	PARAFUSO, Hex, M16 x 1.5 x 140, 10.9
16		829-13416		4	PORCA, M16 x 1.5, Cl 10

GRAMPO - LANÇA

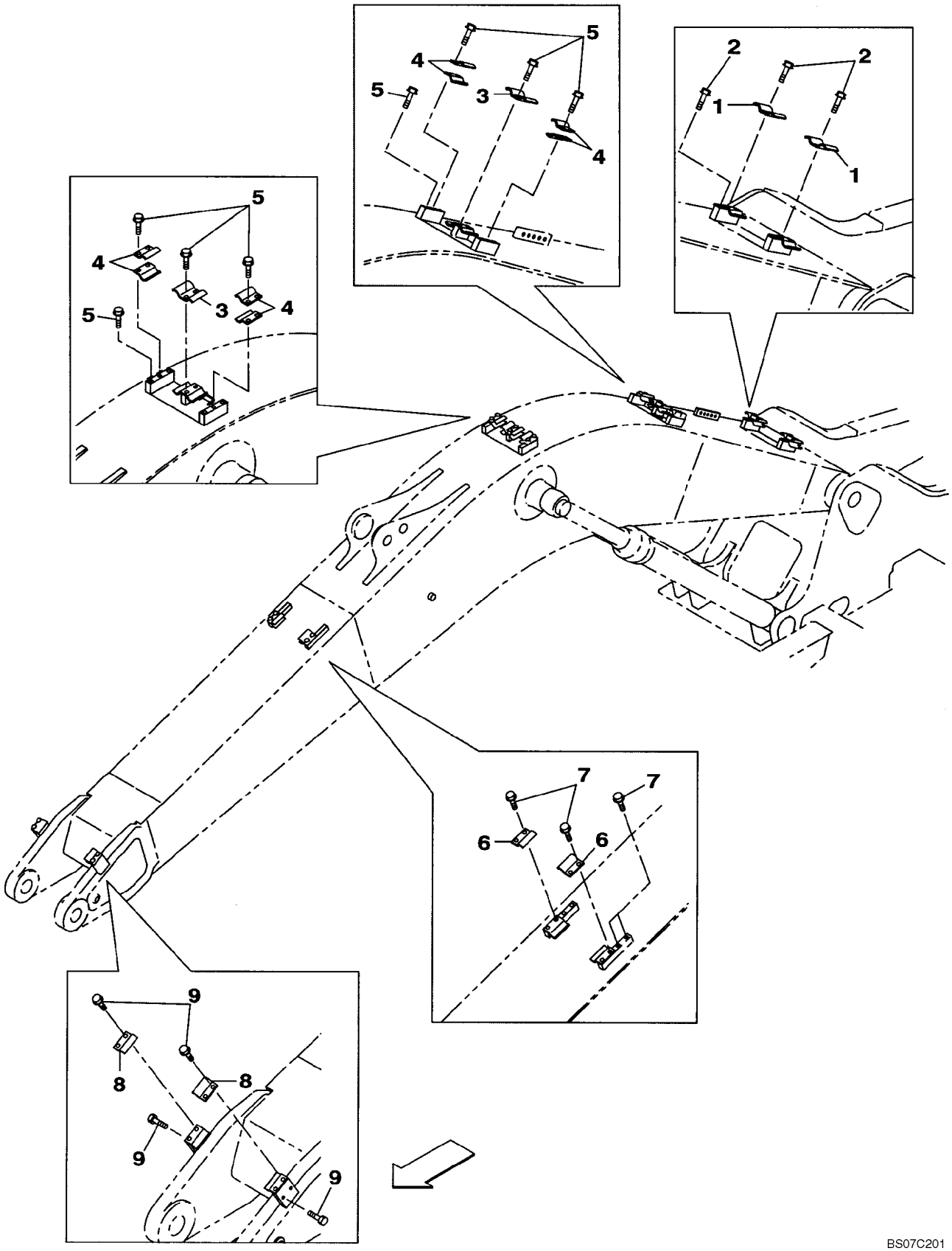

GRAMPO - LANÇA

REF	FN	PART NUMBER	YR/SN	QTY	DESCRIPTION
1		KHV10450		2	BRACADEIRA
2		166352A1		6	PARAFUSO
3		KHV10450		2	BRACADEIRA
4		KHV10460		8	BRACADEIRA
5		166352A1		16	PARAFUSO
6		KHV10460		2	BRACADEIRA
7		166352A1		8	PARAFUSO
8		KHV10460		2	BRACADEIRA
9		166352A1		8	PARAFUSO

09-38	01	p1	03/07

GRAMPO - LANÇA

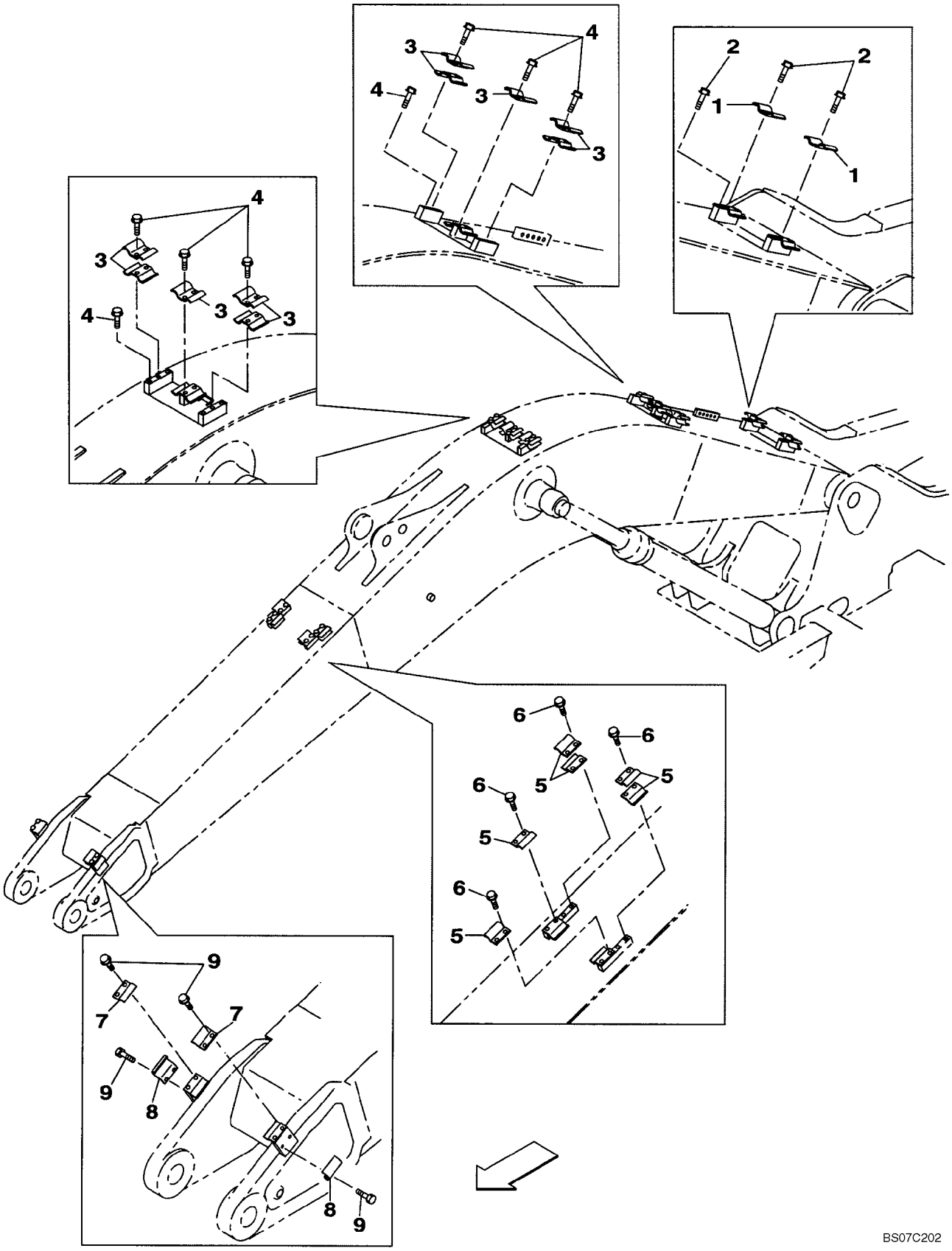

10

GRAMPO - LANÇA

REF	FN	PART NUMBER	YR/SN	QTY	DESCRIPTION
1		KHV10450		2	BRACADEIRA
2		166352A1		6	PARAFUSO
3		KHV10450		10	BRACADEIRA
4		166352A1		16	PARAFUSO
5		KHV10460		6	BRACADEIRA
6		166352A1		8	PARAFUSO
7		KHV10460		2	BRACADEIRA
8		KHV10990		2	BRACADEIRA
9		166352A1		8	PARAFUSO

GRAMPO - LANÇA

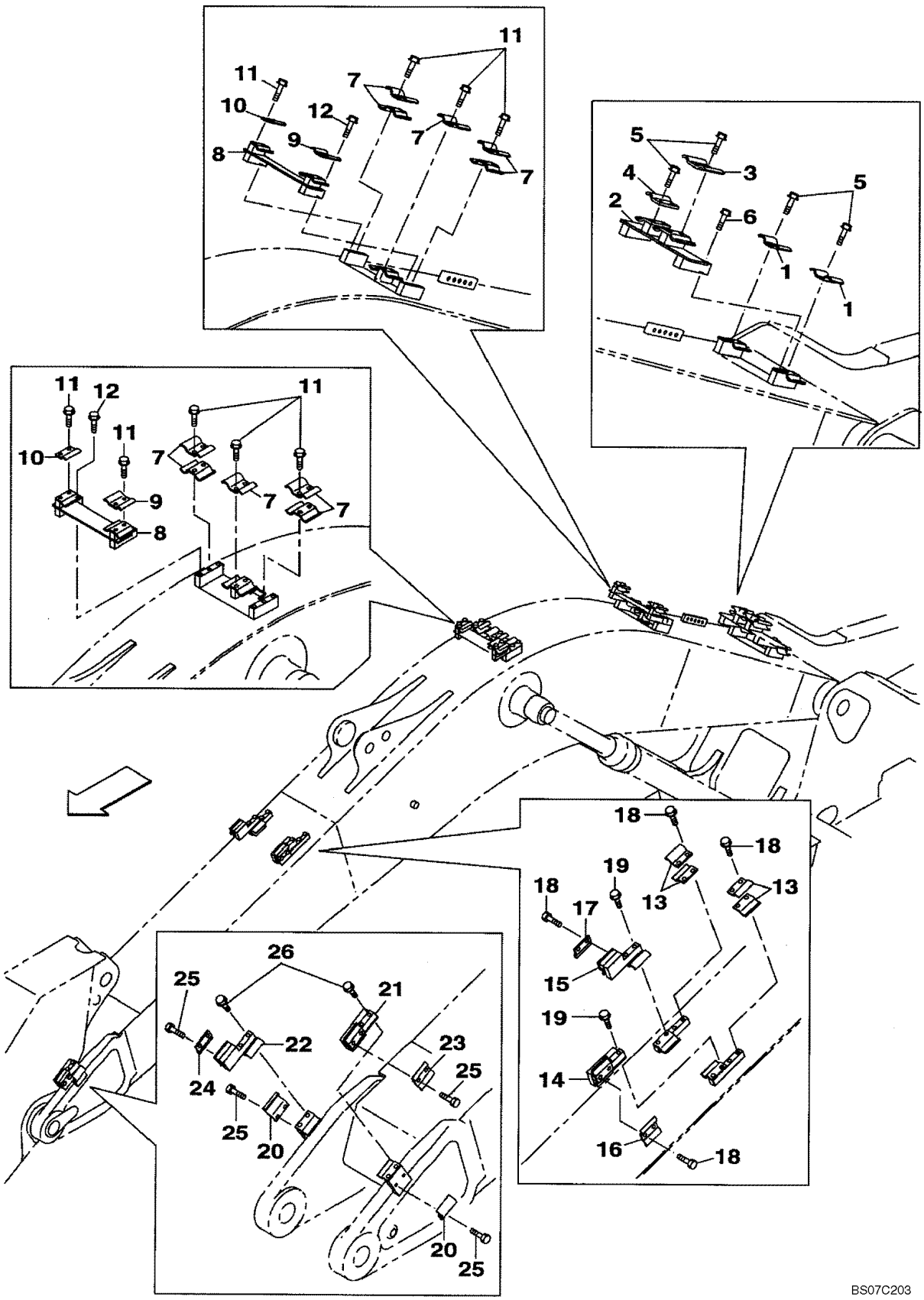

GRAMPO - LANÇA

REF	FN	PART NUMBER	YR/SN	QTY	DESCRIPTION
1		KHV10450		2	BRACADEIRA
2		KLV12300		1	BARRA
3		KHV10480		1	BRACADEIRA
4		KHV10500		1	BRACADEIRA
5		166352A1		8	PARAFUSO
6		167183A1		2	PARAFUSO
7		KHV10450		10	BRACADEIRA
8		KLV12330		2	BARRA
9		KHV10480		2	BRACADEIRA
10		KHV10500		2	BRACADEIRA
11		166352A1		20	PARAFUSO
12		167183A1		4	PARAFUSO
13		KHV10460		4	BRACADEIRA
14		KNV13810		1	BARRA
15		KNV13820		1	BARRA
16		KHV10480		1	BRACADEIRA
17		KHV10500		1	BRACADEIRA
18		166352A1		8	PARAFUSO
19		167183A1		4	PARAFUSO
20		KHV10990		2	BRACADEIRA
21		KNV13810		1	BARRA
22		KNV13820		1	BARRA
23		KHV10480		1	BRACADEIRA
24		KHV10500		1	BRACADEIRA
25		166352A1		8	PARAFUSO
26		167183A1		4	PARAFUSO

GRAMPO - LANÇA

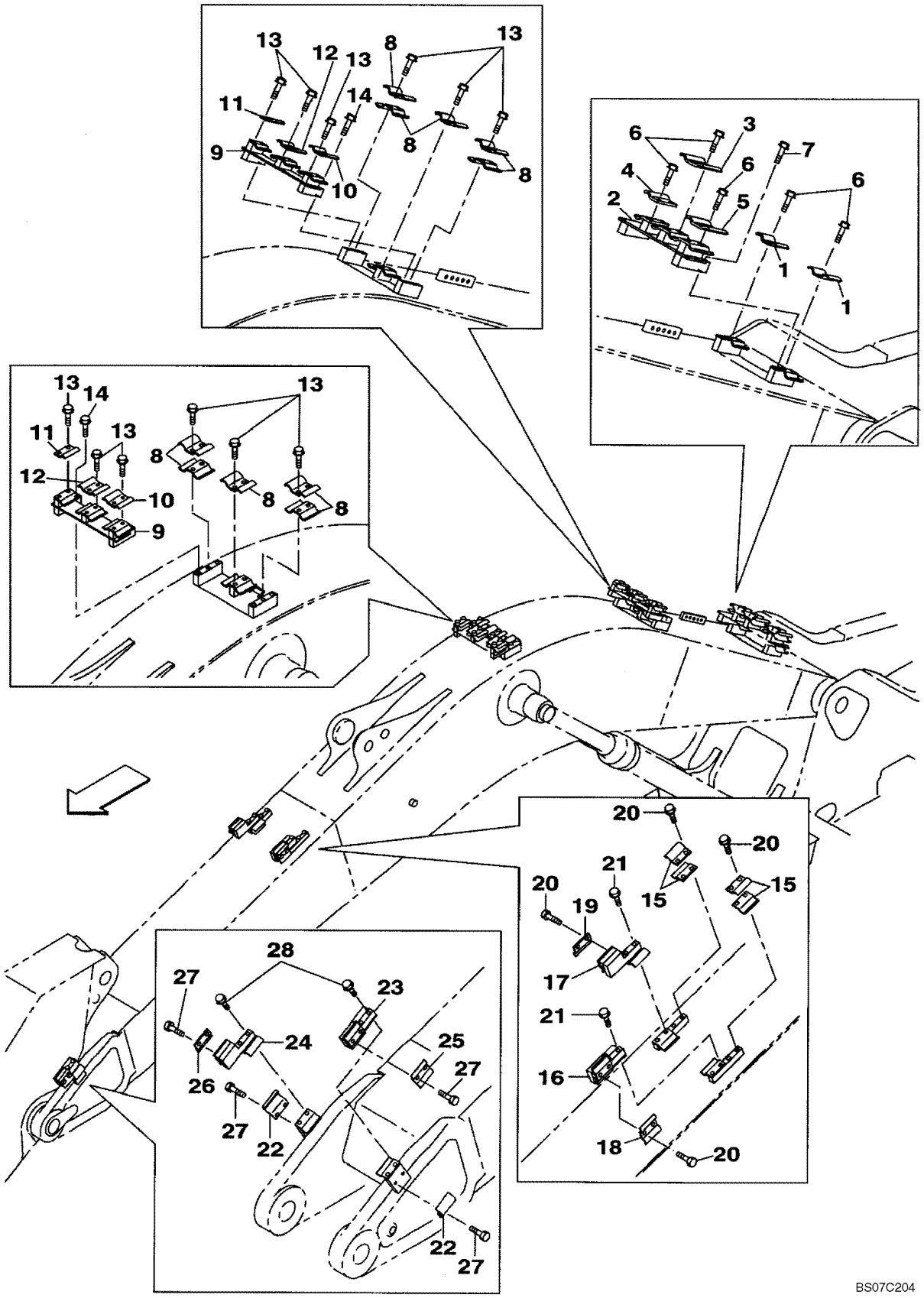

GRAMPO - LANÇA

REF	FN	PART NUMBER	YR/SN	QTY	DESCRIPTION
1		KHV10450		2	BRACADEIRA
2		KLV12310		1	ESTRIBO DE FIXAÇÃO
3		KHV10480		1	BRACADEIRA
4		KHV10500		1	BRACADEIRA
5		KHV10520		1	BRACADEIRA
6		166352A1		10	PARAFUSO
7		167183A1		2	PARAFUSO
8		KHV10450		10	BRACADEIRA
9		KLV12340		2	BARRA
10		KHV10480		2	BRACADEIRA
11		KHV10500		2	BRACADEIRA
12		KHV10520		2	BRACADEIRA
13		166352A1		24	PARAFUSO
14		167183A1		4	PARAFUSO
15		KHV10460		4	BRACADEIRA
16		KNV13810		1	BARRA
17		KNV13820		1	BARRA
18		KHV10480		1	BRACADEIRA
19		KHV10500		1	BRACADEIRA
20		166352A1		8	PARAFUSO
21		167183A1		4	PARAFUSO
22		KHV10990		2	BRACADEIRA
23		KNV13810		1	BARRA
24		KNV13820		1	BARRA
25		KHV10480		1	BRACADEIRA
26		KHV10500		1	BRACADEIRA
27		166352A1		8	PARAFUSO
28		167183A1		4	PARAFUSO

CILINDRO DO BRAÇO - SUPORTE

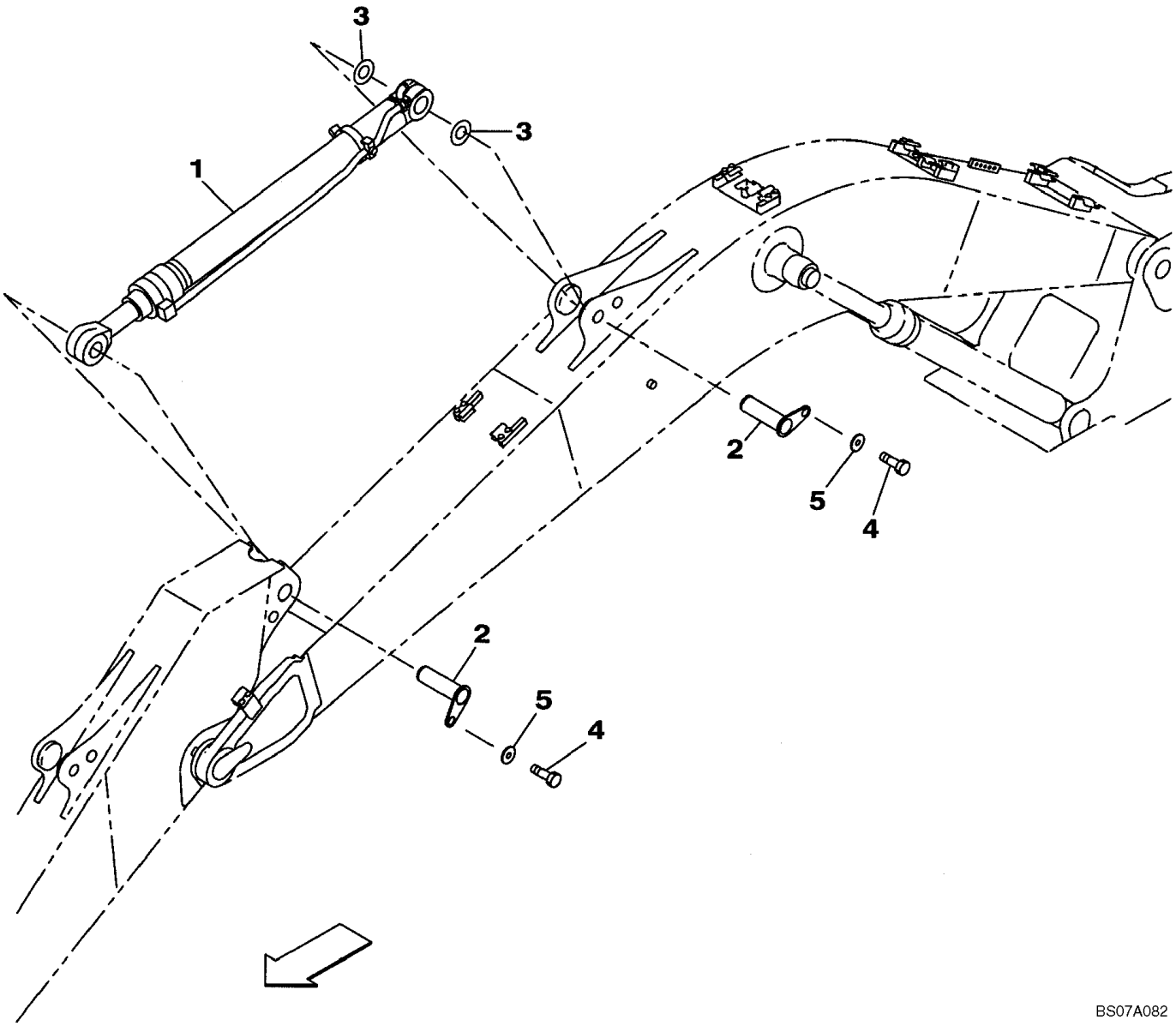

CILINDRO DO BRAÇO - SUPORTE

REF	FN	PART NUMBER	YR/SN	QTY	DESCRIPTION
1		KLV11040		1	CILINDRO HIDRÁULICO, Arm; See Figure 08-85
2		KLV11290		2	PINO
3		159741A1		2	CALCO DE AFINACAO
4		627-12025		2	PARAFUSO, Hex, M12 x 25, 10.9
5		157141A1		2	ARRUELA PLANA

09-39	00	p1	03/07

GRAMPO - BRAÇO

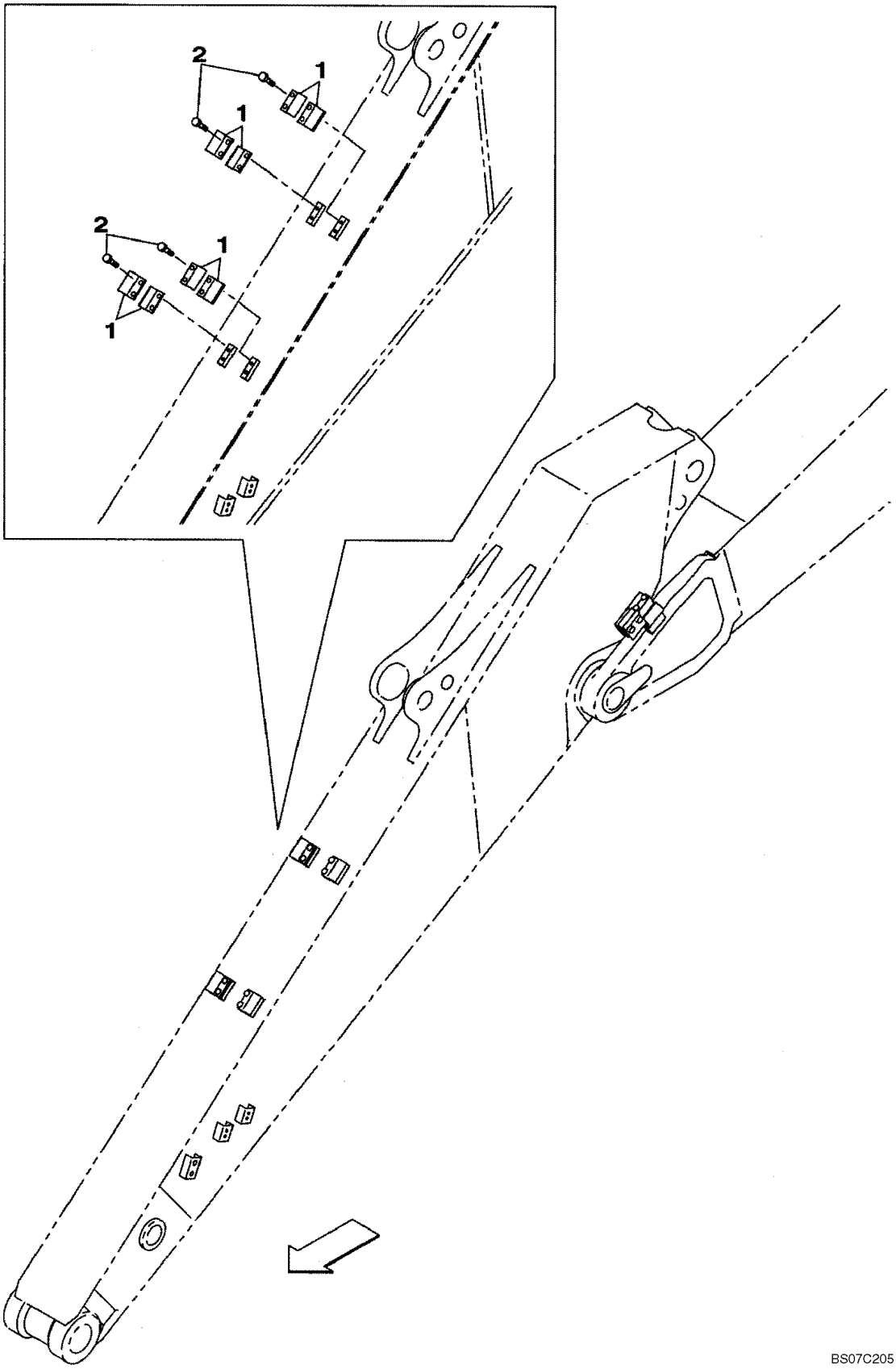

10

GRAMPO - BRAÇO

REF	FN	PART NUMBER	YR/SN	QTY	DESCRIPTION
1		KHV10460		8	BRACADEIRA
2		166352A1		8	PARAFUSO

GRAMPO - BRAÇO

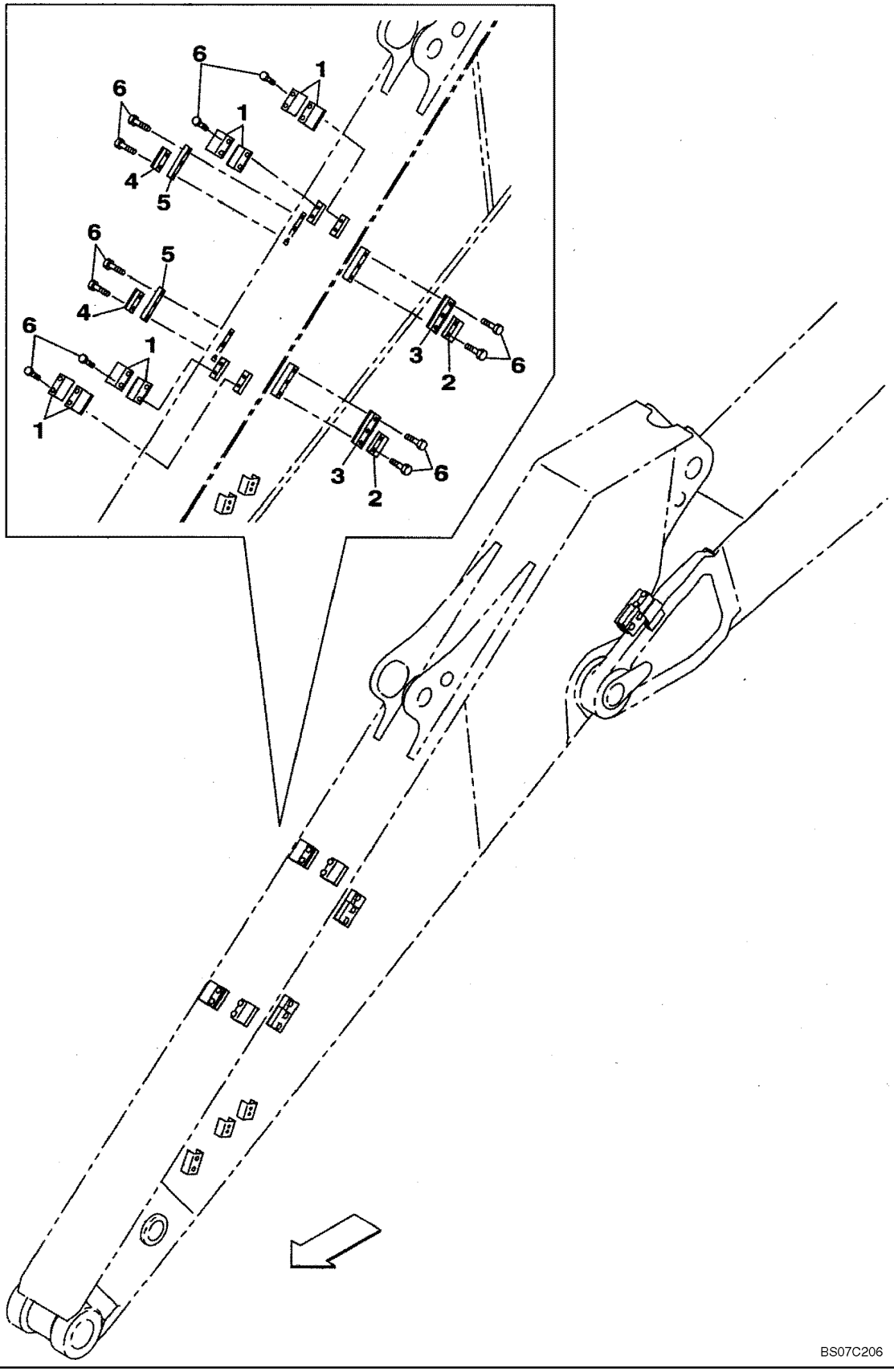

GRAMPO - BRAÇO

REF	FN	PART NUMBER	YR/SN	QTY	DESCRIPTION
1		KHV10460		8	BRACADEIRA
2		KHV10480		2	BRACADEIRA
3		KHV10490		2	BRACADEIRA
4		KHV10500		2	BRACADEIRA
5		KHV10510		2	BRACADEIRA
6		166352A1		20	PARAFUSO

GATO DE CUCHARA - SUPORTE

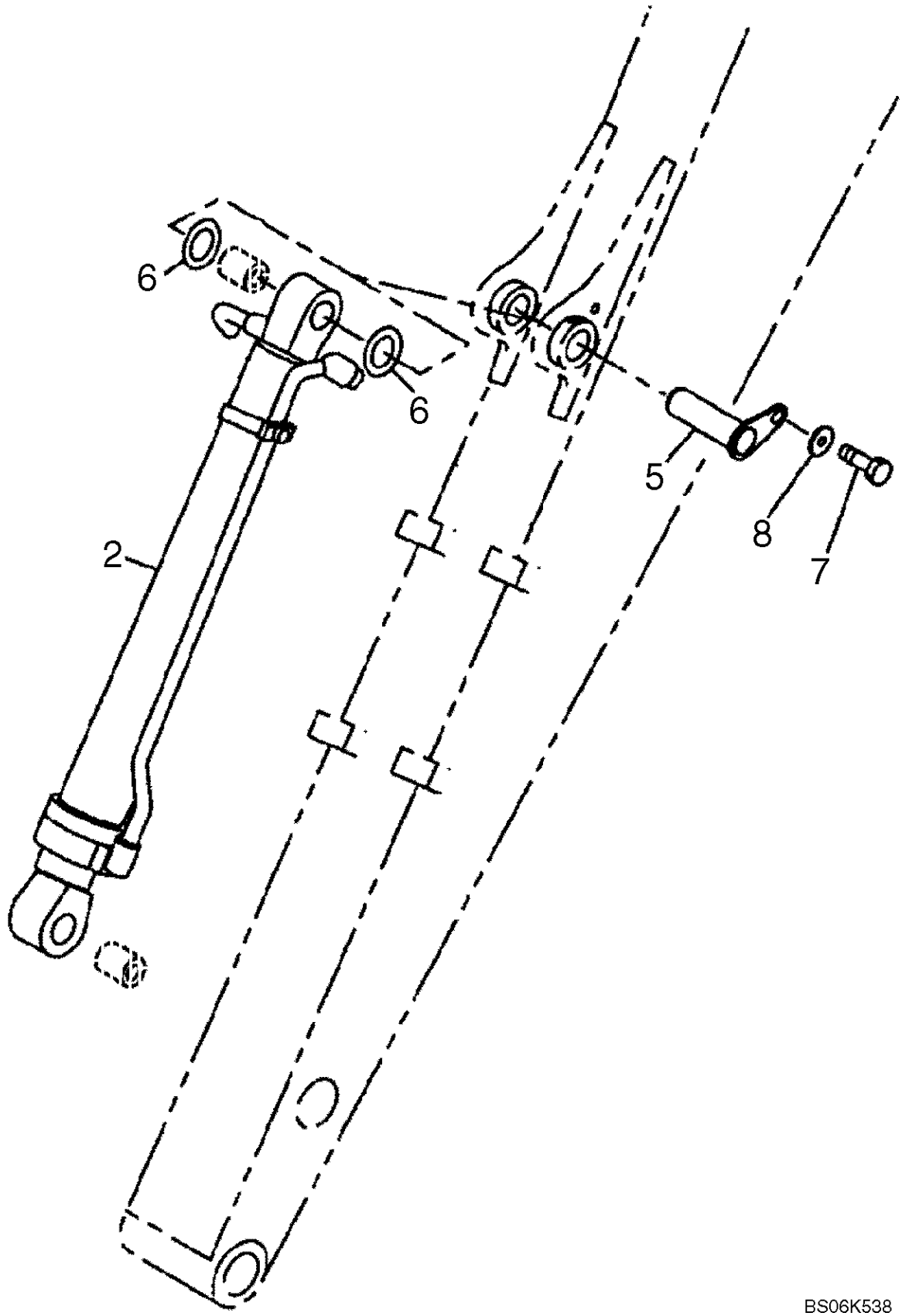

GATO DE CUCHARA - SUPORTE

REF	FN	PART NUMBER	YR/SN	QTY	DESCRIPTION
2		KLV11080		1	MOTOR RECONDICIONADO, See Figure 08-86
5		KLV11280		1	PINO
6		150142A1		2	JOGO DE CALCOS
7		627-12025		1	PARAFUSO, Hex, M12 x 25, 10.9
8		157141A1		1	ARRUELA PLANA

BUCKETS, ESCO - GENERAL PURPOSE BUCKETS

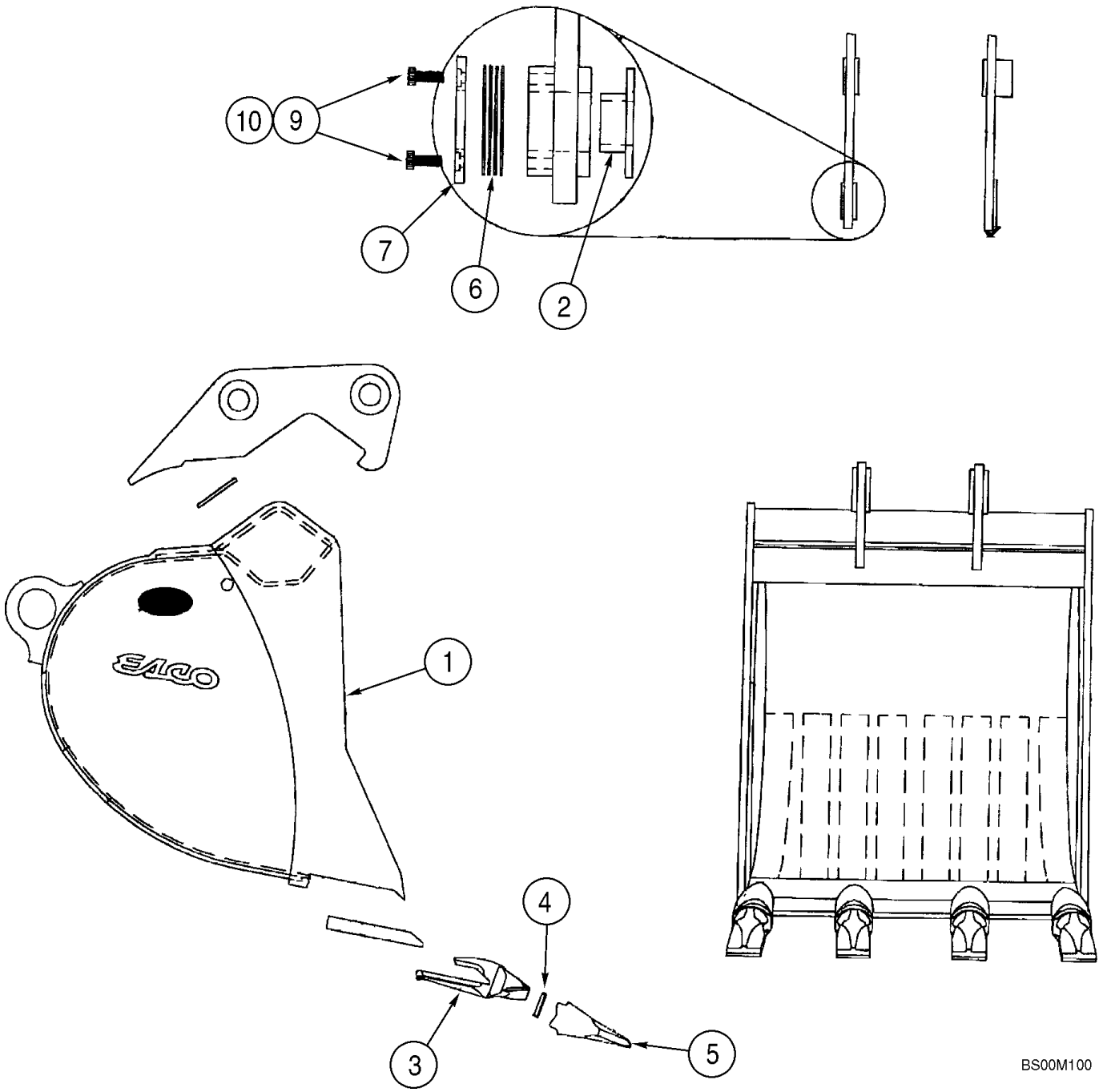

BUCKETS, ESCO - GENERAL PURPOSE BUCKETS

REF	FN	PART NUMBER	YR/SN	QTY	DESCRIPTION
1		REF		1	INSTRUCAO, Bucket, 0,58 cu yd, Bucket, With 4 Teeth
1		REF		1	INSTRUCAO, Bucket, 0,76 cu yd, Bucket, With 4 Teeth
1		REF		1	INSTRUCAO, Bucket, 0,95 cu yd, Bucket, With 5 Teeth
1		REF		1	INSTRUCAO, Bucket, 1,14 cu yd, Bucket, With 6 Teeth
2		387469A1		1	BUCHA
3		127557A1		4-6	ADAPTADOR
4		233792A1		4-6	PINO
5		127558A1		4-6	DENTE
6		378630A1		6	CALCO DE AFINACAO
7		378631A1		1	PLACA
8		378632A1		2	PINO, Not Illustrated
9		892-11016		4	ARRUELA-TRAVA, M16
10		627-16050		4	PARAFUSO, Hex, M16 x 50, 10.9
		387465A1		1	JOGO, Incl. 2, 6 - 10

BUCKETS, ESCO - HEAVY DUTY BUCKETS

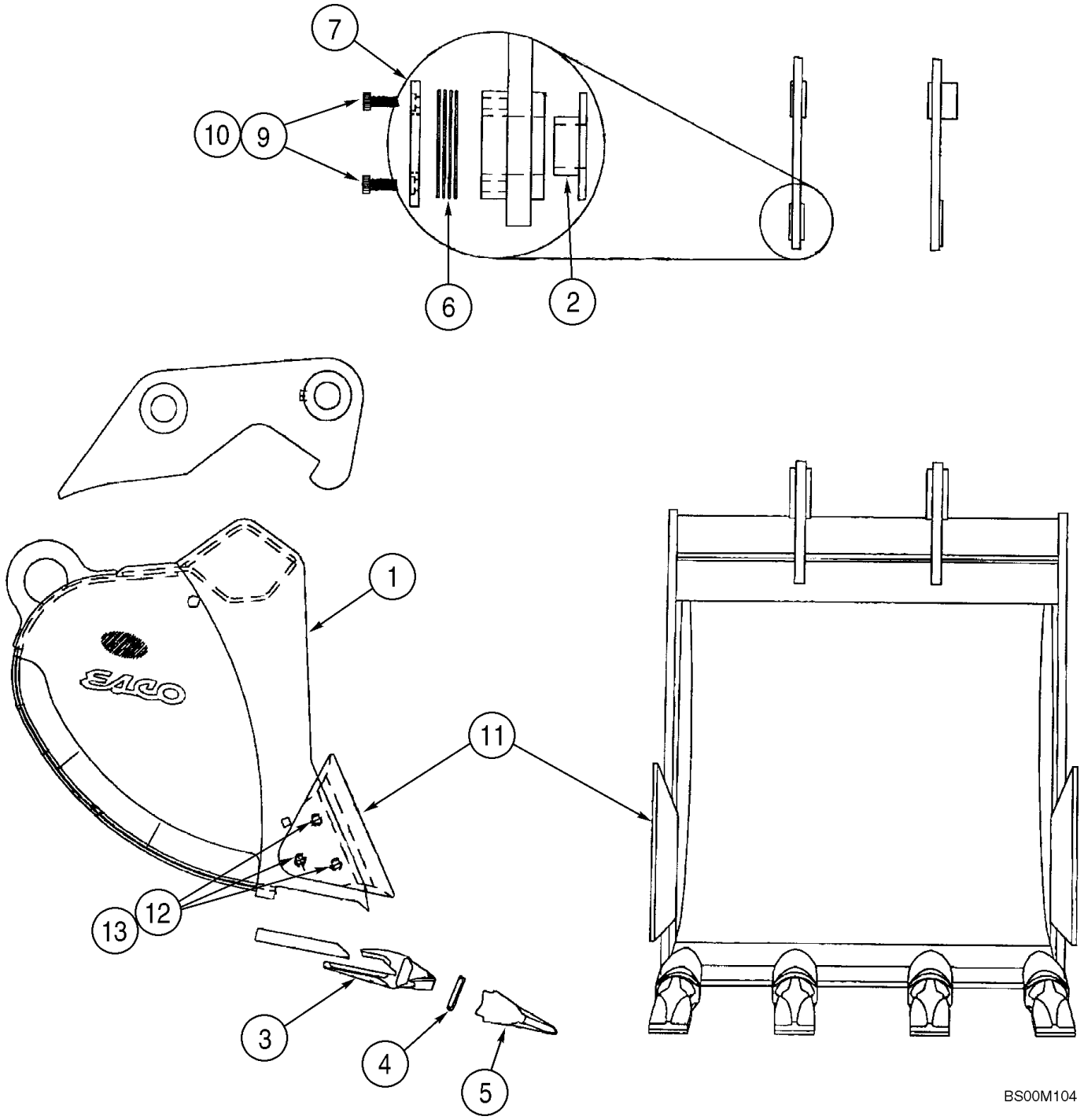

BUCKETS, ESCO - HEAVY DUTY BUCKETS

REF	FN	PART NUMBER	YR/SN	QTY	DESCRIPTION
1		REF		1	INSTRUCAO, Bucket, 0,57 cu yd, Bucket, With 4 Teeth
1		REF		1	INSTRUCAO, Bucket, 0,76 cu yd, Bucket, With 4 Teeth
1		REF		1	INSTRUCAO, Bucket, 0,95 cu yd, Bucket, With 5 Teeth
1		REF		1	INSTRUCAO, Bucket, 0,97 cu yd, Bucket, With 5 Teeth
2		387469A1		1	BUCHA
3		233793A1		4-5	ADAPTADOR
4		233795A1		4-5	PINO
5		233794A1		4-5	DENTE
6		378630A1		6	CALCO DE AFINACAO
7		378631A1		1	PLACA
8		378632A1		2	PINO, Not Illustrated
9		892-11016		4	ARRUELA-TRAVA, M16
10		627-16050		4	PARAFUSO, Hex, M16 x 50, 10.9
		378649A1		1	JOGO, Shroud, Incl. 11 - 13
11		244961A1		2	COBERTURA
12		232-41314		6	CONTRA PORCA, 7/8"-9, GC
13		320-21444		6	PARAFUSO, 7/8"-9 x 2 3/4", G8
		387465A1		1	JOGO, Adjustment, Incl. 2, 6 - 10

BUCKETS, ESCO - DITCH CLEANING BUCKETS

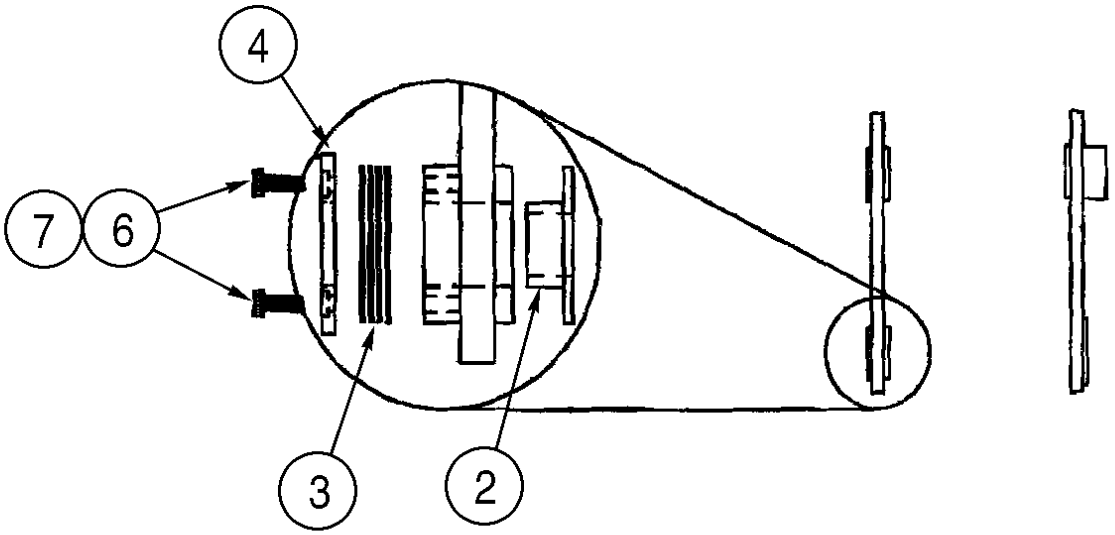

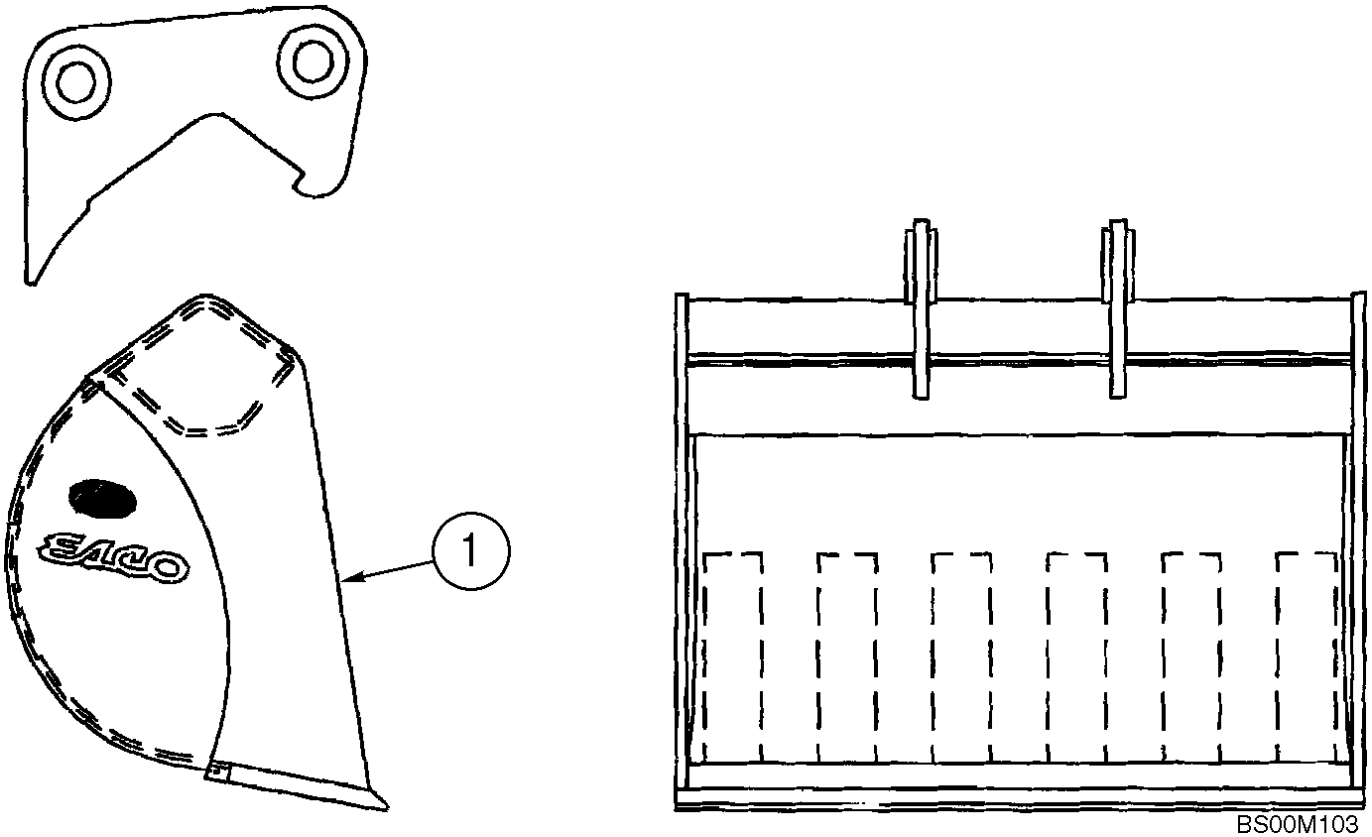

BUCKETS, ESCO - DITCH CLEANING BUCKETS

REF	FN	PART NUMBER	YR/SN	QTY	DESCRIPTION
1		REF		1	INSTRUCAO, 0,95 cu yd, Bucket
1		REF		1	INSTRUCAO, 1,06 cu yd, Bucket
2		387469A1		1	BUCHA
3		378630A1		6	CALCO DE AFINACAO
4		378631A1		1	PLACA
5		378632A1		2	PINO, Not Illustrated
6		892-11016		4	ARRUELA-TRAVA, M16
7		627-16050		4	PARAFUSO, Hex, M16 x 50, 10.9
		387465A1		1	JOGO, Adjustment, Incl. 2 - 7

ADESIVOS - COMPARTIMENTO DO OPERADOR

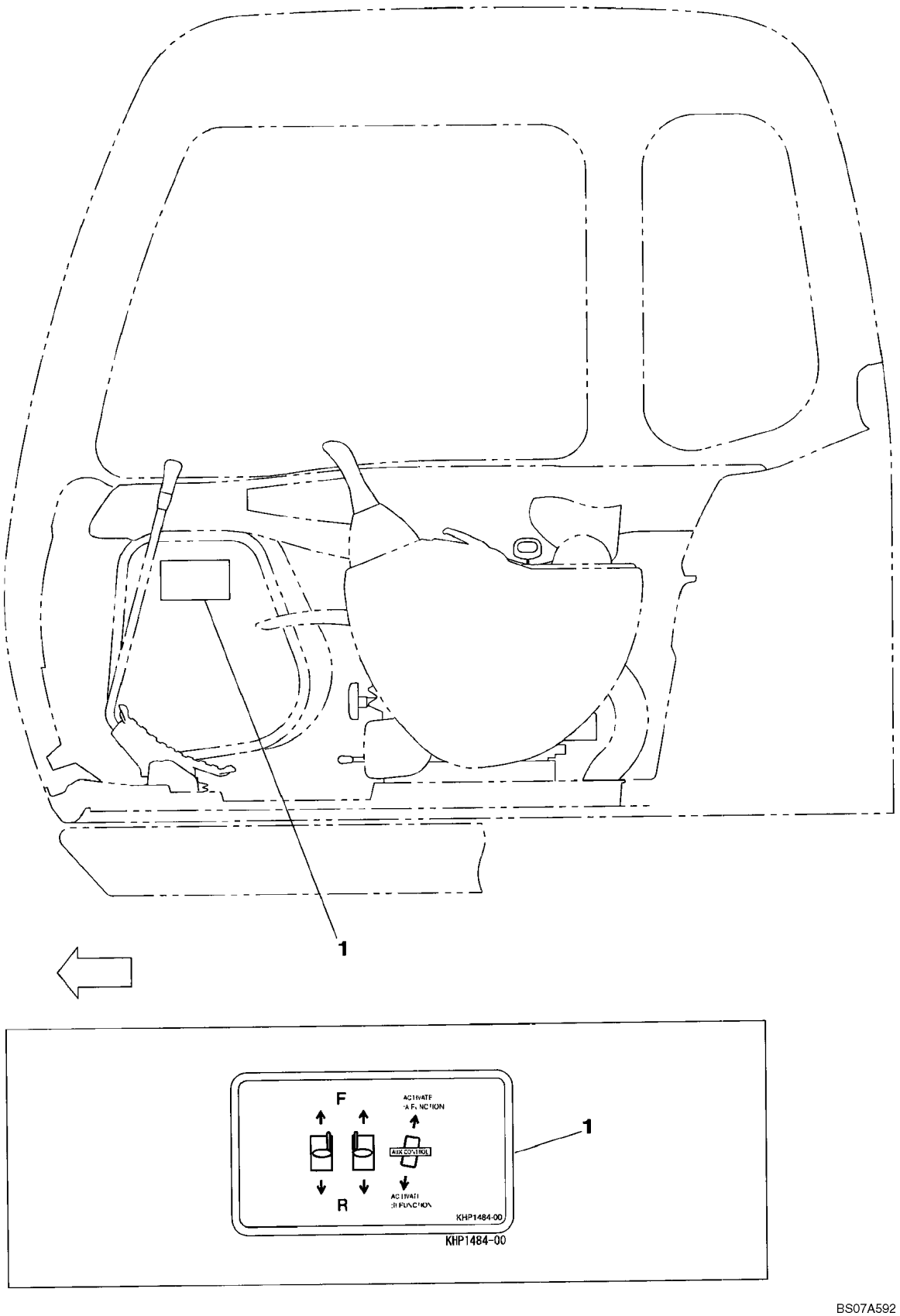

BS07A592

ADESIVOS - COMPARTIMENTO DO OPERADOR

REF	FN	PART NUMBER	YR/SN	QTY	DESCRIPTION
1		KHP1484		1	ADESIVO, Operator's Label

CALCOMANIAS

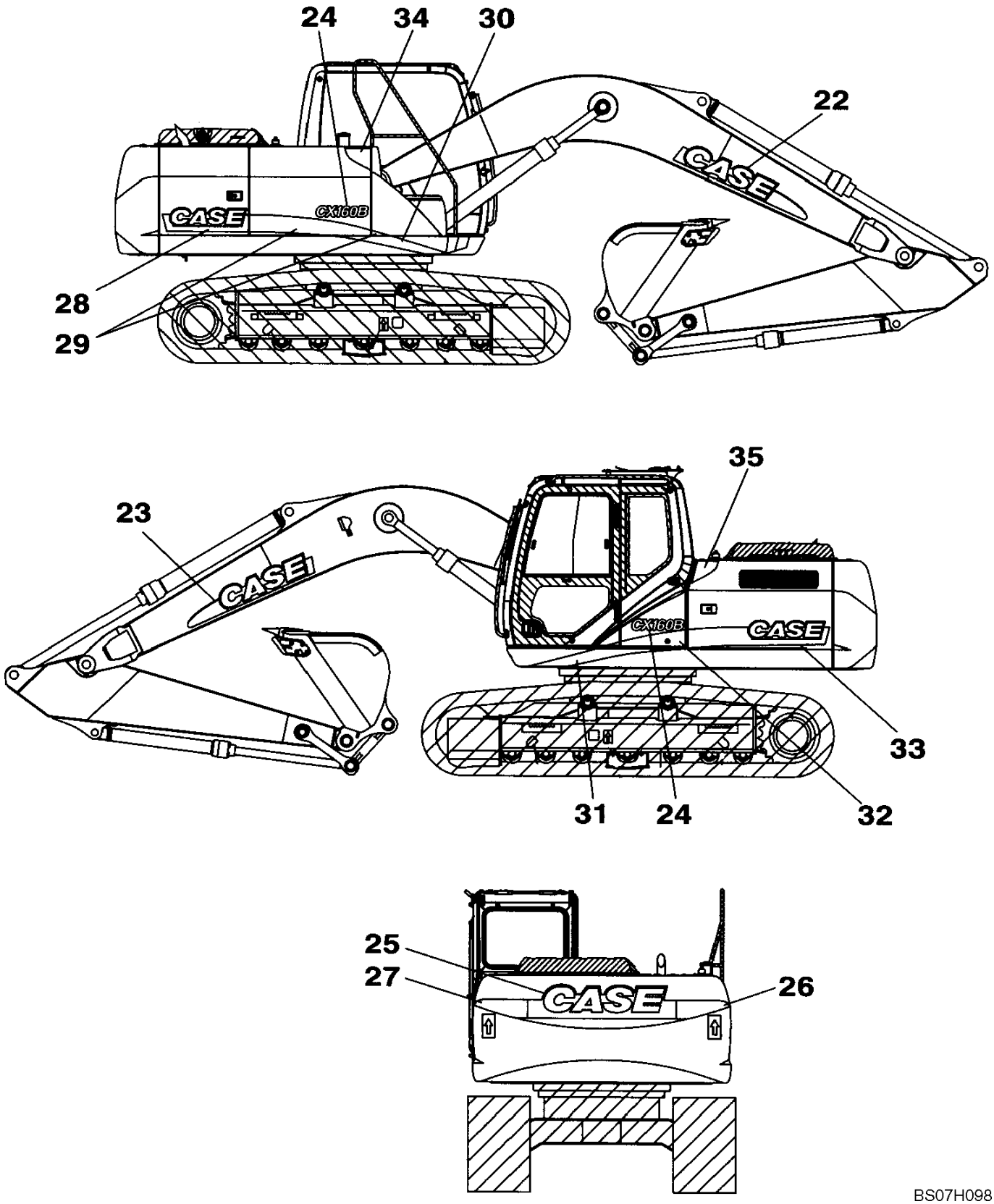

BS07H098

CALCOMANIAS

REF	FN	PART NUMBER	YR/SN	QTY	DESCRIPTION
22		KLP0132		1	DECALCOMANIA, CASE logo; Right Hand Side Of Boom
23		KLP0133		1	DECALCOMANIA, CASE logo; Left Hand Side Of Boom
24		KLP10470		2	DECALCOMANIA, CX160B
25		KLP10480		1	DECALCOMANIA, CASE logo; Rear Of Machine
26		KLP10490		1	DECALCOMANIA, Right Rear
27		KLP10500		1	DECALCOMANIA, Left Rear
28		KLP10510		1	DECALCOMANIA, CASE logo; Right Hand Side of Machine
29		KLP10520		1	DECALCOMANIA, Stripe, (2 Pieces) Right Hand Side of Machine
30		KRP12530		1	DECALCOMANIA, Stripe, Right Hand Side of Machine
31		KRP12540		1	DECALCOMANIA, Stripe, Left Hand Side of Machine
32		KRP12550		1	DECALCOMANIA, Stripe, Left Hand Side of Machine
33		KLP10530		1	DECALCOMANIA, CASE logo; Left Hand Side of Machine
34		KHP12870		1	DECALCOMANIA, Right Hand Side of Machine
35		KHP12880		1	DECALCOMANIA, Left Hand Side of Machine

CALCOMANIAS

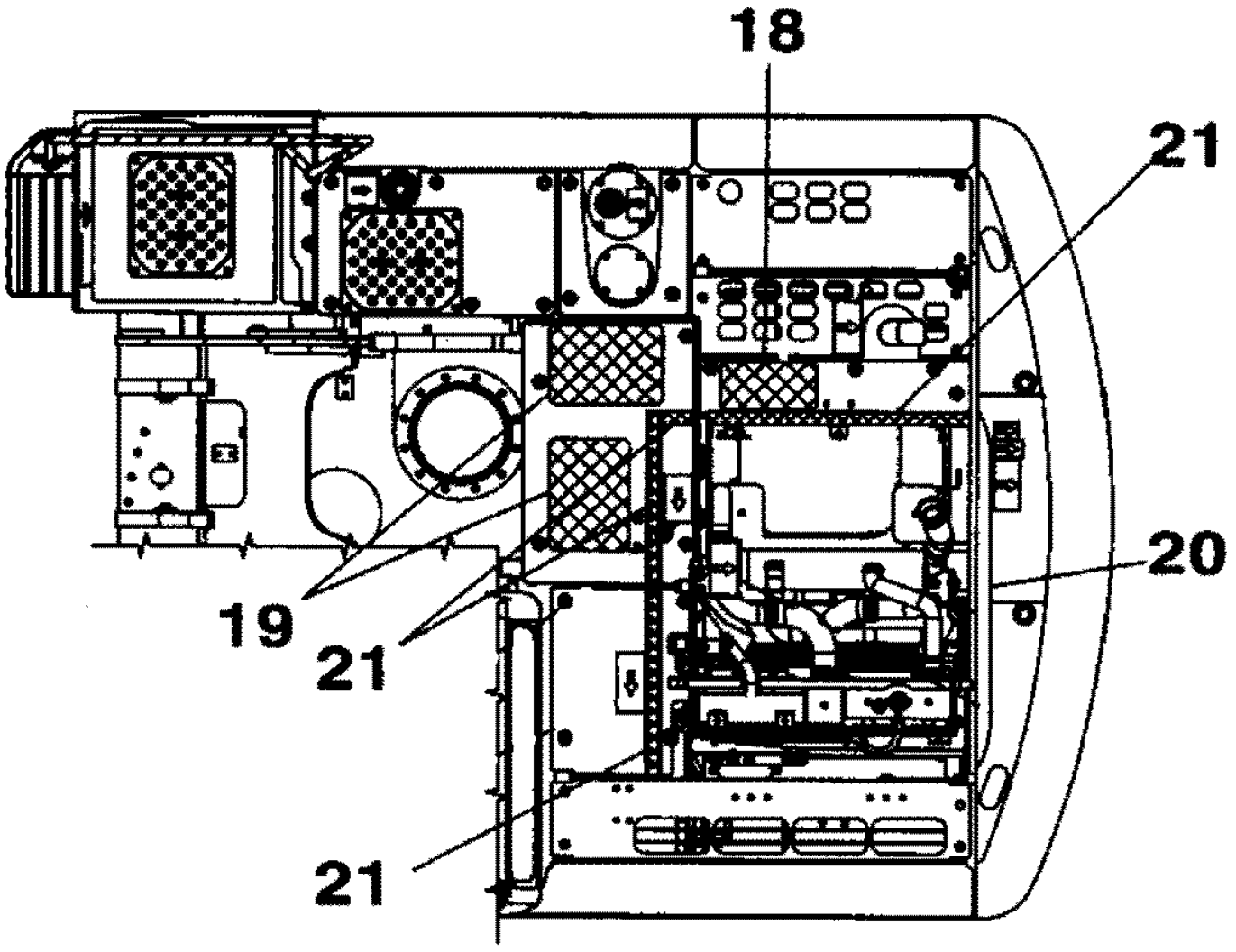

BS07A594

CALCOMANIAS

REF	FN	PART NUMBER	YR/SN	QTY	DESCRIPTION
18		150108A1		1	FAIXA ANTI-DERRAPANTE
19		162935A1		2	FAIXA ANTI-DERRAPANTE
20		KLP10380		1	DECALCOMANIA
21		KHP0084		1	FAIXA ANTI-DERRAPANTE

CALCOMANIAS - ATENÇÃO

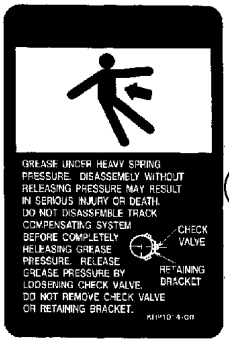

1

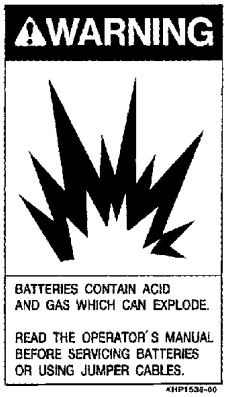

2



10

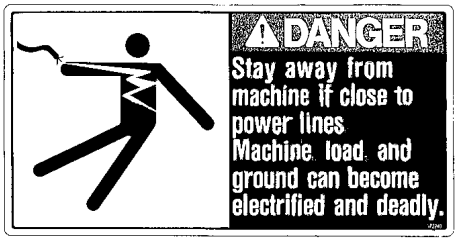

11



3

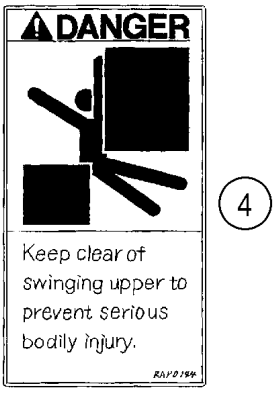

4

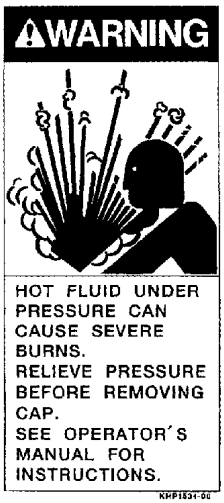

5

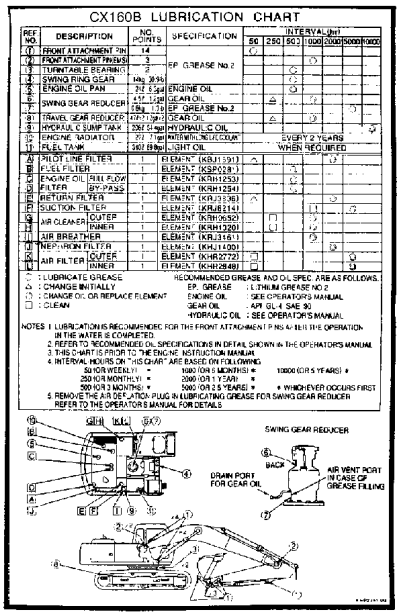

12



6

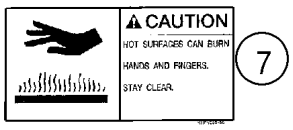

7

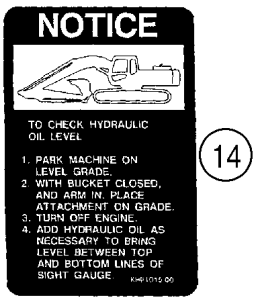

14

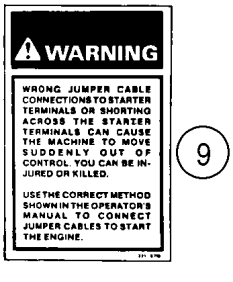

9

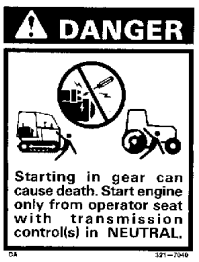

8

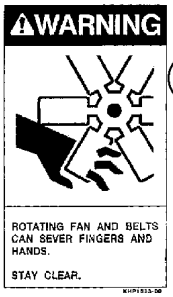

16

BS07A401

10

CALCOMANIAS - ATENÇÃO

REF	FN	PART NUMBER	YR/SN	QTY	DESCRIPTION
1		167327A1		2	DECALCOMANIA, Grease Under Heavy Spring Pressure
2		KHP1536		1	DECALCOMANIA, Warning, Batteries Contain Acid And Explosive Gas
3		KHP1542		1	DECALCOMANIA, Caution, Hot Liquid Hazard
4		KHP1532		2	DECALCOMANIA, Danger, Keep Clear; Replaces RAP0144
5		KHP1534		1	DECALCOMANIA, Warning, Hot Fluid Under Pressure
6		KHP1011		1	DECALCOMANIA, Caution, Slippery And Unstable Surface
7		KHP1535		3	DECALCOMANIA, Caution, Hot Surfaces
8		86982724		1	DECALCOMANIA, Danger, Starting In Gear
9		321-6872		1	DECALCOMANIA, Warning, Jumper Cables
10		KHP1010		1	DECALCOMANIA, Caution, Falling Engine Hood
11		167324A1		1	DECALCOMANIA, Danger, Stay Away From Machine If Close To Power Lines
12		KLP10350		1	DECALCOMANIA, Lubrication Chart
14		167328A1		1	DECALCOMANIA, Notice, Check Hydraulic Fluids
16		KHP1533		1	DECALCOMANIA, Warning, Rotating Fan
17		KHP11681		1	DECALCOMANIA, Warning; Not Illustrated
18		KHP12210		1	DECALCOMANIA, Warning; Not Illustrated
19		KHP1722		4	ADESIVO, Warning; Located On Undercarriage; Not Illustrated

CALCOMANIAS

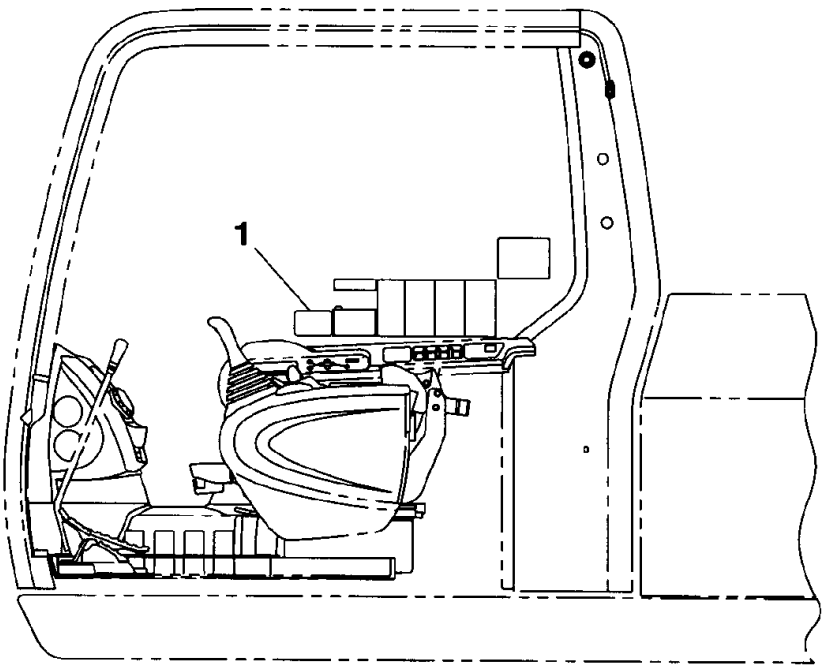

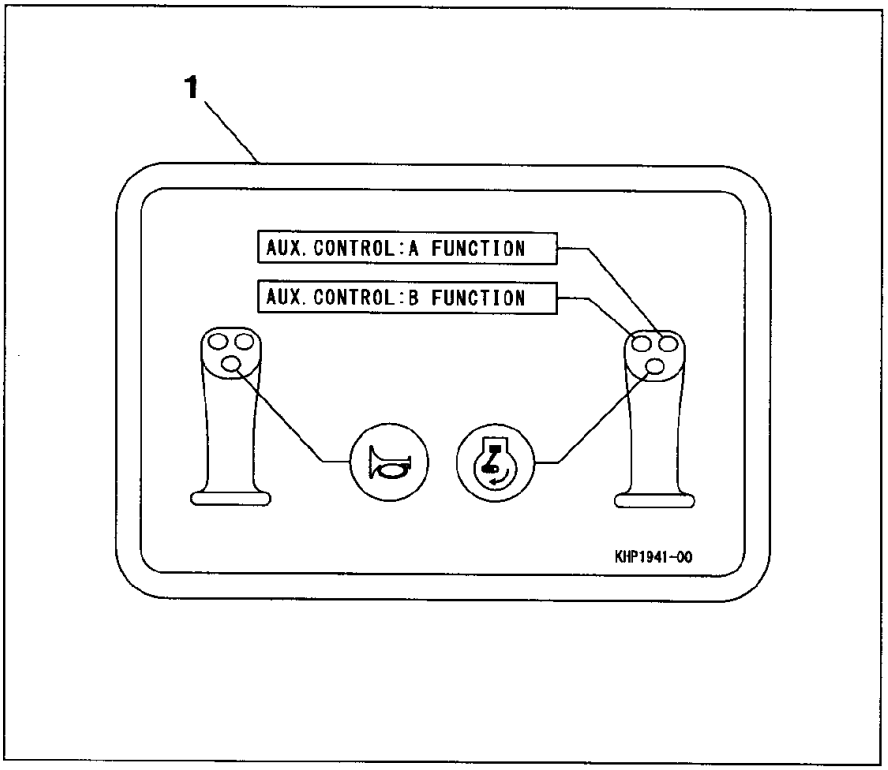

BS07A595

CALCOMANIAS

REF	FN	PART NUMBER	YR/SN	QTY	DESCRIPTION
1		KHP1941		1	DECALCOMANIA, Operating Instructions

CALCOMANIAS

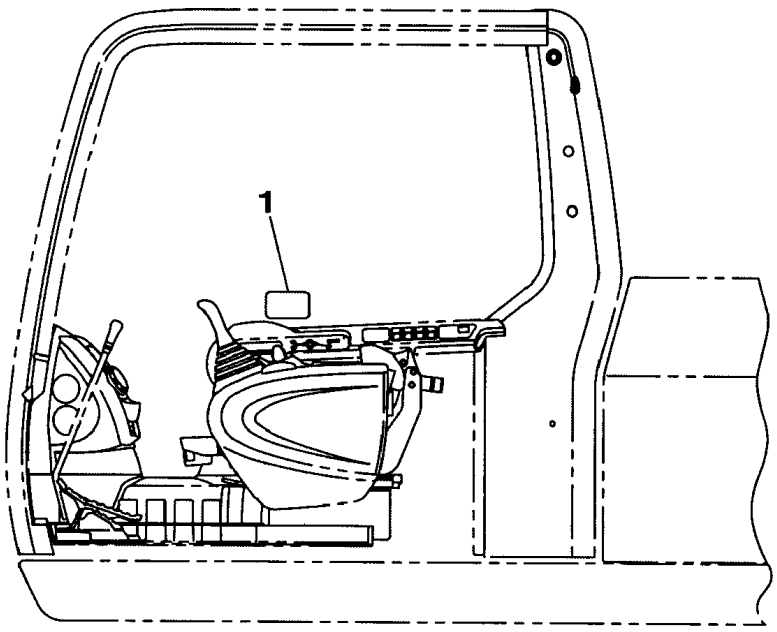

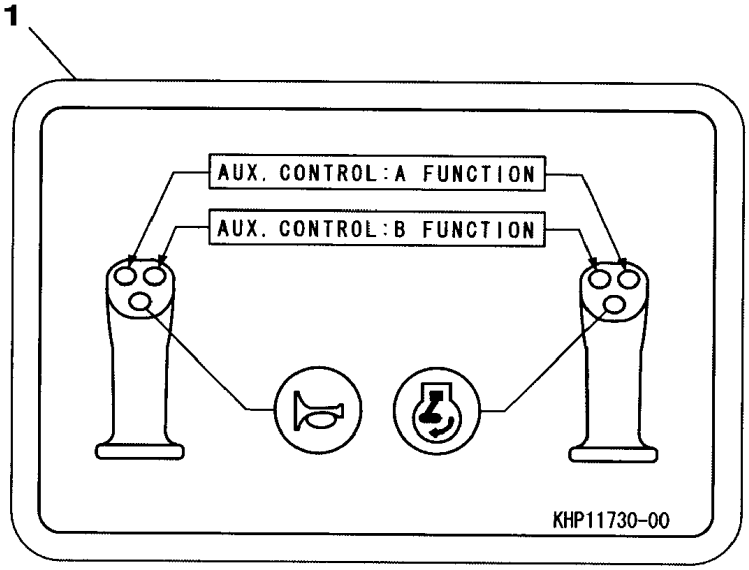

BS07A596

CALCOMANIAS

REF	FN	PART NUMBER	YR/SN	QTY	DESCRIPTION
1		KHP11730		1	DECALCOMANIA, Operating Instructions

CALCOMANIAS

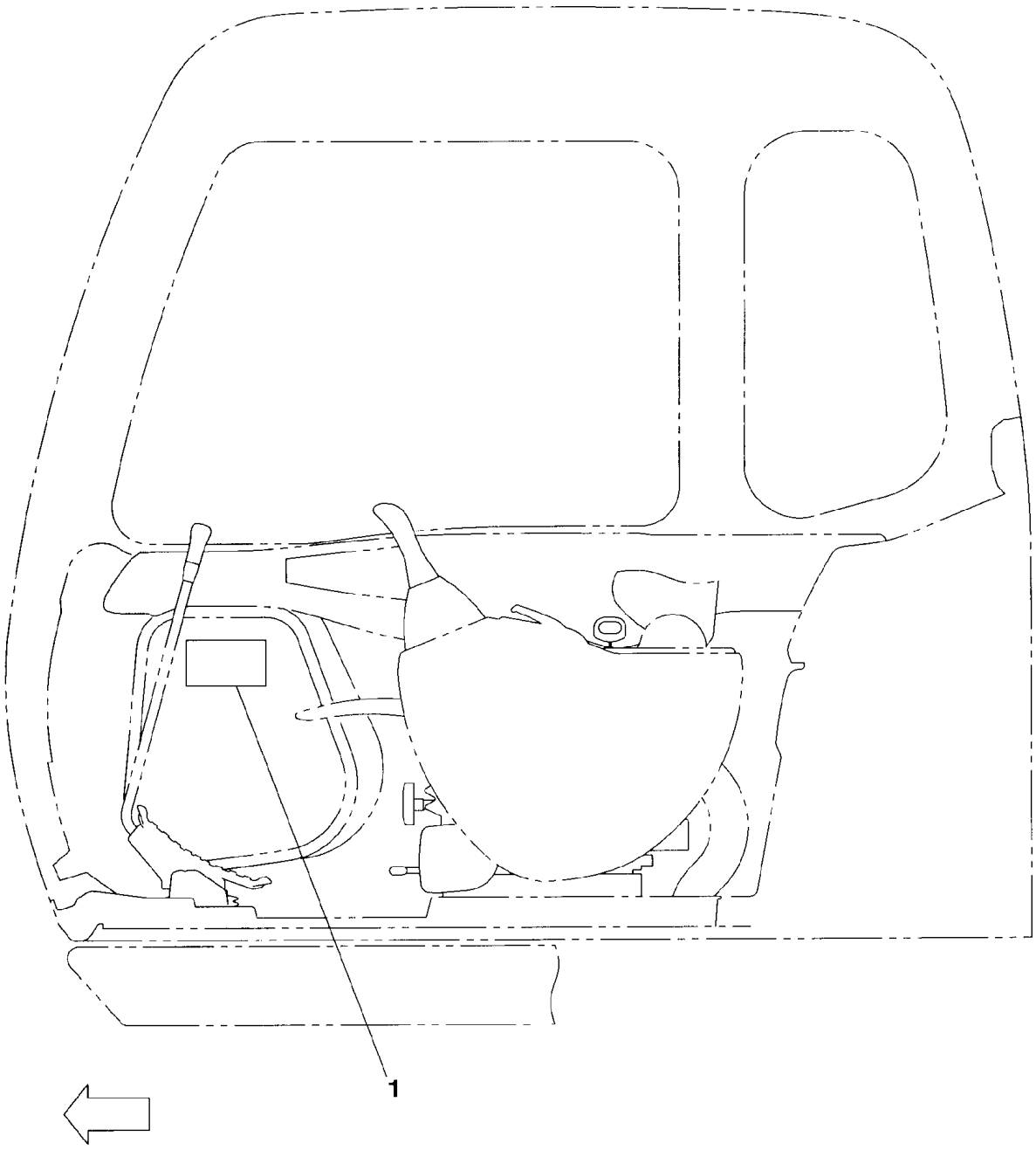

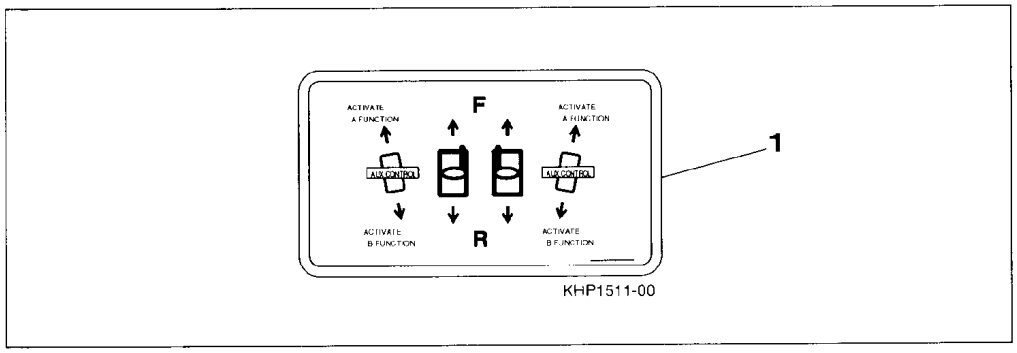

BS07A597

CALCOMANIAS

REF	FN	PART NUMBER	YR/SN	QTY	DESCRIPTION
1		KHP1511		1	DECALCOMANIA, Operating Instructions

CALCOMANIAS

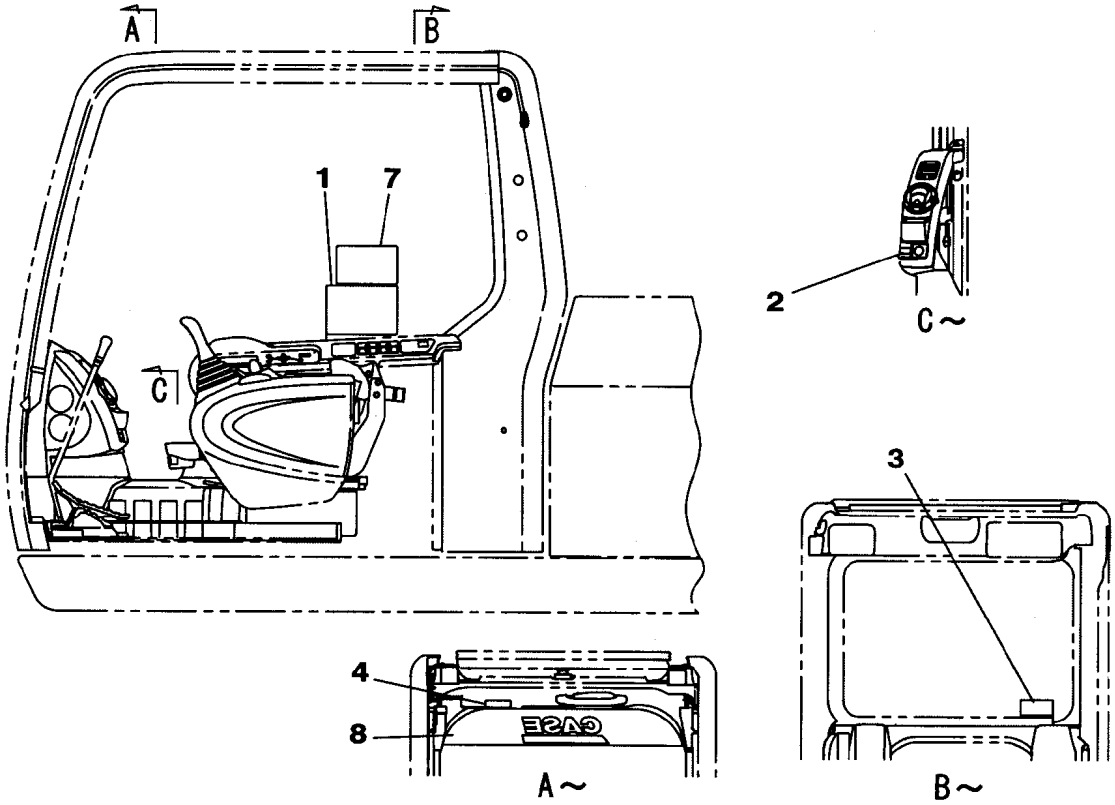

FRONT WINDOW INSIDE CABIN

REAR SIDE OF CABIN

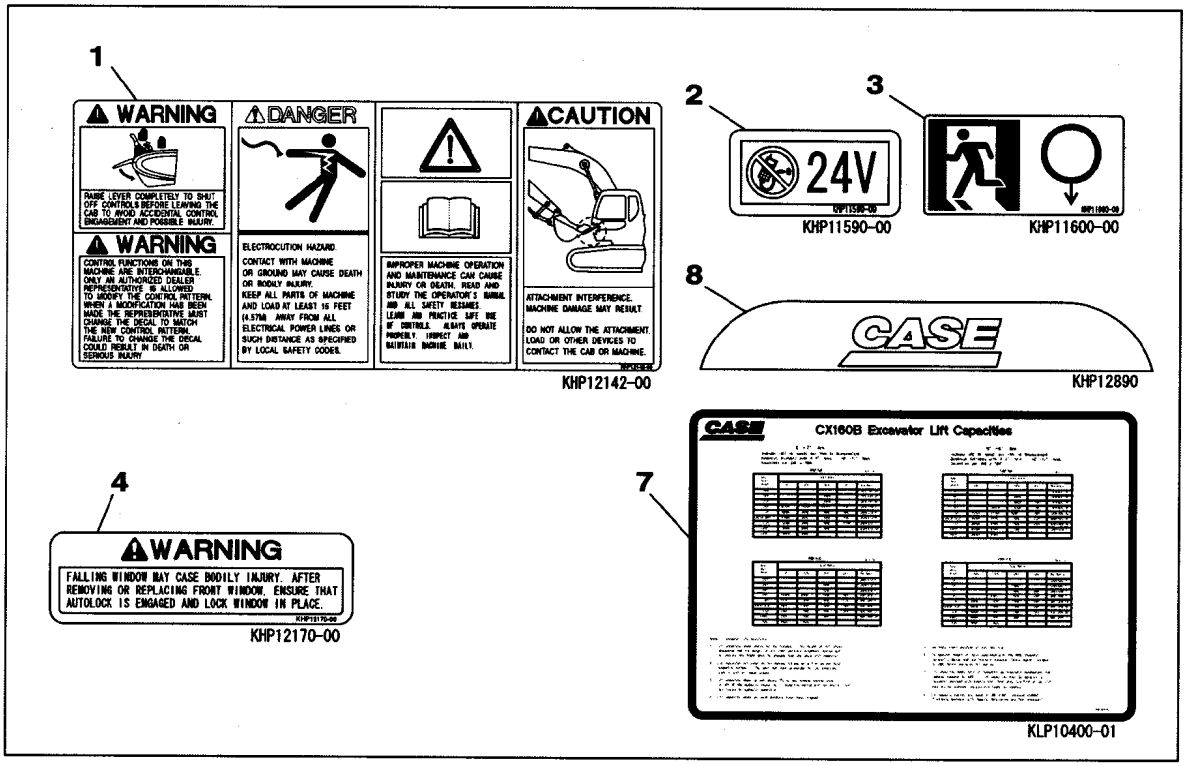

BS07A598

10

CALCOMANIAS

REF	FN	PART NUMBER	YR/SN	QTY	DESCRIPTION
1		KHP12141		1	DECALCOMANIA, Warning, Danger, Caution
2		KHP11590		1	DECALCOMANIA, 24 Volt
3		KHP11600		1	DECALCOMANIA, Right Side of Cab
4		KHP12170		1	DECALCOMANIA, Warning, Falling Window May Caused Bodily Injury
7		162140A1		1	DECALCOMANIA, Lift Capacities
8		KHP12890		1	DECALCOMANIA, CASE

ARM (3.05M) - OPTIONAL

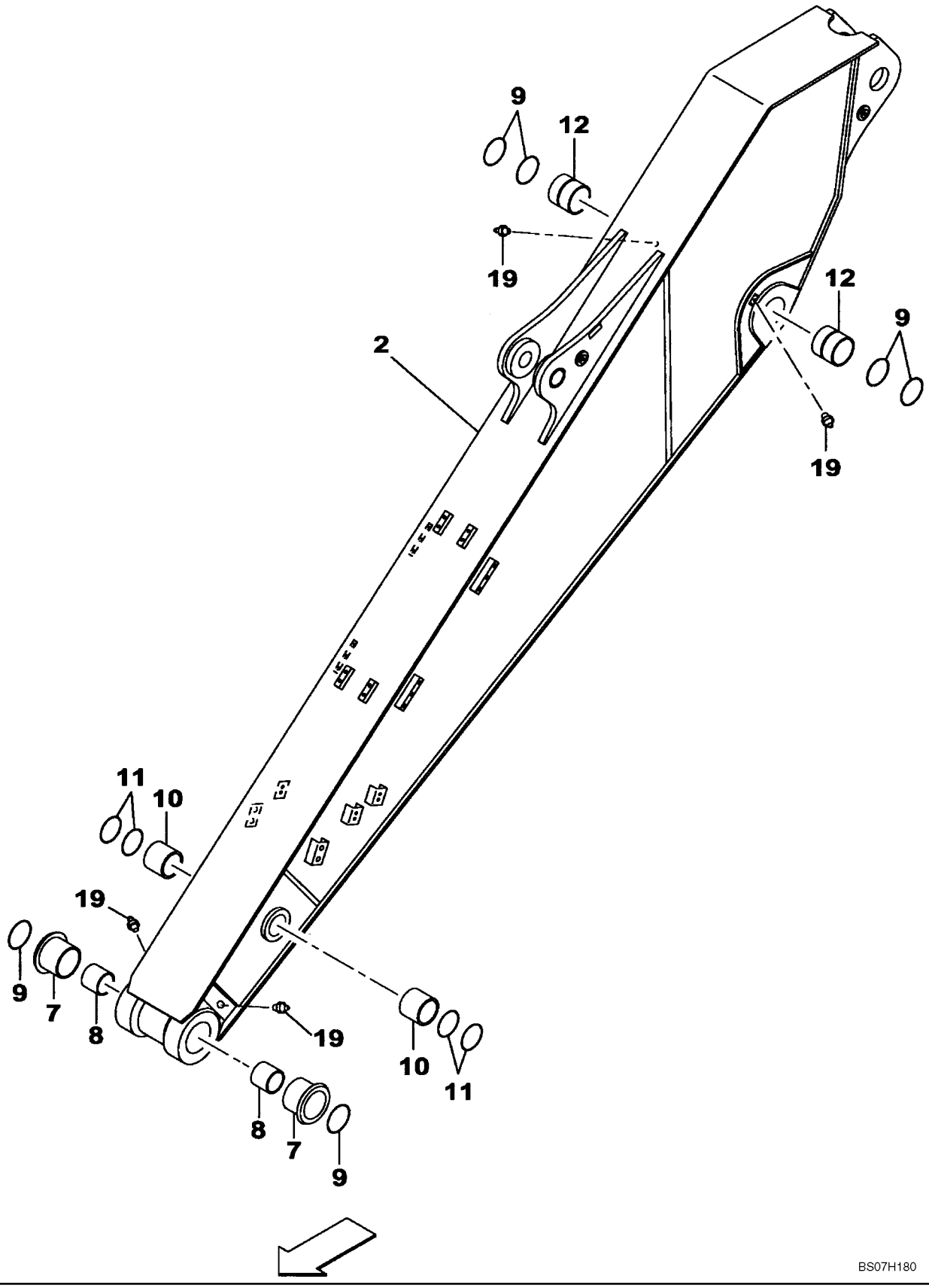

ARM (3.05M) - OPTIONAL

REF	FN	PART NUMBER	YR/SN	QTY	DESCRIPTION
1		KLV12150		1	BALANCÍN, ARM, Long 3.05 M, Replaces KLV13910
2		NSS		1	BOLETIM INFORMATIVO
7		KRV2408		2	BUCHA
8		KRV10910		2	BUCHA
9		159647A1		6	ANEL DE VEDAÇÃO
10		KLV10320		2	CASTILHO ALTO LUBRIF
11		160674A1		4	ANEL DE VEDAÇÃO
12		KRV1784		2	CASTILHO ALTO LUBRIF
19		M01X0812		4	GRAXEIRA, Replaces 153630A1

09-54	00	p1	08/07

ARM (2.23M) - OPTIONAL

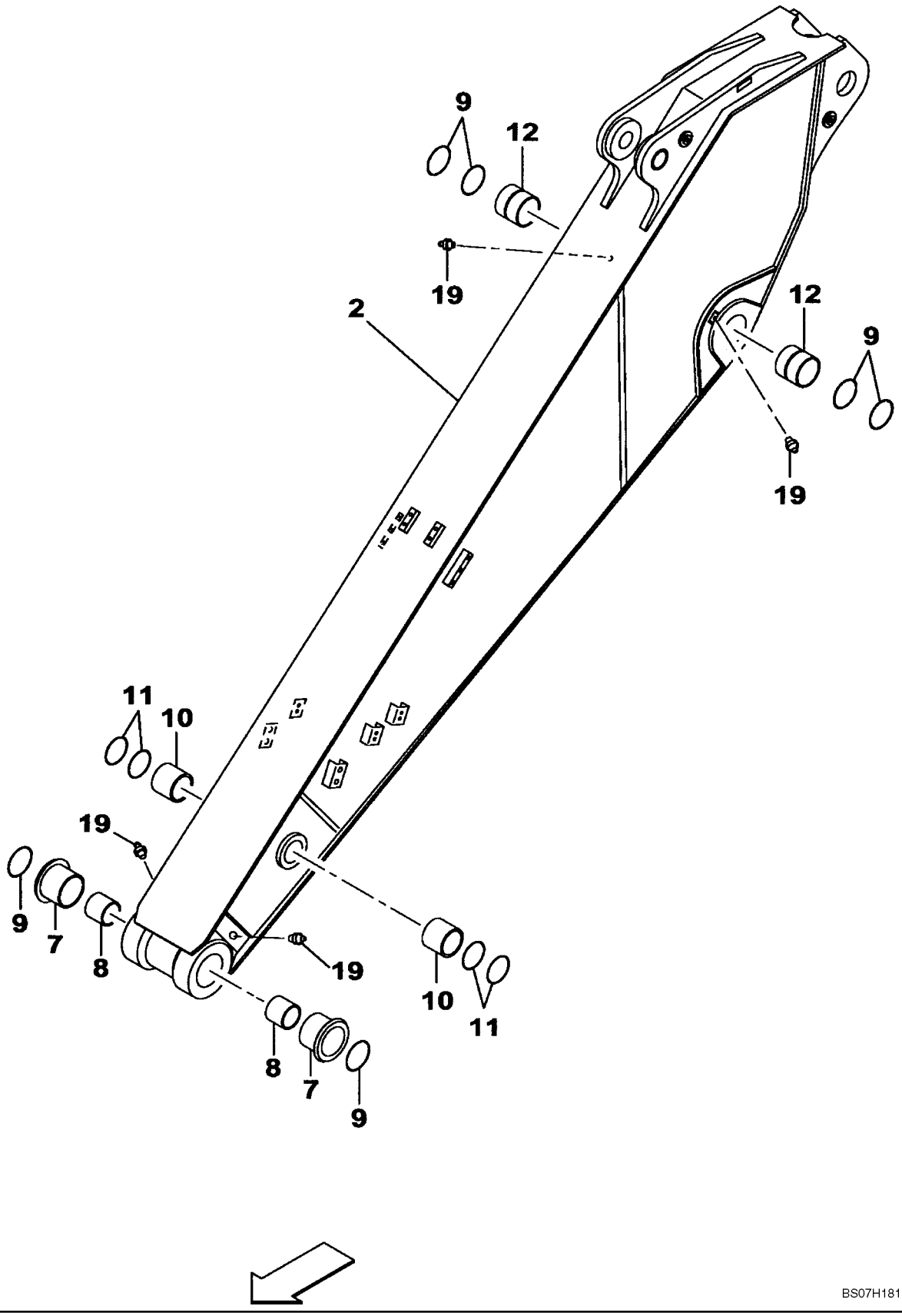

ARM (2.23M) - OPTIONAL

REF	FN	PART NUMBER	YR/SN	QTY	DESCRIPTION
1		KLV11990		1	BALANCÍN, ARM, Short 2.23 M
2		NSS		1	BOLETIM INFORMATIVO
7		KRV2408		2	BUCHA
8		KRV10910		2	BUCHA
9		159647A1		6	ANEL DE VEDAÇÃO
10		KLV10320		2	CASTILHO ALTO LUBRIF
11		160674A1		4	ANEL DE VEDAÇÃO
12		KRV1784		2	CASTILHO ALTO LUBRIF
19		153630A1		4	GRAXEIRA

09-55	00	p1	08/07

ARM (2.62M) - OPTIONAL

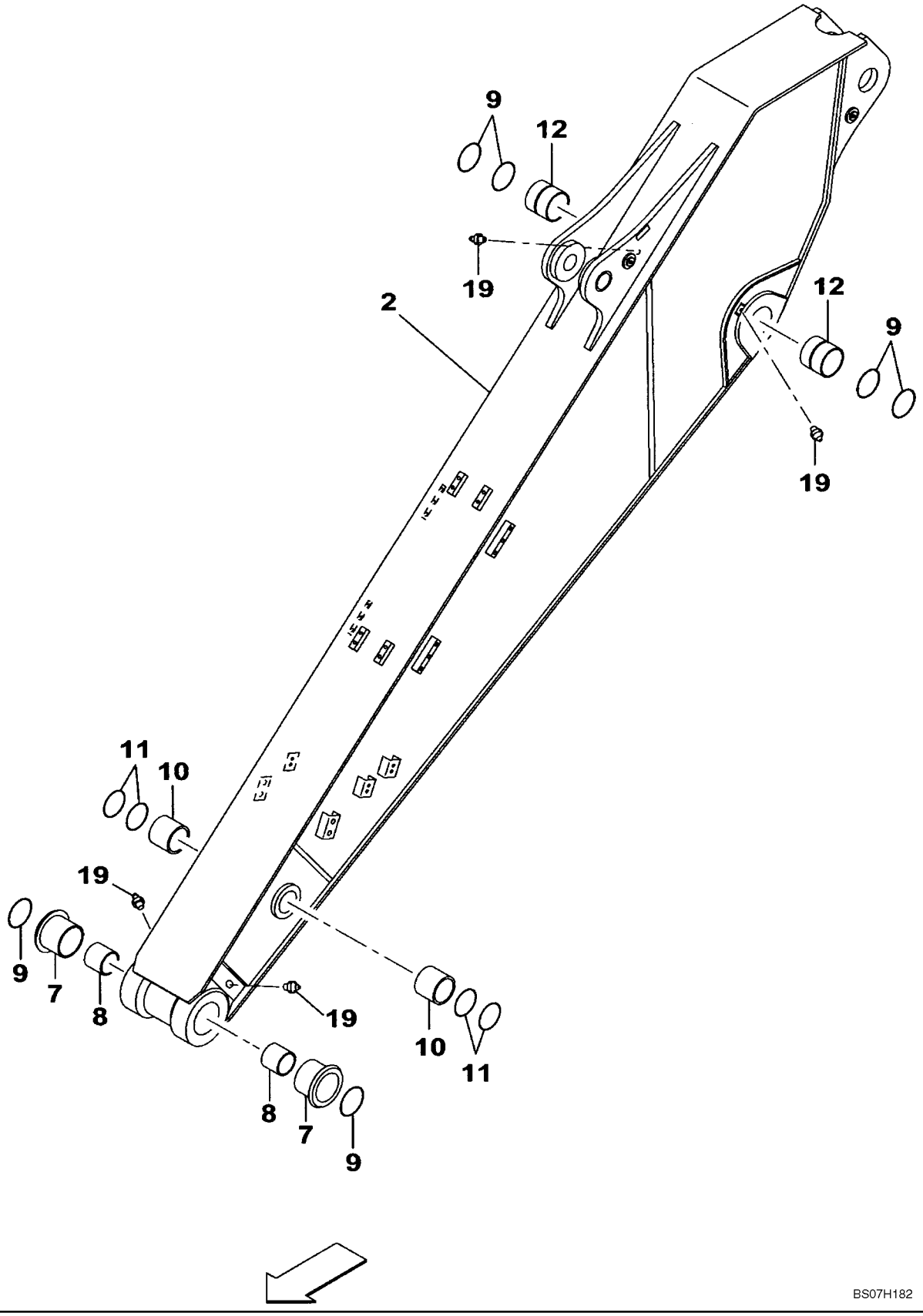

10

ARM (2.62M) - OPTIONAL

REF	FN	PART NUMBER	YR/SN	QTY	DESCRIPTION
1		KLV13910		1	BALANCÍN, ARM, Std 2.62 M
2		NSS		1	BOLETIM INFORMATIVO
7		KRV2408		2	BUCHA
8		KRV10910		2	BUCHA
9		159647A1		6	ANEL DE VEDAÇÃO
10		KLV10320		2	CASTILHO ALTO LUBRIF
11		160674A1		4	ANEL DE VEDAÇÃO
12		KRV1784		2	CASTILHO ALTO LUBRIF
19		153630A1		4	GRAXEIRA

BUCKET LINKAGE, MODELS WITH AUXILIARY HYDRAULICS

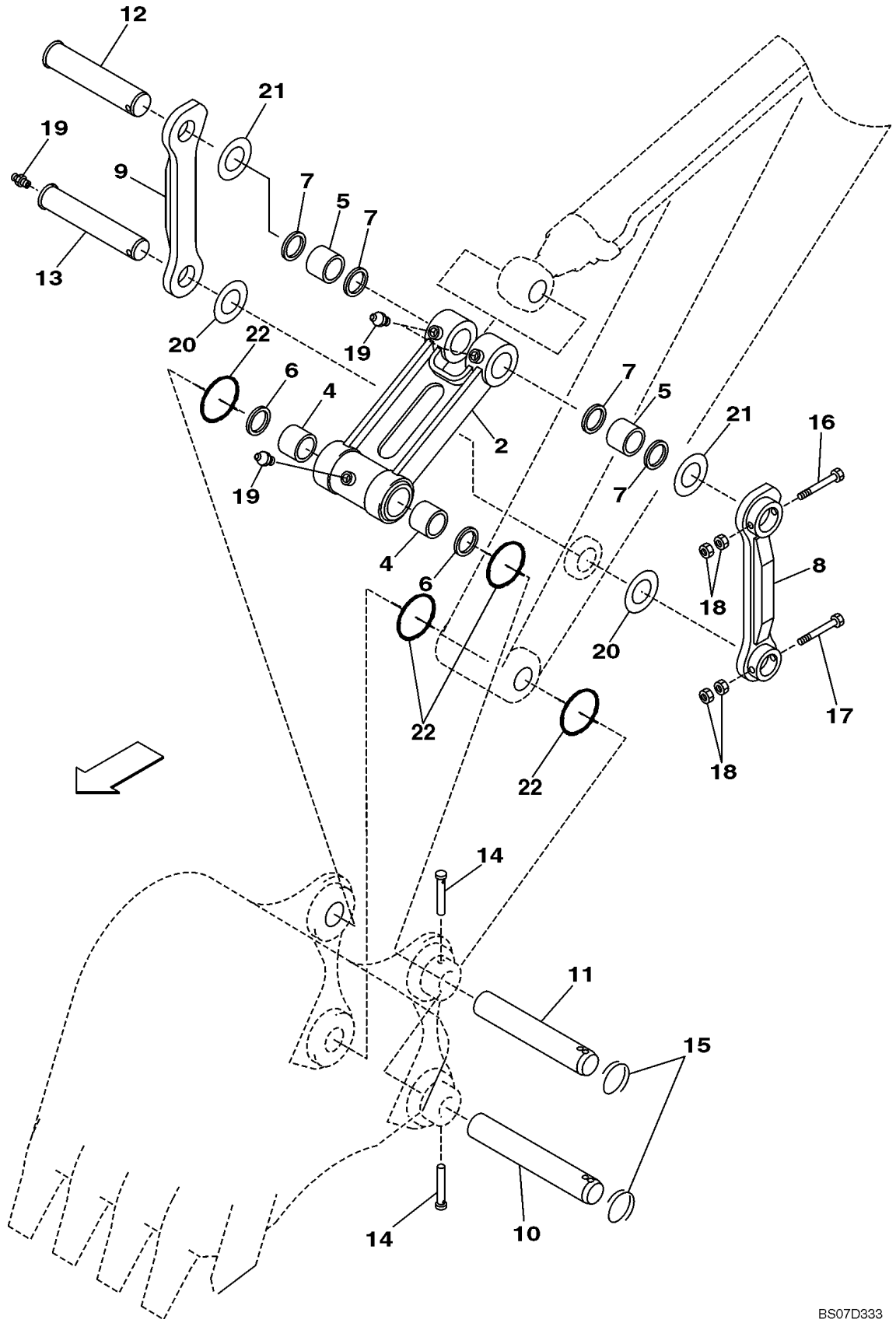

BUCKET LINKAGE, MODELS WITH AUXILIARY HYDRAULICS

REF	FN	PART NUMBER	YR/SN	QTY	DESCRIPTION
					Heavy Duty
		KLV0344		1	BRAÇO DE POTÊNCIA, Bucket, Standard, Incl. 2 - 5
2		NSS		1	BOLETIM INFORMATIVO, Link, Bucket
4		150264A1		2	BUCHA
5		160718A1		2	BUCHA
6		159647A1		2	ANEL DE VEDAÇÃO
7		160400A1		4	ANEL DE VEDAÇÃO
8		KLV0346		1	FORQUILHA
9		KLV0347		1	FORQUILHA
10		169280A1		1	PINO
11		169281A1		1	PINO
12		KLV0348		1	PINO
13		KLV0326		1	PINO
14		153748A1		2	PINO
15		153749A1		2	ANEL
16		514-1038		1	PARAFUSO, Hex, M16 x 1.5 x 160, 10.9
17		514-1112		1	PARAFUSO, Hex, M16 x 1.5 x 140, 10.9
18		829-13416		4	PORCA, M16 x 1.5, Cl 10
19		153630A1		4	GRAXEIRA
20		161643A1		2	CALCO DE AFINACAO
21		160404A1		2	CALCO DE AFINACAO, 1,30 mm (0,051 in)
22		160402A1		4	ANEL O, 122 mm ID x 8 mm thick

BUCKET LINKAGE, MODELS WITHOUT AUXILIARY HYDRAULICS

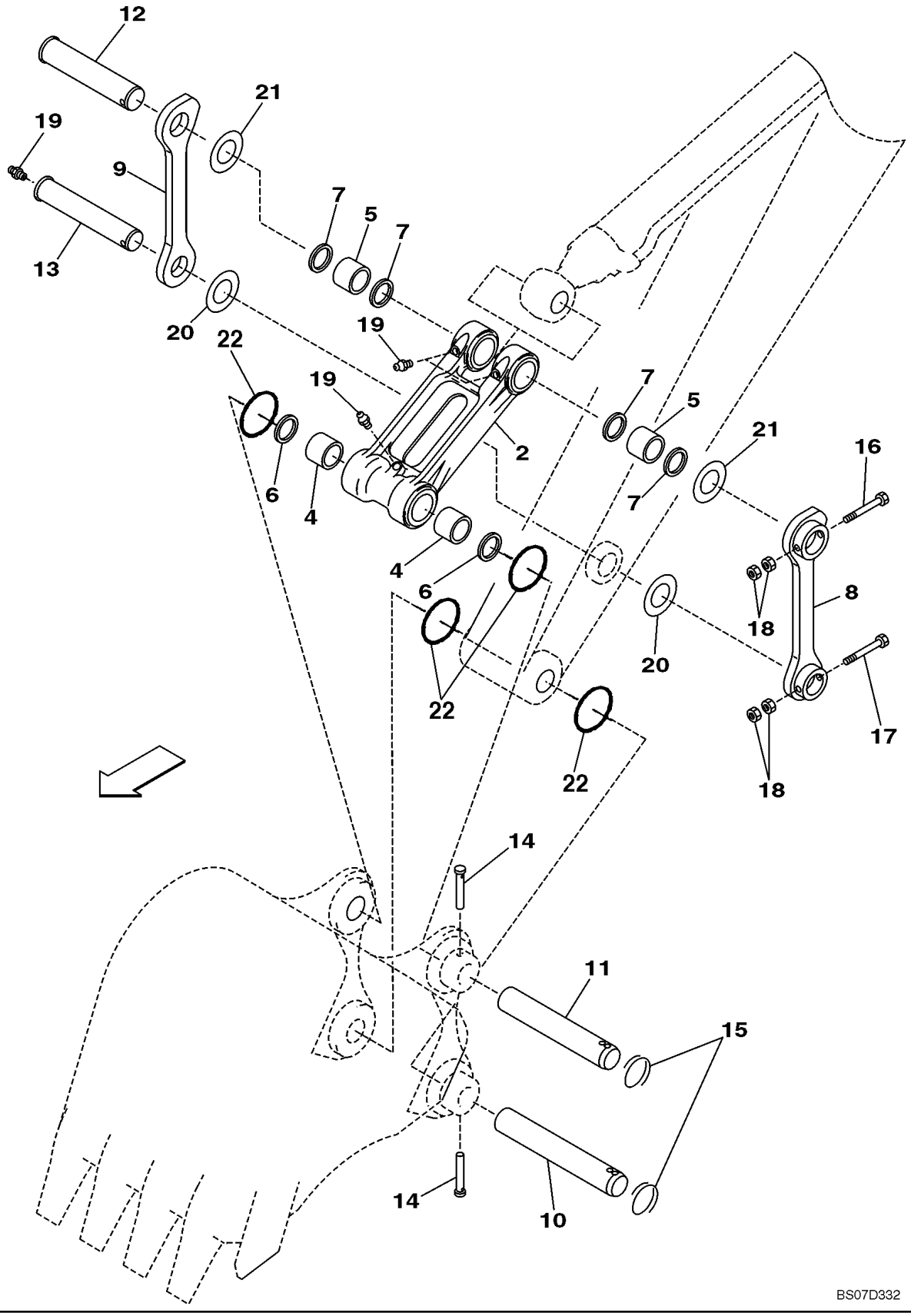

BUCKET LINKAGE, MODELS WITHOUT AUXILIARY HYDRAULICS

REF	FN	PART NUMBER	YR/SN	QTY	DESCRIPTION
					Standard
		KLV0339		1	BRAÇO DE POTÊNCIA, Bucket, Standard, Incl. 2 - 5
2		NSS		1	BOLETIM INFORMATIVO, Link, Bucket
4		150264A1		2	BUCHA
5		160718A1		2	BUCHA
6		159647A1		2	ANEL DE VEDAÇÃO
7		160400A1		4	ANEL DE VEDAÇÃO
8		KLV0304		1	BRAÇO DE POTÊNCIA
9		KLV0305		1	BRAÇO DE POTÊNCIA
10		169280A1		1	PINO
11		169281A1		1	PINO
12		KLV0327		1	PINO
13		KLV0326		1	PINO
14		153748A1		2	PINO
15		153749A1		2	ANEL
16		514-1038		1	PARAFUSO, Hex, M16 x 1.5 x 160, 10.9
17		514-1112		1	PARAFUSO, Hex, M16 x 1.5 x 140, 10.9
18		829-13416		4	PORCA, M16 x 1.5, Cl 10
19		153630A1		4	GRAXEIRA
20		161643A1		2	CALCO DE AFINACAO
21		160404A1		2	CALCO DE AFINACAO, 1,30 mm (0,051 in)
22		160402A1		4	ANEL O, 122 mm ID x 8 mm thick

INDEX - INDICE - INDEX - ZAHLENVERZEICHNIS - INDICE - INDICE - INDHOLD - INHOUD

Number	Figure	Sequence	Ref.
{KG0LV195}	08-14		
{KG0LV221}	08-30		
102R008Y075R	03-02		12
102R008Y110R	02-02		36
102R012Y016R	08-55		4
	08-56		4
102R016Y025R	09-32		5
	09-33		5
105R020Y050R	05-04		18
	05-05		18
	05-08		15
108R006Y020R	04-07		23
	09-09		23
108R008Y016R	09-16		43
108R008Y025N	08-77		8
108R008Y045R	08-77		9
108R008Z025B	08-57		43
	08-59		123
	08-61		43
	08-63		121
	08-65		174
108R008Z050N	08-90		91
	08-91		165
	08-96		91
	08-97		165
108R010Y016R	09-10		10
	09-11		10
108R010Z016N	06-02		124
108R010Z120R	08-65		199
108R014Z035N	06-03		70
108R014Z065N	08-86		12
108R016Y045R	08-03		4
	08-04		4
126R010SR	08-87		85
	08-92		102
127557A1	09-42		3
127558A1	09-42		5
145N003S008R	04-07		25
145N006S008R	08-45		10
	08-45		14
	08-46		14
	08-46		18
	08-47		11
	08-47		15
	08-48		10
	08-48		14
	08-49		10
	08-49		6
	08-50		10
	08-50		6
150009A1	05-08		14
150031A1	08-07		17
150067A1	04-06		52
	09-36		14
150071A1	06-05		14
150107A1	05-07		15
150108A1	09-47		18
150112A1	05-07		17
150115A1	05-07		18
150120A1	05-07		19
150129A1	09-04		4
150138A1	09-37		14
150142A1	09-40		6
150166A1	03-01		11
	08-01		9
150264A1	09-56		4
	09-57		4
150271A1	05-07		10
150364A1	04-14		5
150373A1	09-09		20
150409A1	02-04		9
	04-14		11
	06-07		3
	08-04		15
	08-23		7
	08-29		28
	08-37		63
	08-39		28
150409A1	09-07		77
	09-17		83
150455A1	04-14		4
150469A1	09-33A		11
	09-33A		6
150476A1	03-02		25
150479A1	03-01		12
	08-01		10
150488A1	03-02		28
150492A1	03-01		3
150496A1	03-02		42
	03-03		26
	04-05		113
	04-05		115
	04-05		26
	04-05		57
	04-05		59
	04-05		86
	04-05		91
	04-05A		113
	04-05A		14
	04-05A		17
	04-05A		57
	04-05A		59
	04-05A		8
	04-05A		91
	04-07		10
	04-07		17
	04-07		30
	04-07		32
	04-07		51
	04-15		9
	04-16		3
	06-07		32
	08-15		52
	08-16		52
	08-17		52
	08-18		139
	08-19		52
	08-20		52
	08-21		148
	08-22		148
	08-23		120
	08-23		64
	08-24		120
	08-24		64
	08-27		40
	08-29		47
	08-32		84
	08-33		84
	08-35		92
	08-36		92
	08-38		23
	08-38		36
	08-39		23
	08-39		43
	08-41		18
	08-44		12
	08-44		16
	08-45		11
	08-45		15
	08-46		15
	08-46		19
	08-47		12
	08-47		16
	08-48		11
	08-48		15
	08-49		11
	08-49		7
	08-50		11
	08-50		7
	08-99		6
	09-23		66
150498A1	06-07		33
	08-15		53
	08-18		140
	08-19		53
	08-22		149

Number	Figure	Sequence	Ref.
150498A1	08-33		85
	08-36		93
150529A1	03-02		10
150542A1	08-09		10
	08-09		8
150545A1	02-03		18
150597A1	05-06		7
	05-09		9
150604A1	09-09		14
	09-09		18
	09-10		11
	09-10		5
	09-10		8
	09-11		11
	09-11		5
	09-11		8
150709A1	09-07		30
150714A1	09-09		3
150736A1	02-03		19
	02-03		23
150773A1	09-25		52
150774A1	03-02		22
150785A1	09-07		71
150811A1	02-01		17
	08-11		24
	08-14		5
	08-31		5
	09-15A		34
	09-29		261
	09-32		20
	09-32		25
	09-32		8
	09-33		20
	09-33		24
	09-33		8
150814A1	02-01		22
	09-32		6
	09-33		6
150821A1	05-06		9
	05-08		9
	05-09		8
	08-54		3
150829A1	08-54		4
150834A1	04-12		10
150847A1	03-01		19
	08-01		29
150854A1	09-33A		7
150856A1	09-33A		10
	09-33A		8
150860A1	04-07		15
	04-07		28
	04-07		49
	04-07		8
	08-15		50
	08-16		50
	08-19		50
	08-20		50
	08-44		10
	08-44		14
	08-45		13
	08-45		9
	08-46		13
	08-46		17
	08-47		10
	08-47		14
	08-48		13
	08-48		9
	08-49		5
	08-49		9
	08-50		5
	08-50		9
150876A1	06-05		13
150885A1	08-07		14
	08-07		20
	08-07		26
	08-07		7
150893A1	08-05		2
150897A1	05-07		16
150913A1	08-02		14
	08-15		36
	08-18		94
	08-19		36
	08-22		103
	08-23		107
	08-24		107
	08-25		100
	08-25		107
	08-25		112
	08-25		69
	08-25		90
	08-32		76
	08-33		57
	08-34		47
	08-35		82
	08-36		78
	08-43		10
	08-43		12
	08-44		6
	08-44		8
	08-45		5
	08-45		7
	08-46		11
	08-47		6
	08-47		8
	08-48		5
	08-48		7
	08-49		1
	08-50		1
	08-99		16
150916A1	08-17		100
	08-17		72
	08-21		109
	08-23		21
	08-24		65
150933A1	06-07		12
	08-17		107
	08-17		112
	08-18		128
	08-21		116
	08-21		121
	08-22		137
	08-23		114
	08-24		56
	08-24		78
	08-25		92
	08-32		74
	08-35		84
	08-38		34
	08-39		41
150938A1	09-06		35
	09-06		38
150980A1	09-01		4
151108A1	09-07		27
	09-32		15
	09-33		15
151154A1	09-09		27
151175A1	09-23		53
	09-25		53
151322A1	03-01		6
151650A1	06-05		11
	08-38		15
	08-39		15
151654A1	02-02		26
	06-05		1
	08-05		9
	08-09		9
	08-26		21
	08-28		21
	08-32		42
	08-35		42
151686A1	05-07		8
151688A1	03-01		15
151756A1	09-33A		12
151814A1	08-54		5
151977A1	09-24		20
152012A1	02-02		34

Number	Figure	Sequence	Ref.
152085A1	06-06		12
	06-06		8
	08-11		22
152117A1	04-05		22
152127A1	06-05		6
	06-07		23
	06-07		26
	06-07		6
	08-02		16
	08-02		7
	08-15		25
	08-16		39
	08-17		124
	08-18		109
	08-18		124
	08-18		88
	08-19		25
	08-20		39
	08-21		133
	08-22		118
	08-22		133
	08-22		97
	08-23		29
	08-23		34
	08-23		39
	08-23		45
	08-24		67
	08-27		24
	08-29		32
	08-34		44
	08-34		65
	08-36		64
	08-37		50
	08-38		25
	08-39		32
152128A1	08-16		10
	08-16		14
	08-16		22
	08-16		3
	08-16		41
	08-17		63
	08-17		66
	08-20		10
	08-20		14
	08-20		22
	08-20		3
	08-20		41
	08-21		58
	08-21		75
	08-23		41
152422A1	05-09		6
152423A1	09-07		29
152579A1	04-05		21
152590A1	09-33A		2
152591A1	03-01		16
152593A1	08-54		13
152598A1	08-06		3
152599A1	09-01		16
	09-36		2
	09-36		5
152627A1	09-01		14
	09-36		3
	09-36		6
152718A1	02-03		10
	02-03		21
	02-05		35
	02-05		42
	02-05		5
	04-05		65
	04-05		67
	04-06		42
	08-06		7
	08-11		19
	08-11		21
	09-05		20
	09-05		47
	09-05		48
	09-05		49
152718A1	09-05		50
	09-05		82
	09-05		86
	09-05		89
	09-05		91
	09-05		93
	09-05		95
	09-06		20
	09-06		58
	09-06		60
	09-07		68
	09-07		87
	09-08		108
	09-08		110
	09-08		113
	09-08		120
152719A1	09-06		64
152736A1	05-09		5
152747A1	08-18		122
	08-18		86
	08-18		90
	08-22		131
	08-22		95
	08-22		99
	08-23		43
152772A1	09-05		160
152812A1	04-12		5
152924A1	08-01		27
	08-14		1
	08-14		12
	08-14		19
	08-30		3
	08-30		8
	08-31		1
	08-31		12
	08-31		19
	08-42		1
	08-43		3
	08-46		3
153077A1	09-08		98
153081A1	02-02		38
	03-02		13
	03-02		4
	08-02		3
	08-16		45
	08-20		45
	09-01		22
	09-24		15
	09-24		19
153181A1	09-06		57
	09-32		14
	09-33		14
153191A1	08-01		14
153357A1	03-01		9
	08-01		7
153458A1	08-26		3
	08-28		3
	08-32		20
	08-32		3
	08-35		20
	08-35		3
153559A1	08-18		92
	08-22		101
	08-24		58
153603A1	09-36		13
153630A1	05-07		20
	08-83		35
	08-84		35
	08-86		34
	09-01		13
	09-36		1
	09-54	00	19
	09-55	00	19
	09-56		19
	09-57		19
153631A1	09-01		18
153748A1	09-56		14
	09-57		14

Number	Figure	Sequence	Ref.
153749A1	09-56		15
	09-57		15
153912A1	08-51		11
	08-85		38
153946A1	08-57		48
	08-59		132
	08-61		48
	08-63		130
153952A1	08-57		49
	08-59		133
	08-61		49
	08-63		131
153958A1	08-60		173
	08-64		171
153961A1	08-87		79
	08-92		96
153964A1	06-03		38
153976A1	08-58		14
	08-60		102
	08-62		14
	08-64		100
	08-65		192
153977A1	06-03		32
153991A1	08-52		43
154002A1	08-87		80
	08-92		97
154402A1	08-58		32
	08-58		36
	08-59		146
	08-62		32
	08-62		36
	08-63		144
	08-65		197
154446A1	08-70		7
154455A1	06-04		21
	08-57		23
	08-58		23
	08-59		99
	08-60		99
	08-61		23
	08-62		23
	08-63		97
	08-64		97
154457A1	08-78		26
154462A1	08-70		18
	08-79		23
154463A1	06-03		81
	08-57		21
	08-58		21
	08-59		97
	08-60		97
	08-61		21
	08-62		21
	08-63		95
	08-64		95
	08-69		2
	08-73		19
	08-74		13
	08-78		24
	08-81		13
154465A1	08-58		67
	08-62		67
154467A1	04-05		10
	04-05		102
	04-05		30
	06-03		50
	06-05		7
	06-07		11
	06-07		13
	06-07		24
	06-07		27
	06-07		29
	06-07		31
	06-07		7
	06-07		9
	08-02		10
	08-02		15
	08-02		17
154467A1	08-02		8
	08-03		12
	08-04		12
	08-05		7
	08-15		26
	08-15		37
	08-16		17
	08-16		40
	08-16		6
	08-17		108
	08-17		113
	08-17		125
	08-17		71
	08-18		110
	08-18		123
	08-18		125
	08-18		127
	08-18		129
	08-18		87
	08-18		89
	08-18		91
	08-18		93
	08-18		95
	08-19		26
	08-19		37
	08-20		17
	08-20		40
	08-20		6
	08-21		117
	08-21		122
	08-21		134
	08-21		80
	08-22		100
	08-22		102
	08-22		104
	08-22		119
	08-22		132
	08-22		134
	08-22		136
	08-22		138
	08-22		96
	08-22		98
	08-23		108
	08-23		115
	08-23		14
	08-23		16
	08-23		19
	08-23		30
	08-23		35
	08-23		40
	08-23		44
	08-23		46
	08-24		108
	08-24		57
	08-24		59
	08-24		68
	08-24		79
	08-25		101
	08-25		108
	08-25		113
	08-25		70
	08-25		73
	08-25		82
	08-25		84
	08-25		86
	08-25		89
	08-25		91
	08-25		93
	08-25		96
	08-25		99
	08-27		25
	08-27		28
	08-27		35
	08-27		39
	08-27		43
	08-29		30
	08-29		33
	08-29		35

Number	Figure	Sequence	Ref.
154467A1	08-29		42
	08-29		46
	08-32		75
	08-32		77
	08-33		58
	08-34		103
	08-34		45
	08-34		48
	08-34		63
	08-34		66
	08-34		73
	08-34		87
	08-35		83
	08-35		85
	08-36		53
	08-36		65
	08-36		67
	08-36		79
	08-37		48
	08-37		51
	08-37		67
	08-37		70
	08-37		81
	08-38		26
	08-38		28
	08-38		35
	08-38		38
	08-39		30
	08-39		33
	08-39		35
	08-39		42
	08-43		11
	08-43		13
	08-43		16
	08-43		6
	08-44		7
	08-44		9
	08-45		6
	08-45		8
	08-46		10
	08-46		12
	08-46		6
	08-47		7
	08-47		9
	08-48		6
	08-48		8
	08-49		2
	08-49		4
	08-50		2
	08-50		4
	08-52		18
	08-53		75
	08-57		26
	08-58		26
	08-59		121
	08-60		121
	08-61		26
	08-62		26
	08-63		119
	08-64		119
	08-70		15
	08-79		24
	08-88		21
	08-93		21
154471A1	08-52		33
	08-60		170
	08-64		168
154474A1	08-70		5
154475A1	08-16		11
	08-16		13
	08-16		15
	08-16		2
	08-16		23
	08-16		4
	08-16		42
	08-17		101
	08-17		104
	08-17		106
154475A1	08-17		62
	08-17		64
	08-17		67
	08-17		69
	08-17		73
	08-17		75
	08-17		77
	08-17		80
	08-17		99
	08-20		11
	08-20		13
	08-20		15
	08-20		2
	08-20		23
	08-20		4
	08-20		42
	08-21		108
	08-21		110
	08-21		113
	08-21		115
	08-21		59
	08-21		61
	08-21		66
	08-21		74
	08-21		76
	08-21		78
	08-21		82
	08-21		84
	08-21		86
	08-21		89
	08-23		22
	08-23		38
	08-23		42
	08-24		66
	08-57		39
	08-58		39
	08-59		111
	08-61		39
	08-62		39
	08-63		109
	08-65		185
	08-78		8
154477A1	08-58		70
	08-62		70
154479A1	06-03		37
154481A1	08-78		27
154483A1	08-88		22
	08-93		22
154486A1	08-75		7
154487A1	06-04		45
	06-05		12
	08-08		11
	08-08		2
	08-08		6
	08-23		12
	08-23		5
	08-23		9
	08-32		28
	08-32		33
	08-35		28
	08-35		33
	08-38		10
	08-38		12
	08-38		16
	08-38		5
	08-38		8
	08-39		10
	08-39		12
	08-39		16
	08-39		5
	08-39		8
	08-40		2
	08-41		2
	08-43		2
	08-44		2
	08-45		2
	08-46		2
	08-47		2

Number	Figure	Sequence	Ref.	Number	Figure	Sequence	Ref.
154487A1	08-48		2	154523A1	08-43		8
	08-52		32		08-44		4
	08-53		73		08-45		4
	08-57		61		08-46		8
	08-58		61		08-47		4
	08-59		115		08-48		4
	08-60		115		08-57		54
	08-61		61		08-58		54
	08-63		113		08-58		86
	08-64		113		08-59		138
	08-65		189		08-60		167
	08-73		18		08-61		54
	08-74		12		08-62		86
	08-81		12		08-63		136
154489A1	08-58		69		08-64		165
	08-62		69		08-65		190
154491A1	08-60		172	154525A1	08-58		66
	08-64		170		08-62		66
	08-78		9	154528A1	08-83		26
	08-82		8		08-84		26
	08-89		236		08-85		29
	08-94		253		08-86		25
154495A1	06-03		31	154549A1	08-07		4
	06-04		10		08-07		9
	08-32		35	154569A1	08-77		11
	08-35		35	154589A1	06-04		16
	08-58		11	154609A1	08-07		22
	08-58		31	154639A1	05-06		6
	08-58		35	154667A1	05-08		7
	08-58		9	154681A1	08-05		4
	08-59		103	154689A1	08-93		36
	08-60		103	154697A1	08-04		16
	08-60		148		08-93		37
	08-60		149	154721A1	08-54		9
	08-62		11		08-86		10
	08-62		31	154741A1	08-83		10
	08-62		35		08-84		1
	08-62		9	154761A1	08-85		10
	08-63		101	154776A1	08-01		6
	08-64		101	154837A1	08-01		5
	08-64		146	155063A1	08-58		33
	08-64		147		08-58		37
	08-65		179		08-59		145
	08-65		181		08-60		150
	08-65		196		08-62		33
154499A1	08-65		186		08-62		37
154503A1	02-02		27		08-63		143
	02-02		33		08-64		148
	02-02		35		08-65		198
	06-02		126	155106A1	08-52		4
	06-05		2	155107A1	08-53		56
	08-01		28	155188A1	08-73		17
	08-05		10		08-74		11
	08-14		13		08-81		11
	08-14		2	155198A1	08-52		12
	08-14		20	155199A1	08-52		14
	08-14		7	155201A1	08-52		44
	08-26		22	155203A1	08-89		159
	08-28		22		08-89		231
	08-30		4		08-94		176
	08-30		9		08-94		248
	08-31		13	155204A1	08-11		7
	08-31		2		08-32		29
	08-31		20		08-32		31
	08-31		7		08-35		29
	08-32		43		08-35		31
	08-35		43		08-89		160
	08-42		2		08-89		232
	08-43		4		08-94		177
	08-46		4		08-94		249
	08-86		36	155210A1	06-06		1
	08-93		38		08-06		4
154515A1	08-52		38		08-10		4
154523A1	06-05		4		08-11		17
	08-26		19		08-26		2
	08-28		19		08-28		2
	08-38		3		08-32		19
	08-39		3		08-32		2

Number	Figure	Sequence	Ref.	Number	Figure	Sequence	Ref.
155210A1	08-35		19	156110A1	06-04		11
	08-35		2	156133A1	08-52		5
	08-59		153	156134A1	08-52		24
	08-63		151	156157A1	08-53		51
155211A1	08-34		40	156165A1	08-82		19
	08-37		40	156178A1	08-79		19
155220A1	06-03		82	156179A1	08-79		17
155222A1	08-57		63	156222A1	08-86		19
	08-61		63	156223A1	08-83		20
155223A1	08-69		4		08-84		20
	08-78		25		08-85		20
155225A1	06-03		29	156227A1	08-83		31
155240A1	08-85		11		08-84		31
155241A1	08-83		8		08-85		34
	08-84		8		08-86		30
155249A1	08-85		8	156263A1	08-57		38
155255A1	08-82		17		08-58		38
155295A1	08-58		16		08-59		110
	08-60		105		08-61		38
	08-62		16		08-62		38
	08-64		103		08-63		108
155306A1	08-85		19		08-65		184
155311A1	08-85		16	156280A1	08-79		5
155330A1	08-86		15	156305A1	08-52		42
155383A1	08-53		69	156356A1	08-53		49
155430A1	08-83		4	156559A1	04-05		74
	08-84		4		04-08		4
155471A1	08-93		35		09-19		2
155496A1	08-88		18	156872A1	06-04		51
	08-93		18	156903A1	08-79		25
155515A1	08-78		6	156911A1	04-16		1
155516A1	08-86		23	156960A1	08-87		47
155570A1	08-79		1		08-92		66
155571A1	08-79		2	157141A1	09-35		23
155613A1	08-52		29		09-35		28
155614A1	08-52		25		09-37		11
155616A1	08-52		7		09-39		5
155617A1	08-52		8		09-40		8
155618A1	08-52		11	157169A1	02-03		12
155619A1	08-52		10	157221A1	05-01		2
155620A1	08-52		3	157292A1	09-24		9
155621A1	08-53		58	157299A1	09-24		8
155631A1	06-03		63	157478A1	02-04		5
155685A1	08-53		50	157537A1	04-15		6
155686A1	08-53		55	157538A1	04-07		14
155696A1	08-83		5	157546A1	05-02		3
	08-84		5	157560A1	09-32		19
155713A1	08-85		5		09-33		19
155717A1	08-85		35	157580A1	02-02		32
	08-86		31	157581A1	08-38		2
155745A1	08-69		1		08-39		2
155754A1	08-79			157584A1	08-17		103
155915A1	08-57		57		08-17		61
	08-59		141		08-17		68
	08-61		57		08-17		79
	08-63		139		08-21		112
155920A1	08-58		13		08-21		77
	08-60		101		08-21		88
	08-62		13	157585A1	08-08		1
	08-64		99		08-08		10
155944A1	08-52		40		08-08		5
155950A1	06-03		65		08-38		4
155976A1	06-04		18		08-39		4
	08-86		20	157740A1	09-10		14
155977A1	08-83		21		09-11		14
	08-84		21	157917A1	03-03		8
	08-85		21	157929A1	03-01		20
155990A1	08-52				03-02		18
156027A1	08-58		15	157935A1	08-23		8
	08-60		104	157936A1	08-09		7
	08-62		15	158033A1	08-83		9
	08-64		102		08-84		9
	08-65		193	158067A1	09-24		51
156079A1	08-52		41		09-25		51
156080A1	08-52		6	158068A1	03-02		31
156082A1	08-52		15	158113A1	06-03		62
156090A1	06-03		77	158131A1	08-83		30
156106A1	06-04		19		08-84		30

Number	Figure	Sequence	Ref.	Number	Figure	Sequence	Ref.
158131A1	08-85		33	159497A1	08-23		18
	08-86		29		08-25		81
158403A1	04-14		3		08-25		95
158404A1	09-20		109		08-34		62
158676A1	03-02		1B		08-34		72
158678A1	03-02		1A		08-37		47
158749A1	09-06		65		08-37		80
158776A1	05-08		5		08-49		3
158777A1	05-08		3		08-50		3
158919A1	05-01		4	159500A1	09-10		15
	09-03		12		09-11		15
158923A1	03-01		18	159543A1	04-10		138
	03-02		17	159598A1	04-12		
	08-01		30	159602A1	03-03		18
158955A1	08-51		3		04-07		27
158962A1	04-05A		18		04-07		7
	04-05A		23		04-08		2
	04-05A		39		04-09		2
	04-05A		97		04-16		2
	08-44		17	159615A1	04-12		6
	08-45		16	159622A1	09-20		72
	08-46		20	159647A1	09-35		18
	08-47		17		09-53	00	9
	08-48		16		09-54	00	9
	08-49		12		09-55	00	9
	08-50		12		09-56		6
	08-99		11		09-57		6
	09-24		24	159656A1	04-05		88
159002A1	06-07		28	159668A1	05-04		15
	08-05		6		05-05		15
	08-17		70	159669A1	05-04		16
	08-21		79		05-05		16
	08-23		13	159673A1	05-04		11
	08-27		27		05-05		11
	08-29		34	159676A1	05-04		10
	08-36		52		05-05		10
	08-37		69	159677A1	05-04		12
	08-38		27		05-05		12
	08-39		34	159685A1	05-08		4
	08-43		15	159692A1	05-08		2
	08-43		5	159698A1	03-01		17
	08-46		5	159702A1	08-01		17
	08-46		9	159703A1	08-01		18
	08-99		13	159741A1	09-39		3
159085A1	08-40		1	159895A1	09-19		1
	08-41		1	159897A1	04-06		48
	08-43		1	159902A1	04-06		46
	08-44		1	159904A1	03-03		21
	08-45		1	159906A1	04-12		15
	08-46		1		09-07		75
	08-47		1		09-25		39
	08-48		1	159977A1	08-69		5
159091A1	09-06		21	159979A1	08-69		7
159171A1	04-06		50	160001A1	08-72		32
159179A1	04-05		72	160022A1	08-72		27
	04-05		85	160026A1	08-82		5
159205A1	08-99		5	160027A1	08-82		6
159211A1	08-16		8	160035A1	08-72		26
	08-17		8	160047A1	08-53		61
	08-20		8	160050A1	08-85		4
	08-21		8	160070A1	08-82		4
159213A1	08-16		21	160072A1	08-70		6
	08-16		9	160073A1	08-70		4
	08-20		21	160083A1	08-79		15
	08-20		9	160090A1	08-72		28
159217A1	08-16		19	160097A1	06-03		78
	08-17		19	160101A1	08-52		19
	08-20		19	160103A1	06-03		59
	08-21		19	160104A1	06-02		127
159226A1	08-21		60	160203A1	06-03		60
159361A1	08-38		11	160250A1	08-72		23
	08-38		7	160256A1	08-70		3
	08-39		11	160281A1	08-72		31
	08-39		7	160282A1	08-72		30
159399A1	05-08		11	160283A1	08-72		21
159492A1	08-01		25	160306A1	08-52		17
159493A1	08-01		26		08-53		74
159497A1	08-23		15		08-57		25

Number	Figure	Sequence	Ref.
160306A1	08-58		25
	08-59		122
	08-60		122
	08-61		25
	08-62		25
	08-63		120
	08-64		120
160355A1	06-07		1
	08-75		
160397A1	05-06		4
160400A1	09-56		7
	09-57		7
160402A1	09-56		22
	09-57		22
160404A1	09-56		21
	09-57		21
160408A1	05-06		8
160414A1	04-05		20
160422A1	05-09		7
160423A1	05-09		4
160426A1	05-06		5
160427A1	05-06		3
160433A1	09-01		3
160482A1	08-86		22
160483A1	08-83		23
	08-84		23
	08-85		26
160509A1	08-85		17
160520A1	08-53		60
160548A1	08-53		48
160556A1	08-85		24
160557A1	08-85		25
160565A1	06-03		22
	06-04		22
160590A1	06-03		61
160592A1	06-03		79
160611A1	08-53		57
160652A1	08-89		161
	08-89		233
	08-94		178
	08-94		250
160674A1	09-53	00	11
	09-54	00	11
	09-55	00	11
160718A1	09-56		5
	09-57		5
160783A1	08-86		9
160805A1	08-58		24
	08-60		96
	08-62		24
	08-64		94
	08-65		176
160806A1	08-58		8
	08-60		109
	08-62		8
	08-64		107
	08-65		183
160808A1	08-86		8
160812A1	08-83		11
	08-84		11
160813A1	08-83		17
	08-84		17
160824A1	08-83		16
	08-84		16
160827A1	08-83		19
	08-84		19
160843A1	08-86		4
160848A1	08-79		4
160849A1	08-79		6
160850A1	08-65		175
160870A1	08-86		5
160871A1	08-83		32
	08-84		32
160902A1	08-57		22
	08-58		22
	08-59		98
	08-60		98
	08-61		22
160902A1	08-62		22
	08-63		96
	08-64		96
160903A1	08-52		36
	08-53		72
	08-57		60
	08-59		144
	08-61		60
	08-63		142
160906A1	08-59		118
	08-63		116
160914A1	08-57		56
	08-59		140
	08-61		56
	08-63		138
160918A1	08-58		19
	08-62		19
160946A1	08-79		7
160947A1	08-58		41
	08-62		41
160948A1	08-57		55
	08-59		139
	08-61		55
	08-63		137
160974A1	08-60		108
	08-64		106
160999A1	08-83		29
	08-84		29
161059A1	08-83		12
	08-84		12
	08-85		12
161080A1	08-09		1
	08-11		3
161084A1	08-23		11
161095A1	08-18		134
	08-22		143
161096A1	08-09		2
	08-10		1
	08-11		4
161294A1	09-37		13
161298A1	05-04		14
	05-05		14
161360A1	04-10		86
161381A1	09-26		43
161383A1	09-26		40
161384A1	09-26		10
161385A1	09-26		39
161453A1	09-26		64
161643A1	09-56		20
	09-57		20
161713A1	05-08		12
161740A1	02-05		20
161773A1	06-03		49
161806A1	08-53		62
161841A1	06-07		25
	08-15		24
	08-19		24
	08-27		26
	08-29		31
	08-34		46
	08-37		68
	08-38		24
	08-39		31
161842A1	08-16		16
	08-16		5
	08-20		16
	08-20		5
161859A1	09-26		245
161877A1	08-85		9
161878A1	08-85		13
161879A1	08-85		22
161880A1	08-86		11
161881A1	08-86		16
161883A1	08-86		18
161928A1	08-85		32
162043A1	09-25		37
162057A1	03-02		9
162068A1	09-17		154

Number	Figure	Sequence	Ref.	Number	Figure	Sequence	Ref.
162068A1	09-18		154	165196A1	08-72		16
162140A1	09-52		7	165197A1	08-72		6
162148A1	03-02		19	165198A1	08-72		15
162150A1	04-05A		80	165199A1	08-72		17
162197A1	05-08		13	165200A1	08-72		18
162212A1	04-06		51	165203A1	08-72		1
162409A1	09-06		62	165205A1	08-72		14
	09-08		115	165208A1	08-72		25
162457A1	09-24		10	165210A1	08-72		7
162468A1	02-05		60	165211A1	08-72		5
162525A1	06-07		10	165229A1	08-72		11
	08-25		72	165277A1	08-72		20
	08-25		94		08-72		24
162554A1	06-07		8	165404A1	09-09		17
	08-18		126		09-10		4
	08-22		135		09-11		4
	08-25		85	165437A1	02-03		7
	08-25		88	165681A1	06-02		125
	08-25		98	165696A1	06-03		73
	08-27		34	165720A1	06-03		75
	08-29		29	165721A1	06-03		76
	08-29		41	165745A1	08-52		28
	08-36		66	165792A1	02-05		8
	08-37		66	165793A1	02-03		24
	08-39		29		02-05		9
	08-99		14	165818A1	02-03		15
162625A1	09-09		7	165900A1	09-01		8
162659A1	08-43		7	165929A1	05-07		2
	08-44		3	165930A1	05-07		21
	08-45		3		06-01		3
	08-46		7	165932A1	05-09		11
	08-47		3	165951A1	02-03		13
	08-48		3		02-05		25
162826A1	08-24		80		02-05		28
162935A1	09-47		19	165952A1	02-04		6
163356A1	02-05		52	165984A1	04-05		87
163422A1	08-23		36	166052A1	02-02		41
163560A1	08-01				02-03		8
163561A1	08-01		24		02-05		23
163662A1	08-88		13		03-01		8
	08-93		13		08-07		12
163663A1	08-88		14		08-07		18
	08-93		14		09-09		10
163664A1	08-88		15		09-10		2
	08-93		15		09-11		2
163665A1	08-88		16		09-12		3
	08-93		16		09-13		3
163666A1	08-88		17		09-24		17
	08-93		17	166116A1	04-14		6
163667A1	08-88		19	166129A1	09-23		57
	08-93		19		09-23		58
163668A1	08-88		23	166130A1	09-23		54
	08-93		23		09-24		54
163782A1	09-10		16	166176A1	08-52		31
	09-11		16	166345A1	02-05		11
163804A1	03-01		4		02-05		46
163805A1	08-08		7		02-05		53
163865A1	09-01		5		02-05		57
164445A1	08-86		21		03-03		16
164446A1	08-83		22		04-05		105
	08-84		22		04-05		69
164448A1	08-75		6		04-05		93
164449A1	08-75		5		04-07		12
164485A1	06-04		52		04-07		19
164739A1	08-57		77		04-07		46
	08-61		77		04-07		48
164905A1	08-69		6		04-07		5
164906A1	08-69		3		04-11		3
164966A1	02-05		32		08-15		49
164967A1	02-05		37		08-16		49
	02-05		39		08-18		135
	02-05		44		08-19		49
164R012VR	08-87		81		08-20		49
	08-92		98		08-22		144
164R016VR	08-87		82		08-23		28
	08-92		99		08-44		18
165150A1	08-78		23		08-45		17
165195A1	08-72		9		08-46		21

Number	Figure	Sequence	Ref.	Number	Figure	Sequence	Ref.
166345A1	08-47		18	166352A1	09-06		61
	08-48		17		09-08		114
	08-49		13		09-29		258
	08-50		13		09-38	00	2
	09-01		19		09-38	00	5
	09-16		46		09-38	00	7
	09-20		108		09-38	00	9
	09-24		26		09-38	01	2
166346A1	09-16		110		09-38	01	4
	09-17		109		09-38	01	6
	09-18		109		09-38	01	9
166347A1	03-03		3		09-38	02	11
	08-01		12		09-38	02	18
	08-03		5		09-38	02	25
	08-04		5		09-38	02	5
	08-06		10		09-38	03	13
	08-06		13		09-38	03	20
	08-11		12		09-38	03	27
	08-11		9		09-38	03	6
	08-17		60		09-39	00	2
	08-21		57		09-39	01	6
	08-21		72	166353A1	09-01		9
	08-32		26	166354A1	08-51		4
	08-35		26	166373A1	08-55		3
	08-38		19		08-56		3
	08-38		22	166804A1	08-72		10
	08-39		19	167013A1	08-79		22
	08-39		22	167034A1	04-12		9
	09-06		26	167067A1	05-02		2
166350A1	08-17		57	167181A1	04-09		1
	08-23		117	167182A1	08-99		1
	09-05		161		09-25		28
	09-05		80	167183A1	06-06		9
	09-07		31		08-10		13
	09-07		72		08-10		9
	09-08		104		08-40		4
	09-15B		28		08-41		4
	09-33A		9		09-29		259
	09-34		8		09-38	02	12
166351A1	03-03		10		09-38	02	19
	03-03		12		09-38	02	26
	04-14		12		09-38	02	6
	05-07		13		09-38	03	14
	06-07		5		09-38	03	21
	08-01		11		09-38	03	28
	08-23		24		09-38	03	7
	08-29		25	167321A1	08-34		64
	08-34		61		08-37		49
	08-37		46	167324A1	09-48		11
	08-37		60	167327A1	09-48		1
	08-39		25	167328A1	09-48		14
	09-01		12	167518A1	04-05		111
	09-08		102		04-05		12
	09-25		26		04-05		37
	09-25		30		04-05		4
	09-32		22		04-05		76
	09-33		22		04-05A		109
	09-33A		4		04-05A		19
166352A1	02-05		2		04-05A		24
	05-03		2		04-05A		40
	06-06		11		04-05A		81
	08-10		11		04-05A		98
	08-17		55		04-06		53
	08-18		133		04-06		61
	08-21		55		04-07		55
	08-22		142		04-07		57
	08-23		26		08-99		12
	08-26		17		09-25		38
	08-26		9	167813A1	06-06		13
	08-28		17	167913A1	02-01		4
	08-28		9	168295A1	08-54		7
	08-32		23	168377A1	09-01		20
	08-34		15	168437A1	08-53		66
	08-34		9	168535A1	08-40		11
	08-35		23		08-40		7
	08-37		15	168728A1	08-25		106
	08-37		9	168806A1	08-25		105
	08-54		15	168988A1	08-08		4

Number	Figure	Sequence	Ref.
168988A1	08-09		6
169040A1	06-05		3
	08-26		18
	08-28		18
	08-34		39
	08-37		39
169052A1	09-23		42
	09-24		42
169053A1	09-24		45
	09-25		45
169054A1	09-23		50
	09-25		48
	09-25		50
169174A1	08-09		12
169280A1	09-56		10
	09-57		10
169281A1	09-56		11
	09-57		11
169337A1	09-31		4
169338A1	09-31		5
183-106VR	08-99		4
183-108VR	04-06		84
	09-15A		28
	09-16		44
	09-24		23
	09-34		5
232-41314	09-43		12
233792A1	09-42		4
233793A1	09-43		3
233794A1	09-43		5
233795A1	09-43		4
244961A1	09-43		11
283647A1	05-07		4
288594A1	02-16		275
288798A1	02-08		4
288854A1	02-28		117B
289414A1	02-13		21A
289415A1	02-25		112
289842A1	02-31		2B
304621A1	09-15A		11
307043A1	09-15		8
307044A1	09-15		9
307045A1	09-15		
307046A1	09-15		21
307047A1	09-15		22
307048A1	09-15		12
307049A1	09-15		
307050A1	09-15		16
307051A1	09-15		17
307052A1	09-15		18
307053A1	09-15		19
320-21444	09-43		13
321-6872	09-48		9
338W060Z014B	08-87		84
	08-92		101
353948A1	02-12		8
353962A1	02-12		70
	02-13		70
353965A1	02-09		4
353966A1	02-09		5
355113A1	02-17		38
355117A1	02-17		21
355119A1	02-17		59
355138A1	02-12		7
355142A1	02-12		13
355144A1	02-12		23C
	02-13		21C
355145A1	02-13		21B
355160A1	02-12		61
355280A1	02-18		175
355282A1	02-19		211C
378630A1	09-42		6
	09-43		6
	09-44		3
378631A1	09-42		7
	09-43		7
	09-44		4
378632A1	09-42		8
378632A1	09-43		8
	09-44		5
378649A1	09-43		
378J0050Z	09-17		107
	09-17		111
	09-17		84
378J0080Z	09-17		79
387465A1	09-42		
	09-43		
	09-44		
387469A1	09-42		2
	09-43		2
	09-44		2
414-720	09-15A		33
419722A1	02-27		327
	02-33		74
419726A1	02-33		117
419731A1	02-33		97
426067A1	02-14		49
	04-01		23
426200A1	03-06		9
437881A1	02-11		230
438043A1	02-10		10
438070A1	02-08		72
514-1038	09-56		16
	09-57		16
514-1112	09-37		15
	09-56		17
	09-57		17
614-8020	09-15A		25
626-10016	05-08		6
627-10016	09-20		79
627-10035	02-04		8
	08-29		27
	08-37		62
	08-39		27
627-12025	09-32		24
	09-32		7
	09-33		25
	09-33		7
	09-35		22
	09-35		27
	09-37		10
	09-39		4
	09-40		7
627-12035	02-01		16
627-12040	09-05		51
627-16035	04-12		11
627-16050	09-42		10
	09-43		10
	09-44		7
627-6016	08-99		3
627-8020	09-34		6
627-8025	05-08		10
627-8030	09-01		21
628-12055	08-85		36
	08-86		32
71456224	09-15		10
72109500	02-08		5
72109530	02-08		82
72110623	02-28		66
72217466	04-02		424
72951944	02-27		1B
72961772	02-13		53
738-1880	05-07		5
76552228	02-31		3
76592282	04-04		68
76600543	02-28		163
76609741	02-10		7B
	02-12		23A
800-1110	08-90		144
	08-91		217
	08-96		144
	08-97		217
800-1135	08-87		83
	08-92		100
814-10100	08-23		6
827-10045	09-31		6

Number	Figure	Sequence	Ref.
827-10090	06-07		2
827-12065	08-11		23
827-12075	08-14		4
	08-31		4
	09-29		260
827-16070	03-01		10
	08-01		8
827-16130	02-01		21
827-20100	09-01		7
827-8040	02-05		50
	03-02		11
	03-02		3
827-8055	08-02		2
	09-24		13
	09-24		18
827-8060	09-24		14
827-8070	04-13		2
828-8100	08-16		44
	08-20		44
829-13416	09-37		16
	09-56		18
	09-57		18
829-1408	02-04		3
	04-06		82
	04-06		83
	09-15A		26
829-1410	09-06		22
829-1412	08-11		25
	09-29		263
	09-32		21
	09-33		21
829-1416	09-09		4
840-168	04-07		16
	04-07		29
	04-07		50
	04-07		9
	08-15		51
	08-16		51
	08-19		51
	08-20		51
	08-44		11
	08-44		15
861-10035	08-58		88
	08-59		154
	08-63		152
861-10060	08-57		46
	08-59		130
	08-61		46
	08-63		128
861-12025	08-79		16
861-12040	06-04		17
861-6016	08-87		60
	08-91		169
	08-92		77
	08-97		169
861-6030	08-90		93
	08-91		168
	08-96		93
	08-97		168
861-6045	08-90		95
	08-96		95
861-8070	08-90		92
	08-91		166
	08-96		92
	08-97		166
862-10030	06-06		6
	08-04		14
	08-06		5
	08-11		15
	08-26		4
	08-28		4
	08-32		21
	08-32		4
	08-35		21
	08-35		4
862-10045	08-10		6
862-10055	08-07		24
	08-11		16
862-10065	08-07		5
862-10085	08-07		2
862-12030	08-05		5
862-12055	08-72		19
862-6016	08-01		20
	08-90		94
	08-96		94
862-8025	08-54		8
862-8030	08-07		10
	08-09		3
	08-10		3
	08-11		5
863-10020	08-87		59
	08-93		33
863-12100	08-57		71
	08-59		127
	08-61		71
	08-63		125
863-16060	08-52		39
863-8020	09-15A		23
863-8050	08-59		156
	08-63		154
864-8020	09-15B		29
86542114	08-54		14
86982724	09-48		8
86989867	02-19		487
86989891	02-23		19
86989893	02-23		90
86990039	02-11		268
	02-25		147
	02-25		17
	02-28		118A
86990047	02-27		81
86990175	02-17		48
86990181	02-17		126
86990183	02-17		86
86990184	02-17		203
	02-17		87
86990207	04-01		293
87016471	08-83		27
	08-84		27
	08-85		30
	08-86		26
87344650	09-15		
	09-15A		31
87350972	09-15		4
87350973	09-15		6
87350977	09-15A		2
87365563	02-29		496
87365565	03-06		2
87378549	04-01		797
	04-02		46
	04-02		608
87378567	02-28		488A
87379042	03-06		1
87379063	03-06		11
87379072	03-06		17
87379078	03-06		66
87379337	04-02		796B
87379458	02-12		38
	02-18		38
87379793	03-06		106
87379797	03-06		69
87379800	03-04		199
87379813	02-29		2
87380212	04-04A		483C
87380213	04-04A		102A
87384321	02-08		43
87384455	02-10		7A
87385803	03-04		288
87385814	03-04		290
87386020	03-06		119
87386231	04-01		129
87386274	04-04A		483D
87393862	02-14		3
87393863	02-14		6
87398694	02-13		23D
87554883	02-31		29A

Number	Figure	Sequence	Ref.	Number	Figure	Sequence	Ref.
87559647	02-31		572	87595819	02-10		39
	03-05		427	87595820	02-11		91
87560082	02-28		1	87595821	02-11		123
87560084	03-04		31	87595822	02-10		143
87560086	03-04		408	87595825	02-10		155
	03-05		408	87595826	02-11		168
87560087	04-01		1	87595827	02-10		172
87588086	02-27		36	87595833	02-11		225A
87594036	02-17		73		02-32		16
87595244	02-08		1	87595834	02-11		225B
87595254	02-06		1	87595835	02-11		225C
87595255	02-08		69	87595836	02-11		232A
87595256	02-06		1	87595837	02-11		232B
87595258	02-08		79A	87595838	02-11		262
	02-11		263B	87595839	02-11		263A
	02-29		76C		02-18		36E
87595259	02-06		1		02-24		36
87595260	02-07		2	87595843	02-11		267
87595261	02-08		79B		02-25		193
87595262	02-07		2	87595845	02-12		1
87595263	02-08		94		02-13		1
87595264	02-07		2	87595846	02-13		15
87595265	02-09		1	87595849	02-12		23B
87595267	02-09		2		02-13		23B
	02-16		190	87595850	02-13		29
	02-18		80A	87595851	02-12		51
	02-18		80B	87595852	02-12		52
	02-26		69	87595866	02-14		345
87595269	02-09		6		02-18		36A
87595271	02-08		128		02-24		63A
87595272	02-09		26		02-26		198
	02-21		53		02-28		21B
87595273	02-09		29		02-28		21C
87595274	02-09		39		02-30		49
87595289	02-09		65		03-04		280
87595291	02-09		69		04-04A		150B
87595292	02-09		79A	87595868	02-27		96
	02-11		13		02-31		414B
	02-18		36B	87595916	02-13		83
	02-23		295	87595918	02-12		211
87595323	02-09		79B		02-18		185
87595356	02-09		90		02-25		114
87595387	02-09		119		02-32		2B
87595390	02-09		167		03-05		426
87595391	02-09		168	87595920	02-13		303A
87595392	02-10		1	87595923	02-13		303B
87595394	02-10		2	87595924	02-12		352
87595407	02-10		2	87595926	02-12		399
87595412	02-10		2		04-01		327
87595413	02-10		3	87595936	02-12		400
87595424	02-10		4		04-01		766
87595425	02-10		5A	87595938	02-12		401
87595428	02-11		224		02-18		124
	02-14		24		04-01		782B
	02-14		29	87595941	02-13		465A
	02-18		98	87595942	02-13		465B
	02-21		20	87595943	02-14		1B
	02-24		40	87595944	02-14		2
	02-27		82	87595952	02-25		100
	02-29		362		02-25		85
	02-32		12		04-01		782A
	02-32		681		04-04A		150A
	02-33		379	87595988	02-14		8
	02-33		47	87595992	02-14		17
	03-05		418	87596002	02-14		27
	04-04A		24	87596030	02-29		374
87595431	02-10		5B	87596042	02-30		29A
87595433	02-10		7C	87596055	02-18		36F
87595444	02-11		9		02-24		63B
87595463	02-18		36C	87596348	02-14		30
87595806	02-18		36D	87596350	02-14		194
	02-30		29B	87596371	02-14		295
	02-33		535B	87596372	02-15		2
87595807	02-10		192	87596374	02-15		3
87595811	02-10		11	87596386	02-15		4
87595812	02-11		12	87596387	02-15		5
87595815	02-11		14B	87596389	02-15		53A
87595817	02-11		15	87596393	02-15		53B

Number	Figure	Sequence	Ref.	Number	Figure	Sequence	Ref.
87596397	02-15		56	87597074	02-18		99A
87596410	02-15		65	87597075	02-18		99B
87596420	02-15		66	87597076	02-18		103
87596427	02-15		68	87597078	02-18		123
87596434	02-15		71A	87597081	02-18		172
87596436	02-15		71B	87597112	02-19		211A
87596441	02-15		72	87597117	02-19		211B
87596443	02-15		78		04-01		4
87596445	02-15		87A	87597209	02-26		212
87596446	02-15		87B	87597632	02-18		620
87596448	02-16		107A	87597643	02-18		620
87596449	02-16		107B	87597645	02-18		620
87596451	02-16		112A	87597647	02-20		2A
87596461	02-16		112B	87597649	02-20		2B
87596463	02-16		114A	87597651	02-20		2C
87596465	02-16		114B	87597652	02-20		20A
87596467	02-16		133	87597653	02-20		20B
87596470	02-16		162	87597655	02-20		20C
87596472	02-16		166	87597656	02-21		1
87596480	02-16		172	87597657	02-21		7
87596483	02-16		185	87597658	02-21		10
87596517	02-16		198	87597677	02-21		13B
87596521	02-16		199	87597678	02-21		32
87596527	02-21		13A	87597680	02-21		55
	02-29		76A	87597681	02-21		138
	03-04		283A	87597682	02-22		1
87596528	02-16		200	87597684	02-22		2
87596538	02-16		252A	87597686	02-22		18
87596540	02-16		252B	87597687	02-22		33
87596541	02-15		263	87597688	02-23		18
87596557	02-16		300	87597704	02-24		1
87596571	02-16		329	87597706	02-24		3
87596602	02-16		347	87597716	02-24		42
87596616	02-16		348	87597722	02-24		97
87596619	02-16		349	87597723	02-25		1
87596623	02-17		1	87597726	02-25		15
87596625	02-17		10	87597728	02-25		49
87596636	02-17		10	87597729	02-25		50
87596638	02-17		10		02-32		2A
87596640	02-17		10	87597732	02-25		84
87596642	02-17		10	87597733	02-25		119
87596647	02-17		12B	87597736	02-27		88
87596648	02-17		18	87597773	02-25		190A
87596874	02-33		93	87597775	02-25		190B
87596880	03-04		110	87597837	02-26		23
87596885	02-19		205	87597848	02-27		28B
87596887	02-17		28	87597867	02-31		495
87596889	02-17		35	87597868	02-27		38B
87596891	02-17		40	87597869	02-27		38C
87596895	02-17		42	87597871	02-27		66
87596896	02-17		63	87597873	02-27		71
87596901	02-17		63	87597875	02-27		80
87596903	02-17		63	87597884	02-33		522
87596906	02-17		68	87597887	02-33		535A
87596909	02-17		83	87597963	02-27		112B
87596910	02-17		84	87598283	02-28		2
87596913	02-17		85	87598285	02-28		11
87596934	02-17		172		02-28		18
87596937	02-17		204	87598287	02-28		16
87596939	02-18		1	87598288	02-28		21A
	02-19		1	87598294	02-28		115A
87596941	02-19		2	87598295	02-28		115B
87596942	03-06		8	87598297	02-28		117A
87596944	03-06		94	87598303	02-28		119A
87596945	02-18		32	87598304	02-28		119B
87596955	03-06		56	87598305	02-28		120
87596956	03-06		105	87598306	02-28		137
87596967	02-18		49	87598307	02-28		138
87596974	02-18		50A	87598313	02-28		231
	02-19		50A	87598320	02-28		412
87596976	02-19		50B	87598322	02-28		485A
87596979	02-18		51	87598323	02-28		485B
87596984	02-18		54	87598327	02-28		488B
	02-19		54	87598328	02-28		488C
87596985	02-18		63	87598331	03-04		9
87596993	02-18		64	87598333	03-04		16
87597000	02-18		79	87598369	03-04		17
87597006	02-18		81B	87598371	03-04		18

Number	Figure	Sequence	Ref.	Number	Figure	Sequence	Ref.
87598372	03-04		19	87643313	02-13		448
87598379	03-04		30A	87643316	03-04		216
87598381	03-04		30B	87643334	02-28		118B
87598383	03-04		30C	87643341	03-04		282
87598413	03-04		59	87670091	03-04		29
87598415	03-04		66	87683440	02-11		14A
87598417	03-04		68	87683451	02-18		81A
87598421	03-04		122	87683454	02-22		17
87598425	03-04		137A		02-28		408
87598426	03-04		137B	87683471	02-14		25
87598440	03-04		137C	87709229	04-01		2
87598441	03-04		137D	878-1088	08-79		18
	03-05		137D	892-10012	08-53		65
87598442	03-04		166		08-57		72
87598480	03-04		210		08-59		128
87598481	03-04		211		08-61		72
87598832	03-05		279A		08-63		126
87598834	03-05		279B		08-83		34
87598840	03-04		283B		08-84		34
87598842	03-04		289		08-85		37
87598844	03-04		313		08-86		33
87598845	03-05		315A	892-11006	04-07		24
87598846	03-05		315B		08-01		21
87598847	03-04		347		09-09		24
87598849	03-05		348A	892-11008	09-15A		24
87598851	03-05		348B		09-15B		30
87598852	03-05		425	892-11010	04-14		10
87598853	03-05		428		09-06		25
87598854	03-05		429		09-17		89
87598855	03-07		294		09-18		89
87598856	02-29		9		09-20		80
87598860	02-29		76B		09-24		21
87598861	02-29		323		09-31		7
87598862	02-29		564	892-11016	04-12		12
87598864	02-30		1		09-42		9
87598930	02-30		139		09-43		9
87598932	02-30		140		09-44		6
87598933	02-31		2A	892-16014	04-12		8
87598936	02-31		29B	893-11006	04-05		73
87598937	02-31		57	893-11008	04-05		11
87598938	02-31		58		04-05		110
87598940	02-31		63		04-05		3
87598941	02-31		147		04-05		38
87598944	02-31		149		04-05		75
87599292	02-31		150		04-07		54
87599306	02-31		414A	893-11010	04-05		71
87599337	02-32		1	895-11005	02-05		17
87599344	02-32		2C	895-11006	09-17		108
87599350	02-32		4		09-17		112
87599415	02-32		17A		09-17		86
87599416	02-32		17B	895-11008	02-05		49
87599417	02-32		271		04-13		3
87599418	02-32		718		09-08		97
87599818	04-01		16		09-15A		27
87599841	04-01		611		09-16		45
87600312	04-02		613		09-34		4
87600313	04-02		737	895-11010	09-06		24
87600394	04-01		796A		09-17		78
87600421	04-02		915		09-17		90
87600499	02-33		62		09-18		90
87600522	02-33		104A		09-20		81
87600526	02-33		104B		09-32		13
87600596	02-33		406A		09-33		13
87600598	02-33		536A	896-11014	04-12		7
87600600	02-33		561A	896-11016	04-12		13
87601011	02-33		562A		09-17		74
87601012	04-03		13		09-17		98
87601030	04-04A		102B		09-18		59
87601042	04-04A		150C		09-32		18
87601054	04-04A		483A		09-33		18
87601055	04-04A		483B	9969293	09-15		5
87601122	04-04A		483G	9969295	09-15		7
87601159	04-04A		545	B2447086	09-15		15
87601524	02-13		218	CDP0818	08-82		7
87602437	02-25		257	CDP1373	09-26		46
87602515	03-04		219	HKH0048	09-07		42
87616586	03-05		265	KAB0604	09-01		10
87631924	02-25		295	KAB0623	09-01		11

Number	Figure	Sequence	Ref.
KAJ2351	08-23		37
KAJ2882	08-32		37
	08-34		37
	08-35		37
	08-37		37
KAJ2984	08-07		13
KAJ3096	06-05		9
KAR0921	09-24		11
KBA1118	05-07		
KBA1119	05-07		11
KBA1120	05-07		12
KBA1121	05-07		14
KBH0446	09-07		28
	09-32		16
	09-33		16
KBH0924	02-03		6
KBJ1683	08-26		20
	08-28		20
	08-32		41
	08-34		41
	08-35		41
	08-37		41
KBJ2886	06-07		4
KBR0819	02-02		31
KBR0838	02-05		27
KEH0326	02-04		4
KHA0046	05-04		17
KHA0047	05-05		17
KHA10100	05-07		9
KHA10130	08-54		6
KHB10390	09-04		2
KHH0358	02-05		48
KHH0405	03-02		16
	03-02		23
	03-02		26
	03-02		29
	03-02		32
	03-02		35
	03-02		38
KHH0422	03-02		14
KHH0483	03-02		30
KHH0515	02-02		37
KHH0517	02-05		26
KHH10060	03-01		5
KHH10290	03-02		40
KHH10330	02-03		16
KHH10470	03-02		6
KHH10480	03-02		7
KHH10600	03-02		2B
KHH10820	03-02		39
KHH10840	02-05		
KHH10860	02-05		21
KHH11010	03-02		24
KHH11020	03-02		27
KHH11050	03-02		36
KHH11390	02-04		10
KHH11440	02-04		11
KHH11600	03-02		21
KHH11610	03-02		33
KHH11740	02-05		24
KHH11880	03-02		5
KHH11890	03-02		8
KHH11900	03-02		8A
KHH12020	03-02		1
KHH12030	03-02		2
KHH12090	03-01		13
KHJ10410	08-32		7
	08-34		7
	08-35		7
	08-37		7
	08-78		
KHJ10420	08-32		13
	08-34		13
	08-35		13
	08-37		13
	08-77		
KHJ1044	08-38		9
	08-39		9
KHJ10450	08-79		
	09-10		1
	09-11		1
KHJ10640	09-09		30
KHJ10681	09-11		3
KHJ10691	09-10		3
KHJ10701	09-10		12
	09-11		12
KHJ10711	09-10		9
	09-11		9
KHJ10721	09-10		13
	09-11		13
KHJ10790	08-17		111
	08-21		120
KHJ10930	08-23		
KHJ10940	08-23		2
KHJ10950	08-23		3
KHJ11090	09-23		63
KHJ11170	08-21		130
KHJ1144	06-05		10
KHJ11500	08-35		55
	08-37		55
	08-38		31
	08-39		38
KHJ11510	08-34		59
KHJ11530	08-17		83
	08-18		83
	08-21		92
	08-22		92
KHJ11590	08-17		117
	08-17		121
	08-17		84
	08-18		117
	08-18		121
	08-18		84
	08-21		126
	08-21		93
	08-22		126
	08-22		130
	08-22		93
KHJ11640	08-99		15
KHJ11730	08-02		1
KHJ1178	06-05		8
	08-15		38
	08-19		38
	08-23		20
	08-25		71
	08-25		97
	08-27		33
	08-29		40
	08-33		56
	08-36		77
KHJ12080	08-21		56
KHJ12100	08-99		7
KHJ1215	02-01		25
	02-05		13
	02-05		29
	03-02		20
	03-02		44
	03-03		24
	04-05		107
	04-05A		107
	04-05A		28
	04-05A		32
	04-05A		6
	04-05A		63
	04-05A		78
	04-05A		96
	04-06		44
	04-06		49
	04-06		55
	08-16		138
	08-18		138
	08-20		147
	08-22		147
	08-23		119
	08-23		62
	08-24		119

Number	Figure	Sequence	Ref.
KHJ1215	08-24		62
	08-32		83
	08-35		91
	09-23		62
	09-23		64
KHJ1220	08-15		46
	08-19		46
KHJ12230	08-38		30
	08-39		37
KHJ12660	09-09		31
KHJ12900	09-09		2
KHJ1306	08-23		10
KHJ13290	08-82		
	09-09		22
KHJ13450	08-07		19
	08-07		25
KHJ1348	08-14		6
	08-31		6
KHJ13560	09-09		34
KHJ13580	09-09		32
KHJ13590	09-09		33
KHJ1360	08-11		27
	08-11		6
	08-12		11
	08-12		8
	08-13		12
	08-13		14
	08-13		7
	08-13		9
	08-14		14
	08-14		21
	08-26		11
	08-26		13
	08-26		5
	08-28		11
	08-28		13
	08-28		5
	08-30		10
	08-30		12
	08-30		5
	08-31		14
	08-31		21
	08-32		11
	08-34		17
	08-34		5
	08-35		11
	08-37		17
	08-37		5
KHJ13670	08-24		75
KHJ1375	09-09		6
KHJ13750	08-17		54
	08-21		54
KHJ13760	08-15		48
	08-16		48
	08-19		48
	08-20		48
KHJ13770	08-15		47
	08-16		47
	08-19		47
	08-20		47
KHJ13790	08-17		102
	08-17		65
	08-17		78
	08-21		111
	08-21		87
KHJ13810	08-16		34
	08-20		34
KHJ13820	08-18		131
	08-22		140
KHJ13830	09-09		12
KHJ13840	09-09		11
KHJ13850	09-10		6
	09-11		6
KHJ13860	09-12		2
	09-13		2
KHJ13910	09-09		35
KHJ14000	08-29		24
	08-37		44
KHJ14000	08-37		59
	08-39		24
	08-81		
KHJ14010	08-08		8
KHJ1402	08-16		1
	08-16		12
	08-20		1
	08-20		12
KHJ14080	09-09		1
KHJ1442	08-17		74
	08-17		98
	08-21		107
	08-21		81
KHJ14430	09-09		15
KHJ14440	09-09		16
KHJ1445	08-17		105
	08-17		76
	08-21		114
	08-21		83
	08-21		85
KHJ14470	09-09		29
KHJ14520	08-23		23
	08-73		
KHJ14550	09-12		4
	09-13		4
KHJ14560	09-12		5
	09-13		5
KHJ14570	09-09		8
KHJ14580	09-20		111
KHJ14620	04-07		52
	08-43		17
KHJ14640	08-44		19
	08-45		18
	08-46		22
	08-47		19
	08-48		18
	08-49		14
	08-50		14
KHJ14650	08-36		57
	08-37		57
KHJ14670	08-37		45
KHJ14680	08-29		26
	08-37		61
KHJ14690	08-32		27
	08-35		27
KHJ14710	08-32		32
	08-35		32
KHJ14720	08-32		34
	08-35		34
KHJ14780	08-34		60
	08-74		
KHJ1491	08-01		16
KHJ1492	08-01		19
KHJ14990	09-12		1
KHJ15020	09-13		1
KHJ15060	08-43		19
	08-44		21
	08-45		19
	08-46		24
	08-47		21
	08-48		19
	08-49		15
	08-50		15
KHJ15070	08-43		21
	08-44		23
	08-45		21
	08-46		26
	08-47		23
	08-48		21
	08-49		17
	08-50		17
KHJ15080	08-43		20
	08-44		22
	08-45		20
	08-46		25
	08-47		22
	08-48		20
	08-49		16

Number	Figure	Sequence	Ref.
KHJ15080	08-50		16
KHJ15160	08-36		56
	08-37		56
KHJ15180	08-29		38
KHJ15190	08-39		26
KHJ15390	08-21		68
KHJ15400	08-21		67
KHJ15410	08-21		69
KHJ15420	08-21		70
KHJ15850	08-78		
KHJ16030	08-07		23
KHJ16120	08-51		9
KHJ16140	09-09		26
KHJ16150	09-09		25
KHJ16190	08-17		85
	08-18		85
	08-21		94
	08-22		94
KHJ16200	08-18		130
	08-22		139
KHJ16210	08-17		115
	08-18		115
	08-21		124
	08-22		124
KHJ16220	08-23		27
KHJ16230	08-23		54
	08-24		54
KHJ16240	08-23		51
	08-25		51
KHJ16250	08-23		52
	08-24		52
KHJ16260	08-23		55
	08-24		55
KHJ16270	08-02		13
KHJ16290	08-34		16
	08-37		16
KHJ16300	08-32		69
	08-34		69
KHJ16310	08-33		70
	08-34		70
KHJ1632	09-17		88
	09-18		88
KHJ16860	08-32		79
	08-34		79
	08-35		87
	08-37		87
KHJ16880	08-32		80
	08-34		80
	08-35		88
	08-37		88
KHJ16960	08-99		8-1
	08-99		8-2
KHJ17040	08-23		110
	08-25		110
KHJ17050	08-23		111
	08-25		111
KHJ18180	08-03		11
	08-04		11
KHJ1820	09-09		13
	09-10		7
	09-11		7
KHJ1821	08-21		65
	08-21		73
KHJ1898	08-30		11
KHJ1939	08-40		5
	08-41		5
KHJ1941	08-26		10
	08-26		14
	08-26		6
	08-28		10
	08-28		14
	08-28		6
	08-32		10
	08-34		6
	08-35		10
	08-37		6
KHJ2034	08-43		9
	08-44		5
KHJ2034	08-47		5
KHJ2047	08-33		68
	08-34		68
KHJ2048	08-36		58
	08-37		58
KHJ2049	08-29		39
	08-32		81
	08-34		81
	08-35		89
	08-37		89
KHJ2050	08-27		31
	08-27		32
KHJ2067	08-24		76
KHJ2071	09-36		10
KHJ2072	09-36		11
KHJ2080	08-23		48
	08-25		48
KHJ2081	09-36		12
KHJ2085	08-34		53
KHJ2086	08-33		71
	08-34		71
KHJ2088	08-24		104
	08-25		104
	08-38		32
	08-38		33
	08-39		39
	08-39		40
KHJ2089	08-17		120
	08-18		120
	08-21		129
	08-22		129
KHJ2107	08-23		53
	08-24		53
KHJ2134	08-23		49
	08-25		49
KHJ2146	08-17		118
	08-18		118
	08-21		127
	08-22		127
KHJ2147	08-15		31
	08-19		31
KHJ2165	08-15		28
	08-19		28
	08-36		73
KHJ2179	06-07		16
	08-23		32
	08-25		87
KHJ2180	06-07		21
	06-07		22
	08-37		74
KHJ2181	06-07		17
	06-07		19
KHJ2194	08-34		54
	08-37		75
KHJ2195	08-27		37
	08-29		44
KHJ2198	08-15		29
	08-19		29
	08-27		30
	08-29		37
	08-33		50
	08-34		50
	08-36		72
KHJ2238	08-23		17
KHJ2239	06-07		15
KHJ2241	08-43		14
KHJ2243	08-32		38
	08-34		36
	08-35		38
	08-37		36
KHJ2244	08-34		52
KHJ2249	08-15		32
	08-15		33
	08-16		32
	08-16		33
	08-19		32
	08-19		33
	08-20		32

Number	Figure	Sequence	Ref.	Number	Figure	Sequence	Ref.
KHJ2249	08-20		33	KHN12680	09-08		117
KHJ2292	08-02		12	KHN12690	09-08		118
KHJ2298	04-05		70	KHN12700	09-08		119
KHJ2307	08-16		35	KHN12710	09-08		111
	08-17		82	KHN12720	09-08		112
	08-18		82	KHN12730	09-08		101
	08-20		35	KHN12740	09-08		103
	08-21		91	KHN12760	09-05		83
	08-22		91	KHN12870	09-26		222
KHJ2310	08-24		77	KHN12880	09-26		234
	08-25		77	KHN12960	09-14		
KHJ2320	03-03		7	KHN13181	09-18		47
KHJ2340	08-15		30	KHN13191	09-18		48
	08-19		30	KHN13201	09-18		55
	08-33		51	KHN13210	09-17		68
	08-34		51		09-18		53
KHJ2342	08-25		103	KHN13220	09-18		58
KHJ2343	06-07		18	KHN13231	09-17		67
	06-07		20		09-18		52
KHJ2359	08-23		4	KHN13240	09-17		72
KHJ2412	08-23		33		09-18		57
KHJ2418	08-05		1	KHN13251	09-17		62
KHJ2419	08-18		97	KHN13261	09-17		63
	08-22		106	KHN13271	09-17		70
KHJ2477	08-17		119	KHN13281	09-17		73
	08-18		119	KHN13290	09-17		76
	08-21		128	KHN13301	09-17		77
	08-22		128	KHN13310	09-17		80
KHJ2581	08-23		50	KHN13320	09-17		81
	08-25		50	KHN13331	09-17		96
KHJ2587	08-10		15	KHN13341	09-17		85
KHJ2624	08-17		116	KHN13350	09-17		100
	08-18		116	KHN13391	09-16		37
	08-21		125	KHN13401	09-16		38
	08-22		125	KHN13411	09-16		42
KHJ2656	08-03		3	KHN13420	09-16		40
	08-04		3	KHN13430	09-16		41
KHJ2773	06-07		30	KHN13510	09-07		126
	08-02		9	KHN13510B1	09-08		126
	08-25		83	KHN13530	09-15B		27
	08-27		38	KHN13540	09-07		126
	08-29		45		09-08		127
	08-99		17	KHN13600	09-34		3
KHJ2896	09-09		19	KHN13630	09-27		266
KHJ2897	09-09		21	KHN13640	09-27		267
KHN0482	09-17		82	KHN13680	09-30		
KHN10740	09-17		64	KHN13700	09-29		
	09-18		49	KHN13720	09-08		100
KHN10940	09-07		125	KHN13740	09-17		137
	09-08		125	KHN13760	09-26		264
KHN11510	04-05		89	KHN13780	09-26		228
KHN11900	09-34		2	KHN13790	09-14		8
KHN11920	09-34		7	KHN13860	09-28		
KHN11930	09-29		262	KHN13871	09-14		
KHN11940	09-06		18	KHN13890	09-33A		1
KHN12020	09-05		55	KHN13900	09-33A		3
	09-07		121	KHN14071	09-18		126
	09-07		122	KHN14110	09-27		5
	09-07		123	KHN14120	09-27		6
	09-07		124	KHN14130	09-27		7
KHN12070	09-26		225	KHN14150	09-27		8
KHN12100	09-26		231	KHN14160	09-27		9
KHN12120	09-26		233		09-28		166
KHN12150	09-14		7	KHN14170	09-26		12
KHN12230	09-18		117	KHN14180	04-10		122
KHN12250	09-17		133	KHN14200	09-27		15
KHN12270	09-18		128	KHN14220	09-26		17
KHN12290	09-17		136	KHN14230	09-26		20
KHN12310	09-18		129	KHN14240	09-26		21
KHN12330	09-18		130	KHN14250	09-26		24
KHN12350	09-17		138	KHN14260	09-26		25
KHN12360	09-18		140	KHN14270	09-27		28
KHN12370	09-17		141	KHN14280	09-27		29
KHN12400	09-16		147	KHN14290	09-27		30
KHN12560	09-06		34	KHN14300	09-26		31
	09-06		37	KHN14310	09-26		32
KHN12660	09-06		19	KHN14320	09-26		33
KHN12670	09-06		59	KHN14330	09-27		35

Number	Figure	Sequence	Ref.
KHN14340	09-27		37
KHN14350	09-26		44
KHN14360	09-26		45
KHN14370	09-26		47
KHN14380	09-26		48
	09-30		48
KHN14390	09-26		49
KHN14470	09-33A		5
KHN14520	04-10		
	09-26		
	09-27		
	09-29		
	09-30		
KHN14540	09-30		50
KHN14550	09-30		51
KHN14570	09-30		52
KHN14580	09-30		53
KHN14590	09-30		54
KHN14600	09-30		55
KHN14610	09-30		56
KHN14620	09-30		57
KHN14630	09-30		58
KHN14640	09-30		59
KHN14650	09-30		60
KHN14680	09-30		61
KHN14701	09-26		62
KHN14710	09-26		226
	09-26		63
KHN14730	09-26		65
KHN14750	09-16		148
KHN14760	09-16		149
KHN14810	09-32		23
KHN14871	09-18		103
KHN14880	09-17		95
KHN14890	09-26		67
KHN14910	09-26		68
KHN14930	09-27		69
KHN14950	09-27		70
KHN14960	09-27		71
KHN14970	09-26		72
KHN14980	09-26		73
	09-28		177
KHN14990	09-26		74
	09-28		178
KHN15000	09-27		75
KHN15010	09-27		76
KHN15020	09-27		77
KHN15030	09-27		78
KHN15040	09-27		79
KHN15050	04-10		80
KHN15060	04-10		81
KHN1507	09-28		156
KHN15070	04-10		82
KHN15080	04-10		83
KHN15090	04-10		84
KHN15100	09-18		118
KHN15110	09-18		119
KHN15120	09-18		120
KHN15130	09-18		121
KHN15140	09-18		122
KHN15150	09-16		33
KHN15180	09-29		
KHN15190	09-29		184
KHN15200	09-29		185
KHN15210	09-29		186
KHN15220	09-29		187
KHN15230	09-29		188
KHN15240	09-29		189
KHN15250	09-29		190
KHN15260	09-28		148
	09-29		191
KHN15270	09-29		192
KHN15280	09-29		193
KHN15290	09-29		194
KHN15300	09-29		195
KHN15310	09-29		196
KHN15320	09-29		197
KHN15340	09-29		138
KHN15350	09-28		
KHN15370	09-28		141
KHN15380	09-28		142
KHN15400	09-28		143
KHN15420	09-28		
KHN15430	09-28		150
KHN15440	09-28		151
KHN15450	09-28		152
KHN15460	09-28		153
KHN15470	09-28		154
KHN15480	09-28		155
KHN15490	09-28		157
KHN15500	09-28		158
KHN15510	09-28		159
KHN15530	09-28		160
KHN15540	09-28		163
KHN15550	09-28		164
KHN15560	09-28		165
KHN15570	09-28		167
KHN15580	09-28		169
KHN15590	09-28		170
KHN15600	09-28		171
KHN15610	09-28		172
KHN15620	09-28		173
KHN15630	09-28		174
KHN15640	09-28		175
KHN15650	09-28		176
KHN15660	09-30		201
KHN15670	09-30		202
KHN15680	09-30		203
KHN15690	09-29		95
	09-30		204
	09-30		95
KHN15700	09-30		205
KHN15710	09-30		206
KHN15720	09-30		207
KHN15730	09-30		208
KHN15740	09-30		209
KHN15750	09-30		210
KHN15760	09-30		211
KHN15770	09-30		212
KHN15780	09-30		213
KHN15790	09-30		214
KHN15800	09-30		215
KHN15810	09-30		216
KHN15820	09-30		217
KHN15830	09-30		218
KHN15840	09-30		219
KHN15850	09-30		220
KHN15860	09-30		94
KHN15870	09-29		96
KHN15880	09-30		97
KHN15890	09-30		98
KHN15900	09-30		99
KHN15910	09-30		100
KHN15920	09-30		101
KHN15930	09-26		103
KHN15940	09-29		104
KHN15950	09-29		105
KHN15960	09-29		107
KHN15970	09-29		108
KHN15980	09-29		109
KHN15990	09-30		110
KHN16000	09-30		111
KHN16010	09-30		112
KHN16020	04-10		113
KHN16030	04-10		118
KHN16040	04-10		
KHN16050	04-10		121
KHN16060	04-10		123
KHN16070	04-10		125
KHN16080	04-10		126
KHN16090	04-10		
KHN16100	04-10		133
KHN16110	04-10		135
KHN16120	09-26		223
KHN16130	09-26		224
KHN16140	09-26		227

Number	Figure	Sequence	Ref.
KHN16150	09-26		235
KHN16160	09-26		236
KHN16220	09-30		268
KHN16230	09-30		269
KHN16240	04-10		89
KHN16270	09-26		66
KHN16280	09-26		90
KHN16290	09-26		91
KHN16300	09-26		92
KHN16310	09-26		93
KHN16320	09-28		162
KHN16330	09-30		106
KHN16340	04-10		134
KHN16350	09-28		145
KHN16360	09-28		146
KHN16370	09-28		147
KHN16390	09-28		149
KHN16400	09-26		13
KHN16430	09-26		232
KHN16500	09-26		
KHN16550	09-26		4
KHN16580	09-28		179
KHN16760	09-09		28
KHN16770	09-17		134
KHN16780	09-07		32
KHN16790	09-07		70
KHN16810	09-17		101
KHN16820	04-10		131
KHN16830	04-10		132
KHN16861	09-32		9
KHN16871	09-33		9
KHN16880	09-33		23
KHN16890	09-32		10
	09-33		10
KHN16910	09-32		11
	09-33		11
KHN16920	09-32		12
	09-33		12
KHN16931	09-32		1
	09-33		1
KHN16940	09-32		2
	09-33		2
KHN16950	09-32		3
	09-33		3
KHN16960	09-32		4
	09-33		4
KHN16970	09-32		17
	09-33		17
KHN17030	08-21		63
	09-05		84
KHN17050	09-17		106
	09-18		106
KHN17060	09-18		105
KHN17070	09-17		104
KHN17080	09-17		143
KHN17090	09-17		144
KHN17270	09-16		155
KHN17280	09-17		153
KHN17560	09-17		159
KHN18020	09-05		52
KHN18030	09-05		53
KHN18060	04-06		45
KHN18100	09-20		112
KHN18230	09-16		34
KHN18240	09-16		39
KHN18250	04-10		136
KHN2058	09-17		157
KHN2061	09-06		63
	09-08		116
KHN2132	09-14		11
	09-16		150
	09-17		102
	09-17		152
	09-18		152
	09-20		104
	09-26		265
KHN2143	09-07		67
KHN2249	09-17		71
KHN2249	09-17		97
	09-18		56
KHN2261	09-17		65
	09-18		50
KHN2270	09-17		75
	09-17		99
	09-18		60
KHN2272	09-17		66
	09-18		51
KHN2309	09-14		4
	09-14		9
KHN2312	09-14		10
	09-14		5
	09-20		110
KHN2336	09-17		158
KHN2397	09-17		69
	09-18		54
KHN2470	09-16		151
KHN2537	09-07		73
KHN2538	09-07		74
KHN2681	09-26		19
KHN2682	09-26		18
	09-26		229
	09-28		168
KHN2686	09-30		102
KHN2687	04-10		27
KHN2688	09-26		11
KHN2702	09-27		16
KHN2704	09-26		14
KHN2709	04-10		85
KHN2712	04-10		87
KHN2713	04-10		42
	09-29		42
KHN2714	04-10		26
KHN2716	04-10		137
KHN2719	04-10		88
KHN2722	09-26		23
KHN2723	09-26		38
KHN2732	04-10		130
KHN2733	04-10		129
KHN2737	04-10		117
	09-17		139
KHN2738	04-10		116
KHN2739	04-10		115
KHN2740	04-10		114
KHN2746	04-10		124
KHN2756	04-10		127
	09-26		127
	09-26		237
KHN2768	04-10		22
	09-26		22
	09-27		22
KHN2769	09-27		34
KHN2771	09-27		36
KHN2808	09-28		161
KHN2827	09-29		198
KHN2828	09-29		199
KHN2850	09-28		181
KHN2901	09-34		9
KHN2907	09-28		180
KHN3003	09-15A		32
KHN3029	09-09		5
KHN3390	09-08		106
KHN3392	04-10		119
KHN3548	09-05		162
KHP0084	09-47		21
KHP0578	08-51		6
KHP1010	09-48		10
KHP1011	09-48		6
KHP11350	09-31		2
KHP11590	09-52		2
KHP11600	09-52		3
KHP11681	09-48		17
KHP11730	09-50		1
KHP12141	09-52		1
KHP12170	09-52		4
KHP12180	04-07		2
KHP12210	09-48		18

Number	Figure	Sequence	Ref.
KHP12870	09-46		34
KHP12880	09-46		35
KHP12890	09-52		8
KHP13190	09-31		1
	09-31		3
KHP1400	09-12		6
	09-13		6
KHP1484	09-45		1
KHP1511	09-51		1
KHP1532	09-48		4
KHP1533	09-48		16
KHP1534	09-48		5
KHP1535	09-48		7
KHP1536	09-48		2
KHP1542	09-48		3
KHP1722	09-48		19
KHP1803	04-09		3
KHP1941	09-49		1
KHR0095	04-14		9
KHR10021	04-13		1
KHR10060	09-26		
KHR10220	03-02		41
	03-03		25
	04-05		112
	04-05		25
	04-05		58
	04-05		90
	04-05A		112
	04-05A		13
	04-05A		16
	04-05A		25
	04-05A		56
	04-05A		58
	04-05A		7
	04-05A		90
	04-06		60
	04-07		31
	08-23		63
	09-23		65
KHR10290	04-05		99
KHR10300	04-05		101
	04-05		29
	04-05		9
KHR10390	04-07		40
	04-07		43
	04-07		44
	08-43		18
	08-44		20
	08-47		20
KHR10420	09-20		73
KHR10540	09-20		87
	09-26		
	09-26		255
KHR10670	03-01		14
KHR10820	08-27		42
	08-34		86
	08-38		37
KHR10870	09-20		89
KHR10880	09-20		105
	09-20		90
KHR10970	04-15		8
KHR11080	04-05		36
KHR11090	04-05		2
KHR11160	04-05		114
KHR11210	09-26		256
KHR11240	04-07		53
KHR11460	03-03		4
KHR11480	03-03		6
KHR11760	09-24		7
KHR12430	03-03		2
KHR12510	09-20		70
KHR12670	09-23		41
	09-24		41
KHR12680	09-24		44
	09-25		44
KHR12690	09-25		47
KHR12700	09-23		49
	09-25		49
KHR12840	03-03		1
KHR12860	03-03		9
KHR12880	03-03		15
KHR12900	03-03		19
KHR12910	03-03		5
KHR12920	04-05		33
KHR12970	09-23		55
KHR13070	09-23		27
	09-25		27
KHR13170	09-22		67
KHR13180	09-20		92
KHR13190	09-20		75
KHR13200	09-20		85
	09-26		253
KHR13210	09-20		93
KHR13220	09-20		76
KHR13230	09-20		86
	09-26		254
KHR13240	09-20		94
KHR13250	09-20		77
KHR13260	09-22		66
KHR13270	09-20		99
KHR13280	09-20		100
KHR13290	09-20		101
KHR13300	09-20		102
KHR13310	09-20		103
KHR13320	09-21		
	09-22		
KHR13330	09-22		54
KHR13340	09-20		95
KHR13390	03-02		15
KHR13450	04-07		4
KHR13460	04-07		11
KHR13472	04-07		18
KHR13480	04-07		6
KHR13490	04-07		45
KHR13500	04-07		47
KHR13570	09-23		6
KHR13590	09-23		35
	09-25		35
KHR13600	09-25		36
KHR13610	09-21		3
	09-22		3
KHR13620	09-21		4
KHR13630	09-21		5
KHR13640	09-21		6
KHR13650	09-21		7
KHR13660	09-21		15
KHR13670	09-21		16
KHR13680	09-21		17
KHR13690	09-21		24
KHR13700	09-21		25
KHR13710	09-21		32
KHR13720	09-21		34
KHR13730	09-22		41
KHR13740	09-22		52
KHR13750	09-22		53
KHR13760	09-22		55
KHR13770	09-22		56
KHR13780	09-21		58
KHR13790	09-22		68
KHR13810	09-26		248
KHR13820	09-26		249
KHR13830	09-26		250
KHR13840	09-26		251
KHR13910	04-05		34
KHR13950	09-20		83
	09-20		97
KHR14050	04-07		42
KHR14060	08-27		41
	08-29		48
KHR14230	04-07		20
KHR14420	04-05		92
KHR14450	08-33		88
	08-36		94
KHR14460	08-33		89
	08-36		95
KHR14470	08-02		4

Number	Figure	Sequence	Ref.
KHR14920	04-05		94
	09-08		158
KHR14930	09-17		87
KHR14980	04-06		41
KHR15060	08-49		8
KHR15070	04-05		35
KHR15080	03-03		17
KHR15090	03-03		11
KHR15101	03-03		22
KHR15120	04-08		3
KHR15170	09-26		246
KHR15201	09-26		
KHR15230	09-26		240
KHR15241	09-26		241
KHR15250	09-26		242
KHR15260	09-26		243
KHR15270	09-26		239
KHR15570	04-15		1
KHR15580	04-15		4
KHR15640	04-15		5
KHR15780	09-20		106
KHR15790	09-20		107
KHR15850	04-07		39
KHR15860	09-21		14
KHR15870	09-22		44
KHR15880	09-22		61
KHR15890	09-22		69
KHR15910	03-02		34
	03-02		37
KHR15940	04-07		3
KHR15950	04-07		22
KHR15960	08-44		13
	08-45		12
	08-46		16
	08-47		13
	08-48		12
	08-50		8
KHR15992	04-07		21
KHR16002	04-07		1
KHR16111	04-07		33
KHR16121	04-07		41
KHR16140	08-99		10
KHR16200	09-23		56
KHR16450	03-03		23
	04-05A		108
KHR16740	08-43		22
	08-46		23
KHR1832	03-03		14
KHR19120	04-06		43
KHR20050	04-07		
KHR20070	04-07		36
KHR2427	04-11		1
KHR2428	04-11		2
KHR2433	04-05		103
KHR2464	09-20		74
KHR2475	04-12		
KHR2476	04-12		2
KHR2477	04-12		3
KHR2501	09-26		257
KHR2581	03-02		43
	04-05A		26
	04-05A		27
	04-05A		5
	04-05A		62
	08-16		136
	08-20		145
	08-23		61
	08-24		61
	09-23		60
KHR2583	04-07		26
	04-12		14
KHR2584	02-01		24
	02-05		30
	04-05		106
	04-05A		106
	04-05A		31
	04-05A		77
	04-05A		95
KHR2584	04-06		54
	08-18		137
	08-22		146
	08-23		118
	08-24		118
	08-32		82
	08-35		90
	08-51		7
	08-51		8
	09-23		61
KHR2636	04-14		7
KHR2733	09-17		145
KHR2735	04-15		7
KHR2737	09-18		125
	09-18		131
	09-20		82
KHR2739	09-20		88
KHR2741	09-18		124
KHR2751	09-18		123
KHR2771	09-22		63
KHR2773	09-22		62
KHR2805	09-21		37
KHR2806	09-21		38
KHR2807	09-21		39
KHR2808	09-21		40
KHR2815	09-21		11
KHR2816	09-21		12
KHR2818	09-21		13
KHR2820	09-21		18
KHR2821	09-21		19
KHR2822	09-21		20
KHR2823	09-21		21
KHR2824	09-21		22
KHR2825	09-21		23
KHR2828	09-21		26
KHR2829	09-21		27
KHR2830	09-21		28
KHR2831	09-21		29
KHR2832	09-21		30
KHR2833	09-21		31
KHR2836	09-21		59
KHR2837	09-21		10
KHR2841	09-22		42
KHR2842	09-22		43
KHR2843	09-22		46
KHR2844	09-22		47
KHR2845	09-22		48
KHR2851	09-22		57
KHR2854	09-21		60
KHR2855	09-22		49
KHR2856	09-21		50
	09-22		50
KHR2857	09-21		35
	09-22		35
KHR2858	09-22		51
KHR2860	09-22		45
KHR2861	09-21		33
KHR2862	09-21		36
KHR2950	04-10		41
	09-29		41
KHR2986	09-20		78
	09-20		96
KHR3053	09-24		46
	09-25		46
KHR3054	09-23		43
	09-24		43
KHR3078	04-07		35
KHR3080	04-07		37
KHR3081	04-07		38
KHR3171	09-24		22
KHR3197	09-23		2
	09-24		2
KHR3198	09-24		3
KHR3213	09-26		244
KHR3229	09-22		64
KHR3230	09-21		65
KHR3261	04-16		4
KHR3332	04-15		2

Number	Figure	Sequence	Ref.	Number	Figure	Sequence	Ref.
KHR3333	04-15		3	KLB10540	09-04		5
KHR3574	09-20		71	KLB10550	09-04		6
KHR3748	04-07		56	KLB10560	09-04		7
KHR3802	03-03		20	KLB10570	09-04		8
	04-07		13	KLB10610	09-03		4
KHR3850	04-06		47	KLB10620	09-03		5
KHR3852	04-08		1	KLB10630	09-03		6
KHR3943	04-14			KLB10640	09-03		7
KHR3950	04-14		2	KLB10650	09-03		8
KHR3974	09-24		4	KLB10660	09-03		9
KHR3975	09-24		5	KLB10670	09-03		10
KHR4024	03-03		13	KLB10680	09-03		11
KHR4114	04-06		79	KLC10020	08-51		1
KHR4116	09-21		8		08-52		
KHR4117	09-21		9		08-53		
KHV10440	08-40		3	KLH10140	02-04		1
	08-41		3	KLH10150	02-03		
KHV10450	09-38	00	1	KLH10210	02-02		29
	09-38	00	3	KLH10220	02-02		30
	09-38	01	1	KLH10240	02-05		4
	09-38	01	3	KLH10260	02-05		7
	09-38	02	1	KLH10270	02-05		10
	09-38	02	7	KLH10280	02-05		12
	09-38	03	1	KLH10300	02-05		15
	09-38	03	8	KLH10310	02-05		31
KHV10460	09-38	00	4	KLH10320	02-05		36
	09-38	00	6	KLH10330	02-05		38
	09-38	00	8	KLH10340	02-05		43
	09-38	01	5	KLH10360	02-05		40
	09-38	01	7	KLH10380	02-05		41
	09-38	02	13	KLH10390	02-04		2
	09-38	03	15	KLH10400	02-04		7
	09-39	00	1	KLH10410	02-05		45
	09-39	01	1	KLH10430	02-05		47
KHV10480	09-38	02	16	KLH10440	02-05		51
	09-38	02	23	KLH10480	02-05		58
	09-38	02	3	KLH10510	02-03		17
	09-38	02	9	KLH10550	02-03		3
	09-38	03	10	KLH10560	02-03		4
	09-38	03	18	KLH10570	02-03		5
	09-38	03	25	KLH10620	02-01		6
	09-38	03	3	KLH10720	02-03		9
	09-39	01	2	KLH10740	02-05		55
KHV10490	09-39	01	3	KLH10750	02-05		56
KHV10500	09-38	02	10	KLH10770	03-01		
	09-38	02	17	KLH10790	02-05		34
	09-38	02	24	KLH10800	02-05		54
	09-38	02	4	KLH10850	02-01		2
	09-38	03	11	KLH10870	02-03		20
	09-38	03	19	KLH10880	02-05		59
	09-38	03	26	KLH10890	02-05		3
	09-38	03	4	KLH10900	02-05		14
	09-39	01	4	KLJ10570	08-03		1
KHV10510	09-39	01	5		08-87		
KHV10520	09-38	03	12		08-88		
	09-38	03	5		08-89		
KHV10710	08-14		3		08-90		
	08-31		3		08-91		
KHV10990	09-38	01	8	KLJ10580	08-55		1
	09-38	02	20		08-57		
	09-38	03	22		08-58		
KLA0152	05-07		1		08-59		
KLA10030	06-01		1		08-60		
	06-02			KLJ10590	08-56		1
	06-03				08-61		
	06-04				08-62		
KLA10040	05-07		6		08-63		
KLA10210	06-05		5		08-64		
KLA10340	05-04		1		08-65		
KLA10350	05-04		2	KLJ10610	08-04		1
	05-05		1		08-92		
	05-05		2		08-93		
KLA10390	05-01		1		08-94		
KLA10500	05-07		3		08-96		
KLB10250	09-03		2		08-97		
KLB10310	09-03		3	KLJ10620	08-01		4
KLB10450	09-04		1	KLJ10630	08-09		4
KLB10470	09-02		1	KLJ10640	08-09		5

Number	Figure	Sequence	Ref.	Number	Figure	Sequence	Ref.
KLJ10680	06-06		14	KLN11050	09-05		12
KLJ10700	08-11		1	KLN11060	09-05		13
KLJ10710	08-11		2	KLN11070	09-05		14
KLJ10720	08-11		8	KLN11080G1	09-07		43
KLJ10730	08-11		10	KLN11090G1	09-07		44
	08-32		24	KLN11100G1	09-07		45
	08-35		24	KLN11110G1	09-07		46
KLJ10750	08-11		26	KLN11120	09-05		15
KLJ10770	08-10		2	KLN11130	09-05		16
KLJ10780	08-10		5	KLN11140	09-05		92
KLJ10980	08-26		1	KLN11150	09-05		94
	08-28		1	KLN11160	09-06		140
	08-32		1	KLN11170	09-05		141
	08-34		1	KLN11180	09-05		142
	08-35		1	KLN11190	09-05		143
	08-37		1	KLN11200	09-05		144
KLJ11070	08-55		2	KLN11210	09-05		145
	08-56		2	KLN11220	09-06		146
KLJ11080	06-06		2	KLN11230	09-05		17
KLJ11090	06-06		3	KLN11240	09-06		147
KLJ11100	06-06		4	KLN11270	09-05		148
KLJ11110	06-06		5	KLN11280	09-05		153
KLJ11120	06-06		10	KLN11290	09-05		159
KLJ11130	08-38		13	KLP0132	09-46		22
	08-39		13	KLP0133	09-46		23
KLJ11140	08-38		14	KLP10350	09-48		12
	08-39		14	KLP10380	09-47		20
KLJ11150	08-38		17	KLP10470	09-46		24
	08-39		17	KLP10480	09-46		25
KLJ11160	08-38		18	KLP10490	09-46		26
	08-39		18	KLP10500	09-46		27
KLJ11180	08-09		11	KLP10510	09-46		28
KLJ11230	08-17		56	KLP10520	09-46		29
	08-21		62	KLP10530	09-46		33
KLJ11240	08-17		58	KLR10170	04-05		66
	08-21		64	KLR10180	04-05		68
KLJ11350	08-32		18	KLR10190	04-05		64
	08-34		18	KLR10200	09-25		29
	08-35		18	KLR10210	09-25		24
	08-37		18	KLR10220	09-25		25
KLJ11520	08-38		6	KLR10230	04-05		104
	08-39		6	KLR10260	04-05		15
KLJ11570	08-99		2	KLR10270	04-14		8
KLJ11690	08-26		12	KLR10280	04-05		1
	08-28		12		04-05A		1
	08-32		12	KLR10400	04-16		5
	08-35		12	KLV0304	09-57		8
KLJ11700	08-10		14	KLV0305	09-57		9
KLN0257	09-09		36	KLV0326	09-56		13
KLN10290	09-05		85		09-57		13
KLN10410	09-05		129	KLV0327	09-57		12
KLN10420	09-05		130	KLV0339	09-57		
KLN10430	09-05		131	KLV0344	09-56		
KLN10460	09-05		132	KLV0346	09-56		8
KLN10520	09-05		133	KLV0347	09-56		9
KLN10530	09-05		134	KLV0348	09-56		12
KLN10540	09-05		135	KLV10050	08-83		39
KLN10550	09-05		136		08-84		39
KLN10560	09-05		137	KLV10060	08-85		42
KLN10580	09-05		138		08-85		45
KLN10590	09-05		139	KLV10070	08-86		40
KLN10880Y2	09-06		33	KLV10100	09-37		12
KLN10890Y2	09-06		36	KLV10320	09-53	00	10
KLN10900Y2	09-06		39		09-54	00	10
KLN10910	09-05		2		09-55	00	10
KLN10920	09-05		3	KLV10960	08-83		
KLN10930	09-05		4		09-37		2
KLN10940	09-05		5	KLV10980	08-84		
KLN10950	09-05		6		09-37		6
KLN10960	09-05		79	KLV11040	08-12		1
KLN10970	09-05		81		08-85		
KLN10980	09-05		7		09-39		1
KLN10990	09-05		8	KLV11080	08-13		1
KLN11000	09-05		9		08-86		
KLN11010	09-07		41		09-40		2
KLN11020	09-05		88	KLV11140	09-35		20
KLN11030	09-05		10		09-35		25
KLN11040	09-05		11	KLV11150	09-35		21

Number	Figure	Sequence	Ref.
KLV11150	09-35		26
KLV11270	09-35		24
KLV11280	09-40		5
KLV11290	09-39		2
KLV11300	09-37		9
KLV11420	08-12		6
	08-12		9
KLV11470	08-13		11
	08-13		6
KLV11700	08-40		15
KLV11960	09-35		
KLV11990	09-54	00	1
KLV12150	09-53	00	1
KLV12300	09-38	02	2
KLV12310	09-38	03	2
KLV12330	09-38	02	8
KLV12340	09-38	03	9
KLV12380Y2	08-14		10
	08-30		1
	08-31		10
KLV12390Y2	08-14		17
	08-30		6
	08-31		17
KLV12400Y2	08-14		8
KLV12410Y2	08-14		15
KLV12420	08-40		9
	08-41		9
KLV12430	08-40		13
	08-41		13
KLV12440	08-40		17
	08-41		17
KLV12450	08-40		16
	08-40		8
	08-41		16
	08-41		8
KLV12460	08-40		12
	08-41		12
KLV12470	08-40		6
	08-41		6
KLV12480	08-40		10
	08-41		10
KLV12490	08-40		14
	08-41		14
KLV12500Y2	08-12		10
	08-12		7
KLV12510Y2	08-13		10
KLV12520Y2	08-13		15
KLV12530Y2	08-13		8
KLV12540Y2	08-13		13
KLV12550	09-36		4
KLV12560	09-36		7
KLV12580	09-35		19
KLV12720	08-31		8
KLV12730	08-31		15
KLV12930	08-41		11
	08-41		7
KLV12940	08-41		15
KLV13700	08-14		11
	08-30		2
	08-31		11
KLV13710	08-14		18
	08-30		7
	08-31		18
KLV13910	09-55	00	1
KMJ2660	08-03		6
	08-04		6
KMN2063	09-05		128
KNA11070	08-54		16
KNH10210	02-05		6
KNH10230	02-05		33
KNH10370	02-03		22
KNH10400	02-01		19
KNH10410	02-01		18
KNH10420	02-01		14
KNH10430	02-01		15
KNH10450	02-05		1
	02-05A		
KNJ0255	08-07		6
KNJ10650	08-04		13
	08-98		
KNJ10660	08-01		22
KNJ11480	08-06		1
KNJ11490	08-06		2
KNJ11500	08-06		8
KNJ11510	08-06		11
KNJ11520	08-06		12
KNJ11550	08-11		13
KNJ11560	08-11		14
KNJ11580	08-11		18
KNJ11590	08-11		20
KNJ11750	08-03		2
	08-04		2
KNJ11780	08-18		132
	08-22		141
KNJ12060	08-01		
KNJ12100	08-07		8
KNJ12120	08-07		21
KNJ12210	08-23		116
KNJ12310	08-07		11
KNJ12590	08-06		6
KNJ12880	08-32		30
	08-35		30
KNJ13140	08-38		1
	08-39		1
KNJ13200	08-38		21
	08-39		21
KNJ13630	08-23		25
KNJ13790	08-17		59
	08-21		71
	08-70		
KNJ13880	08-05		3
KNJ13890	08-01		15
KNJ13970	08-07		1
KNJ13990	08-07		3
KNJ14000	08-07		15
KNJ14020	08-32		22
	08-35		22
KNJ2343	08-08		9
KNJ2519	08-10		12
	08-10		8
KNJ2569	08-01		13
KNJ2732	08-27		23
	08-29		23
	08-33		55
	08-36		76
KNJ2988	02-02		42
	08-23		60
KNN10370G1	09-08		107
KNN10380G1	09-08		105
KNN10390	09-08		109
KNN10720	09-05		149
KNN10730	09-05		150
KNN10870	09-05		90
KNN10880	09-05		151
KNN10960G1	09-07		66
KNN11020	09-07		76
KNN11030	09-07		69
KNR10510	09-24		12
KNR10520	09-24		16
KNR10660	09-24		25
KNV1140	08-86		43
KNV13720	08-14		16
	08-14		9
	08-31		16
	08-31		9
KNV13810	09-38	02	14
	09-38	02	21
	09-38	03	16
	09-38	03	23
KNV13820	09-38	02	15
	09-38	02	22
	09-38	03	17
	09-38	03	24
KRA10160	06-01		2
KRA10360	05-09		1
KRA10380	08-54		11

Number	Figure	Sequence	Ref.
KRA10400	05-03		1
KRA11090	08-54		17
KRA11110	05-04		8
	05-05		8
KRA11190	08-54		1
KRA11200	08-54		2
KRA11240	05-02		1
KRA11260	05-09		3
KRA1553	05-01		3
KRA1569	05-04		9
	05-05		9
KRA1594	05-06		10
KRA1595	05-09		10
KRA1717	05-08		
KRA1717-W	05-08		
KRA1718	05-08		1
KRA1719	05-08		8
KRA1767	05-06		
KRA1768	05-06		2
KRA1807	05-04		3
	05-05		3
KRA1808	05-04		4
	05-05		4
KRA1809	05-04		5
	05-05		5
KRA1810	05-04		6
	05-05		6
KRA1811	05-04		7
	05-05		7
KRA1814	05-04		13
	05-05		13
KRA1872	08-54		12
KRA1874	08-54		10
KRB10590	09-04		3
KRB10720	09-01		15
KRB10730	09-01		17
KRB11710	09-01		1
KRB1273	09-01		2
KRB1274	09-01		6
KRC0184	08-52		37
KRC10030	08-52		1
KRH10190	02-01		20
KRH10200	02-02		39
KRH10210	02-02		40
	08-11		11
	08-32		25
	08-35		25
KRH11460	03-01		7
KRH1236	02-03		14
KRH1237	02-03		11
KRH1251	02-01		23
KRH1270	02-05		22
KRH1377	02-05		16
KRJ1062	09-23		59
KRJ10720	06-06		7
	08-10		7
KRJ10810	08-06		9
KRJ10900	08-10		10
KRJ11470	08-26		8
	08-28		8
	08-34		8
	08-37		8
KRJ11540	08-32		44
KRJ11580	08-38		20
	08-39		20
KRJ12170	08-26		15
	08-26		7
	08-28		15
	08-28		7
KRJ15380	08-01		3
KRJ16050	08-26		16
	08-28		16
	08-34		14
	08-37		14
KRJ16100	08-51		5
KRJ4050	08-51		10
	09-36		8
KRJ4381	08-16		20
KRJ4381	08-17		20
	08-20		20
	08-21		20
KRJ5483	08-05		8
KRJ5803	08-72		
	09-09		9
KRJ5903	08-16		43
	08-20		43
KRJ5983	04-14		13
KRN10420	09-06		56
KRN12710	09-06		152
KRN14200	09-05		154
KRN14210	09-05		155
KRN14530	09-05		156
KRN14540	09-05		157
KRN2098	09-06		23
KRP12530	09-46		30
KRP12540	09-46		31
KRP12550	09-46		32
KRR10370	08-99		9
KRV10910	09-53	00	8
	09-54	00	8
	09-55	00	8
KRV1388	08-83		42
	08-84		42
	09-35		17
KRV1784	09-53	00	12
	09-54	00	12
	09-55	00	12
KRV2408	09-53	00	7
	09-54	00	7
	09-55	00	7
KTN1391	09-08		99
L4143253	09-15		14
LA00027	08-87		89
	08-92		106
LA00056	08-72		12
LA00057	08-72		13
	08-82		11
LA00065	08-90		142
	08-91		215
	08-96		142
	08-97		215
LA00068	08-53		70
LA00069	08-53		64
LA00683	08-83		33
	08-84		33
LA00691	08-93		34
LA00702	06-02		98
LA00703	06-02		99
LA00704	06-02		105
LA00705	06-02		107
LA00706	08-79		14
LA00759	08-90		151
	08-91		224
	08-96		151
	08-97		224
LA00769	08-77		10
	08-78		7
	08-79		20
LA010640	08-90		143
	08-91		216
	08-96		143
	08-97		216
LA010650	08-79		21
LA010900	08-93		41
LA010920	08-91		167
	08-97		167
LA010930	08-89		235
	08-94		252
LA010950	06-03		69
LA010960	08-73		8
	08-74		5
	08-81		5
LA010970	08-73		10
	08-74		7
	08-81		7
LA010980	08-73		20

Number	Figure	Sequence	Ref.
LA010980	08-74		14
	08-81		14
LA011050	08-98		13
LA011060	08-98		14
LA011160	08-65		200
LA011170	08-87		
	08-92		
LA011180	08-87		50
	08-92		69
LA011190	08-87		57
	08-92		75
LA011200	08-87		58
	08-92		76
LA011210	02-05A		10
LA011220	02-05A		14
LA011230	02-05A		26
LAP0032	08-98		9
LAP0033	08-98		11
LB00544	08-52		22
LB00545	06-03		53
LB00546	06-03		67
LB00547	06-03		68
LB00548	06-02		89
LB00549	06-02		101
LB011510	08-70		16
LB011790	06-02		102
LB011800	06-02		110
LB011810	06-02		111
LB011880	08-53		47
LB012000	08-57		73
	08-59		124
	08-61		73
	08-63		122
LB012030	08-87		43
	08-92		62
LB012040	08-87		42
	08-92		61
LB012050	08-87		39
	08-92		58
LB012060	08-87		40
	08-92		59
LB012070	08-87		46
	08-92		65
LBP0073	08-98		10
LBQ5245	03-02		2A
LBQ6222	08-60		174
	08-64		172
LBQ7222	08-58		68
	08-62		68
LC00149	08-53		68
LC00163	06-02		103
LC00221	08-53		59
LC002880	06-02		106
LC002890	06-02		112
LC002900	06-02		116
LC002960	08-98		2
LC003010	08-88		
	08-93		
LC003020	08-87		41
	08-92		60
LC003030	08-92		
	08-93		
LD00070	08-86		27
LD001350	08-85		31
LD001440	08-73		13
LD001450	08-73		12
	08-74		9
	08-81		9
LD001460	08-73		15
LD001470	08-73		11
	08-74		8
	08-81		8
LD001490	08-73		14
LD001530	08-83		28
	08-84		28
LE00606	08-87		72
	08-92		89
LE00608	08-90		136
LE00608	08-91		209
	08-96		136
	08-97		209
LE00690	08-85		23
LE00707	08-85		14
LE00726	08-83		14
	08-84		14
LE00768	08-72		8
LE00776	08-52		21
LE01126	06-02		88
LE01175	08-88		10
	08-93		10
LE01177	08-87		75
	08-90		135
	08-91		208
	08-92		92
	08-96		135
	08-97		208
LE013380	08-90		138
	08-91		211
	08-96		138
	08-97		211
LE013410	08-87		73
	08-90		140
	08-91		213
	08-92		90
	08-96		140
	08-97		213
LE013470	08-87		74
	08-90		132
	08-91		205
	08-92		91
	08-96		132
	08-97		205
LE013490	08-87		76
	08-90		134
	08-91		207
	08-92		93
	08-96		134
	08-97		207
LE013510	08-87		71
	08-92		88
LE013530	08-87		70
	08-92		87
LE013540	08-90		137
	08-90		139
	08-91		210
	08-91		212
	08-96		137
	08-96		139
	08-97		210
	08-97		212
LE014680	06-03		71
LE014710	08-87		69
	08-92		86
LE014730	08-90		133
	08-91		206
	08-96		133
	08-97		206
LE014950	08-83		6
	08-84		6
LE014960	08-83		7
	08-84		7
LE014970	08-83		13
	08-84		13
LE014980	08-83		18
	08-84		18
LE014990	08-85		6
LE015000	08-85		7
LE015040	08-85		18
LE015050	08-86		6
LE015060	08-86		7
LE015070	08-86		13
LE015080	08-86		17
LE015250	08-88		20
	08-93		20
LE015260	08-87		77
	08-92		94

Number	Figure	Sequence	Ref.
LE015270	08-90		131
	08-91		204
	08-96		131
	08-97		204
LE015280	08-90		141
	08-91		214
	08-96		141
	08-97		214
LE015320	02-05A		15
LE015330	02-05A		17
LE015340	02-05A		25
LE015350	02-05A		27
LE015360	02-05A		28
LF00043	08-88		12
	08-93		12
LG00312	08-82		15
LG00313	08-82		16
LG00322	08-57		28
	08-61		28
LG00323	08-57		50
	08-59		134
	08-61		50
	08-63		132
LG00324	08-59		158
	08-63		156
LG00325	08-59		113
	08-63		111
LG00326	08-57		74
	08-61		74
LG00329	08-59		159
	08-63		157
LG00330	08-72		22
LG00337	08-52		20
LG00343	06-04		43
LG00345	08-79		8
LG00536	08-88		11
	08-93		11
LG005470	08-82		12
LG005480	08-82		13
LG005490	08-82		14
LG005790	08-78		3
LG005800	08-77		4
LG005810	08-77		7
LG005960	08-70		13
LG006010	08-73		5
	08-74		3
	08-81		3
LG006020	08-73		6
LG006120	08-57		58
	08-59		142
	08-61		58
	08-63		140
LG006130	08-57		64
	08-61		64
LG006140	08-57		78
	08-61		78
LG006150	08-59		120
	08-63		118
LG006160	08-87		51
	08-92		70
LG006170	08-87		68
	08-92		85
LG006180	02-05A		2
LG006200	06-04		12
LH00029	08-79		10
LH00237	08-57		27
	08-61		27
LH00239	08-57		53
	08-59		137
	08-61		53
	08-63		135
LH00240	08-57		59
	08-59		143
	08-61		59
	08-63		141
LH00254	06-02		91
LH00255	08-79		11
LH00337	08-53		53
LH004940	08-98		5
LH005000	08-59		117
	08-63		115
LH005010	08-59		152
	08-63		150
LH005030	02-05A		13
LJ00684	08-89		
	08-90		152
	08-94		
	08-96		152
LJ00700	08-57		29
	08-61		29
LJ00701	08-65		180
LJ00702	08-57		52
	08-59		136
	08-61		52
	08-63		134
LJ00704	08-58		30
	08-58		34
	08-60		147
	08-61		30
	08-61		34
	08-62		30
	08-62		34
	08-64		145
	08-65		195
LJ00705	08-58		42
	08-62		42
LJ00707	08-59		157
	08-63		155
LJ00710	08-57		75
	08-61		75
LJ00714	08-59		160
	08-63		158
LJ00723	08-52		16
LJ00800	08-58		10
	08-61		10
	08-62		10
LJ014410	08-70		10
	08-70		11
	08-70		9
LJ014600	06-03		74
LJ014660	08-52		
LJ014670	08-70		12
LJ014800	08-83		15
	08-84		15
	08-85		15
LJ014870	08-86		14
LJ014880	08-58		17
LJ014920	08-60		106
	08-62		17
	08-64		104
	08-65		194
LJ014930	08-57		47
	08-59		131
	08-61		47
	08-63		129
LJ014940	08-57		62
	08-61		62
LJ014950	08-57		79
	08-61		79
LJ014960	08-58		85
	08-60		166
	08-62		85
	08-64		164
LJ014970	08-59		116
	08-63		114
LJ014980	08-59		119
	08-63		117
LJ014990	08-59		125
	08-63		123
LJ015000	08-59		155
	08-63		153
LJ015050	08-87		1
	08-88		
	08-92		1
	08-93		
LJ015060	08-87		

Number	Figure	Sequence	Ref.
LJ015060	08-92		
LJ015070	08-87		
	08-92		
LJ015080	08-87		
	08-92		
LJ015090	08-87		55
	08-92		74
LJ015100	08-87		65
	08-92		82
LJ015110	08-90		
	08-96		
LJ015120	08-91		
	08-97		
LJ015240	02-05A		18
LK00003	08-72		4
	08-87		64
	08-90		98
	08-91		172
	08-92		81
	08-96		98
	08-97		172
LK00008	08-87		62
	08-90		97
	08-91		171
	08-92		79
	08-96		97
	08-97		171
LK00015	08-87		61
	08-90		96
	08-91		170
	08-92		78
	08-96		96
	08-97		170
LK00038	08-87		63
	08-92		80
LK00053	08-53		54
LK00283	02-05A		7
LK00284	02-05A		8
LK00306	06-04		47
LK00329	06-04		44
LK005460	08-86		35
LK005490	08-78		2
LK005550	08-70		14
LK005560	08-70		17
LK005600	08-52		34
LK005630	08-73		21
	08-74		15
LK005640	08-73		22
LK005720	08-58		81
	08-60		165
	08-62		81
	08-64		163
LK005730	08-58		84
	08-60		163
	08-62		84
	08-64		161
LK005750	08-87		66
	08-92		83
LL00055	08-89		162
	08-94		179
LL001140	08-73		16
	08-74		10
	08-81		10
LLC0152	08-70		22
LLC0153	08-70		21
LLC0156	08-70		8
LMP0257	08-98		12
LN001970	08-53		
LN002010	02-05A		3
LN002020	02-05A		
LN002040	02-05A		9
LN002050	02-05A		24
LN002060	06-02		
LPC0125	08-60		169
	08-64		167
LPM0116	08-52		13
LQ00024	08-82		20
LQ00025	08-79		13
LQ000370	02-05A		11
LQ000380	02-05A		12
LR00537	08-82		2
LR00538	08-82		9
LR00539	08-82		10
LR00540	08-82		18
LR00556	08-60		171
	08-64		169
LR00560	08-57		51
	08-59		135
	08-61		51
	08-63		133
LR00561	08-58		40
	08-62		40
LR00564	08-59		151
	08-63		149
LR00565	08-60		100
	08-64		98
LR00583	06-02		100
LR00585	06-02		109
LR00586	06-02		113
LR00588	06-02		117
LR00895	08-52		45
LR01104	08-58		12
	08-62		12
LR012210	08-85		27
LR014520	08-79		
LR014920	08-52		23
LR015020	06-03		72
LR015030	06-03		80
LR015040	06-02		104
LR015050	06-02		114
LR015080	08-73		7
	08-74		4
	08-81		4
LR015150	08-98		7
LR015350	08-83		24
LR015360	08-83		25
LR015370	08-84		24
LR015380	08-84		25
LR015470	08-85		28
LR015490	08-86		24
LR015550	08-58		18
	08-62		18
LR015560	08-58		20
	08-60		107
	08-62		20
	08-64		105
	08-65		191
LR015570	08-57		65
	08-61		65
LR015580	08-57		76
	08-61		76
LR015590	08-59		112
	08-63		110
LR015600	08-65		187
LR015610	08-65		188
LR015620	08-58		87
LR015660	08-87		
	08-92		
LR015670	08-87		45
	08-92		64
LR015680	08-87		48
	08-92		67
LR015830	02-05A		6
LR015840	06-04		14
LR015850	06-04		13
LR015970	06-03		64
LS00127	06-04		46
LS00190	08-53		71
LS00237	08-53		63
LS003330	06-03		54
LS003350	06-02		108
LS003420	08-59		114
	08-63		112
LS003430	08-87		49
	08-92		68
LS003460	02-05A		20

Number	Figure	Sequence	Ref.
LS003470	02-05A		21
LS003480	02-05A		22
LS003490	02-05A		23
LS003500	06-02		97
LSC0192	08-79		3
LSC0204	08-60		168
	08-64		166
LSC0235	08-72		3
LT001670	02-05A		1
LU00102	08-83		3
	08-84		3
LU00118	08-85		3
LU00120	08-86		3
LUC0103	08-72		29
LUG0096	02-05A		19
LV00029	06-02		115
LV000490	08-87		86
	08-92		103
LW00316	06-02		123
LW00397	08-87		56
LW004960	08-77		1
LW004970	08-77		6
LW005020	08-53		52
LW005070	08-98		6
LW005150	08-57		44
	08-59		126
	08-61		44
	08-63		124
	08-65		182
LW005160	08-57		45
	08-59		129
	08-61		45
	08-63		127
LW005170	08-58		80
	08-62		80
LW005180	08-58		83
	08-60		161
	08-62		83
	08-64		159
LW005190	08-60		164
	08-64		162
LW005220	08-87		52
	08-92		71
LW005230	08-87		53
	08-92		72
LW005240	08-87		54
	08-92		73
LX00007	08-58		82
	08-60		162
	08-62		82
	08-64		160
LZ006890	06-02		
LZ007960	06-03		
	06-04		
LZ008000	08-98		8
LZ008100	08-83		
	08-84		
LZ008110	08-83		
	08-84		
LZ008120	08-83		
	08-84		
LZ008180	08-85		
LZ008190	08-85		
LZ008200	08-85		
LZ008210	08-86		
LZ008220	08-86		
LZ008230	08-86		
LZ008650	06-03		
	06-04		
LZ008660	06-03		
LZC0156	08-52		30
LZU0095	08-86		28
M01X0812	09-53	00	19
MPJ5386	08-08		3
NSS	02-03		2
	02-05		19
	02-05A		5
	02-09		166
NSS	03-01		2
	05-09		2
	06-02		118
	06-02		119
	06-02		120
	06-02		121
	06-02		122
	06-02		90
	06-02		92
	06-02		93
	06-02		94
	06-02		95
	06-02		96
	06-03		
	06-03		2
	06-03		23
	06-03		24
	06-03		25
	06-03		26
	06-03		27
	06-03		28
	06-03		30
	06-03		33
	06-03		34
	06-03		35
	06-03		36
	06-03		4
	06-03		40
	06-03		41
	06-03		42
	06-03		55
	06-03		56
	06-03		57
	06-03		58
	06-03		66
	06-03		86
	06-03		87
	06-04		
	06-04		15
	06-04		20
	06-04		39
	06-04		40
	06-04		48
	06-04		5
	06-04		6
	06-04		7
	06-04		8
	06-04		83
	06-04		84
	06-04		85
	06-04		9
	08-01		2
	08-53		67
	08-58		2
	08-58		3
	08-58		4
	08-58		5
	08-58		6
	08-58		7
	08-60		90
	08-60		91
	08-60		92
	08-60		93
	08-60		94
	08-60		95
	08-62		2
	08-62		3
	08-62		4
	08-62		5
	08-62		6
	08-62		7
	08-64		88
	08-64		89
	08-64		90
	08-64		91
	08-64		92
	08-64		93
	08-65		177

Number	Figure	Sequence	Ref.	Number	Figure	Sequence	Ref.
NSS	08-65		178	NSS	08-89		226
	08-70		1		08-89		227
	08-70		2		08-89		228
	08-72		2		08-89		229
	08-73		1		08-89		230
	08-73		2		08-89		234
	08-73		23		08-89		237
	08-73		3		08-89		238
	08-73		4		08-90		100
	08-73		9		08-90		101
	08-74		1		08-90		102
	08-74		16		08-90		103
	08-74		2		08-90		104
	08-74		6		08-90		105
	08-75		1		08-90		106
	08-75		8		08-90		107
	08-75		9		08-90		108
	08-77		2		08-90		109
	08-77		3		08-90		110
	08-77		5		08-90		111
	08-78		11		08-90		112
	08-78		12		08-90		113
	08-78		13		08-90		114
	08-78		14		08-90		115
	08-78		15		08-90		116
	08-78		16		08-90		117
	08-78		17		08-90		118
	08-78		18		08-90		119
	08-78		19		08-90		120
	08-78		20		08-90		121
	08-78		21		08-90		122
	08-78		22		08-90		123
	08-78		4		08-90		124
	08-79		27		08-90		125
	08-79		28		08-90		126
	08-79		30		08-90		127
	08-79		31		08-90		128
	08-79		32		08-90		129
	08-79		9		08-90		130
	08-81		1		08-90		145
	08-81		15		08-90		146
	08-81		2		08-90		147
	08-81		6		08-90		148
	08-82		1		08-90		149
	08-82		3		08-90		150
	08-83		38		08-90		99
	08-83		41		08-91		173
	08-84		38		08-91		174
	08-84		41		08-91		175
	08-85		41		08-91		176
	08-85		44		08-91		177
	08-86		39		08-91		178
	08-86		42		08-91		179
	08-87		25		08-91		180
	08-87		26		08-91		181
	08-87		28		08-91		182
	08-87		29		08-91		183
	08-87		31		08-91		184
	08-87		32		08-91		185
	08-87		34		08-91		186
	08-87		35		08-91		187
	08-87		37		08-91		188
	08-87		38		08-91		189
	08-87		88		08-91		190
	08-88		3		08-91		191
	08-88		4		08-91		192
	08-88		5		08-91		193
	08-88		6		08-91		194
	08-88		7		08-91		195
	08-88		8		08-91		196
	08-88		9		08-91		197
	08-89		153		08-91		198
	08-89		154		08-91		199
	08-89		155		08-91		200
	08-89		156		08-91		201
	08-89		157		08-91		202
	08-89		158		08-91		203
	08-89		163		08-91		218

Number	Figure	Sequence	Ref.	Number	Figure	Sequence	Ref.
NSS	08-91		219	NSS	08-96		128
	08-91		220		08-96		129
	08-91		221		08-96		130
	08-91		222		08-96		145
	08-91		223		08-96		146
	08-91		225		08-96		147
	08-92		105		08-96		148
	08-92		44		08-96		149
	08-92		45		08-96		150
	08-92		47		08-96		99
	08-92		48		08-97		173
	08-92		50		08-97		174
	08-92		51		08-97		175
	08-92		53		08-97		176
	08-92		54		08-97		177
	08-92		56		08-97		178
	08-92		57		08-97		179
	08-93		25		08-97		180
	08-93		26		08-97		181
	08-93		27		08-97		182
	08-93		28		08-97		183
	08-93		29		08-97		184
	08-93		3		08-97		185
	08-93		30		08-97		186
	08-93		31		08-97		187
	08-93		32		08-97		188
	08-93		39		08-97		189
	08-93		4		08-97		190
	08-93		40		08-97		191
	08-93		42		08-97		192
	08-93		5		08-97		193
	08-93		6		08-97		194
	08-93		7		08-97		195
	08-93		8		08-97		196
	08-93		9		08-97		197
	08-94		170		08-97		198
	08-94		171		08-97		199
	08-94		172		08-97		200
	08-94		173		08-97		201
	08-94		174		08-97		202
	08-94		175		08-97		203
	08-94		180		08-97		218
	08-94		243		08-97		219
	08-94		244		08-97		220
	08-94		245		08-97		221
	08-94		246		08-97		222
	08-94		247		08-97		223
	08-94		251		08-97		225
	08-94		254		08-98		1
	08-94		255		08-98		3
	08-96		100		08-98		4
	08-96		101		08-99		
	08-96		102		09-14		2
	08-96		103		09-14		3
	08-96		104		09-15		20
	08-96		105		09-35		2
	08-96		106		09-53	00	2
	08-96		107		09-54	00	2
	08-96		108		09-55	00	2
	08-96		109		09-56		2
	08-96		110		09-57		2
	08-96		111	REF	02-08		0-11
	08-96		112		02-09		0-11
	08-96		113		02-11		0-20
	08-96		114		02-11		0-60
	08-96		115		02-11		1-10
	08-96		116		02-12		0-13
	08-96		117		02-13		0-50
	08-96		118		02-14		0-12
	08-96		119		02-14		0-50
	08-96		120		02-15		0-11
	08-96		121		02-16		0-11
	08-96		122		02-16		0-20
	08-96		123		02-18		0-11
	08-96		124		02-18		0-12
	08-96		125		02-18		0-40
	08-96		126		02-19		0-40
	08-96		127		02-19		1-10

Number	Figure	Sequence	Ref.
REF	02-20		0-12
	02-21		0-11
	02-21		0-60
	02-22		0-11
	02-23		0-10
	02-23		0-22
	02-24		0-20
	02-24		0-22
	02-24		0-31
	02-24		0-32
	02-24		0-50
	02-25		0-11
	02-25		0-30
	02-25		0-32
	02-25		0-36
	02-25		0-50
	02-26		0-11
	02-26		0-20
	02-26		0-27
	02-26		0-30
	02-26		0-31
	02-26		0-36
	02-26		0-50
	02-26		0-57
	02-27		0-60
	02-28		0-11
	02-28		0-22
	02-28		0-27
	02-28		0-31
	02-28		0-32
	02-28		0-57
	02-29		0-12
	02-30		0-13
	02-30		0-20
	02-31		0-12
	02-31		0-36
	02-32		0-11
	02-32		0-25
	02-32		0-27
	02-32		0-32
	02-33		0-11
	02-33		0-20
	02-33		0-22
	03-04		0-11
	03-04		0-20
	03-05		0-20
	03-05		0-22
	03-05		1-10
	04-01		0-11
	04-01		0-12
	04-01		0-20
	04-01		0-22
	04-01		0-25
	04-02		8-10
	04-02		8-15
	04-04A		0-60
	04-05		48
	04-05		80
	09-15B		1
	09-15B		111
	09-15B		112
	09-15B		34
	09-42		1
	09-42		1
	09-42		1
	09-42		1
	09-43		1
	09-43		1
	09-43		1
	09-43		1
	09-44		1
	09-44		1
TE00881	02-05A		16
TE01038	08-87		78
	08-92		95
TF00005	08-79		12
TG00219	08-87		67
	08-92		84
TH00018	08-87		44
	08-92		63
TIP0002072	08-78		1
TIP0002073	08-78		5
TIP0002136	08-52		27
TIP0002137	08-52		35
TIP0002145	08-52		9
TIP0002146	08-52		26
TV00002	08-87		87
	08-92		104
UCP0101	04-05		100