RUTHZIL TRATOR COMERCIAL DE PEÇAS LTDA 11 97083-6812 ROLANDO CITRANGULO

CASE CONSTRUCTION

JULHO 2013

CX220B

GENERAL
GENERAL
GENERAL 1

ENGINE
MOTOR
MOTEUR 2

FUEL
COMBUSTIBLE
CARBURANT 3

ELECTRICAL SYSTEM
SISTEMA ELECTRICO
SYSTEME ELECTRIQUE 4

STEERING
DIRECCION
DIRECTION 5

TRANSMISSION
TRANSMISION
TRANSMISSION 6

BRAKES
FRENOS
FREINS 7

HYDRAULIC SYSTEM
SISTEMA HIDRAULICO
SYSTEME HIDRAULIQUE 8

CHASSIS
BASTIDOR
CHASSIS 9

NUMERICAL INDEX
INDICE NUMERICO
INDEX NUMERIQUE 10

47451466 07/2013

CX220B
HYDRAULIC EXCAVATOR
Parts Catalog nº 47451466

GENERAL
GENERAL
GENERAL
1

CX220B
EXCAVADORA HIDRAULICA
Catálogo de Repuestos nº 47451466

CX220B
ESCAVADEIRA HIDRÁULICA
Catálogo de Peças nº 47451466



Issued 07/2013 Edición 07/2013 Edição 07/2013

Todos os direitos são reservados à **CNH LATIN AMERICA LTDA.**.
Os dados contidos neste catálogo são fornecidos a título de indicação somente. A qualquer momento, a **CNH LATIN AMERICA LTDA.** poderá introduzir, por razões de ordem técnica ou comerciais, modificações nos produtos descritos neste catálogo. Para informações mais detalhadas e atualizadas, solicitamos ao usuário consultar o concessionário **CNH LATIN AMERICA LTDA.** mais próximo.
O sistema de numeração das peças utilizado neste catálogo não pode ser copiado ou utilizado sem autorização por escrito da **CNH LATIN AMERICA LTDA.**.

All rights reserved by Soc. **CNH LATIN AMERICA LTDA.**.
The information contained in this catalogue is intended to be of a general nature only. The **CNH LATIN AMERICA LTDA.** may at any time and from time to time, for technical or other necessary reasons, modify any of the details or specifications of the product described in this catalogue. To be sure of getting accurate, detailed and up-to-date information, an intending buyer should consult his nearest **CNH LATIN AMERICA LTDA.** dealer or distributor.
Single item numeration method used in this catalogue may not be used without written consent by Soc. **CNH LATIN AMERICA LTDA.**.

Reservados todos los derechos para Soc. **CNH LATIN AMERICA LTDA.**.
Los datos contenidos en este catálogo se facilitan a titulo indicativo. **CNH LATIN AMERICA LTDA.** podrá introducir, en cualquier momento, por razones de naturaleza tanto técnica como comercial, modificaciones en los modelos descritos en este catálogo. Para mayor información rogamos al cliente se dirija al Concesionario o Filiale **CNH LATIN AMERICA LTDA.** más próximo.
El sistema de numeración de las piezas reseñadas en el catálogo no puede ser objeto de imitación o copia en ningun caso sin autorización por escrito de Soc. **CNH LATIN AMERICA LTDA.**.

Tutti i diritti sono riservati alla Soc. **CNH LATIN AMERICA LTDA.**.
Il sistema di numerazione che individua is ingoli particolare elencati nel presente calatogo non può essere adottato in alcun caso senza autorizzazione scritta dalla Soc. **CNH LATIN AMERICA LTDA.**. I dati contenuti in questo catalogo sono forniti a titolo indicativo. La **CNH LATIN AMERICA LTDA.** potrà apportare in qualunque momento modifiche ai modelli descritti in questo catalogo, per ragioni di natura tecnica o commerciale.
Per ulteriore informazione, il cliente è pregato di rivolgersi al più vicino Concessionario o Sede **CNH LATIN AMERICA LTDA.**.

Alle in diesem Propekt anthaltenen Angaben sind Orientierungsdate. Es können jedoch von **CNH LATIN AMERICA LTDA.** sowohl aus technischen und Kaufmännischen Gründen als auch aus der Notwendigkeit, geänderte gesetzliche Erfordernisse der verschiedenen Lander zu berücksichtigen, Anderugen einge führt werden. Der Kunde ist gebeten, sich für weirtere information an Vertragshändler order.
CNH LATIN AMERICA LTDA.-Niederlassungen zu werden.
Alle Urheberrechte sind von der **CNH LATIN AMERICA LTDA.**-vorbehalten.
Die Benutzung des Numerierungssustems zur Kennzeichnung der im vorliegende Katalog aufgeführten Ersatzteile bedarf in jedem Falle der schriftlichen Genehmigung der **CNH LATIN AMERICA LTDA.**.

Tous droits réservés à la Soc. **CNH LATIN AMERICA LTDA.**.
Les données de cette brochure sont fournies à titre indicatif et pourraient se révéler caduques à la suite de modifications apportées par le constructeur, à n'import quel moment, pour de raisons techniques ou commerciales ainsi que pour satisfaire aux normes en vigueur dans le différents Pays. Pour toute information, nous prions le client de bien vouloir s'adresser au Concessionnaire ou à la Filiale **CNH LATIN AMERICA LTDA.** les plus proches.
Le système de numérotation des pièces en list dans ce catalogue ne peut être adopté en aucun cas, sans une autorisation écrite de la Soc. **CNH LATIN AMERICA LTDA.**.

Copyrigth by **CNH LATIN AMERICA LTDA.**
Printed in Brazil

INSTRUÇÕES PARA O PEDIDO DE PEÇAS DE SERVIÇO

“Os números de peça indicados neste catálogo estão corretos até a data da publicação. A política da New Holland de contínuo melhoramento dos produtos durante toda a vida de produção do modelo, pode dar origem às últimas alterações nas figuras e nos números de peça. Quando encomendar peças de substituição, certifique-se de confirmar suas especificações no CD atual do sistema PAL ou com a microficha do catálogo de peças no seu concessionário.”

INSTRUCTIONS FOR ORDERING SPARE PARTS

“The part numbers shown in this catalogue are correct up to the date of publication. New Holland policy of continuously improving our products during the production lifetime of the Model may result in later changes to illustrations and to part numbers. When ordering replacement parts be sure to confirm your requirements against the current CD based PAL or microfiche parts catalogue at your dealership.”

INSTRUCCIONES PARA LOS PEDIDOS DE RECAMBIOS

“Los números de pieza indicados en este catálogo son los correctos en la fecha de la publicación. La política de New Holland es de constante mejora de sus productos durante todo el período de vida de la producción del Modelo, lo que puede hacer que se produzcan cambios en las ilustraciones y en los números de pieza. Al hacer pedidos de recambios debe asegurarse de que sean de acuerdo con sus necesidades comprobando el CD actualizado en sistema PAL o bien las microfichas de catálogos existentes en la agencia.”

ISTRUZIONI PER ORDINARE I RICAMBI

“ I numeri ricambio riportati in questo catalogo si intendono corretti fino alla data della pubblicazione. La New Holland persegue una politica di continuo miglioramento del prodotto durante tutto il periodo di produzione del modello per cui può accadere che ci siano modifiche successive alle illustrazioni e ai numeri ricambio. Al momento di ordinare un particolare di ricambio, verificare accuratamente i dati utilizzando il CD PAL o il catalogo ricambi su microfiche presente presso la Concessionaria.

ANLEITUNG ZUM BESTELLEN VON ERSATZTEILEN

“Die in diesem Katalog aufgeführten Teilnummern sind am Tag der Veröffentlichung korrekt. Die Firmenpolitik von New Holland sieht während der Produktionsdauer dieses Modells dessen kontinuierliche Verbesserung vor; dies kann zu späteren Änderungen an Abbildungen und Teilnummern führen. Stellen Sie vor der Bestellung von Ersatzteilen sicher, daß Sie bei Ihrem Händlerbetrieb die von Ihnen benötigten Teile mit dem aktuellen PAL auf der Grundlag e von CDs oder dem aktuellen Microfiche-Ersatzteilkatalog abgeglichen haben.”

INSTRUCTIONS POUR COMMANDE PIECES DETACHEES

Les références de pièces détachées notées dans ce catalogue sont correctes à la date de publication.La politique New Holland pour l’amélioration constante des produits durant la durée de vie des modèles peut changer les illustrations et les références des pièces détachées.Quand l’ordre de remplacement de pièces est confirmé, il est nécessaire de mettre à jour l’actuel CD base PAL ou microfiches de pièces détachées chez votre concessionnaire.

REGRAS PARA PEDIDO DE PEÇAS

Este catálogo está dividido em seções principais correspondendo a áreas específicas do produto. Cada seção está representada através de figuras detalhadas (desenhos) para auxiliar na localização e identificação de peças. As peças disponíveis para serviço estão indicadas ao lado da figura e, para a correta identificação das peças necessárias proceder da seguinte forma:

1) Consultar a figura da seção principal na página 16 para identificar a seção em questão.

2) Em seguida, consultar as páginas 17 a 36 para encontrar a figura à qual pertence o número de peça necessário.

3) Consultar o índice do número de peça na página 44. Este índice apresenta todos os números de peça que aparecem no catálogo.

ORDERING RULES

This catalogue is divided into main sections corresponding to specific areas of the product. Each section is represented by detailed figures (illustrations) to assist in locating and identifying parts. Parts released for service are indicated alongside the figure, hence, for the correct identification of parts required proceed as follows:

1) Consult the main section illustration on page 16 to identify the section in question.

2) Then consult pages 17 to 36 to find the figure to which the required part number belongs.

3) Refer to the part number index on page 44. This index lists all part numbers appearing in the catalogue.

NORMATIVA DE PEDIDOS

Este catálogo se divide en tres secciones principales correspondientes a áreas específicas del producto. Cada sección se representa con figuras detalladas (ilustraciones) para facilitar la localización e identificación de las piezas. Las piezas disponibles para el servicio se encuentran indicadas al lado de la figura, de aquí, que para la identificación correcta de las piezas necesarias, deba seguirse este orden:

1) Consultar la sección principal en la ilustración de la página 16 para identificar la sección en cuestión.

2) Seguidamente consultar las páginas 17 to 36 para localizar la figura a la que pertenece el número de pieza buscada.

3) Ver el índica de números de pieza en la página 44. Este índica contiene todos los números de pieza del catálogo.

NORME PER L'ORDINAZIONE

Questo catalogo è suddiviso in sezioni principali corrispondenti alle aree specifiche della macchina. Ogni sezione è composta da figure tecniche dettagliate che agevolano l'individuazione e l'identificazione dei particolari. I particolari disponibili per l'assistenza sono indicati unitamente alla figura, per cui per la corretta identificazione degli stess i è necessario procedere come segue:

1) Consultare l'illustrazione delle sezioni principali a pag. 16 per individuare la sezione che interessa.

2) Consultare poi le pagine da 17 a 36 per trovare la figura alla quale appartiene il numero del ricambio necessario.

3) Fare riferimento all'indice dei numeri ricambio a pag. 44, che elenca tutti i numeri ricambio che appaiono nel catalogo.

BESTELLREGELN

Dieser Katalog ist in Hauptabschnitte aufgeteilt, die speziellen Baugruppen des Produkts entsprechen. Jeder Abschnitt wird durch detaillierte Abbildungen veranschaulicht, die das Auffinden und Identifizieren von Teilen erleichtern. Für den Service freigegebene Teile sind neben der Abbildung aufgeführt; um erforderliche Teile richtig zuzuordnen, gehen Sie somit wie folgt vor:

1) Stellen Sie mit Hilfe der auf Seite 16 veranschaulichten Hauptabschnitte fest, zu welcher Baugruppe bzw. welchem Abschnitt das Teil gehört.

2) Suchen Sie dann auf den Seiten 17 bis 36 die Abbildung, zu der die Nu mmer des benötigten Teils gehört.

3) Suchen Sie die Nummer im Teilnummer-Verzeichnis auf Seite 44. In diesem Verzeichnis sind alle im Katalog enthaltenen Teilnummern zusammengefaßt.

REGLES DE COMMANDES

Ce catalogue est divisé en sections principales correspondant aux aires spécifiques de production. Chaques sections est représentées par des figures détaillées (illustrations) pour aider à la localisation et à l'identification des pièces détachées. Les pièces nécessaires pour le service sont indiquées sur le côté de la figure, pour l'identification correcte de la pièce requise procédez comme ci dessous

1) Consultez l'illustration de la section principale page 16 pour identifier la section en question

2) Consulter les pages de 17 à 36 pour trouver la figure qui contient la référence demandée

3) Se référer à l'index de la référence pièce à la page 44 .Cet index indique toutes les références pièces apparaissant dans le catalogue.

01.01	01	p6	02/03

CHASSI
MAIN FRAME
BASTIDOR
TELAIO
GESTELL
CHASSI

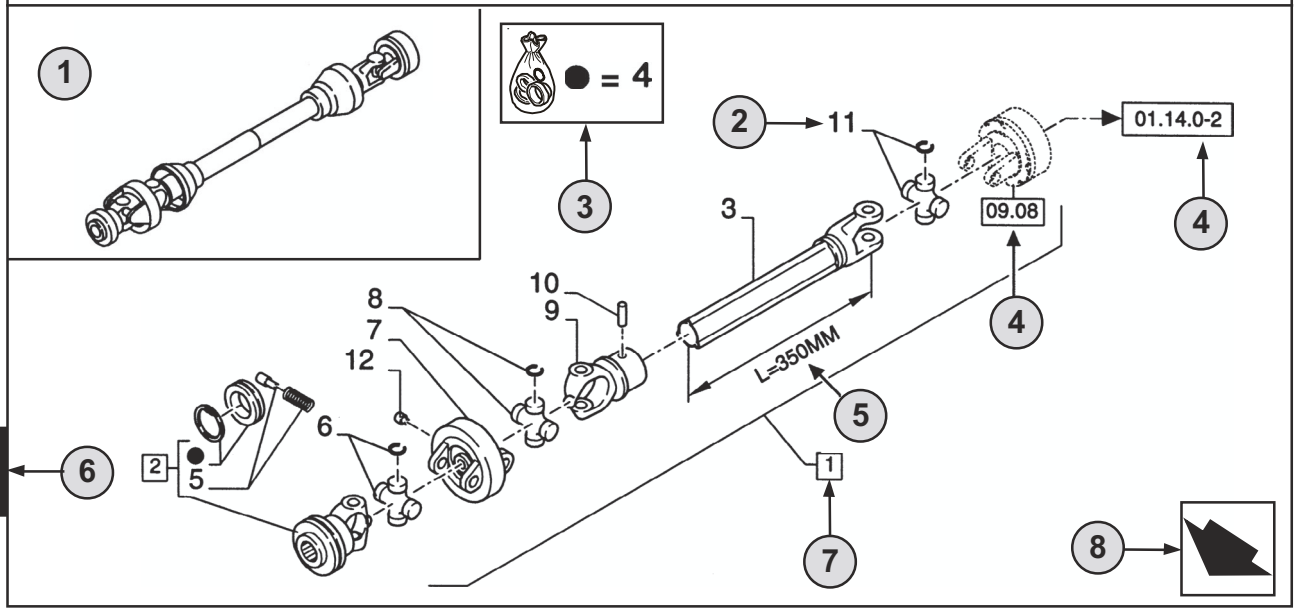

1

9 10

01.01	01	p6	02/03
11	12	13	14

CHASSI - D0200
MAIN FRAME
BASTIDOR
TELAIO
GESTELL
CHASSI

R	N	P.N.	MOD	Q	Descrição	Description	Descripción	L.C.
	A	**86529340**		1	TOMADA DE FORÇA **(2 AO 11)**	SHAFT, PTO	TOMA DE FUERZA	207P
2		**84014007**		1	GARFO **(4,5)**	YOKE	HORQUILLA	085F
3		**NSS**		1	EIXO, **L=350MM**	SHAFT	EJE	016A
4		**84004292**	C0204	1	KIT	KIT	EQUIPO	305C
		[84058743]	D0500	1	KIT	KIT	EQUIPO	305C

15 16 7 2 18 19 20 21 17 22 22 23

(A) SOMENTE BRASIL 24

1

STANDARD 25

26 **MODELOS**

PORTUGUÊS

1 **Posição** da “Figura” na máquina.

2 Referência - figura chamar pelo n° de peça.

3 Peças fornecidas nos kits de reparação por referência de símbolo.

4 01.14.0-2 Peça indicada na **Página** ou no **Figura**, ou chamadas para **Variações** ou **Detalhes**. Indicam componentes que se mostram em detalhe em um outro local do catálogo com o número da figura indicado.

5 Especificações técnicas relacionadas com a peça indicada.

6 Número da **Seção**.

7 2 Inclui os item(s) .....

8 Orientação (A seta indica a frente da máquina). 

9 Descrição da figura.

10 Informação geral da figura.

11 Código do **Conjunto**.

12 Código de **Seqüência** no conjunto.

13 Número da página no código de seqüência.

14 **Data** da impressão ou da atualização da página (mês-ano).

15 **Nota** - Em relação ao n°. de peça. Existe uma chave para os símbolos e abreviaturas na parte inferior da página.

16 Peças que não são disponibilizadas (ver a Página 42).

17 Descrição adicional da peça para auxiliar a confirmar a identificação.
Consultar a página 42 para explicação dos símbolos usados.

18 Não disponível como peça de serviço.

19 Número de Peça.

20 Modificação.
C 0201 = Peça válida **ATÉ 0201** mudar.
D 0300 = Peça válida **A PARTIR** de **0300** mudar.
F 0202 = Peça válida **A PARTIR do N°. de Série.... até ao N°. de Série....**

Implementação da mudança. N° de série a partir do qual a alteração tem início. Os números são indicados na plaqueta de identificação do modelo (ver a página 38).
Ex.: **D0300 N° de Série 2503001** significa que a peça foi montada **“A PARTIR”** do n°. de série **2503001.**
Como conseqüência, as peças marcadas por **C0201**, foram montadas **“ATÉ”** ao n°. de série **2501999.**
Ver a tabela de códigos na página 41.

21 **Quantidade** total de peças referenciadas na página. A quantidade pode ser substituída pelas seguintes indicações:
M = fornecido em metros. **AR** = Quantidade consoante ao pedido.

22 **Descrição** da peça.

23 **L.C. - Código Léxico** para a identificação dos nomes das peças (ver página 45).

24 Referências de rodapé.

25 Notas das figuras.

26 Número do modelo.

01.01	01	p8	02/03

CHASSI
MAIN FRAME
BASTIDOR
TELAIO
GESTELL
CHASSI

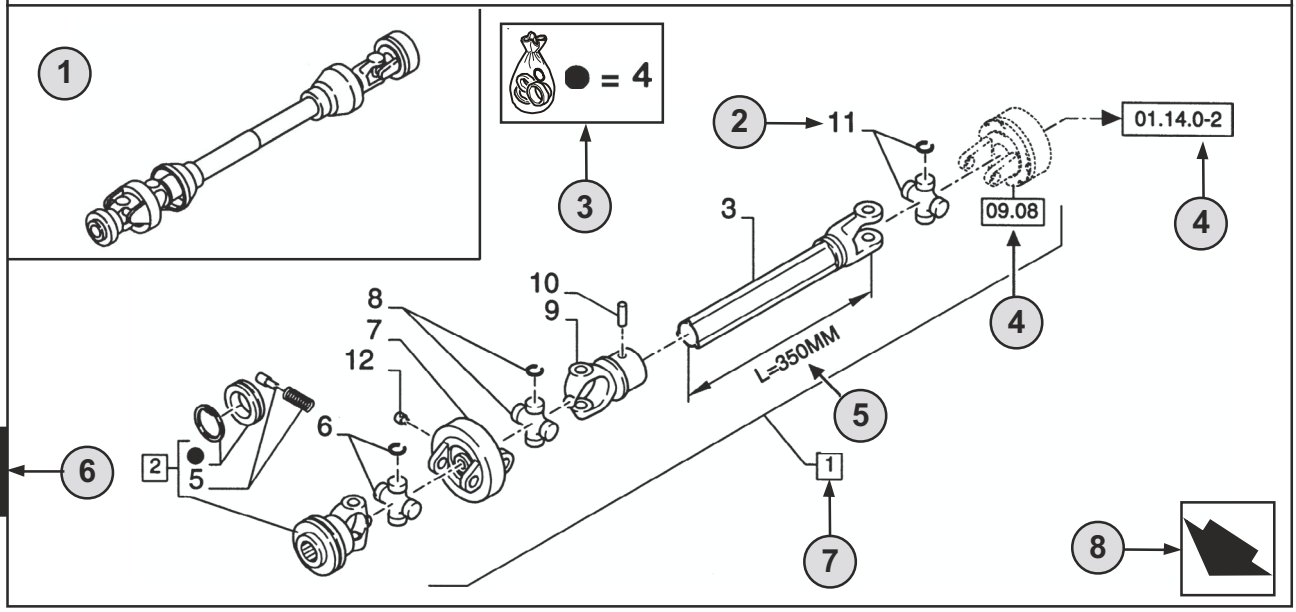

9 10

01.01	01	p8	02/03
11	12	13	14

CHASSI - D0200
MAIN FRAME
BASTIDOR
TELAIO
GESTELL
CHASSI

R	N	P.N.	MOD	Q	Descrição	Description	Descripción	L.C.
	A	**86529340**		1	TOMADA DE FORÇA **(2 AO 11)**	SHAFT, PTO	TOMA DE FUERZA	207P
2		**84014007**		1	GARFO **(4,5)**	YOKE	HORQUILLA	085F
3		**NSS**		1	EIXO, **L=350MM**	SHAFT	EJE	016A
4		**84004292**	C0204	1	KIT	KIT	EQUIPO	305C
		[84058743]	D0500	1	KIT	KIT	EQUIPO	305C

15 16 7 2 18 19 20 21 17 22 22 23

(A) SOMENTE BRASIL 24

STANDARD 25

26 **MODELOS**

1

ENGLISH

1 **Position** of the “Figure” on the machine.

2 Reference - Figure call-out of the partnumber.

3 Parts supplied in repair kits per symbol reference.

4 01.14.0-2 Part illustrated on the **Page** or in the **Figure** indicated, or calls for **Variations** or **Details**. Indicates components shown in detail elsewhere in the catalogue under the figure number shown.

5 Technical specifications relating to the Part indicated.

6 **Section** number.

7 2 Includes item(s) .....

8 Orientation. (Arrow indicates front of the machine). 

9 Figure description.

10 General information of the figure.

11 **Assembly** code.

12 **Sequence** code within the assembly.

13 Page number within the sequence code.

14 **Date** of printing or updating of page (month-year).

15 **Note** - Relating to the Part Number. There is a key to symbols and abbreviations at the bottom of the text page.

16 Non-serviced parts. (see page 42).

17 Further description of the part to help confirm identification. Refer to page 42 for explanation of symbols used.

18 Not available as service part.

19 Part Number.

20 Modification.
C 0201 = Part valid **UNTIL 0201** change.
D 0300 = Part valid **FROM 0300** change.
F 0202 = Part valid **FROM Serial N.... to Serial N....**

Implementation of change. Serial number from which the change starts.
The numbers are indicated on the identification plate of the model (see page 38).
E.g.: **D0300 Serial n° 2503001** means that the part has been installed **“FROM”** serial number **2503001**. Consequently, the parts marked by C0201, were installed **“UP TO”** serial number **2501999**.
See code table page 41.

21 Total **Quantity** of the Part referred to in the page.
The quantity can be replaced by the following indications:
M = supplied in metres. **AR** = quantity as requested.

22 Part **Description**.

23 **L.C. - Lexicon code** for the identification of Part names (see page 45).

24 Footnote references.

25 Figure notes.

26 Model number.

01.01	01	p10	02/03

CHASSI
MAIN FRAME
BASTIDOR
TELAIO
GESTELL
CHASSI

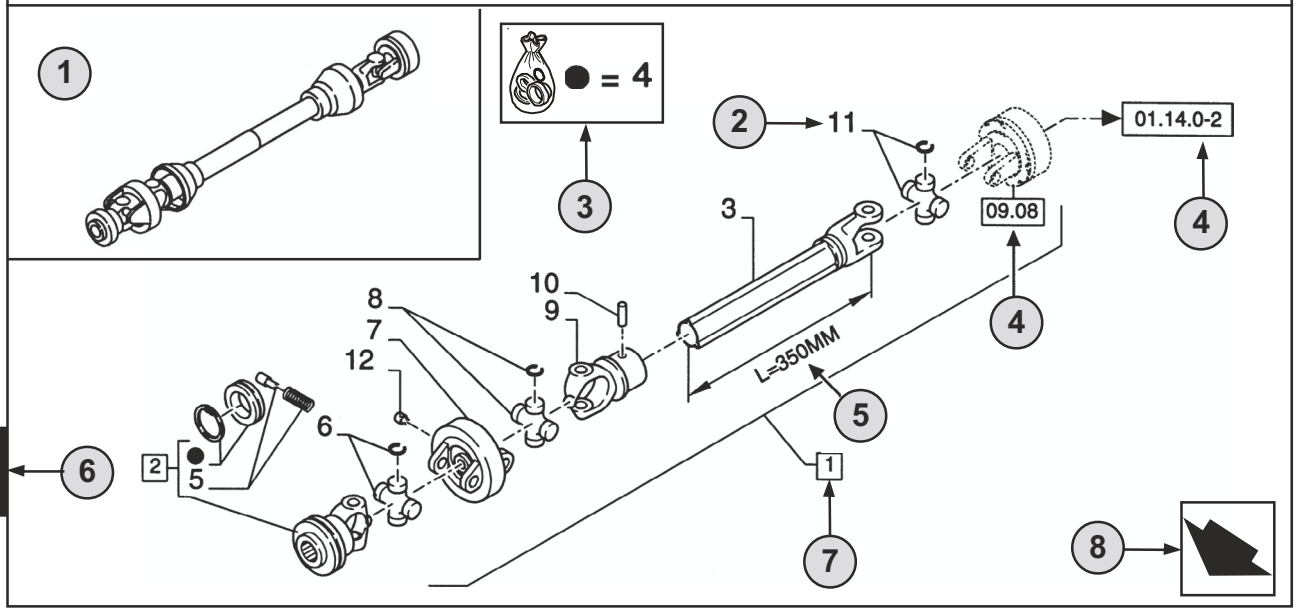

1

9 10

01.01	01	p10	02/03
11	12	13	14

CHASSI - D0200
MAIN FRAME
BASTIDOR
TELAIO
GESTELL
CHASSI

R	N	P.N.	MOD	Q	Descrição	Description	Descripción	L.C.
	A	**86529340**		1	TOMADA DE FORÇA **(2 AO 11)**	SHAFT, PTO	TOMA DE FUERZA	207P
2		**84014007**		1	GARFO **(4,5)**	YOKE	HORQUILLA	085F
3		**NSS**		1	EIXO, **L=350MM**	SHAFT	EJE	016A
4		**84004292**	C0204	1	KIT	KIT	EQUIPO	305C
		[84058743]	D0500	1	KIT	KIT	EQUIPO	305C

15 16 7 2 18 19 20 21 17 22 22 23

(A) SOMENTE BRASIL 24

1

STANDARD 25

26 **MODELOS**

ESPAÑOL

1 **Posición** de la “Figura” en la máquina.

2 Referencia - Figura correspondiente del número de pieza.

3 Piezas suministradas en juegos de reparación por símbolo de referencia.

4 01.14.0-2 Pieza ilustrada en la **Página** o en la **Figura** indicado, o indicaciones por **Variaciones** o **Detalles.** Señala componentes mostrados en detalle en algún lugar del catálogo bajo este número de figura.

5 Especificaciones técnicas relacionadas con la pieza indicada.

6 Número de **Sección**.

7 2 Incluye punto(s) .....

8 Orientación (La flecha indica la parte delantera de la máquina). 

9 Descripción de la figura.

10 Información general de la figura.

11 Código de **Conjunto.**

12 Código de **Secuencia dentro del conjunto.**

13 Número de pieza dentro del código de secuencia.

14 **Fecha** de impresión o puesta al día de la página (mes-año).

15 **Nota -** Relacionada con el Número de Pieza.Hay una clave de símbolos y abreviaciones al final de la página de texto.

16 Piezas que no se suministran en servicio (ver página 42).

17 Descripción ulterior de la pieza para facilitar su identificación. Ver la explicación de los símbolos utilizados en la página 42.

18 No disponible como pieza de servicio.

19 Número de pieza.

20 Modificación.
C 0201 = Pieza válida **HASTA** el cambio **0201**.
D 0300 = Pieza válida **DESDE** el cambio **0300**.
F 0202 = Pieza válida **DESDE el N° de Serie.... al N° de Serie....**

Implementación del cambio. Número de serie a partir del cual comienza el cambio. Los números se indican en la placa de identificación del modelo (ver página 38).
P.e.: **D0300 Serie n° 2503001** significa que las piezas se han instalado **“DESDE”** el número de serie **2503001**.
En consecuencia, las piezas marcadas con **C0201**, fueron montadas **“HASTA”** el número de serie **2501999**.
Ver tabla de códigos en la página 41.

21 **Cantidad** total de las piezas referenciadas en la página.
La cantidad puede ser sustituida por cualquiera de las siguientes indicaciones:
M = suministrada por metros. **AR** = cantidad según sea necesario.

22 **Descripción** de la pieza.

23 **L.C. - Código Léxico** para la identificación de los nombres de piezas (ver página 45).

24 Notas de pié de página.

25 Notas de figura.

26 Número de modelo.

01.01	01	p12	02/03

CHASSI
MAIN FRAME
BASTIDOR
TELAIO
GESTELL
CHASSI

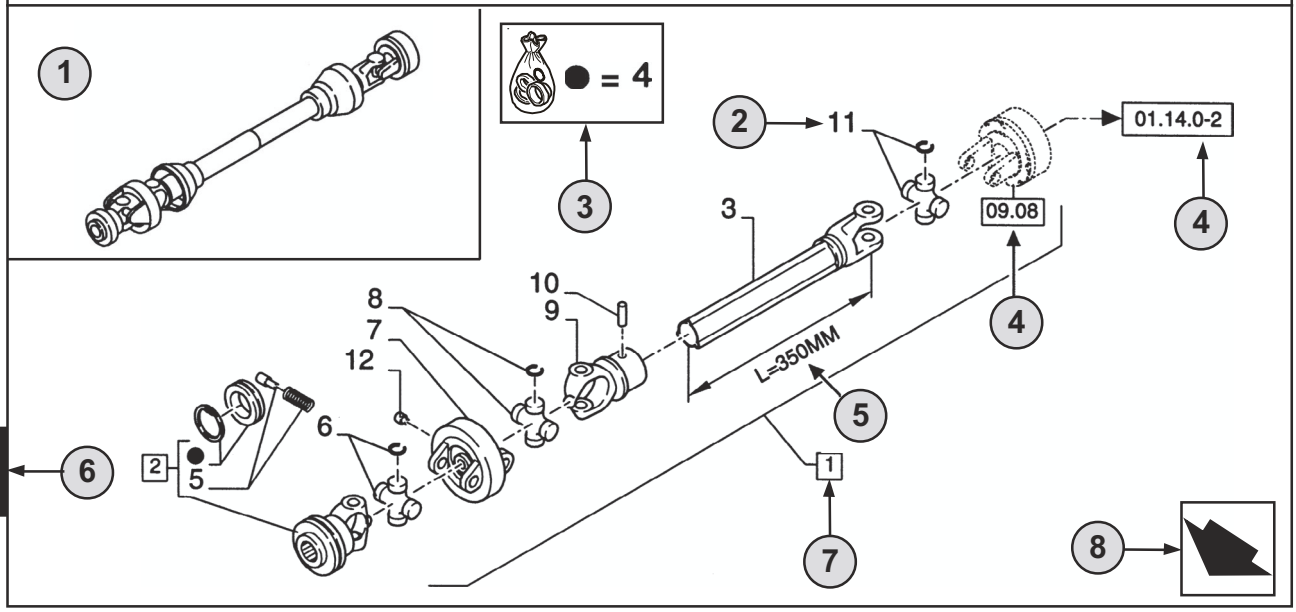

1

9 10

01.01	01	p12	02/03
11	12	13	14

CHASSI - D0200
MAIN FRAME
BASTIDOR
TELAIO
GESTELL
CHASSI

R	N	P.N.	MOD	Q	Descrição	Description	Descripción	L.C.
	A	**86529340**		1	TOMADA DE FORÇA **(2 AO 11)**	SHAFT, PTO	TOMA DE FUERZA	207P
2		**84014007**		1	GARFO **(4,5)**	YOKE	HORQUILLA	085F
3		**NSS**		1	EIXO, **L=350MM**	SHAFT	EJE	016A
4		**84004292**	C0204	1	KIT	KIT	EQUIPO	305C
		[84058743]	D0500	1	KIT	KIT	EQUIPO	305C

15 16 7 2 18 19 20 21 17 22 22 23

(A) SOMENTE BRASIL 24

1

STANDARD 25

26 **MODELOS**

1 **Posizione** della “Figura” sulla macchina.

2 Riferimento del Numero ricambio nella figura.

3 Particolari forniti nei corredi di riparazione per riferimento simbolico.

4 01.14.0-2 Particolare illustrato alla **Pagina** o nella **Figura** indicata, oppure richiamo per **Variazioni** o **Dettagli.** Indica i componenti illustrati in dettaglio in un’altra parte nel catalogo sotto il numero di figura riportato.

5 Dati tecnici relativi al particolare indicato.

6 Numero **Sezione**.

7 2 Comprende il/i pezzo/i .....

8 Orientamento (la freccia indica la parte anteriore della macchina). 

9 Descrizione figura.

10 Informazioni generali sulla figura.

11 Codice **complessivo**.

12 Codice **sequenza** nel complessivo.

13 Numero pagina nel codice sequenza.

14 **Data** di stampa o di aggiornamento della pagina (mese-anno).

15 **Nota** - Si riferisce al numero ricambio. In fondo alla pagina di testo è riportato la legenda dei simboli e delle abbreviazioni.

16 Particolari non soggetti a manutenzione (vedi pag.42).

17 Ulteriore descrizione del particolare per confermare definitivamente l’indentificazione.Fare riferimento a pag.42 per la spiegazione dei simboli utilizzati.

18 Non disponibile come particolare per l’assistenza.

19 Numero ricambio.

20 Modifica.
C 0201 = Particolare valido **FINO alla modifica 0201**.
D 0300 = Particolare valido **A PARTIRE dalla modifica 0300**.
F 0202 = Particolare valido **A PARTIRE dal telaio n. .... fino al telaio n. ....**

Introduzione della modifica. Numero telaio a partire dal quale la modifica è stata adottata.
I numeri sono indicati sulla targhetta di identificazione del modello (vedi pag. 38).
E.s.: **D0300 telaio n. 2503001** significa che il particolare è stato installato **“A PARTIRE DAL”** talaio n. **2503001**. Per cui, i particolari marcati **C0201**, sono stati installati **“FINO AL”** telaio n. **2501999**.
Vedere tabella codici a pag. 41.

21 **Quantità** totale del particolare indicato nella pagina.
La quantità può essere sostituita dalle indicazioni seguenti:
M = fornito a metri. **AR** = quantità come necessario (‘as required’).

22 **Descrizione particolare**.

23 **L.C. - Codice Lessico** per l’identificazione dei nomi dei particolari (vedi pag.45).

24 Riferimenti note a piè di pagina.

25 Note figura**.**

26 Numero modello.

01.01	01	p14	02/03

CHASSI
MAIN FRAME
BASTIDOR
TELAIO
GESTELL
CHASSI

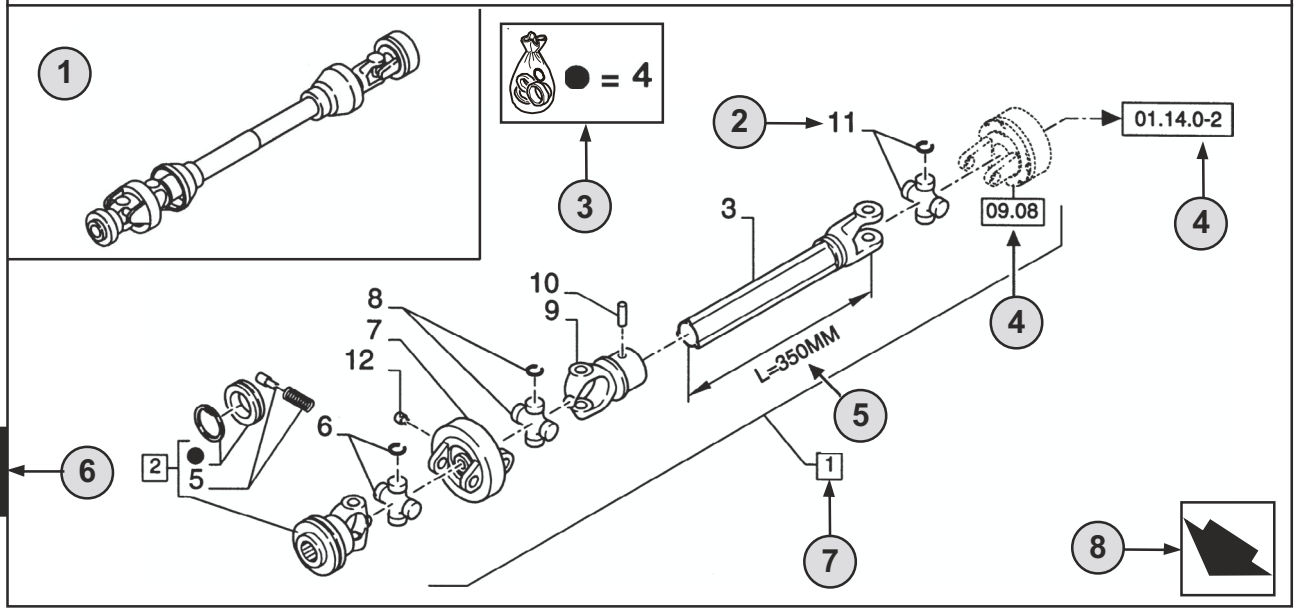

1

9 10

01.01	01	p14	02/03
11	12	13	14

CHASSI - D0200
MAIN FRAME
BASTIDOR
TELAIO
GESTELL
CHASSI

R	N	P.N.	MOD	Q	Descrição	Description	Descripción	L.C.
	A	**86529340**		1	TOMADA DE FORÇA **(2 AO 11)**	SHAFT, PTO	TOMA DE FUERZA	207P
2		**84014007**		1	GARFO **(4,5)**	YOKE	HORQUILLA	085F
3		**NSS**		1	EIXO, **L=350MM**	SHAFT	EJE	016A
4		**84004292**	C0204	1	KIT	KIT	EQUIPO	305C
		[84058743]	D0500	1	KIT	KIT	EQUIPO	305C

15 16 7 2 18 19 20 21 17 22 22 23

(A) SOMENTE BRASIL 24

1

STANDARD 25

26 **MODELOS**

DEUTSCH

1 **Position** der “Abbildung” an der Maschine.

2 Bezug - Abbilding, auf der die Teilnummer aufgeführt ist.

3 Teile, die gemäß der Bezeichnung durch das Symbol in Reparatursätzen geliefert werden.

4 01.14.0-2 Teil, das auf der angegebenen **Seite** oder **Abbildung** veranschaulicht ist, oder Verweis auf **Änderungen** oder **dataillierte Angaben**. Angabe von Teilen, die an anderer Stelle innerhalb des Katalogs unter der dargestellten Abbildungsnummer detailliert dargestellt sind.

5 Technische Daten zum angegebenen Teil.

6 **Abschnitts**nummer.

7 2 I Umfaßt Teil(e) .....

8 Orientierung (der Pfeil weist zur Vorderseite der Maschine). 

9 Beschreibung der Abbildung.

10 Allgemeine Information zur Abbildung.

11 **Montage**code.

12 **Folge**code innerhalb der Baugruppe.

13 Seitennummer innerhalb des Folgecodes.

14 **Datum** des Drucks oder der Aktualisierung der Seite (Monat-Jahr).

15 **Hinweis -** Bezieht sich auf die Teilnummer. Ein Schlüssel für die Symbole und Abkürzungen befindet sich unten auf der Textseite.

16 Kein gewartetes Teil. (Siehe Seite 42).

17 Weitere Beschreibung des Teils; dient als Hilfe bei der Identifizierung des Teils. Beachten Sie Seite 42 mit einer Erläuterung der verwendeten Symbole.

18 Nicht als Service-Teil erhältlich

19 Teilnummer.

20 Modifizierung.
C 0201 = Teil gültig **BIS** zur Änderung **0201**.
D 0300 = Teil gültig **AB** der Änderung **0300**.
F 0202 = Teil gültig **AB Serien-N.... bis Serien-N....**

Einführung der Änderung. Serienummer, von der an die Änderung erfolgte. Die Nummern sind auf dem Typenschild des Modells aufgeführt (siehe Seite 38).
Beispiel: **D0300 Serienummer 2503001** bedeutet, daß das Teil “**AB**” Serienummer **2503001** montiert wurde. Folglich wurden Teile, die mit **C0201** markiert sind, **“BIS”** Serienummer **2501999** montiert.Es sei auf die Code-Tabelle auf Seite 41 verwiesen.

21 **Gesamtzahl** des auf der Seite Aufgeführten Teils.Diese Zahl kann durch die folgenden Angaben ersetzt sein:
M = Lieferung in Meter. **AR** = Anzahl nach Bedarf.

22 **Beschreibung** von Teilen.

23 **L.C. - Lexikon-Code** zur Identifizierung von Bezeichnungen für Teile (siehe Seite 45).

24 Fußnotenverzeichnisse.

25 Hinweise zu Abbildungen.

26 Modellnummer.

01.01	01	p16	02/03

CHASSI
MAIN FRAME
BASTIDOR
TELAIO
GESTELL
CHASSI

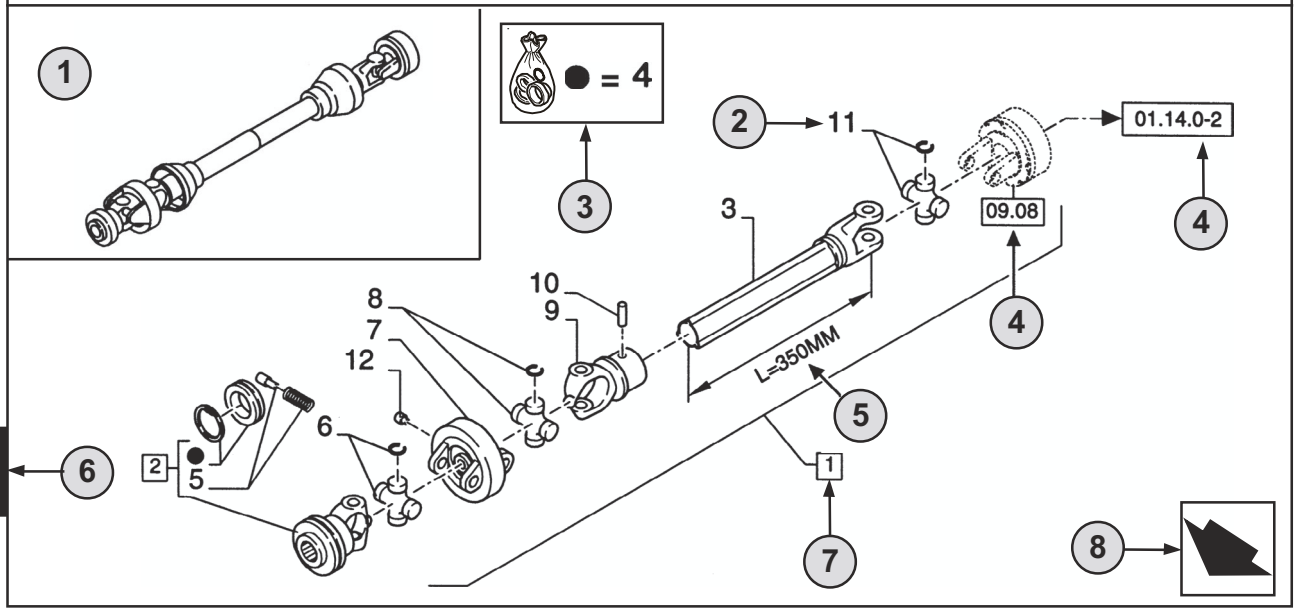

1

9 10

01.01	01	p16	02/03

11 12 13 14

CHASSI - D0200
MAIN FRAME
BASTIDOR
TELAIO
GESTELL
CHASSI

R	N	P.N.	MOD	Q	Descrição	Description	Descripción	L.C.
	A	**86529340**		1	TOMADA DE FORÇA **(2 AO 11)**	SHAFT, PTO	TOMA DE FUERZA	207P
2		**84014007**		1	GARFO **(4,5)**	YOKE	HORQUILLA	085F
3		**NSS**		1	EIXO, **L=350MM**	SHAFT	EJE	016A
4		**84004292**	C0204	1	KIT	KIT	EQUIPO	305C
		[84058743]	D0500	1	KIT	KIT	EQUIPO	305C

15 16 7

2 18 19 20 21 17 22 22 23

(A) SOMENTE BRASIL 24

1

STANDARD 25

26 **MODELOS**

1 Position du “Chiffre” sur la machine.

2 Référence-Chiffre de terminaison de la référence**.**

3 Pièces détachées approvisionnées en kit de réparation par symbole de référence.

4 01.14.0-2 Pièce illustrée dans la **page** ou sur la **figure** indiquée, pour des **variations** ou des **détails**. Montre les composants détaillés par ailleurs dans le catalogue sous le numéro de la figure.

5 Spécifications techniques relatif à la pièce indiquée.

6 Numérotation des sections.

7 2 ITEM inclus .....

8 Orientation (la Flèche indique l’avant de la machine). 

9 Description de la figure.

10 Information générale de la figure.

11 Code d’assemblage.

12 Code de séquence sans l’assemblage.

13 Numéro de page sans le code de séquence.

14 Date d’impression ou mise à jour de la page (mois-année).

15 Note-relatif à la référence. Ceci est la clé des symboles et abréviations en bas de la page suivante.

16 Pièces non servies (voir page 42).

17 Description supplémentaire de la pièces pour aider à la confirmation de l’identification.
Se reporter à la page 42 pour l’explication des symboles utilisés.

18 Ne concerne pas le service pièces détachées.

19 Référence.

20 Modification.
C 0201 = Pièce valable **JUSQU’A 0201** Changement.
D 0300 = Pièce valable **A PARTIR DE 0300** Changement.
F 0202 = Pièce valable **A PARTIR DU** N° de série **.... Jusqu’au** N° de série**....**

Mise en oeuvre de changement.Les numéro de série qui démarrent.Les numéros sont indiqués sur la plaque d’identification du modèles (voir page 38).
Ex.: **D0300** N° de série **2503001** indique que la pièce a été installée à partir du N° de série **2503001**.
En conséquence la pièce marquée **C0201** serait installée après le N° de série **2501999**.
Voir la table - codes page 41.

21 Total du nombre de pièces référencées dans la page.
La quantité peut être remplacée par l’indications suivante:
M = Vendu au mètres. **AR** = Quantité à la demande.

22 Description de la pièce.

23 L.C. - Code Lexique ou Glossaire pour l’identification du nom des pièces (voir page 45).

24 Référence en bas de page.

25 Annotation des chiffres.

26 Numéro du modèle.

SECTION INDEX

Pictorial Index

01-01	01	FILTERS
01-02	01	BOOM - LUBRICATION
01-03	01	BOOM 15M - LUBRICATION
01-04	01	DIPPERSTICK 15M - LUBRICATION

01-01	01	p1	7/2013

FILTERS

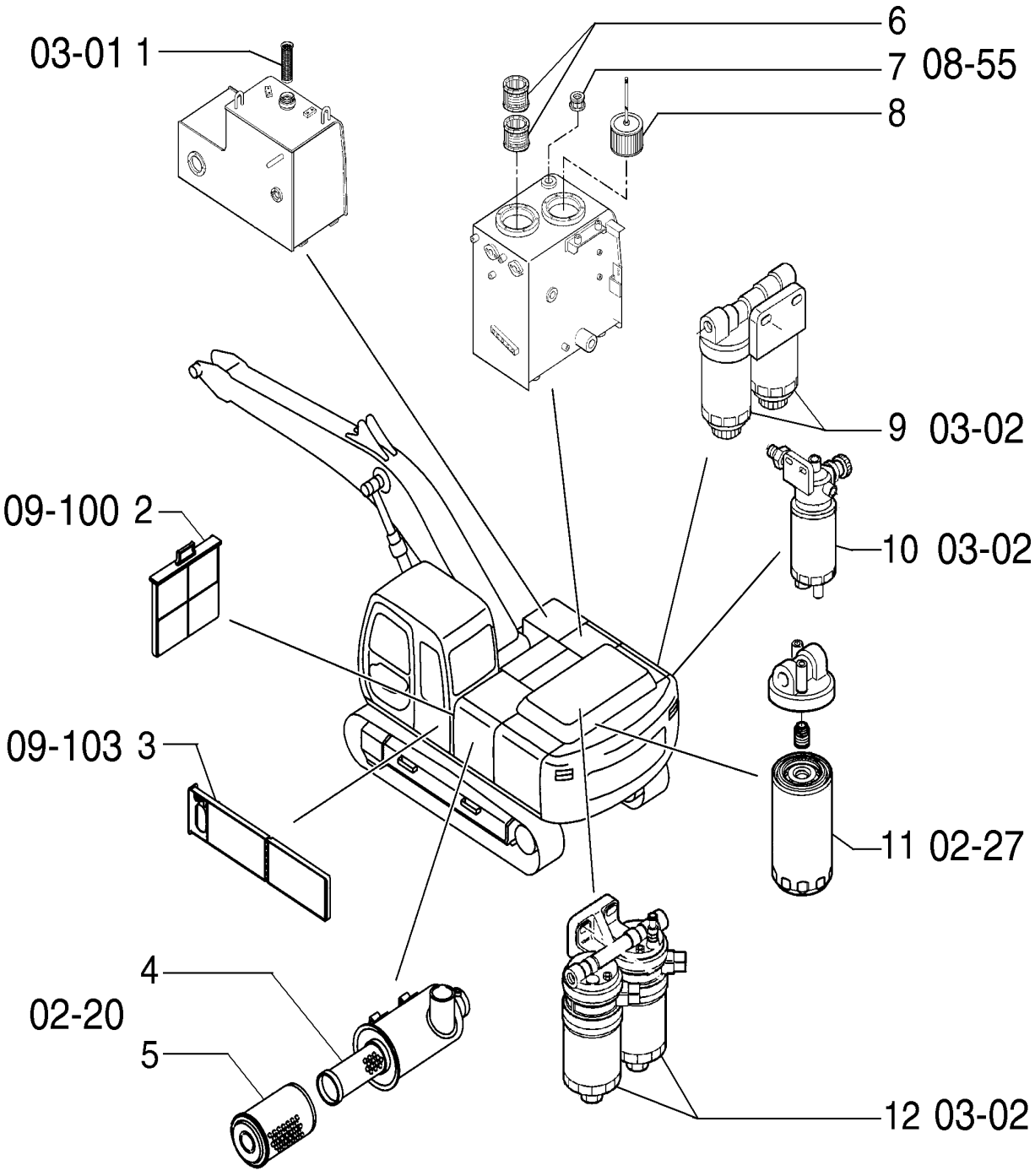

FILTERS

REF	FN	PART NUMBER	YR/SN	QTY	DESCRIPTION
1		75241002		1	FILTRO DE COMBUSTÍVEL
2		87529500		1	FILTRO DA CABINE
3		87529477		1	FILTRO DA CABINE
4		87564846		1	FILTRO DE AR
5		87564844		1	FILTRO DE AR
6		72150174		2	ELEMENTO
7		72214502		1	ELEMENTO
8		72230408		1	FILTRO DE ÓLEO HIDRÁULICO
9		87655371		2	ELEMENTO
10		84168959		1	ELEMENTO
11		87638120		1	FILTRO DE ÓLEO HIDRÁULICO
12		504073234		2	FILTRO DE COMBUSTÍVEL
13		{}		1	

01-02	01	p1	7/2013

BOOM - LUBRICATION

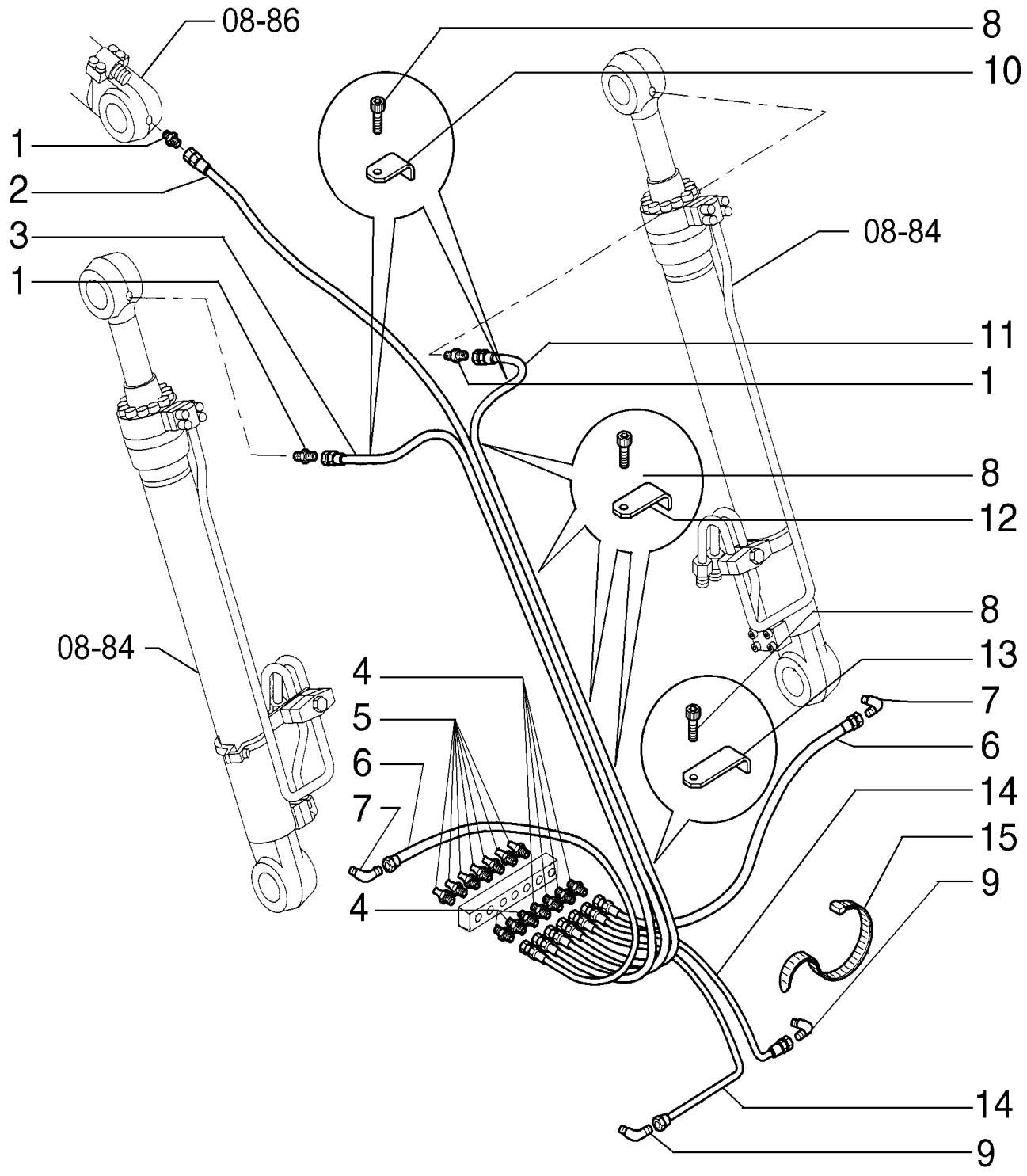

BOOM - LUBRICATION

REF	FN	PART NUMBER	YR/SN	QTY	DESCRIPTION
1		71404787		3	CONECTOR HIDRÁUL
2		87654034		1	MANGUEIRA 6.40 mm ID x 1420.00 mm
3		87654036		1	MANGUEIRA 6.40 mm ID x 150.00 mm
4		71404363		7	CONECTOR HIDRÁUL
5		70914465		7	GRAXEIRA
6		87654032		2	MANGUEIRA 6.40 mm ID x 970.00 mm
7		71404406		2	CONECTOR HIDRÁUL
8		14305131		9	PARAFUSO Hex Soc Hd, M6 x 12, 10.9
9		87654037		2	CONECTOR HIDRÁUL
10		75262389		3	SUPORTE
11		87654035		1	MANGUEIRA 6.40 mm ID x 1042.00 mm
12		75262388		5	SUPORTE
13		87654038		1	SUPORTE
14		87654033		2	MANGUEIRA 6.40 mm ID x 198.00 mm
15		75201642		AR	BRAÇADEIRA

01-03	01	p1	7/2013

BOOM 15M - LUBRICATION

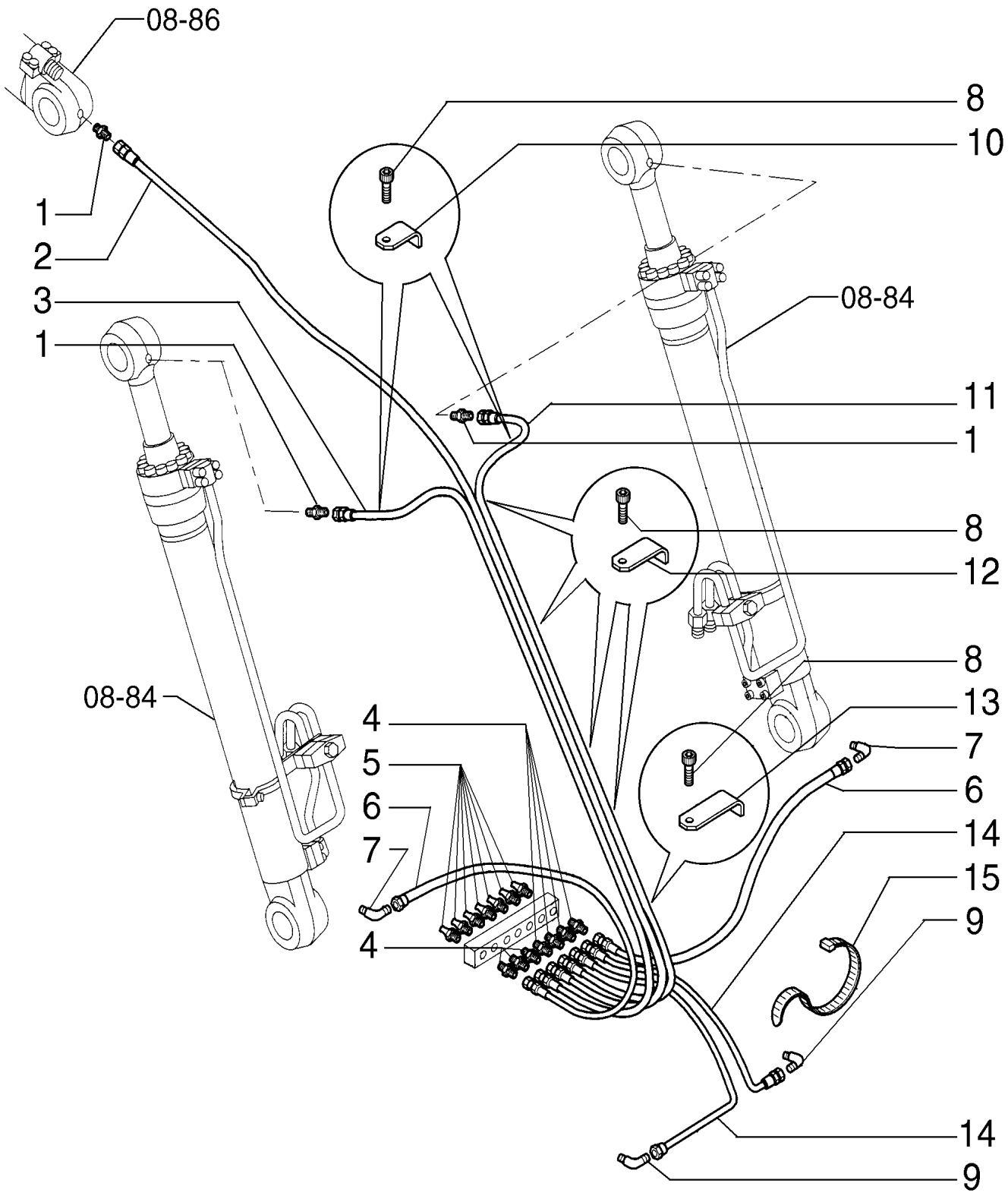

BOOM 15M - LUBRICATION

REF	FN	PART NUMBER	YR/SN	QTY	DESCRIPTION
1		71404787		3	CONECTOR HIDRÁUL
2		87492853		1	MANGUEIRA
3		87654036		1	MANGUEIRA 6.40 mm ID x 150.00 mm
4		71404363		7	CONECTOR HIDRÁUL
5		70914465		7	GRAXEIRA
6		87654032		2	MANGUEIRA 6.40 mm ID x 970.00 mm
7		71404406		2	CONECTOR HIDRÁUL
8		14305131		8	PARAFUSO Hex Soc Hd, M6 x 12, 10.9
9		87654037		2	CONECTOR HIDRÁUL
10		75262389		2	SUPORTE
11		87654035		1	MANGUEIRA 6.40 mm ID x 1042.00 mm
12		75262388		5	SUPORTE
13		87654038		1	SUPORTE
14		87654033		2	MANGUEIRA 6.40 mm ID x 198.00 mm
15		75201642		AR	BRAÇADEIRA

01-04	01	p1	7/2013

DIPPERSTICK 15M - LUBRICATION

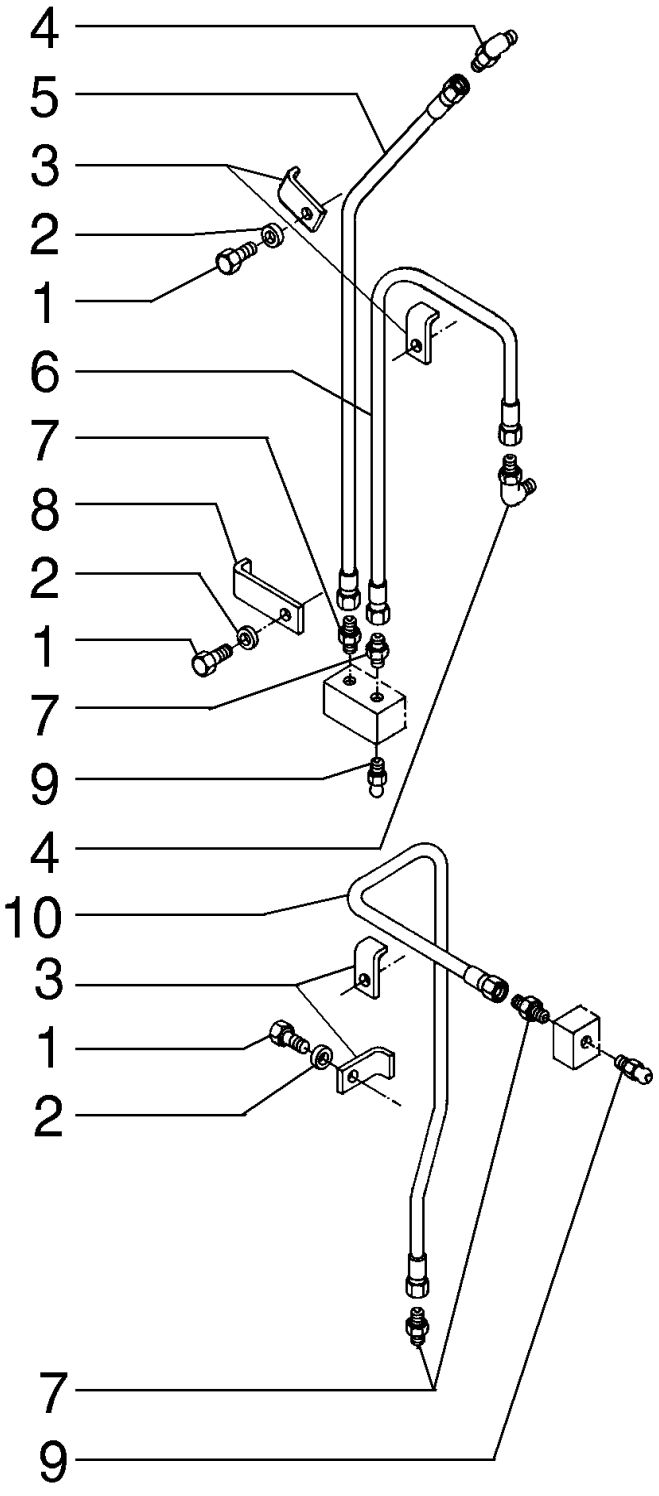

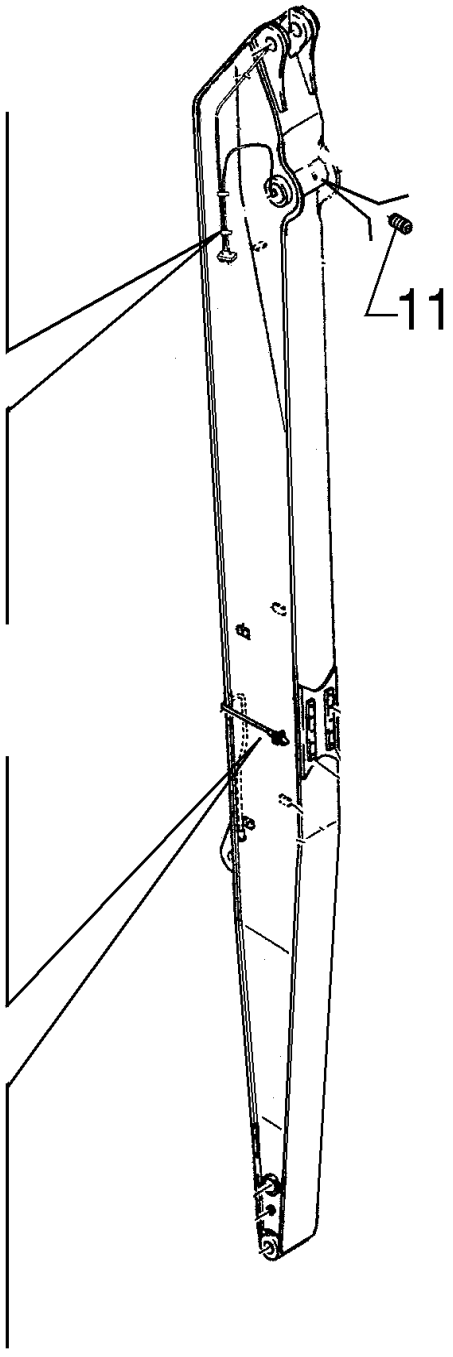

DIPPERSTICK 15M - LUBRICATION

REF	FN	PART NUMBER	YR/SN	QTY	DESCRIPTION
1		10902031		8	PARAFUSO Hex, M6 x 12, 10.9
2		10516471		8	TRAVA DA ARRUELA
3		75262389		6	SUPORTE
4		71404406		2	CONECTOR HIDRÁUL
5		72207921		1	TUBO FLEXÍVEL
6		72207922		1	TUBO FLEXÍVEL
7		71404363		4	CONECTOR HIDRÁUL
8		75262387		2	SUPORTE
9		70914465		2	GRAXEIRA
10		72207927		1	MANGUEIRA HIDRÁULICA
11		71452267		1	BUJÃO

OPTIONAL

CX220B

SECTION INDEX

Engine

02-01	01	ENGINE
02-02	01	ENGINE MOUNT
02-03	01	ENGINE BLOCK
02-04	01	CYLINDER HEAD
02-05	01	VALVE COVER
02-05	02	ENGINE BREATHER
02-06	01	ENGINE COVER & LIFTING EYES
02-07	01	TIMING GEAR COVER
02-08	01	TIMING GEAR COVER
02-08	02	FLYWHEEL HOUSING
02-10	01	OIL PAN
02-11	01	SWITCH & DIPSTICK
02-12	01	CRANKSHAFT
02-13	01	CRANKSHAFT PULLEY AND FLYWHEEL
02-15	01	CONNECTING RODS
02-15	02	PISTONS AND CONNECTING RODS
02-16	01	ENGINE BLOCK
02-17	01	CAMSHAFT
02-18	01	VALVE TRAIN
02-19	01	AIR CLEANER AND TUBING
02-20	01	AIR CLEANER
02-22	01	EXHAUST MANIFOLD
02-23	01	AIR INTAKE ELBOW
02-24	01	MUFFLER & EXHAUST
02-25	01	LUBRICATION SYSTEM
02-26	01	LUBRICATION OIL PUMP, WATER PUMP & COOLING PIPING
02-27	01	LUBRICANT OIL FILTER
02-29	01	LUBRICANT OIL COOLER
02-30	01	RADIATOR PIPING
02-31	01	RADIATOR PIPING
02-32	01	RADIATOR & GUARDS
02-32/A	01	RADIATOR & GUARDS
02-33	01	FAN & SENSORS
02-36	01	THERMOSTAT VALVE
02-38	01	FAN PULLEY

SECTION INDEX

Engine

02-39	01	FAN DRIVE

ENGINE

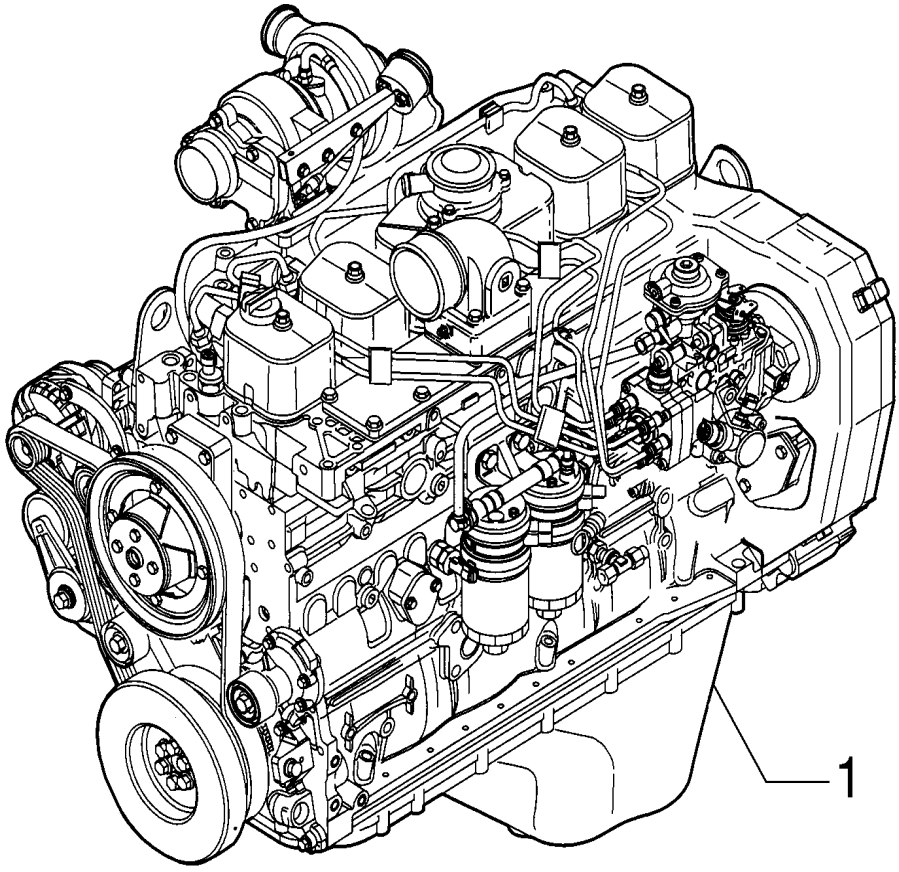

ENGINE

REF	FN	PART NUMBER	YR/SN	QTY	DESCRIPTION
1		87627694		1	MOTOR
1		84285292		1	ENGINE
		71104372			KIT GAXETA DE MOTOR Jogo de Juntas Inferior Jogo de Juntas Inferior Jogo de Juntas Inferior
		71104373			KIT DE GAXETAS SUP MOTOR Jogo de Juntas Superior Jogo de Juntas Superior Jogo de Juntas Superior
		71104374			KIT DE REVISÃO DO MOTOR Kit Reparação do Motor

02-02	01	p1	7/2013

ENGINE MOUNT

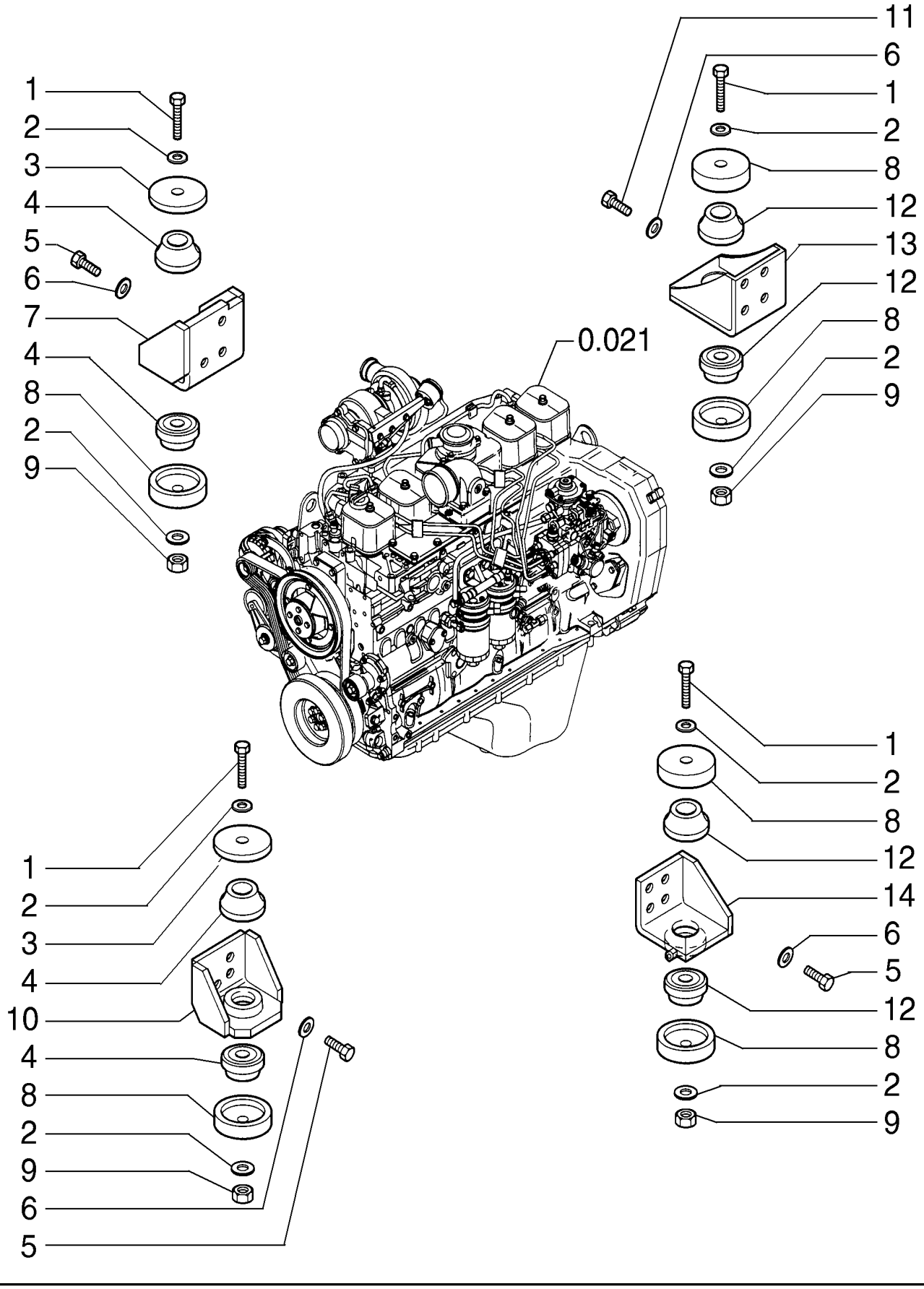

ENGINE MOUNT

REF	FN	PART NUMBER	YR/SN	QTY	DESCRIPTION
1		15986031		4	PARAFUSO
2		14497031		8	ARRUELA PLANA M18 x 34
3		87634412		2	ARRUELA PLANA
4		72203757		4	COXIM
5		11112631		10	PARAFUSO Hex, M12 x 35, 10.9
6		14496731		14	ARRUELA PLANA M12 x 24 x 2.5 Thk
7		87634070		1	SUPORTE
8		72203750		6	COBERTURA
9		75326353		4	CONTRA PORCA
10		87634073		1	SUPORTE
11		11113031		4	PARAFUSO Hex, M12 x 45, 10.9, Full Thd
12		72203758		4	MONTAGEM DE BORRACHA
13		87634071		1	SUPORTE
14		87634072		1	SUPORTE

ENGINE BLOCK

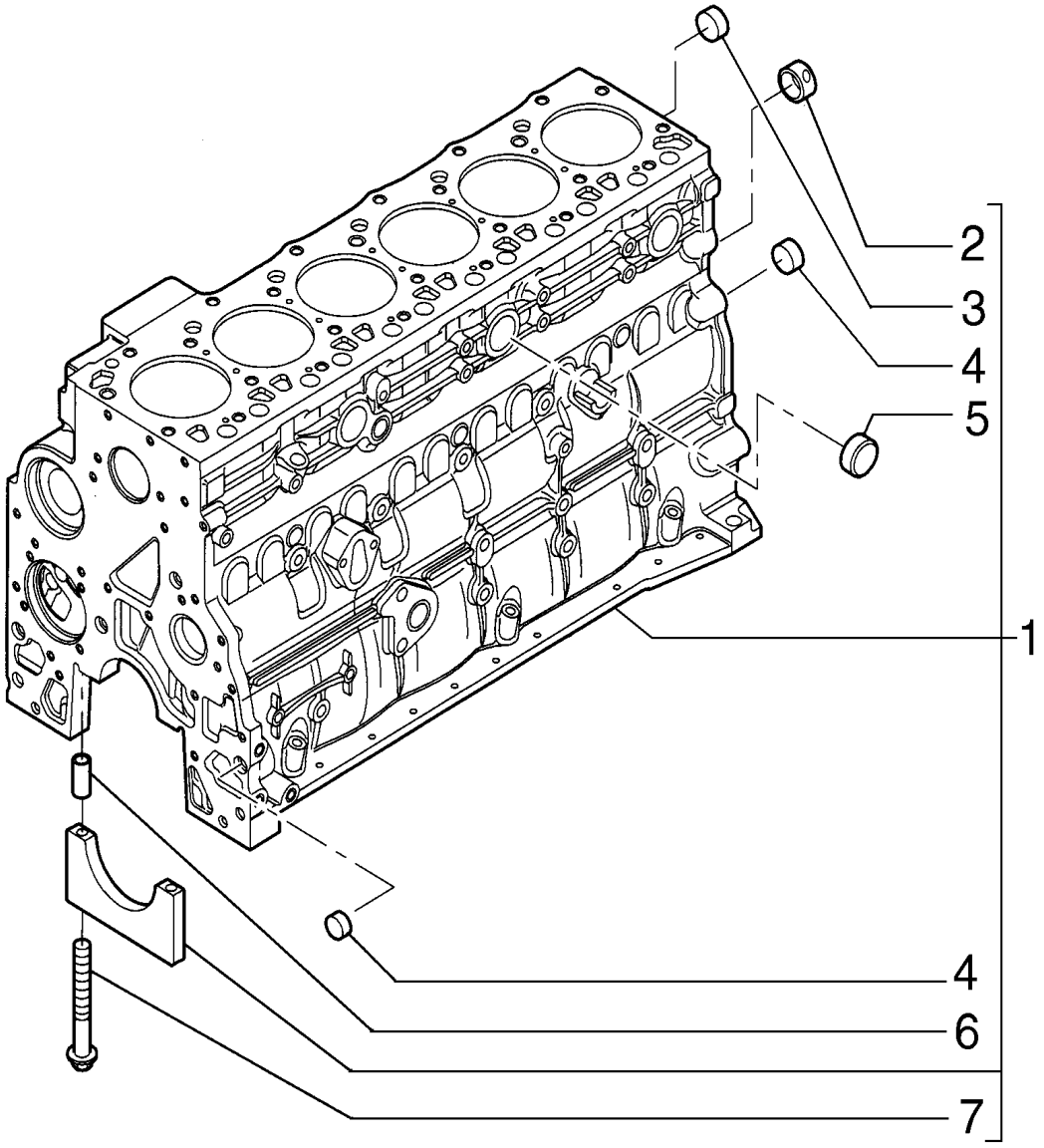

ENGINE BLOCK

REF	FN	PART NUMBER	YR/SN	QTY	DESCRIPTION
1		2830076		1	BLOCO DE CILINDROS Includes items 2 - 7
2		4895040		1	BUCHA
3		4895038		6	BUJÃO DE EXPANSÃO M58.06
4		4895039		3	BUJÃO DE EXPANSÃO M17.73
5		4895228		3	BUJÃO DE EXPANSÃO 35.23mm x 7.94mm
6		4899026		14	GUIA M18 x 10
7		4891353		14	PARAFUSO Flg Hd, M12 x 1.5 x 120

02-04	01	p1	7/2013

CYLINDER HEAD

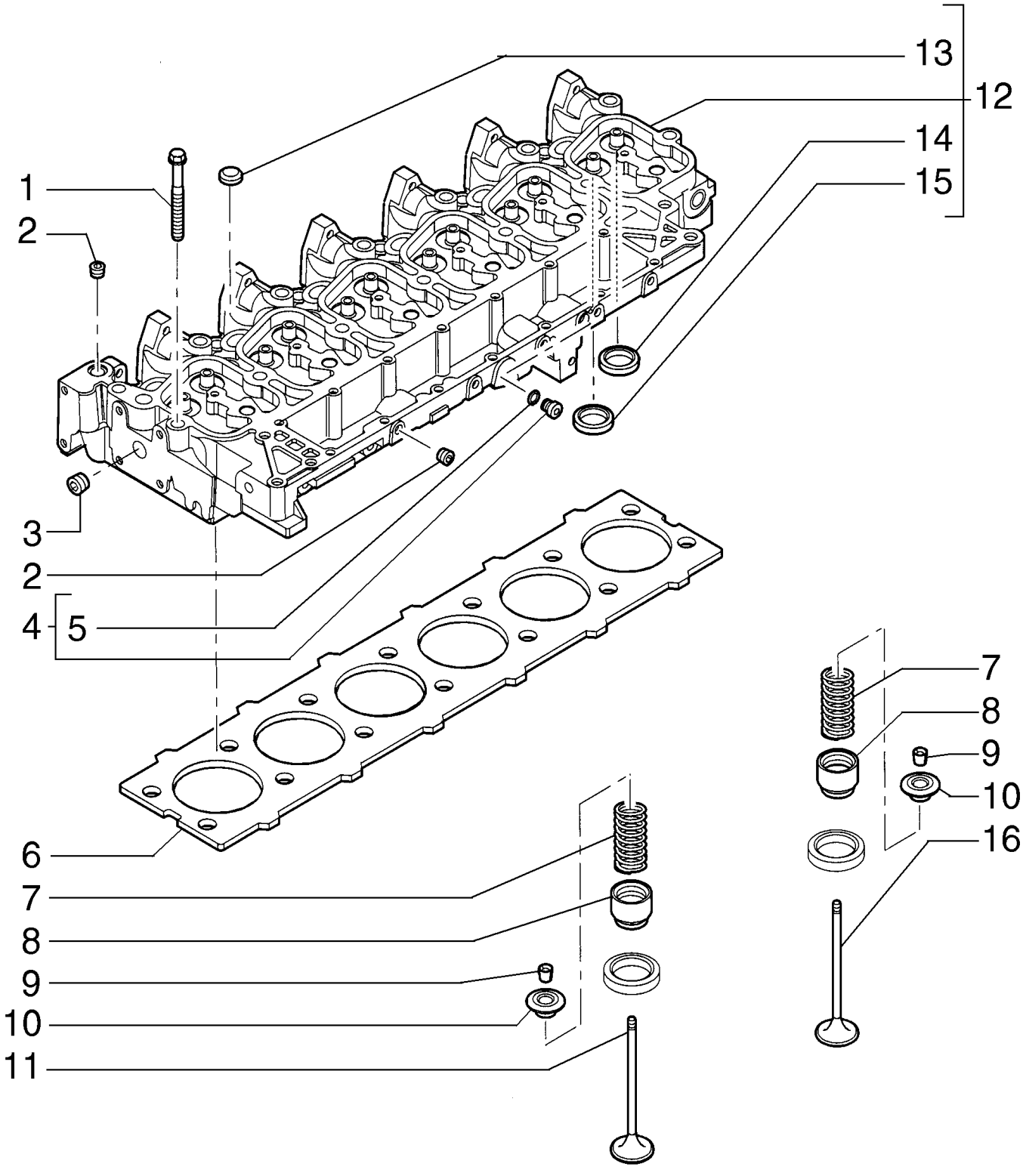

CYLINDER HEAD

REF	FN	PART NUMBER	YR/SN	QTY	DESCRIPTION
1		4892861		6	PARAFUSO Wash Hd, M12 x 1.75 x 73
1		4892859		14	PARAFUSO Wash Hd, M12 x 1.75 x 143
2		4895623		2	BUJÃO SOQUETE SEXTAVADO M16 x 1.5
3		4895179		1	BUJÃO DE EXPANSÃO M20.93
4		4899009		1	BUJÃO M10 x 1.5 Includes item 5
5		4899072		1	O-RING 8.1mm ID x 1.6mm Width
6		2830923		1	JUNTA DO CABEÇOTE
7		2856804		12	MOLA
8		4895347		12	VEDAÇÃO
9		4895183		24	CASQUILHO
10		4895184		12	RETENTOR
11		4895188		6	VÁLVULA DE ESCAPE STD ENGINE EXHAUST VALVE
12		2859346		1	CABEÇOTE Includes items 13, 14, 15
13		4895179		3	BUJÃO DE EXPANSÃO M20.93
14		4897179		6	SEDE DE VÁLVULA
15		4897178		6	SEDE DE VÁLVULA
16		2856802		6	VÁLVULA DE ADMISSÃO STD ENGINE INLET VALVE

02-05	01	p1	7/2013

VALVE COVER

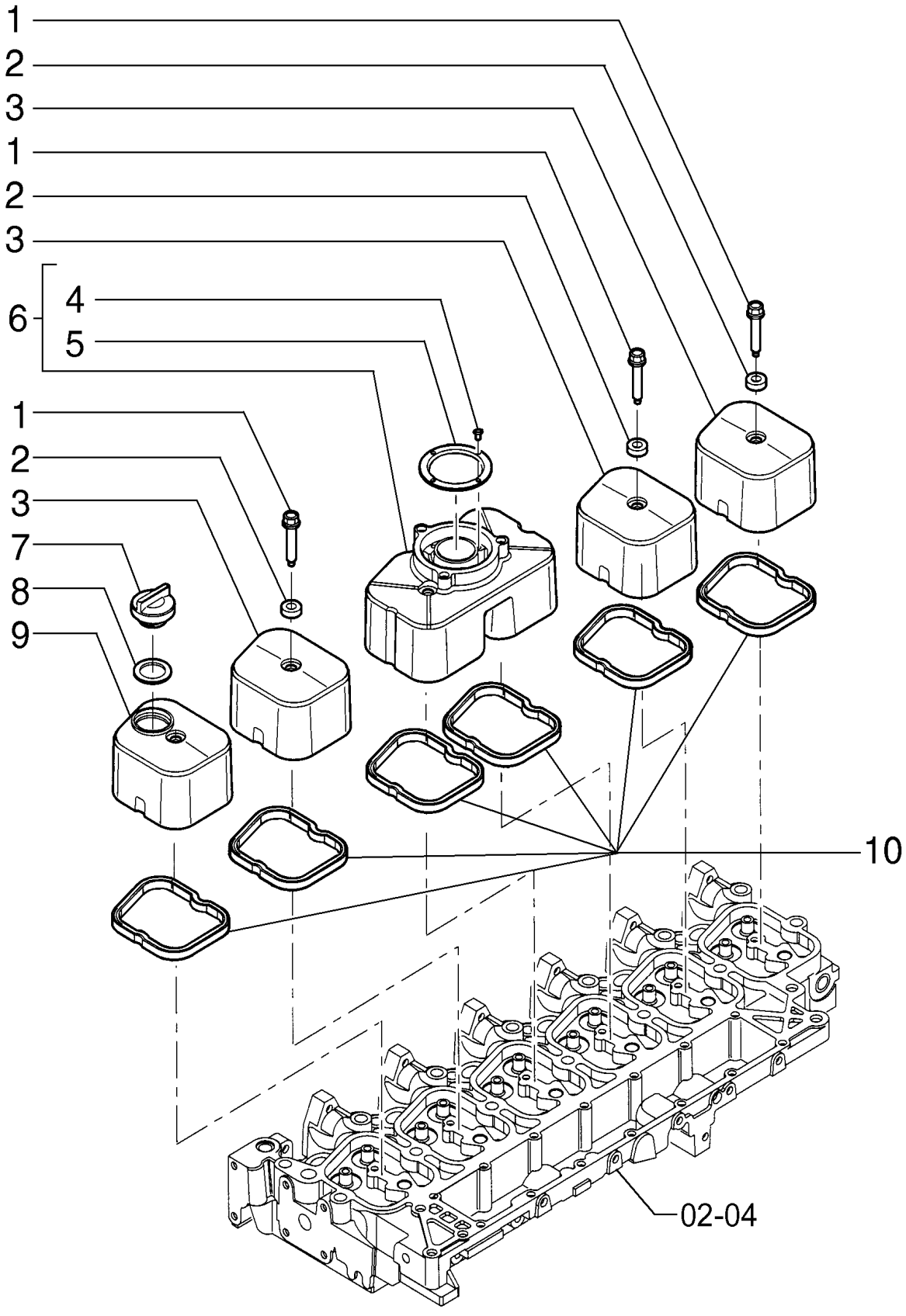

VALVE COVER

REF	FN	PART NUMBER	YR/SN	QTY	DESCRIPTION
1		4895214		6	PARAFUSO Special, Hex, Flg Hd, M8 x 33
2		4895360		6	ISOLADOR
3		2856810		3	COBERTURA
4		2830281		4	PARAFUSO M2.9 x 6.5
5		2830775		1	DEFLETOR
6		2856807		1	TAMPA VÁLVULA Includes items 4, 5
7		4895202		1	TAMPA DE RESERVATÓRIO
8		4895296		1	VEDAÇÃO Rectangular, 30mm ID x 3 Thk
9		2856806		1	COBERTURA
10		2856809		6	JUNTA SEALRING

02-05	02	p1	7/2013

ENGINE BREATHER

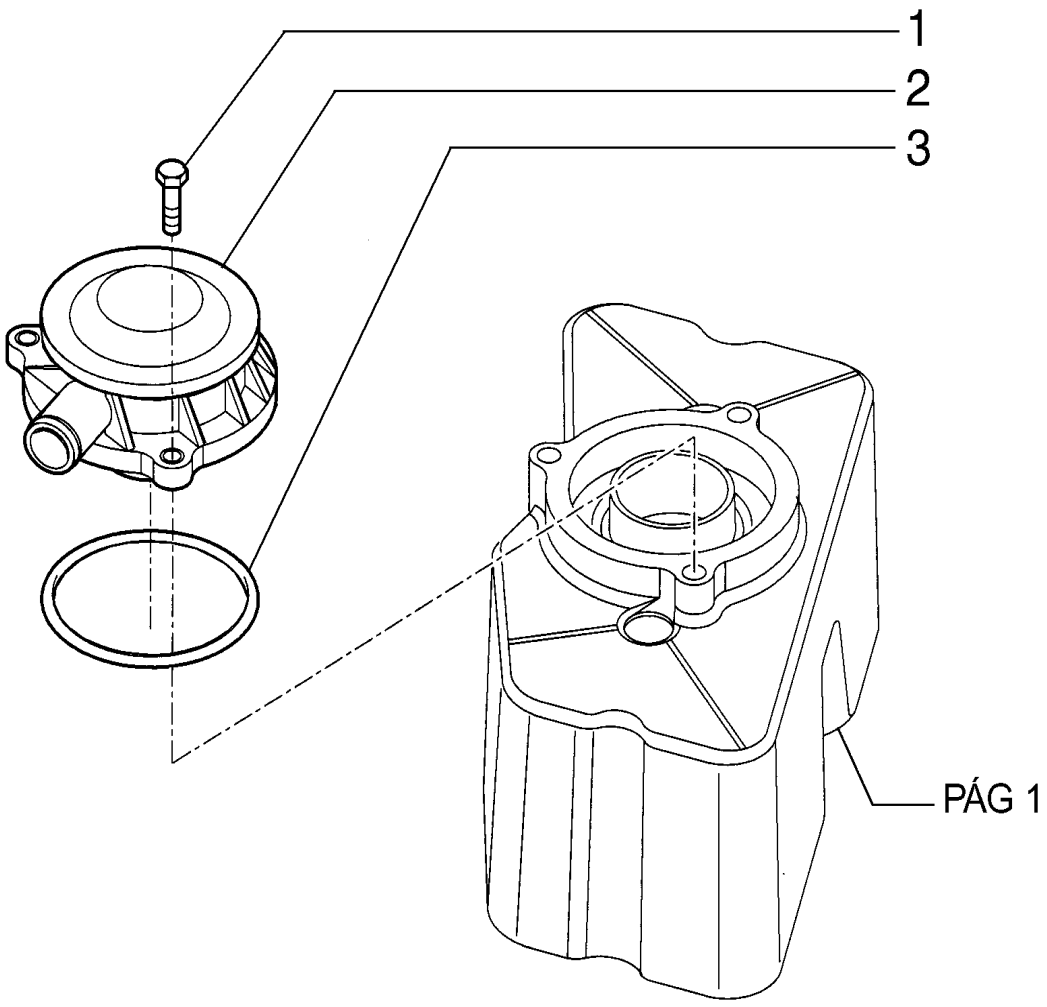

ENGINE BREATHER

REF	FN	PART NUMBER	YR/SN	QTY	DESCRIPTION
1		4899110		3	PARAFUSO Hex Flg, M6 x 1 x 20
2		2852027		1	RESPIRO
3		2852028		1	JUNTA

02-06	01	p1	7/2013

ENGINE COVER & LIFTING EYES

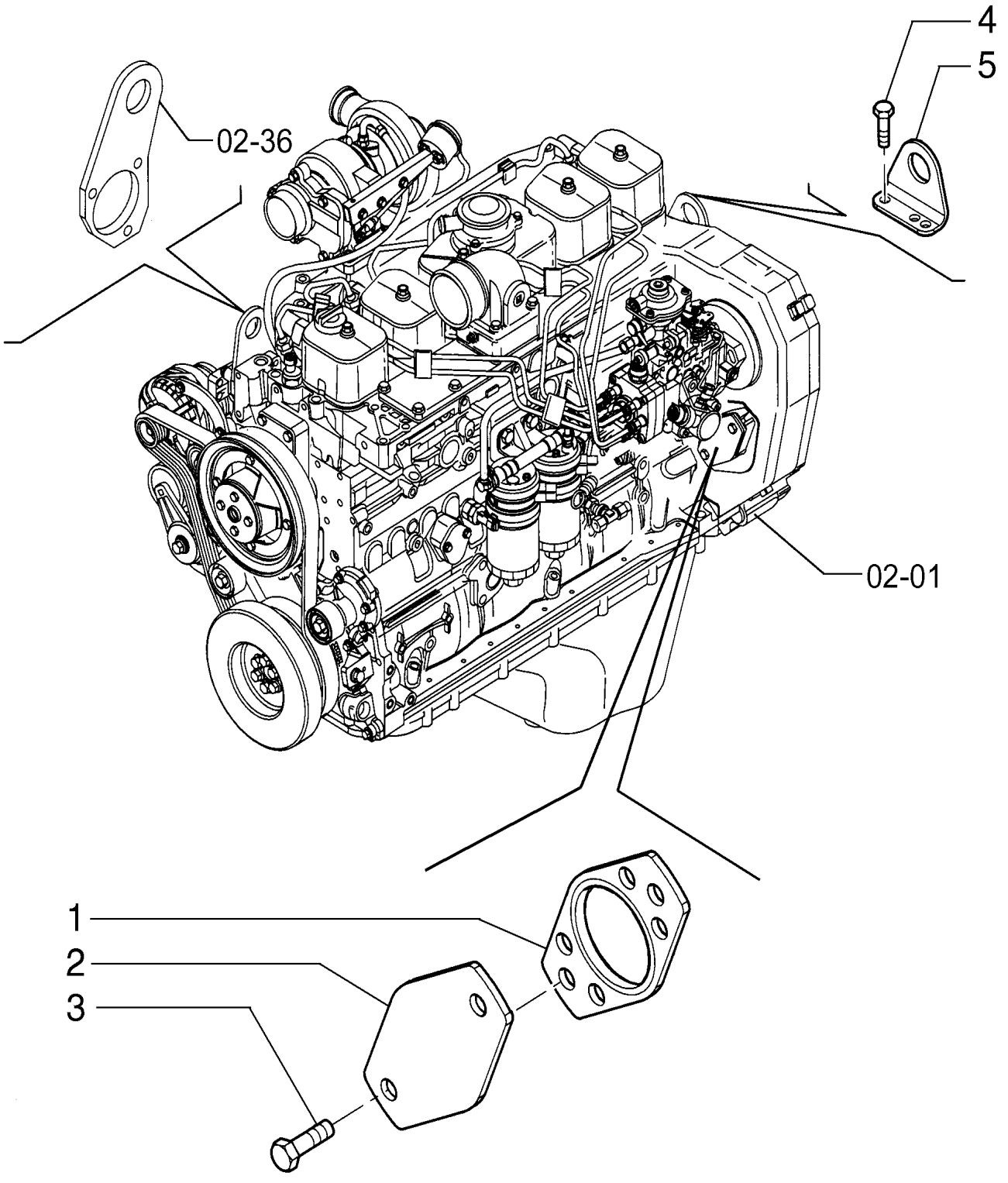

ENGINE COVER & LIFTING EYES

REF	FN	PART NUMBER	YR/SN	QTY	DESCRIPTION
1		4896897		1	JUNTA
2		2852175		1	COBERTURA
3		4899037		2	PARAFUSO
4		4899073		2	PARAFUSO Hex Flg, M12 x 1.75 x 30
5		2852183		1	SUPORTE

02-07	01	p1	7/2013

TIMING GEAR COVER

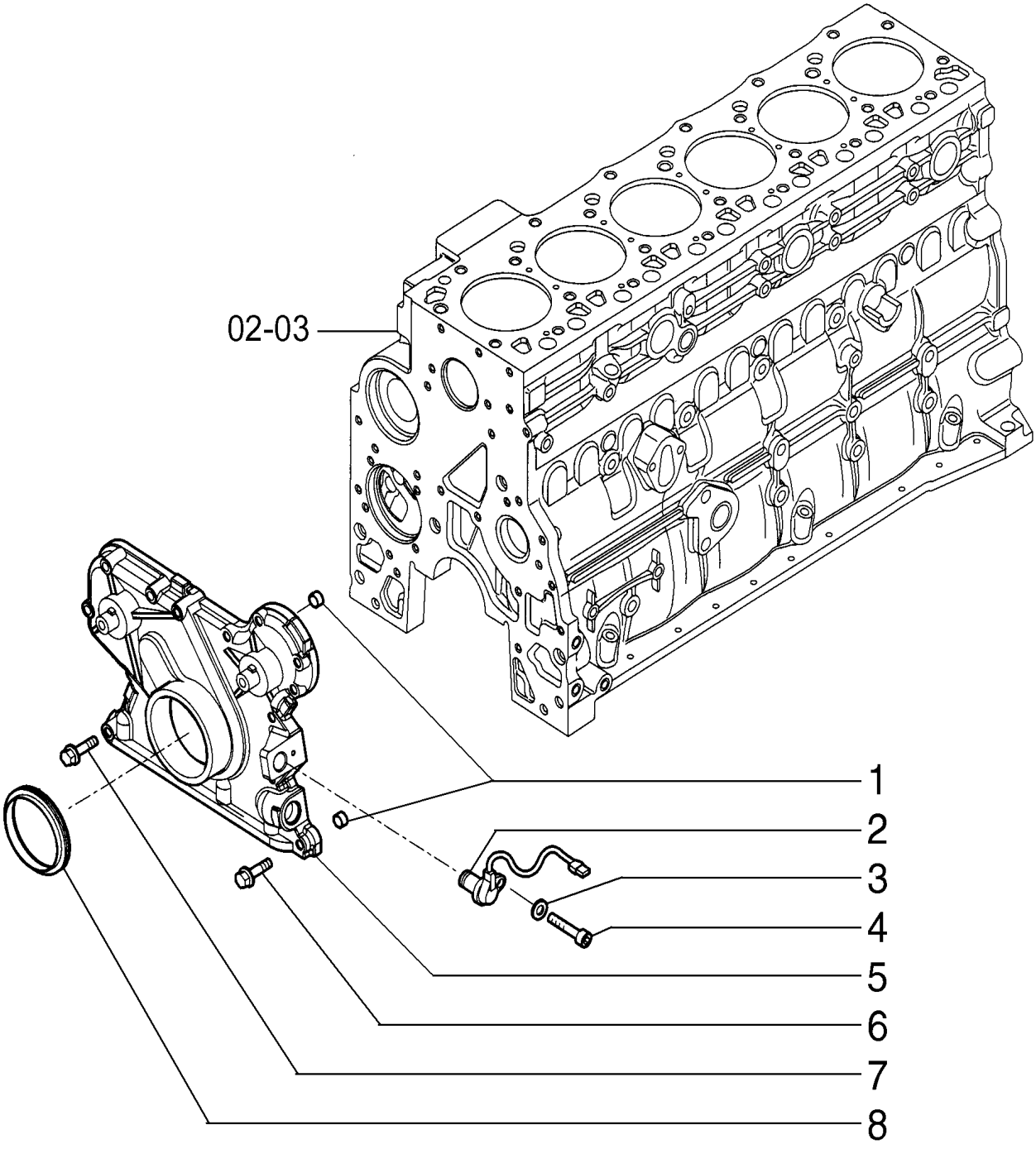

TIMING GEAR COVER

REF	FN	PART NUMBER	YR/SN	QTY	DESCRIPTION
1		4891209		2	GUIA M13 x 8 L
2		4890189		1	SENSOR
3		2852776		1	ARRUELA PLANA
4		4899110		1	PARAFUSO Hex Flg, M6 x 1 x 20
5		4897026		1	COBERTURA
6		4899063		8	PARAFUSO Hex Flg, M8 x 1.25 x 30
7		4899078		5	PARAFUSO Hex Flg, M8 x 1.25 x 45
8		4890832		1	VEDADOR DE ÓLEO M70 x 100 x 12.5/16

02-08	01	p1	7/2013

TIMING GEAR COVER

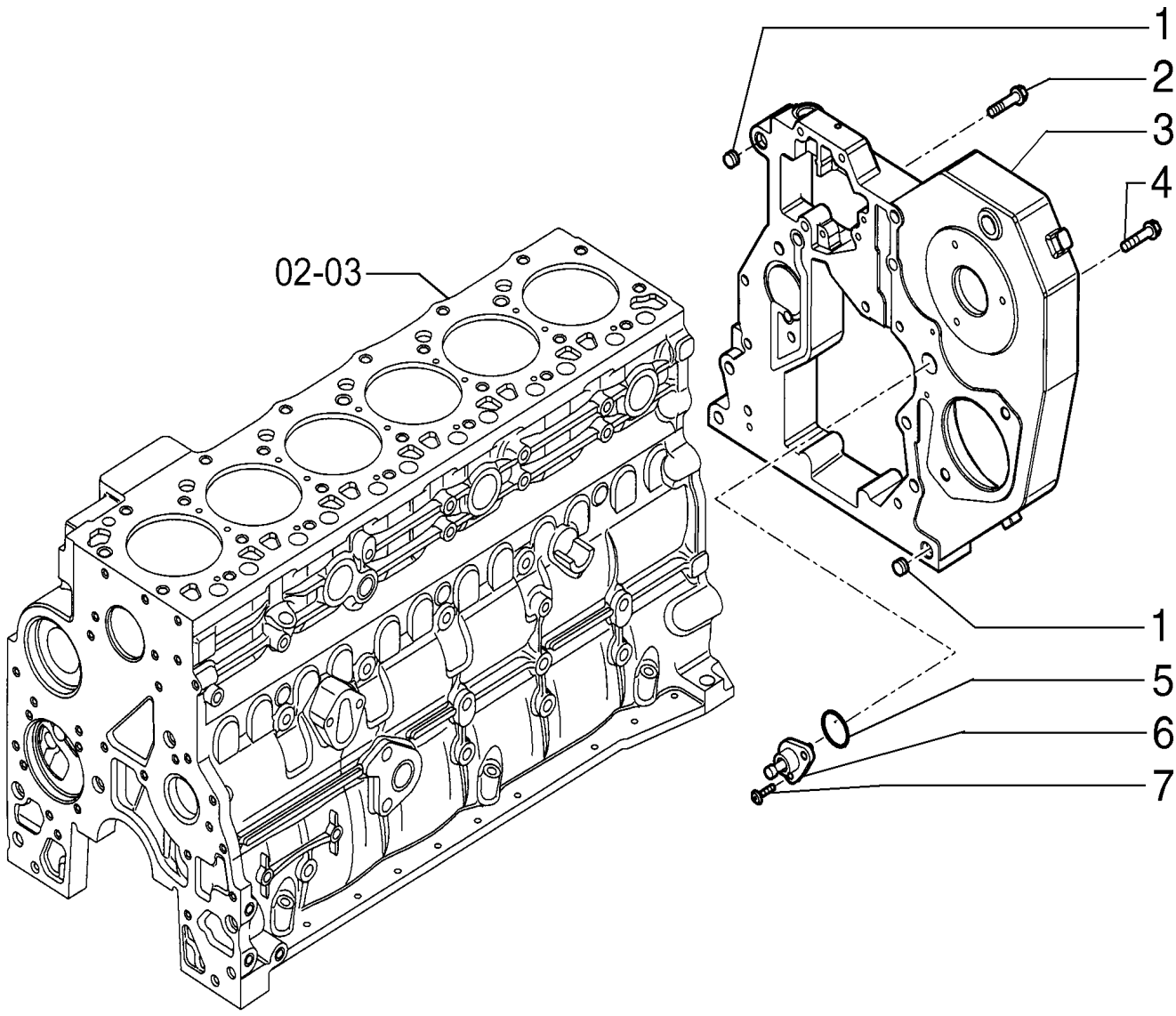

TIMING GEAR COVER

REF	FN	PART NUMBER	YR/SN	QTY	DESCRIPTION
1		4899026		2	GUIA M18 x 10
2		4899091		4	PARAFUSO Hex Flange Cap, M8 x 1.25 x 40.00mm
3		2852320		1	COBERTURA
4		4899093		5	PARAFUSO Hex Flange, M10 x 30.00mm, Cl 10.9, PHC
4		4899073		1	PARAFUSO Hex Flg, M12 x 1.75 x 30
5		17278781		1	O-RING
6		2855287		1	ALOJAMENTO
7		4895355		2	PARAFUSO Torx Rd Hd, M5 x .8 x 17

02-08	02	p1	7/2013

FLYWHEEL HOUSING

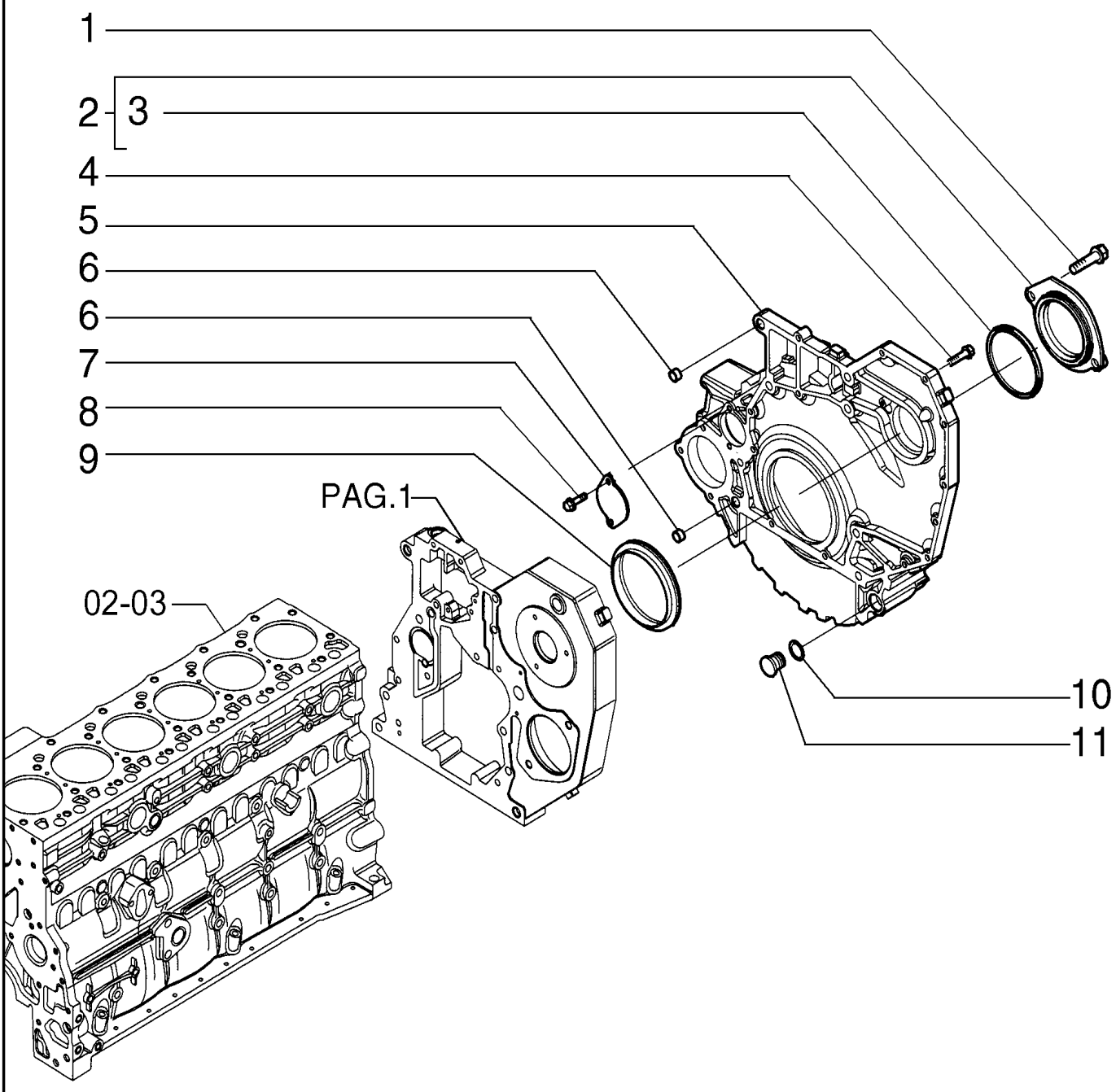

FLYWHEEL HOUSING

REF	FN	PART NUMBER	YR/SN	QTY	DESCRIPTION
1		4899020		2	PARAFUSO FLANGEADO Hex, M8 x 1.25 x 20
2		2854073		1	COBERTURA Includes item 3
3		2854075		1	O-RING M75.87 ID x 2.62 Thk
4		4899109		2	PARAFUSO Hex, M10 x 1.5 x 80
4		4892915		11	PARAFUSO FLANGEADO Hex, M10 x 1.5 x 40
4		4899076		5	PARAFUSO Hex Flg, M12 x 1.75 x 80
4		4899074		3	PARAFUSO Hex Flg, M12 x 1.75 x 120
5		2854916		1	ALOJAMENTO
6		4899026		2	GUIA M18 x 10
7		4895155		1	COBERTURA
8		4899068		2	PARAFUSO Hex Flg, M8 x 1.25 x 16
9		2856794		1	VEDADOR DE ÓLEO
10		4895379		1	O-RING 21.82mm ID x 3.53mm Width
11		4895378		1	BUJÃO TIPO BOTÃO M29.2

02-10	01	p1	7/2013

OIL PAN

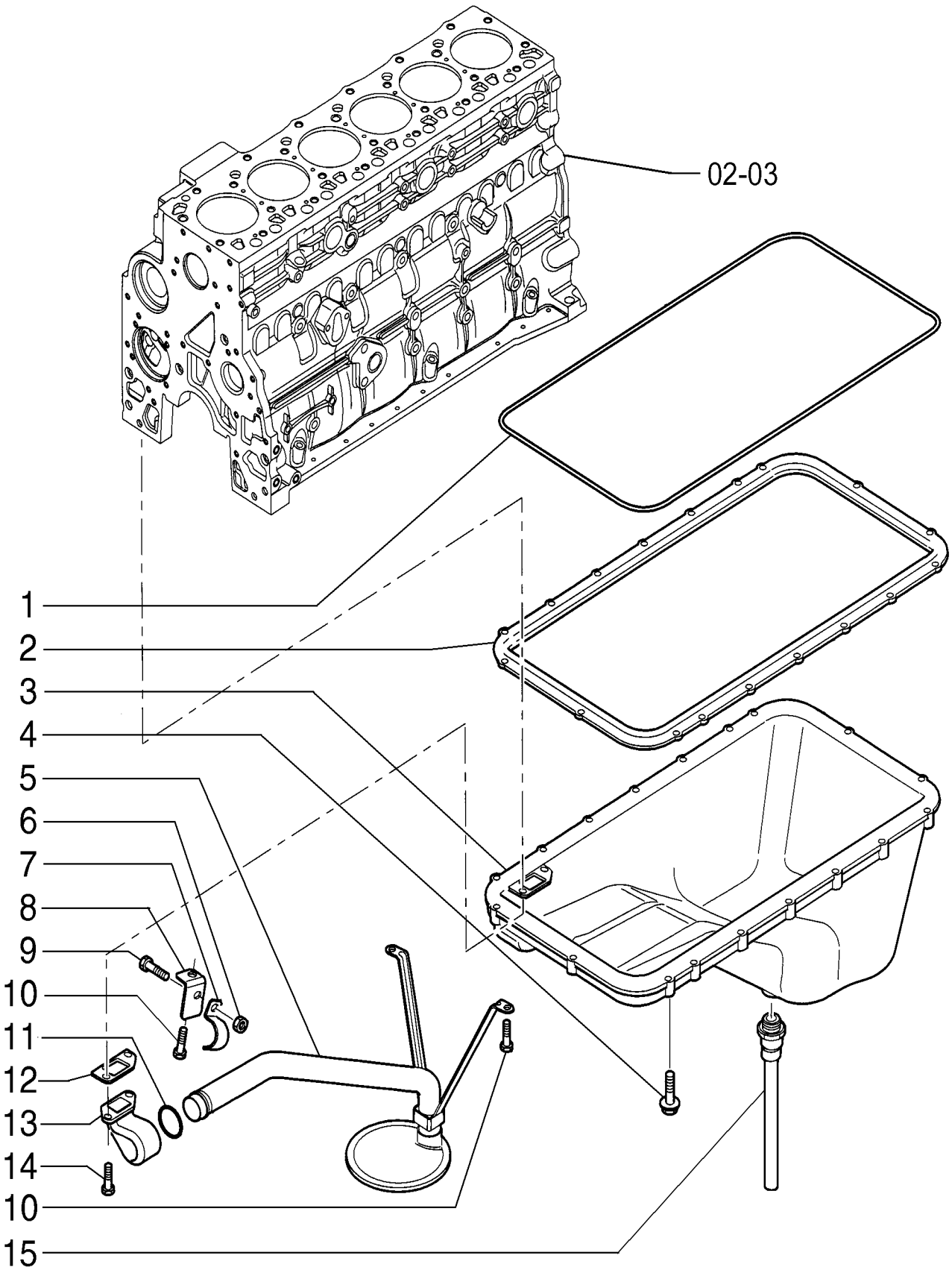

OIL PAN

REF	FN	PART NUMBER	YR/SN	QTY	DESCRIPTION
1		4897861		1	JOGO DE JUNTAS DO CÁRTER
2		4897858		1	ESPAÇADOR
3		2852308		1	CÁRTER DE ÓLEO DO MOTOR
4		4899091		18	PARAFUSO Hex Flange Cap, M8 x 1.25 x 40.00mm
5		2852654		1	TUBO DE ASPIRAÇÃO
6		4899003		1	PORCA FLANGEADA M8 x 1.25
7		2852663		1	BRAÇADEIRA
8		2852664		1	SUPORTE
9		4899068		1	PARAFUSO Hex Flg, M8 x 1.25 x 16
10		4895291		3	PARAFUSO Hex Flg, M10 x 1.5 x 20
11		2852662		1	ANEL VEDADOR
12		4898301		1	JUNTA
13		2856428		1	BRAÇADEIRA DE COLAR
14		2852660		2	PARAFUSO
15		2853363		1	VÁLVULA

02-11	01	p1	7/2013

SWITCH & DIPSTICK

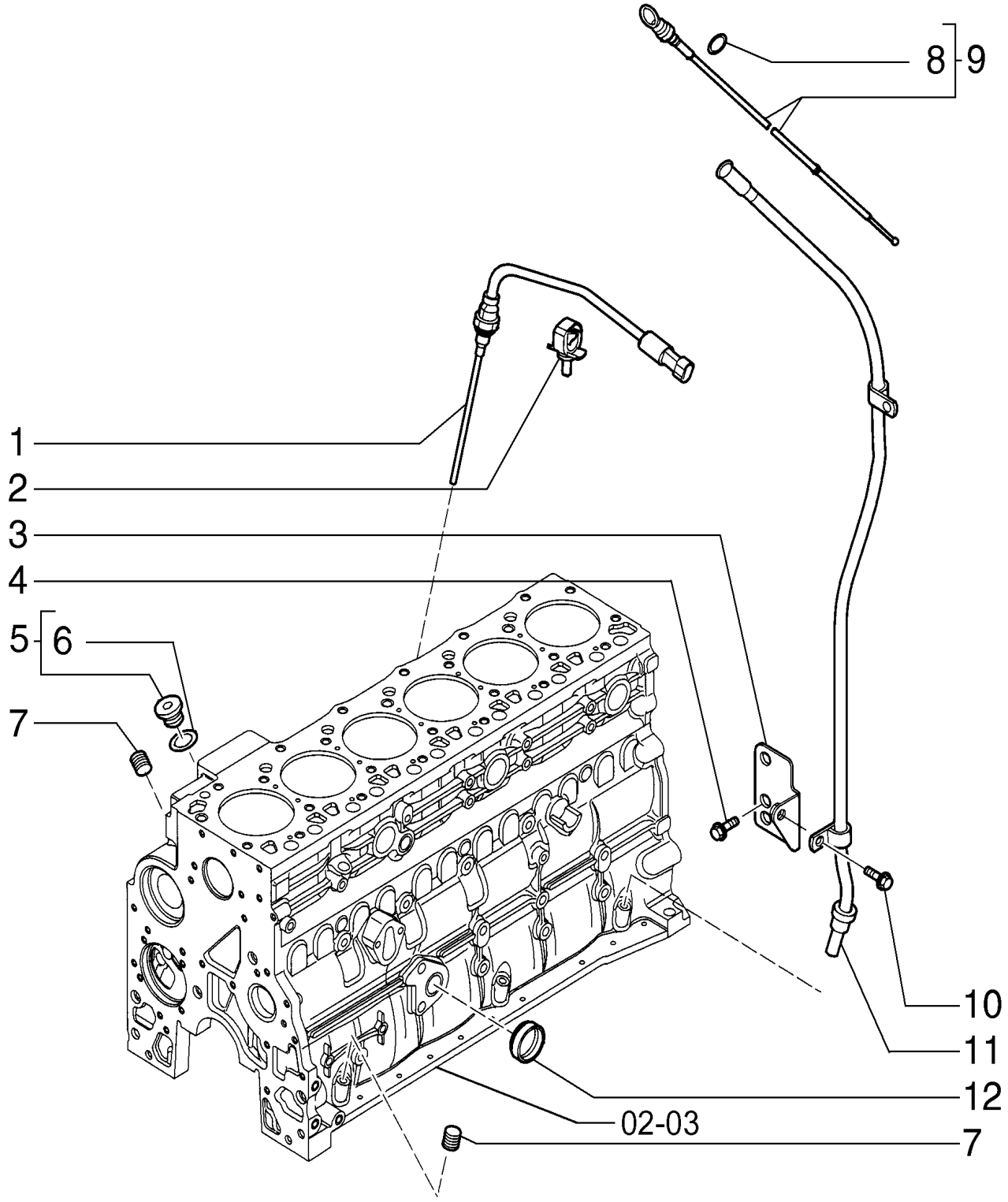

SWITCH & DIPSTICK

REF	FN	PART NUMBER	YR/SN	QTY	DESCRIPTION
1		2854318		1	INTERRUPTOR
2		2853428		1	SUPORTE
3		2852914		1	SUPORTE
4		2852134		1	PARAFUSO FLANGEADO Hex, M12 x 1.75 x 25
5		4897330		1	BUJÃO SOQUETE SEXTAVADO M12 x 1.5 Includes item 6
6		4895610		1	O-RING 9.3mm ID x 2.2mm Width
7		4895406		2	BUJÃO DE EXPANSÃO 9.8mm OD
8		4898502		1	O-RING 0.364" ID x 0.504" OD x 0.07"
9		2852911		1	HASTE DE NÍVEL Includes item 8
10		2852323		1	PARAFUSO
11		2854316		1	TUBO 630 mm Length
12		4895037		1	BUJÃO DE EXPANSÃO 32.03mm

02-12	01	p1	7/2013

CRANKSHAFT

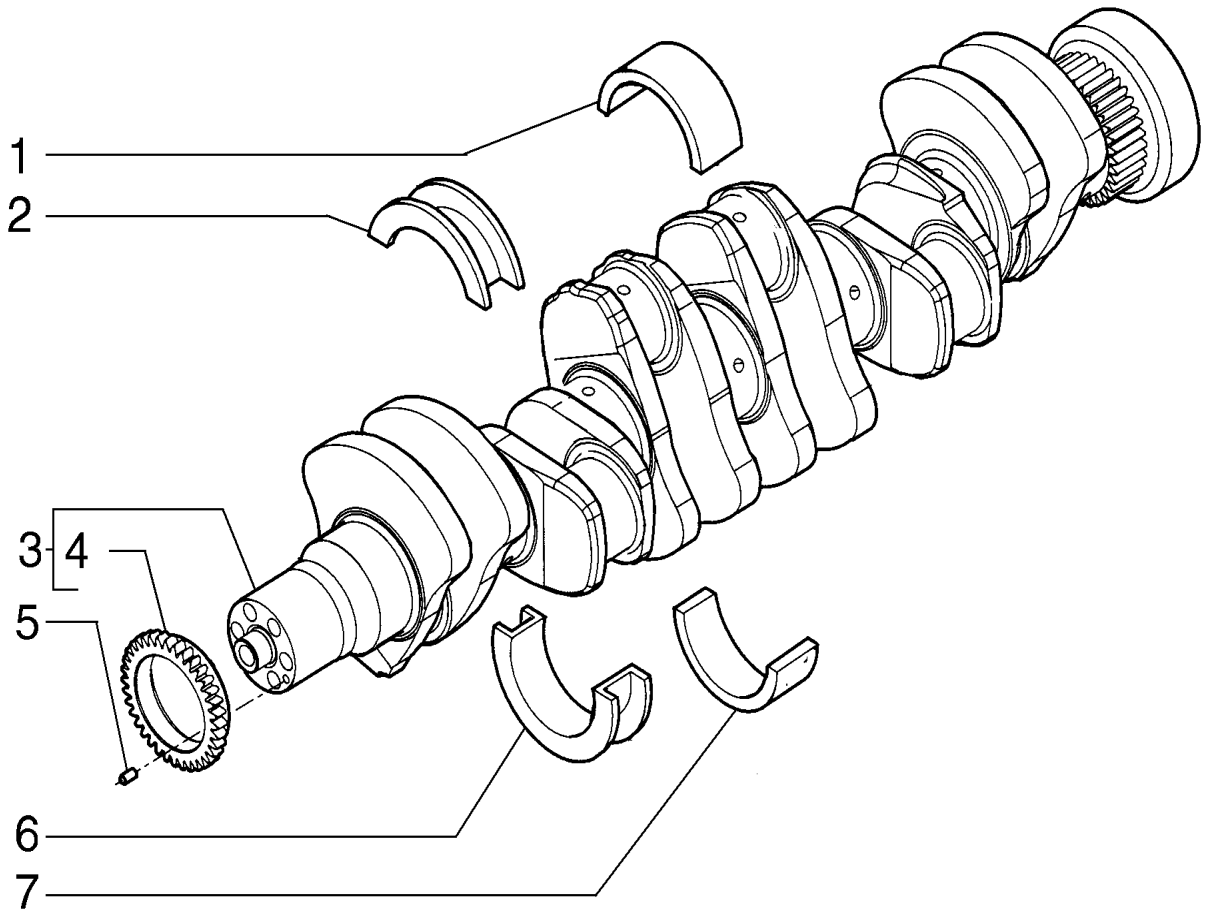

CRANKSHAFT

REF	FN	PART NUMBER	YR/SN	QTY	DESCRIPTION
1		2856766		6	ROLAMENTO DO VIRABREQUIM STD
1		2859288		6	KIT DE REVISÃO DO MOTOR
1		2859289		6	KIT DE REVISÃO DO MOTOR
1		2859290		6	KIT DE REVISÃO DO MOTOR
1		2859291		6	KIT DE REVISÃO DO MOTOR
2		2856765		1	ROLAMENTO DO VIRABREQUIM STD
2		2859292		1	ROLAMENTO DO EIXO COMANDO
2		2859293		1	ROLAMENTO DO EIXO COMANDO
2		2859294		1	ROLAMENTO DO EIXO COMANDO
2		2859295		1	ROLAMENTO DO EIXO COMANDO
3		2852306		1	VIRABREQUIM Includes item 4
4		4893386		1	ENGRENAGEM 36 T
5		4899046		1	GUIA M6 x 9 L
6		2856775		1	ROLAMENTO DO VIRABREQUIM STD
6		2859296		1	ROLAMENTO DO EIXO COMANDO
6		2859297		1	ROLAMENTO DO EIXO COMANDO
6		2859298		1	ROLAMENTO DO EIXO COMANDO
6		2859299		1	ROLAMENTO DO EIXO COMANDO
7		2856767		6	ROLAMENTO DO VIRABREQUIM STD
7		2859300		6	KIT DE REVISÃO DO MOTOR
7		2859301		6	KIT DE REVISÃO DO MOTOR
7		2859302		6	KIT DE REVISÃO DO MOTOR
7		2859303		6	KIT DE REVISÃO DO MOTOR

02-13	01	p1	7/2013

CRANKSHAFT PULLEY AND FLYWHEEL

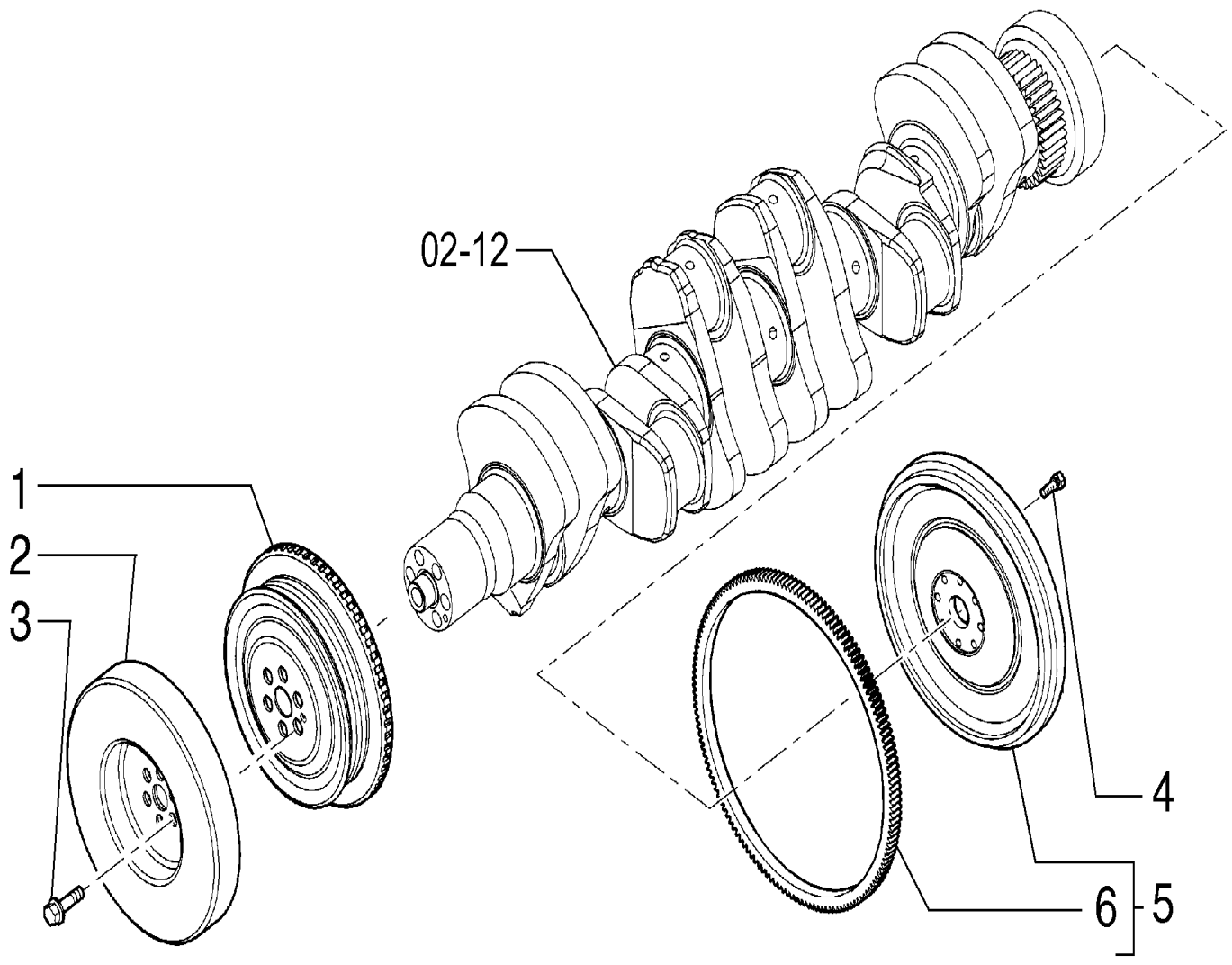

CRANKSHAFT PULLEY AND FLYWHEEL

REF	FN	PART NUMBER	YR/SN	QTY	DESCRIPTION
1		2853176		1	POLIA
2		4892893		1	AMORTECEDOR DE VIBRAÇÃO
3		4892867		6	PARAFUSO Torx Wash Hd, M12 x 1.25 x 78.5
4		4894641		8	PARAFUSO CABEÇA FLANGEADA M12 X 1.25 X 31mm
5		2854237		1	VOLANTE DE MOTOR Includes item 6
6		2852221		1	COROA DENTADA

CONNECTING RODS

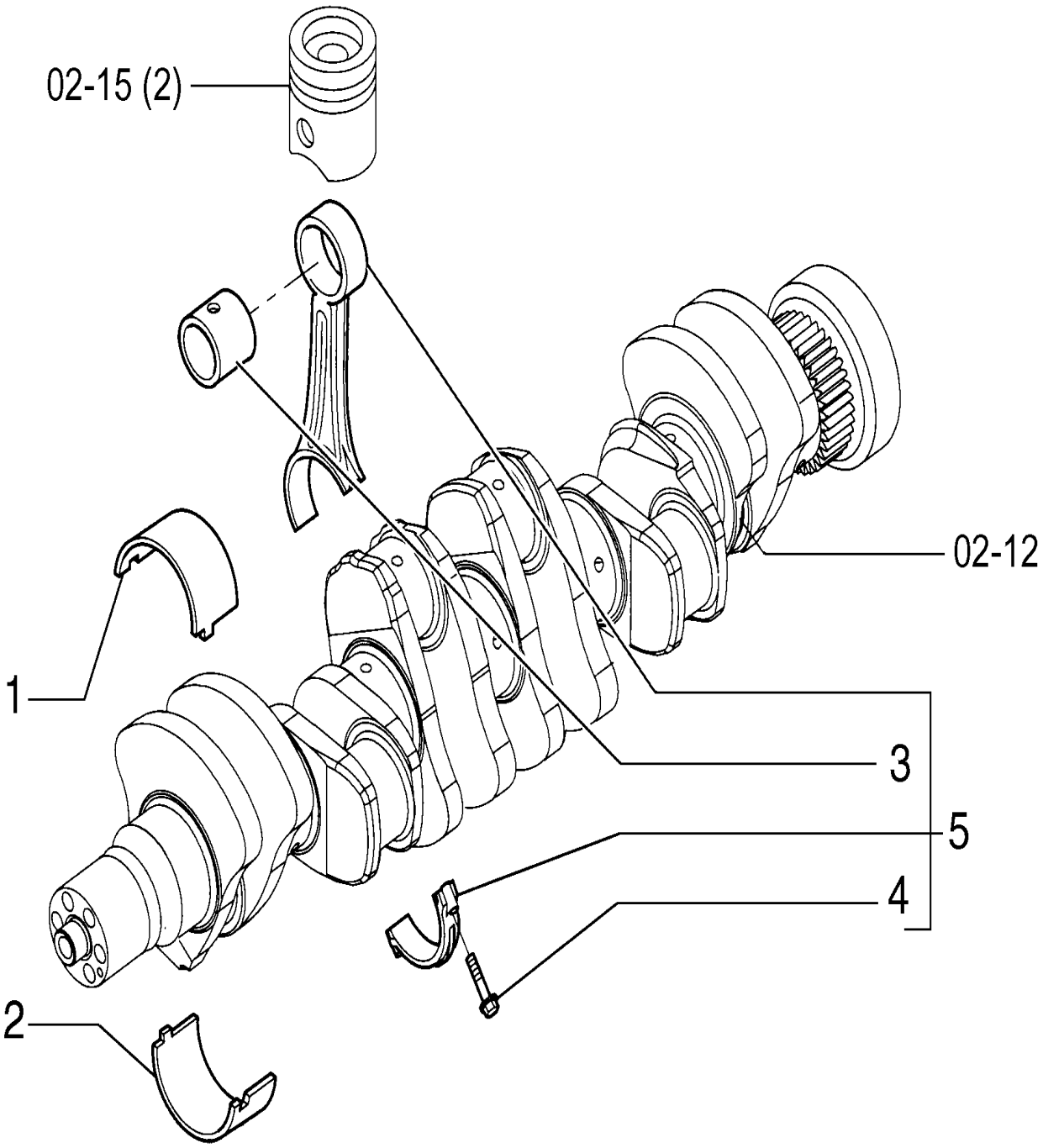

CONNECTING RODS

REF	FN	PART NUMBER	YR/SN	QTY	DESCRIPTION
1		2856831		6	SEMI-BRONZINA STD
1		2859312		6	KIT DE REVISÃO DO MOTOR 0.25mm
1		2859313		6	KIT DE REVISÃO DO MOTOR 0.5mm
1		2859314		6	KIT DE REVISÃO DO MOTOR 0.75mm
1		2859315		6	KIT DE REVISÃO DO MOTOR 1mm
2		2856832		6	SEMI-BRONZINA STD
2		2859316		6	KIT DE REVISÃO DO MOTOR 0.25mm
2		2859317		6	KIT DE REVISÃO DO MOTOR 0.5mm
2		2859318		6	KIT DE REVISÃO DO MOTOR 0.75mm
2		2859319		6	KIT DE REVISÃO DO MOTOR 1mm
3		4892708		1	BUCHA
4		2831297		2	PARAFUSO FLANGEADO Hex, M10 x 1.25 x 52
5		2831298		6	HASTE DE CONEXÃO Includes items 3, 4

02-15	02	p1	7/2013

PISTONS AND CONNECTING RODS

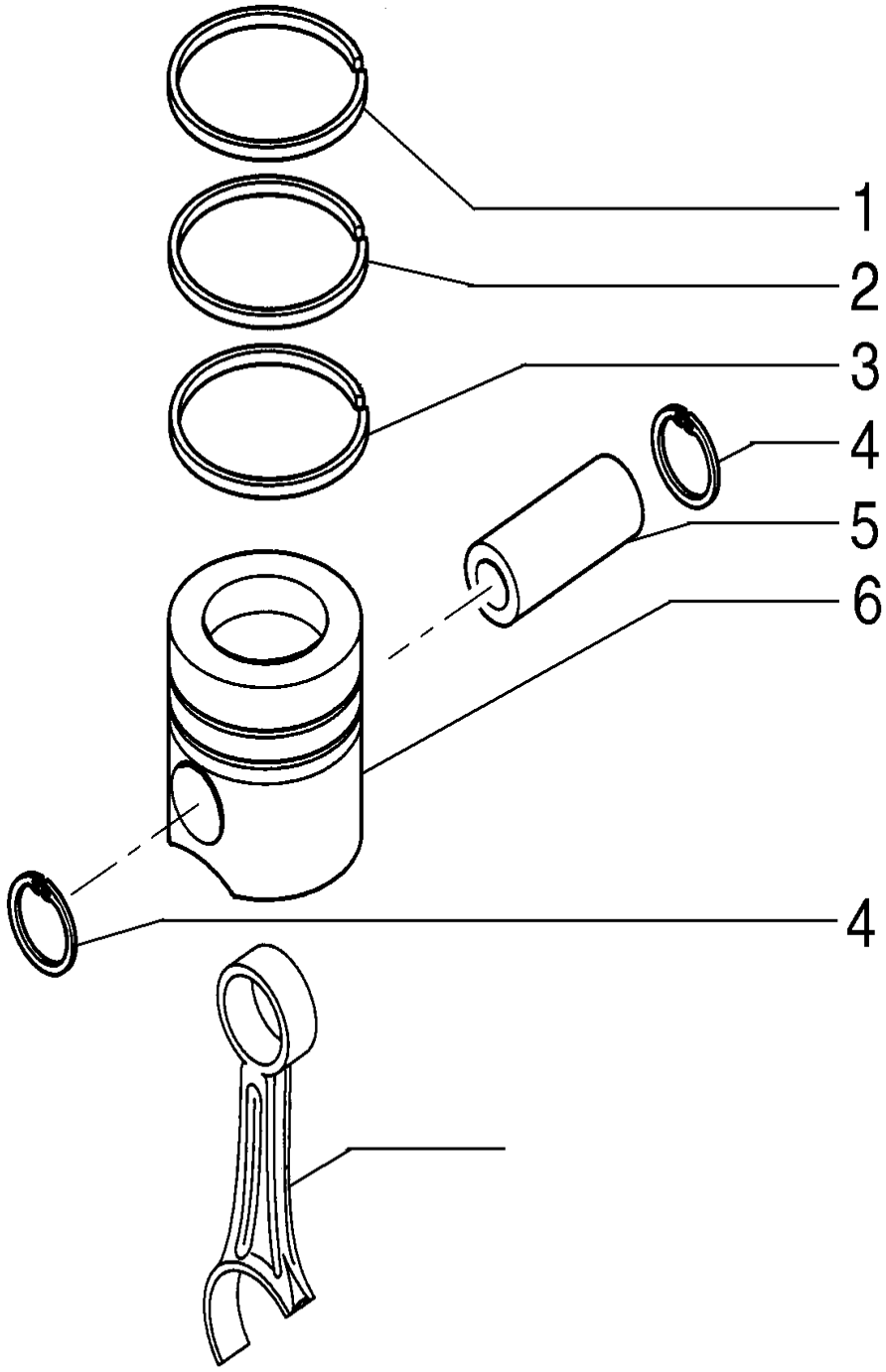

PISTONS AND CONNECTING RODS

REF	FN	PART NUMBER	YR/SN	QTY	DESCRIPTION
1		2856827		6	ANEL DE PISTÃO STD
1		2859304		6	KIT DE ANÉIS DO PISTÃO
1		2859305		6	KIT DE ANÉIS DO PISTÃO
2		2856828		6	ANEL DE PISTÃO STD
2		2859306		6	KIT DE ANÉIS DO PISTÃO
2		2859307		6	KIT DE ANÉIS DO PISTÃO
3		2856829		6	ANEL DE PISTÃO STD
3		2859308		6	KIT DE ANÉIS DO PISTÃO
3		2859309		6	KIT DE ANÉIS DO PISTÃO
4		2856830		12	ANEL
5		2856826		6	PINO DE PISTÃO
6		2856825		6	CONJ PISTÃO STD
6		2859310		6	KIT DE ANÉIS E PISTÕES
6		2859311		6	KIT DE ANÉIS E PISTÕES

02-16	01	p1	7/2013

ENGINE BLOCK

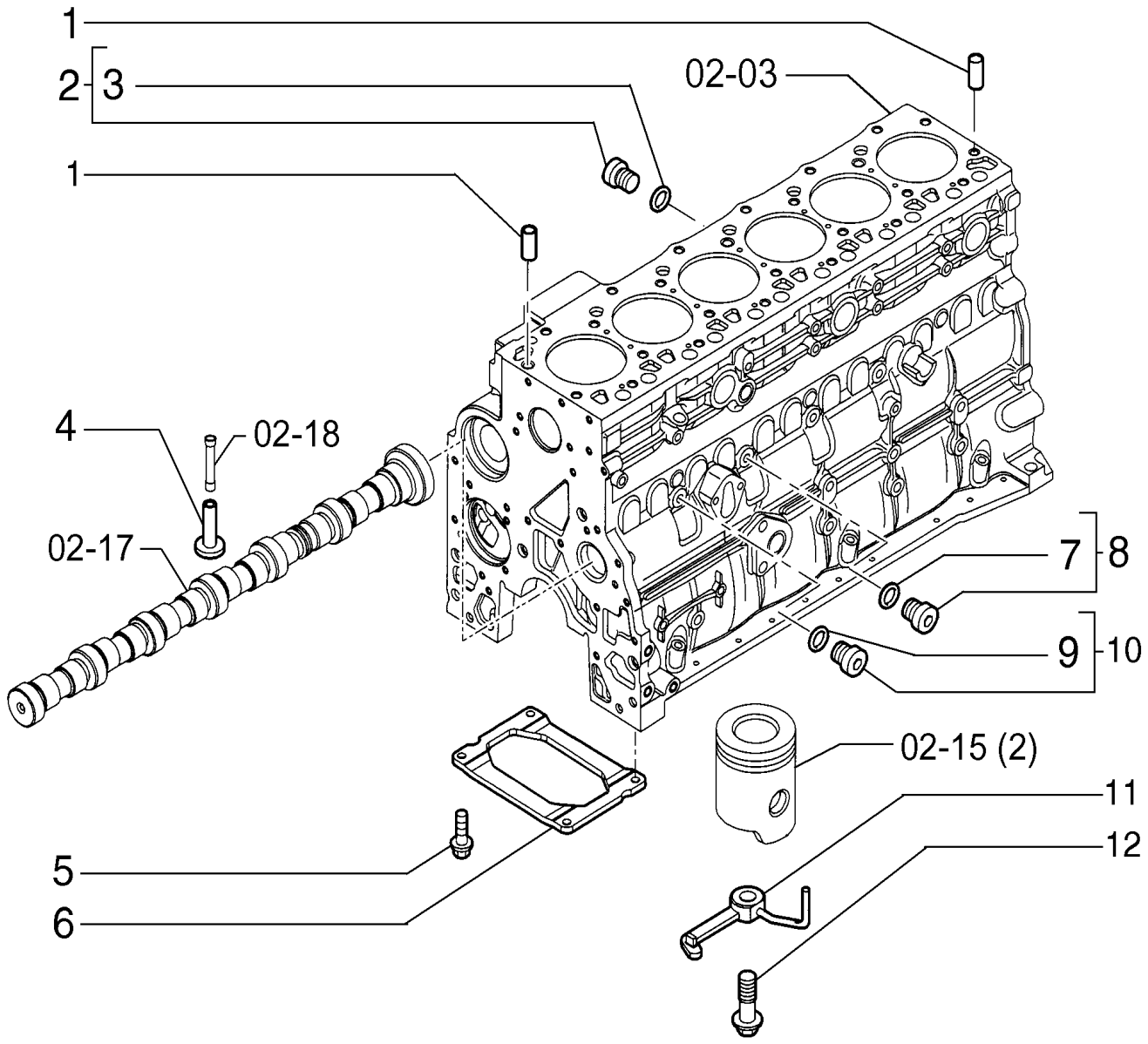

ENGINE BLOCK

REF	FN	PART NUMBER	YR/SN	QTY	DESCRIPTION
1		4895049		2	GUIA M16.05 x 10
2		4895392		3	BUJÃO SOQUETE SEXTAVADO M18 x 1.5 Includes item 3
3		4895393		1	O-RING 15.3mm ID x 2.2mm Width
4		4895180		12	PLATINADO
5		4899032		4	PARAFUSO Hex Flg, M10 x 1.5 x 25
6		2852729		1	REFORÇO
7		4899115		1	O-RING 11.3mm ID x 2.2mm Width
8		4895605		1	BUJÃO SOQUETE SEXTAVADO M14 x 1.5 Includes item 7
9		4899072		1	O-RING 8.1mm ID x 1.6mm Width
10		4899009		1	BUJÃO M10 x 1.5 Includes item 9
11		2852203		6	BICO RESFRIADOR
12		4894218		6	PARAFUSO Special, M8 x 20

02-17	01	p1	7/2013

CAMSHAFT

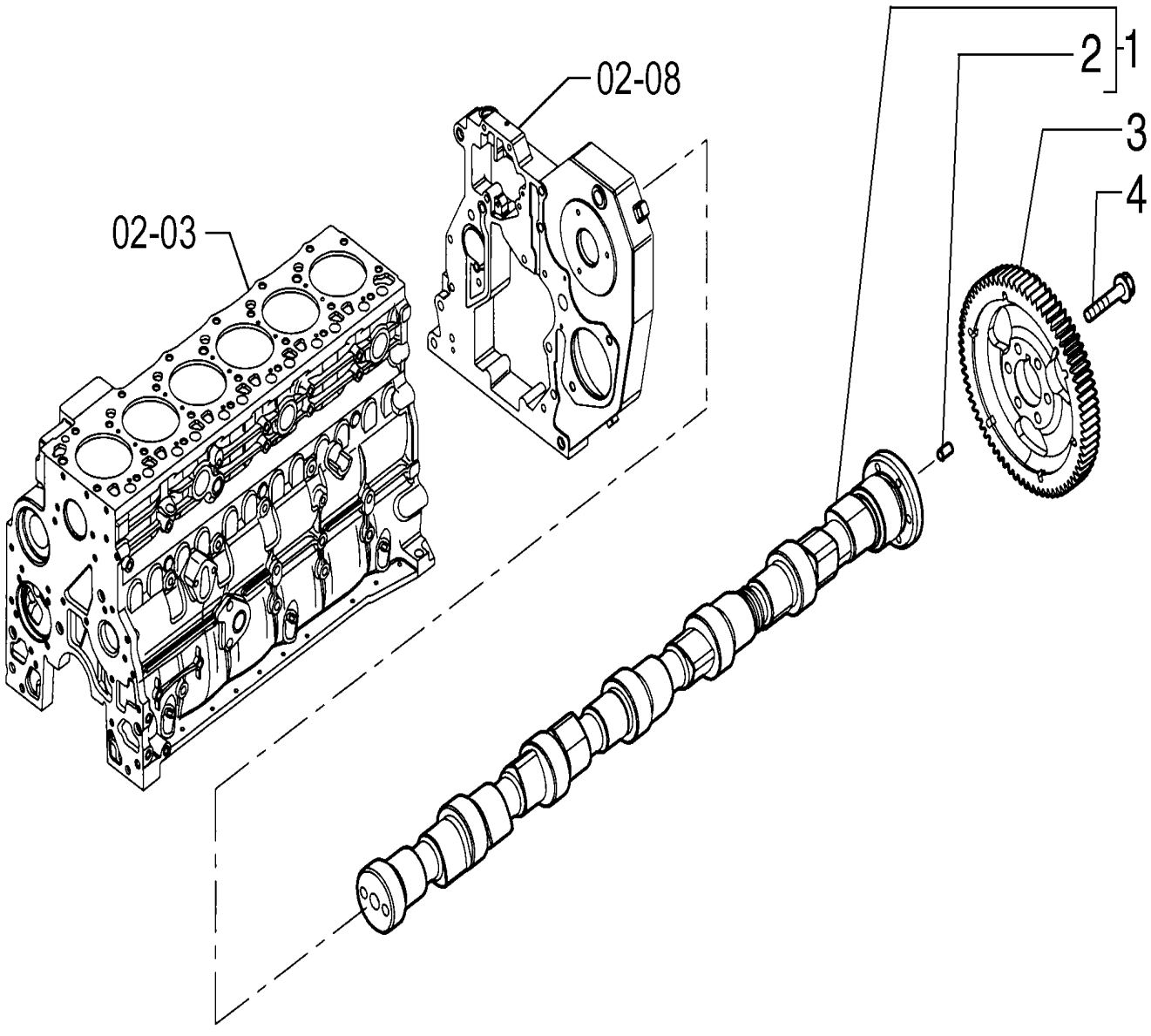

CAMSHAFT

REF	FN	PART NUMBER	YR/SN	QTY	DESCRIPTION
1		504083348		1	EIXO Includes item 2
2		4899080		1	GUIA M6 x 8 L
3		504208042		1	ENGRENAGEM
4		4899079		6	PARAFUSO Hex Flg, M8 x 1.25 x 25

VALVE TRAIN

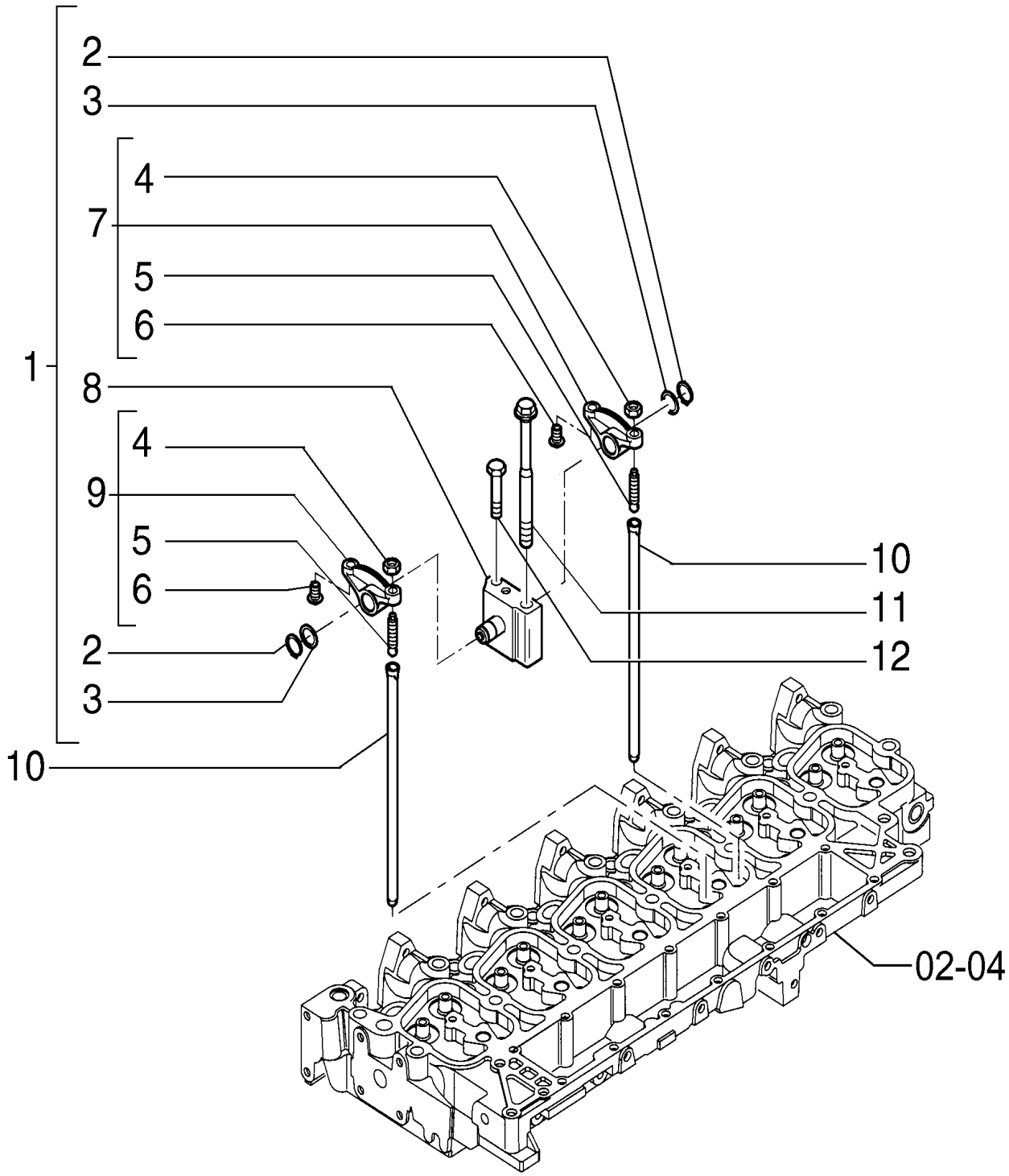

VALVE TRAIN

REF	FN	PART NUMBER	YR/SN	QTY	DESCRIPTION
1		4895195		6	BALANCIM Includes items 2 - 9
2		4895363		2	ANEL DE PRESSÃO
3		4895364		2	ARRUELA PLANA
4		4895198		2	PORCA 3/8"-24, Heavy
5		4895199		2	PARAFUSO DE REGULAGEM
6		4895365		2	ENCHIMENTO
7		4895196		1	BALANCIM Exhaust Includes items 4, 5, 6
8		4895204		1	EIXO
9		4895200		1	BALANCIM Intake Includes items 4, 5, 6
10		4895361		12	HASTE DE IMPULSO
11		4892860		6	PARAFUSO Wash Hd, M12 x 1.25 x 183
12		2852866		6	PARAFUSO

02-19	01	p1	7/2013

AIR CLEANER AND TUBING

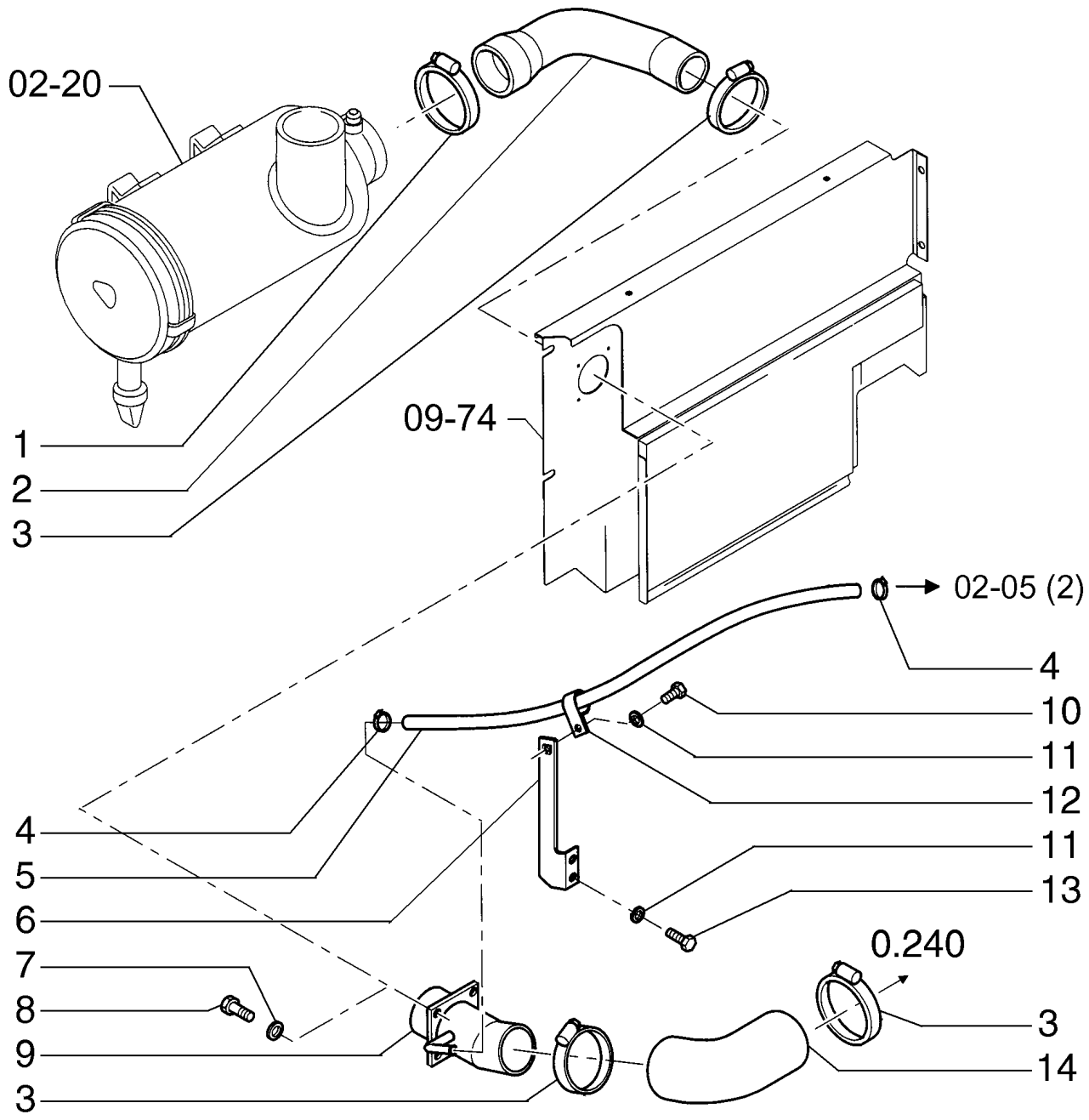

AIR CLEANER AND TUBING

REF	FN	PART NUMBER	YR/SN	QTY	DESCRIPTION
1		87704433		1	SUPORTE
2		87530994		1	MANGUEIRA DE AR
3		75321956		3	COLAR
4		87704428		2	SUPORTE
5		87530996		1	MANGUEIRA
6		87635539		1	SUPORTE
7		14496631		4	ARRUELA PLANA M10 x 21 x 2
8		11106231		4	PARAFUSO Hex, M10 x 25, 10.9, Full Thd
9		87635671		1	TUBO
10		16043431		1	PARAFUSO Hex, M8 x 20, 10.9
11		14496531		3	ARRUELA PLANA M8 x 17 x 1.6
12		70928623		1	COLAR
13		16043631		2	PARAFUSO Hex, M8 x 25, 10.9
14		87530995		1	MANGUEIRA DE AR

AIR CLEANER

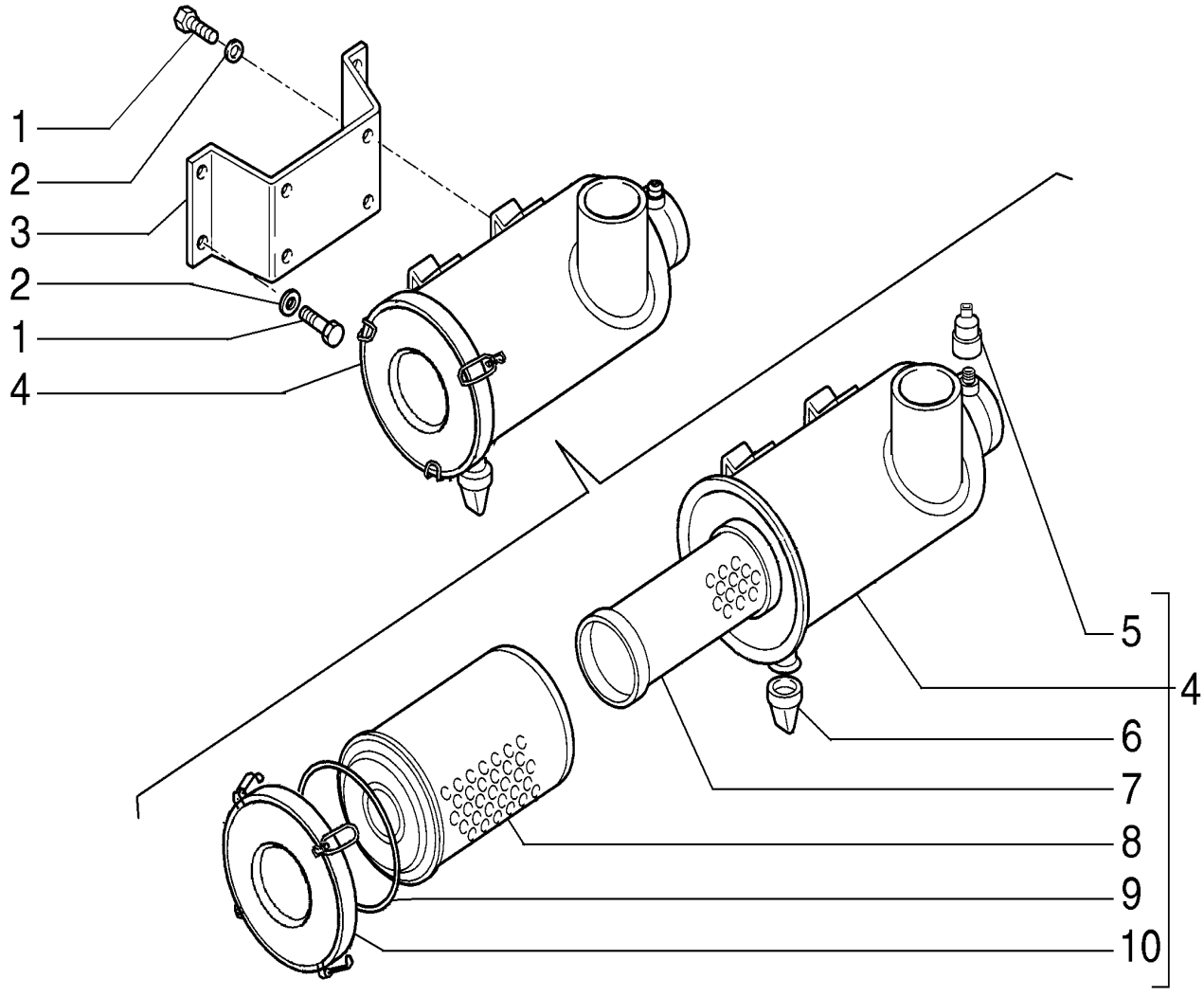

AIR CLEANER

REF	FN	PART NUMBER	YR/SN	QTY	DESCRIPTION
1		11106231		8	PARAFUSO Hex, M10 x 25, 10.9, Full Thd
2		14496631		8	ARRUELA PLANA M10 x 21 x 2
3		87637749		1	PLACA
4		87530988		1	FILTRO DE AR Includes items 5 - 10
5		79102142		1	INDICADOR restrição
6		72217392		1	VÁLVULA ALÍVIO
7		87564846		1	FILTRO DE AR
8		87564844		1	FILTRO DE AR
9		87585125		1	O-RING
10		87585128		1	COBERTURA

02-22	01	p1	7/2013

EXHAUST MANIFOLD

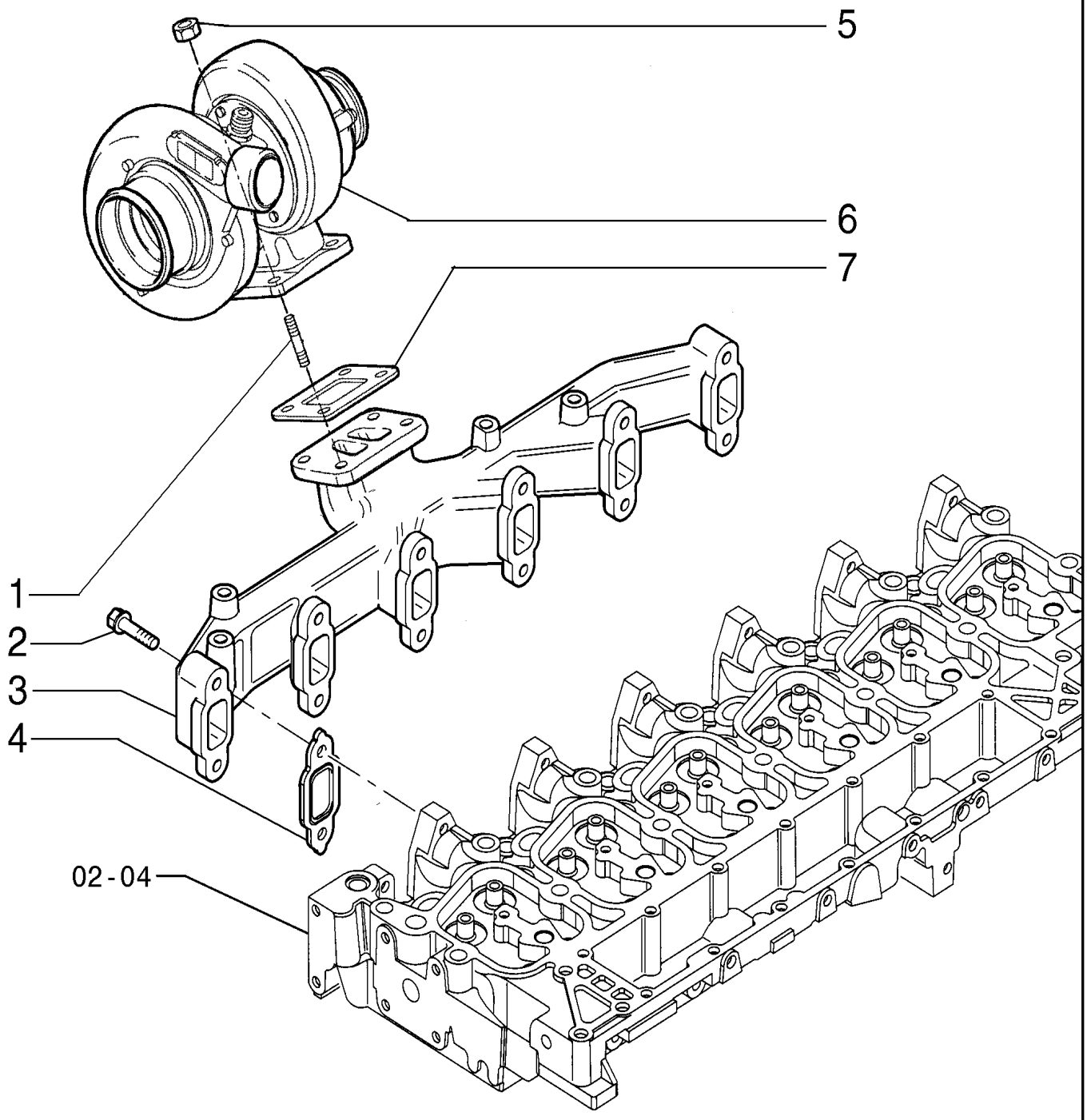

EXHAUST MANIFOLD

REF	FN	PART NUMBER	YR/SN	QTY	DESCRIPTION
1		4899085		4	PRISIONEIRO M10 x 1.5 x 42mm
2		2852744		12	PARAFUSO Hex, Flg Hd, M10 x 1.5 x 65
3		2859170		1	COLETOR DE EXAUSTÃO
4		2856817		6	JUNTA DO COLETOR
5		4899086		4	PORCA FLANGEADA
6		2856640		1	TURBO-COMPRESSOR
7		4895132		1	JUNTA

02-23	01	p1	7/2013

AIR INTAKE ELBOW

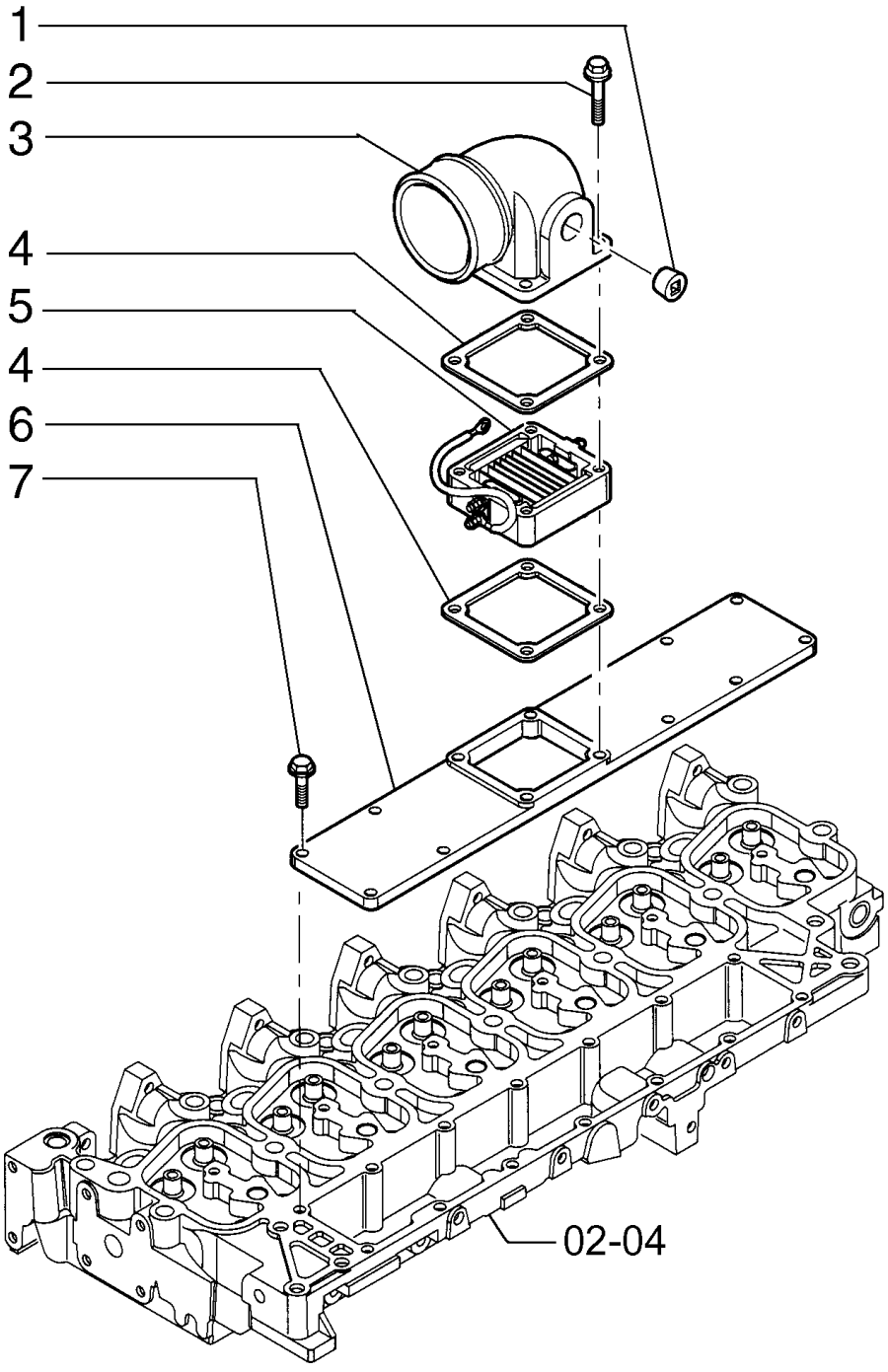

AIR INTAKE ELBOW

REF	FN	PART NUMBER	YR/SN	QTY	DESCRIPTION
1		4893036		1	BUJÃO PARA TUBOS 3/4"-14 NPTF
2		4895294		4	PARAFUSO Hex Flg, M8 x 1.25 x 80
3		4895424		1	COLETOR DE ADMISSÃO
4		4899921		2	JUNTA
5		2831019		1	AQUECEDOR
6		2854362		1	COLETOR DE ADMISSÃO
7		4899039		10	PARAFUSO Hex Flg, M8 x 1.25 x 25

02-24	01	p1	7/2013

MUFFLER & EXHAUST

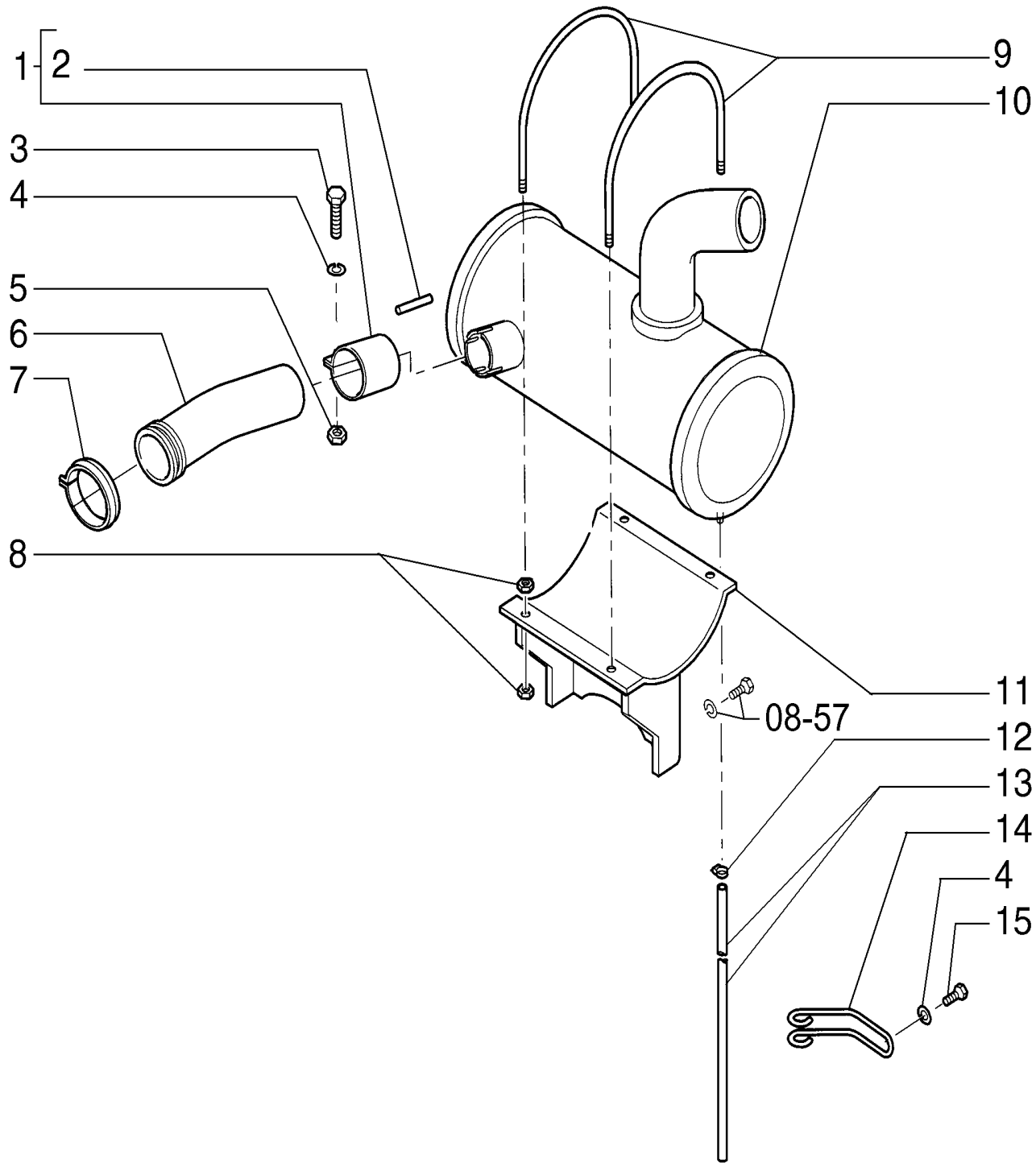

MUFFLER & EXHAUST

REF	FN	PART NUMBER	YR/SN	QTY	DESCRIPTION
1		72204526		1	COLAR Includes item 2
2		72219489		1	VEDAÇÃO
3		11106631		2	PARAFUSO Hex, M10 x 35, 10.9, Full Thd
4		14496631		3	ARRUELA PLANA M10 x 21 x 2
5		11701721		2	PORCA M10, Cl 10
6		87625749		1	TUBO ESCAPE
7		72107089		1	COLAR
8		16100821		8	PORCA M8, Cl 10
9		87634420		2	GARRA
10		87534195		1	SILENCIOSO
11		87625577		1	SUPORTE
12		12179490		1	GRAMPO DA MANGUEIRA
13		72204524		1	TUBO FLEXÍVEL 10.00 mm ID x 860.00 mm
14		87634411		1	SUPORTE
15		11106031		1	PARAFUSO Hex, M10 x 20, 10.9, Full Thd

02-25	01	p1	7/2013

LUBRICATION SYSTEM

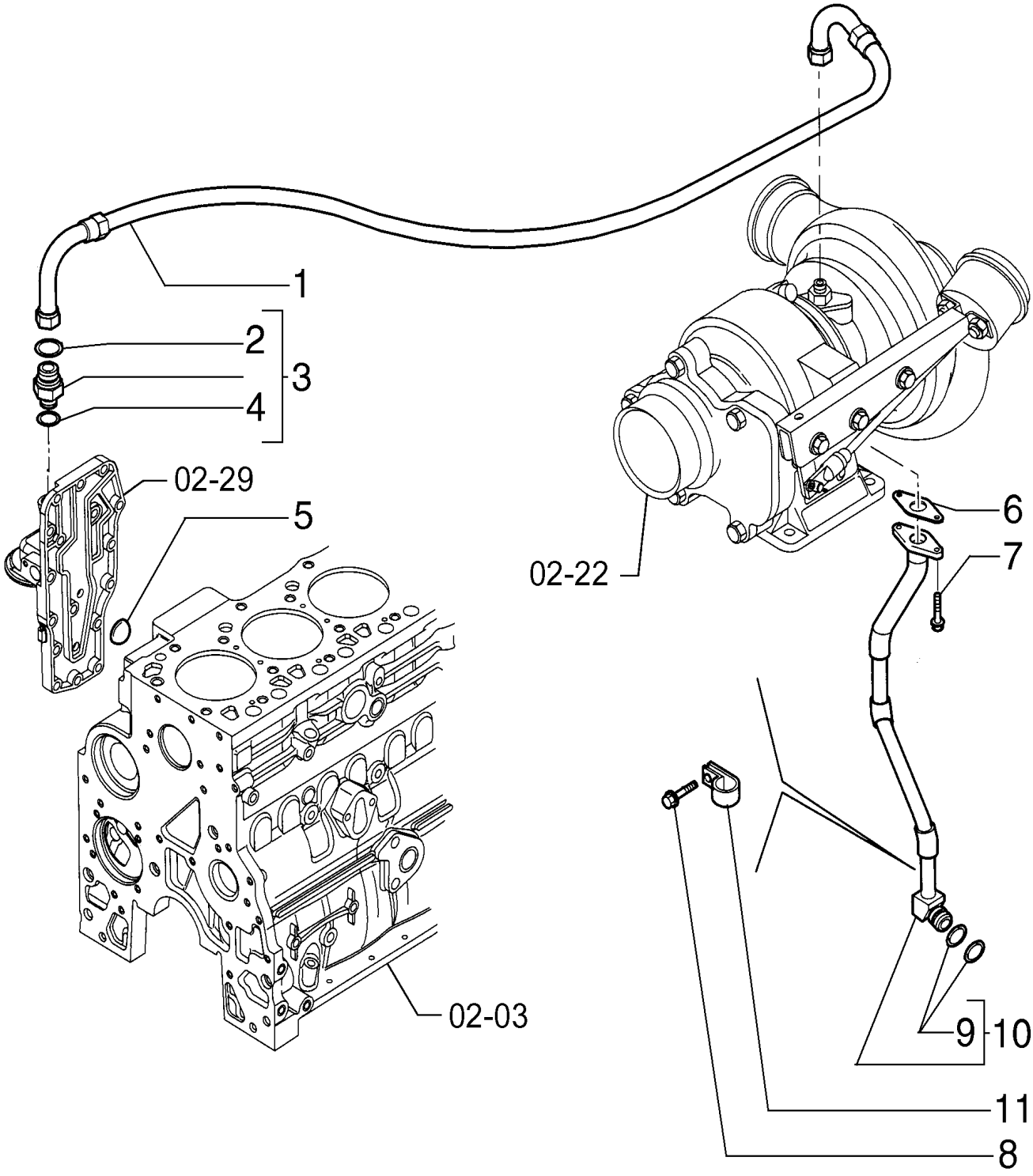

LUBRICATION SYSTEM

REF	FN	PART NUMBER	YR/SN	QTY	DESCRIPTION
1		2852679		1	MANGUEIRA HIDRÁULICA
2		4899108		1	O-RING 0.364mm ID x 0.07mm Width
3		4895107		2	CONECTOR HIDRÁUL 11/16"-16 x M12 Includes items 2, 4
4		4899107		1	O-RING 0.414mm ID x 0.072mm Width
5		4895089		1	BUJÃO
6		4891288		1	JUNTA
7		4899079		2	PARAFUSO Hex Flg, M8 x 1.25 x 25
8		2852134		1	PARAFUSO FLANGEADO Hex, M12 x 1.75 x 25
9		4899058		2	O-RING 0.674" ID x 0.88" OD x 0.103"
10		2852919		1	TUBO RÍGIDO Includes item 9
11		4899827		1	SUPORTE

LUBRICATION OIL PUMP, WATER PUMP & COOLING PIPING

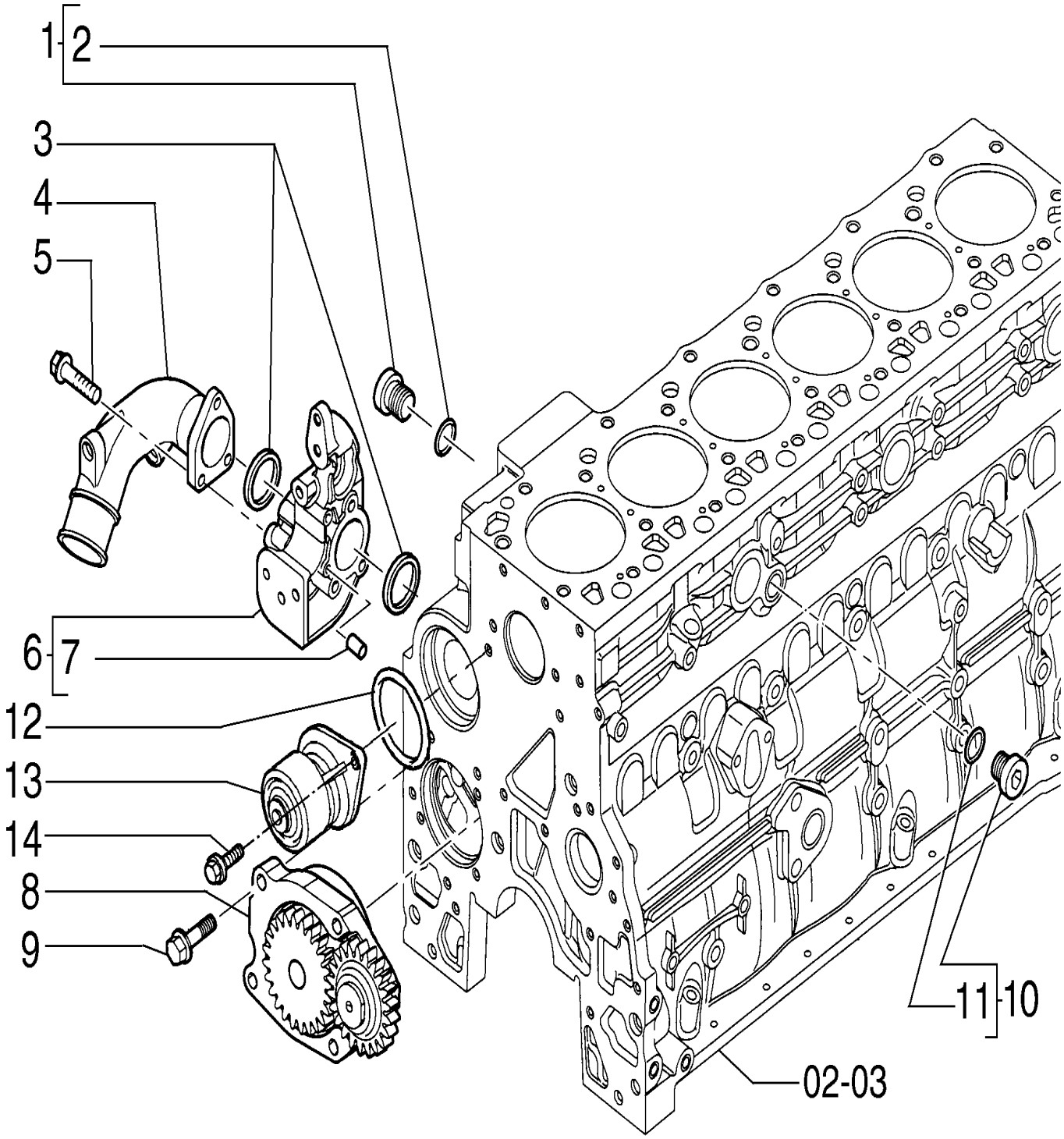

LUBRICATION OIL PUMP, WATER PUMP & COOLING PIPING

REF	FN	PART NUMBER	YR/SN	QTY	DESCRIPTION
1		4895392		2	BUJÃO SOQUETE SEXTAVADO M18 x 1.5 Includes item 2
2		4895393		2	O-RING 15.3mm ID x 2.2mm Width
3		2854072		2	ANEL VEDADOR Rectangular, 50mm ID x 5.16 Thk
4		504042847		1	COTOVELO
5		2852923		3	PARAFUSO
6		2852392		1	SUPORTE Includes item 7
7		4895576		2	GUIA
8		4897481		1	BOMBA DE ÓLEO DO MOTOR
9		4899090		4	PARAFUSO Hex Flg, M8 x 1.25 x 30
10		4895623		1	BUJÃO SOQUETE SEXTAVADO M16 x 1.5 Includes item 11
11		4895625		1	O-RING 13.3mm ID x 2.2mm Width
12		4899052		1	ANEL VEDADOR
13		2853443		1	BOMBA DE ÁGUA
14		4899079		2	PARAFUSO Hex Flg, M8 x 1.25 x 25

02-27	01	p1	7/2013

LUBRICANT OIL FILTER

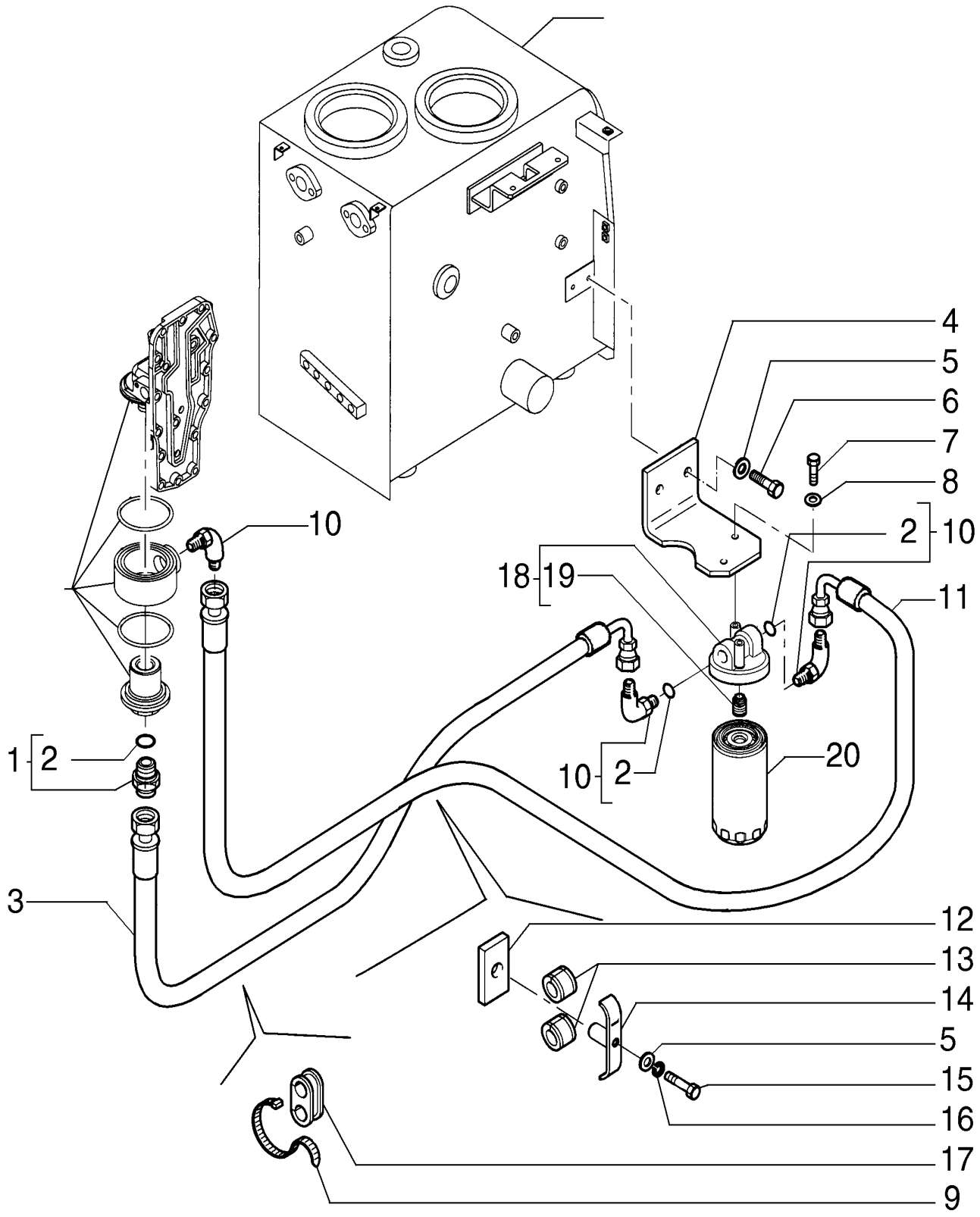

LUBRICANT OIL FILTER

REF	FN	PART NUMBER	YR/SN	QTY	DESCRIPTION
1		87640939		1	CONECTOR HIDRÁUL Includes item 2
2		87612010		4	O-RING 23.47mm ID x 2.95mm Width
3		87555884		1	TUBO FLEXÍVEL
4		87634413		1	SUPORTE
5		14496631		3	ARRUELA PLANA M10 x 21 x 2
6		11106231		2	PARAFUSO Hex, M10 x 25, 10.9, Full Thd
7		16043431		2	PARAFUSO Hex, M8 x 20, 10.9
8		14496531		2	ARRUELA PLANA M8 x 17 x 1.6
9		75201642		1	BRAÇADEIRA
10		87612013		3	CONECTOR HIDRÁUL Includes item 2
11		87555883		1	TUBO FLEXÍVEL
12		87634414		1	PLACA
13		72203763		2	VEDAÇÃO
14		87634395		1	SUPORTE
15		11107431		1	PARAFUSO Hex, M10 x 1.5 x 60.00mm, Cl 10.9, ZND
16		10516871		1	TRAVA DA ARRUELA
17		72203762		1	JUNTA
18		504039282		1	CABEÇA DO FILTRO Includes item 19
19		4893391		1	ADAPTADOR M24 x 2 x M27 x 2
20		87638120		1	FILTRO DE ÓLEO HIDRÁULICO

02-29	01	p1	7/2013

LUBRICANT OIL COOLER

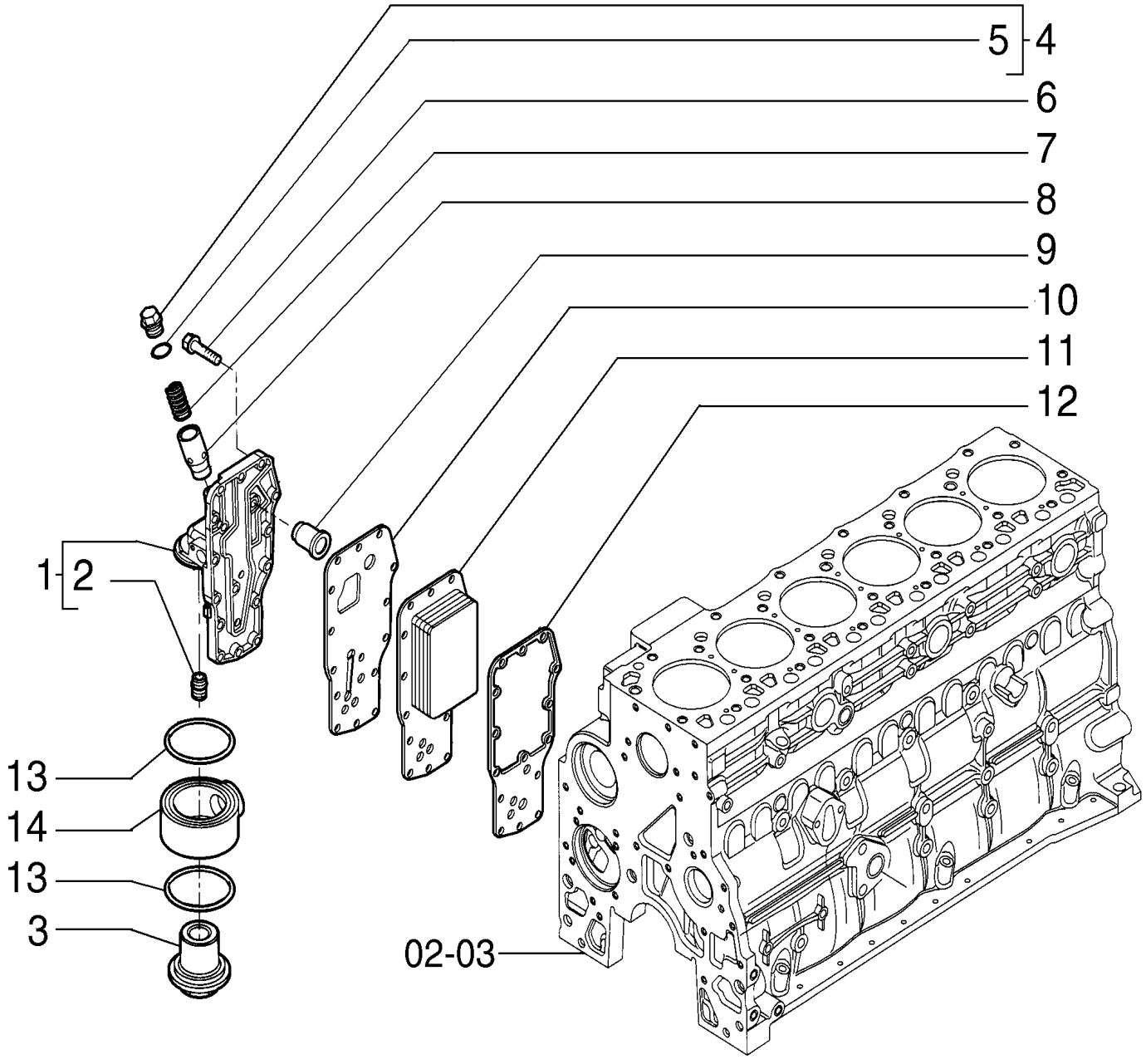

LUBRICANT OIL COOLER

REF	FN	PART NUMBER	YR/SN	QTY	DESCRIPTION
1		4899643		1	CABEÇA DO FILTRO Includes item 2
2		4893391		1	ADAPTADOR M24 x 2 x M27 x 2
3		2853438		1	BUCHA ROSCADA
4		2853781		1	BUJÃO Includes item 5
5		17916280		1	JUNTA
6		4899019		15	PARAFUSO Hex Flg, M8 x 1.25 x 35
7		4895045		1	MOLA
8		4896404		1	ÊMBOLO
9		4896410		1	VÁLVULA ALÍVIO DA PRESSÃO
10		4896409		1	JUNTA
11		4896407		1	RESFRIADOR DO ÓLEO
12		2830559		1	JUNTA
13		14464781		2	JUNTA
14		2853436		1	SUPORTE

02-30	01	p1	7/2013

RADIATOR PIPING

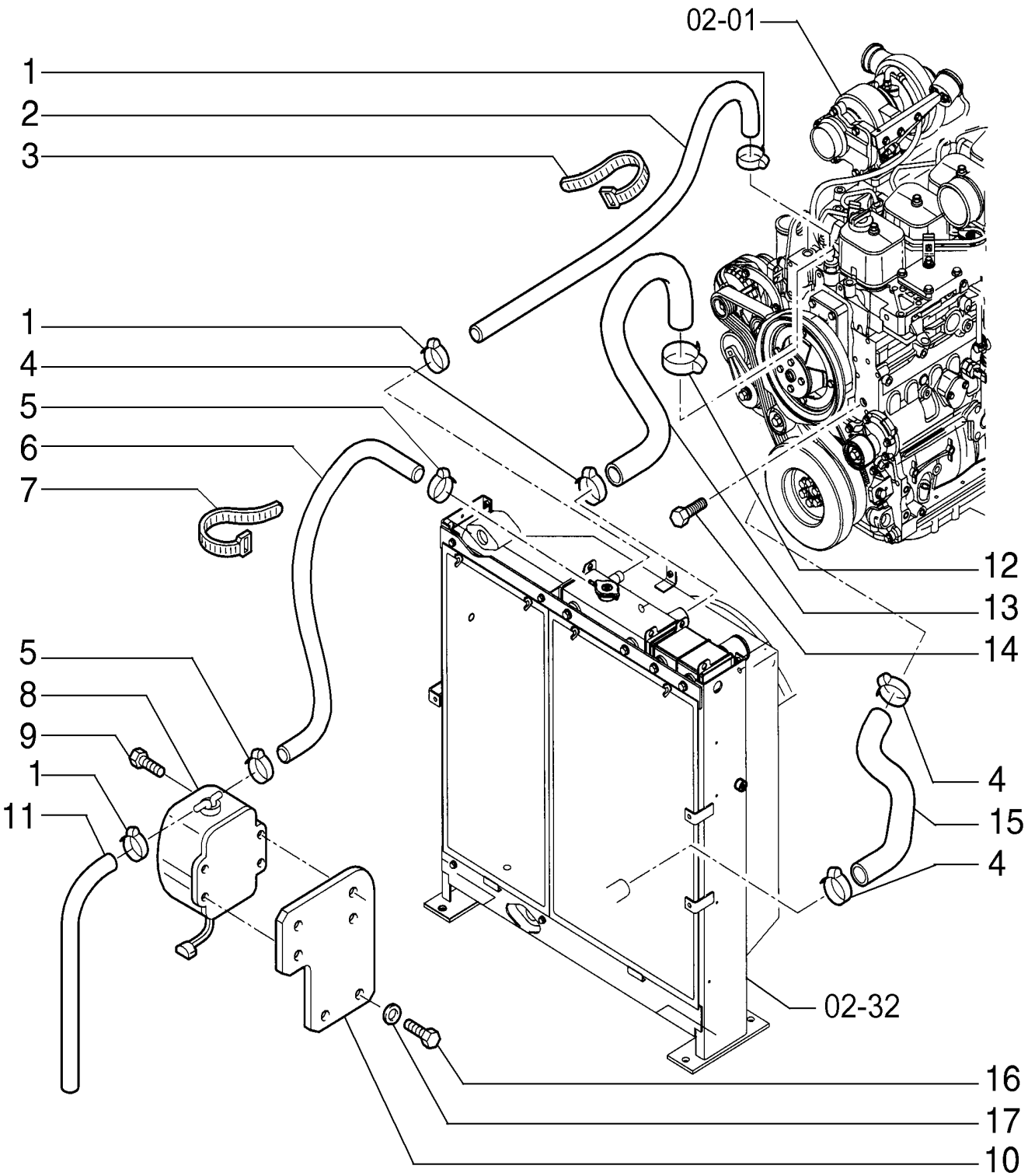

RADIATOR PIPING

REF	FN	PART NUMBER	YR/SN	QTY	DESCRIPTION
1		12179490		3	GRAMPO DA MANGUEIRA
2		72213767		1	MANGUEIRA
3		75201642		1	BRAÇADEIRA
4		L126871		3	BRAÇADEIRA
5		72213766		2	GRAMPO
6		87526677		1	TUBO FLEXÍVEL
7		72203537		5	COLAR
8		72201239		1	RECIPIENTE
9		16043631		4	PARAFUSO Hex, M8 x 25, 10.9
10		87648299		1	SUPORTE
11		87557648		1	TUBO FLEXÍVEL
12		214-2138		1	BRAÇADEIRA #38, 2.06"-2.37", T-Bolt
13		87526661		1	TUBO FLEXÍVEL 49.00 mm ID x 398.00 mm
14		71428460		1	BUJÃO
15		87526660		1	TUBO FLEXÍVEL 47.00 mm ID x 328.00 mm
16		11106431		2	PARAFUSO Hex, M10 x 30, 10.9, Full Thd
17		14496631		2	ARRUELA PLANA M10 x 21 x 2

02-31	01	p1	7/2013

RADIATOR PIPING

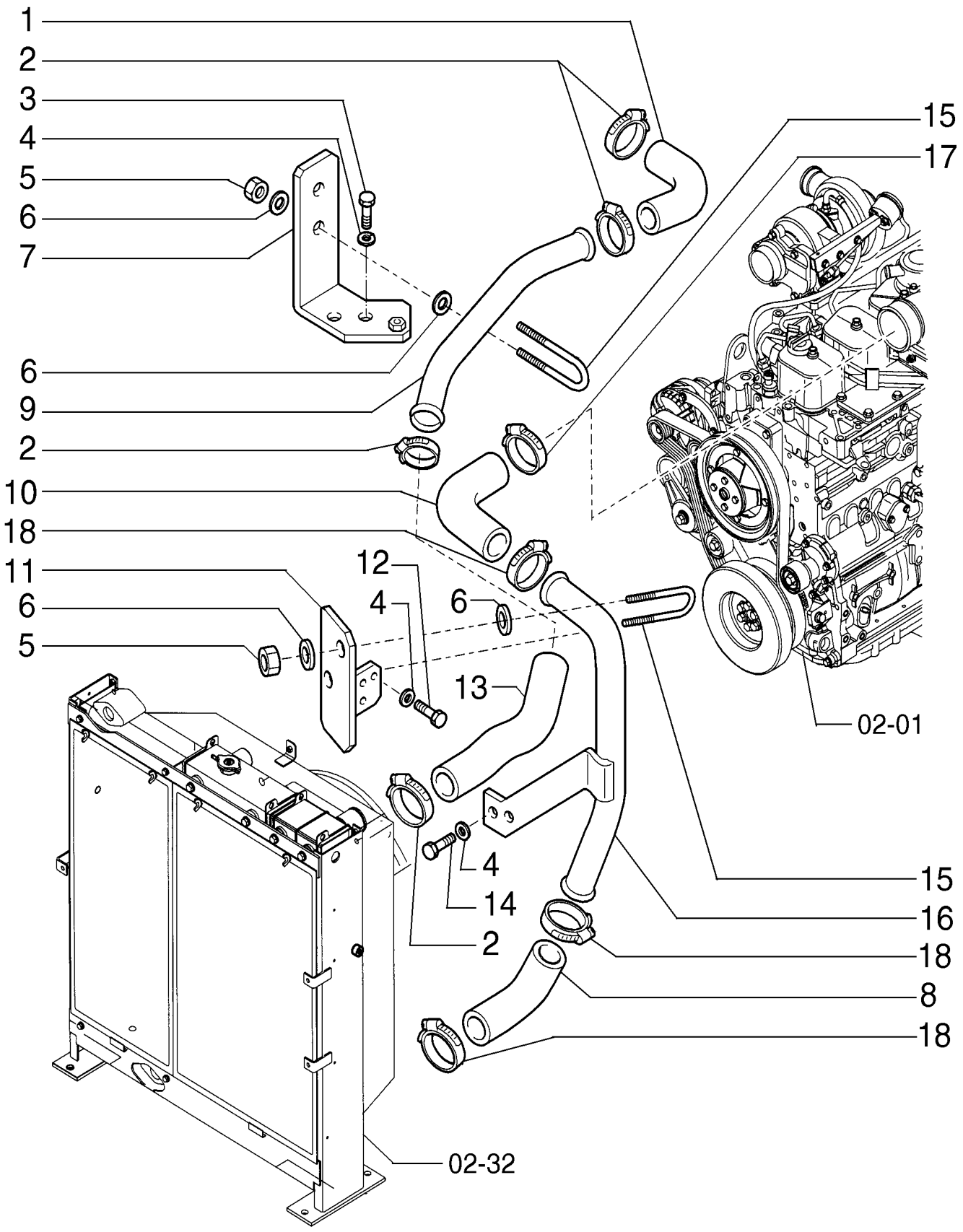

RADIATOR PIPING

REF	FN	PART NUMBER	YR/SN	QTY	DESCRIPTION
1		87526662		1	MANGUEIRA ADMISSÃO DE AR 62.50 mm ID x 160.00 mm
2		214-2160		7	SUPORTE
3		11107431		2	PARAFUSO Hex, M10 x 1.5 x 60.00mm, Cl 10.9, ZND
4		14496631		6	ARRUELA PLANA M10 x 21 x 2
5		16100821		8	PORCA M8, Cl 10
6		14496531		8	ARRUELA PLANA M8 x 17 x 1.6
7		87648240		1	SUPORTE
8		87526665		1	MANGUEIRA
9		87526666		1	TUBO RÍGIDO 59.5 mm ID x 63.5 mm OD x 391, 64 mm L
10		87526664		1	MANGUEIRA
11		87648293		1	SUPORTE
12		11106431		2	PARAFUSO Hex, M10 x 30, 10.9, Full Thd
13		87579445		1	MANGUEIRA DO RADIADOR 62.50 mm ID x 274.00 mm
14		11106031		2	PARAFUSO Hex, M10 x 20, 10.9, Full Thd
15		75262517		2	BRAÇADEIRA
16		87526667		1	TUBO RÍGIDO 545, 266 mm L
17		214-2176		1	BRAÇADEIRA #76, 3.25"-3.56", T-Bolt
18		L115549		3	BRAÇADEIRA

02-32	01	p1	7/2013

RADIATOR & GUARDS

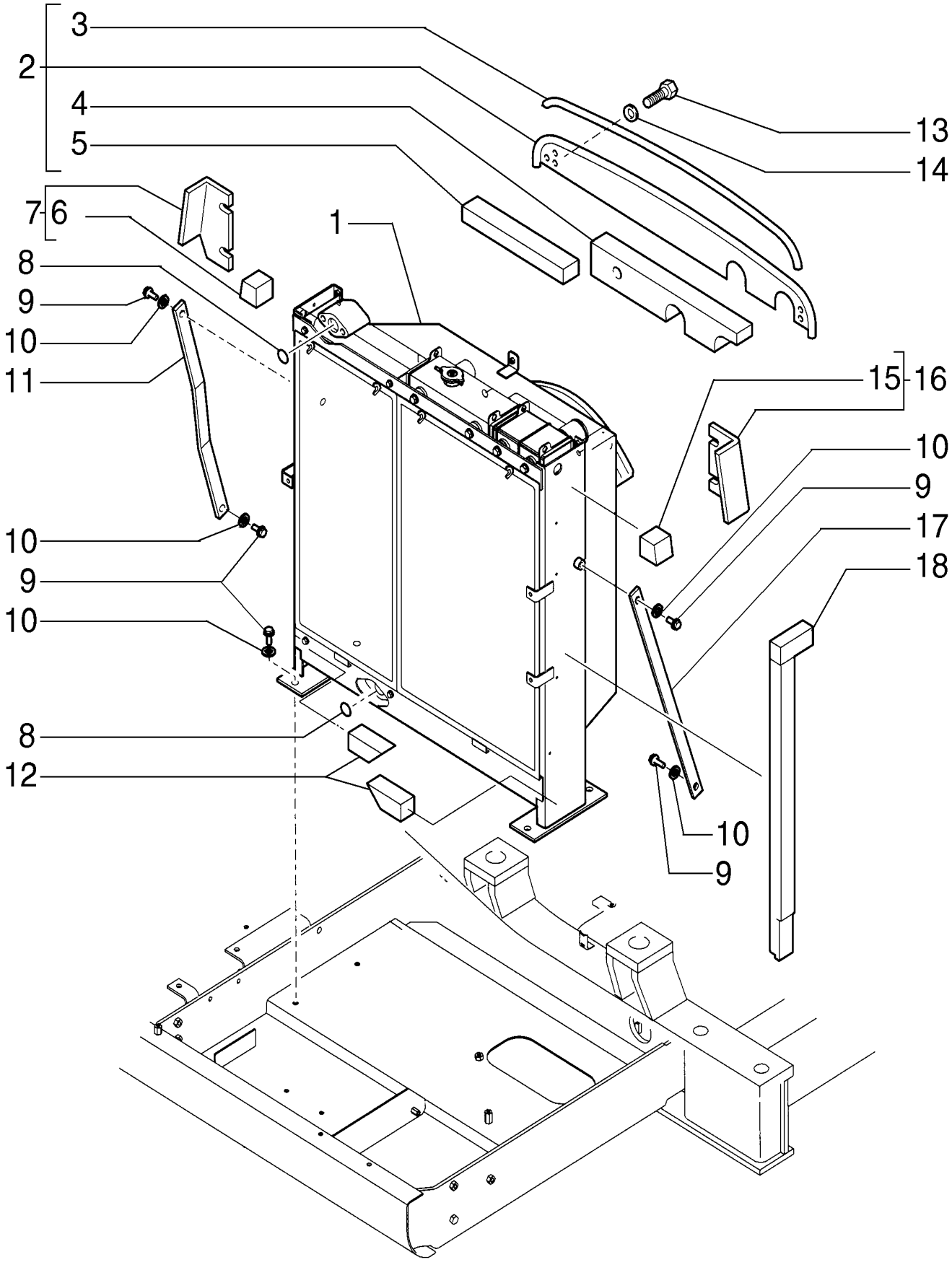

RADIATOR & GUARDS

REF	FN	PART NUMBER	YR/SN	QTY	DESCRIPTION
1		YN05P00062F5		1	RADIADOR
2		87647432		1	SUPORTE Includes items 3, 4, 5
3		87547571		1	JUNTA
4		87647450		1	ISOLADOR
5		87647454		1	ISOLADOR
6		87647463		1	ISOLADOR
7		87647460		1	SUPORTE Includes item 6
8		87340507		2	O-RING 44.7mm ID x 51.7mm OD x 3.5mm
9		11112631		8	PARAFUSO Hex, M12 x 35, 10.9
10		14496731		8	ARRUELA PLANA M12 x 24 x 2.5 Thk
11		87647489		1	SUPORTE
12		87647477		2	ISOLADOR
13		16043431		4	PARAFUSO Hex, M8 x 20, 10.9
14		14496531		4	ARRUELA PLANA M8 x 17 x 1.6
15		87647471		1	ISOLADOR
16		87647464		1	PROTEÇÃO Includes item 15
17		87647484		1	SUPORTE
18		87647475		1	ISOLADOR

02-32/A	01	p1	7/2013

RADIATOR & GUARDS

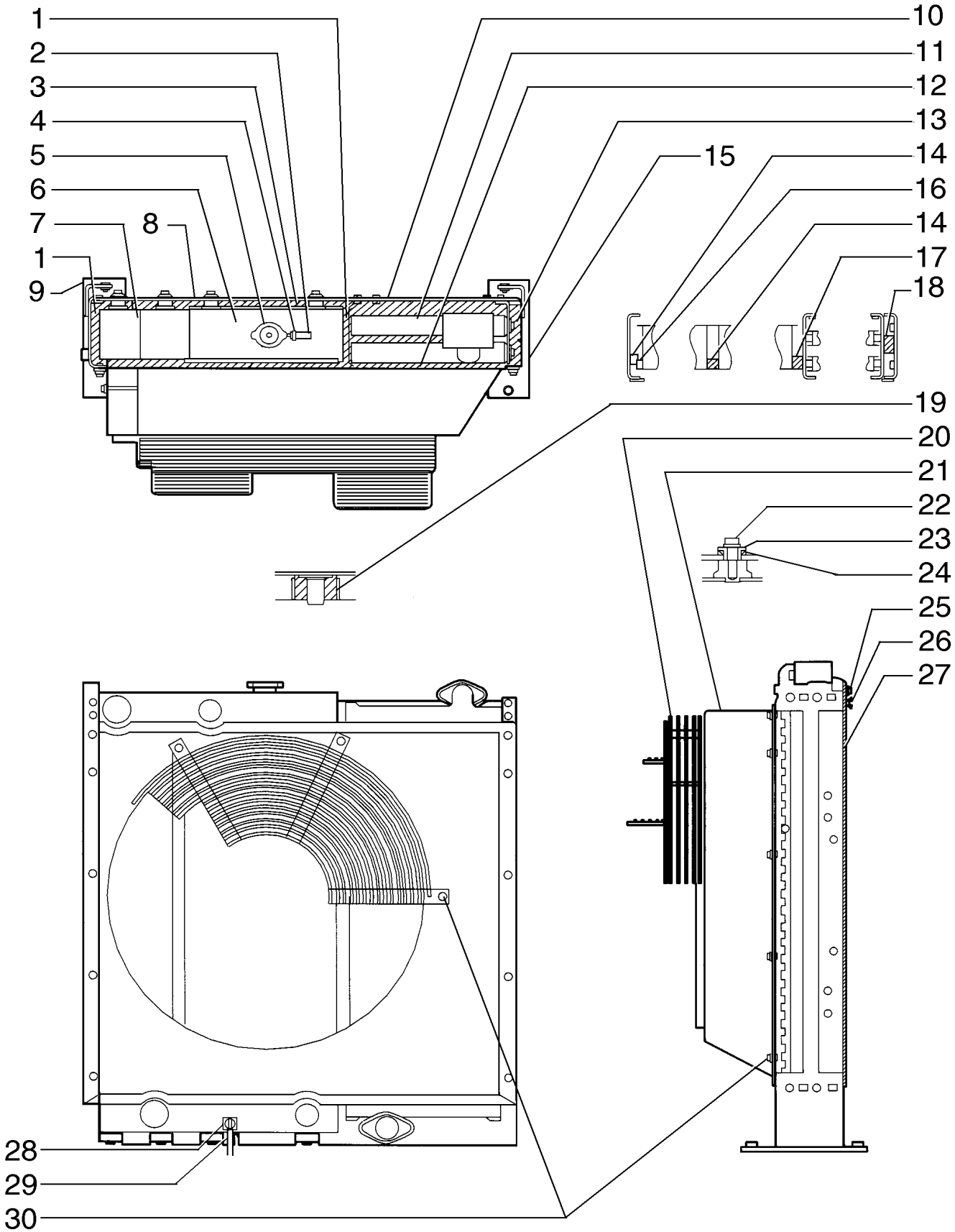

RADIATOR & GUARDS

REF	FN	PART NUMBER	YR/SN	QTY	DESCRIPTION
1		YN05P00058S019		4	ISOLANTE
2		72213767		1	MANGUEIRA
3		YN05P00062S012		2	ISOLANTE
4		72213766		2	GRAMPO
5		72953999		1	GUARDA PÓ
6		YN05P00062S001		1	RADIADOR
7		YN05P00058S003		1	RADIADOR
8		YN05P00062S018		1	PROTEÇÃO
9		YN05P00062S011		1	SUPORTE
10		YN05P00058S005		1	PROTEÇÃO
11		YN05P00058S002		1	RESFRIADOR DO ÓLEO
12		YN05P00062S016		2	VEDAÇÃO DE BORRACHA
13		YN05P00062S013		2	ISOLANTE
14		72210216		2	ISOLANTE
15		YN05P00062S029		1	SUPORTE
16		YN05P00058S022		1	ISOLANTE
17		YN05P00058S023		1	ISOLANTE
18		YN05P00062S014		1	ISOLANTE
19		YN05P00058S014		4	COXIM
20		YN05P00062S027		1	PROTEÇÃO
21		YN05P00062S015		1	PROTEÇÃO
22		72954857		4	PARAFUSO
23		YN05P00058S012		4	COLAR
24		YN05P00058S013		4	COXIM
25		87353624		4	PARAFUSO
26		72210213		4	PARAFUSO
27		YN05P00058S032		2	JUNTA
28		72215424		1	BUJÃO DRENAGEM/ABASTEC
29		72210208		1	TUBO FLEXÍVEL
30		72210209		13	PARAFUSO

02-33	01	p1	7/2013

FAN & SENSORS

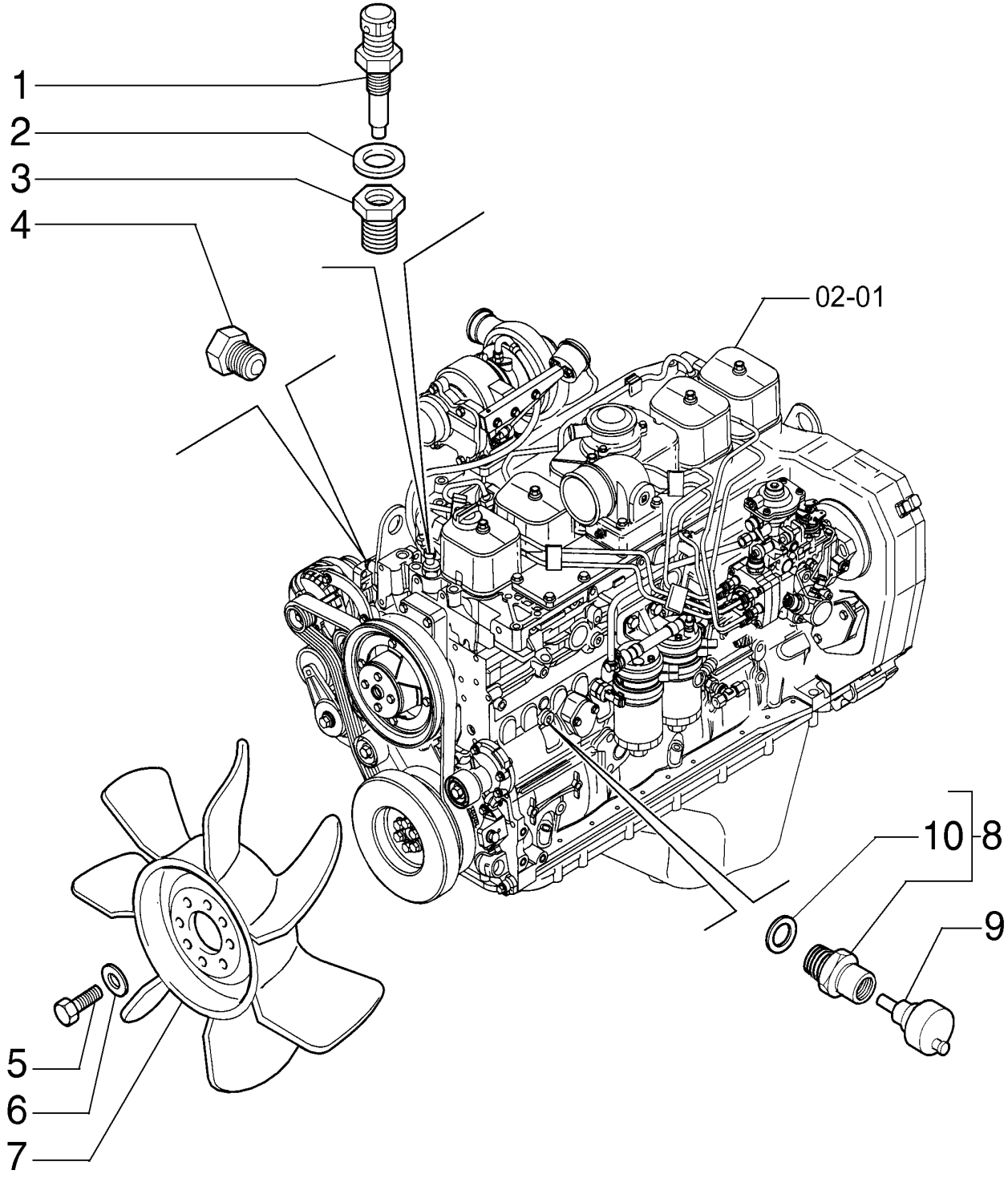

FAN & SENSORS

REF	FN	PART NUMBER	YR/SN	QTY	DESCRIPTION
1		71451711		1	TRANSMISSOR Engine water temperature
2		71488736		1	VEDAÇÃO
3		87634386		1	CONECTOR HIDRÁUL
4		10119440		1	BUJÃO M18 x 1.5 x 16, Brass
5		11106231		4	PARAFUSO Hex, M10 x 25, 10.9, Full Thd
6		14496631		4	ARRUELA PLANA M10 x 21 x 2
7		87550707		1	VENTILADOR
8		72109072		1	CONECTOR HIDRÁUL Includes item 10
9		71451954		1	INTERRUPTOR DE PRESSÃO Engine oil pressure
10		72109073		1	JUNTA

02-36	01	p1	7/2013

THERMOSTAT VALVE

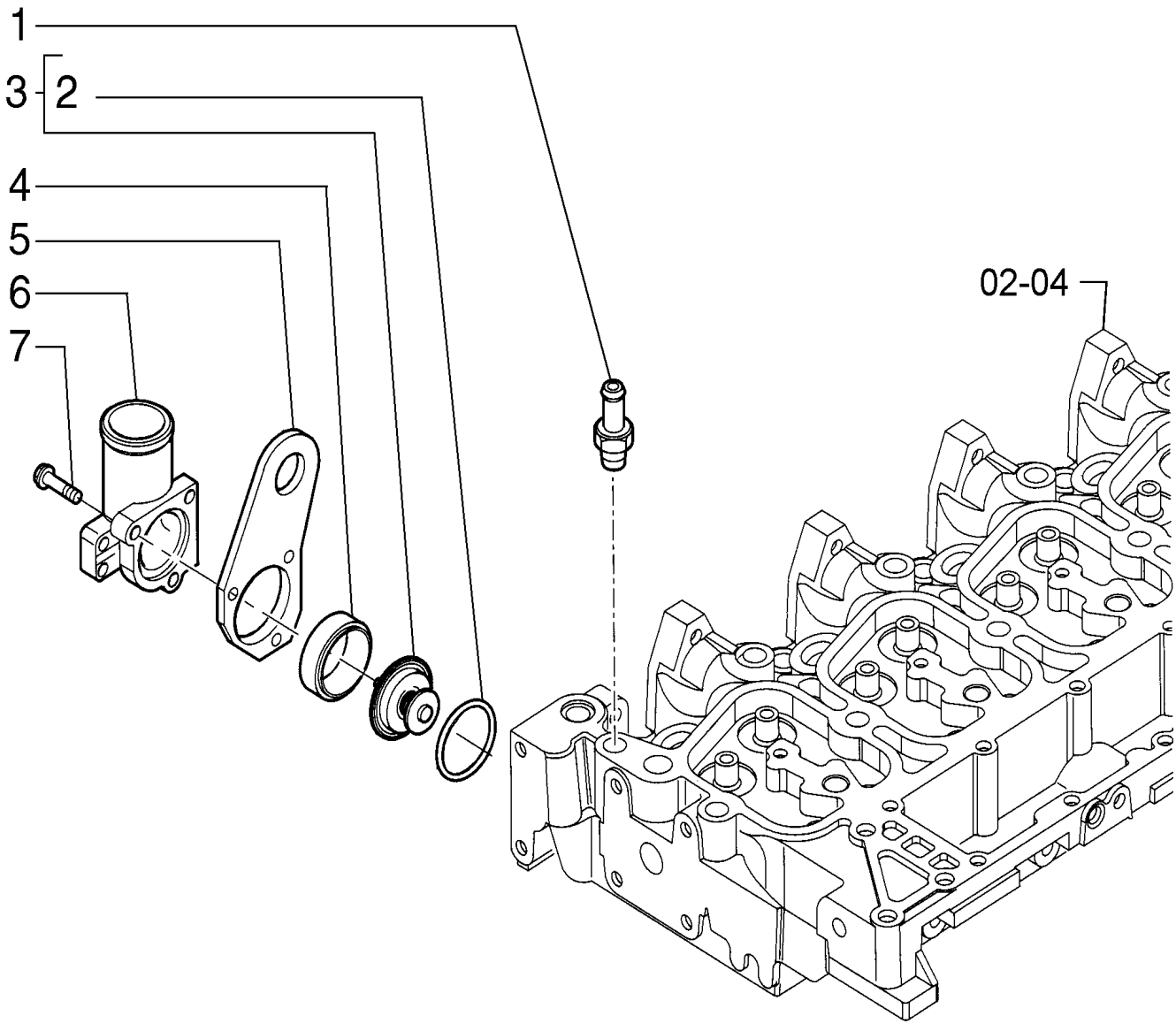

THERMOSTAT VALVE

REF	FN	PART NUMBER	YR/SN	QTY	DESCRIPTION
1		504043984		1	CONEXÃO 1/2"-14 NPTF x M10 Barb
2		504030960		1	JUNTA
3		2858050		1	TERMOSTATO Includes item 2
4		504078856		1	JUNTA
5		504079607		1	SUPORTE
6		504079269		1	COLETOR
7		4899091		3	PARAFUSO Hex Flange Cap, M8 x 1.25 x 40.00mm

02-38	01	p1	7/2013

FAN PULLEY

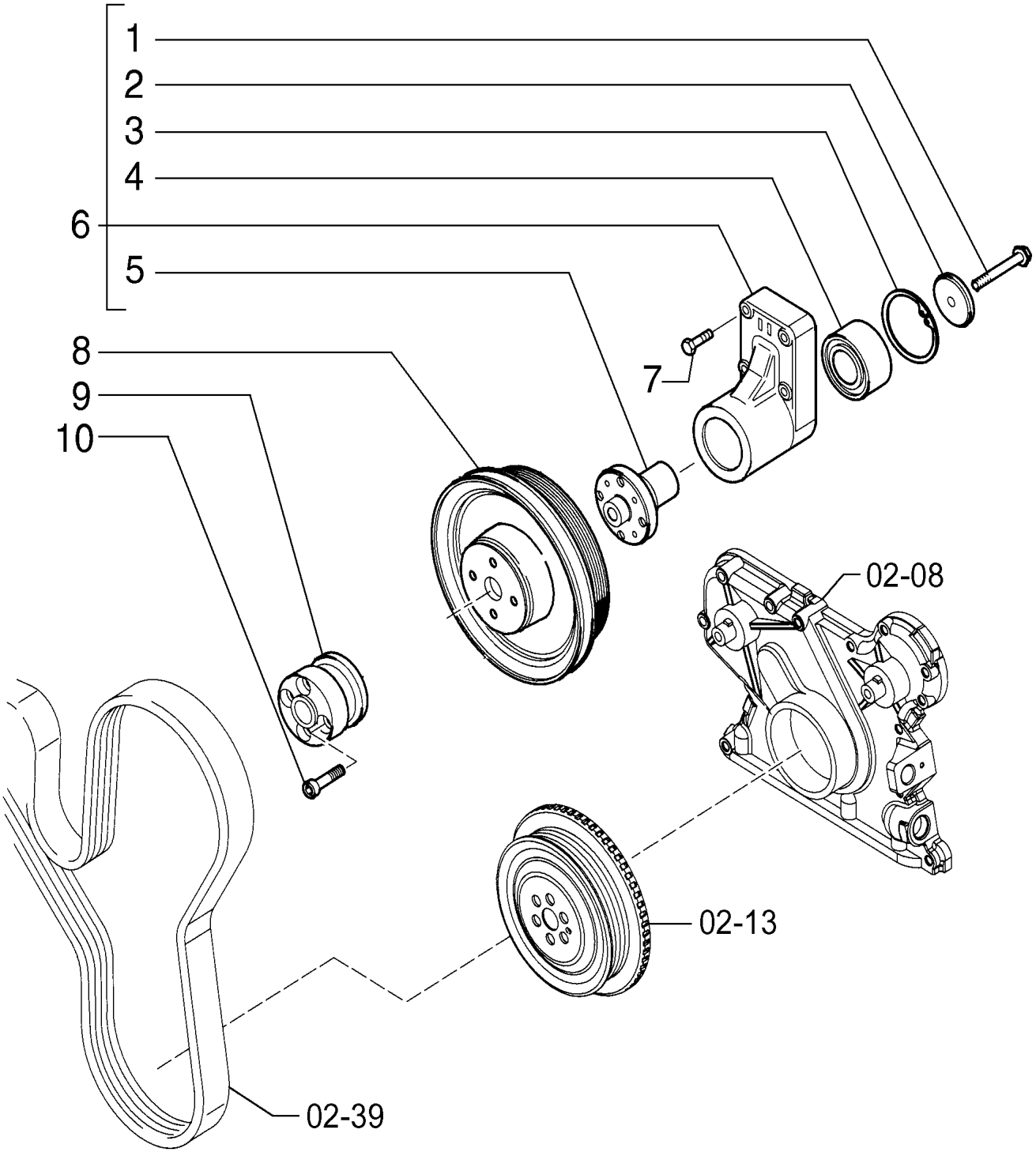

FAN PULLEY

REF	FN	PART NUMBER	YR/SN	QTY	DESCRIPTION
1		2854424		1	PARAFUSO
2		4890732		1	RETENTOR
3		2852171		1	ANEL DE PRESSÃO
4		4892732		1	ROLAMENTO ESFÉRICO 34 mm ID x 64 mm OD x 37 mm
5		4892426		1	CUBO
6		2855881		1	CAIXA VENTILADORA Includes items 1 - 5
7		4895323		4	PARAFUSO FLANGEADO Hex, M8 x 1 x 40
8		2855972		1	POLIA
9		2854320		1	ESPAÇADOR
10		4899109		4	PARAFUSO Hex, M10 x 1.5 x 80

02-39	01	p1	7/2013

FAN DRIVE

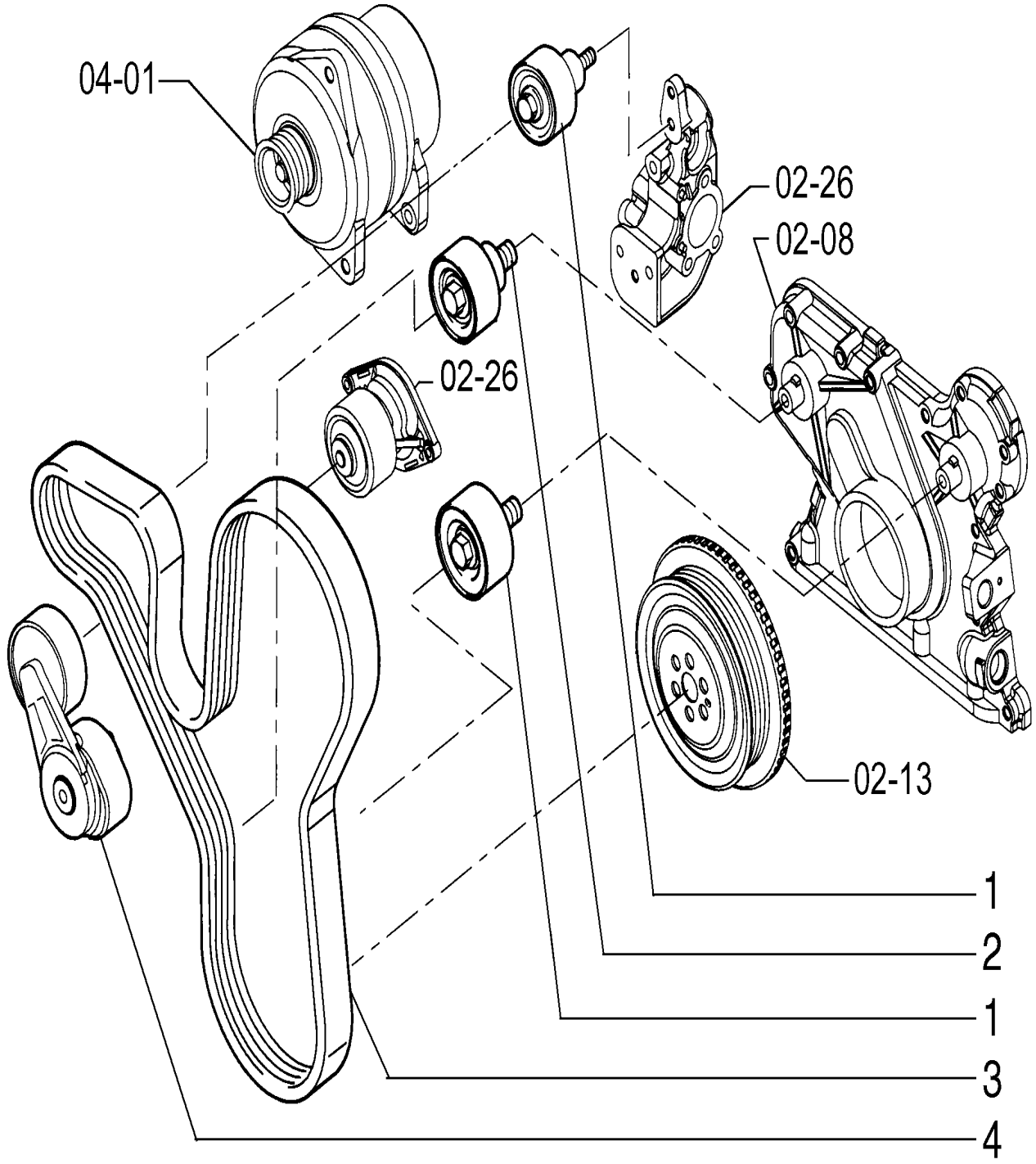

FAN DRIVE

REF	FN	PART NUMBER	YR/SN	QTY	DESCRIPTION
1		2852245		2	POLIA
2		2852397		1	ADIAMENTO
3		2855970		1	CORREIA 1630.00 mm L
4		2856946		1	TENSOR DE CORREIA

SECTION INDEX

Fuel System

03-01	01	FUEL TANK (Nov 18 2009 11:55AM)
03-02	01	FUEL PIPING
03-02	01A	FUEL PIPING
03-02	02	FUEL PIPING
03-02	02A	FUEL PIPING
03-02	03	FUEL FILTER & LIFT PUMP
03-03	01	SUPPLY PUMP
03-03	02	SUPPLY PUMP ASSY
03-06	01	THROTTLE CONTROL
03-09	01	FUEL INJECTION PUMP & NOZZLE
03-10	01	FUEL INJECTION SYSTEM
03-12	01	FUEL INJECTION SYSTEM
03-12	02	FUEL INJECTION SYSTEM

03-01	01	p1	7/2013

FUEL TANK (Nov 18 2009 11:55AM)

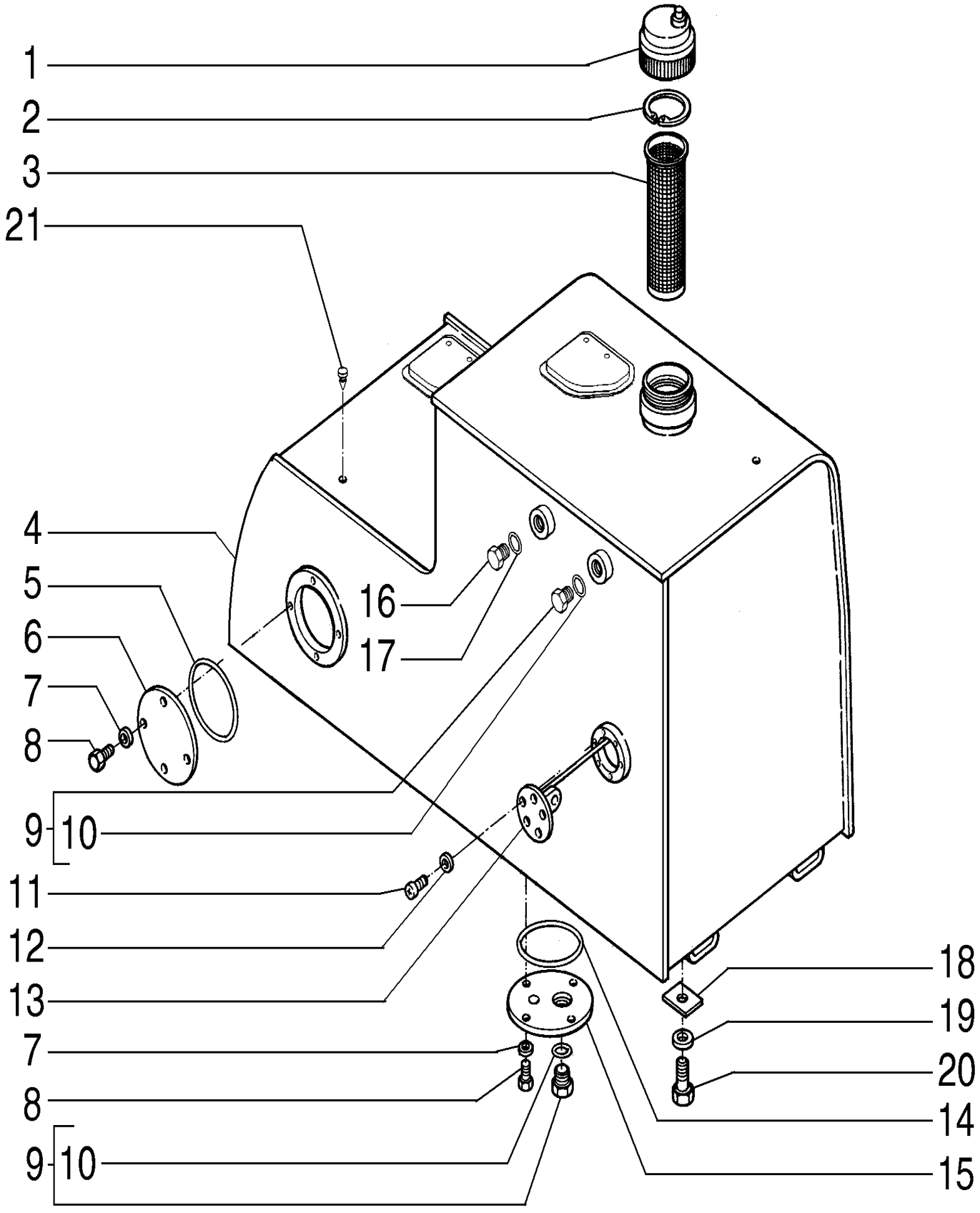

FUEL TANK (Nov 18 2009 11:55AM)

REF	FN	PART NUMBER	YR/SN	QTY	DESCRIPTION
1		87362264		1	COBERTURA
2		4971843		1	ANEL ELÁSTICO
3		75241002		1	FILTRO DE COMBUSTÍVEL
4		87687843		1	RESERVATÓRIO
5		14466880		1	O-RING 4.984" ID x 5.262" OD x 0.139"
6		75263924		1	COBERTURA
7		10516871		8	TRAVA DA ARRUELA
8		11106031		8	PARAFUSO Hex, M10 x 20, 10.9, Full Thd
9		71406271		1	BUJÃO Includes item 10
10		71404162		1	O-RING
11		13274021		5	PARAFUSO Cross Pan Hd, M5 x 12, 8.8
12		11195471		5	TRAVA DA ARRUELA
13		87539072		1	SENSOR
14		14466580		1	O-RING 117.07mm ID x 4.887" OD x 3.53mm
15		87692250		1	COBERTURA
16		76045777		1	BUJÃO
17		72204223		1	VEDAÇÃO DE BORRACHA
18		87626917		AR	CALÇO DE AFINAÇÃO
19		10520421		4	ARRUELA PLANA M16 x 30 x 3
20		15987931		4	PARAFUSO Hex, M20 x 1.5 x 40, 10.9, Full Thd
21		14590887		2	BOTÃO DE BORRACHA

03-02	01	p1	7/2013

FUEL PIPING

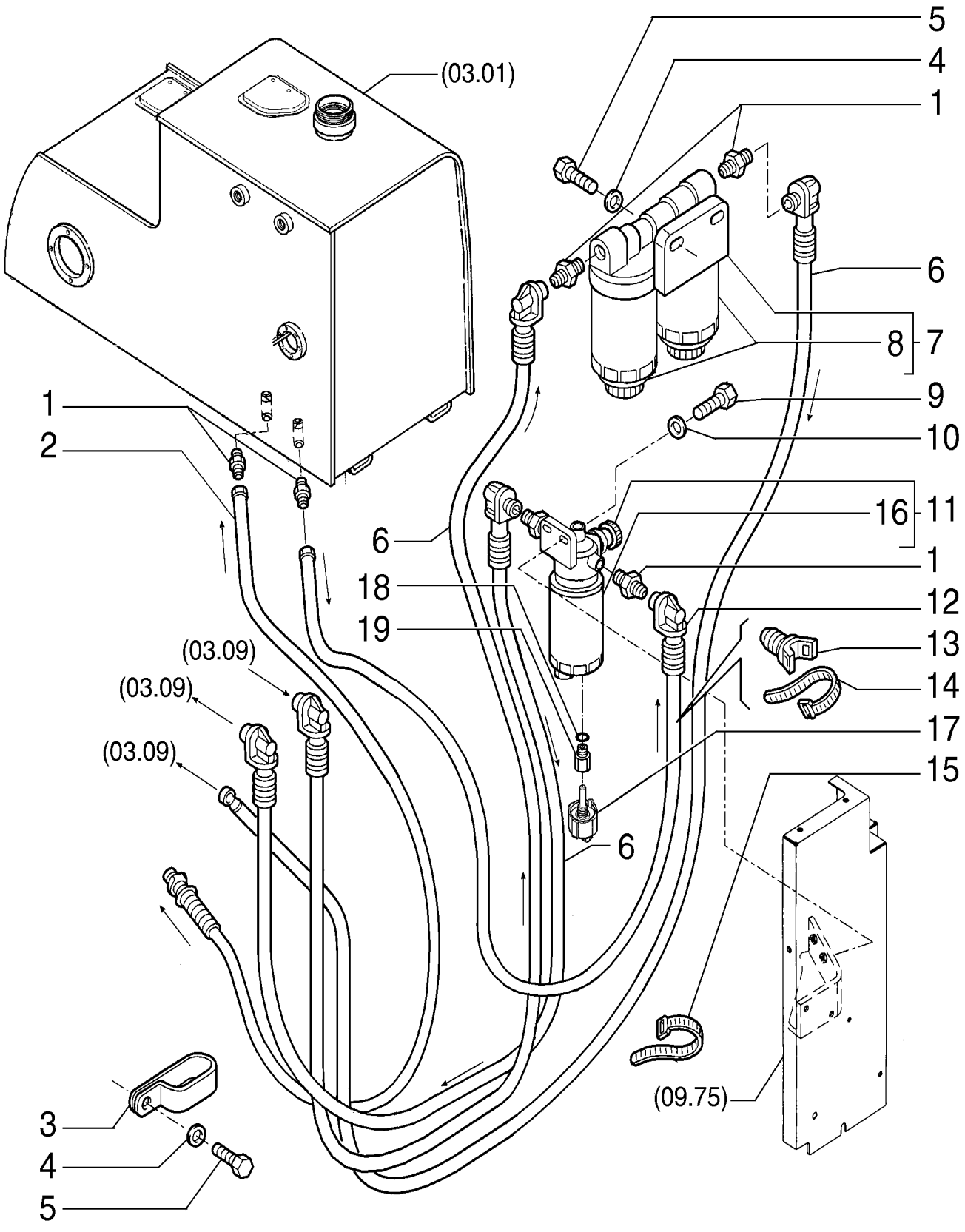

FUEL PIPING

REF	FN	PART NUMBER	YR/SN	QTY	DESCRIPTION
1		72108835		6	CONECTOR HIDRÁUL
2		87633988		1	MANGUEIRA COMBUSTÍVEL 8.00 mm ID x 3250.00 mm
3		71405944		1	GRAMPO
4		14496731		3	ARRUELA PLANA M12 x 24 x 2.5 Thk
5		11112431		3	PARAFUSO Hex, M12 x 30, 10.9, Full Thd
6		87540076		3	MANGUEIRA COMBUSTÍVEL
7		2856637		1	CABEÇA DO FILTRO COVER
8		87655371		2	ELEMENTO
9		11106431		2	PARAFUSO Hex, M10 x 30, 10.9, Full Thd
10		14496631		2	ARRUELA PLANA M10 x 21 x 2
11		87703782		1	SEPARADOR DE ÁGUA
12		87633985		1	MANGUEIRA COMBUSTÍVEL 8.00 mm ID x 3250.00 mm
13		87526680		2	COLAR DE FIXAÇÃO
14		L18331		2	PRENDEDOR DE CABOS CABLE STRAP
15		75201642		7	BRAÇADEIRA
16		84168959		1	ELEMENTO
17		87438159		1	SENSOR
18		14437785		1	O-RING 11.3mm ID x 2.4mm
19		87492389		1	CONECTOR HIDRÁUL

03-02	01A	p1	7/2013

FUEL PIPING

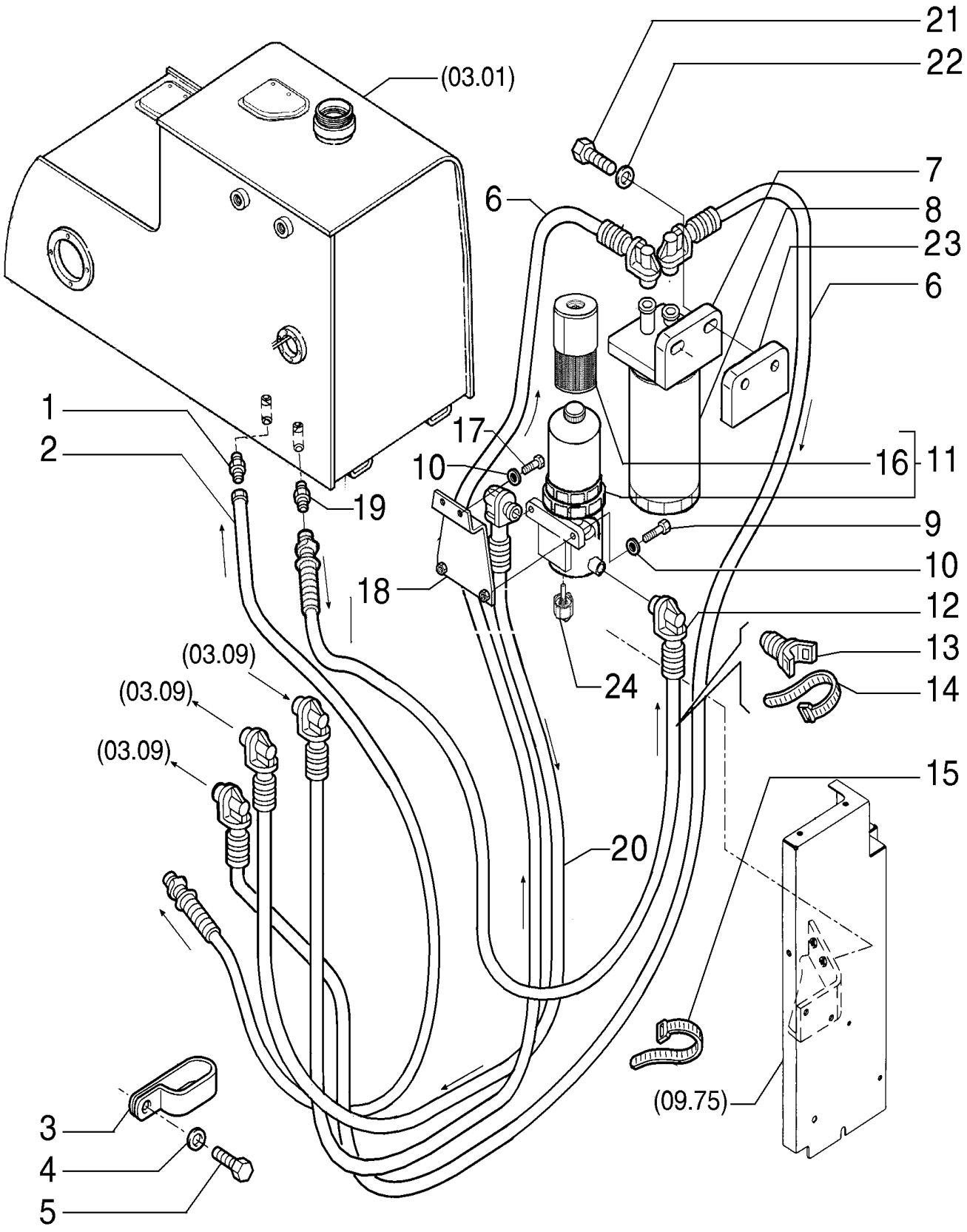

FUEL PIPING

REF	FN	PART NUMBER	YR/SN	QTY	DESCRIPTION
1		72108835		6	CONECTOR HIDRÁUL
2		87633988		1	MANGUEIRA COMBUSTÍVEL 8.00 mm ID x 3250.00 mm
3		71405944		1	GRAMPO
4		14496731		3	ARRUELA PLANA M12 x 24 x 2.5 Thk
5		11112431		3	PARAFUSO Hex, M12 x 30, 10.9, Full Thd
6		87540076		2	MANGUEIRA COMBUSTÍVEL
7		84281891		1	SUPORTE COVER, Includes item 8
8		84273562		1	FILTRO
9		11106431		2	PARAFUSO Hex, M10 x 30, 10.9, Full Thd
10		14496631		4	ARRUELA PLANA M10 x 21 x 2
11		84273550		1	FILTRO Includes item 16
12		84269597		1	MANGUEIRA
13		87526680		2	COLAR DE FIXAÇÃO
14		L18331		2	PRENDEDOR DE CABOS CABLE STRAP
15		75201642		7	BRAÇADEIRA
16		84273566		1	ELEMENTO
17		11106431		2	PARAFUSO Hex, M10 x 30, 10.9, Full Thd
18		84254259		1	SUPORTE
19		8602542		1	ADAPTADOR
20		84269596		1	MANGUEIRA
21		16043831		2	PARAFUSO Hex, M8 x 30, 10.9
22		14496531		2	ARRUELA PLANA M8 x 17 x 1.6
23		84254257		1	ESPAÇADOR
24		47443996		1	SENSOR

03-02	02	p1	7/2013

FUEL PIPING

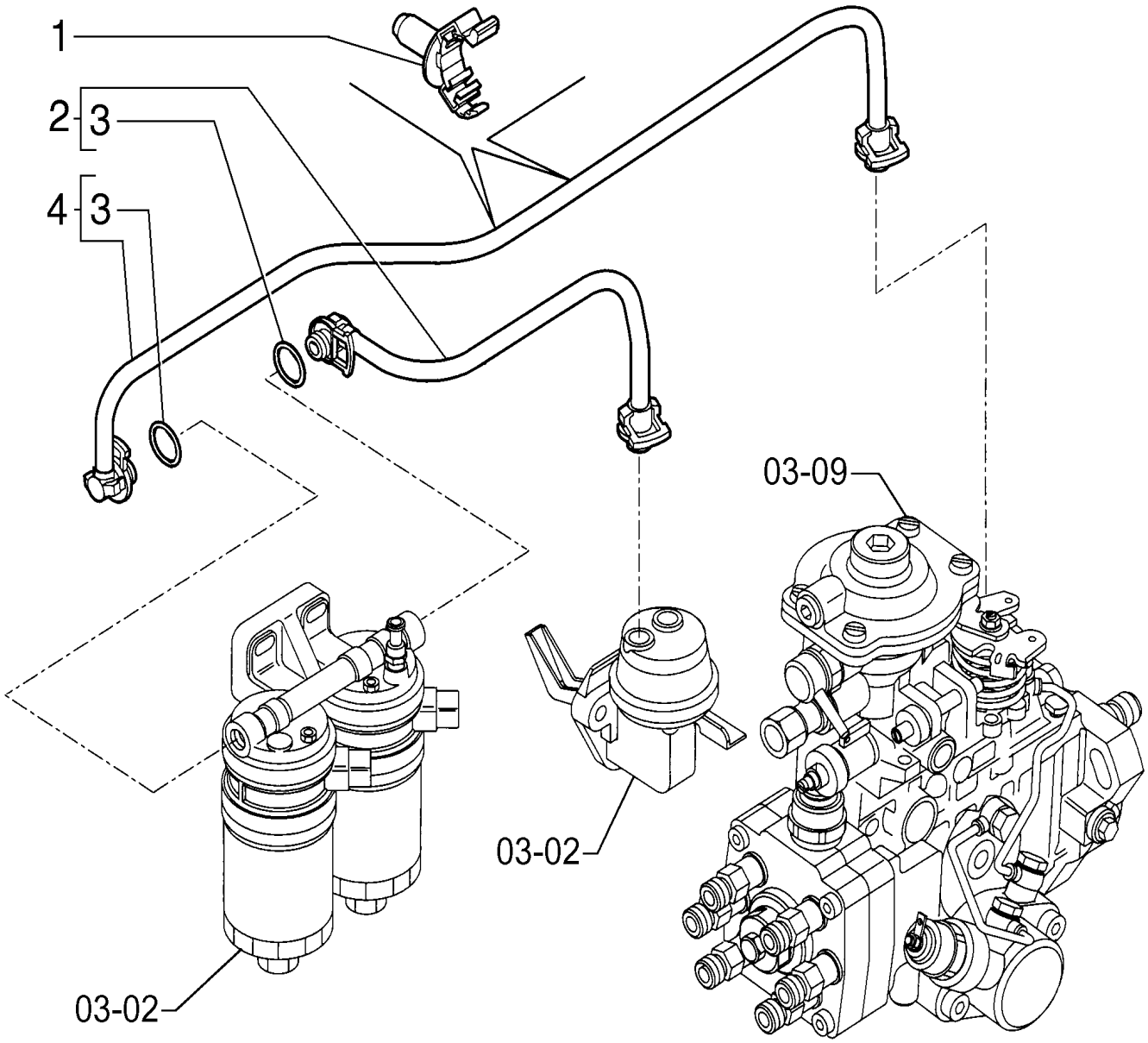

FUEL PIPING

REF	FN	PART NUMBER	YR/SN	QTY	DESCRIPTION
1		2852111		2	GRAMPO
2		2853325		1	TUBO Includes item 3
3		4894095		2	O-RING 8mm ID x 2.5mm
4		2853322		1	TUBO Includes item 3

03-02	02A	p1	7/2013

FUEL PIPING

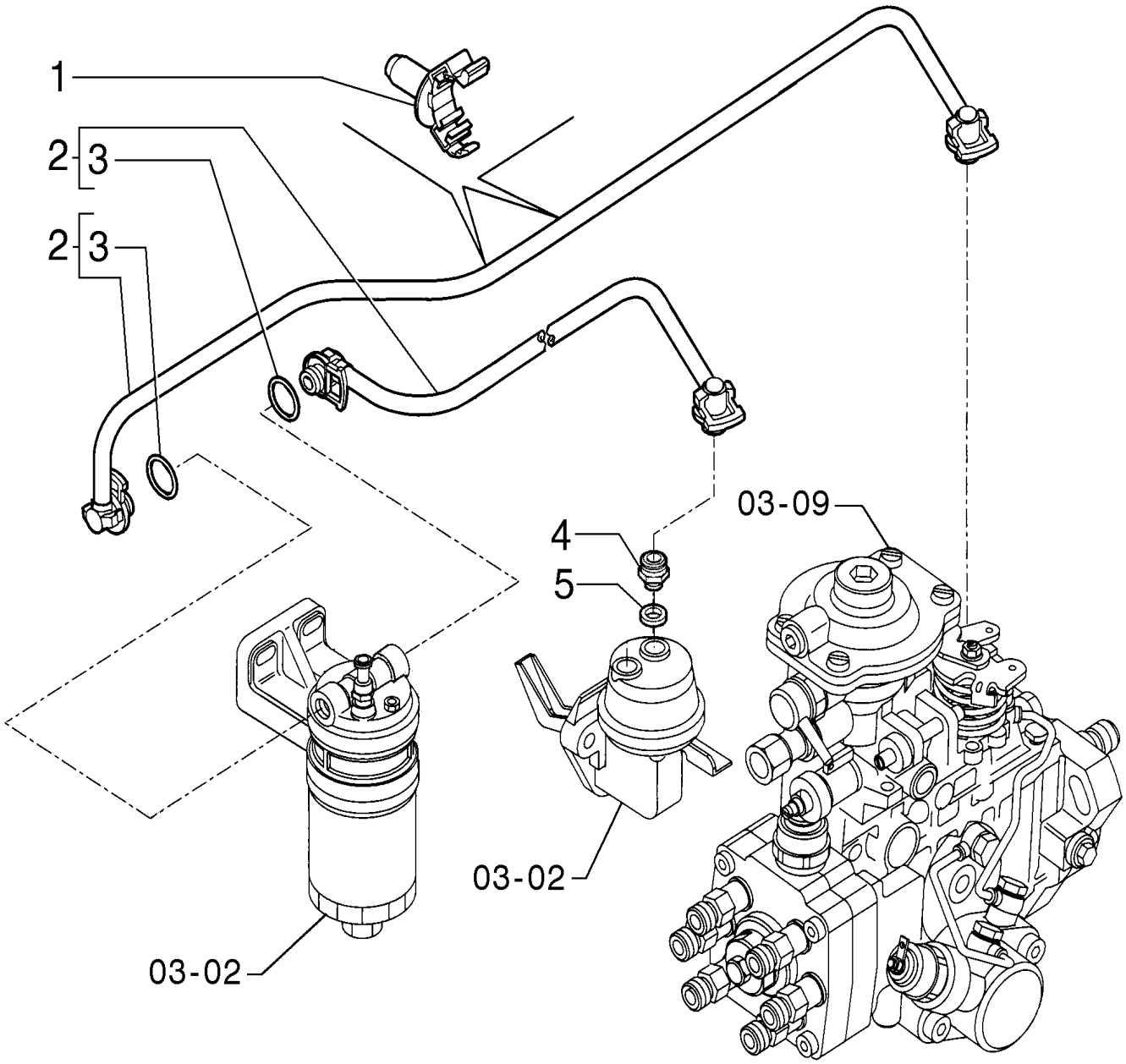

FUEL PIPING

REF	FN	PART NUMBER	YR/SN	QTY	DESCRIPTION
1		2852111		2	GRAMPO
2		87540076		1	MANGUEIRA COMBUSTÍVEL Includes item 3
3		4894095		2	O-RING 8mm ID x 2.5mm
4		84269594		1	ADAPTADOR Includes item 3
5		4894721		1	VEDAÇÃO DA ARRUELA M12.2 x 17 x 1.5 Thk

03-02	03	p1	7/2013

FUEL FILTER & LIFT PUMP

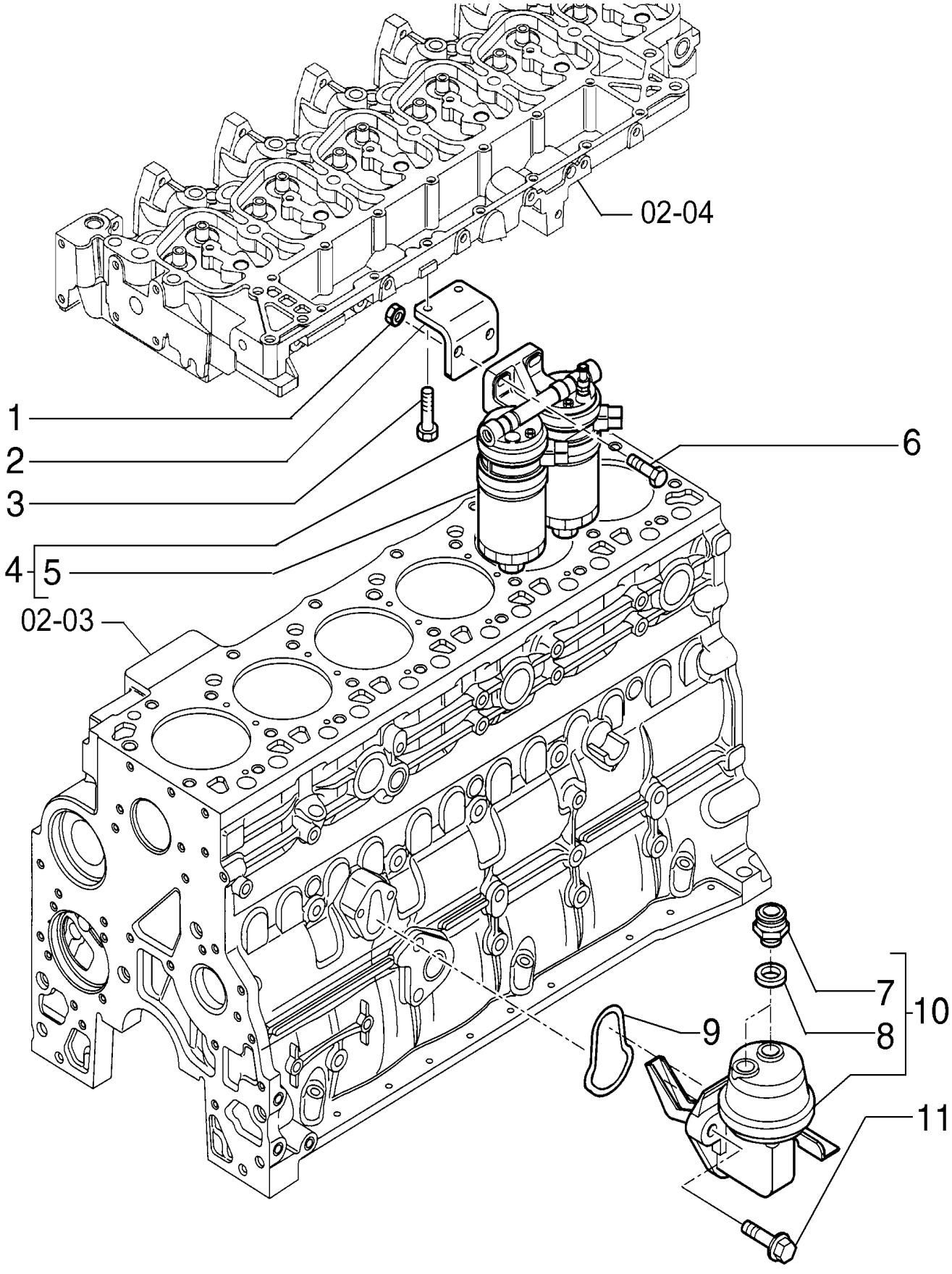

FUEL FILTER & LIFT PUMP

REF	FN	PART NUMBER	YR/SN	QTY	DESCRIPTION
1		4895166		2	PORCA FLANGEADA M10, 1.50mm Pitch, Cl 10
2		2853320		1	SUPORTE
3		4899068		2	PARAFUSO Hex Flg, M8 x 1.25 x 16
4		2856637		1	CABEÇA DO FILTRO Includes item 5
5		87655371		2	ELEMENTO
6		4899093		2	PARAFUSO Hex Flange, M10 x 30.00mm, Cl 10.9, PHC
7		4890964		2	CONEXÃO M12 x 1.5
8		4894721		2	VEDAÇÃO DA ARRUELA M12.2 x 17 x 1.5 Thk
9		2830156		1	O-RING 70 Duro, M2.62 Thk
10		2830266		1	BOMBA DE COMBUSTÍVEL Includes items 7, 8
11		4899031		2	PARAFUSO Hex Flg, M8 x 1.25 x 25
12		84269594		1	ADAPTADOR ASN NAAA04313

03-03	01	p1	7/2013

SUPPLY PUMP

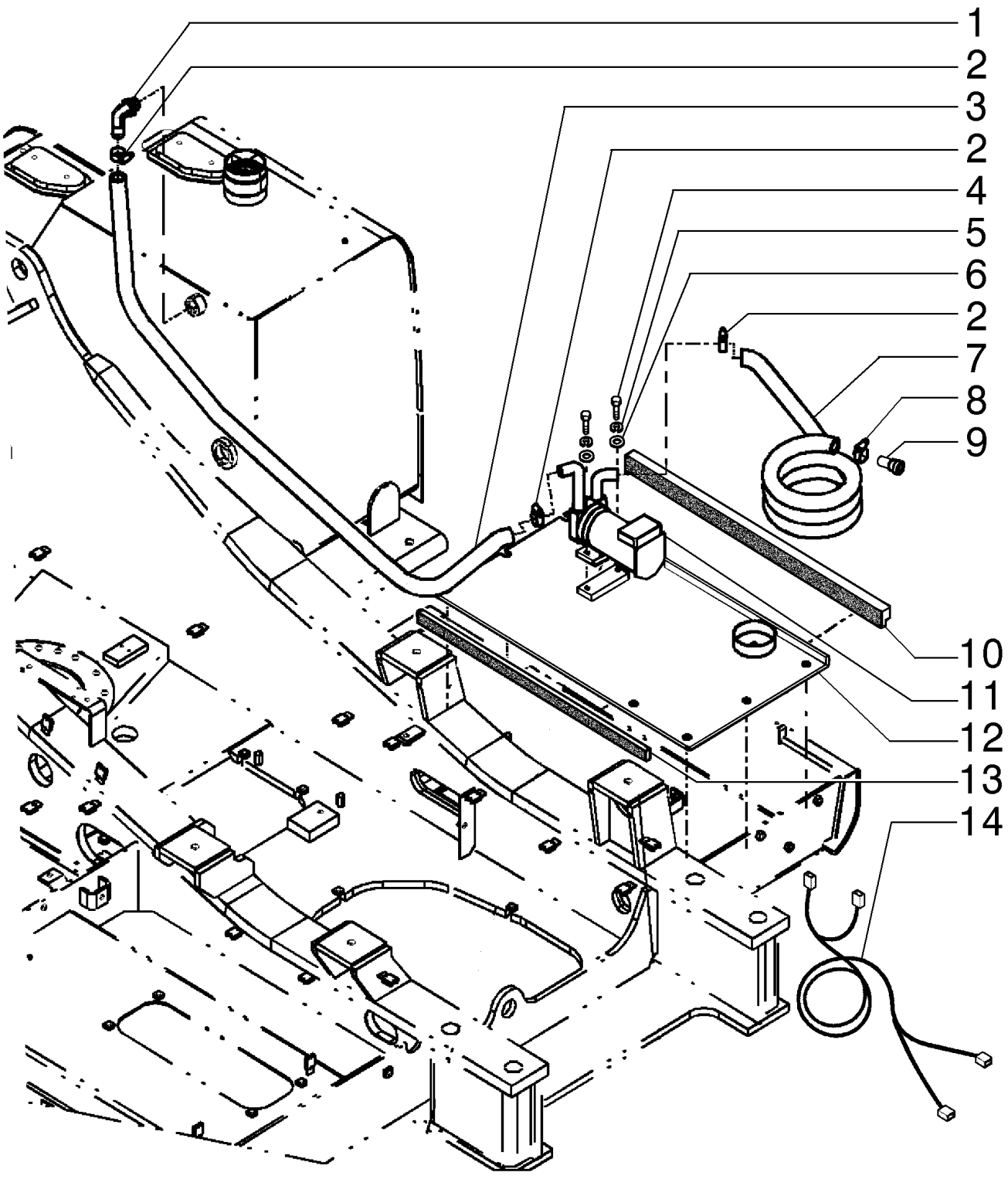

SUPPLY PUMP

REF	FN	PART NUMBER	YR/SN	QTY	DESCRIPTION
1		84158140		1	CONECTOR HIDRÁUL
2		353036A1		3	BRAÇADEIRA
3		84158160		1	MANGUEIRA COMBUSTÍVEL
4		11306931		2	PARAFUSO Hex, M10 x 1.25 x 30, 10.9, Full Thd Includes item 5
5		10516871		2	TRAVA DA ARRUELA
6		14496631		2	ARRUELA PLANA M10 x 21 x 2
7		84158151		1	MANGUEIRA COMBUSTÍVEL
8		12173990		1	GRAMPO DA MANGUEIRA
9		71406178		1	FILTRO
10		87475561		1	ESPUMA ISOLANTE Includes items 7, 8
11		71407937		1	BOMBA DE COMBUSTÍVEL
12		87475566		1	CONJUNTO DA TAMPA
13		87475562		1	ESPUMA ISOLANTE
14		84159677		1	CHICOTE

03-03	02	p1	7/2013

SUPPLY PUMP ASSY

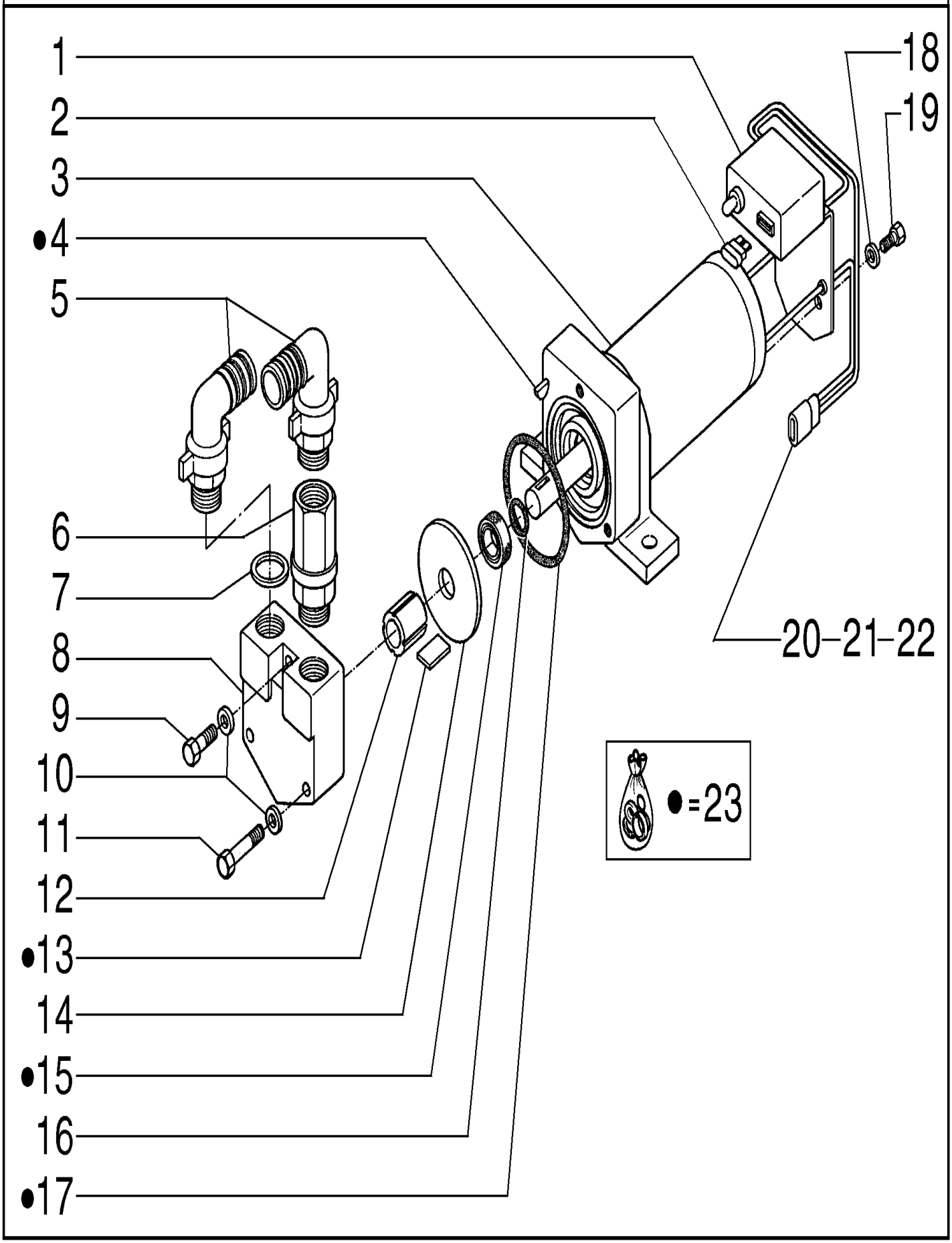

SUPPLY PUMP ASSY

REF	FN	PART NUMBER	YR/SN	QTY	DESCRIPTION
1		71417597		1	INTERRUPTOR SOLENOIDE
2		71408891		1	FUSÍVEL
3		71417596		1	MOTOR ELÉTRICO PEQUENO
4		71417804		1	CHAVE Includes item 5
5		71417809		2	CONECTOR HIDRÁUL
6		71407938		1	VÁLVULA HIDRÁULICA
7		71417808		2	VEDAÇÃO
8		71417806		1	CORPO
9		71417807		1	PARAFUSO
10		71417802		3	TRAVA DA ARRUELA Includes items 7, 8
11		71417801		2	PARAFUSO
12		71417803		1	ROTOR
13		71417805		4	PALHETA
14		71417811		1	PLACA
15		71417813		1	VEDAÇÃO
16		71417814		1	JUNTA
17		71417810		1	JUNTA
18		71417819		2	TRAVA DA ARRUELA
19		71417817		2	PARAFUSO
20		71417820		1	CONECTOR ELÉTR
21		71417821		2	CABLE TERMINAL
22		71417822		2	VEDAÇÃO
23		71417598		1	KIT

03-06	01	p1	7/2013

THROTTLE CONTROL

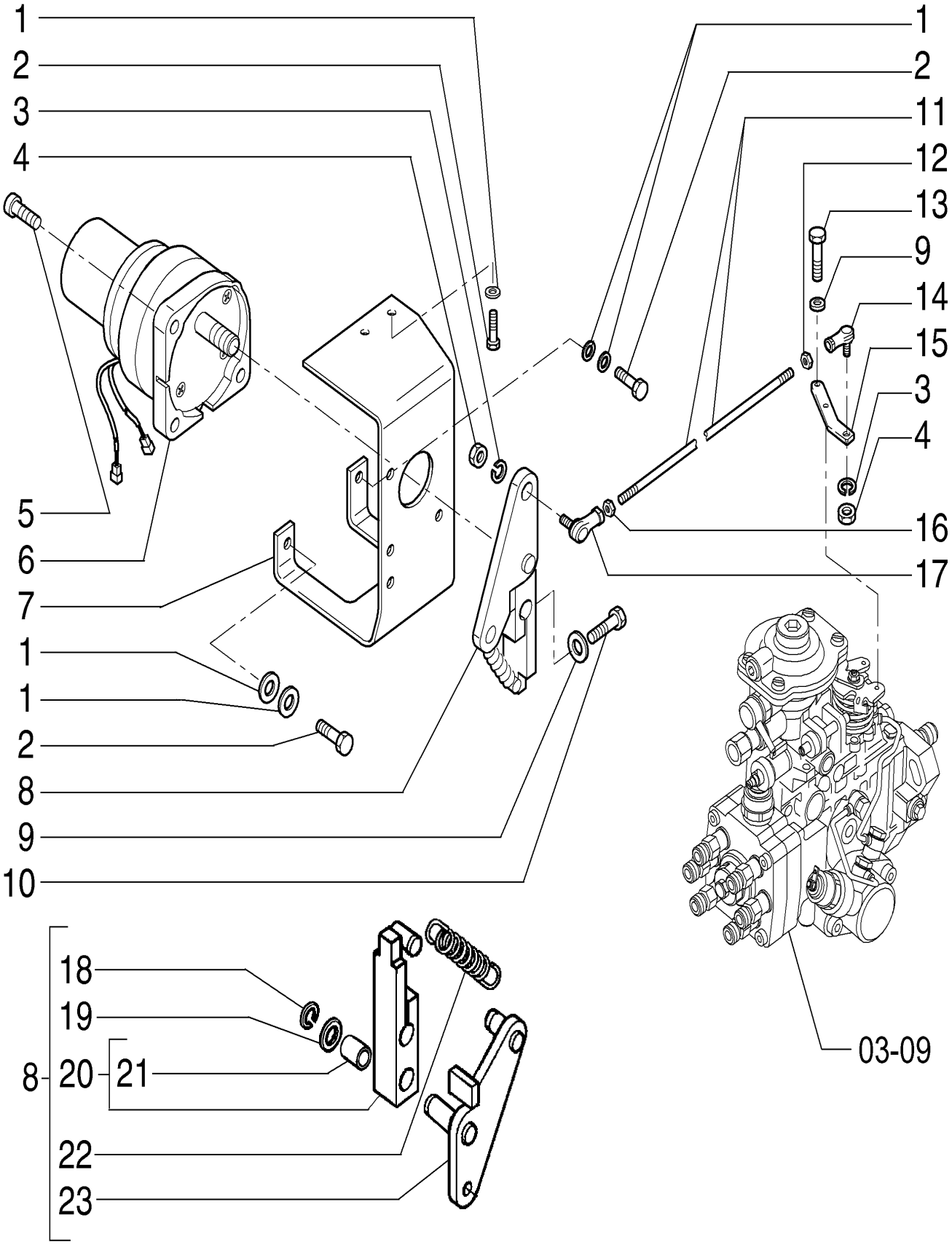

THROTTLE CONTROL

REF	FN	PART NUMBER	YR/SN	QTY	DESCRIPTION
1		12646721		6	ARRUELA PLANA M8 x 20 x 2
2		16043631		4	PARAFUSO Hex, M8 x 25, 10.9
3		10516671		2	TRAVA DA ARRUELA
4		16100821		2	PORCA M8, Cl 10
5		14420331		3	PARAFUSO Hex Soc Hd, M10 x 35, 10.9
6		72204659		1	MOTOR ELÉTRICO PEQUENO
7		87636405		1	SUPORTE
8		87636398		1	ALAVANCA Includes items 18 - 23
9		14496431		3	ARRUELA PLANA M6.4 x 12.5 x 1.6 Thk
10		10902431		1	PARAFUSO Hex, M6 x 20, 10.9
11		87636401		1	HASTE
12		10789721		1	PORCA M10 x 1.25, Cl 10, LH
13		10902231		2	PARAFUSO Hex, M6 x 16, 10.9
14		72209399		1	JUNTA ESFÉRICA
15		84167034		1	PLACA
16		12164721		1	PORCA M10 x 1.25, Cl 10
17		72209400		1	JUNTA ESFÉRICA
18		11066074		1	ANEL ELÁSTICO M12
19		14496731		1	ARRUELA PLANA M12 x 24 x 2.5 Thk
20		72204634		1	ALAVANCA Includes item 21
21		72204635		1	BUCHA
22		72204636		1	MOLA
23		87636421		1	PLACA

FUEL INJECTION PUMP & NOZZLE

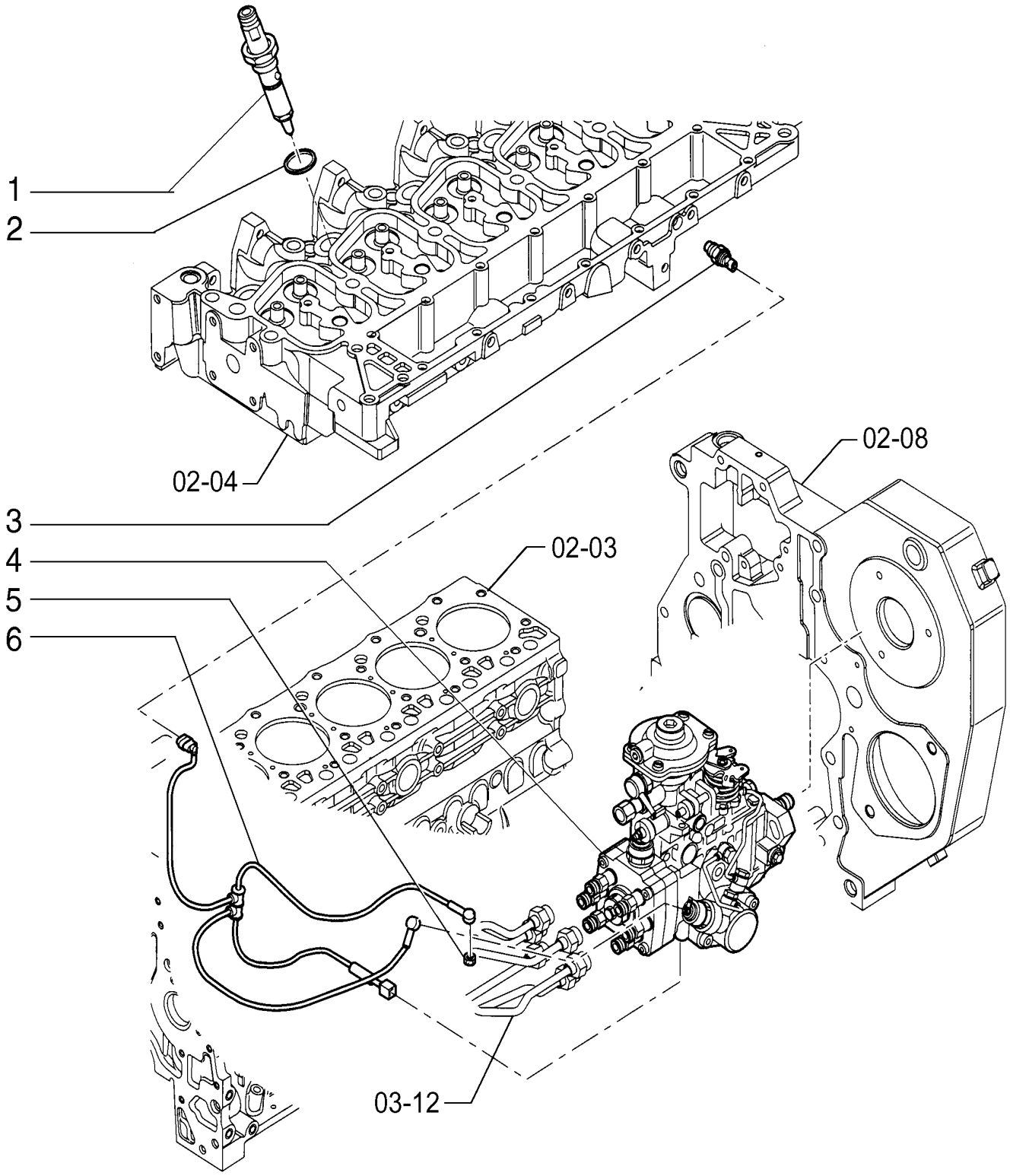

FUEL INJECTION PUMP & NOZZLE

REF	FN	PART NUMBER	YR/SN	QTY	DESCRIPTION
1		2852273		6	INJETOR SIST COMBUSTÍVEL
2		4895297		6	VEDAÇÃO Rectangular, 15.6mm ID x 1.68 Thk
3		2856350		1	SENSOR
4		2859169		1	BOMBA INJEÇÃO COMBUSTÍVEL
5		2852089		2	PORCA M5
6		2852088		1	CHICOTE

FUEL INJECTION SYSTEM

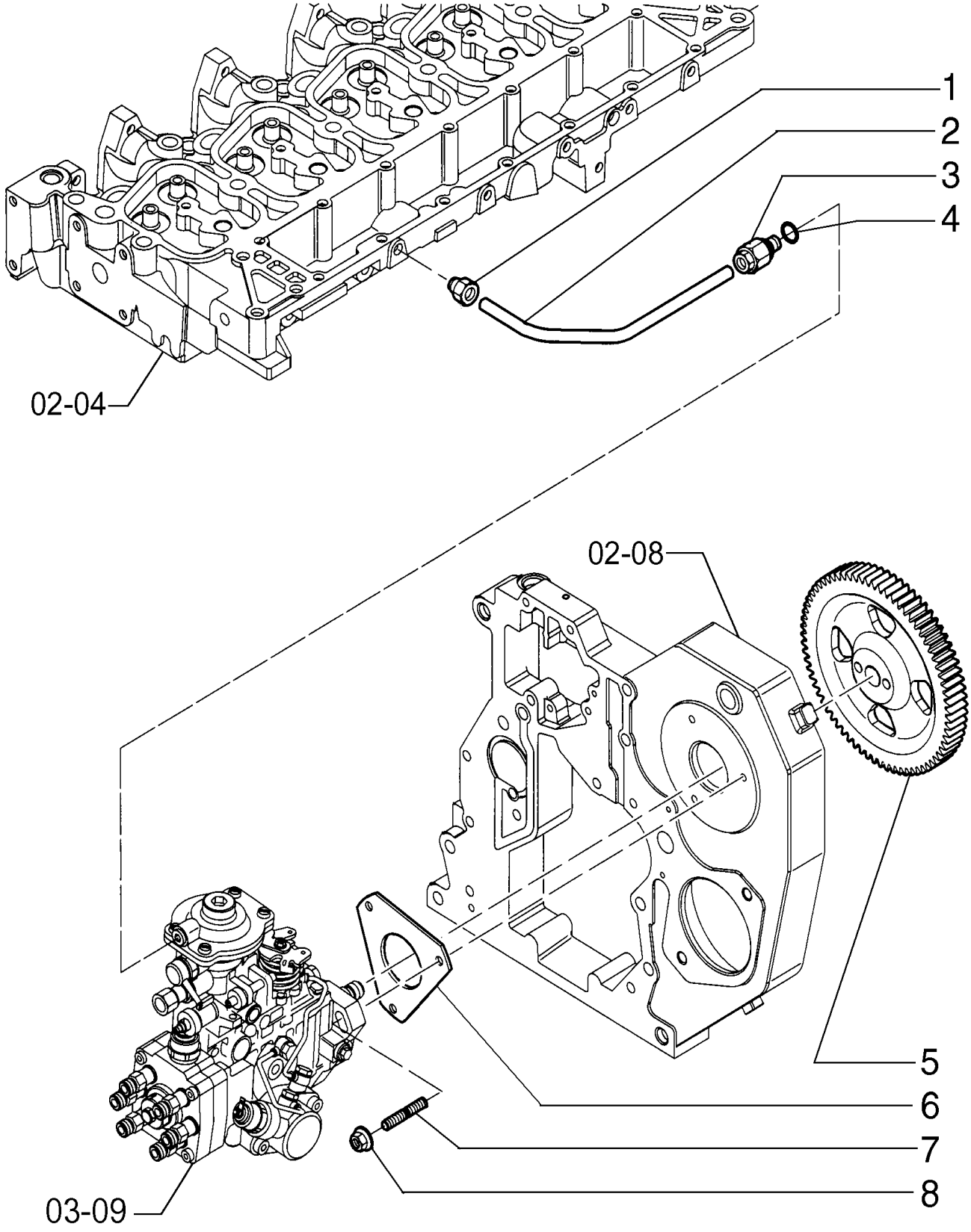

FUEL INJECTION SYSTEM

REF	FN	PART NUMBER	YR/SN	QTY	DESCRIPTION
1		4896770		1	CONEXÃO M10 x 1
2		2852350		1	TUBO RÍGIDO
3		4893518		1	CONEXÃO M8 x 1 x 29.5 L
4		2852057		1	VEDAÇÃO DA ARRUELA M8 x 12 x 1 Thk SEAL WASHER
5		4896616		1	ENGRENAGEM ACIONADA
6		2852885		1	JUNTA
7		2852347		3	PRISIONEIRO
8		4899003		3	PORCA FLANGEADA M8 x 1.25

FUEL INJECTION SYSTEM

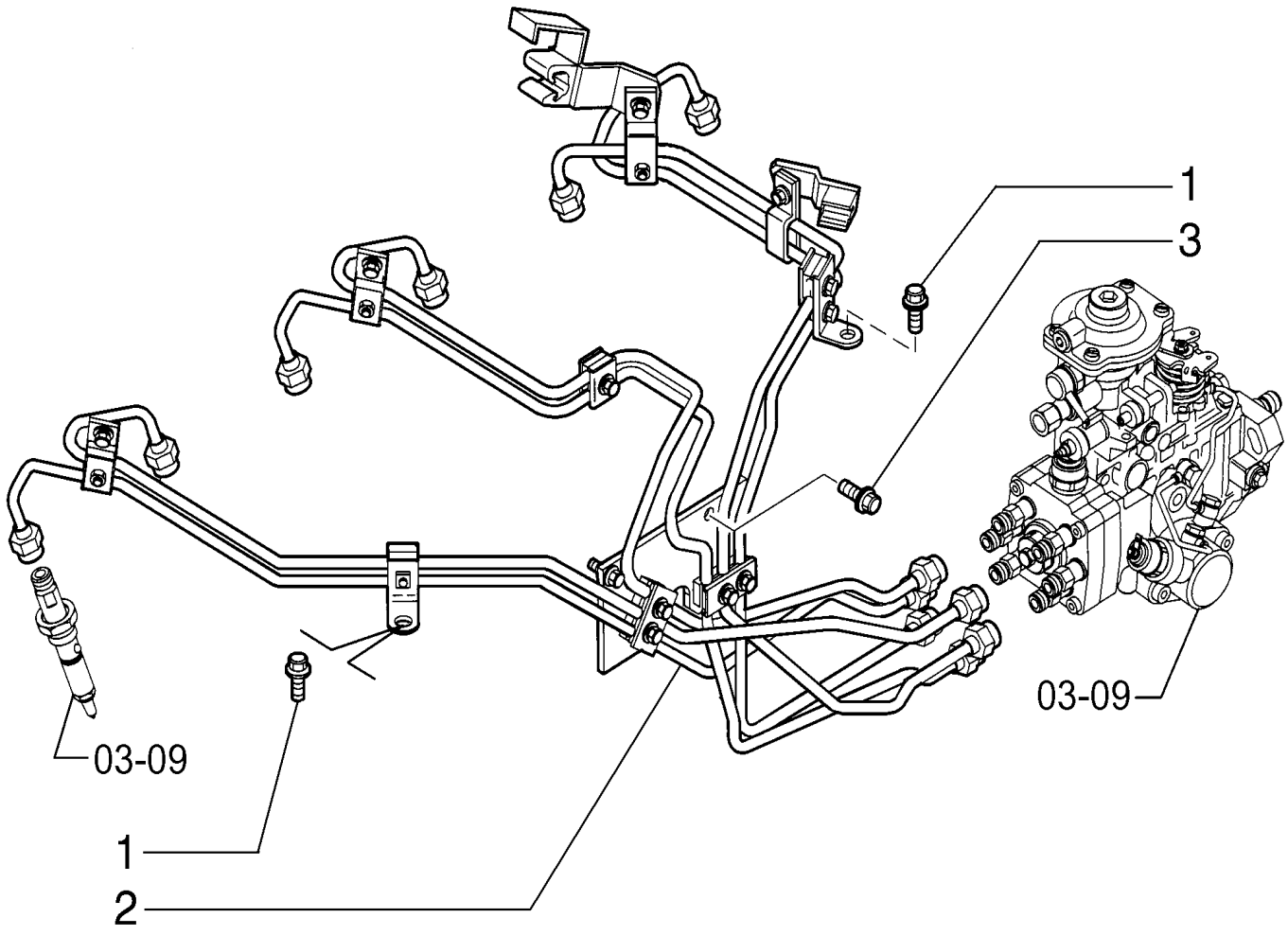

FUEL INJECTION SYSTEM

REF	FN	PART NUMBER	YR/SN	QTY	DESCRIPTION
1		4896884		2	PARAFUSO Hex Flg, M8 x 1.25 x 16
2		2852345		1	KIT Tube
3		4899039		2	PARAFUSO Hex Flg, M8 x 1.25 x 25

FUEL INJECTION SYSTEM

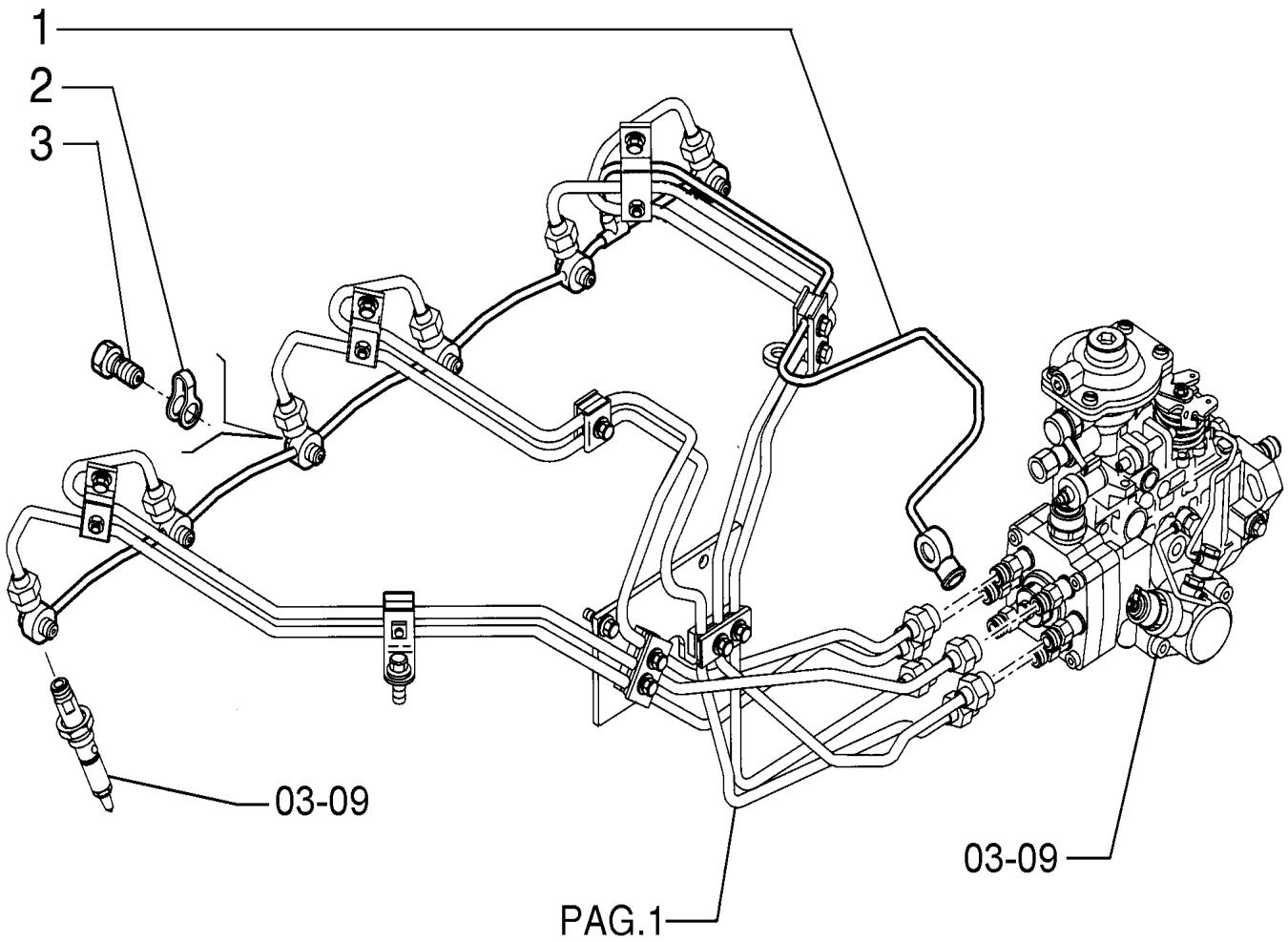

FUEL INJECTION SYSTEM

REF	FN	PART NUMBER	YR/SN	QTY	DESCRIPTION
1		2852367		1	TUBO DE RETORNO
2		4895305		6	VEDAÇÃO
3		4895244		6	PARAFUSO DE BANJO

SECTION INDEX

Electrical System

04-01	01	STARTER & ALTERNATOR
04-01/A	01	ALTERNATOR - 4892318
04-02	01	BATTERIES
04-03	01	ELECTRICAL SYSTEM
04-04	01	ELECTRICAL SYSTEM
04-06	01	ELECTRICAL SYSTEM
04-06	02	ELECTRICAL SYSTEM
04-07	01	ELECTRICAL SYSTEM
04-08	02	ELECTRICAL SYSTEM
04-09	01	ELECTRICAL SYSTEM
04-11	01	ELECTRICAL SYSTEM
04-11	02	ELECTRICAL SYSTEM - PARTS - 87557543
04-12	01	ELECTRICAL SYSTEM - HEADLIGHT
04-13	01	ELECTRICAL SYSTEM - HEADLIGHT
04-13	02	AUXILIARY TAIL LAMP
04-18	01	CAB - PARTS
04-18	02	CAB - PARTS - DASHBOARD
04-22	01	ELECTRICAL SYSTEM - TRAVEL WARNING
04-23	02	STARTER

04-01	01	p1	7/2013

STARTER & ALTERNATOR

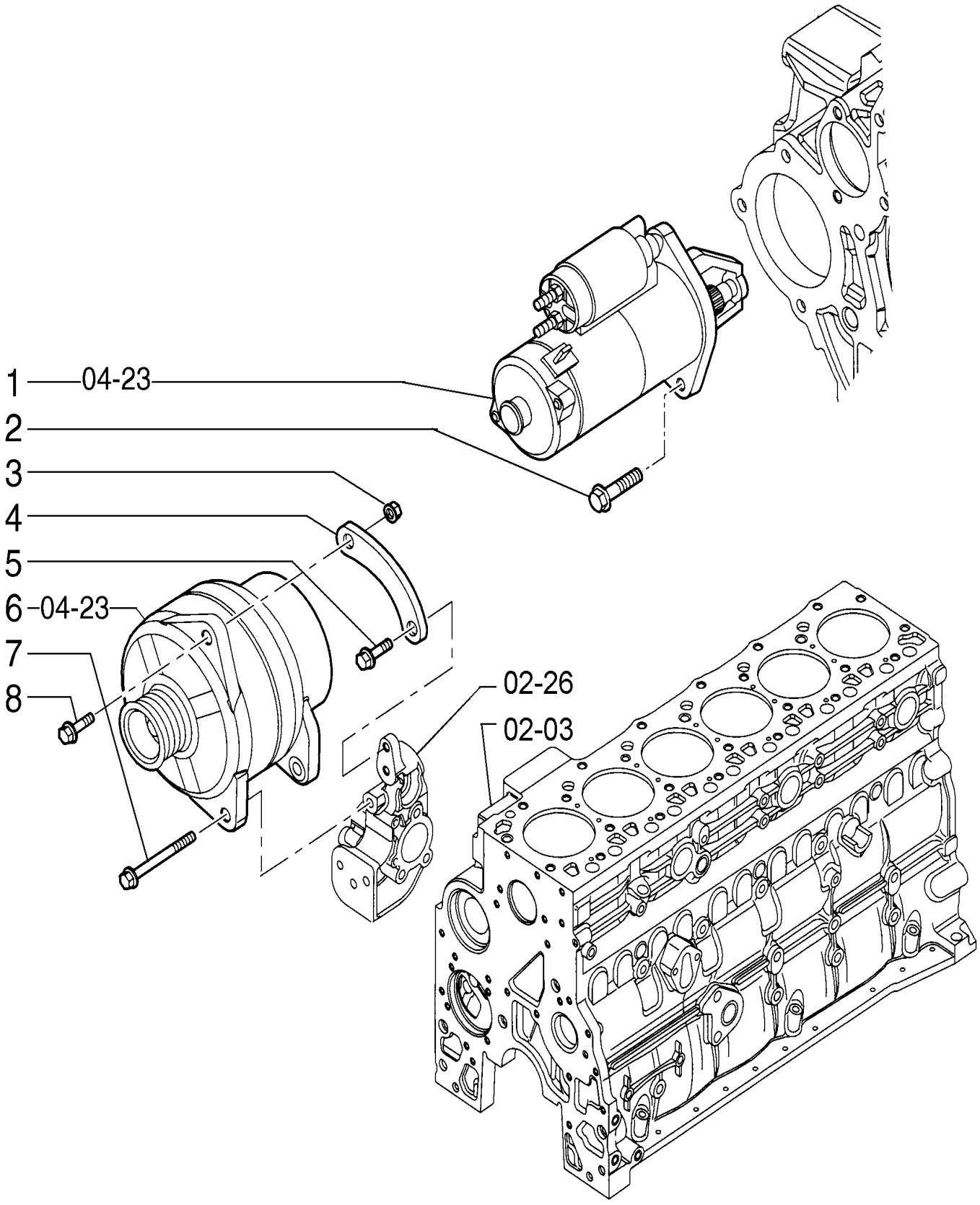

STARTER & ALTERNATOR

REF	FN	PART NUMBER	YR/SN	QTY	DESCRIPTION
1		2852478		1	MOTOR DE PARTIDA
2		2852403		3	PARAFUSO FLANGEADO Hex, M10 x 1.5 x 30
3		4895166		1	PORCA FLANGEADA M10, 1.50mm Pitch, Cl 10
4		4893840		1	SUPORTE
5		4895291		1	PARAFUSO Hex Flg, M10 x 1.5 x 20
6		4892318		1	ALTERNADOR
7		4899122		1	PARAFUSO Hex Flg, M10 x 1.5 x 110
8		4899093		1	PARAFUSO Hex Flange, M10 x 30.00mm, Cl 10.9, PHC

04-01/A	01	p1	7/2013

ALTERNATOR - 4892318

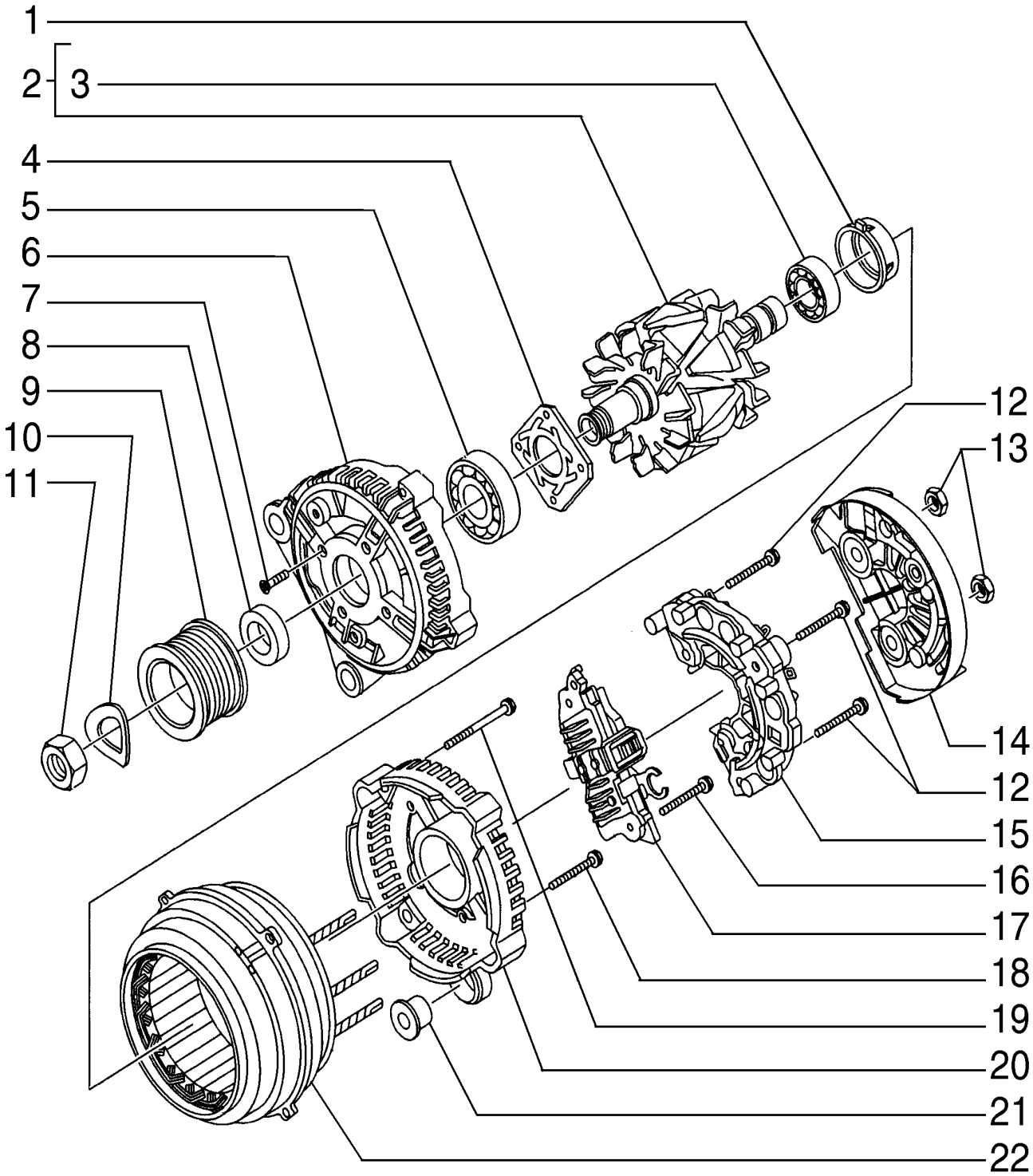

ALTERNATOR - 4892318

REF	FN	PART NUMBER	YR/SN	QTY	DESCRIPTION
1		42533807		1	TAMPA
2		42537060		1	ROTOR Includes item 3
3		2991637		1	ROLAMENTO
4		42537057		1	PLACA DE RETENÇÃO
5		2991636		1	ROLAMENTO
6		42537056		1	ALOJAMENTO
7		42537058		4	PARAFUSO
8		42533805		1	ESPAÇADOR
9		42535631		1	POLIA
10		42531183		1	ARRUELA PLANA
11		1113178		1	PORCA
12		42537878		3	PARAFUSO
13		42533817		2	PORCA
14		42533816		1	COBERTURA
15		42537054		1	RETIFICADOR
16		42536304		2	PARAFUSO
17		42540208		1	REGULADOR DE TENSÃO
18		42536305		1	PARAFUSO
19		42533819		4	PARAFUSO
20		42537670		1	ALOJAMENTO
21		42537051		2	BUCHA
22		42537061		1	ESTATOR

04-02	01	p1	7/2013

BATTERIES

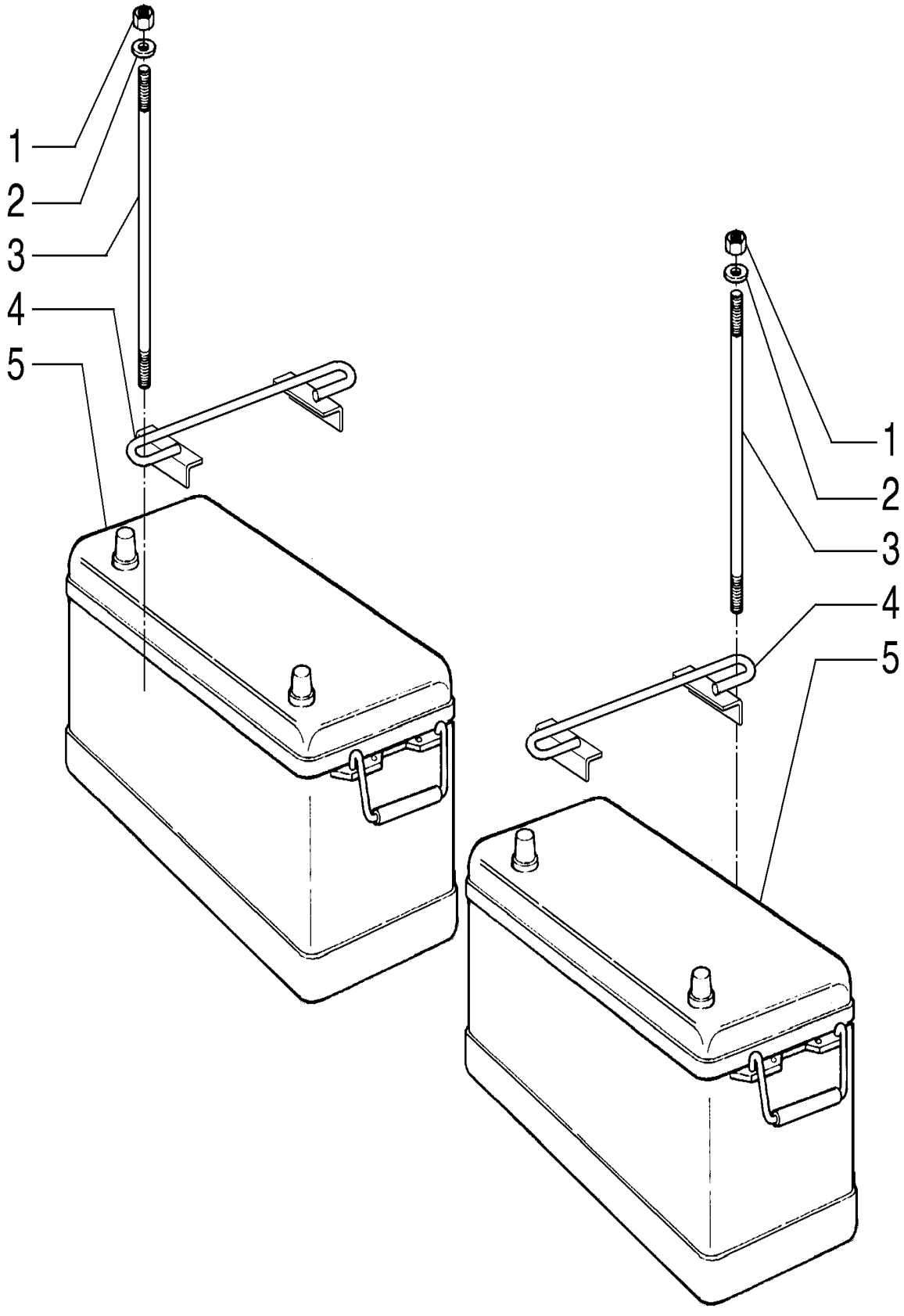

BATTERIES

REF	FN	PART NUMBER	YR/SN	QTY	DESCRIPTION
1		825-1408		4	PORCA M8, Cl 8
2		12645031		4	ARRUELA PLANA M8.45 x 21 x 3 Thk, HT
3		75248827		4	PARAFUSO
4		75259613		2	SUPORTE
5		84251802		2	BATERIA ÚMIDA

ELECTRICAL SYSTEM

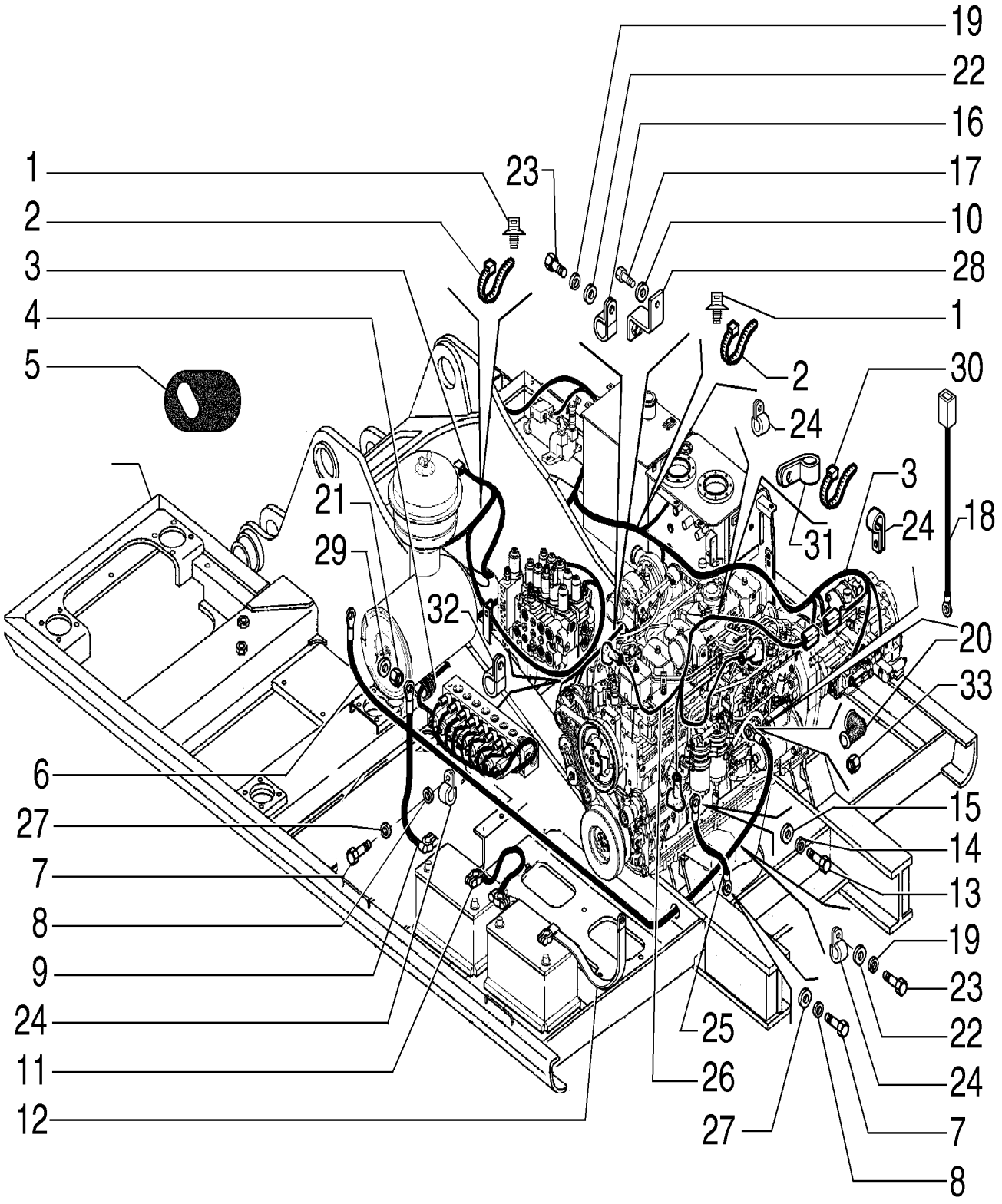

ELECTRICAL SYSTEM

REF	FN	PART NUMBER	YR/SN	QTY	DESCRIPTION
1		87526680		7	COLAR DE FIXAÇÃO
2		L18331		41	PRENDEDOR DE CABOS CABLE STRAP
3		87685835		1	CHICOTE
4		87549842		1	JUNTA
5		87576371		1	JUNTA
6		75327111		1	CABO ELÉTRICO
7		10979231		4	PARAFUSO Hex, M10 x 16, 10.9, Full Thd
8		14496631		4	ARRUELA PLANA M10 x 21 x 2
9		D83485		1	CABO
10		12646921		1	ARRUELA PLANA M12 x 28 x 3
11		8321507		1	CABO
12		87642173		1	CHICOTE
13		11112131		3	PARAFUSO Hex, M12 x 20, 10.9, Full Thd
14		10517071		3	TRAVA DA ARRUELA M12
15		14496731		3	ARRUELA PLANA M12 x 24 x 2.5 Thk
16		70929806		1	COLAR
17		11112231		2	PARAFUSO Hex, M12 x 25, 10.9, Full Thd
18		87726698		1	CABO ELÉTRICO
19		10516671		14	TRAVA DA ARRUELA
20		60093124		2	TAMPA DE PROTEÇÃO
21		16100821		1	PORCA M8, Cl 10
22		12642021		4	ARRUELA PLANA
23		16043431		2	PARAFUSO Hex, M8 x 20, 10.9
24		10450290		5	BRAÇADEIRA
25		D127018		1	STRAP
26		87550878		1	CABO ELÉTRICO
27		10516871		4	TRAVA DA ARRUELA
28		87648242		2	SUPORTE
29		14496531		9	ARRUELA PLANA M8 x 17 x 1.6
30		75201642		13	BRAÇADEIRA
31		70927264		3	COLAR
32		70927310		2	BRAÇADEIRA
33		11701721		1	PORCA M10, Cl 10

ELECTRICAL SYSTEM

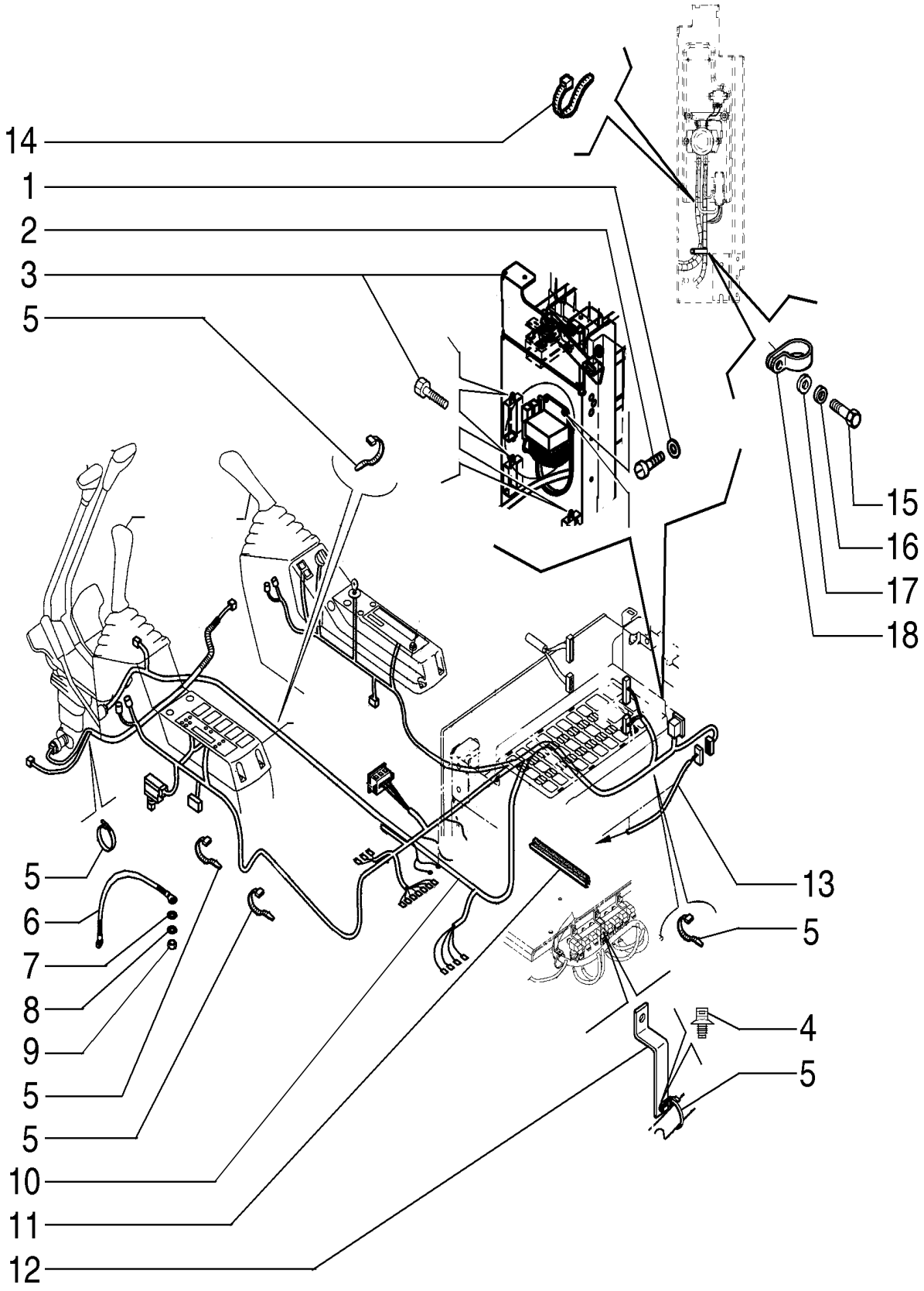

ELECTRICAL SYSTEM

REF	FN	PART NUMBER	YR/SN	QTY	DESCRIPTION
1		14496431		2	ARRUELA PLANA M6.4 x 12.5 x 1.6 Thk
2		13276421		2	PARAFUSO Pan Hd, M6 x 20, 8.8
3		13272014		6	PARAFUSO Pan Hd, M4 x 12
4		87526680		12	COLAR DE FIXAÇÃO
5		L18331		34	PRENDEDOR DE CABOS
6		87564296		1	CABO ELÉTRICO
7		14496531		1	ARRUELA PLANA M8 x 17 x 1.6
8		10516674		1	TRAVA DA ARRUELA M8
9		16100821		1	PORCA M8, Cl 10
10		84390666		1	CHICOTE
11		72214220		1	VEDAÇÃO
12		87565338		1	SUPORTE
13		87685835		1	CHICOTE
14		75201642		3	BRAÇADEIRA
15		16043431		1	PARAFUSO Hex, M8 x 20, 10.9
16		10516671		1	TRAVA DA ARRUELA
17		12642021		1	ARRUELA PLANA
18		70928439		1	BRAÇADEIRA

ELECTRICAL SYSTEM

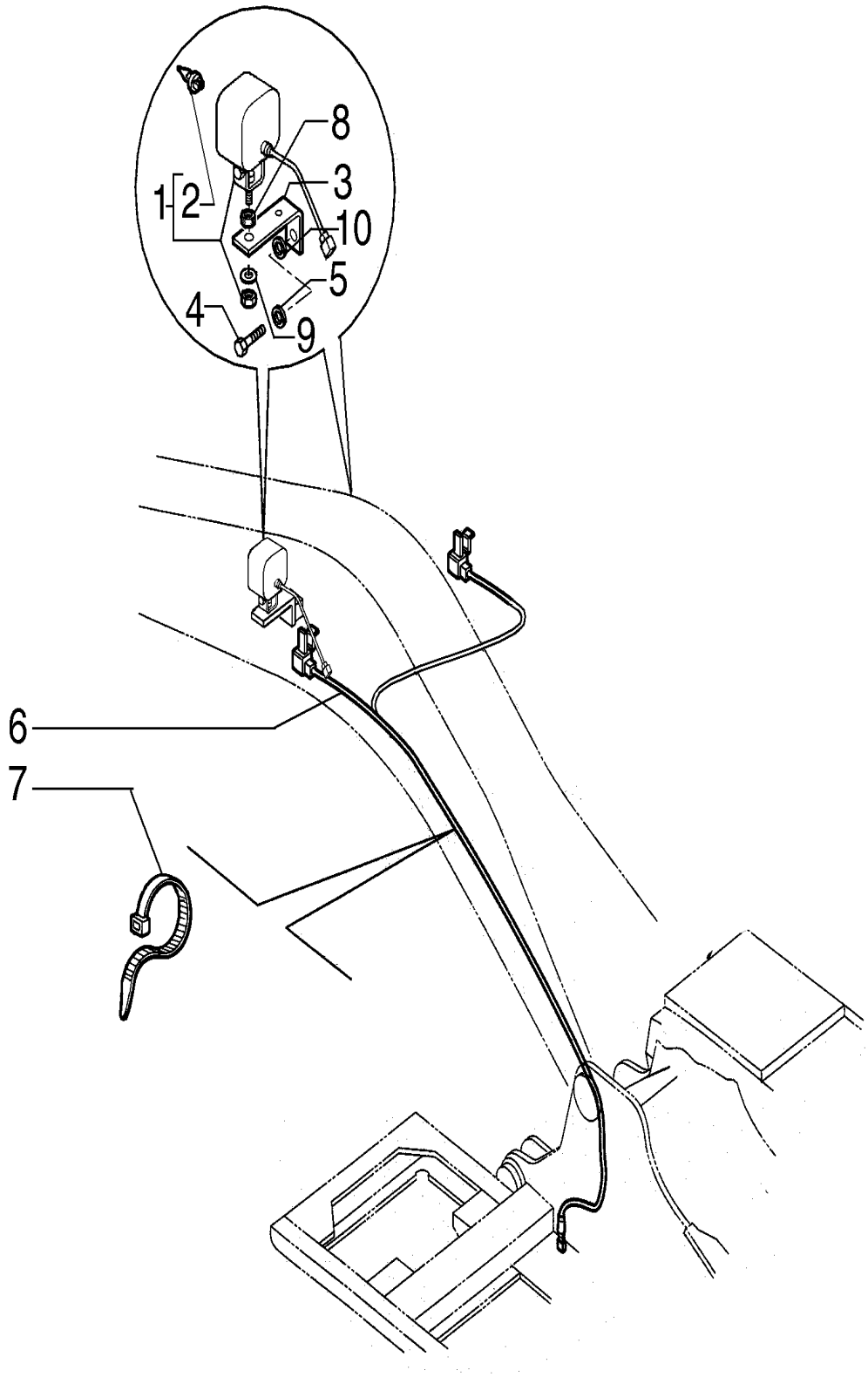

ELECTRICAL SYSTEM

REF	FN	PART NUMBER	YR/SN	QTY	DESCRIPTION
1		75264858		3	LUZ Includes item 2
2		79069460		1	LÂMPADA
3		75261952		2	SUPORTE
4		11115331		1	PARAFUSO Hex, M14 x 25, 10.9, Full Thd
5		10517173		1	TRAVA DA ARRUELA
6		75325772		1	CABO ELÉTRICO
7		75201641		AR	BRAÇADEIRA
8		79089658		3	PASTILHA
9		12646821		2	ARRUELA PLANA M10 x 25 x 2
10		10520101		2	ARRUELA PLANA M14 x 26 x 3

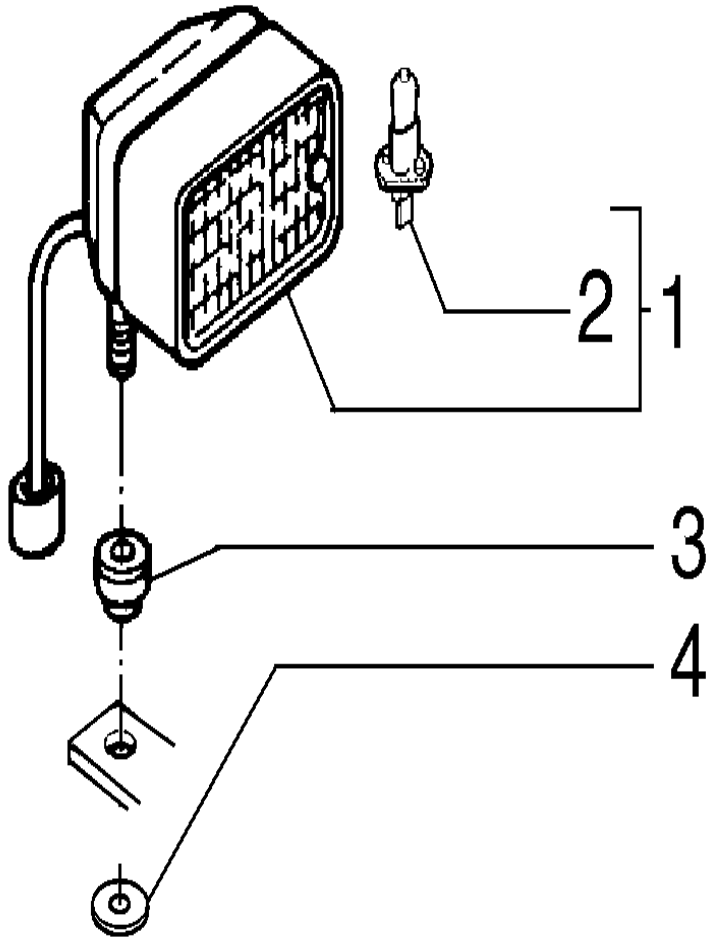
2
1
3
4

ELECTRICAL SYSTEM

REF	FN	PART NUMBER	YR/SN	QTY	DESCRIPTION
1		75264237		1	LUZ Includes item 2
2		75288330		1	LÂMPADA
3		79089658		1	PASTILHA
4		4952483		1	ARRUELA PLANA

04-07	01	p1	7/2013

ELECTRICAL SYSTEM

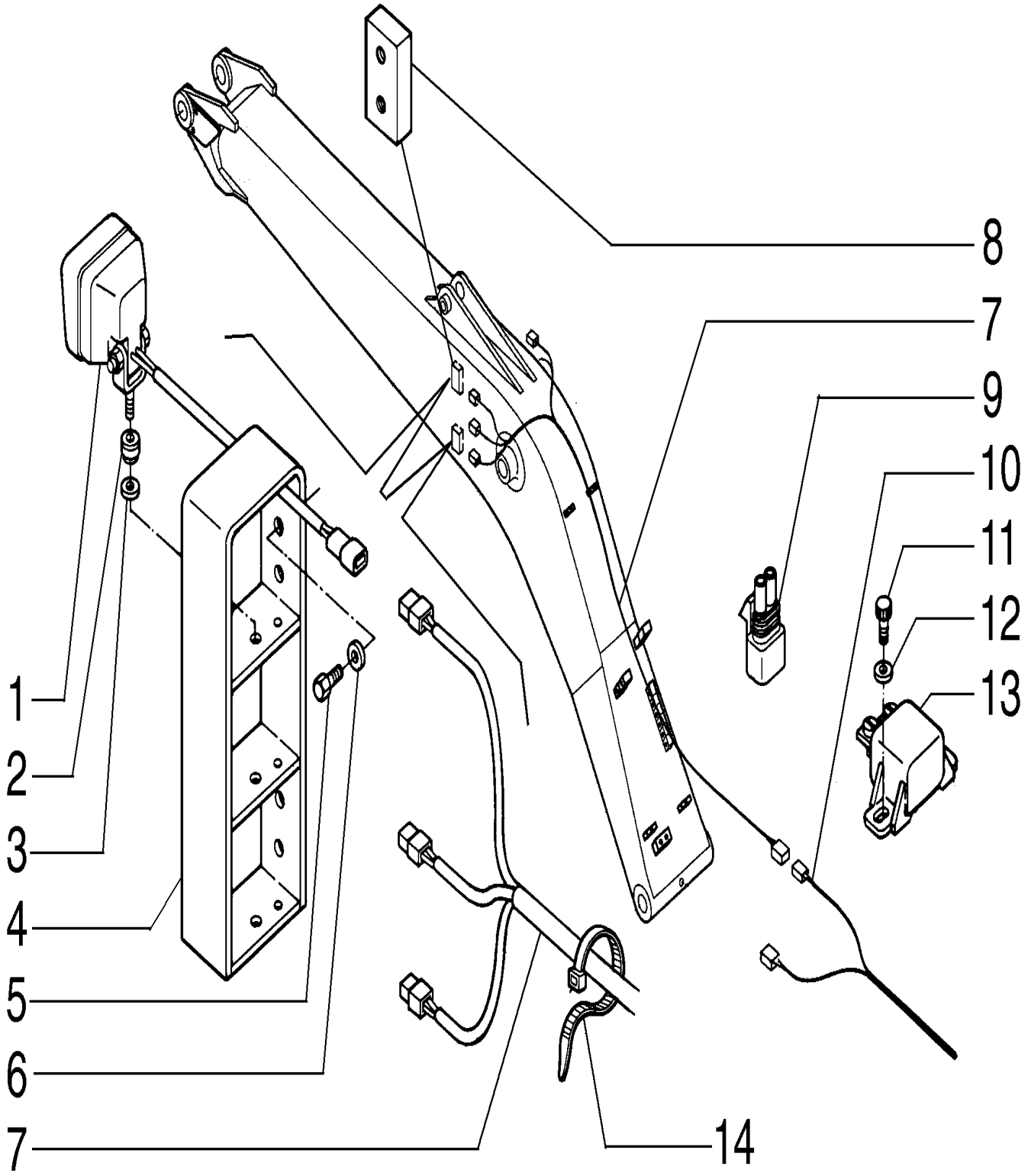

ELECTRICAL SYSTEM

REF	FN	PART NUMBER	YR/SN	QTY	DESCRIPTION
1		75264858		4	LUZ
2		79089658		4	PASTILHA
3		12646821		4	ARRUELA PLANA M10 x 25 x 2
4		75267954		1	SUPORTE RH
4		75267952		1	SUPORTE LH
5		11112231		8	PARAFUSO Hex, M12 x 25, 10.9, Full Thd
6		10520021		8	ARRUELA PLANA M12 x 22 x 3
7		87470124		1	CHICOTE
8		75256028		4	BLOCO
9		75283949		1	ELEMENTO DE DIODO
10		87470125		4	CHICOTE
11		14305231		2	PARAFUSO Hex Soc Hd, M6 x 16, 10.9
12		10516471		2	TRAVA DA ARRUELA
13		71403889		1	RELÉ
14		75201642		15	BRAÇADEIRA

OPTIONAL

CX220B

ELECTRICAL SYSTEM

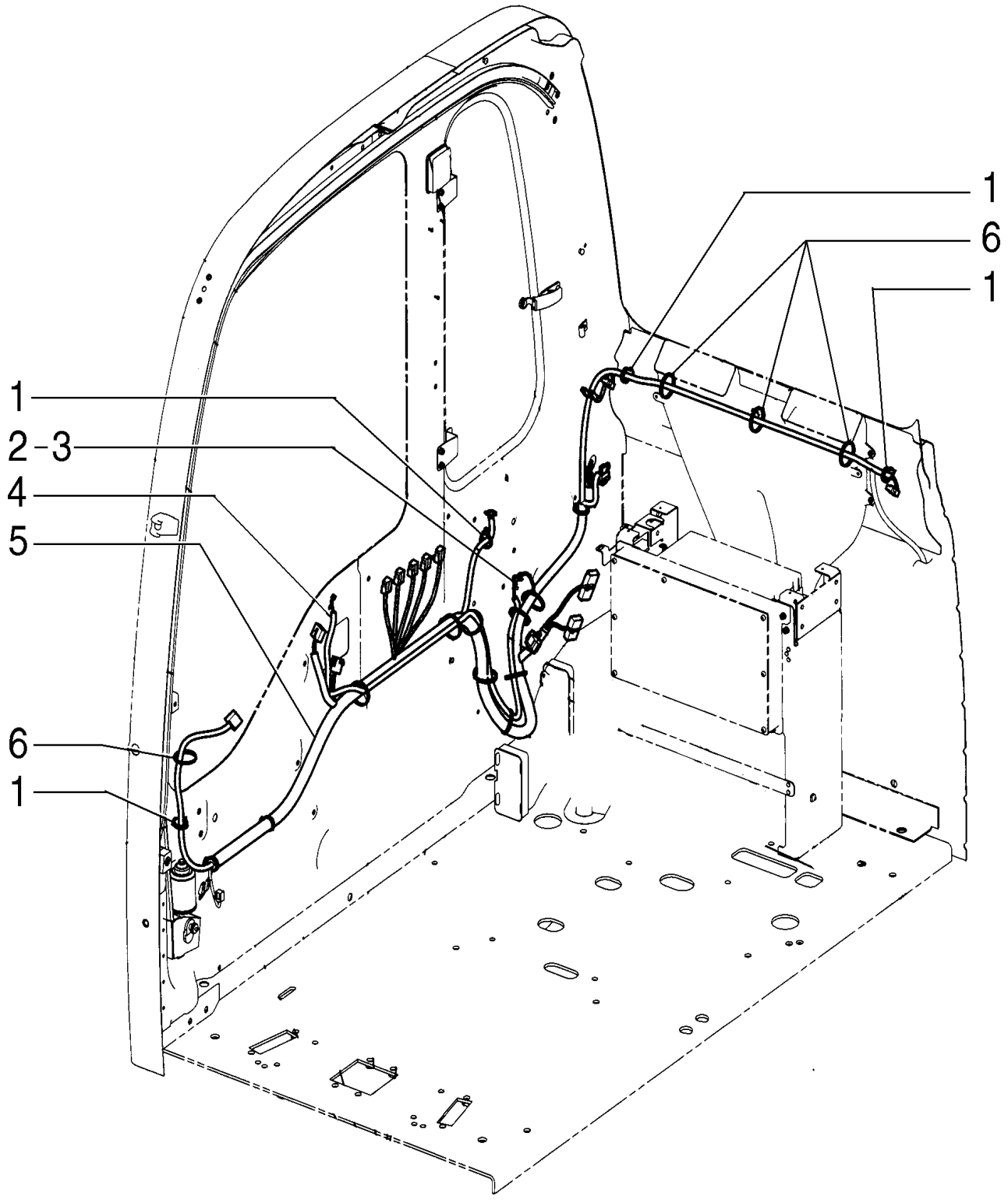

ELECTRICAL SYSTEM

REF	FN	PART NUMBER	YR/SN	QTY	DESCRIPTION
1		87526680		11	COLAR DE FIXAÇÃO
2		10902231		1	PARAFUSO Hex, M6 x 16, 10.9
3		14496431		1	ARRUELA PLANA M6.4 x 12.5 x 1.6 Thk
4		87632674		1	CABO ELÉTRICO
5		87551050		1	CABO ELÉTRICO
6		L18331		19	PRENDEDOR DE CABOS

04-09	01	p1	7/2013

ELECTRICAL SYSTEM

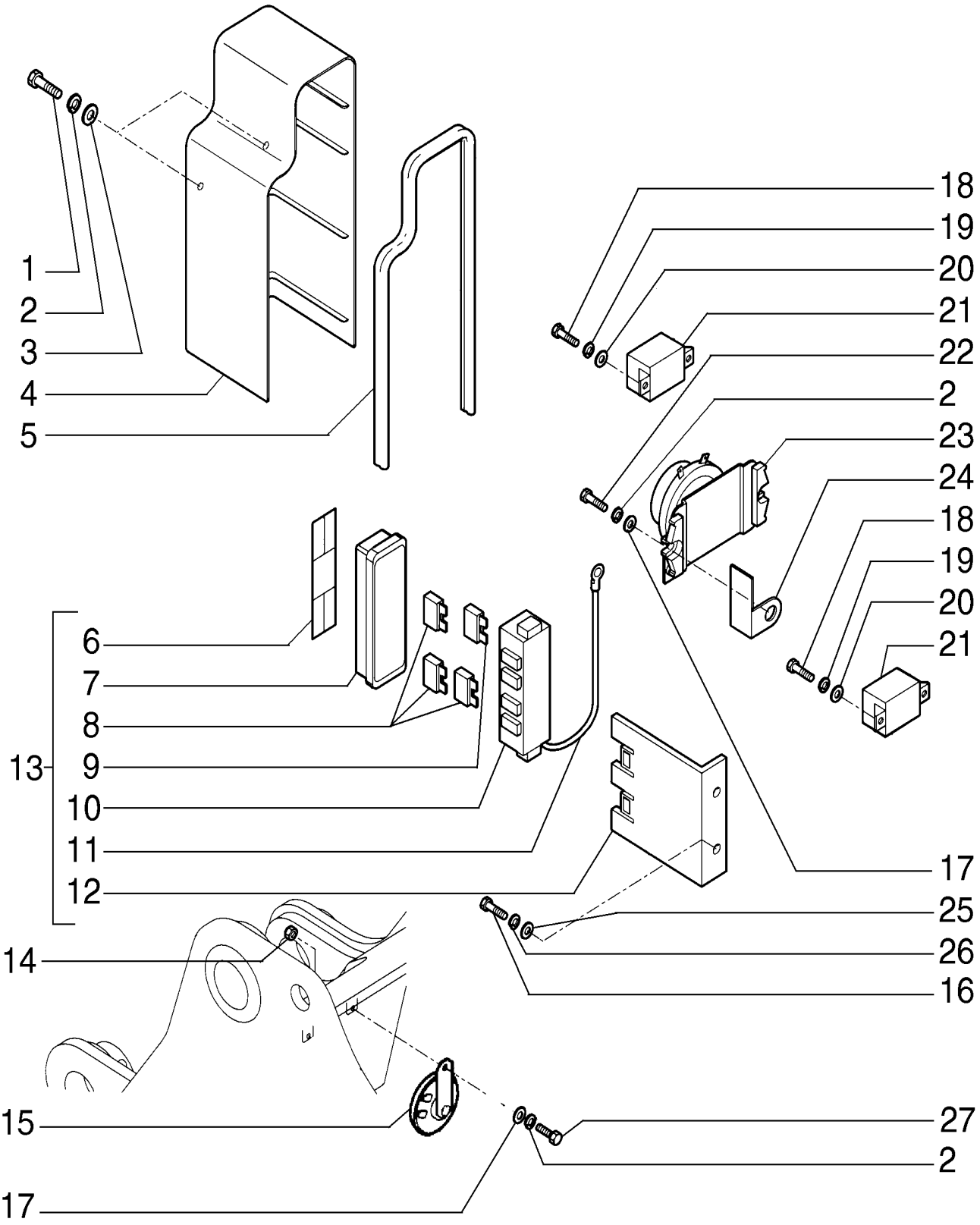

ELECTRICAL SYSTEM

REF	FN	PART NUMBER	YR/SN	QTY	DESCRIPTION
1		16043431		4	PARAFUSO Hex, M8 x 20, 10.9
2		10516671		6	TRAVA DA ARRUELA
3		12642021		2	ARRUELA PLANA
4		87565340		1	COBERTURA
5		87565337		1	JUNTA ADESIVA
6		87565339		1	ADESIVO
7		87865335		1	ADESIVO
8		11055690		3	FUSÍVEL 60A
9		87559396		1	FUSÍVEL 100amp 100A
10		87565334		1	CAIXA
11		87565336		1	CHICOTE
12		87565332		1	SUPORTE
13		87565331		1	CAIXA DE FUSÍVEL Includes item 6 - 12
14		16104121		1	PORCA M8 x 1.25, Cl 10
15		251444A1		1	CONJUNTO
16		10977831		2	PARAFUSO Hex, M5 x 16, 10.9, Full Thd
17		14496531		4	ARRUELA PLANA M8 x 17 x 1.6
18		14305231		8	PARAFUSO Hex Soc Hd, M6 x 16, 10.9
19		10516471		10	TRAVA DA ARRUELA
20		14496431		10	ARRUELA PLANA M6.4 x 12.5 x 1.6 Thk
21		71403889		2	RELÉ
22		16043631		2	PARAFUSO Hex, M8 x 25, 10.9
23		87559395		1	RELÉ
24		87638161		1	SUPORTE
25		10519301		2	ARRUELA PLANA M5 x 9.55 x 1
26		11195471		2	TRAVA DA ARRUELA
27		16043331		1	PARAFUSO Hex, M8 x 18, 10.9, Full Thd

04-11	01	p1	7/2013

ELECTRICAL SYSTEM

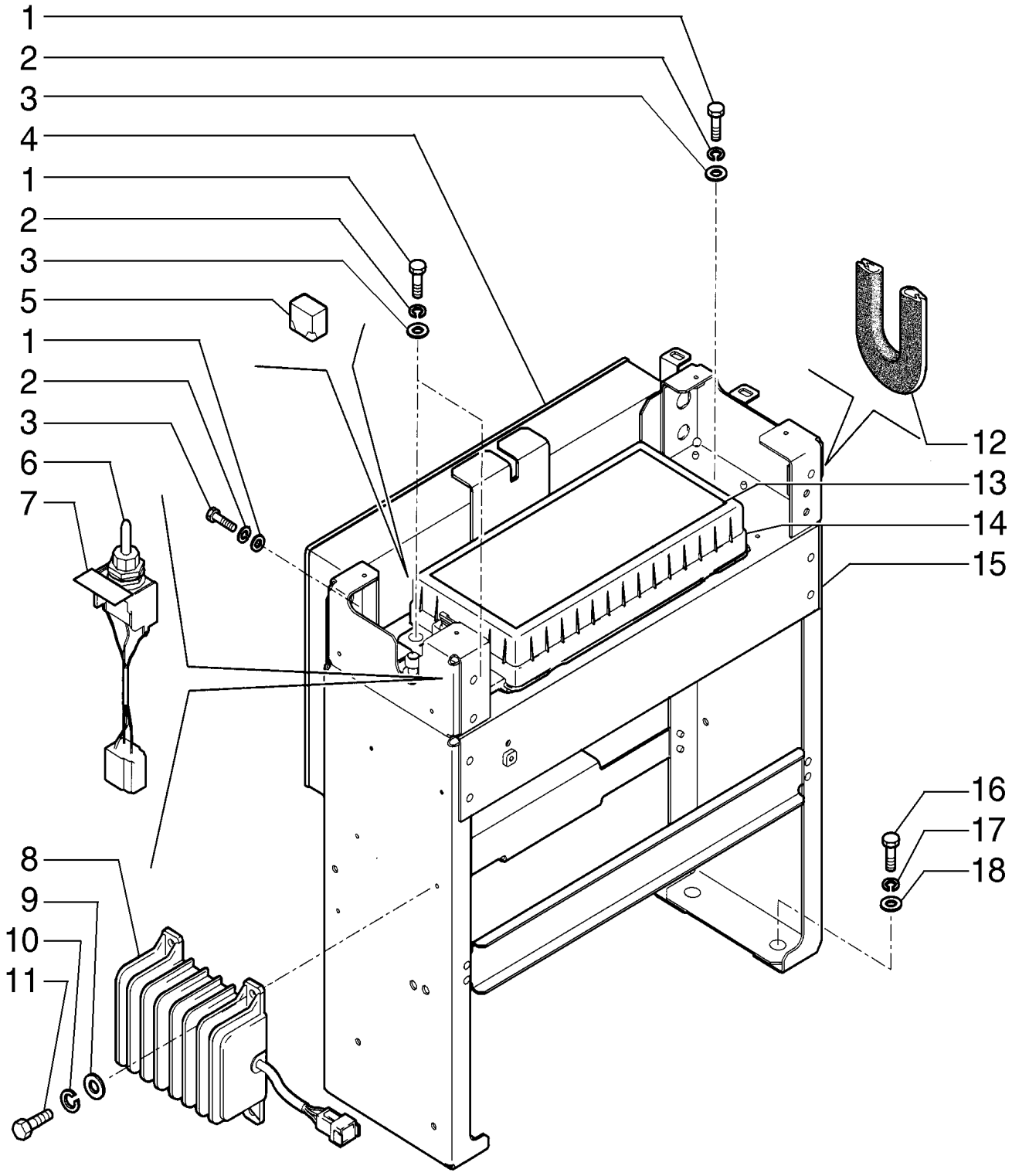

ELECTRICAL SYSTEM

REF	FN	PART NUMBER	YR/SN	QTY	DESCRIPTION
1		ZM61C06025		7	PARAFUSO
2		10516474		7	TRAVA DA ARRUELA
3		14496431		7	ARRUELA PLANA M6.4 x 12.5 x 1.6 Thk
4		YN22E00214F1		1	COMANDO
5		87559156		1	RELÉ
6		YN50S00047P1		1	INTERRUPTOR DE ALAVANCA
7		YN22M01014P1		1	ETIQUETA
8		84130880		1	REGULADOR DE TENSÃO
9		ZW16P05000		4	ARRUELA PLANA
10		ZW26X05000		4	TRAVA DA ARRUELA
11		ZS31C05020		4	PARAFUSO
12		87590506		1	JUNTA ADESIVA
13		87621308		1	PLAQUETA
14		87557543		1	CAIXA
15		87590504		1	SUPORTE
16		ZM73C08020		4	PARAFUSO
17		10516674		4	TRAVA DA ARRUELA M8
18		14496531		4	ARRUELA PLANA M8 x 17 x 1.6

ELECTRICAL SYSTEM - PARTS - 87557543

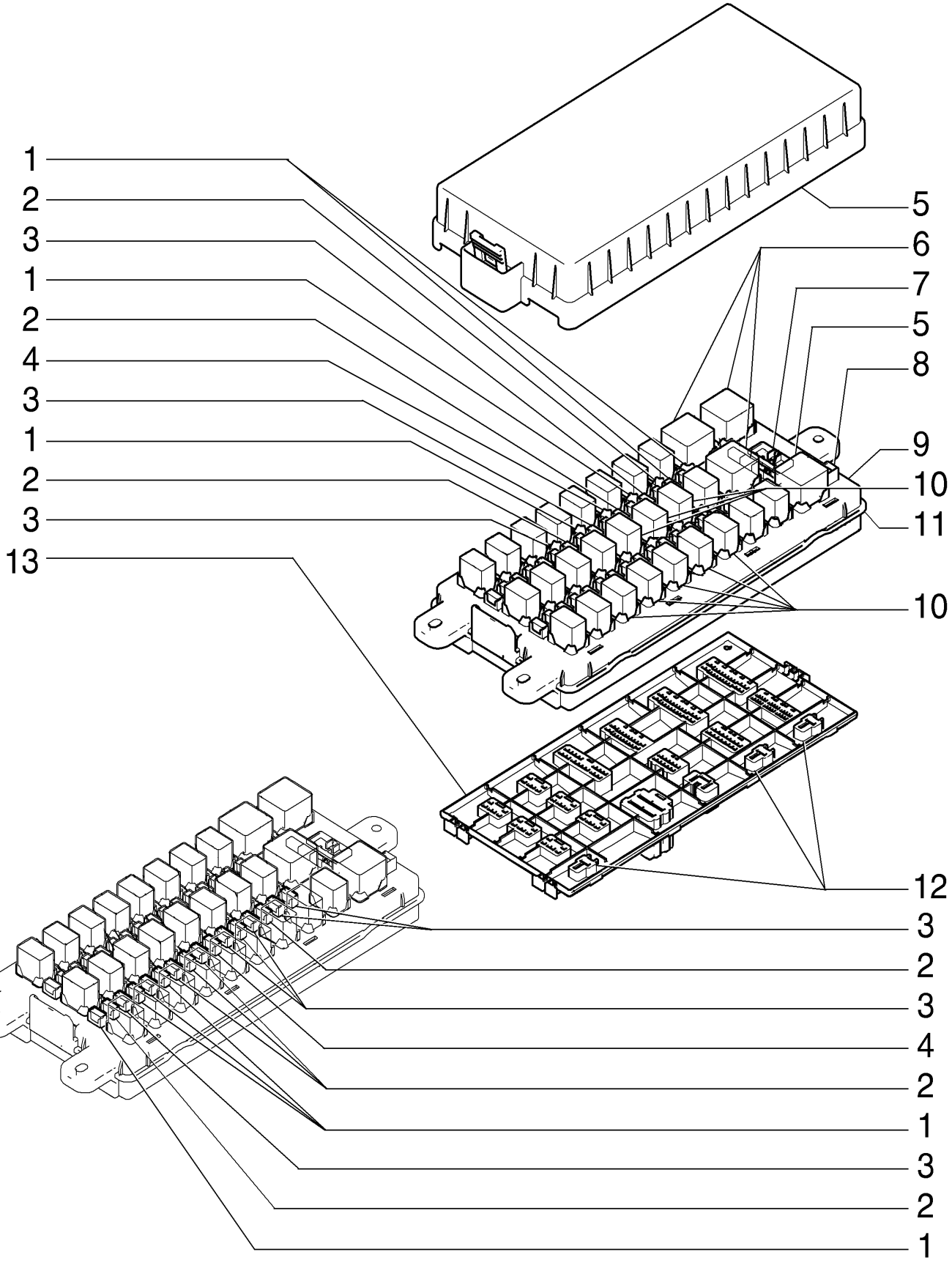

ELECTRICAL SYSTEM - PARTS - 87557543

REF	FN	PART NUMBER	YR/SN	QTY	DESCRIPTION
1		YN24E00016S006		9	FUSÍVEL 10amp
2		YN24E00016S005		11	FUSÍVEL 5amp
3		YN24E00016S008		10	FUSÍVEL 20amp
4		YN24E00016S007		6	FUSÍVEL 15amp
5		YN24E00016S003		1	PROTEÇÃO
6		87611990		4	RELÉ
7		YN24E00016S012		1	CONECTOR DO FIO
8		YN24E00016S011		1	MANILHA
9		YN24E00016S001		1	CAIXA
10		87559156		8	RELÉ
11		YN24E00016S004		1	PLACA DE CIRCUITO IMPRESSO
12		YN24E00016S013		3	CONECTOR DO FIO
13		YN24E00016S002		1	CAIXA

04-12	01	p1	7/2013

ELECTRICAL SYSTEM - HEADLIGHT

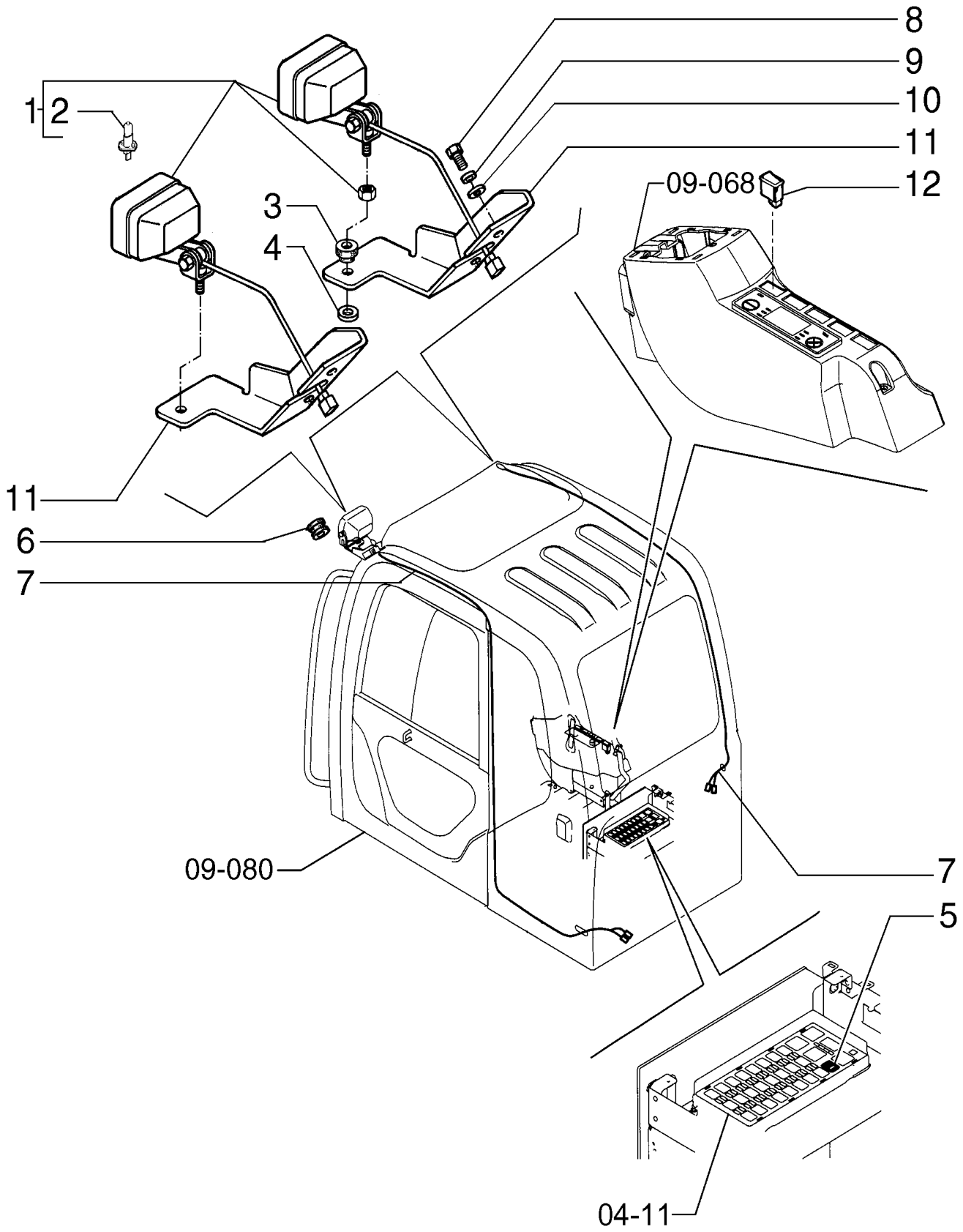

ELECTRICAL SYSTEM - HEADLIGHT

REF	FN	PART NUMBER	YR/SN	QTY	DESCRIPTION
1		75264237		2	LUZ Includes item 2
2		75288330		2	LÂMPADA
3		79089658		2	PASTILHA
4		12646821		2	ARRUELA PLANA M10 x 25 x 2
5		87559156		1	RELÉ
6		72203027		2	VEDAÇÃO DE BORRACHA
7		87749441		2	CHICOTE
8		11106431		4	PARAFUSO Hex, M10 x 30, 10.9, Full Thd
9		10516871		4	TRAVA DA ARRUELA
10		14496631		4	ARRUELA PLANA M10 x 21 x 2
11		75262166		2	SUPORTE
12		87559198		1	INTERRUPTOR

04-13	01	p1	7/2013

ELECTRICAL SYSTEM - HEADLIGHT

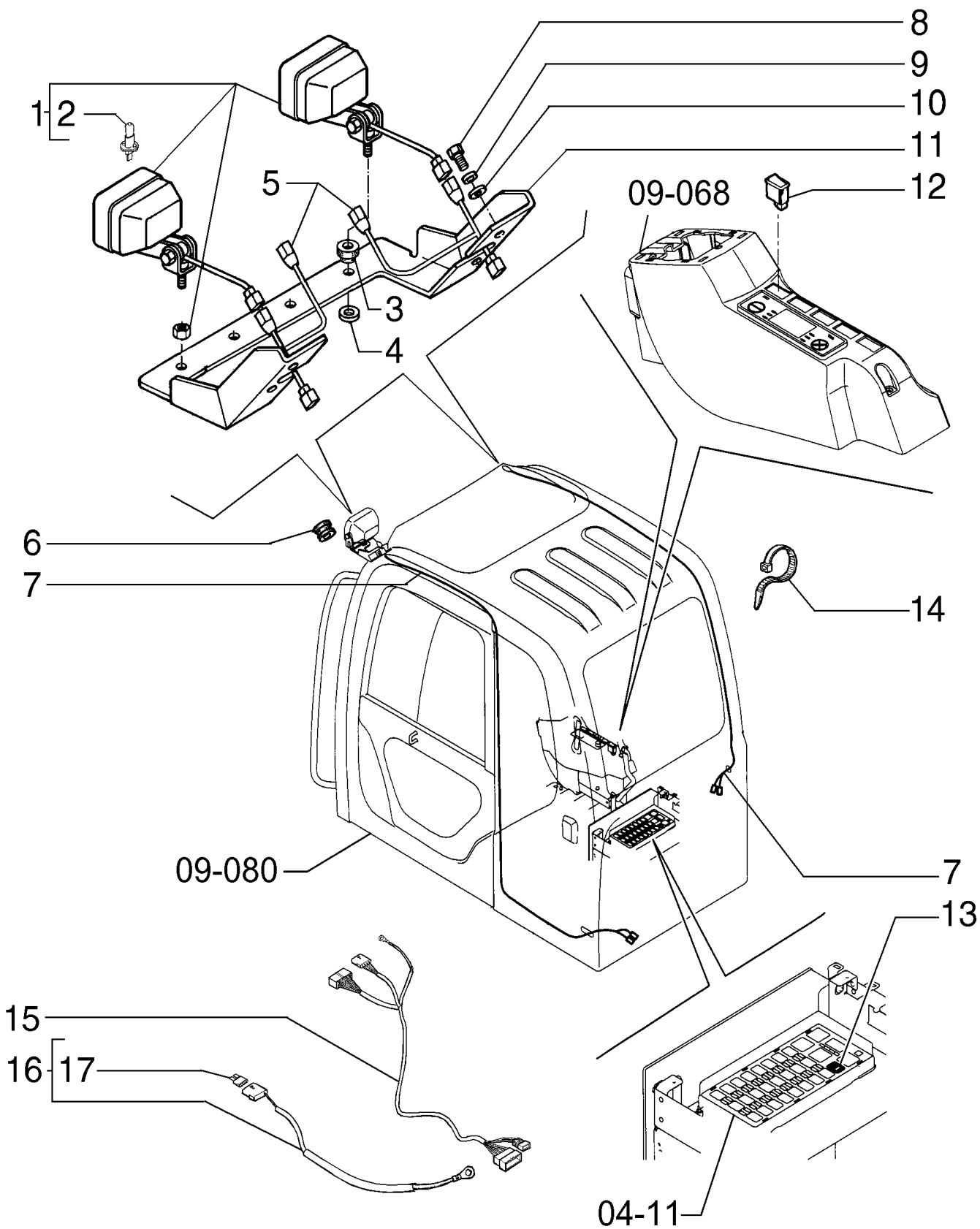

ELECTRICAL SYSTEM - HEADLIGHT

REF	FN	PART NUMBER	YR/SN	QTY	DESCRIPTION
1		75264237		4	LUZ Includes item 2
2		75288330		4	LÂMPADA
3		79089658		4	PASTILHA
4		12646821		4	ARRUELA PLANA M10 x 25 x 2
5		87551689		2	CHICOTE
6		72203027		2	VEDAÇÃO DE BORRACHA
7		87749441		2	CHICOTE
8		11106431		4	PARAFUSO Hex, M10 x 30, 10.9, Full Thd
9		10516871		4	TRAVA DA ARRUELA
10		14496631		4	ARRUELA PLANA M10 x 21 x 2
11		87470160		1	SUPORTE
12		87559198		1	INTERRUPTOR
13		87559156		1	RELÉ
14		75201642		10	BRAÇADEIRA
15		87470122		1	CHICOTE
16		87551688		1	CHICOTE Includes item 17
17		11055890		1	FUSÍVEL 80A

OPTIONAL

04-13	02	p1	7/2013

AUXILIARY TAIL LAMP

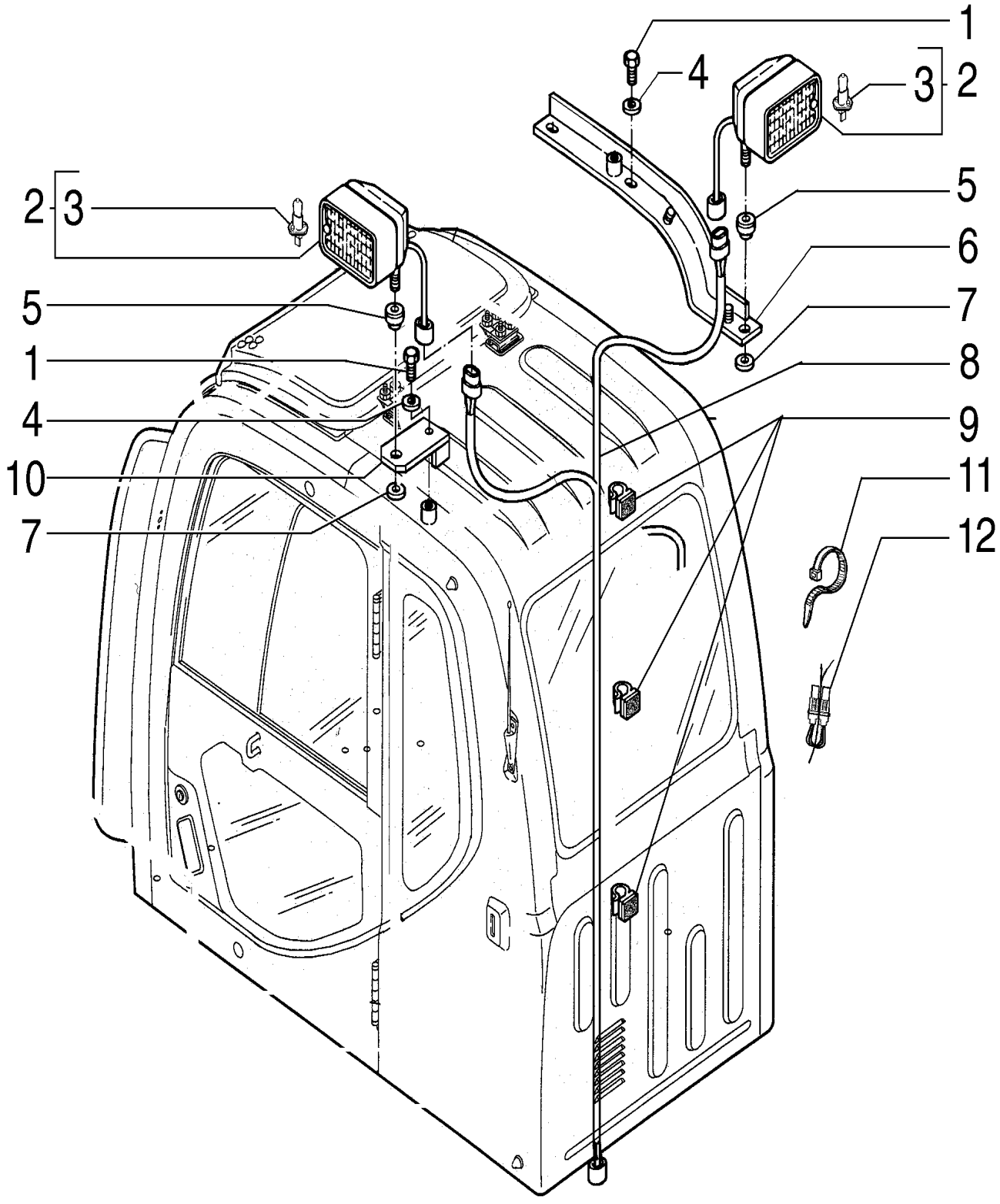

AUXILIARY TAIL LAMP

REF	FN	PART NUMBER	YR/SN	QTY	DESCRIPTION
1		11112231		2	PARAFUSO Hex, M12 x 25, 10.9, Full Thd
2		75264237		1	LUZ Includes item 3
3		75288330		1	LÂMPADA
4		10520021		2	ARRUELA PLANA M12 x 22 x 3
5		79089658		1	PASTILHA
6		87470045		1	SUPORTE
7		12646821		1	ARRUELA PLANA M10 x 25 x 2
8		87470123		1	CHICOTE
9		L100659		10	GRAMPO
10		87470169		2	SUPORTE
11		75201642		5	BRAÇADEIRA
12		71450235		2	RELÉ

OPTIONAL

CX220B

04-18	01	p1	7/2013

CAB - PARTS

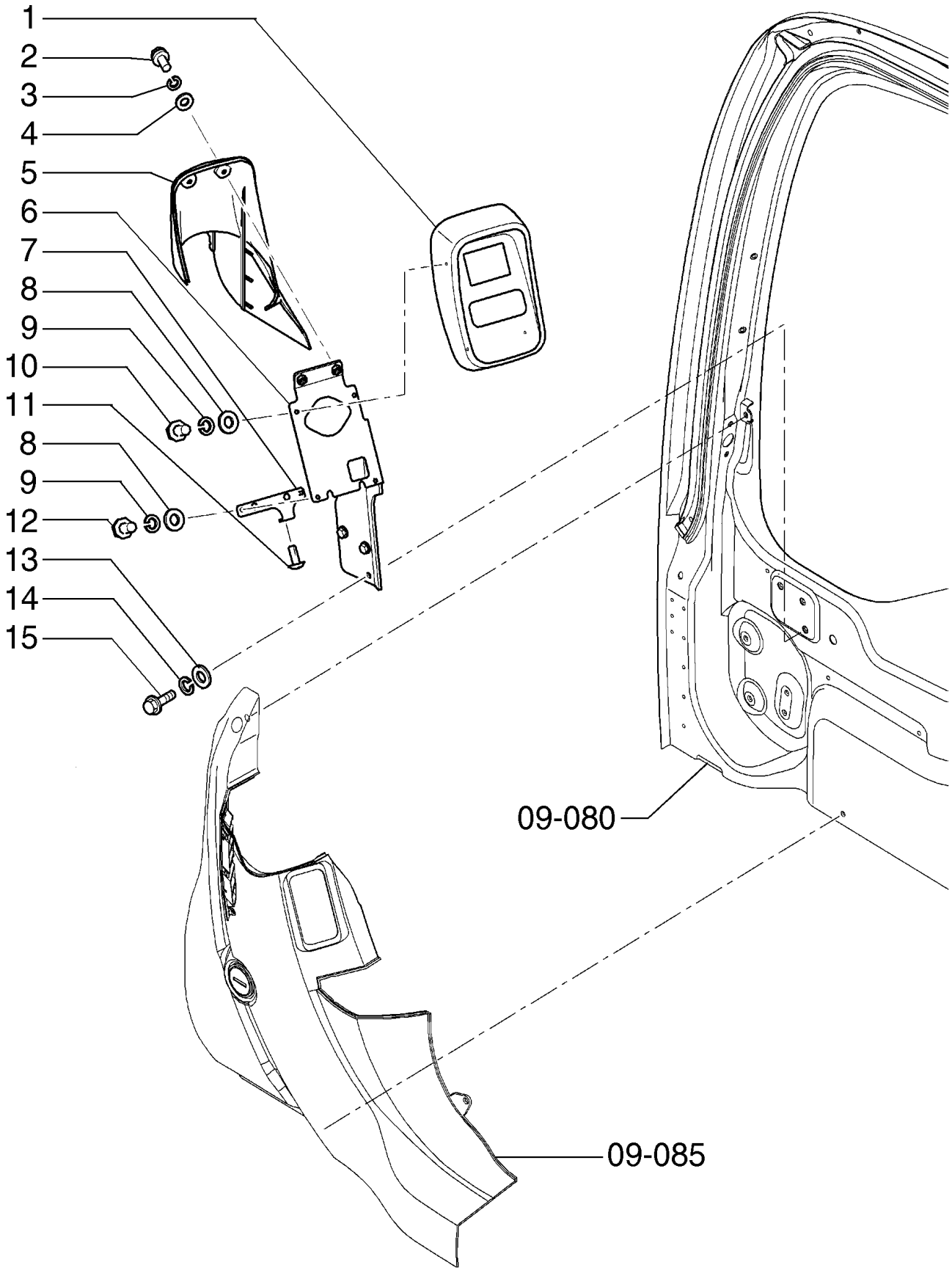

CAB - PARTS

REF	FN	PART NUMBER	YR/SN	QTY	DESCRIPTION
1		YN59S00021F4		1	MONITOR DE CONTROLE
2		10902231		2	PARAFUSO Hex, M6 x 16, 10.9
3		12644421		2	ARRUELA PLANA M6 x 15 x 1
4		10516471		2	TRAVA DA ARRUELA
5		87722248		1	PROTEÇÃO
6		87524802		1	SUPORTE
7		87527036		1	SUPORTE
8		10519301		4	ARRUELA PLANA M5 x 9.55 x 1
9		11195471		4	TRAVA DA ARRUELA
10		10977631		2	PARAFUSO Hex, M5 x 12, 10.9, Full Thd
11		87527038		1	PARAFUSO
12		10977831		2	PARAFUSO Hex, M5 x 16, 10.9, Full Thd
13		14496531		3	ARRUELA PLANA M8 x 17 x 1.6
14		10516671		3	TRAVA DA ARRUELA
15		16043431		3	PARAFUSO Hex, M8 x 20, 10.9

CAB - PARTS - DASHBOARD

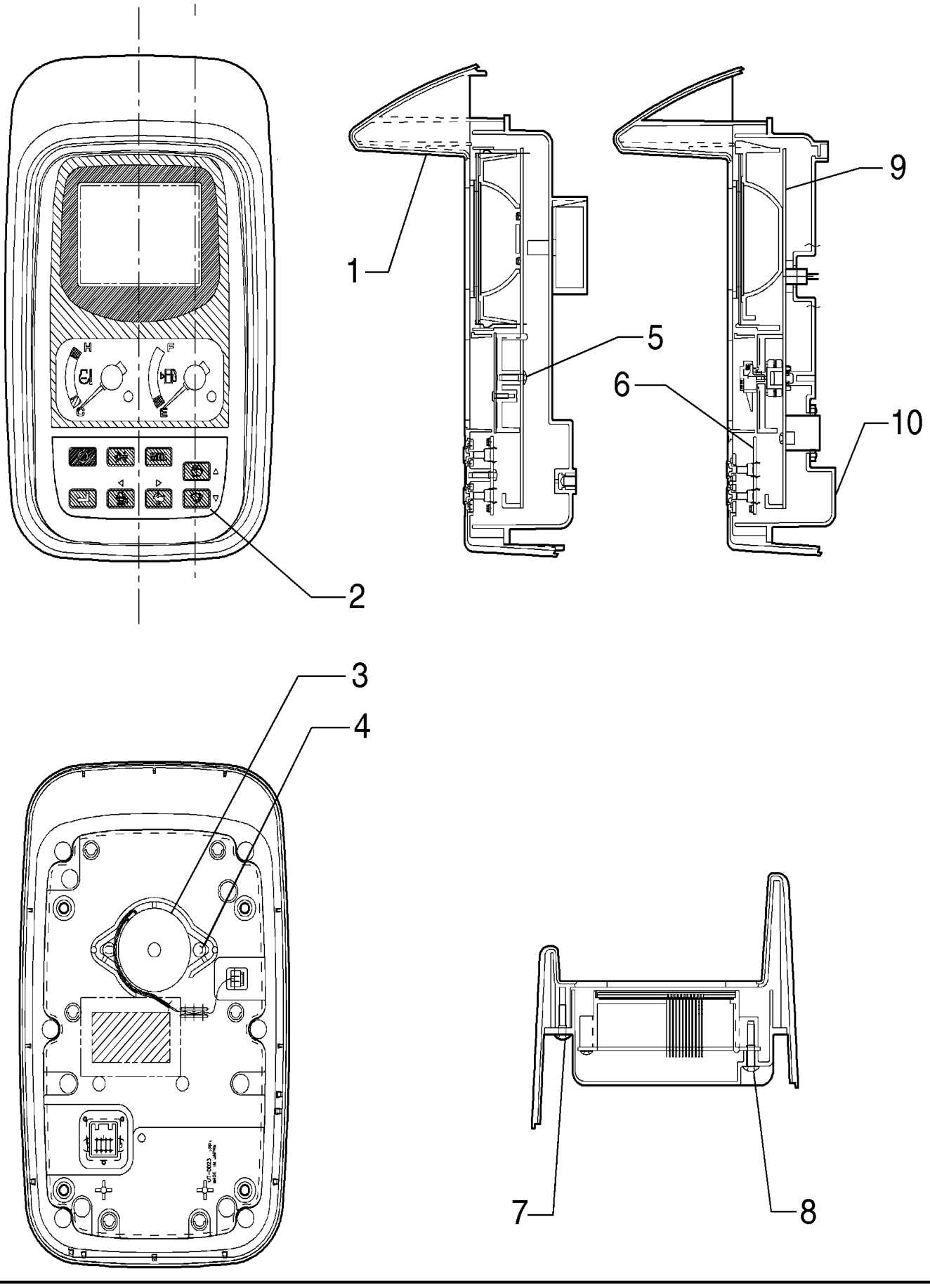

CAB - PARTS - DASHBOARD

REF	FN	PART NUMBER	YR/SN	QTY	DESCRIPTION
1		YN59S00021S003		1	COBERTURA
2		YN59S00021S006		1	PAINEL
3		YN59S00021S005		1	BUZINA VIBRATÓRIA
4		YN59S00021S009		2	PARAFUSO
5		YN59S00021S010		7	PARAFUSO
6		YN59S00021S002		1	PLACA DE CIRCUITO IMPRESSO
7		YN59500021S008		6	PARAFUSO
8		YN59S00021S007		6	PARAFUSO
9		YN59S00021S001		1	MONITOR DE CONTROLE
10		YN59S00021S004		1	COBERTURA

ELECTRICAL SYSTEM - TRAVEL WARNING

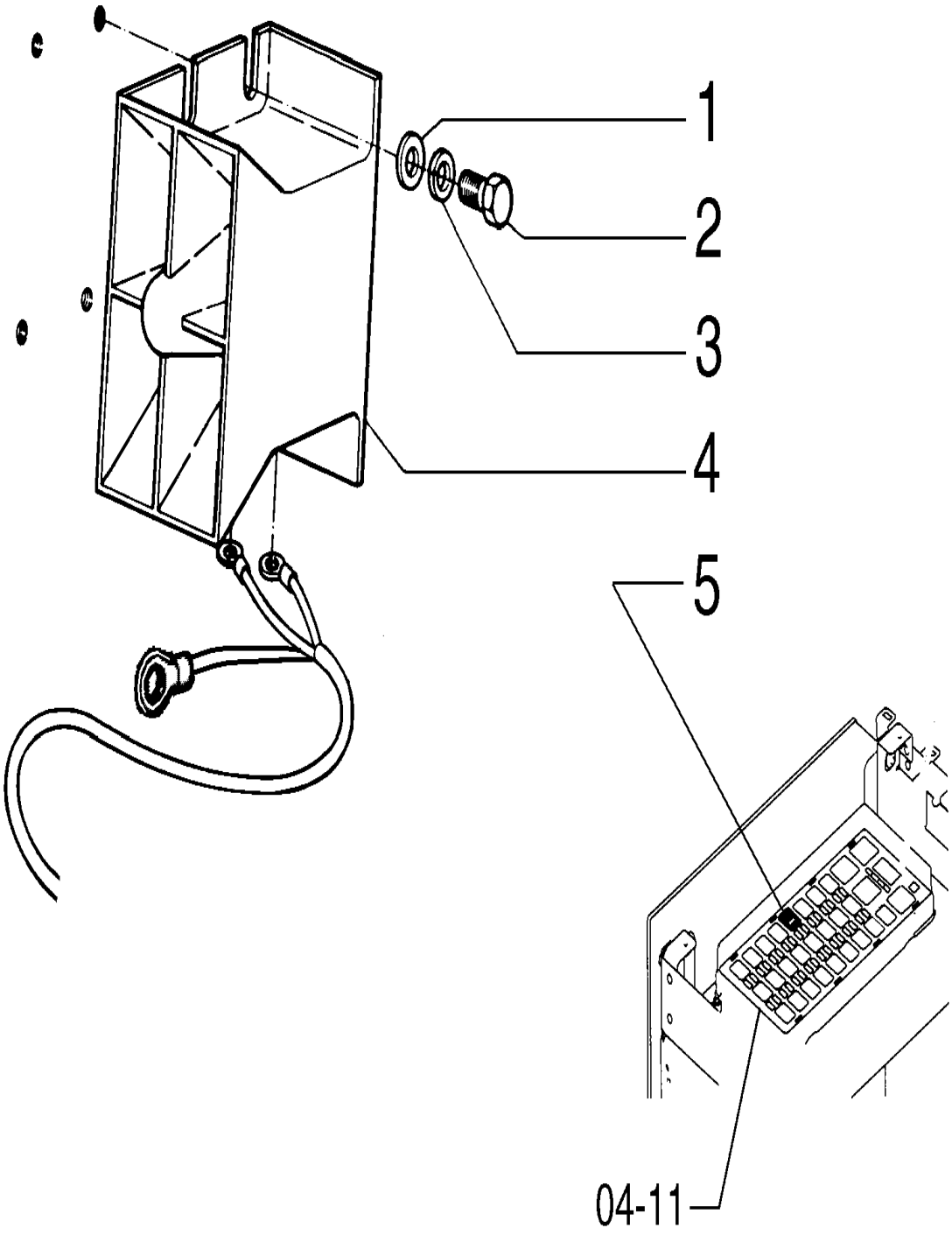

ELECTRICAL SYSTEM - TRAVEL WARNING

REF	FN	PART NUMBER	YR/SN	QTY	DESCRIPTION
1		14496531		4	ARRUELA PLANA M8 x 17 x 1.6
2		16043631		4	PARAFUSO Hex, M8 x 25, 10.9
3		10516671		4	TRAVA DA ARRUELA
4		73131968		1	ALARME DE MARCHA À RÉ
5		87559156		1	RELÉ

STARTER

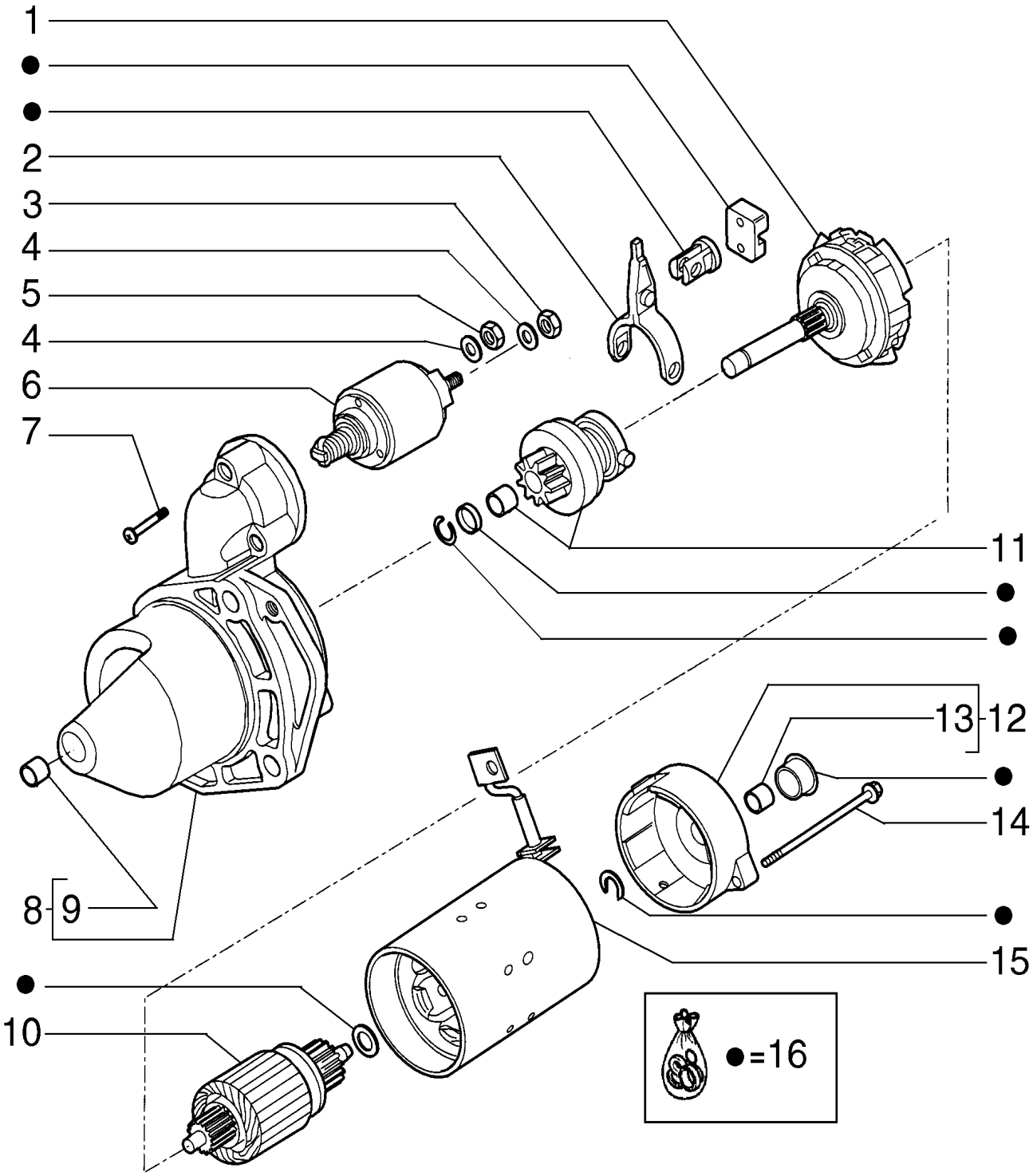

STARTER

REF	FN	PART NUMBER	YR/SN	QTY	DESCRIPTION
1		8093960		1	COBERTURA
2		42537069		1	GARFO
3		42537822		1	PORCA
4		42534012		2	TRAVA DA ARRUELA
5		1306937		1	PORCA
6		8093958		1	SOLENOIDE
7		42534008		3	PARAFUSO
8		8093957		1	ALOJAMENTO Includes item 9
9		8190143		1	BUCHA
10		42537071		1	INTERRUPTOR
11		42537064		1	PINHÃO
12		8093959		1	ALOJAMENTO Includes item 13
13		42535275		1	BUCHA
14		42537076		2	PARAFUSO
15		42546435		1	BLOCO
16		42537082		1	KIT MOTOR ARRANQUE

SECTION INDEX

Power Train

06-01	01	TRACK GUIDE
06-02	01	GUIDE ROLLER
06-03	01	CHAIN TENSIONER
06-04	01	TRACK ROLLER ASSEMBLY
06-05	01	TRACK ROLLERS
06-06	01	TRACK ROLLER ASSEMBLY
06-07	01	TRACK ROLLER ASSEMBLY
06-08	01	CHAIN & TRACK - 600MM
06-09	01	CHAIN & TRACK - 700MM
06-10	01	CHAIN & TRACK - 800MM
06-11	01	CHAIN & TRACK - 900MM
06-12	01	TRAVEL REDUCTORS
06-13	01	TRAVEL HYDRAULIC MOTOR
06-14	01	TRAVEL HYDRAULIC MOTOR
06-15	01	TRAVEL REDUCTORS - 84142001

06-01	01	p1	7/2013

TRACK GUIDE

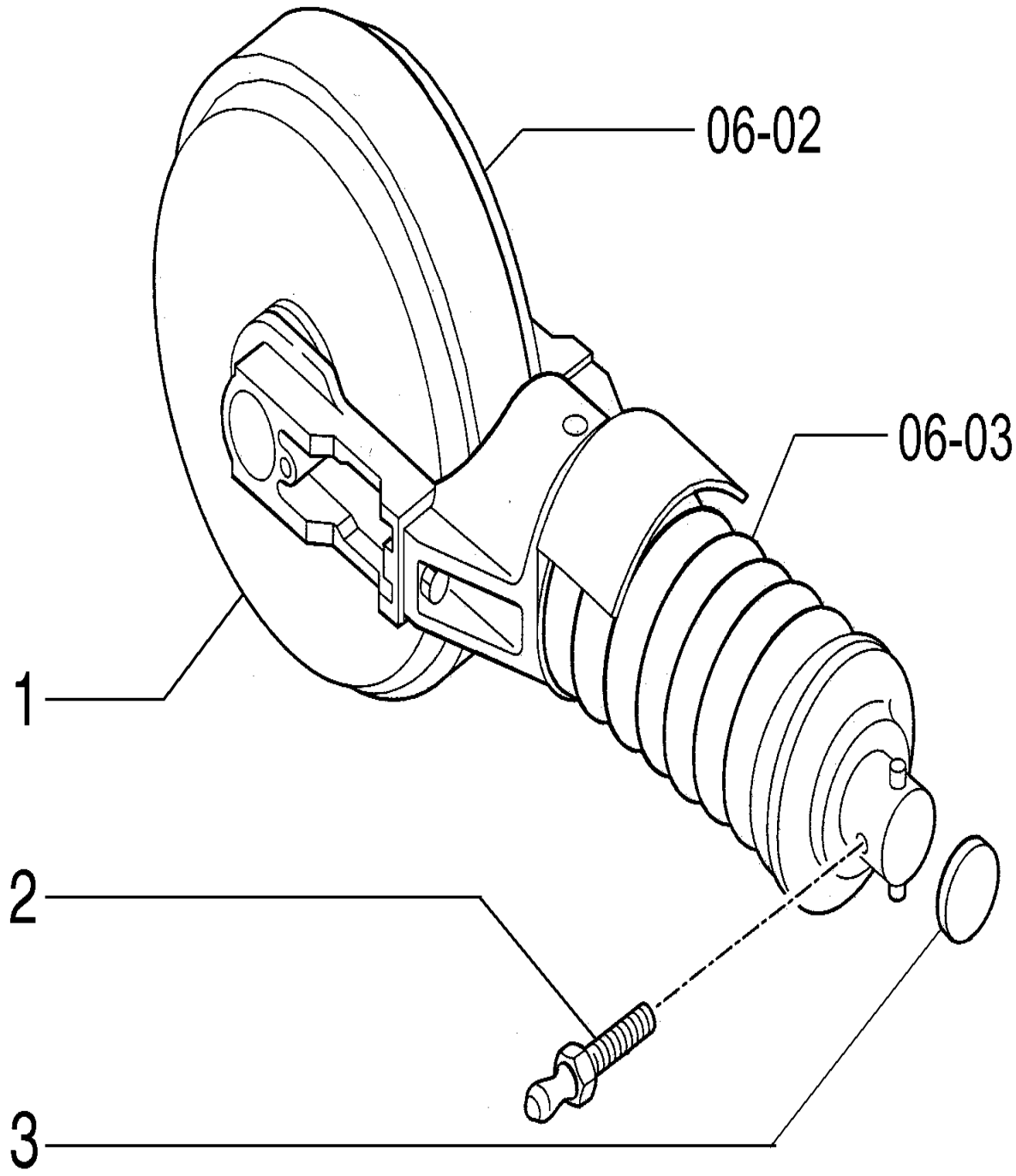

TRACK GUIDE

REF	FN	PART NUMBER	YR/SN	QTY	DESCRIPTION
1		87633389		2	TENSIONADOR
2		72209157		2	VÁLVULA HIDRÁULICA
3		87634394		2	CALÇO DE AFINAÇÃO

06-02	01	p1	7/2013

GUIDE ROLLER

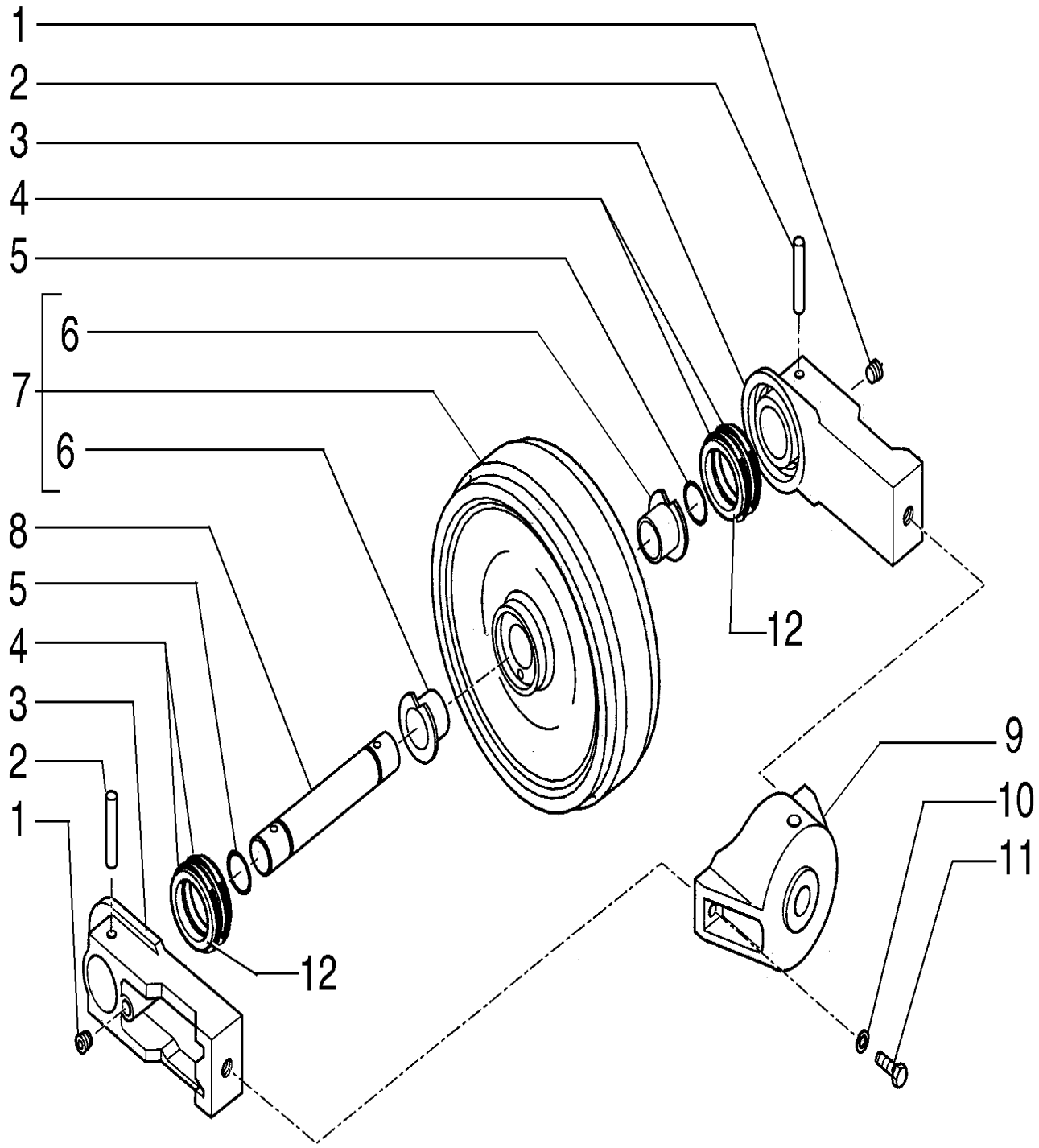

GUIDE ROLLER

REF	FN	PART NUMBER	YR/SN	QTY	DESCRIPTION
1		71401352		2	BUJÃO
2		72210170		2	PINO ELÁSTICO
3		72210165		2	SUPORTE
4		71401329		4	ANEL DE PRESSÃO
5		71401327		2	VEDAÇÃO
6		71401325		2	BUCHA
7		71401321		1	RODA VEICULAR Includes item 6
8		72210164		1	EIXO
9		YN54D01051P1		1	GARFO
10		10517270		2	TRAVA DA ARRUELA
11		71318802		2	PARAFUSO
12		72210523		4	ANEL VEDADOR

06-03	01	p1	7/2013

CHAIN TENSIONER

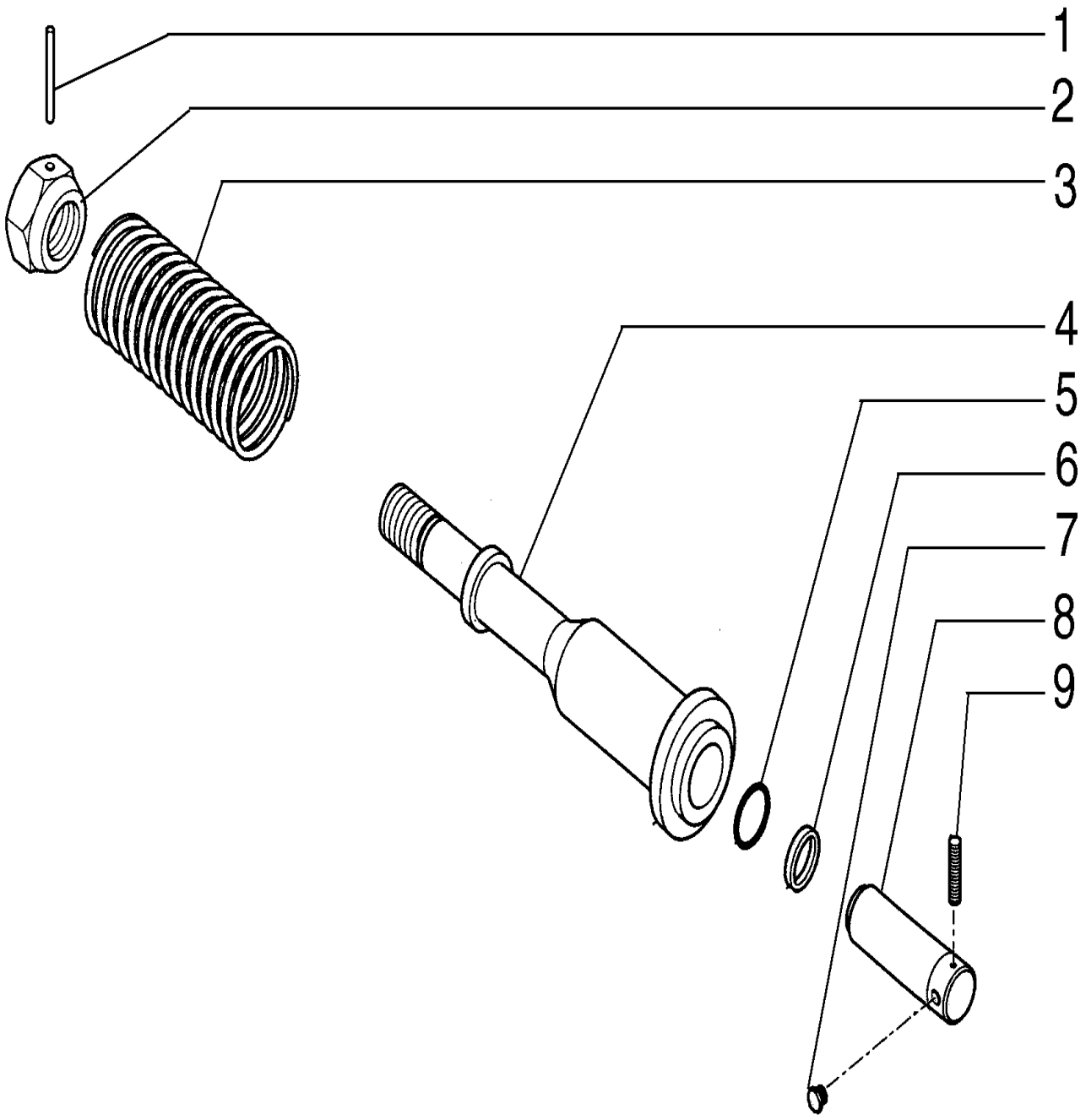

CHAIN TENSIONER

REF	FN	PART NUMBER	YR/SN	QTY	DESCRIPTION
1		79083943		1	PINO ELÁSTICO
2		72210527		1	PORCA
3		YN54001047P1		1	MOLA
4		87648969		1	CILINDRO
5		71466905		1	ANEL VEDADOR
6		45482627		1	VEDAÇÃO
7		220208300		1	BUJÃO
8		87561516		1	PISTÃO
9		72210181		2	PINO ELÁSTICO

TRACK ROLLER ASSEMBLY

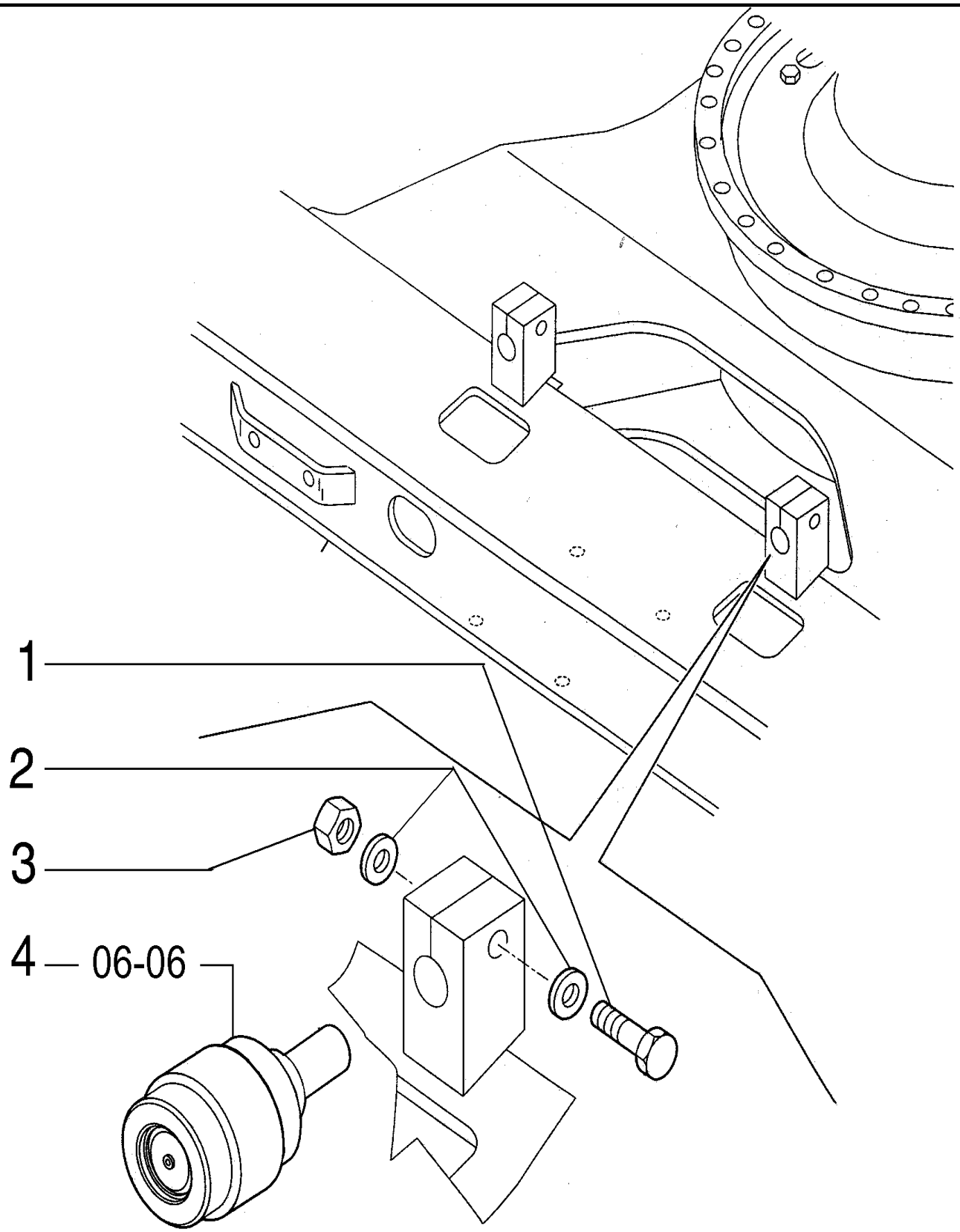

TRACK ROLLER ASSEMBLY

REF	FN	PART NUMBER	YR/SN	QTY	DESCRIPTION
1		11126131		4	PARAFUSO Hex, M20 x 120, 10.9
2		75326006		8	ARRUELA PLANA
3		12163521		4	PORCA M20, Cl 10
4		75263685		4	ROLO

TRACK ROLLERS

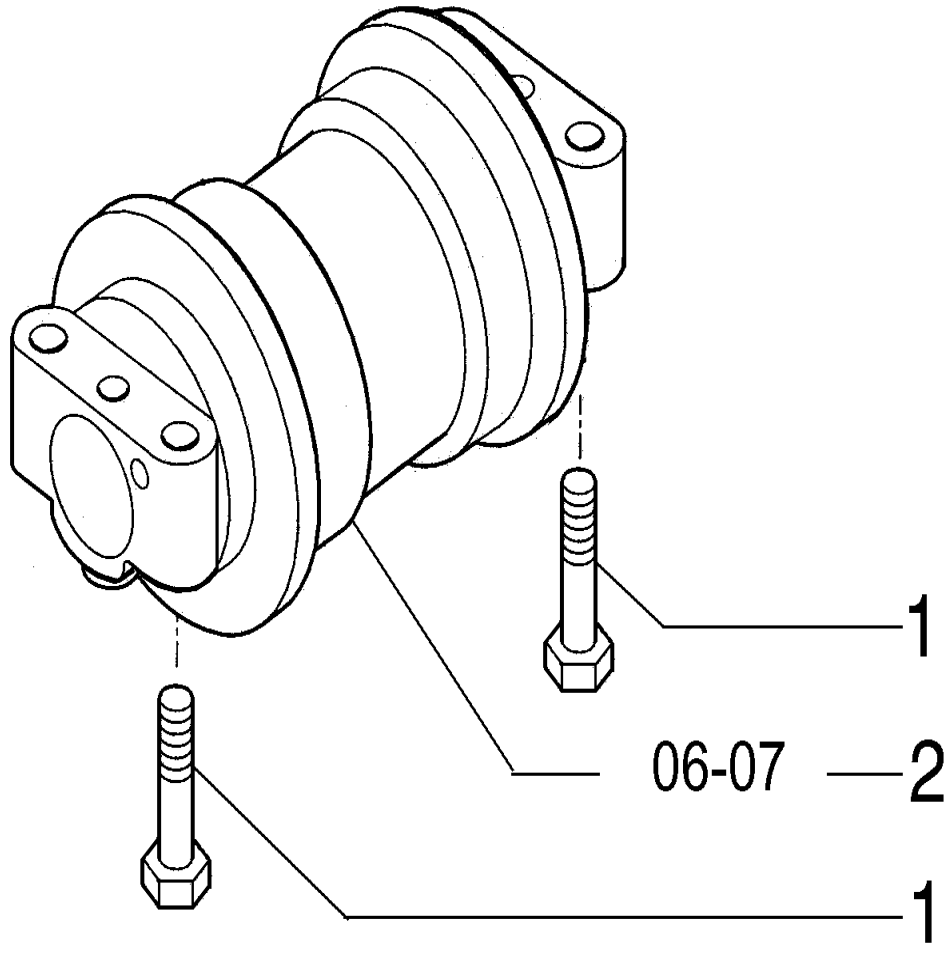

TRACK ROLLERS

REF	FN	PART NUMBER	YR/SN	QTY	DESCRIPTION
1		15984831		64	PARAFUSO Hex, M18 x 1.5 x 80, 10.9
2		75263684		16	ROLO

06-06	01	p1	7/2013

TRACK ROLLER ASSEMBLY

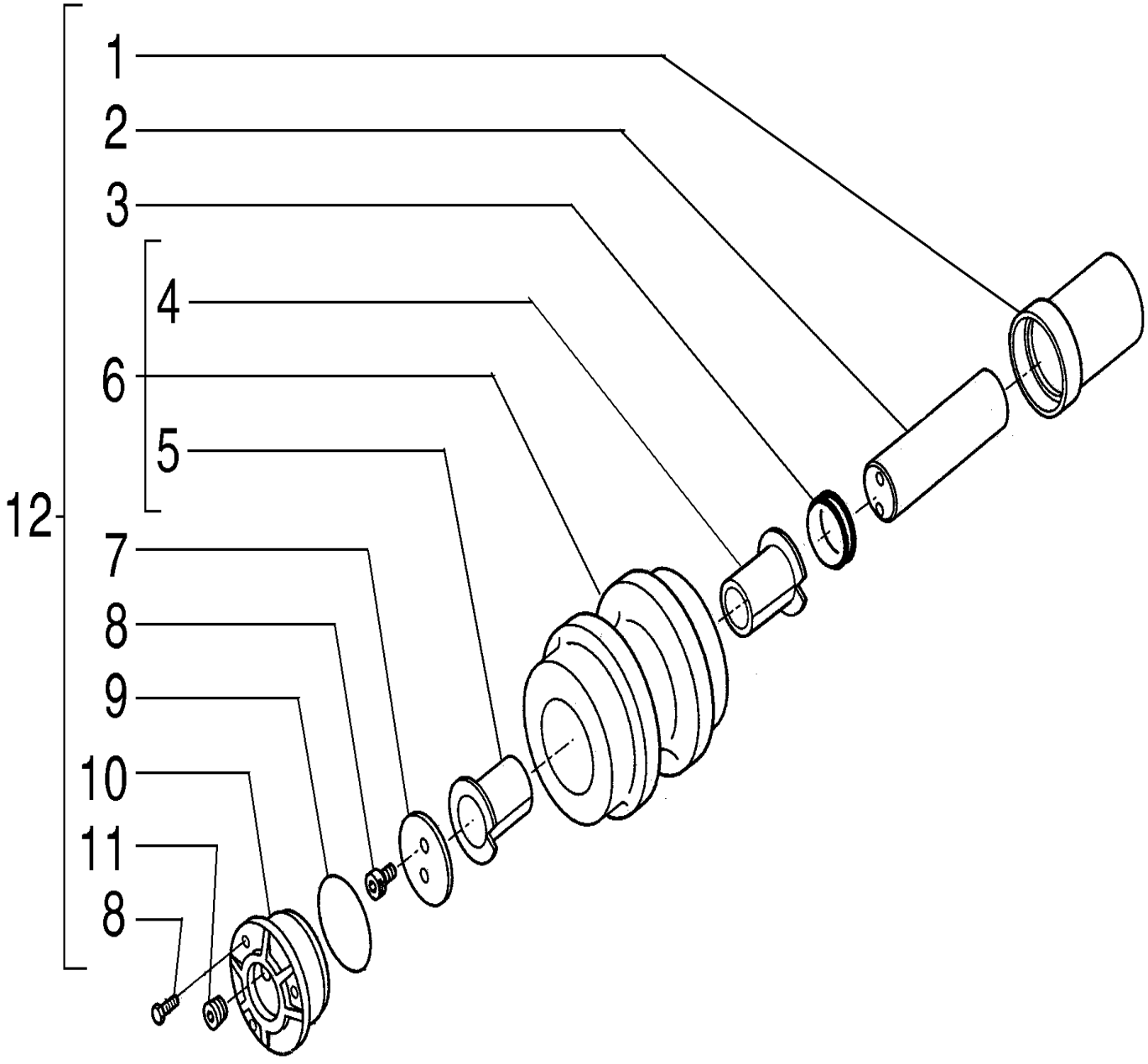

TRACK ROLLER ASSEMBLY

REF	FN	PART NUMBER	YR/SN	QTY	DESCRIPTION
1		72210147		1	CAIXA
2		72210142		1	EIXO
3		72210151		1	KIT
4		72210144		1	BUCHA
5		72210143		1	BUCHA
6		72210152		1	ROLETE PARA ESTEIRA Includes items 4, 5
7		72210149		1	ARRUELA PLANA
8		11112234		5	PARAFUSO Hex, M12 x 25, 10.9, Full Thd
9		70923581		1	O-RING
10		72210148		1	COBERTURA
11		71400954		1	BUJÃO
12		75263685		1	ROLO Includes items 1 - 11

TRACK ROLLER ASSEMBLY

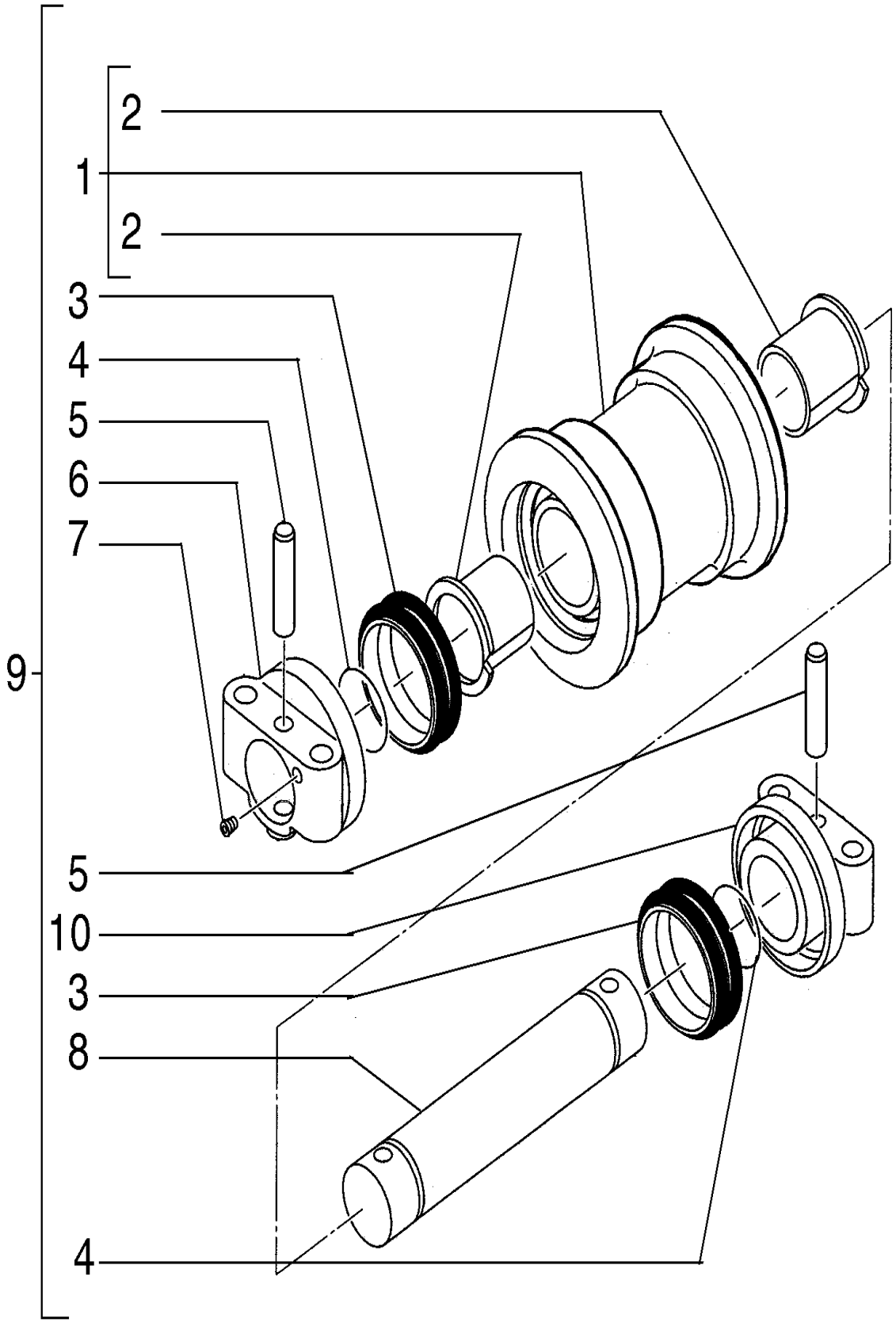

TRACK ROLLER ASSEMBLY

REF	FN	PART NUMBER	YR/SN	QTY	DESCRIPTION
1		72210162		1	ROLETE PARA ESTEIRA Includes item 2
2		71401366		2	BUCHA
3		72210163		2	KIT
4		71401371		2	VEDAÇÃO
5		71401372		2	EIXO
6		72210158		1	SUPORTE
7		71401352		1	BUJÃO
8		72210153		1	EIXO
9		75263684		1	ROLO Includes items 1 - 10
10		72210159		1	SUPORTE

06-08	01	p1	7/2013

CHAIN & TRACK - 600MM

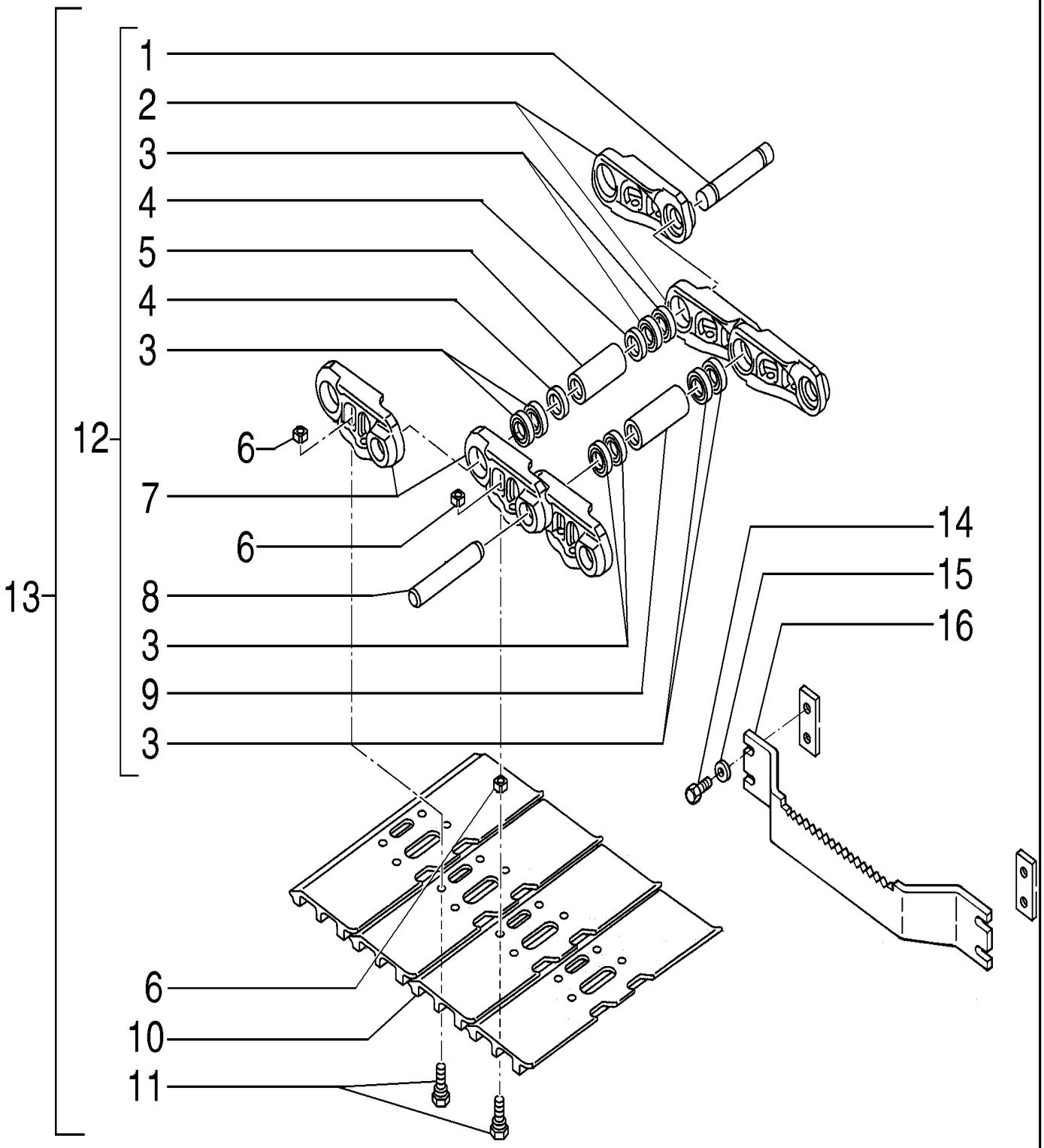

CHAIN & TRACK - 600MM

REF	FN	PART NUMBER	YR/SN	QTY	DESCRIPTION
1		72210192		1	PINO
2		72210186		49	ELO DE ESTEIRA RH
3		71461019		96	ANEL VEDADOR
4		72210191		2	ESPAÇADOR
5		72210190		1	BUCHA
6		76030024		196	PORCA DE VEDAÇÃO
7		72210187		49	ELO DE ESTEIRA LH
8		72210188		48	PINO
9		72210189		48	BUCHA
10		72210195		49	SAPATA DE ESTEIRA
11		72210193		196	PARAFUSO
12		72210200		1	CORRENTE Includes items 1 - 9
13		72202489		2	CATENÁRIA Includes items 1 - 12
14		11127531		16	PARAFUSO Hex, M16 x 35, 10.9
15		14496931		16	ARRUELA PLANA M16 x 30 x 3
16		75254844		4	APÓIA PÉ

06-09	01	p1	7/2013

CHAIN & TRACK - 700MM

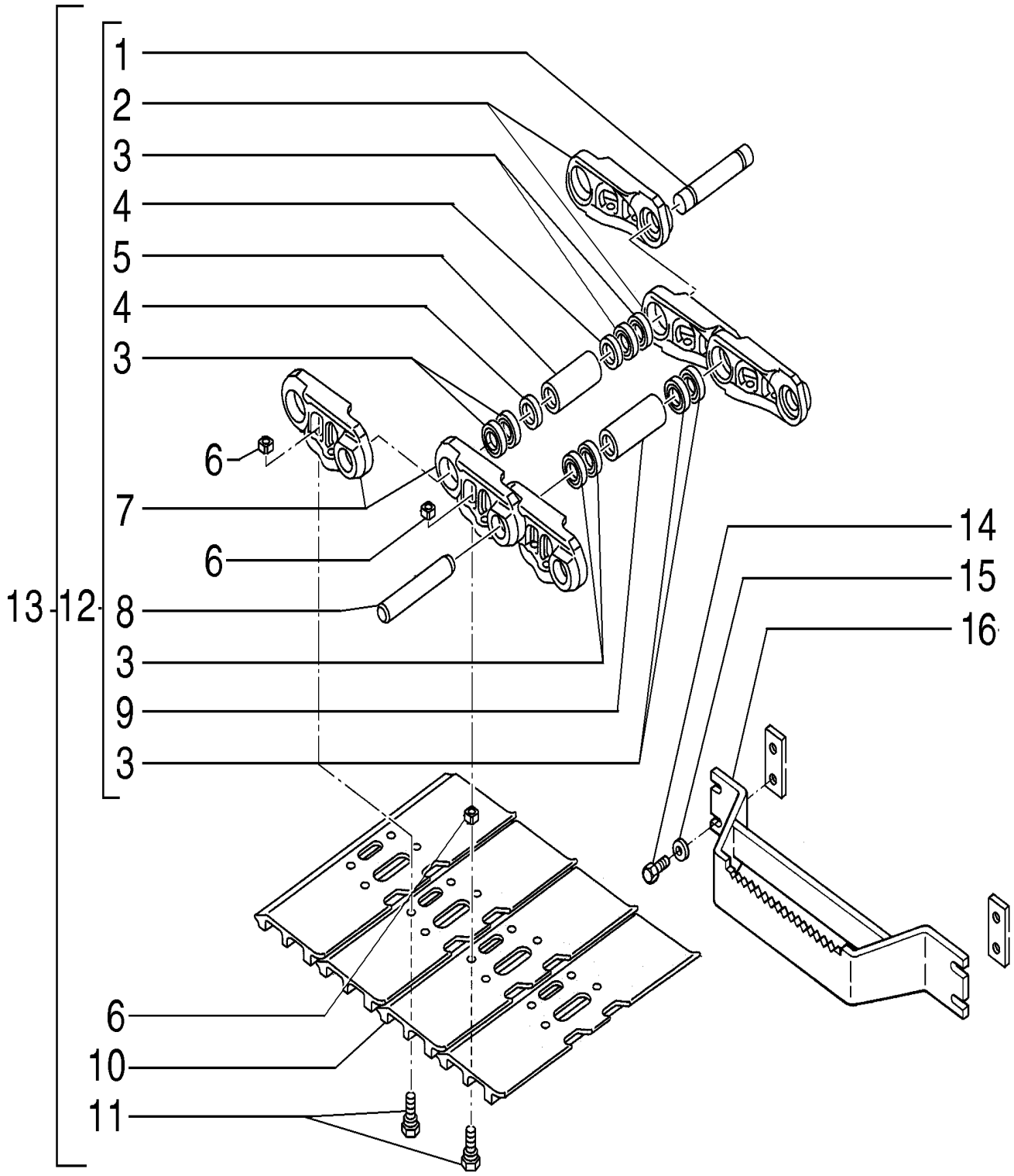

CHAIN & TRACK - 700MM

REF	FN	PART NUMBER	YR/SN	QTY	DESCRIPTION
1		72210192		1	PINO
2		72210186		49	ELO DE ESTEIRA RH
3		71461019		96	ANEL VEDADOR
4		72210191		2	ESPAÇADOR
5		72210190		1	BUCHA
6		76030024		196	PORCA DE VEDAÇÃO
7		72210187		49	ELO DE ESTEIRA LH
8		72210188		48	PINO
9		72210189		48	BUCHA
10		72210196		49	SAPATA DE ESTEIRA
11		72210193		196	PARAFUSO
12		72210200		4	CORRENTE Includes items 1 - 9
13		72203521		5	CATENÁRIA Includes items 1 - 12
14		11127531		16	PARAFUSO Hex, M16 x 35, 10.9
15		14496931		16	ARRUELA PLANA M16 x 30 x 3
16		75321678		4	APÓIA PÉ

06-10	01	p1	7/2013

CHAIN & TRACK - 800MM

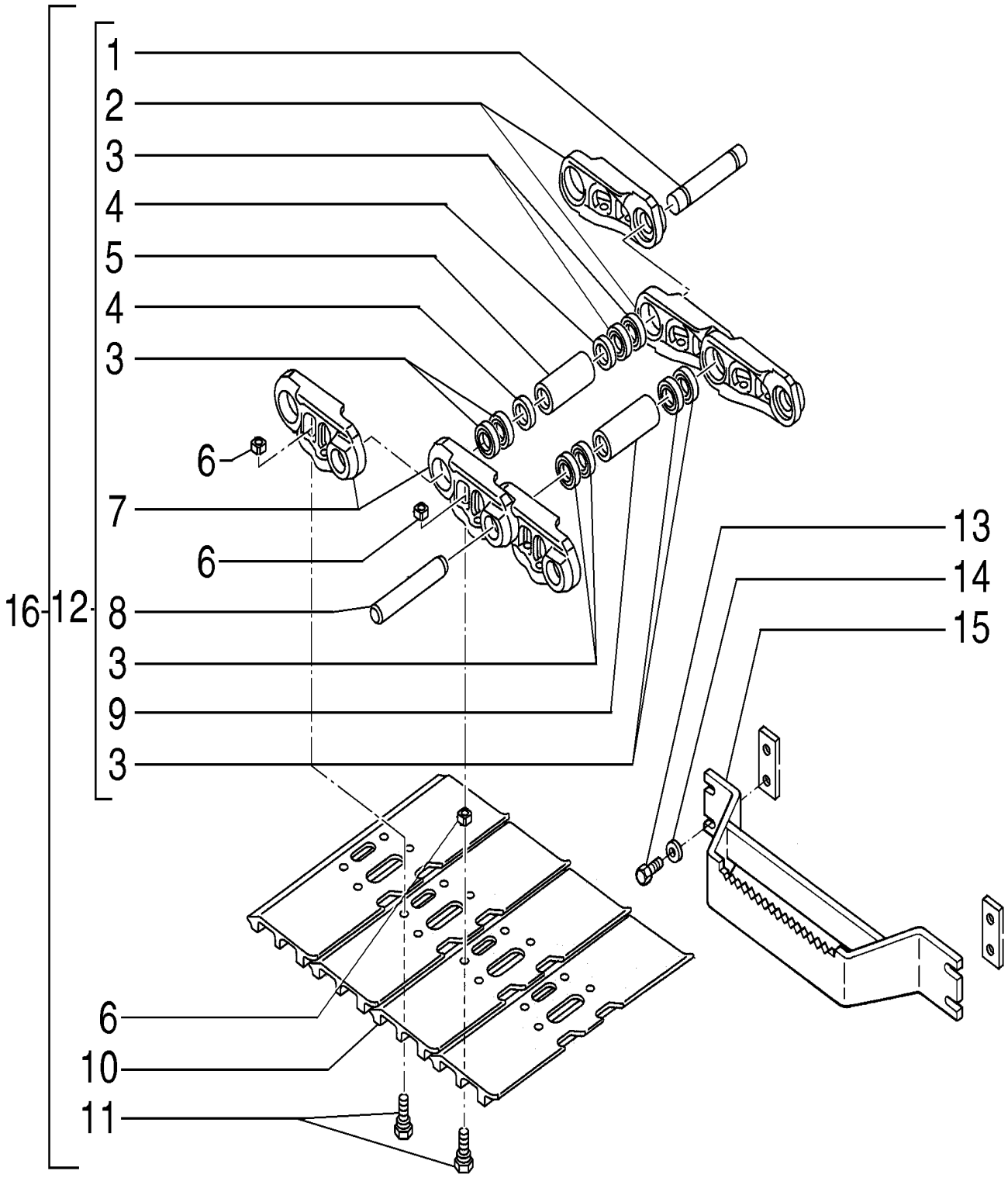

CHAIN & TRACK - 800MM

REF	FN	PART NUMBER	YR/SN	QTY	DESCRIPTION
1		72210192		1	PINO
2		72210186		49	ELO DE ESTEIRA
3		71461019		96	ANEL VEDADOR
4		72210191		2	ESPAÇADOR
5		72210190		1	BUCHA
6		76030024		196	PORCA DE VEDAÇÃO
7		72210187		49	ELO DE ESTEIRA
8		72210188		48	PINO
9		72210189		48	BUCHA
10		72210197		49	SAPATA DE ESTEIRA
11		72210193		196	PARAFUSO
12		72210200		1	CORRENTE Includes items 1 - 9
13		11127531		16	PARAFUSO Hex, M16 x 35, 10.9
14		14496931		16	ARRUELA PLANA M16 x 30 x 3
15		75321678		4	APÓIA PÉ
16		72203523		2	CATENÁRIA Includes items 1 - 12

06-11	01	p1	7/2013

CHAIN & TRACK - 900MM

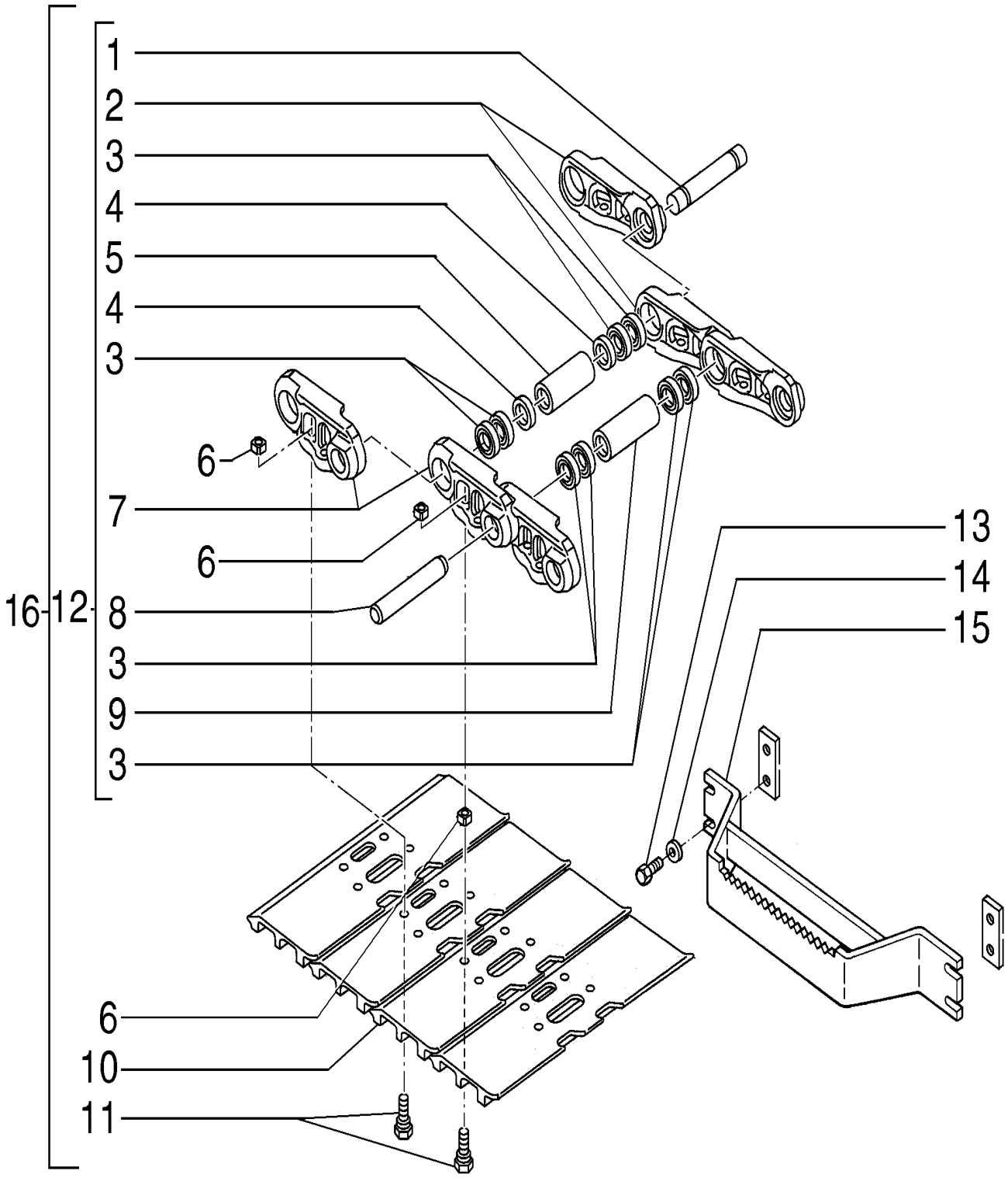

CHAIN & TRACK - 900MM

REF	FN	PART NUMBER	YR/SN	QTY	DESCRIPTION
1		72210192		1	PINO
2		72210186		49	ELO DE ESTEIRA
3		71461019		96	ANEL VEDADOR
4		72210191		2	ESPAÇADOR
5		72210190		1	BUCHA
6		76030024		196	PORCA DE VEDAÇÃO
7		72210187		49	ELO DE ESTEIRA
8		72210188		48	PINO
9		72210189		48	BUCHA
10		72210198		49	SAPATA DE ESTEIRA
11		72210193		196	PARAFUSO
12		72210200		1	CORRENTE Includes items 1 - 9
13		11127531		16	PARAFUSO Hex, M16 x 35, 10.9
14		14496931		16	ARRUELA PLANA M16 x 30 x 3
15		75321678		4	APÓIA PÉ
16		72203525		2	CATENÁRIA Includes items 1 - 12

TRAVEL REDUCTORS

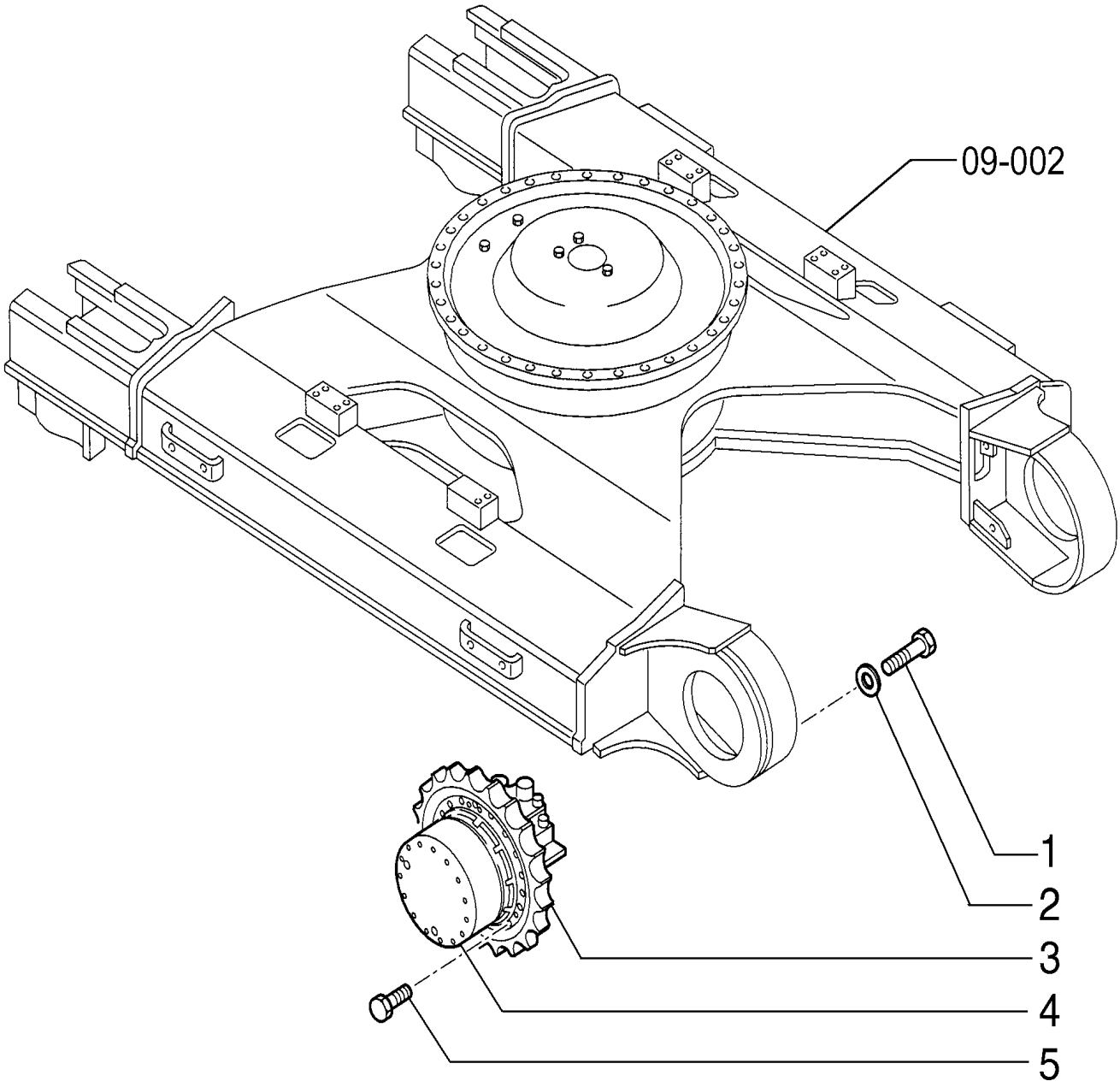

TRAVEL REDUCTORS

REF	FN	PART NUMBER	YR/SN	QTY	DESCRIPTION
1		11119131		54	PARAFUSO Hex, M16 x 60, 10.9
2		496-21066		54	ARRUELA PLANA 21/32" x 1 5/16" x .150"
3		72230314		2	RODA MOTRIZ
4		84142001		2	REDUTOR
5		11124731		40	PARAFUSO Hex, M20 x 50, 10.9

TRAVEL HYDRAULIC MOTOR

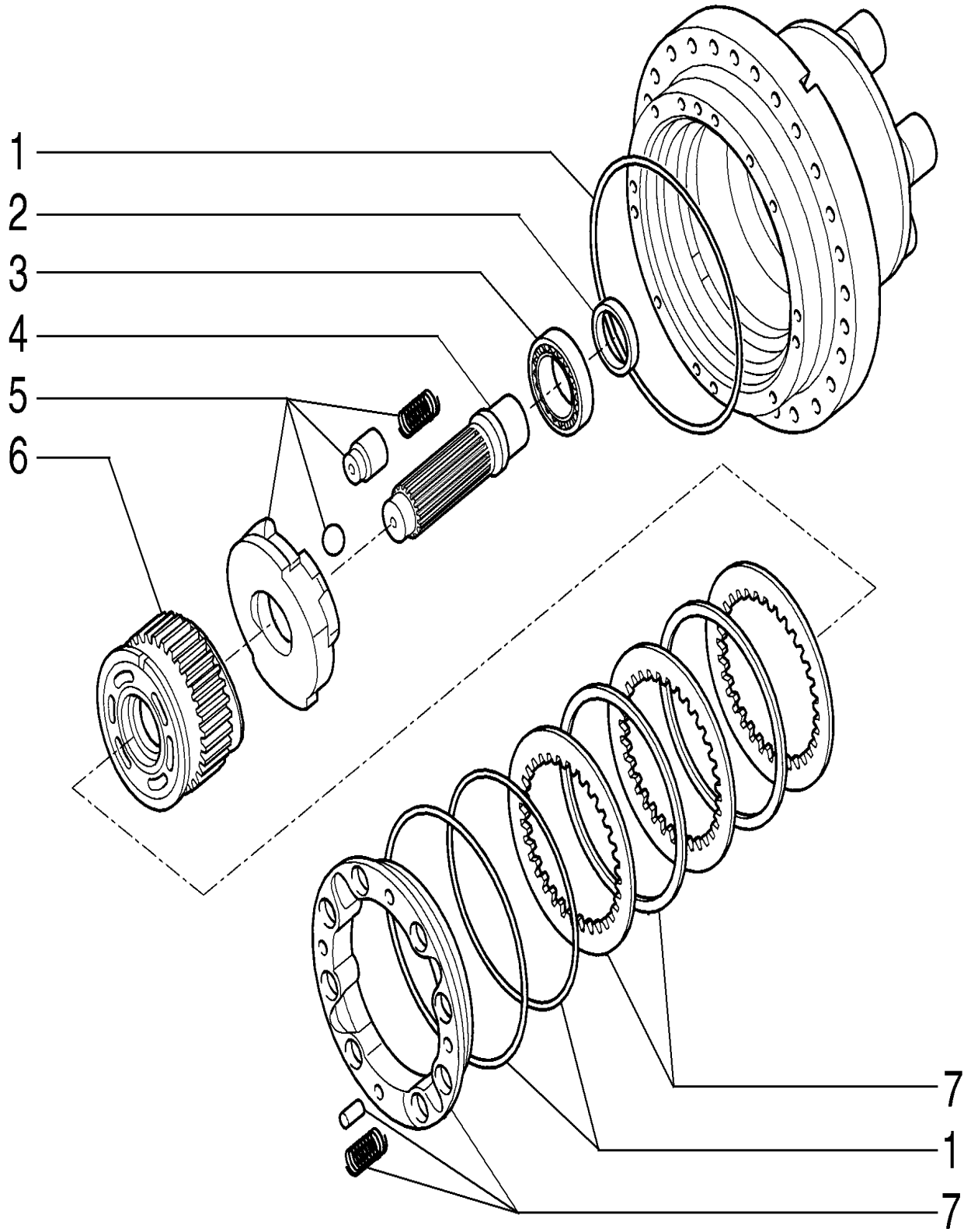

TRAVEL HYDRAULIC MOTOR

REF	FN	PART NUMBER	YR/SN	QTY	DESCRIPTION
1		84152970		1	KIT
2		84152963		1	O-RING
3		72210469		1	KIT
4		72210467		1	EIXO
5		84152959		1	KIT
6		72210465		1	KIT
7		72210470		1	KIT

TRAVEL HYDRAULIC MOTOR

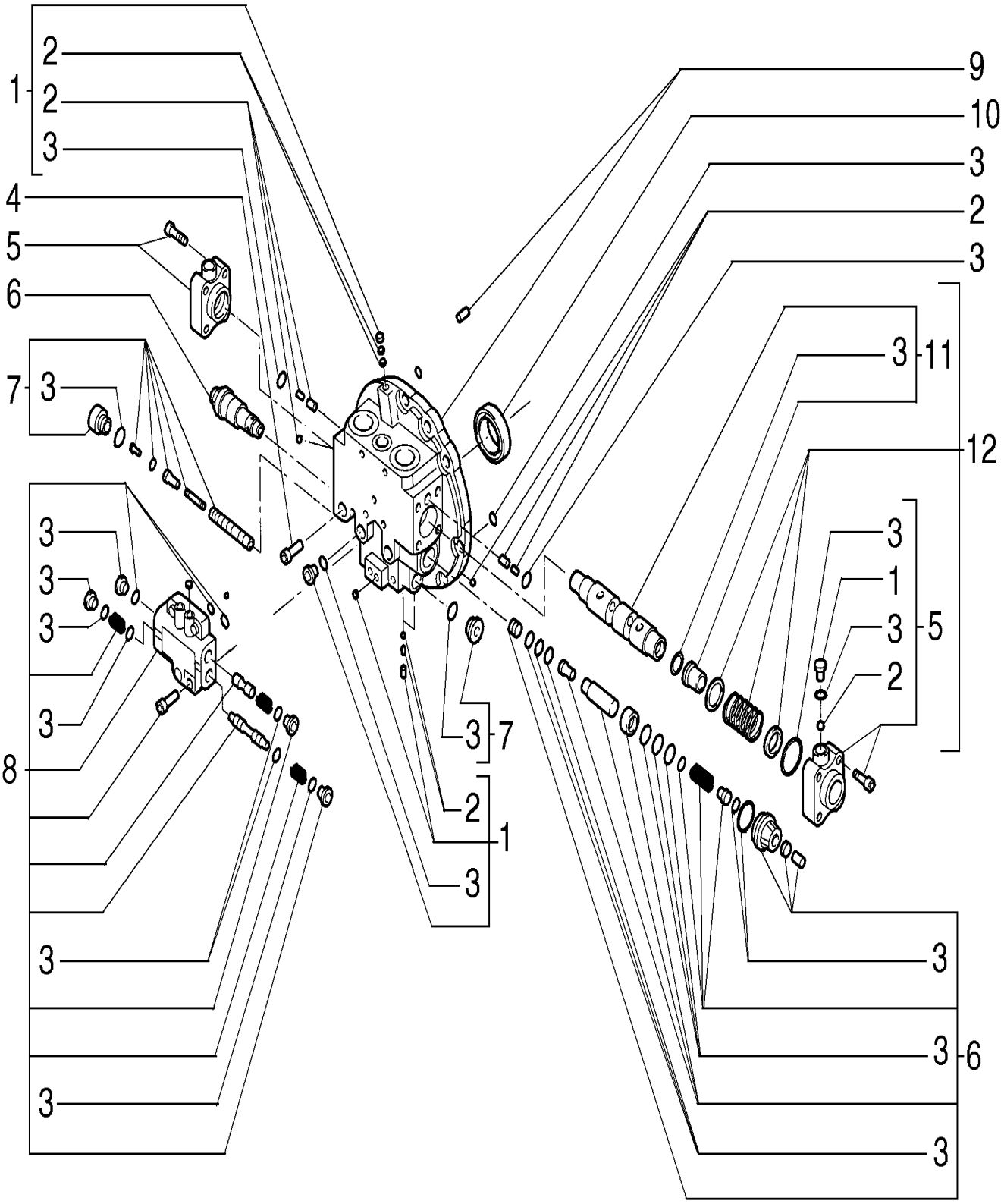

TRAVEL HYDRAULIC MOTOR

REF	FN	PART NUMBER	YR/SN	QTY	DESCRIPTION
1		72210463		1	KIT Includes items 2, 3
2		72210461		1	KIT
3		84152970		1	KIT
4		71412008		10	PARAFUSO
5		72210460		2	BUJÃO Includes items 1, 2, 3
6		72210464		1	KIT Includes item 3
7		72210462		1	KIT Includes item 3
8		84152952		1	VÁLVULA Includes item 3
9		84152777		1	KIT
10		72210469		1	KIT
11		84152942		1	KIT Includes item 3
12		84152939		1	KIT Includes items 1, 2, 3, 5, 11

TRAVEL REDUCTORS - 84142001

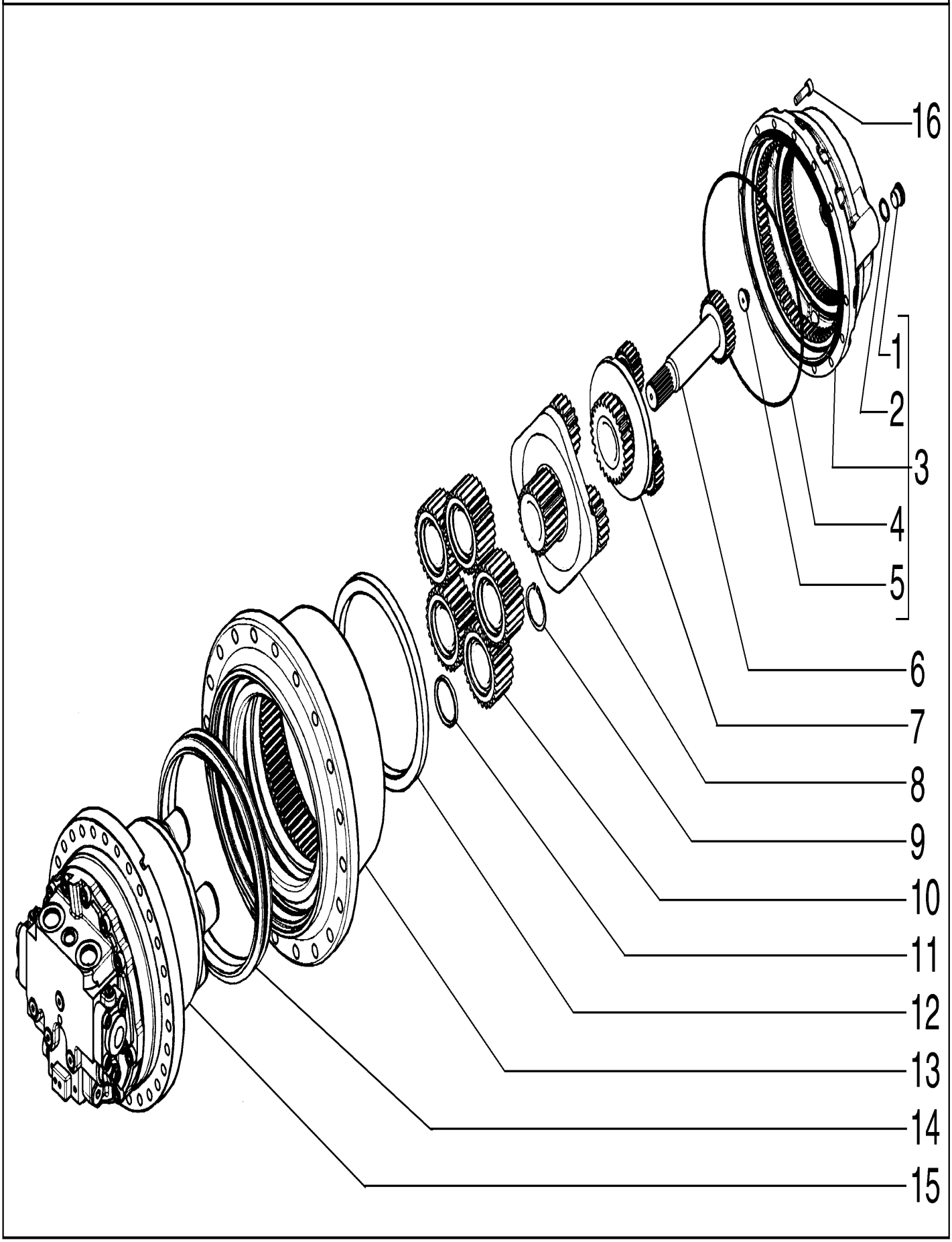

TRAVEL REDUCTORS - 84142001

REF	FN	PART NUMBER	YR/SN	QTY	DESCRIPTION
1		71418385		2	BUJÃO
2		71418683		2	FLANGE
3		84152673		1	COBERTURA Includes items 1, 2, 4, 5
4		71470185		1	JUNTA
5		71471056		1	PASTILHA DE FREIO
6		84152727		1	COBERTURA
7		84152738		1	KIT
8		84152750		1	KIT
9		84152752		5	ANEL
10		84152755		5	KIT
11		84152756		5	ESPAÇADOR
12		84152758		1	PORCA
13		84152764		1	CORPO
14		84152771		1	VEDAÇÃO
15		84152774		1	ENGINE
16		84152664		13	PARAFUSO

SECTION INDEX

Hydraulics

08-03	01	HYDRAULIC SYSTEM
08-03	02	HYDRAULIC SYSTEM
08-03	03	HYDRAULIC SYSTEM
08-05	01	HYDRAULIC SYSTEM
08-07	01	HYDRAULIC SYSTEM
08-07	02	HYDRAULIC SYSTEM
08-08	01	HYDRAULIC SYSTEM
08-09	01	HYDRAULIC SYSTEM
08-10	01	HYDRAULIC SYSTEM
08-11	01	HYDRAULIC SYSTEM
08-12	01	HYDRAULIC SYSTEM - SERVO CONTROL
08-12	02	HYDRAULIC SYSTEM
08-12	03	HYDRAULIC SYSTEM
08-13	01	HYDRAULIC SYSTEM - SERVO CONTROL
08-14	01	HYDRAULIC SYSTEM
08-16	01	HYDRAULIC SYSTEM
08-18	01	HYDRAULIC SYSTEM
08-18	02	HYDRAULIC SYSTEM
08-18/A	01	HYDRAULIC SYSTEM - RAISED CAB
08-18/A	02	HYDRAULIC SYSTEM - RAISED CAB
08-22	01	PEDAL CONTROL
08-23	01	SERVO CONTROLS
08-24	01	HYDRAULIC SYSTEM
08-25	01	CONTROL VALVE - 72209798
08-26	01	HYDRAULIC SYSTEM
08-27/A	01	HYDRAULIC SYSTEM - OPTIONAL RAISED CAB
08-28	01	HYDRAULIC SYSTEM - TRAVEL
08-28	02	HYDRAULIC SYSTEM - TRAVEL
08-29	01	HYDRAULIC SYSTEM - MONOBLOC BOOM
08-31	01	HYDRAULIC SYSTEM - MONOBLOC BOOM 15M
08-32	01	HYDRAULIC SYSTEM - LIFT CYLINDER
08-32	02	HYDRAULIC SYSTEM - LIFT CYLINDER
08-32	03	HYDRAULIC SYSTEM - LIFT CYLINDER, ARM 15M
08-33	01	DIPPERSTICK TUBING - 2,4M
08-35	01	DIPPERSTICK TUBING - 2,94M

SECTION INDEX

Hydraulics

08-36	01	DIPPERSTICK TUBING - 3,5M
08-37	01	HYDRAULIC SYSTEM - DIPPERSTICK CYLINDER
08-38	01	SELECTOR VALVE
08-39	01	SOLENOID VALVE - YN35V00050F1
08-40	01	SOLENOID VALVE
08-42	01	CONTROL VALVE - 87524907
08-44	01	PEDAL VALVE
08-45	01	PEDAL VALVE - 72204155
08-46	01	SERVO VALVE
08-48	01	SOLENOID VALVE - 87531523
08-51	01	SWING REDUCTOR
08-52	01	SWING REDUCTOR
08-53	01	SWING HYDRAULIC MOTOR
08-54	01	HYDRAULIC MOTOR'S SOLENOID VALVE
08-55	01	HYDRAULIC OIL RESERVOIR
08-57	01	HYDRAULIC OIL PUMP
08-58	01	HYDRAULIC OIL PUMP - YN10V00043F1
08-59	01	HYDRAULIC OIL PUMP - YN10V00033F2
08-60	01	HYDRAULIC OIL PUMP
08-61	01	HYDRAULIC OIL PUMP - 72204291
08-62	01	HYDRAULIC OIL PUMP - PARTS - YN10V009F1
08-63	01	VALVE - YN35V00052F1
08-64	01	CONTROL VALVE & BRACKETS
08-65	01	CONTROL VALVE - 87648970
08-66	01	CONTROL VALVE - 87648970
08-67	01	CONTROL VALVE - 87648970
08-68	01	CONTROL VALVE - 87648970
08-69	01	CONTROL VALVE - 87648970
08-70	01	CONTROL VALVE - 87648970
08-71	01	CONTROL VALVE - 87648970
08-77	01	ROTATING CONTROL VALVE
08-78	01	ROTATING CONTROL VALVE
08-80	01	CONTROL VALVE - 72210100
08-81	01	CONTROL VALVE - YN22V00001F8
08-82	01	CONTROL VALVE - 72210098

SECTION INDEX

Hydraulics

08-83	01	CONTROL VALVE - 72210099
08-84	01	LIFT CYLINDER - 87626327
08-86	01	DIPPERSTICK CYLINDER - 87626447
08-88	01	BUCKET CYLINDER - 87626455
08-88	02	BUCKET CYLINDER
08-90	01	BUCKET CYLINDER - 0,45 CUBIC METERS

HYDRAULIC SYSTEM

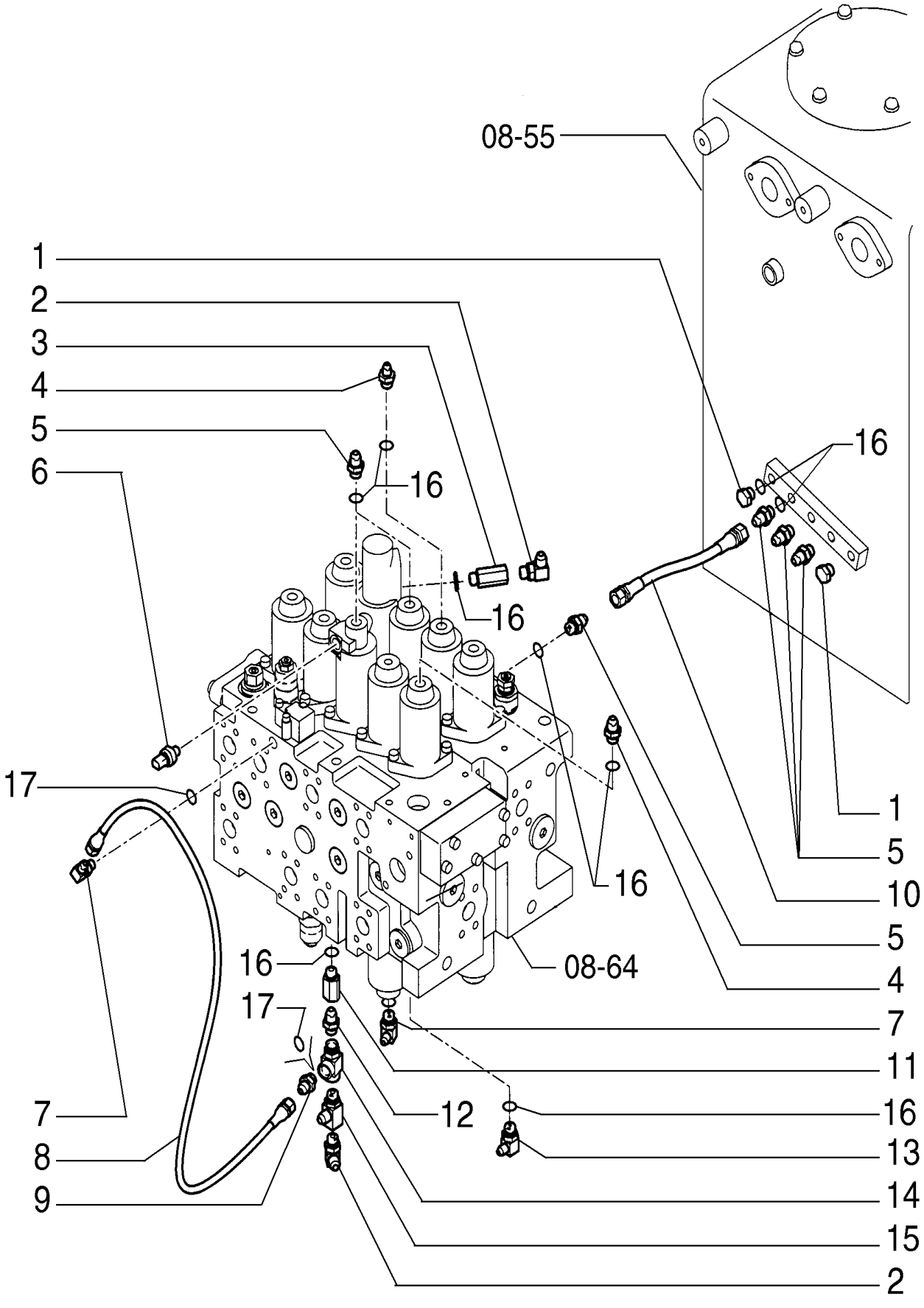

HYDRAULIC SYSTEM

REF	FN	PART NUMBER	YR/SN	QTY	DESCRIPTION
1		72214558		2	BUJÃO
2		72214526		2	CONECTOR HIDRÁUL
3		87652672		1	CONECTOR HIDRÁUL
4		72214522		2	CONECTOR HIDRÁUL
5		72214523		6	CONECTOR HIDRÁUL
6		87608371		1	SENSOR
7		72214524		2	CONECTOR HIDRÁUL
8		72214782		1	MANGUEIRA
9		72214744		1	CONECTOR HIDRÁUL
10		87397171		1	TUBO FLEXÍVEL
11		87652671		1	CONECTOR HIDRÁUL
12		72209013		1	VÁLVULA HIDRÁULICA
13		72214525		1	CONECTOR HIDRÁUL
14		87652675		1	CONECTOR HIDRÁUL
15		87652676		1	CONECTOR HIDRÁUL
16		ZD12P01400		12	O-RING
17		ZD12P01100		3	O-RING

HYDRAULIC SYSTEM

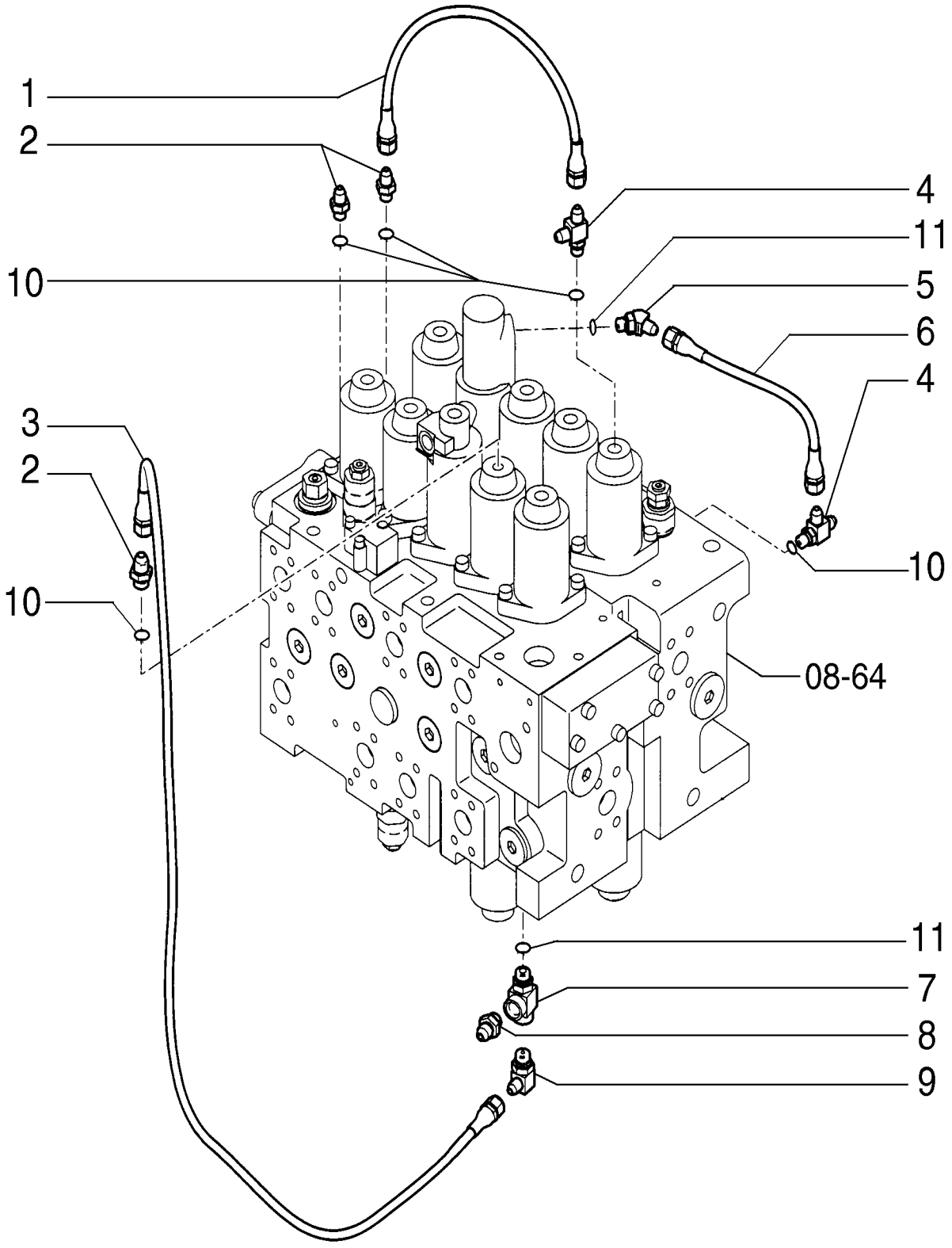

HYDRAULIC SYSTEM

REF	FN	PART NUMBER	YR/SN	QTY	DESCRIPTION
1		72214535		1	MANGUEIRA
2		72214744		3	CONECTOR HIDRÁUL
3		87397568		1	TUBO FLEXÍVEL
4		87652673		1	CONECTOR HIDRÁUL
5		87397451		1	CONECTOR HIDRÁUL
6		87397448		1	TUBO FLEXÍVEL
7		87652674		1	CONECTOR HIDRÁUL
8		72209013		1	VÁLVULA HIDRÁULICA
9		72214525		1	CONECTOR HIDRÁUL
10		ZD12P01100		4	O-RING
11		ZD12P01400		3	O-RING

HYDRAULIC SYSTEM

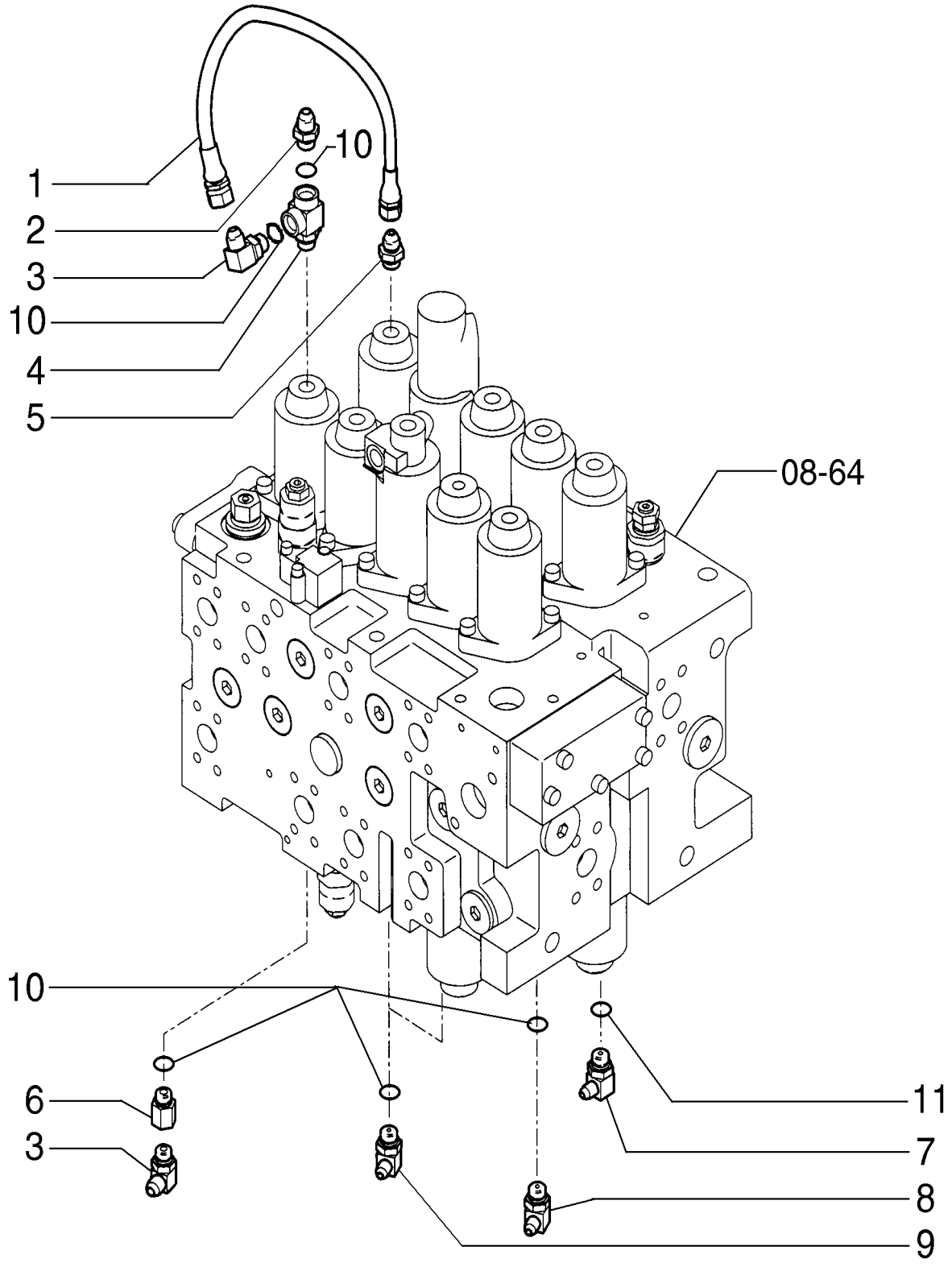

HYDRAULIC SYSTEM

REF	FN	PART NUMBER	YR/SN	QTY	DESCRIPTION
1		87397449		1	TUBO FLEXÍVEL
2		72214523		1	CONECTOR HIDRÁUL
3		72214526		2	CONECTOR HIDRÁUL
4		87652674		1	CONECTOR HIDRÁUL
5		72209013		1	VÁLVULA HIDRÁULICA
6		87652677		1	CONECTOR HIDRÁUL
7		72214524		1	CONECTOR HIDRÁUL
8		72214525		1	CONECTOR HIDRÁUL
9		72214541		2	COTOVELO
10		ZD12P01400		6	O-RING
11		ZD12P01100		1	O-RING

08-05	01	p1	7/2013

HYDRAULIC SYSTEM

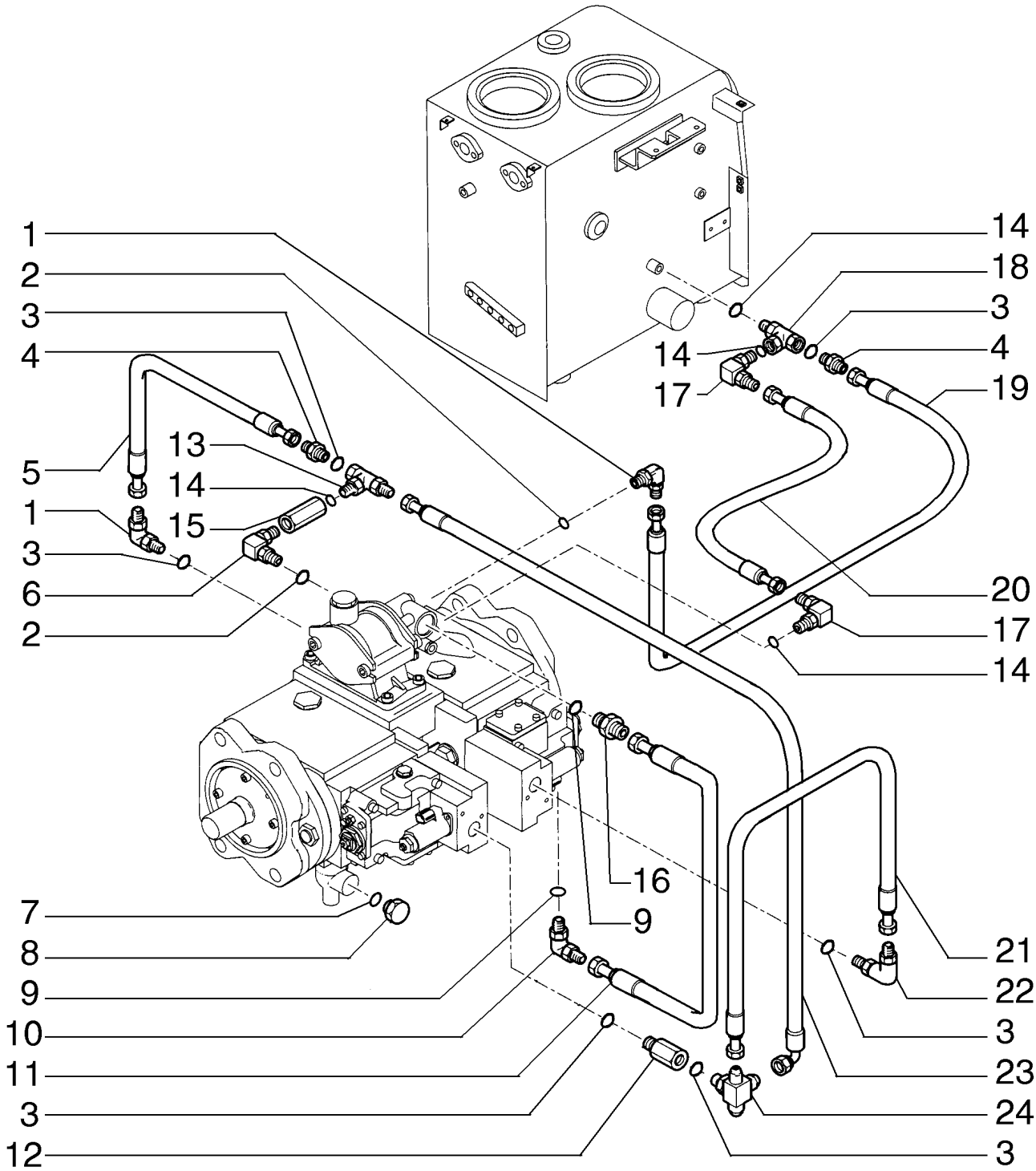

HYDRAULIC SYSTEM

REF	FN	PART NUMBER	YR/SN	QTY	DESCRIPTION
1		72214542		2	CONECTOR HIDRÁUL
2		ZD12P01800		2	O-RING
3		ZD12P01100		6	O-RING
4		72214744		2	CONECTOR HIDRÁUL
5		87531056		1	MANGUEIRA
6		87532891		1	CONECTOR HIDRÁUL
7		70924192		1	O-RING
8		71404615		1	BUJÃO
9		ZD12P02400		2	O-RING
10		72214734		1	CONECTOR HIDRÁUL
11		87338497		1	TUBO FLEXÍVEL
12		72217409		1	CONECTOR HIDRÁUL
13		87635046		1	CONECTOR HIDRÁUL
14		ZD12P01400		4	O-RING
15		87338500		1	FILTRO
16		87634385		1	CONECTOR HIDRÁUL
17		72214526		2	CONECTOR HIDRÁUL
18		72283853		1	T
19		72214534		1	MANGUEIRA
20		87532888		1	TUBO FLEXÍVEL
21		72214533		1	TUBO FLEXÍVEL
22		72214735		1	CONECTOR HIDRÁUL
23		72954173		1	MANGUEIRA
24		87532893		1	CONECTOR HIDRÁUL

HYDRAULIC SYSTEM

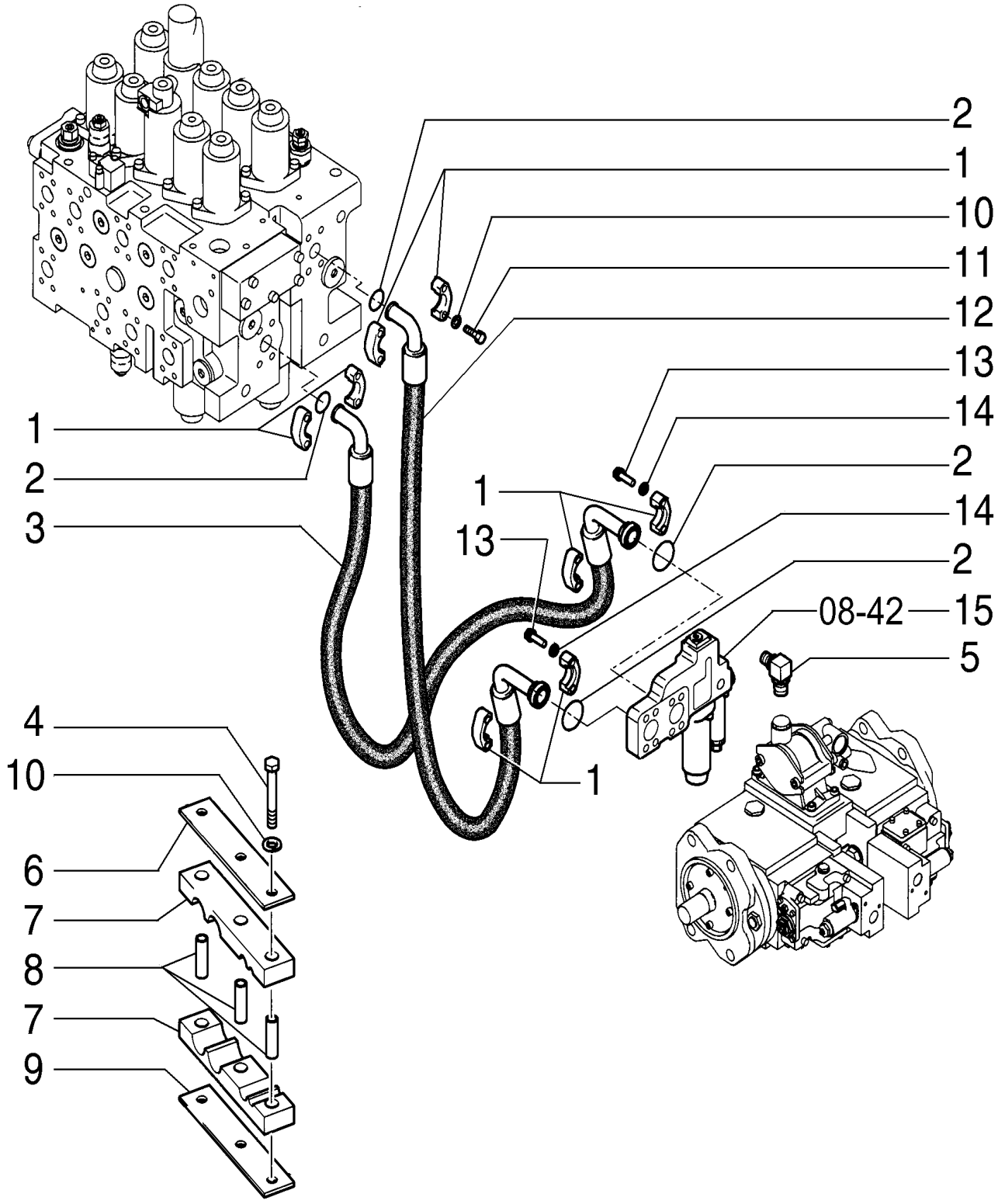

HYDRAULIC SYSTEM

REF	FN	PART NUMBER	YR/SN	QTY	DESCRIPTION
1		71404313		8	SEMI-FLANGE
2		70924200		4	O-RING
3		87524900		1	TUBO FLEXÍVEL
4		11114031		3	PARAFUSO Hex, M12 x 90, 10.9
5		72214734		1	CONECTOR HIDRÁUL
6		87618519		1	PLACA
7		87524904		2	BRAÇADEIRA
8		87618488		3	ESPAÇADOR
9		87618415		1	PLACA
10		14496731		11	ARRUELA PLANA M12 x 24 x 2.5 Thk
11		11112831		8	PARAFUSO Hex, M12 x 40, 10.9, Full Thd
12		87524901		1	TUBO FLEXÍVEL
13		14423231		8	PARAFUSO Hex Soc Hd, M12 x 90, 10.9
14		10517071		11	TRAVA DA ARRUELA M12
15		87524907		1	VÁLVULA HIDRÁULICA

HYDRAULIC SYSTEM

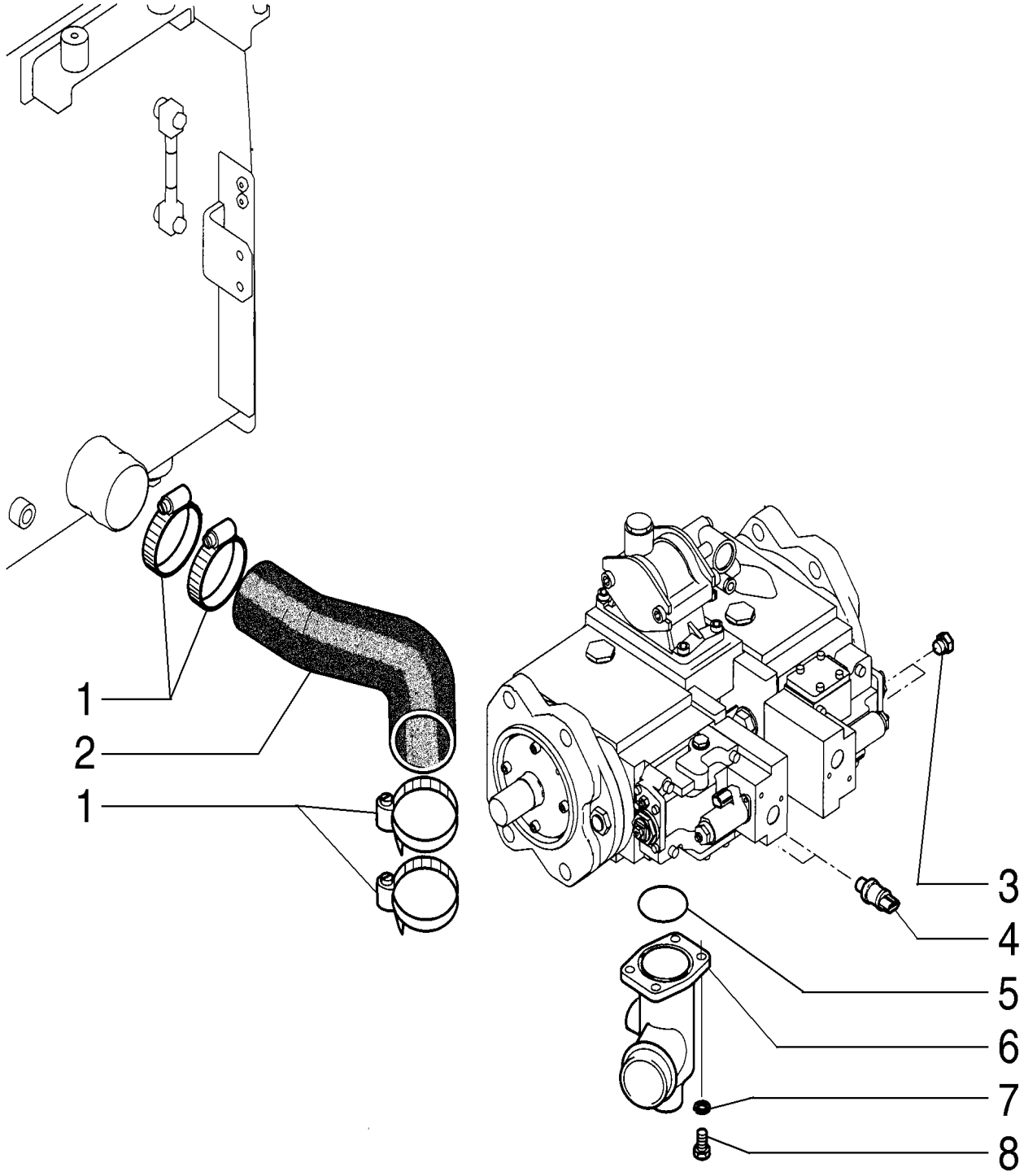

HYDRAULIC SYSTEM

REF	FN	PART NUMBER	YR/SN	QTY	DESCRIPTION
1		L116820		4	BRAÇADEIRA
2		87524902		1	MANGUEIRA
3		72214663		2	BUJÃO
4		87700941		2	SENSOR
5		87397561		1	O-RING 69.44mm ID x 3.53mm Width
6		87530582		1	COTOVELO
7		10517071		4	TRAVA DA ARRUELA M12
8		14422031		4	PARAFUSO Hex Soc Hd, M12 x 30, 10.9

08-08	01	p1	7/2013

HYDRAULIC SYSTEM

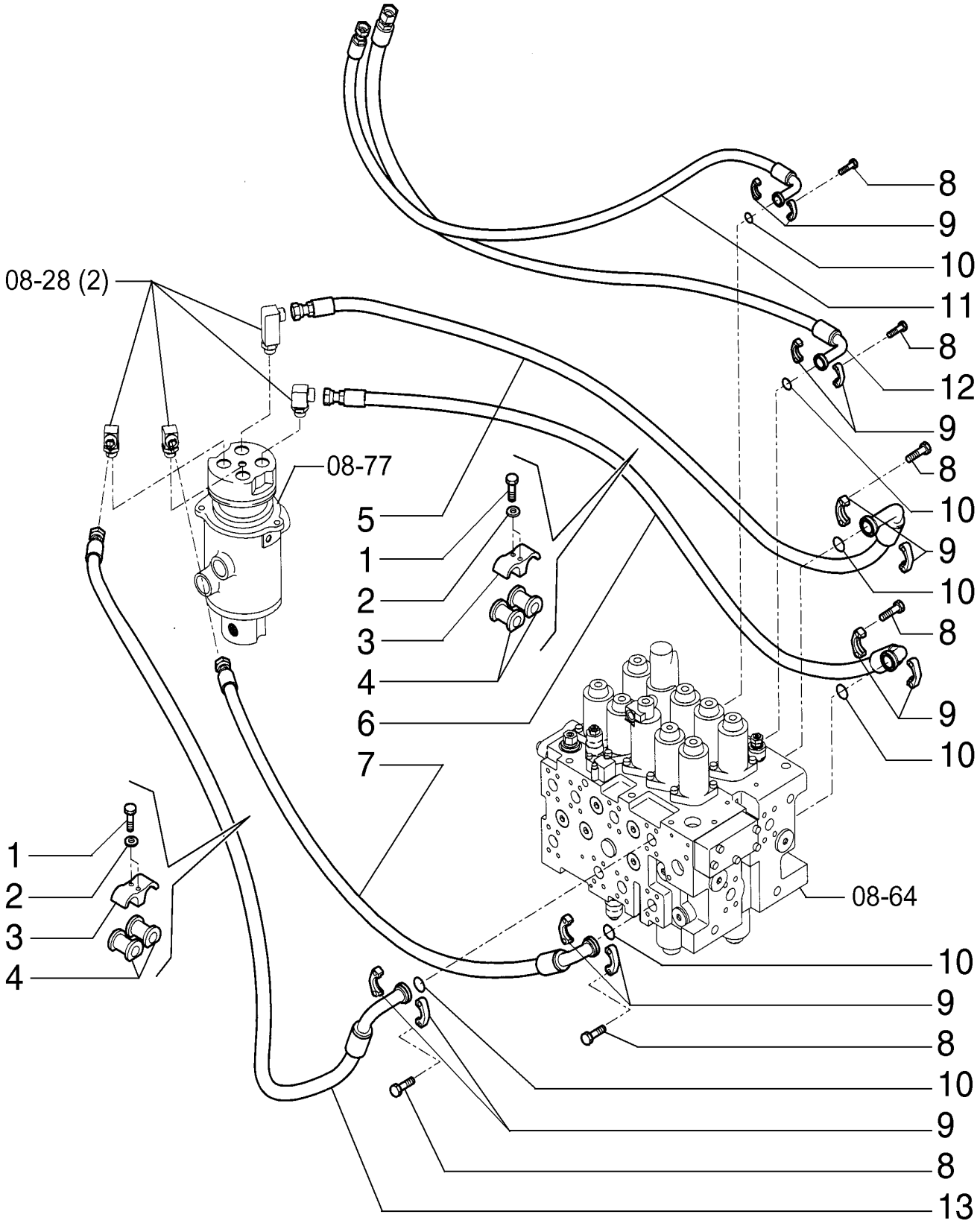

HYDRAULIC SYSTEM

REF	FN	PART NUMBER	YR/SN	QTY	DESCRIPTION
1		11107434		4	PARAFUSO
2		14496631		4	ARRUELA PLANA M10 x 21 x 2
3		72204618		2	COLAR DE FIXAÇÃO
4		72204607		4	BUCHA
5		87603350		1	TUBO FLEXÍVEL
6		87603344		1	TUBO FLEXÍVEL
7		87603343		1	TUBO FLEXÍVEL
8		14420331		24	PARAFUSO Hex Soc Hd, M10 x 35, 10.9
9		71404311		12	SEMI-FLANGE
10		72215443		6	O-RING
11		87603348		1	TUBO FLEXÍVEL
12		87527880		1	TUBO FLEXÍVEL
13		87603349		1	TUBO FLEXÍVEL

08-09	01	p1	7/2013

HYDRAULIC SYSTEM

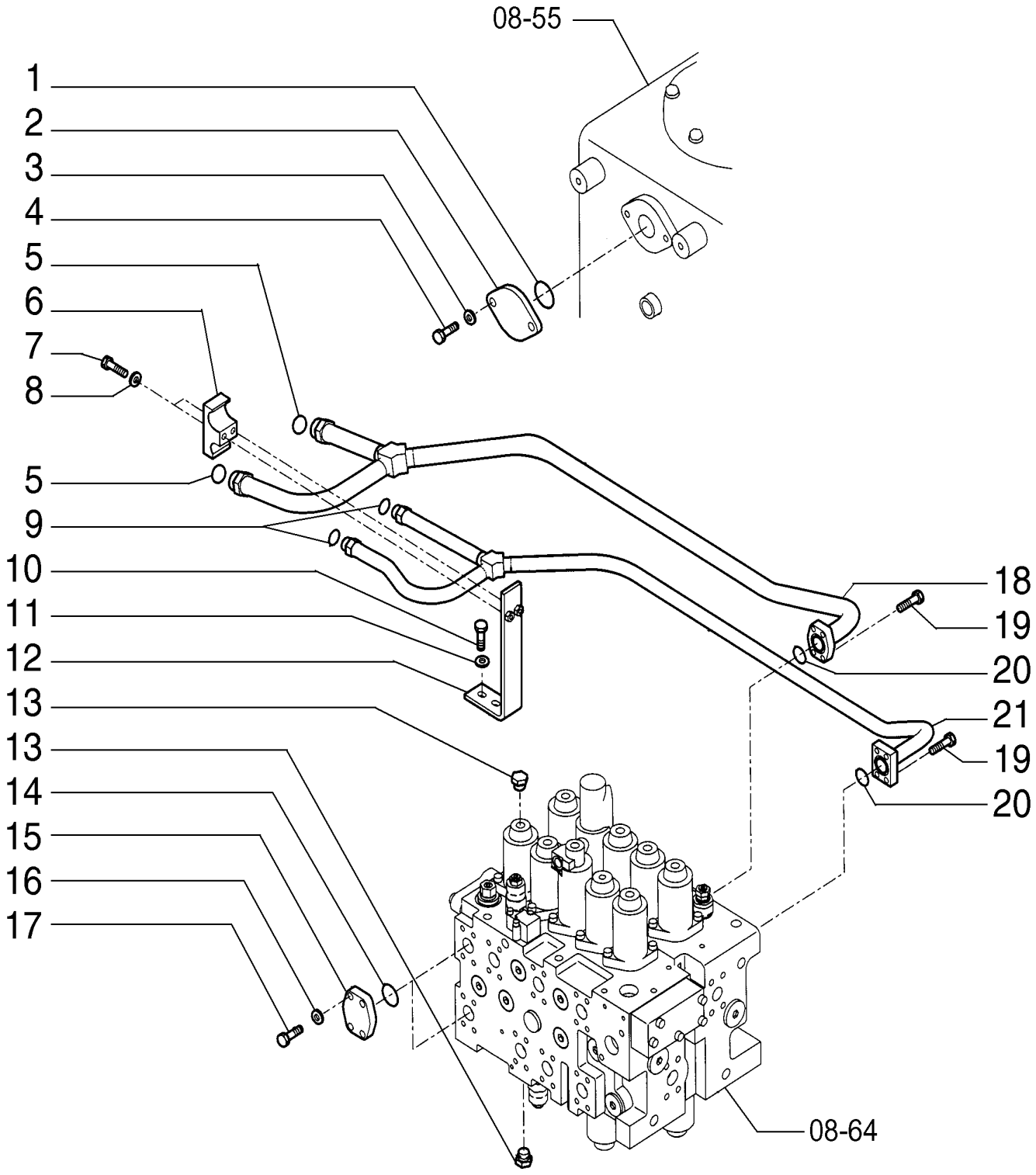

HYDRAULIC SYSTEM

REF	FN	PART NUMBER	YR/SN	QTY	DESCRIPTION
1		87397569		1	O-RING
2		87617549		1	BUJÃO
3		14496731		16	ARRUELA PLANA M12 x 24 x 2.5 Thk
4		11112431		2	PARAFUSO Hex, M12 x 30, 10.9, Full Thd
5		70931640		2	JUNTA
6		87617862		1	SUPORTE
7		11107731		2	PARAFUSO Hex, M10 x 75, 10.9
8		14496631		2	ARRUELA PLANA M10 x 21 x 2
9		71484462		2	O-RING
10		11112631		2	PARAFUSO Hex, M12 x 35, 10.9
11		14496731		2	ARRUELA PLANA M12 x 24 x 2.5 Thk
12		87617572		1	SUPORTE
13		72214558		2	BUJÃO
14		70924200		2	O-RING
15		87397570		2	COBERTURA
16		14496631		8	ARRUELA PLANA M10 x 21 x 2
17		11106431		8	PARAFUSO Hex, M10 x 30, 10.9, Full Thd
18		87528664		1	TUBO RÍGIDO 26 mm ID x 1479.6, 124.5 mm L
19		857-10035		8	PARAFUSO Hex Flg, M10 x 35, 10.9
20		70924200		2	O-RING
21		87528665		1	TUBO RÍGIDO 20.8 mm ID x 1495.1, 116.9 mm L

HYDRAULIC SYSTEM

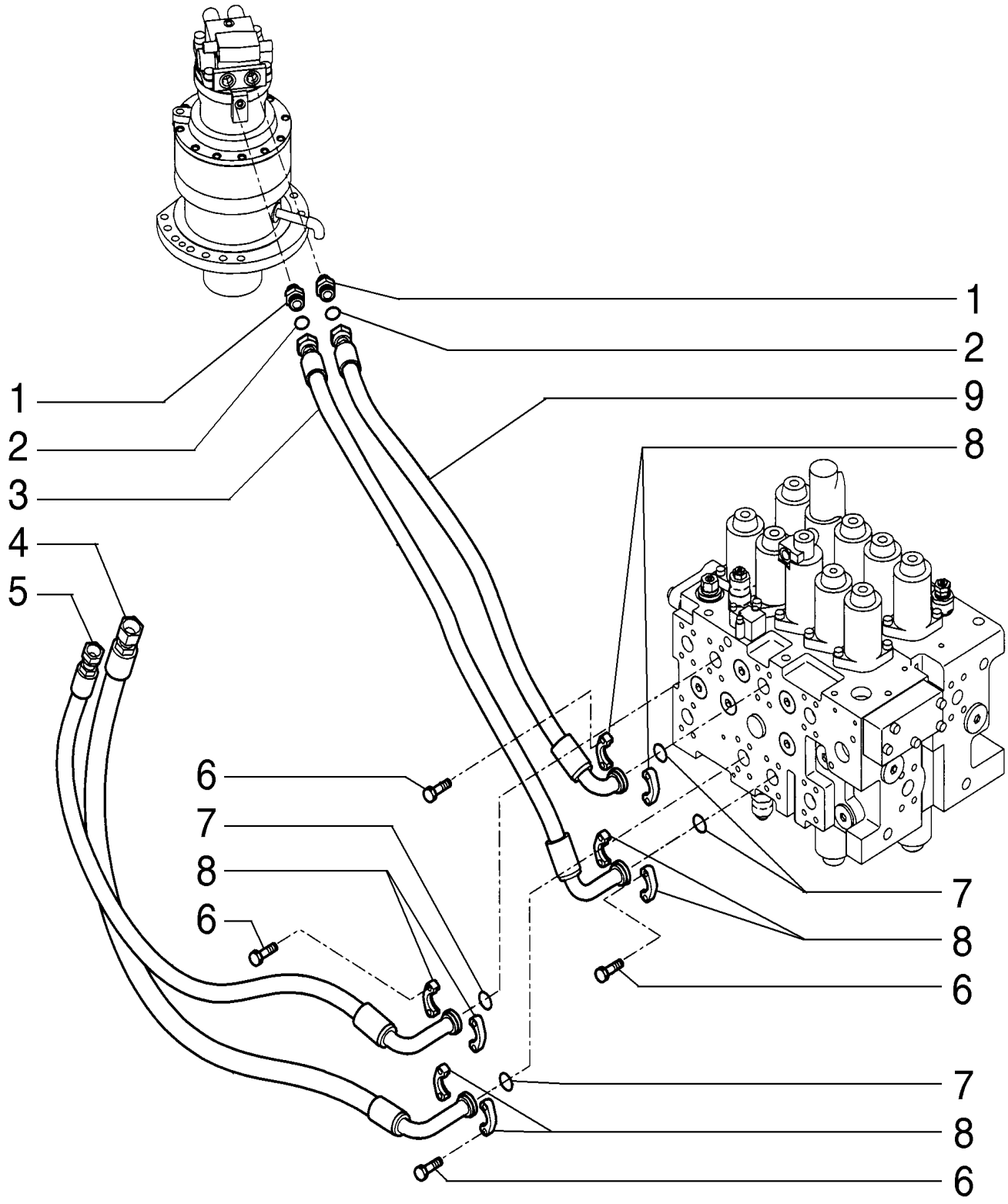

HYDRAULIC SYSTEM

REF	FN	PART NUMBER	YR/SN	QTY	DESCRIPTION
1		72214714		2	CONECTOR HIDRÁUL
2		70923843		2	O-RING
3		87603351		1	TUBO FLEXÍVEL
4		87528129		1	TUBO FLEXÍVEL
5		87603347		1	TUBO FLEXÍVEL
6		857-10035		16	PARAFUSO Hex Flg, M10 x 35, 10.9
7		70924200		4	O-RING
8		71404311		8	SEMI-FLANGE
9		87603345		1	TUBO FLEXÍVEL

08-11	01	p1	7/2013

HYDRAULIC SYSTEM

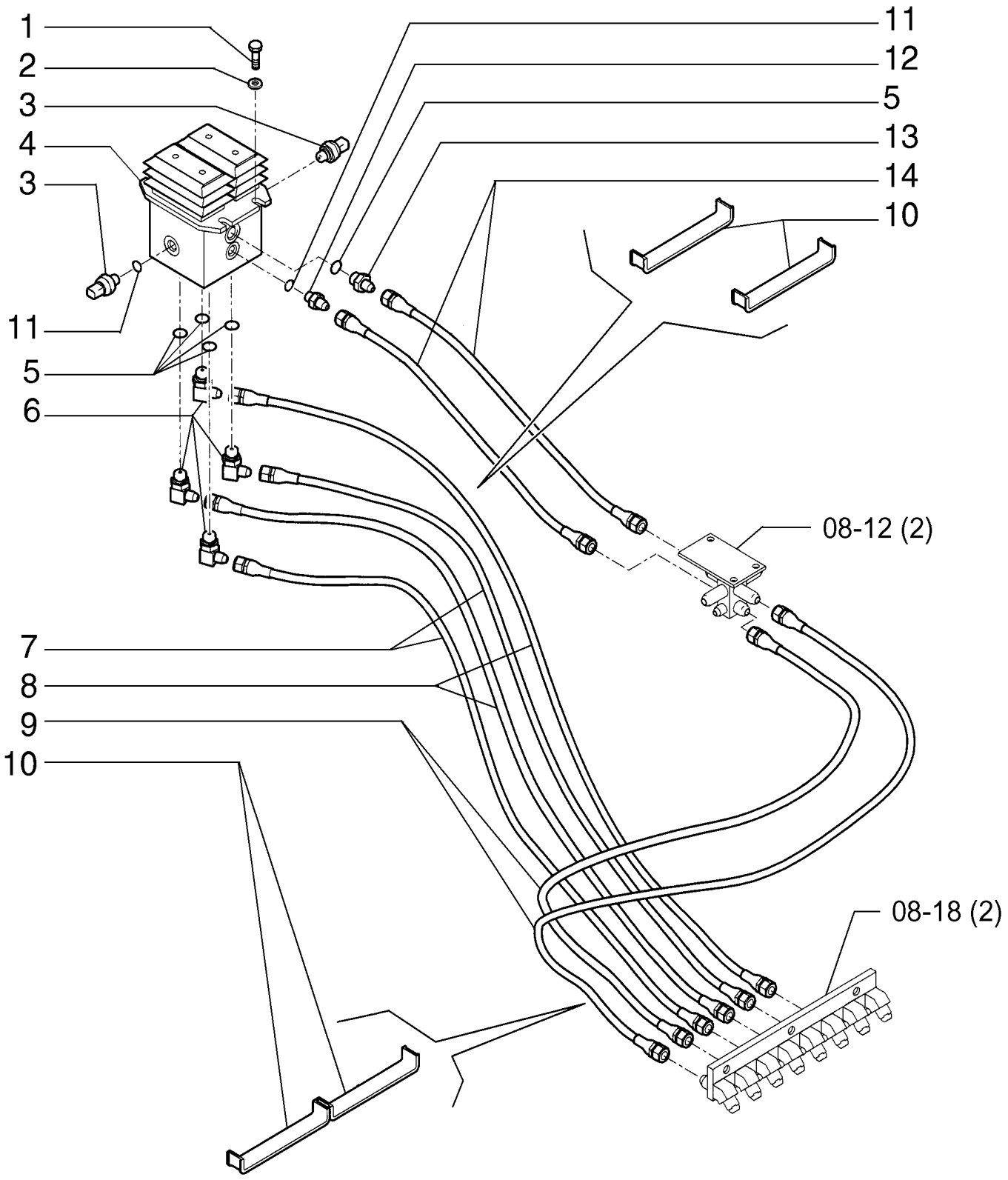

HYDRAULIC SYSTEM

REF	FN	PART NUMBER	YR/SN	QTY	DESCRIPTION
1		11106434		4	PARAFUSO Hex, M10 x 30, 10.9, Full Thd
2		14496631		4	ARRUELA PLANA M10 x 21 x 2
3		87608371		2	SENSOR
4		87529503		1	VÁLVULA HIDRÁULICA
5		ZD12P01400		5	O-RING
6		72214525		4	CONECTOR HIDRÁUL
7		87533077		2	TUBO FLEXÍVEL
8		87533078		2	TUBO FLEXÍVEL
9		87338416		2	TUBO FLEXÍVEL
10		87533102		4	JUNTA
11		ZD12P01100		1	O-RING
12		87522432		1	CONECTOR HIDRÁUL
13		72214522		1	CONECTOR HIDRÁUL
14		87533076		2	TUBO FLEXÍVEL

08-12	01	p1	7/2013

HYDRAULIC SYSTEM - SERVO CONTROL

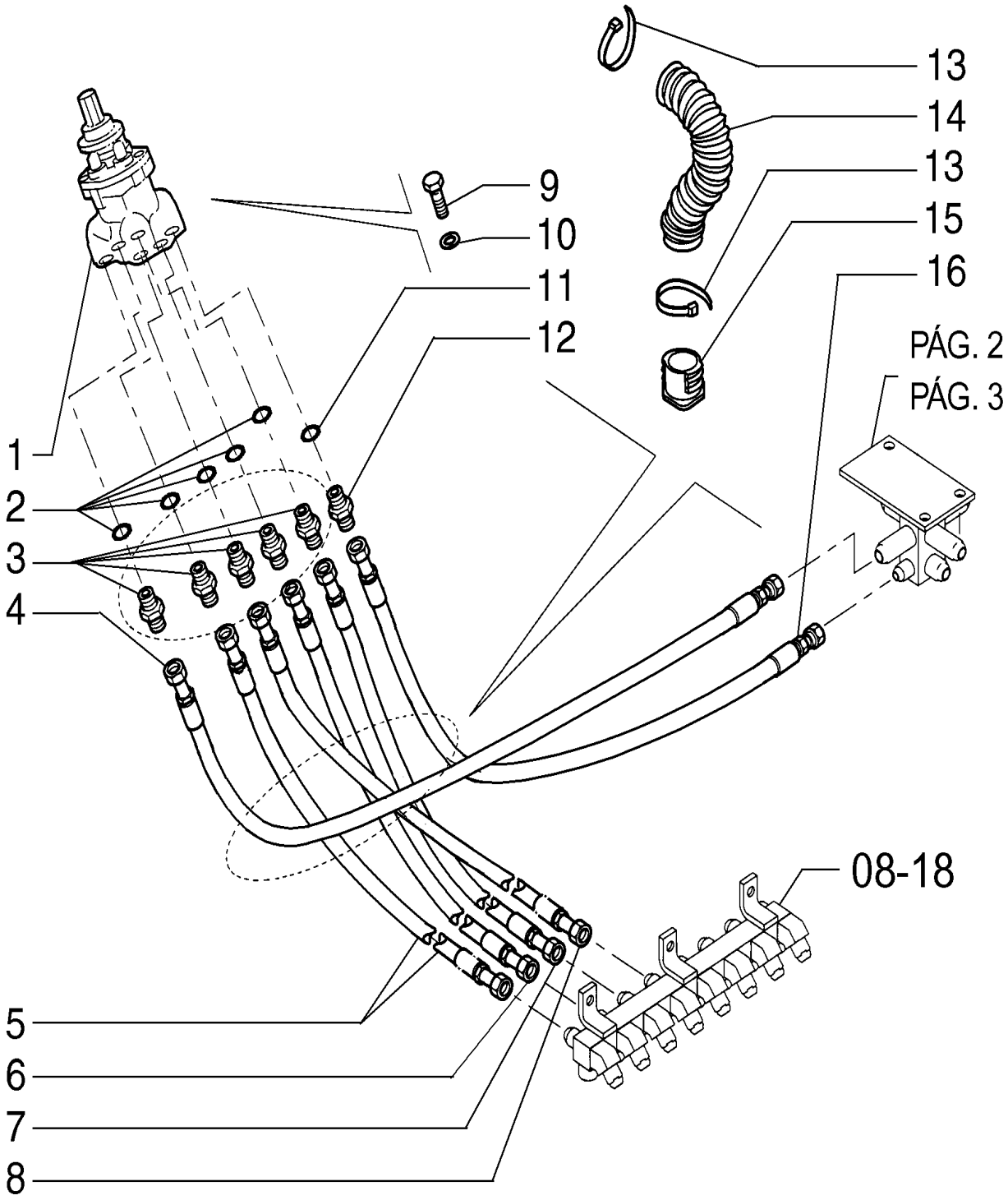

HYDRAULIC SYSTEM - SERVO CONTROL

REF	FN	PART NUMBER	YR/SN	QTY	DESCRIPTION
1		87532882		1	VÁLVULA HIDRÁULICA
2		ZD12P01400		5	O-RING
3		72214523		5	CONECTOR HIDRÁUL
4		72215273		1	MANGUEIRA
5		87338408		1	TUBO FLEXÍVEL 9.52 mm ID x 1550.00 mm
6		87533429		1	TUBO FLEXÍVEL
7		87531068		1	TUBO FLEXÍVEL
8		87533427		1	TUBO FLEXÍVEL
9		14305434		4	PARAFUSO
10		14496431		4	ARRUELA PLANA M6.4 x 12.5 x 1.6 Thk
11		ZD12P01100		1	O-RING
12		87522432		1	CONECTOR HIDRÁUL
13		72951499		2	GRAMPO
14		87527359		1	PROTEÇÃO
15		72202453		1	MANGUEIRA
16		87729182		1	TUBO FLEXÍVEL

08-12	02	p1	7/2013

HYDRAULIC SYSTEM

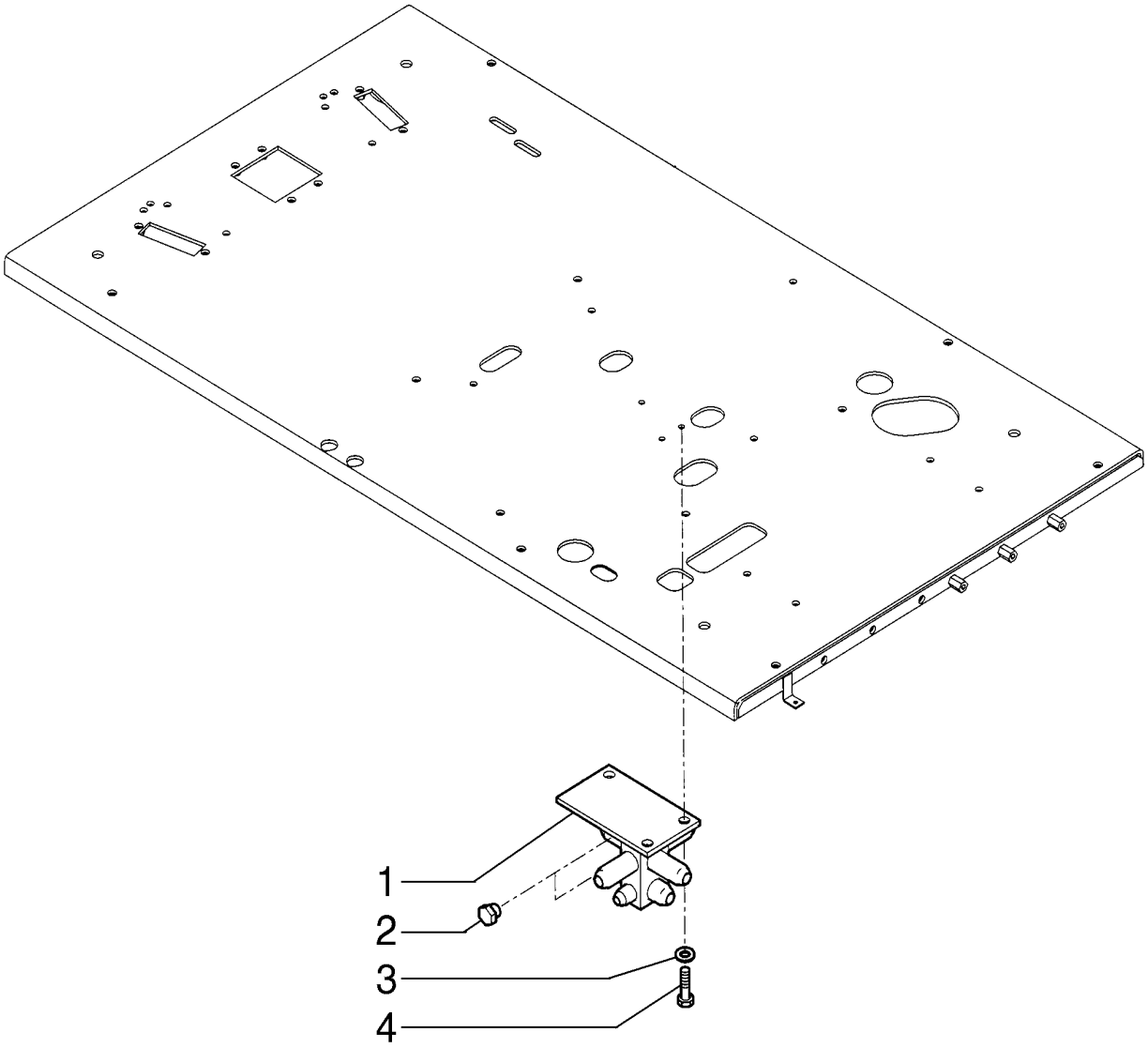

HYDRAULIC SYSTEM

REF	FN	PART NUMBER	YR/SN	QTY	DESCRIPTION
1		87519949		1	BLOCO
2		72214546		2	BUJÃO
3		14496531		3	ARRUELA PLANA M8 x 17 x 1.6
4		16043434		3	PARAFUSO Hex, M8 x 20, 10.9, Full Thd

08-12	03	p1	7/2013

HYDRAULIC SYSTEM

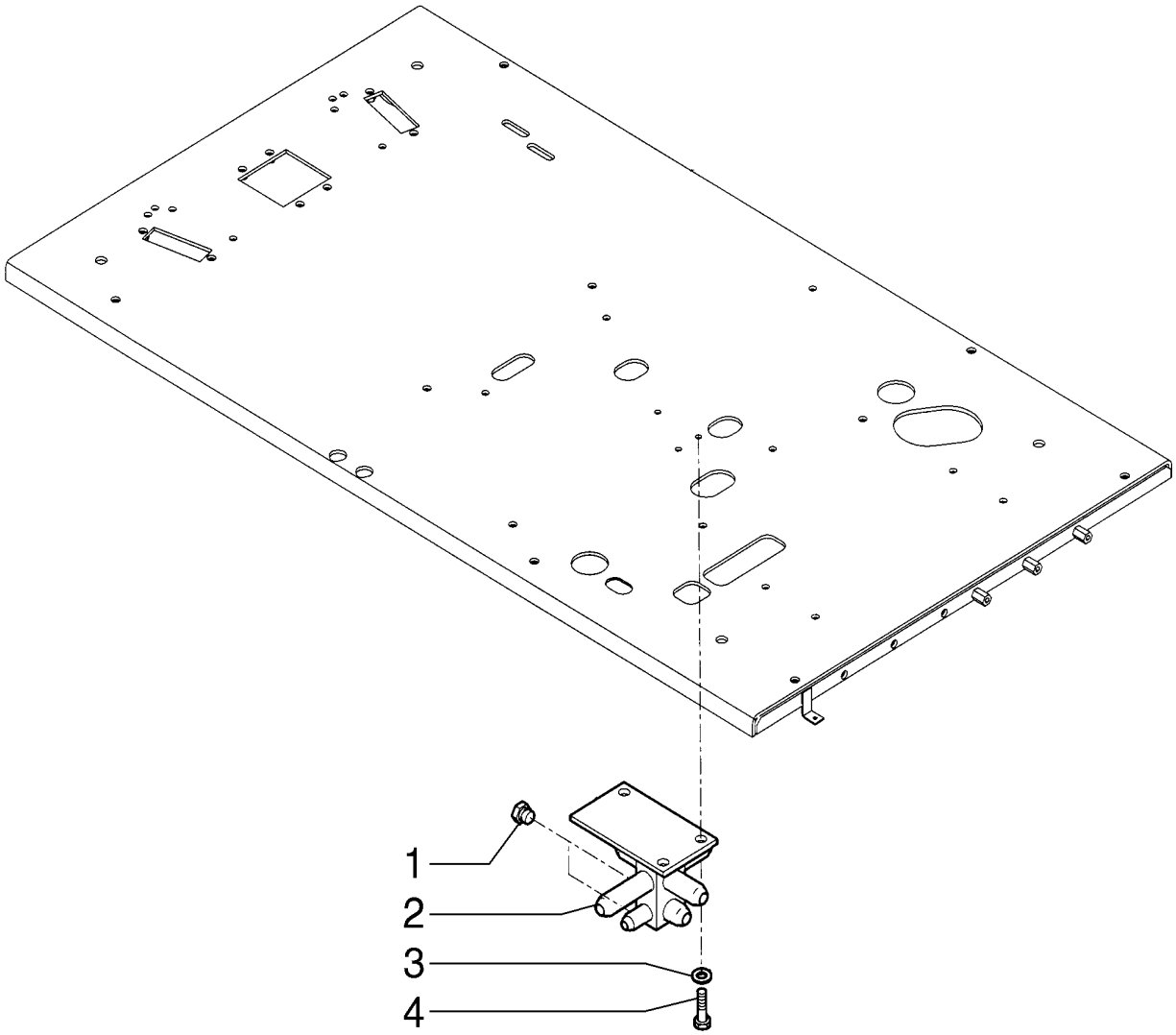

HYDRAULIC SYSTEM

REF	FN	PART NUMBER	YR/SN	QTY	DESCRIPTION
1		87638153		2	PLACA
2		87519950		1	BLOCO
3		14496531		3	ARRUELA PLANA M8 x 17 x 1.6
4		16043434		3	PARAFUSO Hex, M8 x 20, 10.9, Full Thd

OPTIONAL

CX220B

08-13	01	p1	7/2013

HYDRAULIC SYSTEM - SERVO CONTROL

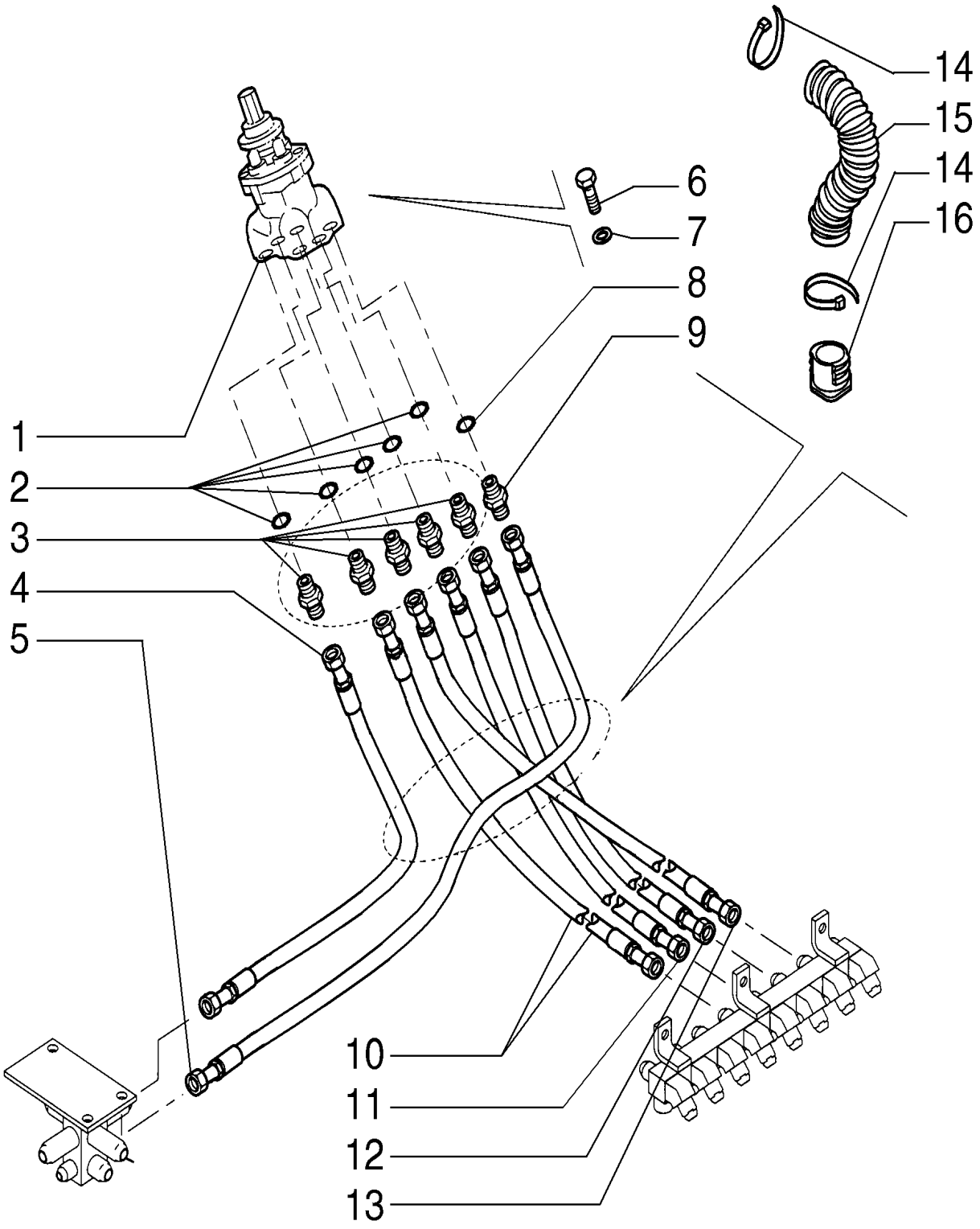

HYDRAULIC SYSTEM - SERVO CONTROL

REF	FN	PART NUMBER	YR/SN	QTY	DESCRIPTION
1		87532882		1	VÁLVULA HIDRÁULICA
2		ZD12P01400		5	O-RING
3		72214523		5	CONECTOR HIDRÁUL
4		72215273		1	MANGUEIRA
5		87729182		1	TUBO FLEXÍVEL
6		14305434		4	PARAFUSO
7		14496431		4	ARRUELA PLANA M6.4 x 12.5 x 1.6 Thk
8		ZD12P01100		1	O-RING
9		87522432		1	CONECTOR HIDRÁUL
10		87533426		1	TUBO FLEXÍVEL
11		87533431		1	MANGUEIRA HIDRÁULICA 9.50 mm ID x 1750.00 mm
12		87533428		1	TUBO FLEXÍVEL
13		87533430		1	TUBO FLEXÍVEL
14		72951499		2	GRAMPO
15		87527359		1	PROTEÇÃO
16		72202453		1	MANGUEIRA

08-14	01	p1	7/2013

HYDRAULIC SYSTEM

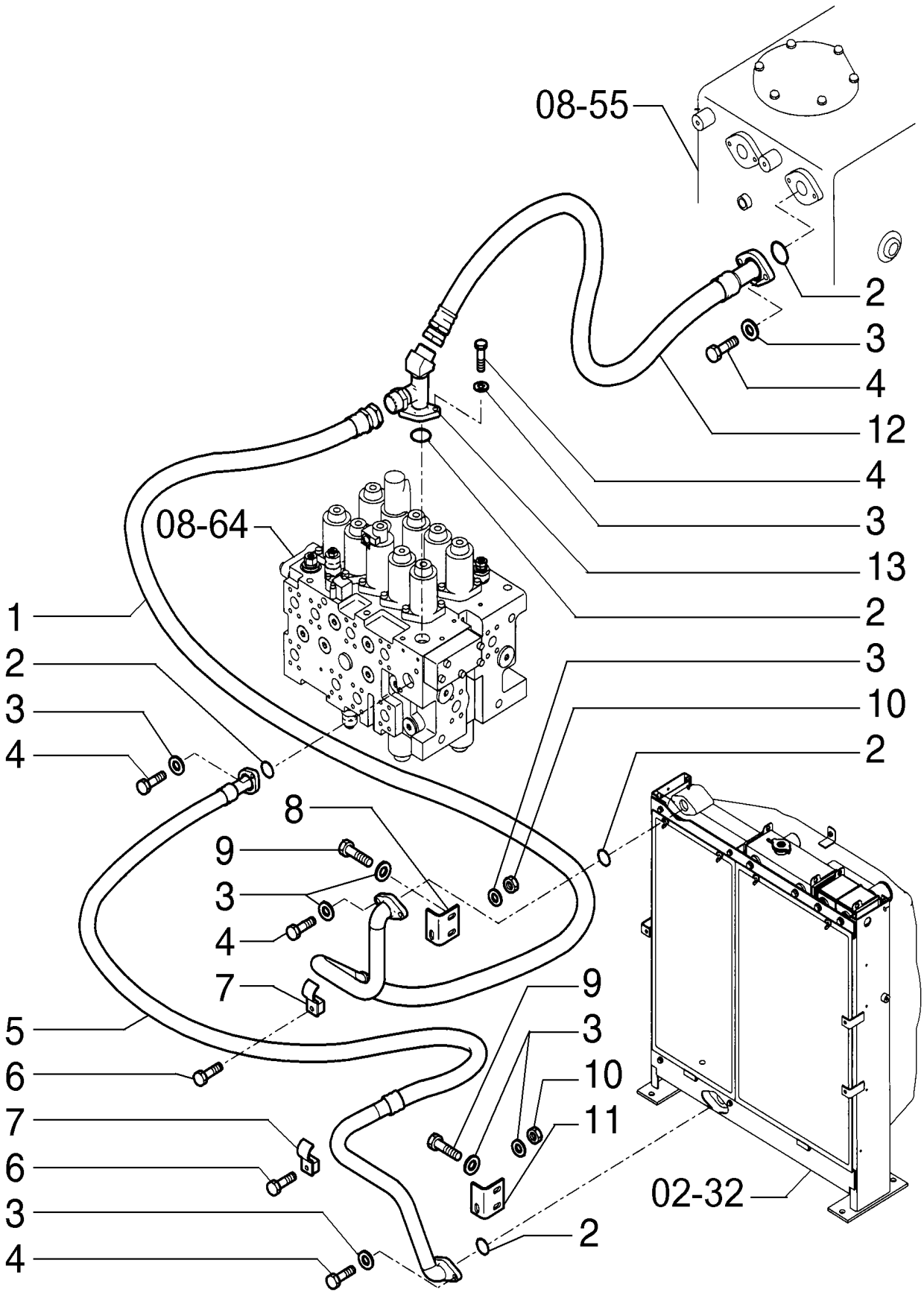

HYDRAULIC SYSTEM

REF	FN	PART NUMBER	YR/SN	QTY	DESCRIPTION
1		87573248		1	TUBO RÍGIDO 35.5 mm OD
2		87397569		5	O-RING
3		14496731		16	ARRUELA PLANA M12 x 24 x 2.5 Thk
4		11112631		10	PARAFUSO Hex, M12 x 35, 10.9
5		87533580		1	TUBO RÍGIDO
6		11113331		2	PARAFUSO Hex, M12 x 55, 10.9
7		87652158		2	BRAÇADEIRA
8		87652150		1	SUPORTE
9		11112431		4	PARAFUSO Hex, M12 x 30, 10.9, Full Thd
10		11702921		2	PORCA M12, Cl 10
11		87652172		1	SUPORTE
12		87533586		1	TUBO FLEXÍVEL
13		87533854		1	CONECTOR HIDRÁUL

HYDRAULIC SYSTEM

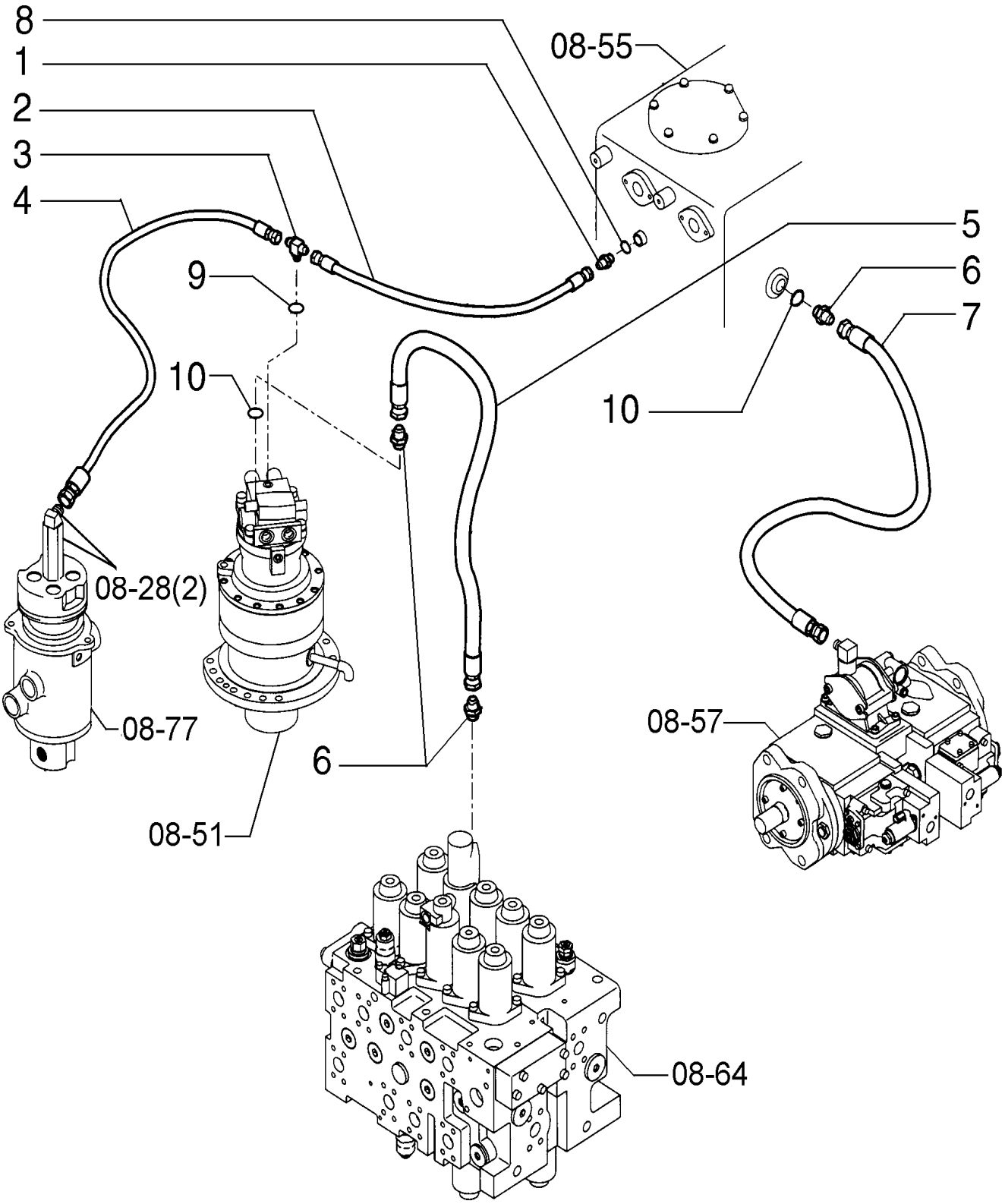

HYDRAULIC SYSTEM

REF	FN	PART NUMBER	YR/SN	QTY	DESCRIPTION
1		72217405		1	CONECTOR HIDRÁUL
2		72214668		1	MANGUEIRA
3		87652157		1	CONECTOR HIDRÁUL
4		87557658		1	TUBO FLEXÍVEL
5		87532949		1	TUBO FLEXÍVEL
6		87652153		3	CONECTOR HIDRÁUL
7		72955472		1	MANGUEIRA
8		ZD12P01800		1	O-RING
9		ZD12P01400		1	O-RING
10		ZD12P02400		3	O-RING

HYDRAULIC SYSTEM

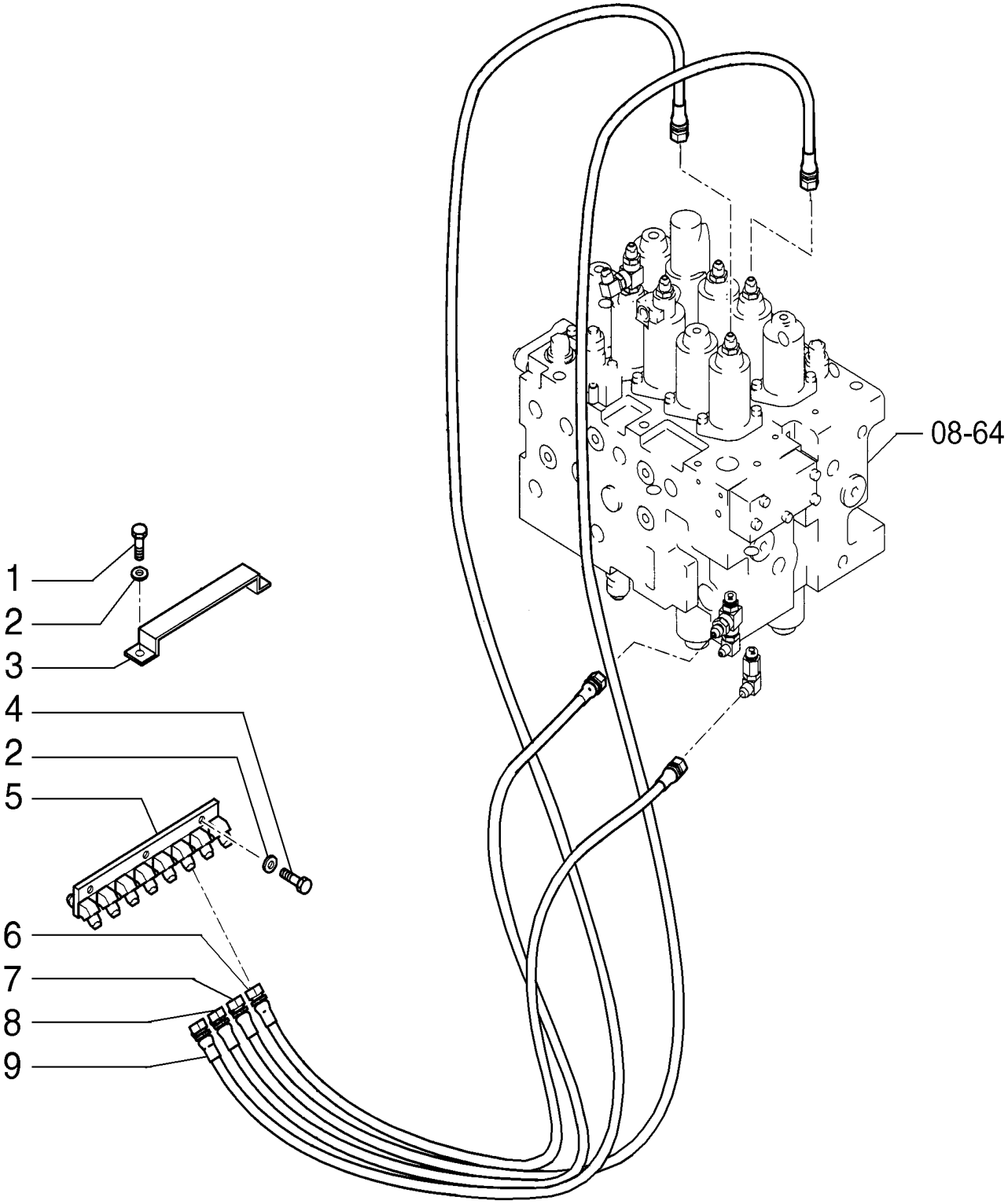

HYDRAULIC SYSTEM

REF	FN	PART NUMBER	YR/SN	QTY	DESCRIPTION
1		11106031		2	PARAFUSO Hex, M10 x 20, 10.9, Full Thd
2		14496631		5	ARRUELA PLANA M10 x 21 x 2
3		87641752		1	SUPORTE
4		11106431		3	PARAFUSO Hex, M10 x 30, 10.9, Full Thd
5		87338570		1	BLOCO
6		87531052		1	TUBO FLEXÍVEL
7		72214775		1	MANGUEIRA
8		87531051		1	TUBO FLEXÍVEL
9		87397568		1	TUBO FLEXÍVEL

HYDRAULIC SYSTEM

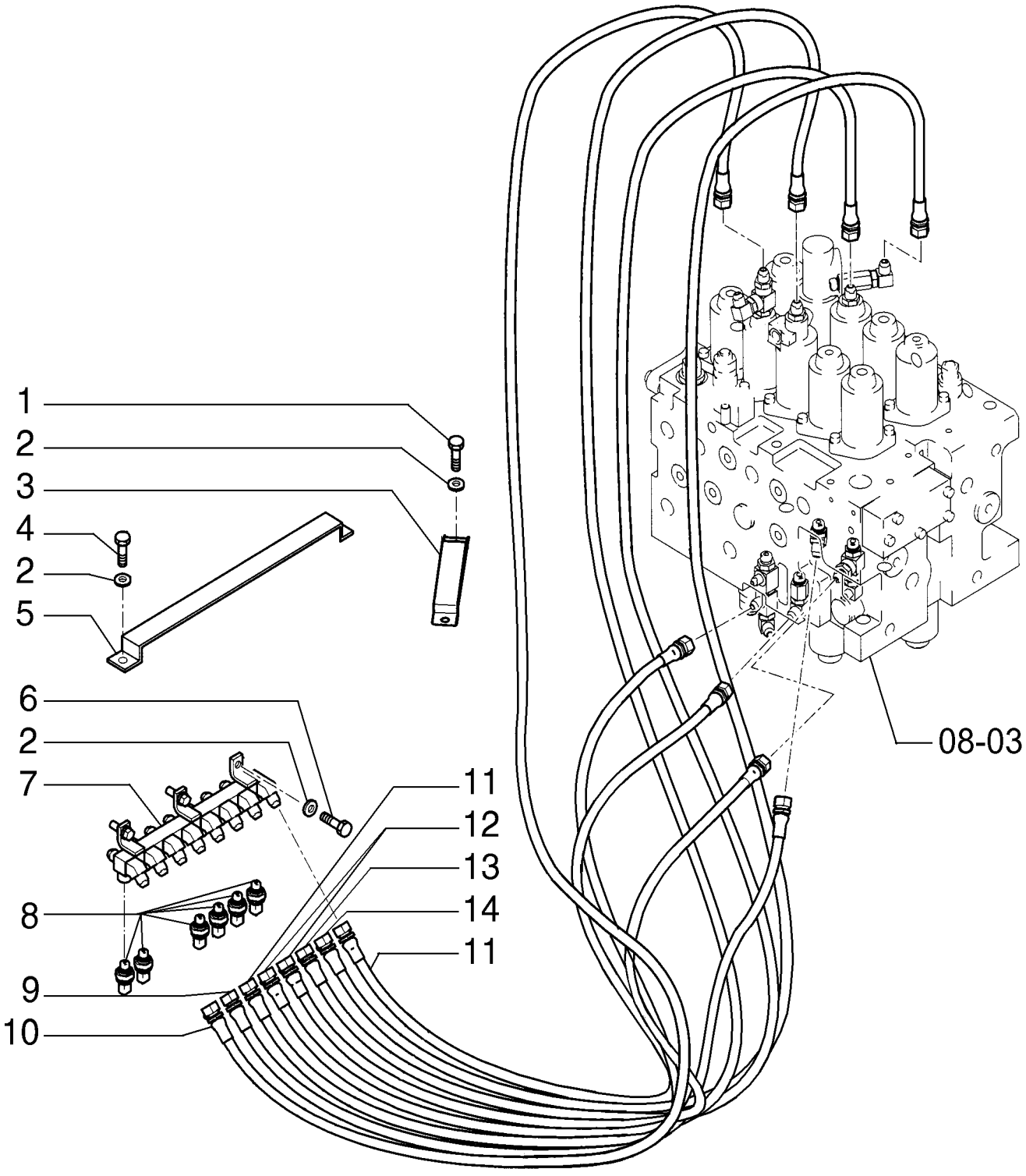

HYDRAULIC SYSTEM

REF	FN	PART NUMBER	YR/SN	QTY	DESCRIPTION
1		11106031		2	PARAFUSO Hex, M10 x 20, 10.9, Full Thd
2		14496631		7	ARRUELA PLANA M10 x 21 x 2
3		87641753		1	SUPORTE
4		11106631		2	PARAFUSO Hex, M10 x 35, 10.9, Full Thd
5		87641751		1	PLACA
6		11106431		3	PARAFUSO Hex, M10 x 30, 10.9, Full Thd
7		87641809		1	BLOCO
8		87608371		6	SENSOR
9		87531048		1	TUBO FLEXÍVEL
10		87531049		1	MANGUEIRA
11		87531068		2	TUBO FLEXÍVEL
12		87531069		2	TUBO FLEXÍVEL
13		87338408		1	TUBO FLEXÍVEL 9.52 mm ID x 1550.00 mm
14		87531050		1	TUBO FLEXÍVEL

08-18/A	01	p1	7/2013

HYDRAULIC SYSTEM - RAISED CAB

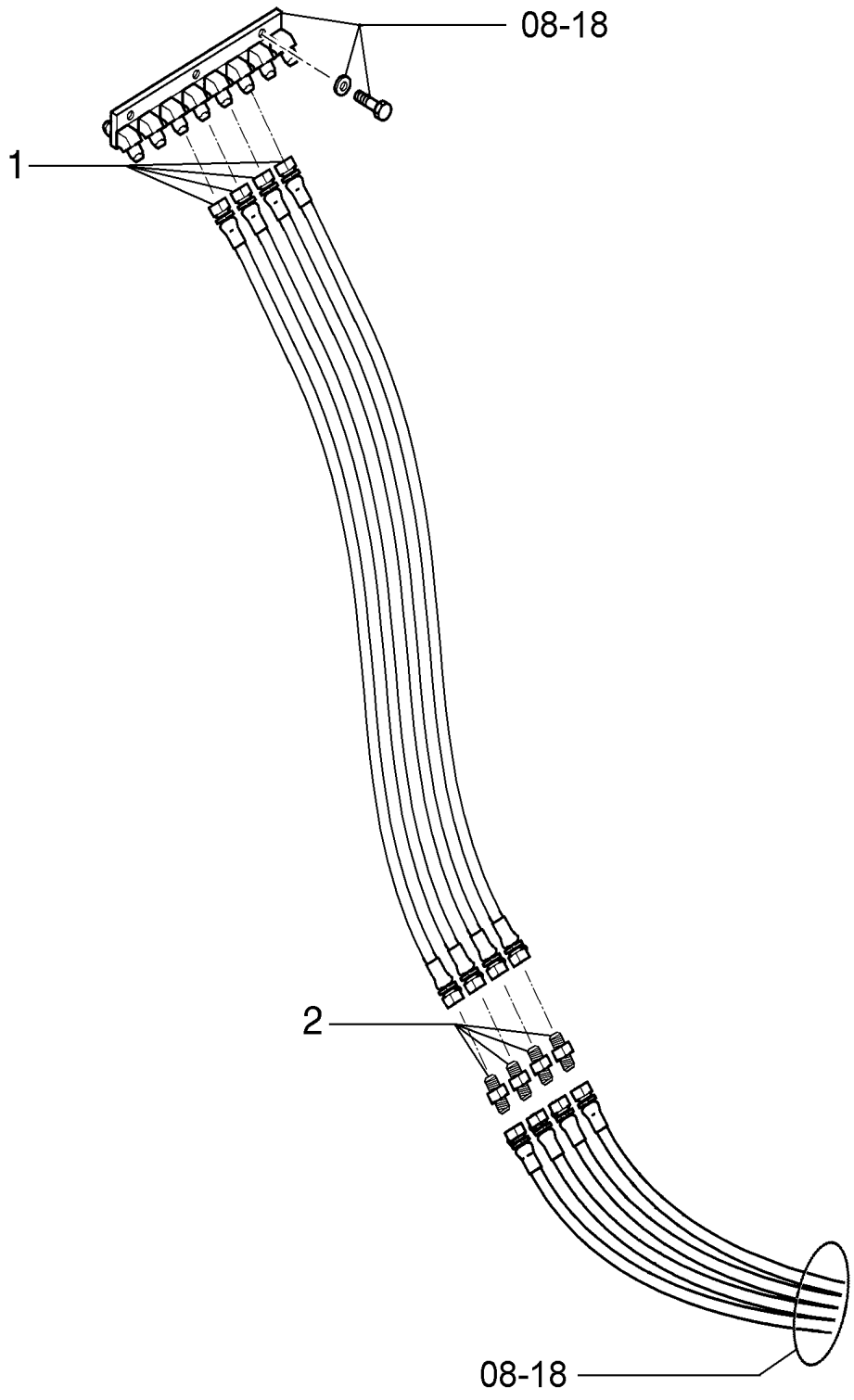

HYDRAULIC SYSTEM - RAISED CAB

REF	FN	PART NUMBER	YR/SN	QTY	DESCRIPTION
1		72214553		4	MANGUEIRA
2		87746067		4	CONECTOR HIDRÁUL

HYDRAULIC SYSTEM - RAISED CAB

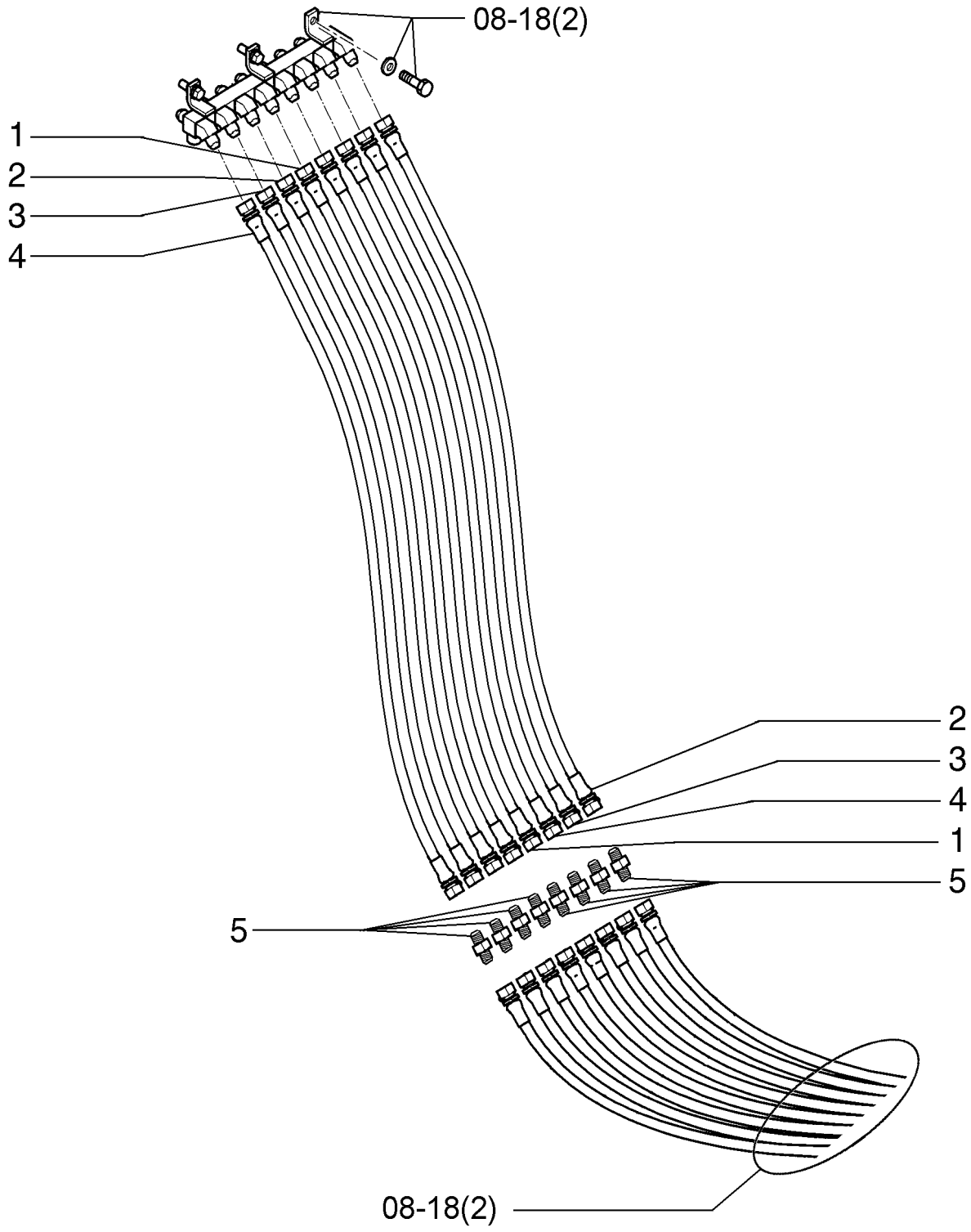

HYDRAULIC SYSTEM - RAISED CAB

REF	FN	PART NUMBER	YR/SN	QTY	DESCRIPTION
1		87533427		2	TUBO FLEXÍVEL
2		87338424		2	TUBO FLEXÍVEL
3		87533429		2	TUBO FLEXÍVEL
4		87338408		2	TUBO FLEXÍVEL 9.52 mm ID x 1550.00 mm
5		87746066		8	CONECTOR HIDRÁUL

08-22	01	p1	7/2013

PEDAL CONTROL

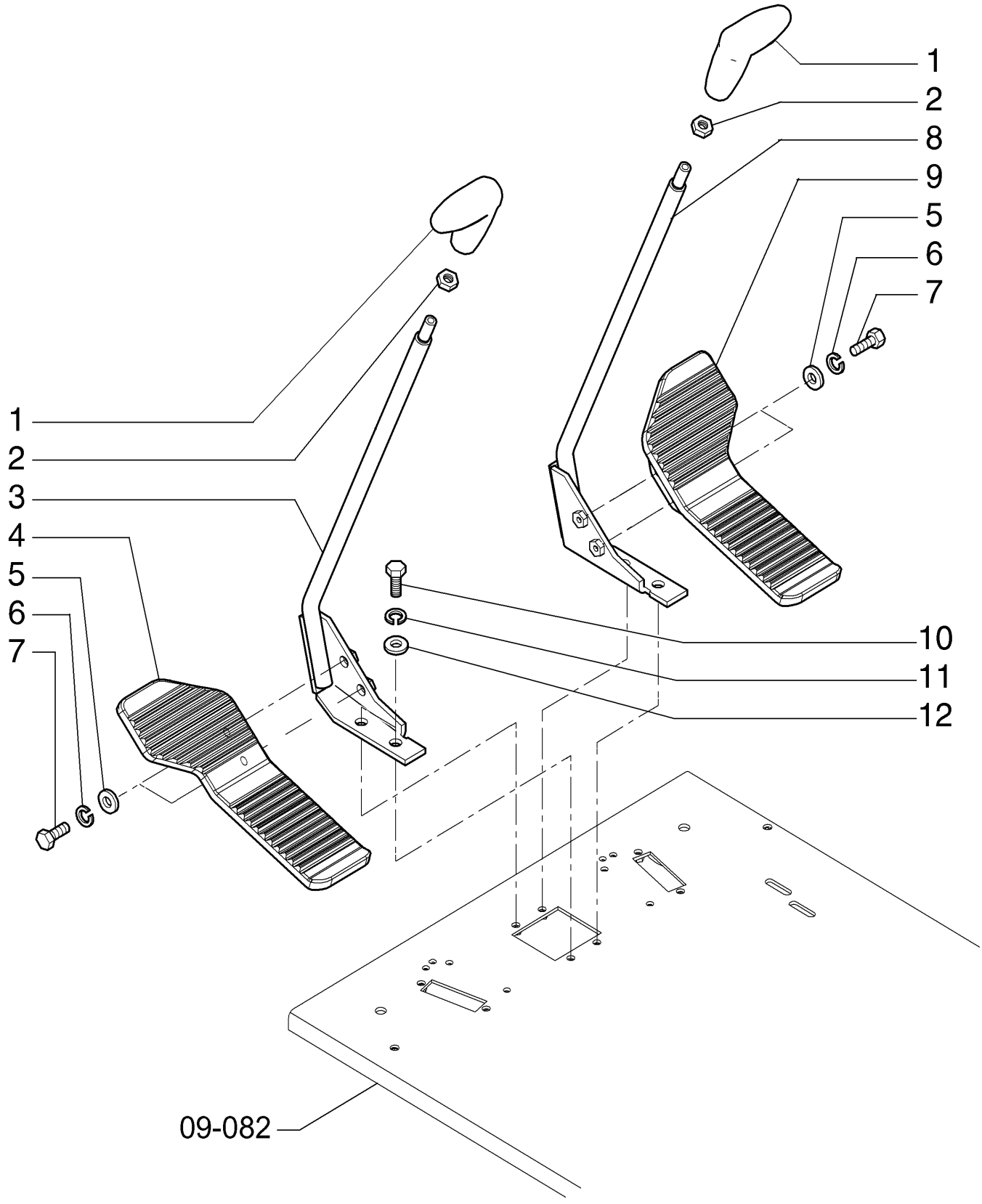

PEDAL CONTROL

REF	FN	PART NUMBER	YR/SN	QTY	DESCRIPTION
1		72203856		2	EMPUNHADURA
2		16101521		2	PORCA M12 x 1.25, Cl 10
3		87524864		1	ALAVANCA
4		87524873		1	PEDAL
5		14496531		4	ARRUELA PLANA M8 x 17 x 1.6
6		10516674		4	TRAVA DA ARRUELA M8
7		16043634		4	PARAFUSO Hex, M8 x 25, 10.9, Full Thd
8		87524865		1	ALAVANCA
9		87524874		1	PEDAL
10		11106234		4	PARAFUSO Hex, M10 x 25, 10.9, Full Thd
11		10516874		4	TRAVA DA ARRUELA
12		14496631		4	ARRUELA PLANA M10 x 21 x 2

08-23	01	p1	7/2013

SERVO CONTROLS

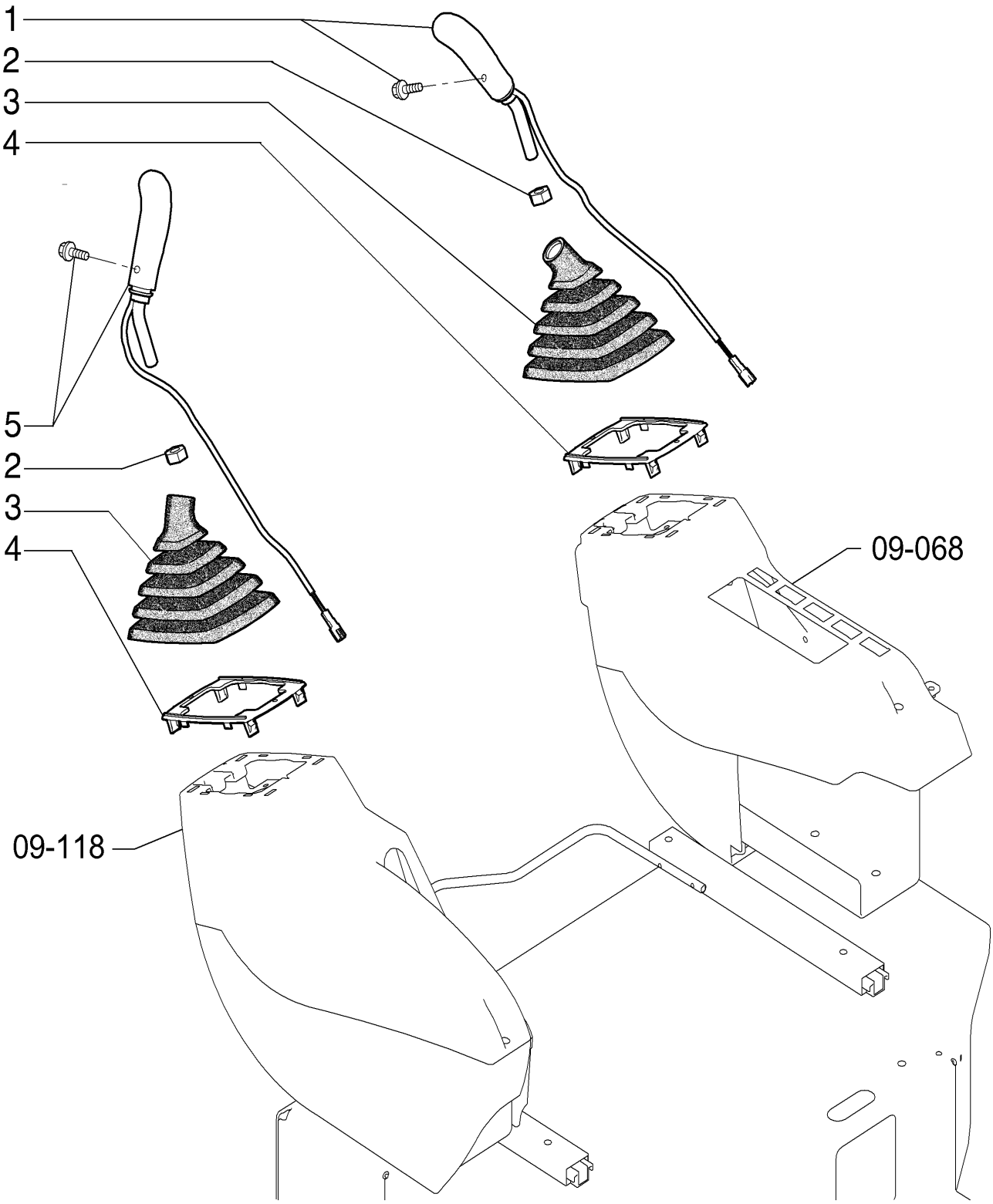

SERVO CONTROLS

REF	FN	PART NUMBER	YR/SN	QTY	DESCRIPTION
1		72203569		1	EMPUNHADURA
2		12163224		2	PORCA
3		87522674		2	FOLE Dust
4		72203567		2	PLACA
5		72203570		1	EMPUNHADURA

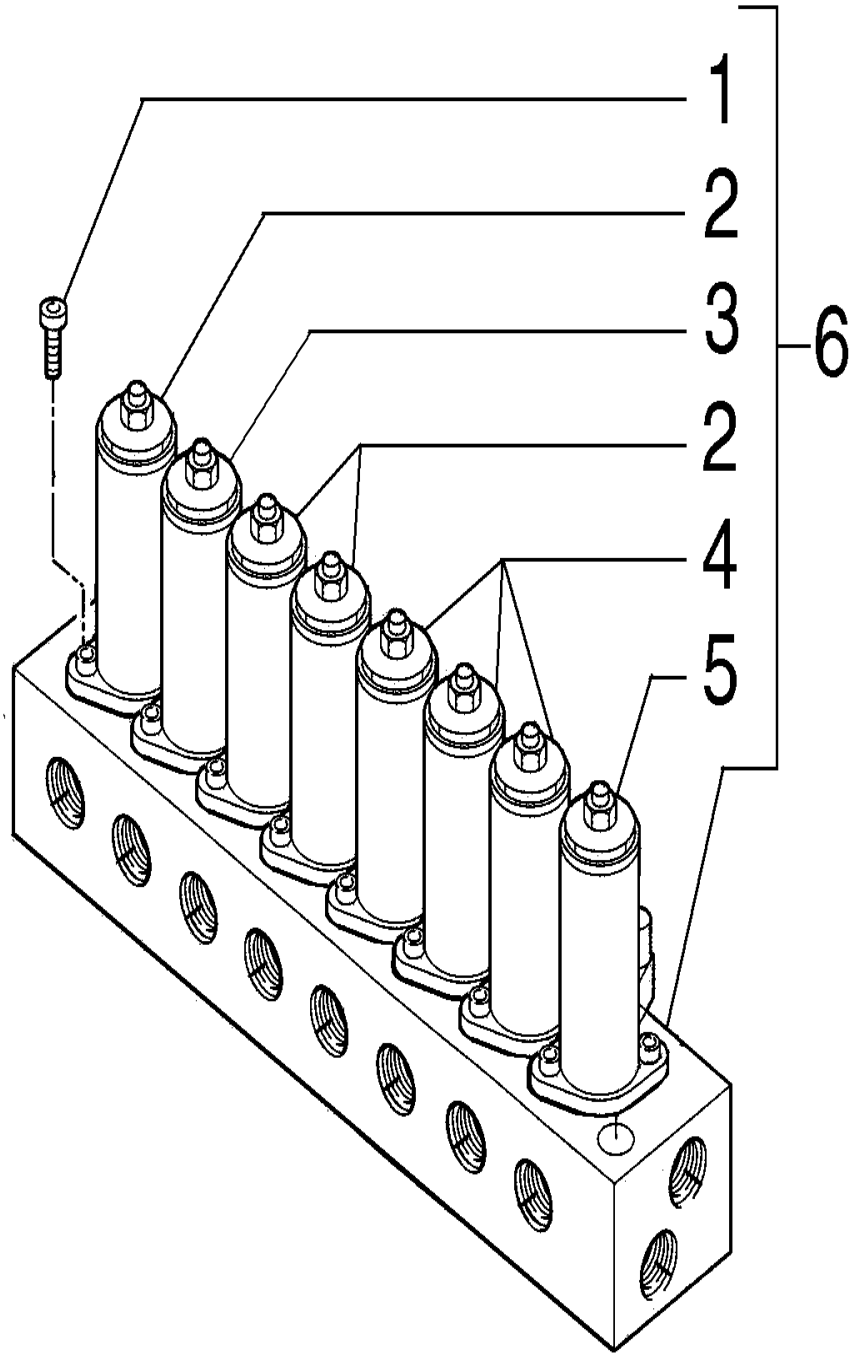
1
2
3
2
4
5
6

HYDRAULIC SYSTEM

REF	FN	PART NUMBER	YR/SN	QTY	DESCRIPTION
1		72209810		16	PARAFUSO Includes items 1 - 5
2		YN35V00050F1		3	VÁLVULA
3		YN35V00051F1		1	VÁLVULA
4		YN35V00048F1		3	VÁLVULA
5		YN35V00049F1		1	VÁLVULA
6		87338533		1	VÁLVULA HIDRÁULICA

08-25	01	p1	7/2013

CONTROL VALVE - 72209798

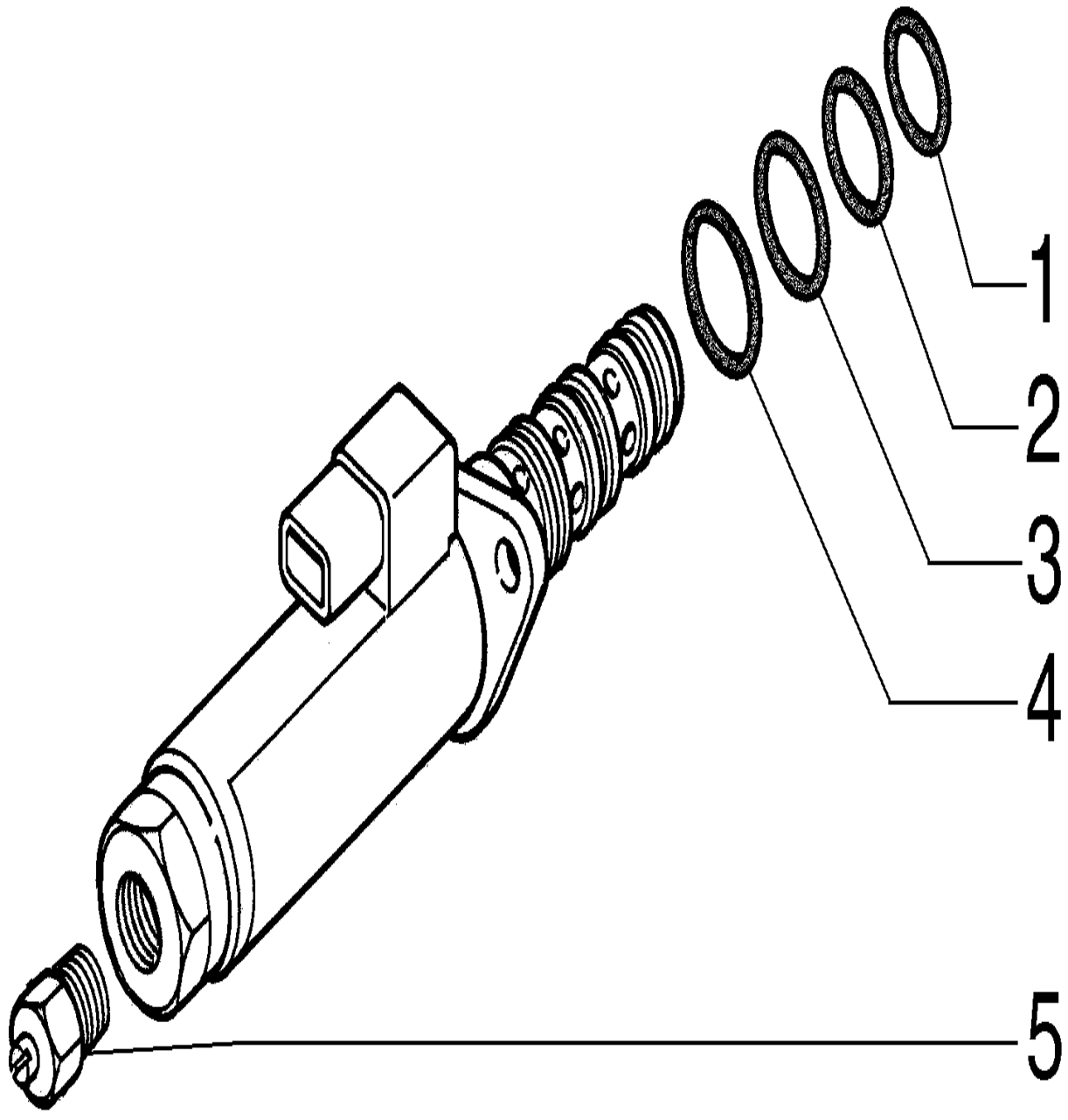

CONTROL VALVE - 72209798

REF	FN	PART NUMBER	YR/SN	QTY	DESCRIPTION
1		72209833		1	O-RING
2		72209834		1	O-RING
3		72209835		1	O-RING
4		72209824		1	O-RING
5		72219365		1	BUJÃO

HYDRAULIC SYSTEM

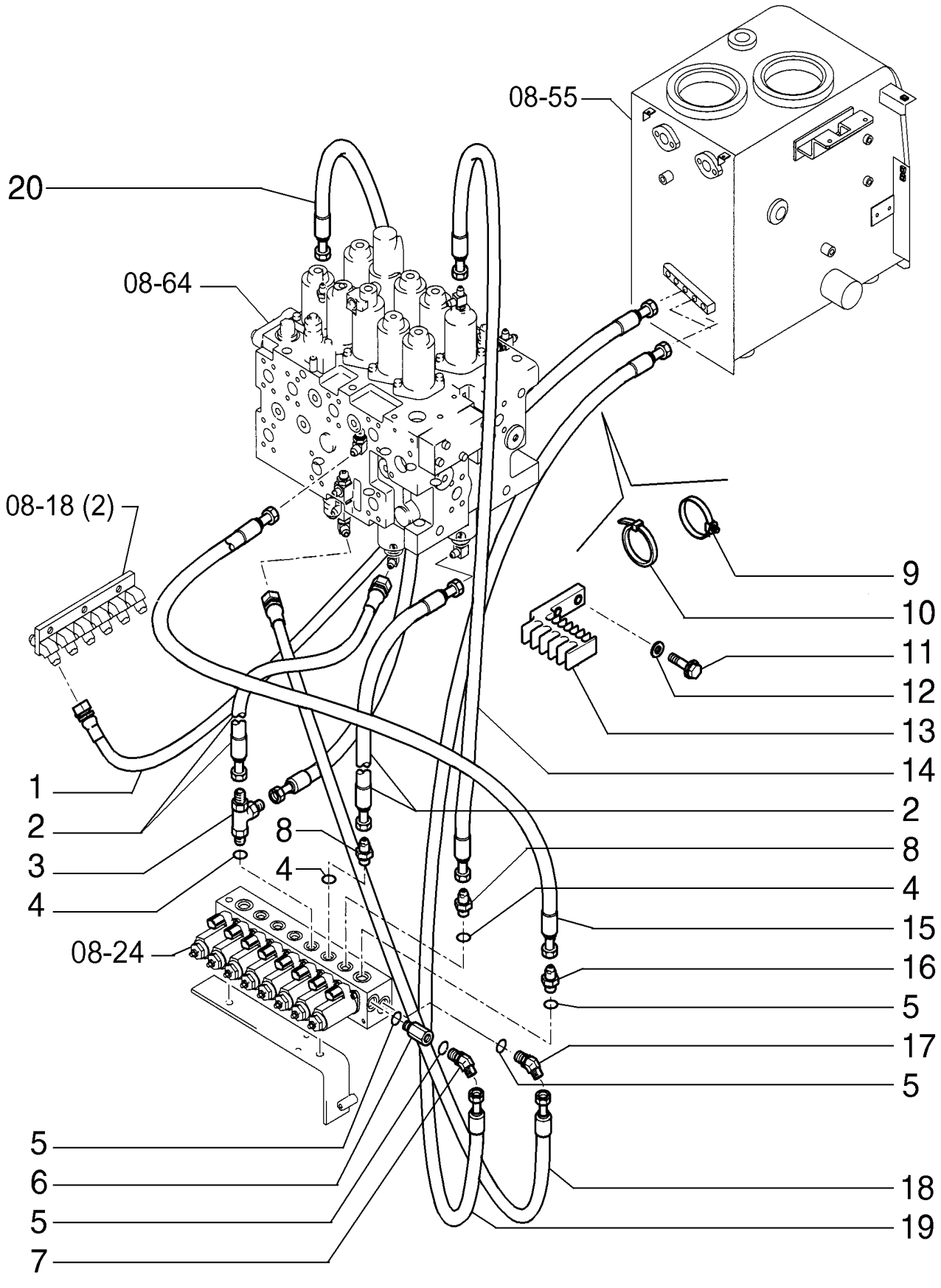

HYDRAULIC SYSTEM

REF	FN	PART NUMBER	YR/SN	QTY	DESCRIPTION
1		87529938		1	MANGUEIRA
2		72214543		2	MANGUEIRA
3		87652673		1	CONECTOR HIDRÁUL
4		ZD12P01100		3	O-RING
5		ZD12P01400		4	O-RING
6		87653345		1	CONECTOR HIDRÁUL
7		72214541		1	COTOVELO
8		72214744		2	CONECTOR HIDRÁUL
9		87526680		4	COLAR DE FIXAÇÃO
10		75201642		4	BRAÇADEIRA
11		16043831		2	PARAFUSO Hex, M8 x 30, 10.9
12		14496531		2	ARRUELA PLANA M8 x 17 x 1.6
13		87338536		1	COLAR
14		72214535		1	MANGUEIRA
15		72214550		1	MANGUEIRA
16		72214523		1	CONECTOR HIDRÁUL
17		87338398		1	CONECTOR HIDRÁUL
18		87529935		1	MANGUEIRA
19		72214731		1	MANGUEIRA
20		72214740		1	MANGUEIRA

08-27/A	01	p1	7/2013

HYDRAULIC SYSTEM - OPTIONAL RAISED CAB

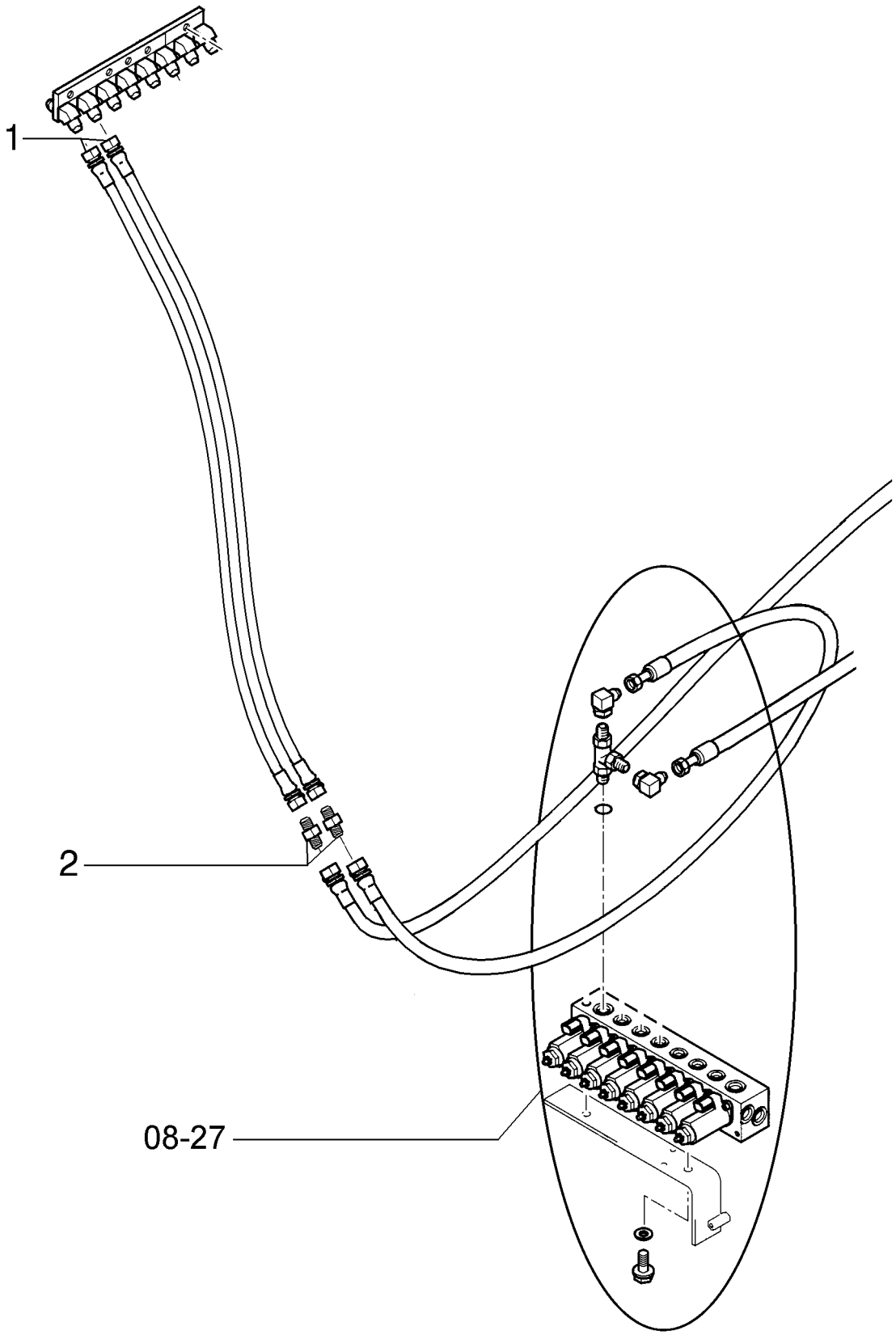

HYDRAULIC SYSTEM - OPTIONAL RAISED CAB

REF	FN	PART NUMBER	YR/SN	QTY	DESCRIPTION
1		72214731		2	MANGUEIRA
2		87746066		2	CONECTOR HIDRÁUL

HYDRAULIC SYSTEM - TRAVEL

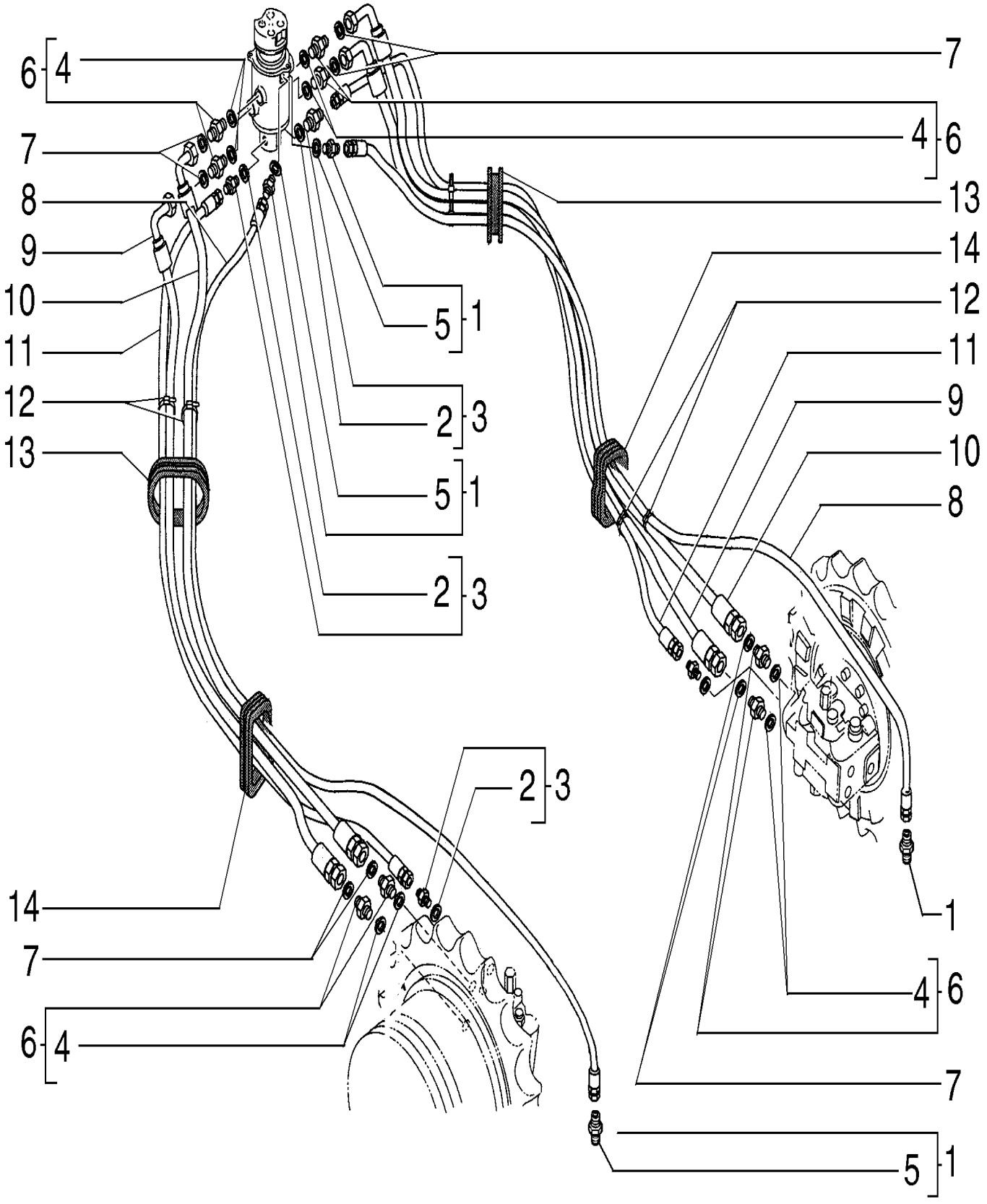

HYDRAULIC SYSTEM - TRAVEL

REF	FN	PART NUMBER	YR/SN	QTY	DESCRIPTION
1		72214744		4	CONECTOR HIDRÁUL Includes item 5
2		71404166		4	O-RING
3		72217405		4	CONECTOR HIDRÁUL Includes item 2
4		71404161		4	O-RING
5		71404163		4	O-RING 90 Duro, M10.8 ID x 2.4 Thk
6		71404365		8	CONECTOR HIDRÁUL Includes item 4
7		70923842		8	O-RING SPARE PART O-RING
8		87557380		2	TUBO FLEXÍVEL
9		72203001		2	MANGUEIRA HIDRÁULICA 19.05 mm ID x 2200.00 mm
10		72203002		2	MANGUEIRA HIDRÁULICA 19.05 mm ID x 2100.00 mm
11		87557379		2	TUBO FLEXÍVEL
12		75201642		6	BRAÇADEIRA
13		75261700		2	JUNTA
14		75261692		2	JUNTA

HYDRAULIC SYSTEM - TRAVEL

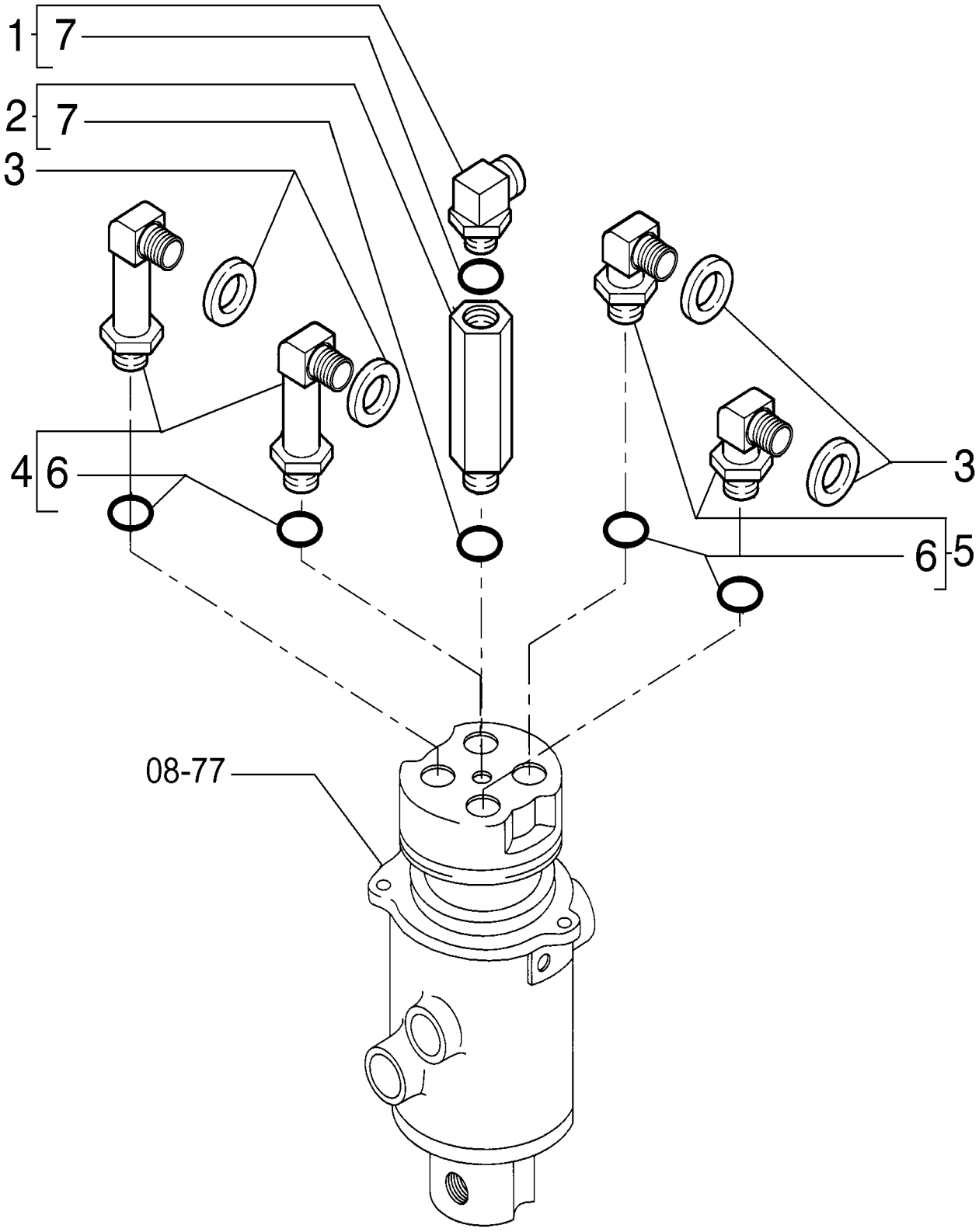

HYDRAULIC SYSTEM - TRAVEL

REF	FN	PART NUMBER	YR/SN	QTY	DESCRIPTION
1		72214669		1	CONECTOR HIDRÁUL
2		72214762		1	CONECTOR HIDRÁUL
3		70923843		4	O-RING
4		87338432		3	CONECTOR HIDRÁUL
5		72214711		2	CONECTOR HIDRÁUL
6		71404161		12	O-RING
7		71404166		5	O-RING

08-29	01	p1	7/2013

HYDRAULIC SYSTEM - MONOBLOC BOOM

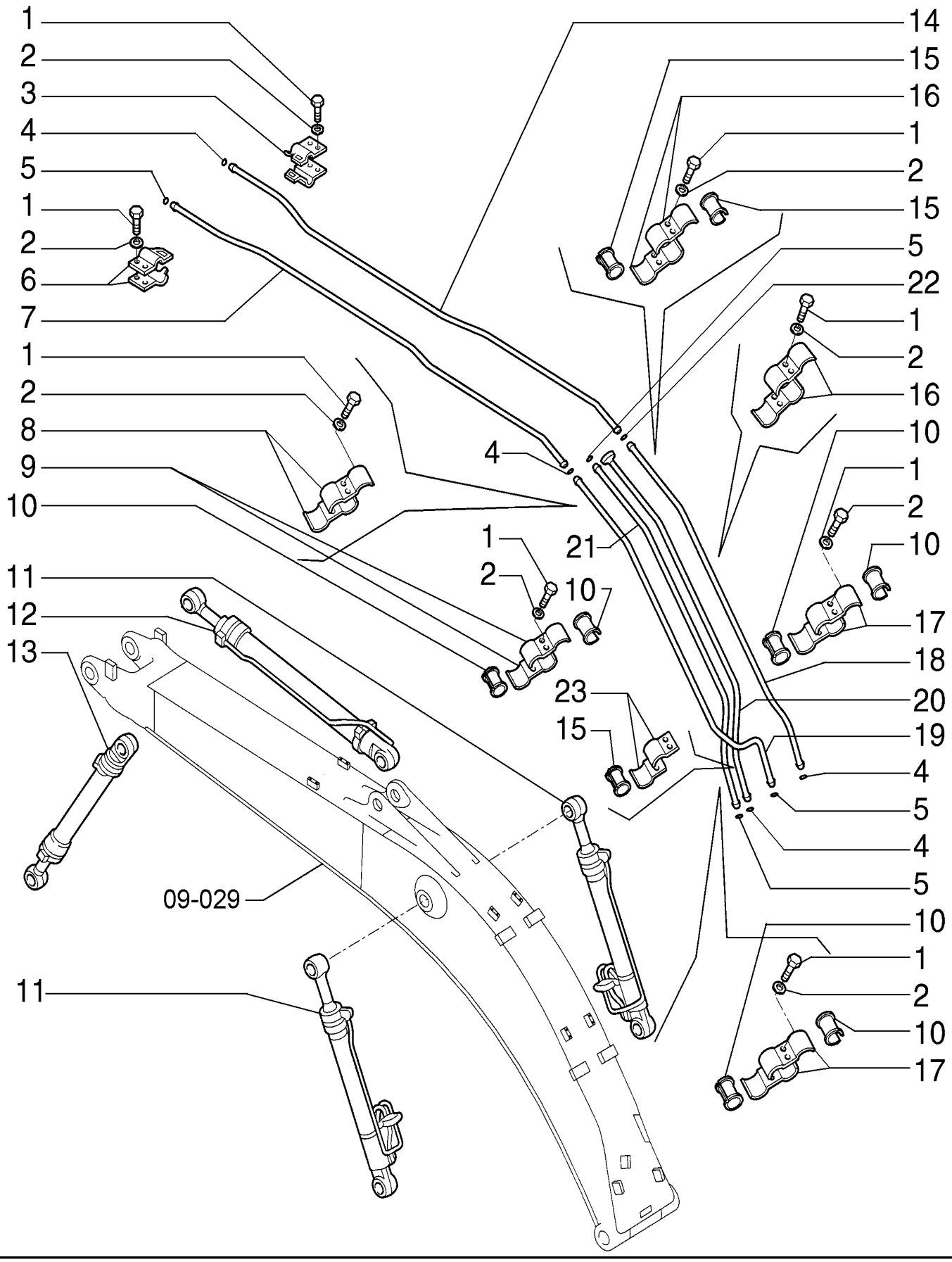

HYDRAULIC SYSTEM - MONOBLOC BOOM

REF	FN	PART NUMBER	YR/SN	QTY	DESCRIPTION
1		11112631		16	PARAFUSO Hex, M12 x 35, 10.9
2		14496731		16	ARRUELA PLANA M12 x 24 x 2.5 Thk
3		87599324		2	BRAÇADEIRA TUBO
4		70931640		4	JUNTA
5		70923843		4	O-RING
6		87599323		2	BRAÇADEIRA TUBO
7		87599317		1	TUBO HIDRÁULICO 27 mm OD
8		87599319		2	BRAÇADEIRA TUBO
9		87599320		4	BRAÇADEIRA TUBO
10		87343521		4	BUCHA
11		87626327		2	CILINDRO
12		87626447		1	CILINDRO
13		87626455		1	CILINDRO
14		87599316		1	TUBO HIDRÁULICO 34 mm OD
15		72151580		5	BUCHA
16		87599321		2	BRAÇADEIRA TUBO
17		87599318		4	BRAÇADEIRA TUBO
18		87599312		1	TUBO HIDRÁULICO 34 mm OD
19		87599313		1	TUBO HIDRÁULICO 27 mm OD
20		84121866		1	TUBO
21		87599314		1	TUBO HIDRÁULICO 27 mm OD
22		71404460		1	O-RING
23		87664005		2	BRAÇADEIRA TUBO

08-31	01	p1	7/2013

HYDRAULIC SYSTEM - MONOBLOC BOOM 15M

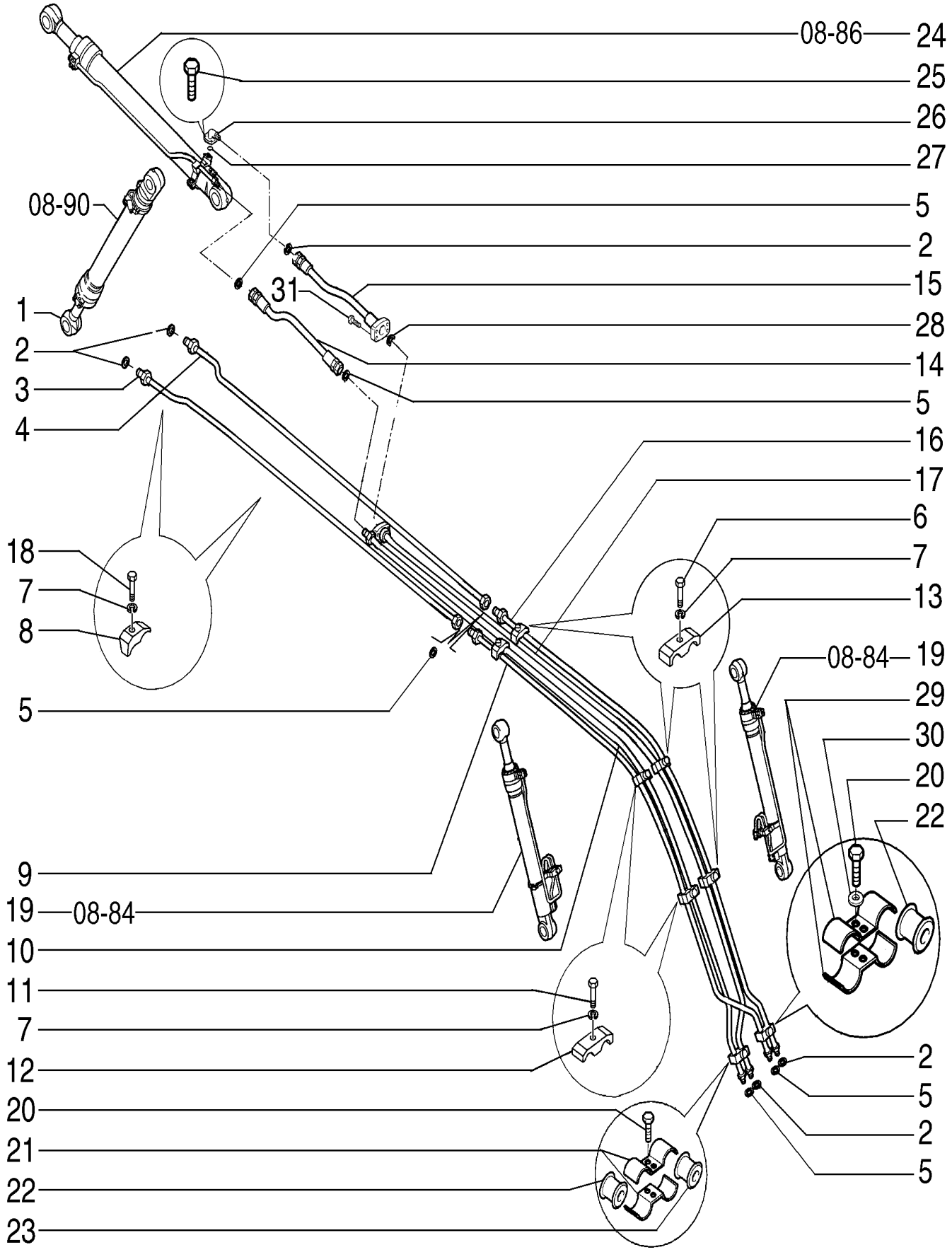

HYDRAULIC SYSTEM - MONOBLOC BOOM 15M

REF	FN	PART NUMBER	YR/SN	QTY	DESCRIPTION
1		75264959		1	CILINDRO LEVANTAMENTO
2		70923843		6	O-RING
3		72203852		1	TUBO RÍGIDO
4		72203854		1	TUBO RÍGIDO
5		70931640		6	JUNTA
6		11113531		4	PARAFUSO Hex, M12 x 65, 10.9
7		10517071		12	TRAVA DA ARRUELA M12
8		71416080		4	SUPORTE
9		87592515		1	TUBO HIDRÁULICO 27 mm OD
10		87592517		1	TUBO HIDRÁULICO 27 mm OD
11		11113431		4	PARAFUSO Hex, M12 x 60, 10.9
12		72204344		4	COLAR DE FIXAÇÃO
13		72204345		4	COLAR DE FIXAÇÃO
14		72203659		1	MANGUEIRA HIDRÁULICA
15		87702060		1	TUBO FLEXÍVEL
16		87592513		1	TUBO HIDRÁULICO 27 mm OD x 3393, 2121 mm L
17		87592519		1	TUBO HIDRÁULICO 34 mm OD
18		11113231		4	PARAFUSO Hex, M12 x 50, 10.9
19		87626327		2	CILINDRO
20		11112631		4	PARAFUSO Hex, M12 x 35, 10.9
21		87599318		2	BRAÇADEIRA TUBO
22		87343521		3	BUCHA
23		72151580		1	BUCHA
24		87626447		1	CILINDRO
25		14422331		4	PARAFUSO Hex Soc Hd, M12 x 45, 10.9
26		71418879		1	FLANGE
27		70924200		1	O-RING
28		70924192		1	O-RING
29		87599320		2	BRAÇADEIRA TUBO
30		14496731		4	ARRUELA PLANA M12 x 24 x 2.5 Thk
31		11113531		4	PARAFUSO Hex, M12 x 65, 10.9

HYDRAULIC SYSTEM - LIFT CYLINDER

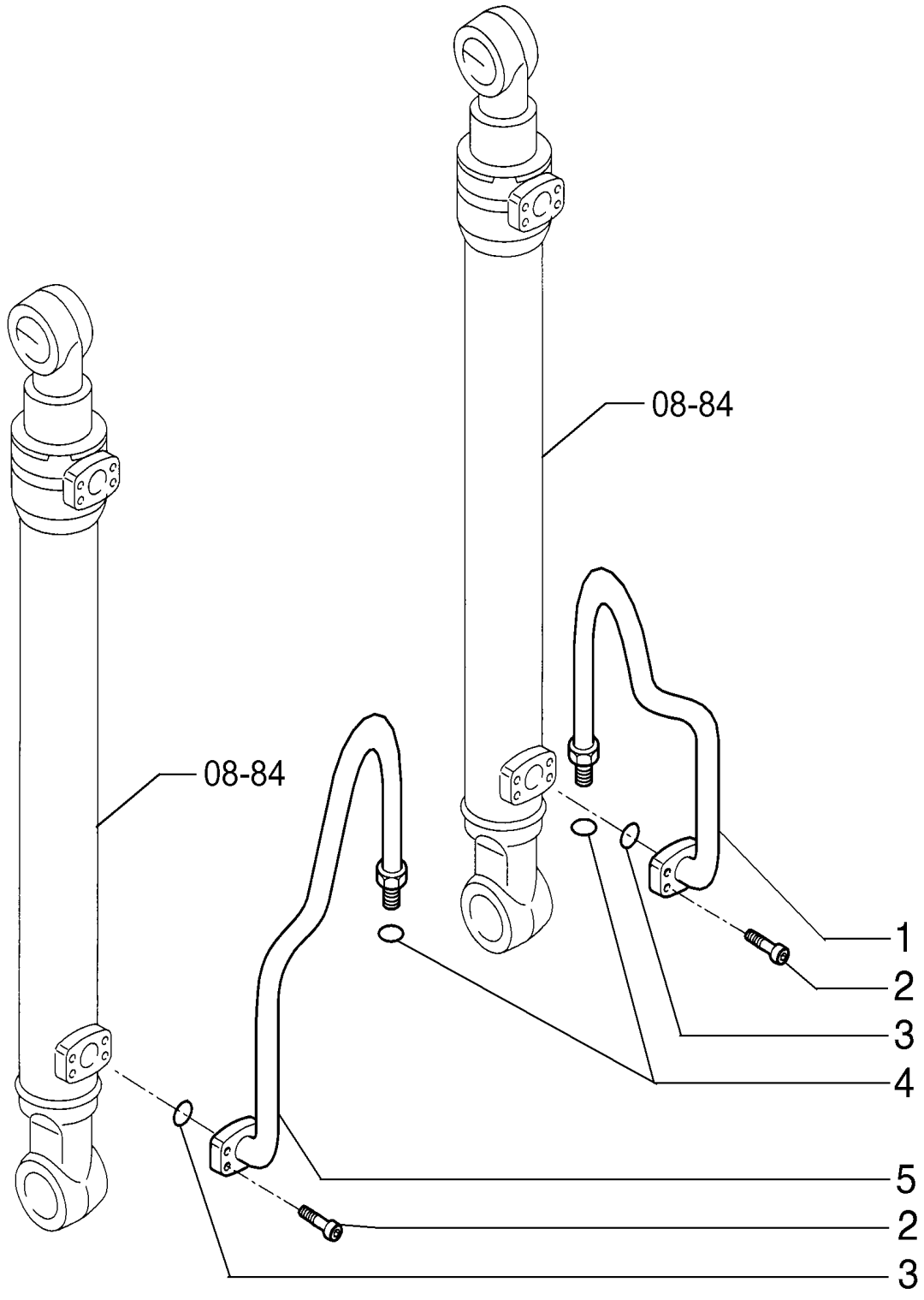

HYDRAULIC SYSTEM - LIFT CYLINDER

REF	FN	PART NUMBER	YR/SN	QTY	DESCRIPTION
1		87598540		1	TUBO HIDRÁULICO 34 mm OD x 1077, 443 mm L
2		14422231		8	PARAFUSO Hex Soc Hd, M12 x 40, 10.9
3		70924200		2	O-RING
4		70931640		2	JUNTA
5		87598541		1	TUBO HIDRÁULICO

08-32	02	p1	7/2013

HYDRAULIC SYSTEM - LIFT CYLINDER

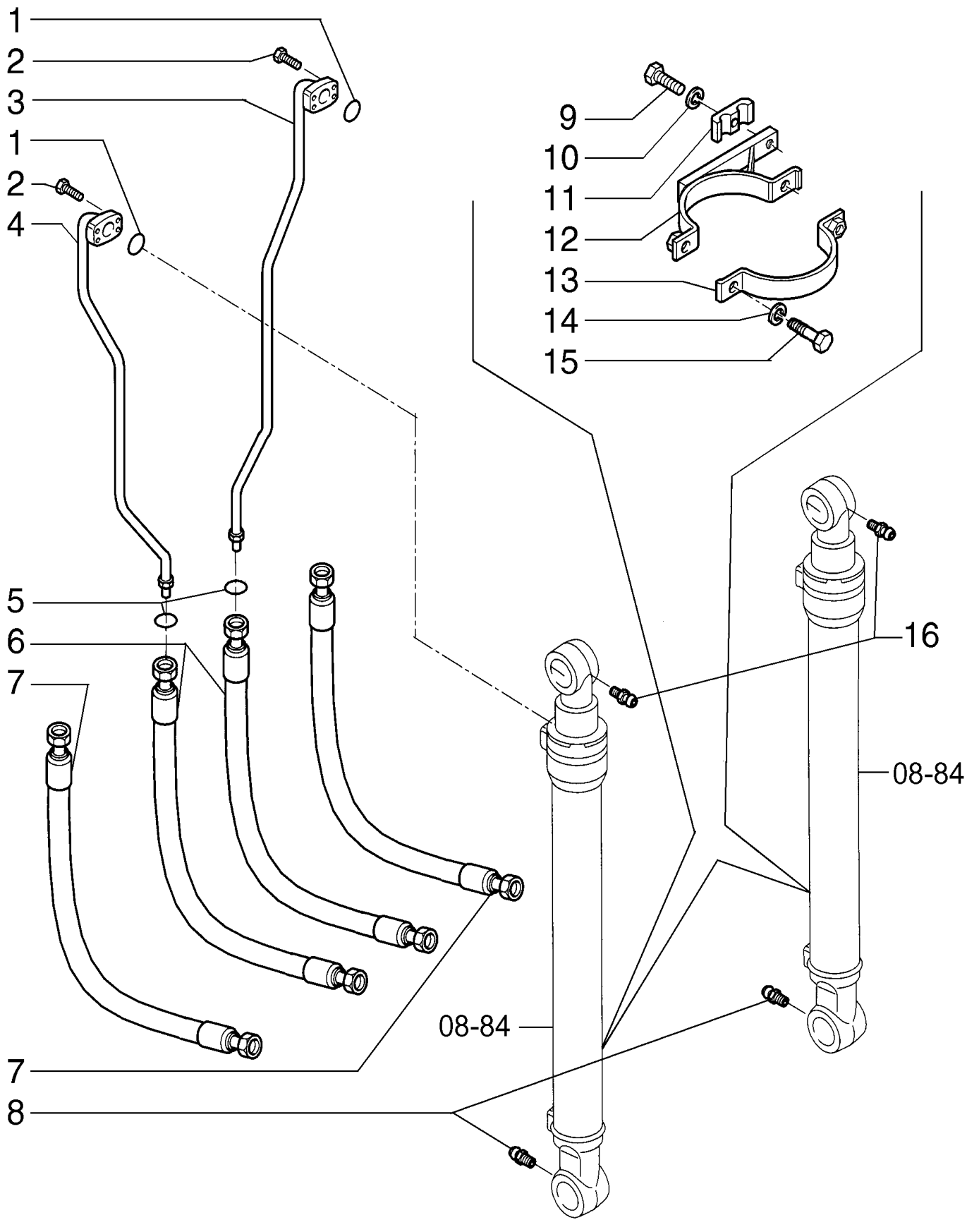

HYDRAULIC SYSTEM - LIFT CYLINDER

REF	FN	PART NUMBER	YR/SN	QTY	DESCRIPTION
1		ZD12P02600		2	O-RING
2		ZS28C10030		8	PARAFUSO
3		YN42H02812P1		1	TUBO 21.7 mm OD x 1210.5, 224.1 mm Length
4		YN42H02342P1		1	TUBO 21.7 mm OD x 1211, 244 mm Length
5		ZD12A01600		2	O-RING
6		ZX20H10072		2	MANGUEIRA
7		ZX20H16078		2	MANGUEIRA
8		ZG91S02000		2	GRAXEIRA
9		11113531		2	PARAFUSO Hex, M12 x 65, 10.9
10		ZW16H12000		2	ARRUELA PLANA
11		87599369		2	SUPORTE
12		YN42H02813P1		1	TIRA DIR.
12		YN42H02615P1		1	TIRA ESQ.
13		YX42H01074P2		2	TIRA
14		ZW26X10000		4	TRAVA DA ARRUELA
15		11106431		4	PARAFUSO Hex, M10 x 30, 10.9, Full Thd
16		ZH22Z04000		2	CONECTOR HIDRÁUL

HYDRAULIC SYSTEM - LIFT CYLINDER, ARM 15M

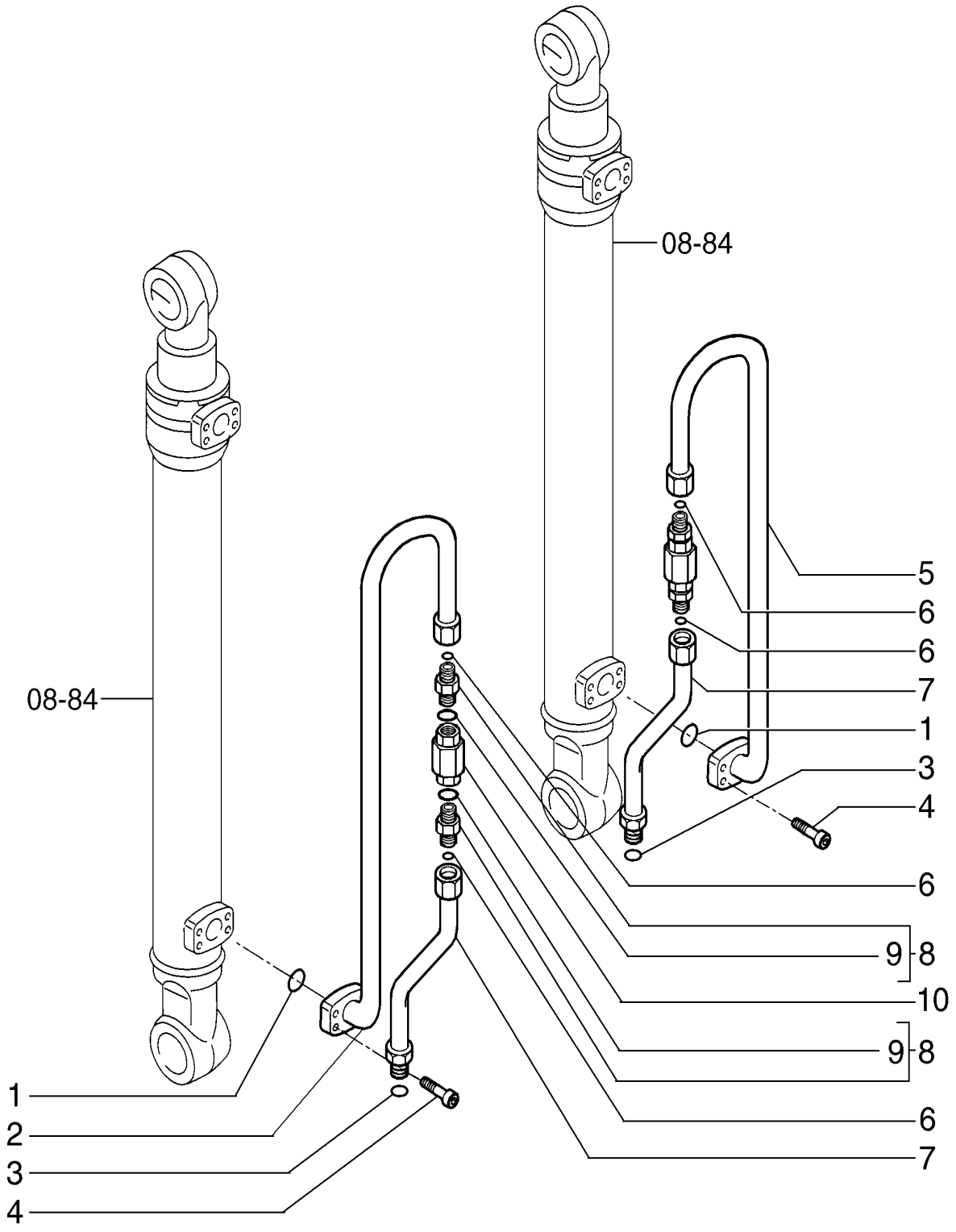

HYDRAULIC SYSTEM - LIFT CYLINDER, ARM 15M

REF	FN	PART NUMBER	YR/SN	QTY	DESCRIPTION
1		70924200		2	O-RING
2		87609519		1	TUBO RÍGIDO 34 mm OD x 1058.5, 174 mm L
3		70931640		2	JUNTA
4		14422231		8	PARAFUSO Hex Soc Hd, M12 x 40, 10.9
5		87609520		1	TUBO RÍGIDO 34 mm OD x 1058.5, 174 mm L
6		71404460		4	O-RING
7		87609513		2	TUBO RÍGIDO 34 mm OD x 392.5, 117 mm L
8		71419758		4	CONECTOR HIDRÁUL Includes item 9
9		71404161		4	O-RING
10		72160674		2	VÁLVULA HIDRÁULICA

08-33	01	p1	7/2013

DIPPERSTICK TUBING - 2,4M

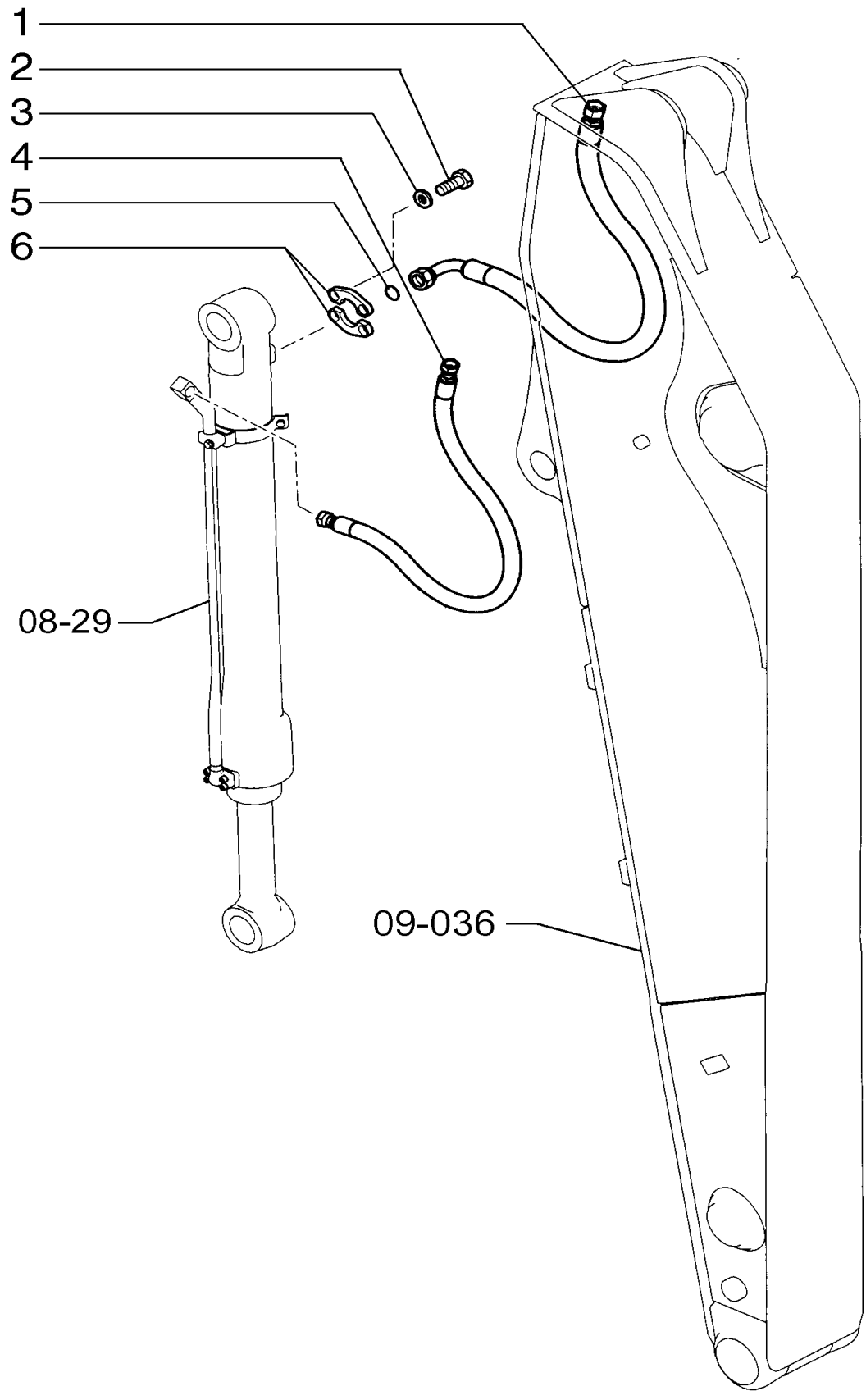

DIPPERSTICK TUBING - 2,4M

REF	FN	PART NUMBER	YR/SN	QTY	DESCRIPTION
1		87533392		1	TUBO FLEXÍVEL
2		14422231		4	PARAFUSO Hex Soc Hd, M12 x 40, 10.9
3		10517071		4	TRAVA DA ARRUELA M12
4		87547562		1	TUBO FLEXÍVEL
5		70924200		1	O-RING
6		71404313		2	SEMI-FLANGE

08-35	01	p1	7/2013

DIPPERSTICK TUBING - 2,94M

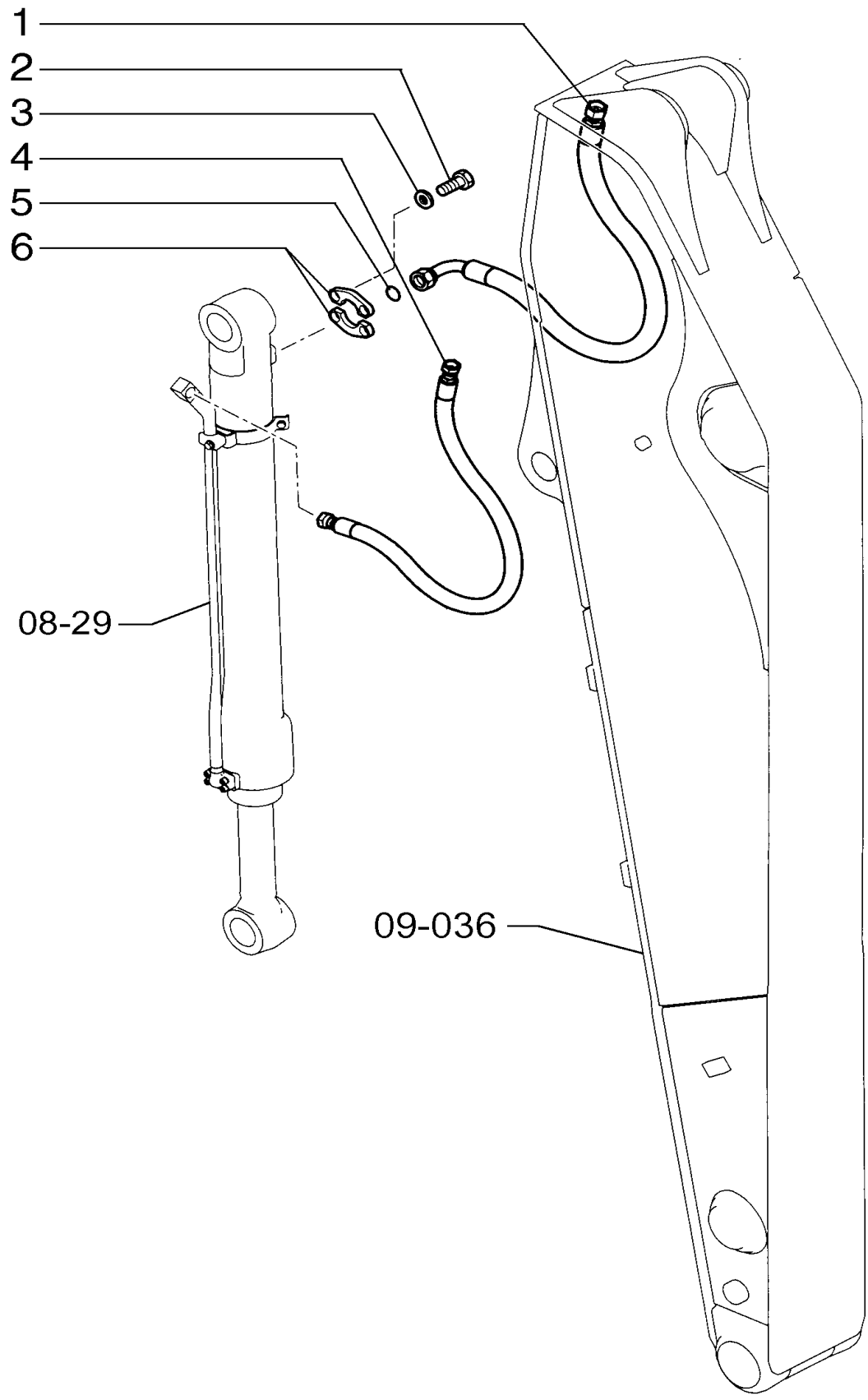

DIPPERSTICK TUBING - 2,94M

REF	FN	PART NUMBER	YR/SN	QTY	DESCRIPTION
1		87533392		1	TUBO FLEXÍVEL
2		14422231		4	PARAFUSO Hex Soc Hd, M12 x 40, 10.9
3		412123		4	TRAVA DA ARRUELA M12 x 21 x 2.6 Thk
4		72205013		1	TUBO FLEXÍVEL 1350.00 mm
5		70924200		1	O-RING
6		71404313		2	SEMI-FLANGE

08-36	01	p1	7/2013

DIPPERSTICK TUBING - 3,5M

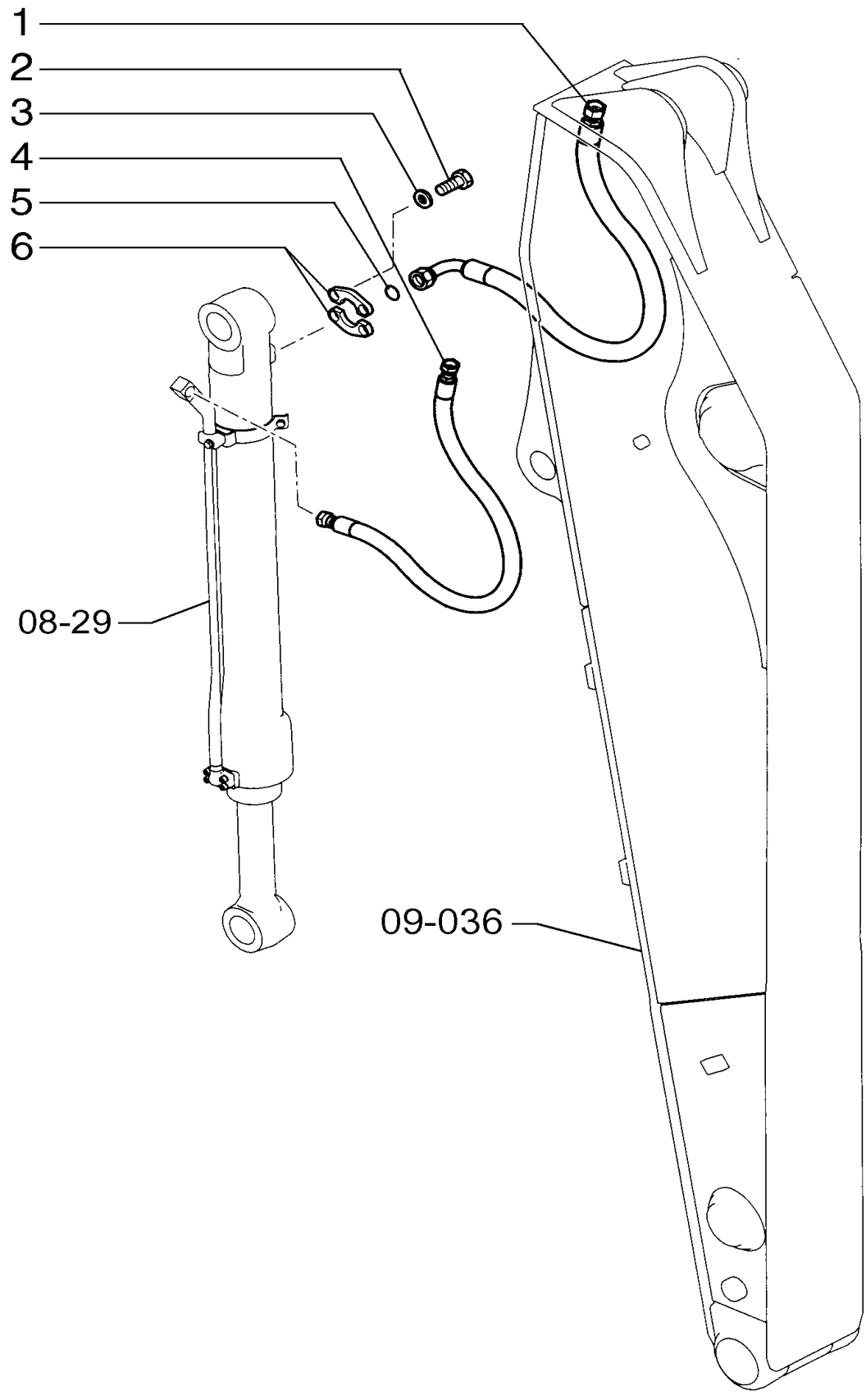

DIPPERSTICK TUBING - 3,5M

REF	FN	PART NUMBER	YR/SN	QTY	DESCRIPTION
1		87547564		1	TUBO FLEXÍVEL
2		14422231		4	PARAFUSO Hex Soc Hd, M12 x 40, 10.9
3		412123		4	TRAVA DA ARRUELA M12 x 21 x 2.6 Thk
4		{87657739}		1	HOSE
5		70924200		1	O-RING
6		71404313		2	SEMI-FLANGE

08-37	01	p1	7/2013

HYDRAULIC SYSTEM - DIPPERSTICK CYLINDER

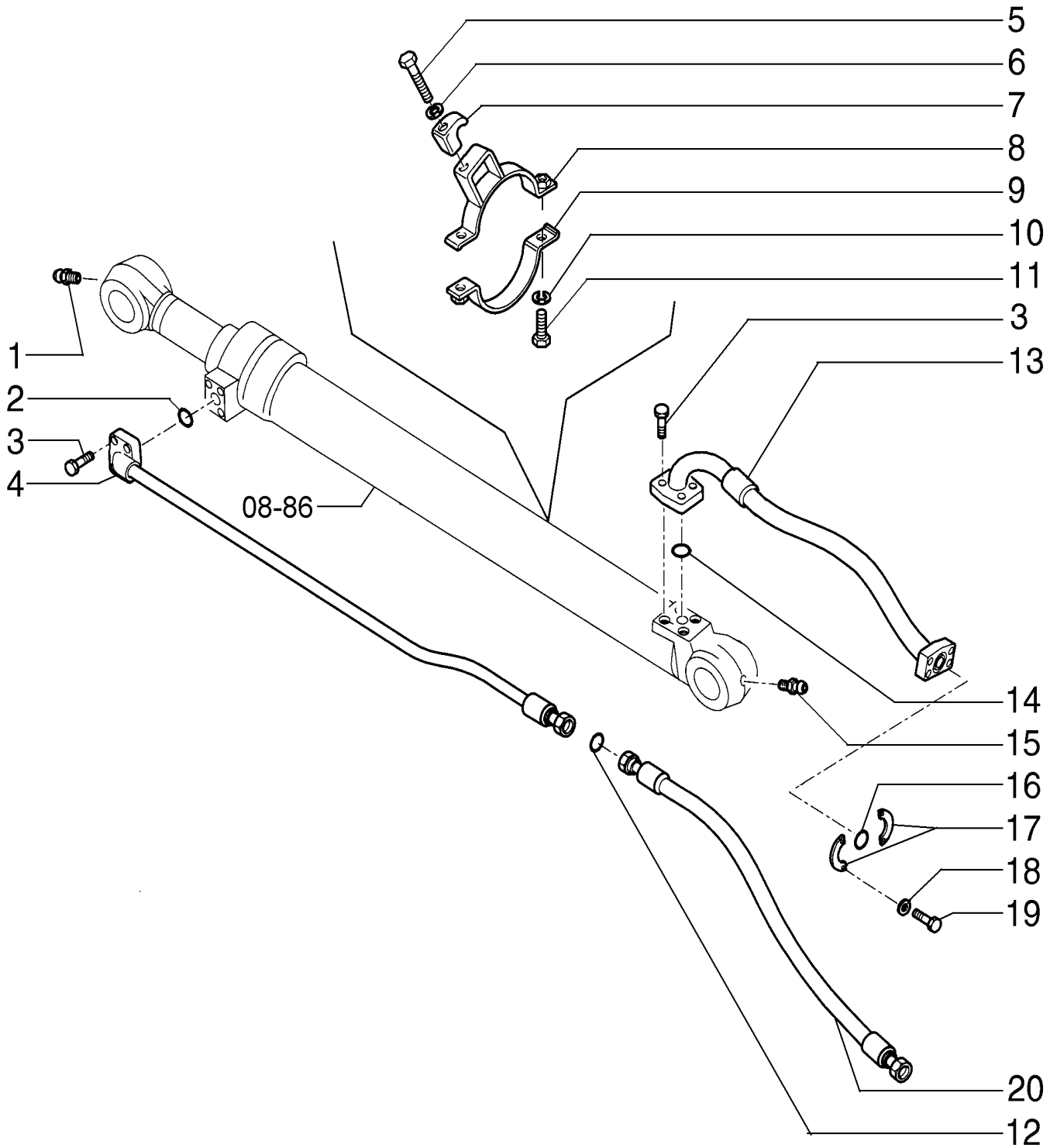

HYDRAULIC SYSTEM - DIPPERSTICK CYLINDER

REF	FN	PART NUMBER	YR/SN	QTY	DESCRIPTION
1		72283478		1	GRAXEIRA
2		70924200		1	O-RING
3		14422231		8	PARAFUSO Hex Soc Hd, M12 x 40, 10.9
4		87626793		1	TUBO 1817.5, 62 mm L
4	1	87533389		1	TUBO HIDRÁULICO 20.6 mm ID x 27 mm OD x 1817.5, 62 mm L
5		11113331		1	PARAFUSO Hex, M12 x 55, 10.9
6		14496731		1	ARRUELA PLANA M12 x 24 x 2.5 Thk
7		72201683		1	SUPORTE
8		87598542		1	SUPORTE
9		87598545		1	SUPORTE
10		10516871		2	TRAVA DA ARRUELA
11		11106431		2	PARAFUSO Hex, M10 x 30, 10.9, Full Thd
12		70923843		1	O-RING
13		87544499		1	TUBO FLEXÍVEL
14		72215443		1	O-RING
15		72283478		1	GRAXEIRA
16		70924192		1	O-RING
17		71444029		2	SEMI-FLANGE
18		10517171		4	TRAVA DA ARRUELA
19		14424531		4	PARAFUSO
20		87544502		1	TUBO FLEXÍVEL

(1) Para braço 15m

08-38	01	p1	7/2013

SELECTOR VALVE

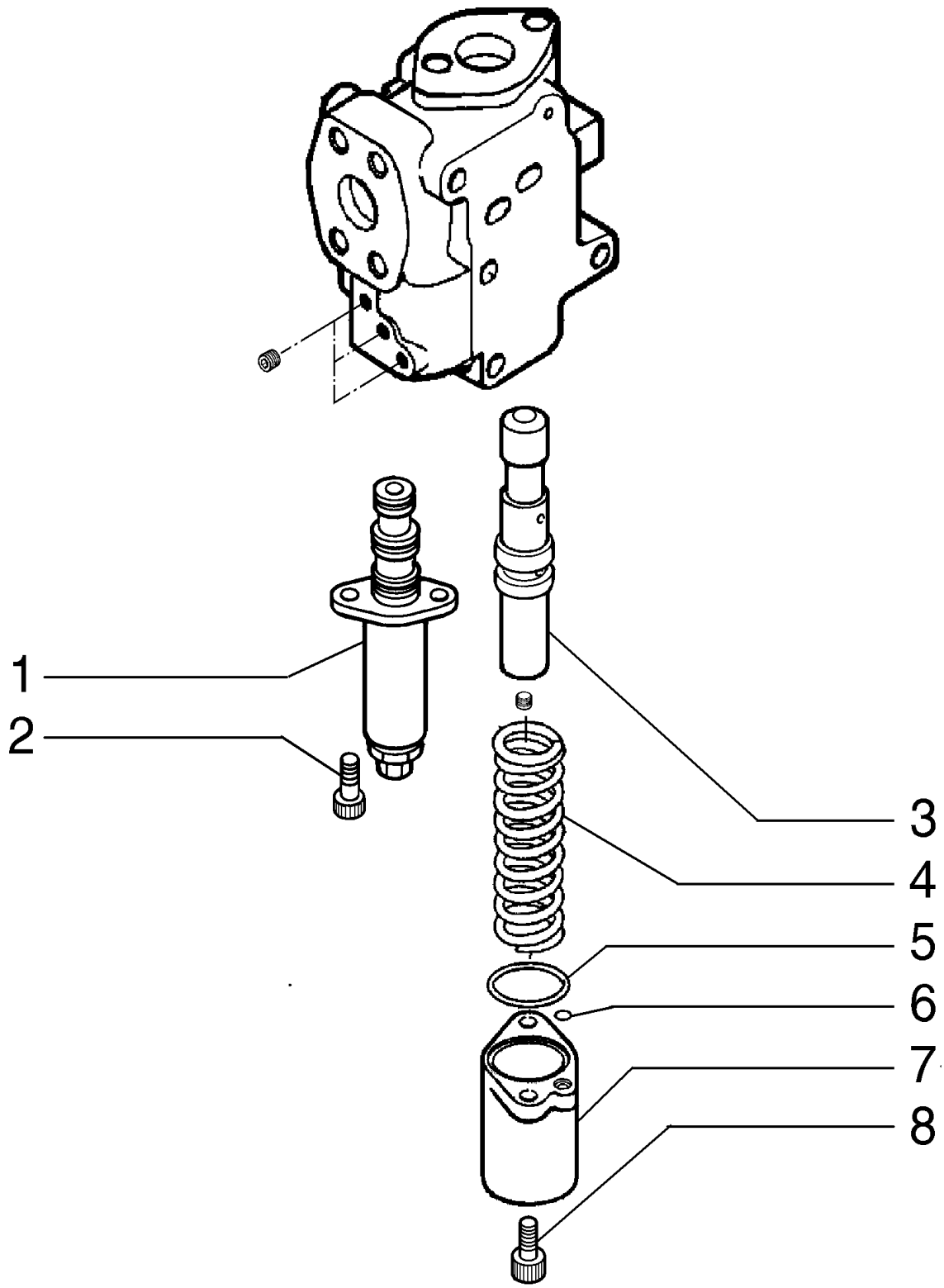

SELECTOR VALVE

REF	FN	PART NUMBER	YR/SN	QTY	DESCRIPTION
1		YN35V00050F1		1	VÁLVULA
2		72209810		2	PARAFUSO
3		YN30V00104S301		1	CARRETO
4		YN30V00104S321		1	MOLA
5		72960987		1	O-RING
6		72283326		1	O-RING
7		YN30V00104S201		1	COBERTURA
8		14420170		2	PARAFUSO

08-39	01	p1	7/2013

SOLENOID VALVE - YN35V00050F1

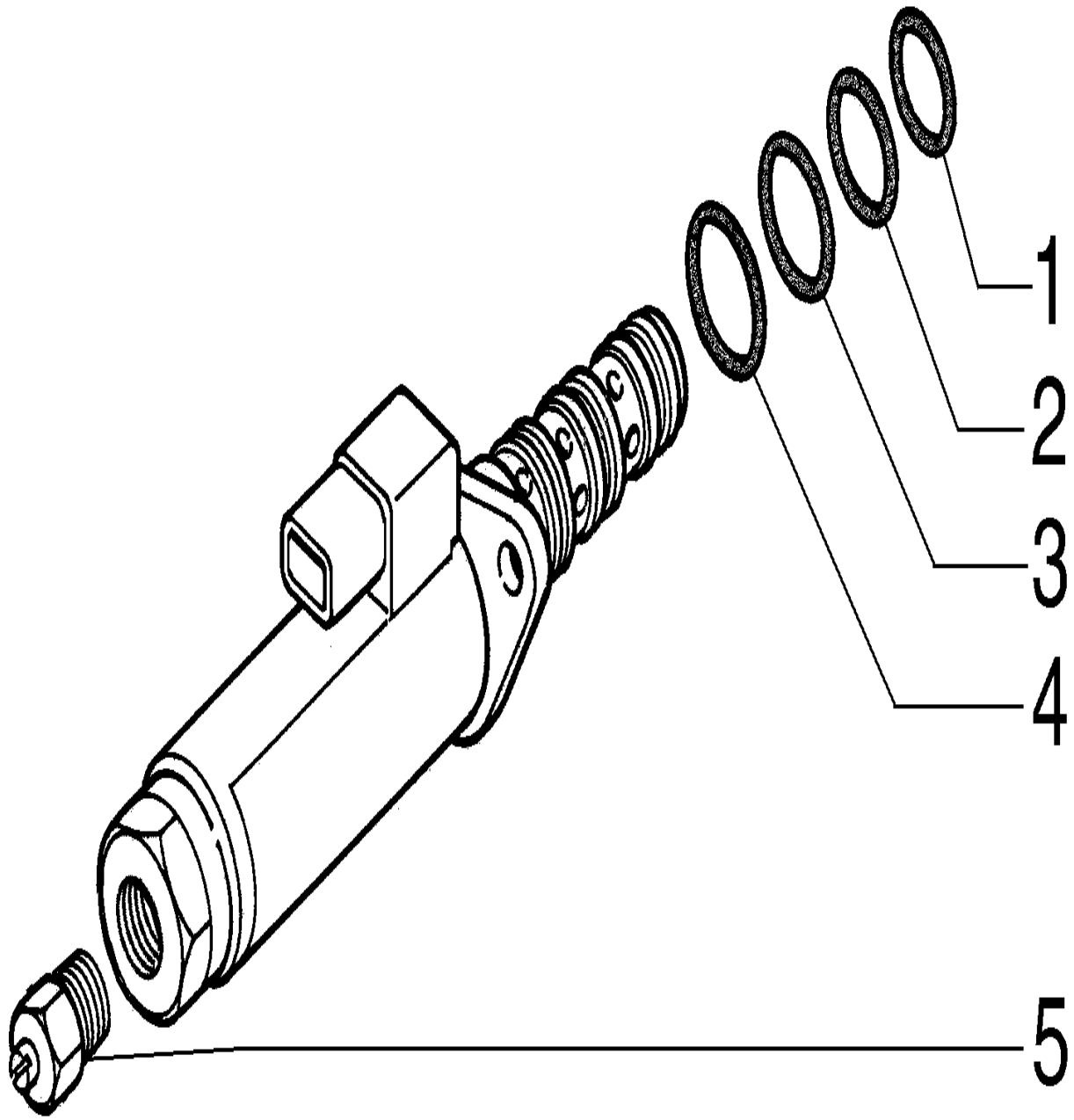

SOLENOID VALVE - YN35V00050F1

REF	FN	PART NUMBER	YR/SN	QTY	DESCRIPTION
1		YN35V0004S361		1	O-RING
2		YN35V00004S362		1	O-RING
3		YN35V0004S363		1	O-RING
4		ZD12P02000		1	O-RING 19.8mm ID x 2.4mm Width
5		YN35V00018S802		1	PORCA

08-40	01	p1	7/2013

SOLENOID VALVE

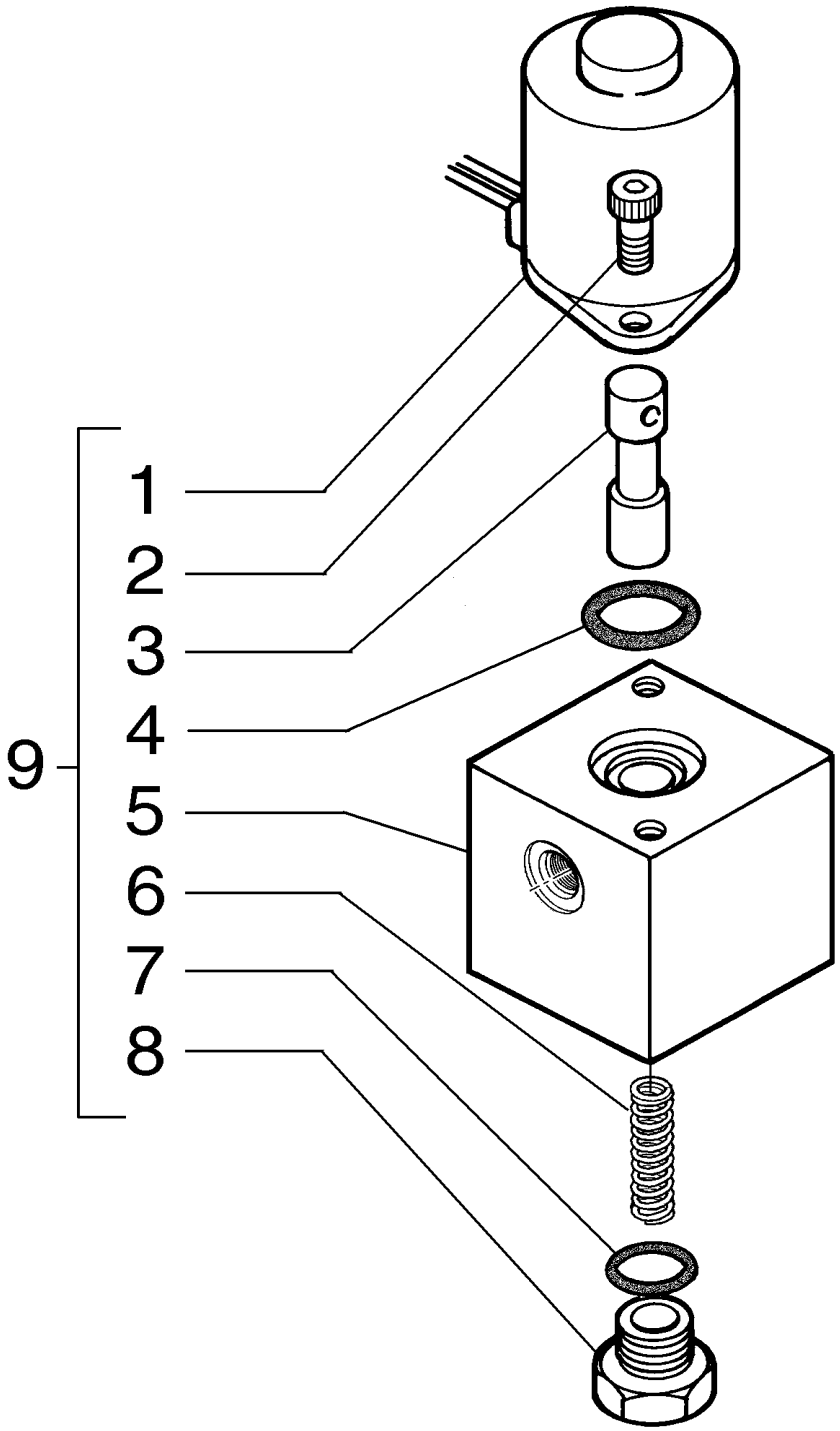

SOLENOID VALVE

REF	FN	PART NUMBER	YR/SN	QTY	DESCRIPTION
1		72210451		1	VÁLVULA HIDRÁULICA
2		72215301		2	PARAFUSO
3		72150614		1	CARRETO
4		72210450		1	O-RING
5		72150613		1	CORPO
6		72210447		1	MOLA
7		72210491		1	O-RING
8		72215300		1	BUJÃO
9		72955526		1	VÁLVULA Includes items 1 - 8

08-42	01	p1	7/2013

CONTROL VALVE - 87524907

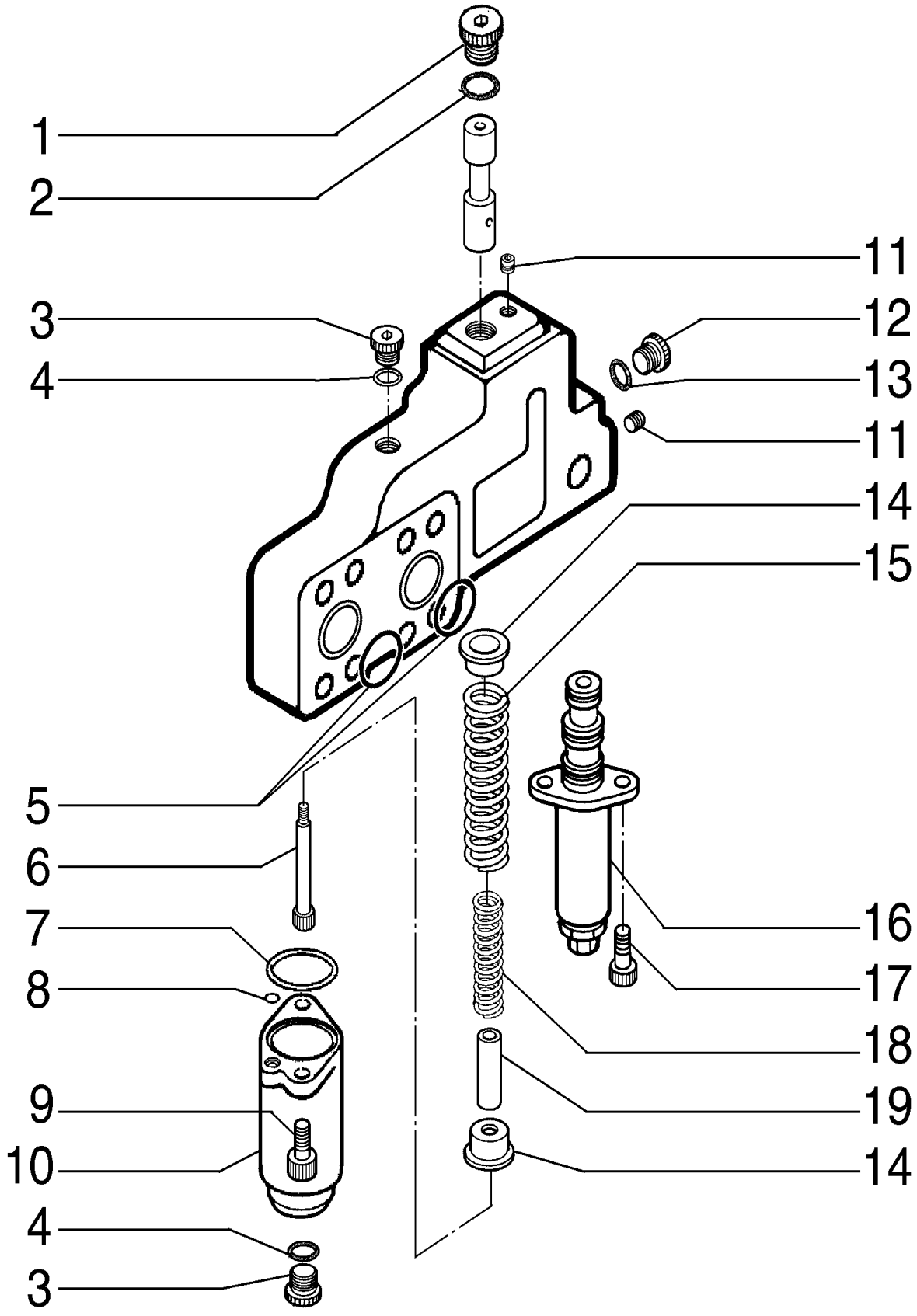

CONTROL VALVE - 87524907

REF	FN	PART NUMBER	YR/SN	QTY	DESCRIPTION
1		2436U1198S551		1	BUJÃO
2		72209989		1	O-RING
3		72961479		2	BUJÃO
4		72209820		2	O-RING
5		72215443		2	O-RING
6		72210126		1	PARAFUSO
7		72950285		1	O-RING
8		72215596		1	JUNTA
9		14306470		2	PARAFUSO Hex Soc Hd, M8 x 25, 12.9
10		YN30V00101S203		1	PROTEÇÃO
11		72209815		3	BUJÃO
12		72209843		1	BUJÃO
13		72209827		1	O-RING
14		72210127		2	SEDE/ALOJAMENTO
15		YN30V00101S327		1	MOLA
16		YN35V00048F1		1	VÁLVULA
17		72209810		2	PARAFUSO
18		YN30V00101S329		1	MOLA
19		72210125		1	PARADA

08-44	01	p1	7/2013

PEDAL VALVE

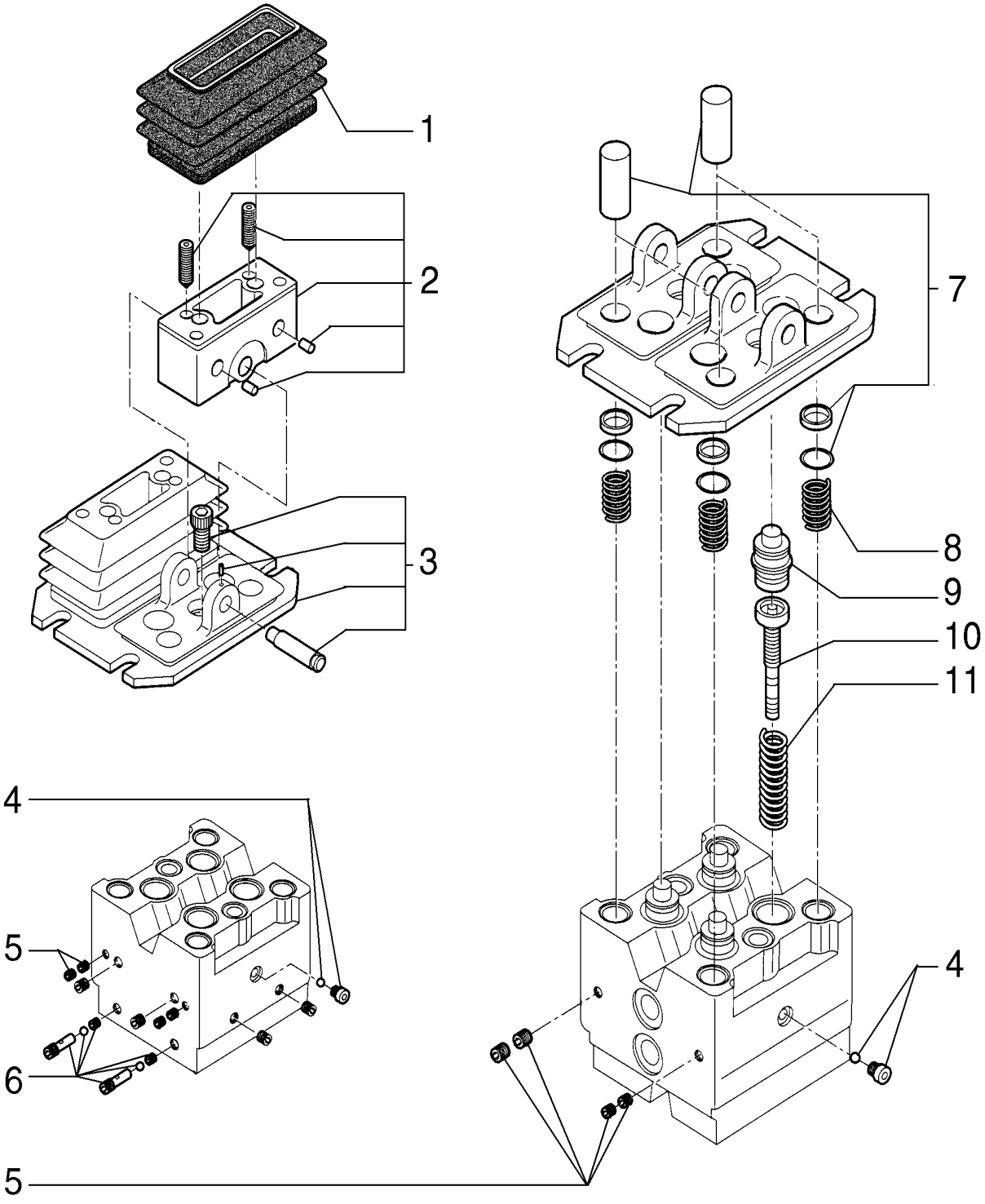

PEDAL VALVE

REF	FN	PART NUMBER	YR/SN	QTY	DESCRIPTION
1		YN30V00105S005		2	COBERTURA Dust
2		YN30V00105R100		1	KIT
3		YN30V00105R110		1	KIT
4		YN30V00105R160		1	KIT
5		YN30V00105R170		1	KIT
6		YN30V00105R180		1	KIT
7		YN30V00105R150		1	KIT
8		YN30V00105R140		1	KIT
9		YN30V00105R120		1	KIT
10		YN30V00105S010		1	HASTE
11		YN30V00105R130		1	KIT

08-45	01	p1	7/2013

PEDAL VALVE - 72204155

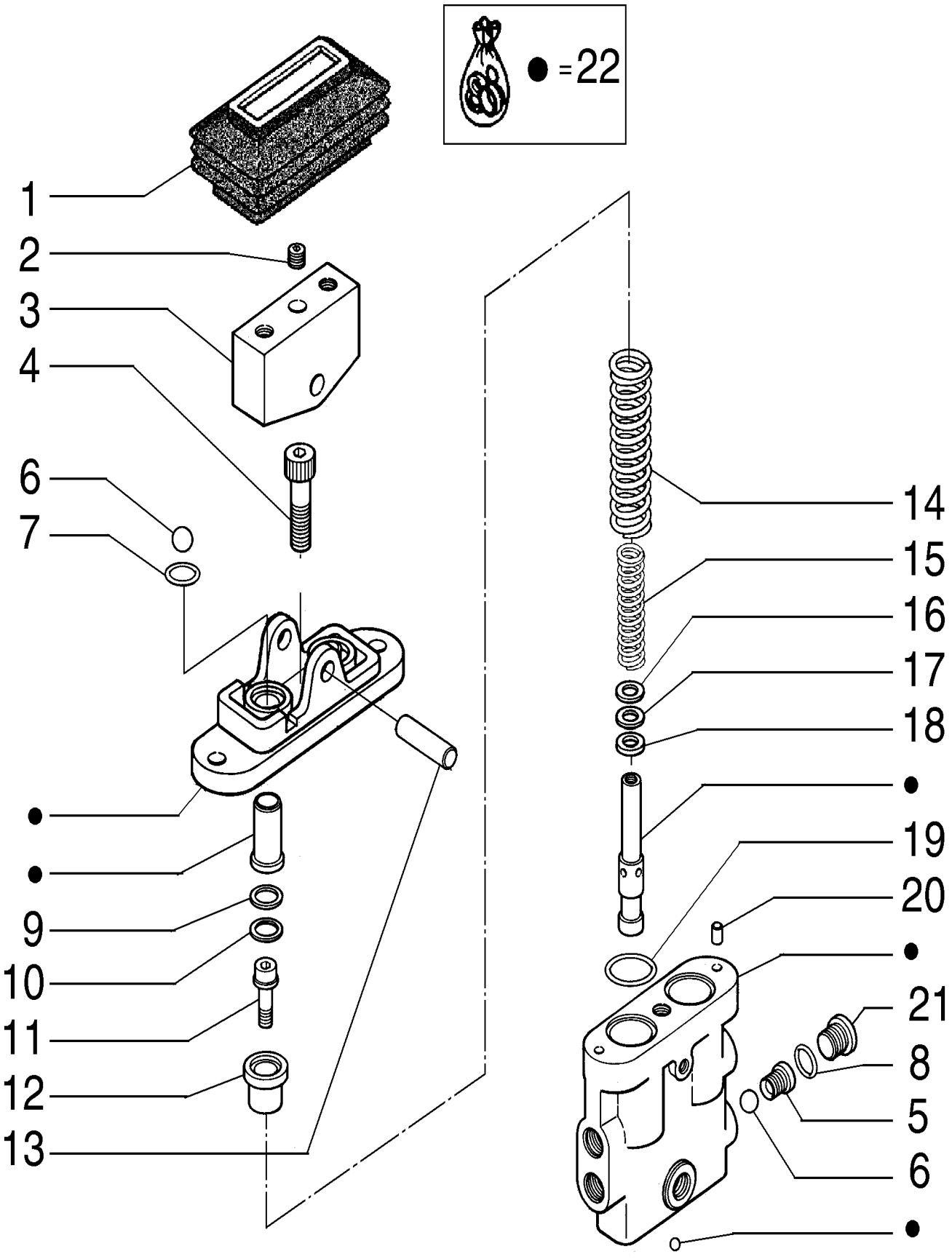

PEDAL VALVE - 72204155

REF	FN	PART NUMBER	YR/SN	QTY	DESCRIPTION
1		72210225		1	CAPA
2		72210233		2	BUJÃO
3		72210489		1	EXCÊNTRICO
4		72210490		1	PARAFUSO
5		72210219		1	SEDE/ALOJAMENTO
6		72210237		3	ESFERA
7		72210491		2	O-RING
8		72209827		1	O-RING
9		72210484		2	CALÇO DE AFINAÇÃO
10		72210485		2	CALÇO DE AFINAÇÃO
11		72210232		2	PARAFUSO
12		72210483		2	LUVA
13		72210226		1	PINO
14		72210486		1	MOLA
15		72210223		2	MOLA
16		72210234		2	ARRUELA PLANA
17		72210488		1	CALÇO DE AFINAÇÃO
18		72210487		2	CALÇO DE AFINAÇÃO
19		72210493		2	O-RING
20		72210492		2	PINO
21		72210230		1	BUJÃO
22		72210494		1	KIT

OPTIONAL

CX220B

08-46	01	p1	7/2013

SERVO VALVE

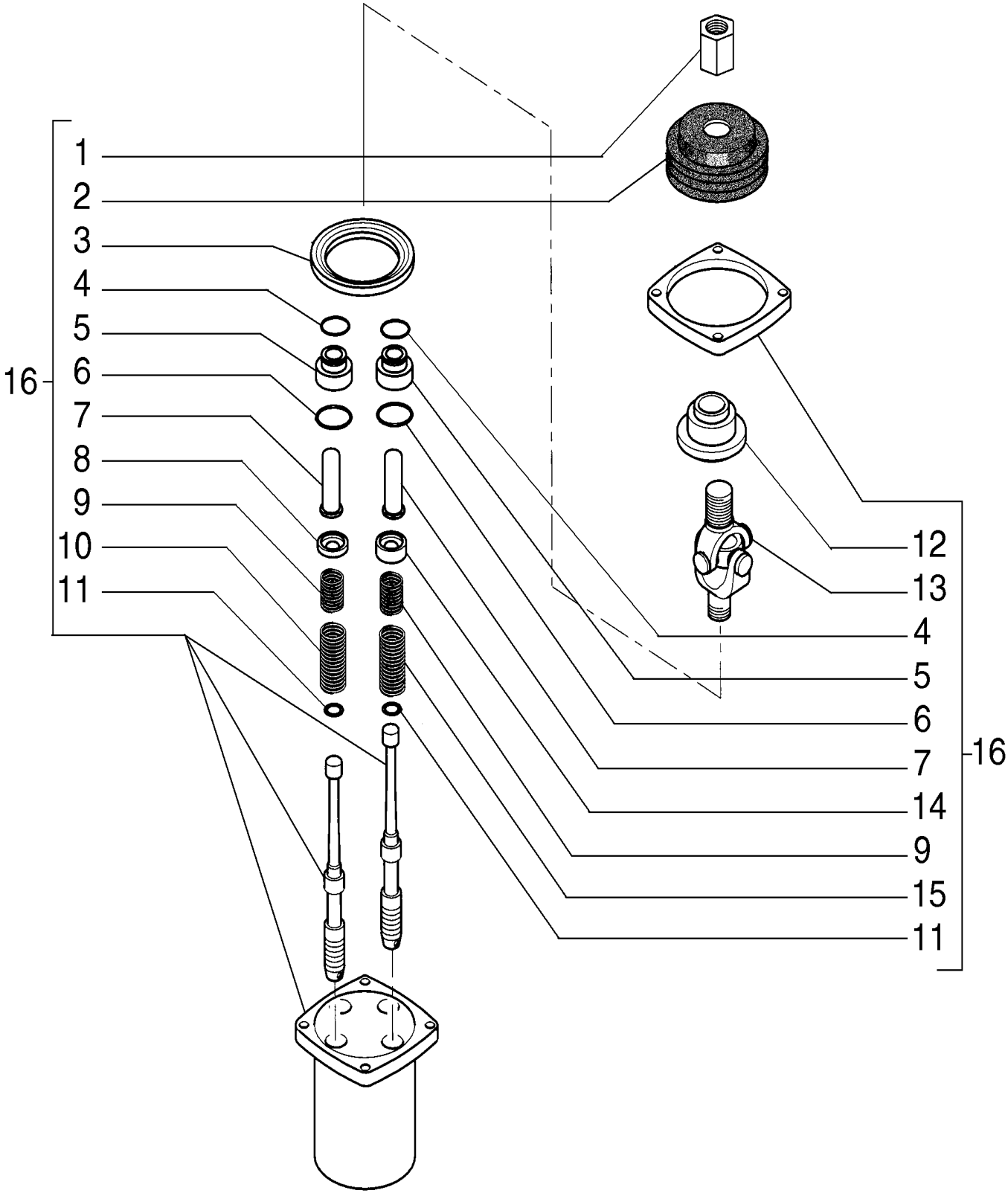

SERVO VALVE

REF	FN	PART NUMBER	YR/SN	QTY	DESCRIPTION
1		72209869		1	PORCA
2		72209870		1	CAPA
3		72209857		1	PLACA
4		72209860		4	VEDAÇÃO
5		72209858		4	BUJÃO
6		72209824		4	O-RING
7		72209859		4	HASTE
8		72209863		2	SEDE/ALOJAMENTO
9		72280271		4	MOLA
10		72209866		2	MOLA
11		72209862		4	ARRUELA PLANA
12		72209868		1	PLACA
13		72209867		1	JUNTA FLEXÍVEL
14		72209861		2	SEDE/ALOJAMENTO
15		72209865		2	MOLA
16		87532882		1	VÁLVULA HIDRÁULICA Includes items 1 - 15

SOLENOID VALVE - 87531523

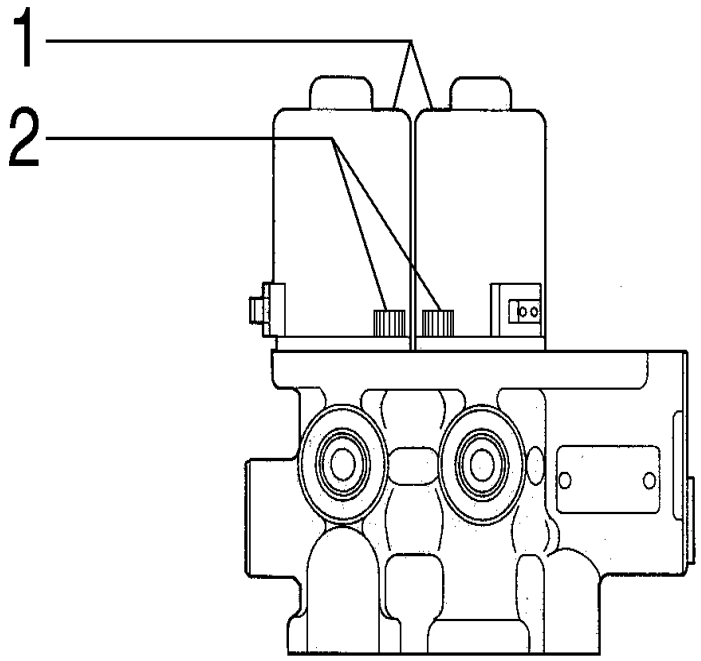

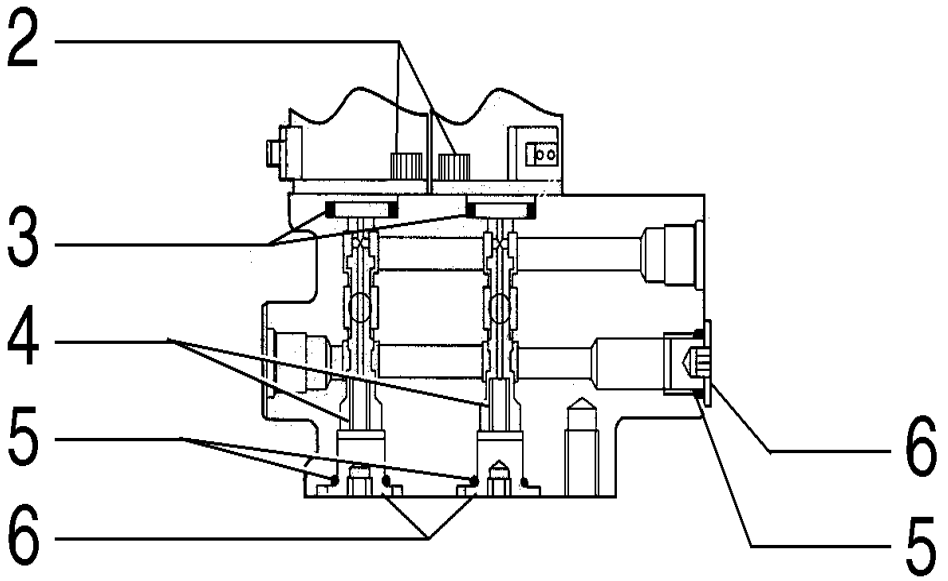

SOLENOID VALVE - 87531523

REF	FN	PART NUMBER	YR/SN	QTY	DESCRIPTION
1		72210451		2	VÁLVULA HIDRÁULICA
2		72210449		4	PARAFUSO
3		72210450		2	O-RING
4		72210447		2	MOLA
5		72209827		3	O-RING
6		72210448		3	BUJÃO

08-51	01	p1	7/2013

SWING REDUCTOR

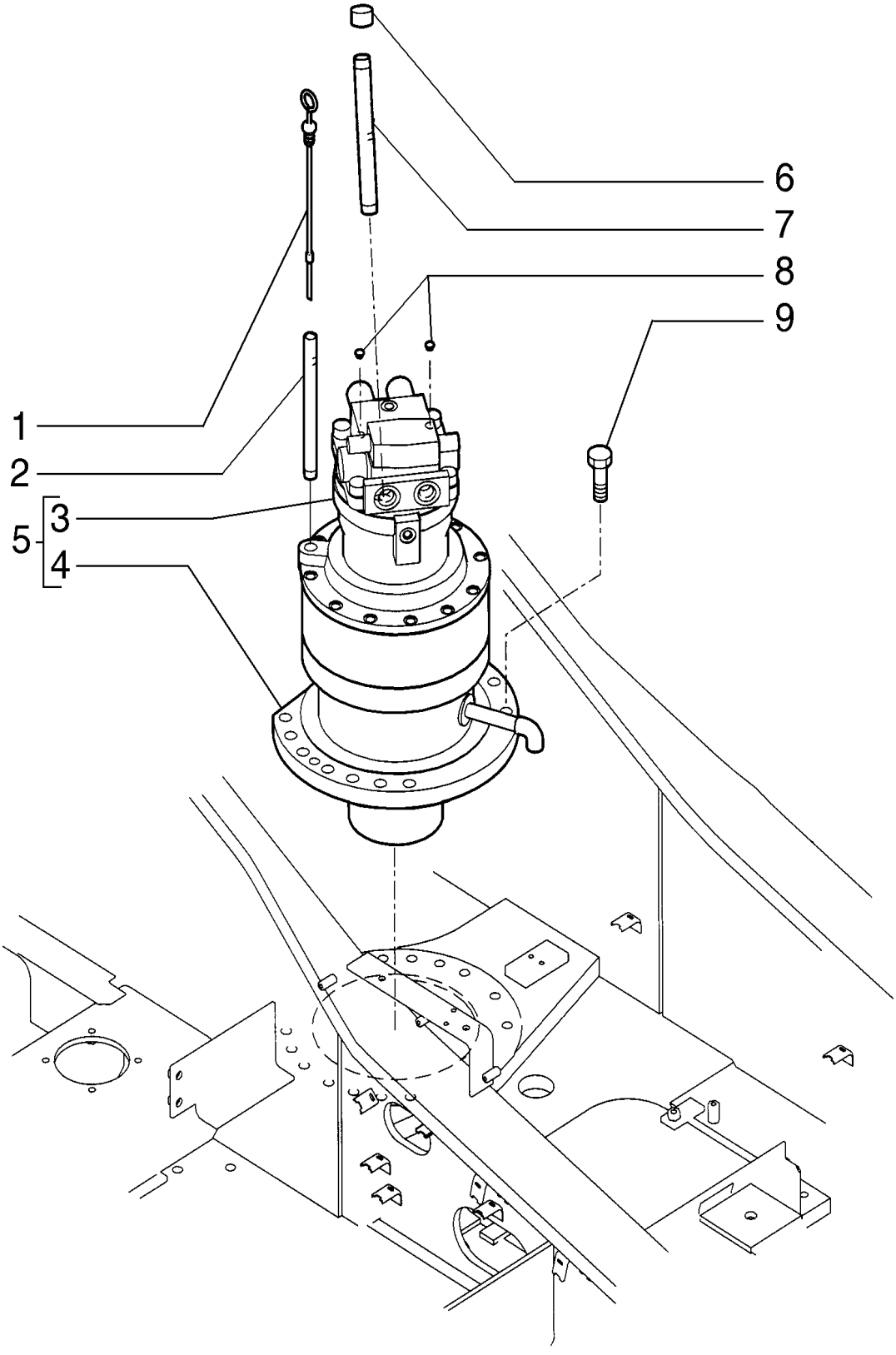

SWING REDUCTOR

REF	FN	PART NUMBER	YR/SN	QTY	DESCRIPTION
1		87369427		1	MEDIDOR DE NÍVEL
2		87653573		1	TUBO 16 mm ID x 21.7 mm OD x 262 mm L
3		87540130		1	MOTOR HIDRÁULICO
4		87693791		1	UNID REDUÇÃO ENGRENAGEM
5		87716915		1	MOTOR HIDRÁULICO Includes items 3, 4
6		87369430		1	BUJÃO
7		84189984		1	TUBO RÍGIDO 20.80 mm ID x 27.20 mm OD x 250 mm L
8		87643225		2	BUJÃO
9		11124831		13	PARAFUSO Hex, M20 x 55, 10.9, Full Thd

08-52	01	p1	7/2013

SWING REDUCTOR

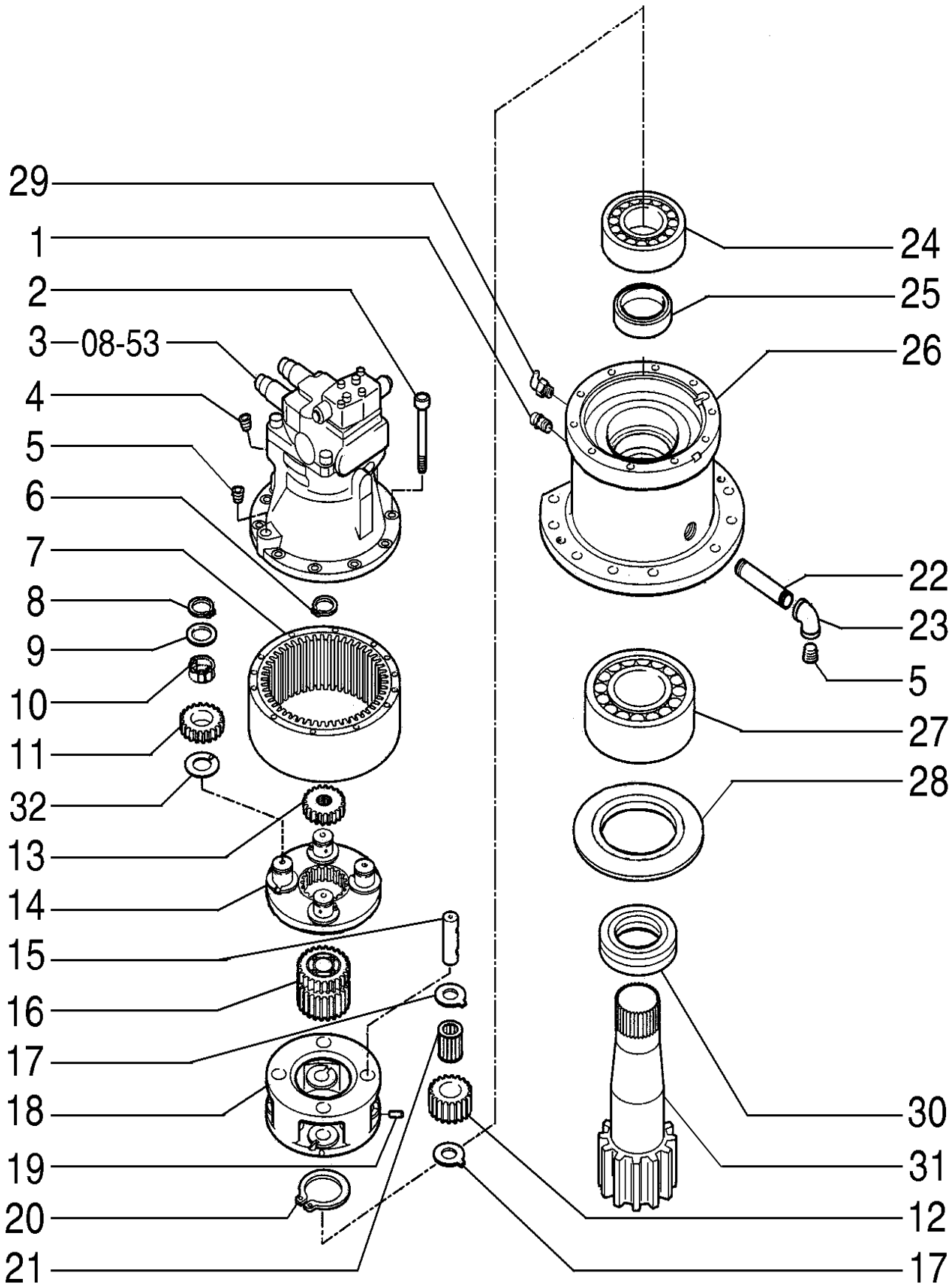

SWING REDUCTOR

REF	FN	PART NUMBER	YR/SN	QTY	DESCRIPTION
1		72960350		1	VÁLVULA
2		HS23C14135G1		11	PARAFUSO
3		87540130		1	MOTOR HIDRÁULICO
4		72210001		2	BUJÃO
5		72210000		1	BUJÃO
6		11068370		1	ANEL DE PRESSÃO
7		YN32W01056P1		1	COROA DENTADA
8		72211282		4	O-RING
9		YN32W01028P1		4	ANEL DE ENCOSTO
10		YN32W01022P1		136	ROLO
11		YN32W01117P1		4	ENGRENAGEM
12		YN32W01055P1		4	ENGRENAGEM
13		YN32W01052P1		1	ENGRENAGEM
14		YN32W01118F1		1	CRUZETA
15		YN32W01067P1		4	EIXO
16		YN32W01054P1		1	ENGRENAGEM
17		YN32W01063P1		8	ARRUELA PLANA
18		YN32W01058P1		1	SUPORTE
19		72210023		4	PINO
20		11071370		1	ANEL
21		YN32W01072P1		4	ROLAMENTO DE AGULHAS
22		YN32W01080D1		1	TUBO RÍGIDO
23		ZG31U08000		1	CONECTOR HIDRÁUL
24		72210015		1	ROLAMENTO
25		YN32W01060P1		1	VEDADOR DE ÓLEO
26		YN32W01104P1		1	CAIXA
27		72210012		1	ROLAMENTO
28		YN32W01081P1		1	VEDADOR DE ÓLEO
29		72283072		1	GRAXEIRA
30		YN32W01082P1		1	LUVA
31		YN32W01051P1		1	EIXO
32		YN32W01026P1		4	ANEL DE ENCOSTO

08-53	01	p1	7/2013

SWING HYDRAULIC MOTOR

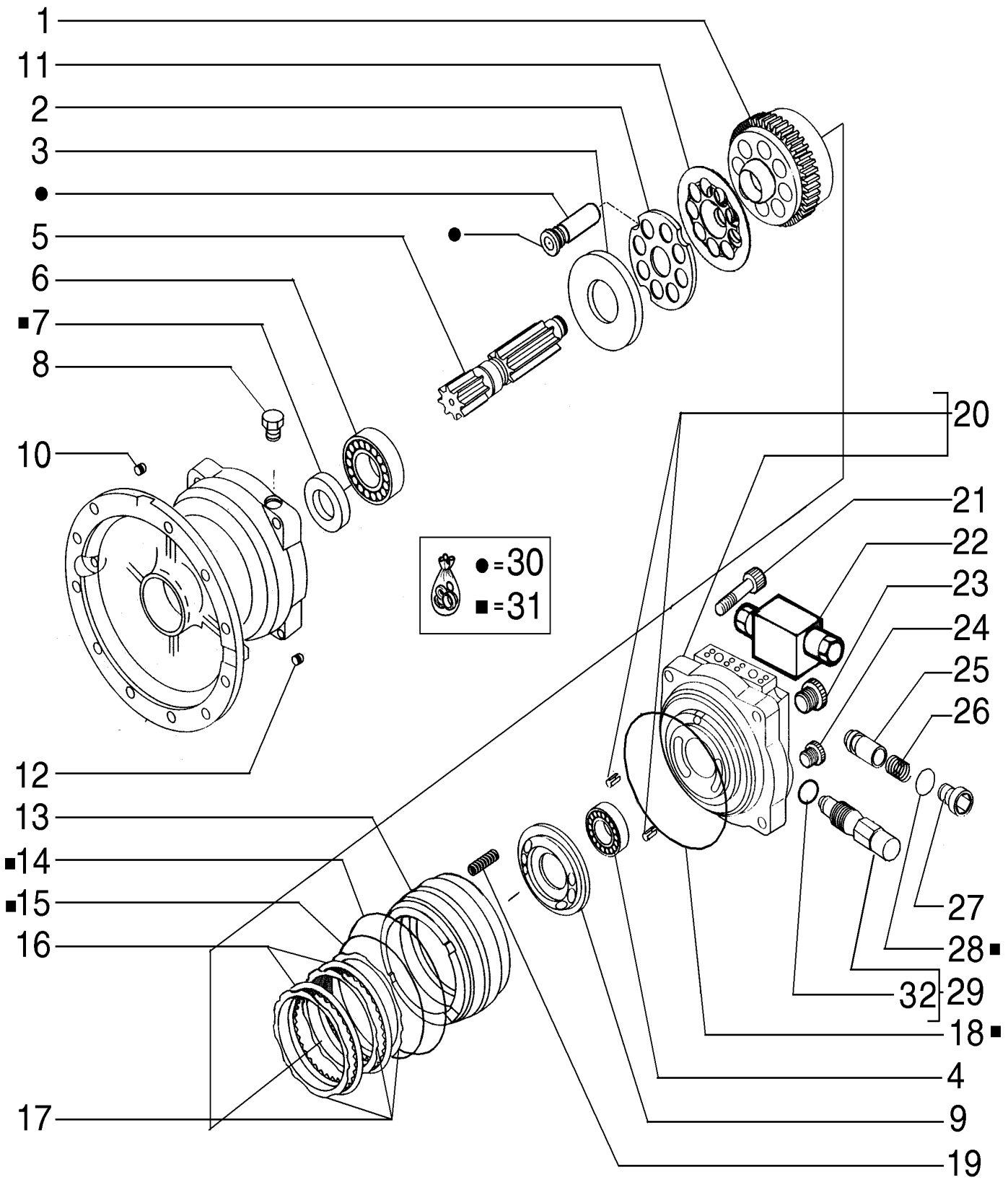

SWING HYDRAULIC MOTOR

REF	FN	PART NUMBER	YR/SN	QTY	DESCRIPTION
1		72209977		1	CILINDRO
2		72209979		1	PLACA
3		72209980		1	PLACA
4		72209986		1	ROLAMENTO
5		72209976		1	EIXO
6		72209985		1	ROLAMENTO
7		YN15V00035S491		1	VEDADOR DE ÓLEO
8		YN15V00035S980		1	BUJÃO
9		72209981		1	PLACA
10		72210000		2	BUJÃO
11		72209978		1	MOLA
12		72210001		1	BUJÃO
13		72209991		1	ÊMBOLO
14		72209993		1	O-RING
15		72209992		1	O-RING
16		72209995		1	PLACA
17		72209996		1	PLACA
18		72215374		1	JUNTA
19		72209994		16	MOLA
20		72210005		1	KIT
21		72209984		4	PARAFUSO
22		72210003		1	VÁLVULA HIDRÁULICA
23		YN15V00035S985		3	BUJÃO
24		YN15V00035S984		1	BUJÃO
25		72209982		2	VÁLVULA HIDRÁULICA
26		72209983		2	MOLA
27		72209987		2	BUJÃO
28		72209989		2	O-RING
29		YN22V00014FA		2	VÁLVULA
30		72210004		1	KIT
31		72215377		1	KIT
32		ZD12G03000		2	O-RING

08-54	01	p1	7/2013

HYDRAULIC MOTOR'S SOLENOID VALVE

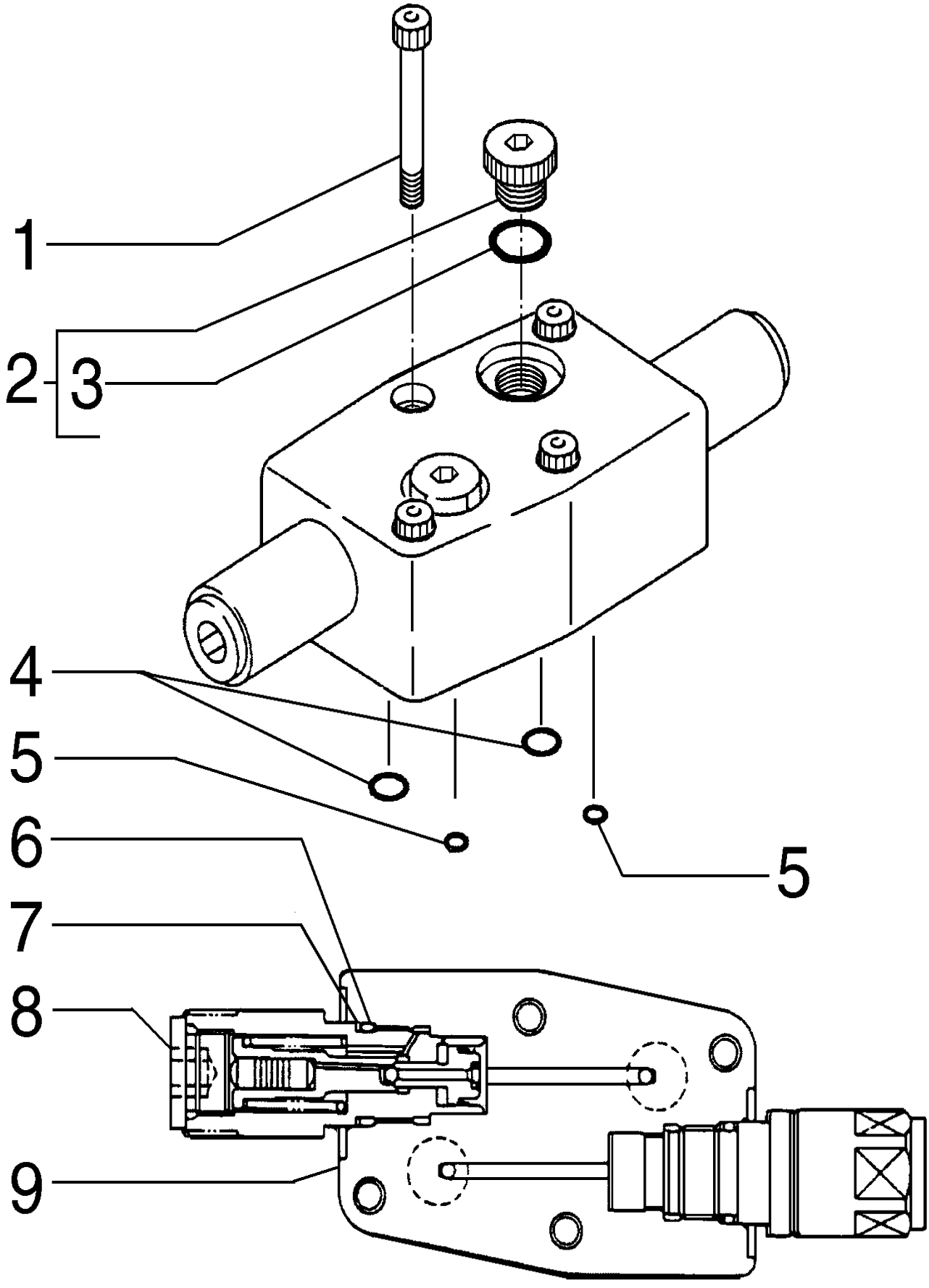

HYDRAULIC MOTOR'S SOLENOID VALVE

REF	FN	PART NUMBER	YR/SN	QTY	DESCRIPTION
1		14302234		4	PARAFUSO
2		72209843		2	BUJÃO Includes item 3
3		72209827		2	O-RING
4		72209829		2	O-RING
5		72209817		2	O-RING
6		72209824		2	O-RING
7		72214601		2	ANEL
8		72214600		2	VÁLVULA HIDRÁULICA
9		72215774		1	SUPORTE

08-55	01	p1	7/2013

HYDRAULIC OIL RESERVOIR

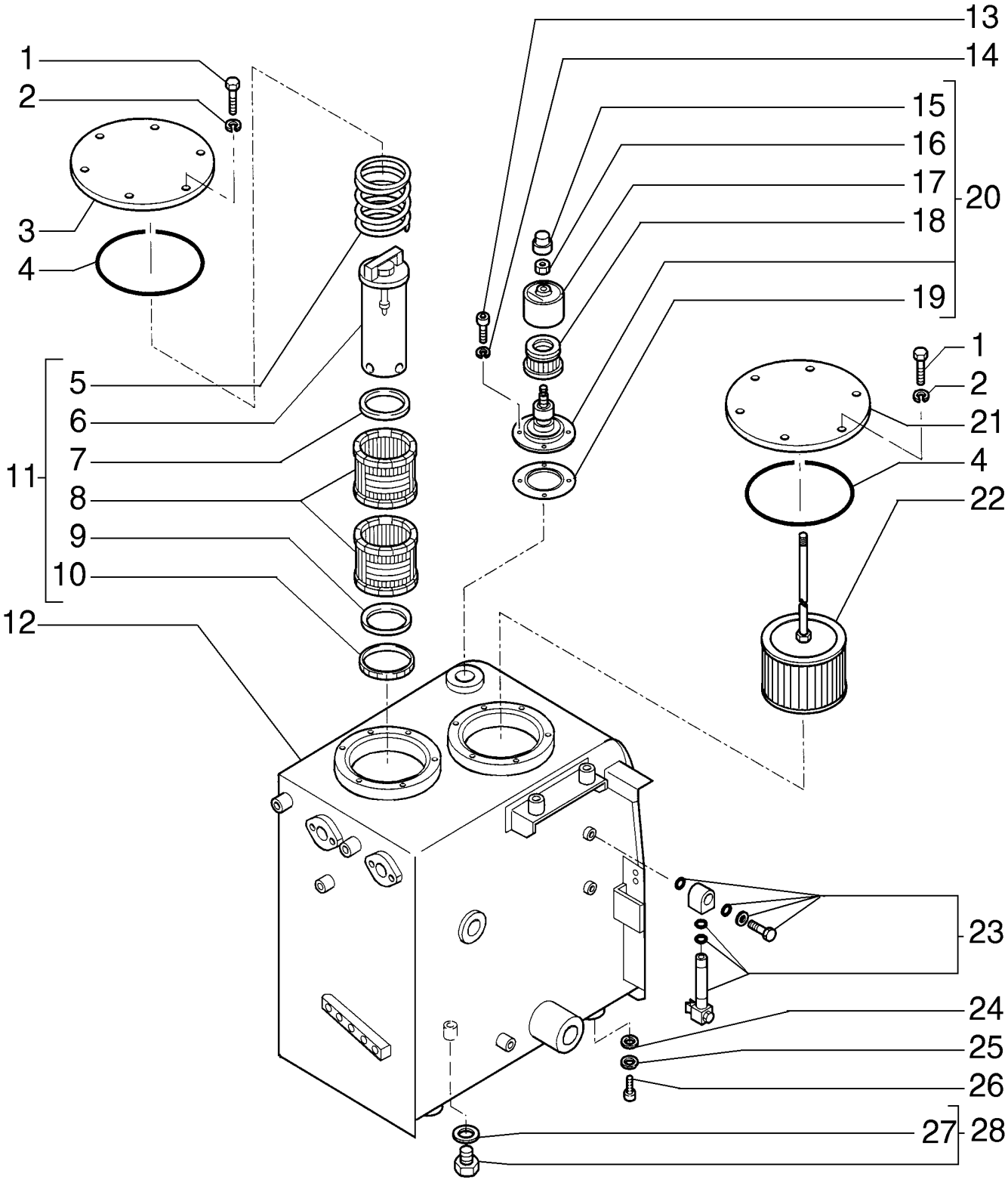

HYDRAULIC OIL RESERVOIR

REF	FN	PART NUMBER	YR/SN	QTY	DESCRIPTION
1		11106131		12	PARAFUSO Hex, M10 x 22, 10.9, Full Thd
2		10571871		12	TRAVA DA ARRUELA M10
3		84521888		1	COBERTURA
4		14482780		2	O-RING 177.2mm ID x 5.33mm Width
5		72962321		1	MOLA
6		72150710		1	VÁLVULA
7		72957828		1	O-RING
8		72150174		2	ELEMENTO
9		72150790		1	ESTRUTURA
10		72150175		1	EMBALAGEM
11		YN52V01016F4		1	FILTRO DE ÓLEO HIDRÁULICO Includes items 5 - 10
12		87631901		1	RESERVATÓRIO
13		14305231		4	PARAFUSO Hex Soc Hd, M6 x 16, 10.9
14		10516471		4	TRAVA DA ARRUELA
15		72214504		1	GUARDA PÓ
16		72214500		1	PORCA
17		72214503		1	COBERTURA
18		72214502		1	ELEMENTO
19		72214501		1	VEDAÇÃO
20		72202082		1	BREATHER ASSY. Includes items 15 - 19
21		75261989		1	COBERTURA
22		72230408		1	FILTRO DE ÓLEO HIDRÁULICO
23		87524750		1	MEDIDOR DE NÍVEL
24		87631084		AR	CALÇO DE AFINAÇÃO
25		496-21066		4	ARRUELA PLANA 21/32" x 1 5/16" x .150"
26		11118531		4	PARAFUSO Hex, M16 x 40, 10.9
27		71404162		1	O-RING
28		71406271		1	BUJÃO Includes item 27

HYDRAULIC OIL PUMP

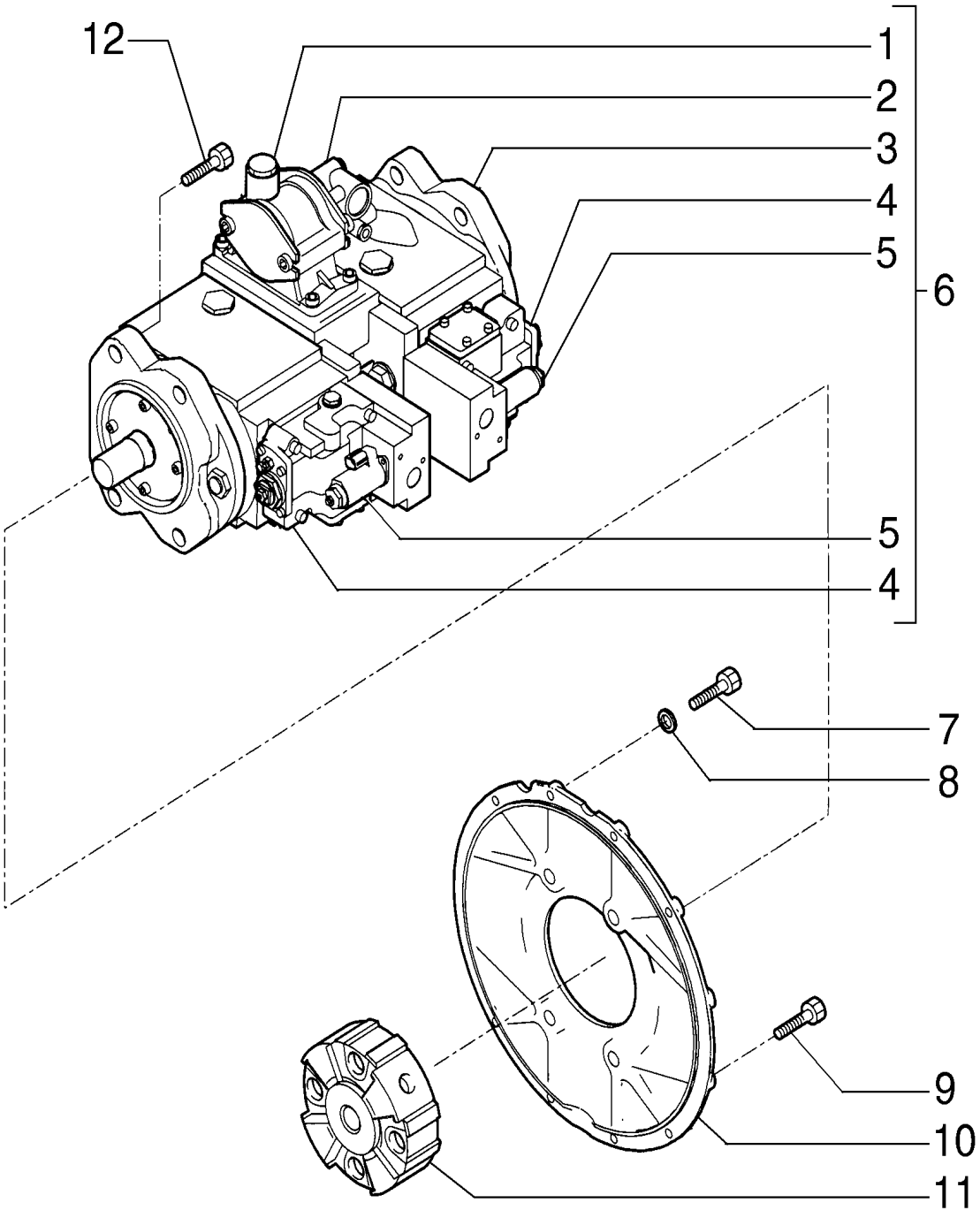

HYDRAULIC OIL PUMP

REF	FN	PART NUMBER	YR/SN	QTY	DESCRIPTION
1		87362960		1	CAIXA
2		YN10V00033F2		1	BOMBA HIDRÁULICA
3		YN10V00043F1		1	BOMBA HIDRÁULICA
4		YN10V01009F1		2	REGULADOR DE VELOCIDADE
5		YN10V00039F4		2	BOMBA HIDRÁULICA
6		87528088		1	BOMBA HIDRÁULICA Includes items 1 - 5
7		11107031		3	PARAFUSO Hex, M10 x 45, 10.9
8		14496631		3	ARRUELA PLANA M10 x 21 x 2
9		11106631		5	PARAFUSO Hex, M10 x 35, 10.9, Full Thd
10		87528089		1	SUPORTE
11		87528090		1	JUNTA UNIVERSAL
12		75262204		4	PARAFUSO

08-58	01	p1	7/2013

HYDRAULIC OIL PUMP - YN10V00043F1

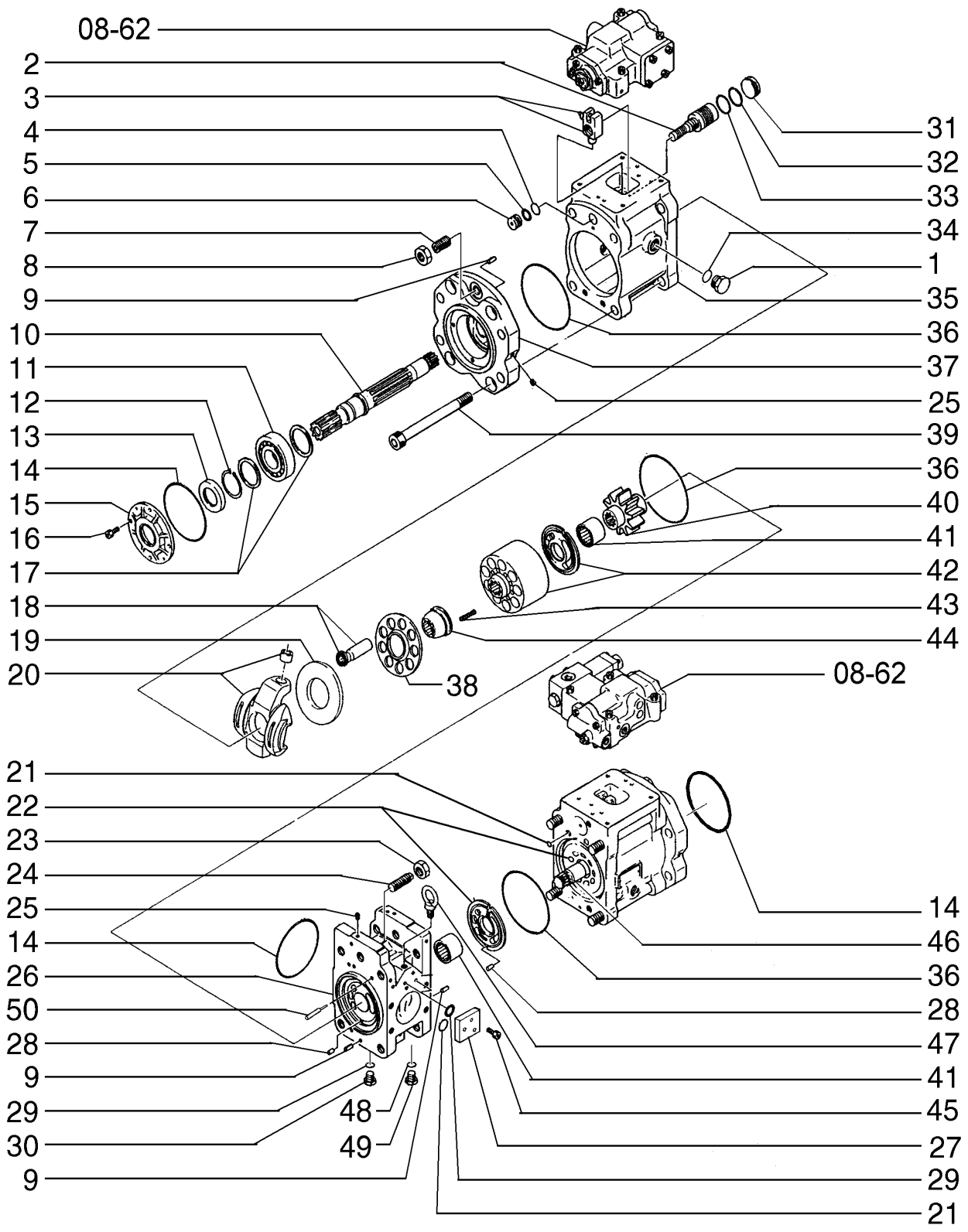

HYDRAULIC OIL PUMP - YN10V00043F1

REF	FN	PART NUMBER	YR/SN	QTY	DESCRIPTION
1		72209878		4	BUJÃO
2		87333070		2	PISTÃO
3		72209807		1	KIT
4		72215463		2	JUNTA
5		72964469		2	ANEL
6		72962150		2	PARADA
7		72209801		2	KIT
8		72964485		2	PORCA
9		72958881		4	PINO
10		YN10V00043S111		1	EIXO
11		87333062		2	ROLAMENTO DE ROLETES
12		72211282		2	O-RING
13		72217376		1	VEDAÇÃO
14		72217471		3	O-RING
15		87333064		1	COBERTURA
16		14306370		8	PARAFUSO
17		72962215		4	ESPAÇADOR
18		72209803		1	KIT
19		72962208		2	PLACA
20		72209806		1	KIT
21		72215395		18	JUNTA
22		YN10V00043R200		1	KIT DE REPARO
23		ZN18C20012		2	PORCA
24		72209802		2	PARAFUSO
25		72209815		32	BUJÃO
26		LC10V00010S312		1	BLOCO
27		YN10V00043S325		1	COBERTURA
28		72962216		2	PINO
29		72215387		9	JUNTA
30		72209813		2	BUJÃO
31		87333071		2	PARADA
32		72211285		2	ANEL
33		72215461		2	VEDAÇÃO
34		72217375		4	JUNTA
35		YN10V00043S271		2	CAIXA
36		72217374		4	JUNTA
37		87333063		2	SUPORTE
38		72962148		2	PLACA
39		87333069		8	PARAFUSO

08-58	01	p2	7/2013

HYDRAULIC OIL PUMP - YN10V00043F1

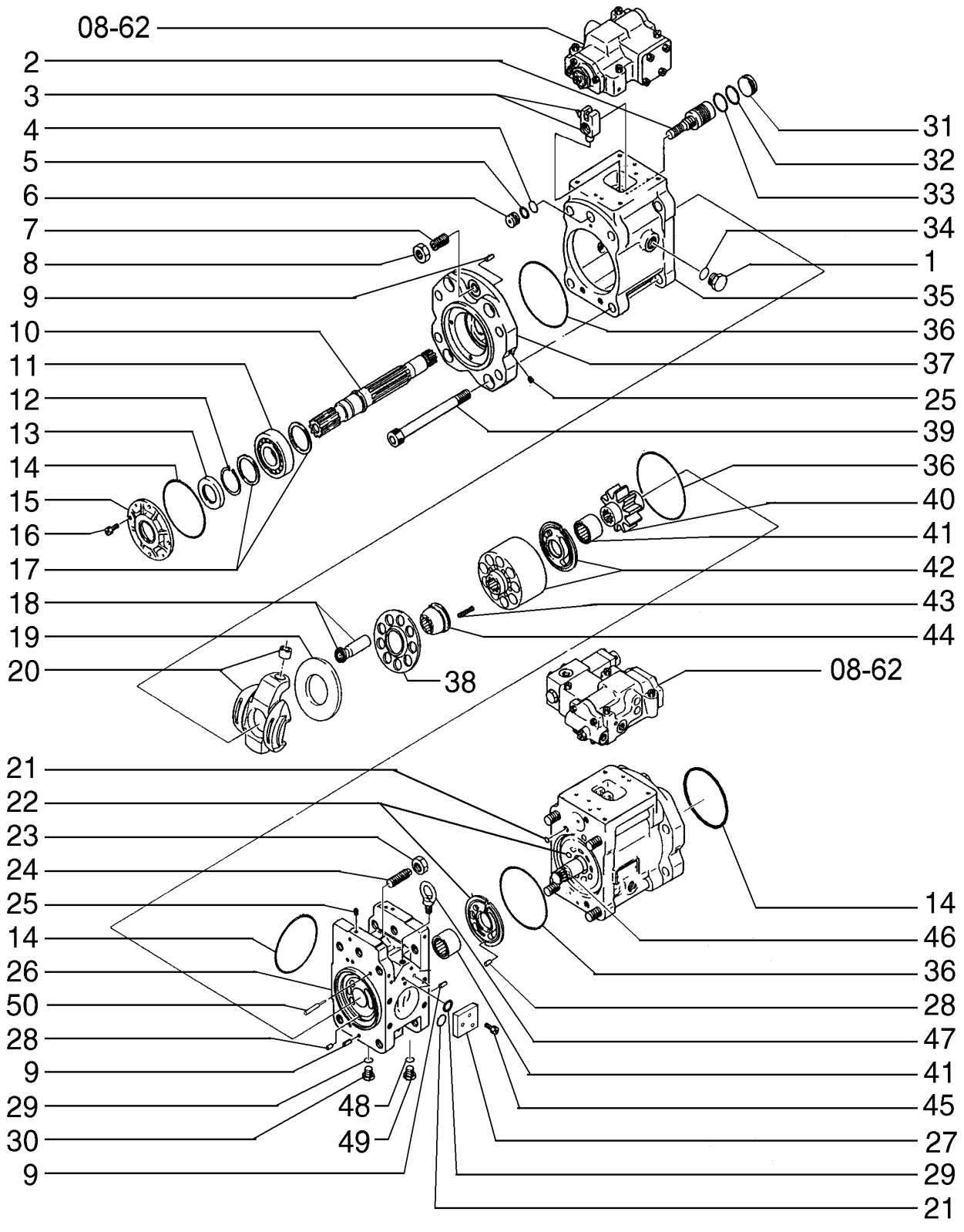

HYDRAULIC OIL PUMP - YN10V00043F1

REF	FN	PART NUMBER	YR/SN	QTY	DESCRIPTION
40		87333061		1	ENGRENAGEM
41		72963976		2	ROLAMENTO DE AGULHAS
42		YN10V00043R100		1	KIT DE REPARO
43		72962149		18	MOLA
44		72963962		2	BUCHA
45		14304870		3	PARAFUSO
46		87333059		1	EIXO
47		72958882		2	PARAFUSO
48		72217475		3	JUNTA
49		2441U549S464		2	BUJÃO
50		YN10V00043S546		1	ESPAÇADOR

08-59	01	p1	7/2013

HYDRAULIC OIL PUMP - YN10V00033F2

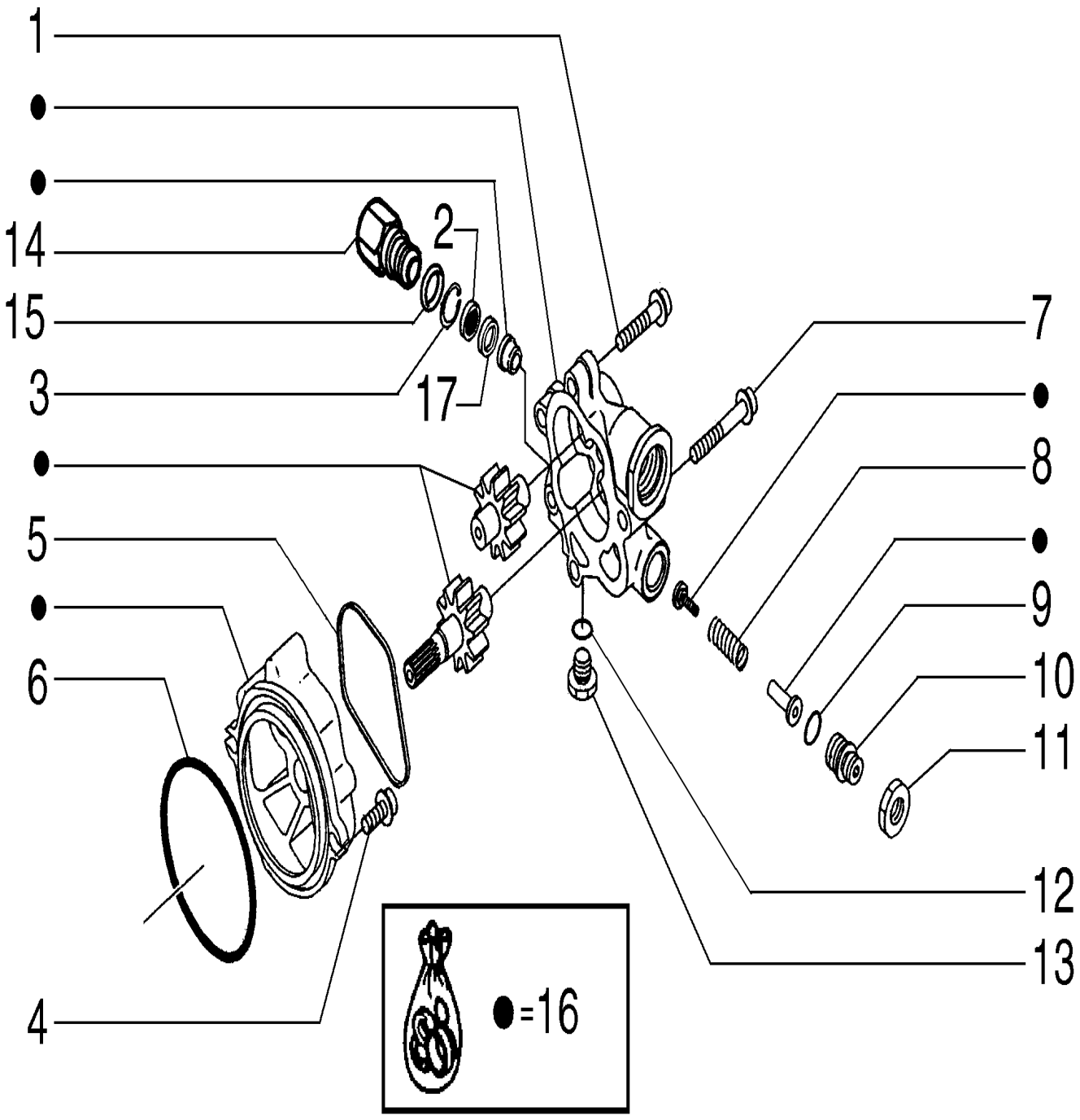

HYDRAULIC OIL PUMP - YN10V00033F2

REF	FN	PART NUMBER	YR/SN	QTY	DESCRIPTION
1		72963969		2	PARAFUSO
2		72963968		1	FILTRO
3		72964498		1	ANEL
4		72150352		2	PARAFUSO
5		72963972		1	ANEL
6		72209836		1	O-RING
7		72963970		2	PARAFUSO
8		72963996		1	MOLA
9		72209832		1	KIT
10		72963997		1	PARAFUSO DE REGULAGEM
11		72960479		1	PORCA
12		72209827		2	O-RING
13		72209813		2	BUJÃO
14		YN10V00006S467		1	ADAPTADOR
15		72209821		1	O-RING
16		72150353		1	KIT DE REPARO
17		72963995		1	ANEL

08-60	01	p1	7/2013

HYDRAULIC OIL PUMP

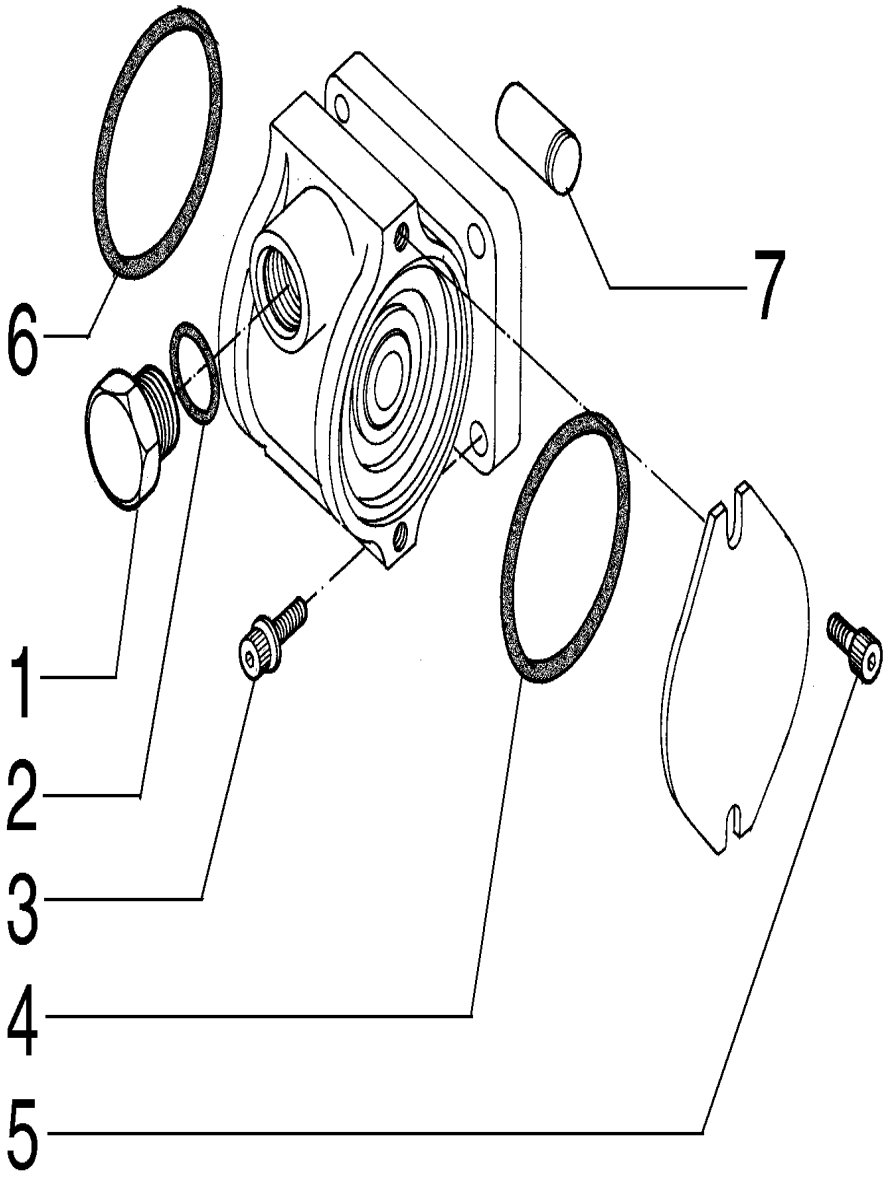

HYDRAULIC OIL PUMP

REF	FN	PART NUMBER	YR/SN	QTY	DESCRIPTION
1		72209878		1	BUJÃO
2		72209838		1	O-RING
3		72209877		4	PARAFUSO
4		72209879		1	O-RING
5		72209876		2	PARAFUSO
6		72209836		1	O-RING
7		87363966		1	PINO

08-61	01	p1	7/2013

HYDRAULIC OIL PUMP - 72204291

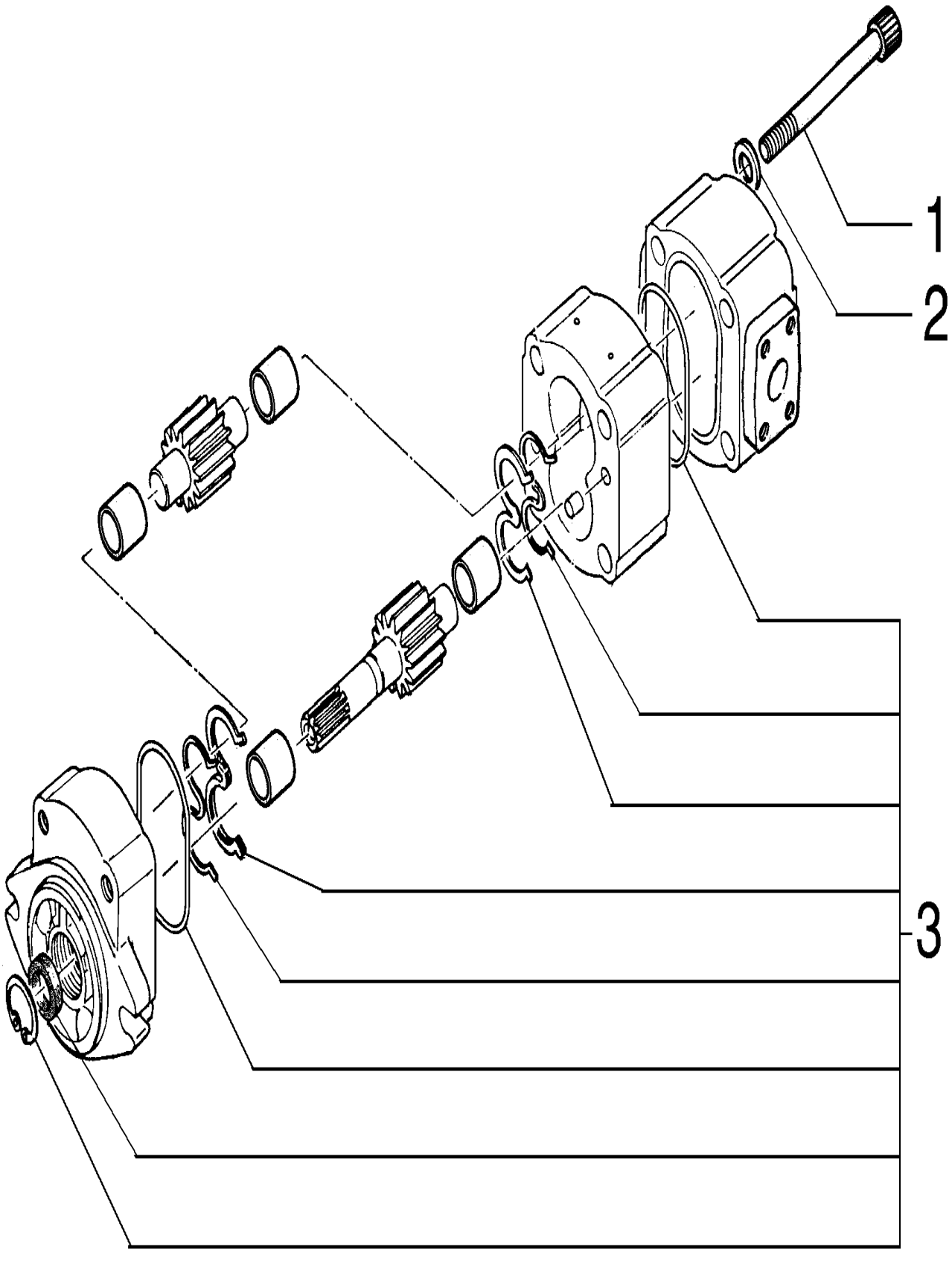

HYDRAULIC OIL PUMP - 72204291

REF	FN	PART NUMBER	YR/SN	QTY	DESCRIPTION
1		72210444		4	PARAFUSO
2		72210445		4	ARRUELA PLANA
3		72210446		1	KIT

08-62	01	p1	7/2013

HYDRAULIC OIL PUMP - PARTS - YN10V009F1

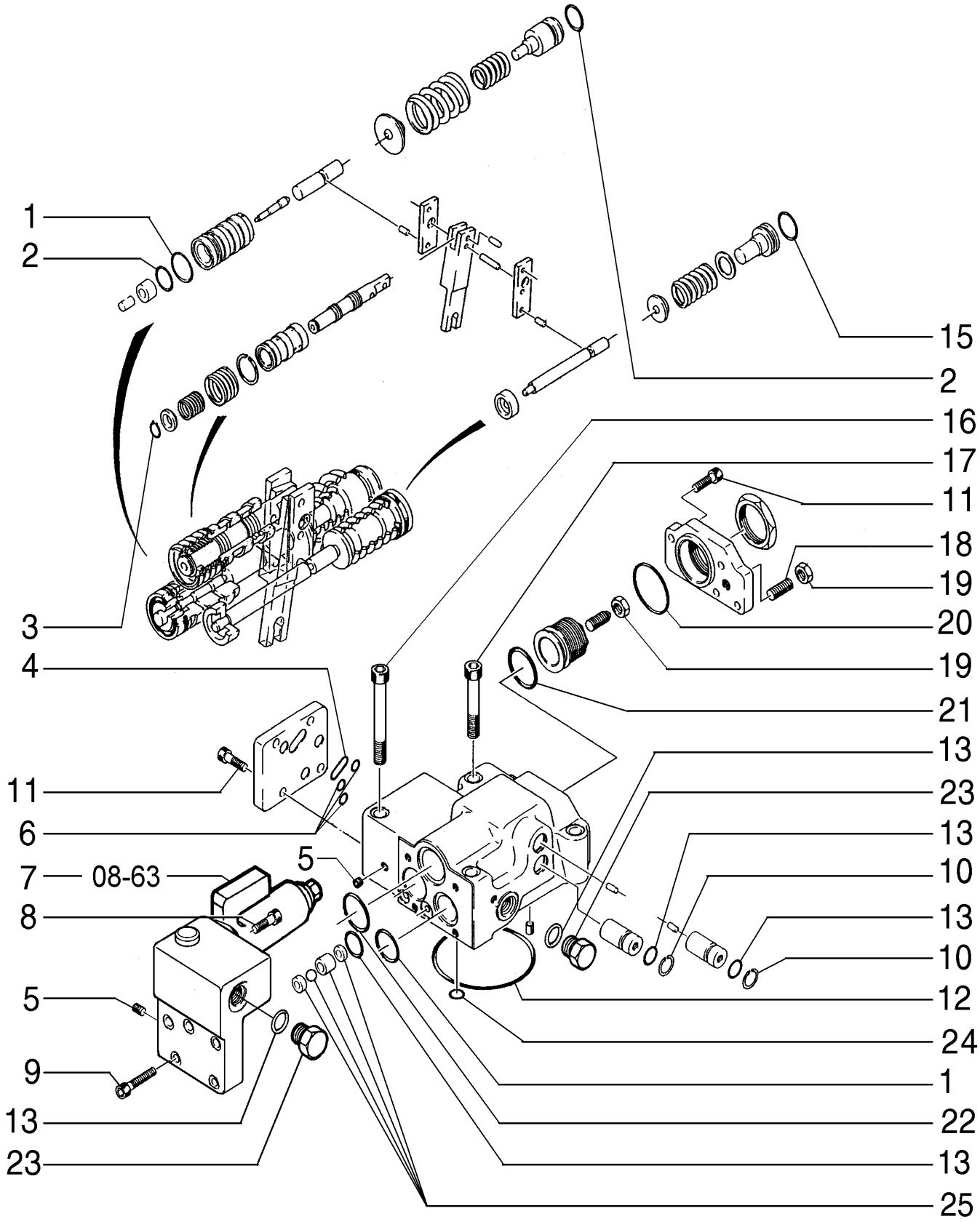

HYDRAULIC OIL PUMP - PARTS - YN10V009F1

REF	FN	PART NUMBER	YR/SN	QTY	DESCRIPTION
1		72217379		1	JUNTA
2		72217476		2	JUNTA
3		72219119		1	ANEL VEDADOR
4		72215386		1	JUNTA
5		72209815		17	BUJÃO
6		72217377		3	JUNTA
7		72209798		1	VÁLVULA HIDRÁULICA
8		72209810		2	PARAFUSO
9		14305470		5	PARAFUSO
10		11066371		2	ANEL
11		14305334		8	PARAFUSO Hex Soc Hd, M6 x 20, 10.9
12		72215396		1	JUNTA
13		72215387		7	JUNTA
14		72215357		1	JUNTA
15		72215463		1	JUNTA
16		14309070		2	PARAFUSO
17		14306970		2	PARAFUSO
18		72209832		1	KIT
19		16102324		1	PORCA FINA Thin, M8 x 1.25, Cl 05
20		72215461		1	VEDAÇÃO
21		72217382		1	JUNTA
22		72217380		1	JUNTA
23		72209813		3	BUJÃO
24		72215395		8	JUNTA
25		72962151		1	KIT DE REPARO

08-63	01	p1	7/2013

VALVE - YN35V00052F1

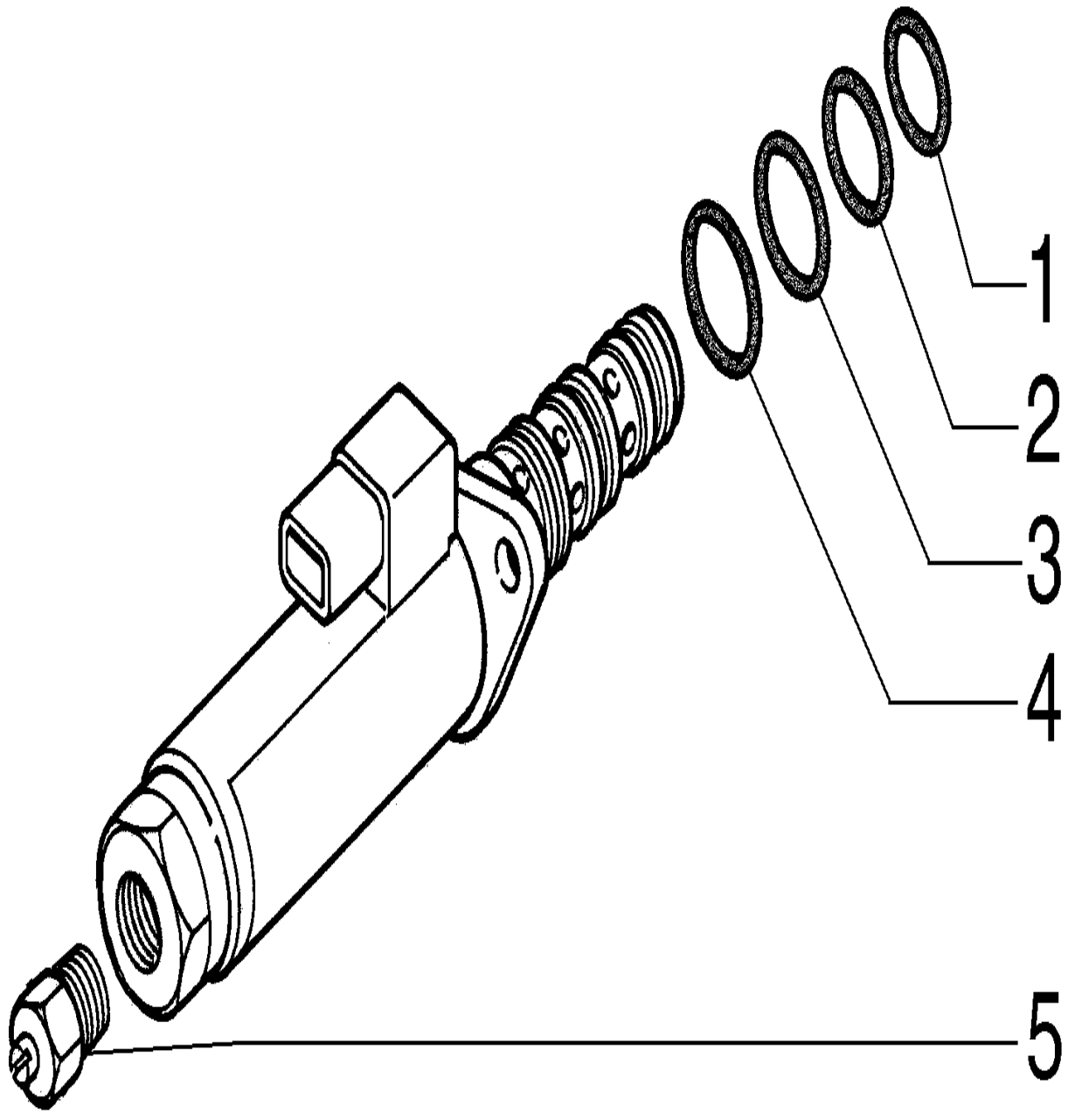

VALVE - YN35V00052F1

REF	FN	PART NUMBER	YR/SN	QTY	DESCRIPTION
1		72209833		1	O-RING
2		72209834		1	O-RING
3		72209835		1	O-RING
4		72209824		1	O-RING
5		72219365		1	BUJÃO

08-64	01	p1	7/2013

CONTROL VALVE & BRACKETS

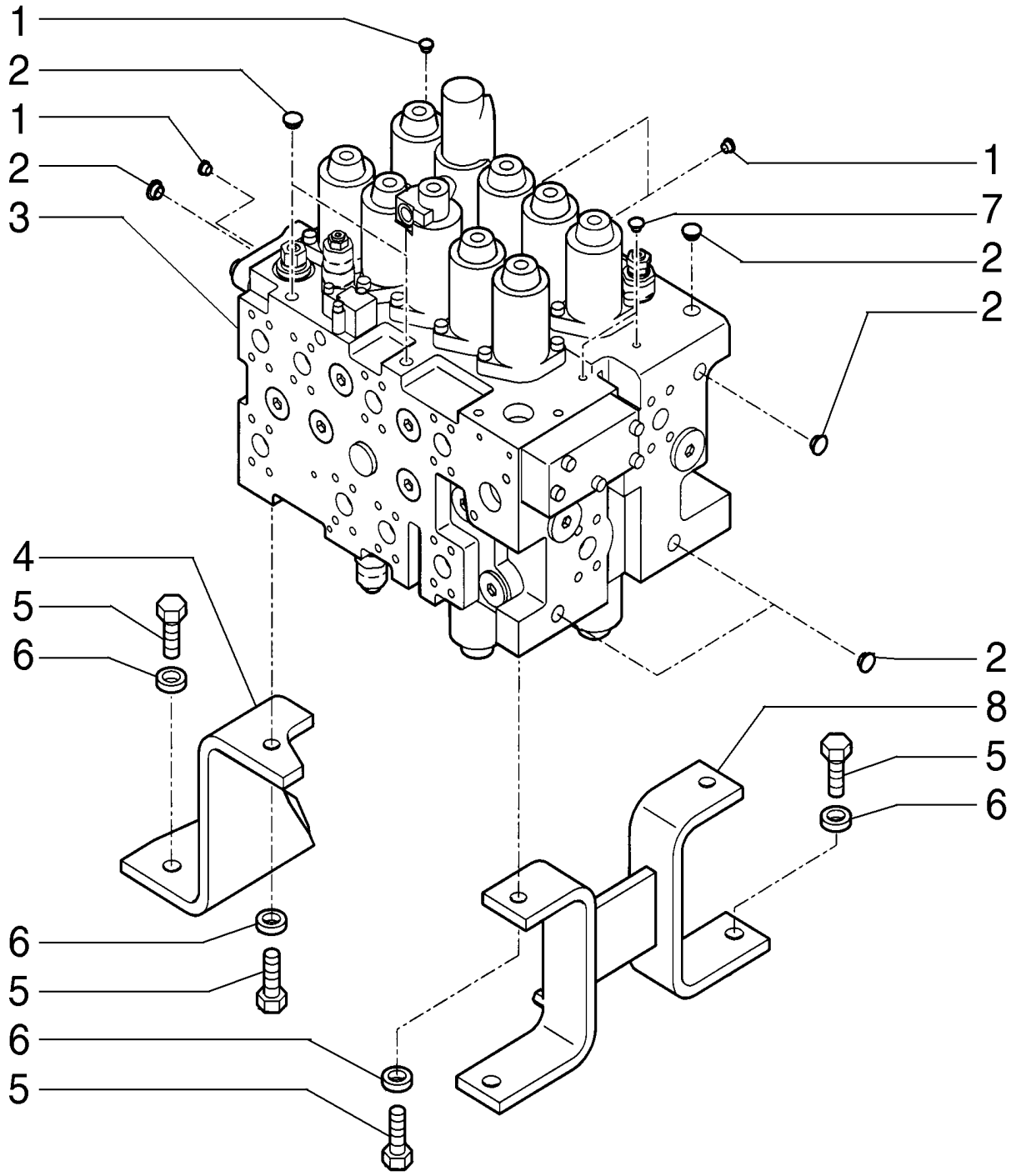

CONTROL VALVE & BRACKETS

REF	FN	PART NUMBER	YR/SN	QTY	DESCRIPTION
1		YN64H01391D1		4	TAMPA
2		87643223		7	BUJÃO
3		YN30V00116F5		1	VÁLVULA HIDRÁULICA
4		87616305		1	SUPORTE
5		11118731		7	PARAFUSO Hex, M16 x 45, 10.9
6		14496931		7	ARRUELA PLANA M16 x 30 x 3
7		YN64H01393D1		2	TAMPA
8		87616308		1	SUPORTE

08-65	01	p1	7/2013

CONTROL VALVE - 87648970

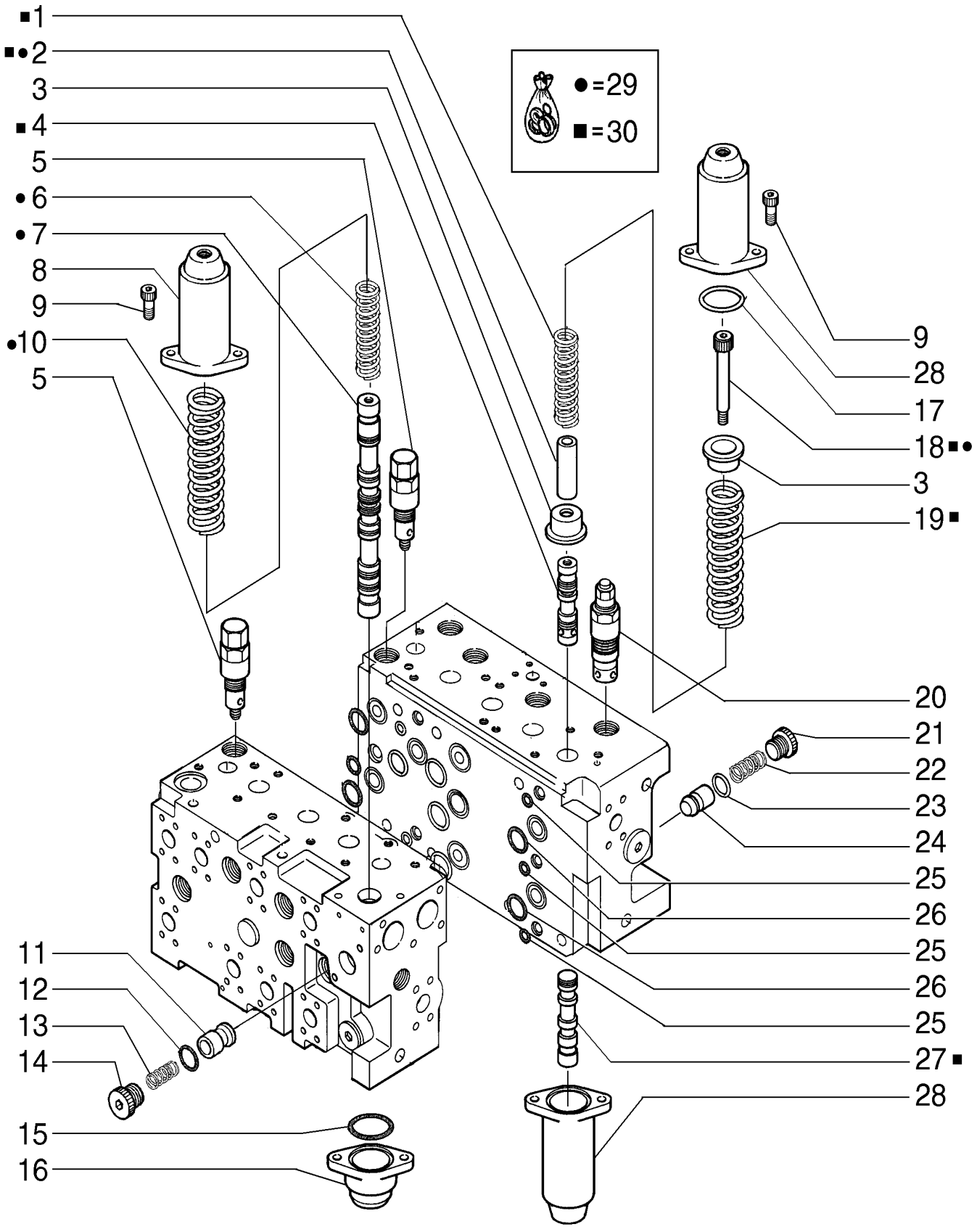

CONTROL VALVE - 87648970

REF	FN	PART NUMBER	YR/SN	QTY	DESCRIPTION
1		YN30V00101S329		1	MOLA
2		72210125		2	PARADA
3		72210127		4	SEDE/ALOJAMENTO
4		YN30V00101S309		1	CARRETO
5		YN30V00120F2		2	VÁLVULA
6		87333132		1	MOLA
7		YN30V00116S306		1	CARRETO
8		YN30V00101S201		1	PROTEÇÃO
9		14306470		8	PARAFUSO Hex Soc Hd, M8 x 25, 12.9
10		72210124		1	MOLA
11		YN30V00101S341		1	VÁLVULA HIDRÁULICA
12		72209838		1	O-RING
13		72210091		1	MOLA
14		YN30V00001S551		1	BUJÃO
15		72210088		1	O-RING
16		YN30V00001S205		1	COBERTURA
17		72950285		3	O-RING
18		72210126		2	PARAFUSO
19		YN30V00101S327		1	MOLA
20		YN22V00001F8		1	VÁLVULA HIDRÁULICA
21		72211160		1	BUJÃO
22		YN30V00101S522		1	MOLA
23		72209824		1	O-RING
24		72958811		1	OBTURADOR
25		72210077		3	O-RING
26		72209839		2	O-RING
27		LQ30V00028S307		1	CARRETO
28		YN30V00101S202		2	PROTEÇÃO
29		YN30V00101R210		1	KIT DE REPARO
30		LQ30V00028R220		1	KIT DE REPARO

08-66	01	p1	7/2013

CONTROL VALVE - 87648970

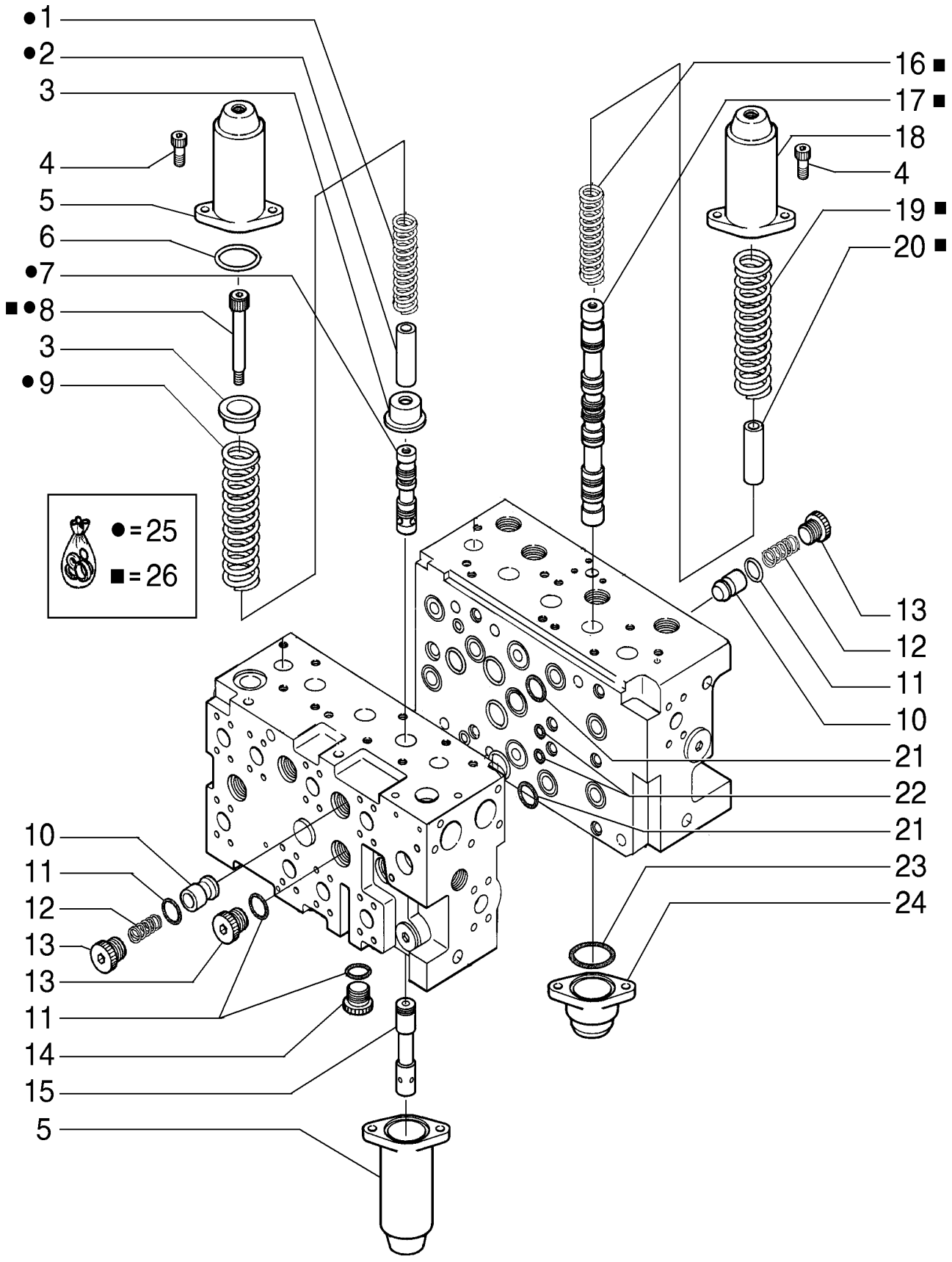

CONTROL VALVE - 87648970

REF	FN	PART NUMBER	YR/SN	QTY	DESCRIPTION
1		YN30V00101S326		1	MOLA
2		YN30V00001S339		1	PARADA
3		72210127		4	SEDE/ALOJAMENTO
4		14306470		8	PARAFUSO Hex Soc Hd, M8 x 25, 12.9
5		YN30V00101S202		1	PROTEÇÃO
6		72950285		3	O-RING
7		YN30V00101S305		1	CARRETO
8		72210126		2	PARAFUSO
9		72964212		1	MOLA
10		YN30V00101S341		2	VÁLVULA HIDRÁULICA
11		72209838		2	O-RING
12		72210091		2	MOLA
13		YN30V00001S551		3	BUJÃO
14		72210072		1	BUJÃO
15		YN30V00101S310		1	CARRETO
16		87333132		1	MOLA
17		YN30V00116S306		1	CARRETO
18		YN30V00101S201		1	PROTEÇÃO
19		72210124		1	MOLA
20		72210125		1	PARADA
21		71444332		2	O-RING
22		72210077		2	O-RING
23		72210088		1	O-RING
24		YN30V00001S205		1	COBERTURA
25		YN30V00101R140		1	KIT DE REPARO
26		YN30V00116R150		1	KIT DE REPARO

08-67	01	p1	7/2013

CONTROL VALVE - 87648970

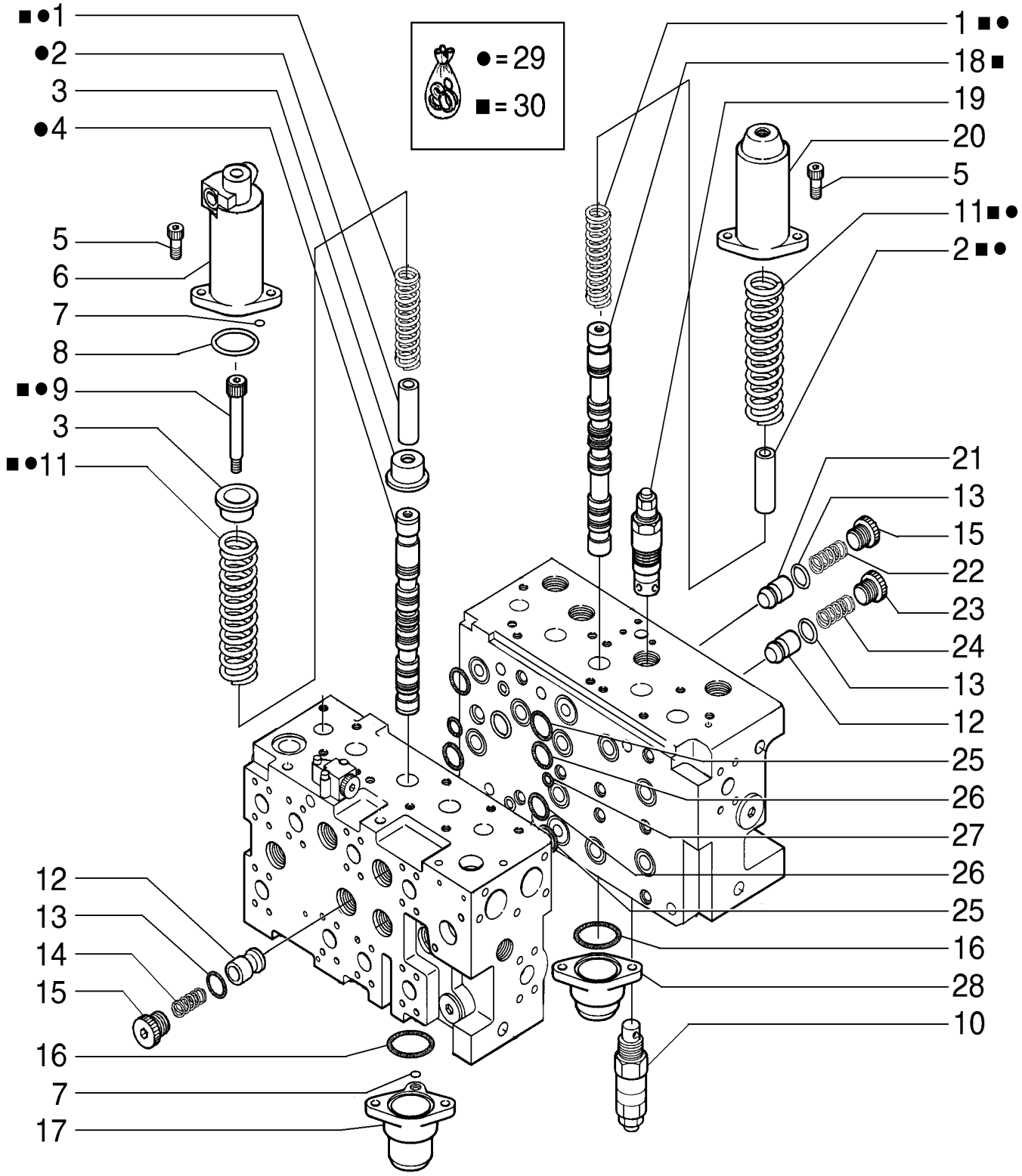

CONTROL VALVE - 87648970

REF	FN	PART NUMBER	YR/SN	QTY	DESCRIPTION
1		72964211		2	MOLA
2		72210125		2	PARADA
3		72210127		4	SEDE/ALOJAMENTO
4		YN30V00101S303		1	CARRETO
5		14306470		8	PARAFUSO Hex Soc Hd, M8 x 25, 12.9
6		YN30V00101S204		1	PROTEÇÃO
7		72215596		2	JUNTA
8		72950285		2	O-RING
9		72210126		2	PARAFUSO
10		72210098		1	VÁLVULA HIDRÁULICA
11		72964210		2	MOLA
12		YN30V00101S341		2	VÁLVULA HIDRÁULICA
13		72209839		3	O-RING
14		72210093		1	MOLA
15		72209841		2	BUJÃO
16		72210088		2	O-RING
17		YN30V00101S206		1	PROTEÇÃO
18		YN30V00101S301		1	CARRETO
19		72210099		1	VÁLVULA HIDRÁULICA
20		YN30V00101S203		1	PROTEÇÃO
21		YN30V00101S514		1	VÁLVULA HIDRÁULICA
22		72210094		1	MOLA
23		YN30V00001S551		1	BUJÃO
24		72210091		1	MOLA
25		71444332		2	O-RING
26		72209839		2	O-RING
27		72210077		1	O-RING
28		YN30V00001S205		1	COBERTURA
29		YN30V00101R120		1	KIT DE REPARO
30		YN30V00101R220		1	CARRETO

08-68	01	p1	7/2013

CONTROL VALVE - 87648970

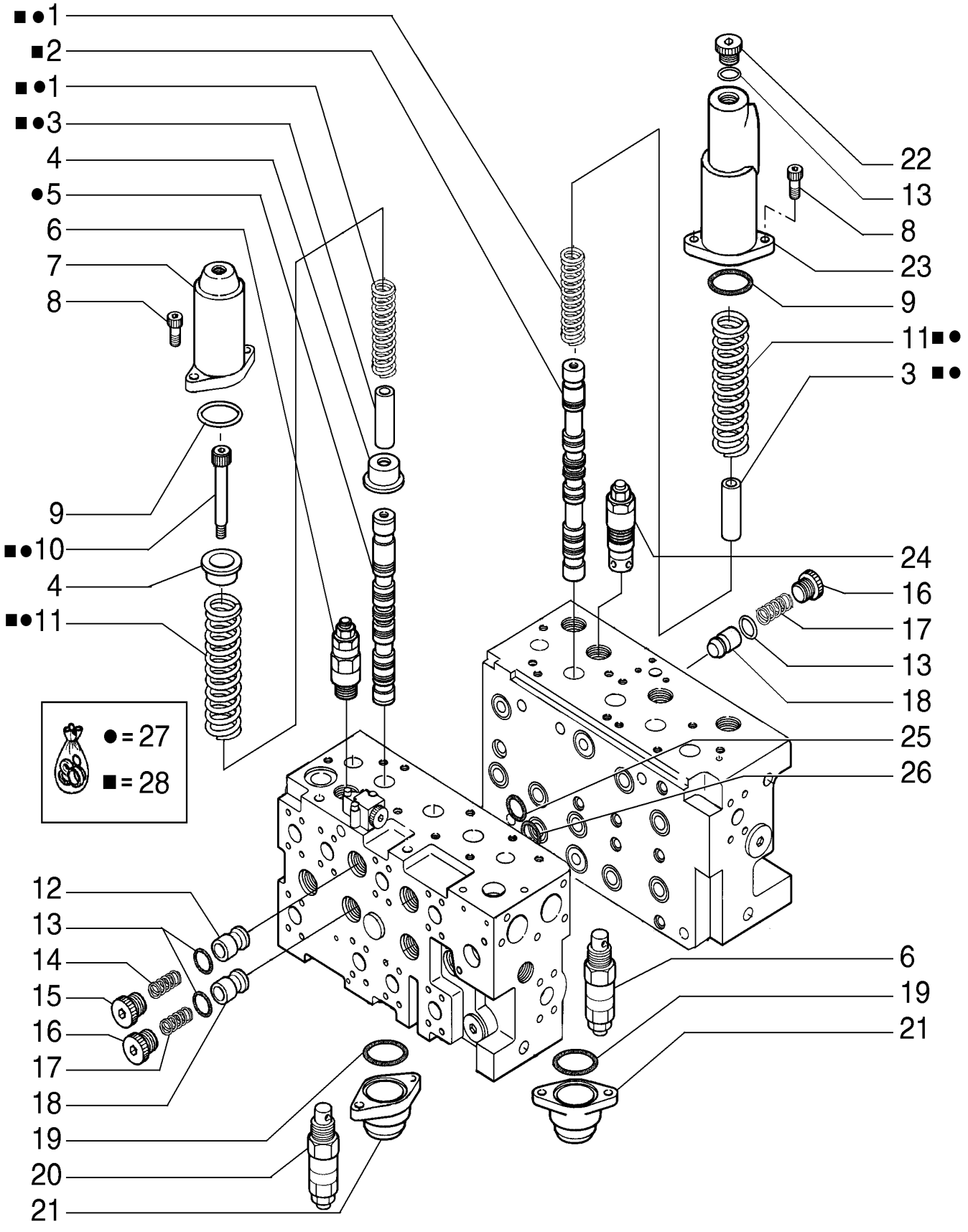

CONTROL VALVE - 87648970

REF	FN	PART NUMBER	YR/SN	QTY	DESCRIPTION
1		72964211		2	MOLA
2		YN30V00116S304		1	CARRETO
3		72210125		2	PARADA
4		72210127		4	SEDE/ALOJAMENTO
5		YN30V00116S302		1	CARRETO
6		72210099		2	VÁLVULA HIDRÁULICA
7		YN30V00101S201		1	PROTEÇÃO
8		14306470		8	PARAFUSO Hex Soc Hd, M8 x 25, 12.9
9		72950285		2	O-RING
10		72210126		2	PARAFUSO
11		72964210		2	MOLA
12		YN30V00101S341		1	VÁLVULA HIDRÁULICA
13		72209839		4	O-RING
14		72210094		2	MOLA
15		72209841		1	BUJÃO
16		YN30V00001S551		2	BUJÃO
17		72210091		2	MOLA
18		YN30V00101S341		2	VÁLVULA HIDRÁULICA
19		72210088		2	O-RING
20		72210100		1	VÁLVULA HIDRÁULICA
21		YN30V00001S205		2	COBERTURA
22		YN30V00001S551		1	BUJÃO
23		YN30V00101S209		1	PROTEÇÃO
24		72210098		1	VÁLVULA HIDRÁULICA
25		72209839		1	O-RING
26		71444332		1	O-RING
27		YN30V00116R110		1	KIT DE REPARO
28		YN30V00116R130		1	KIT DE REPARO

08-69	01	p1	7/2013

CONTROL VALVE - 87648970

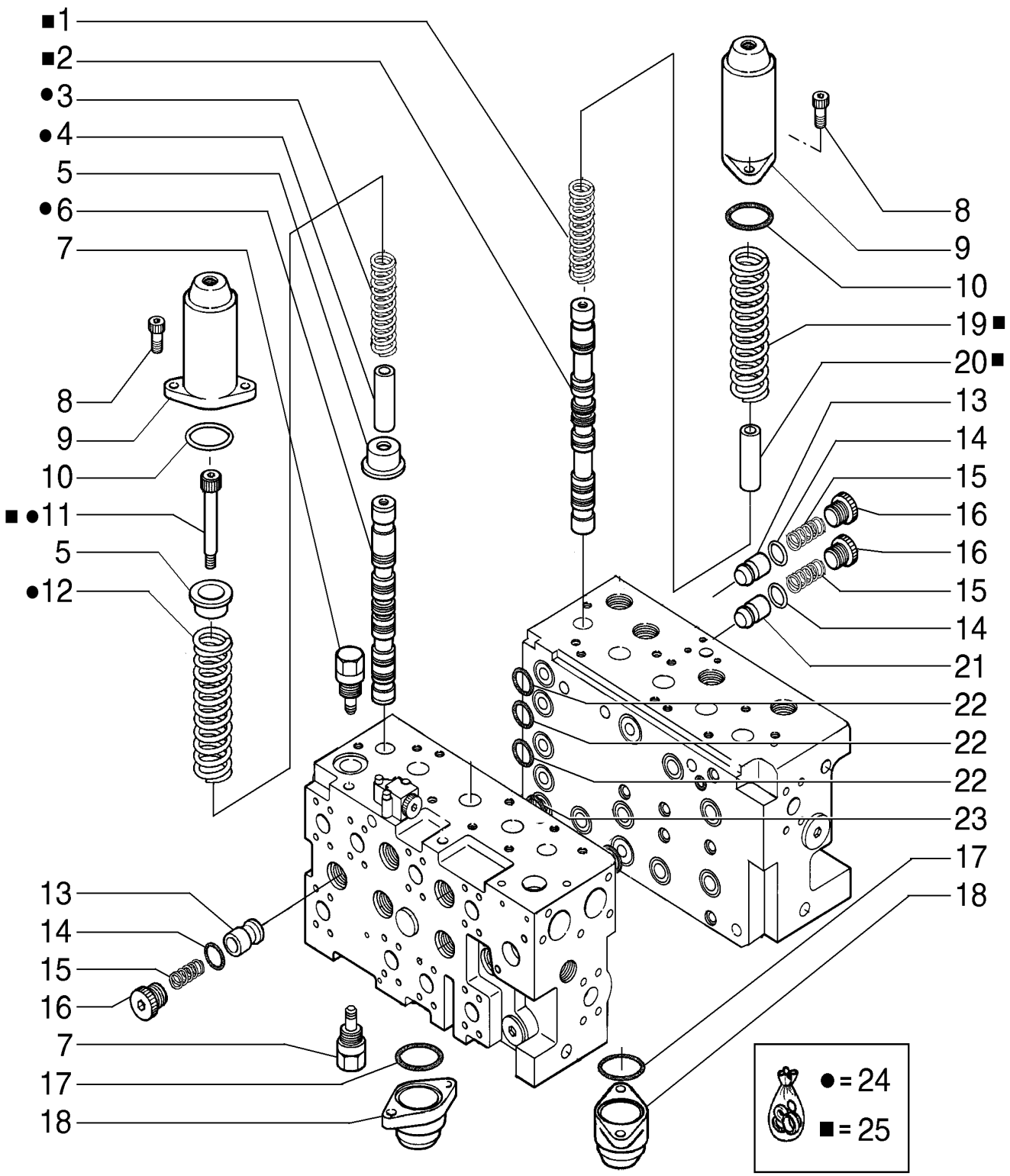

CONTROL VALVE - 87648970

REF	FN	PART NUMBER	YR/SN	QTY	DESCRIPTION
1		YN30V00101S328		1	MOLA
2		YN30V00116S308		1	CARRETO
3		87333132		1	MOLA
4		72210125		1	PARADA
5		72210127		4	SEDE/ALOJAMENTO
6		YN30V00101S311		1	CARRETO
7		YN30V01062P1		2	BUJÃO
8		14306470		8	PARAFUSO Hex Soc Hd, M8 x 25, 12.9
9		YN30V00101S201		2	PROTEÇÃO
10		72950285		2	O-RING
11		72210126		2	PARAFUSO
12		72210124		1	MOLA
13		YN30V00101S341		2	VÁLVULA HIDRÁULICA
14		72209838		2	O-RING
15		72210091		3	MOLA
16		YN30V00001S551		3	BUJÃO
17		72210088		2	O-RING
18		YN30V00001S205		2	COBERTURA
19		72964211		1	MOLA
20		YN30V00101S340		1	GRAMPO
21		2436U1231S513		1	OBTURADOR
22		72209839		3	O-RING
23		71444332		1	O-RING
24		YN30V00101R210		1	KIT DE REPARO
25		YN30V00116R170		1	KIT DE REPARO

08-70	01	p1	7/2013

CONTROL VALVE - 87648970

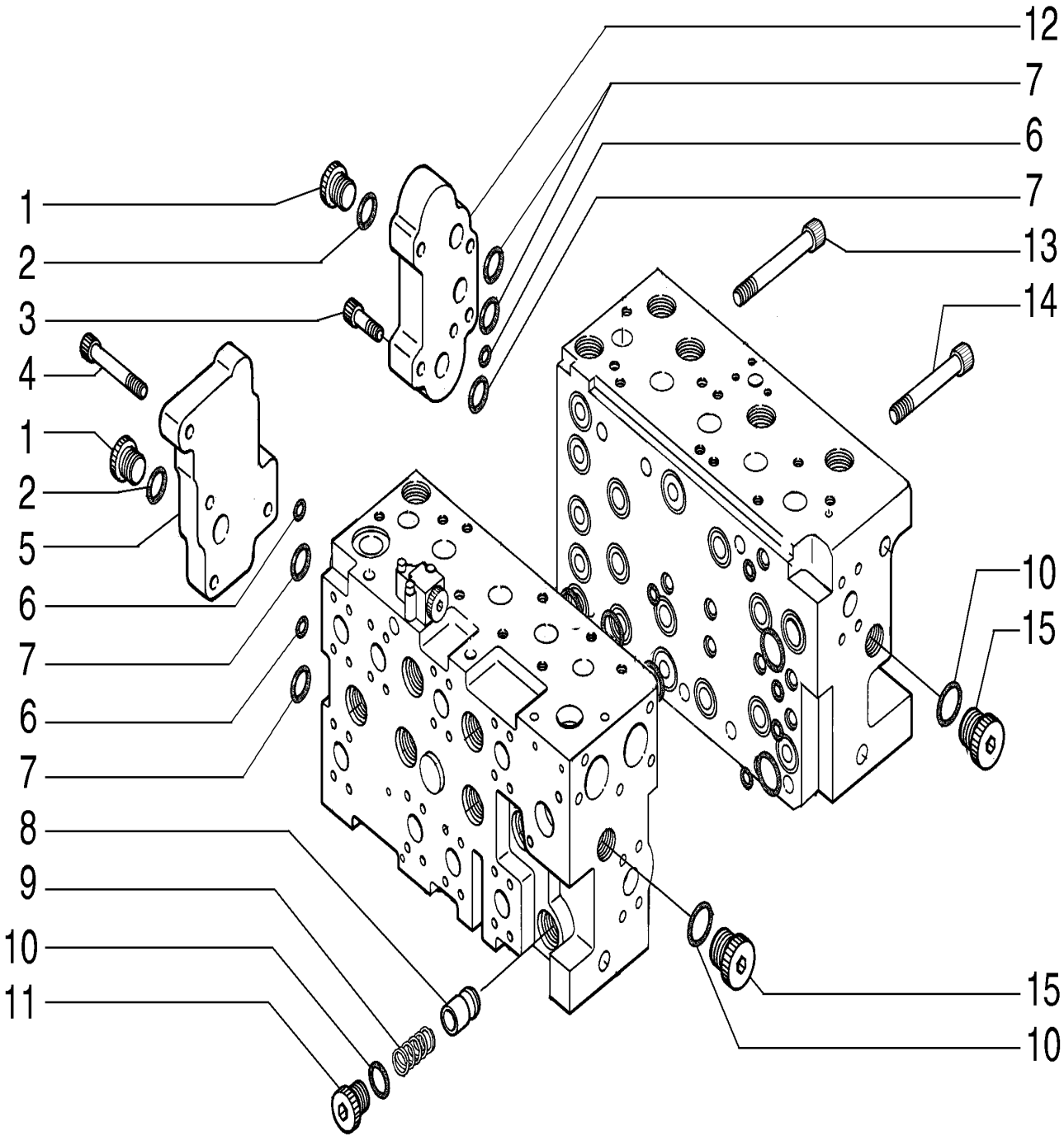

CONTROL VALVE - 87648970

REF	FN	PART NUMBER	YR/SN	QTY	DESCRIPTION
1		72210073		2	BUJÃO
2		72209821		2	O-RING
3		14311070		4	PARAFUSO
4		14422170		4	PARAFUSO
5		YN30V00116S213		1	PLACA
6		72210077		3	O-RING
7		72209839		5	O-RING
8		YN30V00101S341		2	VÁLVULA HIDRÁULICA
9		72210091		2	MOLA
10		72209838		4	O-RING
11		YN30V00001S551		2	BUJÃO
12		72964201		1	PLACA
13		14425470		2	PARAFUSO
14		ZS23C14160		8	PARAFUSO
15		72210072		2	BUJÃO

08-71	01	p1	7/2013

CONTROL VALVE - 87648970

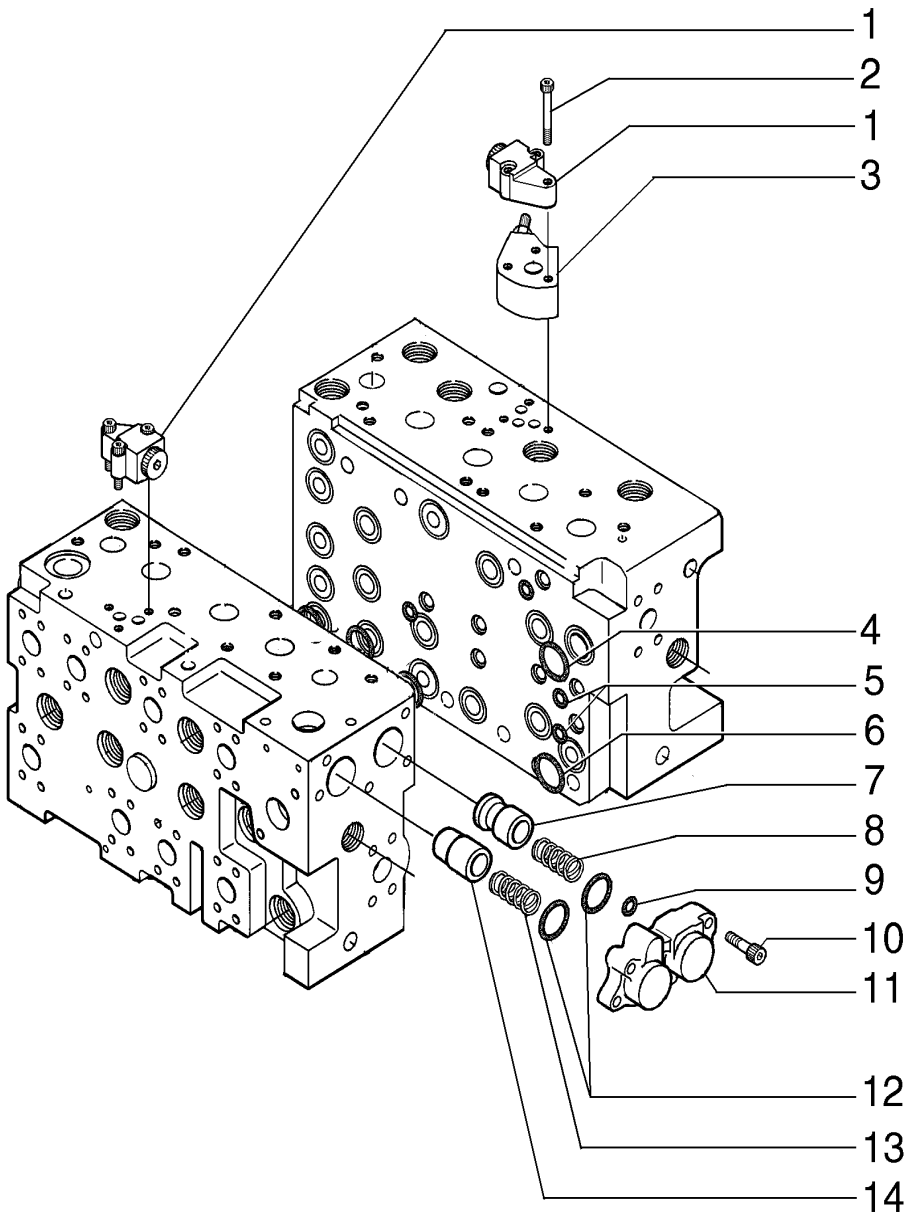

CONTROL VALVE - 87648970

REF	FN	PART NUMBER	YR/SN	QTY	DESCRIPTION
1		YN30V00119F1		2	VÁLVULA
2		14309270		3	PARAFUSO
3		YN30V00116S215		1	VÁLVULA HIDRÁULICA
4		71444332		1	O-RING
5		72210077		1	O-RING
6		72209839		1	O-RING
7		YN30V00101S518		1	VÁLVULA HIDRÁULICA
8		YN30V00101S528		1	MOLA
9		72215596		1	JUNTA
10		14306670		5	PARAFUSO
11		YN30V00101S207		1	PROTEÇÃO
12		72210088		2	O-RING
13		YN30V00101S527		1	MOLA
14		YN30V00101S517		1	VÁLVULA HIDRÁULICA

08-77	01	p1	7/2013

ROTATING CONTROL VALVE

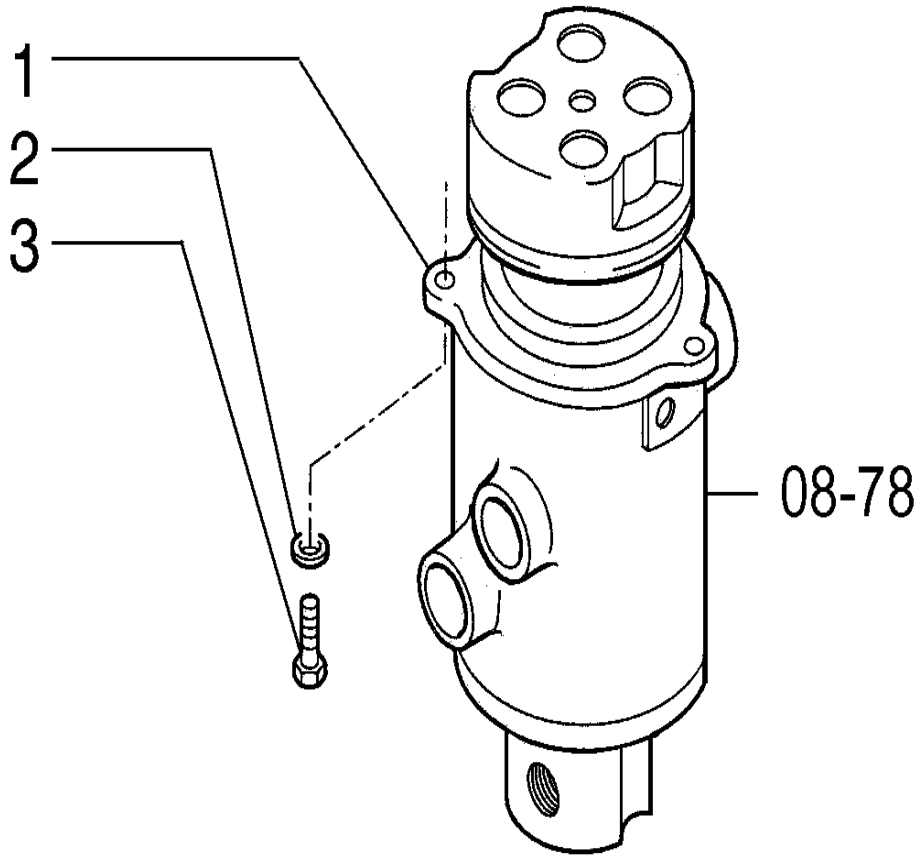

ROTATING CONTROL VALVE

REF	FN	PART NUMBER	YR/SN	QTY	DESCRIPTION
1		87532117		1	CONECTOR MULTIPOLAR
2		14496731		3	ARRUELA PLANA M12 x 24 x 2.5 Thk
3		11112831		3	PARAFUSO Hex, M12 x 40, 10.9, Full Thd

08-78	01	p1	7/2013

ROTATING CONTROL VALVE

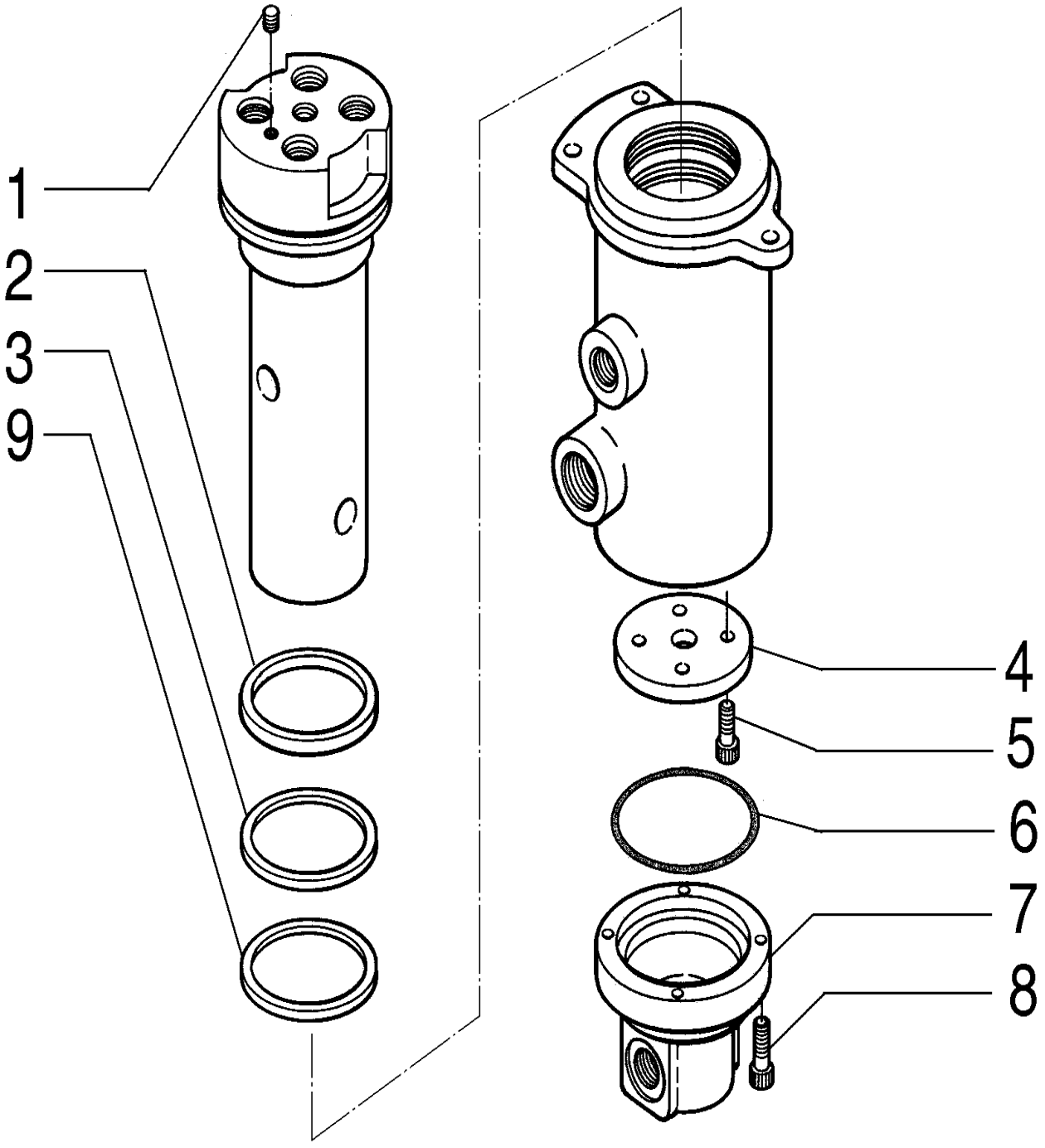

ROTATING CONTROL VALVE

REF	FN	PART NUMBER	YR/SN	QTY	DESCRIPTION
1		72210250		1	BUJÃO
2		2445R152D1		2	O-RING
3		72210246		1	VEDAÇÃO
4		72210243		1	PLACA
5		72210248		2	PARAFUSO
6		72210247		1	O-RING
7		YN55V01062P1		1	PROTEÇÃO
8		72210249		4	PARAFUSO
9		72960147		5	VEDAÇÃO

CONTROL VALVE - 72210100

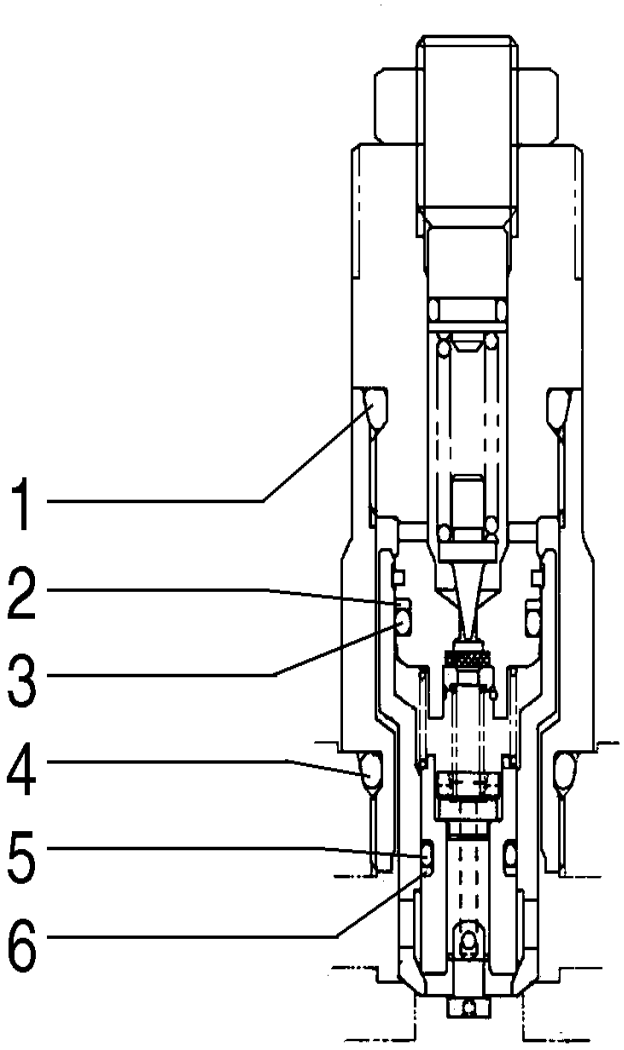

CONTROL VALVE - 72210100

REF	FN	PART NUMBER	YR/SN	QTY	DESCRIPTION
1		ZD12P02240		1	O-RING
2		YN22V00001S562		1	ANEL DE SEGURANÇA
3		YN22V00001S561		1	O-RING
4		ZD12P02400		1	O-RING
5		YN22V00002S563		1	O-RING
6		YN22V00002S564		1	ANEL

08-81	01	p1	7/2013

CONTROL VALVE - YN22V00001F8

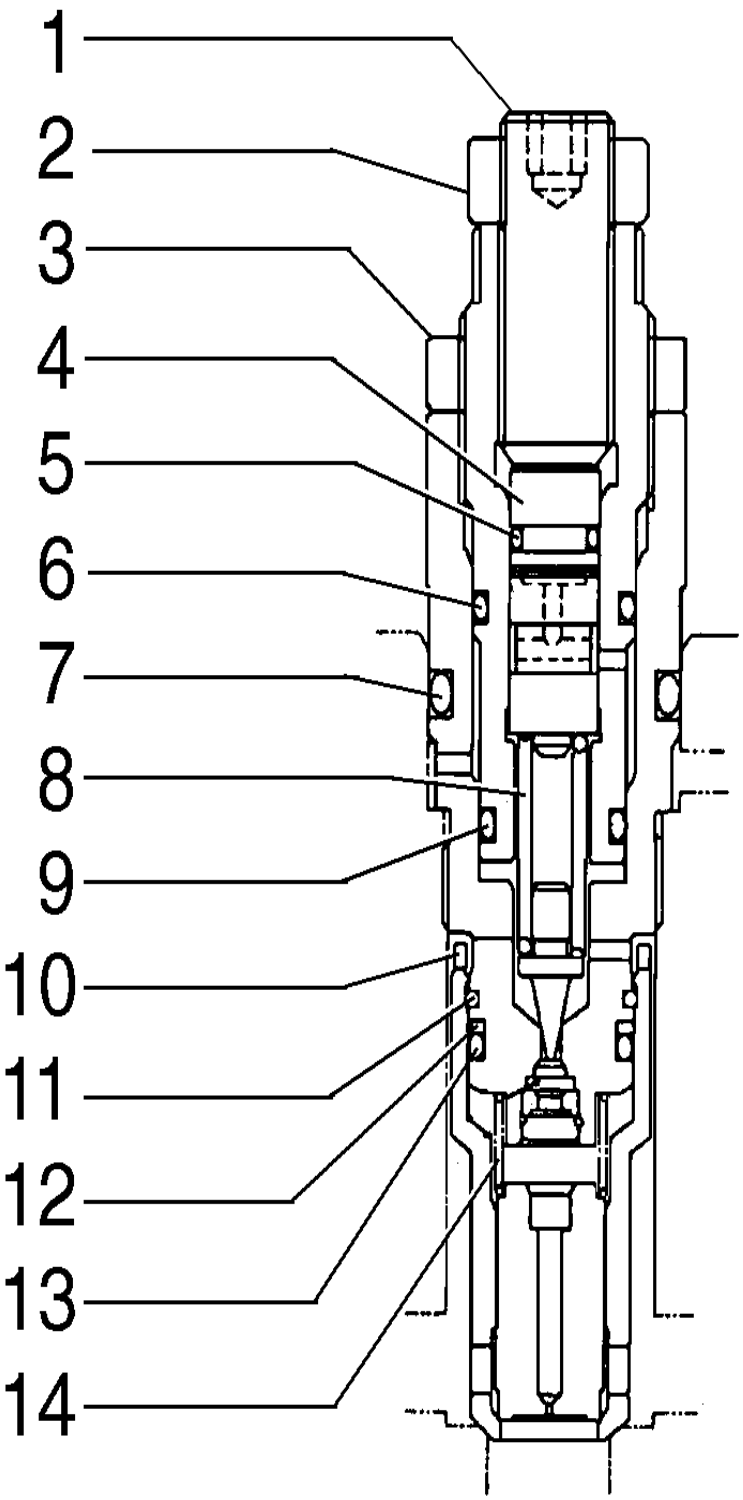

CONTROL VALVE - YN22V00001F8

REF	FN	PART NUMBER	YR/SN	QTY	DESCRIPTION
1		YN22V00001S652		1	PARAFUSO
2		YN22V00001S671		1	CONTRA PORCA
3		2436U1281S612		1	CONTRA PORCA
4		YN22V00001S613		1	PARADA
5		ZD12P00800		1	O-RING 8.8mm ID x 1.9mm Width
6		ZD12P01600		1	O-RING
7		ZD12P02500		1	O-RING
8		2436R750S512		1	MOLA
9		ZD12P01400		1	O-RING
10		YN22V00001S122		1	ESPAÇADOR
11		YN22V00001S121		1	ANEL
12		YN22V00001S562		1	ANEL DE SEGURANÇA
13		YN22V00001S561		1	O-RING
14		YN22V00001S521		1	MOLA

CONTROL VALVE - 72210098

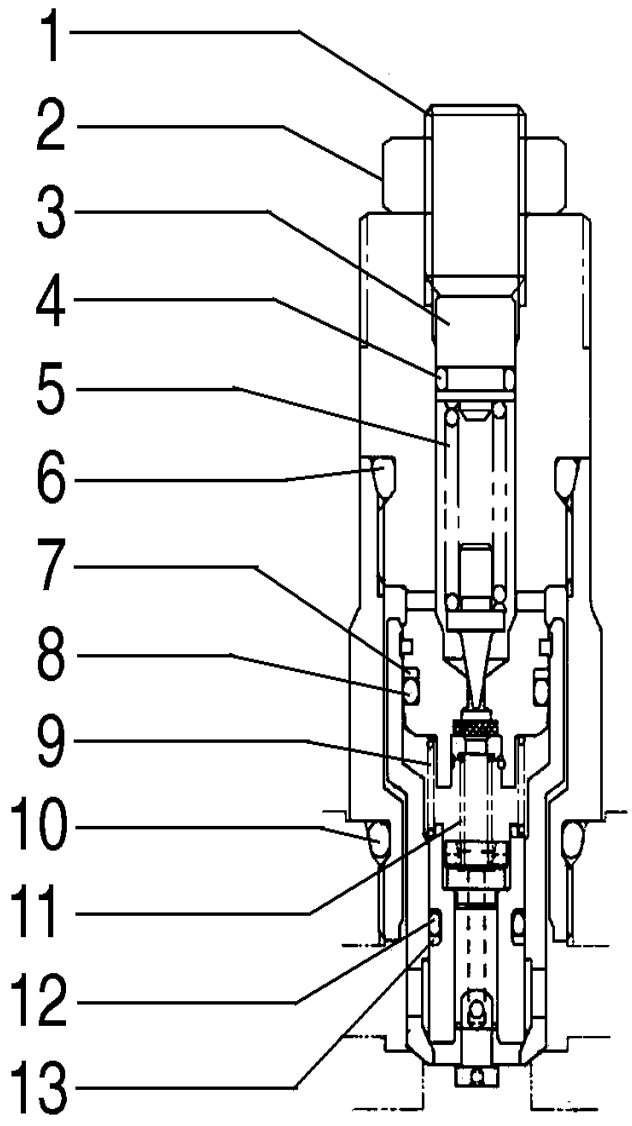

CONTROL VALVE - 72210098

REF	FN	PART NUMBER	YR/SN	QTY	DESCRIPTION
1		YN22V00002S651		1	PARAFUSO DE REGULAGEM
2		YN22V00001S671		1	CONTRA PORCA
3		YN22V00002S612		1	ASSENTO MOLA
4		ZD12P00800		1	O-RING 8.8mm ID x 1.9mm Width
5		2436R750S512		1	MOLA
6		ZD12P02240		1	O-RING
7		YN22V00001S562		1	ANEL DE SEGURANÇA
8		YN22V00001S561		1	O-RING
9		YN22V00001S521		1	MOLA
10		ZD12P02400		1	O-RING
11		YN22V00002S522		1	MOLA
12		YN22V00002S563		1	O-RING
13		YN22V00002S564		1	ANEL

CONTROL VALVE - 72210099

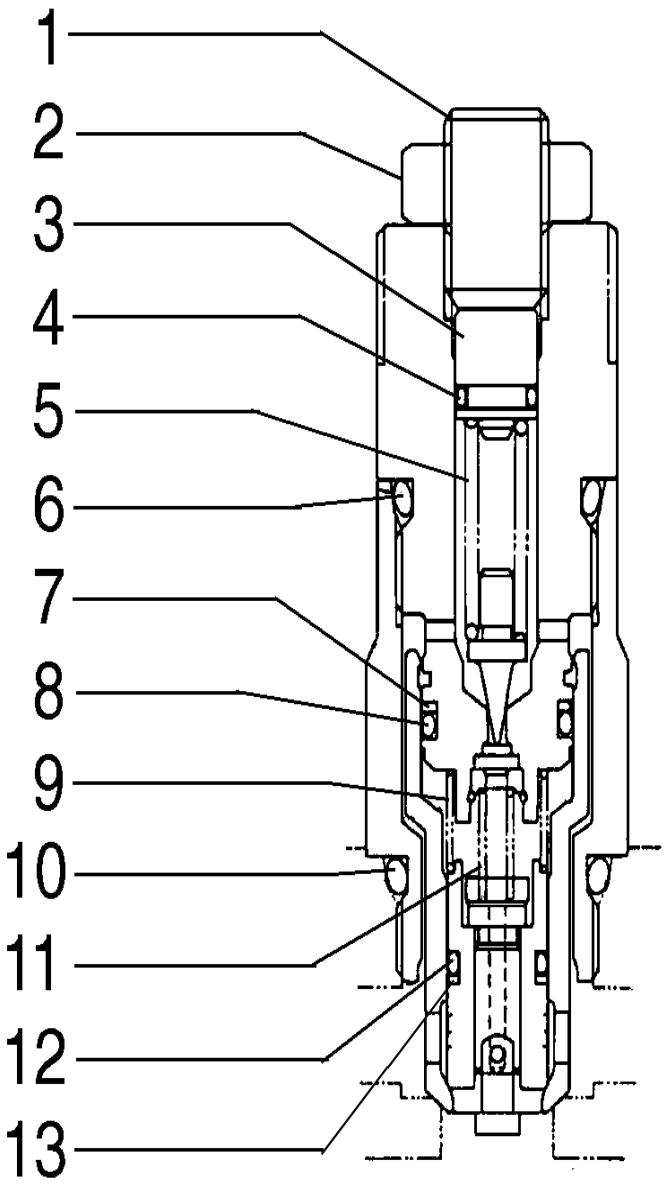

CONTROL VALVE - 72210099

REF	FN	PART NUMBER	YR/SN	QTY	DESCRIPTION
1		YN22V00002S651		1	PARAFUSO DE REGULAGEM
2		YN22V00001S671		1	CONTRA PORCA
3		YN22V00002S612		1	ASSENTO MOLA
4		ZD12P00800		1	O-RING 8.8mm ID x 1.9mm Width
5		2436R750S512		1	MOLA
6		ZD12P02240		1	O-RING
7		YN22V00001S562		1	ANEL DE SEGURANÇA
8		YN22V00001S561		1	O-RING
9		YN22V00001S521		1	MOLA
10		ZD12P02400		1	O-RING
11		YN22V00002S522		1	MOLA
12		YN22V00002S563		1	O-RING
13		YN22V00002S564		1	ANEL

08-84	01	p1	7/2013

LIFT CYLINDER - 87626327

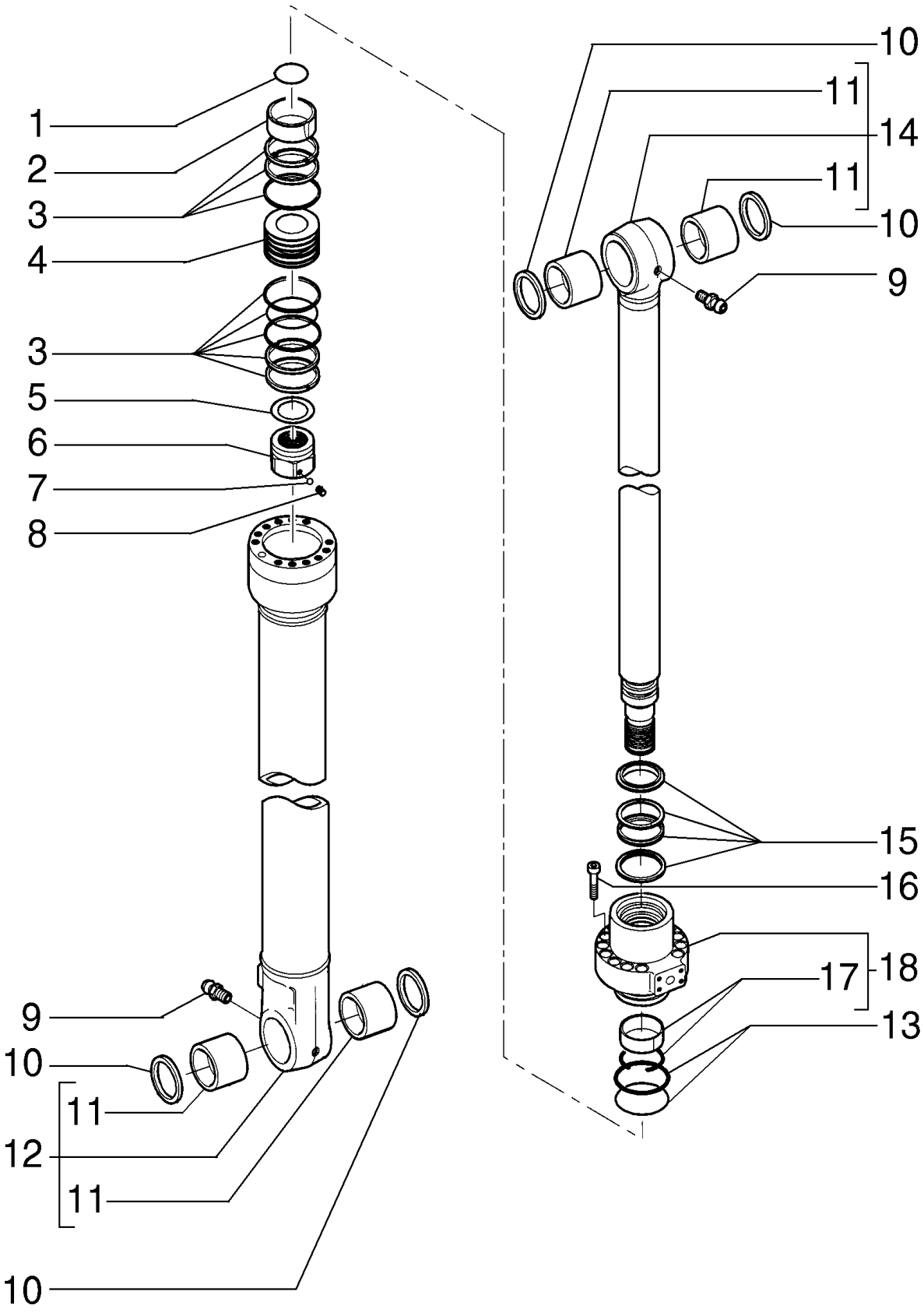

LIFT CYLINDER - 87626327

REF	FN	PART NUMBER	YR/SN	QTY	DESCRIPTION
1		71418479		1	VEDAÇÃO SEALRING
2		71418480		1	BUCHA
3		71418481		1	KIT DE VEDAÇÃO
4		71418483		1	PISTÃO
5		71445714		1	ARRUELA PLANA
6		72104630		1	PORCA
7		71445627		1	ESFERA
8		71445626		1	GUIA
9		13407211		2	GRAXEIRA M10 x 1
10		72104596		4	VEDAÇÃO DO LIMPADOR
11		87543176		4	BUCHA
12		87395454		1	CORPO DO CILINDRO Includes item 11
13		71445704		1	KIT
14		87395451		1	HASTE Includes item 11
15		72104592		1	KIT
16		14426874		12	PARAFUSO Hex Soc Hd, M16 x 75, 12.9
17		71447620		1	KIT
18		71418476		1	CABEÇOTE Includes item 17

08-86	01	p1	7/2013

DIPPERSTICK CYLINDER - 87626447

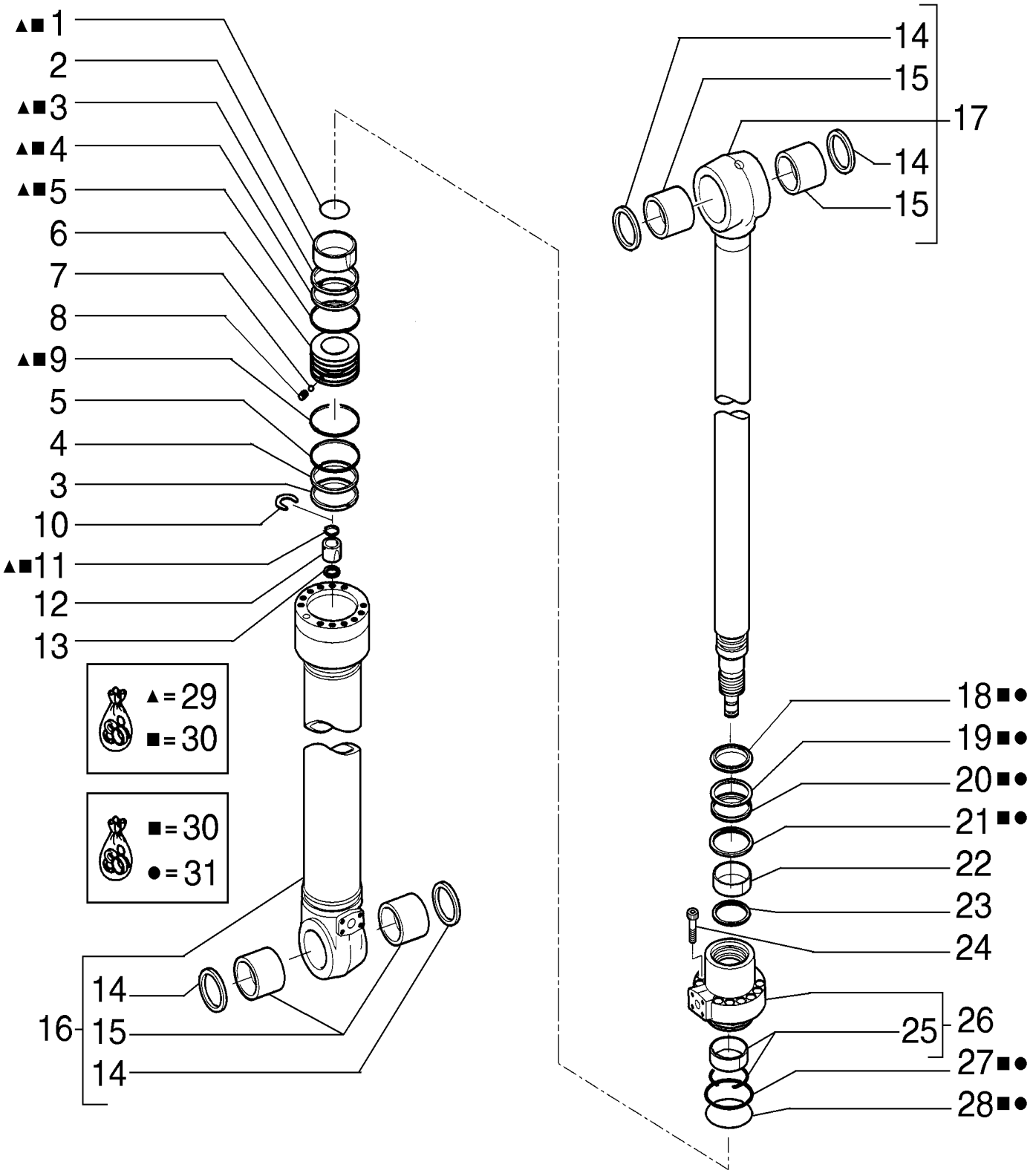

DIPPERSTICK CYLINDER - 87626447

REF	FN	PART NUMBER	YR/SN	QTY	DESCRIPTION
1		87552693		1	VEDAÇÃO
2		87552692		1	BUCHA
3		NLS		2	SEM SERVIÇO
4		87552695		2	O-RING
5		71465036		2	ANEL
6		87552694		1	PISTÃO
7		71445658		1	ESFERA
8		71445657		1	GUIA
9		71445664		1	VEDAÇÃO
10		71418453		1	PARADA
11		71418452		1	VEDAÇÃO
12		87552696		1	BUCHA
13		71418454		1	SEMI-ANEL
14		87552698		4	O-RING
15		87552697		4	BUCHA
16		87576768		1	KIT Includes items 14, 15
17		87576769		1	KIT Includes items 14, 15
18		71418432		1	ANEL
19		71418434		1	ANEL
20		87552691		1	O-RING
21		87552690		1	O-RING
22		71445617		1	BUCHA
23		71445618		1	ANEL
24		14428774		12	PARAFUSO Hex Soc Hd, M18 x 80, 12.9
25		71447621		1	KIT
26		71469208		1	PLACA DE FUNDO Includes item 25
27		71465031		1	O-RING
28		71465030		1	ANEL VEDADOR
29		87576766		1	KIT
30		87576767		1	KIT
31		87576765		1	KIT

08-88	01	p1	7/2013

BUCKET CYLINDER - 87626455

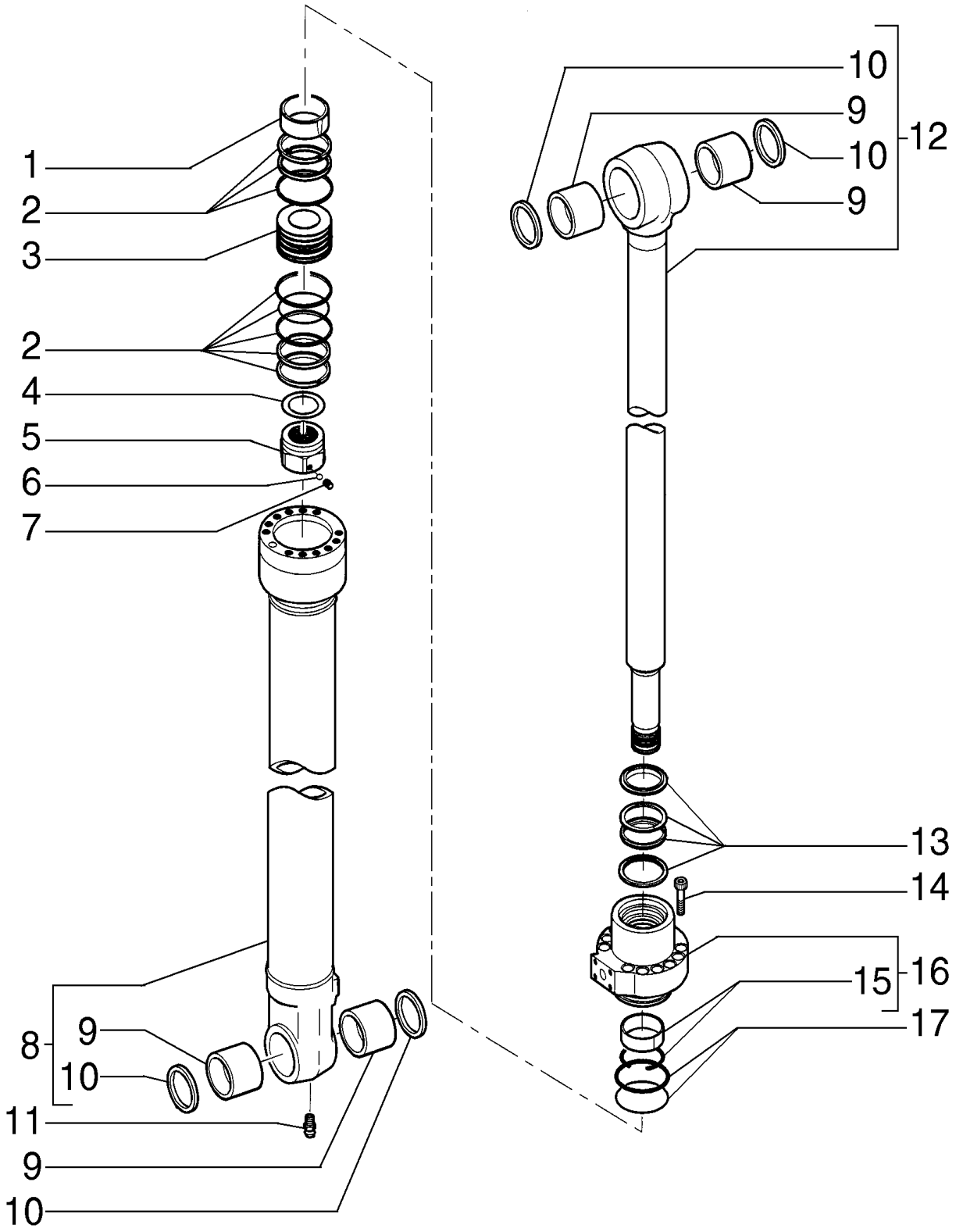

BUCKET CYLINDER - 87626455

REF	FN	PART NUMBER	YR/SN	QTY	DESCRIPTION
1		87369444		1	BUCHA
2		71418481		1	KIT DE VEDAÇÃO
3		71418483		1	PISTÃO
4		71445714		1	ARRUELA PLANA
5		72104630		1	PORCA
6		71445627		1	ESFERA
7		71445626		1	GUIA
8		87349054		1	CORPO DO CILINDRO Includes items 9, 10
9		87543175		4	BUCHA
10		71415158		4	VEDAÇÃO
11		13407211		1	GRAXEIRA M10 x 1
12		87349053		1	HASTE Includes items 9, 10
13		72104631		1	KIT
14		14426874		12	PARAFUSO Hex Soc Hd, M16 x 75, 12.9
15		71447625		1	KIT
16		72104628		1	PLACA DE FUNDO Includes item 15
17		71445704		1	KIT

08-88	02	p1	7/2013

BUCKET CYLINDER

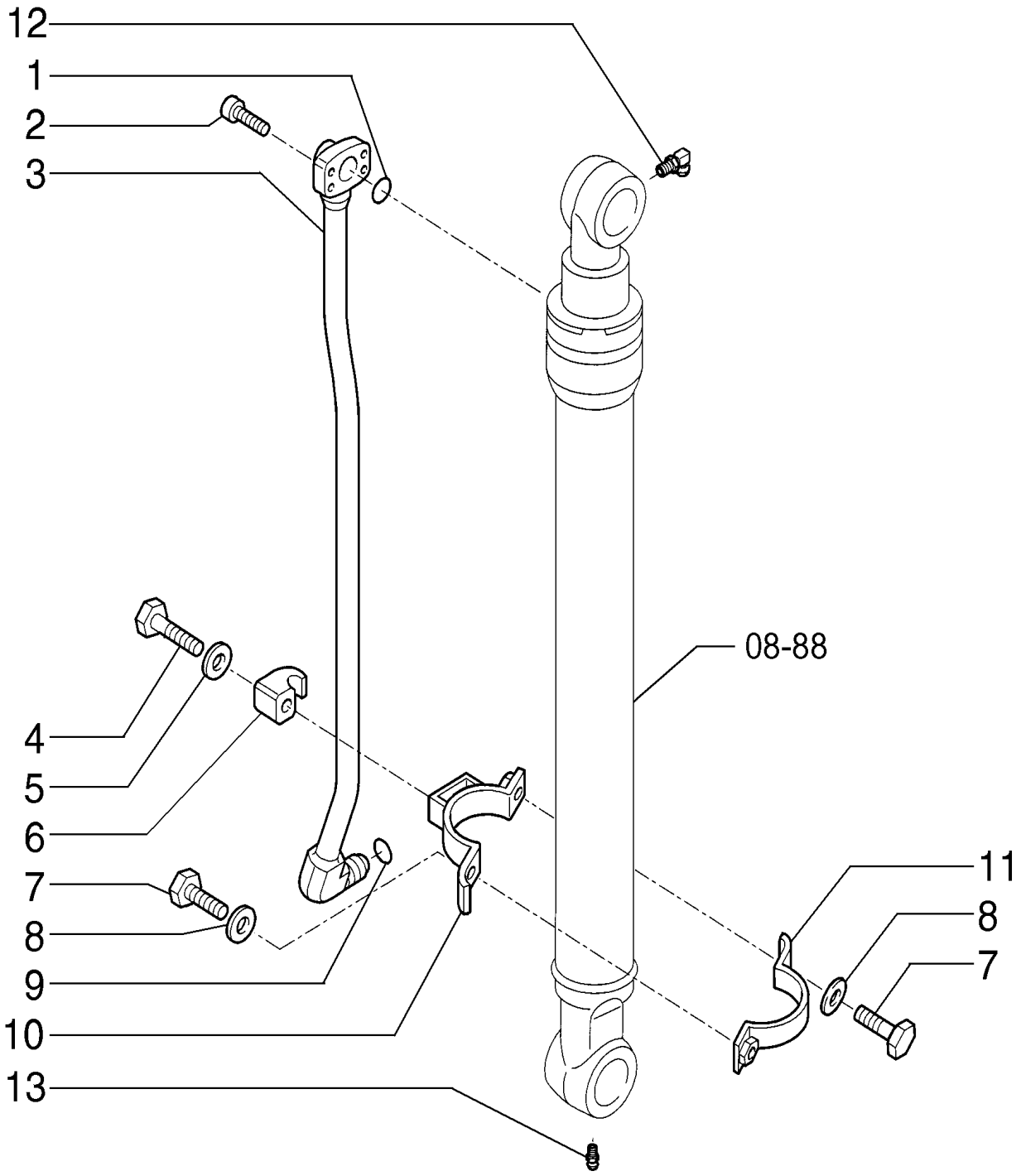

BUCKET CYLINDER

REF	FN	PART NUMBER	YR/SN	QTY	DESCRIPTION
1		70924110		1	O-RING
2		14420331		4	PARAFUSO Hex Soc Hd, M10 x 35, 10.9
3		87599368		1	TUBO HIDRÁULICO 27 mm OD x 1262.5, 65 mm L
4		11107331		1	PARAFUSO Hex, M10 x 55, 10.9
5		14496631		1	ARRUELA PLANA M10 x 21 x 2
6		72201683		1	SUPORTE
7		11106431		2	PARAFUSO Hex, M10 x 30, 10.9, Full Thd
8		10516871		2	TRAVA DA ARRUELA
9		70923843		1	O-RING
10		87599364		1	GRELHA
11		87599362		1	BRAÇADEIRA
12		72283870		1	GRAXEIRA
13		72283478		1	GRAXEIRA

08-90	01	p1	7/2013

BUCKET CYLINDER - 0,45 CUBIC METERS

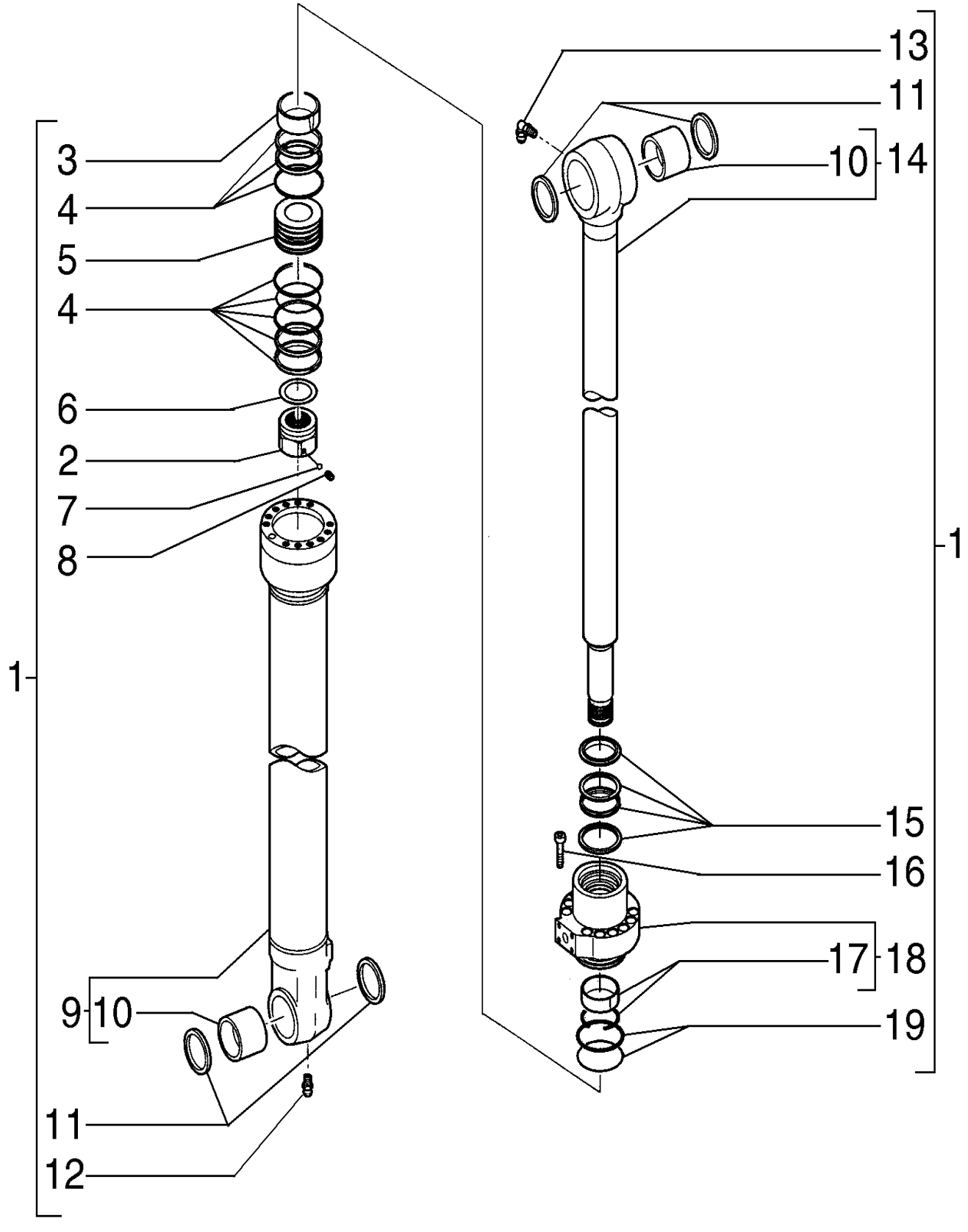

BUCKET CYLINDER - 0,45 CUBIC METERS

REF	FN	PART NUMBER	YR/SN	QTY	DESCRIPTION
1		75264959		1	CILINDRO LEVANTAMENTO Includes items 2 - 19
2		72111926		1	PORCA
3		72104414		1	BUCHA
4		71408811		1	KIT DE VEDAÇÃO
5		71408814		1	PISTÃO
6		71408816		1	ARRUELA PLANA
7		71445889		1	ESFERA
8		71445888		1	GUIA
9		72111917		1	CORPO DO CILINDRO Includes item 10
10		72219445		2	BUCHA
11		72111927		4	VEDAÇÃO DO LIMPADOR
12		13407211		1	GRAXEIRA M10 x 1
13		13408411		1	GRAXEIRA 90°, M10 x1
14		72111912		1	HASTE PISTÃO Includes item 10
15		72111876		1	KIT
16		14433374		10	PARAFUSO Hex Soc Hd, M14 x 65, 12.9
17		71447627		1	BUCHA
18		72111924		1	PLACA DE FUNDO Includes item 17
19		71445827		1	ANEL VEDADOR

SECTION INDEX

Chassis/Attachments

09-002	01	LOWER CHASSIS
09-003	01	UPPER CHASSIS
09-004	01	UPPER CHASSIS
09-005	01	SWING BEARING ASSY
09-006	01	LOWER CHASSIS
09-007	01	UPPER CHASSIS - COUNTERWEIGHT
09-009	01	COUNTERWEIGHT (OPTIONAL ARM 15M)
09-010	01	HYDRAULIC SYSTEM - HAMMER
09-010	02	HYDRAULIC SYSTEM - HAMMER
09-010	03	HYDRAULIC SYSTEM - HAMMER
09-010	04	HYDRAULIC SYSTEM - HAMMER
09-010	05	HYDRAULIC SYSTEM - HAMMER
09-010	06	HYDRAULIC SYSTEM - HAMMER
09-010	07	HYDRAULIC SYSTEM - AUGER
09-010	08	HYDRAULIC SYSTEM - AUGER
09-010	09	HYDRAULIC SYSTEM - WOOD GRABS
09-010/A	01	HYDRAULIC SYSTEM - RAISED CAB (OPTIONAL)
09-011	01	HYDRAULIC SYSTEM - ARM 6,35M
09-012	01	HYDRAULIC SYSTEM - HAMMER
09-015	01	HYDRAULIC SYSTEM - HAMMER - 2400MM
09-016	01	HAMMER - 2900MM ARM TUBING
09-017	01	HAMMER - 2400MM ARM TUBING
09-017	02	HAMMER - 2940MM ARM TUBING
09-018	01	HYDRAULIC SYSTEM - WOOD GRABS
09-019	01	HYDRAULIC SYSTEM - WOOD GRABS
09-019/A	01	WOOD GRABS - SERVO CONTROL
09-019/B	01	WOOD GRABS - SERVO CONTROL
09-020	01	HYDRAULIC SYSTEM - WOOD GRABS
09-021	01	WOOD GRABS - CONTROL
09-022	01	WOOD GRABS - TUBING 2400MM
09-023	01	WOOD GRABS - TUBING 2940MM
09-023	02	WOOD GRABS - TUBING 3500MM
09-024	01	WOOD GRABS - ARM 15M
09-025	01	WOOD GRABS - HYDRAULIC VALVE
09-026	02	CONTROL VALVE

SECTION INDEX

Chassis/Attachments

09-027	01	LOCK VALVE - HAMMER
09-029	02	BOOM
09-031	01	BOOM
09-031	03	BOOM 15M
09-032	01	DIPPERSTICK - 2400MM
09-034	01	DIPPERSTICK - 2940MM
09-036	01	DIPPERSTICK - 3500MM
09-036/A	01	CONNECTING ROD ASSY - 2400MM / 2940MM / 3500MM
09-036B	01	DIPPERSTICK - 2400MM / 2940MM / 3500MM
09-040	01	DIPPERSTICK - 6,350M
09-047	01	NARROW BUCKET - 1,0 CUBIC METERS
09-048	01	NARROW GP BUCKET - 1,1 CUBIC METERS
09-049	01	NARROW GP BUCKET - 1,25 CUBIC METERS
09-050	01	NARROW GP BUCKET - 1,45 CUBIC METERS
09-052	01	WIDE GP BUCKET - 0,78 CUBIC METERS
09-054	01	WIDE GP BUCKET - 1,105 CUBIC METERS
09-055	01	WIDE GP BUCKET - 1,315 CUBIC METERS
09-056	01	NARROW HD BUCKET - 1,1 CUBIC METERS
09-057	01	NARROW HD BUCKET - 1,25 CUBIC METERS
09-058	01	NARROW HD BUCKET - 1,4 CUBIC METERS
09-059	01	WIDE HD BUCKET - 0,78 CUBIC METERS
09-061	01	WIDE HD BUCKET - 1,105 CUBIC METERS
09-062	01	WIDE HD BUCKET - 1,315 CUBIC METERS
09-064	01	RIVER DREDGING BUCKET - 1,1 CUBIC METERS
09-065	01	TRAPEZOIDAL BUCKET - 0,4 METROS CÚBICOS
09-066	01	BUCKET'S CUTTING EDGE
09-067	03	BUCKET 15M ARM - 0,5 METRO CÚBICOS
09-068	01	RADIO & INSTALLATION
09-070	01	BODY & HOOD
09-071	01	BODY & HOOD
09-072	01	BODY & HOOD
09-073	01	BODY & HOOD
09-074	01	BODY & HOOD
09-075	01	BODY & HOOD
09-076	01	REAR-VIEW MIRROR AND BRACKETS

SECTION INDEX

Chassis/Attachments

09-076	02	REAR-VIEW MIRROR AND BRACKETS
09-077	01	GUARDS
09-078	01	BODY & HOOD
09-080	01	CAB
09-081	01	CAB
09-082	01	CAB FLOOR
09-083	01	CAB FLOOR
09-085	01	CAB - PARTS
09-086	01	CAB - PARTS
09-086	02	CAB - RADIO
09-087	01	CAB - PARTS
09-087	02	CAB - PARTS
09-088	01	CAB - PARTS
09-089	01	CAB - PARTS
09-089	02	CAB - PARTS
09-090	01	CAB - PARTS
09-091	01	CAB - PARTS
09-092	01	CAB - PARTS
09-092/A	01	CAB - WINDSHIELD WASHER
09-096	01	CAB - PARTS
09-097	01	CAB - PARTS
09-098	01	CAB - PARTS
09-100	01	AIR CONDITIONER
09-100	02	AIR CONDITIONER - RAISED CAB
09-101	01	AIR CONDITIONER
09-101	02	AIR CONDITIONER
09-101/A	01	COMPRESSOR ASSY
09-102	01	AIR CONDITIONER
09-102	02	AIR CONDITIONER - RAISED CAB
09-103	01	AIR CONDITIONER
09-103	02	AIR CONDITIONER - RAISED CAB
09-104	01	AIR CONDITIONER - PARTS
09-105	01	AIR CONDITIONER - PARTS
09-106	01	AIR CONDITIONER - PARTS
09-109	01	TENSIONER PULLEY

SECTION INDEX

Chassis/Attachments

09-110	01	CAB GUARD
09-110	02	CAB GUARD
09-116	02	OPERATOR'S CONSOLE
09-117	01	OPERATOR'S CONSOLE
09-117	02	SERVO CONTROL TUBE BRACKETS
09-118	01	OPERATOR'S CONSOLE
09-119	01	OPERATOR'S SEAT
09-119	02	ARM REST
09-120	01	OPERATOR'S SEAT - 87724921
09-121	01	OPERATOR'S SEAT - SUPPORT
09-122	01	SEAT BELT
09-123	01	DECALS
09-124	01	DECALS
09-125	01	DECALS - AUGER
09-125	02	DECALS - AUGER
09-126	01	DECALS - AUGER

09-002	01	p1	7/2013

LOWER CHASSIS

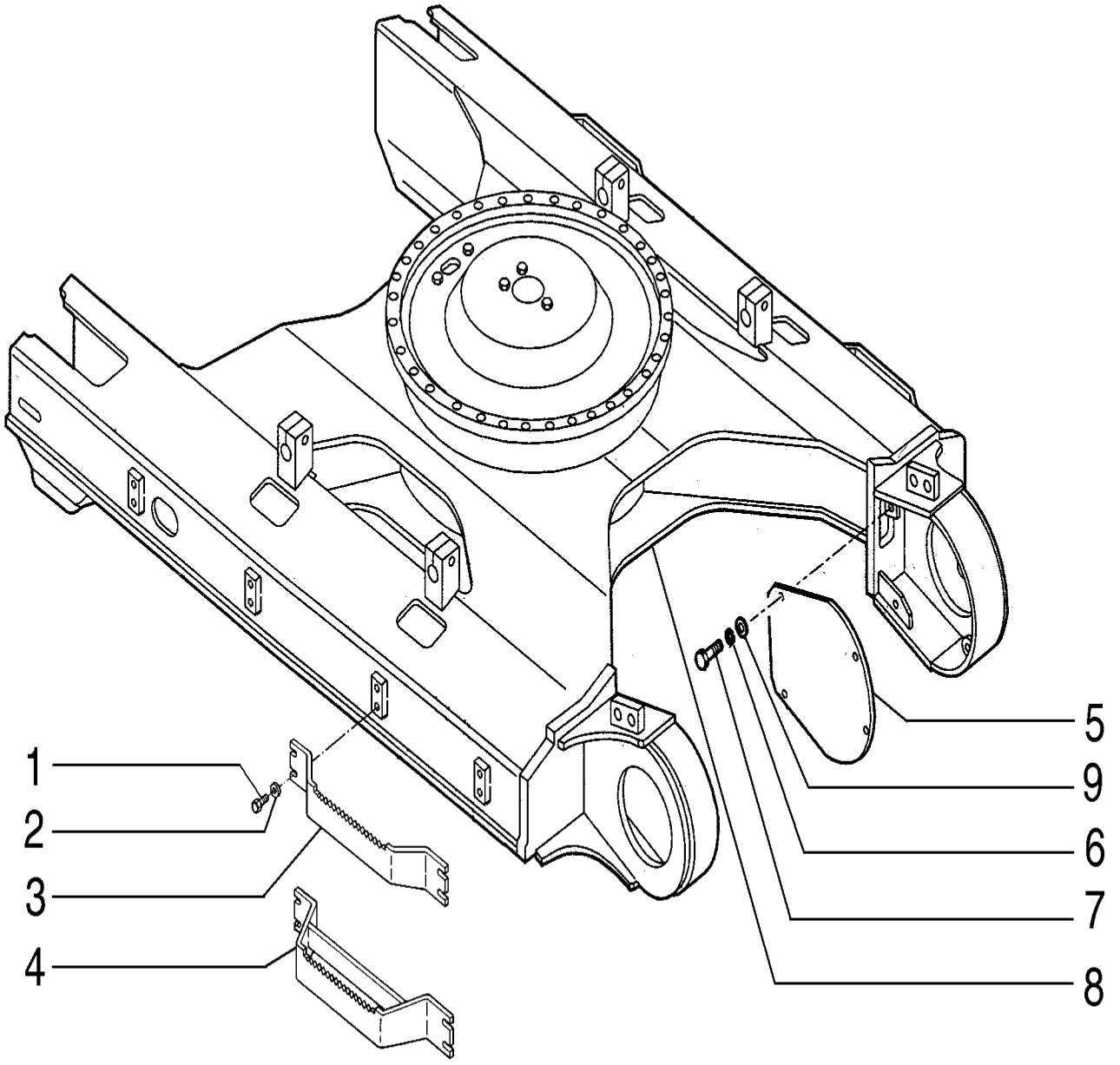

LOWER CHASSIS

REF	FN	PART NUMBER	YR/SN	QTY	DESCRIPTION
1		11127531		16	PARAFUSO Hex, M16 x 35, 10.9
2		14496931		16	ARRUELA PLANA M16 x 30 x 3
3		75254844		4	APÓIA PÉ
4	1	75321678		4	APÓIA PÉ
5		75261771		2	PLACA
6		10517073		8	ARRUELA PLANA
7		11112431		8	PARAFUSO Hex, M12 x 30, 10.9, Full Thd
8		87627232		1	ESTRUTURA
9		14496731		8	ARRUELA PLANA M12 x 24 x 2.5 Thk

(1) PARA ESTEIRAS 700, 800, 900MM

09-003	01	p1	7/2013

UPPER CHASSIS

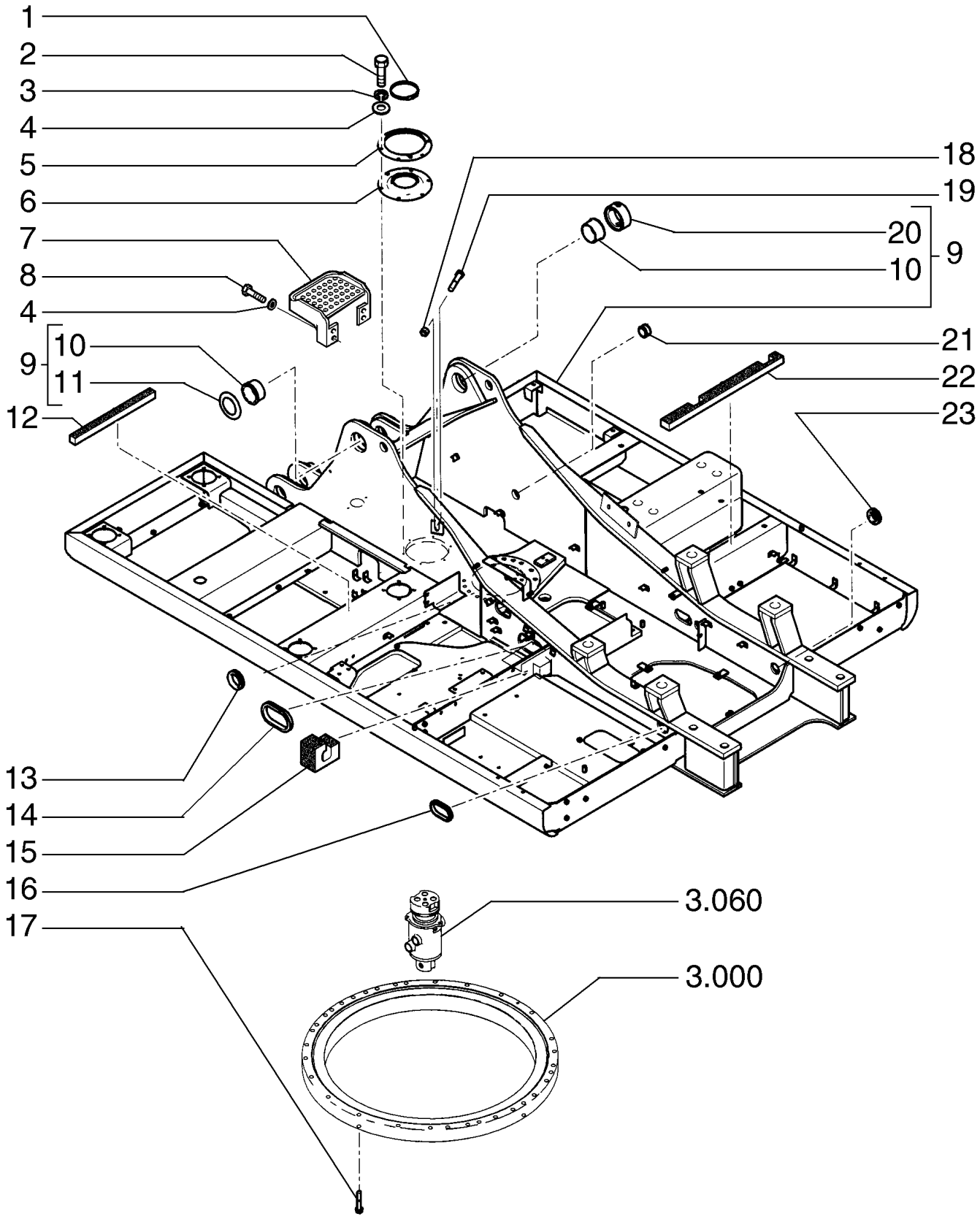

UPPER CHASSIS

REF	FN	PART NUMBER	YR/SN	QTY	DESCRIPTION
1		72955421		1	GRAMPO
2		11106231		6	PARAFUSO Hex, M10 x 25, 10.9, Full Thd
3		10516871		6	TRAVA DA ARRUELA
4		14496621		10	ARRUELA PLANA Flat, 10.50mm ID x 21.00mm OD x 2.00mm, R80, ZND
5		87369423		1	PLACA
6		87638740		1	VEDAÇÃO
7		87727208		1	ESCADA
8		11106031		4	PARAFUSO Hex, M10 x 20, 10.9, Full Thd
9		87641379		1	ESTRUTURA Includes items 10, 11, 20
9	1	87470054		1	ESTRUTURA Includes items 10, 11, 20
10		87614918		2	BUCHA
11		87614919		1	COBERTURA
12		87651530		1	ISOLADOR
13		87652945		1	JUNTA
14		87652946		1	JUNTA
15		87651532		1	ISOLADOR
16		87652947		1	JUNTA
17		11125731		33	PARAFUSO Hex, M20 x 100, 10.9
18		12164521		1	PORCA Hex, M24, 2mm Pitch, 19.00mm High, Cl 10, ZND
19		15246231		1	PARAFUSO
20		87614920		1	BUCHA
21		87651544		1	JUNTA
22		87651531		1	ISOLADOR
23		87651545		1	JUNTA

(1) OPCIONAL 15M

09-004	01	p1	7/2013

UPPER CHASSIS

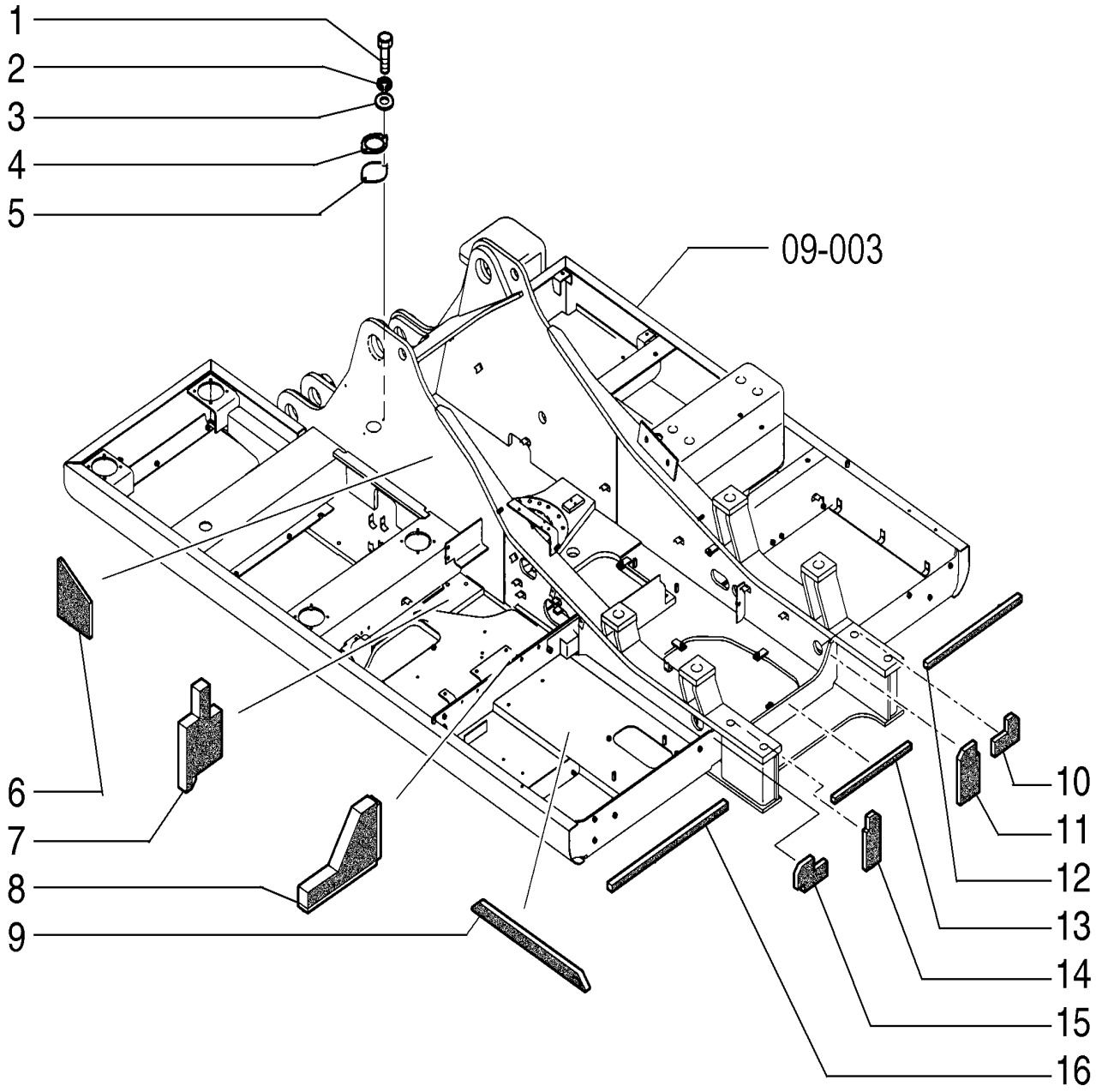

UPPER CHASSIS

REF	FN	PART NUMBER	YR/SN	QTY	DESCRIPTION
1		11106231		2	PARAFUSO Hex, M10 x 25, 10.9, Full Thd
2		10516871		2	TRAVA DA ARRUELA
3		14496621		2	ARRUELA PLANA Flat, 10.50mm ID x 21.00mm OD x 2.00mm, R80, ZND
4		71442116		1	JUNTA
5		75326579		1	FLANGE
6		87651537		1	ISOLADOR
7		87651538		1	ISOLADOR
8		87651539		1	ISOLADOR
9		87490876		1	ISOLAMENTO
10		87735519		1	ISOLADOR
11		87651535		1	ISOLADOR
12		87651528		1	ISOLADOR
13		87651527		1	ISOLADOR
14		87651534		1	ISOLADOR
15		87735518		1	ISOLADOR
16		87651526		1	ISOLADOR

09-005	01	p1	7/2013

SWING BEARING ASSY

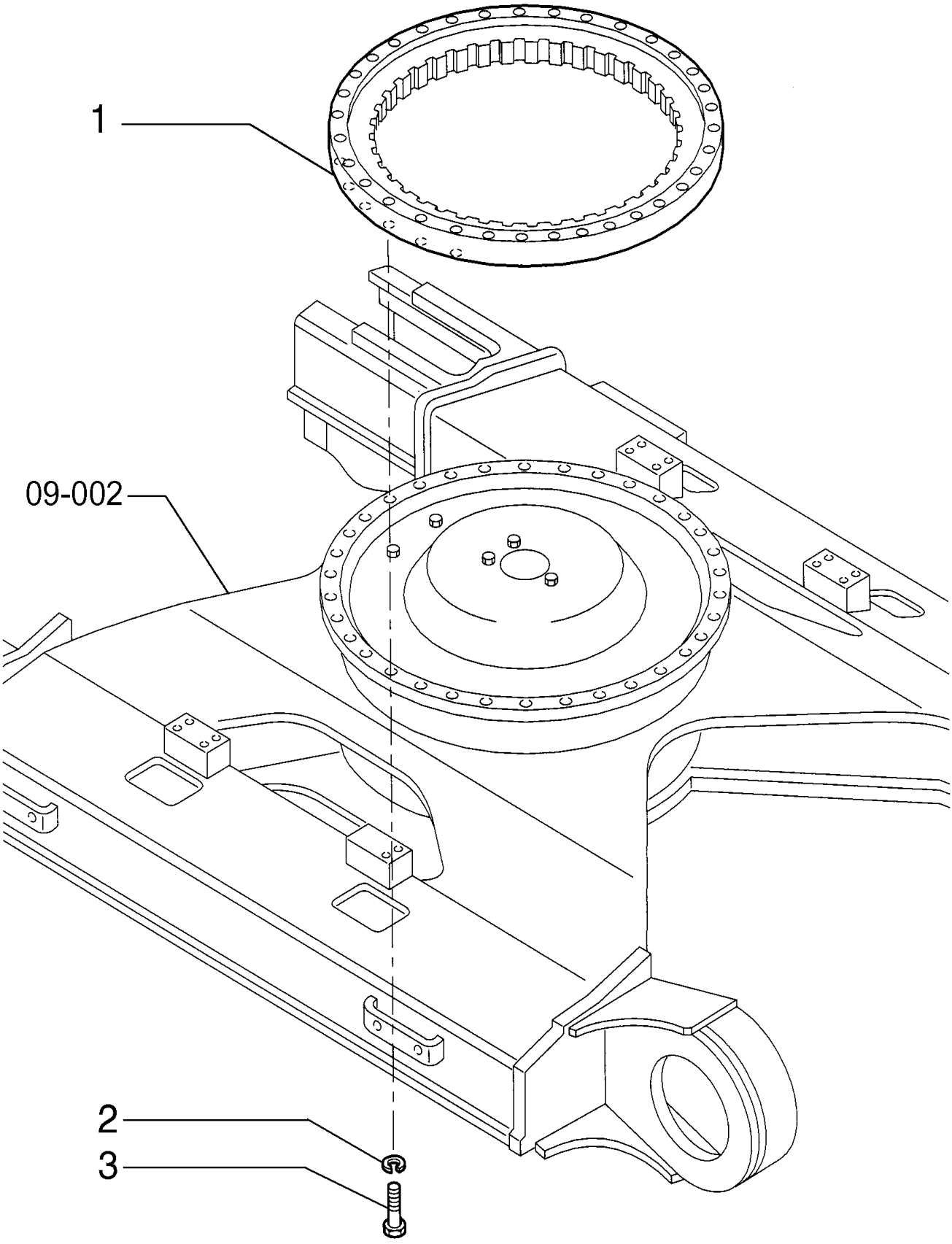

SWING BEARING ASSY

REF	FN	PART NUMBER	YR/SN	QTY	DESCRIPTION
1		87472588		1	COROA
2		75326006		36	ARRUELA PLANA
3		15988431		36	PARAFUSO Hex, M20 x 1.5 x 65, 10.9

09-006	01	p1	7/2013

LOWER CHASSIS

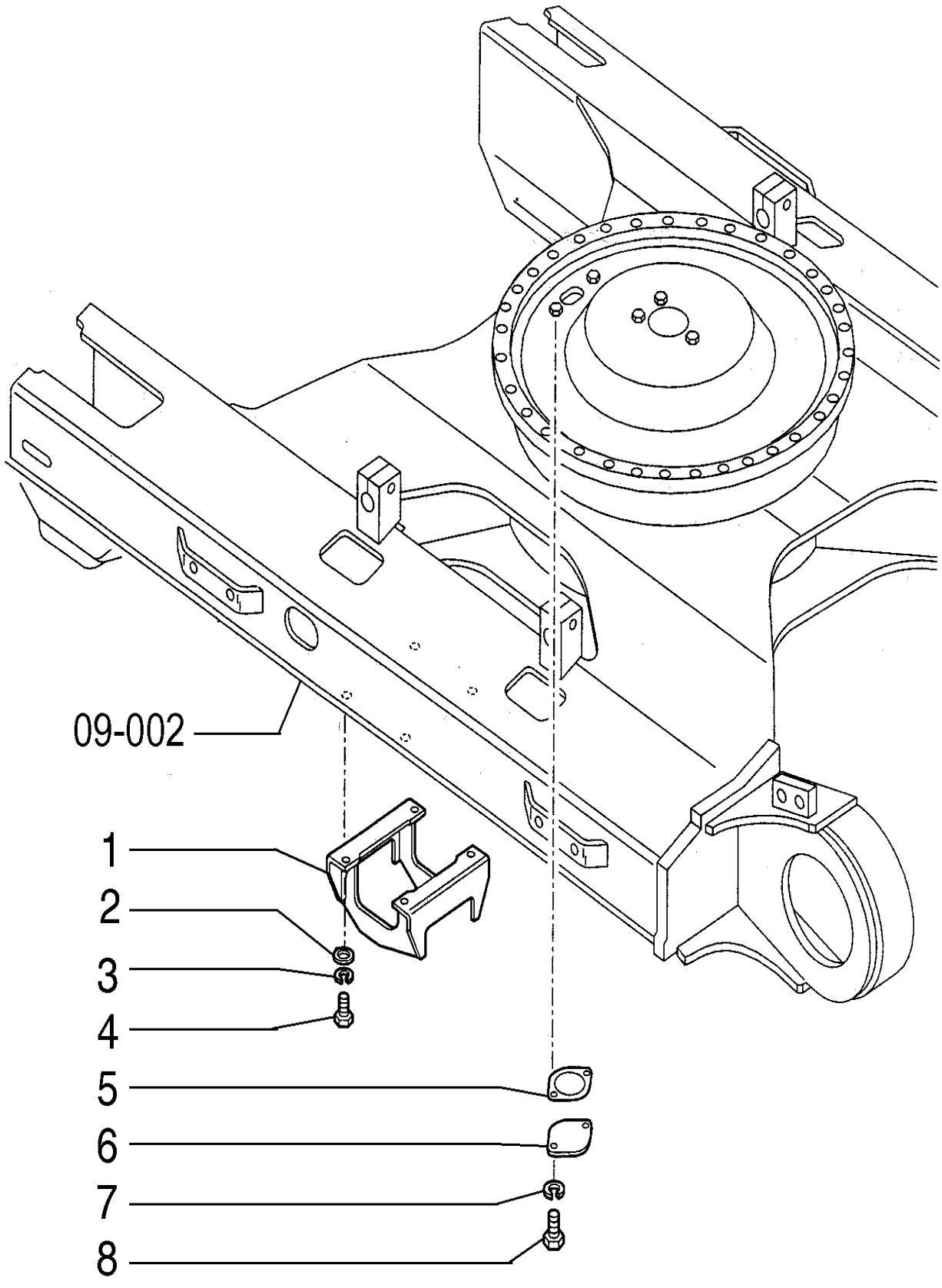

LOWER CHASSIS

REF	FN	PART NUMBER	YR/SN	QTY	DESCRIPTION
1		75261827		2	PASTILHA
2		71415218		8	ARRUELA PLANA
3		10517371		8	TRAVA DA ARRUELA
4		15984131		8	PARAFUSO Hex, M18 x 1.5 x 45, 10.9, Full Thd
5		71442022		1	VEDAÇÃO
6		75325708		1	COBERTURA
7		10516873		2	TRAVA DA ARRUELA
8		11106231		2	PARAFUSO Hex, M10 x 25, 10.9, Full Thd

09-007	01	p1	7/2013

UPPER CHASSIS - COUNTERWEIGHT

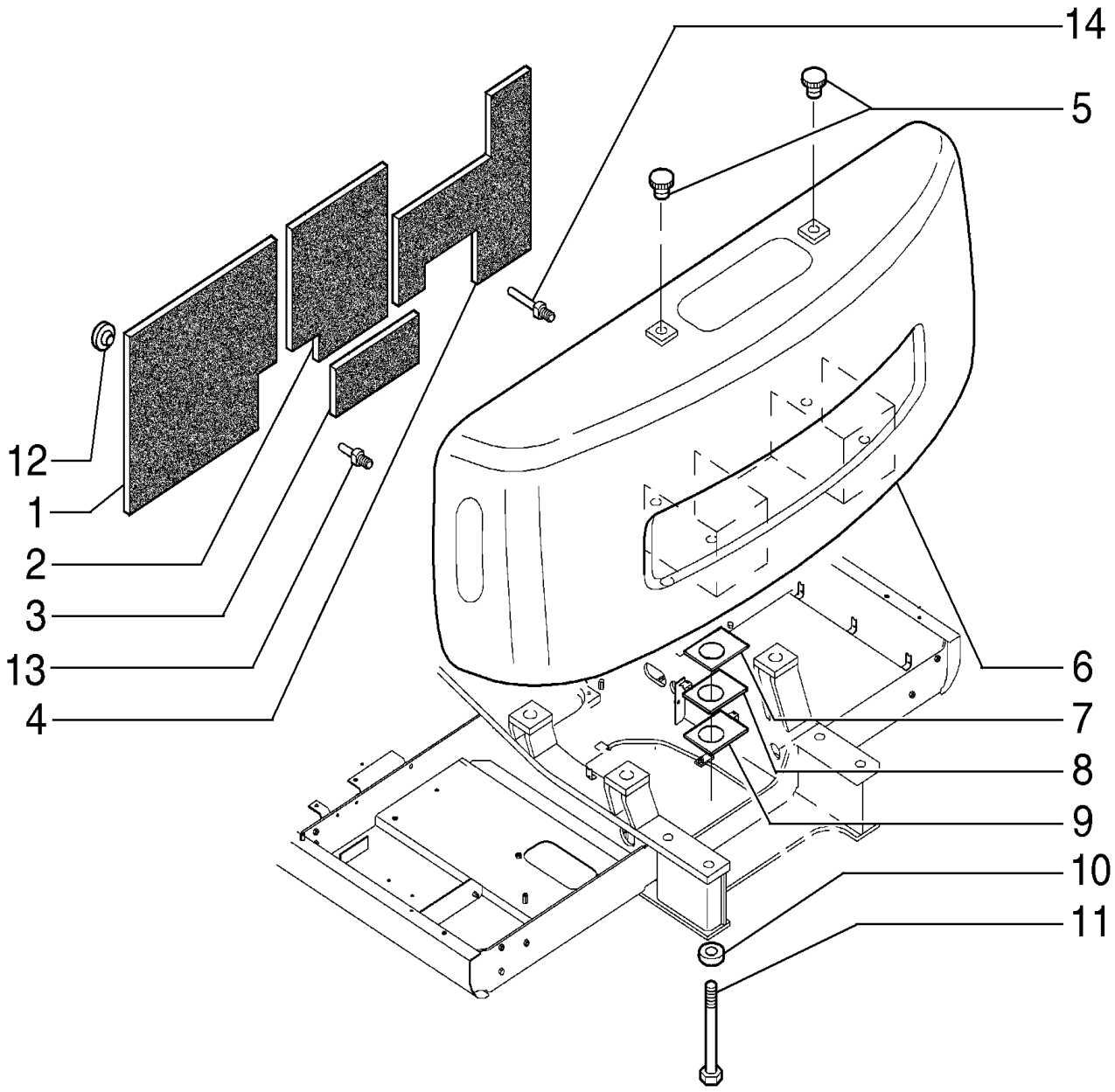

UPPER CHASSIS - COUNTERWEIGHT

REF	FN	PART NUMBER	YR/SN	QTY	DESCRIPTION
1		87733139		1	ISOLAMENTO
2		87733138		1	ISOLAMENTO
3		87733140		1	ISOLAMENTO
4		87733137		1	ISOLAMENTO
5		71415426		2	BUJÃO
6		84575452		1	CONTRAPESO
7		75262147		3	CALÇO DE AFINAÇÃO
8		75262148		3	CALÇO DE AFINAÇÃO
9		75262149		4	CALÇO DE AFINAÇÃO
10		75262146		4	ARRUELA PLANA
11		87550714		4	PARAFUSO
12		75256034		14	GRAMPO
13		75326571		10	PINO
14		87738730		4	PINO

09-009	01	p1	7/2013

COUNTERWEIGHT (OPTIONAL ARM 15M)

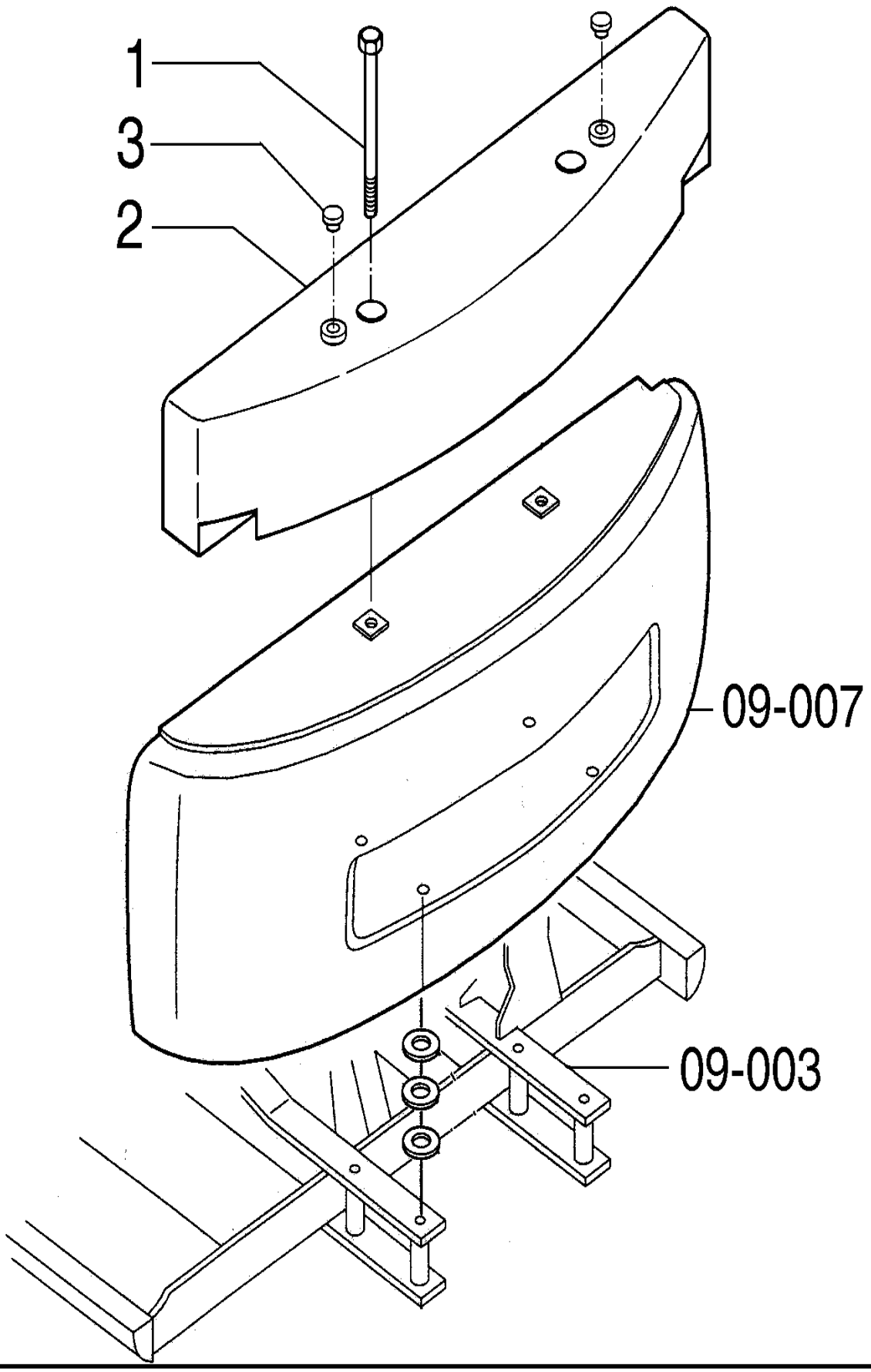

COUNTERWEIGHT (OPTIONAL ARM 15M)

REF	FN	PART NUMBER	YR/SN	QTY	DESCRIPTION
1		75265052		2	PARAFUSO
2		87749351		1	PESO 1300 kg
3		71415426		2	BUJÃO

09-010	01	p1	7/2013

HYDRAULIC SYSTEM - HAMMER

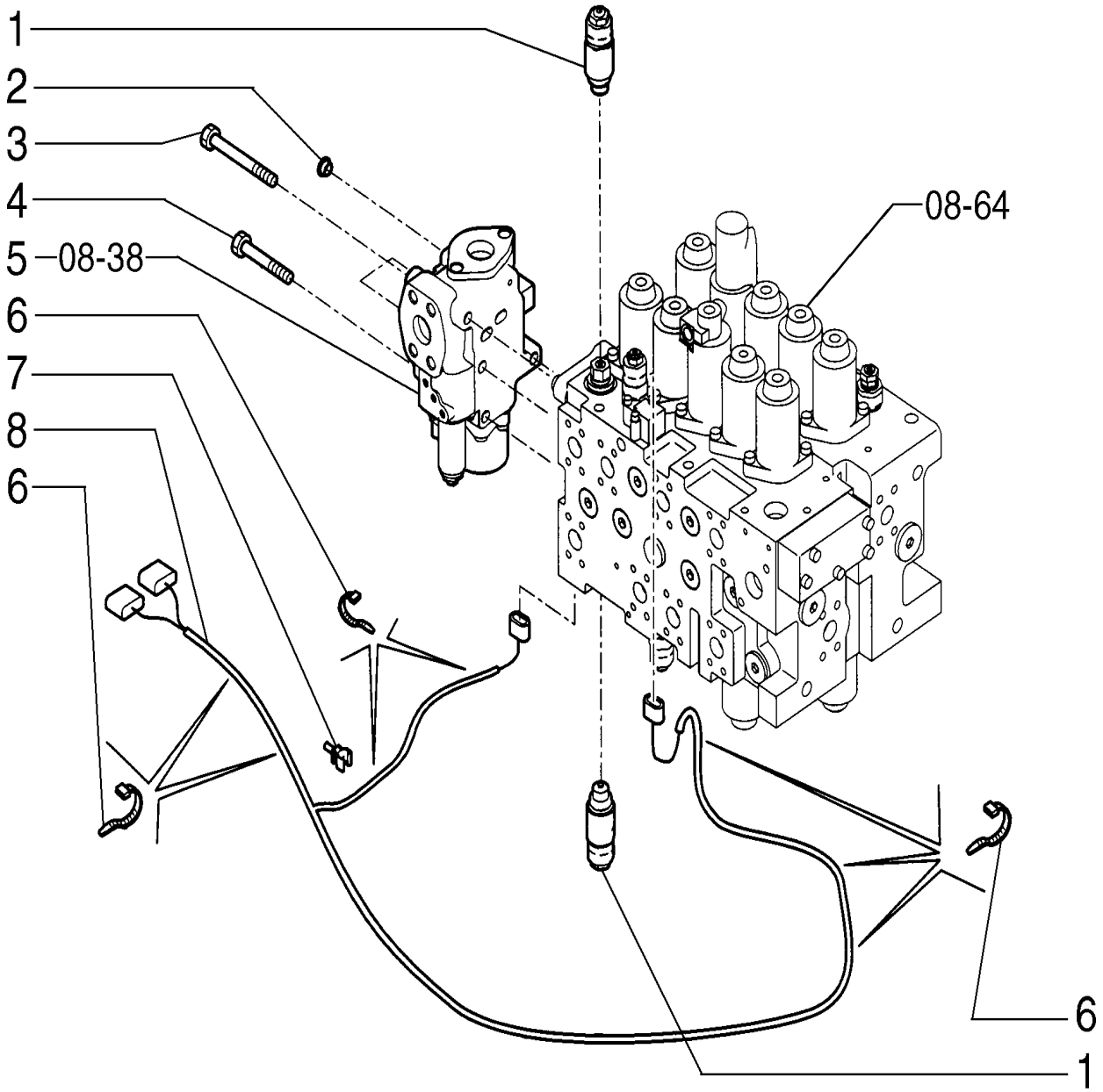

HYDRAULIC SYSTEM - HAMMER

REF	FN	PART NUMBER	YR/SN	QTY	DESCRIPTION
1		87579594		2	VÁLVULA HIDRÁULICA
2		87643223		1	BUJÃO
3		87609321		3	PARAFUSO
4		14423034		1	PARAFUSO
5		87520007		1	VÁLVULA HIDRÁULICA
6		75201642		7	BRAÇADEIRA
7		87526680		1	COLAR DE FIXAÇÃO
8		87599406		1	CABO ELÉTRICO

09-010	02	p1	7/2013

HYDRAULIC SYSTEM - HAMMER

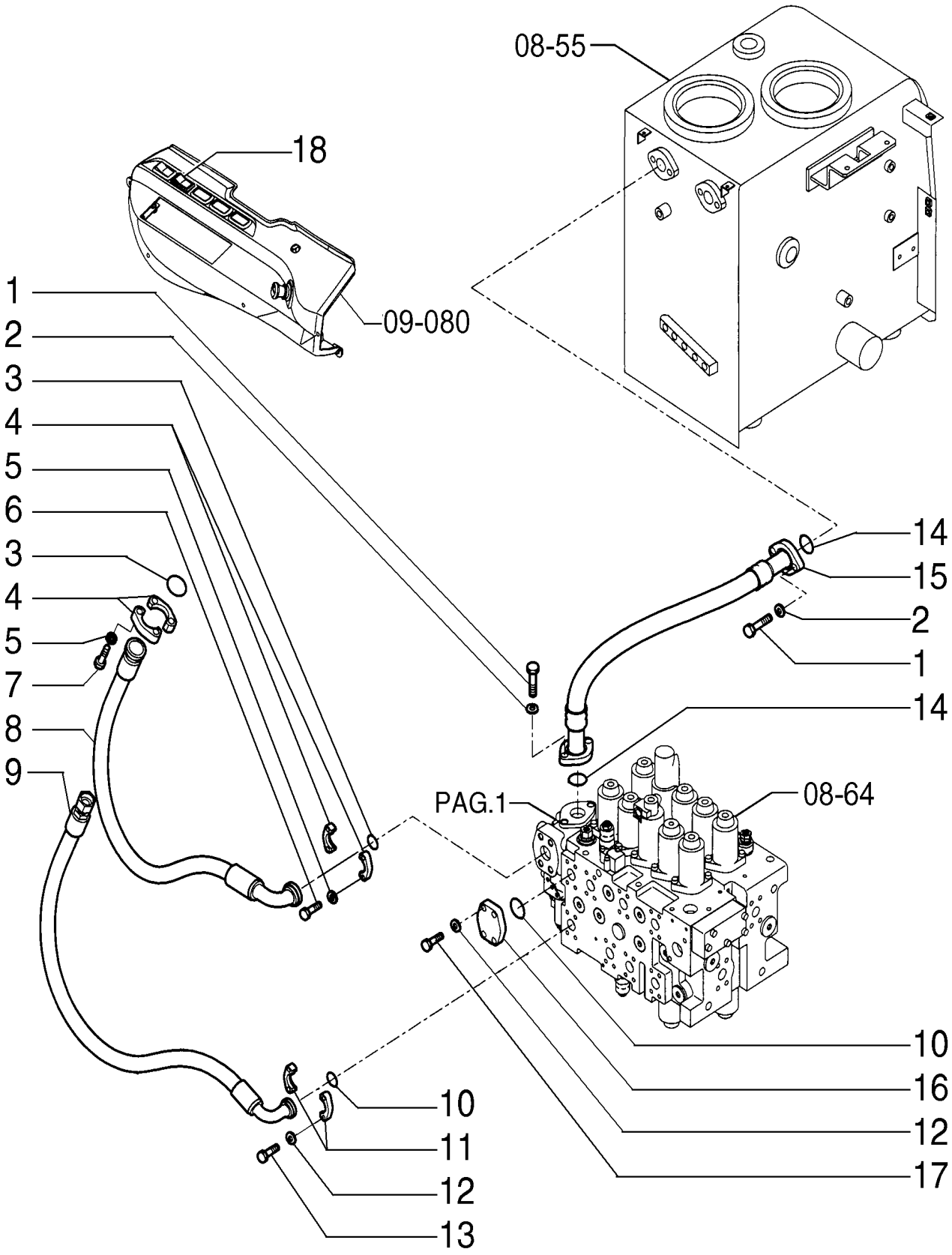

HYDRAULIC SYSTEM - HAMMER

REF	FN	PART NUMBER	YR/SN	QTY	DESCRIPTION
1		11112631		4	PARAFUSO Hex, M12 x 35, 10.9
2		14496731		4	ARRUELA PLANA M12 x 24 x 2.5 Thk
3		70924192		2	O-RING
4		71444029		4	SEMI-FLANGE
5		10517171		8	TRAVA DA ARRUELA
6		11116031		4	PARAFUSO Hex, M14 x 45, 10.9, Full Thd
7		11116231		4	PARAFUSO Hex, M14 x 50, 10.9, Full Thd
8		87521883		1	TUBO FLEXÍVEL
9		87521884		1	TUBO FLEXÍVEL
10		70924200		2	O-RING
11		71404311		2	SEMI-FLANGE
12		14496731		8	ARRUELA PLANA M12 x 24 x 2.5 Thk
13		11106631		4	PARAFUSO Hex, M10 x 35, 10.9, Full Thd
14		87397569		2	O-RING
15		87521882		1	MANGUEIRA
16		87397570		1	COBERTURA
17		11106431		4	PARAFUSO Hex, M10 x 30, 10.9, Full Thd
18		87527531		1	INTERRUPTOR DE ALAVANCA

09-010	03	p1	7/2013

HYDRAULIC SYSTEM - HAMMER

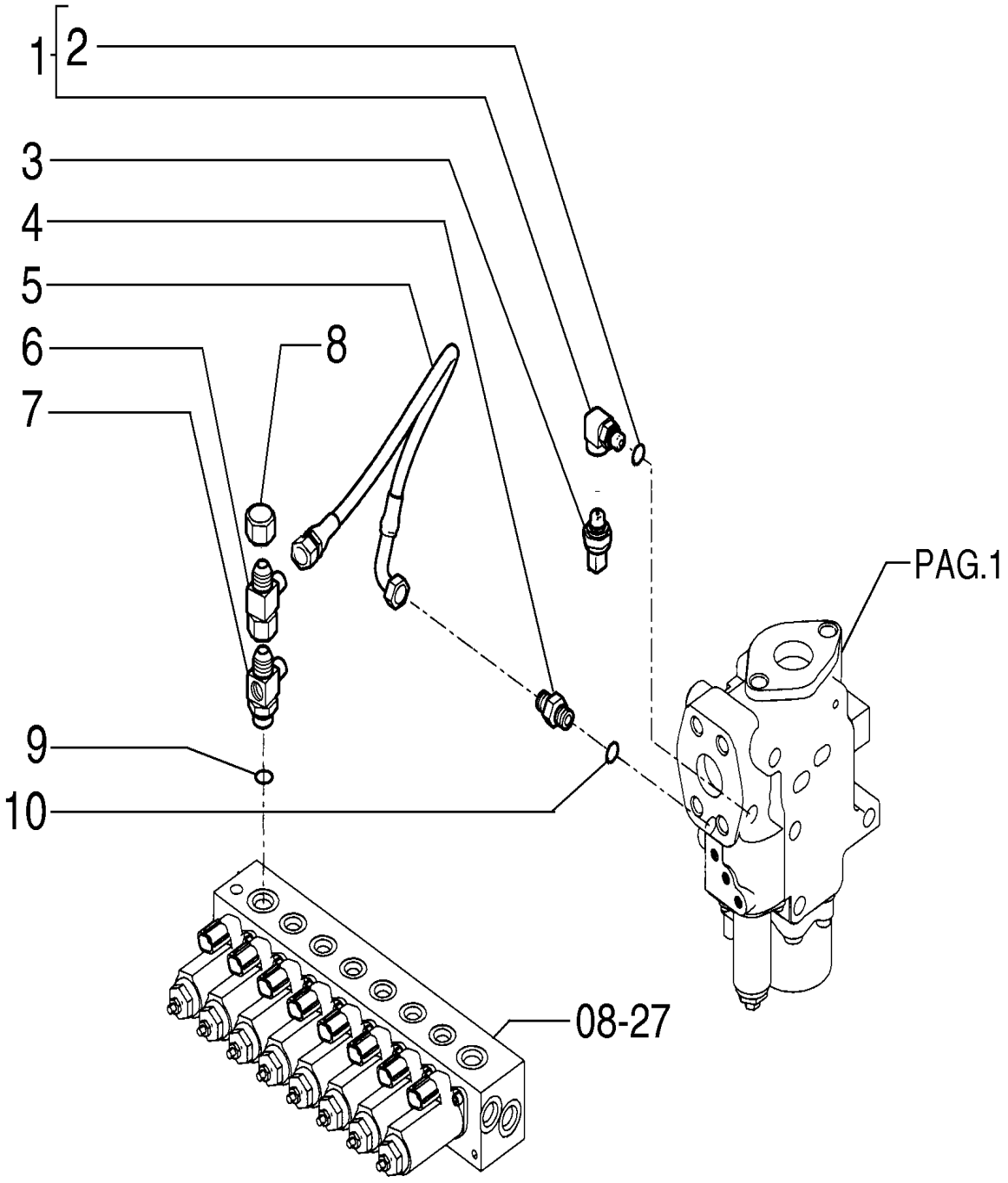

HYDRAULIC SYSTEM - HAMMER

REF	FN	PART NUMBER	YR/SN	QTY	DESCRIPTION
1		87663845		1	CONECTOR HIDRÁUL Includes item 2
2		72209827		1	O-RING
3		87608371		1	SENSOR
4		87522432		1	CONECTOR HIDRÁUL
5		87522431		1	TUBO FLEXÍVEL
6		87663891		1	CONECTOR HIDRÁUL
7		87663851		1	CONECTOR HIDRÁUL
8		87638153		1	PLACA
9		ZD12P01400		1	O-RING
10		ZD12P01100		1	O-RING

09-010	04	p1	7/2013

HYDRAULIC SYSTEM - HAMMER

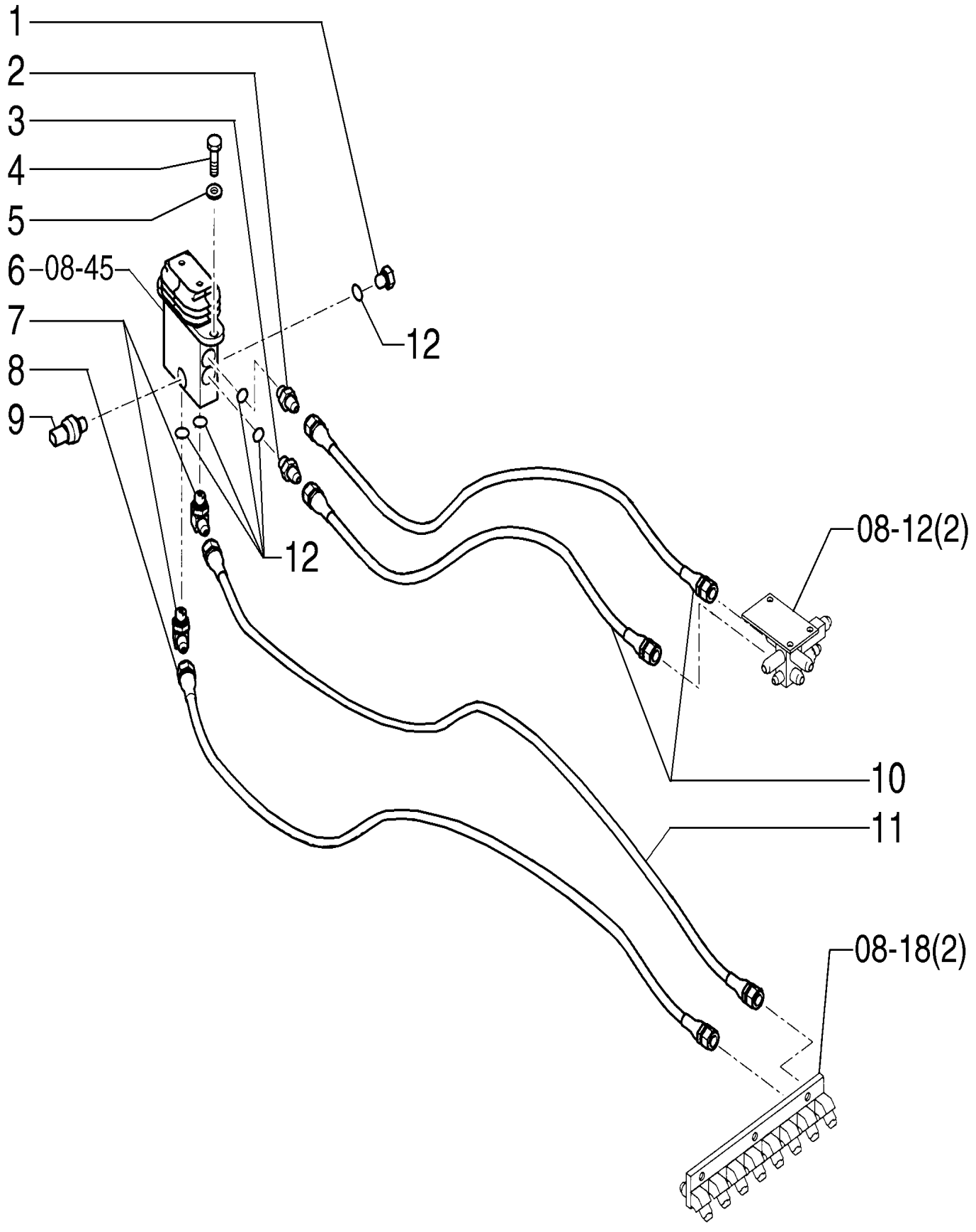

HYDRAULIC SYSTEM - HAMMER

REF	FN	PART NUMBER	YR/SN	QTY	DESCRIPTION
1		87663893		1	PLACA
2		72214744		1	CONECTOR HIDRÁUL
3		87522432		1	CONECTOR HIDRÁUL
4		11106431		2	PARAFUSO Hex, M10 x 30, 10.9, Full Thd
5		12641031		2	TRAVA DA ARRUELA
6		72204155		1	VÁLVULA HIDRÁULICA
7		72214524		2	CONECTOR HIDRÁUL
8		87533078		1	TUBO FLEXÍVEL
9		87608371		1	SENSOR
10		87338415		2	TUBO FLEXÍVEL
11		87533077		1	TUBO FLEXÍVEL
12		ZD12P01100		5	O-RING

09-010	05	p1	7/2013

HYDRAULIC SYSTEM - HAMMER

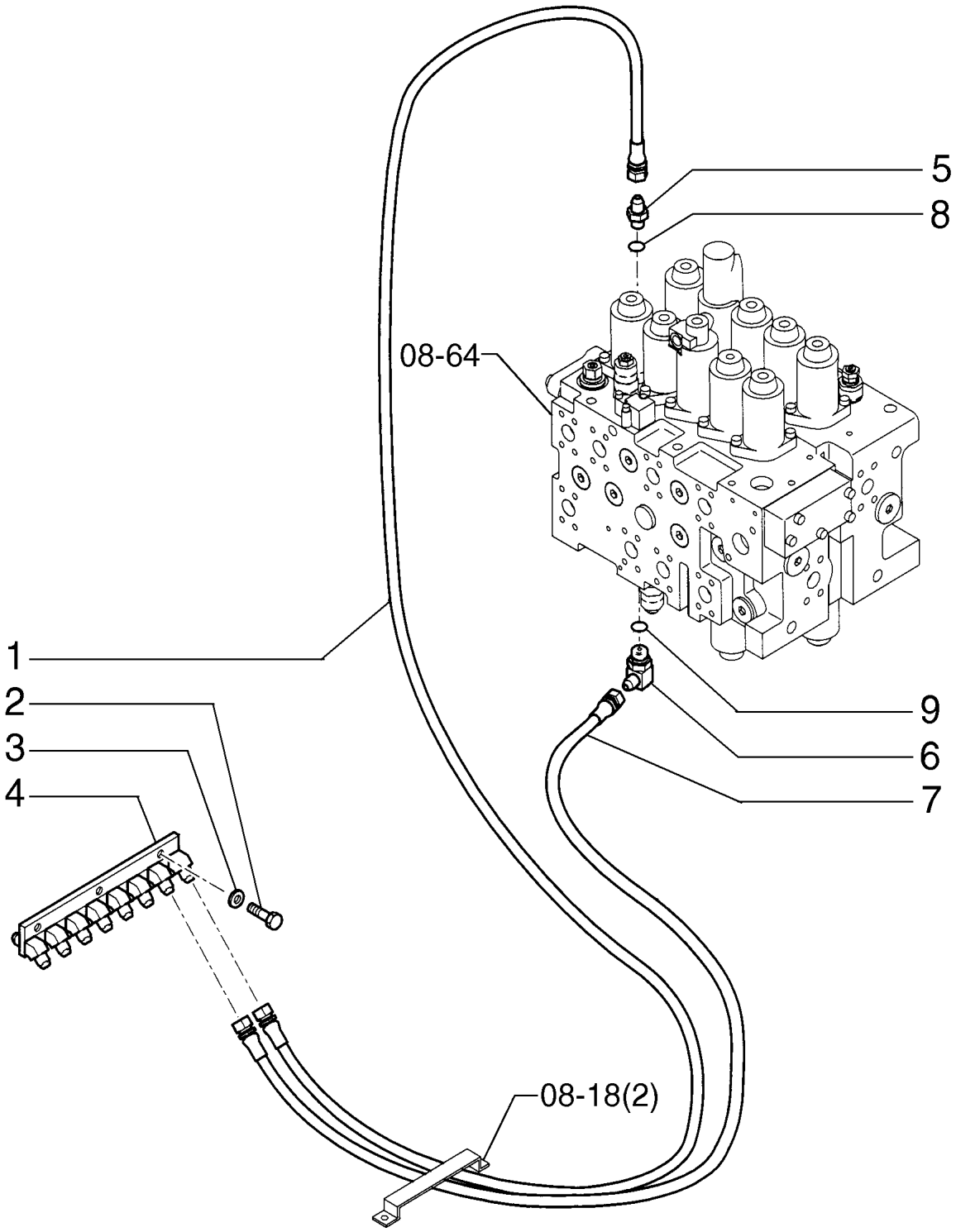

HYDRAULIC SYSTEM - HAMMER

REF	FN	PART NUMBER	YR/SN	QTY	DESCRIPTION
1		87536897		1	TUBO FLEXÍVEL
2		11106431		3	PARAFUSO Hex, M10 x 30, 10.9, Full Thd
3		12641031		3	TRAVA DA ARRUELA
4		87663894		1	BLOCO
5		72214522		1	CONECTOR HIDRÁUL
6		87663898		1	CONECTOR HIDRÁUL
7		72214543		1	MANGUEIRA
8		ZD12P01400		1	O-RING
9		ZD12P01100		1	O-RING

09-010	06	p1	7/2013

HYDRAULIC SYSTEM - HAMMER

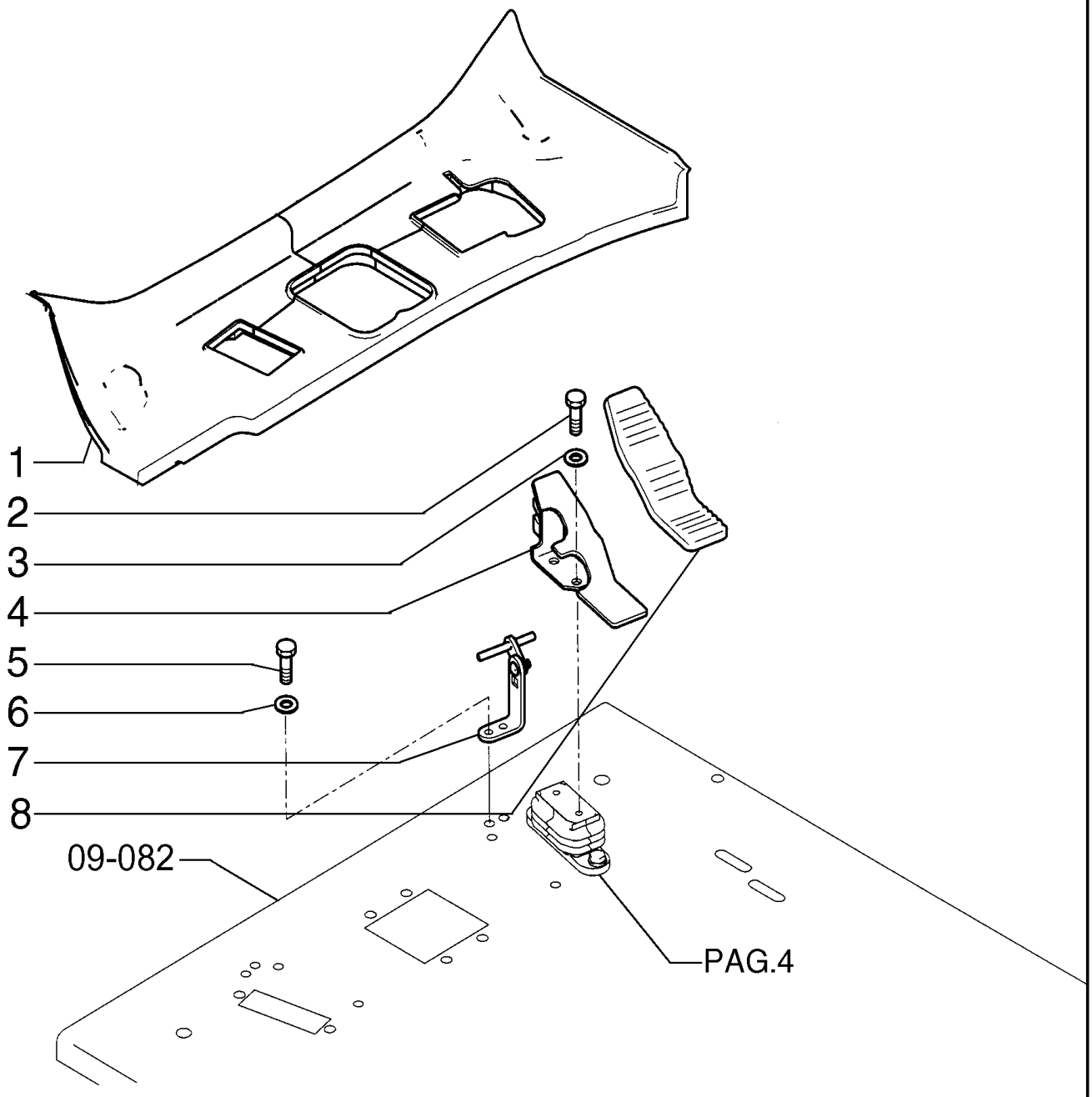

HYDRAULIC SYSTEM - HAMMER

REF	FN	PART NUMBER	YR/SN	QTY	DESCRIPTION
1		87539506		1	ESTRIBO
2		11106031		2	PARAFUSO Hex, M10 x 20, 10.9, Full Thd
3		14496631		2	ARRUELA PLANA M10 x 21 x 2
4		87663899		1	PEDAL
5		16043431		2	PARAFUSO Hex, M8 x 20, 10.9
6		14496531		2	ARRUELA PLANA M8 x 17 x 1.6
7		87539206		1	SUPORTE
8		87539205		1	COBERTURA BORRACHA PEDAL

09-010	07	p1	7/2013

HYDRAULIC SYSTEM - AUGER

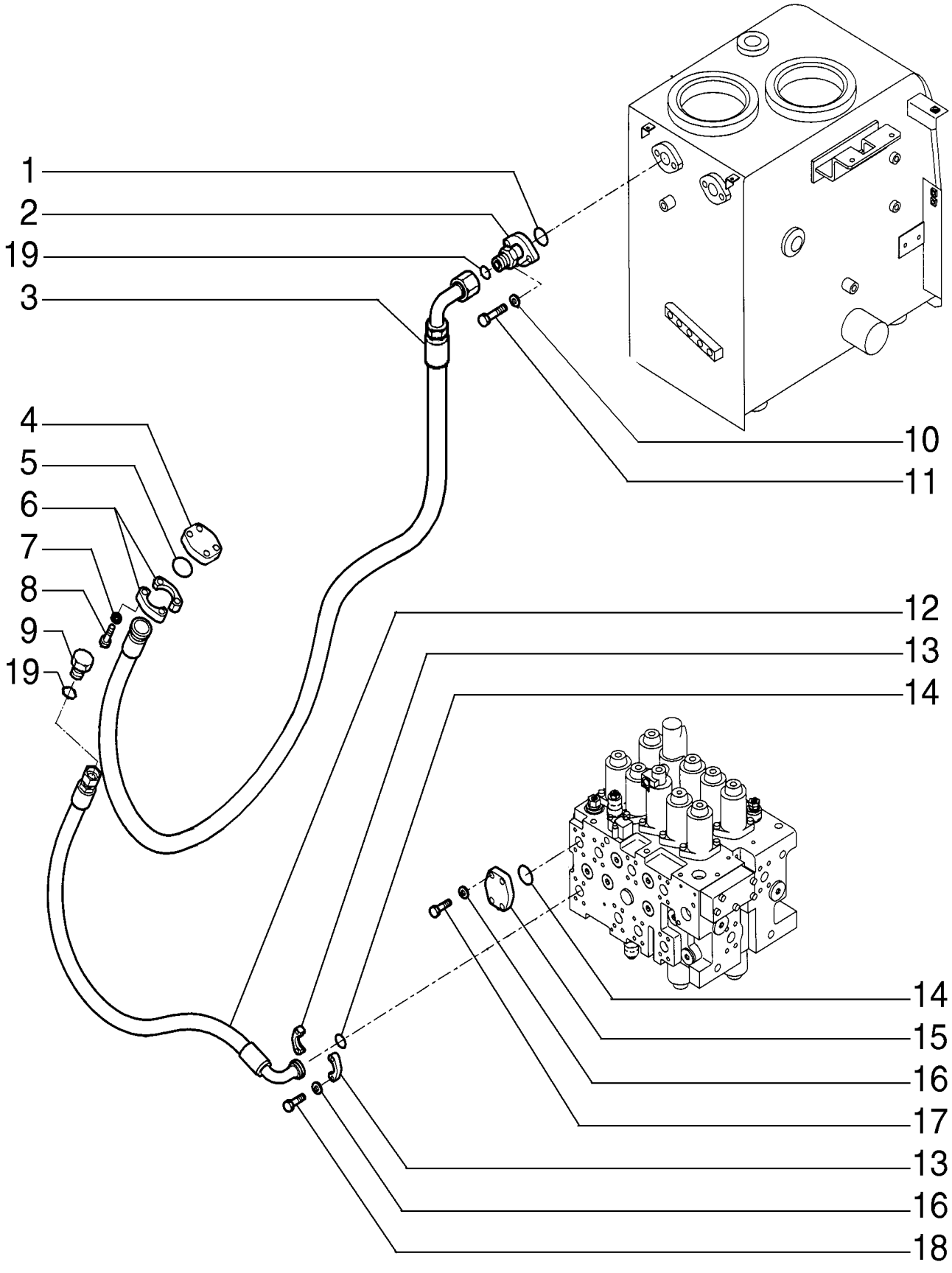

HYDRAULIC SYSTEM - AUGER

REF	FN	PART NUMBER	YR/SN	QTY	DESCRIPTION
1		87397569		1	O-RING
2		87676897		1	FLANGE
3		87757030		1	MANGUEIRA
4		87740511		1	COBERTURA
5		70924192		1	O-RING
6		71444029		2	SEMI-FLANGE
7		10517171		4	TRAVA DA ARRUELA
8		11116231		4	PARAFUSO Hex, M14 x 50, 10.9, Full Thd
9		78100105		1	BUJÃO
10		14496731		2	ARRUELA PLANA M12 x 24 x 2.5 Thk
11		11112431		2	PARAFUSO Hex, M12 x 30, 10.9, Full Thd
12		87521884		1	TUBO FLEXÍVEL
13		71404311		2	SEMI-FLANGE
14		70924200		2	O-RING
15		87397570		1	COBERTURA
16		14496631		8	ARRUELA PLANA M10 x 21 x 2
17		11106431		8	PARAFUSO Hex, M10 x 30, 10.9, Full Thd
18		11106631		4	PARAFUSO Hex, M10 x 35, 10.9, Full Thd
19		70931640		2	JUNTA

09-010	08	p1	7/2013

HYDRAULIC SYSTEM - AUGER

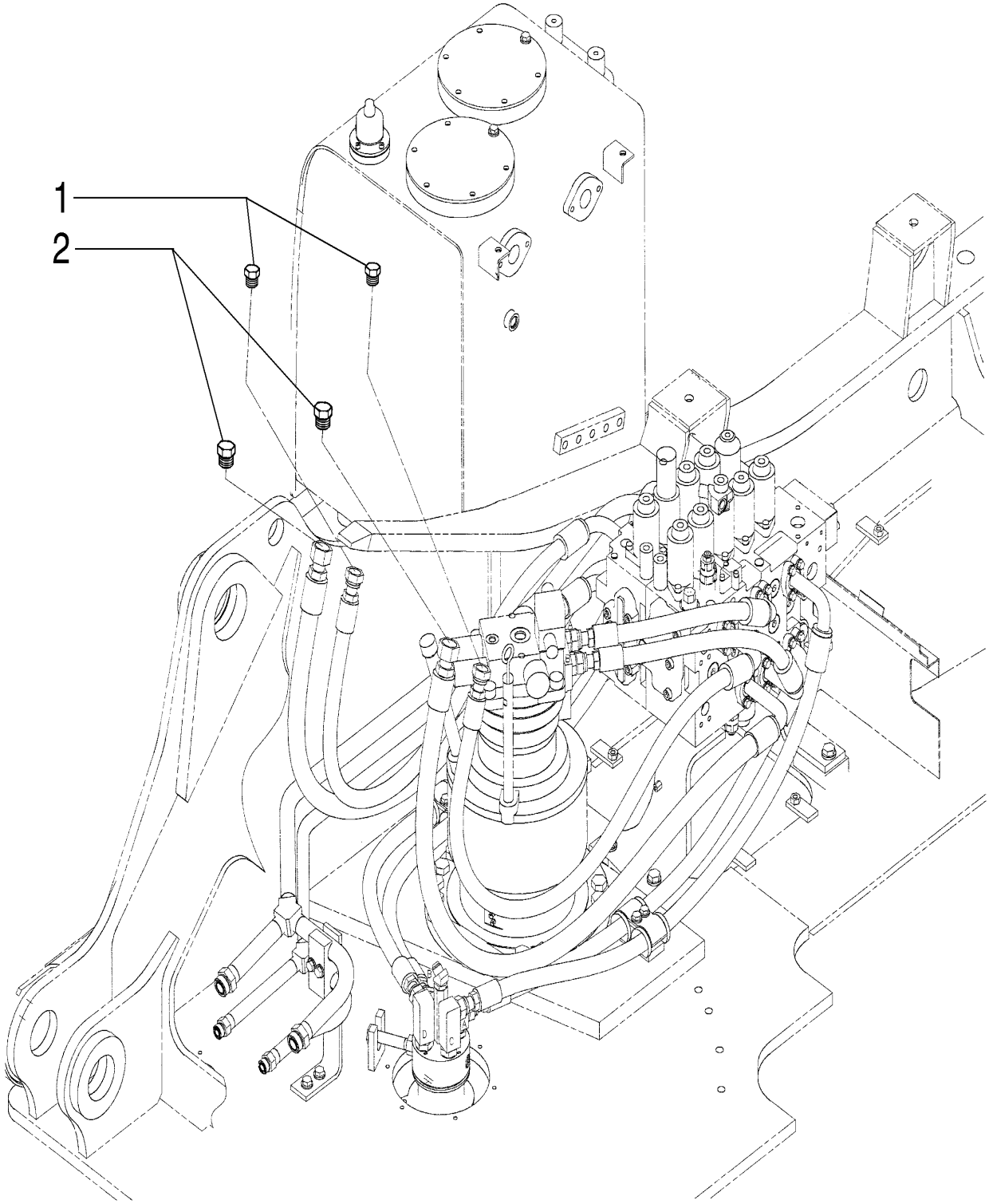

HYDRAULIC SYSTEM - AUGER

REF	FN	PART NUMBER	YR/SN	QTY	DESCRIPTION
1		78100104		2	BUJÃO
2		78100105		2	BUJÃO

09-010	09	p1	7/2013

HYDRAULIC SYSTEM - WOOD GRABS

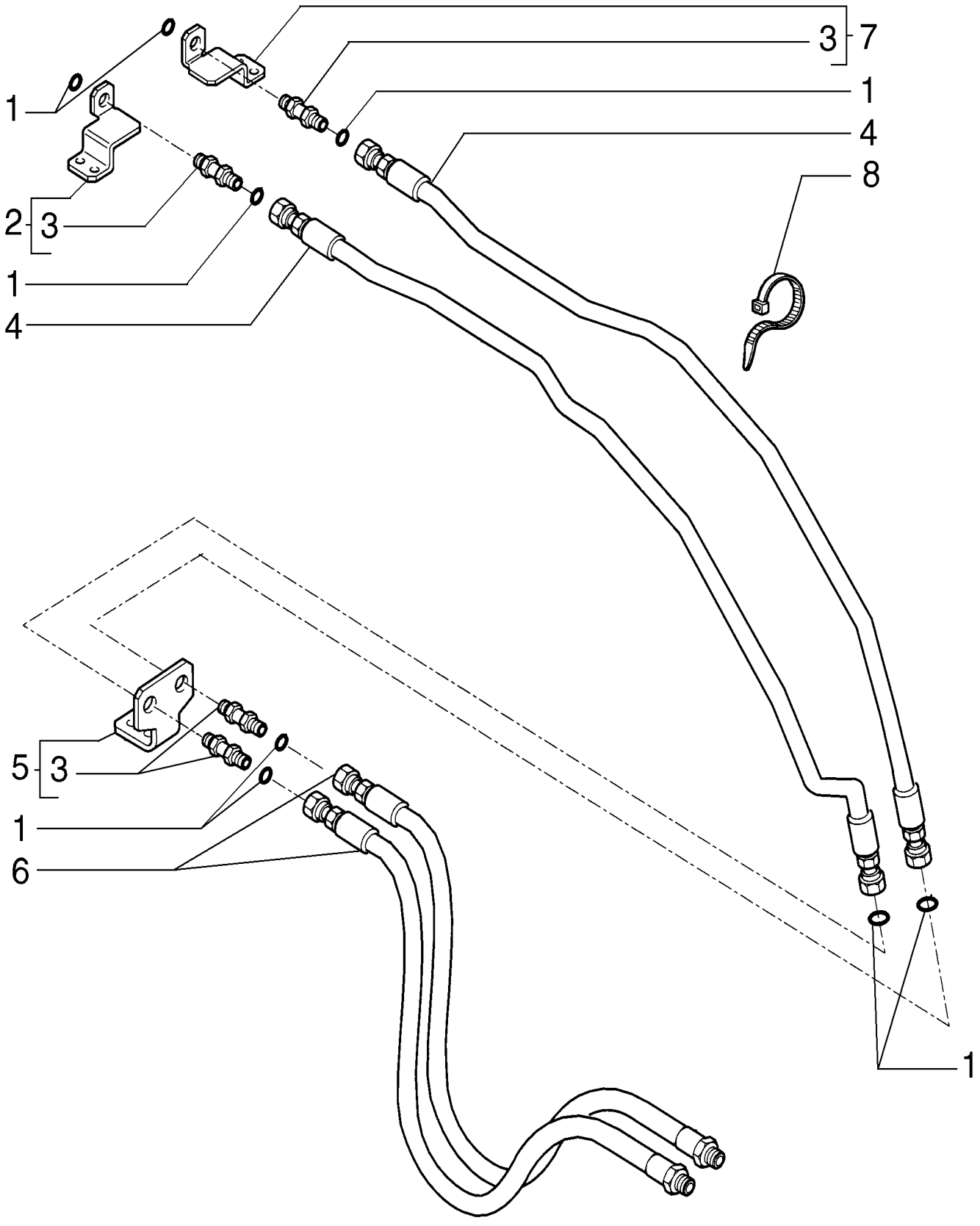

HYDRAULIC SYSTEM - WOOD GRABS

REF	FN	PART NUMBER	YR/SN	QTY	DESCRIPTION
1		70923841		8	O-RING M12.42 ID x 1.78 Thk
2		87396711		1	SUPORTE LH
3		72204201		4	CONECTOR HIDRÁUL
4		87396720		2	TUBO FLEXÍVEL
5		87396715		1	SUPORTE
6		87396721		2	TUBO FLEXÍVEL
7		87396713		1	SUPORTE RH
8		75201642		36	BRAÇADEIRA

09-010/A	01	p1	7/2013

HYDRAULIC SYSTEM - RAISED CAB (OPTIONAL)

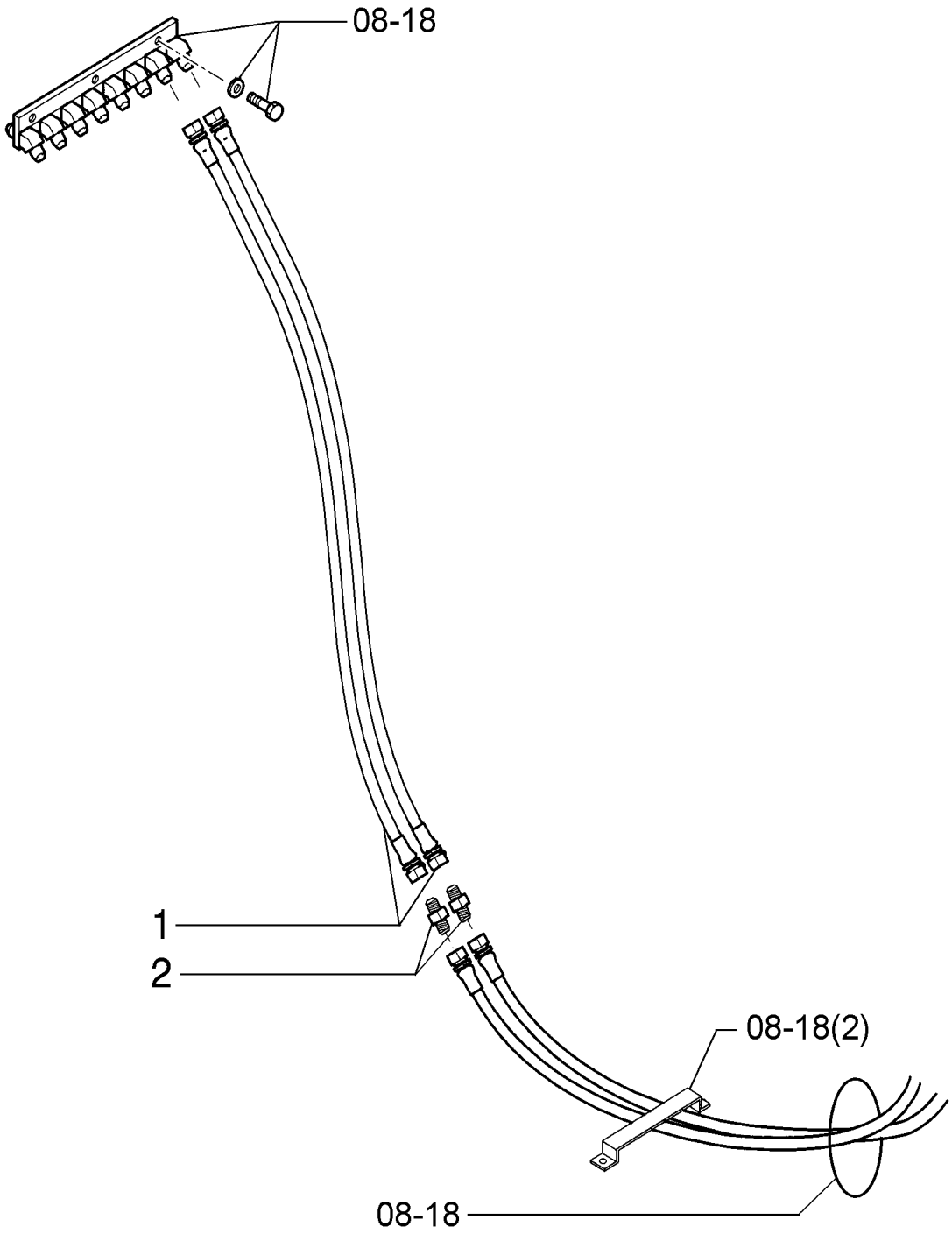

HYDRAULIC SYSTEM - RAISED CAB (OPTIONAL)

REF	FN	PART NUMBER	YR/SN	QTY	DESCRIPTION
1		72214553		2	MANGUEIRA
2		87746067		2	CONECTOR HIDRÁUL

09-011	01	p1	7/2013

HYDRAULIC SYSTEM - ARM 6,35M

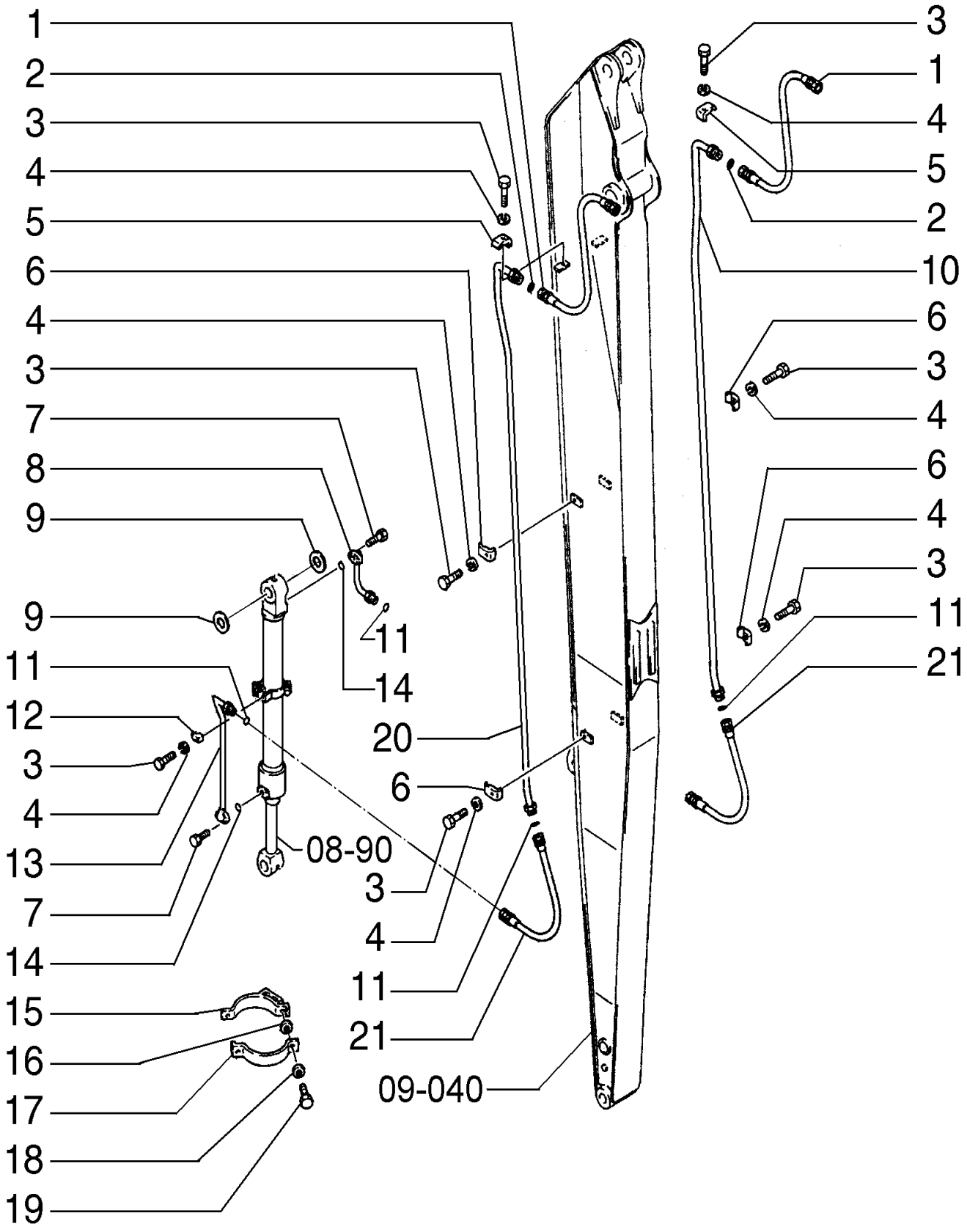

HYDRAULIC SYSTEM - ARM 6,35M

REF	FN	PART NUMBER	YR/SN	QTY	DESCRIPTION
1		72161347		2	MANGUEIRA HIDRÁULICA
2		70923843		2	O-RING
3		11113231		9	PARAFUSO Hex, M12 x 50, 10.9
4		10517071		9	TRAVA DA ARRUELA M12
5		72216473		2	SUPORTE
6		71415855		6	GRAMPO
7		14420231		8	PARAFUSO Hex Soc Hd, M10 x 30, 10.9
8		87591563		1	TUBO HIDRÁULICO
9		75265055		AR	CALÇO DE AFINAÇÃO
9		75265054		AR	CALÇO DE AFINAÇÃO
9		72205758		2	CALÇO DE AFINAÇÃO 2mm Thk
9		75265056		AR	CALÇO DE AFINAÇÃO
10		87591561		1	TUBO
11		71484462		4	O-RING
12		71405859		1	SUPORTE
13		87591564		1	TUBO RÍGIDO
14		70924110		2	O-RING
15		75264970		1	BRAÇADEIRA
16		75262382		2	ESPAÇADOR
17		75264968		1	BRAÇADEIRA
18		10516871		2	TRAVA DA ARRUELA
19		11106631		2	PARAFUSO Hex, M10 x 35, 10.9, Full Thd
20		87591562		1	TUBO
21		72161178		2	MANGUEIRA HIDRÁULICA

09-012	01	p1	7/2013

HYDRAULIC SYSTEM - HAMMER

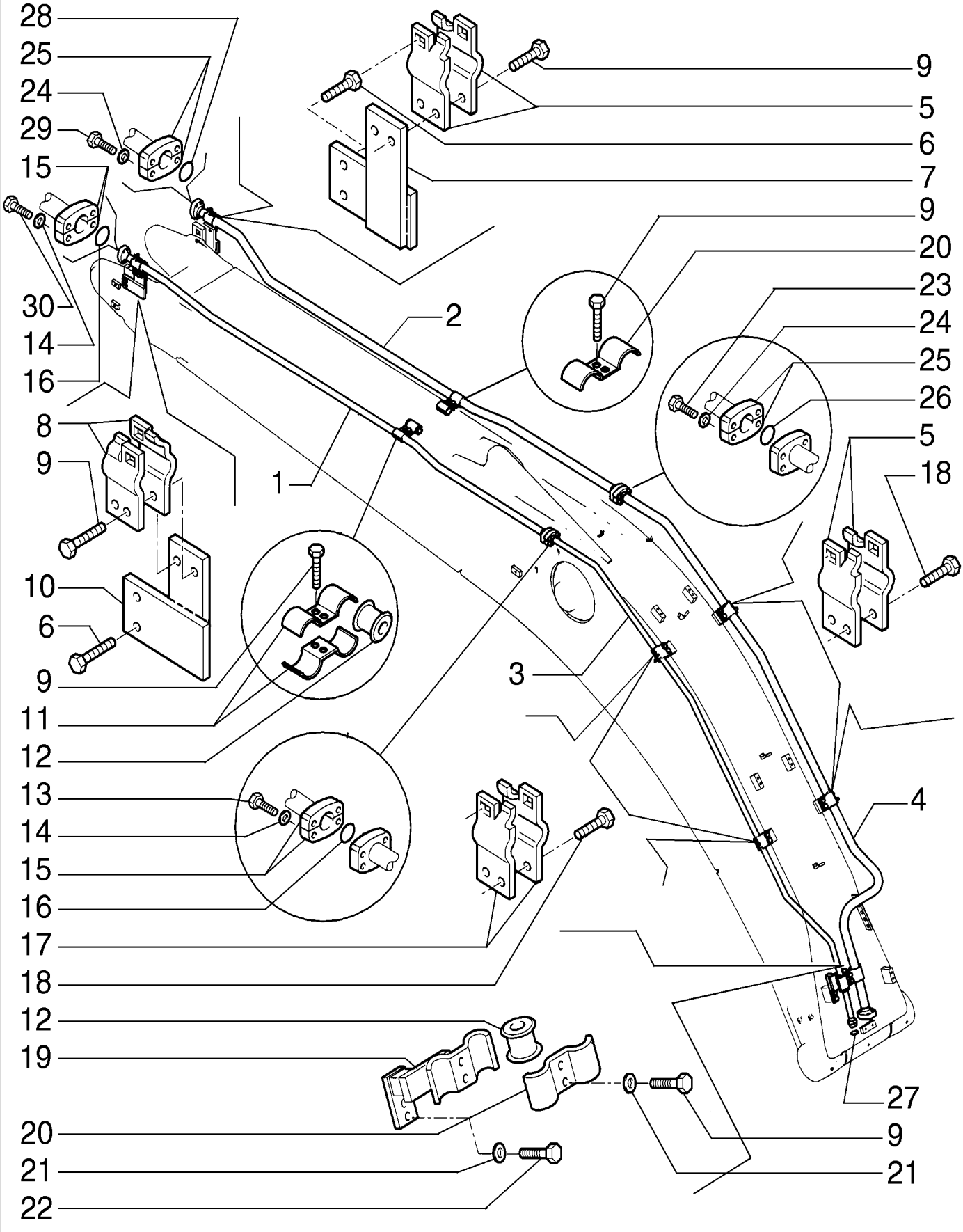

HYDRAULIC SYSTEM - HAMMER

REF	FN	PART NUMBER	YR/SN	QTY	DESCRIPTION
1		87676613		1	TUBO 27.8 mm OD x 3779.2 mm L
2		87676611		1	TUBO 31.75 mm OD x 3779.2, 280.3 mm L
3		87676557		1	TUBO 27.8 mm OD x 2254.5 mm L
4		87676610		1	TUBO
5		87664005		6	BRAÇADEIRA TUBO
6		11112834		4	PARAFUSO Hex, M12 x 40, 10.9, Full Thd
7		87663966		1	SUPORTE
8		87599324		2	BRAÇADEIRA TUBO
9		11112631		10	PARAFUSO Hex, M12 x 35, 10.9
10		87664002		1	SUPORTE
11		87599320		2	BRAÇADEIRA TUBO
12		87343521		2	BUCHA
13		14422431		4	PARAFUSO Hex Soc Hd, M12 x 50, 10.9
14		10517071		4	TRAVA DA ARRUELA M12
15		71404313		2	SEMI-FLANGE
16		70924200		2	O-RING
17		87599323		4	BRAÇADEIRA TUBO
18		11112431		8	PARAFUSO Hex, M12 x 30, 10.9, Full Thd
19		87663958		1	SUPORTE
20		87599318		4	BRAÇADEIRA TUBO
21		14496731		24	ARRUELA PLANA M12 x 24 x 2.5 Thk
22		11113331		2	PARAFUSO Hex, M12 x 55, 10.9
23		14424531		4	PARAFUSO
24		10517171		8	TRAVA DA ARRUELA
25		71444029		4	SEMI-FLANGE
26		70924192		1	O-RING
27		70931640		1	JUNTA
28		70924192		1	O-RING
29		11116231		4	PARAFUSO Hex, M14 x 50, 10.9, Full Thd
30		11113331		4	PARAFUSO Hex, M12 x 55, 10.9

09-015	01	p1	7/2013

HYDRAULIC SYSTEM - HAMMER - 2400MM

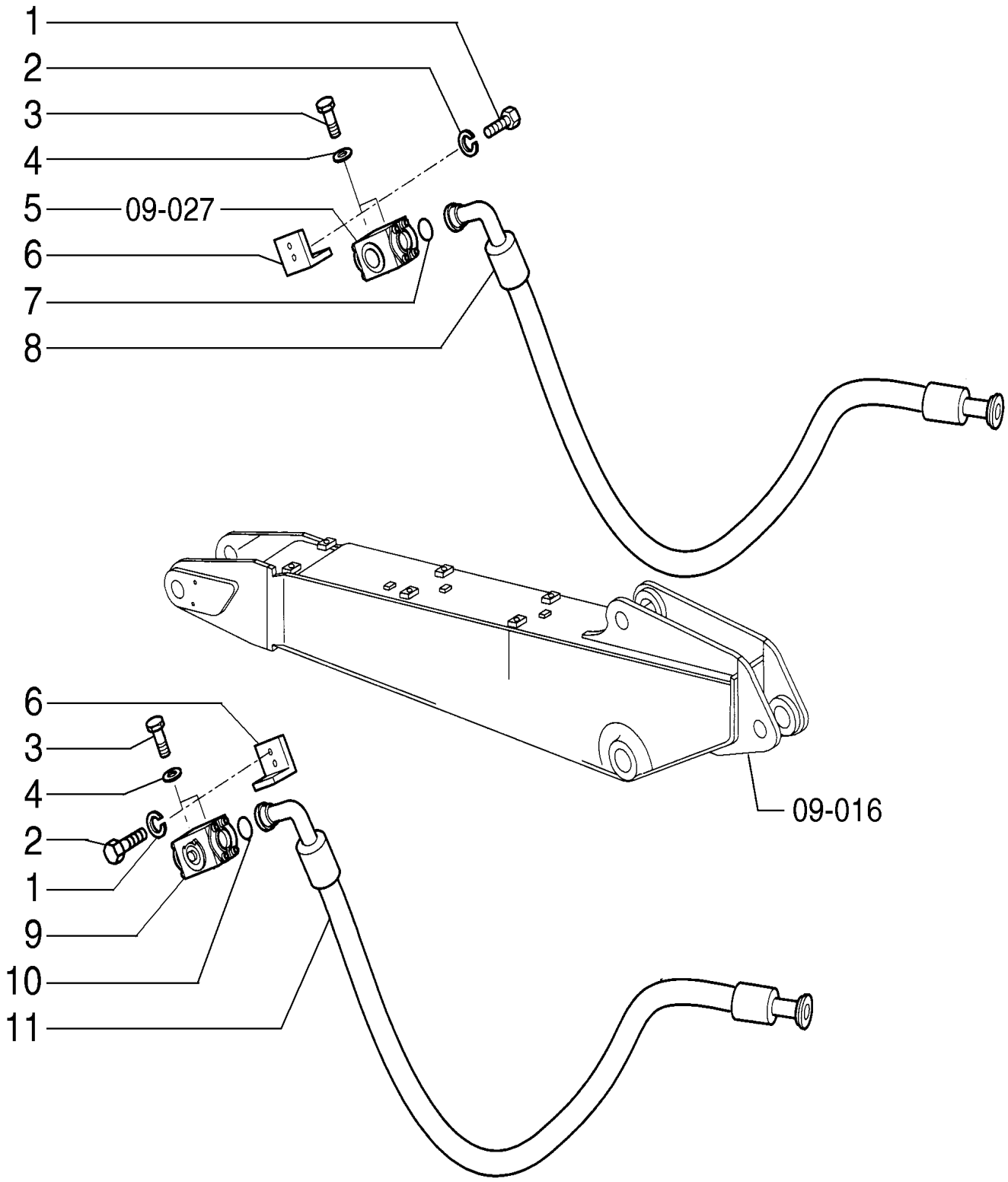

HYDRAULIC SYSTEM - HAMMER - 2400MM

REF	FN	PART NUMBER	YR/SN	QTY	DESCRIPTION
1		11112431		4	PARAFUSO Hex, M12 x 30, 10.9, Full Thd
2		10517071		4	TRAVA DA ARRUELA M12
3		11106231		4	PARAFUSO Hex, M10 x 25, 10.9, Full Thd
4		10516871		4	TRAVA DA ARRUELA
5		72215205		1	VÁLVULA HIDRÁULICA
6		87664006		2	SUPORTE
7		70924192		1	O-RING
8		87556738		1	TUBO FLEXÍVEL
9		72215206		1	VÁLVULA HIDRÁULICA
10		70924200		1	O-RING
11		87556737		1	TUBO FLEXÍVEL

09-016	01	p1	7/2013

HAMMER - 2900MM ARM TUBING

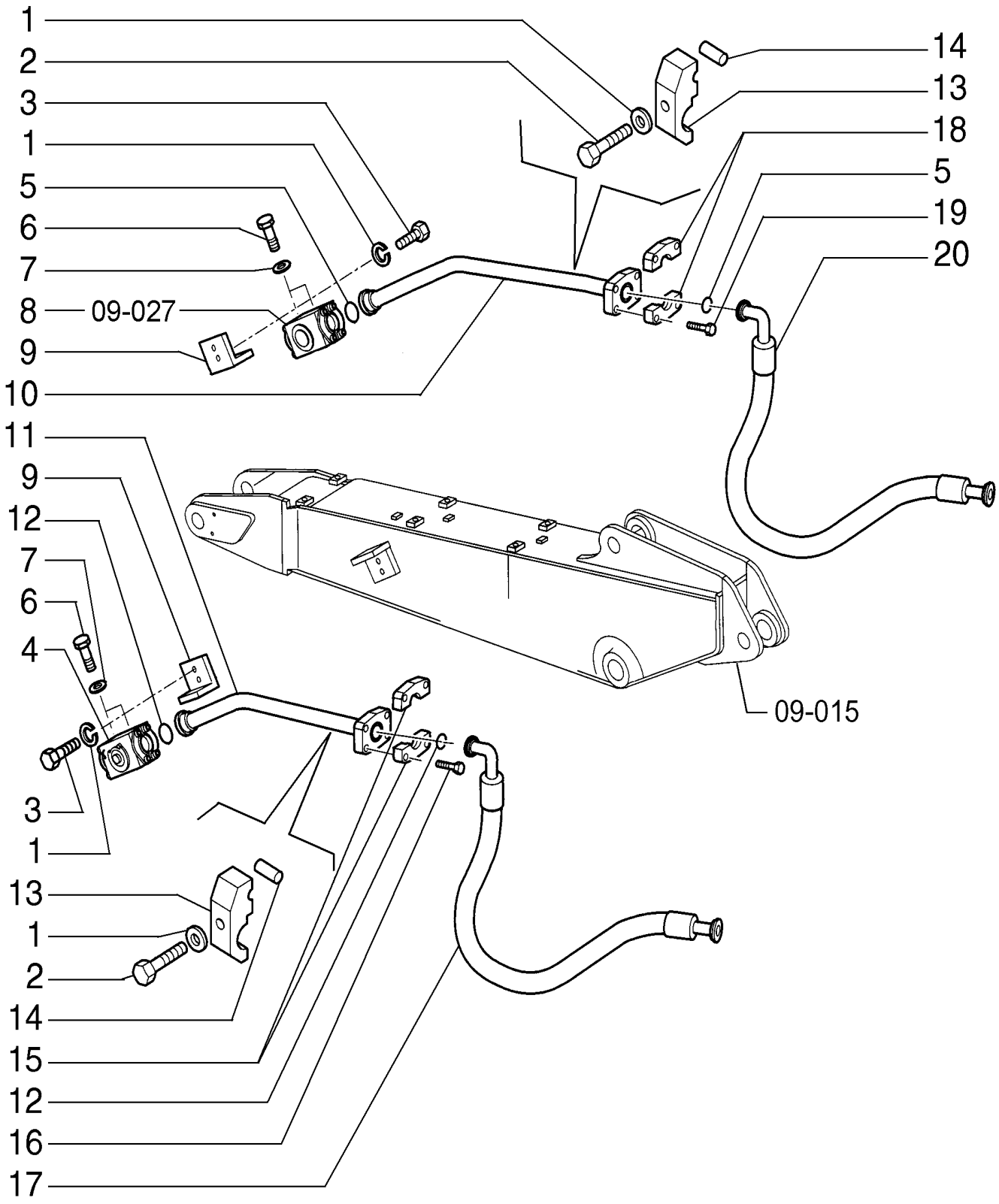

HAMMER - 2900MM ARM TUBING

REF	FN	PART NUMBER	YR/SN	QTY	DESCRIPTION
1		10517074		6	TRAVA DA ARRUELA
2		11113534		2	PARAFUSO Hex, M12 x 65, 10.9, Full Thd
3		11112434		4	PARAFUSO Hex, M12 x 30, 10.9, Full Thd
4		72215206		1	VÁLVULA HIDRÁULICA
5		70924192		2	O-RING
6		11106431		4	PARAFUSO Hex, M10 x 30, 10.9, Full Thd
7		10516871		4	TRAVA DA ARRUELA
8		72215205		1	VÁLVULA HIDRÁULICA
9		87664006		2	SUPORTE
10		87676620		1	TUBO
11		87676618		1	TUBO
12		70924200		2	O-RING
13		71466017		2	BRACKET, SUPPORTING
14		87362973		2	TUBO
15		71404313		2	SEMI-FLANGE
16		14422334		4	PARAFUSO Hex Soc Hd, M12 x 45, 10.9
17		87556737		1	TUBO FLEXÍVEL
18		71444029		2	SEMI-FLANGE
19		14424531		2	PARAFUSO
20		87556738		1	TUBO FLEXÍVEL

09-017	01	p1	7/2013

HAMMER - 2400MM ARM TUBING

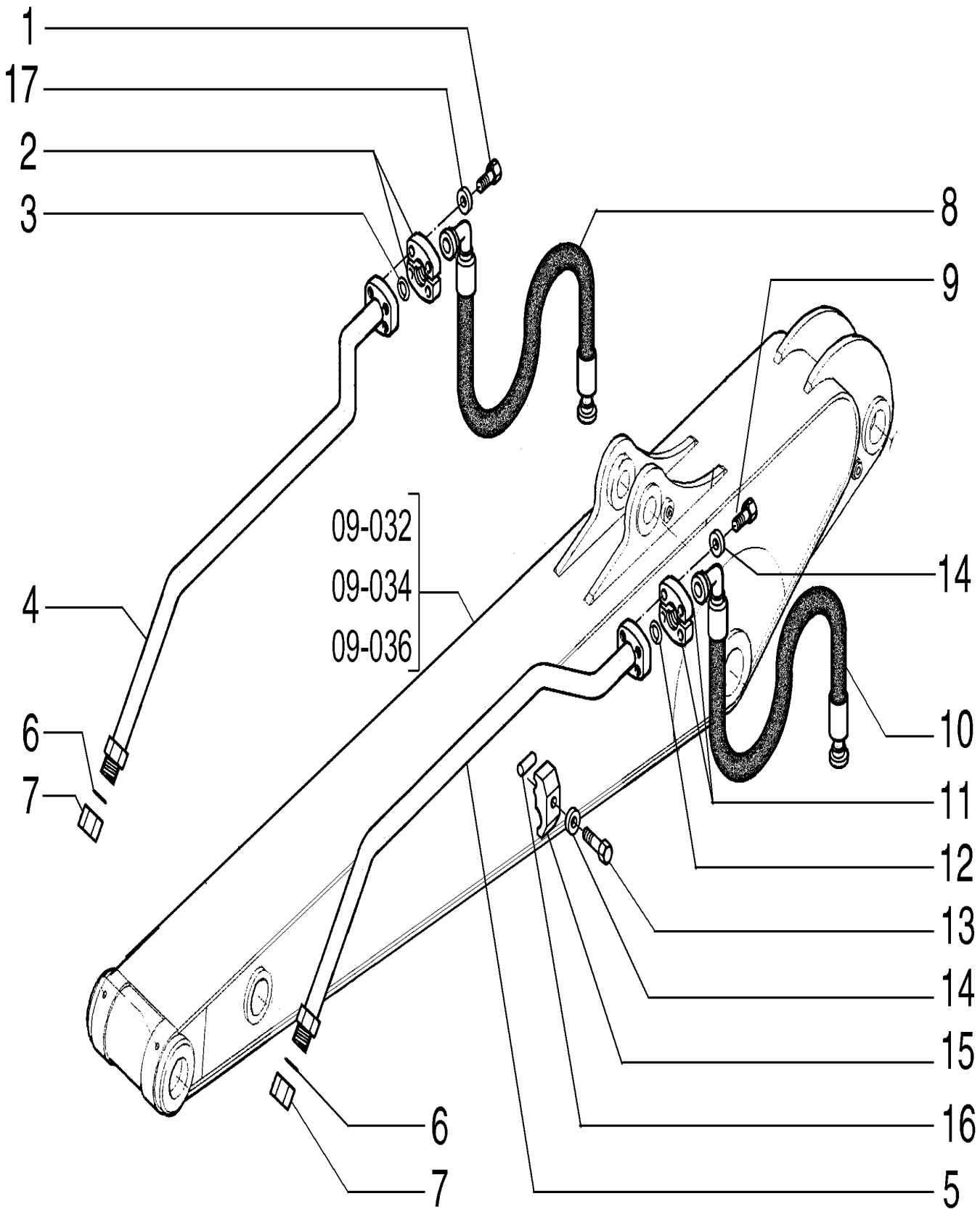

HAMMER - 2400MM ARM TUBING

REF	FN	PART NUMBER	YR/SN	QTY	DESCRIPTION
1		11116231		4	PARAFUSO Hex, M14 x 50, 10.9, Full Thd
2		71444029		2	SEMI-FLANGE
3		70924192		3	O-RING
4		87591589		1	TUBO 26 mm ID x 34 mm OD x 1132, 170 mm L
5		87591590		1	TUBO 26 mm ID x 34 mm OD
6		70931640		2	JUNTA
7		78100138		2	BUJÃO
8		87556738		1	TUBO FLEXÍVEL
9		11113231		4	PARAFUSO Hex, M12 x 50, 10.9
10		87556737		1	TUBO FLEXÍVEL
11		71404313		2	SEMI-FLANGE
12		70924200		1	O-RING
13		11113531		6	PARAFUSO Hex, M12 x 65, 10.9
14		10517071		10	TRAVA DA ARRUELA M12
15		72215152		6	SUPORTE
16		87362973		2	TUBO
17		10517171		4	TRAVA DA ARRUELA

OPTIONAL

CX220B

09-017	02	p1	7/2013

HAMMER - 2940MM ARM TUBING

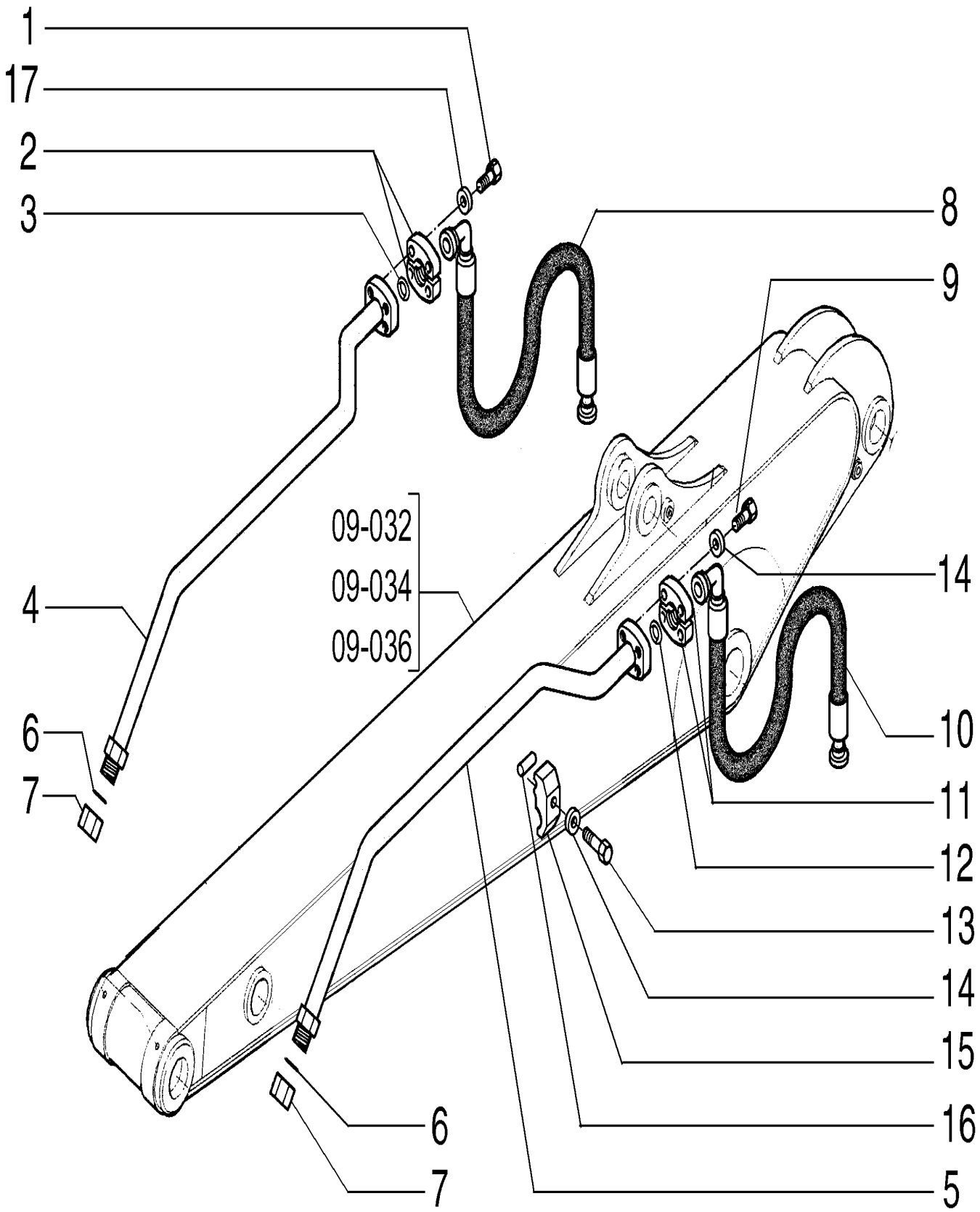

HAMMER - 2940MM ARM TUBING

REF	FN	PART NUMBER	YR/SN	QTY	DESCRIPTION
1		11116231		4	PARAFUSO Hex, M14 x 50, 10.9, Full Thd
2		71444029		2	SEMI-FLANGE
3		70924192		3	O-RING
4		87717359		1	TUBO
5		87717365		1	TUBO
6		70931640		2	JUNTA
7		78100138		2	BUJÃO
8		87556738		1	TUBO FLEXÍVEL
9		11113231		4	PARAFUSO Hex, M12 x 50, 10.9
10		87556737		1	TUBO FLEXÍVEL
11		71404313		2	SEMI-FLANGE
12		70924200		1	O-RING
13		11113531		6	PARAFUSO Hex, M12 x 65, 10.9
14		10517071		10	TRAVA DA ARRUELA M12
15		72215152		6	SUPORTE
16		87362973		2	TUBO
17		10517171		4	TRAVA DA ARRUELA

OPTIONAL

CX220B

09-018	01	p1	7/2013

HYDRAULIC SYSTEM - WOOD GRABS

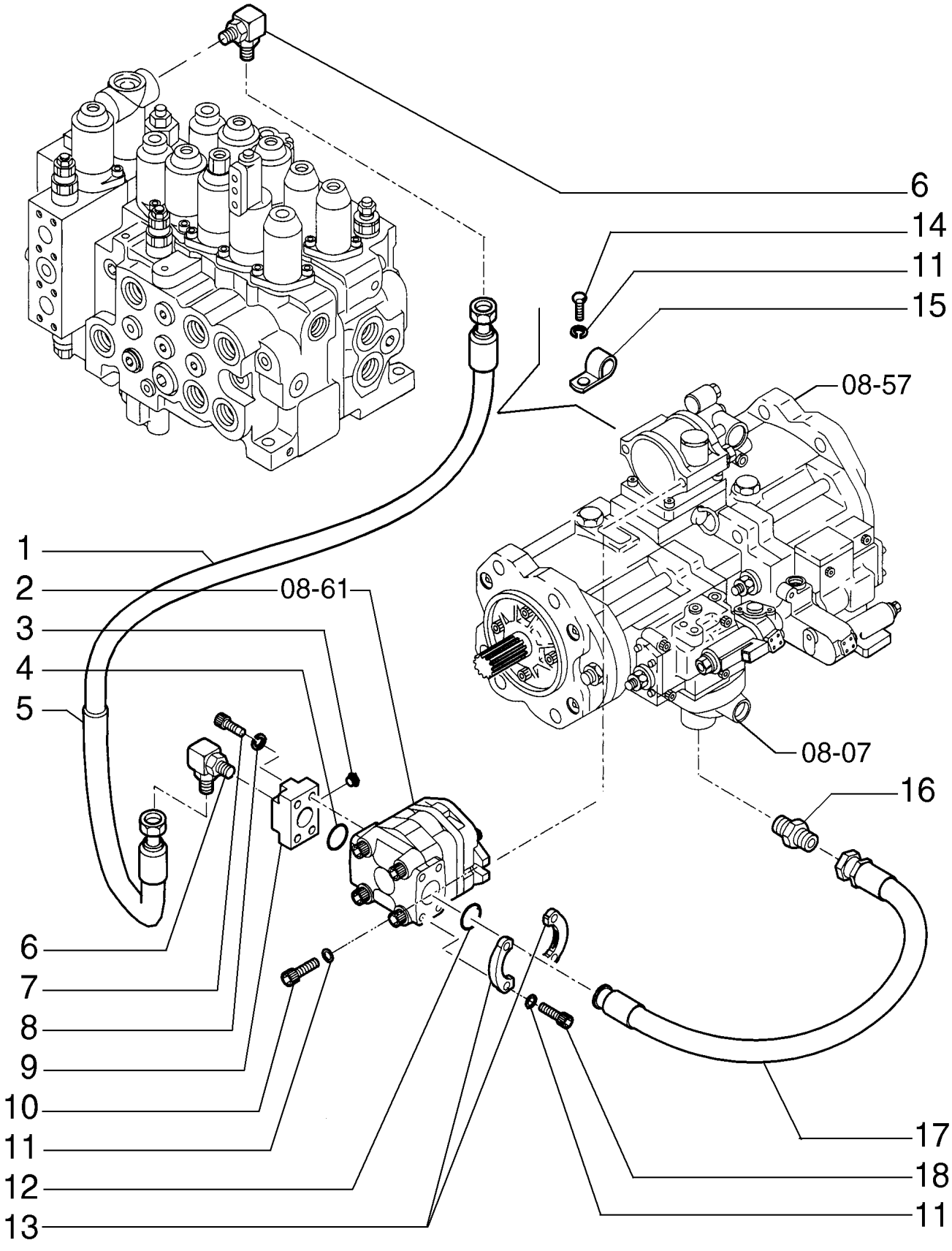

HYDRAULIC SYSTEM - WOOD GRABS

REF	FN	PART NUMBER	YR/SN	QTY	DESCRIPTION
1		87530581		1	MANGUEIRA
2		72204291		1	BOMBA HIDRÁULICA
3		87663893		1	PLACA
4		70924200		1	O-RING
5		87375394		1	CAPA FLEXÍVEL
6		72214763		2	CONECTOR HIDRÁUL
7		14420531		4	PARAFUSO Hex Soc Hd, M10 x 45, 10.9
8		10516871		4	TRAVA DA ARRUELA
9		72204754		1	FLANGE
10		14420231		2	PARAFUSO Hex Soc Hd, M10 x 30, 10.9
11		14496631		6	ARRUELA PLANA M10 x 21 x 2
12		70924192		1	O-RING
13		71404909		2	FLANGE
14		11106031		2	PARAFUSO Hex, M10 x 20, 10.9, Full Thd
15		70929806		2	COLAR
16		87722636		1	CONECTOR HIDRÁUL
17		87528092		1	TUBO FLEXÍVEL
18		11106631		4	PARAFUSO Hex, M10 x 35, 10.9, Full Thd

09-019	01	p1	7/2013

HYDRAULIC SYSTEM - WOOD GRABS

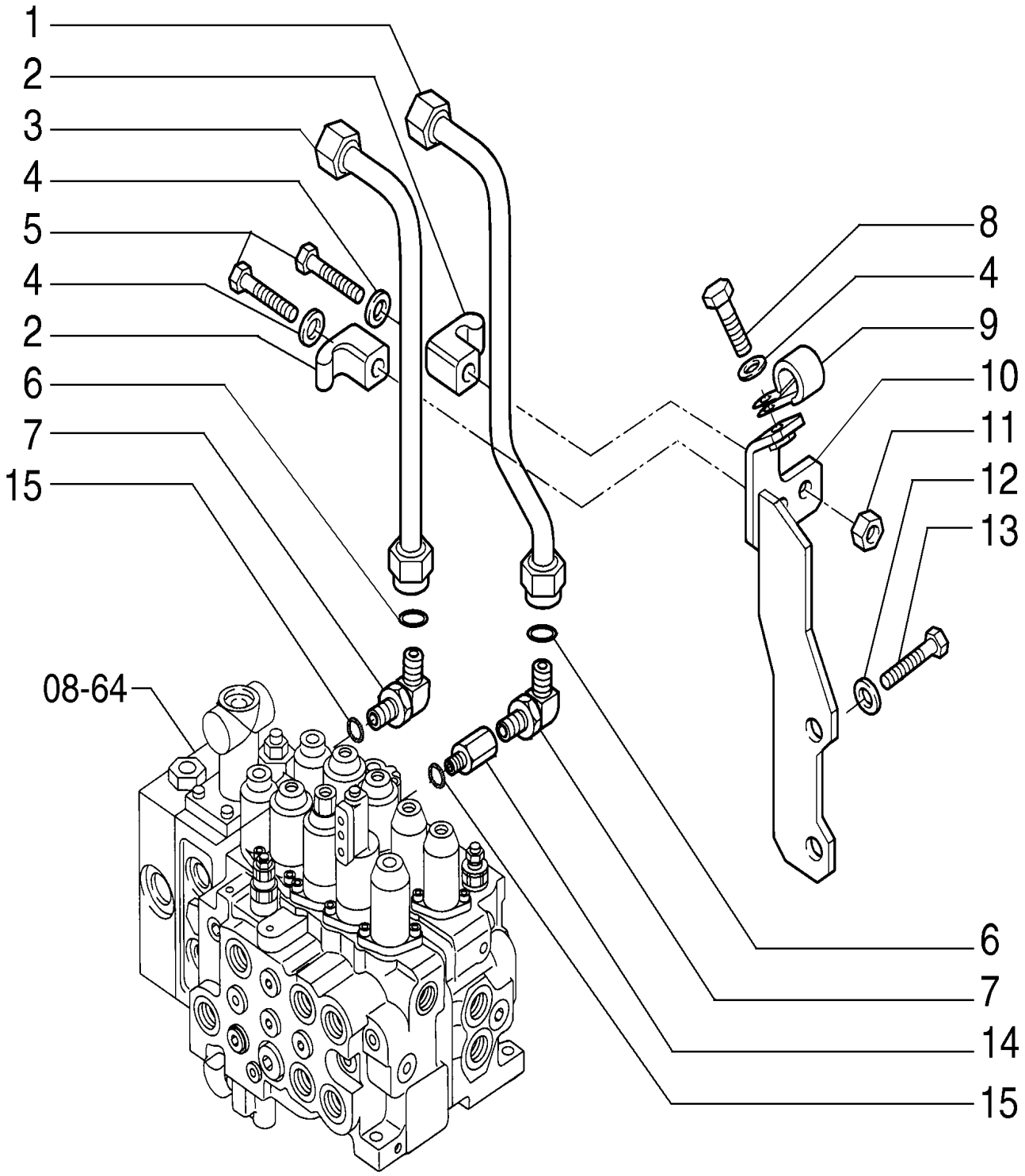

HYDRAULIC SYSTEM - WOOD GRABS

REF	FN	PART NUMBER	YR/SN	QTY	DESCRIPTION
1		87720984		1	TUBO 22 mm DIA x 324, 95 mm L
2		72954322		2	BRAÇADEIRA
3		87720927		1	TUBO 260, 95 mm L
4		14496631		3	ARRUELA PLANA M10 x 21 x 2
5		11107431		2	PARAFUSO Hex, M10 x 1.5 x 60.00mm, Cl 10.9, ZND
6		71404166		2	O-RING
7		87532105		2	CONECTOR HIDRÁUL
8		11106231		1	PARAFUSO Hex, M10 x 25, 10.9, Full Thd
9		70929806		1	COLAR
10		87720998		1	SUPORTE
11		11701721		2	PORCA M10, Cl 10
12		11112231		2	PARAFUSO Hex, M12 x 25, 10.9, Full Thd
13		14496731		2	ARRUELA PLANA M12 x 24 x 2.5 Thk
14		87721008		1	CONECTOR HIDRÁUL
15		ZD12P01800		3	O-RING

09-019/A	01	p1	7/2013

WOOD GRABS - SERVO CONTROL

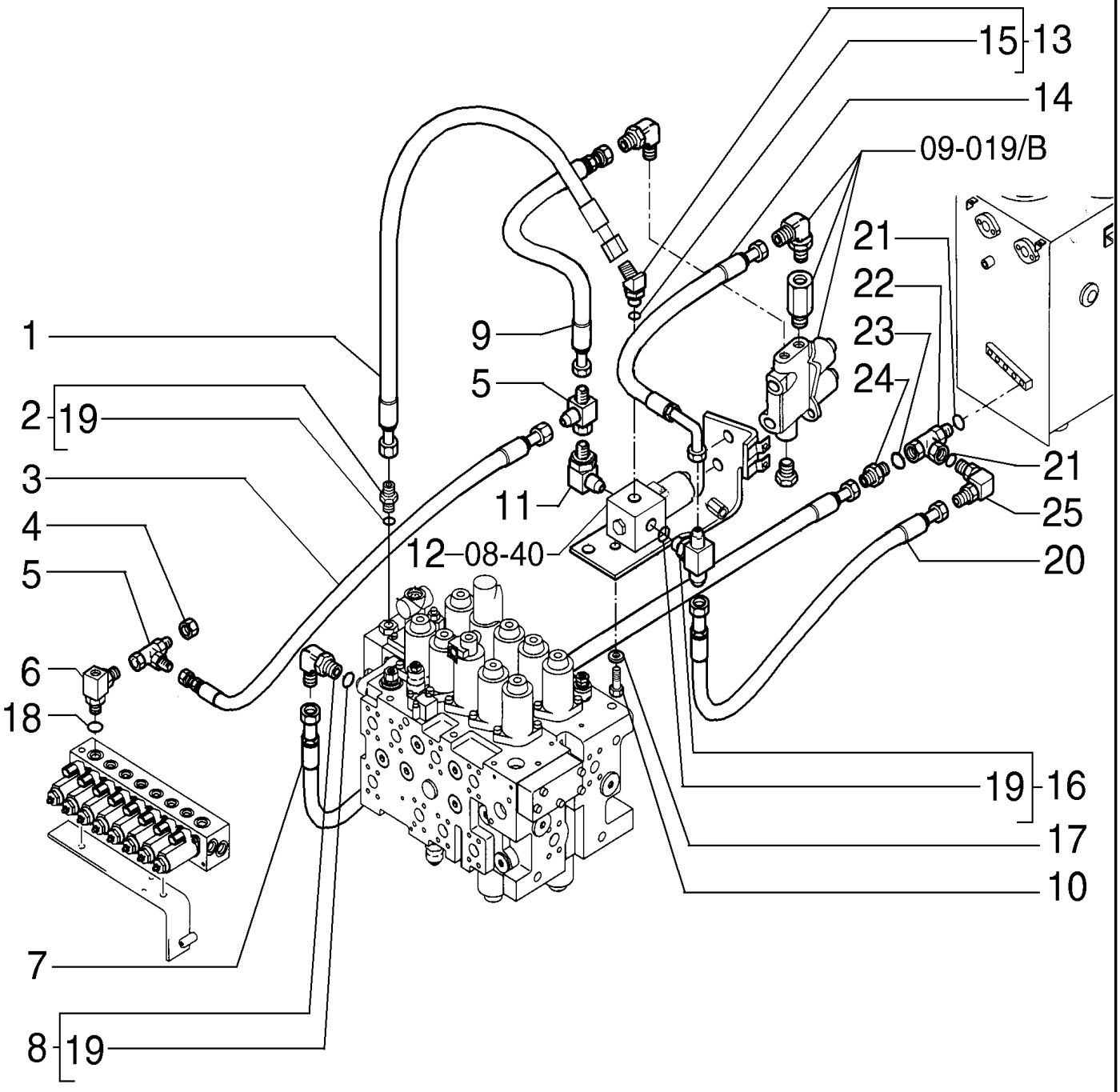

WOOD GRABS - SERVO CONTROL

REF	FN	PART NUMBER	YR/SN	QTY	DESCRIPTION
1		87645092		1	TUBO FLEXÍVEL 6.30 mm ID x 780.00 mm
2		72214714		3	CONECTOR HIDRÁUL Includes item 19
3		72214535		2	MANGUEIRA
4		87638153		1	PLACA
5		87663891		1	CONECTOR HIDRÁUL
6		87663851		1	CONECTOR HIDRÁUL
7		87687417		1	MANGUEIRA HIDRÁULICA 6.30 mm ID x 950.00 mm
8		72214524		3	CONECTOR HIDRÁUL Includes item 19
9		87397448		1	TUBO FLEXÍVEL
10		10902231		2	PARAFUSO Hex, M6 x 16, 10.9
11		72214735		2	CONECTOR HIDRÁUL
12		72955526		1	VÁLVULA
13		72214542		3	CONECTOR HIDRÁUL Includes item 15
14		87532907		1	MANGUEIRA
15		ZD12P01800		1	O-RING
16		87721359		1	CONECTOR HIDRÁUL Includes item 19
17		14496431		2	ARRUELA PLANA M6.4 x 12.5 x 1.6 Thk
18		ZD12P01400		1	O-RING
19		ZD12P01100		4	O-RING
20		87532906		1	MANGUEIRA 6.35 mm ID x 2170.00 mm
21		ZD12P01400		2	O-RING
22		72283853		1	T
23		ZD12P01100		1	O-RING
24		72214744		1	CONECTOR HIDRÁUL
25		72214525		1	CONECTOR HIDRÁUL

09-019/B	01	p1	7/2013

WOOD GRABS - SERVO CONTROL

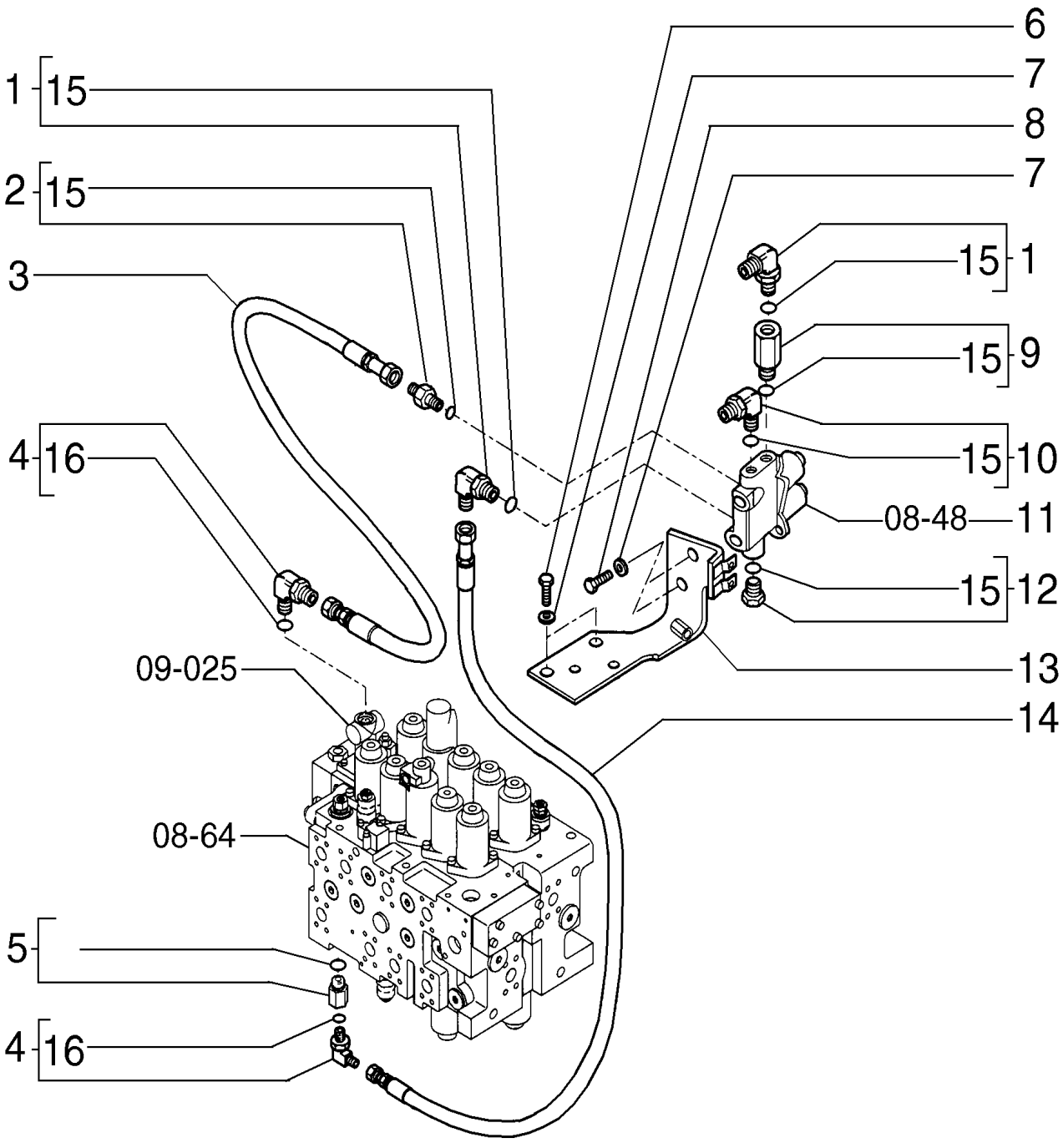

WOOD GRABS - SERVO CONTROL

REF	FN	PART NUMBER	YR/SN	QTY	DESCRIPTION
1		72214524		3	CONECTOR HIDRÁUL Includes item 15
2		72214744		3	CONECTOR HIDRÁUL Includes item 15
3		72214535		2	MANGUEIRA
4		72214542		3	CONECTOR HIDRÁUL Includes item 16
5		87700941		2	SENSOR
6		11106031		2	PARAFUSO Hex, M10 x 20, 10.9, Full Thd
7		14496631		4	ARRUELA PLANA M10 x 21 x 2
8		11106231		2	PARAFUSO Hex, M10 x 25, 10.9, Full Thd
9		87722639		1	CONECTOR HIDRÁUL Includes item 15
10		72214735		2	CONECTOR HIDRÁUL Includes item 15
11		87531523		1	VÁLVULA HIDRÁULICA
12		87663893		1	PLACA
13		87721216		1	SUPORTE
14		72214539		1	MANGUEIRA
15		ZD12P01100		6	O-RING
16		ZD12P01800		2	O-RING

09-020	01	p1	7/2013

HYDRAULIC SYSTEM - WOOD GRABS

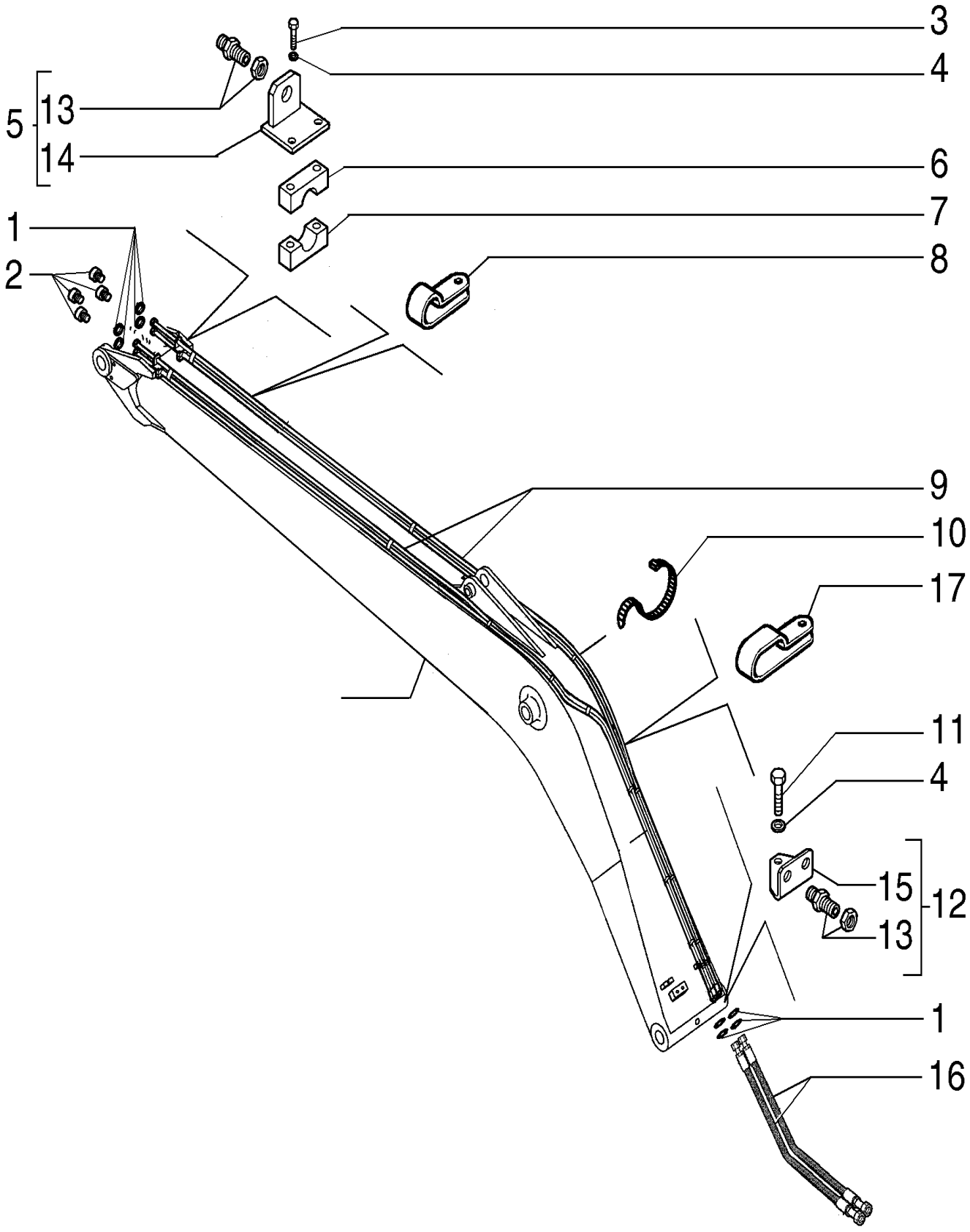

HYDRAULIC SYSTEM - WOOD GRABS

REF	FN	PART NUMBER	YR/SN	QTY	DESCRIPTION
1		70923841		10	O-RING M12.42 ID x 1.78 Thk
2		71443486		2	BUJÃO
3		11113331		4	PARAFUSO Hex, M12 x 55, 10.9
4		10517071		5	TRAVA DA ARRUELA M12
5		72204505		2	SUPORTE Includes items 13, 14
6		72204492		2	SUPORTE
7		72204491		2	SUPORTE
8		70927264		1	COLAR
9		87630589		2	TUBO FLEXÍVEL 12.50 mm ID x 9800.00 mm
10		75201642		30	BRAÇADEIRA
11		11113434		1	PARAFUSO
12		87396715		1	SUPORTE Includes items 13, 15
13		72204201		4	CONECTOR HIDRÁUL
14		72204504		2	SUPORTE
15		87396716		1	SUPORTE
16		87396721		2	TUBO FLEXÍVEL

09-021	01	p1	7/2013

WOOD GRABS - CONTROL

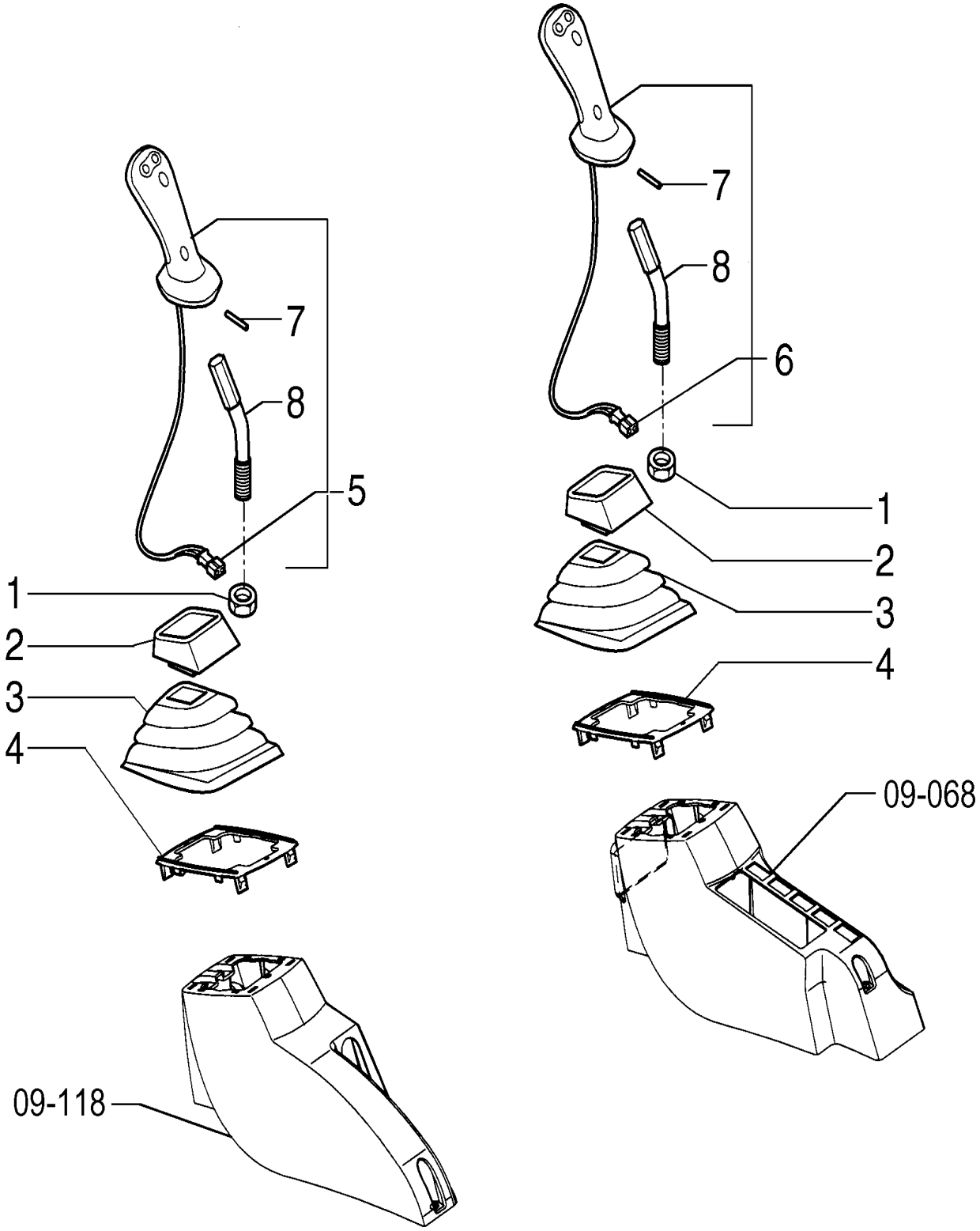

WOOD GRABS - CONTROL

REF	FN	PART NUMBER	YR/SN	QTY	DESCRIPTION
1		12163221		2	PORCA M14, Cl 10
2		72220391		2	CAPA Dust
3		72220390		2	CAPA Dust
4		72203567		2	PLACA
5		72203570		1	EMPUNHADURA Includes items 7, 8
6		72203569		1	EMPUNHADURA Includes items 7, 8
7		14601371		2	PINO ELÁSTICO
8		72203871		1	ALAVANCA

09-022	01	p1	7/2013

WOOD GRABS - TUBING 2400MM

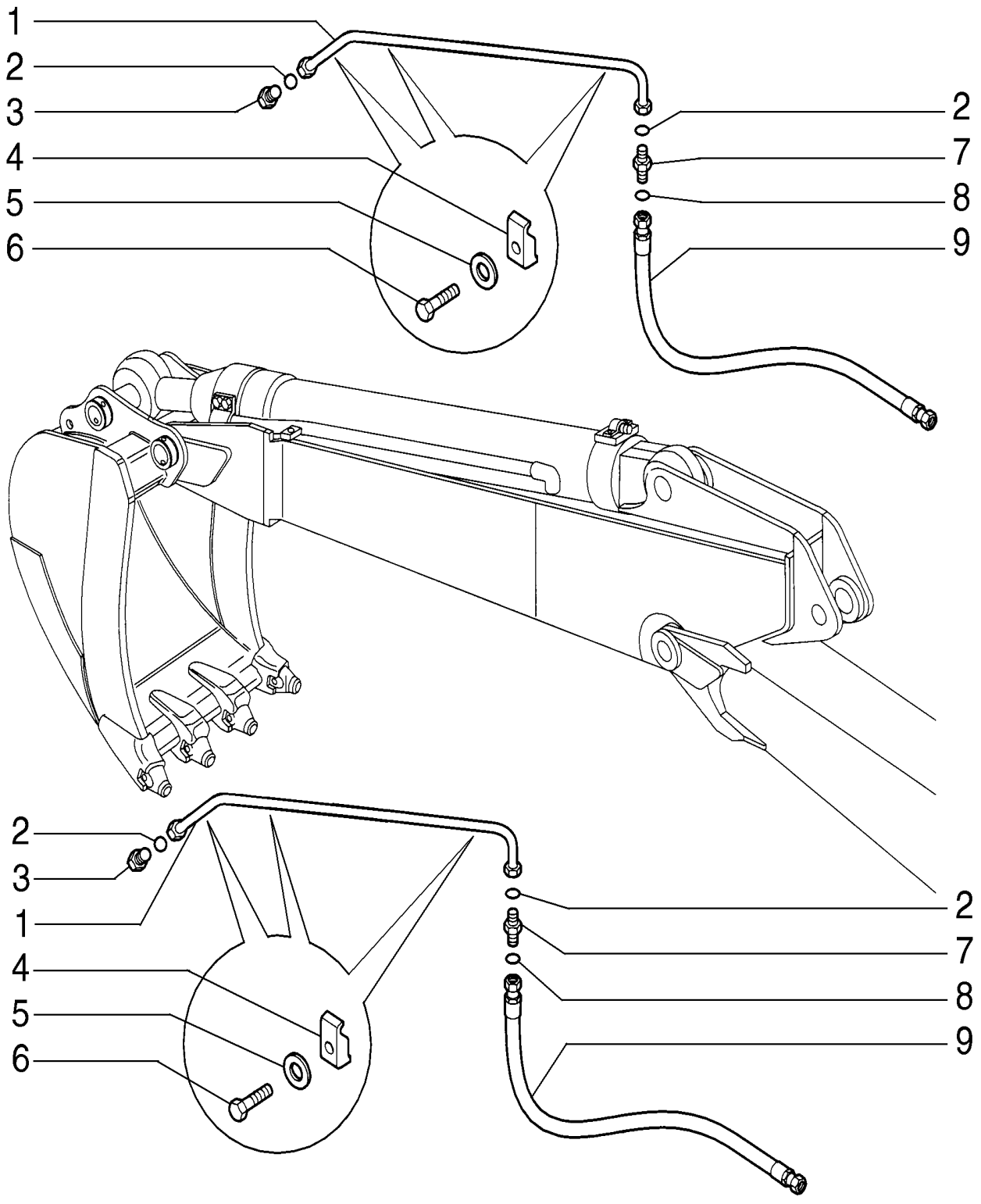

WOOD GRABS - TUBING 2400MM

REF	FN	PART NUMBER	YR/SN	QTY	DESCRIPTION
1		87721914		2	TUBO 12 mm ID x 16 mm OD x 1079, 123 mm L
2		71484462		4	O-RING
3		72204294		2	CONECTOR HIDRÁUL
4		71466172		6	SUPORTE
5		10517071		6	TRAVA DA ARRUELA M12
6		11113231		6	PARAFUSO Hex, M12 x 50, 10.9
7		72204293		2	CONECTOR HIDRÁUL
8		70923841		2	O-RING M12.42 ID x 1.78 Thk
9		72212247		2	TUBO FLEXÍVEL

09-023	01	p1	7/2013

WOOD GRABS - TUBING 2940MM

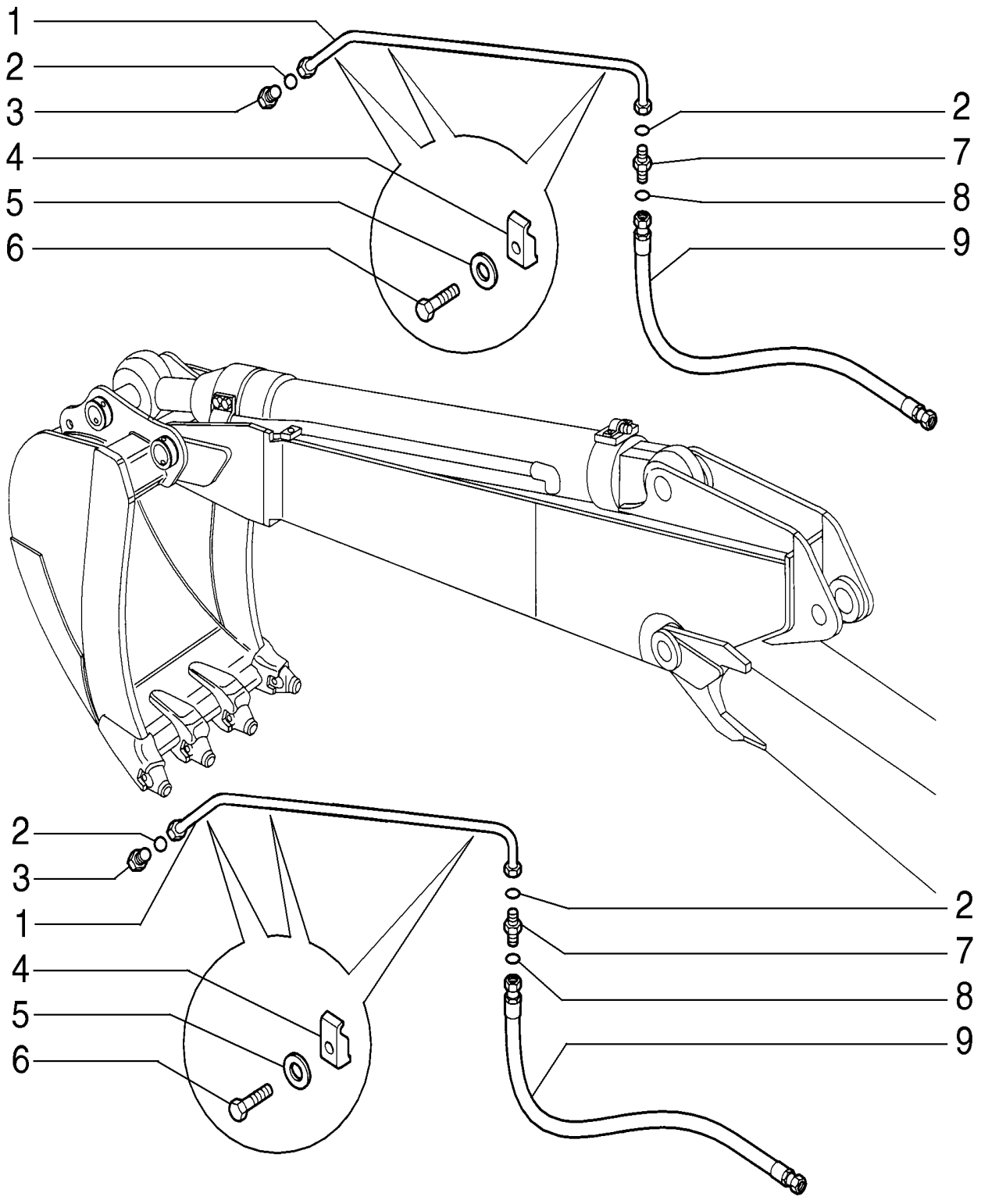

WOOD GRABS - TUBING 2940MM

REF	FN	PART NUMBER	YR/SN	QTY	DESCRIPTION
1		87721964		2	TUBO 12 mm ID x 16 mm OD x 1602, 123 mm L
2		71484462		4	O-RING
3		72204294		2	CONECTOR HIDRÁUL
4		71466172		6	SUPORTE
5		10517071		6	TRAVA DA ARRUELA M12
6		11113231		6	PARAFUSO Hex, M12 x 50, 10.9
7		72204293		2	CONECTOR HIDRÁUL
8		70923841		2	O-RING M12.42 ID x 1.78 Thk
9		72212247		2	TUBO FLEXÍVEL

09-023	02	p1	7/2013

WOOD GRABS - TUBING 3500MM

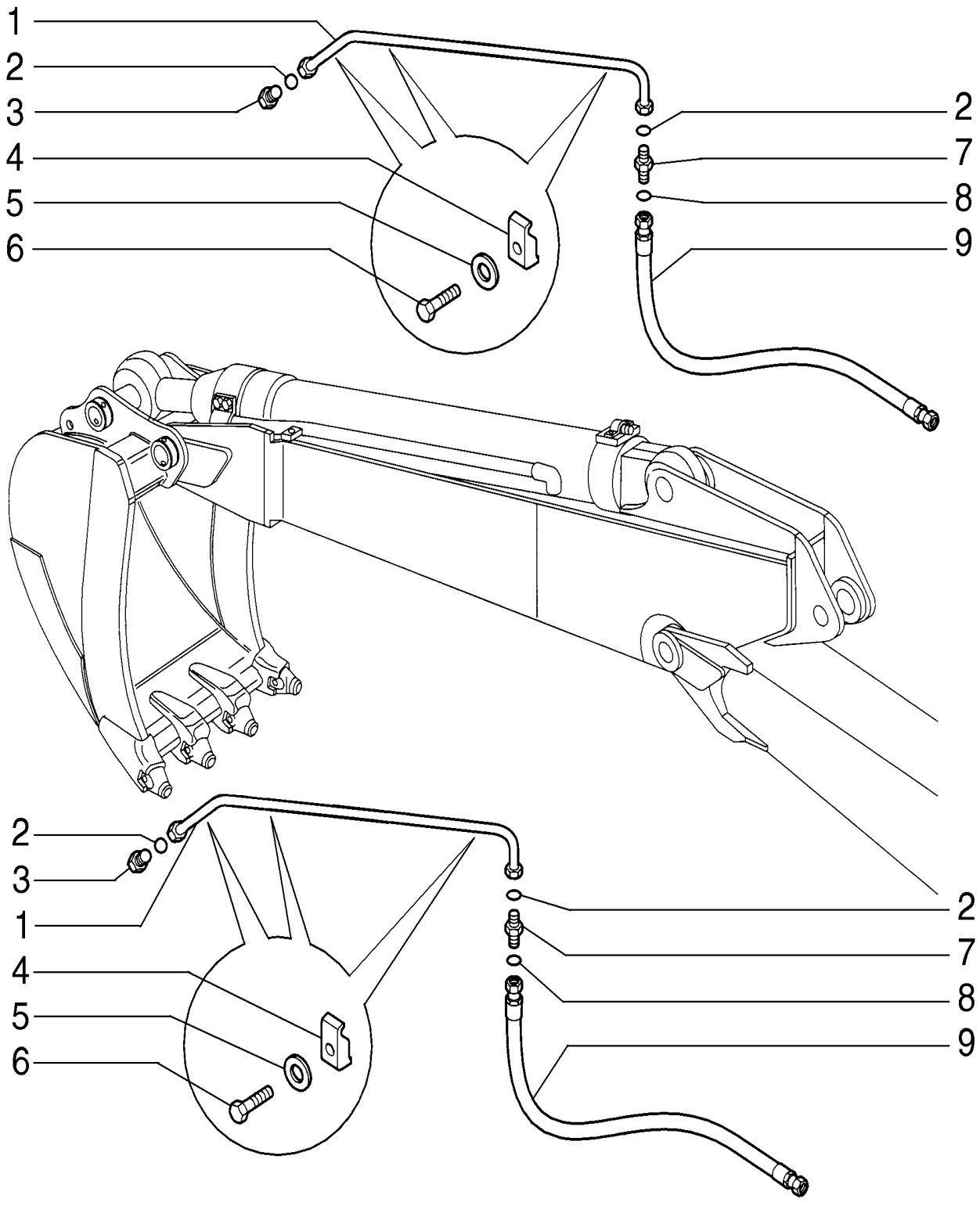

WOOD GRABS - TUBING 3500MM

REF	FN	PART NUMBER	YR/SN	QTY	DESCRIPTION
1		87721964		2	TUBO 12 mm ID x 16 mm OD x 1602, 123 mm L
2		71484462		4	O-RING
3		72204294		2	CONECTOR HIDRÁUL
4		71466172		6	SUPORTE
5		10517071		6	TRAVA DA ARRUELA M12
6		11113231		6	PARAFUSO Hex, M12 x 50, 10.9
7		72204293		2	CONECTOR HIDRÁUL
8		70923841		2	O-RING M12.42 ID x 1.78 Thk
9		87382965		2	TUBO FLEXÍVEL

09-024	01	p1	7/2013

WOOD GRABS - ARM 15M

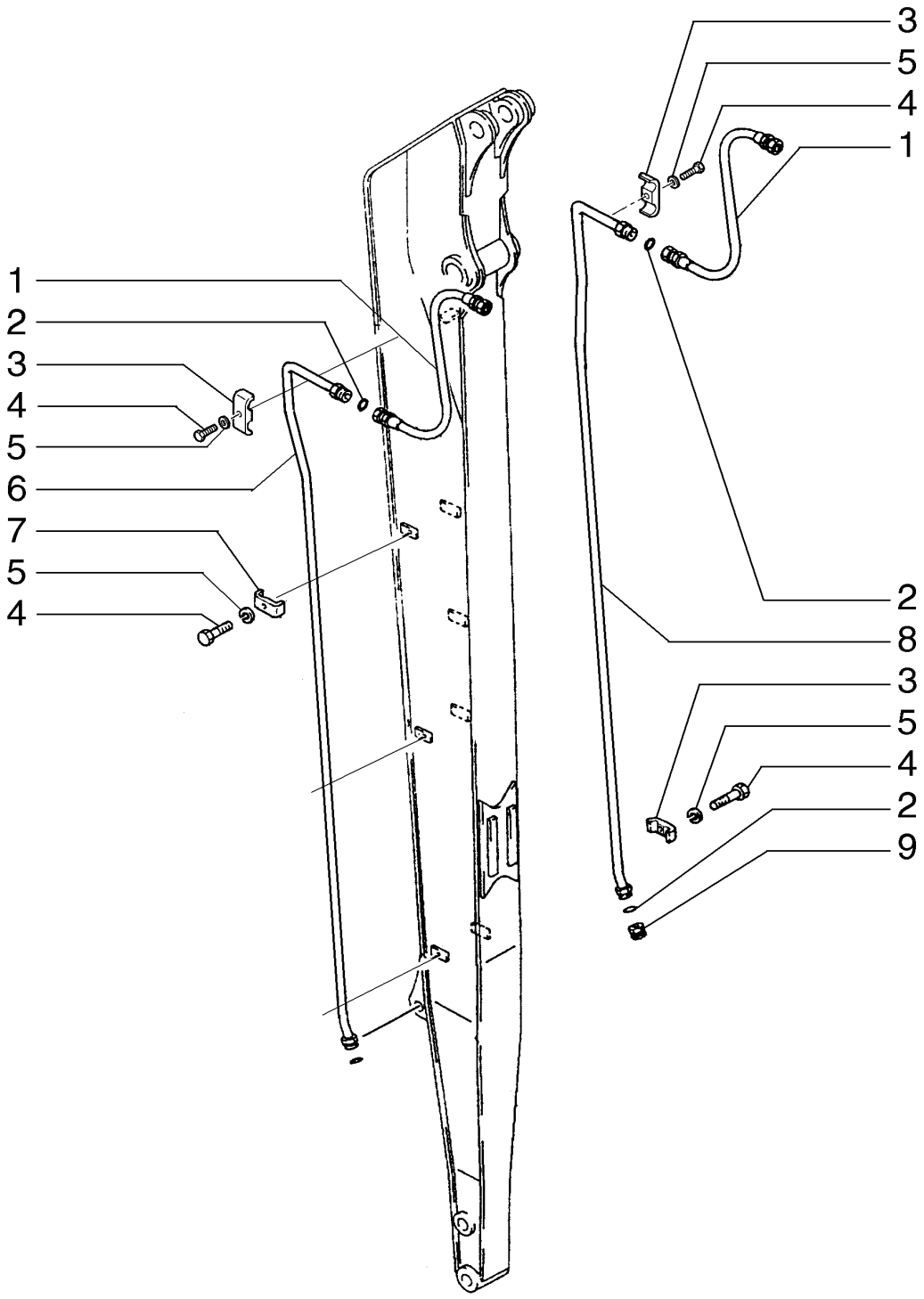

WOOD GRABS - ARM 15M

REF	FN	PART NUMBER	YR/SN	QTY	DESCRIPTION
1		72161345		2	TUBO FLEXÍVEL
2		70923843		4	O-RING
3		71405845		2	SUPORTE
4		11113231		8	PARAFUSO Hex, M12 x 50, 10.9
5		10517071		8	TRAVA DA ARRUELA M12
6		87591592		1	TUBO 22 mm OD x 4880, 238 mm L
7		71405760		6	COLAR DE FIXAÇÃO
8		87591591		1	TUBO 22 mm OD x 4880, 238 mm L
9		71443486		2	BUJÃO

09-025	01	p1	7/2013

WOOD GRABS - HYDRAULIC VALVE

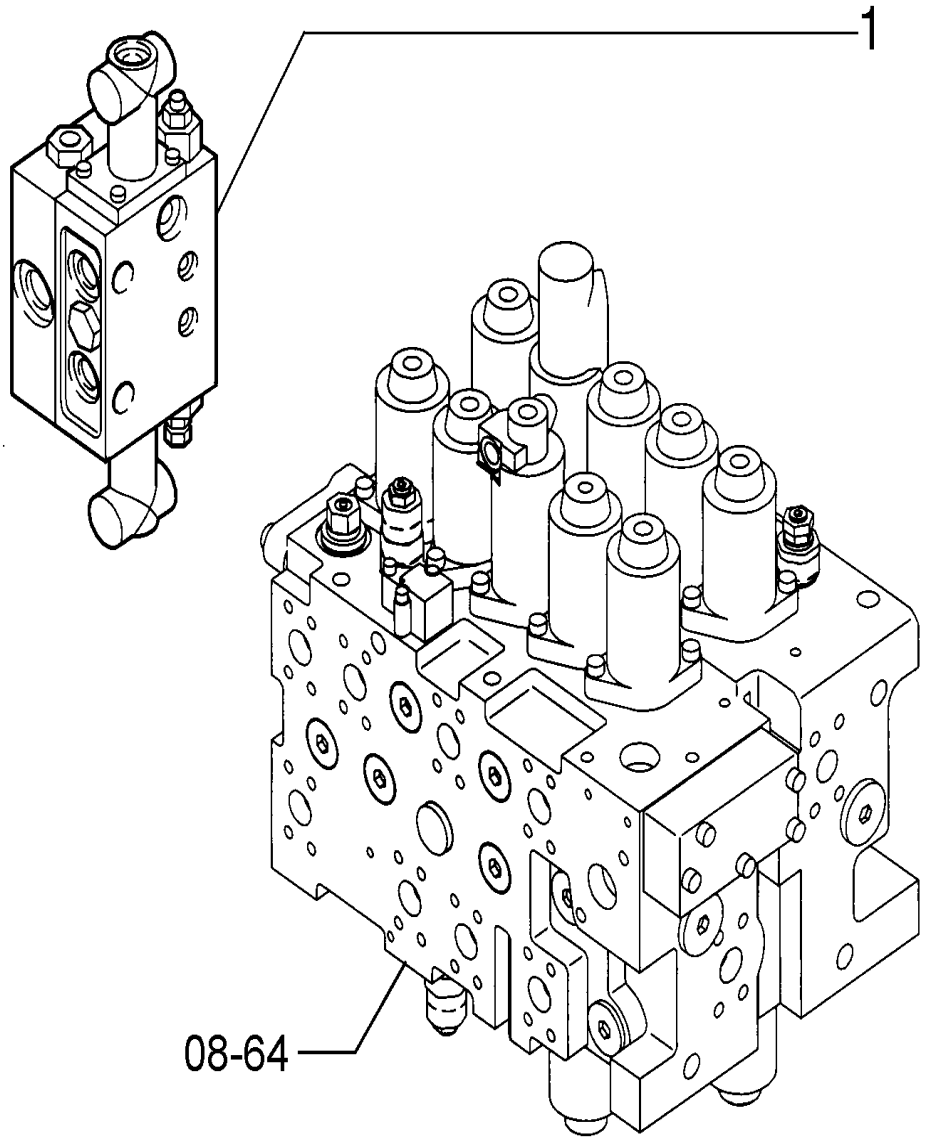

WOOD GRABS - HYDRAULIC VALVE

REF	FN	PART NUMBER	YR/SN	QTY	DESCRIPTION
1		87386068		1	VÁLVULA HIDRÁULICA

09-026	02	p1	7/2013

CONTROL VALVE

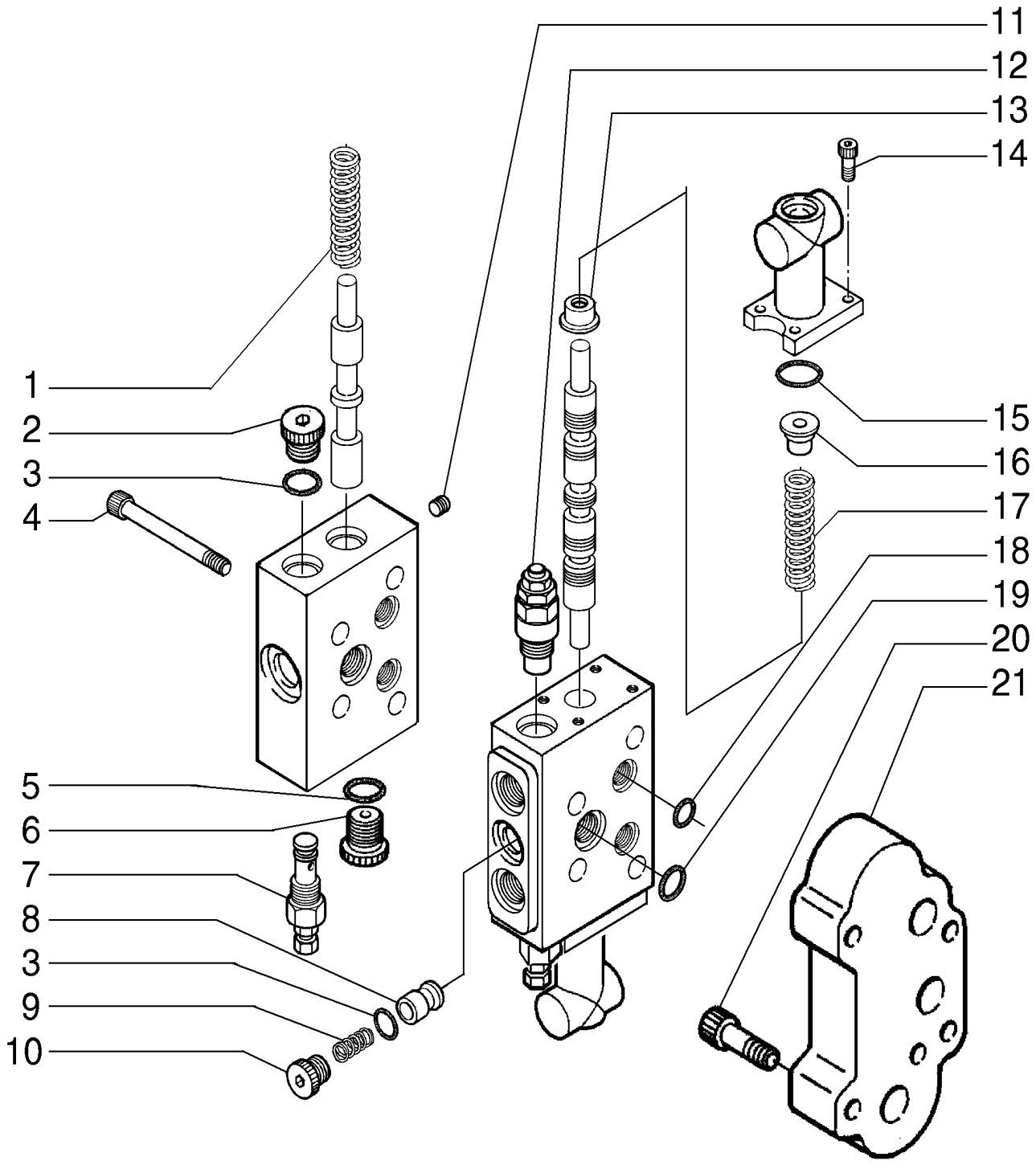

CONTROL VALVE

REF	FN	PART NUMBER	YR/SN	QTY	DESCRIPTION
1		YN30V00107S321		1	MOLA
2		72209842		1	BUJÃO
3		72209823		2	O-RING
4		14359570		4	PARAFUSO
5		71404166		1	O-RING
6		YN30V00107S152		1	BUJÃO
7		YN22V00040F2		1	VÁLVULA HIDRÁULICA
8		YA30V00002S511		1	VÁLVULA DO OBTURADOR
9		YA30V00002S521		1	MOLA
10		YA30V00002S551		1	BUJÃO
11		72209815		1	BUJÃO
12		YN22V00041F2		2	VÁLVULA HIDRÁULICA
13		YA30V00002S331		2	SEDE/ALOJAMENTO
14		YN35V00017S171		8	PARAFUSO
15		YN30V00108S261		2	O-RING
16		YA30V00002S332		2	SEDE/ALOJAMENTO
17		EM30V00001S321		2	MOLA
18		72210077		6	O-RING
19		72209824		2	O-RING
20		14311070		4	PARAFUSO
21		YN30V00108S121		1	PLACA

09-027	01	p1	7/2013

LOCK VALVE - HAMMER

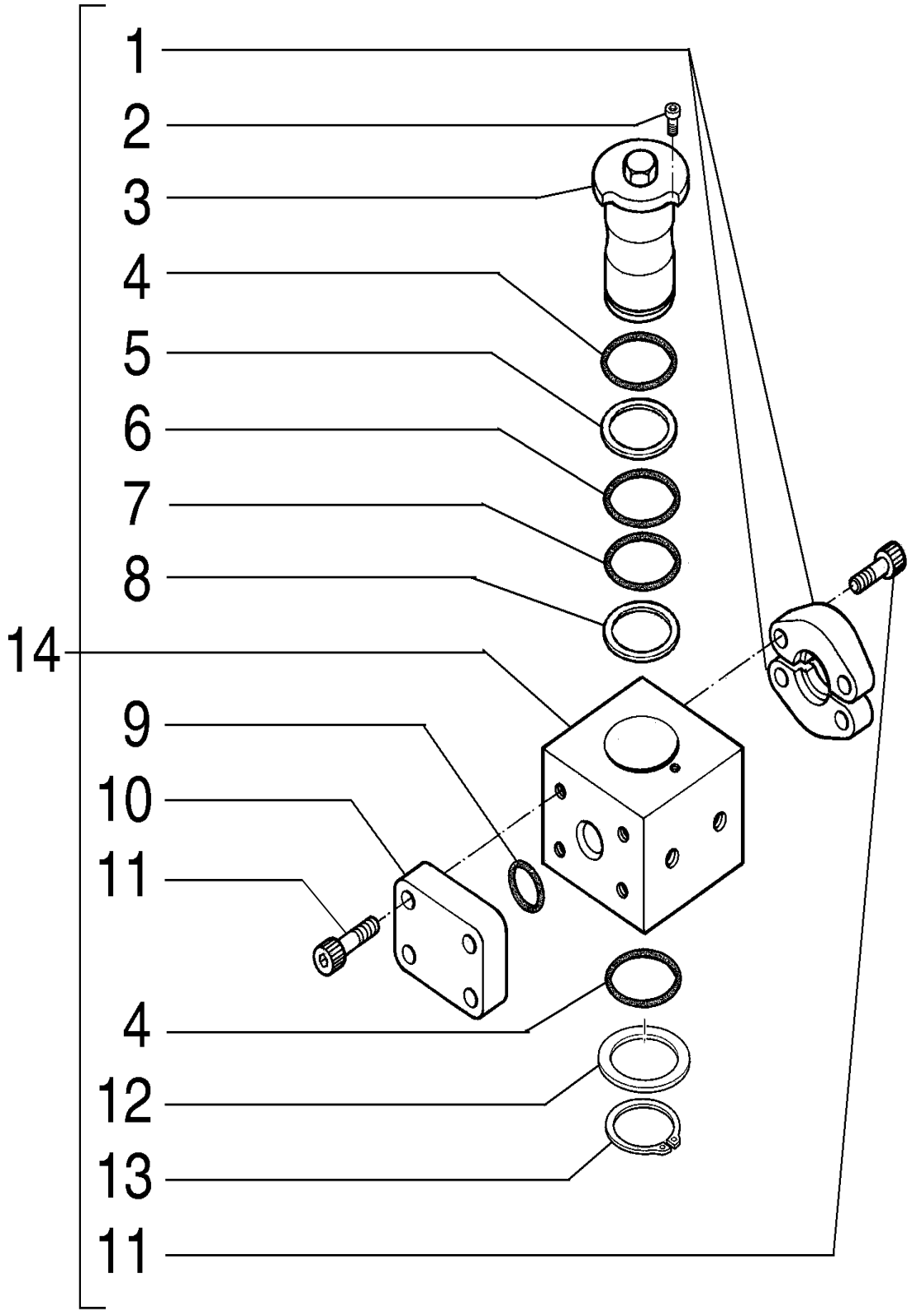

LOCK VALVE - HAMMER

REF	FN	PART NUMBER	YR/SN	QTY	DESCRIPTION
1		72219290		2	SEMI-FLANGE
2		72219251		1	PARAFUSO
3		72219279		1	PINO
4		72219252		2	JUNTA
5		72219256		1	ANEL
6		72219255		1	JUNTA
7		72219253		1	JUNTA
8		72219254		1	ANEL
9		72219287		1	JUNTA
10		72219288		1	FLANGE
11		72219289		8	PARAFUSO
12		72219249		1	ESPAÇADOR
13		72219250		1	ANEL
14		72215205		1	VÁLVULA HIDRÁULICA Includes items 1 - 13

09-029	02	p1	7/2013

BOOM

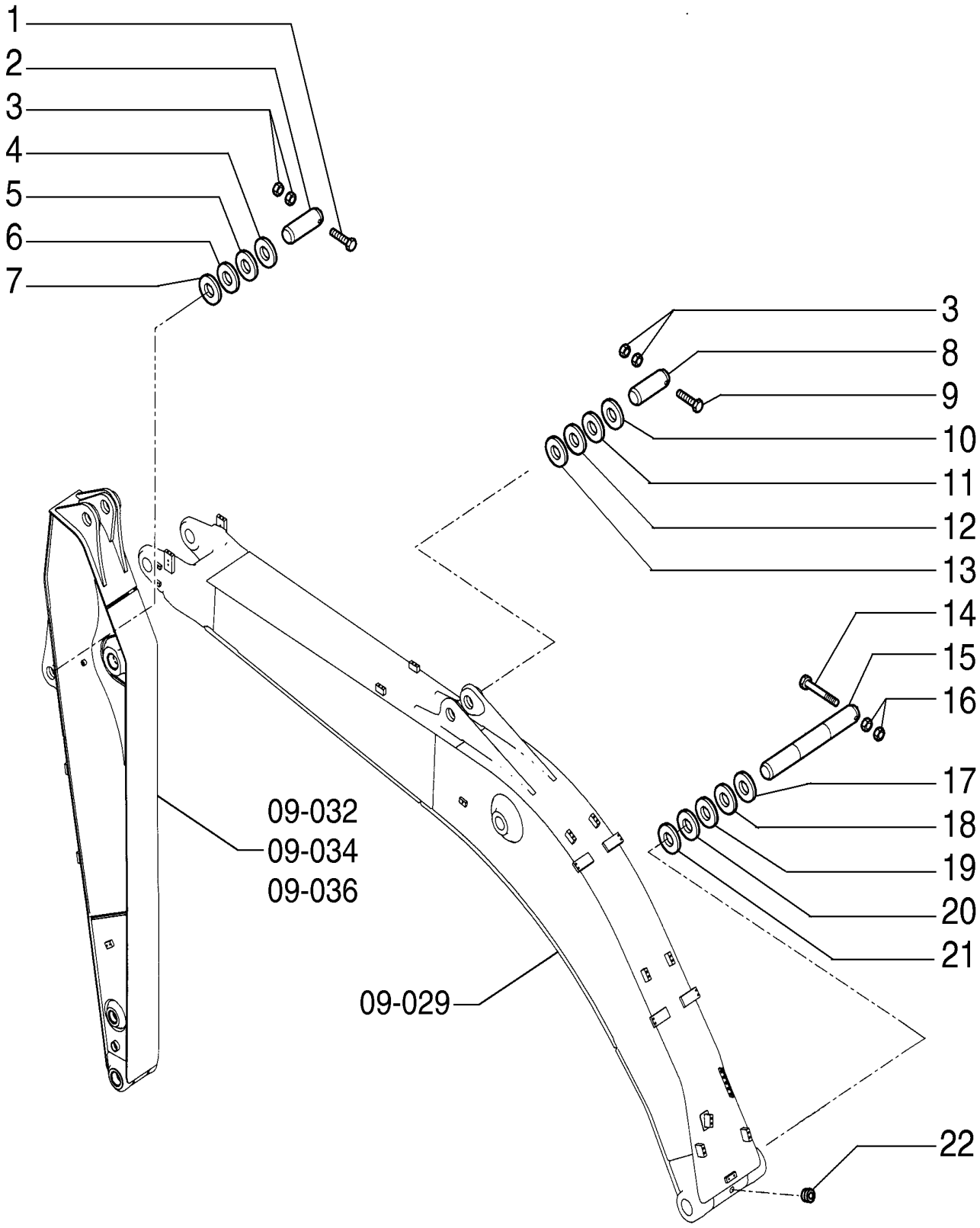

BOOM

REF	FN	PART NUMBER	YR/SN	QTY	DESCRIPTION
1		11120731		1	PARAFUSO
2		87599360		1	PINO
3		12163321		4	PORCA M16, Cl 10
4		72202203		2	CALÇO DE AFINAÇÃO 2mm Thk 2.00mm
5		75261591		AR	CALÇO DE AFINAÇÃO 0.5mm
6		75261592		AR	CALÇO DE AFINAÇÃO 1.00mm
7		75261593		AR	CALÇO DE AFINAÇÃO 1.50mm
8		87599381		1	PINO
9		16051121		1	PARAFUSO Hex, M16 x 160, 8.8
10		75261417		AR	CALÇO DE AFINAÇÃO 0.50mm
11		75261418		AR	CALÇO DE AFINAÇÃO 1.00mm
12		75261419		AR	CALÇO DE AFINAÇÃO 1.50mm
13		72203151		2	CALÇO DE AFINAÇÃO 2mm Thk
14		87334470		1	PARAFUSO
15		87599372		1	PINO
16		12163521		2	PORCA M20, Cl 10
17		75261414		AR	CALÇO DE AFINAÇÃO 0.50mm
18		75261589		AR	CALÇO DE AFINAÇÃO 1.00mm
19		75262159		AR	CALÇO DE AFINAÇÃO 1.50mm
20		87599310		AR	CALÇO DE AFINAÇÃO 2.50mm
21		72203145		2	CALÇO DE AFINAÇÃO 2mm Thk
22		71404856		1	BUJÃO

09-030	01	p1	7/2013

BOOM 15M

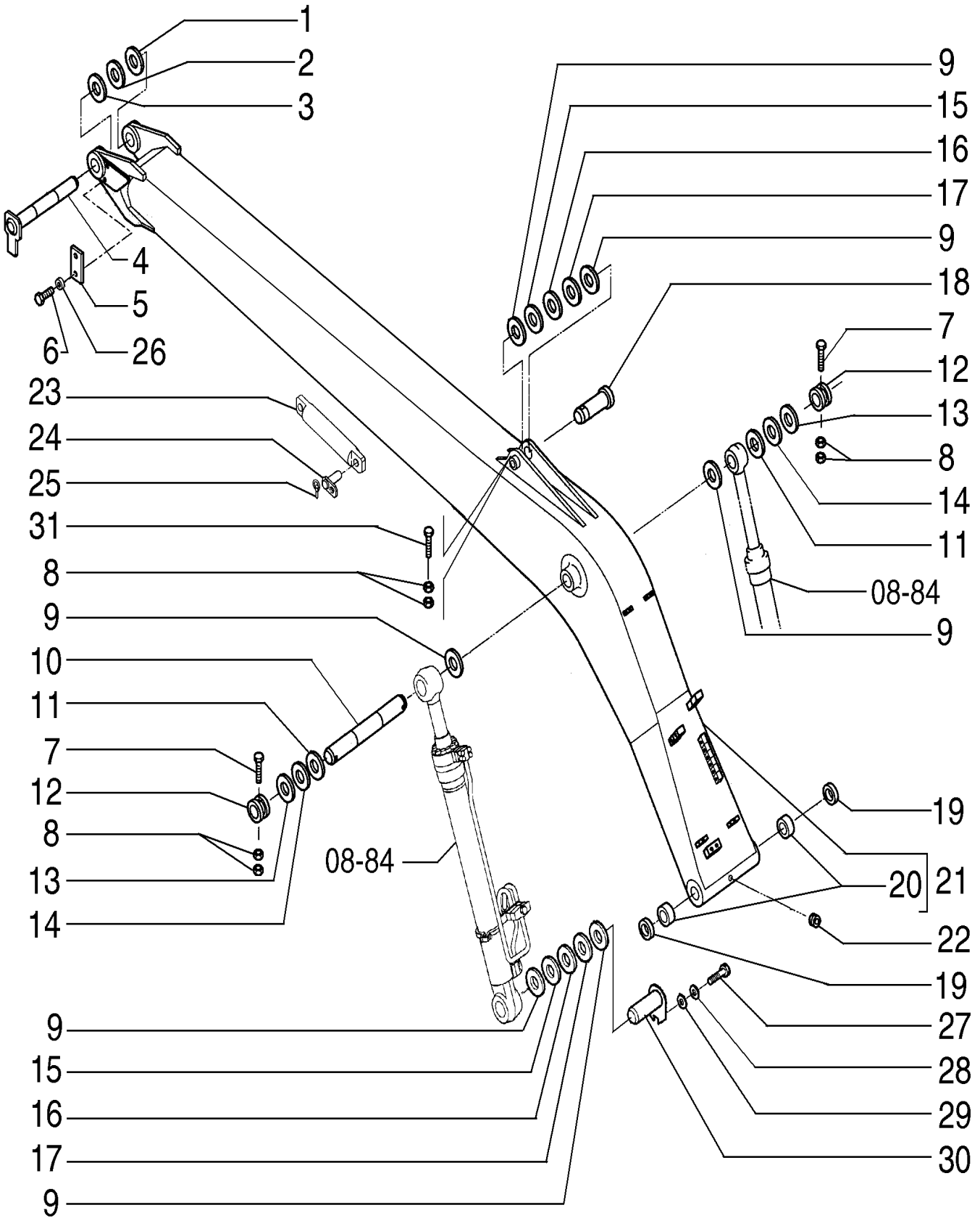

BOOM 15M

REF	FN	PART NUMBER	YR/SN	QTY	DESCRIPTION
1		72203145		AR	CALÇO DE AFINAÇÃO 2mm Thk 2.0MM
2		75261589		AR	CALÇO DE AFINAÇÃO 1.00MM
3		75261414		AR	CALÇO DE AFINAÇÃO 0.50MM
4		87369850		1	PINO
5		87369983		1	PLACA
6		11115531		2	PARAFUSO Hex, M14 x 30, 10.9, Full Thd
7		11120931		1	PARAFUSO
8		12163321		6	PORCA M16, Cl 10
9		72203151		AR	CALÇO DE AFINAÇÃO 2mm Thk
10		87599377		1	PINO
11		87599336		AR	CALÇO DE AFINAÇÃO
12		87599334		2	BUCHA
13		87599356		AR	CALÇO DE AFINAÇÃO 0.50MM
14		87599355		AR	CALÇO DE AFINAÇÃO 1.50MM
15		75261417		AR	CALÇO DE AFINAÇÃO 0.50MM
16		75261418		AR	CALÇO DE AFINAÇÃO 1.00MM
17		75261419		AR	CALÇO DE AFINAÇÃO 1.50MM
18		87599381		1	PINO
19		87531507		2	VEDAÇÃO
20		75265231		4	BUCHA
21		87482410		1	BRAÇO
22		71404856		1	BUJÃO
23		75264920		1	TIRANTE
24		75264923		2	PINO
25		A56393		2	PINO
26		10517171		2	TRAVA DA ARRUELA
27		11127431		2	PARAFUSO Hex, M16 x 30, 10.9, Full Thd
28		14496931		2	ARRUELA PLANA M16 x 30 x 3
29		87599333		2	PLACA
30		87599329		2	PINO
31		16051121		1	PARAFUSO Hex, M16 x 160, 8.8

09-031	01	p1	7/2013

BOOM

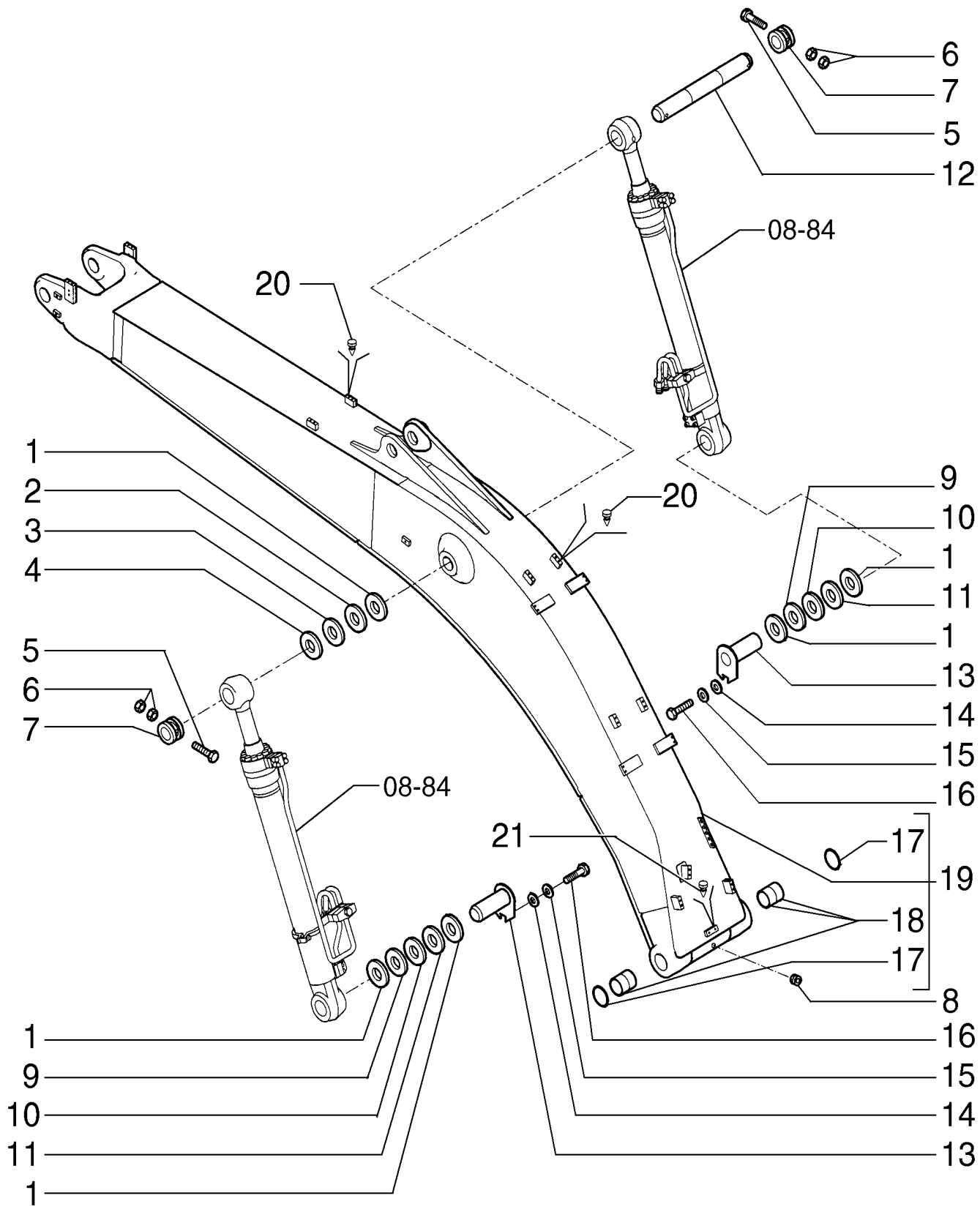

BOOM

REF	FN	PART NUMBER	YR/SN	QTY	DESCRIPTION
1		72203151		6	CALÇO DE AFINAÇÃO 2mm Thk 2.00mm
2		87599336		AR	CALÇO DE AFINAÇÃO 0.50mm
3		87599355		AR	CALÇO DE AFINAÇÃO 1.00mm
4		87599356		AR	CALÇO DE AFINAÇÃO 1.50mm
5		11120931		2	PARAFUSO
6		12163321		4	PORCA M16, Cl 10
7		87599334		2	BUCHA
8		71404856		1	BUJÃO
9		75261417		AR	CALÇO DE AFINAÇÃO 0.50mm
10		75261418		AR	CALÇO DE AFINAÇÃO 1.00m
11		75261419		AR	CALÇO DE AFINAÇÃO 1.50mm
12		87599377		1	PINO
13		87599329		2	PINO
14		87599333		2	PLACA
15		14496931		2	ARRUELA PLANA M16 x 30 x 3
16		11127431		2	PARAFUSO Hex, M16 x 30, 10.9, Full Thd
17		87531507		2	VEDAÇÃO
18		87521245		4	BUCHA
19		87626061		1	BRAÇO LANÇA Includes items 17, 18
20		14590887		12	BOTÃO DE BORRACHA
21		85808422		2	BUJÃO

09-031	03	p1	7/2013

BOOM 15M

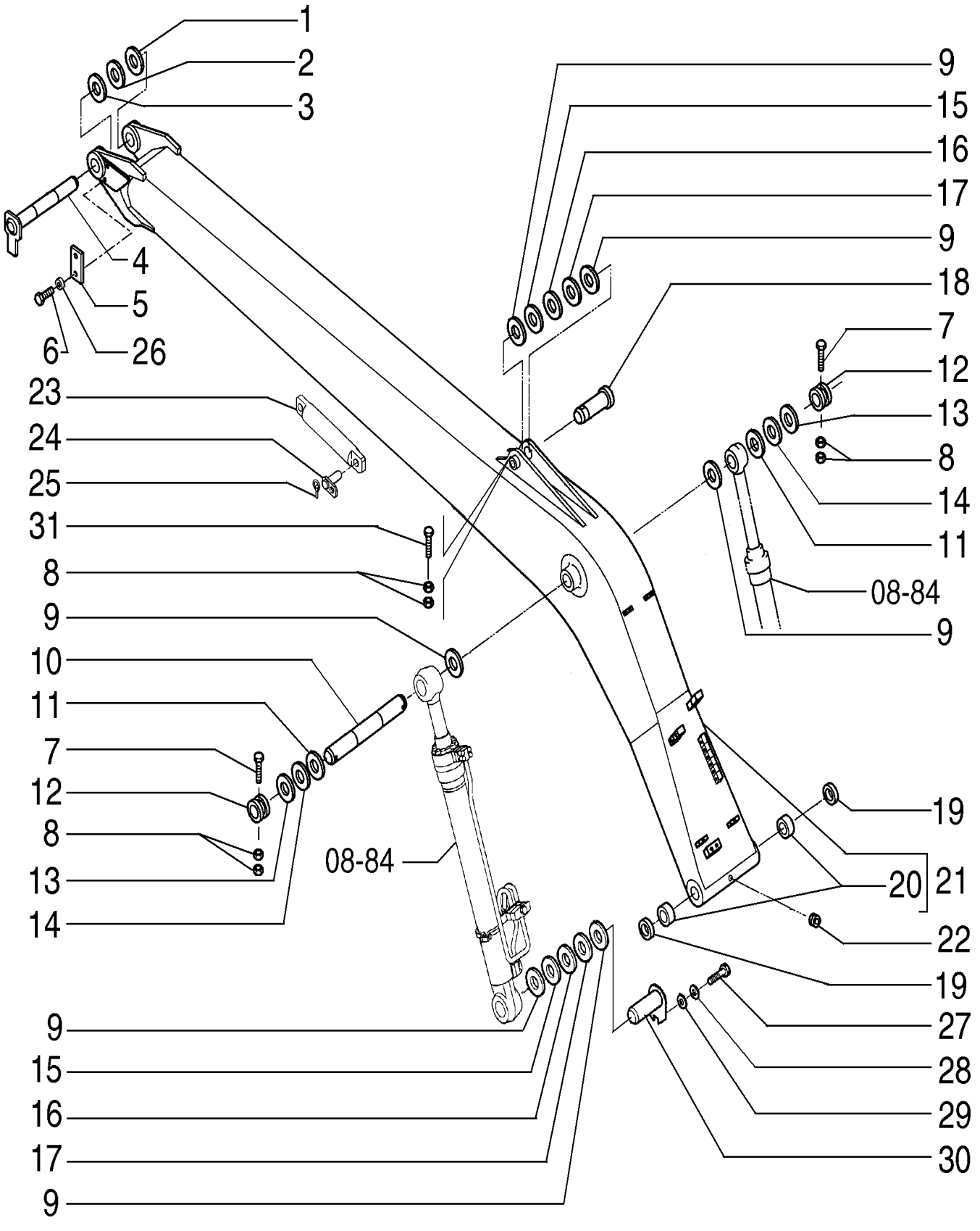

BOOM 15M

REF	FN	PART NUMBER	YR/SN	QTY	DESCRIPTION
1		72203145		AR	CALÇO DE AFINAÇÃO 2mm Thk
2		75261589		AR	CALÇO DE AFINAÇÃO
3		75261414		AR	CALÇO DE AFINAÇÃO
4		87369850		1	PINO
5		87369983		1	PLACA
6		11115531		2	PARAFUSO Hex, M14 x 30, 10.9, Full Thd
7		11120931		1	PARAFUSO
8		12163321		6	PORCA M16, Cl 10
9		72203151		AR	CALÇO DE AFINAÇÃO 2mm Thk
10		87599377		1	PINO
11		87599355		AR	CALÇO DE AFINAÇÃO
12		87599334		2	BUCHA
13		87599336		AR	CALÇO DE AFINAÇÃO
14		87599356		AR	CALÇO DE AFINAÇÃO
15		75261417		AR	CALÇO DE AFINAÇÃO
16		75261418		AR	CALÇO DE AFINAÇÃO
17		75261419		AR	CALÇO DE AFINAÇÃO
18		87599381		1	PINO
19		87531507		2	VEDAÇÃO
20		87521245		4	BUCHA
21		87482410		1	BRAÇO Includes item 20
22		71404856		1	BUJÃO
23		75264920		1	TIRANTE
24		75264923		2	PINO
25		A56393		2	PINO
26		10517171		2	TRAVA DA ARRUELA
27		11127431		2	PARAFUSO Hex, M16 x 30, 10.9, Full Thd
28		14496931		2	ARRUELA PLANA M16 x 30 x 3
29		87599333		2	PLACA
30		87599329		2	PINO
31		16051121		1	PARAFUSO Hex, M16 x 160, 8.8

09-032	01	p1	7/2013

DIPPERSTICK - 2400MM

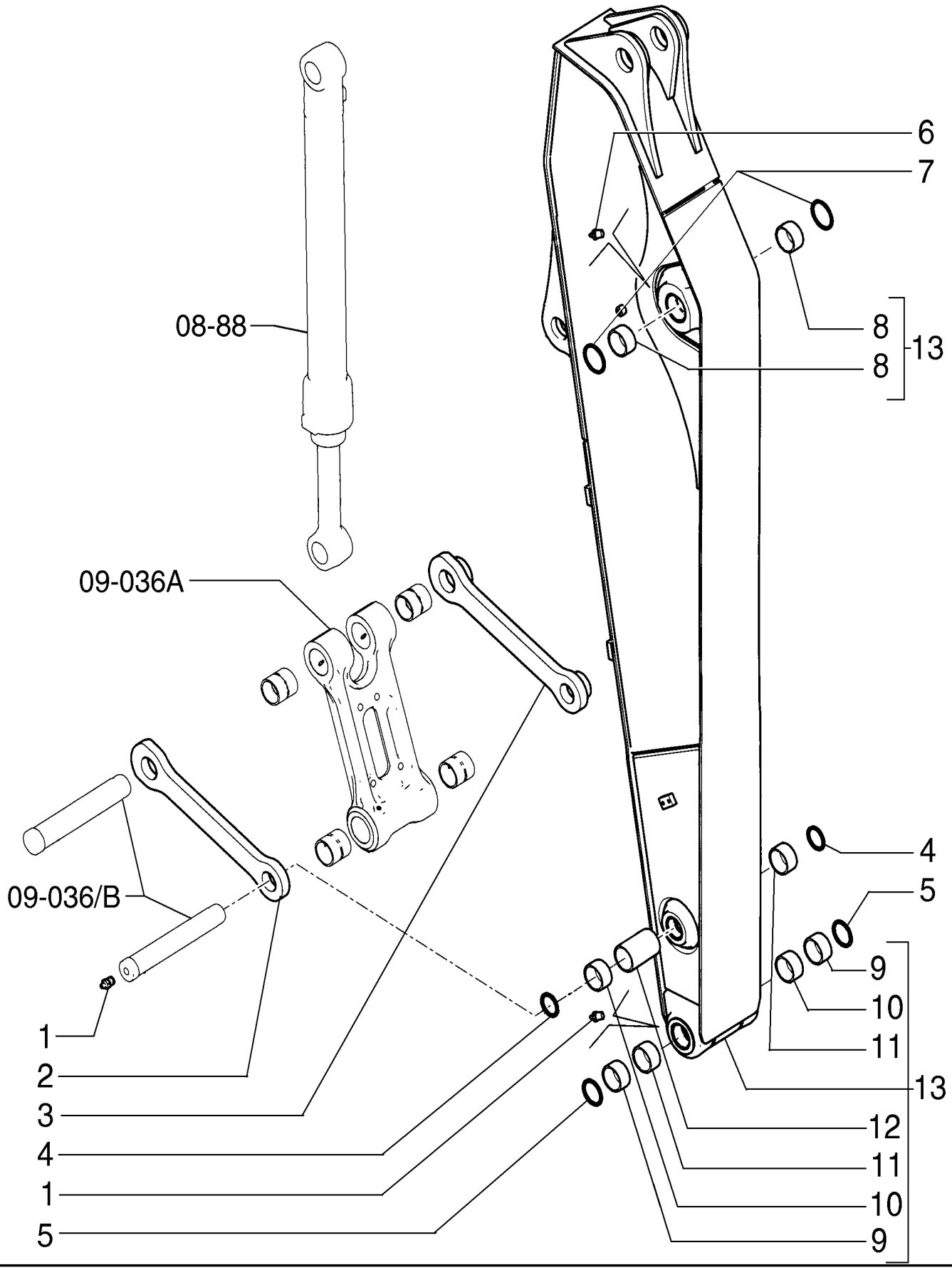

DIPPERSTICK - 2400MM

REF	FN	PART NUMBER	YR/SN	QTY	DESCRIPTION
1		72283478		2	GRAXEIRA
2		75263813		1	ELO
3		75263815		1	ELO
4		72202212		2	VEDAÇÃO
5		71415158		2	VEDAÇÃO
6		71433287		1	GRAXEIRA
7		87531507		2	VEDAÇÃO
8		87533338		2	BUCHA
9		87533336		2	BUCHA
10		87533342		2	BUCHA
11		87525505		2	BUCHA
12		87598527		1	ESPAÇADOR
13		87622333		1	BRAÇO Includes items 8 - 12

09-034	01	p1	7/2013

DIPPERSTICK - 2940MM

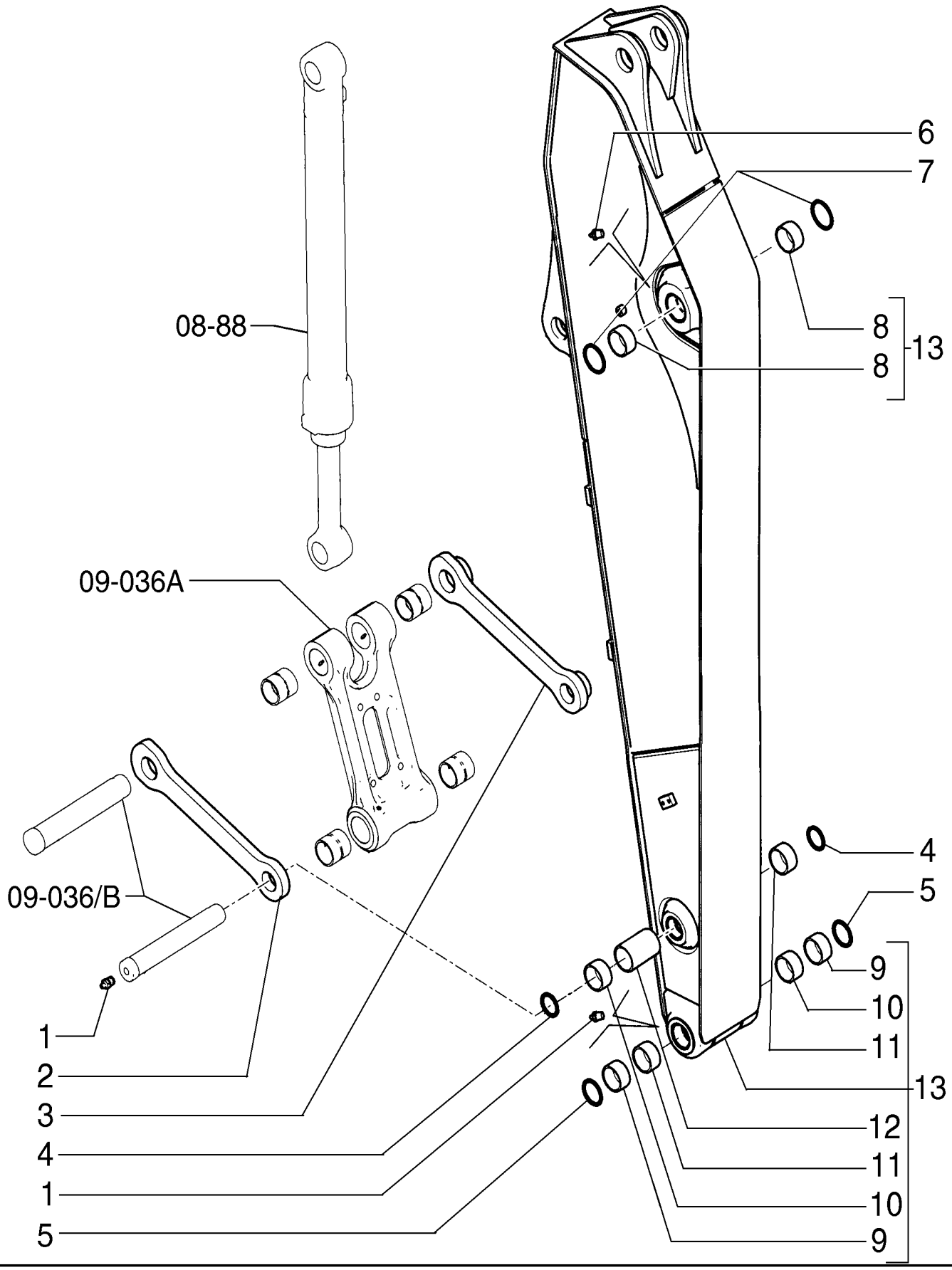

DIPPERSTICK - 2940MM

REF	FN	PART NUMBER	YR/SN	QTY	DESCRIPTION
1		72283478		2	GRAXEIRA
2		75263813		1	ELO
3		75263815		1	ELO
4		72202212		2	VEDAÇÃO
5		71415158		2	VEDAÇÃO
6		71433287		1	GRAXEIRA
7		87531507		2	VEDAÇÃO
8		87533338		2	BUCHA
9		87533336		2	BUCHA
10		87533342		2	BUCHA
11		87525505		2	BUCHA
12		87598527		1	ESPAÇADOR
13		87683043		1	BRAÇO Includes items 8 - 12

09-036	01	p1	7/2013

DIPPERSTICK - 3500MM

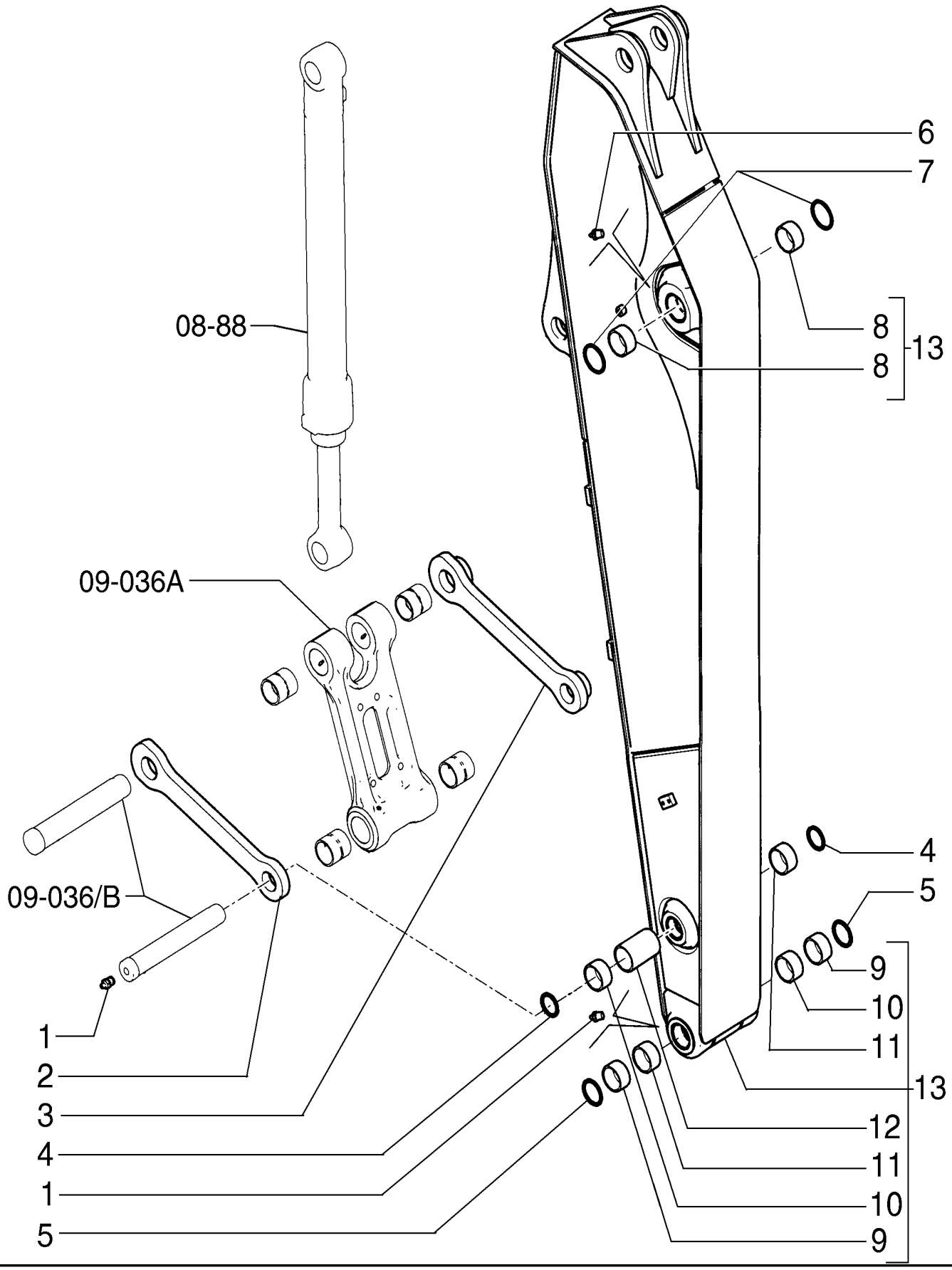

DIPPERSTICK - 3500MM

REF	FN	PART NUMBER	YR/SN	QTY	DESCRIPTION
1		72283478		2	GRAXEIRA
2		75263813		1	ELO
3		75263815		1	ELO
4		72202212		2	VEDAÇÃO
5		71415158		2	VEDAÇÃO
6		71433287		1	GRAXEIRA
7		87531507		2	VEDAÇÃO
8		87533338		2	BUCHA
9		87533336		2	BUCHA
10		87533342		2	BUCHA
11		87525505		2	BUCHA
12		87598527		1	ESPAÇADOR
13		87688451		1	BRAÇO Includes items 8 - 12

09-036/A	01	p1	7/2013

CONNECTING ROD ASSY - 2400MM / 2940MM / 3500MM

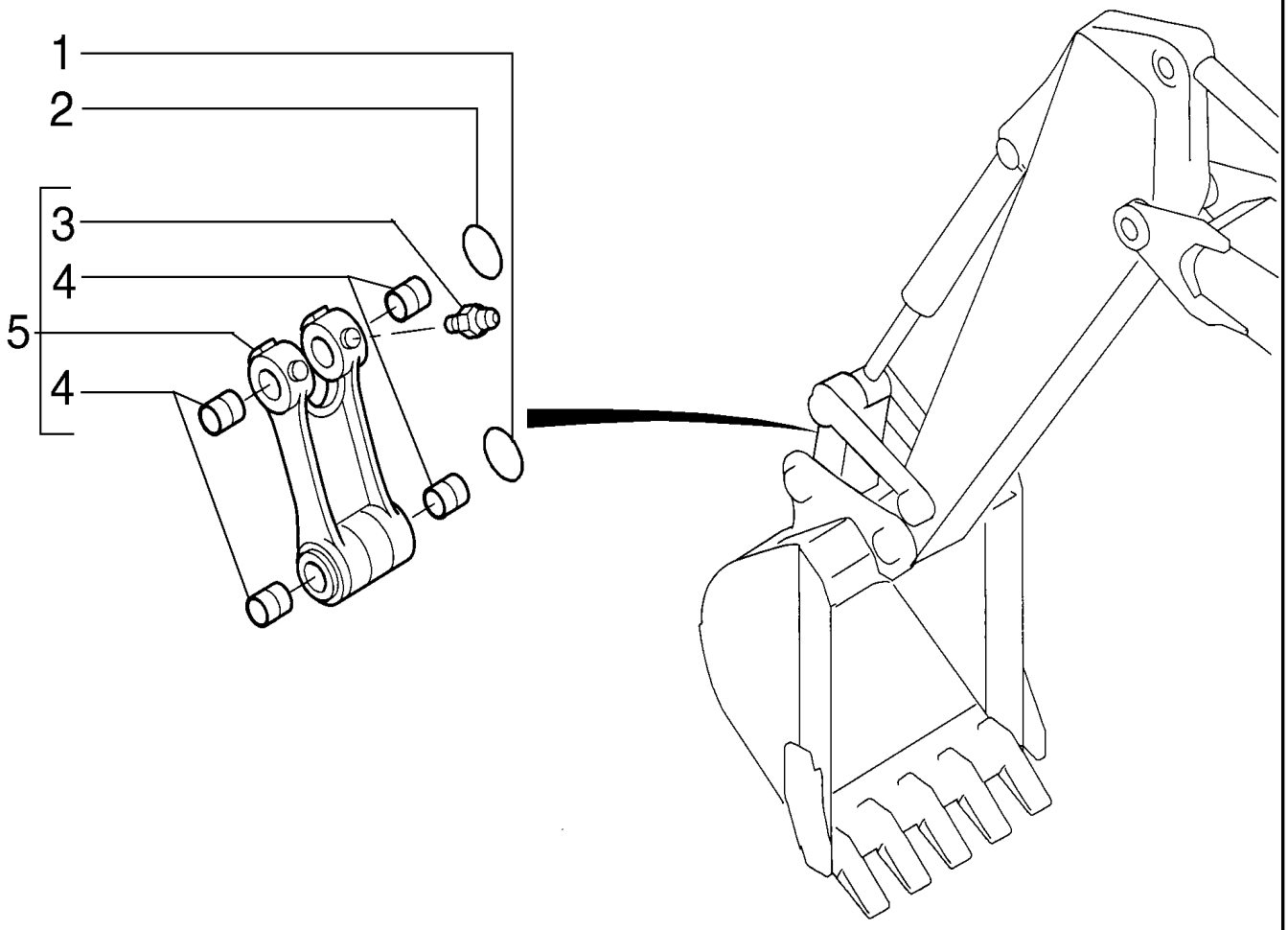

CONNECTING ROD ASSY - 2400MM / 2940MM / 3500MM

REF	FN	PART NUMBER	YR/SN	QTY	DESCRIPTION
1		71415157		2	O-RING
2		72953884		2	O-RING
3		13407211		3	GRAXEIRA M10 x 1
4		87543300		4	BUCHA
5		87485619		1	ELO Includes items 3, 4

09-036B	01	p1	7/2013

DIPPERSTICK - 2400MM / 2940MM / 3500MM

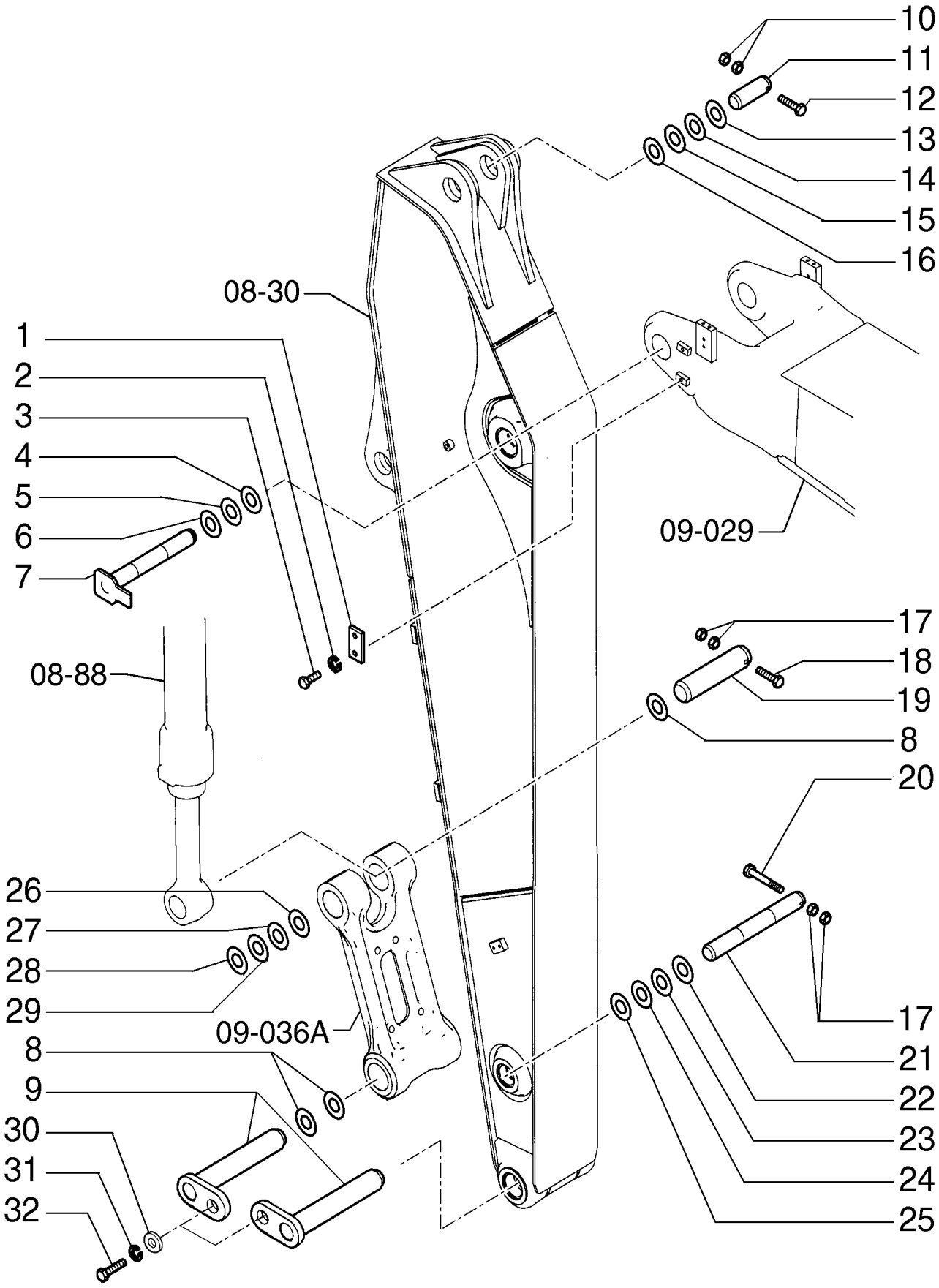

DIPPERSTICK - 2400MM / 2940MM / 3500MM

REF	FN	PART NUMBER	YR/SN	QTY	DESCRIPTION
1		87598515		1	PLACA
2		10520121		2	ARRUELA PLANA
3		16249031		2	PARAFUSO
4		75261589		1	CALÇO DE AFINAÇÃO 1.00mm
5		75261414		1	CALÇO DE AFINAÇÃO 0.50mm
6		72203145		2	CALÇO DE AFINAÇÃO 2mm Thk
7		87598509		1	PINO
8		71415158		6	VEDAÇÃO
9		75327104		2	PINO
10		12163321		2	PORCA M16, Cl 10
11		87599381		1	PINO
12		11120931		1	PARAFUSO
13		72202218		2	CALÇO DE AFINAÇÃO 2mm Thk
14		75261417		1	CALÇO DE AFINAÇÃO 0.50mm
15		75261418		1	CALÇO DE AFINAÇÃO 1.00mm
16		75261419		1	CALÇO DE AFINAÇÃO 1.50mm
17		12163321		4	PORCA M16, Cl 10
18		11120731		1	PARAFUSO
19		87598525		1	PINO
20		11120531		1	PARAFUSO Hex, M16 x 130, 10.9
21		87598522		1	PINO
22		75261587		AR	CALÇO DE AFINAÇÃO 0.5mm
23		75261588		AR	CALÇO DE AFINAÇÃO 1.00mm
24		75261590		AR	CALÇO DE AFINAÇÃO 1.50mm
25		72202204		2	CALÇO DE AFINAÇÃO 2mm Thk (M72 ID x 130)
26		75261591		AR	CALÇO DE AFINAÇÃO 0.50mm
27		75261592		AR	CALÇO DE AFINAÇÃO 1.00mm
28		72202203		4	CALÇO DE AFINAÇÃO 2mm Thk
29		75261593		AR	CALÇO DE AFINAÇÃO 1.50mm
30		75256026		2	ARRUELA PLANA
31		10517471		2	TRAVA DA ARRUELA
32		11124431		2	PARAFUSO Hex, M20 x 40, 10.9

09-040	01	p1	7/2013

DIPPERSTICK - 6,350M

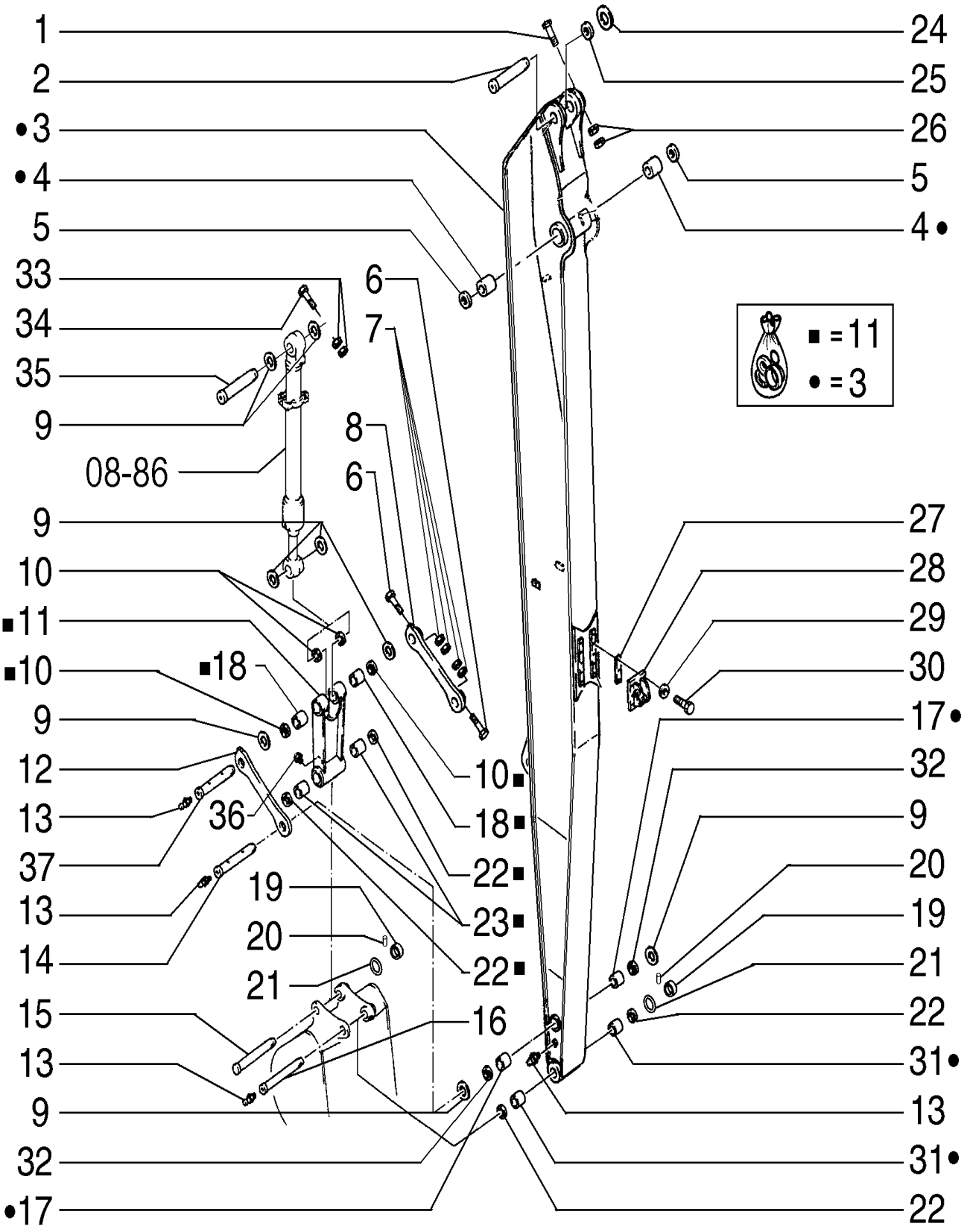

DIPPERSTICK - 6,350M

REF	FN	PART NUMBER	YR/SN	QTY	DESCRIPTION
1		16051131		1	PARAFUSO
2		87482772		1	PINO
3		87482766		1	BRAÇO (3,4,17,31)
4		87533338		2	BUCHA
5		87531507		2	VEDAÇÃO
6		15888931		2	PARAFUSO Hex, M14 x 120, 10.9
7		12163221		4	PORCA M14, Cl 10
8		75265033		1	ELO
9		72205758		8	CALÇO DE AFINAÇÃO 2mm Thk 2.00MM
9		75265056		AR	CALÇO DE AFINAÇÃO 1.50MM
9		75265055		AR	CALÇO DE AFINAÇÃO 1.00MM
9		75265054		AR	CALÇO DE AFINAÇÃO 0.50MM
10		72205748		4	VEDAÇÃO
11		75265036		1	ELO (10,11,17,18,22,23)
12		75265030		1	ELO
13		13407211		4	GRAXEIRA M10 x 1
14		87482775		2	PINO
15		75265015		1	PINO
16		87482776		1	PINO
17		72213529		2	BUCHA
18		72219451		2	BUCHA
19		71405110		2	ANEL
20		10100230		2	PINO
21		71406579		4	O-RING
22		71405108		2	ANEL VEDADOR SEALRING
23		72219452		2	BUCHA
24		75261419		AR	CALÇO DE AFINAÇÃO 1.50MM
24		75261418		AR	CALÇO DE AFINAÇÃO 1.00MM
24		75261417		AR	CALÇO DE AFINAÇÃO 0.50MM
25		72202218		2	CALÇO DE AFINAÇÃO 2mm Thk 2.00MM
26		12163321		2	PORCA M16, Cl 10
27		72265057		2	CALÇO DE AFINAÇÃO
27		75265058		2	CALÇO DE AFINAÇÃO
28		75265048		1	SUPORTE
29		14496821		6	ARRUELA PLANA M14 x 28 x 2.5
30		11116331		6	PARAFUSO Hex, M14 x 3 x 55, 10.9
31		72213528		2	BUCHA
32		71406236		2	VEDAÇÃO
33		11702921		2	PORCA M12, Cl 10

09-040	01	p2	7/2013

DIPPERSTICK - 6,350M

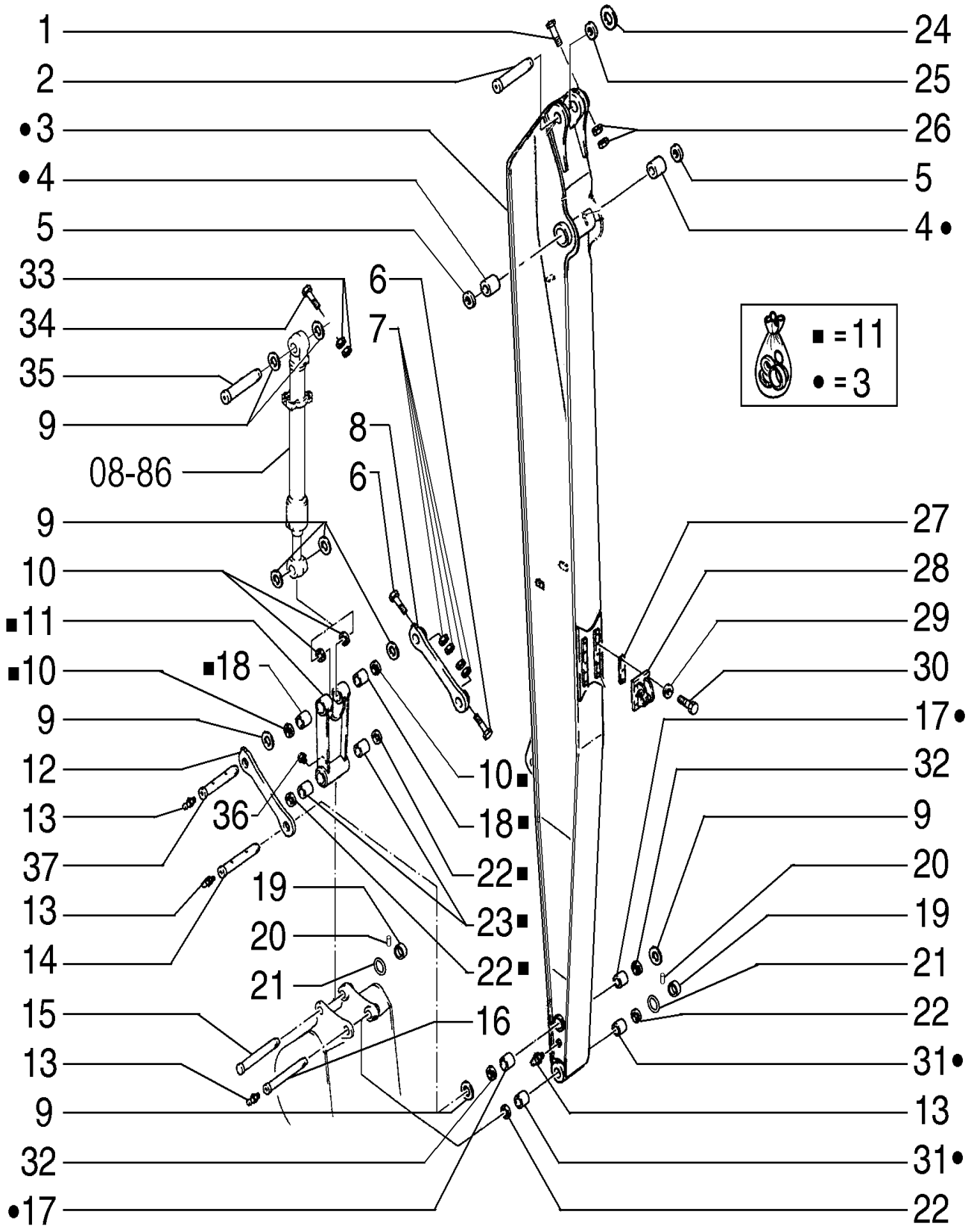

DIPPERSTICK - 6,350M

REF	FN	PART NUMBER	YR/SN	QTY	DESCRIPTION
34		11114631		1	PARAFUSO Hex, M12 x 120, 10.9
35		75265023		1	PINO
36		71404856		1	BUJÃO
37		87470596		1	PINO

09-047	01	p1	7/2013

NARROW BUCKET - 1,0 CUBIC METERS

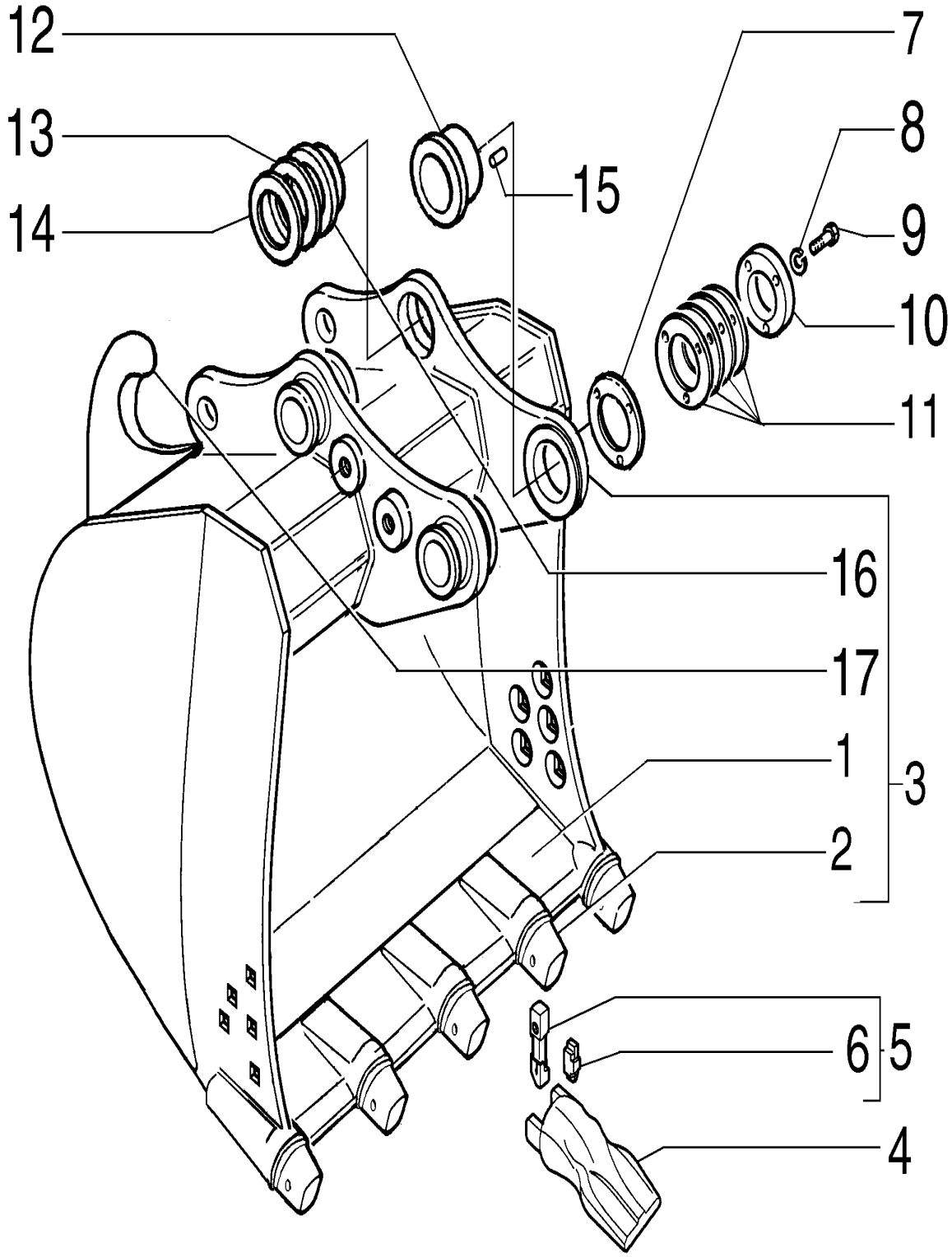

NARROW BUCKET - 1,0 CUBIC METERS

REF	FN	PART NUMBER	YR/SN	QTY	DESCRIPTION
1		87558032		1	PLACA
2		72204480		5	PORTA-DENTES
3	1	87633972		1	CAÇAMBA Includes items 1, 2, 16, 17
4		87638115		5	DENTE DA NAVALHA
5		72204481		5	PINO ELÁSTICO Includes item 6
6		72206731		5	RETENTOR
7		75325825		AR	CALÇO DE AFINAÇÃO 1.00mm
8		10517271		3	TRAVA DA ARRUELA
9		11118931		3	PARAFUSO Hex, M16 x 50, 10.9
10		75325826		1	PLACA
11		75325824		AR	CALÇO DE AFINAÇÃO 0.50mm
12		75327081		1	BUCHA
13		75325827		AR	CALÇO DE AFINAÇÃO 1.00mm
14		75325828		AR	CALÇO DE AFINAÇÃO 0.50mm
15		10493230		1	PINO
16		75327080		2	BUCHA
17		75245286		1	GANCHO

(1) PARA CAÇAMBA COM GANCHO

09-048	01	p1	7/2013

NARROW GP BUCKET - 1,1 CUBIC METERS

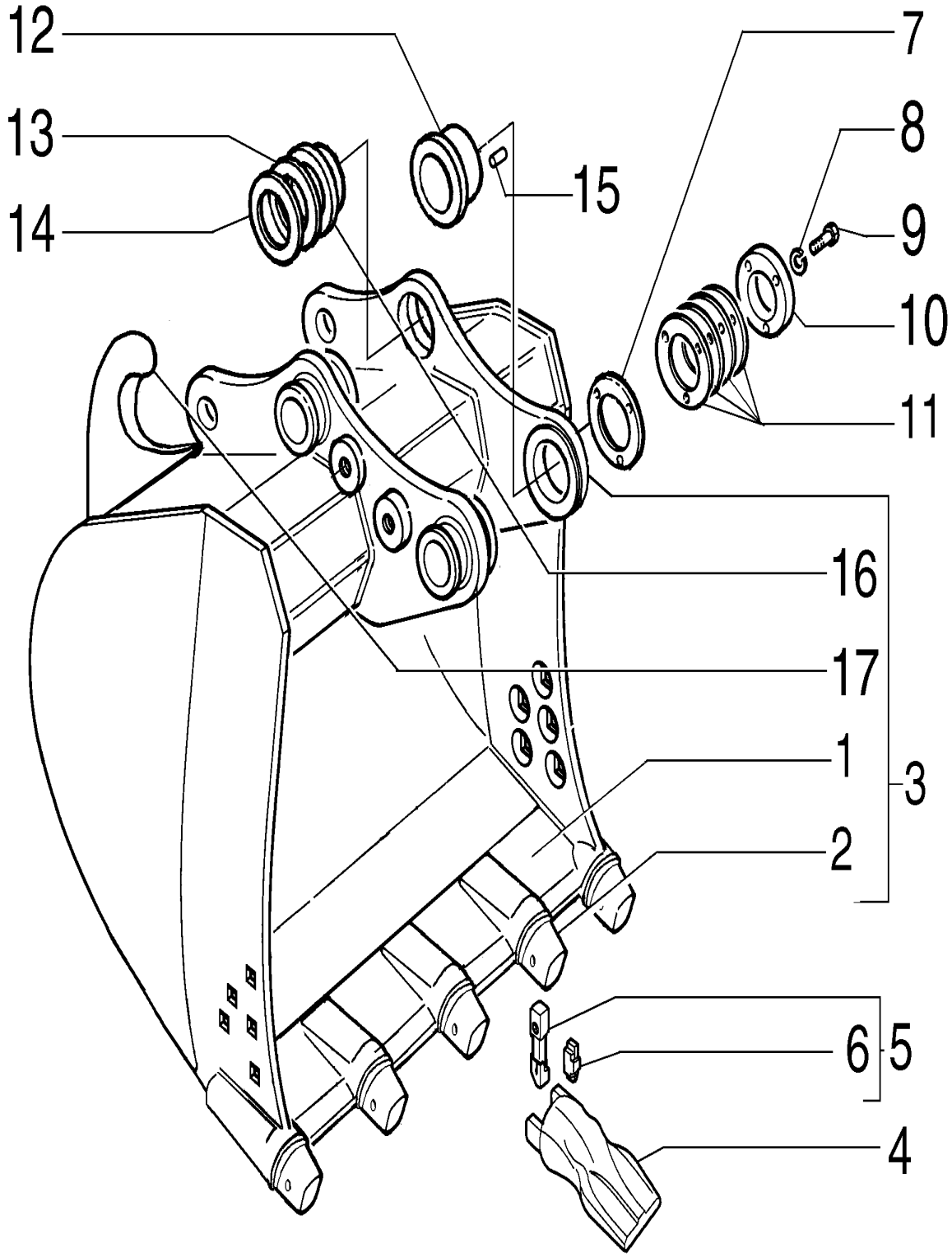

NARROW GP BUCKET - 1,1 CUBIC METERS

REF	FN	PART NUMBER	YR/SN	QTY	DESCRIPTION
1		75323294		1	SUPORTE DO ARADO
2		72204480		5	PORTA-DENTES
3		87638395		1	CAÇAMBA Includes items 1, 2, 16, 17
4		87638115		5	DENTE DA NAVALHA
5		72204481		5	PINO ELÁSTICO Includes item 6
6		72206731		5	RETENTOR
7		75325825		AR	CALÇO DE AFINAÇÃO 1.00mm
8		10517271		3	TRAVA DA ARRUELA
9		11118931		3	PARAFUSO Hex, M16 x 50, 10.9
10		75325826		1	PLACA
11		75325824		AR	CALÇO DE AFINAÇÃO 0.50mm
12		75327081		1	BUCHA
13		75325827		AR	CALÇO DE AFINAÇÃO 1.00mm
14		75325828		AR	CALÇO DE AFINAÇÃO 0.50mm
15		10493230		1	PINO
16		75327080		2	BUCHA
17		75245286		1	GANCHO

09-049	01	p1	7/2013

NARROW GP BUCKET - 1,25 CUBIC METERS

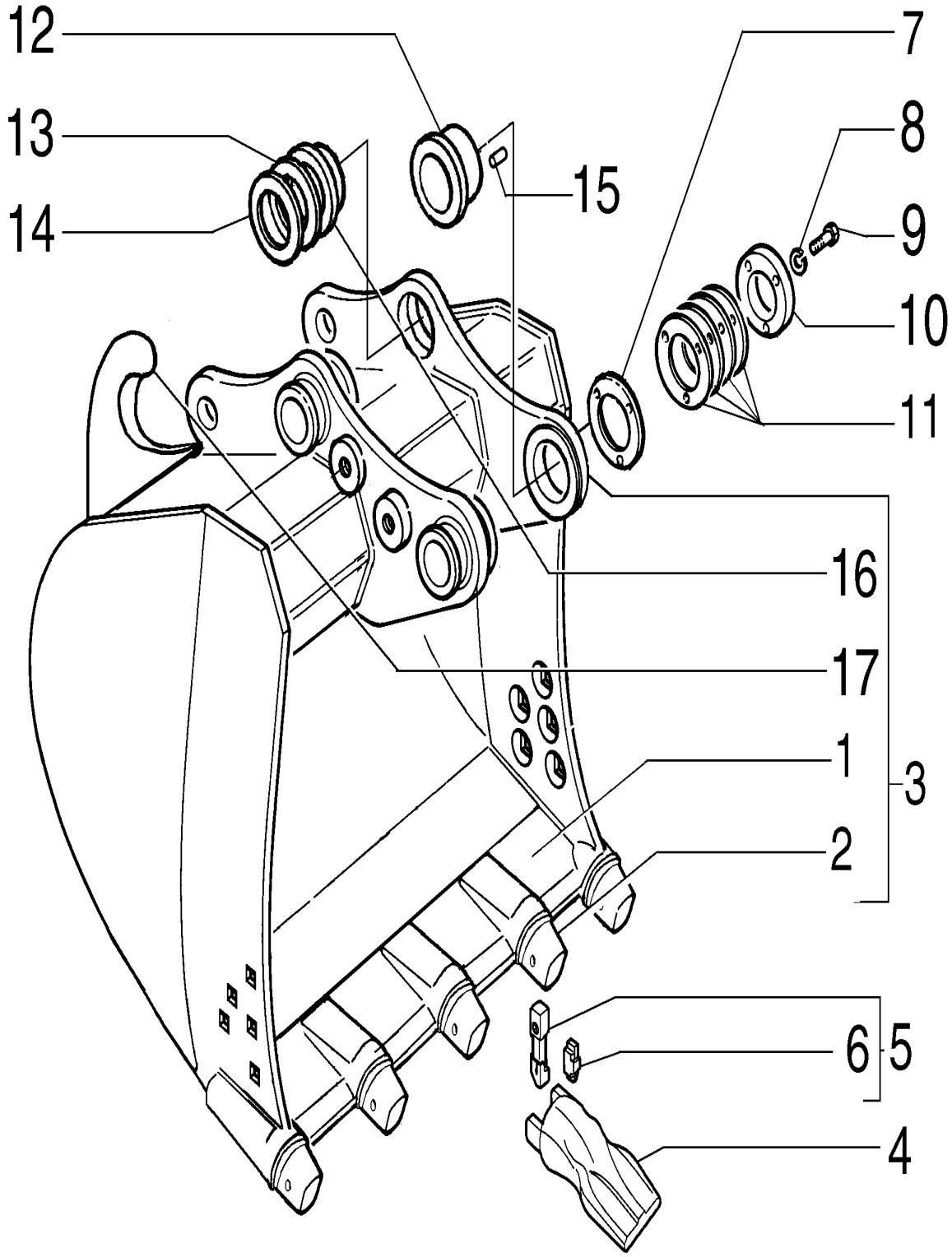

NARROW GP BUCKET - 1,25 CUBIC METERS

REF	FN	PART NUMBER	YR/SN	QTY	DESCRIPTION
1		75322135		1	SUPORTE DO ARADO
2		72204480		5	PORTA-DENTES
3		87638394		1	CAÇAMBA Includes items 1, 2, 16, 17
4		87638115		5	DENTE DA NAVALHA
5		72204481		5	PINO ELÁSTICO Includes item 6
6		72206731		5	RETENTOR
7		75325825		AR	CALÇO DE AFINAÇÃO 1.00mm
8		10517271		3	TRAVA DA ARRUELA
9		11118931		3	PARAFUSO Hex, M16 x 50, 10.9
10		75325826		1	PLACA
11		75325824		AR	CALÇO DE AFINAÇÃO 0.50mm
12		75327081		1	BUCHA
13		75325827		AR	CALÇO DE AFINAÇÃO 1.00mm
14		75325828		AR	CALÇO DE AFINAÇÃO 0.50mm
15		10493230		1	PINO
16		75327080		2	BUCHA
17		75245286		1	GANCHO

09-050	01	p1	7/2013

NARROW GP BUCKET - 1,45 CUBIC METERS

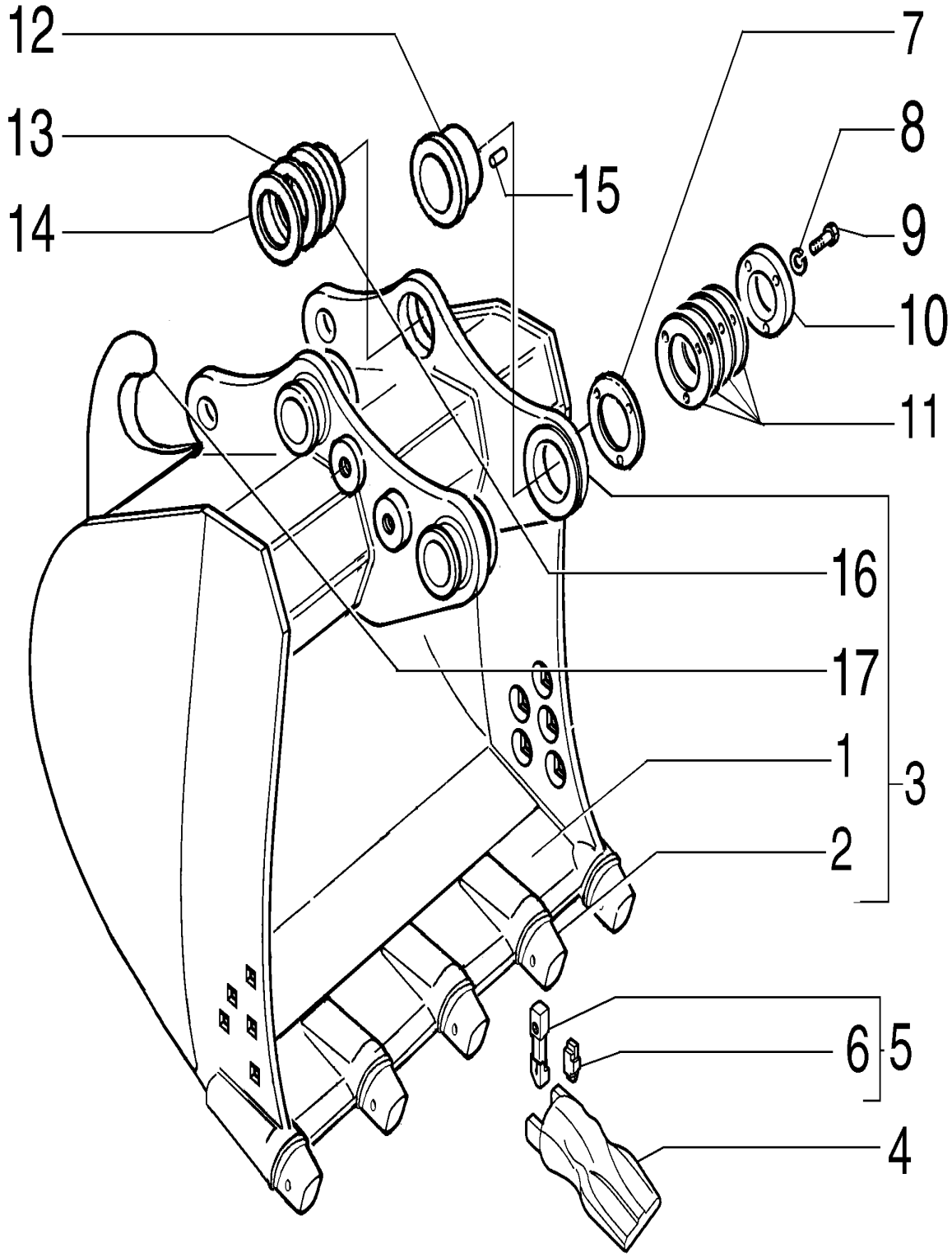

NARROW GP BUCKET - 1,45 CUBIC METERS

REF	FN	PART NUMBER	YR/SN	QTY	DESCRIPTION
1		75322110		1	SUPORTE DO ARADO
2		72204480		5	PORTA-DENTES
3		87638393		1	CAÇAMBA Includes items 1, 2, 16, 17
4		87638115		5	DENTE DA NAVALHA
5		72204481		5	PINO ELÁSTICO Includes item 6
6		72206731		5	RETENTOR
7		75325825		AR	CALÇO DE AFINAÇÃO 1.00mm
8		10517271		3	TRAVA DA ARRUELA
9		11118931		3	PARAFUSO Hex, M16 x 50, 10.9
10		75325826		1	PLACA
11		75325824		AR	CALÇO DE AFINAÇÃO 0.50mm
12		75327081		1	BUCHA
13		75325827		AR	CALÇO DE AFINAÇÃO 1.00mm
14		75325828		AR	CALÇO DE AFINAÇÃO 0.50mm
15		10493230		1	PINO
16		75327080		2	BUCHA
17		75245286		1	GANCHO

09-052	01	p1	7/2013

WIDE GP BUCKET - 0,78 CUBIC METERS

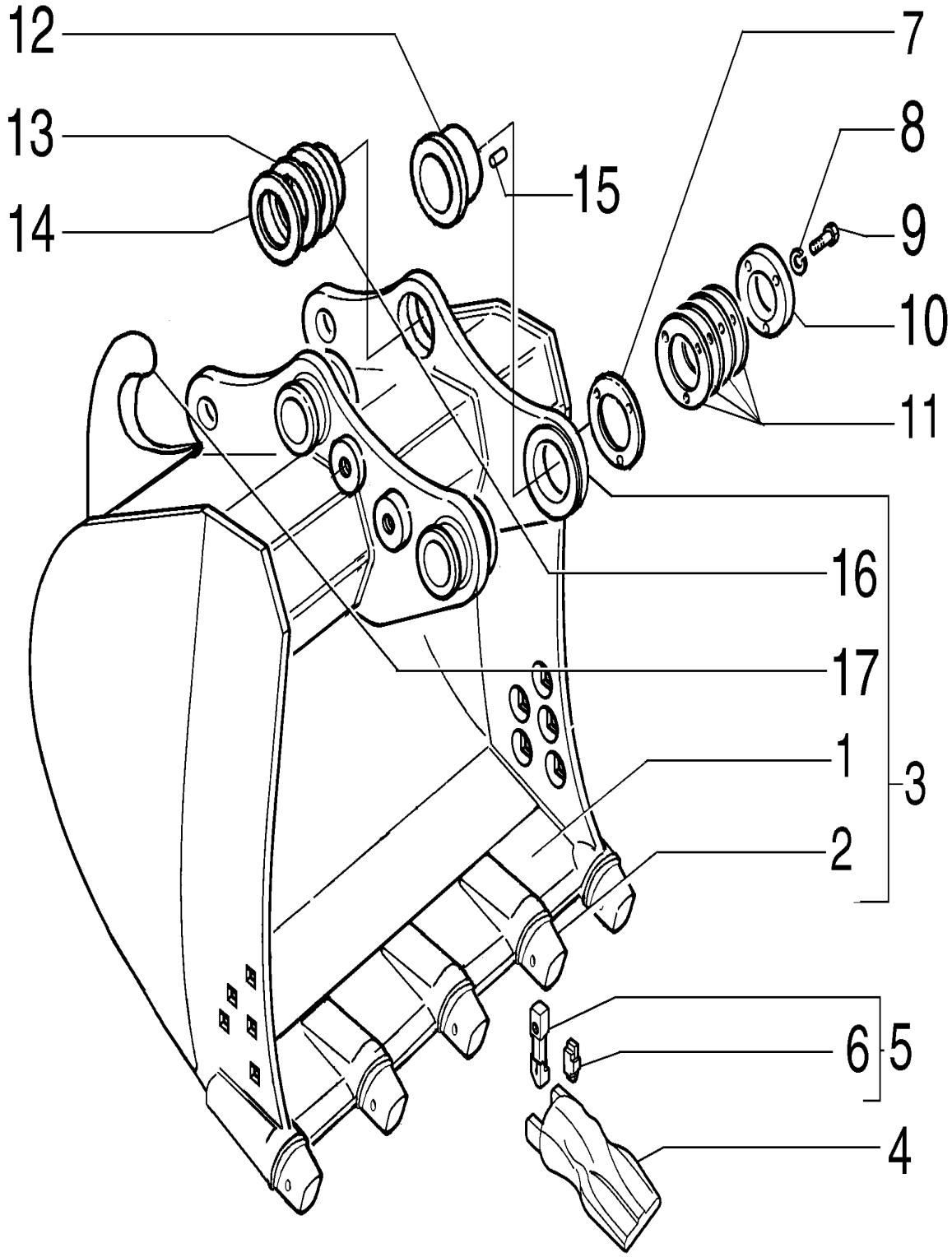

WIDE GP BUCKET - 0,78 CUBIC METERS

REF	FN	PART NUMBER	YR/SN	QTY	DESCRIPTION
1		75257746		1	BORDA CORTANTE
2		72204480		5	PORTA-DENTES
3		87638391		1	CAÇAMBA Includes items 1, 2, 16, 17
4		87638115		5	DENTE DA NAVALHA
5		72204481		5	PINO ELÁSTICO Includes item 6
6		72206731		5	RETENTOR
7		75325825		AR	CALÇO DE AFINAÇÃO 1.00mm
8		10517271		3	TRAVA DA ARRUELA
9		11118931		3	PARAFUSO Hex, M16 x 50, 10.9
10		75325826		1	PLACA
11		75325824		AR	CALÇO DE AFINAÇÃO 0.50mm
12		75327081		1	BUCHA
13		75325827		AR	CALÇO DE AFINAÇÃO 1.00mm
14		75325828		AR	CALÇO DE AFINAÇÃO 0.50mm
15		10493230		1	PINO
16		75327080		2	BUCHA
17		75245286		1	GANCHO

09-054	01	p1	7/2013

WIDE GP BUCKET - 1,105 CUBIC METERS

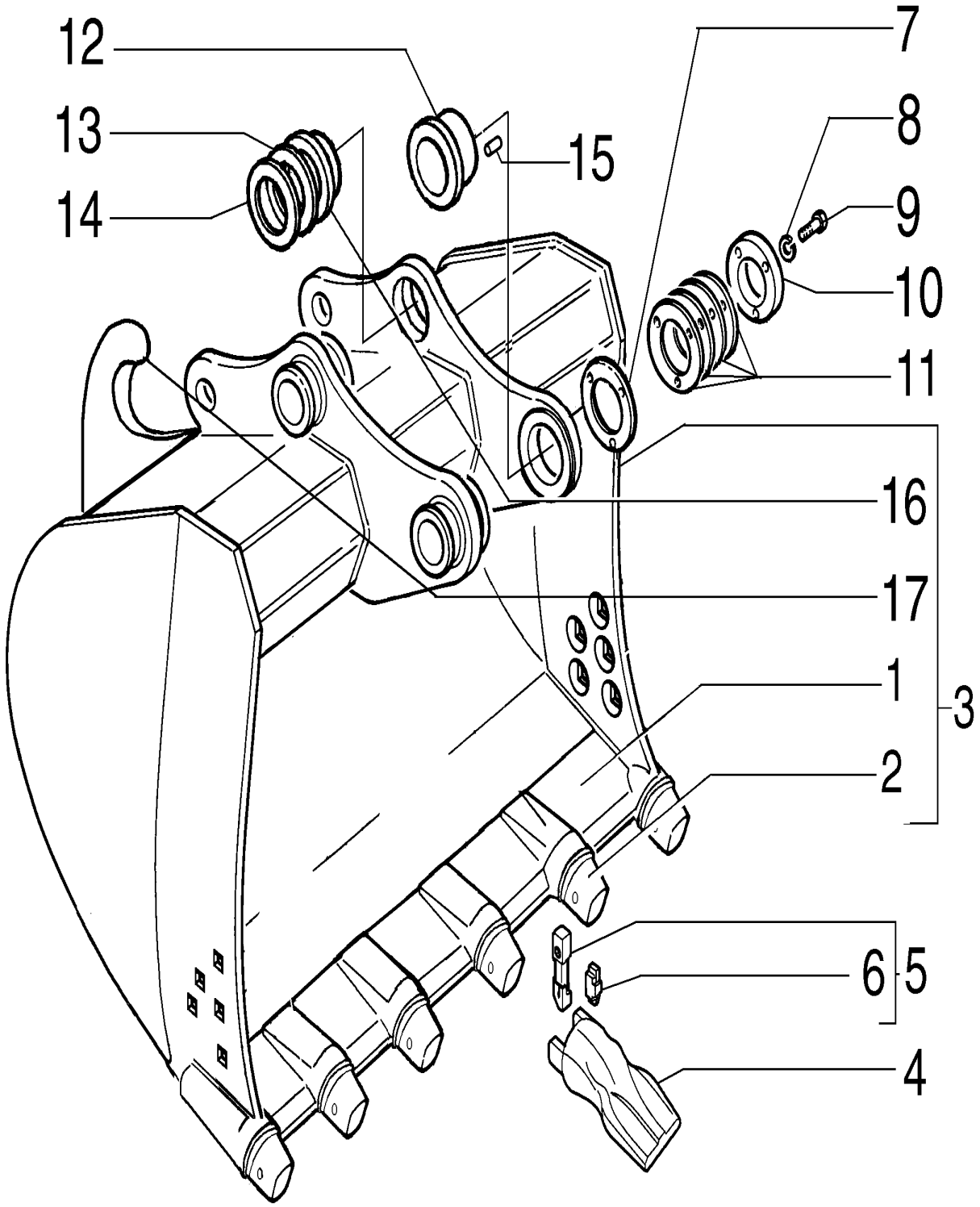

WIDE GP BUCKET - 1,105 CUBIC METERS

REF	FN	PART NUMBER	YR/SN	QTY	DESCRIPTION
1		75257744		1	BORDA CORTANTE
2		72204480		6	PORTA-DENTES
3		87638389		1	CAÇAMBA Includes items 1, 2, 16, 17
4		87638115		6	DENTE DA NAVALHA
5		72204481		6	PINO ELÁSTICO Includes item 6
6		72206731		6	RETENTOR
7		75325825		AR	CALÇO DE AFINAÇÃO 1.00mm
8		10517271		3	TRAVA DA ARRUELA
9		11118931		3	PARAFUSO Hex, M16 x 50, 10.9
10		75325826		1	PLACA
11		75325824		AR	CALÇO DE AFINAÇÃO 0.50mm
12		75327081		1	BUCHA
13		75325827		AR	CALÇO DE AFINAÇÃO 1.00mm
14		75325828		AR	CALÇO DE AFINAÇÃO 0,50mm
15		10493230		1	PINO
16		75327080		2	BUCHA
17		75245286		1	GANCHO

09-055	01	p1	7/2013

WIDE GP BUCKET - 1,315 CUBIC METERS

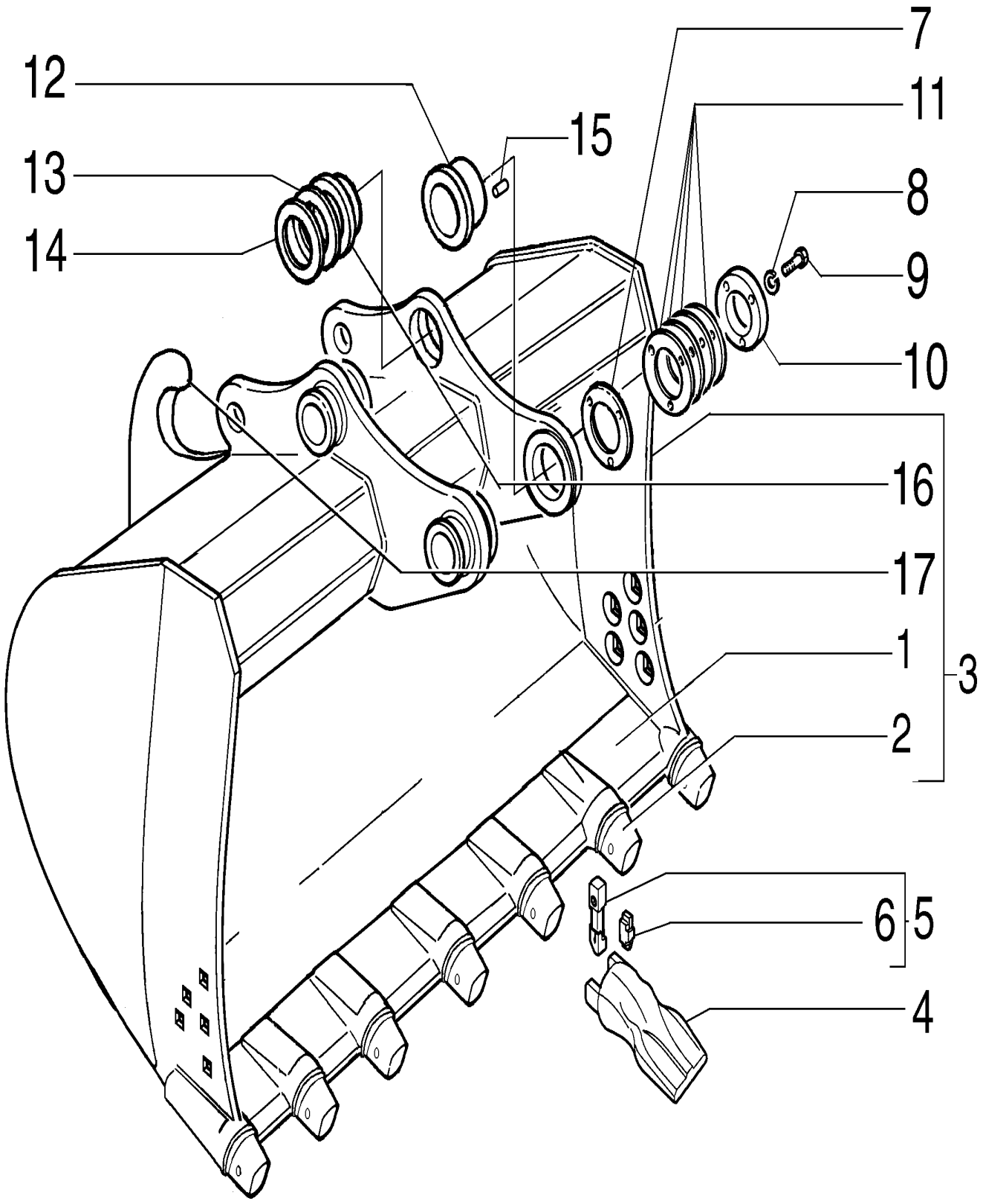

WIDE GP BUCKET - 1,315 CUBIC METERS

REF	FN	PART NUMBER	YR/SN	QTY	DESCRIPTION
1		75257743		1	BORDA CORTANTE
2		72204480		7	PORTA-DENTES
3		87638388		1	CAÇAMBA Includes items 1, 2, 16, 17
4		87638115		7	DENTE DA NAVALHA
5		72204481		7	PINO ELÁSTICO Includes item 6
6		72206731		7	RETENTOR
7		75325825		AR	CALÇO DE AFINAÇÃO 1.00mm
8		10517271		3	TRAVA DA ARRUELA
9		11118931		3	PARAFUSO Hex, M16 x 50, 10.9
10		75325826		1	PLACA
11		75325824		AR	CALÇO DE AFINAÇÃO 0.50mm
12		75327081		1	BUCHA
13		75325827		AR	CALÇO DE AFINAÇÃO 1.00mm
14		75325828		AR	CALÇO DE AFINAÇÃO 0.50mm
15		10493230		1	PINO
16		75327080		2	BUCHA
17		75245286		1	GANCHO

09-056	01	p1	7/2013

NARROW HD BUCKET - 1,1 CUBIC METERS

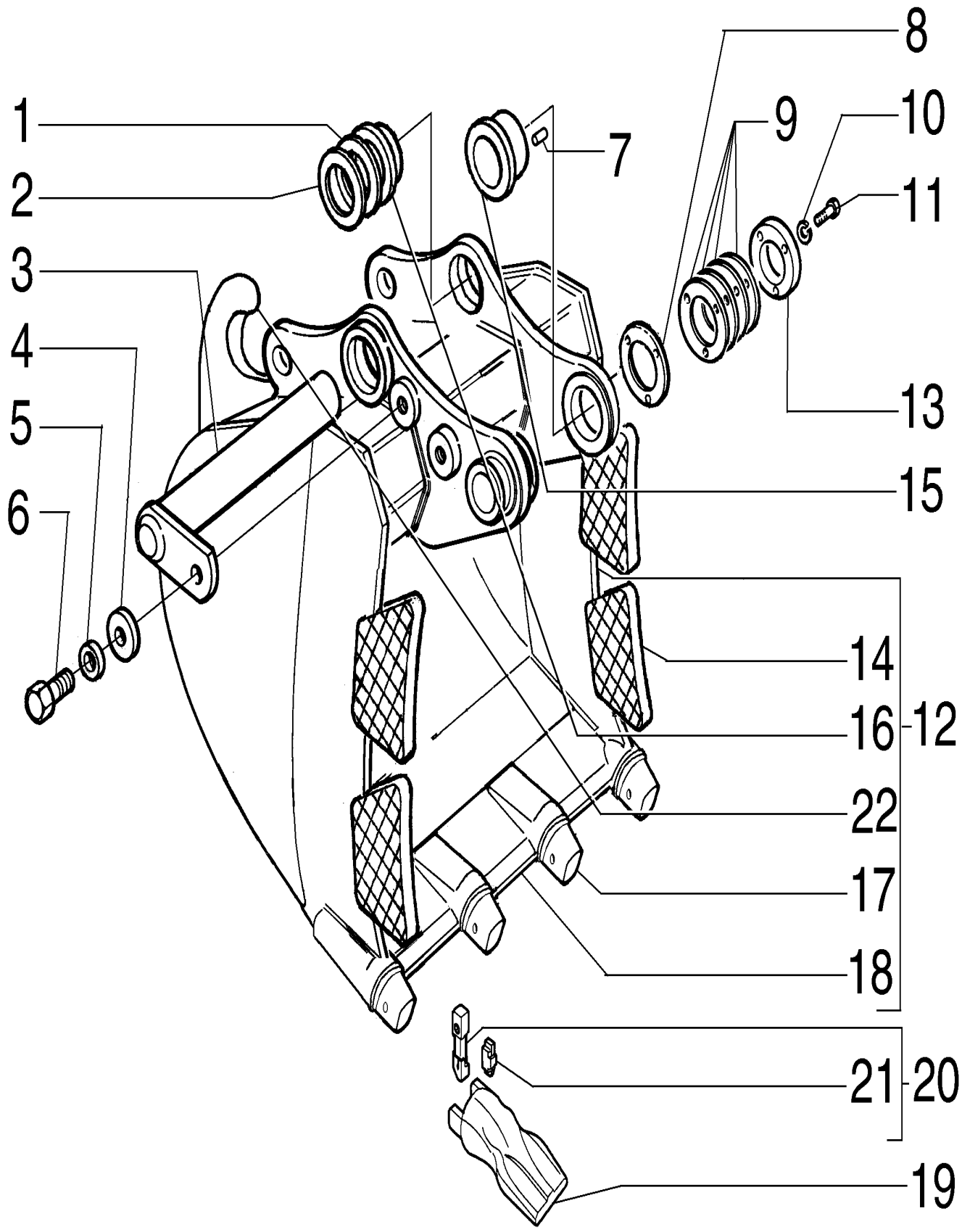

NARROW HD BUCKET - 1,1 CUBIC METERS

REF	FN	PART NUMBER	YR/SN	QTY	DESCRIPTION
1		75325827		AR	CALÇO DE AFINAÇÃO 1.00mm
2		75325828		AR	CALÇO DE AFINAÇÃO 0.50mm
3		75327104		2	PINO
4		75256026		2	ARRUELA PLANA
5		10517471		2	TRAVA DA ARRUELA
6		11124431		2	PARAFUSO Hex, M20 x 40, 10.9
7		10493230		1	PINO
8		75325825		AR	CALÇO DE AFINAÇÃO 1.00mm
9		75325824		AR	CALÇO DE AFINAÇÃO 0.50mm
10		10517271		3	TRAVA DA ARRUELA
11		11118931		3	PARAFUSO Hex, M16 x 50, 10.9
12		87638406		1	CAÇAMBA Includes items 14, 16, 17, 18, 22
13		75325826		1	PLACA
14		75260551		4	REFORÇO
15		75327106		1	BUCHA
16		75264389		2	BUCHA
17		72204485		4	PORTA-DENTES
18		87638385		1	LÂMINA
19		87638186		4	DENTE DA NAVALHA
20		72204486		4	PINO ELÁSTICO Includes item 21
21		72206731		4	RETENTOR
22		75245286		1	GANCHO

09-057	01	p1	7/2013

NARROW HD BUCKET - 1,25 CUBIC METERS

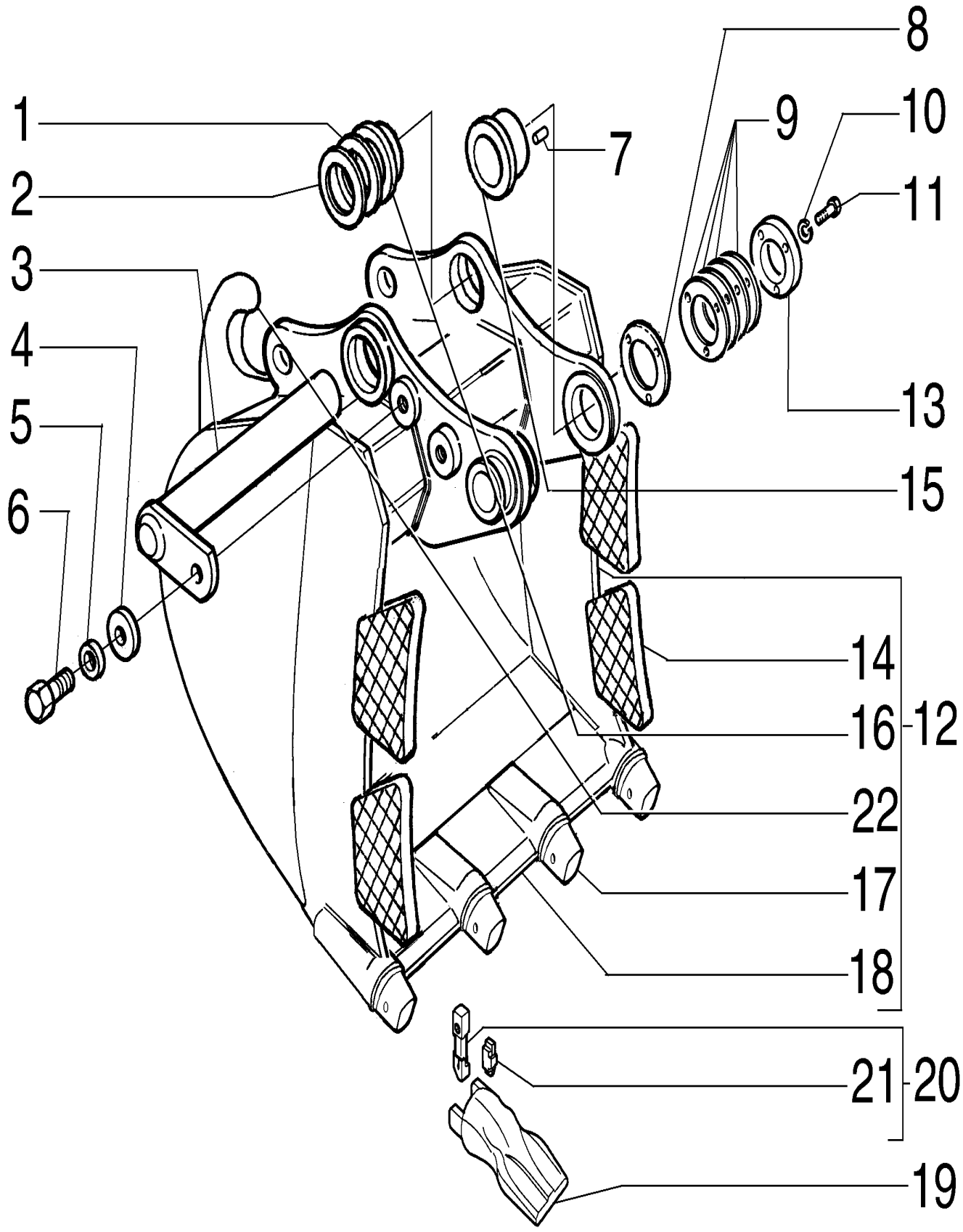

NARROW HD BUCKET - 1,25 CUBIC METERS

REF	FN	PART NUMBER	YR/SN	QTY	DESCRIPTION
1		75325827		AR	CALÇO DE AFINAÇÃO 1.00mm
2		75325828		AR	CALÇO DE AFINAÇÃO 0.50mm
3		75327104		2	PINO
4		75256026		2	ARRUELA PLANA
5		10517471		2	TRAVA DA ARRUELA
6		11124431		2	PARAFUSO Hex, M20 x 40, 10.9
7		10493230		1	PINO
8		75325825		AR	CALÇO DE AFINAÇÃO 1.00mm
9		75325824		AR	CALÇO DE AFINAÇÃO 0.50mm
10		10517271		3	TRAVA DA ARRUELA
11		11118931		3	PARAFUSO Hex, M16 x 50, 10.9
12		87638405		1	CAÇAMBA Includes items 14, 16, 17, 18, 22
13		75325826		1	PLACA
14		75260551		4	REFORÇO
15		75327106		1	BUCHA
16		75264389		2	BUCHA
17		72204485		4	PORTA-DENTES
18		87638384		1	LÂMINA
19		87638186		4	DENTE DA NAVALHA
20		72204486		4	PINO ELÁSTICO Includes item 21
21		72206731		4	RETENTOR
22		75245286		1	GANCHO

09-058	01	p1	7/2013

NARROW HD BUCKET - 1,4 CUBIC METERS

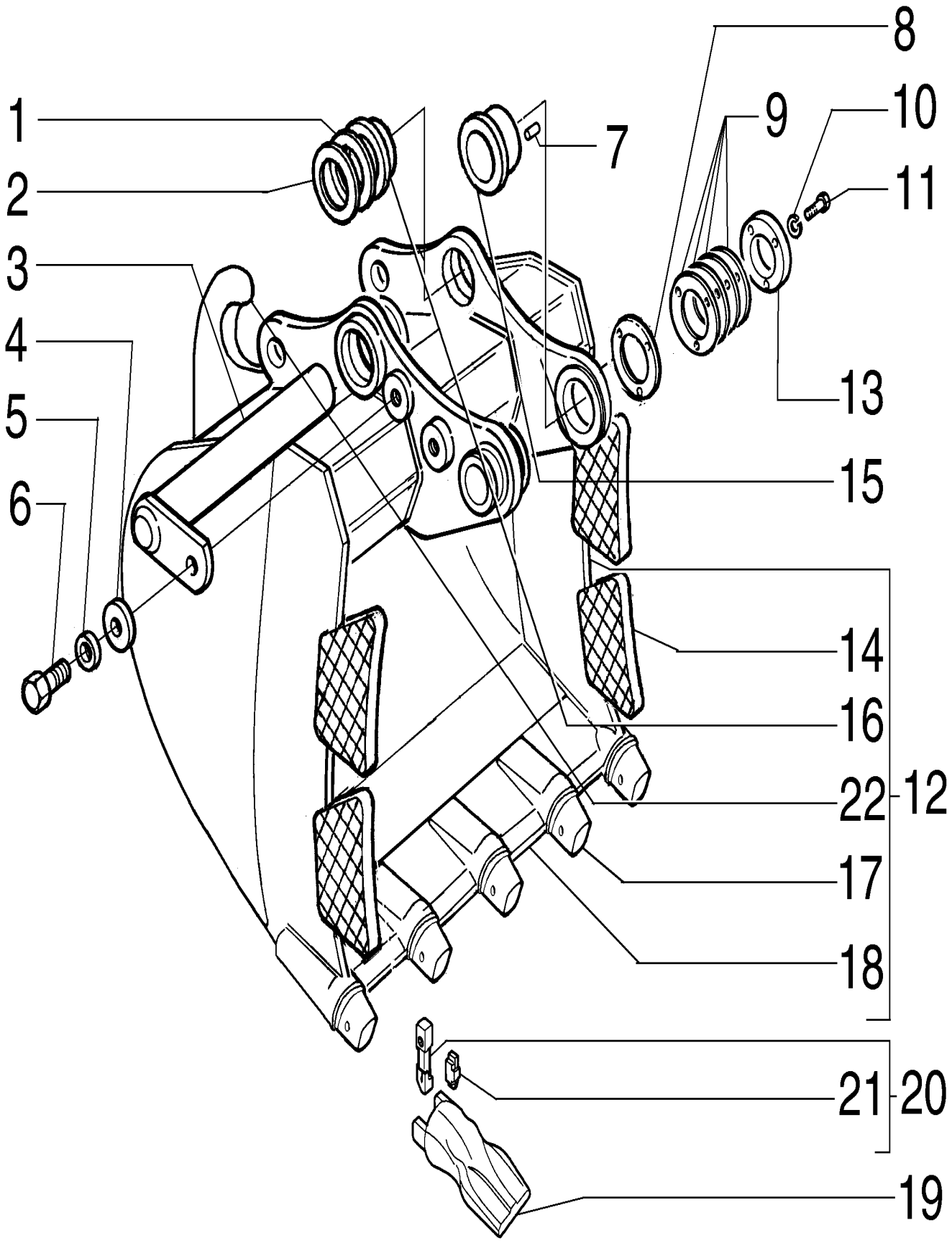

NARROW HD BUCKET - 1,4 CUBIC METERS

REF	FN	PART NUMBER	YR/SN	QTY	DESCRIPTION
1		75325827		AR	CALÇO DE AFINAÇÃO 1.00mm
2		75325828		AR	CALÇO DE AFINAÇÃO 0.50mm
3		75327104		2	PINO
4		75256026		2	ARRUELA PLANA
5		10517471		2	TRAVA DA ARRUELA
6		11124431		2	PARAFUSO Hex, M20 x 40, 10.9
7		10493230		1	PINO
8		75325825		AR	CALÇO DE AFINAÇÃO 1.00mm
9		75325824		AR	CALÇO DE AFINAÇÃO 0.50mm
10		10517271		3	TRAVA DA ARRUELA
11		11118931		3	PARAFUSO Hex, M16 x 50, 10.9
12		87638404		1	CAÇAMBA Includes items 14, 16, 17, 18, 22
13		75325826		1	PLACA
14		75260551		4	REFORÇO
15		75327106		1	BUCHA
16		75264389		2	BUCHA
17		72204485		5	PORTA-DENTES
18		87638383		1	LÂMINA
19		87638186		5	DENTE DA NAVALHA
20		72204486		5	PINO ELÁSTICO Includes item 21
21		72206731		5	RETENTOR
22		75245286		1	GANCHO

09-059	01	p1	7/2013

WIDE HD BUCKET - 0,78 CUBIC METERS

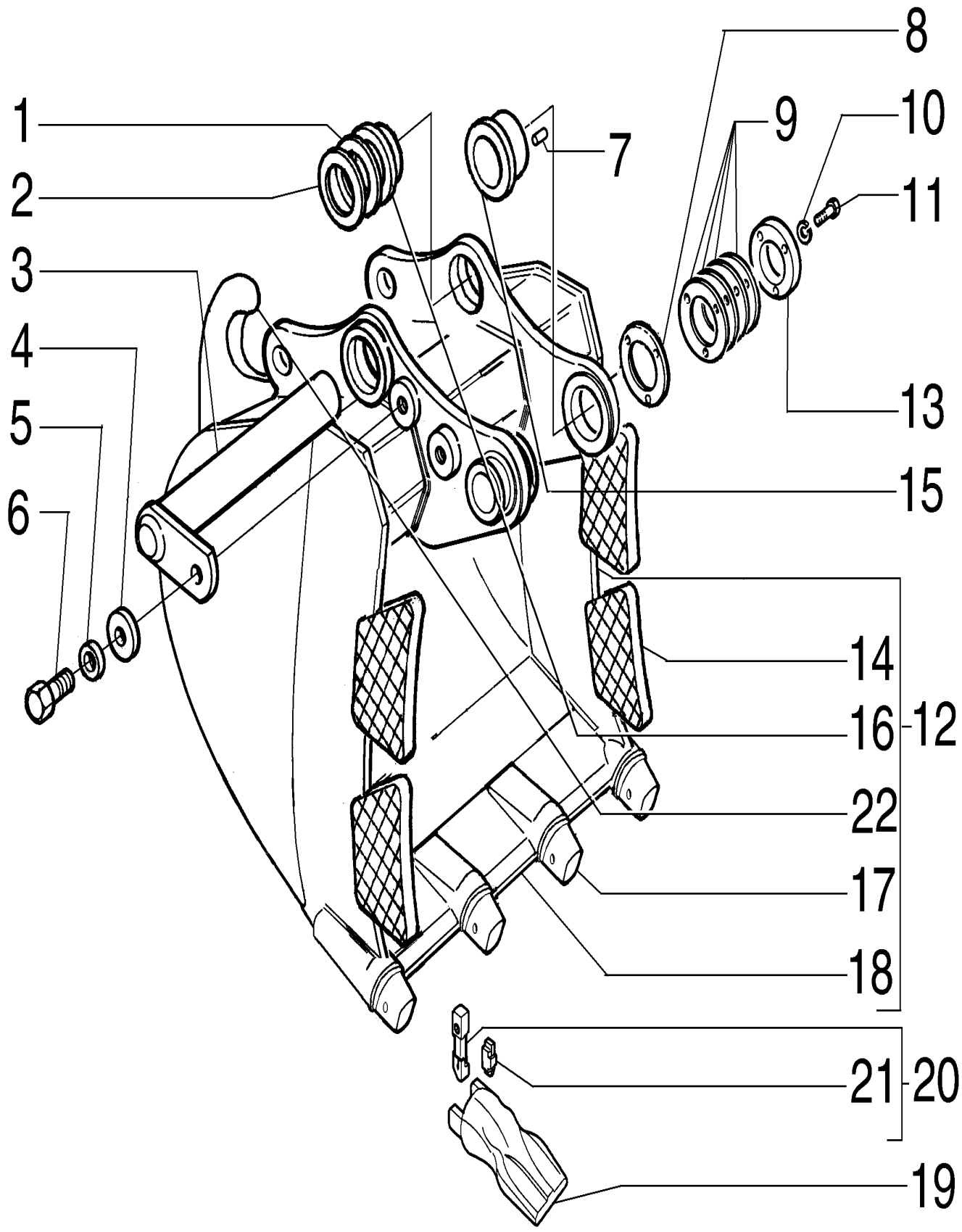

WIDE HD BUCKET - 0,78 CUBIC METERS

REF	FN	PART NUMBER	YR/SN	QTY	DESCRIPTION
1		75325827		AR	CALÇO DE AFINAÇÃO 1.00mm
2		75325828		AR	CALÇO DE AFINAÇÃO 0.50mm
3		75327104		2	PINO
4		75256026		2	ARRUELA PLANA
5		10517471		2	TRAVA DA ARRUELA
6		11124431		2	PARAFUSO Hex, M20 x 40, 10.9
7		10493230		1	PINO
8		75325825		AR	CALÇO DE AFINAÇÃO 1.00mm
9		75325824		AR	CALÇO DE AFINAÇÃO 0.50mm
10		10517271		3	TRAVA DA ARRUELA
11		11118931		3	PARAFUSO Hex, M16 x 50, 10.9
12	1	87638401		1	CAÇAMBA Includes items 14, 16, 17, 18, 22
13		75325826		1	PLACA
14		75260551		4	REFORÇO
15		75327106		1	BUCHA
16		75264389		2	BUCHA
17		72204485		4	PORTA-DENTES
18		87638382		1	LÂMINA
19		87638186		4	DENTE DA NAVALHA
20		72204486		4	PINO ELÁSTICO Includes item 21
21		72206731		4	RETENTOR
22	1	75245286		1	GANCHO

(1) PARA CAÇAMBA COM GANCHO

09-061	01	p1	7/2013

WIDE HD BUCKET - 1,105 CUBIC METERS

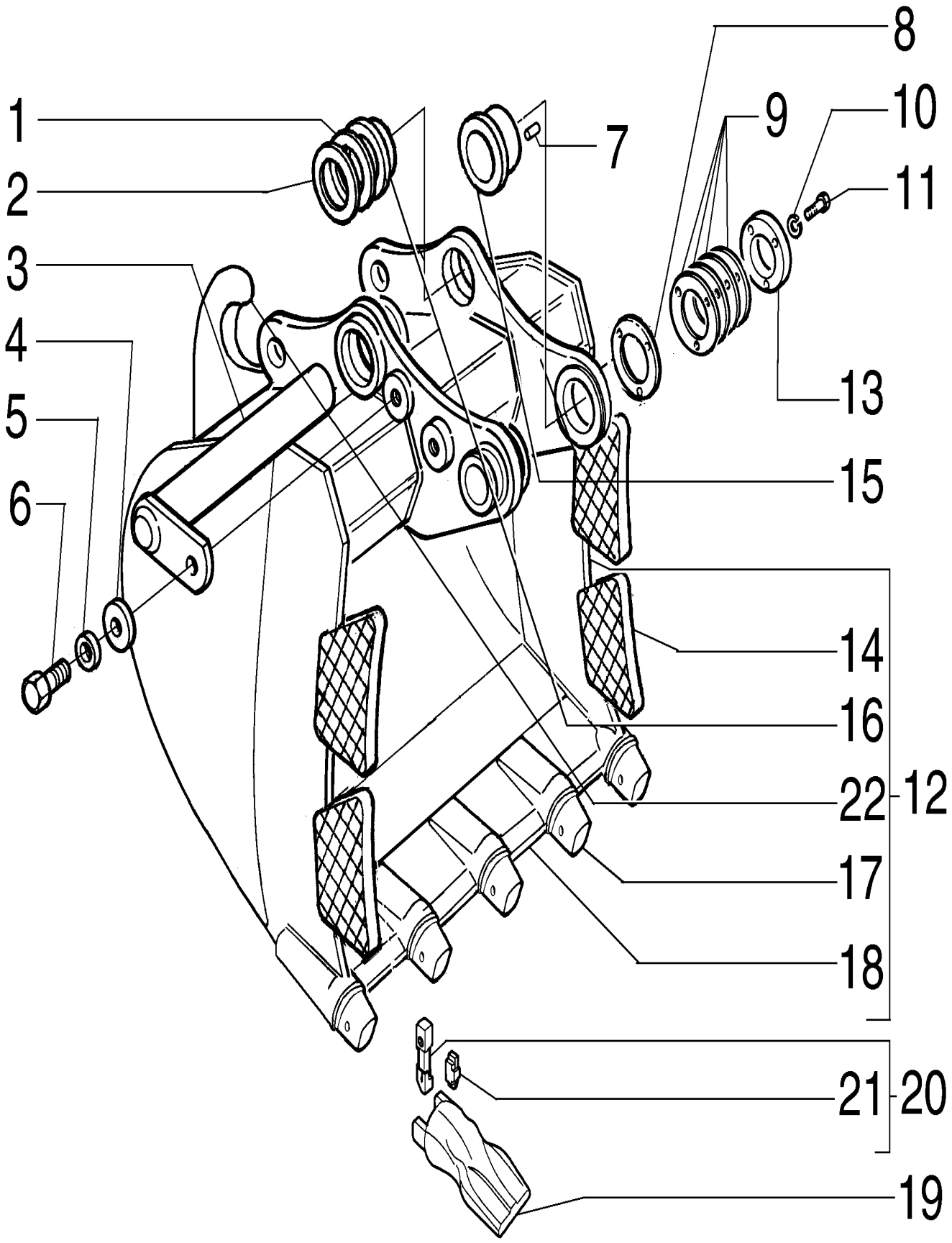

WIDE HD BUCKET - 1,105 CUBIC METERS

REF	FN	PART NUMBER	YR/SN	QTY	DESCRIPTION
1		75325827		AR	CALÇO DE AFINAÇÃO 1.00mm
2		75325828		AR	CALÇO DE AFINAÇÃO 0.50mm
3		75327104		2	PINO
4		75256026		2	ARRUELA PLANA
5		10517471		2	TRAVA DA ARRUELA
6		11124431		2	PARAFUSO Hex, M20 x 40, 10.9
7		10493230		1	PINO
8		75325825		AR	CALÇO DE AFINAÇÃO 1.00mm
9		75325824		AR	CALÇO DE AFINAÇÃO 0.50mm
10		10517271		3	TRAVA DA ARRUELA
11		11118931		3	PARAFUSO Hex, M16 x 50, 10.9
12	1	87638399		1	CAÇAMBA Includes items 14, 16, 17, 18, 22
13		75325826		1	PLACA
14		75260551		4	REFORÇO
15		75327106		1	BUCHA
16		75264389		2	BUCHA
17		72204485		5	PORTA-DENTES
18		87638380		1	CAÇAMBA
19		87638186		5	DENTE DA NAVALHA
20		72204486		5	PINO ELÁSTICO Includes item 21
21		72206731		5	RETENTOR
22		75245286		1	GANCHO

(1) PARA CAÇAMBA COM GANCHO

09-062	01	p1	7/2013

WIDE HD BUCKET - 1,315 CUBIC METERS

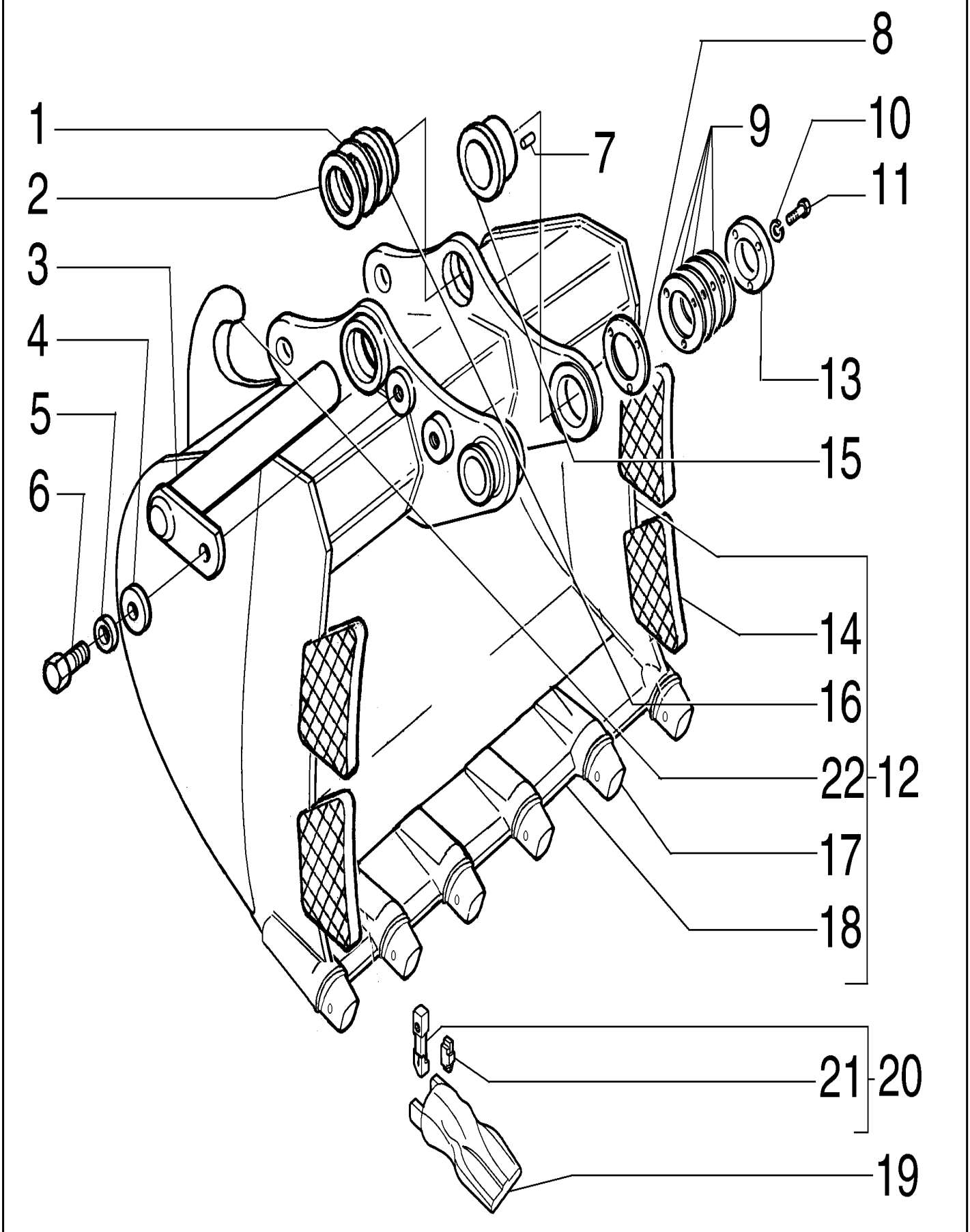

WIDE HD BUCKET - 1,315 CUBIC METERS

REF	FN	PART NUMBER	YR/SN	QTY	DESCRIPTION
1		75325827		AR	CALÇO DE AFINAÇÃO 1.00mm
2		75325828		AR	CALÇO DE AFINAÇÃO 0.50mm
3		75327104		2	PINO
4		75256026		2	ARRUELA PLANA
5		10517471		2	TRAVA DA ARRUELA
6		11124431		2	PARAFUSO Hex, M20 x 40, 10.9
7		10493230		1	PINO
8		75325825		AR	CALÇO DE AFINAÇÃO 1.00mm
9		75325824		AR	CALÇO DE AFINAÇÃO 0.50mm
10		10517271		3	TRAVA DA ARRUELA
11		11118931		3	PARAFUSO Hex, M16 x 50, 10.9
12	1	87638398		1	CAÇAMBA Includes items 14, 16, 17, 18, 22
13		75325826		1	PLACA
14		75260551		4	REFORÇO
15		75327106		1	BUCHA
16		75264389		2	BUCHA
17		72204485		6	PORTA-DENTES
18		87638379		1	CAÇAMBA
19		87638186		6	DENTE DA NAVALHA
20		72204486		6	PINO ELÁSTICO Includes item 21
21		72206731		6	RETENTOR
22		75245286		1	GANCHO

(1) PARA CAÇAMBA COM GANCHO

09-064	01	p1	7/2013

RIVER DREDGING BUCKET - 1,1 CUBIC METERS

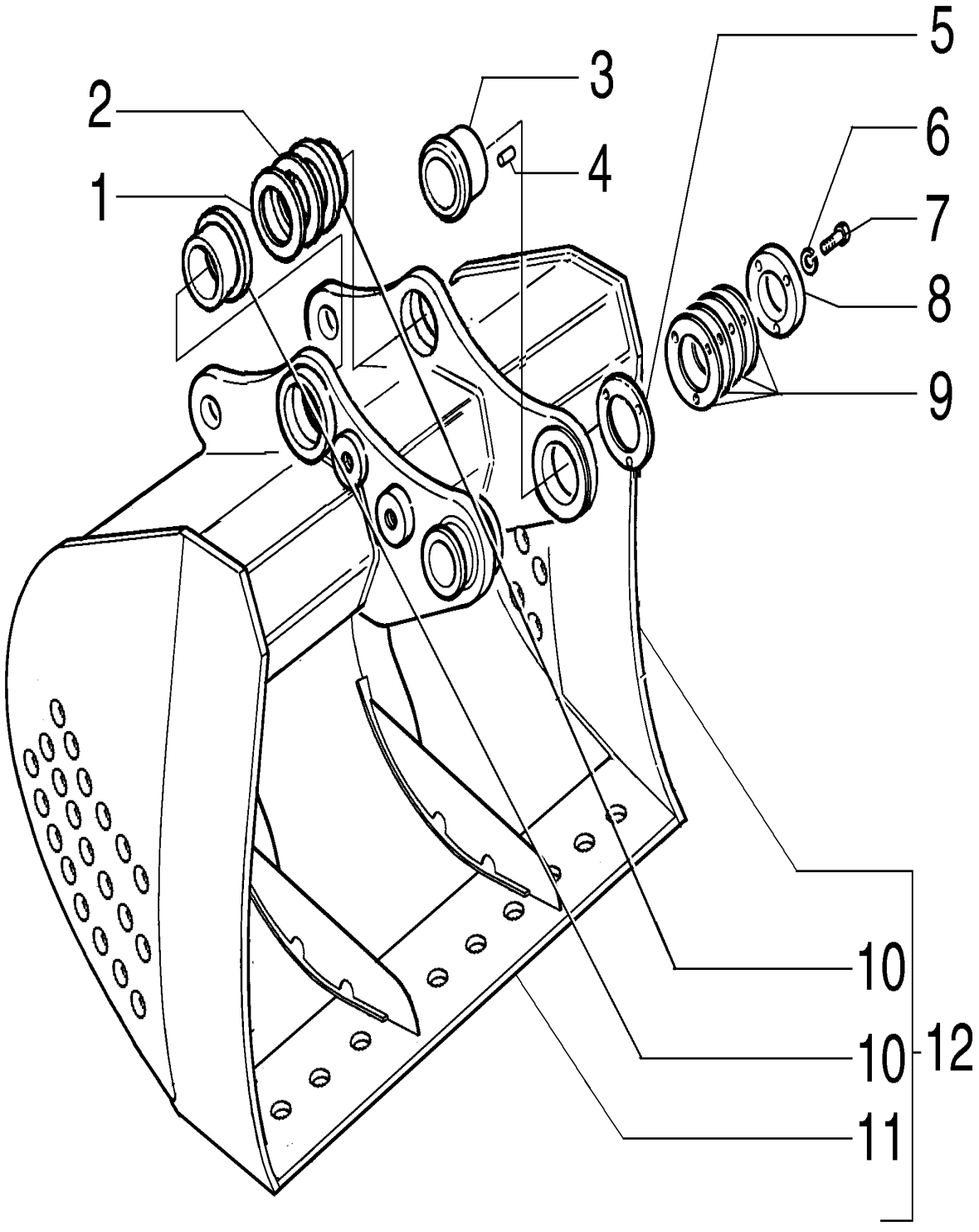

RIVER DREDGING BUCKET - 1,1 CUBIC METERS

REF	FN	PART NUMBER	YR/SN	QTY	DESCRIPTION
1		75325827		AR	CALÇO DE AFINAÇÃO 1.00mm
2		75325828		AR	CALÇO DE AFINAÇÃO 0.50mm
3		75327081		1	BUCHA
4		10493230		1	PINO
5		75325825		AR	CALÇO DE AFINAÇÃO 1.00mm
6		10517271		3	TRAVA DA ARRUELA
7		11118931		3	PARAFUSO Hex, M16 x 50, 10.9
8		75325826		1	PLACA
9		75325824		AR	CALÇO DE AFINAÇÃO 0.50mm
10		75327080		2	BUCHA
11		75261121		1	BORDA CORTANTE
12		75327320		1	CAÇAMBA Includes items 10, 11

09-065	01	p1	7/2013

TRAPEZOIDAL BUCKET - 0,4 METROS CÚBICOS

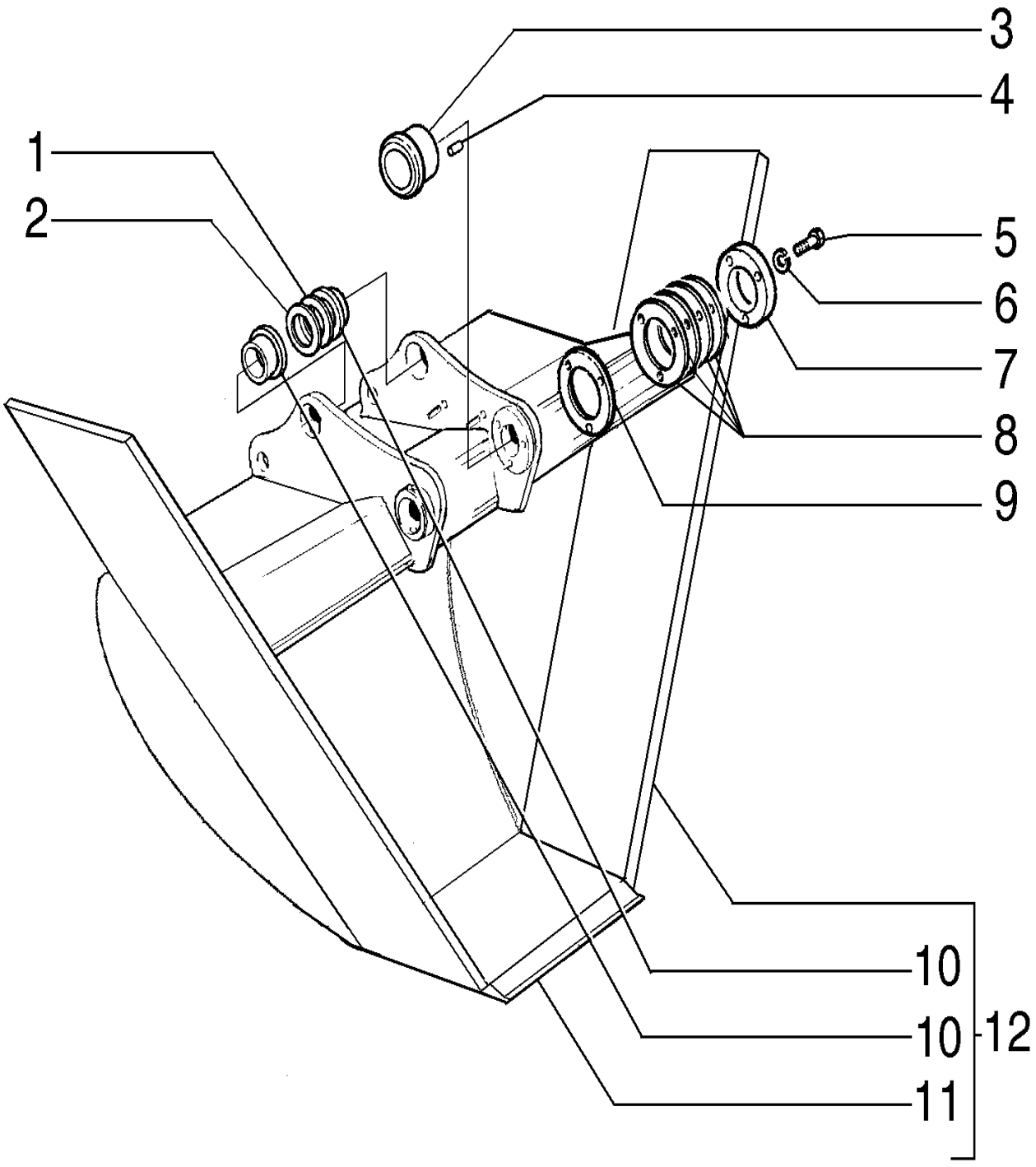

TRAPEZOIDAL BUCKET - 0,4 METROS CÚBICOS

REF	FN	PART NUMBER	YR/SN	QTY	DESCRIPTION
1		75325828		AR	CALÇO DE AFINAÇÃO 0.50mm
2		75325827		AR	CALÇO DE AFINAÇÃO 1.00mm
3		75327081		1	BUCHA
4		10493230		1	PINO
5		11118931		3	PARAFUSO Hex, M16 x 50, 10.9
6		10517271		3	TRAVA DA ARRUELA
7		75325826		1	PLACA
8		75325825		AR	CALÇO DE AFINAÇÃO 1.00mm
9		75325824		AR	CALÇO DE AFINAÇÃO 0.50mm
10		75327080		2	BUCHA
11		75261295		1	BORDA CORTANTE
12		75265094		1	CAÇAMBA Includes items 10, 11

09-066	01	p1	7/2013

BUCKET'S CUTTING EDGE

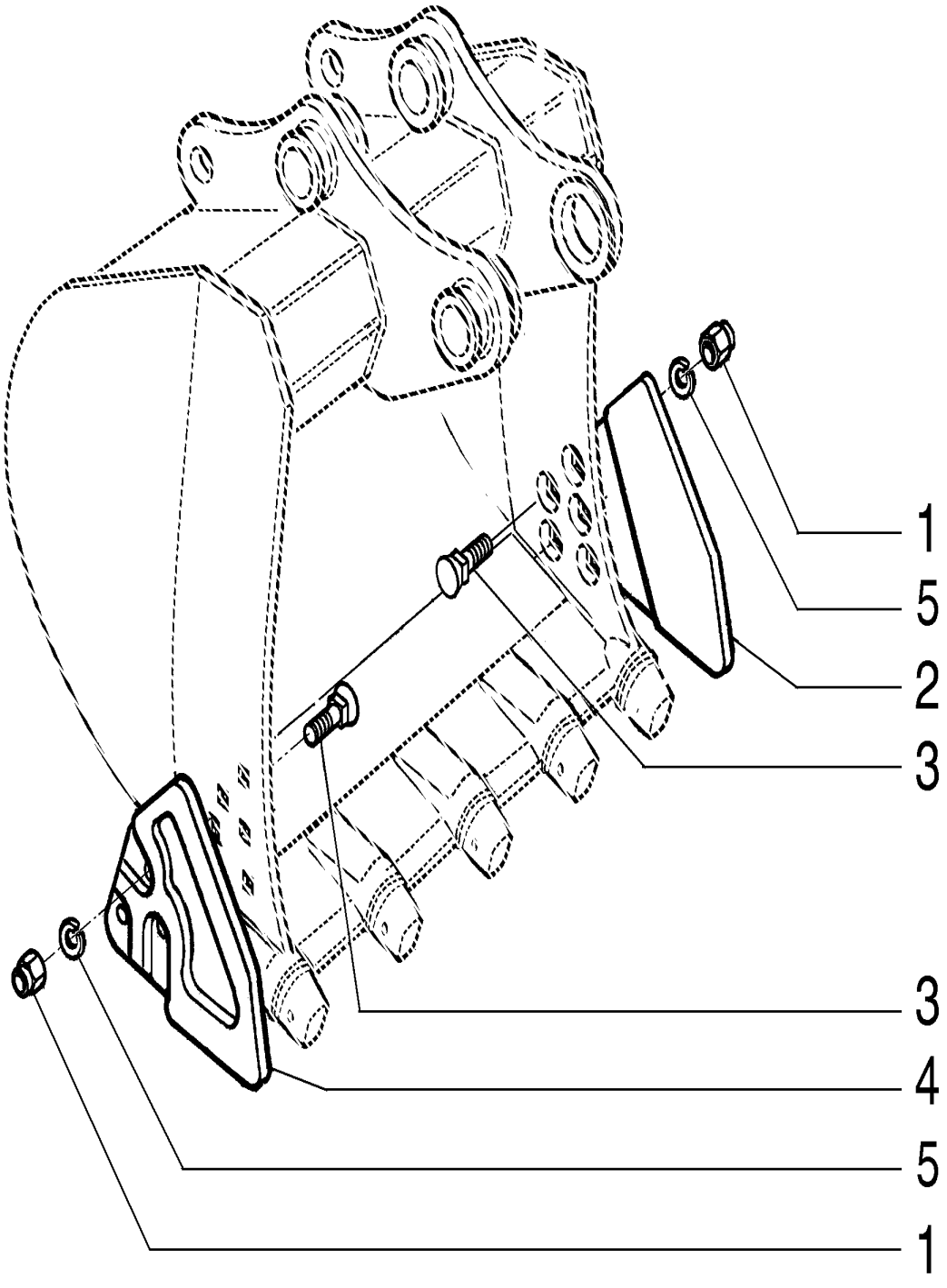

BUCKET'S CUTTING EDGE

REF	FN	PART NUMBER	YR/SN	QTY	DESCRIPTION
1		12575121		6	PORCA M20 x 1.5, Cl 10
2		A1304031		1	LÂMINA
3		8282270		6	PARAFUSO
4		Z1304030		1	LÂMINA
5		10517471		6	TRAVA DA ARRUELA

09-067	03	p1	7/2013

BUCKET 15M ARM - 0,5 METRO CÚBICOS

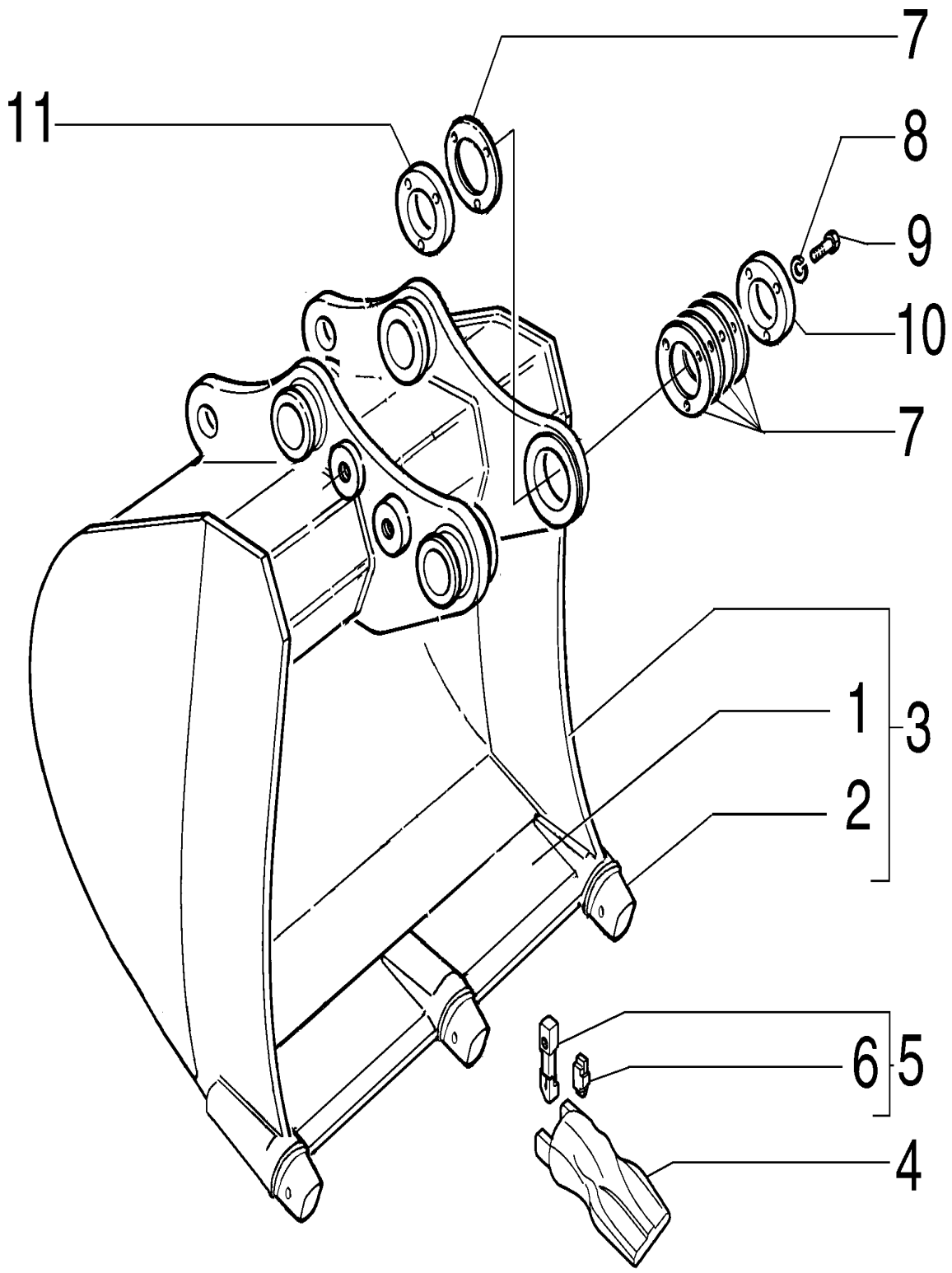

BUCKET 15M ARM - 0,5 METRO CÚBICOS

REF	FN	PART NUMBER	YR/SN	QTY	DESCRIPTION
1		87486618		1	SUPORTE DO ARADO
2		72205958		3	PORTA-DENTES
3		87492848		1	CAÇAMBA Includes items 1, 2
4		87638409		3	DENTE DA NAVALHA
5		72205959		3	PINO ELÁSTICO Includes item 6
6		72206784		3	ENCHIMENTO ROSCADO
7		75264967		AR	CALÇO DE AFINAÇÃO 1mm
8		10517071		3	TRAVA DA ARRUELA M12
9		11113731		3	PARAFUSO Hex, M12 x 75, 10.9
10		75265141		1	CALÇO DE AFINAÇÃO 6mm
11		75265142		1	CALÇO DE AFINAÇÃO 18mm

09-068	01	p1	7/2013

RADIO & INSTALLATION

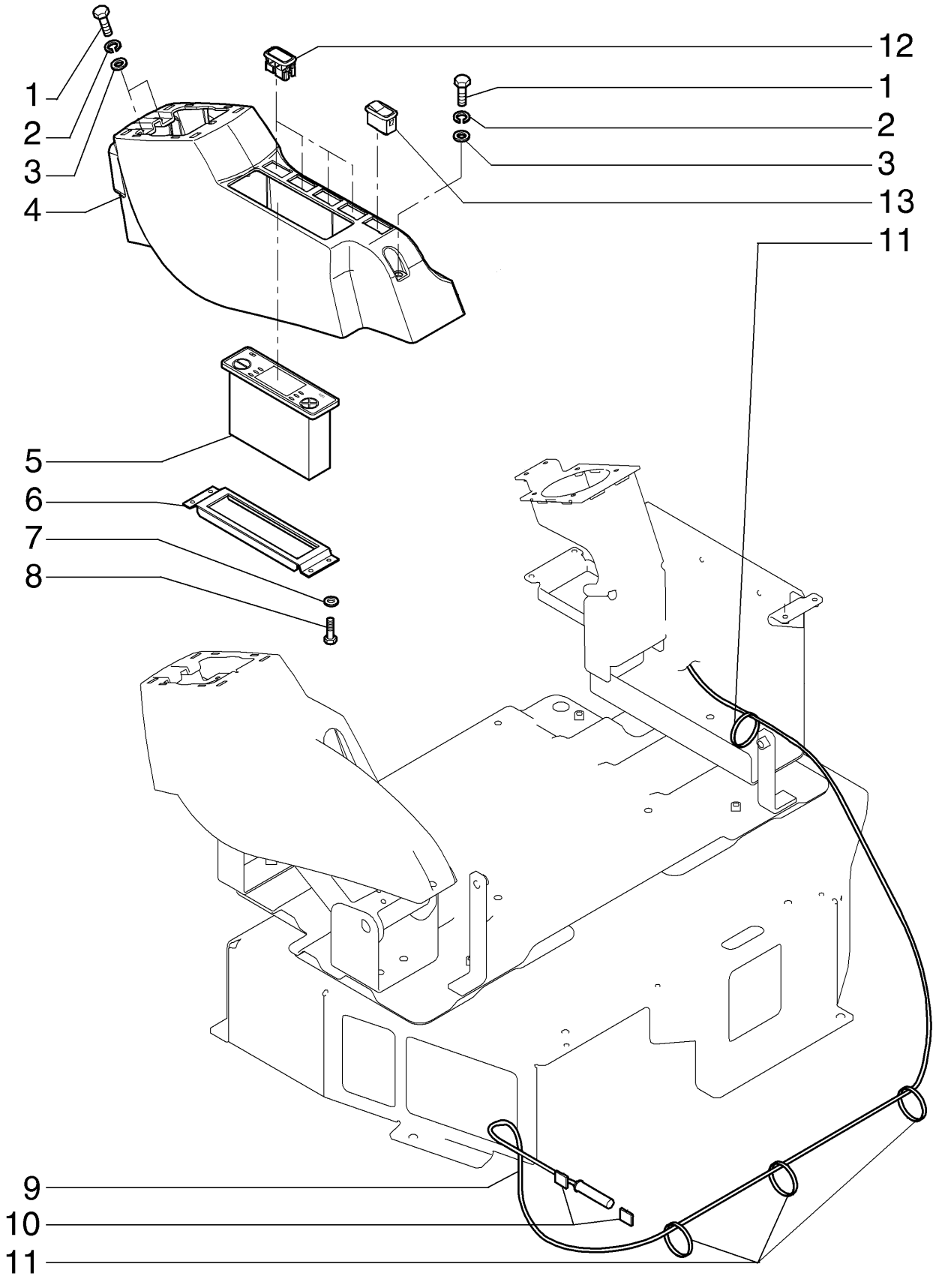

RADIO & INSTALLATION

REF	FN	PART NUMBER	YR/SN	QTY	DESCRIPTION
1		10902234		3	PARAFUSO Hex, M6 x 16, 10.9, Full Thd
2		10516474		3	TRAVA DA ARRUELA
3		14496431		3	ARRUELA PLANA M6.4 x 12.5 x 1.6 Thk
4		87722225		1	PAINEL
5		73313187		1	RÁDIO
6		87525185		1	SUPORTE
7		10519301		4	ARRUELA PLANA M5 x 9.55 x 1
8		87524808		4	PARAFUSO
9		72203961		1	CABO ELÉTRICO
10		71451259		4	COLAR
11		4982514		4	PRENDEDOR DE CABOS CABLE STRAP
12		87527533		4	BUJÃO
13		84136413		1	INTERRUPTOR

09-070	01	p1	7/2013

BODY & HOOD

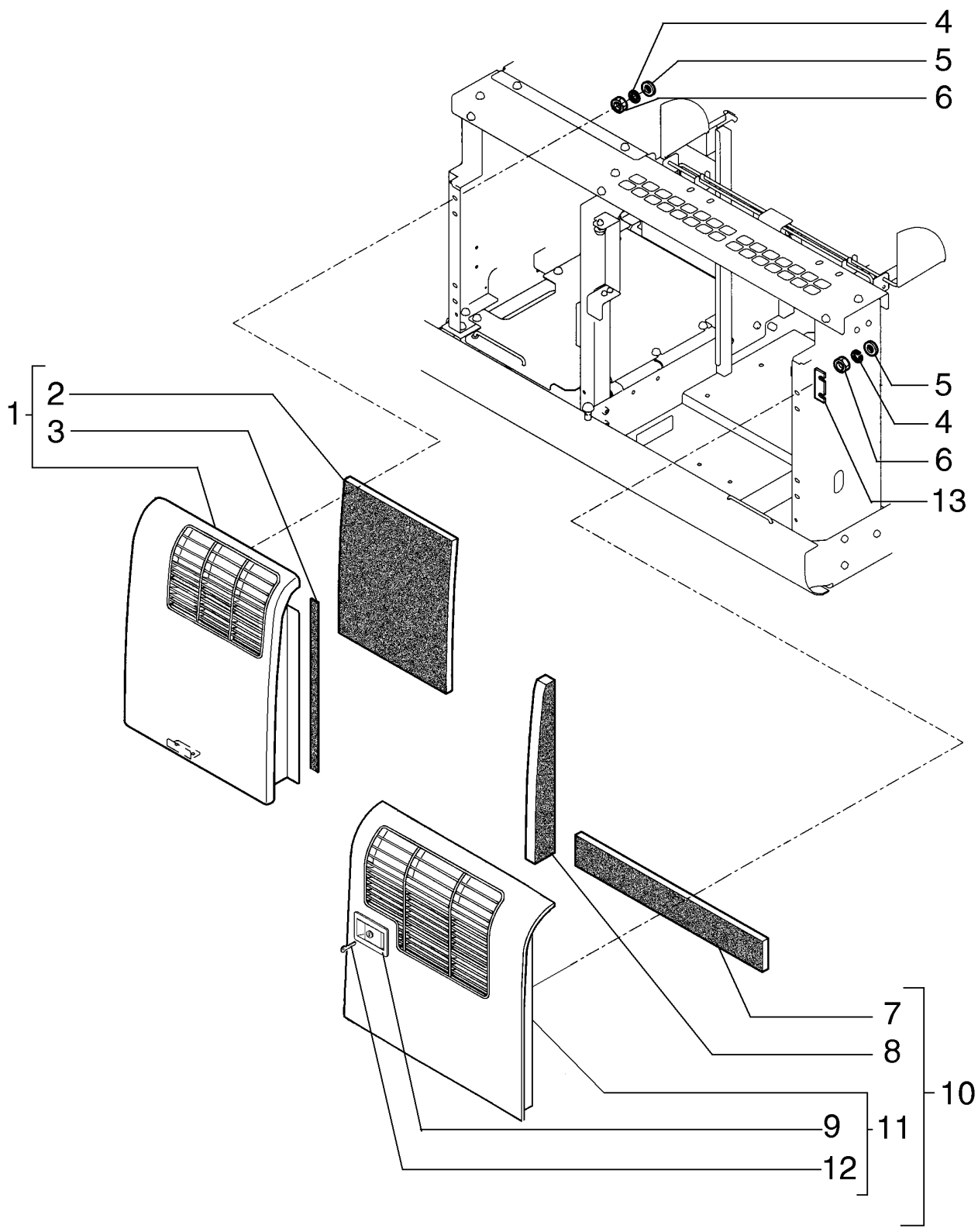

BODY & HOOD

REF	FN	PART NUMBER	YR/SN	QTY	DESCRIPTION
1		87755124		1	COBERTURA Includes items 1, 2
2		87625445		1	ISOLAMENTO
3		87625446		1	ISOLADOR
4		10516871		8	TRAVA DA ARRUELA
5		12626231		8	ARRUELA PLANA M10.2 x 25 x 3 Thk, HT
6		11701721		8	PORCA M10, Cl 10
7		87625731		1	ISOLADOR
8		87625729		1	ISOLADOR
9		87652542		1	TRAVA
10		87755118		1	COBERTURA Includes items 7, 8, 9, 11, 12
11		87755122		1	PACKAGE,SERVICE Includes items 9, 12
12		75325839		1	CHAVE DE PARTIDA
13		75262006		AR	ESPAÇADOR

09-071	01	p1	7/2013

BODY & HOOD

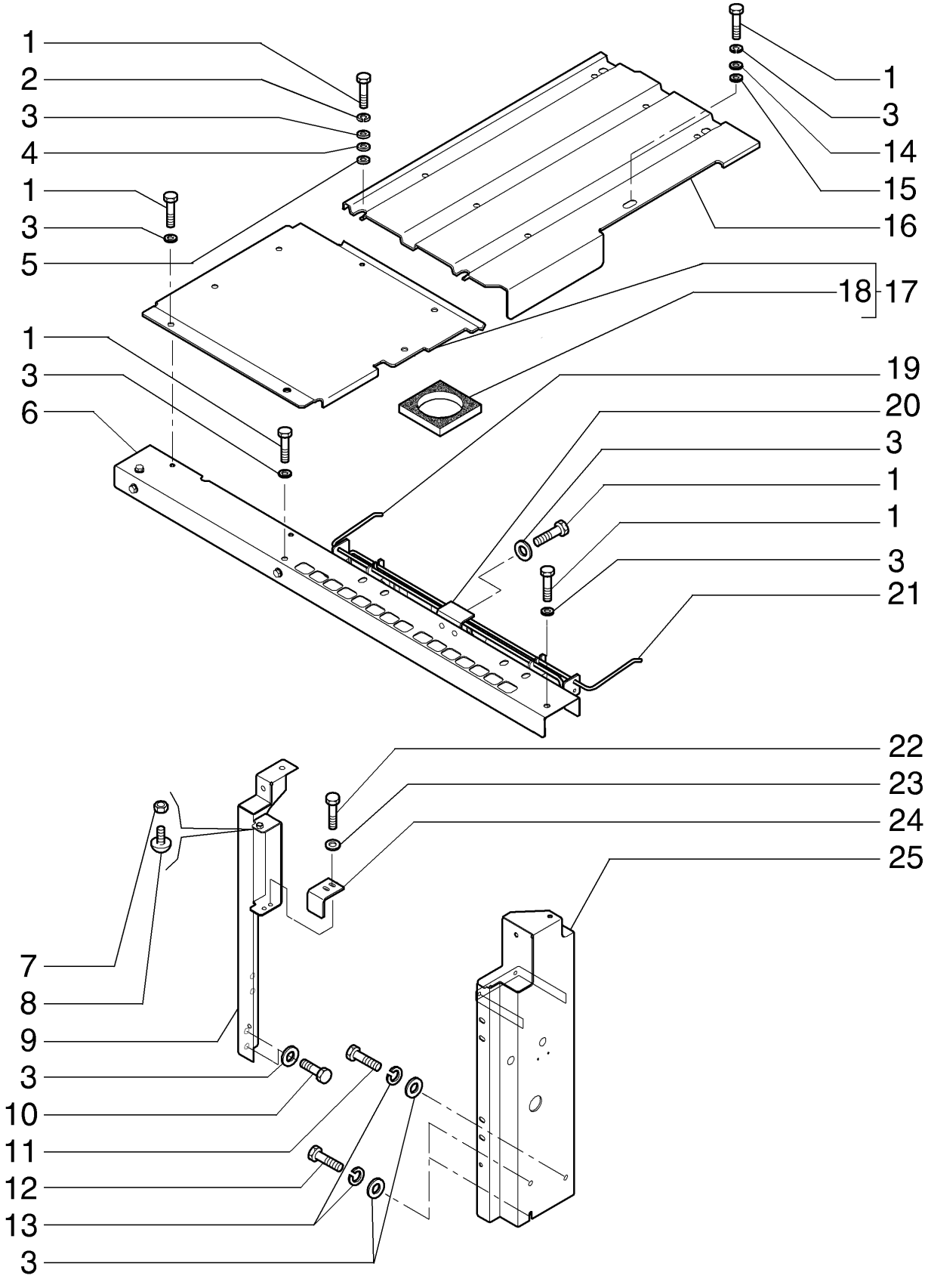

BODY & HOOD

REF	FN	PART NUMBER	YR/SN	QTY	DESCRIPTION
1		11112231		18	PARAFUSO Hex, M12 x 25, 10.9, Full Thd
2		10517071		4	TRAVA DA ARRUELA M12
3		72201225		23	ARRUELA PLANA
4		72206258		4	ARRUELA PLANA
5		75262002		4	ARRUELA PLANA
6		87626167		1	VIGA
7		12164721		1	PORCA M10 x 1.25, Cl 10
8		72201210		1	BATENTE DE BORRACHA
9		87708248		1	FIXADOR
10		11112431		2	PARAFUSO Hex, M12 x 30, 10.9, Full Thd
11		11112631		1	PARAFUSO Hex, M12 x 35, 10.9
12		11112631		2	PARAFUSO Hex, M12 x 35, 10.9
13		4952483		3	ARRUELA PLANA
14		72964141		1	ARRUELA PLANA
15		72964142		1	ARRUELA PLANA
16		87626137		1	PROTEÇÃO
17		87626211		1	PLACA Includes item 18
18		87626209		1	PAINEL ISOLANTE
19		87626232		1	BARRA
20		87626230		1	PLACA
21		87626240		1	BARRA
22		16043631		2	PARAFUSO Hex, M8 x 25, 10.9
23		14496531		2	ARRUELA PLANA M8 x 17 x 1.6
24		87626245		1	PLACA
25		87496747		1	PLACA

09-072	01	p1	7/2013

BODY & HOOD

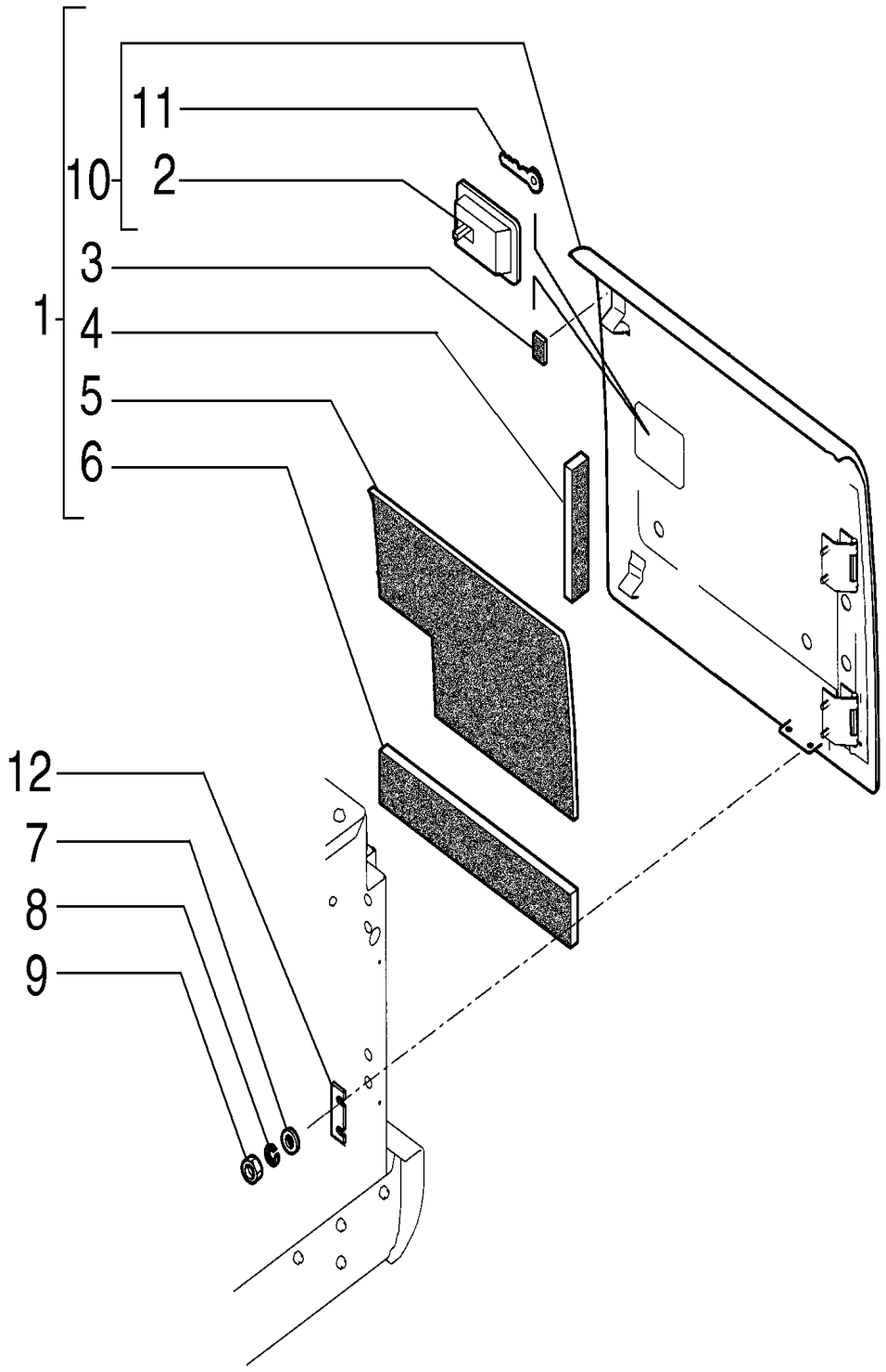

BODY & HOOD

REF	FN	PART NUMBER	YR/SN	QTY	DESCRIPTION
1		87714838		1	COBERTURA Includes items 2 - 6, 10, 11
2		87652542		1	TRAVA
3		87625630		1	VEDAÇÃO
4		87625629		1	ISOLADOR
5		87625627		1	ISOLADOR
6		87625628		1	ISOLADOR
7		12626231		4	ARRUELA PLANA M10.2 x 25 x 3 Thk, HT
8		10516871		4	TRAVA DA ARRUELA
9		11701721		4	PORCA M10, Cl 10
10		87625578		1	COBERTURA
11		75325839		1	CHAVE DE PARTIDA
12		75262006		AR	ESPAÇADOR

09-073	01	p1	7/2013

BODY & HOOD

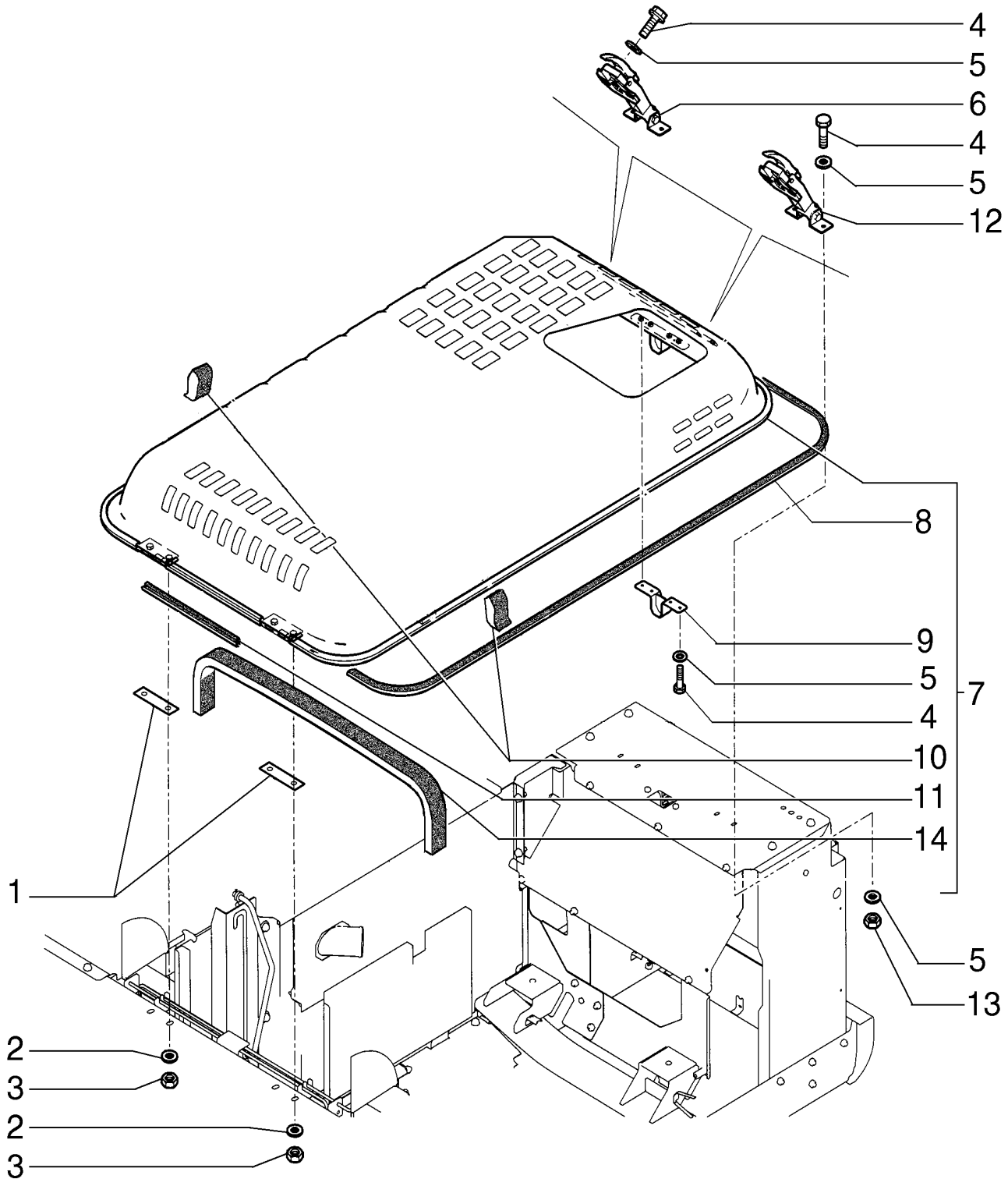

BODY & HOOD

REF	FN	PART NUMBER	YR/SN	QTY	DESCRIPTION
1		87625842		2	CALÇO DE AFINAÇÃO
2		72201225		4	ARRUELA PLANA
3		11702921		4	PORCA M12, Cl 10
4		16043431		8	PARAFUSO Hex, M8 x 20, 10.9
5		14496531		12	ARRUELA PLANA M8 x 17 x 1.6
6		87579057		1	MANILHA
7		87718295		1	CAPÔ Includes items 4, 5, 8, 9, 10, 11, 14
8		87718294		1	PROTEÇÃO
9		87701247		1	SUPORTE
10		87718292		2	ISOLAMENTO
10		84143869		2	ISOLAMENTO
11		87718293		1	PROTEÇÃO
12		87579056		1	MANILHA
13		16100821		6	PORCA M8, Cl 10
14		87718291		1	ISOLAMENTO
14		84143855		1	ISOLAMENTO

09-074	01	p1	7/2013

BODY & HOOD

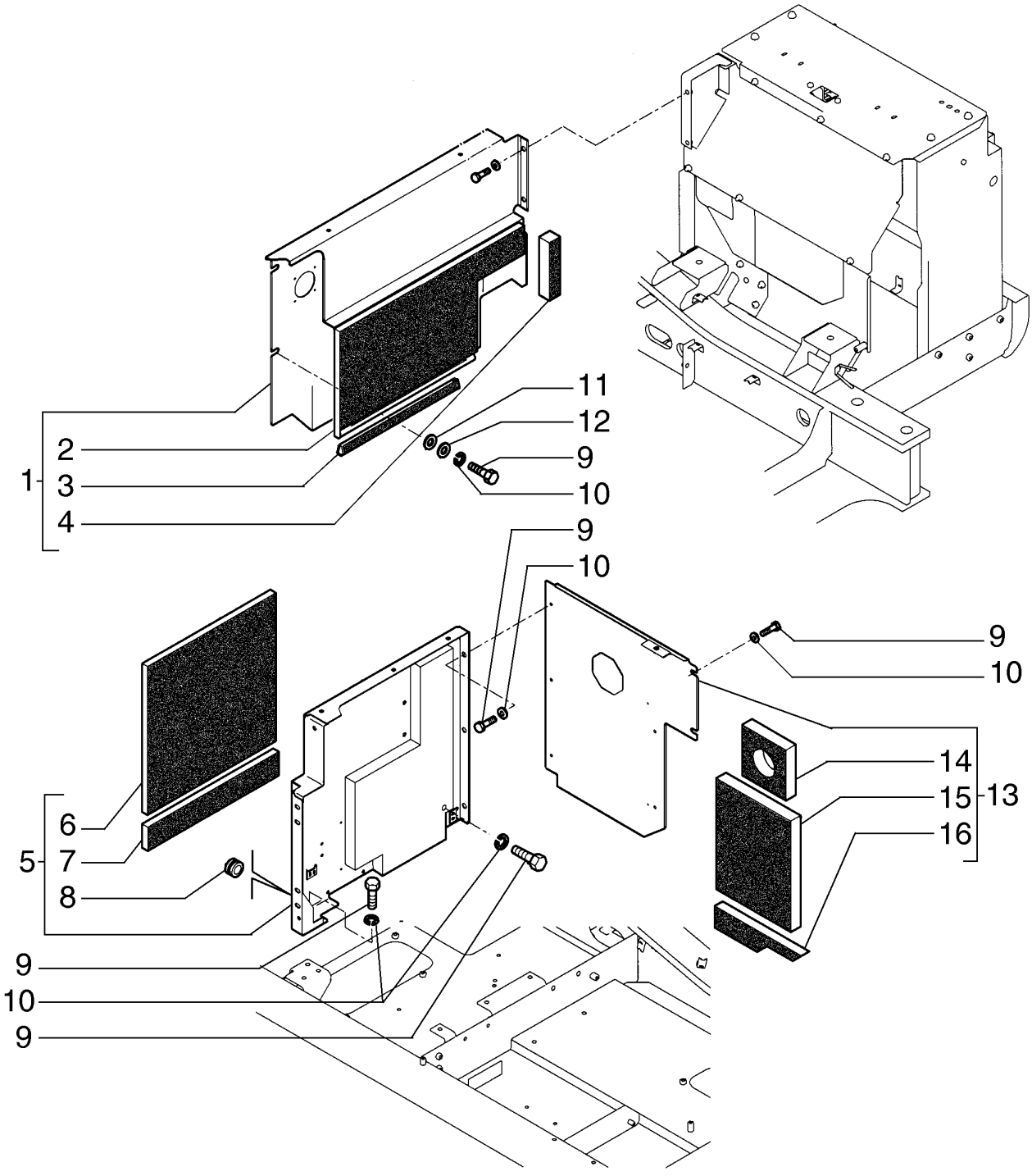

BODY & HOOD

REF	FN	PART NUMBER	YR/SN	QTY	DESCRIPTION
1		87624900		1	PROTEÇÃO Includes items 2, 3, 4
2		87625120		1	ISOLAMENTO
3		87531536		1	CINTA
4		87625122		1	ISOLAMENTO
5		87625231		1	PROTEÇÃO Includes items 6, 7, 8
6		87625227		1	ISOLAMENTO
7		87625228		1	ISOLAMENTO
8		71425116		1	BUCHA DE BORRACHA
9		11112231		15	PARAFUSO Hex, M12 x 25, 10.9, Full Thd
10		72201225		15	ARRUELA PLANA
11		72964141		2	ARRUELA PLANA
12		72964142		2	ARRUELA PLANA
13		87626347		1	PROTEÇÃO Includes items 14, 15, 16
14		87625125		1	ISOLAMENTO
15		87625126		1	ISOLAMENTO
16		87625127		1	ISOLAMENTO

09-075	01	p1	7/2013

BODY & HOOD

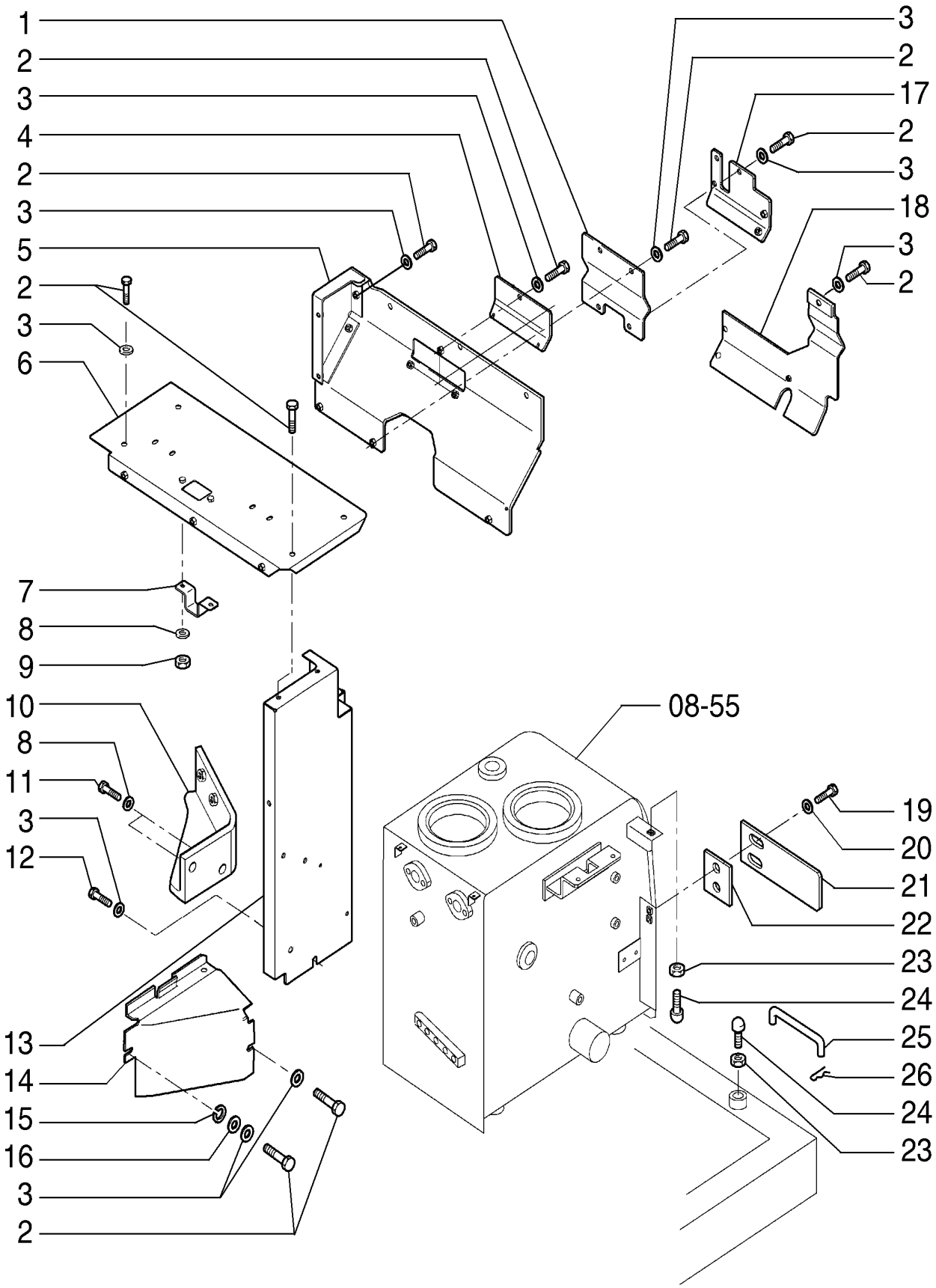

BODY & HOOD

REF	FN	PART NUMBER	YR/SN	QTY	DESCRIPTION
1		87626002		1	COBERTURA
2		11112231		22	PARAFUSO Hex, M12 x 25, 10.9, Full Thd
3		72201225		25	ARRUELA PLANA
4		87626219		1	PLACA
5		87626034		1	COBERTURA
6		87626152		1	PLACA
7		87626215		1	PLACA
8		14496631		4	ARRUELA PLANA M10 x 21 x 2
9		11701721		2	PORCA M10, Cl 10
10		87709274		1	SUPORTE
11		11106031		2	PARAFUSO Hex, M10 x 20, 10.9, Full Thd
12		11112431		3	PARAFUSO Hex, M12 x 30, 10.9, Full Thd
13		87496746		1	PLACA
14		87626224		1	PLACA
15		72964141		1	ARRUELA PLANA
16		72964142		1	ARRUELA PLANA
17		87625994		1	COBERTURA
18		87626012		1	COBERTURA
19		16043631		2	PARAFUSO Hex, M8 x 25, 10.9
20		14496531		2	ARRUELA PLANA M8 x 17 x 1.6
21		87626244		1	PLACA
22		87626348		AR	CALÇO DE AFINAÇÃO
23		12164721		2	PORCA M10 x 1.25, Cl 10
24		72201210		2	BATENTE DE BORRACHA
25		87625878		1	HASTE
26		87626340		1	PINO

09-076	01	p1	7/2013

REAR-VIEW MIRROR AND BRACKETS

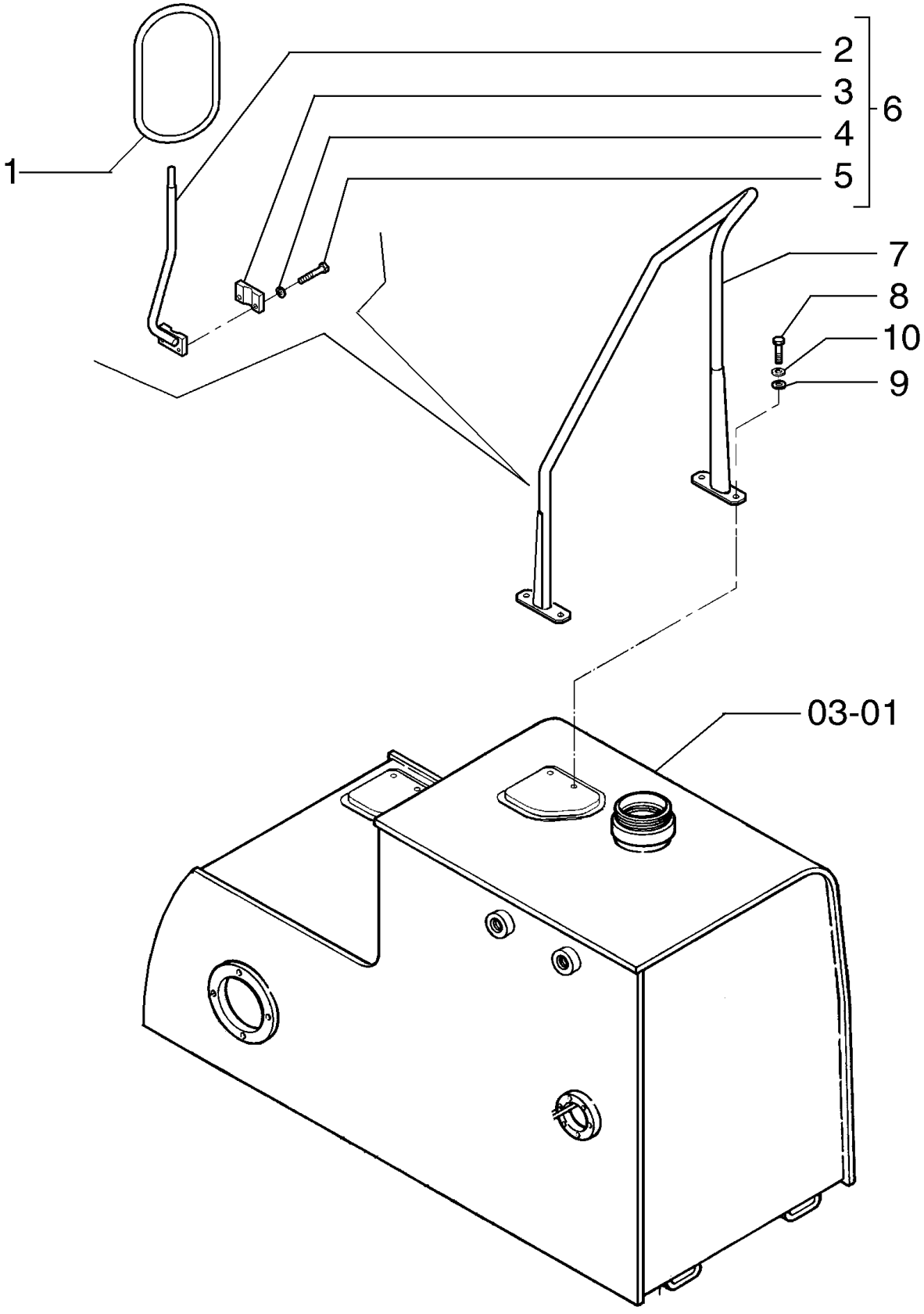

REAR-VIEW MIRROR AND BRACKETS

REF	FN	PART NUMBER	YR/SN	QTY	DESCRIPTION
1		87612553		1	ESPELHO RETROVISOR
2		87616671		1	SUPORTE
3		87616672		1	BLOCO
4		10516674		2	TRAVA DA ARRUELA M8
5		16044134		2	PARAFUSO Hex, M8 x 45, 10.9
6		87616670		1	PILAR Includes items 2 - 5
7		87625746		1	PARA-LAMA
8		11112431		4	PARAFUSO Hex, M12 x 30, 10.9, Full Thd
9		72201225		4	ARRUELA PLANA
10		10517071		4	TRAVA DA ARRUELA M12

09-076	02	p1	7/2013

REAR-VIEW MIRROR AND BRACKETS

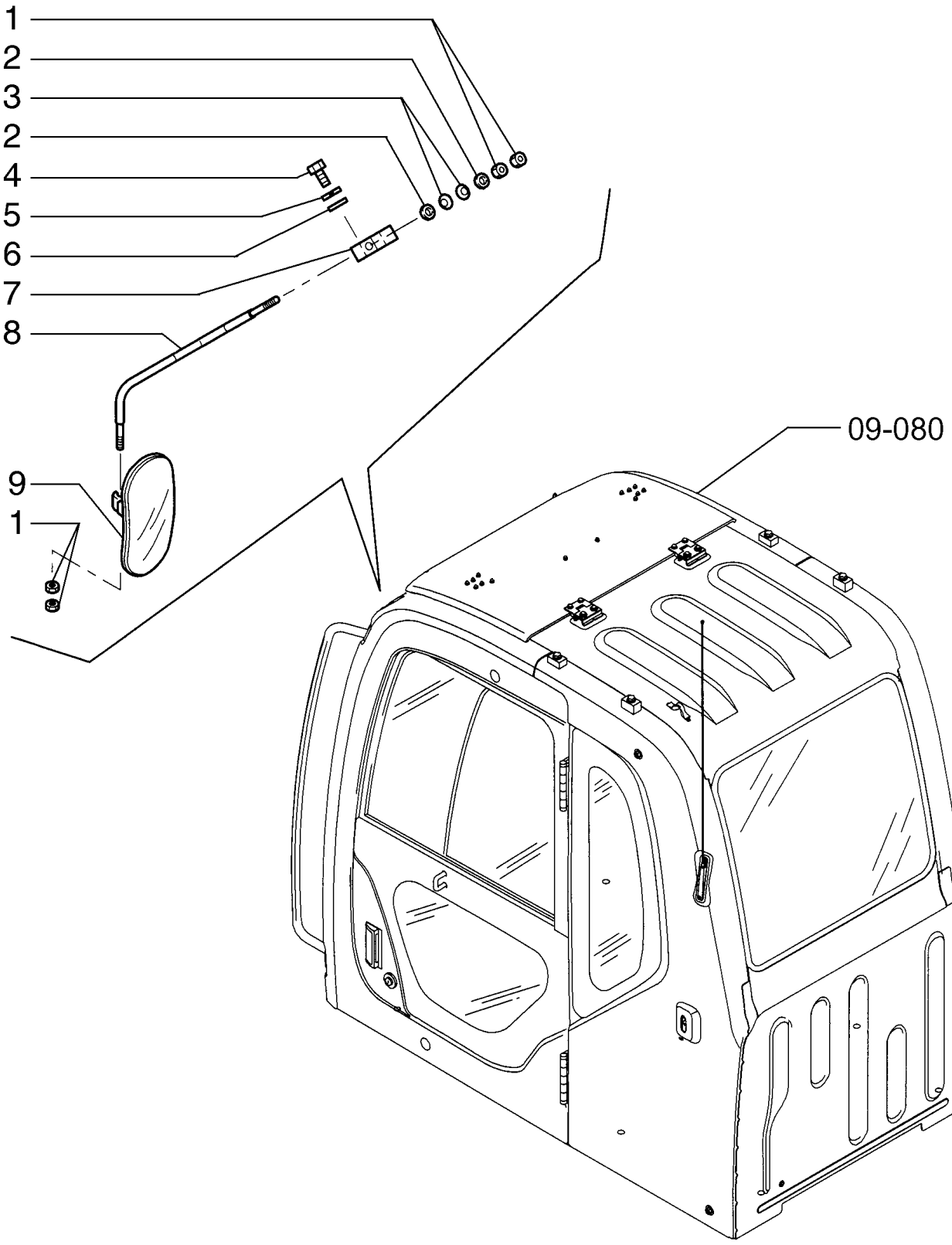

REAR-VIEW MIRROR AND BRACKETS

REF	FN	PART NUMBER	YR/SN	QTY	DESCRIPTION
1		11702921		4	PORCA M12, Cl 10
2		14496731		2	ARRUELA PLANA M12 x 24 x 2.5 Thk
3		72954251		2	MOLA BELLEVILLE
4		11107434		2	PARAFUSO
5		10516874		2	TRAVA DA ARRUELA
6		14496631		2	ARRUELA PLANA M10 x 21 x 2
7		87334509		1	SUPORTE
8		87334508		1	ESCORA
9		87612553		1	ESPELHO RETROVISOR

09-077	01	p1	7/2013

GUARDS

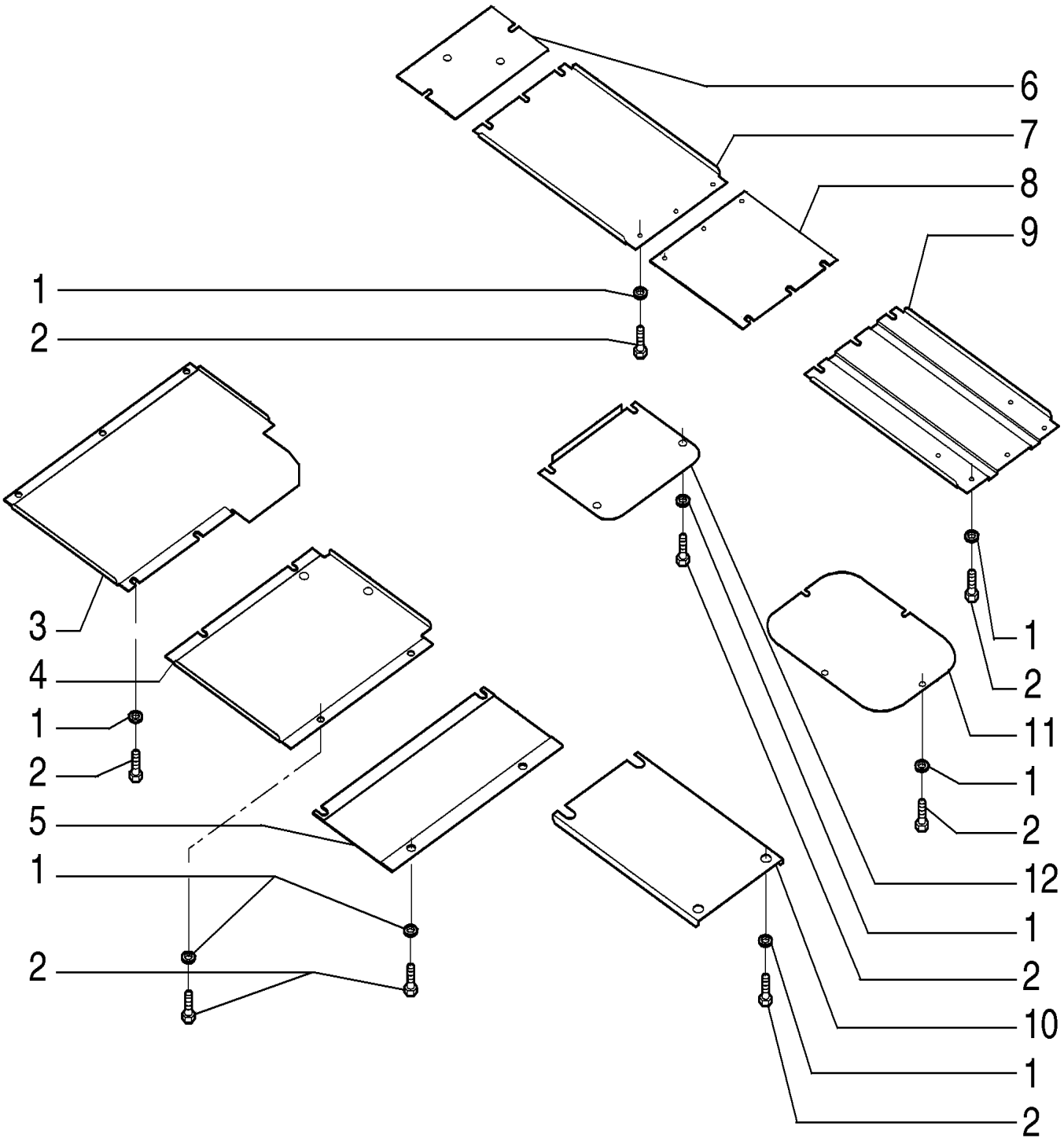

GUARDS

REF	FN	PART NUMBER	YR/SN	QTY	DESCRIPTION
1		12646921		49	ARRUELA PLANA M12 x 28 x 3
2		11112631		49	PARAFUSO Hex, M12 x 35, 10.9
3		87645452		1	COBERTURA
4		87645453		1	COBERTURA
5		87645454		1	COBERTURA
6		87703261		1	PLACA
7		87645459		1	COBERTURA
8		87645460		1	COBERTURA
9		87708784		1	TUBO FLEXÍVEL
10		87645455		1	COBERTURA
11		87645457		1	COBERTURA
12		87645456		1	COBERTURA

09-078	01	p1	7/2013

BODY & HOOD

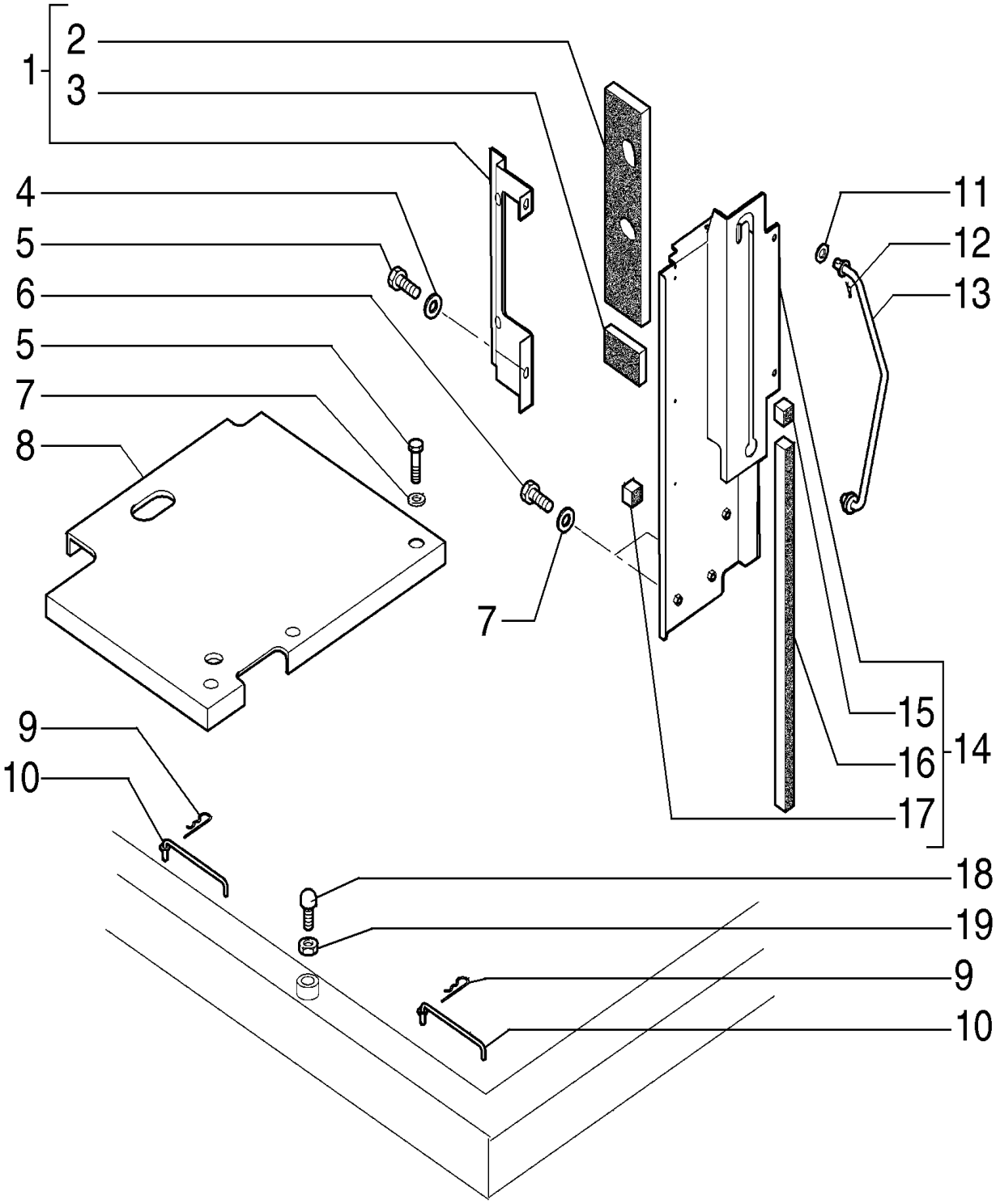

BODY & HOOD

REF	FN	PART NUMBER	YR/SN	QTY	DESCRIPTION
1		87625958		1	PROTEÇÃO Includes items 2, 3
2		87625963		1	BLOCO
3		87625964		1	ISOLADOR
4		72201225		4	ARRUELA PLANA
5		11112231		10	PARAFUSO Hex, M12 x 25, 10.9, Full Thd
6		11112431		2	PARAFUSO Hex, M12 x 30, 10.9, Full Thd
7		72201225		8	ARRUELA PLANA
8		87626346		1	PLACA
9		87626340		2	PINO
10		87625878		2	HASTE
11		14496931		1	ARRUELA PLANA M16 x 30 x 3
12		87625871		1	HASTE
13		87626339		1	PINO
14		87626063		1	PAINEL ISOLANTE Includes items 15, 16, 17
15		87626057		1	PAINEL ISOLANTE
16		87626059		1	PAINEL ISOLANTE
17		87626058		1	PAINEL ISOLANTE
18		72201210		1	BATENTE DE BORRACHA
19		12164721		1	PORCA M10 x 1.25, Cl 10

09-080	01	p1	7/2013

CAB

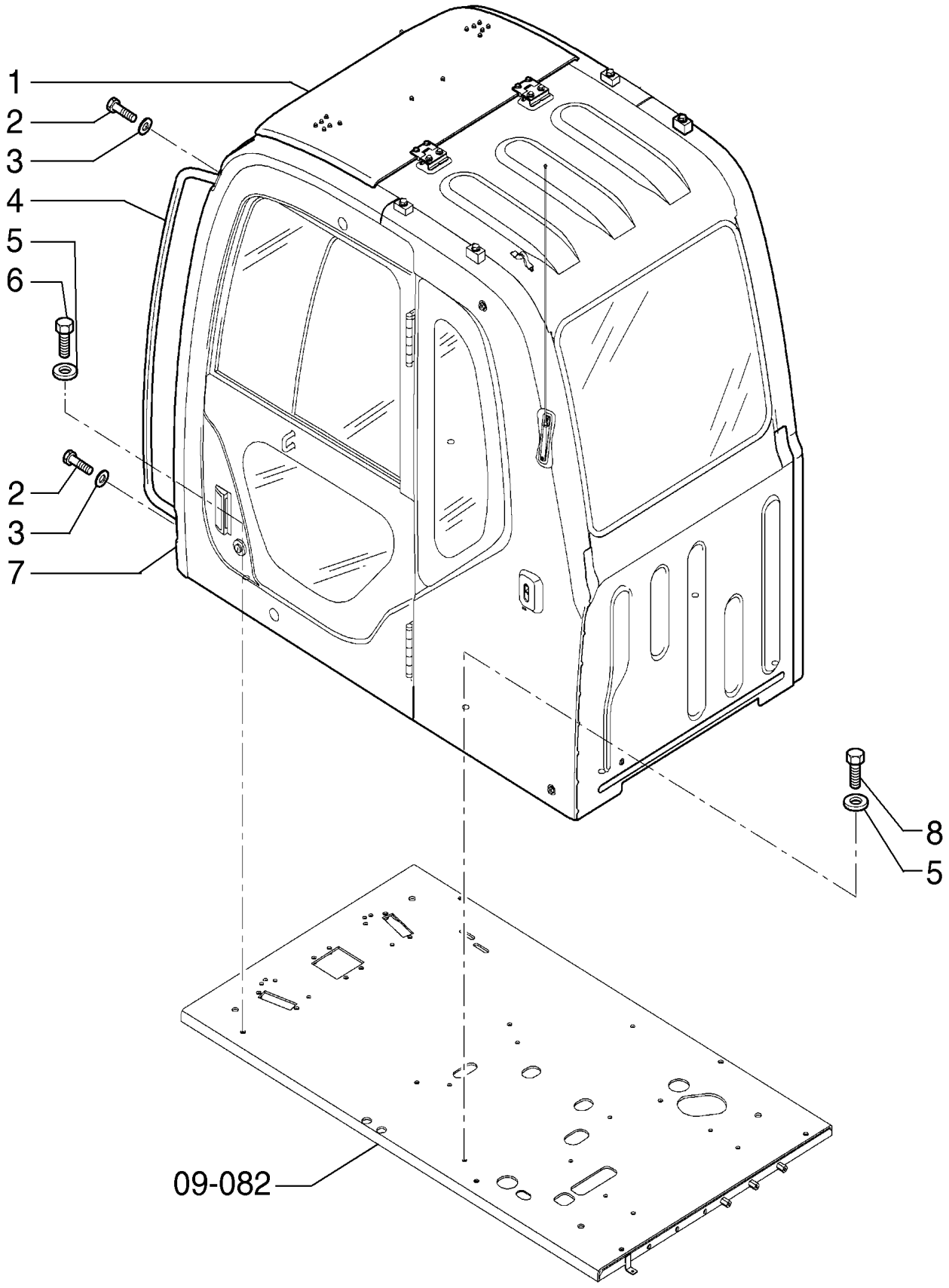

CAB

REF	FN	PART NUMBER	YR/SN	QTY	DESCRIPTION
1		87739854		1	COBERTURA
2		72171602		2	PARAFUSO
3		12626231		2	ARRUELA PLANA M10.2 x 25 x 3 Thk, HT
4		87739609		1	MANILHA
5		11112431		1	PARAFUSO Hex, M12 x 30, 10.9, Full Thd
6		75262001		6	ARRUELA PLANA
7		87725534		1	CABINE
8		11113531		5	PARAFUSO Hex, M12 x 65, 10.9

09-081	01	p1	7/2013

CAB

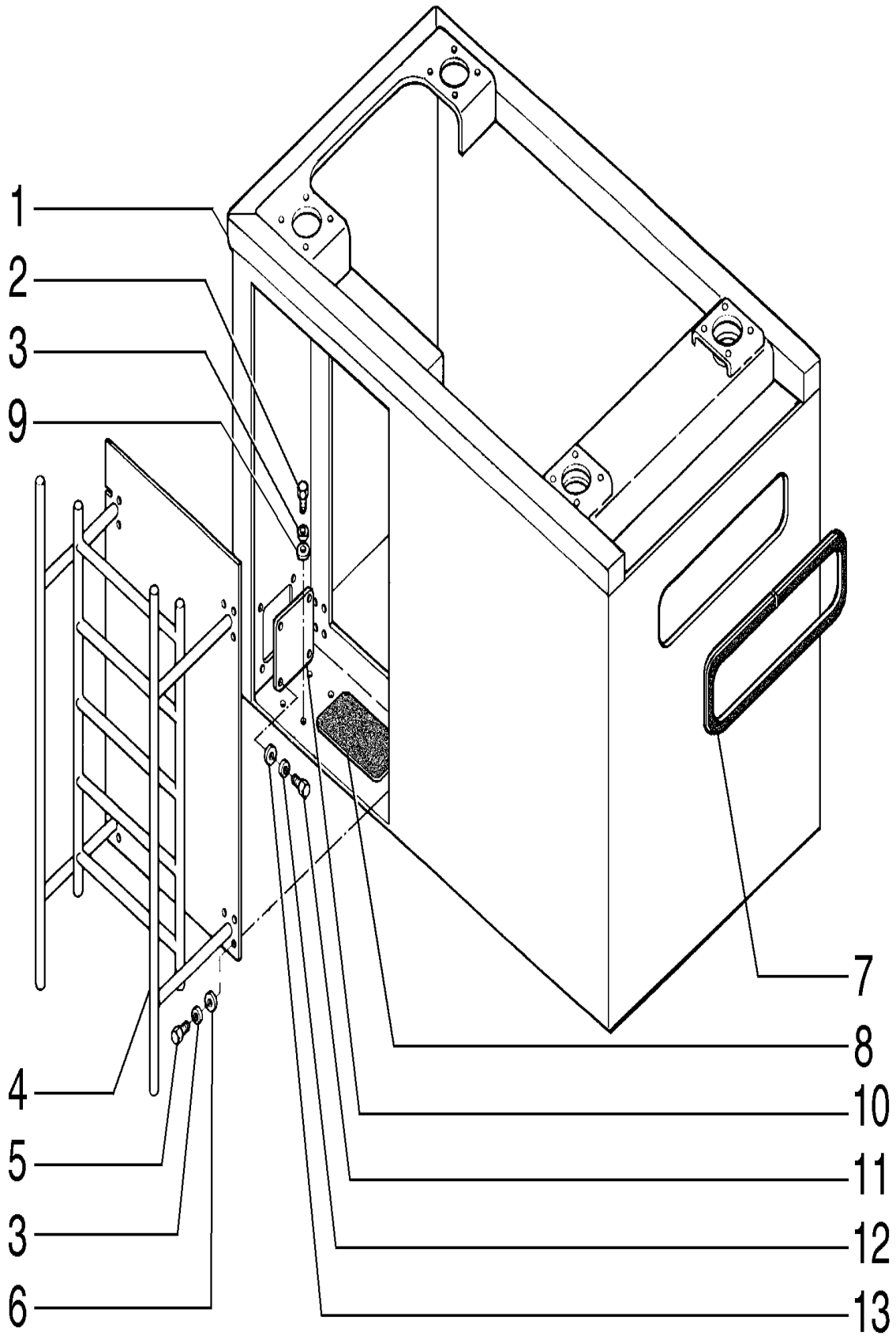

CAB

REF	FN	PART NUMBER	YR/SN	QTY	DESCRIPTION
1		87667983		1	SUPORTE
2		11107331		16	PARAFUSO Hex, M10 x 55, 10.9
3		10516871		32	TRAVA DA ARRUELA
4		87746405		1	ESCORA
5		11106231		16	PARAFUSO Hex, M10 x 25, 10.9, Full Thd
6		14496631		16	ARRUELA PLANA M10 x 21 x 2
7		87361964		1	VEDAÇÃO DE BORRACHA
8		75210383		1	FAIXA ANTI-DERRAPANTE
9		496-41041		16	ARRUELA PLANA 13/32" x 1 1/8" x .134"
10		87667995		1	COBERTURA
11		16043631		4	PARAFUSO Hex, M8 x 25, 10.9
12		10516671		4	TRAVA DA ARRUELA
13		10519621		4	ARRUELA PLANA M8 x 17 x 2

OPTIONAL RAISED CAB

CX220B

09-082	01	p1	7/2013

CAB FLOOR

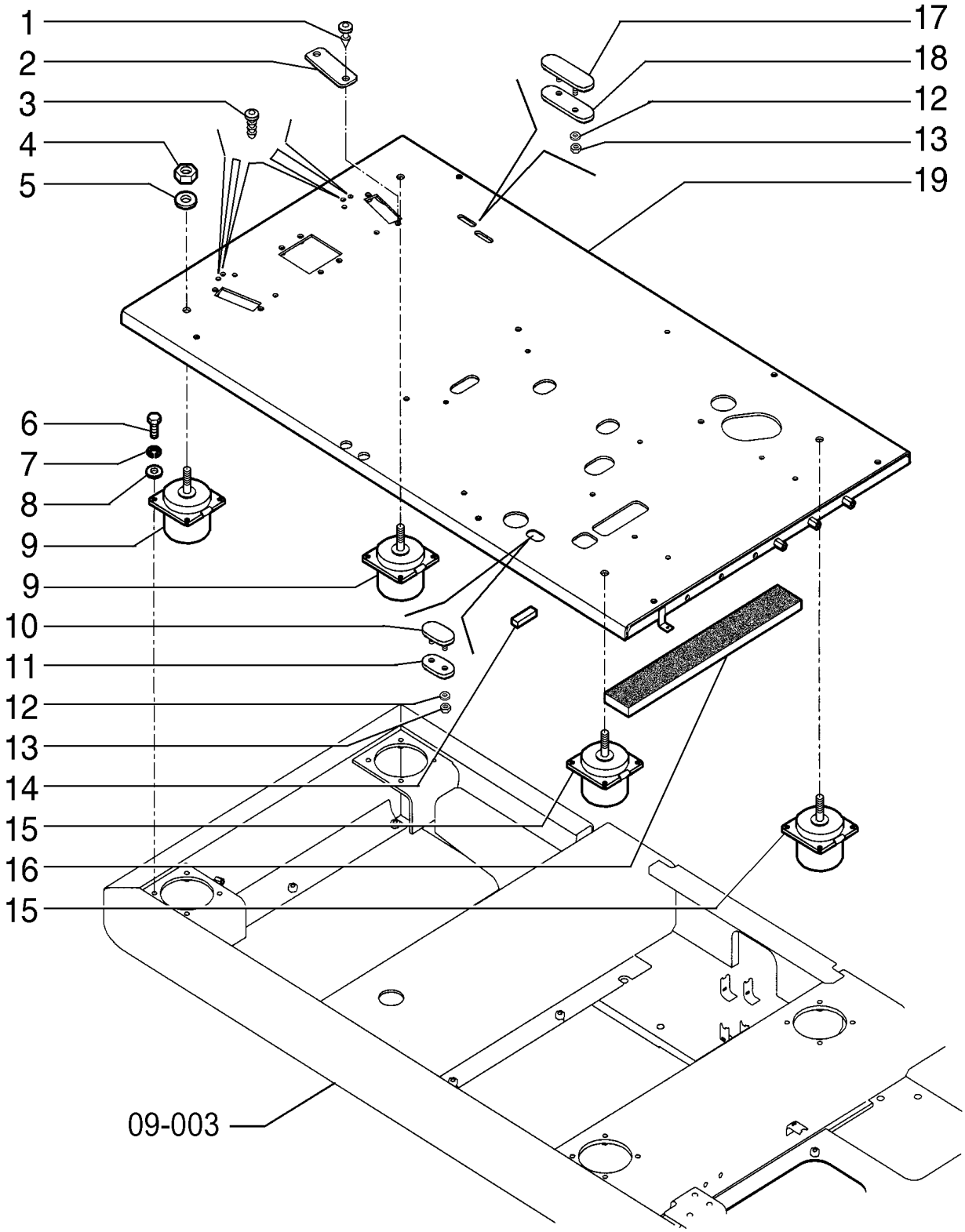

CAB FLOOR

REF	FN	PART NUMBER	YR/SN	QTY	DESCRIPTION
1		14590887		4	BOTÃO DE BORRACHA
2		75327889		2	PLACA DE COBERTURA
3		85804447		4	BUJÃO
4		12163321		4	PORCA M16, Cl 10
5		896-11016		4	ARRUELA PLANA M17.5 x 30 x 4, HT
6		11106631		16	PARAFUSO Hex, M10 x 35, 10.9, Full Thd
7		10516871		16	TRAVA DA ARRUELA
8		14496631		16	ARRUELA PLANA M10 x 21 x 2
9		87520306		2	FIXADOR
10		87732815		1	COBERTURA
11		87733426		1	PLACA
12		14496431		4	ARRUELA PLANA M6.4 x 12.5 x 1.6 Thk
13		15896221		4	PORCA M6, Cl 10
14		87653258		1	BASTÃO Rubber
15		87520307		2	COXIM
16		87652678		1	PAINEL ISOLANTE
17		87732808		1	COBERTURA
18		87733423		1	PLACA
19		87524752		1	PLATAFORMA

09-083	01	p1	7/2013

CAB FLOOR

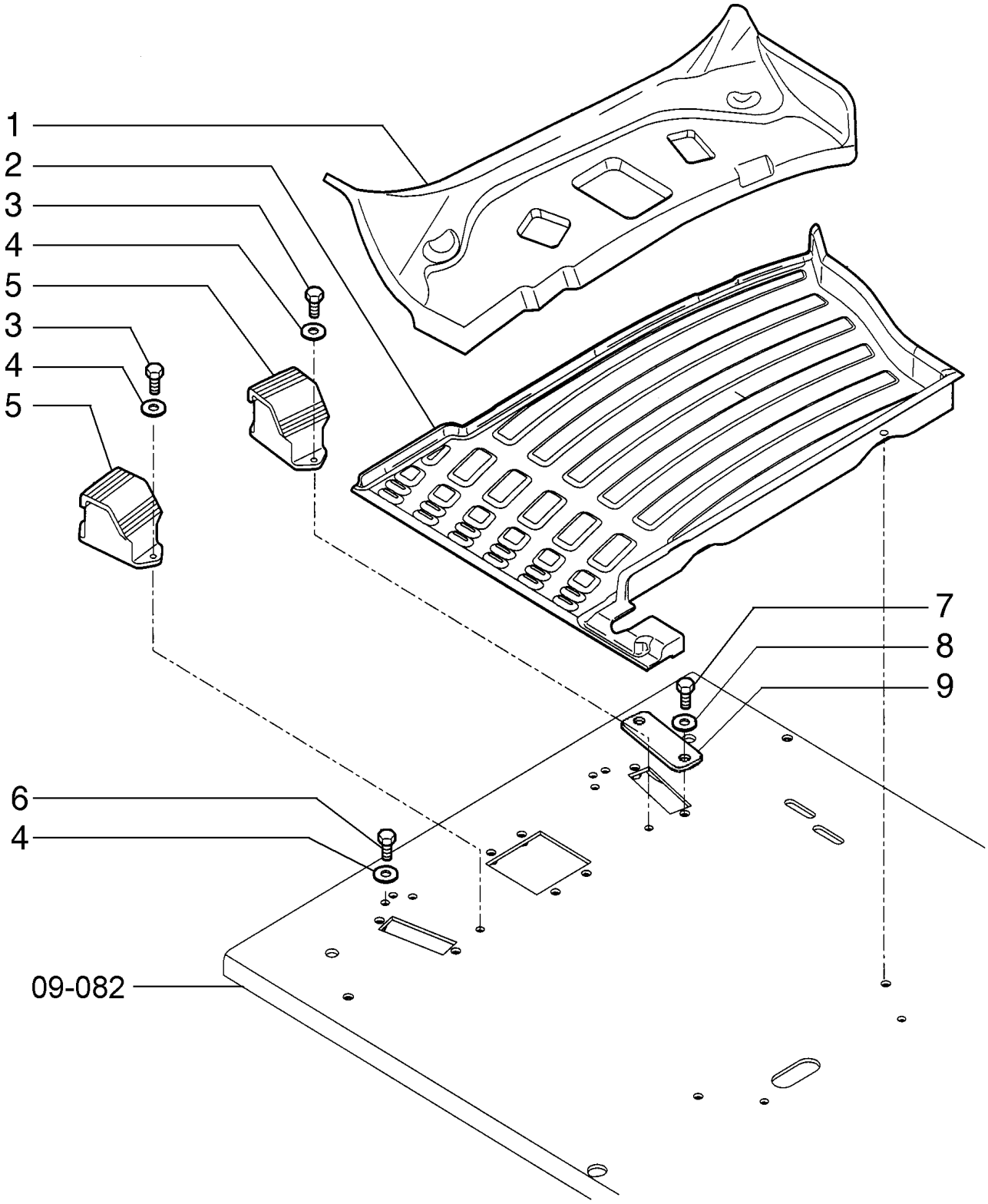

CAB FLOOR

REF	FN	PART NUMBER	YR/SN	QTY	DESCRIPTION
1		87534286		1	ESPUMA ISOLANTE
2		87521854		1	ESTRIBO
3		16043634		4	PARAFUSO Hex, M8 x 25, 10.9, Full Thd
4		14496531		8	ARRUELA PLANA M8 x 17 x 1.6
5		87521852		2	SUPORTE
6		16043434		4	PARAFUSO Hex, M8 x 20, 10.9, Full Thd
7		11106034		4	PARAFUSO Hex, M10 x 20, 10.9, Full Thd
8		14496631		4	ARRUELA PLANA M10 x 21 x 2
9		87746013		2	PLACA

09-085	01	p1	7/2013

CAB - PARTS

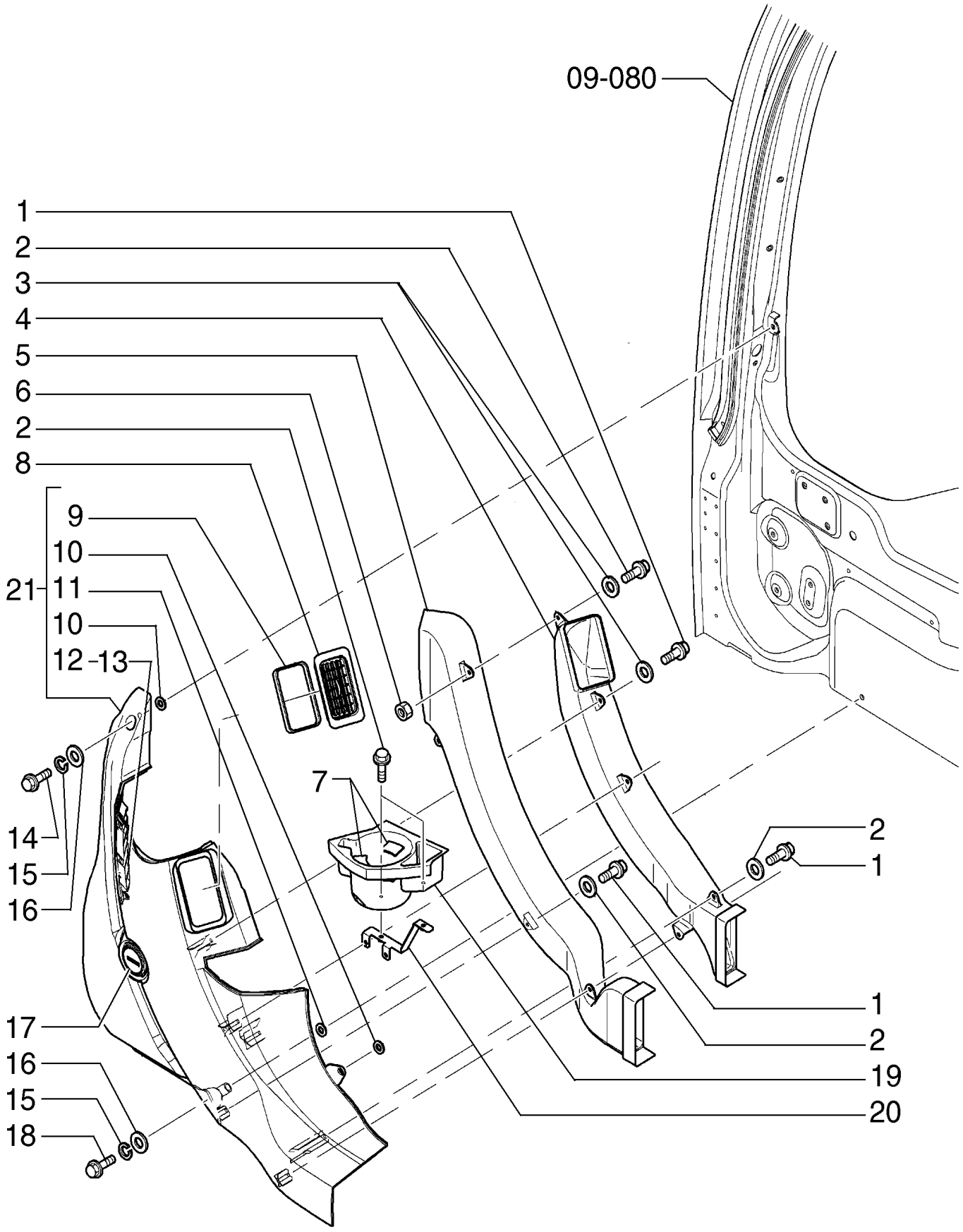

CAB - PARTS

REF	FN	PART NUMBER	YR/SN	QTY	DESCRIPTION
1		87527383		7	PARAFUSO
2		87527490		3	PARAFUSO
3		87527384		8	ARRUELA PLANA
4		87527472		1	DUTO
5		87527477		1	DUTO
6		87527492		1	PORCA
7		87527493		3	PROTEÇÃO Rubber
8		72273823		1	RESPIRO
9		87527469		1	ISOLADOR
10		87527325		2	COLAR
11		87527466		1	COLAR
12		87726613		1	REDE
13		87527470		1	ISOLADOR
14		1270742C1		1	PARAFUSO TORQUE PREV Cross Pan Hd, M6 x 12
15		10516471		2	TRAVA DA ARRUELA
16		12644421		2	ARRUELA PLANA M6 x 15 x 1
17		72203956		1	MEDIDOR
18		13277117		1	PARAFUSO Cross Pan Hd, M6 x 45
19		87722243		1	RECIPIENTE
20		87527471		1	SUPORTE
21		87722245		1	COBERTURA Includes items 9 - 13

09-086	01	p1	7/2013

CAB - PARTS

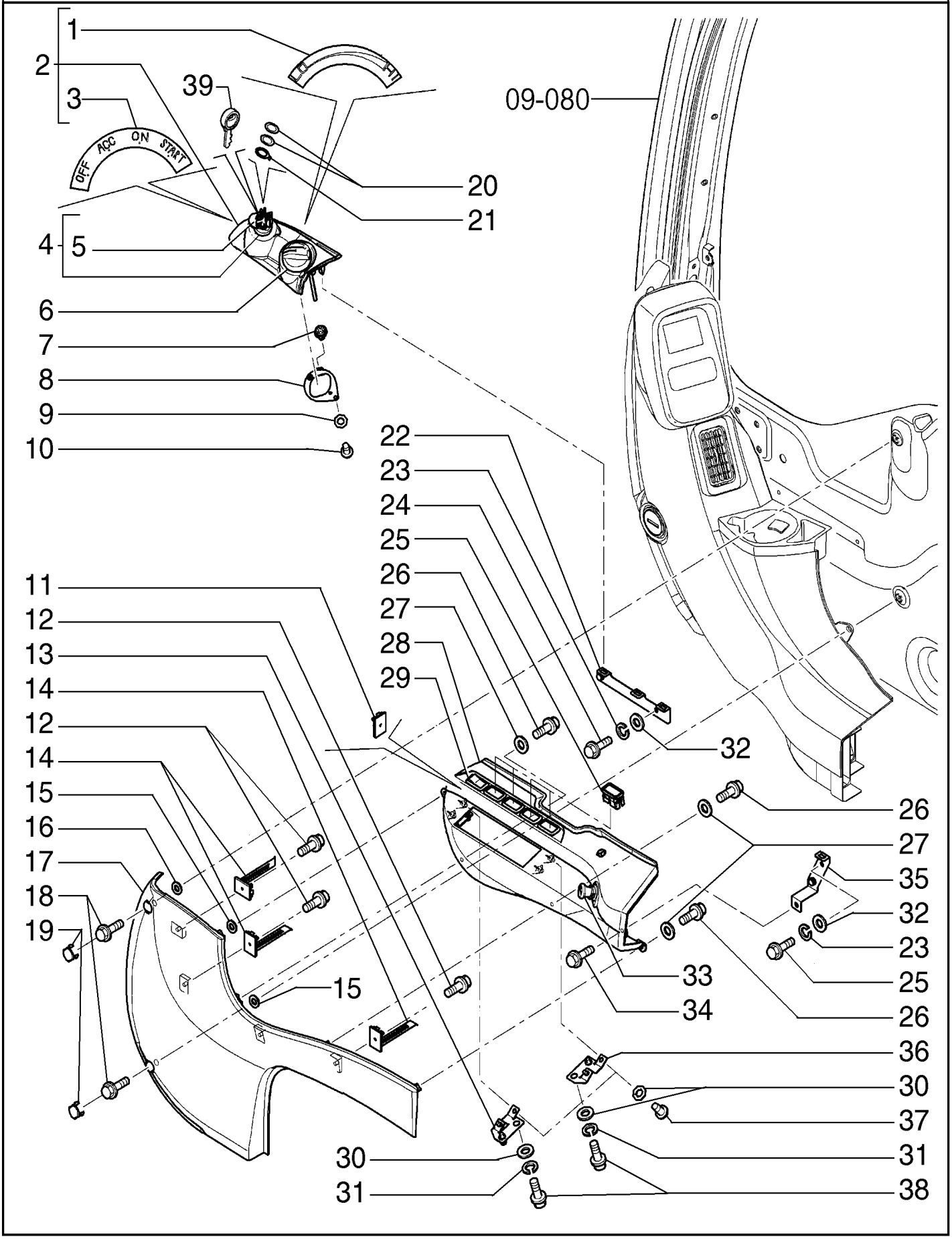

CAB - PARTS

REF	FN	PART NUMBER	YR/SN	QTY	DESCRIPTION
1		87527347		1	PLAQUETA
2		87722235		1	PROTEÇÃO Incldues items 1, 3
3		87527348		1	PLAQUETA
4		72953349		1	INTERRUPTOR INTERMITENTE
5		72951984		1	CHAVE DE PARTIDA
6		YN52S00075P1		1	POTENCIÔMETRO
7		72951642		2	PARAFUSO
8		YN17M01537P1		1	SUPORTE
9		72203938		2	ARRUELA PLANA
10		87524808		2	PARAFUSO
11		87527336		3	GRAMPO
12		87527395		3	PARAFUSO
13		87524814		1	SUPORTE
14		87527387		3	GRAMPO
15		87527325		1	COLAR
16		87527385		2	COLAR
17		87722240		1	COBERTURA
18		540-711		2	PARAFUSO Cross Pan Hd, M6 x 30
19		87726614		2	COBERTURA
20		87623250		2	ARRUELA PLANA
21		87623251		1	TERMINAL
22		87524817		1	SUPORTE
23		10516471		2	TRAVA DA ARRUELA
24		10902231		4	PARAFUSO Hex, M6 x 16, 10.9
25		87527533		4	BUJÃO
26		87527383		4	PARAFUSO
27		87527384		4	ARRUELA PLANA
28		87722239		1	COBERTURA
29		87527530		1	INTERRUPTOR
30		10519301		8	ARRUELA PLANA M5 x 9.55 x 1
31		11195471		4	TRAVA DA ARRUELA
32		12644421		4	ARRUELA PLANA M6 x 15 x 1
33		87527396		1	ACENDEDOR DE CIGARROS
34		540-719		1	PARAFUSO Cross Pan Hd, M6 x 20
35		87524816		1	SUPORTE
36		87524813		1	SUPORTE
37		87524808		4	PARAFUSO
38		13274211		4	PARAFUSO Cross Pan Hd, M5 x 16
39		75325839		1	CHAVE DE PARTIDA

09-086	02	p1	7/2013

CAB - RADIO

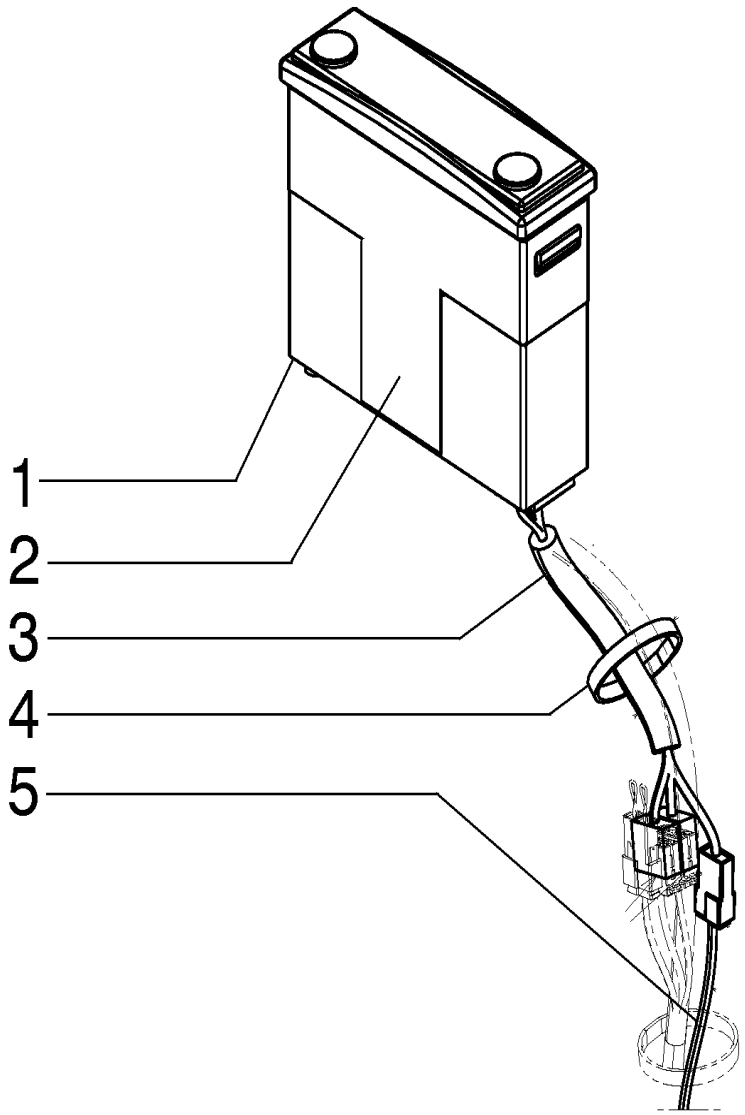

CAB - RADIO

REF	FN	PART NUMBER	YR/SN	QTY	DESCRIPTION
1		87711452		1	RÁDIO
2		84146470		1	ESTOJO
3		84549191		1	CHICOTE
4		L18331		1	PRENDEDOR DE CABOS
5		LB13E01056P1		1	CHICOTE

09-087	01	p1	7/2013

CAB - PARTS

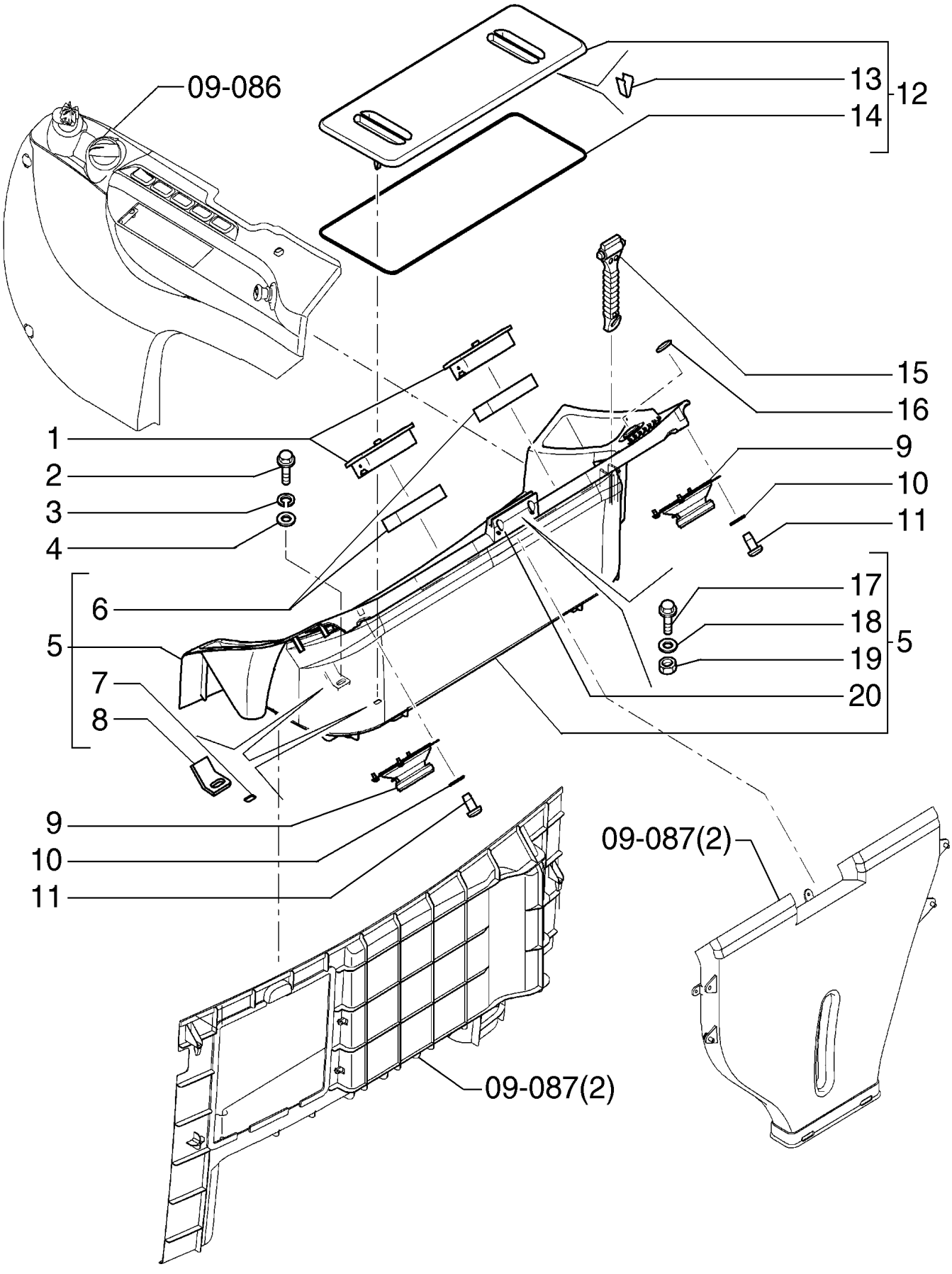

CAB - PARTS

REF	FN	PART NUMBER	YR/SN	QTY	DESCRIPTION
1		87524804		2	GRELHA
2		10902231		4	PARAFUSO Hex, M6 x 16, 10.9
3		10516471		4	TRAVA DA ARRUELA
4		12644421		4	ARRUELA PLANA M6 x 15 x 1
5		87722251		1	PROTEÇÃO Includes items 6, 7, 8, 17, 18, 19, 20
6		87527312		2	ISOLADOR
7		87527307		2	COLAR
8		87527313		2	SUPORTE
9		72954772		2	ALTO-FALANTE
10		10519301		8	ARRUELA PLANA M5 x 9.55 x 1
11		87524808		8	PARAFUSO
12		87722253		1	PROTEÇÃO Includes items 13, 14
13		87527336		2	GRAMPO
14		87527496		1	ISOLADOR
15		87527034		1	MARTELO
16		87524810		1	SEDE/ALOJAMENTO
17		87527309		2	PARAFUSO
18		87527311		2	ESPAÇADOR
19		87527310		2	PORCA
20		87527308		1	JUNTA

09-087	02	p1	7/2013

CAB - PARTS

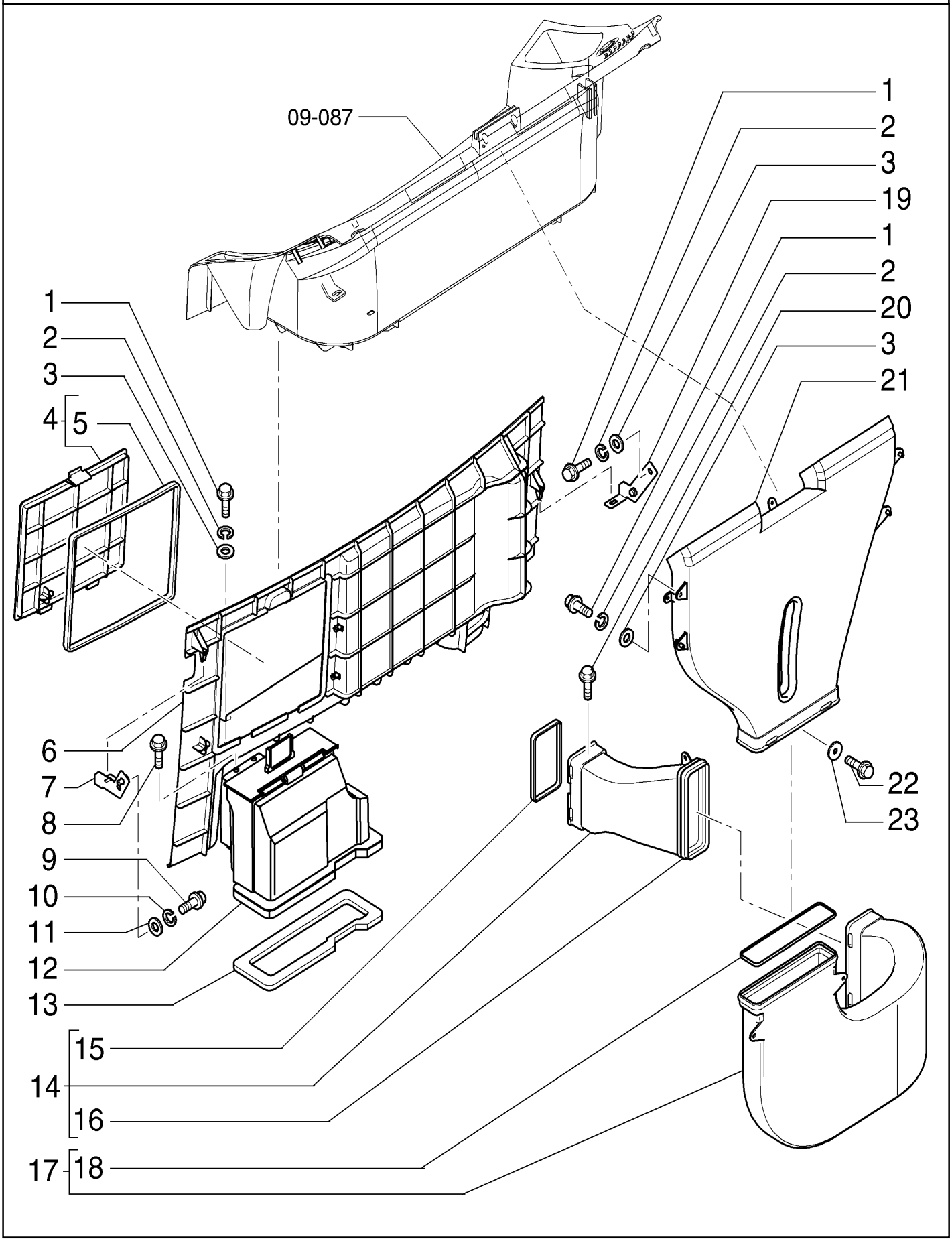

CAB - PARTS

REF	FN	PART NUMBER	YR/SN	QTY	DESCRIPTION
1		10902231		8	PARAFUSO Hex, M6 x 16, 10.9
2		10516471		8	TRAVA DA ARRUELA
3		12644421		8	ARRUELA PLANA M6 x 15 x 1
4		87722259		1	PROTEÇÃO Includes item 5
5		87524798		1	PROTEÇÃO
6		87722256		1	PROTEÇÃO
7		87524819		1	SUPORTE
8		15903801		2	PARAFUSO
9		16043231		2	PARAFUSO Hex, M8 x 16, 10.9
10		10516671		2	TRAVA DA ARRUELA
11		14496531		2	ARRUELA PLANA M8 x 17 x 1.6
12		87527514		1	DUTO
13		87527517		1	ISOLADOR
14		87527507		1	DUTO Includes items 15, 16
15		87527511		1	ISOLADOR
16		87527509		1	ISOLADOR
17		87527504		1	TUBO Includes item 18
18		87527506		1	ISOLADOR
19		87524821		1	SUPORTE
20		15687901		1	PARAFUSO Cross Pan Hd, M4.2 x 9.5
21		87527503		1	TUBO
22		87596368		2	PARAFUSO
23		87596367		2	GRAMPO

09-088	01	p1	7/2013

CAB - PARTS

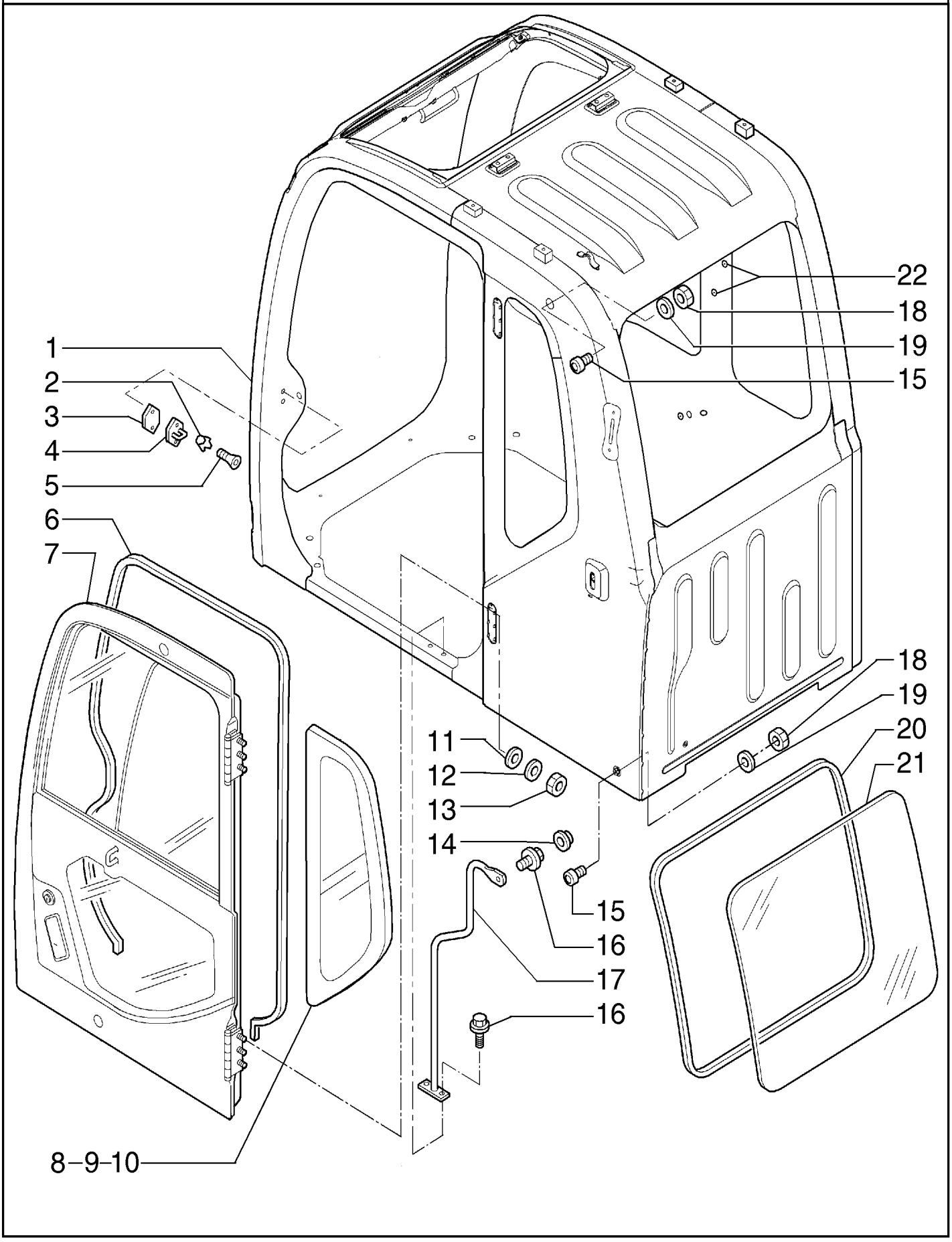

CAB - PARTS

REF	FN	PART NUMBER	YR/SN	QTY	DESCRIPTION
1		87579080		1	ESTRUTURA
2		72954371		2	ARRUELA PLANA
3		72951580		1	ASSENTO ESFÉRICO
4		72206136		1	GANCHO
5		72954902		2	PARAFUSO
6		87333304		1	PERFILADO DE BORRACHA
7		87739624		1	PORTA
8		87333298		1	VIDRO
9		87538371		1	JUNTA
10		72958217		1	VEDAÇÃO
11		72954903		6	ARRUELA PLANA
12		72954906		6	TRAVA DA ARRUELA
13		72954869		6	PORCA
14		72954373		1	BOTÃO
15		87333291		2	PARADA
16		72954860		3	PARAFUSO
17		YN02C03321P1		1	MANILHA
18		72951660		2	PORCA
19		72951753		2	ARRUELA PLANA
20		87333303		1	PERFILADO DE BORRACHA
21		87333297		1	VIDRO
22		84127405		3	ADESIVO

09-089	01	p1	7/2013

CAB - PARTS

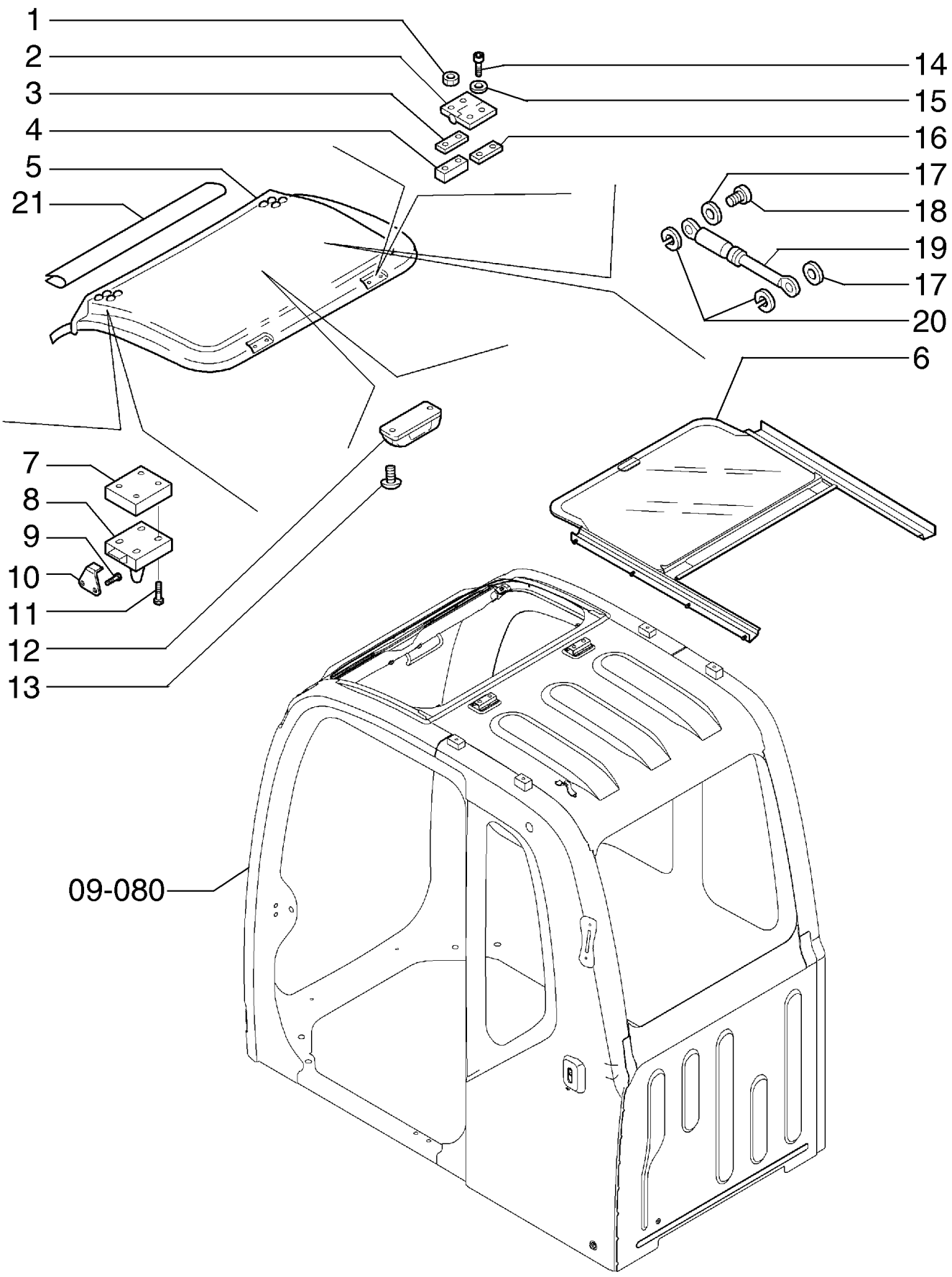

CAB - PARTS

REF	FN	PART NUMBER	YR/SN	QTY	DESCRIPTION
1		ZM73C08025		4	PARAFUSO
2		YN02C03194P1		2	DOBRADIÇA
3		87333293		2	PERFILADO DE BORRACHA
4		YN02C02705P1		2	PLACA
5		YN02C03650P1		1	TETO
6		87739895		1	PARA-SOL
7		YN02C03656P1		2	ESPAÇADOR
8		YN02C03810F1		2	TRAVA
9		ZM73C06016		4	PARAFUSO
10		YN02C03187P2		2	PLACA
11		YN02C03767P1		8	PARAFUSO
12		YN02C02967P1		1	MANILHA
13		YN02C03766P1		2	BUJÃO
14		72951685		4	PARAFUSO
15		72209113		4	ARRUELA PLANA
16		YN02C03641P1		2	PLACA
17		72954404		4	ARRUELA PLANA
18		87336573		2	PINO
19		72950131		2	MOLA
20		72209644		4	O-RING
21		YN02C03669P1		AR	JUNTA

09-089	02	p1	7/2013

CAB - PARTS

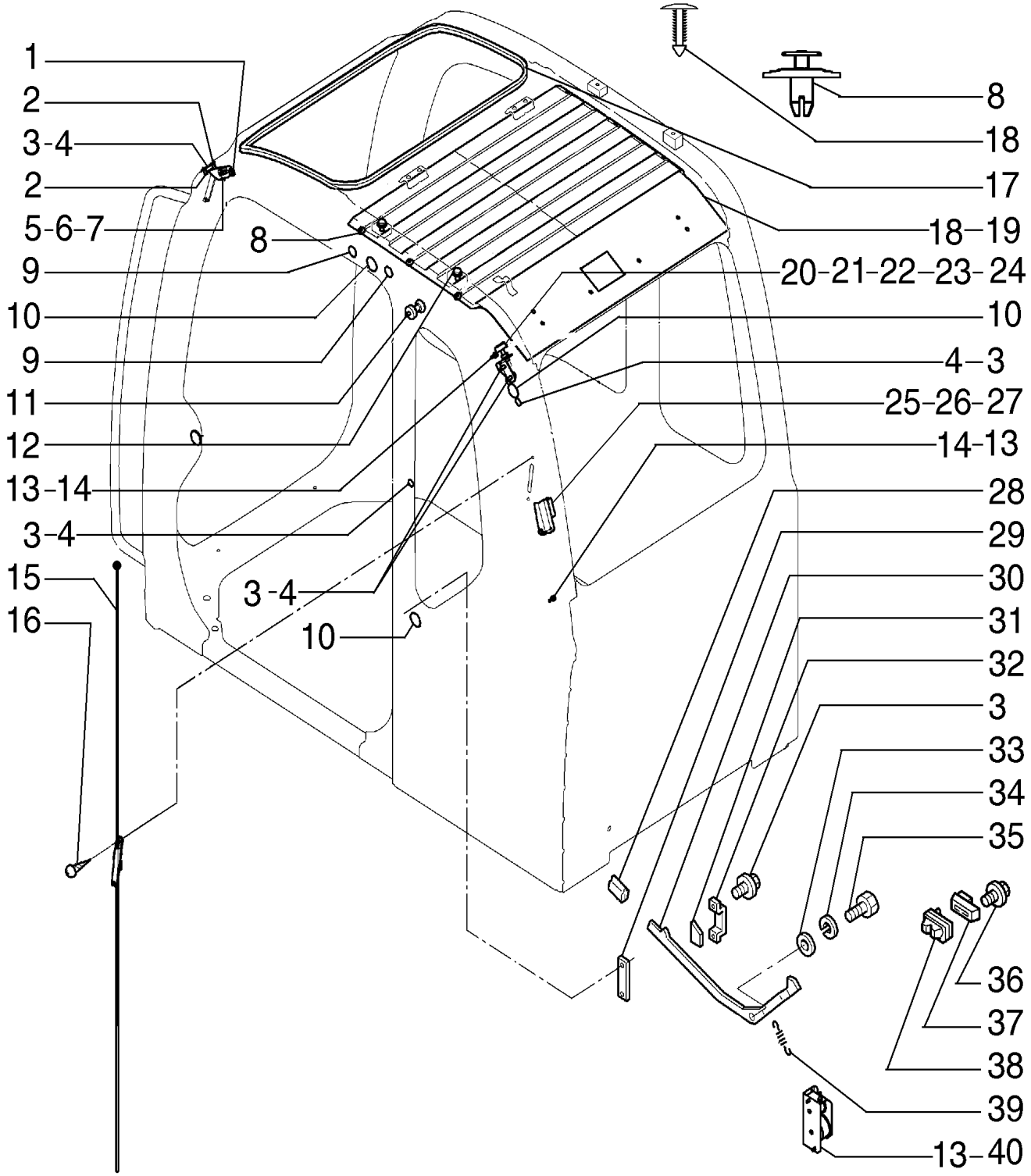

CAB - PARTS

REF	FN	PART NUMBER	YR/SN	QTY	DESCRIPTION
1		87333355		1	CASQUILHO ISOLADOR
2		72954269		2	BUJÃO
3		72151891		5	PLACA
4		84127404		5	KIT DE ADESIVOS
5		72209123		2	ARRUELA PLANA
6		YN02C03095P2		1	PARADA
7		87333574		2	PARAFUSO
8		84162510		3	BUJÃO DE PLÁSTICO
9		72285161		2	PLACA
10		87602354		6	PLACA
11		72954366		1	GANCHO
12		ZM73C12020		2	PARAFUSO
13		72209121		6	PARAFUSO
14		72958503		6	BRAÇADEIRA
15		72150022		1	ANTENA
16		72954897		2	PARAFUSO
17		YN02C03669P2		1	JUNTA
18		84162560		6	GRAMPO
19		87722263		1	PASTILHA
20		72951573		1	PARADA
21		72951660		1	PORCA
22		72951753		1	ARRUELA PLANA
23		ZM27C08025		2	PARAFUSO
24		YN02C03075P1		1	PLACA
25		HY25X09017G1		1	ARRUELA PLANA
26		87333311		1	PARAFUSO
27		YN02C03048P2		1	SUPORTE
28		72954386		1	COBERTURA
29		72954389		1	ESPAÇADOR
30		87333321		1	ALAVANCA
31		72954387		1	ETIQUETA
32		72954388		1	COBERTURA
33		72950361		1	ARRUELA PLANA
34		12581579		1	ARRUELA ONDULADA Wave, M7.4
35		72953334		1	PARAFUSO
36		72951633		4	PARAFUSO
37		72954362		1	COBERTURA
38		72950134		1	TRAVA
39		72954370		1	MOLA

09-089	02	p2	7/2013

CAB - PARTS

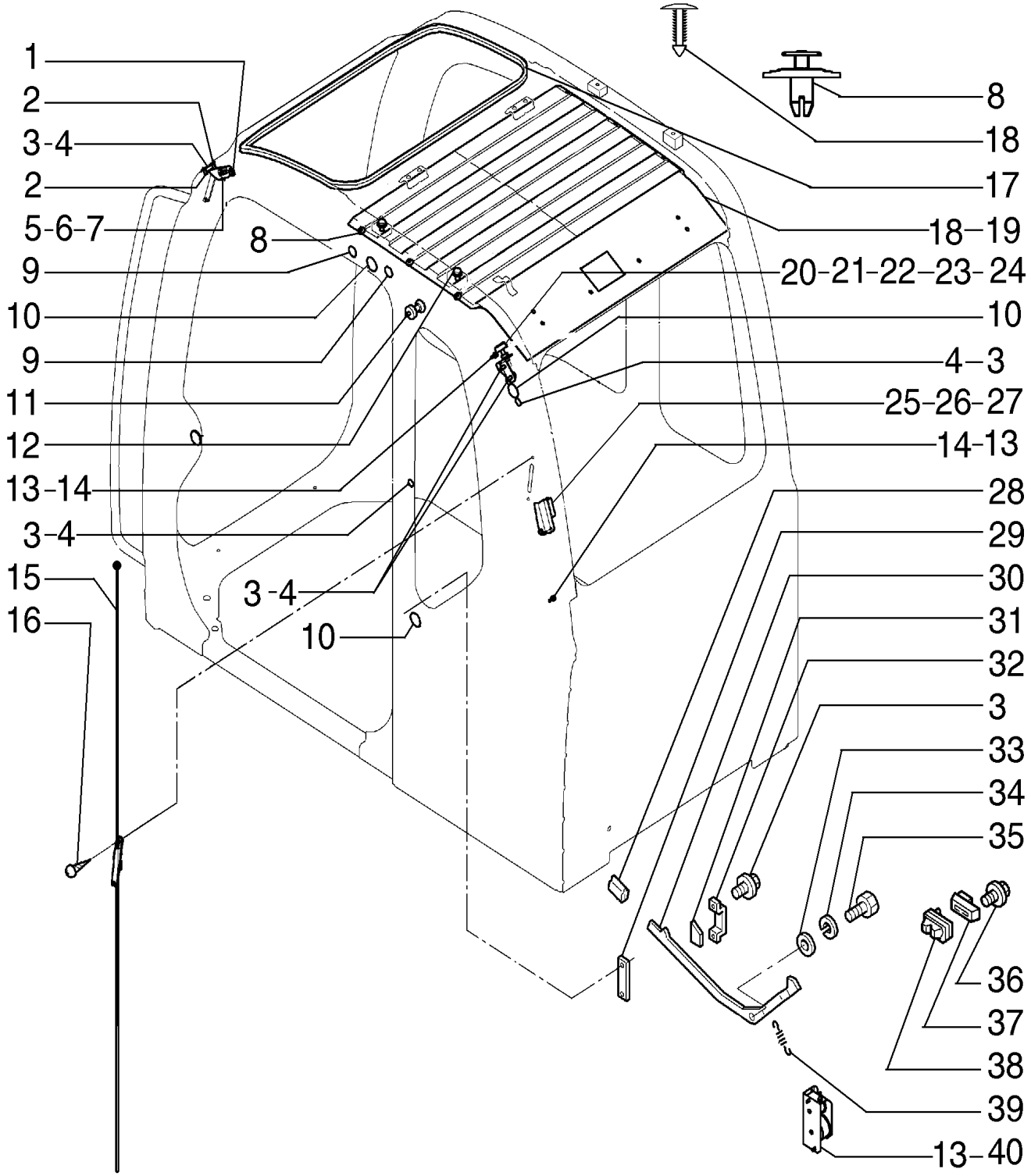

CAB - PARTS

REF	FN	PART NUMBER	YR/SN	QTY	DESCRIPTION
40		YN02C02970F1		1	CABO

09-090	01	p1	7/2013

CAB - PARTS

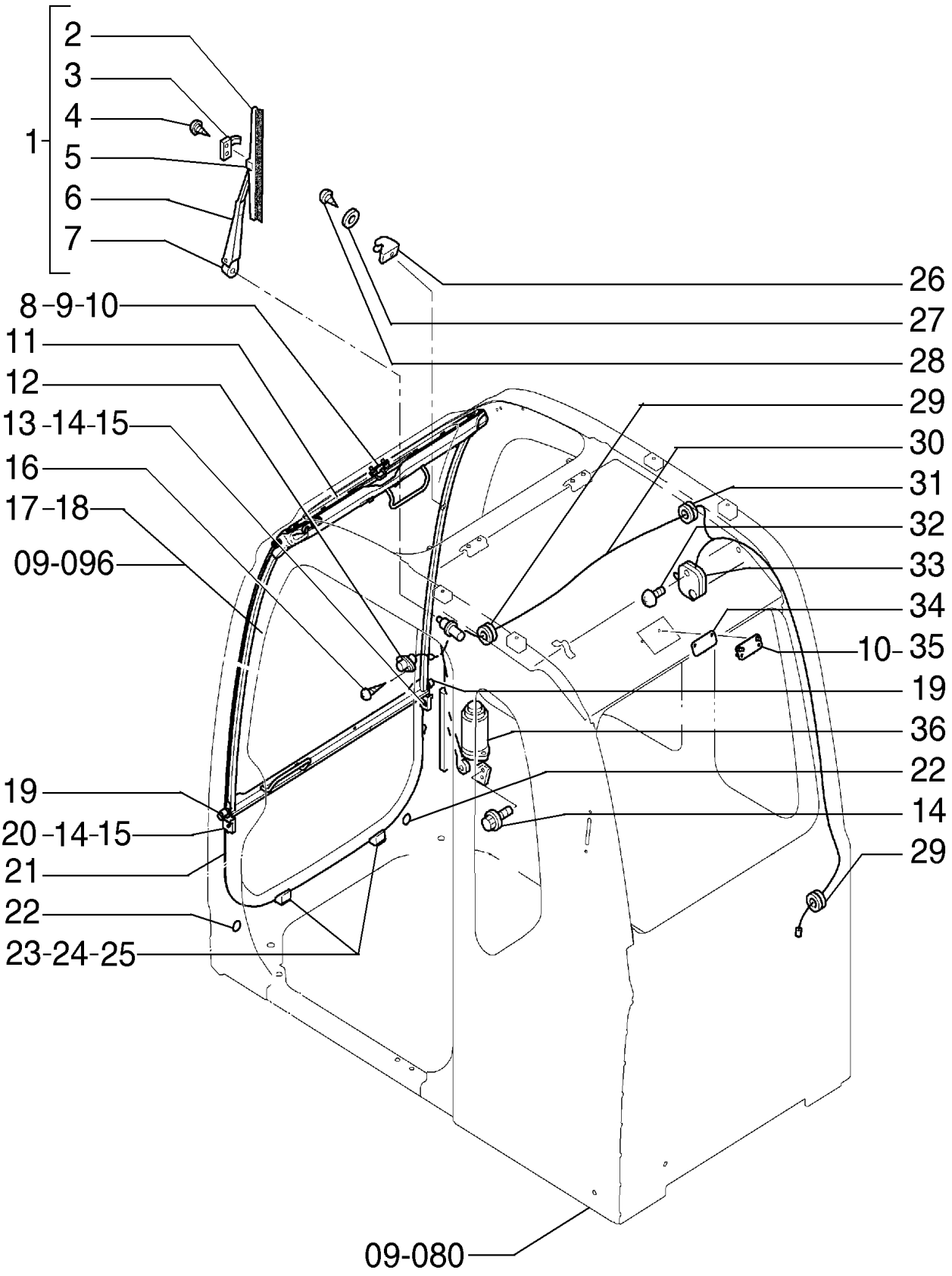

CAB - PARTS

REF	FN	PART NUMBER	YR/SN	QTY	DESCRIPTION
1		72206129		1	ALAVANCA Includes items 2 - 7
2		72209638		1	ESCOVA
3		72209636		1	GRAMPO
4		72209637		2	PARAFUSO
5		72219440		1	BLOCO
6		72209635		1	BRAÇO LIMPADOR
7		72219439		1	COBERTURA
8		YN02C03055P1		1	ADESIVO
9		YN02C03039P1		1	ESPAÇADOR
10		ZM27C08025		4	PARAFUSO
11		2420R372D7		1	CASQUILHO ISOLADOR
12		72950231		1	INTERRUPTOR
13		YN02C02747P1		1	GUIA
14		72209121		6	PARAFUSO
15		72209123		2	ARRUELA PLANA
16		72954900		2	PARAFUSO
17		87579010		1	PORTA
18		YN02C03006P2		1	JUNTA
19		87333307		2	PARADA
20		YN02C02746P1		1	GUIA
21		YN02C03160P1		1	VIDRO
22		72285161		6	PLACA
23		YN02C03887P1		2	PARADA
24		YN02C03005P1		4	ESPAÇADOR
25		ZS41C06020		2	PARAFUSO
26		72958501		1	PARADA
27		87333312		1	ARRUELA PLANA
28		87333311		1	PARAFUSO
29		72954140		2	CASQUILHO ISOLADOR
30		YN02C03098P1		1	CHICOTE
31		87333355		1	CASQUILHO ISOLADOR
32		72954897		2	PARAFUSO
33		72206141		1	LÂMPADA
34		YN02C03040P1		1	ESPAÇADOR
35		YN02C03056P1		1	PLACA DO BATENTE
36		YN53C00012F2		1	MOTOR ELÉTRICO PEQUENO

09-091	01	p1	7/2013

CAB - PARTS

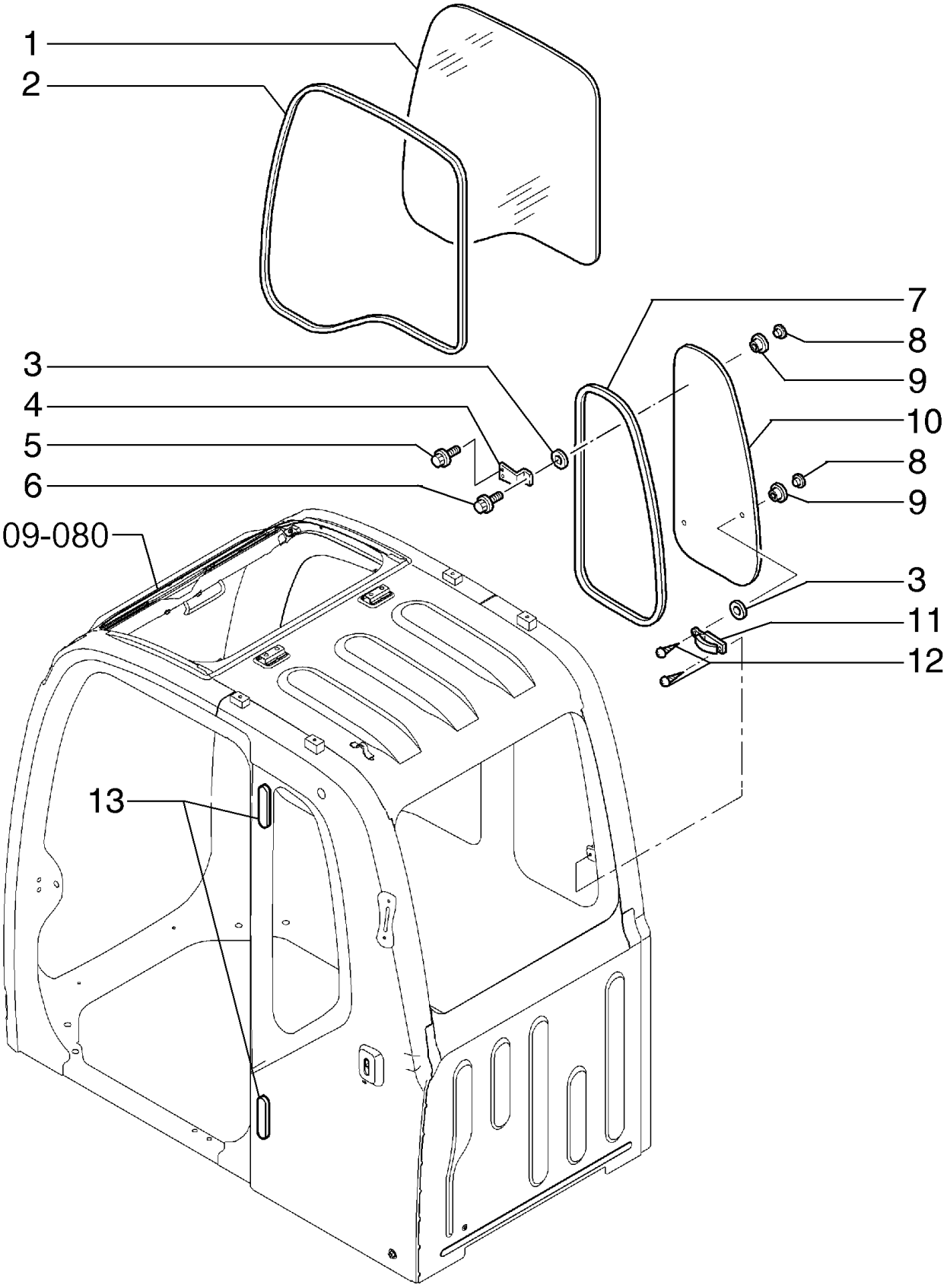

CAB - PARTS

REF	FN	PART NUMBER	YR/SN	QTY	DESCRIPTION
1		87333300		1	VIDRO
2		87333305		1	PERFILADO DE BORRACHA
3		87333301		3	ESPAÇADOR
4		87333292		2	PLACA
5		72209121		4	PARAFUSO
6		87333294		2	PARAFUSO
7		87333308		1	VEDAÇÃO
8		72161758		3	RETENTOR
9		72161759		3	EMBALAGEM
10		87333296		1	VIDRO
11		72206126		1	MANILHA
12		72954277		3	PARAFUSO
13		72954365		2	COBERTURA

09-092	01	p1	7/2013

CAB - PARTS

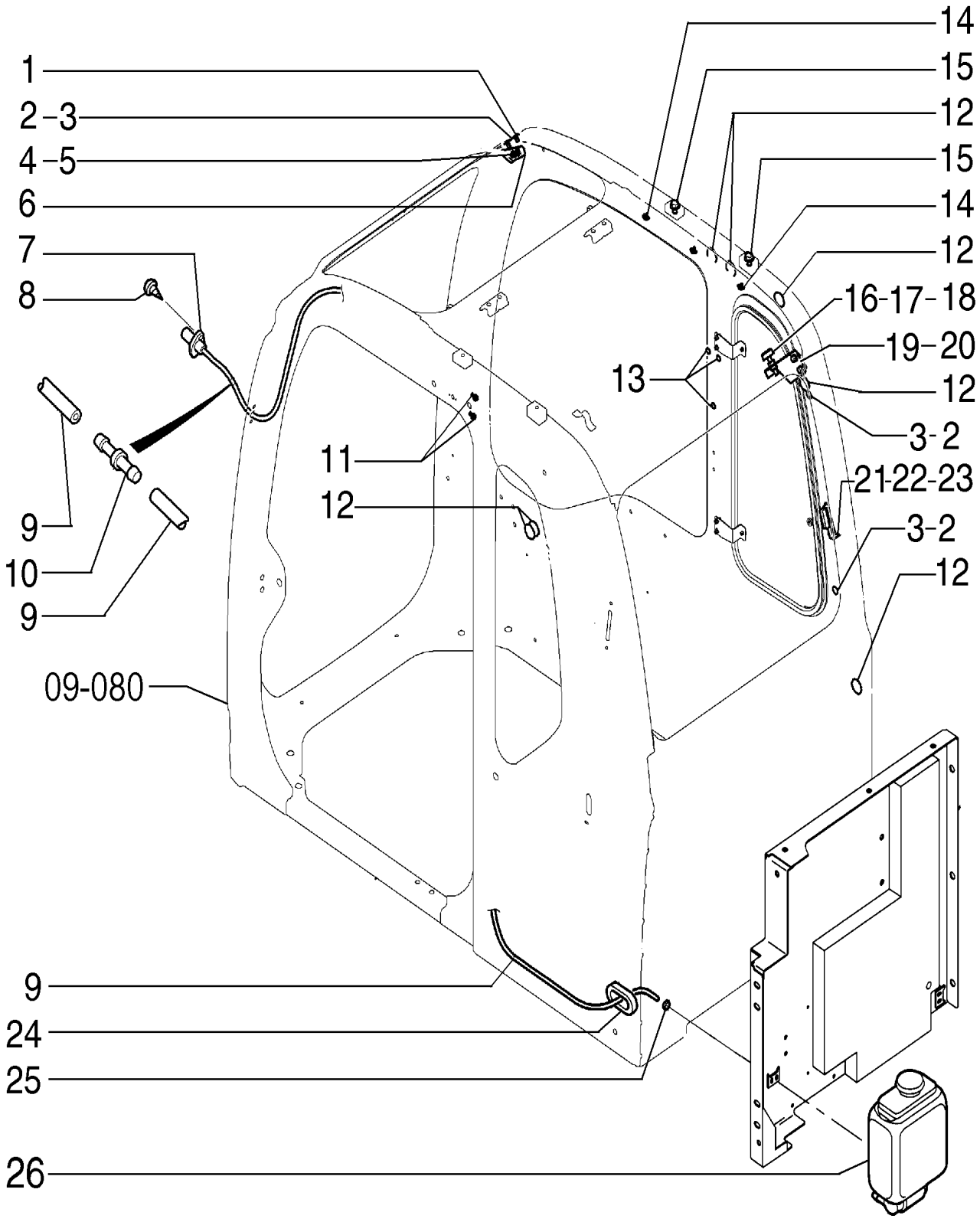

CAB - PARTS

REF	FN	PART NUMBER	YR/SN	QTY	DESCRIPTION
1		72954269		2	BUJÃO
2		72151891		5	PLACA
3		84127404		5	KIT DE ADESIVOS
4		72209123		2	ARRUELA PLANA
5		87333574		2	PARAFUSO
6		YN02C03094P2		1	PARADA
7		72206130		1	MOTOR ELÉTRICO PEQUENO
8		72954900		2	PARAFUSO
9		72951575		1	MANGUEIRA
10		87333352		1	VÁLVULA CHECAGEM
11		72209121		2	PARAFUSO
12		87602354		7	PLACA
13		84127405		3	ADESIVO
14		87333325		3	GRAMPO
15		ZM73C12020		2	PARAFUSO
16		72951753		1	ARRUELA PLANA
17		72951660		1	PORCA
18		72951573		1	PARADA
19		YN02C03077P1		1	PLACA
20		ZM27C08025		2	PARAFUSO
21		87333311		1	PARAFUSO
22		YN02C03047P2		1	SUPORTE
23		HY25X09017G1		1	ARRUELA PLANA
24		72954375		1	CASQUILHO ISOLADOR
25		YN02C03147P1		1	CINTA DE BORRACHA
26		422702800		1	RESERVATÓRIO

09-092/A	01	p1	7/2013

CAB - WINDSHIELD WASHER

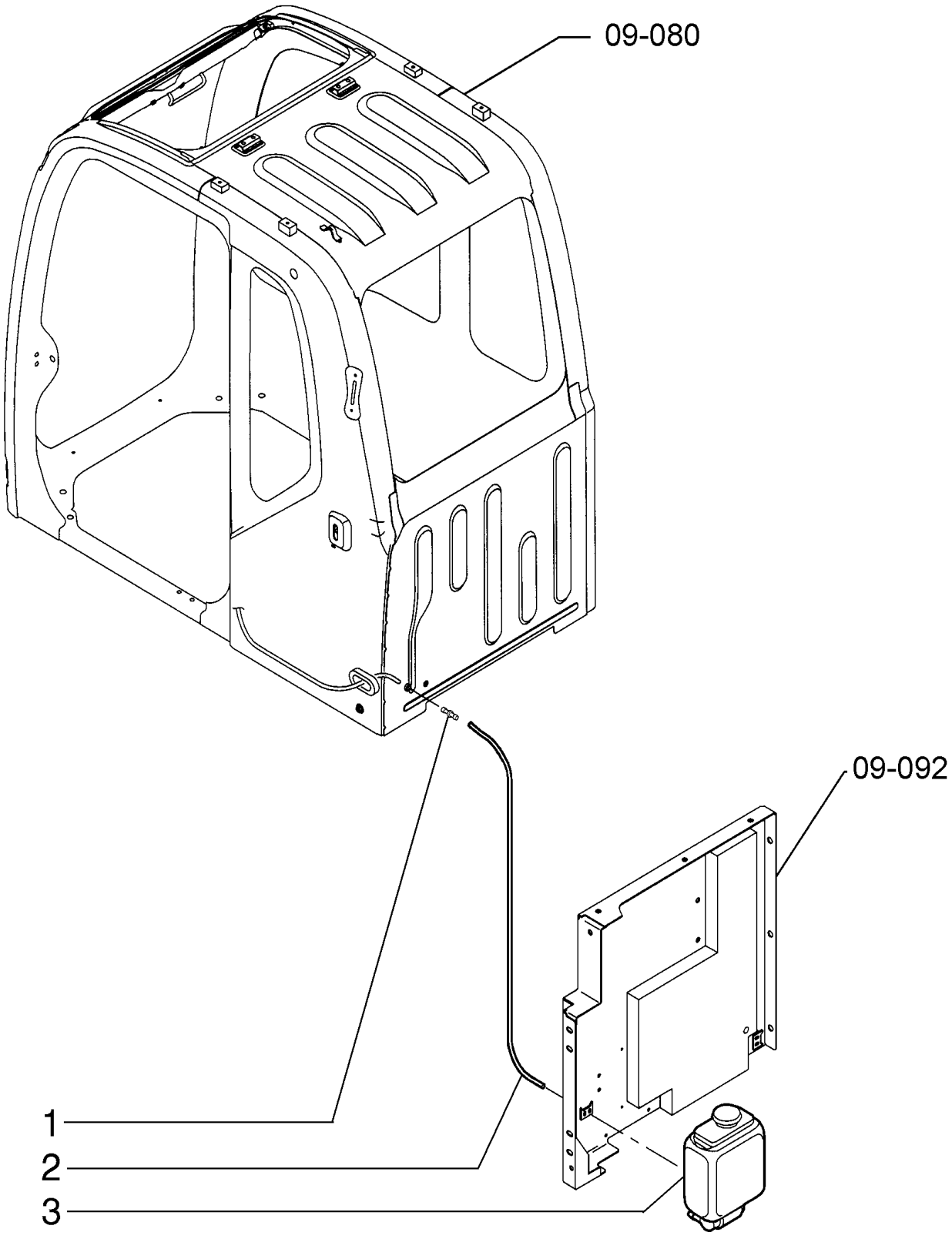

CAB - WINDSHIELD WASHER

REF	FN	PART NUMBER	YR/SN	QTY	DESCRIPTION
1		324203A1		1	VÁLVULA CHECAGEM
2		87558629		1	TUBO FLEXÍVEL
3		4227028		1	RESERVATÓRIO

09-096	01	p1	7/2013

CAB - PARTS

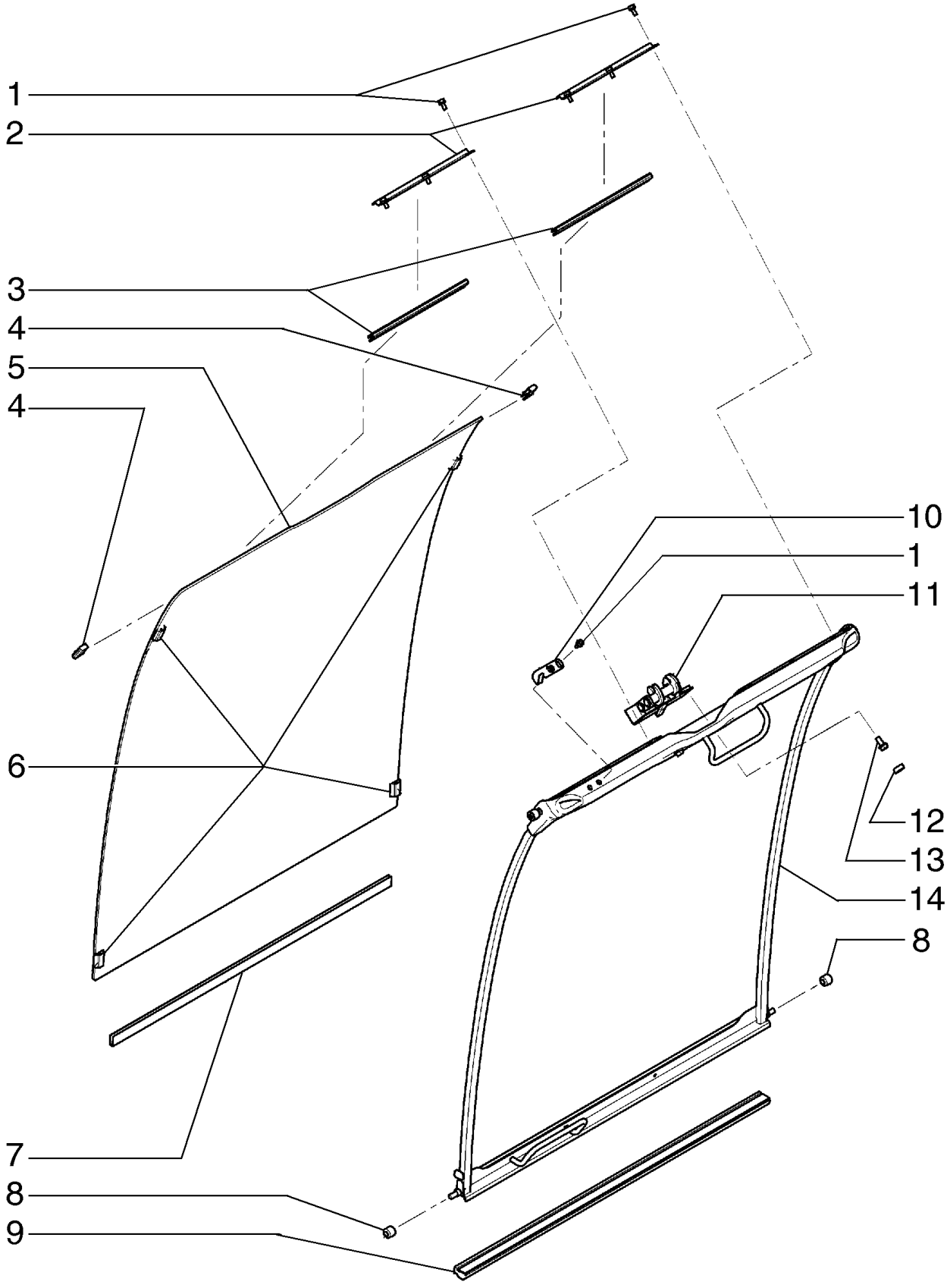

CAB - PARTS

REF	FN	PART NUMBER	YR/SN	QTY	DESCRIPTION
1		72209121		8	PARAFUSO
2		YN50C01170P1		2	PLACA
3		YN50C01171P1		2	CINTA DE BORRACHA
4		YN50C01172P1		2	CINTA DE BORRACHA
5		YN50C01173P1		1	VIDRO
6		72209112		4	VEDAÇÃO DE BORRACHA
7		72209111		1	VEDAÇÃO
8		YT50C01012P1		4	ROLO
9		YN50C01194P1		1	VEDAÇÃO
10		YN50C01207P1		1	PLACA
11		YN50C01189P1		1	TRAVA
12		72950352		2	BOTÃO
13		ZM73C08020		2	PARAFUSO
14		YN50C01209P1		1	ESTRUTURA

09-097	01	p1	7/2013

CAB - PARTS

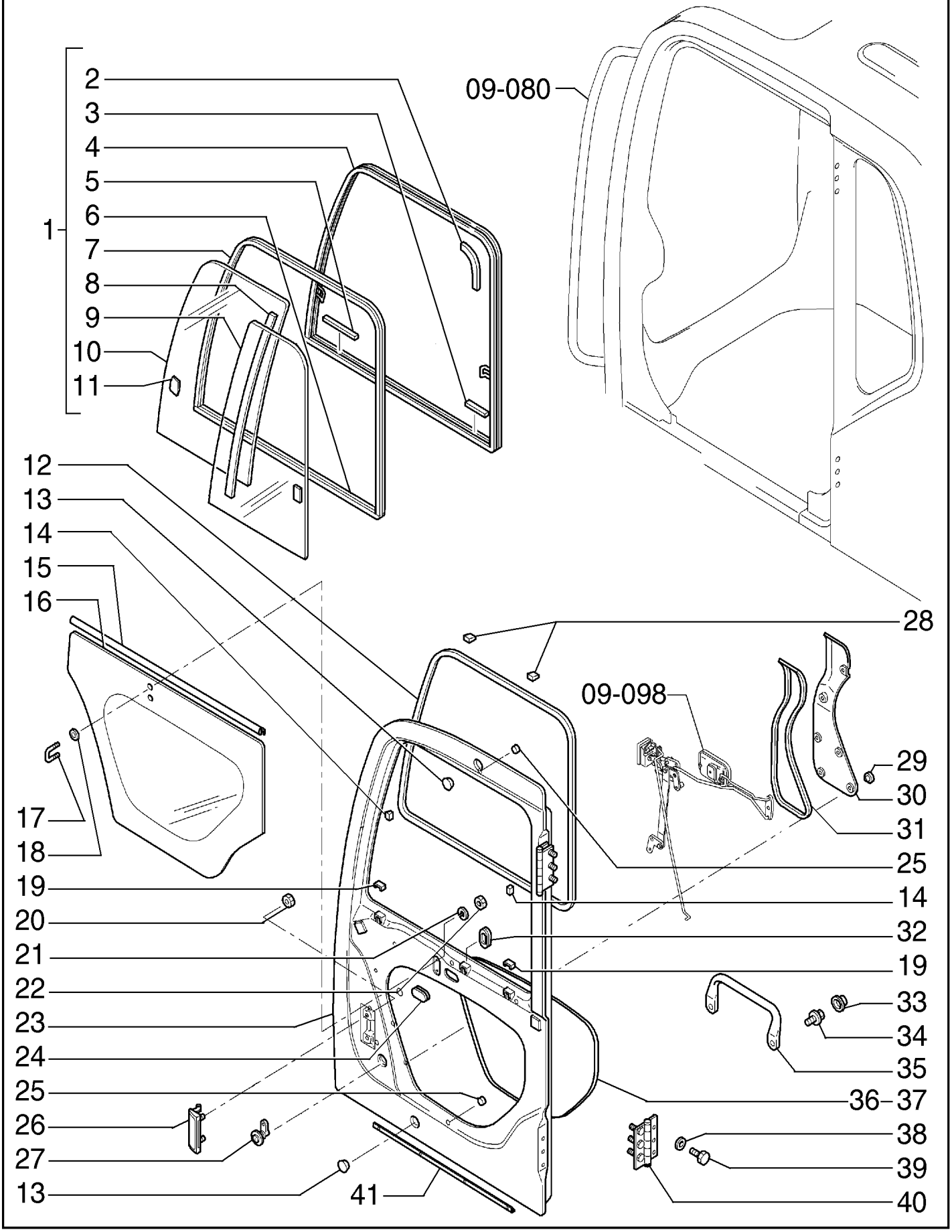

CAB - PARTS

REF	FN	PART NUMBER	YR/SN	QTY	DESCRIPTION
1		87333366		1	JOGO DE PEÇAS Includes items 2 - 11
2		87333374		1	PARADA
3		87333376		1	PARADA
4		87333367		1	ESTRUTURA
5		87333375		1	PARADA
6		87333372		1	VEDAÇÃO
7		87333373		1	VEDAÇÃO
8		87333370		1	VEDAÇÃO
9		87333369		1	VIDRO
10		87333368		1	VIDRO
11		87333371		2	TRAVA
12		72206139		1	VEDAÇÃO DE BORRACHA
13		72954726		2	PLACA
14		87333386		2	PERFILADO DE BORRACHA
15		87333383		1	REVESTIMENTO
16		87333378		1	VIDRO
17		87333365		1	GANCHO
18		72954727		2	ARRUELA PLANA
19		87333384		2	PERFILADO DE BORRACHA
20		72954200		2	PORCA
21		12581579		2	ARRUELA ONDULADA Wave, M7.4
22		72210038		2	PORCA
23		87333364		1	PAINEL
24		72280882		1	PLACA
25		87333382		2	PLACA
26		72206122		1	MANILHA
27		87577977		1	TRAVA
28		87333385		2	PERFILADO DE BORRACHA
29		72954391		6	REBITE
30		87722261		1	PLACA
31		87333387		1	PERFILADO DE BORRACHA
32		72954719		1	CASQUILHO ISOLADOR
33		72954373		2	BOTÃO
34		72954860		2	PARAFUSO
35		87333389		1	MANILHA
36		87333390		1	VEDAÇÃO
37		87333391		1	REVESTIMENTO
38		72954903		6	ARRUELA PLANA
39		72954875		6	PARAFUSO

09-097	01	p2	7/2013

CAB - PARTS

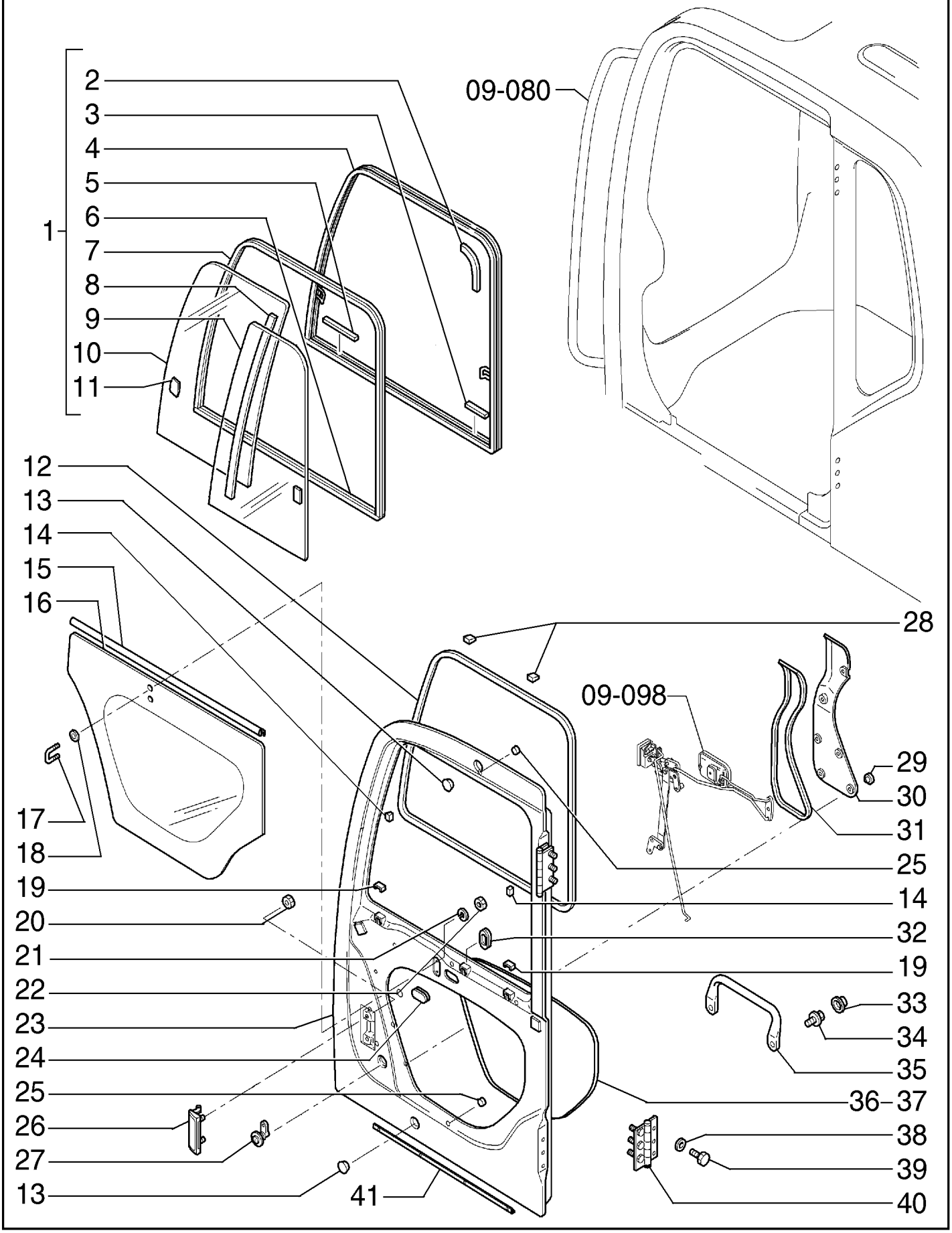

CAB - PARTS

REF	FN	PART NUMBER	YR/SN	QTY	DESCRIPTION
40		87333380		2	DOBRADIÇA
41		87333381		1	VEDAÇÃO

09-098	01	p1	7/2013

CAB - PARTS

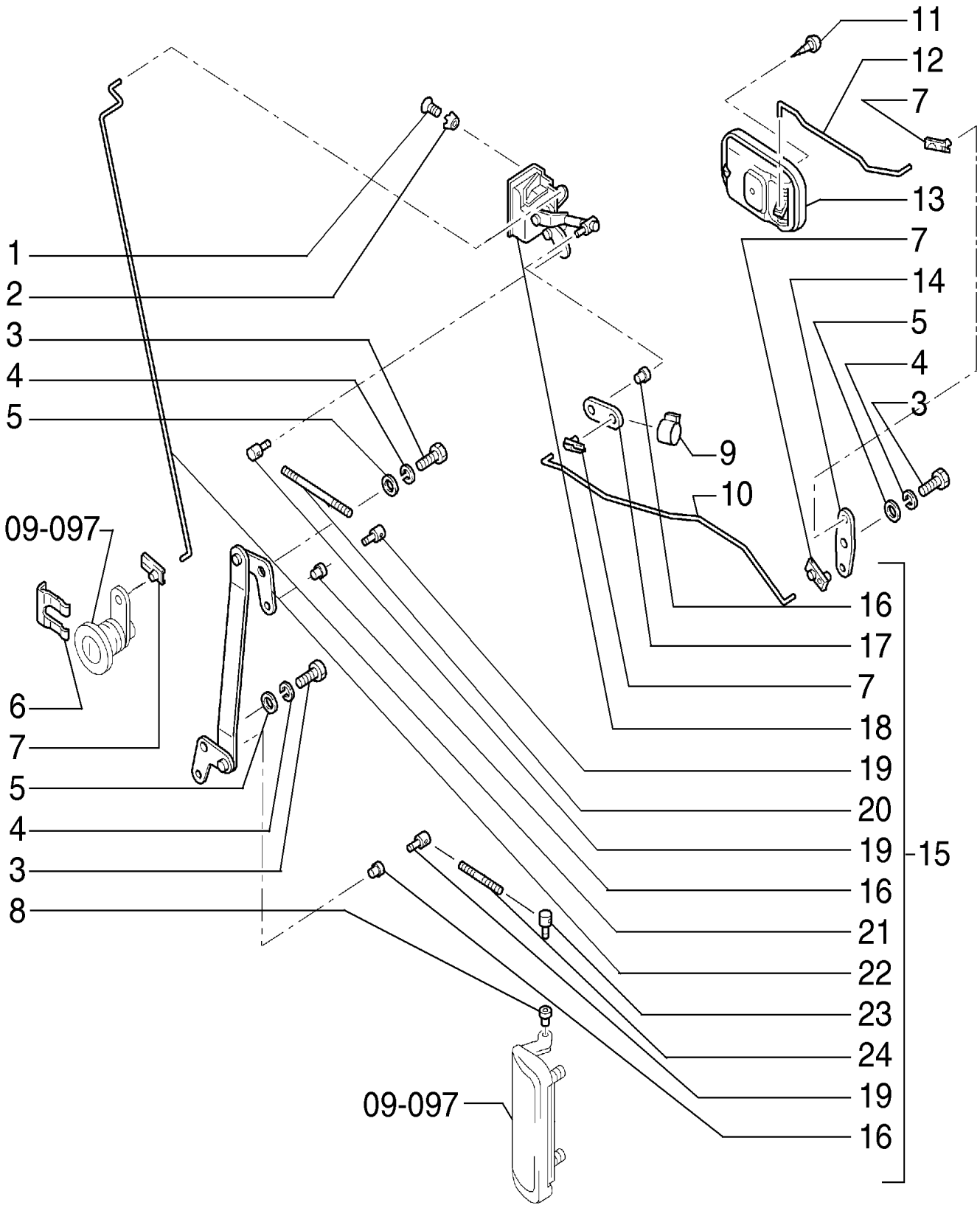

CAB - PARTS

REF	FN	PART NUMBER	YR/SN	QTY	DESCRIPTION
1		72954901		3	PARAFUSO
2		72954372		3	ARRUELA PLANA Includes items 7, 16 - 24
3		72209120		3	PARAFUSO
4		14447124		3	ARRUELA PLANA
5		87333404		3	ARRUELA PLANA
6		72206140		1	GRAMPO
7		87333393		4	FIXADOR
8		72954715		1	FIXADOR
9		87333392		2	PERFILADO DE BORRACHA
10		87333394		1	HASTE
11		72954277		1	PARAFUSO
12		87333395		1	HASTE
13		72206125		1	MANILHA
14		87333403		1	PLACA
15		87333396		1	ELO
16		87333402		3	FIXADOR
17		87333400		1	PLACA
18		72206397		1	GRAMPO
19		72958211		3	PINO
20		87333399		1	HASTE
21		87333401		1	HASTE
22		87333397		1	ELO
23		72958213		1	PINO
24		87333398		1	HASTE

09-100	01	p1	7/2013

AIR CONDITIONER

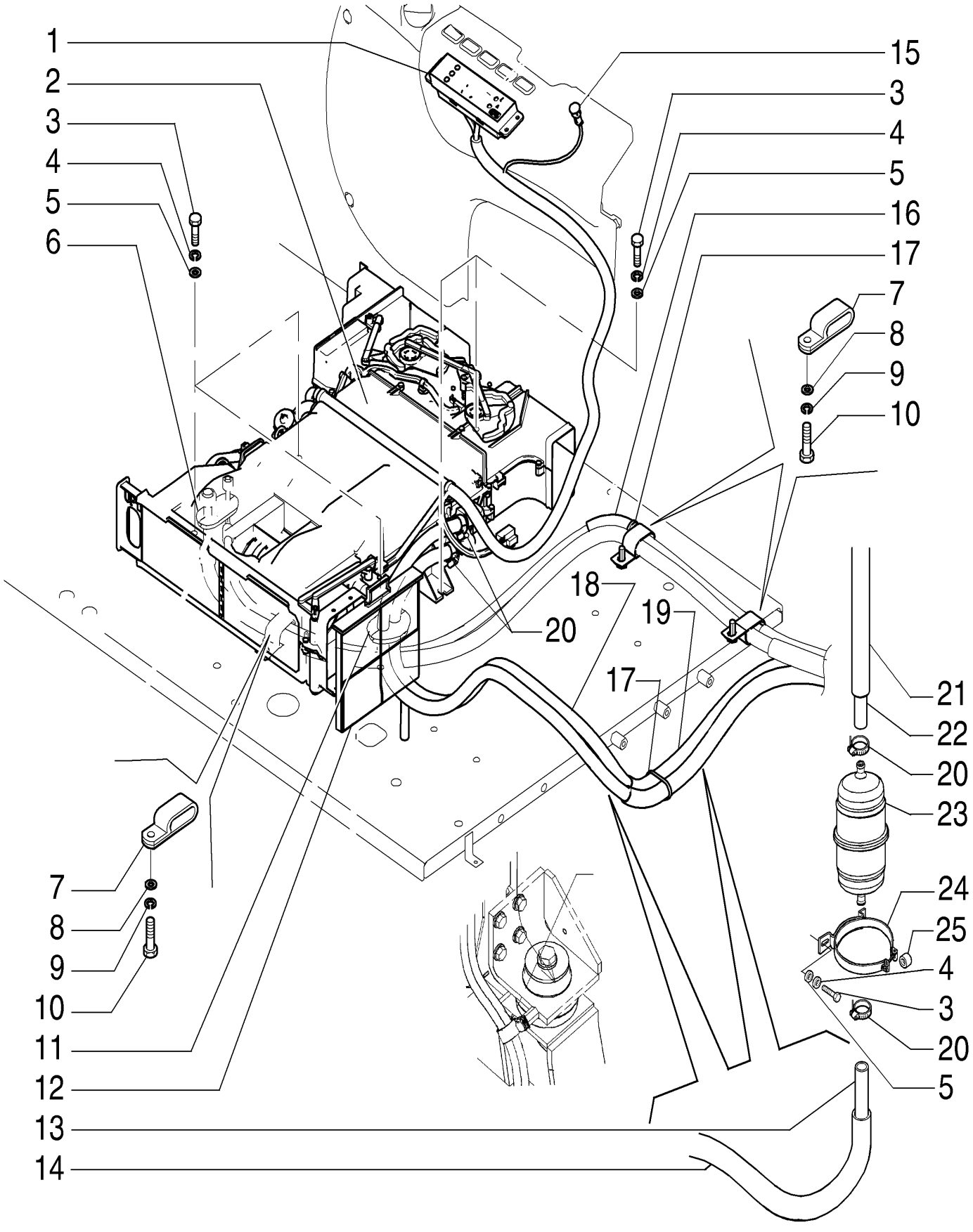

AIR CONDITIONER

REF	FN	PART NUMBER	YR/SN	QTY	DESCRIPTION
1		87750446		1	PAINEL
2		YT20M00022F4		1	AR-CONDICIONADO
3		16043431		7	PARAFUSO Hex, M8 x 20, 10.9
4		10516671		7	TRAVA DA ARRUELA
5		14496531		7	ARRUELA PLANA M8 x 17 x 1.6
6		87575957		1	JUNTA
7		71415385		3	GRAMPO
8		14496631		3	ARRUELA PLANA M10 x 21 x 2
9		10516871		3	TRAVA DA ARRUELA
10		11106231		3	PARAFUSO Hex, M10 x 25, 10.9, Full Thd
11		87529504		1	JUNTA
12		87529500		1	FILTRO DA CABINE
13		72209632		1	MANGUEIRA DO AQUECEDOR 12.00 mm ID x 3700.00 mm
14		87633128		1	TUBO FLEXÍVEL 22.10 mm ID x 3500.00 mm
15		87529502		1	SENSOR
16		87529521		1	TUBO FLEXÍVEL
17		75201642		2	BRAÇADEIRA
18		87633122		1	MANGUEIRA DO AQUECEDOR 12.00 mm ID, 2300.00 mm
19		87529445		1	TUBO FLEXÍVEL
20		70925755		4	BRAÇADEIRA
21		84124313		1	TUBO FLEXÍVEL 22.10 mm ID x 550.00 mm
22		72282535		1	MANGUEIRA DO AQUECEDOR 12.00 mm ID x 1000.00 mm
23		84123792		1	FILTRO
24		84123793		1	COLAR
25		84170883		1	ESPAÇADOR

From chassis N0AA04164

CX220B

09-100	02	p1	7/2013

AIR CONDITIONER - RAISED CAB

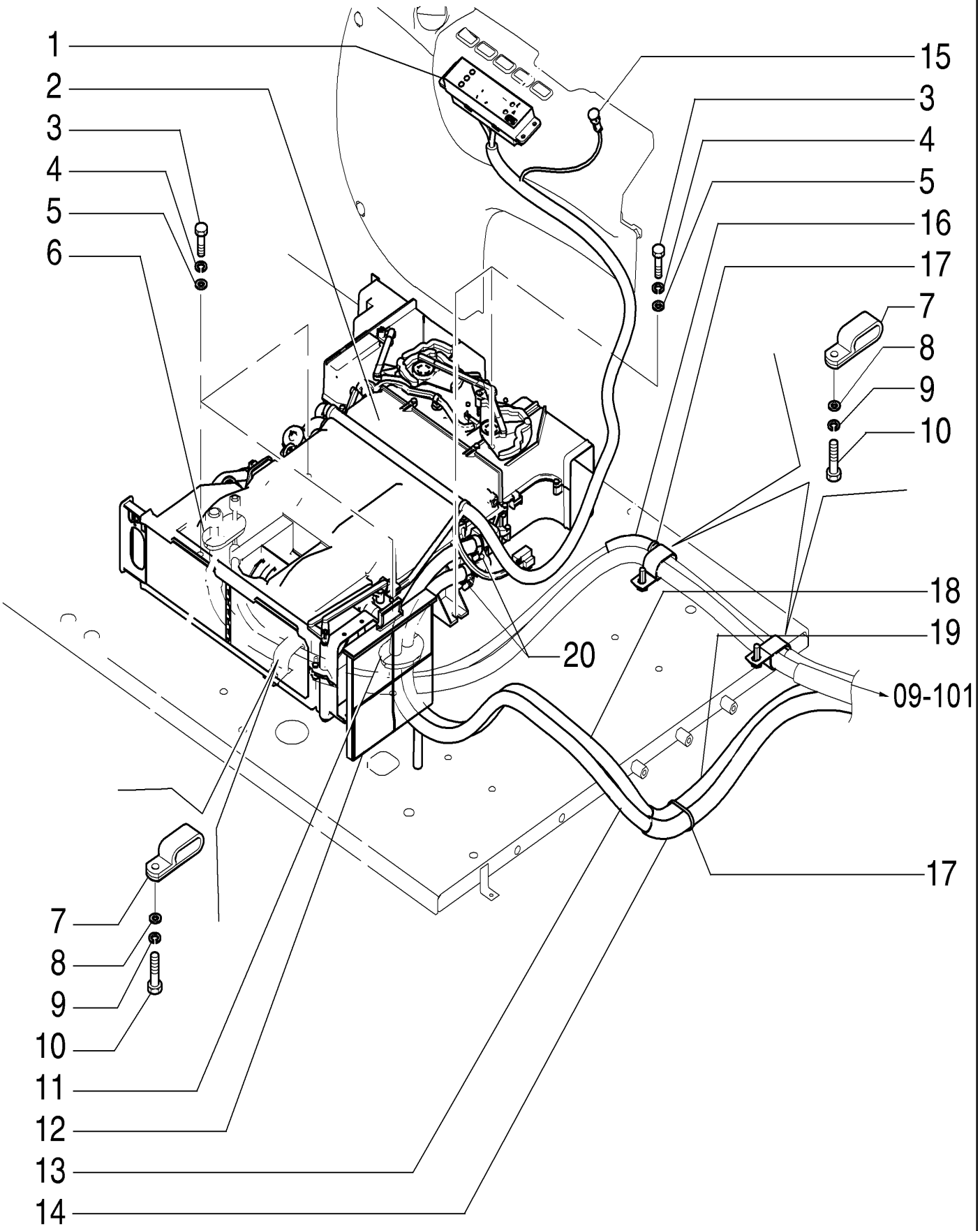

AIR CONDITIONER - RAISED CAB

REF	FN	PART NUMBER	YR/SN	QTY	DESCRIPTION
1		87700637		1	PAINEL
2	1	87704715		1	INTERRUP CONTROLE TEMPER
3		16043431		5	PARAFUSO Hex, M8 x 20, 10.9
4		10516671		5	TRAVA DA ARRUELA
5		14496531		5	ARRUELA PLANA M8 x 17 x 1.6
6		87575957		1	JUNTA
7		70933135		3	BRAÇADEIRA
8		14496631		3	ARRUELA PLANA M10 x 21 x 2
9		10516871		3	TRAVA DA ARRUELA
10		11106231		3	PARAFUSO Hex, M10 x 25, 10.9, Full Thd
11		87529504		1	JUNTA
12		87529500		1	FILTRO DA CABINE
13		87743491		1	MANGUEIRA 12.50 mm ID x 4050 mm
14		87529446		1	TUBO FLEXÍVEL
15		87529502		1	SENSOR
16		87529521		1	TUBO FLEXÍVEL
17		75201642		2	BRAÇADEIRA
18		87743492		1	MANGUEIRA
19		87529445		1	TUBO FLEXÍVEL
20		422050500		2	BRAÇADEIRA

(1) Ver 87704716

09-101	01	p1	7/2013

AIR CONDITIONER

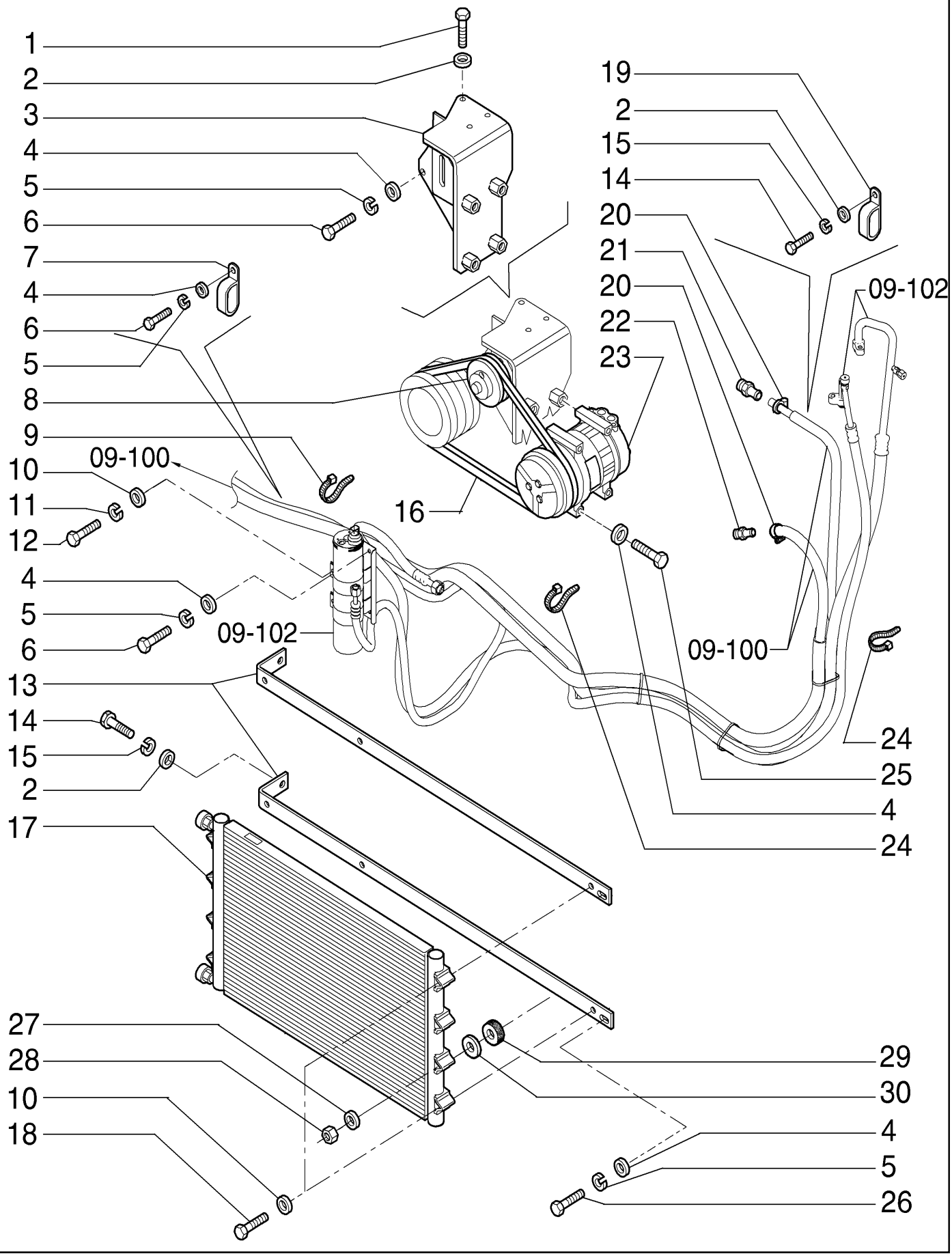

AIR CONDITIONER

REF	FN	PART NUMBER	YR/SN	QTY	DESCRIPTION
1		11107331		1	PARAFUSO Hex, M10 x 55, 10.9
2		14496631		5	ARRUELA PLANA M10 x 21 x 2
3		87656864		1	SUPORTE
4		14496531		9	ARRUELA PLANA M8 x 17 x 1.6
5		10516671		5	TRAVA DA ARRUELA
6		16043431		3	PARAFUSO Hex, M8 x 20, 10.9
7		70933135		1	BRAÇADEIRA
8		72209721		1	POLIA
9		87526680		1	COLAR DE FIXAÇÃO
10		14496431		6	ARRUELA PLANA M6.4 x 12.5 x 1.6 Thk
11		10516471		2	TRAVA DA ARRUELA
12		10902431		2	PARAFUSO Hex, M6 x 20, 10.9
13		87656862		2	SUPORTE
14		11106231		4	PARAFUSO Hex, M10 x 25, 10.9, Full Thd
15		10516871		4	TRAVA DA ARRUELA
16		72204603		1	BELT, TRANSMISSION 17.00 mm W x 1232.00 mm L
17		87575958		1	CONDENSADOR
18		10903731		4	PARAFUSO Hex, M6 x 55, 10.9
19		70928927		1	COLAR
20		70925755		2	BRAÇADEIRA
21		84162283		1	CONEXÃO
22		87656874		1	CONECTOR HIDRÁUL
23		72203934		1	COMPRESSOR DE AR
24		75201642		14	BRAÇADEIRA
25		16046131		4	PARAFUSO Hex, M8 x 100.00mm, Cl 10.9, ZND
26		16043631		2	PARAFUSO Hex, M8 x 25, 10.9
27		12643721		4	ARRUELA PLANA M6 x 18 x 1.5
28		15896221		4	PORCA M6, Cl 10
29		87720558		4	VEDAÇÃO DE BORRACHA
30		12647001		4	ARRUELA PLANA M8 x 25 x 2.5

Until chassis NAAA04176

CX220B

09-101	02	p1	7/2013

AIR CONDITIONER

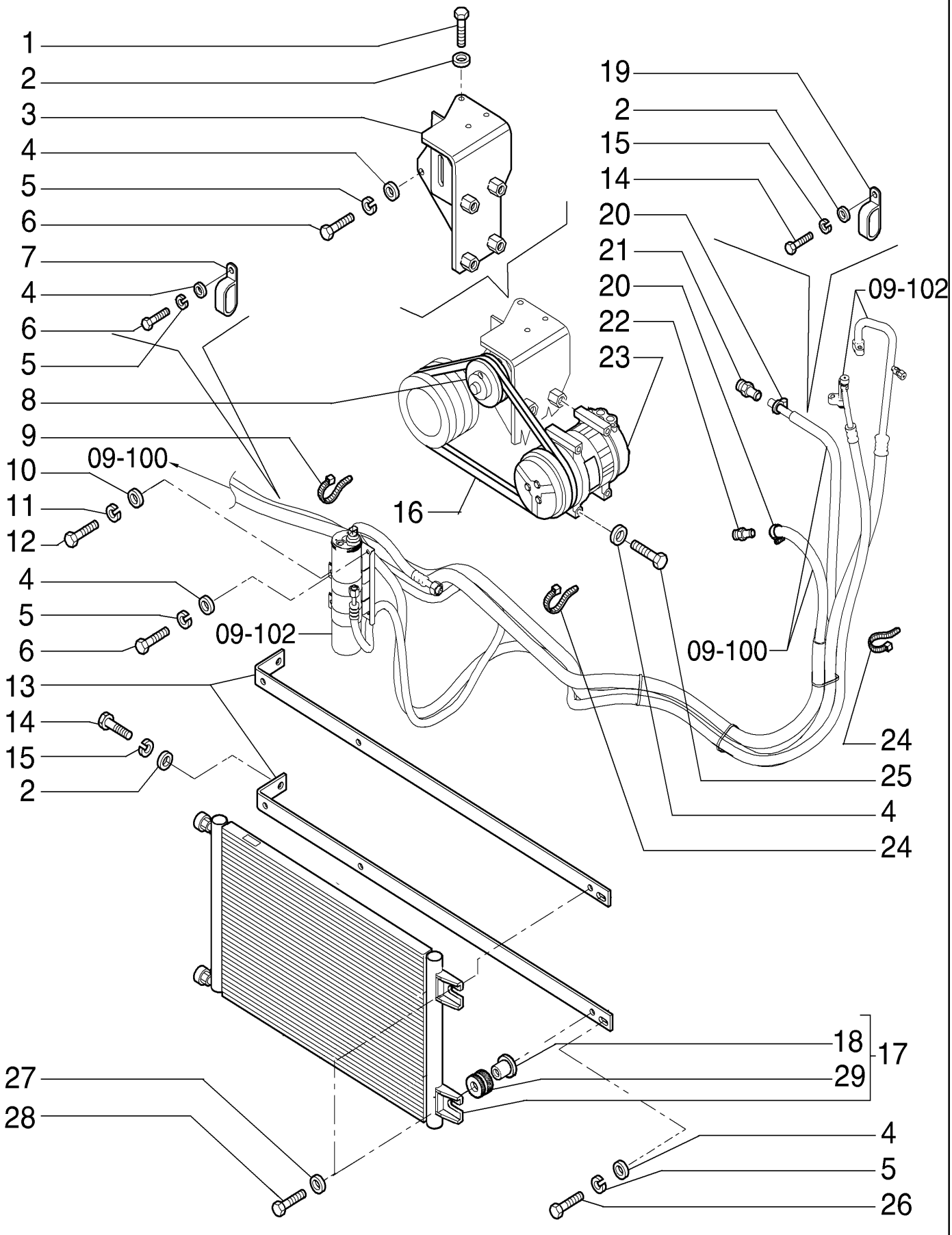

AIR CONDITIONER

REF	FN	PART NUMBER	YR/SN	QTY	DESCRIPTION
1		11107331		1	PARAFUSO Hex, M10 x 55, 10.9
2		14496631		5	ARRUELA PLANA M10 x 21 x 2
3		87656864		1	SUPORTE
4		14496531		9	ARRUELA PLANA M8 x 17 x 1.6
5		10516671		5	TRAVA DA ARRUELA
6		16043431		3	PARAFUSO Hex, M8 x 20, 10.9
7		70933135		1	BRAÇADEIRA
8		72209721		1	POLIA
9		87526680		1	COLAR DE FIXAÇÃO
10		14496431		2	ARRUELA PLANA M6.4 x 12.5 x 1.6 Thk
11		10516471		2	TRAVA DA ARRUELA
12		10902431		2	PARAFUSO Hex, M6 x 20, 10.9
13		YN20M01841P1		2	SUPORTE
14		11106231		4	PARAFUSO Hex, M10 x 25, 10.9, Full Thd
15		10516871		4	TRAVA DA ARRUELA
16		72204603		1	BELT, TRANSMISSION 17.00 mm W x 1232.00 mm L
17		LQ20M01327F1		1	CONDENSADOR
18		YT20M01215S002		4	LUVA DE BORRACHA
19		70928927		1	COLAR
20		70925755		2	BRAÇADEIRA
21		87656875		1	CONECTOR HIDRÁUL
22		87656874		1	CONECTOR HIDRÁUL
23		72203934		1	COMPRESSOR DE AR
24		75201642		14	BRAÇADEIRA
25		16046131		4	PARAFUSO Hex, M8 x 100.00mm, Cl 10.9, ZND
26		16043631		2	PARAFUSO Hex, M8 x 25, 10.9
27		12647001		4	ARRUELA PLANA M8 x 25 x 2.5
28		16043831		4	PARAFUSO Hex, M8 x 30, 10.9
29		YT20M01215S002		4	LUVA DE BORRACHA

From chassis NAAA04176

CX220B

09-101/A	01	p1	7/2013

COMPRESSOR ASSY

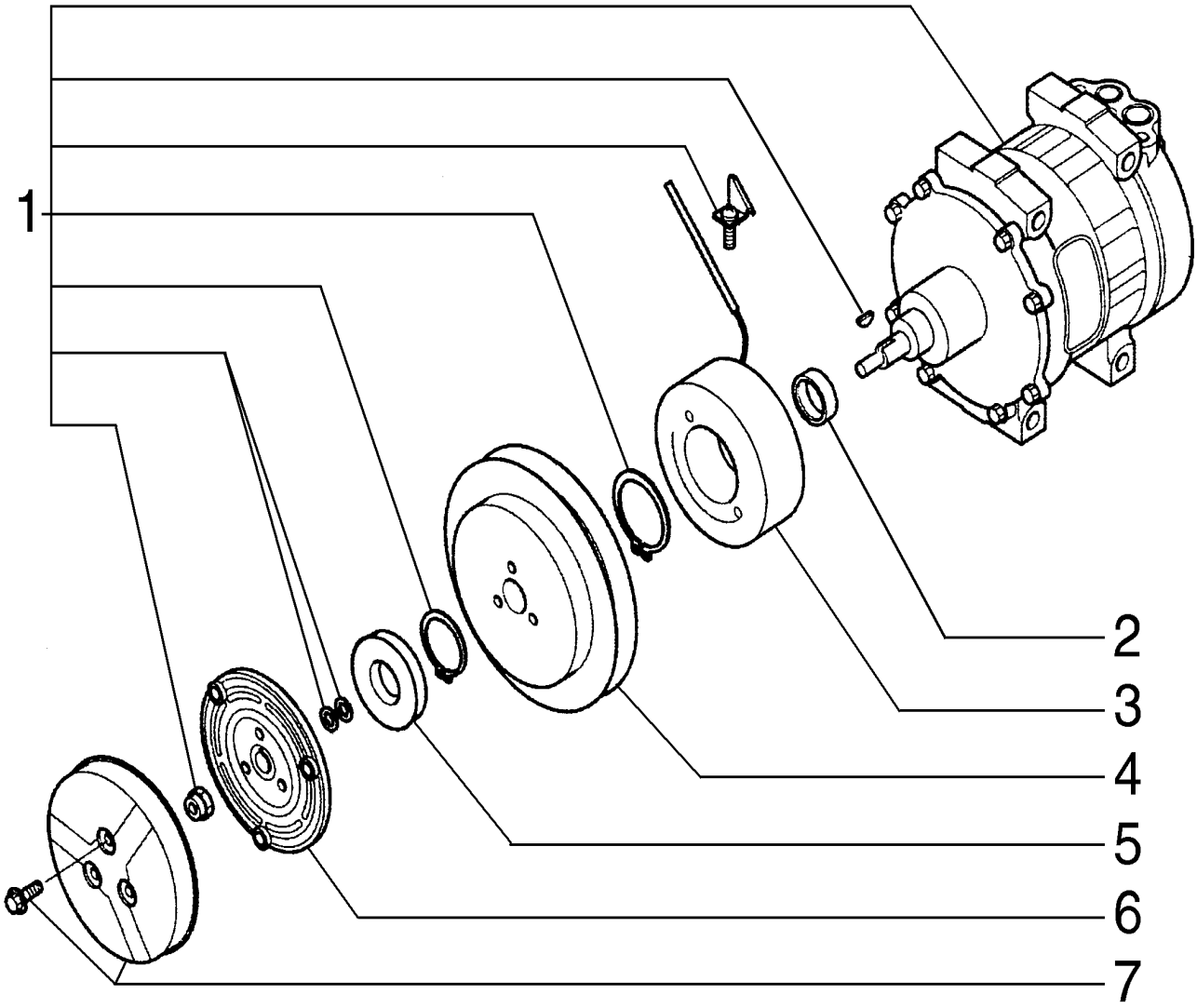

COMPRESSOR ASSY

REF	FN	PART NUMBER	YR/SN	QTY	DESCRIPTION
1		LC91V00001S004		1	ACESSÓRIOS
2		YN91V01001S007		1	ANEL
3		LC91V00001S002		1	PLACA
4		YN91V01001S003		1	ROTOR
5		YN91V01001S005		1	COBERTURA
6		YN91V01001S002		1	PLACA
7		YN91V01001S006		1	COBERTURA

09-102	01	p1	7/2013

AIR CONDITIONER

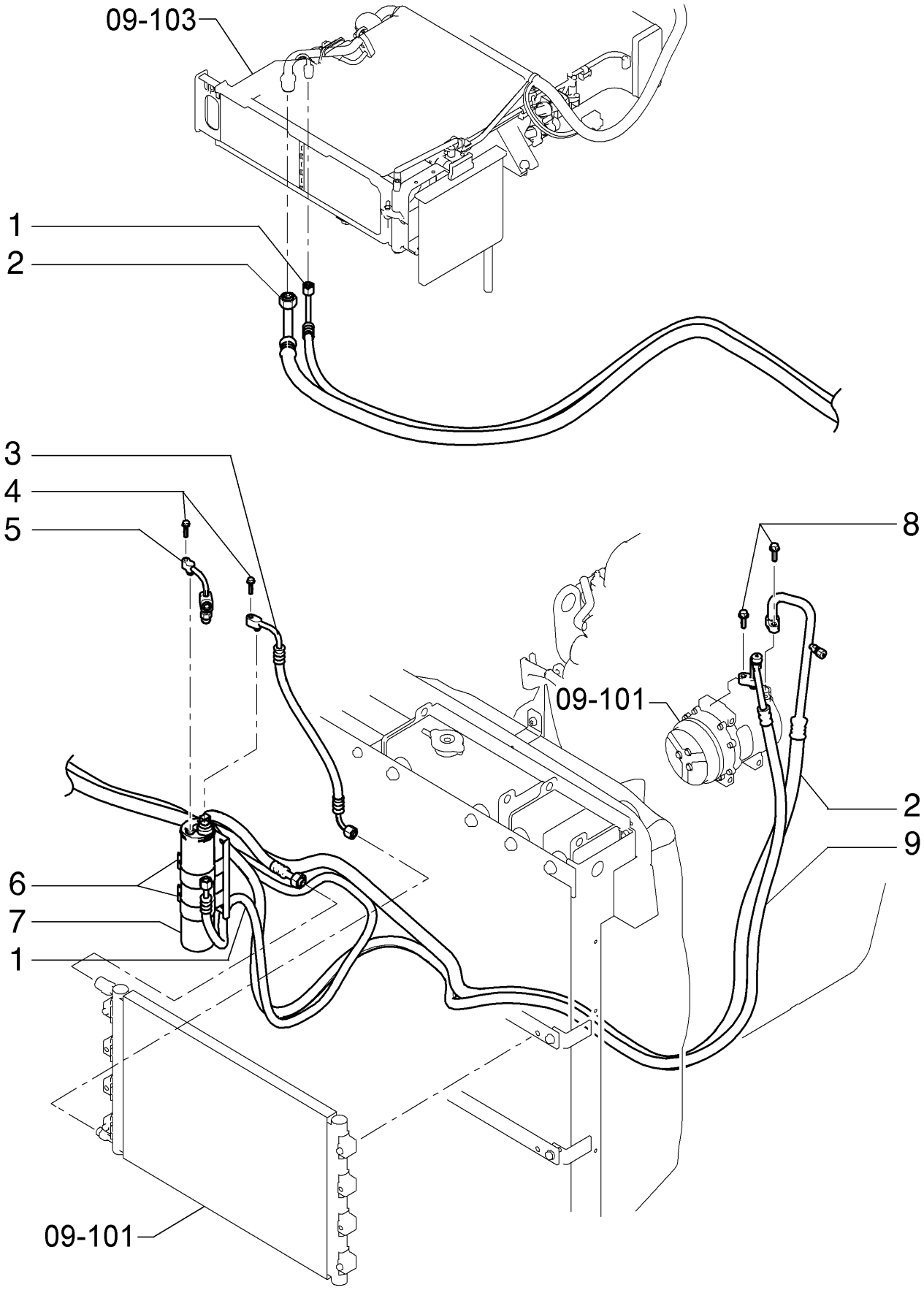

AIR CONDITIONER

REF	FN	PART NUMBER	YR/SN	QTY	DESCRIPTION
1		87529499		1	TUBO FLEXÍVEL
2		87529494		1	TUBO FLEXÍVEL
3		87529497		1	TUBO FLEXÍVEL
4		72203912		2	PARAFUSO
5		87532858		1	TUBO RÍGIDO 8.5 mm OD x 81, 50 mm L
6		87529490		1	SUPORTE
7		LQ54S00005P1		1	DESIDRATADOR
8		72203915		2	PARAFUSO
9		87529496		1	TUBO FLEXÍVEL
10		11106231		3	PARAFUSO Hex, M10 x 25, 10.9, Full Thd
11		10516871		3	TRAVA DA ARRUELA
12		14496631		3	ARRUELA PLANA M10 x 21 x 2
13		71415385		3	GRAMPO

09-102	02	p1	7/2013

AIR CONDITIONER - RAISED CAB

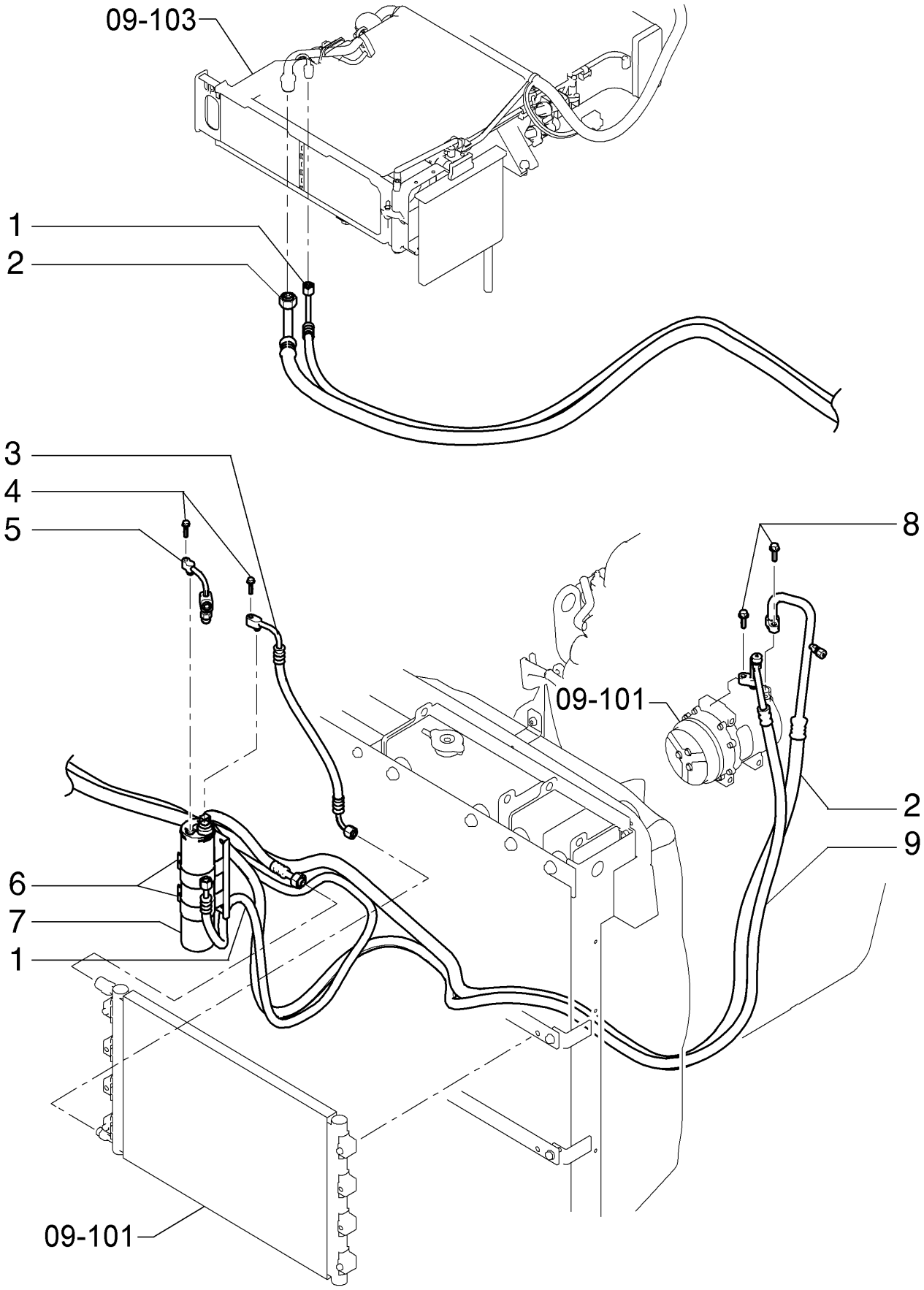

AIR CONDITIONER - RAISED CAB

REF	FN	PART NUMBER	YR/SN	QTY	DESCRIPTION
1		87743515		1	MANGUEIRA
2		87743493		1	MANGUEIRA
3		87529497		1	TUBO FLEXÍVEL
4	1	72203912		2	PARAFUSO
5		87532858		1	TUBO RÍGIDO 8.5 mm OD x 81, 50 mm L
6		87529490		1	SUPORTE
7		LQ54S00005P1		1	DESIDRATADOR
8		72203915		2	PARAFUSO
9		87529496		1	TUBO FLEXÍVEL

(1) CABINE ELEVADA

09-103	01	p1	7/2013

AIR CONDITIONER

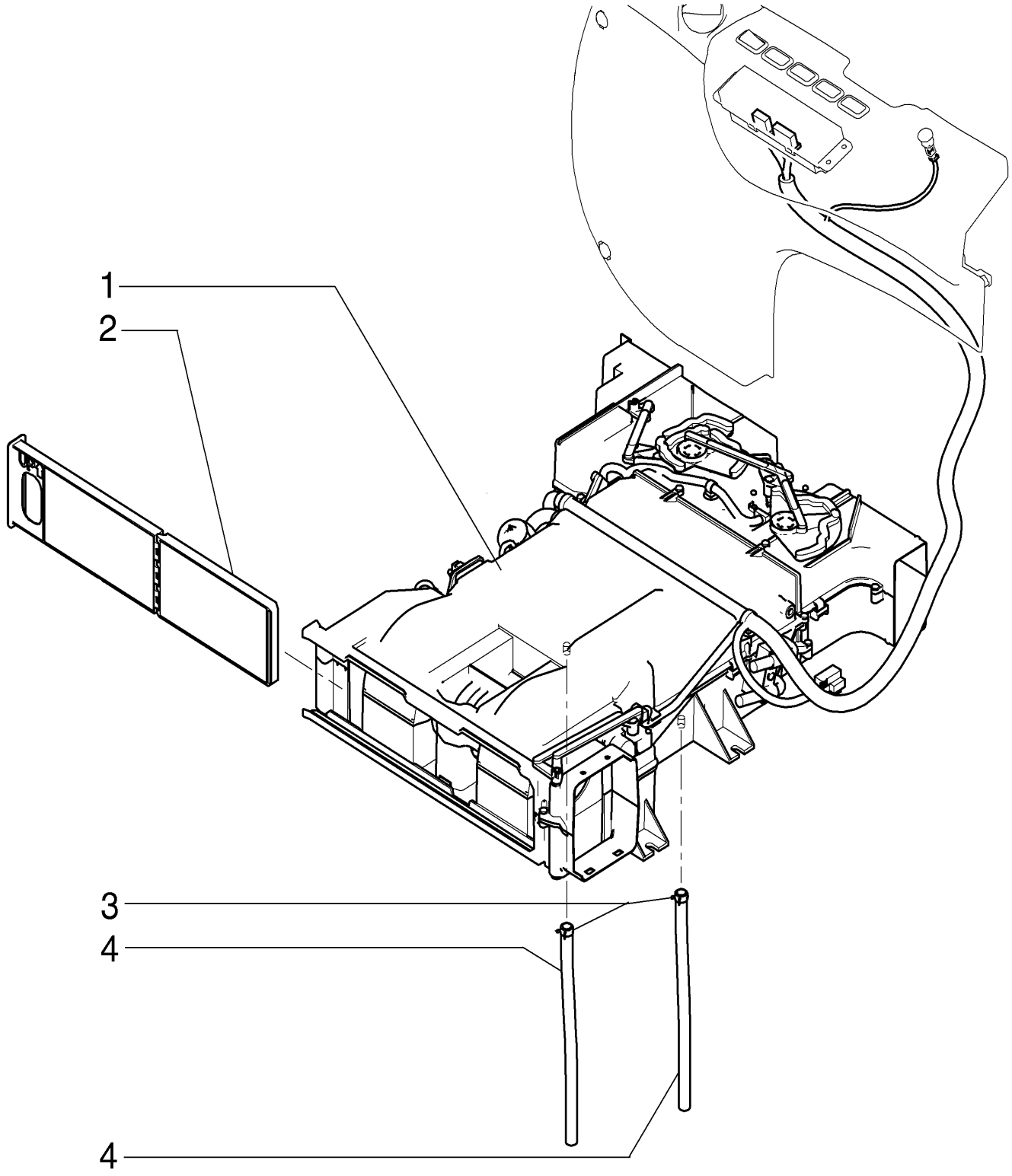

AIR CONDITIONER

REF	FN	PART NUMBER	YR/SN	QTY	DESCRIPTION
1		{YT20M00022F3}		1	
2		87529477		2	FILTRO DA CABINE
3		72204768		2	COLAR
4		87529476		1	MANGUEIRA

09-103	02	p1	7/2013

AIR CONDITIONER - RAISED CAB

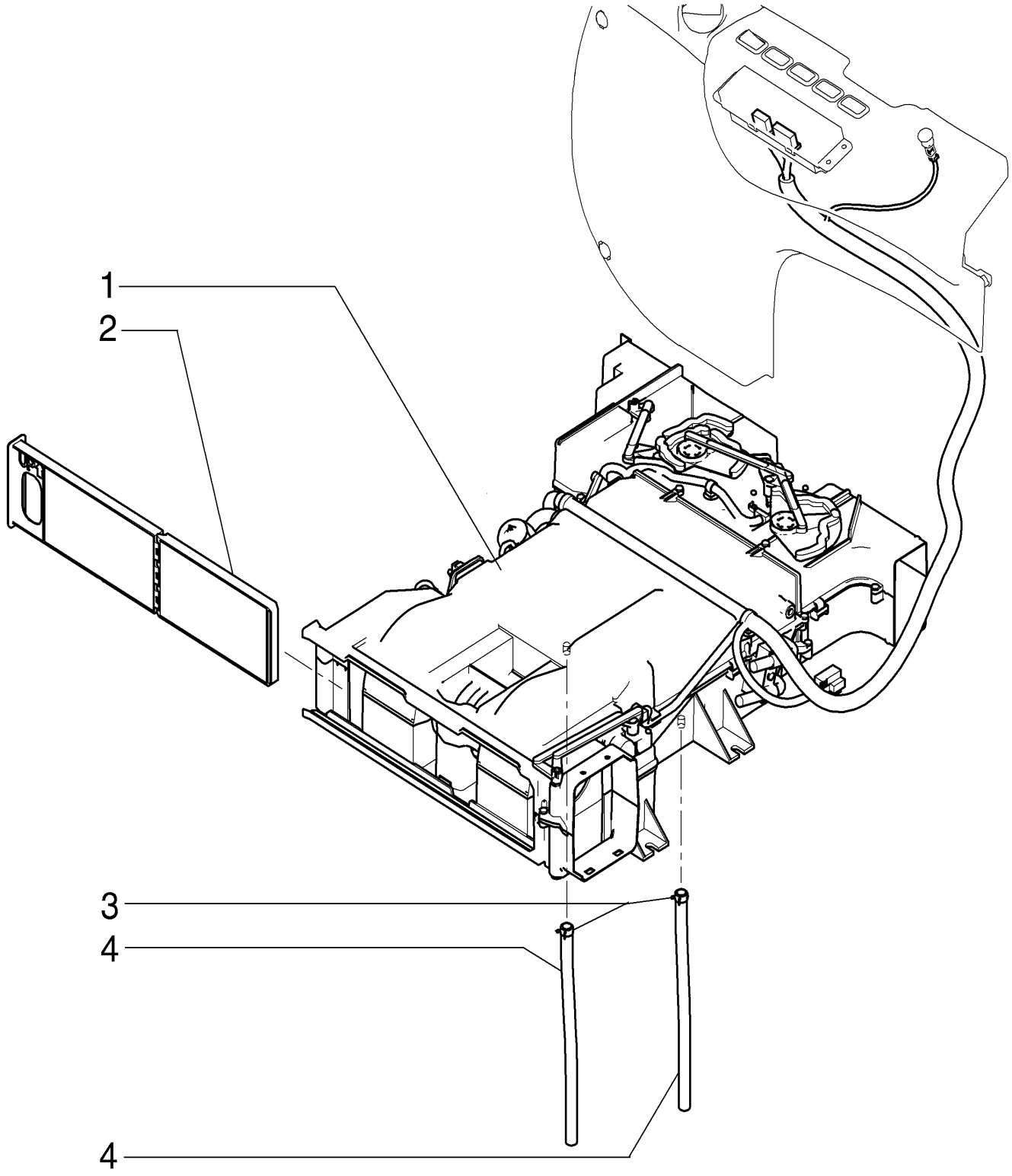

AIR CONDITIONER - RAISED CAB

REF	FN	PART NUMBER	YR/SN	QTY	DESCRIPTION
1		{YT20M00022F3}		1	
2		87529477		2	FILTRO DA CABINE
3		12179490		2	GRAMPO DA MANGUEIRA
4		87519760		2	MANGUEIRA 1300.00 mm
5		75201642		1	BRAÇADEIRA

09-104	01	p1	7/2013

AIR CONDITIONER - PARTS

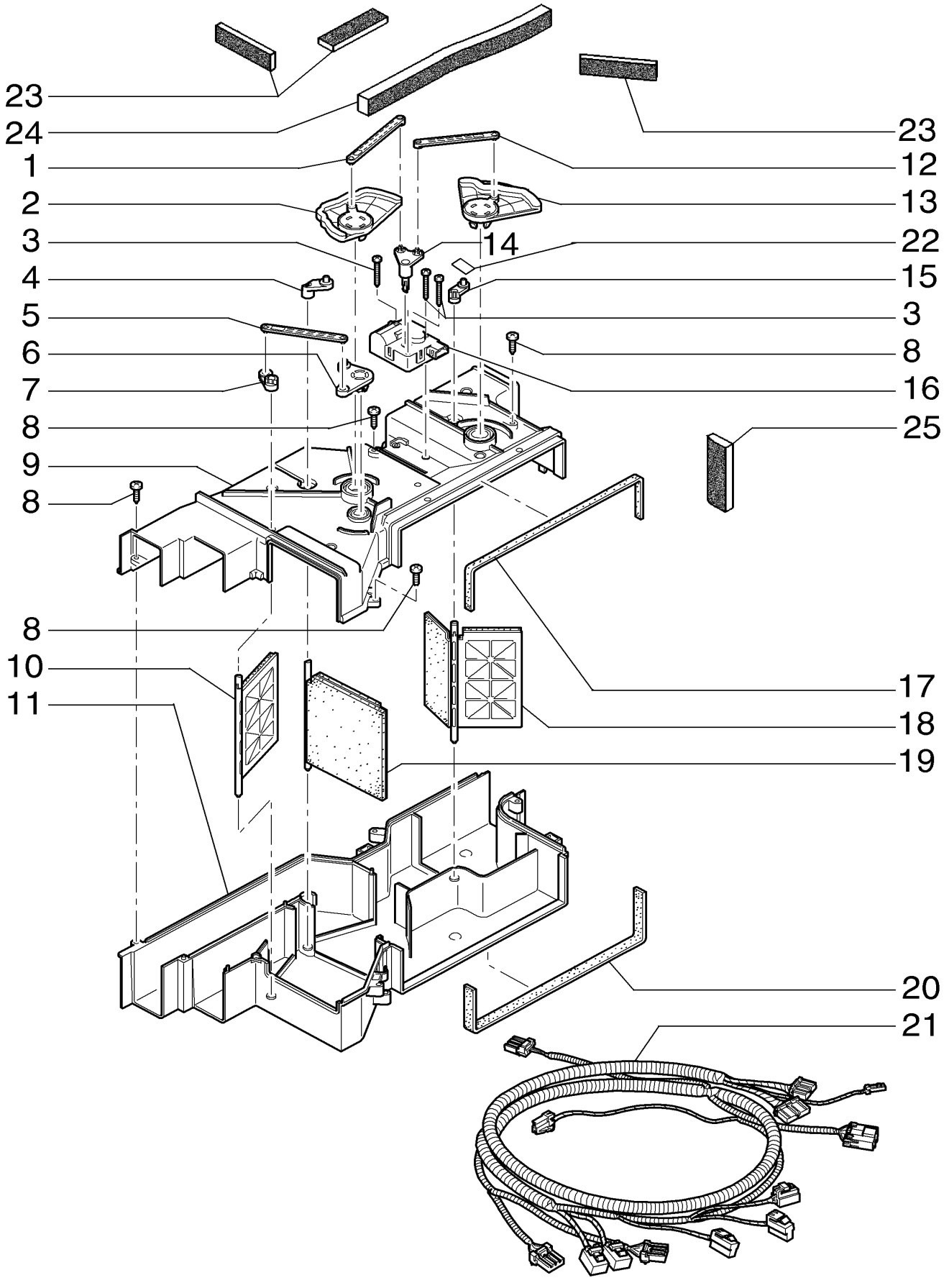

AIR CONDITIONER - PARTS

REF	FN	PART NUMBER	YR/SN	QTY	DESCRIPTION
1		YN20M00107S091		1	HASTE
2		YN20M00107S089		1	ALAVANCA
3		YN20M00107S031		3	PARAFUSO
4		YN20M00107S042		1	ALAVANCA
5		YN20M00107S050		1	HASTE
6		YN20M00107S043		1	ALAVANCA
7		YN20M00107S045		1	ALAVANCA
8		YN20M00107S001		7	PARAFUSO
9		YN20M00107S086		1	CAIXA
10		YN20M00107S036		1	PROTEÇÃO
11		YN20M00107S087		1	CAIXA
12		YN20M00107S049		1	HASTE
13		YN20M00107S090		1	ALAVANCA
14		YN20M00107S088		1	ALAVANCA
15		YN20M00107S041		1	ALAVANCA
16		YN20M00107S003		1	ATUADOR
17		YN20M00107S039		1	JUNTA
18		YN20M00107S037		1	PROTEÇÃO
19		YN20M00107S038		1	PROTEÇÃO
20		YN20M00107S040		1	JUNTA
21		YN20M00107S002		1	CHICOTE
22		YN20M00107S092		1	PLACA
23		YN20M00107S095		3	PAINEL
24		YN20M00107S096		1	PAINEL
25		YN20M00107S097		1	PAINEL

09-105	01	p1	7/2013

AIR CONDITIONER - PARTS

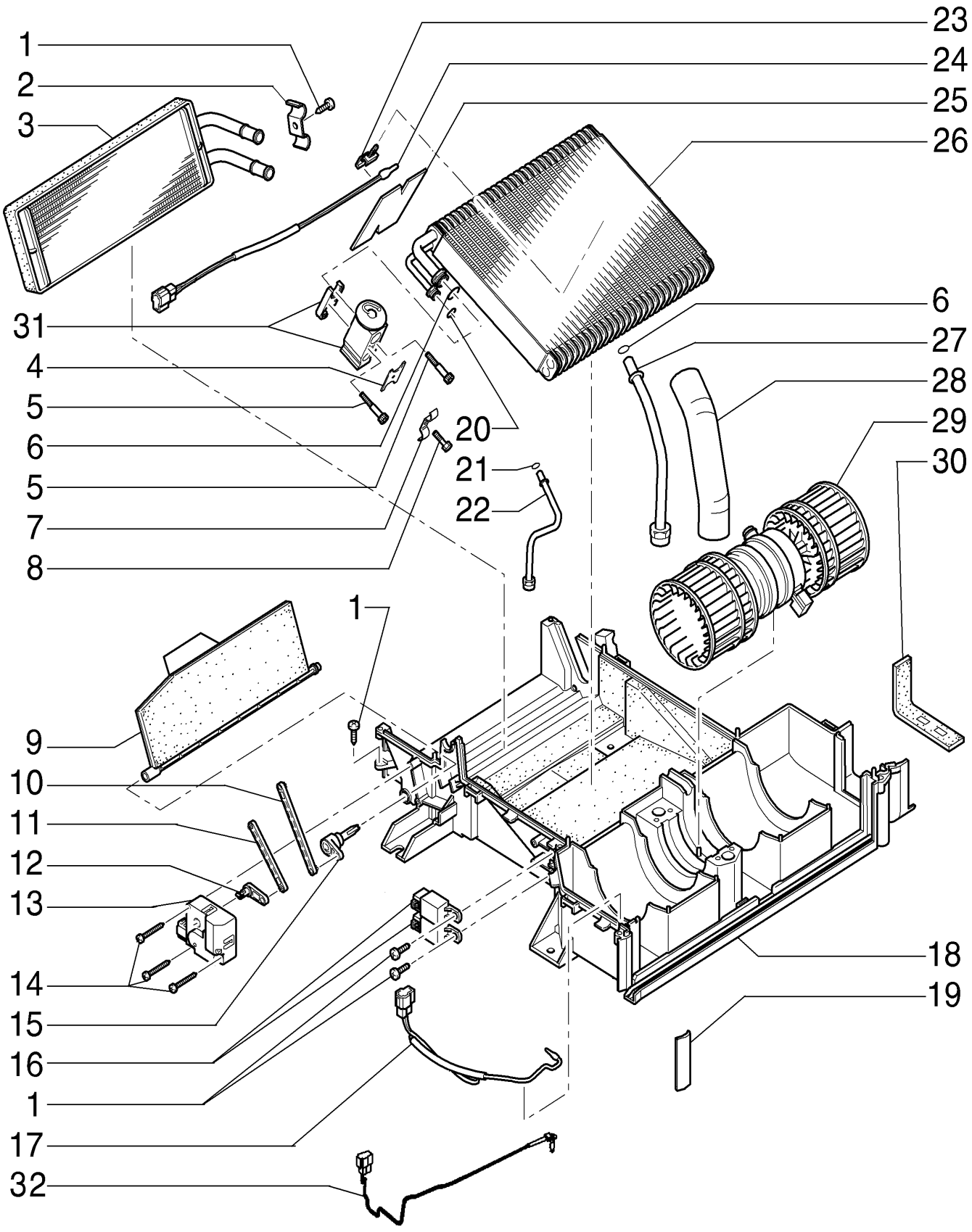

AIR CONDITIONER - PARTS

REF	FN	PART NUMBER	YR/SN	QTY	DESCRIPTION
1		YN20M00107S001		4	PARAFUSO
2		YN20M00107S028		1	FIXADOR
3		YN20M00107S027		1	NÚCLEO
4		YN20M00107S051		1	PLACA
5		YN20M00107S024		2	PARAFUSO
6		2445Z1604D5		2	O-RING
7		YN20M00107S083		1	SUPORTE
8		YN20M00107S054		1	PARAFUSO
9		YN20M00107S009		1	AMORTECEDOR DE VIBRAÇÃO
10		YN20M00107S018		1	HASTE
11		YN20M00107S017		1	HASTE
12		YN20M00107S012		1	ALAVANCA
13		YT20M00022S113		1	MOTOR ELÉTRICO
14		YN20M00107S031		3	PARAFUSO
15		YN20M00107S010		1	ALAVANCA
16		YN20M00107S019		2	RELÉ
17		YT20M00022S002		1	CHICOTE
18		YN20M00107S084		1	CAIXA
19		YN20M00107S077		1	JUNTA
20		2445Z1604D4		1	O-RING
21		YN20M00107S063		1	JUNTA
22		YN20M00107S078		1	TUBO RÍGIDO
23		YN20M00107S026		1	FIXADOR
24		YN20M00107S085		1	SENSOR
25		YN20M00107S060		1	EMBALAGEM
26		YN20M00107S020		1	EVAPORADOR
27		YN20M00107S079		1	TUBO RÍGIDO
28		YN20M00107S082		1	TUBO RÍGIDO
29		YN20M00107S111		1	VENTILADOR ELÉTRICO
30		YN20M00107S061		1	EMBALAGEM
31		YN20M00107S021		1	VÁLVULA
32		YN20M00107S094		1	TERMOSTATO

09-106	01	p1	7/2013

AIR CONDITIONER - PARTS

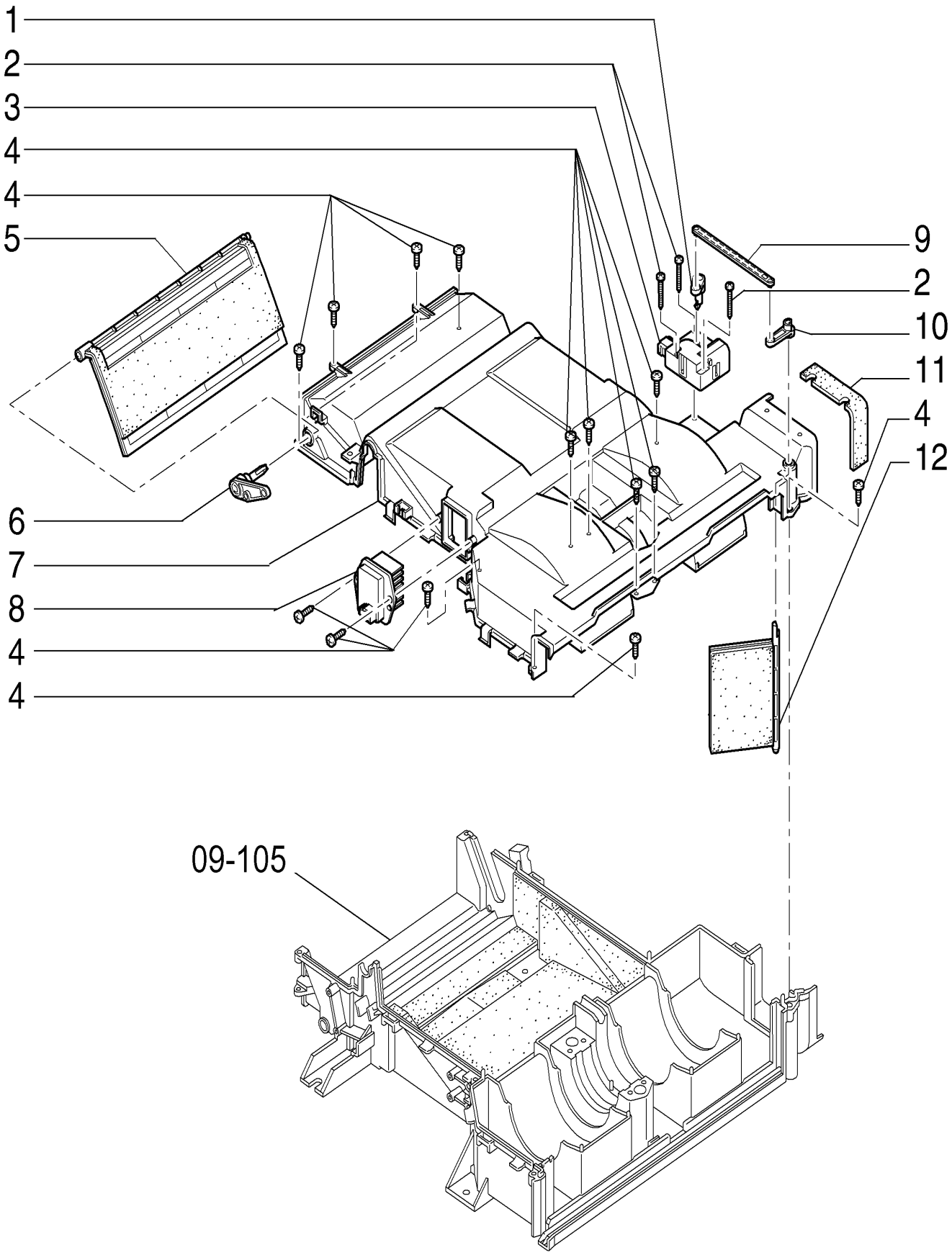

AIR CONDITIONER - PARTS

REF	FN	PART NUMBER	YR/SN	QTY	DESCRIPTION
1		YN20M00107S014		1	ALAVANCA
2		YN20M00107S031		3	PARAFUSO
3		YN20M00107S003		1	ATUADOR
4		YN20M00107S001		12	PARAFUSO
5		YN20M00107S006		1	AMORTECEDOR DE VIBRAÇÃO
6		YN20M00107S007		1	ALAVANCA
7		YN20M00107S093		1	CAIXA
8		LQ20M00059S039		1	RESISTOR
9		YN20M00107S016		1	HASTE
10		YN20M00107S015		1	ALAVANCA
11		YN20M00107S062		1	EMBALAGEM
12		YN20M00107S013		1	AMORTECEDOR DE VIBRAÇÃO

09-109	01	p1	7/2013

TENSIONER PULLEY

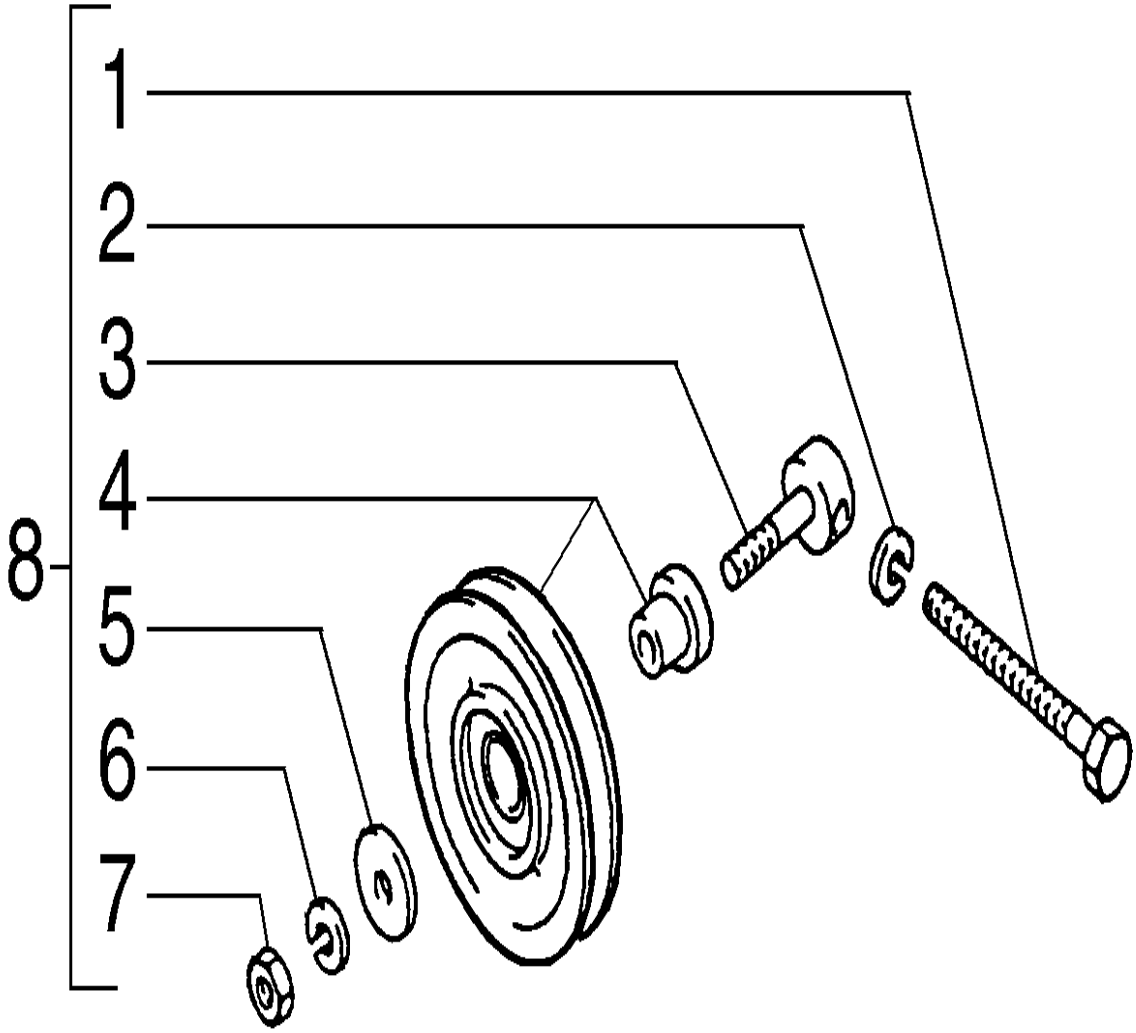

TENSIONER PULLEY

REF	FN	PART NUMBER	YR/SN	QTY	DESCRIPTION
1		73407339		1	PARAFUSO
2		73407337		1	ARRUELA PLANA
3		73422831		1	EIXO
4		77251448		1	POLIA
5		73407341		1	PARADA
6		73407338		1	ARRUELA PLANA
7		73407336		1	PORCA
8		72209721		1	POLIA Includes items 1 - 7

09-110	01	p1	7/2013

CAB GUARD

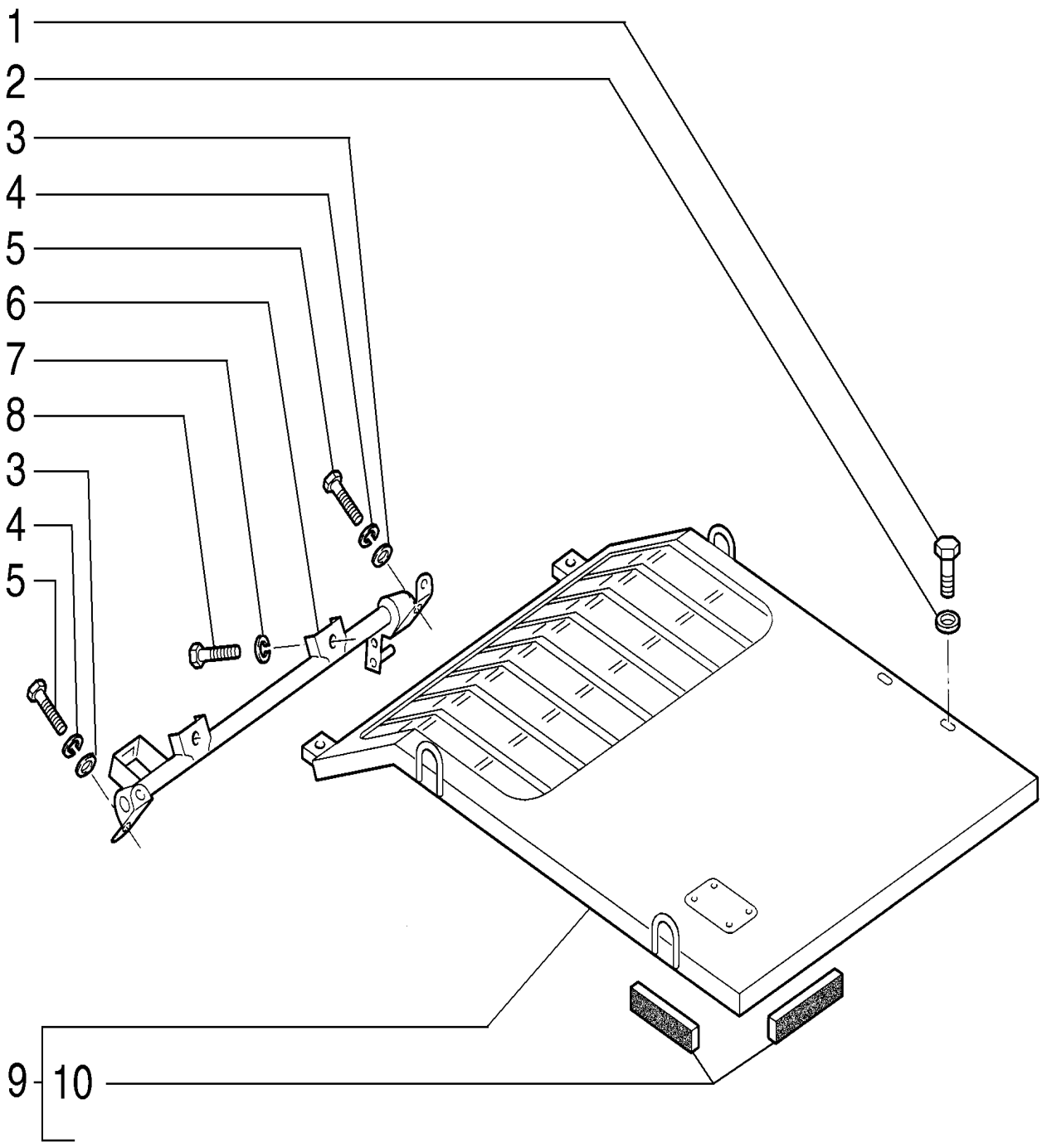

CAB GUARD

REF	FN	PART NUMBER	YR/SN	QTY	DESCRIPTION
1		11113834		4	PARAFUSO Hex, M12 x 80, 10.9, Full Thd
2		13550521		4	TRAVA DA ARRUELA
3		14496631		4	ARRUELA PLANA M10 x 21 x 2
4		10571879		4	TRAVA DA ARRUELA M10
5		11106434		2	PARAFUSO Hex, M10 x 30, 10.9, Full Thd
6		87606411		1	SUPORTE
7		14496731		2	ARRUELA PLANA M12 x 24 x 2.5 Thk
8		11112234		2	PARAFUSO Hex, M12 x 25, 10.9, Full Thd
9		87606859		1	PROTEÇÃO Includes item 10
10		87609716		2	ISOLADOR

09-110	02	p1	7/2013

CAB GUARD

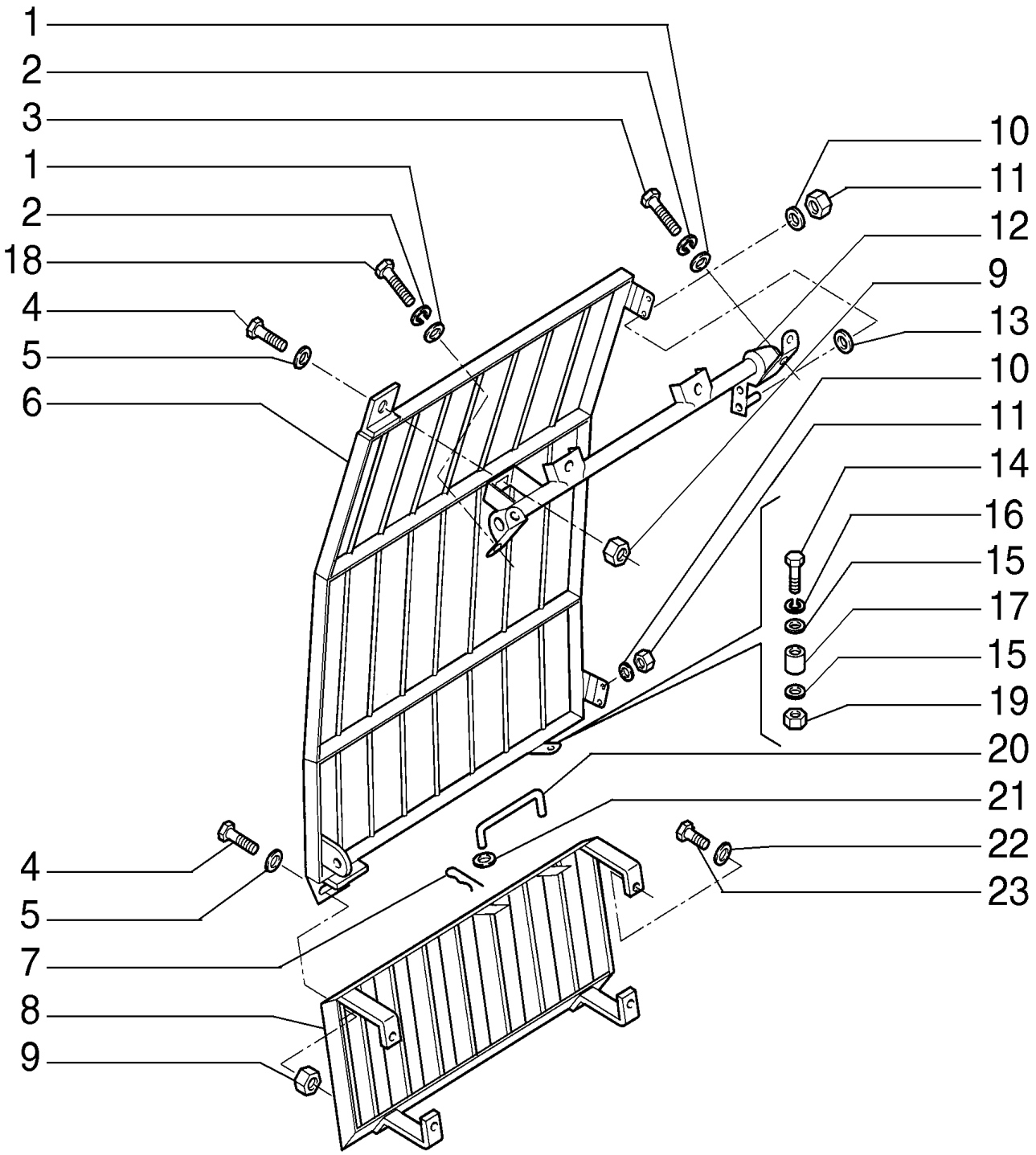

CAB GUARD

REF	FN	PART NUMBER	YR/SN	QTY	DESCRIPTION
1		14496631		4	ARRUELA PLANA M10 x 21 x 2
2		10571879		4	TRAVA DA ARRUELA M10
3		11106434		2	PARAFUSO Hex, M10 x 30, 10.9, Full Thd
4		11112434		2	PARAFUSO Hex, M12 x 30, 10.9, Full Thd
5		14496731		2	ARRUELA PLANA M12 x 24 x 2.5 Thk
6		87606717		1	PROTEÇÃO
7		72275189		1	CONTRA PINO
8		87606476		1	PROTEÇÃO
9		87606857		2	PLACA
10		14496631		4	ARRUELA PLANA M10 x 21 x 2
11		11701721		4	PORCA M10, Cl 10
12		87606411		1	SUPORTE
13		87606858		2	CALÇO DE AFINAÇÃO
14		10444634		1	PARAFUSO
15		14497731		2	ARRUELA PLANA
16		11195374		1	TRAVA DA ARRUELA
17		87606856		1	COLAR
18		11107434		2	PARAFUSO
19		10721911		1	PORCA
20		87606746		1	HASTE
21		72954209		1	ARRUELA PLANA
22		14496731		4	ARRUELA PLANA M12 x 24 x 2.5 Thk
23		11112434		4	PARAFUSO Hex, M12 x 30, 10.9, Full Thd

09-116	02	p1	7/2013

OPERATOR'S CONSOLE

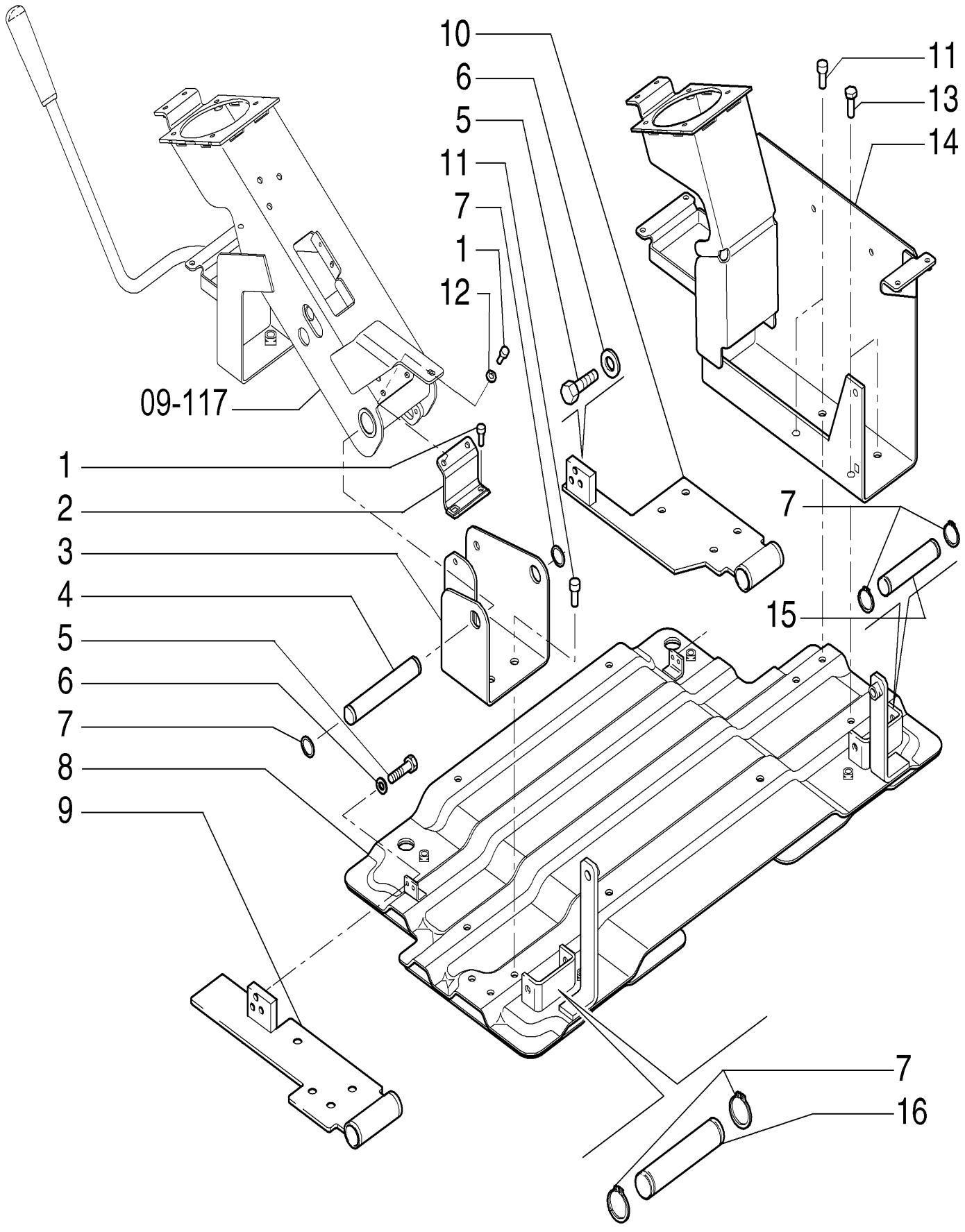

OPERATOR'S CONSOLE

REF	FN	PART NUMBER	YR/SN	QTY	DESCRIPTION
1		87556123		2	PARAFUSO
2		87556125		1	PLACA
3		87556089		1	SUPORTE
4		87556102		1	EIXO
5		87586020		2	PARAFUSO
6		87556154		2	ARRUELA PLANA
7		87556115		6	ANEL
8		YN03M02174P1		1	SUPORTE
9		87586019		1	PILAR
10		87586018		1	PILAR
11		87586030		1	PARAFUSO
12		87556124		2	ARRUELA PLANA
13		87586031		2	PARAFUSO
14		87556086		1	SUPORTE
15		87556137		1	EIXO
16		87556146		1	EIXO

09-117	01	p1	7/2013

OPERATOR'S CONSOLE

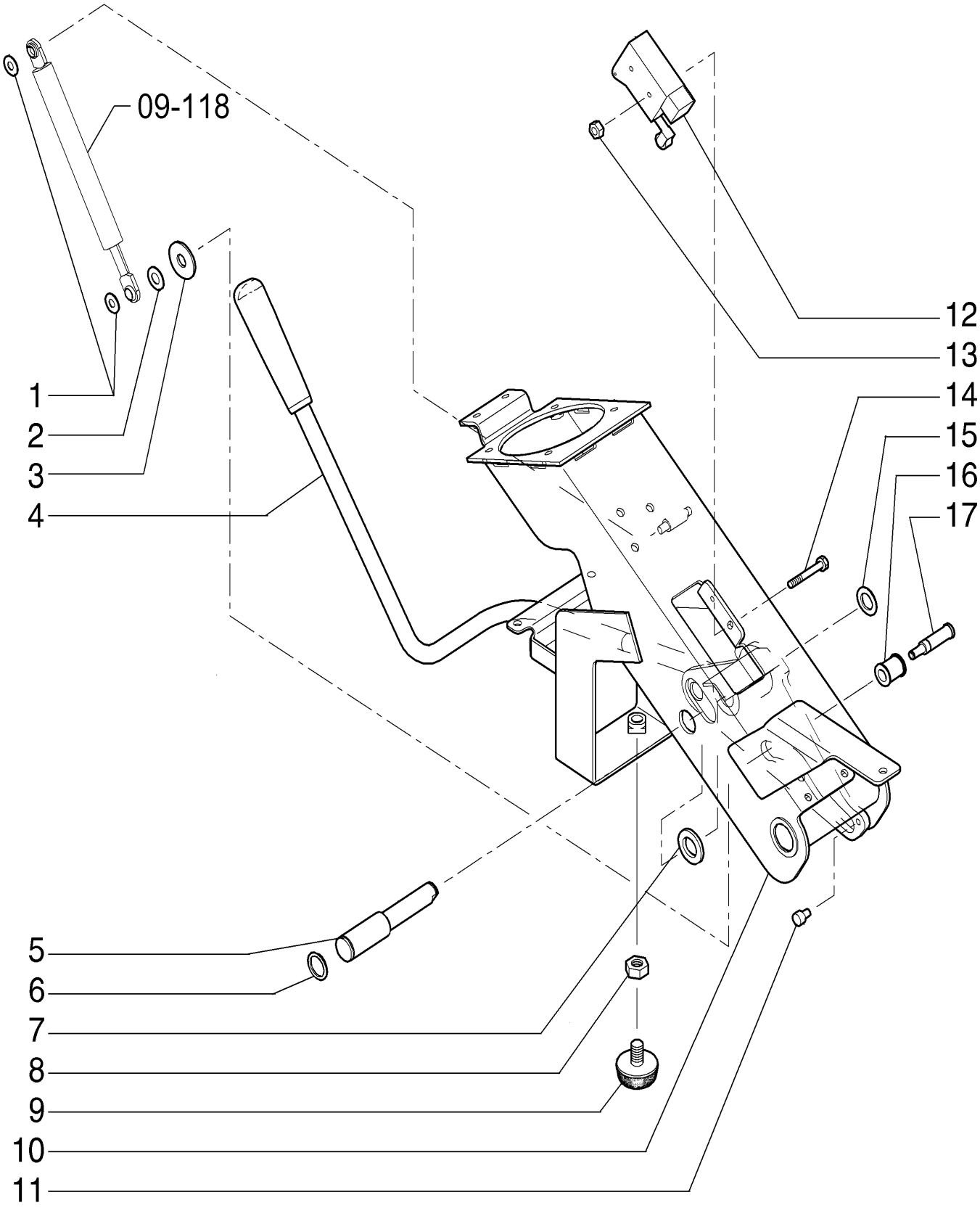

OPERATOR'S CONSOLE

REF	FN	PART NUMBER	YR/SN	QTY	DESCRIPTION
1		87556117		2	ANEL
2		87556118		1	ANEL
3		87556113		1	ARRUELA PLANA
4		87556093		1	ALAVANCA
5		87556105		1	EIXO
6		87556115		1	ANEL
7		87556116		1	ARRUELA PLANA
8		87556108		1	PORCA
9		87556106		1	TRAVA DE PARADA
10		87736585		1	SUPORTE
11		87586017		1	PARAFUSO
12		87556100		1	INTERRUPTOR INTERMITENTE
13		87556121		2	PORCA
14		87556120		2	PARAFUSO
15		87556114		1	ANEL
16		87556112		1	BUCHA
17		87556122		1	EIXO

09-117	02	p1	7/2013

SERVO CONTROL TUBE BRACKETS

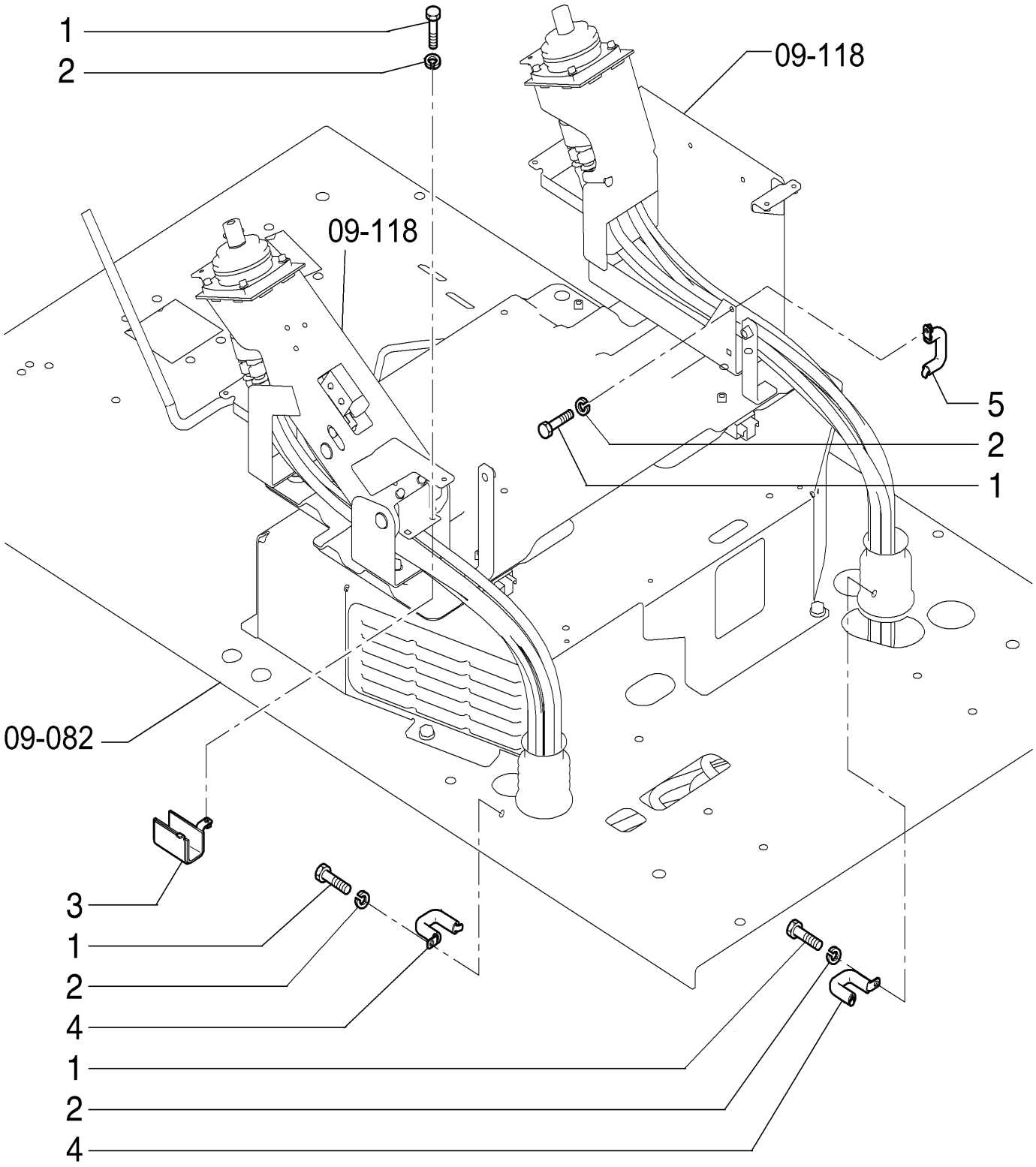

SERVO CONTROL TUBE BRACKETS

REF	FN	PART NUMBER	YR/SN	QTY	DESCRIPTION
1		14305334		4	PARAFUSO Hex Soc Hd, M6 x 20, 10.9
2		10516474		4	TRAVA DA ARRUELA
3		87528675		1	SUPORTE
4		87528672		2	SUPORTE
5		87528679		1	SUPORTE

09-118	01	p1	7/2013

OPERATOR'S CONSOLE

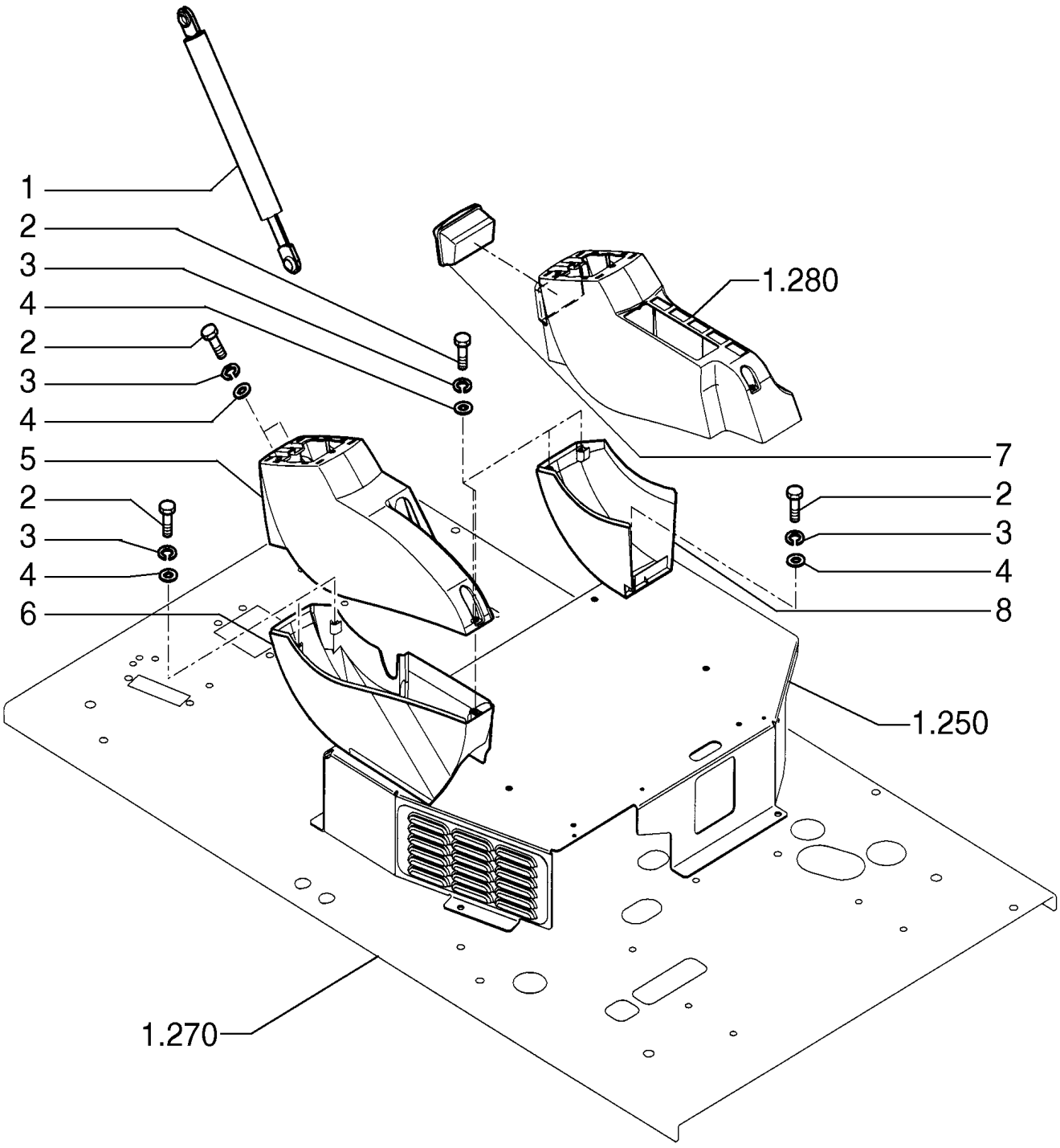

OPERATOR'S CONSOLE

REF	FN	PART NUMBER	YR/SN	QTY	DESCRIPTION
1		84143161		1	MOLA
2		10902234		9	PARAFUSO Hex, M6 x 16, 10.9, Full Thd
3		10516474		9	TRAVA DA ARRUELA
4		14496431		9	ARRUELA PLANA M6.4 x 12.5 x 1.6 Thk
5		87722230		1	CONSOLE
6		87722232		1	PROTEÇÃO
7		72203953		1	CINZEIRO
8		87722228		1	PROTEÇÃO

09-119	01	p1	7/2013

OPERATOR'S SEAT

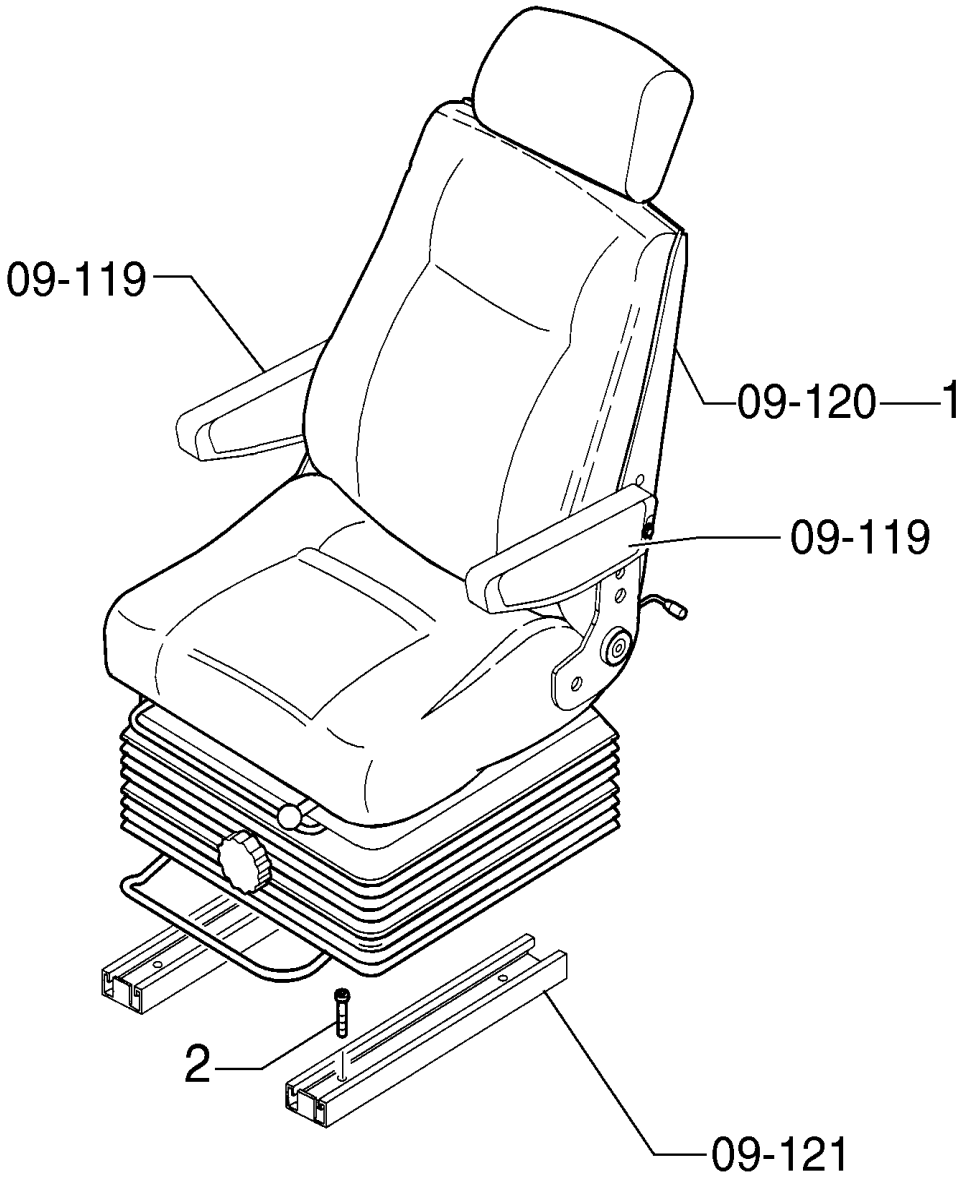

OPERATOR'S SEAT

REF	FN	PART NUMBER	YR/SN	QTY	DESCRIPTION
1		87724921		1	ASSENTO
2		14306331		4	PARAFUSO Hex Soc Hd, M8 x 20, 10.9

09-119	02	p1	7/2013

ARM REST

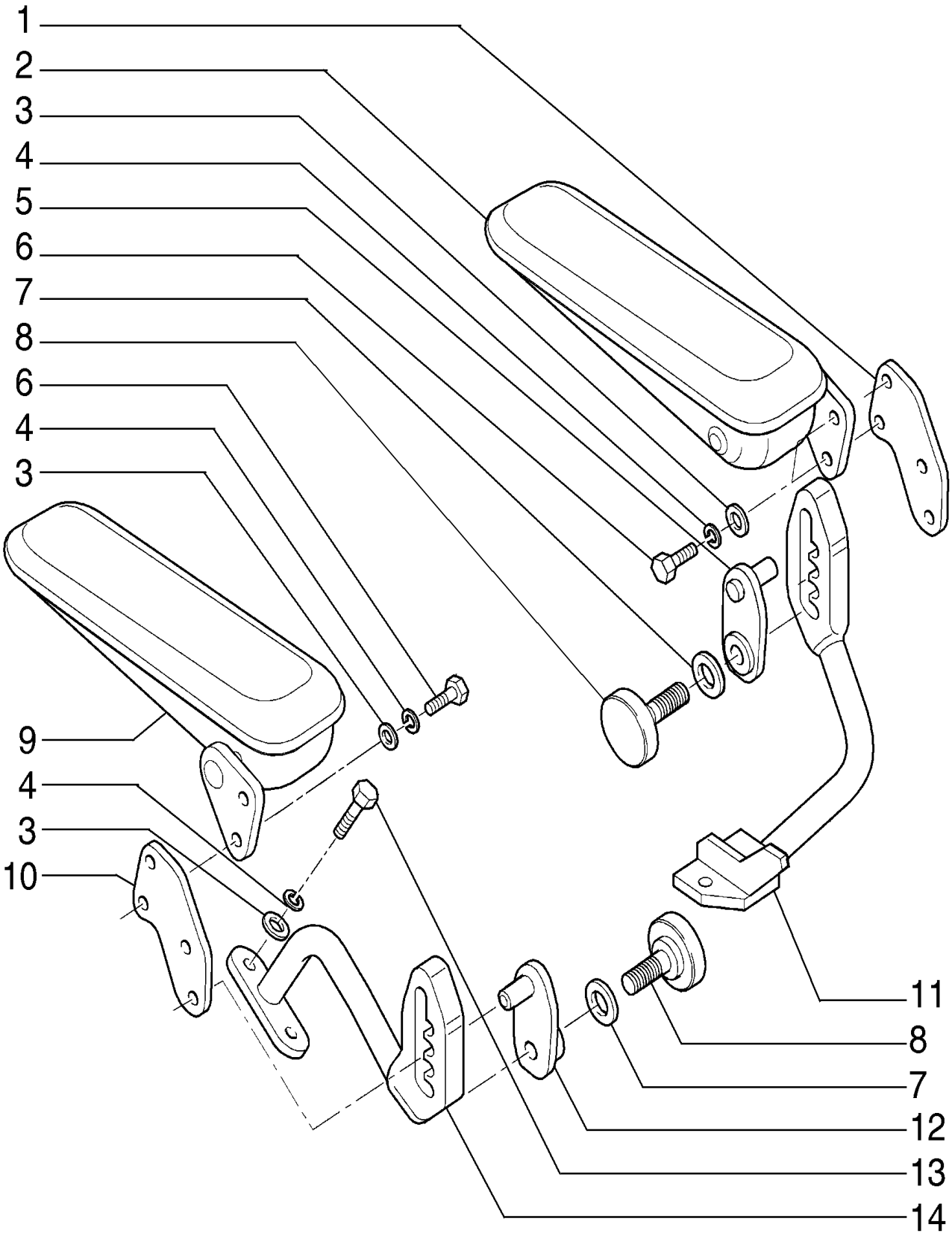

ARM REST

REF	FN	PART NUMBER	YR/SN	QTY	DESCRIPTION
1		87570968		1	PLACA
2		87570967		1	APOIO DE BRAÇO
3		14496531		6	ARRUELA PLANA M8 x 17 x 1.6
4		10516674		6	TRAVA DA ARRUELA M8
5		87570978		1	PLACA
6		87571538		4	PARAFUSO
7		14496631		2	ARRUELA PLANA M10 x 21 x 2
8		87550853		2	EMPUNHADURA
9		87570965		1	APOIO DE BRAÇO
10		87717125		1	PLACA
11		87570962		1	SUPORTE
12		87643421		1	PLACA
13		16043434		2	PARAFUSO Hex, M8 x 20, 10.9, Full Thd
14		87643419		1	SUPORTE

09-120	01	p1	7/2013

OPERATOR'S SEAT - 87724921

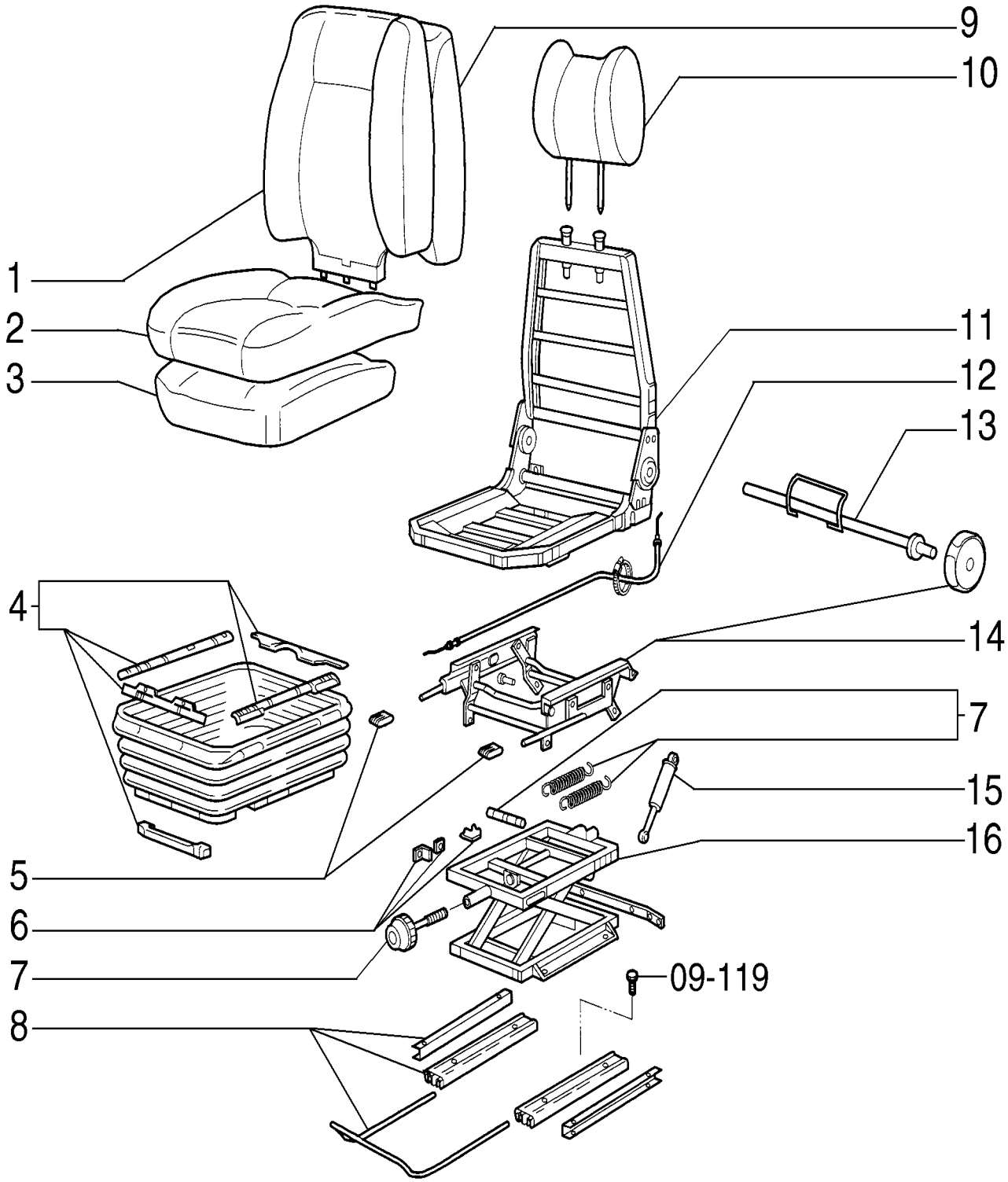

OPERATOR'S SEAT - 87724921

REF	FN	PART NUMBER	YR/SN	QTY	DESCRIPTION
1		87583756		1	KIT
2		87379464		1	KIT
3		72116117		1	KIT
4		72116133		1	KIT
5		71468304		1	KIT
6		71468303		1	KIT
7		71468302		1	KIT
8		87583766		1	KIT
9		87583758		1	KIT
10		87379467		1	KIT
11		87583759		1	KIT
12		71456224		1	CABO
13		87583764		1	KIT
14		87583767		1	KIT
15		71468299		1	AMORTECEDOR
16		87583765		1	KIT

09-121	01	p1	7/2013

OPERATOR'S SEAT - SUPPORT

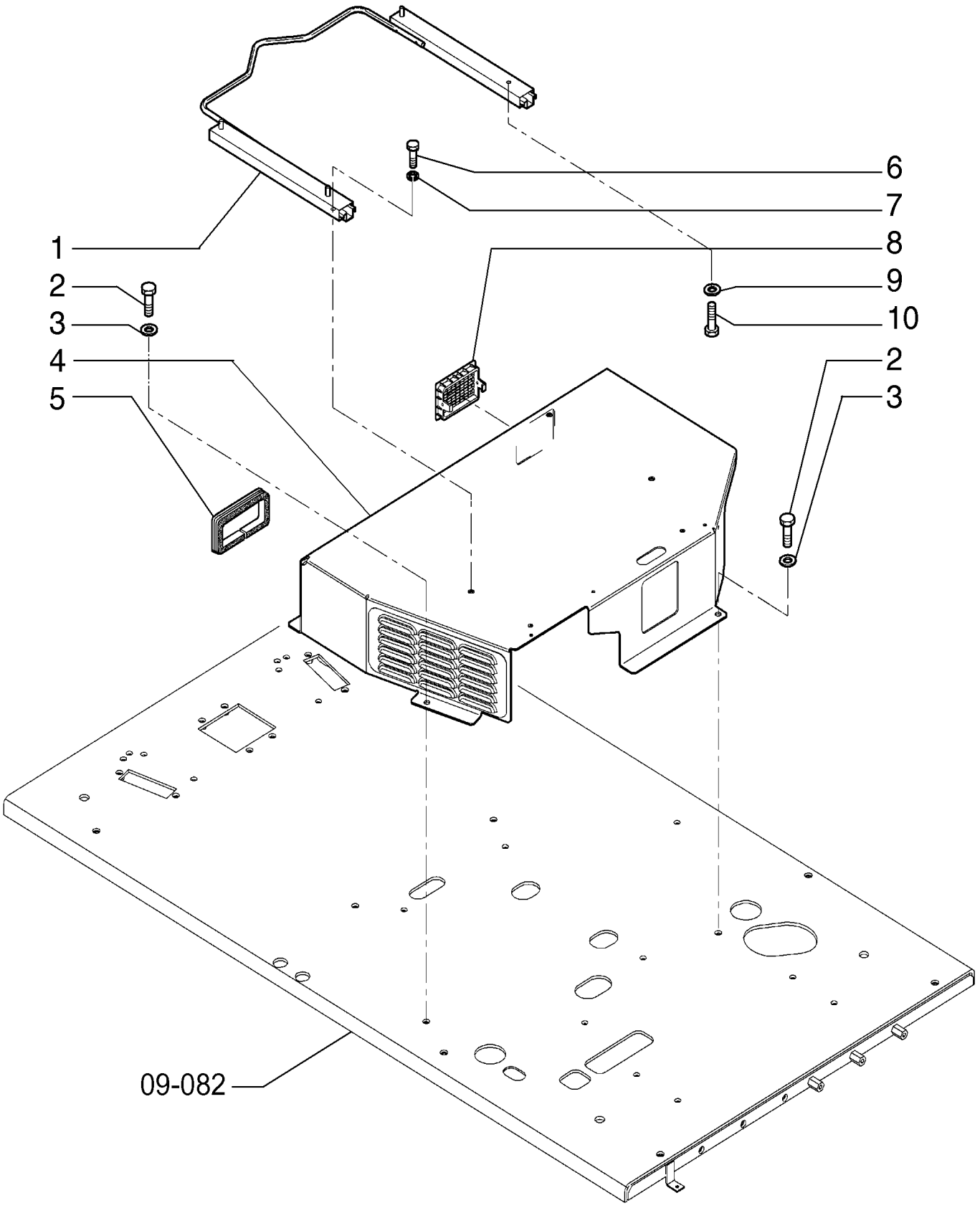

OPERATOR'S SEAT - SUPPORT

REF	FN	PART NUMBER	YR/SN	QTY	DESCRIPTION
1		87521874		1	GUIA
2		11106234		4	PARAFUSO Hex, M10 x 25, 10.9, Full Thd
3		14496631		4	ARRUELA PLANA M10 x 21 x 2
4		87521865		1	SUPORTE
5		87726616		1	JUNTA
6		14306234		4	PARAFUSO Hex Soc Hd, M8 x 16, 10.9
7		10516674		4	TRAVA DA ARRUELA M8
8		72203954		1	DIFUSOR
9		14496531		4	ARRUELA PLANA M8 x 17 x 1.6
10		14306334		4	PARAFUSO

09-122	01	p1	7/2013

SEAT BELT

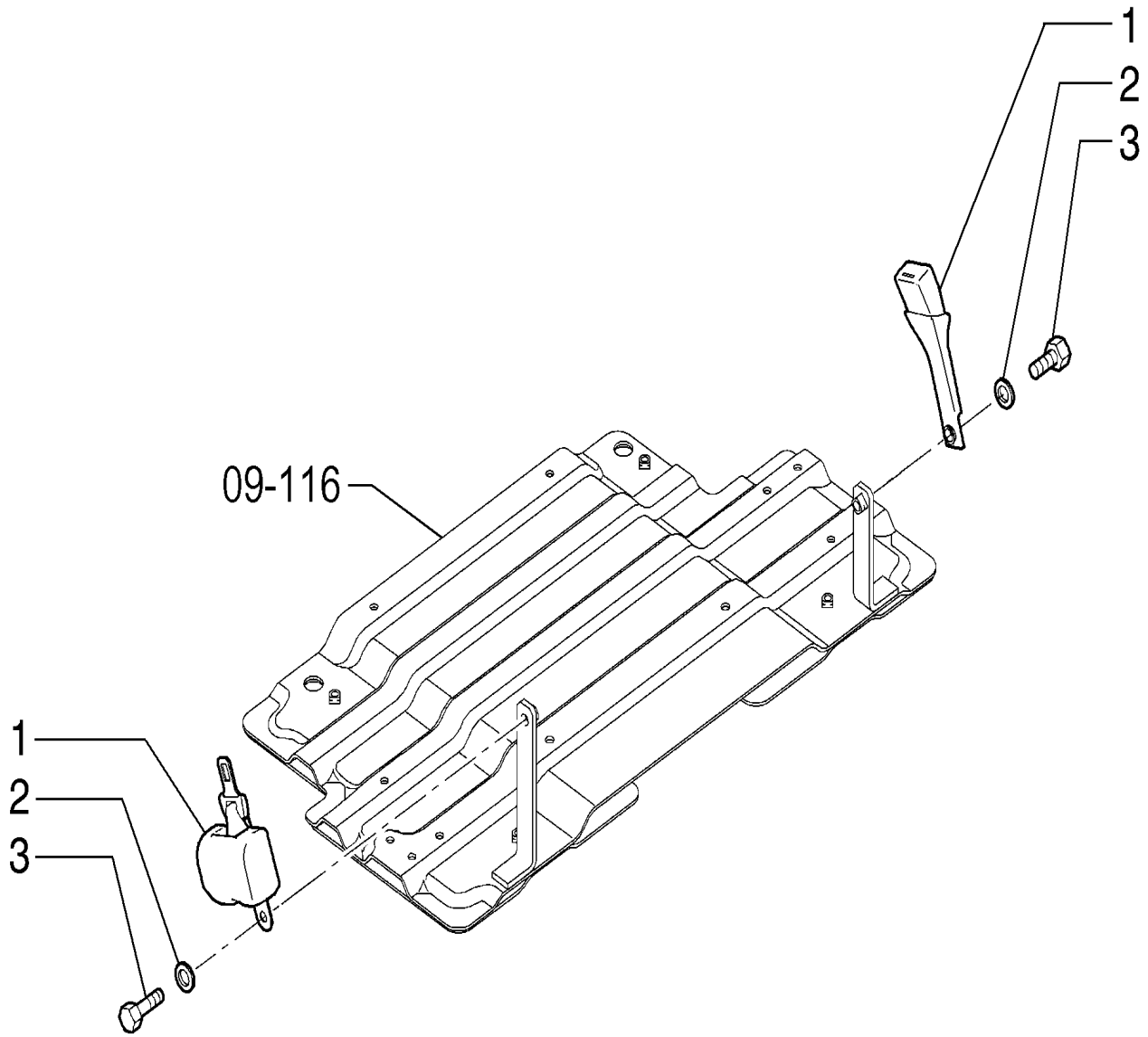

SEAT BELT

REF	FN	PART NUMBER	YR/SN	QTY	DESCRIPTION
1		72280893		1	CINTO DE SEGURANÇA 48.00 mm W
2		14496631		2	ARRUELA PLANA M10 x 21 x 2
3		11106234		2	PARAFUSO Hex, M10 x 25, 10.9, Full Thd

09-123	01	p1	7/2013

DECALS

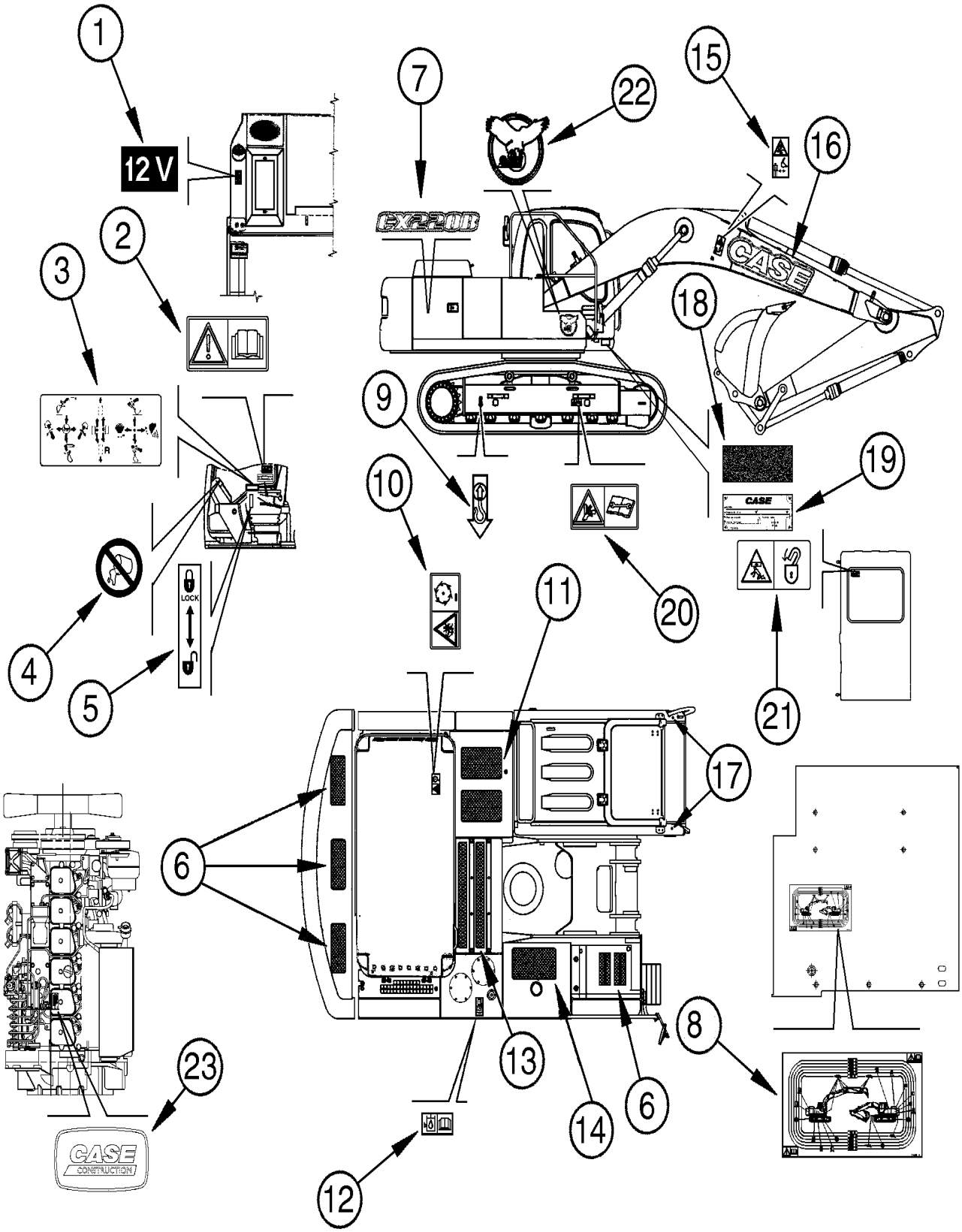

DECALS

REF	FN	PART NUMBER	YR/SN	QTY	DESCRIPTION
1		87368809		1	ADESIVO
2		71433123		1	ADESIVO
3		71415031		1	IDEOGRAMA
4		72116240		2	ADESIVO
5		87368808		1	ADESIVO
6		75210383		5	FAIXA ANTI-DERRAPANTE
7		84517110		2	ADESIVO
8		87480339		1	ADESIVO Maintenance
9		75256993		4	ADESIVO
10		71433096		1	ADESIVO
11		72207108		2	FAIXA ANTI-DERRAPANTE
12		71468156		1	PLAQUETA
13		71469305		3	ADESIVO
14		71468153		1	FAIXA ANTI-DERRAPANTE
15		71433122		2	IDEOGRAMA
16		84517113		2	ADESIVO
17		14590887		2	BOTÃO DE BORRACHA
18		84319013		4	FAIXA ANTI-DERRAPANTE
19		84279037		1	PLACA DE COBERTURA
20		71433088		2	IDEOGRAMA
21		71433079		1	IDEOGRAMA
22		84495413		2	ADESIVO
23		84558036		1	ADESIVO

09-124	01	p1	7/2013

DECALS

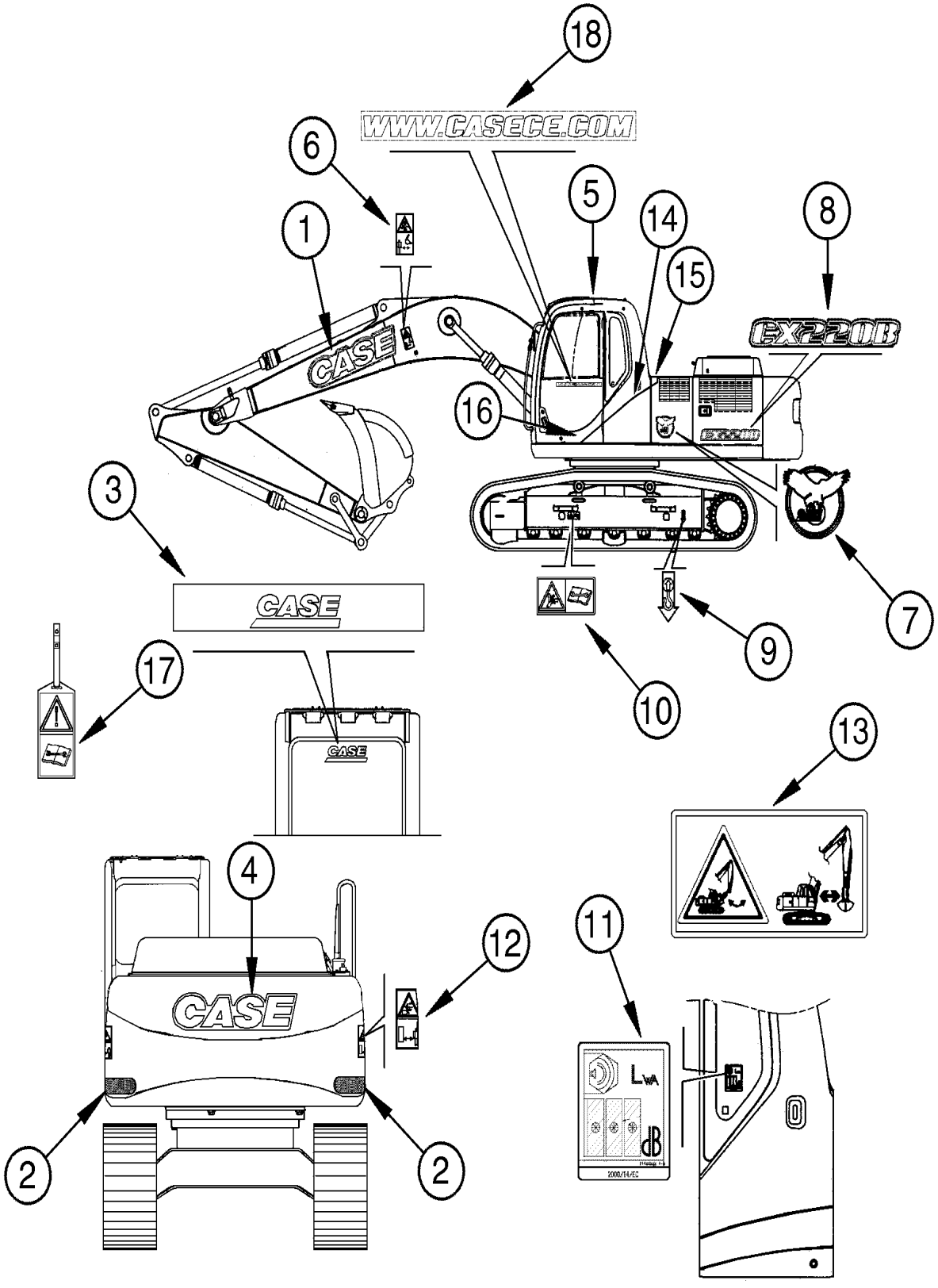

DECALS

REF	FN	PART NUMBER	YR/SN	QTY	DESCRIPTION
1		84517113		2	ADESIVO
2		72209583		2	REFLETOR
3		84517114		1	ADESIVO
4		84517111		1	ADESIVO
5		14590887		2	BOTÃO DE BORRACHA
6		71433122		2	IDEOGRAMA
7		84495413		2	ADESIVO
8		84517110		2	ADESIVO
9		75256993		4	ADESIVO
10		71433088		2	IDEOGRAMA
11		71477095		1	PLAQUETA
12		71433121		2	IDEOGRAMA
13		87616673		2	ADESIVO
14		87477417		1	ADESIVO
15		87477418		1	ADESIVO
16		84517115		1	ADESIVO
17		71433086		1	ETIQUETA
18		84468361		1	ADESIVO

09-125	01	p1	7/2013

DECALS - AUGER

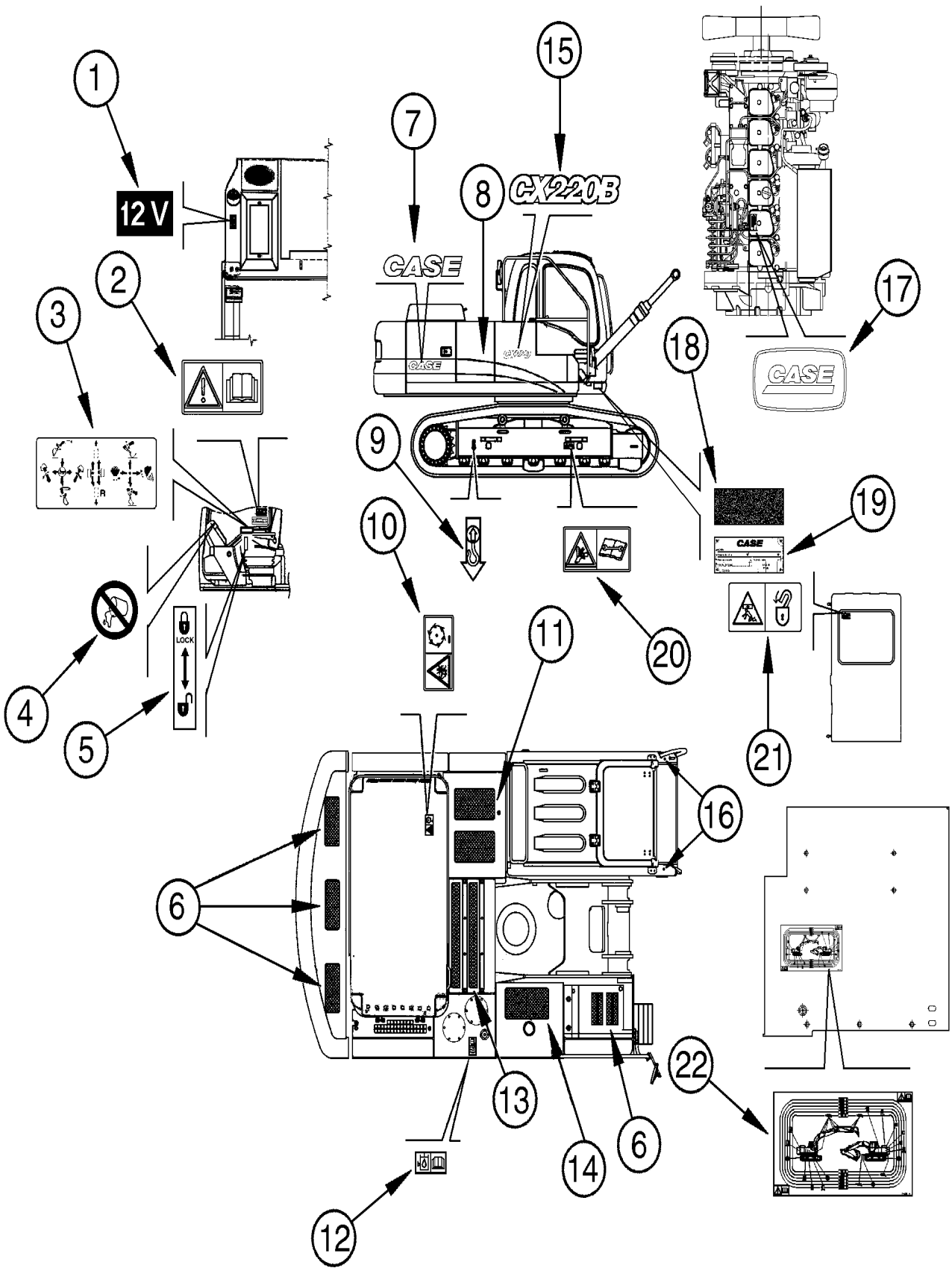

DECALS - AUGER

REF	FN	PART NUMBER	YR/SN	QTY	DESCRIPTION
1		87368809		1	ADESIVO
2		71433123		1	ADESIVO
3		71415031		1	IDEOGRAMA
4		72116240		2	ADESIVO
5		87368808		1	ADESIVO
6		75210383		5	FAIXA ANTI-DERRAPANTE
7		87477422		2	ADESIVO
8		87477423		1	ADESIVO
9		75256993		4	ADESIVO
10		71433096		1	ADESIVO
11		72207108		2	FAIXA ANTI-DERRAPANTE
12		71468156		1	PLAQUETA
13		71469305		3	ADESIVO
14		71468153		1	FAIXA ANTI-DERRAPANTE
15		87477419		2	ADESIVO
16		14590887		2	BOTÃO DE BORRACHA
17		87429186		1	SÍMBOLO
18		T41159		4	CINTA
19		75327362		1	PLACA DE COBERTURA
20		71433088		2	IDEOGRAMA
21		71433079		1	IDEOGRAMA
22		87480339		1	ADESIVO

09-125	02	p1	7/2013

DECALS - AUGER

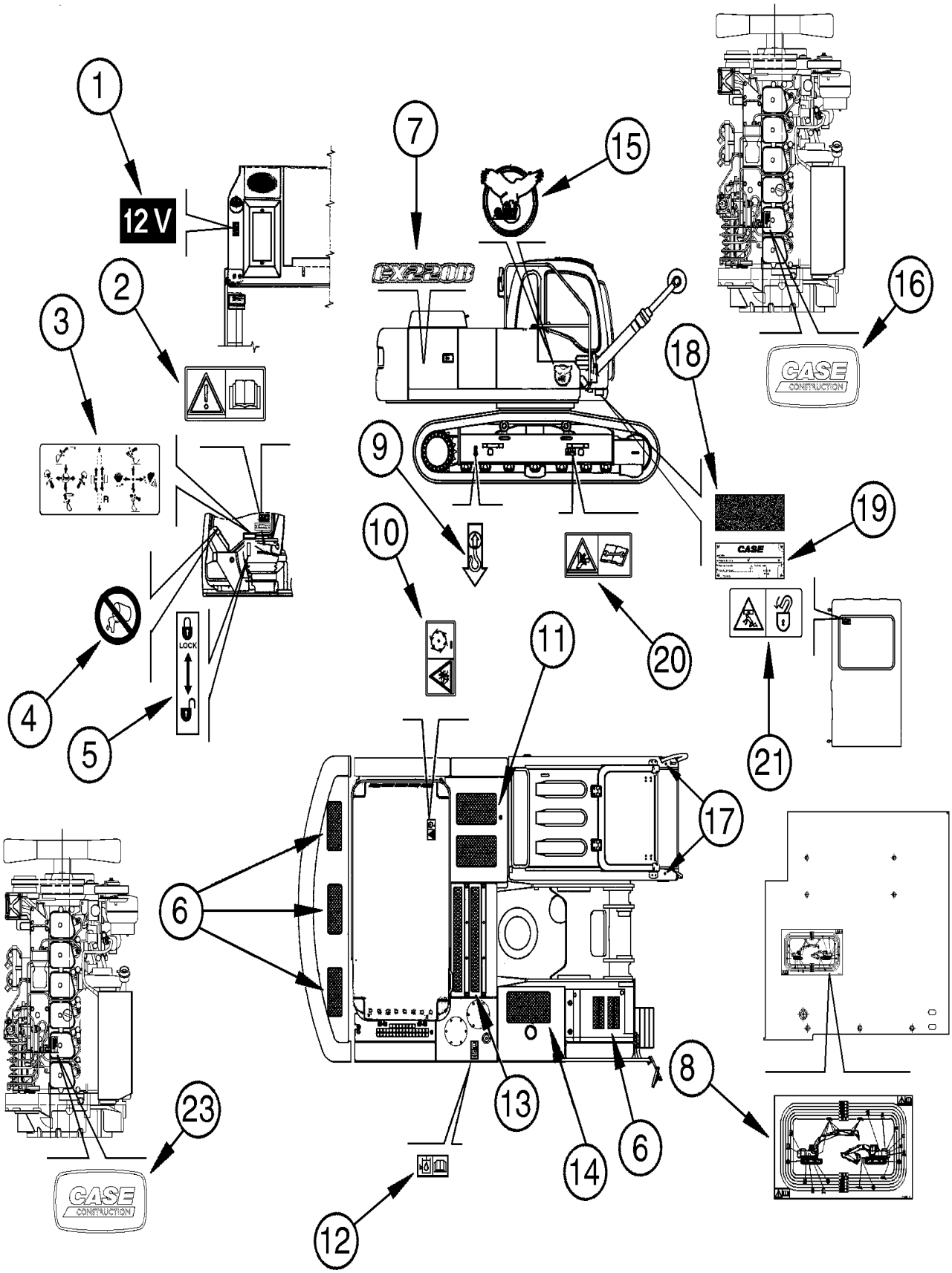

DECALS - AUGER

REF	FN	PART NUMBER	YR/SN	QTY	DESCRIPTION
1		87368809		1	ADESIVO
2		71433123		1	ADESIVO
3		71415031		1	IDEOGRAMA
4		72116240		2	ADESIVO
5		87368808		1	ADESIVO
6		75210383		5	FAIXA ANTI-DERRAPANTE
7		84517110		2	ADESIVO
8		87480339		1	ADESIVO
9		75256993		4	ADESIVO
10		71433096		1	ADESIVO
11		72207108		2	FAIXA ANTI-DERRAPANTE
12		71468156		1	PLAQUETA
13		71469305		3	ADESIVO
14		71468153		1	FAIXA ANTI-DERRAPANTE
15		84495413		2	ADESIVO
16		84558036		1	ADESIVO
17		14590887		2	BOTÃO DE BORRACHA
18		84319013		4	FAIXA ANTI-DERRAPANTE
19		84279037		1	PLACA DE COBERTURA
20		71433088		2	IDEOGRAMA
21		71433079		1	IDEOGRAMA

09-126	01	p1	7/2013

DECALS - AUGER

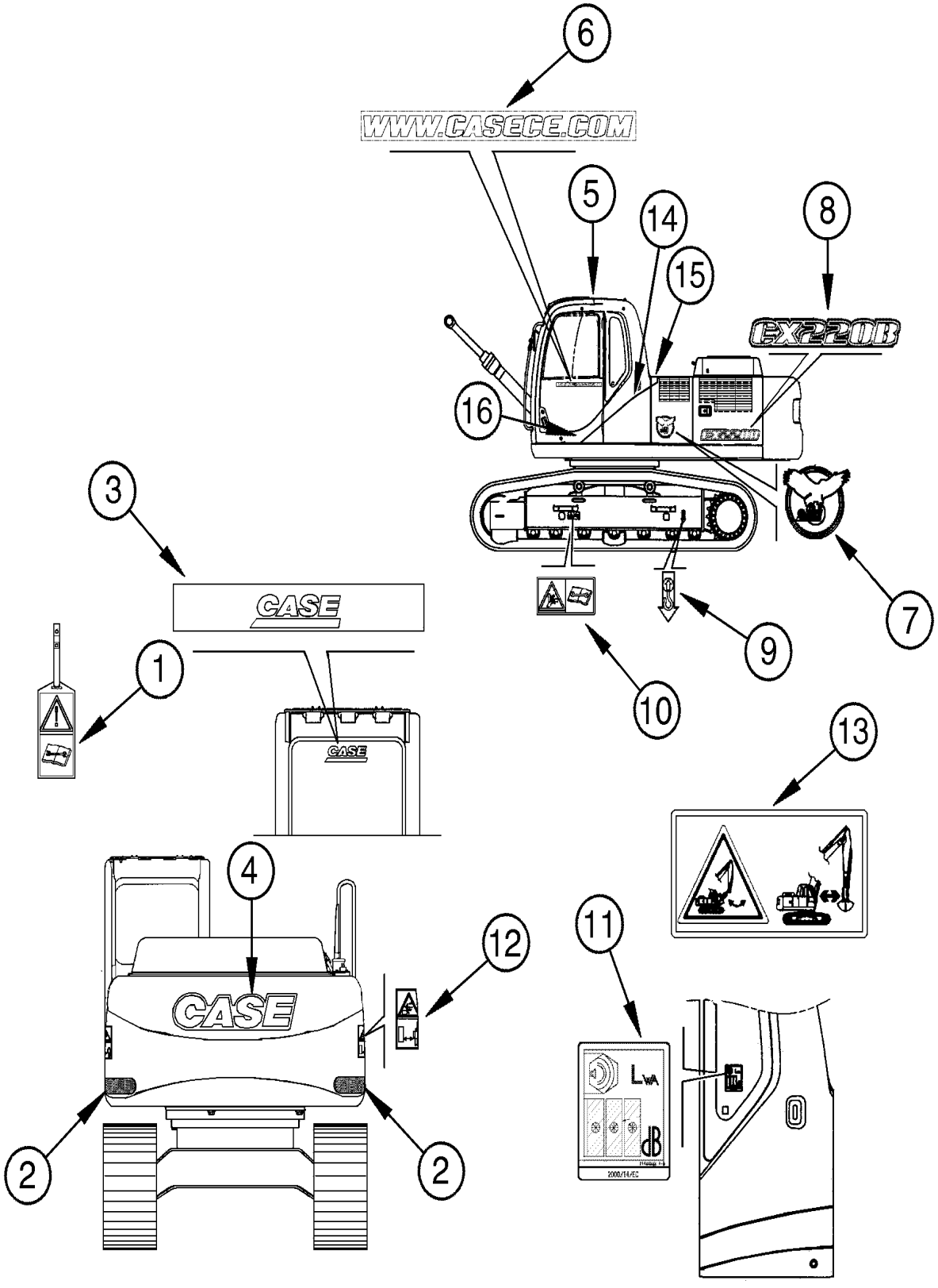

DECALS - AUGER

REF	FN	PART NUMBER	YR/SN	QTY	DESCRIPTION
1		71433086		1	ETIQUETA
2		72209583		1	REFLETOR
3		84517114		1	ADESIVO
4		84517111		1	ADESIVO
5		14590887		2	BOTÃO DE BORRACHA
6		84468361		1	ADESIVO
7		84495413		2	ADESIVO
8		84517110		2	ADESIVO
9		75256993		4	ADESIVO
10		71433088		2	IDEOGRAMA
11		71477095		1	PLAQUETA
12		71433121		2	IDEOGRAMA
13		87616673		2	ADESIVO
14		87477417		1	ADESIVO
15		87477418		1	ADESIVO
16		84517115		1	ADESIVO
17		71433086		1	ETIQUETA
18		14590887		2	BOTÃO DE BORRACHA

INDEX - INDICE - INDEX - ZAHLENVERZEICHNIS - INDICE - INDICE - INDHOLD - INHOUD

Number	Figure	Sequence	Ref.	Number	Figure	Sequence	Ref.
	01-01	01	13	10516674	09-076	01	4
10100230	09-040	01	20	10516674	09-119	02	4
10119440	02-33	01	4	10516674	09-121	01	7
10444634	09-110	02	14	10516871	02-27	01	16
10450290	04-03	01	24	10516871	03-01	01	7
10493230	09-047	01	15	10516871	03-03	01	5
10493230	09-048	01	15	10516871	04-03	01	27
10493230	09-049	01	15	10516871	04-12	01	9
10493230	09-050	01	15	10516871	04-13	01	9
10493230	09-052	01	15	10516871	08-37	01	10
10493230	09-054	01	15	10516871	08-88	02	8
10493230	09-055	01	15	10516871	09-003	01	3
10493230	09-056	01	7	10516871	09-004	01	2
10493230	09-057	01	7	10516871	09-011	01	18
10493230	09-058	01	7	10516871	09-015	01	4
10493230	09-059	01	7	10516871	09-016	01	7
10493230	09-061	01	7	10516871	09-018	01	8
10493230	09-062	01	7	10516871	09-070	01	4
10493230	09-064	01	4	10516871	09-072	01	8
10493230	09-065	01	4	10516871	09-081	01	3
10516471	01-04	01	2	10516871	09-082	01	7
10516471	04-07	01	12	10516871	09-100	01	9
10516471	04-09	01	19	10516871	09-100	02	9
10516471	04-18	01	4	10516871	09-101	01	15
10516471	08-55	01	14	10516871	09-101	02	15
10516471	09-085	01	15	10516871	09-102	01	11
10516471	09-086	01	23	10516873	09-006	01	7
10516471	09-087	01	3	10516874	08-22	01	11
10516471	09-087	02	2	10516874	09-076	02	5
10516471	09-101	01	11	10517071	04-03	01	14
10516471	09-101	02	11	10517071	08-07	01	14
10516474	04-11	01	2	10517071	08-07	02	7
10516474	09-068	01	2	10517071	08-31	01	7
10516474	09-117	02	2	10517071	08-33	01	3
10516474	09-118	01	3	10517071	09-011	01	4
10516671	03-06	01	3	10517071	09-012	01	14
10516671	04-03	01	19	10517071	09-015	01	2
10516671	04-04	01	16	10517071	09-017	01	14
10516671	04-09	01	2	10517071	09-017	02	14
10516671	04-18	01	14	10517071	09-020	01	4
10516671	04-22	01	3	10517071	09-022	01	5
10516671	09-081	01	12	10517071	09-023	01	5
10516671	09-087	02	10	10517071	09-023	02	5
10516671	09-100	01	4	10517071	09-024	01	5
10516671	09-100	02	4	10517071	09-067	03	8
10516671	09-101	01	5	10517071	09-071	01	2
10516671	09-101	02	5	10517071	09-076	01	10
10516674	04-04	01	8	10517073	09-002	01	6
10516674	04-11	01	17	10517074	09-016	01	1
10516674	08-22	01	6	10517171	08-37	01	18

INDEX - INDICE - INDEX - ZAHLENVERZEICHNIS - INDICE - INDICE - INDHOLD - INHOUD

Number	Figure	Sequence	Ref.	Number	Figure	Sequence	Ref.
10517171	09-010	02	5	10902231	03-06	01	13
10517171	09-010	07	7	10902231	04-08	02	2
10517171	09-012	01	24	10902231	04-18	01	2
10517171	09-017	01	17	10902231	09-019/A	01	10
10517171	09-017	02	17	10902231	09-086	01	24
10517171	09-030	01	26	10902231	09-087	01	2
10517171	09-031	03	26	10902231	09-087	02	1
10517173	04-06	01	5	10902234	09-068	01	1
10517270	06-02	01	10	10902234	09-118	01	2
10517271	09-047	01	8	10902431	03-06	01	10
10517271	09-048	01	8	10902431	09-101	01	12
10517271	09-049	01	8	10902431	09-101	02	12
10517271	09-050	01	8	10903731	09-101	01	18
10517271	09-052	01	8	10977631	04-18	01	10
10517271	09-054	01	8	10977831	04-09	01	16
10517271	09-055	01	8	10977831	04-18	01	12
10517271	09-056	01	10	10979231	04-03	01	7
10517271	09-057	01	10	11055690	04-09	01	8
10517271	09-058	01	10	11055890	04-13	01	17
10517271	09-059	01	10	11066074	03-06	01	18
10517271	09-061	01	10	11066371	08-62	01	10
10517271	09-062	01	10	11068370	08-52	01	6
10517271	09-064	01	6	11071370	08-52	01	20
10517271	09-065	01	6	11106031	02-24	01	15
10517371	09-006	01	3	11106031	02-31	01	14
10517471	09-036B	01	31	11106031	03-01	01	8
10517471	09-056	01	5	11106031	08-18	01	1
10517471	09-057	01	5	11106031	08-18	02	1
10517471	09-058	01	5	11106031	09-003	01	8
10517471	09-059	01	5	11106031	09-010	06	2
10517471	09-061	01	5	11106031	09-018	01	14
10517471	09-062	01	5	11106031	09-019/B	01	6
10517471	09-066	01	5	11106031	09-075	01	11
10519301	04-09	01	25	11106034	09-083	01	7
10519301	04-18	01	8	11106131	08-55	01	1
10519301	09-068	01	7	11106231	02-19	01	8
10519301	09-086	01	30	11106231	02-20	01	1
10519301	09-087	01	10	11106231	02-27	01	6
10519621	09-081	01	13	11106231	02-33	01	5
10520021	04-07	01	6	11106231	09-003	01	2
10520021	04-13	02	4	11106231	09-004	01	1
10520101	04-06	01	10	11106231	09-006	01	8
10520121	09-036B	01	2	11106231	09-015	01	3
10520421	03-01	01	19	11106231	09-019	01	8
10571871	08-55	01	2	11106231	09-019/B	01	8
10571879	09-110	01	4	11106231	09-081	01	5
10571879	09-110	02	2	11106231	09-100	01	10
10721911	09-110	02	19	11106231	09-100	02	10
10789721	03-06	01	12	11106231	09-101	01	14
10902031	01-04	01	1	11106231	09-101	02	14

INDEX - INDICE - INDEX - ZAHLENVERZEICHNIS - INDICE - INDICE - INDHOLD - INHOUD

Number	Figure	Sequence	Ref.	Number	Figure	Sequence	Ref.
11106231	09-102	01	10	11112231	09-071	01	1
11106234	08-22	01	10	11112231	09-074	01	9
11106234	09-121	01	2	11112231	09-075	01	2
11106234	09-122	01	3	11112231	09-078	01	5
11106431	02-30	01	16	11112234	06-06	01	8
11106431	02-31	01	12	11112234	09-110	01	8
11106431	03-02	01	9	11112431	03-02	01	5
11106431	03-02	01A	17	11112431	03-02	01A	5
11106431	03-02	01A	9	11112431	08-09	01	4
11106431	04-12	01	8	11112431	08-14	01	9
11106431	04-13	01	8	11112431	09-002	01	7
11106431	08-09	01	17	11112431	09-010	07	11
11106431	08-18	01	4	11112431	09-012	01	18
11106431	08-18	02	6	11112431	09-015	01	1
11106431	08-32	02	15	11112431	09-071	01	10
11106431	08-37	01	11	11112431	09-075	01	12
11106431	08-88	02	7	11112431	09-076	01	8
11106431	09-010	02	17	11112431	09-078	01	6
11106431	09-010	04	4	11112431	09-080	01	5
11106431	09-010	05	2	11112434	09-016	01	3
11106431	09-010	07	17	11112434	09-110	02	23
11106431	09-016	01	6	11112434	09-110	02	4
11106434	08-11	01	1	11112631	02-02	01	5
11106434	09-110	01	5	11112631	02-32	01	9
11106434	09-110	02	3	11112631	08-09	01	10
11106631	02-24	01	3	11112631	08-14	01	4
11106631	08-18	02	4	11112631	08-29	01	1
11106631	08-57	01	9	11112631	08-31	01	20
11106631	09-010	02	13	11112631	09-010	02	1
11106631	09-010	07	18	11112631	09-012	01	9
11106631	09-011	01	19	11112631	09-071	01	11
11106631	09-018	01	18	11112631	09-071	01	12
11106631	09-082	01	6	11112631	09-077	01	2
11107031	08-57	01	7	11112831	08-07	01	11
11107331	08-88	02	4	11112831	08-77	01	3
11107331	09-081	01	2	11112834	09-012	01	6
11107331	09-101	01	1	11113031	02-02	01	11
11107331	09-101	02	1	11113231	08-31	01	18
11107431	02-27	01	15	11113231	09-011	01	3
11107431	02-31	01	3	11113231	09-017	01	9
11107431	09-019	01	5	11113231	09-017	02	9
11107434	08-08	01	1	11113231	09-022	01	6
11107434	09-076	02	4	11113231	09-023	01	6
11107434	09-110	02	18	11113231	09-023	02	6
11107731	08-09	01	7	11113231	09-024	01	4
11112131	04-03	01	13	11113331	08-14	01	6
11112231	04-03	01	17	11113331	08-37	01	5
11112231	04-07	01	5	11113331	09-012	01	22
11112231	04-13	02	1	11113331	09-012	01	30
11112231	09-019	01	12	11113331	09-020	01	3

INDEX - INDICE - INDEX - ZAHLENVERZEICHNIS - INDICE - INDICE - INDHOLD - INHOUD

Number	Figure	Sequence	Ref.	Number	Figure	Sequence	Ref.
11113431	08-31	01	11	11124431	09-057	01	6
11113434	09-020	01	11	11124431	09-058	01	6
11113531	08-31	01	31	11124431	09-059	01	6
11113531	08-31	01	6	11124431	09-061	01	6
11113531	08-32	02	9	11124431	09-062	01	6
11113531	09-017	01	13	11124731	06-12	01	5
11113531	09-017	02	13	11124831	08-51	01	9
11113531	09-080	01	8	11125731	09-003	01	17
11113534	09-016	01	2	11126131	06-04	01	1
11113731	09-067	03	9	11127431	09-030	01	27
11113834	09-110	01	1	11127431	09-031	01	16
11114031	08-07	01	4	11127431	09-031	03	27
11114631	09-040	01	34	11127531	06-08	01	14
11115331	04-06	01	4	11127531	06-09	01	14
11115531	09-030	01	6	11127531	06-10	01	13
11115531	09-031	03	6	11127531	06-11	01	13
11116031	09-010	02	6	11127531	09-002	01	1
11116231	09-010	02	7	1113178	04-01/A	01	11
11116231	09-010	07	8	11195374	09-110	02	16
11116231	09-012	01	29	11195471	03-01	01	12
11116231	09-017	01	1	11195471	04-09	01	26
11116231	09-017	02	1	11195471	04-18	01	9
11116331	09-040	01	30	11195471	09-086	01	31
11118531	08-55	01	26	11306931	03-03	01	4
11118731	08-64	01	5	11701721	02-24	01	5
11118931	09-047	01	9	11701721	04-03	01	33
11118931	09-048	01	9	11701721	09-019	01	11
11118931	09-049	01	9	11701721	09-070	01	6
11118931	09-050	01	9	11701721	09-072	01	9
11118931	09-052	01	9	11701721	09-075	01	9
11118931	09-054	01	9	11701721	09-110	02	11
11118931	09-055	01	9	11702921	08-14	01	10
11118931	09-056	01	11	11702921	09-040	01	33
11118931	09-057	01	11	11702921	09-073	01	3
11118931	09-058	01	11	11702921	09-076	02	1
11118931	09-059	01	11	12163221	09-021	01	1
11118931	09-061	01	11	12163221	09-040	01	7
11118931	09-062	01	11	12163224	08-23	01	2
11118931	09-064	01	7	12163321	09-029	02	3
11118931	09-065	01	5	12163321	09-030	01	8
11119131	06-12	01	1	12163321	09-031	01	6
11120531	09-036B	01	20	12163321	09-031	03	8
11120731	09-029	02	1	12163321	09-036B	01	10
11120731	09-036B	01	18	12163321	09-036B	01	17
11120931	09-030	01	7	12163321	09-040	01	26
11120931	09-031	01	5	12163321	09-082	01	4
11120931	09-031	03	7	12163521	06-04	01	3
11120931	09-036B	01	12	12163521	09-029	02	16
11124431	09-036B	01	32	12164521	09-003	01	18
11124431	09-056	01	6	12164721	03-06	01	16

INDEX - INDICE - INDEX - ZAHLENVERZEICHNIS - INDICE - INDICE - INDHOLD - INHOUD

Number	Figure	Sequence	Ref.	Number	Figure	Sequence	Ref.
12164721	09-071	01	7	14304870	08-58	01	45
12164721	09-075	01	23	14305131	01-02	01	8
12164721	09-078	01	19	14305131	01-03	01	8
12173990	03-03	01	8	14305231	04-07	01	11
12179490	02-24	01	12	14305231	04-09	01	18
12179490	02-30	01	1	14305231	08-55	01	13
12179490	09-103	02	3	14305334	08-62	01	11
12575121	09-066	01	1	14305334	09-117	02	1
12581579	09-089	02	34	14305434	08-12	01	9
12581579	09-097	01	21	14305434	08-13	01	6
12626231	09-070	01	5	14305470	08-62	01	9
12626231	09-072	01	7	14306234	09-121	01	6
12626231	09-080	01	3	14306331	09-119	01	2
12641031	09-010	04	5	14306334	09-121	01	10
12641031	09-010	05	3	14306370	08-58	01	16
12642021	04-03	01	22	14306470	08-42	01	9
12642021	04-04	01	17	14306470	08-65	01	9
12642021	04-09	01	3	14306470	08-66	01	4
12643721	09-101	01	27	14306470	08-67	01	5
12644421	04-18	01	3	14306470	08-68	01	8
12644421	09-085	01	16	14306470	08-69	01	8
12644421	09-086	01	32	14306670	08-71	01	10
12644421	09-087	01	4	14306970	08-62	01	17
12644421	09-087	02	3	14309070	08-62	01	16
12645031	04-02	01	2	14309270	08-71	01	2
12646721	03-06	01	1	14311070	08-70	01	3
12646821	04-06	01	9	14311070	09-026	02	20
12646821	04-07	01	3	14359570	09-026	02	4
12646821	04-12	01	4	14420170	08-38	01	8
12646821	04-13	01	4	14420231	09-011	01	7
12646821	04-13	02	7	14420231	09-018	01	10
12646921	04-03	01	10	14420331	03-06	01	5
12646921	09-077	01	1	14420331	08-08	01	8
12647001	09-101	01	30	14420331	08-88	02	2
12647001	09-101	02	27	14420531	09-018	01	7
1270742C1	09-085	01	14	14422031	08-07	02	8
1306937	04-23	02	5	14422170	08-70	01	4
13272014	04-04	01	3	14422231	08-32	01	2
13274021	03-01	01	11	14422231	08-32	03	4
13274211	09-086	01	38	14422231	08-33	01	2
13276421	04-04	01	2	14422231	08-35	01	2
13277117	09-085	01	18	14422231	08-36	01	2
13407211	08-84	01	9	14422231	08-37	01	3
13407211	08-88	01	11	14422331	08-31	01	25
13407211	08-90	01	12	14422334	09-016	01	16
13407211	09-036/A	01	3	14422431	09-012	01	13
13407211	09-040	01	13	14423034	09-010	01	4
13408411	08-90	01	13	14423231	08-07	01	13
13550521	09-110	01	2	14424531	08-37	01	19
14302234	08-54	01	1	14424531	09-012	01	23

INDEX - INDICE - INDEX - ZAHLENVERZEICHNIS - INDICE - INDICE - INDHOLD - INHOUD

Number	Figure	Sequence	Ref.	Number	Figure	Sequence	Ref.
14424531	09-016	01	19	14496531	09-119	02	3
14425470	08-70	01	13	14496531	09-121	01	9
14426874	08-84	01	16	14496621	09-003	01	4
14426874	08-88	01	14	14496621	09-004	01	3
14428774	08-86	01	24	14496631	02-19	01	7
14433374	08-90	01	16	14496631	02-20	01	2
14437785	03-02	01	18	14496631	02-24	01	4
14447124	09-098	01	4	14496631	02-27	01	5
14464781	02-29	01	13	14496631	02-30	01	17
14466580	03-01	01	14	14496631	02-31	01	4
14466880	03-01	01	5	14496631	02-33	01	6
14482780	08-55	01	4	14496631	03-02	01	10
14496431	03-06	01	9	14496631	03-02	01A	10
14496431	04-04	01	1	14496631	03-03	01	6
14496431	04-08	02	3	14496631	04-03	01	8
14496431	04-09	01	20	14496631	04-12	01	10
14496431	04-11	01	3	14496631	04-13	01	10
14496431	08-12	01	10	14496631	08-08	01	2
14496431	08-13	01	7	14496631	08-09	01	16
14496431	09-019/A	01	17	14496631	08-09	01	8
14496431	09-068	01	3	14496631	08-11	01	2
14496431	09-082	01	12	14496631	08-18	01	2
14496431	09-101	01	10	14496631	08-18	02	2
14496431	09-101	02	10	14496631	08-22	01	12
14496431	09-118	01	4	14496631	08-57	01	8
14496531	02-19	01	11	14496631	08-88	02	5
14496531	02-27	01	8	14496631	09-010	06	3
14496531	02-31	01	6	14496631	09-010	07	16
14496531	02-32	01	14	14496631	09-018	01	11
14496531	03-02	01A	22	14496631	09-019	01	4
14496531	04-03	01	29	14496631	09-019/B	01	7
14496531	04-04	01	7	14496631	09-075	01	8
14496531	04-09	01	17	14496631	09-076	02	6
14496531	04-11	01	18	14496631	09-081	01	6
14496531	04-18	01	13	14496631	09-082	01	8
14496531	04-22	01	1	14496631	09-083	01	8
14496531	08-12	02	3	14496631	09-100	01	8
14496531	08-12	03	3	14496631	09-100	02	8
14496531	08-22	01	5	14496631	09-101	01	2
14496531	08-26	01	12	14496631	09-101	02	2
14496531	09-010	06	6	14496631	09-102	01	12
14496531	09-071	01	23	14496631	09-110	01	3
14496531	09-073	01	5	14496631	09-110	02	1
14496531	09-075	01	20	14496631	09-110	02	10
14496531	09-083	01	4	14496631	09-119	02	7
14496531	09-087	02	11	14496631	09-121	01	3
14496531	09-100	01	5	14496631	09-122	01	2
14496531	09-100	02	5	14496731	02-02	01	6
14496531	09-101	01	4	14496731	02-32	01	10
14496531	09-101	02	4	14496731	03-02	01	4

INDEX - INDICE - INDEX - ZAHLENVERZEICHNIS - INDICE - INDICE - INDHOLD - INHOUD

Number	Figure	Sequence	Ref.	Number	Figure	Sequence	Ref.
14496731	03-02	01A	4	15984131	09-006	01	4
14496731	03-06	01	19	15984831	06-05	01	1
14496731	04-03	01	15	15986031	02-02	01	1
14496731	08-07	01	10	15987931	03-01	01	20
14496731	08-09	01	11	15988431	09-005	01	3
14496731	08-09	01	3	16043231	09-087	02	9
14496731	08-14	01	3	16043331	04-09	01	27
14496731	08-29	01	2	16043431	02-19	01	10
14496731	08-31	01	30	16043431	02-27	01	7
14496731	08-37	01	6	16043431	02-32	01	13
14496731	08-77	01	2	16043431	04-03	01	23
14496731	09-002	01	9	16043431	04-04	01	15
14496731	09-010	02	12	16043431	04-09	01	1
14496731	09-010	02	2	16043431	04-18	01	15
14496731	09-010	07	10	16043431	09-010	06	5
14496731	09-012	01	21	16043431	09-073	01	4
14496731	09-019	01	13	16043431	09-100	01	3
14496731	09-076	02	2	16043431	09-100	02	3
14496731	09-110	01	7	16043431	09-101	01	6
14496731	09-110	02	22	16043431	09-101	02	6
14496731	09-110	02	5	16043434	08-12	02	4
14496821	09-040	01	29	16043434	08-12	03	4
14496931	06-08	01	15	16043434	09-083	01	6
14496931	06-09	01	15	16043434	09-119	02	13
14496931	06-10	01	14	16043631	02-19	01	13
14496931	06-11	01	14	16043631	02-30	01	9
14496931	08-64	01	6	16043631	03-06	01	2
14496931	09-002	01	2	16043631	04-09	01	22
14496931	09-030	01	28	16043631	04-22	01	2
14496931	09-031	01	15	16043631	09-071	01	22
14496931	09-031	03	28	16043631	09-075	01	19
14496931	09-078	01	11	16043631	09-081	01	11
14497031	02-02	01	2	16043631	09-101	01	26
14497731	09-110	02	15	16043631	09-101	02	26
14590887	03-01	01	21	16043634	08-22	01	7
14590887	09-031	01	20	16043634	09-083	01	3
14590887	09-082	01	1	16043831	03-02	01A	21
14590887	09-123	01	17	16043831	08-26	01	11
14590887	09-124	01	5	16043831	09-101	02	28
14590887	09-125	01	16	16044134	09-076	01	5
14590887	09-125	02	17	16046131	09-101	01	25
14590887	09-126	01	18	16046131	09-101	02	25
14590887	09-126	01	5	16051121	09-029	02	9
14601371	09-021	01	7	16051121	09-030	01	31
15246231	09-003	01	19	16051121	09-031	03	31
15687901	09-087	02	20	16051131	09-040	01	1
15888931	09-040	01	6	16100821	02-24	01	8
15896221	09-082	01	13	16100821	02-31	01	5
15896221	09-101	01	28	16100821	03-06	01	4
15903801	09-087	02	8	16100821	04-03	01	21

INDEX - INDICE - INDEX - ZAHLENVERZEICHNIS - INDICE - INDICE - INDHOLD - INHOUD

Number	Figure	Sequence	Ref.	Number	Figure	Sequence	Ref.
16100821	04-04	01	9	2852306	02-12	01	3
16100821	09-073	01	13	2852308	02-10	01	3
16101521	08-22	01	2	2852320	02-08	01	3
16102324	08-62	01	19	2852323	02-11	01	10
16104121	04-09	01	14	2852345	03-12	01	2
16249031	09-036B	01	3	2852347	03-10	01	7
17278781	02-08	01	5	2852350	03-10	01	2
17916280	02-29	01	5	2852367	03-12	02	1
214-2138	02-30	01	12	2852392	02-26	01	6
214-2160	02-31	01	2	2852397	02-39	01	2
214-2176	02-31	01	17	2852403	04-01	01	2
220208300	06-03	01	7	2852478	04-01	01	1
2420R372D7	09-090	01	11	2852654	02-10	01	5
2436R750S5	08-81	01	8	2852660	02-10	01	14
2436R750S5	08-82	01	5	2852662	02-10	01	11
2436R750S5	08-83	01	5	2852663	02-10	01	7
2436U1198S	08-42	01	1	2852664	02-10	01	8
2436U1231S	08-69	01	21	2852679	02-25	01	1
2436U1281S	08-81	01	3	2852729	02-16	01	6
2441U549S4	08-58	01	49	2852744	02-22	01	2
2445R152D1	08-78	01	2	2852776	02-07	01	3
2445Z1604D	09-105	01	20	2852866	02-18	01	12
2445Z1604D	09-105	01	6	2852885	03-10	01	6
251444A1	04-09	01	15	2852911	02-11	01	9
2830076	02-03	01	1	2852914	02-11	01	3
2830156	03-02	03	9	2852919	02-25	01	10
2830266	03-02	03	10	2852923	02-26	01	5
2830281	02-05	01	4	2853176	02-13	01	1
2830559	02-29	01	12	2853320	03-02	03	2
2830775	02-05	01	5	2853322	03-02	02	4
2830923	02-04	01	6	2853325	03-02	02	2
2831019	02-23	01	5	2853363	02-10	01	15
2831297	02-15	01	4	2853428	02-11	01	2
2831298	02-15	01	5	2853436	02-29	01	14
2852027	02-05	02	2	2853438	02-29	01	3
2852028	02-05	02	3	2853443	02-26	01	13
2852057	03-10	01	4	2853781	02-29	01	4
2852088	03-09	01	6	2854072	02-26	01	3
2852089	03-09	01	5	2854073	02-08	02	2
2852111	03-02	02	1	2854075	02-08	02	3
2852111	03-02	02A	1	2854237	02-13	01	5
2852134	02-11	01	4	2854316	02-11	01	11
2852134	02-25	01	8	2854318	02-11	01	1
2852171	02-38	01	3	2854320	02-38	01	9
2852175	02-06	01	2	2854362	02-23	01	6
2852183	02-06	01	5	2854424	02-38	01	1
2852203	02-16	01	11	2854916	02-08	02	5
2852221	02-13	01	6	2855287	02-08	01	6
2852245	02-39	01	1	2855881	02-38	01	6
2852273	03-09	01	1	2855970	02-39	01	3

INDEX - INDICE - INDEX - ZAHLENVERZEICHNIS - INDICE - INDICE - INDHOLD - INHOUD

Number	Figure	Sequence	Ref.	Number	Figure	Sequence	Ref.
2855972	02-38	01	8	2859308	02-15	02	3
2856350	03-09	01	3	2859309	02-15	02	3
2856428	02-10	01	13	2859310	02-15	02	6
2856637	03-02	01	7	2859311	02-15	02	6
2856637	03-02	03	4	2859312	02-15	01	1
2856640	02-22	01	6	2859313	02-15	01	1
2856765	02-12	01	2	2859314	02-15	01	1
2856766	02-12	01	1	2859315	02-15	01	1
2856767	02-12	01	7	2859316	02-15	01	2
2856775	02-12	01	6	2859317	02-15	01	2
2856794	02-08	02	9	2859318	02-15	01	2
2856802	02-04	01	16	2859319	02-15	01	2
2856804	02-04	01	7	2859346	02-04	01	12
2856806	02-05	01	9	2991636	04-01/A	01	5
2856807	02-05	01	6	2991637	04-01/A	01	3
2856809	02-05	01	10	324203A1	09-092/A	01	1
2856810	02-05	01	3	353036A1	03-03	01	2
2856817	02-22	01	4	412123	08-35	01	3
2856825	02-15	02	6	412123	08-36	01	3
2856826	02-15	02	5	422050500	09-100	02	20
2856827	02-15	02	1	4227028	09-092/A	01	3
2856828	02-15	02	2	422702800	09-092	01	26
2856829	02-15	02	3	42531183	04-01/A	01	10
2856830	02-15	02	4	42533805	04-01/A	01	8
2856831	02-15	01	1	42533807	04-01/A	01	1
2856832	02-15	01	2	42533816	04-01/A	01	14
2856946	02-39	01	4	42533817	04-01/A	01	13
2858050	02-36	01	3	42533819	04-01/A	01	19
2859169	03-09	01	4	42534008	04-23	02	7
2859170	02-22	01	3	42534012	04-23	02	4
2859288	02-12	01	1	42535275	04-23	02	13
2859289	02-12	01	1	42535631	04-01/A	01	9
2859290	02-12	01	1	42536304	04-01/A	01	16
2859291	02-12	01	1	42536305	04-01/A	01	18
2859292	02-12	01	2	42537051	04-01/A	01	21
2859293	02-12	01	2	42537054	04-01/A	01	15
2859294	02-12	01	2	42537056	04-01/A	01	6
2859295	02-12	01	2	42537057	04-01/A	01	4
2859296	02-12	01	6	42537058	04-01/A	01	7
2859297	02-12	01	6	42537060	04-01/A	01	2
2859298	02-12	01	6	42537061	04-01/A	01	22
2859299	02-12	01	6	42537064	04-23	02	11
2859300	02-12	01	7	42537069	04-23	02	2
2859301	02-12	01	7	42537071	04-23	02	10
2859302	02-12	01	7	42537076	04-23	02	14
2859303	02-12	01	7	42537082	04-23	02	16
2859304	02-15	02	1	42537670	04-01/A	01	20
2859305	02-15	02	1	42537822	04-23	02	3
2859306	02-15	02	2	42537878	04-01/A	01	12
2859307	02-15	02	2	42540208	04-01/A	01	17

INDEX - INDICE - INDEX - ZAHLENVERZEICHNIS - INDICE - INDICE - INDHOLD - INHOUD

Number	Figure	Sequence	Ref.	Number	Figure	Sequence	Ref.
42546435	04-23	02	15	4895195	02-18	01	1
45482627	06-03	01	6	4895196	02-18	01	7
47443996	03-02	01A	24	4895198	02-18	01	4
4890189	02-07	01	2	4895199	02-18	01	5
4890732	02-38	01	2	4895200	02-18	01	9
4890832	02-07	01	8	4895202	02-05	01	7
4890964	03-02	03	7	4895204	02-18	01	8
4891209	02-07	01	1	4895214	02-05	01	1
4891288	02-25	01	6	4895228	02-03	01	5
4891353	02-03	01	7	4895244	03-12	02	3
4892318	04-01	01	6	4895291	02-10	01	10
4892426	02-38	01	5	4895291	04-01	01	5
4892708	02-15	01	3	4895294	02-23	01	2
4892732	02-38	01	4	4895296	02-05	01	8
4892859	02-04	01	1	4895297	03-09	01	2
4892860	02-18	01	11	4895305	03-12	02	2
4892861	02-04	01	1	4895323	02-38	01	7
4892867	02-13	01	3	4895347	02-04	01	8
4892893	02-13	01	2	4895355	02-08	01	7
4892915	02-08	02	4	4895360	02-05	01	2
4893036	02-23	01	1	4895361	02-18	01	10
4893386	02-12	01	4	4895363	02-18	01	2
4893391	02-27	01	19	4895364	02-18	01	3
4893391	02-29	01	2	4895365	02-18	01	6
4893518	03-10	01	3	4895378	02-08	02	11
4893840	04-01	01	4	4895379	02-08	02	10
4894095	03-02	02	3	4895392	02-16	01	2
4894095	03-02	02A	3	4895392	02-26	01	1
4894218	02-16	01	12	4895393	02-16	01	3
4894641	02-13	01	4	4895393	02-26	01	2
4894721	03-02	02A	5	4895406	02-11	01	7
4894721	03-02	03	8	4895424	02-23	01	3
4895037	02-11	01	12	4895576	02-26	01	7
4895038	02-03	01	3	4895605	02-16	01	8
4895039	02-03	01	4	4895610	02-11	01	6
4895040	02-03	01	2	4895623	02-04	01	2
4895045	02-29	01	7	4895623	02-26	01	10
4895049	02-16	01	1	4895625	02-26	01	11
4895089	02-25	01	5	4896404	02-29	01	8
4895107	02-25	01	3	4896407	02-29	01	11
4895132	02-22	01	7	4896409	02-29	01	10
4895155	02-08	02	7	4896410	02-29	01	9
4895166	03-02	03	1	4896616	03-10	01	5
4895166	04-01	01	3	4896770	03-10	01	1
4895179	02-04	01	13	4896884	03-12	01	1
4895179	02-04	01	3	4896897	02-06	01	1
4895180	02-16	01	4	4897026	02-07	01	5
4895183	02-04	01	9	4897178	02-04	01	15
4895184	02-04	01	10	4897179	02-04	01	14
4895188	02-04	01	11	4897330	02-11	01	5

INDEX - INDICE - INDEX - ZAHLENVERZEICHNIS - INDICE - INDICE - INDHOLD - INHOUD

Number	Figure	Sequence	Ref.	Number	Figure	Sequence	Ref.
4897481	02-26	01	8	4899110	02-05	02	1
4897858	02-10	01	2	4899110	02-07	01	4
4897861	02-10	01	1	4899115	02-16	01	7
4898301	02-10	01	12	4899122	04-01	01	7
4898502	02-11	01	8	4899643	02-29	01	1
4899003	02-10	01	6	4899827	02-25	01	11
4899003	03-10	01	8	4899921	02-23	01	4
4899009	02-04	01	4	4952483	04-06	02	4
4899009	02-16	01	10	4952483	09-071	01	13
4899019	02-29	01	6	496-21066	06-12	01	2
4899020	02-08	02	1	496-21066	08-55	01	25
4899026	02-03	01	6	496-41041	09-081	01	9
4899026	02-08	01	1	4971843	03-01	01	2
4899026	02-08	02	6	4982514	09-068	01	11
4899031	03-02	03	11	504030960	02-36	01	2
4899032	02-16	01	5	504039282	02-27	01	18
4899037	02-06	01	3	504042847	02-26	01	4
4899039	02-23	01	7	504043984	02-36	01	1
4899039	03-12	01	3	504073234	01-01	01	12
4899046	02-12	01	5	504078856	02-36	01	4
4899052	02-26	01	12	504079269	02-36	01	6
4899058	02-25	01	9	504079607	02-36	01	5
4899063	02-07	01	6	504083348	02-17	01	1
4899068	02-08	02	8	504208042	02-17	01	3
4899068	02-10	01	9	540-711	09-086	01	18
4899068	03-02	03	3	540-719	09-086	01	34
4899072	02-04	01	5	60093124	04-03	01	20
4899072	02-16	01	9	70914465	01-02	01	5
4899073	02-06	01	4	70914465	01-03	01	5
4899073	02-08	01	4	70914465	01-04	01	9
4899074	02-08	02	4	70923581	06-06	01	9
4899076	02-08	02	4	70923841	09-010	09	1
4899078	02-07	01	7	70923841	09-020	01	1
4899079	02-17	01	4	70923841	09-022	01	8
4899079	02-25	01	7	70923841	09-023	01	8
4899079	02-26	01	14	70923841	09-023	02	8
4899080	02-17	01	2	70923842	08-28	01	7
4899085	02-22	01	1	70923843	08-10	01	2
4899086	02-22	01	5	70923843	08-28	02	3
4899090	02-26	01	9	70923843	08-29	01	5
4899091	02-08	01	2	70923843	08-31	01	2
4899091	02-10	01	4	70923843	08-37	01	12
4899091	02-36	01	7	70923843	08-88	02	9
4899093	02-08	01	4	70923843	09-011	01	2
4899093	03-02	03	6	70923843	09-024	01	2
4899093	04-01	01	8	70924110	08-88	02	1
4899107	02-25	01	4	70924110	09-011	01	14
4899108	02-25	01	2	70924192	08-05	01	7
4899109	02-08	02	4	70924192	08-31	01	28
4899109	02-38	01	10	70924192	08-37	01	16

INDEX - INDICE - INDEX - ZAHLENVERZEICHNIS - INDICE - INDICE - INDHOLD - INHOUD

Number	Figure	Sequence	Ref.	Number	Figure	Sequence	Ref.
70924192	09-010	02	3	70933135	09-100	02	7
70924192	09-010	07	5	70933135	09-101	01	7
70924192	09-012	01	26	70933135	09-101	02	7
70924192	09-012	01	28	71104372	02-01	01	
70924192	09-015	01	7	71104373	02-01	01	
70924192	09-016	01	5	71104374	02-01	01	
70924192	09-017	01	3	71318802	06-02	01	11
70924192	09-017	02	3	71400954	06-06	01	11
70924192	09-018	01	12	71401321	06-02	01	7
70924200	08-07	01	2	71401325	06-02	01	6
70924200	08-09	01	14	71401327	06-02	01	5
70924200	08-09	01	20	71401329	06-02	01	4
70924200	08-10	01	7	71401352	06-02	01	1
70924200	08-31	01	27	71401352	06-07	01	7
70924200	08-32	01	3	71401366	06-07	01	2
70924200	08-32	03	1	71401371	06-07	01	4
70924200	08-33	01	5	71401372	06-07	01	5
70924200	08-35	01	5	71403889	04-07	01	13
70924200	08-36	01	5	71403889	04-09	01	21
70924200	08-37	01	2	71404161	08-28	01	4
70924200	09-010	02	10	71404161	08-28	02	6
70924200	09-010	07	14	71404161	08-32	03	9
70924200	09-012	01	16	71404162	03-01	01	10
70924200	09-015	01	10	71404162	08-55	01	27
70924200	09-016	01	12	71404163	08-28	01	5
70924200	09-017	01	12	71404166	08-28	01	2
70924200	09-017	02	12	71404166	08-28	02	7
70924200	09-018	01	4	71404166	09-019	01	6
70925755	09-100	01	20	71404166	09-026	02	5
70925755	09-101	01	20	71404311	08-08	01	9
70925755	09-101	02	20	71404311	08-10	01	8
70927264	04-03	01	31	71404311	09-010	02	11
70927264	09-020	01	8	71404311	09-010	07	13
70927310	04-03	01	32	71404313	08-07	01	1
70928439	04-04	01	18	71404313	08-33	01	6
70928623	02-19	01	12	71404313	08-35	01	6
70928927	09-101	01	19	71404313	08-36	01	6
70928927	09-101	02	19	71404313	09-012	01	15
70929806	04-03	01	16	71404313	09-016	01	15
70929806	09-018	01	15	71404313	09-017	01	11
70929806	09-019	01	9	71404313	09-017	02	11
70931640	08-09	01	5	71404363	01-02	01	4
70931640	08-29	01	4	71404363	01-03	01	4
70931640	08-31	01	5	71404363	01-04	01	7
70931640	08-32	01	4	71404365	08-28	01	6
70931640	08-32	03	3	71404406	01-02	01	7
70931640	09-010	07	19	71404406	01-03	01	7
70931640	09-012	01	27	71404406	01-04	01	4
70931640	09-017	01	6	71404460	08-29	01	22
70931640	09-017	02	6	71404460	08-32	03	6

INDEX - INDICE - INDEX - ZAHLENVERZEICHNIS - INDICE - INDICE - INDHOLD - INHOUD

Number	Figure	Sequence	Ref.	Number	Figure	Sequence	Ref.
71404615	08-05	01	8	71417804	03-03	02	4
71404787	01-02	01	1	71417805	03-03	02	13
71404787	01-03	01	1	71417806	03-03	02	8
71404856	09-029	02	22	71417807	03-03	02	9
71404856	09-030	01	22	71417808	03-03	02	7
71404856	09-031	01	8	71417809	03-03	02	5
71404856	09-031	03	22	71417810	03-03	02	17
71404856	09-040	01	36	71417811	03-03	02	14
71404909	09-018	01	13	71417813	03-03	02	15
71405108	09-040	01	22	71417814	03-03	02	16
71405110	09-040	01	19	71417817	03-03	02	19
71405760	09-024	01	7	71417819	03-03	02	18
71405845	09-024	01	3	71417820	03-03	02	20
71405859	09-011	01	12	71417821	03-03	02	21
71405944	03-02	01	3	71417822	03-03	02	22
71405944	03-02	01A	3	71418385	06-15	01	1
71406178	03-03	01	9	71418432	08-86	01	18
71406236	09-040	01	32	71418434	08-86	01	19
71406271	03-01	01	9	71418452	08-86	01	11
71406271	08-55	01	28	71418453	08-86	01	10
71406579	09-040	01	21	71418454	08-86	01	13
71407937	03-03	01	11	71418476	08-84	01	18
71407938	03-03	02	6	71418479	08-84	01	1
71408811	08-90	01	4	71418480	08-84	01	2
71408814	08-90	01	5	71418481	08-84	01	3
71408816	08-90	01	6	71418481	08-88	01	2
71408891	03-03	02	2	71418483	08-84	01	4
71412008	06-14	01	4	71418483	08-88	01	3
71415031	09-123	01	3	71418683	06-15	01	2
71415031	09-125	01	3	71418879	08-31	01	26
71415031	09-125	02	3	71419758	08-32	03	8
71415157	09-036/A	01	1	71425116	09-074	01	8
71415158	08-88	01	10	71428460	02-30	01	14
71415158	09-032	01	5	71433079	09-123	01	21
71415158	09-034	01	5	71433079	09-125	01	21
71415158	09-036	01	5	71433079	09-125	02	21
71415158	09-036B	01	8	71433086	09-124	01	17
71415218	09-006	01	2	71433086	09-126	01	1
71415385	09-100	01	7	71433086	09-126	01	17
71415385	09-102	01	13	71433088	09-123	01	20
71415426	09-007	01	5	71433088	09-124	01	10
71415426	09-009	01	3	71433088	09-125	01	20
71415855	09-011	01	6	71433088	09-125	02	20
71416080	08-31	01	8	71433088	09-126	01	10
71417596	03-03	02	3	71433096	09-123	01	10
71417597	03-03	02	1	71433096	09-125	01	10
71417598	03-03	02	23	71433096	09-125	02	10
71417801	03-03	02	11	71433121	09-124	01	12
71417802	03-03	02	10	71433121	09-126	01	12
71417803	03-03	02	12	71433122	09-123	01	15

INDEX - INDICE - INDEX - ZAHLENVERZEICHNIS - INDICE - INDICE - INDHOLD - INHOUD

Number	Figure	Sequence	Ref.	Number	Figure	Sequence	Ref.
71433122	09-124	01	6	71461019	06-09	01	3
71433123	09-123	01	2	71461019	06-10	01	3
71433123	09-125	01	2	71461019	06-11	01	3
71433123	09-125	02	2	71465030	08-86	01	28
71433287	09-032	01	6	71465031	08-86	01	27
71433287	09-034	01	6	71465036	08-86	01	5
71433287	09-036	01	6	71466017	09-016	01	13
71442022	09-006	01	5	71466172	09-022	01	4
71442116	09-004	01	4	71466172	09-023	01	4
71443486	09-020	01	2	71466172	09-023	02	4
71443486	09-024	01	9	71466905	06-03	01	5
71444029	08-37	01	17	71468153	09-123	01	14
71444029	09-010	02	4	71468153	09-125	01	14
71444029	09-010	07	6	71468153	09-125	02	14
71444029	09-012	01	25	71468156	09-123	01	12
71444029	09-016	01	18	71468156	09-125	01	12
71444029	09-017	01	2	71468156	09-125	02	12
71444029	09-017	02	2	71468299	09-120	01	15
71444332	08-66	01	21	71468302	09-120	01	7
71444332	08-67	01	25	71468303	09-120	01	6
71444332	08-68	01	26	71468304	09-120	01	5
71444332	08-69	01	23	71469208	08-86	01	26
71444332	08-71	01	4	71469305	09-123	01	13
71445617	08-86	01	22	71469305	09-125	01	13
71445618	08-86	01	23	71469305	09-125	02	13
71445626	08-84	01	8	71470185	06-15	01	4
71445626	08-88	01	7	71471056	06-15	01	5
71445627	08-84	01	7	71477095	09-124	01	11
71445627	08-88	01	6	71477095	09-126	01	11
71445657	08-86	01	8	71484462	08-09	01	9
71445658	08-86	01	7	71484462	09-011	01	11
71445664	08-86	01	9	71484462	09-022	01	2
71445704	08-84	01	13	71484462	09-023	01	2
71445704	08-88	01	17	71484462	09-023	02	2
71445714	08-84	01	5	71488736	02-33	01	2
71445714	08-88	01	4	72104414	08-90	01	3
71445827	08-90	01	19	72104592	08-84	01	15
71445888	08-90	01	8	72104596	08-84	01	10
71445889	08-90	01	7	72104628	08-88	01	16
71447620	08-84	01	17	72104630	08-84	01	6
71447621	08-86	01	25	72104630	08-88	01	5
71447625	08-88	01	15	72104631	08-88	01	13
71447627	08-90	01	17	72107089	02-24	01	7
71450235	04-13	02	12	72108835	03-02	01	1
71451259	09-068	01	10	72108835	03-02	01A	1
71451711	02-33	01	1	72109072	02-33	01	8
71451954	02-33	01	9	72109073	02-33	01	10
71452267	01-04	01	11	72111876	08-90	01	15
71456224	09-120	01	12	72111912	08-90	01	14
71461019	06-08	01	3	72111917	08-90	01	9

INDEX - INDICE - INDEX - ZAHLENVERZEICHNIS - INDICE - INDICE - INDHOLD - INHOUD

Number	Figure	Sequence	Ref.	Number	Figure	Sequence	Ref.
72111924	08-90	01	18	72202218	09-040	01	25
72111926	08-90	01	2	72202453	08-12	01	15
72111927	08-90	01	11	72202453	08-13	01	16
72116117	09-120	01	3	72202489	06-08	01	13
72116133	09-120	01	4	72203001	08-28	01	9
72116240	09-123	01	4	72203002	08-28	01	10
72116240	09-125	01	4	72203027	04-12	01	6
72116240	09-125	02	4	72203027	04-13	01	6
72150022	09-089	02	15	72203145	09-029	02	21
72150174	01-01	01	6	72203145	09-030	01	1
72150174	08-55	01	8	72203145	09-031	03	1
72150175	08-55	01	10	72203145	09-036B	01	6
72150352	08-59	01	4	72203151	09-029	02	13
72150353	08-59	01	16	72203151	09-030	01	9
72150613	08-40	01	5	72203151	09-031	01	1
72150614	08-40	01	3	72203151	09-031	03	9
72150710	08-55	01	6	72203521	06-09	01	13
72150790	08-55	01	9	72203523	06-10	01	16
72151580	08-29	01	15	72203525	06-11	01	16
72151580	08-31	01	23	72203537	02-30	01	7
72151891	09-089	02	3	72203567	08-23	01	4
72151891	09-092	01	2	72203567	09-021	01	4
72160674	08-32	03	10	72203569	08-23	01	1
72161178	09-011	01	21	72203569	09-021	01	6
72161345	09-024	01	1	72203570	08-23	01	5
72161347	09-011	01	1	72203570	09-021	01	5
72161758	09-091	01	8	72203659	08-31	01	14
72161759	09-091	01	9	72203750	02-02	01	8
72171602	09-080	01	2	72203757	02-02	01	4
72201210	09-071	01	8	72203758	02-02	01	12
72201210	09-075	01	24	72203762	02-27	01	17
72201210	09-078	01	18	72203763	02-27	01	13
72201225	09-071	01	3	72203852	08-31	01	3
72201225	09-073	01	2	72203854	08-31	01	4
72201225	09-074	01	10	72203856	08-22	01	1
72201225	09-075	01	3	72203871	09-021	01	8
72201225	09-076	01	9	72203912	09-102	01	4
72201225	09-078	01	4	72203912	09-102	02	4
72201225	09-078	01	7	72203915	09-102	01	8
72201239	02-30	01	8	72203915	09-102	02	8
72201683	08-37	01	7	72203934	09-101	01	23
72201683	08-88	02	6	72203934	09-101	02	23
72202082	08-55	01	20	72203938	09-086	01	9
72202203	09-029	02	4	72203953	09-118	01	7
72202203	09-036B	01	28	72203954	09-121	01	8
72202204	09-036B	01	25	72203956	09-085	01	17
72202212	09-032	01	4	72203961	09-068	01	9
72202212	09-034	01	4	72204155	09-010	04	6
72202212	09-036	01	4	72204201	09-010	09	3
72202218	09-036B	01	13	72204201	09-020	01	13

INDEX - INDICE - INDEX - ZAHLENVERZEICHNIS - INDICE - INDICE - INDHOLD - INHOUD

Number	Figure	Sequence	Ref.	Number	Figure	Sequence	Ref.
72204223	03-01	01	17	72204754	09-018	01	9
72204291	09-018	01	2	72204768	09-103	01	3
72204293	09-022	01	7	72205013	08-35	01	4
72204293	09-023	01	7	72205748	09-040	01	10
72204293	09-023	02	7	72205758	09-011	01	9
72204294	09-022	01	3	72205758	09-040	01	9
72204294	09-023	01	3	72205958	09-067	03	2
72204294	09-023	02	3	72205959	09-067	03	5
72204344	08-31	01	12	72206122	09-097	01	26
72204345	08-31	01	13	72206125	09-098	01	13
72204480	09-047	01	2	72206126	09-091	01	11
72204480	09-048	01	2	72206129	09-090	01	1
72204480	09-049	01	2	72206130	09-092	01	7
72204480	09-050	01	2	72206136	09-088	01	4
72204480	09-052	01	2	72206139	09-097	01	12
72204480	09-054	01	2	72206140	09-098	01	6
72204480	09-055	01	2	72206141	09-090	01	33
72204481	09-047	01	5	72206258	09-071	01	4
72204481	09-048	01	5	72206397	09-098	01	18
72204481	09-049	01	5	72206731	09-047	01	6
72204481	09-050	01	5	72206731	09-048	01	6
72204481	09-052	01	5	72206731	09-049	01	6
72204481	09-054	01	5	72206731	09-050	01	6
72204481	09-055	01	5	72206731	09-052	01	6
72204485	09-056	01	17	72206731	09-054	01	6
72204485	09-057	01	17	72206731	09-055	01	6
72204485	09-058	01	17	72206731	09-056	01	21
72204485	09-059	01	17	72206731	09-057	01	21
72204485	09-061	01	17	72206731	09-058	01	21
72204485	09-062	01	17	72206731	09-059	01	21
72204486	09-056	01	20	72206731	09-061	01	21
72204486	09-057	01	20	72206731	09-062	01	21
72204486	09-058	01	20	72206784	09-067	03	6
72204486	09-059	01	20	72207108	09-123	01	11
72204486	09-061	01	20	72207108	09-125	01	11
72204486	09-062	01	20	72207108	09-125	02	11
72204491	09-020	01	7	72207921	01-04	01	5
72204492	09-020	01	6	72207922	01-04	01	6
72204504	09-020	01	14	72207927	01-04	01	10
72204505	09-020	01	5	72209013	08-03	01	12
72204524	02-24	01	13	72209013	08-03	02	8
72204526	02-24	01	1	72209013	08-03	03	5
72204603	09-101	01	16	72209111	09-096	01	7
72204603	09-101	02	16	72209112	09-096	01	6
72204607	08-08	01	4	72209113	09-089	01	15
72204618	08-08	01	3	72209120	09-098	01	3
72204634	03-06	01	20	72209121	09-089	02	13
72204635	03-06	01	21	72209121	09-090	01	14
72204636	03-06	01	22	72209121	09-091	01	5
72204659	03-06	01	6	72209121	09-092	01	11

INDEX - INDICE - INDEX - ZAHLENVERZEICHNIS - INDICE - INDICE - INDHOLD - INHOUD

Number	Figure	Sequence	Ref.	Number	Figure	Sequence	Ref.
72209121	09-096	01	1	72209827	08-59	01	12
72209123	09-089	02	5	72209827	09-010	03	2
72209123	09-090	01	15	72209829	08-54	01	4
72209123	09-092	01	4	72209832	08-59	01	9
72209157	06-01	01	2	72209832	08-62	01	18
72209399	03-06	01	14	72209833	08-25	01	1
72209400	03-06	01	17	72209833	08-63	01	1
72209583	09-124	01	2	72209834	08-25	01	2
72209583	09-126	01	2	72209834	08-63	01	2
72209632	09-100	01	13	72209835	08-25	01	3
72209635	09-090	01	6	72209835	08-63	01	3
72209636	09-090	01	3	72209836	08-59	01	6
72209637	09-090	01	4	72209836	08-60	01	6
72209638	09-090	01	2	72209838	08-60	01	2
72209644	09-089	01	20	72209838	08-65	01	12
72209721	09-101	01	8	72209838	08-66	01	11
72209721	09-101	02	8	72209838	08-69	01	14
72209721	09-109	01	8	72209838	08-70	01	10
72209798	08-62	01	7	72209839	08-65	01	26
72209801	08-58	01	7	72209839	08-67	01	13
72209802	08-58	01	24	72209839	08-67	01	26
72209803	08-58	01	18	72209839	08-68	01	13
72209806	08-58	01	20	72209839	08-68	01	25
72209807	08-58	01	3	72209839	08-69	01	22
72209810	08-24	01	1	72209839	08-70	01	7
72209810	08-38	01	2	72209839	08-71	01	6
72209810	08-42	01	17	72209841	08-67	01	15
72209810	08-62	01	8	72209841	08-68	01	15
72209813	08-58	01	30	72209842	09-026	02	2
72209813	08-59	01	13	72209843	08-42	01	12
72209813	08-62	01	23	72209843	08-54	01	2
72209815	08-42	01	11	72209857	08-46	01	3
72209815	08-58	01	25	72209858	08-46	01	5
72209815	08-62	01	5	72209859	08-46	01	7
72209815	09-026	02	11	72209860	08-46	01	4
72209817	08-54	01	5	72209861	08-46	01	14
72209820	08-42	01	4	72209862	08-46	01	11
72209821	08-59	01	15	72209863	08-46	01	8
72209821	08-70	01	2	72209865	08-46	01	15
72209823	09-026	02	3	72209866	08-46	01	10
72209824	08-25	01	4	72209867	08-46	01	13
72209824	08-46	01	6	72209868	08-46	01	12
72209824	08-54	01	6	72209869	08-46	01	1
72209824	08-63	01	4	72209870	08-46	01	2
72209824	08-65	01	23	72209876	08-60	01	5
72209824	09-026	02	19	72209877	08-60	01	3
72209827	08-42	01	13	72209878	08-58	01	1
72209827	08-45	01	8	72209878	08-60	01	1
72209827	08-48	01	5	72209879	08-60	01	4
72209827	08-54	01	3	72209976	08-53	01	5

INDEX - INDICE - INDEX - ZAHLENVERZEICHNIS - INDICE - INDICE - INDHOLD - INHOUD

Number	Figure	Sequence	Ref.	Number	Figure	Sequence	Ref.
72209977	08-53	01	1	72210091	08-70	01	9
72209978	08-53	01	11	72210093	08-67	01	14
72209979	08-53	01	2	72210094	08-67	01	22
72209980	08-53	01	3	72210094	08-68	01	14
72209981	08-53	01	9	72210098	08-67	01	10
72209982	08-53	01	25	72210098	08-68	01	24
72209983	08-53	01	26	72210099	08-67	01	19
72209984	08-53	01	21	72210099	08-68	01	6
72209985	08-53	01	6	72210100	08-68	01	20
72209986	08-53	01	4	72210124	08-65	01	10
72209987	08-53	01	27	72210124	08-66	01	19
72209989	08-42	01	2	72210124	08-69	01	12
72209989	08-53	01	28	72210125	08-42	01	19
72209991	08-53	01	13	72210125	08-65	01	2
72209992	08-53	01	15	72210125	08-66	01	20
72209993	08-53	01	14	72210125	08-67	01	2
72209994	08-53	01	19	72210125	08-68	01	3
72209995	08-53	01	16	72210125	08-69	01	4
72209996	08-53	01	17	72210126	08-42	01	6
72210000	08-52	01	5	72210126	08-65	01	18
72210000	08-53	01	10	72210126	08-66	01	8
72210001	08-52	01	4	72210126	08-67	01	9
72210001	08-53	01	12	72210126	08-68	01	10
72210003	08-53	01	22	72210126	08-69	01	11
72210004	08-53	01	30	72210127	08-42	01	14
72210005	08-53	01	20	72210127	08-65	01	3
72210012	08-52	01	27	72210127	08-66	01	3
72210015	08-52	01	24	72210127	08-67	01	3
72210023	08-52	01	19	72210127	08-68	01	4
72210038	09-097	01	22	72210127	08-69	01	5
72210072	08-66	01	14	72210142	06-06	01	2
72210072	08-70	01	15	72210143	06-06	01	5
72210073	08-70	01	1	72210144	06-06	01	4
72210077	08-65	01	25	72210147	06-06	01	1
72210077	08-66	01	22	72210148	06-06	01	10
72210077	08-67	01	27	72210149	06-06	01	7
72210077	08-70	01	6	72210151	06-06	01	3
72210077	08-71	01	5	72210152	06-06	01	6
72210077	09-026	02	18	72210153	06-07	01	8
72210088	08-65	01	15	72210158	06-07	01	6
72210088	08-66	01	23	72210159	06-07	01	10
72210088	08-67	01	16	72210162	06-07	01	1
72210088	08-68	01	19	72210163	06-07	01	3
72210088	08-69	01	17	72210164	06-02	01	8
72210088	08-71	01	12	72210165	06-02	01	3
72210091	08-65	01	13	72210170	06-02	01	2
72210091	08-66	01	12	72210181	06-03	01	9
72210091	08-67	01	24	72210186	06-08	01	2
72210091	08-68	01	17	72210186	06-09	01	2
72210091	08-69	01	15	72210186	06-10	01	2

INDEX - INDICE - INDEX - ZAHLENVERZEICHNIS - INDICE - INDICE - INDHOLD - INHOUD

Number	Figure	Sequence	Ref.	Number	Figure	Sequence	Ref.
72210186	06-11	01	2	72210243	08-78	01	4
72210187	06-08	01	7	72210246	08-78	01	3
72210187	06-09	01	7	72210247	08-78	01	6
72210187	06-10	01	7	72210248	08-78	01	5
72210187	06-11	01	7	72210249	08-78	01	8
72210188	06-08	01	8	72210250	08-78	01	1
72210188	06-09	01	8	72210444	08-61	01	1
72210188	06-10	01	8	72210445	08-61	01	2
72210188	06-11	01	8	72210446	08-61	01	3
72210189	06-08	01	9	72210447	08-40	01	6
72210189	06-09	01	9	72210447	08-48	01	4
72210189	06-10	01	9	72210448	08-48	01	6
72210189	06-11	01	9	72210449	08-48	01	2
72210190	06-08	01	5	72210450	08-40	01	4
72210190	06-09	01	5	72210450	08-48	01	3
72210190	06-10	01	5	72210451	08-40	01	1
72210190	06-11	01	5	72210451	08-48	01	1
72210191	06-08	01	4	72210460	06-14	01	5
72210191	06-09	01	4	72210461	06-14	01	2
72210191	06-10	01	4	72210462	06-14	01	7
72210191	06-11	01	4	72210463	06-14	01	1
72210192	06-08	01	1	72210464	06-14	01	6
72210192	06-09	01	1	72210465	06-13	01	6
72210192	06-10	01	1	72210467	06-13	01	4
72210192	06-11	01	1	72210469	06-13	01	3
72210193	06-08	01	11	72210469	06-14	01	10
72210193	06-09	01	11	72210470	06-13	01	7
72210193	06-10	01	11	72210483	08-45	01	12
72210193	06-11	01	11	72210484	08-45	01	9
72210195	06-08	01	10	72210485	08-45	01	10
72210196	06-09	01	10	72210486	08-45	01	14
72210197	06-10	01	10	72210487	08-45	01	18
72210198	06-11	01	10	72210488	08-45	01	17
72210200	06-08	01	12	72210489	08-45	01	3
72210200	06-09	01	12	72210490	08-45	01	4
72210200	06-10	01	12	72210491	08-40	01	7
72210200	06-11	01	12	72210491	08-45	01	7
72210208	02-32/A	01	29	72210492	08-45	01	20
72210209	02-32/A	01	30	72210493	08-45	01	19
72210213	02-32/A	01	26	72210494	08-45	01	22
72210216	02-32/A	01	14	72210523	06-02	01	12
72210219	08-45	01	5	72210527	06-03	01	2
72210223	08-45	01	15	72211160	08-65	01	21
72210225	08-45	01	1	72211282	08-52	01	8
72210226	08-45	01	13	72211282	08-58	01	12
72210230	08-45	01	21	72211285	08-58	01	32
72210232	08-45	01	11	72212247	09-022	01	9
72210233	08-45	01	2	72212247	09-023	01	9
72210234	08-45	01	16	72213528	09-040	01	31
72210237	08-45	01	6	72213529	09-040	01	17

INDEX - INDICE - INDEX - ZAHLENVERZEICHNIS - INDICE - INDICE - INDHOLD - INHOUD

Number	Figure	Sequence	Ref.	Number	Figure	Sequence	Ref.
72213766	02-30	01	5	72214558	08-03	01	1
72213766	02-32/A	01	4	72214558	08-09	01	13
72213767	02-30	01	2	72214600	08-54	01	8
72213767	02-32/A	01	2	72214601	08-54	01	7
72214220	04-04	01	11	72214663	08-07	02	3
72214500	08-55	01	16	72214668	08-16	01	2
72214501	08-55	01	19	72214669	08-28	02	1
72214502	01-01	01	7	72214711	08-28	02	5
72214502	08-55	01	18	72214714	08-10	01	1
72214503	08-55	01	17	72214714	09-019/A	01	2
72214504	08-55	01	15	72214731	08-26	01	19
72214522	08-03	01	4	72214731	08-27/A	01	1
72214522	08-11	01	13	72214734	08-05	01	10
72214522	09-010	05	5	72214734	08-07	01	5
72214523	08-03	01	5	72214735	08-05	01	22
72214523	08-03	03	2	72214735	09-019/A	01	11
72214523	08-12	01	3	72214735	09-019/B	01	10
72214523	08-13	01	3	72214740	08-26	01	20
72214523	08-26	01	16	72214744	08-03	01	9
72214524	08-03	01	7	72214744	08-03	02	2
72214524	08-03	03	7	72214744	08-05	01	4
72214524	09-010	04	7	72214744	08-26	01	8
72214524	09-019/A	01	8	72214744	08-28	01	1
72214524	09-019/B	01	1	72214744	09-010	04	2
72214525	08-03	01	13	72214744	09-019/A	01	24
72214525	08-03	02	9	72214744	09-019/B	01	2
72214525	08-03	03	8	72214762	08-28	02	2
72214525	08-11	01	6	72214763	09-018	01	6
72214525	09-019/A	01	25	72214775	08-18	01	7
72214526	08-03	01	2	72214782	08-03	01	8
72214526	08-03	03	3	72215152	09-017	01	15
72214526	08-05	01	17	72215152	09-017	02	15
72214533	08-05	01	21	72215205	09-015	01	5
72214534	08-05	01	19	72215205	09-016	01	8
72214535	08-03	02	1	72215205	09-027	01	14
72214535	08-26	01	14	72215206	09-015	01	9
72214535	09-019/A	01	3	72215206	09-016	01	4
72214535	09-019/B	01	3	72215273	08-12	01	4
72214539	09-019/B	01	14	72215273	08-13	01	4
72214541	08-03	03	9	72215300	08-40	01	8
72214541	08-26	01	7	72215301	08-40	01	2
72214542	08-05	01	1	72215357	08-62	01	14
72214542	09-019/A	01	13	72215374	08-53	01	18
72214542	09-019/B	01	4	72215377	08-53	01	31
72214543	08-26	01	2	72215386	08-62	01	4
72214543	09-010	05	7	72215387	08-58	01	29
72214546	08-12	02	2	72215387	08-62	01	13
72214550	08-26	01	15	72215395	08-58	01	21
72214553	08-18/A	01	1	72215395	08-62	01	24
72214553	09-010/A	01	1	72215396	08-62	01	12

INDEX - INDICE - INDEX - ZAHLENVERZEICHNIS - INDICE - INDICE - INDHOLD - INHOUD

Number	Figure	Sequence	Ref.	Number	Figure	Sequence	Ref.
72215424	02-32/A	01	28	72220391	09-021	01	2
72215443	08-08	01	10	72230314	06-12	01	3
72215443	08-37	01	14	72230408	01-01	01	8
72215443	08-42	01	5	72230408	08-55	01	22
72215461	08-58	01	33	72265057	09-040	01	27
72215461	08-62	01	20	72273823	09-085	01	8
72215463	08-58	01	4	72275189	09-110	02	7
72215463	08-62	01	15	72280271	08-46	01	9
72215596	08-42	01	8	72280882	09-097	01	24
72215596	08-67	01	7	72280893	09-122	01	1
72215596	08-71	01	9	72282535	09-100	01	22
72215774	08-54	01	9	72283072	08-52	01	29
72216473	09-011	01	5	72283326	08-38	01	6
72217374	08-58	01	36	72283478	08-37	01	1
72217375	08-58	01	34	72283478	08-37	01	15
72217376	08-58	01	13	72283478	08-88	02	13
72217377	08-62	01	6	72283478	09-032	01	1
72217379	08-62	01	1	72283478	09-034	01	1
72217380	08-62	01	22	72283478	09-036	01	1
72217382	08-62	01	21	72283853	08-05	01	18
72217392	02-20	01	6	72283853	09-019/A	01	22
72217405	08-16	01	1	72283870	08-88	02	12
72217405	08-28	01	3	72285161	09-089	02	9
72217409	08-05	01	12	72285161	09-090	01	22
72217471	08-58	01	14	72950131	09-089	01	19
72217475	08-58	01	48	72950134	09-089	02	38
72217476	08-62	01	2	72950231	09-090	01	12
72219119	08-62	01	3	72950285	08-42	01	7
72219249	09-027	01	12	72950285	08-65	01	17
72219250	09-027	01	13	72950285	08-66	01	6
72219251	09-027	01	2	72950285	08-67	01	8
72219252	09-027	01	4	72950285	08-68	01	9
72219253	09-027	01	7	72950285	08-69	01	10
72219254	09-027	01	8	72950352	09-096	01	12
72219255	09-027	01	6	72950361	09-089	02	33
72219256	09-027	01	5	72951499	08-12	01	13
72219279	09-027	01	3	72951499	08-13	01	14
72219287	09-027	01	9	72951573	09-089	02	20
72219288	09-027	01	10	72951573	09-092	01	18
72219289	09-027	01	11	72951575	09-092	01	9
72219290	09-027	01	1	72951580	09-088	01	3
72219365	08-25	01	5	72951633	09-089	02	36
72219365	08-63	01	5	72951642	09-086	01	7
72219439	09-090	01	7	72951660	09-088	01	18
72219440	09-090	01	5	72951660	09-089	02	21
72219445	08-90	01	10	72951660	09-092	01	17
72219451	09-040	01	18	72951685	09-089	01	14
72219452	09-040	01	23	72951753	09-088	01	19
72219489	02-24	01	2	72951753	09-089	02	22
72220390	09-021	01	3	72951753	09-092	01	16

INDEX - INDICE - INDEX - ZAHLENVERZEICHNIS - INDICE - INDICE - INDHOLD - INHOUD

Number	Figure	Sequence	Ref.	Number	Figure	Sequence	Ref.
72951984	09-086	01	5	72955472	08-16	01	7
72953334	09-089	02	35	72955526	08-40	01	9
72953349	09-086	01	4	72955526	09-019/A	01	12
72953884	09-036/A	01	2	72957828	08-55	01	7
72953999	02-32/A	01	5	72958211	09-098	01	19
72954140	09-090	01	29	72958213	09-098	01	23
72954173	08-05	01	23	72958217	09-088	01	10
72954200	09-097	01	20	72958501	09-090	01	26
72954209	09-110	02	21	72958503	09-089	02	14
72954251	09-076	02	3	72958811	08-65	01	24
72954269	09-089	02	2	72958881	08-58	01	9
72954269	09-092	01	1	72958882	08-58	01	47
72954277	09-091	01	12	72960147	08-78	01	9
72954277	09-098	01	11	72960350	08-52	01	1
72954322	09-019	01	2	72960479	08-59	01	11
72954362	09-089	02	37	72960987	08-38	01	5
72954365	09-091	01	13	72961479	08-42	01	3
72954366	09-089	02	11	72962148	08-58	01	38
72954370	09-089	02	39	72962149	08-58	01	43
72954371	09-088	01	2	72962150	08-58	01	6
72954372	09-098	01	2	72962151	08-62	01	25
72954373	09-088	01	14	72962208	08-58	01	19
72954373	09-097	01	33	72962215	08-58	01	17
72954375	09-092	01	24	72962216	08-58	01	28
72954386	09-089	02	28	72962321	08-55	01	5
72954387	09-089	02	31	72963962	08-58	01	44
72954388	09-089	02	32	72963968	08-59	01	2
72954389	09-089	02	29	72963969	08-59	01	1
72954391	09-097	01	29	72963970	08-59	01	7
72954404	09-089	01	17	72963972	08-59	01	5
72954715	09-098	01	8	72963976	08-58	01	41
72954719	09-097	01	32	72963995	08-59	01	17
72954726	09-097	01	13	72963996	08-59	01	8
72954727	09-097	01	18	72963997	08-59	01	10
72954772	09-087	01	9	72964141	09-071	01	14
72954857	02-32/A	01	22	72964141	09-074	01	11
72954860	09-088	01	16	72964141	09-075	01	15
72954860	09-097	01	34	72964142	09-071	01	15
72954869	09-088	01	13	72964142	09-074	01	12
72954875	09-097	01	39	72964142	09-075	01	16
72954897	09-089	02	16	72964201	08-70	01	12
72954897	09-090	01	32	72964210	08-67	01	11
72954900	09-090	01	16	72964210	08-68	01	11
72954900	09-092	01	8	72964211	08-67	01	1
72954901	09-098	01	1	72964211	08-68	01	1
72954902	09-088	01	5	72964211	08-69	01	19
72954903	09-088	01	11	72964212	08-66	01	9
72954903	09-097	01	38	72964469	08-58	01	5
72954906	09-088	01	12	72964485	08-58	01	8
72955421	09-003	01	1	72964498	08-59	01	3

INDEX - INDICE - INDEX - ZAHLENVERZEICHNIS - INDICE - INDICE - INDHOLD - INHOUD

Number	Figure	Sequence	Ref.	Number	Figure	Sequence	Ref.
73131968	04-22	01	4	75254844	06-08	01	16
73313187	09-068	01	5	75254844	09-002	01	3
73407336	09-109	01	7	75256026	09-036B	01	30
73407337	09-109	01	2	75256026	09-056	01	4
73407338	09-109	01	6	75256026	09-057	01	4
73407339	09-109	01	1	75256026	09-058	01	4
73407341	09-109	01	5	75256026	09-059	01	4
73422831	09-109	01	3	75256026	09-061	01	4
75201641	04-06	01	7	75256026	09-062	01	4
75201642	01-02	01	15	75256028	04-07	01	8
75201642	01-03	01	15	75256034	09-007	01	12
75201642	02-27	01	9	75256993	09-123	01	9
75201642	02-30	01	3	75256993	09-124	01	9
75201642	03-02	01	15	75256993	09-125	01	9
75201642	03-02	01A	15	75256993	09-125	02	9
75201642	04-03	01	30	75256993	09-126	01	9
75201642	04-04	01	14	75257743	09-055	01	1
75201642	04-07	01	14	75257744	09-054	01	1
75201642	04-13	01	14	75257746	09-052	01	1
75201642	04-13	02	11	75259613	04-02	01	4
75201642	08-26	01	10	75260551	09-056	01	14
75201642	08-28	01	12	75260551	09-057	01	14
75201642	09-010	01	6	75260551	09-058	01	14
75201642	09-010	09	8	75260551	09-059	01	14
75201642	09-020	01	10	75260551	09-061	01	14
75201642	09-100	01	17	75260551	09-062	01	14
75201642	09-100	02	17	75261121	09-064	01	11
75201642	09-101	01	24	75261295	09-065	01	11
75201642	09-101	02	24	75261414	09-029	02	17
75201642	09-103	02	5	75261414	09-030	01	3
75210383	09-081	01	8	75261414	09-031	03	3
75210383	09-123	01	6	75261414	09-036B	01	5
75210383	09-125	01	6	75261417	09-029	02	10
75210383	09-125	02	6	75261417	09-030	01	15
75241002	01-01	01	1	75261417	09-031	01	9
75241002	03-01	01	3	75261417	09-031	03	15
75245286	09-047	01	17	75261417	09-036B	01	14
75245286	09-048	01	17	75261417	09-040	01	24
75245286	09-049	01	17	75261418	09-029	02	11
75245286	09-050	01	17	75261418	09-030	01	16
75245286	09-052	01	17	75261418	09-031	01	10
75245286	09-054	01	17	75261418	09-031	03	16
75245286	09-055	01	17	75261418	09-036B	01	15
75245286	09-056	01	22	75261418	09-040	01	24
75245286	09-057	01	22	75261419	09-029	02	12
75245286	09-058	01	22	75261419	09-030	01	17
75245286	09-059	01	22	75261419	09-031	01	11
75245286	09-061	01	22	75261419	09-031	03	17
75245286	09-062	01	22	75261419	09-036B	01	16
75248827	04-02	01	3	75261419	09-040	01	24

INDEX - INDICE - INDEX - ZAHLENVERZEICHNIS - INDICE - INDICE - INDHOLD - INHOUD

Number	Figure	Sequence	Ref.	Number	Figure	Sequence	Ref.
75261587	09-036B	01	22	75264237	04-12	01	1
75261588	09-036B	01	23	75264237	04-13	01	1
75261589	09-029	02	18	75264237	04-13	02	2
75261589	09-030	01	2	75264389	09-056	01	16
75261589	09-031	03	2	75264389	09-057	01	16
75261589	09-036B	01	4	75264389	09-058	01	16
75261590	09-036B	01	24	75264389	09-059	01	16
75261591	09-029	02	5	75264389	09-061	01	16
75261591	09-036B	01	26	75264389	09-062	01	16
75261592	09-029	02	6	75264858	04-06	01	1
75261592	09-036B	01	27	75264858	04-07	01	1
75261593	09-029	02	7	75264920	09-030	01	23
75261593	09-036B	01	29	75264920	09-031	03	23
75261692	08-28	01	14	75264923	09-030	01	24
75261700	08-28	01	13	75264923	09-031	03	24
75261771	09-002	01	5	75264959	08-31	01	1
75261827	09-006	01	1	75264959	08-90	01	1
75261952	04-06	01	3	75264967	09-067	03	7
75261989	08-55	01	21	75264968	09-011	01	17
75262001	09-080	01	6	75264970	09-011	01	15
75262002	09-071	01	5	75265015	09-040	01	15
75262006	09-070	01	13	75265023	09-040	01	35
75262006	09-072	01	12	75265030	09-040	01	12
75262146	09-007	01	10	75265033	09-040	01	8
75262147	09-007	01	7	75265036	09-040	01	11
75262148	09-007	01	8	75265048	09-040	01	28
75262149	09-007	01	9	75265052	09-009	01	1
75262159	09-029	02	19	75265054	09-011	01	9
75262166	04-12	01	11	75265054	09-040	01	9
75262204	08-57	01	12	75265055	09-011	01	9
75262382	09-011	01	16	75265055	09-040	01	9
75262387	01-04	01	8	75265056	09-011	01	9
75262388	01-02	01	12	75265056	09-040	01	9
75262388	01-03	01	12	75265058	09-040	01	27
75262389	01-02	01	10	75265094	09-065	01	12
75262389	01-03	01	10	75265141	09-067	03	10
75262389	01-04	01	3	75265142	09-067	03	11
75262517	02-31	01	15	75265231	09-030	01	20
75263684	06-05	01	2	75267952	04-07	01	4
75263684	06-07	01	9	75267954	04-07	01	4
75263685	06-04	01	4	75283949	04-07	01	9
75263685	06-06	01	12	75288330	04-06	02	2
75263813	09-032	01	2	75288330	04-12	01	2
75263813	09-034	01	2	75288330	04-13	01	2
75263813	09-036	01	2	75288330	04-13	02	3
75263815	09-032	01	3	75321678	06-09	01	16
75263815	09-034	01	3	75321678	06-10	01	15
75263815	09-036	01	3	75321678	06-11	01	15
75263924	03-01	01	6	75321678	09-002	01	4
75264237	04-06	02	1	75321956	02-19	01	3

INDEX - INDICE - INDEX - ZAHLENVERZEICHNIS - INDICE - INDICE - INDHOLD - INHOUD

Number	Figure	Sequence	Ref.	Number	Figure	Sequence	Ref.
75322110	09-050	01	1	75325827	09-047	01	13
75322135	09-049	01	1	75325827	09-048	01	13
75323294	09-048	01	1	75325827	09-049	01	13
75325708	09-006	01	6	75325827	09-050	01	13
75325772	04-06	01	6	75325827	09-052	01	13
75325824	09-047	01	11	75325827	09-054	01	13
75325824	09-048	01	11	75325827	09-055	01	13
75325824	09-049	01	11	75325827	09-056	01	1
75325824	09-050	01	11	75325827	09-057	01	1
75325824	09-052	01	11	75325827	09-058	01	1
75325824	09-054	01	11	75325827	09-059	01	1
75325824	09-055	01	11	75325827	09-061	01	1
75325824	09-056	01	9	75325827	09-062	01	1
75325824	09-057	01	9	75325827	09-064	01	1
75325824	09-058	01	9	75325827	09-065	01	2
75325824	09-059	01	9	75325828	09-047	01	14
75325824	09-061	01	9	75325828	09-048	01	14
75325824	09-062	01	9	75325828	09-049	01	14
75325824	09-064	01	9	75325828	09-050	01	14
75325824	09-065	01	9	75325828	09-052	01	14
75325825	09-047	01	7	75325828	09-054	01	14
75325825	09-048	01	7	75325828	09-055	01	14
75325825	09-049	01	7	75325828	09-056	01	2
75325825	09-050	01	7	75325828	09-057	01	2
75325825	09-052	01	7	75325828	09-058	01	2
75325825	09-054	01	7	75325828	09-059	01	2
75325825	09-055	01	7	75325828	09-061	01	2
75325825	09-056	01	8	75325828	09-062	01	2
75325825	09-057	01	8	75325828	09-064	01	2
75325825	09-058	01	8	75325828	09-065	01	1
75325825	09-059	01	8	75325839	09-070	01	12
75325825	09-061	01	8	75325839	09-072	01	11
75325825	09-062	01	8	75325839	09-086	01	39
75325825	09-064	01	5	75326006	06-04	01	2
75325825	09-065	01	8	75326006	09-005	01	2
75325826	09-047	01	10	75326353	02-02	01	9
75325826	09-048	01	10	75326571	09-007	01	13
75325826	09-049	01	10	75326579	09-004	01	5
75325826	09-050	01	10	75327080	09-047	01	16
75325826	09-052	01	10	75327080	09-048	01	16
75325826	09-054	01	10	75327080	09-049	01	16
75325826	09-055	01	10	75327080	09-050	01	16
75325826	09-056	01	13	75327080	09-052	01	16
75325826	09-057	01	13	75327080	09-054	01	16
75325826	09-058	01	13	75327080	09-055	01	16
75325826	09-059	01	13	75327080	09-064	01	10
75325826	09-061	01	13	75327080	09-065	01	10
75325826	09-062	01	13	75327081	09-047	01	12
75325826	09-064	01	8	75327081	09-048	01	12
75325826	09-065	01	7	75327081	09-049	01	12

INDEX - INDICE - INDEX - ZAHLENVERZEICHNIS - INDICE - INDICE - INDHOLD - INHOUD

Number	Figure	Sequence	Ref.	Number	Figure	Sequence	Ref.
75327081	09-050	01	12	8321507	04-03	01	11
75327081	09-052	01	12	84121866	08-29	01	20
75327081	09-054	01	12	84123792	09-100	01	23
75327081	09-055	01	12	84123793	09-100	01	24
75327081	09-064	01	3	84124313	09-100	01	21
75327081	09-065	01	3	84127404	09-089	02	4
75327104	09-036B	01	9	84127404	09-092	01	3
75327104	09-056	01	3	84127405	09-088	01	22
75327104	09-057	01	3	84127405	09-092	01	13
75327104	09-058	01	3	84130880	04-11	01	8
75327104	09-059	01	3	84136413	09-068	01	13
75327104	09-061	01	3	84142001	06-12	01	4
75327104	09-062	01	3	84143161	09-118	01	1
75327106	09-056	01	15	84143855	09-073	01	14
75327106	09-057	01	15	84143869	09-073	01	10
75327106	09-058	01	15	84146470	09-086	02	2
75327106	09-059	01	15	84152664	06-15	01	16
75327106	09-061	01	15	84152673	06-15	01	3
75327106	09-062	01	15	84152727	06-15	01	6
75327111	04-03	01	6	84152738	06-15	01	7
75327320	09-064	01	12	84152750	06-15	01	8
75327362	09-125	01	19	84152752	06-15	01	9
75327889	09-082	01	2	84152755	06-15	01	10
76030024	06-08	01	6	84152756	06-15	01	11
76030024	06-09	01	6	84152758	06-15	01	12
76030024	06-10	01	6	84152764	06-15	01	13
76030024	06-11	01	6	84152771	06-15	01	14
76045777	03-01	01	16	84152774	06-15	01	15
77251448	09-109	01	4	84152777	06-14	01	9
78100104	09-010	08	1	84152939	06-14	01	12
78100105	09-010	07	9	84152942	06-14	01	11
78100105	09-010	08	2	84152952	06-14	01	8
78100138	09-017	01	7	84152959	06-13	01	5
78100138	09-017	02	7	84152963	06-13	01	2
79069460	04-06	01	2	84152970	06-13	01	1
79083943	06-03	01	1	84152970	06-14	01	3
79089658	04-06	01	8	84158140	03-03	01	1
79089658	04-06	02	3	84158151	03-03	01	7
79089658	04-07	01	2	84158160	03-03	01	3
79089658	04-12	01	3	84159677	03-03	01	14
79089658	04-13	01	3	84162283	09-101	01	21
79089658	04-13	02	5	84162510	09-089	02	8
79102142	02-20	01	5	84162560	09-089	02	18
8093957	04-23	02	8	84167034	03-06	01	15
8093958	04-23	02	6	84168959	01-01	01	10
8093959	04-23	02	12	84168959	03-02	01	16
8093960	04-23	02	1	84170883	09-100	01	25
8190143	04-23	02	9	84189984	08-51	01	7
825-1408	04-02	01	1	84251802	04-02	01	5
8282270	09-066	01	3	84254257	03-02	01A	23

INDEX - INDICE - INDEX - ZAHLENVERZEICHNIS - INDICE - INDICE - INDHOLD - INHOUD

Number	Figure	Sequence	Ref.	Number	Figure	Sequence	Ref.
84254259	03-02	01A	18	87333071	08-58	01	31
84269594	03-02	02A	4	87333132	08-65	01	6
84269594	03-02	03	12	87333132	08-66	01	16
84269596	03-02	01A	20	87333132	08-69	01	3
84269597	03-02	01A	12	87333291	09-088	01	15
84273550	03-02	01A	11	87333292	09-091	01	4
84273562	03-02	01A	8	87333293	09-089	01	3
84273566	03-02	01A	16	87333294	09-091	01	6
84279037	09-123	01	19	87333296	09-091	01	10
84279037	09-125	02	19	87333297	09-088	01	21
84281891	03-02	01A	7	87333298	09-088	01	8
84285292	02-01	01	1	87333300	09-091	01	1
84319013	09-123	01	18	87333301	09-091	01	3
84319013	09-125	02	18	87333303	09-088	01	20
84390666	04-04	01	10	87333304	09-088	01	6
84468361	09-124	01	18	87333305	09-091	01	2
84468361	09-126	01	6	87333307	09-090	01	19
84495413	09-123	01	22	87333308	09-091	01	7
84495413	09-124	01	7	87333311	09-089	02	26
84495413	09-125	02	15	87333311	09-090	01	28
84495413	09-126	01	7	87333311	09-092	01	21
84517110	09-123	01	7	87333312	09-090	01	27
84517110	09-124	01	8	87333321	09-089	02	30
84517110	09-125	02	7	87333325	09-092	01	14
84517110	09-126	01	8	87333352	09-092	01	10
84517111	09-124	01	4	87333355	09-089	02	1
84517111	09-126	01	4	87333355	09-090	01	31
84517113	09-123	01	16	87333364	09-097	01	23
84517113	09-124	01	1	87333365	09-097	01	17
84517114	09-124	01	3	87333366	09-097	01	1
84517114	09-126	01	3	87333367	09-097	01	4
84517115	09-124	01	16	87333368	09-097	01	10
84517115	09-126	01	16	87333369	09-097	01	9
84521888	08-55	01	3	87333370	09-097	01	8
84549191	09-086	02	3	87333371	09-097	01	11
84558036	09-123	01	23	87333372	09-097	01	6
84558036	09-125	02	16	87333373	09-097	01	7
84575452	09-007	01	6	87333374	09-097	01	2
857-10035	08-09	01	19	87333375	09-097	01	5
857-10035	08-10	01	6	87333376	09-097	01	3
85804447	09-082	01	3	87333378	09-097	01	16
85808422	09-031	01	21	87333380	09-097	01	40
8602542	03-02	01A	19	87333381	09-097	01	41
87333059	08-58	01	46	87333382	09-097	01	25
87333061	08-58	01	40	87333383	09-097	01	15
87333062	08-58	01	11	87333384	09-097	01	19
87333063	08-58	01	37	87333385	09-097	01	28
87333064	08-58	01	15	87333386	09-097	01	14
87333069	08-58	01	39	87333387	09-097	01	31
87333070	08-58	01	2	87333389	09-097	01	35

INDEX - INDICE - INDEX - ZAHLENVERZEICHNIS - INDICE - INDICE - INDHOLD - INHOUD

Number	Figure	Sequence	Ref.	Number	Figure	Sequence	Ref.
87333390	09-097	01	36	87368808	09-125	02	5
87333391	09-097	01	37	87368809	09-123	01	1
87333392	09-098	01	9	87368809	09-125	01	1
87333393	09-098	01	7	87368809	09-125	02	1
87333394	09-098	01	10	87369423	09-003	01	5
87333395	09-098	01	12	87369427	08-51	01	1
87333396	09-098	01	15	87369430	08-51	01	6
87333397	09-098	01	22	87369444	08-88	01	1
87333398	09-098	01	24	87369850	09-030	01	4
87333399	09-098	01	20	87369850	09-031	03	4
87333400	09-098	01	17	87369983	09-030	01	5
87333401	09-098	01	21	87369983	09-031	03	5
87333402	09-098	01	16	87375394	09-018	01	5
87333403	09-098	01	14	87379464	09-120	01	2
87333404	09-098	01	5	87379467	09-120	01	10
87333574	09-089	02	7	87382965	09-023	02	9
87333574	09-092	01	5	87386068	09-025	01	1
87334470	09-029	02	14	87395451	08-84	01	14
87334508	09-076	02	8	87395454	08-84	01	12
87334509	09-076	02	7	87396711	09-010	09	2
87336573	09-089	01	18	87396713	09-010	09	7
87338398	08-26	01	17	87396715	09-010	09	5
87338408	08-12	01	5	87396715	09-020	01	12
87338408	08-18	02	13	87396716	09-020	01	15
87338408	08-18/A	02	4	87396720	09-010	09	4
87338415	09-010	04	10	87396721	09-010	09	6
87338416	08-11	01	9	87396721	09-020	01	16
87338424	08-18/A	02	2	87397171	08-03	01	10
87338432	08-28	02	4	87397448	08-03	02	6
87338497	08-05	01	11	87397448	09-019/A	01	9
87338500	08-05	01	15	87397449	08-03	03	1
87338533	08-24	01	6	87397451	08-03	02	5
87338536	08-26	01	13	87397561	08-07	02	5
87338570	08-18	01	5	87397568	08-03	02	3
87340507	02-32	01	8	87397568	08-18	01	9
87343521	08-29	01	10	87397569	08-09	01	1
87343521	08-31	01	22	87397569	08-14	01	2
87343521	09-012	01	12	87397569	09-010	02	14
87349053	08-88	01	12	87397569	09-010	07	1
87349054	08-88	01	8	87397570	08-09	01	15
87353624	02-32/A	01	25	87397570	09-010	02	16
87361964	09-081	01	7	87397570	09-010	07	15
87362264	03-01	01	1	87429186	09-125	01	17
87362960	08-57	01	1	87438159	03-02	01	17
87362973	09-016	01	14	87470045	04-13	02	6
87362973	09-017	01	16	87470054	09-003	01	9
87362973	09-017	02	16	87470122	04-13	01	15
87363966	08-60	01	7	87470123	04-13	02	8
87368808	09-123	01	5	87470124	04-07	01	7
87368808	09-125	01	5	87470125	04-07	01	10

INDEX - INDICE - INDEX - ZAHLENVERZEICHNIS - INDICE - INDICE - INDHOLD - INHOUD

Number	Figure	Sequence	Ref.	Number	Figure	Sequence	Ref.
87470160	04-13	01	11	87522432	08-13	01	9
87470169	04-13	02	10	87522432	09-010	03	4
87470596	09-040	01	37	87522432	09-010	04	3
87472588	09-005	01	1	87522674	08-23	01	3
87475561	03-03	01	10	87524750	08-55	01	23
87475562	03-03	01	13	87524752	09-082	01	19
87475566	03-03	01	12	87524798	09-087	02	5
87477417	09-124	01	14	87524802	04-18	01	6
87477417	09-126	01	14	87524804	09-087	01	1
87477418	09-124	01	15	87524808	09-068	01	8
87477418	09-126	01	15	87524808	09-086	01	10
87477419	09-125	01	15	87524808	09-086	01	37
87477422	09-125	01	7	87524808	09-087	01	11
87477423	09-125	01	8	87524810	09-087	01	16
87480339	09-123	01	8	87524813	09-086	01	36
87480339	09-125	01	22	87524814	09-086	01	13
87480339	09-125	02	8	87524816	09-086	01	35
87482410	09-030	01	21	87524817	09-086	01	22
87482410	09-031	03	21	87524819	09-087	02	7
87482766	09-040	01	3	87524821	09-087	02	19
87482772	09-040	01	2	87524864	08-22	01	3
87482775	09-040	01	14	87524865	08-22	01	8
87482776	09-040	01	16	87524873	08-22	01	4
87485619	09-036/A	01	5	87524874	08-22	01	9
87486618	09-067	03	1	87524900	08-07	01	3
87490876	09-004	01	9	87524901	08-07	01	12
87492389	03-02	01	19	87524902	08-07	02	2
87492848	09-067	03	3	87524904	08-07	01	7
87492853	01-03	01	2	87524907	08-07	01	15
87496746	09-075	01	13	87525185	09-068	01	6
87496747	09-071	01	25	87525505	09-032	01	11
87519760	09-103	02	4	87525505	09-034	01	11
87519949	08-12	02	1	87525505	09-036	01	11
87519950	08-12	03	2	87526660	02-30	01	15
87520007	09-010	01	5	87526661	02-30	01	13
87520306	09-082	01	9	87526662	02-31	01	1
87520307	09-082	01	15	87526664	02-31	01	10
87521245	09-031	01	18	87526665	02-31	01	8
87521245	09-031	03	20	87526666	02-31	01	9
87521852	09-083	01	5	87526667	02-31	01	16
87521854	09-083	01	2	87526677	02-30	01	6
87521865	09-121	01	4	87526680	03-02	01	13
87521874	09-121	01	1	87526680	03-02	01A	13
87521882	09-010	02	15	87526680	04-03	01	1
87521883	09-010	02	8	87526680	04-04	01	4
87521884	09-010	02	9	87526680	04-08	02	1
87521884	09-010	07	12	87526680	08-26	01	9
87522431	09-010	03	5	87526680	09-010	01	7
87522432	08-11	01	12	87526680	09-101	01	9
87522432	08-12	01	12	87526680	09-101	02	9

INDEX - INDICE - INDEX - ZAHLENVERZEICHNIS - INDICE - INDICE - INDHOLD - INHOUD

Number	Figure	Sequence	Ref.	Number	Figure	Sequence	Ref.
87527034	09-087	01	15	87528089	08-57	01	10
87527036	04-18	01	7	87528090	08-57	01	11
87527038	04-18	01	11	87528092	09-018	01	17
87527307	09-087	01	7	87528129	08-10	01	4
87527308	09-087	01	20	87528664	08-09	01	18
87527309	09-087	01	17	87528665	08-09	01	21
87527310	09-087	01	19	87528672	09-117	02	4
87527311	09-087	01	18	87528675	09-117	02	3
87527312	09-087	01	6	87528679	09-117	02	5
87527313	09-087	01	8	87529445	09-100	01	19
87527325	09-085	01	10	87529445	09-100	02	19
87527325	09-086	01	15	87529446	09-100	02	14
87527336	09-086	01	11	87529476	09-103	01	4
87527336	09-087	01	13	87529477	01-01	01	3
87527347	09-086	01	1	87529477	09-103	01	2
87527348	09-086	01	3	87529477	09-103	02	2
87527359	08-12	01	14	87529490	09-102	01	6
87527359	08-13	01	15	87529490	09-102	02	6
87527383	09-085	01	1	87529494	09-102	01	2
87527383	09-086	01	26	87529496	09-102	01	9
87527384	09-085	01	3	87529496	09-102	02	9
87527384	09-086	01	27	87529497	09-102	01	3
87527385	09-086	01	16	87529497	09-102	02	3
87527387	09-086	01	14	87529499	09-102	01	1
87527395	09-086	01	12	87529500	01-01	01	2
87527396	09-086	01	33	87529500	09-100	01	12
87527466	09-085	01	11	87529500	09-100	02	12
87527469	09-085	01	9	87529502	09-100	01	15
87527470	09-085	01	13	87529502	09-100	02	15
87527471	09-085	01	20	87529503	08-11	01	4
87527472	09-085	01	4	87529504	09-100	01	11
87527477	09-085	01	5	87529504	09-100	02	11
87527490	09-085	01	2	87529521	09-100	01	16
87527492	09-085	01	6	87529521	09-100	02	16
87527493	09-085	01	7	87529935	08-26	01	18
87527496	09-087	01	14	87529938	08-26	01	1
87527503	09-087	02	21	87530581	09-018	01	1
87527504	09-087	02	17	87530582	08-07	02	6
87527506	09-087	02	18	87530988	02-20	01	4
87527507	09-087	02	14	87530994	02-19	01	2
87527509	09-087	02	16	87530995	02-19	01	14
87527511	09-087	02	15	87530996	02-19	01	5
87527514	09-087	02	12	87531048	08-18	02	9
87527517	09-087	02	13	87531049	08-18	02	10
87527530	09-086	01	29	87531050	08-18	02	14
87527531	09-010	02	18	87531051	08-18	01	8
87527533	09-068	01	12	87531052	08-18	01	6
87527533	09-086	01	25	87531056	08-05	01	5
87527880	08-08	01	12	87531068	08-12	01	7
87528088	08-57	01	6	87531068	08-18	02	11

INDEX - INDICE - INDEX - ZAHLENVERZEICHNIS - INDICE - INDICE - INDHOLD - INHOUD

Number	Figure	Sequence	Ref.	Number	Figure	Sequence	Ref.
87531069	08-18	02	12	87533580	08-14	01	5
87531507	09-030	01	19	87533586	08-14	01	12
87531507	09-031	01	17	87533854	08-14	01	13
87531507	09-031	03	19	87534195	02-24	01	10
87531507	09-032	01	7	87534286	09-083	01	1
87531507	09-034	01	7	87536897	09-010	05	1
87531507	09-036	01	7	87538371	09-088	01	9
87531507	09-040	01	5	87539072	03-01	01	13
87531523	09-019/B	01	11	87539205	09-010	06	8
87531536	09-074	01	3	87539206	09-010	06	7
87532105	09-019	01	7	87539506	09-010	06	1
87532117	08-77	01	1	87540076	03-02	01	6
87532858	09-102	01	5	87540076	03-02	01A	6
87532858	09-102	02	5	87540076	03-02	02A	2
87532882	08-12	01	1	87540130	08-51	01	3
87532882	08-13	01	1	87540130	08-52	01	3
87532882	08-46	01	16	87543175	08-88	01	9
87532888	08-05	01	20	87543176	08-84	01	11
87532891	08-05	01	6	87543300	09-036/A	01	4
87532893	08-05	01	24	87544499	08-37	01	13
87532906	09-019/A	01	20	87544502	08-37	01	20
87532907	09-019/A	01	14	87547562	08-33	01	4
87532949	08-16	01	5	87547564	08-36	01	1
87533076	08-11	01	14	87547571	02-32	01	3
87533077	08-11	01	7	87549842	04-03	01	4
87533077	09-010	04	11	87550707	02-33	01	7
87533078	08-11	01	8	87550714	09-007	01	11
87533078	09-010	04	8	87550853	09-119	02	8
87533102	08-11	01	10	87550878	04-03	01	26
87533336	09-032	01	9	87551050	04-08	02	5
87533336	09-034	01	9	87551688	04-13	01	16
87533336	09-036	01	9	87551689	04-13	01	5
87533338	09-032	01	8	87552690	08-86	01	21
87533338	09-034	01	8	87552691	08-86	01	20
87533338	09-036	01	8	87552692	08-86	01	2
87533338	09-040	01	4	87552693	08-86	01	1
87533342	09-032	01	10	87552694	08-86	01	6
87533342	09-034	01	10	87552695	08-86	01	4
87533342	09-036	01	10	87552696	08-86	01	12
87533389	08-37	01	4	87552697	08-86	01	15
87533392	08-33	01	1	87552698	08-86	01	14
87533392	08-35	01	1	87555883	02-27	01	11
87533426	08-13	01	10	87555884	02-27	01	3
87533427	08-12	01	8	87556086	09-116	02	14
87533427	08-18/A	02	1	87556089	09-116	02	3
87533428	08-13	01	12	87556093	09-117	01	4
87533429	08-12	01	6	87556100	09-117	01	12
87533429	08-18/A	02	3	87556102	09-116	02	4
87533430	08-13	01	13	87556105	09-117	01	5
87533431	08-13	01	11	87556106	09-117	01	9

INDEX - INDICE - INDEX - ZAHLENVERZEICHNIS - INDICE - INDICE - INDHOLD - INHOUD

Number	Figure	Sequence	Ref.	Number	Figure	Sequence	Ref.
87556108	09-117	01	8	87565334	04-09	01	10
87556112	09-117	01	16	87565336	04-09	01	11
87556113	09-117	01	3	87565337	04-09	01	5
87556114	09-117	01	15	87565338	04-04	01	12
87556115	09-116	02	7	87565339	04-09	01	6
87556115	09-117	01	6	87565340	04-09	01	4
87556116	09-117	01	7	87570962	09-119	02	11
87556117	09-117	01	1	87570965	09-119	02	9
87556118	09-117	01	2	87570967	09-119	02	2
87556120	09-117	01	14	87570968	09-119	02	1
87556121	09-117	01	13	87570978	09-119	02	5
87556122	09-117	01	17	87571538	09-119	02	6
87556123	09-116	02	1	87573248	08-14	01	1
87556124	09-116	02	12	87575957	09-100	01	6
87556125	09-116	02	2	87575957	09-100	02	6
87556137	09-116	02	15	87575958	09-101	01	17
87556146	09-116	02	16	87576371	04-03	01	5
87556154	09-116	02	6	87576765	08-86	01	31
87556737	09-015	01	11	87576766	08-86	01	29
87556737	09-016	01	17	87576767	08-86	01	30
87556737	09-017	01	10	87576768	08-86	01	16
87556737	09-017	02	10	87576769	08-86	01	17
87556738	09-015	01	8	87577977	09-097	01	27
87556738	09-016	01	20	87579010	09-090	01	17
87556738	09-017	01	8	87579056	09-073	01	12
87556738	09-017	02	8	87579057	09-073	01	6
87557379	08-28	01	11	87579080	09-088	01	1
87557380	08-28	01	8	87579445	02-31	01	13
87557543	04-11	01	14	87579594	09-010	01	1
87557648	02-30	01	11	87583756	09-120	01	1
87557658	08-16	01	4	87583758	09-120	01	9
87558032	09-047	01	1	87583759	09-120	01	11
87558629	09-092/A	01	2	87583764	09-120	01	13
87559156	04-11	01	5	87583765	09-120	01	16
87559156	04-11	02	10	87583766	09-120	01	8
87559156	04-12	01	5	87583767	09-120	01	14
87559156	04-13	01	13	87585125	02-20	01	9
87559156	04-22	01	5	87585128	02-20	01	10
87559198	04-12	01	12	87586017	09-117	01	11
87559198	04-13	01	12	87586018	09-116	02	10
87559395	04-09	01	23	87586019	09-116	02	9
87559396	04-09	01	9	87586020	09-116	02	5
87561516	06-03	01	8	87586030	09-116	02	11
87564296	04-04	01	6	87586031	09-116	02	13
87564844	01-01	01	5	87590504	04-11	01	15
87564844	02-20	01	8	87590506	04-11	01	12
87564846	01-01	01	4	87591561	09-011	01	10
87564846	02-20	01	7	87591562	09-011	01	20
87565331	04-09	01	13	87591563	09-011	01	8
87565332	04-09	01	12	87591564	09-011	01	13

INDEX - INDICE - INDEX - ZAHLENVERZEICHNIS - INDICE - INDICE - INDHOLD - INHOUD

Number	Figure	Sequence	Ref.	Number	Figure	Sequence	Ref.
87591589	09-017	01	4	87599336	09-031	03	13
87591590	09-017	01	5	87599355	09-030	01	14
87591591	09-024	01	8	87599355	09-031	01	3
87591592	09-024	01	6	87599355	09-031	03	11
87592513	08-31	01	16	87599356	09-030	01	13
87592515	08-31	01	9	87599356	09-031	01	4
87592517	08-31	01	10	87599356	09-031	03	14
87592519	08-31	01	17	87599360	09-029	02	2
87596367	09-087	02	23	87599362	08-88	02	11
87596368	09-087	02	22	87599364	08-88	02	10
87598509	09-036B	01	7	87599368	08-88	02	3
87598515	09-036B	01	1	87599369	08-32	02	11
87598522	09-036B	01	21	87599372	09-029	02	15
87598525	09-036B	01	19	87599377	09-030	01	10
87598527	09-032	01	12	87599377	09-031	01	12
87598527	09-034	01	12	87599377	09-031	03	10
87598527	09-036	01	12	87599381	09-029	02	8
87598540	08-32	01	1	87599381	09-030	01	18
87598541	08-32	01	5	87599381	09-031	03	18
87598542	08-37	01	8	87599381	09-036B	01	11
87598545	08-37	01	9	87599406	09-010	01	8
87599310	09-029	02	20	87602354	09-089	02	10
87599312	08-29	01	18	87602354	09-092	01	12
87599313	08-29	01	19	87603343	08-08	01	7
87599314	08-29	01	21	87603344	08-08	01	6
87599316	08-29	01	14	87603345	08-10	01	9
87599317	08-29	01	7	87603347	08-10	01	5
87599318	08-29	01	17	87603348	08-08	01	11
87599318	08-31	01	21	87603349	08-08	01	13
87599318	09-012	01	20	87603350	08-08	01	5
87599319	08-29	01	8	87603351	08-10	01	3
87599320	08-29	01	9	87606411	09-110	01	6
87599320	08-31	01	29	87606411	09-110	02	12
87599320	09-012	01	11	87606476	09-110	02	8
87599321	08-29	01	16	87606717	09-110	02	6
87599323	08-29	01	6	87606746	09-110	02	20
87599323	09-012	01	17	87606856	09-110	02	17
87599324	08-29	01	3	87606857	09-110	02	9
87599324	09-012	01	8	87606858	09-110	02	13
87599329	09-030	01	30	87606859	09-110	01	9
87599329	09-031	01	13	87608371	08-03	01	6
87599329	09-031	03	30	87608371	08-11	01	3
87599333	09-030	01	29	87608371	08-18	02	8
87599333	09-031	01	14	87608371	09-010	03	3
87599333	09-031	03	29	87608371	09-010	04	9
87599334	09-030	01	12	87609321	09-010	01	3
87599334	09-031	01	7	87609513	08-32	03	7
87599334	09-031	03	12	87609519	08-32	03	2
87599336	09-030	01	11	87609520	08-32	03	5
87599336	09-031	01	2	87609716	09-110	01	10

INDEX - INDICE - INDEX - ZAHLENVERZEICHNIS - INDICE - INDICE - INDHOLD - INHOUD

Number	Figure	Sequence	Ref.	Number	Figure	Sequence	Ref.
87611990	04-11	02	6	87625958	09-078	01	1
87612010	02-27	01	2	87625963	09-078	01	2
87612013	02-27	01	10	87625964	09-078	01	3
87612553	09-076	01	1	87625994	09-075	01	17
87612553	09-076	02	9	87626002	09-075	01	1
87614918	09-003	01	10	87626012	09-075	01	18
87614919	09-003	01	11	87626034	09-075	01	5
87614920	09-003	01	20	87626057	09-078	01	15
87616305	08-64	01	4	87626058	09-078	01	17
87616308	08-64	01	8	87626059	09-078	01	16
87616670	09-076	01	6	87626061	09-031	01	19
87616671	09-076	01	2	87626063	09-078	01	14
87616672	09-076	01	3	87626137	09-071	01	16
87616673	09-124	01	13	87626152	09-075	01	6
87616673	09-126	01	13	87626167	09-071	01	6
87617549	08-09	01	2	87626209	09-071	01	18
87617572	08-09	01	12	87626211	09-071	01	17
87617862	08-09	01	6	87626215	09-075	01	7
87618415	08-07	01	9	87626219	09-075	01	4
87618488	08-07	01	8	87626224	09-075	01	14
87618519	08-07	01	6	87626230	09-071	01	20
87621308	04-11	01	13	87626232	09-071	01	19
87622333	09-032	01	13	87626240	09-071	01	21
87623250	09-086	01	20	87626244	09-075	01	21
87623251	09-086	01	21	87626245	09-071	01	24
87624900	09-074	01	1	87626327	08-29	01	11
87625120	09-074	01	2	87626327	08-31	01	19
87625122	09-074	01	4	87626339	09-078	01	13
87625125	09-074	01	14	87626340	09-075	01	26
87625126	09-074	01	15	87626340	09-078	01	9
87625127	09-074	01	16	87626346	09-078	01	8
87625227	09-074	01	6	87626347	09-074	01	13
87625228	09-074	01	7	87626348	09-075	01	22
87625231	09-074	01	5	87626447	08-29	01	12
87625445	09-070	01	2	87626447	08-31	01	24
87625446	09-070	01	3	87626455	08-29	01	13
87625577	02-24	01	11	87626793	08-37	01	4
87625578	09-072	01	10	87626917	03-01	01	18
87625627	09-072	01	5	87627232	09-002	01	8
87625628	09-072	01	6	87627694	02-01	01	1
87625629	09-072	01	4	87630589	09-020	01	9
87625630	09-072	01	3	87631084	08-55	01	24
87625729	09-070	01	8	87631901	08-55	01	12
87625731	09-070	01	7	87632674	04-08	02	4
87625746	09-076	01	7	87633122	09-100	01	18
87625749	02-24	01	6	87633128	09-100	01	14
87625842	09-073	01	1	87633389	06-01	01	1
87625871	09-078	01	12	87633972	09-047	01	3
87625878	09-075	01	25	87633985	03-02	01	12
87625878	09-078	01	10	87633988	03-02	01	2

INDEX - INDICE - INDEX - ZAHLENVERZEICHNIS - INDICE - INDICE - INDHOLD - INHOUD

Number	Figure	Sequence	Ref.	Number	Figure	Sequence	Ref.
87633988	03-02	01A	2	87638393	09-050	01	3
87634070	02-02	01	7	87638394	09-049	01	3
87634071	02-02	01	13	87638395	09-048	01	3
87634072	02-02	01	14	87638398	09-062	01	12
87634073	02-02	01	10	87638399	09-061	01	12
87634385	08-05	01	16	87638401	09-059	01	12
87634386	02-33	01	3	87638404	09-058	01	12
87634394	06-01	01	3	87638405	09-057	01	12
87634395	02-27	01	14	87638406	09-056	01	12
87634411	02-24	01	14	87638409	09-067	03	4
87634412	02-02	01	3	87638740	09-003	01	6
87634413	02-27	01	4	87640939	02-27	01	1
87634414	02-27	01	12	87641379	09-003	01	9
87634420	02-24	01	9	87641751	08-18	02	5
87635046	08-05	01	13	87641752	08-18	01	3
87635539	02-19	01	6	87641753	08-18	02	3
87635671	02-19	01	9	87641809	08-18	02	7
87636398	03-06	01	8	87642173	04-03	01	12
87636401	03-06	01	11	87643223	08-64	01	2
87636405	03-06	01	7	87643223	09-010	01	2
87636421	03-06	01	23	87643225	08-51	01	8
87637749	02-20	01	3	87643419	09-119	02	14
87638115	09-047	01	4	87643421	09-119	02	12
87638115	09-048	01	4	87645092	09-019/A	01	1
87638115	09-049	01	4	87645452	09-077	01	3
87638115	09-050	01	4	87645453	09-077	01	4
87638115	09-052	01	4	87645454	09-077	01	5
87638115	09-054	01	4	87645455	09-077	01	10
87638115	09-055	01	4	87645456	09-077	01	12
87638120	01-01	01	11	87645457	09-077	01	11
87638120	02-27	01	20	87645459	09-077	01	7
87638153	08-12	03	1	87645460	09-077	01	8
87638153	09-010	03	8	87647432	02-32	01	2
87638153	09-019/A	01	4	87647450	02-32	01	4
87638161	04-09	01	24	87647454	02-32	01	5
87638186	09-056	01	19	87647460	02-32	01	7
87638186	09-057	01	19	87647463	02-32	01	6
87638186	09-058	01	19	87647464	02-32	01	16
87638186	09-059	01	19	87647471	02-32	01	15
87638186	09-061	01	19	87647475	02-32	01	18
87638186	09-062	01	19	87647477	02-32	01	12
87638379	09-062	01	18	87647484	02-32	01	17
87638380	09-061	01	18	87647489	02-32	01	11
87638382	09-059	01	18	87648240	02-31	01	7
87638383	09-058	01	18	87648242	04-03	01	28
87638384	09-057	01	18	87648293	02-31	01	11
87638385	09-056	01	18	87648299	02-30	01	10
87638388	09-055	01	3	87648969	06-03	01	4
87638389	09-054	01	3	87651526	09-004	01	16
87638391	09-052	01	3	87651527	09-004	01	13

INDEX - INDICE - INDEX - ZAHLENVERZEICHNIS - INDICE - INDICE - INDHOLD - INHOUD

Number	Figure	Sequence	Ref.	Number	Figure	Sequence	Ref.
87651528	09-004	01	12	87656862	09-101	01	13
87651530	09-003	01	12	87656864	09-101	01	3
87651531	09-003	01	22	87656864	09-101	02	3
87651532	09-003	01	15	87656874	09-101	01	22
87651534	09-004	01	14	87656874	09-101	02	22
87651535	09-004	01	11	87656875	09-101	02	21
87651537	09-004	01	6	87657739	08-36	01	4
87651538	09-004	01	7	87663845	09-010	03	1
87651539	09-004	01	8	87663851	09-010	03	7
87651544	09-003	01	21	87663851	09-019/A	01	6
87651545	09-003	01	23	87663891	09-010	03	6
87652150	08-14	01	8	87663891	09-019/A	01	5
87652153	08-16	01	6	87663893	09-010	04	1
87652157	08-16	01	3	87663893	09-018	01	3
87652158	08-14	01	7	87663893	09-019/B	01	12
87652172	08-14	01	11	87663894	09-010	05	4
87652542	09-070	01	9	87663898	09-010	05	6
87652542	09-072	01	2	87663899	09-010	06	4
87652671	08-03	01	11	87663958	09-012	01	19
87652672	08-03	01	3	87663966	09-012	01	7
87652673	08-03	02	4	87664002	09-012	01	10
87652673	08-26	01	3	87664005	08-29	01	23
87652674	08-03	02	7	87664005	09-012	01	5
87652674	08-03	03	4	87664006	09-015	01	6
87652675	08-03	01	14	87664006	09-016	01	9
87652676	08-03	01	15	87667983	09-081	01	1
87652677	08-03	03	6	87667995	09-081	01	10
87652678	09-082	01	16	87676557	09-012	01	3
87652945	09-003	01	13	87676610	09-012	01	4
87652946	09-003	01	14	87676611	09-012	01	2
87652947	09-003	01	16	87676613	09-012	01	1
87653258	09-082	01	14	87676618	09-016	01	11
87653345	08-26	01	6	87676620	09-016	01	10
87653573	08-51	01	2	87676897	09-010	07	2
87654032	01-02	01	6	87683043	09-034	01	13
87654032	01-03	01	6	87685835	04-03	01	3
87654033	01-02	01	14	87685835	04-04	01	13
87654033	01-03	01	14	87687417	09-019/A	01	7
87654034	01-02	01	2	87687843	03-01	01	4
87654035	01-02	01	11	87688451	09-036	01	13
87654035	01-03	01	11	87692250	03-01	01	15
87654036	01-02	01	3	87693791	08-51	01	4
87654036	01-03	01	3	87700637	09-100	02	1
87654037	01-02	01	9	87700941	08-07	02	4
87654037	01-03	01	9	87700941	09-019/B	01	5
87654038	01-02	01	13	87701247	09-073	01	9
87654038	01-03	01	13	87702060	08-31	01	15
87655371	01-01	01	9	87703261	09-077	01	6
87655371	03-02	01	8	87703782	03-02	01	11
87655371	03-02	03	5	87704428	02-19	01	4

INDEX - INDICE - INDEX - ZAHLENVERZEICHNIS - INDICE - INDICE - INDHOLD - INHOUD

Number	Figure	Sequence	Ref.	Number	Figure	Sequence	Ref.
87704433	02-19	01	1	87727208	09-003	01	7
87704715	09-100	02	2	87729182	08-12	01	16
87708248	09-071	01	9	87729182	08-13	01	5
87708784	09-077	01	9	87732808	09-082	01	17
87709274	09-075	01	10	87732815	09-082	01	10
87711452	09-086	02	1	87733137	09-007	01	4
87714838	09-072	01	1	87733138	09-007	01	2
87716915	08-51	01	5	87733139	09-007	01	1
87717125	09-119	02	10	87733140	09-007	01	3
87717359	09-017	02	4	87733423	09-082	01	18
87717365	09-017	02	5	87733426	09-082	01	11
87718291	09-073	01	14	87735518	09-004	01	15
87718292	09-073	01	10	87735519	09-004	01	10
87718293	09-073	01	11	87736585	09-117	01	10
87718294	09-073	01	8	87738730	09-007	01	14
87718295	09-073	01	7	87739609	09-080	01	4
87720558	09-101	01	29	87739624	09-088	01	7
87720927	09-019	01	3	87739854	09-080	01	1
87720984	09-019	01	1	87739895	09-089	01	6
87720998	09-019	01	10	87740511	09-010	07	4
87721008	09-019	01	14	87743491	09-100	02	13
87721216	09-019/B	01	13	87743492	09-100	02	18
87721359	09-019/A	01	16	87743493	09-102	02	2
87721914	09-022	01	1	87743515	09-102	02	1
87721964	09-023	01	1	87746013	09-083	01	9
87721964	09-023	02	1	87746066	08-18/A	02	5
87722225	09-068	01	4	87746066	08-27/A	01	2
87722228	09-118	01	8	87746067	08-18/A	01	2
87722230	09-118	01	5	87746067	09-010/A	01	2
87722232	09-118	01	6	87746405	09-081	01	4
87722235	09-086	01	2	87749351	09-009	01	2
87722239	09-086	01	28	87749441	04-12	01	7
87722240	09-086	01	17	87749441	04-13	01	7
87722243	09-085	01	19	87750446	09-100	01	1
87722245	09-085	01	21	87755118	09-070	01	10
87722248	04-18	01	5	87755122	09-070	01	11
87722251	09-087	01	5	87755124	09-070	01	1
87722253	09-087	01	12	87757030	09-010	07	3
87722256	09-087	02	6	87865335	04-09	01	7
87722259	09-087	02	4	896-11016	09-082	01	5
87722261	09-097	01	30	A1304031	09-066	01	2
87722263	09-089	02	19	A56393	09-030	01	25
87722636	09-018	01	16	A56393	09-031	03	25
87722639	09-019/B	01	9	D127018	04-03	01	25
87724921	09-119	01	1	D83485	04-03	01	9
87725534	09-080	01	7	EM30V00001	09-026	02	17
87726613	09-085	01	12	HS23C14135	08-52	01	2
87726614	09-086	01	19	HY25X09017	09-089	02	25
87726616	09-121	01	5	HY25X09017	09-092	01	23
87726698	04-03	01	18	L100659	04-13	02	9

INDEX - INDICE - INDEX - ZAHLENVERZEICHNIS - INDICE - INDICE - INDHOLD - INHOUD

Number	Figure	Sequence	Ref.	Number	Figure	Sequence	Ref.
L115549	02-31	01	18	YN02C03650	09-089	01	5
L116820	08-07	02	1	YN02C03656	09-089	01	7
L126871	02-30	01	4	YN02C03669	09-089	01	21
L18331	03-02	01	14	YN02C03669	09-089	02	17
L18331	03-02	01A	14	YN02C03766	09-089	01	13
L18331	04-03	01	2	YN02C03767	09-089	01	11
L18331	04-04	01	5	YN02C03810	09-089	01	8
L18331	04-08	02	6	YN02C03887	09-090	01	23
L18331	09-086	02	4	YN03M02174	09-116	02	8
LB13E01056	09-086	02	5	YN05P00058	02-32/A	01	11
LC10V00010	08-58	01	26	YN05P00058	02-32/A	01	7
LC91V00001	09-101/A	01	3	YN05P00058	02-32/A	01	10
LC91V00001	09-101/A	01	1	YN05P00058	02-32/A	01	23
LQ20M00059	09-106	01	8	YN05P00058	02-32/A	01	24
LQ20M01327	09-101	02	17	YN05P00058	02-32/A	01	19
LQ30V00028	08-65	01	30	YN05P00058	02-32/A	01	1
LQ30V00028	08-65	01	27	YN05P00058	02-32/A	01	16
LQ54S00005	09-102	01	7	YN05P00058	02-32/A	01	17
LQ54S00005	09-102	02	7	YN05P00058	02-32/A	01	27
NLS	08-86	01	3	YN05P00062	02-32	01	1
T41159	09-125	01	18	YN05P00062	02-32/A	01	6
YA30V00002	09-026	02	13	YN05P00062	02-32/A	01	9
YA30V00002	09-026	02	16	YN05P00062	02-32/A	01	3
YA30V00002	09-026	02	8	YN05P00062	02-32/A	01	13
YA30V00002	09-026	02	9	YN05P00062	02-32/A	01	18
YA30V00002	09-026	02	10	YN05P00062	02-32/A	01	21
YN02C02705	09-089	01	4	YN05P00062	02-32/A	01	12
YN02C02746	09-090	01	20	YN05P00062	02-32/A	01	8
YN02C02747	09-090	01	13	YN05P00062	02-32/A	01	20
YN02C02967	09-089	01	12	YN05P00062	02-32/A	01	15
YN02C02970	09-089	02	40	YN10V00006	08-59	01	14
YN02C03005	09-090	01	24	YN10V00033	08-57	01	2
YN02C03006	09-090	01	18	YN10V00039	08-57	01	5
YN02C03039	09-090	01	9	YN10V00043	08-57	01	3
YN02C03040	09-090	01	34	YN10V00043	08-58	01	42
YN02C03047	09-092	01	22	YN10V00043	08-58	01	22
YN02C03048	09-089	02	27	YN10V00043	08-58	01	10
YN02C03055	09-090	01	8	YN10V00043	08-58	01	35
YN02C03056	09-090	01	35	YN10V00043	08-58	01	27
YN02C03075	09-089	02	24	YN10V00043	08-58	01	50
YN02C03077	09-092	01	19	YN10V01009	08-57	01	4
YN02C03094	09-092	01	6	YN15V00035	08-53	01	7
YN02C03095	09-089	02	6	YN15V00035	08-53	01	8
YN02C03098	09-090	01	30	YN15V00035	08-53	01	24
YN02C03147	09-092	01	25	YN15V00035	08-53	01	23
YN02C03160	09-090	01	21	YN17M01537	09-086	01	8
YN02C03187	09-089	01	10	YN20M00107	09-104	01	8
YN02C03194	09-089	01	2	YN20M00107	09-105	01	1
YN02C03321	09-088	01	17	YN20M00107	09-106	01	4
YN02C03641	09-089	01	16	YN20M00107	09-104	01	21

INDEX - INDICE - INDEX - ZAHLENVERZEICHNIS - INDICE - INDICE - INDHOLD - INHOUD

Number	Figure	Sequence	Ref.	Number	Figure	Sequence	Ref.
YN20M00107	09-104	01	16	YN20M00107	09-104	01	2
YN20M00107	09-106	01	3	YN20M00107	09-104	01	13
YN20M00107	09-106	01	5	YN20M00107	09-104	01	1
YN20M00107	09-106	01	6	YN20M00107	09-104	01	22
YN20M00107	09-105	01	9	YN20M00107	09-106	01	7
YN20M00107	09-105	01	15	YN20M00107	09-105	01	32
YN20M00107	09-105	01	12	YN20M00107	09-104	01	23
YN20M00107	09-106	01	12	YN20M00107	09-104	01	24
YN20M00107	09-106	01	1	YN20M00107	09-104	01	25
YN20M00107	09-106	01	10	YN20M00107	09-105	01	29
YN20M00107	09-106	01	9	YN20M01841	09-101	02	13
YN20M00107	09-105	01	11	YN22E00214	04-11	01	4
YN20M00107	09-105	01	10	YN22M01014	04-11	01	7
YN20M00107	09-105	01	16	YN22V00001	08-65	01	20
YN20M00107	09-105	01	26	YN22V00001	08-81	01	11
YN20M00107	09-105	01	31	YN22V00001	08-81	01	10
YN20M00107	09-105	01	5	YN22V00001	08-81	01	14
YN20M00107	09-105	01	23	YN22V00001	08-82	01	9
YN20M00107	09-105	01	3	YN22V00001	08-83	01	9
YN20M00107	09-105	01	2	YN22V00001	08-80	01	3
YN20M00107	09-104	01	3	YN22V00001	08-81	01	13
YN20M00107	09-105	01	14	YN22V00001	08-82	01	8
YN20M00107	09-106	01	2	YN22V00001	08-83	01	8
YN20M00107	09-104	01	10	YN22V00001	08-80	01	2
YN20M00107	09-104	01	18	YN22V00001	08-81	01	12
YN20M00107	09-104	01	19	YN22V00001	08-82	01	7
YN20M00107	09-104	01	17	YN22V00001	08-83	01	7
YN20M00107	09-104	01	20	YN22V00001	08-81	01	4
YN20M00107	09-104	01	15	YN22V00001	08-81	01	1
YN20M00107	09-104	01	4	YN22V00001	08-81	01	2
YN20M00107	09-104	01	6	YN22V00001	08-82	01	2
YN20M00107	09-104	01	7	YN22V00001	08-83	01	2
YN20M00107	09-104	01	12	YN22V00002	08-82	01	11
YN20M00107	09-104	01	5	YN22V00002	08-83	01	11
YN20M00107	09-105	01	4	YN22V00002	08-80	01	5
YN20M00107	09-105	01	8	YN22V00002	08-82	01	12
YN20M00107	09-105	01	25	YN22V00002	08-83	01	12
YN20M00107	09-105	01	30	YN22V00002	08-80	01	6
YN20M00107	09-106	01	11	YN22V00002	08-82	01	13
YN20M00107	09-105	01	21	YN22V00002	08-83	01	13
YN20M00107	09-105	01	19	YN22V00002	08-82	01	3
YN20M00107	09-105	01	22	YN22V00002	08-83	01	3
YN20M00107	09-105	01	27	YN22V00002	08-82	01	1
YN20M00107	09-105	01	28	YN22V00002	08-83	01	1
YN20M00107	09-105	01	7	YN22V00014	08-53	01	29
YN20M00107	09-105	01	18	YN22V00040	09-026	02	7
YN20M00107	09-105	01	24	YN22V00041	09-026	02	12
YN20M00107	09-104	01	9	YN24E00016	04-11	02	9
YN20M00107	09-104	01	11	YN24E00016	04-11	02	13
YN20M00107	09-104	01	14	YN24E00016	04-11	02	5

INDEX - INDICE - INDEX - ZAHLENVERZEICHNIS - INDICE - INDICE - INDHOLD - INHOUD

Number	Figure	Sequence	Ref.	Number	Figure	Sequence	Ref.
YN24E00016	04-11	02	11	YN30V00101	08-69	01	20
YN24E00016	04-11	02	2	YN30V00101	08-65	01	11
YN24E00016	04-11	02	1	YN30V00101	08-66	01	10
YN24E00016	04-11	02	4	YN30V00101	08-67	01	12
YN24E00016	04-11	02	3	YN30V00101	08-68	01	12
YN24E00016	04-11	02	8	YN30V00101	08-68	01	18
YN24E00016	04-11	02	7	YN30V00101	08-69	01	13
YN24E00016	04-11	02	12	YN30V00101	08-70	01	8
YN30V00001	08-65	01	16	YN30V00101	08-67	01	21
YN30V00001	08-66	01	24	YN30V00101	08-71	01	14
YN30V00001	08-67	01	28	YN30V00101	08-71	01	7
YN30V00001	08-68	01	21	YN30V00101	08-65	01	22
YN30V00001	08-69	01	18	YN30V00101	08-71	01	13
YN30V00001	08-66	01	2	YN30V00101	08-71	01	8
YN30V00001	08-65	01	14	YN30V00104	08-38	01	7
YN30V00001	08-66	01	13	YN30V00104	08-38	01	3
YN30V00001	08-67	01	23	YN30V00104	08-38	01	4
YN30V00001	08-68	01	16	YN30V00105	08-44	01	2
YN30V00001	08-68	01	22	YN30V00105	08-44	01	3
YN30V00001	08-69	01	16	YN30V00105	08-44	01	9
YN30V00001	08-70	01	11	YN30V00105	08-44	01	11
YN30V00101	08-67	01	29	YN30V00105	08-44	01	8
YN30V00101	08-66	01	25	YN30V00105	08-44	01	7
YN30V00101	08-65	01	29	YN30V00105	08-44	01	4
YN30V00101	08-69	01	24	YN30V00105	08-44	01	5
YN30V00101	08-67	01	30	YN30V00105	08-44	01	6
YN30V00101	08-65	01	8	YN30V00105	08-44	01	1
YN30V00101	08-66	01	18	YN30V00105	08-44	01	10
YN30V00101	08-68	01	7	YN30V00107	09-026	02	6
YN30V00101	08-69	01	9	YN30V00107	09-026	02	1
YN30V00101	08-65	01	28	YN30V00108	09-026	02	21
YN30V00101	08-66	01	5	YN30V00108	09-026	02	15
YN30V00101	08-42	01	10	YN30V00116	08-64	01	3
YN30V00101	08-67	01	20	YN30V00116	08-68	01	27
YN30V00101	08-67	01	6	YN30V00116	08-68	01	28
YN30V00101	08-67	01	17	YN30V00116	08-66	01	26
YN30V00101	08-71	01	11	YN30V00116	08-69	01	25
YN30V00101	08-68	01	23	YN30V00116	08-70	01	5
YN30V00101	08-67	01	18	YN30V00116	08-71	01	3
YN30V00101	08-67	01	4	YN30V00116	08-68	01	5
YN30V00101	08-66	01	7	YN30V00116	08-68	01	2
YN30V00101	08-65	01	4	YN30V00116	08-65	01	7
YN30V00101	08-66	01	15	YN30V00116	08-66	01	17
YN30V00101	08-69	01	6	YN30V00116	08-69	01	2
YN30V00101	08-66	01	1	YN30V00119	08-71	01	1
YN30V00101	08-42	01	15	YN30V00120	08-65	01	5
YN30V00101	08-65	01	19	YN30V01062	08-69	01	7
YN30V00101	08-69	01	1	YN32W0102	08-52	01	10
YN30V00101	08-42	01	18	YN32W0102	08-52	01	32
YN30V00101	08-65	01	1	YN32W0102	08-52	01	9

INDEX - INDICE - INDEX - ZAHLENVERZEICHNIS - INDICE - INDICE - INDHOLD - INHOUD

Number	Figure	Sequence	Ref.	Number	Figure	Sequence	Ref.
YN32W0105	08-52	01	31	YN59S00021	04-18	02	1
YN32W0105	08-52	01	13	YN59S00021	04-18	02	10
YN32W0105	08-52	01	16	YN59S00021	04-18	02	3
YN32W0105	08-52	01	12	YN59S00021	04-18	02	2
YN32W0105	08-52	01	7	YN59S00021	04-18	02	8
YN32W0105	08-52	01	18	YN59S00021	04-18	02	4
YN32W0106	08-52	01	25	YN59S00021	04-18	02	5
YN32W0106	08-52	01	17	YN64H01391	08-64	01	1
YN32W0106	08-52	01	15	YN64H01393	08-64	01	7
YN32W0107	08-52	01	21	YN91V01001	09-101/A	01	6
YN32W0108	08-52	01	22	YN91V01001	09-101/A	01	4
YN32W0108	08-52	01	28	YN91V01001	09-101/A	01	5
YN32W0108	08-52	01	30	YN91V01001	09-101/A	01	7
YN32W0110	08-52	01	26	YN91V01001	09-101/A	01	2
YN32W0111	08-52	01	11	YT20M00022	09-103	01	1
YN32W0111	08-52	01	14	YT20M00022	09-103	02	1
YN35V00004	08-39	01	2	YT20M00022	09-100	01	2
YN35V00017	09-026	02	14	YT20M00022	09-105	01	17
YN35V00018	08-39	01	5	YT20M00022	09-105	01	13
YN35V00048	08-24	01	4	YT20M01215	09-101	02	18
YN35V00048	08-42	01	16	YT20M01215	09-101	02	29
YN35V00049	08-24	01	5	YT50C01012	09-096	01	8
YN35V0004S	08-39	01	1	YX42H01074	08-32	02	13
YN35V0004S	08-39	01	3	Z1304030	09-066	01	4
YN35V00050	08-24	01	2	ZD12A01600	08-32	02	5
YN35V00050	08-38	01	1	ZD12G03000	08-53	01	32
YN35V00051	08-24	01	3	ZD12P00800	08-81	01	5
YN42H02342	08-32	02	4	ZD12P00800	08-82	01	4
YN42H02615	08-32	02	12	ZD12P00800	08-83	01	4
YN42H02812	08-32	02	3	ZD12P01100	08-03	01	17
YN42H02813	08-32	02	12	ZD12P01100	08-03	02	10
YN50C01170	09-096	01	2	ZD12P01100	08-03	03	11
YN50C01171	09-096	01	3	ZD12P01100	08-05	01	3
YN50C01172	09-096	01	4	ZD12P01100	08-11	01	11
YN50C01173	09-096	01	5	ZD12P01100	08-12	01	11
YN50C01189	09-096	01	11	ZD12P01100	08-13	01	8
YN50C01194	09-096	01	9	ZD12P01100	08-26	01	4
YN50C01207	09-096	01	10	ZD12P01100	09-010	03	10
YN50C01209	09-096	01	14	ZD12P01100	09-010	04	12
YN50S00047	04-11	01	6	ZD12P01100	09-010	05	9
YN52S00075	09-086	01	6	ZD12P01100	09-019/A	01	19
YN52V01016	08-55	01	11	ZD12P01100	09-019/A	01	23
YN53C00012	09-090	01	36	ZD12P01100	09-019/B	01	15
YN54001047	06-03	01	3	ZD12P01400	08-03	01	16
YN54D01051	06-02	01	9	ZD12P01400	08-03	02	11
YN55V01062	08-78	01	7	ZD12P01400	08-03	03	10
YN59500021	04-18	02	7	ZD12P01400	08-05	01	14
YN59S00021	04-18	01	1	ZD12P01400	08-11	01	5
YN59S00021	04-18	02	9	ZD12P01400	08-12	01	2
YN59S00021	04-18	02	6	ZD12P01400	08-13	01	2

INDEX - INDICE - INDEX - ZAHLENVERZEICHNIS - INDICE - INDICE - INDHOLD - INHOUD

Number	Figure	Sequence	Ref.	Number	Figure	Sequence	Ref.
ZD12P01400	08-16	01	9				
ZD12P01400	08-26	01	5				
ZD12P01400	08-81	01	9				
ZD12P01400	09-010	03	9				
ZD12P01400	09-010	05	8				
ZD12P01400	09-019/A	01	18				
ZD12P01400	09-019/A	01	21				
ZD12P01600	08-81	01	6				
ZD12P01800	08-05	01	2				
ZD12P01800	08-16	01	8				
ZD12P01800	09-019	01	15				
ZD12P01800	09-019/A	01	15				
ZD12P01800	09-019/B	01	16				
ZD12P02000	08-39	01	4				
ZD12P02240	08-80	01	1				
ZD12P02240	08-82	01	6				
ZD12P02240	08-83	01	6				
ZD12P02400	08-05	01	9				
ZD12P02400	08-16	01	10				
ZD12P02400	08-80	01	4				
ZD12P02400	08-82	01	10				
ZD12P02400	08-83	01	10				
ZD12P02500	08-81	01	7				
ZD12P02600	08-32	02	1				
ZG31U08000	08-52	01	23				
ZG91S02000	08-32	02	8				
ZH22Z04000	08-32	02	16				
ZM27C08025	09-089	02	23				
ZM27C08025	09-090	01	10				
ZM27C08025	09-092	01	20				
ZM61C06025	04-11	01	1				
ZM73C06016	09-089	01	9				
ZM73C08020	04-11	01	16				
ZM73C08020	09-096	01	13				
ZM73C08025	09-089	01	1				
ZM73C12020	09-089	02	12				
ZM73C12020	09-092	01	15				
ZN18C20012	08-58	01	23				
ZS23C14160	08-70	01	14				
ZS28C10030	08-32	02	2				
ZS31C05020	04-11	01	11				
ZS41C06020	09-090	01	25				
ZW16H12000	08-32	02	10				
ZW16P05000	04-11	01	9				
ZW26X05000	04-11	01	10				
ZW26X10000	08-32	02	14				
ZX20H10072	08-32	02	6				
ZX20H16078	08-32	02	7				