CATERPILLAR®

SEBP3086
March 2002

RUTHZIL TRATOR COMERCIAL DE PEÇAS LTDA 11 97083-6812 ROLANDO CITRANGULO

Parts Manual



See "General Information" for New Parts Manual Features.

D10R Track-Type Tractor

AKT1-Up (Machine)
5JJ3200-Up (Engine)
7SY1-Up (Transmission)
BHA1-Up (Bulldozer)
BHF1-Up (Bulldozer)
BHJ1-Up (Bulldozer)
BHP1-Up (Bulldozer)
4PP1-Up (Ripper)
BEY1-Up (Ripper)
BRT1-Up (Ripper)
TCE1-Up (Torque Converter)

Powered By 3412E Engine

Product and Dealer Information

Note: For product identification plate locations, see the section “Product Identification Information” in the Operation and Maintenance Manual.

Delivery Date: _____

Product Information

Model: _____

Product Identification Number: _____

Engine Serial Number: _____

Transmission Serial Number: _____

Generator Serial Number: _____

Attachment Serial Numbers: _____

Attachment Information: _____

Customer Equipment Number: _____

Dealer Equipment Number: _____

Dealer Information

Name: _____ Branch: _____

Address: _____

_____

_____

	Dealer Contact	Phone Number	Hours
Sales:	_____	_____	_____
Parts:	_____	_____	_____
Service:	_____	_____	_____

Informations produit et concessionnaire

Nota: Voir l'emplacement de la plaque signalétique du produit au chapitre "Informations produit" du guide d'utilisation et d'entretien.

Date de livraison: _____

Informations produit

Modèle: _____

Numéro d'identification produit: _____

Numéro de série du moteur: _____

Numéro de série de la boîte de vitesses: _____

Numéro de série de l'alternateur: _____

Numéros de série d'équipement: _____

Informations sur l'équipement: _____

Numéro matériel client: _____

Numéro matériel concessionnaire: _____

Informations concessionnaire

Nom: _____ Agence: _____

Adresse: _____

_____

_____

	Contact concessionnaire	Numéro de téléphone	Heures
Ventes:			
Pièces:			
Service:			

Información del Producto/Distribuidor

Nota: Para saber la ubicación de las placas de identificación del producto, ver la sección “Información sobre identificación del producto” en el Manual de Operación y Mantenimiento.

Fecha de entrega: _____

Información del producto

Modelo: _____

Número de identificación del producto: _____

Número de serie del motor: _____

Número de serie de la transmisión: _____

Número de serie del generador: _____

Números de serie de los accesorios: _____

Información sobre los accesorios: _____

Número del equipo del cliente: _____

Número del equipo del distribuidor: _____

Información del distribuidor

Nombre: _____ Sucursal: _____

Dirección: _____

_____

_____

	Comunicación con el distribuidor	Número de teléfono	Horas
Ventas:	_____	_____	_____
Piezas:	_____	_____	_____
Servicio:	_____	_____	_____

Informações Sobre Produto e Revendedor

Nota: Para localizações da placa de identificação do produto, consulte a seção, “Informações Sobre Identificação do Produto” no Manual de Operação e Manutenção.

Data de Entrega: _____

Informações Sobre o Produto

Modelo: _____

Número de Identificação do Produto: _____

Número de Série do Motor: _____

Número de Série da Transmissão: _____

Número de Série do Gerador: _____

Números de Série de Acessórios: _____

Informações Sobre Acessórios: _____

Número do Equipamento do Cliente: _____

Número do Equipamento do Revendedor: _____

Informações Sobre o Revendedor

Nome: _____ Filial: _____

Endereço: _____

_____

_____

	Contato do Revendedor	Telefone	Horas
Vendas:	_____	_____	_____
Peças:	_____	_____	_____
Serviço:	_____	_____	_____

Produkt- und Händlerinformation

Anmerkung: Für die Lage der Produkt-Identnummer und Seriennummern siehe Abschnitt "Produkt-Identinformation" im Betriebs- und Wartungshandbuch.

Lieferdatum: _____

Produkt-Identinformation

Modell: _____

Produkt-Identnummer: _____

Seriennummer des Motors: _____

Seriennummer des Getriebes: _____

Seriennummer des Generators: _____

Seriennummern der Arbeitsgeräte: _____

Arbeitsgeräteinformation: _____

Kundennummer: _____

Händlernummer: _____

Händlerinformation

Name: _____ Niederlassung: _____

Adresse: _____

_____

_____

	Kontaktperson beim Händler	Telefon	Dienststunden
Verkauf:	_____	_____	_____
Ersatzteile:	_____	_____	_____
Service:	_____	_____	_____

MEMORANDA

TABLE OF CONTENTS

Name	Page
GENERAL INFORMATION	A23
REPAIR ALTERNATIVES	A33
SUPPLEMENTAL COOLANT ADDITIVES	A38
MAINTENANCE PARTS	A43
INDEX	A69
MACHINE ARRANGEMENT	1
ARCTIC AR	1
ELECTRONICS AR-MACHINE	2
GENERAL AR	3
SUPPRESSION AR-SOUND	4
ENGINE ARRANGEMENT	5
ENGINE AR	5
INSTALLATION AR-ENGINE	7
BASIC ENGINE	8
BELT TIGHTENER GP	8
CAMSHAFT GP	10
COVER GP-CYLINDER BLOCK	11
COVER GP-FLYWHEEL HOUSING	12
COVER GP-FRONT HOUSING	14
COVER GP-VALVE MECHANISM	16
CRANKSHAFT GP	17
CYLINDER BLOCK AS	18
CYLINDER BLOCK GP	22
CYLINDER HEAD AS	25
CYLINDER HEAD GP	27
DAMPER GP	30
DRIVE GP-ACCESSORY	31
DRIVE GP-FAN	32
FLYWHEEL GP	36
GEAR GP-FRONT	38
GEAR GP-REAR	40
HOUSING GP-FLYWHEEL	44
HOUSING GP-FRONT	46
LIFTING GP-ENGINE	48
MOUNTING GP-ALTERNATOR	49
PAN GP-OIL	50
PISTON & ROD GP	52
PLUG GP-CYLINDER BLOCK	54
PLUG GP-CYLINDER HEAD	56
PULLEY GP-CRANKSHAFT	57
ROCKER ARM GP	59
SUPPORT GP-ENGINE	60
TRUNNION GP-ENGINE	62
VALVE MECHANISM GP	63
YOKE GP	64
LUBRICATION SYSTEM	65
FASTENER GP-OIL PUMP MOUNTING	65
FILLER GP-ENGINE OIL	66
FILTER GP-ENGINE OIL	68
FUMES DISPOSAL GP	70
GAUGE GP-OIL LEVEL (DIPSTICK)	72
LINES GP-ENGINE OIL	74
LINES GP-TURBOCHARGER OIL	76
OIL CHANGE GP-HIGH SPEED	78
PRELUBRICATION AR-ENGINE	80
PUMP GP-ENGINE OIL	84
COOLING SYSTEM	86
FAN AR	86
FAN GP-BLOWER	88
LINES GP-WATER	92
PUMP GP-WATER	102
RADIATOR GP	106
REGULATOR GP-TEMPERATURE	112
TANK GP-COOLANT	116
TANK GP-WATER	118
AIR INLET AND EXHAUST SYSTEM	122
AFTERCOOLER GP-AIR	122
AIR CLEANER GP	126
CAP AS-RAIN	129
DUST EJECTOR GP	130
LINES GP-AIR	132
MANIFOLD GP-EXHAUST	140
MUFFLER GP	141
PRECLEANER GP	142
SHIELD GP-HEAT	144
TURBOCHARGER GP	146
FUEL SYSTEM	148
ADAPTER	148
ADAPTER GP-FAST FILL FUEL	150
CONTROL GP-DECELERATOR	158
DRIVE GP-UNIT INJ HYD PUMP	160
FILTER & LINES GP-FUEL	164
FILTER GP-WATER SEP & FUEL	167
INJECTOR GP-FUEL	169
KIT-SEAL	170
LINES GP-FUEL FILTER	172
LINES GP-INJECTOR HYD PUMP	176
PUMP & MTG GP-UNIT INJ HYD	178
PUMP GP-FUEL INJECTION	179
PUMP GP-UNIT INJECTOR HYD	180
TANK GP-FUEL	184
VALVE GP-PRESSURE CONTROL	186
VALVE GP-SOLENOID	187
ELECTRICAL AND STARTING SYSTEM	188
ALARM GP	188

TABLE OF CONTENTS

Name	Page
ALTERNATOR GP-CHARGING	189
BATTERY & WIRING GP	192
BLOCK GP-POWER	199
CONTROL & MTG GP-ELECTRONIC	200
CONTROL & MTG GP-ENGINE ELEK	206
CONTROL GP-ELECTRONIC	208
CONTROL GP-ENGINE ELECTRONIC	212
CONTROL GP-UNPROGRAMMED	214
CONVERTER GP-ELECTRICAL	217
ELECTRONICS GP-IMPLEMENT	218
ELECTRONICS GP-POWER TRAIN	219
ELECTRONICS GP-VIDS	220
HEATER GP-FUEL	222
HEATER GP-JACKET WATER	224
JUNCTION BLOCK GP	226
LAMP GP-DOME	227
LAMP GP-FLOOD	228
LIGHTING AR	230
LIGHTING AR-REAR	232
LIGHTING GP	233
LIGHTING GP-FLOOD	234
LIGHTING GP-FRONT	238
LIGHTING GP-REAR	240
LIGHTING GP-RIPPER	242
PLUG AS-WIRING	243
SENSOR GP-FUEL LEVEL	244
SENSOR GP-POSITION	245
SENSOR GP-PRESSURE	248
SENSOR GP-SPEED	253
SENSOR GP-TEMPERATURE	258
SERVICE GP-IMPLEMENT	261
SERVICE GP-POWER TRAIN	263
SOLENOID AS-STARTING MOTOR	264
STARTING AID GP-ETHER	266
STARTING AR-LOW TEMPERATURE	268
STARTING MOTOR GP-ELECTRIC	272
SWITCH GP-BYPASS	285
SWITCH GP-DISCONNECT	286
SWITCH GP-FLOW	287
SWITCH GP-MAGNETIC	289
SWITCH GP-START	290
WARNING GP-BACKUP	291
WIRING GP-CONSOLE	292
WIRING GP-ENGINE	296
WIRING GP-PLATFORM	298
WIRING GP-UNIT INJECTOR	303
POWER TRAIN	304
AXLE GP-POWER TRAIN	304
CASE & PARTS GP-PLANETARY	306
CONTROL & MTG GP-TRANSMISSION	308
CONTROL GP-BRAKE	310
CONTROL GP-STEERING & TMSN	312
CONTROL GP-TRANSMISSION HYD	316
COOLER GP-TRANSMISSION OIL	318
COUPLING GP-PUMP	319
DIFFERENTIAL & BEVEL GEAR GP	320
DRAIN GP-ECOLOGY	322
FILTER GP-OIL	324
FINAL DRIVE GP	326
GUARD GP-DRIVE SHAFT	337
LINES GP-POWER TRAIN OIL	338
MANIFOLD & VALVE GP	342
MOUNTING GP-TRANSMISSION	344
PLANETARY GP-TRANSMISSION	346
POWER TRAIN AR	349
PUMP GP-GEAR	350
SEGMENT GP-SPROCKET	356
SHAFT GP-MAIN DRIVE	357
TORQUE CONVERTER GP	358
TRANSMISSION AR	364
UNIVERSAL JOINT GP	365
VALVE & MTG GP-PILOT	366
VALVE GP-CONTROL	368
VALVE GP-MODULATING	372
VALVE GP-PRIORITY	374
VALVE GP-RELIEF	376
VALVE GP-SOLENOID	378
VALVE GP-TRANSMISSION CONTROL	380
FRAME AND BODY	382
CASE & FRAME GP	382
CHASSIS AR	385
COUNTERWEIGHT & BAR AR-REAR	386
COUNTERWEIGHT GP	388
COVER GP-TRUNNION	392
DRAWBAR GP	394
ENCLOSURE GP	396
ENCLOSURE GP-ENGINE	398
FENDER GP	400
GRID GP-SAND BLAST ERODING	404
GUARD AR-FINAL DRIVE	405
GUARD GP-BOTTOM	406
GUARD GP-IDLER	408
GUARD GP-PIVOT SHAFT	409
GUARD GP-RADIATOR	410
GUARD GP-REAR	412
GUARD GP-ROCK	414
GUARD GP-SEAL	416
HOOD & GUARD GP	418
PLATE	421
UNDERCARRIAGE	422
BAR AR-STRIKER	422
BAR GP-STRIKER	424
CAP GP-TRACK IDLER	426
CAP GP-TRACK ROLLER	428
EQUALIZER BAR AS	429

TABLE OF CONTENTS

Name	Page
EQUALIZER BAR GP	430
FRAME GP-TELESCOPING RECOIL	434
IDLER GP-TRACK	436
LINK AS-TRACK	438
LUBRICATION GP-EQUALIZER BAR	440
LUBRICATION GP-PIVOT SHAFT	442
ROLLER AR-TRACK CARRIER	444
ROLLER GP-TRACK-DOUBLE FLANGE	445
ROLLER GP-TRACK-SINGLE FLANGE	447
SUSPENSION GP-BOGIE	450
TRACK ADJUSTER & RECOIL GP	452
TRACK GP	454
UNDERCARRIAGE AR	457
STEERING AND BRAKING SYSTEM	458
ADJUSTER GP-STEER & TMSN CONT	458
CLUTCH & BRAKE GP-STEERING	462
CONTROL GP-PARKING BRAKE	464
DETENT GP	465
GEAR GP-STEERING	466
SUPPORT GP-CONTROL	470
VALVE & MTG GP-STEERING	471
HYDRAULIC SYSTEM	472
CARTRIDGE GP-VANE PUMP	472
CONTROL AR-HYDRAULIC	474
CONTROL GP-JOYSTICK	480
COVER GP-HYDRAULIC TANK CAP	484
CYLINDER AR-DUAL TILT	485
CYLINDER GP-BULLDOZER LIFT	486
CYLINDER GP-BULLDOZER TILT	488
CYLINDER GP-RIPPER LIFT	494
CYLINDER GP-RIPPER PIN PULLER	498
CYLINDER GP-RIPPER TILT	500
FILTER GP-OIL	502
LINES GP-LIFT CYLINDER	504
LINES GP-MOTOR	506
LINES GP-PILOT	510
LINES GP-PIN PULLER CYLINDER	514
LINES GP-PUMP	516
LINES GP-RIPPER	522
LINES GP-TILT CYLINDER	528
MOTOR GP-FAN	538
PUMP GP-VANE	540
TANK & FILTER GP-HYDRAULIC	542
TANK & MTG GP-HYDRAULIC	546
VALVE & CYLINDER GP	548
VALVE & MTG GP-BULLDOZER	551
VALVE & MTG GP-CONTROL	552
VALVE GP-COMBINATION	553
VALVE GP-CONTROL	554
VALVE GP-PILOT	566
VALVE GP-PRESSURE REDUCING	570
VALVE GP-QUICK-DROP	572
VALVE GP-SHUTTLE	573
VALVE GP-SOLENOID	574
IMPLEMENTS	581
BLOCK GP-PUSH	581
BRACE GP-BULLDOZER	584
BULLDOZER AR	585
FRAME GP-RIPPER	594
GEAR GP-ACCESSORY	600
KIT-OVERPACK	602
LINES GP-OIL	606
LINK GP-STABILIZER	610
MODIFICATION AR-BULLDOZER	611
MOUNTING GP-CYLINDER	613
MOUNTING GP-RIPPER	614
PULLER AR-PIN	616
PULLER GP-PIN	618
PUSH ARM GP-LH	620
PUSH ARM GP-RH	621
PUSH ARM GP-STABILIZER	622
RIPPER AR	623
TRUNNION GP-BULLDOZER	626
WORK TOOLS	627
BIT & CUTTING EDGE GP	627
BLADE & EDGE GP	631
BLADE AS	636
BLADE AS-SEMI-UNIVERSAL	638
BLADE AS-UNIVERSAL	640
BLADE GP-SEMI-UNIVERSAL	644
BLADE GP-UNIVERSAL	646
PLATE GP-WEAR	649
RIPPER GP	651
TOOTH GP-RIPPER	654
OPERATOR STATION	657
ADJUSTER GP-SEAT	657
AIR CONDITIONER AR	658
AIR CONDITIONER GP	660
CAB AR	663
CAB GP	670
COMPRESSOR GP-REFRIGERANT	674
CONDENSER & MTG GP-REFRIGERANT	678
CONDENSER GP-REFRIGERANT	682
CONTROL & MTG GP-IMPLEMENT	684
CONTROL GP-DISPLAY ELECTRONIC	687
CONTROL GP-HANDLE	689
CONTROL GP-IMPLEMENT	690
CONTROL GP-MONITOR SYS DIMMER	692
CONVERSION AR-ROPS	693

TABLE OF CONTENTS

Name	Page	Name	Page
FAN GP-DEFROSTER	694		
HEATER GP-CAB	696		
HOUSING GP-SEAT SUSPENSION	704		
INSTALLATION GP-RADIO	707		
INSTRUMENT GP	708		
KIT-WINDOW	710		
LINER GP-CAB	711		
LINES GP-AIR CONDITIONER	712		
LINES GP-HEATER	720		
MIRROR GP-REAR VIEW	722		
MODULE GP-MESSAGE CENTER	724		
MODULE GP-MONITOR KEYPAD	725		
MODULE GP-QUAD GAUGE	727		
MODULE GP-SPEEDOMETER & TACH	728		
MOUNTING GP-CAB	730		
MOUNTING GP-CB	732		
MOUNTING GP-ROPS	733		
PAN GP-BACKREST	734		
PLATFORM GP-CAB	738		
RECLINER GP-SEAT	740		
ROPS AS	741		
ROPS GP	742		
SCREEN GP-PROTECTION	743		
SEAT AR	744		
SEAT GP	745		
SEAT GP-SUSPENSION	752		
SUSPENSION GP-SEAT	756		
TANK GP-WINDOW WASHER	760		
WASHER GP-WINDOW	764		
WINDOW AS-SLIDING	767		
WINDOW GP-CAB	769		
WIPER GP-WINDOW	782		
WIPER PIVOT GP	790		
SERVICE EQUIPMENT AND SUPPLIES	791		
FILM GP	791		
PLATE & FILM GP	792		
PART NUMBER INDEX	B1		

TABLE DES MATIÈRES

Désignation	Page
GÉNÉRALITÉS	A25
OPTIONS DE RÉPARATION	A34
ADDITIFS POUR LIQUIDE DE REFROIDISSEMENT	A39
PIÈCES DE RECHANGE	A47
INDEX	A80
VERSION DE MACHINE	1
VERSION POUR LES RÉGIONS POLAIRES	1
COMPOSANTS ÉLECTRONIQUES DE LA MACHINE (VERSION)	2
VUE DU MODÈLE	3
INSONORISATION (VERSION)	4
VERSION DE MOTEUR	5
MOTEUR (VERSION)	5
MONTAGE DE MOTEUR (VERSION)	7
MOTEUR STANDARD	8
TENDEUR DE COURROIE (ASS)	8
ARBRE A CAMES (ASS)	10
BLOC-CYLINDRES - COUVERCLE (ASS)	11
COUVERCLE DE CARTER DE VOLANT (ASS)	12
COUVERCLE DE CARTER AV (ASS)	14
CACHE-SOUPAPES (ASS)	16
VILEBREQUIN (ASS)	17
BLOC-CYLINDRES (ENS)	18
BLOC-CYLINDRES (ASS)	22
CULASSE (ENS)	25
CULASSE (ASS)	27
AMORTISSEUR DE VIBRATIONS (ASS)	30
ENTRAÎNEMENT AUXILIAIRE (ASS)	31
ENTRAÎNEMENT DE VENTILATEUR (ASS)	32
VOLANT MOTEUR (ASS)	36
PIGNONNERIE AV (ASS)	38
PIGNON AR (ASS)	40
CARTER DE VOLANT (ASS)	44
CARTER AV (ASS)	46
OEILLETONS DE LEVAGE MOTEUR (ASS)	48
MONTAGE D'ALTERNATEUR (ASS)	49
HUILE MOTEUR - CARTER (ASS)	50
PISTON ET BIELLE (ASS)	52
BOUCHON - BLOC-CYLINDRES	54
BOUCHON - CULASSE (ASS)	56
VILEBREQUIN - POULIE (ASS)	57
AXE DE CULBUTEUR (ASS)	59
SUPPORT DE MOTEUR (ASS)	60
TOURILLON DE MOTEUR (ASS)	62
CULBUTERIE (ASS)	63
ETRIER (ASS)	64
CIRCUIT DE GRAISSAGE	65
BOULONNERIE DE MONTAGE DE LA POMPE A HUILE (ASS)	65
BOUCHON DE REMPLISSAGE D'HUILE MOTEUR (ASS)	66
FILTRE À HUILE MOTEUR (ASS)	68
DISPOSITIF D'EVACUATION DES VAPEURS DE CARTER	70
JAUGE D'HUILE MOTEUR (BAIONNETTE) (ASS)	72
CANALISATIONS D'HUILE MOTEUR (ASS)	74
CANALISATIONS D'HUILE DE TURBOCOMPRESSEUR (ASS)	76
DISPOSITIF DE VIDANGE RAPIDE D'HUILE (ASS)	78
VERSION DE PRÉGRAISSAGE DE MOTEUR	80
POMPE A HUILE MOTEUR (ASS)	84
CIRCUIT DE REFROIDISSEMENT	86
VERSION DE VENTILATEUR	86
VENTILATEUR SOUFFLANT (ASS)	88
CANALISATIONS D'EAU (ASS)	92
POMPE A EAU (ASS)	102
RADIATEUR (ASS)	106
RÉGULATEUR DE TEMPÉRATURE (ASS)	112
RÉSERVOIR DU LIQUIDE DE REFROIDISSEMENT (ASS)	116
RÉSERVOIR D'EAU (ASS)	118
CIRCUIT D'ADMISSION D'AIR ET D'ECHAPPEMENT	122
REFROIDISSEUR D'ADMISSION D'AIR (ASS)	122
FILTRE A AIR (ASS)	126
DÉFLECTEUR DE PLUIE (ENS)	129
ÉJECTEUR AUTOMATIQUE DE POUSSIÈRE (ASS)	130
CANALISATIONS D'AIR (ASS)	132
COLLECTEUR D'ÉCHAPPEMENT (ASS)	140
SILENCIEUX (ASS)	141
PREFILTRE (ASS)	142
ÉCRAN THERMIQUE (ASS)	144
TURBOCOMPRESSEUR (ASS)	146

TABLE DES MATIÈRES

Désignation	Page
CIRCUIT DE CARBURANT	148
RACCORD	148
ADAPTATEUR DE REMPLIS. RAPIDE DE CARBURANT (ASS)	150
COMMANDE DE DECELERATEUR (ASS)	158
ENTRAINEMENT D'INJECTEURS-POMPES HYDRAULIQUES	160
FILTRE ET CANALISATIONS DE CARBURANT (ASS)	164
FILTRE DE SÉPARATEUR D'EAU ET DE CARBURANT (ASS)	167
INJECTEUR DE CARBURANT (ASS)	169
KIT DE JOINTS	170
CANALISATIONS DU FILTRE A CARBURANT (ASS)	172
CANALISATIONS - INJECTEURS-POMPES HYDRAULIQUES	176
POMPE D'INJECTEURS-POMPES HYDRAU. ET MONTAGE	178
POMPE D'INJECTION DE CARBURANT (ASS)	179
INJECTEURS-POMPES HYDRAULIQUES (ENS)	180
RÉSERVOIR DE CARBURANT (ASS)	184
DISTRIBUTEUR DE PRESSION (ASS)	186
SOUPAPE - SOLÉNOÏDE (ASS)	187
CIRCUIT DE DÉMARRAGE ET ÉLECTRIQUE	188
AVERTISSEUR (ASS)	188
ALTERNATEUR DE CHARGE (ASS)	189
BATTERIE ET CÂBLAGE	192
BLOC-PUISSANCE (ASS)	199
COMMANDE ELECTRONIQUE ET MONTAGE (ASS)	200
COMMANDE ET MONTAGE - MOTEUR	206
COMMANDE ELECTRONIQUE DE BOITE (ASS)	208
COMMANDE ELECTRONIQUE DE MOTEUR (ASS)	212
COMMANDE NON PROGRAMMEE (ASS)	214
TRANSFORMATION ELECTRIQUE (ASS)	217
COMMANDE ÉLECTRONIQUE D'ÉQUIPEMENT (ASS)	218
ÉLECTRONIQUE DE TRANSMISSION (ASS)	219
COMPOSANTS ÉLECTRONIQUES DU SYSTÈME VIDS (ASS)	220
RECHAUFFEUR DE CARBURANT (ASS)	222
EAU DES CHEMISES - RECHAUFFEUR (ASS)	224
BLOC DE BRANCHEMENT (ASS)	226
PLAFONNIER (ASS)	227
LAMPE - PHARE (ASS)	228
ÉCLAIRAGE (VERSION)	230
VERSION D'ÉCLAIRAGE ARRIÈRE	232
ÉCLAIRAGE (ASS)	233
ÉCLAIRAGE - PROJECTEURS (ASS)	234
ECLAIRAGE AV (ASS)	238
ECLAIRAGE AR (ASS)	240
ECLAIRAGE DE RIPPER (ASS)	242
BOUCHON - CABLAGE (ENS)	243
CAPTEUR DE NIVEAU DE CARBURANT (ASS)	244
SONDE - CIRCUIT DE CARBURANT	245
CAPTEUR DE PRESSION (ASS)	248
CAPTEUR DE VITESSE (ASS)	253
CAPTEUR DE TEMPERATURE (ASS)	258
ENTRETIEN D'ÉQUIPEMENT (ASS)	261
ENTRETIEN DE LA TRANSMISSION (ASS)	263
SOLÉNOÏDE DE DÉMARREUR (ENS)	264
AUXILIAIRE DE DÉMARRAGE À L'ÉTHER	266
DÉMARRAGE À TEMPÉRATURE BASSE	268
DÉMARREUR ÉLECTRIQUE (ASS)	272
INTERRUPTEUR - DÉRIVATION (ASS)	285
ROBINET DE BATTERIE (ASS)	286
CONTACTEUR DE DEBIT (ASS)	287
CONTACTEUR MAGNETIQUE (ASS)	289
INTERRUPTEUR DE DÉMARRAGE (ASS)	290
AVERTISSEUR DE RECUL (ASS)	291
CABLAGE DE CONSOLE (ASS)	292
CABLAGE DE MOTEUR (ASS)	296
CABLAGE - PLATE-FORME (ASS)	298
CABLAGE D'INJECTEUR	303
TRANSMISSION	304
ARBRE DE TRANSMISSION (ASS)	304
TRAINS PLANÉTAIRES - CARTER ET PIÈCES	306
COMMANDE DE BOÎTE ET MONTAGE (ASS)	308
FREIN - COMMANDE (ASS)	310
COMMANDE DE DIRECTION ET BOITE DE VITESSES	312
COMMANDE HYDRAULIQUE DE BOÎTE (ASS)	316
REFROIDISSEUR D'HUILE DE BOÎTE (ASS)	318
ACCOUPLEMENT DE POMPE (ASS)	319

TABLE DES MATIÈRES

Désignation	Page
COURONNE ET DIFFERENTIEL (ASS)	320
VIDANGE-ÉCOLOGIE (ASS)	322
FILTRE A HUILE (ASS)	324
RÉDUCTEURS (ASS)	326
BLINDAGE D'ARBRE DE TRANSMISSION (ASS)	337
CANALISATIONS D'HUILE DE TRANSMISSION (ASS)	338
COLLECTEUR ET SOUPAPE (ASS)	342
REDUCTEUR MARIN - MONTAGE (ASS)	344
BOÎTE PLANÉTAIRE (ASS)	346
TRANSMISSION (VERSION)	349
POMPE A ENGRENAGES (ASS)	350
SEGMENT DE BARBOTIN (ASS)	356
ARBRE D'ENTRAINEMENT PRINCIPAL	357
CONVERTISSEUR DE COUPLE (ASS)	358
BOÎTE DE VITESSES (VERSION)	364
JOINT UNIVERSEL (ASS)	365
SOUPAPE PILOTE ET MONTAGE (ASS)	366
DISTRIBUTEUR (ASS)	368
SOUPAPE DE MODULATION (ASS)	372
SOUPAPE DE PRIORITE (ASS)	374
CLAPET DE DECHARGE (ASS)	376
SOUPAPE - SOLÉNOÏDE (ASS)	378
DISTRIBUTEUR DE BOITE (ASS)	380
CHÂSSIS ET BENNE	382
CHÂSSIS ET CARTER (ASS)	382
VERSION DE CHASSIS	385
CONTREPOIDS ET BARRE - ARRIÈRE (VERSION)	386
CONTREPOIDS (ASS)	388
COUVERCLE DE TOURILLON (ASS)	392
BARRE D'ATTELAGE (ASS)	394
CARENAGE (ASS)	396
CARENAGE DE MOTEUR (ASS)	398
GARDE-BOUE (ASS)	400
DEFLECTEUR PARE-SABLE (ASS)	404
PROTECTEUR DE RÉDUCTEURS (VERSION)	405
BLINDAGE INFÉRIEUR (ASS)	406
BLINDAGE DE ROUE AV (ASS)	408
PROTECTION D'ARBRE PIVOT (ASS)	409
PROTÈGE-RADIATEUR (ASS)	410
BLINDAGE AR	412
PARE-PIERRES (ASS)	414
PROTECTION DE JOINT (ASS)	416
CAPOT ET PROTECTION (ASS)	418
PLAQUE	421
TRAIN DE ROULEMENT	422
BARRE DÉFLECTRICE (VERSION)	422
BARRE DÉFLECTRICE (ASS)	424
CHAPEAU DE ROUE AV (CHAINE) (ASS)	426
CHAPEAU DE GALET INFERIEUR (ASS)	428
BALANCIER DE SUSPENSION (ENS)	429
BALANCIER DE SUSPENSION (ASS)	430
CARTER TELESCOPIQUE DE MECANISME AMORTISSEUR	434
ROUE AV - CHAINES (ASS)	436
MAILLON DE CHAINE (ENS)	438
GRAISSAGE DE BALANCIER DE SUSPENSION (ASS)	440
GRAISSAGE DE LA TRAVERSE-PIVOT	442
GALET SUPERIEUR (VERSION)	444
GALET A BOUDIN DOUBLE (ASS)	445
GALET A BOUDIN SIMPLE (ASS)	447
SUSPENSION A BOGIES (ASS)	450
MECANISME AMORTISSEUR ET REGLAGE DE CHAINES (ASS)	452
CHAINES (ASS)	454
TRAIN DE ROULEMENT	457
CIRCUIT DE DIRECTION ET DE FREIN	458
RÉGLAGE DE COMMANDE DE DIRECT. ET DE BOÎTE	458
EMBRAYAGE ET FREIN DE DIRECTION (ASS)	462
COMMANDE DE FREIN DE STATIONNEMENT (ASS)	464
DISPOSITIF D'ARRÊT	465
ENGRENAGE DE DIRECTION (ASS)	466
SUPPORT - COMMANDE (ASS)	470
SOUPAPE DE DIRECTION ET MONTAGE (ENS)	471
CIRCUIT HYDRAULIQUE	472
POMPE À AILETTES - CARTOUCHE	472
COMMANDE HYDRAULIQUE (VERSION)	474
PALONNIER - GROUPE DE COMMANDE (ASS)	480
COUVERCLE DE RÉSERVOIR HYDRAULIQUE	484
VÉRIN À DOUBLE INCLINAISON (VERSION)	485
VÉRIN DE LEVAGE DE LAME DE BULLDOZER (ASS)	486
VÉRIN D'INCLINAISON DE BULLDOZER (ASS)	488
VERIN DE LEVAGE DE RIPPER (ASS)	494

TABLE DES MATIÈRES

Désignation	Page
VERIN D'EXTRACTEUR DE BROCHE DE RIPPER (ASS)	498
VERIN D'INCLINAISON DU RIPPER (ASS)	500
FILTRE A HUILE (ASS)	502
CANALISATIONS DE VÉRIN DE LEVAGE (ASS)	504
CANALISATIONS DU MOTEUR (ASS)	506
CANALISATIONS A COMMANDE PILOTE (ASS)	510
CANALISATIONS D'EXTRACTEUR DE BROCHE (ASS)	514
CANALISATIONS DE POMPE (ASS)	516
CANALISATIONS DU RIPPER (ASS)	522
CANALISATIONS DU VÉRIN D'INCLINAISON (ASS)	528
MOTEUR DE VENTILATEUR (ASS)	538
POMPE À PALETTES (ASS)	540
RÉSERVOIR HYDRAULIQUE ET FILTRE (ASS)	542
RÉSERVOIR HYDRAULIQUE ET MONTAGE (ASS)	546
DISTRIBUTEUR ET VÉRIN (ASS)	548
SOUPAPE DE BULLDOZER ET MONTAGE (ASS)	551
DISTRIBUTEUR ET MONTAGE (ASS)	552
SOUPAPE DE COMBINAISON (ASS)	553
DISTRIBUTEUR (ASS)	554
SOUPAPE PILOTE (ASS)	566
SOUPAPE RÉDUCTRICE DE PRESSION (ASS)	570
SOUPAPE D'ABAISSEMENT RAPIDE (ASS)	572
VANNE PILOTE (ASS)	573
SOUPAPE - SOLÉNOÏDE (ASS)	574
ÉQUIPEMENTS	581
TAMPON DE POUSSÉE (ASS)	581
TIRANT DE BULLDOZER (ASS)	584
VERSION DE BULLDOZER	585
BATI DE RIPPER (ASS)	594
ENGRENAGE D'ÉQUIPEMENT (ASS)	600
KIT DE BOULONNERIE, JOINTS ET CALES D'ÉPAISSEUR	602
CANALISATIONS D'HUILE (ASS)	606
STABILISATEUR - BRAS DE POUSSEE (ASS)	610
MODIFICATION -BULLDOZER	611
MONTAGE DE VÉRIN (ASS)	613
MONTAGE DE RIPPER (ASS)	614
EXTRACTEUR DE BROCHE (VERSION)	616
EXTRACTEUR DE BROCHE (ASS)	618
BRAS DE POUSSEE - GAUCHE (ASS)	620
BRAS DE POUSSEE - DROITE (ASS)	621
STABILISATEUR DU BRAS DE POUSSEE (ASS)	622
RIPPER (VERSION)	623
TOURILLON DE BULLDOZER (ASS)	626
OUTILS DE TRAVAIL	627
EMBOUT ET LAME DE COUPE (ASS)	627
LAME DE COUPE (ASS)	631
BALAI D'ESSUIE-GLACE (ENS)	636
LAME SEMI-UNIVERSELLE (ENS)	638
LAME UNIVERSELLE (ENS)	640
LAME SEMI-UNIVERSELLE (ASS)	644
LAME UNIVERSELLE (ASS)	646
PLAQUE D'USURE (ASS)	649
RIPPER (ASS)	651
DENT DE RIPPER (ASS)	654
POSTE DE CONDUITE	657
REGLAGE DE SIEGE (ASS)	657
CLIMATISEUR (VERSION)	658
CLIMATISEUR (ASS)	660
CABINE (VERSION)	663
CABINE (ASS)	670
COMPRESSEUR DE REFRIGERANT (ASS)	674
CONDENSATEUR ET MONTAGE (RÉFRIGÉRANT)	678
CONDENSEUR DE RÉFRIGÉRANT	682
COMMANDE D'ÉQUIPEMENT	684
COMMANDE D'AFFICHAGE ÉLECTRONIQUE	687
COMMANDE DE POIGNÉE (ASS)	689
COMMANDE D'EQUIPEMENT (ASS)	690
COMMANDE D'INVERSION DE LA CENTRALE DE SURVEILLANCE (ASS)	692
VERSION DE TRANSFORMATION DE CABINE ROPS	693
VENTILATEUR DÉGIVREUR (ASS)	694
CHAUFFAGE DE CABINE (ASS)	696
SUSPENSION DE SIEGE - CARTER (ASS)	704
MONTAGE DE RADIO (ASS)	707
TABLEAU DE BORD (ASS)	708
KIT-FENETRE	710
CABINE - REVÊTEMENT (ASS)	711
CANALISATIONS DE CLIMATISEUR (ASS)	712
CANALISATIONS DE CHAUFFAGE (ASS)	720
RÉTROVISEUR (ASS)	722
MODULE (ASS)-CENTRE DE MESSAGE	724
MODULE (ASS)-TOUCHE DE MODULE DE SURVEILLANCE	725

TABLE DES MATIÈRES

Désignation	Page	Désignation	Page
MODULE - QUATRE INSTRUMENTS (ASS)	727		
MODULE D'INDICATEUR DE VITESSE ET COMPTE-TOURS (ASS)	728		
MONTAGE DE CABINE (ASS)	730		
GROUPE DE MONTAGE	732		
MONTAGE DU TOIT ROPS (ASS)	733		
COUVERCLE INFÉRIEUR-DOSSIER (ASS)	734		
PLATE-FORME - CABINE (ASS)	738		
SIÈGE INCLINABLE (ASS)	740		
TOIT ROPS (ENS)	741		
TOIT ROPS (ASS)	742		
GRILLE DE PROTECTION (ASS)	743		
SIEGE (VERSION)	744		
SIÈGE (ASS)	745		
SIÈGE AVEC SUSPENSION (ASS)	752		
RÉSERVOIR - LAVE-GLACE (ASS)	760		
LAVE-GLACE - VITRE (ASS)	764		
VITRE COULISSANTE (ENS)	767		
VITRE DE CABINE (ASS)	769		
ESSUIE-GLACE (ASS)	782		
PIVOT D'ESSUIE-GLACE (ASS)	790		
MATÉRIEL ET FOURNITURES D'ENTRETIEN	791		
PLAQUE SIGNALÉTIQUE (ASS)	791		
PLAQUES SIGNALETIQUES ET AUTOCOLLANTS (ASS)	792		
INDEX DE NUMÉROS DE PIÈCES	B1		

CONTENIDO

Nombre	Página
INFORMACIÓN GENERAL	A27
ALTERNATIVAS DE REPARACIÓN	A35
ADITIVOS DE REFRIGERANTE SUPLEMENTARIOS	A40
PIEZAS DE MANTENIMIENTO	A53
INDICE	A92
CONFIGURACIÓN DE MÁQUINA	1
CONFIGURACIÓN PARA REGIONES ÁRTICAS	1
CONFIGURACIÓN ELECTRÓNICA DE LA MÁQUINA	2
CONFIGURACIÓN GENERAL	3
INSONORIZADOR (CONFIG)	4
CONFIGURACIÓN DE MOTOR	5
CONFIGURACIÓN DE MOTORES	5
CONFIGURACIÓN DE INSTALACIÓN DEL MOTOR	7
MOTOR BÁSICO	8
AJUSTADOR DE CORREA (GR)	8
ÁRBOL DE LEVAS (GR)	10
TAPA DEL BLOQUE MOTOR (GR)	11
TAPA DE LA CAJA DE VOLANTE (GR)	12
TAPA DE LA CAJA DELANTERA (GR)	14
TAPA DEL MECANISMO DE VÁLVULAS (GR)	16
CIGÜEÑAL (GR)	17
BLOQUE MOTOR (CONJ)	18
BLOQUE MOTOR (GR)	22
CULATA DE CILINDROS (CONJ)	25
CULATA DE CILINDROS (GR)	27
AMORTIGUADOR DE VIBRACIONES (GR)	30
ACCESORIOS - IMPULSOR DE (GR)	31
IMPULSOR DE VENTILADOR (GR)	32
VOLANTE (GR)	36
ENGRANAJE DELANTERO (GR)	38
ENGRANAJE TRASERO (GR)	40
VOLANTE - CAJA DE (GR)	44
CAJA DELANTERA (GR)	46
CÁNCAMOS DE LEVANTAMIENTO DEL MOTOR (GR)	48
MONTAJE DEL ALTERNADOR (GR)	49
CÁRTER - COLECTOR DEL (GR)	50
PISTÓN Y BIELA (GR)	52
TAPÓN DEL BLOQUE MOTOR (GR)	54
TAPÓN DE CULATA (GR)	56
CIGÜEÑAL - POLEA DE (GR)	57
BALANCÍN (GR)	59
MOTOR - SOPORTE DEL (GR)	60
MUÑÓN DEL MOTOR (GR)	62
MECANISMO DE VÁLVULAS (GR)	63
YUGO (GR)	64
SISTEMA DE LUBRICACIÓN	65
TORNILLERÍA DE MONT. DE LA BOMBA DE ACEITE (GR)	65
TUBO DE LLENADO DE ACEITE (GR)	66
FILTRO DE ACEITE DEL MOTOR (GR)	68
ESCAPE DE GASES (GR)	70
INDICADOR DEL NIVEL DE ACEITE (VARILLA) (GR)	72
TUBERÍAS DE ACEITE DEL MOTOR (GR)	74
TURBOCOMPRESOR - TUBERÍAS DE ACEITE DEL (GR)	76
CAMBIO RÁPIDO DE ACEITE (GR)	78
PRELUBRICACION DEL MOTOR (CONFIG)	80
BOMBA DE ACEITE DEL MOTOR (GR)	84
SISTEMA DE ENFRIAMIENTO	86
VENTILADOR, CONFIGURACIÓN	86
SOPLADOR - VENTILADOR (GR)	88
TUBERÍAS DEL AGUA (GR)	92
BOMBA DE AGUA (GR)	102
RADIADOR (GR)	106
TEMPERATURA - REGULADOR DE (GR)	112
TANQUE DE REFRIGERANTE (GR)	116
TANQUE DEL AGUA (GR)	118
SISTEMA DE ADMISIÓN Y ESCAPE DE AIRE	122
POSENFRIADOR DE AIRE (GR)	122
FILTRO DE AIRE (GR)	126
TAPA CONTRA LA LLUVIA (CONJ)	129
EXPULSOR DE POLVO (GR)	130
AIRE - TUBERÍAS DE (GR)	132
MÚLTIPLE DE ESCAPE (GR)	140
SILENCIADOR (GR)	141
ANTEFILTRO (GR)	142
PROTECTOR TÉRMICO (GR)	144
TURBOCOMPRESOR (GR)	146
SISTEMA DE COMBUSTIBLE	148
ADAPTADOR	148
ADAPTADOR DE LLENADO RÁPIDO DE COMBUSTIBLE (GR)	150
CONTROL DEL DECELERADOR (GR)	158
MANDO DE BOMBA HIDRÁULICA INYECTORA (GR)	160
FILTRO Y TUBERÍAS DE COMBUSTIBLE (GR)	164

CONTENIDO

Nombre	Página
FILTRO DE COMBUSTIBLE Y SEPARADOR DE AGUA (GR)	167
INYECTOR DE COMBUSTIBLE (GR)	169
JUEGO DE SELLOS	170
TUBERÍAS DEL FILTRO DE COMBUSTIBLE	172
TUBERÍAS DE BOMBA HIDRÁULICA DE INYECCIÓN (GR)	176
BOMBA HIDRÁULICA DEL INYECTOR UNITARIO Y MONTAJE	178
BOMBA DE INYECCIÓN DE COMBUSTIBLE (GR)	179
BOMBA HIDRÁULICA DEL INYECTOR UNITARIO (GR)	180
COMBUSTIBLE - TANQUE DE (GR)	184
PRESIÓN - VÁLVULA DE CONTROL DE (GR)	186
VÁLVULA DE SOLENOIDE (GR)	187
SISTEMA ELÉCTRICO Y DE ARRANQUE	188
ALARMA (GR)	188
CARGA - ALTERNADOR DE (GR)	189
BATERÍA Y CABLES (GR)	192
BLOQUE DE POTENCIA (GR)	199
CONTROL ELECTRÓNICO Y MONTAJE (GR)	200
CONTROL ELECTRÓNICO DEL MOTOR Y MONTAJE	206
CONTROL ELECTRÓNICO (GR)	208
CONTROL ELECTRÓNICO DEL MOTOR (GR)	212
CONTROL NO PROGRAMADO (GR)	214
CONVERTIDOR ELÉCTRICO (GR)	217
IMPLEMENTOS (GR ELECTRÓNICO)	218
TREN DE FUERZA-GRUPO ELECTRÓNICO	219
VIDS ELECTRÓNICO (GR)	220
CALENTADOR DEL COMBUSTIBLE (GR)	222
AGUA DE LAS CAMISAS - CALENTADOR DEL (GR)	224
BLOQUE DE EMPALME (GR)	226
LÁMPARA DEL TECHO (GR)	227
REFLECTOR (GR)	228
LUCES (CONFIG)	230
ILUMINACION TRASERA (CONFIG)	232
GRUPO DE LUCES	233
LUCES DE REFLECTOR (GR)	234
LUCES DELANTERAS (GR)	238
LUCES TRASERAS (GR)	240
LUCES DEL DESGARRADOR (GR)	242
CABLES DEL TAPÓN (CONJ)	243
SENSOR DE NIVEL DE COMBUSTIBLE (GR)	244
DETECTOR DE POSICIÓN (SISTEMA DE COMBUST.) (GR)	245
SENSOR DE PRESIÓN (GR)	248
SENSOR DE VELOCIDAD (GR)	253
SENSOR DE TEMPERATURA (GR)	258
SERVICIO DE IMPLEMENTO (GR)	261
SERVICIO DE TREN DE FUERZA (GR)	263
SOLENOIDE DEL MOTOR DE ARRANQUE (CONJ)	264
AUXILIAR DE ARRANQUE CON ÉTER (GR)	266
ARRANQUE A TEMPERATURA BAJA (CONFIG)	268
MOTOR DE ARRANQUE ELÉCTRICO (GR)	272
INTERRUPTOR DE DERIVACIÓN	285
DISYUNTOR (GR)	286
INTERRUPTOR DE FLUJO (GR)	287
INTERRUPTOR MAGNÉTICO (GR)	289
ARRANQUE - INTERRUPTOR DE (GR)	290
RETROCESO - ALARMA DE (GR)	291
CABLES DE LA CONSOLA (GR)	292
CABLES DEL MOTOR (GR)	296
CABLES DE LA PLATAFORMA (GR)	298
CABLES DE INYECTOR (GR)	303
TREN DE FUERZA	304
EJE DEL TREN DE FUERZA (GR)	304
CAJA Y PIEZAS DE LOS PLANETARIOS	306
CONTROL DE LA TRANSMISIÓN Y MONTAJE (GR)	308
CONTROL DEL FRENO (GR)	310
CONTROL DE DIRECCIÓN Y TRANSMISIÓN (GR)	312
CONTROL HIDRÁULICO DE LA TRANSMISIÓN (GR)	316
ENFRIADOR DE ACEITE DE LA TRANSMISIÓN (GR)	318
ACOPLAMIENTO DE BOMBA (GR)	319
DIFERENCIAL Y CORONA (GR)	320
DRENAJE DE SEGURIDAD ECOLÓGICA (GR)	322
FILTRO DE ACEITE (GR)	324
MANDO FINAL (GR)	326
PROTECTOR DEL EJE IMPULSOR (GR)	337
TUBERÍAS DE ACEITE DEL TREN DE FUERZA (GR)	338
MÚLTIPLE Y VÁLVULA (GR)	342
MONTAJE DE LA TRANSMISIÓN (GR)	344
TRANSMISIÓN PLANETARIA (GR)	346
TREN DE FUERZA (CONFIG)	349
BOMBA DE ENGRANAJES (GR)	350

CONTENIDO

Nombre	Página
SEGMENTO DE RUEDA MOTRIZ (GR)	356
EJE DE MANDO PRINCIPAL (GR)	357
CONVERTIDOR DE PAR (GR)	358
TRANSMISION (CONFIG)	364
JUNTA UNIVERSAL (GR)	365
VALVULA PILOTO Y MONTAJE (GR)	366
VÁLVULA DE CONTROL (GR)	368
VÁLVULA DE MODULACIÓN (GR)	372
PRIORIDAD - VÁLVULA DE (GR)	374
VÁLVULA DE ALIVIO (GR)	376
VÁLVULA DE SOLENOIDE (GR)	378
VÁLVULA DE CONTROL DE LA TRANSMISIÓN (GR)	380
BASTIDOR Y CAJA	382
CAJA Y BASTIDOR (GR)	382
CHASIS (CONFIG)	385
CONTRAPESO TRASERO Y BARRA (CONFIG)	386
CONTRAPESO (GR)	388
TAPA DEL MUÑÓN (GR)	392
BARRA DE TIRO (GR)	394
COMPARTIMIENTO (GR)	396
COMPARTIMIENTO DEL MOTOR (GR)	398
GUARDABARROS (GR)	400
PROTECTOR CONTRA ARENA (GR)	404
PROTECTOR DE MANDO FINAL (GR)	405
PROTECTOR INFERIOR (GR)	406
PROTECTOR DE RUEDA GUÍA	408
PROTECTOR DEL EJE PIVOTE (GR)	409
PROTECTOR DEL RADIADOR (GR)	410
PROTECTOR POSTERIOR (GR)	412
PROTECTOR CONTRA ROCAS (GR)	414
PROTECTOR DE SELLO (GR)	416
CAPO Y PROTECTOR (GR)	418
PLACA	421
TREN DE RODAJE	422
BARRA LIMPIADORA(CONFIG)	422
BARRA LIMPIADORA (GR)	424
TAPA DE RUEDA GUÍA (GR)	426
TAPA DE RODILLO INFERIOR	428
BARRA COMPENSADORA (CONJ)	429
BARRA COMPENSADORA (GR)	430
BASTIDOR TELESCÓPICO DEL RESORTE TENSOR (GR)	434
RUEDA GUÍA DE CADENA (GR)	436
ESLABÓN DE CADENA (CONJ)	438
GRUPO DE LUBRICACIÓN DE BARRA ESTABILIZADORA	440
LUBRICACIÓN DE EJE PIVOTE (GR)	442
RODILLO SUPERIOR DE CADENAS (CONFIG)	444
RODILLOS DE PESTAÑA DOBLE (GR)	445
RODILLOS DE PESTAÑA SIMPLE (GR)	447
SOPORTE BASCULANTE (GR)	450
RESORTE TENSOR Y AJUSTADOR DE LA CADENA (GR)	452
CADENAS (GR)	454
TREN DE RODAJE (CONFIG)	457
SISTEMA DE FRENOS Y DIRECCIÓN	458
AJUSTADOR DEL CONTROL DE DIRECCIÓN Y TRANSMISIÓN (GR)	458
FRENO Y EMBRAGUE DE DIRECCIÓN (GR)	462
CONTROL DEL FRENO DE ESTACIONAMIENTO	464
TOPE (GR)	465
ENGRANAJE DE DIRECCIÓN (GR)	466
SOPORTE DE CONTROL (GR)	470
VÁLVULA DE DIRECCIÓN Y MONTAJE (GR)	471
SISTEMA HIDRÁULICO	472
BOMBA DE PALETAS-CARTUCHO (GR)	472
CONTROL HIDRÁULICO (CONFIG)	474
PALANCA UNIVERSAL DE CONTROL (GR)	480
TAPA DEL TAPÓN DEL TANQUE HIDRÁULICO (GR)	484
CILINDRO DE DOBLE INCLINACION (CONFIG)	485
CILINDRO DE LEVANTAMIENTO DE LA HOJA TOPADORA (GR)	486
CILINDRO DE INCLINACIÓN DE LA HOJA TOPADORA (GR)	488
CILINDRO DE LEVANTAMIENTO DEL DESGARRADOR (GR)	494
CILINDRO DEL EXTRACTOR DE PASADOR DEL DESGARRADOR (GR)	498
CILINDRO DE INCLINACIÓN DEL DESGARRADOR (GR)	500
FILTRO DE ACEITE (GR)	502
CILINDRO DE LEVANTAMIENTO - TUBERÍAS DEL (GR)	504
TUBERIAS DEL MOTOR (GR)	506
TUBERÍAS CON SERVOMANDO (GR)	510
TUBERÍAS DE CILINDRO DE EXTRACTOR DE PASADORES	514
BOMBA - TUBERÍAS DE (GR)	516
TUBERÍAS DEL DESGARRADOR (GR)	522
TUBERÍAS DEL CILINDRO DE INCLINACIÓN (GR)	528
MOTOR DE VENTILADOR (GR)	538
BOMBA DE PALETAS (GR)	540

CONTENIDO

Nombre	Página
TANQUE Y FILTRO HIDRÁULICOS (GR)	542
TANQUE HIDRÁULICO Y MONTAJE (GR)	546
VÁLVULA Y CILINDRO (GR)	548
GRUPO DE MONTAJE Y VÁLVULA, HOJA TOPADORA	551
VÁLVULA DE CONTROL Y MONTAJE (GR)	552
VÁLVULA DE COMBINACIÓN (GR)	553
VÁLVULA DE CONTROL (GR)	554
VÁLVULA PILOTO (GR)	566
VÁLVULA REDUCTORA DE PRESIÓN (GR)	570
VÁLVULA DE CAÍDA RÁPIDA (GR)	572
VÁLVULA DE LANZADERA (GR)	573
VÁLVULA DE SOLENOIDE (GR)	574
IMPLEMENTOS	581
BLOQUE DE EMPUJE (GR)	581
SOPORTE DE LA HOJA TOPADORA	584
HOJA TOPADORA (CONFIG)	585
BASTIDOR DEL DESGARRADOR (GR)	594
ENGRANAJE ACCESORIO (GR)	600
JUEGO DE TORNILLERÍA, JUNTAS Y CALCES	602
TUBERÍAS DE ACEITE (GR)	606
ESTABILIZADOR DEL BRAZO DE EMPUJE (GR)	610
MODIFICACIÓN DEL TRACTOR TOPADOR (CONFIG)	611
MONTAJE DE CILINDRO (GR)	613
MONTAJE DEL DESGARRADOR (GR)	614
EXTRACTOR DE PASADOR (CONFIG)	616
EXTRACTOR DE PASADOR (GR)	618
BRAZO DE EMPUJE IZQUIERDO (GR)	620
BRAZO DE EMPUJE DERECHO (GR)	621
ESTABILIZADOR DEL BRAZO DE EMPUJE (GR)	622
DESGARRADOR (CONFIG)	623
MUÑÓN DE LA HOJA TOPADORA (GR)	626
HERRAMIENTAS	627
CANTONERA Y CUCHILLA (GR)	627
HOJA Y CUCHILLA (GR)	631
HOJA DE LIMPIAPARABRISAS (CONJ)	636
HOJA SEMIUNIVERSAL (CONJ)	638
HOJA UNIVERSAL (CONJ)	640
HOJA SEMIUNIVERSAL (GR)	644
HOJA UNIVERSAL (GR)	646
PLANCHA DE DESGASTE (GR)	649
DESGARRADOR (GR)	651
DIENTE DE DESGARRADOR (GR)	654
CABINA DEL OPERADOR	657
AJUSTADOR DEL ASIENTO (GR)	657
ACONDICIONADOR DE AIRE (CONFIG)	658
ACONDICIONADOR DE AIRE (GR)	660
CABINA (CONFIG)	663
CABINA (GR)	670
COMPRESOR DE REFRIGERANTE (GR)	674
CONDENSADOR DEL REFRIGERANTE Y MONTAJE (GR)	678
CONDENSADOR DE REFRIGERANTE (GR)	682
CONTROL DE IMPLEMENTOS Y MONTAJE (GR)	684
TABLERO ELECTRÓNICO DE CONTROL (GR)	687
CONTROL DE MANIJA (GR)	689
CONTROL DE IMPLEMENTOS (GR)	690
CONTROL ELECTRONICO DEL REDUCTOR DE LA LUZ INTERIOR DEL SISTEMA MONITOR (GR)	692
CONFIGURACIÓN DE CONVERSION, ROPS	693
VENTILADOR DESCONGELADOR (GR)	694
CALEFACCIÓN DE LA CABINA (GR)	696
CAJA DE LA SUSPENSIÓN DEL ASIENTO (GR)	704
INSTALACIÓN DE RADIO (GR)	707
INSTRUMENTOS (GR)	708
JUEGO DE VENTANAS	710
REVESTIMIENTO DE LA CABINA (GR)	711
TUBERÍAS DE ACONDICIONADOR DE AIRE (GR)	712
TUBERÍAS DE LA CALEFACCIÓN (GR)	720
RETROVISOR (GR)	722
MODULO CENTRAL DE MENSAJES(GR)	724
MODULO DEL TECLADO MONITOR (GR)	725
MODULO ELECTRÓNICO DE CUATRO INDICADORES (GR)	727
MÓDULO DEL TACÓMETRO Y DEL VELOCÍMETRO (GR)	728
GRUPO DE MONTAJE DE LA CABINA	730
GRUPO DE MONTAJE	732
MONTAJE DE LA ESTRUCTURA ROPS (GR)	733
SOPORTE DEL RESPALDO (GR)	734
PLATAFORMA DE LA CABINA (GR)	738
RECLINACION DE ASIENTO (GR)	740

CONTENIDO

Nombre	Página
SISTEMA ROPS (CONJ)	741
ESTRUCTURA ROPS (GR)	742
REJILLA PROTECTORA (GR)	743
CONFIGURACIÓN DE ASIENTO	744
ASIENTO (GR)	745
SUSPENSIÓN - ASIENTO CON (GR)	752
ASIENTO CON SUSPENSIÓN (GR)	756
TANQUE DEL LAVAPARABRISAS (GR)	760
LAVAPARABRISAS DE LA VENTANA (GR)	764
VENTANA CORREDIZA (CONJ)	767
VENTANA DE LA CABINA (GR)	769
LIMPIAPARABRISAS DE LA VENTANA (GR)	782
PIVOTE DEL LIMPIADOR (GR)	790
EQUIPOS Y SUMINISTRO DE SERVICIOS	791
ETIQUETA DE ADVERTENCIA (GR)	791
CALCOMANÍAS Y PLACAS DE IDENTIFICACIÓN (GR)	792
INDICE DE NUMEROS DE PIEZA	B1

ÍNDICE

Designação	Página
INFORMAÇÃO GERAL	A29
ALTERNATIVAS DE REPARO	A36
ADITIVOS SUPLEMENTARES DO LÍQUIDO ARREFECEDOR	A41
PEÇAS DE MANUTENÇÃO	A59
ÍNDICE	A104
MÁQUINA - ARRANJO	1
ARRANJO ÁRTICO	1
SISTEMA ELETRÔNICO - MÁQUINA	2
ARRANJO GERAL	3
RUÍDO - ARRANJO PARA SUPRESSÃO	4
MOTOR - ARRANJO	5
MOTOR	5
GRUPO DE INSTALAÇÃO - MOTOR	7
MOTOR BÁSICO	8
AJUSTADOR DE CORREIAS	8
EIXO-COMANDO DE VÁLVULA	10
TAMPA - BLOCO DO MOTOR	11
TAMPA - CAIXA DO VOLANTE	12
TAMPA - CAIXA DIANTEIRA	14
TAMPA - MECANISMO DAS VÁLVULAS	16
VIRABREQUIM	17
BLOCO DO MOTOR	18
CABEÇOTE DO MOTOR	25
AMORTECEDOR	30
COMANDO DE ACESSÓRIOS	31
COMANDO DO VENTILADOR	32
VOLANTE DO MOTOR	36
ENGRENAGENS DE DISTRIBUIÇÃO	38
ENGRENAGENS DE COMANDO TRASEIRO	40
CAIXA DO VOLANTE DO MOTOR	44
CAIXA DIANTEIRA	46
LEVANTAMENTO DO MOTOR	48
MONTAGEM - ALTERNADOR	49
CÁRTER DO ÓLEO DO MOTOR	50
PISTÃO E BIELA	52
BUJÃO DO BLOCO DO CILINDRO	54
BUJÃO - CABEÇA DO CILINDRO	56
POLIA DO VIRABREQUIM	57
BALANCIM	59
SUPORTE DO MOTOR	60
MUNHÃO DO MOTOR	62
MECANISMO DAS VÁLVULAS	63
GARFO	64
SISTEMA DE LUBRIFICAÇÃO	65
FIXADORES - BOMBA DE ÓLEO DO MOTOR	65
BOCAL DE ENCHIMENTO DE ÓLEO DO MOTOR	66
FILTRO - ÓLEO DO MOTOR	68
ELIMINAÇÃO DE VAPORES DO CÁRTER	70
INDICADOR - NÍVEL DO ÓLEO (VARETA)	72
TUBOS - ÓLEO DO MOTOR	74
TUBOS - ÓLEO DO TURBOALIMENTADOR	76
ÓLEO - ARRANJO PARA TROCA RÁPIDA	78
PRÊ-LUBRIFICAÇÃO	80
BOMBA DE ÓLEO - MOTOR	84
SISTEMA DE ARREFECIMENTO	86
VENTILADOR	86
VENTILADOR DE SOPRO	88
TUBOS - ÁGUA	92
BOMBA DE ÁGUA	102
RADIADOR	106
TERMOSTATO	112
TANQUE - LÍQUIDO ARREFECEDOR	116
TANQUE DE ÁGUA	118
SISTEMA DA ADMISSÃO DE AR E DE ESCAPE	122
PÓS-ARREFECEDOR DA ADMISSÃO DE AR	122
PURIFICADOR DE AR	126
PROTETOR CONTRA CHUVA	129
EJETOR DE POEIRA	130
TUBOS - AR	132
COLETOR DE ESCAPE	140
SILENCIADOR	141
PRÉ-PURIFICADOR	142
DEFLETOR TÉRMICO DE CALOR	144
TURBOALIMENTADOR	146
SISTEMA DE COMBUSTÍVEL	148
ADAPTADOR	148
ADAPTADOR - ABASTECIMENTO RÁPIDO DE COMBUSTÍVEL	150
CONTROLE DO DESACELERADOR	158
COMANDO DA BOMBA HIDRÁULICA DO INJETOR	160
FILTRO E TUBOS - COMBUSTÍVEL	164
FILTRO DE COMBUSTÍVEL E SEPARADOR DE ÁGUA	167
INJETOR DE COMBUSTÍVEL	169
JOGO DE RETENTOR	170
TUBOS - FILTRO DO COMBUSTÍVEL	172

ÍNDICE

Designação	Página
TUBOS - INJETOR DA BOMBA HIDRÁULICA	176
BOMBA HIDRÁULICA E MONTAGEM - UNIDADE INJETORA	178
BOMBA DE INJEÇÃO DO COMBUSTÍVEL	179
BOMBA HIDRÁULICA - UNIDADE INJETORA	180
TANQUE DE COMBUSTÍVEL	184
VÁLVULA DE CONTROLE DE PRESSÃO	186
VÁLVULA SOLENÓIDE	187
SISTEMA ELÉTRICO E DE PARTIDA	188
ALARME	188
ALTERNADOR DE CORRENTE	189
BATERIA E CABOS / FIOS ELÉTRICOS	192
BLOCO - FORÇA	199
CONTROLE ELETRÔNICO E MONTAGEM	200
CONTROLE ELETRÔNICO E MONTAGEM - MOTOR	206
CONTROLE ELETRÔNICO	208
CONTROLE ELETRÔNICO - MOTOR	212
CONTROLE - NÃO PROGRAMADO	214
CONVERSOR ELÉTRICO	217
SIST. ELETRÔNICO - ACESSÓRIO	218
SISTEMA ELETRÔNICO - TREM DE FORÇA	219
SISTEMA ELETRÔNICO - VIDS	220
AQUECEDOR DO COMBUSTÍVEL	222
AQUECEDOR DA ÁGUA DO MOTOR	224
BLOCO DE JUNÇÃO	226
LÂMPADA - TETO	227
LÂMPADA - FAROL	228
SISTEMA DE ILUMINAÇÃO	230
ILUMINAÇÃO TRASEIRA	232
ILUMINAÇÃO	233
SISTEMA DE ILUMINAÇÃO - FARÓIS	234
ILUMINAÇÃO - DIANTEIRA	238
ILUMINAÇÃO - TRASEIRA	240
ILUMINAÇÃO - RÍPER	242
BUJÃO - CABOS/FIOS ELÉTRICOS	243
SENSOR - NÍVEL DE COMBUSTÍVEL	244
EMISSOR - POSIÇÃO	245
SENSOR - PRESSÃO	248
SENSOR DE VELOCIDADE	253
SENSOR - TEMPERATURA	258
GR. DE SERVIÇO - ACESSÓRIO	261
GR. DE SERVICO - TREM DE FORÇA	263
SOLENÓIDE DO MOTOR DE ARRANQUE	264
AUXILIAR DE PARTIDA A ÉTER	266
PARTIDA EM TEMPERATURAS BAIXAS	268
MOTOR ELÉTRICO DE PARTIDA	272
INTERRUPTOR DE DERIVAÇÃO	285
CHAVE GERAL	286
INTERRUPTOR - FLUXO	287
INTERRUPTOR - MAGNÉTICO	289
INTERRUPTOR - PARTIDA	290
ALARME DE MARCHA À RÉ	291
CABOS/FIOS ELÉTRICOS DO CONSOLE	292
CABOS/FIOS ELÉTRICOS - MOTOR	296
CABOS/FIOS ELÉTRICOS - PLATAFORMA	298
CABOS/FIOS ELÉTRICOS - INJETOR	303
TREM DE FORÇA	304
SEMI-EIXO - TREM DE FORÇA	304
CARCAÇA DAS ENGRENAGENS PLANETÁRIAS E COMPONENTES	306
CONTROLE E MONTAGEM - TRANSMISSÃO	308
CONTROLE DO FREIO	310
CONTROLE DE DIREÇÃO E TRANSMISSÃO	312
CONTROLE HIDRÁULICO DA TRANSMISSÃO	316
ARREFECEDOR DE ÓLEO DA TRANSMISSÃO	318
ACOPLAMENTO DA BOMBA	319
DIFERENCIAL E COROA	320
DRENO - ECOLOGIA	322
FILTRO - ÓLEO	324
COMANDO FINAL	326
PROTETOR - EIXO DE TRANSMISSÃO	337
TUBOS - ÓLEO DA TRANSMISSÃO	338
COLETOR E VÁLVULA	342
MONTAGEM - TRANSMISSÃO	344
ENGRENAGENS PLANETÁRIAS - TRANSMISSÃO	346
TREM DE FORÇA	349
BOMBA DE ENGRENAGENS	350
SEGMENTO DA RODA MOTRIZ	356
EIXO DA TRANSMISSÃO	357
CONVERSOR DE TORQUE	358
TRANSMISSÃO	364
JUNTA UNIVERSAL	365
VÁLVULA PILOTO E MONTAGEM	366
VÁLVULA DE CONTROLE	368
VÁLVULA DE MODULAÇÃO	372
VÁLVULA DE PRIORIDADE	374
VÁLVULA DE ALÍVIO	376
VÁLVULA SOLENÓIDE	378

ÍNDICE

Designação	Página
VÁLVULA DE CONTROLE - TRANSMISSÃO	380
CHASSI E CARROCERIA	382
CAIXA E CHASSI	382
CHASSI	385
CONTRAPESO TRASEIRO E BARRA	386
CONTRAPESO	388
TAMPA - MUNHÃO	392
BARRA DE TRAÇÃO	394
COBERTURA	396
COBERTURA DO MOTOR	398
PÁRA-LAMA	400
GRADE DO RADIADOR CONTRA EROSÃO	404
PROTETOR - COMANDO FINAL	405
PROTETOR INFERIOR	406
PROTETOR - RODA-GUIA	408
PROTETOR - EIXO PIVÔ	409
PROTETOR - RADIADOR	410
PROTETOR - TRASEIRO	412
PROTETOR - ROCHA	414
GUIA - VEDADOR	416
CAPÔ E PROTETOR	418
PLACA/CHAPA	421
MATERIAL RODANTE	422
BARRA LIMPADORA DOS ROLOS	422
TAMPA DA RODA-GUIA	426
TAMPA - ROLETE DAS ESTEIRAS	428
BARRA EQUALIZADORA	429
ARMAÇÃO TELESCÓPICA DA MOLA TENSORA	434
RODA-GUIA DAS ESTEIRAS	436
ELO DA ESTEIRA	438
LUBRIFICAÇÃO-BARRA EQUALIZADORA	440
EIXO PIVÔ - LUBRIFICAÇÃO	442
ROLETE SUPERIOR DA ESTEIRA	444
ROLETE DE ESTEIRA DE FLANGE DUPLO	445
ROLETE DE ESTEIRA DE FLANGE SIMPLES	447
SUSPENSÃO - TRUQUE	450
AJUSTADOR DE ESTEIRAS E MOLA TENSORA	452
ESTEIRA	454
MATERIAL RODANTE	457
SISTEMA DE DIREÇÃO E DE FREIO	458
AJUSTADOR DO CONTROLE DA DIREÇÃO E TRANSMISSÃO	458
EMBREAGEM DE DIREÇÃO E FREIOS	462
CONTROLE DO FREIO DE ESTACIONAMENTO	464
RETEM	465
MECANISMO DE DIREÇÃO	466
SUPORTE - CONTROLE	470
VÁLVULA DA DIREÇÃO E MONTAGEM	471
SISTEMA HIDRÁULICO	472
CARTUCHO - BOMBA DE PALHETAS	472
CONTROLE HIDRÁULICO	474
CONTROLE - ALAVANCA	480
TAMPA - TANQUE HIDRÁULICO	484
CILINDRO DUPLO DE INCLINAÇÃO	485
CILINDRO - LEVANTAMENTO DA LÂMINA	486
CILINDRO - INCLINAÇÃO DA LÂMINA	488
CILINDRO DE LEVANTAMENTO DO RIPER	494
CILINDRO DO SACADOR DE PINO DO RIPER	498
CILINDRO DE INCLINAÇÃO DO RÍPER	500
FILTRO - ÓLEO	502
TUBOS - CILINDRO DE LEVANTAMENTO	504
TUBOS - MOTOR	506
TUBOS - CIRCUITO PILOTO	510
TUBOS - CILINDRO DO SACA-PINO	514
TUBOS - BOMBA	516
TUBOS - RIPER	522
TUBOS - CILINDRO DE INCLINAÇÃO	528
MOTOR - VENTILADOR	538
BOMBA DE PALHETAS	540
TANQUE HIDRÁULICO E FILTRO	542
TANQUE DE ÓLEO HIDRÁULICO E MONTAGEM	546
VÁLVULA E CILINDRO	548
VÁLVULA E MONTAGEM - LÂMINA	551
VÁLVULA DE CONTROLE E MONTAGEM	552
VÁLVULA COMBINADA	553
VÁLVULA DE CONTROLE	554
VÁLVULA DE CONTROLE PILOTO	566
VÁLVULA DE REDUÇÃO DE PRESSÃO	570
VÁLVULA DE QUEDA RÁPIDA	572
VÁLVULA DE SEPARAÇÃO	573
VÁLVULA SOLENÓIDE	574
ACESSÓRIOS	581
BLOCO DE EMPUXO	581
TIRANTE DA LÂMINA	584
LÂMINA	585
ARMAÇÃO DO RIPER	594

ÍNDICE

Designação	Página
ENGRENAGEM DO ACESSÓRIO	600
JOGO DE GAXETA	602
TUBOS - ÓLEO	606
ELO ESTABILIZADOR	610
GRUPO DE CONVERSÃO - LÂMINA	611
MONTAGEM - CILINDRO	613
MONTAGEM - RIPER	614
SACA-PINO	616
BRAÇO DE EMPUXO - ESQUERDO	620
BRAÇO DE EMPUXO - DIREITO	621
BRAÇO DE EMPUXO - ESTABILIZADOR	622
RIPER	623
MUNHÃO DA LÂMINA	626
FERRAMENTAS DE TRABALHO	627
CANTO E BORDA CORTANTE	627
LÂMINA E BORDA CORTANTE	631
LÂMINA	636
LÂMINA SEMI-UNIVERSAL	638
LÂMINA UNIVERSAL	640
LÂMINA SEMI-UNIVERSAL	644
LÂMINA UNIVERSAL	646
PLACA DE DESGASTE	649
RIPER	651
DENTE DO RÍPER	654
POSTO DO OPERADOR	657
AJUSTADOR DO ASSENTO	657
CONDICIONADOR DE AR	658
CABINE	663
COMPRESSOR DE REFRIGERANTE	674
CONDENSADOR DO REFRIGERANTE E MONTAGEM	678
CONDENSADOR DE REFRIGERANTE	682
CONTROLE DO ACESSÓRIO E MONTAGEM	684
CONTROLE ELETRÔNICO - VISOR	687
CONTROLE-CABO	689
CONTROLE DO ACESSÓRIO	690
CONTROLE - REDUTOR DE LUMINOSIDADE DO SIST. DE MONITORIZAÇÃO	692
CONVERSOR - ROPS	693
DESCONGELADOR	694
AQUECEDOR DA CABINE	696
CAIXA - SUSPENSÃO DO ASSENTO	704
INSTALAÇÃO DO RÁDIO	707
INSTRUMENTOS	708
JOGO-JANELA	710
REVESTIMENTO DA CABINE	711
TUBOS - AR CONDICIONADO	712
TUBOS - AQUECEDOR	720
ESPELHO RETROVISOR	722
MÓDULO - CENTRO DE MENSAGEM	724
MÓDULO - TECLADO DO MONITOR	725
MÓDULO ELETRÔNICO DE QUATRO INDICADORES	727
MÓDULO - VELOCÍMETRO E TACÔMETRO	728
MONTAGEM - CABINE	730
MONTAGEM DE RÁDIO DE FAIXA DE ONDA CIVIL	732
MONTAGEM - ESTRUTURA ROPS	733
FUNDO - ENCOSTO	734
PLATAFORMA DA CABINE	738
RECLINAÇÃO - ASSENTO	740
ESTRUTURA ROPS	741
TELA DE PROTEÇÃO	743
ASSENTO	744
ASSENTO COM SUSPENSÃO	752
SUSPENSÃO - ASSENTO	756
TANQUE - LAVADOR DE JANELA	760
LAVADOR DO VIDRO	764
JANELA DESLIZANTE	767
JANELA DA CABINE	769
LIMPADOR DO VIDRO	782
PIVÔ DO LIMPADOR	790
EQUIPAMENTO DE SERVIÇO E SUPRIMENTOS	791
DECALQUE	791
PLACA E DECALQUE	792
ÍNDICE DE NÚMERO DE PEÇA	B1

INHALTSVERZEICHNIS

Bezeichnung	Seite
ALLGEMEINE HINWEISE	A31
REPARATURALTERNATIVEN	A37
KÜHLMITTELZUSATZ	A42
WARTUNGSTEILE	A64
STICHWORTVERZEICHNIS	A115
MASCHINE	1
KALTWETTERAUSRÜSTUNG	1
ELEKTRONIK - MASCHINE	2
GRUNDAUSFÜHRUNG	3
SCHALLDÄMPFUNG	4
MOTORAUSFÜHRUNG	5
MOTORAUSFÜHRUNG	5
MOTOR-EINBAUSATZ	7
MOTOR (GRUNDAUSFÜHRUNG)	8
RIEMENSPANNER	8
NOCKENWELLE	10
MOTORBLOCKDECKEL	11
SCHWUNGRADGEHÄUSEDECKEL	12
STIRNRADGEHÄUSEDECKEL	14
VENTILDECKEL	16
KURBELWELLE	17
MOTORBLOCK	18
ZYLINDERKOPF	25
DÄMPFER	30
NEBENANTRIEB	31
LÜFTERANTRIEB	32
SCHWUNGRAD	36
STIRNRAD	38
ZAHNRADVORGELEGE	40
SCHWUNGRADGEHÄUSE	44
STIRNRADGEHÄUSE	46
MOTORHUBÖSE	48
DREHSTROMGENERATOR - BEFESTIGUNG	49
ÖLWANNE	50
PLEUELSTANGE UND KOLBEN	52
ZYLINDERBLOCKSCHRAUBE	54
ZYLINDERKOPFSTOPFEN	56
KURBELWELLEN-RIEMENSCHEIBE	57
VENTILKIPPHEBEL	59
MOTORAUFHÄNGUNG	60
MONTAGEZAPFEN	62
VENTILSTEUERUNG	63
JOCHSATZ	64
SCHMIERSYSTEM	65
ÖLPUMPEN-BEFESTIGUNGSTEILE	65
MOTORÖLEINFÜLLSTUTZEN	66
ÖLFILTER	68
ENTDUNSTER	70
ÖLMESSSTAB	72
MOTORÖLLEITUNGEN	74
TURBOLADERÖLLEITUNGEN	76
ÖLSCHNELLWECHSELANSCHLUSS	78
MOTORVORSCHMIERUNG	80
SCHMIERPUMPE	84
KÜHLSYSTEM	86
LÜFTER	86
DRUCKLÜFTER	88
KÜHLWASSERLEITUNGEN	92
KÜHLWASSERPUMPE	102
KÜHLER	106
TEMPERATURREGLER	112
KÜHLMITTELBEHÄLTER	116
WASSERTANK	118
LUFTEINLASS- UND ABGASSYSTEM	122
LADELUFTKÜHLER	122
LUFTREINIGER	126
REGENKAPPE	129
STAUBAUSWERFER	130
DRUCKLUFTLEITUNGEN	132
AUSPUFFKRÜMMER	140
SCHALLDÄMPFER	141
VORREINIGER	142
WÄRMESCHIRM	144
TURBOLADER	146
KRAFTSTOFFSYSTEM	148
ADAPTER	148
SCHNELLBETANKUNGSANSCHLUSS	150
GASREDUZIERGESTÄNGE	158
HYDRAULIKPUMPENANTRIEB	160
KRAFTSTOFFILTER UND LEITUNGEN	164
WASSERABSCHEIDER- U. KRAFTSTOFFILTER	167
KRAFTSTOFFEINSPRITZDÜSE	169
DICHTUNGSSATZ	170
KRAFTSTOFFILTERLEITUNGEN	172
EINSPRITZLEITUNGEN - HYDRAULIKPUMPE	176
PUMPE UND BEFESTIGUNGSTEILE	178
KRAFTSTOFFEINSPRITZPUMPE	179
PUMPENDÜSE, HYDRAULISCH	180
KRAFTSTOFFTANK	184
DRUCKSTEUERVENTIL	186
MAGNETVENTIL	187

INHALTSVERZEICHNIS

Bezeichnung	Seite
ELEKTRISCHE ANLAGE UND STARTSYSTEM	188
WARNVORRICHTUNG	188
DREHSTROMGENERATOR	189
BATTERIE UND VERDRAHTUNG	192
STROMBLOCK	199
ELEKTRON. STEUERUNG UND ANBAUSATZ	200
STEUERUNGSEINHEIT, ELEKTRON. FÜR MOTOR UND BEFEST.	206
STEUERUNG, ELEKTRON.	208
MOTORSTEUERUNG, ELEKTRON.	212
STEUERUNG - NICHT PROGRAMMIERT	214
ELEKTR. UMFORMER	217
ARBEITSGERÄTEELEKTRONIK	218
KRAFTÜBERTRAGUNGSELEKTRONIK	219
VIDS-ELEKTRONIK	220
KRAFTSTOFFHEIZUNG	222
UMLAUFKÜHLWASSERHEIZUNG	224
KLEMMLEISTE	226
FAHRERHAUSBELEUCHTUNG	227
ARBEITSLEUCHTEN	228
BELEUCHTUNGSANLAGE	230
HECKBELEUCHTUNG	232
BELEUCHTUNGSANLAGE	233
ARBEITSLEUCHTEN	234
FRONTBELEUCHTUNG	238
HECKBELEUCHTUNG	240
BELEUCHTUNGSANLAGE (AUFREISSER)	242
GLÜHKERZENVERDRAHTUNG	243
KRAFTSTOFFSTANDSENSOR	244
STELLUNGSSENSOR	245
DRUCKSENSOR	248
DREHZAHLSENSOR	253
TEMPERATURSENSOR	258
ARBEITSGERÄT - SERVICESATZ	261
ANTRIEBSSTRANG-WARTUNGSSATZ	263
MAGNETSPULE - ANLASSMOTOR (ELEKTR.)	264
ÄTHERSTARTHILFE	266
KALTWETTERSTARTANLAGE	268
STARTERMOTOR	272
UMGEHUNGSSCHALTER	285
TRENNSCHALTER	286
STRÖMUNGSSCHALTER	287
MAGNETSCHALTER	289
STARTSCHALTER	290
RÜCKFAHRWARNHORN	291
KONSOLENVERDRAHTUNG	292
MOTORVERDRAHTUNG	296
FAHRERPLATTFORMVERDRAHTUNG	298
VERDRAHTUNG (EINSPRITZEINHEIT)	303
KRAFTÜBERTRAGUNG	304
KRAFTÜBERTRAGUNGSACHSE	304
PLANETENANTRIEBSGEHÄUSE U. TEILE	306
GETRIEBESTEUERUNG UND BEFESTIGUNGSTEILE	308
BREMSGESTÄNGE	310
LENK- UND GETRIEBESTEUERUNG	312
GETRIEBEHYDRAULIK	316
GETRIEBEÖLKÜHLER	318
PUMPENANSCHLUSS	319
DIFFERENTIAL UND TELLERRAD	320
ABLASS (UMWELTFREUNDLICH)	322
ÖLFILTER	324
SEITENANTRIEB	326
ANTRIEBSWELLENVERKLEIDUNG	337
ÖLLEITUNGEN - KRAFTÜBERTRAGUNG	338
KRÜMMER UND VENTIL	342
GETRIEBEAUFLAGER	344
PLANETENGETRIEBE	346
KRAFTÜBERTRAGUNG	349
ZAHNRADPUMPE	350
KETTENRADSEGMENT	356
HAUPTANTRIEBSWELLE	357
DREHMOMENTWANDLER	358
GETRIEBE	364
KREUZGELENK	365
VORSTEUERVENTIL UND BEFESTIGUNGSTEILE	366
STEUERVENTIL	368
MODULATORVENTIL	372
VORRANGVENTIL	374
ÜBERDRUCKVENTIL	376
MAGNETVENTIL	378
GETRIEBESTEUERVENTIL	380
RAHMEN UND AUFBAU	382
RAHMEN UND GEHÄUSE	382
FAHRWERK	385
GEGENGEWICHT UND BALKEN, HINTEN	386
GEGENGEWICHT	388
MONTAGEZAPFENVERKLEIDUNG	392
ZUGHAKEN	394
VERKLEIDUNG	396
MOTORVERKLEIDUNG	398
SCHUTZBLECHE	400
SANDSTRAHLSCHUTZGITTER	404
SEITENANTRIEBSVERKLEIDUNG	405

INHALTSVERZEICHNIS

Bezeichnung	Seite
PANZERWANNE	406
LEITRADSCHUTZ	408
DREHZAPFENVERKLEIDUNG	409
KÜHLERSCHUTZ	410
HECKVERKLEIDUNG	412
STEINSCHUTZ	414
SCHUTZDICHTUNG	416
MOTORHAUBE UND VERKLEIDUNG	418
PLATTE	421
LAUFWERK	422
ABSTREIFBALKEN	422
LEITRADAUFSATZ	426
LAUFROLLENAUFSATZ	428
QUERTRAVERSE	429
LAUFROLLENRAHMEN (TELESKOPRÜCKLAUF)	434
LEITRAD	436
KETTENGLIEDER	438
SCHMIERVORRICHTUNG - QUERTRAVERSE	440
ACHSWELLENSCHMIERUNG	442
TRAGROLLEN	444
DOPPELFLANSCHROLLEN	445
EINZELFLANSCHROLLEN	447
LAUFROLLENRAHMEN-KNICKFEDERUNG	450
KETTENSPANNER UND -FEDERRÜCKLAUF	452
LAUFWERKSKETTE	454
LAUFWERKSRAHMEN	457
LENK- UND BREMSSYSTEM	458
LENK- UND GETRIEBEEINSTELLER	458
LENKKUPPLUNG UND BREMSE	462
FESTSTELLBREMSGESTÄNGE	464
SPERRE	465
LENKTRIEB	466
STÜTZGRUPPE - STEUERUNG	470
LENKVENTIL U. BEFESTIGUNGSTEILE	471
HYDRAULIKSYSTEM	472
FLÜGELZELLENPUMPENEINSATZ	472
HYDRAULIKSTEUERUNG	474
JOYSTICK -STEUERUNG	480
ZUGANGSKLAPPE - HYDRAULIKTANKKAPPE	484
DOPPELKIPPZYLINDER	485
PLANIERSCHILDHUBZYLINDER	486
PLANIERSCHILDKIPPZYLINDER	488
AUFREISSERHUBZYLINDER	494
AUFREISSER-BOLZENZIEHERZYLINDER	498
AUFREISSERKIPPZYLINDER	500
ÖLFILTER	502
HUBZYLINDERLEITUNGEN	504
MOTORLEITUNGEN	506
VORSTEUERLEITUNGEN	510
BOLZENZIEHERZYLINDERLEITUNGEN	514
HYDRAULIKPUMPE UND LEITUNGEN	516
AUFREISSERLEITUNGEN	522
NEIGEZYLINDERLEITUNGEN	528
LÜFTERMOTOR	538
MESSERPUMPE	540
HYDRAULIKTANK UND SCHMIERFILTER	542
HYDRAULIKTANK UND BEFESTIGUNGSTEILE	546
VENTIL UND ZYLINDER	548
VENTIL U. BEFESTIGUNG - DOZER	551
STEUERVENTIL UND BEFESTIGUNGSTEILE	552
SAMMELVENTIL	553
STEUERVENTIL	554
VORSTEUERVENTIL	566
DRUCKREDUZIERVENTIL	570
SCHNELLSENKVENTIL	572
PENDELVENTIL	573
MAGNETVENTIL	574
ARBEITSGERÄTE	581
SCHUBBLOCK	581
SCHILDSTREBE	584
PLANIEREINRICHTUNG	585
AUFREISSERRAHMEN	594
ZUSATZANTRIEB	600
DICHTUNGSSATZ	602
ÖLLEITUNGEN	606
STABILISATORGELENK	610
PLANIERSCHILD-UMRÜSTSATZ	611
ZYLINDERAUFHÄNGUNG	613
AUFREISSERBEFESTIGUNG	614
BOLZENZIEHER	616
SCHUBARM, LINKS	620
SCHUBARM, RECHTS	621
SCHUBARM - STABILISATOR	622
AUFREISSER - TEILLISTE	623
MONTAGEZAPFEN (PLANIERSCHILDEINRICHTUNG)	626
ARBEITSGERÄTE	627
ECK- UND SCHNEIDMESSER	627
SCHILD UND SCHNEIDMESSER	631
SCHEIBENWISCHERBLATT	636
SU-SCHILD	638
U-SCHILD	640
SU-SCHILD	644

INHALTSVERZEICHNIS

Bezeichnung	Seite
U-SCHILD	646
VERSCHLEISSPLATTEN	649
AUFREISSER	651
AUFREISSERZAHN	654
FAHRERHAUS	657
FAHRERSITZVERSTELLER	657
KLIMAANLAGE	658
FAHRERHAUS	663
KÄLTEMITTELKOMPRESSOR	674
KÄLTEMITTELKONDENSATOR U. BEFESTIGUNGSTEILE	678
KÄLTEMITTELKONDENSATOR	682
ARBEITSGERÄTEHEBEL UND BEFESTIGUNGSTEILE	684
STEUERUNG, ELEKTRON. ANZEIGE	687
STEUERHEBEL	689
ARBEITSGERÄTESTEUERUNG	690
ÜBERWACHUNGSSYSTEMDIMMER - STEUERUNG	692
UMRÜSTSATZ - ÜBERROLLSCHUTZ ROPS	693
ENTFROSTERGEBLÄSE	694
FAHRERHAUSHEIZUNG	696
FAHRERSITZFEDERUNGSGEHÄUSE	704
RADIOEINBAUSATZ	707
INSTRUMENTENSATZ	708
FENSTERSATZ	710
FAHRERHAUSAUSKLEIDUNG	711
KLIMAANLAGENLEITUNGEN	712
HEIZUNGSLEITUNGEN	720
RÜCKSPIEGEL	722
MELDEZENTRUMMODUL	724
MODUL-MONITORTASTATUR	725
MODUL - VIER ELEKTRON. ANZEIGEN	727
GESCHWINDIGKEITS- U. DREHZAHLMESSERMODUL	728
FAHRERHAUSANBAUSATZ	730
ÜBERROLLSCHUTZAUFLAGER	733
SCHALE - RÜCKENLEHNE	734
FAHRERPLATTFORM	738
VERSTELLBARER SITZ	740
ÜBERROLLSCHUTZ	741
SCHUTZGITTER	743
FAHRERSITZ	744
SCHWINGSITZ	752
FAHRERSITZFEDERUNG	756
SCHEIBENWASCHMITTELBEHÄLTER	760
SCHEIBENWASCHANLAGE	764
SCHIEBEFENSTER	767
FAHRERHAUSFENSTER	769
SCHEIBENWISCHER	782
WISCHERARM	790
WARTUNGSAUSRÜSTUNG UND -ZUBEHÖR	791
AUFKLEBER	791
SCHILD UND AUFKLEBER	792
ERSATZTEILNUMMERNINDEX	B1

1. ENGINE IDENTIFICATION

Caterpillar engines are identified with Serial Numbers and Arrangement Numbers. In some cases, Modification Numbers are also used. The serial number plate which shows these numbers is mounted on the engine.

Caterpillar dealers need this information to determine which components were included on the engine when it was assembled at the factory. This permits accurate identification of replacement part numbers.

2. ORDERING PARTS

⚠ WARNING

When replacement parts are required for this product Caterpillar recommends using Caterpillar replacement parts or parts with equivalent specifications including, but not limited to, physical dimensions, type, strength and material.

Failure to heed this warning can lead to premature failures, product damage, personal injury or death.

Quality Caterpillar replacement parts are available from Caterpillar dealers throughout the world. Their parts inventories are up to date and include all parts normally required to protect your investment in Caterpillar Engines. Dealers may offer repair kits or remanufactured parts to allow selection of the most effective repair alternative for a particular situation. When ordering parts, your order should specify the quantity, part number, part name, and the serial number/product identification number of the engine for which the parts are needed.

3. PARTS MANUAL ORGANIZATION

Product information in this manual is presented as "information elements" that represent all of the components for the specific model. An Engine Arrangement is an example of an information element. The information elements are organized alphabetically by part name and secondarily by part number within each major section of the manual.

4. TABLE OF CONTENTS

SIS ***New Feature***

A table of contents (TOC) is found at the beginning of the manual. The TOC lists each section of the manual with a complete list of all information elements organized as they appear in the manual. Page numbers are provided for quick reference to detailed parts identification illustrations and serviceable consist lists.

5. MAINTENANCE PARTS INDEX

The Maintenance Parts Index, located near the beginning of the manual, references most frequently used maintenance part numbers, providing description, quantity, usage and page number. This information is organized alphabetically by part description.

6. INDEX

The index located near the front of the manual is an alphabetical listing of all information elements included in the manual. Page numbers are provided for quick reference to detailed parts identification illustrations and serviceable consist lists.

7. PART NUMBER INDEX

A numerical index listing all part numbers and the corresponding page number(s) appears at the back of the manual.

8. CAPTIONS

Captions located at the top of each page of an information element identify the part number and part name along with additional descriptive information. S/N information found in each caption should be used to select correct information for a specific engine. Field replacement options, identification of optional attachment components, and where used ("part of") information is also provided.

SIS ***New Feature***

The first line of a caption is shown in larger type font to indicate the beginning of an information element. Captions for additional pages that may be required to illustrate an information element will be shown in standard type font and will include the term *(contd.)* .

9. NON-SERVICED PARTS

SIS *New Feature*

In some instances it is necessary to display non-serviced parts that are a link to lower level serviceable consist lists. These non-serviced part numbers are shown in *italic* type indicating that they are not available. All consist lists have not been converted to reflect this enhancement.

10. PARTS LIST REFERENCE NUMBERS

SIS *New Feature*

Numbers shown in the Ref No column correspond to numbers used in the associated graphic(s). An alphabetic suffix may be added to a reference number to identify lower level consist items. Numbers shown in the Graphic Ref column refer to the graphic number identifier displayed in the lower left corner of each illustration. The Graphic Ref number may be used in combination with the item Ref No to determine the correct part number. There may be intentional omission of a Ref No in a consist list as information is updated to reflect the latest serviceable part numbers.

11. INDENTED PART NAMES

When a part name is indented in a parts list, it is part of (included in) the group or assembly under which it is indented.

12. ILLUSTRATION REFERENCE LETTERS

When necessary, illustrations contain reference letters (A, B, C etc.) that are intended to track lines and harnesses from one point to another. They are also used to show where to reconnect illustrations that have been separated.

13. ABBREVIATIONS AND SYMBOLS

O.D. – Outside Diameter
I.D. – Inside Diameter
A – Not Part Of This Group
B – Use As Required
C – Change From Previous Type
D – Order By The Meter
E – Order By The Centimeter
F – Not Shown
G – Order By The Inch
I – See Hose Fabrication Guide
M – Metric Part
R – Remfg Part May Be Available
Y – Separate Illustration
Z – Not Serviced Separately

NOTE:

Continuing improvement and advancement of product design may cause changes to your engine which may not be included in this publication. Whenever a question arises regarding your Caterpillar product or this publication, please consult your Caterpillar dealer for the latest available information.

1. IDENTIFICATION DU MOTEUR

Les moteurs Caterpillar portent des numéros de série et des numéros de version. Dans certains cas, des numéros de modification sont aussi utilisés. Ces numéros figurent sur la plaque de numéro de série qui se trouve sur le moteur.

Les concessionnaires Caterpillar ont besoin de ces renseignements pour déterminer les composants inclus sur le moteur lors de l'assemblage à l'usine. Cela permet d'identifier les numéros de pièces de rechange avec précision.

2. COMMANDE DE PIÈCES

⚠ DANGER

Lorsqu'il faut remplacer des pièces de rechange pour ce produit Caterpillar recommande d'utiliser les pièces de rechange Caterpillar ou les pièces qui ont des spécifications équivalentes dont les dimensions physiques, le type, la force et le matériau. Ces équivalences ne se limitent pas à l'énoncé précédent.

L'inobservation de cette mise en garde peut entraîner des défaillances prématurées, des dommages au produit, des blessures ou même la mort.

Les concessionnaires Caterpillar fournissent dans le monde entier des pièces de rechange de qualité Caterpillar. Leurs stocks de pièces sont constamment réapprovisionnés et comptent toutes les pièces nécessaires pour assurer la bonne marche de vos moteurs Caterpillar. Certains concessionnaires proposent également des kits de réparation ou des pièces rénovées, ce qui permet de choisir la solution la plus économique dans une situation donnée. Lors des commandes de pièces, mentionner la quantité, le numéro de pièce et la désignation des pièces ainsi que le numéro de série/numéro d'identification (PIN) du moteur pour lequel ces pièces sont requises.

3. ORGANISATION DU CATALOGUE DE PIÈCES

Les renseignements sur les produits sont présentés sous forme de "Information element" (élément d'information) représentant tous les composants d'un modèle donné. "Engine Arrangement" (version de moteur) est un exemple d'un élément d'information. Les éléments d'information sont classés par ordre alphabétique par la désignation standard des pièces et par numéros de pièces dans chaque partie importante du manuel.

4. TABLE DES MATIÈRES

SIS *Nouvelle Caractéristique*

La table des matières se trouve au début du manuel. La table des matières fournit la liste de tous les chapitres du manuel avec une liste complète de tous les éléments d'information classés par ordre d'apparition dans le manuel. Les numéros de page sont fournis afin que l'utilisateur puisse trouver rapidement les illustrations détaillées concernant l'identification des pièces et les listes des pièces d'entretien.

5. INDEX DES PIÈCES D'ENTRETIEN

La rubrique "Index des pièces d'entretien" qui se trouve au début du manuel renvoie aux pièces d'entretien les plus fréquemment utilisées en précisant la désignation, la quantité, là où la pièce est utilisée et le numéro de page. Ces pièces sont classés par ordre alphabétique.

6. INDEX

L'index qui se trouve vers le début du manuel est une liste alphabétique de tous les éléments d'information du manuel. Les numéros de page sont fournis afin que l'utilisateur puisse trouver rapidement les illustrations détaillées concernant l'identification des pièces et les listes des pièces d'entretien.

7. INDEX DES NUMÉROS DE PIÈCES

Une liste numérique de tous les numéros de pièces et des pages correspondantes se trouve à la fin du manuel.

8. LÉGENDES

Les légendes qui se trouvent en haut de chaque page de chaque élément d'information fournissent le numéro de pièce, la désignation ainsi que des renseignements supplémentaires sur les pièces. Les renseignements concernant les numéros de série (S/N) qui se trouvent dans chaque légende doivent être utilisés pour sélectionner les informations correctes pour un moteur donné. Les informations concernant les options de remplacement sur le chantier, l'identification des composants des équipements offerts en option et les lieux d'application sont aussi fournies.

SIS ***Nouvelle Caractéristique***

Les lettres de la première ligne d'une légende sont présentées en police plus grande afin d'indiquer le début d'une unité d'information. Les légendes qui pourraient être requises pour des pages supplémentaires afin d'illustrer une unité d'information seront présentées en police standard et comprendront le terme (à suivre).

9. PIÈCES NON FOURNIES

SIS ***Nouvelle Caractéristique***

Dans certains cas, il est nécessaire d'indiquer les pièces non fournies qui sont en aval de la liste des pièces d'entretien. Les numéros des pièces non fournies dans la liste des pièces et les légendes seront en italique pour signaler qu'ils ne sont pas disponibles.

10. NUMÉROS DE RÉFÉRENCE DE LA LISTE DES PIÈCES

SIS ***Nouvelle Caractéristique***

Les numéros indiqués dans la colonne des numéros de références correspondent aux numéros utilisés dans les illustrations auxquelles ils sont associés. Un suffixe alphabétique peut être ajouté à un numéro de référence pour identifier la liste des articles en aval. Les numéros indiqués dans la colonne de référence de l'illustration renvoient à l'identification du numéro affiché dans le coin inférieur gauche de chaque illustration. Le numéro de référence de l'illustration pourrait être utilisé avec le numéro de référence de l'article pour déterminer le numéro de pièce correct. Il peut y avoir une omission intentionnelle d'un numéro de référence dans une liste de pièces suite à la mise à jour des informations en vue de refléter les numéros de pièces les plus récentes.

11. DÉSIGNATIONS DE PIÈCES EN RETRAIT

Lorsqu'une désignation de pièce est en retrait, cela veut dire que l'article en regard fait partie de l'ensemble sous lequel il figure.

12. LETTRES DE RÉFÉRENCE DES ILLUSTRATIONS

Quand cela est nécessaire, les illustrations comportent des lettres de référence (A, B, C, etc.) pour montrer le trajet des canalisations et faisceaux de câbles d'un point à l'autre. Elles sont utilisées également pour indiquer où relier les illustrations séparées auparavant.

13. ABRÉVIATIONS ET SYMBOLES

O.D. – Diamètre extérieur
I.D. – Diamètre intérieur
A – Ne fait pas partie de ce groupe
B – Utiliser selon besoin
C – Modification
D – Commander par mètre
E – Commander par centimètre
F – Non représenté
G – Commander par pouce
I – Voir "Hose Fabrication Guide"
M – Pièce métrique
R – Pièce rénovée éventuellement disponible
Y – Illustration séparée
Z – Non fourni séparément

NOTA:

En raison du progrès technique et des améliorations continuelles apportées au matériel, votre moteur comporte peut-être des modifications qui n'apparaissent pas dans la présente publication. En cas de doute sur un détail de votre moteur Caterpillar ou sur le texte de la présente publication, adressez-vous à votre concessionnaire Caterpillar.

INFORMACIÓN GENERAL

1. IDENTIFICACIÓN DEL MOTOR

Los motores Caterpillar se identifican con Números de Identificación del Producto (PIN). El motor se identifica además con Números de Configuración y en algunos casos, Números de Modificación. Estos números están en las placas de identificación que se encuentran montadas en el motor.

Los distribuidores Caterpillar necesitan esta información para determinar que componentes fueron incluidos en el motor cuando lo ensamblaron en la fábrica. Estos números permiten identificar con exactitud los números de piezas de repuesto.

2. COMO PEDIR REPUESTOS

⚠ ADVERTENCIA

Cuando se necesiten piezas de repuesto para este producto, Caterpillar recomienda usar piezas de repuesto Caterpillar o piezas que tengan especificaciones equivalentes incluyendo, pero sin estar limitadas a, dimensiones físicas, tipo, fortaleza y material.

El no hacer caso de esta advertencia puede llevar a fallas prematuras, daños al producto y lesiones graves o mortales.

Las piezas de repuesto Caterpillar de calidad están disponibles de los distribuidores Caterpillar en todo el mundo. Sus existencias actualizadas incluyen todas las piezas normalmente requeridas para proteger su inversión en motores Caterpillar. Los distribuidores pueden tener juegos de reparación o piezas remanufacturadas para permitir la selección de la mejor alternativa de reparación en un caso en particular. Al pedir piezas de repuesto, especifique en su pedido la cantidad, el número de pieza, el nombre de la pieza y el número de serie/número de identificación del producto del motor para la cual se necesitan estas piezas.

3. ORGANIZACION DEL MANUAL DE PIEZAS

La información sobre el producto, se presenta en este manual, como "elementos de información" que representan todos los componentes de un modelo específico. Las configuraciones de motores es un ejemplo de un elemento de información. Los elementos de información están organizados primeramente por nombres de piezas en orden alfabético y en segundo lugar, por el número de pieza dentro de cada sección principal del manual.

4. CONTENIDO

SIS *Nueva Característica*

La página de Contenido se encuentra al comienzo del manual. El Contenido indica cada sección del manual con una lista completa de todos los elementos de información organizados en el orden que aparecen en el manual. Los números de página proporcionan una referencia rápida a las ilustraciones detalladas de identificación de piezas y a las listas de componentes de repuesto de dichas piezas.

5. INDICE DE PIEZAS DE MANTENIMIENTO

Al frente de este catálogo se encuentra un índice de los números de piezas utilizadas más frecuentemente para el mantenimiento, que incluye descripción, cantidad necesaria, lugar de utilización y número de página. Esta información está organizada alfabéticamente, por descripción de la pieza.

6. ÍNDICE

El Índice, ubicado cerca frente del manual, es una lista en orden alfabético de todos los elementos de información incluídos en el manual. Los números de página proporcionan una referencia rápida a las ilustraciones detalladas de identificación de piezas y a las listas de componentes de repuesto de dichas piezas.

7. INDICE NUMÉICO DE PIEZAS

Un índice numérico de piezas con el correspondiente número de página aparece al final de este catálogo.

8. TÍTULOS

Los títulos ubicados en la parte superior de cada página de elementos de información identifican el número y el nombre de la pieza junto con información descriptiva adicional para ayudar al usuario a seleccionar información correcta para un motor en particular. También se suministra información sobre las opciones de reparación en el campo, la identificación de componentes de accesorios optativos y el lugar de ubicación de la pieza ("es parte de").

SIS *Nueva Característica*

La primera línea del título se muestra con un tipo de letra más grande para indicar el comienzo de un elemento de información. Si se requieren páginas adicionales para ilustrar un elemento de información, los títulos se muestran con un tipo de letra normal y la continuación se indica entre paréntesis.

9. PIEZAS QUE NO SE SUMINISTRAN COMO REPUESTO

SIS *Nueva Característica*

En algunos casos es necesario indicar piezas que no se suministran como repuesto pero que pueden estar conectadas a listas de componentes de otras piezas de repuesto. En tal caso, dichas piezas se muestran en cursiva para indicar que no son piezas disponibles.

10. NÚMEROS DE REFERENCIA

SIS *Nueva Característica*

Los números en la columna de No. de Referencia corresponden a los números indicados en la ilustración que pertenece a ese número de pieza. Los números que tienen un sufijo alfabético identifican artículos de las listas de componentes de piezas. Los números en la columna de Referencia de la ilustración se identifican en la esquina inferior izquierda de cada ilustración. Para determinar el número correcto de pieza se puede utilizar tanto el No. de Referencia de la ilustración como el No. de Referencia del artículo. A medida que se actualiza la información para indicar los más recientes números de piezas de repuesto, puede omitirse intencionalmente un No. de Referencia en una lista de componentes de piezas.

11. NOMBRES DE PIEZA SANGRADOS

Cuando el nombre de una pieza está sangrado en una lista, significa que esta pieza forma parte del grupo o conjunto del renglón inmediatamente superior.

12. LETRAS DE REFERENCIA DE ILUSTRACIONES

Las ilustraciones contienen algunas veces letras de referencia (A, B, C etc.) cuyo propósito es seguir el trayecto de líneas y mazos de cables de un punto a otro. También se utilizan para mostrar dónde volver a unir ilustraciones que se habían separado.

13. ABREVIATURAS Y SIMBOLOS

O.D. – Diámetro exterior
I.D. – Diámetro interior
A – No es pieza de este grupo
B – Utilizado según la demanda
C – Indica cambio
D – Se pide por metro
E – Se pide por centímetro
F – No se muestra
G – Se pide por pulgada
I – Ver "Hose Fabrication Guide"
M – Pieza métrica
R – Puede estar disponible como pieza remanufacturada
Y – Ilustración separada
Z – No se suministra por separado

NOTA:

Las contínuas mejoras y adelantos en diseño podrían originar cambios a su motor que no se incluyen en esta publicación. Cuando tenga alguna pregunta acerca de su producto Caterpillar o de esta publicación, consulte al distribuidor Caterpillar para obtener la información más reciente.

INFORMAÇÃO GERAL

1. IDENTIFICAÇÃO DO MOTOR

Os motores Caterpillar são identificadas pelos Números de Série e Números de Arranjo. Em alguns casos, Números de Modificação são também usados. A placa do número de série que exibe esses números encontra-se no motor.

Os revendedores Caterpillar necessitam destas informações para determinar que componentes foram incluídos no motor durante a montagem na fábrica. Isto facilita a identificação precisa dos números de peça de reposição.

2. COMO OBTER PEÇAS

⚠ CUIDADO

Quando peças de substituição são exigidas para este produto, a Caterpillar recomenda a utilização de peças de substituição Caterpillar ou peças com as especificações equivalentes incluindo, mas não limitadas, à dimensões físicas, tipos, resistência e materiais.

A inobservância desta advertência poderá resultar em falhas prematuras, danos ao produto, ferimentos ou morte.

As Peças de Reposição de Qualidade Caterpillar encontram-se disponíveis nos revendedores Caterpillar no mundo inteiro. Seus estoques de peças são atualizados e incluem todas as peças normalmente necessárias para proteger seu investimento em motores Caterpillar. Alguns revendedores podem oferecer jogos de reparo ou peças de troca/remanufaturadas disponíveis como uma opção da alternativa de reparo mais eficaz para uma situação específica. Ao encomendar peças, seu pedido deve especificar a quantidade, o número e o nome da peça e o número de série/número de identificação do produto referentes ao motor para o qual as peças se destinam.

3. ORGANIZAÇÃO DO MANUAL DE PEÇAS

A informação do produto neste manual é apresentada em forma de "elementos de informação" que representam todos os componentes para o modelo específico. O Arranjo de Motor é um exemplo de elemento de informação. Os elementos de informação são organizados em ordem alfabética por nome de peça ou, secundariamente, por número de peça incluído em cada seção principal do manual.

4. LISTA DE CONTEÚDOS

SIS ***Novidades***

A Lista de Conteúdos (TOC) se encontra no princípio do manual. A Lista de Conteúdos (TOC) relaciona em cada seção do manual uma lista completa com todos os elementos de informação organizados conforme aparecem no manual. Números de página são fornecidos para que se tenha referência rápida de ilustrações de peças detalhadas e listas de conteúdos que podem receber serviço de manutenção.

5. ÍNDICE DE PEÇAS DE MANUTENÇÃO

O Índice de Peças de Manutenção, localizado perto do princípio do manual, faz referência aos números de peça de manutenção usados com maior frequência, fornecendo uma descrição, a quantidade, o uso e o número de página. Esta informação é organizada com a descrição da peça em ordem alfabética.

6. ÍNDICE

O Índice localizado perto do princípio do manual, consiste de uma lista em ordem alfabética de todos os elementos de informação incluídos no manual. Números de página são fornecidos para que se tenha referência rápida de ilustrações de peças detalhadas e listas de conteúdos que podem receber serviço de manutenção.

7. ÍNDICE DE NÚMERO DE PEÇA

Um índice numérico relacionando todos os números de peça e a(s) página(s) correspondentes, aparece no final do manual.

8. LEGENDAS

As legendas localizadas na parte de cima de cada página de um elemento de informação identifica o número de peça e o nome da peça, juntamente com informação descritiva adicional. Informações sobre o Número de Série (S/N) encontradas em cada legenda devem ser usadas para selecionar a informação correta sobre um motor específico. Opções de substituição no campo, identificação de componentes de acessórios opcionais e informações sobre onde são utilizados ("parte de") são também fornecidas.

SIS *Novidades*

A primeira linha de uma legenda é indicada em tipo maior para indicar o princípio de um elemento de informação. Legendas para páginas adicionais que podem ser necessárias para ilustrar um elemento de informação serão apresentadas em tipo padrão e incluirão o termo *(continua)* .

9. NÃO DISPONÍVEL SEPARADAMENTE

SIS *Novidades*

Em alguns casos, é necessário mostrar peças não disponíveis separadamente que têm uma ligação com listas de conteúdos de nível inferior que podem receber serviço de manutenção. Os números de peça destes componentes não disponíveis aparecerão em *itálico* , a fim de indicar que não estão disponíveis.

10. NÚMEROS DE REFERÊNCIA À LISTA DE PEÇAS

SIS *Novidades*

Os números indicados na coluna Ref No (No. de Referência) correspondem-se aos números usados no(s) gráfico(s) correspondente(s). Um sufixo com letras pode ser acrescentado a um número de referência para identificar itens de conteúdo de nível inferior. Os números indicados na coluna Graphic Ref (Referência de Gráfico) referem-se ao identificador de número de gráfico presente no canto esquerdo inferior de cada ilustração. O número de Referência de Gráfico pode ser usado em combinação com o item Ref No para determinar-se o número de peça correto. Poderá haver omissão intencional de um número de referência (Ref No) de uma lista de conteúdos uma vez que as informações são atualizadas para refletir os números de peça mais recentes que podem receber serviço de manutenção.

11. NOMES DE PEÇAS DESALINHADOS

Quando um nome de peça encontra-se desalinhado numa lista de peças, significa que tal item faz parte do (está incluído no) grupo ou conjunto sob o qual está relacionado.

12. LETRAS DE REFERÊNCIA NAS ILUSTRAÇÕES

Quando necessário, as ilustrações contêm letras de referência (A, B, C, etc.) que são utilizadas para seguir tubulações e cabos elétricos de um ponto a outro. Também foram utilizadas para indicar onde se pode reconectar as ilustrações que foram separadas.

13. ABREVIAÇÕES E SÍMBOLOS

O.D. – "Outside Diameter" (Diâmetro Externo)
I.D. – "Inside Diameter" (Diâmetro Interno)
A – Não faz parte deste grupo
B – Use conforme necessário
C – Indica modificação
D – Vendido por metro
E – Vendido por centímetro
F – Não ilustrado
G – Vendido por polegada
I – Consulte o seu revendedor quanto a mangueira
M – Peça métrica
R – Peça remanufaturada pode estar disponível; consulte o seu revendedor Cat
Y – Ilustração separada
Z – Não disponível separadamente

NOTA:

Os contínuos aperfeiçoamentos e avanços no projeto do produto podem ocasionar modificações em seu motor que talvez ainda não estejam incluídas nesta publicação. Sempre que surgirem dúvidas quanto a um produto Caterpillar ou quanto à presente publicação, consulte o seu revendedor Caterpillar para obter as informações mais recentes disponíveis.

ALLGEMEINE HINWEISE

1. MOTORENKENNZEICHNUNG

Caterpillar-Motoren sind mit SERIAL NUMBERS (Seriennummern) und ARRANGEMENT NUMBERS (Ausführungsnummern) gekennzeichnet. In einigen Fällen werden auch MODIFICATION NUMBERS (Änderungsnummern) erteilt. Diese Nummern befinden sich auf dem Typenschild des Motors.

Die Caterpillar-Händler benötigen diese Nummern, um festzustellen, welche Bauteile bei der Montage des Motors verwendet wurden. Dies ermöglicht das Auffinden der richtigen Ersatzteilnummern.

2. BESTELLEN VON ERSATZTEILEN

⚠ WARNUNG

Wenn für diese Maschine Ersatzteile benötigt werden, empfiehlt Caterpillar, ausschließlich Caterpillar-Ersatzteile oder solche zu verwenden, die die gleichen technischen Merkmale hinsichtlich Typ, Festigkeit, Werkzeugeigenschaften und die gleichen Maße aufweisen.

Bei Nichtbeachtung dieser Warnung besteht Verletzungs- oder sogar Lebensgefahr! Ferner kann Nichtbeachtung vorzeitige Ausfälle der Teile und Beschädigung der Maschine zur Folge haben.

Original Caterpillar-Ersatzteile können weltweit bei jedem Caterpillar-Händler bestellt werden. Die umfangreichen Händlerlager enthalten normalerweise alle Teile, die Sie für Ihren Caterpillar-Motor benötigen. Einige Händler bieten Reparatursätze, Austausch- oder werküberholte Teile an, so daß Sie eine Auswahl unter verschiedenen Reparaturmöglichkeiten treffen können. Ihre Bestellung muß folgende Angaben enthalten: Anzahl der benötigten Teile, Bestellnummer, Bezeichnung des Teils und Serien-Nr./Produkt-Ident-Nr. des Motors, für den diese Teile benötigt werden.

3. AUFBAU DES PARTS MANUAL

Die Produktinformationen für alle Komponenten eines bestimmten Modells sind in INFORMATION ELEMENTS (Informationseinheiten) gegliedert. ENGINE ARRANGEMENT (Motorausführung) ist ein Beispiel für solche Informationseinheiten. Sie sind innerhalb jeder Gruppe alphabetisch, entsprechend der Ersatzteilbezeichnung, und zusätzlich numerisch, entsprechend der Ersatzteilnummer, geordnet.

4. INHALTSVERZEICHNIS

SIS *Neu im Parts Manual*

Das Inhaltsverzeichnis befindet sich am Anfang des Buches. Im Inhaltsverzeichnis werden die einzelnen Abschnitte des Buches aufgeführt. Die Abschnitte enthalten eine vollständige Aufstellung aller Informationseinheiten. Diese sind entsprechend ihrem Erscheinen im Buch geordnet. Das Inhaltsverzeichnis enthält Seitenangaben für Schnellverweise auf detaillierte Abbildungen und Teillisten.

5. INDEX FÜR WARTUNGSTEILE

Der Index für Wartungsteile vorn im Buch enthält die Bestellnummern, Seitenangaben, Mengenangaben und Informationen über den Einsatzbereich für die am häufigsten benötigten Ersatzteile. Die Angaben sind alphabetisch entsprechend der Teilebezeichnung geordnet.

6. INDEX

Der Index vorn im Buch enthält eine alphabetische Liste aller Informationseinheiten. Er enthält Seitenangaben für Schnellverweise auf detaillierte Abbildungen und Teillisten.

7. INDEX FÜR BESTELLNUMMERN

Hinten im Buch befindet sich ein numerischer Index, mit allen Bestellnummern und dem Hinweis auf die Seite, auf der sich die betreffende Abbildung befindet.

8. ÜBERSCHRIFTEN

Die Überschriften, die sich oben auf den Seiten der Informationseinheiten befinden, enthalten Bestellnummern, Ersatzteilbezeichnungen und zusätzliche beschreibende Informationen. Die Seriennummern in den Überschriften sollten zur Auswahl der richtigen Informationen für den betreffenden Motor verwendet werden. Die Überschriften enthalten außerdem Informationen über möglichen Außendienstersatz, mögliche Baugerätekomponenten und die Baugruppe, zu der das Teil gehört.

SIS *Neu im Parts Manual*

Die erste Zeile einer Überschrift erscheint in einer größeren Schriftart, um den Anfang einer Informationseinheit zu kennzeichnen. Überschriften für zusätzliche Seiten, die zur Erläuterung einer Informationseinheit notwendig sind, erscheinen in normaler Schriftart und enthalten den Begriff "(contd.)".

9. NICHT EINZELN LIEFERBARE TEILE

SIS *Neu im Parts Manual*

In einigen Fällen ist es notwendig nicht lieferbare Teile, die selbst mit einer eigenen Teilliste im Buch vertreten sind, aufzuführen. Die Bestellnummern dieser nicht einzeln lieferbaren Teile erscheinen kursiv, wodurch angezeigt wird, daß sie nur in Verbindung mit anderen Teilen lieferbar sind.

10. REFERENZNUMMER FÜR ERSATZTEILE

SIS *Neu im Parts Manual*

Die Zahlen, die in der Spalte "Ref No" aufgeführt sind, stimmen mit den Zahlen in den beigefügten Abbildungen überein. Ein Buchstaben-Suffix kann zu einer Referenznummer hinzugefügt werden, um zu kennzeichnen, daß das Teil mit einer eigenen Teilliste im Buch aufgeführt ist. Die in der Spalte "Graphic Ref" angeführten Zahlen verweisen auf die Identifikationsnummer der Abbildung, die sich in der linken unteren Ecke der Abbildung befindet. Diese Nummer kann zusammen mit der Referenznummer des Teils angegeben werden, um die richtige Ersatzteilnummer zu ermitteln. Referenznummern können absichtlich weggelassen werden, da die Nummern der lieferbaren Ersatzteile ständig aktualisiert werden.

11. EINGERÜCKTE BEZEICHNUNGEN

Wenn eine Bezeichnung eingerückt ist, wird dadurch angezeigt, daß das Teil zu einer Baugruppe gehört, unter deren Bezeichnung es eingerückt ist.

12. REFERENZBUCHSTABEN

Falls erforderlich sind in den Abbildungen Referenzbuchstaben enthalten (z.B. A, B, C, usw.), die Leitungen und Kabelbäume von einem Punkt zum anderen verfolgen. Außerdem geben sie die Stelle an, an der getrennte Abbildungen fortgesetzt werden.

13. ABKÜRZUNGEN UND SYMBOLE

O.D. – Außendurchmesser
I.D. – Innendurchmesser
A – kein Teil dieser Gruppe
B – nach Bedarf verwenden
C – Hinweis auf eine Änderung
D – in Meter-Länge bestellen
E – in Zentimeter-Länge bestellen
F – nicht gezeigt
G – in Zoll-Länge bestellen
I – siehe "Hose Fabrication Guide"
M – metrisches Teil
R – werküberholtes Teil unter Umständen lieferbar
Y – separate Abbildung
Z – nicht einzeln lieferbar

ANMERKUNG:

Ständig vorgenommene Verbesserungen und Weiterentwicklungen an Ihrem Motor können Änderungen verursachen, die in der vorliegenden Ausgabe noch nicht berücksichtigt sind. Fragen zu Ihrem Caterpillar-Motor oder diesem Ersatzteilbuch beantwortet Ihr Caterpillar-Händler.

REMANUFACTURED COMPONENTS

As an option when making repairs consider Caterpillar Remanufactured Components. Components that are available through the Caterpillar Remanufactured Program are identified three ways in the parts book:

- with the letter R in the note field of the parts list
- with an R* at the beginning of the first line of the caption
- with an *R at the end of the first line of the caption

Typical components included in the Remanufacturing Program include:

ALTERNATORS
CONNECTING RODS
CRANKSHAFTS - UNDERSIZE
CRANKSHAFTS - UPGRADE TO NEW
CYLINDER HEADS
ELECTRONIC CONTROL MODULES (ECM)
ELECTRONIC SENSORS
FUEL INJECTORS
FUEL NOZZLES
FUEL PUMPS
GOVERNORS
OIL PUMPS
PISTONS
SHORT BLOCKS
STARTERS
TURBOCHARGERS - COMPLETE
TURBOCHARGER CARTRIDGES
WATER PUMPS

Caterpillar Remanufactured engines for many engine arrangements are also available.

OPTIONS DE RÉPARATION

COMPOSANTS RÉNOVÉS

Comme option de réparation, considérer les composants rénovés Caterpillar. Les composants disponibles dans le cadre du programme Caterpillar de composants rénovés sont identifiés de trois façons dans le catalogue de pièces:

- avec la lettre "R" dans l'espace note de la liste des pièces
- avec R* au début de la première ligne des légendes
- avec *R à la fin de la première ligne des légendes

Les composants suivants figurent parmi les composants typiques du programme de rénovation:

ALTERNATEURS
BIELLES
VILEBREQUINS - SOUS-DIMENSIONNÉS
VILEBREQUINS - REMIS À NEUF
CULASSES
MODULES DE COMMANDE ÉLECTRONIQUE (ECM)
CAPTEURS ÉLECTRONIQUES
INJECTEURS
TÊTES D'INJECTEURS
POMPES À CARBURANT
RÉGULATEURS
POMPES À HUILE
PISTONS
BLOCS EMBIELLÉS
DÉMARREURS
TURBOCOMPRESSEURS - COMPLETS
CARTOUCHES DE TURBOCOMPRESSEUR
POMPES À EAU

Des moteurs rénovés sont aussi disponibles pour plusieurs versions de moteur.

COMPONENTES REMANUFACTURADOS

Al hacer reparaciones, tenga en cuenta la opción de Componentes Remanufacturados Caterpillar. Los componentes que están disponibles por medio del programa de Productos Remanufacturados Caterpillar se identifican de tres maneras en el manual de piezas:

- con la letra R en el espacio de Nota de la lista de piezas
- con una R* al comienzo de la primera línea de la leyenda
- con una *R al final de la primera línea de la leyenda

Los componentes que se incluyen típicamente en el Programa de Productos Remanufacturados son:

ALTERNADORES
BIELAS
CIGÜEÑALES - BAJOMEDIDA
CIGÜEÑALES - REMANUFACTURADOS A NUEVO
CULATAS
MÓDULOS DE CONTROL ELECTRÓNICO (ECM)
SENSORES ELECTRONICOS
INYECTORES
BOQUILLAS
BOMBAS DE COMBUSTIBLE
REGULADORES
BOMBAS DE ACEITE
PISTONES
MONOBLOQUES
MOTORES DE ARRANQUE
TURBOCOMPRESORES - COMPLETOS
NÚCLEOS DE TURBOCOMPRESOR
BOMBAS DE AGUA

También hay disponibles motores Remanufacturados Caterpillar para muchas de las configuraciones de motores.

ALTERNATIVAS DE REPARO

COMPONENTES REMANUFATURADOS

Considere o uso de Componentes Remanufaturados Caterpillar ao efetuar reparos. Os componentes disponíveis através do Programa de Remanufatura Caterpillar são identificados de três formas no manual de peças:

- com um R na área da nota da lista de peças
- com um R* no princípio da primeira linha da legenda
- com um *R no final da primeira linha da legenda

Os componentes típicos que constam no Programa de Remanufatura incluem:

ALTERNADORES
BIELAS
VIRABREQUINS - SUBMEDIDAS
VIRABREQUINS - ATUALIZAÇÃO
CABEÇOTES
MÓDULOS DE CONTROLE ELETRÔNICO (ECM)
SENSORES ELETRÔNICOS
INJETORES DE COMBUSTÍVEL
BICOS DE ABASTECIMENTO DE COMBUSTÍVEL
BOMBAS DE COMBUSTÍVEL
GOVERNADORES
BOMBAS DE ÓLEO
PISTÕES
BLOCOS BÁSICOS DO MOTOR
MOTORES DE PARTIDA
TURBOALIMENTADORES - COMPLETOS
CARTUCHOS DE TURBOALIMENTADORES
BOMBAS D'ÁGUA

Motores Remanufaturados Caterpillar também encontram-se disponíveis para diversos arranjos de motor.

WERKÜBERHOLTE AT-PRODUKTE

Bei Reparaturen sollten werküberholte AT-Produkte von Caterpillar in Betracht gezogen werden. Die durch das AT-Programm von Caterpillar erhältlichen Teile sind im Parts Book auf drei verschiedene Arten gekennzeichnet:

- mit dem Buchstaben R in der Spalte NOTE der Ersatzteilliste
- mit einem R* am Anfang der ersten Zeile der Überschrift
- mit einem *R am Ende der ersten Zeile der Überschrift

Das AT-Programm umfaßt u.a. folgende Produkte:

DREHSTROMGENERATOREN
PLEUELSTANGEN
KURBELWELLEN - MIT UNTERMASS
KURBELWELLEN - MIT ORIGINALMASS
ZYLINDERKÖPFE
ELEKTRONISCHE STEUEREINHEITEN (EMC)
ELEKTRONISCHE SENSOREN
PUMPENDÜSEN
EINSPRITZDÜSEN
KRAFTSTOFFPUMPEN
DREHZAHLREGLER
ÖLPUMPEN
KOLBEN
TEILMOTOREN
ANLASSER
TURBOLADER - KOMPLETT
TURBOLADERLAUFZEUGE
KÜHLWASSERPUMPEN

Viele Motoren können durch werküberholte AT-Motoren von Caterpillar ersetzt werden.

SUPPLEMENTAL COOLANT ADDITIVES

CUSTOMER BENEFITS:

Protects against cavitation, foam, erosion, corrosion, and scale buildup in cooling systems.

- Provides measured coolant conditioner.

DESCRIPTION:

Additives deplete from the coolant with normal operation. For this reason, Supplemental Coolant Additives (SCA) must be added to all heavy duty coolants at regular intervals. In addition, when not using a fully formulated, pre-charged antifreeze, like Caterpillar's DEAC, an initial charge of SCA must be added to the cooling system. The amount of SCA added to the system is dependent on the capacity of the system.

The SCA for initial fill is provided as a liquid. SCA's for maintenance intervals are available in liquid form and as a spin-on element. (No Spin-on available for 3600 Family of Engines)

NOTE:

The amount of SCA added at initial fill is not the same as the amount added at maintenance intervals.

The coolant additive elements can be used with any ethylene or propylene glycol type antifreeze which meets ASTM D4985 or ASTM D5345 Specifications.

NOTE:

For use with standard heavy duty coolant only, not for use with Extended Life Coolant.

PARTS NEEDED:

Cooling System Capacity		Liquid SCA at Initial Fill	Liquid SCA at Maintenance*	Spin-on SCA Maintenance Element*
Liters	Gallons			
22-30	(6-8)	3P-2044 (1)	6V-3542 (1)	111-2370 (1)
30-38	(8-10)	3P-2044 (1) 6V-3542 (1)	111-2372 (1)	111-2369 (1)
38-49	(10-13)	3P-2044 (1) 8T-1589 (1)	111-2372 (1)	111-2369 (1)
49-64	(13-17)	3P-2044 (2)	8T-1589 (1)	9N-3368 (1)
64-83	(17-22)	3P-2044 (2) 8T-1589 (1)	111-2372 (1) 6V-3542 (1)	111-2371 (1)
83-114	(22-30)	3P-2044 (3) 8T-1589 (1)	3P-2044 (1)	9N-3718 (1)
114-163	(30-43)	3P-2044 (5)	3P-2044 (1) 6V-3542 (1)	111-2371 (2)
163-242	(43-64)	3P-2044 (8)	3P-2044 (2)	9N-3718 (2)

** Normal maintenance period is 250 hrs. See your Operation and Maintenance Manual for complete coolant maintenance instructions.*

( ) Indicates quantity required.

ADDITIFS POUR LIQUIDE DE REFROIDISSEMENT

AVANTAGES POUR LE CLIENT

L'additif protège contre la cavitation, la mousse, l'érosion, la corrosion et l'accumulation de dépôts dans le circuit de refroidissement.

- L'additif complémentaire fournit une quantité mesurée d'additif.

DESCRIPTION:

Les additifs s'épuisent pendant l'utilisation du moteur. C'est pourquoi l'on doit ajouter de l'additif au liquide de refroidissement/antigel pour moteurs diesel à intervalles réguliers. En plus, si l'on n'utilise pas de l'antigel entièrement formulé et pré-chargé comme le liquide de refroidissement/antigel Caterpillar pour moteurs diesel, une quantité initiale d'additif doit être ajoutée au circuit de refroidissement. La quantité d'additif à ajouter au circuit dépend de la contenance du circuit.

L'additif pour le remplissage initial est fourni sous forme liquide. L'additif pour l'entretien ultérieur est disponible sous forme liquide et sous forme d'élément à visser. (Il n'y a pas d'élément à visser pour les moteurs de la famille 3600).

NOTA:

La quantité d'additif à ajouter au remplissage initial diffère de la quantité à ajouter aux intervalles d'entretien.

Les éléments d'additif peuvent être utilisés avec tout antigel de type éthylène ou propylène-glycol conforme à la norme ASTM D4985 ou ASTM D5345.

NOTA:

A utiliser uniquement avec du liquide de refroidissement pour moteurs diesel et non avec le liquide de refroidissement longue durée.

PIÈCES NÉCESSAIRES:

Contenance du circuit de refroidissement		Additif liquide au remplissage initial	Additif liquide aux intervalles d'entretien*	Elément d'additif à visser aux intervalles d'entretien*
Litres	Gallons U.S.			
22-30	(6-8)	3P-2044 (1)	6V-3542 (1)	111-2370 (1)
30-38	(8-10)	3P-2044 (1) 6V-3542 (1)	111-2372 (1)	111-2369 (1)
38-49	(10-13)	3P-2044 (1) 8T-1589 (1)	111-2372 (1)	111-2369 (1)
49-64	(13-17)	3P-2044 (2)	8T-1589 (1)	9N-3368 (1)
64-83	(17-22)	3P-2044 (2) 8T-1589 (1)	111-2372 (1) 6V-3542 (1)	111-2371 (1)
83-114	(22-30)	3P-2044 (3) 8T-1589 (1)	3P-2044 (1)	9N-3718 (1)
114-163	(30-43)	3P-2044 (5)	3P-2044 (1) 6V-3542 (1)	111-2371 (2)
163-242	(43-64)	3P-2044 (8)	3P-2044 (2)	9N-3718 (2)

** L'intervalle d'entretien normal est de 250 heures-service. Voir le Guide d'utilisation et d'entretien pour de plus amples renseignements concernant l'entretien du circuit de refroidissement.*

( ) Indique la quantité exigée.

ADITIVOS DE REFRIGERANTE SUPLEMENTARIOS

VENTAJAS PARA EL USUARIO:

Protegen contra la cavitación, la formación de espuma, la corrosión y la acumulación de escamas en los sistemas de enfriamiento.

- Suministra un acondicionador dosificado de refrigerante.

DESCRIPCIÓN:

Los aditivos en el refrigerante se agotan con la operación normal. Por esta razón, se debe agregar Aditivo de refrigerante suplementario (SCA) a todos los refrigerantes para servicio pesado, a intervalos regulares. Además, cuando no se usa un anticongelante de precarga completo, tal como el DEAC de Caterpillar, es necesario agregar una cantidad de aditivo de refrigerante suplementario inicial al sistema de enfriamiento. La cantidad de aditivo que se debe agregar depende de la capacidad del sistema.

El SCA de llenado inicial es líquido. El que se usa para el mantenimiento está disponible tanto en líquido como en un elemento enroscable. (No hay elemento enroscable disponible para la Familia de Motores 3600).

NOTA:

La cantidad de aditivo de llenado inicial no es la misma que se agrega en los intervalos de mantenimiento.

Los elementos de aditivo de refrigerante se pueden usar con cualquier anticongelante de tipo glicol etilénico o propílico que esté de acuerdo con las especificaciones de las normas ASTM D4985 o ASTM D5345.

NOTA:

Se debe utilizar únicamente con refrigerante estándar para servicio pesado; no se debe usar con Refrigerante de Larga Duración.

PIEZAS NECESARIAS:

Capacidad del Sistema de Enfriamiento		SCA líquido de llenado inicial	SCA líquido de mantenimiento*	Elemento de mantenimiento enroscable*
litros	gal EE.UU.			
22-30	6-8	3P-2044 (1)	6V-3542 (1)	111-2370 (1)
30-38	8-10	3P-2044 (1) 6V-3542 (1)	111-2372 (1)	111-2369 (1)
38-49	10-13	3P-2044 (1) 8T-1589 (1)	111-2372 (1)	111-2369 (1)
49-64	13-17	3P-2044 (2)	8T-1589 (1)	9N-3368 (1)
64-83	17-22	3P-2044 (2) 8T-1589 (1)	111-2372 (1) 6V-3542 (1)	111-2371 (1)
83-114	22-30	3P-2044 (3) 8T-1589 (1)	3P-2044 (1)	9N-3718 (1)
114-163	30-43	3P-2044 (5)	3P-2044 (1) 6V-3542 (1)	111-2371 (2)
163-242	43-64	3P-2044 (8)	3P-2044 (2)	9N-3718 (2)

** El período normal de mantenimiento es de 250 horas. Para ver las instrucciones completas sobre el mantenimiento del refrigerante, consulte el Manual de Operación y Mantenimiento.*

( ) Indica la cantidad necesaria.

ADITIVOS SUPLEMENTARES DO LÍQUIDO ARREFECEDOR

BENEFÍCIOS PARA O CLIENTE:

Protege contra cavitação, espuma, erosão, corrosão e acúmulo de crostas nos sistemas de arrefecimento.

- Fornece uma quantidade pré-determinada de condicionador de arrefecimento.

DESCRIÇÃO:

Com a operação normal, os aditivos se esgotam do líquido arrefecedor. Por isso, Aditivos Suplementares do Líquido Arrefecedor (SCA) devem ser acrescentados a todos os líquidos arrefecedores para serviço pesado em intervalos regulares. Além disso, quando um anticongelante pré-carregado, totalmente formulado não for usado, como o DEAC Caterpillar, uma carga inicial de SCA deve ser acrescentada ao sistema de arrefecimento. A quantidade de SCA acrescentada ao sistema depende da capacidade do sistema.

O SCA para abastecimento inicial é fornecido em forma de líquido. Os aditivos suplementares (SCA) para intervalos de manutenção estão à disposição em forma líquida e como um elemento com roscas. (Exceto os Motores da Família 3600)

NOTA:

A quantidade de SCA adicionada no abastecimento inicial não é a mesma que a acrescentada nos intervalos de manutenção.

Os elementos do aditivo do líquido arrefecedor podem ser usados com qualquer tipo de anticongelante etileno ou propileno que satisfaz as Especificações ASTM D4985 ou ASTM D5345.

NOTA:

Para uso apenas com líquido arrefecedor para serviço pesado padrão, não deve ser usado com Líquido Arrefecedor de Vida Longa.

PEÇAS NECESSÁRIAS:

Capacidade do Sistema de Arrefecimento		Líquido SCA Durante Abastecimento Inicial	Líquido SCA Durante Manutenção*	Elemento de Manutenção de SCA com Roscas*
Litros	Galões			
22-30	6-8	3P-2044 (1)	6V-3542 (1)	111-2370 (1)
30-38	8-10	3P-2044 (1) 6V-3542 (1)	111-2372 (1)	111-2369 (1)
38-49	10-13	3P-2044 (1) 8T-1589 (1)	111-2372 (1)	111-2369 (1)
49-64	13-17	3P-2044 (2)	8T-1589 (1)	9N-3368 (1)
64-83	17-22	3P-2044 (2) 8T-1589 (1)	111-2372 (1) 6V-3542 (1)	111-2371 (1)
83-114	22-30	3P-2044 (3) 8T-1589 (1)	3P-2044 (1)	9N-3718 (1)
114-163	30-43	3P-2044 (5)	3P-2044 (1) 6V-3542 (1)	111-2371 (2)
163-242	43-64	3P-2044 (8)	3P-2044 (2)	9N-3718 (2)

** O período normal de manutenção é de 250 horas. Consulte o Manual de Operação e Manutenção para obter instruções completas quanto à manutenção do líquido arrefecedor.*

( ) Indica a quantidade exigida.

KÜHLMITTELZUSATZ

VORTEILE FÜR DEN KUNDEN:

Schutz gegen Kavitation, Schaumbildung, Erosion, Korrosion und Kesselsteinbildung in Kühlsystemen.

- Richtig dosierter Kühlmittelzusatz

BESCHREIBUNG:

Additive erschöpfen sich während des Motorbetriebs. Deshalb muß allen HD-Kühlmitteln regelmäßig Kühlmittelzusatz beigefügt werden. Wenn bei Erstfüllung kein vollwertiges Fertigkühlmittel, wie das Frostschutz- und Kühlmittel für Dieselmotoren von Caterpiller (DEAC), verwendet wird, muß bei Erstfüllung Kühlmittelzusatz beigefügt werden. Wieviel Kühlmittelzusatz beigefügt werden muß, hängt vom Inhalt des Kühlsystems ab.

Für Erstfüllung ist Kühlmittelzusatz nur in flüssiger Form erhältlich. Für Wartungsintervalle ist Kühlmittelzusatz in flüssiger Form und als Zusatzelement erhältlich. (Für die Motorbaureihe 3600 sind keine Zusatzelemente erhältlich.)

ANMERKUNG:

Die Kühlmittelmenge bei Erstfüllung ist nicht die gleiche Menge, die bei Wartungsintervallen beigefügt werden muß.

Die Kühlmittelzusatzelemente können mit allen Frostschutzmitteln auf Ethylen- oder Propylenglykolbasis verwendet werden, die den Standards nach ASTM D4985 oder ASTM D5345 entsprechen.

ANMERKUNG:

Den Kühlmittelzusatz nicht mit Langzeitkühlmittel (ELC) von Caterpillar verwenden. Der Kühlmittelzusatz ist nur für HD-Kühlmittel bestimmt.

TEILEBEZEICHNUNG:

Kühlsysteminhalt		Kühlmittelzusatz bei Erstfüllung	Flüssiger Kühlmittelzusatz bei Wartung*	Kühlmittelzusatzelement bei Wartung*
Liter	US-Gall.			
22-30	(6-8)	3P-2044 (1)	6V-3542 (1)	111-2370 (1)
30-38	(8-10)	3P-2044 (1) 6V-3542 (1)	111-2372 (1)	111-2369 (1)
38-49	(10-13)	3P-2044 (1) 8T-1589 (1)	111-2372 (1)	111-2369 (1)
49-64	(13-17)	3P-2044 (2)	8T-1589 (1)	9N-3368 (1)
64-83	(17-22)	3P-2044 (2) 8T-1589 (1)	111-2372 (1) 6V-3542 (1)	111-2371 (1)
83-114	(22-30)	3P-2044 (3) 8T-1589 (1)	3P-2044 (1)	9N-3718 (1)
114-163	(30-43)	3P-2044 (5)	3P-2044 (1) 6V-3542 (1)	111-2371 (2)
163-242	(43-64)	3P-2044 (8)	3P-2044 (2)	9N-3718 (2)

** Der normale Wartungsintervall beträgt 250 Betriebsstunden. Für vollständige Anweisungen zur Wartung des Kühlsystems, siehe Betriebs- und Wartungshandbuch.*

( ) Erforderliche Anzahl

MAINTENANCE PARTS

DESCRIPTION	PART NUMBER	QTY	WHERE USED	PAGE
AIR INLET AND EXHAUST SYSTEM				
CAP AS-RAIN	7S-4411	1	DUST EJECTOR GP	130
		1	DUST EJECTOR GP	131
FILTER ELEMENT AS-AIR (PRIMARY)	6I-2505	1	AIR CLEANER GP	128
FILTER ELEMENT AS-AIR (SECONDARY)	6I-2506	1	AIR CLEANER GP	128
GASKET-EXHAUST MANIFOLD	129-9452	12	MANIFOLD GP-EXHAUST	140
BASIC ENGINE				
BREATHER AS (CRANKCASE)	4N-4668	2	COVER GP-VALVE MECHANISM	16
CAP-DUST	6V-0852	1	PLUG GP-CYLINDER BLOCK	54
FITTING-GREASE	3B-8485	1	BELT TIGHTENER GP	8
FITTING-GREASE (1/8-27 THD)(45 DEGREE)	3B-8485	1	DRIVE GP-FAN	32
PLUG-OIL DRAIN	109-5839	1	PAN GP-OIL	50
V-BELT SET (INCLUDES 4 BELTS)	123-5889	1	DRIVE GP-FAN	35
	180-4526	1	DRIVE GP-FAN	32
COOLING SYSTEM				
CAP	111-7421	2	RADIATOR GP	110
CAP AS-RADIATOR	031-1119	1	TANK GP-COOLANT	116
CAP-DUST	157-0670	1	LINES GP-WATER	95
FILTER (WATER PUMP)	111-2721	1	PUMP GP-WATER	104
PLUG-DRAIN	4B-7739	1	LINES GP-WATER	100
REGULATOR-WATER TEMPERATURE (92 DEG C.)	4W-4794	2	REGULATOR GP-TEMPERATURE	112
		2	REGULATOR GP-TEMPERATURE	114
SEAL-LIP	3S-9643	2	REGULATOR GP-TEMPERATURE	112
		2	REGULATOR GP-TEMPERATURE	114
ELECTRICAL AND STARTING SYSTEM				
ATOMIZER AS-ETHER	7J-5606	1	STARTING AID GP-ETHER	266
BASE-INDICATOR LIGHT	3T-0304	1	WIRING GP-PLATFORM	298
BATTERY (12 VOLT/DRY)	9X-9730	2	BATTERY & WIRING GP	194
		2	STARTING AR-LOW TEMPERATURE	269
BELT	218-9823	1	ALTERNATOR GP-CHARGING	189
BRUSH AS	3T-9524	6	STARTING MOTOR GP-ELECTRIC	282
BRUSH AS (STARTING MOTOR)	3T-9524	6	STARTING MOTOR GP-ELECTRIC	272
CAP	9L-6770	1	ALTERNATOR GP-CHARGING	190
CIRCUIT BREAKER AS (10 AMP) (ELECTRONIC CLUTCH BRAKE)	6T-3642	1	WIRING GP-CONSOLE	292
CIRCUIT BREAKER AS (10 AMP) (START KEY SWITCH)	6T-3642	1	WIRING GP-CONSOLE	292
CIRCUIT BREAKER AS (15 AMP) (BLOWER)	6T-3643	1	WIRING GP-CONSOLE	292
CIRCUIT BREAKER AS (15 AMP) (ENGINE)	6T-3643	1	WIRING GP-CONSOLE	292
CIRCUIT BREAKER AS (15 AMP) (FRONT FLOODS)	3T-2662	1	WIRING GP-CONSOLE	292
CIRCUIT BREAKER AS (15 AMP) (IMPLEMENT)	6T-3643	1	WIRING GP-CONSOLE	292
CONVERTER-POWER (24 VOLT TO 12 VOLT)(25 AMP)	3E-8646	1	CONVERTER GP-ELECTRICAL	217
ELEMENT AS-JACKET WATER HEATER	6T-3764	2	HEATER GP-JACKET WATER	225

MAINTENANCE PARTS

DESCRIPTION	PART NUMBER	QTY	WHERE USED	PAGE
ELEMENT AS-JACKET WATER HEATER (120 VOLTS/1500 WATTS)	9G-6655	2	HEATER GP-JACKET WATER	224
FILTER-FOAM	111-4402	1	BATTERY & WIRING GP	192
FUSE (10 AMP)	9W-1442	10	WIRING GP-CONSOLE	293
FUSE (15 AMP)	9W-1441	3	WIRING GP-CONSOLE	293
FUSE (20 AMP)	9W-1446	3	WIRING GP-CONSOLE	293
FUSE (30 AMP)	8T-9636	2	CONVERTER GP-ELECTRICAL	217
HOLDER AS-BRUSH	6T-0363	6	STARTING MOTOR GP-ELECTRIC	283
HOLDER AS-BRUSH (STARTING MOTOR BRUSH)	6T-0363	6	STARTING MOTOR GP-ELECTRIC	272
KEY (BATTERY DISCONNECT)	8H-5306	1	SWITCH GP-DISCONNECT	286
KIT-TERMINAL	3N-3763	1	STARTING MOTOR GP-ELECTRIC	283
KIT-TERMINAL (STARTING MOTOR)	3N-3763	1	STARTING MOTOR GP-ELECTRIC	273
LAMP-HEAD (24 VOLT) (FLOOD)	9X-3463	1	LAMP GP-FLOOD	229
LAMP-HEAD (24 VOLT) (65 WATT)(FLOOD)	9X-3463	1	LAMP GP-FLOOD	228
LAMP (24 VOLT)	3E-8825	2	WIRING GP-PLATFORM	299
	7N-1996	1	WIRING GP-PLATFORM	298
	7N-5876	4	WIRING GP-PLATFORM	298
LAMP (24 VOLT) (DOME)	7N-9943	1	LAMP GP-DOME	227
LAMP (28 VOLT)	123-9294	1	CONTROL GP-ELECTRONIC	208
		1	CONTROL GP-ELECTRONIC	210
LENS AS (FLOODLAMP)	158-0248	1	LAMP GP-FLOOD	228
		1	LAMP GP-FLOOD	229
LENS (DOME LAMP)	7T-0020	1	LAMP GP-DOME	227
LENS-RED	6T-7058	1	WIRING GP-PLATFORM	298
SPRING	3T-9494	6	STARTING MOTOR GP-ELECTRIC	283
SPRING (STARTING MOTOR BRUSH)	3T-9494	1	STARTING MOTOR GP-ELECTRIC	272
		6	STARTING MOTOR GP-ELECTRIC	273
VENT AS	7N-0060	6	BATTERY & WIRING GP	194
FRAME AND BODY				
PLUG	106-8187	1	CASE & FRAME GP	382
FUEL SYSTEM				
CAP AS-FUEL TANK	7X-7700	1	TANK GP-FUEL	185
CAP-DUST	9D-0630	1	ADAPTER GP-FAST FILL FUEL	150
		1	ADAPTER GP-FAST FILL FUEL	152
		1	ADAPTER GP-FAST FILL FUEL	154
		1	ADAPTER GP-FAST FILL FUEL	156
FILTER AS-FUEL	1R-0749	2	LINES GP-FUEL FILTER	172
FILTER AS (WATER SEPARATOR & FUEL)	1R-0769	1	FILTER GP-WATER SEP & FUEL	167
FILTER (UNIT INJECTOR HYDRAULIC PUMP)	125-5835	1	DRIVE GP-UNIT INJ HYD PUMP	162
GASKET (FUEL PRIMING PUMP)	1P-0436	1	LINES GP-FUEL FILTER	172
KEY	5P-8500	1	TANK GP-FUEL	184
PADLOCK GP	5P-8502	1	TANK GP-FUEL	184
STRAINER-FUEL TANK	9P-7121	1	TANK GP-FUEL	184

MAINTENANCE PARTS

DESCRIPTION	PART NUMBER	QTY	WHERE USED	PAGE
HYDRAULIC SYSTEM				
CAP-DUST	6V-0852	1	LINES GP-MOTOR	506
		1	LINES GP-PILOT	510
		2	LINES GP-PUMP	516
		4	LINES GP-RIPPER	526
		2	VALVE GP-COMBINATION	553
		1	VALVE GP-PILOT	566
		1	VALVE GP-PILOT	568
CAP-FILLER	7H-1447	1	TANK & FILTER GP-HYDRAULIC	542
FILTER ELEMENT AS-OIL (HYDRAULIC)	139-1537	1	TANK & FILTER GP-HYDRAULIC	542
FILTER ELEMENT AS-OIL (HYDRAULIC/REVERSE FLOW)	1R-0735	2	TANK & FILTER GP-HYDRAULIC	542
FILTER ELEMENT-HYDRAULIC (ELECTRICAL/HYDRAULIC VALVE)	134-0964	1	FILTER GP-OIL	502
FITTING-GREASE	3B-8489	1	CYLINDER GP-BULLDOZER TILT	488
		1	CYLINDER GP-BULLDOZER TILT	490
		1	CYLINDER GP-BULLDOZER TILT	492
		2	CYLINDER GP-RIPPER LIFT	494
FITTING-GREASE (1/8-27 THD)	3B-8489	2	CYLINDER GP-RIPPER LIFT	496
		2	CYLINDER GP-RIPPER TILT	500
SCREEN AS	9T-7571	1	TANK & FILTER GP-HYDRAULIC	542
STRAINER AS	5D-7927	1	TANK & FILTER GP-HYDRAULIC	542
IMPLEMENTS				
FITTING-GREASE	3B-8489	2	FRAME GP-RIPPER	598
		2	KIT-OVERPACK	602
		2	KIT-OVERPACK	604
FITTING-GREASE (1/8-27 THD)	3B-8489	1	BRACE GP-BULLDOZER	584
		2	FRAME GP-RIPPER	594
		2	FRAME GP-RIPPER	596
		2	MOUNTING GP-CYLINDER	613
LUBRICATION SYSTEM				
CAP	110-8318	1	OIL CHANGE GP-HIGH SPEED	78
CAP AS-FILLER	6N-2206	1	FILLER GP-ENGINE OIL	66
CAP-DUST	8C-3445	1	FILTER GP-ENGINE OIL	68
FILTER AS-ENGINE OIL	1R-0716	2	FILTER GP-ENGINE OIL	68
SCREEN AS-BELL	4N-0913	1	LINES GP-ENGINE OIL	74

MAINTENANCE PARTS

DESCRIPTION	PART NUMBER	QTY	WHERE USED	PAGE
OPERATOR STATION				
BASE-INDICATOR LIGHT	3T-0304	1	INSTRUMENT GP	708
BLADE AS-WIPER (FRONT)	6V-5851	1	WIPER GP-WINDOW	786
BLADE AS-WIPER (LH DOOR)	6V-5849	4	WIPER GP-WINDOW	786
BLADE AS-WIPER (REAR)	5C-8811	1	WIPER GP-WINDOW	786
CAP-VENTED	8E-8292	1	TANK GP-WINDOW WASHER	760
CIRCUIT BREAKER AS (15 AMP)	6T-3643	1	LINES GP-AIR CONDITIONER	712
FILTER-AIR (CAB) (HIGH EFFICIENCY)	175-2839	1	HEATER GP-CAB	700
	175-2841	1	HEATER GP-CAB	700
FILTER-AIR (CAB) (ODOR REDUCTION)	175-2832	1	HEATER GP-CAB	700
FILTER-AIR (CAB) (standard)	7T-1890	1	HEATER GP-CAB	700
FILTER-CAB AIR (standard)	107-0266	1	HEATER GP-CAB	700
LAMP-RED	171-1033	1	INSTRUMENT GP	708
LAMP (24 VOLT)	7N-1996	1	INSTRUMENT GP	708
LENS-RED	6T-7058	1	INSTRUMENT GP	708
SEAT BELT GP	183-3648	1	SEAT GP	750
		1	SEAT GP	751
V-BELT	2S-2743	1	COMPRESSOR GP-REFRIGERANT	676
POWER TRAIN				
BREATHER (POWER TRAIN)	9G-5127	1	LINES GP-POWER TRAIN OIL	338
CAP AS-FILLER (POWER TRAIN OIL)	6N-2985	1	LINES GP-POWER TRAIN OIL	338
CAP-DUST	6V-0852	3	CASE & PARTS GP-PLANETARY	306
		1	LINES GP-POWER TRAIN OIL	338
		1	VALVE & MTG GP-PILOT	366
		2	VALVE GP-PRIORITY	374
		1	VALVE GP-RELIEF	376
	8C-3447	1	LINES GP-POWER TRAIN OIL	338
FILTER ELEMENT AS-OIL	132-8876	1	FILTER GP-OIL	324
PLUG-MAGNETIC	6V-3298	1	final DRIVE GP	326
		1	final DRIVE GP	330
		1	final DRIVE GP	334
SCREEN AS (POWER TRAIN OIL PUMP INLET)	9P-9555	1	LINES GP-POWER TRAIN OIL	338
SCREEN-SUCTION	8S-9130	1	CASE & PARTS GP-PLANETARY	306
		1	TORQUE CONVERTER GP	358
STEERING AND BRAKING SYSTEM				
CAP-DUST	6V-0852	4	VALVE & MTG GP-STEERING	471
CAP-PUSHBUTTON	144-0331	1	SUPPORT GP-CONTROL	470
UNDERCARRIAGE				
BREATHER	198-7711	1	LUBRICATION GP-EQUALIZER BAR	440
CAP AS-OIL FILLER	5L-2952	1	LUBRICATION GP-EQUALIZER BAR	440
CAP AS-OIL LEVEL	9W-8277	1	LUBRICATION GP-PIVOT SHAFT	442
FITTING-GREASE (1/8-27 THD)	3B-8489	2	EQUALIZER BAR GP	430
		2	EQUALIZER BAR GP	432
PLUG-DRAIN	4T-2069	6	FRAME GP-TELESCOPING RECOIL	434

PIÈCES DE RECHANGE

DESCRIPTION	NUMÉRO DE PIECÈS	QTÉ	DOMAINE D'APPLICATION	PAGE
CHÂSSIS ET BENNE				
BOUCHON FILETÉ	106-8187	1	CHÂSSIS ET CARTER (ASS)	382
CIRCUIT D'ADMISSION D'AIR ET D'ECHAPPEMENT				
DÉFLECTEUR DE PLUIE (ENS)	7S-4411	1	ÉJECTEUR AUTOMATIQUE DE POUSSIÈRE (ASS)	130
		1	ÉJECTEUR AUTOMATIQUE DE POUSSIÈRE (ASS)	131
ÉLÉMENT DE FILTRE À AIR (ENS) (PRINCIPAL)	6I-2505	1	FILTRE A AIR (ASS)	128
ÉLÉMENT DE FILTRE À AIR (ENS) (SECONDAIRE)	6I-2506	1	FILTRE A AIR (ASS)	128
JOINT PLAT DU COLLECTEUR D'ECHAPPEMENT	129-9452	12	COLLECTEUR D'ÉCHAPPEMENT (ASS)	140
CIRCUIT DE CARBURANT				
BOUCHON DE RÉSERVOIR DE CARBURANT (ENS)	7X-7700	1	RÉSERVOIR DE CARBURANT (ASS)	185
CADENAS (ASS)	5P-8502	1	RÉSERVOIR DE CARBURANT (ASS)	184
CLÉ	5P-8500	1	RÉSERVOIR DE CARBURANT (ASS)	184
FILTRE A CARBURANT (ENS)	1R-0749	2	CANALISATIONS DU FILTRE A CARBURANT (ASS)	172
FILTRE (ENS) (SÉPARATEUR D'EAU ET CARBURANT)	1R-0769	1	FILTRE DE SÉPARATEUR D'EAU ET DE CARBURANT (ASS)	167
FILTRE (INJECTEUR DE POMPE HYDRAULIQUE)	125-5835	1	ENTRAINEMENT D'INJECTEURS-POMPES HYDRAULIQUES	162
JOINT PLAT (POMPE D'AMORÇAGE DE CARBURANT)	1P-0436	1	CANALISATIONS DU FILTRE A CARBURANT (ASS)	172
PARE-POUSSIERE	9D-0630	1	ADAPTATEUR DE REMPLIS. RAPIDE DE CARBURANT (ASS)	150
		1	ADAPTATEUR DE REMPLIS. RAPIDE DE CARBURANT (ASS)	152
		1	ADAPTATEUR DE REMPLIS. RAPIDE DE CARBURANT (ASS)	154
		1	ADAPTATEUR DE REMPLIS. RAPIDE DE CARBURANT (ASS)	156
TAMIS DE RÉSERVOIR DE CARBURANT	9P-7121	1	RÉSERVOIR DE CARBURANT (ASS)	184
CIRCUIT DE DÉMARRAGE ET ÉLECTRIQUE				
AMPOULE (24 VOLTS)	3E-8825	2	CABLAGE - PLATE-FORME (ASS)	299
	7N-1996	1	CABLAGE - PLATE-FORME (ASS)	298
	7N-5876	4	CABLAGE - PLATE-FORME (ASS)	298
AMPOULE (24 VOLTS) (PLAFONNIER)	7N-9943	1	PLAFONNIER (ASS)	227
AMPOULE (28 VOLTS)	123-9294	1	COMMANDE ELECTRONIQUE DE BOITE (ASS)	208
		1	COMMANDE ELECTRONIQUE DE BOITE (ASS)	210
BASE-TÉMOIN LUMINEUX	3T-0304	1	CABLAGE - PLATE-FORME (ASS)	298
BATTERIE (12 VOLTS/SEC)	9X-9730	2	BATTERIE ET CÂBLAGE	194
		2	DÉMARRAGE À TEMPÉRATURE BASSE	269
BROSSE (ENS)	3T-9524	6	DÉMARREUR ÉLECTRIQUE (ASS)	282
BROSSE (ENS) (DÉMARREUR)	3T-9524	6	DÉMARREUR ÉLECTRIQUE (ASS)	272

PIÈCES DE RECHANGE

DESCRIPTION	NUMÉRO DE PIECÈS	QTÉ	DOMAINE D'APPLICATION	PAGE
CHAPEAU	9L-6770	1	ALTERNATEUR DE CHARGE (ASS)	190
CLÉ (COUPE-BATTERIE)	8H-5306	1	ROBINET DE BATTERIE (ASS)	286
COURROIE	218-9823	1	ALTERNATEUR DE CHARGE (ASS)	189
DISJONCTEUR (ENS) (10A) (CONTACTEUR DE DÉMARRAGE À CLÉ)	6T-3642	1	CABLAGE DE CONSOLE (ASS)	292
DISJONCTEUR (ENS) (10A) (FREIN D'EMBRAYAGE ÉLECTRONIQUE)	6T-3642	1	CABLAGE DE CONSOLE (ASS)	292
DISJONCTEUR (ENS) (15A) (ÉQUIPEMENT)	6T-3643	1	CABLAGE DE CONSOLE (ASS)	292
DISJONCTEUR (ENS) (15A) (MOTEUR)	6T-3643	1	CABLAGE DE CONSOLE (ASS)	292
DISJONCTEUR (ENS) (15A) (PROJECTEURS AVANT)	3T-2662	1	CABLAGE DE CONSOLE (ASS)	292
DISJONCTEUR (ENS) (15A) (SOUFFLANT)	6T-3643	1	CABLAGE DE CONSOLE (ASS)	292
ÉLÉMENT DU RÉCHAUFFEUR D'EAU DES CHEMISES (ENS)	6T-3764	2	EAU DES CHEMISES - RECHAUFFEUR (ASS)	225
ÉLÉMENT DU RÉCHAUFFEUR D'EAU DES CHEMISES (ENS) (120 VOLTS/1500 WATTS)	9G-6655	2	EAU DES CHEMISES - RECHAUFFEUR (ASS)	224
ÉVENT (ENS)	7N-0060	6	BATTERIE ET CÂBLAGE	194
FILTRE A MOUSSE	111-4402	1	BATTERIE ET CÂBLAGE	192
FUSIBLE (10A)	9W-1442	10	CABLAGE DE CONSOLE (ASS)	293
FUSIBLE (15A)	9W-1441	3	CABLAGE DE CONSOLE (ASS)	293
FUSIBLE (20 A)	9W-1446	3	CABLAGE DE CONSOLE (ASS)	293
FUSIBLE (30A)	8T-9636	2	TRANSFORMATION ELECTRIQUE (ASS)	217
GICLEUR-ÉTHER (ENS)	7J-5606	1	AUXILIAIRE DE DÉMARRAGE À L'ÉTHER	266
KIT DE BORNE	3N-3763	1	DÉMARREUR ÉLECTRIQUE (ASS)	283
KIT DE BORNE (DÉMARREUR)	3N-3763	1	DÉMARREUR ÉLECTRIQUE (ASS)	273
LAMPE - FEUX AV (24 VOLTS) (PROJECTEUR)	9X-3463	1	LAMPE - PHARE (ASS)	229
LAMPE - FEUX AV (24 VOLTS) (65 WATTS)(PROJECTEUR)	9X-3463	1	LAMPE - PHARE (ASS)	228
LENTILLE (ENS) (PROJECTEUR)	158-0248	1	LAMPE - PHARE (ASS)	228
		1	LAMPE - PHARE (ASS)	229
LENTILLE (PLAFONNIER)	7T-0020	1	PLAFONNIER (ASS)	227
LENTILLE ROUGE	6T-7058	1	CABLAGE - PLATE-FORME (ASS)	298
PORTE-BALAIS (ENS)	6T-0363	6	DÉMARREUR ÉLECTRIQUE (ASS)	283
PORTE-BALAIS (ENS) (BROSSE DE DÉMARREUR)	6T-0363	6	DÉMARREUR ÉLECTRIQUE (ASS)	272
RESSORT	3T-9494	6	DÉMARREUR ÉLECTRIQUE (ASS)	283
RESSORT (BROSSE DE DÉMARREUR)	3T-9494	1	DÉMARREUR ÉLECTRIQUE (ASS)	272
		6	DÉMARREUR ÉLECTRIQUE (ASS)	273
TRANSFORMATEUR DE PUISSANCE (DE 24 VOLTS À 12 VOLTS)(25 AMP)	3E-8646	1	TRANSFORMATION ELECTRIQUE (ASS)	217
CIRCUIT DE DIRECTION ET DE FREIN				
BOUCHON-BOUTON-POUSSOIR	144-0331	1	SUPPORT - COMMANDE (ASS)	470
PARE-POUSSIERE	6V-0852	4	SOUPAPE DE DIRECTION ET MONTAGE (ENS)	471

PIÈCES DE RECHANGE

DESCRIPTION	NUMÉRO DE PIECÈS	QTÉ	DOMAINE D'APPLICATION	PAGE
CIRCUIT DE GRAISSAGE				
BOUCHON DE GOULOTTE DE REMPLISSAGE (ENS)	6N-2206	1	BOUCHON DE REMPLISSAGE D'HUILE MOTEUR (ASS)	66
CHAPEAU	110-8318	1	DISPOSITIF DE VIDANGE RAPIDE D'HUILE (ASS)	78
FILTRE A HUILE MOTEUR (ENS)	1R-0716	2	FILTRE À HUILE MOTEUR (ASS)	68
PARE-POUSSIERE	8C-3445	1	FILTRE À HUILE MOTEUR (ASS)	68
TAMIS DE CLOCHE (ENS)	4N-0913	1	CANALISATIONS D'HUILE MOTEUR (ASS)	74
CIRCUIT DE REFROIDISSEMENT				
BOUCHON DE RADIATEUR (ENS)	031-1119	1	RÉSERVOIR DU LIQUIDE DE REFROIDISSEMENT (ASS)	116
BOUCHON DE VIDANGE	4B-7739	1	CANALISATIONS D'EAU (ASS)	100
CHAPEAU	111-7421	2	RADIATEUR (ASS)	110
FILTRE (POMPE À EAU)	111-2721	1	POMPE A EAU (ASS)	104
LÈVRE	3S-9643	2	RÉGULATEUR DE TEMPÉRATURE (ASS)	112
		2	RÉGULATEUR DE TEMPÉRATURE (ASS)	114
PARE-POUSSIERE	157-0670	1	CANALISATIONS D'EAU (ASS)	95
THERMOSTAT-TEMPÉRATURE D'EAU (92 DEGRÉS C)	4W-4794	2	RÉGULATEUR DE TEMPÉRATURE (ASS)	112
		2	RÉGULATEUR DE TEMPÉRATURE (ASS)	114

PIÈCES DE RECHANGE

DESCRIPTION	NUMÉRO DE PIECÈS	QTÉ	DOMAINE D'APPLICATION	PAGE
CIRCUIT HYDRAULIQUE				
BOUCHON DE GOULOTTE DE REMPLISSAGE	7H-1447	1	RÉSERVOIR HYDRAULIQUE ET FILTRE (ASS)	542
CREPINE (ENS)	5D-7927	1	RÉSERVOIR HYDRAULIQUE ET FILTRE (ASS)	542
ÉCRAN (ENS)	9T-7571	1	RÉSERVOIR HYDRAULIQUE ET FILTRE (ASS)	542
ÉLÉMENT DE FILTRE À HUILE (ENS) (DÉBIT HYDRAULIQUE/RETOUR DE DÉBIT)	1R-0735	2	RÉSERVOIR HYDRAULIQUE ET FILTRE (ASS)	542
ÉLÉMENT DE FILTRE À HUILE (ENS) (HYDRAULIQUE)	139-1537	1	RÉSERVOIR HYDRAULIQUE ET FILTRE (ASS)	542
ÉLÉMENT DE FILTRE-HYDRAULIQUE (SOUPAGE ÉLECTRIQUE /HYDRAULIQUE)	134-0964	1	FILTRE A HUILE (ASS)	502
GRAISSEUR	3B-8489	2	VERIN DE LEVAGE DE RIPPER (ASS)	494
		1	VÉRIN D'INCLINAISON DE BULLDOZER (ASS)	488
		1	VÉRIN D'INCLINAISON DE BULLDOZER (ASS)	490
		1	VÉRIN D'INCLINAISON DE BULLDOZER (ASS)	492
GRAISSEUR (FILET 1/8-27)	3B-8489	2	VERIN DE LEVAGE DE RIPPER (ASS)	496
		2	VERIN D'INCLINAISON DU RIPPER (ASS)	500
PARE-POUSSIERE	6V-0852	1	CANALISATIONS A COMMANDE PILOTE (ASS)	510
		2	CANALISATIONS DE POMPE (ASS)	516
		1	CANALISATIONS DU MOTEUR (ASS)	506
		4	CANALISATIONS DU RIPPER (ASS)	526
		2	SOUPAPE DE COMBINAISON (ASS)	553
		1	SOUPAPE PILOTE (ASS)	566
		1	SOUPAPE PILOTE (ASS)	568
ÉQUIPEMENTS				
GRAISSEUR	3B-8489	2	BATI DE RIPPER (ASS)	598
		2	KIT DE BOULONNERIE, JOINTS ET CALES D'ÉPAISSEUR	602
		2	KIT DE BOULONNERIE, JOINTS ET CALES D'ÉPAISSEUR	604
GRAISSEUR (FILET 1/8-27)	3B-8489	2	BATI DE RIPPER (ASS)	594
		2	BATI DE RIPPER (ASS)	596
		2	MONTAGE DE VÉRIN (ASS)	613
		1	TIRANT DE BULLDOZER (ASS)	584

PIÈCES DE RECHANGE

DESCRIPTION	NUMÉRO DE PIECÈS	QTÉ	DOMAINE D'APPLICATION	PAGE
MOTEUR standard				
BOUCHON DE VIDANGE D'HUILE	109-5839	1	HUILE MOTEUR - CARTER (ASS)	50
GRAISSEUR	3B-8485	1	TENDEUR DE COURROIE (ASS)	8
GRAISSEUR (FILETAGE 1/8-27)(45 DEGRÉS)	3B-8485	1	ENTRAÎNEMENT DE VENTILATEUR (ASS)	32
JEU DE COURROIES TRAPEZOIDALES (COMPREND 4 COURROIES)	123-5889	1	ENTRAÎNEMENT DE VENTILATEUR (ASS)	35
	180-4526	1	ENTRAÎNEMENT DE VENTILATEUR (ASS)	32
PARE-POUSSIERE	6V-0852	1	BOUCHON - BLOC-CYLINDRES	54
RENIFLARD (ENS) (CARTER)	4N-4668	2	CACHE-SOUPAPES (ASS)	16
POSTE DE CONDUITE				
AMPOULE ROUGE	171-1033	1	TABLEAU DE BORD (ASS)	708
AMPOULE (24 VOLTS)	7N-1996	1	TABLEAU DE BORD (ASS)	708
BALAI D'ESSUIE-GLACE (ENS) (ARRIÈRE)	5C-8811	1	ESSUIE-GLACE (ASS)	786
BALAI D'ESSUIE-GLACE (ENS) (AVANT)	6V-5851	1	ESSUIE-GLACE (ASS)	786
BALAI D'ESSUIE-GLACE (ENS) (PORTE GAUCHE)	6V-5849	4	ESSUIE-GLACE (ASS)	786
BASE-TÉMOIN LUMINEUX	3T-0304	1	TABLEAU DE BORD (ASS)	708
BOUCHON À ÉVENT	8E-8292	1	RÉSERVOIR - LAVE-GLACE (ASS)	760
CEINTURE DE SECURITE (ASS)	183-3648	1	SIÈGE (ASS)	750
		1	SIÈGE (ASS)	751
COURROIE TRAPEZOIDALE	2S-2743	1	COMPRESSEUR DE REFRIGERANT (ASS)	676
DISJONCTEUR (ENS) (15A)	6T-3643	1	CANALISATIONS DE CLIMATISEUR (ASS)	712
FILTRE À AIR (CABINE) (GRANDE EFFICACITÉ)	175-2839	1	CHAUFFAGE DE CABINE (ASS)	700
	175-2841	1	CHAUFFAGE DE CABINE (ASS)	700
FILTRE À AIR (CABINE) (RÉDUCTION DES ODEURS)	175-2832	1	CHAUFFAGE DE CABINE (ASS)	700
FILTRE À AIR (CABINE) (standard)	7T-1890	1	CHAUFFAGE DE CABINE (ASS)	700
FILTRE À AIR DE CABINE (standard)	107-0266	1	CHAUFFAGE DE CABINE (ASS)	700
LENTILLE ROUGE	6T-7058	1	TABLEAU DE BORD (ASS)	708
TRAIN DE ROULEMENT				
BOUCHON DE CONTROLE DE NIVEAU D'HUILE (ENS)	9W-8277	1	GRAISSAGE DE LA TRAVERSE-PIVOT	442
BOUCHON DE GOULOTTE DE REMPLISSAGE D'HUILE MOTEUR	5L-2952	1	GRAISSAGE DE BALANCIER DE SUSPENSION (ASS)	440
BOUCHON DE VIDANGE	4T-2069	6	CARTER TELESCOPIQUE DE MECANISME AMORTISSEUR	434
GRAISSEUR (FILET 1/8-27)	3B-8489	2	BALANCIER DE SUSPENSION (ASS)	430
		2	BALANCIER DE SUSPENSION (ASS)	432
RENIFLARD	198-7711	1	GRAISSAGE DE BALANCIER DE SUSPENSION (ASS)	440

PIÈCES DE RECHANGE

DESCRIPTION	NUMÉRO DE PIECÈS	QTÉ	DOMAINE D'APPLICATION	PAGE
TRANSMISSION				
BOUCHON AIMANTÉ	6V-3298	1	RÉDUCTEURS (ASS)	326
		1	RÉDUCTEURS (ASS)	330
		1	RÉDUCTEURS (ASS)	334
BOUCHON DE GOULOTTE DE REMPLISSAGE (ENS) (HUILE DE TRANSMISSION)	6N-2985	1	CANALISATIONS D'HUILE DE TRANSMISSION (ASS)	338
ÉCRAN (ENS) (ADMISSION DE POMPE À HUILE DE TRANSMISSION)	9P-9555	1	CANALISATIONS D'HUILE DE TRANSMISSION (ASS)	338
ÉLÉMENT DE FILTRE À HUILE (ENS)	132-8876	1	FILTRE A HUILE (ASS)	324
PARE-POUSSIERE	6V-0852	1	CANALISATIONS D'HUILE DE TRANSMISSION (ASS)	338
		1	CLAPET DE DECHARGE (ASS)	376
		2	SOUPAPE DE PRIORITE (ASS)	374
		1	SOUPAPE PILOTE ET MONTAGE (ASS)	366
		3	TRAINS PLANÉTAIRES - CARTER ET PIÈCES	306
	8C-3447	1	CANALISATIONS D'HUILE DE TRANSMISSION (ASS)	338
RENIFLARD (TRANSMISSION)	9G-5127	1	CANALISATIONS D'HUILE DE TRANSMISSION (ASS)	338
TAMIS D'ASPIRATION	8S-9130	1	TRAINS PLANÉTAIRES - CARTER ET PIÈCES	306
		1	CONVERTISSEUR DE COUPLE (ASS)	358

PIEZAS DE MANTENIMIENTO

DESCRIPCION	NUMERO DE PIEZA	CANT	SE UTILIZA EN	PAGINA
BASTIDOR Y CAJA				
TAPÓN	106-8187	1	CAJA Y BASTIDOR (GR)	382
CABINA DEL OPERADOR				
CINTURÓN DE SEGURIDAD (GR)	183-3648	1	ASIENTO (GR)	750
		1	ASIENTO (GR)	751
CORREA TRAPEZOIDAL	2S-2743	1	COMPRESOR DE REFRIGERANTE (GR)	676
DISYUNTOR (CONJ) (15 A)	6T-3643	1	TUBERÍAS DE ACONDICIONADOR DE AIRE (GR)	712
FILTRO DE AIRE (CABINA) (ALTA EFICIENCIA)	175-2839	1	CALEFACCIÓN DE LA CABINA (GR)	700
	175-2841	1	CALEFACCIÓN DE LA CABINA (GR)	700
FILTRO DE AIRE (CABINA) (ESTANDAR)	7T-1890	1	CALEFACCIÓN DE LA CABINA (GR)	700
FILTRO DE AIRE (CABINA) (REDUCCION DE OLORES)	175-2832	1	CALEFACCIÓN DE LA CABINA (GR)	700
FILTRO DE AIRE DE CABINA (ESTANDAR)	107-0266	1	CALEFACCIÓN DE LA CABINA (GR)	700
HOJA DE LIMPIAPARABRISAS (CONJ) (FRENTE)	6V-5851	1	LIMPIAPARABRISAS DE LA VENTANA (GR)	786
HOJA DE LIMPIAPARABRISAS (CONJ) (PARTE TRASERA)	5C-8811	1	LIMPIAPARABRISAS DE LA VENTANA (GR)	786
HOJA DE LIMPIAPARABRISAS (CONJ) (PUERTA IZQUIERDA)	6V-5849	4	LIMPIAPARABRISAS DE LA VENTANA (GR)	786
LÁMPARA DE LUZ ROJA	171-1033	1	INSTRUMENTOS (GR)	708
LÁMPARA (24 VOLTIOS)	7N-1996	1	INSTRUMENTOS (GR)	708
LENTE-ROJO	6T-7058	1	INSTRUMENTOS (GR)	708
LUCES DE SEÑALES-BASE	3T-0304	1	INSTRUMENTOS (GR)	708
TAPA CON RESPIRADERO	8E-8292	1	TANQUE DEL LAVAPARABRISAS (GR)	760
IMPLEMENTOS				
CONEXIÓN DE ENGRASE	3B-8489	2	BASTIDOR DEL DESGARRADOR (GR)	598
		2	JUEGO DE TORNILLERÍA, JUNTAS Y CALCES	602
		2	JUEGO DE TORNILLERÍA, JUNTAS Y CALCES	604
CONEXIÓN DE ENGRASE (ROSCA DE 1/8-27)	3B-8489	2	BASTIDOR DEL DESGARRADOR (GR)	594
		2	BASTIDOR DEL DESGARRADOR (GR)	596
		2	MONTAJE DE CILINDRO (GR)	613
		1	SOPORTE DE LA HOJA TOPADORA	584
MOTOR BÁSICO				
CONEXIÓN DE ENGRASE	3B-8485	1	AJUSTADOR DE CORREA (GR)	8
CONEXIÓN DE ENGRASE (ROSCA 1/8-27)(45 GRADO)	3B-8485	1	IMPULSOR DE VENTILADOR (GR)	32
JUEGO DE CORREAS TRAPEZOIDALES (INCLUYE 4 CORREAS)	123-5889	1	IMPULSOR DE VENTILADOR (GR)	35
	180-4526	1	IMPULSOR DE VENTILADOR (GR)	32
RESPIRADERO (CONJ) (CÁRTER DEL MOTOR)	4N-4668	2	TAPA DEL MECANISMO DE VÁLVULAS (GR)	16
TAPA CONTRA EL POLVO	6V-0852	1	TAPÓN DEL BLOQUE MOTOR (GR)	54
TAPON DE DRENAJE DE ACEITE	109-5839	1	CÁRTER - COLECTOR DEL (GR)	50

PIEZAS DE MANTENIMIENTO

DESCRIPCION	NUMERO DE PIEZA	CANT	SE UTILIZA EN	PAGINA
SISTEMA DE ADMISIÓN Y ESCAPE DE AIRE				
ELEMENTO DEL FILTRO DE AIRE (CONJ) (PRIMARIO)	6I-2505	1	FILTRO DE AIRE (GR)	128
ELEMENTO DEL FILTRO DE AIRE (CONJ) (SECUNDARIO)	6I-2506	1	FILTRO DE AIRE (GR)	128
EMPAQUETADURA DE MULTIPLE DE ESCAPE	129-9452	12	MÚLTIPLE DE ESCAPE (GR)	140
TAPA CONTRA LA LLUVIA (CONJ)	7S-4411	1	EXPULSOR DE POLVO (GR)	130
		1	EXPULSOR DE POLVO (GR)	131
SISTEMA DE COMBUSTIBLE				
CANDADO (GR)	5P-8502	1	COMBUSTIBLE - TANQUE DE (GR)	184
COLADOR DEL TANQUE DE COMBUSTIBLE	9P-7121	1	COMBUSTIBLE - TANQUE DE (GR)	184
EMPAQUETADURA (BOMBA DE CEBADO DE COMBUSTIBLE)	1P-0436	1	TUBERÍAS DEL FILTRO DE COMBUSTIBLE	172
FILTRO (BOMBA HIDRAULICA DE LA UNIDAD DEL INYECTOR)	125-5835	1	MANDO DE BOMBA HIDRÁULICA INYECTORA (GR)	162
FILTRO (CONJ) (SEPARADOR DE AGUA Y COMBUSTIBLE)	1R-0769	1	FILTRO DE COMBUSTIBLE Y SEPARADOR DE AGUA (GR)	167
FILTRO DE COMBUSTIBLE (CONJ)	1R-0749	2	TUBERÍAS DEL FILTRO DE COMBUSTIBLE	172
LLAVE	5P-8500	1	COMBUSTIBLE - TANQUE DE (GR)	184
TAPA CONTRA EL POLVO	9D-0630	1	ADAPTADOR DE LLENADO RÁPIDO DE COMBUSTIBLE (GR)	150
		1	ADAPTADOR DE LLENADO RÁPIDO DE COMBUSTIBLE (GR)	152
		1	ADAPTADOR DE LLENADO RÁPIDO DE COMBUSTIBLE (GR)	154
		1	ADAPTADOR DE LLENADO RÁPIDO DE COMBUSTIBLE (GR)	156
TAPA DEL TANQUE DE COMBUSTIBLE (CONJ)	7X-7700	1	COMBUSTIBLE - TANQUE DE (GR)	185
SISTEMA DE ENFRIAMIENTO				
FILTRO (BOMBA DE AGUA)	111-2721	1	BOMBA DE AGUA (GR)	104
REGULADOR DE TEMPERATURA DEL AGUA (92 GR C)	4W-4794	2	TEMPERATURA - REGULADOR DE (GR)	112
		2	TEMPERATURA - REGULADOR DE (GR)	114
SELLO DE LABIO	3S-9643	2	TEMPERATURA - REGULADOR DE (GR)	112
		2	TEMPERATURA - REGULADOR DE (GR)	114
TAPA	111-7421	2	RADIADOR (GR)	110
TAPA CONTRA EL POLVO	157-0670	1	TUBERÍAS DEL AGUA (GR)	95
TAPA DE RADIADOR (CONJ)	031-1119	1	TANQUE DE REFRIGERANTE (GR)	116
TAPÓN DE DRENAJE	4B-7739	1	TUBERÍAS DEL AGUA (GR)	100
SISTEMA DE FRENOS Y DIRECCIÓN				
TAPA CONTRA EL POLVO	6V-0852	4	VÁLVULA DE DIRECCIÓN Y MONTAJE (GR)	471
TAPA PULSADORA	144-0331	1	SOPORTE DE CONTROL (GR)	470

PIEZAS DE MANTENIMIENTO

DESCRIPCION	NUMERO DE PIEZA	CANT	SE UTILIZA EN	PAGINA
SISTEMA DE LUBRICACIÓN				
FILTRO DE ACEITE DEL MOTOR (CONJ)	1R-0716	2	FILTRO DE ACEITE DEL MOTOR (GR)	68
REJILLA ACAMPANADA (CONJ)	4N-0913	1	TUBERÍAS DE ACEITE DEL MOTOR (GR)	74
TAPA	110-8318	1	CAMBIO RÁPIDO DE ACEITE (GR)	78
TAPA CONTRA EL POLVO	8C-3445	1	FILTRO DE ACEITE DEL MOTOR (GR)	68
TAPA DE LLENADO (CONJ)	6N-2206	1	TUBO DE LLENADO DE ACEITE (GR)	66
SISTEMA ELÉCTRICO Y DE ARRANQUE				
ABERTURA DE DESCARGA (CONJ)	7N-0060	6	BATERÍA Y CABLES (GR)	194
ATOMIZADOR DE ETER (CONJ)	7J-5606	1	AUXILIAR DE ARRANQUE CON ÉTER (GR)	266
BATERÍA (12 VOLTIOS/SECO)	9X-9730	2	ARRANQUE A TEMPERATURA BAJA (CONFIG)	269
		2	BATERÍA Y CABLES (GR)	194
CONVERTIDOR DE VOLTAJE (24 VOLTIOS A 12 VOLTIOS)(25 AMPERIOS)	3E-8646	1	CONVERTIDOR ELÉCTRICO (GR)	217
CORREA	218-9823	1	CARGA - ALTERNADOR DE (GR)	189
CRISTAL (LUZ DE TECHO)	7T-0020	1	LÁMPARA DEL TECHO (GR)	227
DISYUNTOR (CONJ) (10 A) (FRENO DE EMBRAGUE ELECTRONICO)	6T-3642	1	CABLES DE LA CONSOLA (GR)	292
DISYUNTOR (CONJ) (10 A) (INTERRUPTOR DE LLAVE DE ARRANQUE)	6T-3642	1	CABLES DE LA CONSOLA (GR)	292
DISYUNTOR (CONJ) (15 A) (FAROLES DELANTEROS)	3T-2662	1	CABLES DE LA CONSOLA (GR)	292
DISYUNTOR (CONJ) (15 A) (IMPLEMENTO)	6T-3643	1	CABLES DE LA CONSOLA (GR)	292
DISYUNTOR (CONJ) (15 A) (MOTOR)	6T-3643	1	CABLES DE LA CONSOLA (GR)	292
DISYUNTOR (CONJ) (15 A) (VENTILADOR SOPLADOR)	6T-3643	1	CABLES DE LA CONSOLA (GR)	292
ELEMENTO DEL CALENTADOR DEL AGUA DE LAS CAMISAS	6T-3764	2	AGUA DE LAS CAMISAS - CALENTADOR DEL (GR)	225
ELEMENTO DEL CALENTADOR DEL AGUA DE LAS CAMISAS (120 VOLTIOS/1500 VATIOS)	9G-6655	2	AGUA DE LAS CAMISAS - CALENTADOR DEL (GR)	224
ESCOBILLA (CONJ)	3T-9524	6	MOTOR DE ARRANQUE ELÉCTRICO (GR)	282
ESCOBILLA (CONJ) (MOTOR DE ARRANQUE)	3T-9524	6	MOTOR DE ARRANQUE ELÉCTRICO (GR)	272
FILTRO ESPONJOSO	111-4402	1	BATERÍA Y CABLES (GR)	192
FUSIBLE (10 A)	9W-1442	10	CABLES DE LA CONSOLA (GR)	293
FUSIBLE (15 A)	9W-1441	3	CABLES DE LA CONSOLA (GR)	293
FUSIBLE (20 A)	9W-1446	3	CABLES DE LA CONSOLA (GR)	293
FUSIBLE (30 A)	8T-9636	2	CONVERTIDOR ELÉCTRICO (GR)	217
JUEGO DE TERMINAL	3N-3763	1	MOTOR DE ARRANQUE ELÉCTRICO (GR)	283
JUEGO DE TERMINAL (MOTOR DE ARRANQUE)	3N-3763	1	MOTOR DE ARRANQUE ELÉCTRICO (GR)	273
LÁMPARA DE FARO DELANTERO (24 VOLTIOS) (REFLECTOR)	9X-3463	1	REFLECTOR (GR)	229

PIEZAS DE MANTENIMIENTO

DESCRIPCION	NUMERO DE PIEZA	CANT	SE UTILIZA EN	PAGINA
LÁMPARA DE FARO DELANTERO (24 VOLTIOS) (65 VATIOS, REFLECTOR)	9X-3463	1	REFLECTOR (GR)	228
LÁMPARA (24 VOLTIOS)	3E-8825	2	CABLES DE LA PLATAFORMA (GR)	299
	7N-1996	1	CABLES DE LA PLATAFORMA (GR)	298
	7N-5876	4	CABLES DE LA PLATAFORMA (GR)	298
LÁMPARA (24 VOLTIOS) (CÚPULA)	7N-9943	1	LÁMPARA DEL TECHO (GR)	227
LÁMPARA (28 VOLTIOS)	123-9294	1	CONTROL ELECTRÓNICO (GR)	208
		1	CONTROL ELECTRÓNICO (GR)	210
LENTE-ROJO	6T-7058	1	CABLES DE LA PLATAFORMA (GR)	298
LLAVE (DESCONECTAR BATERIA)	8H-5306	1	DISYUNTOR (GR)	286
LUCES DE SEÑALES-BASE	3T-0304	1	CABLES DE LA PLATAFORMA (GR)	298
PORTAESCOBILLAS (CONJ)	6T-0363	6	MOTOR DE ARRANQUE ELÉCTRICO (GR)	283
PORTAESCOBILLAS (CONJ) (ESCOBILLAS DEL MOTOR DE ARRANQUE)	6T-0363	6	MOTOR DE ARRANQUE ELÉCTRICO (GR)	272
RESORTE	3T-9494	6	MOTOR DE ARRANQUE ELÉCTRICO (GR)	283
RESORTE (ESCOBILLAS DEL MOTOR DE ARRANQUE)	3T-9494	1	MOTOR DE ARRANQUE ELÉCTRICO (GR)	272
		6	MOTOR DE ARRANQUE ELÉCTRICO (GR)	273
TAPA	9L-6770	1	CARGA - ALTERNADOR DE (GR)	190
VIDRIO (CONJ) (REFLECTOR)	158-0248	1	REFLECTOR (GR)	228
		1	REFLECTOR (GR)	229

PIEZAS DE MANTENIMIENTO

DESCRIPCION	NUMERO DE PIEZA	CANT	SE UTILIZA EN	PAGINA
SISTEMA HIDRÁULICO				
COLADOR (CONJ)	5D-7927	1	TANQUE Y FILTRO HIDRÁULICOS (GR)	542
CONEXIÓN DE ENGRASE	3B-8489	1	CILINDRO DE INCLINACIÓN DE LA HOJA TOPADORA (GR)	488
		1	CILINDRO DE INCLINACIÓN DE LA HOJA TOPADORA (GR)	490
		1	CILINDRO DE INCLINACIÓN DE LA HOJA TOPADORA (GR)	492
		2	CILINDRO DE LEVANTAMIENTO DEL DESGARRADOR (GR)	494
CONEXIÓN DE ENGRASE (ROSCA DE 1/8-27)	3B-8489	2	CILINDRO DE INCLINACIÓN DEL DESGARRADOR (GR)	500
		2	CILINDRO DE LEVANTAMIENTO DEL DESGARRADOR (GR)	496
ELEMENTO DE FILTRO DE ACEITE (CONJ) (HIDRAULICO)	139-1537	1	TANQUE Y FILTRO HIDRÁULICOS (GR)	542
ELEMENTO DE FILTRO DE ACEITE (CONJ) (HIDRAULICO/FLUJO INVERSO)	1R-0735	2	TANQUE Y FILTRO HIDRÁULICOS (GR)	542
ELEMENTO DE FILTRO HIDRÁULICO (VÁLVULA HIDRÁULICA/ELÉCTRICA)	134-0964	1	FILTRO DE ACEITE (GR)	502
PANTALLA (CONJ)	9T-7571	1	TANQUE Y FILTRO HIDRÁULICOS (GR)	542
TAPA CONTRA EL POLVO	6V-0852	2	BOMBA - TUBERÍAS DE (GR)	516
		1	TUBERÍAS CON SERVOMANDO (GR)	510
		4	TUBERÍAS DEL DESGARRADOR (GR)	526
		1	TUBERIAS DEL MOTOR (GR)	506
		2	VÁLVULA DE COMBINACIÓN (GR)	553
		1	VÁLVULA PILOTO (GR)	566
		1	VÁLVULA PILOTO (GR)	568
TAPA DEL TUBO DE LLENADO	7H-1447	1	TANQUE Y FILTRO HIDRÁULICOS (GR)	542

PIEZAS DE MANTENIMIENTO

DESCRIPCION	NUMERO DE PIEZA	CANT	SE UTILIZA EN	PAGINA
TREN DE FUERZA				
ELEMENTO DE FILTRO DE ACEITE (CONJ)	132-8876	1	FILTRO DE ACEITE (GR)	324
PANTALLA (CONJ) (ENTRADA DE BOMBA DE ACEITE DE TREN DE FUERZA)	9P-9555	1	TUBERÍAS DE ACEITE DEL TREN DE FUERZA (GR)	338
REJILLA DE SUCCIÓN	8S-9130	1	CAJA Y PIEZAS DE LOS PLANETARIOS	306
		1	CONVERTIDOR DE PAR (GR)	358
RESPIRADERO (TREN DE FUERZA)	9G-5127	1	TUBERÍAS DE ACEITE DEL TREN DE FUERZA (GR)	338
TAPA CONTRA EL POLVO	6V-0852	3	CAJA Y PIEZAS DE LOS PLANETARIOS	306
		2	PRIORIDAD - VÁLVULA DE (GR)	374
		1	TUBERÍAS DE ACEITE DEL TREN DE FUERZA (GR)	338
		1	VÁLVULA DE ALIVIO (GR)	376
		1	VALVULA PILOTO Y MONTAJE (GR)	366
	8C-3447	1	TUBERÍAS DE ACEITE DEL TREN DE FUERZA (GR)	338
TAPA DE LLENADO (CONJ) (ACEITE DEL TREN DE FUERZA)	6N-2985	1	TUBERÍAS DE ACEITE DEL TREN DE FUERZA (GR)	338
TAPÓN MAGNÉTICO	6V-3298	1	MANDO final (GR)	326
		1	MANDO final (GR)	330
		1	MANDO final (GR)	334
TREN DE RODAJE				
CONEXIÓN DE ENGRASE (ROSCA DE 1/8-27)	3B-8489	2	BARRA COMPENSADORA (GR)	430
		2	BARRA COMPENSADORA (GR)	432
RESPIRADERO	198-7711	1	GRUPO DE LUBRICACIÓN DE BARRA ESTABILIZADORA	440
TAPA DE NIVEL DE ACEITE (CONJ)	9W-8277	1	LUBRICACIÓN DE EJE PIVOTE (GR)	442
TAPA DEL TUBO DE LLENADO DE ACEITE (CONJ)	5L-2952	1	GRUPO DE LUBRICACIÓN DE BARRA ESTABILIZADORA	440
TAPÓN DE DRENAJE	4T-2069	6	BASTIDOR TELESCÓPICO DEL RESORTE TENSOR (GR)	434

PEÇAS DE MANUTENÇÃO

DESCRIÇÃO	NÚMERO DE PEÇA	QUANT	UTILIZADA EM	PÁGINA
ACESSÓRIOS				
GRAXEIRA	3B-8489	2	ARMAÇÃO DO RIPER	598
		2	JOGO DE GAXETA	602
		2	JOGO DE GAXETA	604
GRAXEIRA (ROSCA 1/8-27 POL)	3B-8489	2	ARMAÇÃO DO RIPER	594
		2	ARMAÇÃO DO RIPER	596
		2	MONTAGEM - CILINDRO	613
		1	TIRANTE DA LÂMINA	584
CHASSI E CARROCERIA				
TAMPÃO	106-8187	1	CAIXA E CHASSI	382
MATERIAL RODANTE				
BUJÃO DO DRENO	4T-2069	6	ARMAÇÃO TELESCÓPICA DA MOLA TENSORA	434
GRAXEIRA (ROSCA 1/8-27 POL)	3B-8489	2	BARRA EQUALIZADORA	430
		2	BARRA EQUALIZADORA	432
RESPIRO	198-7711	1	LUBRIFICAÇÃO-BARRA EQUALIZADORA	440
TAMPA - BOCAL DE ENCHIMENTO DE ÓLEO	5L-2952	1	LUBRIFICAÇÃO-BARRA EQUALIZADORA	440
TAMPA - NÍVEL DO ÓLEO	9W-8277	1	EIXO PIVÔ - LUBRIFICAÇÃO	442
MOTOR BÁSICO				
BUJÃO - DRENAGEM DO ÓLEO	109-5839	1	CÁRTER DO ÓLEO DO MOTOR	50
GRAXEIRA	3B-8485	1	AJUSTADOR DE CORREIAS	8
GRAXEIRA (ROSCA 1/8-27 45 GRAUS)	3B-8485	1	COMANDO DO VENTILADOR	32
JOGO DE CORREIAS EM V (INCLUI 4 CORREIAS)	123-5889	1	COMANDO DO VENTILADOR	35
	180-4526	1	COMANDO DO VENTILADOR	32
RESPIRO (CÁRTER DO MOTOR)	4N-4668	2	TAMPA - MECANISMO DAS VÁLVULAS	16
TAMPA CONTRA POEIRA	6V-0852	1	BUJÃO DO BLOCO DO CILINDRO	54

PEÇAS DE MANUTENÇÃO

DESCRIÇÃO	NÚMERO DE PEÇA	QUANT	UTILIZADA EM	PÁGINA
POSTO DO OPERADOR				
CINTO DE SEGURANÇA	183-3648	1	ASSENTO	750
		1	ASSENTO	751
CORREIA EM V	2S-2743	1	COMPRESSOR DE REFRIGERANTE	676
DISJUNTOR AUTOMÁTICO DE CIRCUITO (15 A)	6T-3643	1	TUBOS - AR CONDICIONADO	712
FILTRO - AR (CABINE) (ALTA EFICIÊNCIA)	175-2839	1	AQUECEDOR DA CABINE	700
	175-2841	1	AQUECEDOR DA CABINE	700
FILTRO - AR (CABINE) (PADRÃO)	7T-1890	1	AQUECEDOR DA CABINE	700
FILTRO - AR (CABINE) (REDUÇÃO DE ODOR)	175-2832	1	AQUECEDOR DA CABINE	700
FILTRO DE AR DE CABINA (PADRÃO)	107-0266	1	AQUECEDOR DA CABINE	700
LÂMINA DO LIMPADOR DE PÁRA-BRISA (DIANTEIRO)	6V-5851	1	LIMPADOR DO VIDRO	786
LÂMINA DO LIMPADOR DE PÁRA-BRISA (PORTA - LADO ESQUERDO)	6V-5849	4	LIMPADOR DO VIDRO	786
LÂMINA DO LIMPADOR DE PÁRA-BRISA (TRASEIRO)	5C-8811	1	LIMPADOR DO VIDRO	786
LÂMPADA VERMELHA	171-1033	1	INSTRUMENTOS	708
LÂMPADA (24 V)	7N-1996	1	INSTRUMENTOS	708
LENTE VERMELHA	6T-7058	1	INSTRUMENTOS	708
SUPORTE DA LAMPADA INDICADORA	3T-0304	1	INSTRUMENTOS	708
TAMPA COM RESPIRO	8E-8292	1	TANQUE - LAVADOR DE JANELA	760
SISTEMA DA ADMISSÃO DE AR E DE ESCAPE				
ELEMENTO DO FILTRO DE AR (PRIMÁRIO)	6I-2505	1	PURIFICADOR DE AR	128
ELEMENTO DO FILTRO DE AR (SECUNDÁRIO)	6I-2506	1	PURIFICADOR DE AR	128
JUNTA - COLETOR DE ESCAPE	129-9452	12	COLETOR DE ESCAPE	140
PROTETOR CONTRA CHUVA	7S-4411	1	EJETOR DE POEIRA	130
		1	EJETOR DE POEIRA	131
SISTEMA DE ARREFECIMENTO				
BUJÃO DO DRENO	4B-7739	1	TUBOS - ÁGUA	100
FILTRO (BOMBA D'ÁGUA)	111-2721	1	BOMBA DE ÁGUA	104
REGULADOR DE TEMPERATURA DA ÁGUA (92 GRAUS CENTÍGRADOS)	4W-4794	2	TERMOSTATO	112
		2	TERMOSTATO	114
TAMPA	111-7421	2	RADIADOR	110
TAMPA - RADIADOR	031-1119	1	TANQUE - LÍQUIDO ARREFECEDOR	116
TAMPA CONTRA POEIRA	157-0670	1	TUBOS - ÁGUA	95
VEDAÇÃO	3S-9643	2	TERMOSTATO	112
		2	TERMOSTATO	114

PEÇAS DE MANUTENÇÃO

DESCRIÇÃO	NÚMERO DE PEÇA	QUANT	UTILIZADA EM	PÁGINA
SISTEMA DE COMBUSTÍVEL				
CADEADO	5P-8502	1	TANQUE DE COMBUSTÍVEL	184
CHAVE	5P-8500	1	TANQUE DE COMBUSTÍVEL	184
FILTRO - COMBUSTÍVEL	1R-0749	2	TUBOS - FILTRO DO COMBUSTÍVEL	172
FILTRO (BOMBA HIDRÁULICA DA UNIDADE INJETORA)	125-5835	1	COMANDO DA BOMBA HIDRÁULICA DO INJETOR	162
FILTRO (SEPARADOR DE ÁGUA E COMBUSTÍVEL)	1R-0769	1	FILTRO DE COMBUSTÍVEL E SEPARADOR DE ÁGUA	167
JUNTA (BOMBA DE ESCORVA DE COMBUSTÍVEL)	1P-0436	1	TUBOS - FILTRO DO COMBUSTÍVEL	172
PENEIRA DO TANQUE DE COMBUSTÍVEL	9P-7121	1	TANQUE DE COMBUSTÍVEL	184
TAMPA CONTRA POEIRA	9D-0630	1	ADAPTADOR - ABASTECIMENTO RÁPIDO DE COMBUSTÍVEL	150
		1	ADAPTADOR - ABASTECIMENTO RÁPIDO DE COMBUSTÍVEL	152
		1	ADAPTADOR - ABASTECIMENTO RÁPIDO DE COMBUSTÍVEL	154
		1	ADAPTADOR - ABASTECIMENTO RÁPIDO DE COMBUSTÍVEL	156
TAMPA DO TANQUE DE COMBUSTÍVEL	7X-7700	1	TANQUE DE COMBUSTÍVEL	185
SISTEMA DE DIREÇÃO E DE FREIO				
CAPA DO BOTÃO	144-0331	1	SUPORTE - CONTROLE	470
TAMPA CONTRA POEIRA	6V-0852	4	VÁLVULA DA DIREÇÃO E MONTAGEM	471
SISTEMA DE LUBRIFICAÇÃO				
FILTRO - ÓLEO DO MOTOR	1R-0716	2	FILTRO - ÓLEO DO MOTOR	68
TAMPA	110-8318	1	ÓLEO - ARRANJO PARA TROCA RÁPIDA	78
TAMPA - BOCAL DE ENCHIMENTO	6N-2206	1	BOCAL DE ENCHIMENTO DE ÓLEO DO MOTOR	66
TAMPA CONTRA POEIRA	8C-3445	1	FILTRO - ÓLEO DO MOTOR	68
TELA	4N-0913	1	TUBOS - ÓLEO DO MOTOR	74
SISTEMA ELÉTRICO E DE PARTIDA				
ATOMIZADOR - ÉTER	7J-5606	1	AUXILIAR DE PARTIDA A ÉTER	266
BATERIA (12 VOLT/SECO)	9X-9730	2	BATERIA E CABOS / FIOS ELÉTRICOS	194
		2	PARTIDA EM TEMPERATURAS BAIXAS	269
CHAVE (DESCONECTAR A BATERIA)	8H-5306	1	CHAVE GERAL	286
CONVERSOR DE POTÊNCIA (24 VOLTS A 12 VOLTS)(25 AMP)	3E-8646	1	CONVERSOR ELÉTRICO	217
CORREIA	218-9823	1	ALTERNADOR DE CORRENTE	189
DISJUNTOR AUTOMÁTICO DE CIRCUITO (10 A) (FREIO/EMBREAGEM ELETRÔNICOS)	6T-3642	1	CABOS/FIOS ELÉTRICOS DO CONSOLE	292
DISJUNTOR AUTOMÁTICO DE CIRCUITO (10 A) (INTERRUPTOR DA CHAVE DE PARTIDA)	6T-3642	1	CABOS/FIOS ELÉTRICOS DO CONSOLE	292
DISJUNTOR AUTOMÁTICO DE CIRCUITO (15 A) (FARÓIS DIANTEIROS)	3T-2662	1	CABOS/FIOS ELÉTRICOS DO CONSOLE	292
DISJUNTOR AUTOMÁTICO DE CIRCUITO (15 A) (IMPLEMENTO)	6T-3643	1	CABOS/FIOS ELÉTRICOS DO CONSOLE	292

PEÇAS DE MANUTENÇÃO

DESCRIÇÃO	NÚMERO DE PEÇA	QUANT	UTILIZADA EM	PÁGINA
DISJUNTOR AUTOMÁTICO DE CIRCUITO (15 A) (MOTOR)	6T-3643	1	CABOS/FIOS ELÉTRICOS DO CONSOLE	292
DISJUNTOR AUTOMÁTICO DE CIRCUITO (15 A) (VENTILADOR)	6T-3643	1	CABOS/FIOS ELÉTRICOS DO CONSOLE	292
ELEMENTO - AQUECEDOR DE ÁGUA DA CAMISA	6T-3764	2	AQUECEDOR DA ÁGUA DO MOTOR	225
ELEMENTO - AQUECEDOR DE ÁGUA DA CAMISA (120 VOLTS/1500 WATTS)	9G-6655	2	AQUECEDOR DA ÁGUA DO MOTOR	224
ESCOVA	3T-9524	6	MOTOR ELÉTRICO DE PARTIDA	282
ESCOVA (MOTOR DE PARTIDA)	3T-9524	6	MOTOR ELÉTRICO DE PARTIDA	272
FAROL DIANTEIRO (24 V) (FAROL)	9X-3463	1	LÂMPADA - FAROL	229
FAROL DIANTEIRO (24 V) (65 WATTS)(FAROL)	9X-3463	1	LÂMPADA - FAROL	228
FILTRO - ESPUMA	111-4402	1	BATERIA E CABOS / FIOS ELÉTRICOS	192
FUSÍVEL (10 A)	9W-1442	10	CABOS/FIOS ELÉTRICOS DO CONSOLE	293
FUSÍVEL (15 A)	9W-1441	3	CABOS/FIOS ELÉTRICOS DO CONSOLE	293
FUSÍVEL (20 A)	9W-1446	3	CABOS/FIOS ELÉTRICOS DO CONSOLE	293
FUSÍVEL (30 A)	8T-9636	2	CONVERSOR ELÉTRICO	217
JOGO DE TERMINAL	3N-3763	1	MOTOR ELÉTRICO DE PARTIDA	283
JOGO DE TERMINAL (MOTOR DE PARTIDA)	3N-3763	1	MOTOR ELÉTRICO DE PARTIDA	273
LÂMPADA (24 V)	3E-8825	2	CABOS/FIOS ELÉTRICOS - PLATAFORMA	299
	7N-1996	1	CABOS/FIOS ELÉTRICOS - PLATAFORMA	298
	7N-5876	4	CABOS/FIOS ELÉTRICOS - PLATAFORMA	298
LÂMPADA (24 V) (TETO)	7N-9943	1	LÂMPADA - TETO	227
LÂMPADA (28 V)	123-9294	1	CONTROLE ELETRÔNICO	208
		1	CONTROLE ELETRÔNICO	210
LENTE (FAROL)	158-0248	1	LÂMPADA - FAROL	228
		1	LÂMPADA - FAROL	229
LENTE (LÂMPADA DO TETO)	7T-0020	1	LÂMPADA - TETO	227
LENTE VERMELHA	6T-7058	1	CABOS/FIOS ELÉTRICOS - PLATAFORMA	298
MOLA	3T-9494	6	MOTOR ELÉTRICO DE PARTIDA	283
MOLA (ESCOVA DO MOTOR DE PARTIDA)	3T-9494	1	MOTOR ELÉTRICO DE PARTIDA	272
		6	MOTOR ELÉTRICO DE PARTIDA	273
RESPIRO	7N-0060	6	BATERIA E CABOS / FIOS ELÉTRICOS	194
SUPORTE - ESCOVA	6T-0363	6	MOTOR ELÉTRICO DE PARTIDA	283
SUPORTE - ESCOVA (ESCOVA DO MOTOR DE PARTIDA)	6T-0363	6	MOTOR ELÉTRICO DE PARTIDA	272
SUPORTE DA LAMPADA INDICADORA	3T-0304	1	CABOS/FIOS ELÉTRICOS - PLATAFORMA	298
TAMPA	9L-6770	1	ALTERNADOR DE CORRENTE	190

PEÇAS DE MANUTENÇÃO

DESCRIÇÃO	NÚMERO DE PEÇA	QUANT	UTILIZADA EM	PÁGINA
SISTEMA HIDRÁULICO				
ELEMENTO FILTRANTE - ÓLEO (FLUXO HIDRÁULICO/REVERSO)	1R-0735	2	TANQUE HIDRÁULICO E FILTRO	542
ELEMENTO FILTRANTE - ÓLEO (HIDRÁULICO)	139-1537	1	TANQUE HIDRÁULICO E FILTRO	542
FILTRO - ELEMENTO HIDRÁULICO (VÁLVULA HIDRÁULICA/ELÉTRICA)	134-0964	1	FILTRO - ÓLEO	502
GRAXEIRA	3B-8489	1	CILINDRO - INCLINAÇÃO DA LÂMINA	488
		1	CILINDRO - INCLINAÇÃO DA LÂMINA	490
		1	CILINDRO - INCLINAÇÃO DA LÂMINA	492
		2	CILINDRO DE LEVANTAMENTO DO RIPER	494
GRAXEIRA (ROSCA 1/8-27 POL)	3B-8489	2	CILINDRO DE INCLINAÇÃO DO RÍPER	500
		2	CILINDRO DE LEVANTAMENTO DO RIPER	496
TAMPA - BOCAL DE ENCHIMENTO	7H-1447	1	TANQUE HIDRÁULICO E FILTRO	542
TAMPA CONTRA POEIRA	6V-0852	2	TUBOS - BOMBA	516
		1	TUBOS - CIRCUITO PILOTO	510
		1	TUBOS - MOTOR	506
		4	TUBOS - RIPER	526
		2	VÁLVULA COMBINADA	553
		1	VÁLVULA DE CONTROLE PILOTO	566
		1	VÁLVULA DE CONTROLE PILOTO	568
TELA FILTRANTE	5D-7927	1	TANQUE HIDRÁULICO E FILTRO	542
	9T-7571	1	TANQUE HIDRÁULICO E FILTRO	542
TREM DE FORÇA				
BUJÃO MAGNÉTICO	6V-3298	1	COMANDO final	326
		1	COMANDO final	330
		1	COMANDO final	334
ELEMENTO FILTRANTE - ÓLEO	132-8876	1	FILTRO - ÓLEO	324
RESPIRO (TREM DE FORÇA)	9G-5127	1	TUBOS - ÓLEO DA TRANSMISSÃO	338
TAMPA - BOCAL DE ENCHIMENTO (ÓLEO DO TREM DE FORÇA)	6N-2985	1	TUBOS - ÓLEO DA TRANSMISSÃO	338
TAMPA CONTRA POEIRA	6V-0852	3	CARCAÇA DAS ENGRENAGENS PLANETÁRIAS E COMPONENTES	306
		1	TUBOS - ÓLEO DA TRANSMISSÃO	338
		1	VÁLVULA DE ALÍVIO	376
		2	VÁLVULA DE PRIORIDADE	374
		1	VÁLVULA PILOTO E MONTAGEM	366
	8C-3447	1	TUBOS - ÓLEO DA TRANSMISSÃO	338
TELA DE SUCÇÃO	8S-9130	1	CARCAÇA DAS ENGRENAGENS PLANETÁRIAS E COMPONENTES	306
		1	CONVERSOR DE TORQUE	358
TELA FILTRANTE (ENTRADA DA BOMBA DE ÓLEO DO TREM DE FORÇA)	9P-9555	1	TUBOS - ÓLEO DA TRANSMISSÃO	338

WARTUNGSTEILE

BESCHREIBUNG	ERSATZTEIL-NUMMER	MENGE	VERWENDET IN	SEITE
ARBEITSGERÄTE				
SCHMIERNIPPEL	3B-8489	2	AUFREISSERRAHMEN	598
		2	DICHTUNGSSATZ	602
		2	DICHTUNGSSATZ	604
SCHMIERNIPPEL (1/8-27-GEWINDE)	3B-8489	2	AUFREISSERRAHMEN	594
		2	AUFREISSERRAHMEN	596
		1	SCHILDSTREBE	584
		2	ZYLINDERAUFHÄNGUNG	613
ELEKTRISCHE ANLAGE UND STARTSYSTEM				
ABDECKGLAS (ARBEITSLEUCHTE)	158-0248	1	ARBEITSLEUCHTEN	228
		1	ARBEITSLEUCHTEN	229
ABDECKGLAS (FAHRERHAUS-INNENLEUCHTE)	7T-0020	1	FAHRERHAUSBELEUCHTUNG	227
ANSCHLUSSKLEMMENSATZ	3N-3763	1	STARTERMOTOR	283
ANSCHLUSSKLEMMENSATZ (STARTERMOTOR)	3N-3763	1	STARTERMOTOR	273
ÄTHERSPRÜHGERÄT	7J-5606	1	ÄTHERSTARTHILFE	266
BATTERIE (12 V/TROCKEN)	9X-9730	2	BATTERIE UND VERDRAHTUNG	194
		2	KALTWETTERSTARTANLAGE	269
BÜRSTENHALTER	6T-0363	6	STARTERMOTOR	283
BÜRSTENHALTER (STARTERMOTORBÜRSTE)	6T-0363	6	STARTERMOTOR	272
BÜRSTENSATZ	3T-9524	6	STARTERMOTOR	282
BÜRSTENSATZ (STARTERMOTOR)	3T-9524	6	STARTERMOTOR	272
ELEKTR. UMFORMER (24 V BIS 12 V)(25 A)	3E-8646	1	ELEKTR. UMFORMER	217
ENTLÜFTUNGSVORRICHTUNG	7N-0060	6	BATTERIE UND VERDRAHTUNG	194
FEDER	3T-9494	6	STARTERMOTOR	283
FEDER (STARTERMOTORBÜRSTE)	3T-9494	1	STARTERMOTOR	272
		6	STARTERMOTOR	273
GRUNDRAHMEN - ANZEIGELEUCHTE	3T-0304	1	FAHRERPLATTFORMVERDRAHTUNG	298
KAPPE	9L-6770	1	DREHSTROMGENERATOR	190
KEILRIEMEN	218-9823	1	DREHSTROMGENERATOR	189
LEUCHTE (24 V)	3E-8825	2	FAHRERPLATTFORMVERDRAHTUNG	299
	7N-1996	1	FAHRERPLATTFORMVERDRAHTUNG	298
	7N-5876	4	FAHRERPLATTFORMVERDRAHTUNG	298
LEUCHTE (24 V) (FAHRERHAUSDACH)	7N-9943	1	FAHRERHAUSBELEUCHTUNG	227
LEUCHTE (28 V)	123-9294	1	STEUERUNG, ELEKTRON.	208
		1	STEUERUNG, ELEKTRON.	210
LINSE - ROT	6T-7058	1	FAHRERPLATTFORMVERDRAHTUNG	298
SCHAUMFILTER	111-4402	1	BATTERIE UND VERDRAHTUNG	192
SCHEINWERFER (24 V) (ARBEITSSCHEINWERFER)	9X-3463	1	ARBEITSLEUCHTEN	229
SCHEINWERFER (24 V) (65 W)(ARBEITSSCHEINWERFER)	9X-3463	1	ARBEITSLEUCHTEN	228
SCHLÜSSEL (HAUPTSCHALTER)	8H-5306	1	TRENNSCHALTER	286
SICHERUNG (10 A)	9W-1442	10	KONSOLENVERDRAHTUNG	293
SICHERUNG (15 A)	9W-1441	3	KONSOLENVERDRAHTUNG	293
SICHERUNG (20 A)	9W-1446	3	KONSOLENVERDRAHTUNG	293
SICHERUNG (30 A)	8T-9636	2	ELEKTR. UMFORMER	217
UMLAUFKÜHLWASSERHEIZUNGS-ELEMENT	6T-3764	2	UMLAUFKÜHLWASSERHEIZUNG	225

BESCHREIBUNG	ERSATZTEIL-NUMMER	MENGE	VERWENDET IN	SEITE
UMLAUFKÜHLWASSERHEIZUNGS-ELEMENT (120 V/1500 W)	9G-6655	2	UMLAUFKÜHLWASSERHEIZUNG	224
UNTERBRECHER (10 A) (ELEKTRONISCHE KUPPLUNGSBREMSE)	6T-3642	1	KONSOLENVERDRAHTUNG	292
UNTERBRECHER (10 A) (STARTSCHLÜSSELSCHALTER)	6T-3642	1	KONSOLENVERDRAHTUNG	292
UNTERBRECHER (15 A) (ARBEITSGERÄT)	6T-3643	1	KONSOLENVERDRAHTUNG	292
UNTERBRECHER (15 A) (ARBEITSLEUCHTEN, VORNE)	3T-2662	1	KONSOLENVERDRAHTUNG	292
UNTERBRECHER (15 A) (LÜFTER)	6T-3643	1	KONSOLENVERDRAHTUNG	292
UNTERBRECHER (15 A) (MOTOR)	6T-3643	1	KONSOLENVERDRAHTUNG	292
FAHRERHAUS				
FAHRERHAUSLUFTFILTER (standard)	107-0266	1	FAHRERHAUSHEIZUNG	700
GRUNDRAHMEN - ANZEIGELEUCHTE	3T-0304	1	INSTRUMENTENSATZ	708
KAPPE MIT ENTLÜFTER	8E-8292	1	SCHEIBENWASCHMITTELBEHÄLTER	760
KEILRIEMEN	2S-2743	1	KÄLTEMITTELKOMPRESSOR	676
LEUCHTE - ROT	171-1033	1	INSTRUMENTENSATZ	708
LEUCHTE (24 V)	7N-1996	1	INSTRUMENTENSATZ	708
LINSE - ROT	6T-7058	1	INSTRUMENTENSATZ	708
LUFTFILTER (FAHRERHAUS) (GERUCHSREDUZIERUNG)	175-2832	1	FAHRERHAUSHEIZUNG	700
LUFTFILTER (FAHRERHAUS) (HOCHLEISTUNG)	175-2839	1	FAHRERHAUSHEIZUNG	700
	175-2841	1	FAHRERHAUSHEIZUNG	700
LUFTFILTER (FAHRERHAUS) (standard)	7T-1890	1	FAHRERHAUSHEIZUNG	700
SCHEIBENWISCHERBLATT (HINTEN)	5C-8811	1	SCHEIBENWISCHER	786
SCHEIBENWISCHERBLATT (LINKE TÜR)	6V-5849	4	SCHEIBENWISCHER	786
SCHEIBENWISCHERBLATT (VORNE)	6V-5851	1	SCHEIBENWISCHER	786
SICHERHEITSGURT	183-3648	1	FAHRERSITZ	750
		1	FAHRERSITZ	751
UNTERBRECHER (15 A)	6T-3643	1	KLIMAANLAGENLEITUNGEN	712

WARTUNGSTEILE

BESCHREIBUNG	ERSATZTEIL-NUMMER	MENGE	VERWENDET IN	SEITE
HYDRAULIKSYSTEM				
EINFÜLLSTUTZENKAPPE	7H-1447	1	HYDRAULIKTANK UND SCHMIERFILTER	542
FILTERELEMENT - HYDRAULIK (ELEKTRISCH-HYDRAULISCHES VENTIL)	134-0964	1	ÖLFILTER	502
FILTERSIEB	5D-7927	1	HYDRAULIKTANK UND SCHMIERFILTER	542
ÖLFILTERELEMENT (HYDRAULIK/STROMUMKEHRUNG)	1R-0735	2	HYDRAULIKTANK UND SCHMIERFILTER	542
ÖLFILTERELEMENT (HYDRAULISCH)	139-1537	1	HYDRAULIKTANK UND SCHMIERFILTER	542
SCHMIERNIPPEL	3B-8489	2	AUFREISSERHUBZYLINDER	494
		1	PLANIERSCHILDKIPPZYLINDER	488
		1	PLANIERSCHILDKIPPZYLINDER	490
		1	PLANIERSCHILDKIPPZYLINDER	492
SCHMIERNIPPEL (1/8-27-GEWINDE)	3B-8489	2	AUFREISSERHUBZYLINDER	496
		2	AUFREISSERKIPPZYLINDER	500
SIEB	9T-7571	1	HYDRAULIKTANK UND SCHMIERFILTER	542
STAUBKAPPE	6V-0852	4	AUFREISSERLEITUNGEN	526
		2	HYDRAULIKPUMPE UND LEITUNGEN	516
		1	MOTORLEITUNGEN	506
		2	SAMMELVENTIL	553
		1	VORSTEUERLEITUNGEN	510
		1	VORSTEUERVENTIL	566
		1	VORSTEUERVENTIL	568
KRAFTSTOFFSYSTEM				
DICHTUNG (KRAFTSTOFFENTLÜFTUNGSPUMPE)	1P-0436	1	KRAFTSTOFFILTERLEITUNGEN	172
FILTER (HYDRAULISCHE PUMPENDÜSE)	125-5835	1	HYDRAULIKPUMPENANTRIEB	162
FILTERSATZ (WASSERABSCHEIDER U. KRAFTSTOFFILTER)	1R-0769	1	WASSERABSCHEIDER- U. KRAFTSTOFFILTER	167
KRAFTSTOFFILTER	1R-0749	2	KRAFTSTOFFILTERLEITUNGEN	172
KRAFTSTOFFTANK-SIEBEINSATZ	9P-7121	1	KRAFTSTOFFTANK	184
KRAFTSTOFFTANKKAPPE	7X-7700	1	KRAFTSTOFFTANK	185
SCHLÜSSEL	5P-8500	1	KRAFTSTOFFTANK	184
STAUBKAPPE	9D-0630	1	SCHNELLBETANKUNGSANSCHLUSS	150
		1	SCHNELLBETANKUNGSANSCHLUSS	152
		1	SCHNELLBETANKUNGSANSCHLUSS	154
		1	SCHNELLBETANKUNGSANSCHLUSS	156
VORHÄNGESCHLOSS	5P-8502	1	KRAFTSTOFFTANK	184

WARTUNGSTEILE

BESCHREIBUNG	ERSATZTEIL-NUMMER	MENGE	VERWENDET IN	SEITE
KRAFTÜBERTRAGUNG				
ANSAUGSIEB	8S-9130	1	DREHMOMENTWANDLER	358
		1	PLANETENANTRIEBSGEHÄUSE U. TEILE	306
EINFÜLLKAPPE (KRAFTÜBERTRAGUNGSÖL)	6N-2985	1	ÖLLEITUNGEN - KRAFTÜBERTRAGUNG	338
ENTLÜFTER (KRAFTÜBERTRAGUNG)	9G-5127	1	ÖLLEITUNGEN - KRAFTÜBERTRAGUNG	338
MAGNETSTOPFEN	6V-3298	1	SEITENANTRIEB	326
		1	SEITENANTRIEB	330
		1	SEITENANTRIEB	334
ÖLFILTERELEMENT	132-8876	1	ÖLFILTER	324
SIEB (KRAFTÜBERTRAGUNGSÖLPUMPENEINLASS)	9P-9555	1	ÖLLEITUNGEN - KRAFTÜBERTRAGUNG	338
STAUBKAPPE	6V-0852	1	ÖLLEITUNGEN - KRAFTÜBERTRAGUNG	338
		3	PLANETENANTRIEBSGEHÄUSE U. TEILE	306
		1	ÜBERDRUCKVENTIL	376
		2	VORRANGVENTIL	374
		1	VORSTEUERVENTIL UND BEFESTIGUNGSTEILE	366
	8C-3447	1	ÖLLEITUNGEN - KRAFTÜBERTRAGUNG	338
KÜHLSYSTEM				
ABLASSSTOPFEN	4B-7739	1	KÜHLWASSERLEITUNGEN	100
FILTER (WASSERPUMPE)	111-2721	1	KÜHLWASSERPUMPE	104
KAPPE	111-7421	2	KÜHLER	110
KÜHLERKAPPE	031-1119	1	KÜHLMITTELBEHÄLTER	116
LIPPENDICHTUNG	3S-9643	2	TEMPERATURREGLER	112
		2	TEMPERATURREGLER	114
STAUBKAPPE	157-0670	1	KÜHLWASSERLEITUNGEN	95
WASSERTEMPERATURREGLER (92 GRAD CELSIUS)	4W-4794	2	TEMPERATURREGLER	112
		2	TEMPERATURREGLER	114
LAUFWERK				
ABLASSSTOPFEN	4T-2069	6	LAUFROLLENRAHMEN (TELESKOPRÜCKLAUF)	434
ENTLÜFTER	198-7711	1	SCHMIERVORRICHTUNG - QUERTRAVERSE	440
ÖLEINFÜLLSTUTZEN	5L-2952	1	SCHMIERVORRICHTUNG - QUERTRAVERSE	440
ÖLSTANDKAPPE	9W-8277	1	ACHSWELLENSCHMIERUNG	442
SCHMIERNIPPEL (1/8-27-GEWINDE)	3B-8489	2	QUERTRAVERSE	430
		2	QUERTRAVERSE	432
LENK- UND BREMSSYSTEM				
DRUCKKNOPFKAPPE	144-0331	1	STÜTZGRUPPE - STEUERUNG	470
STAUBKAPPE	6V-0852	4	LENKVENTIL U. BEFESTIGUNGSTEILE	471

WARTUNGSTEILE

BESCHREIBUNG	ERSATZTEIL-NUMMER	MENGE	VERWENDET IN	SEITE
LUFTEINLASS- UND ABGASSYSTEM				
ABGASKRÜMMERDICHTUNG	129-9452	12	AUSPUFFKRÜMMER	140
LUFTFILTER (HAUPTFILTER)	6I-2505	1	LUFTREINIGER	128
LUFTFILTER (SICHERHEITSFILTER)	6I-2506	1	LUFTREINIGER	128
REGENKAPPE	7S-4411	1	STAUBAUSWERFER	130
		1	STAUBAUSWERFER	131
MOTOR (GRUNDAUSFÜHRUNG)				
ENTLÜFTER (KURBELGEHÄUSE)	4N-4668	2	VENTILDECKEL	16
KEILRIEMENSATZ (EINSCHL. 4 RIEMEN)	123-5889	1	LÜFTERANTRIEB	35
	180-4526	1	LÜFTERANTRIEB	32
ÖLABLASSSCHRAUBE	109-5839	1	ÖLWANNE	50
SCHMIERNIPPEL	3B-8485	1	RIEMENSPANNER	8
SCHMIERNIPPEL (1/8-27 GEWINDE(45 GRAD)	3B-8485	1	LÜFTERANTRIEB	32
STAUBKAPPE	6V-0852	1	ZYLINDERBLOCKSCHRAUBE	54
RAHMEN UND AUFBAU				
SCHRAUBE	106-8187	1	RAHMEN UND GEHÄUSE	382
SCHMIERSYSTEM				
EINFÜLLKAPPE	6N-2206	1	MOTORÖLEINFÜLLSTUTZEN	66
KAPPE	110-8318	1	ÖLSCHNELLWECHSELANSCHLUSS	78
ÖLFILTER	1R-0716	2	ÖLFILTER	68
SAUGGLOCKENSIEB	4N-0913	1	MOTORÖLLEITUNGEN	74
STAUBKAPPE	8C-3445	1	ÖLFILTER	68

INDEX

Name	Page
A	
ACCUMULATOR-AIR CONDITIONER	712, 716
ADAPTER	148
ADAPTER GP-FAST FILL FUEL	150, 152, 154, 156
ADJUSTER GP-SEAT	657
ADJUSTER GP-STEER & TMSN CONT	458
AFTERCOOLER GP-AIR	122
AIR CLEANER GP	126, 128
AIR CONDITIONER AR	658, 659
AIR CONDITIONER GP	660
ALARM GP	188
ALTERNATOR GP-CHARGING	189, 190
ARCTIC AR–SEALS & COMPONENTS	1
ASHTRAY	700
ATOMIZER AS-ETHER	266
AXLE GP-POWER TRAIN	304
B	
BAR AR-STRIKER	422
BAR GP-STRIKER	424, 425
BAR GP-STRIKER (LH)	422
BAR GP-STRIKER (RH)	422
BASE-INDICATOR LIGHT	298, 708
BATTERY & WIRING GP	192
BATTERY (12 VOLT/DRY)	194, 269
BELT	189
BELT TIGHTENER GP	8
BIT & CUTTING EDGE GP	627, 628, 629, 630
BLADE & EDGE GP	631, 632, 633, 634, 635
BLADE AS	636
BLADE AS-SEMI-UNIVERSAL	638
BLADE AS-UNIVERSAL	640, 641, 642, 643
BLADE AS-WIPER (FRONT)	786
BLADE AS-WIPER (LH DOOR)	786
BLADE AS-WIPER (REAR)	786
BLADE GP-SEMI-UNIVERSAL	644, 645
BLADE GP-UNIVERSAL	646, 648
BLOCK AS-FUSE (16 POLE)	293
BLOCK GP-POWER	199
BLOCK GP-PUSH	581, 582, 583
BRACE GP-BULLDOZER	584
BREATHER	440
BREATHER AS (CRANKCASE)	16
BREATHER (POWER TRAIN)	338
BRUSH AS	282
BRUSH AS (STARTING MOTOR)	272
BULLDOZER AR	585, 586, 587, 588, 589, 590, 591, 592
C	
CAB AR	663, 664, 665, 666, 668
CAB GP	670
CAMSHAFT GP	10
CAP	78, 110, 190
CAP AS-FILLER	66
CAP AS-FILLER (POWER TRAIN OIL)	338
CAP AS-FUEL TANK	185
CAP AS-OIL FILLER	440
CAP AS-OIL LEVEL	442
CAP AS-RADIATOR	116
CAP AS-RAIN	129, 130, 131
CAP-DUST	54, 68, 95, 150, 152, 154, 156, 306

INDEX

Name	Page
	338
	366
	374
	376
	471
	506
	510
	516
	526
	553
	566
	568
CAP-FILLER	542
CAP GP-TRACK IDLER	426
	427
CAP GP-TRACK ROLLER	428
CAP-PUSHBUTTON	470
CAP-VENTED	760
CARTRIDGE GP-TURBOCHARGER	147
CARTRIDGE GP-VANE PUMP	472
	473
CASE & FRAME GP	382
CASE & PARTS GP-PLANETARY	306
CHASSIS AR	385
CIRCUIT BREAKER AS (10 AMP) (ELECTRONIC CLUTCH BRAKE)	292
CIRCUIT BREAKER AS (10 AMP) (START KEY SWITCH)	292
CIRCUIT BREAKER AS (125 AMP) (MAIN)	292
CIRCUIT BREAKER AS (15 AMP)	712
CIRCUIT BREAKER AS (15 AMP) (BLOWER)	292
CIRCUIT BREAKER AS (15 AMP) (ENGINE)	292
CIRCUIT BREAKER AS (15 AMP) (FRONT FLOODS)	292
CIRCUIT BREAKER AS (15 AMP) (IMPLEMENT)	292
CLUTCH & BRAKE GP-STEERING	462
COMPRESSOR GP-REFRIGERANT	674
	676
CONDENSER & MTG GP-REFRIGERANT	678
	680
CONDENSER GP-REFRIGERANT	682
CONNECTOR GP	506
CONTROL & MTG GP-ELECTRONIC	200
	201
	202
	204
CONTROL & MTG GP-ENGINE ELEK	206
CONTROL & MTG GP-IMPLEMENT	684
	685
	686
CONTROL & MTG GP-TRANSMISSION	308
CONTROL AR-HYDRAULIC	474
	476
	477
	478
CONTROL AS-ELECTRONIC (DASH LIGHT)	708
CONTROL GP-BRAKE	310
CONTROL GP-DECELERATOR	158
CONTROL GP-DISPLAY ELECTRONIC	687
	688
CONTROL GP-ELECTRONIC	208
	210
CONTROL GP-ELECTRONIC (ENGLISH KEYPAD)	201
CONTROL GP-ELECTRONIC (INTERNATIONAL KEYPAD)	201
CONTROL GP-ENGINE ELECTRONIC	212
	213
CONTROL GP-HANDLE	483
	689
CONTROL GP-IMPLEMENT	690
CONTROL GP-JOYSTICK	480
	482
	483
CONTROL GP-MONITOR SYS DIMMER	692
CONTROL GP-PARKING BRAKE	464
CONTROL GP-STEERING & TMSN	312
	314
CONTROL GP-TRANSMISSION HYD	316
CONTROL GP-UNPROGRAMMED	200
	214
	215
	263
CONTROL GP-UNPROGRAMMED–POWER TRAIN	216
CONVERSION AR-ROPS	693
CONVERTER GP-ELECTRICAL	217
CONVERTER-POWER (24 VOLT TO 12 VOLT)(25 AMP)	217
COOLANT HEATER LINES	720
COOLER GP-TRANSMISSION OIL	318
CORE AS-OIL COOLER (ENGINE)	94
COUNTERWEIGHT & BAR AR-REAR	386
COUNTERWEIGHT GP	390
COUNTERWEIGHT GP–FRONT	391
COUNTERWEIGHT GP–REAR	388
COUPLING GP-PUMP	319
COVER GP-CYLINDER BLOCK	11
COVER GP-FLYWHEEL HOUSING	12
COVER GP-FRONT HOUSING	14
COVER GP-HYDRAULIC TANK CAP	484
COVER GP-TRUNNION	392
COVER GP-VALVE MECHANISM	16
CRANKSHAFT GP	17
CYLINDER AR-DUAL TILT	485
CYLINDER BLOCK AS	18
	20
CYLINDER BLOCK GP	22
	24

INDEX

Name	Page
CYLINDER GP-BULLDOZER LIFT	486, 548
CYLINDER GP-BULLDOZER TILT	488
CYLINDER GP-BULLDOZER TILT–LH	492
CYLINDER GP-BULLDOZER TILT–RH	490
CYLINDER GP-BULLDOZER TILT (LH)	485
CYLINDER GP-BULLDOZER TILT (RH)	485
CYLINDER GP-RIPPER LIFT	494, 496
CYLINDER GP-RIPPER LIFT (LH)	623, 624, 625
CYLINDER GP-RIPPER LIFT (RH)	623, 624, 625
CYLINDER GP-RIPPER PIN PULLER	498
CYLINDER GP-RIPPER TILT	500
CYLINDER HEAD AS	25, 26
CYLINDER HEAD GP	27, 28
D	
DAMPER GP	30
DETENT GP	465
DETENT GP-CONTROL	480, 483
DIFFERENTIAL & BEVEL GEAR GP	320
DRAIN GP-ECOLOGY	322
DRAWBAR GP	394
DRIVE GP-ACCESSORY	31
DRIVE GP-FAN	32, 34, 35
DRIVE GP-UNIT INJ HYD PUMP	160, 162
DUST EJECTOR GP	130, 131
E	
ELBOW GP	516
ELECTRONICS AR-MACHINE	2
ELECTRONICS GP-IMPLEMENT	218
ELECTRONICS GP-POWER TRAIN	219
ELECTRONICS GP-VIDS	220
ELEMENT AS-JACKET WATER HEATER	225
ELEMENT AS-JACKET WATER HEATER (120 VOLTS/1500 WATTS)	224
ENCLOSURE GP	396
ENCLOSURE GP-ENGINE	398
ENGINE AR	5, 6
EQUALIZER BAR AS	429
EQUALIZER BAR GP	430, 432
EXTENSION GP-BACKREST	750, 751
F	
FAN AR	86
FAN GP-BLOWER	88, 90
FAN GP-DEFROSTER	694
FASTENER GP-OIL PUMP MOUNTING	65
FENDER GP	400
FILLER GP-ENGINE OIL	66
FILM	464
FILM-FUSE	712
FILM GP	791
FILM-IDENTIFICATION	208, 210
FILM-IDENTIFICATION (CIRCUIT BREAKER)	292
FILM-IDENTIFICATION (EXCLAMATION SYMBOL)	298
FILM-IDENTIFICATION (FUSE)	292
FILM-IDENTIFICATION (GROUP & SEQUENCE NO.)	660, 682, 696
FILM-INFORMATION (FUEL FILTER/WATER SEPARATOR)	793
FILM-INSTRUCTION	478, 684, 786, 793
FILM-INSTRUCTION (DOZER CONTROL)	793
FILM-INSTRUCTION (RIPPER PIN PULLER SWITCH)	474
FILM-INSTRUCTION (SEAT ADJUSTMENT)	756, 758
FILM-INSTRUCTION (WATER IN/WATER OUT)	660, 696
FILM-KEYPAD	725, 726
FILM-NOTICE	732
FILM-NOTICE (PRELUBRICATION PUMP)	80
FILM-NOTICE (RADIO)	707
FILM-PANEL	708
FILM-PANEL (AIR CONDITIONER & BLOWER)	700
FILM (SEAT CUSHION IDENTIFICATION)	735, 736
FILM-WARNING	434
FILM-WARNING (JUMPER CABLE)	269
FILTER & LINES GP-FUEL	164
FILTER-AIR (CAB) (HIGH EFFICIENCY)	700

INDEX

Name	Page
FILTER-AIR (CAB) (ODOR REDUCTION)	700
FILTER-AIR (CAB) (STANDARD)	700
FILTER AS-ENGINE OIL	68
FILTER AS-FUEL	172
FILTER AS (WATER SEPARATOR & FUEL)	167
FILTER-CAB AIR (STANDARD)	700
FILTER ELEMENT AS-AIR (PRIMARY)	128
FILTER ELEMENT AS-AIR (SECONDARY)	128
FILTER ELEMENT AS-OIL	324
FILTER ELEMENT AS-OIL (HYDRAULIC)	542
FILTER ELEMENT AS-OIL (HYDRAULIC/REVERSE FLOW)	542
FILTER ELEMENT-HYDRAULIC (ELECTRICAL/HYDRAULIC VALVE)	502
FILTER-FOAM	192
FILTER GP-ENGINE OIL	68
FILTER GP-OIL	324
	502
FILTER GP-OIL (POWER TRAIN)	338
FILTER GP-WATER SEP & FUEL	167
	168
FILTER (UNIT INJECTOR HYDRAULIC PUMP)	162
FILTER (WATER PUMP)	104
FINAL DRIVE GP	326
	330
	334
FITTING GP (QUICK DISCONNECT)	516
FITTING-GREASE	8
	488
	490
	492
	494
	598
	602
	604
FITTING-GREASE (1/8-27 THD)	430
	432
	496
	500
	584
	594
	596
	613
FITTING-GREASE (1/8-27 THD)(45 DEGREE)	32
FLOOR MAT-LOWER	730
FLOOR MAT-UPPER	730
FLYWHEEL GP	36
FRAME GP-RIPPER	594
	596
	598
FRAME GP-TELESCOPING RECOIL	434
FUMES DISPOSAL GP	70
FUSE (10 AMP)	293
FUSE (15 AMP)	293
FUSE (20 AMP)	293
FUSE (30 AMP)	217

G

GASKET-EXHAUST MANIFOLD	140
GASKET (FUEL PRIMING PUMP)	172
GAUGE AS-OIL LEVEL (DIPSTICK) (POWER TRAIN)	338
GAUGE GP-OIL LEVEL (DIPSTICK)	72
GEAR GP-ACCESSORY	600
GEAR GP-FRONT	38
GEAR GP-REAR	40
GEAR GP-STEERING	466
	468
GENERAL AR	3
GLASS-FIXED-LH (TINTED)	774
GLASS-FIXED-RH (TINTED)	773
GLASS-SLIDER (LH) (TINTED)	776
GLASS-SLIDER-RH (TINTED)	778
GLASS (TINTED)	769
	770
	779
GLASS (TINTED) (CAB DOORS-FIXED)	670
GLASS (TINTED) (CAB-FRONT-FIXED)	670
GLASS (TINTED) (CAB-SIDE-FIXED)	670
GLASS (TINTED)(GREEN)	780
GRID GP-SAND BLAST ERODING	404
GUARD AR-FINAL DRIVE	405
GUARD GP-BOTTOM	406
GUARD GP-DRIVE SHAFT	337
GUARD GP-IDLER	408
GUARD GP-PIVOT SHAFT	409
GUARD GP-RADIATOR	410
GUARD GP-REAR	412
GUARD GP-ROCK	414
	415
GUARD GP-SEAL	416

H

HARNESS AS (PRESSURE SENSOR)	249
HARNESS AS (SOCKET) (PRESSURE SENSOR)	249
HEATER GP-CAB	696
	700
HEATER GP-FUEL	222
HEATER GP-JACKET WATER	224
	225
HOLDER AS-BRUSH	283
HOLDER AS-BRUSH (STARTING MOTOR BRUSH)	272
HOOD & GUARD GP	418
HORN AS (24 VOLT)(HIGH TONE)	193
HORN AS (24 VOLT)(LOW TONE)	194

INDEX

Name	Page
HOUSING GP-FLYWHEEL	44
HOUSING GP-FRONT	46
HOUSING GP-SEAT SUSPENSION	704
I	
IDLER GP-TRACK	436
	437
INJECTOR GP-FUEL	169
INSERT-VALVE SEAT (EXHAUST)	25
INSERT-VALVE SEAT (INLET)	25
INSTALLATION AR-ENGINE	7
INSTALLATION GP-RADIO	707
INSTRUMENT GP	708
J	
JUNCTION BLOCK AS	226
JUNCTION BLOCK GP	226
K	
KEY	184
KEY (BATTERY DISCONNECT)	286
KIT-BEARING	190
	705
KIT-BEARING (STANDARD)	52
KIT-BEARING (STARTER)	282
KIT-BEARING (YOKE)(UNIT INJECTOR HYD PUMP)	182
KIT-BEARING (1.27MM US)	52
KIT-BEARING (.635MM US)	52
KIT-BELT TETHER	756
KIT-BUMPER	704
KIT-CAP FILTER (FUEL TANK)	185
KIT-CARTRIDGE (REAR)	540
KIT-CATCH	776
	778
KIT-COMPENSATOR (UNIT INJECTOR HYDRAULIC PUMP)	182
KIT-CONNECTING PLUG (2 PIN)	289
	293
	296
	316
	458
KIT-CONNECTING PLUG (3 PIN)	250
	251
	252
	296
	299
	690
KIT-CONNECTING PLUG (3 PIN) (ENGINE SPEED TIMING SENSOR)	254
KIT-CONNECTING PLUG (3 PIN) (PRESSURE SENSOR)	249
KIT-CONNECTING PLUG (4 PIN)	293
	296
KIT-CONNECTING PLUG (6 PINS)	688
KIT-FASTENER	758
KIT-FOLLOWER	705
KIT-HARDWARE	190
KIT-HYDRAULIC CYLINDER SEAL	486
	488
KIT-INDICATOR	704
KIT-LEAF SPRING	773
	774
KIT-OVERHAUL	34
KIT-OVERPACK	602
	604
KIT-PLUG (UNIT INJECTOR HYDRAULIC PUMP)	182
KIT-PUMP REBUILD (WATER)	104
KIT-PUMP (REBUILD)(UNIT INJ HYD PUMP)	182
KIT-RECEPTACLE (12 PIN)	464
	480
KIT-RECEPTACLE (2 PIN)	80
	188
	255
	256
	257
	266
	268
	285
	291
	292
	293
	296
	298
	379
	458
	502
	546
	577
	580
	661
	682
	696
	712
	716
	724
KIT-RECEPTACLE (3 PIN)	132
	172
	246
	247
	258
	259
	260
	293
	296
	474

INDEX

Name	Page
	690
	700
	708
	764
KIT-RECEPTACLE (4 PIN)	244
	293
	296
	316
	574
	575
	578
	687
	690
	712
	725
	726
KIT-RECEPTACLE (6 PIN)	243
	299
	470
	661
	692
	696
	700
	724
	727
	728
	782
	784
	786
KIT-RECEPTACLE (8 PIN)	299
KIT-RETAINING BOLT	216
KIT-ROLLER	758
KIT-RUNNER GUIDE	776
	778
KIT-SEAL	34
	170
	373
	379
	553
	574
	577
	578
	579
	580
KIT-SEAL (PILOT PRESSURE SOLENOID VALVE)	576
KIT-SEAL (SOLENOID VALVE)	187
KIT-SEAL (UNIT INJECTOR HYDRAULIC PUMP)	182
KIT-SLIDER BLOCK	753
	754
	755
KIT-SPRING	704
KIT-STARTING MOTOR GEAR	283
KIT-SUSPENSION BOOT	756
KIT-SUSPENSION KNOB	704
KIT-SUSPENSION ROLLER	756
KIT-TERMINAL	190
	277
	283
KIT-TERMINAL LOCK (FUSE BLOCK)	293
KIT-TERMINAL (STARTING MOTOR)	273
KIT-TETHER	758
KIT-VANE	472
	473
	540
KIT-WINDOW	710
KIT-WIPER BLADE	787
KIT-WIRING HARNESS (AIR SUSPENSION SEAT)	758
KNOB	670
KNOB (ARMREST ADJUSTMENT)	458
KNOB-HORN	298
KNOB-LUMBAR	736
L	
LAMP GP-DOME	227
LAMP GP-DOME (24 VOLT)(WITH SWITCH)	670
LAMP GP-FLOOD	228
	229
LAMP GP-FLOOD (24 VOLT)(SUSPENDED)	233
	234
LAMP GP-FLOOD (24 VOLT)(VERTICAL)	236
LAMP-HEAD (24 VOLT) (FLOOD)	229
LAMP-HEAD (24 VOLT) (65 WATT)(FLOOD)	228
LAMP-RED	708
LAMP (24 VOLT)	298
	299
	708
LAMP (24 VOLT) (DOME)	227
LAMP (28 VOLT)	208
	210
LENS AS (FLOODLAMP)	228
	229
LENS (DOME LAMP)	227
LENS-RED	298
	708
LIFTING GP-ENGINE	48
LIGHTING AR	230
LIGHTING AR-REAR	232
LIGHTING GP	233
LIGHTING GP-FLOOD	234
	236
LIGHTING GP-FRONT	238
	239
LIGHTING GP-REAR	240
LIGHTING GP-RIPPER	242
LINER GP-CAB	711
LINES GP-AIR	132

INDEX

Name	Page
	134
	136
	138
LINES GP-AIR CONDITIONER	712
	716
LINES GP-ENGINE OIL	74
LINES GP-FUEL FILTER	172
LINES GP-HEATER	720
LINES GP-INJECTOR HYD PUMP	176
LINES GP-LIFT CYLINDER	504
LINES GP-MOTOR	506
LINES GP-OIL	606
LINES GP-PILOT	510
LINES GP-PIN PULLER CYLINDER	514
LINES GP-POWER TRAIN OIL	338
LINES GP-PUMP	516
LINES GP-RIPPER	522
	524
	526
LINES GP-TILT CYLINDER	528
	532
	534
	536
LINES GP-TURBOCHARGER OIL	76
LINES GP-WATER	92
	94
	98
	100
LINK AS-TRACK	438
LINK GP-STABILIZER	610
LUBRICATION GP-EQUALIZER BAR	440
LUBRICATION GP-PIVOT SHAFT	442

M

MANIFOLD & VALVE GP	342
	343
MANIFOLD GP-EXHAUST	140
MIRROR GP-REAR VIEW	722
	723
MODIFICATION AR-BULLDOZER	611
	612
MODULE GP-MESSAGE CENTER	724
MODULE GP-MONITOR KEYPAD	725
	726
MODULE GP-MONITOR KEYPAD (ENGLISH VERSION)	208
MODULE GP-MONITOR KEYPAD (INTERNATIONAL VERSION)	210
MODULE GP-QUAD GAUGE	727
MODULE GP-SPEEDOMETER & TACH	728
MOTOR GP-ELECTRIC	682
MOTOR GP-ELECTRIC (27 VOLT)	660
	696
MOTOR GP-FAN	538
MOTOR GP-PISTON	538
MOUNTING GP-ALTERNATOR	49
MOUNTING GP-CAB	730
MOUNTING GP-CB	732
MOUNTING GP-CYLINDER	613
MOUNTING GP-RIPPER	614
MOUNTING GP-ROPS	733
MOUNTING GP-TRANSMISSION	344
MUFFLER GP	141

O

OIL CHANGE GP-HIGH SPEED	78

P

PADLOCK GP	184
PAN GP-BACKREST	734
	735
	736
PAN GP-OIL	50
PISTON & ROD GP	52
PLANETARY GP-TRANSMISSION	346
PLATE	421
PLATE & FILM GP	792
PLATE GP-WEAR	649
	650
PLATE-INFORMATION (SERVICE NUMBERS)	792
PLATE-WARNING (RECOIL SPRING)	422
	434
PLATE-WARNING (RECOIL SPRING OIL)	434
PLATFORM GP-CAB	738
PLUG	382
PLUG AS-WIRING	243
PLUG-DRAIN	100
	434
PLUG GP	516
PLUG GP-CYLINDER BLOCK	54
PLUG GP-CYLINDER HEAD	56
PLUG-MAGNETIC	326
	330
	334
PLUG-OIL DRAIN	50
POWER TRAIN AR	349
PRECLEANER GP	142
PRELUBRICATION AR-ENGINE	80
PULLER AR-PIN	616
PULLER GP-PIN	618
PULLEY GP-CRANKSHAFT	57
	58
PUMP & MTG GP-UNIT INJ HYD	178
PUMP GP-ENGINE OIL	84
PUMP GP-FUEL INJECTION	179
PUMP GP-GEAR	350

INDEX

Name	Page
	352
	354
PUMP GP-GEAR (POWER TRAIN OIL)	338
PUMP GP-UNIT INJECTOR HYD	180
	182
PUMP GP-VANE	540
PUMP GP-WATER	102
	104
PUSH ARM GP-LH	620
PUSH ARM GP-RH	621
PUSH ARM GP-STABILIZER	622

R

RADIATOR GP	106
	110
RECEIVER-DRYER GP (AIR CONDITIONER)	716
RECEIVER-DRYER GP (REFRIGERANT)	712
RECLINER GP-SEAT	740
REGULATOR GP-TEMPERATURE	112
	114
REGULATOR-WATER TEMPERATURE (92 DEG C.)	112
	114
RIPPER AR	623
	624
	625
RIPPER GP	651
	652
	653
ROCKER ARM GP	59
ROLLER AR-TRACK CARRIER	444
ROLLER GP-TRACK-DOUBLE FLANGE	445
	446
ROLLER GP-TRACK-SINGLE FLANGE	447
	448
ROPS AS	741
ROPS GP	742

S

SCREEN AS	542
SCREEN AS-BELL	74
SCREEN AS (POWER TRAIN OIL PUMP INLET)	338
SCREEN GP-PROTECTION	743
SCREEN-SUCTION	306
	358
SEAL GP-CRANKSHAFT	17
SEAL-LIP	112
	114
SEALANT-GASKET	14
SEAT AR	744
SEAT BELT GP	750
	751
SEAT GP	745
	746
	748
	750
	751
SEAT GP-SUSPENSION	752
	754
	755
SEAT GP-SUSPENSION–VINYL	753
SEGMENT GP-SPROCKET	356
SENSOR GP-FUEL LEVEL–ULTRASONIC	244
SENSOR GP-POSITION	245
	246
	247
	480
	483
	690
SENSOR GP-POSITION (SPRINGLESS) (DIRECTION)	312
SENSOR GP-POSITION (STEER POSITION)	312
SENSOR GP-PRESSURE	248
	249
	250
	251
	252
	516
SENSOR GP-PRESSURE (BOOST AIR)	28
SENSOR GP-PRESSURE (INJECTION ACTUATION)	28
SENSOR GP-SPEED	255
	256
	257
SENSOR GP-SPEED– ENGINE SPEED/TIMING	254
SENSOR GP-SPEED–FAN	253
SENSOR GP-SPEED (ENGINE TIMING)	46
SENSOR GP-SPEED (FAN)	34
SENSOR GP-TEMPERATURE	259
	260
SENSOR GP-TEMPERATURE–ENGINE OIL	258
SENSOR GP-TEMPERATURE (AIR)	132
SENSOR GP-TEMPERATURE (COOLANT)	94
SENSOR GP-TEMPERATURE (FUEL)	172
SERVICE GP-IMPLEMENT	261
	262
SERVICE GP-POWER TRAIN	263
SHAFT GP-MAIN DRIVE	357
SHIELD GP-HEAT	144
SLEEVE-BOTTOM LINER	18
	20
SLEEVE-LIFTER BORE	18
	20
SOFTWARE GP-IMPLEMENT	218
SOFTWARE GP-POWER TRAIN	219
SOLENOID AS	282

INDEX

Name	Page
SOLENOID AS (STARTING MOTOR)	272
SOLENOID AS-STARTING MOTOR	264, 276
SPIDER & BEARING GP	365
SPRING	283
SPRING (STARTING MOTOR BRUSH)	272, 273
STARTING AID GP-ETHER	266
STARTING AR-LOW TEMPERATURE	268
STARTING MOTOR GP-ELECTRIC	272, 276, 279, 280, 282
STRAINER AS	542
STRAINER-FUEL TANK	184
SUPPORT GP-CONTROL	470
SUPPORT GP-ENGINE	60
SUPPORT GP-ENGINE–FRONT	61
SUPPRESSION AR-SOUND	4
SUSPENSION GP-BOGIE	450
SUSPENSION GP-SEAT	756, 758
SWITCH AS (BLOWER SPEED)	700
SWITCH AS (DIFFERENTIAL PRESSURE)	502
SWITCH AS (FRONT LIGHTS)	299
SWITCH AS (FRONT,REAR,RH & LH DOOR)	786
SWITCH AS-HORN	298
SWITCH AS-LIMIT (BRAKE)	310
SWITCH AS-LIMIT (REVERSE)	312
SWITCH AS-MAGNETIC (STARTER RELAY)	80
SWITCH AS-PRESSURE	546, 716
SWITCH AS-PRESSURE (A/C)	712
SWITCH AS-PRESSURE (HIGH/LOW)	712
SWITCH AS-PRESSURE (OIL)	80
SWITCH AS-PUSH BUTTON	690, 708
SWITCH AS-PUSH BUTTON (DOWNSHIFT)	470
SWITCH AS-PUSH BUTTON (UPSHIFT)	470
SWITCH AS (REAR LIGHTS)	299
SWITCH AS-ROCKER (AIR CONDITIONER ON/OFF)	700
SWITCH AS-ROCKER (AUXILIARY)	299
SWITCH AS (ROCKER) (CONSOLE RAISE/LOWER)	458
SWITCH AS-ROCKER (PARKING BRAKE)	464
SWITCH AS-ROCKER (SIDE LIGHTS)	299
SWITCH AS-ROCKER (24 VOLT)(ILLUMINATED)	299
SWITCH AS-ROCKER (24 VOLT)(SEALED-ILLUMINATED)	299
SWITCH AS-ROCKER (24 VOLT)(SEALED)(ILLUMINATED)	299
SWITCH AS-THERMOSTAT	660
SWITCH AS-TOGGLE (LOCKING)(RIPPER PIN PULLER)	474
SWITCH AS (24 VOLT)(ILLUMINATED)	299
SWITCH GP-BYPASS	285
SWITCH GP-DISCONNECT	286
SWITCH GP-DISCONNECT (BATTERY)	192
SWITCH GP-FLOW	5, 6
SWITCH GP-FLOW–COOLANT	287, 288
SWITCH GP-MAGNETIC	289
SWITCH GP-MAGNETIC (MAIN RELAY)	292
SWITCH GP-MAGNETIC (START RELAY)	268, 292
SWITCH GP-ROCKER (START AID)	299
SWITCH GP-START–KEY	290
SWITCH GP-TOGGLE (FAN CONTROL)	694
SWITCH GP-TOGGLE (LOCKING)(RIPPER PIN PULLER)	474

T

Name	Page
TANK & FILTER GP-HYDRAULIC	542
TANK & MTG GP-HYDRAULIC	546
TANK GP-COOLANT	116
TANK GP-FUEL	184, 185
TANK GP-WATER	118
TANK GP-WINDOW WASHER	760, 762
TIMER	80
TIMER AS-ON DELAY (24 VOLT)	712, 716
TOOTH GP-RIPPER	654, 655, 656
TORQUE CONVERTER GP	358, 360, 362
TRACK ADJUSTER & RECOIL GP	452
TRACK GP–2 REQUIRED	454, 455, 456
TRANSMISSION AR	364
TRUNNION GP-BULLDOZER	626
TRUNNION GP-ENGINE	62
TURBOCHARGER GP	146, 147

U

Name	Page
UNDERCARRIAGE AR	457
UNIVERSAL JOINT GP	365

INDEX

Name	Page
V	
V-BELT	676
V-BELT SET (INCLUDES 4 BELTS)	32, 35
VALVE	558, 560
VALVE & CYLINDER GP	548, 549, 550
VALVE & MTG GP-BULLDOZER	551
VALVE & MTG GP-CONTROL	552
VALVE & MTG GP-PILOT	366
VALVE & MTG GP-STEERING	471
VALVE AS	118, 150, 152, 154, 156, 661
VALVE AS-CHECK	130
VALVE AS-CHECK (WIPER/WASHER SYSTEM)	762
VALVE AS-CONTROL	553
VALVE AS (ETHER START)(24 VOLT)	266
VALVE AS-GREASE (FILL)	452
VALVE AS (WATER)	696
VALVE-BALL (MANUAL SHUTOFF)	164
VALVE-BYPASS	542
VALVE-CHECK	164
VALVE-CHECK (VACUUM BREATHER)	546
VALVE-DRAIN	382, 546
VALVE-EXHAUST	27
VALVE GP-COMBINATION	553
VALVE GP-CONTROL	368, 370, 554, 556, 558, 560, 564
VALVE GP-DIVERTER (COLD WEATHER CLIMATE ONLY)	558
VALVE GP-FLUID SAMPLING	339
VALVE GP-FLUID SAMPLING (ENGINE OIL)	68
VALVE GP-MODULATING	372, 373
VALVE GP-PILOT	566, 568
VALVE GP-PRESSURE CONTROL–FUEL	186
VALVE GP-PRESSURE REDUCING	570, 571
VALVE GP-PRIORITY	374
VALVE GP-QUICK-DROP	572
VALVE GP-RELIEF	376, 553
VALVE GP-RELIEF (TRANSMISSION COOLER BYPASS)	338
VALVE GP-SEQUENCE	553
VALVE GP-SHUTTLE	573
VALVE GP-SOLENOID	187, 378, 379, 556, 574, 575, 576, 577, 578, 579
VALVE GP-SOLENOID–PILOT PRESSURE SUPPLY	580
VALVE GP-TRANSMISSION CONTROL	380
VALVE-INLET	27
VALVE MECHANISM GP	63
VALVE (RELIEF)	452
VALVE-RELIEF	352
VALVE-RELIEF POPPET	560
VALVE-SAMPLING	95
VENT AS	194
W	
WARNING GP-BACKUP	192, 291
WASHER GP-WINDOW	764
WEATHERSTRIP	773, 774, 778
WINDOW AS-SLIDING–LH	768
WINDOW AS-SLIDING–RH	767
WINDOW GP-CAB	779
WINDOW GP-CAB–LH	770, 772, 774, 776
WINDOW GP-CAB–REAR	780
WINDOW GP-CAB–RH	769, 771, 773, 778
WINDOW GP-CAB (LH)	770
WINDOW GP-CAB (LH)(SLIDING)	768
WINDOW GP-CAB (REAR-SLIDING)	670
WINDOW GP-CAB (RH)	769, 773
WINDOW GP-CAB (RH)(SLIDING)	767
WIPER GP-WINDOW	782, 784

INDEX

Name	Page	Name	Page
	786		
WIPER PIVOT GP	790		
WIRING GP-CONSOLE	292		
WIRING GP-ENGINE	296		
WIRING GP-PLATFORM	298		
WIRING GP-UNIT INJECTOR	303		

Y

YOKE GP	64		

INDEX

Désignation	Page

A

ACCOUPLEMENT DE POMPE (ASS)	319
ACCUMULATEUR DE CLIMATISEUR	712
	716
ADAPTATEUR DE REMPLIS. RAPIDE DE CARBURANT (ASS)	150
	152
	154
	156
ALTERNATEUR DE CHARGE (ASS)	189
	190
AMORTISSEUR DE VIBRATIONS (ASS)	30
AMPOULE ROUGE	708
AMPOULE (24 VOLTS)	298
	299
	708
AMPOULE (24 VOLTS) (PLAFONNIER)	227
AMPOULE (28 VOLTS)	208
	210
ARBRE A CAMES (ASS)	10
ARBRE DE TRANSMISSION (ASS)	304
ARBRE D'ENTRAINEMENT PRINCIPAL	357
AUTOCOLLANT	464
AUTOCOLLANT - FUSIBLE	712
AUTOCOLLANT-BLOC DE TOUCHES	725
	726
AUTOCOLLANT DE MISE EN GARDE	434
AUTOCOLLANT DE MISE EN GARDE (CÂBLES VOLANTS)	269
AUTOCOLLANT D'IDENTIFICATION	210
AUTOCOLLANT D'IDENTIFICATION	208
AUTOCOLLANT D'IDENTIFICATION (ASSEMBLAGE ET NO DE SÉQUENCE)	660
	682
	696
AUTOCOLLANT D'IDENTIFICATION (DISJONCTEUR)	292
AUTOCOLLANT D'IDENTIFICATION (FUSIBLE)	292
AUTOCOLLANT D'IDENTIFICATION (SYMBOLE D'EXCLAMATION)	298
AUTOCOLLANT DU PANNEAU	708
AUTOCOLLANT DU PANNEAU (CLIMATISEUR ET SOUFFLANTE)	700
AUTOCOLLANT (IDENTIFICATION DU COUSSIN DE SIÈGE)	735
	736
AUTOCOLLANT-INFORMATION (SÉPARATEUR D'EAU/FILTRE À CARBURANT)	793
AUXILIAIRE DE DÉMARRAGE À L'ÉTHER	266
AVERTISSEUR (ASS)	188
AVERTISSEUR DE RECUL (ASS)	291
AVERTISSEUR DE RECUL (ASS)	192
AXE DE CULBUTEUR (ASS)	59

B

BALAI D'ESSUIE-GLACE (ENS)	636
BALAI D'ESSUIE-GLACE (ENS) (ARRIÈRE)	786
BALAI D'ESSUIE-GLACE (ENS) (AVANT)	786
BALAI D'ESSUIE-GLACE (ENS) (PORTE GAUCHE)	786
BALANCIER DE SUSPENSION (ASS)	432
BALANCIER DE SUSPENSION (ASS)	430
BALANCIER DE SUSPENSION (ENS)	429
BANDE MÉTÉOROLOGIQUE	773
	774
	778
BARRE D'ATTELAGE (ASS)	394
BARRE DÉFLECTRICE (ASS)	424
	425
BARRE DÉFLECTRICE (ASS) (DROITE)	422
BARRE DÉFLECTRICE (ASS) (GAUCHE)	422
BARRE DÉFLECTRICE (VERSION)	422
BASE-TÉMOIN LUMINEUX	298
	708
BATI DE RIPPER (ASS)	594
	596
	598
BATTERIE ET CÂBLAGE	192
BATTERIE (12 VOLTS/SEC)	194
	269
BLINDAGE AR	412
BLINDAGE D'ARBRE DE TRANSMISSION (ASS)	337
BLINDAGE DE ROUE AV (ASS)	408
BLINDAGE INFÉRIEUR (ASS)	406
BLOC-CYLINDRES - COUVERCLE (ASS)	11
BLOC-CYLINDRES (ASS)	22
	24
BLOC-CYLINDRES (ENS)	18
	20
BLOC DE BRANCHEMENT (ASS)	226
BLOC DE BRANCHEMENT (ENS)	226
BLOC-FUSIBLE (ENS) (16 POLES)	293
BLOC-PUISSANCE (ASS)	199
BOÎTE DE VITESSES (VERSION)	364
BOÎTE PLANÉTAIRE (ASS)	346
BOUCHON - BLOC-CYLINDRES	54
BOUCHON - CABLAGE (ENS)	243
BOUCHON - CULASSE (ASS)	56
BOUCHON À ÉVENT	760
BOUCHON AIMANTÉ	326
	330
	334
BOUCHON (ASS)	516
BOUCHON-BOUTON-POUSSOIR	470
BOUCHON DE CONTROLE DE NIVEAU D'HUILE (ENS)	442

INDEX

Désignation	Page
BOUCHON DE GOULOTTE DE REMPLISSAGE	542
BOUCHON DE GOULOTTE DE REMPLISSAGE D'HUILE MOTEUR	440
BOUCHON DE GOULOTTE DE REMPLISSAGE (ENS)	66
BOUCHON DE GOULOTTE DE REMPLISSAGE (ENS) (HUILE DE TRANSMISSION)	338
BOUCHON DE RADIATEUR (ENS)	116
BOUCHON DE REMPLISSAGE D'HUILE MOTEUR (ASS)	66
BOUCHON DE RÉSERVOIR DE CARBURANT (ENS)	185
BOUCHON DE VIDANGE	100
	434
BOUCHON DE VIDANGE D'HUILE	50
BOUCHON FILETÉ	382
BOULONNERIE DE MONTAGE DE LA POMPE A HUILE (ASS)	65
BOUTON	670
BOUTON-AVERTISSEUR	298
BOUTON-LOMBAIRE	736
BOUTON (RÉGLAGE DE L'ACCOUDOIR)	458
BRAS DE POUSSEE - DROITE (ASS)	621
BRAS DE POUSSEE - GAUCHE (ASS)	620
BROSSE (ENS)	282
BROSSE (ENS) (DÉMARREUR)	272

C

CABINE - REVÊTEMENT (ASS)	711
CABINE (ASS)	670
CABINE (VERSION)	663
	664
	665
	666
	668
CABLAGE - PLATE-FORME (ASS)	298
CABLAGE DE CONSOLE (ASS)	292
CABLAGE DE MOTEUR (ASS)	296
CABLAGE D'INJECTEUR	303
CACHE-SOUPAPES (ASS)	16
CADENAS (ASS)	184
CANALISATIONS - INJECTEURS-POMPES HYDRAULIQUES	176
CANALISATIONS A COMMANDE PILOTE (ASS)	510
CANALISATIONS D'AIR (ASS)	132
CANALISATIONS D'AIR (ASS)	134
	136
	138
CANALISATIONS DE CHAUFFAGE (ASS)	720
CANALISATIONS DE CLIMATISEUR (ASS)	712
	716
CANALISATIONS DE POMPE (ASS)	516
CANALISATIONS DE RÉCHAUFFEUR DE LIQUIDE DE REFROIDISSEMENT	720
CANALISATIONS DE VÉRIN DE LEVAGE (ASS)	504
CANALISATIONS D'EAU (ASS)	92
	94
	98
	100
CANALISATIONS D'EXTRACTEUR DE BROCHE (ASS)	514
CANALISATIONS D'HUILE (ASS)	606
CANALISATIONS D'HUILE DE TRANSMISSION (ASS)	338
CANALISATIONS D'HUILE DE TURBOCOMPRESSEUR (ASS)	76
CANALISATIONS D'HUILE MOTEUR (ASS)	74
CANALISATIONS DU FILTRE A CARBURANT (ASS)	172
CANALISATIONS DU MOTEUR (ASS)	506
CANALISATIONS DU RIPPER (ASS)	522
	524
	526
CANALISATIONS DU VÉRIN D'INCLINAISON (ASS)	528
	532
	534
	536
CAPOT ET PROTECTION (ASS)	418
CAPTEUR DE NIVEAU DE CARBURANT (ASS)	244
CAPTEUR DE PRESSION (ASS)	251
	252
CAPTEUR DE PRESSION (ASS)	248
	249
	516
CAPTEUR DE PRESSION (ASS)	250
CAPTEUR DE PRESSION (ASS) (ASSISTANCE PNEUMATIQUE)	28
CAPTEUR DE PRESSION (ASS) (COMMANDE D'INJECTION)	28
CAPTEUR DE TEMPERATURE (ASS)	258
	259
	260
CAPTEUR DE TEMPERATURE (ASS) (AIR)	132
CAPTEUR DE TEMPERATURE (ASS) (CARBURANT)	172
CAPTEUR DE TEMPERATURE (ASS) (LIQUIDE DE REFROIDISSEMENT)	94
CAPTEUR DE VITESSE (ASS)	253
	254
	255
	256
	257
CAPTEUR DE VITESSE (ASS) (CALAGE DU MOTEUR)	46

INDEX

Désignation	Page
CAPTEUR DE VITESSE (ASS) (VENTILATEUR)	34
CARENAGE (ASS)	396
CARENAGE DE MOTEUR (ASS)	398
CARTER AV (ASS)	46
CARTER DE VOLANT (ASS)	44
CARTER TELESCOPIQUE DE MECANISME AMORTISSEUR	434
CEINTURE DE SECURITE (ASS)	750
	751
CENDRIER	700
CHAINES (ASS)	454
	455
	456
CHAPEAU	78
	110
	190
CHAPEAU DE GALET INFERIEUR (ASS)	428
CHAPEAU DE ROUE AV (CHAINE) (ASS)	426
	427
CHÂSSIS ET CARTER (ASS)	382
CHAUFFAGE DE CABINE (ASS)	696
	700
CHEMISE INFERIEURE	18
	20
CLAPET	558
	560
CLAPET A BILLE (ARRÊT MANUEL)	164
CLAPET ANTI-RETOUR	164
CLAPET ANTI-RETOUR (RENIFLARD DE VIDE)	546
CLAPET DE DECHARGE	352
CLAPET DE DECHARGE (ASS)	376
	553
CLAPET DE DECHARGE (ASS) (DÉRIVATION DE REFROIDISSEUR DE BOÎTE DE VITESSES)	338
CLAPET DE RETENUE (ENS)	130
CLAPET DE RETENUE (ENS) (SYSTÈME D'ESSUIE GLACE/LAVE-GLACE)	762
CLAPET (DÉTENTE)	452
CLAPET (ENS)	150
	152
	154
	156
	661
CLAPET (ENS)	118
CLAPET (ENS) (DÉMARRAGE À L'ÉTHER)(24 VOLTS)	266
CLAPET (ENS) (EAU)	696
CLÉ	184
CLÉ (COUPE-BATTERIE)	286
CLIMATISEUR (ASS)	660
CLIMATISEUR (VERSION)	658
	659
COLLECTEUR D'ÉCHAPPEMENT (ASS)	140
COLLECTEUR ET SOUPAPE (ASS)	342
	343
COMMANDE D'AFFICHAGE ÉLECTRONIQUE	687
	688
COMMANDE DE BOÎTE ET MONTAGE (ASS)	308
COMMANDE DE DECELERATEUR (ASS)	158
COMMANDE DE DIRECTION ET BOITE DE VITESSES	312
	314
COMMANDE DE FREIN DE STATIONNEMENT (ASS)	464
COMMANDE DE POIGNÉE (ASS)	689
COMMANDE DE POIGNÉE (ASS)	483
COMMANDE D'ÉQUIPEMENT	684
	685
	686
COMMANDE D'EQUIPEMENT (ASS)	690
COMMANDE D'INVERSION DE LA CENTRALE DE SURVEILLANCE (ASS)	692
COMMANDE ELECTRONIQUE DE BOITE (ASS)	208
COMMANDE ELECTRONIQUE DE BOITE (ASS)	210
COMMANDE ELECTRONIQUE DE BOITE (ASS) (CLAVIER ANGLAIS)	201
COMMANDE ELECTRONIQUE DE BOITE (ASS) (CLAVIER INTERNATIONAL)	201
COMMANDE ELECTRONIQUE DE MOTEUR (ASS)	212
	213
COMMANDE ÉLECTRONIQUE D'ÉQUIPEMENT (ASS)	218
COMMANDE ELECTRONIQUE (ENS) (LAMPE DE TABLEAU DE BORD)	708
COMMANDE ELECTRONIQUE ET MONTAGE (ASS)	202
	204
COMMANDE ELECTRONIQUE ET MONTAGE (ASS)	200
	201
COMMANDE ET MONTAGE - MOTEUR	206
COMMANDE HYDRAULIQUE DE BOÎTE (ASS)	316
COMMANDE HYDRAULIQUE (VERSION)	474
	476
	477
	478
COMMANDE NON PROGRAMMEE (ASS)	200
	214
	215
	216
	263

INDEX

Désignation	Page
COMPOSANTS ÉLECTRONIQUES DE LA MACHINE (VERSION)	2
COMPOSANTS ÉLECTRONIQUES DU SYSTÈME VIDS (ASS)	220
COMPRESSEUR DE REFRIGERANT (ASS)	674 676
CONDENSATEUR ET MONTAGE (RÉFRIGÉRANT)	678 680
CONDENSEUR DE RÉFRIGÉRANT	682
CONNEXION (ASS)	506
CONTACTEUR DE DEBIT (ASS)	5 6
CONTACTEUR DE DEBIT (ASS)	287 288
CONTACTEUR (ENS) (À BASCULE) (RELEVAGE/ABAISSEMENT DE LA CONSOLE (ASS))	458
CONTACTEUR (ENS) (FEUX ARRIÈRE)	299
CONTACTEUR (ENS) (PHARES AV)	299
CONTACTEUR (ENS) (PORTIERE AVANT,ARRIERE,DROITE ET GAUCHE)	786
CONTACTEUR (ENS) (PRESSION DIFFÉRENTIEL)	502
CONTACTEUR (ENS) (VENTILATEUR SOUFFLANT)	700
CONTACTEUR (ENS) (24 VOLTS) (ILLUMINÉ)	299
CONTACTEUR MAGNETIQUE (ASS)	289
CONTACTEUR MAGNETIQUE (ASS) (RELAIS DE DÉMARRAGE)	268 292
CONTACTEUR MAGNETIQUE (ASS) (RELAIS PRINCIPAL)	292
CONTACTEUR MAGNETIQUE (ENS) (RELAIS DE DÉMARREUR)	80
CONTREPOIDS (ASS)	388 390 391
CONTREPOIDS ET BARRE - ARRIÈRE (VERSION)	386
CONVERTISSEUR DE COUPLE (ASS)	358 360 362
COUDE (ASS)	516
COURONNE ET DIFFERENTIEL (ASS)	320
COURROIE	189
COURROIE TRAPEZOIDALE	676
COUVERCLE DE CARTER AV (ASS)	14
COUVERCLE DE CARTER DE VOLANT (ASS)	12
COUVERCLE DE RÉSERVOIR HYDRAULIQUE	484
COUVERCLE DE TOURILLON (ASS)	392
COUVERCLE INFÉRIEUR-DOSSIER (ASS)	736
COUVERCLE INFÉRIEUR-DOSSIER (ASS)	734 735
CRAN DE COMMANDE (ASS)	480 483
CREPINE (ENS)	542
CROISILLON ET ROULEMENT	365
CULASSE (ASS)	27 28
CULASSE (ENS)	25 26
CULBUTERIE (ASS)	63

D

Désignation	Page
DÉFLECTEUR DE PLUIE (ENS)	130 131
DÉFLECTEUR DE PLUIE (ENS)	129
DEFLECTEUR PARE-SABLE (ASS)	404
DÉMARRAGE À TEMPÉRATURE BASSE	268
DÉMARREUR ÉLECTRIQUE (ASS)	272 276
DÉMARREUR ÉLECTRIQUE (ASS)	279 280 282
DENT DE RIPPER (ASS)	654 655 656
DISJONCTEUR DE SECURITE (ENS) (FREIN)	310
DISJONCTEUR DE SECURITE (ENS) (INVERSION)	312
DISJONCTEUR (ENS) (10A) (CONTACTEUR DE DÉMARRAGE À CLÉ)	292
DISJONCTEUR (ENS) (10A) (FREIN D'EMBRAYAGE ÉLECTRONIQUE)	292
DISJONCTEUR (ENS) (125A) (PRINCIPAL)	292
DISJONCTEUR (ENS) (15A)	712
DISJONCTEUR (ENS) (15A) (ÉQUIPEMENT)	292
DISJONCTEUR (ENS) (15A) (MOTEUR)	292
DISJONCTEUR (ENS) (15A) (PROJECTEURS AVANT)	292
DISJONCTEUR (ENS) (15A) (SOUFFLANT)	292
DISPOSITIF D'ARRÊT	465
DISPOSITIF DE VIDANGE RAPIDE D'HUILE (ASS)	78
DISPOSITIF D'EVACUATION DES VAPEURS DE CARTER	70
DISTRIBUTEUR (ASS)	368 370 554 556 558 560 564
DISTRIBUTEUR DE BOITE (ASS)	380
DISTRIBUTEUR DE FREIN (ENS)	553

INDEX

Désignation	Page
DISTRIBUTEUR DE PRESSION (ASS)	186
DISTRIBUTEUR ET MONTAGE (ASS)	552
DISTRIBUTEUR ET VÉRIN (ASS)	548
	549
	550

E

EAU DES CHEMISES - RECHAUFFEUR (ASS)	225
EAU DES CHEMISES - RECHAUFFEUR (ASS)	224
ÉCLAIRAGE - PROJECTEURS (ASS)	234
	236
ECLAIRAGE AR (ASS)	240
ÉCLAIRAGE (ASS)	233
ECLAIRAGE AV (ASS)	238
	239
ECLAIRAGE DE RIPPER (ASS)	242
ÉCLAIRAGE (VERSION)	230
ÉCRAN (ENS)	542
ÉCRAN (ENS) (ADMISSION DE POMPE À HUILE DE TRANSMISSION)	338
ÉCRAN THERMIQUE (ASS)	144
ÉJECTEUR AUTOMATIQUE DE POUSSIÈRE (ASS)	130
	131
ÉLECTRONIQUE DE TRANSMISSION (ASS)	219
ÉLÉMENT DE FILTRE À AIR (ENS) (PRINCIPAL)	128
ÉLÉMENT DE FILTRE À AIR (ENS) (SECONDAIRE)	128
ÉLÉMENT DE FILTRE À HUILE (ENS)	324
ÉLÉMENT DE FILTRE À HUILE (ENS) (DÉBIT HYDRAULIQUE/RETOUR DE DÉBIT)	542
ÉLÉMENT DE FILTRE À HUILE (ENS) (HYDRAULIQUE)	542
ÉLÉMENT DE FILTRE-HYDRAULIQUE (SOUPAGE ÉLECTRIQUE /HYDRAULIQUE)	502
ÉLÉMENT DU RÉCHAUFFEUR D'EAU DES CHEMISES (ENS)	225
ÉLÉMENT DU RÉCHAUFFEUR D'EAU DES CHEMISES (ENS) (120 VOLTS/1500 WATTS)	224
EMBOUT ET LAME DE COUPE (ASS)	627
	628
	629
	630
EMBRAYAGE ET FREIN DE DIRECTION (ASS)	462
ENGRENAGE DE DIRECTION (ASS)	466
	468
ENGRENAGE D'ÉQUIPEMENT (ASS)	600
ENTRAÎNEMENT AUXILIAIRE (ASS)	31
ENTRAÎNEMENT DE VENTILATEUR (ASS)	32
	34
ENTRAÎNEMENT DE VENTILATEUR (ASS)	35
ENTRAINEMENT D'INJECTEURS-POMPES HYDRAULIQUES	160
	162
ENTRETIEN DE LA TRANSMISSION (ASS)	263
ENTRETIEN D'ÉQUIPEMENT (ASS)	261
	262
ESSUIE-GLACE (ASS)	782
	784
	786
ETRIER (ASS)	64
ÉVENT (ENS)	194
EXTRACTEUR DE BROCHE (ASS)	618
EXTRACTEUR DE BROCHE (VERSION)	616

F

FAISCEAU DE CABLES (ENS) (CAPTEUR DE PRESSION)	249
FAISCEAU DE CABLES (ENS) (DOUILLE) (CAPTEUR DE PRESSION)	249
FAISCEAU DU REFROIDISSEUR D'HUILE (ENS) (MOTEUR)	94
FILTRE A AIR (ASS)	126
	128
FILTRE À AIR (CABINE) (GRANDE EFFICACITÉ)	700
FILTRE À AIR (CABINE) (RÉDUCTION DES ODEURS)	700
FILTRE À AIR (CABINE) (STANDARD)	700
FILTRE À AIR DE CABINE (STANDARD)	700
FILTRE A CARBURANT (ENS)	172
FILTRE A HUILE (ASS)	324
FILTRE A HUILE (ASS)	502
FILTRE A HUILE (ASS) (TRANSMISSION)	338
FILTRE À HUILE MOTEUR (ASS)	68
FILTRE A HUILE MOTEUR (ENS)	68
FILTRE A MOUSSE	192
FILTRE DE SÉPARATEUR D'EAU ET DE CARBURANT (ASS)	168
FILTRE DE SÉPARATEUR D'EAU ET DE CARBURANT (ASS)	167
FILTRE (ENS) (SÉPARATEUR D'EAU ET CARBURANT)	167
FILTRE ET CANALISATIONS DE CARBURANT (ASS)	164
FILTRE (INJECTEUR DE POMPE HYDRAULIQUE)	162
FILTRE (POMPE À EAU)	104
FREIN - COMMANDE (ASS)	310
FUSIBLE (10A)	293
FUSIBLE (15A)	293
FUSIBLE (20 A)	293

INDEX

Désignation	Page
FUSIBLE (30A)	217
G	
GALET A BOUDIN DOUBLE (ASS)	445 446
GALET A BOUDIN SIMPLE (ASS)	447 448
GALET SUPERIEUR (VERSION)	444
GARDE-BOUE (ASS)	400
GICLEUR-ÉTHER (ENS)	266
GRAISSAGE DE BALANCIER DE SUSPENSION (ASS)	440
GRAISSAGE DE LA TRAVERSE-PIVOT	442
GRAISSEUR	8 488 490 492 494 598 602 604
GRAISSEUR (FILET 1/8-27)	430 432 496 500 584 594 596 613
GRAISSEUR (FILETAGE 1/8-27)(45 DEGRÉS)	32
GRILLE DE PROTECTION (ASS)	743
GROUPE DE MONTAGE	732
GROUPE DE MOTEUR A PISTONS	538
H	
HUILE MOTEUR - CARTER (ASS)	50
I	
INJECTEUR DE CARBURANT (ASS)	169
INJECTEURS-POMPES HYDRAULIQUES (ENS)	180 182
INSONORISATION (VERSION)	4
INTERRUPTEUR - BOUTON-POUSSOIR (ENS)	690
INTERRUPTEUR - BOUTON-POUSSOIR (ENS)	708
INTERRUPTEUR - BOUTON-POUSSOIR (ENS) (CHANG. DE VITESSE)	470
INTERRUPTEUR - BOUTON-POUSSOIR (ENS) (PASSAGE DE VITESSE)	470
INTERRUPTEUR - DÉRIVATION (ASS)	285
INTERRUPTEUR À BASCULE (ASS) (AUXILIAIRE DE DÉMARRAGE)	299
INTERRUPTEUR À BASCULE (ASS) (COMMANDE DU VENTILATEUR)	694
INTERRUPTEUR À BASCULE (ASS) (VERROUILLAGE)(EXTRACTEUR DE BROCHE DE RIPPER)	474
INTERRUPTEUR À BASCULE (ENS) (VERROUILLAGE)(EXTRACTEUR DE BROCHE DE RIPPER)	474
INTERRUPTEUR BALANCIER (ENS) (AUXILIAIRE)	299
INTERRUPTEUR BALANCIER (ENS) (CLIMATISEUR MARCHE/ARRÊT)	700
INTERRUPTEUR BALANCIER (ENS) (ÉCLAIRAGE LATÉRAL)	299
INTERRUPTEUR BALANCIER (ENS) (FREIN DE STATIONNEMENT)	464
INTERRUPTEUR BALANCIER (ENS) (24 VOLTS) (ILLUMINÉ)	299
INTERRUPTEUR BALANCIER (ENS) (24 VOLTS)(ÉTANCHE-ILLUMINÉ)	299
INTERRUPTEUR BALANCIER (ENS) (24 VOLTS)(SCELLÉ)(ALLUMÉ)	299
INTERRUPTEUR DE DÉMARRAGE (ASS)	290
INTERRUPTEUR DE KLAXON (ENS)	298
INTERRUPTEUR DE THERMOSTAT (ENS)	660
J	
JAUGE D'HUILE MOTEUR (BAIONNETTE) (ASS)	72
JAUGE D'HUILE MOTEUR (BAÏONNETTE) (ENS) (TRANSMISSION)	338
JEU DE COURROIES TRAPEZOIDALES (COMPREND 4 COURROIES)	32 35
JOINT DE VILEBREQUIN (ASS)	17
JOINT-PÂTE	14
JOINT PLAT DU COLLECTEUR D'ECHAPPEMENT	140
JOINT PLAT (POMPE D'AMORÇAGE DE CARBURANT)	172
JOINT UNIVERSEL (ASS)	365
K	
KIT - BLOCAGE DE BORNE (BLOC FUSIBLE)	293
KIT D'ATTACHE	758
KIT D'ATTACHE DE CEINTURE DE SECURITE	756
KIT DE BALAI D'ESSUIE-GLACE	787
KIT DE BEC	776 778

INDEX

Désignation	Page
KIT DE BLOC COULISSANT	753
	754
	755
KIT DE BORNE	190
	277
	283
KIT DE BORNE (DÉMARREUR)	273
KIT DE BOUCHON (INJECTEUR DE POMPE HYDRAULIQUE)	182
KIT DE BOUGIE (2 BROCHES)	289
	293
	296
	316
	458
KIT DE BOUGIE (3 BROCHES)	250
	251
	252
	296
	299
	690
KIT DE BOUGIE (3 BROCHES) (CAPTEUR DE PRESSION)	249
KIT DE BOUGIE (3 BROCHES) (CAPTEUR DE VITESSE-CALAGE DU MOTEUR)	254
KIT DE BOUGIE (4 BROCHES)	293
	296
KIT DE BOUGIE (6 BROCHES)	688
KIT DE BOULONNERIE	190
	758
KIT DE BOULONNERIE, JOINTS ET CALES D'ÉPAISSEUR	602
	604
KIT DE BOUTON	704
KIT DE CARTOUCHE (ARRIÈRE)	540
KIT DE CHAPEAU DE FILTRE (RÉSERVOIR DE CARBURANT)	185
KIT DE COMPENSATEUR (INJECTEUR DE POMPE HYDRAULIQUE)	182
KIT DE COUSSINET	190
	705
KIT DE COUSSINET (DÉMARREUR)	282
KIT DE COUSSINET (ÉTRIER)(POMPE HYDRAULIQUE D'INJECTEUR)	182
KIT DE COUSSINET (STANDARD)	52
KIT DE COUSSINET (0,635 MM SOUS-DIMENSIONNÉ)	52
KIT DE COUSSINET (1,27 MM SOUS-DIMENSIONNÉ)	52
KIT DE FAISCEAU DE CABLAGE (SIÈGE À SUSPENSION PNEUMATIQUE)	758
KIT DE GAINE	756
KIT DE GUIDE	776
	778
KIT DE JOINT DE VERIN HYDRAULIQUE	486
	488
KIT DE JOINTS	34
	170
	373
	379
	553
	574
	577
	578
	579
	580
KIT DE JOINTS (ÉLECTROVANNE)	187
KIT DE JOINTS (ÉLECTROVANNE DE PRESSION PILOTE)	576
KIT DE JOINTS (INJECTEUR DE POMPE HYDRAULIQUE)	182
KIT DE PALETTE	472
	473
	540
KIT DE PARE-CHOCS	704
KIT DE POMPE (RÉNOVÉ)(POMPE HYDRAULIQUE D'INJECTEUR)	182
KIT DE POUSSOIR	705
KIT DE PRISE FEMELLE (12 BROCHES)	464
	480
KIT DE PRISE FEMELLE (2 BROCHES)	80
	188
	255
	256
	257
	266
	268
	285
	291
	292
	293
	296
	298
	379
	458
	502
	546
	577
	580
	661
	682
	696
	712
	716
	724
KIT DE PRISE FEMELLE (3 BROCHES)	132
	172
	246
	247
	258
	259

INDEX

Désignation	Page
	260
	293
	296
	474
	690
	700
	708
	764
KIT DE PRISE FEMELLE (4 BROCHES)	244
	293
	296
	316
	574
	575
	578
	687
	690
	712
	725
	726
KIT DE PRISE FEMELLE (6 BROCHES)	243
	299
	470
	661
	692
	696
	700
	724
	727
	728
	782
	784
	786
KIT DE PRISE FEMELLE (8 BROCHES)	299
KIT DE RÉNOVATION DE LA POMPE À EAU (EAU)	104
KIT DE RESSORT	773
	774
KIT DE RESSORTS	704
KIT DE REVISION GENERALE	34
KIT DE ROULEAU	756
	758
KIT DE VIS DE RETENUE	216
KIT D'ENGRENAGE DE DÉMARREUR	283
KIT D'INDICATEUR	704
KIT-FENETRE	710
KLAXON (ENS) (24 VOLTS)(TON FAIBLE)	194
KLAXON (ENS) (24 VOLTS)(TON FORT)	193

L

Désignation	Page
LAME DE COUPE (ASS)	631
	632
	633
	634
	635
LAME SEMI-UNIVERSELLE (ASS)	644
	645
LAME SEMI-UNIVERSELLE (ENS)	638
LAME UNIVERSELLE (ASS)	646
	648
LAME UNIVERSELLE (ENS)	640
	641
	642
	643
LAMPE - FEUX AV (24 VOLTS) (PROJECTEUR)	229
LAMPE - FEUX AV (24 VOLTS) (65 WATTS)(PROJECTEUR)	228
LAMPE - PHARE (ASS)	229
LAMPE - PHARE (ASS)	228
LAMPE - PHARE (ASS) (24 VOLTS)(SUSPENDU)	233
	234
LAMPE - PHARE (ASS) (24 VOLTS)(VERTICAL)	236
LAVE-GLACE - VITRE (ASS)	764
LENTILLE (ENS) (PROJECTEUR)	228
	229
LENTILLE (PLAFONNIER)	227
LENTILLE ROUGE	298
	708
LÈVRE	112
	114
LOGICIEL - TRANSMISSION (ASS)	219
LOGICIEL-ÉQUIPEMENT (ASS)	218

M

Désignation	Page
MAILLON DE CHAINE (ENS)	438
MANCHON POUR L'ALESAGE DE POUSSOIR	18
	20
MANOCONTACT (ENS)	546
	716
MANOCONTACT (ENS) (CLIMATISEUR)	712
MANOCONTACT (ENS) (HAUTE/BASSE)	712
MANOCONTACT (ENS) (HUILE)	80
MECANISME AMORTISSEUR ET REGLAGE DE CHAINES (ASS)	452
MINUTERIE	80
MINUTERIE (ENS) À TEMPORISATION (24 VOLTS)	712
	716
MODIFICATION -BULLDOZER	611
	612
MODULE - QUATRE INSTRUMENTS (ASS)	727
MODULE (ASS)-CENTRE DE MESSAGE	724
MODULE (ASS)-TOUCHE DE MODULE DE SURVEILLANCE	725

INDEX

Désignation	Page
	726
MODULE (ASS)-TOUCHE DE MODULE DE SURVEILLANCE (VERSION ANGLAISE)	208
MODULE (ASS)-TOUCHE DE MODULE DE SURVEILLANCE (VERSION INTERNATIONALE)	210
MODULE D'INDICATEUR DE VITESSE ET COMPTE-TOURS (ASS)	728
MONTAGE D'ALTERNATEUR (ASS)	49
MONTAGE DE CABINE (ASS)	730
MONTAGE DE MOTEUR (VERSION)	7
MONTAGE DE RADIO (ASS)	707
MONTAGE DE RIPPER (ASS)	614
MONTAGE DE VÉRIN (ASS)	613
MONTAGE DU TOIT ROPS (ASS)	733
MOTEUR DE VENTILATEUR (ASS)	538
MOTEUR ELECTRIQUE (ASS)	682
MOTEUR ELECTRIQUE (ASS) (27 VOLTS)	660
	696
MOTEUR (VERSION)	6
MOTEUR (VERSION)	5

O

OEILLETONS DE LEVAGE MOTEUR (ASS)	48

P

PALONNIER - GROUPE DE COMMANDE (ASS)	482
	483
PALONNIER - GROUPE DE COMMANDE (ASS)	480
PARE-PIERRES (ASS)	414
	415
PARE-POUSSIERE	54
	68
	95
	150
	152
	154
	156
	306
	338
	366
	374
	376
	471
	506
	510
	516
	526
	553
	566
	568
PIGNON AR (ASS)	40
PIGNONNERIE AV (ASS)	38
PISTON ET BIELLE (ASS)	52
PIVOT D'ESSUIE-GLACE (ASS)	790
PLAFONNIER (ASS)	227
PLAFONNIER (ASS) (24 VOLTS)(AVEC INTERRUPTEUR)	670
PLAQUE	421
PLAQUE - AVERTISSEMENT (HUILE DE RESSORT AMORTISSEUR)	434
PLAQUE - AVERTISSEMENT (RESSORT AMORTISSEUR)	422
	434
PLAQUE D'USURE (ASS)	649
	650
PLAQUE SIGNALÉTIQUE (ASS)	791
PLAQUE SIGNALÉTIQUE (NUMÉROS D'ENTRETIEN)	792
PLAQUE SIGNALÉTIQUE (REMARQUE)	732
PLAQUE SIGNALÉTIQUE (REMARQUE) (POMPE DE PRÉGRAISSAGE)	80
PLAQUE SIGNALÉTIQUE (REMARQUE) (RADIO)	707
PLAQUES SIGNALETIQUES ET AUTOCOLLANTS (ASS)	792
PLATE-FORME - CABINE (ASS)	738
POMPE À AILETTES - CARTOUCHE	472
	473
POMPE A EAU (ASS)	102
	104
POMPE A ENGRENAGES (ASS)	350
	352
	354
POMPE A ENGRENAGES (ASS) (HUILE DE TRANSMISSION)	338
POMPE A HUILE MOTEUR (ASS)	84
POMPE À PALETTES (ASS)	540
POMPE D'INJECTEURS-POMPES HYDRAU. ET MONTAGE	178
POMPE D'INJECTION DE CARBURANT (ASS)	179
PORTE-BALAIS (ENS)	283
PORTE-BALAIS (ENS) (BROSSE DE DÉMARREUR)	272
POUPÉE DU CLAPET DE DÉCHARGE	560
PREFILTRE (ASS)	142
PROTECTEUR DE RÉDUCTEURS (VERSION)	405
PROTECTION D'ARBRE PIVOT (ASS)	409
PROTECTION DE JOINT (ASS)	416
PROTÈGE-RADIATEUR (ASS)	410

R

RACCORD	148

INDEX

Désignation	Page
RACCORD (ASS) (DÉBRANCHEMENT RAPIDE)	516
RADIATEUR (ASS)	106
	110
RALLONGE DU DOSSIER DE SIEGE	750
	751
RÉCEPTEUR-DÉSHYDRATEUR (ASS) (CLIMATISEUR)	716
RÉCEPTEUR-DÉSHYDRATEUR (ASS) (RÉFRIGÉRANT)	712
RECHAUFFEUR DE CARBURANT (ASS)	222
REDUCTEUR MARIN - MONTAGE (ASS)	344
RÉDUCTEURS (ASS)	326
	330
	334
REFROIDISSEUR D'ADMISSION D'AIR (ASS)	122
REFROIDISSEUR D'HUILE DE BOÎTE (ASS)	318
RÉGLAGE DE COMMANDE DE DIRECT. ET DE BOÎTE	458
REGLAGE DE SIEGE (ASS)	657
RÉGULATEUR DE TEMPÉRATURE (ASS)	112
RÉGULATEUR DE TEMPÉRATURE (ASS)	114
RENIFLARD	440
RENIFLARD (ENS) (CARTER)	16
RENIFLARD (TRANSMISSION)	338
RÉSERVOIR - LAVE-GLACE (ASS)	760
	762
RÉSERVOIR DE CARBURANT (ASS)	184
	185
RÉSERVOIR D'EAU (ASS)	118
RÉSERVOIR DU LIQUIDE DE REFROIDISSEMENT (ASS)	116
RÉSERVOIR HYDRAULIQUE ET FILTRE (ASS)	542
RÉSERVOIR HYDRAULIQUE ET MONTAGE (ASS)	546
RESSORT	283
RESSORT (BROSSE DE DÉMARREUR)	272
	273
RÉTROVISEUR (ASS)	722
	723
RIPPER (ASS)	651
	652
	653
RIPPER (VERSION)	623
	624
	625
ROBINET DE BATTERIE (ASS)	286
ROBINET DE BATTERIE (ASS) (BATTERIE)	192
ROBINET-PRÉLÈVEMENT D'ÉCHANTILLON DE LIQUIDE (ASS)	339
ROBINET-PRÉLÈVEMENT D'ÉCHANTILLON DE LIQUIDE (ASS) (HUILE MOTEUR)	68
ROTATION DE LA ROUE DU VENTILATEUR SOUFFLANT	478
	684
	786
	793
ROTATION DE LA ROUE DU VENTILATEUR SOUFFLANT (COMMANDE DE BULLDOZER)	793
ROTATION DE LA ROUE DU VENTILATEUR SOUFFLANT (CONTACTEUR D'EXTRACTEUR DE BROCHE DE RIPPER)	474
ROTATION DE LA ROUE DU VENTILATEUR SOUFFLANT (ENTRÉE D'EAU/SORTIE D'EAU)	660
	696
ROTATION DE LA ROUE DU VENTILATEUR SOUFFLANT (RÉGLAGE DU SIÈGE)	756
	758
ROUE AV - CHAINES (ASS)	436
	437

S

SEGMENT DE BARBOTIN (ASS)	356
SIÈGE (ASS)	745
	746
	748
	750
	751
SIÈGE AVEC SUSPENSION (ASS)	758
SIÈGE AVEC SUSPENSION (ASS)	752
	753
	754
	755
	756
SIÈGE INCLINABLE (ASS)	740
SIEGE RAPPORTE (SOUPAPE) (ADMISSION)	25
SIEGE RAPPORTE (SOUPAPE) (ÉCHAPPEMENT)	25
SIEGE (VERSION)	744
SILENCIEUX (ASS)	141
SOLÉNOÏDE DE DÉMARREUR (ENS)	276
SOLÉNOÏDE DE DÉMARREUR (ENS)	264
SOLÉNOÏDE (ENS)	282
SOLÉNOÏDE (ENS) (DÉMARREUR)	272
SONDE - CIRCUIT DE CARBURANT	245
	246
	247
	480
	483
	690
SONDE - CIRCUIT DE CARBURANT (POSITION DE BRAQUAGE)	312

INDEX

Désignation	Page
SONDE - CIRCUIT DE CARBURANT (SANS RESSORT) (DIRECTION)	312
SOUPAPE - SOLÉNOÏDE (ASS)	187
SOUPAPE - SOLÉNOÏDE (ASS)	574
	575
	576
	577
	578
	579
	580
SOUPAPE - SOLÉNOÏDE (ASS)	378
	379
	556
SOUPAPE D'ABAISSEMENT RAPIDE (ASS)	572
SOUPAPE D'ADMISSION	27
SOUPAPE DE BULLDOZER ET MONTAGE (ASS)	551
SOUPAPE DE COMBINAISON (ASS)	553
SOUPAPE DE DÉRIVATION	542
SOUPAPE DE DERIVATION (ASS) (CLIMAT FROID UNIQUEMENT)	558
SOUPAPE DE DIRECTION ET MONTAGE (ENS)	471
SOUPAPE DE GRAISSAGE (ENS) (REMPLISSAGE)	452
SOUPAPE DE MODULATION (ASS)	372
	373
SOUPAPE DE PRIORITE (ASS)	374
SOUPAPE DE SÉQUENCE (ASS)	553
SOUPAPE DE VIDANGE	382
	546
SOUPAPE D'ÉCHAPPEMENT	27
SOUPAPE-ÉCHANTILLON	95
SOUPAPE PILOTE (ASS)	566
	568
SOUPAPE PILOTE ET MONTAGE (ASS)	366
SOUPAPE RÉDUCTRICE DE PRESSION (ASS)	570
	571
STABILISATEUR - BRAS DE POUSSEE (ASS)	610
STABILISATEUR DU BRAS DE POUSSEE (ASS)	622
SUPPORT - COMMANDE (ASS)	470
SUPPORT DE MOTEUR (ASS)	60
	61
SUSPENSION A BOGIES (ASS)	450
SUSPENSION DE SIEGE - CARTER (ASS)	704

T

Désignation	Page
TABLEAU DE BORD (ASS)	708
TAMIS D'ASPIRATION	306
	358
TAMIS DE CLOCHE (ENS)	74
TAMIS DE RÉSERVOIR DE CARBURANT	184
TAMPON DE POUSSÉE (ASS)	581
	582
	583
TAPIS DE SOL (INFERIEUR)	730
TAPIS DE SOL (SUPERIEUR)	730
TENDEUR DE COURROIE (ASS)	8
THERMOSTAT-TEMPÉRATURE D'EAU (92 DEGRÉS C)	112
	114
TIRANT DE BULLDOZER (ASS)	584
TOIT ROPS (ASS)	742
TOIT ROPS (ENS)	741
TOURILLON DE BULLDOZER (ASS)	626
TOURILLON DE MOTEUR (ASS)	62
TRAIN DE ROULEMENT	457
TRAINS PLANÉTAIRES - CARTER ET PIÈCES	306
TRANSFORMATEUR DE PUISSANCE (DE 24 VOLTS À 12 VOLTS)(25 AMP)	217
TRANSFORMATION ELECTRIQUE (ASS)	217
TRANSMISSION (VERSION)	349
TURBOCOMPRESSEUR - CARTOUCHE (ASS)	147
TURBOCOMPRESSEUR (ASS)	146
	147

V

Désignation	Page
VANNE PILOTE (ASS)	573
VENTILATEUR DÉGIVREUR (ASS)	694
VENTILATEUR SOUFFLANT (ASS)	88
	90
VÉRIN À DOUBLE INCLINAISON (VERSION)	485
VÉRIN DE LEVAGE DE LAME DE BULLDOZER (ASS)	486
	548
VERIN DE LEVAGE DE RIPPER (ASS)	494
	496
VERIN DE LEVAGE DE RIPPER (ASS) (DROITE)	623
	624
	625
VERIN DE LEVAGE DE RIPPER (ASS) (GAUCHE)	623
	624
	625
VERIN D'EXTRACTEUR DE BROCHE DE RIPPER (ASS)	498
VÉRIN D'INCLINAISON DE BULLDOZER (ASS)	488
	490
	492
VÉRIN D'INCLINAISON DE BULLDOZER (ASS) (DROITE)	485

INDEX

Désignation	Page
VÉRIN D'INCLINAISON DE BULLDOZER (ASS) (GAUCHE)	485
VERIN D'INCLINAISON DU RIPPER (ASS)	500
VERSION DE BULLDOZER	585
	586
	587
	588
	589
	590
	591
	592
VERSION DE CHASSIS	385
VERSION DE PRÉGRAISSAGE DE MOTEUR	80
VERSION DE TRANSFORMATION DE CABINE ROPS	693
VERSION DE VENTILATEUR	86
VERSION D'ÉCLAIRAGE ARRIÈRE	232
VERSION POUR LES RÉGIONS POLAIRES	1
VIDANGE-ÉCOLOGIE (ASS)	322
VILEBREQUIN - POULIE (ASS)	57
	58
VILEBREQUIN (ASS)	17
VITRE COULISSANTE (ENS)	767
	768
VITRE DE CABINE (ASS)	769
	770
	771
	772
	773
	780
VITRE DE CABINE (ASS)	774
	776
	779
VITRE DE CABINE (ASS)	778
VITRE DE CABINE (ASS) (ARRIÈRE-GLISSEMENT)	670
VITRE DE CABINE (ASS) (CÔTÉ DROIT)(COULISSANT)	767
VITRE DE CABINE (ASS) (CÔTÉ GAUCHE)(COULISSANT)	768
VITRE DE CABINE (ASS) (DROITE)	769
	773
VITRE DE CABINE (ASS) (GAUCHE)	770
VITRE-FIXE-DROITE (TEINTÉ)	773
VITRE-FIXE-GAUCHE (TEINTÉ)	774
VITRE-PATIN-DROIT (TEINTÉ)	778
VITRE-PATIN (GAUCHE) (TEINTÉ)	776
VITRE (TEINTÉ)	769
	770
	779
VITRE (TEINTÉ) (CABINE-AVANT-FIXE)	670
VITRE (TEINTÉ) (CABINE-CÔTÉ-FIXE)	670
VITRE (TEINTÉ) (PORTES DE LA CABINE-FIXES)	670
VITRE (TEINTÉ)(VERT)	780
VOLANT MOTEUR (ASS)	36
VUE DU MODÈLE	3

INDICE

Nombre	Página

A

ABERTURA DE DESCARGA (CONJ)	194
ACCESORIOS - IMPULSOR DE (GR)	31
ACONDICIONADOR DE AIRE (CONFIG)	658 659
ACONDICIONADOR DE AIRE (GR)	660
ACOPLAMIENTO DE BOMBA (GR)	319
ACUMULADOR DE ACONDICIONADOR DE AIRE	712 716
ADAPTADOR	148
ADAPTADOR DE LLENADO RÁPIDO DE COMBUSTIBLE (GR)	150 152 154 156
AGUA DE LAS CAMISAS - CALENTADOR DEL (GR)	224
AGUA DE LAS CAMISAS - CALENTADOR DEL (GR)	225
AIRE - TUBERÍAS DE (GR)	134 136 138
AIRE - TUBERÍAS DE (GR)	132
AJUSTADOR DE CORREA (GR)	8
AJUSTADOR DEL ASIENTO (GR)	657
AJUSTADOR DEL CONTROL DE DIRECCIÓN Y TRANSMISIÓN (GR)	458
ALARMA (GR)	188
ALFOMBRILLA INFERIOR	730
ALFOMBRILLA SUPERIOR	730
AMORTIGUADOR DE VIBRACIONES (GR)	30
ANTEFILTRO (GR)	142
ÁRBOL DE LEVAS (GR)	10
ARRANQUE - INTERRUPTOR DE (GR)	290
ARRANQUE A TEMPERATURA BAJA (CONFIG)	268
ASIENTO CON SUSPENSIÓN (GR)	756 758
ASIENTO DE VÁLVULA-CASQUILLO (ADMISIÓN)	25
ASIENTO DE VÁLVULA-CASQUILLO (ESCAPE)	25
ASIENTO (GR)	745 746 748 750 751
ATOMIZADOR DE ETER (CONJ)	266
AUXILIAR DE ARRANQUE CON ÉTER (GR)	266

B

BALANCÍN (GR)	59
BARRA COMPENSADORA (CONJ)	429
BARRA COMPENSADORA (GR)	430 432
BARRA DE TIRO (GR)	394
BARRA LIMPIADORA (GR)	424 425
BARRA LIMPIADORA (GR) (LADO DERECHO)	422
BARRA LIMPIADORA (GR) (LADO IZQUIERDO)	422
BARRA LIMPIADORA(CONFIG)	422
BASTIDOR DEL DESGARRADOR (GR)	594 596 598
BASTIDOR TELESCÓPICO DEL RESORTE TENSOR (GR)	434
BATERÍA Y CABLES (GR)	192
BATERÍA (12 VOLTIOS/SECO)	194 269
BLOQUE DE EMPALME (CONJ)	226
BLOQUE DE EMPALME (GR)	226
BLOQUE DE EMPUJE (GR)	581 582 583
BLOQUE DE FUSIBLES (CONJ) (16 POLOS)	293
BLOQUE DE POTENCIA (GR)	199
BLOQUE DESLIZANTE-JUEGO	753 754 755
BLOQUE MOTOR (CONJ)	20
BLOQUE MOTOR (CONJ)	18
BLOQUE MOTOR (GR)	22 24
BOCINA (CONJ) (24 VOLTIOS)(TONO ALTO)	193
BOCINA (CONJ) (24 VOLTIOS)(TONO BAJO)	194
BOMBA - TUBERÍAS DE (GR)	516
BOMBA DE ACEITE DEL MOTOR (GR)	84
BOMBA DE AGUA (GR)	102 104
BOMBA DE ENGRANAJES (GR)	350 352 354
BOMBA DE ENGRANAJES (GR) (ACEITE DEL TREN DE FUERZA)	338
BOMBA DE INYECCIÓN DE COMBUSTIBLE (GR)	179
BOMBA DE PALETAS-CARTUCHO (GR)	472 473
BOMBA DE PALETAS (GR)	540
BOMBA HIDRÁULICA DEL INYECTOR UNITARIO (GR)	180 182
BOMBA HIDRÁULICA DEL INYECTOR UNITARIO Y MONTAJE	178
BRAZO DE EMPUJE DERECHO (GR)	621

INDICE

Nombre	Página
BRAZO DE EMPUJE IZQUIERDO (GR)	620
C	
CABINA (CONFIG)	663, 664, 665, 666, 668
CABINA (GR)	670
CABLES DE INYECTOR (GR)	303
CABLES DE LA CONSOLA (GR)	292
CABLES DE LA PLATAFORMA (GR)	298
CABLES DEL MOTOR (GR)	296
CABLES DEL TAPÓN (CONJ)	243
CADENAS (GR)	454, 455, 456
CAJA DE LA SUSPENSIÓN DEL ASIENTO (GR)	704
CAJA DELANTERA (GR)	46
CAJA Y BASTIDOR (GR)	382
CAJA Y PIEZAS DE LOS PLANETARIOS	306
CALCOMANÍA	464
CALCOMANÍA DE ADVERTENCIA	434, 478, 684, 732, 786, 793
CALCOMANÍA DE ADVERTENCIA (AGUA ADENTRO/AGUA AFUERA)	660, 696
CALCOMANÍA DE ADVERTENCIA (ASIENTO AJUSTABLE)	756, 758
CALCOMANÍA DE ADVERTENCIA (BOMBA DE PRELUBRICACION)	80
CALCOMANÍA DE ADVERTENCIA (CABLE AUXILIAR DE ARRANQUE)	269
CALCOMANÍA DE ADVERTENCIA (CONTROL DE HOJA TOPADORA)	793
CALCOMANÍA DE ADVERTENCIA (INTERRUPTOR DE EXTRACTOR DE PASADORES DE DESGARRADOR)	474
CALCOMANÍA DE ADVERTENCIA (RADIO)	707
CALCOMANIA DE FUSIBLE	712
CALCOMANÍA DE IDENTIFICACIÓN	208, 210
CALCOMANÍA DE IDENTIFICACIÓN (DISYUNTOR)	292
CALCOMANÍA DE IDENTIFICACIÓN (FUSIBLE)	292
CALCOMANÍA DE IDENTIFICACIÓN (NUMERO DE GRUPO Y SECUENCIA)	660, 682, 696
CALCOMANÍA DE IDENTIFICACIÓN (PUNTO DE ADMIRACION)	298
CALCOMANÍA (IDENTIFICACION DE COJIN DE ASIENTO)	735, 736
CALCOMANIA-TECLADO	725, 726
CALCOMANÍAS Y PLACAS DE IDENTIFICACIÓN (GR)	792
CALEFACCIÓN DE LA CABINA (GR)	700
CALEFACCIÓN DE LA CABINA (GR)	696
CALENTADOR DEL COMBUSTIBLE (GR)	222
CAMBIO RÁPIDO DE ACEITE (GR)	78
CAMISA INFERIOR	18, 20
CÁNCAMOS DE LEVANTAMIENTO DEL MOTOR (GR)	48
CANDADO (GR)	184
CANTONERA Y CUCHILLA (GR)	627, 628, 629, 630
CAPO Y PROTECTOR (GR)	418
CARGA - ALTERNADOR DE (GR)	189, 190
CÁRTER - COLECTOR DEL (GR)	50
CENICERO	700
CHASIS (CONFIG)	385
CIGÜEÑAL - POLEA DE (GR)	57, 58
CIGÜEÑAL (GR)	17
CILINDRO DE DOBLE INCLINACION (CONFIG)	485
CILINDRO DE INCLINACIÓN DE LA HOJA TOPADORA (GR)	488, 490, 492
CILINDRO DE INCLINACIÓN DE LA HOJA TOPADORA (GR) (LADO DERECHO)	485
CILINDRO DE INCLINACIÓN DE LA HOJA TOPADORA (GR) (LADO IZQUIERDO)	485
CILINDRO DE INCLINACIÓN DEL DESGARRADOR (GR)	500
CILINDRO DE LEVANTAMIENTO - TUBERÍAS DEL (GR)	504
CILINDRO DE LEVANTAMIENTO DE LA HOJA TOPADORA (GR)	486
CILINDRO DE LEVANTAMIENTO DE LA HOJA TOPADORA (GR)	548
CILINDRO DE LEVANTAMIENTO DEL DESGARRADOR (GR)	494, 496

INDICE

Nombre	Página
CILINDRO DE LEVANTAMIENTO DEL DESGARRADOR (GR) (LADO DERECHO)	623, 624, 625
CILINDRO DE LEVANTAMIENTO DEL DESGARRADOR (GR) (LADO IZQUIERDO)	623, 624, 625
CILINDRO DEL EXTRACTOR DE PASADOR DEL DESGARRADOR (GR)	498
CINTA AISLANTE	773, 774, 778
CINTURÓN DE SEGURIDAD (GR)	750, 751
COLADOR (CONJ)	542
COLADOR DEL TANQUE DE COMBUSTIBLE	184
COMBUSTIBLE - TANQUE DE (GR)	184, 185
COMPARTIMIENTO DEL MOTOR (GR)	398
COMPARTIMIENTO (GR)	396
COMPRESOR DE REFRIGERANTE (GR)	674, 676
CONDENSADOR DE REFRIGERANTE (GR)	682
CONDENSADOR DEL REFRIGERANTE Y MONTAJE (GR)	678, 680
CONEXIÓN DE ENGRASE	8, 488, 490, 492, 494, 598, 602, 604
CONEXIÓN DE ENGRASE (ROSCA DE 1/8-27)	430, 432, 496, 500, 584, 594, 596, 613
CONEXIÓN DE ENGRASE (ROSCA 1/8-27)(45 GRADO)	32
CONEXIÓN (GR) (DESCONEXION RAPIDA)	516
CONFIGURACIÓN DE ASIENTO	744
CONFIGURACIÓN DE CONVERSION, ROPS	693
CONFIGURACIÓN DE INSTALACIÓN DEL MOTOR	7
CONFIGURACIÓN DE MOTORES	5, 6
CONFIGURACIÓN ELECTRÓNICA DE LA MÁQUINA	2
CONFIGURACIÓN GENERAL	3
CONFIGURACIÓN PARA REGIONES ÁRTICAS	1
CONTRAPESO (GR)	388, 390, 391
CONTRAPESO TRASERO Y BARRA (CONFIG)	386
CONTROL DE DIRECCIÓN Y TRANSMISIÓN (GR)	314
CONTROL DE DIRECCIÓN Y TRANSMISIÓN (GR)	312
CONTROL DE IMPLEMENTOS (GR)	690
CONTROL DE IMPLEMENTOS Y MONTAJE (GR)	684, 685, 686
CONTROL DE LA TRANSMISIÓN Y MONTAJE (GR)	308
CONTROL DE MANIJA (GR)	483
CONTROL DE MANIJA (GR)	689
CONTROL DEL DECELERADOR (GR)	158
CONTROL DEL FRENO DE ESTACIONAMIENTO	464
CONTROL DEL FRENO (GR)	310
CONTROL ELECTRÓNICO (CONJ) (LUZ DE TABLERO)	708
CONTROL ELECTRÓNICO DEL MOTOR (GR)	212, 213
CONTROL ELECTRÓNICO DEL MOTOR Y MONTAJE	206
CONTROL ELECTRONICO DEL REDUCTOR DE LA LUZ INTERIOR DEL SISTEMA MONITOR (GR)	692
CONTROL ELECTRÓNICO (GR)	208
CONTROL ELECTRÓNICO (GR)	210
CONTROL ELECTRÓNICO (GR) (TECLADO INGLES)	201
CONTROL ELECTRÓNICO (GR) (TECLADO INTERNACIONAL)	201
CONTROL ELECTRÓNICO Y MONTAJE (GR)	202, 204
CONTROL ELECTRÓNICO Y MONTAJE (GR)	200, 201
CONTROL HIDRÁULICO (CONFIG)	474, 476, 477, 478
CONTROL HIDRÁULICO DE LA TRANSMISIÓN (GR)	316
CONTROL NO PROGRAMADO (GR)	200, 214

INDICE

Nombre	Página
	215
	216
	263
CONVERTIDOR DE PAR (GR)	358
	360
	362
CONVERTIDOR DE VOLTAJE (24 VOLTIOS A 12 VOLTIOS)(25 AMPERIOS)	217
CONVERTIDOR ELÉCTRICO (GR)	217
CORREA	189
CORREA TRAPEZOIDAL	676
CRISTAL (LUZ DE TECHO)	227
CRONOMETRO DE DEMORA DE ACTIVACION (CONJ) (24 VOLTIOS)	712
	716
CRUCETA Y COJINETE (GR)	365
CULATA DE CILINDROS (CONJ)	25
	26
CULATA DE CILINDROS (GR)	27
	28

D

DESGARRADOR (CONFIG)	623
	624
	625
DESGARRADOR (GR)	651
	652
	653
DETECTOR DE POSICIÓN (SISTEMA DE COMBUST.) (GR)	483
	690
DETECTOR DE POSICIÓN (SISTEMA DE COMBUST.) (GR)	480
DETECTOR DE POSICIÓN (SISTEMA DE COMBUST.) (GR)	245
	246
	247
	690
DETECTOR DE POSICIÓN (SISTEMA DE COMBUST.) (GR) (POSICIÓN DE VIRAJE)	312
DETECTOR DE POSICIÓN (SISTEMA DE COMBUST.) (GR) (SIN RESORTE) (SENTIDO)	312
DIENTE DE DESGARRADOR (GR)	654
	655
	656
DIFERENCIAL Y CORONA (GR)	320
DISYUNTOR (CONJ) (10 A) (FRENO DE EMBRAGUE ELECTRONICO)	292
DISYUNTOR (CONJ) (10 A) (INTERRUPTOR DE LLAVE DE ARRANQUE)	292
DISYUNTOR (CONJ) (125 AMPERIOS) (PRINCIPAL)	292
DISYUNTOR (CONJ) (15 A)	712
DISYUNTOR (CONJ) (15 A) (FAROLES DELANTEROS)	292
DISYUNTOR (CONJ) (15 A) (IMPLEMENTO)	292
DISYUNTOR (CONJ) (15 A) (MOTOR)	292
DISYUNTOR (CONJ) (15 A) (VENTILADOR SOPLADOR)	292
DISYUNTOR (GR)	286
DISYUNTOR (GR) (BATERÍA)	192
DRENAJE DE SEGURIDAD ECOLÓGICA (GR)	322

E

EJE DE MANDO PRINCIPAL (GR)	357
EJE DEL TREN DE FUERZA (GR)	304
ELEMENTO DE FILTRO DE ACEITE (CONJ)	324
ELEMENTO DE FILTRO DE ACEITE (CONJ) (HIDRAULICO)	542
ELEMENTO DE FILTRO DE ACEITE (CONJ) (HIDRAULICO/FLUJO INVERSO)	542
ELEMENTO DE FILTRO HIDRÁULICO (VÁLVULA HIDRÁULICA/ELÉCTRICA)	502
ELEMENTO DEL CALENTADOR DEL AGUA DE LAS CAMISAS	225
ELEMENTO DEL CALENTADOR DEL AGUA DE LAS CAMISAS (120 VOLTIOS/1500 VATIOS)	224
ELEMENTO DEL FILTRO DE AIRE (CONJ) (PRIMARIO)	128
ELEMENTO DEL FILTRO DE AIRE (CONJ) (SECUNDARIO)	128
EMPAQUETADURA (BOMBA DE CEBADO DE COMBUSTIBLE)	172
EMPAQUETADURA DE MULTIPLE DE ESCAPE	140
ENFRIADOR DE ACEITE DE LA TRANSMISIÓN (GR)	318
ENGRANAJE ACCESORIO (GR)	600
ENGRANAJE DE DIRECCIÓN (GR)	466
	468
ENGRANAJE DELANTERO (GR)	38
ENGRANAJE TRASERO (GR)	40
ESCAPE DE GASES (GR)	70
ESCOBILLA (CONJ)	282
ESCOBILLA (CONJ) (MOTOR DE ARRANQUE)	272
ESLABÓN DE CADENA (CONJ)	438
ESTABILIZADOR DEL BRAZO DE EMPUJE (GR)	610
	622
ESTRUCTURA ROPS (GR)	742
ETIQUETA DE ADVERTENCIA (GR)	791
EXPULSOR DE POLVO (GR)	130
EXPULSOR DE POLVO (GR)	131
EXTENSIÓN DEL RESPALDO (GR)	750

INDICE

Nombre	Página
EXTENSIÓN DEL RESPALDO (GR)	751
EXTRACTOR DE PASADOR (CONFIG)	616
EXTRACTOR DE PASADOR (GR)	618

F

FILTRO (BOMBA DE AGUA)	104
FILTRO (BOMBA HIDRAULICA DE LA UNIDAD DEL INYECTOR)	162
FILTRO (CONJ) (SEPARADOR DE AGUA Y COMBUSTIBLE)	167
FILTRO DE ACEITE DEL MOTOR (CONJ)	68
FILTRO DE ACEITE DEL MOTOR (GR)	68
FILTRO DE ACEITE (GR)	324
FILTRO DE ACEITE (GR)	502
FILTRO DE ACEITE (GR) (TREN DE FUERZA)	338
FILTRO DE AIRE (CABINA) (ALTA EFICIENCIA)	700
FILTRO DE AIRE (CABINA) (ESTANDAR)	700
FILTRO DE AIRE (CABINA) (REDUCCION DE OLORES)	700
FILTRO DE AIRE DE CABINA (ESTANDAR)	700
FILTRO DE AIRE (GR)	126 128
FILTRO DE COMBUSTIBLE (CONJ)	172
FILTRO DE COMBUSTIBLE Y SEPARADOR DE AGUA (GR)	168
FILTRO DE COMBUSTIBLE Y SEPARADOR DE AGUA (GR)	167
FILTRO ESPONJOSO	192
FILTRO Y TUBERÍAS DE COMBUSTIBLE (GR)	164
FRENO Y EMBRAGUE DE DIRECCIÓN (GR)	462
FUSIBLE (10 A)	293
FUSIBLE (15 A)	293
FUSIBLE (20 A)	293
FUSIBLE (30 A)	217

G

GRUPO DE CODO	516
GRUPO DE CONEXION	506
GRUPO DE LUBRICACIÓN DE BARRA ESTABILIZADORA	440
GRUPO DE LUCES	233
GRUPO DE MONTAJE	732
GRUPO DE MONTAJE DE LA CABINA	730
GRUPO DE MONTAJE Y VÁLVULA, HOJA TOPADORA	551
GRUPO DE TOPE, CONTROL	480 483
GUARDABARROS (GR)	400

H

HOJA DE LIMPIAPARABRISAS (CONJ)	636
HOJA DE LIMPIAPARABRISAS (CONJ) (FRENTE)	786
HOJA DE LIMPIAPARABRISAS (CONJ) (PARTE TRASERA)	786
HOJA DE LIMPIAPARABRISAS (CONJ) (PUERTA IZQUIERDA)	786
HOJA SEMIUNIVERSAL (CONJ)	638
HOJA SEMIUNIVERSAL (GR)	644 645
HOJA TOPADORA (CONFIG)	585 586 587 588 589 590 591 592
HOJA UNIVERSAL (CONJ)	640 641 642 643
HOJA UNIVERSAL (GR)	646 648
HOJA Y CUCHILLA (GR)	631 632 633 634 635

I

ILUMINACION TRASERA (CONFIG)	232
IMPLEMENTOS (GR ELECTRÓNICO)	218
IMPULSOR DE VENTILADOR (GR)	32 34 35
INDICADOR DEL NIVEL DE ACEITE (VARILLA) (GR)	72
INDICADOR DEL NIVEL DEL ACEITE (VARILLA) (CONJ) (TREN DE FUERZA)	338
INSONORIZADOR (CONFIG)	4
INSTALACIÓN DE RADIO (GR)	707
INSTRUMENTOS (GR)	708
INTERRUPTOR (CONJ) (BASCULANTE) (CONSOLA LEVANTAR/BAJAR)	458
INTERRUPTOR (CONJ) (ILUMINADO CON 24 VOLTIOS)	299
INTERRUPTOR (CONJ) (LUCES DELANTERAS)	299
INTERRUPTOR (CONJ) (LUCES TRASERAS)	299
INTERRUPTOR (CONJ) (PRESIÓN DEL DIFERENCIAL)	502

INDICE

Nombre	Página
INTERRUPTOR (CONJ) (PUERTA DELANTERA, TRASERA, LATERAL IZQUIERDA Y DERECHA)	786
INTERRUPTOR (CONJ) (VELOCIDAD DEL VENTILADOR)	700
INTERRUPTOR DE DERIVACIÓN	285
INTERRUPTOR DE FLUJO (GR)	5 6 287 288
INTERRUPTOR DE LA BOCINA (CONJ)	298
INTERRUPTOR DE LÍMITE (CONJ) (FRENO)	310
INTERRUPTOR DE LÍMITE (CONJ) (REVERSA)	312
INTERRUPTOR DE PRESIÓN (CONJ)	716
INTERRUPTOR DE PRESIÓN (CONJ)	546
INTERRUPTOR DE PRESIÓN (CONJ) (A/A)	712
INTERRUPTOR DE PRESIÓN (CONJ) (ACEITE)	80
INTERRUPTOR DE PRESIÓN (CONJ) (ALTO/BAJO)	712
INTERRUPTOR DE VOLQUETE (CONJ) (ACONDICIONADOR DE AIRE ACTIVACION/DESACTIV.)	700
INTERRUPTOR DE VOLQUETE (CONJ) (AUXILIAR)	299
INTERRUPTOR DE VOLQUETE (CONJ) (DE TRABA)(EXTRACTOR DE PASADORES DE DESGARRADOR)	474
INTERRUPTOR DE VOLQUETE (CONJ) (FRENO DE ESTACIONAMIENTO)	464
INTERRUPTOR DE VOLQUETE (CONJ) (ILUMINADO CON 24 VOLTIOS)	299
INTERRUPTOR DE VOLQUETE (CONJ) (LUCES LATERALES)	299
INTERRUPTOR DE VOLQUETE (CONJ) (24 VOLTIOS)(SELLADO-ILUMINADO)	299
INTERRUPTOR DE VOLQUETE (CONJ) (24 VOLTIOS)(SELLADO)(ILUMINADO)	299
INTERRUPTOR DE VOLQUETE (GR) (AUXILIAR DE ARRANQUE)	299
INTERRUPTOR DE VOLQUETE (GR) (CONTROL DEL VENTILADOR)	694
INTERRUPTOR DE VOLQUETE (GR) (DE TRABA)(EXTRACTOR DE PASADORES DE DESGARRADOR)	474
INTERRUPTOR DEL TERMOSTATO (CONJ)	660
INTERRUPTOR MAGNÉTICO (CONJ) (RELE DE ARRANQUE)	80
INTERRUPTOR MAGNÉTICO (GR)	289
INTERRUPTOR MAGNÉTICO (GR) (RELÉ DE ARRANQUE)	268 292
INTERRUPTOR MAGNÉTICO (GR) (RELE PRINCIPAL)	292
INTERRUPTOR PULSADOR (CONJ)	708
INTERRUPTOR PULSADOR (CONJ)	690
INTERRUPTOR PULSADOR (CONJ) (CAMBIAR A UNA MARCHA SUPERIOR)	470
INTERRUPTOR PULSADOR (CONJ) (CAMBIO DESCENDENTE)	470
INYECTOR DE COMBUSTIBLE (GR)	169

J

Nombre	Página
JUEGO DE ALDABA	776 778
JUEGO DE ATADURA	758
JUEGO DE BOMBA (RECONSTRUCCIÓN DE BOMBA HIDRÁULICA DE LA UNIDAD DE INYECCIÓN)	182
JUEGO DE BOTÓN	704
JUEGO DE COJINETES	190 705
JUEGO DE COJINETES (ARRANQUE)	282
JUEGO DE COJINETES (ESTANDAR)	52
JUEGO DE COJINETES (HORQUILLA, BOMBA HIDRÁULICA DE LA UNIDAD DE INYECCIÓN)	182
JUEGO DE COJINETES (0,635 MM BAJOMEDIDA)	52
JUEGO DE COJINETES (1,27 MM BAJOMEDIDA)	52
JUEGO DE COMPENSADOR (BOMBA HIDRAULICA DE LA UNIDAD DEL INYECTOR)	182
JUEGO DE CORREAS TRAPEZOIDALES (INCLUYE 4 CORREAS)	32 35
JUEGO DE ENCHUFE (2 CLAVIJAS)	289 293 296 316 458
JUEGO DE ENCHUFE (3 CLAVIJAS)	250 251 252 296 299 690
JUEGO DE ENCHUFE (3 CLAVIJAS) (SENSOR DE LA PRESIÓN)	249
JUEGO DE ENCHUFE (3 CLAVIJAS) (SENSOR DE VELOCIDAD DEL SINCRONIZADOR DEL MOTOR)	254
JUEGO DE ENCHUFE (4 CLAVIJAS)	293 296
JUEGO DE ENCHUFE (6 CLAVIJAS)	688
JUEGO DE ENGRANAJE DEL MOTOR DE ARRANQUE	283

INDICE

Nombre	Página
JUEGO DE FILTRO DE TAPA (TANQUE DE COMBUSTIBLE)	185
JUEGO DE FUNDA DE LA SUSPENSIÓN DEL ASIENTO	756
JUEGO DE GUÍA	776
	778
JUEGO DE HOJA DE LIMPIAPARABRISAS	787
JUEGO DE INDICADOR	704
JUEGO DE MAZO DE CABLES (ASIENTO CON SUSPENSIÓN DE AIRE)	758
JUEGO DE NÚCLEO (PARTE TRASERA)	540
JUEGO DE PALETA DE BOMBA	472
	473
	540
JUEGO DE PARAGOLPES	704
JUEGO DE PERNO RETENEDOR	216
JUEGO DE REACONDICIONAMIENTO	34
JUEGO DE RECEPTÁCULO (12 CLAVIJAS)	464
	480
JUEGO DE RECEPTÁCULO (2 CLAVIJAS)	80
	188
	255
	256
	257
	266
	268
	285
	291
	292
	293
	296
	298
	379
	458
	502
	546
	577
	580
	661
	682
	696
	712
	716
	724
JUEGO DE RECEPTÁCULO (3 CLAVIJAS)	132
	172
	246
	247
	258
	259
	260
	293
	296
	474
	690
	700
	708
	764
JUEGO DE RECEPTÁCULO (4 CLAVIJAS)	244
	293
	296
	316
	574
	575
	578
	687
	690
	712
	725
	726
JUEGO DE RECEPTÁCULO (6 CLAVIJAS)	243
	299
	470
	661
	692
	696
	700
	724
	727
	728
	782
	784
	786
JUEGO DE RECEPTÁCULO (8 CLAVIJAS)	299
JUEGO DE RECONSTRUCCIÓN DE LA BOMBA (AGUA)	104
JUEGO DE RESORTE DE HOJA DE BALLESTA	773
	774
JUEGO DE RESORTES	704
JUEGO DE RESTRICCIÓN DEL CINTURÓN	756
JUEGO DE RODILLO	756
	758
JUEGO DE SEGUIDOR	705
JUEGO DE SELLO DE CILINDRO HIDRAULICO	486
	488
JUEGO DE SELLOS	34
	170
	373
	379
	553
	574
	577
	578
	579
	580
JUEGO DE SELLOS (BOMBA HIDRAULICA DE LA UNIDAD DEL INYECTOR)	182

INDICE

Nombre	Página
JUEGO DE SELLOS (VALVULA DE SOLENOIDE)	187
JUEGO DE SELLOS (VALVULA SOLENOIDE DE PRESION PILOTO)	576
JUEGO DE TAPÓN (BOMBA HIDRAULICA DE LA UNIDAD DEL INYECTOR)	182
JUEGO DE TERMINAL	190 277 283
JUEGO DE TERMINAL (MOTOR DE ARRANQUE)	273
JUEGO DE TORNILLERÍA	190 758
JUEGO DE TORNILLERÍA, JUNTAS Y CALCES	602 604
JUEGO DE TRABA DE TERMINAL (BLOQUE DE FUSIBLES)	293
JUEGO DE VENTANAS	710
JUNTA UNIVERSAL (GR)	365

L

LÁMPARA DE FARO DELANTERO (24 VOLTIOS) (REFLECTOR)	229
LÁMPARA DE FARO DELANTERO (24 VOLTIOS) (65 VATIOS, REFLECTOR)	228
LÁMPARA DE LUZ ROJA	708
LÁMPARA DEL TECHO (GR)	227
LÁMPARA DEL TECHO (GR) (24 VOLTIOS)(CON INTERRUPTOR)	670
LÁMPARA (24 VOLTIOS)	298 299 708
LÁMPARA (24 VOLTIOS) (CÚPULA)	227
LÁMPARA (28 VOLTIOS)	208 210
LAVAPARABRISAS DE LA VENTANA (GR)	764
LENTE-ROJO	298 708
LIMPIAPARABRISAS DE LA VENTANA (GR)	784 786
LIMPIAPARABRISAS DE LA VENTANA (GR)	782
LLAVE	184
LLAVE (DESCONECTAR BATERIA)	286
LUBRICACIÓN DE EJE PIVOTE (GR)	442
LUCES (CONFIG)	230
LUCES DE REFLECTOR (GR)	234 236
LUCES DE SEÑALES-BASE	298 708
LUCES DEL DESGARRADOR (GR)	242
LUCES DELANTERAS (GR)	238 239
LUCES TRASERAS (GR)	240

M

MANDO DE BOMBA HIDRÁULICA INYECTORA (GR)	160 162
MANDO FINAL (GR)	326 330 334
MANGUITO PARA CALIBRE DE LEVANTAVÁLVULAS	18 20
MAZO DE CABLES (RECEPTÁCULO) (SENSOR DE LA PRESIÓN)	249
MAZO DE CABLES (SENSOR DE LA PRESIÓN)	249
MECANISMO DE VÁLVULAS (GR)	63
MODIFICACIÓN DEL TRACTOR TOPADOR (CONFIG)	611 612
MODULO CENTRAL DE MENSAJES(GR)	724
MÓDULO DEL TACÓMETRO Y DEL VELOCÍMETRO (GR)	728
MODULO DEL TECLADO MONITOR (GR)	725 726
MODULO DEL TECLADO MONITOR (GR) (VERSION INGLES)	208
MODULO DEL TECLADO MONITOR (GR) (VERSION INTERNACIONAL)	210
MODULO ELECTRÓNICO DE CUATRO INDICADORES (GR)	727
MONTAJE DE CILINDRO (GR)	613
MONTAJE DE LA ESTRUCTURA ROPS (GR)	733
MONTAJE DE LA TRANSMISIÓN (GR)	344
MONTAJE DEL ALTERNADOR (GR)	49
MONTAJE DEL DESGARRADOR (GR)	614
MOTOR - SOPORTE DEL (GR)	60 61
MOTOR DE ARRANQUE ELÉCTRICO (GR)	272
MOTOR DE ARRANQUE ELÉCTRICO (GR)	276 279 280 282
MOTOR DE VENTILADOR (GR)	538
MOTOR ELÉCTRICO (GR)	682
MOTOR ELÉCTRICO (GR) (27 VOLTIOS)	660 696
MÚLTIPLE DE ESCAPE (GR)	140
MÚLTIPLE Y VÁLVULA (GR)	342 343
MUÑÓN DE LA HOJA TOPADORA (GR)	626
MUÑÓN DEL MOTOR (GR)	62

N

N	218

INDICE

Nombre	Página
NÚCLEO DE TURBOCOMPRESOR (GR)	147
NÚCLEO DEL ENFRIADOR DE ACEITE (CONJ) (MOTOR)	94

P

PALANCA UNIVERSAL DE CONTROL (GR)	480, 482, 483
PANTALLA (CONJ)	542
PANTALLA (CONJ) (ENTRADA DE BOMBA DE ACEITE DE TREN DE FUERZA)	338
PERILLA	670
PERILLA (AJUSTE DEL POSABRAZOS)	458
PERILLA DE BOCINA	298
PERILLA LUMBAR	736
PISTÓN Y BIELA (GR)	52
PISTONES DEL MOTOR (GR)	538
PIVOTE DEL LIMPIADOR (GR)	790
PLACA	421
PLACA DE ADVERTENCIA (ACEITE DE RESORTE TENSOR)	434
PLACA DE ADVERTENCIA (RESORTE DE AMORTIGUACION)	422, 434
PLACA DE INFORMACION (NUMEROS DE SERVICIO)	792
PLACA DE INFORMACION (SEPARADOR DE AGUA/FILTRO DE COMBUSTIBLE)	793
PLACA DEL TABLERO	708
PLACA DEL TABLERO (ACONDICIONADOR DE AIRE Y SOPLADOR)	700
PLANCHA DE DESGASTE (GR)	649, 650
PLATAFORMA DE LA CABINA (GR)	738
PORTAESCOBILLAS (CONJ)	283
PORTAESCOBILLAS (CONJ) (ESCOBILLAS DEL MOTOR DE ARRANQUE)	272
POSENFRIADOR DE AIRE (GR)	122
PRELUBRICACION DEL MOTOR (CONFIG)	80
PRESIÓN - VÁLVULA DE CONTROL DE (GR)	186
PRIORIDAD - VÁLVULA DE (GR)	374
PROTECTOR CONTRA ARENA (GR)	404
PROTECTOR CONTRA ROCAS (GR)	414, 415
PROTECTOR DE MANDO FINAL (GR)	405
PROTECTOR DE RUEDA GUÍA	408
PROTECTOR DE SELLO (GR)	416
PROTECTOR DEL EJE IMPULSOR (GR)	337
PROTECTOR DEL EJE PIVOTE (GR)	409
PROTECTOR DEL RADIADOR (GR)	410
PROTECTOR INFERIOR (GR)	406
PROTECTOR POSTERIOR (GR)	412
PROTECTOR TÉRMICO (GR)	144

R

RADIADOR (GR)	106, 110
RECEPTOR-SECADOR (GR) (ACONDICIONADOR DE AIRE)	716
RECEPTOR-SECADOR (GR) (REFRIGERANTE)	712
RECLINACION DE ASIENTO (GR)	740
REFLECTOR (GR)	228
REFLECTOR (GR)	229
REFLECTOR (GR) (24 VOLTIOS)(SUSPENDIDA)	233, 234
REFLECTOR (GR) (24 VOLTIOS)(VERTICAL)	236
REGULADOR DE TEMPERATURA DEL AGUA (92 GR C)	112, 114
REJILLA ACAMPANADA (CONJ)	74
REJILLA DE SUCCIÓN	306, 358
REJILLA PROTECTORA (GR)	743
RESORTE	283
RESORTE (ESCOBILLAS DEL MOTOR DE ARRANQUE)	272, 273
RESORTE TENSOR Y AJUSTADOR DE LA CADENA (GR)	452
RESPIRADERO	440
RESPIRADERO (CONJ) (CÁRTER DEL MOTOR)	16
RESPIRADERO (TREN DE FUERZA)	338
RETROCESO - ALARMA DE (GR)	192
RETROCESO - ALARMA DE (GR)	291
RETROVISOR (GR)	722, 723
REVESTIMIENTO DE LA CABINA (GR)	711
RODILLO SUPERIOR DE CADENAS (CONFIG)	444
RODILLOS DE PESTAÑA DOBLE (GR)	445, 446
RODILLOS DE PESTAÑA SIMPLE (GR)	447, 448
RUEDA GUÍA DE CADENA (GR)	436, 437

S

SEGMENTO DE RUEDA MOTRIZ (GR)	356
SELLANTE DE EMPAQUETADURA	14
SELLO DE CIGÜEÑAL (GR)	17
SELLO DE LABIO	112, 114
SENSOR DE NIVEL DE COMBUSTIBLE (GR)	244
SENSOR DE PRESIÓN (GR)	250

INDICE

Nombre	Página
	516
SENSOR DE PRESIÓN (GR)	248
	249
SENSOR DE PRESIÓN (GR)	251
	252
SENSOR DE PRESIÓN (GR) (ACCIONAMIENTO DE INYECCIÓN)	28
SENSOR DE PRESIÓN (GR) (AIRE DE REFUERZO)	28
SENSOR DE TEMPERATURA (GR)	258
	259
	260
SENSOR DE TEMPERATURA (GR) (AIRE)	132
SENSOR DE TEMPERATURA (GR) (COMBUSTIBLE)	172
SENSOR DE TEMPERATURA (GR) (REFRIGERANTE)	94
SENSOR DE VELOCIDAD (GR)	253
	254
	255
	256
	257
SENSOR DE VELOCIDAD (GR) (SINCRONIZACION DEL MOTOR)	46
SENSOR DE VELOCIDAD (GR) (VENTILADOR)	34
SERVICIO DE IMPLEMENTO (GR)	261
	262
SERVICIO DE TREN DE FUERZA (GR)	263
SILENCIADOR (GR)	141
SINCRONIZADOR	80
SISTEMA ROPS (CONJ)	741
SOFTWARE DEL TREN DE FUERZA (GR)	219
SOLENOIDE (CONJ)	282
SOLENOIDE (CONJ) (MOTOR DE ARRANQUE)	272
SOLENOIDE DEL MOTOR DE ARRANQUE (CONJ)	276
SOLENOIDE DEL MOTOR DE ARRANQUE (CONJ)	264
SOPLADOR - VENTILADOR (GR)	88
	90
SOPORTE BASCULANTE (GR)	450
SOPORTE DE CONTROL (GR)	470
SOPORTE DE LA HOJA TOPADORA	584
SOPORTE DEL RESPALDO (GR)	734
	735
	736
SUSPENSIÓN - ASIENTO CON (GR)	752
	753
	754
	755

T

Nombre	Página
TABLERO ELECTRÓNICO DE CONTROL (GR)	687
TABLERO ELECTRÓNICO DE CONTROL (GR)	688
TANQUE DE REFRIGERANTE (GR)	116
TANQUE DEL AGUA (GR)	118
TANQUE DEL LAVAPARABRISAS (GR)	760
	762
TANQUE HIDRÁULICO Y MONTAJE (GR)	546
TANQUE Y FILTRO HIDRÁULICOS (GR)	542
TAPA	78
	110
	190
TAPA CON RESPIRADERO	760
TAPA CONTRA EL POLVO	54
	68
	95
	150
	152
	154
	156
	306
	338
	366
	374
	376
	471
	506
	510
	516
	526
	553
	566
	568
TAPA CONTRA LA LLUVIA (CONJ)	129
TAPA CONTRA LA LLUVIA (CONJ)	130
	131
TAPA DE LA CAJA DE VOLANTE (GR)	12
TAPA DE LA CAJA DELANTERA (GR)	14
TAPA DE LLENADO (CONJ)	66
TAPA DE LLENADO (CONJ) (ACEITE DEL TREN DE FUERZA)	338
TAPA DE NIVEL DE ACEITE (CONJ)	442
TAPA DE RADIADOR (CONJ)	116
TAPA DE RODILLO INFERIOR	428
TAPA DE RUEDA GUÍA (GR)	426
	427
TAPA DEL BLOQUE MOTOR (GR)	11
TAPA DEL MECANISMO DE VÁLVULAS (GR)	16
TAPA DEL MUÑÓN (GR)	392
TAPA DEL TANQUE DE COMBUSTIBLE (CONJ)	185

INDICE

Nombre	Página
TAPA DEL TAPÓN DEL TANQUE HIDRÁULICO (GR)	484
TAPA DEL TUBO DE LLENADO	542
TAPA DEL TUBO DE LLENADO DE ACEITE (CONJ)	440
TAPA PULSADORA	470
TAPÓN	382
TAPÓN DE CULATA (GR)	56
TAPÓN DE DRENAJE	100
	434
TAPON DE DRENAJE DE ACEITE	50
TAPÓN DEL BLOQUE MOTOR (GR)	54
TAPÓN (GR)	516
TAPÓN MAGNÉTICO	326
	330
	334
TEMPERATURA - REGULADOR DE (GR)	112
	114
TOPE (GR)	465
TORNILLERÍA DE MONT. DE LA BOMBA DE ACEITE (GR)	65
TRANSMISION (CONFIG)	364
TRANSMISIÓN PLANETARIA (GR)	346
TREN DE FUERZA (CONFIG)	349
TREN DE FUERZA-GRUPO ELECTRÓNICO	219
TREN DE RODAJE (CONFIG)	457
TUBERÍAS CON SERVOMANDO (GR)	510
TUBERÍAS DE ACEITE DEL MOTOR (GR)	74
TUBERÍAS DE ACEITE DEL TREN DE FUERZA (GR)	338
TUBERÍAS DE ACEITE (GR)	606
TUBERÍAS DE ACONDICIONADOR DE AIRE (GR)	716
TUBERÍAS DE ACONDICIONADOR DE AIRE (GR)	712
TUBERÍAS DE BOMBA HIDRÁULICA DE INYECCIÓN (GR)	176
TUBERIAS DE CALEFACCION	720
TUBERÍAS DE CILINDRO DE EXTRACTOR DE PASADORES	514
TUBERÍAS DE LA CALEFACCIÓN (GR)	720
TUBERÍAS DEL AGUA (GR)	92
	94
TUBERÍAS DEL AGUA (GR)	98
	100
TUBERÍAS DEL CILINDRO DE INCLINACIÓN (GR)	528
	532
	534
	536
TUBERÍAS DEL DESGARRADOR (GR)	522
	524
	526
TUBERÍAS DEL FILTRO DE COMBUSTIBLE	172
TUBERIAS DEL MOTOR (GR)	506
TUBO DE LLENADO DE ACEITE (GR)	66
TURBOCOMPRESOR - TUBERÍAS DE ACEITE DEL (GR)	76
TURBOCOMPRESOR (GR)	146
	147

V

VALVULA	164
VÁLVULA	558
	560
VÁLVULA - ESFERA (CIERRE MANUAL)	164
VÁLVULA (CONJ)	118
	150
	152
	154
	156
	661
VÁLVULA (CONJ) (AGUA)	696
VÁLVULA (CONJ) (ARRANQUE CON ETER)(24 VOLTIOS)	266
VALVULA DE ALIVIO	352
VALVULA DE ALIVIO DE DISCO	560
VÁLVULA DE ALIVIO (GR)	376
VÁLVULA DE ALIVIO (GR)	553
VÁLVULA DE ALIVIO (GR) (DERIVADOR DE ENFRIAMIENTO DE LA TRANSMISION)	338
VÁLVULA DE CAÍDA RÁPIDA (GR)	572
VÁLVULA DE COMBINACIÓN (GR)	553
VÁLVULA DE CONTROL (CONJ)	553
VÁLVULA DE CONTROL DE LA TRANSMISIÓN (GR)	380
VÁLVULA DE CONTROL (GR)	368
	370
	558
	564
VÁLVULA DE CONTROL (GR)	560
VÁLVULA DE CONTROL (GR)	554
	556
VÁLVULA DE CONTROL Y MONTAJE (GR)	552
VALVULA DE DERIVACION	542
VÁLVULA DE DERIVACIÓN (GR) (SOLAMENTE CLIMA DE TIEMPO DE FRIO)	558
VÁLVULA DE DIRECCIÓN Y MONTAJE (GR)	471
VÁLVULA DE DRENAJE	382
	546
VÁLVULA DE ENTRADA	27
VÁLVULA DE ESCAPE	27
VALVULA DE GRASA (CONJ) (LLENADO)	452
VÁLVULA DE LANZADERA (GR)	573
VÁLVULA DE MODULACIÓN (GR)	372
	373
VALVULA DE MUESTREAR	95
VÁLVULA DE MUESTREO (GR)	339

INDICE

Nombre	Página
VÁLVULA DE MUESTREO (GR) (ACEITE DEL MOTOR)	68
VÁLVULA DE RETENCIÓN (CONJ)	130
VÁLVULA DE RETENCIÓN (CONJ) (SISTEMA DE LIMPIA/LAVAPARABRISAS)	762
VÁLVULA DE SECUENCIA (GR)	553
VÁLVULA DE SOLENOIDE (GR)	187
	378
	379
	556
	577
VÁLVULA DE SOLENOIDE (GR)	574
VÁLVULA DE SOLENOIDE (GR)	575
	576
	578
	579
	580
VÁLVULA PILOTO (GR)	566
	568
VALVULA PILOTO Y MONTAJE (GR)	366
VÁLVULA REDUCTORA DE PRESIÓN (GR)	570
	571
VALVULA (RESPIRADERO DE VACIO)	546
VÁLVULA (VACIADO)	452
VÁLVULA Y CILINDRO (GR)	548
	549
	550
VENTANA CORREDIZA (CONJ)	767
	768
VENTANA DE LA CABINA (GR)	776
	778
	779
VENTANA DE LA CABINA (GR)	774
VENTANA DE LA CABINA (GR)	769
	770
	771
	772
	773
	780
VENTANA DE LA CABINA (GR) (DERECHA)(DESLIZANTE)	767
VENTANA DE LA CABINA (GR) (IZQUIERDA)(DESLIZANTE)	768
VENTANA DE LA CABINA (GR) (LADO DERECHO)	769
	773
VENTANA DE LA CABINA (GR) (LADO IZQUIERDO)	770
VENTANA DE LA CABINA (GR) (TRASERA-DESLIZANTE)	670
VENTILADOR, CONFIGURACIÓN	86
VENTILADOR DESCONGELADOR (GR)	694
VIDRIO (AHUMADO)	769
	770
	779
VIDRIO (AHUMADO) (LADO DE CABINA-FIJO)	670
VIDRIO (AHUMADO) (PARTE DELANTERA DE CABINA-FIJO)	670
VIDRIO (AHUMADO) (PUERTAS DE CABINA-FIJO)	670
VIDRIO (AHUMADO)(VERDE)	780
VIDRIO (CONJ) (REFLECTOR)	228
	229
VIDRIO-DESLIZANTE-DERECHO (AHUMADO)	778
VIDRIO-DESLIZANTE (IZQUIERDO) (AHUMADO)	776
VIDRIO-FIJO-DERECHO (AHUMADO)	773
VIDRIO-FIJO-LADO IZQUIERDO (AHUMADO)	774
VIDS ELECTRÓNICO (GR)	220
VOLANTE - CAJA DE (GR)	44
VOLANTE (GR)	36

Y

YUGO (GR)	64

ÍNDICE

Designação	Página

A

ACOPLAMENTO DA BOMBA	319
ACUMULADOR DO AR CONDICIONADO	712
	716
ADAPTADOR	148
ADAPTADOR - ABASTECIMENTO RÁPIDO DE COMBUSTÍVEL	150
	152
	154
	156
AJUSTADOR DE CORREIAS	8
AJUSTADOR DE ESTEIRAS E MOLA TENSORA	452
AJUSTADOR DO ASSENTO	657
AJUSTADOR DO CONTROLE DA DIREÇÃO E TRANSMISSÃO	458
ALARME	188
ALARME DE MARCHA À RÉ	192
	291
ALTERNADOR DE CORRENTE	189
	190
AMORTECEDOR	30
AQUECEDOR DA ÁGUA DO MOTOR	224
	225
AQUECEDOR DA CABINE	696
	700
AQUECEDOR DO COMBUSTÍVEL	222
ARMAÇÃO DO RIPER	594
	596
	598
ARMAÇÃO TELESCÓPICA DA MOLA TENSORA	434
ARRANJO ÁRTICO	1
ARRANJO GERAL	3
ARREFECEDOR DE ÓLEO DA TRANSMISSÃO	318
ASSENTO	744
	745
	746
	748
	750
	751
ASSENTO COM SUSPENSÃO	752
	753
	754
	755
ATOMIZADOR - ÉTER	266
AUXILIAR DE PARTIDA A ÉTER	266

B

BALANCIM	59
BARRA DE TRAÇÃO	394
BARRA EQUALIZADORA	429
	430
	432
BARRA LIMPADORA DOS ROLOS	422
	424
	425
BARRA LIMPADORA DOS ROLOS (DIREITO)	422
BARRA LIMPADORA DOS ROLOS (ESQUERDO)	422
BATERIA E CABOS / FIOS ELÉTRICOS	192
BATERIA (12 VOLT/SECO)	194
	269
BLOCO - FORÇA	199
BLOCO DE EMPUXO	581
	582
	583
BLOCO DE FUSÍVEIS (16 POLOS)	293
BLOCO DE JUNÇÃO	226
BLOCO DO MOTOR	18
	20
	22
	24
BOCAL DE ENCHIMENTO DE ÓLEO DO MOTOR	66
BOMBA DE ÁGUA	102
	104
BOMBA DE ENGRENAGENS	350
	352
	354
BOMBA DE ENGRENAGENS (ÓLEO DO TREM DE FORÇA)	338
BOMBA DE INJEÇÃO DO COMBUSTÍVEL	179
BOMBA DE ÓLEO - MOTOR	84
BOMBA DE PALHETAS	540
BOMBA HIDRÁULICA - UNIDADE INJETORA	180
	182
BOMBA HIDRÁULICA E MONTAGEM - UNIDADE INJETORA	178
BOTÃO - CHICOTE	298
BOTÃO - LOMBAR	736
BOTÃO (AJUSTE DO BRAÇO DO ASSENTO)	458
BRAÇO DE EMPUXO - DIREITO	621
BRAÇO DE EMPUXO - ESQUERDO	620
BRAÇO DE EMPUXO - ESTABILIZADOR	622
BUJÃO	516
BUJÃO - CABEÇA DO CILINDRO	56
BUJÃO - CABOS/FIOS ELÉTRICOS	243
BUJÃO - DRENAGEM DO ÓLEO	50
BUJÃO DO BLOCO DO CILINDRO	54
BUJÃO DO DRENO	100
	434
BUJÃO MAGNÉTICO	326
	330
	334
BUZINA (24 VOLTS - ALTA TONALIDADE)	193
BUZINA (24 VOLTS)(TONALIDADE BAIXA)	194

ÍNDICE

Designação	Página

C

CABEÇOTE DO MOTOR 25, 26, 27, 28
CABINE 663, 664, 665, 666, 668, 670
CABOS/FIOS ELÉTRICOS - INJETOR 303
CABOS/FIOS ELÉTRICOS - MOTOR 296
CABOS/FIOS ELÉTRICOS - PLATAFORMA 298
CABOS/FIOS ELÉTRICOS DO CONSOLE 292
CADEADO 184
CAIXA - SUSPENSÃO DO ASSENTO 704
CAIXA DIANTEIRA 46
CAIXA DO VOLANTE DO MOTOR 44
CAIXA E CHASSI 382
CANTO E BORDA CORTANTE 627, 628, 629, 630
CAPA DO BOTÃO 470
CAPÔ E PROTETOR 418
CARCAÇA DAS ENGRENAGENS PLANETÁRIAS E COMPONENTES 306
CÁRTER DO ÓLEO DO MOTOR 50
CARTUCHO - BOMBA DE PALHETAS 472, 473
CARTUCHO DO TURBOALIMENTADOR 147
CHASSI 385
CHAVE 184
CHAVE (DESCONECTAR A BATERIA) 286
CHAVE GERAL 286
CHAVE GERAL (BATERIA) 192
CHICOTE (SENSOR DE PRESSÃO) 249
CHICOTE (TOMADA) (SENSOR DE PRESSÃO) 249
CILINDRO - INCLINAÇÃO DA LÂMINA 488, 490, 492
CILINDRO - INCLINAÇÃO DA LÂMINA (DIREITO) 485
CILINDRO - INCLINAÇÃO DA LÂMINA (ESQUERDO) 485
CILINDRO - LEVANTAMENTO DA LÂMINA 486, 548
CILINDRO DE INCLINAÇÃO DO RÍPER 500
CILINDRO DE LEVANTAMENTO DO RIPER 494, 496
CILINDRO DE LEVANTAMENTO DO RIPER (DIREITO) 623, 624, 625
CILINDRO DE LEVANTAMENTO DO RIPER (ESQUERDO) 623, 624, 625
CILINDRO DO SACADOR DE PINO DO RIPER 498
CILINDRO DUPLO DE INCLINAÇÃO 485
CINTO DE SEGURANÇA 750, 751
CINZEIRO 700
COBERTURA 396
COBERTURA DO MOTOR 398
COLETOR DE ESCAPE 140
COLETOR E VÁLVULA 342, 343
COLMÉIA - ARREFECEDOR DE ÓLEO (MOTOR) 94
COMANDO DA BOMBA HIDRÁULICA DO INJETOR 160, 162
COMANDO DE ACESSÓRIOS 31
COMANDO DO VENTILADOR 32, 34, 35
COMANDO FINAL 326, 330, 334
COMPRESSOR DE REFRIGERANTE 674, 676
CONDENSADOR DE REFRIGERANTE 682
CONDENSADOR DO REFRIGERANTE E MONTAGEM 678, 680
CONDICIONADOR DE AR 658, 659, 660
CONECTOR 506
CONEXÃO (DESCONEXÃO RÁPIDA) 516
CONTRAPESO 388, 390, 391
CONTRAPESO TRASEIRO E BARRA 386
CONTROLE - ALAVANCA 480, 482, 483
CONTROLE - NÃO PROGRAMADO 200, 214, 215, 216, 263
CONTROLE - REDUTOR DE LUMINOSIDADE DO SIST. DE MONITORIZAÇÃO 692
CONTROLE-CABO 483

ÍNDICE

Designação	Página
	689
CONTROLE DE DIREÇÃO E TRANSMISSÃO	312
	314
CONTROLE DO ACESSÓRIO	690
CONTROLE DO ACESSÓRIO E MONTAGEM	684
	685
	686
CONTROLE DO DESACELERADOR	158
CONTROLE DO FREIO	310
CONTROLE DO FREIO DE ESTACIONAMENTO	464
CONTROLE E MONTAGEM - TRANSMISSÃO	308
CONTROLE ELETRÔNICO	208
	210
CONTROLE ELETRÔNICO - MOTOR	212
	213
CONTROLE ELETRÔNICO - VISOR	687
	688
CONTROLE ELETRÔNICO E MONTAGEM	200
	201
	202
	204
CONTROLE ELETRÔNICO E MONTAGEM - MOTOR	206
CONTROLE ELETRÔNICO (LUZ DO PAINEL DE INSTRUMENTOS)	708
CONTROLE ELETRÔNICO (TECLADO - INGLÊS)	201
CONTROLE ELETRÔNICO (TECLADO INTERNACIONAL)	201
CONTROLE HIDRÁULICO	474
	476
	477
	478
CONTROLE HIDRÁULICO DA TRANSMISSÃO	316
CONVERSOR - ROPS	693
CONVERSOR DE POTÊNCIA (24 VOLTS A 12 VOLTS)(25 AMP)	217
CONVERSOR DE TORQUE	358
	360
	362
CONVERSOR ELÉTRICO	217
CORREIA	189
CORREIA EM V	676
COTOVELO	516
CRONÔMETRO-ESPERA DE LIGAÇÃO (24 V)	712
	716
CRUZETA E MANCAL	365

D

Designação	Página
DECALQUE	464
	791
DECALQUE - ADVERTÊNCIA	434
DECALQUE - ADVERTÊNCIA (CABO AUXILIAR DE PARTIDA)	269
DECALQUE - AVISO	732
DECALQUE - AVISO (BOMBA DE PRÉ-LUBRIFICAÇÃO)	80
DECALQUE - AVISO (RÁDIO)	707
DECALQUE - FUSÍVEL	712
DECALQUE - IDENTIFICAÇÃO	208
	210
DECALQUE - IDENTIFICAÇÃO (DISJUNTOR)	292
DECALQUE - IDENTIFICAÇÃO (FUSÍVEL)	292
DECALQUE - IDENTIFICAÇÃO (NO. DE SEQÜÊNCIA E GRUPO)	660
	682
	696
DECALQUE - IDENTIFICAÇÃO (SÍMBOLO DE EXCLAMAÇÃO)	298
DECALQUE - INFORMAÇÕES (FILTRO DE COMBUSTÍVEL - SEPARADOR DE ÁGUA)	793
DECALQUE - INSTRUÇÃO	478
	684
	786
	793
DECALQUE - INSTRUÇÃO (AJUSTE DO ASSENTO)	756
	758
DECALQUE - INSTRUÇÃO (CONTROLE DO BULDÔZER)	793
DECALQUE - INSTRUÇÃO (ENTRADA E SAÍDA DE ÁGUA)	660
	696
DECALQUE - INSTRUÇÃO (INTERUPTOR DO SACA-PINO DO RIPER)	474
DECALQUE - PAINEL	708
DECALQUE - PAINEL (CONDICIONADOR DE AR E SOPRADOR)	700
DECALQUE - TECLADO	725
	726
DECALQUE (ALMOFADA DO ASSENTO - IDENTIFICAÇÃO)	735
	736
DEFLETOR TÉRMICO DE CALOR	144
DENTE DO RÍPER	654
	655
	656
DESCONGELADOR	694
DESLIZADOR DO VIDRO - LADO DIREITO (MATIZADO)	778
DIFERENCIAL E COROA	320
DISJUNTOR AUTOMÁTICO DE CIRCUITO (10 A) (FREIO/EMBREAGEM ELETRÔNICOS)	292
DISJUNTOR AUTOMÁTICO DE CIRCUITO (10 A) (INTERRUPTOR DA CHAVE DE PARTIDA)	292

ÍNDICE

Designação	Página
DISJUNTOR AUTOMÁTICO DE CIRCUITO (125 AMP) (PRINCIPAL)	292
DISJUNTOR AUTOMÁTICO DE CIRCUITO (15 A)	712
DISJUNTOR AUTOMÁTICO DE CIRCUITO (15 A) (FARÓIS DIANTEIROS)	292
DISJUNTOR AUTOMÁTICO DE CIRCUITO (15 A) (IMPLEMENTO)	292
DISJUNTOR AUTOMÁTICO DE CIRCUITO (15 A) (MOTOR)	292
DISJUNTOR AUTOMÁTICO DE CIRCUITO (15 A) (VENTILADOR)	292
DRENO - ECOLOGIA	322
E	
EIXO-COMANDO DE VÁLVULA	10
EIXO DA TRANSMISSÃO	357
EIXO PIVÔ - LUBRIFICAÇÃO	442
EJETOR DE POEIRA	130
	131
ELEMENTO - AQUECEDOR DE ÁGUA DA CAMISA	225
ELEMENTO - AQUECEDOR DE ÁGUA DA CAMISA (120 VOLTS/1500 WATTS)	224
ELEMENTO DO FILTRO DE AR (PRIMÁRIO)	128
ELEMENTO DO FILTRO DE AR (SECUNDÁRIO)	128
ELEMENTO FILTRANTE - ÓLEO	324
ELEMENTO FILTRANTE - ÓLEO (FLUXO HIDRÁULICO/REVERSO)	542
ELEMENTO FILTRANTE - ÓLEO (HIDRÁULICO)	542
ELIMINAÇÃO DE VAPORES DO CÁRTER	70
ELO DA ESTEIRA	438
ELO ESTABILIZADOR	610
EMBREAGEM DE DIREÇÃO E FREIOS	462
EMISSOR - POSIÇÃO	245
	246
	247
	480
	483
	690
EMISSOR - POSIÇÃO (POSIÇÃO DA DIREÇÃO)	312
EMISSOR - POSIÇÃO (SEM MOLA) (DIREÇÃO)	312
ENGRENAGEM DO ACESSÓRIO	600
ENGRENAGENS DE COMANDO TRASEIRO	40
ENGRENAGENS DE DISTRIBUIÇÃO	38
ENGRENAGENS PLANETÁRIAS - TRANSMISSÃO	346
ESCOVA	282
ESCOVA (MOTOR DE PARTIDA)	272
ESPELHO RETROVISOR	722
	723
ESTEIRA	454
	455
	456
ESTRUTURA ROPS	741
	742
EXTENSÃO - ENCOSTO	750
	751
F	
FAROL DIANTEIRO (24 V) (FAROL)	229
FAROL DIANTEIRO (24 V) (65 WATTS)(FAROL)	228
FILTRO - AR (CABINE) (ALTA EFICIÊNCIA)	700
FILTRO - AR (CABINE) (PADRÃO)	700
FILTRO - AR (CABINE) (REDUÇÃO DE ODOR)	700
FILTRO - COMBUSTÍVEL	172
FILTRO - ELEMENTO HIDRÁULICO (VÁLVULA HIDRÁULICA/ELÉTRICA)	502
FILTRO - ESPUMA	192
FILTRO - ÓLEO	324
	502
FILTRO - ÓLEO DO MOTOR	68
FILTRO - ÓLEO (TREM DE FORÇA)	338
FILTRO (BOMBA D'ÁGUA)	104
FILTRO (BOMBA HIDRÁULICA DA UNIDADE INJETORA)	162
FILTRO DE AR DE CABINA (PADRÃO)	700
FILTRO DE COMBUSTÍVEL E SEPARADOR DE ÁGUA	167
	168
FILTRO E TUBOS - COMBUSTÍVEL	164
FILTRO (SEPARADOR DE ÁGUA E COMBUSTÍVEL)	167
FIXADORES - BOMBA DE ÓLEO DO MOTOR	65
FUNDO - ENCOSTO	734
	735
	736
FUSÍVEL (10 A)	293
FUSÍVEL (15 A)	293
FUSÍVEL (20 A)	293
FUSÍVEL (30 A)	217
G	
GARFO	64
GR. DE SERVIÇO - ACESSÓRIO	261
	262
GR. DE SERVICO - TREM DE FORÇA	263
GRADE DO RADIADOR CONTRA EROSÃO	404
GRAXEIRA	8
	488
	490

ÍNDICE

Designação	Página
	492
	494
	598
	602
	604
GRAXEIRA (ROSCA 1/8-27 POL)	430
	432
	496
	500
	584
	594
	596
	613
GRAXEIRA (ROSCA 1/8-27 45 GRAUS)	32
GRUPO DE CONVERSÃO - LÂMINA	611
	612
GRUPO DE INSTALAÇÃO - MOTOR	7
GUIA - VEDADOR	416

I

ILUMINAÇÃO	233
ILUMINAÇÃO - DIANTEIRA	238
	239
ILUMINAÇÃO - RÍPER	242
ILUMINAÇÃO - TRASEIRA	240
ILUMINAÇÃO TRASEIRA	232
INDICADOR - NÍVEL DO ÓLEO (VARETA)	72
INDICADOR - VARETA DO NÍVEL DE ÓLEO (TREM DE FORÇA)	338
INJETOR DE COMBUSTÍVEL	169
INSERTO - SEDE DE VÁLVULA (ENTRADA)	25
INSERTO - SEDE DE VÁLVULA (ESCAPE)	25
INSTALAÇÃO DO RÁDIO	707
INSTRUMENTOS	708
INTERRUPTOR - BALANCIM (AUXILIAR)	299
INTERRUPTOR - BALANCIM (AUXILIAR DE PARTIDA)	299
INTERRUPTOR - BALANCIM (CONTROLE DO VENTILADOR)	694
INTERRUPTOR - BALANCIM (FREIO DE ESTACIONAMENTO)	464
INTERRUPTOR - BALANCIM (LIGAR - DESLIGAR AR CONDICIONADO)	700
INTERRUPTOR - BALANCIM (LUZES LATERAIS)	299
INTERRUPTOR - BALANCIM (TRAVAMENTO)(SACA-PINO DO RIPER)	474
INTERRUPTOR - BALANCIM (24 VOLT)(ILUMINADO)	299
INTERRUPTOR - BALANCIM (24 VOLTS - SELADO E ILUMINADO)	299
INTERRUPTOR - BALANCIM (24 VOLTS)(VEDADO)(ILUMINADO)	299
INTERRUPTOR - BOTÃO	690
	708
INTERRUPTOR - BOTÃO (MUDANÇA MARCHAS ACIMA)	470
INTERRUPTOR - BOTÃO (REDUÇÃO DE MARCHA)	470
INTERRUPTOR - BUZINA	298
INTERRUPTOR - FLUXO	5
	6
	287
	288
INTERRUPTOR - LIMITADOR (FREIO)	310
INTERRUPTOR - LIMITADOR (MARCHA À RÉ)	312
INTERRUPTOR - MAGNÉTICO	289
INTERRUPTOR - MAGNÉTICO (RELÉ DE PARTIDA)	268
	292
INTERRUPTOR - MAGNÉTICO (RELÉ DO MOTOR DE PARTIDA)	80
INTERRUPTOR - MAGNÉTICO (RELÉ PRINCIPAL)	292
INTERRUPTOR - PARTIDA	290
INTERRUPTOR - PRESSÃO	546
	716
INTERRUPTOR - PRESSÃO (ALTO/BAIXO)	712
INTERRUPTOR - PRESSÃO (AR CONDICIONADO)	712
INTERRUPTOR - PRESSÃO (ÓLEO)	80
INTERRUPTOR - TERMOSTATO	660
INTERRUPTOR (BALANCIM) (CONSOLE - LEVANTAR/ABAIXAR)	458
INTERRUPTOR DE DERIVAÇÃO	285
INTERRUPTOR (LUZES DIANTEIRAS)	299
INTERRUPTOR (LUZES TRASEIRAS)	299
INTERRUPTOR (PORTAS-DIANTEIRA, TRASEIRA, LADO DIREITO & LADO ESQUERDO)	786
INTERRUPTOR (PRESSÃO DO DIFERENCIAL)	502
INTERRUPTOR (VELOCIDADE DO VENTILADOR)	700
INTERRUPTOR (24 VOLT)(ILUMINADO)	299

J

JANELA DA CABINE	769
	770
	771
	772
	773
	774
	776
	778
	779
	780

ÍNDICE

Designação	Página
JANELA DA CABINE (DIREITO)	769
	773
JANELA DA CABINE (ESQUERDO)	770
JANELA DA CABINE (LADO DIREITO - DESLIZANTE)	767
JANELA DA CABINE (LADO ESQUERDO - DESLIZANTE)	768
JANELA DA CABINE (TRASEIRA - DESLIZANTE)	670
JANELA DESLIZANTE	767
	768
JOGO - COMPENSADOR (BOMBA HIDRÁULICA DA UNIDADE INJETORA)	182
JOGO DE ACONDICIONAMENTO DA BOMBA D'ÁGUA (ÁGUA)	104
JOGO DE BLOCO DESLIZADOR	753
	754
	755
JOGO DE BOMBA (RECONDICIONAMENTO)(BOMBA HIDRÁULICA DA UNIDADE INJETORA)	182
JOGO DE BOTÃO DE SUSPENSÃO	704
JOGO DE BUJÃO (BOMBA HIDRÁULICA DA UNIDADE INJETORA)	182
JOGO DE CARTUCHO (TRASEIRO)	540
JOGO DE CHICOTE (ASSENTO COM SUSPENSÃO A AR)	758
JOGO DE COIFA DE SUSPENSÃO	756
JOGO DE CORDÃO	758
JOGO DE CORREIAS EM V (INCLUI 4 CORREIAS)	32
	35
JOGO DE ENGRENAGENS DO MOTOR DE PARTIDA	283
JOGO DE FILTRO DA TAMPA (TANQUE DE COMBUSTÍVEL)	185
JOGO DE FIXADOR DE CORREIA	756
JOGO DE FIXADORES	190
	758
JOGO DE GAXETA	602
	604
JOGO DE GUIA DE TRILHO	776
	778
JOGO DE INDICADOR	704
JOGO DE LÂMINA DO LIMPADOR DE PÁRA-BRISA	787
JOGO DE MANCAL	190
	705
JOGO DE MANCAL (GARFO)(BOMBA HIDRÁULICA DA UNIDADE INJETORA)	182
JOGO DE MANCAL (MOTOR DE PARTIDA)	282
JOGO DE MANCAL (PADRÃO)	52
JOGO DE MANCAL (SUBMEDIDA DE 0,635 MM)	52
JOGO DE MANCAL (SUBMEDIDA DE 1,27 MM)	52
JOGO DE MOLA	704
JOGO DE MOLA DE FOLHA	773
	774
JOGO DE PALHETA	472
	473
	540
JOGO DE PÁRA-CHOQUE	704
JOGO DE PARAFUSO DE RETENÇÃO	216
JOGO DE RECEPTÁCULO (12 PINOS)	464
	480
JOGO DE RECEPTÁCULO (2 PINOS)	80
	188
	255
	256
	257
	266
	268
	285
	291
	292
	293
	296
	298
	379
	458
	502
	546
	577
	580
	661
	682
	696
	712
	716
	724
JOGO DE RECEPTÁCULO (3 PINOS)	132
	172
	246
	247
	258
	259
	260
	293
	296
	474
	690
	700
	708
	764
JOGO DE RECEPTÁCULO (4 PINOS)	244
	293
	296
	316

ÍNDICE

Designação	Página
	574
	575
	578
	687
	690
	712
	725
	726
JOGO DE RECEPTÁCULO (6 PINOS)	243
	299
	470
	661
	692
	696
	700
	724
	727
	728
	782
	784
	786
JOGO DE RECEPTÁCULO (8 PINOS)	299
JOGO DE RETENTOR	34
	170
	373
	379
	553
	574
	577
	578
	579
	580
JOGO DE RETENTOR (BOMBA HIDRÁULICA DA UNIDADE INJETORA)	182
JOGO DE RETENTOR DO CILINDRO HIDRÁULICO	486
	488
JOGO DE RETENTOR (VÁLVULA SOLENÓIDE)	187
JOGO DE RETENTOR (VÁLVULA SOLENÓIDE DE PRESSÃO PILOTO)	576
JOGO DE REVISÃO	34
JOGO DE ROLETE DE SUSPENSÃO	756
JOGO DE ROLO	758
JOGO DE SEGUIDOR	705
JOGO DE TERMINAL	190
	277
	283
JOGO DE TERMINAL (MOTOR DE PARTIDA)	273
JOGO DE TOMADA DE CONEXÃO (2 PINOS)	289
	293
	296
	316
	458
JOGO DE TOMADA DE CONEXÃO (3 PINOS)	250
	251
	252
	296
	299
	690
JOGO DE TOMADA DE CONEXÃO (3 PINOS) (SENSOR DE PRESSÃO)	249
JOGO DE TOMADA DE CONEXÃO (3 PINOS) (SENSOR DE SINCRONIZAÇÃO DA ROTAÇÃO DO MOTOR)	254
JOGO DE TOMADA DE CONEXÃO (4 PINOS)	293
	296
JOGO DE TOMADA DE CONEXÃO (6 PINOS)	688
JOGO DE TRAVA DE TERMINAL (BLOCO DE FUSÍVEIS)	293
JOGO DE TRINCO	776
	778
JOGO-JANELA	710
JUNTA - COLETOR DE ESCAPE	140
JUNTA (BOMBA DE ESCORVA DE COMBUSTÍVEL)	172
JUNTA UNIVERSAL	365

L

Designação	Página
LÂMINA	585
	586
	587
	588
	589
	590
	591
	592
	636
LÂMINA DO LIMPADOR DE PÁRA-BRISA (DIANTEIRO)	786
LÂMINA DO LIMPADOR DE PÁRA-BRISA (PORTA - LADO ESQUERDO)	786
LÂMINA DO LIMPADOR DE PÁRA-BRISA (TRASEIRO)	786
LÂMINA E BORDA CORTANTE	631
	632
	633
	634
	635
LÂMINA SEMI-UNIVERSAL	638
	644
	645
LÂMINA UNIVERSAL	640
	641
	642
	643
	646
	648
LÂMPADA - FAROL	228

ÍNDICE

Designação	Página
	229
LÂMPADA - FAROL (24 VOLT)(SUSPENSO)	233
	234
LÂMPADA - FAROL (24 VOLTS)(VERTICAL)	236
LÂMPADA - TETO	227
LÂMPADA - TETO (24 VOLTS - COM INTERRUPTOR)	670
LÂMPADA VERMELHA	708
LÂMPADA (24 V)	298
	299
	708
LÂMPADA (24 V) (TETO)	227
LÂMPADA (28 V)	208
	210
LAVADOR DO VIDRO	764
LENTE (FAROL)	228
	229
LENTE (LÂMPADA DO TETO)	227
LENTE VERMELHA	298
	708
LEVANTAMENTO DO MOTOR	48
LIMPADOR DO VIDRO	782
	784
	786
LUBRIFICAÇÃO-BARRA EQUALIZADORA	440
LUVA - REVESTIMENTO INFERIOR	18
	20
LUVA DO TUCHO	18
	20

M

MAÇANETA	670
MATERIAL RODANTE	457
MECANISMO DAS VÁLVULAS	63
MECANISMO DE DIREÇÃO	466
	468
MÓDULO - CENTRO DE MENSAGEM	724
MÓDULO - TECLADO DO MONITOR	725
	726
MÓDULO - TECLADO DO MONITOR (VERSÃO EM INGLÊS)	208
MÓDULO - TECLADO DO MONITOR (VERSÃO INTERNACIONAL)	210
MÓDULO - VELOCÍMETRO E TACÔMETRO	728
MÓDULO ELETRÔNICO DE QUATRO INDICADORES	727
MOLA	283
MOLA (ESCOVA DO MOTOR DE PARTIDA)	272
	273
MONTAGEM - ALTERNADOR	49
MONTAGEM - CABINE	730
MONTAGEM - CILINDRO	613
MONTAGEM - ESTRUTURA ROPS	733
MONTAGEM - RIPER	614
MONTAGEM - TRANSMISSÃO	344
MONTAGEM DE RÁDIO DE FAIXA DE ONDA CIVIL	732
MOTOR	5
	6
MOTOR - PISTÃO	538
MOTOR - VENTILADOR	538
MOTOR ELÉTRICO	682
MOTOR ELÉTRICO DE PARTIDA	272
	276
	279
	280
	282
MOTOR ELÉTRICO (27 VOLT)	660
	696
MUNHÃO DA LÂMINA	626
MUNHÃO DO MOTOR	62

O

ÓLEO - ARRANJO PARA TROCA RÁPIDA	78

P

PÁRA-LAMA	400
PARTIDA EM TEMPERATURAS BAIXAS	268
PENEIRA DO TANQUE DE COMBUSTÍVEL	184
PISTÃO E BIELA	52
PIVÔ DO LIMPADOR	790
PLACA DE ADVERTÊNCIA (MOLA TENSORA)	422
	434
PLACA DE ADVERTÊNCIA (ÓLEO DE MOLA TENSORA)	434
PLACA DE DESGASTE	649
	650
PLACA DE INFORMAÇÃO (NÚMEROS DE SERVIÇO)	792
PLACA E DECALQUE	792
PLACA/CHAPA	421
PLATAFORMA DA CABINE	738
POLIA DO VIRABREQUIM	57
	58
PÓS-ARREFECEDOR DA ADMISSÃO DE AR	122
PRÊ-LUBRIFICAÇÃO	80
PRÉ-PURIFICADOR	142
PROTETOR - COMANDO FINAL	405
PROTETOR - EIXO DE TRANSMISSÃO	337
PROTETOR - EIXO PIVÔ	409
PROTETOR - RADIADOR	410
PROTETOR - ROCHA	414
	415
PROTETOR - RODA-GUIA	408
PROTETOR - TRASEIRO	412
PROTETOR CONTRA CHUVA	129

ÍNDICE

Designação	Página
	130
	131
PROTETOR INFERIOR	406
PURIFICADOR DE AR	126
	128

R

RADIADOR	106
	110
RECEPTOR - SECADOR (CONDICIONADOR DE AR)	716
RECEPTOR - SECADOR (REFRIGERANTE)	712
RECLINAÇÃO - ASSENTO	740
REGULADOR DE TEMPERATURA DA ÁGUA (92 GRAUS CENTÍGRADOS)	112
	114
RESPIRO	194
	440
RESPIRO (CÁRTER DO MOTOR)	16
RESPIRO (TREM DE FORÇA)	338
RETEM	465
RETÉM - CONTROLE	480
	483
RETENTOR DO VIRABREQUIM	17
REVESTIMENTO DA CABINE	711
RIPER	623
	624
	625
	651
	652
	653
RODA-GUIA DAS ESTEIRAS	436
	437
ROLETE DE ESTEIRA DE FLANGE DUPLO	445
	446
ROLETE DE ESTEIRA DE FLANGE SIMPLES	447
	448
ROLETE SUPERIOR DA ESTEIRA	444
RUÍDO - ARRANJO PARA SUPRESSÃO	4

S

SACA-PINO	616
	618
SEGMENTO DA RODA MOTRIZ	356
SEMI-EIXO - TREM DE FORÇA	304
SENSOR - NÍVEL DE COMBUSTÍVEL	244
SENSOR - PRESSÃO	248
	249
	250
	251
	252
	516
SENSOR - PRESSÃO (ACIONAMENTO DA INJEÇÃO)	28
SENSOR - PRESSÃO (AR DE REFORÇO)	28
SENSOR - TEMPERATURA	258
	259
	260
SENSOR - TEMPERATURA (AR)	132
SENSOR - TEMPERATURA (COMBUSTÍVEL)	172
SENSOR - TEMPERATURA (LÍQUIDO ARREFECEDOR)	94
SENSOR DE VELOCIDADE	253
	254
	255
	256
	257
SENSOR DE VELOCIDADE (SINCRONIZAÇÃO DO MOTOR)	46
SENSOR DE VELOCIDADE (VENTILADOR)	34
SILENCIADOR	141
SINCRONIZADOR	80
SIST. ELETRÔNICO - ACESSÓRIO	218
SISTEMA DE ILUMINAÇÃO	230
SISTEMA DE ILUMINAÇÃO - FARÓIS	234
	236
SISTEMA ELETRÔNICO - MÁQUINA	2
SISTEMA ELETRÔNICO - TREM DE FORÇA	219
SISTEMA ELETRÔNICO - VIDS	220
SOFTWARE - ACESSÓRIO	218
SOFTWARE - TREM DE FORÇA	219
SOLENÓIDE	282
SOLENÓIDE DO MOTOR DE ARRANQUE	264
	276
SOLENÓIDE (MOTOR DE PARTIDA)	272
SUPORTE - CONTROLE	470
SUPORTE - ESCOVA	283
SUPORTE - ESCOVA (ESCOVA DO MOTOR DE PARTIDA)	272
SUPORTE DA LAMPADA INDICADORA	298
	708
SUPORTE DO MOTOR	60
	61
SUSPENSÃO - ASSENTO	756
	758
SUSPENSÃO - TRUQUE	450

T

TAMPA	78
	110
	190
TAMPA - BLOCO DO MOTOR	11
TAMPA - BOCAL DE ENCHIMENTO	66
	542
TAMPA - BOCAL DE ENCHIMENTO DE ÓLEO	440

ÍNDICE

Designação	Página
TAMPA - BOCAL DE ENCHIMENTO (ÓLEO DO TREM DE FORÇA)	338
TAMPA - CAIXA DIANTEIRA	14
TAMPA - CAIXA DO VOLANTE	12
TAMPA - MECANISMO DAS VÁLVULAS	16
TAMPA - MUNHÃO	392
TAMPA - NÍVEL DO ÓLEO	442
TAMPA - RADIADOR	116
TAMPA - ROLETE DAS ESTEIRAS	428
TAMPA - TANQUE HIDRÁULICO	484
TAMPA COM RESPIRO	760
TAMPA CONTRA POEIRA	54
	68
	95
	150
	152
	154
	156
	306
	338
	366
	374
	376
	471
	506
	510
	516
	526
	553
	566
	568
TAMPA DA RODA-GUIA	426
	427
TAMPA DO TANQUE DE COMBUSTÍVEL	185
TAMPÃO	382
TANQUE - LAVADOR DE JANELA	760
	762
TANQUE - LÍQUIDO ARREFECEDOR	116
TANQUE DE ÁGUA	118
TANQUE DE COMBUSTÍVEL	184
	185
TANQUE DE ÓLEO HIDRÁULICO E MONTAGEM	546
TANQUE HIDRÁULICO E FILTRO	542
TAPETE INFERIOR	730
TAPETE SUPERIOR	730
TELA	74
TELA DE PROTEÇÃO	743
TELA DE SUCÇÃO	306
	358
TELA FILTRANTE	542
TELA FILTRANTE (ENTRADA DA BOMBA DE ÓLEO DO TREM DE FORÇA)	338
TERMOSTATO	112
	114
TIRA	773
	774
	778
TIRANTE DA LÂMINA	584
TRANSMISSÃO	364
TREM DE FORÇA	349
TUBOS - ÁGUA	92
	94
	98
	100
TUBOS - AQUECEDOR	720
TUBOS - AR	132
	134
	136
	138
TUBOS - AR CONDICIONADO	712
	716
TUBOS - BOMBA	516
TUBOS - CILINDRO DE INCLINAÇÃO	528
	532
	534
	536
TUBOS - CILINDRO DE LEVANTAMENTO	504
TUBOS - CILINDRO DO SACA-PINO	514
TUBOS - CIRCUITO PILOTO	510
TUBOS - FILTRO DO COMBUSTÍVEL	172
TUBOS - INJETOR DA BOMBA HIDRÁULICA	176
TUBOS - MOTOR	506
TUBOS - ÓLEO	606
TUBOS - ÓLEO DA TRANSMISSÃO	338
TUBOS - ÓLEO DO MOTOR	74
TUBOS - ÓLEO DO TURBOALIMENTADOR	76
TUBOS - RIPER	522
	524
	526
TUBOS DO AQUECEDOR	720
TURBOALIMENTADOR	146
	147

V

VÁLVULA	118
	150
	152
	154
	156
	558
	560
	661
VÁLVULA - ALÍVIO DO GATILHO	560
VÁLVULA - ESFERA (CORTE MANUAL)	164
VÁLVULA (ÁGUA)	696
VÁLVULA (ALÍVIO)	452
VÁLVULA COMBINADA	553
VÁLVULA DA DIREÇÃO E MONTAGEM	471

ÍNDICE

Designação	Página
VÁLVULA DE ADMISSÃO	27
VÁLVULA DE ALÍVIO	352
	376
	553
VÁLVULA DE ALÍVIO (DERIVAÇÃO DO ARREFECEDOR DA TRANSMISSÃO)	338
VÁLVULA DE AMOSTRAGEM	95
VÁLVULA DE CONTROLE	368
	370
	553
	554
	556
	558
	560
	564
VÁLVULA DE CONTROLE - TRANSMISSÃO	380
VÁLVULA DE CONTROLE DE PRESSÃO	186
VÁLVULA DE CONTROLE E MONTAGEM	552
VÁLVULA DE CONTROLE PILOTO	566
	568
VÁLVULA DE DESVIO	542
VÁLVULA DE DRENAGEM	382
	546
VÁLVULA DE ESCAPE	27
VÁLVULA DE MODULAÇÃO	372
	373
VÁLVULA DE PRIORIDADE	374
VÁLVULA DE QUEDA RÁPIDA	572
VÁLVULA DE REDUÇÃO DE PRESSÃO	570
	571
VÁLVULA DE RETENÇÃO	130
	164
VÁLVULA DE RETENÇÃO (RESPIRO DO VÁCUO)	546
VÁLVULA DE RETENÇÃO (SISTEMA DO LAVADOR E LIMPADOR)	762
VÁLVULA DE SEPARAÇÃO	573
VÁLVULA DE SEQUÊNCIA	553
VÁLVULA DESVIADORA (SOMENTE CLIMA DE TEMPO FRIO)	558
VÁLVULA E CILINDRO	548
	549
	550
VÁLVULA E MONTAGEM - LÂMINA	551
VÁLVULA-GRAXA (ABASTECIMENTO)	452
VÁLVULA PARA TIRAR AMOSTRAS DE FLUIDOS	339
VÁLVULA PARA TIRAR AMOSTRAS DE FLUIDOS (ÓLEO DO MOTOR)	68
VÁLVULA (PARTIDA A ÉTER)(24 VOLTS)	266
VÁLVULA PILOTO E MONTAGEM	366
VÁLVULA SOLENÓIDE	187
	378
	379
	556
	574
	575
	576
	577
	578
	579
	580
VEDAÇÃO	112
	114
VEDADOR DE JUNTA	14
VENTILADOR	86
VENTILADOR DE SOPRO	88
	90
VIDRO - DESLIZADOR (LADO ESQUERDO) (MATIZADO)	776
VIDRO FIXO - LADO DIREITO (MATIZADO)	773
VIDRO FIXO - LADO ESQUERDO (MATIZADO)	774
VIDRO (MATIZADO)	769
	770
	779
VIDRO (MATIZADO) (DIANTEIRA DA CABINE - FIXA)	670
VIDRO (MATIZADO) (LATERAL DA PORTA - FIXA)	670
VIDRO (MATIZADO) (PORTAS DA CABINE - FIXAS)	670
VIDRO (VIDRO MATIZADO - VERDE)	780
VIRABREQUIM	17
VOLANTE DO MOTOR	36

STICHWORTVERZEICHNIS

Bezeichnung	Seite
A	
ABDECKGLAS (ARBEITSLEUCHTE)	228, 229
ABDECKGLAS (FAHRERHAUS-INNENLEUCHTE)	227
ABGASKRÜMMERDICHTUNG	140
ABLASS (UMWELTFREUNDLICH)	322
ABLASSSTOPFEN	100, 434
ABLASSVENTIL	382, 546
ABSTREIFBALKEN	422, 424, 425
ABSTREIFBALKEN (LINKS)	422
ABSTREIFBALKEN (RECHTS)	422
ACHSWELLENSCHMIERUNG	442
ADAPTER	148
ANSAUGSIEB	306, 358
ANSCHLUSSGRUPPE	506
ANSCHLUSSKLEMMENSATZ	190, 277, 283
ANSCHLUSSKLEMMENSATZ (STARTERMOTOR)	273
ANSCHLUSSSPERRSATZ (SICHERUNGSBLOCK)	293
ANTRIEBSSTRANG-WARTUNGSSATZ	263
ANTRIEBSWELLENVERKLEIDUNG	337
ANZEIGEN-EINBAUSATZ	704
ANZUGSLEINE	758
ARBEITSGERÄT - SERVICESATZ	261, 262
ARBEITSGERÄTE-SOFTWARE	218
ARBEITSGERÄTEELEKTRONIK	218
ARBEITSGERÄTEHEBEL UND BEFESTIGUNGSTEILE	684, 685, 686
ARBEITSGERÄTESTEUERUNG	690
ARBEITSLEUCHTEN	228, 229, 234, 236
ARBEITSLEUCHTEN (24 VOLT)(HÄNGEND)	233, 234
ARBEITSLEUCHTEN (24 V)(SENKRECHT)	236
ARMATUR (SCHNELLWECHSELANSCHLUSS)	516
ARRETIERUNGSEINBAUSATZ	776, 778
ASCHENBECHER	700
ÄTHERSPRÜHGERÄT	266
ÄTHERSTARTHILFE	266
AUFKLEBER	464, 732, 791
AUFKLEBER - INFORMATION (KRAFTSTOFF-FILTER/WASSERABSCHEIDER)	793
AUFKLEBER - SICHERUNG	712
AUFKLEBER - TASTENFELD	725, 726
AUFKLEBER (RADIO)	707
AUFKLEBER (SITZKISSENKENNUNG)	735, 736
AUFKLEBER (VORSCHMIERPUMPE)	80
AUFREISSER	651, 652, 653
AUFREISSER - TEILLISTE	623, 624, 625
AUFREISSER-BOLZENZIEHERZYLINDER	498
AUFREISSERBEFESTIGUNG	614
AUFREISSERHUBZYLINDER	494, 496
AUFREISSERHUBZYLINDER (LINKS)	623, 624, 625
AUFREISSERHUBZYLINDER (RECHTS)	623, 624, 625
AUFREISSERKIPPZYLINDER	500
AUFREISSERLEITUNGEN	522, 524, 526
AUFREISSERRAHMEN	594, 596, 598
AUFREISSERZAHN	654, 655, 656
AUSGLEICHER-EINBAUSATZ (HYDRAULISCHE PUMPENDÜSE)	182
AUSLASSVENTIL	27
AUSPUFFKRÜMMER	140
B	
BATTERIE UND VERDRAHTUNG	192
BATTERIE (12 V/TROCKEN)	269
BATTERIE (12 V/TROCKEN)	194
BEFESTIGUNGSSCHRAUBENSATZ	216
BEFESTIGUNGSTEILE	190
BELEUCHTUNGSANLAGE	230, 233
BELEUCHTUNGSANLAGE (AUFREISSER)	242
BLATTFEDERSATZ	773

STICHWORTVERZEICHNIS

Bezeichnung	Seite
	774
BOLZENZIEHER	616
	618
BOLZENZIEHERZYLINDERLEITUNGEN	514
BREMSGESTÄNGE	310
BUCHSENLAUFFLÄCHE, UNTEN	18
	20
BÜRSTENHALTER	283
BÜRSTENHALTER (STARTERMOTORBÜRSTE)	272
BÜRSTENSATZ	282
BÜRSTENSATZ (STARTERMOTOR)	272
D	
DÄMPFER	30
DICHTUNG	773
	774
	778
DICHTUNG (KRAFTSTOFFENTLÜFTUNGSPUMPE)	172
DICHTUNGS-ABDICHTMITTEL	14
DICHTUNGSSATZ	34
	170
	373
	379
	553
	574
	577
	578
	579
	580
	602
	604
DICHTUNGSSATZ (HYDRAULISCHE PUMPENDÜSE)	182
DICHTUNGSSATZ (SOLENOIDVENTIL)	187
DICHTUNGSSATZ (VORSTEUERDRUCK - SOLENOIDVENTIL)	576
DIFFERENTIAL UND TELLERRAD	320
DOPPELFLANSCHROLLEN	445
	446
DOPPELKIPPZYLINDER	485
DREHMOMENTWANDLER	358
	360
	362
DREHSTROMGENERATOR	189
	190
DREHSTROMGENERATOR - BEFESTIGUNG	49
DREHZAHLSENSOR	253
	254
	255
	256
	257
DREHZAHLSENSOR (LÜFTER)	34
DREHZAHLSENSOR (ZÜNDZEITPUNKT-EINSTELLUNG)	46
DREHZAPFENVERKLEIDUNG	409
DRUCKBEGRENZUNGSVENTIL	352
DRUCKKNOPFKAPPE	470
DRUCKKNOPFSCHALTER	690
	708
DRUCKKNOPFSCHALTER (HERUNTERSCHALTEN)	470
DRUCKKNOPFSCHALTER (HOCHSCHALTEN)	470
DRUCKLÜFTER	88
	90
DRUCKLUFTLEITUNGEN	132
	134
	136
	138
DRUCKREDUZIERVENTIL	570
	571
DRUCKSCHALTER	546
	716
DRUCKSCHALTER (A/C)	712
DRUCKSCHALTER (HOCH/NIEDRIG)	712
DRUCKSCHALTER (ÖL)	80
DRUCKSENSOR	248
	249
	250
	251
	252
	516
DRUCKSENSOR (EINSPRITZBETÄTIGUNG)	28
DRUCKSENSOR (LADELUFT)	28
DRUCKSTEUERVENTIL	186
E	
ECK- UND SCHNEIDMESSER	627
	628
	629
	630
EINFÜLLKAPPE	66
EINFÜLLKAPPE (KRAFTÜBERTRAGUNGSÖL)	338
EINFÜLLSTUTZENKAPPE	542
EINLASSVENTIL	27
EINSATZ (HINTEN)	540
EINSPRITZLEITUNGEN - HYDRAULIKPUMPE	176
EINZELFLANSCHROLLEN	447
	448
ELEKTR. UMFORMER	217
ELEKTR. UMFORMER (24 V BIS 12 V)(25 A)	217
ELEKTRON. STEUERUNG (INSTRUMENTENBRETTBELEUCHTUNG)	708
ELEKTRON. STEUERUNG UND ANBAUSATZ	200

STICHWORTVERZEICHNIS

Bezeichnung	Seite
	201
	202
	204
ELEKTRONIK - MASCHINE	2
ENDSCHALTER (BREMSE)	310
ENDSCHALTER (RÜCKWÄRTS)	312
ENTDUNSTER	70
ENTFROSTERGEBLÄSE	694
ENTLÜFTER	440
ENTLÜFTER (KRAFTÜBERTRAGUNG)	338
ENTLÜFTER (KURBELGEHÄUSE)	16
ENTLÜFTUNGSVORRICHTUNG	194

F

FAHRERHAUS	663
	664
	665
	666
	668
	670
FAHRERHAUSANBAUSATZ	730
	732
FAHRERHAUSAUSKLEIDUNG	711
FAHRERHAUSBELEUCHTUNG	227
FAHRERHAUSBELEUCHTUNG (24 V)(MIT SCHALTER)	670
FAHRERHAUSFENSTER	769
	770
	771
	772
	773
	774
	776
	778
	779
	780
FAHRERHAUSFENSTER (HECK - SCHIEBBAR)	670
FAHRERHAUSFENSTER (LINKS)	770
FAHRERHAUSFENSTER (LINKS) (SCHIEBEFENSTER)	768
FAHRERHAUSFENSTER (RECHTS)	769
	773
FAHRERHAUSFENSTER (RECHTS) (SCHIEBEFENSTER)	767
FAHRERHAUSHEIZUNG	696
	700
FAHRERHAUSLUFTFILTER (STANDARD)	700
FAHRERPLATTFORM	738
FAHRERPLATTFORMVERDRAHTUNG	298
FAHRERSITZ	744
	745
	746
	748
	750
	751
FAHRERSITZFEDERUNG	756
	758
FAHRERSITZFEDERUNGSGEHÄUSE	704
FAHRERSITZVERSTELLER	657
FAHRWERK	385
FEDER	283
FEDER-EINBAUSATZ	704
FEDER (STARTERMOTORBÜRSTE)	272
	273
FEDERUNGS-EINBAUSATZ (EINSTELL-KNOPF)	704
FEDERUNGS-EINBAUSATZ (MANSCHETTE)	756
FEDERUNGS-EINBAUSATZ (ROLLE)	756
FENSTERSATZ	710
FESTSTELLBREMSGESTÄNGE	464
FILTER (HYDRAULISCHE PUMPENDÜSE)	162
FILTER (WASSERPUMPE)	104
FILTERELEMENT - HYDRAULIK (ELEKTRISCH-HYDRAULISCHES VENTIL)	502
FILTERSATZ (WASSERABSCHEIDER U. KRAFTSTOFFILTER)	167
FILTERSIEB	542
FLÜGELSATZ	472
	473
	540
FLÜGELZELLENPUMPENEINSATZ	472
	473
FOLGEVENTIL	553
FRONTBELEUCHTUNG	238
	239
FUSSMATTE (OBERE)	730
FUSSMATTE (UNTERE)	730

G

GASREDUZIERGESTÄNGE	158
GEGENGEWICHT	388
	390
	391
GEGENGEWICHT UND BALKEN, HINTEN	386
GESCHWINDIGKEITS- U. DREHZAHLMESSER-MODUL	728
GETRIEBE	364
GETRIEBEAUFLAGER	344
GETRIEBEHYDRAULIK	316
GETRIEBEÖLKÜHLER	318
GETRIEBESTEUERUNG UND BEFESTIGUNGS-TEILE	308
GETRIEBESTEUERVENTIL	380
GLAS (GETÖNT)	769
	770
	779

STICHWORTVERZEICHNIS

Bezeichnung	Seite
GLAS (GETÖNT) (FAHRERHAUSFRONT - NICHT VERSTELLBAR)	670
GLAS (GETÖNT) (FAHRERHAUSSEITE - NICHT VERSTELLBAR)	670
GLAS (GETÖNT) (FAHRERHAUSTÜREN - NICHT VERSTELBAR)	670
GLAS (GETÖNT)(GRÜN)	780
GLASSCHEIBEFENSTER, LINKS (GETÖNT)	776
GLEITSCHIENENBLOCK-EINBAUSATZ	753 754 755
GLÜHKERZENVERDRAHTUNG	243
GRUNDAUSFÜHRUNG	3
GRUNDRAHMEN - ANZEIGELEUCHTE	298 708

H

HALTETEILESATZ	758
HAUPTANTRIEBSWELLE	357
HECKBELEUCHTUNG	232 240
HECKVERKLEIDUNG	412
HEIZUNGSLEITUNGEN	720
HUBZYLINDERLEITUNGEN	504
HYDRAULIKPUMPE UND LEITUNGEN	516
HYDRAULIKPUMPENANTRIEB	160 162
HYDRAULIKSTEUERUNG	474 476 477 478
HYDRAULIKTANK UND BEFESTIGUNGSTEILE	546
HYDRAULIKTANK UND SCHMIERFILTER	542
HYDRAULIKZYLINDER-DICHTUNGSSATZ	486 488

I

IDENTIFIZIERUNGS-AUFKLEBER	208 210
IDENTIFIZIERUNGS-AUFKLEBER (AUSRUFEZEICHEN)	298
IDENTIFIZIERUNGS-AUFKLEBER (FÜR UNTERBRECHER)	292
IDENTIFIZIERUNGS-AUFKLEBER (GRUPPEN- U. SEQUENZNR.)	682
IDENTIFIZIERUNGS-AUFKLEBER (GRUPPEN- U. SEQUENZNR.)	660
IDENTIFIZIERUNGS-AUFKLEBER (GRUPPEN- U. SEQUENZNR.)	696
IDENTIFIZIERUNGS-AUFKLEBER (SICHERUNG)	292
INFORMATIONSSCHILD (WARTUNGS-NR.)	792
INSTRUKTIONS-AUFKLEBER	478 684 786 793
INSTRUKTIONS-AUFKLEBER (AUFREISSER - BOLZENZIEHSCHALTER)	474
INSTRUKTIONS-AUFKLEBER (FÜR SITZVERSTELLUNG)	756 758
INSTRUKTIONS-AUFKLEBER (PALNIER-SCHILDSTEUERUNG)	793
INSTRUKTIONS-AUFKLEBER (WASSER - EINLASS/AUSLASS)	696
INSTRUKTIONS-AUFKLEBER (WASSER - EINLASS/AUSLASS)	660
INSTRUMENTENBRETT-AUFKLEBER	708
INSTRUMENTENBRETT-AUFKLEBER (KLIMAANLAGE U. GEBLÄSE)	700
INSTRUMENTENSATZ	708

J

JOCHSATZ	64
JOYSTICK -STEUERUNG	480 482 483

K

KABELSTRANG (DRUCKSENSOR)	249
KABELSTRANG (SOCKEL) (DRUCKSEN-SOR)	249
KÄLTEMITTELKOMPRESSOR	674 676
KÄLTEMITTELKONDENSATOR	682
KÄLTEMITTELKONDENSATOR U. BEFESTIGUNGSTEILE	678 680
KÄLTEMITTELTROCKNER (KLIMAANLAGE)	716
KÄLTEMITTELTROCKNER (KÜHLMITTEL)	712
KALTWETTERAUSRÜSTUNG	1
KALTWETTERSTARTANLAGE	268
KAPPE	78 110 190
KAPPE MIT ENTLÜFTER	760
KAPPENFILTERSATZ (KRAFTSTOFFTANK)	185
KEILRIEMEN	189 676
KEILRIEMENSATZ (EINSCHL. 4 RIEMEN)	32
KEILRIEMENSATZ (EINSCHL. 4 RIEMEN)	35
KETTENGLIEDER	438
KETTENRADSEGMENT	356
KETTENSPANNER UND -FEDERRÜCKLAUF	452
KIPPSCHALTER (FESTSTELLBREMSE)	464

STICHWORTVERZEICHNIS

Bezeichnung	Seite
KIPPSCHALTER (GEBLÄSEREGELUNG)	694
KIPPSCHALTER (KLIMAANLAGE EIN/AUS)	700
KIPPSCHALTER (SEITENLEUCHTEN)	299
KIPPSCHALTER (SPERREN) (AUFREISSEBOLZENZIEHER)	474
KIPPSCHALTER (STARTHILFE)	299
KIPPSCHALTER (ZUSATZ)	299
KIPPSCHALTER (24 V)(ABGEDICHTET) (BELEUCHTET)	299
KIPPSCHALTER (24 V)(ERLEUCHTET)	299
KIPPSCHALTER (24 V)(VERSIEGELT-BELEUCHTET)	299
KLEMMLEISTE	226
KLIMAANLAGE	658 659 660
KLIMAANLAGEN-DRUCKSPEICHER	712 716
KLIMAANLAGENLEITUNGEN	712 716
KNIESTÜCK	516
KNOPF	670
KNOPF (ARMLEHNENEINSTELLUNG)	458
KOLBENMOTOR	538
KONSOLENVERDRAHTUNG	292
KRAFTSTOFFEINSPRITZDÜSE	169
KRAFTSTOFFEINSPRITZPUMPE	179
KRAFTSTOFFHEIZUNG	222
KRAFTSTOFFILTER	172
KRAFTSTOFFILTER UND LEITUNGEN	164
KRAFTSTOFFILTERLEITUNGEN	172
KRAFTSTOFFSTANDSENSOR	244
KRAFTSTOFFTANK	184 185
KRAFTSTOFFTANK-SIEBEINSATZ	184
KRAFTSTOFFTANKKAPPE	185
KRAFTÜBERTRAGUNG	349
KRAFTÜBERTRAGUNGSACHSE	304
KRAFTÜBERTRAGUNGSELEKTRONIK	219
KREUZGELENK	365
KREUZGELENK UND LAGER	365
KRÜMMER UND VENTIL	342 343
KUGELVENTIL (MANUELLE ABSTELLUNG)	164
KÜHLER	106 110
KÜHLERKAPPE	116
KÜHLERSCHUTZ	410
KÜHLMITTELBEHÄLTER	116
KÜHLWASSERLEITUNGEN	92 94 98 100
KÜHLWASSERPUMPE	102 104
KÜHLWASSERPUMPEN-REGENERIERSATZ (WASSER)	104
KURBELWELLE	17
KURBELWELLEN-RIEMENSCHEIBE	57 58
KURBELWELLENDICHTUNG	17

L

Bezeichnung	Seite
LADELUFTKÜHLER	122
LAGERSATZ	190 705
LAGERSATZ (GABEL)(HYDRAULISCHE PUMPENDÜSE)	182
LAGERSATZ (STANDARD)	52
LAGERSATZ (STARTER)	282
LAGERSATZ (0,635 MM UNTERGRÖSSE)	52
LAGERSATZ (1,27 MM UNTERGRÖSSE)	52
LAUFFÜHRUNGSSATZ	776 778
LAUFROLLENAUFSATZ	428
LAUFROLLENRAHMEN-KNICKFEDERUNG	450
LAUFROLLENRAHMEN (TELESKOPRÜCK-LAUF)	434
LAUFWERKSKETTE	454 455 456
LAUFWERKSRAHMEN	457
LEITRAD	436 437
LEITRADAUFSATZ	426 427
LEITRADSCHUTZ	408
LENK- UND GETRIEBEEINSTELLER	458
LENK- UND GETRIEBESTEUERUNG	312 314
LENKKUPPLUNG UND BREMSE	462
LENKTRIEB	466 468
LENKVENTIL U. BEFESTIGUNGSTEILE	471
LEUCHTE - ROT	708
LEUCHTE (24 V)	298 299 708
LEUCHTE (24 V)	299
LEUCHTE (24 V) (FAHRERHAUSDACH)	227
LEUCHTE (28 V)	208 210
LINSE - ROT	298 708
LIPPENDICHTUNG	112 114
LÜFTER	86
LÜFTERANTRIEB	32 34

STICHWORTVERZEICHNIS

Bezeichnung	Seite
	35
LÜFTERMOTOR	538
LUFTFILTER (FAHRERHAUS) (GERUCHSREDUZIERUNG)	700
LUFTFILTER (FAHRERHAUS) (HOCHLEISTUNG)	700
LUFTFILTER (FAHRERHAUS) (STANDARD)	700
LUFTFILTER (HAUPTFILTER)	128
LUFTFILTER (SICHERHEITSFILTER)	128
LUFTREINIGER	126
	128

M

MAGNETSCHALTER	289
MAGNETSCHALTER (HAUPTRELAIS)	292
MAGNETSCHALTER (STARTERRELAIS)	80
MAGNETSCHALTER (STARTRELAIS)	268
	292
MAGNETSPULE	282
MAGNETSPULE - ANLASSMOTOR (ELEKTR.)	264
MAGNETSPULE - ANLASSMOTOR (ELEKTR.)	276
MAGNETSPULE (STARTERMOTOR)	272
MAGNETSTOPFEN	326
	330
	334
MAGNETVENTIL	187
	378
	379
	556
	574
	575
	576
	577
	578
	579
	580
MELDEZENTRUMMODUL	724
MESSERPUMPE	540
MODUL - VIER ELEKTRON. ANZEIGEN	727
MODUL-MONITORTASTATUR	725
	726
MODUL-MONITORTASTATUR (ENGLISCHE AUSFÜHRUNG)	208
MODUL-MONITORTASTATUR (INTERNATIONALE AUSFÜHRUNG)	210
MODULATORVENTIL	372
	373
MONTAGEZAPFEN	62
MONTAGEZAPFEN (PLANIERSCHILDEINRICHTUNG)	626
MONTAGEZAPFENVERKLEIDUNG	392
MOTOR-EINBAUSATZ	7
MOTOR, ELEKTR.	682
MOTOR, ELEKTR. (27 V)	660
	696
MOTORAUFHÄNGUNG	60
	61
MOTORAUSFÜHRUNG	5
	6
MOTORBLOCK	18
	20
	22
	24
MOTORBLOCKDECKEL	11
MOTORHAUBE UND VERKLEIDUNG	418
MOTORHUBÖSE	48
MOTORLEITUNGEN	506
MOTORÖLEINFÜLLSTUTZEN	66
MOTORÖLLEITUNGEN	74
MOTORSTEUERUNG, ELEKTRON.	212
	213
MOTORVERDRAHTUNG	296
MOTORVERKLEIDUNG	398
MOTORVORSCHMIERUNG	80

N

NEBENANTRIEB	31
NEIGEZYLINDERLEITUNGEN	528
	532
	534
	536
NOCKENWELLE	10

O

ÖLABLASSSCHRAUBE	50
ÖLEINFÜLLSTUTZEN	440
ÖLFILTER	68
	324
	502
ÖLFILTER (KRAFTÜBERTRAGUNG)	338
ÖLFILTERELEMENT	324
ÖLFILTERELEMENT (HYDRAULIK/STROMUMKEHRUNG)	542
ÖLFILTERELEMENT (HYDRAULISCH)	542
ÖLKÜHLERBLOCK (MOTOR)	94
ÖLLEITUNGEN	606
ÖLLEITUNGEN - KRAFTÜBERTRAGUNG	338
ÖLMESSSTAB	72
ÖLMESSSTAB (KRAFTÜBERTRAGUNG)	338
ÖLPUMPEN-BEFESTIGUNGSTEILE	65
ÖLSCHNELLWECHSELANSCHLUSS	78
ÖLSTANDKAPPE	442
ÖLWANNE	50

STICHWORTVERZEICHNIS

Bezeichnung	Seite
P	
PANZERWANNE	406
PENDELVENTIL	573
PLANETENANTRIEBSGEHÄUSE U. TEILE	306
PLANETENGETRIEBE	346
PLANIEREINRICHTUNG	585
	586
	587
	588
	589
	590
	591
	592
PLANIERSCHILD-UMRÜSTSATZ	611
	612
PLANIERSCHILDHUBZYLINDER	486
	548
PLANIERSCHILDKIPPZYLINDER	488
	490
	492
PLANIERSCHILDKIPPZYLINDER (LINKS)	485
PLANIERSCHILDKIPPZYLINDER (RECHTS)	485
PLATTE	421
PLEUELSTANGE UND KOLBEN	52
PROBEENTNAHMEVENTIL	95
	339
PROBEENTNAHMEVENTIL (MOTORÖL)	68
PUMPE UND BEFESTIGUNGSTEILE	178
PUMPEN-EINBAUSATZ (ÜBERHOLUNG) (HYDRAULISCHE PUMPENDÜSE)	182
PUMPENANSCHLUSS	319
PUMPENDÜSE, HYDRAULISCH	180
	182
Q	
QUERTRAVERSE	429
	430
	432
R	
RADIOEINBAUSATZ	707
RAHMEN UND GEHÄUSE	382
RASTE - STEUERUNG	480
	483
RECHTES SCHIEBEGLASFENSTER (GETÖNT)	778
REGENKAPPE	129
	130
	131
RIEMENSPANNER	8
ROLLENSATZ	758
RÜCKENSTÜTZEN-EINSTELLKNOPF	736
RÜCKFAHRWARNHORN	192
	291
RÜCKLEHNENVERLÄNGERUNG	750
	751
RÜCKSPIEGEL	722
	723
S	
SAMMELVENTIL	553
SANDSTRAHLSCHUTZGITTER	404
SAUGGLOCKENSIEB	74
SCHALE - RÜCKENLEHNE	734
	735
	736
SCHALLDÄMPFER	141
SCHALLDÄMPFUNG	4
SCHALTER (DIFFERENTIALDRUCK)	502
SCHALTER (FRONTSCHEINWERFER)	299
SCHALTER (GEBLÄSEGESCHWINDIGKEIT)	700
SCHALTER (HINTERE LEUCHTEN)	299
SCHALTER (KIPPSCHALTER) (KONSOLE ANHEBEN/ABSENKEN)	458
SCHALTER (VORNE, HINTEN, RECHTS U. LINKS TÜR)	786
SCHALTER (24 V)(ERLEUCHTET)	299
SCHAUMFILTER	192
SCHEIBENWASCHANLAGE	764
SCHEIBENWASCHMITTELBEHÄLTER	760
	762
SCHEIBENWISCHER	782
	784
	786
SCHEIBENWISCHERBLATT	636
SCHEIBENWISCHERBLATT (HINTEN)	786
SCHEIBENWISCHERBLATT (LINKE TÜR)	786
SCHEIBENWISCHERBLATT (VORNE)	786
SCHEIBENWISCHERBLATTSATZ	787
SCHEINWERFER (24 V) (ARBEITSSCHEIN-WERFER)	229
SCHEINWERFER (24 V) (65 W) (ARBEITSSCHEINWERFER)	228
SCHIEBEFENSTER	767
	768
SCHILD UND AUFKLEBER	792
SCHILD UND SCHNEIDMESSER	631
	632
	633
	634
	635
SCHILDSTREBE	584
SCHLÜSSEL	184
SCHLÜSSEL (HAUPTSCHALTER)	286
SCHMIERNIPPEL	8
	488

STICHWORTVERZEICHNIS

Bezeichnung	Seite
	490
	492
	494
	598
	602
	604
SCHMIERNIPPEL (1/8-27-GEWINDE)	430
	432
	496
	500
	584
	594
	596
	613
SCHMIERNIPPEL (1/8-27 GEWINDE(45 GRAD)	32
SCHMIERPUMPE	84
SCHMIERVENTIL (FÜLLEN)	452
SCHMIERVORRICHTUNG - QUERTRAVERSE	440
SCHNELLBETANKUNGSANSCHLUSS	150
	152
	154
	156
SCHNELLSENKVENTIL	572
SCHRAUBE	382
	516
SCHUBARM - STABILISATOR	622
SCHUBARM, LINKS	620
SCHUBARM, RECHTS	621
SCHUBBLOCK	581
	582
	583
SCHUTZBLECHE	400
SCHUTZDICHTUNG	416
SCHUTZGITTER	743
SCHWINGSITZ	752
	753
	754
	755
SCHWUNGRAD	36
SCHWUNGRADGEHÄUSE	44
SCHWUNGRADGEHÄUSEDECKEL	12
SEITENANTRIEB	326
	330
	334
SEITENANTRIEBSVERKLEIDUNG	405
SENSORANSCHLUSSSATZ (2POLIG)	289
	316
	458
SENSORANSCHLUSSSATZ (2POLIG)	296
SENSORANSCHLUSSSATZ (2POLIG)	293
SENSORANSCHLUSSSATZ (3POLIG)	250
	251
	252
	690
SENSORANSCHLUSSSATZ (3POLIG)	296
SENSORANSCHLUSSSATZ (3POLIG)	299
SENSORANSCHLUSSSATZ (3POLIG) (DRUCKSENSOR)	249
SENSORANSCHLUSSSATZ (3POLIG) (SENSOR FÜR DREHZAHL UND EINSPRITZZEITPUNKT)	254
SENSORANSCHLUSSSATZ (4 POLIG)	296
SENSORANSCHLUSSSATZ (4 POLIG)	293
SENSORANSCHLUSSSATZ (6POLIG)	688
SICHERHEITSGURT	750
	751
SICHERUNG (10 A)	293
SICHERUNG (15 A)	293
SICHERUNG (20 A)	293
SICHERUNG (30 A)	217
SICHERUNGSBLOCK (16POLIG)	293
SIEB	542
SIEB (KRAFTÜBERTRAGUNGSÖLPUMPENEINLASS)	338
SITZGURT-HALTESEIL	756
SOFTWARE - KRAFTÜBERTRAGUNG	219
SPERRE	465
SPERRVENTIL	130
	164
SPERRVENTIL (SCHEIBENWISCHER- U. -WASCHERANLAGE)	762
SPERRVENTIL (VAKUUMLÜFTER)	546
STABILISATORGELENK	610
STARTERMOTOR	272
	276
	279
	280
	282
STARTERMOTORZAHNRAD	283
STARTSCHALTER	290
STAUBAUSWERFER	130
	131
STAUBKAPPE	54
	68
	95
	150
	152
	154
	156
	306
	338
	366
	374
	376
	471
	506
	510
	516

STICHWORTVERZEICHNIS

Bezeichnung	Seite
	526
	553
	566
	568
STECKDOSEN - EINBAUSATZ (12POLIG)	464
STECKDOSEN - EINBAUSATZ (12POLIG)	480
STECKDOSEN - EINBAUSATZ (2POLIG)	80
	188
	266
	268
	285
	291
	292
	293
	296
	298
	379
	502
	546
	577
	580
	682
	712
	716
	724
STECKDOSEN - EINBAUSATZ (2POLIG)	255
	256
	257
STECKDOSEN - EINBAUSATZ (2POLIG)	458
	661
	696
STECKDOSEN - EINBAUSATZ (3POLIG)	132
	172
	246
	247
	293
	296
	474
	690
	700
	708
	764
STECKDOSEN - EINBAUSATZ (3POLIG)	258
	259
	260
STECKDOSEN - EINBAUSATZ (4 POLIG)	316
	574
	575
	687
STECKDOSEN - EINBAUSATZ (4 POLIG)	244
	293
	296
	578
	690
	712
	725
	726
STECKDOSEN - EINBAUSATZ (6POLIG)	299
	470
	692
	696
	700
	724
	727
	728
	782
	784
	786
STECKDOSEN - EINBAUSATZ (6POLIG)	243
STECKDOSEN - EINBAUSATZ (6POLIG)	661
STECKDOSEN - EINBAUSATZ (8POLIG)	299
STEINSCHUTZ	414
	415
STELLUNGSSENSOR	245
	246
	247
	480
	483
	690
STELLUNGSSENSOR (LENKSTELLUNG)	312
STELLUNGSSENSOR (OHNE FEDER) (RICHTUNG)	312
STEUERHEBEL	483
	689
STEUERUNG - NICHT PROGRAMMIERT	200
	214
	215
	216
	263
STEUERUNG, ELEKTRON.	208
STEUERUNG, ELEKTRON.	210
STEUERUNG, ELEKTRON. ANZEIGE	687
	688
STEUERUNG, ELEKTRON. (TASTENFELD ENGLISCH)	201
STEUERUNG, ELEKTRON. (TASTENFELD INTERNATIONALE AUSFÜHRUNG)	201
STEUERUNGSEINHEIT, ELEKTRON. FÜR MOTOR UND BEFEST.	206
STEUERVENTIL	368
	370
	553
	554
	556
	558
	560
	564
STEUERVENTIL UND BEFESTIGUNGSTEILE	552
STIRNRAD	38

STICHWORTVERZEICHNIS

Bezeichnung	Seite
STIRNRADGEHÄUSE	46
STIRNRADGEHÄUSEDECKEL	14
STOPFENSATZ (HYDRAULISCHE PUMPENDÜSE)	182
STÖSSELLAUFFLÄCHE	18
	20
STOSSSTANGEN-EINBAUSATZ	704
STROMBLOCK	199
STRÖMUNGSSCHALTER	5
	6
	287
	288
STÜTZGRUPPE - STEUERUNG	470
SU-SCHILD	638
	644
	645

T

TEMPERATURREGLER	112
	114
TEMPERATURSENSOR	258
	259
	260
TEMPERATURSENSOR (DRUCKLUFT)	132
TEMPERATURSENSOR (KRAFTSTOFF)	172
TEMPERATURSENSOR (KÜHLMITTEL)	94
THERMOSTATSCHALTER	660
TRAGROLLEN	444
TRENNSCHALTER	286
TRENNSCHALTER (BATTERIE)	192
TURBOLADER	146
	147
TURBOLADEREINSATZ	147
TURBOLADERÖLLEITUNGEN	76

U

U-SCHILD	640
	641
	642
	643
	646
	648
ÜBERDRUCKRÜCKSCHLAGVENTIL	560
ÜBERDRUCKVENTIL	376
	553
ÜBERDRUCKVENTIL (GETRIEBEKÜHLERUMGEHUNG)	338
ÜBERHOLSATZ	34
ÜBERROLLSCHUTZ	741
	742
ÜBERROLLSCHUTZAUFLAGER	733
ÜBERWACHUNGSSYSTEMDIMMER - STEUERUNG	692
UMGEHUNGSSCHALTER	285
UMGEHUNGSVENTIL	542
UMLAUFKÜHLWASSERHEIZUNG	224
	225
UMLAUFKÜHLWASSERHEIZUNGS-ELEMENT	225
UMLAUFKÜHLWASSERHEIZUNGS-ELEMENT (120 V/1500 W)	224
UMLEITVENTIL (NUR FÜR TIEFE UMGEBUNGSTEMPERATUREN)	558
UMRÜSTSATZ - ÜBERROLLSCHUTZ ROPS	693
UNTERBRECHER (10 A) (ELEKTRONISCHE KUPPLUNGSBREMSE)	292
UNTERBRECHER (10 A) (STARTSCHLÜSSEL-SCHALTER)	292
UNTERBRECHER (125 A) (HAUPTUNTERBRECHER)	292
UNTERBRECHER (15 A)	712
UNTERBRECHER (15 A) (ARBEITSGERÄT)	292
UNTERBRECHER (15 A) (ARBEITSLEUCHTEN, VORNE)	292
UNTERBRECHER (15 A) (LÜFTER)	292
UNTERBRECHER (15 A) (MOTOR)	292

V

VENTIL	118
	150
	152
	154
	156
	558
	560
	661
VENTIL (ÄTHERSTARTHILFE)(24 V)	266
VENTIL (DRUCKBEGRENZUNG)	452
VENTIL U. BEFESTIGUNG - DOZER	551
VENTIL UND ZYLINDER	548
	549
	550
VENTIL (WASSER)	696
VENTILDECKEL	16
VENTILKIPPHEBEL	59
VENTILSITZEINSATZ (AUSLASS)	25
VENTILSITZEINSATZ (EINLASS)	25
VENTILSTEUERUNG	63
VENTILSTÖSSELSATZ	705
VERDRAHTUNG (EINSPRITZEINHEIT)	303
VERDRAHTUNGSSATZ (LUFTGEFEDERTER SITZ)	758
VERGLASUNG, LINKS (GETÖNT)	774
VERGLASUNG, RECHTS (GETÖNT)	773
VERKLEIDUNG	396
VERSCHLEISSPLATTEN	649
	650

STICHWORTVERZEICHNIS

Bezeichnung	Seite
VERSTELLBARER SITZ	740
VERTEILERBLOCK	226
VERZÖGERUNGSZEITGEBER (24 V)	712
	716
VIDS-ELEKTRONIK	220
VORHÄNGESCHLOSS	184
VORRANGVENTIL	374
VORREINIGER	142
VORSTEUERLEITUNGEN	510
VORSTEUERVENTIL	566
	568
VORSTEUERVENTIL UND BEFESTIGUNGSTEILE	366

W

WÄRMESCHIRM	144
WARNAUFKLEBER	434
WARNAUFKLEBER (ÜBERBRÜCKUNGSKABEL)	269
WARNHORN (24 VOLT)(HOCHTON)	193
WARNHORN (24V)(NIEDERTON)	194
WARNHORNKNOPF	298
WARNHORNSCHALTER	298
WARNSCHILD (KETTENSPANNFEDER)	422
	434
WARNSCHILD (KETTENSPANNFEDERÖL)	434
WARNVORRICHTUNG	188
WASSERABSCHEIDER- U. KRAFTSTOFFILTER	167
	168
WASSERTANK	118
WASSERTEMPERATURREGLER (92 GRAD CELSIUS)	112
	114
WISCHERARM	790

Z

ZAHNRADPUMPE	350
	352
	354
ZAHNRADPUMPE (KRAFTÜBERTRAGUNGSÖL)	338
ZAHNRADVORGELEGE	40
ZEITGEBER	80
ZUGANGSKLAPPE - HYDRAULIKTANKKAPPE	484
ZUGHAKEN	394
ZUSATZANTRIEB	600
ZYLINDERAUFHÄNGUNG	613
ZYLINDERBLOCKSCHRAUBE	54
ZYLINDERKOPF	25
	26
	27
	28
ZYLINDERKOPFSTOPFEN	56

MEMORANDA

MACHINE ARRANGEMENT

130-9719 ARCTIC AR–SEALS & COMPONENTS

S/N: AKT1-UP

AN ATTACHMENT

SMCS-7000 **i01502306**

NOTE	PART NUMBER	QTY	PART NAME 1 2 3 4 5 6 (PRODUCT LEVEL)	SEE PAGE
Y	**110-2780**	2	FINAL DRIVE GP	330
Y	**107-9617**	4	IDLER GP-TRACK	436
Y	**197-8492**	8	ROLLER GP-TRACK-DOUBLE FLANGE	446
Y	**197-8493**	8	ROLLER GP-TRACK-SINGLE FLANGE	448
	7T-9310	32	PIN AS-CARTRIDGE	
			(EACH INCLUDES)	
	9G-4872	2	STOPPER-RUBBER	
	6Y-0473	2	PLUG-CLEAR	
	9X-7487	2	SEAL AS-SHAFT	

Y-SEPARATE ILLUSTRATION

MACHINE ARRANGEMENT

171-5805 ELECTRONICS AR-MACHINE

S/N: AKT1-UP

PART OF 171-5800 GENERAL AR

SMCS-7000 **i01688955**

NOTE	PART NUMBER	QTY	PART NAME 1 2 3 4 5 6 (PRODUCT LEVEL)	SEE PAGE
Y	*173-0623*	1	ELECTRONICS GP-POWER TRAIN	219
Y	*174-4354*	1	ELECTRONICS GP-VIDS	220
Y	*180-4186*	1	ELECTRONICS GP-IMPLEMENT	218

Y-SEPARATE ILLUSTRATION

MACHINE ARRANGEMENT

171-5800 GENERAL AR

S/N: AKT1-UP

SMCS-7000 **i01664656**

NOTE	PART NUMBER	QTY	PART NAME 1 2 3 4 5 6 (PRODUCT LEVEL)	SEE PAGE
Y	*171-5801*	1	CHASSIS AR	385
Y	*171-5803*	1	CONTROL AR-HYDRAULIC	476
Y	*171-5805*	1	ELECTRONICS AR-MACHINE	2
Y	*171-5806*	1	ENGINE AR	5
Y	*171-5807*	1	INSTALLATION AR-ENGINE	7
Y	*171-5808*	1	POWER TRAIN AR	349
Y	*171-5809*	1	UNDERCARRIAGE AR	457

Y-SEPARATE ILLUSTRATION

MACHINE ARRANGEMENT

206-7328 SUPPRESSION AR-SOUND

S/N: AKT1-UP
CANNOT BE USED WITH DEMAND FAN
AN ATTACHMENT

SMCS-7000 **i01691378**

NOTE	PART NUMBER	QTY	PART NAME 1 2 3 4 5 6 (PRODUCT LEVEL)	SEE PAGE
Y	*192-6156*	1	DRIVE GP-FAN	35
Y	**206-3114**	1	ENGINE AR	6
Y	*218-2828*	1	FAN GP-BLOWER	90
Y	*196-5844*	1	LINES GP-OIL	606
Y	*210-7723*	1	PULLEY GP-CRANKSHAFT	58
	205-3244	1	FILM	
	082-2817	4	TACK	

Y-SEPARATE ILLUSTRATION

ENGINE ARRANGEMENT

171-5806 ENGINE AR

S/N: 5JJ3200-UP

PART OF 171-5800 GENERAL AR

SMCS-1000 **i01691418**

NOTE	PART NUMBER	QTY	PART NAME 1 2 3 4 5 6 (PRODUCT LEVEL)	SEE PAGE
Y	*185-7909*	1	CAMSHAFT GP	10
Y	*193-1221*	1	CONTROL & MTG GP-ENGINE ELEK	206
Y	*127-3511*	1	COVER GP-CYLINDER BLOCK	11
Y	*4N-6876*	1	COVER GP-FLYWHEEL HOUSING	12
Y	*195-2906*	1	COVER GP-FRONT HOUSING	14
Y	*178-4202*	1	COVER GP-VALVE MECHANISM	16
Y	*190-7653*	1	CRANKSHAFT GP	17
YR	*109-9010*	1	CYLINDER BLOCK GP	22
Y	*172-6507*	1	CYLINDER HEAD GP	28
Y	*6N-2229*	1	DAMPER GP	30
Y	*125-3431*	1	DRIVE GP-UNIT INJ HYD PUMP	160
	214-3386	1	ELECTRONICS GP-ENGINE RATINGS	
Y	*4N-2481*	1	FASTENER GP-OIL PUMP MOUNTING	65
Y	*175-7864*	1	FILLER GP-ENGINE OIL	66
Y	*172-6511*	1	FILTER GP-ENGINE OIL	68
Y	*107-3752*	1	FLYWHEEL GP	36
Y	*175-7865*	1	GAUGE GP-OIL LEVEL (DIPSTICK)	72
Y	*180-0523*	1	GEAR GP-ACCESSORY	600
Y	*127-3516*	1	GEAR GP-FRONT	38
Y	*193-2185*	1	GEAR GP-REAR	40
Y	*193-2186*	1	HOUSING GP-FLYWHEEL	44
Y	*166-5427*	1	HOUSING GP-FRONT	46
Y	*126-2267*	1	LIFTING GP-ENGINE	48
Y	*166-5425*	1	LINES GP-AIR	132
Y	*212-1447*	1	LINES GP-ENGINE OIL	74
Y	*176-6672*	1	LINES GP-FUEL FILTER	172
Y	*121-4034*	1	LINES GP-INJECTOR HYD PUMP	176
Y	*166-5431*	1	LINES GP-TURBOCHARGER OIL	76
Y	*166-5433*	1	LINES GP-WATER	92
Y	*166-5435*	1	LINES GP-WATER	94
Y	*166-5436*	1	LINES GP-WATER	98
Y	*212-4246*	1	MANIFOLD GP-EXHAUST	140
Y	*214-0624*	1	MOUNTING GP-ALTERNATOR	49
Y	*119-8582*	1	PAN GP-OIL	50
Y	*192-8809*	12	PISTON & ROD GP	52
Y	*209-6749*	1	PLUG GP-CYLINDER BLOCK	54
Y	*124-4456*	1	PLUG GP-CYLINDER HEAD	56
Y	*153-9078*	1	PUMP & MTG GP-UNIT INJ HYD	178
YR	**7C-1772**	1	PUMP GP-ENGINE OIL	84
Y	*209-2785*	12	PUMP GP-FUEL INJECTION	179
Y	*4N-5837*	1	PUMP GP-WATER	102
Y	*191-6506*	1	SENSOR GP-SPEED	255
Y	*6N-1378*	1	SUPPORT GP-ENGINE	61
Y	*100-4417*	1	SWITCH GP-FLOW	287
Y	*179-7086*	1	TRUNNION GP-ENGINE	62
Y	*166-5441*	1	TURBOCHARGER GP	146
Y	*108-1874*	1	VALVE MECHANISM GP	63
Y	*166-5442*	1	WIRING GP-ENGINE	296
Y	*109-0401*	6	WIRING GP-UNIT INJECTOR	303
			GASKET KITS WILL BE PROVIDED WHEN AVAILABLE	

R-REMFG PART MAY BE AVAILABLE
Y-SEPARATE ILLUSTRATION

ENGINE ARRANGEMENT

206-3114 ENGINE AR

S/N: 5JJ3200-UP
PART OF 206-7328 SUPPRESSION AR-SOUND
AN ATTACHMENT

SMCS-1000 **i01691382**

NOTE	PART NUMBER	QTY	PART NAME 1 2 3 4 5 6 (PRODUCT LEVEL)	SEE PAGE
Y	*185-7909*	1	CAMSHAFT GP	10
Y	*193-1221*	1	CONTROL & MTG GP-ENGINE ELEK	206
Y	*127-3511*	1	COVER GP-CYLINDER BLOCK	11
Y	*4N-6876*	1	COVER GP-FLYWHEEL HOUSING	12
Y	*195-2906*	1	COVER GP-FRONT HOUSING	14
Y	*178-4202*	1	COVER GP-VALVE MECHANISM	16
Y	*190-7653*	1	CRANKSHAFT GP	17
YR	*109-9010*	1	CYLINDER BLOCK GP	22
Y	*172-6507*	1	CYLINDER HEAD GP	28
Y	*6N-2229*	1	DAMPER GP	30
Y	*125-3431*	1	DRIVE GP-UNIT INJ HYD PUMP	160
	214-3391	1	ELECTRONICS GP	
Y	*4N-2481*	1	FASTENER GP-OIL PUMP MOUNTING	65
Y	*175-7864*	1	FILLER GP-ENGINE OIL	66
Y	*172-6511*	1	FILTER GP-ENGINE OIL	68
Y	*107-3752*	1	FLYWHEEL GP	36
Y	*175-7865*	1	GAUGE GP-OIL LEVEL (DIPSTICK)	72
Y	*180-0523*	1	GEAR GP-ACCESSORY	600
Y	*127-3516*	1	GEAR GP-FRONT	38
Y	*193-2185*	1	GEAR GP-REAR	40
Y	*193-2186*	1	HOUSING GP-FLYWHEEL	44
Y	*166-5427*	1	HOUSING GP-FRONT	46
Y	*126-2267*	1	LIFTING GP-ENGINE	48
Y	*166-5425*	1	LINES GP-AIR	132
Y	*212-1447*	1	LINES GP-ENGINE OIL	74
Y	*176-6672*	1	LINES GP-FUEL FILTER	172
Y	*121-4034*	1	LINES GP-INJECTOR HYD PUMP	176
Y	*166-5431*	1	LINES GP-TURBOCHARGER OIL	76
Y	*166-5433*	1	LINES GP-WATER	92
Y	*166-5435*	1	LINES GP-WATER	94
Y	*166-5436*	1	LINES GP-WATER	98
Y	*212-4246*	1	MANIFOLD GP-EXHAUST	140
Y	*214-0624*	1	MOUNTING GP-ALTERNATOR	49
Y	*119-8582*	1	PAN GP-OIL	50
Y	*192-8809*	12	PISTON & ROD GP	52
Y	*209-6749*	1	PLUG GP-CYLINDER BLOCK	54
Y	*124-4456*	1	PLUG GP-CYLINDER HEAD	56
Y	*153-9078*	1	PUMP & MTG GP-UNIT INJ HYD	178
YR	**7C-1772**	1	PUMP GP-ENGINE OIL	84
Y	*209-2785*	12	PUMP GP-FUEL INJECTION	179
Y	*4N-5837*	1	PUMP GP-WATER	102
Y	*191-6506*	1	SENSOR GP-SPEED	255
Y	*6N-1378*	1	SUPPORT GP-ENGINE	61
Y	*100-4417*	1	SWITCH GP-FLOW	287
Y	*179-7086*	1	TRUNNION GP-ENGINE	62
Y	*166-5441*	1	TURBOCHARGER GP	146
Y	*108-1874*	1	VALVE MECHANISM GP	63
Y	*166-5442*	1	WIRING GP-ENGINE	296
Y	*109-0401*	6	WIRING GP-UNIT INJECTOR	303

GASKET KITS WILL BE PROVIDED WHEN AVAILABLE

R-REMFG PART MAY BE AVAILABLE
Y-SEPARATE ILLUSTRATION

ENGINE ARRANGEMENT

171-5807 INSTALLATION AR-ENGINE

S/N: AKT1-UP

PART OF 171-5800 GENERAL AR

SMCS-1000 **i01692351**

NOTE	PART NUMBER	QTY	PART NAME 1 2 3 4 5 6 (PRODUCT LEVEL)	SEE PAGE
Y	*169-6450*	1	AFTERCOOLER GP-AIR	122
Y	*172-4352*	1	AIR CLEANER GP	126
Y	*176-1364*	1	ALTERNATOR GP-CHARGING	189
Y	*198-6578*	1	BELT TIGHTENER GP	8
Y	*175-7148*	1	COOLER GP-TRANSMISSION OIL	318
Y	*168-5063*	1	DRIVE GP-FAN	32
Y	*172-4353*	1	DUST EJECTOR GP	131
Y	*169-6452*	1	DUST EJECTOR GP	130
Y	*207-9816*	1	FAN GP-BLOWER	88
Y	*177-4924*	1	FUMES DISPOSAL GP	70
Y	*175-7508*	1	GRID GP-SAND BLAST ERODING	404
Y	*192-0829*	1	HEATER GP-JACKET WATER	224
Y	*176-1857*	1	LINES GP-AIR	138
Y	*173-1030*	1	LINES GP-AIR	136
Y	*166-5428*	1	LINES GP-AIR	134
Y	*172-7857*	1	LINES GP-WATER	100
Y	*172-4354*	1	MUFFLER GP	141
	5P-8502	2	PADLOCK GP	
			(EACH INCLUDES)	
A	**5P-8500**	1	KEY	
A	**8Y-6364**	1	SLEEVE	
Y	*175-7542*	1	PRECLEANER GP	142
Y	*179-1253*	1	PULLEY GP-CRANKSHAFT	57
Y	*172-4347*	1	RADIATOR GP	106
Y	*211-8727*	1	SHIELD GP-HEAT	144
Y	**7N-7049**	1	STARTING MOTOR GP-ELECTRIC	279
Y	*4P-5544*	1	SUPPORT GP-ENGINE	60
Y	*172-4355*	1	TANK GP-WATER	118
Y	*128-3339*	1	YOKE GP	64

A-NOT PART OF THIS GROUP
Y-SEPARATE ILLUSTRATION

BASIC ENGINE

198-6578 BELT TIGHTENER GP

S/N: AKT1-UP

PART OF 171-5807 INSTALLATION AR-ENGINE

SMCS-1358 **i01493766**

NOTE	REF NO	GRAPHIC REF	PART NUMBER	QTY	PART NAME 1 2 3 4 5 6 (PRODUCT LEVEL)	SEE PAGE
	1	1	**2M-2742**	1	PLATE-RETAINER	
	2	1	**2S-6150**	1	COVER-PULLEY	
	3	1	**3B-8485**	1	FITTING-GREASE	
	4	1	**6N-1186**	1	PULLEY	
	5	1	**8B-2327**	1	RING-RETAINING	
	6	1	**201-0357**	2	ABSORBER AS-SHOCK	
	7	1	**8R-7699**	1	HOSE AS	
	8	1	**191-4959**	1	ARM AS	
	8A	1	**2S-9006**	1	SHAFT-PULLEY	
	8B	1	**4S-5367**	1	BUSHING AS	
	8C	1	**3H-0703**	1	DOWEL	
	9	1	**198-3137**	1	PIN-CLEVIS	
	10	1	**198-3138**	1	PIN-CLEVIS	
	11	1	**0S-0509**	1	BOLT (3/8-16X0.75 IN)	
	12	1	**1S-8687**	1	SPACER	
	13	1	**2S-6151**	1	GASKET	
	14	1	**2S-6160**	1	WASHER-HARD (10.2X32X5MM THK)	
	15	1	**2T-3019**	1	CLIP	
	16	1	**3B-4617**	2	COTTER	
	17	1	**4L-6454**	1	BOLT (3/8-16X1 IN)	
	18	1	**4M-6425**	4	BOLT (5/16-18X1 IN)	
	19	1	**5M-9735**	1	SEAL-LIP	
	20	1	**5P-9297**	2	CLIP	
	21	1	**6B-1124**	2	BALL BEARING	
	22	1	**8L-5008**	1	ELBOW-PIPE	
	23	1	**8T-4896**	2	WASHER-HARD (10.2X18.5X2.5MM THK)	

198-6578 **BELT TIGHTENER GP** *(contd.)* **i01493766**

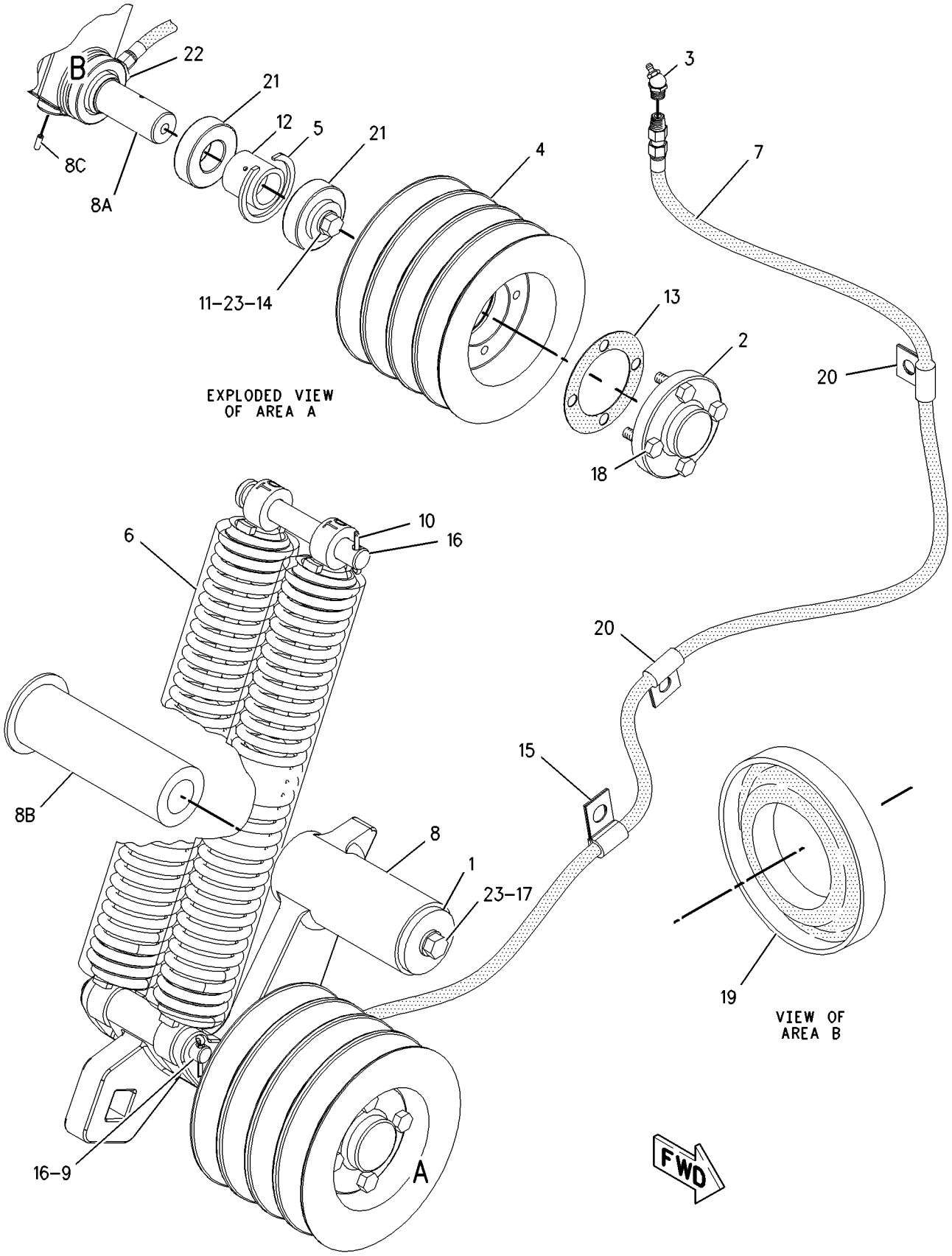

GRAPHIC #1 g00761175

185-7909 CAMSHAFT GP

S/N: 5JJ3200-UP
PART OF 171-5806, 206-3114 ENGINE AR
ALSO AN ATTACHMENT

SMCS-1210, 1211, 1212 **i01220887**

NOTE	REF NO	GRAPHIC REF	PART NUMBER	QTY	PART NAME 1 2 3 4 5 6 (PRODUCT LEVEL)	SEE PAGE
	1	1	**4N-0342**	1	PLATE-CAMSHAFT THRUST	
	2	1	**0S-0509**	2	BOLT (3/8-16X.75IN)	
	3	1	**185-7912**	1	CAMSHAFT AS	
	4	1	**101-3374**	1	GEAR-CAMSHAFT DRIVE (86 TEETH)	
	5	1	**1B-8705**	1	KEY-WOODRUFF	

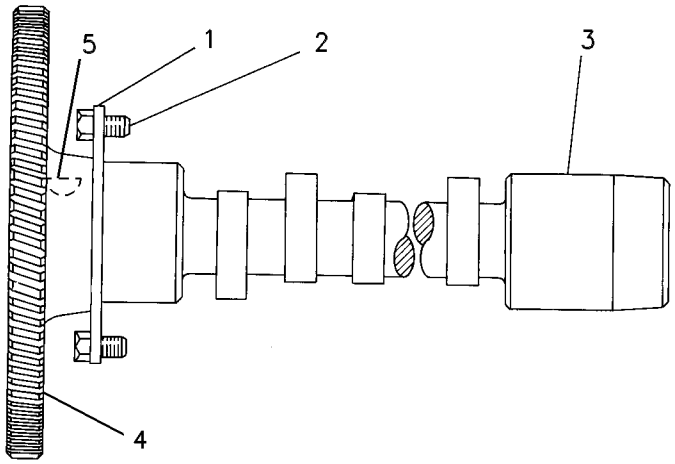

GRAPHIC #1 g00086422

BASIC ENGINE

127-3511 COVER GP-CYLINDER BLOCK

S/N: 5JJ3200-UP
PART OF 171-5806, 206-3114 ENGINE AR
ALSO AN ATTACHMENT

SMCS-1201 **i00604436**

NOTE	REF NO	GRAPHIC REF	PART NUMBER	QTY	PART NAME 1 2 3 4 5 6 (PRODUCT LEVEL)	SEE PAGE
	1	1	**0S-1594**	6	BOLT (3/8-16X1IN)	
	2	1	**5M-2894**	9	WASHER (2.5MM THK)	
	3	1	**4N-1682**	1	COVER	
	4	1	**4N-0864**	1	GASKET	
	5	1	**123-9052**	1	COVER	
	6	1	**4N-1684**	1	GASKET	
	7	1	**0S-1588**	3	BOLT (3/8-16X1.25IN)	
	8	1	**9S-4185**	1	PLUG-O-RING (3/4-16 THD)	
	9	1	**8L-2786**	1	SEAL-O-RING (16.36MM ID)	

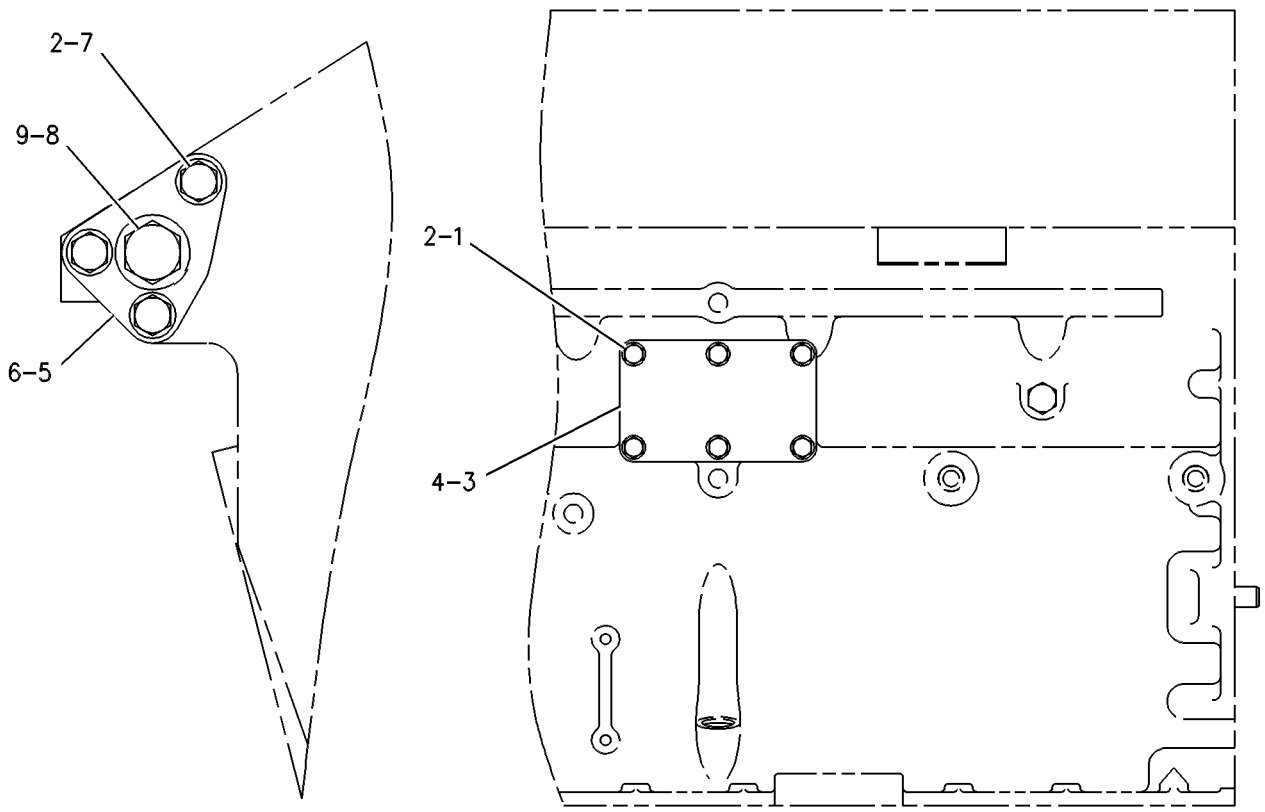

GRAPHIC #1 g00253330

4N-6876 COVER GP-FLYWHEEL HOUSING

S/N: 5JJ3200-UP
PART OF 171-5806, 206-3114 ENGINE AR
ALSO AN ATTACHMENT

SMCS-1157 **i01446334**

NOTE	REF NO	GRAPHIC REF	PART NUMBER	QTY	PART NAME 1 2 3 4 5 6 (PRODUCT LEVEL)	SEE PAGE
	1	1	**4N-1114**	1	COVER	
		1	**9Y-6089**	1	GASKET	
	2	1	**0S-1566**	3	BOLT (5/8-11X1.5 IN)	
		1	**5P-8247**	3	WASHER-HARD (17X32X3.5MM THK)	

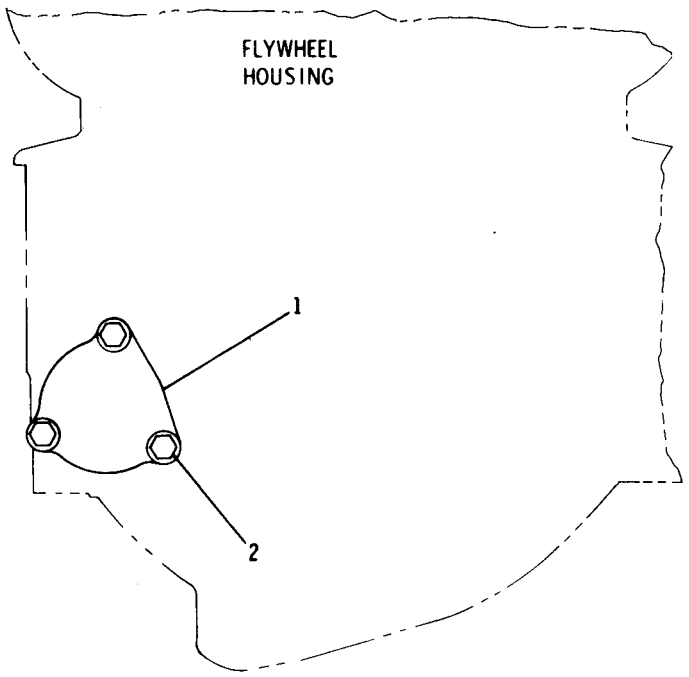

GRAPHIC #1 g00082168

MEMORANDA

BASIC ENGINE

195-2906 COVER GP-FRONT HOUSING

S/N: 5JJ3200-UP
PART OF 171-5806, 206-3114 ENGINE AR
ALSO AN ATTACHMENT

SMCS-1151, 1162, 1166 **i01472688**

NOTE	REF NO	GRAPHIC REF	PART NUMBER	QTY	PART NAME 1 2 3 4 5 6 (PRODUCT LEVEL)	SEE PAGE
	1	1	**4N-0205**	2	SPACER (15.24MM THK)	
	2	1	**6N-2508**	1	GASKET	
	3	1	**6N-2509**	1	COVER	
	4	1	**127-8953**	1	PLATE-FAN SUPPORT	
	5	1	**133-3868**	1	BRACKET AS	
	6	1	**135-9880**	1	COVER	
	7	1	**0S-1588**	4	BOLT (3/8-16X1.25 IN)	
	8	1	**0S-1590**	2	BOLT (3/8-16X2 IN)	
	9	1	**0S-1591**	4	BOLT (3/8-16X1.5 IN)	
	10	1	**0S-1594**	3	BOLT (3/8-16X1 IN)	
	11	1	**0T-0055**	3	BOLT (3/8-16X4.25 IN)	
	12	1	**133-3867**	1	BRACKET AS	
	13	1	**2M-2488**	1	STUD-TAPERLOCK	
	14	1	**4F-0411**	3	BOLT (3/8-16X6.5 IN)	
	15	1	**5B-9603**	1	BOLT (3/8-16X5 IN)	
	16	1	**5M-2894**	6	WASHER-HARD (10.2X18.5X2.5MM THK)	
	17	1	**6B-1557**	1	BOLT (3/8-16X7.5 IN)	
	18	1	**6B-7254**	1	STUD	
	19	1	**6V-4589**	1	SEAL-O-RING	
	20	1	**9S-4190**	1	PLUG-O-RING	
	21	1	**9S-8752**	4	NUT-FULL (3/8-16 THD)	
	22	1	**9X-6458**	10	WASHER-HARD (10.2X22.5X3MM THK)	
B	23	1	**1U-8846**	1	SEALANT-GASKET	

B-USE AS REQUIRED

195-2906 **COVER GP-FRONT HOUSING** *(contd.)* **i01472688**

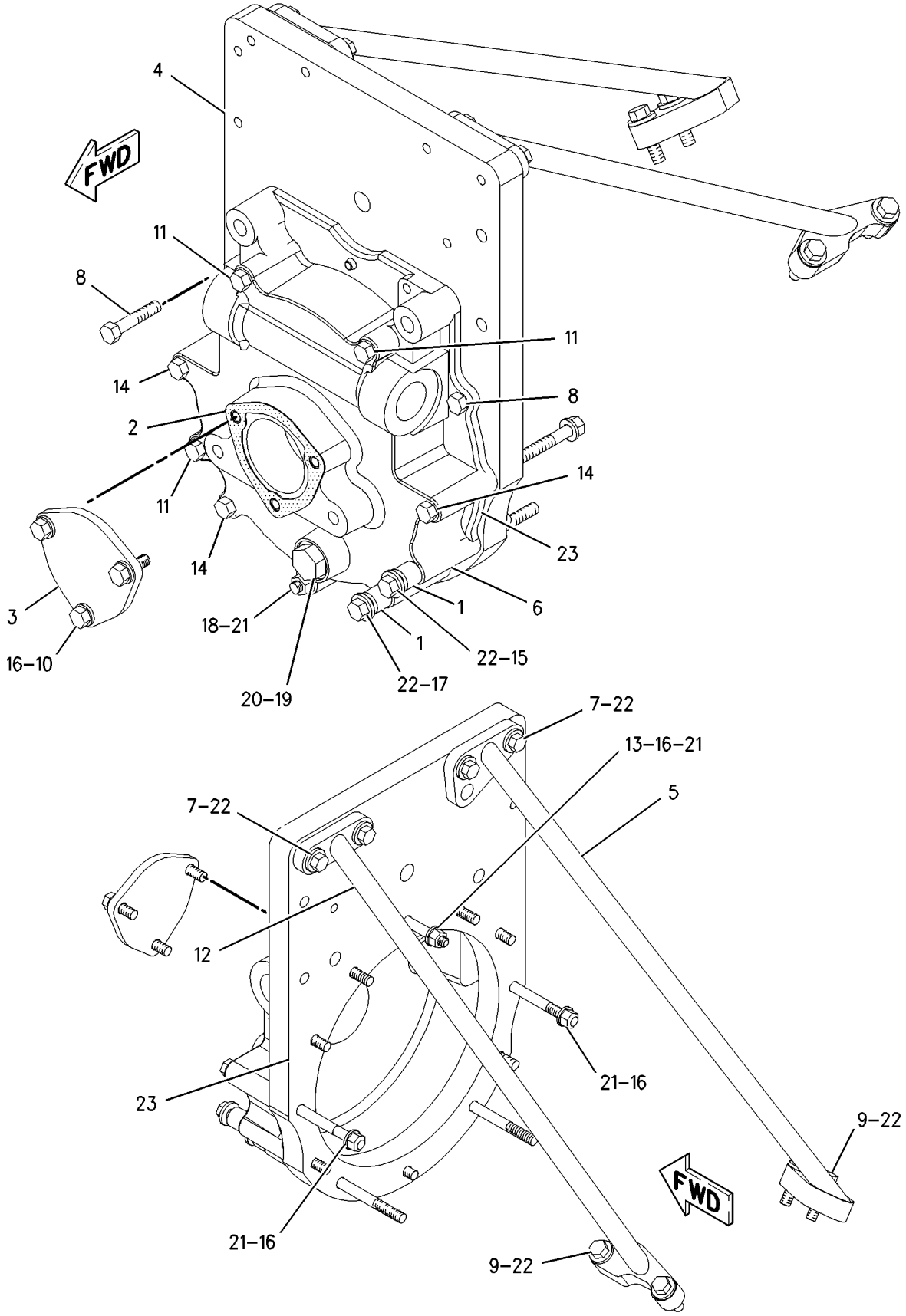

GRAPHIC #1 g00757548

BASIC ENGINE

178-4202 COVER GP-VALVE MECHANISM

S/N: 5JJ3200-UP
PART OF 171-5806, 206-3114 ENGINE AR
ALSO AN ATTACHMENT

SMCS-1107, 1120 **i01444043**

NOTE	REF NO	GRAPHIC REF	PART NUMBER	QTY	PART NAME 1 2 3 4 5 6 (PRODUCT LEVEL)	SEE PAGE
	1	1	**2N-8109**	2	CLAMP	
	2	1	**4N-4668**	2	BREATHER AS (CRANKCASE)	
	3	1	**3E-4352**	1	WASHER-HARD (8.8X20.5X2.5MM THK)	
	4	1	**106-9488**	6	BASE-VALVE COVER	
	5	1	**108-3956**	12	SEAL-DIAMOND	
	6	1	**114-8684**	1	COVER-VALVE MECHANISM	
	7	1	**119-9015**	3	COVER AS-VALVE	
					(EACH INCLUDES)	
	7A	1	**6V-5100**	1	SEAL-O-RING	
	7B	1	**7C-6514**	1	ADAPTER	
	8	1	**191-7782**	2	COVER-VALVE MECHANISM	
	9	1	**1B-2790**	54	BOLT (5/16-18X1.375 IN)	
	10	1	**1A-9579**	12	BOLT (5/16-18X1.5 IN)	
	11	1	**6V-3831**	2	SEAL-O-RING	
	12	1	**9M-1974**	64	WASHER-HARD (8.8X16X2MM THK)	

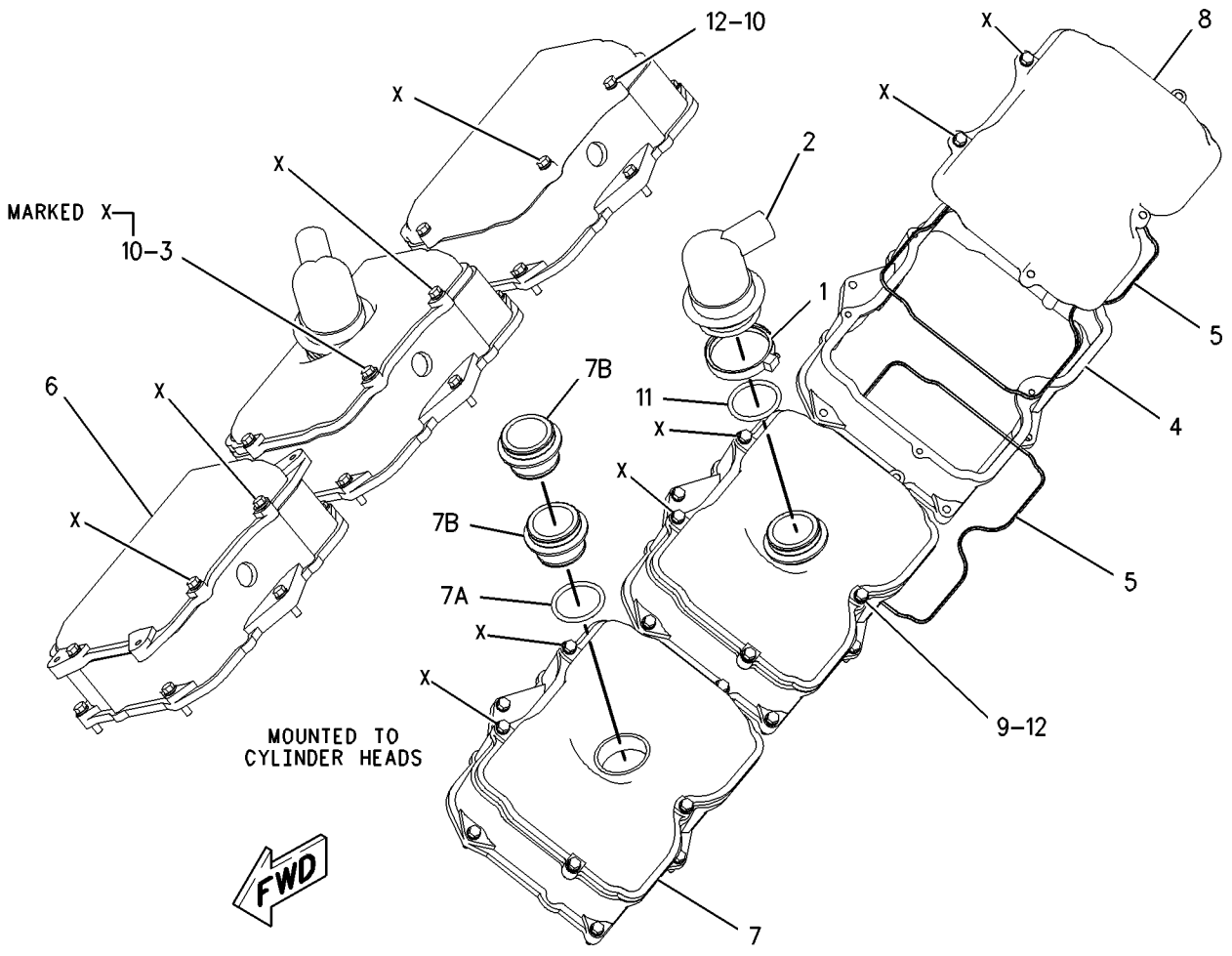

GRAPHIC #1 g00756322

190-7653 CRANKSHAFT GP

S/N: 5JJ3200-UP
PART OF 171-5806, 206-3114 ENGINE AR
ALSO AN ATTACHMENT

SMCS-1202, 1203, 1204, 1230, 1231, 1232 **i01692605**

NOTE	REF NO	GRAPHIC REF	PART NUMBER	QTY	PART NAME 1 2 3 4 5 6 (PRODUCT LEVEL)	SEE PAGE
R	1	1	**151-2941**	1	CRANKSHAFT AS	
	1A	1	**151-2940**	1	GEAR-CRANKSHAFT (99 TEETH)	
	1B	1	**7S-5005**	1	DOWEL	
	1C	1	**4N-0684**	1	DOWEL	
	1D	1	**8T-6757**	6	PLUG-PIPE	
	2	1	**4W-5492**	7	BEARING-MAIN	
	3	1	**7E-9262**	2	PLATE-THRUST	
	4	1	**142-5867**	1	SEAL GP-CRANKSHAFT	
	5	1	**2W-1734**	1	SEAL GP-CRANKSHAFT	

R-REMFG PART MAY BE AVAILABLE

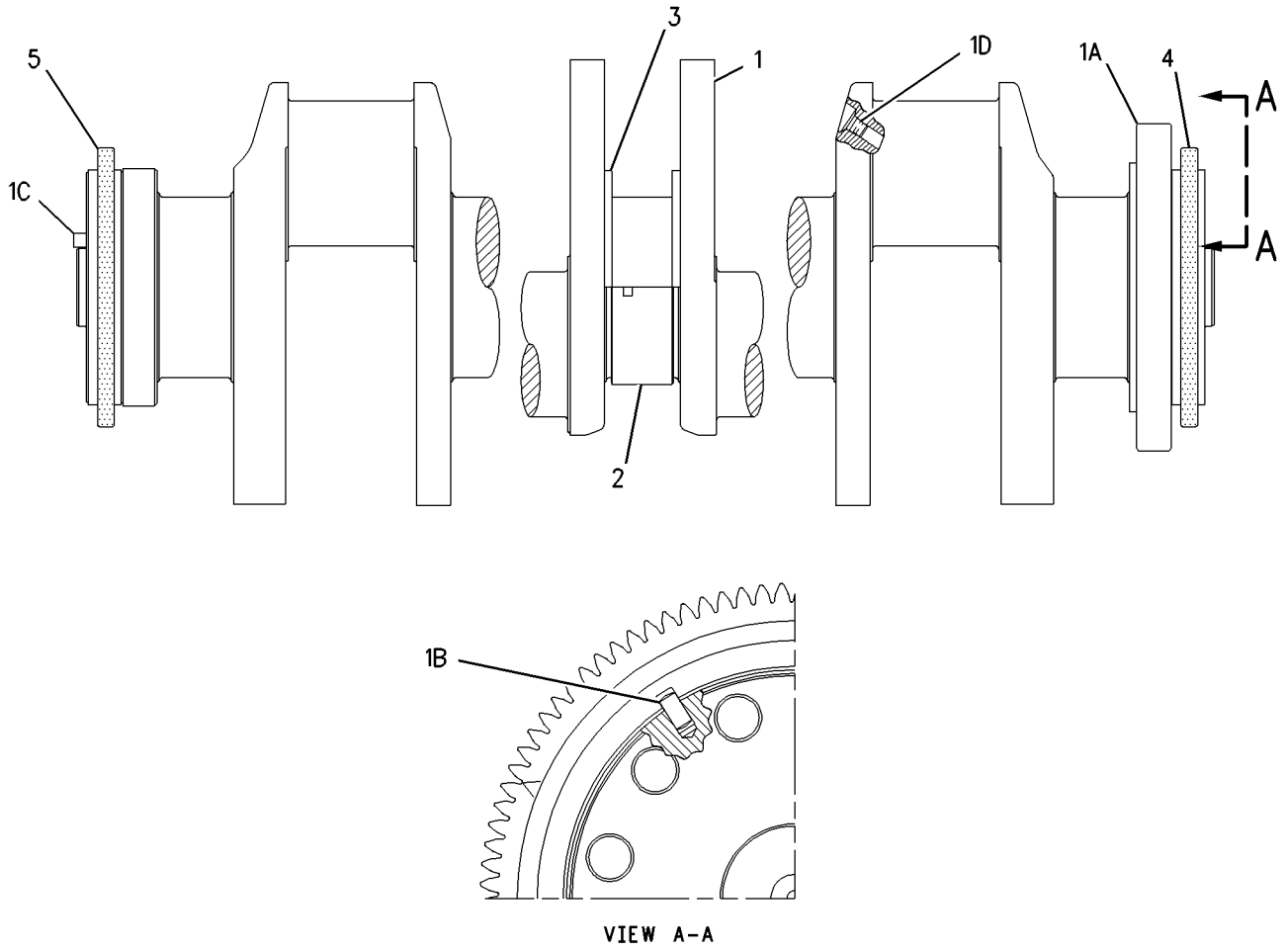

GRAPHIC #1 g00725011

117-9512 CYLINDER BLOCK AS

S/N: 5JJ3200-UP

PART OF 109-9010 CYLINDER BLOCK GP

FIELD REPLACEMENT ORDER 126-1373—PAGE 24, 12-111-8606 BOLT-OIL JET, 12-168-4538 TUBE AS-OIL JET, 12-7W-4990 TUBE AS-OIL JET

ALSO AN ATTACHMENT

SMCS-1117, 1201, 1211, 1216, 1217, 1221, 1222, 1223, 1224, 1238, 1239, 1240, 1331

i01614881

NOTE	REF NO	GRAPHIC REF	PART NUMBER	QTY	PART NAME 1 2 3 4 5 6 (PRODUCT LEVEL)	SEE PAGE
	1	1	**110-2220**	12	SEAL-LINER (141MM ID)	
	2	1	**142-7072**	12	SEAL-LINER (140.20MM ID)	
	3	1	**142-6217**	12	SEAL-LINER	
	4	1	**2W-6000**	12	LINER-CYLINDER	
	5	1	**9L-5854**	12	BAND-FILLER (5.125MM ID)	
	6	1	**3P-1323**	14	BOLT (BEARING CAP)	
		1	**9H-1031**	14	WASHER-HARD (24X41.5X6MM THK)	
	7	1	**4N-0614**	7	CAP-CRANKSHAFT BEARING	
	8	1	**4N-6658**	2	BEARING-SLEEVE	
	9	1	**7W-6492**	2	PLUG-PIPE	
	10	1	**4N-0685**	5	BEARING-SLEEVE	
AFJT		1	**4W-4588**		SLEEVE-LIFTER BORE	
AFLT		1	**4W-6061**		SLEEVE-BOTTOM LINER	
AFJT		1	**2W-3815**		INSERT-SEAT (1.59MM THK)	
AFJT		1	**5N-0093**		INSERT-SEAT (2.7MM THK)	
AFJT		1	**9Y-3368**		INSERT-LINER SEAT (.834MM THK)	

A-NOT PART OF THIS GROUP
F-NOT SHOWN
J-FOR SALVAGE OF DAMAGED LIFTER BORES IN CYLINDER BLOCK
L-FOR SALVAGE OF THE BOTTOM LINER O-RING BORE
T-QTY TO BE DETERMINED BY USER

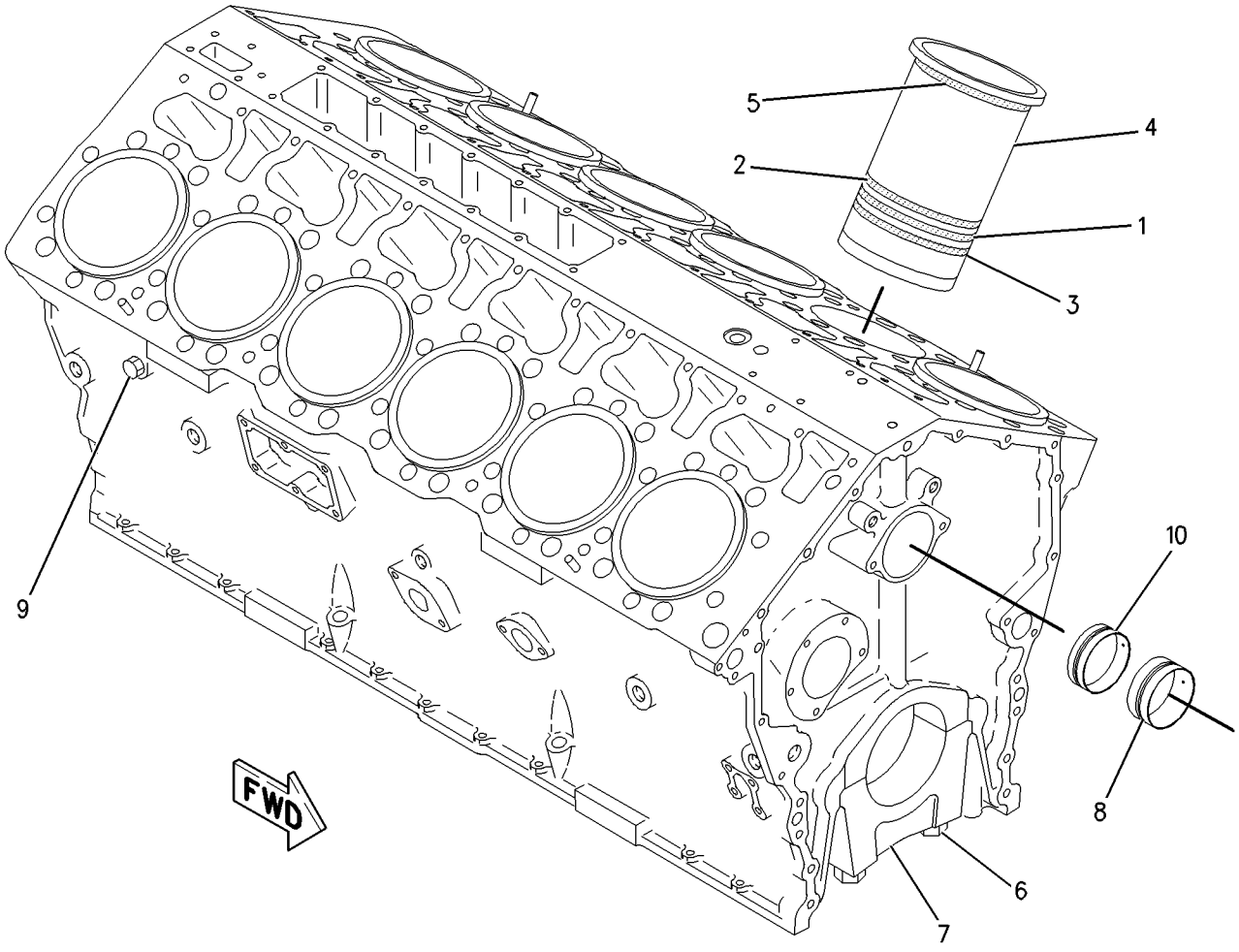

GRAPHIC #1 g00836193

BASIC ENGINE

126-1372 CYLINDER BLOCK AS

S/N: 5JJ3200-UP

PART OF 126-1373 CYLINDER BLOCK GP

SMCS-1117, 1201, 1211, 1216, 1217, 1221, 1222, 1223, 1224, 1238, 1239, 1240, 1331 **i01699947**

NOTE	REF NO	GRAPHIC REF	PART NUMBER	QTY	PART NAME 1 2 3 4 5 6 (PRODUCT LEVEL)	SEE PAGE
	1	1	**3P-1323**	14	BOLT (BEARING CAP)	
		1	**9H-1031**	14	WASHER-HARD (24X41.5X6MM THK)	
	2	1	**4N-5858**	7	CAP (CRANKSHAFT BEARING)	
	3	1	**4N-6658**	2	BEARING-SLEEVE	
	4	1	**4N-0685**	5	BEARING-SLEEVE	
AFJN		1	**4W-4588**		SLEEVE-LIFTER BORE	
AFLN		1	**4W-6061**		SLEEVE-BOTTOM LINER	
AFJN		1	**2W-3815**		INSERT-SEAT (1.59MM THK)	
AFJN		1	**5N-0093**		INSERT-SEAT (2.7MM THK)	
AFJN		1	**9Y-3368**		INSERT-LINER SEAT (.834MM THK)	

A-NOT PART OF THIS GROUP
F-NOT SHOWN
J-FOR SALVAGE OF DAMAGED LIFTER BORES IN CYLINDER BLOCK
L-FOR SALVAGE OF THE BOTTOM LINER O-RING BORE
N-QUANTITY TO BE DETERMINED BY USER

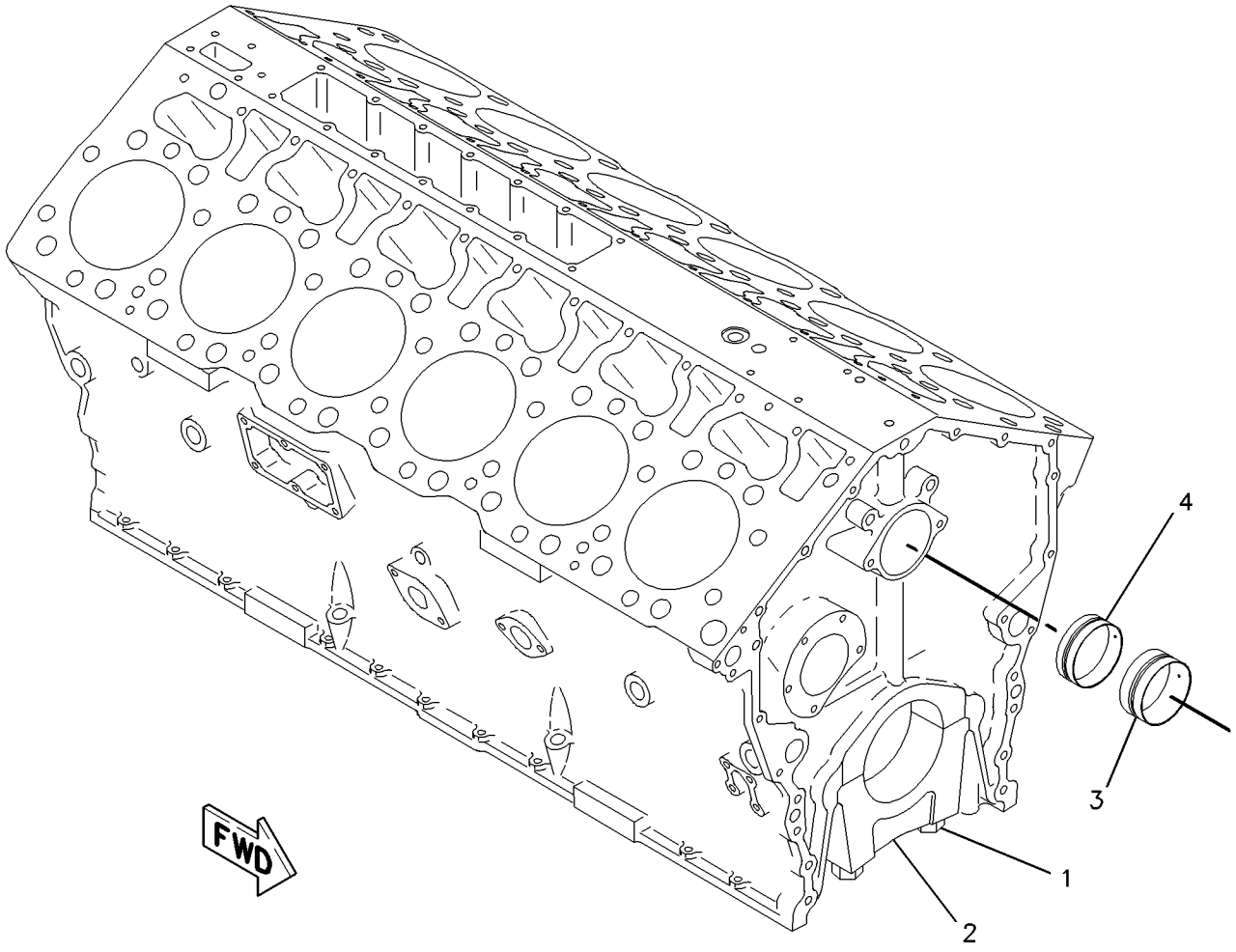

GRAPHIC #1 g00836199

MEMORANDA

109-9010 CYLINDER BLOCK GP*R

S/N: 5JJ3200-UP
PART OF 171-5806, 206-3114 ENGINE AR
ALSO AN ATTACHMENT

SMCS-1201 **i01113363**

NOTE	REF NO	GRAPHIC REF	PART NUMBER	QTY	PART NAME 1 2 3 4 5 6 (PRODUCT LEVEL)	SEE PAGE
	2	1	**4N-1650**	4	DOWEL	
	3	1	**8T-6763**	4	PLUG-PIPE (1/4-18 NPTF THD)	
Y	4	1	*117-9512*	1	CYLINDER BLOCK AS	18
	5	1	**8T-6757**	5	PLUG-PIPE (1/8-27 NPTF)	
	6	1	**6N-9135**	2	GASKET-PLATE	
	7	1	**6I-4611**	2	PLATE-SPACER	
	8	1	**7C-9614**	3	PLUG-TAPERLOCK (1.63IN X 12 THD)	
	9	1	**4N-0683**	4	DOWEL	
	10	1	**101-8917**	26	STUD-TAPERLOCK	
	11	1	**3B-0645**	1	PLUG-CUP (32.08MM AVG OD)	
	12	1	**6L-4428**	3	STUD-TAPERLOCK	
	14	1	**5P-8356**	4	SEAL-O-RING (21.89MM ID)	
	15	1	**3S-6605**	2	PLUG-CUP	
	16	1	**7C-7407**	1	STUD	
AFLN		1	**101-0523**		INSERT-LINER SEAT (5.21MM THK)	

A-NOT PART OF THIS GROUP
F-NOT SHOWN
L-QUANTITY TO BE DETERMINED BY USER
N-FOR SALVAGE OF THE DAMAGED LIFTER BORES IN CYLINDER BLOCK
Y-SEPARATE ILLUSTRATION

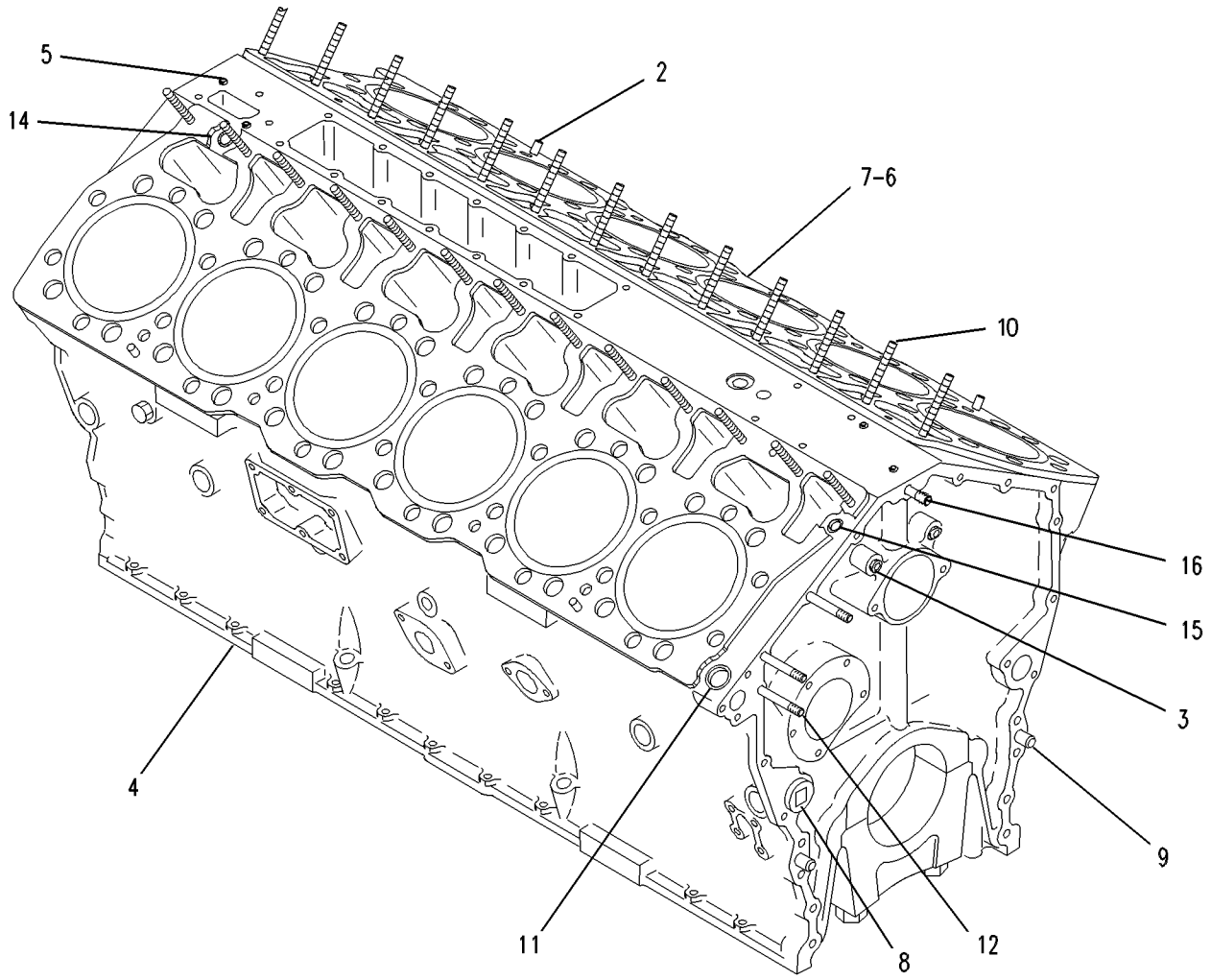

GRAPHIC #1 g00588493

126-1373 CYLINDER BLOCK GP

S/N: 5JJ3200-UP

FIELD REPLACEMENT FOR 117-9512—PAGE 18

SMCS-1201 **i01627514**

NOTE	REF NO	GRAPHIC REF	PART NUMBER	QTY	PART NAME 1 2 3 4 5 6 (PRODUCT LEVEL)	SEE PAGE
	1	1	**7W-6534**	4	PLUG-PIPE (3/8X1/2)	
	2	1	**9S-4190**	8	PLUG-O-RING	
		1	**114-4427**	8	SEAL-O-RING	
	3	1	**8T-6757**	6	PLUG-PIPE	
	4	1	**7W-6492**	2	PLUG-PIPE	
Y	5	1	**126-1372**	1	CYLINDER BLOCK AS	20
	6	1	**3S-6605**	2	PLUG-CUP	
	7	1	**8T-6763**	4	PLUG-PIPE	
	8	1	**3B-0645**	1	PLUG-CUP	
	9	1	**7C-9614**	3	PLUG-TAPERLOCK (1-5/8-12 THD)	

Y-SEPARATE ILLUSTRATION

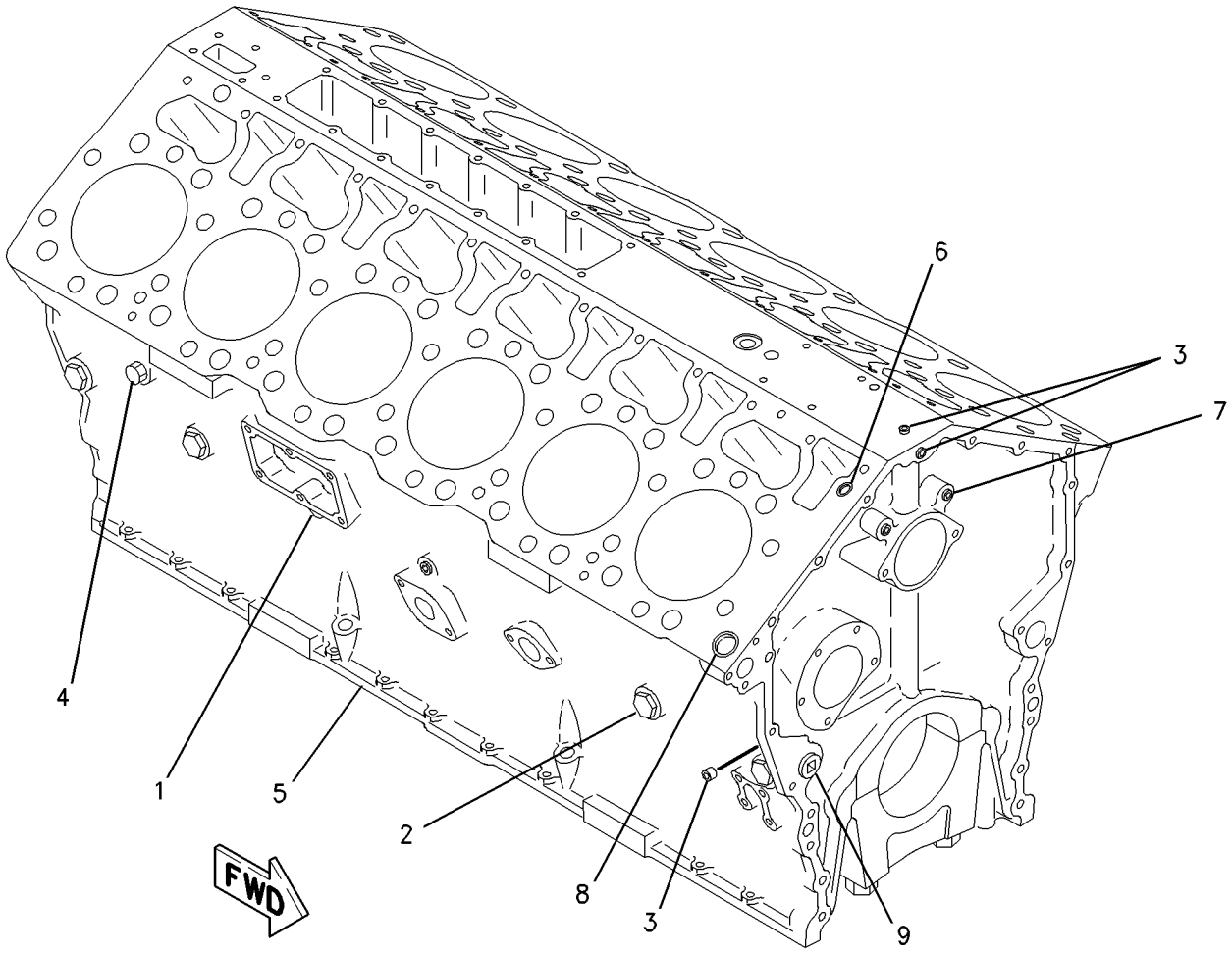

GRAPHIC #1 g00836191

143-3615 CYLINDER HEAD AS

S/N: 5JJ3200-UP
PART OF 192-1322 CYLINDER HEAD AS, 108-1887 CYLINDER HEAD GP
FIELD REPLACEMENT ORDER 192-1322–PAGE 26
ALSO AN ATTACHMENT

SMCS-1100, 1101, 1103, 1104, 1105, 1106, 1108, 1109, 1115, 1117, 1121, 1124, 1125

i01633369

NOTE	REF NO	GRAPHIC REF	PART NUMBER	QTY	PART NAME 1 2 3 4 5 6 (PRODUCT LEVEL)	SEE PAGE
	1	1	**3B-0645**	10	PLUG-CUP	
	2	1	**4N-5893**	12	INSERT-VALVE SEAT (INLET)	
	3	1	**1W-5283**	12	INSERT-VALVE SEAT (EXHAUST)	
	4	1	**3B-0623**	12	PLUG-CUP	

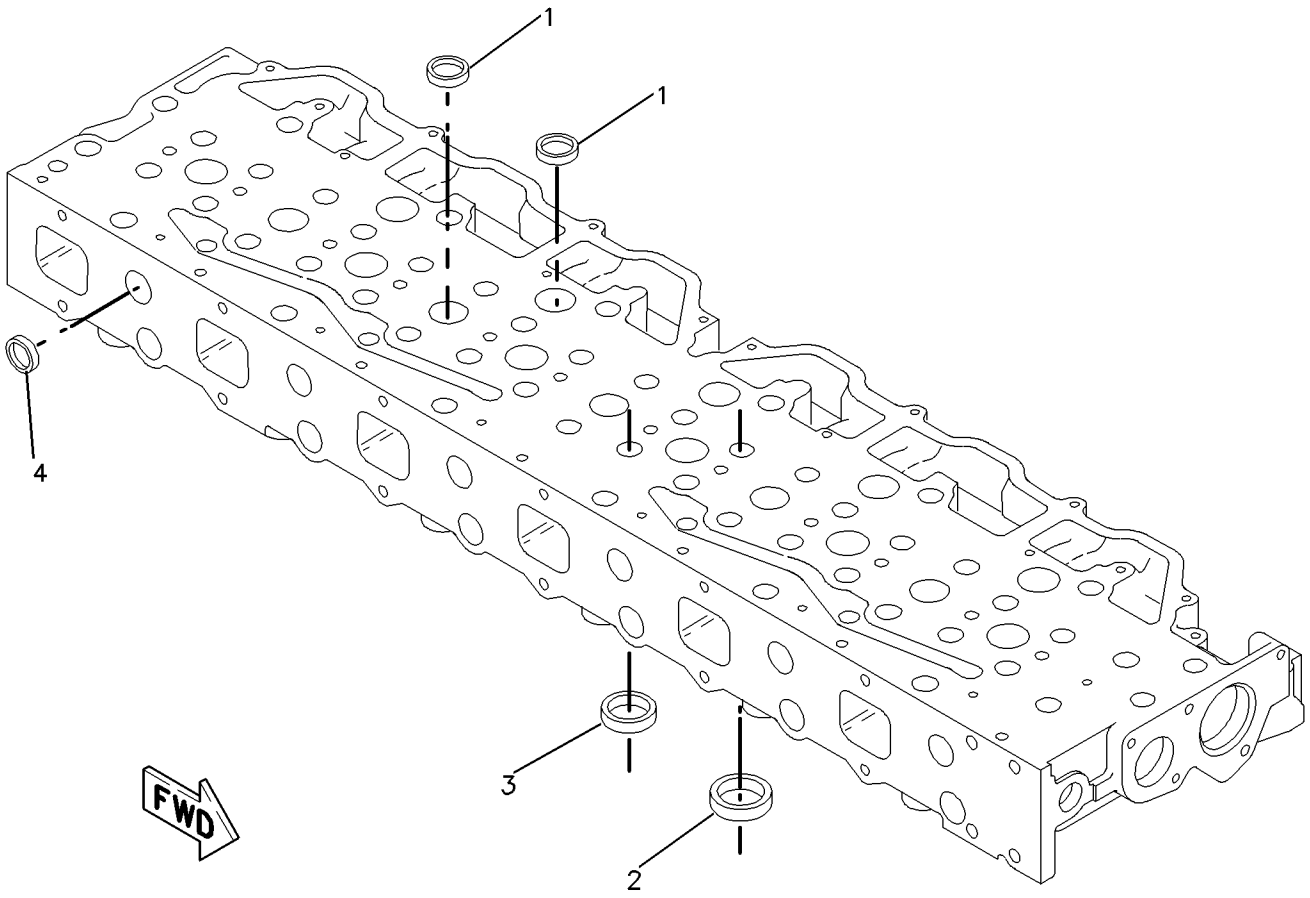

GRAPHIC #1

g00836011

192-1322 CYLINDER HEAD AS*R

S/N: 5JJ3200-UP

FIELD REPLACEMENT FOR 143-3615—PAGE 25

SMCS-1100, 1101, 1103, 1104, 1105, 1106, 1108, 1109, 1115, 1117, 1121, 1124, 1125

i01614791

NOTE	REF NO	GRAPHIC REF	PART NUMBER	QTY	PART NAME 1 2 3 4 5 6 (PRODUCT LEVEL)	SEE PAGE
Y	1	1	*143-3615*	1	CYLINDER HEAD AS	25
	2	1	**173-7188**	24	GUIDE-VALVE	
	3	1	**102-7494**	2	DOWEL	

Y-SEPARATE ILLUSTRATION

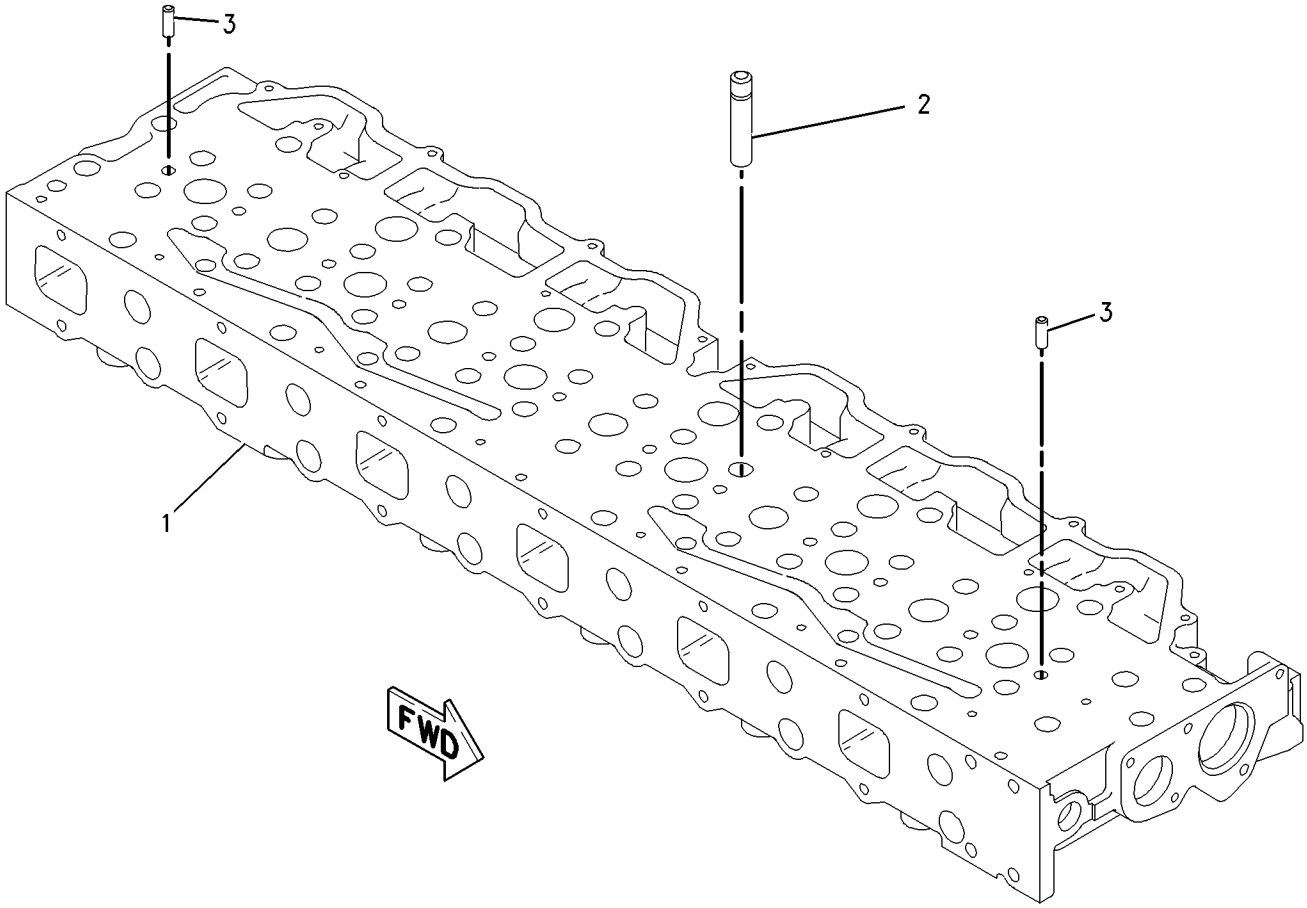

GRAPHIC #1

g00836089

108-1887 CYLINDER HEAD GP*R

S/N: 5JJ3200-UP
PART OF 172-6507 CYLINDER HEAD GP
ALSO AN ATTACHMENT

SMCS-1100, 1103, 1104, 1105, 1106, 1108, 1109, 1115, 1117, 1121, 1124, 1125

i01454752

NOTE	REF NO	GRAPHIC REF	PART NUMBER	QTY	PART NAME 1 2 3 4 5 6 (PRODUCT LEVEL)	SEE PAGE
YC	1	1	*143-3615*	1	CYLINDER HEAD AS	25
	2	1	**122-0322**	12	VALVE-INLET	
	3	1	**102-7494**	2	DOWEL	
	4	1	**2A-4429**	48	LOCK-RETAINER	
	5	1	**137-6500**	24	ROTOCOIL AS	
					(EACH INCLUDES)	
		1	**137-6501**	1	SHIELD-OIL	
	6	1	**173-7188**	24	GUIDE-VALVE	
	7	1	**122-0321**	12	VALVE-EXHAUST	
	8	1	**4N-2803**	24	GUIDE-VALVE	

C-CHANGE FROM PREVIOUS TYPE
Y-SEPARATE ILLUSTRATION

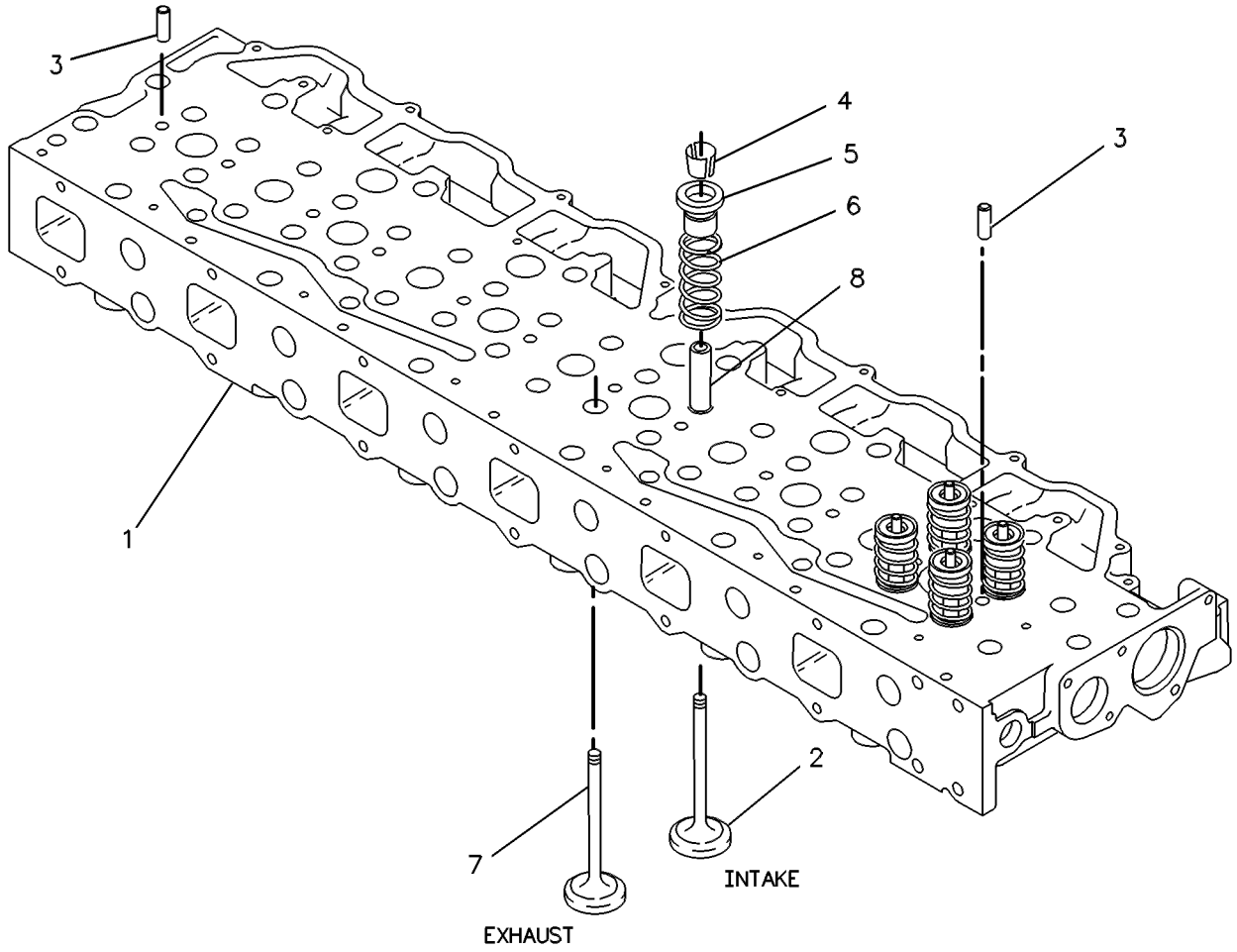

GRAPHIC #1

g00278854

172-6507 CYLINDER HEAD GP

S/N: 5JJ3200-UP
PART OF 171-5806, 206-3114 ENGINE AR
ALSO AN ATTACHMENT

SMCS-1100, 1103, 1104, 1105, 1106, 1108, 1109, 1115, 1117, 1121, 1124, 1125

i01550962

NOTE	REF NO	GRAPHIC REF	PART NUMBER	QTY	PART NAME 1 2 3 4 5 6 (PRODUCT LEVEL)	SEE PAGE
YR	1	1	*108-1887*	2	CYLINDER HEAD GP	27
	2	1	**141-6607**	2	MANIFOLD (HEUI FLUID)	
	3	1	**106-1792**	24	STUD-TAPERLOCK (3/8-16X3.93IN)	
	4	1	**1D-4541**	12	BOLT (5/16-18X3 IN)	
	5	1	**5P-7684**	4	PLUG	
	6	1	**108-5806**	4	SEAL-O-RING	
	7	1	**8T-6764**	1	PLUG-PIPE	
	8	1	**5M-2894**	10	WASHER-HARD (10.2X18.5X2.5MM THK)	
	9	1	**9S-8752**	26	NUT-FULL (3/8-16 THD)	
	10	1	**108-5803**	2	SEAL-O-RING	
	11	1	**9S-8006**	2	PLUG	
	12	1	**1N-5999**	1	PLUG	
Y	13	1	**167-1709**	1	SENSOR GP-PRESSURE (INJECTION ACTUATION)	250
	14	1	**124-6625**	1	PLATE	
	15	1	**7W-3447**	7	SPACER (10.2X19.05X10.2MM THK)	
Y	16	1	**194-6724**	1	SENSOR GP-PRESSURE (BOOST AIR)	252
	17	1	**9X-0263**	1	ADAPTER	
	18	1	**6V-5048**	1	SEAL-O-RING	
	19	1	**9S-8004**	4	PLUG	
	20	1	**6V-5049**	4	SEAL-O-RING	
	21	1	**2K-2813**	40	BOLT (3/4-16X10IN)	
		1	**5H-1504**	40	WASHER-HARD (20X33.5X5MM THK)	
	22	1	**061-8561**	12	SEAL-O-RING	
	23	1	**6V-5266**	12	SEAL-O-RING	
	24	1	**107-9570**	24	SEAL-O-RING	
	25	1	**108-0219**	12	SLEEVE	
	26	1	**7E-7312**	2	GASKET-CYLINDER HEAD	
	27	1	**2N-7174**	12	GASKET-ADAPTER	
	28	1	**3E-6772**	48	SEAL-WATER	
B	29	1	**1U-8846**		SEALANT-GASKET	
	30	1	**033-6027**	2	SEAL-O-RING	
	31	1	**124-6626**	1	PLATE	
	32	1	**172-6508**	2	BRACE	
	33	1	**9X-6458**	9	WASHER-HARD (10.2X22.5X3MM THK)	

B-USE AS REQUIRED
R-REMFG PART MAY BE AVAILABLE
Y-SEPARATE ILLUSTRATION

172-6507 **CYLINDER HEAD GP** ***(contd.)*** **i01550962**

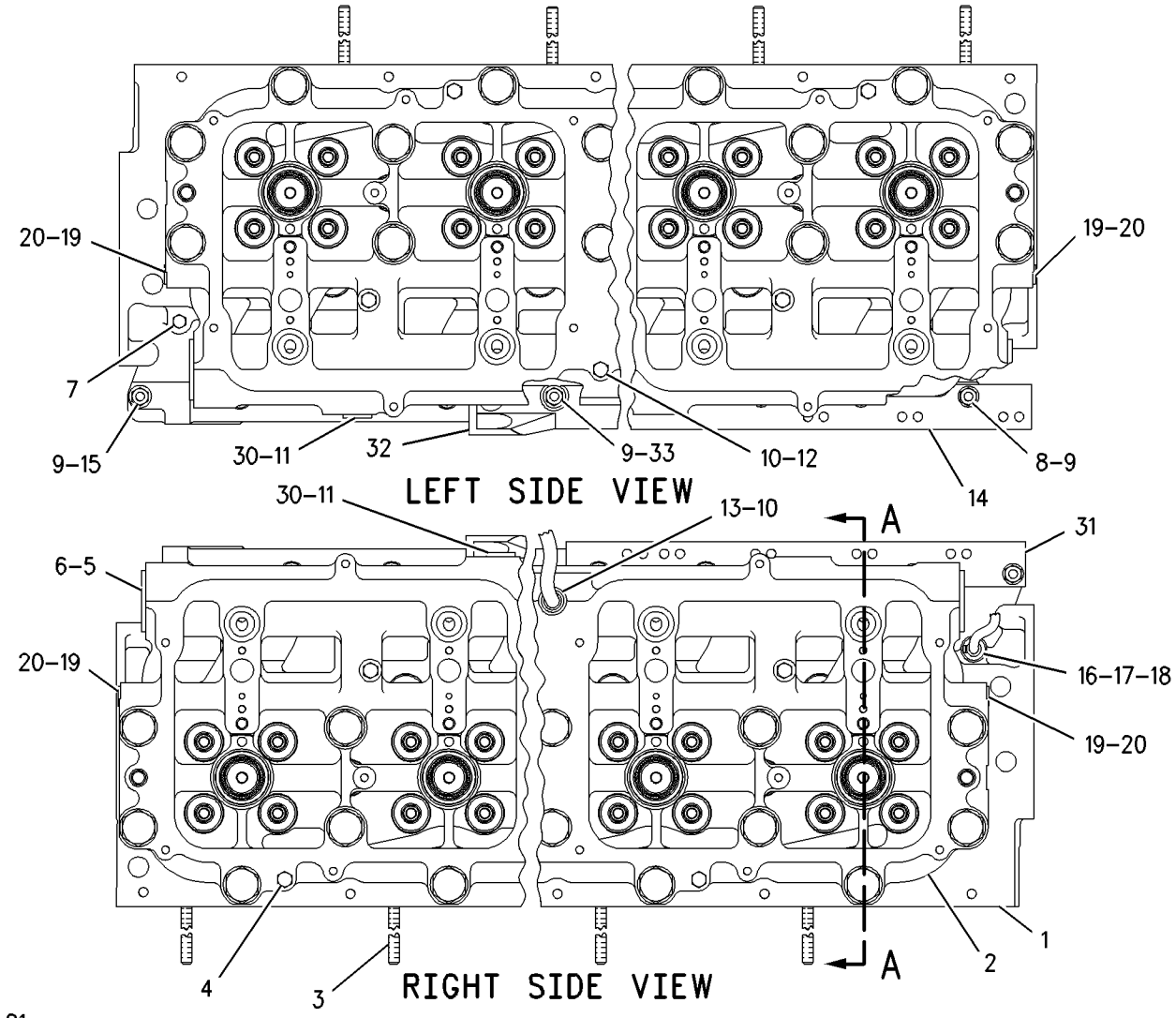

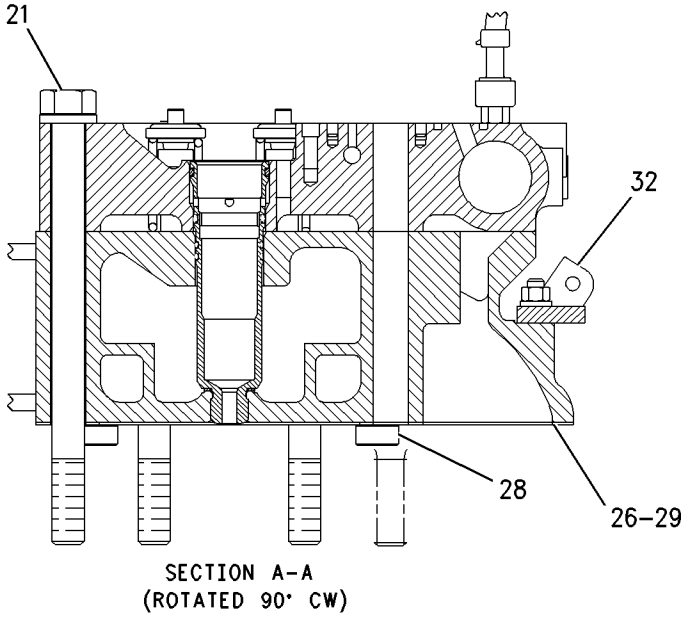

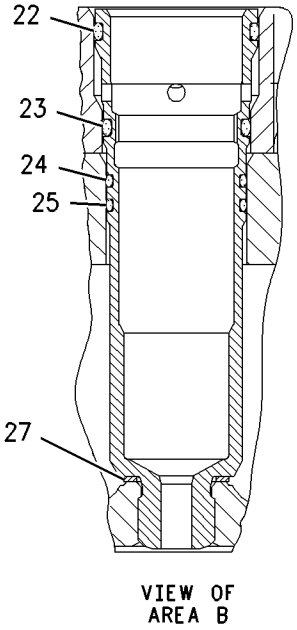

GRAPHIC #1 g00754215

6N-2229 DAMPER GP

S/N: 5JJ3200-UP
PART OF 171-5806, 206-3114 ENGINE AR
ALSO AN ATTACHMENT

SMCS-1205 **i01263332**

NOTE	REF NO	GRAPHIC REF	PART NUMBER	QTY	PART NAME 1 2 3 4 5 6 (PRODUCT LEVEL)	SEE PAGE
	1	1	**6N-6037**	1	ADAPTER-DAMPER	
	2	1	**2D-6374**	8	BOLT (5/8-18X6.75IN)	
	3	1	**0S-1585**	12	BOLT (1/2-13X1.50IN)	
	4	1	**6N-7654**	1	SPACER	
	5	1	**167-8132**	1	DAMPER AS	

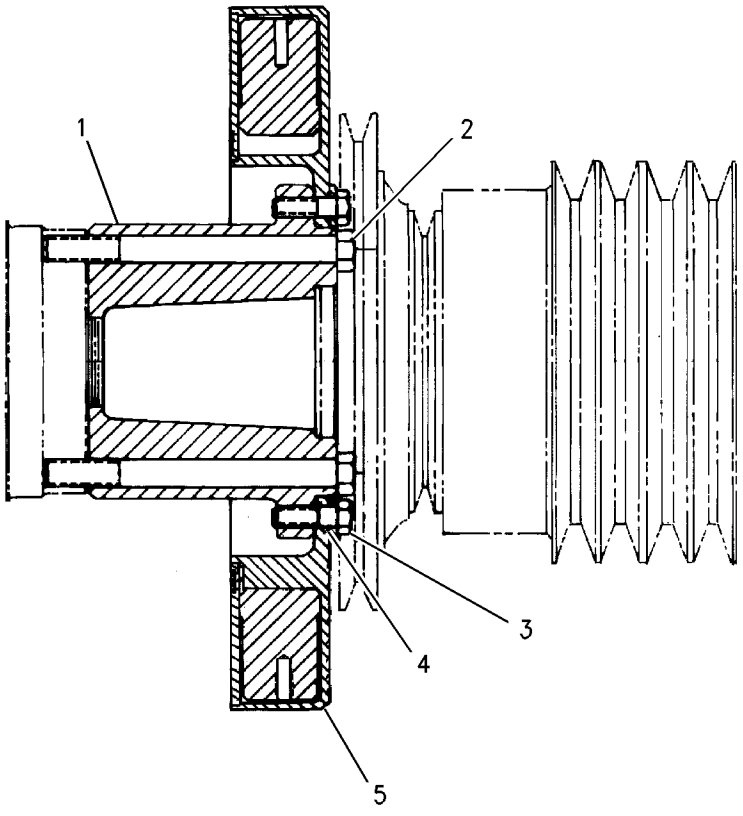

GRAPHIC #1 g00672248

193-8414 DRIVE GP-ACCESSORY

S/N: 5JJ3200-UP
PART OF 180-0523 GEAR GP-ACCESSORY
ALSO AN ATTACHMENT

SMCS-1207 **i01666145**

NOTE	REF NO	GRAPHIC REF	PART NUMBER	QTY	PART NAME 1 2 3 4 5 6 (PRODUCT LEVEL)	SEE PAGE
	1	1	**8J-0422**	2	CUP-BEARING	
	2	1	**8J-0423**	1	CONE-BEARING	
	3	1	**000-6281**	1	CONE-BEARING	
	4	1	**177-3036**	1	ADAPTER	
	5	1	**179-1255**	1	SHAFT-GEAR	
	6	1	**179-4230**	1	SEAL-LIP TYPE	
	7	1	**190-5069**	1	NUT	
	8	1	**194-5041**	1	WASHER-HARD	

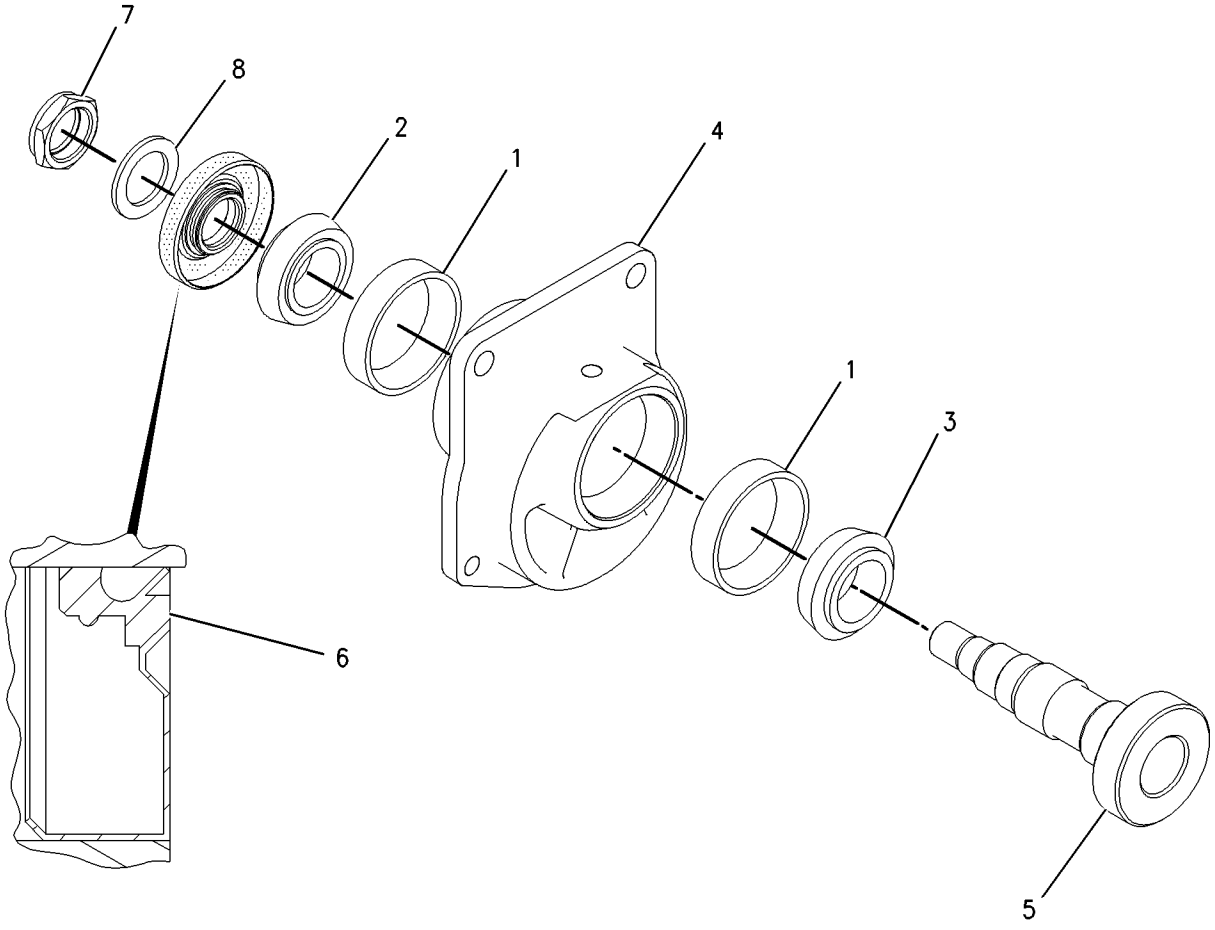

GRAPHIC #1 g00860387

BASIC ENGINE

168-5063 DRIVE GP-FAN

S/N: AKT1-UP

PART OF 171-5807 INSTALLATION AR-ENGINE

SMCS-1357, 1358, 1359, 1390 **i01691372**

NOTE	REF NO	GRAPHIC REF	PART NUMBER	QTY	PART NAME 1 2 3 4 5 6 (PRODUCT LEVEL)	SEE PAGE
	1	1	**3B-8485**	1	FITTING-GREASE (1/8-27 THD)(45 DEGREE)	
	2	1	**5K-3772**	1	HOSE AS	
	3	1	**5M-8009**	1	PIN-SPRING	
	4	1	**5P-4625**	1	BOLT (5/8-11 THD)	
	5	1	**6I-0976**	1	SLEEVE	
	6	1	**6I-0977**	1	SPACER (63.9X90X106.8MM THK)	
	7	1	**6I-1684**	1	PLATE	
	8	1	**6Y-7651**	2	CONE-BEARING	
	9	1	**6Y-7652**	2	CUP-BEARING	
	10	1	**1K-4649**	1	SPACER (.516X1X1 IN THK)	
	11	1	**150-1960**	1	PULLEY	
	12	1	**164-5025**	1	ADAPTER	
	13	1	**180-4526**	1	V-BELT SET (INCLUDES 4 BELTS)	
	14	1	**180-9639**	1	HUB	
	15	1	**191-8242**	1	BRACKET AS	
		1	**1S-9209**	1	SHAFT-TIGHTENER	
		1	**4N-0955**	1	DOWEL	
		1	**6I-0975**	1	SHAFT	
	16	1	**118-6330**	2	STUD	
	17	1	**5F-3999**	1	SEAL-O-RING	
	18	1	**6V-8188**	2	NUT (1/2-13 THD)	
	19	1	**7X-0328**	1	BOLT (1/2-13X3.50 IN)	
	20	1	**6V-4432**	1	BOLT (1/2-13X4 IN)	
	21	1	**8C-5222**	1	SEAL-LIP	
	22	1	**8T-4223**	4	WASHER-HARD (13.5X25.5X3MM THK)	
	23	1	**8T-8917**	6	BOLT (1/2-13X1.25 IN)	
	24	1	**9B-7237**	6	BOLT (3/8-16X1.25 IN)	

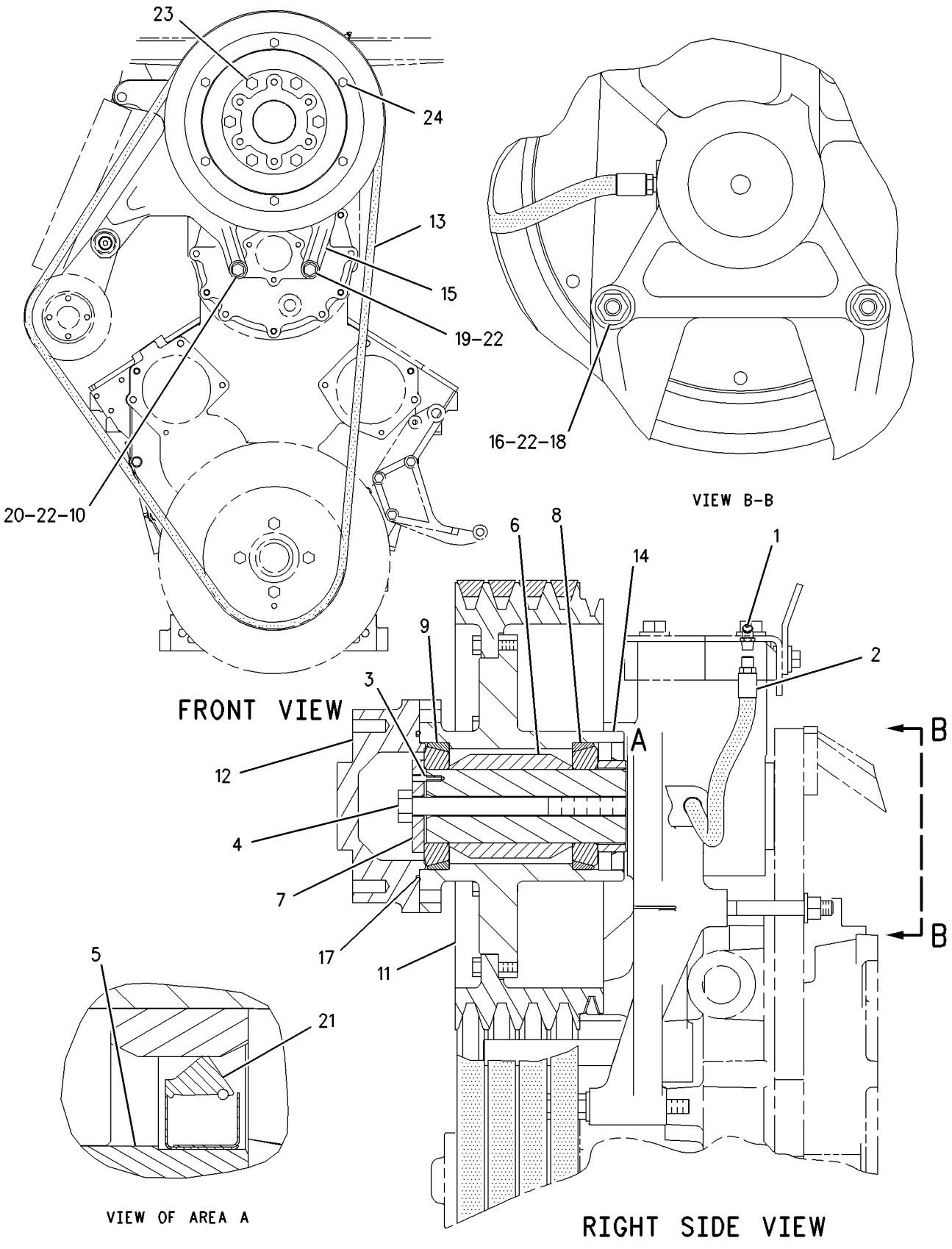

GRAPHIC #1 g00769623

183-5116 DRIVE GP-FAN

S/N: AKT1-UP
PART OF 192-6156 DRIVE GP-FAN
AN ATTACHMENT

SMCS-1357, 1358, 1359, 1390 **i01446345**

NOTE	REF NO	GRAPHIC REF	PART NUMBER	QTY	PART NAME 1 2 3 4 5 6 (PRODUCT LEVEL)	SEE PAGE
Y	1	1	**119-4166**	1	SENSOR GP-SPEED (FAN)	253
					AVAILABLE REPAIR KIT(S):	
			188-3548		KIT-SEAL	
					(INCLUDES SLEEVES, SEALS, O-RINGS, NAMEPLATE KIT, PLATE, RETAINERS & INSTRUCTION SHEET)	
			188-3549		KIT-OVERHAUL	
					(INCLUDES SEAL KIT, BEARINGS, KEYS, RINGS-SNAP, CLUTCH PLATES, FACING PLATES & SPRING WASHER)	

Y-SEPARATE ILLUSTRATION

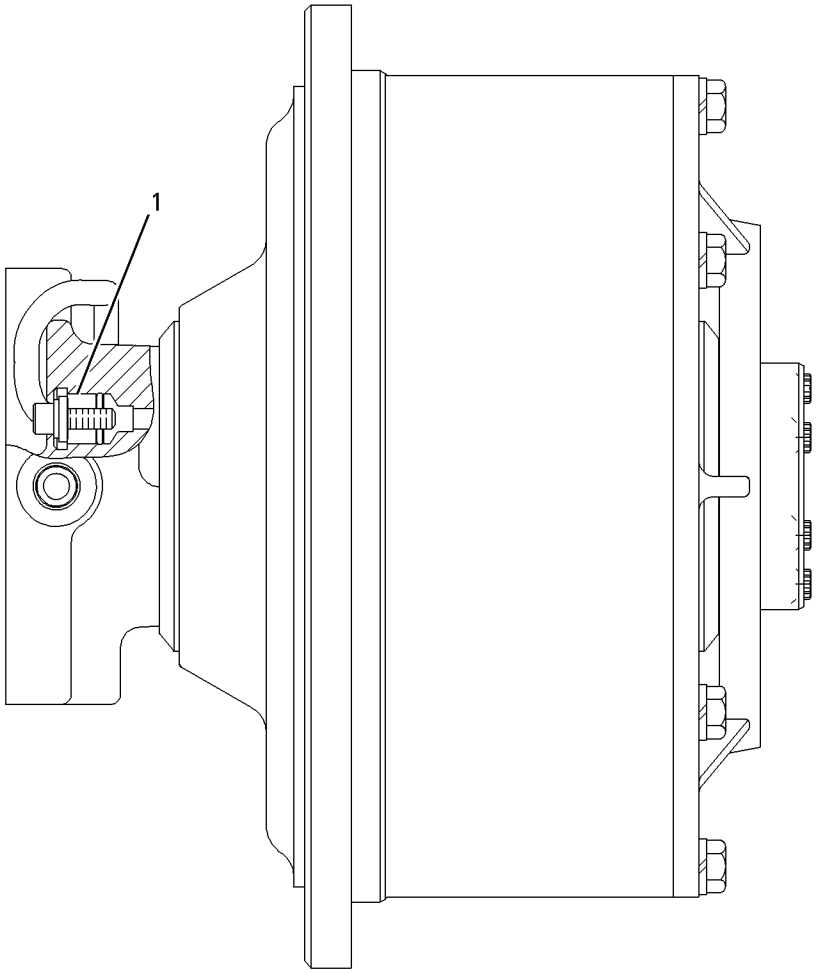

GRAPHIC #1 g00712261

192-6156 DRIVE GP-FAN

S/N: AKT1-UP
BELT
PART OF 197-7904 FAN AR, 206-7328 SUPPRESSION AR-SOUND
AN ATTACHMENT

SMCS-1357, 1358, 1359, 1390 **i01505255**

NOTE	REF NO	GRAPHIC REF	PART NUMBER	QTY	PART NAME 1 2 3 4 5 6 (PRODUCT LEVEL)	SEE PAGE
	1	1	**123-5889**	1	V-BELT SET (INCLUDES 4 BELTS)	
	2	1	**150-1960**	1	PULLEY	
	3	1	**192-6148**	1	BRACKET AS	
		1	**1S-9209**	1	SHAFT-TIGHTENER	
		1	**4N-0955**	1	DOWEL	
	4	1	**118-6330**	2	STUD	
Y	5	1	**183-5116**	1	DRIVE GP-FAN	34
	6	1	**5M-1932**	4	STUD-TAPERLOCK (1/2X13X2.2 IN OAL)	
	7	1	**6V-8188**	6	NUT (1/2-13 THD)	
	8	1	**7X-0328**	2	BOLT (1/2-13X3.50 IN)	
	9	1	**8T-4223**	4	WASHER-HARD (13.5X25.5X3MM THK)	
	10	1	**9B-7237**	6	BOLT (3/8-16X1.25 IN)	

Y-SEPARATE ILLUSTRATION

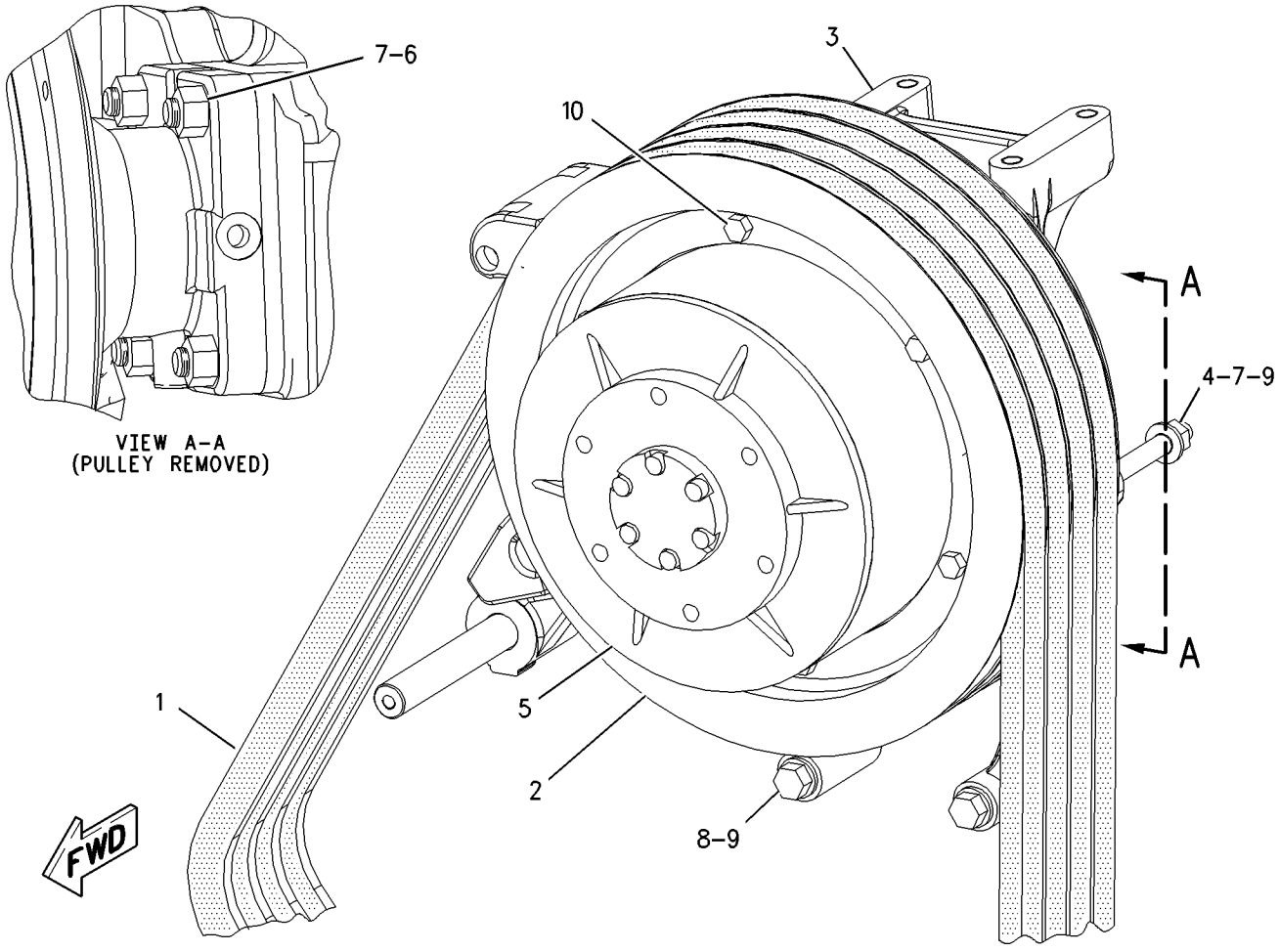

GRAPHIC #1 g00782223

107-3752 FLYWHEEL GP

S/N: 5JJ3200-UP
PART OF 171-5806, 206-3114 ENGINE AR
ALSO AN ATTACHMENT

SMCS-1156, 1158 **i01390245**

NOTE	REF NO	GRAPHIC REF	PART NUMBER	QTY	PART NAME 1 2 3 4 5 6 (PRODUCT LEVEL)	SEE PAGE
	1	1	**6I-2922**	1	FLYWHEEL AS	
	2	1	**4N-2514**	1	GEAR (113 TEETH)	
	3	1	**5L-2683**	12	BOLT	
		1	**4D-3704**	12	WASHER-HARD (17X30X5MM THK)	

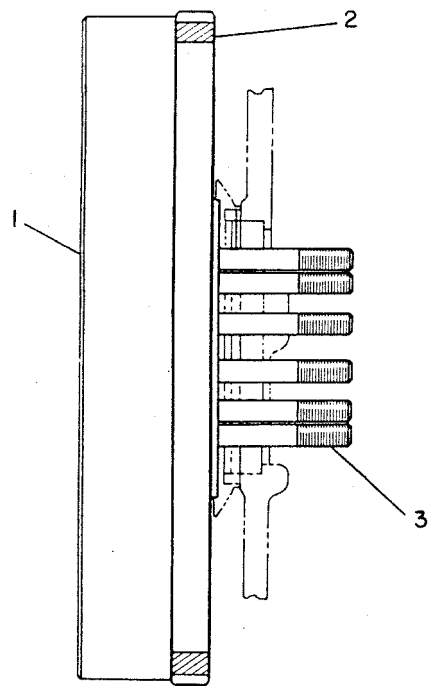

GRAPHIC #1 g00165398

MEMORANDA

BASIC ENGINE

127-3516 GEAR GP-FRONT

S/N: 5JJ3200-UP
TIMING
PART OF 171-5806, 206-3114 ENGINE AR
ALSO AN ATTACHMENT

SMCS-1206 **i01437709**

NOTE	REF NO	GRAPHIC REF	PART NUMBER	QTY	PART NAME 1 2 3 4 5 6 (PRODUCT LEVEL)	SEE PAGE
	1	1	**2B-2695**	4	BOLT (5/16-18X0.875 IN)	
	2	1	**112-9217**	1	PLATE-THRUST	
	3	1	**2W-4087**	1	GEAR AS-IDLER (35 TEETH)	
		1	**6N-0977**	1	BEARING-SLEEVE	
	4	1	**2W-3875**	1	GEAR-OIL PUMP DRIVE (56 TEETH)	
	5	1	**1P-7346**	1	WASHER-HARD (10.2X35X6MM THK)	
	6	1	**0S-1571**	1	BOLT (3/8-16X1.75 IN)	
	7	1	**124-7609**	1	GEAR-PUMP IDLER (86 TEETH)	
	8	1	**7S-5005**	2	DOWEL	
	9	1	**6N-1025**	1	SHAFT-PUMP IDLER	
		1	**4H-1641**	1	PIN-SPRING	
	10	1	**3B-1915**	2	BOLT (3/8-16X1.37 IN)	
	11	1	**6N-1027**	1	PLATE-THRUST	
	12	1	**0T-0573**	1	BOLT (3/8-16X2.75 IN)	
	13	1	**151-2946**	1	GEAR AS-IDLER (99 & 43 TEETH)	
		1	**1B-8705**	1	KEY-WOODRUFF	
		1	**131-7123**	1	BEARING-SLEEVE	
	14	1	**117-9712**	1	SHAFT-DRIVE IDLER	
	15	1	**3G-2292**	5	BOLT-LOCKING (3/8-16X22.22MM)	
	16	1	**7N-2443**	1	WASHER-THRUST (2.51X2.89X0.188IN THK)	
	17	1	**5M-2894**	3	WASHER-HARD (10.2X18.5X2.5MM THK)	
	18	1	**101-6713**	1	PLATE-RETAINING	
	19	1	**5P-5855**	4	BOLT-12 POINT HEAD (1/2-13X1.75 IN)	

127-3516 **GEAR GP-FRONT** *(contd.)* **i01437709**

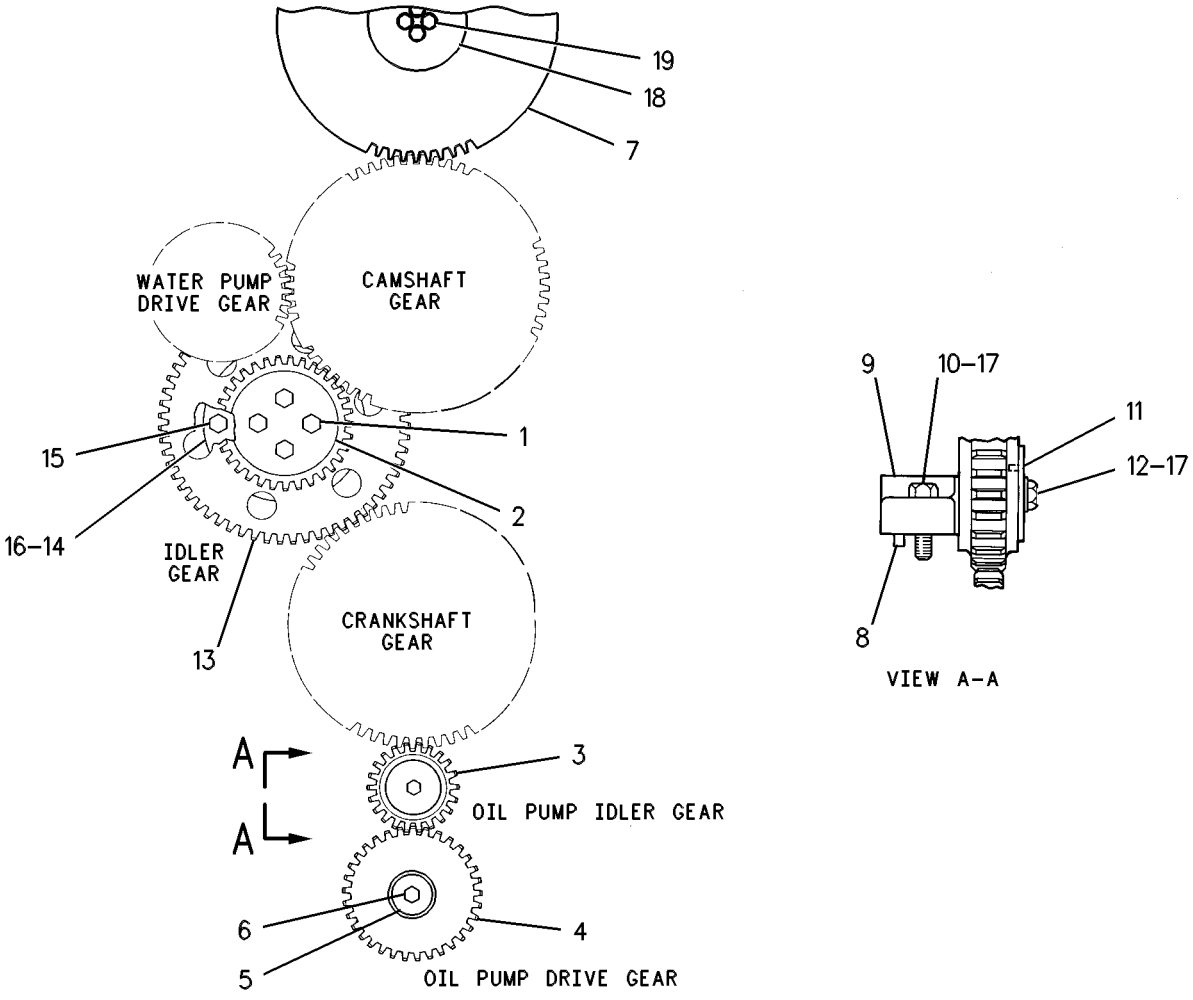

GRAPHIC #1 g00088490

BASIC ENGINE

193-2185 GEAR GP-REAR

S/N: 5JJ3200-UP
PART OF 171-5806, 206-3114 ENGINE AR
ALSO AN ATTACHMENT

SMCS-1204 **i01440085**

NOTE	REF NO	GRAPHIC REF	PART NUMBER	QTY	PART NAME 1 2 3 4 5 6 (PRODUCT LEVEL)	SEE PAGE
	1	2	**5M-2894**	8	WASHER-HARD (10.2X18.5X2.5MM THK)	
	2	1	**9Y-9929**	2	ADAPTER AS	
					(EACH INCLUDES)	
	2A	1	**1T-0550**	2	PIN-SPRING	
	3	1	**2W-7615**	2	GEAR-IDLER (64 TEETH)	
	4	1	**2W-7614**	1	GEAR-CRANKSHAFT (64 TEETH)	
	5	1	**030-8194**	1	CONNECTOR-FLARED	
	6	1	**6V-4589**	1	SEAL-O-RING	
	7	1	**8N-7806**	1	HOSE AS	
	8	1	**032-1267**	1	CONNECTOR-FLARED	
	9	1	**4N-0684**	1	DOWEL	
	10	2	**2W-7610**	2	GEAR (64 TEETH)	
	11	2	**5P-8429**	2	SEAL-O-RING (208.92MM ID)	
	12	2	**4N-7183**	2	RING-RETAINING	
	13	2	**1T-0720**	12	BOLT-12 POINT HEAD (3/8-16X1.25 IN)	
	14	2	**5P-1370**	2	BEARING AS-ROLLER	
	15	2	**6V-7423**	2	BEARING AS-ROLLER	
	16	2	**1D-4566**	8	BOLT (1/2-13X3.5 IN)	
	17	2	**4N-1235**	2	SHAFT-IDLER GEAR	
	18	2	**5K-9065**	2	RING-RETAINING (5.4MM OD)	
	19	2	**4N-0848**	1	SLEEVE-WEAR	
	20	2	**6V-3319**	1	SEAL-O-RING (158.34MM ID)	
	21	1,2	**1A-2029**	20	BOLT (3/8-16X1.125 IN)	
	22	2	**4N-1232**	2	WASHER-RETAINER	
	23	1	**5P-8247**	4	WASHER-HARD (17X32X3.5MM THK)	

193-2185 **GEAR GP-REAR** *(contd.)* **i01440085**

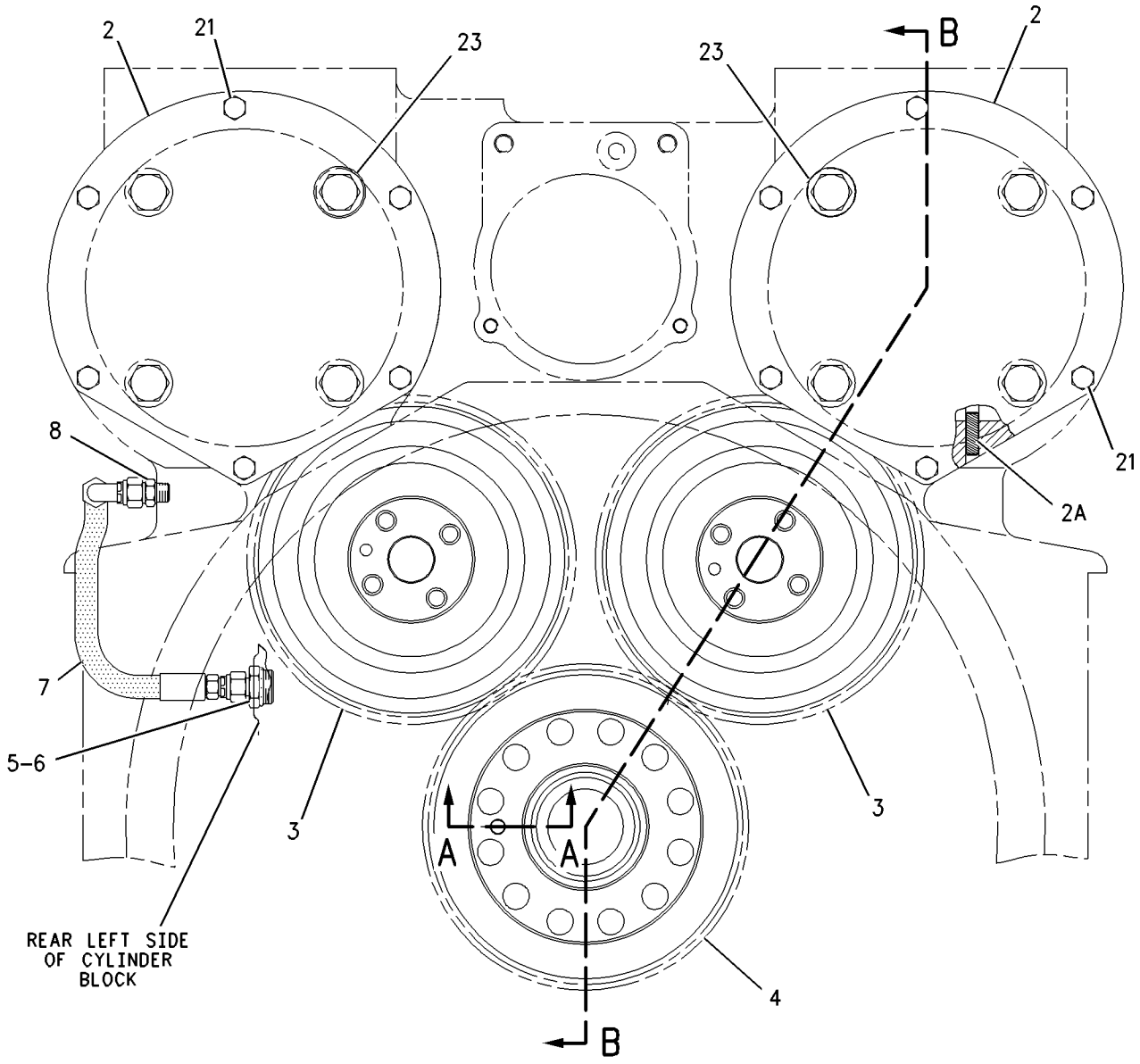

REAR VIEW

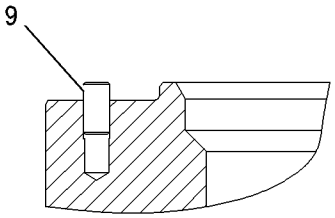

SECTION A-A

REFER TO ALL ILLUSTRATIONS OF
THIS GROUP FOR AUXILIARY VIEWS

GRAPHIC #1 g00759280

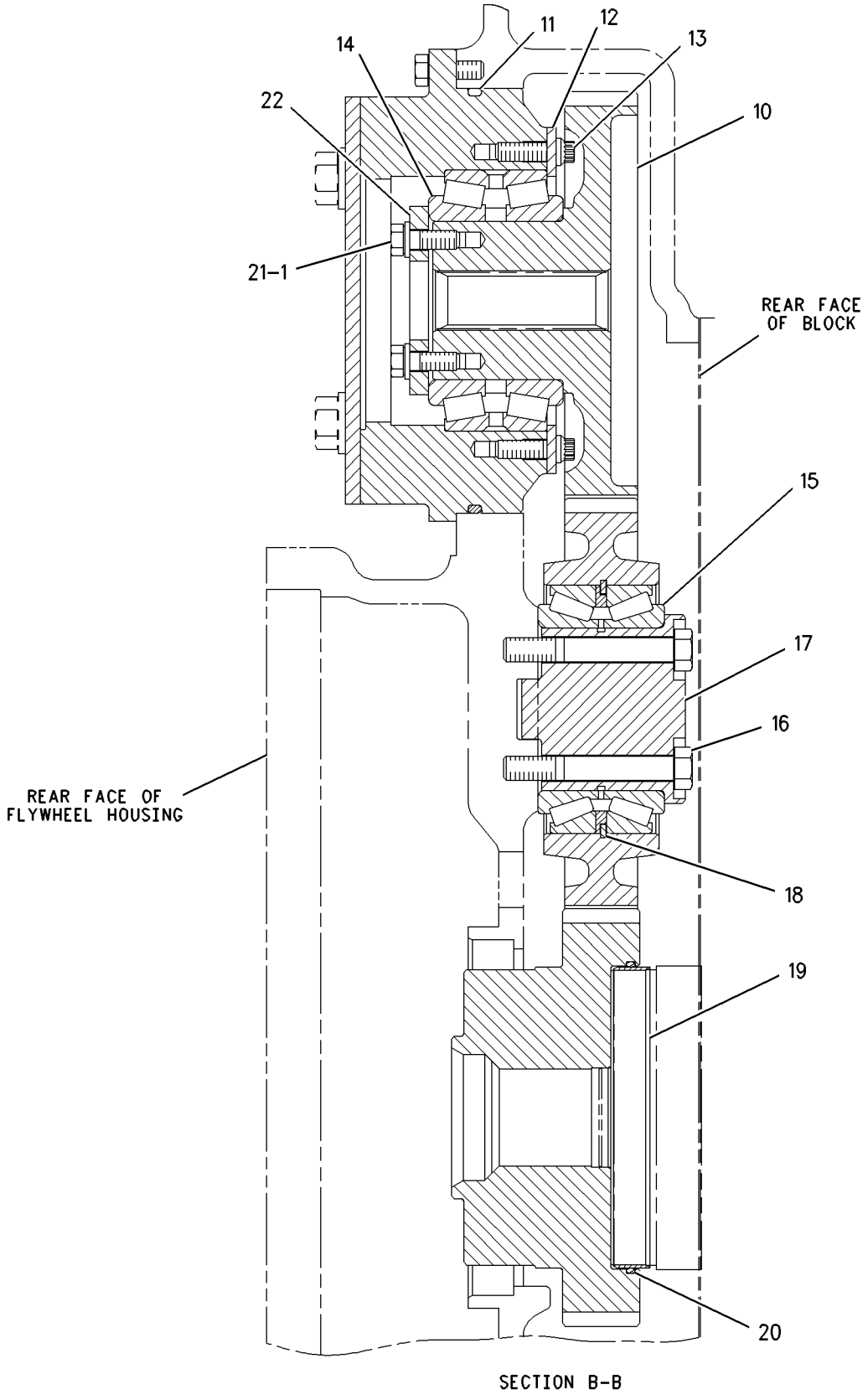

GRAPHIC #2

g00759281

MEMORANDA

BASIC ENGINE

193-2186 HOUSING GP-FLYWHEEL

S/N: 5JJ3200-UP
PART OF 171-5806, 206-3114 ENGINE AR
ALSO AN ATTACHMENT

SMCS-1157 **i01689499**

NOTE	REF NO	GRAPHIC REF	PART NUMBER	QTY	PART NAME 1 2 3 4 5 6 (PRODUCT LEVEL)	SEE PAGE
	1	1	**1W-3189**	6	SPACER	
	2	1	**2H-6488**	8	BOLT (1/2-13X5IN)	
	3	1	**2P-2772**	2	COVER	
	4	1	**4N-0933**	2	GASKET	
	5	1	**8M-9124**	1	WASHER (10X22.5X8MM THK)	
	6	1	**161-7293**	1	GASKET-CYLINDER	
	7	1	**0L-1352**	1	BOLT (3/8-16X3.25 IN)	
	8	1	**0S-1590**	6	BOLT (3/8-16X2 IN)	
	9	1	**0S-1619**	4	BOLT (3/8-16X3 IN)	
	10	1	**198-3038**	1	HOUSING AS-FLYWHEEL	
		1	**1W-3136**	1	BAFFLE	
	11	1	**1A-2029**	2	BOLT (3/8-16X1.125 IN)	
	12	1	**1A-5964**	2	BOLT (3/8-16X4.5 IN)	
	13	1	**3D-2871**	2	STUD	
	14	1	**3S-0036**	2	PLUG-CORE	
	15	1	**5M-2894**	10	WASHER-HARD (10.2X18.5X2.5MM THK)	
	16	1	**5P-8245**	8	WASHER-HARD (13.5X25.5X3MM THK)	
	17	1	**8T-6761**	1	PLUG-PIPE	
	18	1	**8T-6765**	3	PLUG-PIPE	
	19	1	**9M-4225**	2	BOLT (3/8 NC X 4 3/8)	

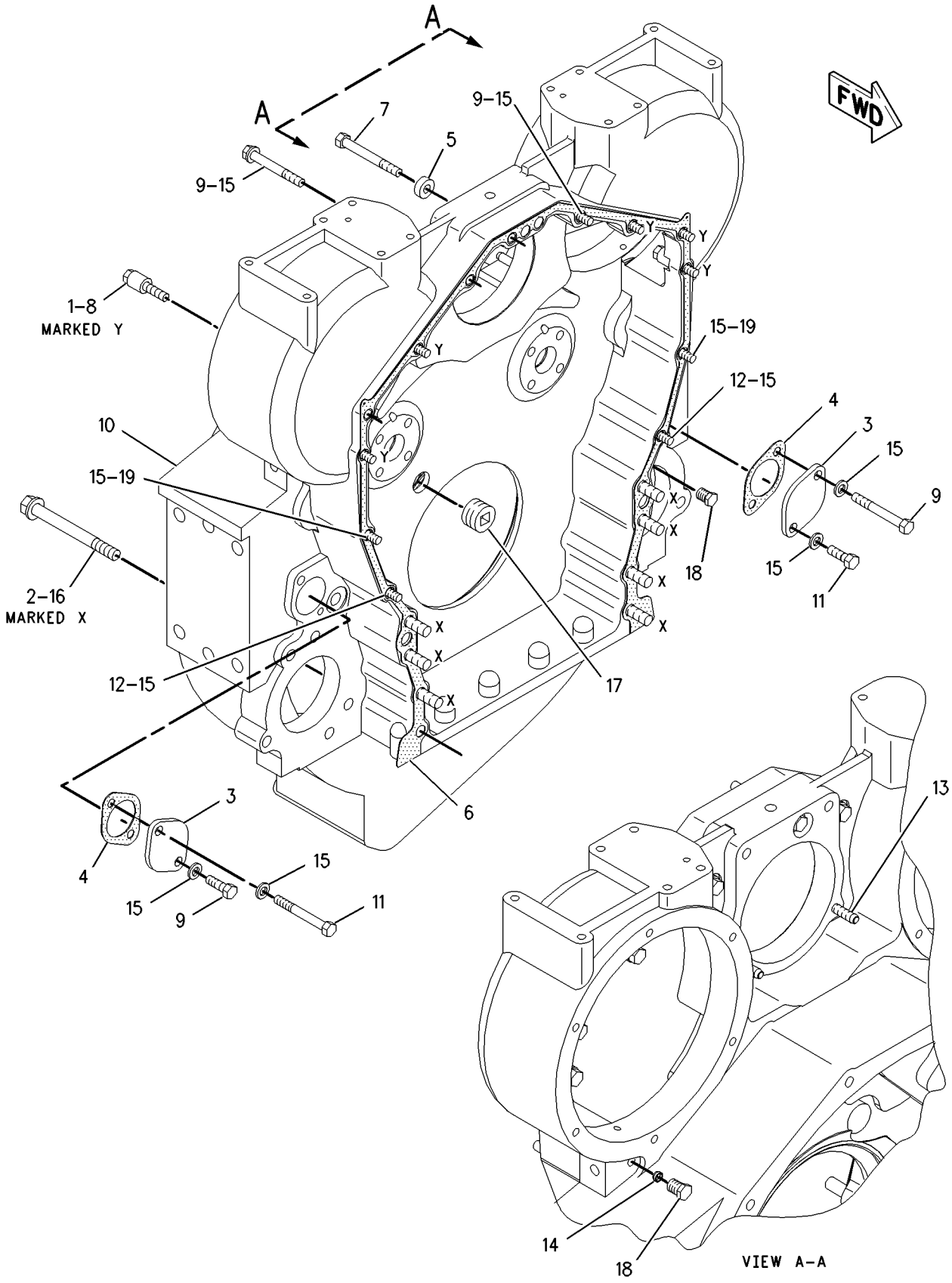

GRAPHIC #1

g00871225

BASIC ENGINE

166-5427 HOUSING GP-FRONT

S/N: 5JJ3200-UP
PART OF 171-5806, 206-3114 ENGINE AR
ALSO AN ATTACHMENT

SMCS-1151, 1162, 1166 **i01445770**

NOTE	REF NO	GRAPHIC REF	PART NUMBER	QTY	PART NAME 1 2 3 4 5 6 (PRODUCT LEVEL)	SEE PAGE
	1	1	**6N-2723**	1	SUPPORT-ALTERNATOR	
	2	1	**172-9313**	1	HOUSING-TIMING GEAR	
	3	1	**0S-1590**	1	BOLT (3/8-16X2 IN)	
	4	1	**0T-0573**	3	BOLT (3/8-16X2.75 IN)	
Y	5	1	**129-6628**	2	SENSOR GP-SPEED (ENGINE TIMING)	254
	6	1	**166-9145**	1	GASKET-CYLINDER BLOCK	
	7	1	**1A-5964**	2	BOLT (3/8-16X4.5 IN)	
	8	1	**2K-4973**	1	LOCKNUT	
	9	1	**3K-3256**	1	STUD	
	10	1	**4B-8641**	1	STUD	
	11	1	**5M-2894**	4	WASHER-HARD (10.2X18.5X2.5MM THK)	

Y-SEPARATE ILLUSTRATION

166-5427 **HOUSING GP-FRONT** *(contd.)* **i01445770**

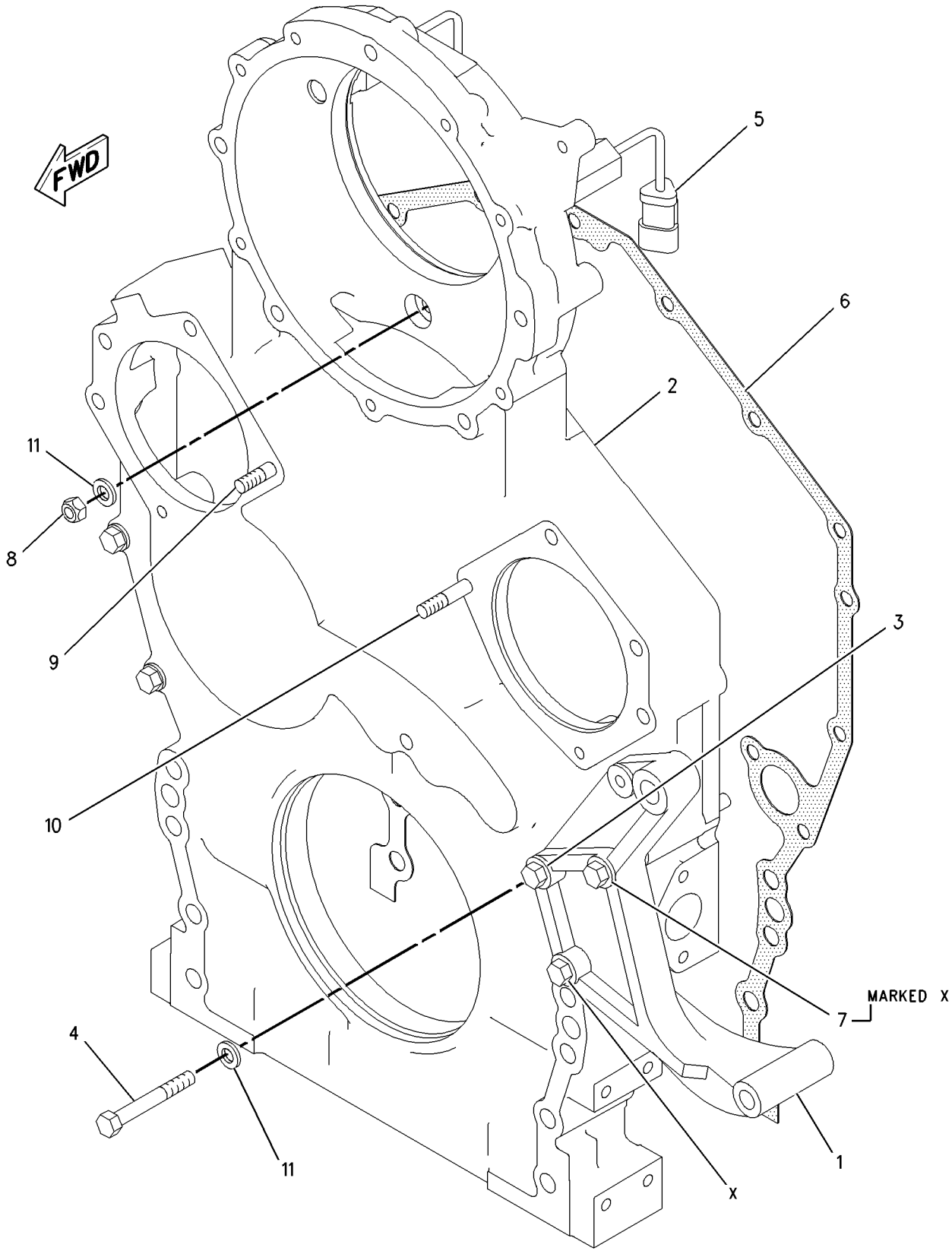

GRAPHIC #1 g00757092

126-2267 LIFTING GP-ENGINE

S/N: 5JJ3200-UP
PART OF 171-5806, 206-3114 ENGINE AR
ALSO AN ATTACHMENT

SMCS-1122 **i01699965**

NOTE	REF NO	GRAPHIC REF	PART NUMBER	QTY	PART NAME 1 2 3 4 5 6 (PRODUCT LEVEL)	SEE PAGE
	1	1	**5P-8245**	8	WASHER-HARD (13.5X25.5X3MM THK)	
	2	1	**118-8475**	1	BRACKET-LIFTING	
	3	1	**7B-3235**	4	BOLT (1/2-13X1.375 IN)	
	4	1	**118-9115**	1	BRACKET-LIFTING	
	5	1	**0S-1587**	4	BOLT (1/2-13X1.75 IN)	

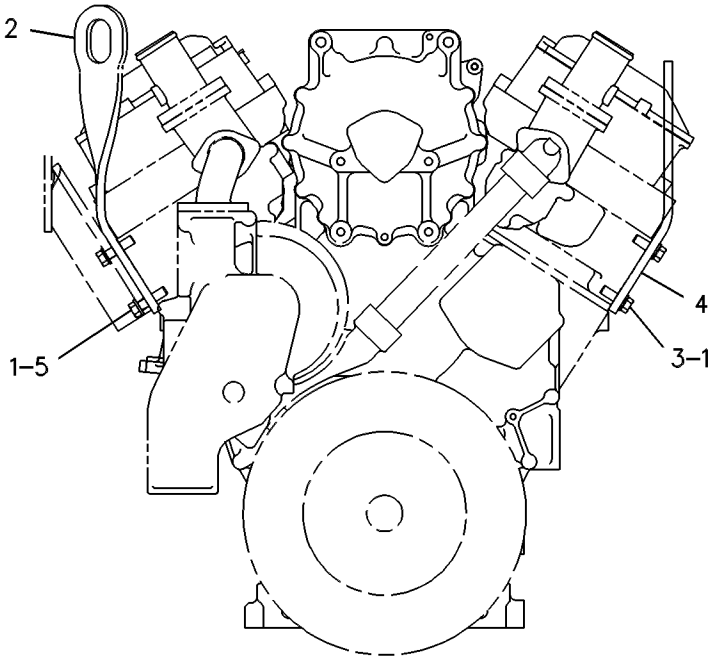

FRONT VIEW

GRAPHIC #1 g00111352

BASIC ENGINE

214-0624 MOUNTING GP-ALTERNATOR

S/N: 5JJ3200-UP
PART OF 171-5806, 206-3114 ENGINE AR
ALSO AN ATTACHMENT

SMCS-1405 **i01689315**

NOTE	REF NO	GRAPHIC REF	PART NUMBER	QTY	PART NAME 1 2 3 4 5 6 (PRODUCT LEVEL)	SEE PAGE
	1	1	**4N-6672**	1	GASKET	
	2	1	**198-2788**	1	SUPPORT-ALTERNATOR	
	3	1	**2H-1190**	2	DOWEL	
	4	1	**4L-6454**	4	BOLT (3/8-16X1 IN)	

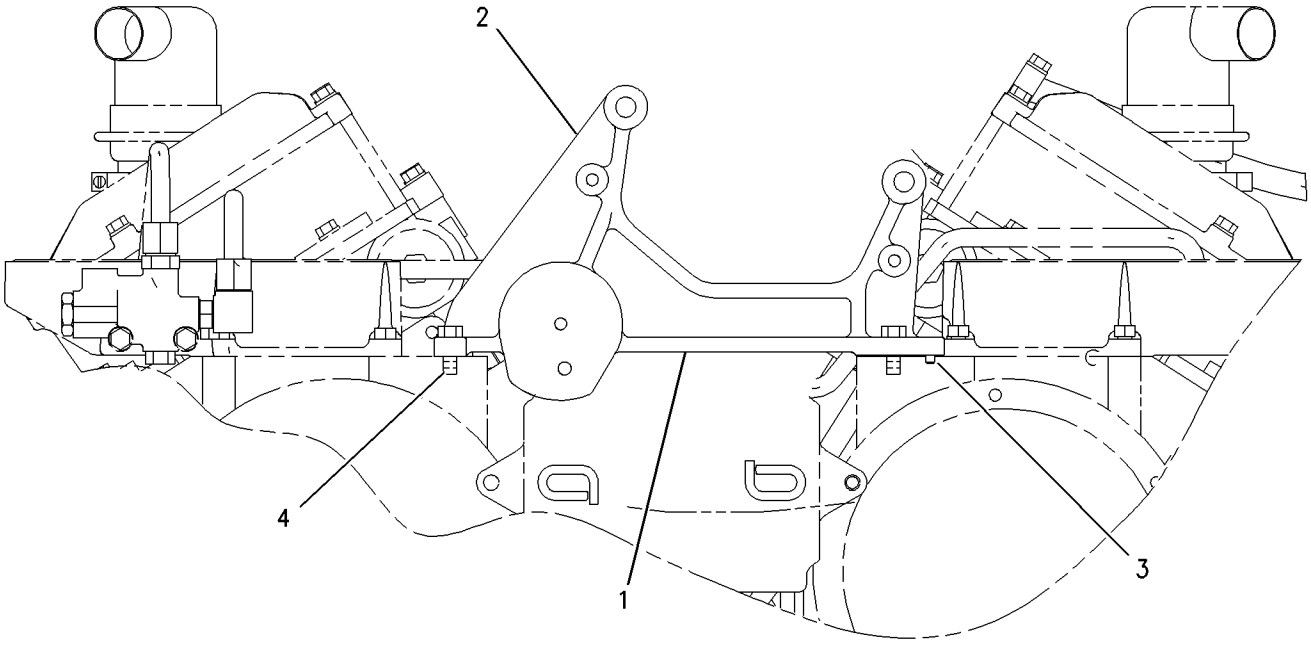

FRONT VIEW

GRAPHIC #1 g00871346

BASIC ENGINE

119-8582 PAN GP-OIL

S/N: 5JJ3200-UP
PART OF 171-5806, 206-3114 ENGINE AR
ALSO AN ATTACHMENT

SMCS-1302 **i01439740**

NOTE	REF NO	GRAPHIC REF	PART NUMBER	QTY	PART NAME 1 2 3 4 5 6 (PRODUCT LEVEL)	SEE PAGE
	1	1	**2P-3203**	30	BOLT-WASHER HEAD (3/8-16X1.25 IN)	
	2	1	**2P-3204**	2	BOLT-WASHER HEAD	
	3	1	**2P-3209**	4	BOLT-WASHER HEAD	
	4	1	**4P-0519**	1	ADAPTER AS-DRAIN	
	4A	1	**109-5839**	1	PLUG-OIL DRAIN	
	5	1	**4N-1151**	1	GASKET	
	6	1	**6N-2469**	1	GASKET-OIL PAN	
	7	1	**7N-9802**	1	PAN-FRONT OIL	
	8	1	**8N-0422**	1	GASKET-OIL PAN-REAR	
	9	1	**8N-0423**	1	PAN-OIL	
	10	1	**113-4323**	1	PAN-OIL	
	11	1	**0S-1571**	6	BOLT (3/8-16X1.75 IN)	
	12	1	**0S-1587**	2	BOLT (1/2-13X1.75 IN)	
	13	1	**0T-0055**	4	BOLT (3/8-16X4.25 IN)	
	14	1	**3B-1915**	6	BOLT (3/8-16X1.37 IN)	
	15	1	**5M-2894**	22	WASHER-HARD (10.2X18.5X2.5MM THK)	
	16	1	**5P-7701**	1	SEAL-O-RING (29.74MM ID)	
	17	1	**6V-3830**	1	SEAL-O-RING (34.29MM ID)	
	18	1	**8T-6761**	1	PLUG-PIPE	
	19	1	**9S-4181**	1	PLUG-STRAIGHT THREAD	
	20	1	**9S-8752**	6	NUT-FULL (3/8-16 THD)	

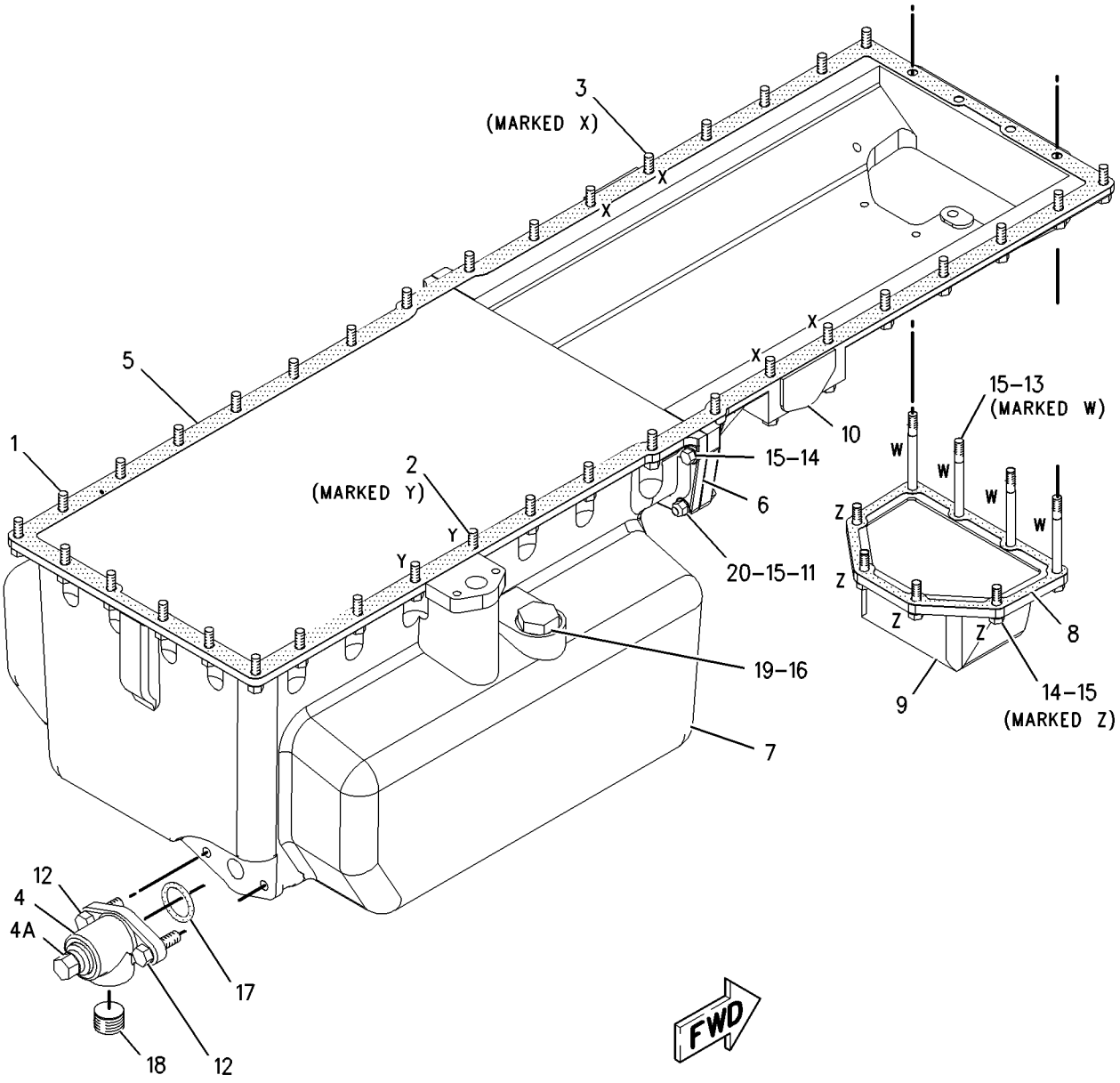

GRAPHIC #1 g00757065

192-8809 PISTON & ROD GP

S/N: 5JJ3200-UP
16:1 RATIO
PART OF 171-5806, 206-3114 ENGINE AR
ALSO AN ATTACHMENT

SMCS-1213, 1214, 1215, 1218, 1219, 1225, 1239 **i01431495**

NOTE	REF NO	GRAPHIC REF	PART NUMBER	QTY	PART NAME 1 2 3 4 5 6 (PRODUCT LEVEL)	SEE PAGE
	1	1	**7E-5665**	2	RETAINER-PIN	
J	2	1	**9Y-9497**	1	BEARING-CONNECTING ROD (STANDARD)	
AL		1	**4W-5702**	1	BEARING-CONNECTING ROD (.635MM US)	
AN		1	**4W-5703**	1	BEARING-CONNECTING ROD (1.27MM US)	
	3	1	**150-1156**	1	BOLT-OIL JET	
	4	1	**160-8178**	1	ROD AS-CONNECTING	
	4A	1	**6N-8942**	2	BOLT-CONNECTING ROD	
	4B	1	**8L-3441**	2	NUT (9/16-18 THD)	
	5	1	**173-0147**	1	TUBE AS-OIL JET	
	6	1	**173-0148**	1	PIN-PISTON	
	7	1	**177-7496**	1	RING-PISTON (TOP)	
	8	1	**187-1507**	1	RING-PISTON (OIL CONTROL)	
	9	1	**192-2209**	1	BODY AS-PISTON	
	10	1	**192-8807**	1	RING-INTERMEDIATE	
					AVAILABLE REPAIR KIT(S):	
J			**9Y-6188**		KIT-BEARING (STANDARD)	
L			**9Y-6189**		KIT-BEARING (.635MM US)	
N			**9Y-6190**		KIT-BEARING (1.27MM US)	

A-NOT PART OF THIS GROUP
J-KIT MARKED J INCLUDES PART MARKED J
L-KIT MARKED L INCLUDES PART MARKED L
N-KIT MARKED N INCLUDES PART MARKED N

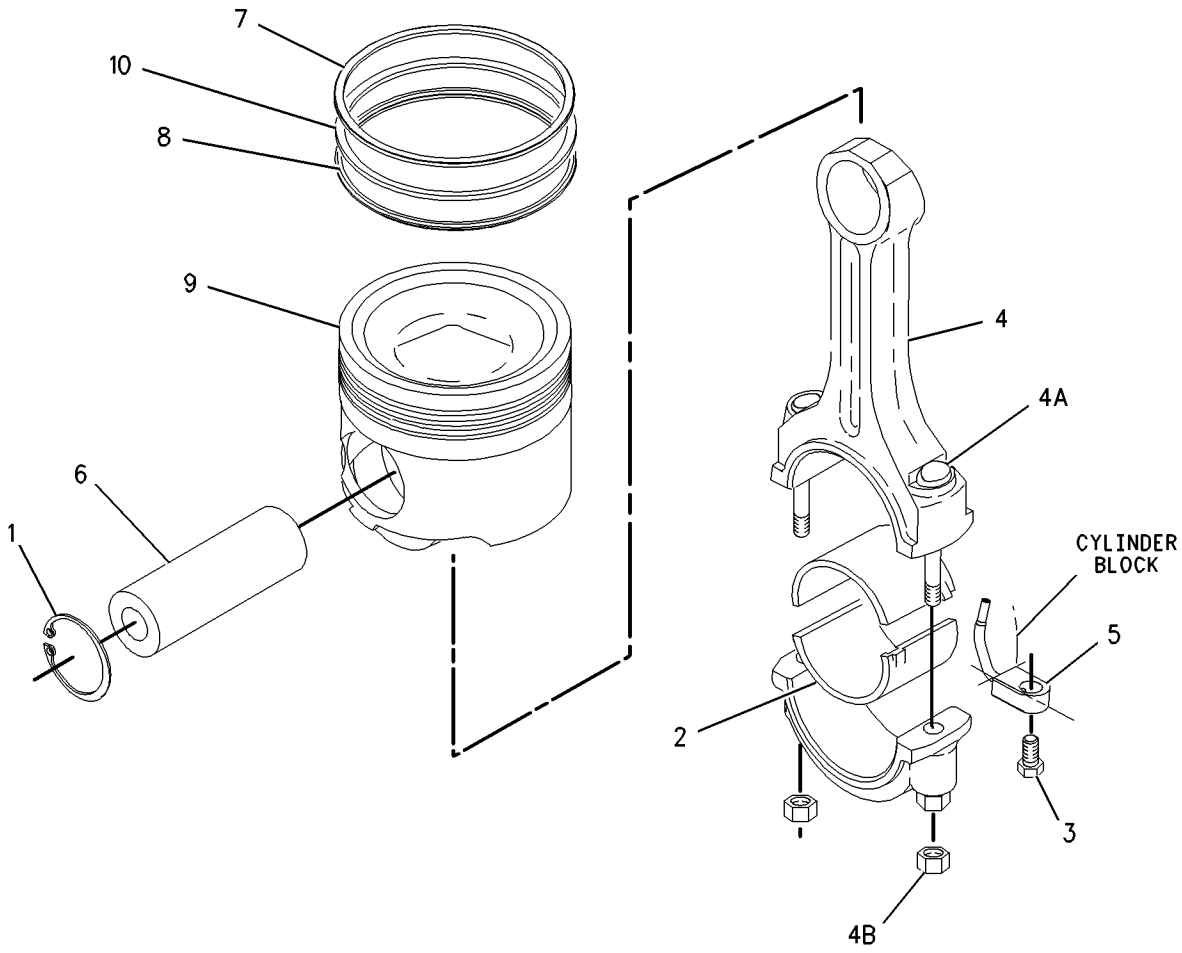

GRAPHIC #1 g00753788

209-6749 PLUG GP-CYLINDER BLOCK

S/N: 5JJ3200-UP
PART OF 171-5806, 206-3114 ENGINE AR
ALSO AN ATTACHMENT

SMCS-1201 **i01689281**

NOTE	REF NO	GRAPHIC REF	PART NUMBER	QTY	PART NAME 1 2 3 4 5 6 (PRODUCT LEVEL)	SEE PAGE
	1	1	**9S-4190**	4	PLUG	
	2	1	**6V-4589**	5	SEAL-O-RING	
	3	1	**7W-6534**	4	PLUG-PIPE	
	4	1	**8T-6757**	1	PLUG-PIPE	
	5	1	**5P-1404**	1	ADAPTER-O-RING (STRAIGHT THREAD)	
	6	1	**6V-3965**	1	FITTING AS	
	7	1	**6V-5049**	1	SEAL-O-RING	
	8	1	**6V-0852**	1	CAP-DUST	

209-6749 **PLUG GP-CYLINDER BLOCK** *(contd.)* **i01689281**

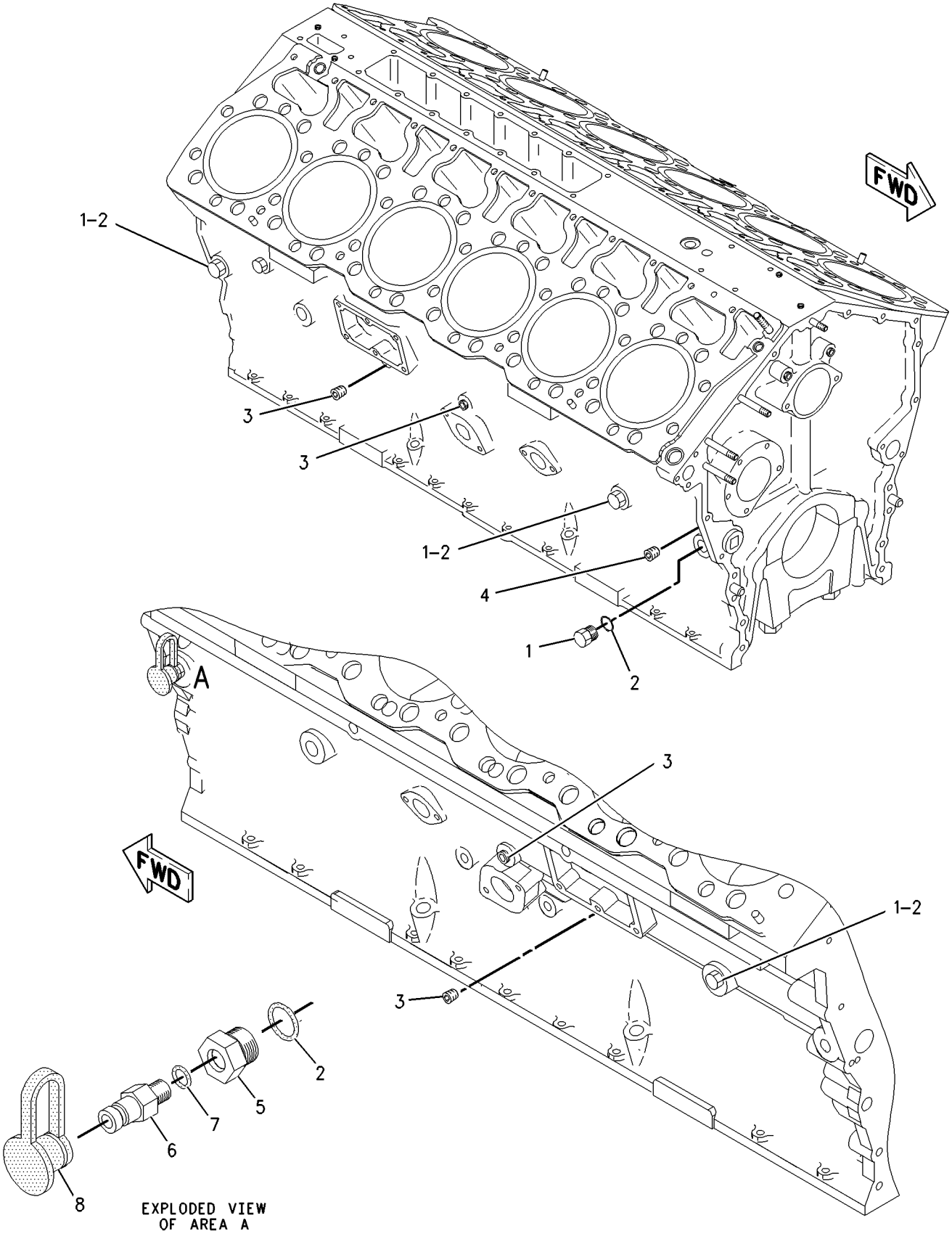

GRAPHIC #1 g00871790

124-4456 PLUG GP-CYLINDER HEAD

S/N: 5JJ3200-UP
PART OF 171-5806, 206-3114 ENGINE AR
ALSO AN ATTACHMENT

SMCS-1100 **i01699970**

NOTE	REF NO	GRAPHIC REF	PART NUMBER	QTY	PART NAME 1 2 3 4 5 6 (PRODUCT LEVEL)	SEE PAGE
	1	1	**8T-6762**	6	PLUG-PIPE (1/2-14 NPTF THD)	
	2	1	**7X-7731**	2	PLUG-PIPE (3/4-14 NPTF THD)	
	3	1	**5P-0063**	3	PLUG-CUP (1.764 IN OD)	
	4	1	**4N-0932**	2	PLUG-CUP	

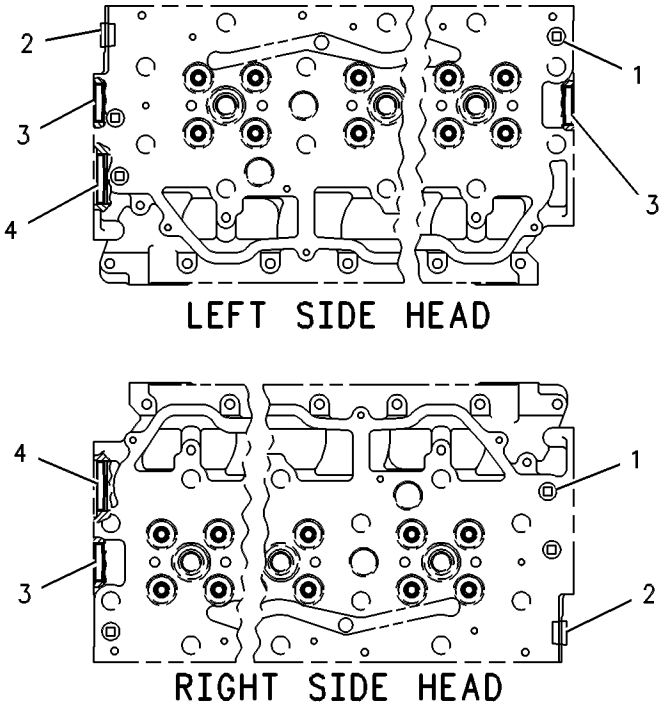

GRAPHIC #1 g00086474

BASIC ENGINE

179-1253 PULLEY GP-CRANKSHAFT

S/N: AKT1-UP

PART OF 171-5807 INSTALLATION AR-ENGINE

SMCS-1205 **i01450484**

NOTE	REF NO	GRAPHIC REF	PART NUMBER	QTY	PART NAME 1 2 3 4 5 6 (PRODUCT LEVEL)	SEE PAGE
	1	1	**179-1252**	1	PULLEY-CRANKSHAFT	
	2	1	**3D-9348**	4	BOLT (1/2-13X7.75IN)	

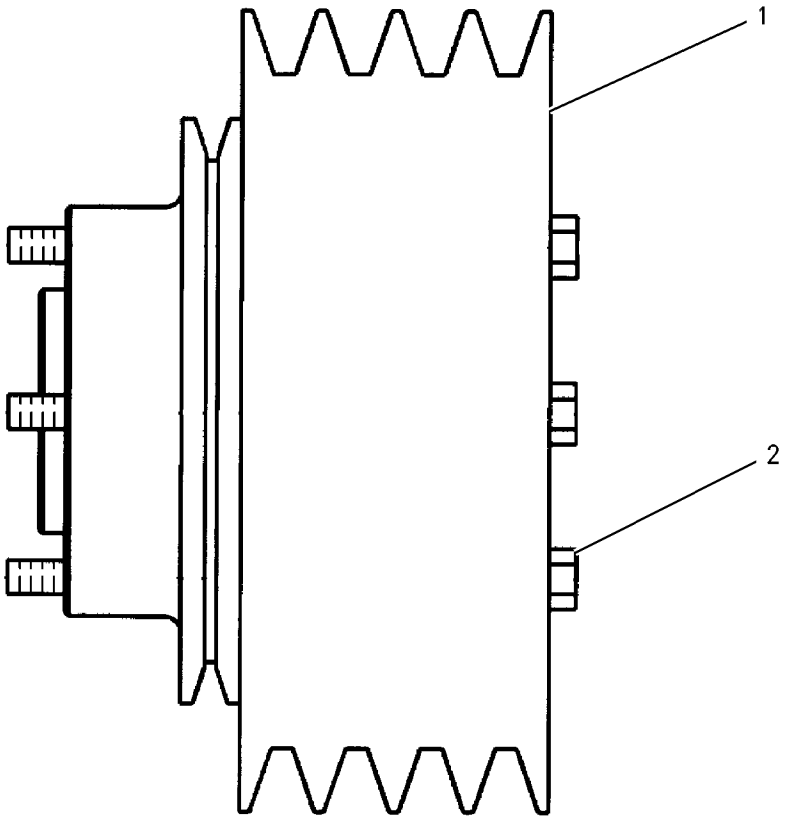

GRAPHIC #1 g00650880

210-7723 PULLEY GP-CRANKSHAFT

S/N: AKT1-UP

PART OF 197-7904 FAN AR, 206-7328 SUPPRESSION AR-SOUND AN ATTACHMENT

SMCS-1205 **i01667096**

NOTE	REF NO	GRAPHIC REF	PART NUMBER	QTY	PART NAME 1 2 3 4 5 6 (PRODUCT LEVEL)	SEE PAGE
	1	1	**210-7721**	1	PULLEY	
	2	1	**3D-9348**	4	BOLT (1/2-13X7.75IN)	

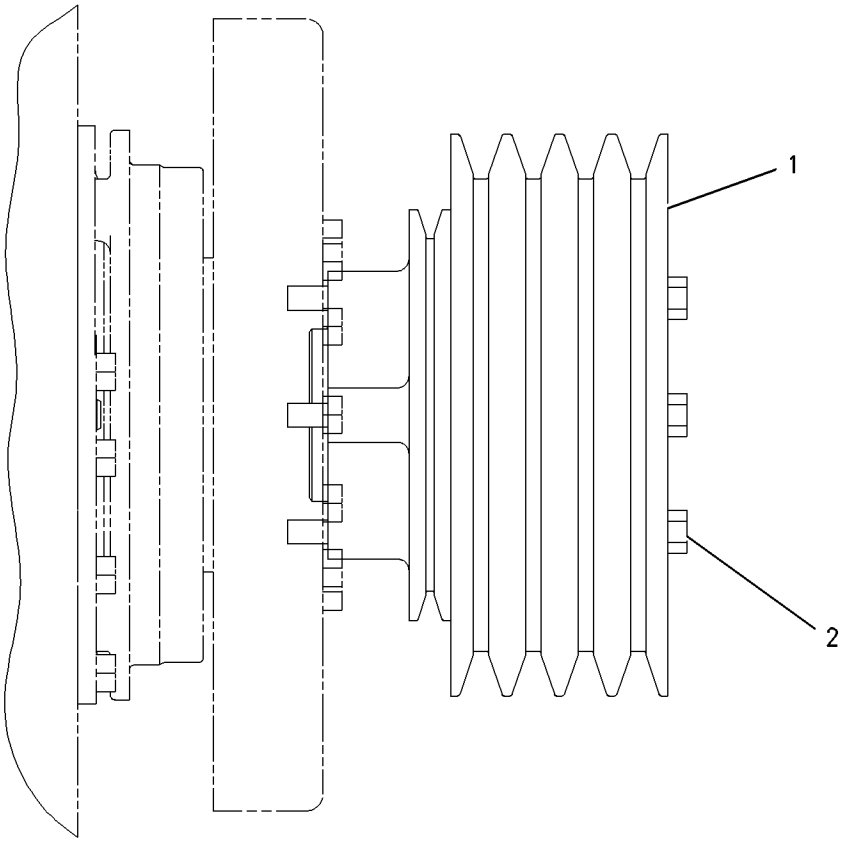

GRAPHIC #1 g00863144

107-1954 ROCKER ARM GP

S/N: 5JJ3200-UP
PART OF 108-1874 VALVE MECHANISM GP
ALSO AN ATTACHMENT

SMCS-1102, 1123 **i01390323**

NOTE	REF NO	GRAPHIC REF	PART NUMBER	QTY	PART NAME 1 2 3 4 5 6 (PRODUCT LEVEL)	SEE PAGE
	1	1	**134-2263**	2	RING-RETAINING	
	2	1	**2N-7228**	2	WASHER (1X1.5X.03 IN THK)	
	3	1	**4N-5614**	2	ROCKER ARM AS	
	4	1	**108-5603**	2	SCREW-ROCKER ADJUSTMENT	
	5	1	**9L-7712**	2	NUT (3/8-24 THD)	
	6	1	**122-0163**	1	BRACKET-SHAFT	
	7	1	**6V-3536**	2	DOWEL	
	8	1	**135-3225**	1	SHAFT AS	

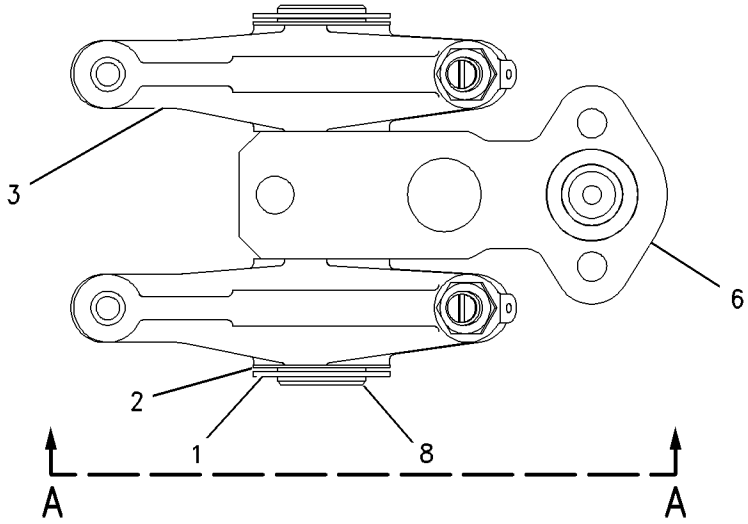

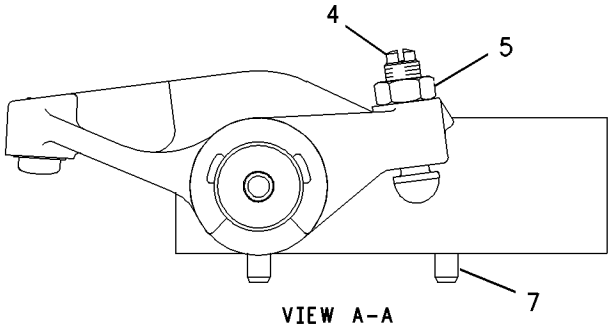

GRAPHIC #1 g00678432

BASIC ENGINE

4P-5544 SUPPORT GP-ENGINE

S/N: AKT1-UP

PART OF 171-5807 INSTALLATION AR-ENGINE

SMCS-1152, 1153, 1154 **i01699974**

NOTE	REF NO	GRAPHIC REF	PART NUMBER	QTY	PART NAME 1 2 3 4 5 6 (PRODUCT LEVEL)	SEE PAGE
	1	1	**6N-3897**	2	SUPPORT-ENGINE	
	2	1	**2A-1538**	12	BOLT (3/4-10X2.25 IN)	
	3	1	**6Y-2090**	2	MOUNT AS	
	4	1	**6N-3896**	2	CAP	
	5	1	**4P-5546**	2	SUPPORT	
	6	1	**3B-2968**	4	BOLT (3/4-10X3.5 IN)	
	7	1	**1D-4627**	4	BOLT (7/8-9X3 IN)	
	8	1	**1D-4631**	4	BOLT (7/8-9X4.25 IN)	
	9	1	**5P-8248**	16	WASHER-HARD (20X36.5X3.5MM THK)	
	10	1	**5P-8249**	8	WASHER-HARD (24X41.5X4MM THK)	

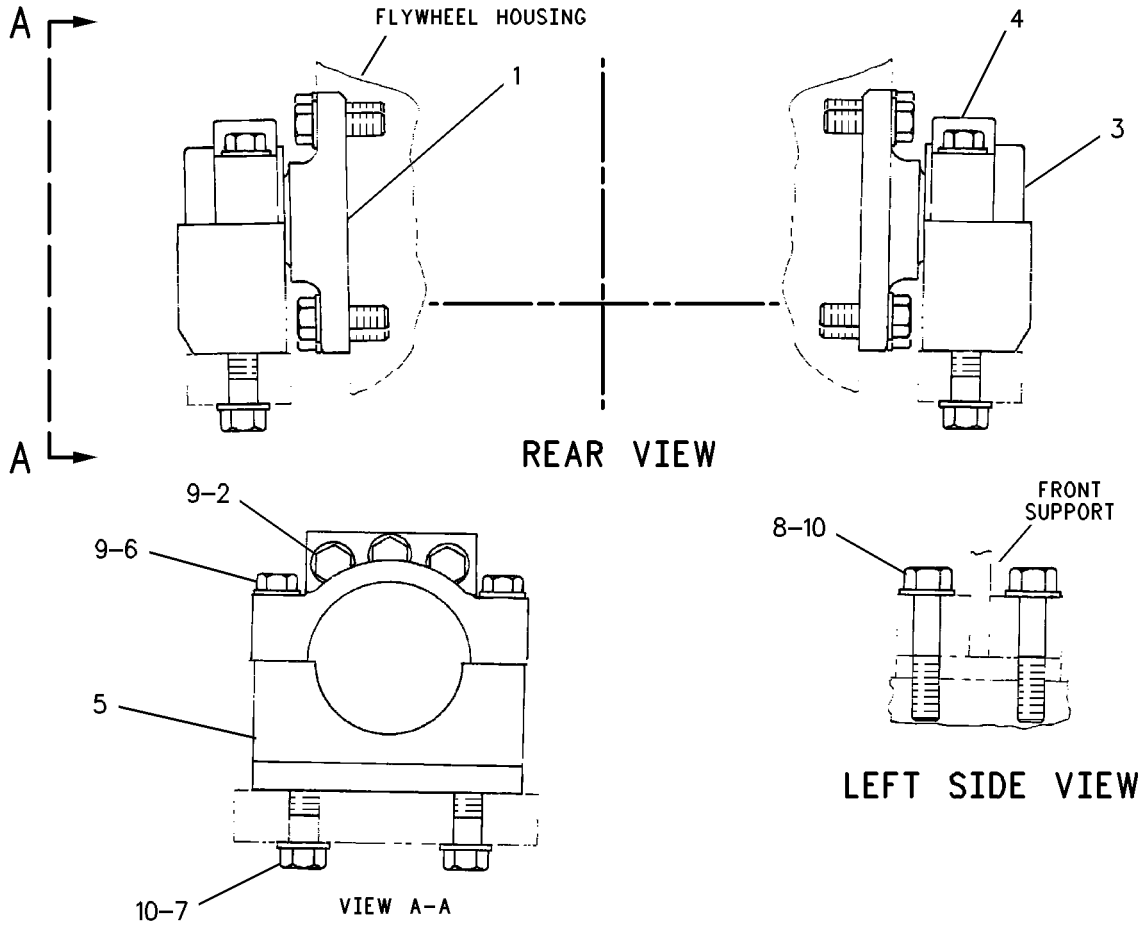

GRAPHIC #1 g00234594

6N-1378 SUPPORT GP-ENGINE–FRONT

S/N: 5JJ3200-UP
PART OF 171-5806, 206-3114 ENGINE AR
ALSO AN ATTACHMENT

SMCS-1152, 1153, 1154 **i01699979**

NOTE	REF NO	GRAPHIC REF	PART NUMBER	QTY	PART NAME 1 2 3 4 5 6 (PRODUCT LEVEL)	SEE PAGE
	1	1	**1A-1135**	4	BOLT (5/8-11X2 IN)	
	2	1	**155-4788**	1	SUPPORT AS-ENGINE	
	3	1	**5P-8247**	4	WASHER-HARD (17X32X3.5MM THK)	

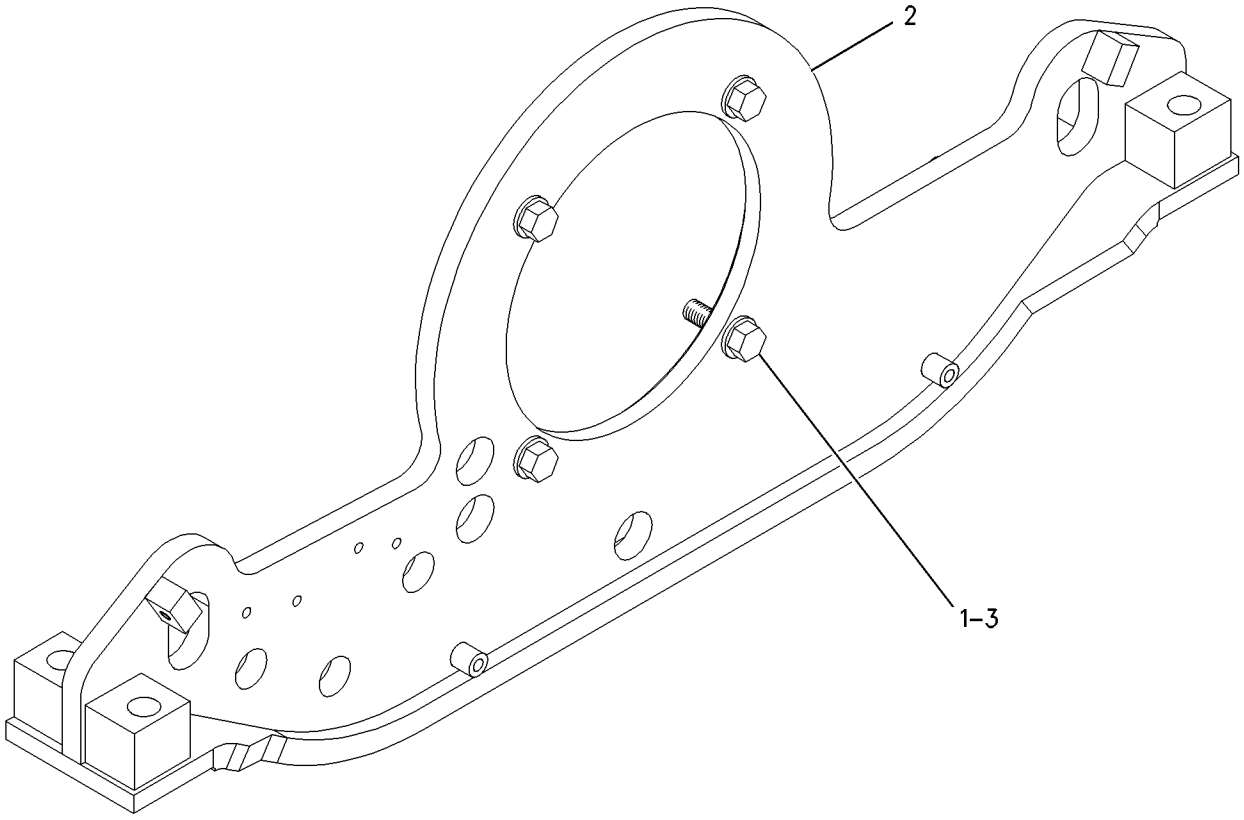

GRAPHIC #1 g00674296

179-7086 TRUNNION GP-ENGINE

S/N: 5JJ3200-UP
PART OF 171-5806, 206-3114 ENGINE AR
ALSO AN ATTACHMENT

SMCS-1152, 1153, 1154 **i01446354**

NOTE	REF NO	GRAPHIC REF	PART NUMBER	QTY	PART NAME 1 2 3 4 5 6 (PRODUCT LEVEL)	SEE PAGE
	1	1	**1W-3014**	1	ADAPTER AS	
	1A	1	**4N-0683**	2	DOWEL	
	2	1	**7N-1210**	1	MOUNT AS	
	3	1	**0S-1573**	8	BOLT (1/2-13X4 IN)	

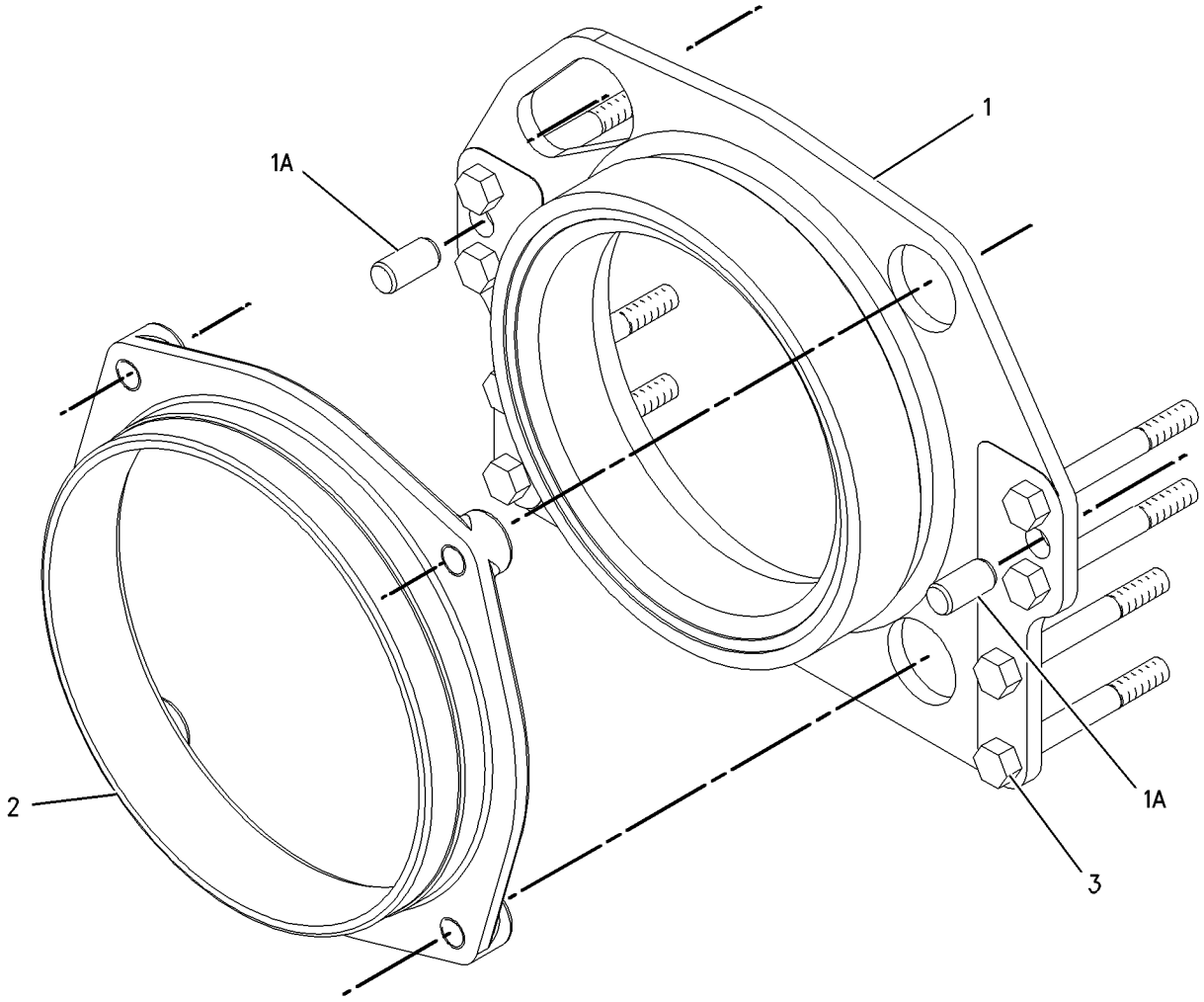

GRAPHIC #1 g00725950

BASIC ENGINE

108-1874 VALVE MECHANISM GP

S/N: 5JJ3200-UP
PART OF 171-5806, 206-3114 ENGINE AR
ALSO AN ATTACHMENT

SMCS-1102, 1112, 1121, 1123, 1208, 1209 **i01699983**

NOTE	REF NO	GRAPHIC REF	PART NUMBER	QTY	PART NAME 1 2 3 4 5 6 (PRODUCT LEVEL)	SEE PAGE
Y	1	1	*107-1954*	12	ROCKER ARM GP	59
	2	1	**100-6889**	24	BRIDGE-VALVE	
	3	1	**2P-9845**	12	BOLT (3/4-16X11.5 IN)	
		1	**5H-1504**	12	WASHER-HARD (20X33.5X5MM THK)	
	4	1	**4W-5998**	24	PUSHROD AS	
	5	1	**6N-6872**	24	SPRING-GUIDE	
	6	1	**101-7788**	24	LIFTER AS-VALVE	
	7	1	**5M-2894**	12	WASHER-HARD (10.2X18.5X2.5MM THK)	
	8	1	**0L-1143**	12	BOLT (3/8-16X2.50 IN)	
	9	1	**116-7220**	12	SEAL-RECTANGULAR	

Y-SEPARATE ILLUSTRATION

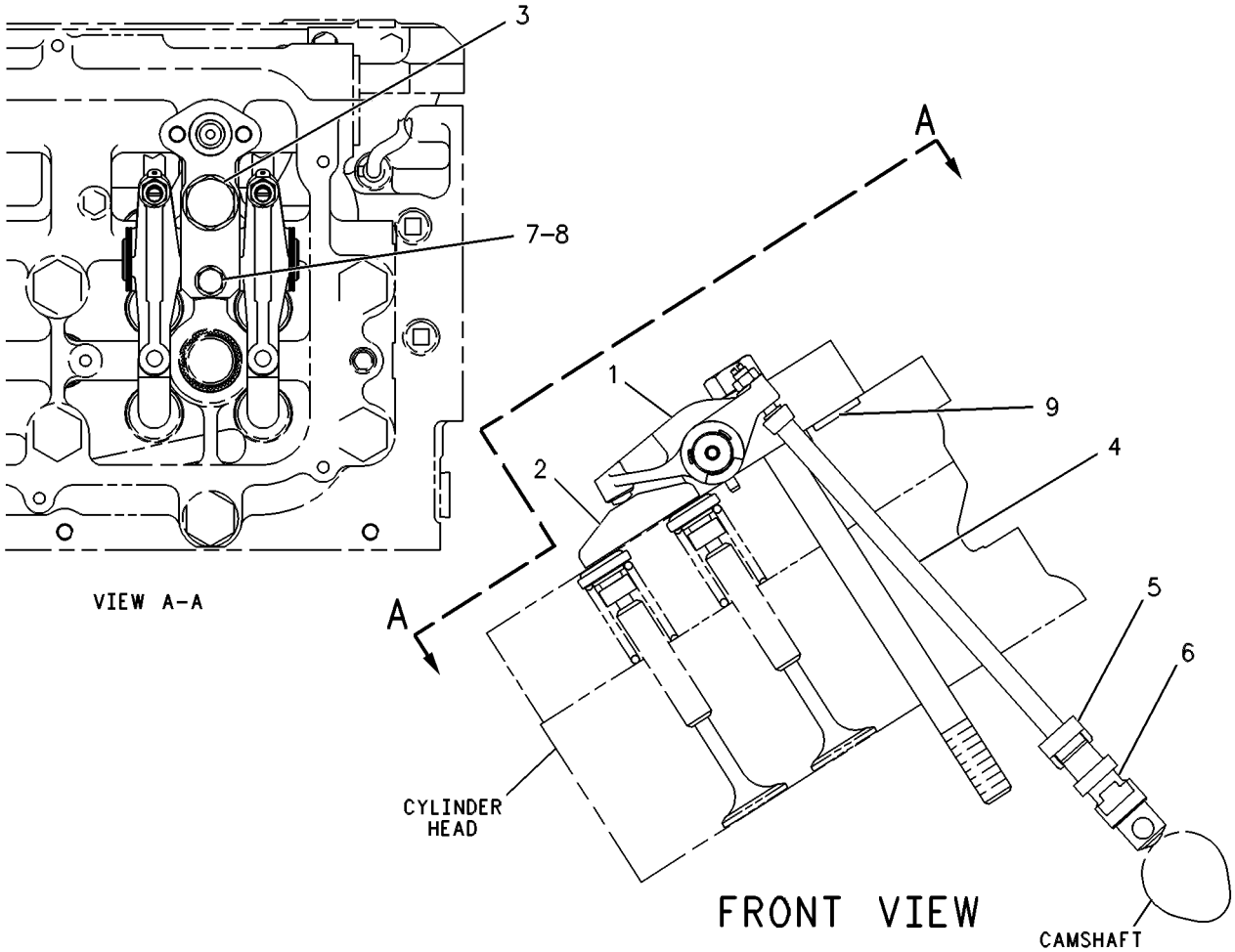

GRAPHIC #1 g00086438

BASIC ENGINE

128-3339 YOKE GP

S/N: AKT1-UP

PART OF 171-5807 INSTALLATION AR-ENGINE

SMCS-1207, 3108 **i01446359**

NOTE	REF NO	GRAPHIC REF	PART NUMBER	QTY	PART NAME 1 2 3 4 5 6 (PRODUCT LEVEL)	SEE PAGE
	1	1	**128-3340**	1	FLANGE-STUB	
	2	1	**128-3341**	1	COVER	
	3	1	**7X-0343**	2	BOLT (5/8-11X1.25 IN)	
	4	1	**6V-8260**	1	SEAL-O-RING (123.42MM ID)	
	5	1	**2S-3029**	1	BALL BEARING	
	6	1	**128-3813**	1	SEAL-LIP TYPE	
	7	1	**1L-4775**	1	RING-RETAINING	

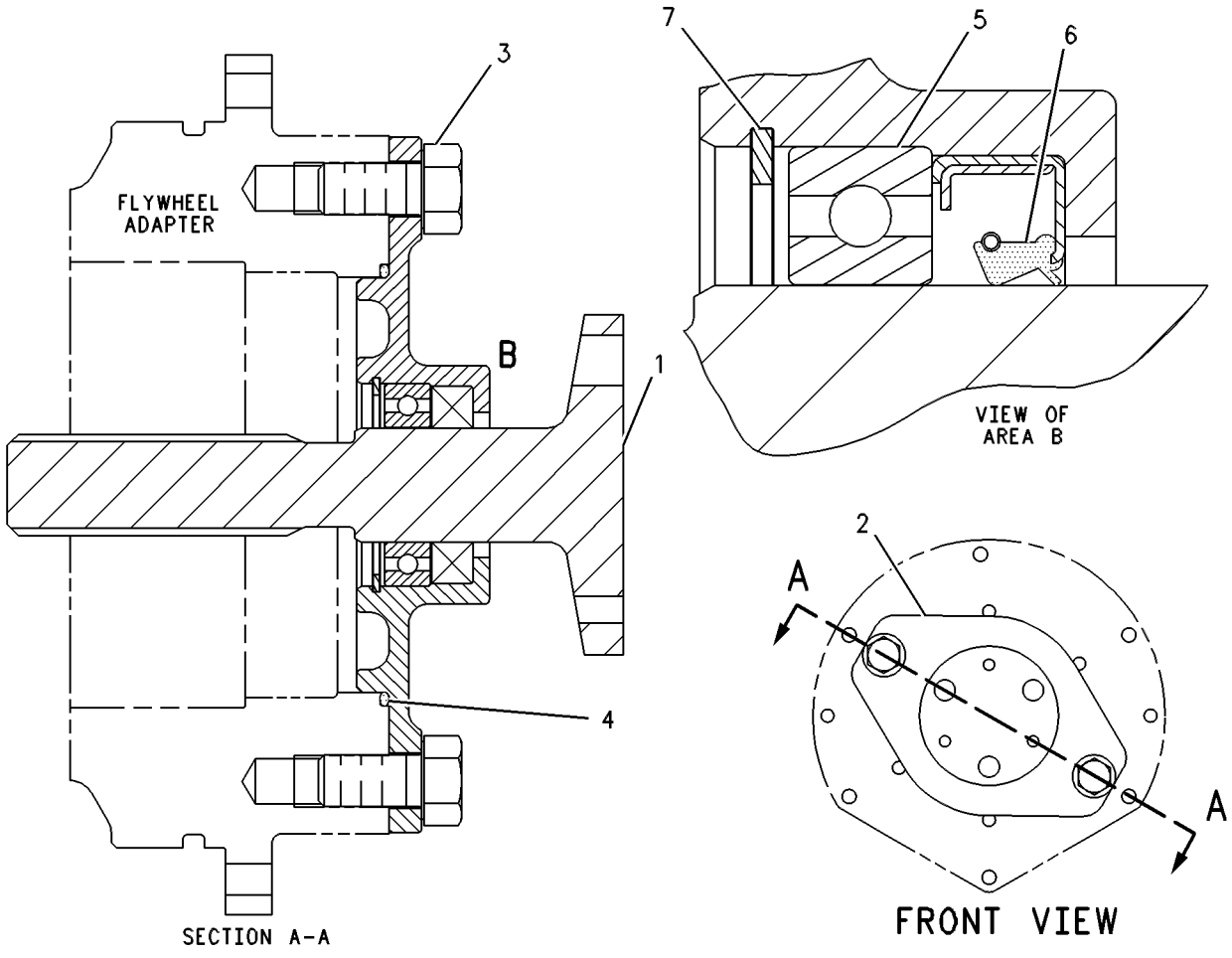

GRAPHIC #1 g00256750

4N-2481 FASTENER GP-OIL PUMP MOUNTING

S/N: 5JJ3200-UP
PART OF 171-5806, 206-3114 ENGINE AR
ALSO AN ATTACHMENT

SMCS-1304 **i01446823**

NOTE	REF NO	GRAPHIC REF	PART NUMBER	QTY	PART NAME 1 2 3 4 5 6 (PRODUCT LEVEL)	SEE PAGE
	1	1	**0L-1143**	2	BOLT (3/8-16X2.50 IN)	
	2	1	**0S-1590**	1	BOLT (3/8-16X2 IN)	
	3	1	**5M-2894**	3	WASHER-HARD (10.2X18.5X2.5MM THK)	

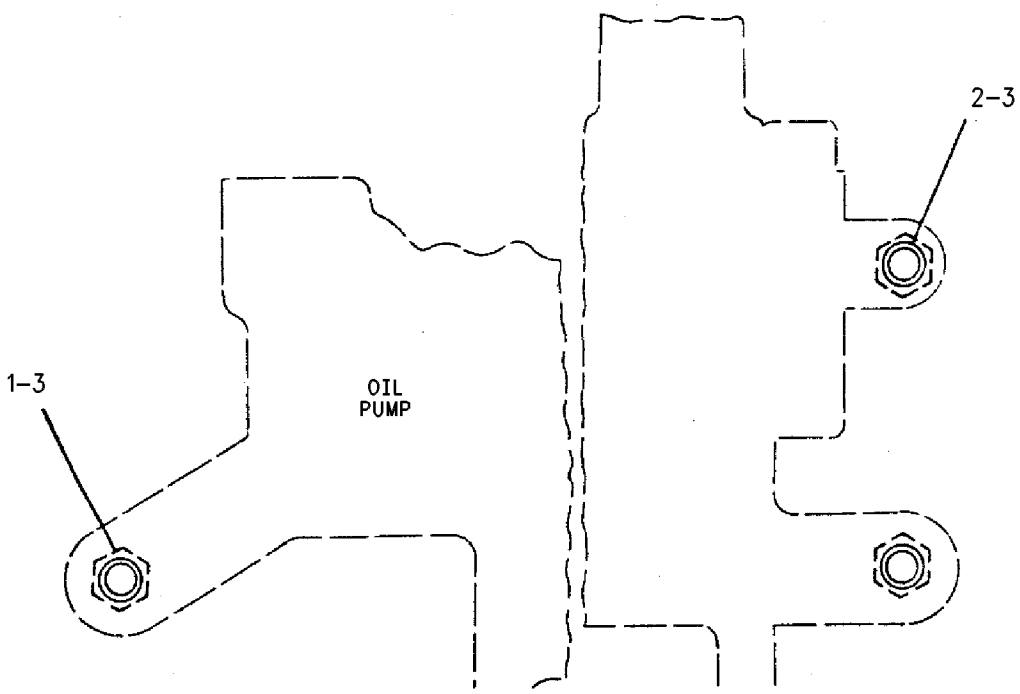

GRAPHIC #1 g00604525

LUBRICATION SYSTEM

175-7864 FILLER GP-ENGINE OIL

S/N: 5JJ3200-UP
PART OF 171-5806, 206-3114 ENGINE AR
ALSO AN ATTACHMENT

SMCS-1316 **i01689559**

NOTE	REF NO	GRAPHIC REF	PART NUMBER	QTY	PART NAME 1 2 3 4 5 6 (PRODUCT LEVEL)	SEE PAGE
	1	1	**2N-8109**	1	CLAMP	
	2	1	**213-1111**	1	TUBE AS	
	2A	1	**1W-3862**	1	HASP-OIL FILLER	
	2B	1	**6N-2206**	1	CAP AS-FILLER	
	2C	1	**4B-4314**	1	RIVET	
	3	1	**215-9804**	1	BRACKET	
	4	1	**0S-1594**	4	BOLT (3/8-16X1 IN)	
	5	1	**6V-3831**	1	SEAL-O-RING	
	6	1	**9X-6458**	6	WASHER-HARD (10.2X22.5X3MM THK)	
	7	1	**9S-8752**	2	NUT-FULL (3/8-16 THD)	

175-7864 **FILLER GP-ENGINE OIL** ***(contd.)*** **i01689559**

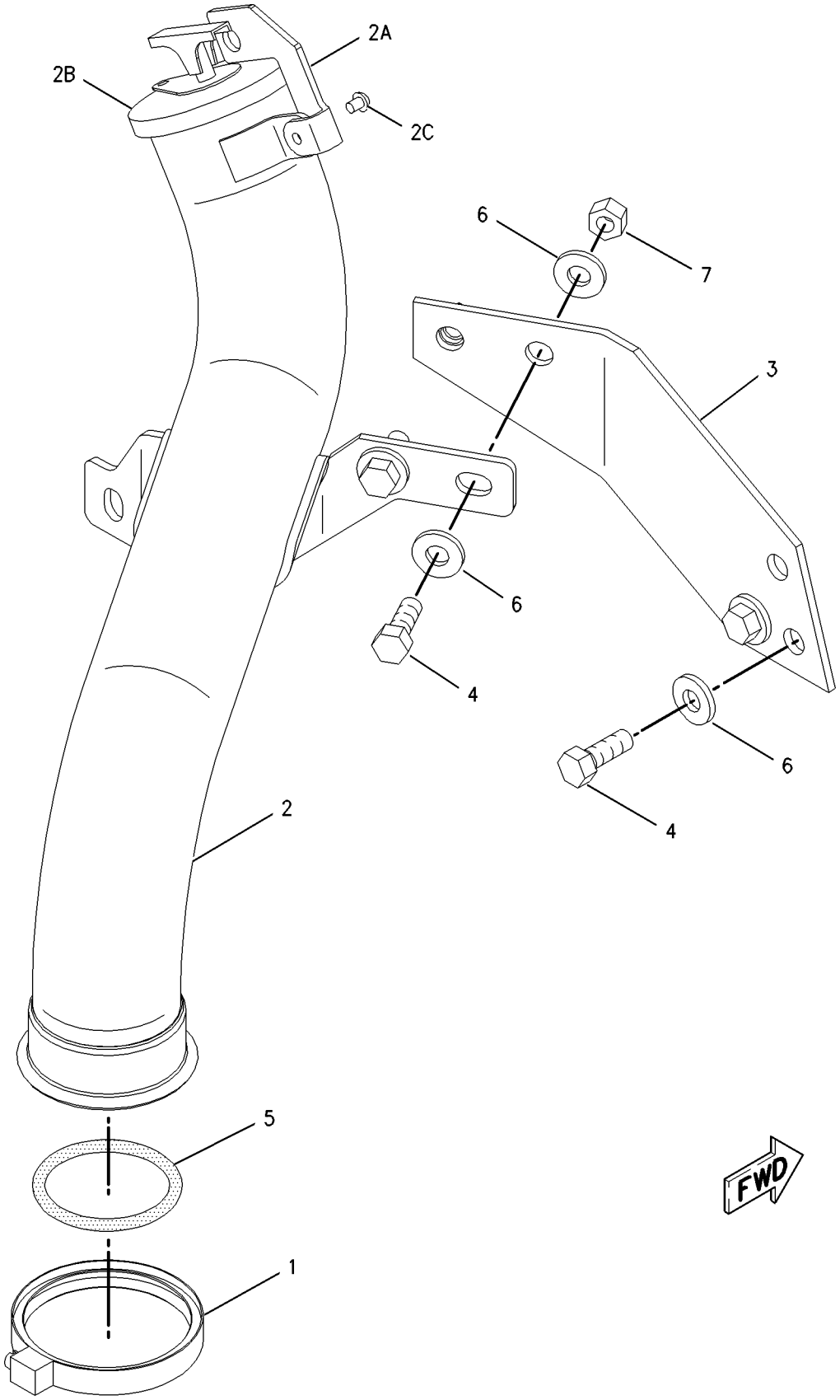

GRAPHIC #1 g00871834

LUBRICATION SYSTEM

172-6511 FILTER GP-ENGINE OIL

S/N: 5JJ3200-UP
PART OF 171-5806, 206-3114 ENGINE AR
ALSO AN ATTACHMENT

SMCS-1306, 1308, 1318 **i01689553**

NOTE	REF NO	GRAPHIC REF	PART NUMBER	QTY	PART NAME 1 2 3 4 5 6 (PRODUCT LEVEL)	SEE PAGE
	1	1	**7W-3447**	3	SPACER (10.2X19.05X10.2MM THK)	
	2	1	**8C-3445**	1	CAP-DUST	
	3	1	**8C-3446**	1	VALVE GP-FLUID SAMPLING (ENGINE OIL)	
	4	1	**8N-6739**	2	RING-RETAINING	
	5	1	**114-3824**	1	GASKET	
	6	1	**114-3825**	1	ELBOW	
	7	1	**115-8384**	4	RETAINER	
	8	1	**189-0981**	1	BASE AS-OIL FILTER	
		1	**2W-8225**	2	STUD-TAPERLOCK	
	9	1	**127-4326**	1	BRACKET	
	10	1	**127-8949**	1	TUBE AS	
	11	1	**127-8950**	1	TUBE AS	
	12	1	**172-6510**	1	PLATE	
	13	1	**188-2034**	1	PAN AS-DRIP	
		1	**1F-0750**	1	NUT-WELD (3/8-16 THD)	
	14	1	**061-7540**	1	SEAL-O-RING	
	15	1	**0L-1351**	4	BOLT (3/8-16X0.875 IN)	
	16	1	**0L-2070**	4	BOLT (3/8-16X2.25 IN)	
	17	1	**0S-1585**	2	BOLT (1/2-13X1.50 IN)	
	18	1	**0S-1588**	5	BOLT (3/8-16X1.25 IN)	
	19	1	**0S-1594**	1	BOLT (3/8-16X1 IN)	
	20	1	**0S-1619**	4	BOLT (3/8-16X3 IN)	
	21	1	**125-9794**	1	SEAL-O-RING	
	22	1	**1A-2029**	1	BOLT (3/8-16X1.125 IN)	
	23	1	**1R-0716**	2	FILTER AS-ENGINE OIL	
	24	1	**4B-4161**	6	SCREW-DRIVE (NO.6X3/8)	
	25	1	**4B-8641**	1	STUD	
	26	1	**4L-6454**	2	BOLT (3/8-16X1 IN)	
	27	1	**5M-2894**	16	WASHER-HARD (10.2X18.5X2.5MM THK)	
	28	1	**5P-1075**	2	WASHER-HARD (10.2X22.5X3MM THK)	
	29	1	**5P-8831**	3	STUD-TAPERLOCK (3/8 THD)	
	30	1	**6V-3830**	2	SEAL-O-RING	
	31	1	**6V-4589**	1	SEAL-O-RING	
	32	1	**6V-5048**	1	SEAL-O-RING	
	33	1	**7D-1649**	2	WASHER-HARD (13.5X32X5MM THK)	
	34	1	**8C-5230**	1	SEAL-O-RING	
	35	1	**9S-4190**	1	PLUG	
	36	1	**9S-8752**	5	NUT-FULL (3/8-16 THD)	
	37	1	**9X-6458**	4	WASHER-HARD (10.2X22.5X3MM THK)	
	38	1	**117-8301**	1	SHIELD	
	39	1	**170-0610**	1	STUD	
	40	1	**114-9223**	1	SPACER (11.13X19.05X19MM THK)	

172-6511 **FILTER GP-ENGINE OIL** *(contd.)* **i01689553**

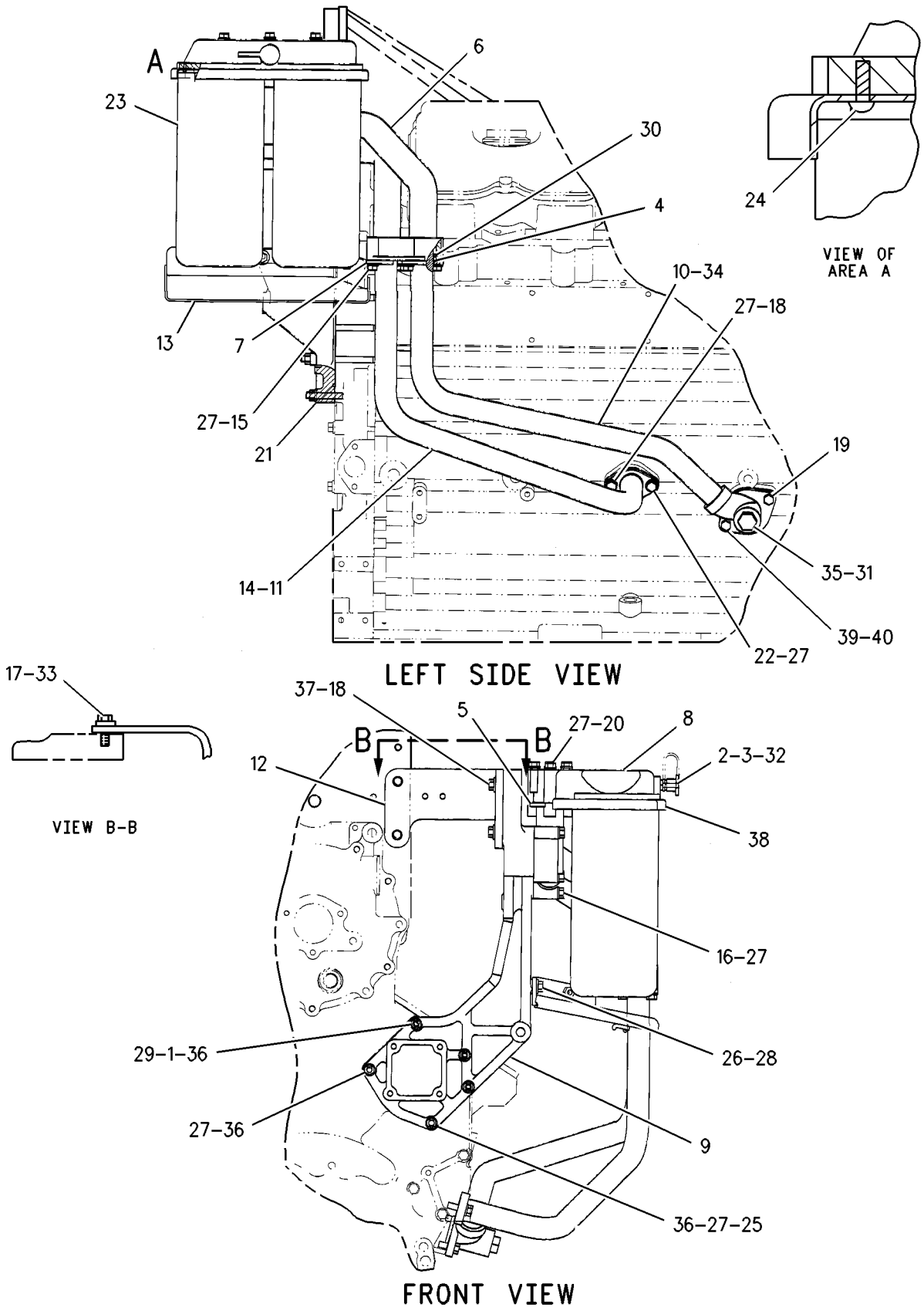

GRAPHIC #1 g00873044

LUBRICATION SYSTEM

177-4924 FUMES DISPOSAL GP

S/N: AKT1-UP

PART OF 171-5807 INSTALLATION AR-ENGINE

SMCS-1317 **i01692065**

NOTE	REF NO	GRAPHIC REF	PART NUMBER	QTY	PART NAME 1 2 3 4 5 6 (PRODUCT LEVEL)	SEE PAGE
E	1	1	**1W-2835**		HOSE (9.0CM EACH)	
	2	1	**9M-2904**	6	CLAMP-HOSE	
	3	1	**110-6157**	1	CLIP	
	4	1	**177-9429**	1	TUBE (LH)	
	5	1	**177-9431**	1	TUBE AS (RH)	
	6	1	**205-1336**	1	BRACKET AS	
		1	**1F-0750**	2	NUT-WELD (3/8-16 THD)	
	7	1	**205-1337**	1	BRACKET AS	
		1	**1F-0750**	2	NUT-WELD (3/8-16 THD)	
	8	1	**2S-2053**	4	CLIP	
	9	1	**4L-6454**	11	BOLT (3/8-16X1 IN)	
	10	1	**5P-1075**	1	WASHER-HARD (10.2X22.5X3MM THK)	
	11	1	**5P-2369**	3	CLIP	
	12	1	**6V-8801**	1	NUT (3/8-16 THD)	
	13	1	**8T-4896**	11	WASHER-HARD (10.2X18.5X2.5MM THK)	
E	14	1	**5P-1255**		HOSE (170CM)	
E	14A	1	**5P-1255**		HOSE (162.5CM)	

E-ORDER BY THE CENTIMETER

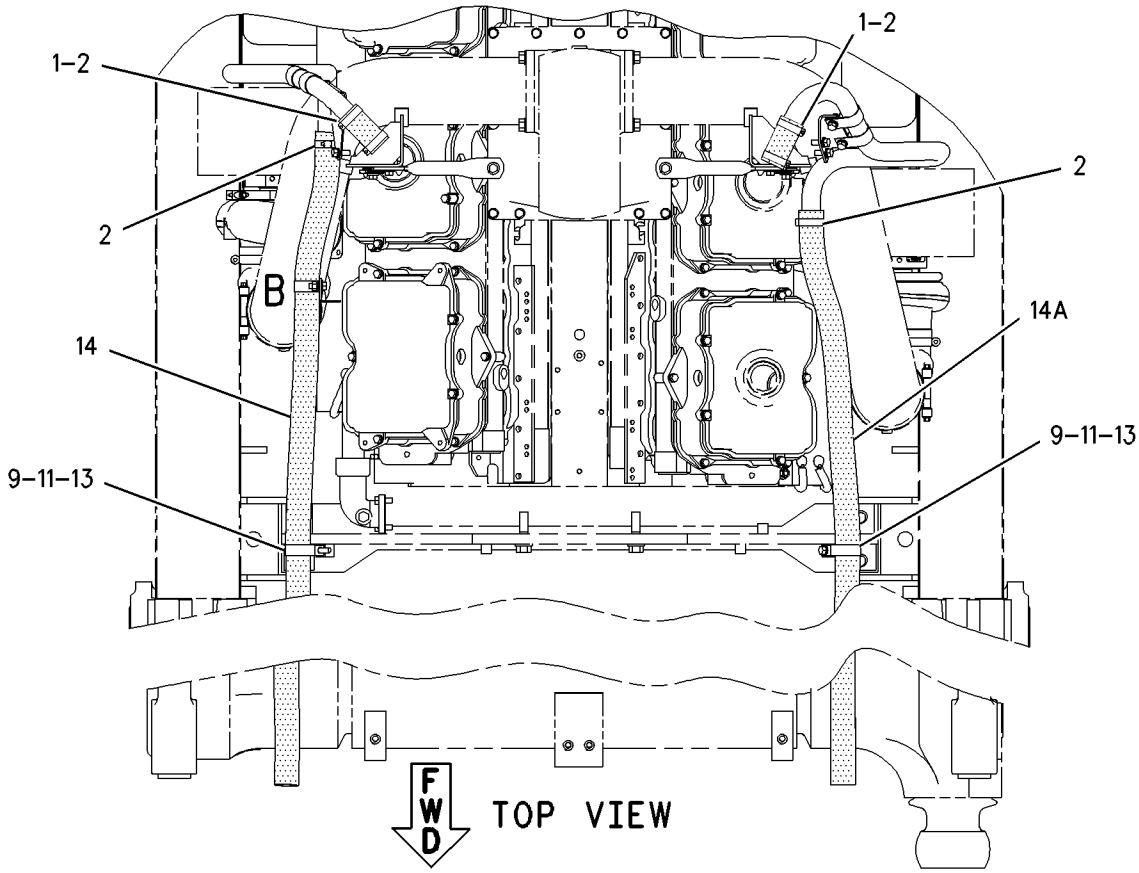

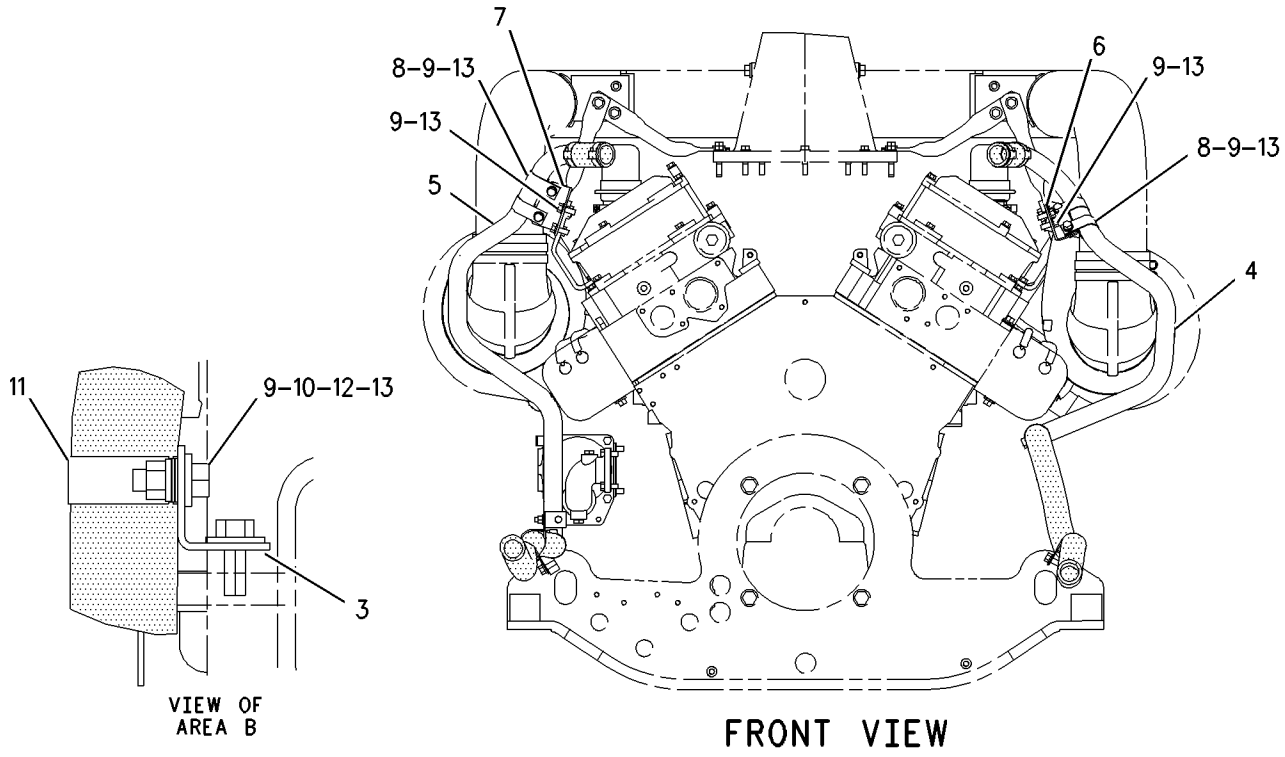

GRAPHIC #1 g00872002

LUBRICATION SYSTEM

175-7865 GAUGE GP-OIL LEVEL (DIPSTICK)

S/N: 5JJ3200-UP
PART OF 171-5806, 206-3114 ENGINE AR
ALSO AN ATTACHMENT

SMCS-1326 **i01699987**

NOTE	REF NO	GRAPHIC REF	PART NUMBER	QTY	PART NAME 1 2 3 4 5 6 (PRODUCT LEVEL)	SEE PAGE
	1	1	**206-7044**	1	GAUGE AS-OIL LEVEL (DIPSTICK)	
	2	1	**206-7043**	1	TUBE AS	
	3	1	**0S-0509**	1	BOLT (3/8-16X0.75 IN)	
	4	1	**118-5068**	1	SEAL-O-RING	
	5	1	**4D-7388**	1	CLIP	
	6	1	**9X-6458**	4	WASHER-HARD (10.2X22.5X3MM THK)	
	7	1	**9S-8752**	1	NUT-FULL (3/8-16 THD)	
	8	1	**0S-1594**	2	BOLT (3/8-16X1 IN)	

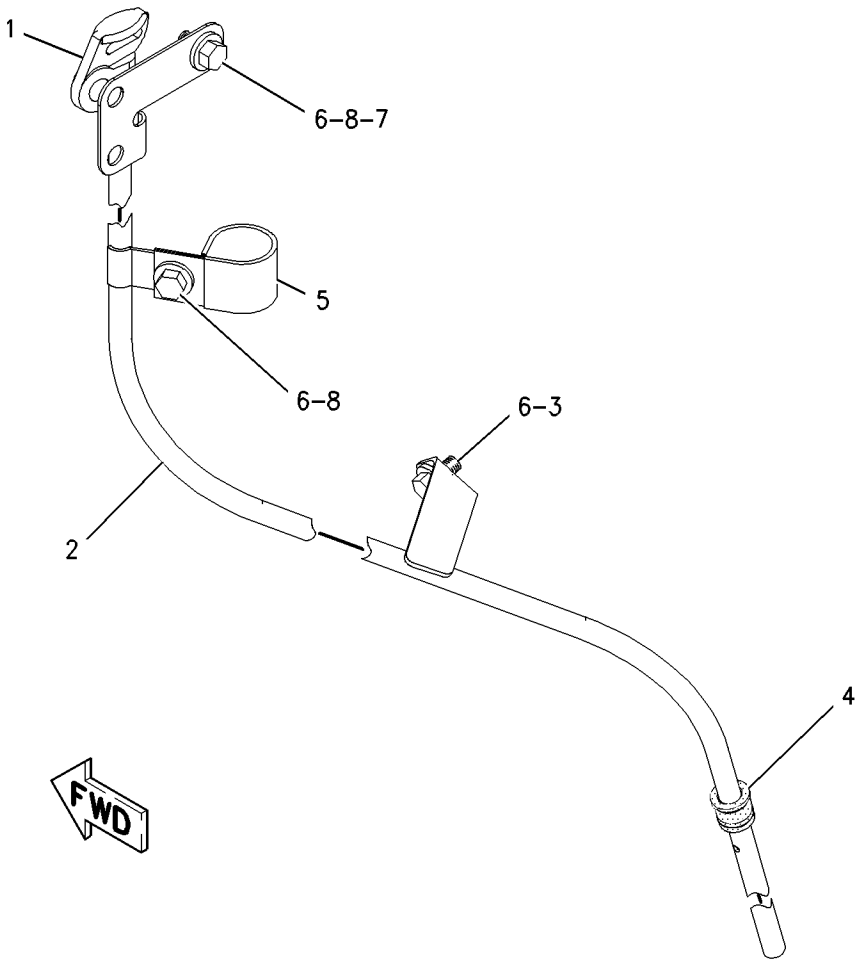

GRAPHIC #1 g00870378

MEMORANDA

LUBRICATION SYSTEM

212-1447 LINES GP-ENGINE OIL

S/N: 5JJ3200-UP
PART OF 171-5806, 206-3114 ENGINE AR
ALSO AN ATTACHMENT

SMCS-1307 **i01689298**

NOTE	REF NO	GRAPHIC REF	PART NUMBER	QTY	PART NAME 1 2 3 4 5 6 (PRODUCT LEVEL)	SEE PAGE
	1	1	**8N-0612**	1	TUBE AS	
	2	1	**7N-6252**	1	TUBE AS-LH	
	3	1	**7C-4938**	1	PLATE-FRONT PAN	
	4	1	**0S-1594**	21	BOLT (3/8-16X1 IN)	
	5	1	**5M-2894**	21	WASHER-HARD (10.2X18.5X2.5MM THK)	
	6	1	**5P-8068**	5	SEAL-O-RING	
	7	1	**8J-4351**	1	SEAL-O-RING	
	8	1	**9L-9132**	3	WASHER (10.2X25.5X2.5MM THK)	
	9	1	**8S-9191**	2	BOLT (3/8-16X4 IN)	
	10	1	**0L-1351**	3	BOLT (3/8-16X0.875 IN)	
	11	1	**9S-8752**	4	NUT-FULL (3/8-16 THD)	
	12	1	**2L-2685**	2	CLIP (SLOT)	
	13	1	**7N-9212**	1	TUBE AS	
	14	1	**9F-6304**	2	SPRING	
	15	1	**1P-1367**	2	PLUNGER	
	16	1	**4N-8770**	1	ELBOW-COOLER OUTLET	
	17	1	**0T-0065**	1	BOLT (3/8-16X3.5 IN)	
	18	1	**109-0076**	3	SEAL-O-RING	
	19	1	**0S-1608**	2	BOLT (3/8-16X3.75 IN)	
	20	1	**5P-9890**	2	SEAL-O-RING	
	21	1	**4N-8411**	1	TUBE-COOLER BYPASS	
	22	1	**4N-0865**	1	GASKET	
	23	1	**4N-0861**	1	COVER	
	24	1	**0L-2070**	1	BOLT (3/8-16X2.25 IN)	
	25	1	**2S-2053**	1	CLIP	
	26	1	**1W-1116**	1	BODY-BYPASS	
	27	1	**4F-8965**	2	BOLT (7/16-14X1.125IN)	
	28	1	**5P-8244**	2	WASHER (12X22.5X2.5MM THK)	
	29	1	**5H-2068**	1	COVER	
	30	1	**205-7843**	1	TUBE AS	
	31	1	**0T-0768**	3	BOLT (7/16-14X1.75 IN)	
	32	1	**061-7540**	2	SEAL-O-RING	
	33	1	**1D-4556**	1	BOLT (7/16-14X2.75IN)	
	34	1	**6V-3830**	2	SEAL-O-RING	
	35	1	**8N-6739**	1	RING-RETAINING	
	36	1	**8N-6740**	1	RETAINER	
	37	1	**8N-0396**	1	SUPPORT	
	38	1	**0S-1591**	4	BOLT (3/8-16X1.5 IN)	
	39	1	**8N-0397**	1	PIPE AS-PUMP SUCTION	
	40	1	**8N-2104**	1	BELL AS-SUCTION	
		1	**1F-0750**	2	NUT-WELD (3/8-16 THD)	
	41	1	**4N-0913**	1	SCREEN AS-BELL	
	42	1	**4N-0914**	1	CLIP	
	43	1	**5H-0135**	1	GASKET	
	44	1	**7N-6253**	1	ELBOW	
	45	1	**8N-0610**	1	TUBE AS	
	46	1	**1W-8795**	1	BRACKET	
	47	1	**0S-1595**	1	BOLT (1/2-13X1.25 IN)	
	48	1	**5P-8245**	1	WASHER-HARD (13.5X25.5X3MM THK)	
	49	1	**5K-9592**	2	ANGLE	
	50	1	**0S-1588**	2	BOLT (3/8-16X1.25 IN)	

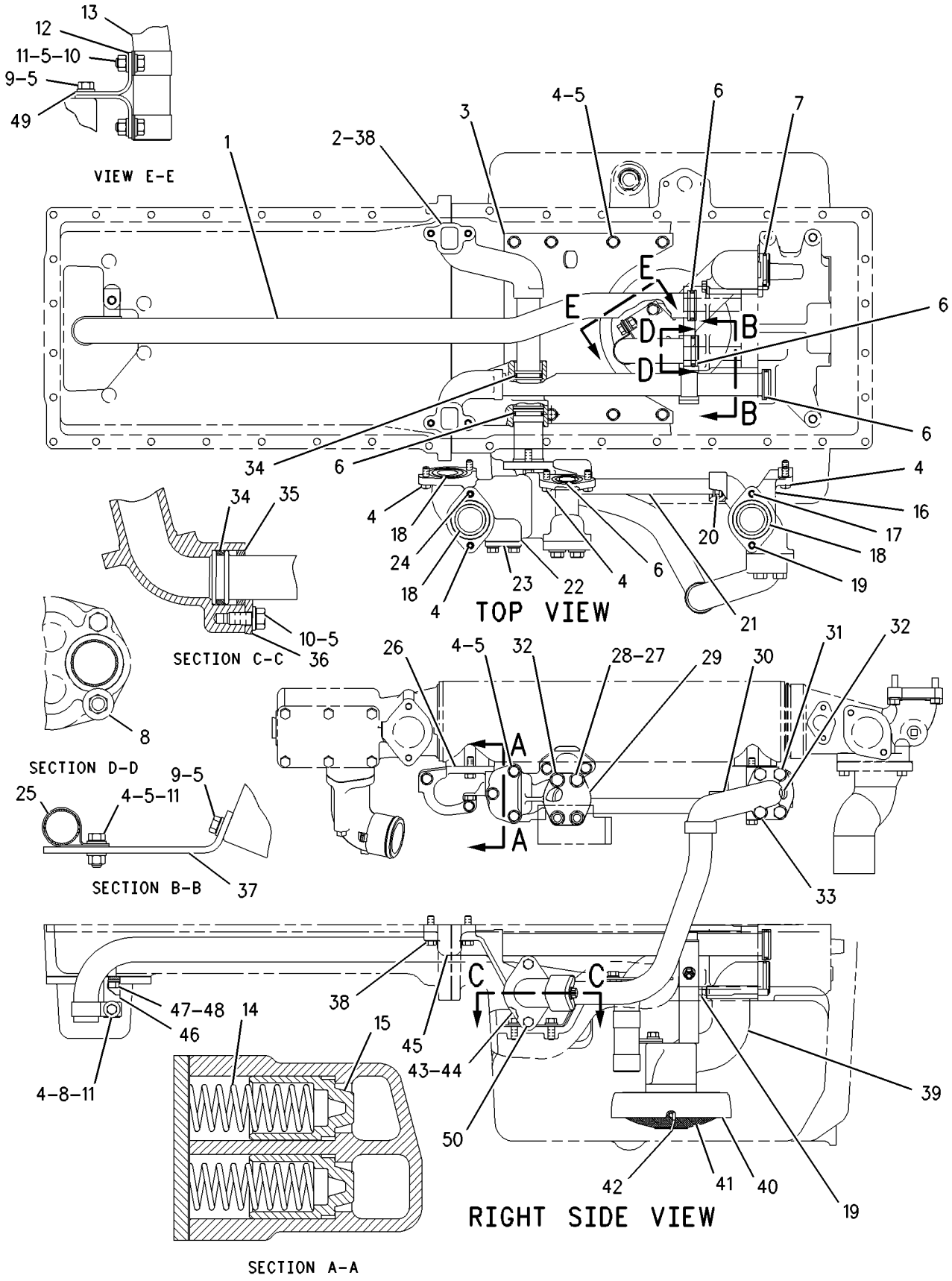

GRAPHIC #1 g00872584

LUBRICATION SYSTEM

166-5431 LINES GP-TURBOCHARGER OIL

S/N: 5JJ3200-UP
PART OF 171-5806, 206-3114 ENGINE AR
ALSO AN ATTACHMENT

SMCS-1052, 1307 **i01692477**

NOTE	REF NO	GRAPHIC REF	PART NUMBER	QTY	PART NAME 1 2 3 4 5 6 (PRODUCT LEVEL)	SEE PAGE
	1	1	**7N-7559**	2	GASKET	
	2	1	**8T-7970**	1	ELBOW	
	3	1	**178-1673**	1	TUBE AS	
	4	1	**178-1674**	1	TUBE AS	
	5	1	**192-1633**	1	ADAPTER	
	6	1	**203-4006**	1	TUBE AS	
	7	1	**203-7086**	1	TUBE AS	
	8	1	**0L-1143**	4	BOLT (3/8-16X2.50 IN)	
	9	1	**0S-1571**	4	BOLT (3/8-16X1.75 IN)	
	10	1	**106-9586**	2	SEAL-O-RING	
	11	1	**1T-0765**	2	BOLT (3/8-16X1 IN)	
	12	1	**5P-5598**	2	SEAL-O-RING	
	13	1	**6V-4367**	1	SEAL-O-RING	
	14	1	**6V-4589**	2	SEAL-O-RING	
	15	1	**6V-5050**	2	SEAL-O-RING	
	16	1	**6V-8642**	2	CONNECTOR	
	17	1	**8L-2746**	2	SEAL-O-RING	
	18	1	**8T-6684**	1	ELBOW	
	19	1	**5M-2894**	2	WASHER-HARD (10.2X18.5X2.5MM THK)	

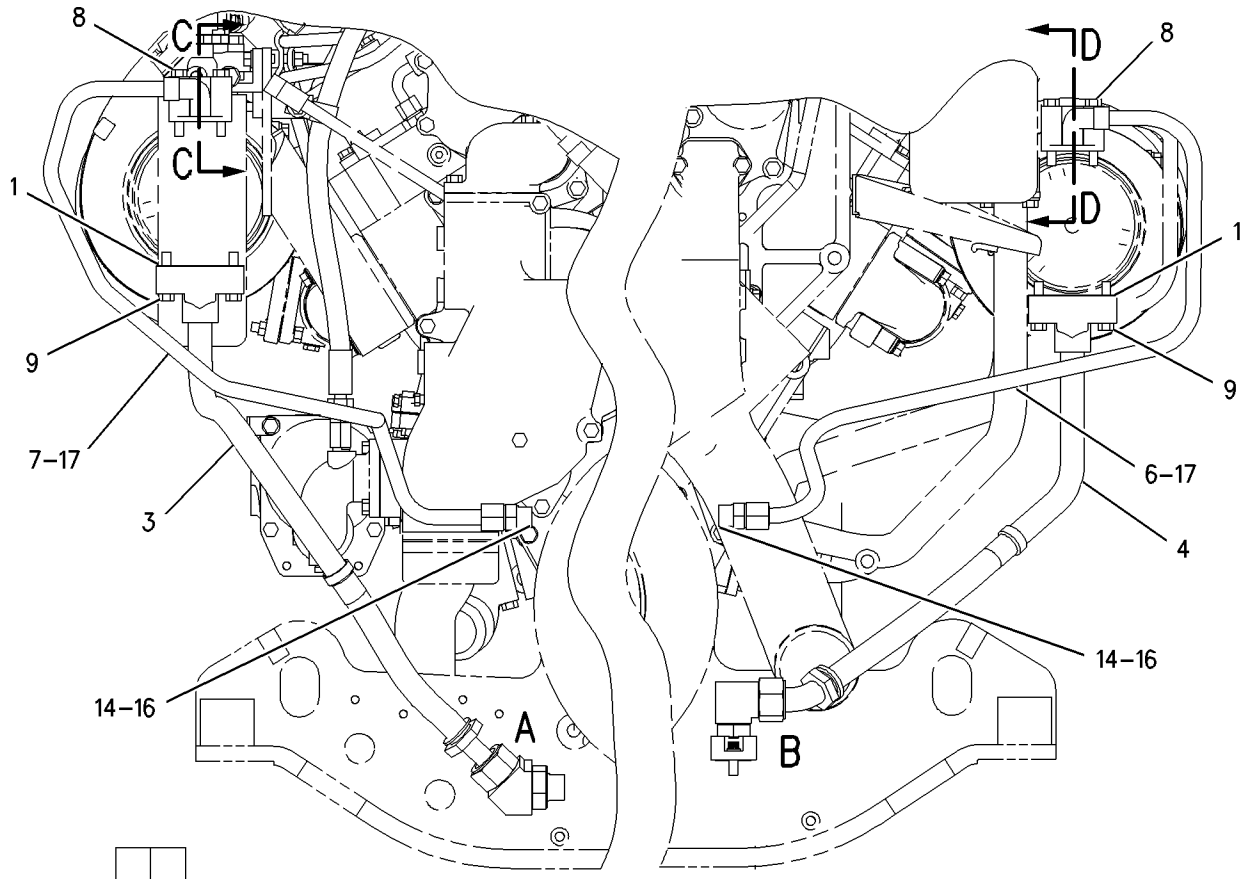

FRONT VIEW

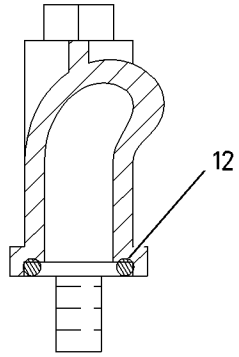

SECTION C-C

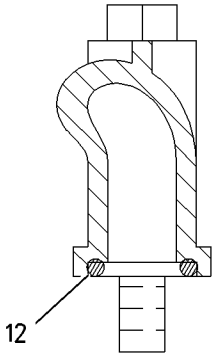

SECTION D-D

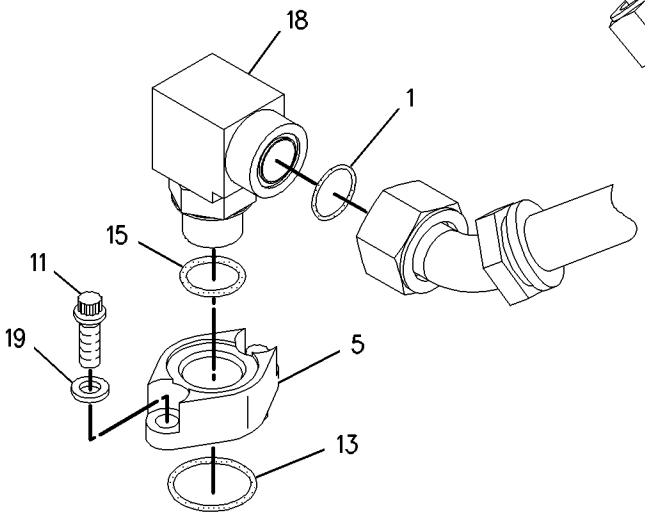

VIEW OF AREA B
EXPLODED

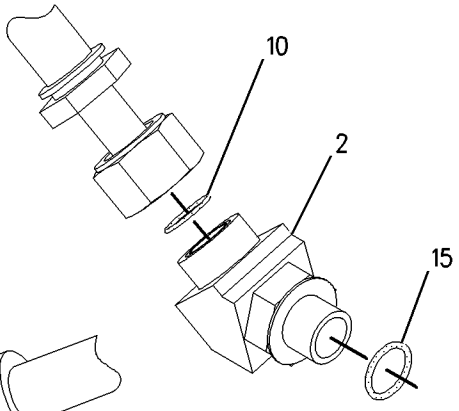

VIEW OF AREA A
EXPLODED

GRAPHIC #1

g00872143

LUBRICATION SYSTEM

174-0052 OIL CHANGE GP-HIGH SPEED

S/N: AKT1-UP
AN ATTACHMENT

SMCS-1325 **i01690941**

NOTE	REF NO	GRAPHIC REF	PART NUMBER	QTY	PART NAME 1 2 3 4 5 6 (PRODUCT LEVEL)	SEE PAGE
	1	1	**2P-1286**	1	LOCKNUT-BULKHEAD (1-5/16-12 THD)	
	2	1	**2V-2043**	1	LOCKNUT-FLARED (1-5/8-12 THD)	
	3	1	**6N-2656**	1	TUBE AS-OIL CHANGE	
	4	1	**6V-9833**	1	CAP AS	
	5	1	**110-8319**	1	RECEIVER AS (POWER TRAIN OIL)	
		1	**110-8318**	1	CAP	
	6	1	**110-8827**	1	RECEIVER AS (ENGINE OIL)	
		1	**110-8826**	1	CAP	
	7	1	*148-8429*	1	FITTING GP	
		1	**5K-9090**	2	SEAL-O-RING	
		1	**6V-9840**	1	TEE-SWIVEL	
I	8	1	**174-0053**	1	HOSE AS	
I	9	1	**174-0054**	1	HOSE AS	
	10	1	**180-4323**	1	BRACKET AS	
	11	1	*188-2008*	1	ELBOW AS	
		1	**3D-2824**	1	SEAL-O-RING	
		1	**5K-9090**	1	SEAL-O-RING	
		1	**8T-7970**	1	ELBOW	
	12	1	*148-8335*	1	CONNECTOR GP	
		1	**5K-9090**	1	SEAL-O-RING	
		1	**6V-8635**	1	CONNECTOR	
		1	**7M-8485**	1	SEAL-O-RING	
	13	1	*148-8355*	2	ELBOW GP	
					(EACH INCLUDES)	
		1	**5K-9090**	1	SEAL-O-RING	
		1	**6V-9005**	1	ELBOW	
		1	**7M-8485**	1	SEAL-O-RING	
	14	1	**1S-0004**	1	SEAL-O-RING	
	15	1	**4L-6454**	2	BOLT (3/8-16X1 IN)	
	16	1	**4S-4455**	3	CLIP	
	17	1	**5C-6565**	1	BOLT (1/2-13X1.125 IN)	
	18	1	**5M-3062**	2	BOLT (3/8-16X0.75 IN)	
	19	1	**5P-1075**	5	WASHER-HARD (10.2X22.5X3MM THK)	
	20	1	**5P-2369**	1	CLIP	
	21	1	**6V-8801**	1	NUT (3/8-16 THD)	
	22	1	**7W-5157**	1	BRACKET AS	
		1	**1F-0750**	1	NUT-WELD (3/8-16 THD)	
	23	1	**8D-9947**	1	CLIP	
	24	1	**8T-4223**	1	WASHER-HARD (13.5X25.5X3MM THK)	
	25	1	**8T-4835**	1	BOLT (1/2-13X2 IN)	
	26	1	**8T-4896**	2	WASHER-HARD (10.2X18.5X2.5MM THK)	
	27	1	**218-9961**	1	BRACKET AS	
		1	**1F-0750**	1	NUT-WELD (3/8-16 THD)	
	28	1	**5S-7379**	2	BOLT (3/8-16X0.875 IN)	

I-SEE HOSE FABRICATION GUIDE

174-0052 **OIL CHANGE GP-HIGH SPEED** *(contd.)* **i01690941**

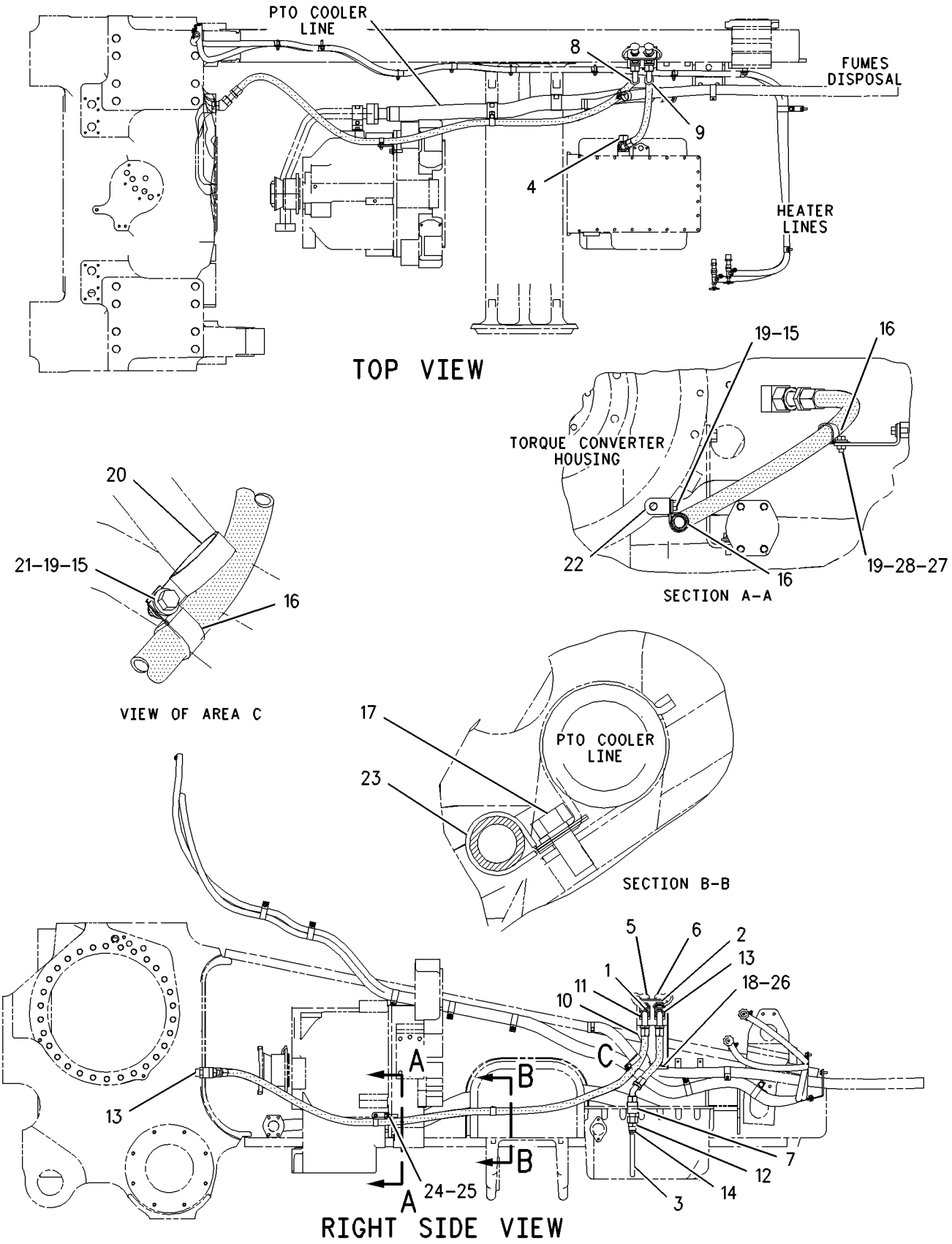

GRAPHIC #1 g00871461

LUBRICATION SYSTEM

200-0830 PRELUBRICATION AR-ENGINE

S/N: AKT1-UP
AN ATTACHMENT

SMCS-1319 **i01691031**

NOTE	REF NO	GRAPHIC REF	PART NUMBER	QTY	PART NAME 1 2 3 4 5 6 (PRODUCT LEVEL)	SEE PAGE
	1	1	**6N-2656**	1	TUBE AS-OIL CHANGE	
	2	1	**6V-9833**	1	CAP AS	
B	3	1	**7K-1181**	10	STRAP-CABLE	
	4	1	**105-9152**	1	SWITCH AS-PRESSURE (OIL)	
		1	**102-8802**	1	KIT-RECEPTACLE (2 PIN)	
					(INCLUDES RECEPTACLE AS & WEDGE)	
		1	**3E-3365**	1	WEDGE-RECEPTACLE LOCK (2 PIN)	
		1	**186-3735**	2	PIN-CONNECTOR	
	5	1	**123-5150**	1	VALVE-CHECK	
YR	6	1	**123-8686**	1	STARTING MOTOR GP-ELECTRIC	282
	7	1	**125-0473**	1	FILM-NOTICE (PRELUBRICATION PUMP)	
	8	1	**140-3108**	1	TIMER	
	9	1	*148-8342*	1	CONNECTOR GP	
		1	**3K-0360**	1	SEAL-O-RING	
		1	**6V-8632**	1	CONNECTOR	
		1	**7J-9108**	1	SEAL-O-RING	
	10	1	*148-8429*	1	FITTING GP	
		1	**5K-9090**	2	SEAL-O-RING	
		1	**6V-9840**	1	TEE-SWIVEL	
	11	1	**177-4308**	1	PLATE AS	
		1	**9F-6445**	6	NUT-WELD (1/4-20 THD)	
	12	1	**179-0006**	1	SWITCH AS-MAGNETIC (STARTER RELAY)	
		1	**1B-2578**	2	NUT (3/8-16 THD)	
		1	**4D-1326**	2	LOCKWASHER	
		1	**4L-6499**	2	WASHER (0.38X0.88X0.02 IN THK)	
		1	**6V-8378**	2	NUT (10-32 THD)	
		1	**7X-0620**	2	WASHER-HARD (5.5X13X1.6MM THK)	
		1	**8F-1434**	2	LOCKWASHER	
	13	1	**200-1066**	1	HARNESS AS (PRELUBE)	
I	14	1	**200-7839**	1	HOSE AS	
	15	1	**200-7840**	1	TUBE AS	
	16	1	**132-5789**	1	CLIP	
	17	1	*148-8335*	1	CONNECTOR GP	
		1	**5K-9090**	1	SEAL-O-RING	
		1	**6V-8635**	1	CONNECTOR	
		1	**7M-8485**	1	SEAL-O-RING	
	18	1	*153-6230*	1	CONNECTOR GP	
		1	**2M-9780**	1	SEAL-O-RING	
		1	**5K-9090**	1	SEAL-O-RING	
		1	**8T-9386**	1	CONNECTOR	
	19	1	**1S-0004**	1	SEAL-O-RING	
	20	1	**2M-9780**	1	SEAL-O-RING	
	21	1	**4M-5281**	4	BOLT (1/4-20X.750 IN)	
	22	1	**4P-7581**	1	CLIP	
	23	1	**4P-8134**	4	CLIP	
	24	1	**5M-3062**	2	BOLT (3/8-16X0.75 IN)	
	25	1	**5P-4115**	2	WASHER-HARD (7.2X19X2MM THK)	
	26	1	**6H-4746**	1	ADAPTER	
		1	**4B-9044**	1	PLUG-TRANSFER PUMP	
	27	1	**7J-9108**	1	SEAL-O-RING	
	28	1	**8T-4205**	4	WASHER-HARD (7.2X14.5X2MM THK)	
	29	1	**8T-4896**	2	WASHER-HARD (10.2X18.5X2.5MM THK)	
	30	1	**8T-9367**	2	BOLT (1/4-20X2 IN)	

B-USE AS REQUIRED
I-SEE HOSE FABRICATION GUIDE
R-REMFG PART MAY BE AVAILABLE
Y-SEPARATE ILLUSTRATION

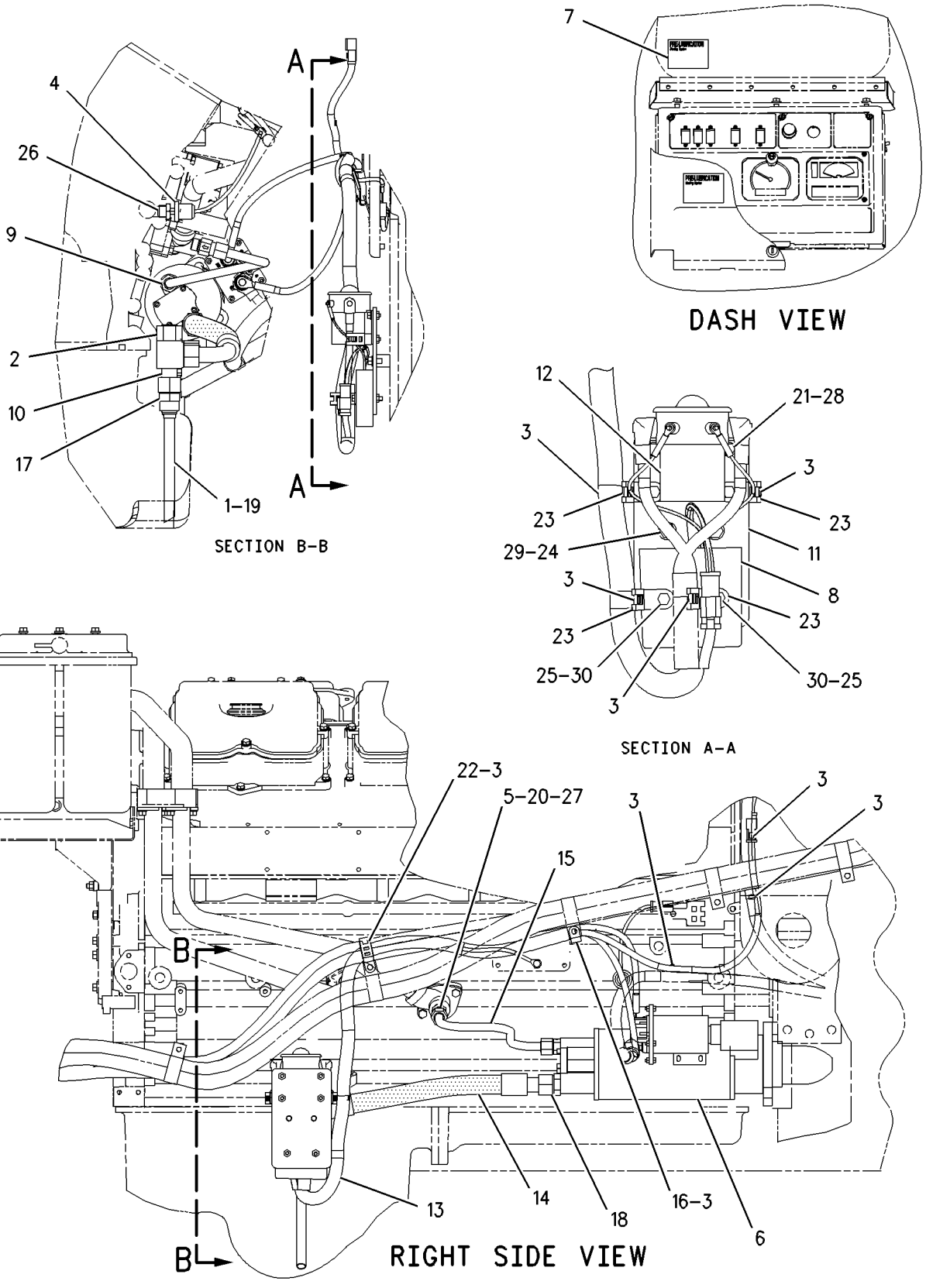

GRAPHIC #1

g00816845

MEMORANDA

LUBRICATION SYSTEM

7C-1772 PUMP GP-ENGINE OIL*R

S/N: 5JJ3200-UP
PART OF 171-5806, 206-3114 ENGINE AR
ALSO AN ATTACHMENT

SMCS-1304, 1315 **i01511784**

NOTE	REF NO	GRAPHIC REF	PART NUMBER	QTY	PART NAME 1 2 3 4 5 6 (PRODUCT LEVEL)	SEE PAGE
	1	1	**6N-1029**	1	BODY AS-OIL PUMP	
		1	**7N-2156**	2	BEARING-SLEEVE	
	2	1	**8M-8489**	2	DOWEL	
	3	1	**145-8503**	1	SHAFT AS-IDLER	
	4	1	**4N-5339**	1	SPACER AS-OIL PUMP	
		1	**7N-2155**	2	BEARING-SLEEVE	
	5	1	**7W-6528**	1	GEAR-PUMP (8 TEETH)	
	6	1	**6N-2343**	1	BODY AS-PUMP	
		1	**7N-2213**	2	BEARING-SLEEVE	
	7	1	**5F-4899**	4	BOLT (3/8-16X5.5 IN)	
	8	1	**5B-4274**	2	BOLT (3/8-16X3.5 IN)	
	9	1	**5M-2894**	2	WASHER-HARD (10.2X18.5X2.5MM THK)	
	10	1	**9Y-1800**	1	RETAINER	
	11	1	**7C-1527**	1	SPACER	
	12	1	**2S-2760**	1	SPRING	
	13	1	**202-3572**	1	SHAFT AS-DRIVE	
	14	1	**7C-1512**	1	PLUNGER-RELIEF	
	15	1	**7W-7141**	1	GEAR-PUMP (8 TEETH)	
	16	1	**7G-2176**	4	DAMPER-BOLT	
	17	1	**7C-1511**	1	RING-PLUNGER	

7C-1772 **PUMP GP-ENGINE OIL** *(contd.)* **i01511784**

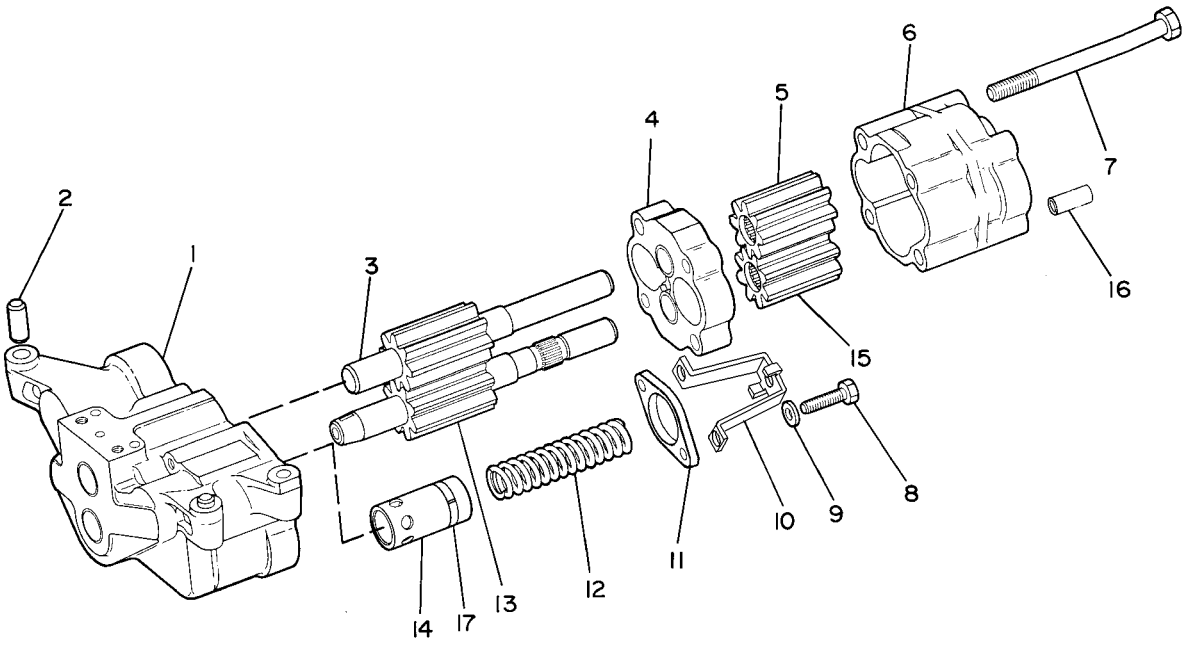

GRAPHIC #1 g00082258

COOLING SYSTEM

197-7904 FAN AR

S/N: AKT1-UP

AN ATTACHMENT

SMCS-1356 **i01667062**

NOTE	PART NUMBER	QTY	PART NAME 1 2 3 4 5 6 (PRODUCT LEVEL)	SEE PAGE
Y	*192-6156*	1	DRIVE GP-FAN	35
Y	*218-2828*	1	FAN GP-BLOWER	90
Y	*196-5844*	1	LINES GP-OIL	606
Y	*210-7723*	1	PULLEY GP-CRANKSHAFT	58

Y-SEPARATE ILLUSTRATION

MEMORANDA

COOLING SYSTEM

207-9816 FAN GP-BLOWER

S/N: AKT1-UP

PART OF 171-5807 INSTALLATION AR-ENGINE

SMCS-1356, 1360 **i01691136**

NOTE	REF NO	GRAPHIC REF	PART NUMBER	QTY	PART NAME 1 2 3 4 5 6 (PRODUCT LEVEL)	SEE PAGE
	1	1	**119-4287**	1	SUPPORT	
	2	1	**119-4290**	2	BRACKET-RH	
	3	1	**177-9388**	1	SPIDER AS-FAN	
	4	1	**206-7507**	1	GUARD AS-FAN	
		1	**1F-0750**	2	NUT-WELD (3/8-16 THD)	
	5	1	**206-7508**	1	GUARD AS-FAN	
	6	1	**208-2264**	1	GUARD AS-FAN	
		1	**1F-0750**	2	NUT-WELD (3/8-16 THD)	
	7	1	**208-2266**	1	GUARD AS-FAN	
	8	1	**4L-6454**	4	BOLT (3/8-16X1 IN)	
	9	1	**5P-1075**	26	WASHER-HARD (10.2X22.5X3MM THK)	
	10	1	**6V-8801**	6	NUT (3/8-16 THD)	
	11	1	**8T-4223**	6	WASHER-HARD (13.5X25.5X3MM THK)	
	12	1	**8T-4896**	4	WASHER-HARD (10.2X18.5X2.5MM THK)	
	13	1	**8T-8919**	6	BOLT (1/2-13X1.75 IN)	
	14	1	**9B-7237**	20	BOLT (3/8-16X1.25 IN)	

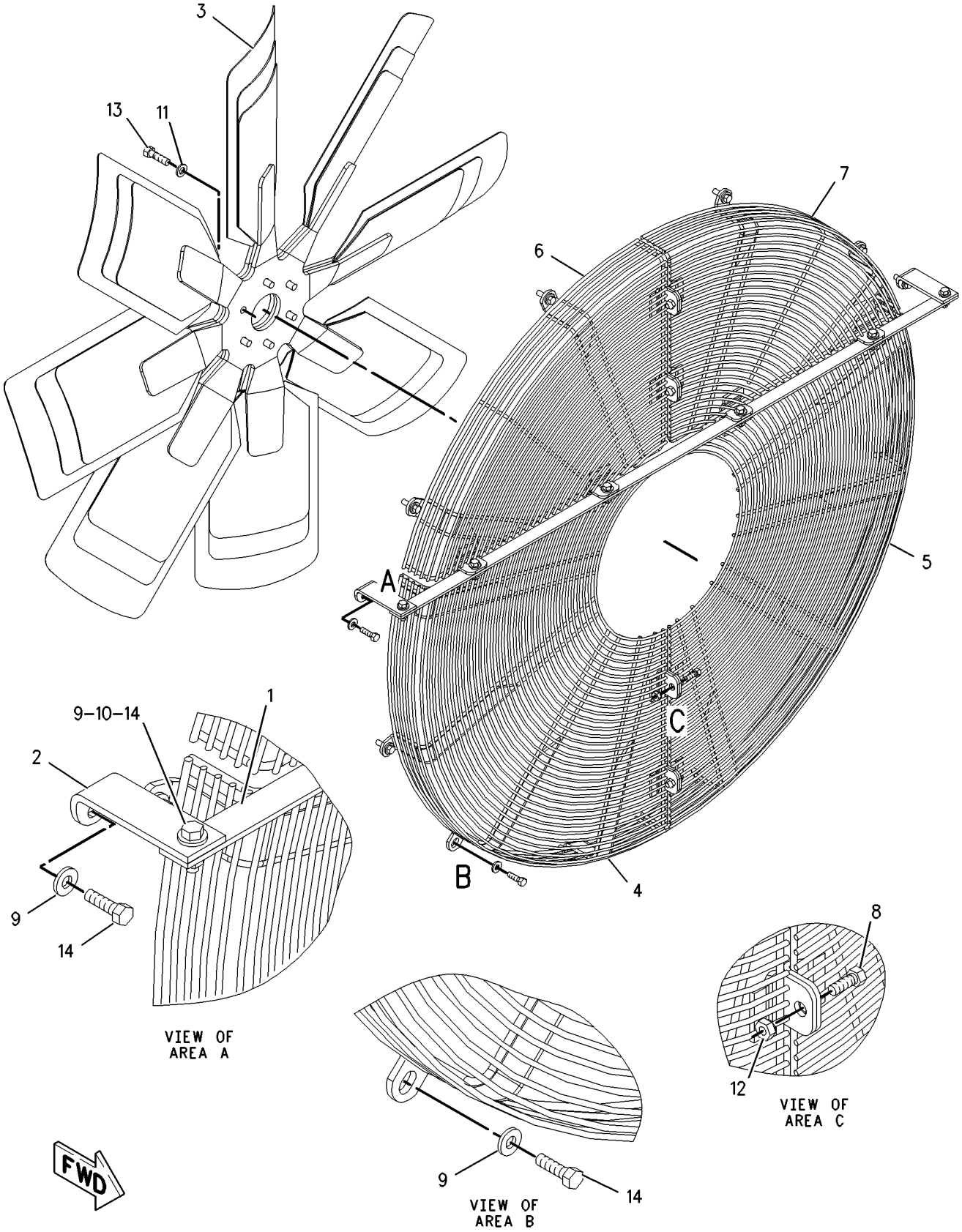

GRAPHIC #1 g00872707

COOLING SYSTEM

218-2828 FAN GP-BLOWER

S/N: AKT1-UP
PART OF 197-7904 FAN AR, 206-7328 SUPPRESSION AR-SOUND
AN ATTACHMENT

SMCS-1356, 1360 **i01682872**

NOTE	REF NO	GRAPHIC REF	PART NUMBER	QTY	PART NAME 1 2 3 4 5 6 (PRODUCT LEVEL)	SEE PAGE
	1	1	**118-6840**	1	SPIDER AS-FAN	
	2	1	**119-4287**	1	SUPPORT	
	3	1	**119-4290**	2	BRACKET-RH	
	4	1	**206-7507**	1	GUARD AS-FAN	
		1	**1F-0750**	2	NUT-WELD (3/8-16 THD)	
	5	1	**206-7508**	1	GUARD AS-FAN	
	6	1	**208-2264**	1	GUARD AS-FAN	
		1	**1F-0750**	2	NUT-WELD (3/8-16 THD)	
	7	1	**208-2266**	1	GUARD AS-FAN	
	8	1	**4L-6454**	4	BOLT (3/8-16X1 IN)	
	9	1	**5P-1075**	26	WASHER-HARD (10.2X22.5X3MM THK)	
	10	1	**5P-2566**	6	BOLT (1/2-13X1.5 IN)	
	11	1	**6V-8801**	6	NUT (3/8-16 THD)	
	12	1	**8T-4223**	6	WASHER-HARD (13.5X25.5X3MM THK)	
	13	1	**8T-4896**	4	WASHER-HARD (10.2X18.5X2.5MM THK)	
	14	1	**9B-7237**	20	BOLT (3/8-16X1.25 IN)	

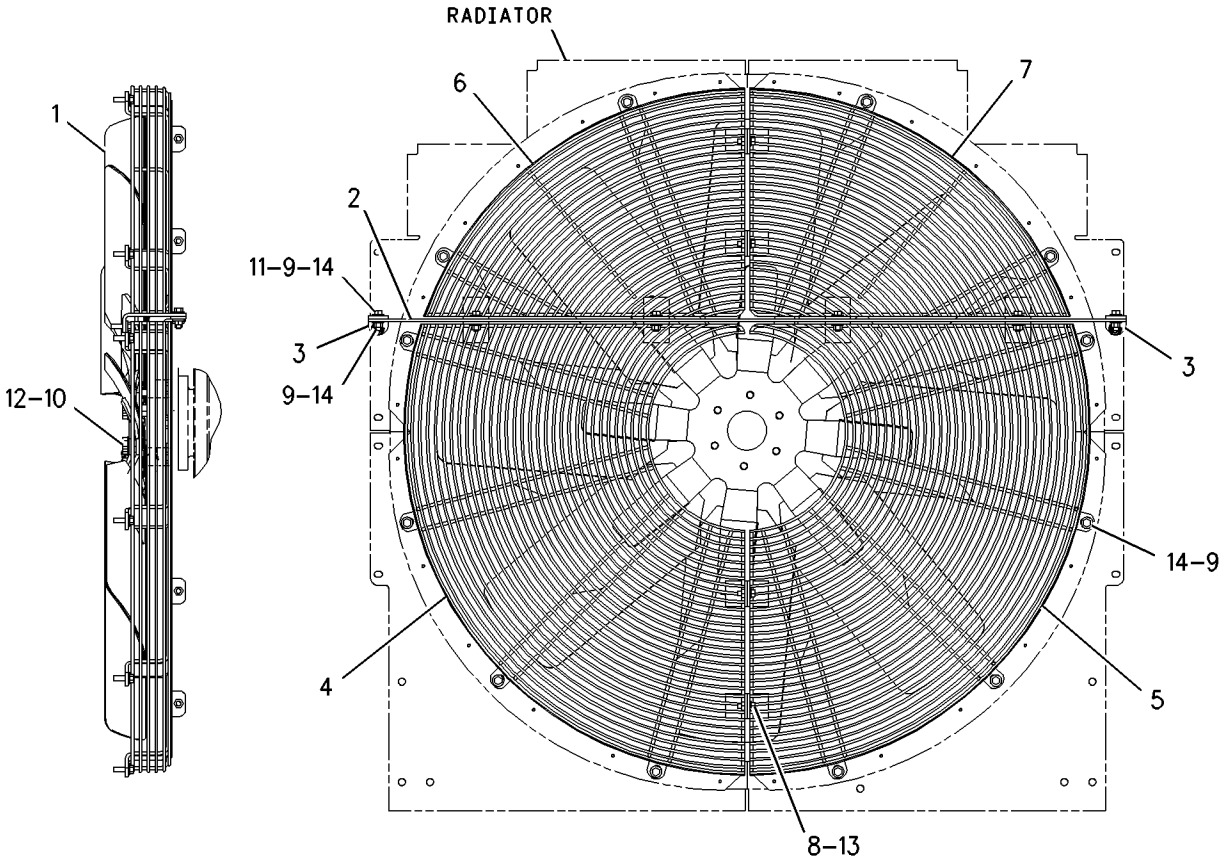

GRAPHIC #1 g00868090

MEMORANDA

COOLING SYSTEM

166-5433 LINES GP-WATER

S/N: 5JJ3200-UP
PART OF 171-5806, 206-3114 ENGINE AR
ALSO AN ATTACHMENT

SMCS-1355, 1380, 1393 **i01699991**

NOTE	REF NO	GRAPHIC REF	PART NUMBER	QTY	PART NAME 1 2 3 4 5 6 (PRODUCT LEVEL)	SEE PAGE
I	1	1	**4E-3447**	1	HOSE AS	
	2	1	**5G-1713**	1	PLATE	
	3	1	**7N-7628**	8	GASKET	
	4	1	**7N-7878**	4	PLATE-COVER	
	5	1	**109-0642**	1	BRACKET	
	6	1	**174-2370**	1	BRACKET AS	
		1	**9F-2978**	1	NUT-WELD (3/8-16 THD)	
	7	1	**177-0233**	1	TUBE AS	
	8	1	**203-7087**	1	TUBE AS	
	9	1	**212-2787**	1	TUBE AS	
	10	1	**212-2788**	1	TUBE AS	
	11	1	**0L-1351**	2	BOLT (3/8-16X0.875 IN)	
	12	1	**0S-1571**	1	BOLT (3/8-16X1.75 IN)	
	13	1	**0S-1588**	1	BOLT (3/8-16X1.25 IN)	
	14	1	**0S-1590**	1	BOLT (3/8-16X2 IN)	
	15	1	**0S-1594**	18	BOLT (3/8-16X1 IN)	
	16	1	**2P-4437**	6	CLAMP	
	17	1	**5M-2894**	22	WASHER-HARD (10.2X18.5X2.5MM THK)	
	18	1	**6B-2882**	2	SPACER (.406X.75X.312 IN THK)	
	19	1	**6D-4244**	1	CLIP	
	20	1	**6V-8398**	6	SEAL-O-RING	
	21	1	**6V-9169**	2	NUT-BULKHEAD (13/16-16 THD)	
	22	1	**7E-4039**	1	ORIFICE	
	23	1	**7X-7715**	2	TEE	
	24	1	**8C-6871**	1	CONNECTOR	
	25	1	**9S-8752**	4	NUT-FULL (3/8-16 THD)	
	26	1	**9X-6458**	5	WASHER-HARD (10.2X22.5X3MM THK)	

I-SEE HOSE FABRICATION GUIDE

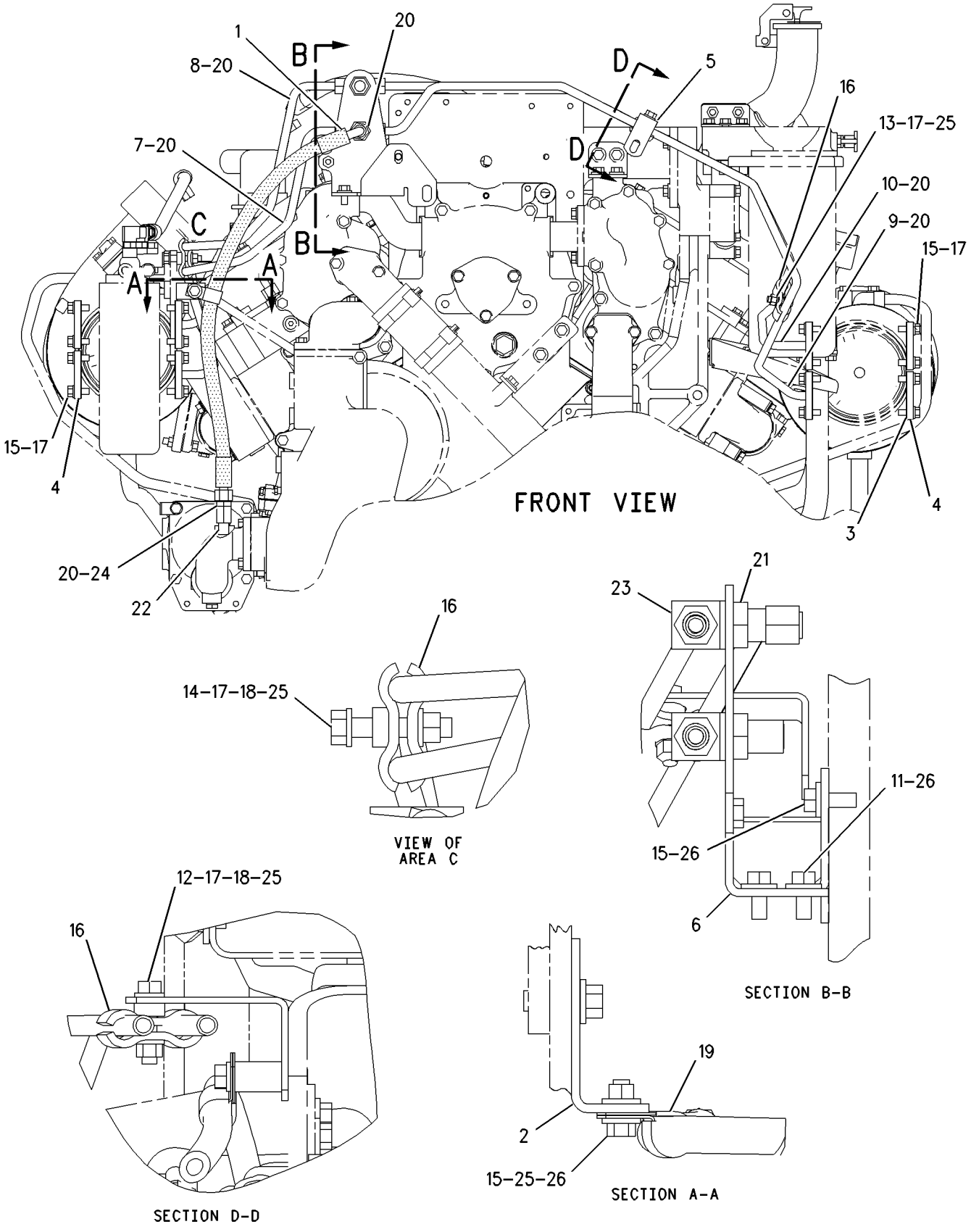

GRAPHIC #1 g00875294

COOLING SYSTEM

166-5435 LINES GP-WATER

S/N: 5JJ3200-UP
PART OF 171-5806, 206-3114 ENGINE AR
ALSO AN ATTACHMENT

SMCS-1355, 1380, 1393 **i01700140**

NOTE	REF NO	GRAPHIC REF	PART NUMBER	QTY	PART NAME 1 2 3 4 5 6 (PRODUCT LEVEL)	SEE PAGE
	1	2	**4N-0864**	1	GASKET	
	2	2	**4N-1779**	1	COVER	
	3	2	**4N-1946**	1	GASKET	
	4	2	**4N-2199**	1	GASKET	
	5	2	**4N-4307**	1	GASKET	
	6	1	**4P-3864**	1	COVER-WATER PUMP	
E	7	1	**5P-1262**		HOSE (12.70CM)	
	8	2	**6N-0008**	1	ADAPTER	
	9	2	**6N-7145**	1	BONNET-COOLER INLET	
R	10	2	**7C-0145**	1	CORE AS-OIL COOLER (ENGINE)	
	11	2	**7N-6654**	1	ELBOW	
	12	2	**7W-7000**	1	ELBOW	
	13	1	**8T-4984**	2	CLAMP-HOSE	
	14	2	**102-2240**	1	SENSOR GP-TEMPERATURE (COOLANT)	
		2	**3E-3371**	1	WEDGE-RECEPTACLE LOCK (3 PIN)	
BE		2	**9X-1813**		SLEEVE	
		2	**186-3735**	3	PIN-CONNECTOR	
		2	**102-8803**	1	KIT-RECEPTACLE (3 PIN)	
					(INCLUDES RECEPTACLE AS & WEDGE)	
	15	1	**108-8105**	2	GASKET	
	16	2	**109-2811**	1	PLATE-COVER	
	17	2	**123-2923**	1	ADAPTER	
	18	1	**165-5070**	1	ELBOW	
	19	1	**169-5890**	1	ELBOW	
	20	2	**172-5275**	1	BONNET	
	21	1	**172-7597**	1	BRACKET	
	22	2	**172-7598**	1	ELBOW	
	23	1	**172-7599**	1	PIPE	
Y	24	1	*172-7622*	1	REGULATOR GP-TEMPERATURE (COOLANT)(RH)	112
Y	25	1	*172-7623*	1	REGULATOR GP-TEMPERATURE (COOLANT)(LH)	114
	26	1	**173-7623**	1	BRACKET	
	27	1	**174-2371**	1	BRACKET	
	28	2	**193-0714**	1	FLANGE	
	29	1	**194-1606**	1	ADAPTER	
	30	1	**0L-1143**	1	BOLT (3/8-16X2.50 IN)	
	31	1	**0L-1351**	6	BOLT (3/8-16X0.875 IN)	
	32	2	**0L-1352**	2	BOLT (3/8-16X3.25 IN)	
	33	1	**0S-0509**	2	BOLT (3/8-16X0.75 IN)	
	34	1,2	**0S-1588**	4	BOLT (3/8-16X1.25 IN)	
	35	2	**0S-1591**	3	BOLT (3/8-16X1.5 IN)	
	36	1,2	**0S-1594**	9	BOLT (3/8-16X1 IN)	
	37	1	**0S-1619**	1	BOLT (3/8-16X3 IN)	
	38	1,2	**0T-0065**	3	BOLT (3/8-16X3.5 IN)	
	39	1	**0T-0573**	3	BOLT (3/8-16X2.75 IN)	
	40	2	**109-0074**	1	SEAL-O-RING	
	41	2	**109-0076**	1	SEAL-O-RING	
	42	2	**109-0077**	2	SEAL-O-RING	
	43	1	**112-1102**	1	SEAL-O-RING	
	44	1	**112-1574**	2	SEAL-O-RING	
	45	2	**112-5282**	1	SEAL-O-RING	
	46	1,2	**118-7214**	4	SEAL-O-RING	
	47	2	**1A-2029**	4	BOLT (3/8-16X1.125 IN)	
	48	1	**1A-5183**	3	BOLT (3/8-16X4.75 IN)	
	49	1	**1A-5964**	1	BOLT (3/8-16X4.5 IN)	
	50	1	**1C-2251**	1	BOLT (3/8-16X1.87 IN)	

166-5435 **LINES GP-WATER** ***(contd.)*** **i01700140**

NOTE	REF NO	GRAPHIC REF	PART NUMBER	QTY	PART NAME 1 2 3 4 5 6 (PRODUCT LEVEL)	SEE PAGE
	51	1	**1D-4706**	1	BOLT (3/8-16X6 IN)	
	52	2	**5B-9603**	6	BOLT (3/8-16X5 IN)	
	53	1,2	**5M-2894**	10	WASHER-HARD (10.2X18.5X2.5MM THK)	
	54	2	**7C-0307**	2	GASKET	
	55	2	**7X-7731**	2	PLUG-PIPE (3/4-14 NPTF THD)	
	56	1	**8F-6711**	1	SEAL-O-RING	
	57	1	**8M-4443**	1	SEAL-O-RING	
	58	2	**8T-6762**	1	PLUG-PIPE	
	59	2	**8T-6764**	1	PLUG-PIPE	
	60	1	**9X-6458**	10	WASHER-HARD (10.2X22.5X3MM THK)	
	61	1	**6B-4661**	1	BUSHING-REDUCER	
	62	1	**157-0670**	1	CAP-DUST	
	63	1	**154-9024**	1	VALVE-SAMPLING	

B-USE AS REQUIRED
E-ORDER BY THE CENTIMETER
R-REMFG PART MAY BE AVAILABLE
Y-SEPARATE ILLUSTRATION

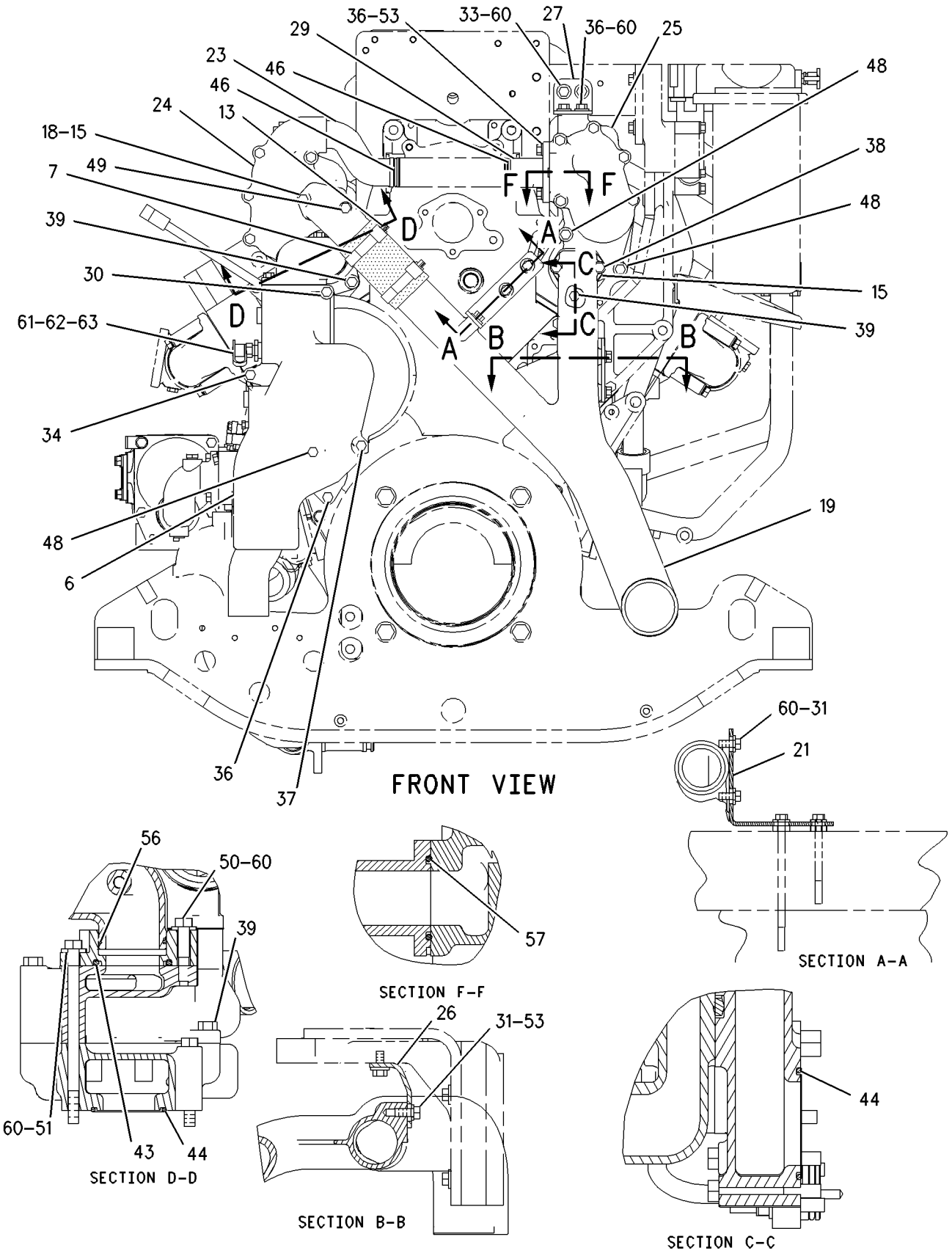

GRAPHIC #1 g00872441

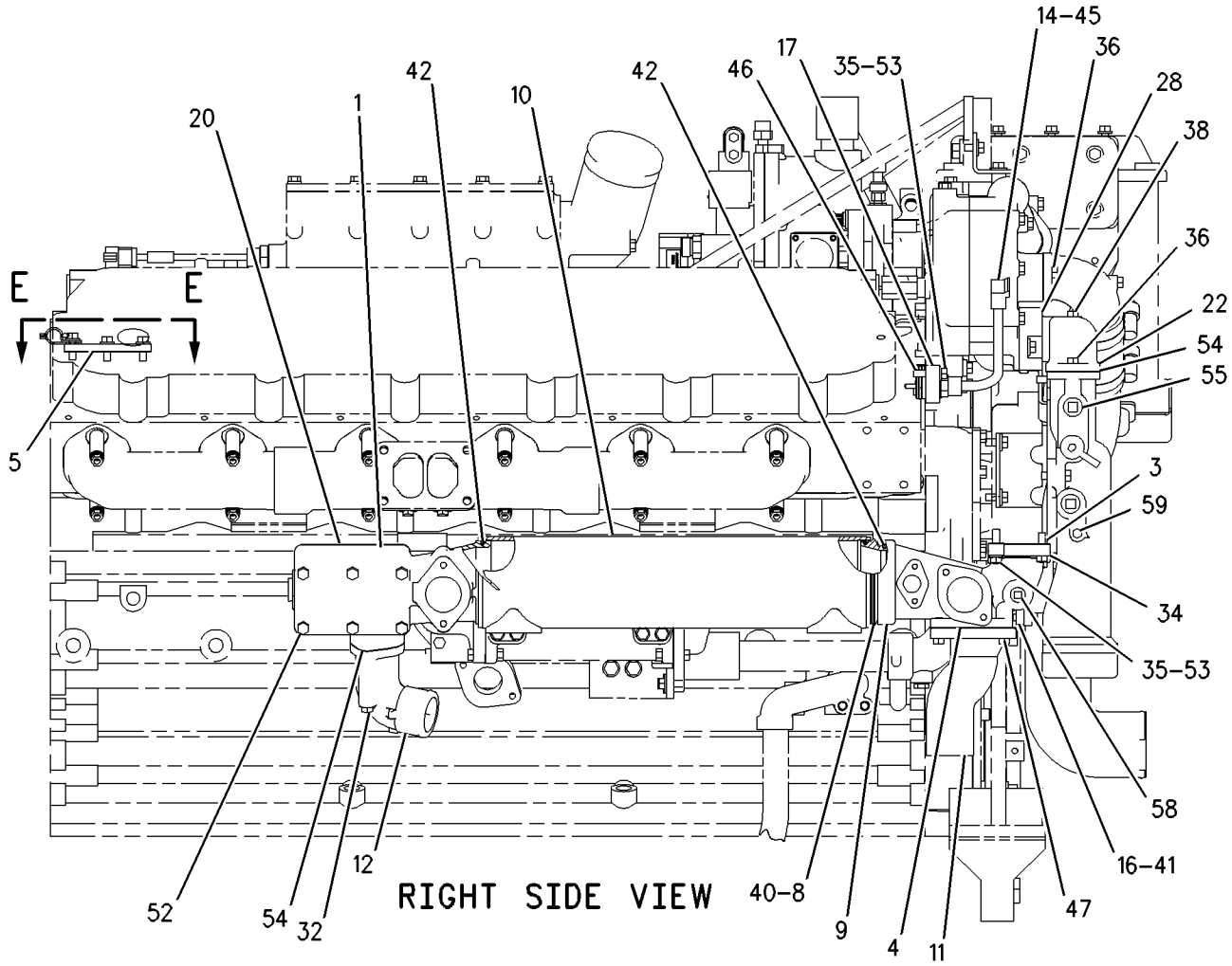

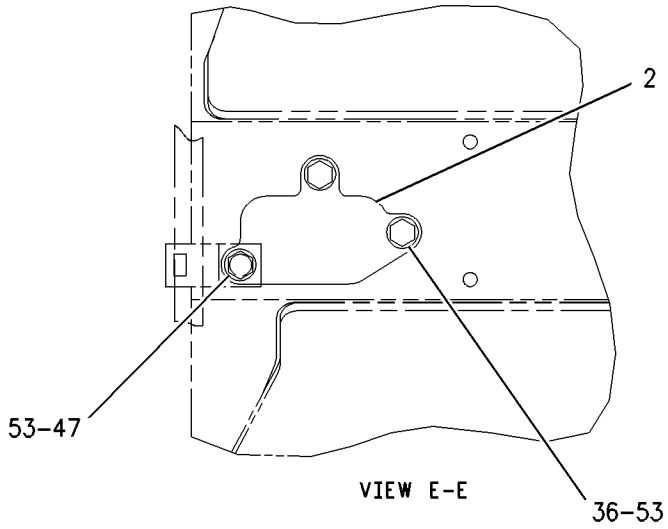

GRAPHIC #2 g00872815

COOLING SYSTEM

166-5436 LINES GP-WATER

S/N: 5JJ3200-UP
PART OF 171-5806, 206-3114 ENGINE AR
ALSO AN ATTACHMENT

SMCS-1355, 1380, 1393 **i01444813**

NOTE	REF NO	GRAPHIC REF	PART NUMBER	QTY	PART NAME 1 2 3 4 5 6 (PRODUCT LEVEL)	SEE PAGE
R	1	1	**2W-9978**	1	CORE AS-OIL COOLER	
	2	1	**7N-5168**	1	TUBE	
	3	1	**8N-0881**	1	ELBOW	
	4	1	**8N-0882**	1	BONNET-INLET	
	5	1	**8N-0883**	1	BONNET-OUTLET	
	6	1	**9L-1775**	1	BRACKET	
	8	1	**2W-0985**	1	BRACKET-MOUNTING	
	9	1	**0S-1571**	1	BOLT (3/8-16X1.75 IN)	
	10	1	**0S-1591**	5	BOLT (3/8-16X1.5 IN)	
	11	1	**0S-1594**	4	BOLT (3/8-16X1 IN)	
	12	1	**0S-1608**	2	BOLT (3/8-16X3.75 IN)	
	13	1	**0T-0768**	2	BOLT (7/16-14X1.75IN)	
	14	1	**109-0072**	2	SEAL-O-RING (40.64MM ID)	
	15	1	**129-2861**	2	GASKET	
	17	1	**2A-4639**	2	BOLT (3/8-16X1.625 IN)	
	18	1	**4S-9191**	2	WASHER (12X22.5X5MM THK)	
	19	1	**5M-2894**	1	WASHER-HARD (10.2X18.5X2.5MM THK)	
	20	1	**7C-0307**	2	GASKET	
	21	1	**8T-6767**	1	PLUG-PIPE	
	22	1	**9L-9132**	2	WASHER (10.2X25.5X2.5MM THK)	
	24	1	**9S-8752**	8	NUT-FULL (3/8-16 THD)	

R-REMFG PART MAY BE AVAILABLE

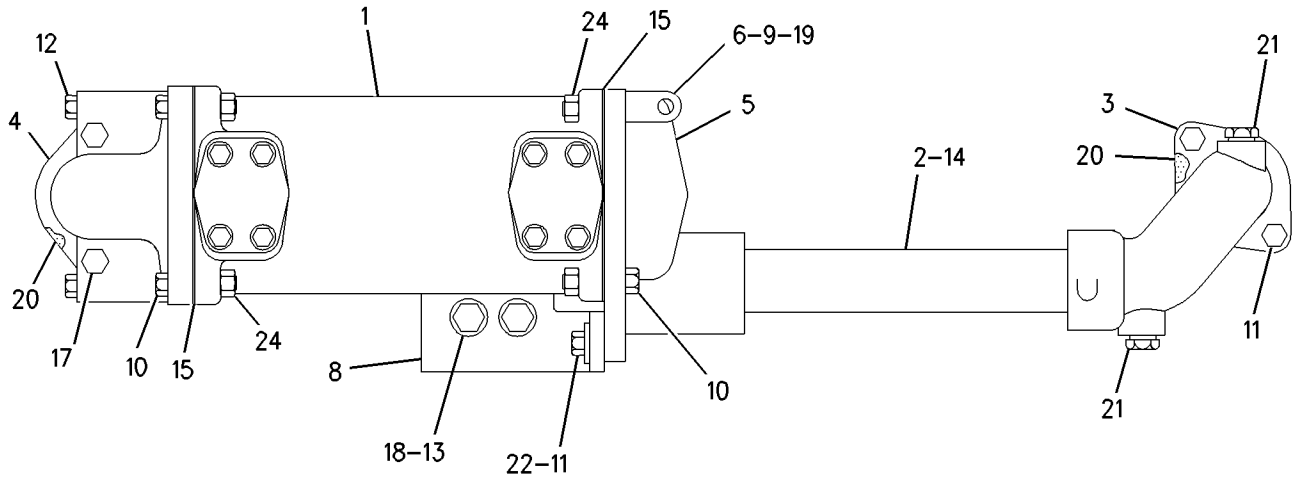

GRAPHIC #1 g00756591

COOLING SYSTEM

172-7857 LINES GP-WATER

S/N: AKT1-UP

PART OF 171-5807 INSTALLATION AR-ENGINE

SMCS-1355, 1380, 1393 **i01692021**

NOTE	REF NO	GRAPHIC REF	PART NUMBER	QTY	PART NAME 1 2 3 4 5 6 (PRODUCT LEVEL)	SEE PAGE
	1	1	**4B-7739**	1	PLUG-DRAIN	
	2	1	**8J-2288**	1	SPACER	
	3	1	**8N-0301**	1	VALVE AS	
	3A	1	**7N-7688**	1	FERRULE	
	3B	1	**9M-5590**	1	BALL	
	4	1	**122-3608**	1	CLIP	
	5	1	**170-6070**	1	BONNET	
	6	1	**170-6071**	1	BONNET	
	7	1	**175-7871**	1	PLATE-DRAIN	
	8	1	**200-1996**	1	ADAPTER	
	9	1	**1F-4417**	2	GASKET	
	10	1	**4D-7388**	1	CLIP	
	11	1	**4L-6454**	2	BOLT (3/8-16X1 IN)	
	12	1	**4L-6459**	2	BOLT (3/8-16X2.5 IN)	
	13	1	**5H-0244**	1	GASKET	
	14	1	**5P-2566**	17	BOLT (1/2-13X1.5 IN)	
	15	1	**5S-7379**	1	BOLT (3/8-16X0.875 IN)	
	16	1	**6V-8801**	1	NUT (3/8-16 THD)	
	17	1	**7W-6492**	1	PLUG-PIPE	
	18	1	**7X-0333**	3	BOLT (1/2-13X4.75 IN)	
	19	1	**8T-4896**	6	WASHER-HARD (10.2X18.5X2.5MM THK)	
	20	1	**8T-6675**	4	CLAMP-HOSE	
E	21	1	**5P-1262**		HOSE (63.5MM ID) (90CM)	
E	21A	1	**5P-1262**		HOSE (63.5MM ID) (18CM)	

E-ORDER BY THE CENTIMETER

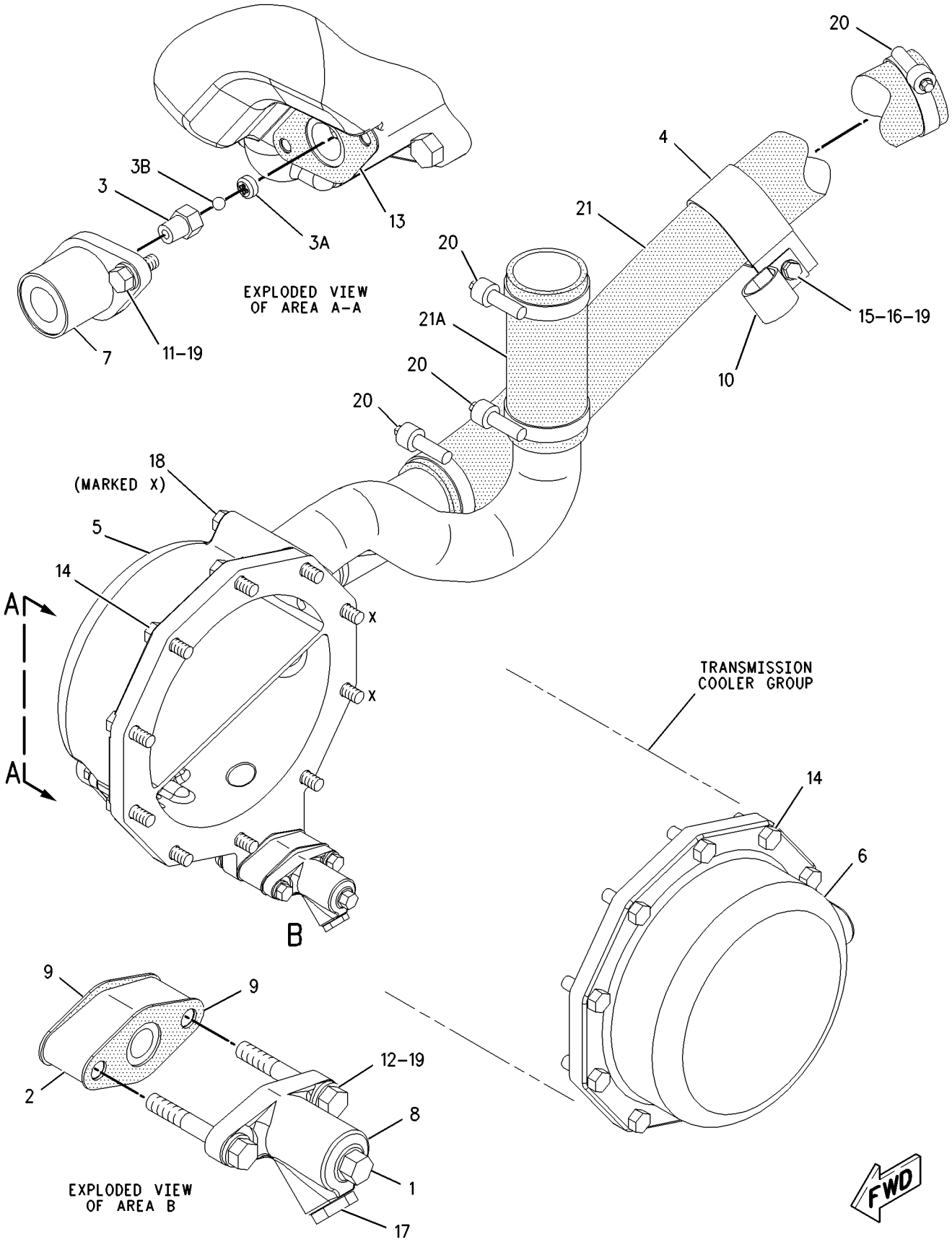

GRAPHIC #1

g00872602

COOLING SYSTEM

4N-5837 PUMP GP-WATER

S/N: 5JJ3200-UP
PART OF 171-5806, 206-3114 ENGINE AR
ALSO AN ATTACHMENT

SMCS-1361, 1363, 1364, 1373, 1384, 1389, 1394 **i01321275**

NOTE	REF NO	GRAPHIC REF	PART NUMBER	QTY	PART NAME 1 2 3 4 5 6 (PRODUCT LEVEL)	SEE PAGE
CYR	1	1	**137-1339**	1	PUMP GP-WATER	104
	2	1	**112-1579**	1	SEAL-O-RING (158.12MM ID)	
	3	1	**101-2749**	1	ADAPTER-INLET	
	4	1	**9X-7371**	1	SEAL-O-RING (126.59MM ID)	
	5	1	**112-1580**	1	SEAL-O-RING (113.66MM ID)	
	6	1	**9S-8752**	4	NUT-FULL (3/8-16 THD)	
	7	1	**0S-1594**	1	BOLT (3/8-16X1 IN)	

C-CHANGE FROM PREVIOUS TYPE
R-REMFG PART MAY BE AVAILABLE
Y-SEPARATE ILLUSTRATION

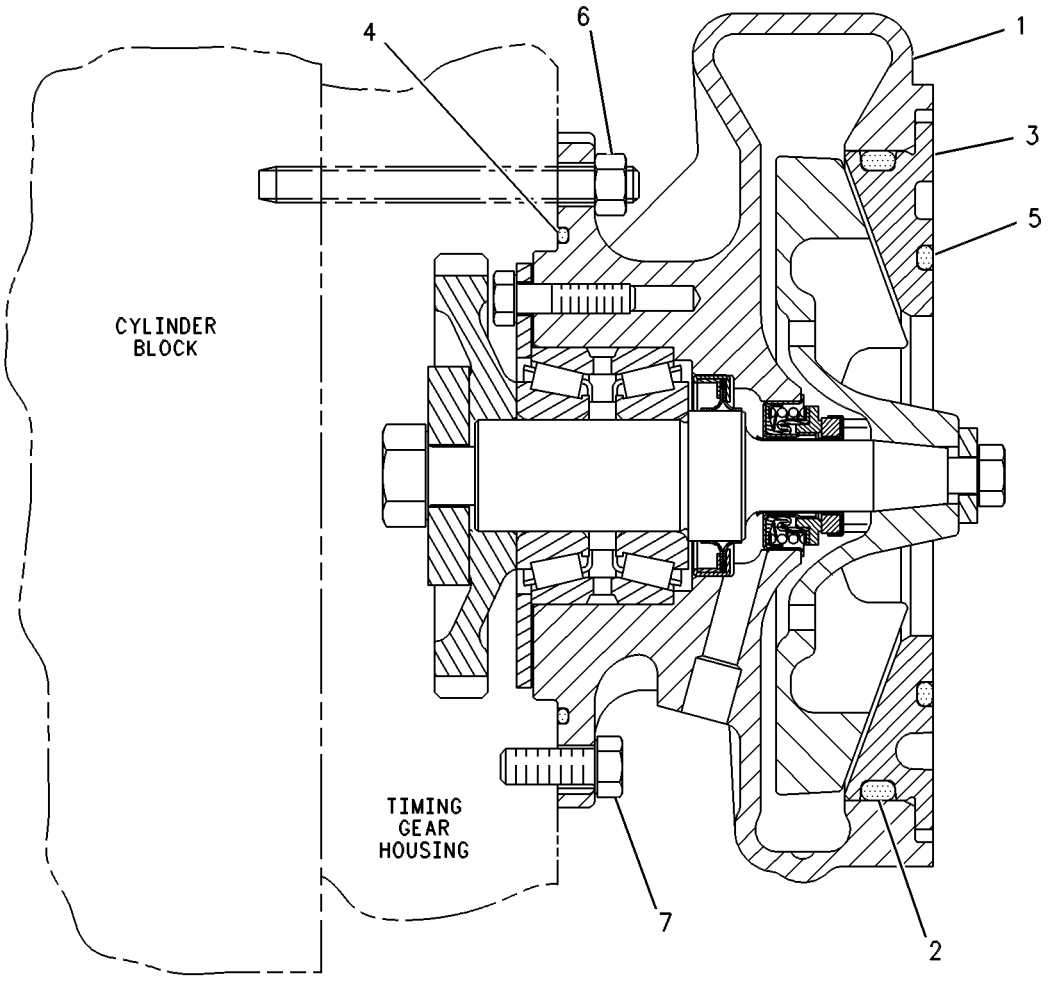

GRAPHIC #1 g00277057

MEMORANDA

COOLING SYSTEM

137-1339 PUMP GP-WATER*R

S/N: 5JJ3200-UP
PART OF 4N-5837 PUMP GP-WATER
ALSO AN ATTACHMENT

SMCS-1361, 1363, 1364, 1373, 1384, 1389, 1394 **i01509276**

NOTE	REF NO	GRAPHIC REF	PART NUMBER	QTY	PART NAME 1 2 3 4 5 6 (PRODUCT LEVEL)	SEE PAGE
	1	1	**137-1344**	1	HOUSING AS-PUMP	
J	2	1	**111-2721**	1	FILTER (WATER PUMP)	
		1	**4M-1336**	1	FERRULE	
		1	**5H-8985**	1	PIN-SPRING	
		1	**8T-6764**	1	PLUG-PIPE	
J	3	1	**128-0317**	1	SEAL GP	
J	4	1	**9M-6527**	1	WASHER-HARD (10.2X25.5X5MM THK)	
J	5	1	**0S-1591**	1	BOLT (3/8-16X1.5 IN)	
J	6	1	**108-7930**	1	BEARING AS-ROLLER	
J	7	1	**153-1256**	1	SEAL-LIP TYPE	
	8	1	**1B-7182**	4	BOLT (5/16-18X1.25 IN)	
	9	1	**4N-1948**	1	GEAR (43 TEETH)	
	10	1	**1A-1135**	1	BOLT (5/8-11X2 IN)	
J	11	1	**135-4928**	1	SHAFT-WATER PUMP	
J	12	1	**136-1107**	1	RETAINER	
J	13	1	**5S-0581**	1	WASHER-HARD (17X38X8MM THK)	
	14	1	**137-1970**	1	IMPELLER-PUMP	
					AVAILABLE REPAIR KIT(S):	
AJ			**138-6744**	1	KIT-PUMP REBUILD (WATER)	

A-NOT PART OF THIS GROUP
J-KIT(S) MARKED J INCLUDES PART(S) MARKED J

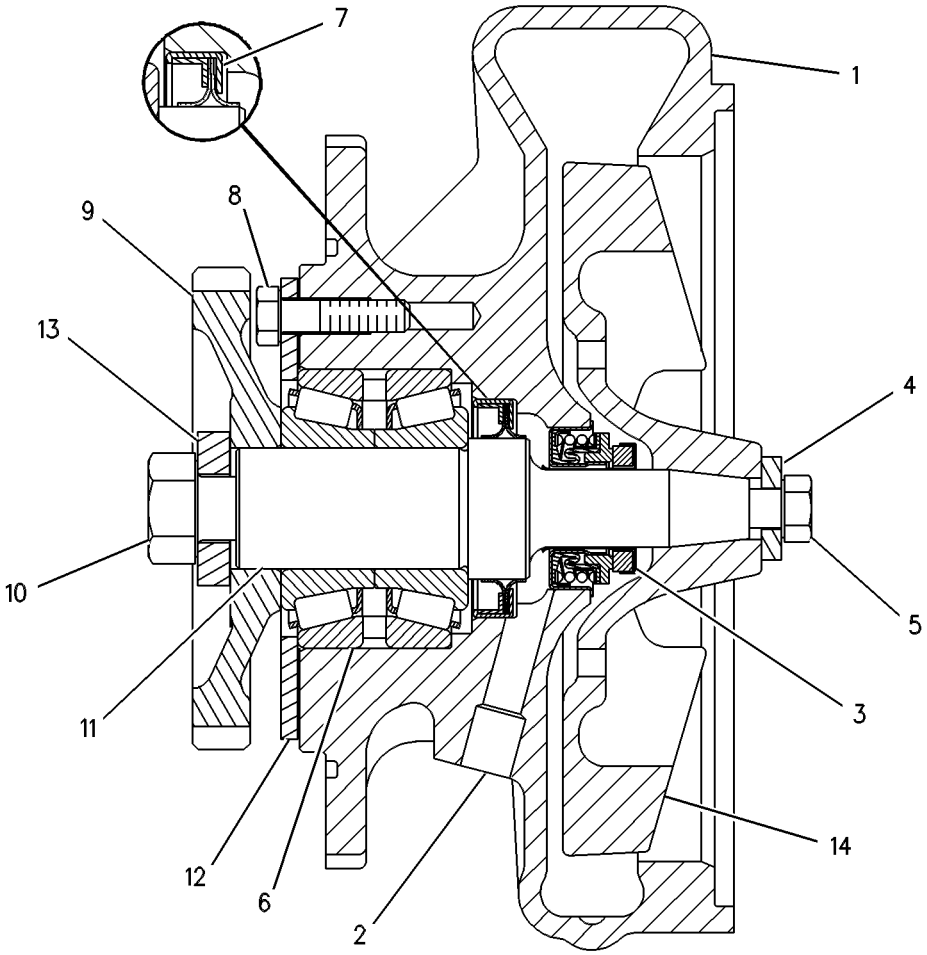

GRAPHIC #1 g00277052

COOLING SYSTEM

172-4347 RADIATOR GP

S/N: AKT1-UP

PART OF 171-5807 INSTALLATION AR-ENGINE

SMCS-1351 **i01700168**

NOTE	REF NO	GRAPHIC REF	PART NUMBER	QTY	PART NAME 1 2 3 4 5 6 (PRODUCT LEVEL)	SEE PAGE
I	1	2	**2T-1888**	1	HOSE AS	
	2	2	**7N-1639**	4	CAP	
	3	1	**7N-2628**	1	HOSE-HUMP	
	4	2	**7N-3864**	2	SUPPORT	
	5	1	**7N-4932**	1	GASKET	
	6	1	**7W-5532**	2	SHAFT	
	7	1	**7W-7233**	2	MOUNT-RADIATOR	
	8	2	**7W-7346**	2	STRIP	
	9	1,2	**8N-7257**	4	MOUNT AS	
	10	2	**8T-4986**	4	CLAMP-HOSE	
	11	1	**8T-4990**	2	CLAMP-HOSE	
	12	2	**9M-6738**	2	CLAMP-HOSE	
	13	1	**119-7258**	1	SHIELD AS-BOTTOM-LH	
		1	**1F-0750**	5	NUT-WELD (3/8-16 THD)	
		1	**4D-6716**	6	RIVET-POP	
		1	**7G-5186**	3	SPACER (13X19X4.5MM THK)	
	14	1	**119-7259**	1	SHIELD AS-BOTTOM-RH	
		1	**1F-0750**	6	NUT-WELD (3/8-16 THD)	
		1	**4D-6716**	6	RIVET-POP	
		1	**7G-5186**	3	SPACER (13X19X4.5MM THK)	
	15	1	**133-9528**	2	BAFFLE AS	
					(EACH INCLUDES)	
		1	**7G-5186**	3	SPACER (13X19X4.5MM THK)	
	16	1	**133-9529**	2	STRIP	
Y	17	1	*172-4365*	1	RADIATOR GP	110
	18	1	**172-6039**	1	SHIELD AS (RH)	
		1	**1F-0750**	3	NUT-WELD (3/8-16 THD)	
		1	**4D-6716**	7	RIVET-POP	
		1	**7G-5186**	3	SPACER (13X19X4.5MM THK)	
	19	1	**172-6040**	1	SHIELD AS (LH)	
		1	**1F-0750**	3	NUT-WELD (3/8-16 THD)	
		1	**4D-6716**	7	RIVET-POP	
		1	**7G-5186**	3	SPACER (13X19X4.5MM THK)	
I	20	2	**173-0894**	1	HOSE AS	
	21	2	**173-8354**	1	ELBOW-OUTLET	
	22	2	**173-9690**	1	ELBOW	
	23	2	**175-2432**	1	HOSE	
	24	2	**176-0781**	2	DUCT	
	25	2	**177-0265**	1	PLATE AS-RH	
		2	**1F-0750**	5	NUT-WELD (3/8-16 THD)	
	26	2	**177-0266**	1	PLATE AS-LH	
		2	**1F-0750**	5	NUT-WELD (3/8-16 THD)	
	27	2	**177-0267**	2	BAFFLE AS	
					(EACH INCLUDES)	
		2	**7G-5186**	8	SPACER (13X19X4.5MM THK)	
	28	2	**177-0268**	2	STRIP	
	29	2	**0L-1351**	1	BOLT (3/8-16X0.875 IN)	
	30	1	*148-8327*	1	CONNECTOR GP	
		1	**6V-8637**	1	CONNECTOR-SEAL	
		1	**3D-2824**	1	SEAL-O-RING (23.47MM ID)	
		1	**6V-9746**	1	SEAL-O-RING (22.50MM OD)	
	31	1	*148-8347*	1	ELBOW GP	
		1	**6V-9007**	1	ELBOW	
		1	**3D-2824**	1	SEAL-O-RING (23.47MM ID)	
		1	**6V-9746**	1	SEAL-O-RING (22.50MM OD)	
	32	1	**2T-1922**	1	ELBOW	

172-4347 **RADIATOR GP** ***(contd.)*** **i01700168**

NOTE	REF NO	GRAPHIC REF	PART NUMBER	QTY	PART NAME 1 2 3 4 5 6 (PRODUCT LEVEL)	SEE PAGE
	33	2	**3S-8665**	3	CLIP	
	34	1,2	**4L-6454**	38	BOLT (3/8-16X1 IN)	
	35	1,2	**5P-1075**	56	WASHER-HARD (10.2X22.5X3MM THK)	
	36	2	**5S-7379**	14	BOLT (3/8-16X0.875 IN)	
	37	1	**6V-8398**	2	SEAL-O-RING	
	38	2	**6V-8801**	1	NUT (3/8-16 THD)	
	39	1	**7X-0350**	6	BOLT (5/8-11X3.50 IN)	
	40	1	**8C-6872**	1	CONNECTOR	
	41	2	**8C-7323**	2	BOLT (3/8-16X6 IN)	
	42	1	**8T-4122**	12	WASHER-HARD (17X32X3.5MM THK)	
	43	2	**8T-4223**	8	WASHER-HARD (13.5X25.5X3MM THK)	
	44	1	**8T-6764**	1	PLUG-PIPE	
	45	1	**8T-6871**	6	BOLT (5/8-11X2.50 IN)	
	46	2	**8T-8920**	8	BOLT (1/2-13X3.25 IN)	
	47	1,2	**9B-7237**	6	BOLT (3/8-16X1.25 IN)	
E	48	2	**5P-0764**		HOSE (88.9 MM ID) (25CM)	

E-ORDER BY THE CENTIMETER
I-SEE HOSE FABRICATION GUIDE
Y-SEPARATE ILLUSTRATION

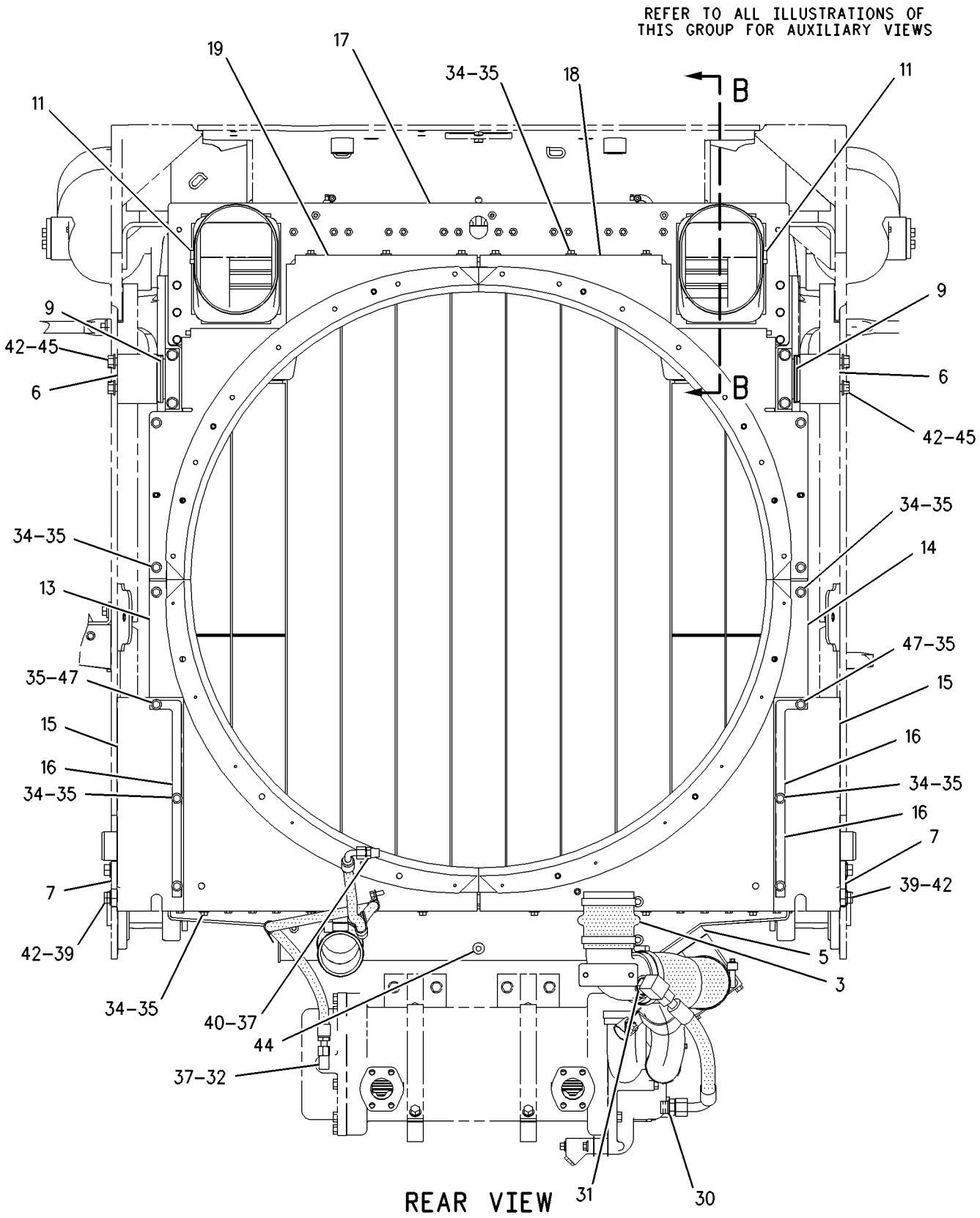

GRAPHIC #1 g00872122

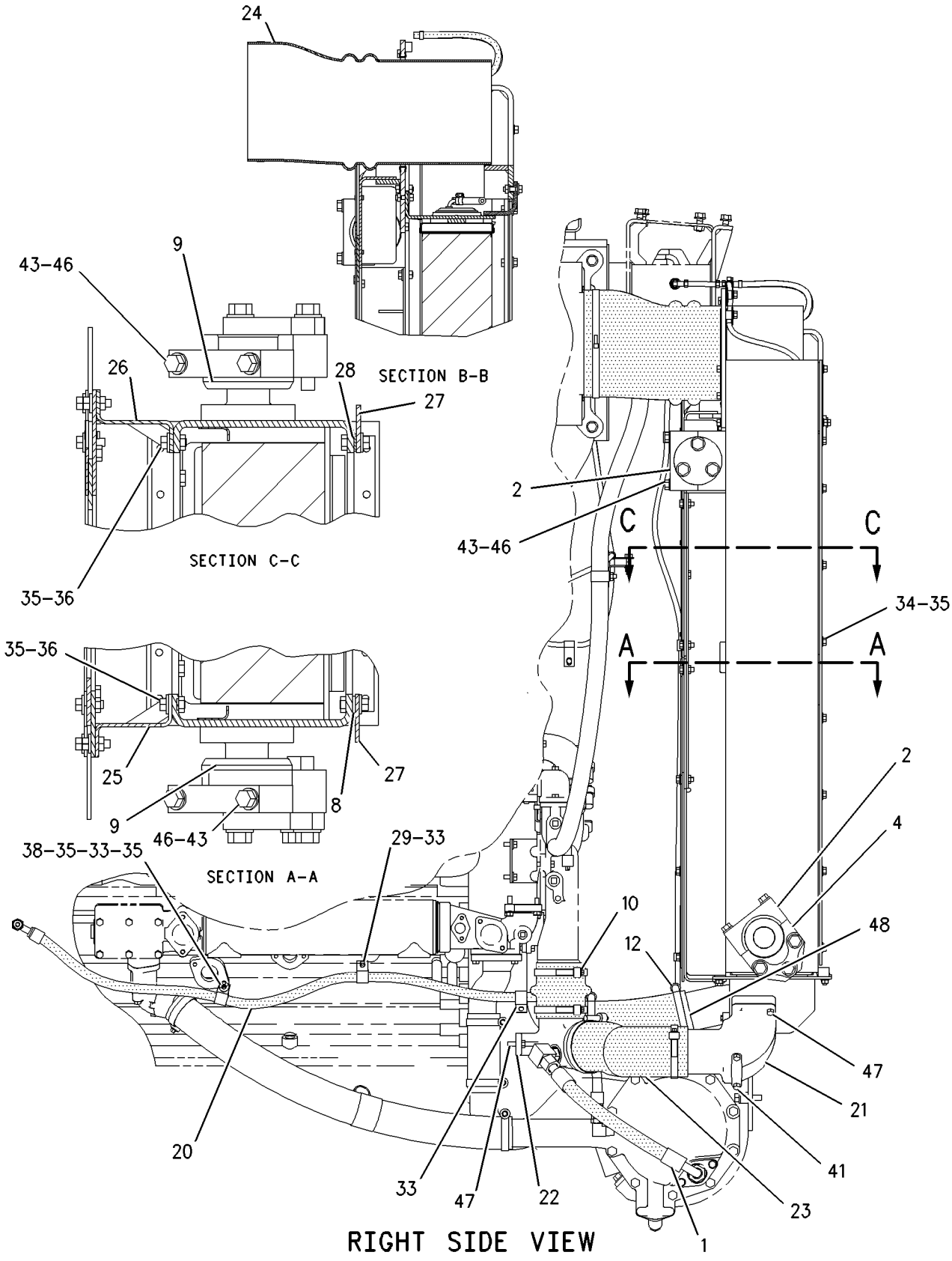

GRAPHIC #2 g00872123

COOLING SYSTEM

172-4365 RADIATOR GP

S/N: AKT1-UP

PART OF 172-4347 RADIATOR GP

SMCS-1351 **i01691974**

NOTE	REF NO	GRAPHIC REF	PART NUMBER	QTY	PART NAME 1 2 3 4 5 6 (PRODUCT LEVEL)	SEE PAGE
	1	1	**1P-4278**	22	CLAMP-HOSE	
	2	1	**6I-2431**	11	SEAL	
	3	1	**6I-2435**	11	SPACER (80X108X25MM THK)	
	4	1	**106-4572**	8	HOSE	
	5	1	**111-7421**	2	CAP	
	6	1	**119-4774**	7	CORE AS-RADIATOR	
	7	1	**135-4553**	1	BRACKET	
	8	1	**146-6204**	9	RETAINER	
	9	1	**170-8541**	4	CORE AS-RADIATOR	
	10	1	**172-6037**	1	PLATE AS	
		1	**1F-0750**	6	NUT-WELD (3/8-16 THD)	
	11	1	**172-6038**	1	PLATE AS	
		1	**1F-0750**	39	NUT-WELD (3/8-16 THD)	
	12	1	**172-6518**	1	TANK AS-BOTTOM	
		1	**1F-0750**	8	NUT-WELD (3/8-16 THD)	
	13	1	**174-7609**	2	RETAINER	
	14	1	**176-7330**	1	CHANNEL AS	
		1	**1F-0750**	24	NUT-WELD (3/8-16 THD)	
	15	1	**176-7332**	1	CHANNEL AS	
		1	**1F-0750**	24	NUT-WELD (3/8-16 THD)	
	16	1	**177-6855**	2	PLATE	
	17	1	**4L-6454**	22	BOLT (3/8-16X1 IN)	
	18	1	**5P-1075**	32	WASHER-HARD (10.2X22.5X3MM THK)	
	19	1	**8T-2502**	32	BOLT (3/8-16X1.125 IN)	
	20	1	**8T-4896**	28	WASHER-HARD (10.2X18.5X2.5MM THK)	
	21	1	**9B-7237**	6	BOLT (3/8-16X1.25 IN)	
E	22	1	**5P-1465**	2	HOSE (32.5CM EACH)	
BE	23	1	**153-9516**		SEAL	
BE	24	1	**198-3085**		SEAL	

B-USE AS REQUIRED
E-ORDER BY THE CENTIMETER

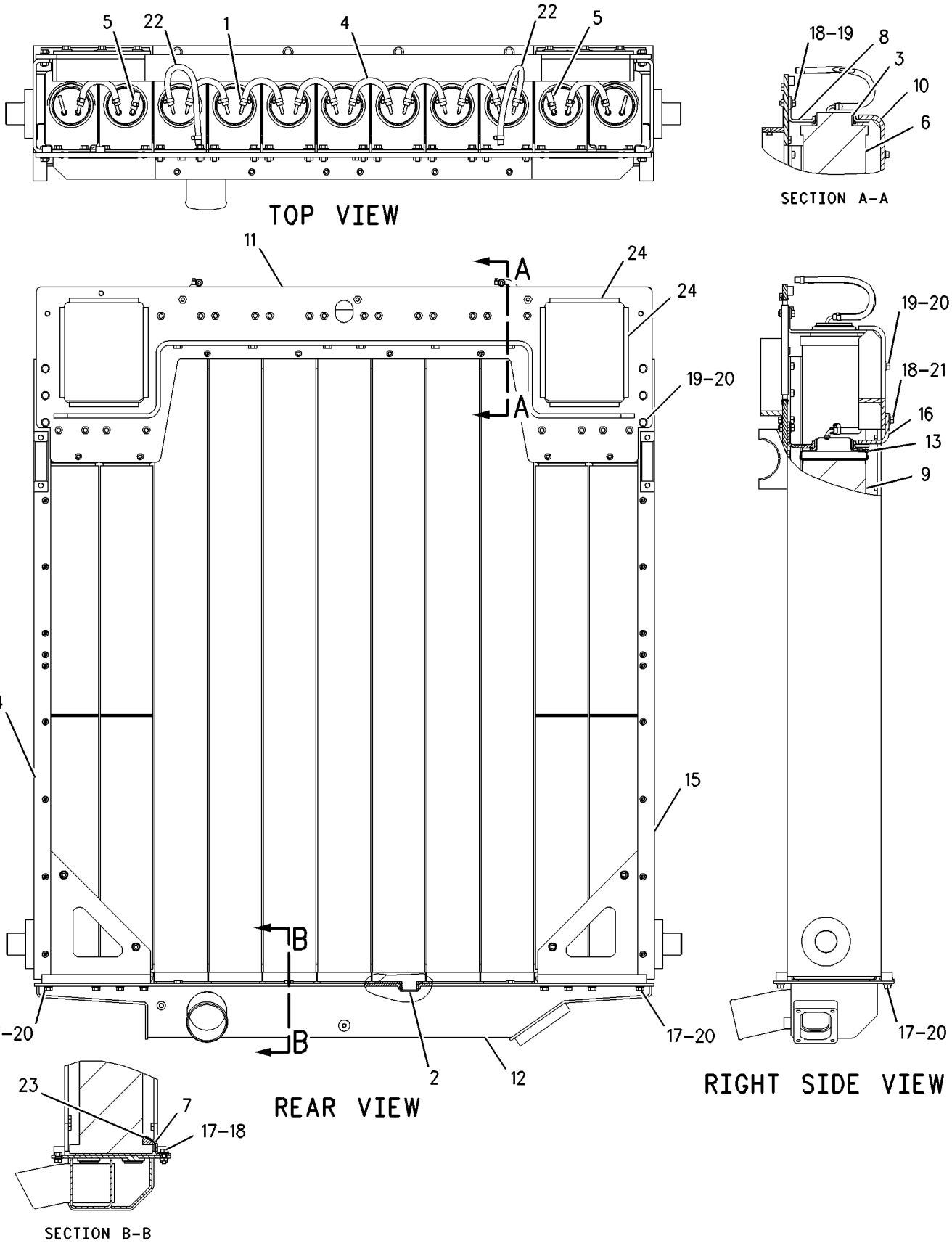

GRAPHIC #1 g00872630

COOLING SYSTEM

172-7622 REGULATOR GP-TEMPERATURE

S/N: 5JJ3200-UP
PART OF 166-5435 LINES GP-WATER
ALSO AN ATTACHMENT

SMCS-1355 **i01700192**

NOTE	REF NO	GRAPHIC REF	PART NUMBER	QTY	PART NAME 1 2 3 4 5 6 (PRODUCT LEVEL)	SEE PAGE
	1	1	**4W-4794**	2	REGULATOR-WATER TEMPERATURE (92 DEG C.)	
	2	1	**169-5886**	1	HOUSING-REGULATOR	
	3	1	**169-5888**	1	MANIFOLD	
	4	1	**173-2046**	1	SEAL	
	5	1	**0L-1352**	3	BOLT (3/8-16X3.25 IN)	
	6	1	**0S-1594**	1	BOLT (3/8-16X1 IN)	
	7	1	**0S-1608**	1	BOLT (3/8-16X3.75 IN)	
	8	1	**9S-4182**	1	PLUG	
	9	1	**3J-7354**	1	SEAL-O-RING	
	10	1	**3S-9643**	2	SEAL-LIP	

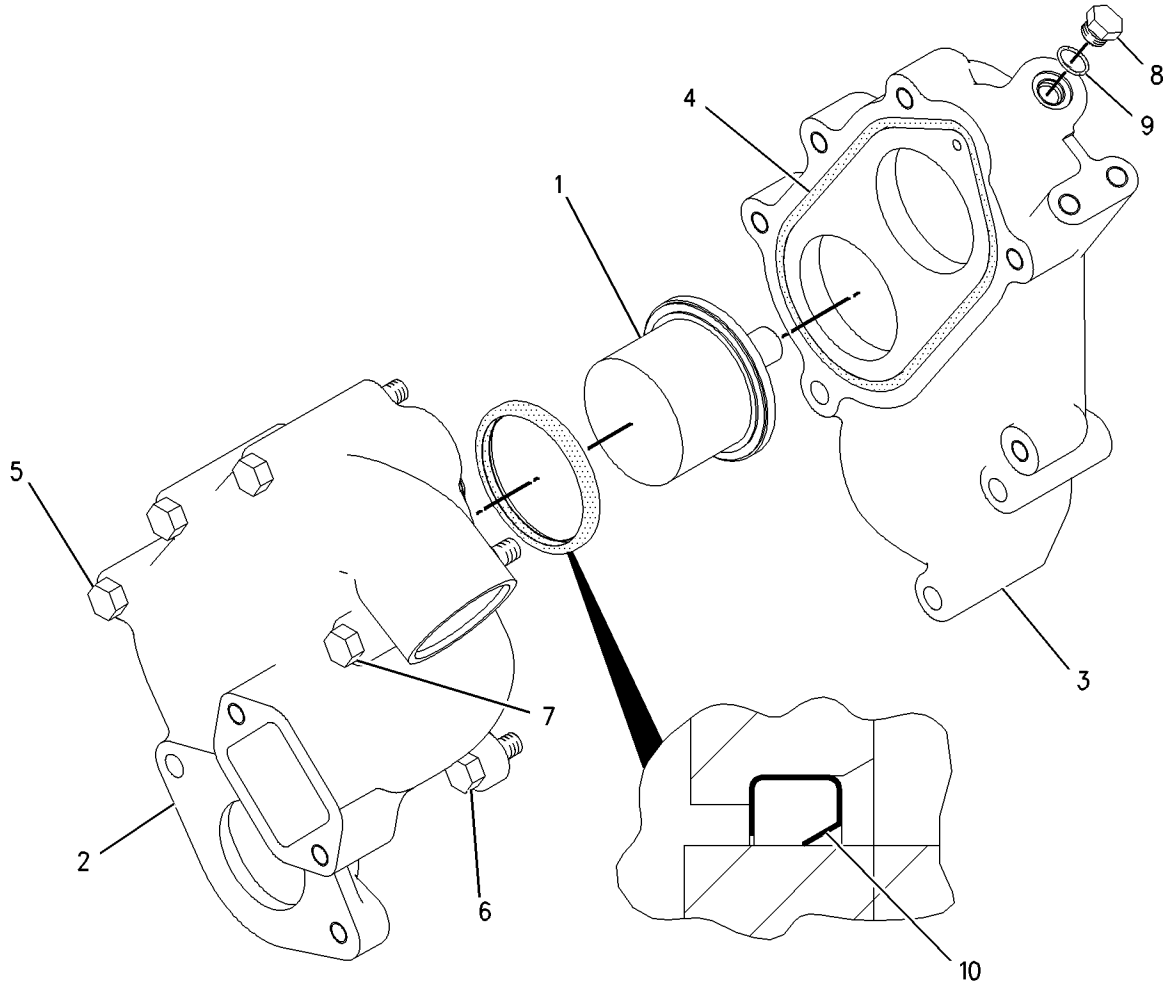

GRAPHIC #1 g00875407

MEMORANDA

172-7623 REGULATOR GP-TEMPERATURE

S/N: 5JJ3200-UP
PART OF 166-5435 LINES GP-WATER
ALSO AN ATTACHMENT

SMCS-1355 **i01700202**

NOTE	REF NO	GRAPHIC REF	PART NUMBER	QTY	PART NAME 1 2 3 4 5 6 (PRODUCT LEVEL)	SEE PAGE
	1	1	**4W-4794**	2	REGULATOR-WATER TEMPERATURE (92 DEG C.)	
	2	1	**169-5887**	1	HOUSING-REGULATOR	
	3	1	**169-5889**	1	MANIFOLD	
	4	1	**173-2047**	1	SEAL	
	5	1	**0L-1352**	3	BOLT (3/8-16X3.25 IN)	
	6	1	**0T-0055**	2	BOLT (3/8-16X4.25 IN)	
	7	1	**9S-4182**	1	PLUG	
	7A	1	**3J-7354**	1	SEAL-O-RING	
	8	1	**3S-9643**	2	SEAL-LIP	

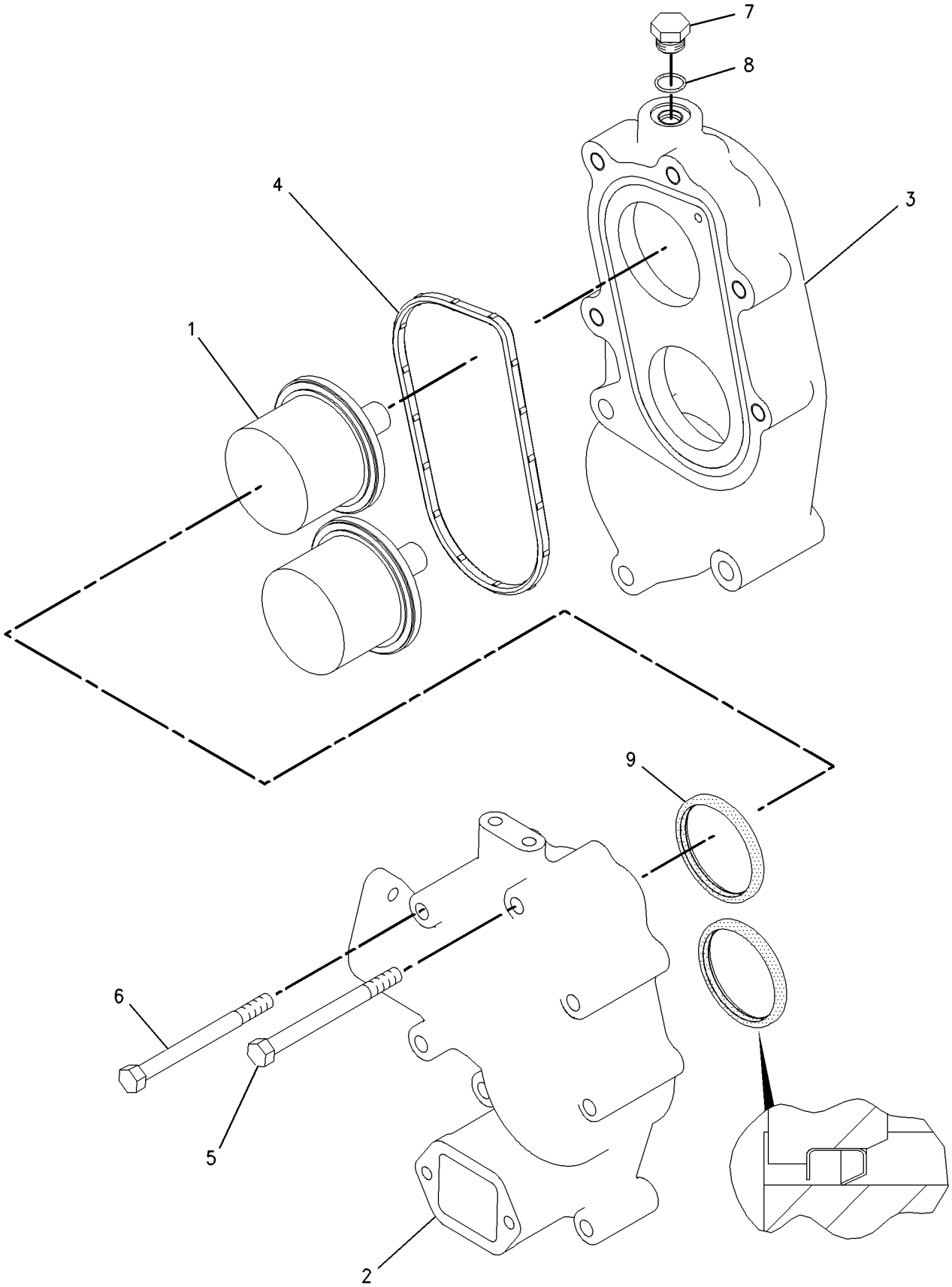

GRAPHIC #1 g00875410

COOLING SYSTEM

172-6519 TANK GP-COOLANT

S/N: AKT1-UP

PART OF 172-4355 TANK GP-WATER

SMCS-1354, 1377 **i01449232**

NOTE	REF NO	GRAPHIC REF	PART NUMBER	QTY	PART NAME 1 2 3 4 5 6 (PRODUCT LEVEL)	SEE PAGE
	1	1	**031-1119**	1	CAP AS-RADIATOR	
	2	1	**172-6089**	1	TANK AS-COOLANT	

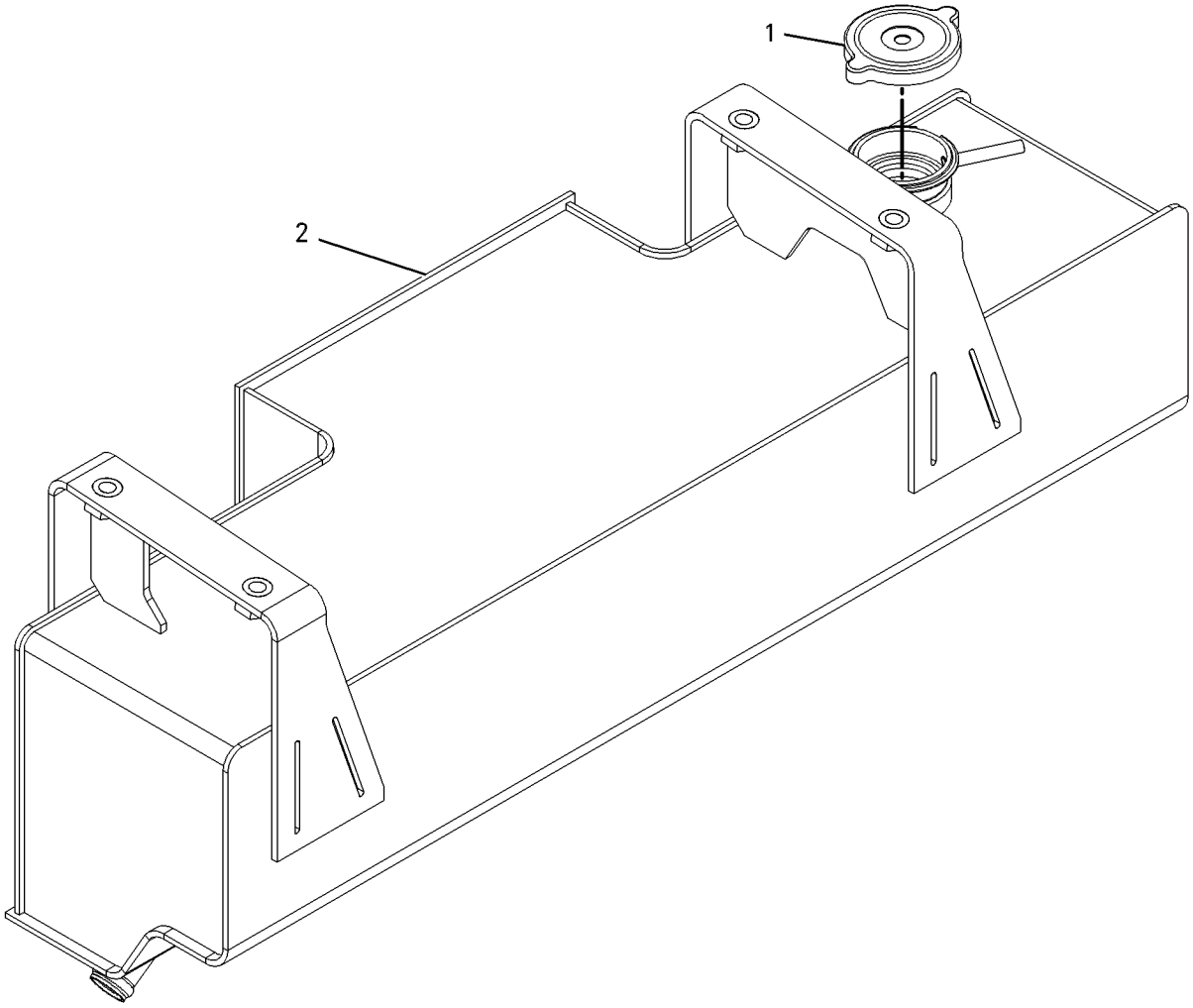

GRAPHIC #1 g00652666

MEMORANDA

COOLING SYSTEM

172-4355 TANK GP-WATER

S/N: AKT1-UP

PART OF 171-5807 INSTALLATION AR-ENGINE

SMCS-1377 **i01700246**

NOTE	REF NO	GRAPHIC REF	PART NUMBER	QTY	PART NAME 1 2 3 4 5 6 (PRODUCT LEVEL)	SEE PAGE
	1	1,2	**1P-9328**	2	FITTING	
	2	2	**3S-2093**	2	STRAP-CABLE	
	3	1,2	**5P-2937**	2	ADAPTER-O-RING	
	4	1,2	**6V-1355**	4	ELBOW	
	5	1	**6V-2492**	1	CONNECTOR	
	6	1	**7N-1277**	1	BRACKET AS	
		1	**1F-0750**	1	NUT-WELD (3/8-16 THD)	
	7	1	**7X-7958**	2	CLAMP-HOSE	
	8	1	**9M-7961**	1	FITTING	
	9	1	**9N-3666**	1	VALVE AS	
I	10	2	**152-0277**	1	HOSE AS	
Y	11	1	*172-6519*	1	TANK GP-COOLANT	116
	12	1	**176-2603**	1	BODY AS	
	13	1,2	**192-5425**	4	TEE	
	14	2	**200-6345**	1	MOUNT-SWIVEL	
	15	1,2	**1P-4278**	18	CLAMP-HOSE	
	16	1	**2S-4078**	1	SEAL-O-RING	
	17	1,2	**3J-7354**	6	SEAL-O-RING	
	18	1,2	**4D-9517**	9	CLIP	
	19	1	**4L-9337**	1	BOLT (3/8-16X1.5 IN)	
	20	2	**4M-0061**	2	BOLT (5/16-18X.750 IN)	
	21	1	**5P-9299**	3	CLIP	
	22	1,2	**5S-7379**	7	BOLT (3/8-16X0.875 IN)	
	23	2	**6V-8398**	2	SEAL-O-RING	
	24	1	**6V-8625**	1	ELBOW	
	25	1	**6V-8801**	1	NUT (3/8-16 THD)	
	26	1	**7D-7233**	1	CLIP	
	27	1	**8C-4436**	2	BOLT (1/2-13X1.375 IN)	
	28	1	**8L-2786**	1	SEAL-O-RING	
	29	1	**8M-2770**	1	CLIP	
	30	1	**8T-4223**	4	WASHER-HARD (13.5X25.5X3MM THK)	
	31	2	**8T-4224**	2	WASHER-HARD (8.8X16X2MM THK)	
	32	1,2	**8T-4896**	9	WASHER-HARD (10.2X18.5X2.5MM THK)	
	33	1	**8T-8917**	2	BOLT (1/2-13X1.25 IN)	
E	34	1	**5P-1251**		HOSE (141CM)	
E	35	1	**8C-3681**		HOSE (205CM)	
E	36	2	**5P-1465**		HOSE (126CM)	
E	37	2	**5P-1465**		HOSE (69CM)	
E	38	2	**5P-1465**		HOSE (8CM)	
E	39	1	**5P-1465**		HOSE (8CM)	
E	40	1	**5P-1465**		HOSE (66CM)	
E	41	1,2	**5P-1465**		HOSE (122CM)	
E	42	1	**5P-1465**		HOSE (67CM)	
E	43	2	**5P-1465**		HOSE (11CM)	
E	44	1	**5P-1465**		HOSE (11CM)	

E-ORDER BY THE CENTIMETER
I-SEE HOSE FABRICATION GUIDE
Y-SEPARATE ILLUSTRATION

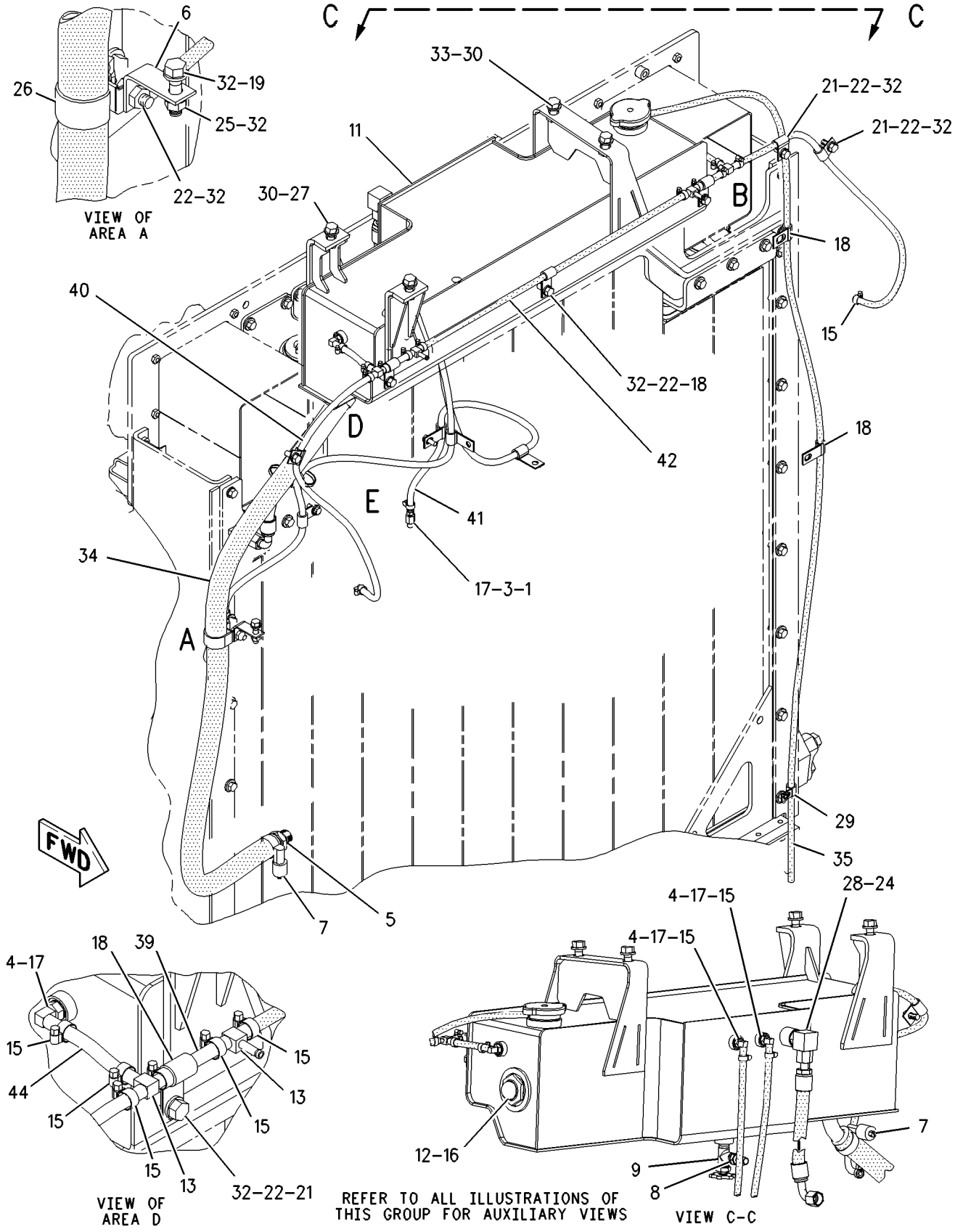

GRAPHIC #1 g00875423

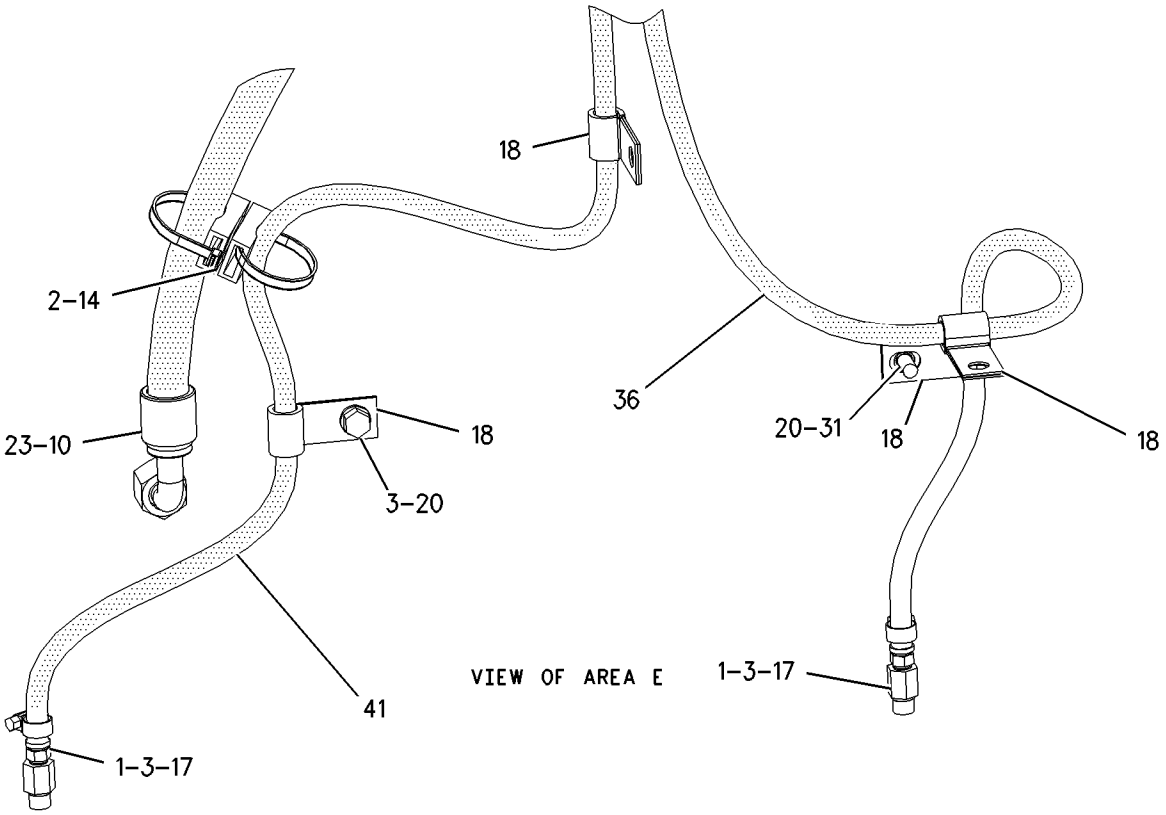

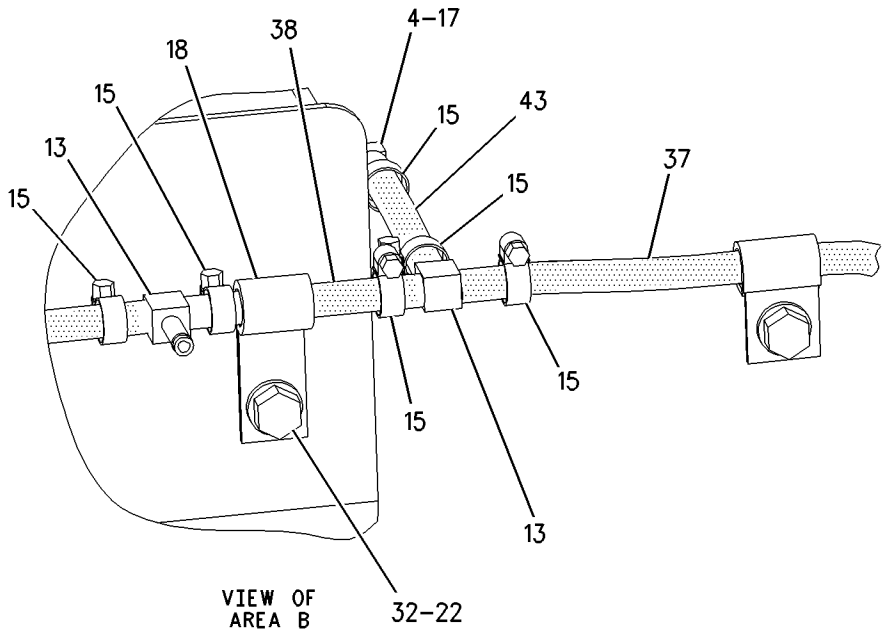

REFER TO ALL ILLUSTRATIONS OF
THIS GROUP FOR AUXILIARY VIEWS

GRAPHIC #2 g00875446

MEMORANDA

AIR INLET AND EXHAUST SYSTEM

169-6450 AFTERCOOLER GP-AIR

S/N: AKT1-UP

PART OF 171-5807 INSTALLATION AR-ENGINE

SMCS-1063 **i01700267**

NOTE	REF NO	GRAPHIC REF	PART NUMBER	QTY	PART NAME 1 2 3 4 5 6 (PRODUCT LEVEL)	SEE PAGE
	1	3	**5R-5927**	4	WASHER	
	2	3	**7T-8331**	8	MOUNTING	
	3	2	**166-7432**	2	AFTERCOOLER AS	
	4	1	**168-8316**	1	ENCLOSURE	
	5	2	**168-8502**	2	SEAL	
	6	1	**169-6443**	1	SEAL AS	
	7	3	**172-4367**	2	SEAL	
	8	3	**174-6098**	4	SLEEVE	
	9	2	**176-2494**	4	PLATE	
	10	2	**176-2497**	4	GASKET	
	11	1	**177-0038**	2	HANDHOLD	
	12	2	**177-9123**	1	PAN-DRIP	
	13	1	**180-4328**	2	MANIFOLD	
	14	2	**185-7979**	1	FAN	
	15	1	**198-6002**	4	BRACKET	
	16	3	**213-8517**	1	ADAPTER-FAN	
	17	3	**214-1048**	8	SPACER (8.8X16X4MM THK)	
	18	2	**9B-7237**	4	BOLT (3/8-16X1.25 IN)	
	19	1	**217-2195**	2	PLATE	
	20	1	**217-2196**	2	SEAL	
Y	21	3	**217-9277**	1	MOTOR GP-FAN	538
	22	3	**218-7168**	1	SEAL-V-RING	
	23	3	**131-3718**	1	SEAL-O-RING	
	24	3	**159-7488**	8	MOUNT	
	25	3	**199-4272**	8	WASHER-HARD	
	26	3	**1T-1402**	1	RETAINER-SHAFT	
	27	3	**2A-3223**	1	BOLT (1/2-20X1.875IN)	
	28	2	**4L-6454**	8	BOLT (3/8-16X1 IN)	
	29	3	**4L-9337**	8	BOLT (3/8-16X1.5 IN)	
	30	3	**4M-0189**	1	SEAL-O-RING	
	31	2	**5P-1075**	8	WASHER-HARD (10.2X22.5X3MM THK)	
	32	3	**5P-1076**	5	WASHER-HARD (13.5X30X4MM THK)	
	33	1	**5P-4116**	28	WASHER-HARD (8.8X20.5X2MM THK)	
	34	2	**5P-8245**	8	WASHER-HARD (13.5X25.5X3MM THK)	
	35	1	**6V-5782**	28	BOLT (5/16-18X1.125 IN)	
	36	3	**6V-8188**	12	NUT (1/2-13 THD)	
	37	3	**7G-8839**	8	SPACER (13.5X57X6MM THK)	
	38	3	**7X-0340**	4	BOLT (1/2-13X6.5 IN)	
	39	3	**7X-0440**	8	BOLT (5/16-18X1.75 IN)	
	40	1	**7X-0482**	8	BOLT	
	41	1,2	**8T-4205**	48	WASHER-HARD (7.2X14.5X2MM THK)	
	42	2,3	**8T-4896**	16	WASHER-HARD (10.2X18.5X2.5MM THK)	
	43	2	**8T-6763**	1	PLUG-PIPE	
	44	1,2	**8T-8908**	48	BOLT (1/4-20X1 IN)	
	45	2	**8T-9377**	4	BOLT (3/8-16X2.25 IN)	
	46	3	**1K-6985**	1	RING-RETAINING	
	47	3	**2D-6648**	1	RING-RETAINING	
	48	3	**5P-9597**	1	SEAL-LIP	
	49	3	**6H-3957**	2	BALL BEARING	
	50	3	**211-5337**	1	HOUSING	
	51	3	**214-2296**	1	SHAFT	

Y-SEPARATE ILLUSTRATION

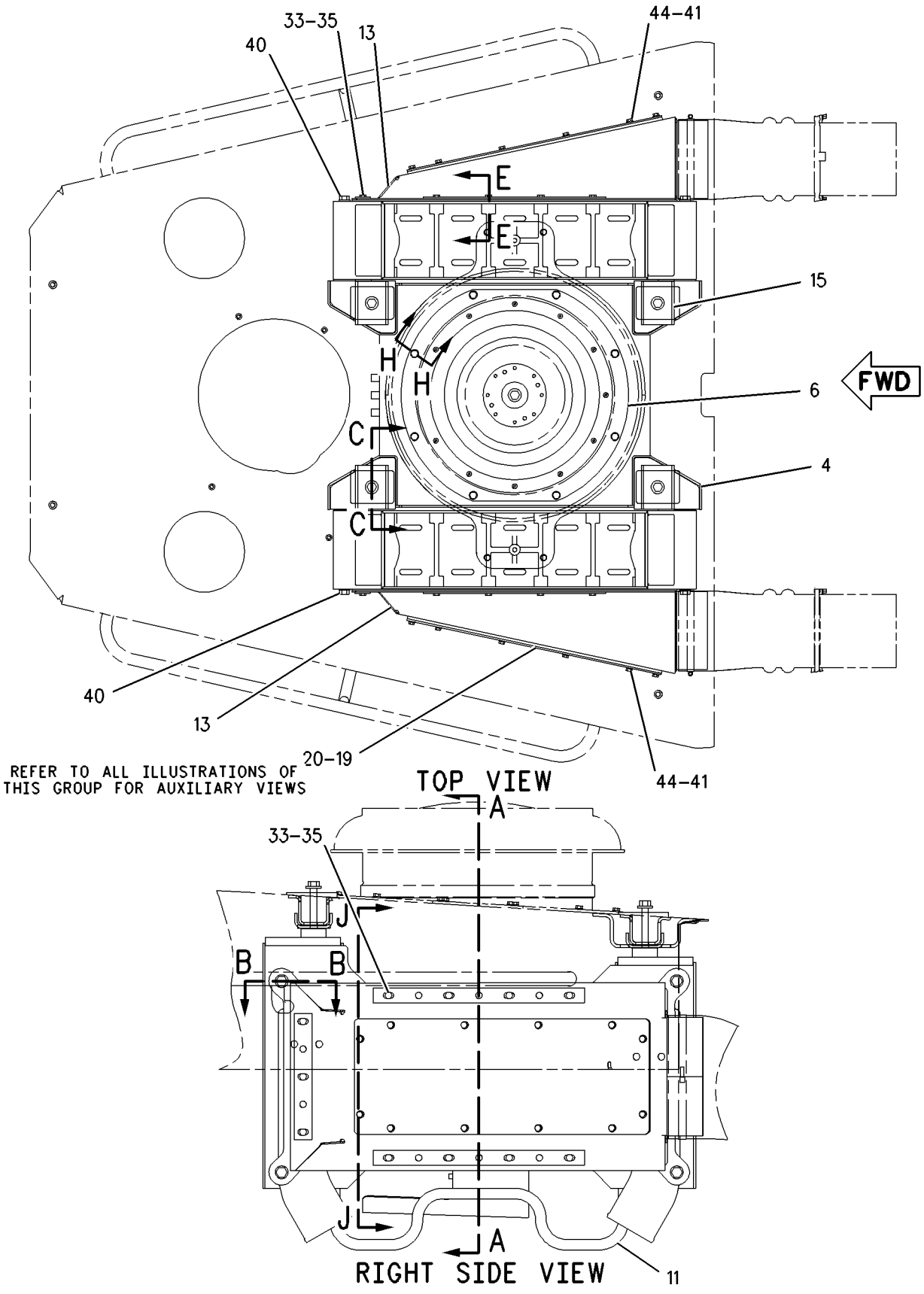

GRAPHIC #1 g00872277

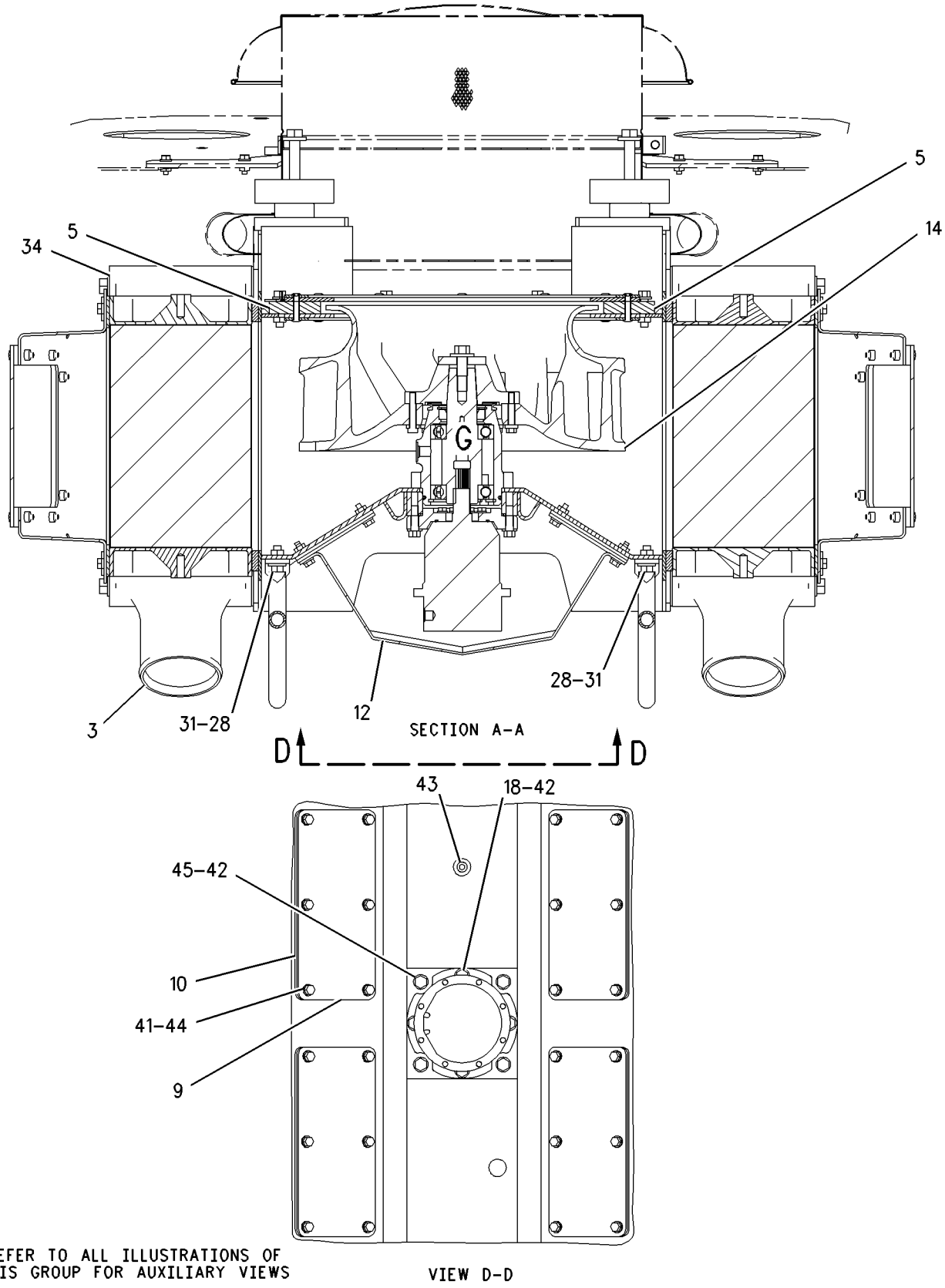

GRAPHIC #2 g00875488

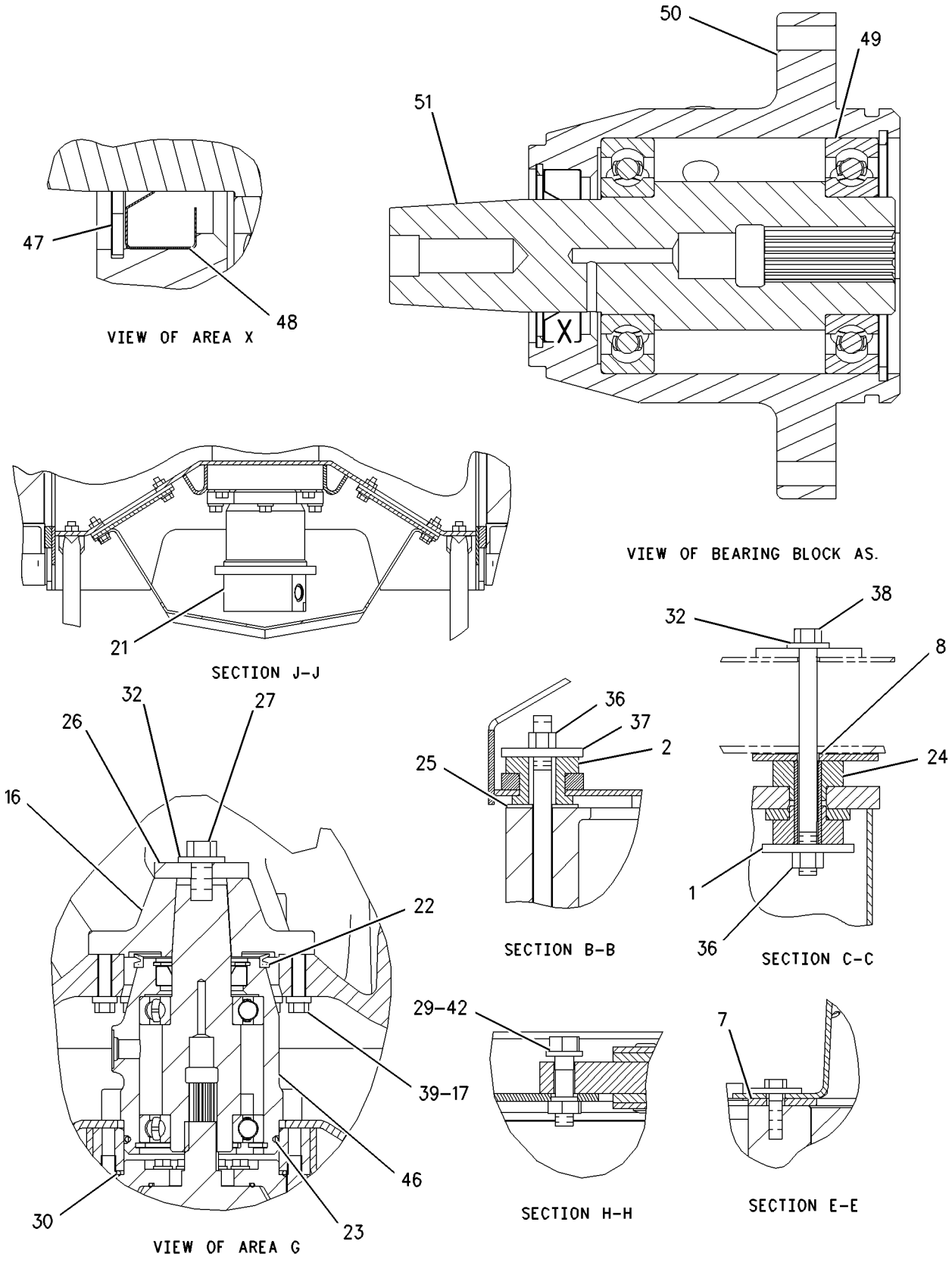

GRAPHIC #3 g00875489

AIR INLET AND EXHAUST SYSTEM

172-4352 AIR CLEANER GP

S/N: AKT1-UP

PART OF 171-5807 INSTALLATION AR-ENGINE

SMCS-1051, 1054 **i01692627**

NOTE	REF NO	GRAPHIC REF	PART NUMBER	QTY	PART NAME 1 2 3 4 5 6 (PRODUCT LEVEL)	SEE PAGE
	1	1	**1P-9390**	2	GASKET-OUTLET	
	2	1	**2P-2508**	1	COVER AS-PRECLEANER	
	3	1	**3E-7424**	4	CLAMP-HOSE	
	4	1	**3E-7447**	1	CLAMP-HOSE	
	5	1	**9X-4008**	2	HOSE-HUMP	
	6	1	**175-4464**	1	ELBOW	
Y	7	1	**177-9007**	2	AIR CLEANER GP	128
	8	1	**177-9008**	1	BODY AS-PRECLEANER	
	9	1	**179-2809**	2	CLAMP AS	
	10	1	**2K-4973**	24	LOCKNUT (3/8-16 THD)	
	11	1	**2M-1538**	20	STUD-TAPERLOCK	
	12	1	**5M-3062**	4	BOLT (3/8-16X0.75 IN)	
	13	1	**5P-1075**	12	WASHER-HARD (10.2X22.5X3MM THK)	
	14	1	**5P-1076**	2	WASHER-HARD (13.5X30X4MM THK)	
	15	1	**5P-2228**	2	BOLT (1/2-13X1 IN)	
	16	1	**8T-0192**	4	BOLT (3/8-16X2.25 IN)	
	17	1	**8T-4896**	20	WASHER-HARD (10.2X18.5X2.5MM THK)	

Y-SEPARATE ILLUSTRATION

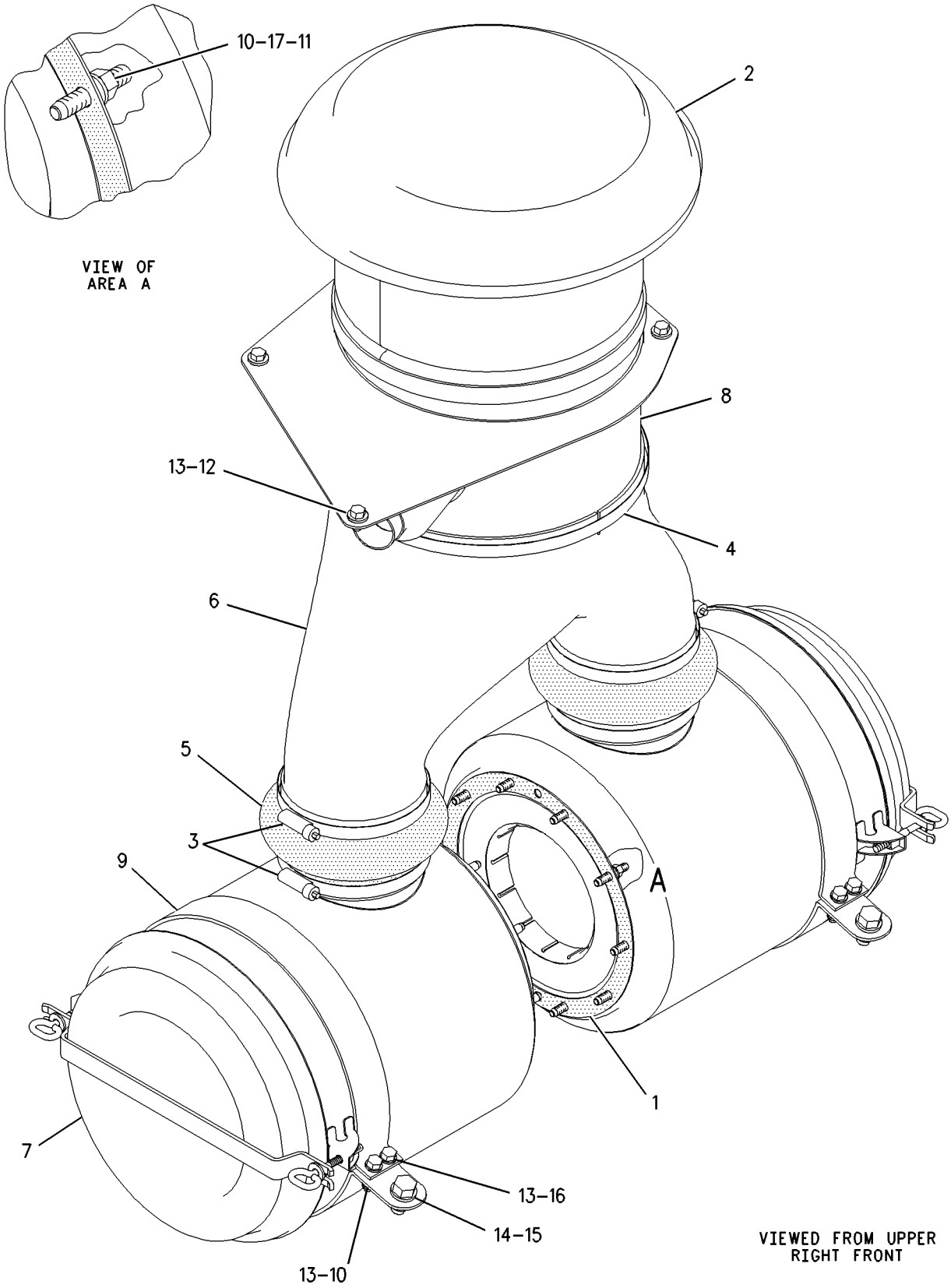

GRAPHIC #1 g00759393

AIR INLET AND EXHAUST SYSTEM

177-9007 AIR CLEANER GP

S/N: AKT1-UP

BASIC

PART OF 172-4352 AIR CLEANER GP

SMCS-1051, 1054 **i01450840**

NOTE	REF NO	GRAPHIC REF	PART NUMBER	QTY	PART NAME 1 2 3 4 5 6 (PRODUCT LEVEL)	SEE PAGE
	1	1	**1P-8481**	1	CUP AS-AIR CLEANER	
	1A	1	**6N-7692**	1	GASKET	
	2	1	**3S-4115**	2	BOLT AS	
	3	1	**6I-2505**	1	FILTER ELEMENT AS-AIR (PRIMARY)	
	4	1	**6I-2506**	1	FILTER ELEMENT AS-AIR (SECONDARY)	

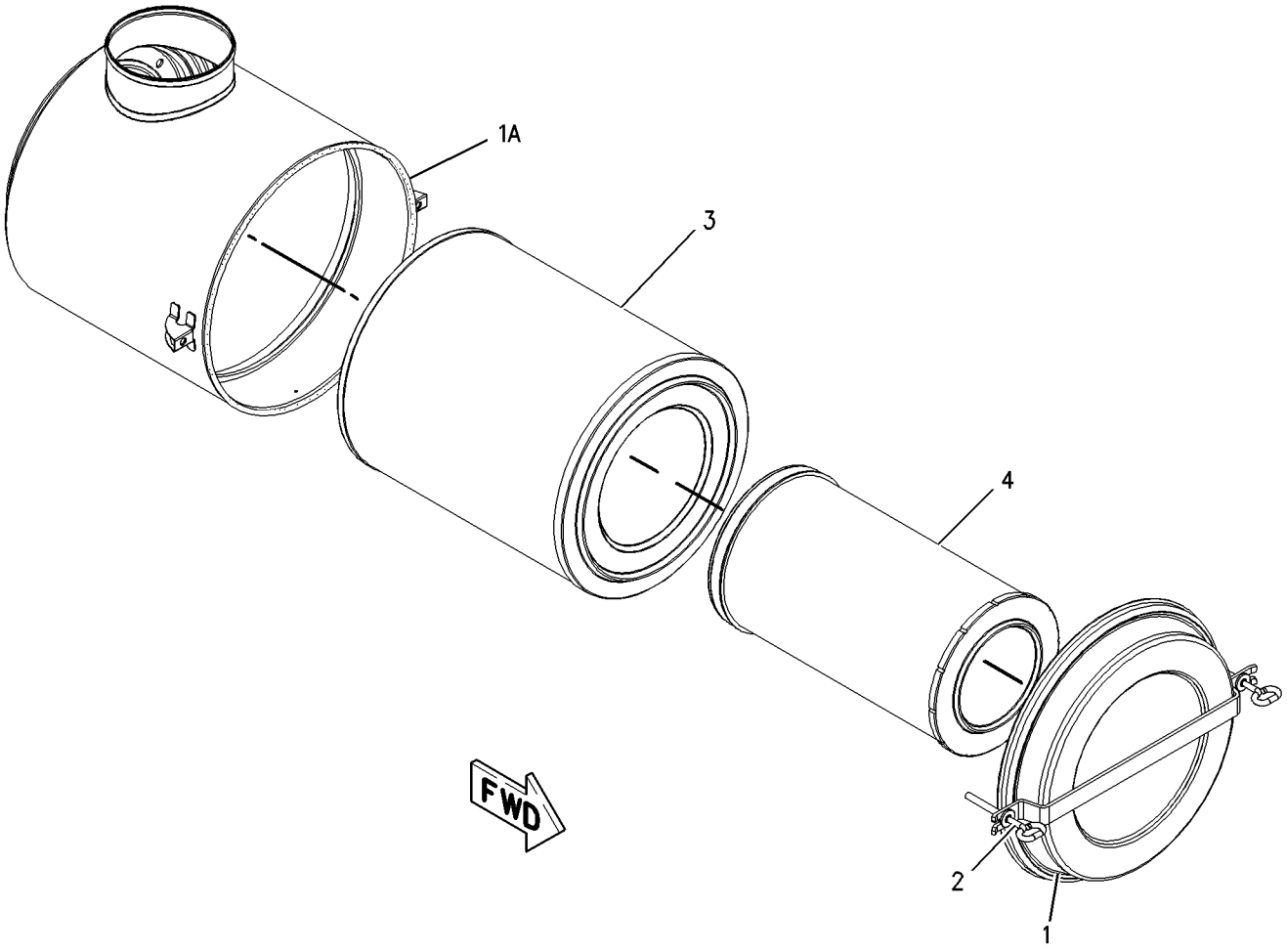

GRAPHIC #1 g00760994

AIR INLET AND EXHAUST SYSTEM

7S-4411 CAP AS-RAIN

S/N: AKT1-UP
PART OF 172-4353 DUST EJECTOR GP
FOR USE WITH 6 INCH DIAMETER EXHAUST

SMCS-1072 **i01297417**

NOTE	REF NO	GRAPHIC REF	PART NUMBER	QTY	PART NAME 1 2 3 4 5 6 (PRODUCT LEVEL)	SEE PAGE
					(NO SERVICED PARTS)	

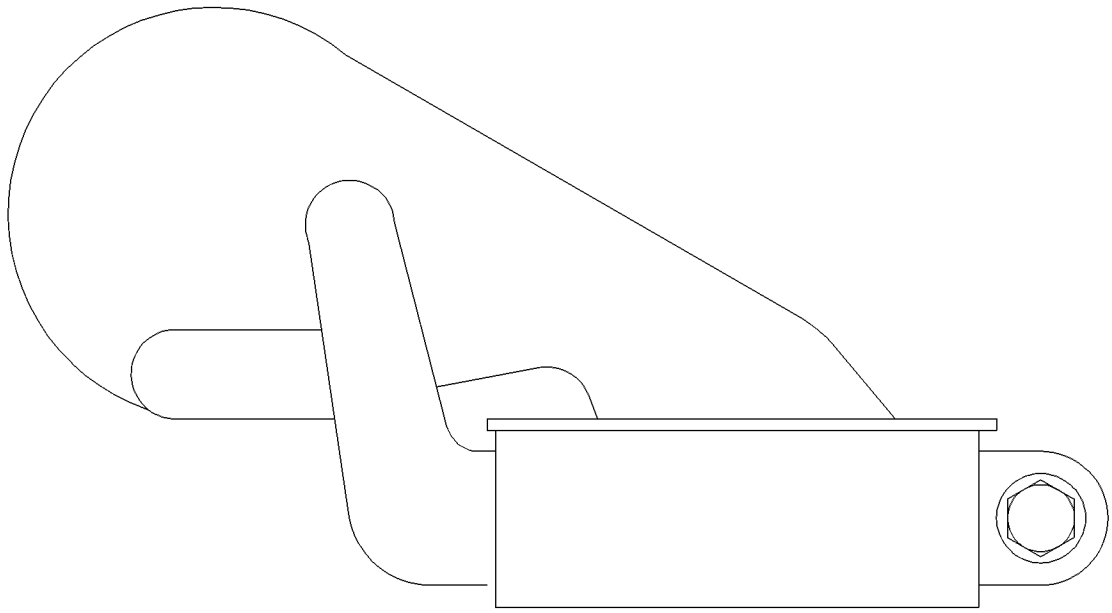

GRAPHIC #1 g00595606

AIR INLET AND EXHAUST SYSTEM

169-6452 DUST EJECTOR GP

S/N: AKT1-UP

PART OF 171-5807 INSTALLATION AR-ENGINE

SMCS-1068 **i01692206**

NOTE	REF NO	GRAPHIC REF	PART NUMBER	QTY	PART NAME 1 2 3 4 5 6 (PRODUCT LEVEL)	SEE PAGE
	1	1	**1W-8620**	1	VALVE AS-CHECK	
	2	1	**5P-0597**	8	CLAMP-HOSE	
	3	1	**7S-4411**	1	CAP AS-RAIN	
	4	1	**180-2449**	1	ELBOW	
	5	1	**180-5571**	1	BRACKET	
	6	1	**210-9124**	2	HOSE	
	7	1	**210-9125**	1	HOSE	
	8	1	**210-9126**	1	HOSE	
	9	1	**219-9914**	1	EJECTOR AS	
	9A	1	**158-3528**	1	CLAMP-BENT BOLT	
	10	1	**4L-6454**	3	BOLT (3/8-16X1 IN)	
	11	1	**6V-8801**	3	NUT (3/8-16 THD)	
	12	1	**8T-4896**	9	WASHER-HARD (10.2X18.5X2.5MM THK)	
	13	1	**9B-7237**	3	BOLT (3/8-16X1.25 IN)	

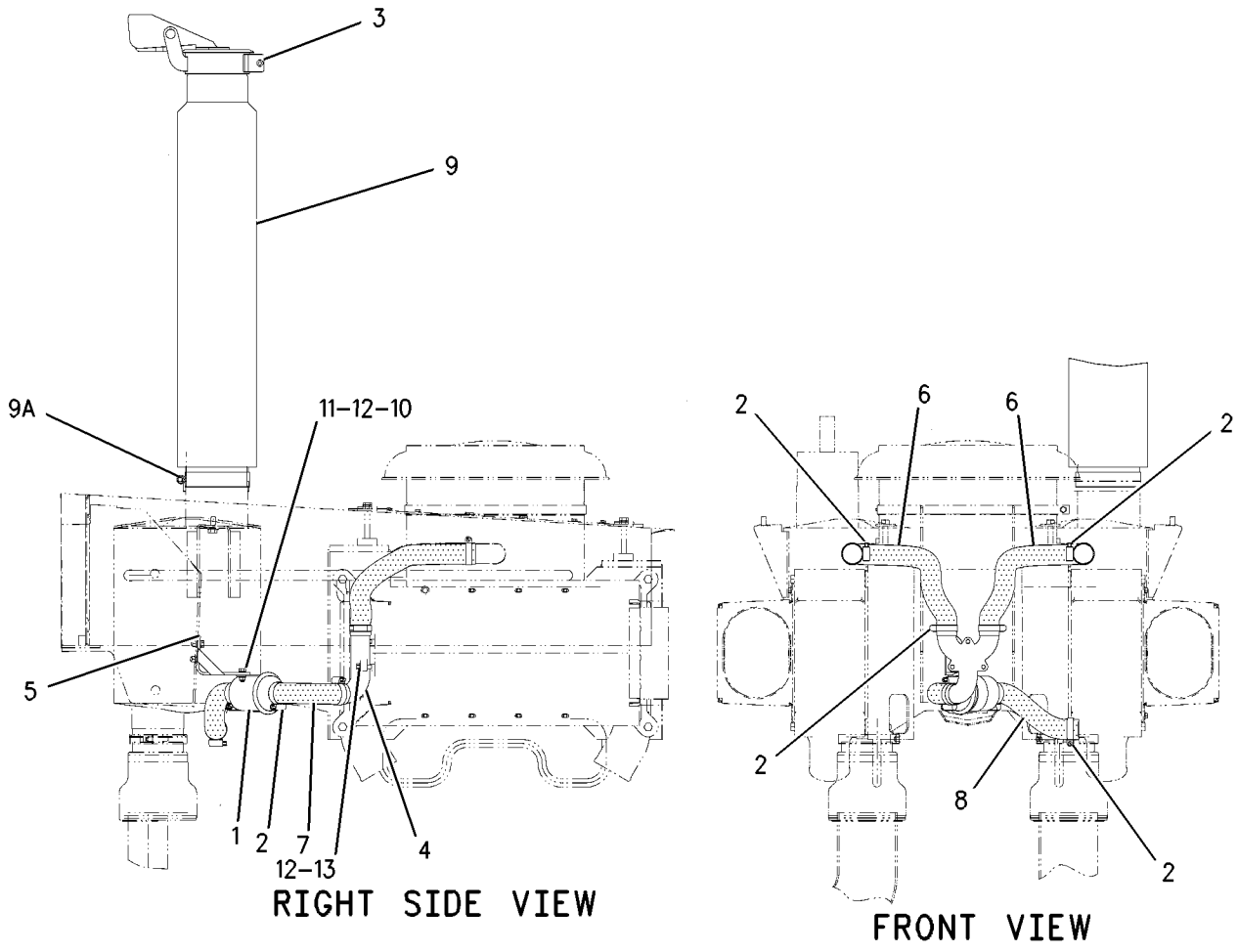

GRAPHIC #1 g00871226

AIR INLET AND EXHAUST SYSTEM

172-4353 DUST EJECTOR GP

S/N: AKT1-UP

PART OF 171-5807 INSTALLATION AR-ENGINE

SMCS-1068 **i01692821**

NOTE	REF NO	GRAPHIC REF	PART NUMBER	QTY	PART NAME 1 2 3 4 5 6 (PRODUCT LEVEL)	SEE PAGE
	1	1	**5P-0597**	4	CLAMP-HOSE	
	2	1	**6I-4265**	1	HOSE	
Y	3	1	**7S-4411**	1	CAP AS-RAIN	129
	4	1	**198-2787**	1	TUBE-EJECTOR	
	5	1	**210-9123**	1	HOSE	
	6	1	**219-9914**	1	EJECTOR AS	
	6A	1	**158-3528**	1	CLAMP-BENT BOLT	
	7	1	**130-3374**	2	CLIP	
	8	1	**4L-6454**	2	BOLT (3/8-16X1 IN)	
	9	1	**8T-4896**	2	WASHER-HARD (10.2X18.5X2.5MM THK)	

Y-SEPARATE ILLUSTRATION

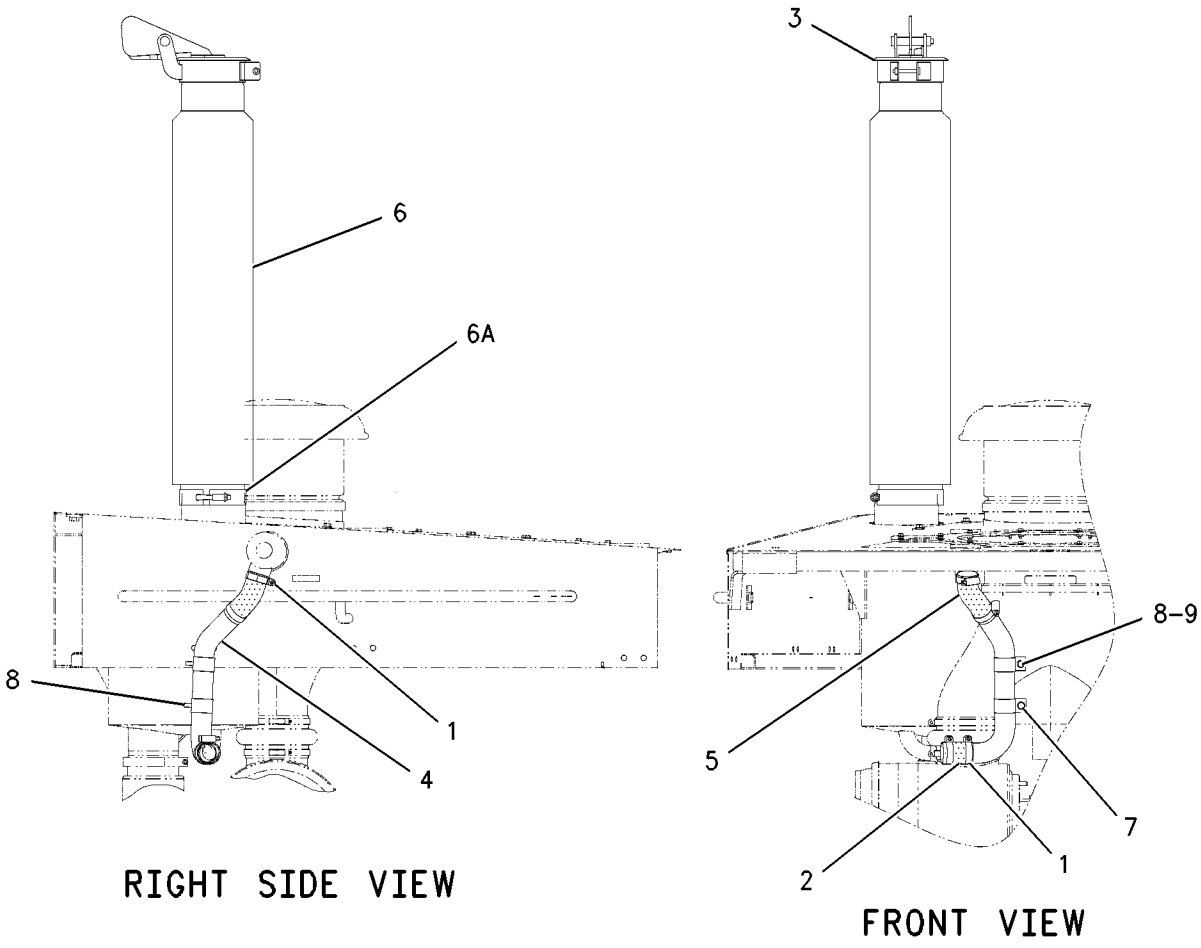

GRAPHIC #1 g00871685

AIR INLET AND EXHAUST SYSTEM

166-5425 LINES GP-AIR

S/N: 5JJ3200-UP
PART OF 171-5806, 206-3114 ENGINE AR
ALSO AN ATTACHMENT

SMCS-1058 **i01692534**

NOTE	REF NO	GRAPHIC REF	PART NUMBER	QTY	PART NAME 1 2 3 4 5 6 (PRODUCT LEVEL)	SEE PAGE
	1	1	**107-8618**	1	SENSOR GP-TEMPERATURE (AIR)	
		1	**3E-3371**	1	WEDGE-RECEPTACLE LOCK (3 PIN)	
		1	**186-3735**	3	PIN-CONNECTOR	
BE		1	**112-4550**		SLEEVE	
		1	**102-8803**	1	KIT-RECEPTACLE (3 PIN)	
					(INCLUDES RECEPTACLE AS & WEDGE)	
	2	1	**172-6513**	1	BASE	
	3	1	**172-6514**	1	COVER	
	4	1	**172-6515**	2	ADAPTER	
	5	1	**176-0267**	1	GASKET	
	6	1	**176-0739**	1	BRACKET	
	7	1	**0L-1352**	10	BOLT (3/8-16X3.25 IN)	
	8	1	**0S-1588**	2	BOLT (3/8-16X1.25 IN)	
	9	1	**0L-2070**	4	BOLT (3/8-16X2.25 IN)	
	10	1	**1A-2029**	14	BOLT (3/8-16X1.125 IN)	
	11	1	**1A-5183**	4	BOLT (3/8-16X4.75 IN)	
	12	1	**1A-5964**	4	BOLT (3/8-16X4.5 IN)	
	13	1	**1B-4971**	2	SPACER (.4062X1X1 IN THK)	
	14	1	**4N-2564**	1	GASKET-AFTERCOOLER	
	15	1	**5M-2894**	30	WASHER-HARD (10.2X18.5X2.5MM THK)	
	16	1	**5M-6213**	1	PLUG-PIPE	
	17	1	**6D-7146**	2	SEAL-O-RING	
	18	1	**8M-1047**	2	STUD-TAPERLOCK	
	19	1	**9S-8752**	2	NUT-FULL (3/8-16 THD)	
	20	1	**9X-6458**	4	WASHER-HARD (10.2X22.5X3MM THK)	

B-USE AS REQUIRED
E-ORDER BY THE CENTIMETER

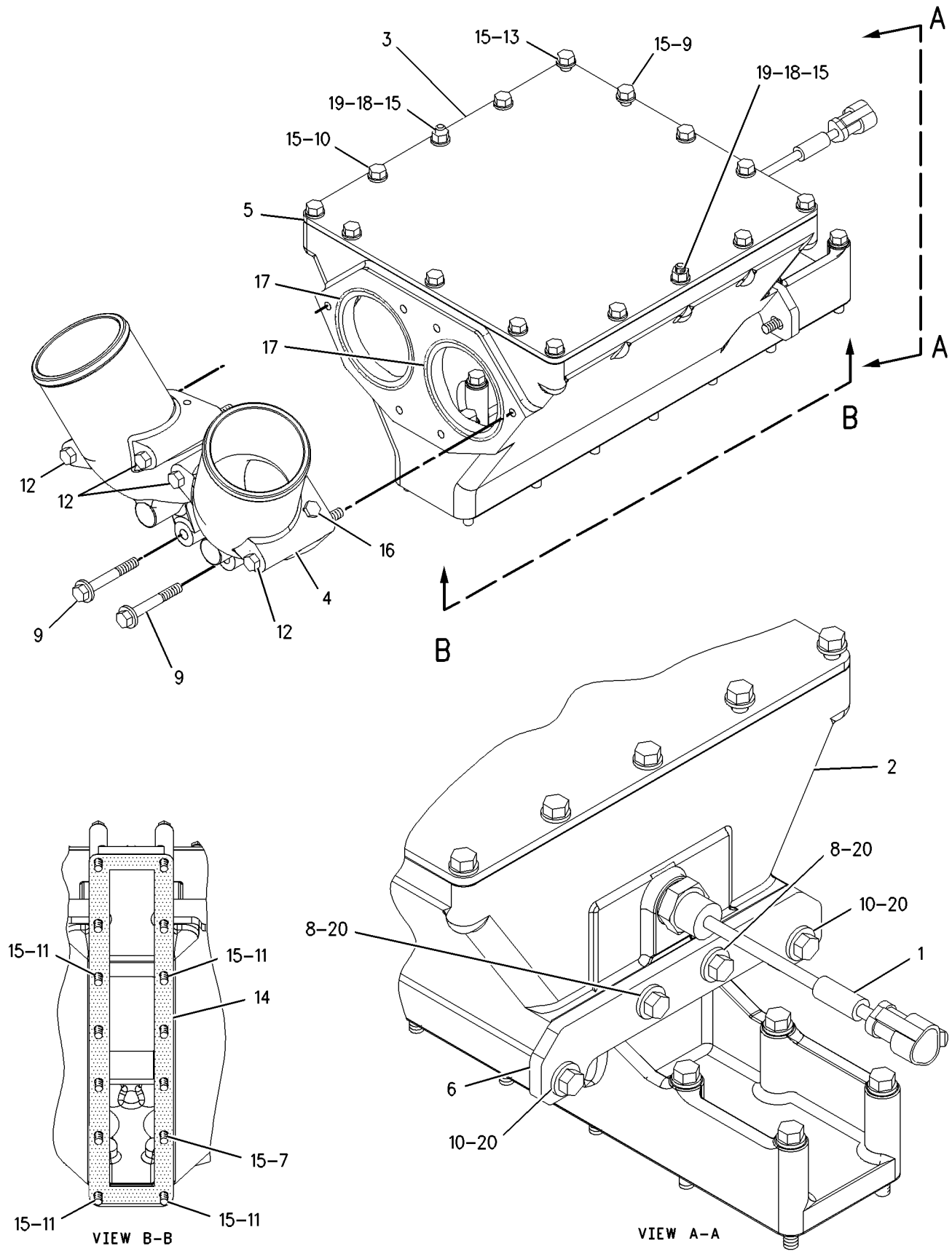

GRAPHIC #1

g00871499

AIR INLET AND EXHAUST SYSTEM

166-5428 LINES GP-AIR

S/N: AKT1-UP

PART OF 171-5807 INSTALLATION AR-ENGINE

SMCS-1058 **i01694475**

NOTE	REF NO	GRAPHIC REF	PART NUMBER	QTY	PART NAME 1 2 3 4 5 6 (PRODUCT LEVEL)	SEE PAGE
	1	1	**7W-3144**	1	ELBOW	
	2	1	**7W-3145**	4	PLATE	
	3	1	**147-7109**	1	HOSE	
	4	1	**177-2222**	1	TUBE AS	
	5	1	**179-4997**	1	STRUT	
	6	1	**180-5141**	1	BRACKET AS	
		1	**1F-0750**	4	NUT-WELD (3/8-16 THD)	
	7	1	**210-5519**	1	HOSE	
	8	1	**210-5520**	1	HOSE	
	9	1	**213-0016**	1	HOSE	
	10	1	**213-0017**	1	HOSE	
	11	1	**218-1959**	1	BRACKET AS	
		1	**1F-0750**	4	NUT-WELD (3/8-16 THD)	
	12	1	**219-7227**	1	BRACKET AS	
		1	**1F-0750**	2	NUT-WELD (3/8-16 THD)	
	13	1	**4L-6454**	4	BOLT (3/8-16X1 IN)	
	14	1	**5H-7704**	4	SEAL-O-RING	
	15	1	**5M-6214**	1	PLUG-PIPE	
	16	1	**5P-1075**	4	WASHER-HARD (10.2X22.5X3MM THK)	
	17	1	**5P-2228**	2	BOLT (1/2-13X1 IN)	
	18	1	**8M-3175**	1	WASHER-HARD (10.2X16X3MM THK)	
	19	1	**8T-4223**	2	WASHER-HARD (13.5X25.5X3MM THK)	
	20	1	**8T-4896**	4	WASHER-HARD (10.2X18.5X2.5MM THK)	
	21	1	**9B-7237**	4	BOLT (3/8-16X1.25 IN)	
	22	1	**9X-2201**	20	CLAMP-HOSE	

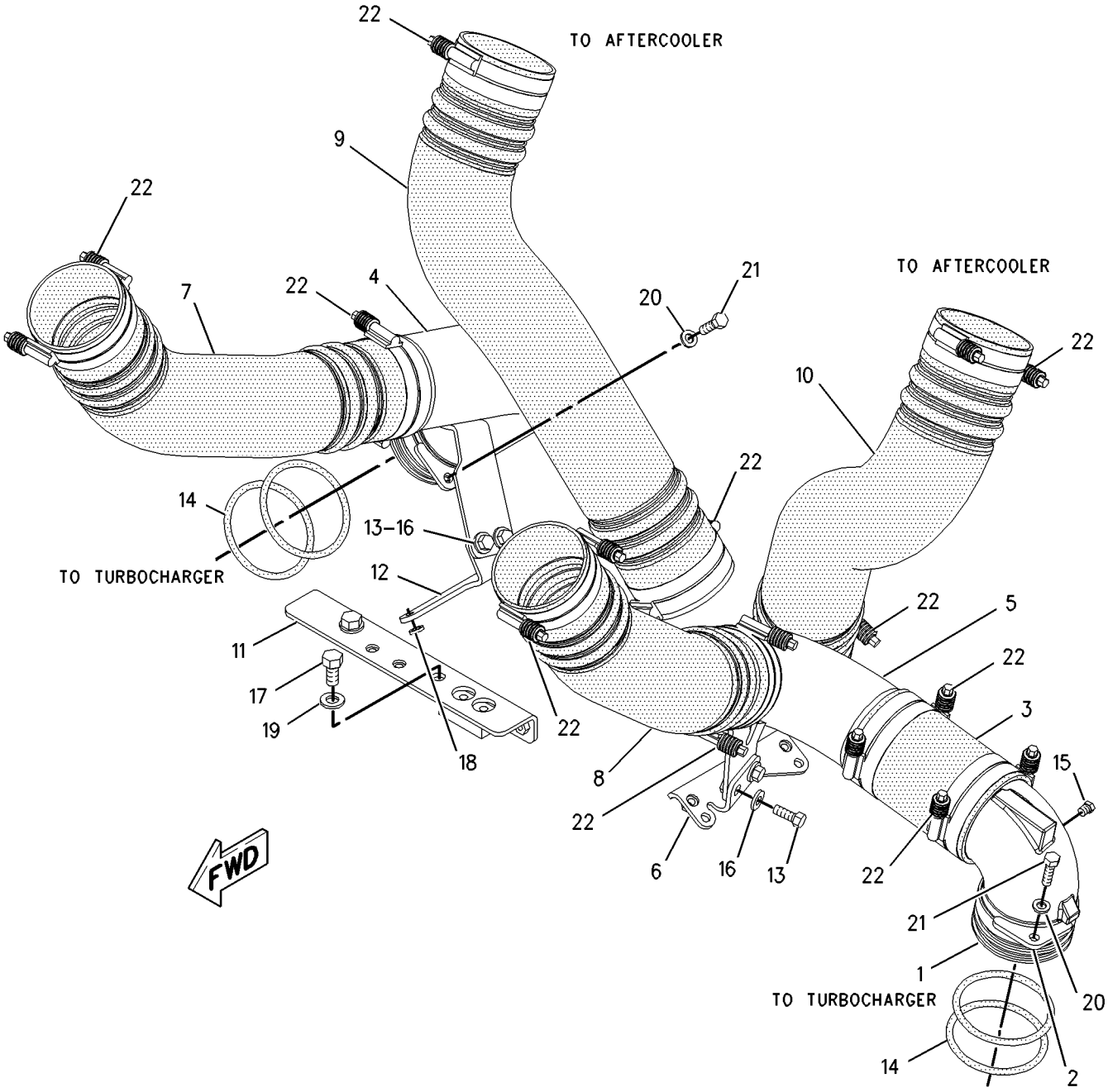

GRAPHIC #1 g00873384

AIR INLET AND EXHAUST SYSTEM

173-1030 LINES GP-AIR

S/N: AKT1-UP

PART OF 171-5807 INSTALLATION AR-ENGINE

SMCS-1058 **i01694496**

NOTE	REF NO	GRAPHIC REF	PART NUMBER	QTY	PART NAME 1 2 3 4 5 6 (PRODUCT LEVEL)	SEE PAGE
	1	1	**5L-8854**	4	RING-SEALING	
	2	1	**6L-3005**	2	CLAMP-BAND	
	3	1	**175-2580**	2	SUPPORT	
	4	1	**175-2582**	4	RING-METAL SEAL	
	5	1	**175-2583**	2	SEAL-EXHAUST	
	6	1	**175-2592**	2	COUPLING AS	
	7	1	**175-2593**	1	ELBOW AS	
	8	1	**175-2605**	2	TUBE AS	
	9	1	**176-1854**	1	ELBOW AS	
	10	1	**219-1066**	2	COUPLING AS	
	11	1	**214-9367**	2	CLAMP-BAND	
	12	1	**4L-6454**	4	BOLT (3/8-16X1 IN)	
	13	1	**5P-1075**	10	WASHER-HARD (10.2X22.5X3MM THK)	
	14	1	**8T-2502**	6	BOLT (3/8-16X1.125 IN)	

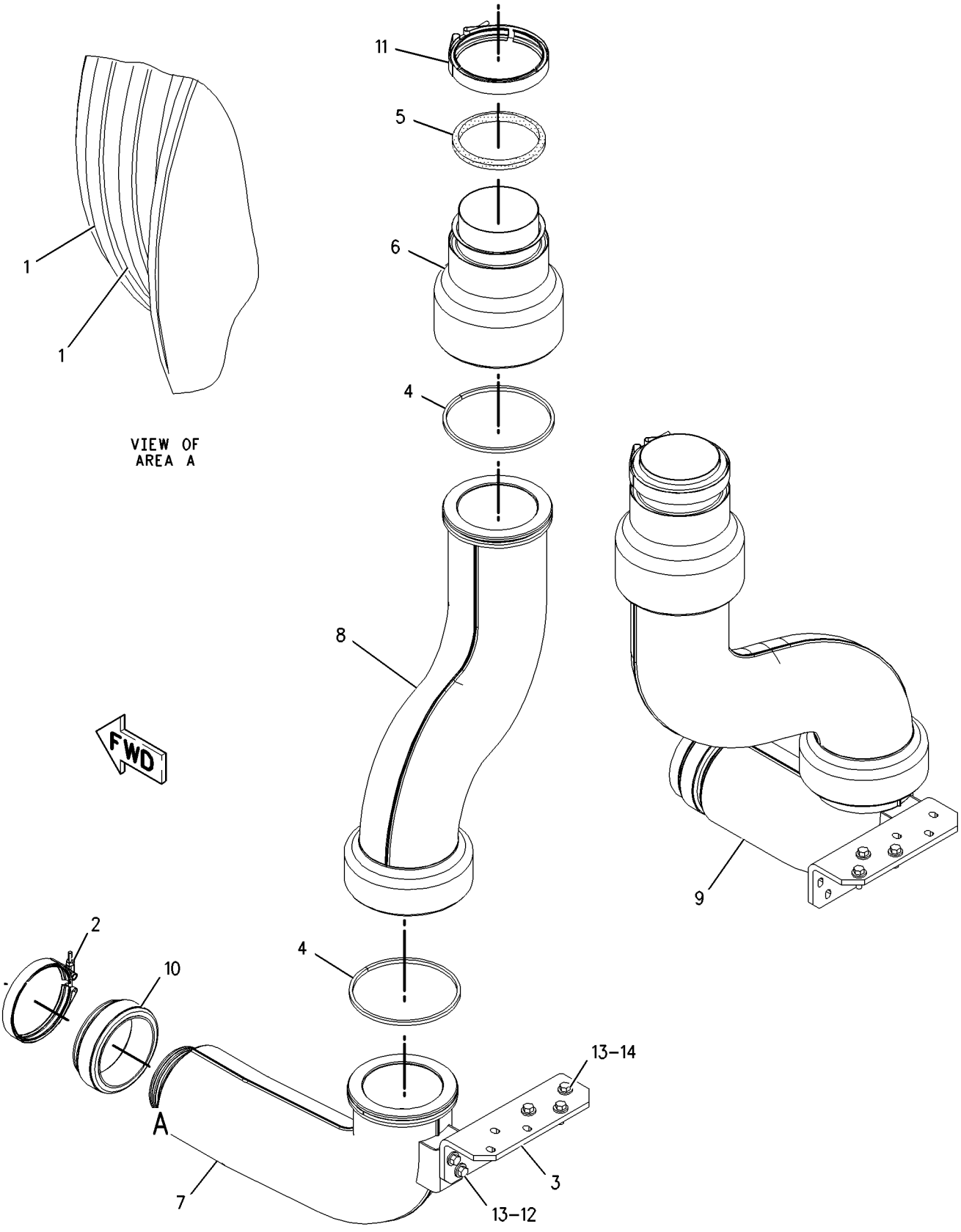

GRAPHIC #1 g00873333

AIR INLET AND EXHAUST SYSTEM

176-1857 LINES GP-AIR

S/N: AKT1-UP

PART OF 171-5807 INSTALLATION AR-ENGINE

SMCS-1058 **i01694527**

NOTE	REF NO	GRAPHIC REF	PART NUMBER	QTY	PART NAME 1 2 3 4 5 6 (PRODUCT LEVEL)	SEE PAGE
	1	1	**8T-4987**	4	CLAMP-HOSE	
	2	1	**8T-4988**	4	CLAMP-HOSE	
	3	1	**175-4411**	1	SUPPORT-COVER	
	4	1	**176-0265**	1	TUBE AS	
	5	1	**176-0266**	1	TUBE AS	
	6	1	**178-9410**	2	HOSE-ELBOW	
	7	1	**179-3623**	1	BRACKET AS	
		1	**1F-0750**	1	NUT-WELD (3/8-16 THD)	
	8	1	**179-3624**	1	BRACKET AS	
		1	**1F-0750**	1	NUT-WELD (3/8-16 THD)	
	9	1	**179-4994**	2	STRUT	
	10	1	**179-4995**	2	STRUT	
	11	1	**0L-2070**	2	BOLT (3/8-16X2.25 IN)	
	12	1	**0S-1587**	8	BOLT (1/2-13X1.75 IN)	
	13	1	**1C-2251**	12	BOLT (3/8-16X1.87 IN)	
	14	1	**4L-6454**	4	BOLT (3/8-16X1 IN)	
	15	1	**5M-2894**	12	WASHER-HARD (10.2X18.5X2.5MM THK)	
	16	1	**5P-1075**	8	WASHER-HARD (10.2X22.5X3MM THK)	
	17	1	**5P-8245**	8	WASHER-HARD (13.5X25.5X3MM THK)	
	18	1	**6V-1195**	2	SEAL-O-RING	
	19	1	**8C-6876**	4	BOLT (5/16-18X1.625)	
	20	1	**8T-4224**	4	WASHER-HARD (8.8X16X2MM THK)	
	21	1	**9B-7237**	2	BOLT (3/8-16X1.25 IN)	

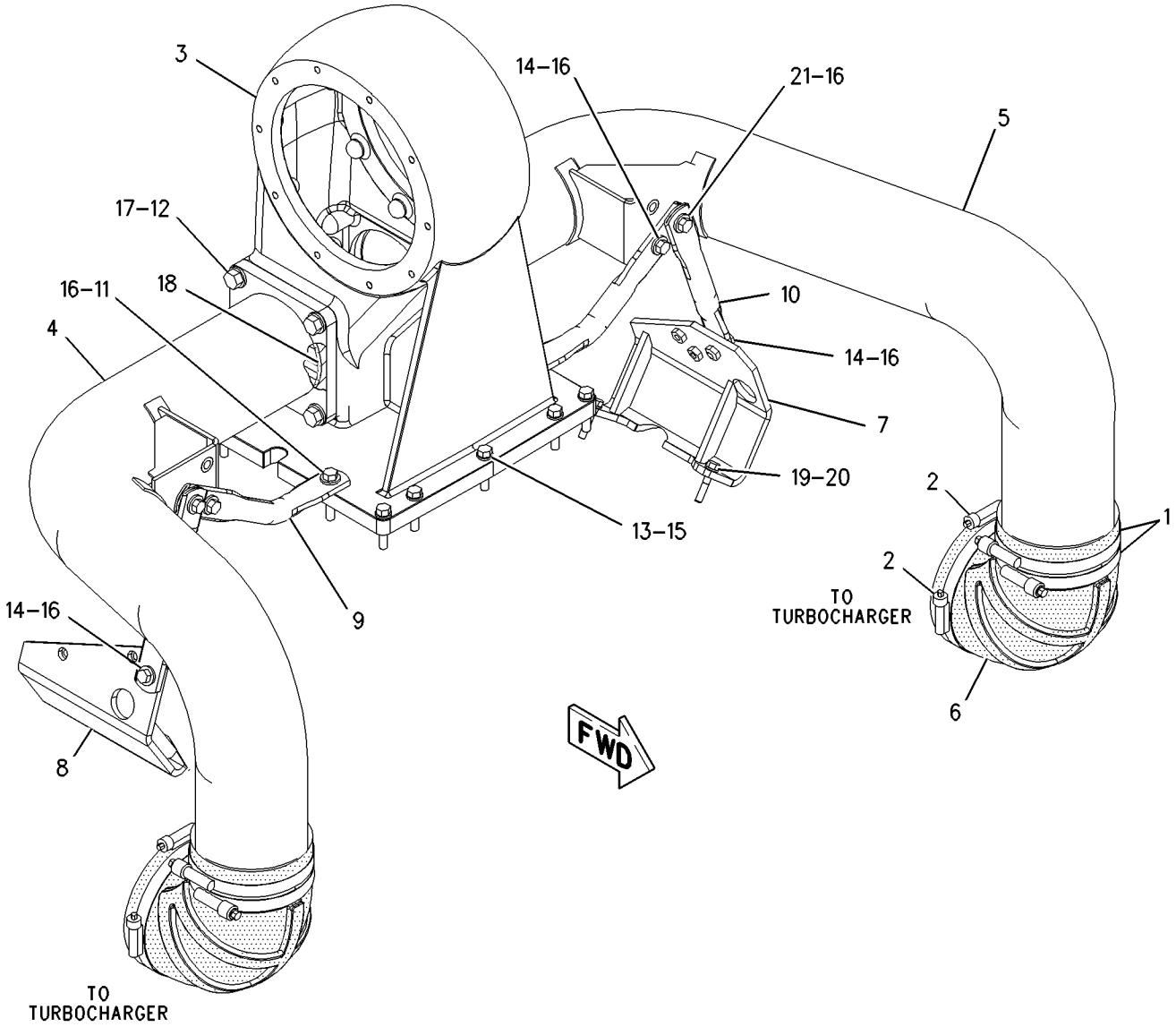

GRAPHIC #1 g00873367

AIR INLET AND EXHAUST SYSTEM

212-4246 MANIFOLD GP-EXHAUST

S/N: 5JJ3200-UP
PART OF 171-5806, 206-3114 ENGINE AR
ALSO AN ATTACHMENT

SMCS-1059 **i01689308**

NOTE	REF NO	GRAPHIC REF	PART NUMBER	QTY	PART NAME 1 2 3 4 5 6 (PRODUCT LEVEL)	SEE PAGE
	1	1	**2W-4474**	6	BRACKET	
	2	1	**100-7401**	8	SEAL AS-EXHAUST	
	3	1	**108-3612**	12	SPACER (11.13X19.05X53MM THK)	
	4	1	**114-9223**	12	SPACER (11.13X19.05X19MM THK)	
	5	1	**129-9452**	12	GASKET-EXHAUST MANIFOLD	
	6	1	**163-3103**	4	MANIFOLD-EXHAUST	
	7	1	**173-8352**	1	MANIFOLD-EXHAUST	
	8	1	**173-8353**	1	MANIFOLD-EXHAUST	
	9	1	**106-1793**	2	STUD-TAPERLOCK	
	10	1	**2N-2766**	24	LOCKNUT	
	11	1	**5B-7890**	4	PLUG-PIPE	
	12	1	**5M-2894**	24	WASHER-HARD (10.2X18.5X2.5MM THK)	
	13	1	**6B-2882**	12	SPACER (.406X.75X.312 IN THK)	

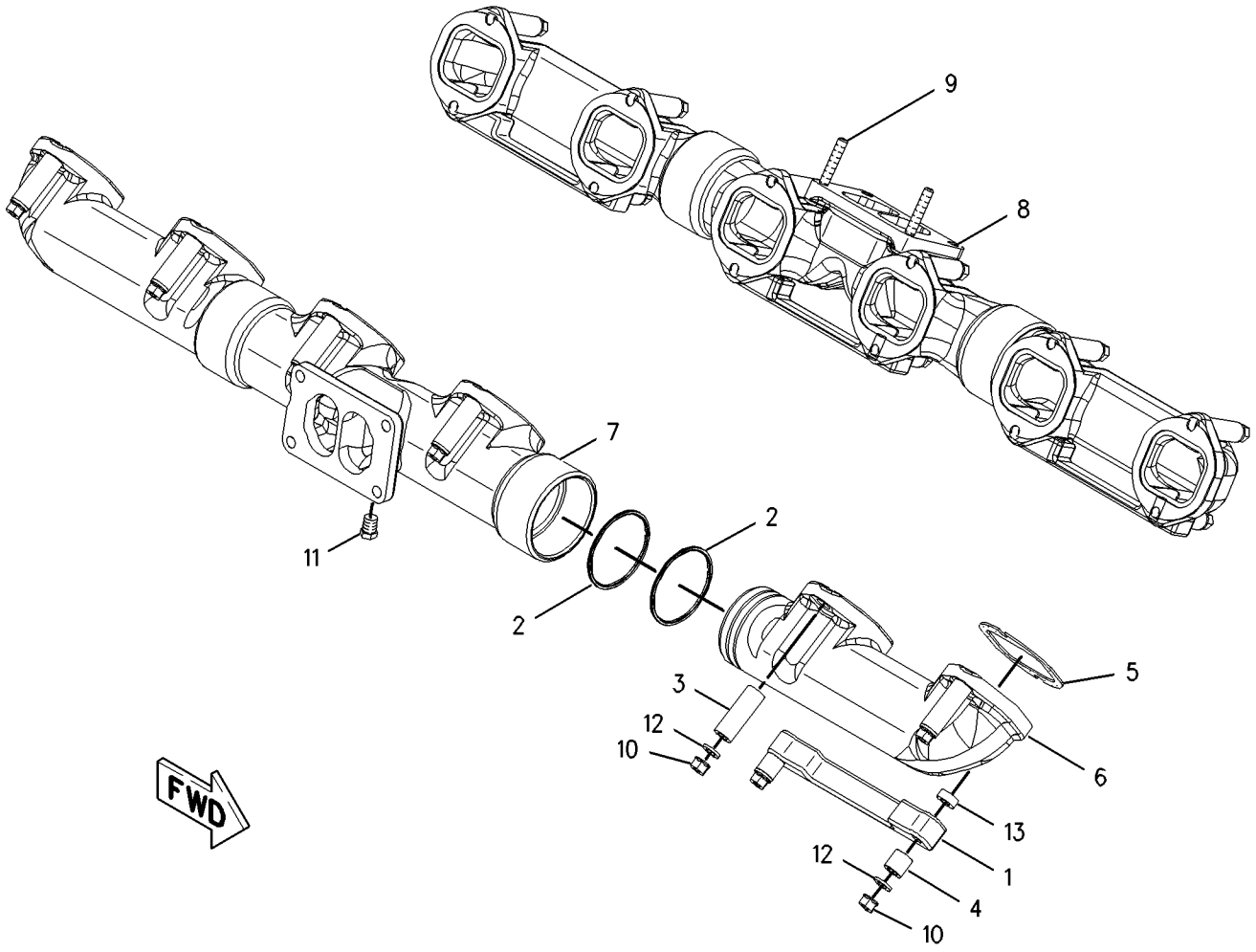

GRAPHIC #1 g00871420

AIR INLET AND EXHAUST SYSTEM

172-4354 MUFFLER GP

S/N: AKT1-UP

PART OF 171-5807 INSTALLATION AR-ENGINE

SMCS-1062 **i01692924**

NOTE	REF NO	GRAPHIC REF	PART NUMBER	QTY	PART NAME 1 2 3 4 5 6 (PRODUCT LEVEL)	SEE PAGE
	1	1	**211-8767**	1	MUFFLER AS (RH)	
	2	1	**211-8768**	1	MUFFLER AS (LH)	
	3	1	**0S-1621**	4	BOLT (1/2-13X1 IN)	
	4	1	**5P-1076**	6	WASHER-HARD (13.5X30X4MM THK)	
	5	1	**8T-8917**	2	BOLT (1/2-13X1.25 IN)	

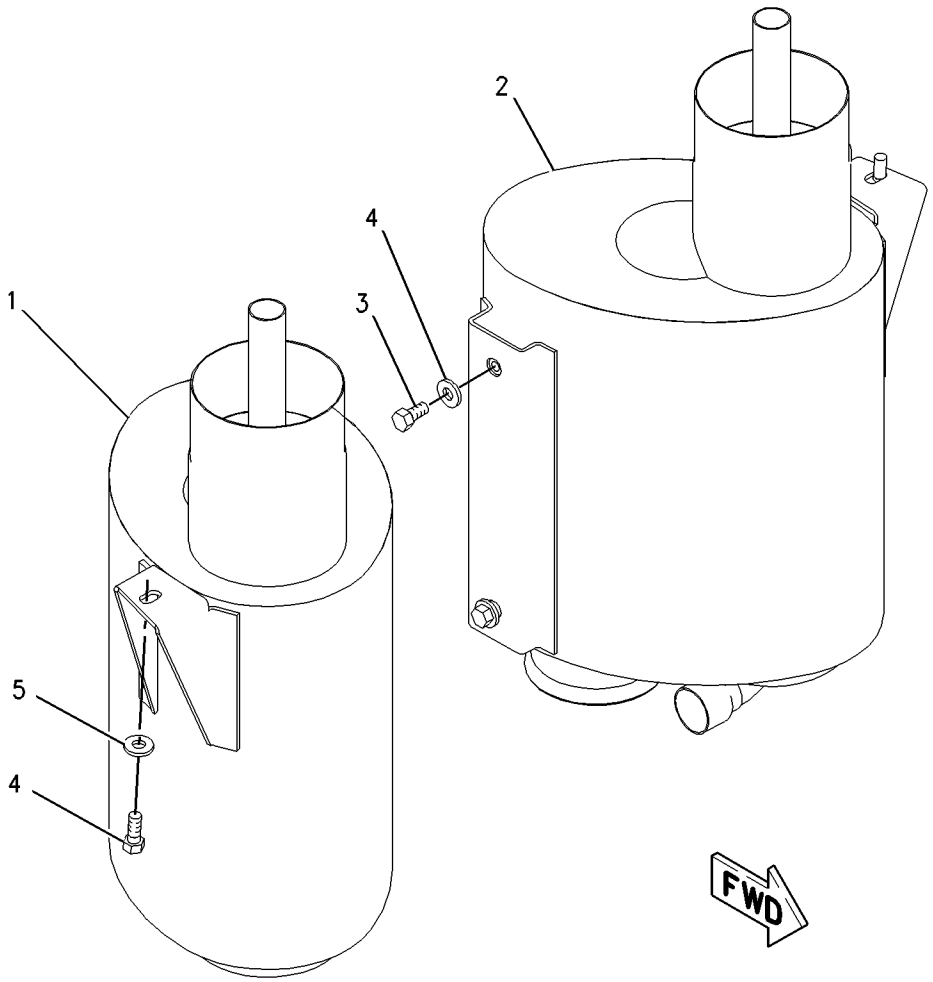

GRAPHIC #1 g00871608

AIR INLET AND EXHAUST SYSTEM

175-7542 PRECLEANER GP

S/N: AKT1-UP

PART OF 171-5807 INSTALLATION AR-ENGINE

SMCS-1055 **i01449409**

NOTE	REF NO	GRAPHIC REF	PART NUMBER	QTY	PART NAME 1 2 3 4 5 6 (PRODUCT LEVEL)	SEE PAGE
	1	1	**169-0902**	1	BODY-PRECLEANER	
	2	1	**169-0903**	1	COVER AS-PRECLEANER	

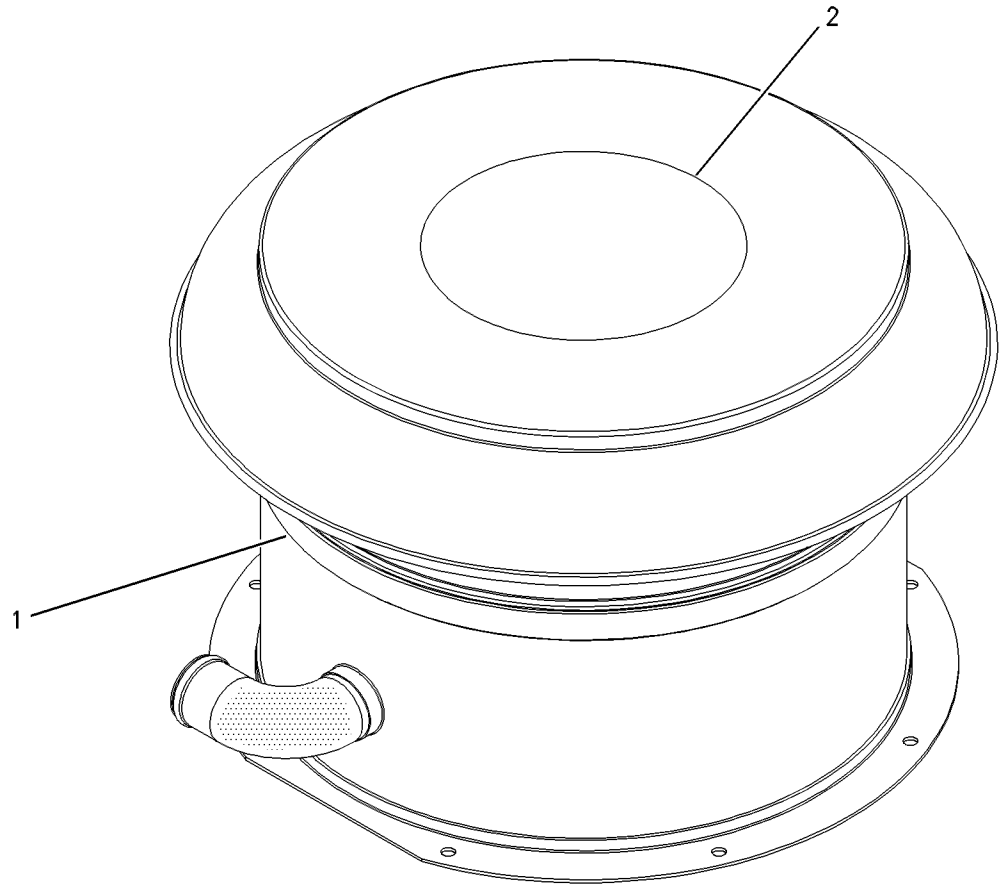

GRAPHIC #1 g00653640

MEMORANDA

AIR INLET AND EXHAUST SYSTEM

211-8727 SHIELD GP-HEAT

S/N: AKT1-UP

PART OF 171-5807 INSTALLATION AR-ENGINE

SMCS-1067 **i01691102**

NOTE	REF NO	GRAPHIC REF	PART NUMBER	QTY	PART NAME 1 2 3 4 5 6 (PRODUCT LEVEL)	SEE PAGE
	1	1	**1A-2161**	12	SPACER (13/32 X 7/8 X .381IN)	
	2	1	**205-6344**	2	SHIELD AS	
	3	1	**205-6345**	1	SHIELD AS	
	4	1	**205-6346**	1	SHIELD AS	
	5	1	**3K-3256**	26	STUD	
	6	1	**5P-1075**	24	WASHER-HARD (10.2X22.5X3MM THK)	
	7	1	**6V-8801**	24	NUT (3/8-16 THD)	

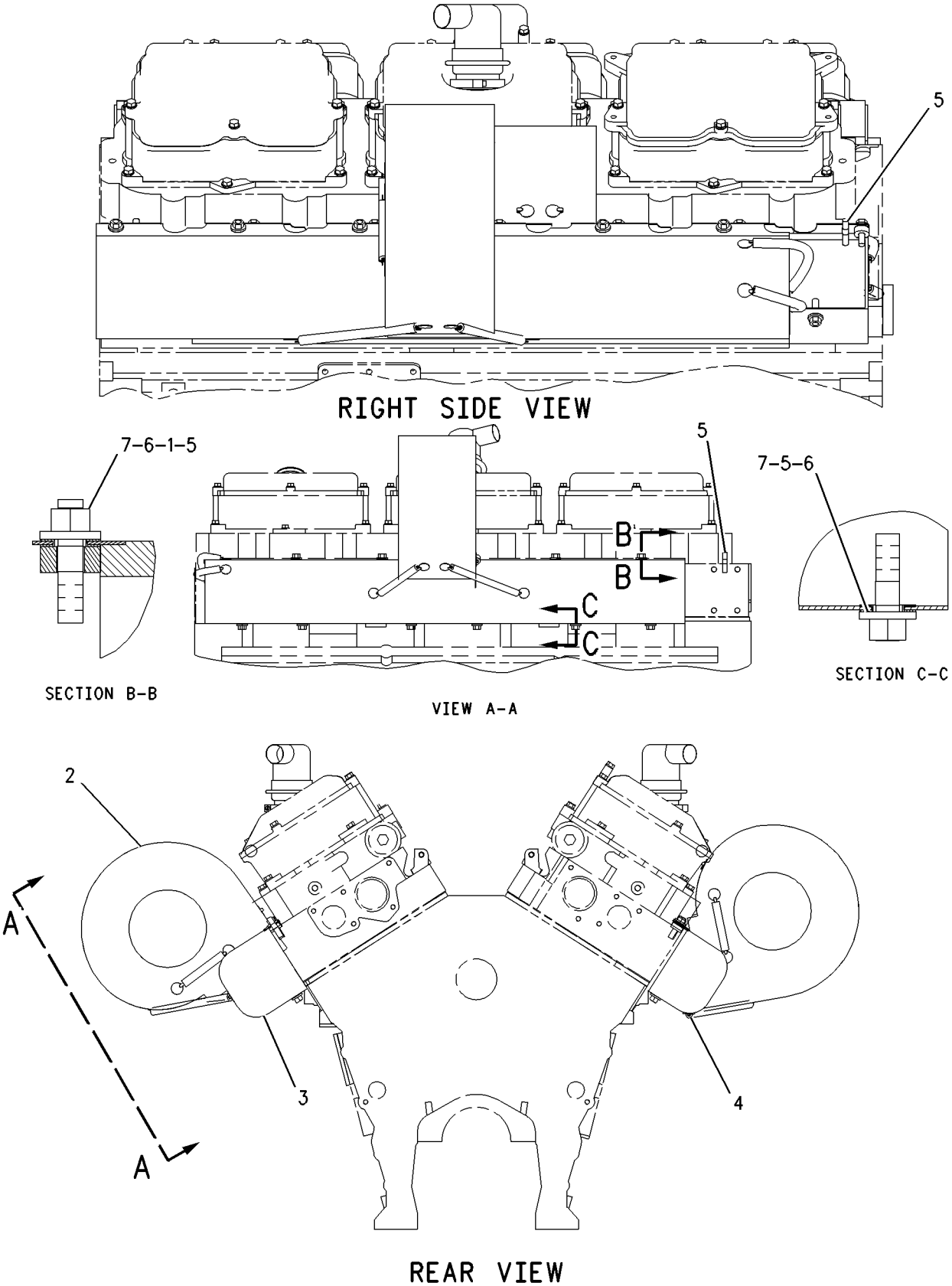

GRAPHIC #1

g00871735

AIR INLET AND EXHAUST SYSTEM

166-5441 TURBOCHARGER GP

S/N: 5JJ3200-UP
PART OF 171-5806, 206-3114 ENGINE AR
ALSO AN ATTACHMENT

SMCS-1052, 1053, 1056, 1060, 1065, 1066, 1077 **i01440056**

NOTE	REF NO	GRAPHIC REF	PART NUMBER	QTY	PART NAME 1 2 3 4 5 6 (PRODUCT LEVEL)	SEE PAGE
Y	1	1	**174-1471**	2	TURBOCHARGER GP	147
	2	1	**2N-2765**	6	BOLT-HIGH TEMPERATURE (3/8-16X1.75IN)	
	3	1	**2N-2766**	8	LOCKNUT (3/8-16 THD)	
	4	1	**1S-4295**	2	GASKET-TURBOCHARGER	
F		1	**114-9223**	2	SPACER (19.0MM THK)	

F-NOT SHOWN
Y-SEPARATE ILLUSTRATION

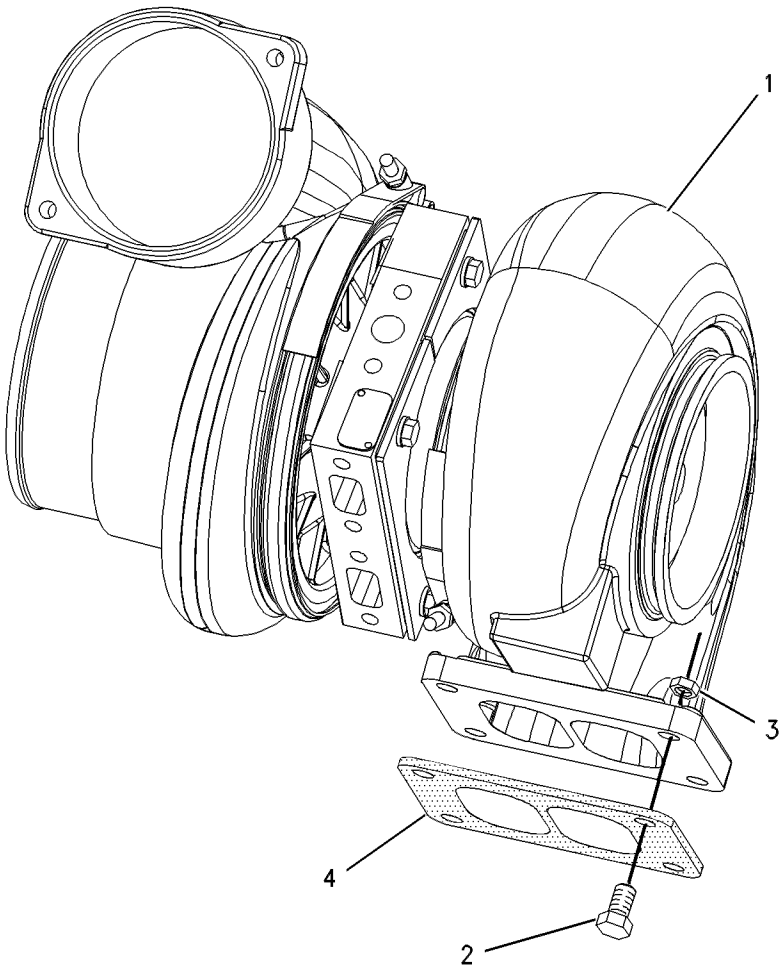

GRAPHIC #1 g00652973

AIR INLET AND EXHAUST SYSTEM

174-1471 TURBOCHARGER GP*R

S/N: 5JJ3200-UP
PART OF 166-5441 TURBOCHARGER GP
ALSO AN ATTACHMENT

SMCS-1052, 1053, 1056, 1060, 1065, 1066, 1077 **i01700280**

NOTE	REF NO	GRAPHIC REF	PART NUMBER	QTY	PART NAME 1 2 3 4 5 6 (PRODUCT LEVEL)	SEE PAGE
	1	1	**7N-7672**	2	PLATE	
	2	1	**7N-7673**	2	PLATE	
	3	1	**9N-2038**	1	CLAMP AS (TURBINE)	
	4	1	**196-3847**	1	COVER (COMPRESSOR)	
	5	1	**137-4550**	1	CLAMP AS-COMPRESSOR	
	6	1	**148-9104**	1	HOUSING-TURBINE	
R	7	1	**167-9270**	1	CARTRIDGE GP-TURBOCHARGER	
	8	1	**2A-0762**	4	BOLT (1/4-20X.625 IN)	
	9	1	**5P-0537**	4	WASHER-HARD (7.2X14.5X2MM THK)	

R-REMFG PART MAY BE AVAILABLE

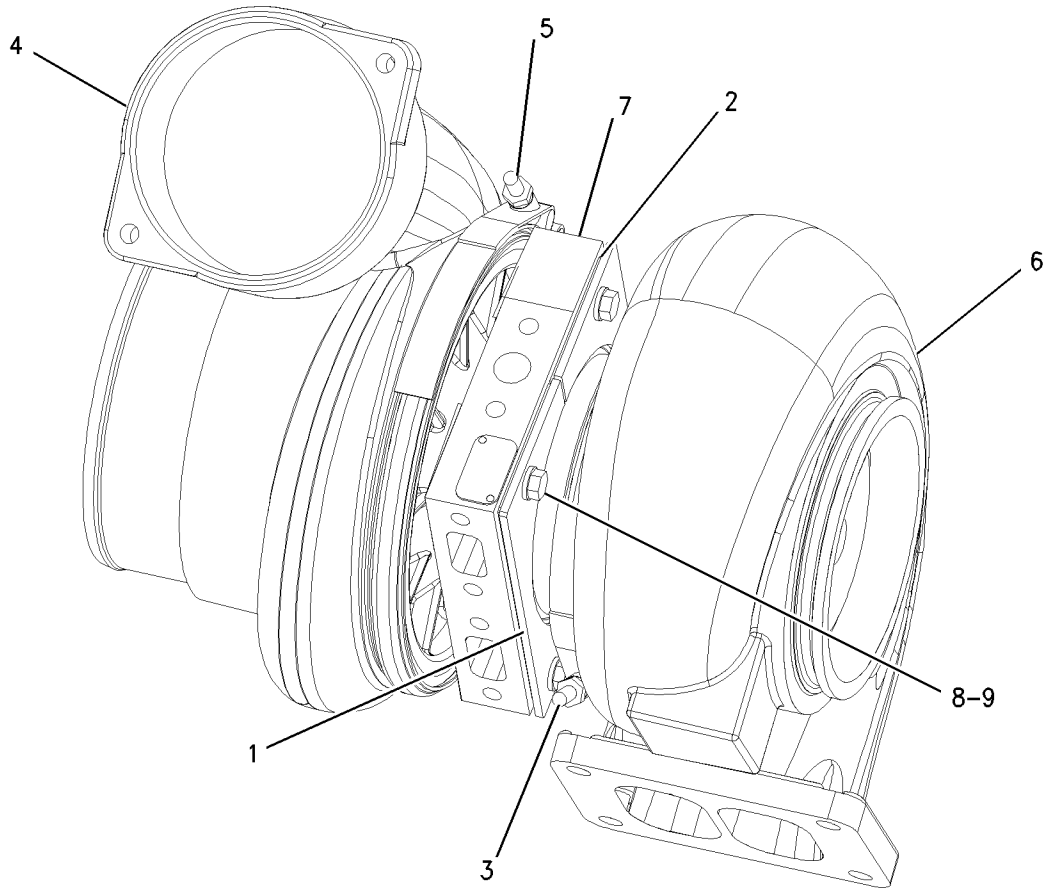

GRAPHIC #1 g00652758

FUEL SYSTEM

205-7303 ADAPTER

S/N: AKT1-UP
FAST FUEL FILL
FIELD INSTALLATION

SMCS-1710 **i01663763**

NOTE	REF NO	GRAPHIC REF	PART NUMBER	QTY	PART NAME 1 2 3 4 5 6 (PRODUCT LEVEL)	SEE PAGE
					(NO SERVICED PARTS)	

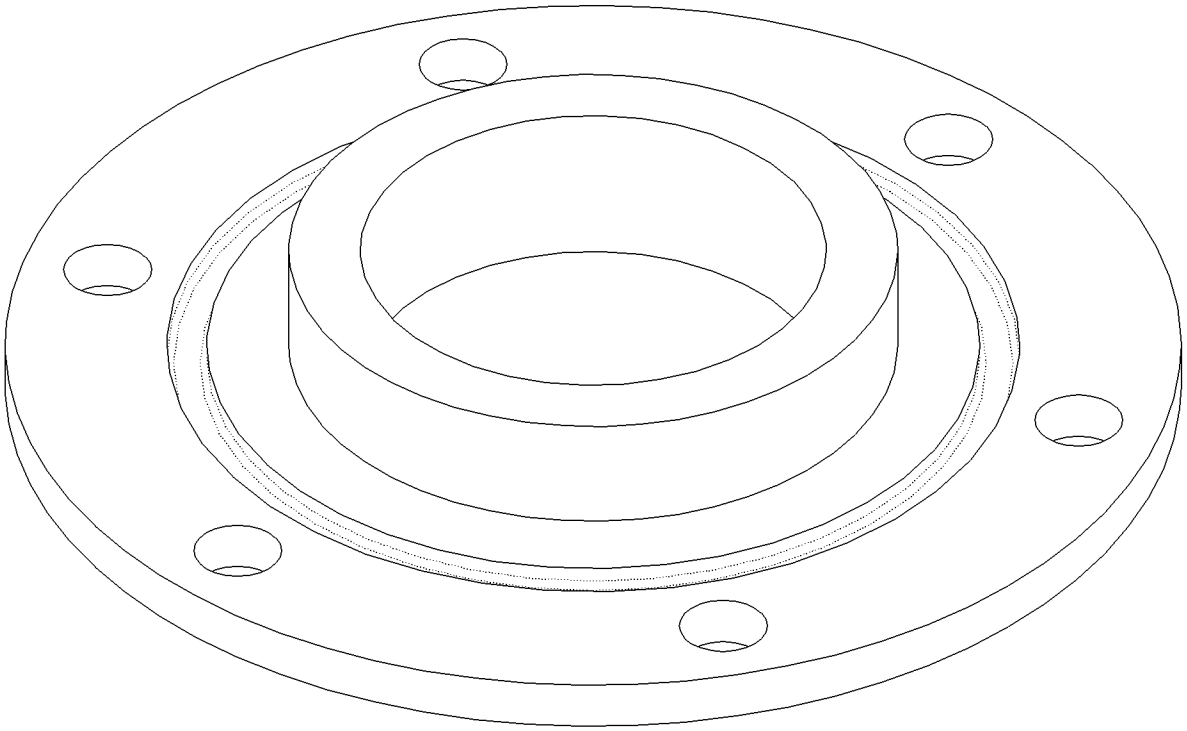

GRAPHIC #1 g00859063

MEMORANDA

174-0049 ADAPTER GP-FAST FILL FUEL

S/N: AKT1-UP
FOR USE WITH MACHINES EQUIPPED WITH RIPPER
AN ATTACHMENT

SMCS-1710 **i01666727**

NOTE	REF NO	GRAPHIC REF	PART NUMBER	QTY	PART NAME 1 2 3 4 5 6 (PRODUCT LEVEL)	SEE PAGE
	1	1	**124-2463**	1	ADAPTER GP-FAST FILL FUEL	
	2	1	**4J-8820**	2	SPACER (.375X2.0X1.5IN THK)	
	3	1	**6Y-0091**	1	BLOCK AS	
	4	1	**9D-0630**	1	CAP-DUST	
I	5	1	**127-4978**	1	HOSE AS	
	6	1	**142-0406**	1	BRACKET AS	
		1	**1F-0748**	2	NUT-WELD (1/2-13 THD)	
	7	1	**163-5455**	1	VALVE AS	
	8	1	**188-5095**	1	VENT AS	
	9	1	**174-0050**	1	HOSE AS	
	10	1	**1H-8128**	1	SEAL-O-RING	
	11	1	**1J-9671**	2	SEAL-O-RING	
	12	1	**1P-4582**	4	FLANGE-HALF	
	13	1	**2D-4534**	6	BOLT-SOCKET HEAD (3/8-16X1 IN)	
	14	1	**4J-0527**	2	SEAL-O-RING	
	15	1	**4L-6454**	12	BOLT (3/8-16X1 IN)	
	16	1	**5H-6734**	1	SEAL-O-RING	
	17	1	**5P-2566**	4	BOLT (1/2-13X1.5 IN)	
	18	1	**5P-2618**	2	CONNECTOR	
	19	1	**6V-2686**	1	CLIP	
	20	1	**6V-8801**	1	NUT (3/8-16 THD)	
	21	1	**7X-0340**	2	BOLT (1/2-13X6.5 IN)	
	22	1	**8C-8844**	2	BOLT (1-8X5 IN)	
	23	1	**8T-4223**	12	WASHER-HARD (13.5X25.5X3MM THK)	
	24	1	**8T-4896**	12	WASHER-HARD (10.2X18.5X2.5MM THK)	
	25	1	**8T-5361**	2	WASHER-HARD (28X49X5MM THK)	
	26	1	**8T-8919**	4	BOLT (1/2-13X1.75 IN)	

I-SEE HOSE FABRICATION GUIDE

174-0049 **ADAPTER GP-FAST FILL FUEL** ***(contd.)*** **i01666727**

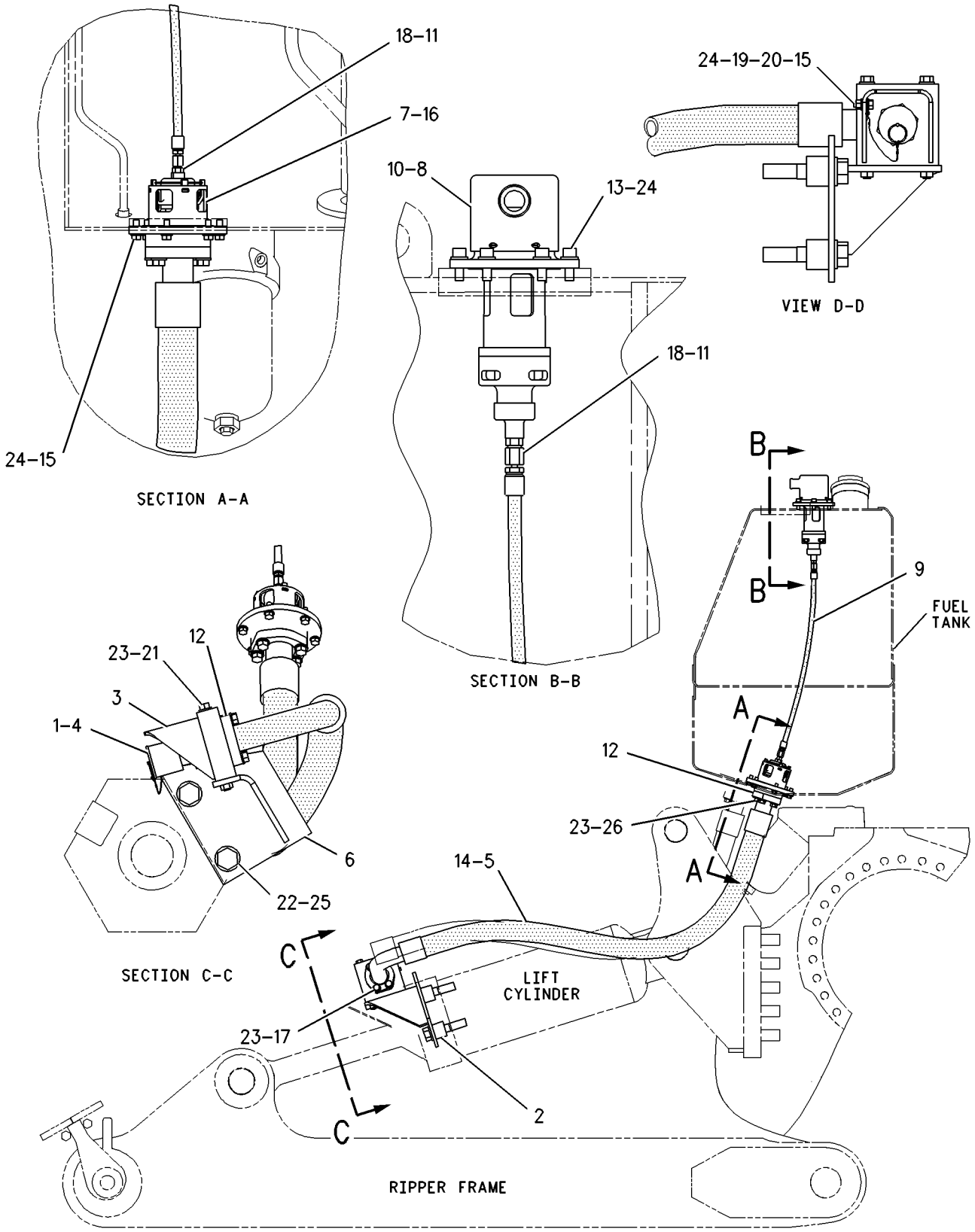

RIGHT SIDE VIEW

GRAPHIC #1 g00809413

174-0051 ADAPTER GP-FAST FILL FUEL

S/N: AKT1-UP
FOR USE WITH MACHINES EQUIPPED WITH COUNTERWEIGHTS
AN ATTACHMENT

SMCS-1710 **i01666753**

NOTE	REF NO	GRAPHIC REF	PART NUMBER	QTY	PART NAME 1 2 3 4 5 6 (PRODUCT LEVEL)	SEE PAGE
	1	1	**124-2463**	1	ADAPTER GP-FAST FILL FUEL	
	2	1	**9D-0630**	1	CAP-DUST	
	3	1	**9G-0371**	1	BLOCK AS	
	4	1	**9W-8100**	1	PLATE	
	5	1	**163-5455**	1	VALVE AS	
	6	1	**188-5095**	1	VENT AS	
	7	1	**174-0050**	1	HOSE AS	
	8	1	**1H-8128**	1	SEAL-O-RING	
	9	1	**1J-9671**	2	SEAL-O-RING	
	10	1	**1K-6870**	2	LOCKNUT (3/4-10 THD)	
	11	1	**1K-6872**	2	LOCKNUT (1/2-13 THD)	
	12	1	**1P-4582**	4	FLANGE-HALF	
	13	1	**2D-4534**	6	BOLT-SOCKET HEAD (3/8-16X1 IN)	
	14	1	**4J-0527**	2	SEAL-O-RING	
	15	1	**4L-6454**	6	BOLT (3/8-16X1 IN)	
	16	1	**5H-6734**	1	SEAL-O-RING	
	17	1	**5P-2566**	4	BOLT (1/2-13X1.5 IN)	
	18	1	**5P-2618**	2	CONNECTOR	
	19	1	**7X-0341**	2	BOLT (1/2-13X7 IN)	
B	20	1	**7X-0375**	2	BOLT (3/4-10X5 IN)	
B	21	1	**8G-9794**	2	SPACER (22.76X42.16X67MM THK)	
	22	1	**8T-4223**	12	WASHER-HARD (13.5X25.5X3MM THK)	
	23	1	**8T-4896**	12	WASHER-HARD (10.2X18.5X2.5MM THK)	
	24	1	**8T-4994**	4	WASHER-HARD (20X36.5X3.5MM THK)	
	25	1	**8T-8919**	4	BOLT (1/2-13X1.75 IN)	
B	26	1	**8T-8924**	2	BOLT (3/4-10X2.50 IN)	
I	27	1	**9W-9978**	1	HOSE AS	

B-USE AS REQUIRED
I-SEE HOSE FABRICATION GUIDE

174-0051 **ADAPTER GP-FAST FILL FUEL** *(contd.)* **i01666753**

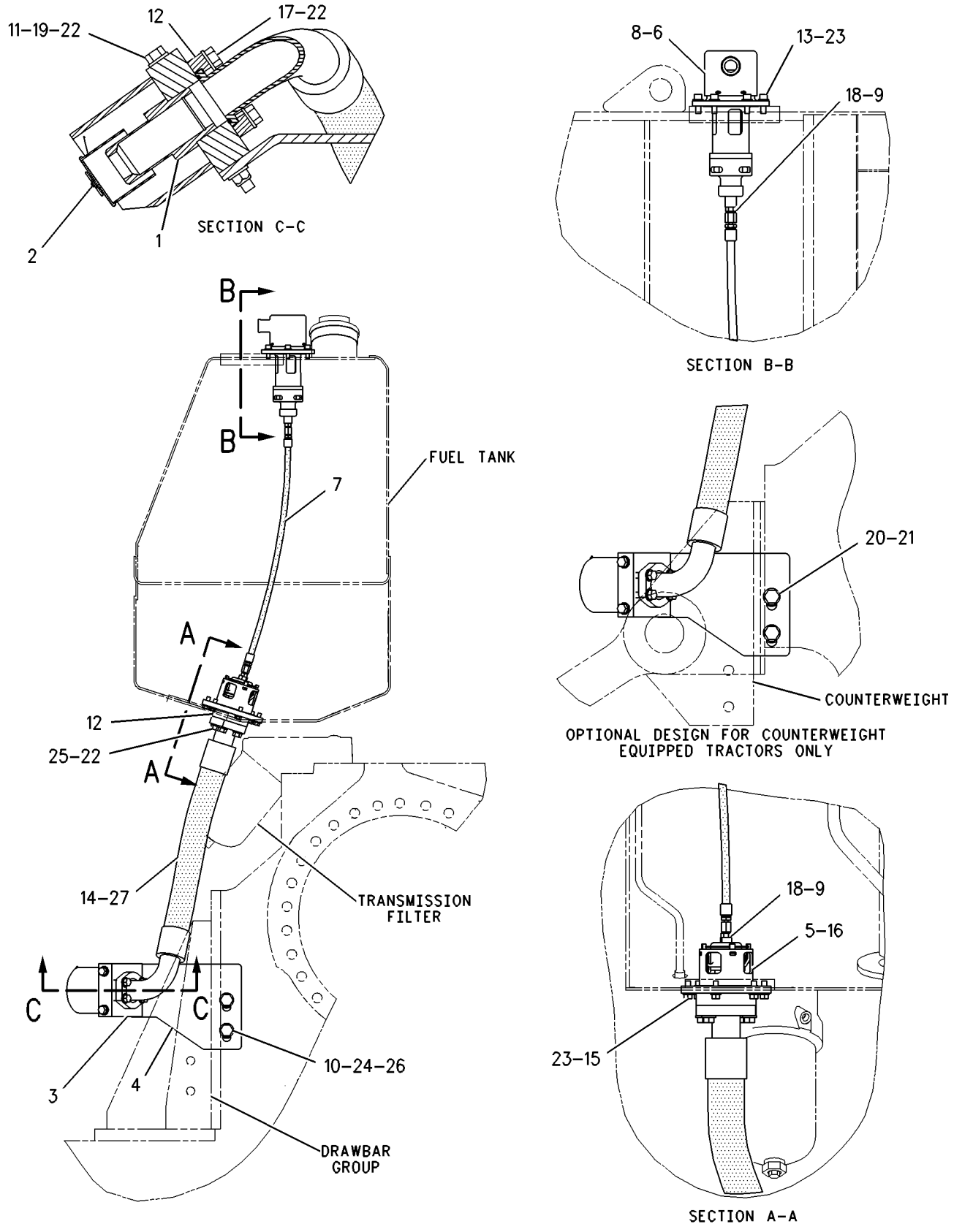

GRAPHIC #1 g00809354

196-3829 ADAPTER GP-FAST FILL FUEL

S/N: AKT1-UP
FOR USE WITH MACHINES EQUIPPED WITH A WINCH
AN ATTACHMENT

SMCS-1710 **i01667025**

NOTE	REF NO	GRAPHIC REF	PART NUMBER	QTY	PART NAME 1 2 3 4 5 6 (PRODUCT LEVEL)	SEE PAGE
	1	1	**1Q-3392**	1	PLATE AS	
	2	1	**124-2463**	1	ADAPTER GP-FAST FILL FUEL	
	3	1	**9D-0630**	1	CAP-DUST	
	4	1	**163-5455**	1	VALVE AS	
	5	1	**174-0050**	1	HOSE AS	
	6	1	**188-5095**	1	VENT AS	
I	7	1	**197-8504**	1	HOSE AS	
	8	1	**1H-8128**	1	SEAL-O-RING	
	9	1	**1J-9671**	2	SEAL-O-RING	
	10	1	**1P-4582**	4	FLANGE-HALF	
	11	1	**2D-4534**	6	BOLT-SOCKET HEAD (3/8-16X1 IN)	
	12	1	**4J-0527**	2	SEAL-O-RING	
	13	1	**4L-6454**	6	BOLT (3/8-16X1 IN)	
	14	1	**5H-6734**	1	SEAL-O-RING	
	15	1	**5P-2566**	4	BOLT (1/2-13X1.5 IN)	
	16	1	**5P-2618**	2	CONNECTOR	
	17	1	**8T-4223**	8	WASHER-HARD (13.5X25.5X3MM THK)	
	18	1	**8T-4896**	12	WASHER-HARD (10.2X18.5X2.5MM THK)	
	19	1	**8T-8919**	4	BOLT (1/2-13X1.75 IN)	

I-SEE HOSE FABRICATION GUIDE

196-3829 **ADAPTER GP-FAST FILL FUEL** *(contd.)* **i01667025**

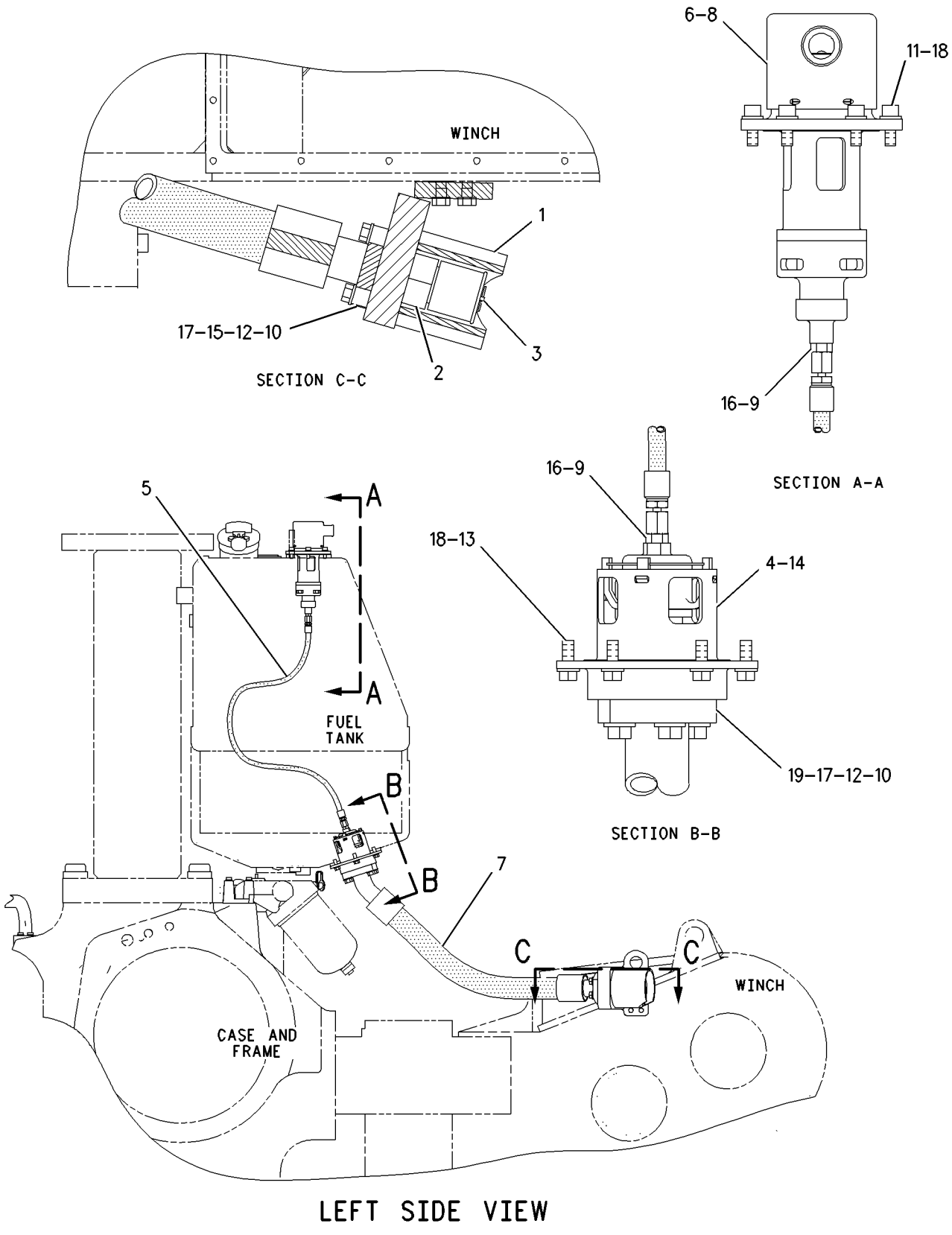

LEFT SIDE VIEW

GRAPHIC #1 g00812855

FUEL SYSTEM

208-4826 ADAPTER GP-FAST FILL FUEL

S/N: AKT1-UP
FOR USE WITH WINCH. CANNOT BE USED WITH COUNTERWEIGHTS
AN ATTACHMENT

SMCS-1710 **i01667192**

NOTE	REF NO	GRAPHIC REF	PART NUMBER	QTY	PART NAME 1 2 3 4 5 6 (PRODUCT LEVEL)	SEE PAGE
	1	1	**1Q-3392**	1	PLATE AS	
	2	1	**9D-0630**	1	CAP-DUST	
	3	1	**124-2463**	1	ADAPTER GP-FAST FILL FUEL	
	4	1	**163-5455**	1	VALVE AS	
	5	1	**174-0050**	1	HOSE AS	
	6	1	**188-5095**	1	VENT AS	
I	7	1	**208-4831**	1	HOSE AS	
	8	1	**1H-8128**	1	SEAL-O-RING	
	9	1	**1J-9671**	2	SEAL-O-RING	
	10	1	**1P-4582**	4	FLANGE-HALF	
	11	1	**2D-4534**	6	BOLT-SOCKET HEAD (3/8-16X1 IN)	
	12	1	**4J-0527**	2	SEAL-O-RING	
	13	1	**4L-6454**	6	BOLT (3/8-16X1 IN)	
	14	1	**5H-6734**	1	SEAL-O-RING	
	15	1	**5P-2566**	4	BOLT (1/2-13X1.5 IN)	
	16	1	**5P-2618**	2	CONNECTOR	
	17	1	**8T-4223**	8	WASHER-HARD (13.5X25.5X3MM THK)	
	18	1	**8T-4896**	12	WASHER-HARD (10.2X18.5X2.5MM THK)	
	19	1	**8T-8919**	4	BOLT (1/2-13X1.75 IN)	

I-SEE HOSE FABRICATION GUIDE

208-4826 **ADAPTER GP-FAST FILL FUEL** ***(contd.)*** **i01667192**

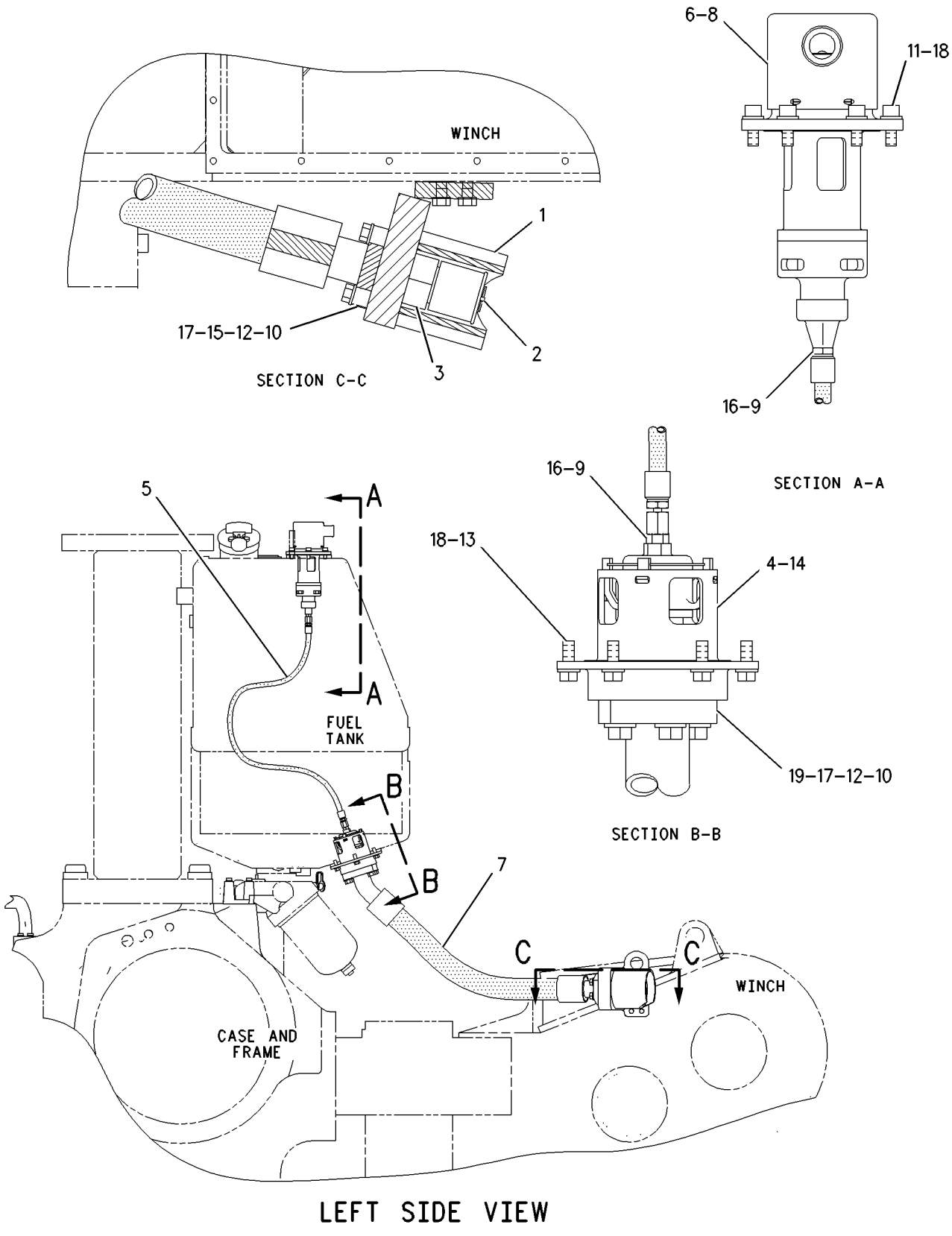

LEFT SIDE VIEW

GRAPHIC #1 g00865257

172-7938 CONTROL GP-DECELERATOR

S/N: AKT1-UP

PART OF 171-5801 CHASSIS AR

SMCS-1276 **i01516020**

NOTE	REF NO	GRAPHIC REF	PART NUMBER	QTY	PART NAME 1 2 3 4 5 6 (PRODUCT LEVEL)	SEE PAGE
	1	1	**6I-8363**	1	HOUSING AS	
		1	**1F-0750**	2	NUT-WELD (3/8-16 THD)	
	2	1	**7G-7684**	1	LEVER	
	3	1	**6I-8361**	1	SHAFT	
	4	1	**6V-7607**	2	WASHER-HARD (20X30X2.5MM THK)	
	5	1	**9B-7237**	5	BOLT (3/8-16X1.25 IN)	
	6	1	**5P-1075**	4	WASHER-HARD (10.2X22.5X3MM THK)	
	7	1	**9G-0772**	1	PEDAL	
	8	1	**2N-3162**	2	SCREW-MACHINE (10-24X1.25 IN)	
Y	9	1	**160-2443**	1	SENSOR GP-POSITION	246
	10	1	**2J-6356**	1	RING-RETAINING	
	11	1	**1B-8706**	1	KEY-WOODRUFF	
	12	1	**2K-7979**	2	BEARING-SLEEVE	
	13	1	**8T-2502**	1	BOLT (3/8-16X1.125 IN)	
	14	1	**4B-3609**	1	SETSCREW-SQUARE HEAD	
	15	1	**1B-2578**	2	NUT (3/8-16 THD)	
	16	1	**194-7034**	1	SPRING	
	17	1	**4B-3611**	1	SETSCREW-SQUARE HEAD	
	18	1	**105-1515**	1	GASKET	
	19	1	**8C-5608**	1	SPACER (6.5X9.5X25.4MM THK)	
	20	1	**7X-3178**	1	BOLT (1/4-20X1.625 IN)	
	21	1	**8T-4205**	2	WASHER-HARD (7.2X14.5X2MM THK)	

Y-SEPARATE ILLUSTRATION

172-7938 **CONTROL GP-DECELERATOR** ***(contd.)*** **i01516020**

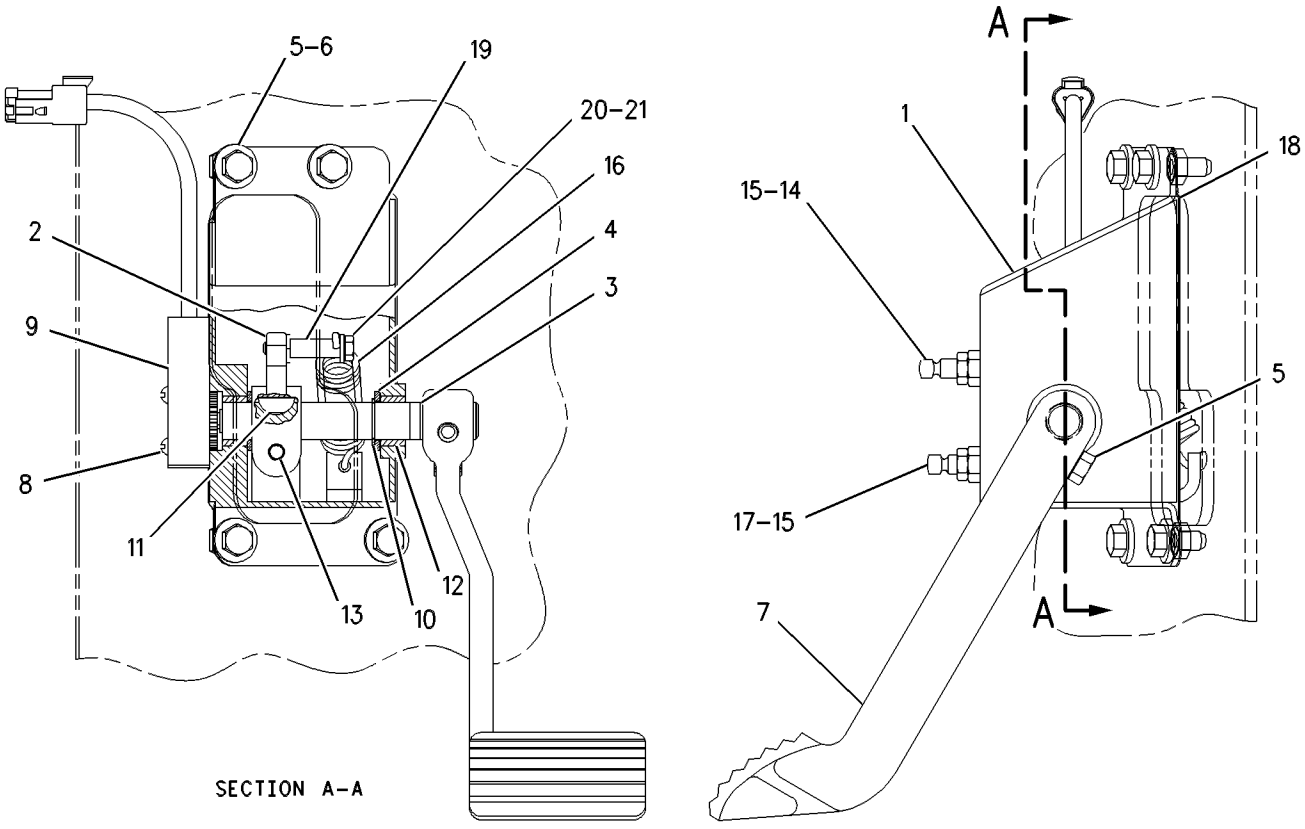

GRAPHIC #1

g00580709

125-3431 DRIVE GP-UNIT INJ HYD PUMP

S/N: 5JJ3602-UP
PART OF 171-5806, 206-3114 ENGINE AR
ALSO AN ATTACHMENT

SMCS-1714 **i01615493**

NOTE	REF NO	GRAPHIC REF	PART NUMBER	QTY	PART NAME 1 2 3 4 5 6 (PRODUCT LEVEL)	SEE PAGE
CY	1	1	**180-6644**	1	DRIVE GP-UNIT INJ HYD PUMP	162
	2	1	**6V-3549**	1	SEAL-O-RING	
	3	1	**5P-0076**	4	BOLT-12 POINT HEAD (3/8-16X1.50 IN)	
Y	4	1	**194-6722**	1	SENSOR GP-PRESSURE (ATMOSPHERIC)	251
	5	1	**5M-2894**	4	WASHER-HARD (10.2X18.5X2.5MM THK)	
	7	1	**6V-5049**	1	SEAL-O-RING	
	8	1	**118-6335**	1	PIN	
	9	1	**6V-4589**	1	SEAL-O-RING	
	10	1	**5P-9890**	2	SEAL-O-RING	

C-CHANGE FROM PREVIOUS TYPE
Y-SEPARATE ILLUSTRATION

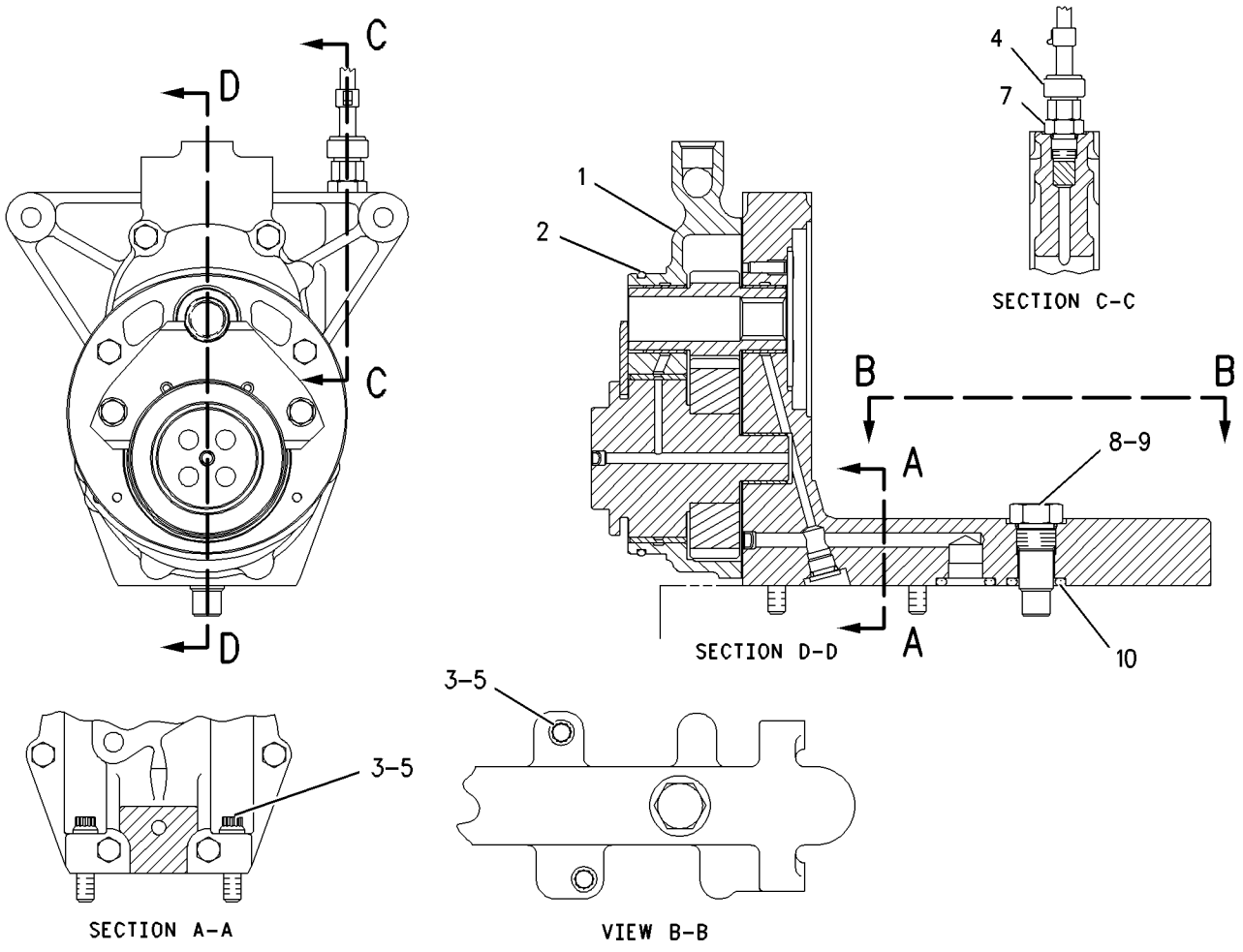

GRAPHIC #1 g00656070

MEMORANDA

180-6644 DRIVE GP-UNIT INJ HYD PUMP

S/N: 5JJ3602-UP

PART OF 125-3431 DRIVE GP-UNIT INJ HYD PUMP

ALSO AN ATTACHMENT

SMCS-1714 **i01630279**

NOTE	REF NO	GRAPHIC REF	PART NUMBER	QTY	PART NAME 1 2 3 4 5 6 (PRODUCT LEVEL)	SEE PAGE
	1	1	**180-6645**	1	SHAFT AS	
	1A	1	**3S-6605**	1	PLUG-CUP	
	2	1	**150-2392**	1	PLATE-THRUST	
	3	1	**180-6646**	1	GASKET	
	4	1	**180-6647**	1	HOUSING AS	
	4A	1	**2H-1190**	2	DOWEL	
	4B	1	**162-0151**	1	BEARING-SLEEVE	
	4C	1	**162-0152**	1	BEARING-SLEEVE	
	5	1	**162-0160**	1	HOUSING AS	
	5A	1	**2A-3746**	1	PLUG-CUP	
	5B	1	**162-0150**	1	BEARING-SLEEVE	
	5C	1	**162-0151**	1	BEARING-SLEEVE	
	6	1	**125-5835**	1	FILTER (UNIT INJECTOR HYDRAULIC PUMP)	
	7	1	**1B-9575**	4	BOLT (5/16-18X1.75 IN)	
	8	1	**0S-1618**	2	BOLT (5/16-18X1 IN)	
	9	1	**9N-0869**	2	WASHER-HARD (8.8X25.5X2MM THK)	
	10	1	**9S-8004**	1	PLUG	
	11	1	**6V-5049**	1	SEAL-O-RING	
	12	1	**1D-4541**	2	BOLT (5/16-18X3 IN)	
	13	1	**8M-6802**	3	SCREW-HEX SOCKET	
	14	1	**155-6637**	1	GEAR-OIL DRIVE (13 TEETH)	
	15	1	**124-6640**	1	PLATE	
	16	1	**031-2701**	2	BOLT-LOCKING (5/16-18X1.25 IN)	

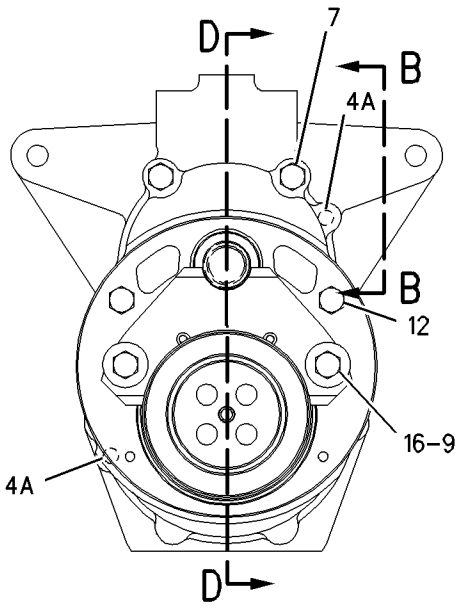

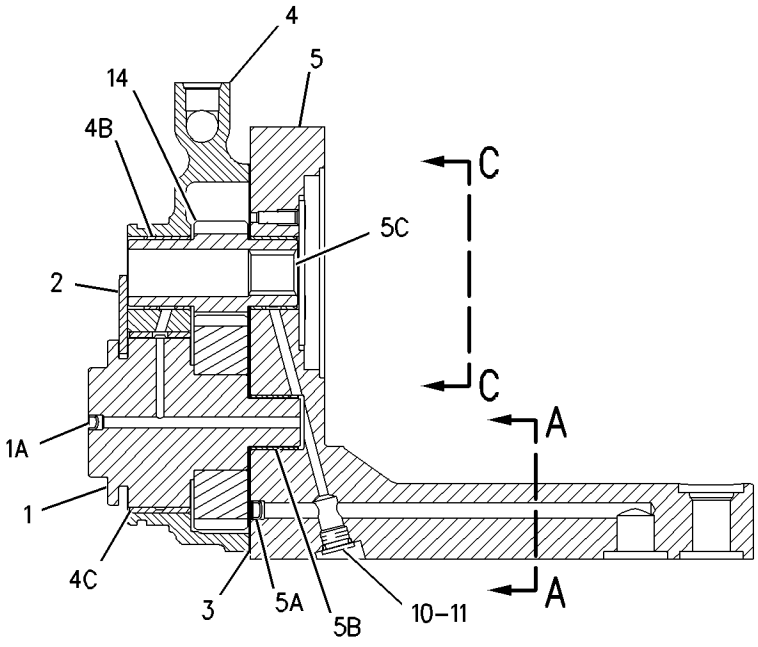

SECTION D-D

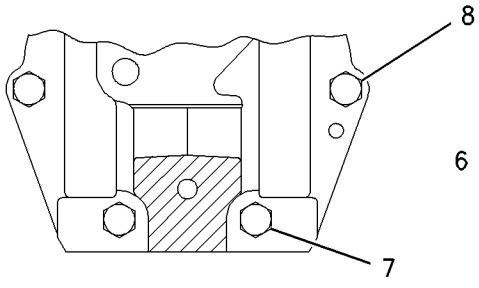

SECTION A-A

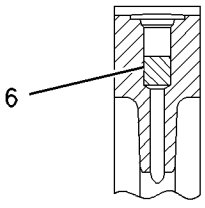

SECTION B-B

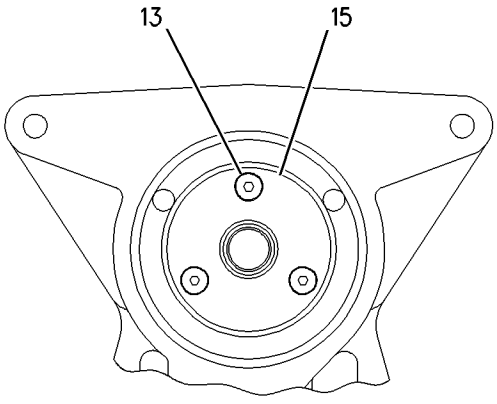

VIEW C-C

GRAPHIC #1 g00702509

FUEL SYSTEM

172-5393 FILTER & LINES GP-FUEL

S/N: AKT1-UP

PART OF 171-5801 CHASSIS AR

SMCS-1261 **i01688958**

NOTE	REF NO	GRAPHIC REF	PART NUMBER	QTY	PART NAME 1 2 3 4 5 6 (PRODUCT LEVEL)	SEE PAGE
	1	1	**5P-8502**	1	PADLOCK GP	
A		1	**5P-8500**	1	KEY	
A		1	**8Y-6364**	1	SLEEVE	
	2	1	**6V-8358**	1	VALVE-BALL (MANUAL SHUTOFF)	
	3	1	**7G-8150**	1	PLATE AS	
		1	**1F-0750**	2	NUT-WELD (3/8-16 THD)	
	4	1	**8T-6638**	1	VALVE-BALL	
	5	1	**9S-1803**	1	BOSS	
	6	1	**9W-1599**	1	VALVE-CHECK	
	7	1	**033-6783**	1	FITTING	
	8	1	**149-9935**	1	TUBE AS	
	9	1	*153-6240*	1	TEE AS	
		1	**2M-9780**	1	SEAL-O-RING	
		1	**6V-8398**	1	SEAL-O-RING	
		1	**8C-7514**	1	TEE	
	10	1	*167-1795*	1	ELBOW AS	
		1	**3D-2824**	1	SEAL-O-RING	
		1	**8T-3491**	1	ELBOW	
I	11	1	**175-7033**	1	HOSE AS	
Y	12	1	*185-9977*	1	FILTER GP-WATER SEP & FUEL	168
I	13	1	**215-9001**	1	HOSE AS	
	14	1	**215-9002**	1	BRACKET AS	
	15	1	*148-8341*	1	CONNECTOR GP	
		1	**3D-2824**	1	SEAL-O-RING	
		1	**6V-8713**	1	CONNECTOR	
		1	**7J-9108**	1	SEAL-O-RING	
	16	1	*148-8365*	1	ELBOW GP	
		1	**3J-1907**	1	SEAL-O-RING	
		1	**6V-8398**	1	SEAL-O-RING	
		1	**8T-6876**	1	ELBOW	
	17	1	**149-9129**	1	CLIP	
	18	1	*150-4048*	1	ELBOW GP	
		1	**3K-0360**	1	SEAL-O-RING	
		1	**6V-8722**	1	ELBOW	
		1	**7J-9108**	1	SEAL-O-RING	
	19	1	*164-5573*	1	UNION AS	
		1	**7J-9108**	1	SEAL-O-RING	
		1	**6V-8398**	1	SEAL-O-RING	
		1	**6V-8738**	1	UNION-FACE SEAL	
	20	1	**177-8839**	1	CLIP	
	21	1	**2M-9780**	1	SEAL-O-RING	
	22	1	**3D-2824**	3	SEAL-O-RING	
	23	1	**4L-6454**	1	BOLT (3/8-16X1 IN)	
	24	1	**5M-3062**	4	BOLT (3/8-16X0.75 IN)	
	25	1	**5P-1075**	6	WASHER-HARD (10.2X22.5X3MM THK)	
	26	1	**5P-1076**	2	WASHER-HARD (13.5X30X4MM THK)	
	27	1	**5P-2228**	2	BOLT (1/2-13X1 IN)	
	28	1	**6D-4636**	1	CLIP	
	29	1	**6V-8398**	1	SEAL-O-RING	
	30	1	**6V-8801**	1	NUT (3/8-16 THD)	
	31	1	**6V-9830**	2	CAP AS	
	32	1	**7D-7735**	1	CLIP	
	33	1	**7J-9108**	1	SEAL-O-RING	
	34	1	**7S-1912**	1	CLIP	
	35	1	**8T-4224**	1	WASHER-HARD (8.8X16X2MM THK)	
	36	1	**8N-4247**	1	CLIP (SLOT)	

172-5393 FILTER & LINES GP-FUEL *(contd.)*

i01688958

NOTE	REF NO	GRAPHIC REF	PART NUMBER	QTY	PART NAME 1 2 3 4 5 6 (PRODUCT LEVEL)	SEE PAGE
M	37	1	**8T-4200**	1	BOLT (M8X1.25X16MM)	
	38	1	**8T-4896**	2	WASHER-HARD (10.2X18.5X2.5MM THK)	
	39	1	**8T-9377**	1	BOLT (3/8-16X2.25 IN)	
	40	1	**9B-7237**	2	BOLT (3/8-16X1.25 IN)	
E	41	1	**5P-5991**		HOSE (11CM)	
E	42	1	**5P-1695**		HOSE (60CM)	

A-NOT PART OF THIS GROUP
E-ORDER BY THE CENTIMETER
I-SEE HOSE FABRICATION GUIDE
M-METRIC PART
Y-SEPARATE ILLUSTRATION

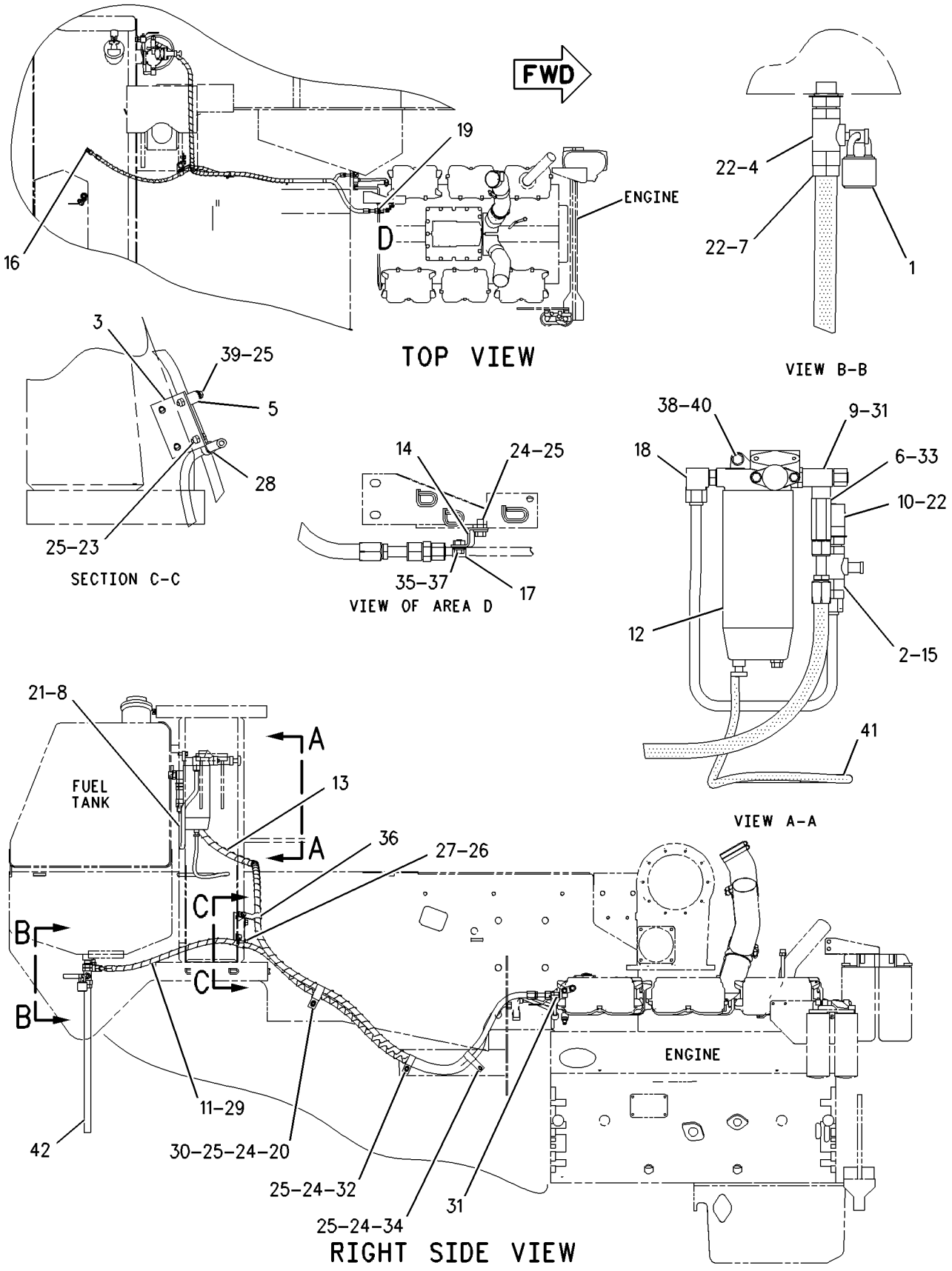

GRAPHIC #1 g00865824

176-5618 FILTER GP-WATER SEP & FUEL

S/N: AKT1-UP

PART OF 185-9977 FILTER GP-WATER SEP & FUEL

SMCS-1261, 1263 **i01305521**

NOTE	REF NO	GRAPHIC REF	PART NUMBER	QTY	PART NAME 1 2 3 4 5 6 (PRODUCT LEVEL)	SEE PAGE
	1	1	**1R-0769**	1	FILTER AS (WATER SEPARATOR & FUEL)	
	2	1	**173-7126**	1	BOWL AS	
		1	**5F-9144**	1	SEAL-O-RING (7.65MM ID)	
		1	**6V-5049**	1	SEAL-O-RING (11.89MM ID)	

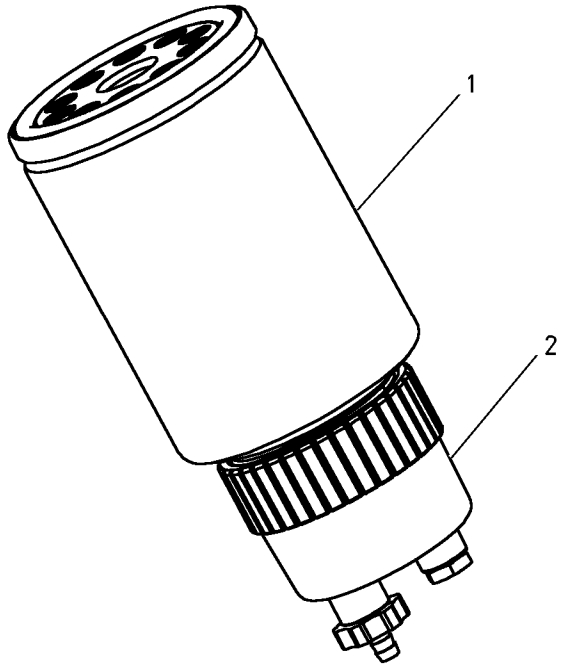

GRAPHIC #1 g00691582

185-9977 FILTER GP-WATER SEP & FUEL

S/N: AKT1-UP

PART OF 172-5393 FILTER & LINES GP-FUEL

SMCS-1261, 1263 **i01446471**

NOTE	REF NO	GRAPHIC REF	PART NUMBER	QTY	PART NAME 1 2 3 4 5 6 (PRODUCT LEVEL)	SEE PAGE
	1	1	**1P-0436**	1	GASKET (FUEL PRIMING PUMP)	
Y	2	1	**176-5618**	1	FILTER GP-WATER SEP & FUEL	167
J	3	1	**105-2508**	1	PUMP AS-FUEL PRIMING	
	4	1	**128-8557**	1	BASE AS-FILTER	
		1	**7E-5346**	1	VALVE AS	
		1	**9S-4167**	1	STUD-HOLLOW	
	5	1	**9S-8002**	4	PLUG-O-RING (7/16-20 THD)	
	6	1	**1B-7182**	1	BOLT (5/16-18X1.25 IN)	
	7	1	**5P-0537**	1	WASHER-HARD (7.2X14.5X2MM THK)	
	8	1	**6V-5048**	4	SEAL-O-RING (8.92MM ID)	
	9	1	**7B-2742**	1	BOLT (1/4-20X1.25 IN)	
	10	1	**9M-1974**	1	WASHER-HARD (8.8X16X2MM THK)	

J-THE INDIVIDUAL PARTS OF THIS ASSEMBLY ARE NOT SERVICED SEPARATELY
Y-SEPARATE ILLUSTRATION

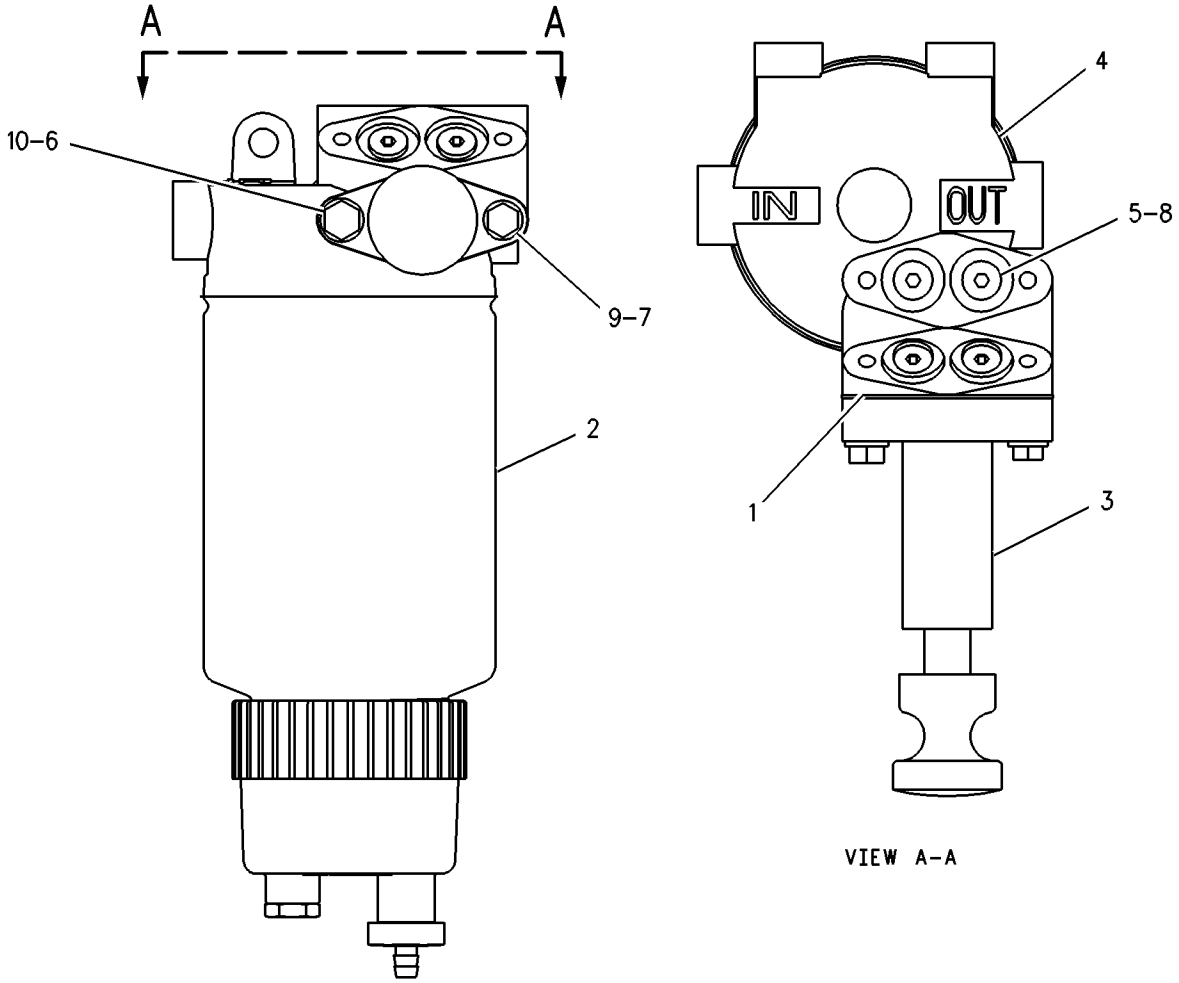

GRAPHIC #1 g00687313

174-7527 INJECTOR GP-FUEL

S/N: 5JJ3200-UP
PART OF 209-2785 PUMP GP-FUEL INJECTION
ALSO AN ATTACHMENT

SMCS-1254, 1290, 1713 **i01110682**

NOTE	REF NO	GRAPHIC REF	PART NUMBER	QTY	PART NAME 1 2 3 4 5 6 (PRODUCT LEVEL)	SEE PAGE
	1	1	**115-3598**	1	ADAPTER-INJECTION	
	2	1	**116-7222**	1	SEAL-RECTANGULAR	
	3	1	**136-1869**	2	BOLT-SOCKET HEAD	
	4	1	**174-7526**	1	INJECTOR GP-FUEL	

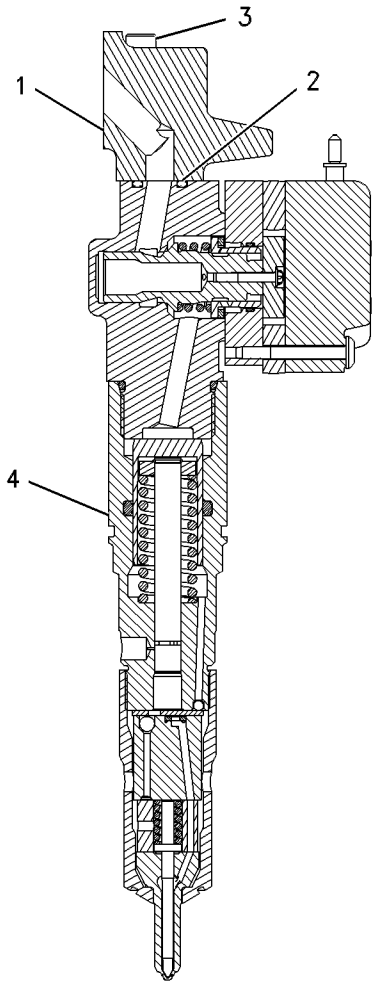

GRAPHIC #1 g00586359

FUEL SYSTEM

138-6256 KIT-SEAL

S/N: 5JJ3200-UP
PART OF 201-4202 PUMP GP-UNIT INJECTOR HYD
ALSO AN ATTACHMENT

SMCS-1714 **i01229048**

NOTE	REF NO	GRAPHIC REF	PART NUMBER	QTY	PART NAME 1 2 3 4 5 6 (PRODUCT LEVEL)	SEE PAGE
	1	1	**109-9685**	4	SEAL-O-RING (6.07MM ID)	
	2	1	**033-5853**	3	SEAL-O-RING (8.92MM ID)	
	3	1	**109-3206**	1	SEAL-O-RING (10.52MM ID)	
	4	1	**033-6042**	4	SEAL-O-RING (11.89MM ID)	
	5	1	**108-5803**	1	SEAL-O-RING (7.65MM ID)	
	6	1	**6V-5142**	2	SEAL-O-RING (15.6MM ID)	
	7	1	**9X-7680**	6	SEAL-O-RING (7.65MM ID)	
	8	1	**033-6027**	2	SEAL-O-RING (19.18MM ID)	
	9	1	**033-6039**	1	SEAL-O-RING (9.25MM ID)	
	10	1	**133-1705**	1	GASKET-HOUSING	
	11	1	**6V-8676**	1	SEAL-O-RING (48.90MM ID)	
	12	1	**135-2655**	2	SEAL-O-RING (55.24MM ID)	
	13	1	**135-2652**	1	SEAL-O-RING (17.17MM ID)	

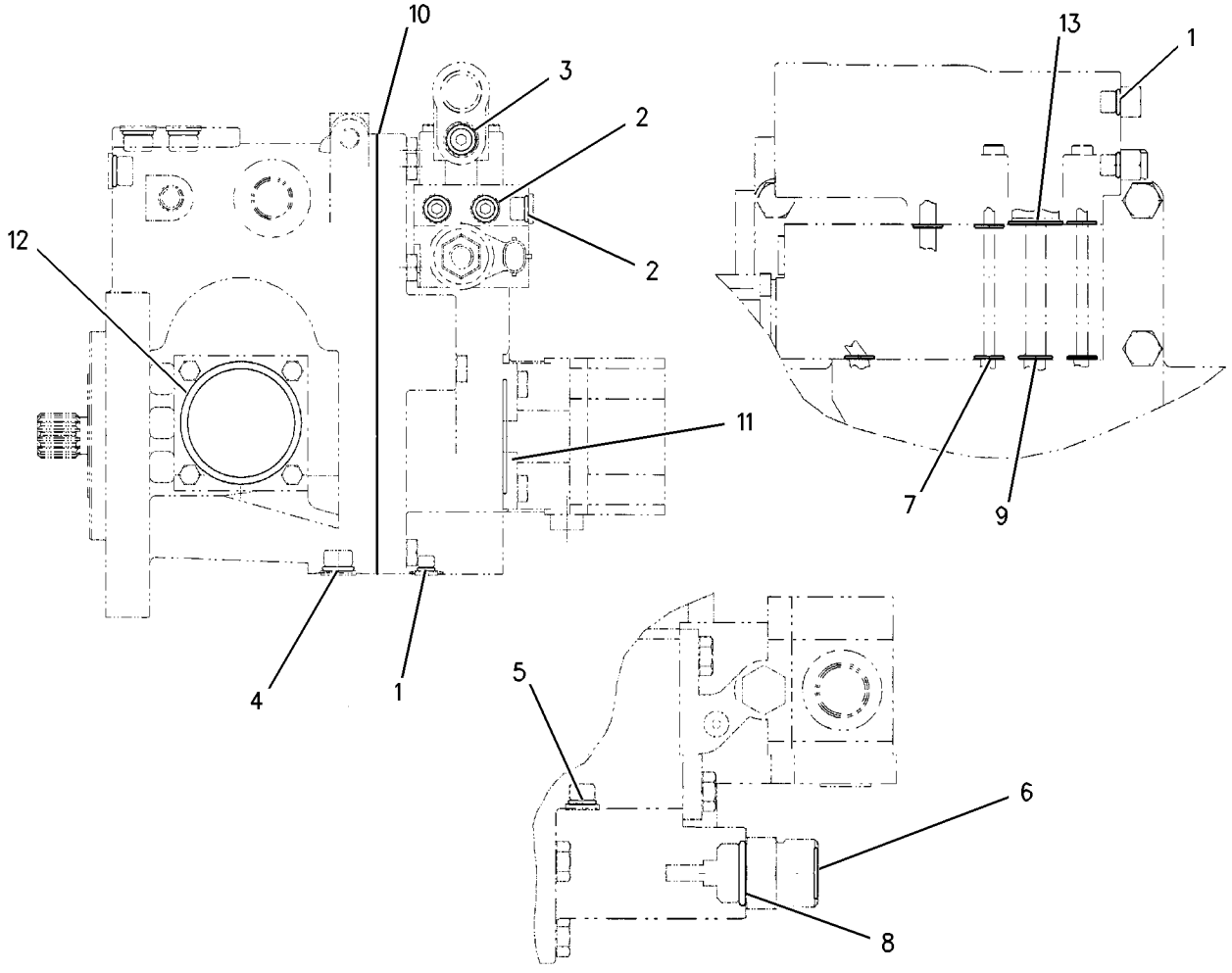

GRAPHIC #1 g00642811

MEMORANDA

FUEL SYSTEM

176-6672 LINES GP-FUEL FILTER

S/N: 5JJ3200-UP
PART OF 171-5806, 206-3114 ENGINE AR
ALSO AN ATTACHMENT

SMCS-1261, 1274 **i01689969**

NOTE	REF NO	GRAPHIC REF	PART NUMBER	QTY	PART NAME 1 2 3 4 5 6 (PRODUCT LEVEL)	SEE PAGE
	1	2	**1P-0436**	1	GASKET (FUEL PRIMING PUMP)	
	2	1	**2S-3770**	1	SPACER (33.5MM THK)	
	3	1	**4P-7233**	1	GROMMET	
	4	1	**6N-2946**	1	BASE AS-FUEL FILTER	
	4A	1	**9S-4167**	2	STUD-HOLLOW	
	4B	1	**9S-8004**	1	PLUG	
	4C	1	**6V-5049**	1	SEAL-O-RING	
	5	2	**6N-4414**	1	COVER-FILTER BASE	
	6	2	**8T-6876**	2	ELBOW	
	7	2	**102-2240**	1	SENSOR GP-TEMPERATURE (FUEL)	
		2	**3E-3371**	1	WEDGE-RECEPTACLE LOCK (3 PIN)	
		2	**186-3735**	3	PIN-CONNECTOR	
BE		2	**9X-1813**		SLEEVE	
		2	**102-8803**	1	KIT-RECEPTACLE (3 PIN)	
					(INCLUDES RECEPTACLE AS & WEDGE)	
Y	8	2	**102-7535**	1	VALVE GP-PRESSURE CONTROL (FUEL)	186
I	9	2	**112-9265**	1	HOSE AS	
	10	2	**123-0555**	1	MANIFOLD	
I	11	2	**125-6797**	1	HOSE AS	
I	12	1	**128-7135**	1	HOSE AS	
I	13	2	**131-6833**	1	HOSE AS	
I	14	2	**138-8745**	1	HOSE AS	
	15	2	**173-8351**	1	SUPPORT AS	
	16	2	**176-3533**	2	SUPPORT	
	17	1	**179-3687**	1	TUBE AS	
	18	1	**179-3688**	1	TUBE AS	
	19	1	**215-8320**	1	TUBE AS	
	20	1	**033-6033**	5	SEAL-O-RING	
	21	2	**098-5687**	1	TEE	
	22	1	**0L-2070**	1	BOLT (3/8-16X2.25 IN)	
	23	1	**0S-0509**	1	BOLT (3/8-16X0.75 IN)	
	24	2	**0S-1594**	10	BOLT (3/8-16X1 IN)	
	25	2	**1B-2790**	1	BOLT (5/16-18X1.375 IN)	
	26	2	**1B-9575**	2	BOLT (5/16-18X1.75 IN)	
	27	1	**1R-0749**	2	FILTER AS-FUEL	
	28	2	**3B-1915**	1	BOLT (3/8-16X1.37 IN)	
	29	1	**4B-0418**	2	CLIP	
	30	1,2	**5M-2894**	5	WASHER-HARD (10.2X18.5X2.5MM THK)	
	31	2	**5P-0537**	1	WASHER-HARD (7.2X14.5X2MM THK)	
	32	1	**6V-5048**	1	SEAL-O-RING	
	33	1,2	**6V-5049**	18	SEAL-O-RING	
	34	2	**6V-8634**	1	CONNECTOR	
	35	2	**6V-8636**	3	CONNECTOR	
	36	1	**6V-8724**	2	ELBOW	
	37	1	**6V-9873**	3	CONNECTOR-SEAL	
	38	2	**7B-2742**	1	BOLT (1/4-20X1.25 IN)	
	39	1,2	**8L-2779**	10	SEAL-O-RING	
	40	1,2	**8L-2786**	4	SEAL-O-RING	
	41	1	**8M-2773**	2	CLIP	
	42	1	**8T-1686**	1	ELBOW	
	43	1	**8T-1887**	1	CLIP (SLOT)	
	44	1	**8T-1888**	1	CLIP (TAB)	
	45	2	**9M-1974**	3	WASHER-HARD (8.8X16X2MM THK)	
	46	1	**9S-4182**	1	PLUG	
	47	1,2	**9S-4191**	4	PLUG	

176-6672 LINES GP-FUEL FILTER *(contd.)* i01689969

NOTE	REF NO	GRAPHIC REF	PART NUMBER	QTY	PART NAME 1 2 3 4 5 6 (PRODUCT LEVEL)	SEE PAGE
	48	1,2	**9S-8004**	4	PLUG	

B-USE AS REQUIRED
E-ORDER BY THE CENTIMETER
I-SEE HOSE FABRICATION GUIDE
Y-SEPARATE ILLUSTRATION

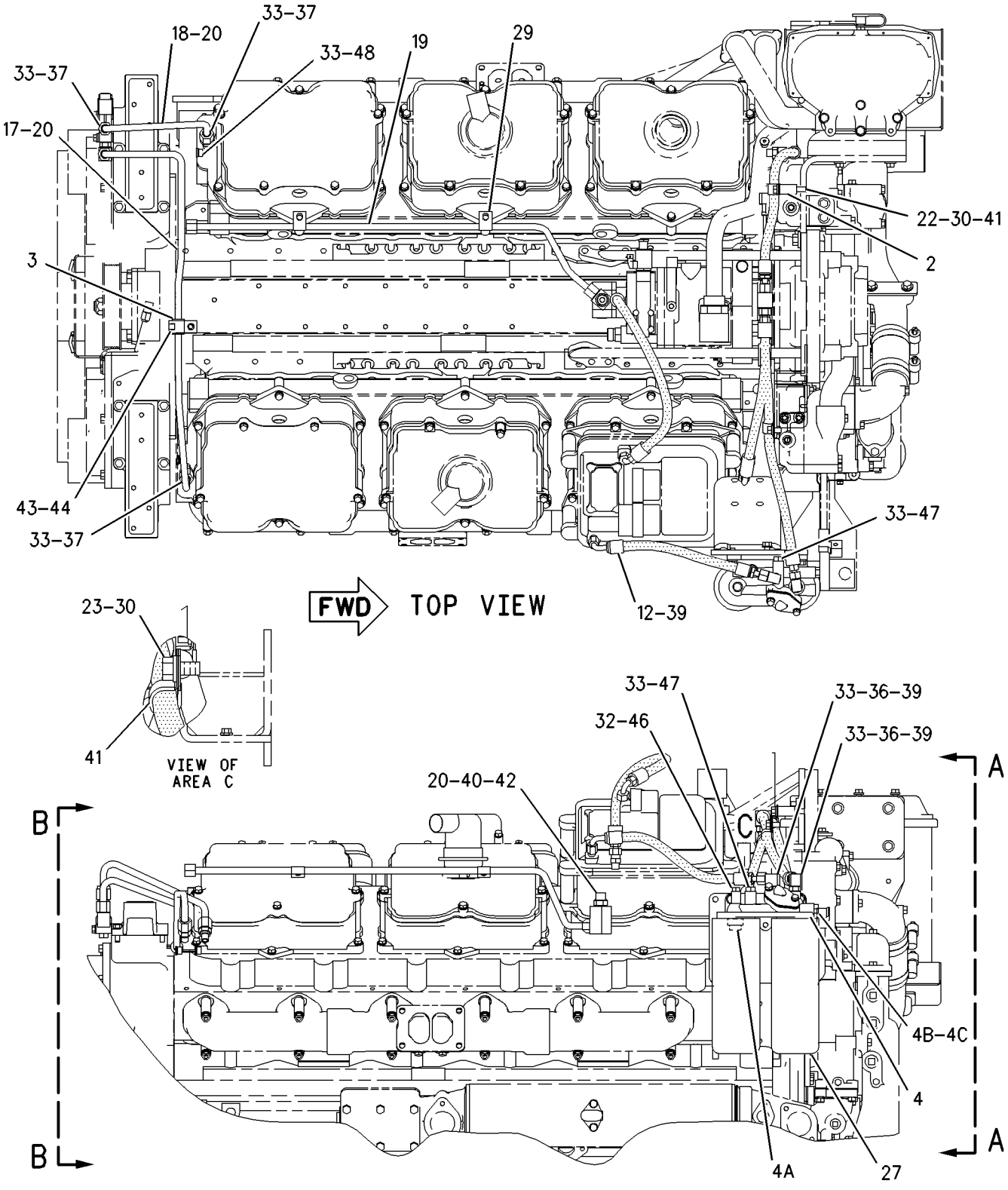

GRAPHIC #1 g00871687

176-6672 **LINES GP-FUEL FILTER** *(contd.)* **i01689969**

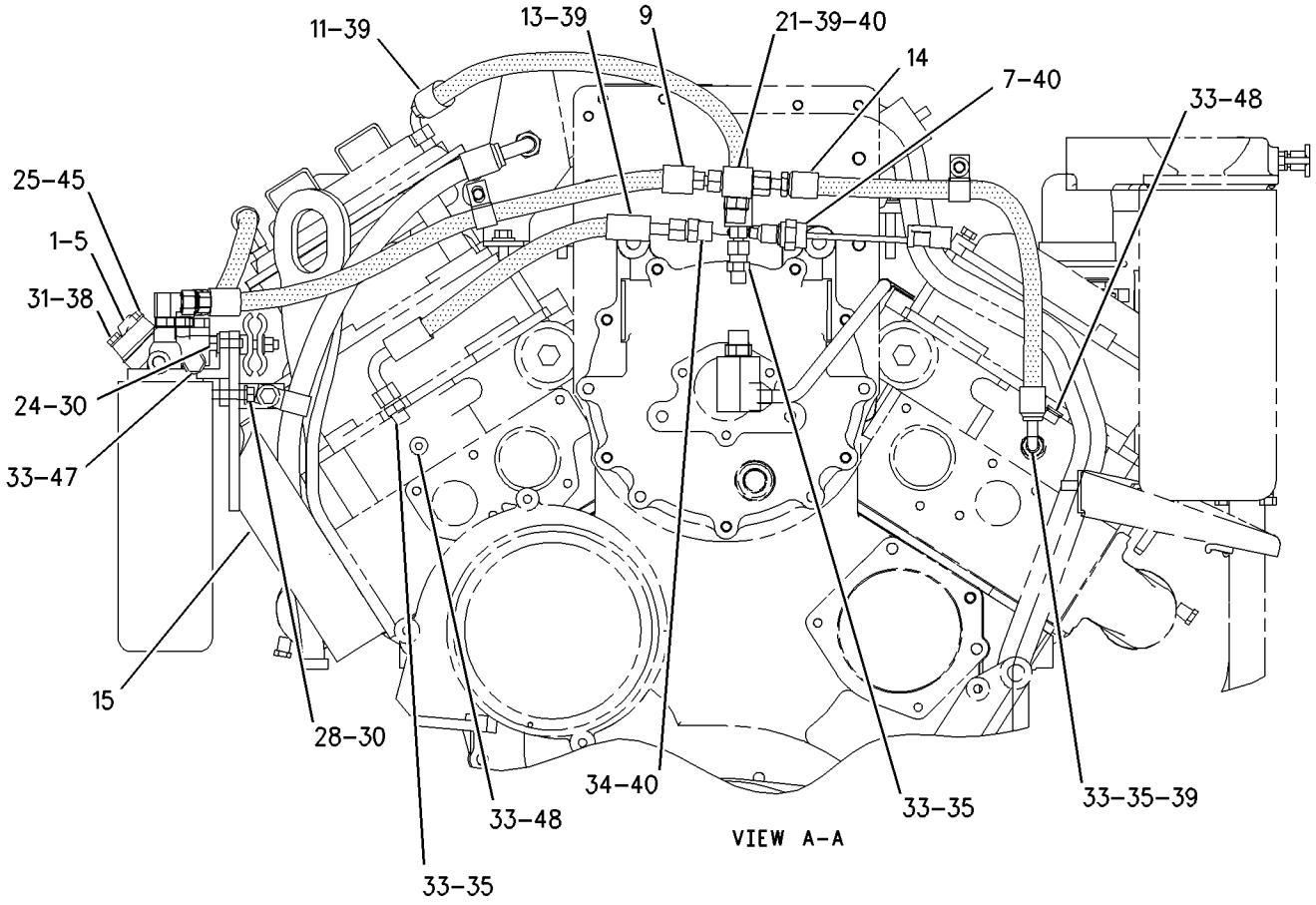

REFER TO ALL ILLUSTRATIONS OF THIS GROUP FOR AUXILIARY VIEWS

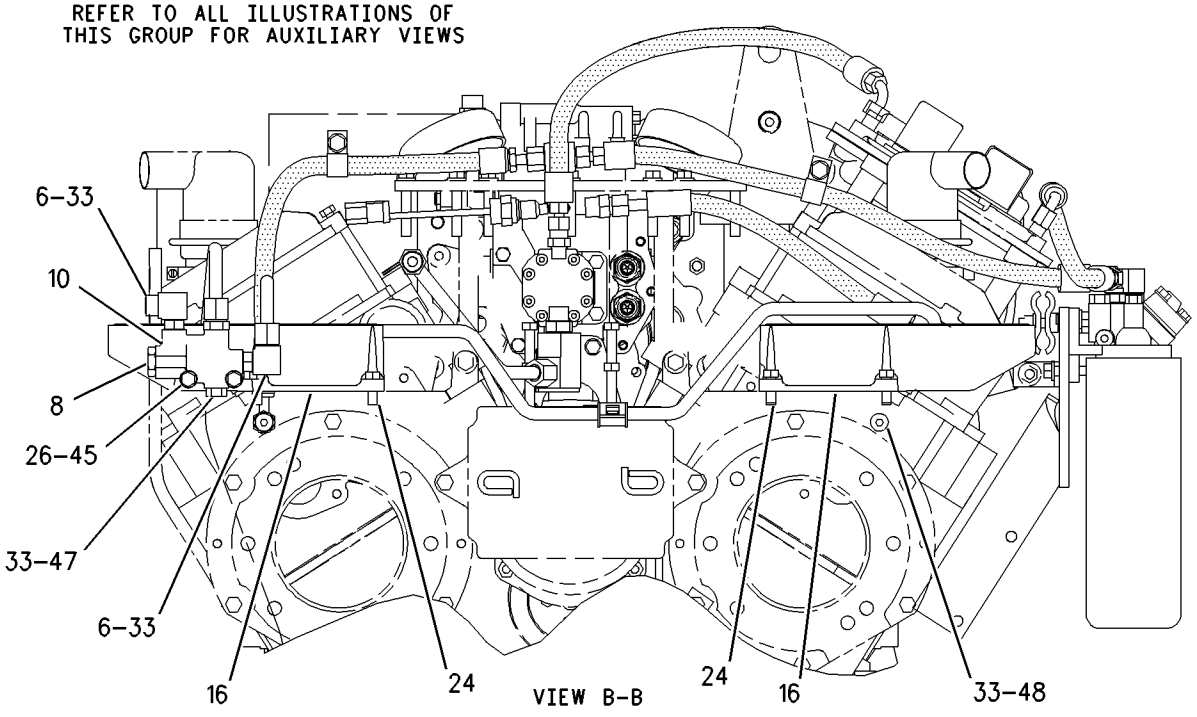

GRAPHIC #2 g00871688

121-4034 LINES GP-INJECTOR HYD PUMP

S/N: 5JJ3200-UP
PART OF 171-5806, 206-3114 ENGINE AR
ALSO AN ATTACHMENT

SMCS-1307 **i01490358**

NOTE	REF NO	GRAPHIC REF	PART NUMBER	QTY	PART NAME 1 2 3 4 5 6 (PRODUCT LEVEL)	SEE PAGE
	1	1	**107-3202**	1	TUBE AS	
	2	1	**117-9650**	1	TUBE AS	
	3	1	**0S-1588**	1	BOLT (3/8-16X1.25 IN)	
	4	1	**0L-1143**	2	BOLT (3/8-16X2.50 IN)	
	5	1	**9L-9132**	1	WASHER (10.2X25.5X2.5MM THK)	
	6	1	**4N-0933**	1	GASKET	
	7	1	**6V-9009**	1	ELBOW	
	8	1	**5P-7815**	1	SEAL-O-RING	
	9	1	**9X-7734**	1	SEAL-O-RING	
	10	1	**6V-8626**	1	ELBOW	
	11	1	**152-2939**	2	SEAL-O-RING	
	12	1	**152-2938**	4	SEAL-O-RING	
	13	1	**6V-5134**	1	SEAL-O-RING	
I	14	1	**162-2501**	1	HOSE AS	
	15	1	**6V-9003**	1	ELBOW	
	16	1	**113-1921**	1	ELBOW	
	17	1	**8S-0023**	1	CLIP (SLOT)	
	18	1	**8S-0024**	1	CLIP (TAB)	
B	19	1	**3K-1470**	1	SPACER	

B-USE AS REQUIRED
I-SEE HOSE FABRICATION GUIDE

121-4034 **LINES GP-INJECTOR HYD PUMP** ***(contd.)*** **i01490358**

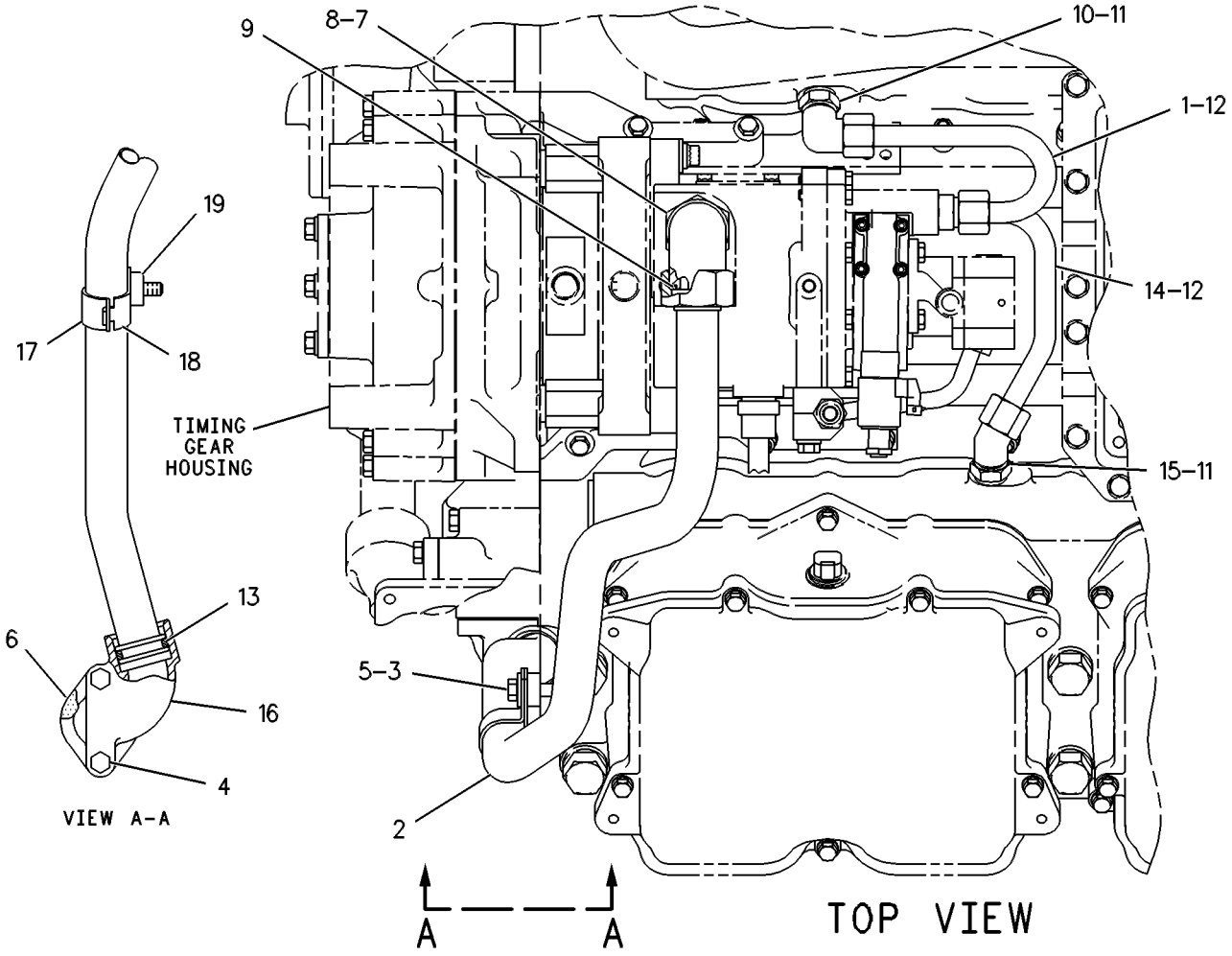

GRAPHIC #1

g00086476

153-9078 PUMP & MTG GP-UNIT INJ HYD

S/N: 5JJ3200-UP
PART OF 171-5806, 206-3114 ENGINE AR
ALSO AN ATTACHMENT

SMCS-1714 **i01604100**

NOTE	REF NO	GRAPHIC REF	PART NUMBER	QTY	PART NAME 1 2 3 4 5 6 (PRODUCT LEVEL)	SEE PAGE
	1	1	**5P-5855**	3	BOLT-12 POINT HEAD (1/2-13X1.75 IN)	
	2	1	**5P-8245**	3	WASHER-HARD (13.5X25.5X3MM THK)	
Y	3	1	**201-4201**	1	PUMP GP-UNIT INJECTOR HYD	180
	4	1	**0S-1617**	4	BOLT (5/16-18X0.75 IN)	
	5	1	**9M-1974**	4	WASHER-HARD (8.8X16X2MM THK)	
	6	1	**118-8157**	1	SUPPORT-PUMP	
	7	1	**6V-1197**	1	SEAL-O-RING	
	8	1	**194-6725**	1	SENSOR GP-PRESSURE (OIL)	
	9	1	**9X-0262**	1	ADAPTER	
	10	1	**6V-5048**	2	SEAL-O-RING	
Y	11	1	**106-0735**	1	SENSOR GP-TEMPERATURE (OIL)	258
	12	1	**8L-2786**	2	SEAL-O-RING	

Y-SEPARATE ILLUSTRATION

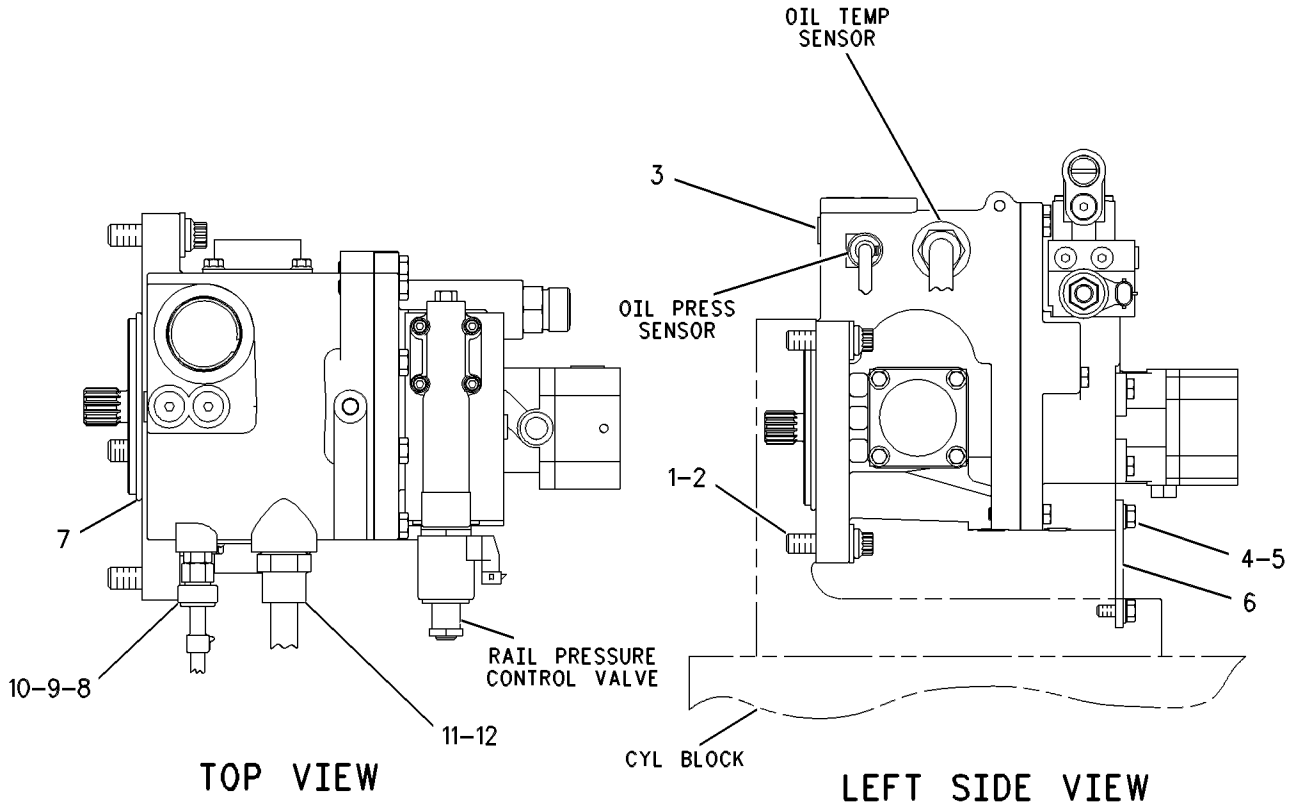

GRAPHIC #1 g00568371

209-2785 PUMP GP-FUEL INJECTION

S/N: 5JJ3200-UP
PART OF 171-5806, 206-3114 ENGINE AR
ALSO AN ATTACHMENT

SMCS-1251, 1253, 1272, 1281, 1290, 1292, 1299 **i01700285**

NOTE	REF NO	GRAPHIC REF	PART NUMBER	QTY	PART NAME 1 2 3 4 5 6 (PRODUCT LEVEL)	SEE PAGE
	1	1	**2P-3206**	4	BOLT-WASHER HEAD	
	2	1	**1A-5964**	1	BOLT (3/8-16X4.5 IN)	
	3	1	**119-1708**	1	ELBOW-INJECTOR	
CY	4	1	*174-7527*	1	INJECTOR GP-FUEL	169
	5	1	**107-9326**	1	CLAMP-INJECTOR	
	6	1	**3E-6747**	1	SEAL-O-RING	
	7	1	**9X-7681**	1	SEAL-O-RING (18.77MM ID)	
	8	1	**116-7221**	2	SEAL-RECTANGULAR	

C-CHANGE FROM PREVIOUS TYPE
Y-SEPARATE ILLUSTRATION

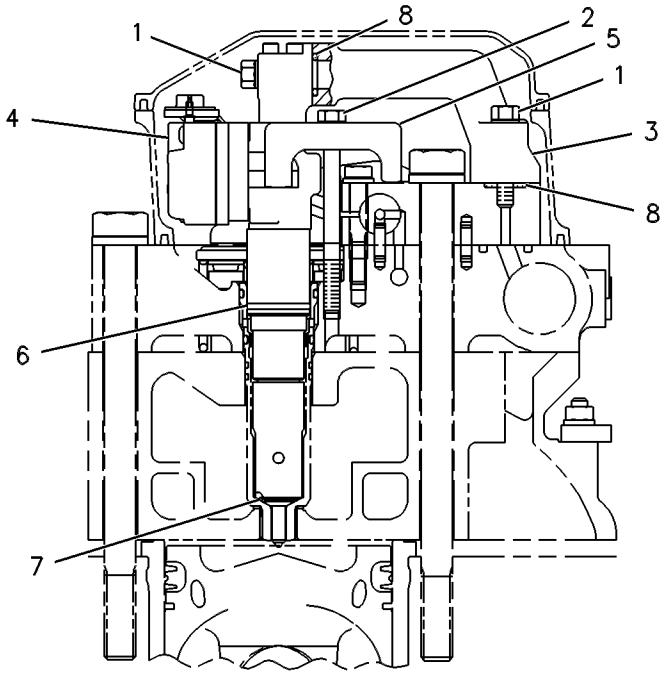

FRONT VIEW

GRAPHIC #1 g00086488

201-4201 PUMP GP-UNIT INJECTOR HYD

S/N: 5JJ3200-UP
PART OF 153-9078 PUMP & MTG GP-UNIT INJ HYD
ALSO AN ATTACHMENT

SMCS-1714 **i01601804**

NOTE	REF NO	GRAPHIC REF	PART NUMBER	QTY	PART NAME 1 2 3 4 5 6 (PRODUCT LEVEL)	SEE PAGE
	1	1	**117-1620**	1	COUPLING	
	2	1	**149-1950**	1	PUMP GP-FUEL TRANSFER	
YR	3	1	**201-4202**	1	PUMP GP-UNIT INJECTOR HYD	182
	4	1	**0S-1617**	4	BOLT (5/16-18X0.75 IN)	
	5	1	**6V-8676**	1	SEAL-O-RING	

R-REMFG PART MAY BE AVAILABLE
Y-SEPARATE ILLUSTRATION

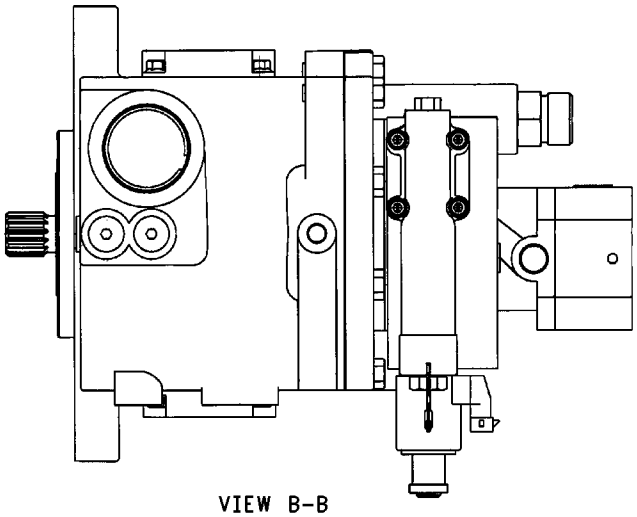

VIEW B-B

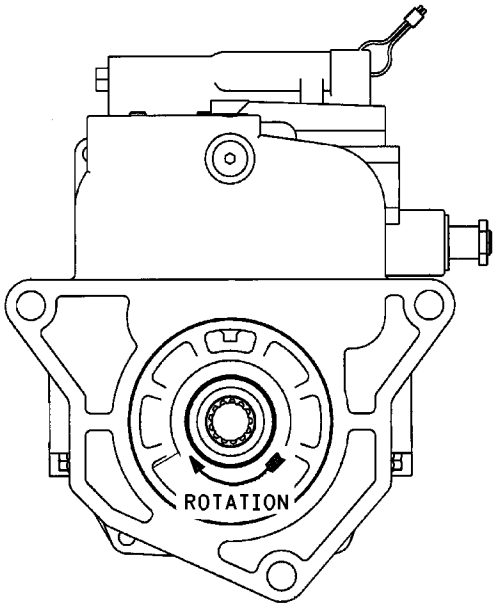

VIEW A-A

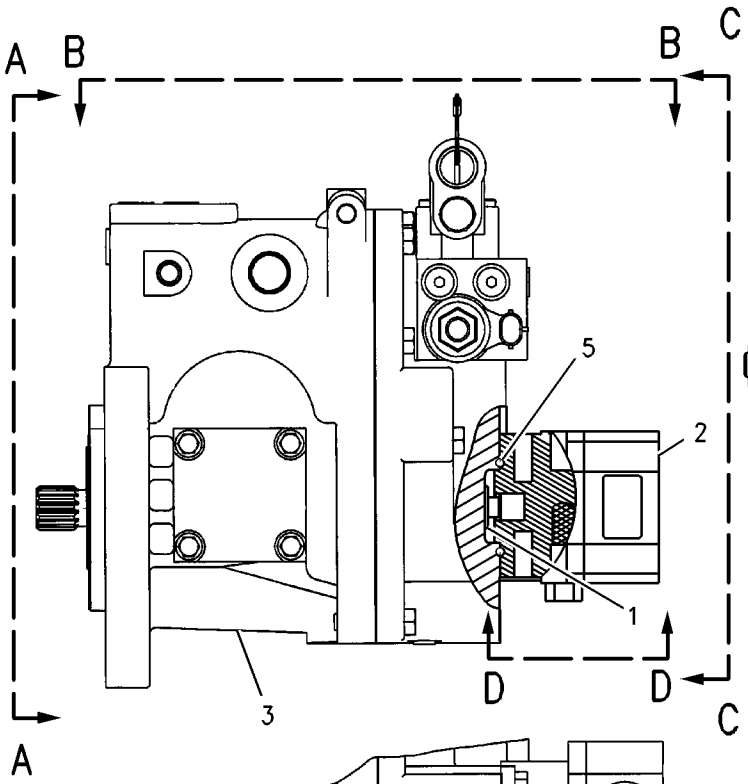

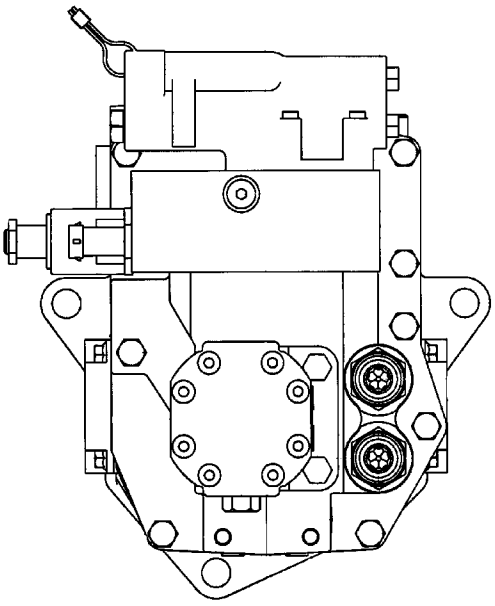

VIEW C-C

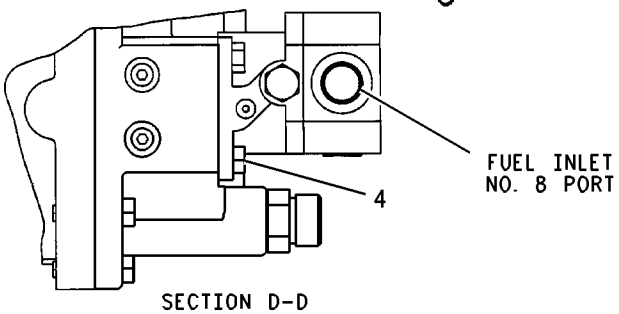

SECTION D-D

GRAPHIC #1 g00830144

201-4202 PUMP GP-UNIT INJECTOR HYD*R

S/N: 5JJ3200-UP
PART OF 201-4201 PUMP GP-UNIT INJECTOR HYD
ALSO AN ATTACHMENT

SMCS-1714 **i01663744**

NOTE	REF NO	GRAPHIC REF	PART NUMBER	QTY	PART NAME 1 2 3 4 5 6 (PRODUCT LEVEL)	SEE PAGE
Y	1	1	**107-0677**	1	VALVE GP-SOLENOID (PRESSURE CONTROL)	187
B	2	1	**161-8627**	1	KIT-PLUG (UNIT INJECTOR HYDRAULIC PUMP)	
					(INCLUDES PLUGS & SEALS)	
					(SELECT APPROPRIATE PLUG FROM KIT)	
	3	1	**9S-4180**	2	PLUG (5/16-24 THD)	
	4	1	**9S-8001**	2	PLUG (5/16-24 THD-HEX SOCKET HEAD)	
	5	1	**9S-8002**	3	PLUG (7/16-20 THD)	
	6	1	**9S-8004**	3	PLUG (9/16-18 THD)	
	7	1	**9S-8007**	1	PLUG (3/8-24 THD)	
	8	1	**138-4309**	2	FITTING	
	9	1	**138-4311**	2	SPRING	
	10	1	**138-4313**	2	VALVE	
	12	1	**164-0759**	4	BOLT-SOCKET HEAD (10-24X3.25 IN)	
	13	1	**201-4155**	1	SEAL-LIP TYPE	
F		1	**154-6734**	1	BEARING (REAR)	
F		1	**9X-7680**	3	SEAL-O-RING (7.65MM ID) (COMPENSATOR TO ADAPTER)	
F		1	**135-2652**	1	SEAL-O-RING (17.17MM ID) (COMPENSATOR TO ADAPTER)	
F		1	**174-8943**	1	SLEEVE (COMPENSATOR)	
					AVAILABLE REPAIR KIT(S):	
			154-6735	1	KIT-BEARING (YOKE)(UNIT INJECTOR HYD PUMP)	
					(INCLUDES A SET OF TWO YOKE BEARINGS)	
			166-5985	1	KIT-COMPENSATOR (UNIT INJECTOR HYDRAULIC PUMP)	
					(INCLUDES COMPENSATOR SUB ASSEMBLY, O-RING SEALS, SLEEVE, WIRE SEAL, LOCK WIRE & COMPENSATOR PLUGS)	
			201-4203	1	KIT-PUMP (REBUILD)(UNIT INJ HYD PUMP)	
					(INCLUDES YOKE, SHAFT, CONTROL PISTON, SEAL KIT & FRONT BEARING)	
Y			**138-6256**	1	KIT-SEAL (UNIT INJECTOR HYDRAULIC PUMP)	170

B-USE AS REQUIRED
F-NOT SHOWN
Y-SEPARATE ILLUSTRATION

201-4202 PUMP GP-UNIT INJECTOR HYD *(contd.)* i01663744

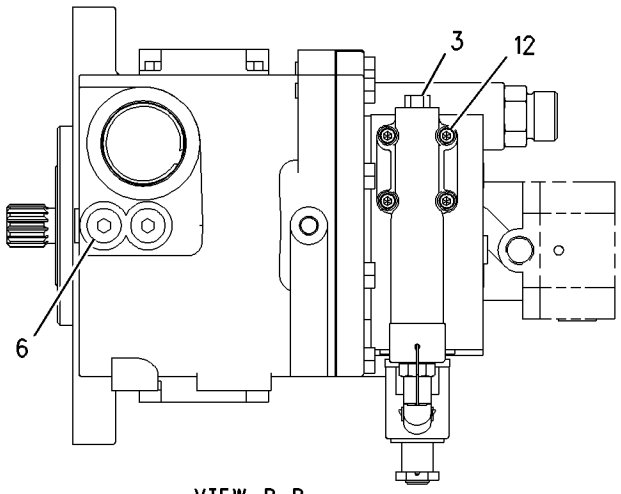

VIEW B-B

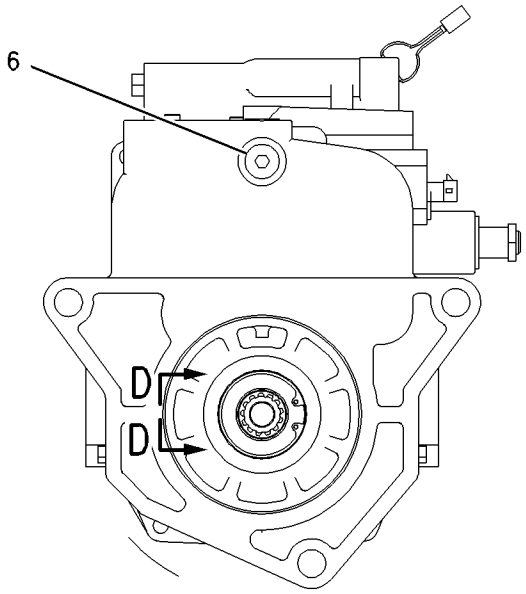

VIEW A-A

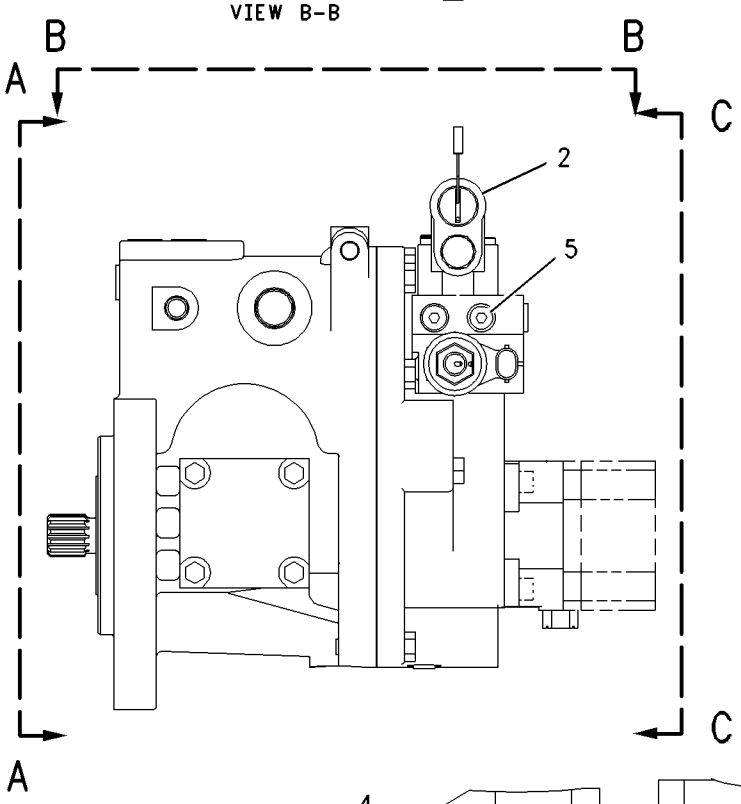

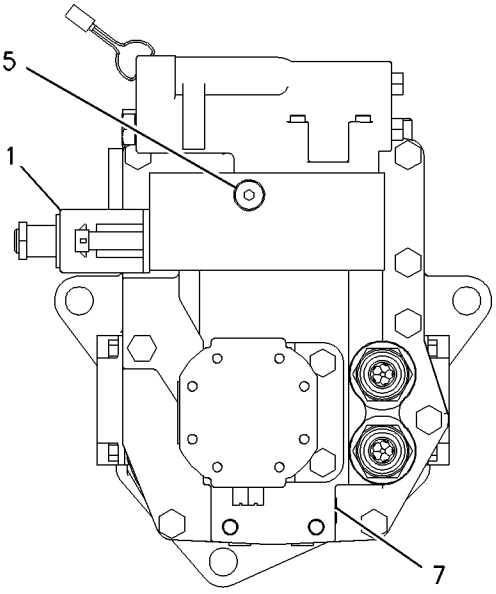

VIEW C-C

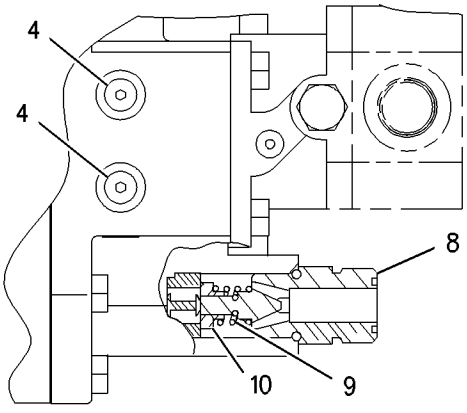

SECTION D-D

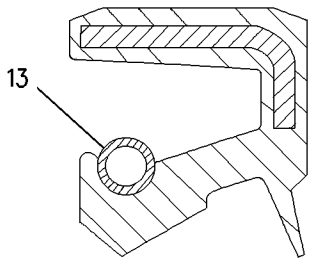

SECTION D-D

GRAPHIC #1

g00859085

174-7468 TANK GP-FUEL

S/N: AKT1-UP

PART OF 171-5801 CHASSIS AR

SMCS-1273 **i01435899**

NOTE	REF NO	GRAPHIC REF	PART NUMBER	QTY	PART NAME 1 2 3 4 5 6 (PRODUCT LEVEL)	SEE PAGE
	1	1	**5P-8502**	1	PADLOCK GP	
A		1	**5P-8500**	1	KEY	
A		1	**8Y-6364**	1	SLEEVE	
	2	1	**6T-6080**	8	MOUNTING	
	3	1	**9P-7121**	1	STRAINER-FUEL TANK	
Y	4	1	**205-4276**	1	TANK GP-FUEL	185
	5	1	**0S-1627**	4	BOLT (3/4-10X4.5IN)	
	6	1	**5P-6652**	4	WASHER (20X44.5X6MM THK)	
	7	1	**6T-6079**	4	WASHER (20X100X12MM THK)	

A-NOT PART OF THIS GROUP
Y-SEPARATE ILLUSTRATION

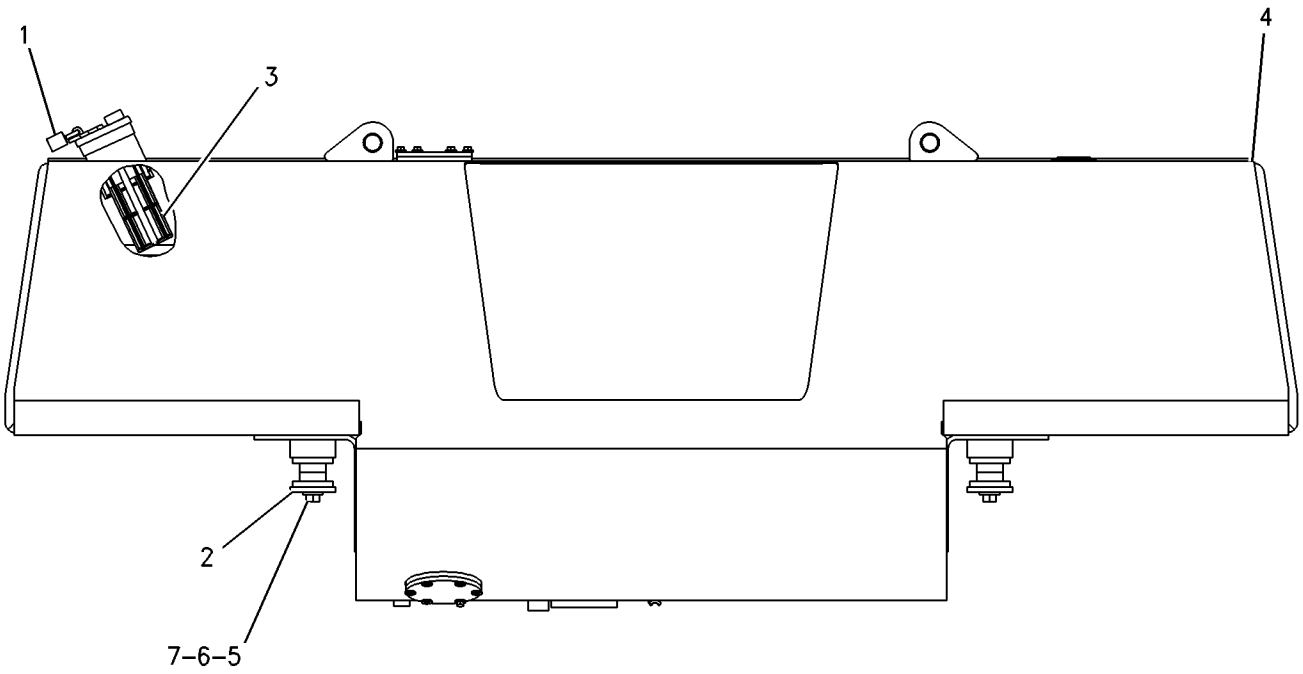

REAR VIEW

GRAPHIC #1 g00806601

205-4276 TANK GP-FUEL

S/N: AKT1-UP

PART OF 174-7468 TANK GP-FUEL

SMCS-1273 **i01581808**

NOTE	REF NO	GRAPHIC REF	PART NUMBER	QTY	PART NAME 1 2 3 4 5 6 (PRODUCT LEVEL)	SEE PAGE
	1	1	**7X-7700**	1	CAP AS-FUEL TANK	
		1	**9X-2205**	1	KIT-CAP FILTER (FUEL TANK)	
					(INCLUDES FILTER AS, GASKETS, VALVE & SCREW)	
		1	**9X-8600**	1	SEAL-O-RING	
	2	1	**164-3417**	1	COVER	
	3	1	**174-7469**	1	TANK AS-FUEL	
	4	1	**187-1679**	1	COVER	
	5	1	**1H-8128**	1	SEAL-O-RING	
		1	**5K-1770**	1	SEAL-O-RING	
	6	1	**4L-6454**	12	BOLT (3/8-16X1 IN)	
	7	1	**5H-6734**	1	SEAL-O-RING	
	8	1	**5P-1075**	6	WASHER-HARD (10.2X22.5X3MM THK)	
	9	1	**8T-4896**	6	WASHER-HARD (10.2X18.5X2.5MM THK)	

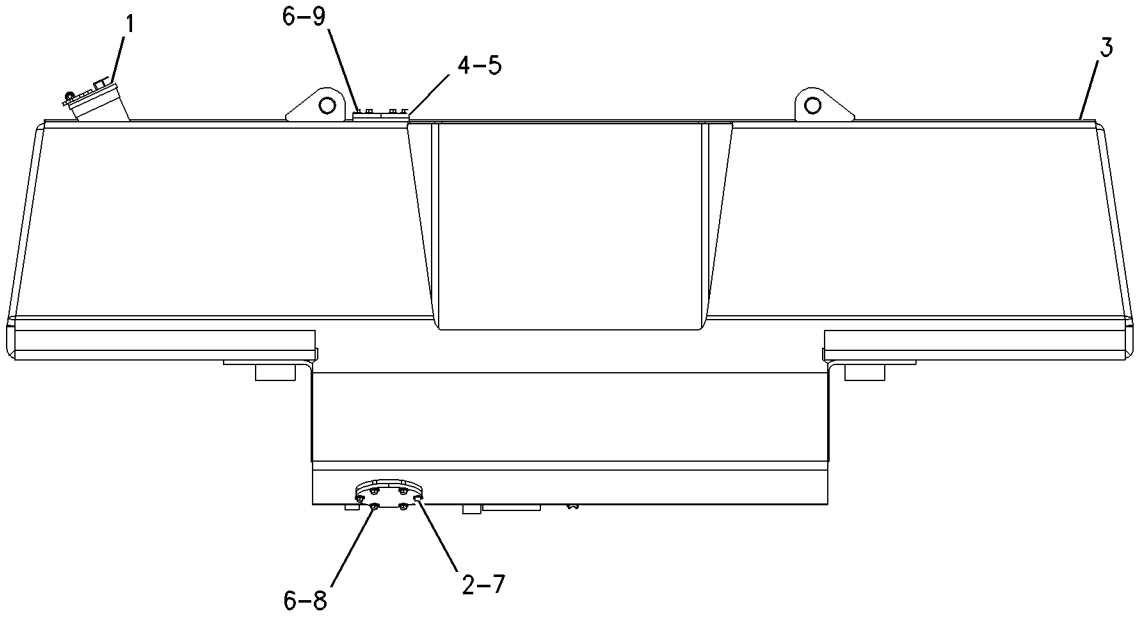

GRAPHIC #1 g00816582

102-7535 VALVE GP-PRESSURE CONTROL–FUEL

S/N: 5JJ3200-UP
PART OF 176-6672 LINES GP-FUEL FILTER
ALSO AN ATTACHMENT

SMCS-1715 **i01700414**

NOTE	REF NO	GRAPHIC REF	PART NUMBER	QTY	PART NAME 1 2 3 4 5 6 (PRODUCT LEVEL)	SEE PAGE
	1	1	**033-6033**	1	SEAL-O-RING	
	2	1	**6V-6923**	1	RING-BACKUP	
	3	1	**6V-4589**	1	SEAL-O-RING	

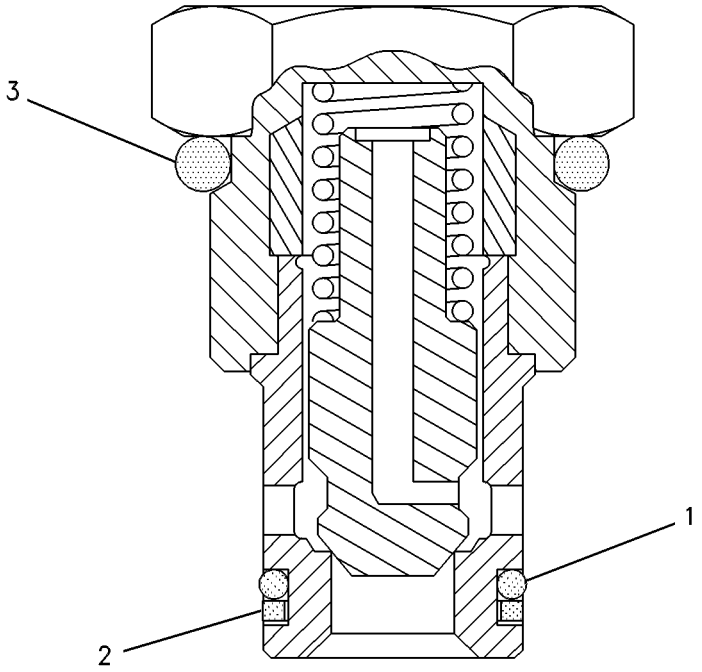

GRAPHIC #1 g00278840

107-0677 VALVE GP-SOLENOID

S/N: 5JJ3200-UP
PART OF 201-4202 PUMP GP-UNIT INJECTOR HYD
ALSO AN ATTACHMENT

SMCS-1259 **i01700255**

NOTE	REF NO	GRAPHIC REF	PART NUMBER	QTY	PART NAME 1 2 3 4 5 6 (PRODUCT LEVEL)	SEE PAGE
J	1	1	**033-6039**	1	SEAL-O-RING	
J	2	1	**123-3132**	1	RING-BACKUP	
J	3	1	**9X-5535**	1	SPACER	
J	4	1	**8C-6711**	1	NUT-RETAINER (1/2-20 THD)	
J	5	1	**033-6028**	1	SEAL-O-RING	
					AVAILABLE REPAIR KIT(S):	
J			**9X-1484**	1	KIT-SEAL (SOLENOID VALVE)	

J-KIT MARKED J INCLUDES PARTS MARKED J

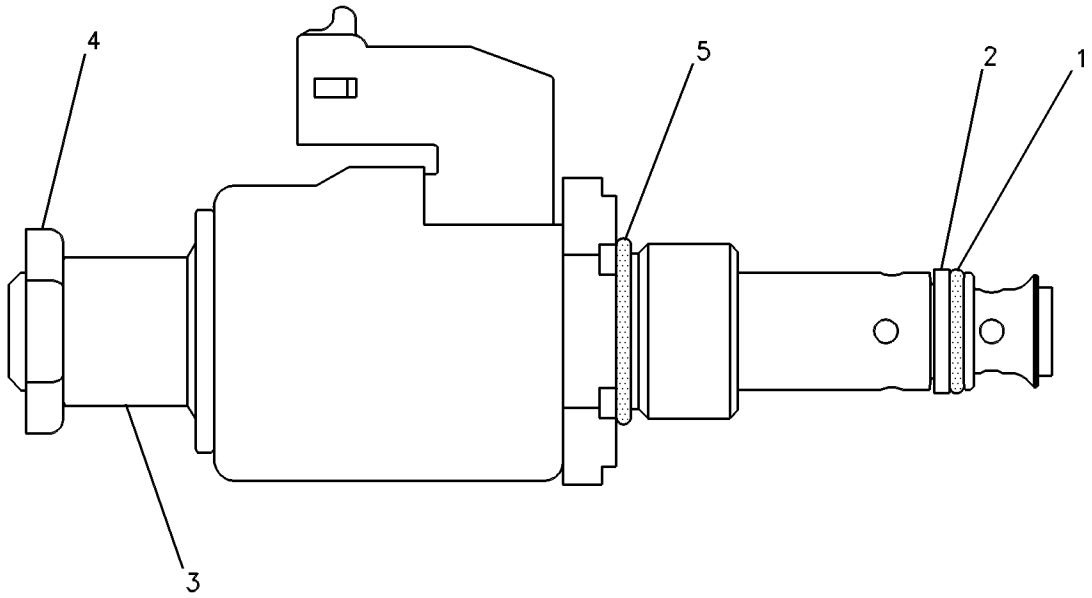

GRAPHIC #1 g00452590

3E-6328 ALARM GP

S/N: AKT1-UP
24 VOLT
PART OF 172-5067 WIRING GP-PLATFORM

SMCS-7402 **i01700420**

NOTE	REF NO	GRAPHIC REF	PART NUMBER	QTY	PART NAME 1 2 3 4 5 6 (PRODUCT LEVEL)	SEE PAGE
	1	1	**102-8802**	1	KIT-RECEPTACLE (2 PIN)	
					(INCLUDES RECEPTACLE AS & WEDGE)	
	2	1	**186-3735**	2	PIN-CONNECTOR	
	3	1	**3E-3365**	1	WEDGE-RECEPTACLE LOCK (2 PIN)	

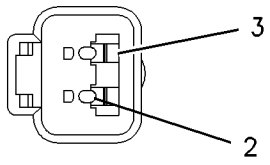

VIEW A–A

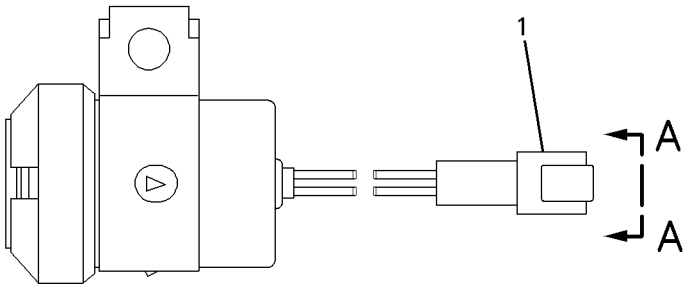

GRAPHIC #1 g00826023

176-1364 ALTERNATOR GP-CHARGING

S/N: AKT1-UP
24 VOLT, 100 AMPERE
PART OF 171-5807 INSTALLATION AR-ENGINE

SMCS-1405, 1410, 1425 **i01700439**

NOTE	REF NO	GRAPHIC REF	PART NUMBER	QTY	PART NAME 1 2 3 4 5 6 (PRODUCT LEVEL)	SEE PAGE
	1	1	**7C-5287**	1	CABLE AS	
	2	1	**179-5450**	1	PULLEY-ALTERNATOR	
	3	1	**184-5498**	1	BRACKET AS	
		1	**1F-0750**	1	NUT-WELD (3/8-16 THD)	
	4	1	**196-4195**	1	BELT TIGHTENER	
Y	5	1	**197-8820**	1	ALTERNATOR GP-CHARGING	190
	6	1	**218-9823**	1	BELT	
	7	1	**219-1828**	1	GUARD-ALTERNATOR	
	8	1	**5M-3062**	4	BOLT (3/8-16X0.75 IN)	
	9	1	**5P-1075**	4	WASHER-HARD (10.2X22.5X3MM THK)	
	10	1	**6V-8188**	1	NUT (1/2-13 THD)	
	11	1	**7X-0340**	1	BOLT (1/2-13X6.5 IN)	
	12	1	**8T-4223**	3	WASHER-HARD (13.5X25.5X3MM THK)	
	13	1	**8T-4896**	1	WASHER-HARD (10.2X18.5X2.5MM THK)	
	14	1	**8T-7008**	1	BOLT (3/8-16X3 IN)	
	15	1	**8T-8920**	1	BOLT (1/2-13X3.25 IN)	

Y-SEPARATE ILLUSTRATION

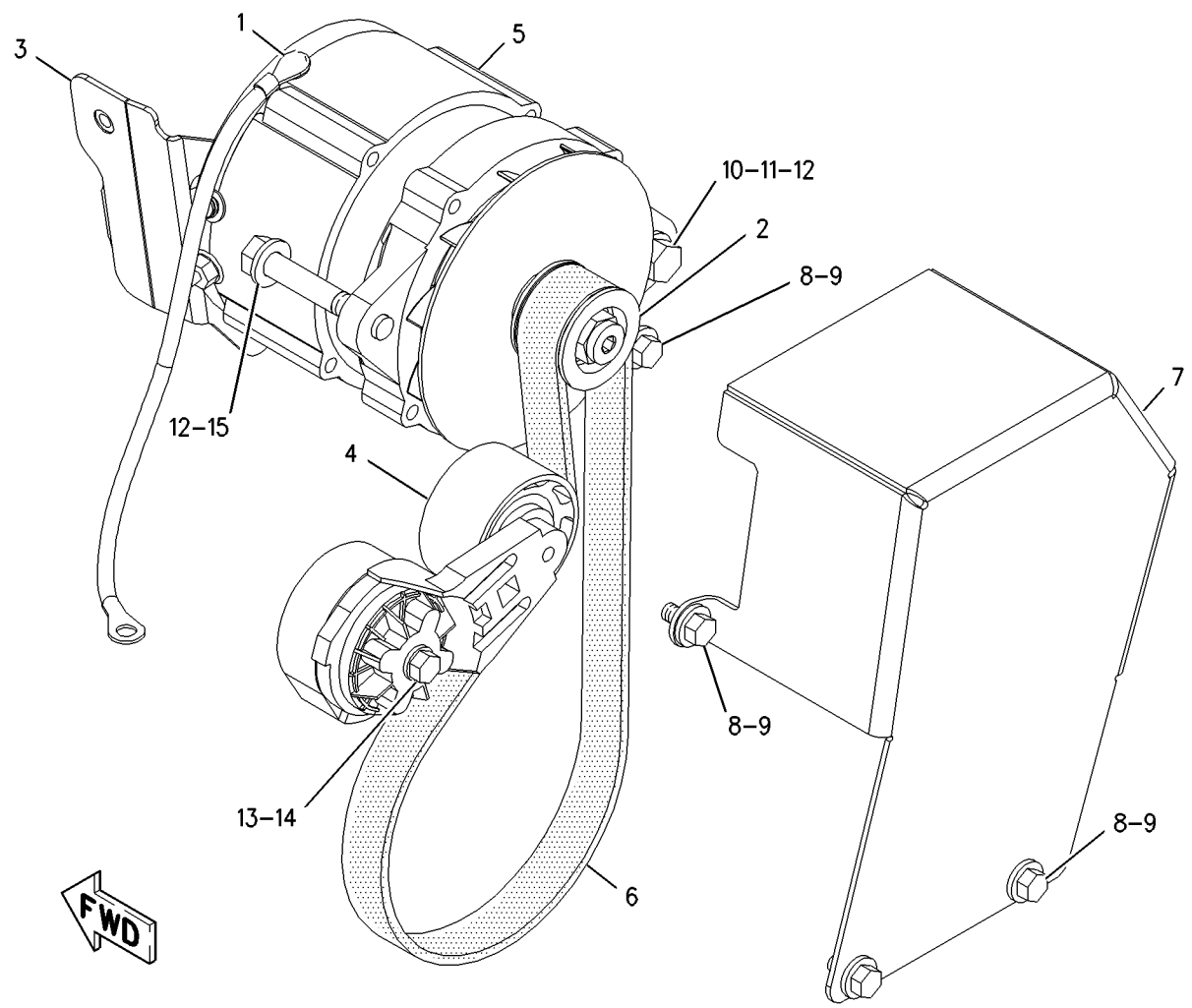

GRAPHIC #1 g00873412

ELECTRICAL AND STARTING SYSTEM

197-8820 ALTERNATOR GP-CHARGING

S/N: AKT1-UP

PART OF 176-1364 ALTERNATOR GP-CHARGING

SMCS-1405, 1410, 1425 **i01691128**

NOTE	REF NO	GRAPHIC REF	PART NUMBER	QTY	PART NAME 1 2 3 4 5 6 (PRODUCT LEVEL)	SEE PAGE
	1	1	**185-2653**	1	FRAME	
	2	1	**5S-7349**	1	BOLT (1/4-20X0.5 IN)	
	3	1	**185-2639**	1	FAN AS	
	4	1	**1H-3244**	1	LOCKWASHER	
	5	1	**185-2645**	1	FRAME	
	6	1	**2K-4821**	1	LOCKNUT (5/8-18 THD)	
	7	1	**5P-8247**	1	WASHER-HARD (17X32X3.5MM THK)	
	8	1	**185-2651**	1	COVER	
	9	1	**8T-4205**	1	WASHER-HARD (7.2X14.5X2MM THK)	
	10	1	**185-2647**	1	GROMMET	
	11	1	**9L-6770**	1	CAP	
	12	1	**205-0626**	1	STATOR AS-ALTERNATOR	
	13	1	**185-2638**	2	COLLAR	
	14	1	**185-2654**	1	PLATE	
	15	1	**185-2650**	1	ROTOR AS	
	16	1	**185-2644**	1	COIL AS	
	17	1	**185-2648**	1	REGULATOR AS	
	18	1	**6V-8189**	1	NUT (5/16-18 THD)	
	19	1	**8T-4224**	1	WASHER-HARD (8.8X16X2MM THK)	
	20	1	**3F-9556**	1	LOCKWASHER	
					AVAILABLE REPAIR KIT(S):	
			185-2655		KIT-BEARING	
					(INCLUDES 2 BEARINGS)	
			185-2656		KIT-TERMINAL	
					(INCLUDES HOLDER AS, PLATE, INSULATOR, PIN, BOLTS, GROMMET, AND NUT	
			185-2657		KIT-TERMINAL	
					(INCLUDES INSULATORS, WASHERS, AND NUTS)	
			185-2658		KIT-HARDWARE	
					(INCLUDES BOLTS)	

197-8820 ALTERNATOR GP-CHARGING ***(contd.)*** **i01691128**

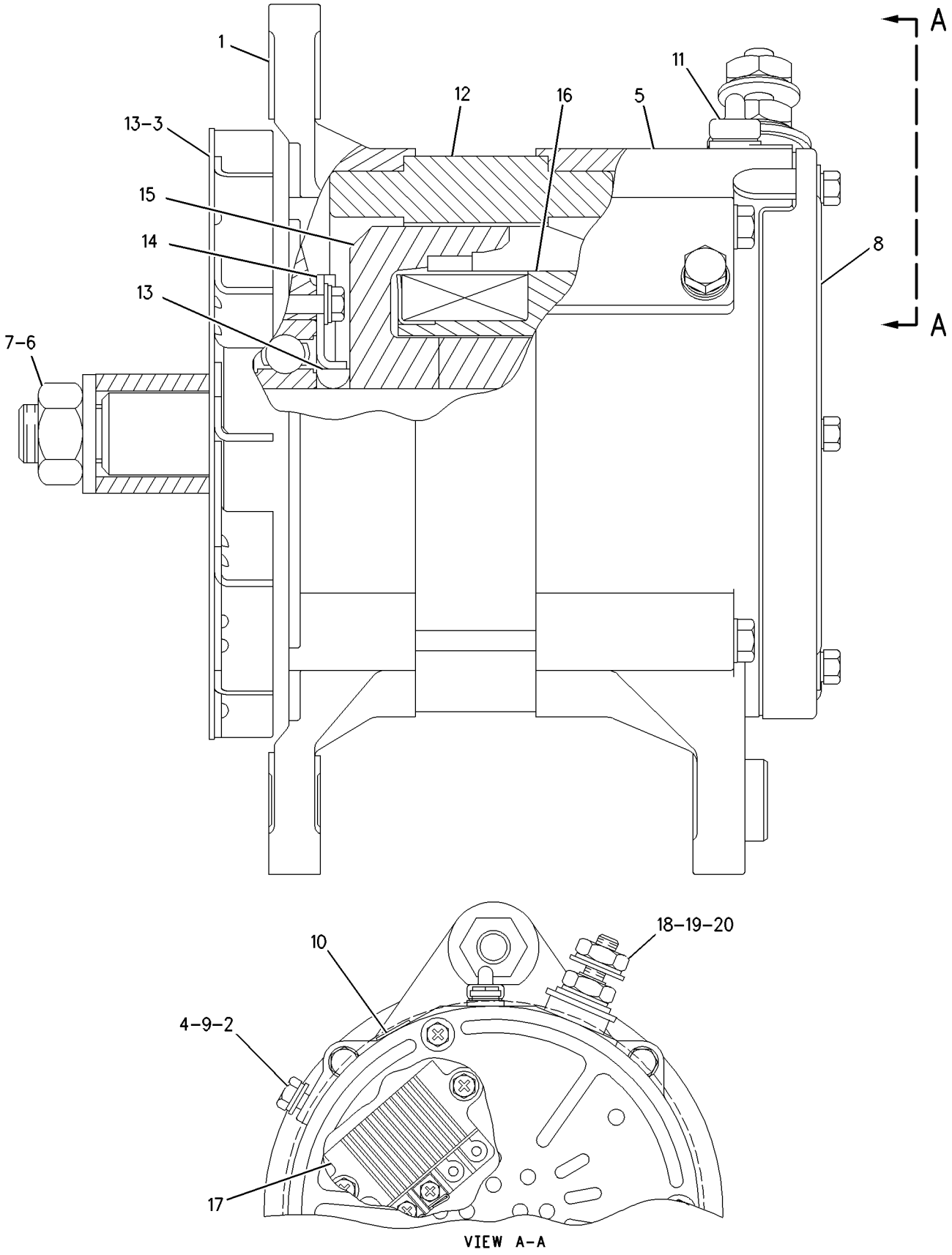

GRAPHIC #1 g00873198

ELECTRICAL AND STARTING SYSTEM

172-5066 BATTERY & WIRING GP

S/N: AKT1-UP

PART OF 171-5801 CHASSIS AR

SMCS-1401, 1402, 1408 **i01689233**

NOTE	REF NO	GRAPHIC REF	PART NUMBER	QTY	PART NAME 1 2 3 4 5 6 (PRODUCT LEVEL)	SEE PAGE
	1	4	**3E-7753**	1	FLOAT AS	
	2	4	**3T-9549**	1	ADAPTER	
	3	4	**6S-4039**	2	GROMMET	
	4	1	**6Y-6584**	1	STRAP AS-GROUND	
	5	1,3,4	**7G-1060**	4	STRAP AS-GROUND	
B	6	1,4	**7K-1181**	142	STRAP-CABLE	
Y	7	3	**7N-0719**	1	SWITCH GP-DISCONNECT (BATTERY)	286
	8	3	**7Y-3948**	1	CABLE AS	
		3	**1S-7251**	2	TERMINAL-RING (FOR 1/2 IN BOLT)	
E		3	**5P-0747**		CABLE (00GA)(BLACK) (42CM)	
	9	3	**8S-4211**	2	PLATE	
	10	4	**8V-0622**	1	CABLE AS	
		4	**8C-5917**	1	TERMINAL AS-BATTERY (POSITIVE)	
		4	**1M-6119**	2	BOLT-BATTERY TERMINAL (5/16-18X1.375 IN)	
		4	**1M-6120**	2	NUT-BATTERY TERMINAL (5/16-18 THD)	
E		4	**5P-0761**		CABLE (00GA)(RED) (14CM)	
		4	**8T-9757**	1	TERMINAL AS-BATTERY (NEGATIVE)	
		4	**9G-0003**	1	COVER-TERMINAL (BLACK)	
		4	**9G-0004**	1	COVER-TERMINAL (RED)	
Y	11	3	**9W-0742**	1	JUNCTION BLOCK GP	226
	12	3	**9W-2938**	1	COVER AS	
		3	**4D-6716**	3	RIVET-POP	
	13	1	**9X-0263**	1	ADAPTER	
	14	1	**101-3121**	1	SPACER (10.5X25X.25MM THK)	
	15	2,3	**109-5735**	2	PLATE AS	
					(EACH INCLUDES)	
		2,3	**6V-6716**	4	RIVET-TRUSS HEAD	
		2,3	**109-1645**	2	CLIP	
	16	4	**111-4402**	1	FILTER-FOAM	
	17	2	**113-4316**	1	PLATE AS	
		2	**6C-3680**	6	RIVET-POP	
		2	**109-1645**	3	CLIP	
	18	3	**118-6365**	1	PLATE AS	
		3	**6V-6716**	2	RIVET-TRUSS HEAD	
		3	**109-1645**	1	CLIP	
Y	19	4	**118-7226**	1	SENSOR GP-TEMPERATURE	259
Y	20	4	**123-6449**	1	WARNING GP-BACKUP	291
Y	21	4	**124-9325**	1	SENSOR GP-FUEL LEVEL (ULTRASONIC)	244
Y	22	1,3	**134-2252**	2	SENSOR GP-TEMPERATURE	260
	23	1	**153-6281**	1	HOLD DOWN AS	
Y	24	1	**161-9926**	1	SENSOR GP-PRESSURE	249
Y	25	4	**164-7577**	1	SWITCH GP-BYPASS	285
Y	26	2	*164-9436*	1	BLOCK GP-POWER	199
	27	3	**172-5964**	1	HARNESS AS-LH FENDER	
	28	3	**172-5965**	1	HARNESS AS-RH FENDER	
	29	1	**172-5966**	1	HARNESS AS-ENGINE	
	30	4	**172-5967**	1	HARNESS AS-RADIATOR GUARD	
	31	3	**172-5969**	1	CABLE AS	
		3	**159-8047**		CABLE-ELECTRICAL (0 GA)(RED) (49CM)	
		3	**1S-4915**	2	LINER-CONDUIT	
BE		3	**5P-0695**		CONDUIT	
		3	**8N-0869**	2	COVER-TERMINAL (RED)	
BE		3	**8T-2225**		TUBE-HEAT SHRINK	
		3	**170-3795**	2	RING-TERMINAL	
	32	1	**172-5970**	1	CABLE AS	
		1	**1S-4915**	2	LINER-CONDUIT	

172-5066 **BATTERY & WIRING GP** ***(contd.)*** **i01689233**

NOTE	REF NO	GRAPHIC REF	PART NUMBER	QTY	PART NAME 1 2 3 4 5 6 (PRODUCT LEVEL)	SEE PAGE
BE		1	**5P-0695**		CONDUIT	
E		1	**159-8047**		CABLE-ELECTRICAL (0 GA)(RED) (150CM)	
		1	**8N-0869**	2	COVER-TERMINAL (RED)	
BE		1	**8T-2225**		TUBE-HEAT SHRINK	
		1	**170-3793**	1	RING-TERMINAL	
		1	**170-3794**	1	RING-TERMINAL	
	33	4	**174-7875**	1	HORN AS (24 VOLT)(HIGH TONE)	
		4	**178-3586**	1	LOCK	
		4	**177-9853**	1	RECEPTACLE AS	
	34	1	**175-3578**	1	HARNESS AS-TRANSMISSION	
	35	1	**178-1780**	7	CLIP	
	36	1,2,3	**178-1781**	11	CLIP	
	37	3	**178-8521**	1	RECEPTACLE AS	
		3	**8N-0869**	1	COVER-TERMINAL (RED)	
		3	**1S-4915**	2	LINER-CONDUIT	
		3	**1S-7251**	2	TERMINAL-RING (FOR 1/2 IN BOLT)	
BE		3	**5P-0695**		CONDUIT	
E		3	**5P-0747**		CABLE (00GA)(BLACK) (140CM)	
E		3	**5P-0761**		CABLE (00GA)(RED) (140CM)	
BE		3	**8T-2225**		TUBE-HEAT SHRINK	
	38	3	**178-8523**	1	CABLE AS	
		3	**1S-7251**	1	TERMINAL-RING (FOR 1/2 IN BOLT)	
		3	**1S-7252**	1	TERMINAL-RING (FOR 3/8 IN BOLT)	
E		3	**5P-0747**		CABLE (00GA)(BLACK) (130CM)	
		3	**9G-8909**	1	COVER-TERMINAL (BLACK)	
	39	1	**178-8599**	1	BRACKET AS	
		1	**1F-0750**	1	NUT-WELD (3/8-16 THD)	
		1	**7T-1099**	3	LINK	
	40	4	**187-5196**	1	HARNESS AS-EXHAUST VALVE	
	41	4	**191-8726**	1	CABLE AS	
		4	**1S-4915**	2	LINER-CONDUIT	
		4	**5P-0761**		CABLE (00GA)(RED) (69CM)	
		4	**1S-7251**	1	TERMINAL-RING (FOR 1/2 IN BOLT)	
BE		4	**5P-0695**		CONDUIT	
		4	**8N-0869**	1	COVER-TERMINAL (RED)	
BE		4	**8T-2225**		TUBE-HEAT SHRINK	
		4	**9G-0002**	1	COVER-TERMINAL	
		4	**8T-9756**	1	TERMINAL AS (POS)	
		4	**1M-6119**	1	BOLT-BATTERY TERMINAL (5/16-18X1.375 IN)	
		4	**1M-6120**	1	NUT-BATTERY TERMINAL (5/16-18 THD)	
	42	4	**191-8727**	1	CABLE AS	
		4	**159-8050**		CABLE-ELECTRICAL (33CM)	
		4	**1S-7252**	1	TERMINAL-RING (FOR 3/8 IN BOLT)	
		4	**9G-0003**	1	COVER-TERMINAL (BLACK) (LH NEG)	
		4	**9G-8909**	1	COVER-TERMINAL (BLACK)	
		4	**8T-9757**	1	TERMINAL AS-BATTERY (NEGATIVE)	
		4	**1M-6119**	1	BOLT-BATTERY TERMINAL (5/16-18X1.375 IN)	
		4	**1M-6120**	1	NUT-BATTERY TERMINAL (5/16-18 THD)	
	43	3	**191-8730**	1	CABLE AS	
		3	**5P-0761**		CABLE (00GA)(RED) (92CM)	
		3	**1S-4915**	2	LINER-CONDUIT	
		3	**1S-7251**	2	TERMINAL-RING (FOR 1/2 IN BOLT)	
BE		3	**5P-0695**		CONDUIT	
		3	**8N-0869**	2	COVER-TERMINAL (RED)	
BE		3	**8T-2225**		TUBE-HEAT SHRINK	
	44	3	**191-8731**	1	CABLE AS	
		3	**5P-0747**		CABLE (00GA)(BLACK) (76CM)	
		3	**1S-4915**	2	LINER-CONDUIT	
		3	**1S-7252**	2	TERMINAL-RING (FOR 3/8 IN BOLT)	

172-5066 BATTERY & WIRING GP *(contd.)* i01689233

NOTE	REF NO	GRAPHIC REF	PART NUMBER	QTY	PART NAME 1 2 3 4 5 6 (PRODUCT LEVEL)	SEE PAGE
BE		3	**5P-0695**		CONDUIT	
BE		3	**8T-2225**		TUBE-HEAT SHRINK	
		3	**9G-8909**	2	COVER-TERMINAL (BLACK)	
	45	3	**191-8734**	1	JUNCTION BLOCK	
Y	46	2	**193-2550**	1	SENSOR GP-SPEED	257
	47	3	**197-8974**	1	CABLE AS	
		3	**1S-4915**	2	LINER-CONDUIT	
		3	**1S-7251**	2	TERMINAL-RING (FOR 1/2 IN BOLT)	
BE		3	**5P-0695**		CONDUIT	
E		3	**5P-0761**		CABLE (00GA)(RED) (110CM)	
		3	**8N-0869**	1	COVER-TERMINAL (RED)	
BE		3	**8T-2225**		TUBE-HEAT SHRINK	
	48	2	**200-6345**	2	MOUNT-SWIVEL	
	49	4	**100-4336**	1	CLIP	
	50	3	**104-6202**	1	CLIP (LADDER)	
	51	4	**163-1201**	1	HORN AS (24 VOLT)(LOW TONE)	
					(EACH HORN AS INCLUDES)	
		4	**177-9853**	1	RECEPTACLE AS	
		4	**178-3586**	1	LOCK	
	52	4	**204-2281**	36	TIE (WRAP)	
	53	3	**2J-5245**	3	BOLT (3/8-16X1.25 IN)	
	54	4	**2P-8421**	1	ADAPTER-O-RING	
	55	4	**2S-4078**	1	SEAL-O-RING	
	56	4	**3D-2824**	1	SEAL-O-RING	
	57	1,3,4	**3J-1907**	3	SEAL-O-RING	
	58	1	**3J-7354**	1	SEAL-O-RING	
	59	1	**3K-6060**	2	LOCKNUT (3/8-16 THD)	
	60	1,2,3	**4L-6454**	8	BOLT (3/8-16X1 IN)	
	61	1,3	**4P-7429**	4	CLIP	
	62	2,3,4	**4P-7581**	12	CLIP	
	63	1,3	**4P-8134**	12	CLIP	
	64	1	**4S-1962**	1	CLIP	
	65	3	**5C-6565**	2	BOLT (1/2-13X1.125 IN)	
	66	1,3,4	**5M-3062**	24	BOLT (3/8-16X0.75 IN)	
	67	4	**5P-1075**	4	WASHER-HARD (10.2X22.5X3MM THK)	
	68	3	**5P-2228**	2	BOLT (1/2-13X1 IN)	
	69	3	**5P-6887**	1	GROMMET	
	70	1,4	**5P-8167**	3	BOLT (3/8-16X0.625 IN)	
	71	2,4	**5S-7379**	10	BOLT (3/8-16X0.875 IN)	
	72	1	**5S-7383**	1	BOLT (3/8-16X1.75 IN)	
	73	4	**6V-5051**	1	SEAL-O-RING	
	74	3	**6V-8188**	2	NUT (1/2-13 THD)	
	75	4	**6V-8801**	1	NUT (3/8-16 THD)	
	76	1	**7B-1251**	6	GROMMET	
	77	4	**7X-0291**	2	BOLT (3/8-16X3.75 IN)	
	78	3	**8S-2634**	1	COVER AS	
		3	**2P-2975**	2	SEAL-O-RING	
	79	4	**8T-2501**	4	BOLT (3/8-16X2 IN)	
	80	1,3	**8T-4223**	6	WASHER-HARD (13.5X25.5X3MM THK)	
	81	1,2,3,4	**8T-4896**	42	WASHER-HARD (10.2X18.5X2.5MM THK)	
	82	1	**8T-9383**	2	BOLT (1/2-13X0.75 IN)	
	83	1	**9X-9730**	2	BATTERY (12 VOLT/DRY)	
					(EACH INCLUDES)	
		1	**7N-0060**	6	VENT AS	
BD	84	4	**5P-6025**		LOCKWIRE	

B-USE AS REQUIRED
D-ORDER BY THE METER
E-ORDER BY THE CENTIMETER
Y-SEPARATE ILLUSTRATION

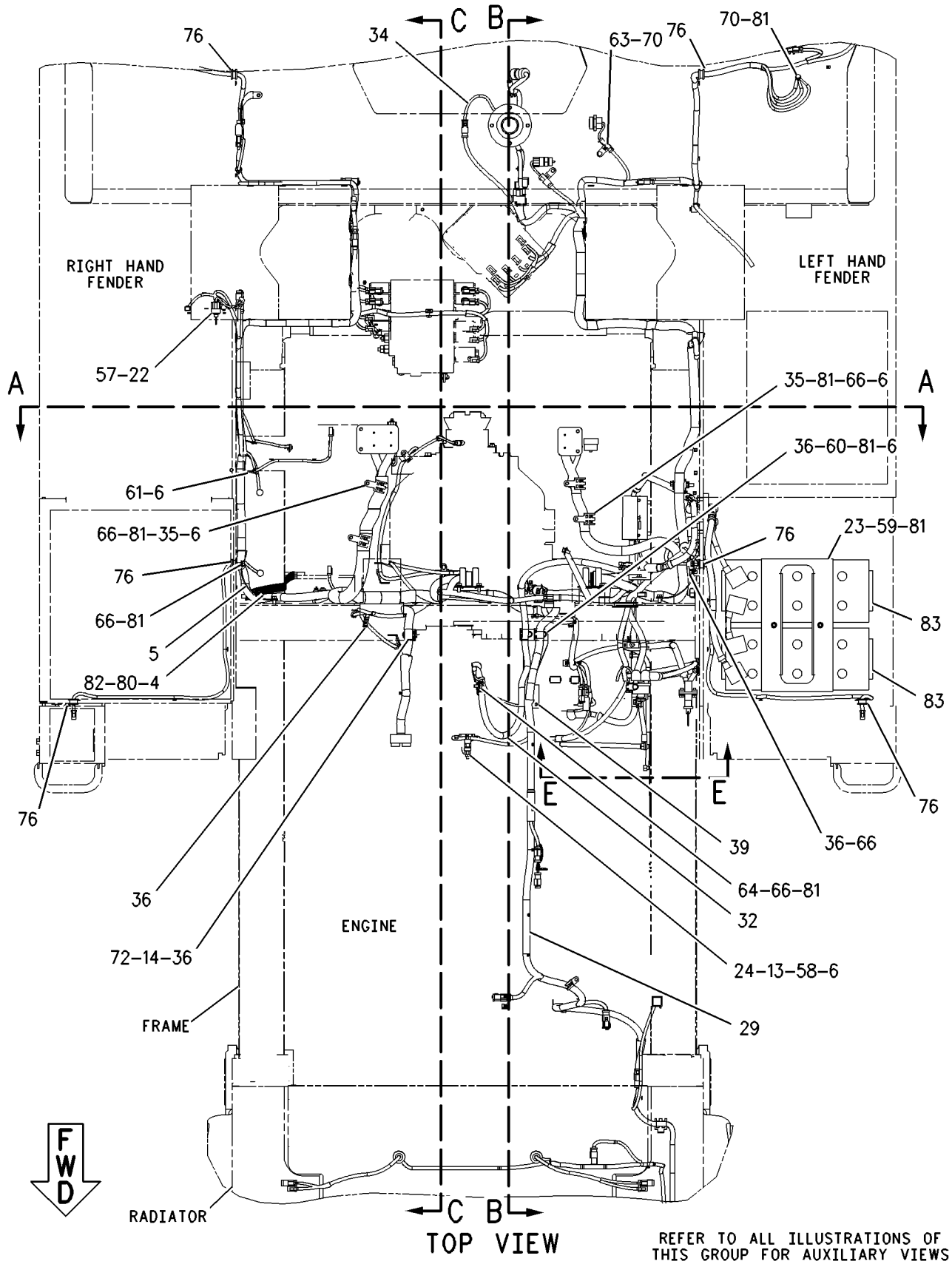

GRAPHIC #1

g00870154

REFER TO ALL ILLUSTRATIONS OF
THIS GROUP FOR AUXILIARY VIEWS

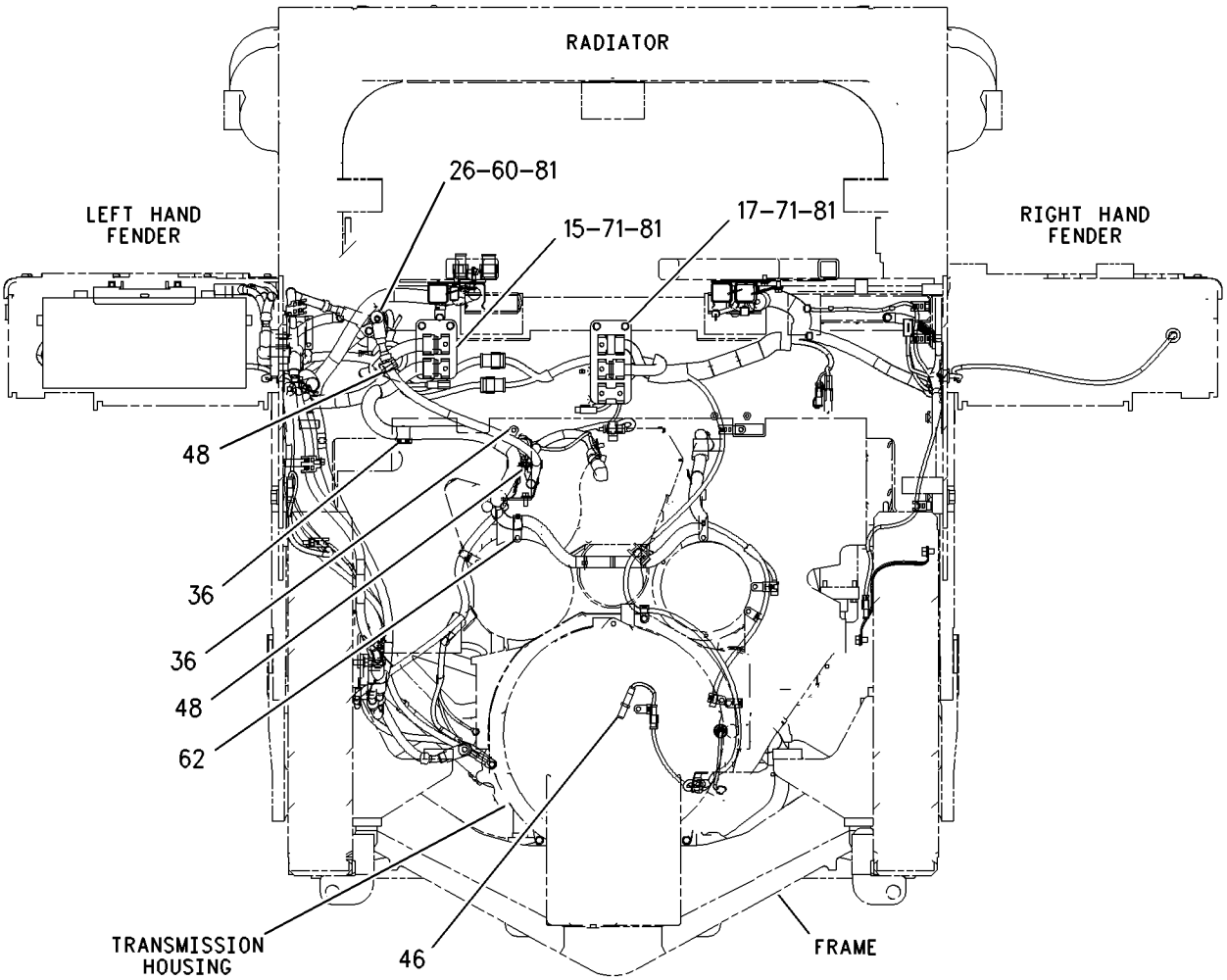

SECTION A-A

GRAPHIC #2 g00869304

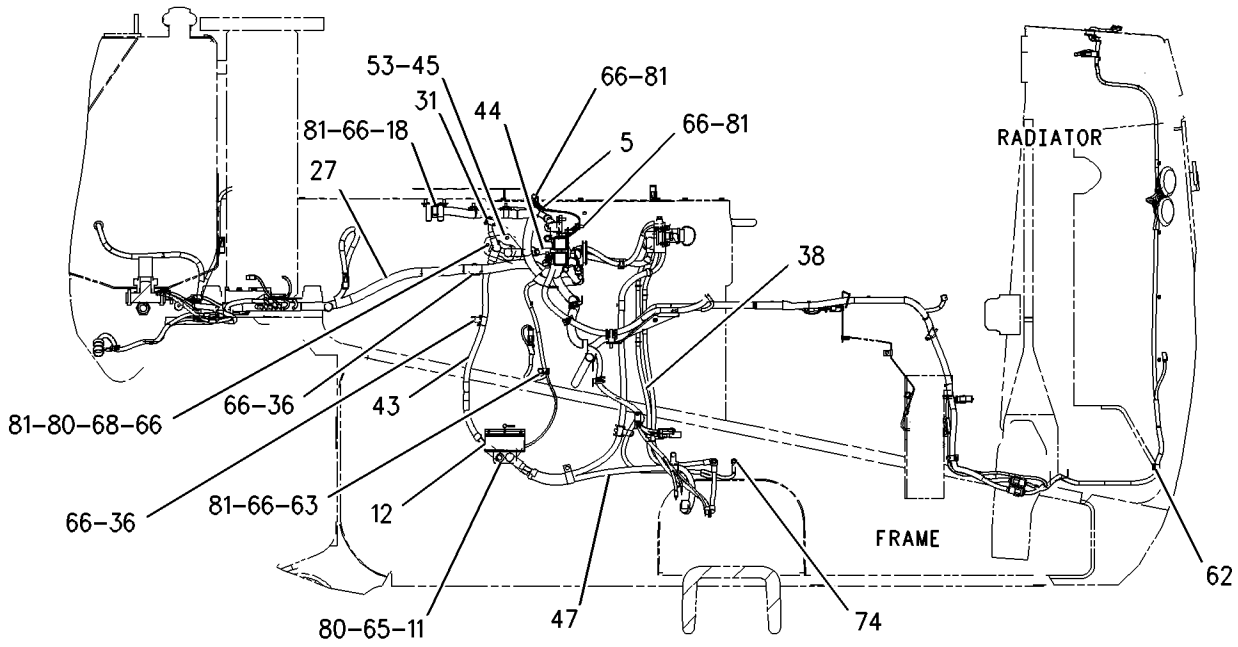

SECTION B-B

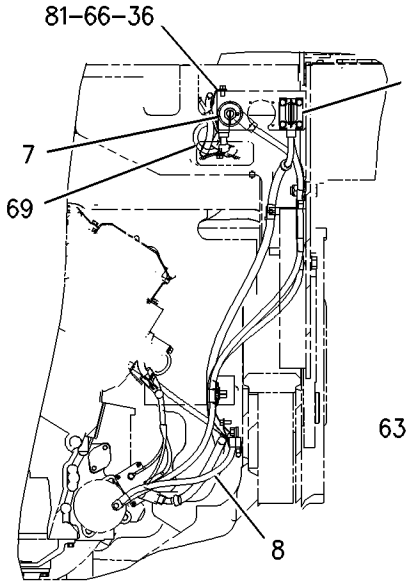

SECTION D-D

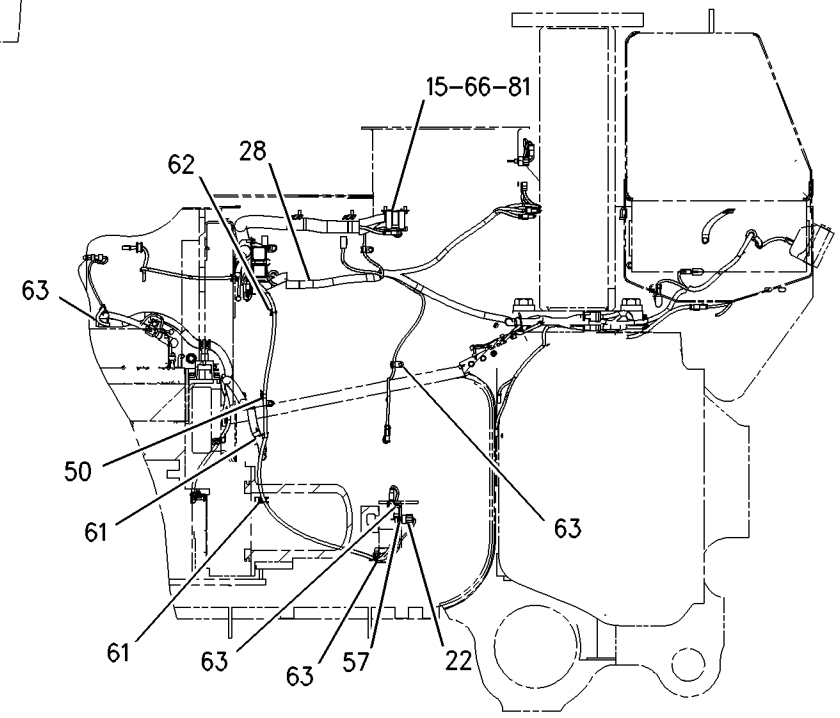

SECTION C-C

REFER TO ALL ILLUSTRATIONS OF
THIS GROUP FOR AUXILIARY VIEWS

GRAPHIC #3 g00869305

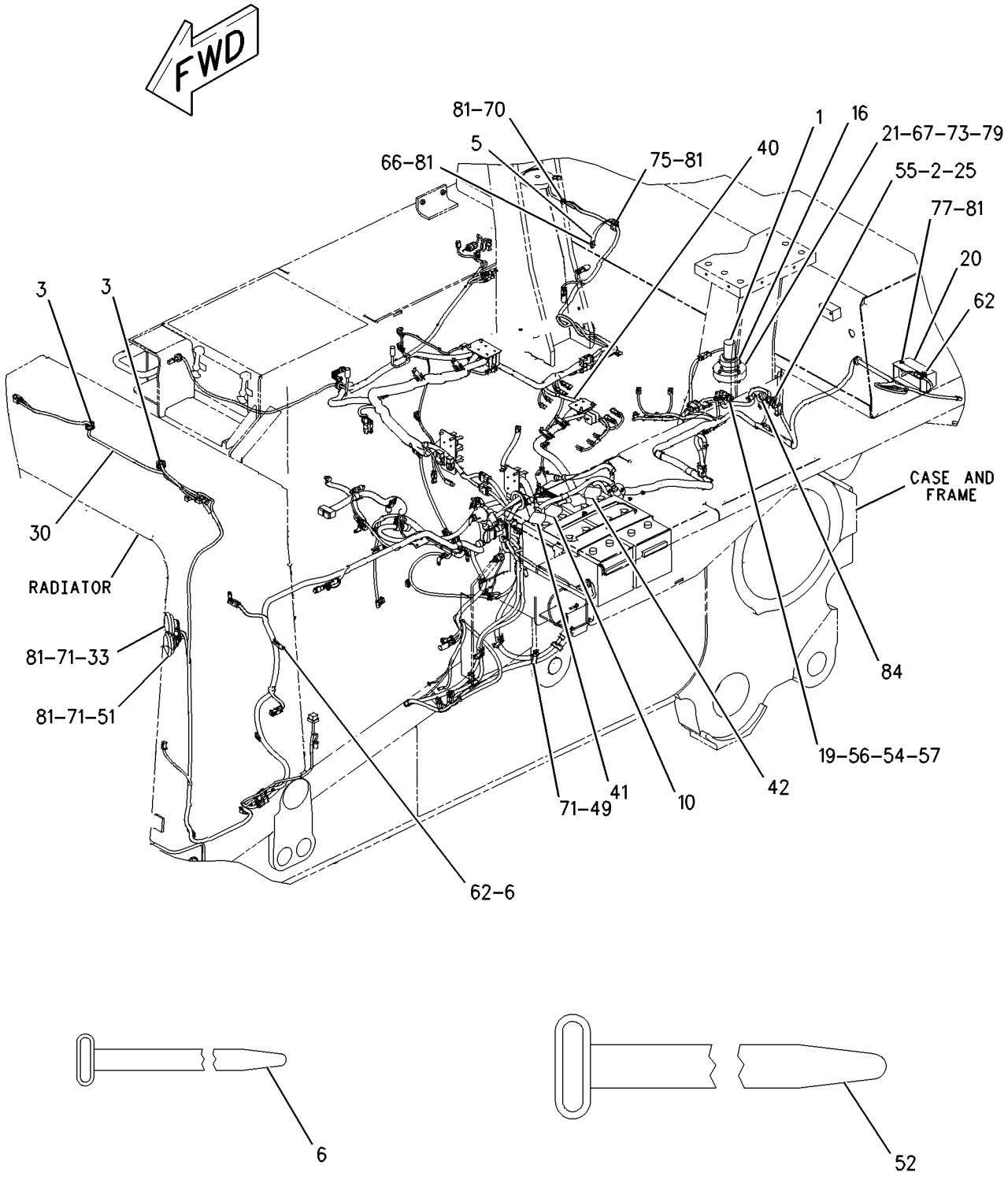

GRAPHIC #4 g00870161

164-9436 BLOCK GP-POWER

S/N: AKT1-UP

PART OF 172-5066 BATTERY & WIRING GP

SMCS-1408 **i01446629**

NOTE	REF NO	GRAPHIC REF	PART NUMBER	QTY	PART NAME 1 2 3 4 5 6 (PRODUCT LEVEL)	SEE PAGE
	1	1	**1D-5117**	1	NUT-JAM (1/2-13 THD)	
	2	1	**3K-6060**	1	LOCKNUT	
	3	1	**5P-1075**	2	WASHER-HARD (10.2X22.5X3MM THK)	
	4	1	**5P-1076**	2	WASHER-HARD (13.5X30X4MM THK)	
	5	1	**6V-8801**	1	NUT (3/8-16 THD)	
	6	1	**9B-7237**	1	BOLT (3/8-16X1.25 IN)	
	7	1	**5P-2566**	1	BOLT (1/2-13X1.5 IN)	
	8	1	**9X-0941**	1	NUT (1/2-13 THD)	

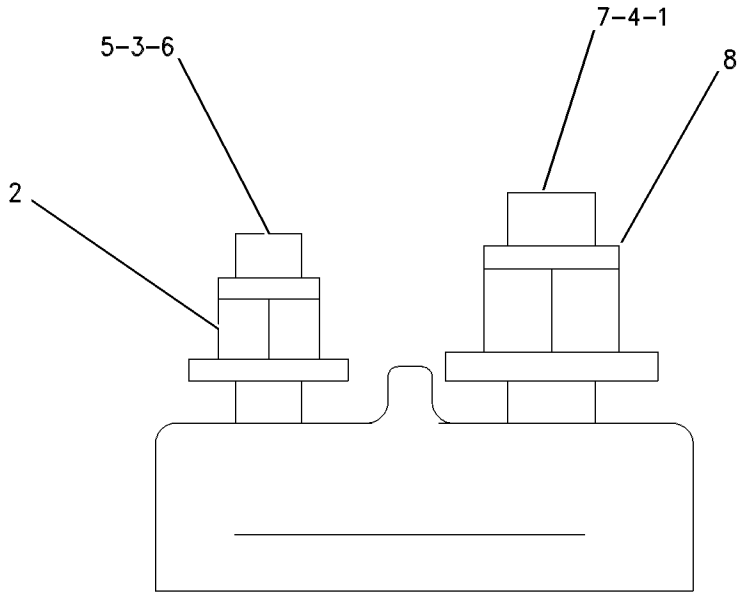

GRAPHIC #1 g00520404

158-8077 CONTROL & MTG GP-ELECTRONIC

S/N: AKT1-UP

PART OF 171-5808 POWER TRAIN AR

SMCS-1901 **i01357721**

NOTE	REF NO	GRAPHIC REF	PART NUMBER	QTY	PART NAME 1 2 3 4 5 6 (PRODUCT LEVEL)	SEE PAGE
	1	1	**6I-1418**	4	SPACER (28.7MM THK)	
	2	1	**8T-9655**	8	MOUNT (ISOLATION)	
CY	3	1	**172-9389**	1	CONTROL GP-UNPROGRAMMED	216
	4	1	**8T-4224**	1	WASHER-HARD (8.8X16X2MM THK)	
	5	1	**9N-0869**	4	WASHER-HARD (8.8X25.5X2MM THK)	
M	6	1	**7X-0818**	4	BOLT (M8X1.25X45MM)	

C-CHANGE FROM PREVIOUS TYPE
M-METRIC PART
Y-SEPARATE ILLUSTRATION

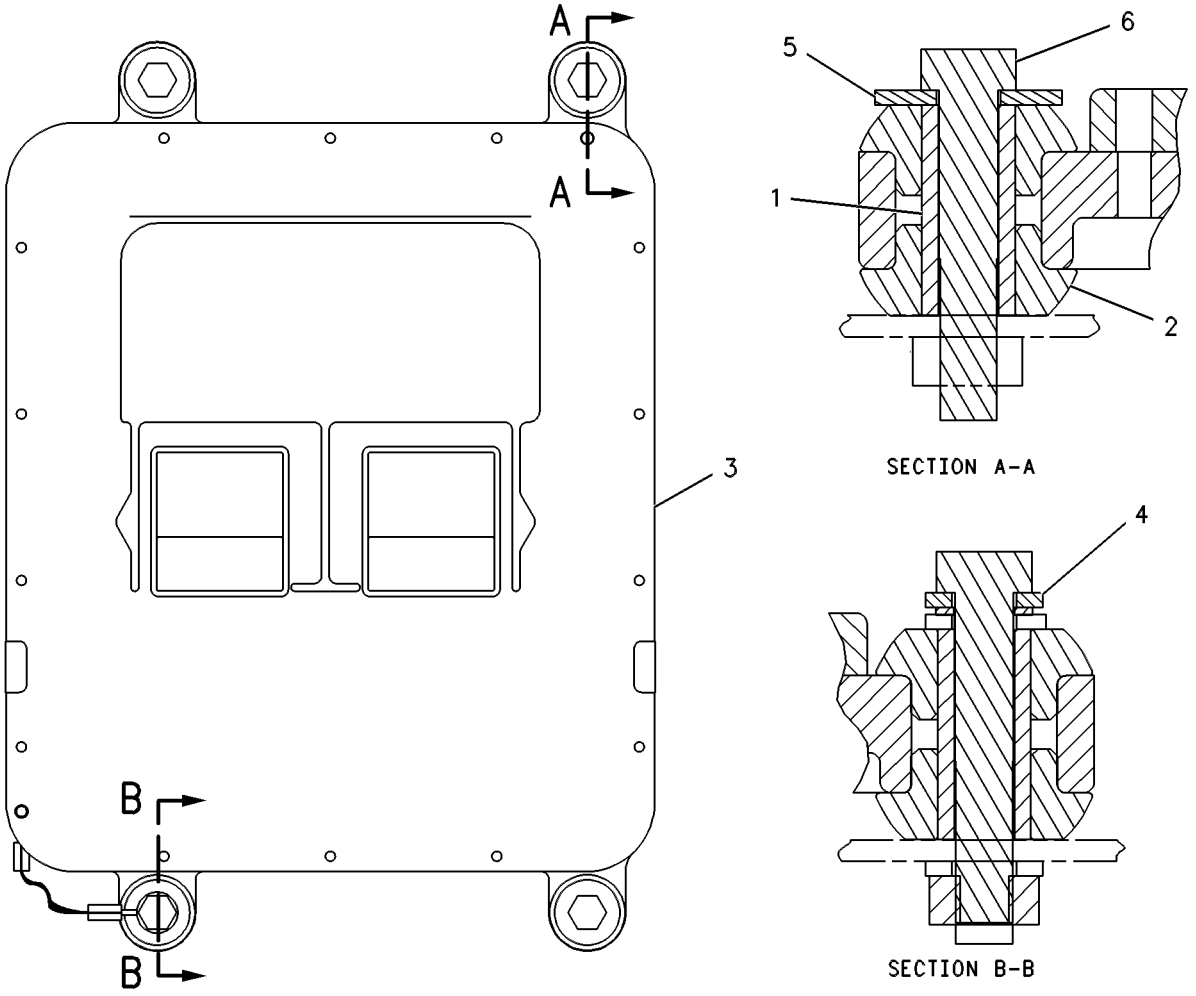

GRAPHIC #1 g00258550

170-3715 CONTROL & MTG GP-ELECTRONIC

S/N: AKT1-UP

PART OF 171-5801 CHASSIS AR

SMCS-1901 **i01240247**

NOTE	REF NO	GRAPHIC REF	PART NUMBER	QTY	PART NAME 1 2 3 4 5 6 (PRODUCT LEVEL)	SEE PAGE
	1	1	**9P-6571**	2	PLUG	
Y	2	1	*165-5018*	1	CONTROL GP-ELECTRONIC (ENGLISH KEYPAD)	208
					—OR—	
AY		1	*183-2076*	1	CONTROL GP-ELECTRONIC (INTERNATIONAL KEYPAD)	210
	3	1	**5M-3062**	2	BOLT (3/8-16X.75IN)	
	4	1	**5P-1075**	2	WASHER-HARD (3MM THK)	

A-NOT PART OF THIS GROUP
Y-SEPARATE ILLUSTRATION

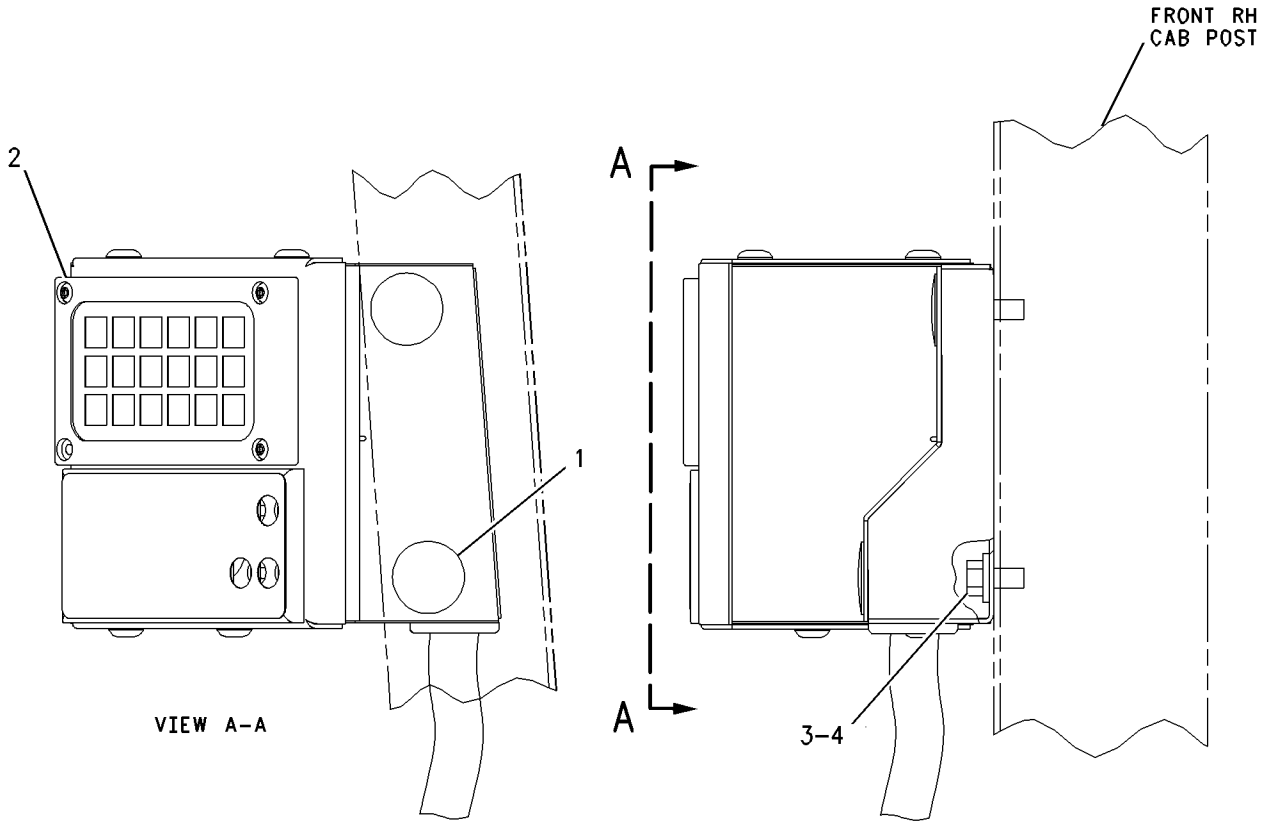

GRAPHIC #1 g00663348

ELECTRICAL AND STARTING SYSTEM

173-3262 CONTROL & MTG GP-ELECTRONIC

S/N: AKT1-UP

PART OF 171-5801 CHASSIS AR

SMCS-1901 **i01700443**

NOTE	REF NO	GRAPHIC REF	PART NUMBER	QTY	PART NAME 1 2 3 4 5 6 (PRODUCT LEVEL)	SEE PAGE
	1	1	**3S-2093**	2	STRAP-CABLE	
	2	1	**6I-1418**	4	SPACER (8.2X12.7X28.7MM THK)	
	3	1	**8L-5449**	2	SPACER (0.69 IN THK)	
	4	1	**8T-9655**	8	MOUNT (ISOLATION)	
	5	1	**133-3489**	1	PLATE AS	
		1	**9D-4439**	4	STUD-WELD (3/8-16X1.0 IN OAL)	
	6	1	**143-9666**	1	BRACKET AS	
M		1	**8T-3612**	4	NUT-WELD (M8X1.25 THD)	
Y	7	1	**169-0489**	1	CONTROL GP-UNPROGRAMMED	215
	8	1	**4P-8134**	1	CLIP (LADDER)	
	9	1	**5M-3062**	3	BOLT (3/8-16X0.75 IN)	
	10	1	**6V-8801**	1	NUT (3/8-16 THD)	
M	11	1	**7X-0818**	2	BOLT (M8X1.25X45MM)	
	12	1	**8T-4224**	3	WASHER-HARD (8.8X16X2MM THK)	
	13	1	**8T-4896**	4	WASHER-HARD (10.2X18.5X2.5MM THK)	
M	14	1	**8T-6870**	2	BOLT (M8X1.25X70MM)	
	15	1	**9N-0869**	8	WASHER-HARD (8.8X25.5X2MM THK)	

M-METRIC PART
Y-SEPARATE ILLUSTRATION

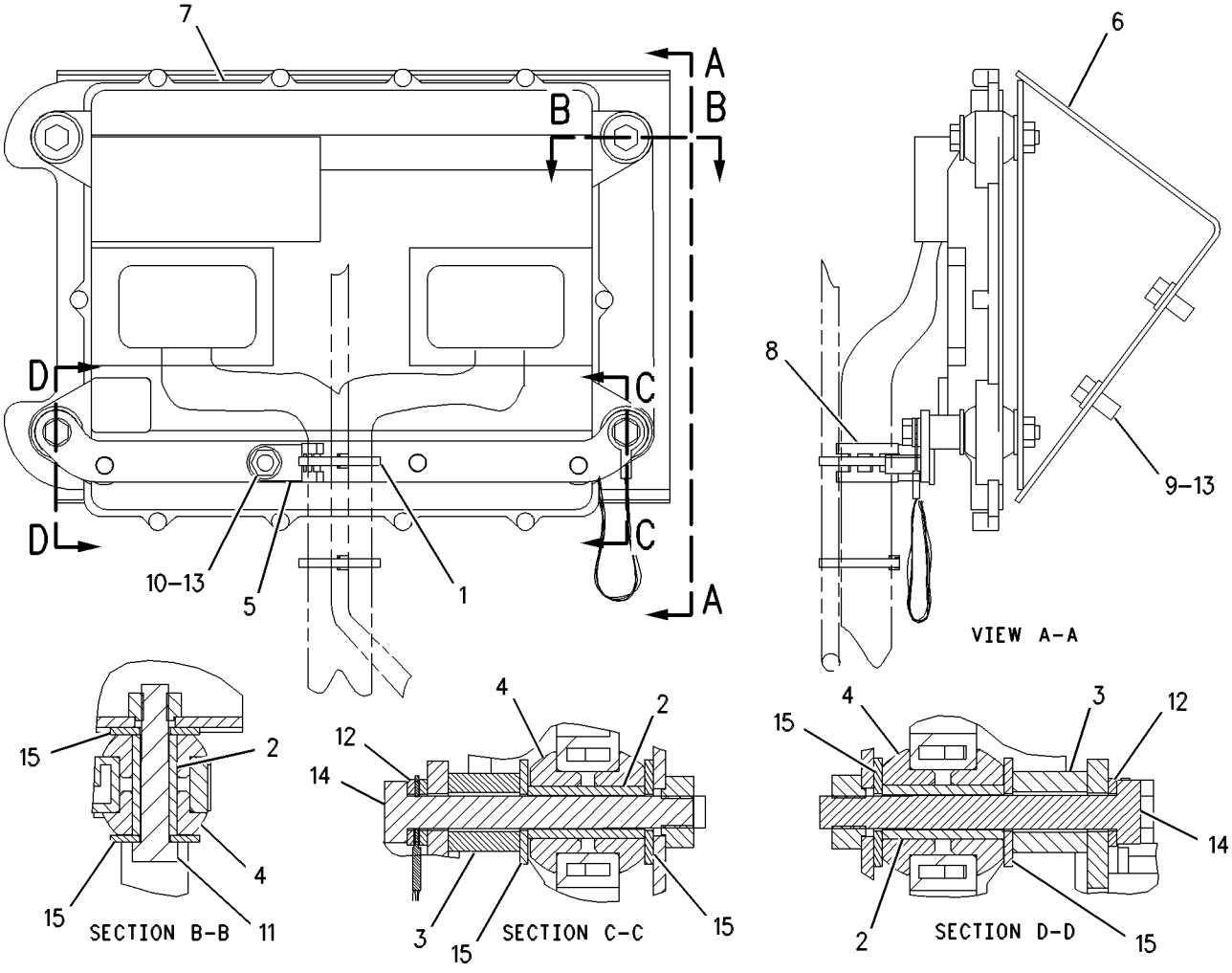

GRAPHIC #1 g00581241

MEMORANDA

173-3263 CONTROL & MTG GP-ELECTRONIC

S/N: AKT1-UP

PART OF 171-5803 CONTROL AR-HYDRAULIC

SMCS-1901 **i01700455**

NOTE	REF NO	GRAPHIC REF	PART NUMBER	QTY	PART NAME 1 2 3 4 5 6 (PRODUCT LEVEL)	SEE PAGE
	1	1	**3S-2093**	1	STRAP-CABLE	
	2	1	**8L-5449**	2	SPACER (0.69 IN THK)	
	3	1	**8T-9655**	8	MOUNT (ISOLATION)	
	4	1	**133-3489**	1	PLATE AS	
	5	1	**9D-4439**	4	STUD-WELD (3/8-16X1.0 IN OAL)	
	6	1	**150-6259**	1	BRACKET AS	
Y	7	1	**166-7731**	1	CONTROL GP-UNPROGRAMMED	214
	8	1	**4L-6454**	4	BOLT (3/8-16X1 IN)	
	9	1	**4P-8134**	1	CLIP (LADDER)	
	10	1	**6V-8801**	1	NUT (3/8-16 THD)	
M	11	1	**8T-3647**	2	BOLT (M8X1.25X80MM)	
	12	1	**8T-4224**	3	WASHER-HARD (8.8X16X2MM THK)	
	13	1	**8T-4896**	5	WASHER-HARD (10.2X18.5X2.5MM THK)	
M	14	1	**8T-6869**	2	BOLT (M8X1.25X60MM)	
	15	1	**9N-0869**	4	WASHER-HARD (8.8X25.5X2MM THK)	
	16	1	**145-0487**	4	SPACER (43.6MM THK)	

M-METRIC PART
Y-SEPARATE ILLUSTRATION

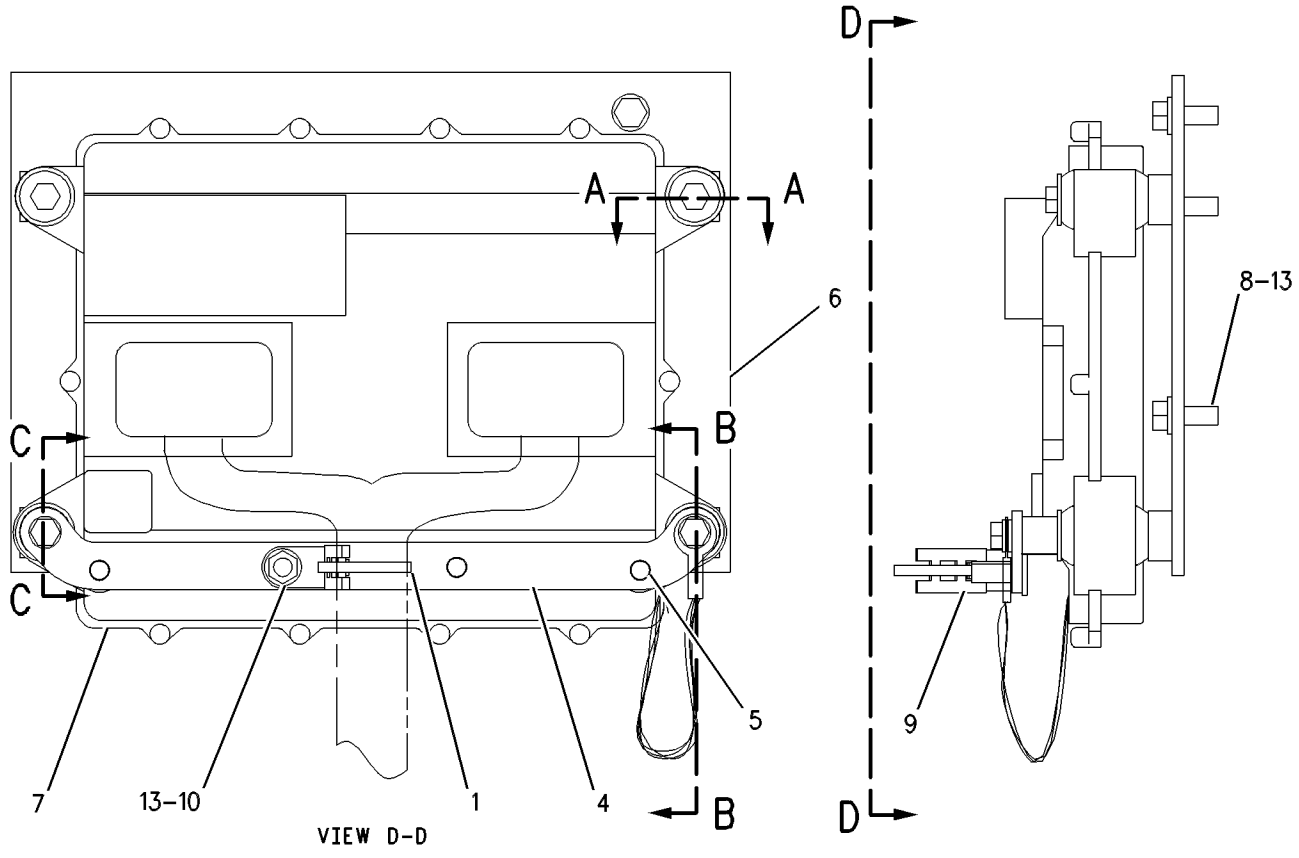

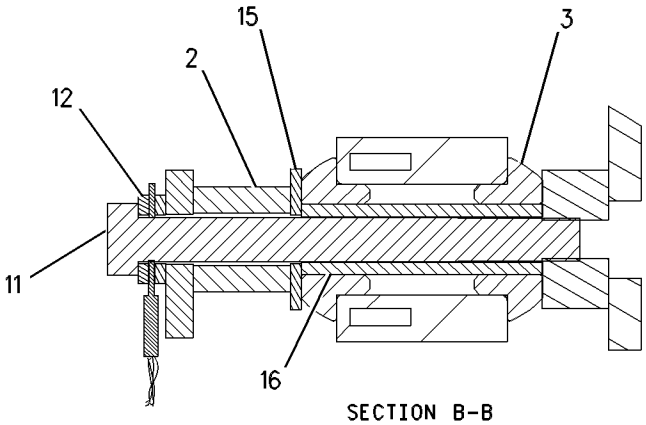

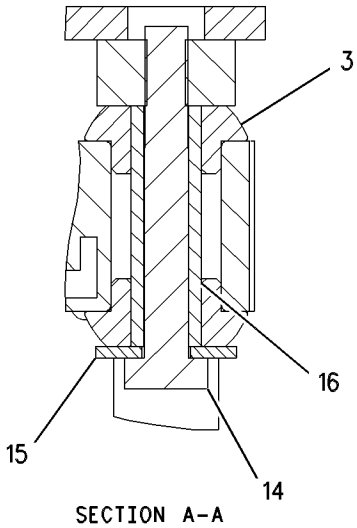

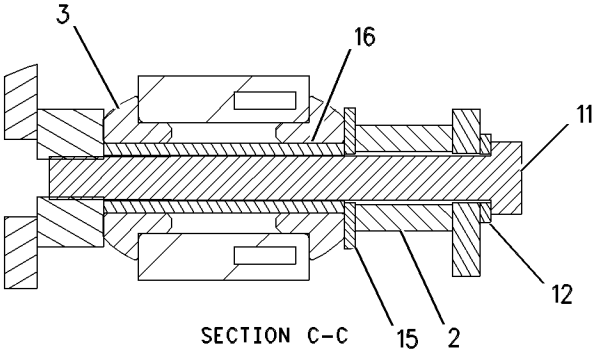

GRAPHIC #1

g00579714

193-1221 CONTROL & MTG GP-ENGINE ELEK

S/N: 5JJ3200-UP
PART OF 171-5806, 206-3114 ENGINE AR
ALSO AN ATTACHMENT

SMCS-1901 **i01440115**

NOTE	REF NO	GRAPHIC REF	PART NUMBER	QTY	PART NAME 1 2 3 4 5 6 (PRODUCT LEVEL)	SEE PAGE
	1	1	**8T-9655**	8	MOUNT (ISOLATION)	
Y	2	1	*105-6122*	1	CONTROL GP-ENGINE ELECTRONIC	212
	3	1	**115-6469**	4	SPACER	
	4	1	**3H-3243**	1	BOLT (5/16-18X4.75 IN)	
	5	1	**3H-5932**	1	BOLT (5/16-18X4.5IN)	
	6	1	**8H-8769**	2	BOLT (5/16-18X4.25IN)	
	7	1	**8T-4224**	3	WASHER-HARD (8.8X16X2MM THK)	
	8	1	**9N-0869**	4	WASHER-HARD (8.8X25.5X2MM THK)	

Y-SEPARATE ILLUSTRATION

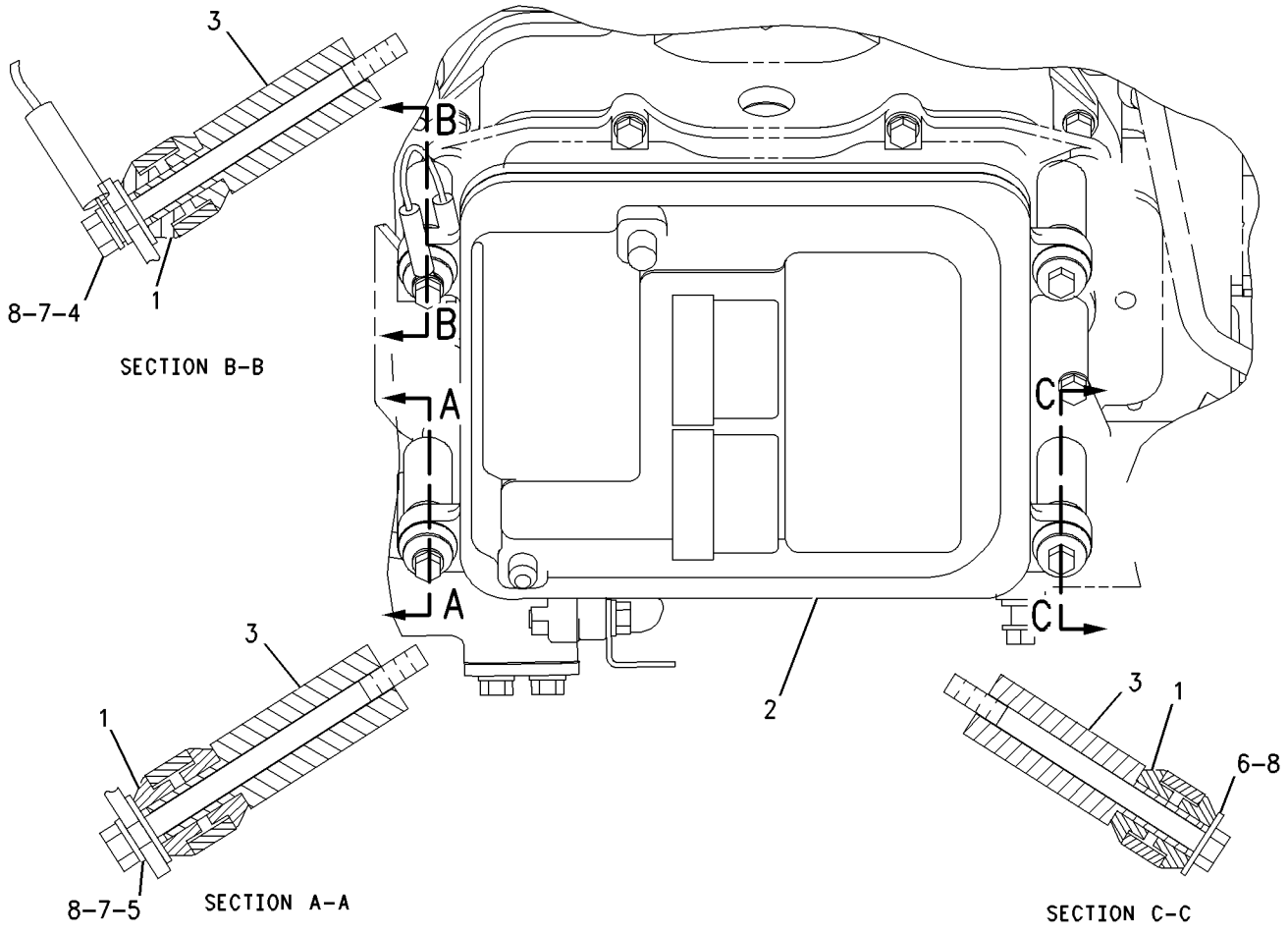

GRAPHIC #1 g00756205

MEMORANDA

165-5018 CONTROL GP-ELECTRONIC

S/N: AKT1-UP
(WITH ENGLISH VERSION KEYPAD)
PART OF 170-3715 CONTROL & MTG GP-ELECTRONIC

SMCS-7490 **i01564906**

NOTE	REF NO	GRAPHIC REF	PART NUMBER	QTY	PART NAME 1 2 3 4 5 6 (PRODUCT LEVEL)	SEE PAGE
	1	1	**9X-6259**	4	SCREW-MACHINE (6-32 X 0.375IN)	
	2	1	**136-6140**	1	COVER AS	
	3	1	**136-6142**	1	PLATE AS	
		1	**9F-6445**	4	NUT-WELD (1/4-20 THD)	
	4	1	**143-3974**	1	COVER AS	
Y	5	1	**149-6470**	1	CONTROL GP-DISPLAY ELECTRONIC	688
Y	6	1	**165-4639**	1	MODULE GP-MONITOR KEYPAD (ENGLISH VERSION)	725
	7	1	**173-1646**	1	FILM-IDENTIFICATION	
	8	1	**096-6166**	4	WASHER-HARD (4.5X9X1MM THK)	
M	9	1	**129-3178**	4	LOCKNUT (M6X1 THD)	
	10	1	**1M-4543**	1	GROMMET	
	11	1	**6V-3884**	4	SCREW-HEX SOCKET (1/4-20X0.5 IN)	
M	12	1	**7Y-7256**	4	SCREW-TRUSS HEAD (M4X0.7X35MM)	
BD	13	1	**5P-5969**		SEAL	
	14	1	**143-9484**	1	HARNESS AS-KEYPAD	
	15	1	**123-9294**	1	LAMP (28 VOLT)	

B-USE AS REQUIRED
D-ORDER BY THE METER
M-METRIC PART
Y-SEPARATE ILLUSTRATION

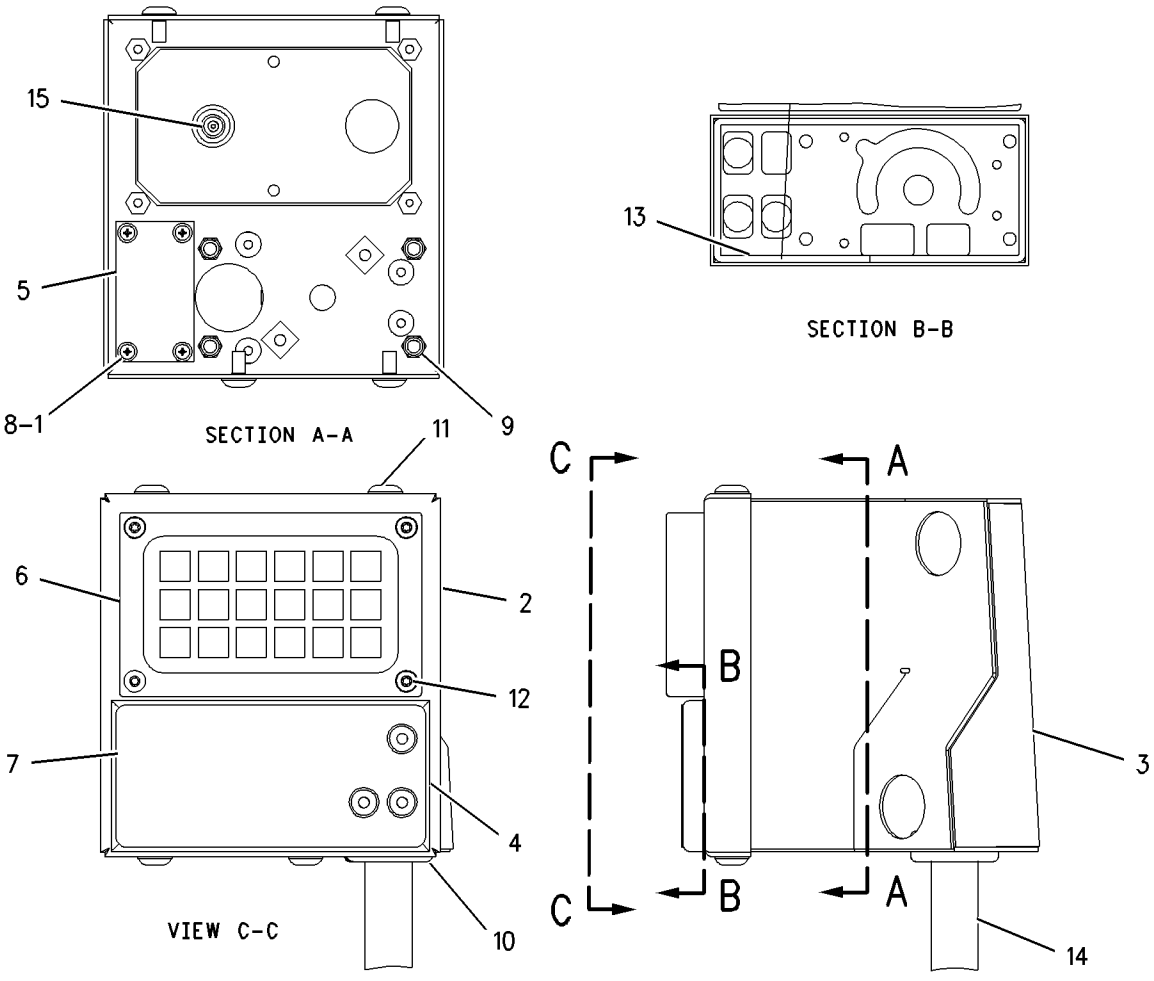

GRAPHIC #1 g00663349

ELECTRICAL AND STARTING SYSTEM

183-2076 CONTROL GP-ELECTRONIC

S/N: AKT1-UP
(WITH INTERNATIONAL VERSION KEYPAD)
PART OF 170-3715 CONTROL & MTG GP-ELECTRONIC

SMCS-7490 **i01564907**

NOTE	REF NO	GRAPHIC REF	PART NUMBER	QTY	PART NAME 1 2 3 4 5 6 (PRODUCT LEVEL)	SEE PAGE
	1	1	**9X-6259**	4	SCREW-MACHINE (6-32 X 0.375IN)	
	2	1	**123-9294**	1	LAMP (28 VOLT)	
	3	1	**136-6140**	1	COVER AS	
	4	1	**136-6142**	1	PLATE AS	
		1	**9F-6445**	4	NUT-WELD (1/4-20 THD)	
	5	1	**143-3974**	1	COVER AS	
Y	6	1	**149-6470**	1	CONTROL GP-DISPLAY ELECTRONIC	688
	7	1	**173-1646**	1	FILM-IDENTIFICATION	
Y	8	1	**183-2009**	1	MODULE GP-MONITOR KEYPAD (INTERNATIONAL VERSION)	726
	9	1	**096-6166**	4	WASHER-HARD (4.5X9X1MM THK)	
M	10	1	**129-3178**	4	LOCKNUT (M6X1 THD)	
	11	1	**1M-4543**	1	GROMMET	
	12	1	**6V-3884**	4	SCREW-HEX SOCKET (1/4-20X0.5 IN)	
M	13	1	**7Y-7256**	4	SCREW-TRUSS HEAD (M4X0.7X35MM)	
BD	14	1	**5P-5969**		SEAL	
	15	1	**143-9484**	1	HARNESS AS-KEYPAD	

B-USE AS REQUIRED
D-ORDER BY THE METER
M-METRIC PART
Y-SEPARATE ILLUSTRATION

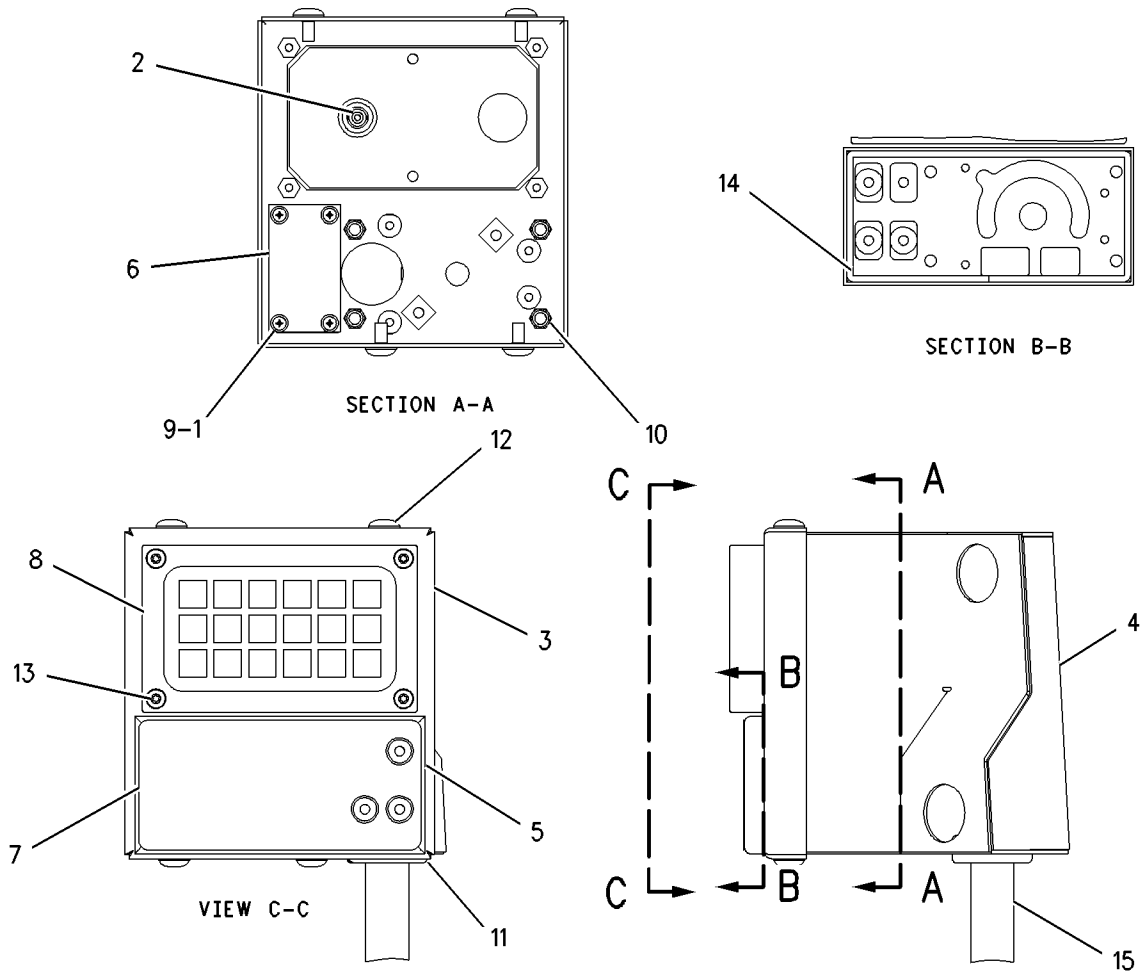

GRAPHIC #1 g00664942

105-6122 CONTROL GP-ENGINE ELECTRONIC

S/N: 5JJ3200-UP
ADEM-II
PART OF 193-1221 CONTROL & MTG GP-ENGINE ELEK
ALSO AN ATTACHMENT

SMCS-1901 **i01281563**

NOTE	REF NO	GRAPHIC REF	PART NUMBER	QTY	PART NAME 1 2 3 4 5 6 (PRODUCT LEVEL)	SEE PAGE
Y	1	1	**172-0802**	1	CONTROL GP-ENGINE ELECTRONIC (ADEM-II)	213

Y-SEPARATE ILLUSTRATION

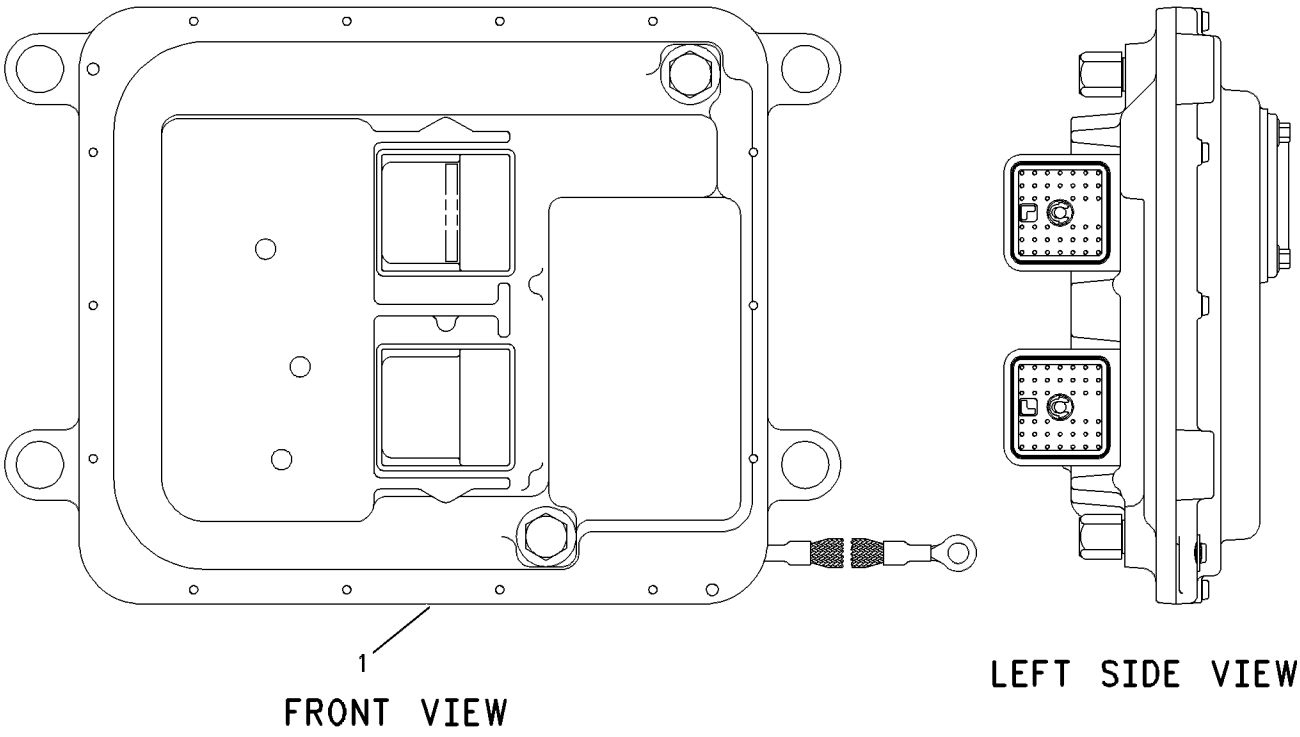

GRAPHIC #1 g00592489

172-0802 CONTROL GP-ENGINE ELECTRONIC

S/N: 5JJ3200-UP
ADEM-II
PART OF 105-6122 CONTROL GP-ENGINE ELECTRONIC
ALSO AN ATTACHMENT

SMCS-1901 **i01446632**

NOTE	REF NO	GRAPHIC REF	PART NUMBER	QTY	PART NAME 1 2 3 4 5 6 (PRODUCT LEVEL)	SEE PAGE
	2	1	**111-8411**	1	COVER	
	3	1	**6V-1179**	1	SEAL-O-RING (76.62MM ID)	
M	4	1	**3E-6900**	4	BOLT	
	5	1	**7X-6315**	1	STRAP-GROUNDING	
	6	1	**126-7574**	1	SCREW-PAN HEAD	

M-METRIC PART

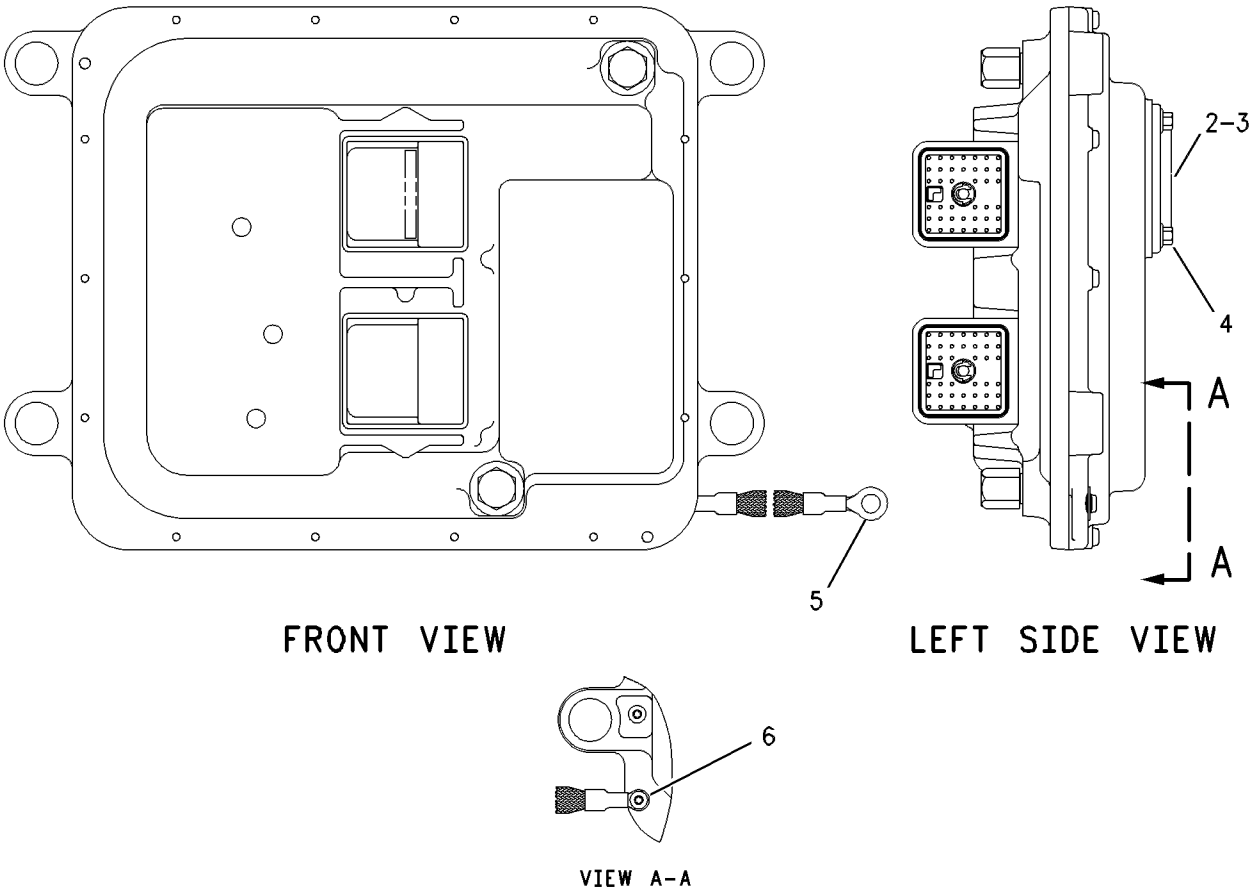

FRONT VIEW

LEFT SIDE VIEW

VIEW A-A

GRAPHIC #1 g00595635

166-7731 CONTROL GP-UNPROGRAMMED

S/N: AKT1-UP

PART OF 173-3263 CONTROL & MTG GP-ELECTRONIC, 209-6267 SERVICE GP-IMPLEMENT

SMCS-3030 **i01091777**

NOTE	REF NO	GRAPHIC REF	PART NUMBER	QTY	PART NAME 1 2 3 4 5 6 (PRODUCT LEVEL)	SEE PAGE
	1	1	**134-4126**	1	WASHER	
	2	1	**7X-6315**	1	STRAP-GROUNDING	
	3	1	**120-4897**	1	SCREW-PAN HEAD	

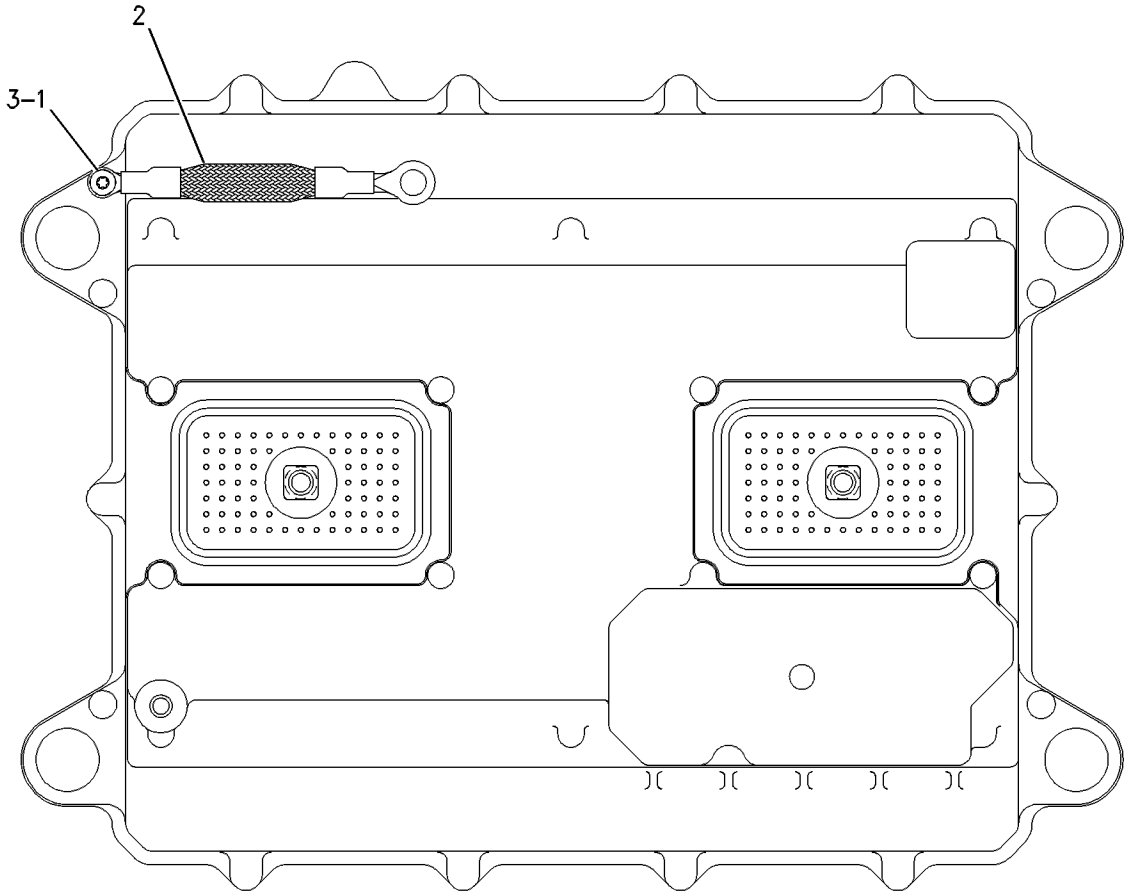

GRAPHIC #1 g00580081

169-0489 CONTROL GP-UNPROGRAMMED

S/N: AKT1-UP

PART OF 173-3262 CONTROL & MTG GP-ELECTRONIC, 209-3723 SERVICE GP-IMPLEMENT

SMCS-3030 **i01435900**

NOTE	REF NO	GRAPHIC REF	PART NUMBER	QTY	PART NAME 1 2 3 4 5 6 (PRODUCT LEVEL)	SEE PAGE
	1	1	**134-4126**	1	WASHER (0.76MM THK)	
	2	1	**184-2472**	2	SCREW-PAN HEAD (LUBRICATED)	
	3	1	**7X-6315**	1	STRAP-GROUNDING	
Z	4	1		1	CONTROL AS	

Z-NOT SERVICED SEPARATELY

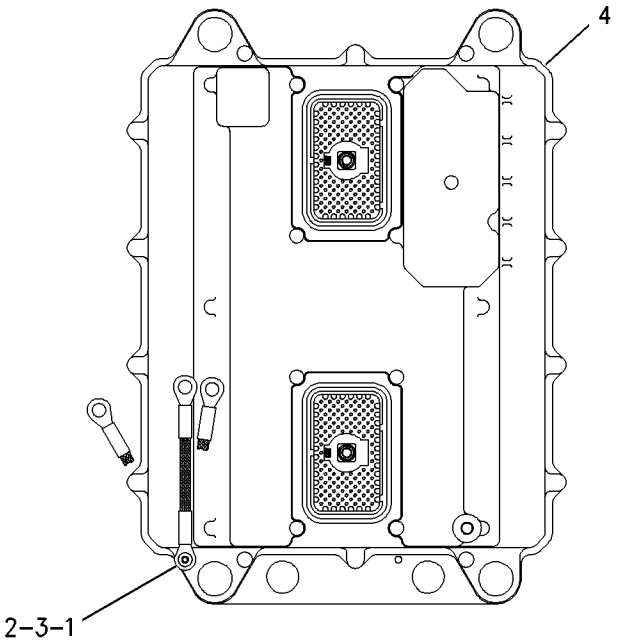

GRAPHIC #1 g00752275

172-9389 CONTROL GP-UNPROGRAMMED–POWER TRAIN

S/N: AKT1-UP

PART OF 158-8077 CONTROL & MTG GP-ELECTRONIC, 211-1542 SERVICE GP-POWER TRAIN

SMCS-3030 **i01273399**

NOTE	REF NO	GRAPHIC REF	PART NUMBER	QTY	PART NAME 1 2 3 4 5 6 (PRODUCT LEVEL)	SEE PAGE
	1	1	**7X-6315**	1	STRAP-GROUNDING	
	2	1	**101-0852**	1	SCREW-PAN HEAD (NO 8 X 3/8 IN)	
M	3	1	**6V-6703**	2	KIT-RETAINING BOLT	
					(EACH INCLUDES BOLT, RING, AND SEALS)	
					FOR SOFTWARE, SEE ELECTRONICS GP	

M-METRIC PART

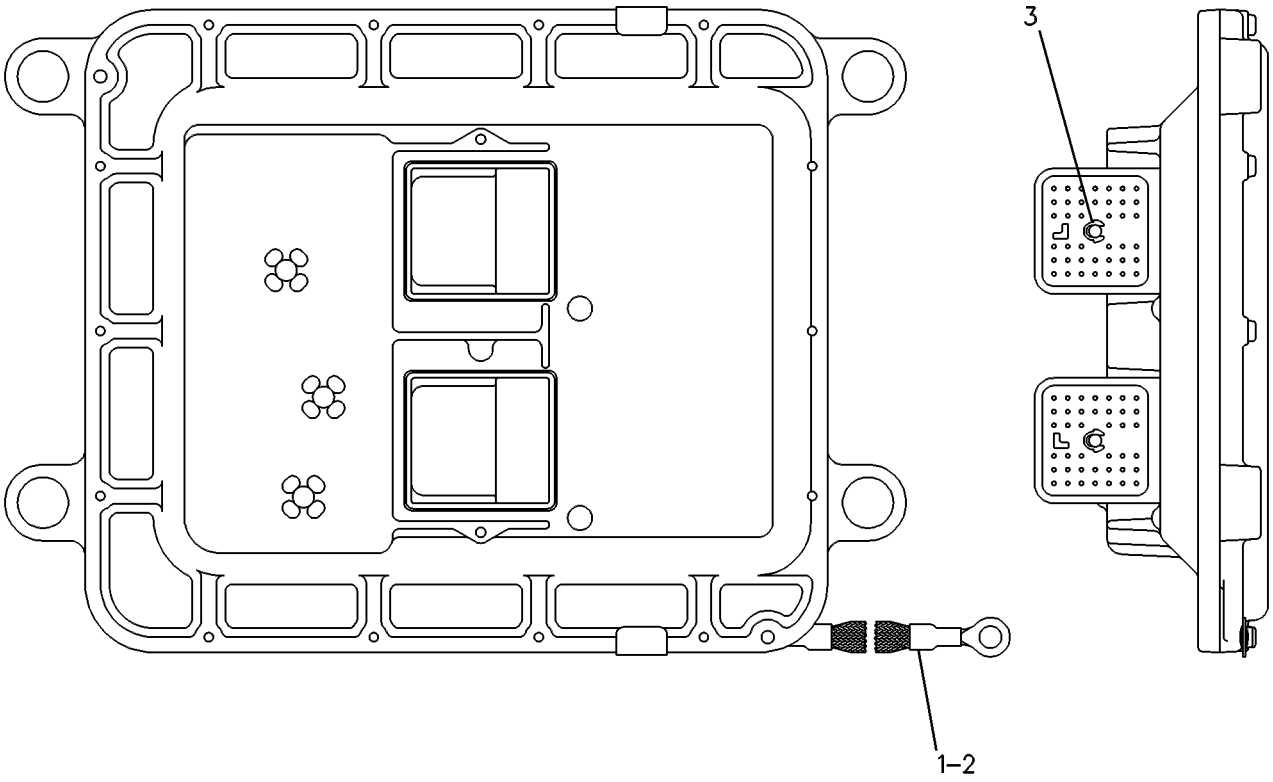

GRAPHIC #1 g00087166

159-5200 CONVERTER GP-ELECTRICAL

S/N: AKT1-UP
(24 VOLTS TO 12 VOLTS)(25 AMP)
AN ATTACHMENT

SMCS-1421 **i01289073**

NOTE	REF NO	GRAPHIC REF	PART NUMBER	QTY	PART NAME 1 2 3 4 5 6 (PRODUCT LEVEL)	SEE PAGE
	1	1	**3E-8646**	1	CONVERTER-POWER (24 VOLT TO 12 VOLT)(25 AMP)	
		1	**8T-9636**	2	FUSE (30 AMP)	
	2	1	**9X-6772**	3	STRAP-CABLE (1.97IN DIA)	
	3	1	**160-0633**	1	HARNESS AS	
	4	1	**9X-2498**	8	SCREW-HEX FLANGE	

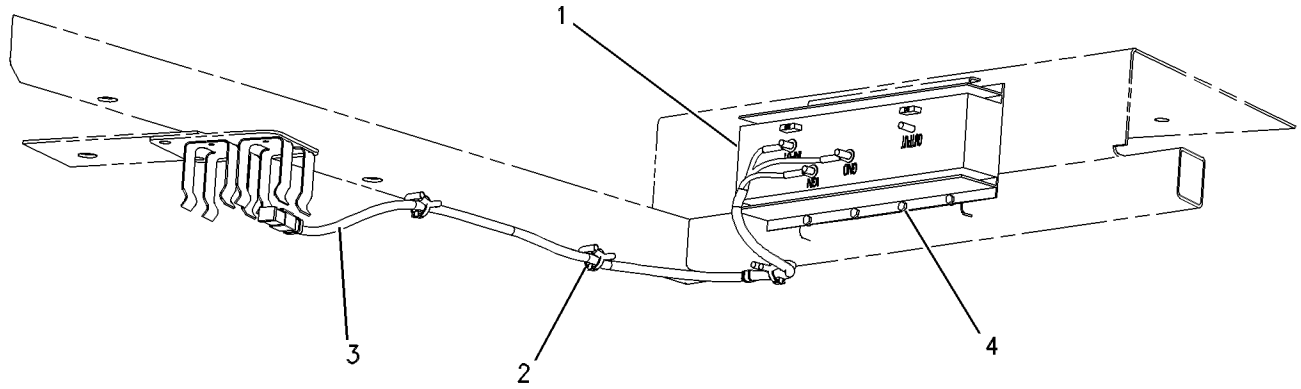

GRAPHIC #1 g00573516

ELECTRICAL AND STARTING SYSTEM

180-4186 ELECTRONICS GP-IMPLEMENT

S/N: AKT1-UP

PART OF 171-5805 ELECTRONICS AR-MACHINE

SMCS-5701, 5740 **i01665763**

NOTE	PART NUMBER	QTY	PART NAME 1 2 3 4 5 6 (PRODUCT LEVEL)	SEE PAGE
	209-6266	1	SOFTWARE GP-IMPLEMENT (SOFTWARE ONLY)	
			—OR—	
Y	**209-6267**	1	SERVICE GP-IMPLEMENT (INCLUDES SOFTWARE)	262
			(OPTIONAL SERVICE REPLACEMENT)	

Y-SEPARATE ILLUSTRATION

ELECTRICAL AND STARTING SYSTEM

173-0623 ELECTRONICS GP-POWER TRAIN

S/N: AKT1-UP

PART OF 171-5805 ELECTRONICS AR-MACHINE

SMCS-1400, 4808, 4812, 4820 **i01665668**

NOTE	PART NUMBER	QTY	PART NAME 1 2 3 4 5 6 (PRODUCT LEVEL)	SEE PAGE
	211-1541	1	SOFTWARE GP-POWER TRAIN (SOFTWARE ONLY)	
			–OR–	
Y	**211-1542**	1	SERVICE GP-POWER TRAIN (INCLUDES SOFTWARE)	263
			(OPTIONAL SERVICE REPLACEMENT)	

Y-SEPARATE ILLUSTRATION

ELECTRICAL AND STARTING SYSTEM

174-4354 ELECTRONICS GP-VIDS

S/N: AKT1-UP

PART OF 171-5805 ELECTRONICS AR-MACHINE

SMCS-7603, 7620 **i01665685**

NOTE	PART NUMBER	QTY	PART NAME 1 2 3 4 5 6 (PRODUCT LEVEL)	SEE PAGE
	209-3717	1	SOFTWARE GP-MONITOR (SOFTWARE ONLY)	
			—OR—	
Y	**209-3723**	1	SERVICE GP-IMPLEMENT (INCLUDES SOFTWARE)	261
			(OPTIONAL SERVICE REPLACEMENT)	

Y-SEPARATE ILLUSTRATION

MEMORANDA

172-5396 HEATER GP-FUEL

S/N: AKT1-UP
AN ATTACHMENT

SMCS-1296 **i01690935**

NOTE	REF NO	GRAPHIC REF	PART NUMBER	QTY	PART NAME 1 2 3 4 5 6 (PRODUCT LEVEL)	SEE PAGE
	1	1	**7C-0754**	2	TEE-HOSE	
	2	1	**9W-8394**	1	ORIFICE	
	3	1	**9X-2488**	9	CLAMP-HOSE	
	4	1	**101-8240**	1	BRACKET	
B	5	1	**106-5823**	2	HOSE	
	6	1	**111-9289**	1	HEATER AS	
		1	**2M-9780**	2	SEAL-O-RING	
		1	**111-9827**	2	ADAPTER	
I	7	1	**200-5005**	1	HOSE AS	
I	8	1	**215-9000**	1	HOSE AS	
	9	1	**215-9002**	1	BRACKET AS	
	10	1	**149-9129**	1	CLIP	
	11	1	*150-3037*	1	ELBOW AS	
		1	**3K-0360**	1	SEAL-O-RING	
		1	**7J-9108**	1	SEAL-O-RING	
		1	**8T-2530**	1	ELBOW	
	12	1	*150-4048*	1	ELBOW GP	
		1	**3K-0360**	1	SEAL-O-RING	
		1	**6V-8722**	1	ELBOW	
		1	**7J-9108**	1	SEAL-O-RING	
	13	1	**4L-6454**	6	BOLT (3/8-16X1 IN)	
	14	1	**5C-6565**	1	BOLT (1/2-13X1.125 IN)	
	15	1	**5M-3062**	1	BOLT (3/8-16X0.75 IN)	
	16	1	**5P-1075**	1	WASHER-HARD (10.2X22.5X3MM THK)	
	17	1	**5P-6994**	1	CLIP	
	18	1	**8T-4223**	1	WASHER-HARD (13.5X25.5X3MM THK)	
	19	1	**6V-8188**	1	NUT (1/2-13 THD)	
	20	1	**164-5573**	1	UNION AS	
	21	1	**8T-4896**	6	WASHER-HARD (10.2X18.5X2.5MM THK)	
	22	1	**7J-9108**	1	SEAL-O-RING	
	23	1	**8T-4224**	1	WASHER-HARD (8.8X16X2MM THK)	
M	24	1	**8T-4200**	1	BOLT (M8X1.25X16MM)	

B-USE AS REQUIRED
I-SEE HOSE FABRICATION GUIDE
M-METRIC PART

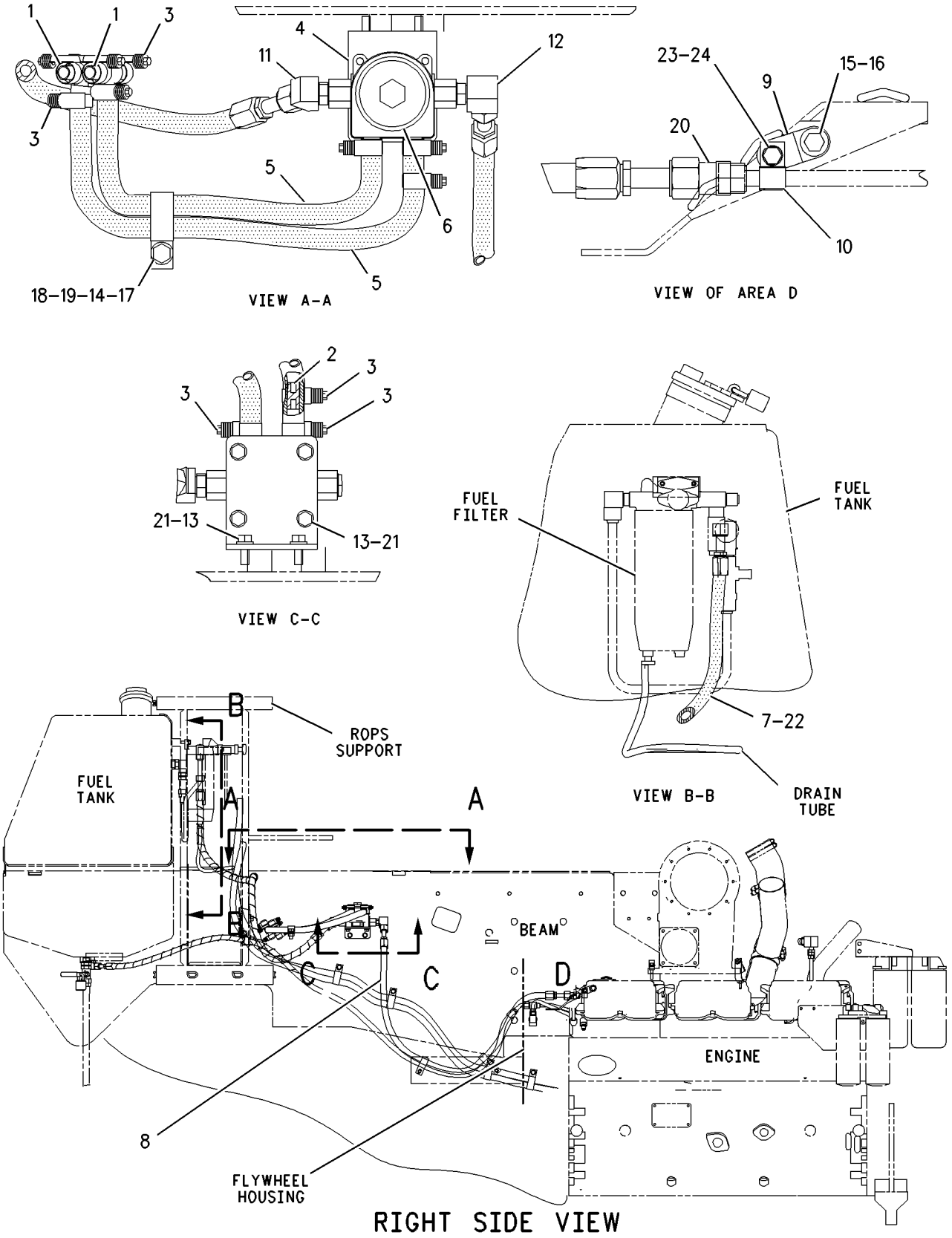

GRAPHIC #1 g00871556

192-0829 HEATER GP-JACKET WATER

S/N: AKT1-UP
120 VOLT/30 AMP
PART OF 171-5807 INSTALLATION AR-ENGINE

SMCS-1383 **i01626318**

NOTE	REF NO	GRAPHIC REF	PART NUMBER	QTY	PART NAME 1 2 3 4 5 6 (PRODUCT LEVEL)	SEE PAGE
	1	1	**4N-0864**	1	GASKET	
	2	1	**7K-1181**	11	STRAP-CABLE	
	3	1	**7N-0210**	1	ADAPTER-HEATER	
	4	1	**9G-6655**	2	ELEMENT AS-JACKET WATER HEATER (120 VOLTS/1500 WATTS)	
	5	1	**196-0123**	1	CORD AS	
	6	1	**3D-9799**	4	SCREW-MACHINE (8-32X.875IN)	
	7	1	**4L-6454**	1	BOLT (3/8-16X1 IN)	
	8	1	**4P-7428**	1	CLIP	
	9	1	**8T-7008**	5	BOLT (3/8-16X3 IN)	

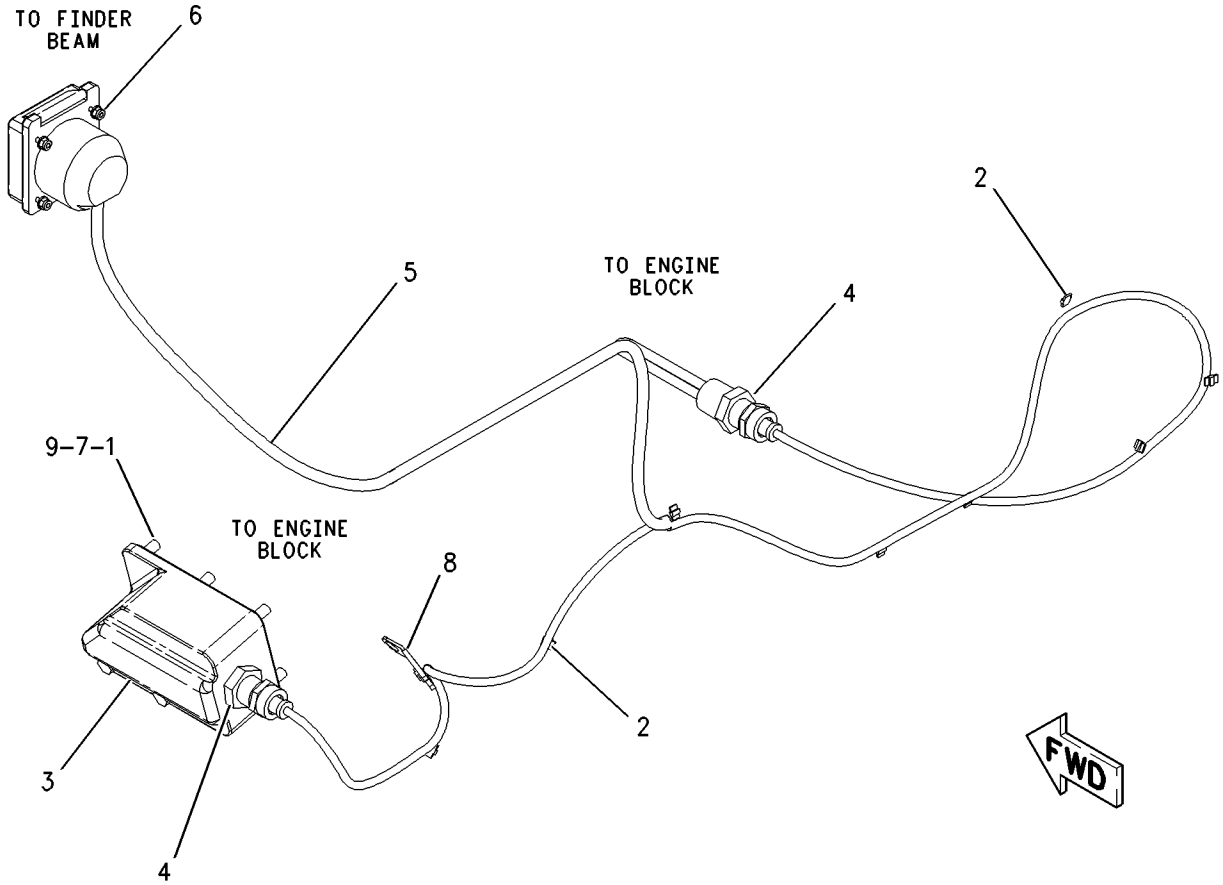

GRAPHIC #1 g00863163

192-0830 HEATER GP-JACKET WATER

S/N: AKT1-UP
250 VOLT/30 AMP
AN ATTACHMENT

SMCS-1383 **i01626319**

NOTE	REF NO	GRAPHIC REF	PART NUMBER	QTY	PART NAME 1 2 3 4 5 6 (PRODUCT LEVEL)	SEE PAGE
	1	1	**4N-0864**	1	GASKET	
	2	1	**6T-3764**	2	ELEMENT AS-JACKET WATER HEATER	
	3	1	**7K-1181**	11	STRAP-CABLE	
	4	1	**7N-0210**	1	ADAPTER-HEATER	
	5	1	**196-1954**	1	CORD AS	
	6	1	**3D-9799**	4	SCREW-MACHINE (8-32X.875IN)	
	7	1	**4L-6454**	1	BOLT (3/8-16X1 IN)	
	8	1	**4P-7428**	1	CLIP	
	9	1	**8T-7008**	5	BOLT (3/8-16X3 IN)	

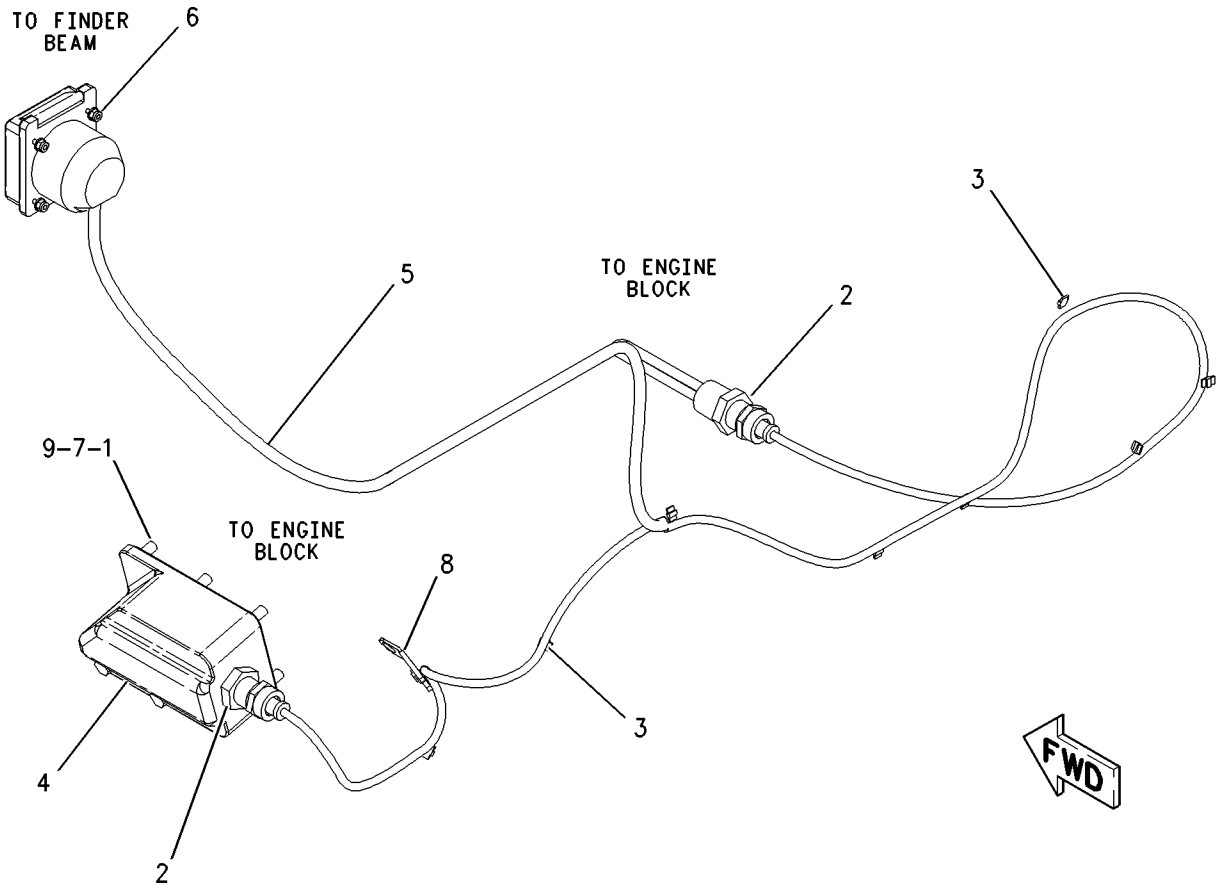

GRAPHIC #1 g00863276

9W-0742 JUNCTION BLOCK GP

S/N: AKT1-UP

PART OF 172-5066 BATTERY & WIRING GP

SMCS-1408 **i01217383**

NOTE	REF NO	GRAPHIC REF	PART NUMBER	QTY	PART NAME 1 2 3 4 5 6 (PRODUCT LEVEL)	SEE PAGE
	1	1	**8C-6358**	1	JUNCTION BLOCK AS	
	1A	1	**8T-3519**	3	BOLT-BRONZE	
BD	2	1	**6V-2722**		TUBE-SHRINKABLE	
	3	1	**7F-0560**	6	WASHER (2.57MM THK)	
	4	1	**8T-3518**	6	NUT-FULL	

B-USE AS REQUIRED
D-ORDER BY THE METER

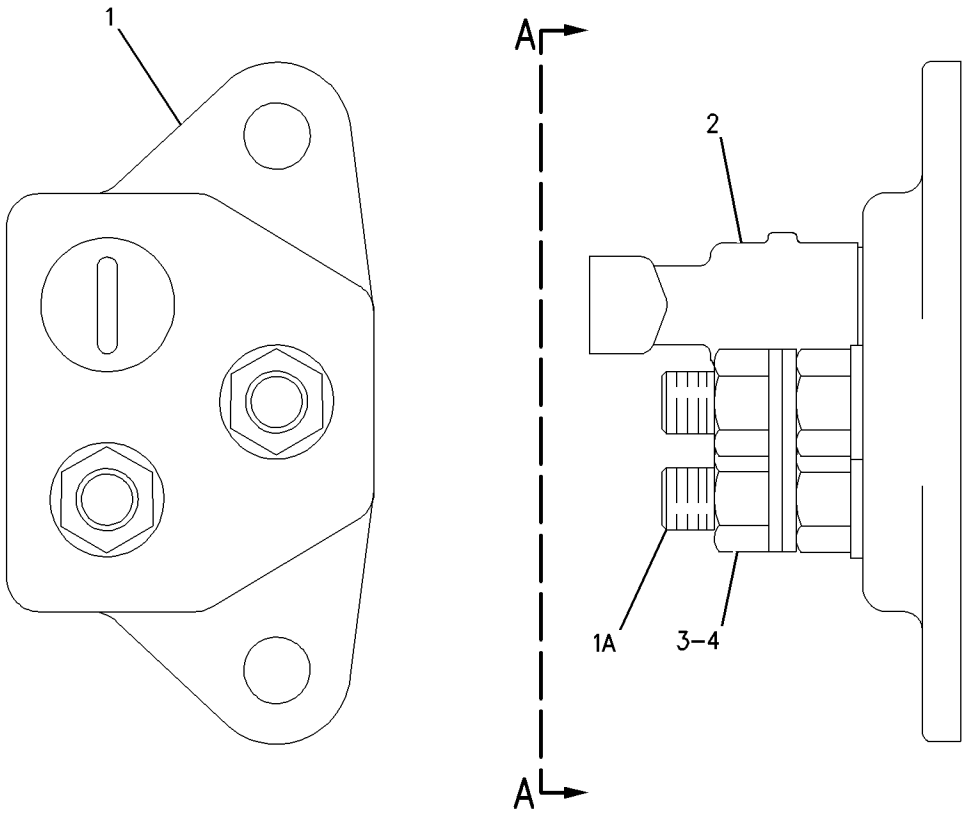

VIEW A-A

GRAPHIC #1 g00650721

3E-6389 LAMP GP-DOME

S/N: AKT1-UP
24 VOLT. WITH SWITCH
PART OF 157-3737 CAB GP
ALSO AN ATTACHMENT

SMCS-1429 **i01700469**

NOTE	REF NO	GRAPHIC REF	PART NUMBER	QTY	PART NAME 1 2 3 4 5 6 (PRODUCT LEVEL)	SEE PAGE
	1	1	**7N-9943**	1	LAMP (24 VOLT) (DOME)	
	2	1	**102-8803**	1	KIT-RECEPTACLE (3 PIN)	
					(INCLUDES RECEPTACLE AS & WEDGE)	
	3	1	**3E-3371**	1	WEDGE-RECEPTACLE LOCK (3 PIN)	
	4	1	**8T-8729**	3	PIN-CONNECTOR	
	5	1	**7T-0020**	1	LENS (DOME LAMP)	

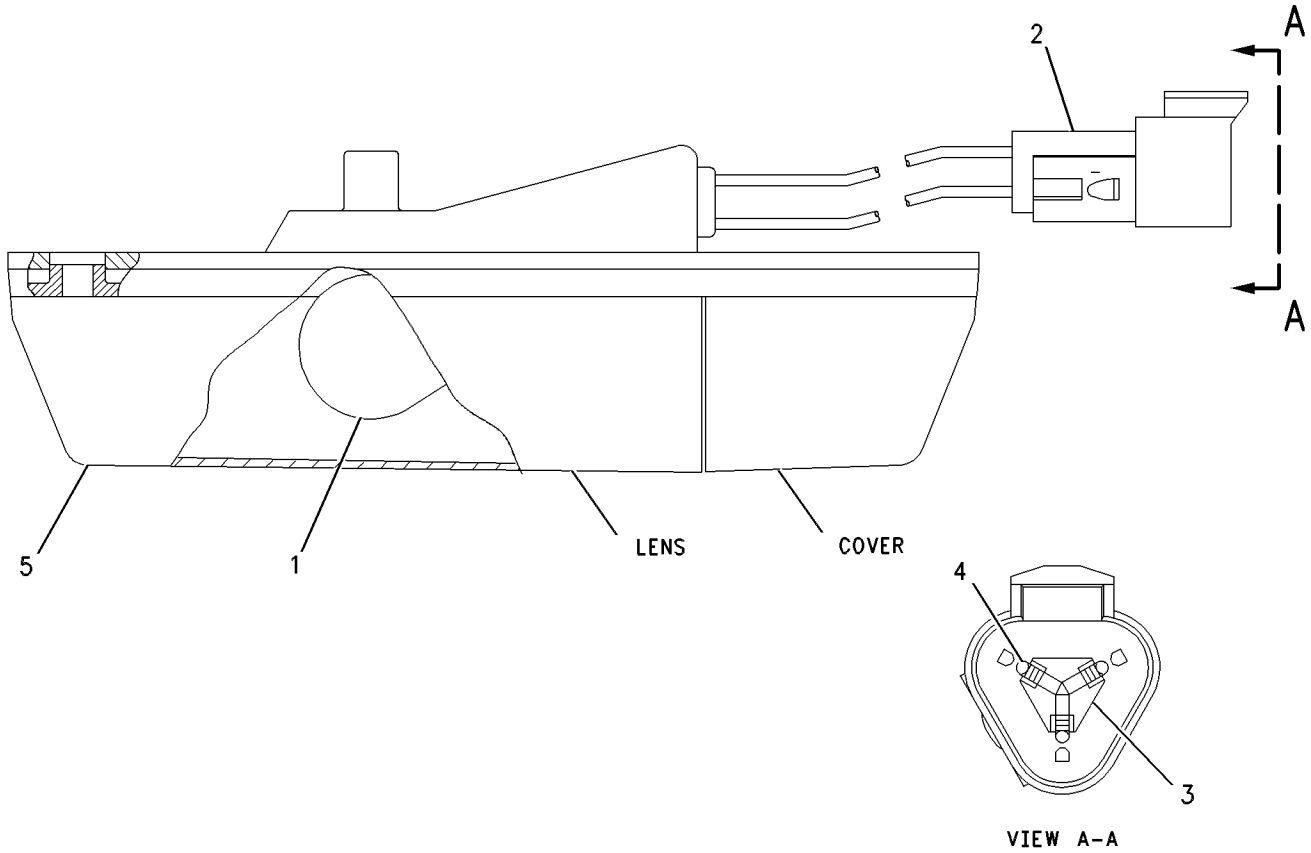

GRAPHIC #1 g00647928

147-0319 LAMP GP-FLOOD

S/N: BHA1-UP; BHF1-UP; BHJ1-UP; 4PP1-UP; BHP1-UP; AKT1-UP; BRT1-UP; BEY1-UP
24 VOLT. SUSPENDED
PART OF 152-8427 LIGHTING GP, 125-2001 LIGHTING GP-FLOOD
AN ATTACHMENT

SMCS-1434 **i01683117**

NOTE	REF NO	GRAPHIC REF	PART NUMBER	QTY	PART NAME 1 2 3 4 5 6 (PRODUCT LEVEL)	SEE PAGE
	1	1	**9X-3463**	1	LAMP-HEAD (24 VOLT) (65 WATT)(FLOOD)	
	2	1	**158-0250**	1	BODY AS-LAMP	
	3	1	**158-0248**	1	LENS AS (FLOODLAMP)	
	4	1	**158-0252**	1	BEZEL	
	5	1	**188-8849**	2	CLAMP	

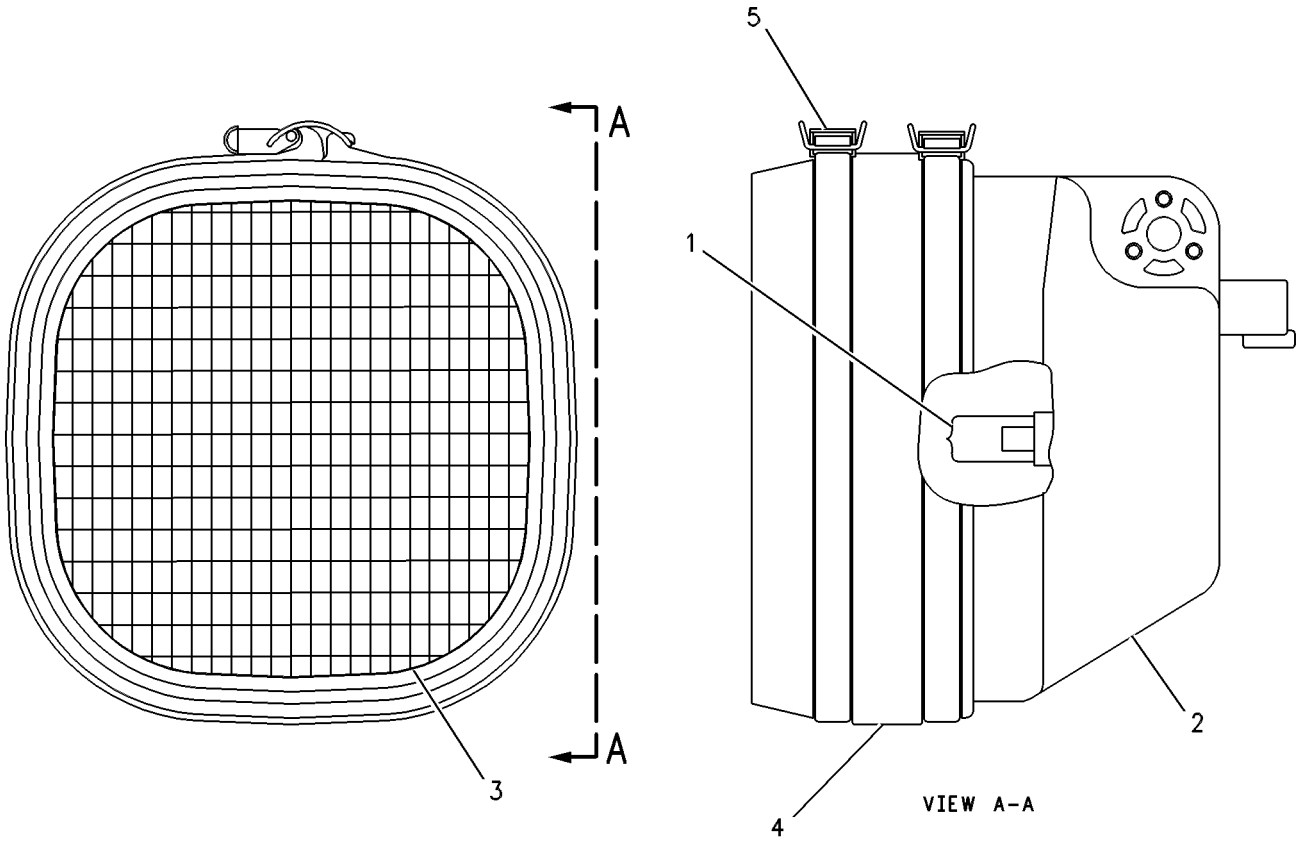

GRAPHIC #1 g00458549

153-2073 LAMP GP-FLOOD

S/N: AKT1-UP
24 VOLT. VERTICAL
PART OF 134-0978 LIGHTING GP-FLOOD

SMCS-1434 **i01683129**

NOTE	REF NO	GRAPHIC REF	PART NUMBER	QTY	PART NAME 1 2 3 4 5 6 (PRODUCT LEVEL)	SEE PAGE
	1	1	**9X-3463**	1	LAMP-HEAD (24 VOLT) (FLOOD)	
	2	1	**158-0250**	1	BODY AS-LAMP	
	3	1	**158-0248**	1	LENS AS (FLOODLAMP)	
	4	1	**158-0252**	1	BEZEL	
	5	1	**188-8849**	2	CLAMP	

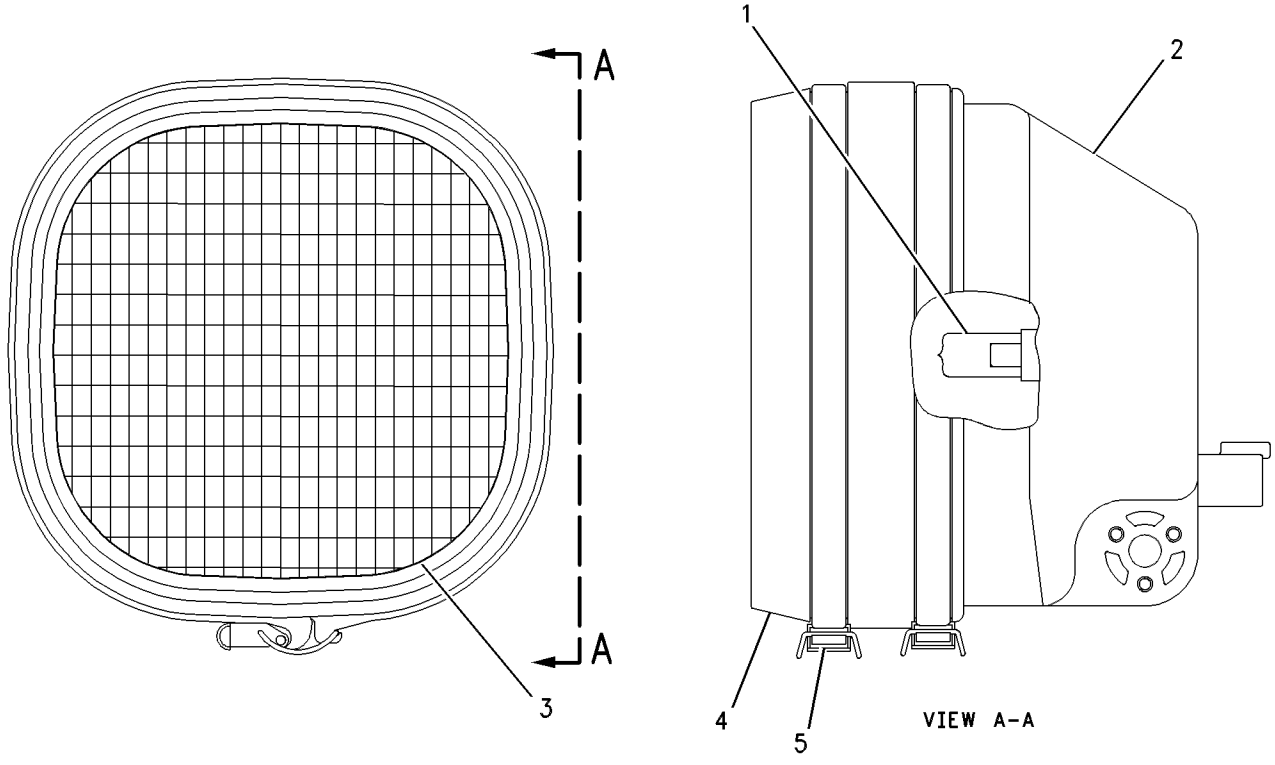

GRAPHIC #1 g00449633

114-6009 LIGHTING AR

S/N: AKT1-UP

FOR USE WITH BULLDOZER LIFT CYLINDERS AND WASTE DISPOSAL AR AN ATTACHMENT

SMCS-1429 **i01700492**

NOTE	REF NO	GRAPHIC REF	PART NUMBER	QTY	PART NAME 1 2 3 4 5 6 (PRODUCT LEVEL)	SEE PAGE
CY	1	1	**152-8427**	2	LIGHTING GP	233
	2	1	**6V-8801**	14	NUT (3/8-16 THD)	
	3	1	**9X-6772**	14	STRAP-CABLE	
	4	1	**5P-1075**	24	WASHER-HARD (10.2X22.5X3MM THK)	
	5	1	**115-1032**	2	BRACKET	
	6	1	**4L-6454**	2	BOLT (3/8-16X1 IN)	
	7	1	**4P-7429**	4	CLIP	
	8	1	**5P-2226**	4	COVER-IDLE SCREW	
	9	1	**5C-6565**	8	BOLT (1/2-13X1.125 IN)	
	10	1	**8T-4223**	12	WASHER-HARD (13.5X25.5X3MM THK)	
C	11	1	**151-4854**	2	HARNESS AS	
	12	1	**115-1250**	2	BRACKET AS	
					(EACH INCLUDES)	
		1	**7T-1099**	2	LINK	
C	13	1	**4P-7581**	2	CLIP (LADDER)	
C	14	1	**8T-4896**	4	WASHER-HARD (10.2X18.5X2.5MM THK)	
C	15	1	**9B-7237**	12	BOLT (3/8-16X1.25 IN)	

C-CHANGE FROM PREVIOUS TYPE
Y-SEPARATE ILLUSTRATION

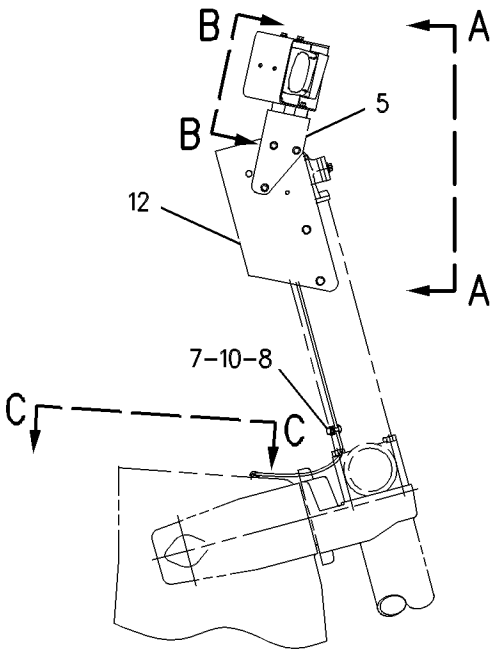

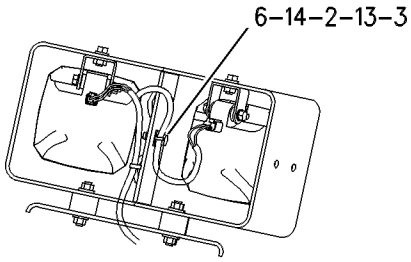

VIEW B-B

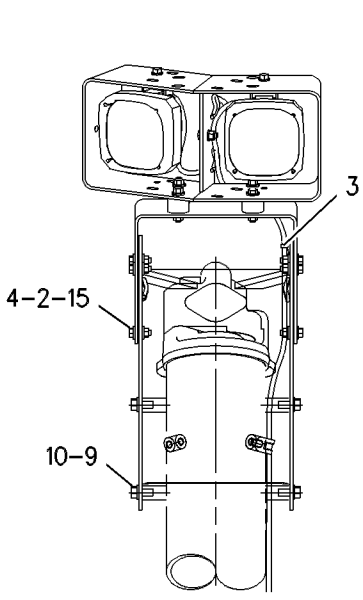

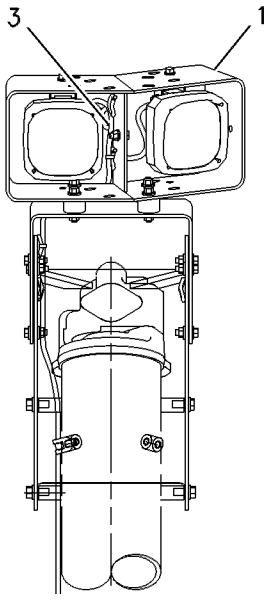

VIEW A-A

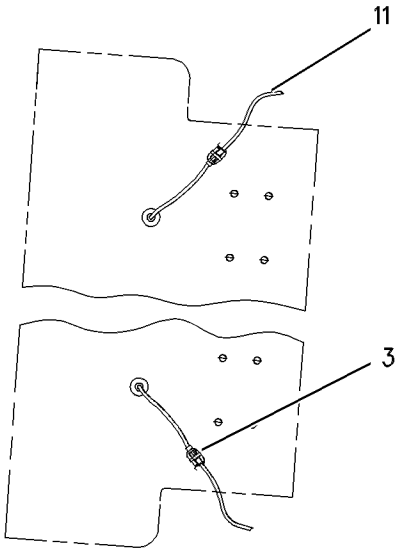

VIEW C-C

GRAPHIC #1 g00589786

102-4394 LIGHTING AR-REAR

S/N: AKT1-UP
4 LAMP
AN ATTACHMENT

SMCS-1429 **i01401034**

NOTE	REF NO	GRAPHIC REF	PART NUMBER	QTY	PART NAME 1 2 3 4 5 6 (PRODUCT LEVEL)	SEE PAGE
	1	1	**9X-6772**	17	STRAP-CABLE	
	2	1	**5D-7635**	2	GROMMET (22.22MM OD)	
B	3	1	**1Q-1592**	1	PLATE AS	
		1	**7T-1099**	4	LINK	
	4	1	**114-9365**	2	PLATE	
	5	1	**8T-9397**	2	BOLT (3/4-10X1.25 IN)	
	6	1	**7X-0582**	2	WASHER-HARD (20X44.5X6MM THK)	
C	7	1	**153-0976**	1	HARNESS AS	
CY	8	1	*152-8427*	2	LIGHTING GP	233
	9	1	**4L-6454**	8	BOLT (3/8-16X1 IN)	
	10	1	**5P-1075**	8	WASHER-HARD (10.2X22.5X3MM THK)	
	11	1	**115-1889**	1	HARNESS AS	

B-USE AS REQUIRED
C-CHANGE FROM PREVIOUS TYPE
Y-SEPARATE ILLUSTRATION

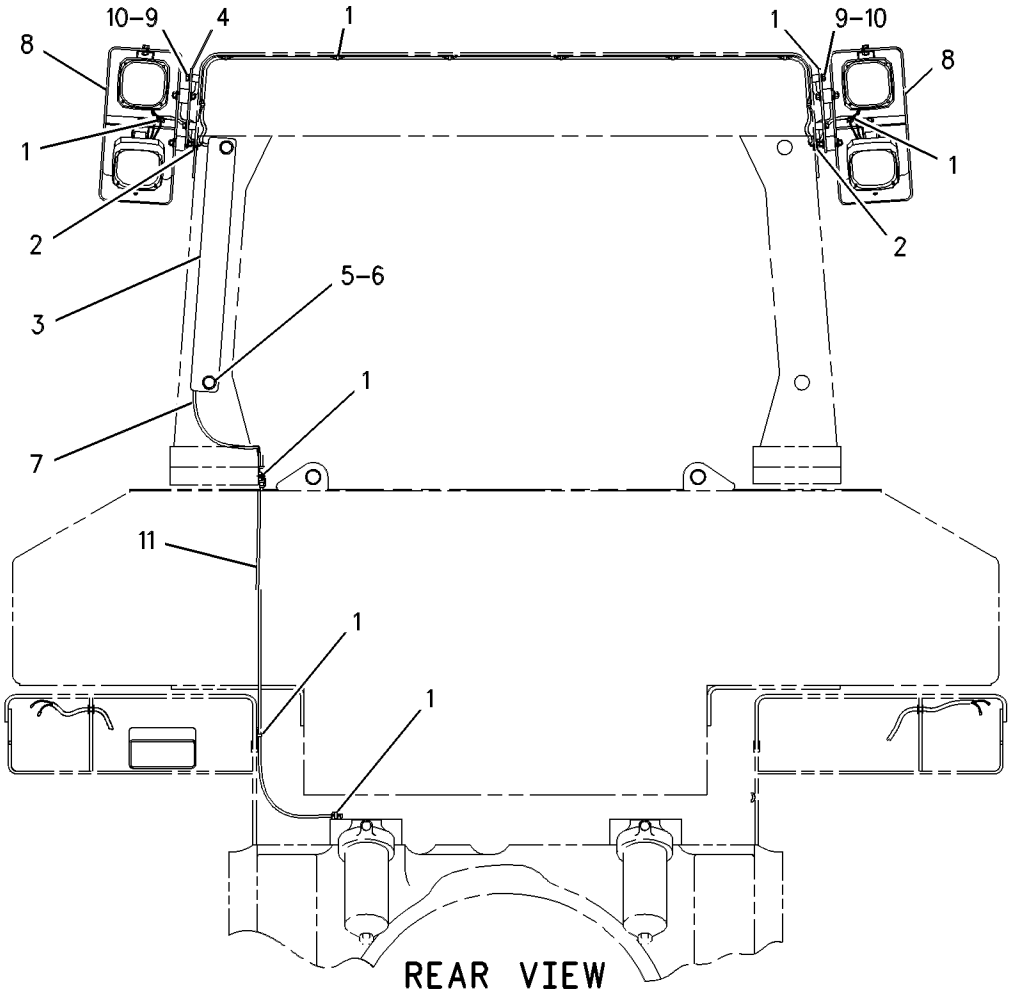

GRAPHIC #1 g00448755

152-8427 LIGHTING GP

S/N: AKT1-UP
PART OF 114-6009 LIGHTING AR, 102-4394 LIGHTING AR-REAR
AN ATTACHMENT

SMCS-1429 **i01401036**

NOTE	REF NO	GRAPHIC REF	PART NUMBER	QTY	PART NAME 1 2 3 4 5 6 (PRODUCT LEVEL)	SEE PAGE
	1	1	**9W-4361**	4	MOUNT	
	2	1	**8T-4896**	2	WASHER-HARD (10.2X18.5X2.5MM THK)	
	3	1	**8T-4224**	4	WASHER-HARD (8.8X16X2MM THK)	
Y	4	1	**147-0319**	2	LAMP GP-FLOOD (24 VOLT)(SUSPENDED)	228
	5	1	**5M-3062**	2	BOLT (3/8-16X.75 IN)	
	6	1	**5P-1075**	8	WASHER-HARD (10.2X22.5X3MM THK)	
	7	1	**5P-2955**	2	BOLT (5/16-18X2.50 IN)	
	8	1	**6V-8189**	2	NUT (5/16-18 THD)	
	9	1	**6V-8801**	8	NUT (3/8-16 THD)	
	10	1	**114-9363**	1	GUARD AS	
	11	1	**7T-1099**	2	LINK	
	12	1	**111-8314**	2	BRACKET AS	

Y-SEPARATE ILLUSTRATION

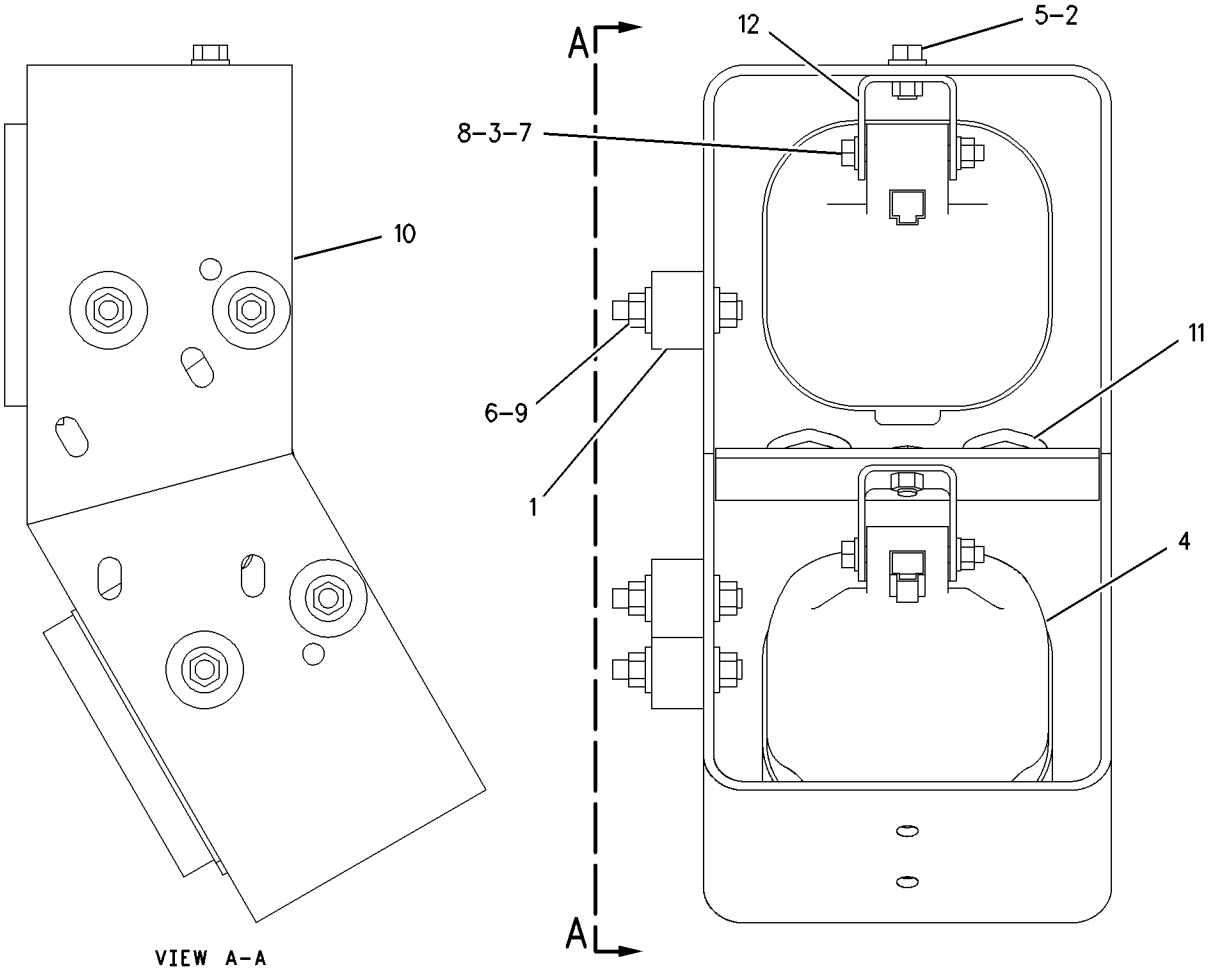

GRAPHIC #1 g00651682

125-2001 LIGHTING GP-FLOOD

S/N: BHA1-UP; BHF1-UP; BHJ1-UP; 4PP1-UP; BHP1-UP; AKT1-UP; BRT1-UP; BEY1-UP
PART OF 102-4395, 114-6006 LIGHTING GP-FRONT, 114-3107 LIGHTING GP-REAR, 114-6005 LIGHTING GP-RIPPER
AN ATTACHMENT

SMCS-1429 **i01446635**

NOTE	REF NO	GRAPHIC REF	PART NUMBER	QTY	PART NAME 1 2 3 4 5 6 (PRODUCT LEVEL)	SEE PAGE
	1	1	**9W-4361**	4	MOUNT	
	2	1	**111-8314**	1	BRACKET AS	
	3	1	**1F-0750**	1	NUT-WELD (3/8-16 THD)	
Y	4	1	**147-0319**	1	LAMP GP-FLOOD (24 VOLT)(SUSPENDED)	228
	5	1	**5M-3062**	1	BOLT (3/8-16X0.75 IN)	
	6	1	**5P-1075**	9	WASHER-HARD (10.2X22.5X3MM THK)	
	7	1	**5P-2955**	1	BOLT (5/16-18X2.50 IN)	
	8	1	**6V-8189**	1	NUT (5/16-18 THD)	
	9	1	**6V-8801**	8	NUT (3/8-16 THD)	
	10	1	**8T-4224**	2	WASHER-HARD (8.8X16X2MM THK)	
	11	1	**114-2368**	1	GUARD AS	
		1	**7T-1099**	1	LINK	

Y-SEPARATE ILLUSTRATION

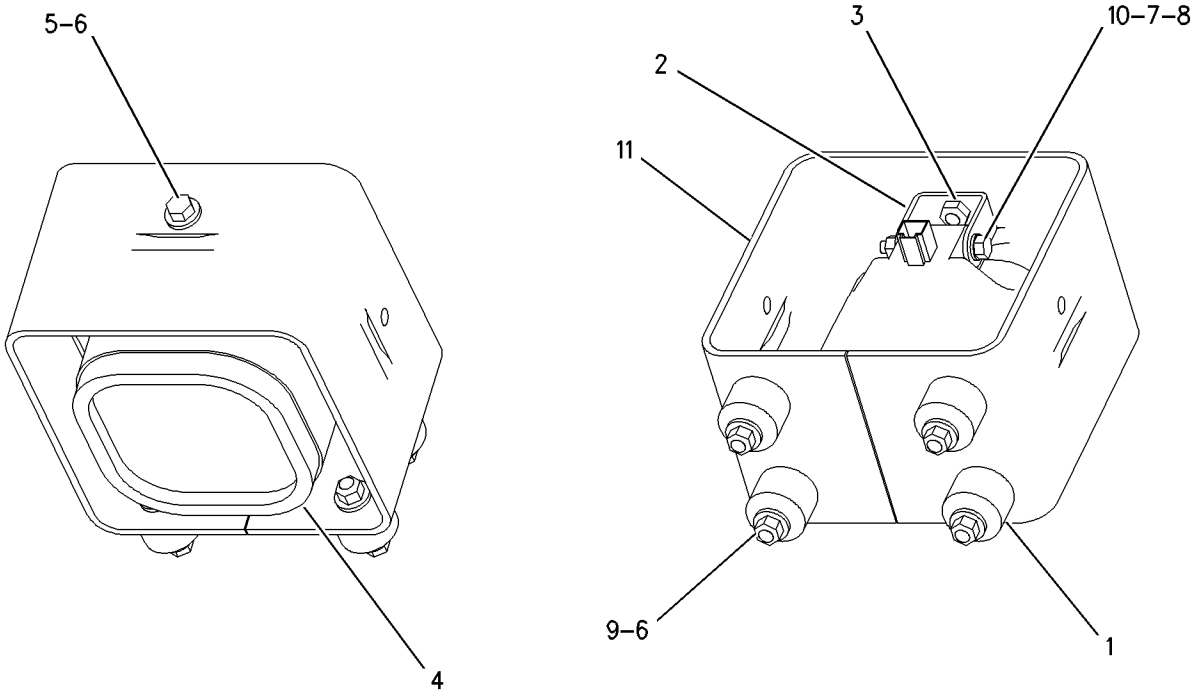

GRAPHIC #1 g00658568

MEMORANDA

134-0978 LIGHTING GP-FLOOD

S/N: AKT1-UP

4 LAMP

PART OF 171-5801 CHASSIS AR

SMCS-1429 **i01446636**

NOTE	REF NO	GRAPHIC REF	PART NUMBER	QTY	PART NAME 1 2 3 4 5 6 (PRODUCT LEVEL)	SEE PAGE
CY	1	1	**153-2073**	4	LAMP GP-FLOOD (24 VOLT)(VERTICAL)	229
	2	1	**8T-4224**	8	WASHER-HARD (8.8X16X2MM THK)	
	3	1	**5P-2955**	4	BOLT (5/16-18X2.50 IN)	
	4	1	**6V-8189**	4	NUT (5/16-18 THD)	
	5	1	**5P-1075**	8	WASHER-HARD (10.2X22.5X3MM THK)	
	6	1	**5M-3062**	4	BOLT (3/8-16X0.75 IN)	
	7	1	**111-8314**	4	BRACKET AS	
	8	1	**8E-3241**	4	BRACKET AS	
					(EACH BRACKET AS INCLUDES)	
		1	**1F-0750**	1	NUT-WELD (3/8-16 THD)	
	9	1	**8T-2502**	4	BOLT (3/8-16X1.125 IN)	

C-CHANGE FROM PREVIOUS TYPE
Y-SEPARATE ILLUSTRATION

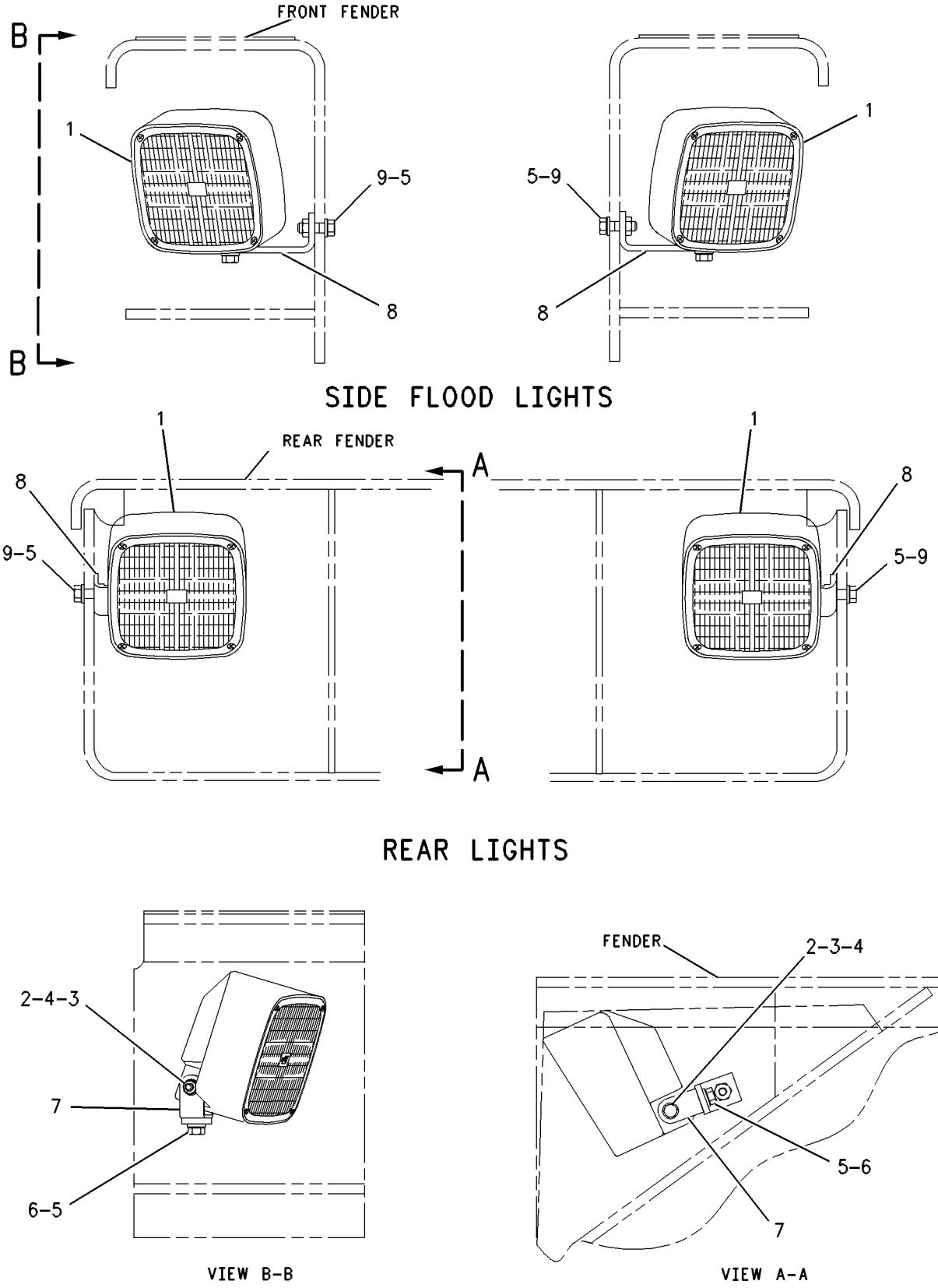

GRAPHIC #1

g00451083

102-4395 LIGHTING GP-FRONT

S/N: AKT1-UP
2 LAMP
FOR USE WITH BULLDOZER LIFT CYLINDERS
AN ATTACHMENT

SMCS-1429 **i00899020**

NOTE	REF NO	GRAPHIC REF	PART NUMBER	QTY	PART NAME 1 2 3 4 5 6 (PRODUCT LEVEL)	SEE PAGE
	1	1	**5P-8522**	2	GROMMET	
					(FOR USE ON D10R, D11R, & D11R CARRY DOZER)	
	2	1	**9D-3768**	2	GROMMET (14.29MM ID)	
					(FOR USE ON D9R)	
	3	1	**5P-8522**	2	GROMMET (9.5MM ID)	
					(FOR USE ON D8R)	
YC	4	1	*125-2001*	2	LIGHTING GP-FLOOD	234
	5	1	**9X-6772**	2	STRAP-CABLE	

C-CHANGE FROM PREVIOUS TYPE
Y-SEPARATE ILLUSTRATION

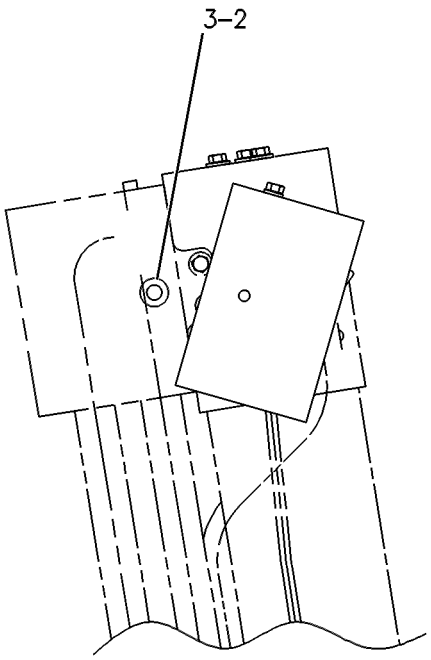

RIGHT SIDE VIEW

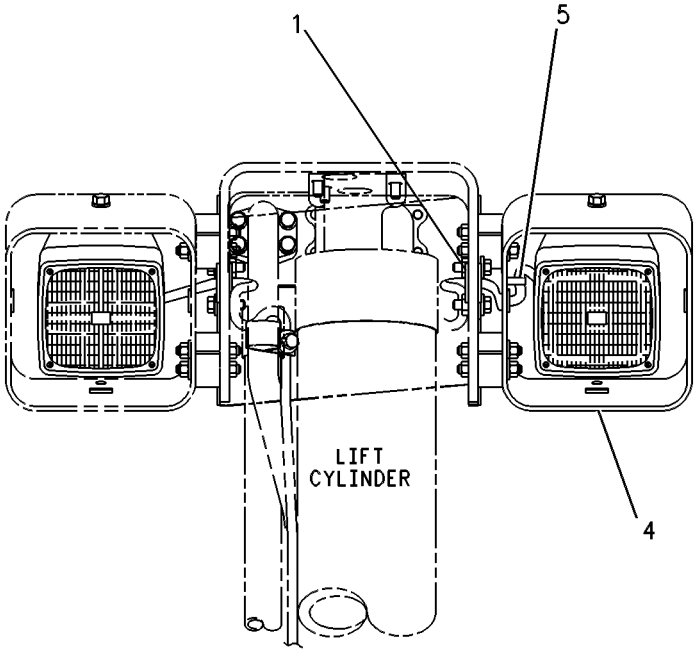

FRONT VIEW

GRAPHIC #1 g00453511

114-6006 LIGHTING GP-FRONT

S/N: BHA1-UP; BHF1-UP; BHJ1-UP; BHP1-UP; AKT1-UP
PART OF 171-6672, 171-6673, 171-6674, 171-6675 BULLDOZER AR
FOR USE WITH BULLDOZER LIFT CYLINDERS
AN ATTACHMENT

SMCS-1429 **i01666383**

NOTE	REF NO	GRAPHIC REF	PART NUMBER	QTY	PART NAME 1 2 3 4 5 6 (PRODUCT LEVEL)	SEE PAGE
B	1	1	**9X-6772**	14	STRAP-CABLE	
	2	1	**115-1250**	2	BRACKET AS	
					(EACH INCLUDES)	
		1	**7T-1099**	2	LINK	
CY	3	1	*125-2001*	2	LIGHTING GP-FLOOD	234
C	4	1	**151-4854**	2	HARNESS AS (FRONT LAMP)	
	5	1	**4P-7428**	2	CLIP	
	6	1	**4P-7429**	2	CLIP	
	7	1	**5C-6565**	8	BOLT (1/2-13X1.125 IN)	
	8	1	**5P-2228**	4	BOLT (1/2-13X1 IN)	
	9	1	**5P-8522**	2	GROMMET (9.5MM ID)	
	10	1	**8T-4223**	12	WASHER-HARD (13.5X25.5X3MM THK)	

B-USE AS REQUIRED
C-CHANGE FROM PREVIOUS TYPE
Y-SEPARATE ILLUSTRATION

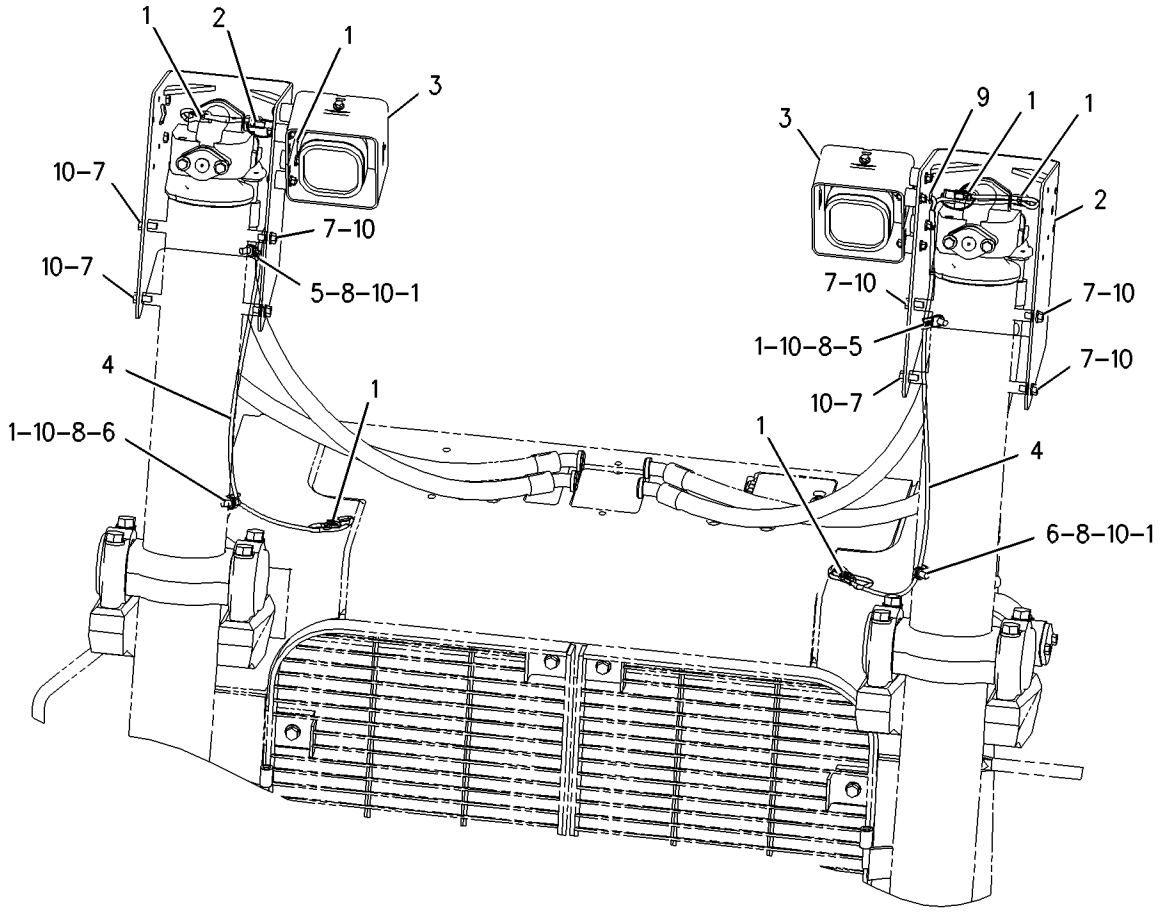

FRONT VIEW

GRAPHIC #1 g00864035

114-3107 LIGHTING GP-REAR

S/N: AKT1-UP
2 LAMP
CANNOT BE USED WITH WASTE DISPOSAL AR
AN ATTACHMENT

SMCS-1429 **i01617822**

NOTE	REF NO	GRAPHIC REF	PART NUMBER	QTY	PART NAME 1 2 3 4 5 6 (PRODUCT LEVEL)	SEE PAGE
B	1	1	**7K-1181**	21	STRAP-CABLE	
	2	1	**5D-7635**	2	GROMMET	
	3	1	**1Q-1592**	1	PLATE AS	
		1	**7T-1099**	4	LINK	
	4	1	**114-9365**	2	PLATE	
	5	1	**8T-9397**	2	BOLT (3/4-10X1.25 IN)	
	6	1	**7X-0582**	2	WASHER-HARD (20X44.5X6MM THK)	
	7	1	**115-1888**	1	HARNESS AS	
CY	8	1	*125-2001*	2	LIGHTING GP-FLOOD	234
	9	1	**4L-6454**	8	BOLT (3/8-16X1 IN)	
	10	1	**5P-1075**	8	WASHER-HARD (10.2X22.5X3MM THK)	
C	11	1	**153-0976**	1	HARNESS AS	
C	12	1	**4P-7581**	1	CLIP	
C	13	1	**5S-7379**	1	BOLT (3/8-16X0.875 IN)	
C	14	1	**8T-4896**	1	WASHER-HARD (10.2X18.5X2.5MM THK)	

B-USE AS REQUIRED
C-CHANGE FROM PREVIOUS TYPE
Y-SEPARATE ILLUSTRATION

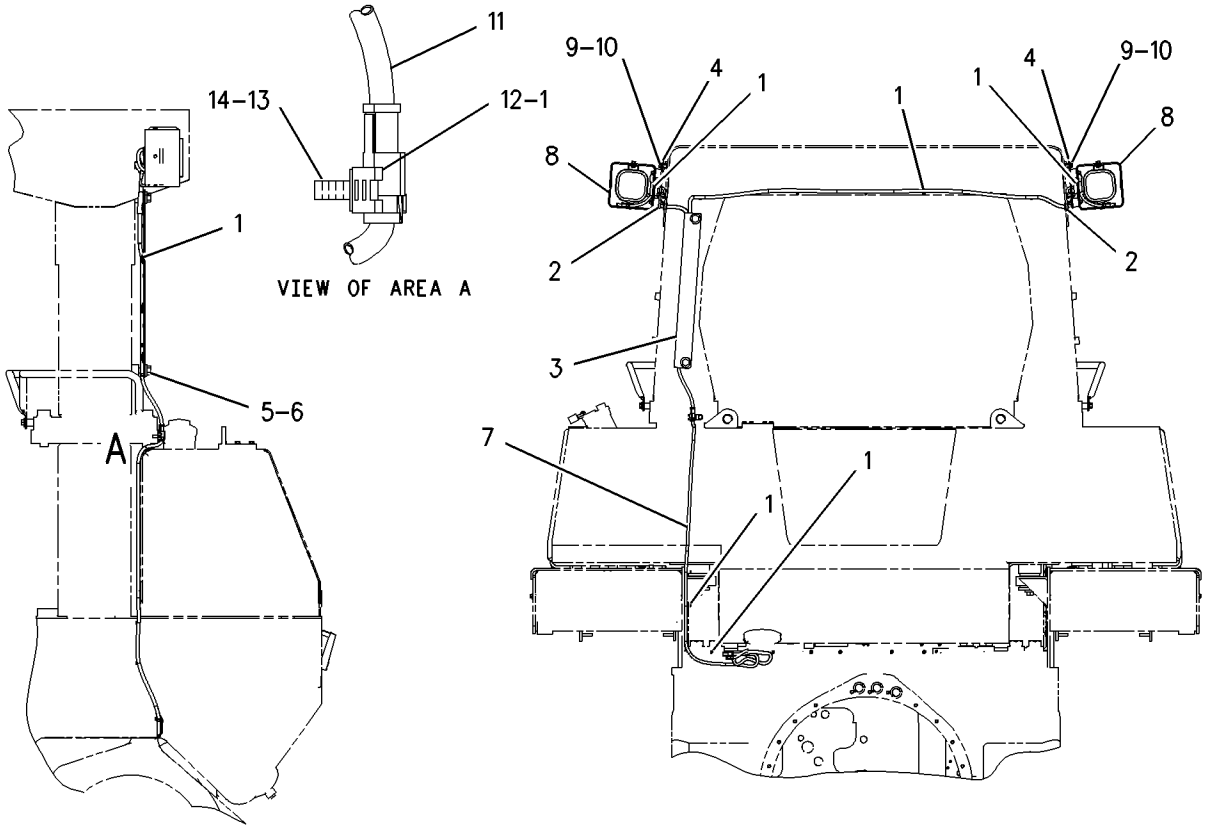

GRAPHIC #1

g00838106

114-6005 LIGHTING GP-RIPPER

S/N: 4PP1-UP; AKT1-UP; BRT1-UP; BEY1-UP
PART OF 119-8210, 180-2401, 180-2404 RIPPER AR
AN ATTACHMENT

SMCS-1429 **i01666355**

NOTE	REF NO	GRAPHIC REF	PART NUMBER	QTY	PART NAME 1 2 3 4 5 6 (PRODUCT LEVEL)	SEE PAGE
	1	1	**7K-1181**	7	STRAP-CABLE	
	2	1	**125-2000**	1	HARNESS AS (RIPPER)	
Y	3	1	*125-2001*	1	LIGHTING GP-FLOOD	234
	4	1	**127-9619**	1	BRACKET	
	5	1	**4L-6454**	2	BOLT (3/8-16X1 IN)	
	6	1	**4P-7581**	3	CLIP	
	7	1	**5M-3062**	1	BOLT (3/8-16X0.75 IN)	
	8	1	**8T-4896**	3	WASHER-HARD (10.2X18.5X2.5MM THK)	

Y-SEPARATE ILLUSTRATION

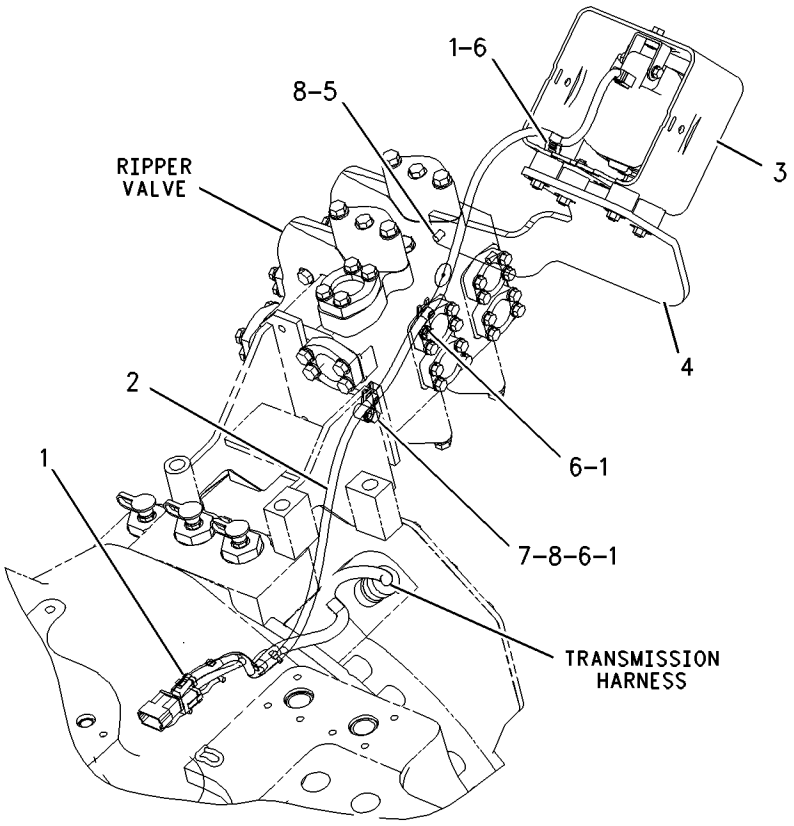

GRAPHIC #1 g00864087

111-7003 PLUG AS-WIRING

S/N: AKT1-UP
ELECTRIC CLUTCH & BRAKE/ELECTRIC CLUTCH PRESSURE , CONTROL 3-SPEED
PART OF 172-5067 WIRING GP-PLATFORM

SMCS-1408 **i01232096**

NOTE	REF NO	GRAPHIC REF	PART NUMBER	QTY	PART NAME 1 2 3 4 5 6 (PRODUCT LEVEL)	SEE PAGE
BD	1	1	**5P-5677**		WIRE (18 GA)	
	2	1	**102-8805**	1	KIT-RECEPTACLE (6 PIN)	
					(INCLUDES RECEPTACLE AS & WEDGE)	
	3	1	**3E-3383**	1	WEDGE-RECEPTACLE LOCK	
	4	1	**8T-8729**	4	PIN-CONNECTOR	
	5	1	**8T-8737**	2	PLUG-SEAL	

B-USE AS REQUIRED
D-ORDER BY THE METER

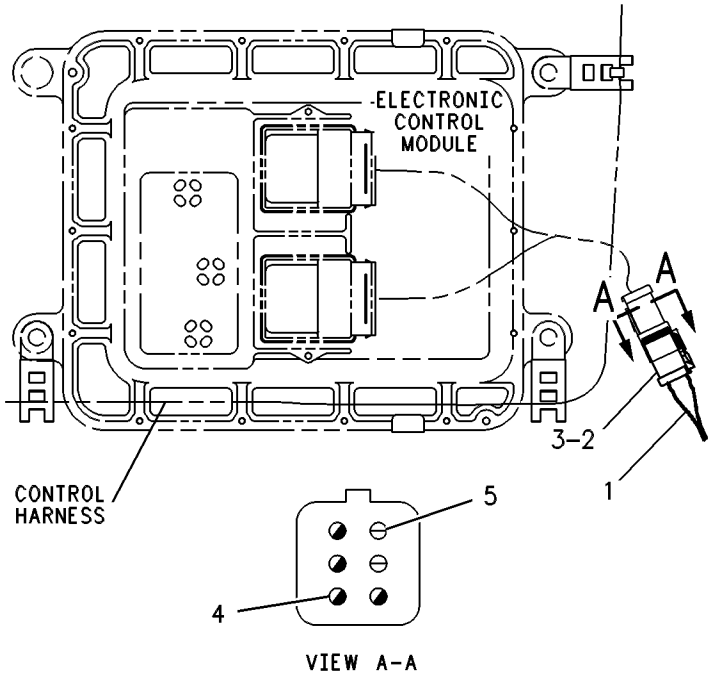

GRAPHIC #1 g00265916

124-9325 SENSOR GP-FUEL LEVEL–ULTRASONIC

S/N: AKT1-UP

PART OF 172-5066 BATTERY & WIRING GP

SMCS-1273 **i01644645**

NOTE	REF NO	GRAPHIC REF	PART NUMBER	QTY	PART NAME 1 2 3 4 5 6 (PRODUCT LEVEL)	SEE PAGE
J	1	1	**102-8804**	1	KIT-RECEPTACLE (4 PIN)	
					(INCLUDES RECEPTACLE AS & WEDGE)	
J	2	1	**3E-3377**	1	WEDGE-RECEPTACLE LOCK	
	3	1	**8T-8729**	4	PIN-CONNECTOR	
E	4	1	**9X-1813**		SLEEVE (34CM)	

E-ORDER BY THE CENTIMETER
J-KIT MARKED J SERVICES PART MARKED J

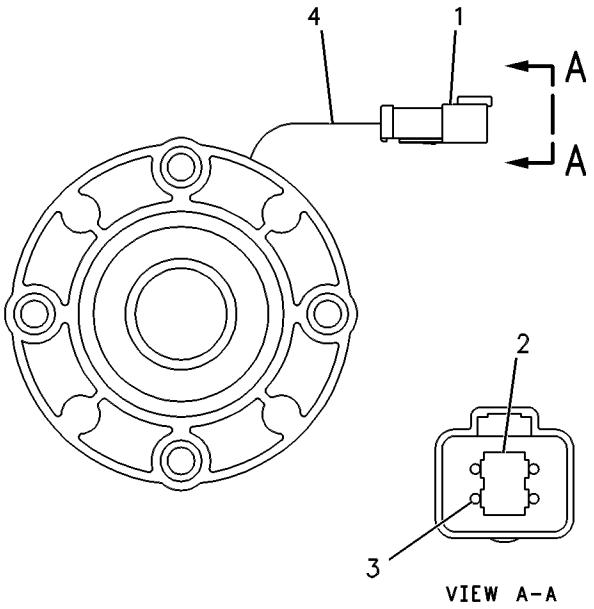

GRAPHIC #1 g00085712

147-1680 SENSOR GP-POSITION

S/N: AKT1-UP

PART OF 115-7411 CONTROL GP-BRAKE, 122-1512 CONTROL GP-STEERING & TMSN

SMCS-1408 **i01700497**

NOTE	REF NO	GRAPHIC REF	PART NUMBER	QTY	PART NAME 1 2 3 4 5 6 (PRODUCT LEVEL)	SEE PAGE
	1	1	**102-8803**	1	KIT-RECEPTACLE (3 PIN)	
					(INCLUDES RECEPTACLE AS & WEDGE)	
	2	1	**8T-8729**	3	PIN-CONNECTOR	

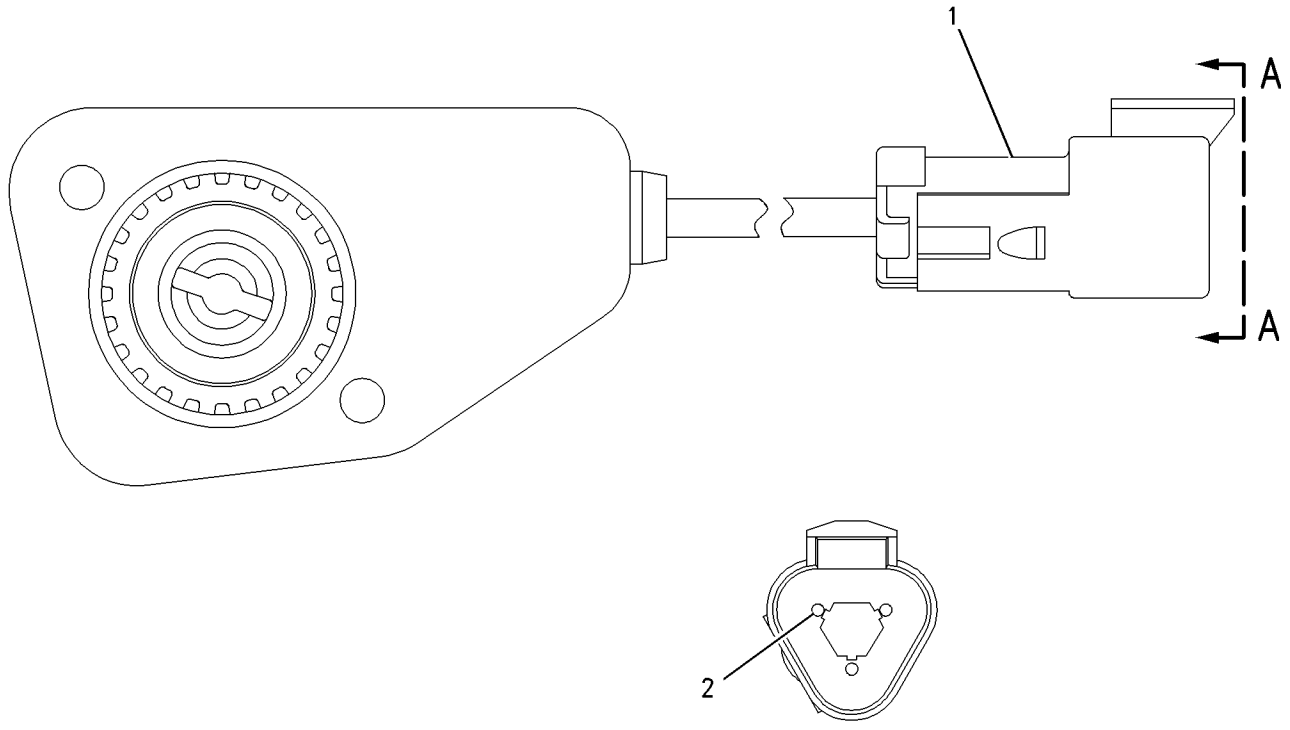

VIEW A-A

GRAPHIC #1 g00711081

160-2443 SENSOR GP-POSITION

S/N: AKT1-UP
ROTARY
PART OF 172-7938 CONTROL GP-DECELERATOR

SMCS-1408 **i01191666**

NOTE	REF NO	GRAPHIC REF	PART NUMBER	QTY	PART NAME 1 2 3 4 5 6 (PRODUCT LEVEL)	SEE PAGE
	1	1	**102-8803**	1	KIT-RECEPTACLE (3 PIN)	
					(INCLUDES RECEPTACLE AS & WEDGE)	
	2	1	**8T-8729**	3	PIN-CONNECTOR	
	3	1	**3E-3371**	1	WEDGE-RECEPTACLE LOCK	

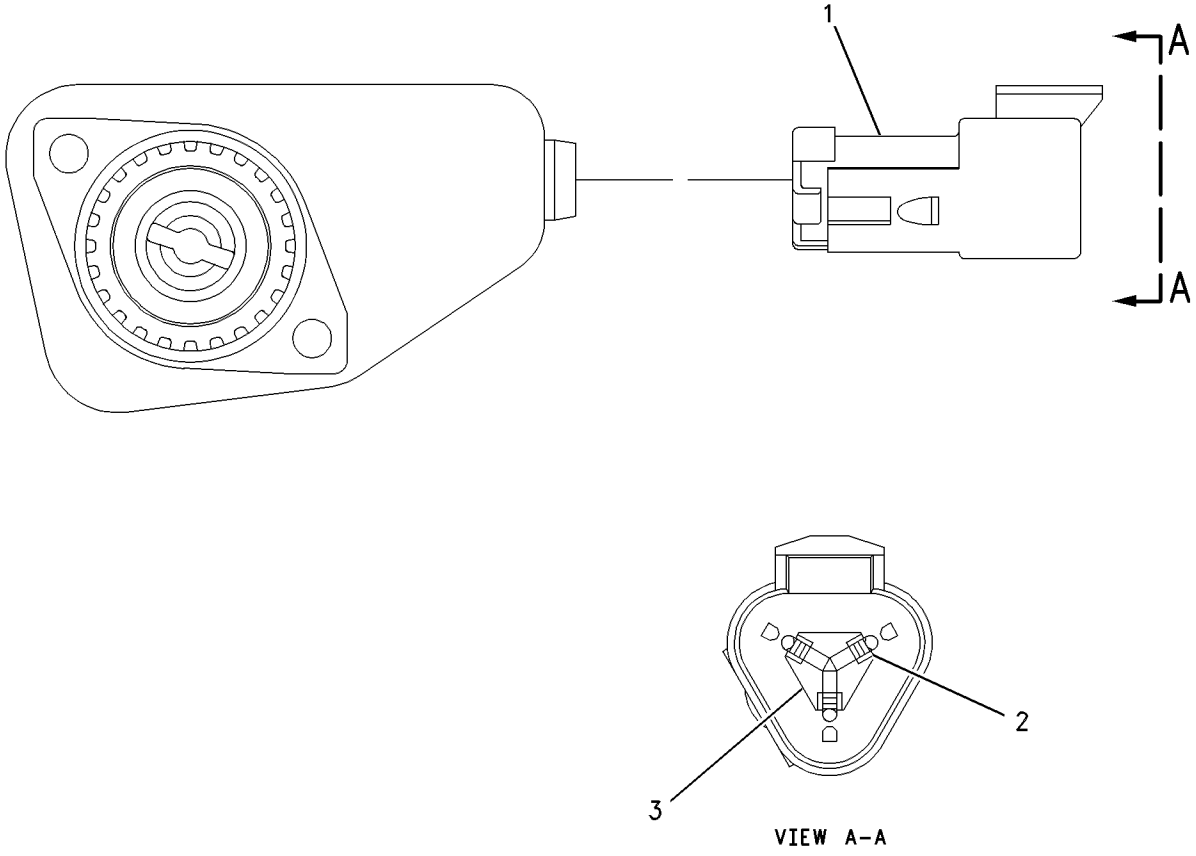

GRAPHIC #1 g00637818

161-8979 SENSOR GP-POSITION

S/N: AKT1-UP
SPRINGLESS
PART OF 122-1512 CONTROL GP-STEERING & TMSN

SMCS-1408 **i01216799**

NOTE	REF NO	GRAPHIC REF	PART NUMBER	QTY	PART NAME 1 2 3 4 5 6 (PRODUCT LEVEL)	SEE PAGE
	1	1	**102-8803**	1	KIT-RECEPTACLE (3 PIN)	
					(INCLUDES RECEPTACLE AS & WEDGE)	
	2	1	**8T-8729**	3	PIN-CONNECTOR	
	3	1	**3E-3371**	1	WEDGE-RECEPTACLE LOCK	

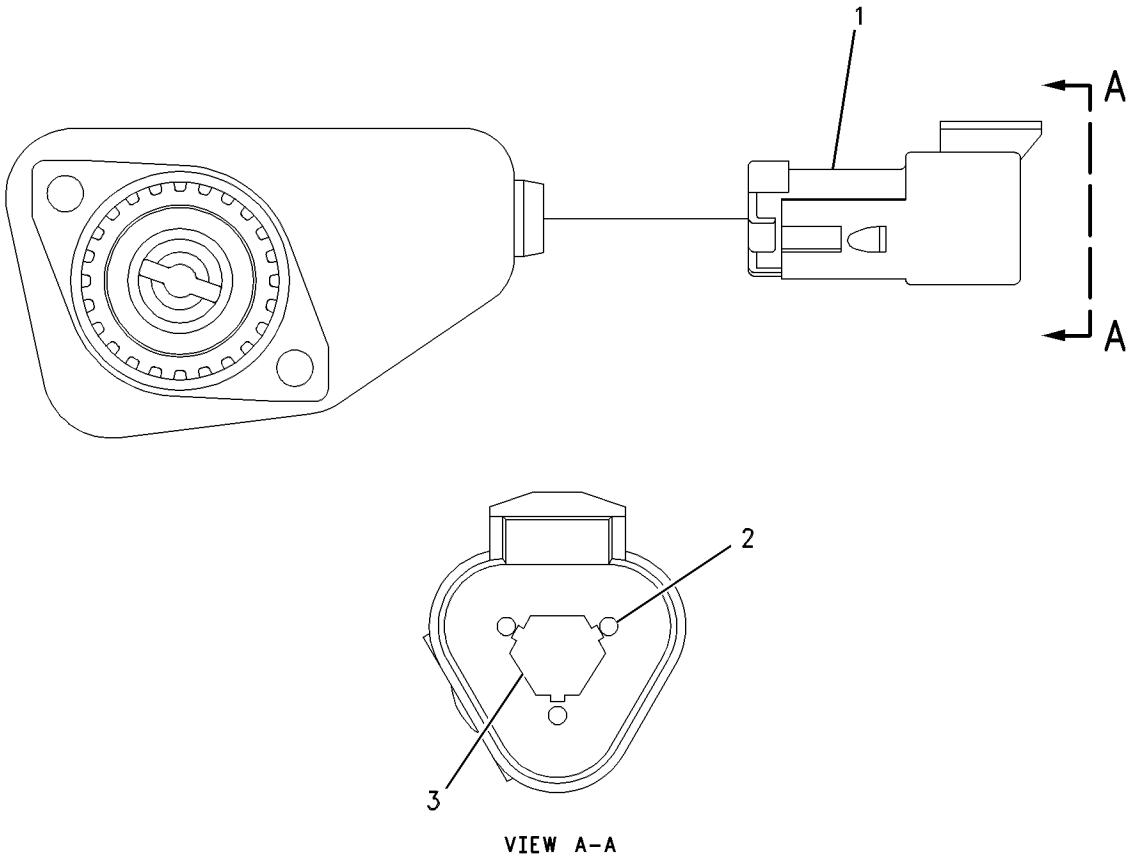

VIEW A-A

GRAPHIC #1 g00550816

155-3549 SENSOR GP-PRESSURE

S/N: AKT1-UP

PART OF 172-7183 LINES GP-PUMP

SMCS-1408 **i00898282**

NOTE	REF NO	GRAPHIC REF	PART NUMBER	QTY	PART NAME 1 2 3 4 5 6 (PRODUCT LEVEL)	SEE PAGE
BE	1	1	**8T-2225**		TUBE	
BE	2	1	**9X-1813**		SLEEVE	
	3	1	**8T-8731**	1	PLUG-CONNECTOR	
	4	1	**8T-8730**	3	SOCKET-CONNECTOR	

B-USE AS REQUIRED
E-ORDER BY THE CENTIMETER

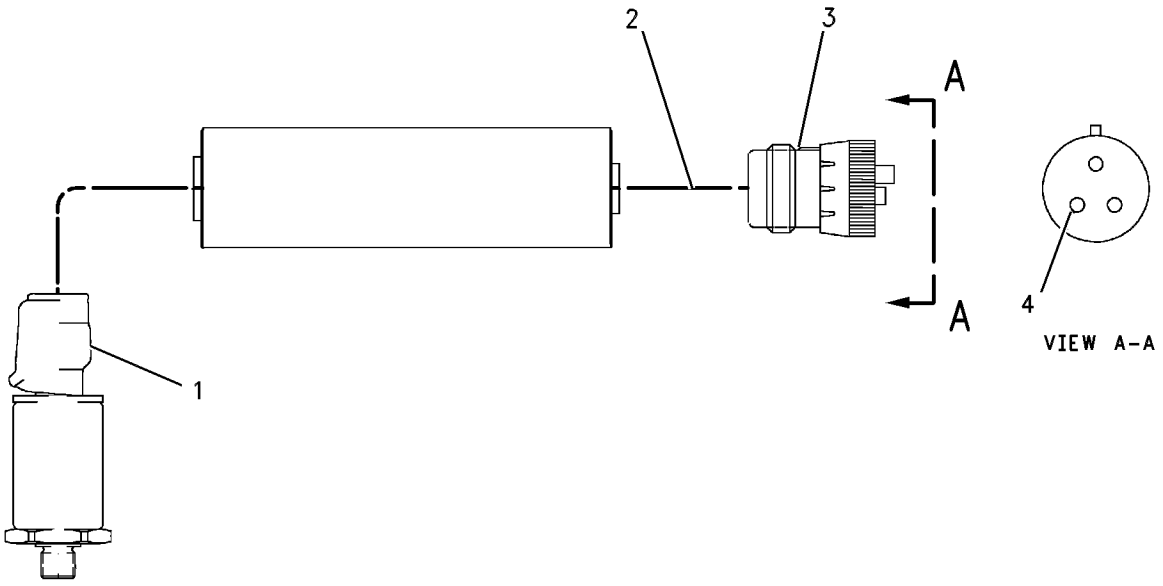

GRAPHIC #1 g00374193

161-9926 SENSOR GP-PRESSURE

S/N: AKT1-UP

PART OF 172-5066 BATTERY & WIRING GP

SMCS-1408 **i01689746**

NOTE	REF NO	GRAPHIC REF	PART NUMBER	QTY	PART NAME 1 2 3 4 5 6 (PRODUCT LEVEL)	SEE PAGE
BE	1	1	**9X-1813**		SLEEVE	
	2	1	**155-2260**	1	KIT-CONNECTING PLUG (3 PIN) (PRESSURE SENSOR)	
					(INCLUDES PLUG AS & WEDGE)	
	3	1	**194-5226**	1	HARNESS AS (SOCKET) (PRESSURE SENSOR)	
					(FOR 16-18 GA WIRE)	
					–OR–	
		1	**194-5227**	1	HARNESS AS (PRESSURE SENSOR)	
					(FOR 14 GA WIRE)	
	4	1	**3E-3368**	1	WEDGE-PLUG LOCK	

B-USE AS REQUIRED
E-ORDER BY THE CENTIMETER

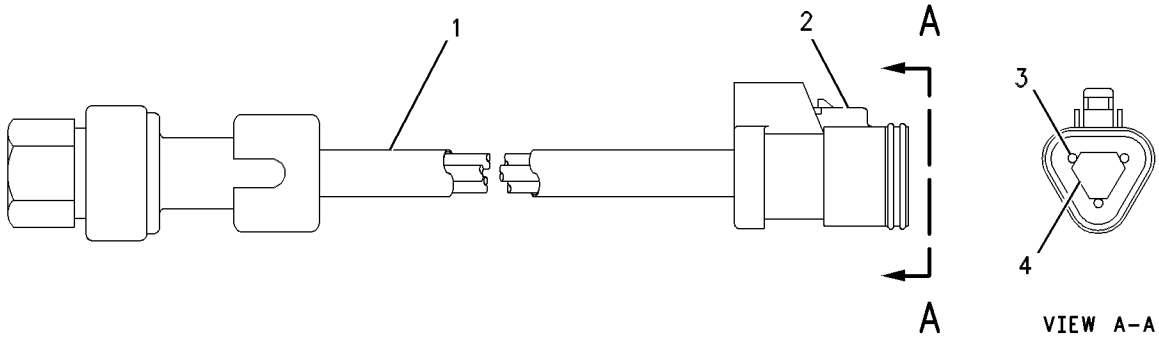

GRAPHIC #1 g00513129

167-1709 SENSOR GP-PRESSURE

S/N: 5JJ3200-UP
PART OF 172-6507 CYLINDER HEAD GP
ALSO AN ATTACHMENT

SMCS-1408 **i01560203**

NOTE	REF NO	GRAPHIC REF	PART NUMBER	QTY	PART NAME 1 2 3 4 5 6 (PRODUCT LEVEL)	SEE PAGE
BE	1	1	**9X-1813**		SLEEVE	
	2	1	**155-2260**	1	KIT-CONNECTING PLUG (3 PIN)	
					(INCLUDES PLUG AS & WEDGE)	
	3	1	**9X-3402**	3	SOCKET-CONNECTOR	

B-USE AS REQUIRED
E-ORDER BY THE CENTIMETER

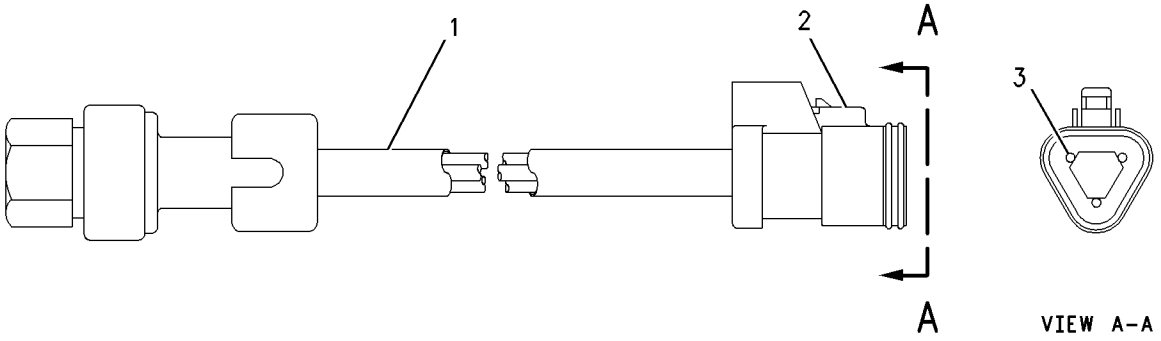

GRAPHIC #1 g00803802

194-6722 SENSOR GP-PRESSURE

S/N: 5JJ3200-UP
PART OF 125-3431 DRIVE GP-UNIT INJ HYD PUMP
ALSO AN ATTACHMENT

SMCS-1408 **i01700510**

NOTE	REF NO	GRAPHIC REF	PART NUMBER	QTY	PART NAME 1 2 3 4 5 6 (PRODUCT LEVEL)	SEE PAGE
BE	1	1	**9X-1813**		SLEEVE	
	2	1	**155-2260**	1	KIT-CONNECTING PLUG (3 PIN)	
					(INCLUDES PLUG AS & WEDGE)	
	3	1	*180-9340*	3	SOCKET-CONNECTOR	
	4	1	**3E-3368**	1	WEDGE-PLUG LOCK	

B-USE AS REQUIRED
E-ORDER BY THE CENTIMETER

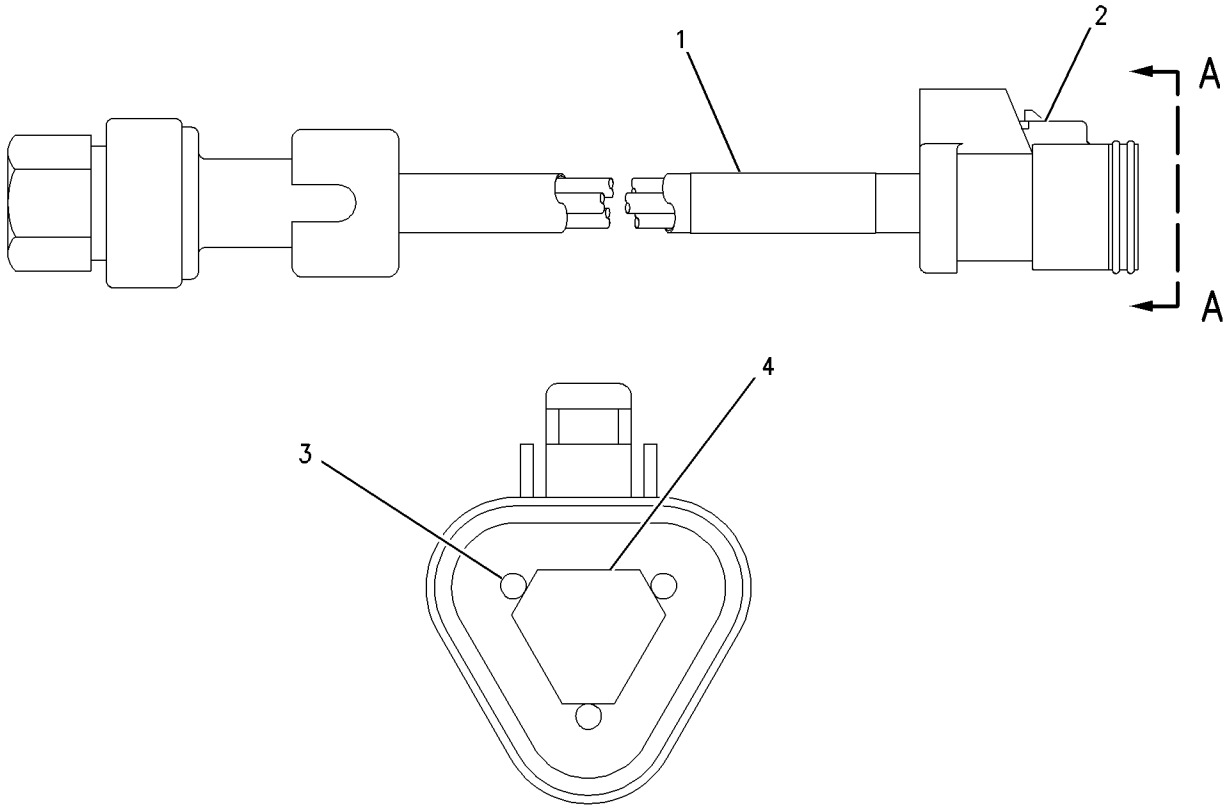

VIEW A-A

GRAPHIC #1 g00851220

194-6724 SENSOR GP-PRESSURE

S/N: 5JJ3200-UP
PART OF 172-6507 CYLINDER HEAD GP
ALSO AN ATTACHMENT

SMCS-1408 **i01700536**

NOTE	REF NO	GRAPHIC REF	PART NUMBER	QTY	PART NAME 1 2 3 4 5 6 (PRODUCT LEVEL)	SEE PAGE
BE	1	1	**138-3094**		SLEEVE	
	2	1	**155-2260**	1	KIT-CONNECTING PLUG (3 PIN)	
					(INCLUDES PLUG AS & WEDGE)	
	3	1	**180-9340**	3	SOCKET-CONNECTOR	
	4	1	**3E-3368**	1	WEDGE-PLUG LOCK	

B-USE AS REQUIRED
E-ORDER BY THE CENTIMETER

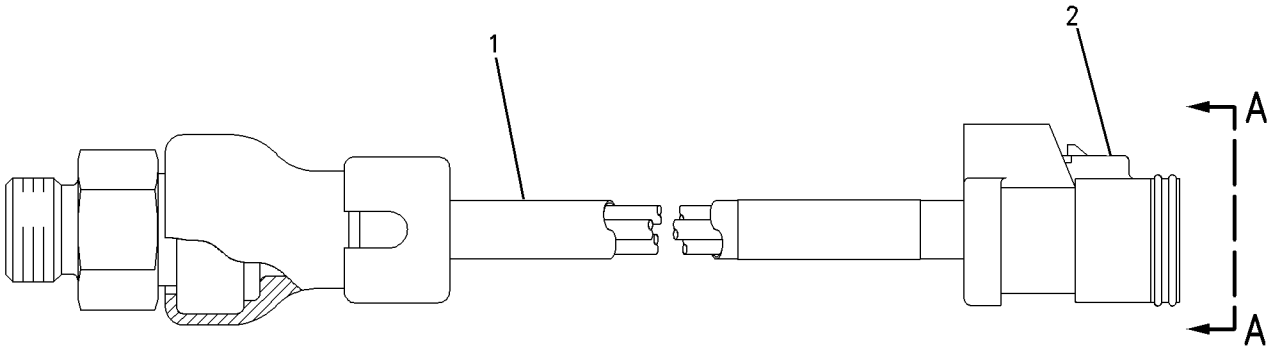

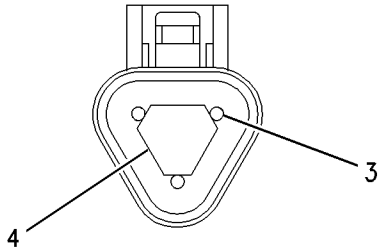

VIEW A-A

GRAPHIC #1 g00807030

119-4166 SENSOR GP-SPEED–FAN

S/N: AKT1-UP
PART OF 183-5116 DRIVE GP-FAN
AN ATTACHMENT

SMCS-1408 **i01700553**

NOTE	REF NO	GRAPHIC REF	PART NUMBER	QTY	PART NAME 1 2 3 4 5 6 (PRODUCT LEVEL)	SEE PAGE
	1	1	**3E-3371**	1	WEDGE-RECEPTACLE LOCK (3 PIN)	
	2	1	**033-6033**	1	SEAL-O-RING	
	3	1	**8H-3127**	1	BOLT (1/4-20X3/4 IN)	
	4	1	**6N-7523**	1	WASHER (6.48X11.9X1.57MM THK)	
	5	1	**7X-2031**	1	RETAINER	
BE	6	1	**9X-1813**		SLEEVE	
	7	1	**102-8803**	1	KIT-RECEPTACLE (3 PIN)	
					(INCLUDES RECEPTACLE AS & WEDGE)	
	8	1	**8T-8729**	3	PIN-CONNECTOR	

B-USE AS REQUIRED
E-ORDER BY THE CENTIMETER

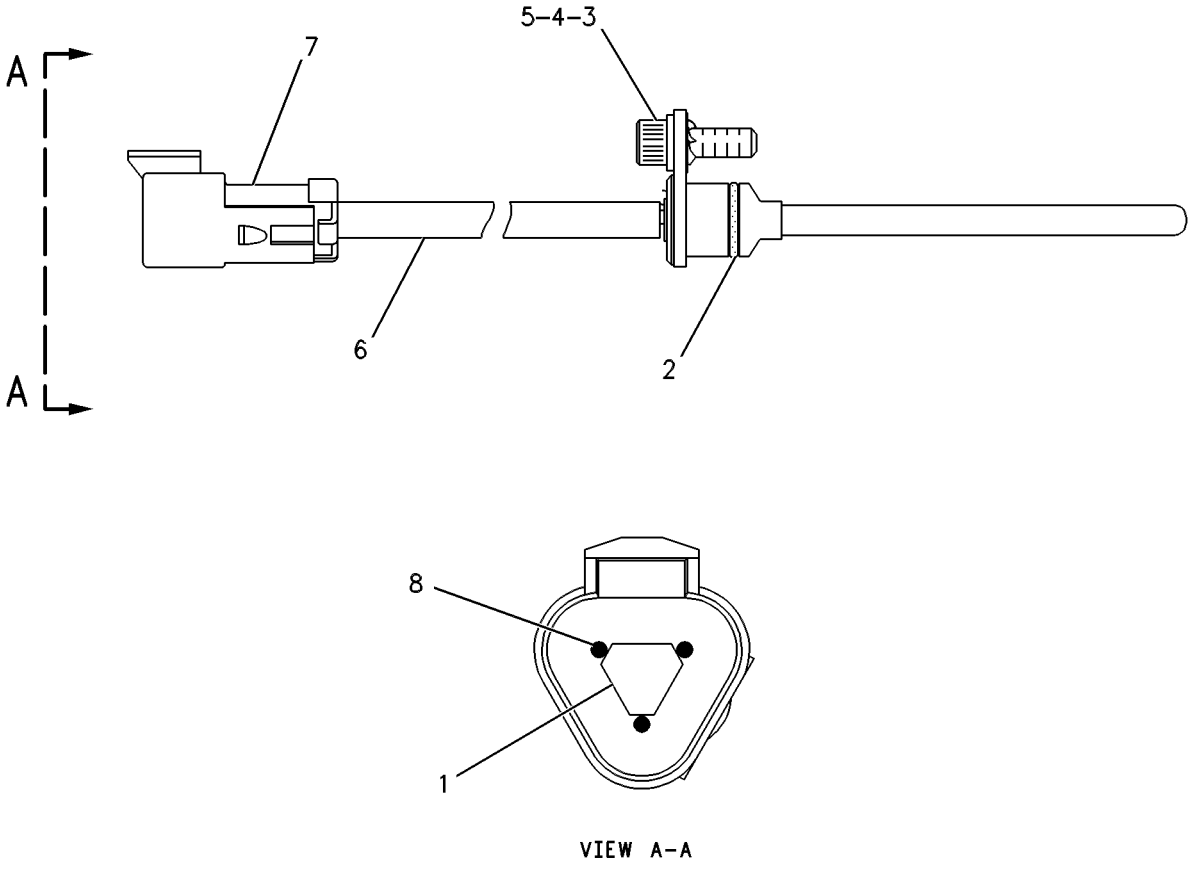

VIEW A-A

GRAPHIC #1 g00087024

129-6628 SENSOR GP-SPEED—ENGINE SPEED/TIMING

S/N: 5JJ3200-UP
PART OF 166-5427 HOUSING GP-FRONT
ALSO AN ATTACHMENT

SMCS-1408 **i01613291**

NOTE	REF NO	GRAPHIC REF	PART NUMBER	QTY	PART NAME 1 2 3 4 5 6 (PRODUCT LEVEL)	SEE PAGE
BE	1	1	**9X-1813**		SLEEVE	
	2	1	**155-2260**	1	KIT-CONNECTING PLUG (3 PIN) (ENGINE SPEED TIMING SENSOR)	
					(INCLUDES PLUG AS & WEDGE)	
	3	1	**102-8813**	1	SEAL	
	4	1	**3E-3368**	1	WEDGE-PLUG LOCK	
	5	1	**8T-8730**	3	SOCKET-CONNECTOR	
	6	1	**8L-2786**	1	SEAL-O-RING	

B-USE AS REQUIRED
E-ORDER BY THE CENTIMETER

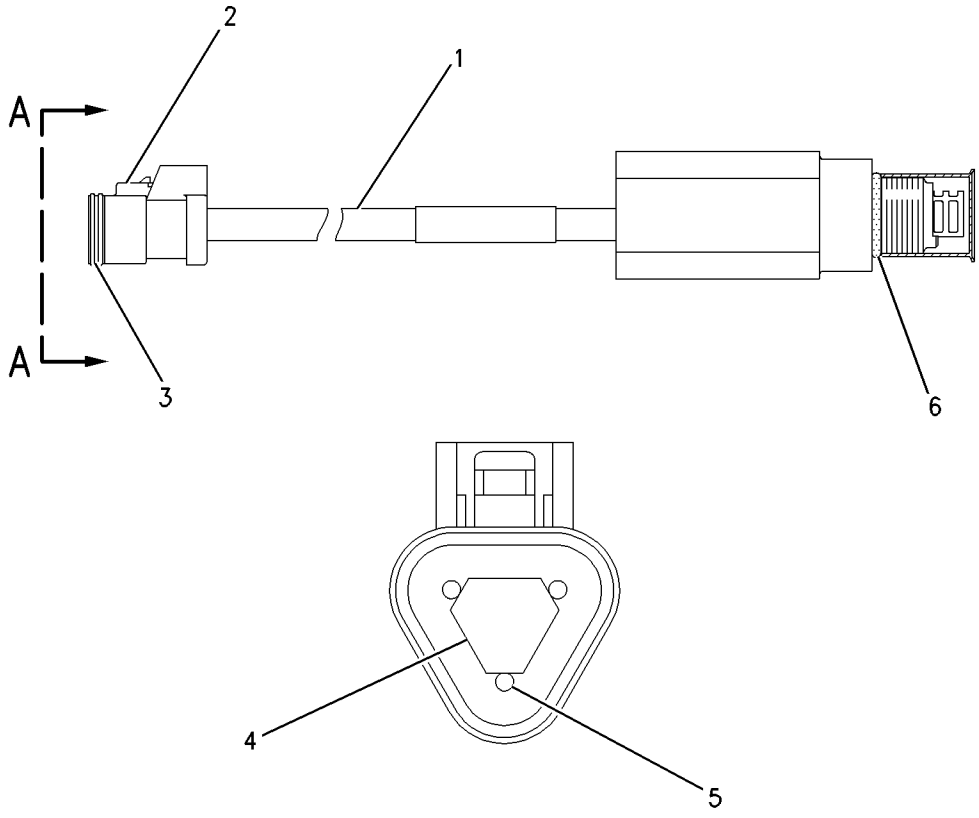

VIEW A–A

GRAPHIC #1 g00714038

191-6506 SENSOR GP-SPEED

S/N: 5JJ3200-UP
PART OF 171-5806, 206-3114 ENGINE AR
ALSO AN ATTACHMENT

SMCS-1408 **i01700589**

NOTE	REF NO	GRAPHIC REF	PART NUMBER	QTY	PART NAME 1 2 3 4 5 6 (PRODUCT LEVEL)	SEE PAGE
	1	1	**189-5746**	1	SENSOR GP-SPEED (ENGINE TIMING)	
	2	1	**189-5746**	1	SENSOR GP-SPEED (ENGINE TIMING CALIBRATION)	
					(EACH SENSOR GP INCLUDES)	
		1	**3E-3365**	1	WEDGE-RECEPTACLE LOCK (2 PIN)	
BE		1	**9X-1386**		SLEEVE	
		1	**186-3735**	2	PIN-CONNECTOR	
		1	**171-5349**	1	STRAP-MARKER	
		1	**102-8802**	1	KIT-RECEPTACLE (2 PIN)	
					(INCLUDES RECEPTACLE AS & WEDGE)	
	3	1	**4N-3329**	2	WASHER (16.25X25.65X.79MM)	
	4	1	**1V-6341**	2	SEAL	

B-USE AS REQUIRED
E-ORDER BY THE CENTIMETER

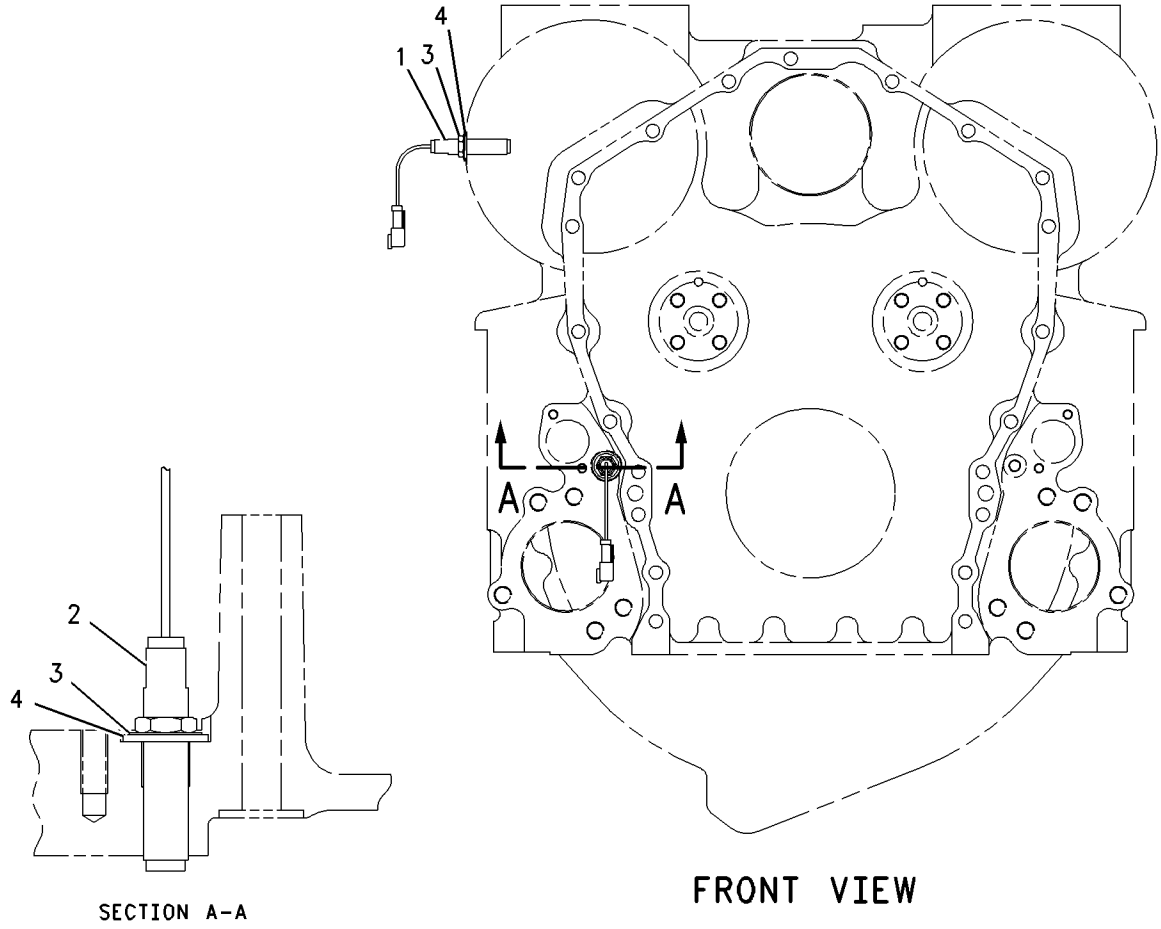

GRAPHIC #1 g00875700

193-0421 SENSOR GP-SPEED

S/N: 7SY1-UP

PART OF 172-2267 PLANETARY GP-TRANSMISSION

SMCS-1408 **i01700611**

NOTE	REF NO	GRAPHIC REF	PART NUMBER	QTY	PART NAME 1 2 3 4 5 6 (PRODUCT LEVEL)	SEE PAGE
	1	1	**171-5349**	1	STRAP-MARKER	
J	2	1	**102-8802**	1	KIT-RECEPTACLE (2 PIN)	
					(INCLUDES RECEPTACLE AS & WEDGE)	
	3	1	**186-3735**	2	PIN-CONNECTOR	
J	4	1	**3E-3365**	1	WEDGE-RECEPTACLE LOCK (2 PIN)	
E	5	1	**9X-1386**		SLEEVE	

E-ORDER BY THE CENTIMETER
J-KIT MARKED J INCLUDES PART(S) MARKED J

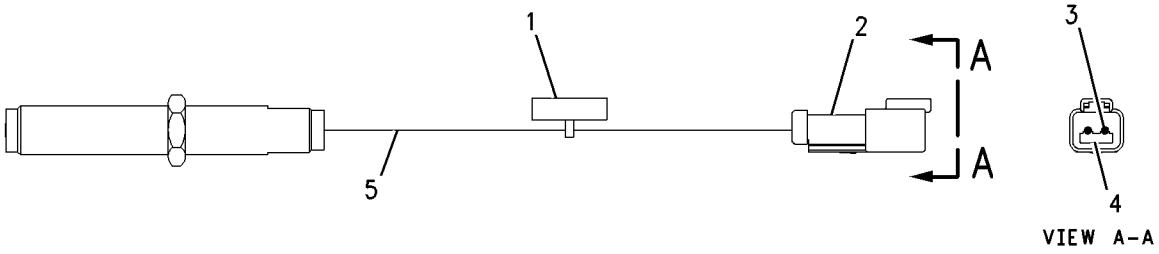

GRAPHIC #1 g00766837

193-2550 SENSOR GP-SPEED

S/N: AKT1-UP; 7SY1-UP

PART OF 172-5066 BATTERY & WIRING GP, 172-2267 PLANETARY GP-TRANSMISSION

SMCS-1408 **i01700608**

NOTE	REF NO	GRAPHIC REF	PART NUMBER	QTY	PART NAME 1 2 3 4 5 6 (PRODUCT LEVEL)	SEE PAGE
	1	1	**171-5349**	1	STRAP-MARKER	
	2	1	**102-8802**	1	KIT-RECEPTACLE (2 PIN)	
					(INCLUDES RECEPTACLE AS & WEDGE)	
	3	1	**8T-8729**	2	PIN-CONNECTOR	
	4	1	**3E-3365**	1	WEDGE-RECEPTACLE LOCK (2 PIN)	
BE	5	1	**9X-1813**		SLEEVE	

B-USE AS REQUIRED
E-ORDER BY THE CENTIMETER

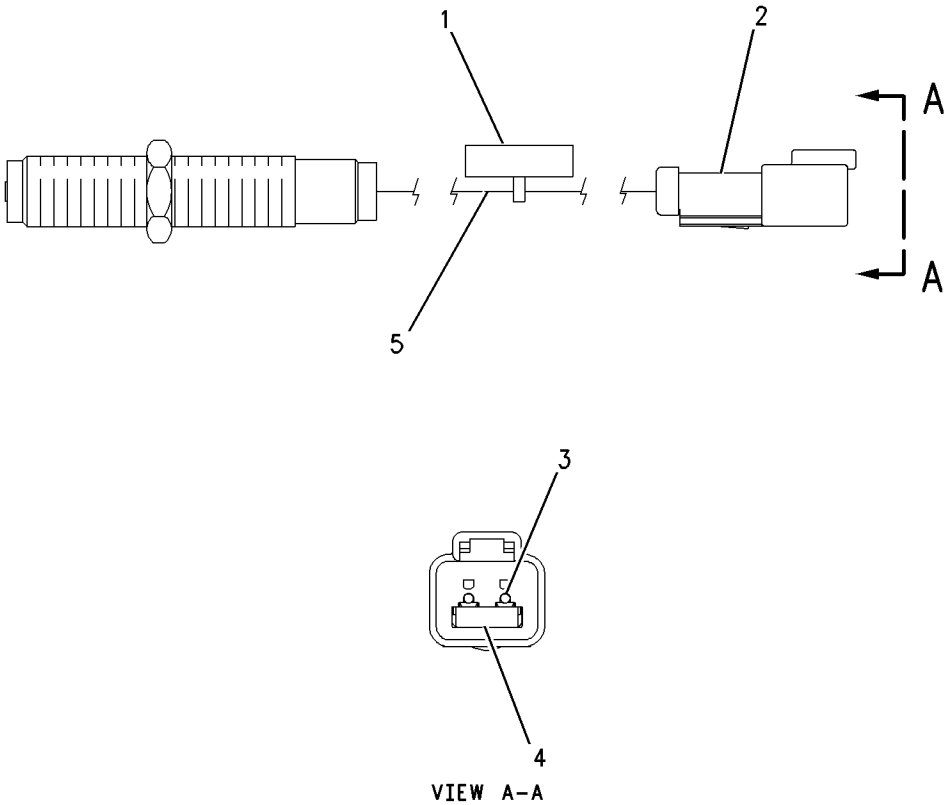

GRAPHIC #1 g00690327

106-0735 SENSOR GP-TEMPERATURE—ENGINE OIL

S/N: 5JJ3200-UP
PART OF 153-9078 PUMP & MTG GP-UNIT INJ HYD
ALSO AN ATTACHMENT

SMCS-1408, 1906, 1921, 1922, 7400 **i01560205**

NOTE	REF NO	GRAPHIC REF	PART NUMBER	QTY	PART NAME 1 2 3 4 5 6 (PRODUCT LEVEL)	SEE PAGE
BE	1	1	**9X-1813**		SLEEVE	
	2	1	**102-8803**	1	KIT-RECEPTACLE (3 PIN)	
					(INCLUDES RECEPTACLE AS & WEDGE)	
	3	1	**186-3735**	3	PIN-CONNECTOR	

B-USE AS REQUIRED
E-ORDER BY THE CENTIMETER

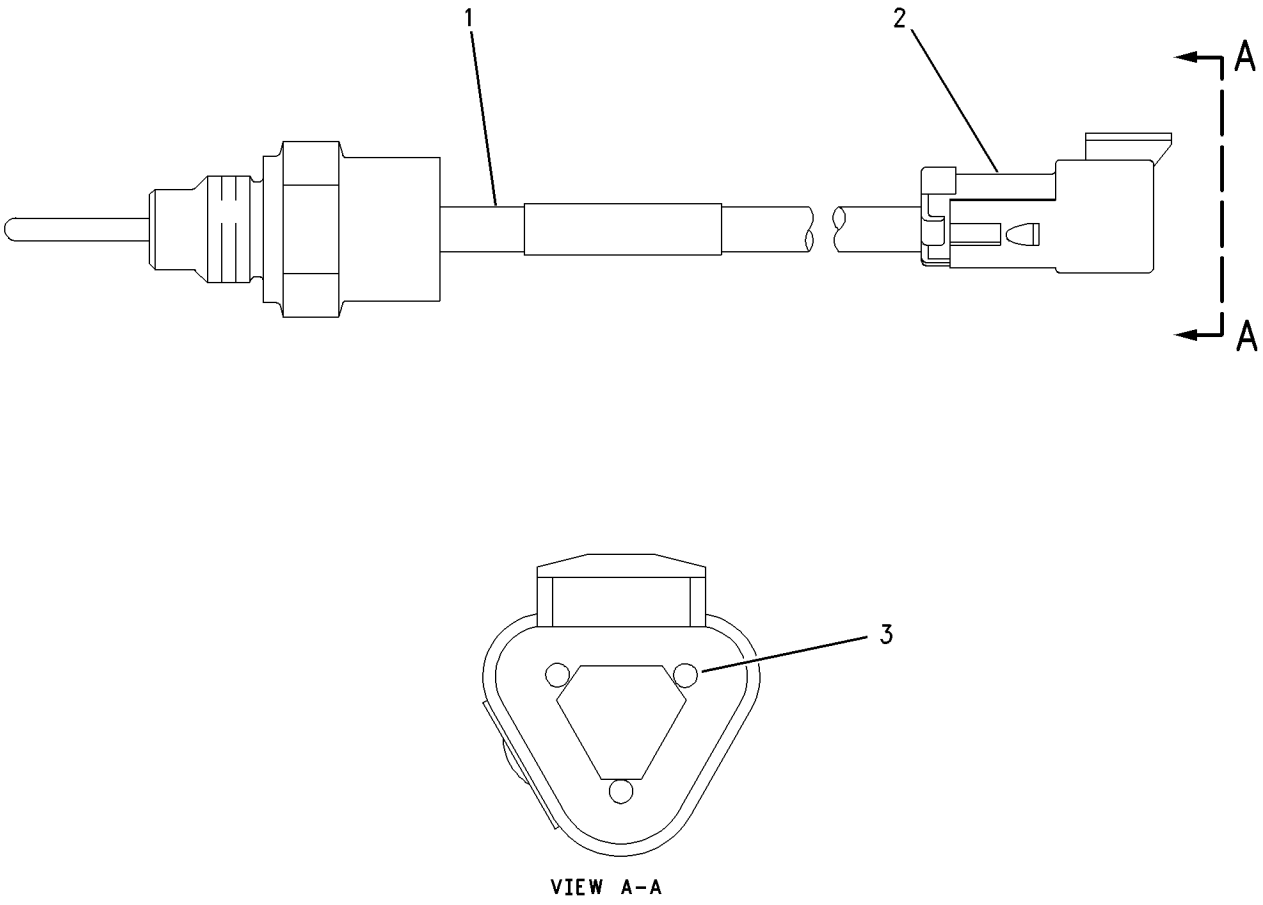

GRAPHIC #1 g00803804

118-7226 SENSOR GP-TEMPERATURE

S/N: AKT1-UP
8 VOLT. PULSE WIDTH MODULATION
PART OF 172-5066 BATTERY & WIRING GP

SMCS-1408, 1906, 1921, 1922, 7400 **i01668866**

NOTE	REF NO	GRAPHIC REF	PART NUMBER	QTY	PART NAME 1 2 3 4 5 6 (PRODUCT LEVEL)	SEE PAGE
BE	1	1	**9X-1813**		SLEEVE	
	2	1	**102-8803**	1	KIT-RECEPTACLE (3 PIN)	
					(INCLUDES RECEPTACLE AS & WEDGE)	
	3	1	**8T-8729**	3	PIN-CONNECTOR	
	4	1	**3E-3371**	1	WEDGE-RECEPTACLE LOCK (3 PIN)	

B-USE AS REQUIRED
E-ORDER BY THE CENTIMETER

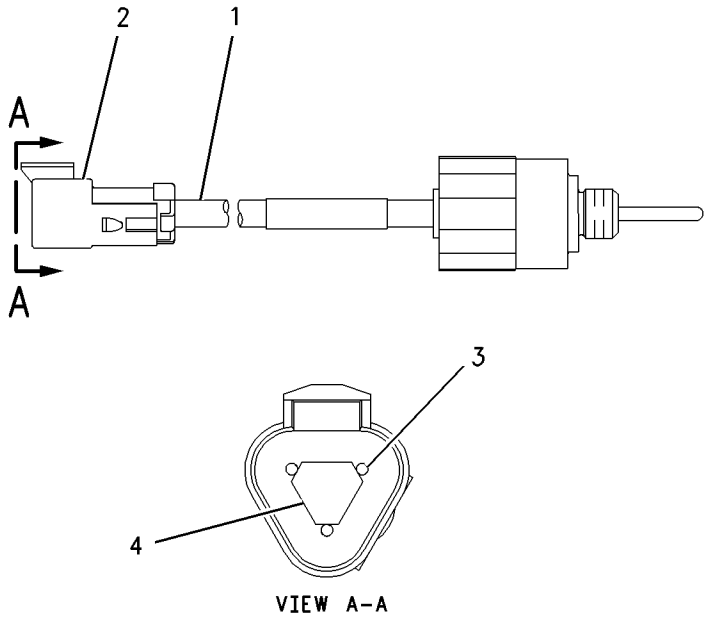

VIEW A-A

GRAPHIC #1 g00830476

134-2252 SENSOR GP-TEMPERATURE

S/N: AKT1-UP
8 VOLT. PULSE WIDTH MODULATION
PART OF 172-5066 BATTERY & WIRING GP

SMCS-1408, 1906, 1921, 1922, 7400 **i01233990**

NOTE	REF NO	GRAPHIC REF	PART NUMBER	QTY	PART NAME 1 2 3 4 5 6 (PRODUCT LEVEL)	SEE PAGE
	1	1	**3E-3371**	1	WEDGE-RECEPTACLE LOCK	
BE	2	1	**9X-1386**		SLEEVE	
	3	1	**102-8803**	1	KIT-RECEPTACLE (3 PIN)	
					(INCLUDES RECEPTACLE AS & WEDGE)	
	4	1	**8T-8729**	3	PIN-CONNECTOR	

B-USE AS REQUIRED
E-ORDER BY THE CENTIMETER

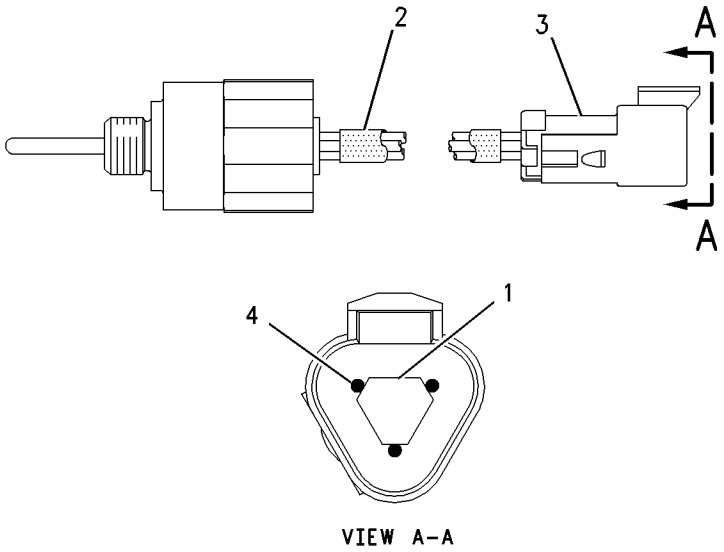

VIEW A-A

GRAPHIC #1 g00658816

ELECTRICAL AND STARTING SYSTEM

209-3723 SERVICE GP-IMPLEMENT

S/N: AKT1-UP

PART OF 174-4354 ELECTRONICS GP-VIDS

SMCS-7610 **i01665704**

NOTE	REF NO	GRAPHIC REF	PART NUMBER	QTY	PART NAME 1 2 3 4 5 6 (PRODUCT LEVEL)	SEE PAGE
Y	1	1	*169-0489*	1	CONTROL GP-UNPROGRAMMED	215
F		1	**209-3717**	1	SOFTWARE GP-MONITOR	

F-NOT SHOWN
Y-SEPARATE ILLUSTRATION

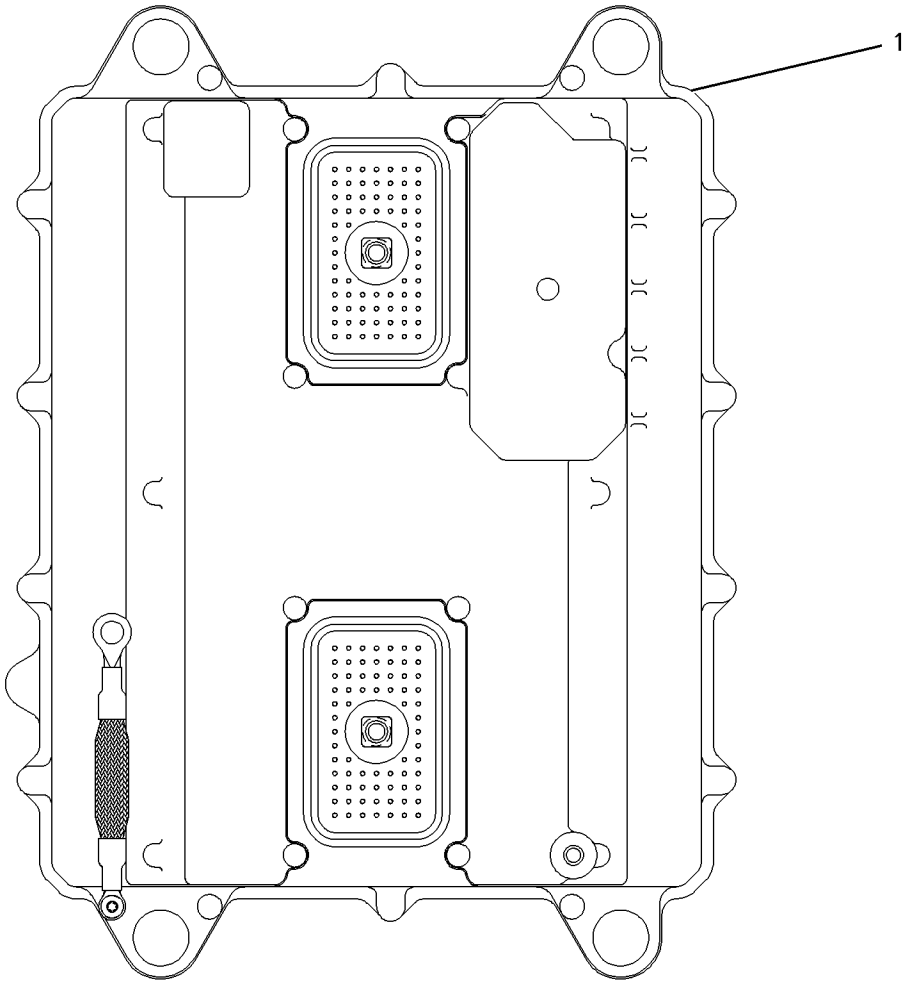

GRAPHIC #1 g00864275

209-6267 SERVICE GP-IMPLEMENT

S/N: AKT1-UP

PART OF 180-4186 ELECTRONICS GP-IMPLEMENT

SMCS-7610 **i01665767**

NOTE	REF NO	GRAPHIC REF	PART NUMBER	QTY	PART NAME 1 2 3 4 5 6 (PRODUCT LEVEL)	SEE PAGE
Y	1	1	*166-7731*	1	CONTROL GP-UNPROGRAMMED	214
F		1	**209-6266**	1	SOFTWARE GP-IMPLEMENT	

F-NOT SHOWN
Y-SEPARATE ILLUSTRATION

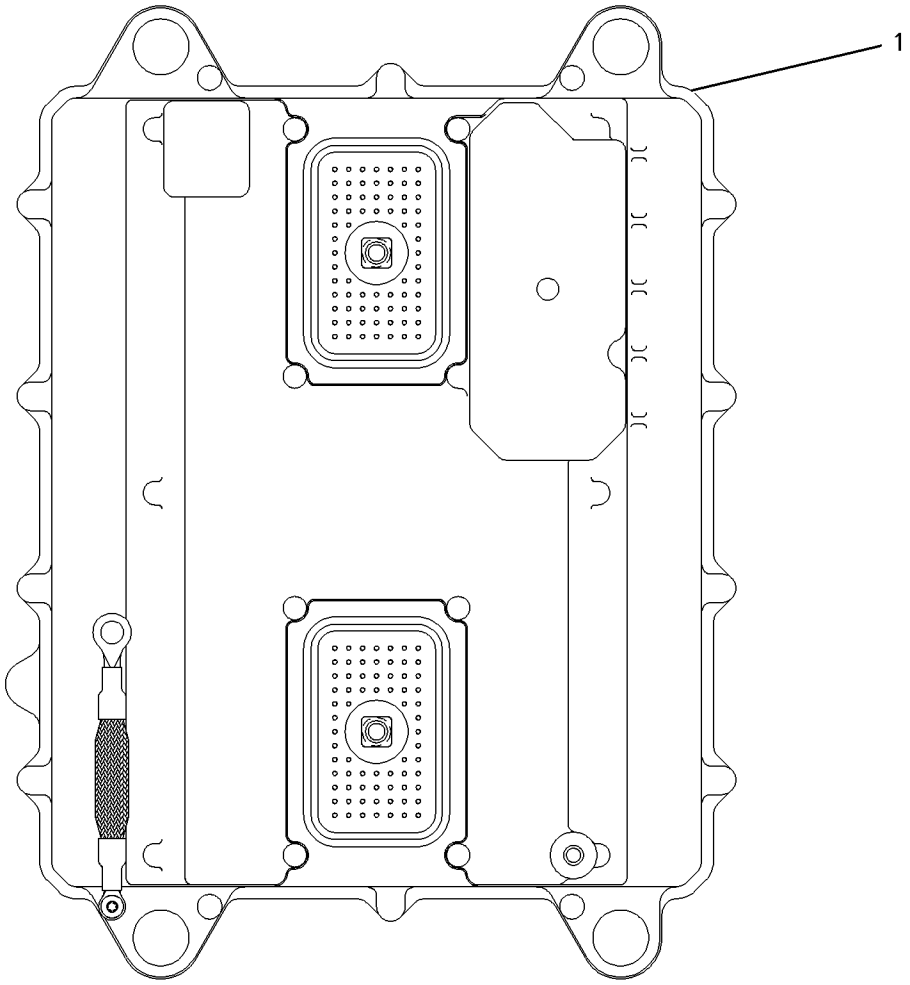

GRAPHIC #1 g00863314

211-1542 SERVICE GP-POWER TRAIN

S/N: AKT1-UP

PART OF 173-0623 ELECTRONICS GP-POWER TRAIN

SMCS-7610 **i01665676**

NOTE	REF NO	GRAPHIC REF	PART NUMBER	QTY	PART NAME 1 2 3 4 5 6 (PRODUCT LEVEL)	SEE PAGE
Y	1	1	**172-9389**	1	CONTROL GP-UNPROGRAMMED	216
F		1	**211-1541**	1	SOFTWARE GP-POWER TRAIN	

F-NOT SHOWN
Y-SEPARATE ILLUSTRATION

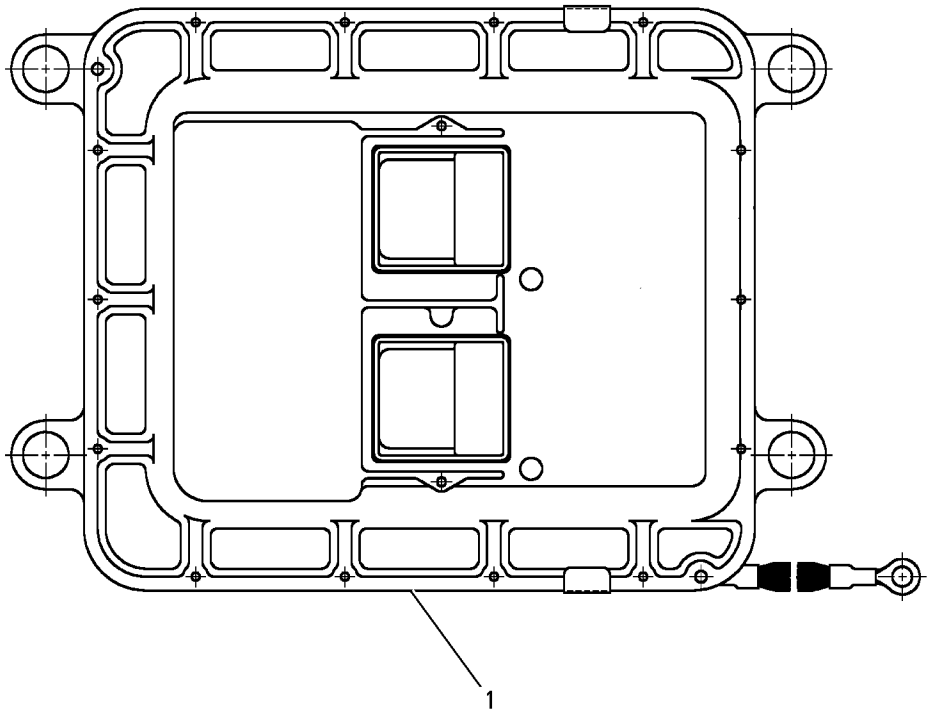

GRAPHIC #1 g00865410

3T-4704 SOLENOID AS-STARTING MOTOR

S/N: AKT1-UP
24 VOLT
PART OF 6V-0928 STARTING MOTOR GP-ELECTRIC
AN ATTACHMENT

SMCS-1467 **i01446638**

NOTE	REF NO	GRAPHIC REF	PART NUMBER	QTY	PART NAME 1 2 3 4 5 6 (PRODUCT LEVEL)	SEE PAGE
	1	1	**9G-6770**	1	CONTACT AS	
	2	1	**4M-1815**	1	SPRING-CONTACT	
	3	1	**6V-8373**	3	SCREW-MACHINE (6-32X0.187 IN)	
	4	1	**7T-9123**	1	GASKET-PLATE	
	5	1	**045-4065**	4	SCREW-MACHINE (10-32X0.75 IN)	
		1	**4B-4274**	8	WASHER (5.5X13X1.2MM THK)	
		1	**4B-2049**	4	NUT (10-32 THD)	
	6	1	**6T-1120**	1	BUSHING-TERMINAL	
	7	1	**6T-1119**	1	TERMINAL AS	
	8	1	**8T-0328**	3	WASHER-HARD (5.5X10X1MM THK)	
		1	**8F-1434**	2	LOCKWASHER	
		1	**6V-8188**	3	NUT (1/2-13 THD)	
	9	1	**4B-2049**	3	NUT (10-32 THD)	
		1	**7X-0562**	3	WASHER-HARD (13.5X19X0.8MM THK)	
	10	1	**6T-0362**	1	INSULATOR	

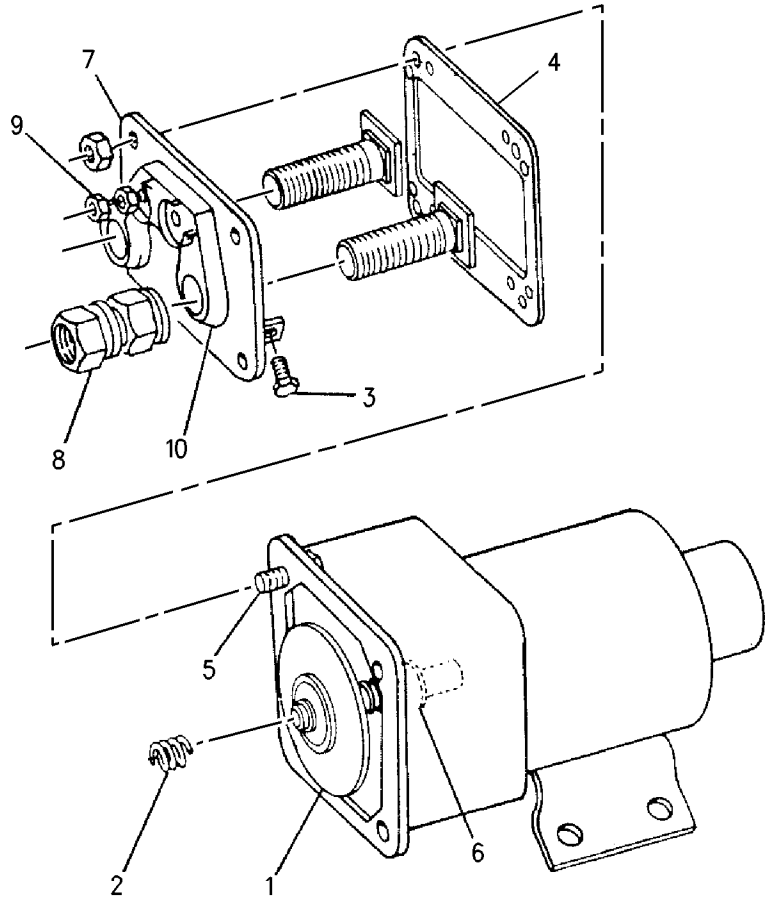

GRAPHIC #1 g00744087

MEMORANDA

ELECTRICAL AND STARTING SYSTEM

172-5243 STARTING AID GP-ETHER

S/N: AKT1-UP

PART OF 171-5801 CHASSIS AR

SMCS-1456 **i01459163**

NOTE	REF NO	GRAPHIC REF	PART NUMBER	QTY	PART NAME 1 2 3 4 5 6 (PRODUCT LEVEL)	SEE PAGE
	1	1	**3E-5239**	1	RELAY AS (24 VOLT)	
	2	1	**3E-6333**	1	VALVE AS (ETHER START)(24 VOLT)	
		1	**3E-3365**	1	WEDGE-RECEPTACLE LOCK (2 PIN)	
		1	**7N-9801**	1	GASKET	
		1	**8T-8729**	2	PIN-CONNECTOR	
		1	**102-8802**	1	KIT-RECEPTACLE (2 PIN)	
					(INCLUDES RECEPTACLE AS & WEDGE)	
	3	1	**5P-6313**	1	NUT-FLARELESS (5/16-24 THD)	
	4	1	**5P-6314**	1	SLEEVE	
	5	1	**7N-2059**	1	CLAMP AS-CYLINDER	
	6	1	**7W-3447**	1	SPACER (10.2X19.05X10.2MM THK)	
	7	1	**174-0036**	1	TUBE AS	
	8	1	**179-9317**	1	BRACKET AS	
		1	**4K-9097**	5	NUT-WELD (5/16-18 THD)	
		1	**9F-6445**	1	NUT-WELD (1/4-20 THD)	
	9	1	**179-9318**	1	HOSE AS	
	10	1	**0S-1571**	1	BOLT (3/8-16X1.75 IN)	
	11	1	**164-5618**	1	ADAPTER	
	12	1	**164-5621**	1	UNION	
	13	1	**4D-7388**	1	CLIP	
	14	1	**4L-6454**	5	BOLT (3/8-16X1 IN)	
	15	1	**4M-0061**	5	BOLT (5/16-18X0.750 IN)	
	16	1	**4M-5281**	1	BOLT (1/4-20X.750 IN)	
	17	1	**4P-7581**	1	CLIP	
	18	1	**5P-1075**	2	WASHER-HARD (10.2X22.5X3MM THK)	
	19	1	**6V-2686**	3	CLIP	
	20	1	**6V-8801**	1	NUT (3/8-16 THD)	
	21	1	**7J-5606**	1	ATOMIZER AS-ETHER	
	22	1	**8T-4205**	1	WASHER-HARD (7.2X14.5X2MM THK)	
	23	1	**8T-4224**	5	WASHER-HARD (8.8X16X2MM THK)	
	24	1	**8T-4896**	4	WASHER-HARD (10.2X18.5X2.5MM THK)	

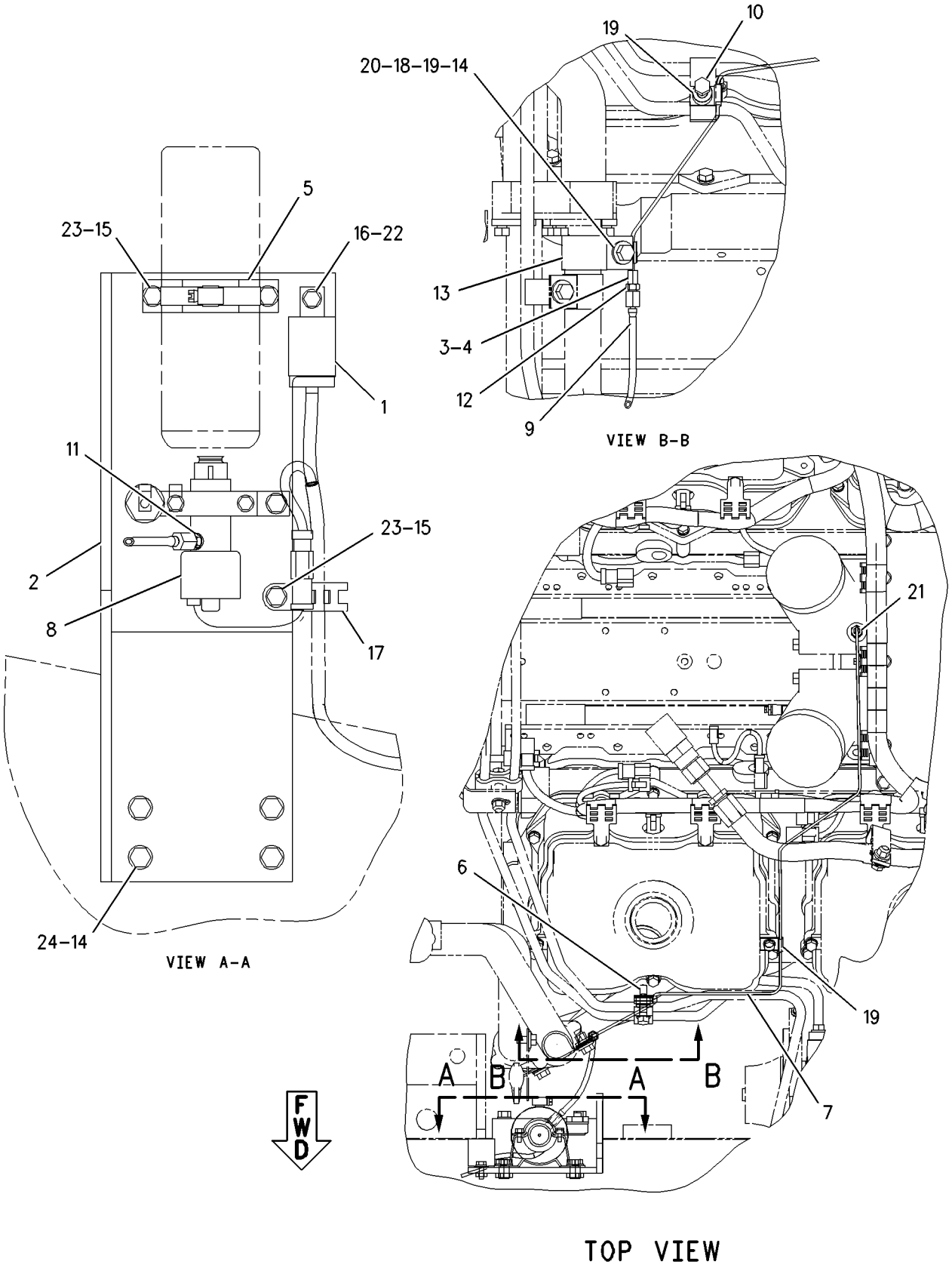

GRAPHIC #1 g00808469

196-6108 STARTING AR-LOW TEMPERATURE

S/N: AKT1-UP

AN ATTACHMENT

SMCS-1450 **i01699930**

NOTE	REF NO	GRAPHIC REF	PART NUMBER	QTY	PART NAME 1 2 3 4 5 6 (PRODUCT LEVEL)	SEE PAGE
	1	1	**5P-8502**	1	PADLOCK GP	
A		1	**5P-8500**	1	KEY	
A		1	**8Y-6364**	1	SLEEVE	
	2	1	**6Y-0634**	1	BRACKET	
	3	1,2	**7K-1181**	16	STRAP-CABLE	
Y	4	1	*8N-8753*	1	STARTING MOTOR GP-ELECTRIC	280
	5	1	**8V-0622**	1	CABLE AS	
		1	**8T-9757**	1	TERMINAL AS-BATTERY (NEGATIVE)	
		1	**1M-6119**	2	BOLT-BATTERY TERMINAL (5/16-18X1.375 IN)	
		1	**1M-6120**	2	NUT-BATTERY TERMINAL (5/16-18 THD)	
		1	**8C-5917**	1	TERMINAL AS-BATTERY (POSITIVE)	
E		1	**5P-0761**		CABLE (00GA)(RED) (14CM)	
		1	**9G-0003**	2	COVER-TERMINAL (BLACK)	
		1	**9G-0004**	2	COVER-TERMINAL (RED)	
	6	2	**125-1302**	1	SWITCH GP-MAGNETIC (START RELAY)	
		2	**102-8802**	1	KIT-RECEPTACLE (2 PIN)	
					(INCLUDES RECEPTACLE AS & WEDGE)	
		2	**3E-3365**	1	WEDGE-RECEPTACLE LOCK (2 PIN)	
M		2	**5C-2890**	2	NUT (M6X1 THD)	
		2	**186-3735**	2	PIN-CONNECTOR	
BE		2	**9X-1386**		SLEEVE	
	7	2	**128-8405**	1	STRAP	
	8	1	**153-6281**	1	HOLD DOWN AS	
	9	2	**174-6052**	1	BRACKET AS	
	10	1,2	**178-1780**	2	CLIP	
	11	1,2	**178-1781**	3	CLIP	
	12	1	**191-8728**	1	CABLE AS	
		1	**1S-4915**	2	LINER-CONDUIT	
BE		1	**5P-0695**		CONDUIT	
		1	**5P-0761**		CABLE (00GA)(RED) (33CM)	
BE		1	**8T-2225**		TUBE-HEAT SHRINK	
		1	**1S-7251**	1	TERMINAL-RING (FOR 1/2 IN BOLT)	
		1	**8N-0869**	1	COVER-TERMINAL (RED)	
		1	**9G-0004**	1	COVER-TERMINAL (RED)	
		1	**8C-5917**	1	TERMINAL AS-BATTERY (POSITIVE)	
		1	**1M-4983**	1	TERMINAL-BATTERY (RH)(POSITIVE)	
		1	**1M-6119**	1	BOLT-BATTERY TERMINAL (5/16-18X1.375 IN)	
		1	**1M-6120**	1	NUT-BATTERY TERMINAL (5/16-18 THD)	
	13	1	**191-8729**	1	CABLE AS	
		1	**5P-0747**		CABLE (00GA)(BLACK) (70CM)	
		1	**1S-4915**	2	LINER-CONDUIT	
		1	**1S-7252**	1	TERMINAL-RING (FOR 3/8 IN BOLT)	
BE		1	**5P-0695**		CONDUIT	
BE		1	**8T-2225**		TUBE-HEAT SHRINK	
		1	**9G-0005**	1	COVER-TERMINAL (BLACK)(RH NEG)	
		1	**9G-8909**	1	COVER-TERMINAL (BLACK)	
		1	**8C-5918**	1	TERMINAL AS (NEG)	
		1	**1M-4982**	1	TERMINAL-BATTERY (NEGATIVE)	
		1	**1M-6119**	1	BOLT-BATTERY TERMINAL (5/16-18X1.375 IN)	
		1	**1M-6120**	1	NUT-BATTERY TERMINAL (5/16-18 THD)	
	14	1	**191-8732**	1	CABLE AS	
		1	**1S-4915**	6	LINER-CONDUIT	
		1	**1S-7251**	3	TERMINAL-RING (FOR 1/2 IN BOLT)	
BE		1	**5P-0695**		CONDUIT	
E		1	**5P-0761**		CABLE (00GA)(RED) (360CM)	
		1	**8N-0869**	3	COVER-TERMINAL (RED)	

196-6108 STARTING AR-LOW TEMPERATURE *(contd.)* i01699930

NOTE	REF NO	GRAPHIC REF	PART NUMBER	QTY	PART NAME 1 2 3 4 5 6 (PRODUCT LEVEL)	SEE PAGE
BE		1	**8T-2225**		TUBE-HEAT SHRINK	
	15	1	**191-8733**	1	CABLE AS	
		1	**5P-0747**		CABLE (00GA)(BLACK) (218CM)	
		1	**1S-4915**	2	LINER-CONDUIT	
		1	**1S-7252**	2	TERMINAL-RING (FOR 3/8 IN BOLT)	
BE		1	**5P-0695**		CONDUIT	
BE		1	**8T-2225**		TUBE-HEAT SHRINK	
		1	**9G-8909**	1	COVER-TERMINAL (BLACK)	
	16	2	**191-8734**	1	JUNCTION BLOCK	
	17	1	**192-9464**	1	PLATE	
	18	2	**198-2817**	1	HARNESS AS (LOW TEMP)	
	19	1	**061-7278**	1	CABLE AS	
		1	**1S-7251**	2	TERMINAL-RING (FOR 1/2 IN BOLT)	
E		1	**5P-0747**		CABLE (00GA)(BLACK) (53CM)	
	20	1	**204-2281**	11	TIE	
	21	1	**215-9802**	1	FILM-WARNING (JUMPER CABLE)	
	22	2	**2J-5245**	3	BOLT (3/8-16X1.25 IN)	
	23	2	**3E-9865**	2	LOCKNUT (1/4-20 THD)	
	24	1	**3K-6060**	2	LOCKNUT (3/8-16 THD)	
	25	1,2	**5M-3062**	5	BOLT (3/8-16X0.75 IN)	
	26	1	**5P-1075**	7	WASHER-HARD (10.2X22.5X3MM THK)	
	27	1	**5P-4295**	1	CLIP	
	28	1	**5S-7379**	1	BOLT (3/8-16X0.875 IN)	
	29	1	**6V-8801**	4	NUT (3/8-16 THD)	
	30	2	**8T-4205**	2	WASHER-HARD (7.2X14.5X2MM THK)	
	31	2	**8T-4223**	2	WASHER-HARD (13.5X25.5X3MM THK)	
	32	1,2	**8T-4896**	5	WASHER-HARD (10.2X18.5X2.5MM THK)	
	33	2	**8T-9383**	2	BOLT (1/2-13X0.75 IN)	
	34	1	**8T-9407**	3	BOLT-CARRIAGE (3/8-16X1.25 IN)	
	35	1	**9X-9730**	2	BATTERY (12 VOLT/DRY)	
					(EACH INCLUDES)	
		1	**7N-0060**	6	VENT AS	

A-NOT PART OF THIS GROUP
B-USE AS REQUIRED
E-ORDER BY THE CENTIMETER
M-METRIC PART
Y-SEPARATE ILLUSTRATION

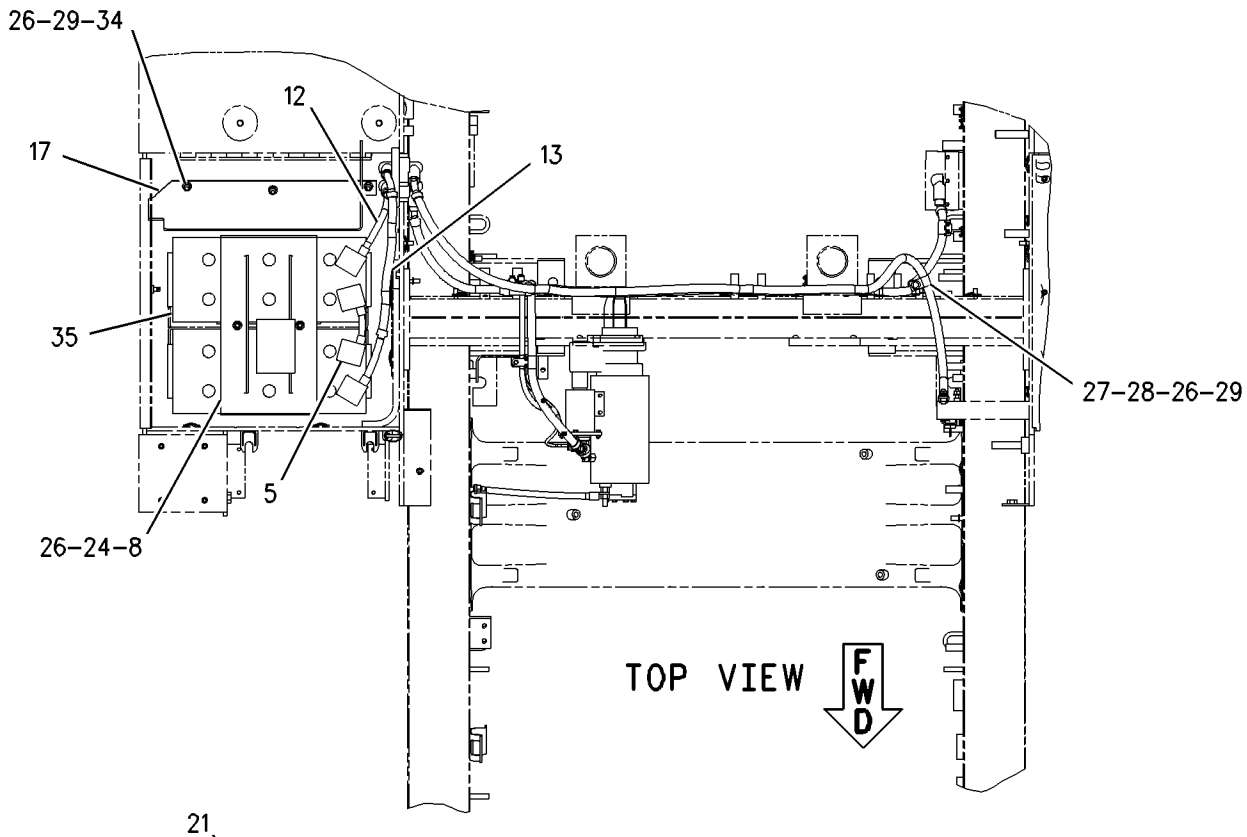

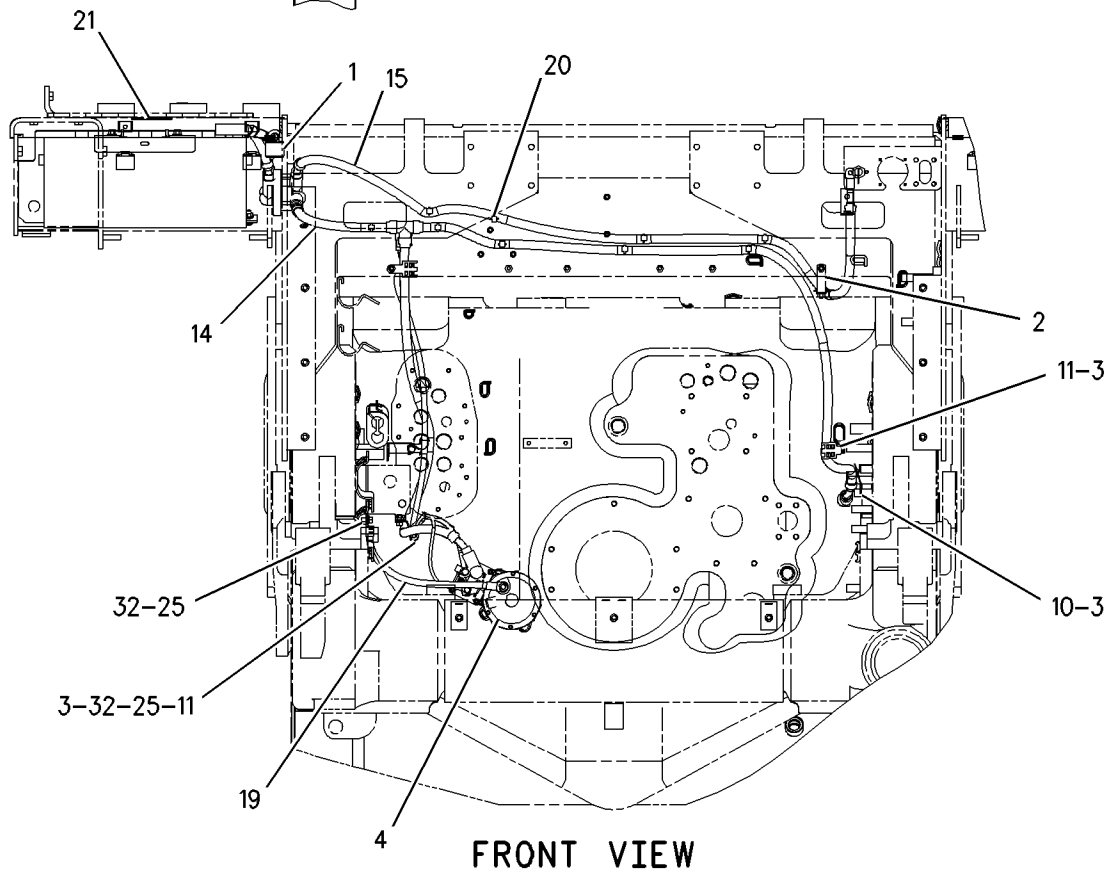

GRAPHIC #1 g00865363

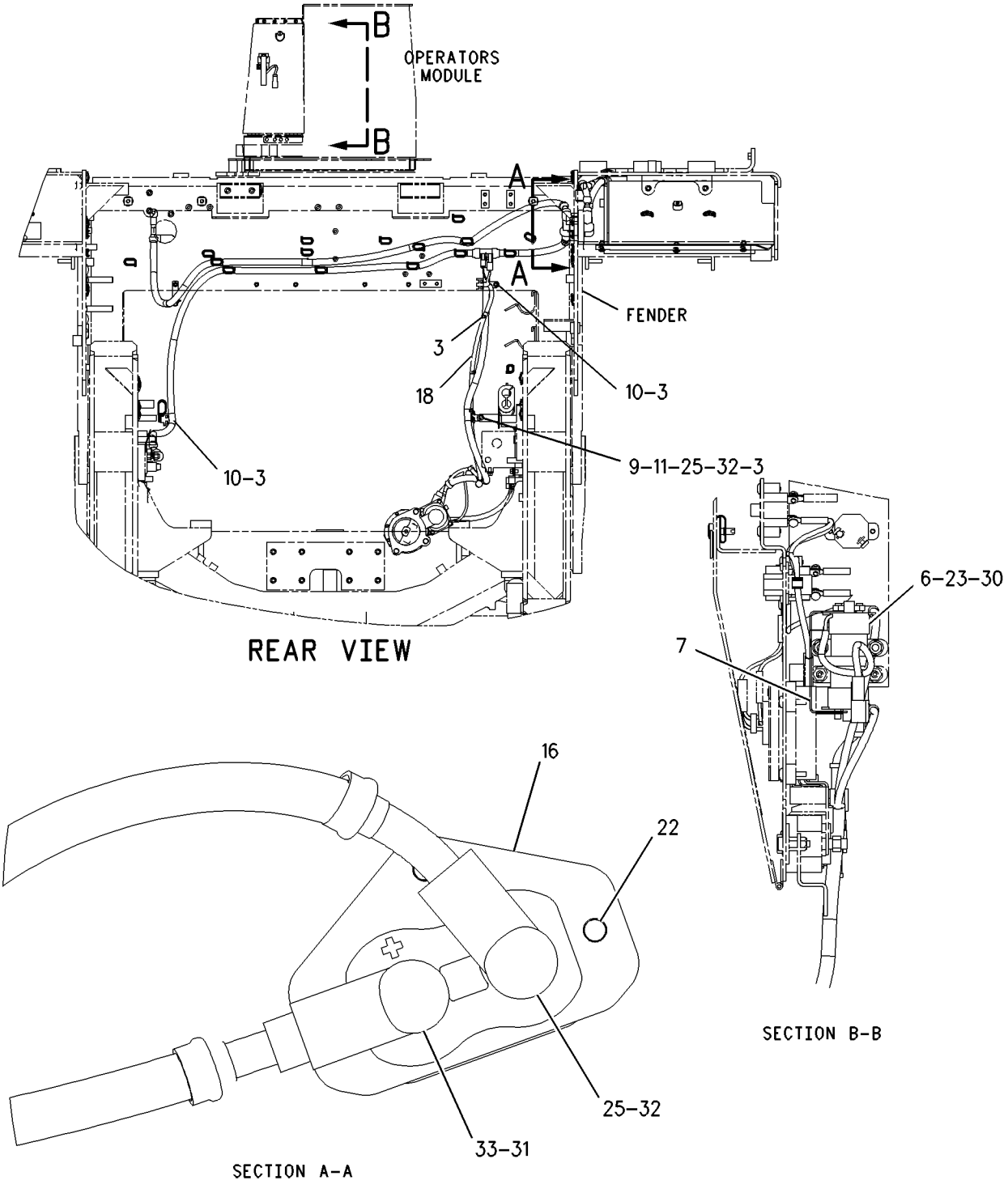

GRAPHIC #2

g00865364

ELECTRICAL AND STARTING SYSTEM

6V-0513 STARTING MOTOR GP-ELECTRIC*R

S/N: AKT1-UP

PART OF 7N-7049 STARTING MOTOR GP-ELECTRIC

FIELD REPLACEMENT FOR 6V-0928—PAGE 276

SMCS-1453, 1454, 1465 **i01670338**

NOTE	REF NO	GRAPHIC REF	PART NUMBER	QTY	PART NAME 1 2 3 4 5 6 (PRODUCT LEVEL)	SEE PAGE
	1	1	**036-9823**	13	BOLT	
	2	1	**3L-3380**	1	BUSHING-TERMINAL	
	3	1	**3T-3418**	1	FRAME AS-END	
	4	1	**3T-3423**	1	CUP	
	5	1	**9G-4101**	1	BUSHING-END	
	6	1	**3T-3424**	1	PLUG-FELT	
	7	1	**7M-0327**	1	WASHER-THRUST (17.40X25.4X1.6MM THK)	
	8	1	**7M-8651**	1	ARMATURE AS	
	9	1	**7M-0324**	1	COIL AS-FIELD	
	10	1	**9H-3757**	2	WASHER (0.516X1X0.094 IN THK)	
	11	1	**7X-0562**	6	WASHER-HARD (13.5X19X0.8MM THK)	
	12	1	**6V-8188**	6	NUT (1/2-13 THD)	
	13	1	**7M-0326**	1	CONNECTOR	
	14	1	**8T-4205**	4	WASHER-HARD (7.2X14.5X2MM THK)	
	15	1	**125-6533**	1	SOLENOID AS (STARTING MOTOR)	
		1	**3R-8801**	1	CLAMP	
	16	1	**6V-1322**	4	BOLT (1/4-20X0.375 IN)	
	17	1	**4M-1831**	4	PLUG-LEVER HOUSING	
	18	1	**7L-2894**	4	GASKET	
	19	1	**3F-0379**	12	SCREW-POLE SHOE (3/8-24 THD)	
	20	1	**7M-0325**	1	INSULATOR-COIL	
	21	1	**7F-3488**	6	SHOE-POLE	
	22	1	**1S-7446**	3	SCREW-MACHINE (8-32X0.437 THD)	
	23	1	**3T-9524**	6	BRUSH AS (STARTING MOTOR)	
	24	1	**9S-2544**	6	SCREW-HEX HEAD (8-32X11.13MM)	
	25	1	**3T-9525**	1	PLATE AS-BRUSH	
	26	1	**6T-0371**	1	INSULATOR	
	27	1	**5P-6298**	12	SCREW-MACHINE (10-32X0.5 IN)	
		1	**9F-5599**	12	LOCKWASHER	
	28	1	**7F-3525**	6	WASHER-BUSHING (.209X.39X.09MM THK)	
	29	1	**6T-0372**	1	PLATE	
	30	1	**3T-4709**	3	PLATE	
	31	1	**2L-6679**	3	PLATE-INSULATOR	
	32	1	**3T-4710**	3	PLATE	
	33	1	**6T-0363**	6	HOLDER AS-BRUSH (STARTING MOTOR BRUSH)	
					(EACH INCLUDES)	
	34	1	**3T-9494**	1	SPRING (STARTING MOTOR BRUSH)	
	35	1	**2D-6392**	1	SEAL-O-RING	
	36	1	**2J-8163**	2	SEAL-O-RING	
	37	1	**7F-3491**	2	WASHER (0.516X1X0.094 IN THK)	
	38	1	**3R-8801**	1	CLAMP	
	39	1	**6N-3826**	1	DRIVE AS-MOTOR	
	40	1	**1H-2629**	3	STRIP-INSULATION	
	41	1	**3T-3422**	1	WIRE AS	
	42	1	**9M-7606**	1	PLUNGER AS	
	43	1	**036-9821**	1	WASHER	
	44	1	**4M-1829**	1	BOOT-RUBBER	
	45	1	**4M-1828**	1	RETAINER-SPRING	
	46	1	**9M-7609**	1	SPRING	
	47	1	**1H-1023**	1	SEAL-O-RING	
	48	1	**3E-7771**	1	HOUSING AS	
	49	1	**3T-3424**	2	PLUG-FELT	
	50	1	**3T-3423**	2	CUP	
	51	1	**1M-9968**	1	BUSHING	
	52	1	**2F-6678**	1	SEAL-LIP	

6V-0513 STARTING MOTOR GP-ELECTRIC *(contd.)* i01670338

NOTE	REF NO	GRAPHIC REF	PART NUMBER	QTY	PART NAME 1 2 3 4 5 6 (PRODUCT LEVEL)	SEE PAGE
	53	1	**4L-2729**	1	WASHER (0.844X1.9X0.188 IN THK)	
	54	1	**4M-1854**	1	SHAFT-LEVER	
	55	1	**2H-3429**	2	RING-RETAINING	
	56	1	**4M-1853**	1	LEVER AS-SHIFT	
	57	1	**5M-3034**	1	LOCKNUT (5/16-24 THD)	
	58	1	**1M-9971**	1	SPACER (.840X1.72X1.88 IN THK)	
	59	1	**4M-1827**	1	RETAINER-SPRING	
	60	1	**8C-3089**	1	SEAL-O-RING	
	61	1	**3E-7768**	1	HOUSING AS	
	62	1	**4M-1896**	1	BUSHING-TERMINAL	
	63	1	**8C-9660**	3	WASHER (4.6X7.9X0.8MM THK)	
	64	1	**3T-9494**	6	SPRING (STARTING MOTOR BRUSH)	
	65	1	**5J-5314**	5	BOLT (5/16-18X1.5 IN)	
J	66	1	**3N-3763**	1	KIT-TERMINAL (STARTING MOTOR)	
JZ		1		1	INSULATOR	
JZ	67	1		1	BUSHING	
JZ	68	1		1	BUSHING	
JZ	69	1		1	WASHER	
	70	1	**7X-3373**	1	BOLT (5/16-18X0.88 IN)	
	71	1	**6N-3279**	1	INSULATOR	
	72	1	**4B-2049**	6	NUT (10-32 THD)	
	73	1	**8T-0328**	10	WASHER-HARD (5.5X10X1MM THK)	
	74	1	**8F-1434**	2	LOCKWASHER	
B	75	1	**3T-3434**	6	PLUG	
	76	1	**6T-0362**	1	INSULATOR	
	77	1	**045-4065**	4	SCREW-MACHINE (10-32X0.75 IN)	
	78	1	**125-6535**	1	COVER-STARTING MOTOR	
	79	1	**125-6536**	1	TERMINAL AS	
	80	1	**7T-9123**	1	GASKET-PLATE	

B-USE AS REQUIRED
J-KIT MARKED J INCLUDES PART(S) MARKED J
Z-NOT SERVICED SEPARATELY

6V-0513 STARTING MOTOR GP-ELECTRIC *(contd.)* i01670338

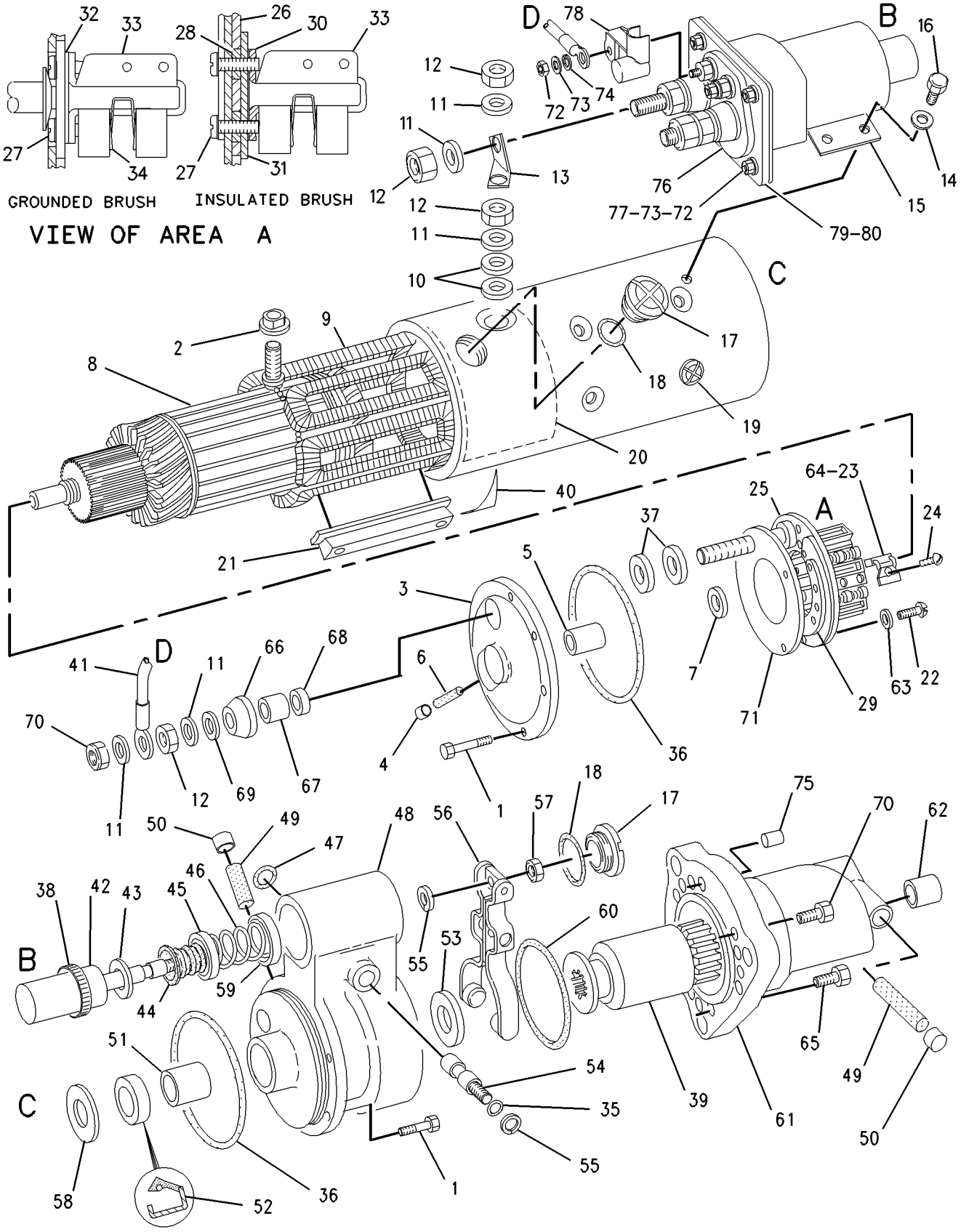

GRAPHIC #1 g00673263

MEMORANDA

ELECTRICAL AND STARTING SYSTEM

6V-0928 STARTING MOTOR GP-ELECTRIC

S/N: AKT1-UP
PART OF 8N-8753 STARTING MOTOR GP-ELECTRIC
FIELD REPLACEMENT ORDER 6V-0513—PAGE 272
AN ATTACHMENT

SMCS-1453, 1454, 1465 **i01540925**

NOTE	REF NO	GRAPHIC REF	PART NUMBER	QTY	PART NAME 1 2 3 4 5 6 (PRODUCT LEVEL)	SEE PAGE
	1	1	**036-9823**	13	BOLT	
	2	1	**3L-3380**	1	BUSHING-TERMINAL	
	3	1	**3T-3418**	1	FRAME AS-END	
	4	1	**3T-3423**	1	CUP	
	5	1	**9G-4101**	1	BUSHING-END	
	6	1	**3T-3424**	1	PLUG-FELT	
	7	1	**7M-0327**	1	WASHER-THRUST (17.40X25.4X1.6MM THK)	
	8	1	**7M-8651**	1	ARMATURE AS	
	9	1	**7M-0324**	1	COIL AS-FIELD	
	10	1	**9H-3757**	2	WASHER (0.516X1X0.094 IN THK)	
	11	1	**7X-0562**	6	WASHER-HARD (13.5X19X0.8MM THK)	
	12	1	**6V-8188**	6	NUT (1/2-13 THD)	
	13	1	**7M-0326**	1	CONNECTOR	
	14	1	**8T-4205**	4	WASHER-HARD (7.2X14.5X2MM THK)	
Y	15	1	**3T-4704**	1	SOLENOID AS-STARTING MOTOR	264
	16	1	**6V-1322**	4	BOLT (1/4-20X0.375 IN)	
	17	1	**4M-1831**	4	PLUG-LEVER HOUSING	
	18	1	**7L-2894**	4	GASKET	
	19	1	**3F-0379**	12	SCREW-POLE SHOE	
	20	1	**7M-0325**	1	INSULATOR-COIL	
	21	1	**7F-3488**	6	SHOE-POLE	
	22	1	**1S-7446**	3	SCREW-MACHINE (8-32X0.437 THD)	
	23	1	**3T-9524**	6	BRUSH AS	
	24	1	**9S-2544**	9	SCREW-HEX HEAD (8-32X11.13MM)	
	25	1	**3T-9525**	1	PLATE AS-BRUSH	
	26	1	**6T-0371**	1	INSULATOR	
	27	1	**3T-4711**	12	SCREW AS	
		1	**9F-5599**	12	LOCKWASHER	
	28	1	**7F-3525**	6	WASHER-BUSHING	
	29	1	**6T-0372**	1	PLATE	
	30	1	**3T-4709**	3	PLATE	
	31	1	**2L-6679**	3	PLATE-INSULATOR	
	32	1	**3T-4710**	3	PLATE	
	33	1	**6T-0363**	6	HOLDER AS-BRUSH	
					(EACH INCLUDES)	
	34	1	**3T-9494**	1	SPRING-BRUSH	
	35	1	**2D-6392**	1	SEAL-O-RING	
	36	1	**2J-8163**	2	SEAL-O-RING	
	37	1	**7F-3491**	2	WASHER (0.516X1X0.094 IN THK)	
	38	1	**3R-8801**	1	CLAMP-BOOT	
	39	1	**6N-3826**	1	DRIVE AS-MOTOR	
	40	1	**1H-2629**	3	STRIP-INSULATION	
	41	1	**3T-3422**	1	WIRE AS	
	42	1	**9M-7606**	1	PLUNGER AS	
	43	1	**036-9821**	1	WASHER	
	44	1	**4M-1829**	1	BOOT-RUBBER	
	45	1	**4M-1828**	1	RETAINER-SPRING	
	46	1	**9M-7609**	1	SPRING	
	47	1	**1H-1023**	1	SEAL-O-RING	
	48	1	**3E-7771**	1	HOUSING AS	
	49	1	**3T-3424**	3	PLUG-FELT	
	50	1	**3T-3423**	3	CUP	
	51	1	**1M-9968**	1	BUSHING	
	52	1	**2F-6678**	1	SEAL-LIP	

6V-0928 **STARTING MOTOR GP-ELECTRIC** *(contd.)* **i01540925**

NOTE	REF NO	GRAPHIC REF	PART NUMBER	QTY	PART NAME 1 2 3 4 5 6 (PRODUCT LEVEL)	SEE PAGE
	53	1	**4L-2729**	1	WASHER (0.844X1.9X0.188 IN THK)	
	54	1	**4M-1854**	1	SHAFT-LEVER	
	55	1	**2H-3429**	2	RING-RETAINING	
	56	1	**4M-1853**	1	LEVER AS-SHIFT	
	57	1	**5M-3034**	1	LOCKNUT	
	58	1	**1M-9971**	1	SPACER	
	59	1	**4M-1827**	1	RETAINER-SPRING	
	60	1	**8C-3089**	1	SEAL-O-RING	
	61	1	**3E-7768**	1	HOUSING AS	
	62	1	**4M-1896**	1	BUSHING-TERMINAL	
	63	1	**8C-9660**	3	WASHER (4.6X7.9X0.8MM THK)	
	64	1	**3T-9494**	6	SPRING-BRUSH	
	65	1	**5J-5314**	5	BOLT (5/16-18X1.5 IN)	
J	66	1	**3N-3763**	1	KIT-TERMINAL	
JZ		1		1	INSULATOR	
JZ	67	1		1	BUSHING	
JZ	68	1		1	BUSHING	
JZ	69	1		1	WASHER (0.38X0.88X0.02 IN THK)	
	70	1	**7X-3373**	1	BOLT (5/16-18X0.88 IN)	
	71	1	**6N-3279**	1	INSULATOR	
	72	1	**4B-2049**	6	NUT (10-32 THD)	
	73	1	**8T-0328**	10	WASHER-HARD (5.5X10X1MM THK)	
	74	1	**8F-1434**	2	LOCKWASHER	
B	75	1	**3T-3434**	6	PLUG	
	76	1	**125-6537**	1	INSULATOR	
	77	1	**045-4065**	4	SCREW-MACHINE (10-32X0.75 IN)	
	78	1	**125-6536**	1	TERMINAL AS	
		1	**7T-9123**	1	GASKET-PLATE	
	79	1	**125-6535**	1	COVER-STARTING MOTOR	

B-USE AS REQUIRED
J-KIT MARKED J INCLUDES PARTS MARKED J
Y-SEPARATE ILLUSTRATION
Z-NOT SERVICED SEPARATELY

6V-0928 **STARTING MOTOR GP-ELECTRIC** *(contd.)* **i01540925**

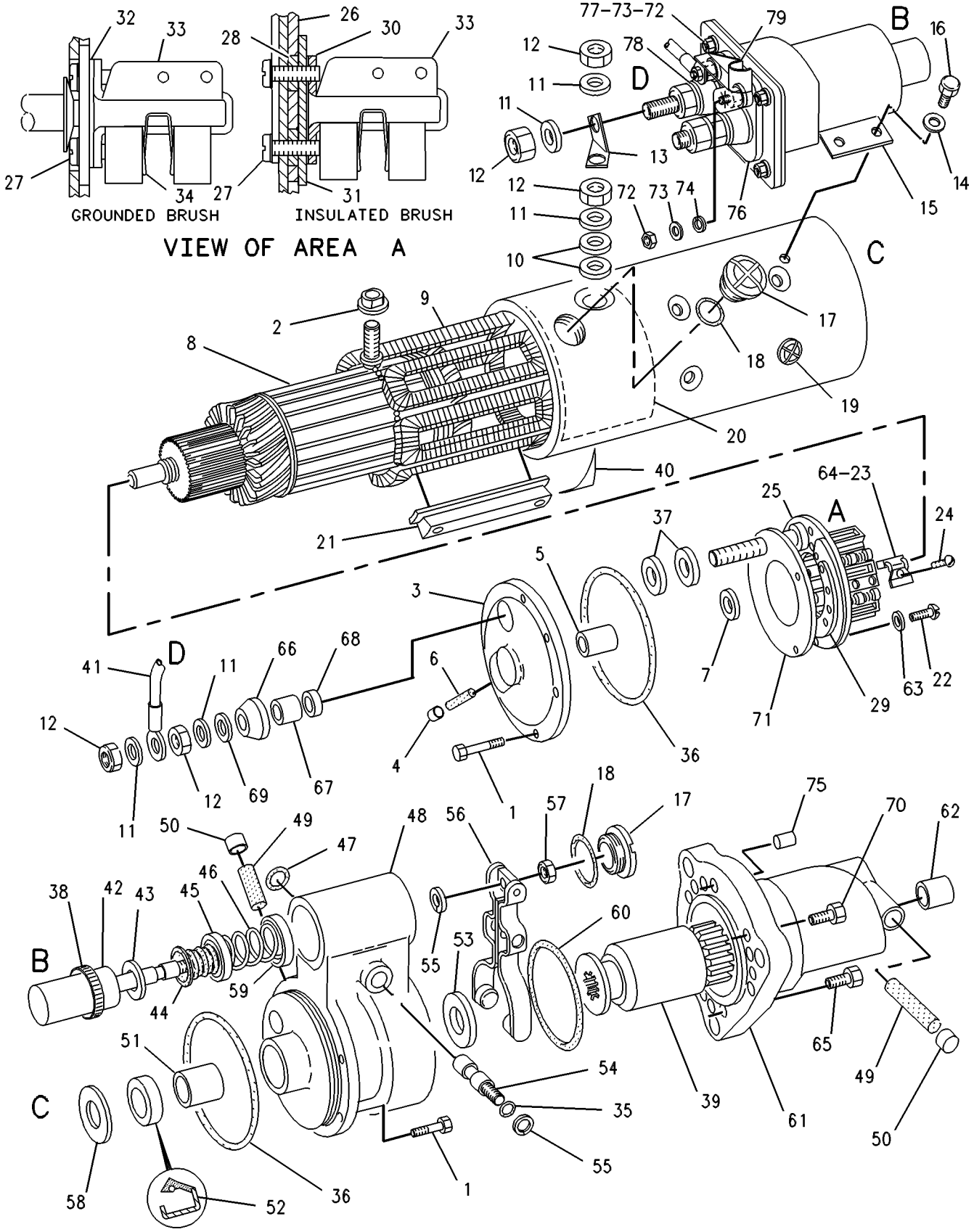

GRAPHIC #1 g00256599

7N-7049 STARTING MOTOR GP-ELECTRIC

S/N: AKT1-UP

PART OF 171-5807 INSTALLATION AR-ENGINE

SMCS-1453, 1454, 1465 **i00581500**

NOTE	REF NO	GRAPHIC REF	PART NUMBER	QTY	PART NAME 1 2 3 4 5 6 (PRODUCT LEVEL)	SEE PAGE
CYR	1	1	**6V-0513**	1	STARTING MOTOR GP-ELECTRIC	272
	2	1	**8S-2332**	3	BOLT-12 POINT HEAD (5/8-11X1.75IN)	
	3	1	**7N-6494**	1	GASKET	
	4	1	**5R-7755**	1	WIRE AS	

C-CHANGE FROM PREVIOUS TYPE
R-REMFG PART MAY BE AVAILABLE
Y-SEPARATE ILLUSTRATION

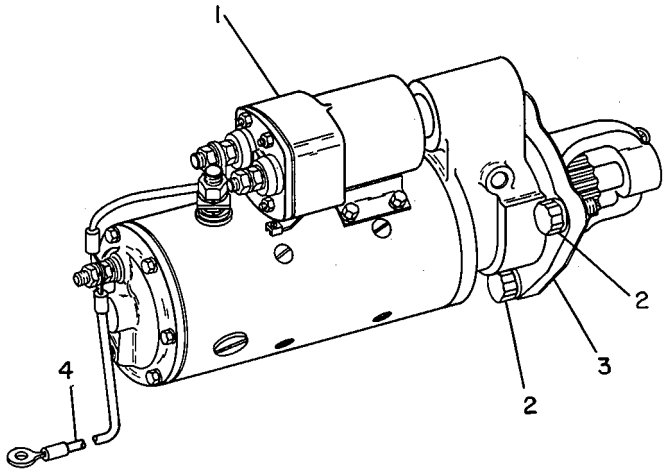

GRAPHIC #1 g00169724

8N-8753 STARTING MOTOR GP-ELECTRIC

S/N: AKT1-UP
24 VOLT
PART OF 196-6108 STARTING AR-LOW TEMPERATURE
AN ATTACHMENT

SMCS-1453, 1454, 1465 **i00596795**

NOTE	REF NO	GRAPHIC REF	PART NUMBER	QTY	PART NAME 1 2 3 4 5 6 (PRODUCT LEVEL)	SEE PAGE
CY	1	1	*6V-0928*	1	STARTING MOTOR GP-ELECTRIC	276
	2	1	**8S-2332**	3	BOLT-12 POINT HEAD (5/8-11X1.75IN)	
	3	1	**7N-6494**	1	GASKET	
	4	1	**5R-7755**	1	WIRE AS	

C-CHANGE FROM PREVIOUS TYPE
Y-SEPARATE ILLUSTRATION

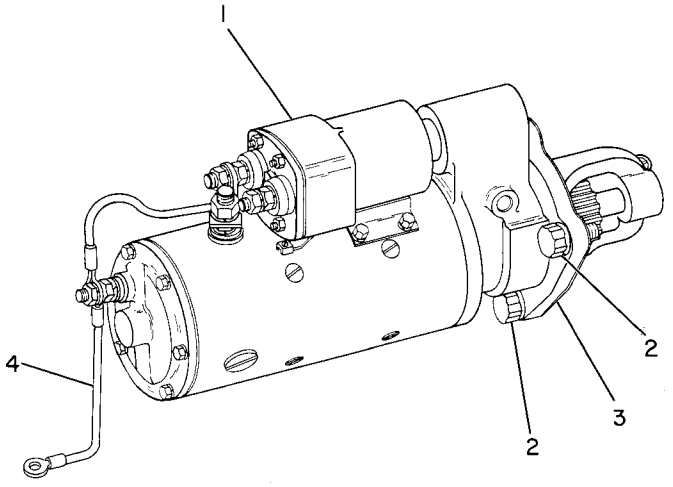

GRAPHIC #1 g00282511

MEMORANDA

ELECTRICAL AND STARTING SYSTEM

123-8686 STARTING MOTOR GP-ELECTRIC*R

S/N: AKT1-UP
24 VOLT
PART OF 200-0830 PRELUBRICATION AR-ENGINE
AN ATTACHMENT

SMCS-1453, 1454, 1465 **i01700617**

NOTE	REF NO	GRAPHIC REF	PART NUMBER	QTY	PART NAME 1 2 3 4 5 6 (PRODUCT LEVEL)	SEE PAGE
	1	1	**7M-0326**	1	CONNECTOR	
	2	1	**9H-3757**	2	WASHER (0.516X1X0.094 IN THK)	
	3	1	**1S-7446**	3	SCREW-MACHINE (8-32X0.437 THD)	
	4	1	**8C-9660**	3	WASHER (4.6X7.9X0.8MM THK)	
	5	1	**9S-2544**	9	SCREW-HEX HEAD (8-32X11.13MM)	
	6	1	**4L-7124**	4	BOLT (1/4-20X1.25 IN)	
	7	1	**117-0610**	1	KIT-BEARING (STARTER)	
					(INCLUDES WASHERS & BEARING)	
	8	1	**125-6536**	1	TERMINAL AS	
	9	1	**7F-3491**	2	WASHER (0.516X1X0.094 IN THK)	
	10	1	**3T-3422**	1	WIRE AS	
	11	1	**2J-8163**	2	SEAL-O-RING	
	12	1	**7X-3373**	1	BOLT (5/16-18X0.88 IN)	
	13	1	**3T-3434**	6	PLUG	
	14	1	**5J-5314**	5	BOLT (5/16-18X1.5 IN)	
	15	1	**3L-3380**	1	BUSHING-TERMINAL	
	16	1	**036-9821**	1	WASHER	
	17	1	**4M-1828**	1	RETAINER-SPRING	
	18	1	**4M-1829**	1	BOOT-RUBBER	
	19	1	**9M-7606**	1	PLUNGER AS	
	20	1	**9M-7609**	1	SPRING	
	21	1	**4M-1827**	1	RETAINER-SPRING	
	22	1	**8C-3089**	1	SEAL-O-RING	
	23	1	**4M-1853**	1	LEVER AS-SHIFT	
	24	1	**5M-3034**	1	LOCKNUT (5/16-24 THD)	
	25	1	**7L-2894**	4	GASKET	
	26	1	**4M-1831**	4	PLUG-LEVER HOUSING	
	27	1	**4M-1854**	1	SHAFT-LEVER	
	28	1	**1H-1023**	1	SEAL-O-RING	
	29	1	**2D-6392**	1	SEAL-O-RING	
	30	1	**3E-7768**	1	HOUSING AS	
	31	1	**6N-3826**	1	DRIVE AS-MOTOR	
	32	1	**2H-3429**	2	RING-RETAINING	
	33	1	**6V-1322**	4	BOLT (1/4-20X0.375 IN)	
	34	1	**8T-4205**	4	WASHER-HARD (7.2X14.5X2MM THK)	
	35	1	**6N-3279**	1	INSULATOR	
	36	1	**036-9823**	13	BOLT	
	37	1	**111-9862**	1	COVER-STARTING MOTOR	
	38	1	**1H-2629**	3	STRIP-INSULATION	
	39	1	**7M-0324**	1	COIL AS-FIELD	
	40	1	**3F-0379**	12	SCREW-POLE SHOE (3/8-24 THD)	
	41	1	**7F-3488**	6	SHOE-POLE	
	42	1	**111-9864**	1	GASKET	
	43	1	**7M-0325**	1	INSULATOR-COIL	
	44	1	**3T-9524**	6	BRUSH AS	
	45	1	**125-6533**	1	SOLENOID AS	
		1	**3R-8801**	1	CLAMP	
	46	1	**125-6537**	1	INSULATOR	
	47	1	**3R-8801**	1	CLAMP	
	48	1	**8F-1434**	2	LOCKWASHER	
	49	1	**6V-8188**	6	NUT (1/2-13 THD)	
	50	1	**7X-0562**	6	WASHER-HARD (13.5X19X0.8MM THK)	
	51	1	**4B-2049**	6	NUT (10-32 THD)	
	52	1	**8T-0328**	10	WASHER-HARD (5.5X10X1MM THK)	

123-8686 STARTING MOTOR GP-ELECTRIC *(contd.)* i01700617

NOTE	REF NO	GRAPHIC REF	PART NUMBER	QTY	PART NAME 1 2 3 4 5 6 (PRODUCT LEVEL)	SEE PAGE
	53	1	**3T-9494**	6	SPRING	
	54	1	**123-9776**	1	ARMATURE AS-STARTING MOTOR	
	55	1	**123-9773**	1	HOUSING AS-STARTING MOTOR	
	56	1	**3T-3424**	2	PLUG-FELT	
	57	1	**3T-3423**	2	CUP	
	58	1	**1M-9968**	1	BUSHING	
	59	1	**2F-6678**	1	SEAL-LIP	
	60	1	**4M-1896**	1	BUSHING-TERMINAL	
	61	1	**045-4065**	4	SCREW-MACHINE (10-32X0.75 IN)	
	62	1	**6V-8373**	3	SCREW-MACHINE (6-32X0.187 IN)	
	63	1	**9G-6770**	1	CONTACT AS	
	64	1	**6T-1120**	1	BUSHING-TERMINAL	
	65	1	**4M-1815**	1	SPRING-CONTACT	
	66	1	**125-6535**	1	COVER-STARTING MOTOR	
	67	1	**7T-9123**	1	GASKET-PLATE	
	68	1	**3T-9525**	1	PLATE AS-BRUSH	
	69	1	**6T-0371**	1	INSULATOR	
	70	1	**5P-6298**	12	SCREW-MACHINE (10-32X0.5 IN)	
		1	**9F-5599**	12	LOCKWASHER	
	71	1	**7F-3525**	6	WASHER-BUSHING (.209X.39X.09MM THK)	
	72	1	**6T-0372**	1	PLATE (OUTSIDE)	
	73	1	**3T-4709**	3	PLATE (.51MM THK)	
	74	1	**2L-6679**	3	PLATE-INSULATOR	
	75	1	**3T-4710**	3	PLATE (1.6MM THK)	
	76	1	**6T-0363**	6	HOLDER AS-BRUSH	
J	77	1	**3N-3763**	1	KIT-TERMINAL	
JZ	78	1		1	BUSHING	
JZ	79	1		1	WASHER (0.38X0.88X0.02 IN THK)	
JZ	80	1		1	INSULATOR	
JZ	81	1		1	BUSHING	
	82	1	**111-9866**	1	KIT-STARTING MOTOR GEAR	
	83	1	**147-0633**	1	HOUSING AS	

J-KIT MARKED J INCLUDES PART(S) MARKED J
Z-NOT SERVICED SEPARATELY

123-8686 STARTING MOTOR GP-ELECTRIC *(contd.)* i01700617

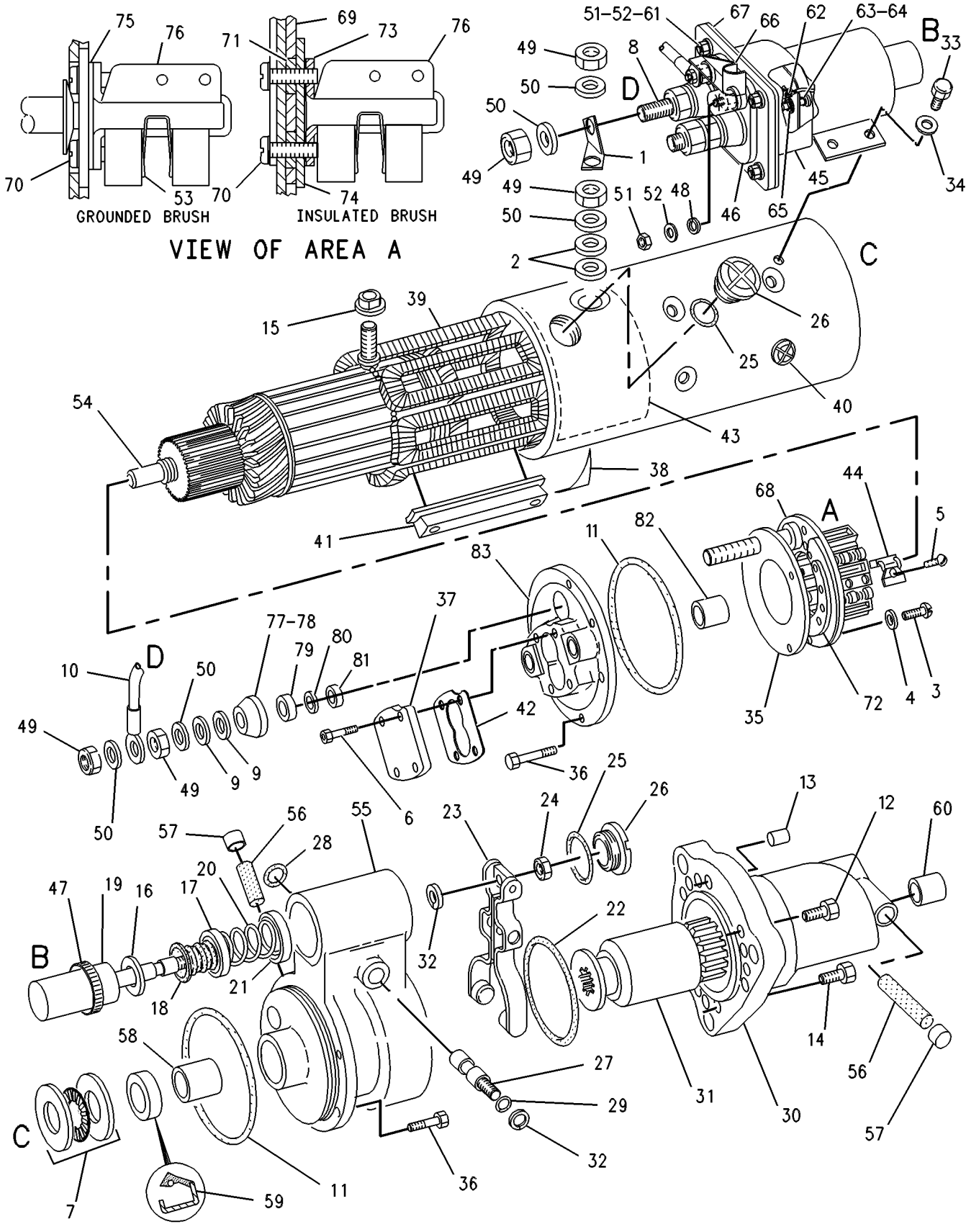

GRAPHIC #1 g00282910

164-7577 SWITCH GP-BYPASS

S/N: AKT1-UP

PART OF 172-5066 BATTERY & WIRING GP

SMCS-1408 **i01700622**

NOTE	REF NO	GRAPHIC REF	PART NUMBER	QTY	PART NAME 1 2 3 4 5 6 (PRODUCT LEVEL)	SEE PAGE
B	1	1	**9X-1813**		SLEEVE	
J	2	1	**102-8802**	1	KIT-RECEPTACLE (2 PIN)	
					(INCLUDES RECEPTACLE AS & WEDGE)	
	3	1	**186-3735**	2	PIN-CONNECTOR	
J	4	1	**3E-3365**	1	WEDGE-RECEPTACLE LOCK (2 PIN)	
	5	1	**3D-2824**	1	SEAL-O-RING	
Z	6	1		1	SWITCH AS	

B-USE AS REQUIRED
J-KIT MARKED J INCLUDES PART(S) MARKED J
Z-NOT SERVICED SEPARATELY

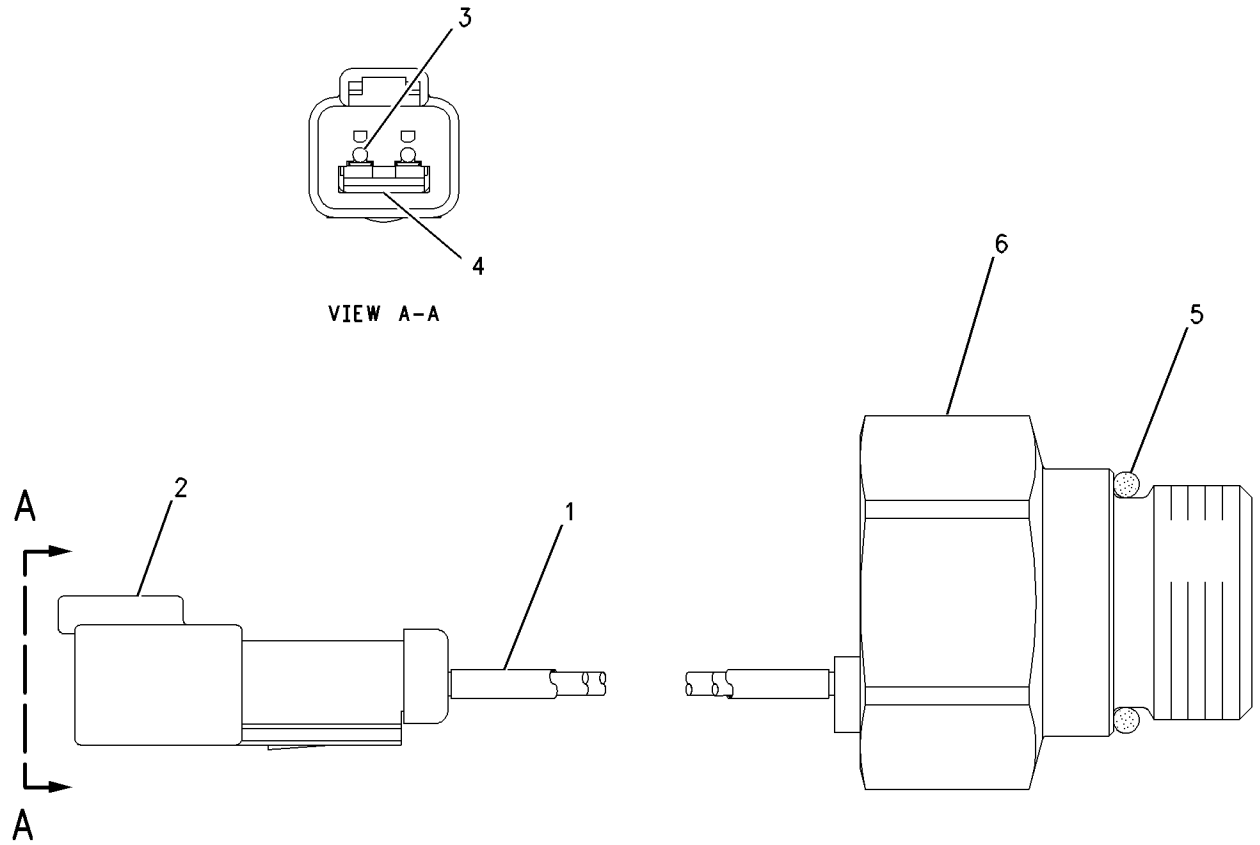

GRAPHIC #1 g00750019

7N-0719 SWITCH GP-DISCONNECT

S/N: AKT1-UP

PART OF 172-5066 BATTERY & WIRING GP

SMCS-1411 **i01289277**

NOTE	REF NO	GRAPHIC REF	PART NUMBER	QTY	PART NAME 1 2 3 4 5 6 (PRODUCT LEVEL)	SEE PAGE
	1	1	**8H-5306**	1	KEY (BATTERY DISCONNECT)	
	2	1	**8H-5303**	1	NUT (3/4-16-2A THD)	
	3	1	**2H-3922**	2	LOCKWASHER (19.9X31.3X1.3MM THK)	
	4	1	**9F-5644**	2	LOCKWASHER (9.93X17.3X.9MM THK)	
	5	1	**6F-7045**	2	NUT-FULL (3/8X24 THD)	

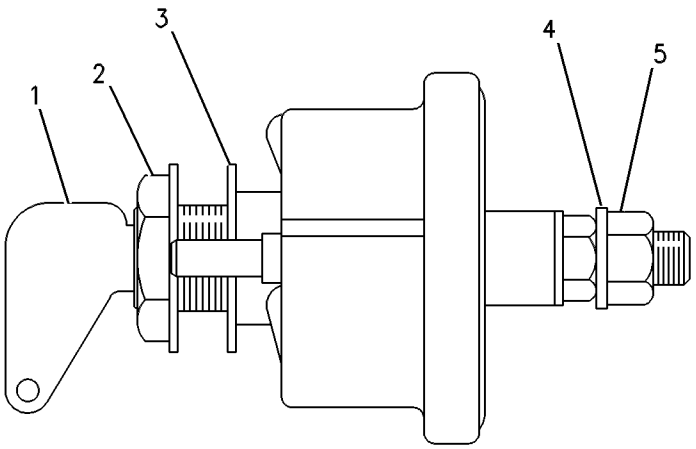

GRAPHIC #1 g00117885

100-4417 SWITCH GP-FLOW–COOLANT

S/N: 5JJ3200-UP
PART OF 171-5806, 206-3114 ENGINE AR
ALSO AN ATTACHMENT

SMCS-1435 **i01547458**

NOTE	REF NO	GRAPHIC REF	PART NUMBER	QTY	PART NAME 1 2 3 4 5 6 (PRODUCT LEVEL)	SEE PAGE
Y	1	1	**171-8708**	1	SWITCH GP-FLOW (COOLANT)	288
	2	1	**2B-2695**	2	BOLT (5/16-18X0.875 IN)	
	3	1	**9M-1974**	2	WASHER-HARD (8.8X16X2MM THK)	
	4	1	**4N-3841**	1	GASKET	

Y-SEPARATE ILLUSTRATION

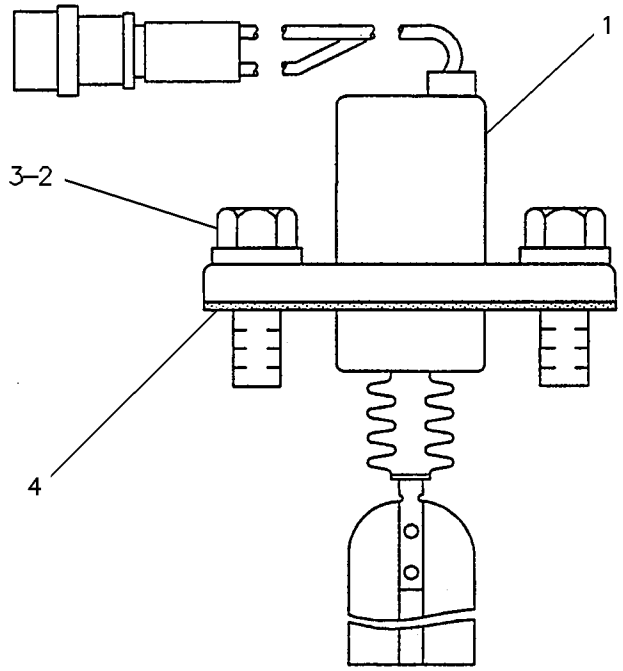

GRAPHIC #1 g00083292

171-8708 SWITCH GP-FLOW–COOLANT

S/N: 5JJ3200-UP
PART OF 100-4417 SWITCH GP-FLOW
ALSO AN ATTACHMENT

SMCS-1435 **i01582521**

NOTE	REF NO	GRAPHIC REF	PART NUMBER	QTY	PART NAME 1 2 3 4 5 6 (PRODUCT LEVEL)	SEE PAGE
					(NO SERVICED PARTS)	

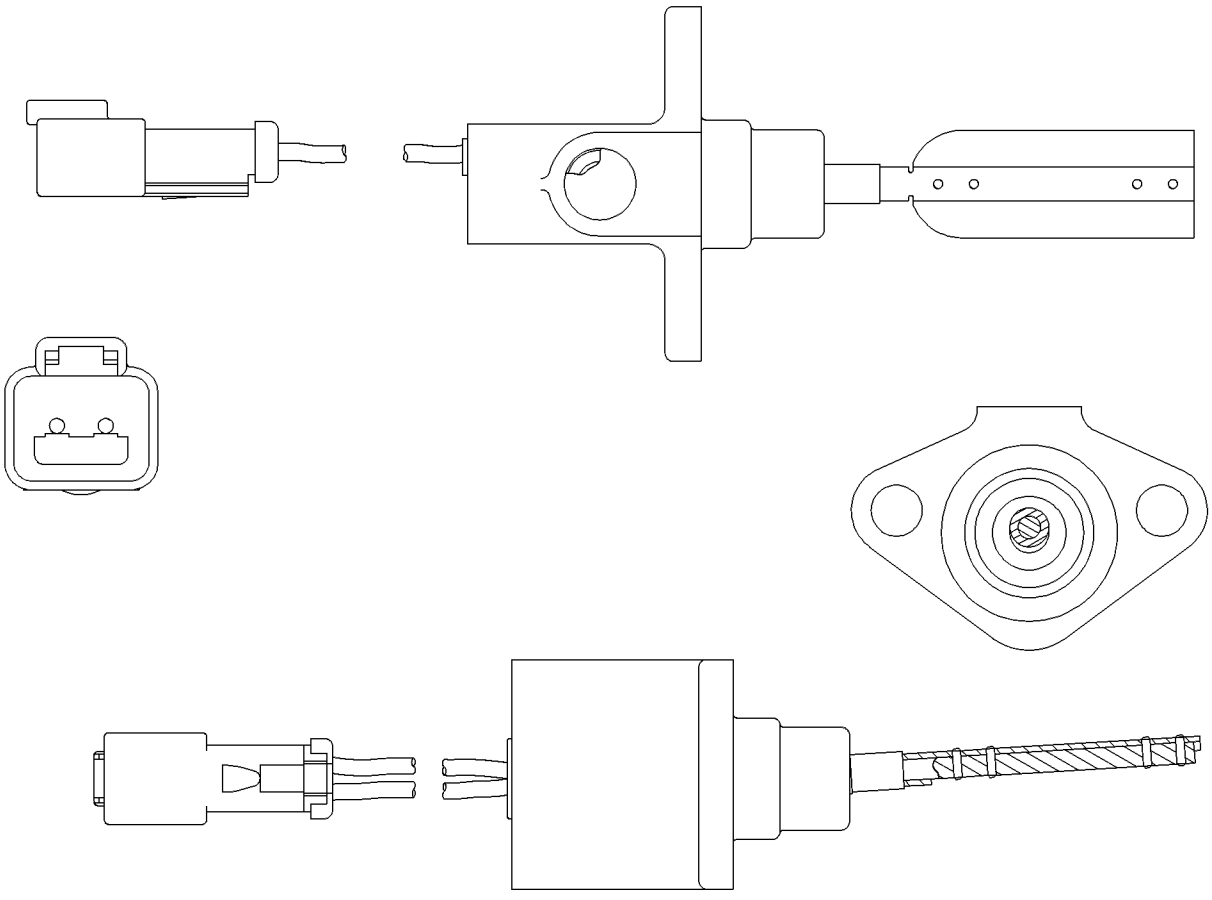

GRAPHIC #1 g00613049

167-0138 SWITCH GP-MAGNETIC

S/N: AKT1-UP

PART OF 167-7494 WIRING GP-CONSOLE

SMCS-7499 **i01700656**

NOTE	REF NO	GRAPHIC REF	PART NUMBER	QTY	PART NAME 1 2 3 4 5 6 (PRODUCT LEVEL)	SEE PAGE
	1	1	**4F-2294**	2	NUT-JAM (5/16-24 THD)	
	2	1	**6V-8186**	2	NUT-FULL (5/16-24 THD)	
	3	1	**155-2270**	1	KIT-CONNECTING PLUG (2 PIN)	
					(INCLUDES PLUG AS & WEDGE)	
	4	1	**186-3736**	2	SOCKET-CONNECTOR	
	5	1	**155-2261**	1	WEDGE-PLUG LOCK (2 PIN)	

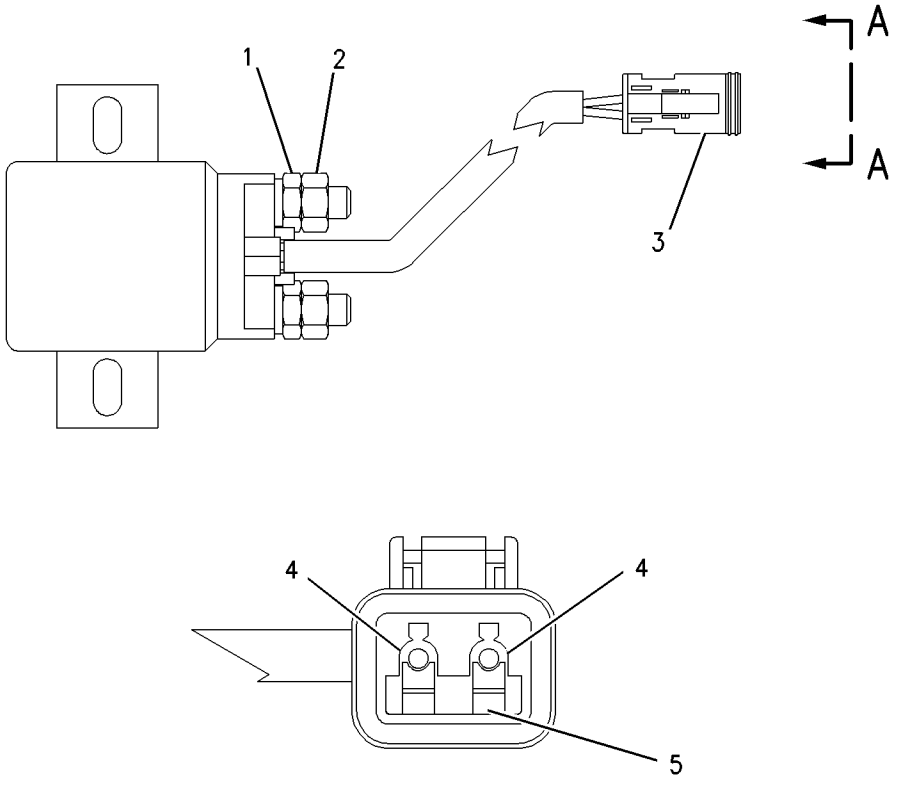

VIEW A-A

GRAPHIC #1 g00831588

9G-7641 SWITCH GP-START–KEY

S/N: AKT1-UP

PART OF 172-5067 WIRING GP-PLATFORM

SMCS-1416 **i01582627**

NOTE	REF NO	GRAPHIC REF	PART NUMBER	QTY	PART NAME 1 2 3 4 5 6 (PRODUCT LEVEL)	SEE PAGE
	1	1	**6V-8362**	4	SCREW-MACHINE (8-32X0.31 IN)	
	2	1	**9B-7233**	4	LOCKWASHER	
	3	1	**7T-6799**	1	NUT-MOUNTING (1-32 THD)	

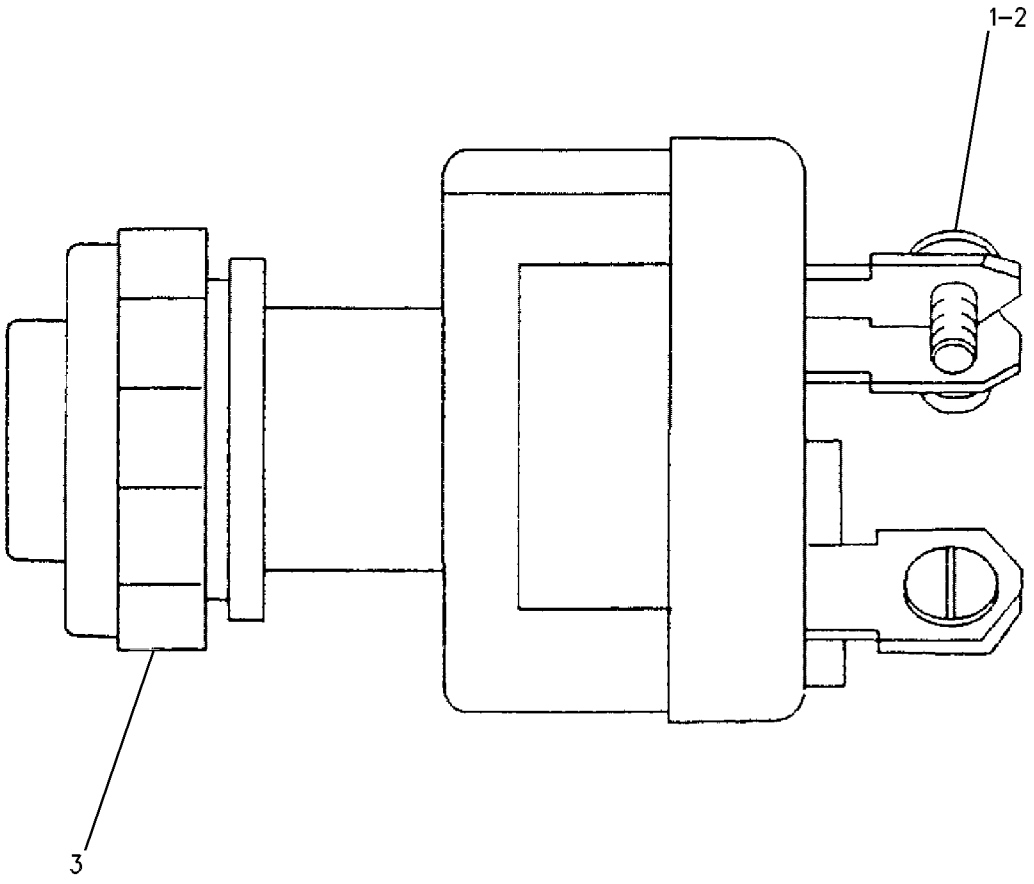

GRAPHIC #1 g00606018

123-6449 WARNING GP-BACKUP

S/N: AKT1-UP

PART OF 172-5066 BATTERY & WIRING GP

SMCS-7406 **i01612351**

NOTE	REF NO	GRAPHIC REF	PART NUMBER	QTY	PART NAME 1 2 3 4 5 6 (PRODUCT LEVEL)	SEE PAGE
	1	1	**102-8802**	1	KIT-RECEPTACLE (2 PIN)	
					(KIT INCLUDES RECEPTACLE AS AND WEDGE)	
	2	1	**3E-3365**	1	WEDGE-RECEPTACLE LOCK (2 PIN)	
	3	1	**186-3735**	2	PIN-CONNECTOR	
D	4	1	**5P-5677**		WIRE-ELECTRICAL (18 GA) (0.6M)	
E	5	1	**9X-1813**		SLEEVE (28CM)	

D-ORDER BY THE METER
E-ORDER BY THE CENTIMETER

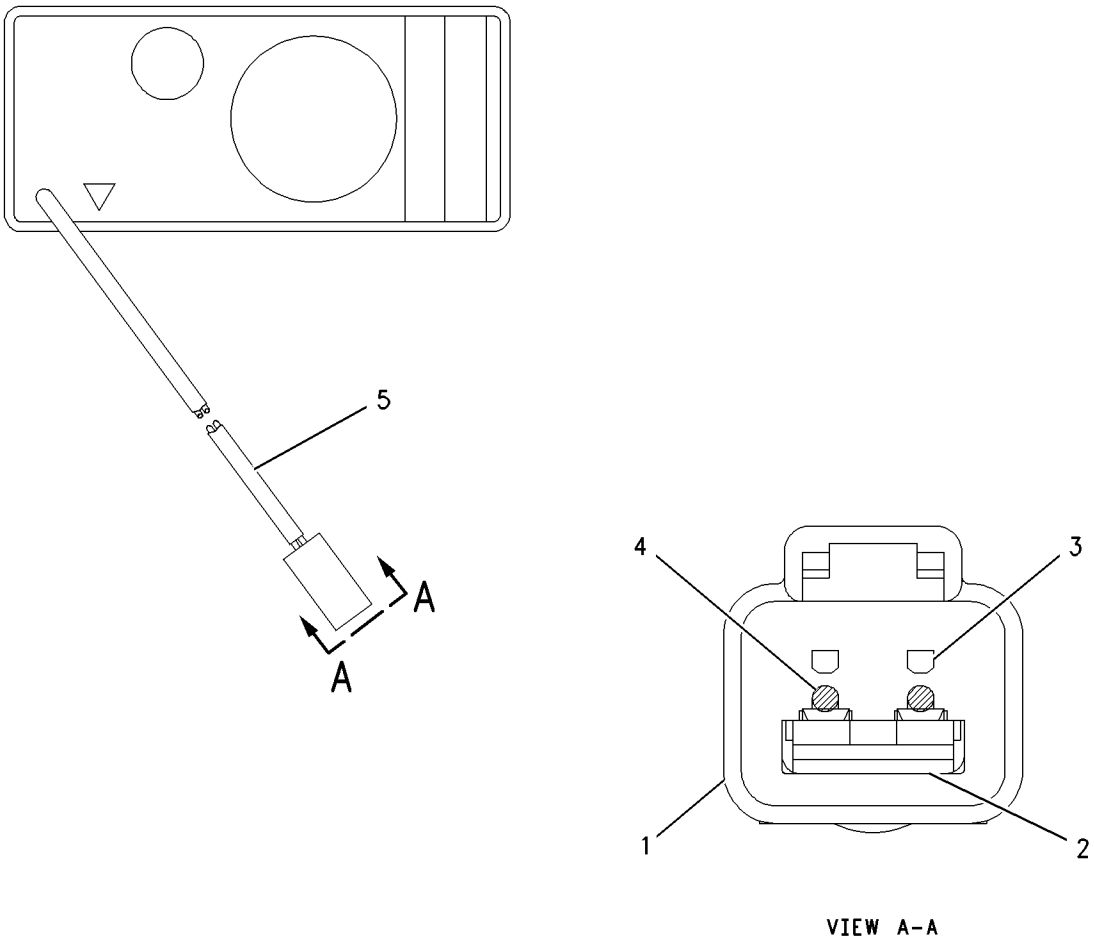

GRAPHIC #1 g00677117

167-7494 WIRING GP-CONSOLE

S/N: AKT1-UP

PART OF 172-5067 WIRING GP-PLATFORM

SMCS-1408 **i01540923**

NOTE	REF NO	GRAPHIC REF	PART NUMBER	QTY	PART NAME 1 2 3 4 5 6 (PRODUCT LEVEL)	SEE PAGE
	1	1	**3T-2662**	1	CIRCUIT BREAKER AS (15 AMP) (FRONT FLOODS)	
		1	**6V-8376**	2	SCREW-MACHINE (8-32X0.25 IN)	
		1	**9B-7233**	2	LOCKWASHER	
	2	1	**6T-3642**	1	CIRCUIT BREAKER AS (10 AMP) (ELECTRONIC CLUTCH BRAKE)	
		1	**6V-8376**	2	SCREW-MACHINE (8-32X0.25 IN)	
		1	**9B-7233**	2	LOCKWASHER	
	3	1	**6T-3643**	1	CIRCUIT BREAKER AS (15 AMP) (BLOWER)	
		1	**6V-8376**	2	SCREW-MACHINE (8-32X0.25 IN)	
		1	**9B-7233**	2	LOCKWASHER	
	4	1	**6T-3643**	1	CIRCUIT BREAKER AS (15 AMP) (IMPLEMENT)	
		1	**6V-8376**	2	SCREW-MACHINE (8-32X0.25 IN)	
		1	**9B-7233**	2	LOCKWASHER	
	5	1	**167-7499**	1	BRACKET	
	6	1	**125-1302**	1	SWITCH GP-MAGNETIC (START RELAY)	
		1	**102-8802**	1	KIT-RECEPTACLE (2 PIN)	
					(INCLUDES RECEPTACLE AS & WEDGE)	
		1	**3E-3365**	1	WEDGE-RECEPTACLE LOCK (2 PIN)	
M		1	**5C-2890**	2	NUT (M6X1 THD)	
		1	**186-3735**	2	PIN-CONNECTOR	
BE		1	**9X-1386**		SLEEVE	
	7	1	**128-6157**	1	PLATE	
	8	1	**155-1556**	1	STRAP	
	9	1	**155-1996**	1	CLIP	
	10	1	**155-1998**	1	STUD	
	11	1	**155-2001**	1	RETAINER	
	12	1	**159-2943**	1	WIRE AS	
	13	1	**159-4689**	1	FILM-IDENTIFICATION (CIRCUIT BREAKER)	
	14	1	**159-4696**	1	FILM-IDENTIFICATION (FUSE)	
	15	1	**159-4697**	1	FILM-IDENTIFICATION (CIRCUIT BREAKER)	
	16	1	**164-9980**	1	FILM-IDENTIFICATION (CIRCUIT BREAKER)	
	17	1	**166-7164**	1	CIRCUIT BREAKER AS (125 AMP) (MAIN)	
		1	**6V-8183**	2	NUT-FULL (3/8-24 THD)	
		1	**7X-0608**	2	WASHER-HARD (10.2X16X2.0MM THK)	
		1	**9F-5644**	2	LOCKWASHER	
Y	18	1	**167-0138**	1	SWITCH GP-MAGNETIC (MAIN RELAY)	289
	19	1	**167-3830**	1	PLATE AS	
	20	1	**127-2419**	1	HINGE	
	21	1	**168-0264**	1	STRAP	
	22	1	**168-0265**	1	STRAP	
	23	1	**168-0267**	1	WIRE AS	
	24	1	**168-0270**	1	HARNESS AS (POWER)	
		1	**127-5485**	1	PLUG AS-CONNECTOR (1 PIN)	
		1	**127-5486**	1	RECEPTACLE AS (1 PIN)	
	25	1	**6T-3642**	1	CIRCUIT BREAKER AS (10 AMP) (START KEY SWITCH)	
		1	**6V-8376**	2	SCREW-MACHINE (8-32X0.25 IN)	
		1	**9B-7233**	2	LOCKWASHER	
	26	1	**033-8755**	2	SCREW (1/4-20X1 IN)	
	27	1	**068-4209**	12	SCREW (8-32X0.75 IN)	
	28	1	**2D-6235**	2	LOCKNUT (1/4-20 THD)	
	29	1	**6T-3643**	1	CIRCUIT BREAKER AS (15 AMP) (ENGINE)	
		1	**6V-8376**	2	SCREW-MACHINE (8-32X0.25 IN)	
		1	**9B-7233**	2	LOCKWASHER	
	30	1	**3S-9557**	4	SCREW-PAN HEAD (4-40X0.5 IN)	
	31	1	**6V-5645**	4	SCREW-MACHINE (10-32X0.87 IN)	
	32	1	**6V-8185**	4	NUT (1/4-20 THD)	

167-7494 **WIRING GP-CONSOLE** ***(contd.)*** **i01540923**

NOTE	REF NO	GRAPHIC REF	PART NUMBER	QTY	PART NAME 1 2 3 4 5 6 (PRODUCT LEVEL)	SEE PAGE
	33	1	**8T-4205**	4	WASHER-HARD (7.2X14.5X2MM THK)	
	34	1	**9X-6258**	2	SCREW-MACHINE (6-32X.50 IN)	
	35	1	**173-1566**	1	CAP AS	
	36	1	**155-2271**	1	KIT-CONNECTING PLUG (4 PIN)	
					(INCLUDES PLUG AS, WEDGE & INTERFACE SEAL)	
	37	1	**2L-8077**	1	TERMINAL (RING)	
	38	1	**8C-6354**	1	CAP-RECEPTACLE	
BE	39	1	**125-7875**		TUBE-SHRINKABLE	
BD	40	1	**5P-5677**		WIRE (18 GA)	
	41	1	**168-0275**	1	FUSE BLOCK & HARNESS AS	
		1	**168-0269**	1	HARNESS AS-FUSE PANEL	
		1	**102-8807**	2	KIT-CONNECTING PLUG (2 PIN)	
					(INCLUDES PLUG AS & WEDGE)	
		1	**102-8802**	1	KIT-RECEPTACLE (2 PIN)	
					(INCLUDES RECEPTACLE AS & WEDGE)	
		1	**102-8803**	1	KIT-RECEPTACLE (3 PIN)	
					(INCLUDES RECEPTACLE AS & WEDGE)	
		1	**102-8804**	1	KIT-RECEPTACLE (4 PIN)	
					(INCLUDES RECEPTACLE AS & WEDGE)	
		1	**9W-1441**	3	FUSE (15 AMP)	
		1	**9W-1442**	10	FUSE (10 AMP)	
		1	**9W-1446**	3	FUSE (20 AMP)	
	42	1	**151-1396**	1	BLOCK AS-FUSE (16 POLE)	
		1	**151-1398**	2	KIT-TERMINAL LOCK (FUSE BLOCK)	
		1	**6V-8185**	2	NUT (1/4-20 THD)	
		1	**1H-3244**	2	LOCKWASHER (6.64X11.91X.65MM THK)	
	43	1	**151-1397**	1	COVER-FUSE BLOCK	
	44	1	**7D-6922**	2	LOCKNUT (6-32 THD)	
BF		1	**3S-2093**	5	STRAP-CABLE	
BF		1	**7K-1181**	5	STRAP-CABLE	

B-USE AS REQUIRED
D-ORDER BY THE METER
E-ORDER BY THE CENTIMETER
F-NOT SHOWN
M-METRIC PART
Y-SEPARATE ILLUSTRATION

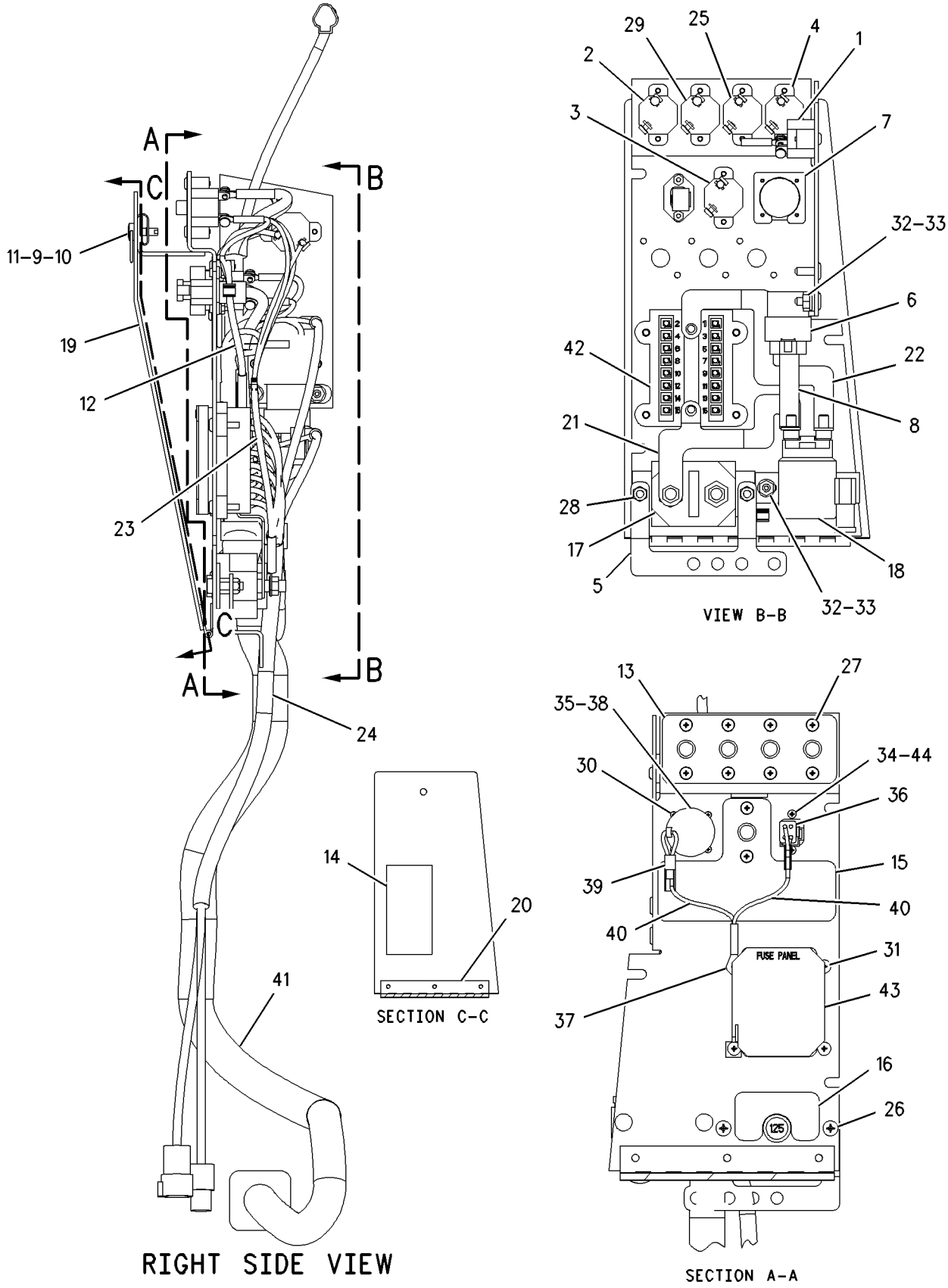

GRAPHIC #1 g00755119

MEMORANDA

166-5442 WIRING GP-ENGINE

S/N: 5JJ3200-UP
PART OF 171-5806, 206-3114 ENGINE AR
ALSO AN ATTACHMENT

SMCS-1403, 1408 **i01446353**

NOTE	REF NO	GRAPHIC REF	PART NUMBER	QTY	PART NAME 1 2 3 4 5 6 (PRODUCT LEVEL)	SEE PAGE
	1	1	**121-0596**	1	WIRE AS	
	2	1	**175-7460**	1	HARNESS AS	
		1	**155-2260**	4	KIT-CONNECTING PLUG (3 PIN)	
					(INCLUDES PLUG AS & WEDGE)	
		1	**155-2270**	3	KIT-CONNECTING PLUG (2 PIN)	
					(INCLUDES PLUG AS & WEDGE)	
		1	**155-2271**	6	KIT-CONNECTING PLUG (4 PIN)	
					(INCLUDES PLUG AS & WEDGE)	
		1	**102-8802**	1	KIT-RECEPTACLE (2 PIN)	
					(INCLUDES RECEPTACLE AS & WEDGE)	
		1	**102-8803**	6	KIT-RECEPTACLE (3 PIN)	
					(INCLUDES RECEPTACLE AS & WEDGE)	
		1	**102-8804**	1	KIT-RECEPTACLE (4 PIN)	
					(INCLUDES RECEPTACLE AS & WEDGE)	
	3	1	**175-7463**	1	BRACKET	
	4	1	**178-1780**	9	CLIP	
	5	1	**178-1781**	5	CLIP	
	6	1	**195-1239**	1	BRACKET	
	7	1	**195-1243**	1	BRACKET	
	8	1	**0S-1594**	1	BOLT (3/8-16X1 IN)	
	9	1	**130-5300**	1	CLIP	
	10	1	**132-5789**	2	CLIP	
	11	1	**165-3930**	1	BOLT-HEX HEAD	
	12	1	**4B-5324**	4	WASHER (3.9X9.6X1.2MM THK)	
	13	1	**4P-7581**	1	CLIP	
	14	1	**4P-8134**	3	CLIP	
	15	1	**5M-2894**	1	WASHER-HARD (10.2X18.5X2.5MM THK)	
	16	1	**6V-8801**	2	NUT (3/8-16 THD)	
	17	1	**8T-4896**	4	WASHER-HARD (10.2X18.5X2.5MM THK)	
	18	1	**9X-6258**	4	SCREW-MACHINE (6-32X.50 IN)	
BF		1	**9X-6772**	30	STRAP-CABLE	
BF		1	**7K-1181**	10	STRAP-CABLE	

B-USE AS REQUIRED
F-NOT SHOWN

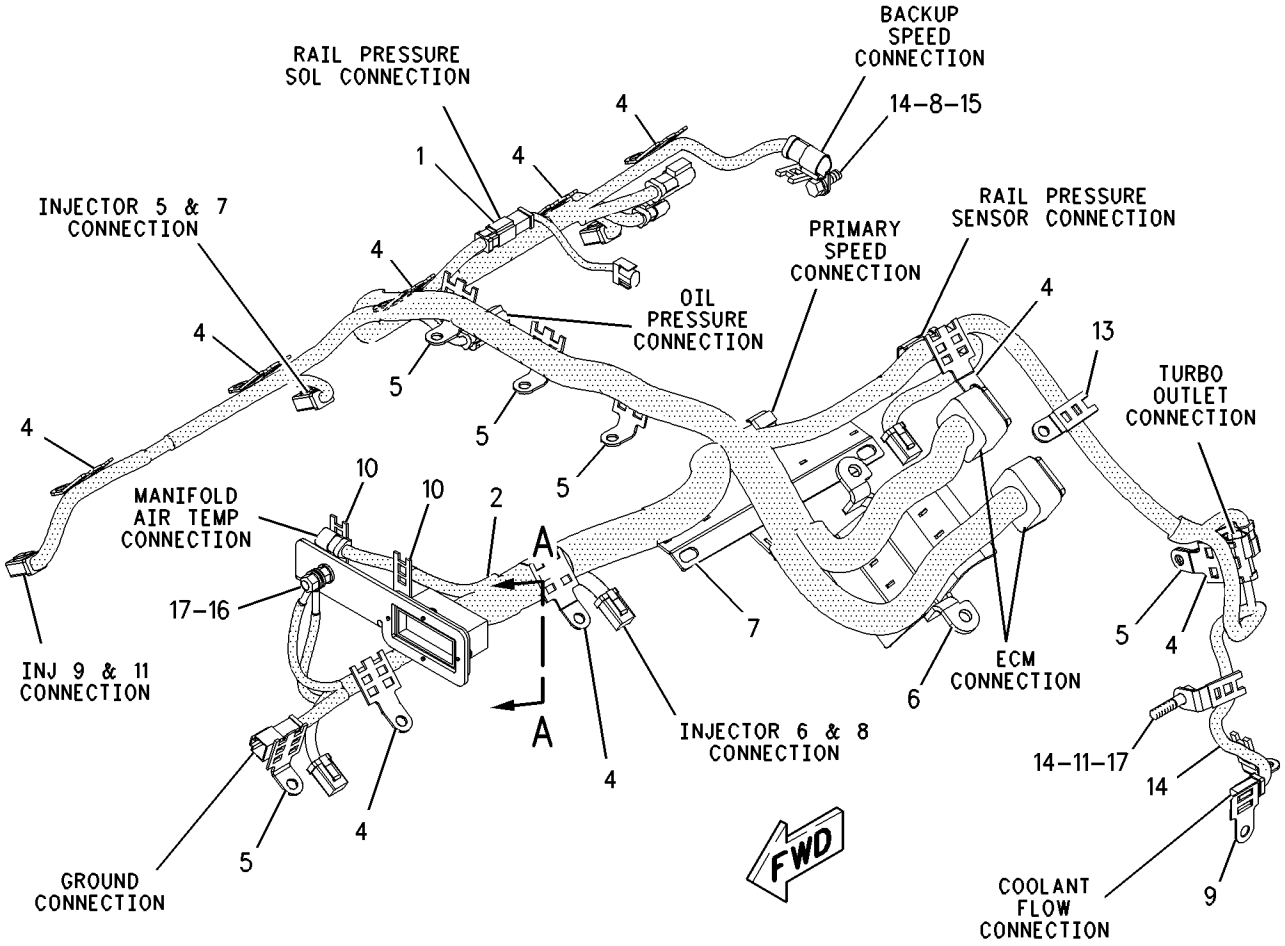

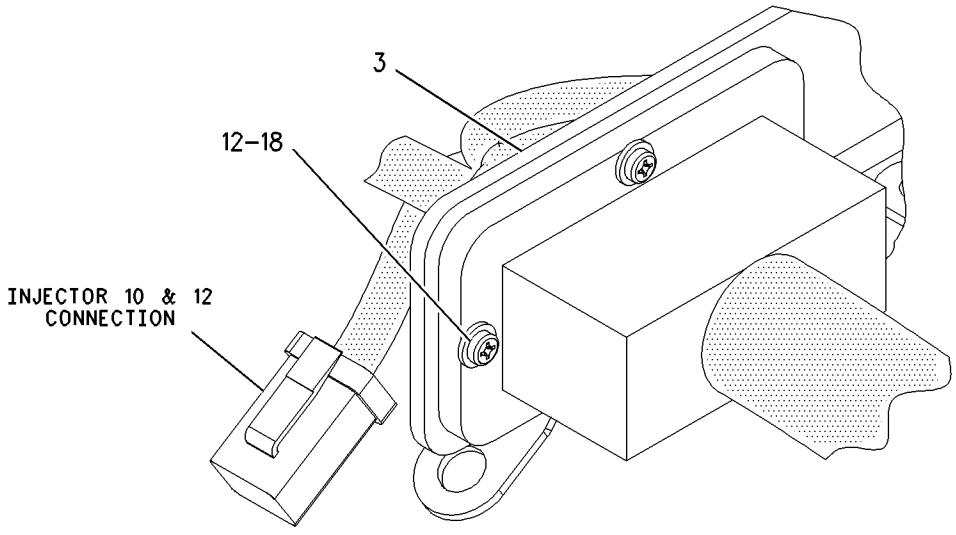

VIEW A-A

GRAPHIC #1 g00757906

ELECTRICAL AND STARTING SYSTEM

172-5067 WIRING GP-PLATFORM

S/N: AKT1-UP

PART OF 171-5801 CHASSIS AR

SMCS-1408 **i01700662**

NOTE	REF NO	GRAPHIC REF	PART NUMBER	QTY	PART NAME 1 2 3 4 5 6 (PRODUCT LEVEL)	SEE PAGE
B	1	2	**102-8803**	2	KIT-RECEPTACLE (3 PIN)	
					(EACH KIT INCLUDES RECEPTACLE AS & WEDGE)	
Y	2	1	**3E-6328**	1	ALARM GP	188
	3	1	**6T-7058**	1	LENS-RED	
	4	2	**6V-8927**	10	BOLT-SOCKET HEAD (6-32X0.5 IN)	
B	5	1,2	**7K-1181**	46	STRAP-CABLE	
	6	1	**7N-1996**	1	LAMP (24 VOLT)	
	7	2	**7N-5876**	4	LAMP (24 VOLT)	
B	8	1,2	**8T-8737**	21	PLUG-SEAL	
Y	9	1	**9G-7641**	1	SWITCH GP-START	290
B	10	2	**9X-6772**	17	STRAP-CABLE	
Y	11	1	**103-5526**	1	CONTROL GP-MONITOR SYS DIMMER	692
Y	12	1	**111-7003**	1	PLUG AS-WIRING	243
	13	1	**122-2738**	1	RETAINER	
	14	1	**125-4490**	1	CLIP (POWER OUT)	
	15	1	**137-3937**	1	FILM-IDENTIFICATION (EXCLAMATION SYMBOL)	
	16	1	**148-0334**	1	GROMMET-SPLIT	
B	17	2	**155-2276**	1	WEDGE-PLUG LOCK (3 PIN)	
	18	1	**158-6632**	1	SWITCH AS-HORN	
		1	**2H-3922**	1	LOCKWASHER (19.86X31.31X1.3MM THK)	
		1	**3B-4501**	1	LOCKWASHER (4.42X7.22X1.02M THK)	
		1	**3E-3365**	1	WEDGE-RECEPTACLE LOCK (2 PIN)	
		1	**5L-7200**	1	SCREW (8-32X0.375 IN)	
		1	**6V-8370**	1	NUT-HEX (3/4-32 THD)	
		1	**7T-9515**	1	KNOB-HORN	
		1	**9X-0199**	1	BOOT-SWITCH	
		1	**9X-3401**	2	PIN-CONNECTOR	
		1	**102-8802**	1	KIT-RECEPTACLE (2 PIN)	
					(INCLUDES RECEPTACLE AS & WEDGE)	
	19	1	**159-3449**	1	SOCKET AS (12 VOLT POWER OUTLET)	
		1	**102-8802**	1	KIT-RECEPTACLE (2 PIN)	
					(INCLUDES RECEPTACLE AS & WEDGE)	
		1	**186-3735**	2	PIN-CONNECTOR	
		1	**3E-3365**	1	WEDGE-RECEPTACLE LOCK (2 PIN)	
	20	1	**218-1946**	1	HARNESS AS (RH CONSOLE)	
	21	2	**160-0638**	1	HARNESS AS (DASH)	
Y	22	2	*167-7494*	1	WIRING GP-CONSOLE	292
	23	1	**170-3461**	1	BASE AS-LIGHT	
		1	**102-8802**	1	KIT-RECEPTACLE (2 PIN)	
					(INCLUDES RECEPTACLE AS & WEDGE)	
		1	**3E-3365**	1	WEDGE-RECEPTACLE LOCK (2 PIN)	
		1	**3T-0304**	1	BASE-INDICATOR LIGHT	
BE		1	**9X-1813**		SLEEVE	
	24	2	**172-5972**	1	HARNESS AS (PLATFORM)	
	25	1	**172-5973**	1	CABLE AS	
		1	**1S-4915**	2	LINER-CONDUIT	
BE		1	**5P-0695**		CONDUIT	
BE		1	**8T-2225**		TUBE-HEAT SHRINK	
E		1	**159-8047**		CABLE-ELECTRICAL (0 GA)(RED) (80CM)	
		1	**170-3793**	2	RING-TERMINAL	
	26	1	**172-5974**	1	CABLE AS	
		1	**1S-4915**	2	LINER-CONDUIT	
BE		1	**5P-0695**		CONDUIT	
BE		1	**8T-2225**		TUBE-HEAT SHRINK	
E		1	**159-8047**		CABLE-ELECTRICAL (0 GA)(RED) (100CM)	
		1	**170-3793**	1	RING-TERMINAL	

172-5067 **WIRING GP-PLATFORM** ***(contd.)*** **i01700662**

NOTE	REF NO	GRAPHIC REF	PART NUMBER	QTY	PART NAME 1 2 3 4 5 6 (PRODUCT LEVEL)	SEE PAGE
		1	**170-3795**	1	RING-TERMINAL	
	27	1	**173-6623**	1	WIRE AS	
	28	1	**180-2916**	1	PLUG AS-CODE	
		1	**102-8805**	1	KIT-RECEPTACLE (6 PIN)	
					(INCLUDES RECEPTACLE AS & WEDGE)	
		1	**3E-3383**	1	WEDGE-RECEPTACLE LOCK	
D		1	**5P-5677**		WIRE-ELECTRICAL (18 GA) (3M)	
		1	**9G-3695**	3	PLUG (GROMMET SEALING)	
		1	**9X-3401**	3	PIN-CONNECTOR	
					—OR—	
		1	**126-1767**	3	CONNECTOR-PIN	
	29	2	**187-5177**	1	HARNESS AS (RH CONSOLE COVER)	
	30	1	**187-8677**	1	PLATE AS	
		1	**7T-1099**	2	LINK	
	31	1	**189-2319**	1	SEAL	
	32	1	**209-0381**	1	CONVERTER-POWER (24 V TO 12 V)	
	33	1	*116-4502*	1	SWITCH AS-ROCKER (24 VOLT)(SEALED-ILLUMINATED)	
		1	**3E-8825**	1	LAMP (24 VOLT)	
		1	**116-4501**	1	ACTUATOR-ROCKER	
		1	**116-4503**	1	SWITCH AS-ROCKER (24 VOLT)(ILLUMINATED)	
B	34	2	**155-2260**	1	KIT-CONNECTING PLUG (3 PIN)	
					(INCLUDES PLUG AS & WEDGE)	
B	35	2	**102-8804**	1	KIT-RECEPTACLE (4 PIN)	
					(INCLUDES RECEPTACLE AS & WEDGE)	
	36	1	**102-8806**	1	KIT-RECEPTACLE (8 PIN)	
					(INCLUDES RECEPTACLE AS & WEDGE)	
	37	1	**3E-9044**	1	SWITCH AS-ROCKER (24 VOLT)(SEALED)(ILLUMINATED)	
		1	**105-9149**	1	SWITCH AS (24 VOLT)(ILLUMINATED)	
		1	**3E-8825**	2	LAMP (24 VOLT)	
		1	**6V-1748**	1	ACTUATOR-ROCKER	
	38	1	**3P-3839**	1	GROMMET	
	39	1	**4M-5281**	3	BOLT (1/4-20X.750 IN)	
	40	1,2	**4P-8134**	4	CLIP (LADDER)	
	41	1	**5F-9757**	1	GROMMET	
	42	1	**5M-3062**	5	BOLT (3/8-16X0.75 IN)	
	43	1	**5P-1075**	2	WASHER-HARD (10.2X22.5X3MM THK)	
	44	1	**5P-6264**	1	GROMMET	
	45	1	**5S-7349**	2	BOLT (1/4-20X0.5 IN)	
	46	1	**6P-6641**	1	GROMMET	
	47	2	**6T-3990**	1	SWITCH AS-ROCKER (SIDE LIGHTS)	
		2	**3L-8187**	2	LOCKWASHER (3.7X7.24X.48MM THK)	
		2	**6V-8374**	2	SCREW-MACHINE (6-32X0.25 IN)	
	48	2	**6T-5814**	1	SWITCH AS (FRONT LIGHTS)	
		2	**3L-8187**	4	LOCKWASHER (3.7X7.24X.48MM THK)	
		2	**6V-8374**	4	SCREW-MACHINE (6-32X0.25 IN)	
	49	2	**6T-6066**	1	SWITCH GP-ROCKER (START AID)	
		2	**3L-8187**	2	LOCKWASHER (3.7X7.24X.48MM THK)	
		2	**6V-8374**	2	SCREW-MACHINE (6-32X0.25 IN)	
	50	2	**6V-8801**	2	NUT (3/8-16 THD)	
	51	1	**8T-4205**	7	WASHER-HARD (7.2X14.5X2MM THK)	
	52	1,2	**8T-4896**	7	WASHER-HARD (10.2X18.5X2.5MM THK)	
	53	1	**8T-9367**	2	BOLT (1/4-20X2 IN)	
	54	1	**9X-2498**	4	SCREW-HEX FLANGE (10-24X0.5 IN)	
BD	55	1	**5P-5901**		SEAL	
	56	2	**6T-3990**	1	SWITCH AS-ROCKER (AUXILIARY)	
		2	**3L-8187**	2	LOCKWASHER (3.7X7.24X.48MM THK)	
		2	**6V-8374**	2	SCREW-MACHINE (6-32X0.25 IN)	
	57	2	**6T-5814**	1	SWITCH AS (REAR LIGHTS)	
		2	**3L-8187**	4	LOCKWASHER (3.7X7.24X.48MM THK)	

172-5067 **WIRING GP-PLATFORM** ***(contd.)*** **i01700662**

NOTE	REF NO	GRAPHIC REF	PART NUMBER	QTY	PART NAME 1 2 3 4 5 6 (PRODUCT LEVEL)	SEE PAGE
		2	**6V-8374**	4	SCREW-MACHINE (6-32X0.25 IN)	
M	58	1	**8T-4191**	2	BOLT (M10X1.5X16MM)	

B-USE AS REQUIRED
D-ORDER BY THE METER
E-ORDER BY THE CENTIMETER
M-METRIC PART
Y-SEPARATE ILLUSTRATION

172-5067 **WIRING GP-PLATFORM** ***(contd.)*** **i01700662**

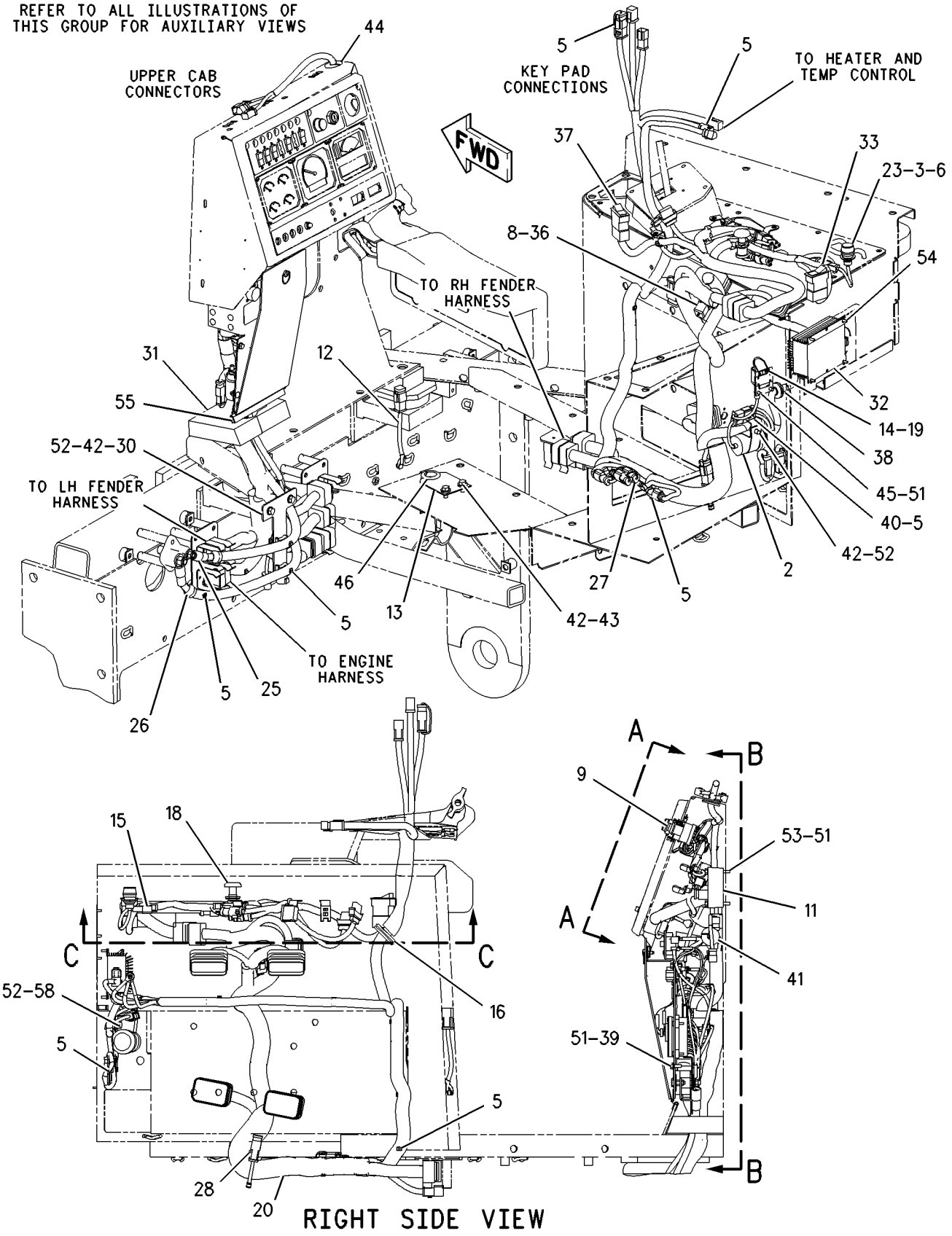

GRAPHIC #1 g00870892

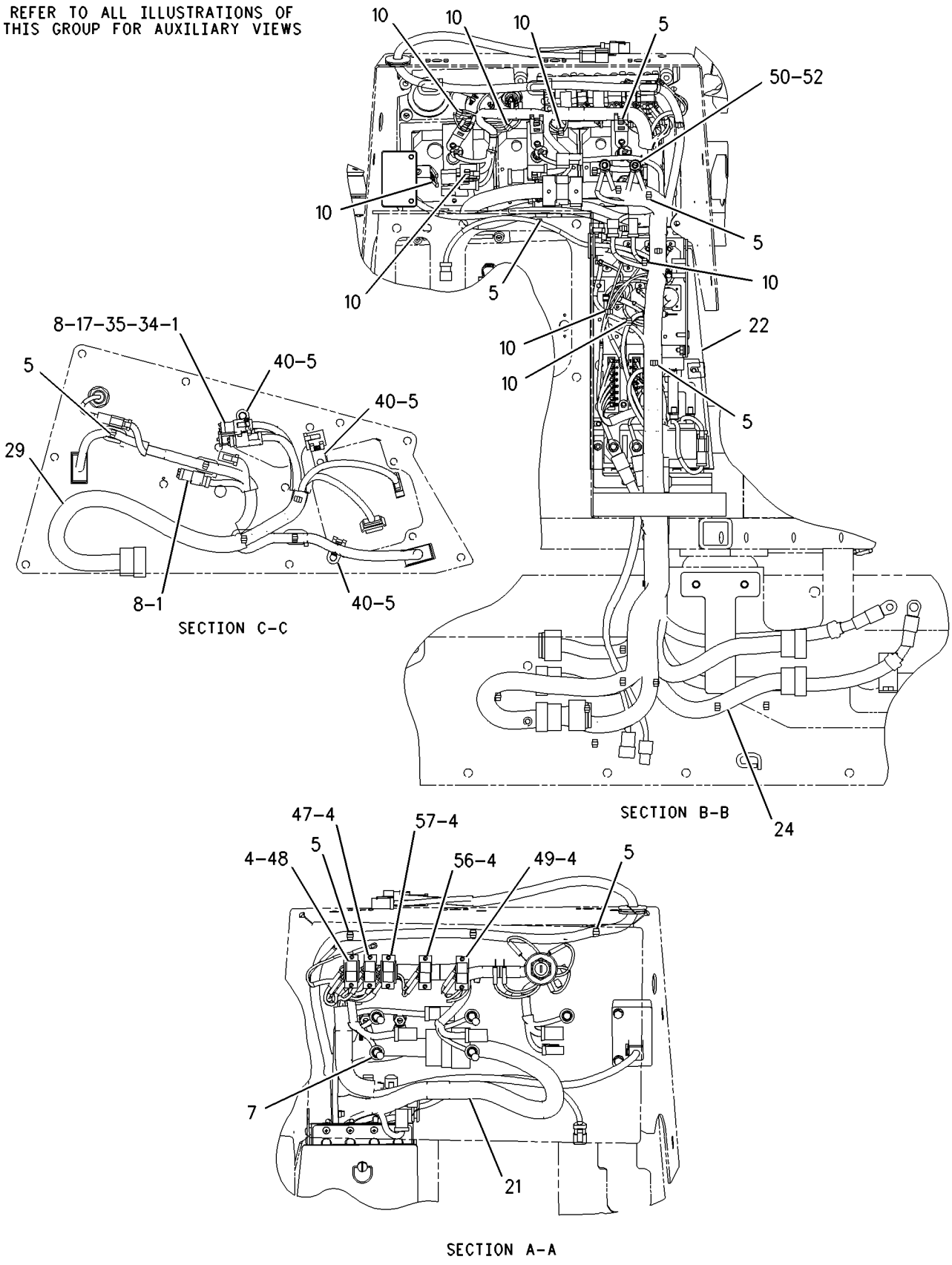

GRAPHIC #2 g00862431

109-0401 WIRING GP-UNIT INJECTOR

S/N: 5JJ3200-UP
PART OF 171-5806, 206-3114 ENGINE AR
ALSO AN ATTACHMENT

SMCS-1290, 1408 **i01612740**

NOTE	REF NO	GRAPHIC REF	PART NUMBER	QTY	PART NAME 1 2 3 4 5 6 (PRODUCT LEVEL)	SEE PAGE
	1	1	**7E-6508**	2	CAP AS (UNIT INJECTOR)	
	2	1	**107-6761**	1	CLIP	
	3	1	**2H-3755**	1	BOLT (5/16-18X0.62 IN)	
	4	1	**9M-1974**	1	WASHER-HARD (8.8X16X2MM THK)	
	5	1	**179-7087**	1	HARNESS AS-ENGINE (UNIT INJECTOR)	
	6	1	**033-6034**	1	SEAL-O-RING	
	7	1	**5L-4019**	1	RING-RETAINING	

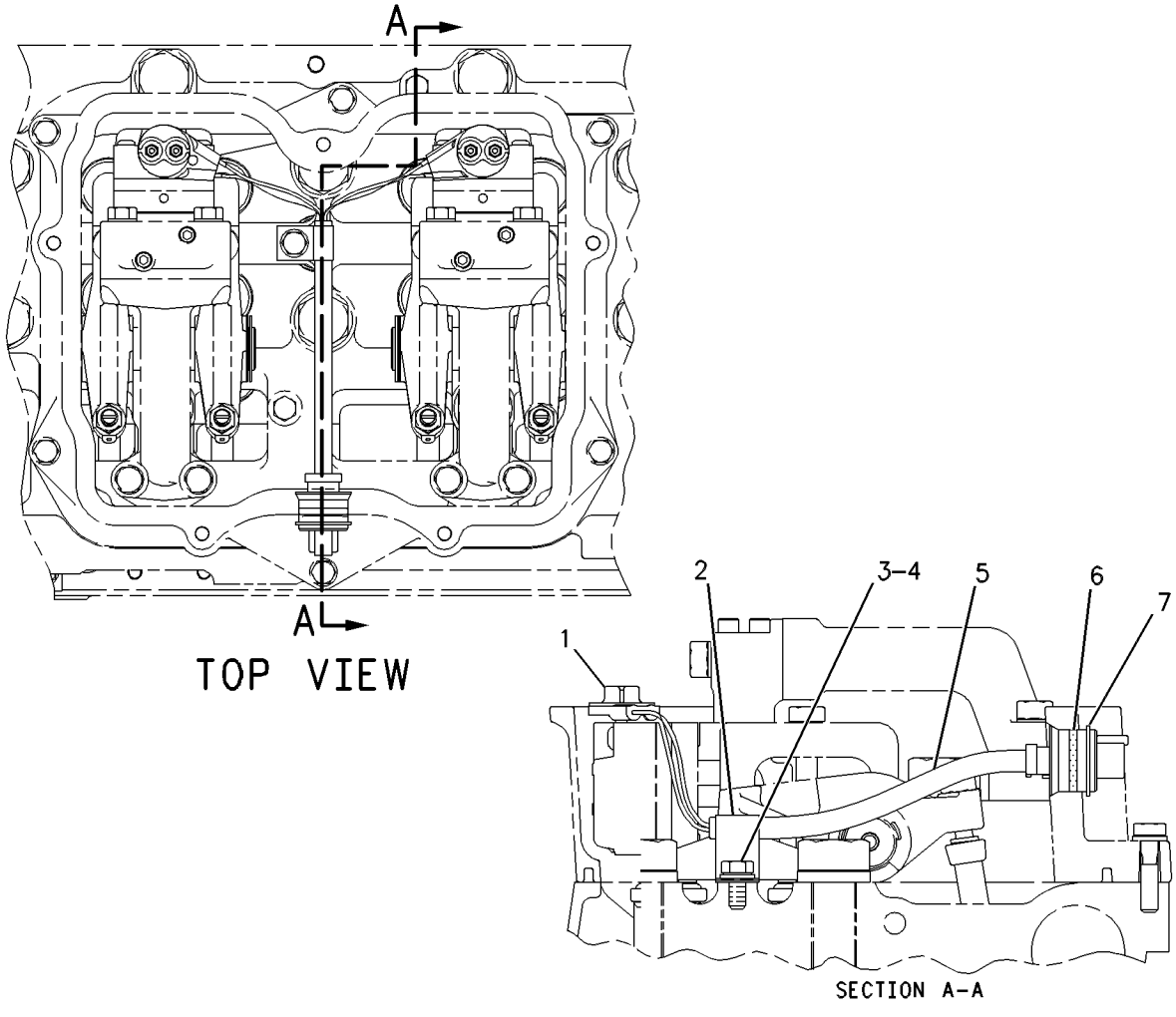

GRAPHIC #1 g00586543

POWER TRAIN

110-2637 AXLE GP-POWER TRAIN

S/N: AKT1-UP

PART OF 171-5808 POWER TRAIN AR

SMCS-3013, 3259, 3278 **i01401277**

NOTE	REF NO	GRAPHIC REF	PART NUMBER	QTY	PART NAME 1 2 3 4 5 6 (PRODUCT LEVEL)	SEE PAGE
	1	1	**147-1226**	2	SHAFT AS	
					(EACH SHAFT AS INCLUDES)	
		1	**8E-0618**	1	BEARING-THRUST	
C	2	1	**150-1302**	2	SHAFT AS	
					(EACH SHAFT AS INCLUDES)	
		1	**8E-0618**	1	BEARING-THRUST	

QUANTITIES SHOWN ARE THOSE REQUIRED FOR BOTH LH AND RH SIDES
C-CHANGE FROM PREVIOUS TYPE

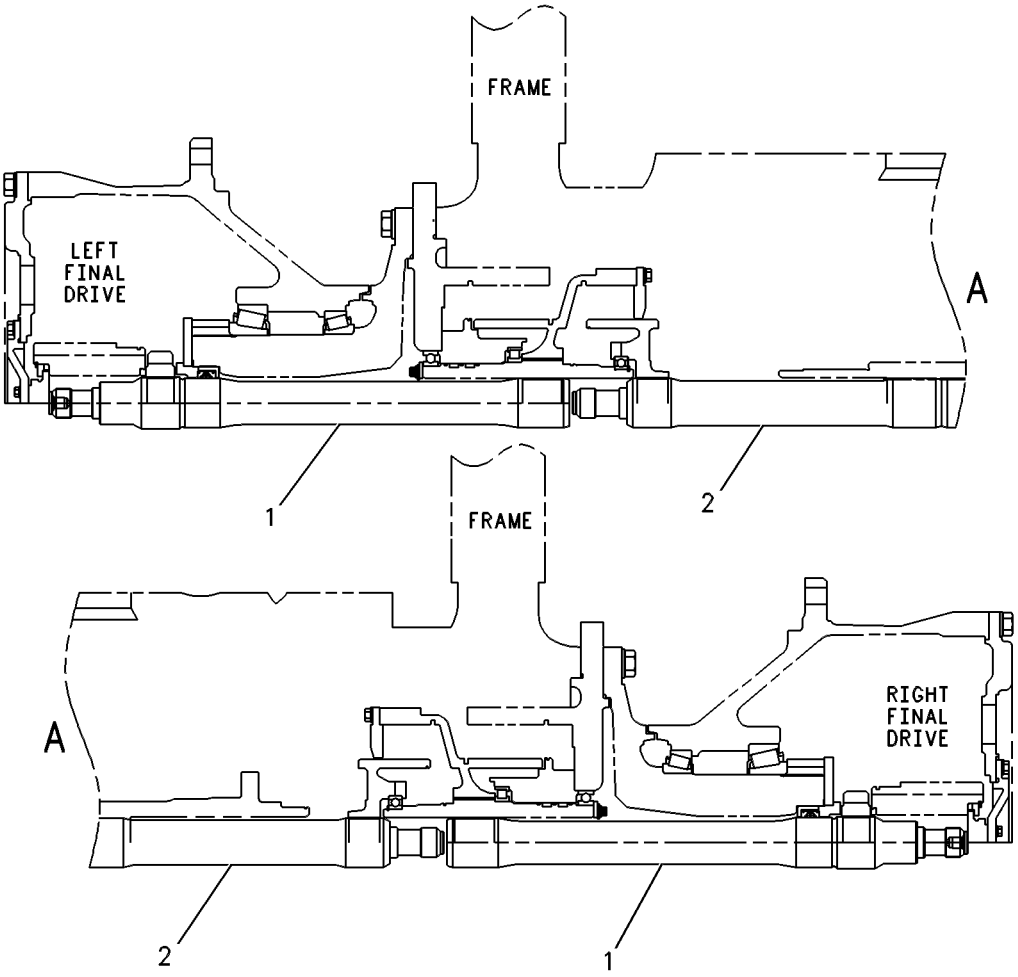

GRAPHIC #1 g00252802

MEMORANDA

POWER TRAIN

172-2263 CASE & PARTS GP-PLANETARY

S/N: 7SY1-UP

PART OF 172-2268 TRANSMISSION AR

SMCS-3064 **i01689219**

NOTE	REF NO	GRAPHIC REF	PART NUMBER	QTY	PART NAME 1 2 3 4 5 6 (PRODUCT LEVEL)	SEE PAGE
	1	1	**110-9291**	1	COVER AS	
		1	**7M-8480**	2	DOWEL	
	2	1	**9M-9647**	3	SEAL-O-RING	
	3	1	**5P-8998**	1	FITTING (1/4-18 NPTF THD)	
	4	1	**172-3473**	1	CASE AS	
		1	**4B-9785**	3	BALL	
		1	**4D-8148**	2	DOWEL	
		1	**114-4655**	1	PLUG-CUP	
	5	1	**5P-9519**	1	SEAL-O-RING	
	6	1	**6L-9284**	1	SEAL-O-RING	
	7	1	**8S-9130**	1	SCREEN-SUCTION	
	8	1	**8T-6762**	1	PLUG-PIPE	
Y	9	1	**106-4150**	1	DRAIN GP-ECOLOGY	322
	10	1	**6L-9965**	1	SEAL-O-RING	
	11	1	**8T-2501**	4	BOLT (3/8-16X2 IN)	
	12	1	**9G-8615**	1	COVER	
	13	1	**8P-0058**	1	GASKET-COVER	
	14	1	**034-3557**	25	BOLT-LOCKING (3/8-16X1.125 IN)	
	15	1	**5K-9107**	2	BOLT-LOCKING (3/8-16X0.75 IN)	
	16	1	**5K-5120**	1	STRIP	
	17	1	**9S-7710**	1	ELBOW-FLARED	
	18	1	**5M-2894**	1	WASHER-HARD (10.2X18.5X2.5MM THK)	
	19	1	**9S-1350**	1	CLIP	
	20	1	**172-4275**	1	COVER	
	21	1	**186-3161**	1	GASKET-COVER	
	22	1	**9S-4191**	4	PLUG	
	23	1	**3J-1907**	7	SEAL-O-RING	
	24	1	**2S-4078**	3	SEAL-O-RING	
	25	1	**8J-5914**	3	PLUG	
	26	1	**6V-0852**	3	CAP-DUST	
	27	1	**6V-3965**	3	FITTING AS	
	28	1	**110-9299**	1	TUBE AS	
	29	1	**4K-5175**	4	BOLT-12 POINT HEAD (1/2-13X1.5 IN)	
	30	1	**5K-9235**	1	ELBOW-FLARED	
	31	1	**110-9300**	1	TUBE AS	
	32	1	**5K-9989**	1	TEE-FLARED	
	33	1	**8M-5266**	2	SEAL-O-RING	
	34	1	**112-4512**	1	TUBE	
	35	1	**9X-8880**	15	BOLT (5/8-11X2 IN)	
	36	1	**5P-8247**	15	WASHER-HARD (17X32X3.5MM THK)	

Y-SEPARATE ILLUSTRATION

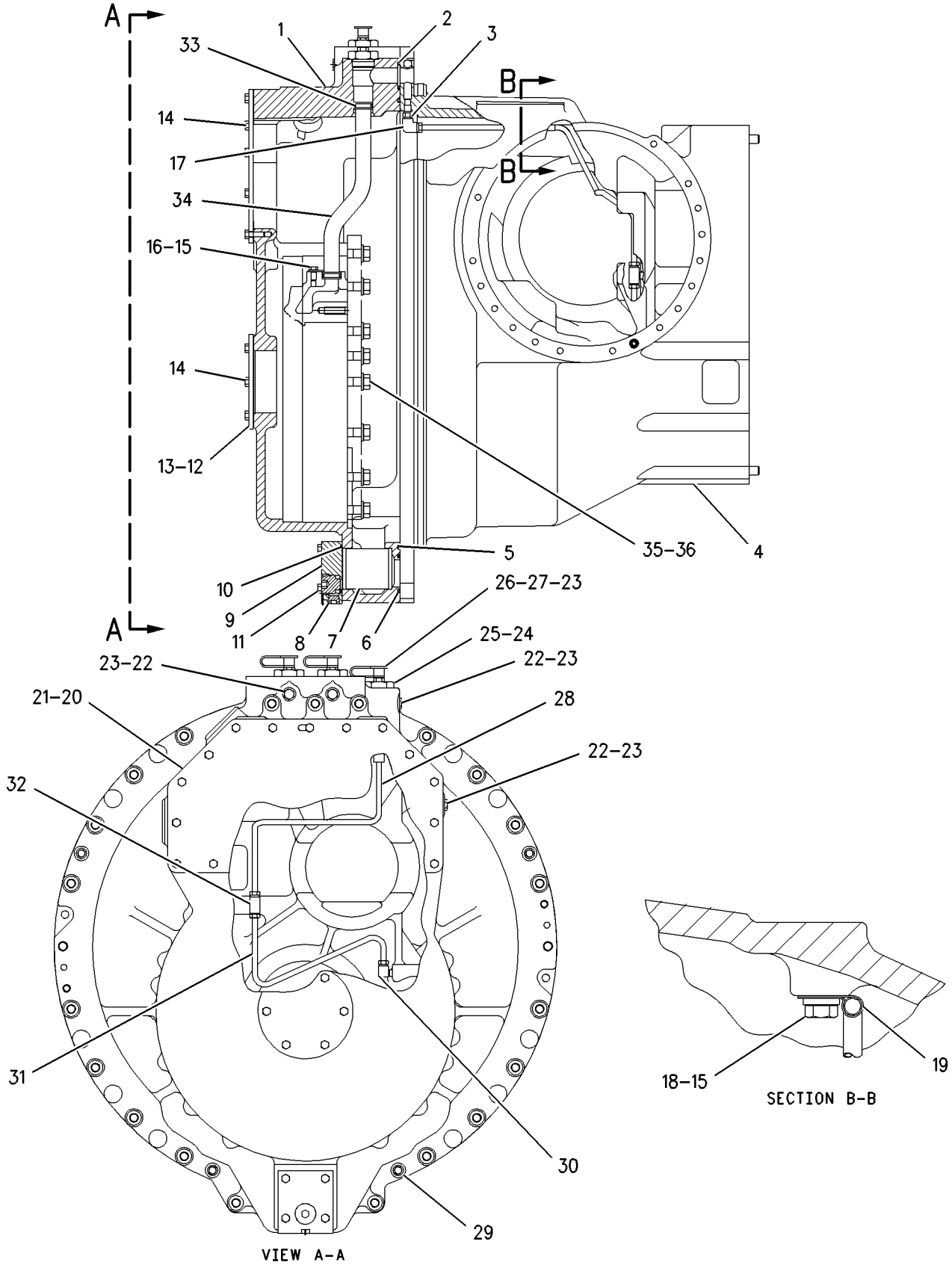

GRAPHIC #1

g00753493

115-7412 CONTROL & MTG GP-TRANSMISSION

S/N: AKT1-UP
ELECTRONIC
PART OF 171-5808 POWER TRAIN AR

SMCS-3065 **i00945132**

NOTE	REF NO	GRAPHIC REF	PART NUMBER	QTY	PART NAME 1 2 3 4 5 6 (PRODUCT LEVEL)	SEE PAGE
	1	1	**6F-7012**	2	STUD (3/8-16 THD)	
Y	2	1	*124-2356*	1	CONTROL GP-STEERING & TMSN	314
	3	1	**5M-3062**	4	BOLT (3/8-16X.75IN)	
	4	1	**6V-8801**	2	NUT (3/8-16 THD)	
	5	1	**8T-4896**	4	WASHER-HARD (2.5MM THK)	

Y-SEPARATE ILLUSTRATION

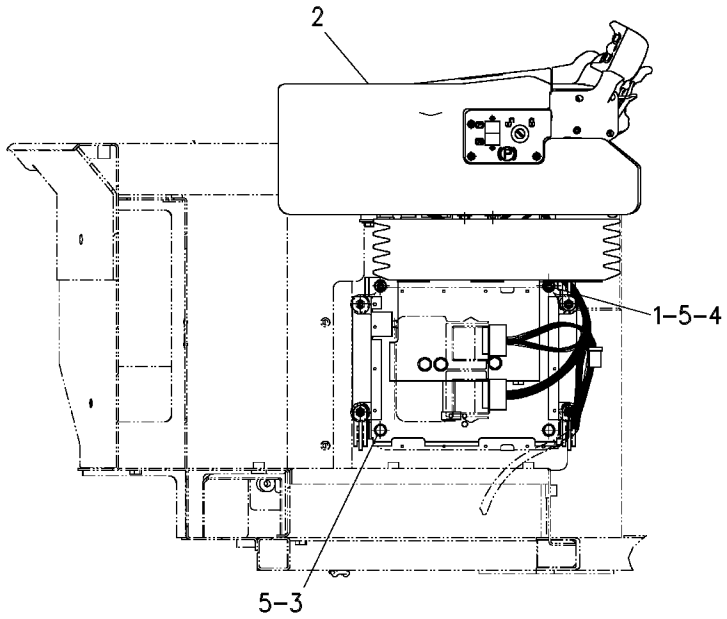

RIGHT SIDE VIEW

GRAPHIC #1 g00272760

MEMORANDA

POWER TRAIN

115-7411 CONTROL GP-BRAKE

S/N: AKT1-UP

PART OF 171-5808 POWER TRAIN AR

SMCS-4284 **i01700670**

NOTE	REF NO	GRAPHIC REF	PART NUMBER	QTY	PART NAME 1 2 3 4 5 6 (PRODUCT LEVEL)	SEE PAGE
	1	1	**148-3663**	1	HOUSING	
	2	1	**117-9758**	1	SHAFT	
	3	1	**7G-8420**	1	PEDAL	
	4	1	**8T-8919**	1	BOLT (1/2-13X1.75 IN)	
	5	1	**148-3664**	1	LEVER	
	6	1	**1B-8714**	1	KEY-WOODRUFF	
	7	1	**7X-0288**	1	BOLT (3/8-16X1.625 IN)	
	8	1	**8T-4167**	1	WASHER-HARD (26X44X4MM THK)	
	9	1	**9S-6465**	1	BEARING-ROLLER	
	10	1	**8F-5340**	1	SEAL-LIP	
	11	1	**7P-4190**	1	BEARING-ROLLER	
	12	1	**112-7686**	1	HARNESS AS	
	13	1	**6V-7607**	1	WASHER-HARD (20X30X2.5MM THK)	
	14	1	**2J-6356**	1	RING-RETAINING	
	15	1	**9G-5209**	1	BRACKET	
	16	1	**5D-0353**	2	BOLT-LOCKING (3/8-16X1 IN)	
	17	1	**8T-4896**	2	WASHER-HARD (10.2X18.5X2.5MM THK)	
	18	1	**9G-5212**	1	LINK	
	19	1	**7T-0905**	2	BOLT-ANCHOR	
	20	1	**8T-4223**	3	WASHER-HARD (13.5X25.5X3MM THK)	
	21	1	**9G-5211**	2	SPACER (12.95X19.05X9.0MM THK)	
	22	1	**1K-6872**	2	LOCKNUT (1/2-13 THD)	
	23	1	**9G-5213**	1	SPRING	
CY	24	1	**147-1680**	1	SENSOR GP-POSITION (BRAKE)	245
	25	1	**2N-3162**	2	SCREW-MACHINE (10-24X1.25 IN)	
	26	1	**9B-7237**	4	BOLT (3/8-16X1.25 IN)	
	27	1	**148-2712**	1	PLATE	
	28	1	**132-7077**	1	SWITCH AS-LIMIT (BRAKE)	
		1	**6V-8376**	3	SCREW-MACHINE (8-32X0.25 IN)	
		1	**9B-7233**	3	LOCKWASHER	
	29	1	**9X-6281**	2	SCREW-MACHINE (4-40X1 IN)	
	30	1	**096-5962**	4	WASHER-HARD (3.4X7X0.8MM THK)	
	31	1	**148-2713**	1	PLATE	
	32	1	**7J-9018**	2	BOLT-SOCKET HEAD (10-24X.625 IN)	
	33	1	**8T-0328**	2	WASHER-HARD (5.5X10X1MM THK)	
	34	1	**148-2714**	1	SPRING	
	35	1	**9M-5731**	2	RIVET-POP	
M	36	1	**106-5472**	1	SETSCREW-HEX SOCKET (M5X0.8X20MM)	
	37	1	**2B-0858**	1	PLUG-PIPE	
	38	1	**6V-0894**	1	SEAL-O-RING	
	39	1	**5P-1075**	4	WASHER-HARD (10.2X22.5X3MM THK)	

C-CHANGE FROM PREVIOUS TYPE
M-METRIC PART
Y-SEPARATE ILLUSTRATION

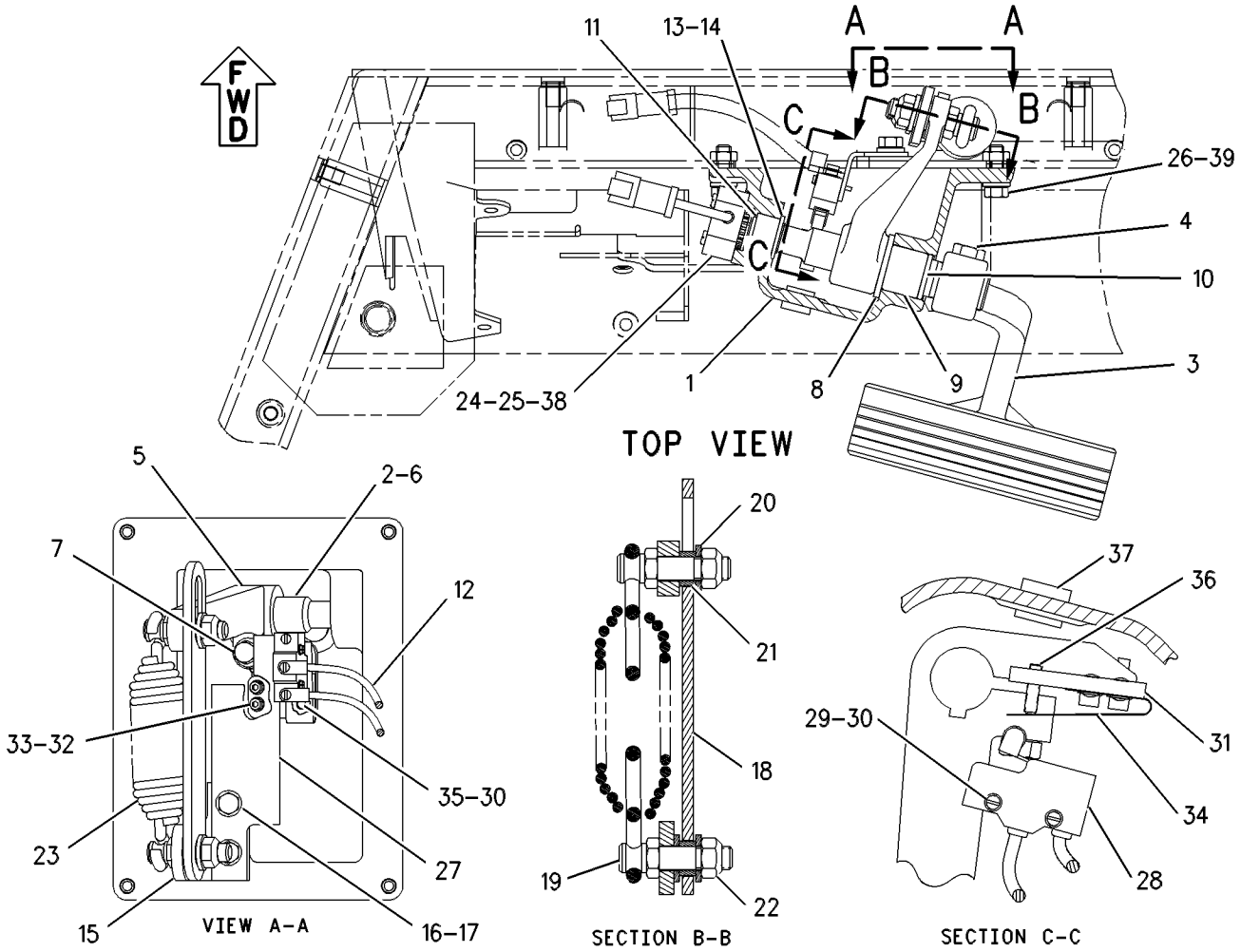

GRAPHIC #1 g00578627

122-1512 CONTROL GP-STEERING & TMSN

S/N: AKT1-UP

PART OF 124-2356 CONTROL GP-STEERING & TMSN

SMCS-3033 **i01404454**

NOTE	REF NO	GRAPHIC REF	PART NUMBER	QTY	PART NAME 1 2 3 4 5 6 (PRODUCT LEVEL)	SEE PAGE
	1	1	**1W-6448**	2	DOWEL	
	2	1	**4B-1270**	1	SCREW-MACHINE (8-32X.75 IN)	
	3	1	**8T-0328**	1	WASHER-HARD (5.5X10X1MM THK)	
Y	4	1	**147-1680**	2	SENSOR GP-POSITION (STEER POSITION)	245
M	5	1	**9X-6615**	6	BOLT-HEX HEAD (M5X0.8X30MM)	
C	6	1	**9X-6772**	6	STRAP-CABLE	
M	7	1	**9X-8902**	3	BOLT-SOCKET HEAD (M3X0.5X8MM)	
	8	1	**103-6262**	2	SCREW-MACHINE (4-40X.63 IN)	
	9	1	**159-7352**	1	PLATE AS	
M		1	**6V-9632**	4	NUT-WELD (M6X1 THD)	
M		1	**8T-3612**	5	NUT-WELD (M8X1.25 THD)	
Y	10	1	**122-7372**	1	GEAR GP-STEERING	466
	11	1	**123-3295**	1	PLATE	
	12	1	**123-3296**	1	GASKET	
	13	1	**123-3826**	1	HANDLE AS	
	14	1	**123-6377**	1	SWITCH AS-LIMIT (REVERSE)	
	15	1	**123-6392**	1	CUSHION AS	
M		1	**8T-3490**	4	NUT-WELD (M10X1.5 THD)	
Y	16	1	*123-6446*	1	CONTROL GP-PARKING BRAKE	464
	17	1	**123-9812**	1	HANDLE AS	
Y	18	1	**125-0583**	1	SUPPORT GP-CONTROL	470
Y	19	1	*125-9664*	1	GEAR GP-STEERING	468
	20	1	**126-2487**	1	PLATE	
Y	21	1	**127-2945**	1	DETENT GP	465
	22	1	**133-8468**	1	HARNESS AS	
CY	23	1	**161-8979**	1	SENSOR GP-POSITION (SPRINGLESS) (DIRECTION)	247
M	24	1	**135-8581**	1	BOLT-SOCKET HEAD (M6X1.0X30MM)	
C	25	1	**3K-7942**	1	CLAMP	
C	26	1	**6V-0894**	3	SEAL-O-RING (29.87MM ID)	
M	27	1	**7X-7888**	2	BOLT (M6X1X90MM)	
	28	1	**8M-2771**	1	CLIP	
M	29	1	**8T-0267**	1	BOLT-SOCKET HEAD (M6X1.0X12MM)	
C	30	1	**8T-4121**	1	WASHER-HARD (11X21X2.5MM THK)	
M	31	1	**8T-4137**	4	BOLT (M10X1.5X20MM)	
M	32	1	**8T-4138**	2	BOLT (M6X1.0X20MM)	
	33	1	**9X-8256**	4	WASHER (6.6X12X2MM THK)	
	34	1	**159-7351**	2	CLIP	

C-CHANGE FROM PREVIOUS TYPE
M-METRIC PART
Y-SEPARATE ILLUSTRATION

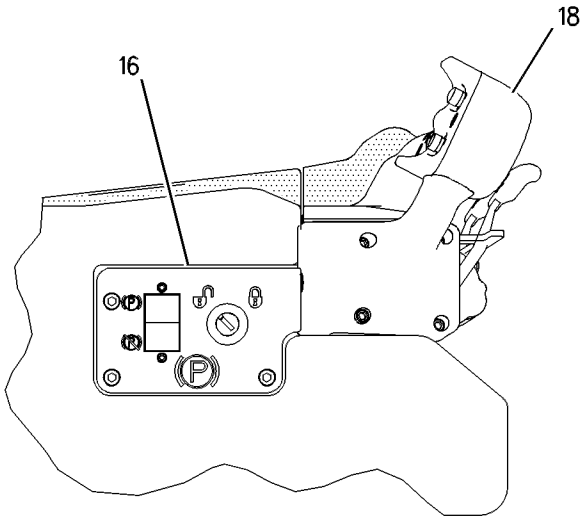

RIGHT SIDE VIEW

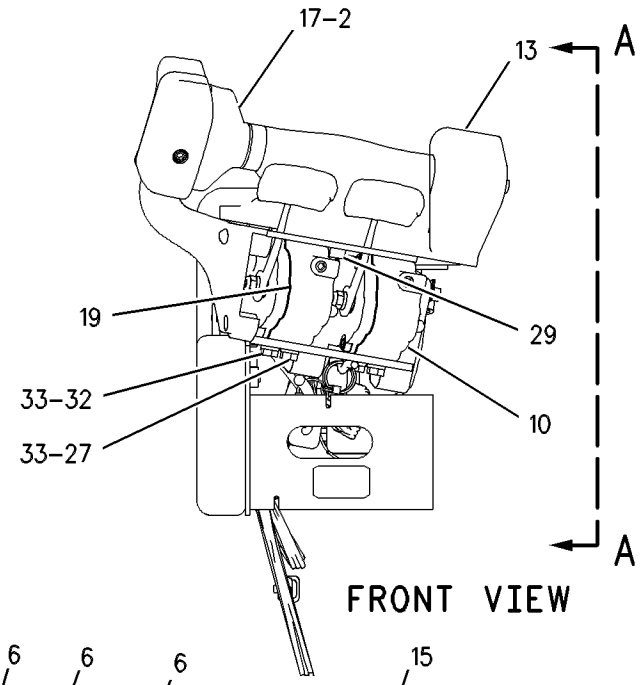

FRONT VIEW

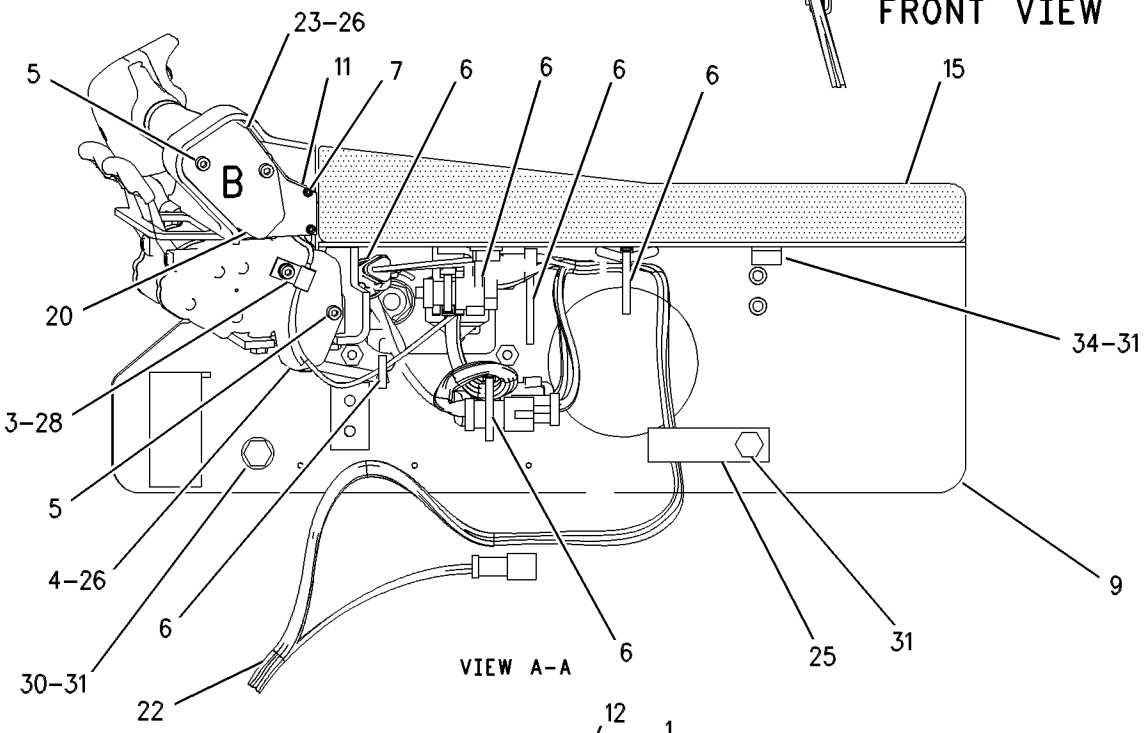

VIEW A-A

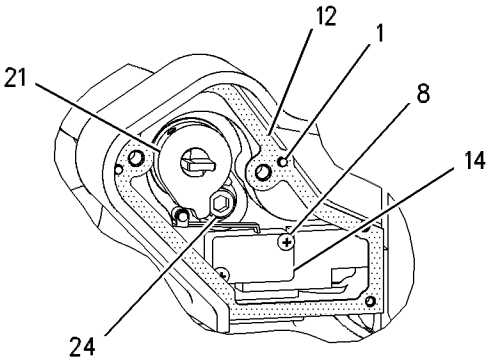

VIEW OF AREA B
(WITH PLATE AND CONTROL GP REMOVED)

GRAPHIC #1 g00628116

124-2356 CONTROL GP-STEERING & TMSN

S/N: AKT1-UP

PART OF 115-7412 CONTROL & MTG GP-TRANSMISSION

SMCS-3033 **i01423796**

NOTE	REF NO	GRAPHIC REF	PART NUMBER	QTY	PART NAME 1 2 3 4 5 6 (PRODUCT LEVEL)	SEE PAGE
B	1	1	**9X-6772**	3	STRAP-CABLE	
Y	2	1	*122-1512*	1	CONTROL GP-STEERING & TMSN	312
	3	1	**122-8026**	1	PLATE	
	4	1	**123-3283**	1	PLATE AS	
M		1	**6V-9632**	2	NUT-WELD (M6X1 THD)	
	5	1	**123-9176**	1	COVER	
Y	6	1	*124-2354*	1	ADJUSTER GP-STEER & TMSN CONT	458
	7	1	**143-0013**	1	BELLOWS AS	
	8	1	**4P-7581**	2	CLIP	
M	9	1	**5C-9553**	2	BOLT (M6X1X16MM)	
	10	1	**5P-4116**	2	WASHER-HARD (8.8X20.5X2MM THK)	
M	11	1	**8T-4200**	9	BOLT (M8X1.25X16MM)	
	12	1	**8T-4224**	7	WASHER-HARD (8.8X16X2MM THK)	
M	13	1	**9X-2043**	5	SCREW-TRUSS HEAD (M6X1X14MM)	
	14	1	**9X-8256**	2	WASHER (6.6X12X2MM THK)	
B	15	1	**4P-7581**	1	CLIP	
B	16	1	**9X-6772**	1	STRAP-CABLE	

B-USE AS REQUIRED
M-METRIC PART
Y-SEPARATE ILLUSTRATION

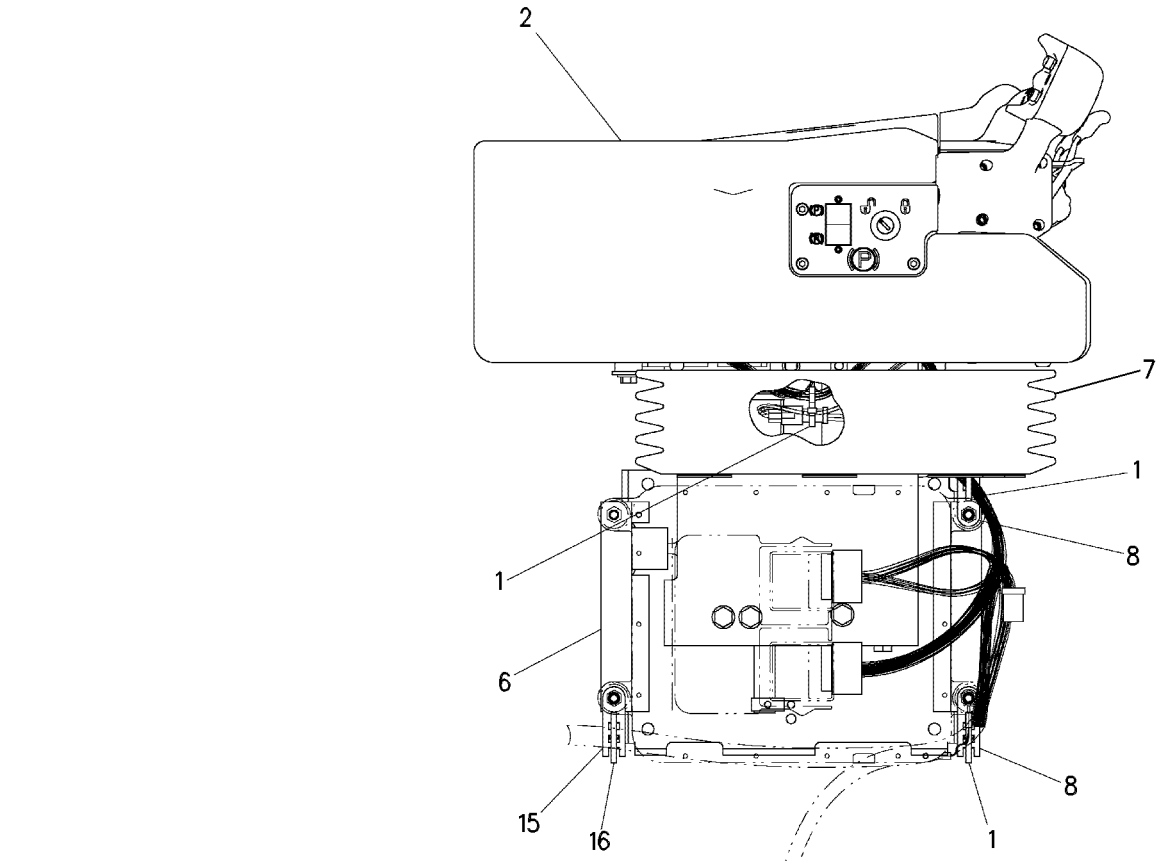

RIGHT SIDE VIEW

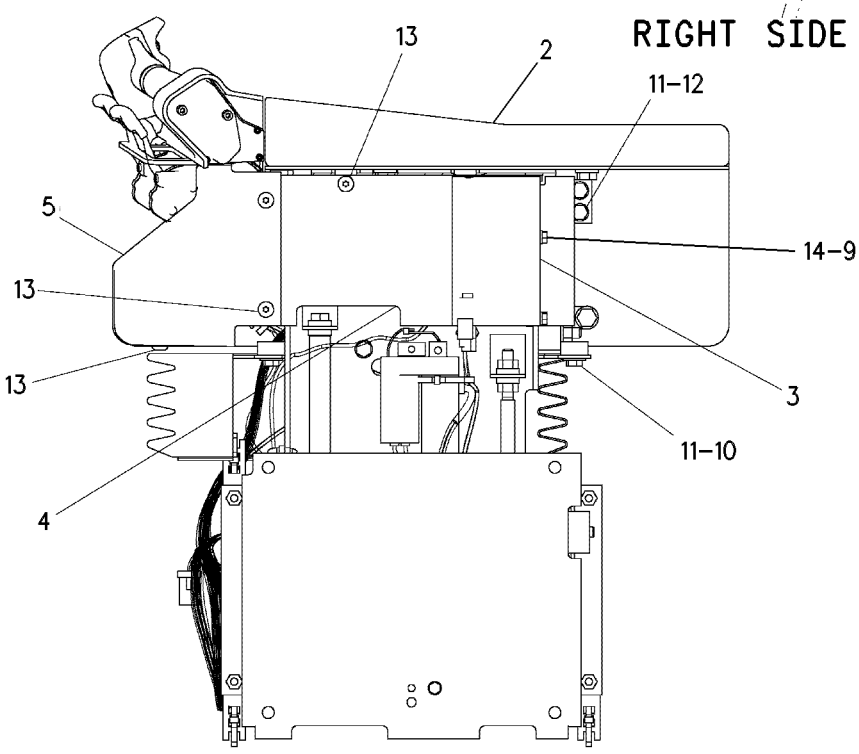

LEFT SIDE VIEW

GRAPHIC #1

g00272535

172-1718 CONTROL GP-TRANSMISSION HYD

S/N: 7SY1-UP

PART OF 172-2268 TRANSMISSION AR

SMCS-3073 **i01689257**

NOTE	REF NO	GRAPHIC REF	PART NUMBER	QTY	PART NAME 1 2 3 4 5 6 (PRODUCT LEVEL)	SEE PAGE
	1	1	**174-3389**	1	HARNESS AS (CONTROL)	
		1	**102-8804**	1	KIT-RECEPTACLE (4 PIN)	
					(INCLUDES RECEPTACLE AS & WEDGE)	
		1	**155-2270**	7	KIT-CONNECTING PLUG (2 PIN)	
					(INCLUDES PLUG AS & WEDGE)	
Y	2	1	*172-1719*	1	VALVE GP-CONTROL	368
	3	1	**165-7787**	1	CLIP AS	
	4	1	**132-5789**	2	CLIP	
	5	1	**3T-6457**	2	SLEEVE	
	6	1	**8M-4432**	4	SEAL-O-RING	
	7	1	**3S-2093**	4	STRAP-CABLE	
Y	8	1	**160-8408**	5	VALVE GP-MODULATING (TORQUE CONVERTER LOCKUP CLUTCH)	372
	9	1	**5M-2894**	4	WASHER-HARD (10.2X18.5X2.5MM THK)	
	10	1	**0S-1619**	4	BOLT (3/8-16X3 IN)	
	11	1	**9M-1974**	13	WASHER-HARD (8.8X16X2MM THK)	
	12	1	**1D-4540**	10	BOLT (5/16-18X2.75 IN)	
	13	1	**104-6729**	1	RETAINER	
	14	1	**104-6730**	1	GASKET	
	15	1	**1A-2029**	2	BOLT (3/8-16X1.125 IN)	
	16	1	**2H-3755**	1	BOLT (5/16-18X0.62 IN)	
	17	1	**4P-7581**	2	CLIP	
	18	1	**1B-7182**	2	BOLT (5/16-18X1.25 IN)	
	20	1	**3T-4403**	2	SPRING	
	21	1	**193-0711**	1	COVER	
	22	1	**125-5341**	1	NUT (1-1/4-18 THD)	
	23	1	**6J-2419**	1	SEAL-O-RING	

Y-SEPARATE ILLUSTRATION

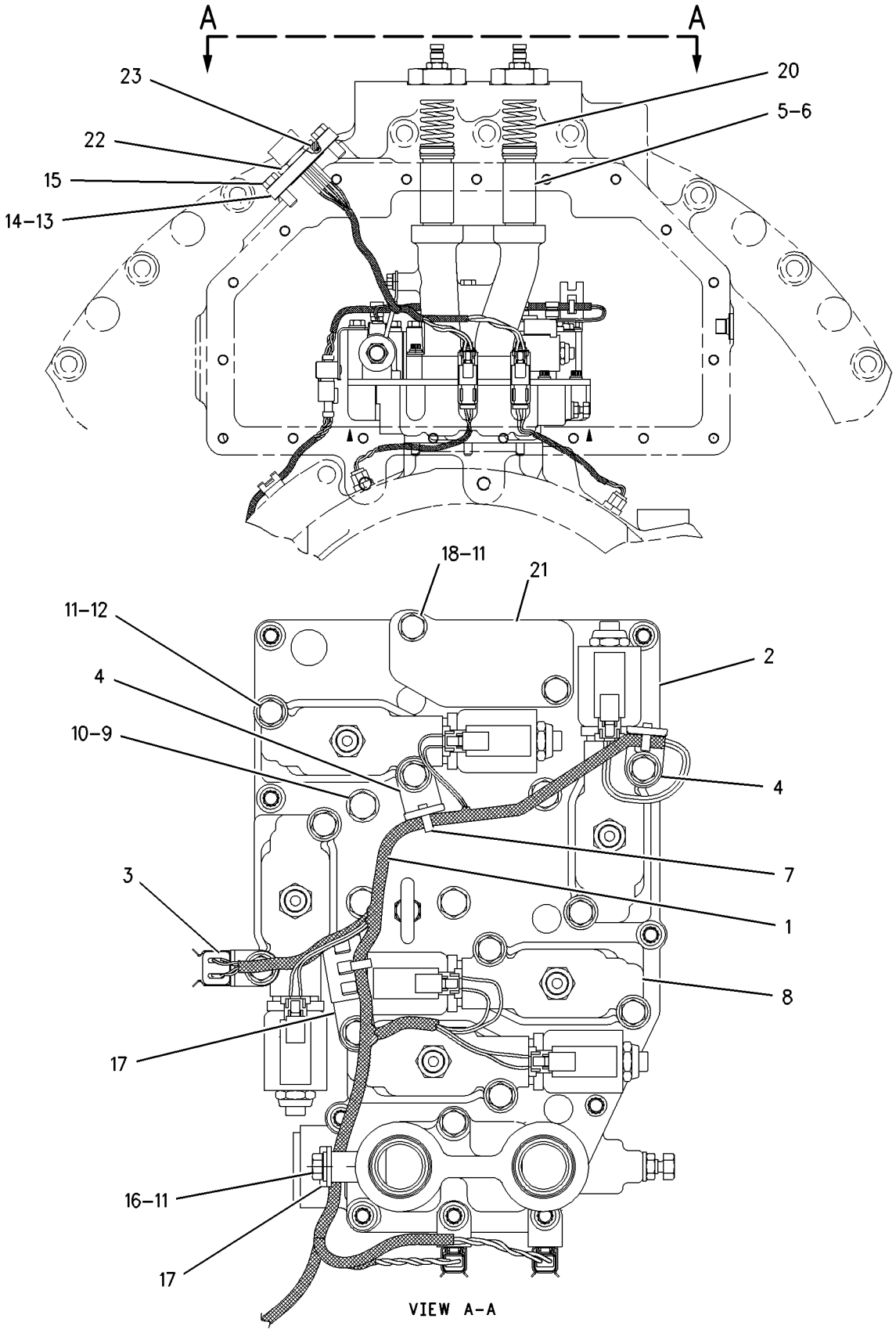

GRAPHIC #1

g00753484

POWER TRAIN

175-7148 COOLER GP-TRANSMISSION OIL

S/N: AKT1-UP

PART OF 171-5807 INSTALLATION AR-ENGINE

SMCS-1375 **i01700688**

NOTE	REF NO	GRAPHIC REF	PART NUMBER	QTY	PART NAME 1 2 3 4 5 6 (PRODUCT LEVEL)	SEE PAGE
	1	1	**5G-6504**	8	LUG	
	2	1	**168-9886**	1	CORE AS	
	3	1	**172-6504**	2	SUPPORT AS	
	4	1	**175-7506**	2	GASKET	
	5	1	**137-8199**	2	CLIP	
	6	1	**5C-6565**	4	BOLT (1/2-13X1.125 IN)	
	7	1	**8T-4223**	12	WASHER-HARD (13.5X25.5X3MM THK)	
	8	1	**8T-4835**	8	BOLT (1/2-13X2 IN)	

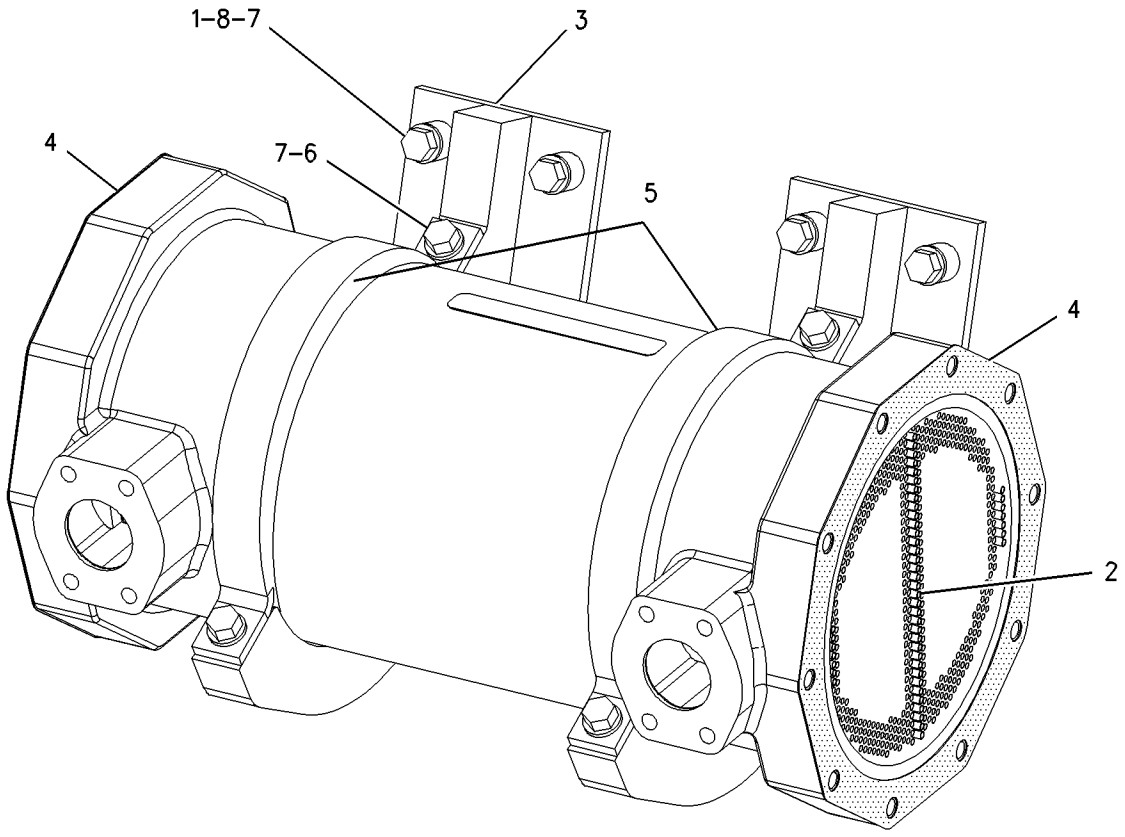

GRAPHIC #1 g00875761

199-1084 COUPLING GP-PUMP

S/N: AKT1-UP

PART OF 171-5808 POWER TRAIN AR

SMCS-5062 **i01437672**

NOTE	REF NO	GRAPHIC REF	PART NUMBER	QTY	PART NAME 1 2 3 4 5 6 (PRODUCT LEVEL)	SEE PAGE
	1	1	**3E-4880**	2	COUPLING AS	
					(EACH INCLUDES)	
		1	**3E-4876**	3	BUSHING AS	
		1	**3E-4875**	1	SLEEVE	
		1	**6Y-2130**	3	BUSHING AS	
		1	**8E-5170**	1	SLEEVE	
N	2	1	**199-1085**	1	TUBE AS	
	3	1	**5S-7383**	6	BOLT (3/8-16X1.75 IN)	
	4	1	**8T-2501**	6	BOLT (3/8-16X2 IN)	
	5	1	**8T-4896**	12	WASHER-HARD (10.2X18.5X2.5MM THK)	

N-NEW PART

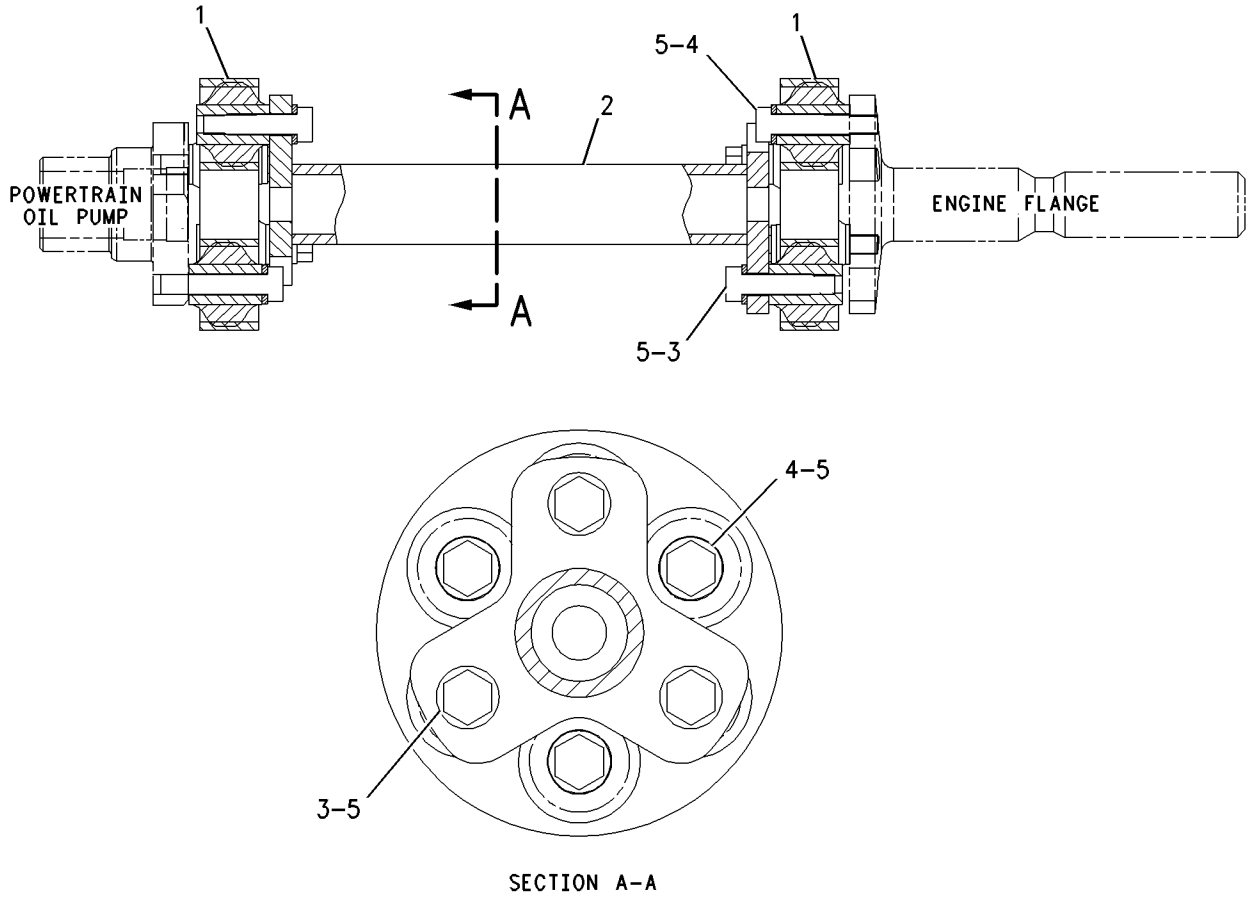

GRAPHIC #1 g00816547

POWER TRAIN

172-2260 DIFFERENTIAL & BEVEL GEAR GP

S/N: 7SY1-UP

PART OF 172-2268 TRANSMISSION AR

SMCS-3258, 3281, 3283 **i01436222**

NOTE	REF NO	GRAPHIC REF	PART NUMBER	QTY	PART NAME 1 2 3 4 5 6 (PRODUCT LEVEL)	SEE PAGE
	1	1	**112-1289**	1	PLATE AS	
		1	**4B-9785**	2	BALL	
	2	1	**9X-8881**	15	BOLT (5/8-11X2.25 IN)	
	3	1	**5P-8247**	19	WASHER-HARD (17X32X3.5MM THK)	
	4	1	**5P-4143**	41	BOLT-LOCKING (1/2-13X2 IN)	
	5	1	**5P-8245**	41	WASHER-HARD (13.5X25.5X3MM THK)	
	6	1	**110-9302**	1	CAGE-BEARING	
	7	1	**110-9303**	1	CAGE-BEARING	
	8	1	**110-9309**	1	BRACKET AS	
	9	1	**9X-8874**	2	BOLT (1/2-13X3 IN)	
	10	1	**7D-1649**	2	WASHER-HARD (13.5X32X5MM THK)	
	11	1	**9G-3464**	2	BUSHING-TERMINAL	
	12	1	**6V-0458**	1	CUP-ROLLER BEARING	
	13	1	**6V-0457**	1	CONE-ROLLER BEARING	
	14	1	**110-9301**	1	PINION-BEVEL (23 TEETH)	
	15	1	**108-6044**	1	GEAR-TRANSFER (37 TEETH)	
B	16	1	**7G-2325**	4	SHIM PACK (INCLUDES 14 SHIMS)	
	17	1	**5K-3931**	1	CUP-ROLLER BEARING	
	18	1	**5K-3932**	1	CONE-ROLLER BEARING	
	19	1	**032-0676**	1	BOLT-LOCKING	
	20	1	**114-0325**	1	RETAINER	
	21	1	**5D-6659**	1	RACE & ROLLER AS	
	22	1	**108-6043**	1	GEAR-TRANSFER (32 TEETH)	
	23	1	**6Y-2546**	1	CONE-ROLLER BEARING	
	24	1	**6Y-2547**	1	CUP-ROLLER BEARING	
	25	1	**1M-6573**	1	CUP-ROLLER BEARING	
	26	1	**9M-2744**	1	CONE-ROLLER BEARING	
	27	1	**8C-3075**	1	SEAL-LIP	
	28	1	**110-9306**	1	GEAR-BEVEL (29 TEETH)	
	29	1	**110-9307**	1	CAGE-BEARING	
	30	1	**9W-4163**	1	RACE-ROLLER BEARING	
	31	1	**9W-4162**	1	BEARING	
	32	1	**5P-1981**	1	RING-RETAINING	
	33	1	**9S-1367**	10	BOLT (1-14X3.75 IN)	
	34	1	**2K-7471**	10	LOCKNUT	
	35	1	**110-9305**	1	SHAFT-BEVEL GEAR	
B	36	1	**3T-4391**	2	SHIM PACK (INCLUDES 18 SHIMS)	
	37	1	**110-9304**	1	CAGE-BEARING	
	38	1	**112-7317**	1	BEARING AS	
	39	1	**121-9871**	1	NUT-BEARING	
	40	1	**122-4575**	1	LOCKWASHER-BEARING	
	41	1	**122-0333**	1	WASHER-BEARING	
	42	1	**9X-8883**	4	BOLT (5/8-11X2.75 IN)	
	43	1	**1S-8385**	1	RING-RETAINING	
	44	1	**172-3467**	1	PLATE	
	45	1	**5K-9107**	4	BOLT-LOCKING (3/8-16X0.75 IN)	

B-USE AS REQUIRED

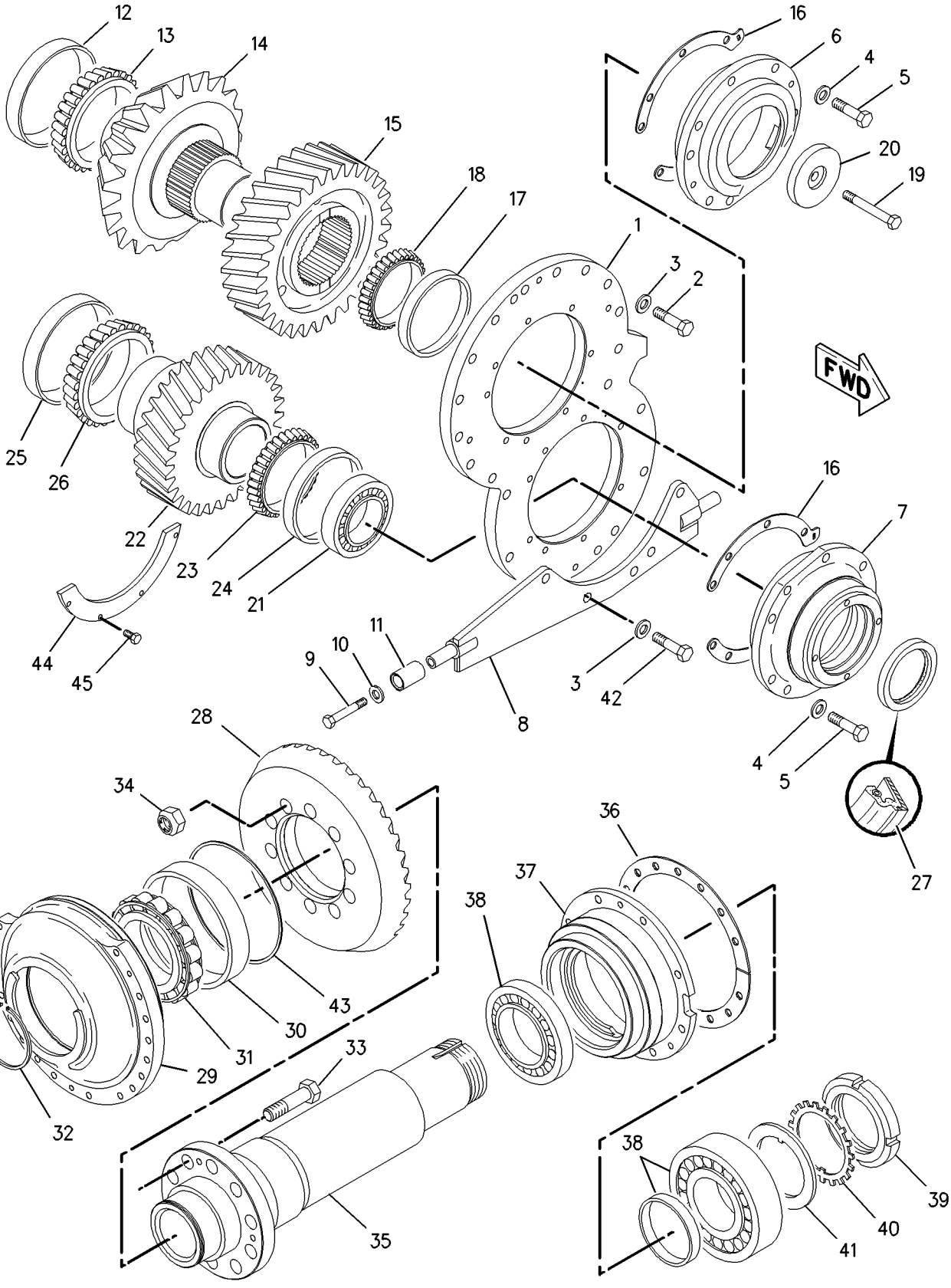

GRAPHIC #1

g00759374

106-4150 DRAIN GP-ECOLOGY

S/N: AKT1-UP; 7SY1-UP

PART OF 172-2263 CASE & PARTS GP-PLANETARY, 172-2399 TORQUE CONVERTER GP

SMCS-3100 **i01590582**

NOTE	REF NO	GRAPHIC REF	PART NUMBER	QTY	PART NAME 1 2 3 4 5 6 (PRODUCT LEVEL)	SEE PAGE
	1	1	**4N-3808**	1	PIN-SPRING	
	2	1	**5P-9658**	1	SEAL-O-RING	
A	3	1	**2H-3931**	1	SEAL-O-RING	

A-NOT PART OF THIS GROUP

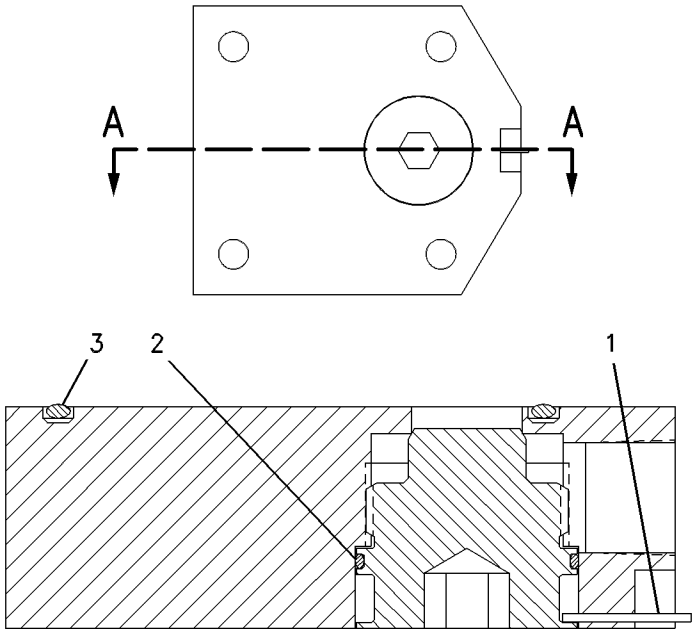

SECTION A-A

GRAPHIC #1 g00543496

MEMORANDA

174-3230 FILTER GP-OIL

S/N: AKT1-UP

PART OF 173-0239 LINES GP-POWER TRAIN OIL

SMCS-3004 **i01689291**

NOTE	REF NO	GRAPHIC REF	PART NUMBER	QTY	PART NAME 1 2 3 4 5 6 (PRODUCT LEVEL)	SEE PAGE
	1	1	**174-3231**	1	BASE-HOUSING	
	2	1	**2S-4078**	1	SEAL-O-RING	
	3	1	**7M-1297**	1	SPRING	
	4	1	**9S-9334**	1	PLUG	
	5	1	**7M-8485**	1	SEAL-O-RING	
	6	1	**9S-8008**	1	PLUG	
	7	1	**3D-2824**	1	SEAL-O-RING	
	8	1	**8T-8915**	6	BOLT (3/8-16X3.25 IN)	
	9	1	**8T-4896**	6	WASHER-HARD (10.2X18.5X2.5MM THK)	
	10	1	**3S-8652**	1	SPRING	
	11	1	**9S-4191**	2	PLUG	
	12	1	**3J-1907**	2	SEAL-O-RING	
	13	1	**8M-6393**	1	RING-RETAINING	
	14	1	**165-8079**	1	RETAINER	
	15	1	**133-1279**	1	HOUSING AS-OIL FILTER	
	16	1	**5P-3620**	1	SEAL-O-RING	
	17	1	**133-2198**	1	SPRING	
	18	1	**7G-4998**	1	SPOOL-BYPASS	
	19	1	**132-8876**	1	FILTER ELEMENT AS-OIL	
	20	1	**9S-8010**	1	PLUG	

174-3230 **FILTER GP-OIL** ***(contd.)*** **i01689291**

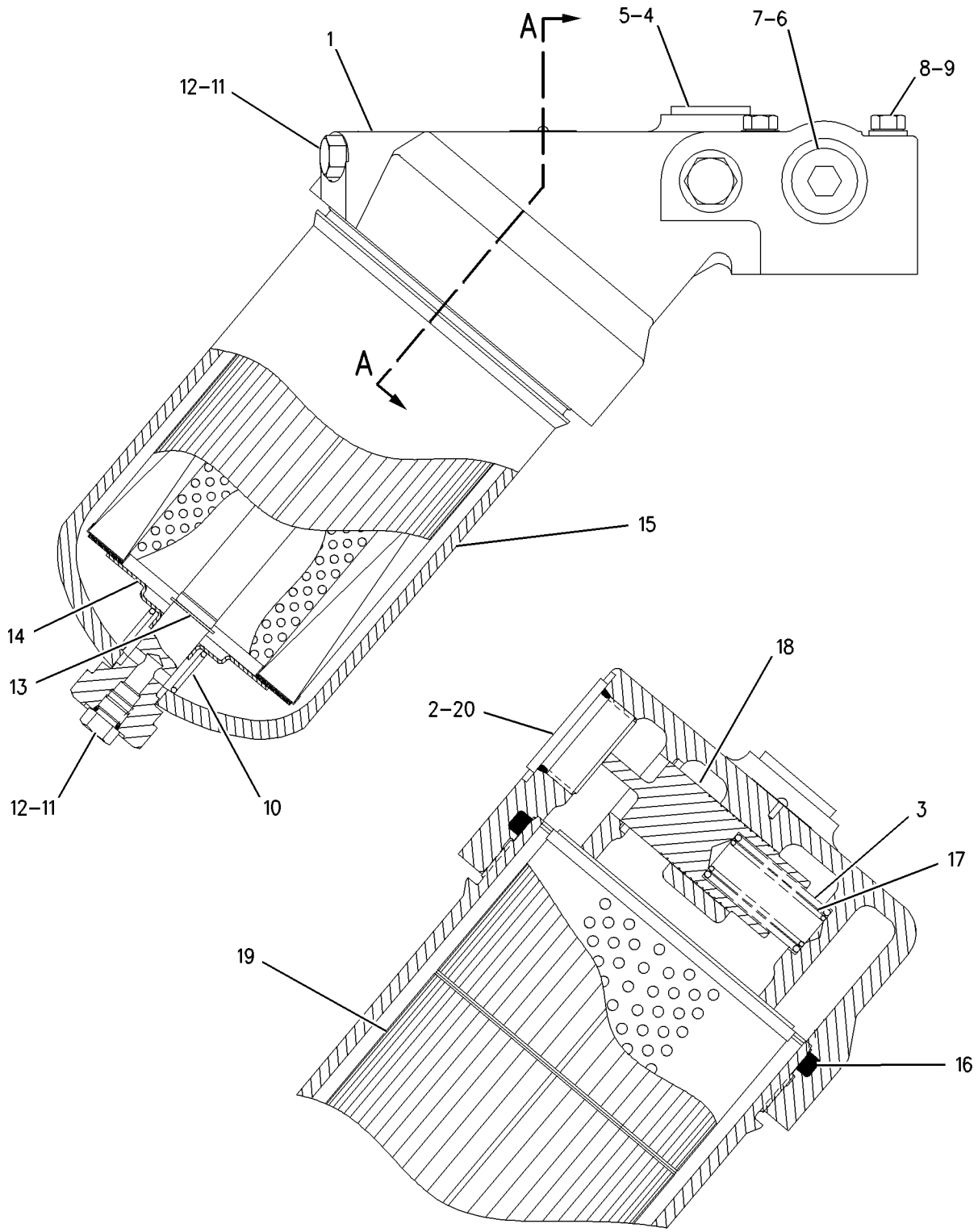

SECTION A-A

GRAPHIC #1 g00645997

POWER TRAIN

110-2655 FINAL DRIVE GP

S/N: AKT1-UP

PART OF 171-5808 POWER TRAIN AR

SMCS-4050 **i01700699**

NOTE	REF NO	GRAPHIC REF	PART NUMBER	QTY	PART NAME 1 2 3 4 5 6 (PRODUCT LEVEL)	SEE PAGE
	1	1	**8T-2502**	3	BOLT (3/8-16X1.125 IN)	
	2	1	**8T-4896**	3	WASHER-HARD (10.2X18.5X2.5MM THK)	
	3	1	**030-8538**	8	BOLT (1/2-13X1.25 IN)	
	4	1	**5P-8245**	8	WASHER-HARD (13.5X25.5X3MM THK)	
	5	1	**3P-8822**	1	COVER	
	6	1	**6V-3298**	1	PLUG-MAGNETIC	
	7	1	**2S-4078**	1	SEAL-O-RING	
	8	1	**9S-4185**	1	PLUG	
	9	1	**3K-0360**	1	SEAL-O-RING	
	10	1	**5F-7054**	1	SEAL-O-RING	
	11	1	**3T-3294**	1	CARRIER-PLANETARY	
	12	1	**5D-7523**	1	SEAL-O-RING	
	13	1	**9M-5894**	1	SEAL-O-RING	
	14	1	**2S-0613**	1	RING-RETAINING	
	15	1	**3P-8827**	4	PLATE	
	16	1	**6V-1653**	4	SEAL-QUAD RING	
	17	1	**8T-9400**	35	BOLT (7/8-9X2.5 IN)	
	18	1	**8C-6913**	35	WASHER-HARD (24X41.5X4MM THK)	
	19	1	**1L-7203**	8	CONE-BEARING	
	20	1	**1L-7319**	8	CUP-BEARING	
	21	1	**9W-9134**	4	GEAR-PLANETARY (25 TEETH)	
	22	1	**9W-9133**	1	GEAR-SUN (22 TEETH)	
	23	1	**7S-4326**	1	DOWEL	
	24	1	**9W-9136**	1	CARRIER-PLANETARY	
	25	1	**3P-8820**	1	RING-THRUST	
	26	1	**6F-8146**	1	SEAL-O-RING	
	27	1	**8E-3124**	1	RETAINER	
	28	1	**5K-7143**	16	BOLT-SELF LOCKING (1/2-13X1.5 IN)	
	29	1	**110-2665**	4	SHAFT-PLANETARY	
	30	1	**5P-8944**	1	RING-RETAINING	
	31	1	**8P-5698**	4	PLATE	
	32	1	**5D-0353**	8	BOLT-LOCKING (3/8-16X1 IN)	
	33	1	**110-2662**	1	GEAR-SUN (18 TEETH)	
	34	1	**9P-3801**	4	SHAFT-GOVERNOR CONTROL	
	35	1	**147-0071**	1	BEARING-THRUST	
	36	1	**110-2671**	1	RETAINER	
	37	1	**9P-3555**	1	GEAR-RING (74 TEETH)	
	38	1	**1B-3980**	8	CONE-BEARING	
	39	1	**1B-3978**	8	CUP-BEARING	
	40	1	**9W-9132**	4	GEAR-PLANETARY (27 TEETH)	
	41	1	**9P-3657**	4	RING-LOCK	
	42	1	**6T-0609**	16	PIN	
	43	1	**9W-9135**	1	HUB-REACTION	
	44	1	**6T-6566**	1	RING-RETAINING	
	45	1	**124-2375**	1	SEAL-LIP TYPE	
	46	1	**126-0587**	1	CONE-SPECIAL TAPERED	
	47	1	**6V-8281**	1	CUP-BEARING	
	48	1	**110-2664**	1	HUB-SPROCKET	
	49	1	**3D-9133**	1	CUP-BEARING	
	50	1	**126-0588**	1	CONE-SPECIAL TAPERED	
	51	1	**130-6889**	1	SEAL GP-DUO-CONE	
		1	**127-0116**	2	RING-TORIC	
R	52	1	**110-2663**	1	HUB-SPINDLE	
	53	1	**8D-4771**	1	SEAL-O-RING	
CY	54	1	*160-4928*	1	SEGMENT GP-SPROCKET	356
	55	1	**8T-9412**	3	BOLT-12 POINT HEAD (1/2-13X1.5 IN)	

110-2655 FINAL DRIVE GP *(contd.)*

i01700699

NOTE	REF NO	GRAPHIC REF	PART NUMBER	QTY	PART NAME 1 2 3 4 5 6 (PRODUCT LEVEL)	SEE PAGE
	56	1	**5P-8250**	30	WASHER (28X49X5MM THK)	
	57	1	**1D-4640**	30	BOLT (1-8X4.25 IN)	
	58	1	**110-2674**	1	RING-THRUST	
	59	1	**110-2670**	1	HOLDER-SEAL	
	60	1	**8T-8917**	4	BOLT (1/2-13X1.25 IN)	
	61	1	**8T-4223**	4	WASHER-HARD (13.5X25.5X3MM THK)	

C-CHANGE FROM PREVIOUS TYPE
R-REMFG PART MAY BE AVAILABLE
Y-SEPARATE ILLUSTRATION

110-2655 FINAL DRIVE GP *(contd.)*

i01700699

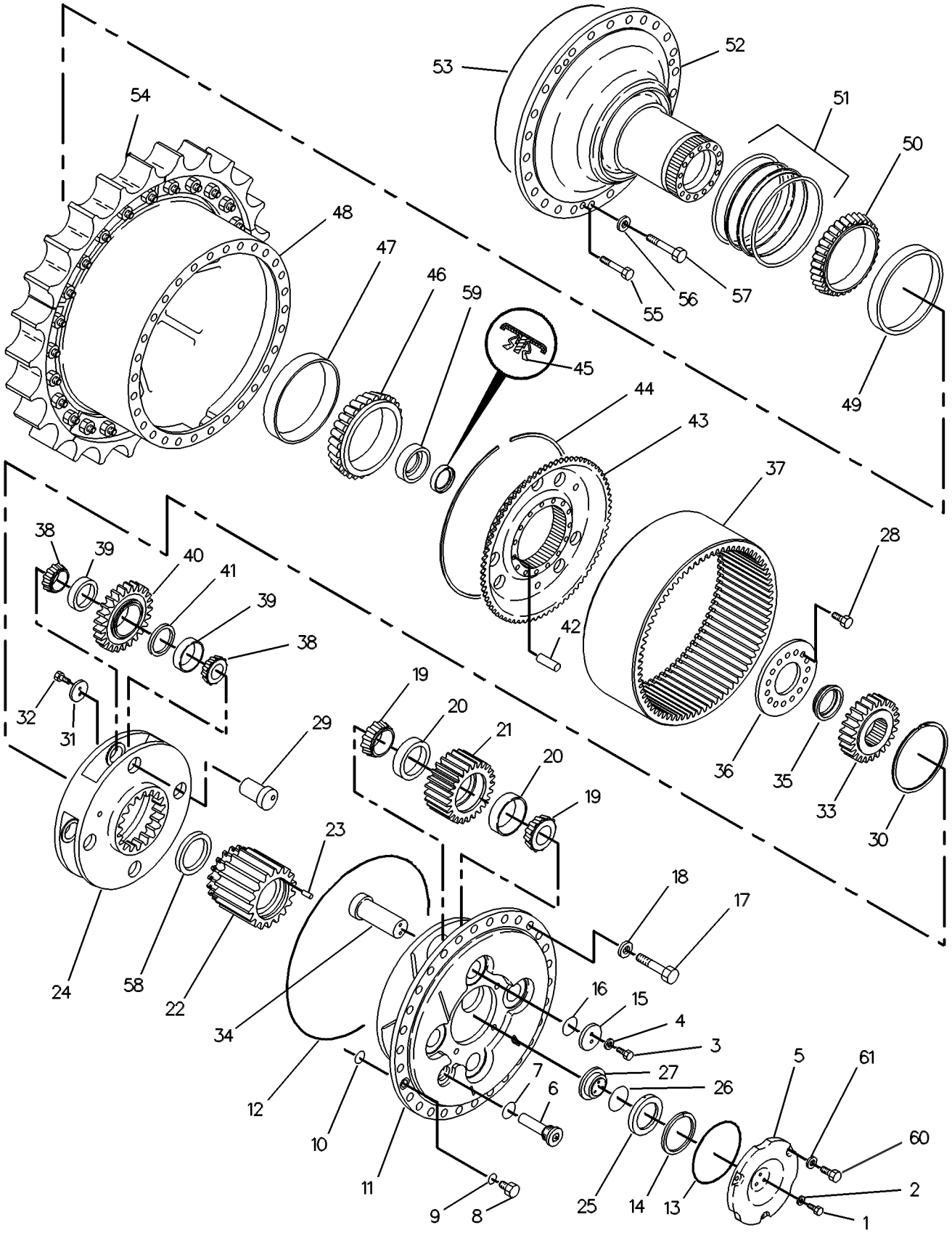

GRAPHIC #1

g00252851

MEMORANDA

POWER TRAIN

110-2780 FINAL DRIVE GP

S/N: AKT1-UP
ARCTIC
PART OF 130-9719 ARCTIC AR
AN ATTACHMENT

SMCS-4050 **i01700758**

NOTE	REF NO	GRAPHIC REF	PART NUMBER	QTY	PART NAME 1 2 3 4 5 6 (PRODUCT LEVEL)	SEE PAGE
	1	1	**8D-4771**	1	SEAL-O-RING	
	2	1	**8T-9412**	3	BOLT-12 POINT HEAD (1/2-13X1.5 IN)	
R	3	1	**110-2663**	1	HUB-SPINDLE	
	4	1	**118-2900**	1	SEAL GP-DUO-CONE	
		1	**3P-1849**	2	RING-SEALING	
	5	1	**126-0588**	1	CONE-SPECIAL TAPERED	
	6	1	**3D-9133**	1	CUP-BEARING	
	7	1	**6V-8281**	1	CUP-BEARING	
	8	1	**126-0587**	1	CONE-SPECIAL TAPERED	
	9	1	**110-2664**	1	HUB-SPROCKET	
	10	1	**9W-9135**	1	HUB-REACTION	
	11	1	**5D-0353**	8	BOLT-LOCKING (3/8-16X1 IN)	
	12	1	**8P-5698**	4	PLATE	
CY	13	1	*160-4928*	1	SEGMENT GP-SPROCKET	356
	14	1	**9W-9132**	4	GEAR-PLANETARY (27 TEETH)	
	15	1	**9P-3657**	4	RING-LOCK	
	16	1	**1B-3978**	8	CUP-BEARING	
	17	1	**1B-3980**	8	CONE-BEARING	
	18	1	**110-2665**	4	SHAFT-PLANETARY	
	19	1	**9P-3801**	4	SHAFT-GOVERNOR CONTROL	
	20	1	**1L-7319**	8	CUP-BEARING	
	21	1	**1L-7203**	8	CONE-BEARING	
	22	1	**9W-9134**	4	GEAR-PLANETARY (25 TEETH)	
	23	1	**3T-3294**	1	CARRIER-PLANETARY	
	24	1	**8T-9400**	35	BOLT (7/8-9X2.5 IN)	
	25	1	**8C-6913**	35	WASHER-HARD (24X41.5X4MM THK)	
	26	1	**5D-7523**	1	SEAL-O-RING	
	27	1	**6V-1653**	4	SEAL-QUAD RING	
	28	1	**3P-8827**	4	PLATE	
	29	1	**030-8538**	8	BOLT (1/2-13X1.25 IN)	
	30	1	**9M-5894**	1	SEAL-O-RING	
	31	1	**3P-8820**	1	RING-THRUST	
	32	1	**3P-8822**	1	COVER	
	33	1	**110-2674**	1	RING-THRUST	
	34	1	**9W-9133**	1	GEAR-SUN (22 TEETH)	
	35	1	**2S-0613**	1	RING-RETAINING	
	36	1	**6V-3298**	1	PLUG-MAGNETIC	
	37	1	**2S-4078**	1	SEAL-O-RING	
	38	1	**9S-4185**	1	PLUG	
	39	1	**3K-0360**	1	SEAL-O-RING	
	40	1	**5F-7054**	1	SEAL-O-RING	
	41	1	**9P-3555**	1	GEAR-RING (74 TEETH)	
	42	1	**9W-9136**	1	CARRIER-PLANETARY	
	43	1	**6T-6566**	1	RING-RETAINING	
	44	1	**5P-8944**	1	RING-RETAINING	
	45	1	**110-2662**	1	GEAR-SUN (18 TEETH)	
	46	1	**110-2671**	1	RETAINER	
	47	1	**124-2375**	1	SEAL-LIP TYPE	
	48	1	**110-2670**	1	HOLDER-SEAL	
	49	1	**1D-4640**	30	BOLT (1-8X4.25 IN)	
	50	1	**5P-8250**	30	WASHER (28X49X5MM THK)	
	51	1	**147-0071**	1	BEARING-THRUST	
	52	1	**5K-7143**	16	BOLT-SELF LOCKING (1/2-13X1.5 IN)	
	53	1	**6T-0609**	16	PIN	

110-2780 FINAL DRIVE GP *(contd.)* i01700758

NOTE	REF NO	GRAPHIC REF	PART NUMBER	QTY	PART NAME 1 2 3 4 5 6 (PRODUCT LEVEL)	SEE PAGE
	54	1	**5P-8245**	8	WASHER-HARD (13.5X25.5X3MM THK)	
	55	1	**7S-4326**	1	DOWEL	
	56	1	**8T-2502**	3	BOLT (3/8-16X1.125 IN)	
	57	1	**8T-4896**	3	WASHER-HARD (10.2X18.5X2.5MM THK)	
	58	1	**8E-3124**	1	RETAINER	
	59	1	**6F-8146**	1	SEAL-O-RING	
	60	1	**8T-8917**	4	BOLT (1/2-13X1.25 IN)	
	61	1	**8T-4223**	4	WASHER-HARD (13.5X25.5X3MM THK)	

C-CHANGE FROM PREVIOUS TYPE
R-REMFG PART MAY BE AVAILABLE
Y-SEPARATE ILLUSTRATION

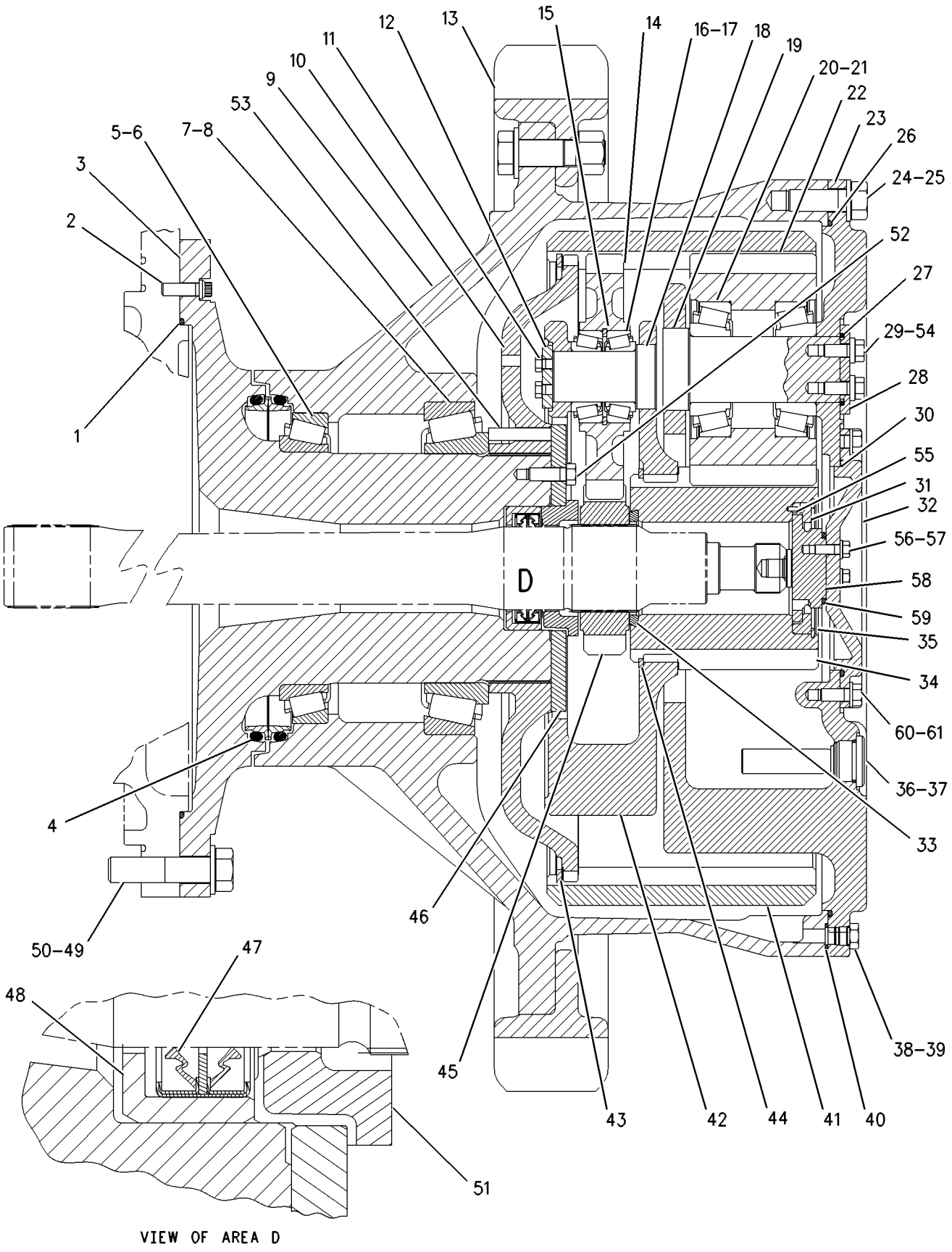

GRAPHIC #1 g00516326

MEMORANDA

POWER TRAIN

192-0722 FINAL DRIVE GP

S/N: AKT1-UP
PART OF 143-7543 GUARD AR-FINAL DRIVE
AN ATTACHMENT

SMCS-4050 **i01700730**

NOTE	REF NO	GRAPHIC REF	PART NUMBER	QTY	PART NAME 1 2 3 4 5 6 (PRODUCT LEVEL)	SEE PAGE
	1	1	**8D-4771**	1	SEAL-O-RING	
	2	1	**8T-9412**	3	BOLT-12 POINT HEAD (1/2-13X1.5 IN)	
	3	1	**189-8874**	1	SPINDLE AS	
		1	**0R-8521**	1	HUB-SPROCKET	
					—OR—	
R		1	**110-2663**	1	HUB-SPINDLE	
		1	**189-3064**	1	GUARD	
	4	1	**130-6889**	1	SEAL GP-DUO-CONE	
		1	**127-0116**	2	RING-TORIC	
	5	1	**126-0588**	1	CONE-SPECIAL TAPERED	
	6	1	**3D-9133**	1	CUP-BEARING	
	7	1	**6V-8281**	1	CUP-BEARING	
	8	1	**126-0587**	1	CONE-SPECIAL TAPERED	
	9	1	**189-8869**	1	HUB AS-SPROCKET	
		1	**189-3065**	1	GUARD	
	10	1	**9W-9135**	1	HUB-REACTION	
	11	1	**5D-0353**	8	BOLT-LOCKING (3/8-16X1 IN)	
	12	1	**8P-5698**	4	PLATE	
Y	13	1	*160-4928*	1	SEGMENT GP-SPROCKET	356
	14	1	**9W-9132**	4	GEAR-PLANETARY (27 TEETH)	
	15	1	**9P-3657**	4	RING-LOCK	
	16	1	**1B-3978**	8	CUP-BEARING	
	17	1	**1B-3980**	8	CONE-BEARING	
	18	1	**110-2665**	4	SHAFT-PLANETARY	
	19	1	**9P-3801**	4	SHAFT-GOVERNOR CONTROL	
	20	1	**1L-7319**	8	CUP-BEARING	
	21	1	**1L-7203**	8	CONE-BEARING	
	22	1	**9W-9134**	4	GEAR-PLANETARY (25 TEETH)	
	23	1	**3T-3294**	1	CARRIER-PLANETARY	
	24	1	**8T-9400**	35	BOLT (7/8-9X2.5 IN)	
	25	1	**8C-6913**	35	WASHER-HARD (24X41.5X4MM THK)	
	26	1	**5D-7523**	1	SEAL-O-RING	
	27	1	**6V-1653**	4	SEAL-QUAD RING	
	28	1	**3P-8827**	4	PLATE	
	29	1	**030-8538**	8	BOLT (1/2-13X1.25 IN)	
	30	1	**9M-5894**	1	SEAL-O-RING	
	31	1	**3P-8820**	1	RING-THRUST	
	32	1	**3P-8822**	1	COVER	
	33	1	**110-2674**	1	RING-THRUST	
	34	1	**9W-9133**	1	GEAR-SUN (22 TEETH)	
	35	1	**2S-0613**	1	RING-RETAINING	
	36	1	**6V-3298**	1	PLUG-MAGNETIC	
	37	1	**2S-4078**	1	SEAL-O-RING	
	38	1	**9S-4185**	1	PLUG	
	39	1	**3K-0360**	1	SEAL-O-RING	
	40	1	**5F-7054**	1	SEAL-O-RING	
	41	1	**9P-3555**	1	GEAR-RING (74 TEETH)	
	42	1	**9W-9136**	1	CARRIER-PLANETARY	
	43	1	**6T-6566**	1	RING-RETAINING	
	44	1	**5P-8944**	1	RING-RETAINING	
	45	1	**110-2662**	1	GEAR-SUN (18 TEETH)	
	46	1	**110-2671**	1	RETAINER	
	47	1	**124-2375**	1	SEAL-LIP TYPE	
	48	1	**110-2670**	1	HOLDER-SEAL	
	49	1	**1D-4640**	30	BOLT (1-8X4.25 IN)	

192-0722 FINAL DRIVE GP *(contd.)* i01700730

NOTE	REF NO	GRAPHIC REF	PART NUMBER	QTY	PART NAME 1 2 3 4 5 6 (PRODUCT LEVEL)	SEE PAGE
	50	1	**5P-8250**	30	WASHER (28X49X5MM THK)	
	51	1	**147-0071**	1	BEARING-THRUST	
	52	1	**5K-7143**	16	BOLT-SELF LOCKING (1/2-13X1.5 IN)	
	53	1	**6T-0609**	16	PIN	
	54	1	**5P-8245**	8	WASHER-HARD (13.5X25.5X3MM THK)	
	55	1	**7S-4326**	1	DOWEL	
	56	1	**8T-2502**	3	BOLT (3/8-16X1.125 IN)	
	57	1	**8T-4896**	3	WASHER-HARD (10.2X18.5X2.5MM THK)	
	58	1	**8E-3124**	1	RETAINER	
	59	1	**6F-8146**	1	SEAL-O-RING	
	60	1	**8T-8917**	4	BOLT (1/2-13X1.25 IN)	
	61	1	**8T-4223**	4	WASHER-HARD (13.5X25.5X3MM THK)	
	62	1	**189-6244**	2	SEAL	
	63	1	**189-3063**	2	RETAINER	
	64	1	**8C-6561**	16	BOLT (5/16-18X1.375 IN)	
	65	1	**8T-4224**	16	WASHER-HARD (8.8X16X2MM THK)	

R-REMFG PART MAY BE AVAILABLE
Y-SEPARATE ILLUSTRATION

192-0722 FINAL DRIVE GP *(contd.)* **i01700730**

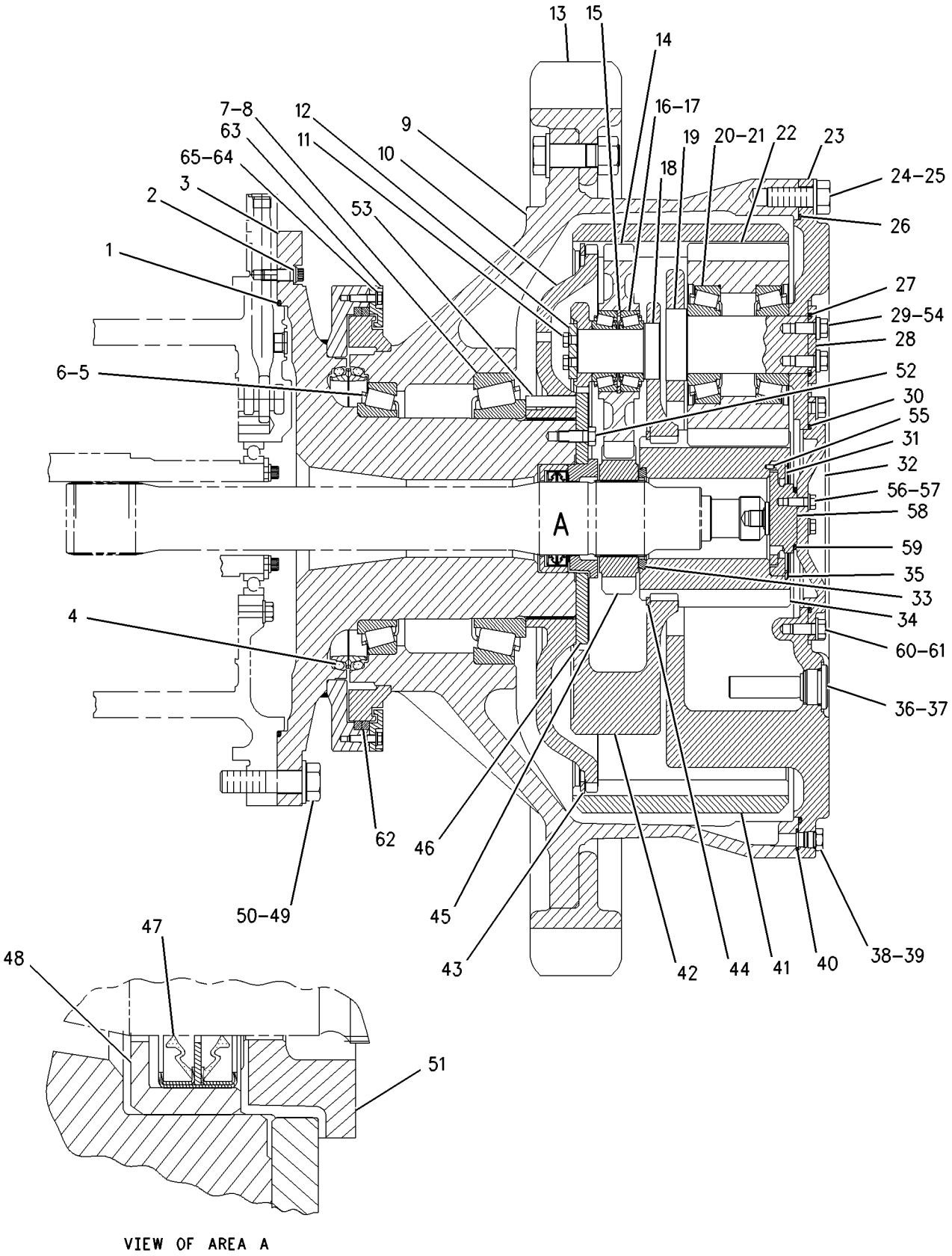

GRAPHIC #1 g00753252

POWER TRAIN

172-9400 GUARD GP-DRIVE SHAFT

S/N: AKT1-UP

PART OF 171-5801 CHASSIS AR

SMCS-7153 **i01689296**

NOTE	REF NO	GRAPHIC REF	PART NUMBER	QTY	PART NAME 1 2 3 4 5 6 (PRODUCT LEVEL)	SEE PAGE
	1	1	**6T-9180**	2	BRACKET	
	2	1	**173-7220**	1	GUARD AS	
		1	**1F-0750**	2	NUT-WELD (3/8-16 THD)	
	3	1	**173-7221**	2	GUARD AS	
	4	1	**173-7222**	1	GUARD AS	
		1	**1F-0750**	6	NUT-WELD (3/8-16 THD)	
	5	1	**4L-6454**	8	BOLT (3/8-16X1 IN)	
	6	1	**5C-6565**	6	BOLT (1/2-13X1.125 IN)	
	7	1	**5P-1075**	8	WASHER-HARD (10.2X22.5X3MM THK)	
	8	1	**5S-7379**	4	BOLT (3/8-16X0.875 IN)	
	9	1	**8T-4223**	6	WASHER-HARD (13.5X25.5X3MM THK)	
	10	1	**8T-4896**	4	WASHER-HARD (10.2X18.5X2.5MM THK)	

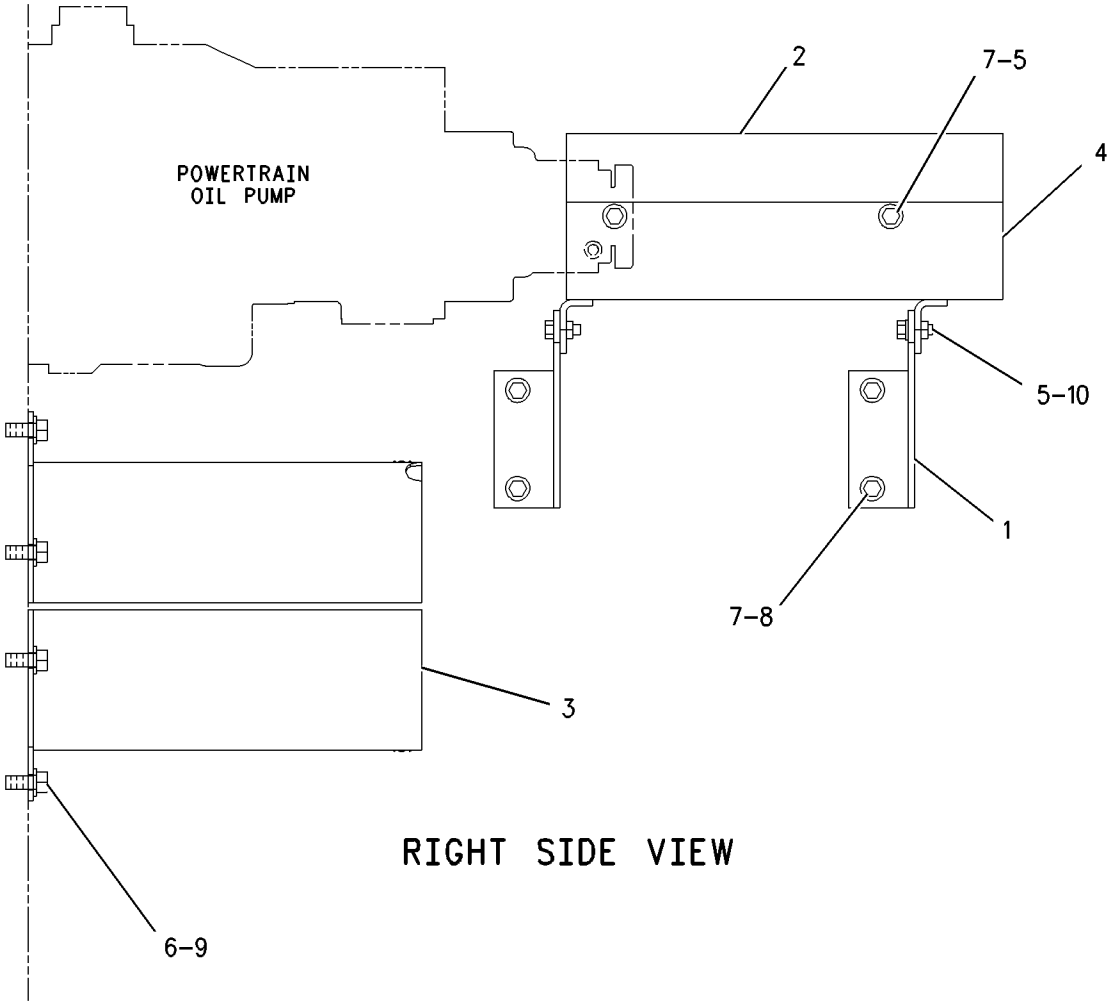

GRAPHIC #1 g00809558

POWER TRAIN

173-0239 LINES GP-POWER TRAIN OIL

S/N: AKT1-UP

PART OF 171-5808 POWER TRAIN AR

SMCS-3016 **i01666000**

NOTE	REF NO	GRAPHIC REF	PART NUMBER	QTY	PART NAME 1 2 3 4 5 6 (PRODUCT LEVEL)	SEE PAGE
	1	2	**3T-2710**	1	FLANGE	
	2	1	**5K-9238**	1	CONNECTOR-FLARED	
	3	2	**5P-3501**	1	ADAPTER	
	4	1	**6N-2985**	1	CAP AS-FILLER (POWER TRAIN OIL)	
	5	1	**6V-0852**	1	CAP-DUST	
	6	1	**8C-3447**	1	CAP-DUST	
	7	2	**8T-7926**	2	CONNECTOR	
	8	2	**9G-5127**	1	BREATHER (POWER TRAIN)	
	9	1	**9M-5732**	1	RIVET-POP	
	10	2	**9P-9555**	1	SCREEN AS (POWER TRAIN OIL PUMP INLET)	
	11	1	**8T-9378**	2	BOLT (3/8-16X4 IN)	
	12	1	**129-1609**	1	SEAL-O-RING	
	13	1	**131-0136**	1	TUBE AS	
	14	2	**5P-7816**	2	SEAL-O-RING	
	15	2	**141-9497**	2	SEAL-RECTANGULAR	
	16	1	*150-3059*	1	TEE GP	
		1	**5K-9090**	1	SEAL-O-RING	
		1	**7M-8485**	1	SEAL-O-RING	
		1	**8T-1674**	1	TEE	
Y	17	1	**170-1163**	1	PUMP GP-GEAR (POWER TRAIN OIL)	350
Y	18	1	**172-1717**	1	VALVE GP-PRIORITY	374
Y	19	2	**172-1720**	1	VALVE GP-RELIEF (TRANSMISSION COOLER BYPASS)	376
I	20	1	**174-0037**	1	HOSE AS	
I	21	1	**174-0038**	1	HOSE AS	
I	22	1	**174-0040**	1	HOSE AS	
I	23	1	**174-0041**	1	HOSE AS	
	24	2	**174-0044**	1	TUBE AS	
I	25	2	**174-0046**	1	HOSE AS	
	26	2	**174-0055**	1	HOUSING-SUCTION SCREEN	
Y	27	1	**174-3230**	2	FILTER GP-OIL (POWER TRAIN)	324
I	28	1	**174-7502**	1	HOSE AS	
	29	2	**176-8297**	1	TUBE	
	30	2	**176-9966**	1	COVER-TOP	
	31	1	**179-1734**	1	TUBE AS	
	32	1	**179-1735**	1	PLATE AS	
	33	1	**179-1736**	1	TUBE AS	
	34	1	**179-9970**	1	TUBE AS	
	35	1	**179-9971**	1	TUBE AS	
	36	1	**179-9972**	1	TUBE AS	
	37	1	**179-9973**	1	PLATE AS	
	38	1	**179-9974**	1	PLATE AS	
	39	1	**180-1461**	1	GAUGE AS-OIL LEVEL (DIPSTICK) (POWER TRAIN)	
	40	1,2	**9B-7237**	8	BOLT (3/8-16X1.25 IN)	
	41	1	**180-4363**	3	SEAL-RECTANGULAR	
	42	2	**180-4364**	2	SEAL-O-RING	
	43	1	**6V-8001**	1	SEAL-O-RING	
	44	1	**061-8561**	1	SEAL-O-RING	
	45	1	**061-9455**	6	SEAL-O-RING	
	46	1	*148-8317*	1	CONNECTOR GP	
		1	**3D-2824**	1	SEAL-O-RING	
		1	**5K-9090**	1	SEAL-O-RING	
		1	**6V-8714**	1	CONNECTOR	
	47	2	**153-1157**	1	SEAL-O-RING	
	48	1	**1B-3057**	1	CLIP	
	49	1	**1M-3464**	1	CLIP	
	50	1	**1P-4576**	2	FLANGE-HALF	

173-0239 LINES GP-POWER TRAIN OIL *(contd.)* i01666000

NOTE	REF NO	GRAPHIC REF	PART NUMBER	QTY	PART NAME 1 2 3 4 5 6 (PRODUCT LEVEL)	SEE PAGE
	51	1,2	**1P-4579**	4	FLANGE-HALF	
	52	1,2	**1P-4582**	12	FLANGE-HALF	
	53	1	**1P-5763**	2	FLANGE-HALF	
	54	1,2	**3J-1907**	2	SEAL-O-RING	
	55	1	**3J-7354**	1	SEAL-O-RING	
	56	1	**3K-0360**	2	SEAL-O-RING	
	57	1	**3P-1155**	2	SEAL-O-RING	
	58	1	**3P-1932**	1	ADAPTER	
	59	1	**4B-4274**	1	WASHER (5.5X13X1.2MM THK)	
	60	1	**4L-6454**	1	BOLT (3/8-16X1 IN)	
	61	1	**4L-9337**	7	BOLT (3/8-16X1.5 IN)	
	62	1	**5H-7153**	2	SEAL-O-RING	
	63	2	**5K-1770**	1	SEAL-O-RING	
	64	1	**1J-8668**	3	STUD-TAPERLOCK	
	65	1	**5M-2894**	3	WASHER-HARD (10.2X18.5X2.5MM THK)	
	66	1	**5P-0840**	5	SEAL-O-RING	
	67	1,2	**5P-1075**	8	WASHER-HARD (10.2X22.5X3MM THK)	
	68	2	**5P-2566**	8	BOLT (1/2-13X1.5 IN)	
	69	1	**5P-6944**	1	ADAPTER-STRAIGHT THREAD	
	70	1	**5P-7468**	4	CLIP (SLOT)	
	71	1	**5P-7469**	4	CLIP (TAB)	
	72	1	**5C-6565**	4	BOLT (1/2-13X1.125 IN)	
	73	1	**5P-8066**	1	SEAL-O-RING	
	74	1	**5S-7382**	5	BOLT (3/8-16X1.375 IN)	
	75	1	**6L-1651**	4	SEAL-O-RING	
	76	1	**5P-7470**	4	CLIP (SLOT)	
	77	1	**5P-7471**	4	CLIP (TAB)	
	78	2	**6V-1904**	1	SEAL-O-RING	
	79	1	**6V-3965**	1	FITTING AS	
	80	1,2	**6V-4368**	6	SEAL-O-RING	
	81	1	**6V-5656**	1	SEAL-O-RING	
	82	1	**6V-8801**	3	NUT (3/8-16 THD)	
	83	1	**7M-8485**	1	SEAL-O-RING	
	84	2	**7X-0290**	3	BOLT (3/8-16X3.50 IN)	
	85	1	**5P-2424**	8	BOLT (1/2-13X2.25 IN)	
	86	1	**9S-4181**	1	PLUG	
	87	1	**8C-3446**	1	VALVE GP-FLUID SAMPLING	
	88	1,2	**8J-4351**	6	SEAL-O-RING	
	89	1	**6V-5266**	1	SEAL-O-RING	
	90	2	**8M-8157**	1	SEAL-O-RING	
	91	1,2	**8T-4223**	52	WASHER-HARD (13.5X25.5X3MM THK)	
	92	1	**8T-4835**	12	BOLT (1/2-13X2 IN)	
	93	1,2	**8T-4896**	18	WASHER-HARD (10.2X18.5X2.5MM THK)	
	94	1	**8T-7971**	4	WASHER-HARD (13.5X25.5X5MM THK)	
	95	1	**8T-8917**	4	BOLT (1/2-13X1.25 IN)	
	96	1,2	**8T-8919**	20	BOLT (1/2-13X1.75 IN)	

I-SEE HOSE FABRICATION GUIDE
Y-SEPARATE ILLUSTRATION

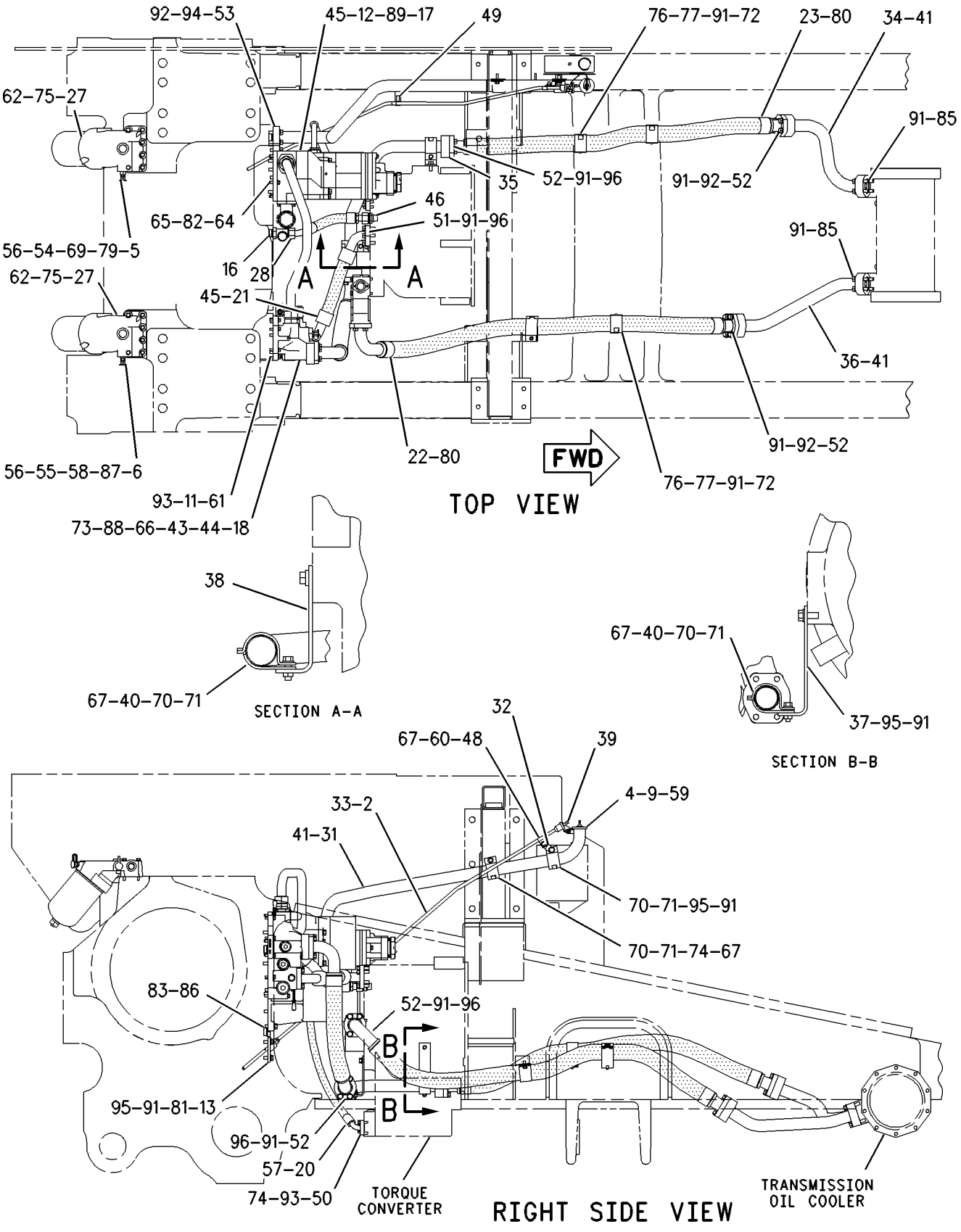

GRAPHIC #1 g00862956

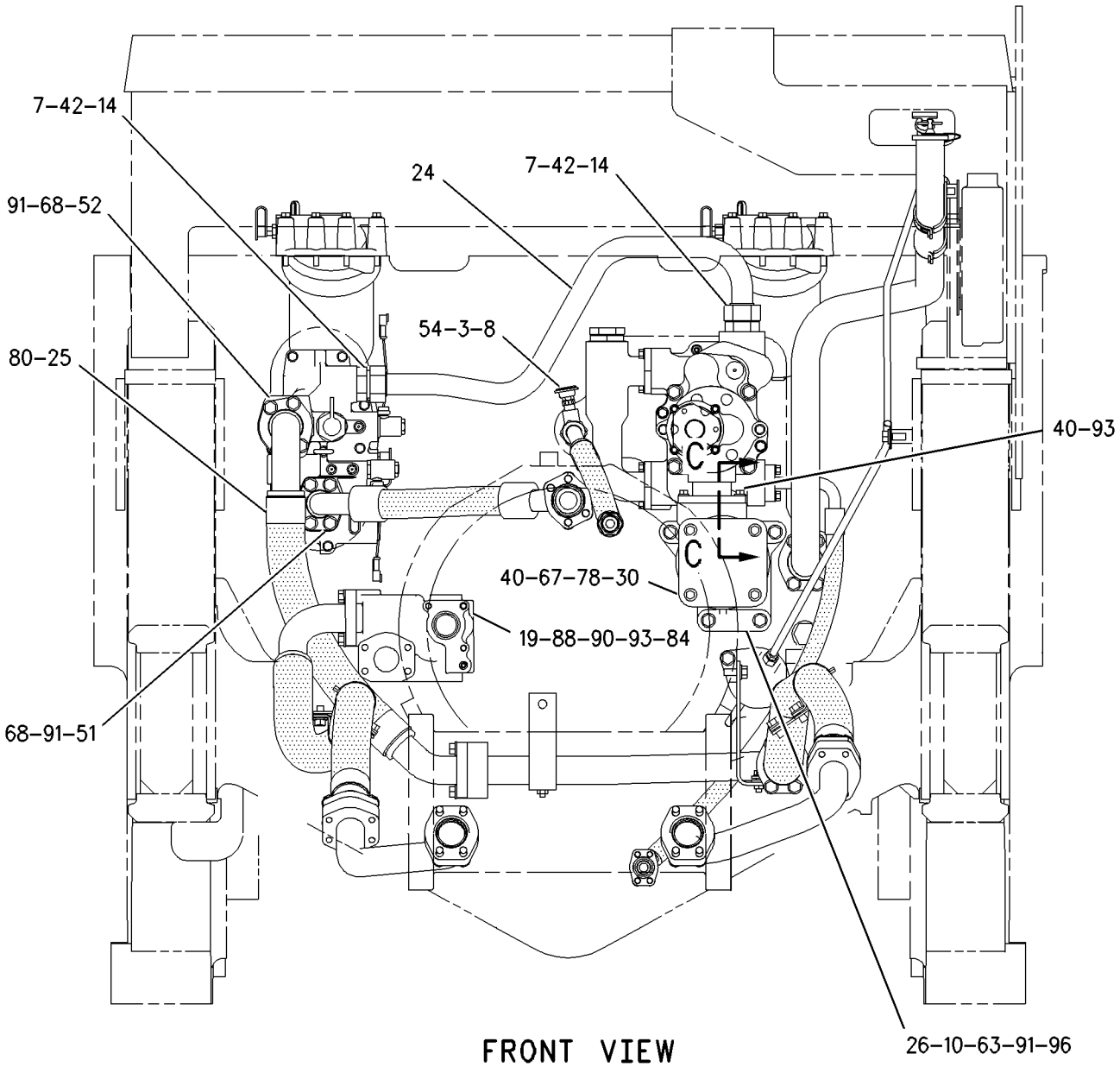

FRONT VIEW

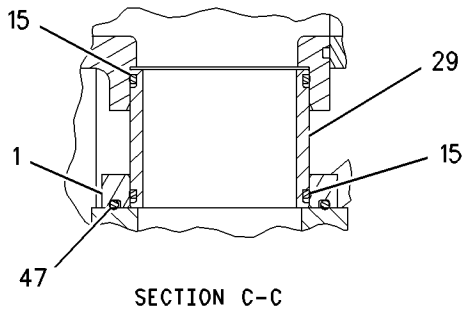

SECTION C-C

GRAPHIC #2

g00767349

164-6093 MANIFOLD & VALVE GP

S/N: AKT1-UP

PART OF 201-7272 VALVE GP-CONTROL

SMCS-4320 **i01576803**

NOTE	REF NO	GRAPHIC REF	PART NUMBER	QTY	PART NAME 1 2 3 4 5 6 (PRODUCT LEVEL)	SEE PAGE
	1	1	**137-8794**	2	SPOOL AS	
					(EACH INCLUDES)	
	2	1	**3D-7943**	1	RING-RETAINING	
	3	1	**5L-4758**	1	SEAL-O-RING	
	4	1	**137-8793**	1	SPRING	
	5	1	**111-3199**	1	MANIFOLD	
Y	6	1	**174-4909**	4	VALVE GP-SOLENOID	378
	7	1	**1P-1744**	2	DOWEL	

Y-SEPARATE ILLUSTRATION

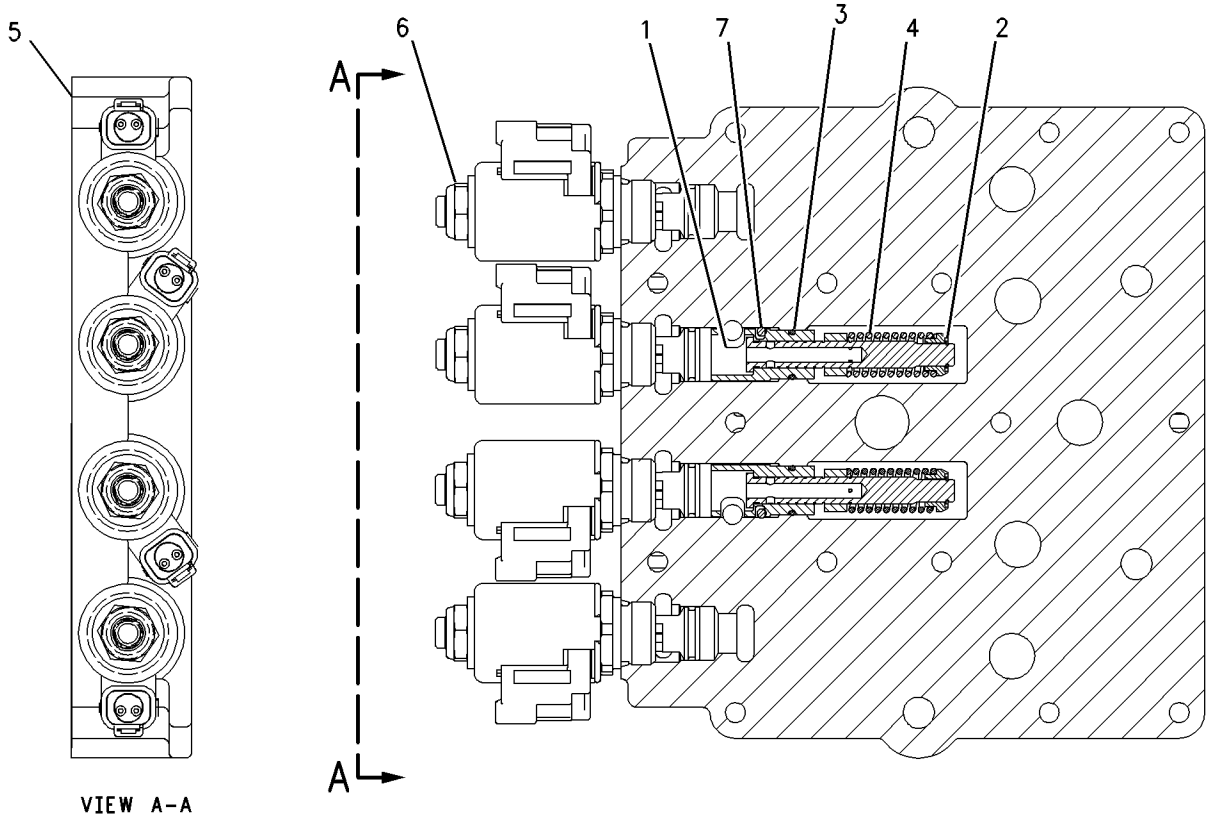

GRAPHIC #1 g00753145

175-4972 MANIFOLD & VALVE GP

S/N: AKT1-UP

PART OF 201-7272 VALVE GP-CONTROL

SMCS-4320 **i01203942**

NOTE	REF NO	GRAPHIC REF	PART NUMBER	QTY	PART NAME 1 2 3 4 5 6 (PRODUCT LEVEL)	SEE PAGE
	1	1	**132-9455**	1	MANIFOLD	
Y	2	1	*172-2392*	2	VALVE GP-SOLENOID	578

Y-SEPARATE ILLUSTRATION

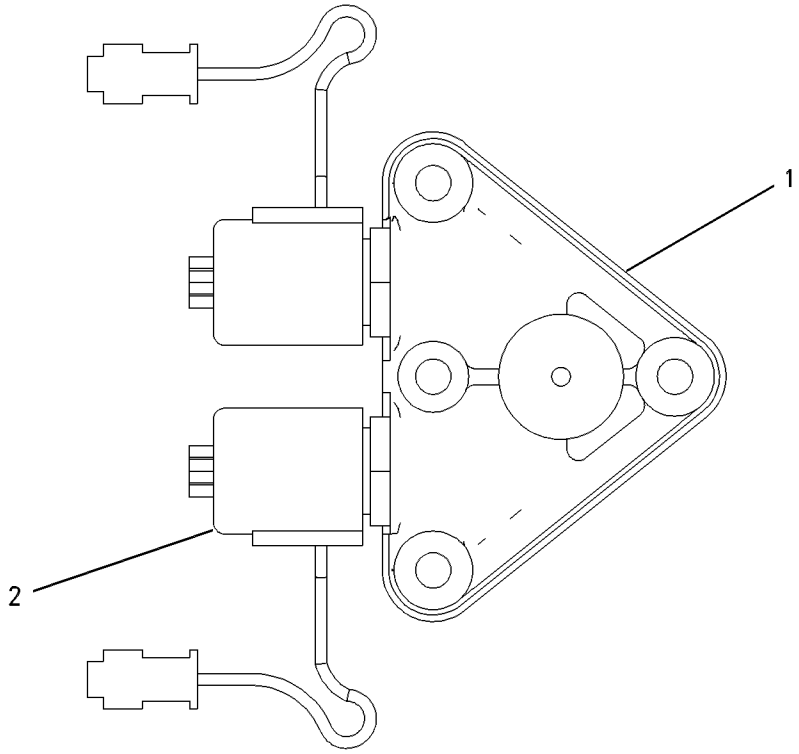

GRAPHIC #1 g00653425

122-8682 MOUNTING GP-TRANSMISSION

S/N: AKT1-UP

PART OF 171-5808 POWER TRAIN AR

SMCS-3030 **i01700733**

NOTE	REF NO	GRAPHIC REF	PART NUMBER	QTY	PART NAME 1 2 3 4 5 6 (PRODUCT LEVEL)	SEE PAGE
	1	1	**5J-5793**	2	BOLT-12 POINT HEAD (1/2-13X1.75 IN)	
	2	1	**1B-2886**	18	BOLT (1/2-13X3.75 IN)	
	3	1	**2A-1531**	3	BOLT (1/2-13X6.5 IN)	
	4	1	**5P-8245**	23	WASHER-HARD (13.5X25.5X3MM THK)	
	5	1	**9M-9647**	3	SEAL-O-RING	
	6	1	**6L-9284**	1	SEAL-O-RING	
	7	1	**5P-9519**	1	SEAL-O-RING	
	8	1	**7M-0475**	1	RING-SEALING	
	9	1	**3T-5830**	1	PLATE	
	10	1	**0S-1591**	4	BOLT (3/8-16X1.5 IN)	
	11	1	**5M-2894**	4	WASHER-HARD (10.2X18.5X2.5MM THK)	

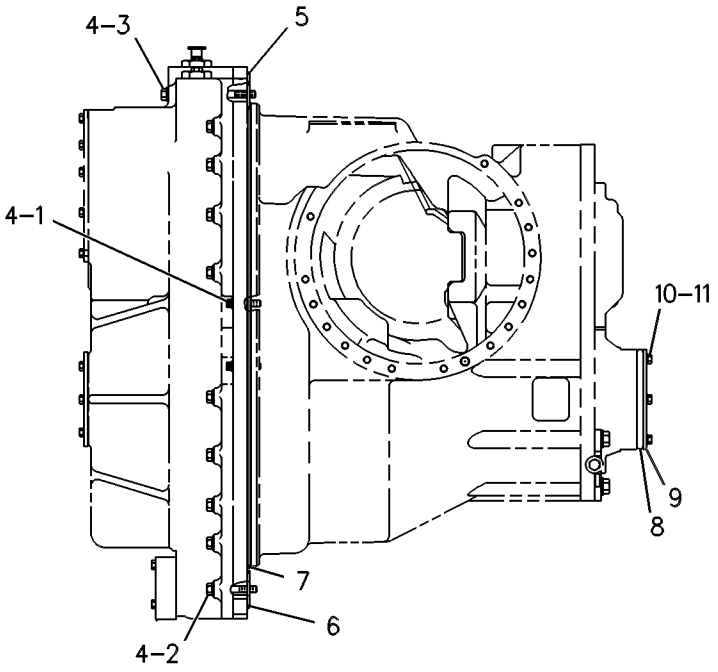

GRAPHIC #1 g00252752

MEMORANDA

POWER TRAIN

172-2267 PLANETARY GP-TRANSMISSION

S/N: 7SY1-UP

PART OF 172-2268 TRANSMISSION AR

SMCS-3155, 3160, 3169, 3170, 3187, 3189, 3190, 3304 **i01658498**

NOTE	REF NO	GRAPHIC REF	PART NUMBER	QTY	PART NAME 1 2 3 4 5 6 (PRODUCT LEVEL)	SEE PAGE
	1	1	**110-9264**	1	HOUSING AS	
		1	**7M-8480**	4	DOWEL	
	2	1	**110-9258**	1	CARRIER-PLANETARY	
	3	1	**110-9262**	1	GEAR-SUN (50 TEETH)	
	4	1	**110-9269**	1	HOUSING-CLUTCH	
	5	1	**153-5481**	2	PISTON-CLUTCH	
R	6	1	**3P-7489**	5	PLATE-CLUTCH	
	7	1	**6I-9255**	6	DISC-FRICTION	
	8	1	**110-9274**	1	HOUSING AS	
		1	**8B-1312**	3	DOWEL	
	9	1	**110-9276**	1	HOUSING AS-ROTATION	
		1	**4S-8537**	1	DOWEL	
		1	**6B-6863**	1	PIN-SPRING	
		1	**6P-7564**	1	CARRIER-RING	
		1	**112-4509**	1	BEARING-SLEEVE	
		1	**110-9255**	1	HOUSING-CLUTCH	
	10	1	**8S-9191**	20	BOLT (3/8-16X4 IN)	
	11	1	**5M-2894**	24	WASHER-HARD (10.2X18.5X2.5MM THK)	
	12	1	**3P-2792**	1	SEAL-RING	
	13	1	**153-5482**	1	PISTON-CLUTCH	
	14	1	**110-9272**	1	HUB AS	
		1	**4S-8537**	1	DOWEL	
	15	1	**1P-9261**	1	SEAL-RING	
	16	1	**0S-1594**	2	BOLT (3/8-16X1 IN)	
	17	1	**6Y-3484**	3	BALL BEARING	
	18	1	**8T-1141**	3	RING-RETAINING	
	19	1	**110-9281**	1	SHAFT-TRANSMISSION INPUT	
	20	1	**172-3262**	1	SHAFT AS-OUTPUT	
		1	**3P-3103**	1	CARRIER-RING	
		1	**111-8919**	1	BEARING-ROLLER	
	21	1	**137-5532**	1	SEAL-LIP TYPE	
	22	1	**170-3852**	1	PLATE	
	23	1	**6V-0836**	3	RING-RETAINING	
	24	1	**9W-6991**	2	RING-SEAL	
	25	1	**2S-8939**	1	RING-RETAINING	
	26	1	**110-9283**	3	SPRING-DISC	
	27	1	**110-9282**	1	PLATE-RETAINER	
	28	1	**110-9278**	1	MANIFOLD AS	
		1	**7M-8480**	2	DOWEL	
	29	1	**5P-3414**	1	RING-RETAINING	
	30	1	**1M-8657**	21	BOLT (1/2-13X15.69 IN)	
	31	1	**5P-8245**	24	WASHER-HARD (13.5X25.5X3MM THK)	
	32	1	**3P-2794**	3	SEAL-RING	
	33	1	**3P-2793**	3	SEAL-RING	
	34	1	**114-4653**	6	DOWEL-REACTION	
	35	1	**169-7055**	7	DISC-CLUTCH	
	36	1	**8E-8304**	10	DISC-THRUST	
	37	1	**110-9284**	1	GEAR-RING (90 TEETH)	
	38	1	**7G-2476**	5	GEAR-PLANET (20 TEETH)	
	39	1	**5M-6126**	5	BEARING	
	40	1	**6P-6739**	5	SHAFT-PLANETARY	
	41	1	**7M-1199**	24	SPRING	
	42	1	**110-9285**	1	GEAR-RING (79 TEETH)	
	43	1	**110-9286**	10	GEAR-PLANET (22 TEETH)	
	44	1	**7G-4817**	1	RING-SEAL	
	45	1	**3P-7570**	1	RING-SEAL	

172-2267 PLANETARY GP-TRANSMISSION *(contd.)* i01658498

NOTE	REF NO	GRAPHIC REF	PART NUMBER	QTY	PART NAME 1 2 3 4 5 6 (PRODUCT LEVEL)	SEE PAGE
	46	1	**111-8920**	2	BALL BEARING	
	47	1	**170-3849**	1	PISTON-CLUTCH	
	48	1	**112-4511**	5	PIN-SPRING	
	49	1	**5P-6254**	15	BEARING	
	50	1	**9W-9856**	6	DISC AS-FRICTION	
	51	1	**5C-3240**	12	ROD	
	52	1	**110-9287**	5	SHAFT-PLANETARY	
	53	1	**110-9288**	1	GEAR-RING (79 TEETH)	
	54	1	**9G-1919**	5	GEAR-PLANET (25 TEETH)	
	55	1	**114-4652**	12	SPRING	
R	56	1	**3P-7447**	15	PLATE-CLUTCH	
	57	1	**114-4654**	6	DOWEL-REACTION	
	58	1	**8E-2729**	6	DISC AS-FRICTION	
	59	1	**172-3263**	1	HOUSING AS	
		1	**9S-1343**	2	PLUG-CUP	
	60	1	**165-5631**	1	BRACKET	
	61	1	**110-9289**	1	GEAR-RING	
	62	1	**3S-2708**	10	PIN-SPRING	
	63	1	**8P-4047**	5	SHAFT-PLANETARY	
	64	1	**8E-8310**	30	DISC-THRUST	
	65	1	**8K-2692**	1	RING-RETAINING	
	66	1	**2D-5658**	1	BALL BEARING	
	67	1	**8C-6761**	1	RING-RETAINING	
	68	1	**8M-5661**	1	SEAL-O-RING	
	69	1	**6P-3458**	1	SPACER (21.79X30X3.66MM THK)	
	70	1	**6F-0156**	2	RING-METAL SEAL	
	71	1	**3P-3321**	2	SEAL-METAL RING	
	72	1	**170-3851**	1	PISTON-CLUTCH	
	73	1	**132-5546**	1	GEAR-SUN (34 TEETH)	
	74	1	**170-9060**	1	GEAR-RING (60/86 TEETH)	
	75	1	**110-9243**	1	CARRIER AS	
		1	**4S-8537**	1	DOWEL	
	76	1	**8P-4617**	1	SEAL-METAL RING	
	77	1	**172-3264**	1	PLATE AS	
		1	**7M-8480**	1	DOWEL	
		1	**8T-1444**	2	DOWEL	
	78	1	**8M-4395**	2	SEAL-O-RING	
	79	1	**108-2736**	2	RING-LOCK	
	80	1	**5M-4480**	2	RING-RETAINING	
	81	1	**132-5538**	1	GEAR-SUN (36 TEETH)	
	82	1	**2A-4639**	2	BOLT (3/8-16X1.625 IN)	
	83	1	**110-9251**	1	CARRIER-PLANETARY	
Y	84	1	**193-2550**	2	SENSOR GP-SPEED	257
	85	1	**8F-8544**	2	BOLT (3/8-16X6.25 IN)	
	86	1	**110-9255**	1	HOUSING-CLUTCH	
	87	1	**095-7950**	1	RING-RETAINING	
	88	1	**5M-6187**	1	RING-METAL SEAL	
	89	1	**9M-4355**	21	DAMPER-BOLT	
	90	1	**108-2735**	1	RING-LOCK	
	91	1	**9M-1503**	1	RING-METAL SEAL	
	92	1	**166-7265**	2	CLIP AS	
	93	1	**170-7196**	1	ROTOR	
	94	1	**171-7174**	12	SPRING-SEPARATOR	
	95	1	**174-3621**	1	HARNESS AS (SPEED SENSOR)	
	96	1	**2H-3855**	3	BOLT (1/2-13X0.875 IN)	
	97	1	**7J-6525**	2	RING-RETAINING	
Y	98	1	**193-0421**	2	SENSOR GP-SPEED	256

R-REMFG PART MAY BE AVAILABLE
Y-SEPARATE ILLUSTRATION

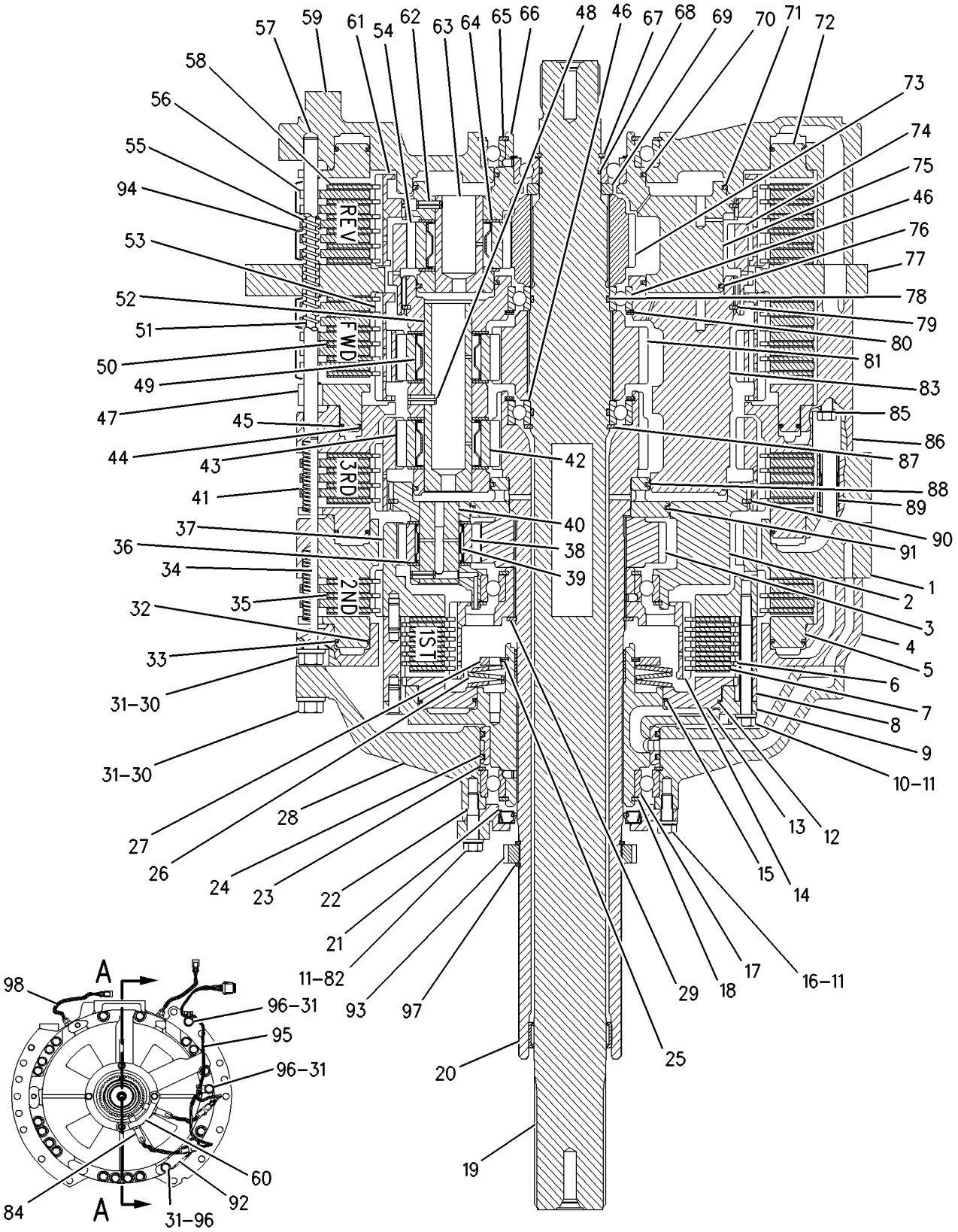

GRAPHIC #1 g00864038

171-5808 POWER TRAIN AR

S/N: AKT1-UP

PART OF 171-5800 GENERAL AR

SMCS-3000 **i01689307**

NOTE	PART NUMBER	QTY	PART NAME 1 2 3 4 5 6 (PRODUCT LEVEL)	SEE PAGE
Y	*110-2637*	1	AXLE GP-POWER TRAIN	304
YR	**106-0466**	2	CLUTCH & BRAKE GP-STEERING	462
Y	*158-8077*	1	CONTROL & MTG GP-ELECTRONIC	200
Y	*115-7412*	1	CONTROL & MTG GP-TRANSMISSION	308
Y	*115-7411*	1	CONTROL GP-BRAKE	310
Y	*199-1084*	1	COUPLING GP-PUMP	319
Y	*110-2655*	2	FINAL DRIVE GP	326
Y	*173-0239*	1	LINES GP-POWER TRAIN OIL	338
Y	*122-8682*	1	MOUNTING GP-TRANSMISSION	344
Y	*173-0245*	1	SHAFT GP-MAIN DRIVE	357
Y	*172-2399*	1	TORQUE CONVERTER GP	358
Y	*172-2268*	1	TRANSMISSION AR	364
Y	*202-7400*	1	VALVE & MTG GP-STEERING	471

R-REMFG PART MAY BE AVAILABLE
Y-SEPARATE ILLUSTRATION

170-1163 PUMP GP-GEAR

S/N: AKT1-UP
5 SECTION
PART OF 173-0239 LINES GP-POWER TRAIN OIL

SMCS-3115, 3153 **i01689310**

NOTE	REF NO	GRAPHIC REF	PART NUMBER	QTY	PART NAME 1 2 3 4 5 6 (PRODUCT LEVEL)	SEE PAGE
	1	1	**3T-5355**	1	FLANGE	
	2	1	**5H-4279**	1	PLUG-CUP	
	3	1	**9M-1974**	4	WASHER-HARD (8.8X16X2MM THK)	
	4	1	**7G-2248**	1	CAGE-BEARING	
	5	1	**129-1610**	1	SEAL-O-RING	
	6	1	**129-7213**	1	COUPLER AS	
		1	**1S-5582**	1	COUPLING	
		1	**3L-6917**	1	RING-RETAINING	
Y	7	1	**170-1164**	1	PUMP GP-GEAR (3 SECTION)	352
Y	8	1	**170-1177**	1	PUMP GP-GEAR (2 SECTION)	354
	9	1	**8M-0139**	4	BOLT (1/2 X 13 X 10.5 IN)	
	10	1	**176-0356**	1	MANIFOLD	
	11	1	**177-0273**	1	VALVE	
	12	1	**178-3712**	1	RETAINER AS	
	13	1	**061-8561**	2	SEAL-O-RING	
	14	1	**111-4919**	1	SEAL-LIP TYPE	
	15	1	**1A-2029**	4	BOLT (3/8-16X1.125 IN)	
	16	1	**1B-5675**	1	BALL BEARING AS	
	17	1	**2M-0849**	4	WASHER-HARD (13.5X25.5X5MM THK)	
	18	1	**2M-3974**	1	RING-RETAINING	
	19	1	**3B-1915**	2	BOLT (3/8-16X1.37 IN)	
	20	1	**5M-2894**	6	WASHER-HARD (10.2X18.5X2.5MM THK)	
	21	1	**5P-8211**	1	SEAL-O-RING	
	22	1	**6L-4784**	4	BOLT-12 POINT HEAD (5/16-18X1.75 IN)	
	23	1	**6V-1196**	1	SEAL-O-RING	
	24	1	**6V-5065**	1	SEAL-O-RING	
	25	1	**8J-4351**	2	SEAL-O-RING	

Y-SEPARATE ILLUSTRATION

170-1163 **PUMP GP-GEAR** ***(contd.)*** **i01689310**

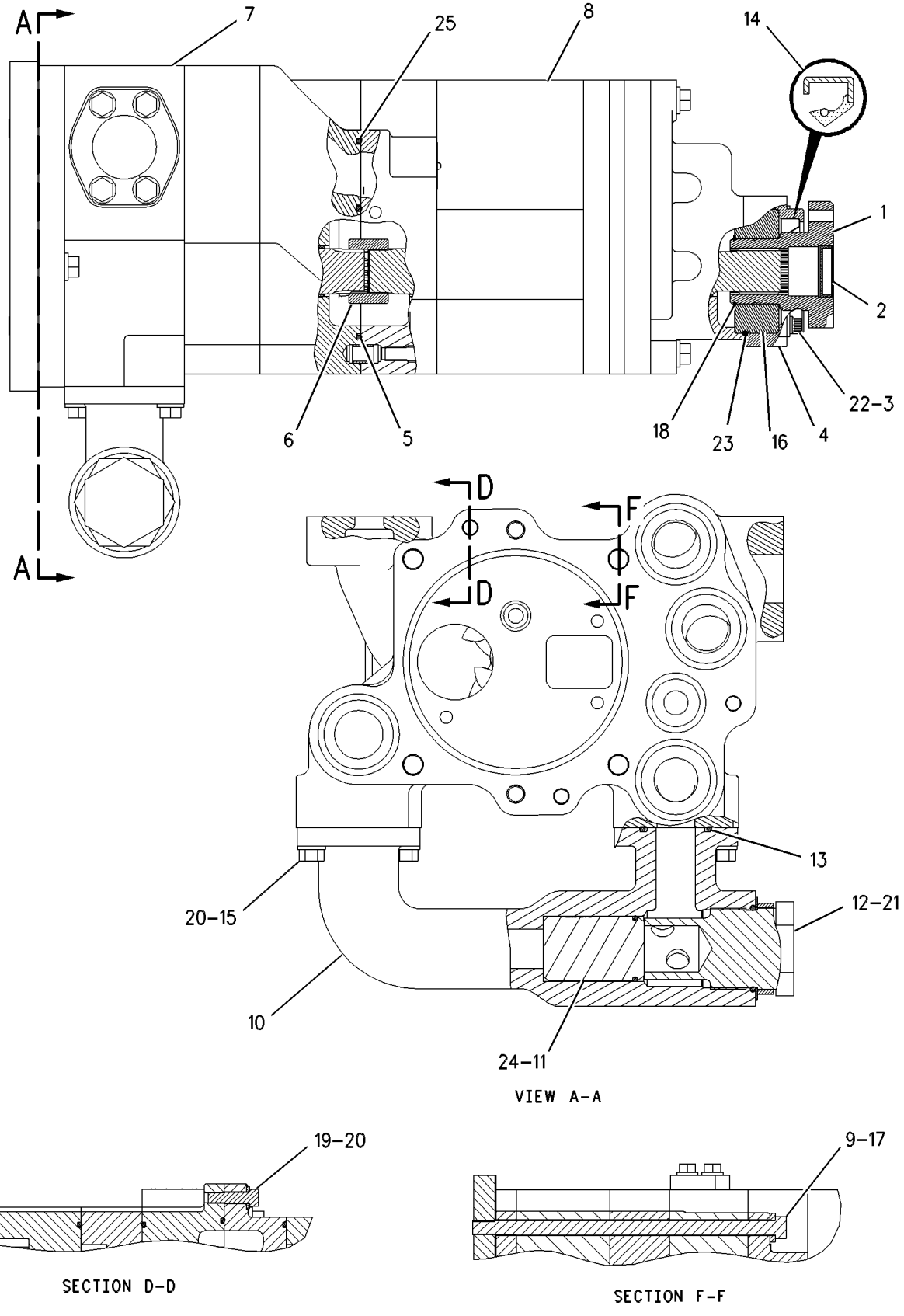

GRAPHIC #1

g00650525

170-1164 PUMP GP-GEAR

S/N: AKT1-UP
3 SECTION
PART OF 170-1163 PUMP GP-GEAR

SMCS-3115, 3153 **i01700769**

NOTE	REF NO	GRAPHIC REF	PART NUMBER	QTY	PART NAME 1 2 3 4 5 6 (PRODUCT LEVEL)	SEE PAGE
	1	1	**3P-0747**	2	GEAR-OIL PUMP (12 TEETH)	
	2	1	**3S-0004**	4	WASHER (0.406X0.728X0.09 IN THK)	
	3	1	**8F-6350**	4	BOLT (3/8-16X8 IN)	
	4	1	**9G-9543**	2	GEAR-OIL PUMP (12 TEETH)	
	5	1	**129-1609**	3	SEAL-O-RING	
	6	1	**170-1166**	1	COVER	
	7	1	**170-1167**	1	BODY AS	
		1	**1M-3909**	2	BEARING-SLEEVE	
		1	**8M-8489**	4	DOWEL	
	8	1	**170-1169**	1	BODY AS	
		1	**1M-3780**	2	BEARING-SLEEVE	
		1	**6P-3223**	4	DAMPER-BOLT	
	9	1	**170-1171**	1	BODY AS	
		1	**8M-8489**	2	DOWEL	
		1	**9M-4370**	2	BEARING	
	10	1	**170-1173**	1	GEAR AS-OIL PUMP (8 TEETH)	
	11	1	**170-1175**	1	GEAR AS-OIL PUMP (8 TEETH)	
					(EACH GEAR AS INCLUDES)	
		1	**2B-9373**	1	KEY-WOODRUFF	
	12	1	**8J-4351**	9	SEAL-O-RING	
	13	1	**2B-9373**	2	KEY-WOODRUFF	
	14	1	**197-4652**	1	VALVE-RELIEF	
	15	1	**6V-5266**	1	SEAL-O-RING	
	16	1	**9X-4609**	1	SEAL-O-RING	

170-1164 **PUMP GP-GEAR** ***(contd.)*** **i01700769**

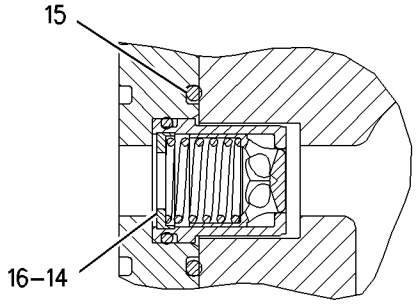

SECTION C-C

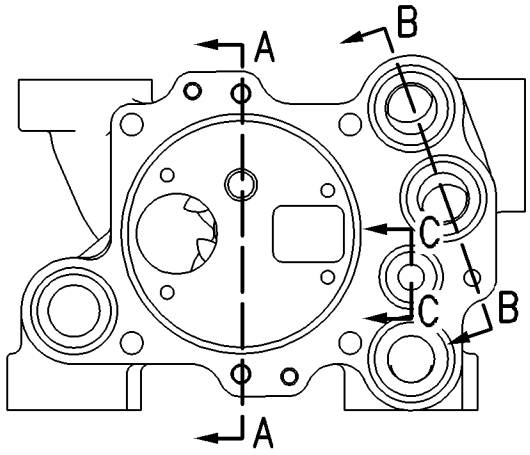

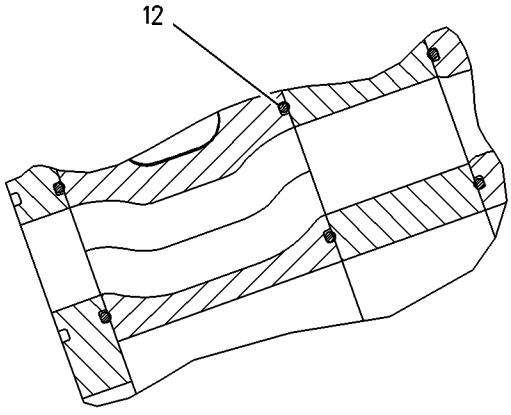

SECTION B-B

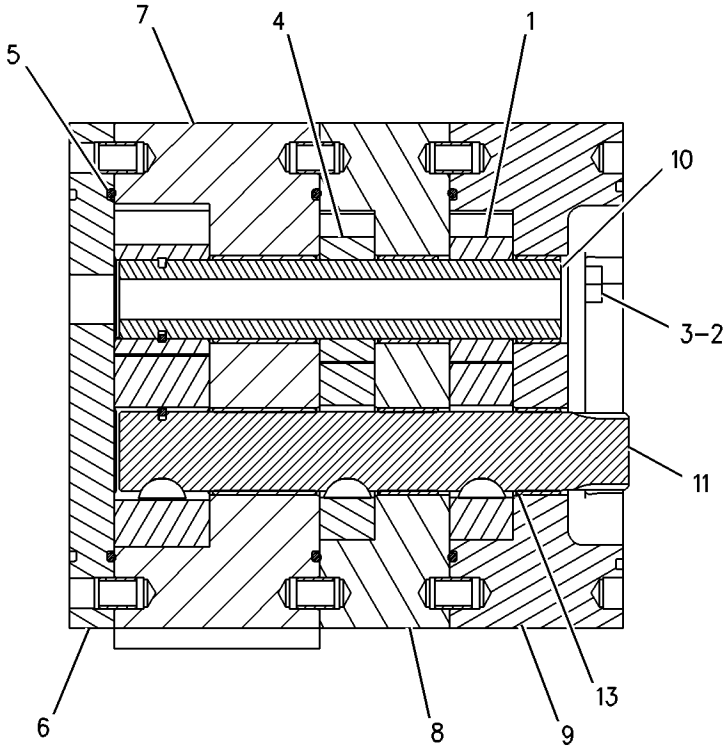

SECTION A-A

GRAPHIC #1 g00806453

170-1177 PUMP GP-GEAR

S/N: AKT1-UP
2 SECTION
PART OF 170-1163 PUMP GP-GEAR

SMCS-3115, 3153 **i01689318**

NOTE	REF NO	GRAPHIC REF	PART NUMBER	QTY	PART NAME 1 2 3 4 5 6 (PRODUCT LEVEL)	SEE PAGE
	1	1	**3S-0004**	6	WASHER (0.406X0.728X0.09 IN THK)	
	2	1	**193-8131**	4	GEAR (8 TEETH)	
	3	1	**9F-2773**	6	BOLT (3/8-16X8.5 IN)	
	4	1	**9W-3273**	1	SPACER-OIL PUMP	
	5	1	**129-1609**	5	SEAL-O-RING	
	6	1	**170-1178**	1	COVER AS	
		1	**8M-8489**	4	DOWEL	
		1	**9M-4370**	2	BEARING	
	7	1	**170-1180**	1	BODY AS	
		1	**6P-3223**	6	DAMPER-BOLT	
		1	**1M-3909**	2	BEARING-SLEEVE	
		1	**9M-4370**	2	BEARING	
	8	1	**170-1182**	1	COVER AS	
		1	**1M-3909**	2	BEARING-SLEEVE	
	9	1	**170-1185**	1	GEAR AS-OIL PUMP (12 TEETH)	
	10	1	**170-1188**	1	GEAR AS-OIL PUMP (12 TEETH)	
					(EACH GEAR AS INCLUDES)	
		1	**1B-8736**	1	KEY-WOODRUFF	
	11	1	**170-5344**	2	BODY AS	
					(EACH INCLUDES)	
		1	**7C-7225**	2	SLEEVE	
	12	1	**8J-4351**	1	SEAL-O-RING	
	13	1	**1B-8705**	2	KEY-WOODRUFF	

170-1177 **PUMP GP-GEAR** ***(contd.)*** **i01689318**

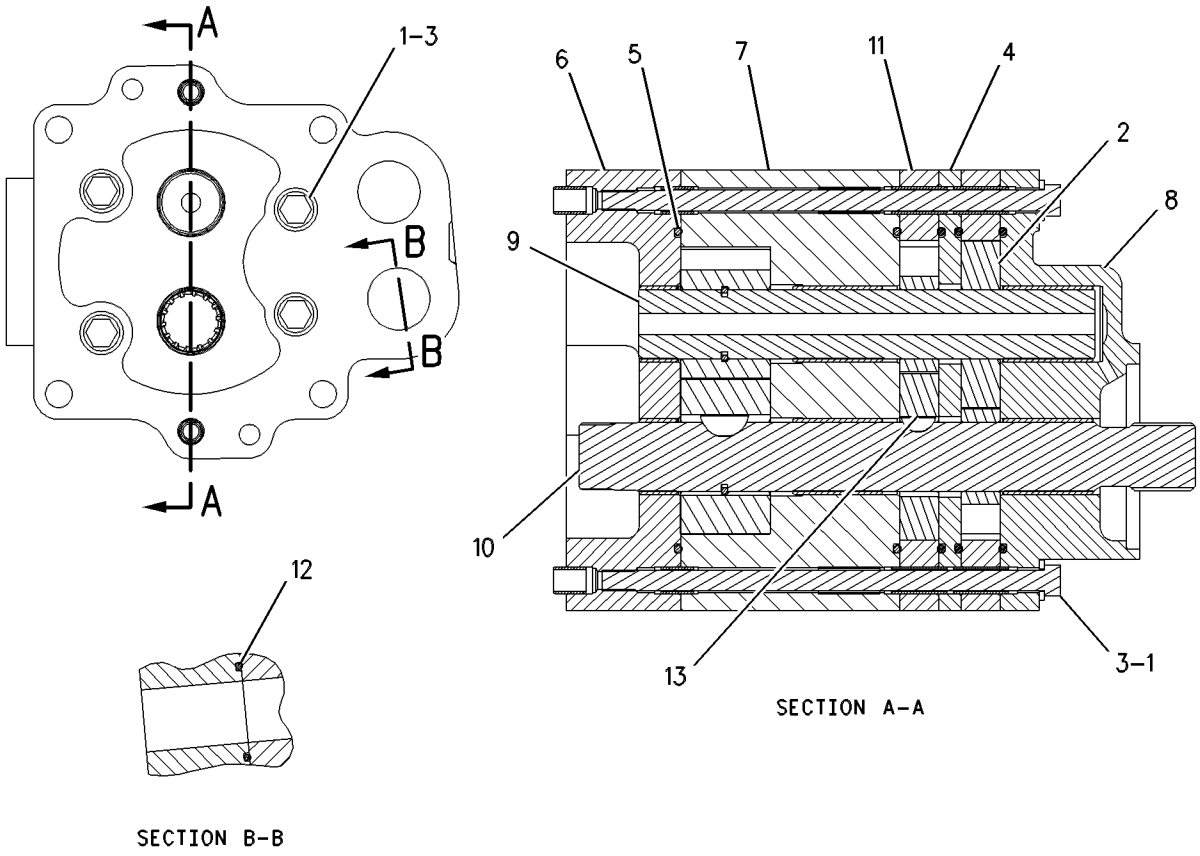

GRAPHIC #1 g00650551

160-4928 SEGMENT GP-SPROCKET

S/N: AKT1-UP
PART OF 110-2655, 110-2780, 192-0722 FINAL DRIVE GP
ALSO AN ATTACHMENT

SMCS-4155 **i01401469**

NOTE	REF NO	GRAPHIC REF	PART NUMBER	QTY	PART NAME 1 2 3 4 5 6 (PRODUCT LEVEL)	SEE PAGE
	1	1	**2M-5656**	30	NUT (1-14 THD)	
	2	1	**5P-5422**	30	BOLT (1-14X3.64 IN)	
	3	1	**129-9208**	5	SEGMENT-SPROCKET	
	4	1	**5P-8250**	30	WASHER (28X49X5MM THK)	

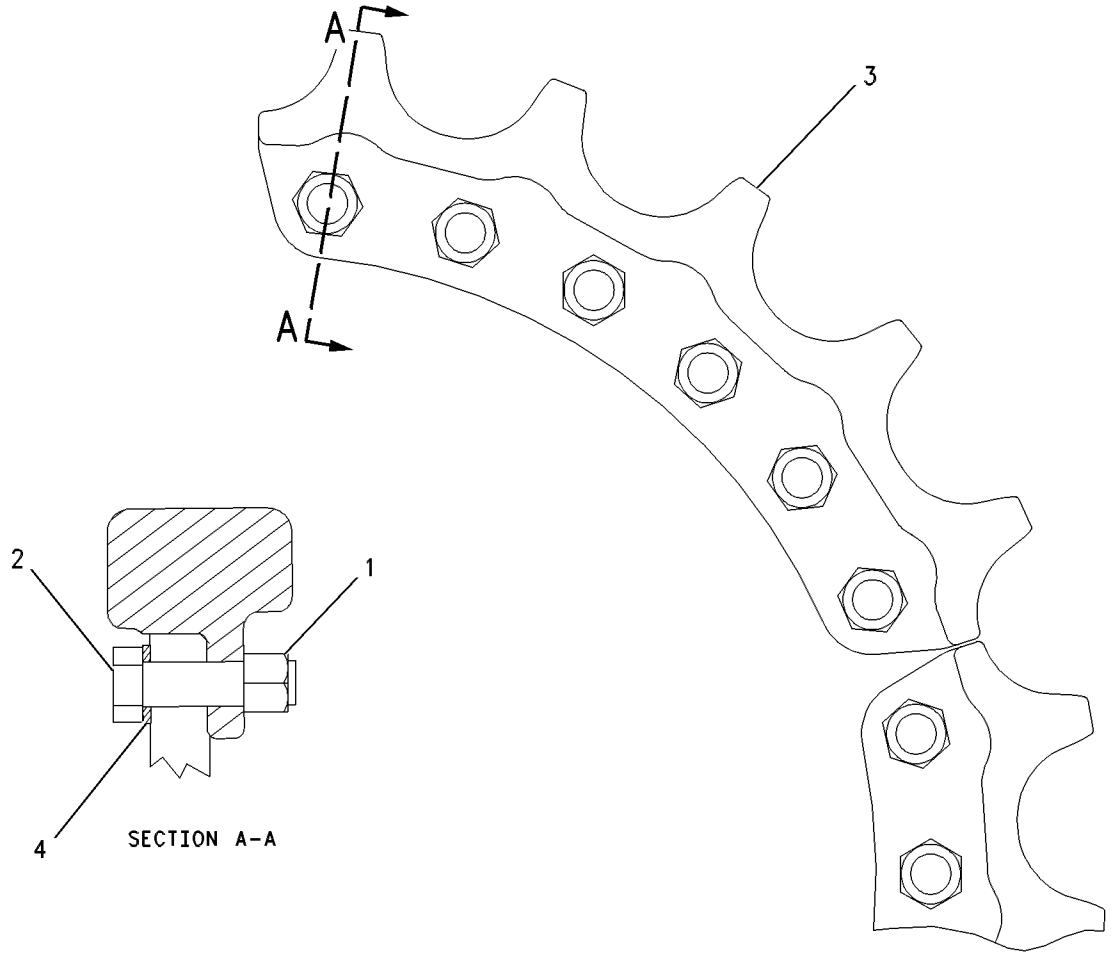

GRAPHIC #1 g00602916

173-0245 SHAFT GP-MAIN DRIVE

S/N: AKT1-UP

PART OF 171-5808 POWER TRAIN AR

SMCS-3253 **i01689320**

NOTE	REF NO	GRAPHIC REF	PART NUMBER	QTY	PART NAME 1 2 3 4 5 6 (PRODUCT LEVEL)	SEE PAGE
	1	1	**110-9311**	1	YOKE AS	
		1	**4F-8503**	1	PLUG-CUP	
Y	2	1	**173-0246**	1	UNIVERSAL JOINT GP	365
	3	1	**0S-1604**	8	BOLT (1/2-20X2.5 IN)	
	4	1	**5D-6657**	1	RACE	

Y-SEPARATE ILLUSTRATION

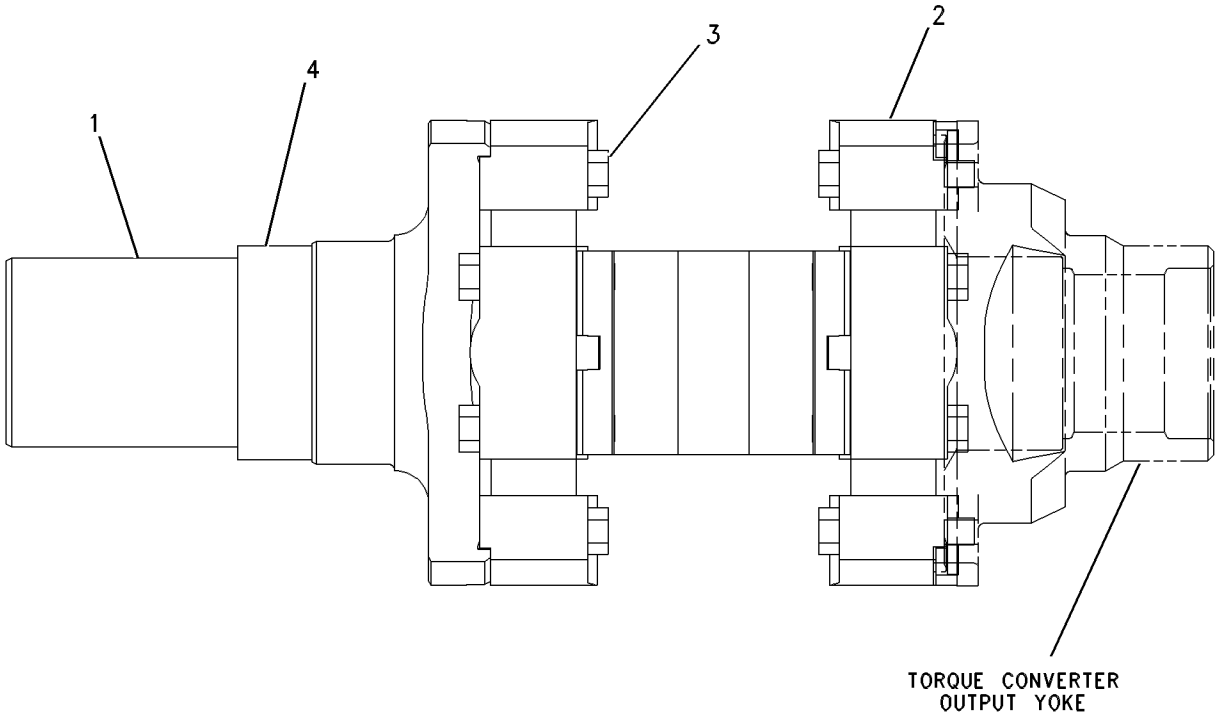

GRAPHIC #1 g00648254

POWER TRAIN

172-2399 TORQUE CONVERTER GP

S/N: AKT1-UP

PART OF 171-5808 POWER TRAIN AR

SMCS-3101, 3102, 3105, 3127, 3128, 3129, 3130, 3131, 3134, 3135, 3136 **i01665922**

NOTE	REF NO	GRAPHIC REF	PART NUMBER	QTY	PART NAME 1 2 3 4 5 6 (PRODUCT LEVEL)	SEE PAGE
Y	1	1	**210-1612**	1	TORQUE CONVERTER GP	362
	2	1	**8E-8158**	1	COVER-TORQUE CONVERTER	
	3	1	**0S-1585**	11	BOLT (1/2-13X1.50 IN)	
	4	1	**5P-8245**	11	WASHER-HARD (13.5X25.5X3MM THK)	
	5	1	**4M-8910**	1	RING-RETAINING	
	6	1	**2K-5254**	1	BEARING-OUTER	
	7	1	**8E-7838**	1	GEAR-SUN (35 TEETH)	
	8	1	**7X-2623**	1	RING-RETAINING	
	9	1	**3D-8241**	1	SEAL-O-RING	
	10	1	**165-4854**	2	SEAL-O-RING	
	11	1	**6P-8339**	1	LOCK	
	12	1	**6P-8340**	1	SLEEVE	
	13	1	**5S-7379**	1	BOLT (3/8-16X0.875 IN)	
	14	1	**8T-4896**	1	WASHER-HARD (10.2X18.5X2.5MM THK)	
	15	1	**8S-9130**	1	SCREEN-SUCTION	
Y	16	1	**106-4150**	1	DRAIN GP-ECOLOGY	322
	17	1	**8T-2501**	4	BOLT (3/8-16X2 IN)	
	18	1	**2B-0858**	1	PLUG-PIPE	
	19	1	**165-4852**	2	SEAL-O-RING	
	20	1	**9S-4191**	1	PLUG	
	21	1	**3J-1907**	1	SEAL-O-RING	
	22	1	**3P-0653**	1	SEAL-O-RING	
	23	1	**174-7108**	1	YOKE	
	24	1	**9S-4372**	1	RETAINER	
	25	1	**1B-4367**	1	BOLT (5/8-11X3 IN)	
	26	1	**8T-8919**	1	BOLT (1/2-13X1.75 IN)	
	27	1	**117-7127**	1	SEAL-LIP TYPE	
	28	1	**8T-4223**	12	WASHER-HARD (13.5X25.5X3MM THK)	
	29	1	**5P-2566**	11	BOLT (1/2-13X1.5 IN)	
	30	1	**8E-8994**	1	SEAL-RING	
	31	1	**6V-1196**	1	SEAL-O-RING	
	32	1	**0S-1587**	1	BOLT (1/2-13X1.75 IN)	
	33	1	**2M-0849**	1	WASHER-HARD (13.5X25.5X5MM THK)	

Y-SEPARATE ILLUSTRATION

172-2399 **TORQUE CONVERTER GP** ***(contd.)*** **i01665922**

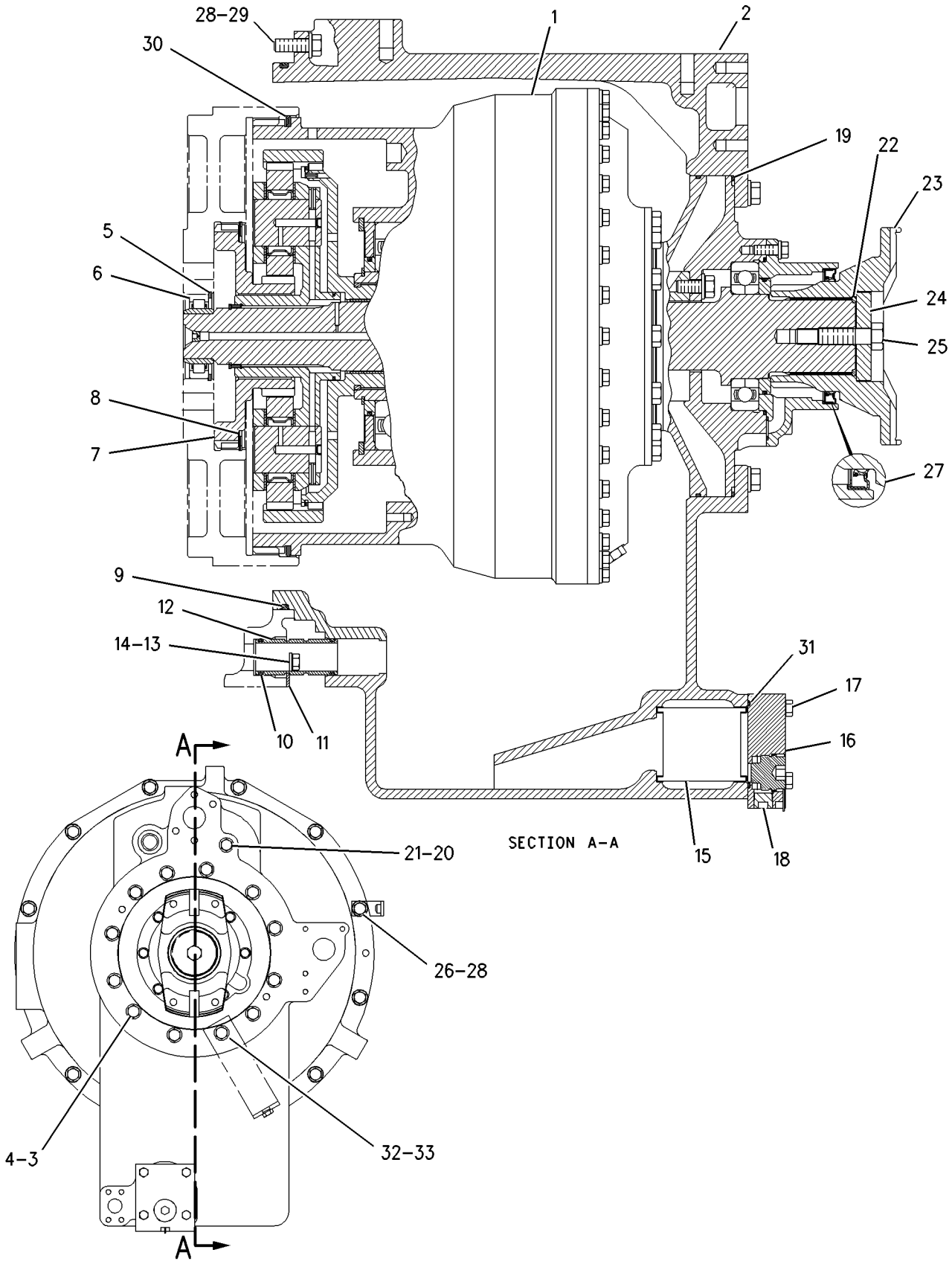

GRAPHIC #1 g00753440

POWER TRAIN

210-1611 TORQUE CONVERTER GP

S/N: TCE1-UP

PART OF 210-1612 TORQUE CONVERTER GP

SMCS-3101, 3102, 3105, 3127, 3128, 3129, 3130, 3131, 3134, 3135, 3136 **i01665916**

NOTE	REF NO	GRAPHIC REF	PART NUMBER	QTY	PART NAME 1 2 3 4 5 6 (PRODUCT LEVEL)	SEE PAGE
	1	1	**3T-3811**	1	SUPPORT-STATOR	
	2	1	**7G-6115**	1	PLATE-THRUST	
	3	1	**8E-8159**	1	CARRIER-STATOR	
	4	1	**2L-3650**	5	PIN-SPRING	
	5	1	**6H-1717**	36	BOLT (1/2-13X1.125 IN)	
	6	1	**5P-8245**	36	WASHER-HARD (13.5X25.5X3MM THK)	
	7	1	**7T-6992**	1	IMPELLER-CONVERTER	
	8	1	**7G-6059**	1	CARRIER-RING	
	9	1	**9W-6991**	2	RING-SEAL	
	10	1	**6H-3956**	1	PIN	
	11	1	**7T-7678**	1	STATOR-CONVERTER	
	12	1	**165-7783**	1	FLANGE AS	
		1	**9M-4007**	2	DOWEL	
		1	**9S-4191**	2	PLUG	
		1	**033-6042**	2	SEAL-O-RING	
	13	1	**7G-6114**	1	SLEEVE-WEAR	
	14	1	**8E-8160**	1	HUB-IMPELLER	
	15	1	**1A-5822**	12	BOLT (1/2-13X2.75 IN)	
	16	1	**4F-2041**	1	CUP-BEARING	
	17	1	**2D-9457**	1	CONE-BEARING	
	18	1	**9S-4368**	1	RING-RETAINING	
	19	1	**1T-0795**	3	RING-RETAINING	
	20	1	**8E-8153**	1	HUB-TURBINE	
	21	1	**8P-9265**	1	TURBINE-CONVERTER	
	22	1	**9U-8241**	1	BALL BEARING	
	23	1	**8E-8161**	1	CARRIER-SEAL	
	24	1	**5P-5297**	1	RING-RETAINING	
	25	1	**8E-8155**	1	FLANGE AS	
		1	**1T-0278**	2	BEARING-SLEEVE	
	26	1	**8E-8157**	1	SPACER (90.5X109X3MM THK)	
	27	1	**5P-3629**	1	RING-RETAINING	
	28	1	**8E-8152**	1	HOUSING-ROTATING	
	29	1	**8E-8162**	1	SLEEVE	
	30	1	**117-8806**	1	RING-RETAINING	
	31	1	**1A-2029**	36	BOLT (3/8-16X1.125 IN)	
	32	1	**5M-2894**	36	WASHER-HARD (10.2X18.5X2.5MM THK)	
	33	1	**6V-4315**	1	SEAL-O-RING	
	34	1	**210-1610**	2	PLATE	
	35	1	**133-6589**	1	ADAPTER-STATOR	

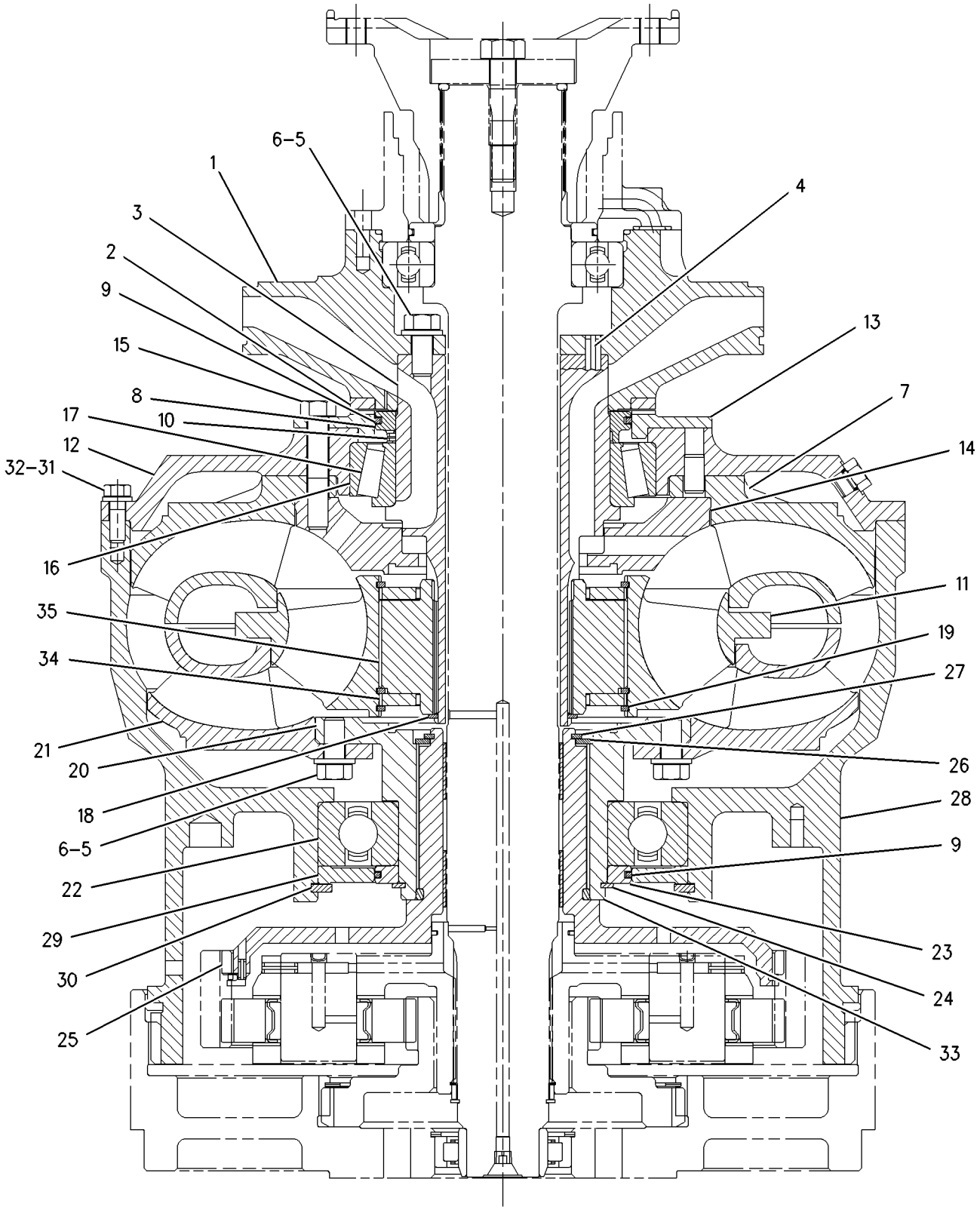

GRAPHIC #1 g00863268

210-1612 TORQUE CONVERTER GP

S/N: TCE1-UP

PART OF 172-2399 TORQUE CONVERTER GP

SMCS-3101, 3102, 3105, 3127, 3128, 3129, 3130, 3131, 3134, 3135, 3136 **i01665909**

NOTE	REF NO	GRAPHIC REF	PART NUMBER	QTY	PART NAME 1 2 3 4 5 6 (PRODUCT LEVEL)	SEE PAGE
Y	1	1	*210-1611*	1	TORQUE CONVERTER GP	360
	2	1	**9M-2076**	1	RING-SNAP	
	3	1	**9M-2074**	1	GEAR-RING (106 TEETH)	
	4	1	**5H-8985**	2	PIN-SPRING	
	5	1	**106-7099**	1	CARRIER-PLANETARY	
	6	1	**6L-6560**	1	RING-RETAINING	
	7	1	**9P-4057**	1	SPACER (58X63.50X9.08MM THK)	
	8	1	**8J-8322**	1	RING-RETAINING	
	9	1	**6P-3901**	3	SHAFT AS	
					(EACH INCLUDES)	
		1	**2A-3746**	1	PLUG-CUP	
	10	1	**8E-8316**	6	DISC-THRUST	
	11	1	**7G-5622**	3	GEAR-PLANETARY (35 TEETH)	
	12	1	**1S-9110**	3	ROLLER AS	
	13	1	**3S-2708**	3	PIN-SPRING	
	14	1	**5P-5405**	1	RACE-BEARING INNER	
	15	1	**173-4014**	1	SHAFT AS	
		1	**5J-7386**	1	PLUG-ORIFICE (1/8-27 THD)	
	16	1	**7L-9061**	1	SEAL-O-RING	
	17	1	**6Y-5888**	1	RING-SEAL	
	18	1	**8P-5056**	1	CARRIER-RING	
	19	1	**117-5794**	1	RETAINER-BEARING	
	20	1	**1A-2029**	8	BOLT (3/8-16X1.125 IN)	
	21	1	**5M-2894**	8	WASHER-HARD (10.2X18.5X2.5MM THK)	
	22	1	**6V-5553**	1	SEAL-O-RING	
	23	1	**6V-9176**	1	BALL BEARING	
	24	1	**1T-0141**	1	RING-METAL SEAL	

Y-SEPARATE ILLUSTRATION

210-1612 TORQUE CONVERTER GP *(contd.)* i01665909

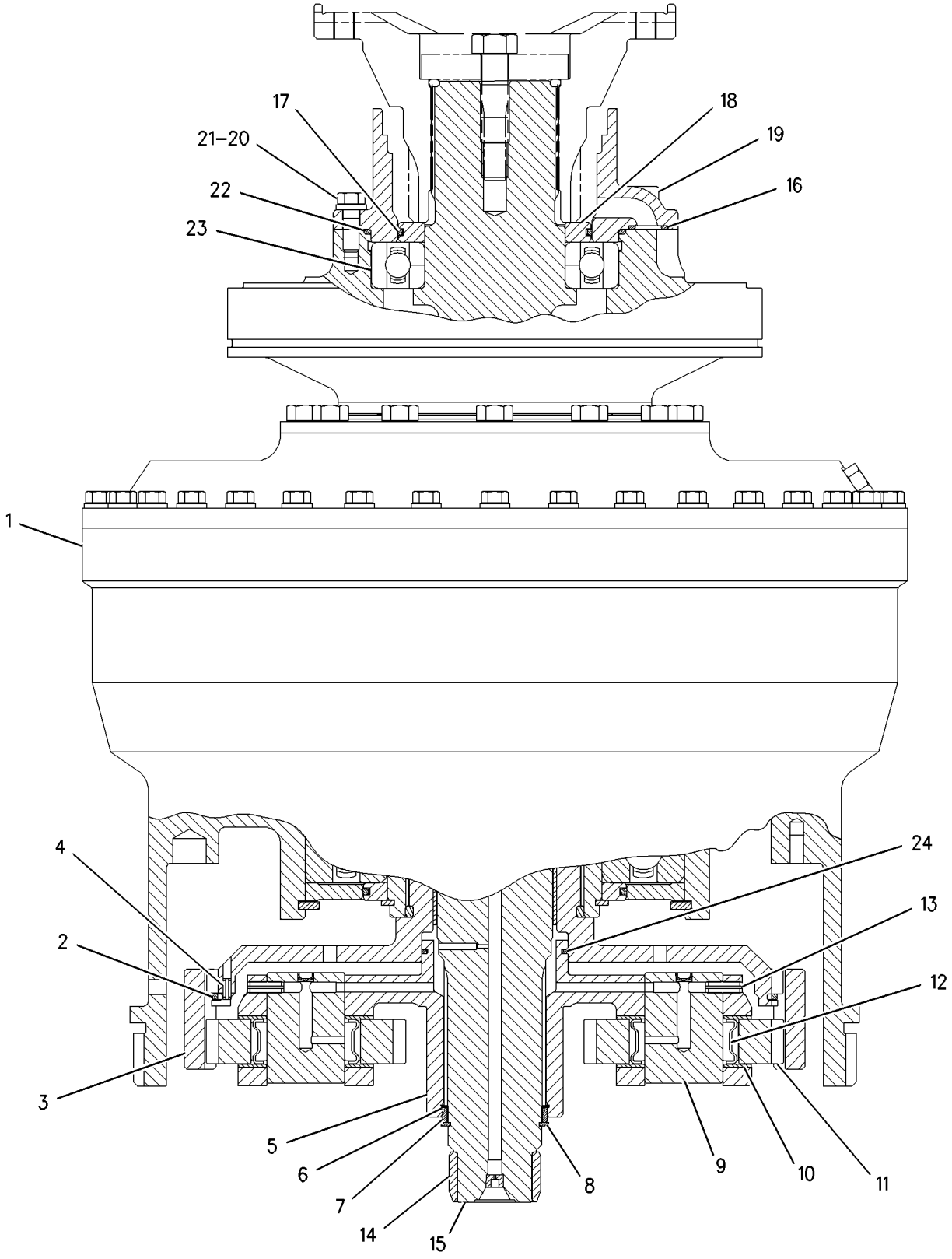

GRAPHIC #1 g00863292

POWER TRAIN

172-2268 TRANSMISSION AR

S/N: 7SY1-UP

PART OF 171-5808 POWER TRAIN AR

SMCS-3030, 3060, 3160 **i01689383**

NOTE	PART NUMBER	QTY	PART NAME 1 2 3 4 5 6 (PRODUCT LEVEL)	SEE PAGE
Y	*172-2263*	1	CASE & PARTS GP-PLANETARY	306
Y	*172-1718*	1	CONTROL GP-TRANSMISSION HYD	316
Y	*172-2260*	1	DIFFERENTIAL & BEVEL GEAR GP	320
Y	*172-2267*	1	PLANETARY GP-TRANSMISSION	346

Y-SEPARATE ILLUSTRATION

173-0246 UNIVERSAL JOINT GP

S/N: AKT1-UP

PART OF 173-0245 SHAFT GP-MAIN DRIVE

SMCS-3251, 3253 **i01689398**

NOTE	REF NO	GRAPHIC REF	PART NUMBER	QTY	PART NAME 1 2 3 4 5 6 (PRODUCT LEVEL)	SEE PAGE
	1	1	**8W-9912**	2	SPIDER & BEARING GP	
	2	1	**173-0247**	1	YOKE-COUPLING	
	3	1	**0S-1604**	8	BOLT (1/2-20X2.5 IN)	

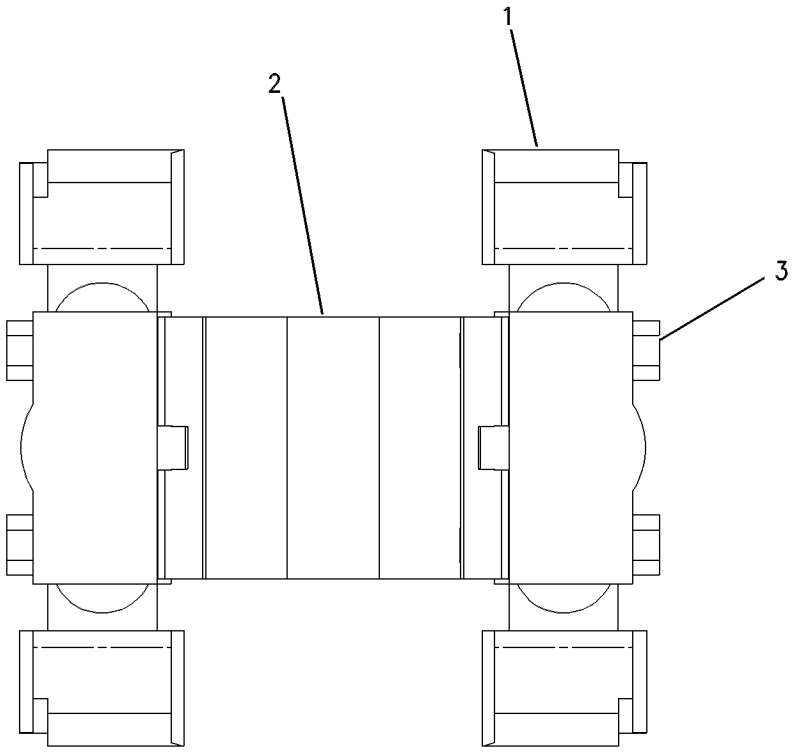

GRAPHIC #1 g00648256

192-0729 VALVE & MTG GP-PILOT

S/N: AKT1-UP
PART OF 196-5844 LINES GP-OIL
AN ATTACHMENT

SMCS-5059 **i01431506**

NOTE	REF NO	GRAPHIC REF	PART NUMBER	QTY	PART NAME 1 2 3 4 5 6 (PRODUCT LEVEL)	SEE PAGE
	1	1	**175-3616**	1	MANIFOLD AS	
	1A	1	**6V-0852**	1	CAP-DUST	
	1B	1	**6V-3965**	1	FITTING AS (QUICK DISCONNECT)	
Y	2	1	**176-5321**	1	VALVE GP-MODULATING	373

Y-SEPARATE ILLUSTRATION

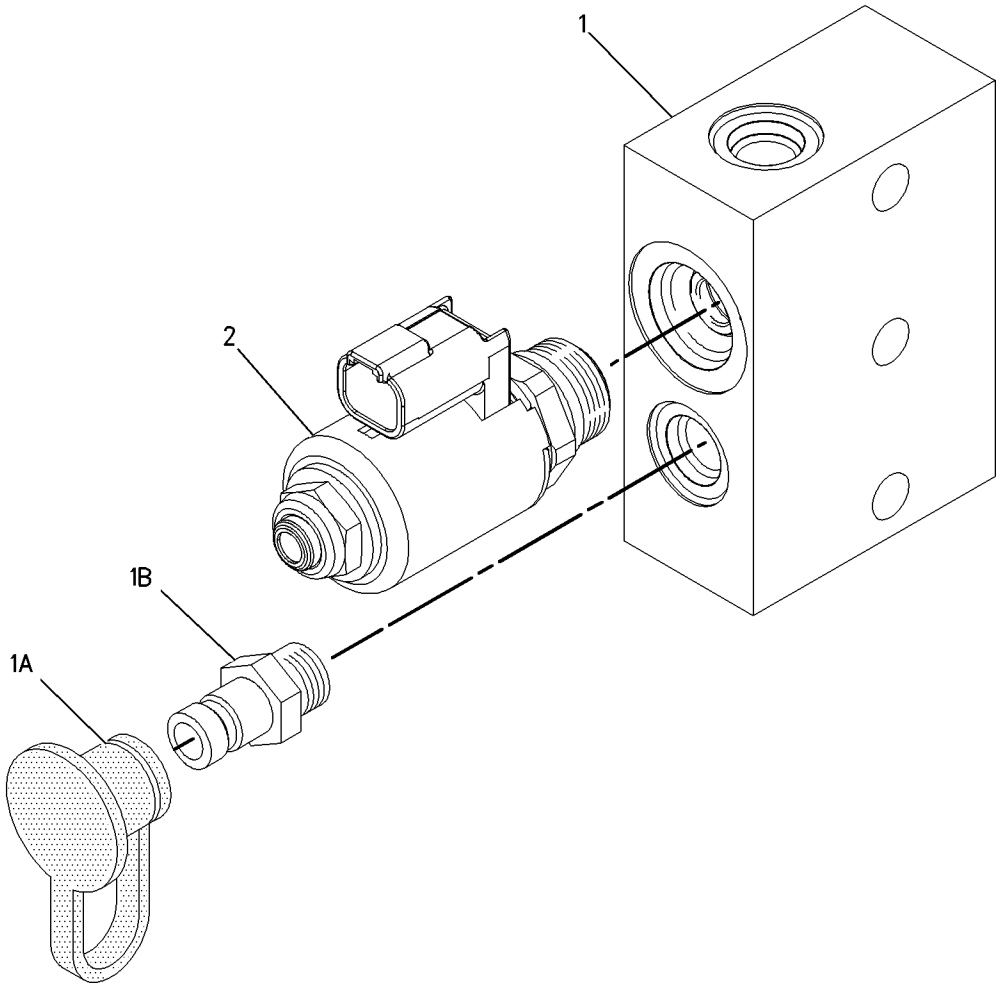

GRAPHIC #1 g00756312

MEMORANDA

172-1719 VALVE GP-CONTROL

S/N: 7SY1-UP

PART OF 172-1718 CONTROL GP-TRANSMISSION HYD

SMCS-3167 **i01689411**

NOTE	REF NO	GRAPHIC REF	PART NUMBER	QTY	PART NAME 1 2 3 4 5 6 (PRODUCT LEVEL)	SEE PAGE
	1	1	**133-4772**	1	MANIFOLD	
	2	1	**133-0772**	1	PLATE	
	3	1	**169-0486**	1	MANIFOLD	
	4	1	**6Y-4638**	1	PLUG-HEX SOCKET	
	5	1	**7M-8485**	1	SEAL-O-RING	
	6	1	**106-9212**	1	SPRING	
	7	1	**133-6567**	1	SPOOL AS-RELIEF	
		1	**3D-8317**	1	RING-RETAINING	
		1	**4B-9880**	1	BALL	
		1	**4M-2381**	1	SPRING	
		1	**8M-1013**	1	RETAINER	
	8	1	**109-3969**	1	STOP	
	9	1	**5B-3180**	1	NUT (5/16-18 THD)	
	10	1	**9M-1974**	5	WASHER-HARD (8.8X16X2MM THK)	
	11	1	**4M-5905**	1	SCREW-ADJUSTMENT (5/16-18X1 IN)	
	12	1	**9W-5568**	1	SLUG	
	13	1	**174-6042**	1	SPOOL	
	14	1	**6L-4784**	3	BOLT-12 POINT HEAD (5/16-18X1.75 IN)	
	15	1	**8H-8769**	1	BOLT (5/16-18X4.25 IN)	
	16	1	**1T-0416**	8	BOLT (5/16-18X0.75 IN)	
	17	1	**1P-7404**	1	EYEBOLT	
	18	1	**5S-0003**	1	NUT (5/16-18 THD)	
	19	1	**7B-3028**	1	SCREW-DRIVE (NO 4X3/16 IN)	
	20	1	**179-1537**	2	CLIP AS	
					(EACH INCLUDES)	
		1	**8C-3334**	1	RIVET-TUBULAR	

172-1719 **VALVE GP-CONTROL** *(contd.)* **i01689411**

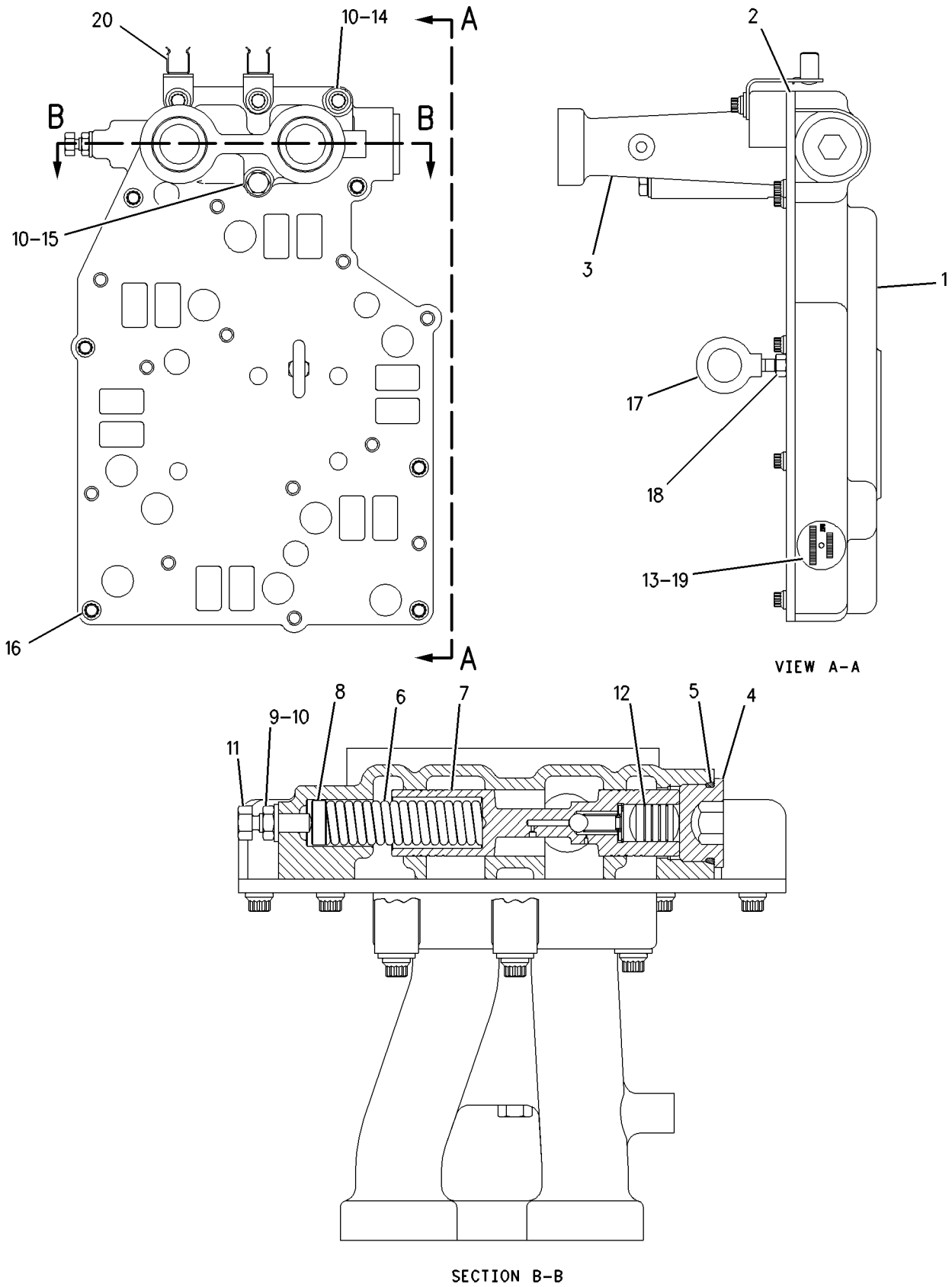

GRAPHIC #1 g00753381

201-7272 VALVE GP-CONTROL

S/N: AKT1-UP

PART OF 202-7400 VALVE & MTG GP-STEERING

SMCS-3167 **i01551733**

NOTE	REF NO	GRAPHIC REF	PART NUMBER	QTY	PART NAME 1 2 3 4 5 6 (PRODUCT LEVEL)	SEE PAGE
	1	1	**9P-9150**	36	WASHER (8.25X18X.84MM THK)	
Y	2	1	**164-6093**	1	MANIFOLD & VALVE GP	342
	3	1	**176-0258**	2	PLUG	
	4	1	**108-4434**	1	PLATE-SEPARATOR	
	5	1	**132-9899**	1	PLATE	
	6	1	**132-9900**	1	PLATE	
Y	7	1	*175-4972*	1	MANIFOLD & VALVE GP	343
Y	8	1	*201-7270*	1	VALVE GP-TRANSMISSION CONTROL	380
	9	1	**1T-0738**	16	WASHER (8.4X19X1.83MM THK)	
	10	1	**3S-2093**	4	STRAP-CABLE	
	11	1	**185-3503**	2	SEAL-O-RING	
	12	1	**4J-7533**	4	SEAL-O-RING	
	13	1	**185-3502**	2	SEAL-O-RING	
	14	1	**176-0259**	2	PLUG	
M	15	1	**7X-2541**	3	BOLT (M8X1.25X140MM)	
M	16	1	**8T-3647**	11	BOLT (M8X1.25X80MM)	
M	17	1	**8T-4177**	2	BOLT (M8X1.25X90MM)	
	18	1	**9L-9068**	4	DOWEL	

M-METRIC PART
Y-SEPARATE ILLUSTRATION

201-7272 VALVE GP-CONTROL *(contd.)* **i01551733**

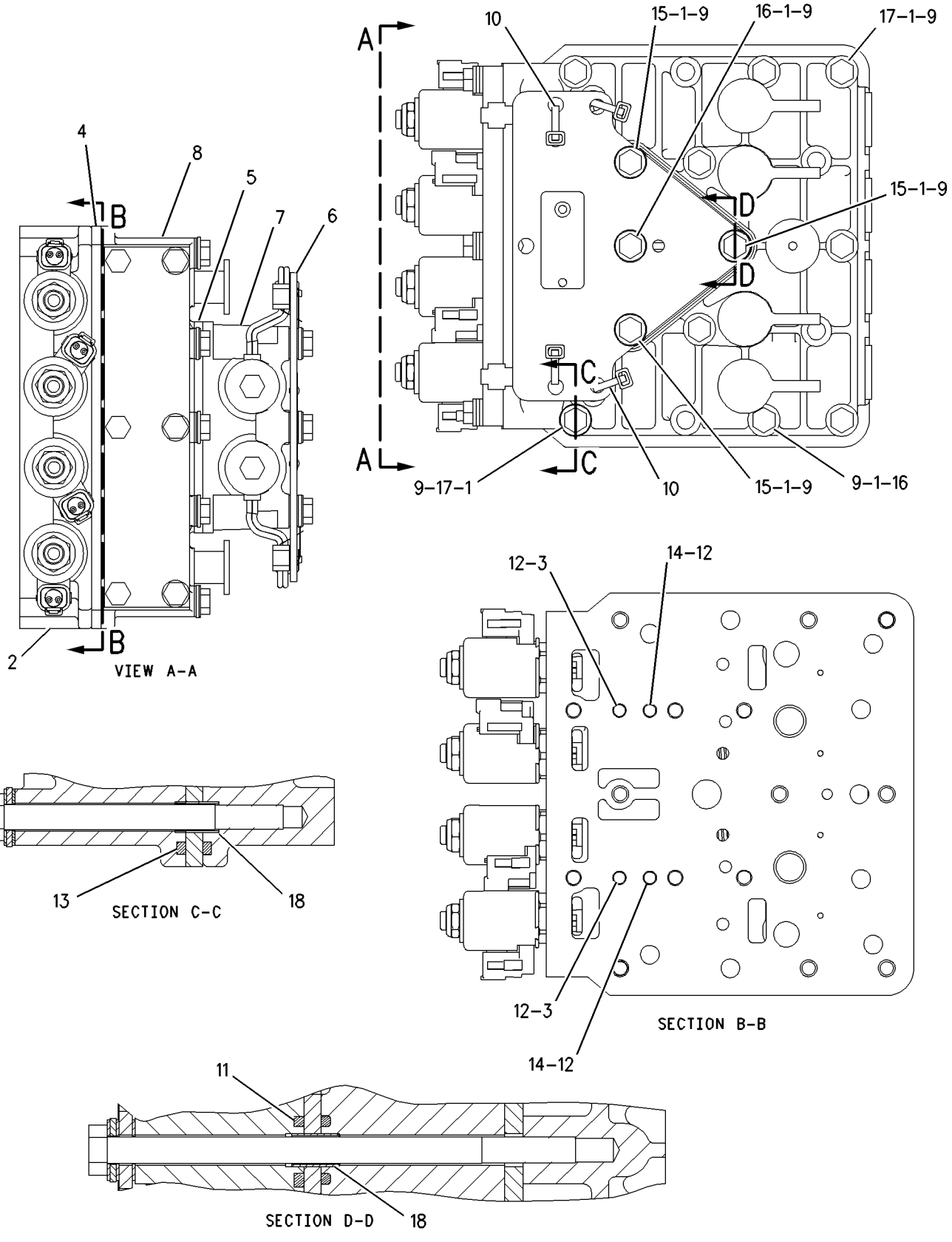

GRAPHIC #1 g00769056

160-8408 VALVE GP-MODULATING

S/N: 7SY1-UP
24 VOLTS DC
PART OF 172-1718 CONTROL GP-TRANSMISSION HYD

SMCS-3139 **i01684159**

NOTE	REF NO	GRAPHIC REF	PART NUMBER	QTY	PART NAME 1 2 3 4 5 6 (PRODUCT LEVEL)	SEE PAGE
	1	1	**6V-3965**	1	FITTING AS	
	2	1	**145-1144**	1	COIL AS	
	3	1	**3J-1907**	1	SEAL-O-RING	
	4	1	**164-2108**	1	WASHER (13.03X25.4X2.38MM THK)	
	5	1	**167-9524**	1	NUT-SELF LOCKING (1/2-28 THD)	

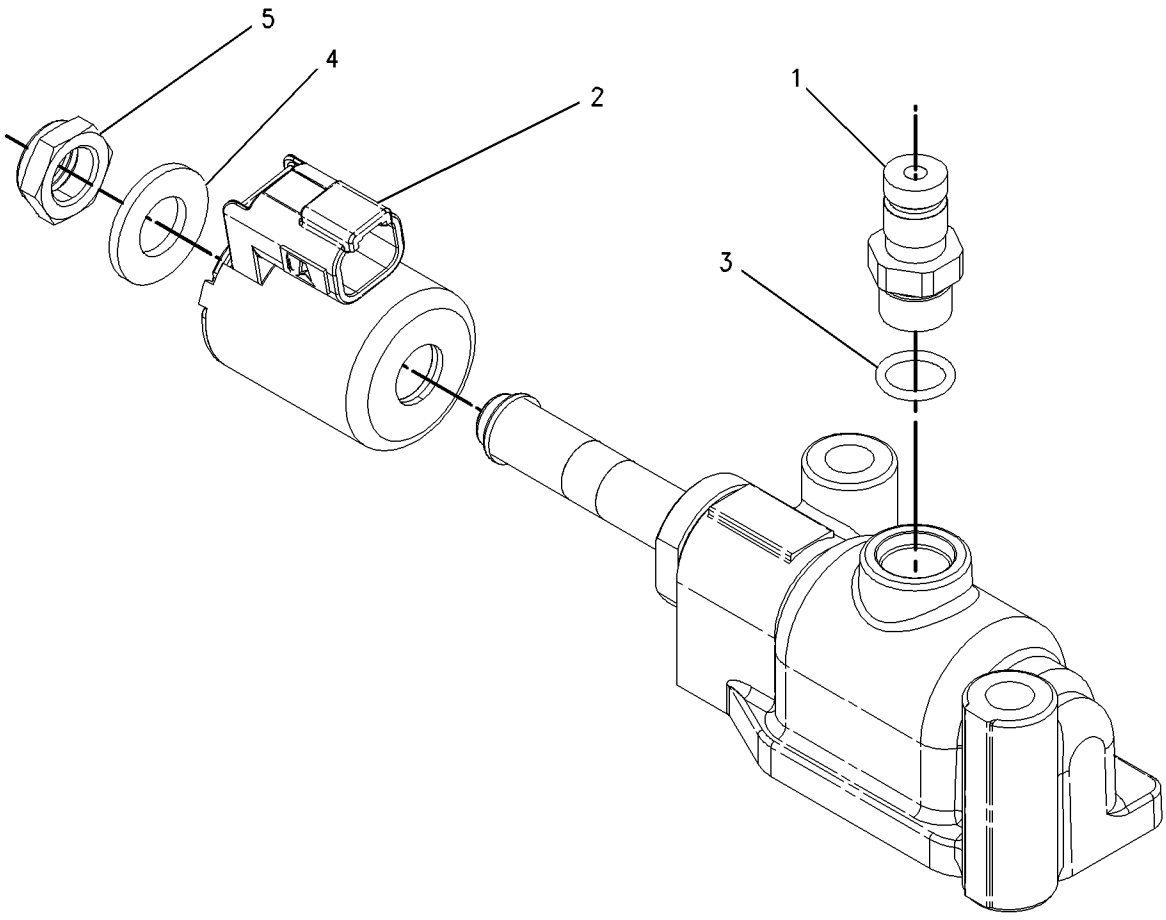

GRAPHIC #1 g00868266

176-5321 VALVE GP-MODULATING

S/N: AKT1-UP
PART OF 192-0729 VALVE & MTG GP-PILOT
AN ATTACHMENT

SMCS-3139 **i01446701**

NOTE	REF NO	GRAPHIC REF	PART NUMBER	QTY	PART NAME 1 2 3 4 5 6 (PRODUCT LEVEL)	SEE PAGE
	1	1	**155-4426**	1	COIL AS	
	2	1	**164-2108**	1	WASHER (13.03X25.4X2.38MM THK)	
	3	1	**167-9524**	1	NUT-SELF LOCKING (1/2-28 THD)	
	4	1	**176-5322**	1	VALVE AS	
					AVAILABLE REPAIR KIT(S):	
			111-3203	1	KIT-SEAL	

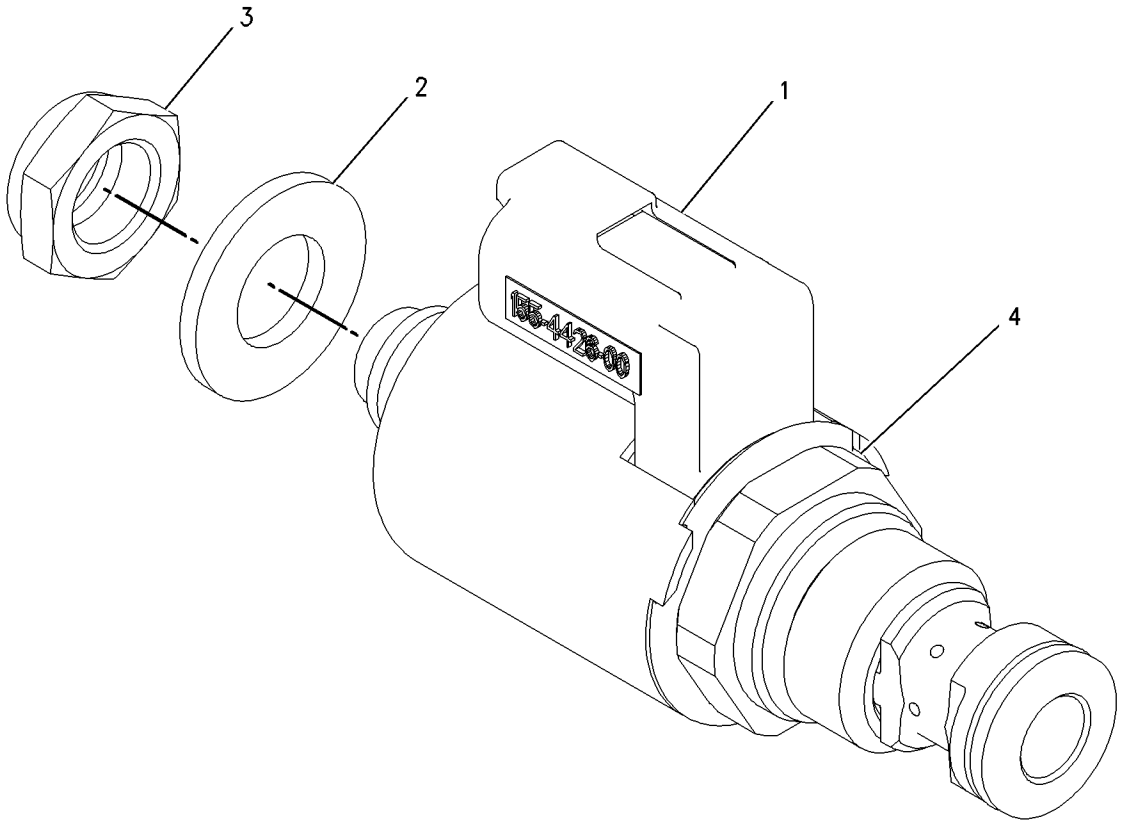

GRAPHIC #1 g00752727

172-1717 VALVE GP-PRIORITY

S/N: AKT1-UP

PART OF 173-0239 LINES GP-POWER TRAIN OIL

SMCS-3180, 4320 **i01436245**

NOTE	REF NO	GRAPHIC REF	PART NUMBER	QTY	PART NAME 1 2 3 4 5 6 (PRODUCT LEVEL)	SEE PAGE
	1	1	**2P-4538**	1	SPOOL AS-RELIEF	
		1	**1L-3162**	1	RING-RETAINING	
		1	**5M-9548**	1	SPRING	
		1	**8M-2537**	1	RETAINER	
		1	**9M-4313**	1	POPPET	
	2	1	**3P-0246**	1	SPRING	
	3	1	**6V-0852**	2	CAP-DUST	
	4	1	**9S-8007**	5	PLUG (3/8-24 THD)	
	5	1	**8J-6307**	1	PLUG	
	6	1	**9J-5498**	1	SPRING	
	7	1	**9S-9334**	3	PLUG	
	8	1	**178-5190**	1	SPOOL	
	9	1	**178-5199**	1	SPOOL AS	
		1	**1S-8517**	1	RING-RETAINING	
		1	**5M-9548**	1	SPRING	
		1	**8M-2537**	1	RETAINER	
		1	**9M-4313**	1	POPPET	
	10	1	**178-7578**	1	ORIFICE	
	11	1	**178-7580**	2	ORIFICE	
	12	1	**178-7581**	1	ORIFICE	
	13	1	**178-7584**	1	SPRING	
Y	14	1	**198-4607**	2	VALVE GP-SOLENOID	379
	15	1	**9S-8010**	3	PLUG	
	16	1	**1P-7404**	1	EYEBOLT	
	17	1	**2S-4078**	4	SEAL-O-RING	
	18	1	**3J-1907**	3	SEAL-O-RING	
	19	1	**3K-0360**	1	SEAL-O-RING	
B	20	1	**5M-9623**	3	SHIM (0.9MM THK)	
B	21	1	**5M-9624**	1	SHIM (0.25MM THK)	
	22	1	**5P-7684**	1	PLUG	
	23	1	**5S-0003**	1	NUT (5/16-18 THD)	
	24	1	**6K-6307**	1	SEAL-O-RING	
	25	1	**6V-3965**	2	FITTING AS	
	26	1	**7J-0204**	5	SEAL-O-RING	
	27	1	**7M-8485**	3	SEAL-O-RING	
	28	1	**9S-4185**	1	PLUG	
	29	1	**9S-4191**	1	PLUG	

B-USE AS REQUIRED
Y-SEPARATE ILLUSTRATION

172-1717 VALVE GP-PRIORITY *(contd.)*

i01436245

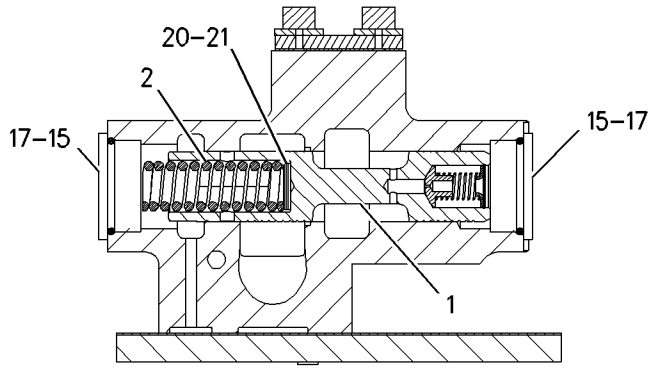

SECTION C-C
(ROTATED 90 DEGREES CCW)

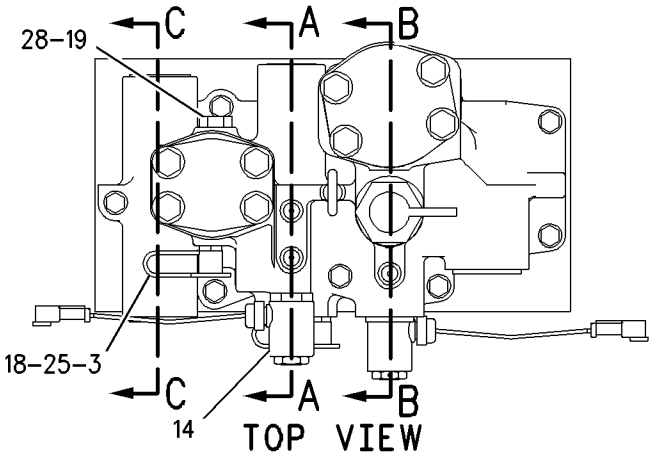

TOP VIEW

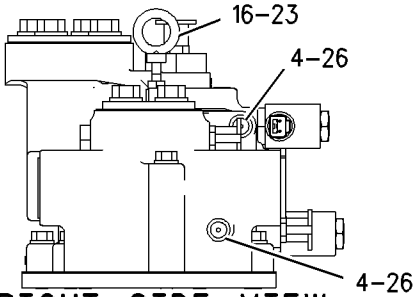

RIGHT SIDE VIEW

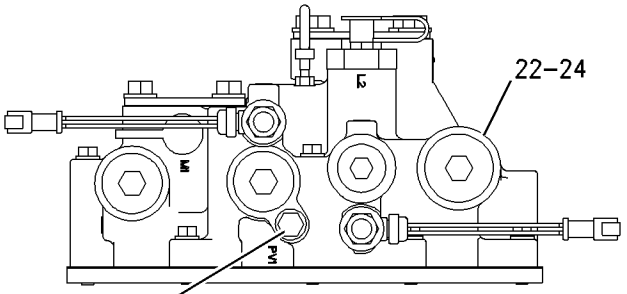

FRONT VIEW

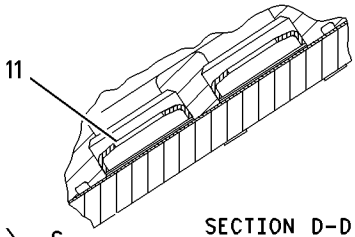

SECTION D-D
(ROTATED 180 DEGREES CCW)

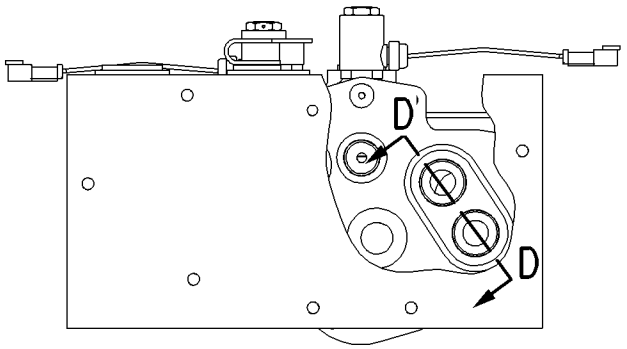

BOTTOM VIEW

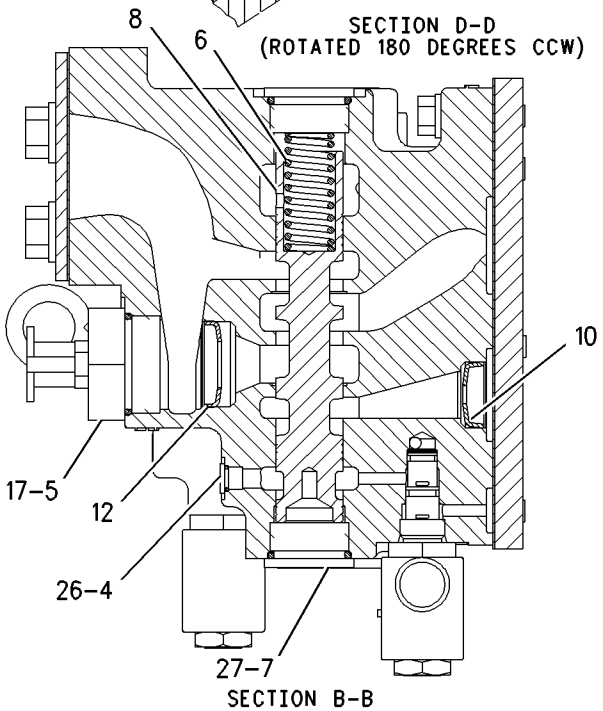

SECTION B-B

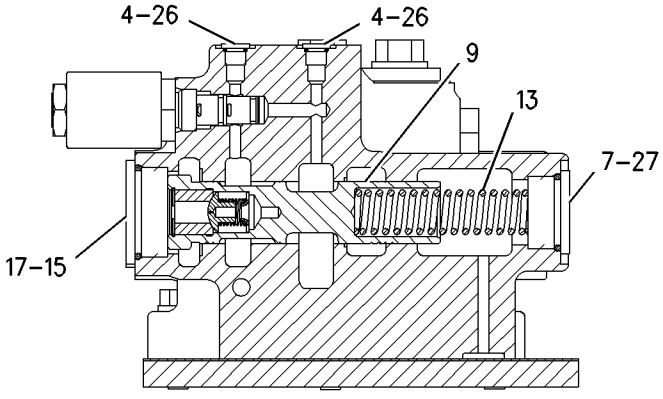

SECTION A-A
(ROTATED 90 DEGREES CCW)

GRAPHIC #1

g00810753

172-1720 VALVE GP-RELIEF

S/N: AKT1-UP

PART OF 173-0239 LINES GP-POWER TRAIN OIL

SMCS-3133, 3182 **i01689425**

NOTE	REF NO	GRAPHIC REF	PART NUMBER	QTY	PART NAME 1 2 3 4 5 6 (PRODUCT LEVEL)	SEE PAGE
	1	1	**4M-8239**	1	COVER	
	2	1	**0S-1594**	4	BOLT (3/8-16X1 IN)	
	3	1	**199-4203**	1	PLATE	
	4	1	**3J-1907**	2	SEAL-O-RING	
	5	1	**6V-3965**	2	FITTING AS	
	6	1	**6V-0852**	1	CAP-DUST	
	7	1	**9S-8010**	1	PLUG	
	8	1	**2S-4078**	1	SEAL-O-RING	
	9	1	**1W-9860**	1	SPRING	
B	10	1	**8J-6709**	4	SHIM (.25MM THK)	
	11	1	**8M-4992**	1	SEAL-O-RING	
	12	1	**193-5463**	1	SPOOL	
	13	1	**2R-4330**	1	WASHER	
	14	1	**8M-4986**	1	SEAL-O-RING	

B-USE AS REQUIRED

172-1720 VALVE GP-RELIEF *(contd.)* **i01689425**

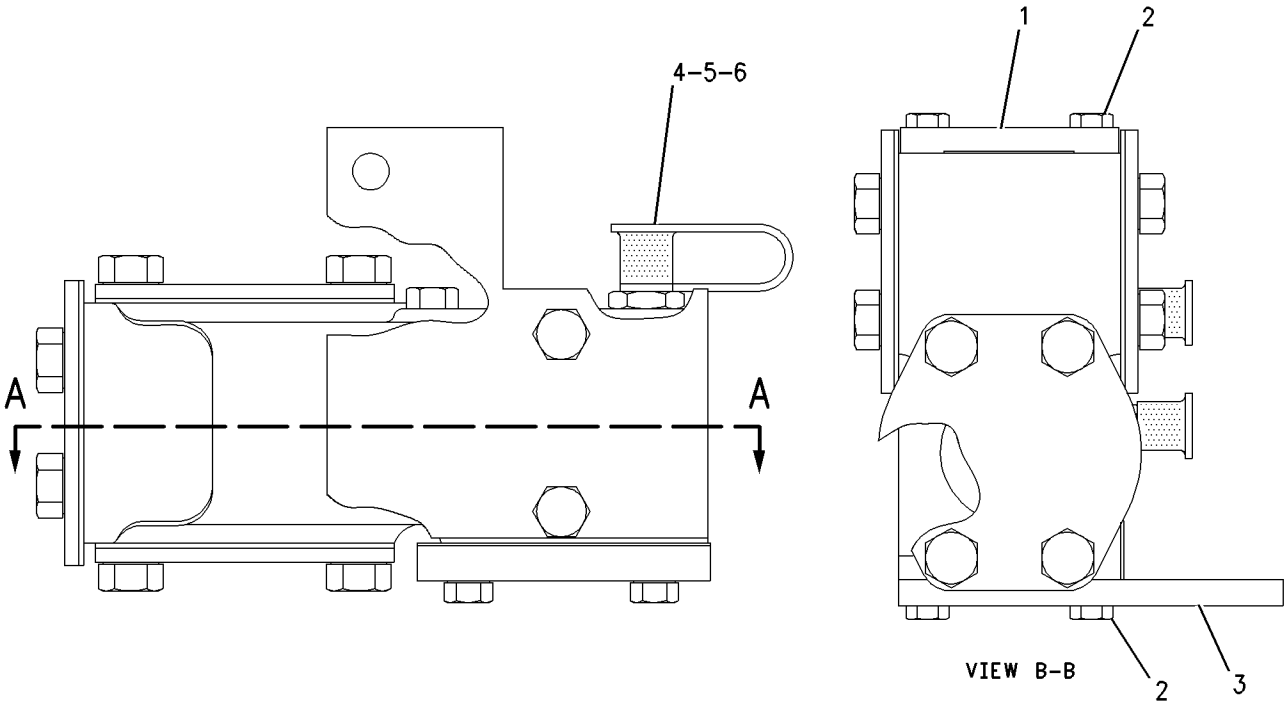

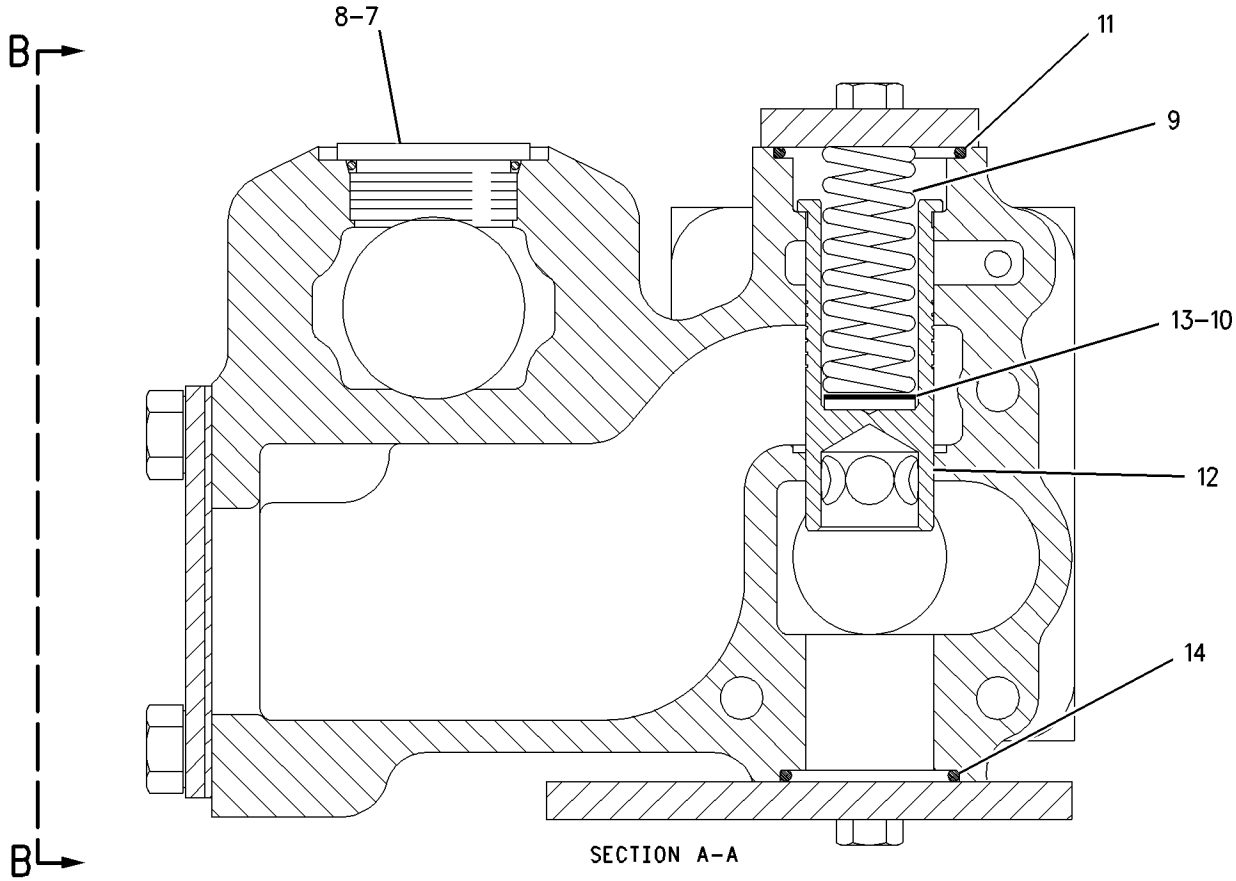

GRAPHIC #1

g00836039

174-4909 VALVE GP-SOLENOID

S/N: AKT1-UP

PART OF 164-6093 MANIFOLD & VALVE GP

SMCS-4282, 5479 **i01563514**

NOTE	REF NO	GRAPHIC REF	PART NUMBER	QTY	PART NAME 1 2 3 4 5 6 (PRODUCT LEVEL)	SEE PAGE
	1	1	**145-1144**	1	COIL AS	
	2	1	**164-2108**	1	WASHER (13.03X25.4X2.38MM THK)	
	3	1	**167-9524**	1	NUT-SELF LOCKING (1/2-28 THD)	
	4	1	**8L-2746**	1	SEAL-O-RING	
	5	1	**6V-4589**	1	SEAL-O-RING	

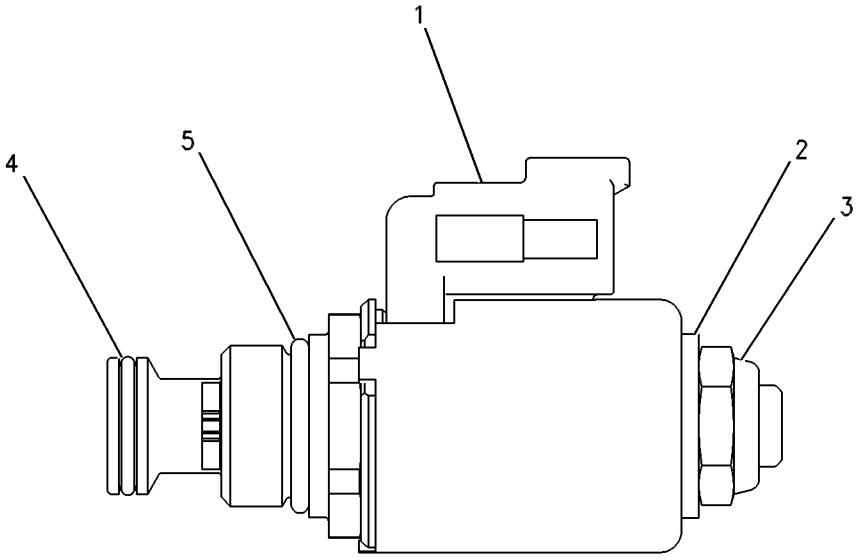

GRAPHIC #1 g00638363

198-4607 VALVE GP-SOLENOID

S/N: AKT1-UP

PART OF 172-1717 VALVE GP-PRIORITY

SMCS-4282, 5479 **i01668500**

NOTE	REF NO	GRAPHIC REF	PART NUMBER	QTY	PART NAME 1 2 3 4 5 6 (PRODUCT LEVEL)	SEE PAGE
	1	1	**9X-7202**	1	WASHER (13.59X23.88X1.02MM THK)	
	2	1	**156-5970**	1	NUT (1/2-20-2B THD)	
	3	1	**176-6496**	1	COIL AS	
		1	**1S-9593**	2	STRAP-CABLE	
		1	**102-8802**	1	KIT-RECEPTACLE (2 PIN)	
					(INCLUDES RECEPTACLE AS & WEDGE)	
		1	**8T-8729**	2	PIN-CONNECTOR	
		1	**033-6032**	1	SEAL-O-RING	
	4	1	**198-4605**	1	SPOOL AS	
		1	**9X-7202**	1	WASHER (13.59X23.88X1.02MM THK)	
		1	**156-5970**	1	NUT (1/2-20-2B THD)	
					AVAILABLE REPAIR KIT(S):	
			7T-4515	1	KIT-SEAL	
					(INCLUDES 3 SEALS	

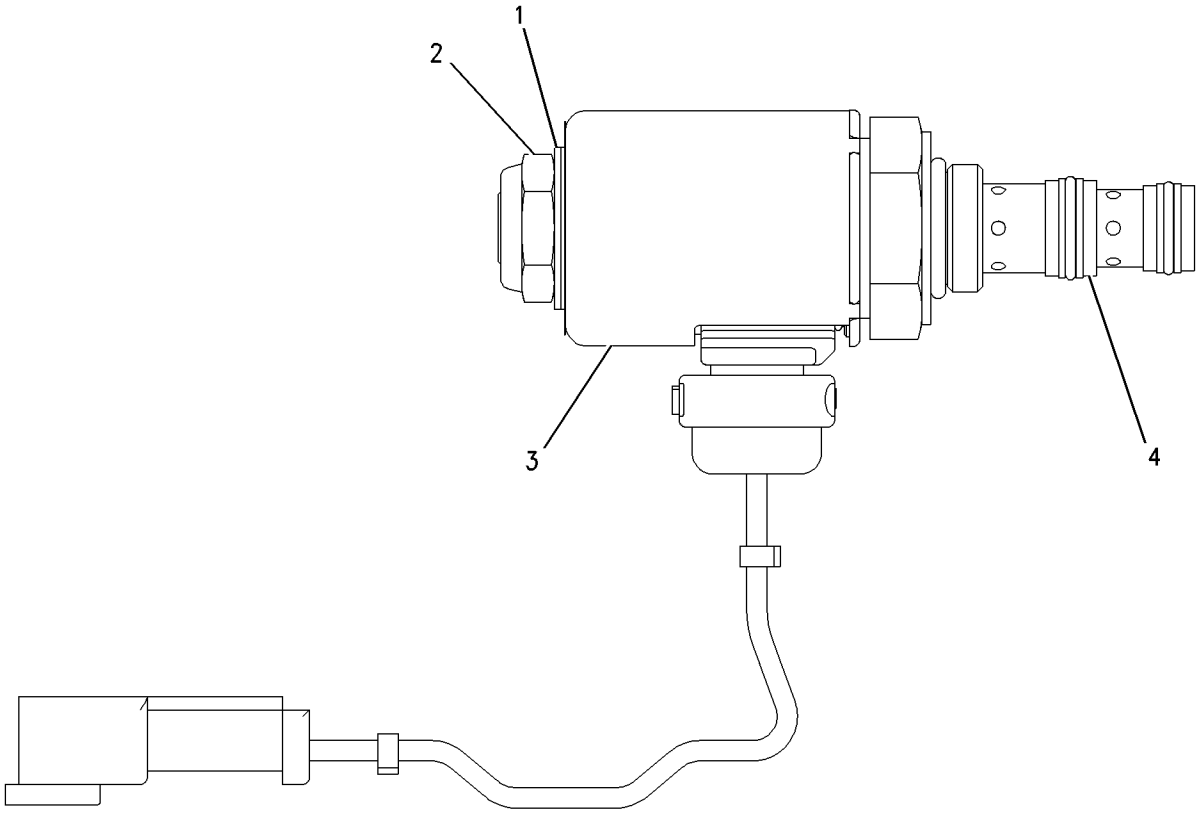

GRAPHIC #1 g00845356

201-7270 VALVE GP-TRANSMISSION CONTROL

S/N: AKT1-UP

PART OF 201-7272 VALVE GP-CONTROL

SMCS-3073 **i01690781**

NOTE	REF NO	GRAPHIC REF	PART NUMBER	QTY	PART NAME 1 2 3 4 5 6 (PRODUCT LEVEL)	SEE PAGE
	1	1	**188-7067**	4	SPRING	
	2	1	**188-7068**	4	RETAINER	
	3	1	**188-7069**	4	PISTON-LOAD	
	4	1	**108-4430**	4	SPRING	
	5	1	**108-4433**	1	PLATE-END	
	6	1	**9S-8008**	4	PLUG	
M	7	1	**7X-2537**	3	BOLT (M8X1.25X35MM)	
M	8	1	**8T-7547**	3	BOLT (M8X1.25X30MM)	
	9	1	**2M-9780**	2	SEAL-O-RING	
	10	1	**3D-2824**	4	SEAL-O-RING	
	11	1	**3J-1907**	2	SEAL-O-RING	
	12	1	**9S-4190**	2	PLUG	
	13	1	**6J-2419**	4	SEAL-O-RING	
	14	1	**3G-3250**	2	PLUG	
	15	1	**8T-4224**	3	WASHER-HARD (8.8X16X2MM THK)	

M-METRIC PART

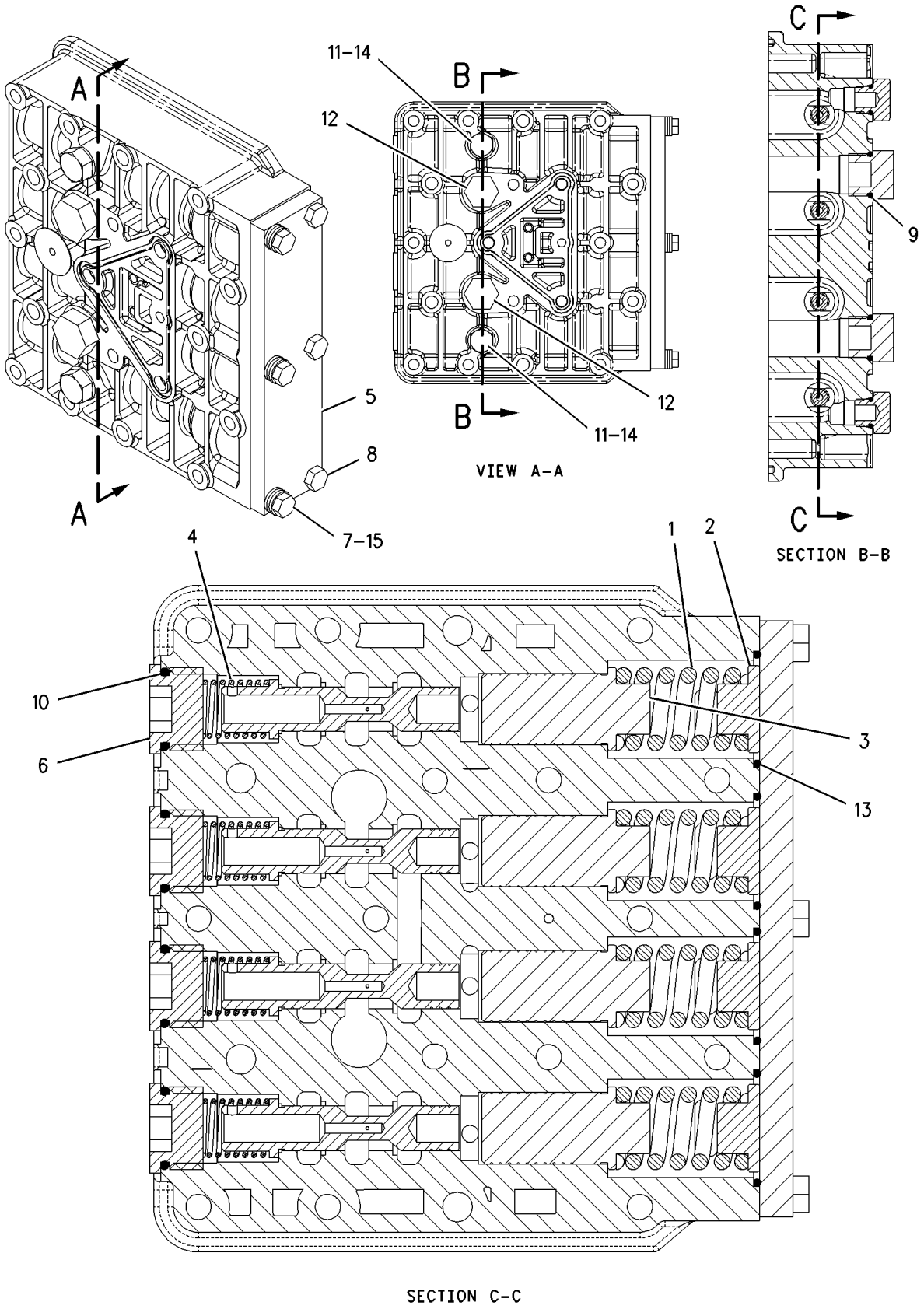

GRAPHIC #1 g00871068

FRAME AND BODY

172-5216 CASE & FRAME GP

S/N: AKT1-UP

PART OF 171-5801 CHASSIS AR

SMCS-7051 **i01700787**

NOTE	REF NO	GRAPHIC REF	PART NUMBER	QTY	PART NAME 1 2 3 4 5 6 (PRODUCT LEVEL)	SEE PAGE
	1	1	**7T-4135**	2	BEARING	
	2	1	**117-8547**	2	TUBE AS	
	3	1	**8T-2502**	4	BOLT (3/8-16X1.125 IN)	
	4	1	**8T-4896**	4	WASHER-HARD (10.2X18.5X2.5MM THK)	
	5	1	**106-8187**	1	PLUG	
	6	1	**6F-0711**	1	SEAL-O-RING	
	7	1	**7M-8480**	1	DOWEL	
	8	1	**8P-7598**	2	BEARING-SLEEVE	
	9	1	**7T-9014**	4	BEARING-SLEEVE	
	10	1	**3T-9658**	2	BEARING-SLEEVE (102.08MM ID)	
	11	1	**106-8186**	1	VALVE-DRAIN	
	12	1	**6Y-5812**	4	BEARING-SLEEVE	
	13	1	**172-5215**	1	CASE & FRAME AS	
	14	1	**1F-0750**	16	NUT-WELD (3/8-16 THD)	
	15	2	**5P-1075**	1	WASHER-HARD (10.2X22.5X3MM THK)	
	16	2	**3H-4776**	2	BOSS (3/8-16X1.25 IN)	
	17	2	**6J-1323**	1	LUG (1/2-13 THD)	
	18	2	**9J-6067**	1	TRUNNION	
	19	1	**5H-9394**	3	BOSS	
	20	2	**4V-4548**	1	BOSS	
	21	1	**3Y-7829**	2	BOSS (3/8-16X1.0 IN) (25MM LONG)	
	22	2	**0S-1594**	1	BOLT (3/8-16X1 IN)	
	23	2	**144-7090**	1	CLIP (SLOT)	
	24	2	**144-7091**	1	CLIP (TAB)	
	25	2	**7S-3916**	1	CLIP (TAB)	
	26	2	**7S-3919**	1	CLIP (SLOT)	
	27	2	**9K-3050**	4	STUD-WELD	
	28	2	**2K-4973**	1	LOCKNUT (3/8-16 THD)	
	29	2	**5F-7845**	3	BOSS (50.8MM LG)	
	30	2	**7T-1099**	15	LINK	
	31	2	**4D-6267**	1	BLOCK	
	32	1	**7G-3834**	2	CLIP (SLOT)	
	33	1	**7D-4726**	3	BLOCK	
	34	2	**8T-4897**	1	WASHER (10.2X35X6MM THK)	
	35	1	**6S-8948**	1	BOSS	
	36	1	**6J-0499**	2	LUG (1/2-13 THD)	
	37	2	**8J-4916**	4	BOSS (3/8-16 THD)	
	38	1,2	**8P-6334**	10	LUG	
	39	2	**1F-0748**	7	NUT-WELD (1/2-13 THD)	

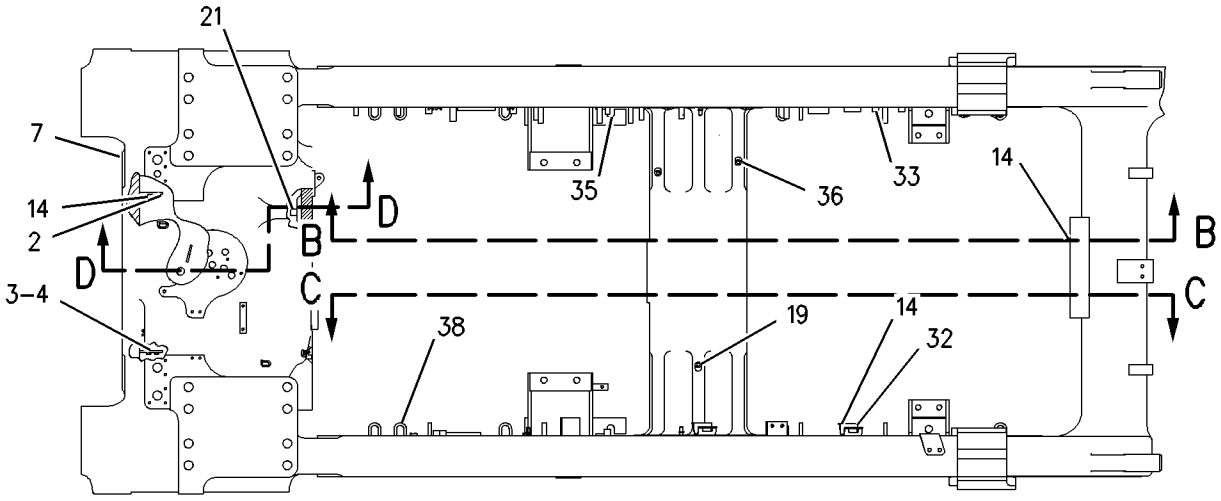

TOP VIEW

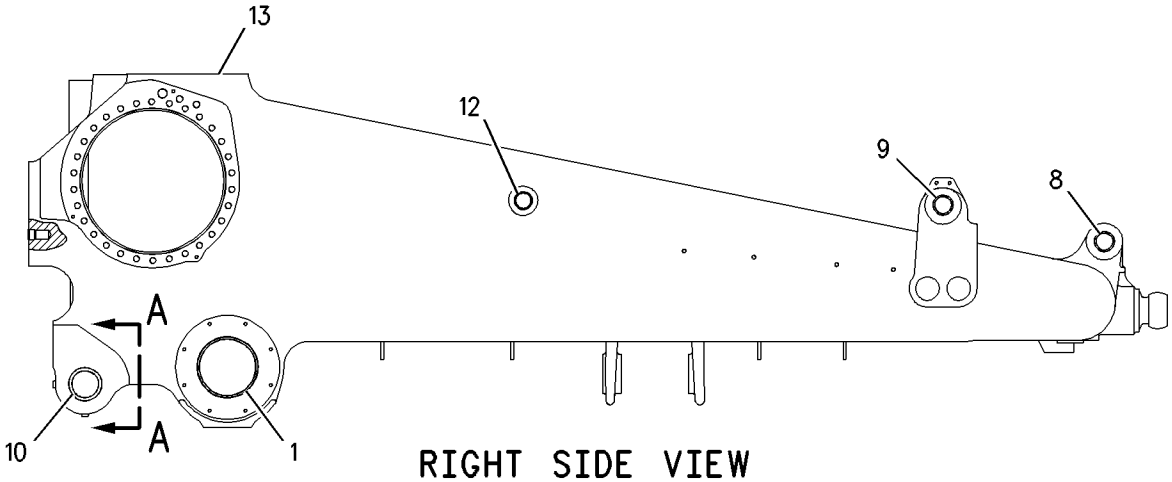

RIGHT SIDE VIEW

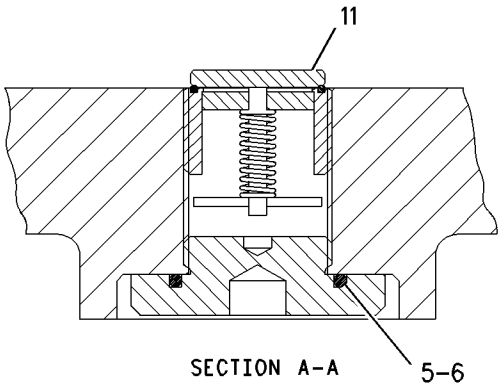

SECTION A-A

REFER TO ALL ILLUSTRATIONS OF THIS GROUP FOR AUXILIARY VIEWS

GRAPHIC #1

g00807942

REFER TO ALL ILLUSTRATIONS OF
THIS GROUP FOR AUXILIARY VIEWS

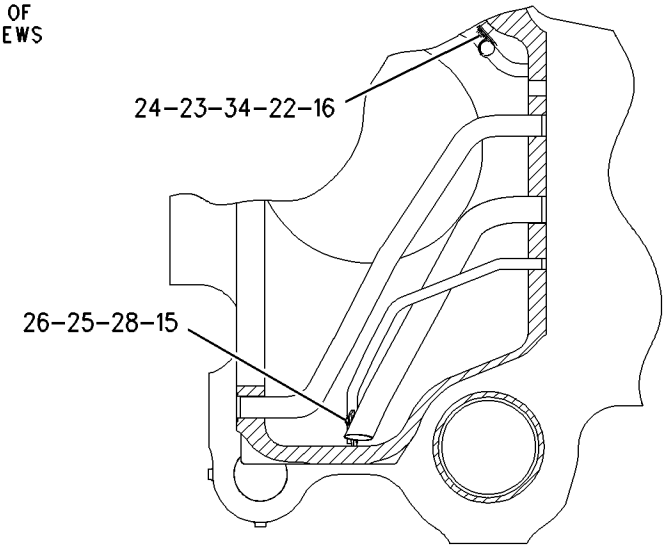

SECTION D-D

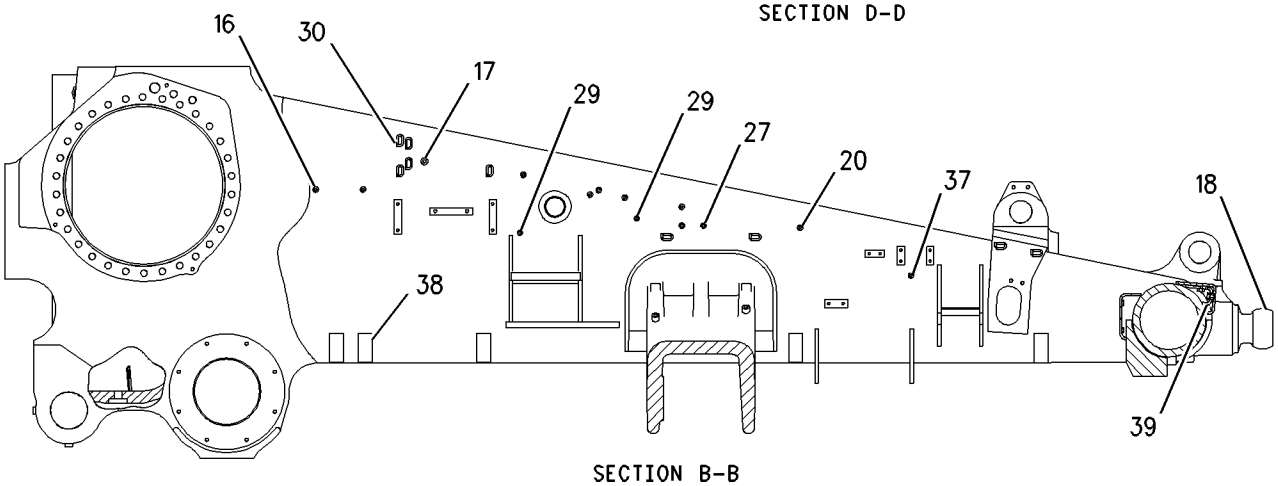

SECTION B-B

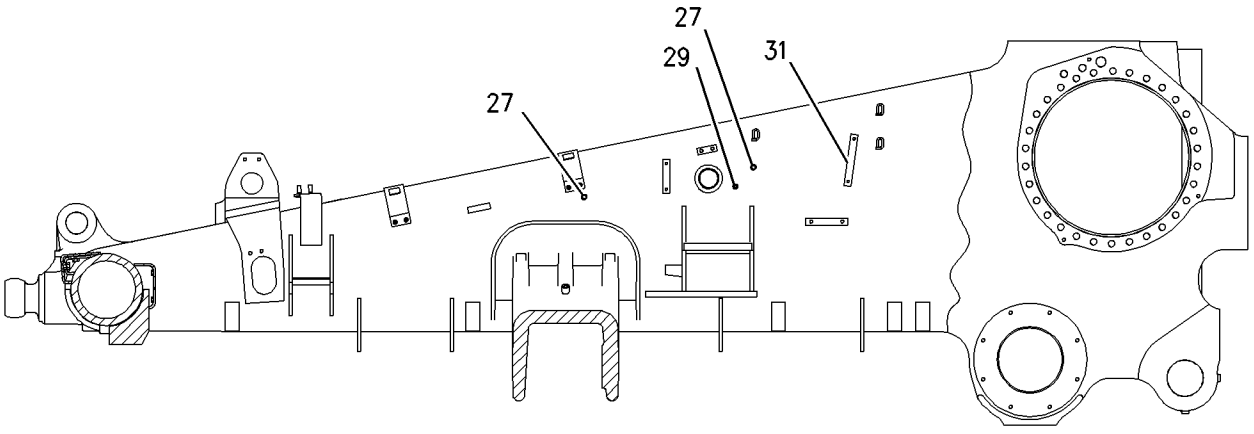

SECTION C-C

GRAPHIC #2 g00807963

FRAME AND BODY

171-5801 CHASSIS AR

S/N: AKT1-UP

PART OF 171-5800 GENERAL AR

SMCS-7000 **i01664705**

NOTE	PART NUMBER	QTY	PART NAME 1 2 3 4 5 6 (PRODUCT LEVEL)	SEE PAGE
Y	*172-5066*	1	BATTERY & WIRING GP	192
Y	*171-1265*	1	CAB AR	665
Y	*172-5216*	1	CASE & FRAME GP	382
Y	*170-3715*	1	CONTROL & MTG GP-ELECTRONIC	201
Y	*173-3262*	1	CONTROL & MTG GP-ELECTRONIC	202
Y	*172-7938*	1	CONTROL GP-DECELERATOR	158
Y	*172-3891*	1	ENCLOSURE GP	396
Y	*175-3656*	1	ENCLOSURE GP-ENGINE	398
Y	*172-5071*	1	FENDER GP	400
Y	*172-5393*	1	FILTER & LINES GP-FUEL	164
Y	*200-7133*	1	GUARD GP-BOTTOM	406
Y	*172-9400*	1	GUARD GP-DRIVE SHAFT	337
Y	*173-4027*	1	GUARD GP-RADIATOR	410
Y	*169-2559*	1	HOOD & GUARD GP	418
Y	*170-7082*	1	INSTRUMENT GP	708
Y	*134-0978*	1	LIGHTING GP-FLOOD	236
Y	*210-4719*	1	LUBRICATION GP-EQUALIZER BAR	440
Y	*177-8016*	1	LUBRICATION GP-PIVOT SHAFT	442
Y	*112-4398*	1	MOUNTING GP-ROPS	733
Y	*173-1647*	1	PLATE & FILM GP	792
Y	*204-2643*	1	PLATFORM GP-CAB	738
Y	*9W-7311*	1	ROPS GP	742
Y	*156-7418*	1	SEAT GP	745
Y	*172-5243*	1	STARTING AID GP-ETHER	266
Y	*174-7468*	1	TANK GP-FUEL	184
Y	*172-5067*	1	WIRING GP-PLATFORM	298

Y-SEPARATE ILLUSTRATION

1Q-3459 COUNTERWEIGHT & BAR AR-REAR

S/N: AKT1-UP
AN ATTACHMENT

SMCS-7056 **i01700792**

NOTE	REF NO	GRAPHIC REF	PART NUMBER	QTY	PART NAME 1 2 3 4 5 6 (PRODUCT LEVEL)	SEE PAGE
	1	1	**9G-1935**	1	PIN AS-DRAWBAR	
	2	1	**6V-8970**	8	BOLT (1 1/2-6 THD)	
	3	1	**3S-6162**	8	WASHER-HARD (40.5X67X6MM THK)	
	4	1	**5T-4896**	8	SPACER (12MM THK)	
	5	1	**6T-3591**	1	PLATE AS	
	6	1	**8E-8630**	2	LINK AS	
	7	1	**7X-0347**	1	BOLT (5/8-11X2.25 IN)	
	8	1	**3K-2889**	1	LOCKNUT (5/8-11 THD)	
	9	1	**8E-9289**	1	LATCH	
	10	1	**3T-7566**	4	PIN	
	11	1	**3T-7567**	6	BAR	
	12	1	**5P-2566**	12	BOLT (1/2-13X1.5 IN)	
	13	1	**8T-4223**	12	WASHER-HARD (13.5X25.5X3MM THK)	
	14	1	**6T-0410**	2	PIN	
	15	1	**6T-3590**	1	PLATE AS	
	16	1	**1Q-3460**	1	COUNTERWEIGHT AS	
		1	**5H-8803**	2	SUPPORT-PIN	
	17	1	**6T-3588**	3	PLATE	
	18	1	**031-0213**	4	BOLT-HEX HEAD (1 1/8-7X15IN)	
	19	1	**4K-0684**	4	WASHER-HARD (34X55X6MM THK)	

1Q-3459 **COUNTERWEIGHT & BAR AR-REAR** ***(contd.)*** **i01700792**

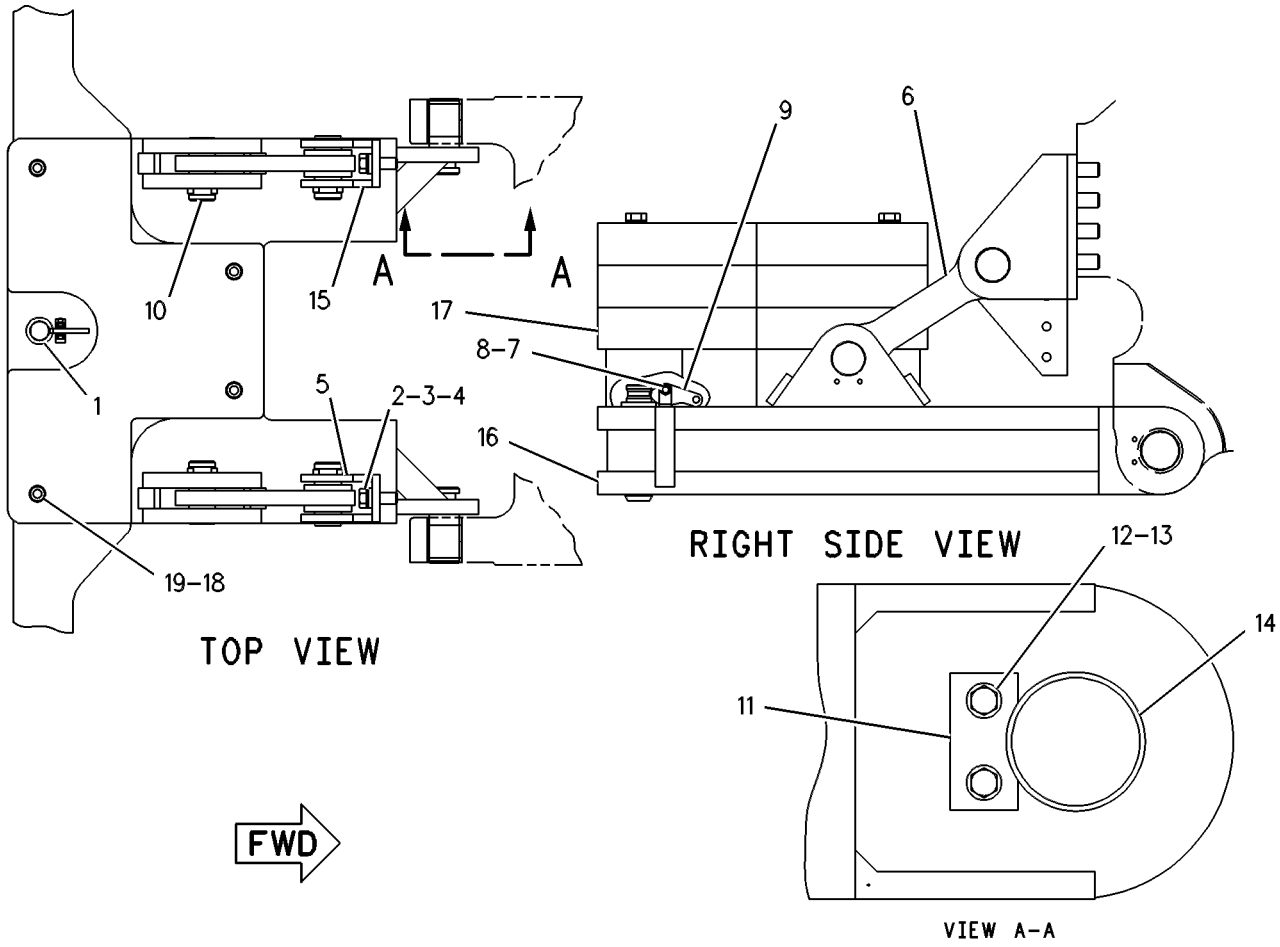

GRAPHIC #1

g00258509

6T-3583 COUNTERWEIGHT GP–REAR

S/N: AKT1-UP
CANNOT BE USED WITH RIPPER, WINCH OR DRAWBAR
AN ATTACHMENT

SMCS-7056 **i01521824**

NOTE	REF NO	GRAPHIC REF	PART NUMBER	QTY	PART NAME 1 2 3 4 5 6 (PRODUCT LEVEL)	SEE PAGE
	1	1	**7X-0347**	1	BOLT (5/8-11X2.25 IN)	
	2	1	**3K-2889**	1	LOCKNUT	
	3	1	**8E-8630**	2	LINK AS	
	4	1	**3T-7566**	4	PIN	
	5	1	**6T-3588**	1	PLATE	
	6	1	**6T-0410**	2	PIN	
	7	1	**6V-8970**	8	BOLT (1 1/2-6 THD)	
		1	**5T-4896**	8	SPACER (12MM THK)	
	8	1	**3S-6162**	8	WASHER-HARD (40.5X67X6MM THK)	
	9	1	**9G-1935**	1	PIN AS-DRAWBAR	
	10	1	**8E-9289**	1	LATCH	
	11	1	**6T-3584**	1	COUNTERWEIGHT AS	
		1	**5H-8803**	2	SUPPORT-PIN	
	12	1	**6T-3591**	1	PLATE AS (RH)	
	13	1	**6T-3590**	1	PLATE AS (LH)	
	14	1	**6T-3589**	2	PLATE	
	15	1	**4K-0684**	4	WASHER-HARD (34X55X6MM THK)	
	16	1	**1K-9415**	4	BOLT (1 1/8-7X11 IN)	
	17	1	**3T-7567**	6	BAR	
	18	1	**5P-2566**	12	BOLT (1/2-13X1.5 IN)	
	19	1	**8T-4223**	12	WASHER-HARD (13.5X25.5X3MM THK)	

6T-3583 **COUNTERWEIGHT GP** ***(contd.)*** **i01521824**

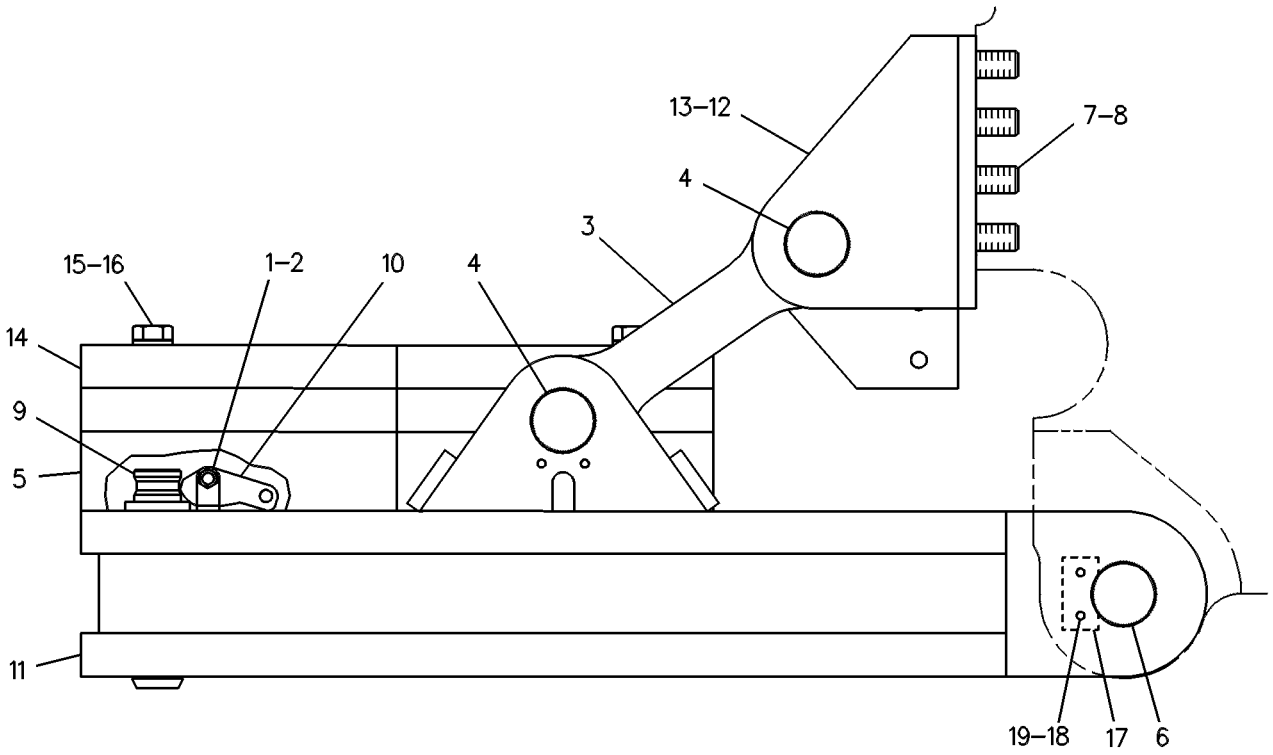

RIGHT SIDE VIEW

GRAPHIC #1 g00234785

8E-9052 COUNTERWEIGHT GP

S/N: AKT1-UP
1270 KG (2794 LBS)
FOR USE WITH BASIC REAR COUNTERWEIGHTS
AN ATTACHMENT

SMCS-7056 **i01700802**

NOTE	REF NO	GRAPHIC REF	PART NUMBER	QTY	PART NAME 1 2 3 4 5 6 (PRODUCT LEVEL)	SEE PAGE
	1	1	**6T-3588**	2	PLATE	
	2	1	**033-0512**	4	BOLT	

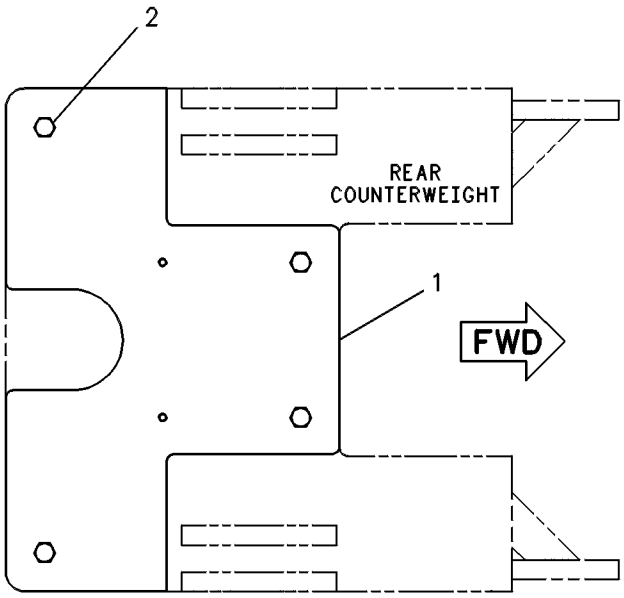

TOP VIEW

GRAPHIC #1 g00234780

FRAME AND BODY

9G-9325 COUNTERWEIGHT GP–FRONT

S/N: AKT1-UP
2428 KG (5354 LBS)
AN ATTACHMENT

SMCS-7056 **i01700827**

NOTE	REF NO	GRAPHIC REF	PART NUMBER	QTY	PART NAME 1 2 3 4 5 6 (PRODUCT LEVEL)	SEE PAGE
	1	1	**8E-2485**	1	COUNTERWEIGHT AS	
	2	1	**2J-8348**	2	BOLT (1-8X10 IN)	
		1	**5P-8250**	2	WASHER (28X49X5MM THK)	
		1	**2J-3507**	2	NUT-FULL (1-8 THD)	
	3	1	**7K-6956**	2	BLOCK	
	4	1	**6P-8829**	2	RETAINER	
	5	1	**8H-5727**	4	BOLT (1 1/8-7X6 IN)	
		1	**3S-1349**	4	WASHER-HARD (31X52.5X6MM THK)	

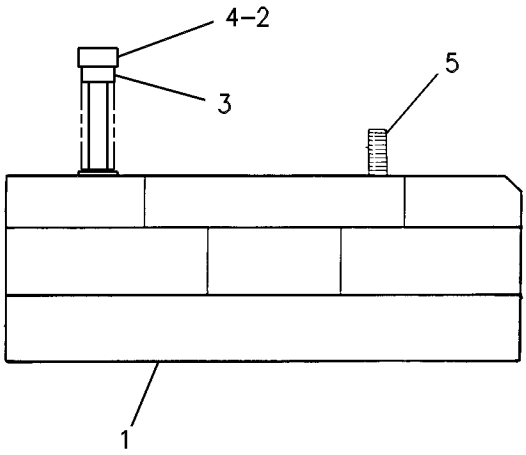

RIGHT SIDE VIEW

GRAPHIC #1 g00346448

7T-6040 COVER GP-TRUNNION

S/N: AKT1-UP
CANNOT BE USED WITH BULLDOZER TRUNNIONS
AN ATTACHMENT

SMCS-7050, 7250 **i01446721**

NOTE	REF NO	GRAPHIC REF	PART NUMBER	QTY	PART NAME 1 2 3 4 5 6 (PRODUCT LEVEL)	SEE PAGE
	1	1	**6P-8901**	2	COVER	
	2	1	**7X-0403**	12	BOLT (1-8X2.25 IN)	
	3	1	**8T-5361**	12	WASHER-HARD (28X49X5MM THK)	

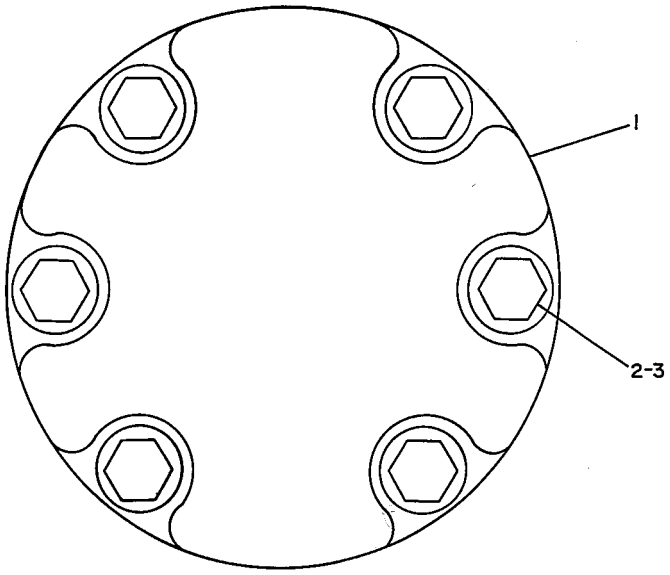

GRAPHIC #1 g00172067

MEMORANDA

FRAME AND BODY

7T-7942 DRAWBAR GP

S/N: AKT1-UP
CANNOT BE USED WITH OTHER REAR MOUNTED EQUIPMENT
AN ATTACHMENT

SMCS-7105, 7119 **i01401511**

NOTE	REF NO	GRAPHIC REF	PART NUMBER	QTY	PART NAME 1 2 3 4 5 6 (PRODUCT LEVEL)	SEE PAGE
	1	1	**3T-8792**	1	BRACKET AS	
	2	1	**5P-1076**	4	WASHER-HARD (13.5X30X4MM THK)	
	3	1	**3T-7567**	2	BAR	
	4	1	**8T-4835**	4	BOLT (1/2-13X2 IN)	
	5	1	**6T-0410**	2	PIN	
	6	1	**7F-5711**	8	WASHER (1 9/32X3X5/8 IN THK)	
	7	1	**3S-1349**	16	WASHER-HARD (31X52.5X6MM THK)	
	8	1	**5M-0544**	8	BOLT (1 1/8-7X4.5IN)	
	9	1	**3T-8791**	1	BRACKET AS	
	10	1	**9W-4904**	1	DRAWBAR AS	
	11	1	**4J-5977**	8	NUT-FULL (1-1/8-7 THD)	
	12	1	**3D-8012**	8	SPACER	
	13	1	**8E-9289**	1	LATCH	
	14	1	**2H-1537**	6	BOLT (1 1/4-7X6IN)	
		1	**3K-9770**	6	NUT-FULL (1-1/4-7 THD)	
		1	**4K-0684**	12	WASHER-HARD (34X55X6MM THK)	
	15	1	**7X-0349**	1	BOLT (5/8-11X3 IN)	
		1	**3K-2889**	1	LOCKNUT (5/8-11 THD)	
	16	1	**7G-6623**	1	HITCH	
	17	1	**1H-4106**	1	PIN AS-DRAWBAR	
	18	1	**5T-4896**	6	SPACER (12MM THK)	
	19	1	**6V-8970**	6	BOLT (1 1/2-6 THD)	
	20	1	**3S-6162**	6	WASHER-HARD (40.5X67X6MM THK)	

7T-7942 **DRAWBAR GP** ***(contd.)*** **i01401511**

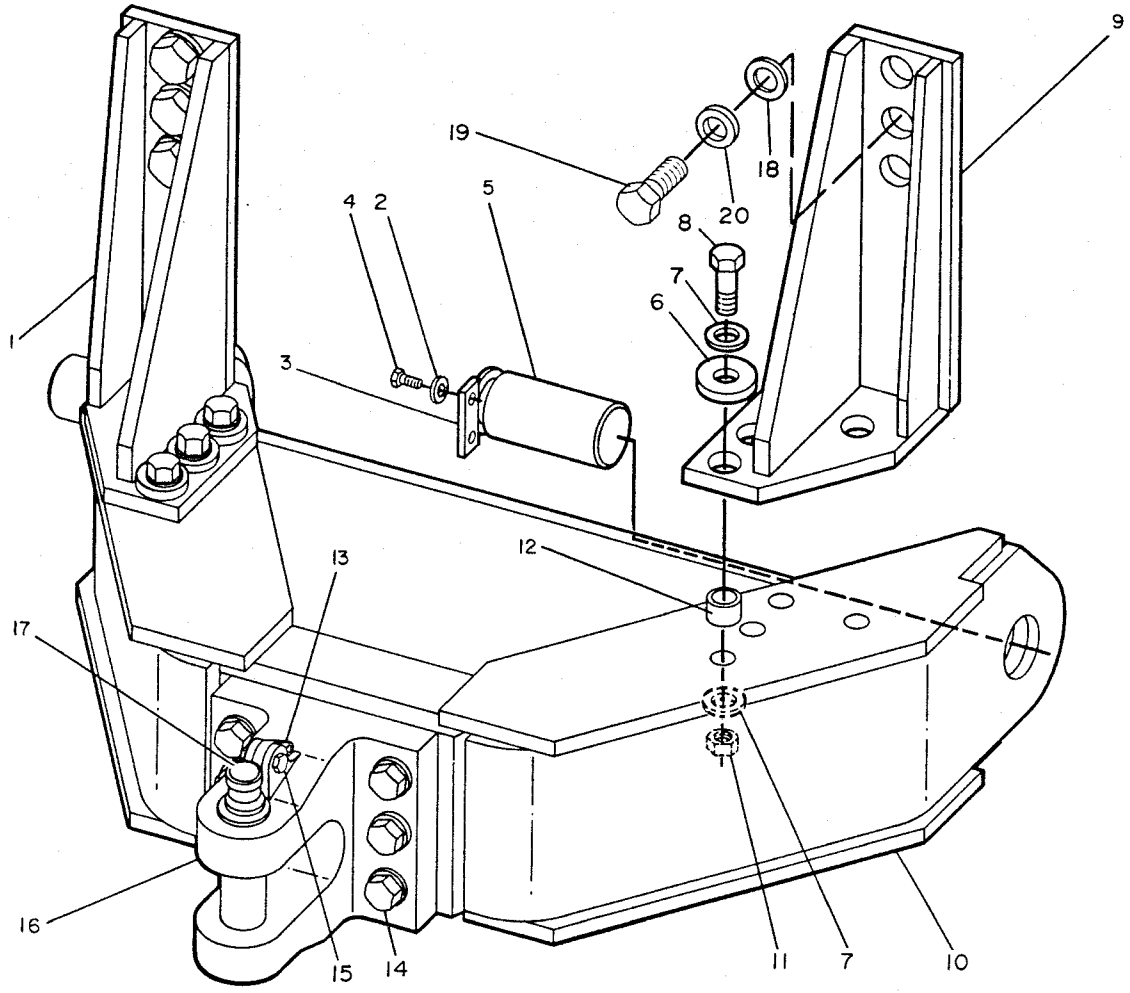

GRAPHIC #1 g00192501

FRAME AND BODY

172-3891 ENCLOSURE GP

S/N: AKT1-UP

PART OF 171-5801 CHASSIS AR

SMCS-7153 **i01665217**

NOTE	REF NO	GRAPHIC REF	PART NUMBER	QTY	PART NAME 1 2 3 4 5 6 (PRODUCT LEVEL)	SEE PAGE
	1	1	**3B-4610**	1	PIN-COTTER	
	2	1	**5P-8502**	1	PADLOCK GP	
A		1	**5P-8500**	1	KEY	
A		1	**8Y-6364**	1	SLEEVE	
	3	1	**6D-1746**	1	BOLT (1/2-13X1.32 IN)	
	4	1	**8B-4624**	1	SHIM (.032MM THK)	
	5	1	**104-5771**	1	PLATE	
	6	1	**104-5773**	1	PLATE	
	7	1	**156-5462**	1	PLATE	
	8	1	**176-5717**	1	COVER AS	
	9	1	**191-1814**	1	COVER AS	
	10	1	**4L-6454**	2	BOLT (3/8-16X1 IN)	
	11	1	**5C-6565**	2	BOLT (1/2-13X1.125 IN)	
	12	1	**5P-1076**	8	WASHER-HARD (13.5X30X4MM THK)	
	13	1	**5P-2228**	6	BOLT (1/2-13X1 IN)	
	14	1	**5P-2566**	4	BOLT (1/2-13X1.5 IN)	
	15	1	**7X-0772**	3	WASHER-HARD (10.2X25.5X2.5MM THK)	
	16	1	**8T-4223**	4	WASHER-HARD (13.5X25.5X3MM THK)	
	17	1	**8T-9371**	1	BOLT (3/8-16X0.5 IN)	

A-NOT PART OF THIS GROUP

172-3891 **ENCLOSURE GP** ***(contd.)*** **i01665217**

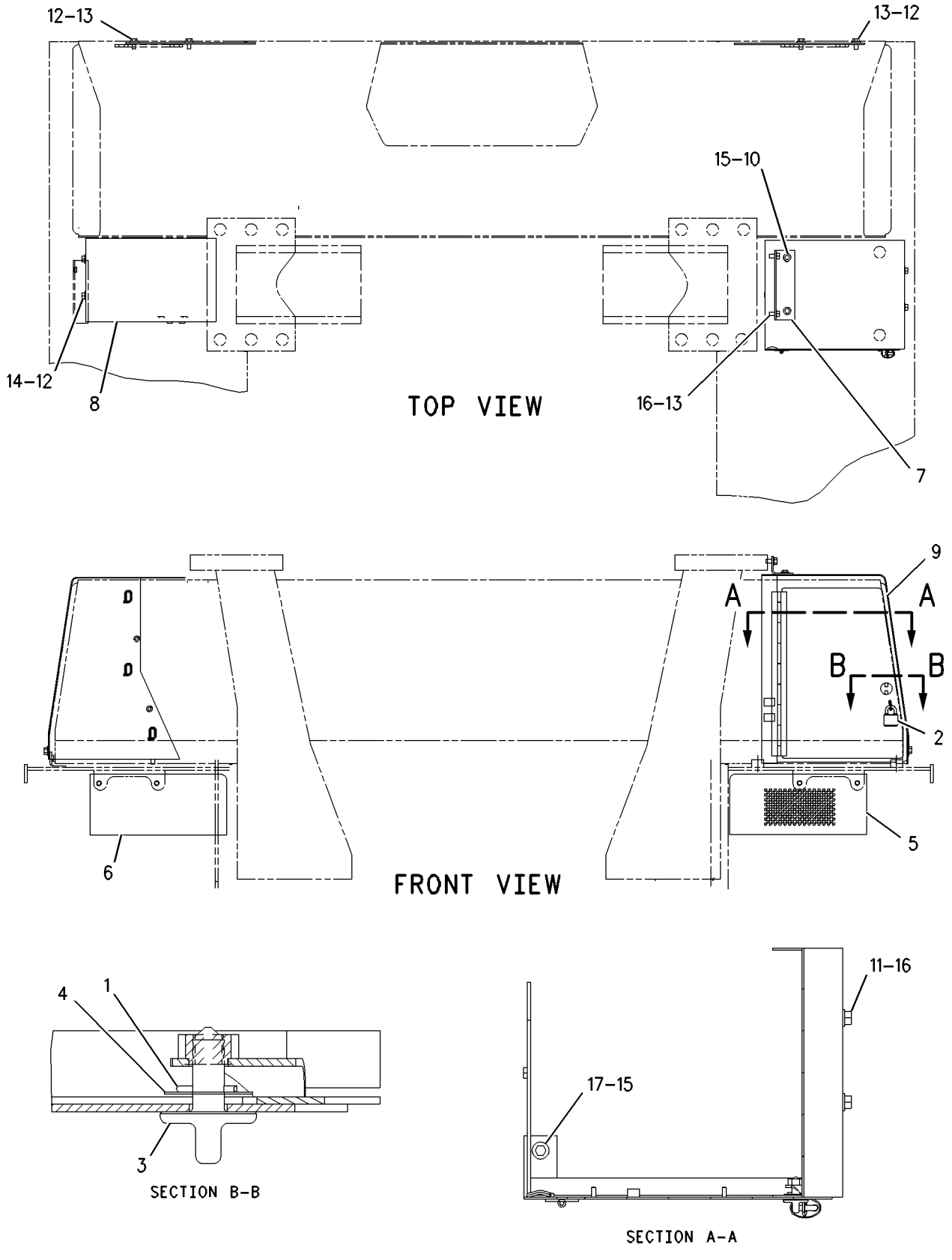

GRAPHIC #1 g00862612

FRAME AND BODY

175-3656 ENCLOSURE GP-ENGINE

S/N: AKT1-UP

PART OF 171-5801 CHASSIS AR

SMCS-7263 **i01700841**

NOTE	REF NO	GRAPHIC REF	PART NUMBER	QTY	PART NAME 1 2 3 4 5 6 (PRODUCT LEVEL)	SEE PAGE
	1	1	**2V-5019**	4	SPRING	
	2	1	**6B-0533**	6	SPRING	
	3	1	**9S-2075**	6	SPACER	
	4	1	**161-0832**	6	HANDLE AS	
	5	1	**172-4277**	12	GUIDE AS	
					(EACH INCLUDES)	
		1	**1F-0750**	2	NUT-WELD (3/8-16 THD)	
	6	1	**175-3663**	1	DOOR AS (RIGHT)	
	7	1	**199-8367**	1	DOOR AS (LEFT)	
					(EACH DOOR AS INCLUDES)	
		1	**1F-0748**	2	NUT-WELD (1/2-13 THD)	
		1	**3T-9476**	2	HINGE	
		1	**9G-4328**	2	PLATE	
	8	1	**199-9100**	2	PLATE	
	9	1	**200-1841**	4	PLATE AS	
	10	1	**200-4420**	4	ROD AS	
					(EACH INCLUDES)	
		1	**8T-4896**	1	WASHER-HARD (10.2X18.5X2.5MM THK)	
		1	**8T-4994**	1	WASHER-HARD (20X36.5X3.5MM THK)	
	11	1	**219-3571**	2	PLATE AS	
	12	1	**095-0843**	4	PIN-COTTER	
	13	1	**4L-6454**	24	BOLT (3/8-16X1 IN)	
	14	1	**5P-1075**	24	WASHER-HARD (10.2X22.5X3MM THK)	
	15	1	**5P-1076**	20	WASHER-HARD (13.5X30X4MM THK)	
	16	1	**5P-2566**	4	BOLT (1/2-13X1.5 IN)	
	17	1	**6H-3956**	6	PIN	
	18	1	**6V-1322**	4	BOLT (1/4-20X0.375 IN)	
	19	1	**8C-4436**	8	BOLT (1/2-13X1.375 IN)	
	20	1	**8T-4205**	4	WASHER-HARD (7.2X14.5X2MM THK)	
	21	1	**8T-4896**	4	WASHER-HARD (10.2X18.5X2.5MM THK)	
	22	1	**8T-8917**	8	BOLT (1/2-13X1.25 IN)	

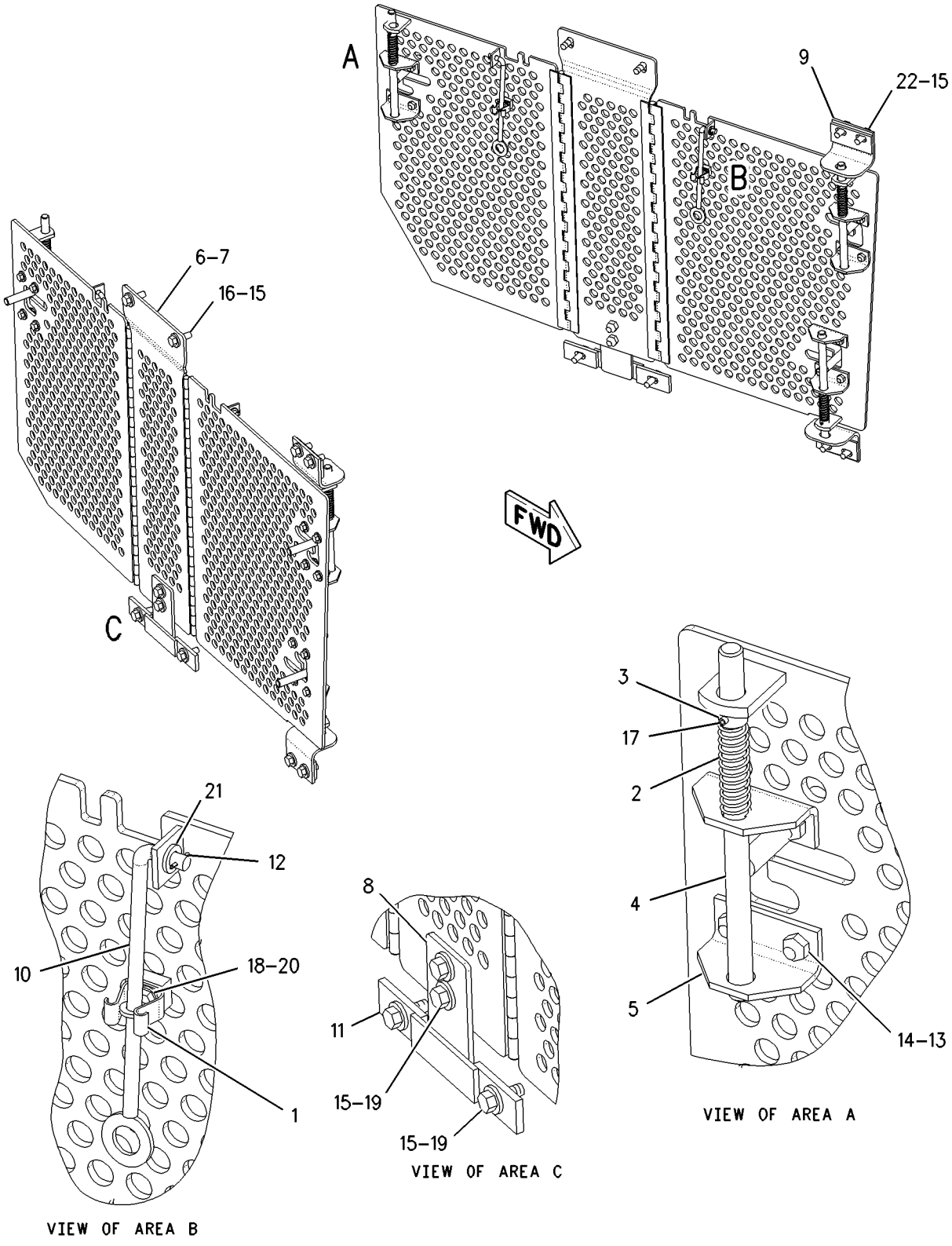

GRAPHIC #1 g00864111

FRAME AND BODY

172-5071 FENDER GP

S/N: AKT1-UP

PART OF 171-5801 CHASSIS AR

SMCS-7252 **i01696860**

NOTE	REF NO	GRAPHIC REF	PART NUMBER	QTY	PART NAME 1 2 3 4 5 6 (PRODUCT LEVEL)	SEE PAGE
	1	2	**3W-3110**	4	LOCK PIN	
	2	1	**5P-8502**	1	PADLOCK GP	
A		1	**5P-8500**	1	KEY	
A		1	**8Y-6364**	1	SLEEVE	
	3	2	**6T-9099**	2	PLATE	
	4	2	**7G-6171**	2	STEP	
	5	2	**7J-8814**	1	PLUG	
	6	2	**8E-0992**	1	PLATE	
	7	1	**9M-3835**	4	LATCH-RUBBER	
	8	1	**9N-4622**	2	PIN	
	9	2	**9W-0352**	2	LINK	
	10	1	**9W-6958**	2	HANDHOLD (GRAB)	
	11	2	**177-7788**	1	BRACKET AS	
		2	**1F-0750**	3	NUT-WELD (3/8-16 THD)	
	12	2	**178-7587**	1	PLATE	
	13	2	**178-7589**	1	PLATE AS	
		2	**1F-0750**	10	NUT-WELD (3/8-16 THD)	
	14	1	**186-4763**	1	BARRIER AS	
		1	**8T-7971**	2	WASHER-HARD (13.5X25.5X5MM THK)	
	15	2	**192-7300**	1	FENDER AS (LH)	
		2	**7T-1099**	21	LINK	
		2	**8F-9836**	2	BOSS-THREADED	
		2	**8J-4916**	11	BOSS (3/8-16 THD)	
		2	**8J-7236**	2	NUT-WELD (3/4-10 THD)	
		2	**8P-0612**	2	BRACKET	
		2	**8T-5911**	3	NUT-WELD (1/2-13 THD)	
		2	**8T-5912**	19	NUT-WELD (3/8-16 THD)	
		2	**9W-0648**	1	HINGE	
		2	**9X-2029**	2	STUD-WELD	
		2	**111-0611**	1	COVER AS	
		2	**123-6801**	1	PLATE	
	16	2	**192-7305**	1	FENDER AS (RH)	
		2	**1F-0748**	8	NUT-WELD (1/2-13 THD)	
		2	**3Y-7829**	1	BOSS (3/8-16X1.0 IN)	
		2	**7G-3945**	2	PLATE	
		2	**7J-7778**	2	LUG (1/2-13 THD)	
		2	**7T-1099**	19	LINK	
		2	**8J-7236**	2	NUT-WELD (3/4-10 THD)	
		2	**8P-0612**	2	BRACKET	
		2	**8T-5911**	3	NUT-WELD (1/2-13 THD)	
		2	**8T-5912**	10	NUT-WELD (3/8-16 THD)	
		2	**9W-0648**	1	HINGE	
		2	**9X-2029**	3	STUD-WELD	
		2	**111-0613**	1	COVER AS	
		2	**123-6801**	1	PLATE	
	17	2	**194-1818**	1	PLATE	
	18	2	**194-1819**	1	PLATE AS	
	19	2	**9B-7237**	6	BOLT (3/8-16X1.25 IN)	
	20	1	**194-5631**	1	BARRIER AS	
		1	**8T-7971**	2	WASHER-HARD (13.5X25.5X5MM THK)	
	21	1	**198-0964**	1	BEAM AS	
	21A	1	**6Y-5812**	2	BEARING-SLEEVE	
	22	1	**1K-6870**	10	LOCKNUT (3/4-10 THD)	
	23	1	**2M-5795**	4	PIN-CLEVIS	
	24	2	**3T-2977**	2	PLATE	
	25	2	**4L-6454**	5	BOLT (3/8-16X1 IN)	

172-5071 **FENDER GP** ***(contd.)*** **i01696860**

NOTE	REF NO	GRAPHIC REF	PART NUMBER	QTY	PART NAME 1 2 3 4 5 6 (PRODUCT LEVEL)	SEE PAGE
	26	2	**5C-6565**	6	BOLT (1/2-13X1.125 IN)	
	27	1,2	**5P-1075**	14	WASHER-HARD (10.2X22.5X3MM THK)	
	28	1,2	**5P-1076**	16	WASHER-HARD (13.5X30X4MM THK)	
	29	1	**5P-8248**	20	WASHER-HARD (20X36.5X3.5MM THK)	
	30	1	**5S-7379**	8	BOLT (3/8-16X0.875 IN)	
	31	1	**5V-1496**	4	RETAINER	
	32	2	**6J-0488**	17	SCREW-BUTTON HEAD (3/8-16X0.875 IN)	
	33	2	**6V-1193**	33	SCREW-HEX SOCKET (3/8-16X.625 IN)	
	34	1	**7X-0555**	2	WASHER-HARD (20X65X5MM THK)	
	35	1	**8C-3185**	2	BOLT-12 POINT HEAD (3/4-10 X 7IN)	
	36	1	**8T-4122**	12	WASHER-HARD (17X32X3.5MM THK)	
	37	2	**8T-4226**	5	WASHER-PLATED (10.5X45X3MM THK)	
	38	1	**8T-4994**	2	WASHER-HARD (20X36.5X3.5MM THK)	
	39	1	**8T-6871**	12	BOLT (5/8-11X2.50 IN)	
	40	1	**8T-8917**	6	BOLT (1/2-13X1.25 IN)	
	41	1	**8T-9399**	12	BOLT (3/4-10X2.25 IN)	
BD	42	1	**5P-7211**		SEAL	
	43	1	**110-5982**	2	BRACKET	

A-NOT PART OF THIS GROUP
B-USE AS REQUIRED
D-ORDER BY THE METER

REFER TO ALL ILLUSTRATIONS OF
THIS GROUP FOR AUXILIARY VIEWS

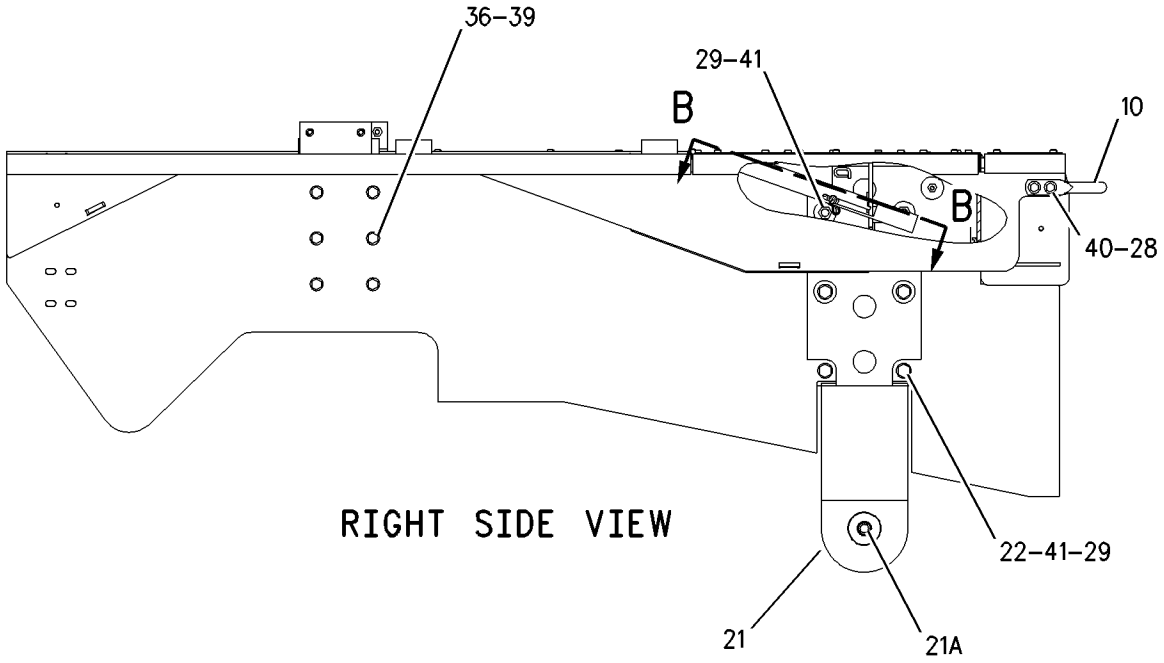

RIGHT SIDE VIEW

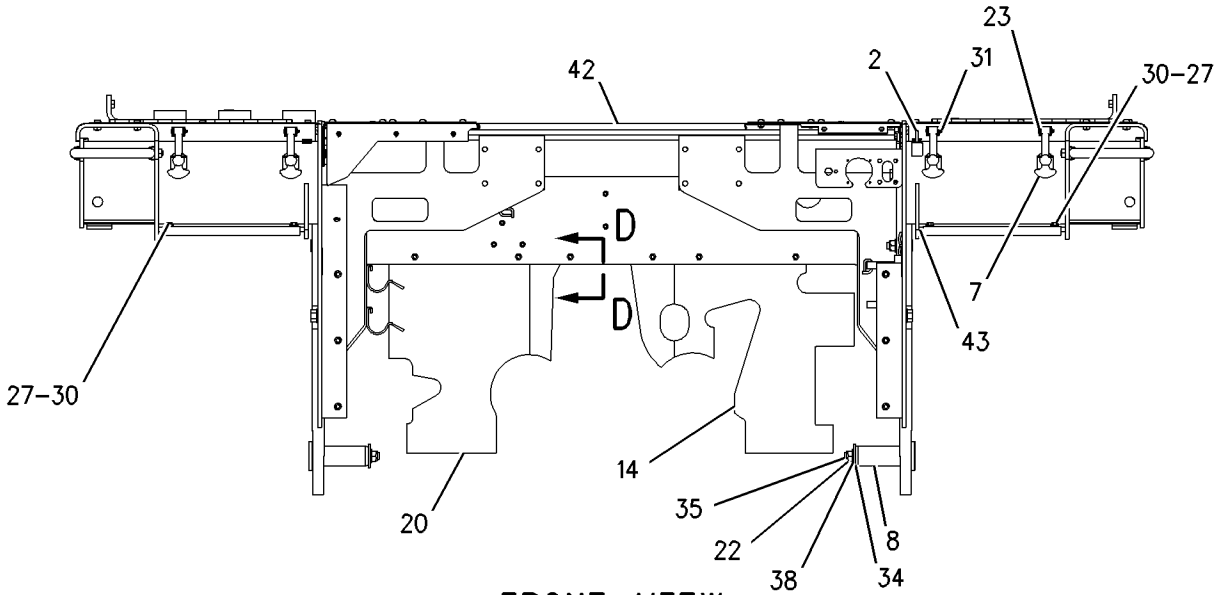

FRONT VIEW

GRAPHIC #1 g00874301

REFER TO ALL ILLUSTRATIONS OF
THIS GROUP FOR AUXILIARY VIEWS

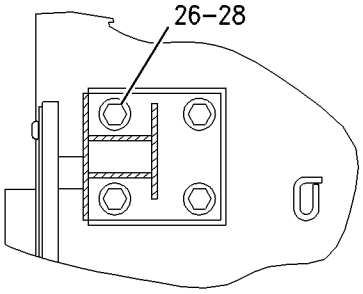

SECTION A-A

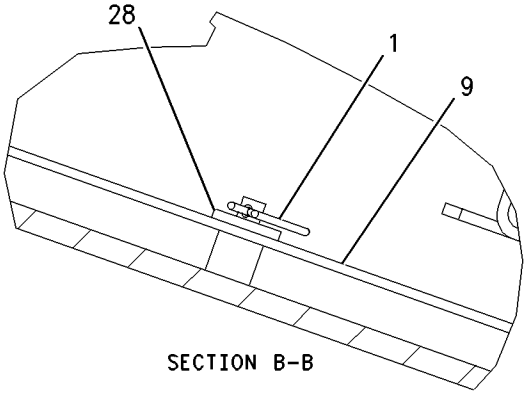

SECTION B-B

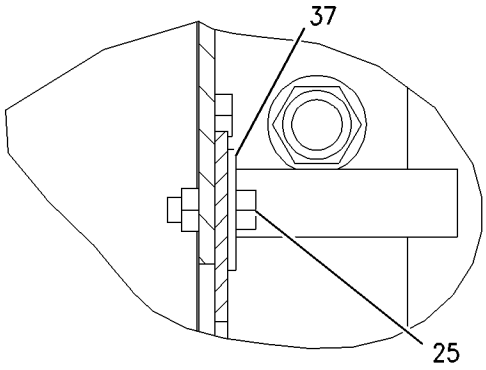

SECTION D-D

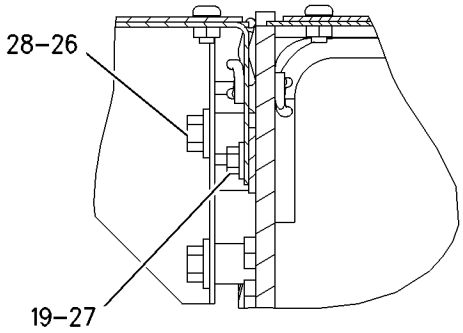

SECTION F-F

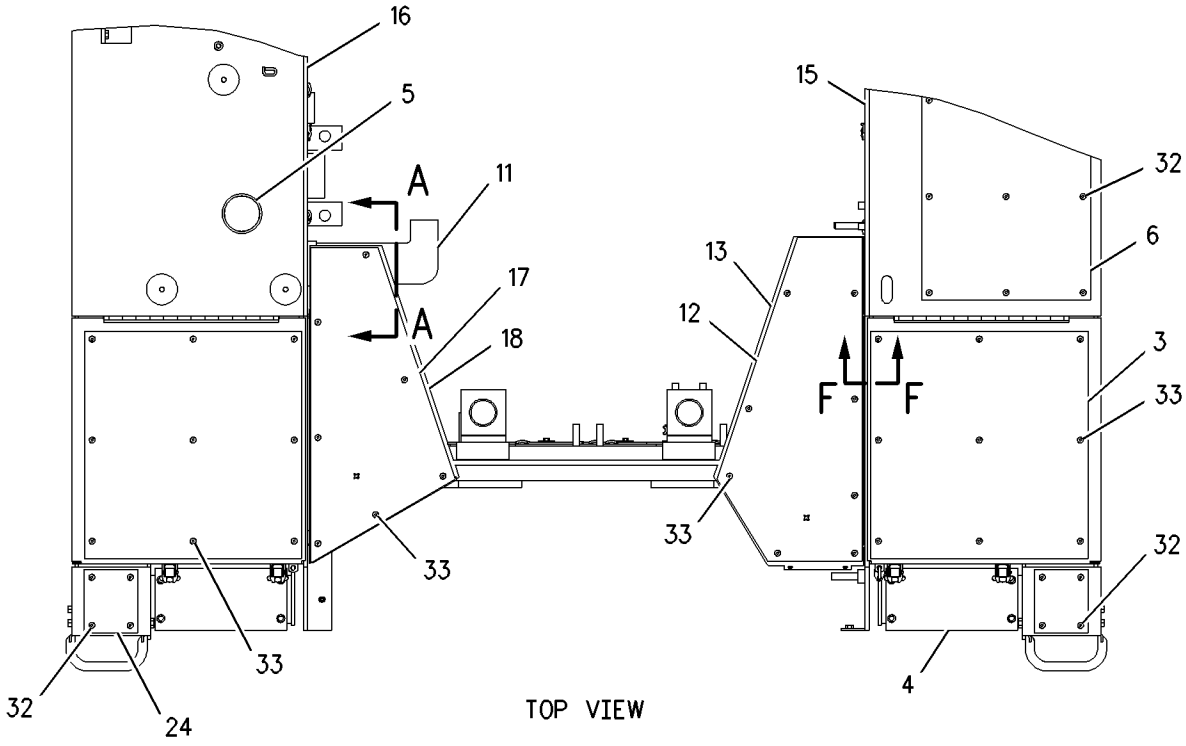

TOP VIEW

GRAPHIC #2 g00865626

175-7508 GRID GP-SAND BLAST ERODING

S/N: AKT1-UP
PART OF 171-5807 INSTALLATION AR-ENGINE
ALSO AN ATTACHMENT

SMCS-7179 **i01694321**

NOTE	REF NO	GRAPHIC REF	PART NUMBER	QTY	PART NAME 1 2 3 4 5 6 (PRODUCT LEVEL)	SEE PAGE
	1	1	**218-5074**	1	SUPPORT AS	
	2	1	**128-7098**	1	GRID AS-BOTTOM	
	3	1	**177-2176**	1	GRID AS-TOP	
	4	1	**4L-6454**	12	BOLT (3/8-16X1 IN)	
	5	1	**5M-3062**	12	BOLT (3/8-16X0.75 IN)	
	6	1	**5P-1075**	24	WASHER-HARD (10.2X22.5X3MM THK)	

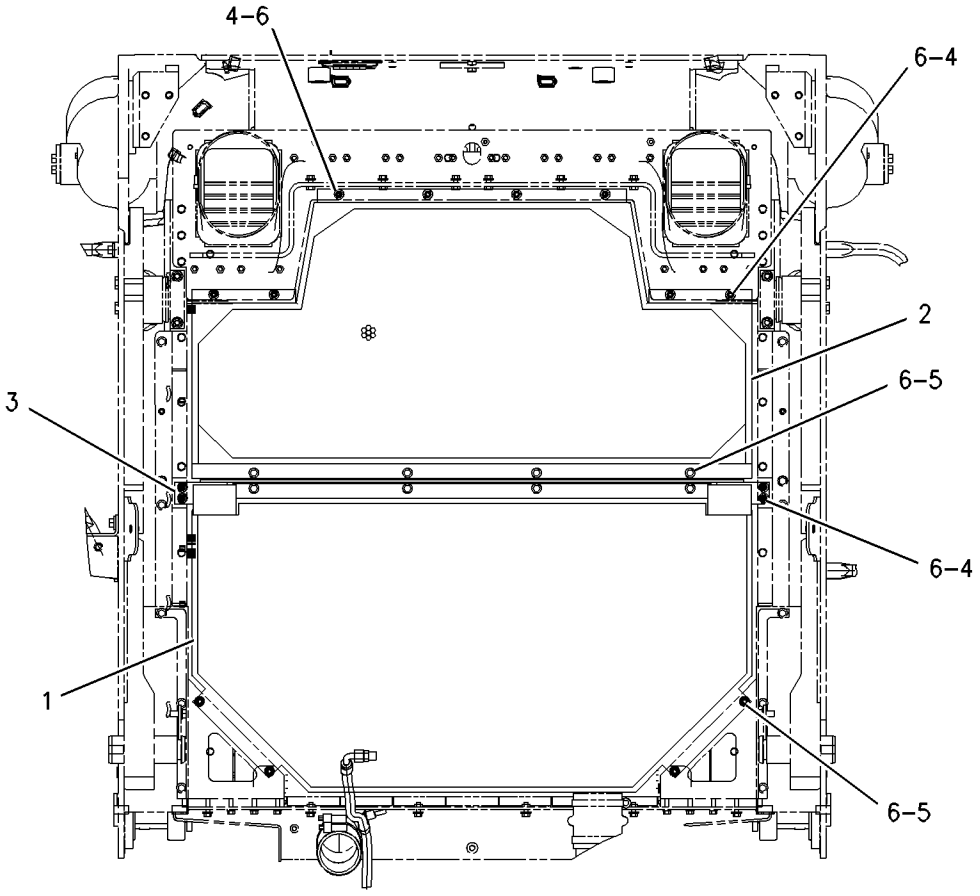

REAR VIEW

GRAPHIC #1 g00872363

FRAME AND BODY

143-7543 GUARD AR-FINAL DRIVE

S/N: AKT1-UP
DUO-CONE PACKING SEAL & GUARD
AN ATTACHMENT

SMCS-7172 **i01436976**

NOTE	PART NUMBER	QTY	PART NAME 1 2 3 4 5 6 (PRODUCT LEVEL)	SEE PAGE
Y	**192-0722**	2	FINAL DRIVE GP	334

Y-SEPARATE ILLUSTRATION

200-7133 GUARD GP-BOTTOM

S/N: AKT1-UP

PART OF 171-5801 CHASSIS AR

SMCS-7153 **i01696761**

NOTE	REF NO	GRAPHIC REF	PART NUMBER	QTY	PART NAME 1 2 3 4 5 6 (PRODUCT LEVEL)	SEE PAGE
	1	1	**3W-2647**	3	SPACER (13.5X30X10MM THK)	
	2	1	**6P-8829**	14	RETAINER	
	3	1	**6T-5941**	6	PIN-SECONDARY BAR	
	4	1	**7G-1814**	1	GUARD AS	
	5	1	**7G-1815**	1	PLATE	
	6	1	**7G-6503**	1	PLATE AS	
	7	1	**7G-6757**	1	GUARD AS	
	8	1	**200-7134**	1	GUARD AS	
		1	**8T-5911**	2	NUT-WELD (1/2-13 THD)	
		1	**8T-5912**	1	NUT-WELD (3/8-16 THD)	
	9	1	**200-7135**	1	GUARD AS	
		1	**8T-5912**	1	NUT-WELD (3/8-16 THD)	
	10	1	**200-7136**	2	COVER	
	11	1	**7X-0444**	2	BOLT (1-8X6.5 IN)	
	12	1	**3B-6677**	6	PIN-COTTER	
	13	1	**6V-8190**	14	NUT (1-8 THD)	
	14	1	**7X-0403**	4	BOLT (1-8X2.25 IN)	
	15	1	**7X-0405**	4	BOLT (1-8X2.75 IN)	
	16	1	**9B-7237**	2	BOLT (3/8-16X1.25 IN)	
	17	1	**7X-0418**	2	BOLT (1-8X9.5 IN)	
	18	1	**7X-0422**	4	BOLT (1-1/8-7 THD)	
	19	1	**8T-8919**	3	BOLT (1/2-13X1.75 IN)	
	20	1	**7X-0531**	4	WASHER-HARD (31X52.5X6MM THK)	
	21	1	**7X-0549**	22	WASHER-HARD (28X52.5X8MM THK)	
	22	1	**8T-4222**	2	WASHER-PLATED (11X32X2.5MM THK)	
	23	1	**8T-5361**	6	WASHER-HARD (28X49X5MM THK)	

200-7133 **GUARD GP-BOTTOM** *(contd.)* **i01696761**

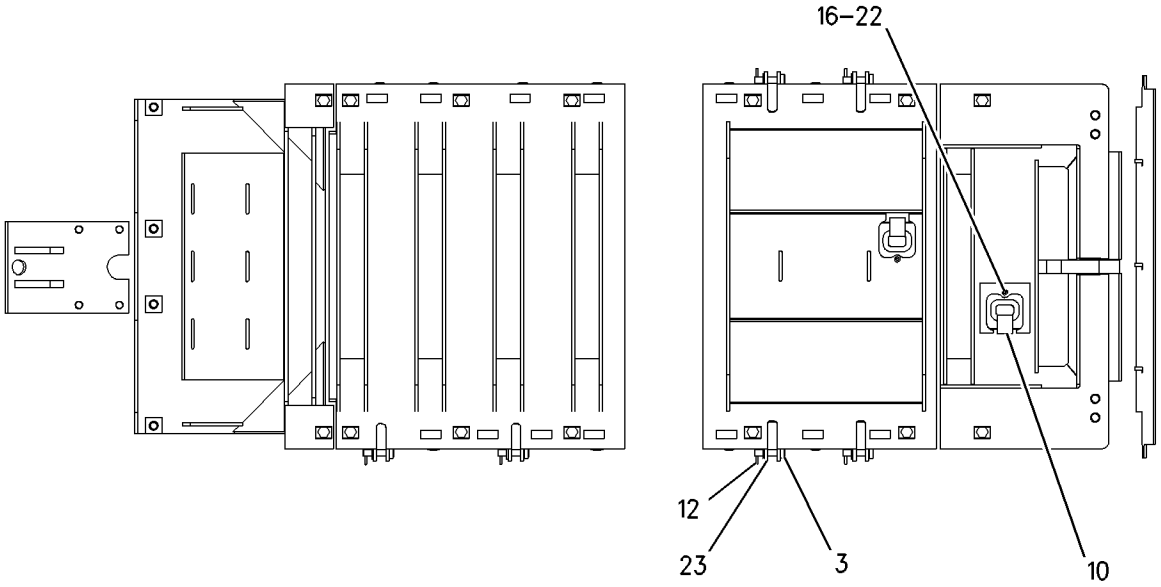

TOP VIEW

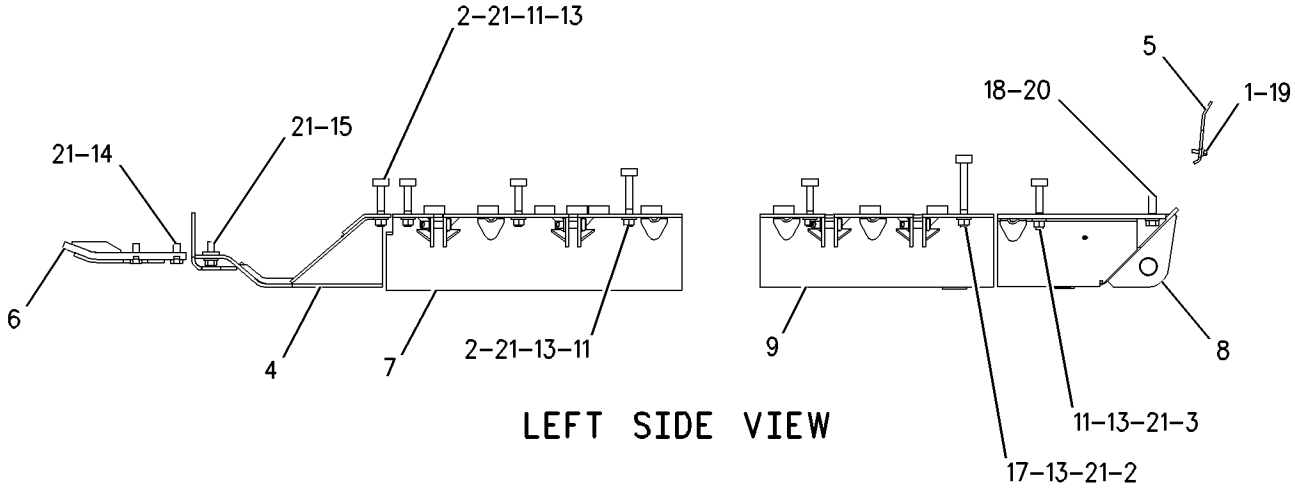

LEFT SIDE VIEW

GRAPHIC #1 g00873715

196-8565 GUARD GP-IDLER

S/N: AKT1-UP

FOR USE WITH 196-8562—PAGE 434. CANNOT BE USED WITH WASTE DISPOSAL AR AN ATTACHMENT

SMCS-4159 **i01437638**

NOTE	REF NO	GRAPHIC REF	PART NUMBER	QTY	PART NAME 1 2 3 4 5 6 (PRODUCT LEVEL)	SEE PAGE
	1	1	**147-5330**	4	GUARD AS (LH)	
	2	1	**147-5331**	2	GUARD AS (IDLER)	
	3	1	**147-5332**	2	GUARD AS (RH)	
	4	1	**147-5333**	4	PLATE	
	5	1	**7X-0344**	12	BOLT (5/8-11X1.375 IN)	
	6	1	**8T-4122**	24	WASHER-HARD (17X32X3.5MM THK)	
	7	1	**8T-6871**	12	BOLT (5/8-11X2.50 IN)	
QUANTITIES SHOWN ARE THOSE REQUIRED FOR BOTH LH AND RH SIDES						

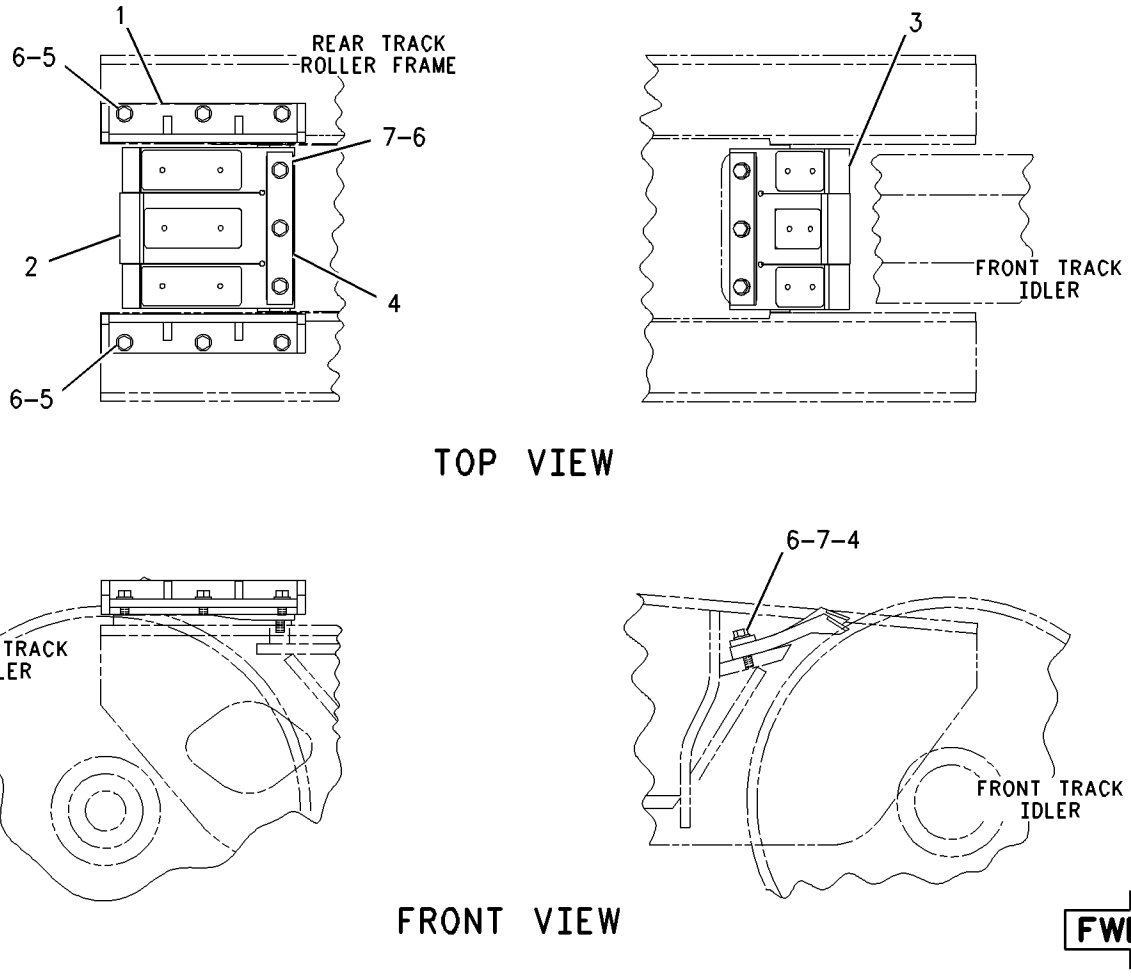

GRAPHIC #1

g00816504

1Z-0749 GUARD GP-PIVOT SHAFT

S/N: AKT1-UP
AN ATTACHMENT

SMCS-7150 **i01446727**

NOTE	REF NO	GRAPHIC REF	PART NUMBER	QTY	PART NAME 1 2 3 4 5 6 (PRODUCT LEVEL)	SEE PAGE
	1	1	**1Q-3627**	2	GUARD	
	2	1	**1Q-3626**	2	RETAINER	
	3	1	**8T-9389**	16	BOLT (1/2-13X2.75 IN)	
		1	**8T-4223**	16	WASHER-HARD (13.5X25.5X3MM THK)	

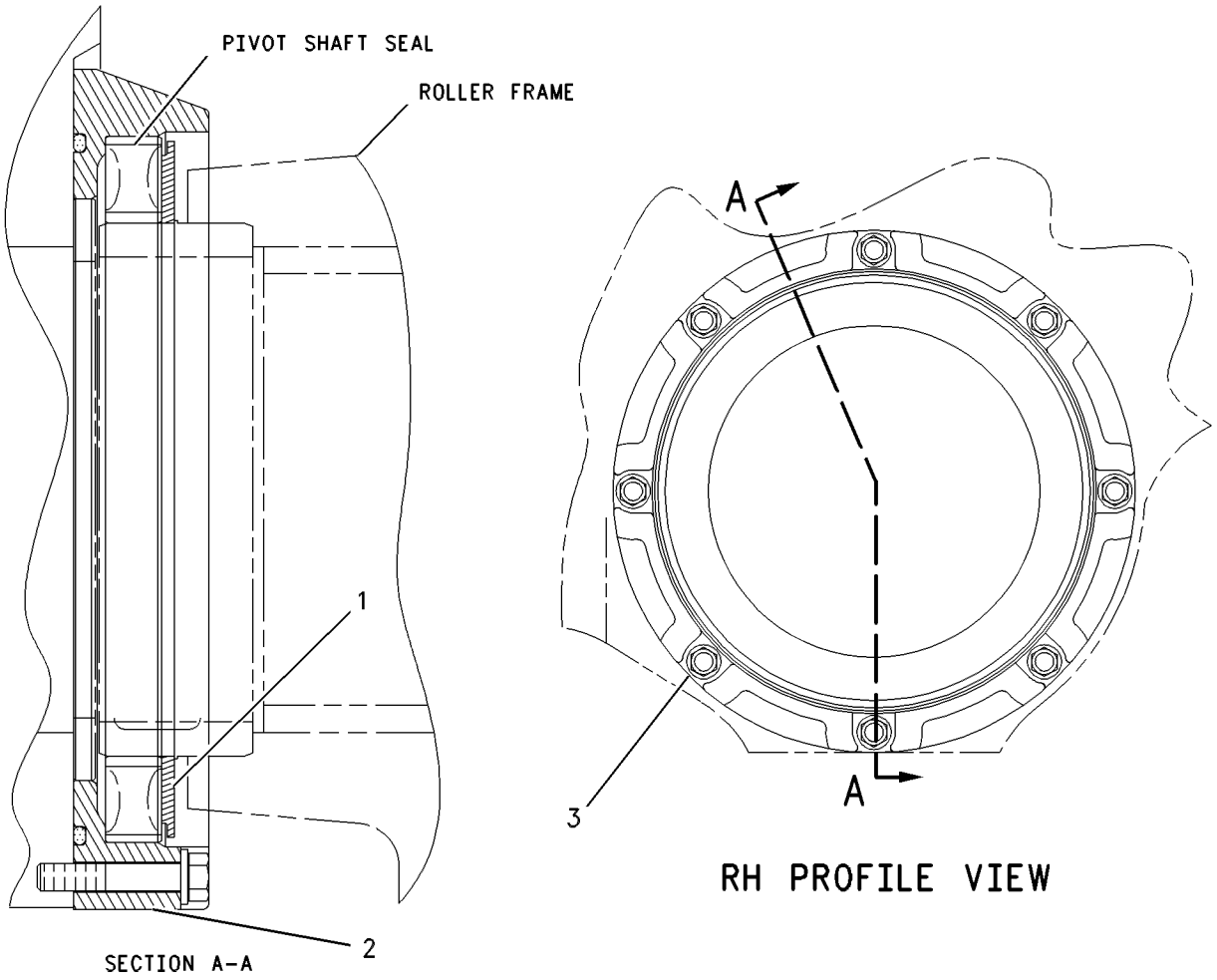

GRAPHIC #1 g00344482

173-4027 GUARD GP-RADIATOR

S/N: AKT1-UP

PART OF 171-5801 CHASSIS AR

SMCS-7155 **i01690631**

NOTE	REF NO	GRAPHIC REF	PART NUMBER	QTY	PART NAME 1 2 3 4 5 6 (PRODUCT LEVEL)	SEE PAGE
	1	1	**7K-6413**	2	FLANGE	
	2	1	**5M-6214**	2	PLUG-PIPE	
	3	1	**4J-7083**	2	GASKET	
	4	1	**5C-6565**	8	BOLT (1/2-13X1.125 IN)	
	5	1	**208-2823**	2	BAFFLE AS	
					(EACH INCLUDES)	
		1	**6B-4594**	4	RIVET	
	6	1	**110-5975**	1	STEP AS	
	7	1	**9B-7237**	12	BOLT (3/8-16X1.25 IN)	
	8	1	**5P-1075**	16	WASHER-HARD (10.2X22.5X3MM THK)	
	9	1	**6T-6079**	2	WASHER (20X100X12MM THK)	
	10	1	**135-3173**	2	ROD	
	11	1	**3B-4617**	4	PIN-COTTER	
	12	1	**118-4548**	1	BAFFLE AS	
		1	**6B-4594**	11	RIVET	
	13	1	**173-4028**	1	GUARD AS	
	13A	1	**7J-1337**	2	BEARING (6.5IN OD)	
	13B	1	**7J-1338**	2	BEARING (5IN OD)	
	13C	1	**7T-9014**	4	BEARING-SLEEVE	
	13D	1	**8P-7598**	2	BEARING-SLEEVE	
	14	1	**6J-0488**	4	SCREW-BUTTON HEAD (3/8-16X0.875 IN)	
	15	1	**173-4031**	1	SCREEN AS-LH	
	16	1	**110-6030**	1	PLATE	
	17	1	**173-4030**	1	SCREEN AS-RH	
	18	1	**8T-9398**	2	BOLT (3/4-10X1.75 IN)	
	19	1	**9W-7007**	2	PIN	
	20	1	**8T-4223**	4	WASHER-HARD (13.5X25.5X3MM THK)	
	21	1	**206-6900**	2	PLATE	
	22	1	**8E-4815**	2	PLUG	
	23	1	**127-9189**	2	PIN	
	24	1	**110-6031**	1	HANDLE AS	
	25	1	**5P-1076**	8	WASHER-HARD (13.5X30X4MM THK)	
	26	1	**8T-4835**	8	BOLT (1/2-13X2 IN)	
	27	1	**8T-4122**	10	WASHER-HARD (17X32X3.5MM THK)	
	28	1	**7X-0346**	2	BOLT (5/8-11X2 IN)	
	29	1	**8T-9393**	8	BOLT (5/8-11X1.5 IN)	

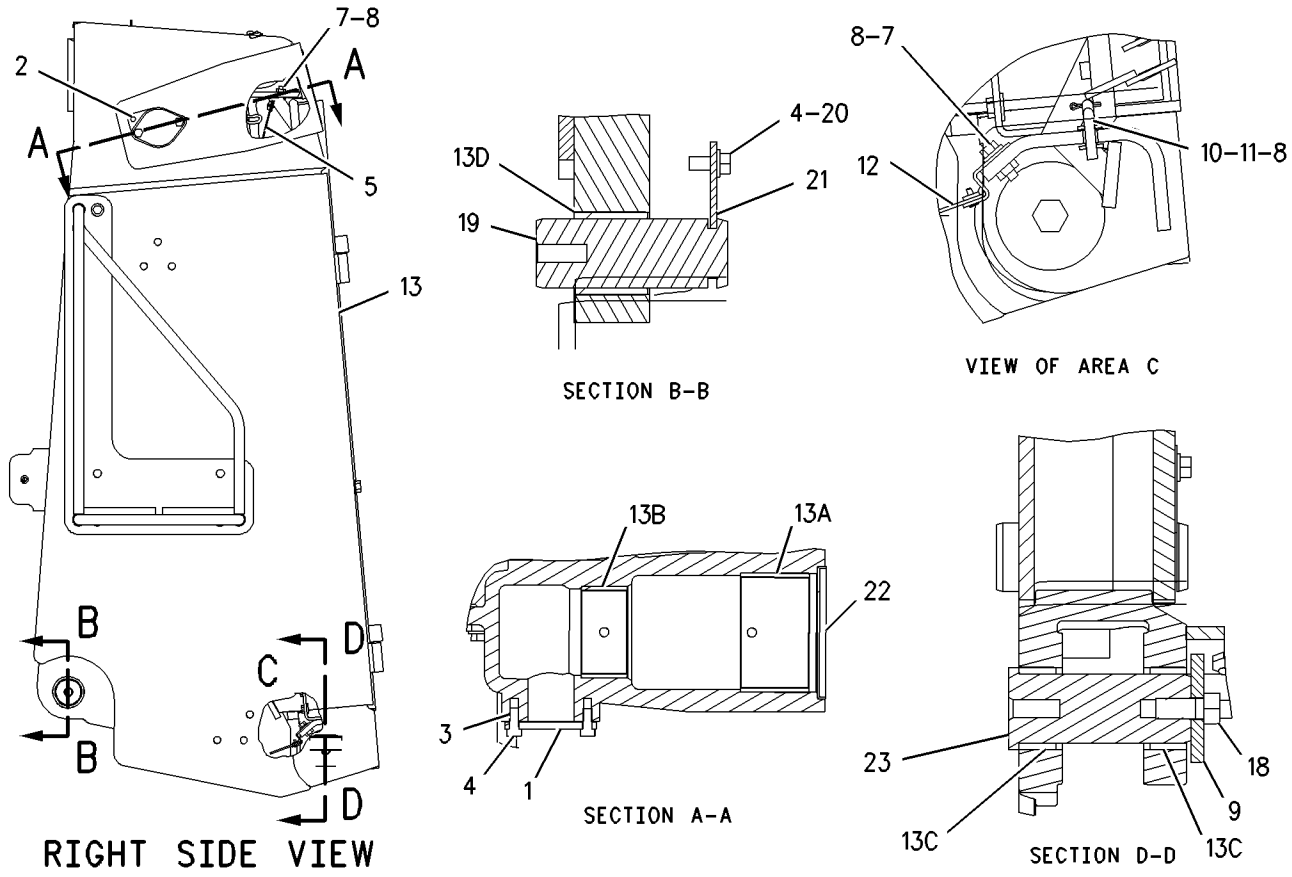

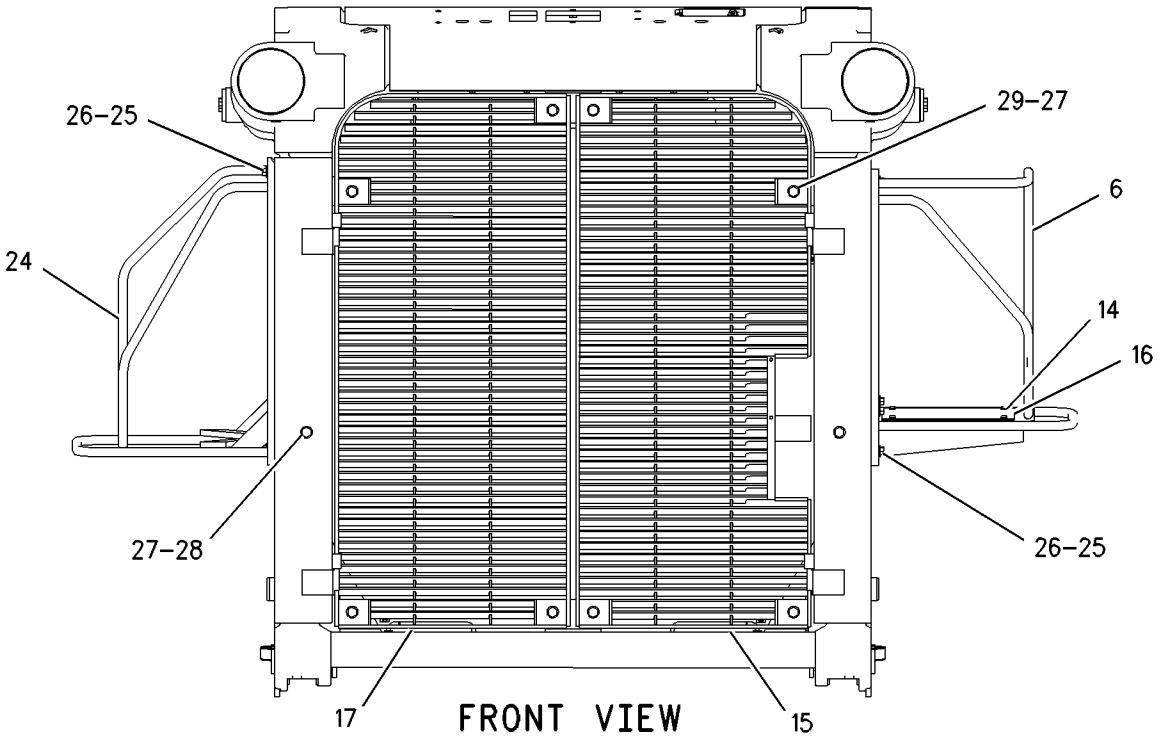

GRAPHIC #1

g00871288

119-6676 GUARD GP-REAR

S/N: AKT1-UP

CANNOT BE USED WITH REAR TOWING WINCH, RIPPER OR FAST FILL FUEL SYSTEM AN ATTACHMENT

SMCS-7187 **i01401570**

NOTE	REF NO	GRAPHIC REF	PART NUMBER	QTY	PART NAME 1 2 3 4 5 6 (PRODUCT LEVEL)	SEE PAGE
	1	1	**2M-6095**	1	HANDLE	
	2	1	**3B-4610**	1	COTTER	
	3	1	**4J-4262**	1	COVER	
	4	1	**4S-8033**	2	PIN-SECONDARY BAR	
	5	1	**5P-8837**	2	LOCKPIN	
	6	1	**6B-0533**	1	SPRING	
	7	1	**6D-1746**	1	BOLT (1/2-13X1.32 IN)	
	8	1	**6H-3956**	1	PIN	
	9	1	**119-6677**	1	GUARD AS	
		1	**5F-4639**	1	LUG	
		1	**5G-5503**	1	DOOR	
	10	1	**119-6678**	2	BRACKET AS	
					(EACH INCLUDES)	
		1	**3J-5169**	8	NUT (5/8-11 THD)	
	11	1	**119-6679**	1	PLATE AS	
	12	1	**125-6392**	1	PLATE AS	
		1	**1F-0748**	4	NUT-WELD (1/2-13 THD)	
	13	1	**125-6393**	1	PLATE AS	
		1	**1F-0748**	4	NUT-WELD (1/2-13 THD)	
	14	1	**5P-1076**	8	WASHER-HARD (13.5X30X4MM THK)	
	15	1	**7X-0584**	1	WASHER-HARD (13.5X20.5X2MM THK)	
	16	1	**8T-4122**	17	WASHER-HARD (17X32X3.5MM THK)	
	17	1	**8T-4223**	4	WASHER-HARD (13.5X25.5X3MM THK)	
	18	1	**8T-5361**	2	WASHER-HARD (28X49X5MM THK)	
	19	1	**5C-6565**	4	BOLT (1/2-13X1.25 IN)	
	20	1	**5P-2566**	8	BOLT (1/2-13X1.5 IN)	
	21	1	**7X-0345**	8	BOLT (5/8-11X1.75 IN)	
	22	1	**7X-0347**	8	BOLT (5/8-11X2.25 IN)	

119-6676 **GUARD GP-REAR** *(contd.)* **i01401570**

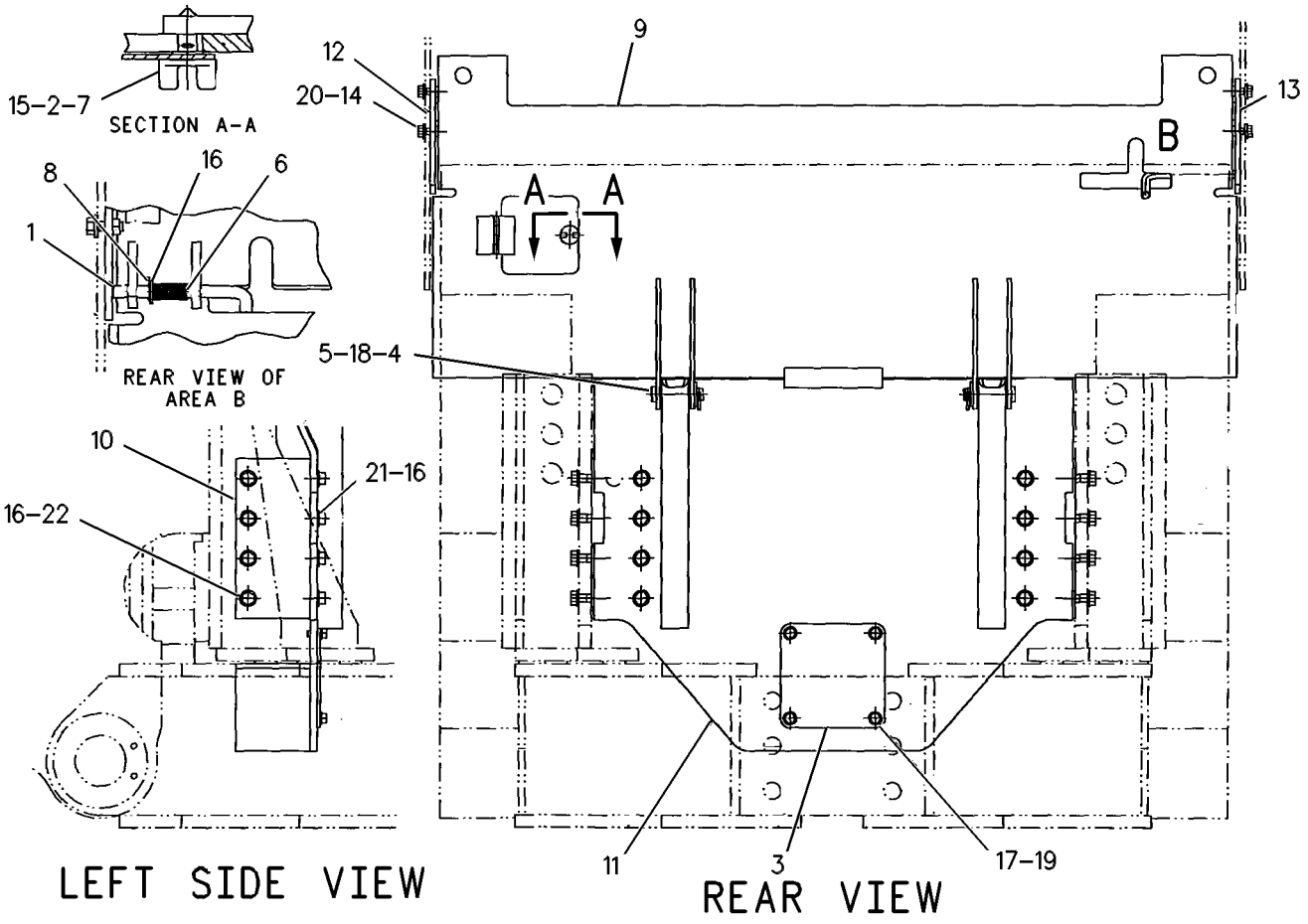

GRAPHIC #1 g00253866

8E-9570 GUARD GP-ROCK

S/N: BHJ1-UP
PART OF 8E-9010 BLADE AS-SEMI-UNIVERSAL
AN ATTACHMENT

SMCS-7182 **i00596183**

NOTE	REF NO	GRAPHIC REF	PART NUMBER	QTY	PART NAME 1 2 3 4 5 6 (PRODUCT LEVEL)	SEE PAGE
	1	1	**8E-9947**	1	GUARD AS	
	2	1	**8E-6866**	1	GUARD AS-LH	
	3	1	**8E-6757**	1	GUARD AS-RH	
	4	1	**8E-9938**	2	PLATE	

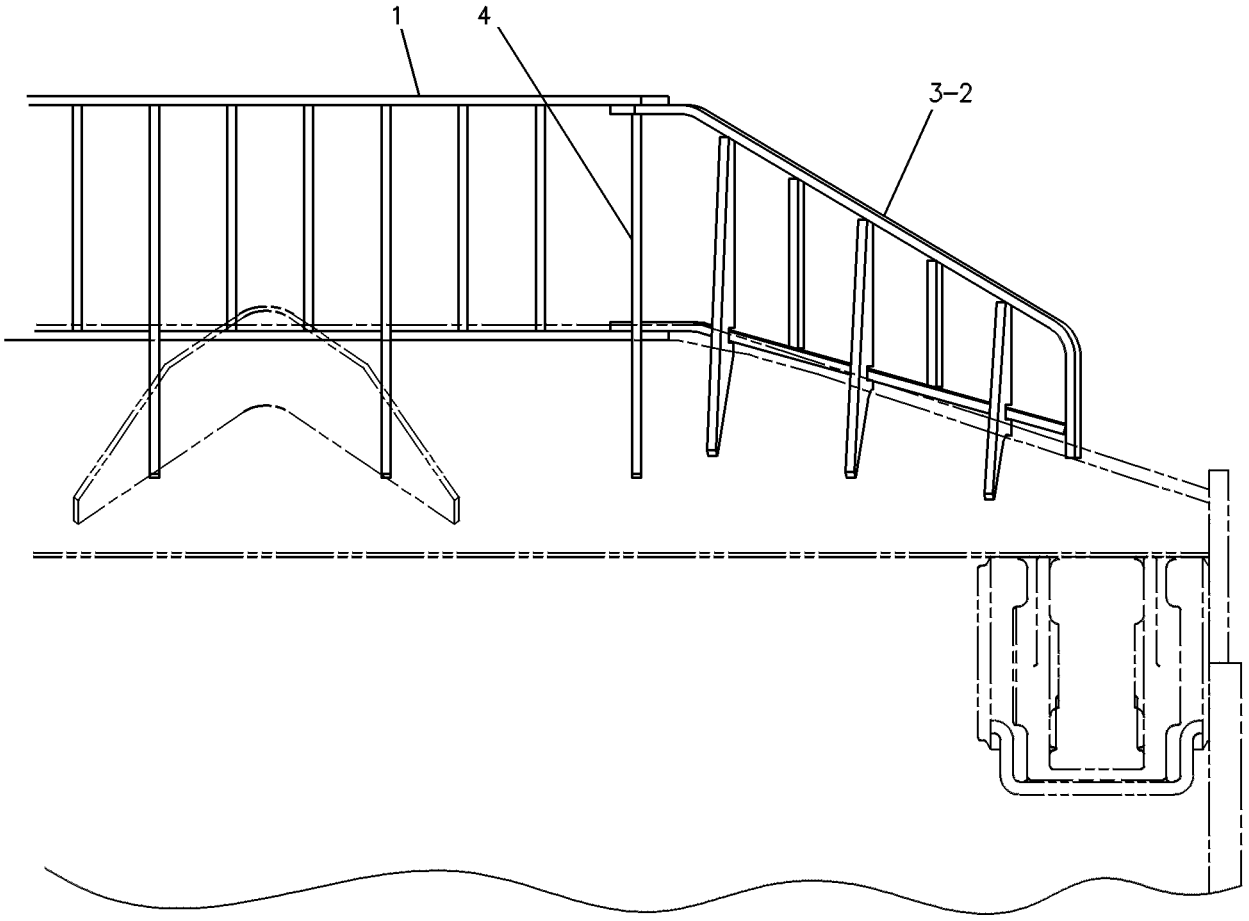

REAR VIEW

GRAPHIC #1 g00234840

131-0785 GUARD GP-ROCK

S/N: BHP1-UP; AKT1-UP
PART OF 130-7749, 130-7751 BLADE AS-UNIVERSAL
AN ATTACHMENT

SMCS-7182 **i00602752**

NOTE	REF NO	GRAPHIC REF	PART NUMBER	QTY	PART NAME 1 2 3 4 5 6 (PRODUCT LEVEL)	SEE PAGE
	1	1	**8E-9947**	1	GUARD AS	
	2	1	**131-0782**	1	GUARD AS-RH	
	3	1	**131-0783**	1	GUARD AS-LH	
	4	1	**131-0786**	2	PLATE	

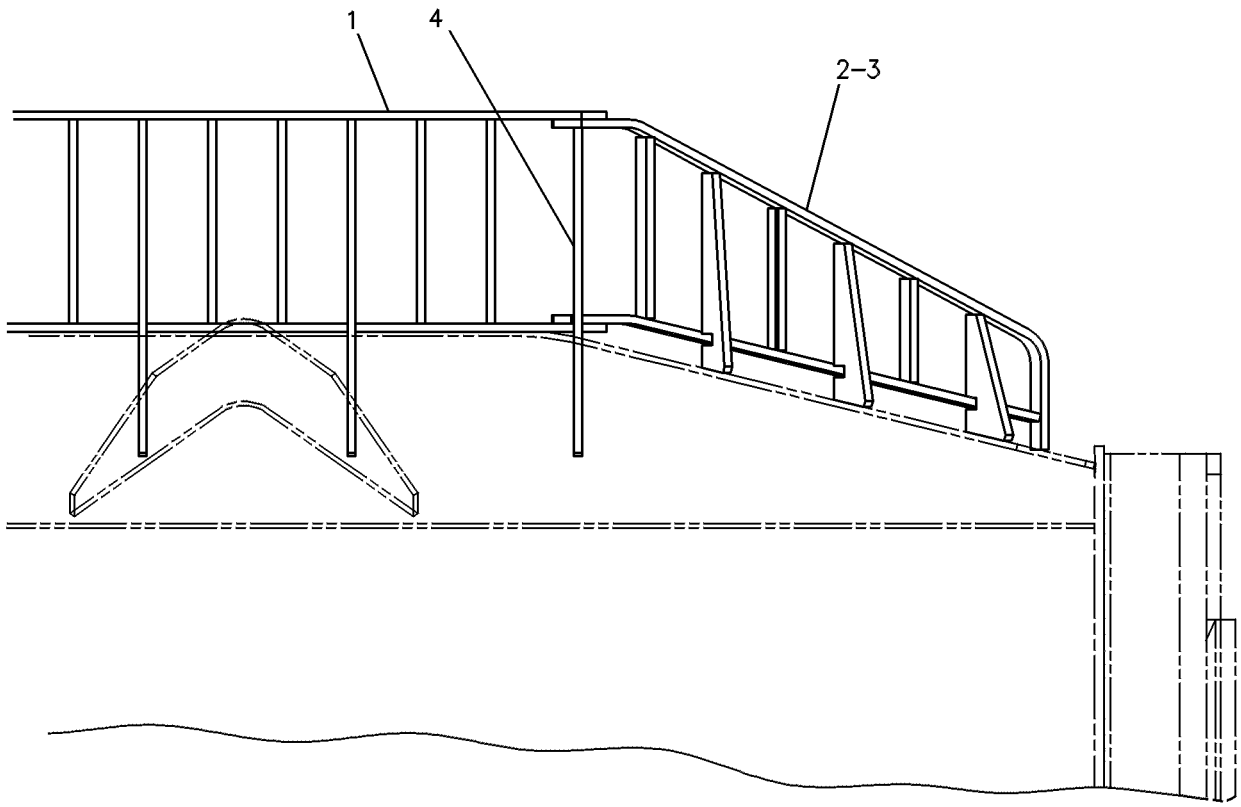

REAR VIEW

GRAPHIC #1 g00234819

FRAME AND BODY

203-9380 GUARD GP-SEAL

S/N: AKT1-UP
AN ATTACHMENT

SMCS-7150 **i01612775**

NOTE	REF NO	GRAPHIC REF	PART NUMBER	QTY	PART NAME 1 2 3 4 5 6 (PRODUCT LEVEL)	SEE PAGE
	1	1	**203-9381**	2	RING	
	2	1	**203-9382**	2	GUARD-SEAL	
	3	1	**203-9383**	2	PLATE	
	4	1	**1K-6872**	6	LOCKNUT (1/2-13 THD)	
	5	1	**7X-0328**	8	BOLT (1/2-13X3.50 IN)	
	6	1	**8T-4223**	20	WASHER-HARD (13.5X25.5X3MM THK)	
	7	1	**8T-4835**	6	BOLT (1/2-13X2 IN)	

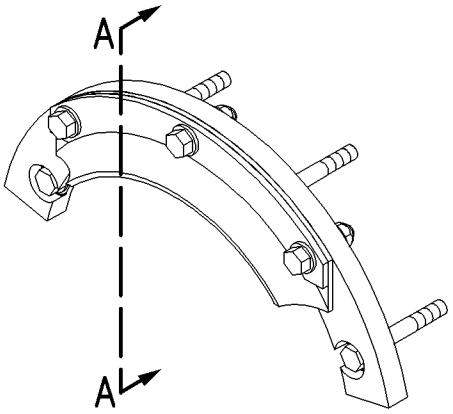

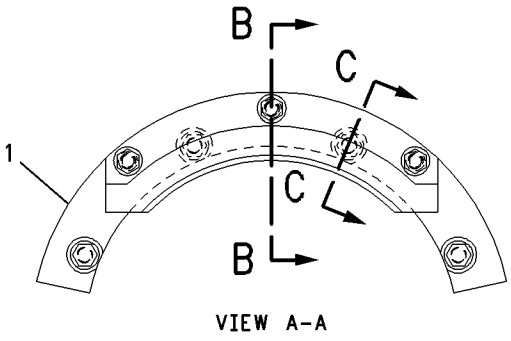

VIEW A-A

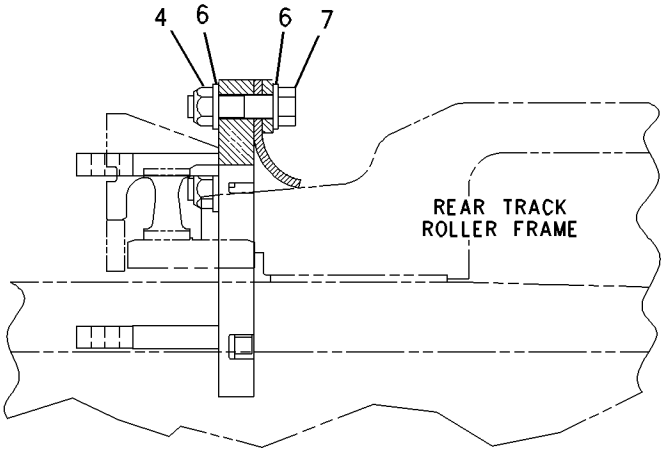

SECTION B-B

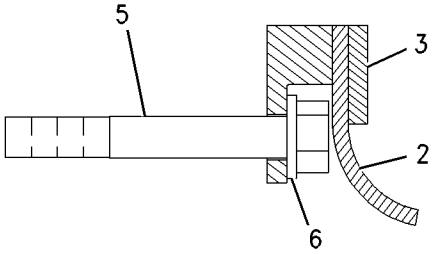

SECTION C-C

GRAPHIC #1 g00854824

MEMORANDA

FRAME AND BODY

169-2559 HOOD & GUARD GP

S/N: AKT1-UP

PART OF 171-5801 CHASSIS AR

SMCS-7251 **i01665077**

NOTE	REF NO	GRAPHIC REF	PART NUMBER	QTY	PART NAME 1 2 3 4 5 6 (PRODUCT LEVEL)	SEE PAGE
	1	2	**2G-0493**	2	WASHER-RETAINING (20X82.55X11MM THK)	
	2	2	**6T-1698**	4	MOUNTING	
	3	2	**6V-9197**	2	LOCK PIN	
	4	2	**7D-6055**	2	PLATE	
	5	2	**7G-7156**	1	PLATE AS	
		2	**1F-0748**	2	NUT-WELD (1/2-13 THD)	
		2	**4H-7728**	1	LUG	
	6	2	**9M-3835**	2	LATCH-RUBBER	
	7	1,2	**9P-8663**	7	SPACER (13.8X38X13MM THK)	
	8	2	**9W-2770**	2	BAFFLE	
	9	2	**122-8079**	1	PLATE AS	
		2	**1F-0748**	2	NUT-WELD (1/2-13 THD)	
	10	2	**169-2561**	1	HOOD AS	
		2	**9G-8327**	2	HANDHOLD	
	11	2	**175-3248**	1	PLATE AS-RH	
		2	**1F-0748**	4	NUT-WELD (1/2-13 THD)	
		2	**1F-0750**	2	NUT-WELD (3/8-16 THD)	
		2	**9P-9550**	2	TUBE	
	12	2	**175-3250**	1	PLATE AS-LH	
		2	**1F-0748**	4	NUT-WELD (1/2-13 THD)	
		2	**1F-0750**	2	NUT-WELD (3/8-16 THD)	
		2	**9P-9550**	2	TUBE	
	13	2	**179-1939**	1	SUPPORT AS (RH)	
	14	2	**179-1940**	1	SUPPORT AS (LH)	
	15	2	**179-1959**	1	PLATE AS	
		2	**1F-0748**	1	NUT-WELD (1/2-13 THD)	
	16	2	**179-5616**	1	SUPPORT AS	
	17	2	**179-5617**	1	SUPPORT AS	
					(EACH SUPPORT AS INCLUDES)	
		2	**3T-6191**	1	PAD	
		2	**6S-9470**	1	PLATE	
		2	**033-9412**	5	RIVET	
	18	2	**179-9373**	1	PLATE	
	19	2	**179-9374**	1	PLATE	
	20	2	**199-2572**	1	PLATE AS	
	21	2	**199-2573**	1	PLATE AS	
					(EACH PLATE AS INCLUDES)	
		2	**9P-9548**	1	PIN (FRONT)	
		2	**9P-9549**	1	PIN (REAR)	
	22	2	**200-2737**	1	PLATE AS	
		2	**1F-0748**	2	NUT-WELD (1/2-13 THD)	
		2	**1K-8850**	1	SPRING	
		2	**4K-8501**	2	CLIP	
	23	2	**201-5537**	2	PLATE AS	
					(EACH INCLUDES)	
		2	**8T-5911**	1	NUT-WELD (1/2-13 THD)	
	24	2	**2K-4973**	10	LOCKNUT (3/8-16 THD)	
	25	2	**2M-5795**	2	PIN-CLEVIS	
	26	2	**5C-6565**	6	BOLT (1/2-13X1.125 IN)	
	27	1,2	**5P-1075**	13	WASHER-HARD (10.2X22.5X3MM THK)	
	28	2	**5P-1076**	13	WASHER-HARD (13.5X30X4MM THK)	
	29	1,2	**5P-2228**	6	BOLT (1/2-13X1 IN)	
	30	1	**5P-2566**	1	BOLT (1/2-13X1.5 IN)	
	31	1	**5S-7379**	3	BOLT (3/8-16X0.875 IN)	
	32	2	**7X-0343**	8	BOLT (5/8-11X1.25 IN)	
	33	2	**7X-0347**	8	BOLT (5/8-11X2.25 IN)	

169-2559 **HOOD & GUARD GP** *(contd.)*

i01665077

NOTE	REF NO	GRAPHIC REF	PART NUMBER	QTY	PART NAME 1 2 3 4 5 6 (PRODUCT LEVEL)	SEE PAGE
	34	2	**7X-0370**	2	BOLT (3/4-10X3.50 IN)	
	35	1,2	**8C-4436**	7	BOLT (1/2-13X1.375 IN)	
	36	2	**8T-2561**	2	WASHER-HARD (10.5X28.5X5MM THK)	
	37	2	**8T-4122**	22	WASHER-HARD (17X32X3.5MM THK)	
	38	2	**8T-4223**	6	WASHER-HARD (13.5X25.5X3MM THK)	
	39	2	**8T-4994**	2	WASHER-HARD (20X36.5X3.5MM THK)	
	40	1	**8T-9383**	6	BOLT (1/2-13X0.75 IN)	
	41	2	**8T-9393**	6	BOLT (5/8-11X1.5 IN)	
	42	2	**9B-7237**	10	BOLT (3/8-16X1.25 IN)	

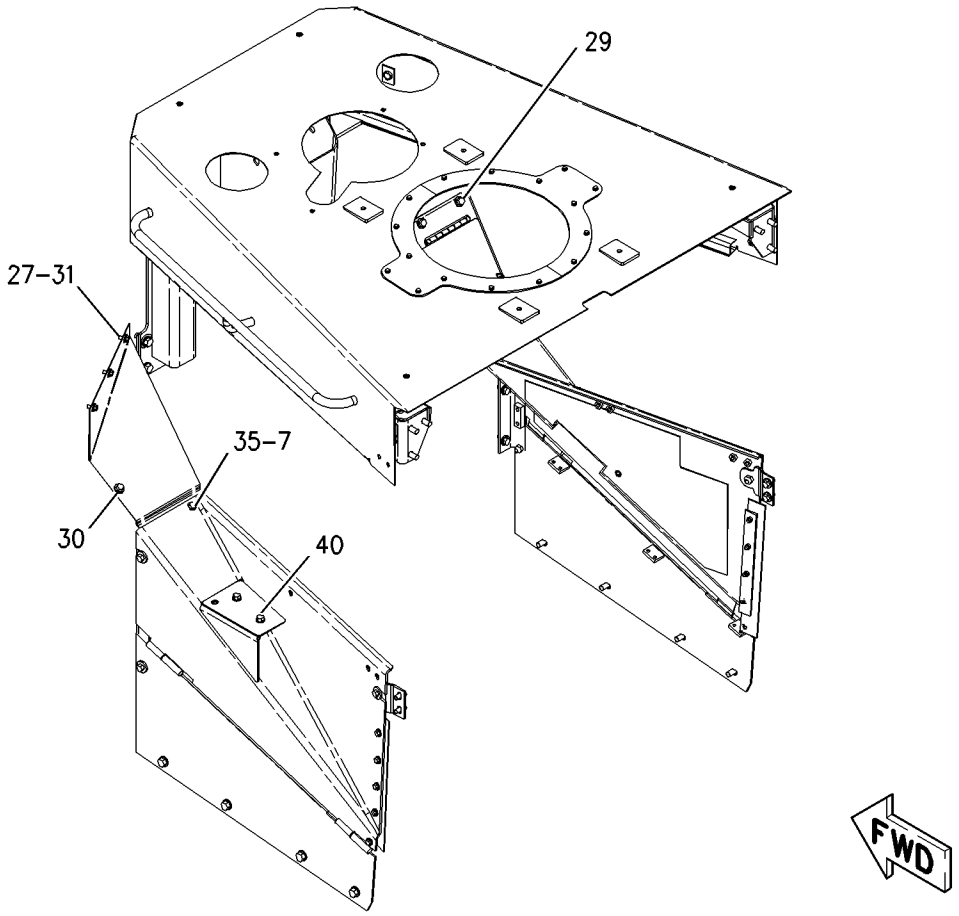

GRAPHIC #1

g00806918

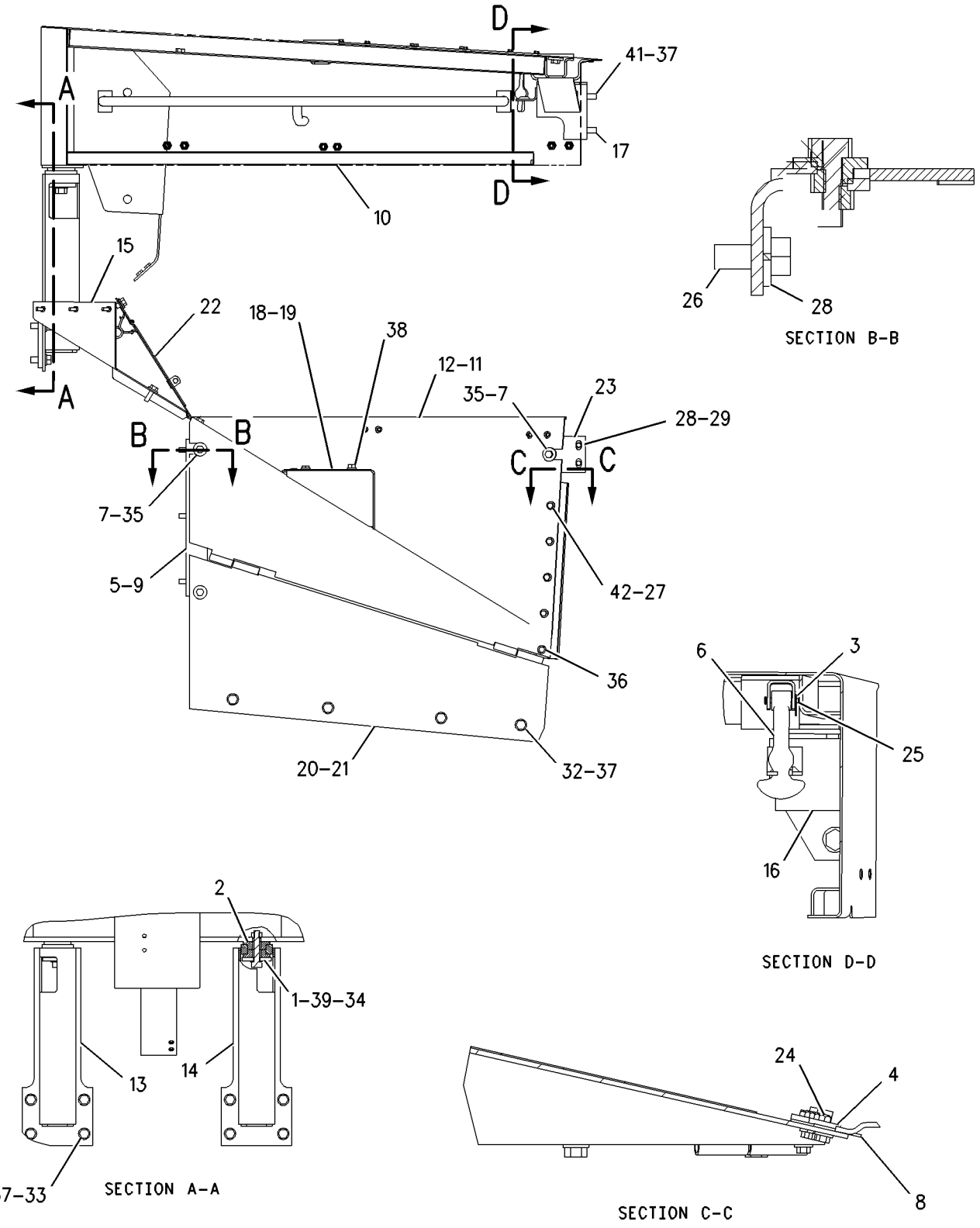

GRAPHIC #2 g00806917

FRAME AND BODY

194-9617 PLATE

S/N: AKT1-UP

FIELD INSTALLATION

SMCS-7051 **i01437605**

NOTE	REF NO	GRAPHIC REF	PART NUMBER	QTY	PART NAME 1 2 3 4 5 6 (PRODUCT LEVEL)	SEE PAGE
					(NO SERVICED PARTS)	

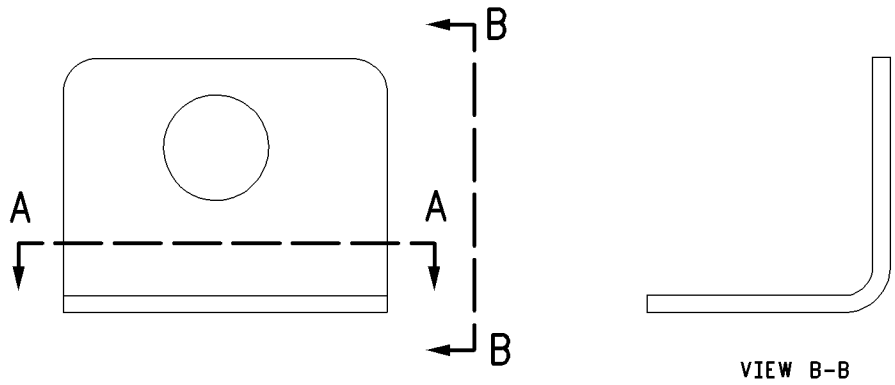

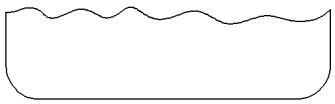

GRAPHIC #1 g00753245

UNDERCARRIAGE

163-1101 BAR AR-STRIKER

S/N: AKT1-UP
28 IN MAXIMUM TRACK WIDTH
AN ATTACHMENT

SMCS-7180 **i01437027**

NOTE	REF NO	GRAPHIC REF	PART NUMBER	QTY	PART NAME 1 2 3 4 5 6 (PRODUCT LEVEL)	SEE PAGE
Y	1	1	*1Q-3458*	1	BAR GP-STRIKER (RH)	424
Y	2	1	*1Q-3468*	1	BAR GP-STRIKER (LH)	425
	3	1	**155-2745**	2	FRAME AS	
					(EACH INCLUDES)	
	4	1	**4B-4158**	4	SCREW-DRIVE (3/16X0.25 IN)	
	5	1	**6V-0709**	1	PLATE-WARNING (RECOIL SPRING)	
	6	1	**7G-1958**	1	BEARING-SLEEVE	

Y-SEPARATE ILLUSTRATION

163-1101 **BAR AR-STRIKER** ***(contd.)*** **i01437027**

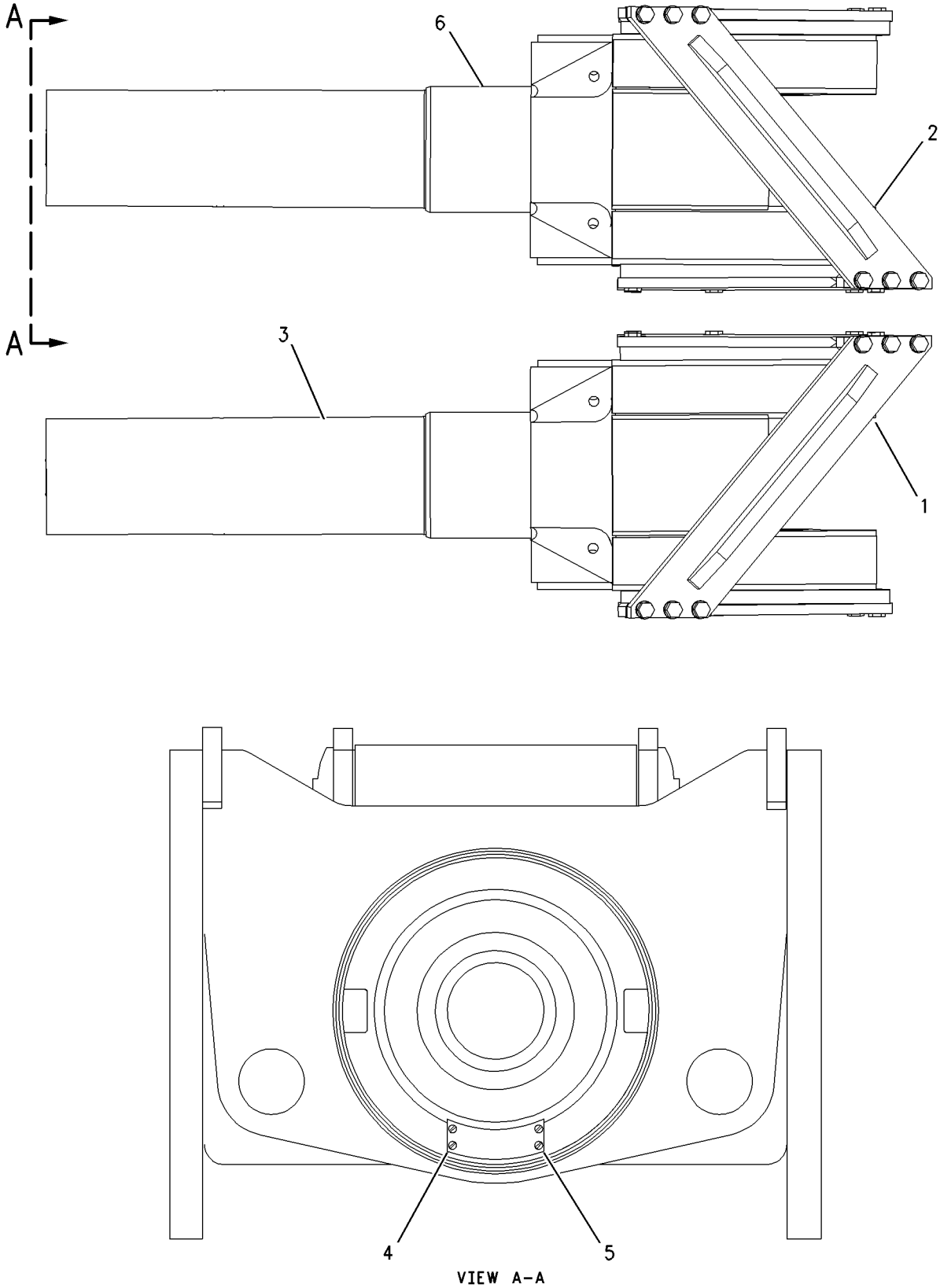

GRAPHIC #1 g00806339

1Q-3458 BAR GP-STRIKER

S/N: AKT1-UP
PART OF 163-1101 BAR AR-STRIKER
AN ATTACHMENT

SMCS-7180 **i01700872**

NOTE	REF NO	GRAPHIC REF	PART NUMBER	QTY	PART NAME 1 2 3 4 5 6 (PRODUCT LEVEL)	SEE PAGE
	1	1	**7X-0422**	6	BOLT (1-1/8-7 THD)	
	2	1	**1Q-3463**	1	PLATE AS	
	3	1	**1Q-3467**	1	PLATE AS	
	4	1	**7X-0531**	16	WASHER-HARD (31X52.5X6MM THK)	
	5	1	**7X-0420**	10	BOLT	
	6	1	**1Q-3462**	1	PLATE AS	

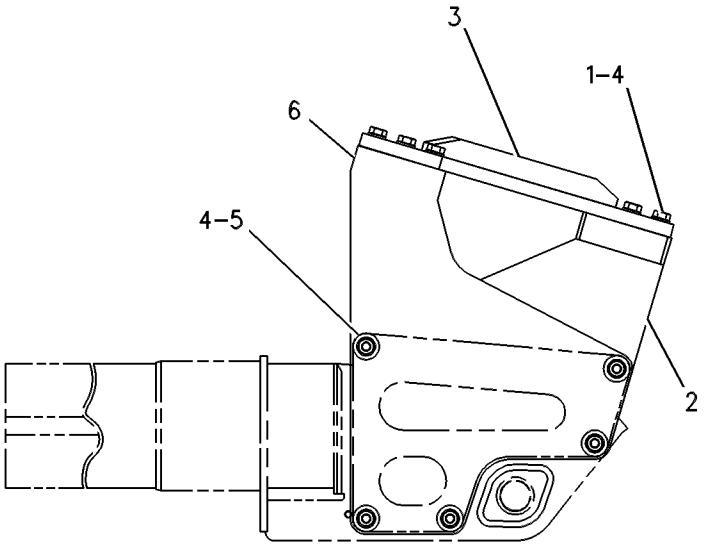

RIGHT SIDE VIEW

GRAPHIC #1 g00350324

UNDERCARRIAGE

1Q-3468 BAR GP-STRIKER

S/N: AKT1-UP
PART OF 163-1101 BAR AR-STRIKER
AN ATTACHMENT

SMCS-7180 **i01700888**

NOTE	REF NO	GRAPHIC REF	PART NUMBER	QTY	PART NAME 1 2 3 4 5 6 (PRODUCT LEVEL)	SEE PAGE
	1	1	**1Q-3465**	1	PLATE AS	
	2	1	**1Q-3466**	1	PLATE AS	
	3	1	**1Q-3453**	1	PLATE AS	
	4	1	**7X-0531**	16	WASHER-HARD (31X52.5X6MM THK)	
	5	1	**7X-0422**	6	BOLT (1-1/8-7 THD)	
	6	1	**7X-0420**	10	BOLT (1-1/8-7 IN)	

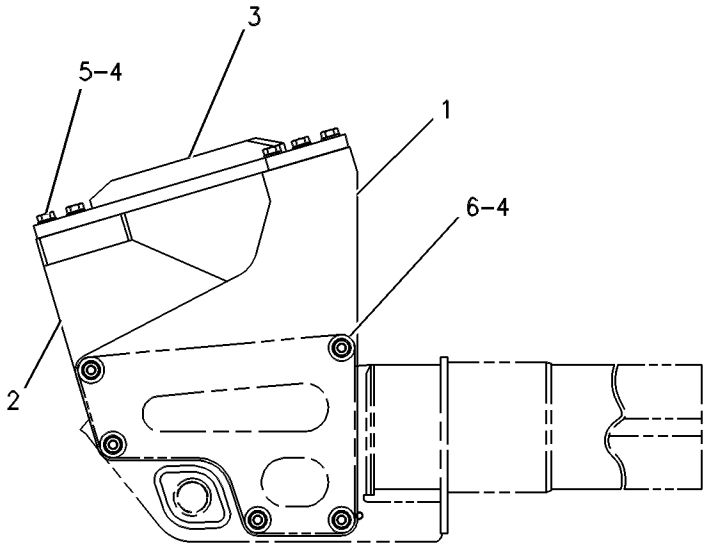

LEFT SIDE VIEW

GRAPHIC #1 g00262996

127-3446 CAP GP-TRACK IDLER

S/N: AKT1-UP

PART OF 171-5809 UNDERCARRIAGE AR

SMCS-4159 **i01700899**

NOTE	REF NO	GRAPHIC REF	PART NUMBER	QTY	PART NAME 1 2 3 4 5 6 (PRODUCT LEVEL)	SEE PAGE
	1	1	**127-3445**	1	CAP AS-TRACK IDLER	
		1	**1T-0068**	1	PIN-SPRING	
	2	1	**4K-0684**	3	WASHER-HARD (34X55X6MM THK)	
	3	1	**9W-4488**	3	BOLT (1-1/4X7 UNJC THD)	

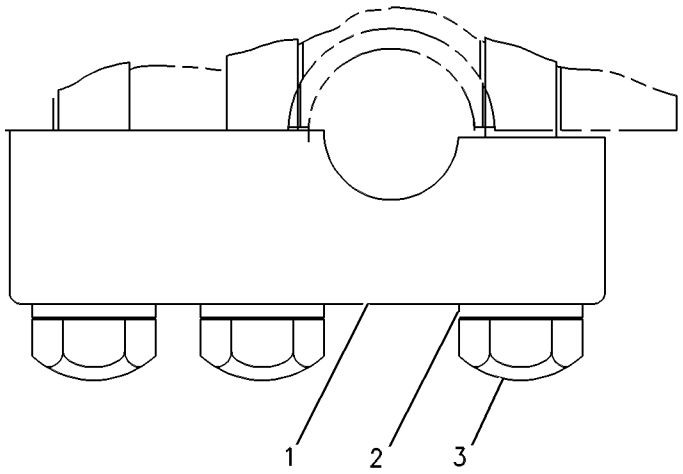

GRAPHIC #1 g00252790

128-3504 CAP GP-TRACK IDLER

S/N: AKT1-UP

PART OF 171-5809 UNDERCARRIAGE AR

SMCS-4159 **i01700945**

NOTE	REF NO	GRAPHIC REF	PART NUMBER	QTY	PART NAME 1 2 3 4 5 6 (PRODUCT LEVEL)	SEE PAGE
	1	1	**128-3503**	1	CAP AS-TRACK IDLER	
		1	**1T-0068**	1	PIN-SPRING	
	2	1	**4K-0684**	3	WASHER-HARD (34X55X6MM THK)	
	3	1	**9W-4488**	3	BOLT (1-1/4X7 UNJC THD)	

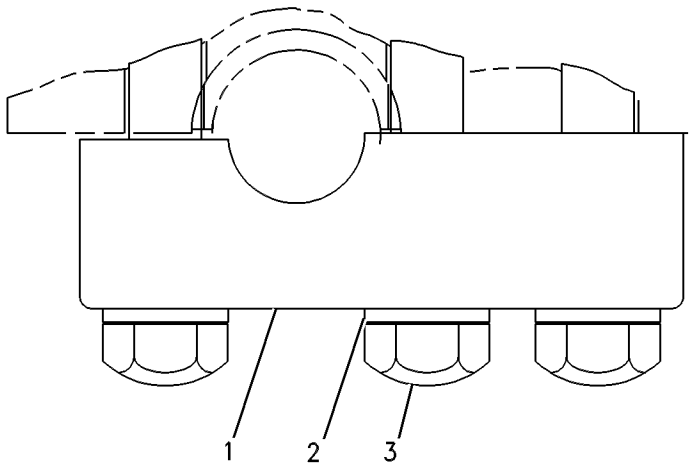

GRAPHIC #1 g00252785

6T-1141 CAP GP-TRACK ROLLER

S/N: AKT1-UP

PART OF 171-5809 UNDERCARRIAGE AR

SMCS-4180 **i01700948**

NOTE	REF NO	GRAPHIC REF	PART NUMBER	QTY	PART NAME 1 2 3 4 5 6 (PRODUCT LEVEL)	SEE PAGE
	1	1	**131-1650**	1	CAP AS-TRACK ROLLER	
	2	1	**1T-0068**	1	PIN-SPRING	
	3	1	**6T-1139**	2	BOLT-ROLLER MOUNTING (1-8X3.8 UNJC THD)	
		1	**3K-5234**	2	WASHER-HARD (28X49X6MM THK)	

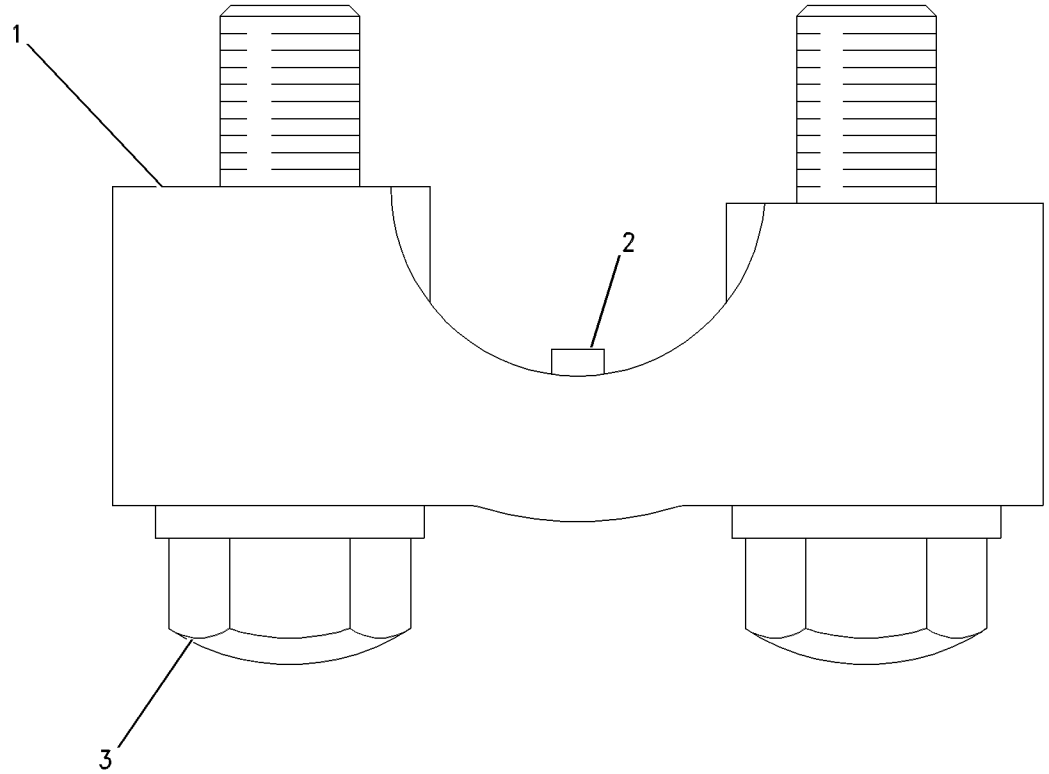

GRAPHIC #1 g00546453

161-9227 EQUALIZER BAR AS

S/N: AKT1-UP

PART OF 160-2540 EQUALIZER BAR GP

SMCS-7206, 7207, 7210 **i01666324**

NOTE	REF NO	GRAPHIC REF	PART NUMBER	QTY	PART NAME 1 2 3 4 5 6 (PRODUCT LEVEL)	SEE PAGE
	1	1	**7J-3296**	4	LOCK RING	
	2	1	**8P-9142**	1	SEAL	
	3	1	**9G-2398**	1	SEAL	
	4	1	**9X-7500**	4	SEAL AS	
	5	1	**127-0843**	2	BEARING-SLEEVE	
	6	1	**153-1370**	2	BEARING-SELF ALIGNING	

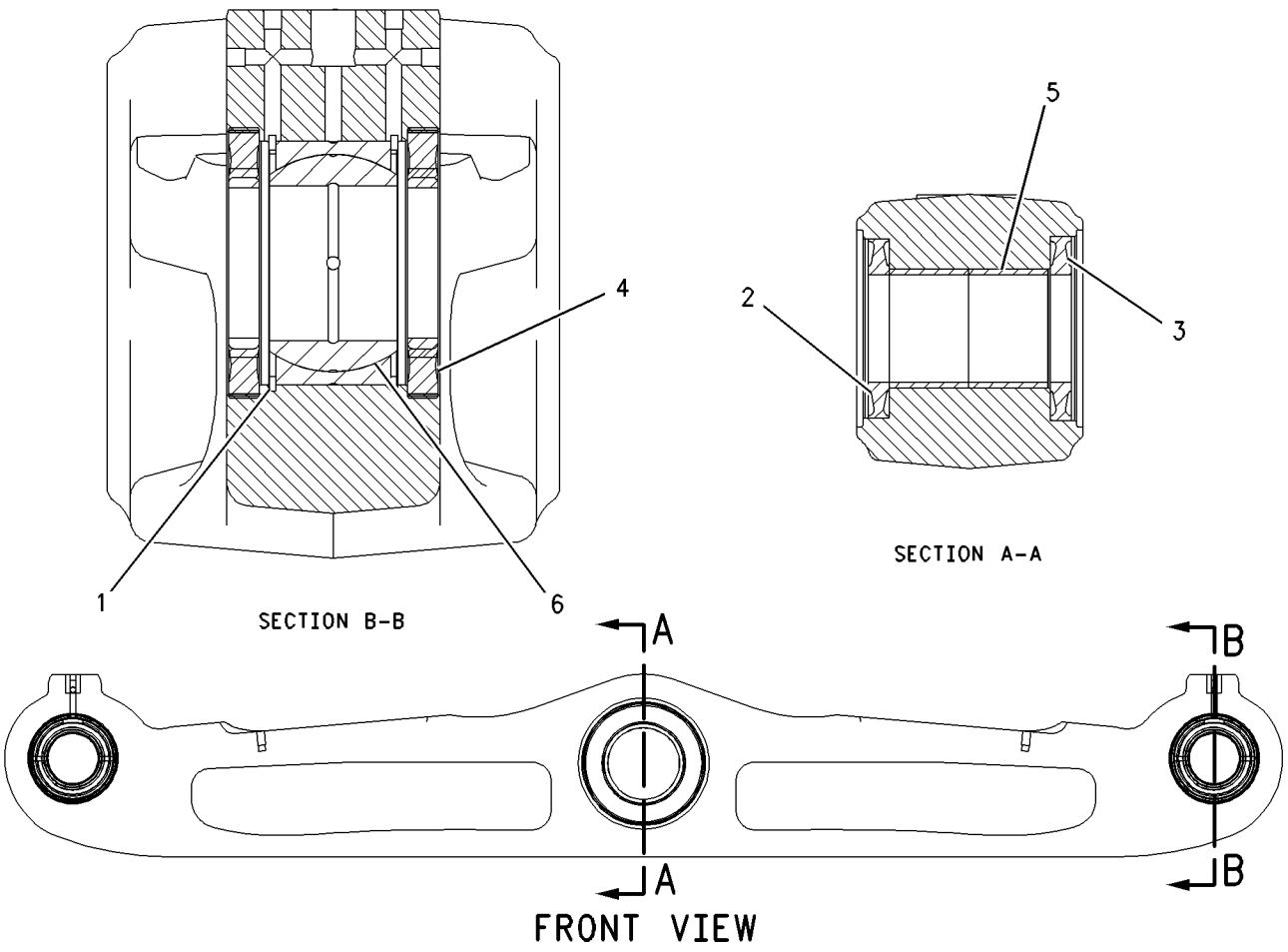

GRAPHIC #1 g00753511

UNDERCARRIAGE

160-2540 EQUALIZER BAR GP

S/N: AKT1-UP

PART OF 171-5809 UNDERCARRIAGE AR

SMCS-7206, 7207, 7210 **i01666320**

NOTE	REF NO	GRAPHIC REF	PART NUMBER	QTY	PART NAME 1 2 3 4 5 6 (PRODUCT LEVEL)	SEE PAGE
	1	1	**2H-3745**	2	BOLT (1-14X2.75 IN)	
	2	1	**3B-8489**	2	FITTING-GREASE (1/8-27 THD)	
	3	1	**3J-4278**	4	SPACER (13.5X22.2X6.5)	
	4	1	**7F-6112**	1	BOLT (1 1/4-12X3 IN)	
	5	1	**213-7322**	2	PAD AS	
	6	1	**7G-2704**	2	PAD AS	
	7	1	**8P-9382**	1	PIN	
	8	1	**9G-2401**	2	WASHER (117X206X1MM THK)	
	9	1	**209-3186**	1	MANIFOLD	
	10	1	**133-5631**	2	PLUG	
	11	1	**8T-5361**	2	WASHER-HARD (28X49X5MM THK)	
	12	1	**2F-5326**	8	SETSCREW (3/8-16X.37 IN)	
	13	1	**2M-3530**	4	BOLT (1-1/8-12 THD)	
	14	1	**3S-1356**	4	NUT-FULL (1-1/8-12 THD)	
	15	1	**3T-4214**	2	PIN	
	16	1	**5C-6565**	12	BOLT (1/2-13X1.125 IN)	
	17	1	**5F-1678**	2	SEAL-O-RING	
	18	1	**7X-0531**	8	WASHER-HARD (31X52.5X6MM THK)	
	19	1	**7X-0533**	1	WASHER-HARD (34X55X6MM THK)	
	20	1	**7X-0590**	4	WASHER-HARD (13.5X44.5X6MM THK)	
	21	1	**8T-4223**	8	WASHER-HARD (13.5X25.5X3MM THK)	
Y	22	1	*161-9227*	1	EQUALIZER BAR AS	429

Y-SEPARATE ILLUSTRATION

160-2540 **EQUALIZER BAR GP** *(contd.)* **i01666320**

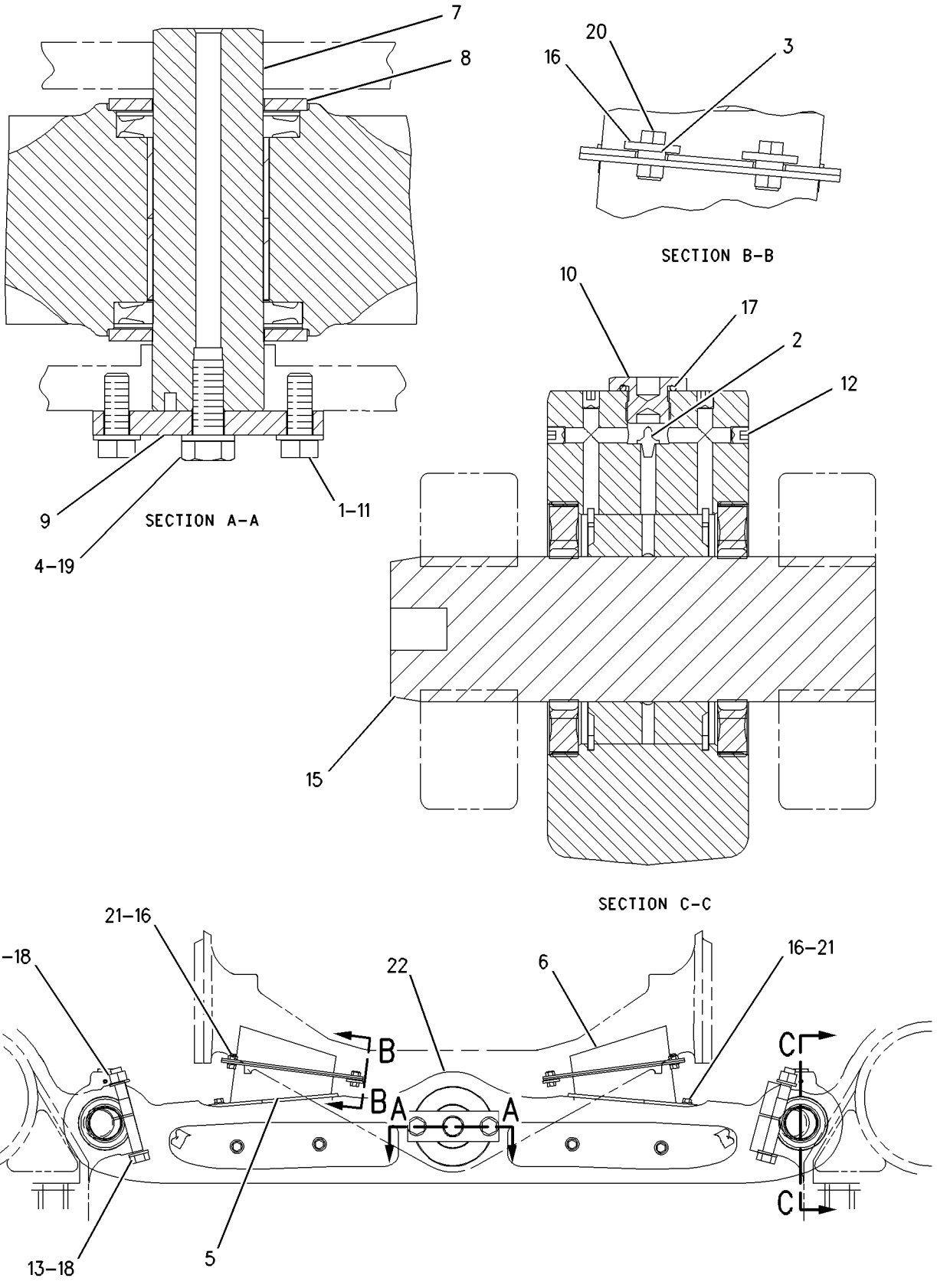

GRAPHIC #1 g00863079

UNDERCARRIAGE

207-2682 EQUALIZER BAR GP

S/N: AKT1-UP

SMCS-7206, 7207, 7210 **i01614905**

NOTE	REF NO	GRAPHIC REF	PART NUMBER	QTY	PART NAME 1 2 3 4 5 6 (PRODUCT LEVEL)	SEE PAGE
	1	1	**3B-8489**	2	FITTING-GREASE (1/8-27 THD)	
	2	1	**7J-3296**	4	LOCK RING	
	3	1	**8P-9142**	1	SEAL	
	4	1	**9G-2398**	1	SEAL	
	5	1	**9X-7500**	4	SEAL AS	
	6	1	**127-0843**	2	BEARING-SLEEVE	
	7	1	**133-5631**	2	PLUG	
	8	1	**153-1370**	2	BEARING-SELF ALIGNING	
	9	1	**9S-8002**	2	PLUG	
	10	1	**2F-5326**	8	SETSCREW	
	11	1	**3J-7354**	2	SEAL-O-RING	
	12	1	**5F-1678**	2	SEAL-O-RING	
	13	1	**7X-0323**	4	BOLT	
	14	1	**8T-4223**	4	WASHER-HARD (13.5X25.5X3MM THK)	

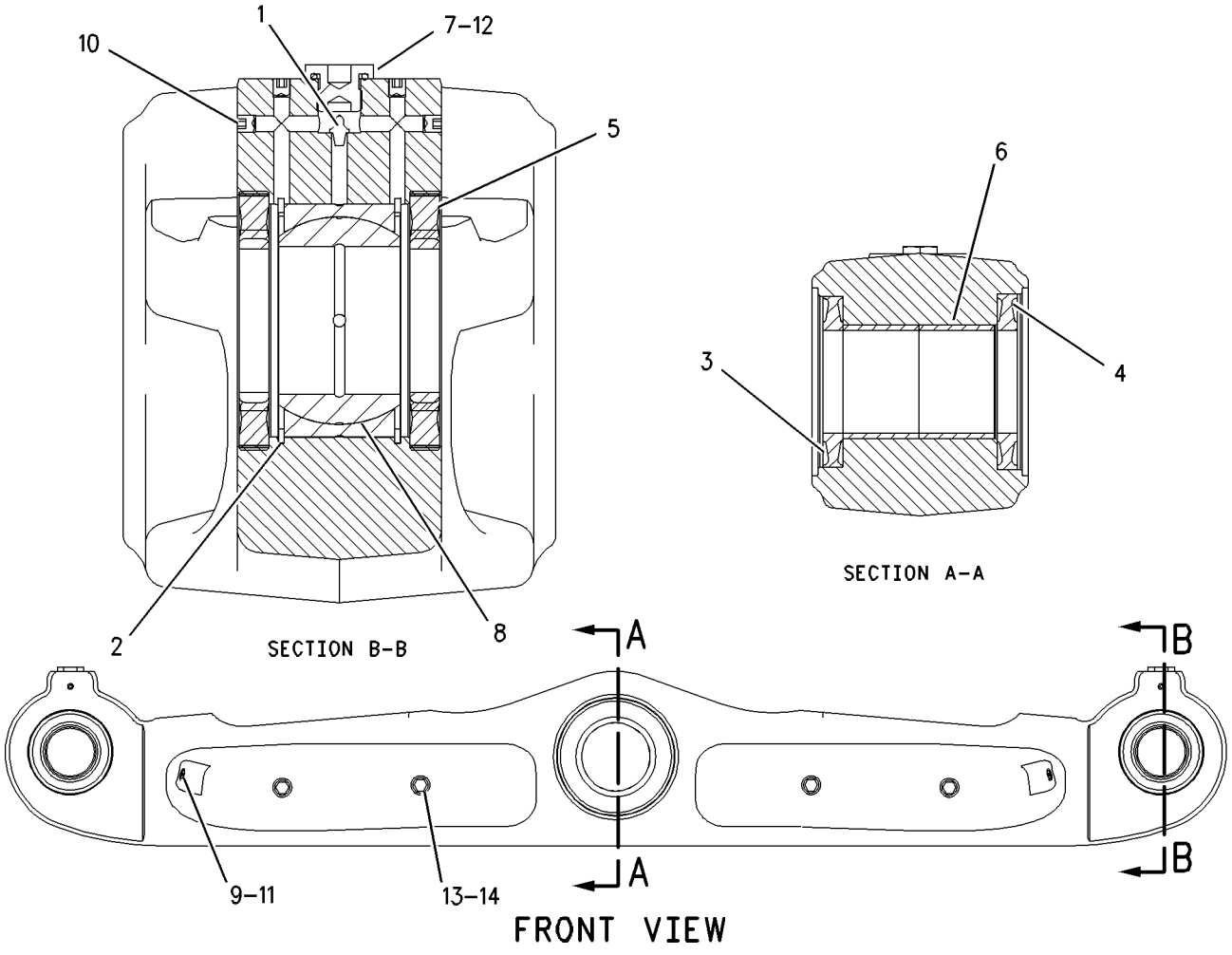

GRAPHIC #1 g00849488

MEMORANDA

UNDERCARRIAGE

196-8562 FRAME GP-TELESCOPING RECOIL

S/N: AKT1-UP

PART OF 171-5809 UNDERCARRIAGE AR

SMCS-4151 **i01700958**

NOTE	REF NO	GRAPHIC REF	PART NUMBER	QTY	PART NAME 1 2 3 4 5 6 (PRODUCT LEVEL)	SEE PAGE
	1	1	**187-6289**	2	FRAME AS-FRONT	
					(EACH INCLUDES)	
		1	**7X-0342**	3	BOLT (5/8-11X0.74 IN)	
		1	**7G-1958**	1	BEARING-SLEEVE	
		1	**6V-0709**	1	PLATE-WARNING (RECOIL SPRING)	
		1	**4B-4158**	4	SCREW-DRIVE (3/16X0.25 IN)	
		1	**8T-4122**	3	WASHER-HARD (17X32X3.5MM THK)	
	2	1	**147-5353**	1	FRAME AS (LH)	
	3	1	**147-5352**	1	FRAME AS (RH)	
					(EACH FRAME AS INCLUDES)	
		1	**7X-0342**	9	BOLT (5/8-11X0.74 IN)	
		1	**8T-4122**	9	WASHER-HARD (17X32X3.5MM THK)	
		1	**7T-3877**	1	HOOK	
	4	1	**7T-8006**	2	RING-RETAINING	
	5	1	**9X-4588**	2	SEAL AS	
	6	1	**7G-1952**	2	BEARING	
	7	1	**4T-2069**	6	PLUG-DRAIN	
	8	1	**2H-3932**	6	SEAL-O-RING	
	9	1	**9G-7516**	32	PLUG	
	10	1	**9W-5575**	2	COVER AS	
					(EACH INCLUDES)	
	11	1	**5P-7179**	2	PLATE-WARNING (RECOIL SPRING OIL)	
		1	**9N-1995**	6	RIVET-POP	
		1	**3H-9675**	1	PIN-SPRING	
	12	1	**5H-6734**	2	SEAL-O-RING	
	13	1	**8T-8917**	8	BOLT (1/2-13X1.25 IN)	
	14	1	**8T-4223**	24	WASHER-HARD (13.5X25.5X3MM THK)	
	15	1	**7T-4129**	4	GUIDE	
					(EACH INCLUDES)	
	16	1	**6V-9481**	1	FILM-WARNING	
	17	1	**6V-8849**	24	BOLT-12 POINT HEAD (3/4-10X3 IN)	
	18	1	**7T-4132**	2	RING-THRUST	
	19	1	**8T-9389**	16	BOLT (1/2-13X2.75 IN)	
	20	1	**7T-4133**	2	PLATE-THRUST	
	21	1	**8T-0208**	2	SEAL-PIVOT SHAFT	
	22	1	**4D-4508**	2	SEAL-O-RING	
	23	1	**9W-2380**	2	RETAINER	
	24	1	**7T-4134**	2	BEARING-SLEEVE	
	25	1	**7G-9709**	2	BEARING-SLEEVE	
	26	1	**8E-2901**	2	PLATE-THRUST	
	27	1	**9M-5894**	2	SEAL-O-RING	
	28	1	**1P-9254**	2	RING-RETAINING	
	29	1	**9S-4185**	2	PLUG	
	30	1	**3K-0360**	2	SEAL-O-RING	
	31	1	**8E-2902**	2	PLATE-THRUST	
	32	1	**7X-0345**	40	BOLT (5/8-11X1.75 IN)	
		1	**8T-4122**	40	WASHER-HARD (17X32X3.5MM THK)	
	33	1	**5P-3092**	4	SEAL-O-RING	
	34	1	**7T-4131**	4	COVER	
	35	1	**7T-4145**	2	SLEEVE	
	36	1	**8E-2900**	1	SHAFT-PIVOT	
C	37	1	**8E-2827**	2	RING-RETAINING	

C-CHANGE FROM PREVIOUS TYPE

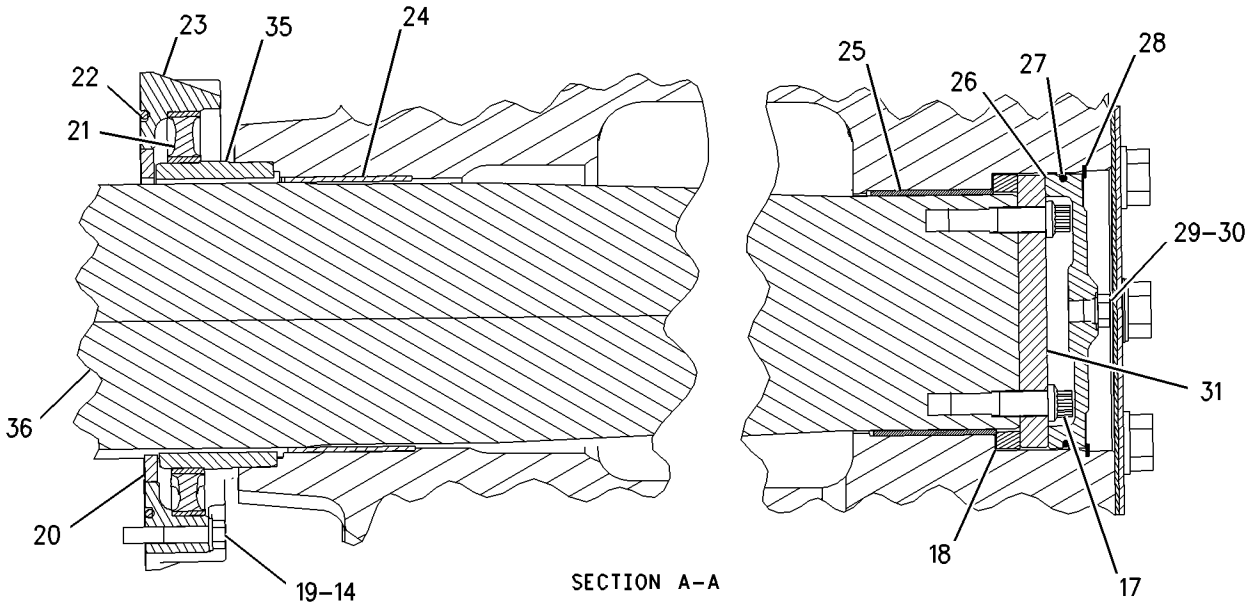

SECTION A-A

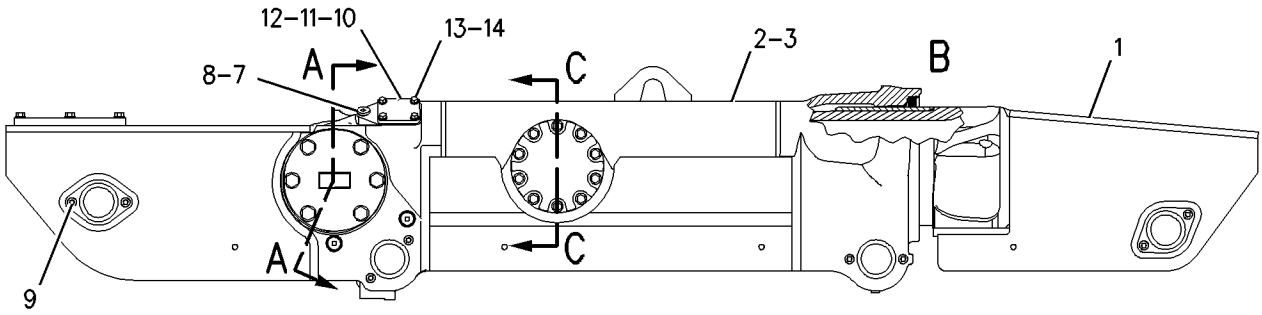

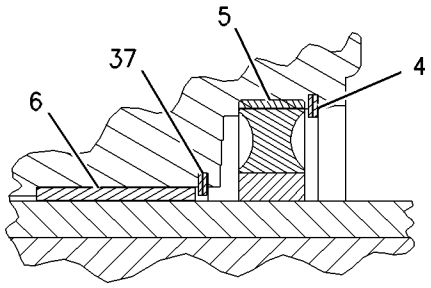

VIEW OF AREA B

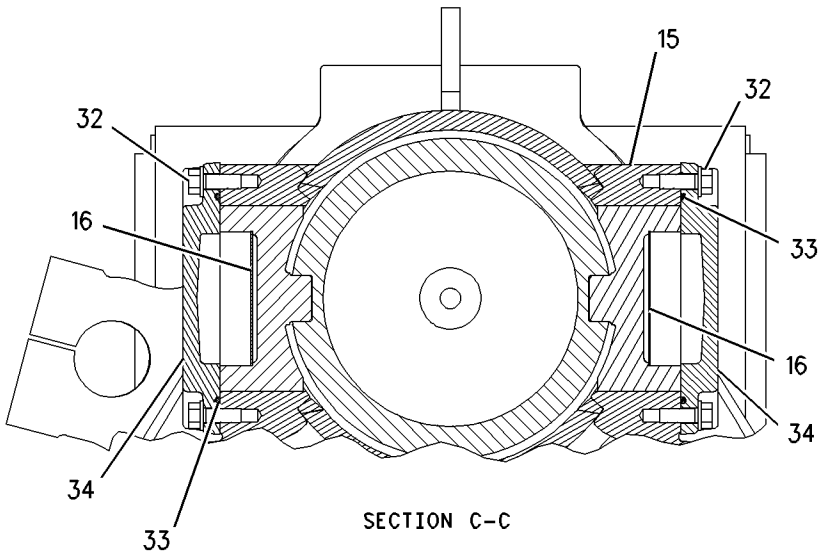

SECTION C-C

GRAPHIC #1

g00815114

107-9617 IDLER GP-TRACK

S/N: AKT1-UP
PART OF 130-9719 ARCTIC AR
AN ATTACHMENT

SMCS-4159 **i01700962**

NOTE	REF NO	GRAPHIC REF	PART NUMBER	QTY	PART NAME 1 2 3 4 5 6 (PRODUCT LEVEL)	SEE PAGE
	1	1	**7T-0961**	1	IDLER & BEARING AS	
		1	**9W-4194**	2	BEARING-SLEEVE	
	2	1	**142-2805**	2	RETAINER AS	
					(EACH INCLUDES)	
		1	**2H-1190**	4	DOWEL	
		1	**8P-4661**	1	WASHER-THRUST	
	3	1	**107-9620**	2	COLLAR-SEAL	
	4	1	**154-3308**	1	SHAFT-TRACK IDLER	
	5	1	**9G-4872**	1	STOPPER-RUBBER	
	6	1	**7R-8872**	2	SEAL-O-RING	
	7	1	**107-9621**	2	SEAL GP-DUO-CONE	
					(EACH INCLUDES)	
		1	**8S-5653**	2	RING-SEALING	
	8	1	**3H-7654**	24	WASHER-HARD (13.5X22.5X3MM THK)	
	9	1	**4K-5175**	24	BOLT-12 POINT HEAD (1/2-13X1.5 IN)	
	10	1	**8F-8733**	2	SEAL-O-RING	
	11	1	**6Y-0473**	1	PLUG-CLEAR	

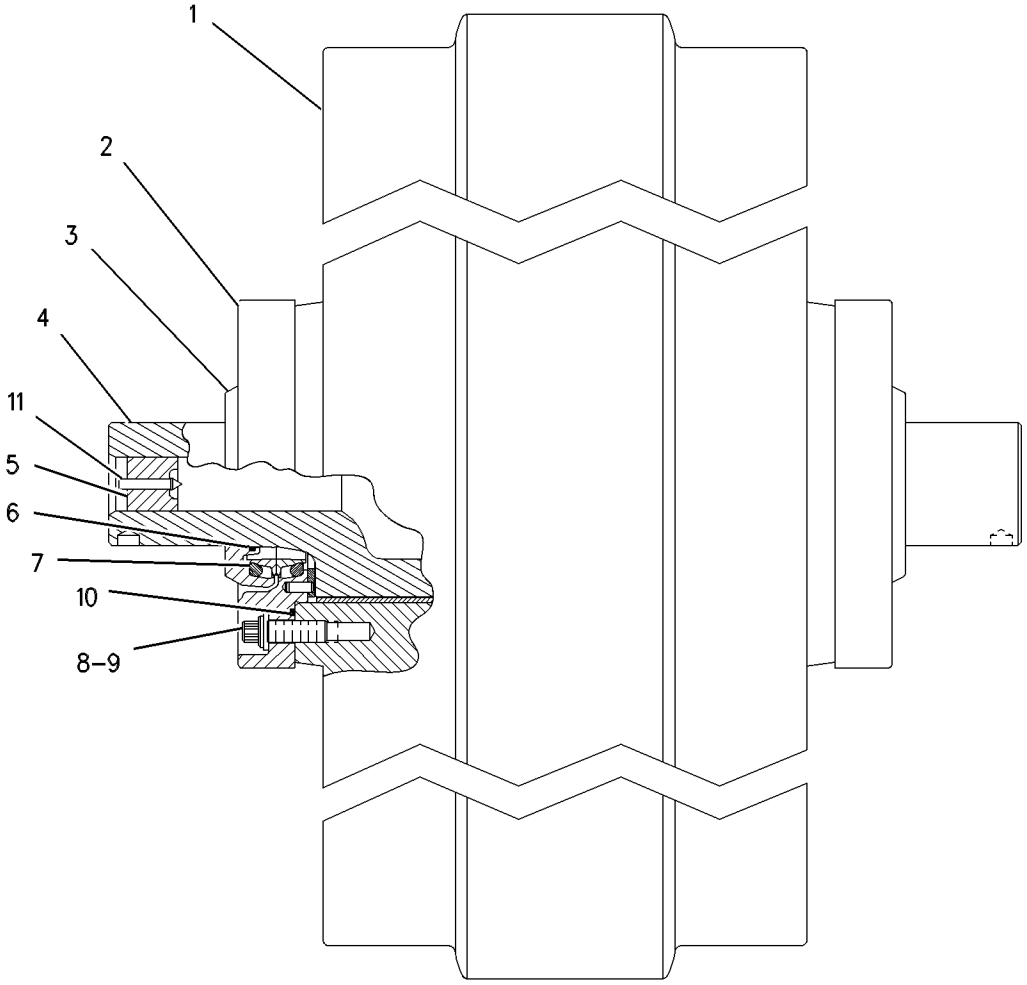

GRAPHIC #1 g00344478

UNDERCARRIAGE

125-3537 IDLER GP-TRACK

S/N: AKT1-UP

PART OF 171-5809 UNDERCARRIAGE AR

SMCS-4159 **i01700964**

NOTE	REF NO	GRAPHIC REF	PART NUMBER	QTY	PART NAME 1 2 3 4 5 6 (PRODUCT LEVEL)	SEE PAGE
	1	1	**7T-0961**	1	IDLER & BEARING AS	
		1	**9W-4194**	2	BEARING-SLEEVE	
	2	1	**142-2805**	2	RETAINER AS	
		1	**2H-1190**	4	DOWEL	
		1	**8P-4661**	1	WASHER-THRUST	
	3	1	**107-9620**	2	COLLAR-SEAL	
	4	1	**154-3308**	1	SHAFT-TRACK IDLER	
	5	1	**9G-4872**	1	STOPPER-RUBBER	
	6	1	**7R-8872**	2	SEAL-O-RING	
	7	1	**162-7864**	2	SEAL GP-DUO-CONE	
					(EACH INCLUDES)	
		1	**162-2168**	2	RING-TORIC	
	8	1	**3H-7654**	24	WASHER-HARD (13.5X22.5X3MM THK)	
	9	1	**4K-5175**	24	BOLT-12 POINT HEAD (1/2-13X1.5 IN)	
	10	1	**8F-8733**	2	SEAL-O-RING	
	11	1	**6Y-0473**	1	PLUG-CLEAR	

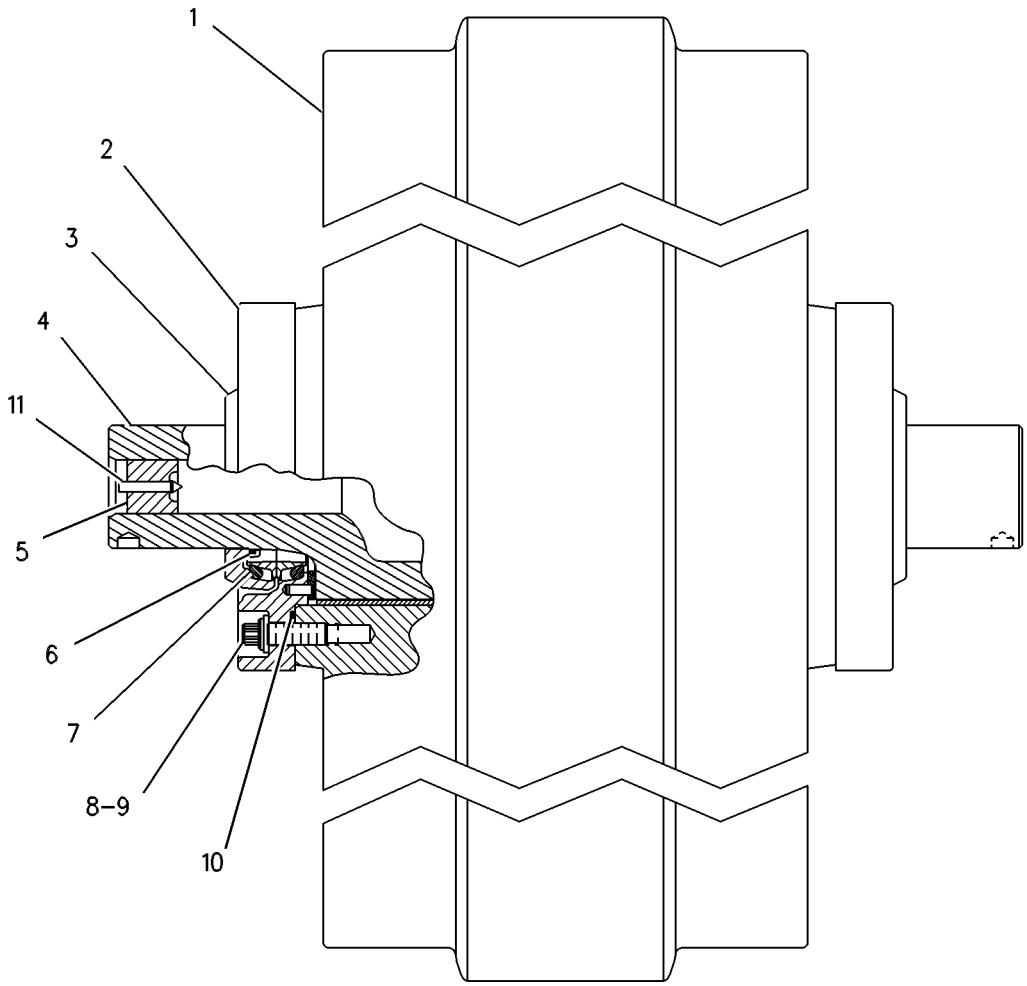

GRAPHIC #1 g00276866

8E-7928 LINK AS-TRACK

S/N: AKT1-UP
SEALED & LUBRICATED-POSITIVE PIN RETENTION
PART OF 7T-0723, 7T-4606, 7T-4608 TRACK GP
ALSO AN ATTACHMENT

SMCS-4169, 4171 **i01701113**

NOTE	REF NO	GRAPHIC REF	PART NUMBER	QTY	PART NAME 1 2 3 4 5 6 (PRODUCT LEVEL)	SEE PAGE
	1	1	**6Y-0473**	44	PLUG-CLEAR	
	2	1	**7G-4332**	44	STOPPER	
	3	1	**9W-9300**	88	RING-THRUST	
	4	1	**9U-8537**	88	SEAL AS	
	5	1	**7T-0715**	43	LINK-TRACK (RH)	
	6	1	**7T-0716**	43	LINK-TRACK (LH)	
	7	1	**7T-0719**	1	LINK-MASTER-RH (BUSHING-END)	
	8	1	**7T-0720**	1	LINK-MASTER-LH (BUSHING-END)	
	9	1	**7T-0718**	1	LINK-MASTER-LH (PIN-END)	
	10	1	**7T-0717**	1	LINK-MASTER-RH (PIN-END)	
	11	1	**6Y-2057**	44	BUSHING-TRACK	
	12	1	**6Y-1579**	44	PIN-TRACK	
	13	1	**7T-0998**	2	BOLT-TRACK (1 1/8-12X6.46 IN)	
	14	1	**7T-0999**	2	BOLT-TRACK (1 1/8-12X5.28 IN)	
	15	1	**6Y-0471**	88	RING-RETAINING	

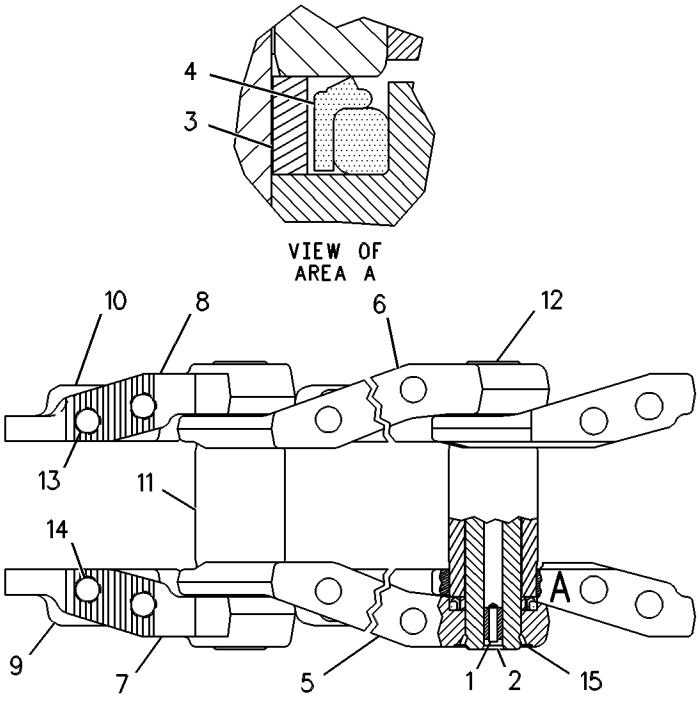

GRAPHIC #1 g00247796

MEMORANDA

UNDERCARRIAGE

210-4719 LUBRICATION GP-EQUALIZER BAR

S/N: AKT1-UP

PART OF 171-5801 CHASSIS AR

SMCS-7206 **i01690639**

NOTE	REF NO	GRAPHIC REF	PART NUMBER	QTY	PART NAME 1 2 3 4 5 6 (PRODUCT LEVEL)	SEE PAGE
	1	1	**2V-9923**	4	SPACER (.50X.75X1.06IN THK)	
M	2	1	**5C-9553**	4	BOLT (M6X1X16MM)	
	3	1	**5L-2952**	1	CAP AS-OIL FILLER	
		1	**6L-2609**	1	SEAL-RUBBER	
	4	1	**210-4720**	1	PLATE	
	5	1	**210-4721**	1	PLATE	
	6	1	**210-4723**	2	HOSE AS	
I	7	1	**210-4722**	1	HOSE AS	
I	8	1	**210-4726**	1	HOSE AS	
	9	1	**210-8580**	1	TANK AS-LUBRICATION	
		1	**2T-2305**	2	ELBOW	
		1	**6W-5698**	1	GROMMET	
		1	**198-7711**	1	BREATHER	
	10	1	**211-0243**	1	PLATE	
	11	1	**4J-5477**	2	SEAL-O-RING	
	12	1	*148-8326*	2	CONNECTOR GP	
					(EACH INCLUDES)	
		1	**3J-7354**	1	SEAL-O-RING	
		1	**6V-8397**	1	SEAL-O-RING	
		1	**6V-9872**	1	CONNECTOR	
	13	1	*148-8385*	2	ELBOW GP	
					(EACH INCLUDES)	
		1	**3J-7354**	1	SEAL-O-RING	
		1	**4J-5477**	1	SEAL-O-RING	
		1	**6V-9000**	1	ELBOW	
	14	1	**7I-8663**	2	CONNECTOR	
	15	1	**3D-0472**	4	STUD-TAPERLOCK	
	16	1	**4D-7733**	5	CLIP	
	17	1	**9X-8256**	4	WASHER (6.6X12X2MM THK)	
	18	1	**8T-4896**	8	WASHER-HARD (10.2X18.5X2.5MM THK)	
	19	1	**4L-6454**	4	BOLT (3/8-16X1 IN)	
	20	1	**5M-3062**	4	BOLT (3/8-16X0.75 IN)	
	21	1	**6S-5993**	4	CLIP	
	22	1	**6V-8188**	4	NUT (1/2-13 THD)	
	23	1	**6V-8397**	2	SEAL-O-RING	
	24	1	**8T-4223**	4	WASHER-HARD (13.5X25.5X3MM THK)	
	25	1	**3J-7354**	2	SEAL-O-RING	

I-SEE HOSE FABRICATION GUIDE
M-METRIC PART

210-4719 **LUBRICATION GP-EQUALIZER BAR** ***(contd.)*** **i01690639**

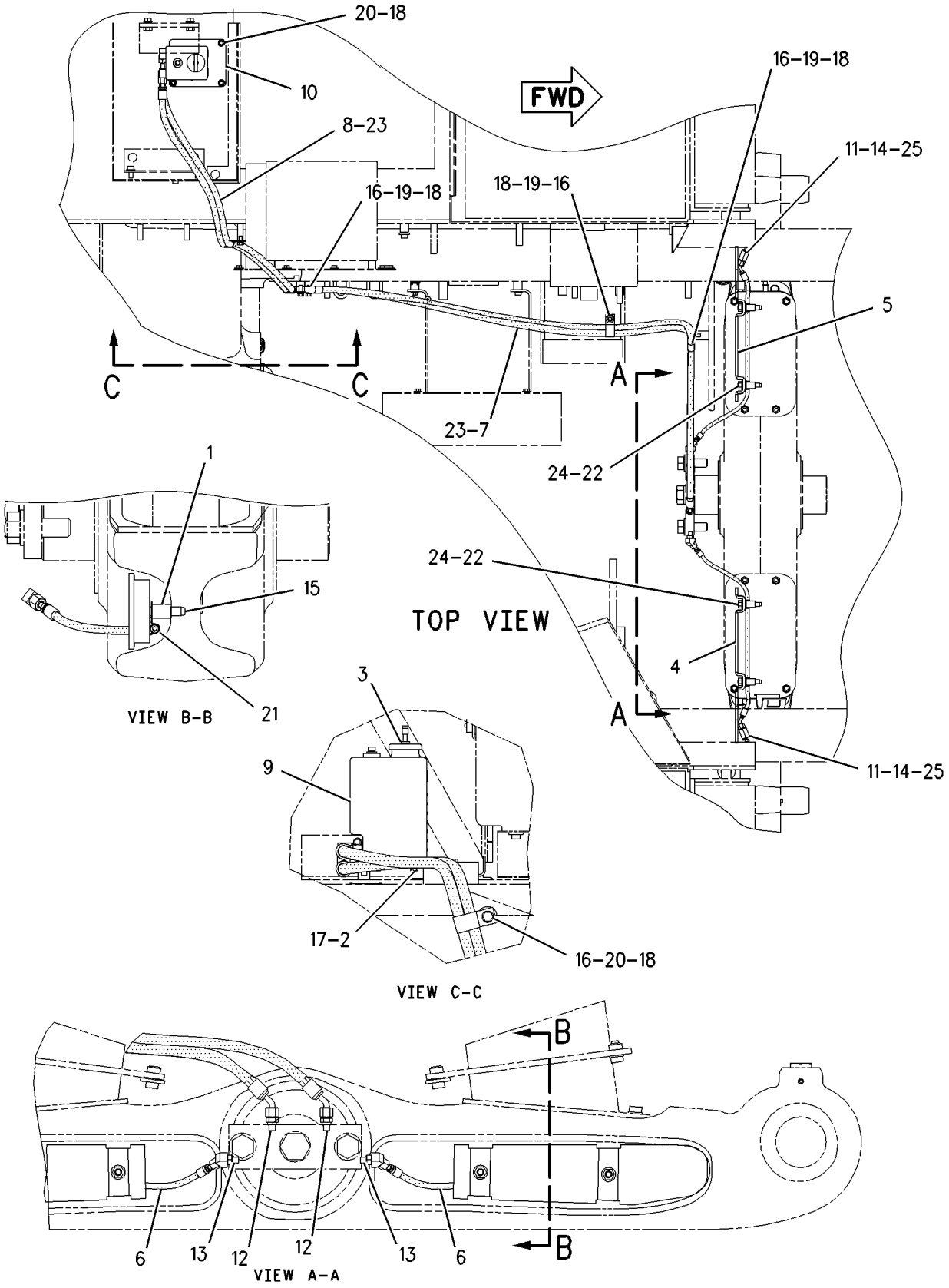

GRAPHIC #1

g00871588

177-8016 LUBRICATION GP-PIVOT SHAFT

S/N: AKT1-UP

PART OF 171-5801 CHASSIS AR

SMCS-3286 **i01435904**

NOTE	REF NO	GRAPHIC REF	PART NUMBER	QTY	PART NAME 1 2 3 4 5 6 (PRODUCT LEVEL)	SEE PAGE
	1	1	**6V-6757**	1	ELBOW-PIPE	
	2	1	**9M-5733**	1	RIVET-POP (4.78MM DIA)	
	3	1	**9U-9409**	1	BOTTLE	
	5	1	**9W-1694**	2	PAD	
	6	1	**9W-8277**	1	CAP AS-OIL LEVEL	
I	7	1	**179-2125**	1	HOSE AS	
	8	1	**179-2129**	1	PLATE AS	
		1	**6J-0499**	1	LUG (1/2-13 THD)	
	9	1	*148-8341*	1	CONNECTOR GP	
		1	**3D-2824**	1	SEAL-O-RING	
		1	**6V-8713**	1	CONNECTOR	
		1	**7J-9108**	1	SEAL-O-RING	
	10	1	*150-4048*	1	ELBOW GP	
		1	**3K-0360**	1	SEAL-O-RING	
		1	**6V-8722**	1	ELBOW	
		1	**7J-9108**	1	SEAL-O-RING	
	11	1	**4B-4274**	1	WASHER (5.5X13X1.2MM THK)	
	12	1	**5P-1075**	2	WASHER-HARD (10.2X22.5X3MM THK)	
	13	1	**5S-7379**	2	BOLT (3/8-16X0.875 IN)	
	14	1	**7X-0326**	1	BOLT (1/2-13X3 IN)	
	15	1	**8T-4223**	1	WASHER-HARD (13.5X25.5X3MM THK)	
	16	1	**8T-7529**	1	CLIP	
E	17	1	**144-0195**		HOSE (24CM)	

E-ORDER BY THE CENTIMETER
I-SEE HOSE FABRICATION GUIDE

177-8016 **LUBRICATION GP-PIVOT SHAFT** ***(contd.)*** **i01435904**

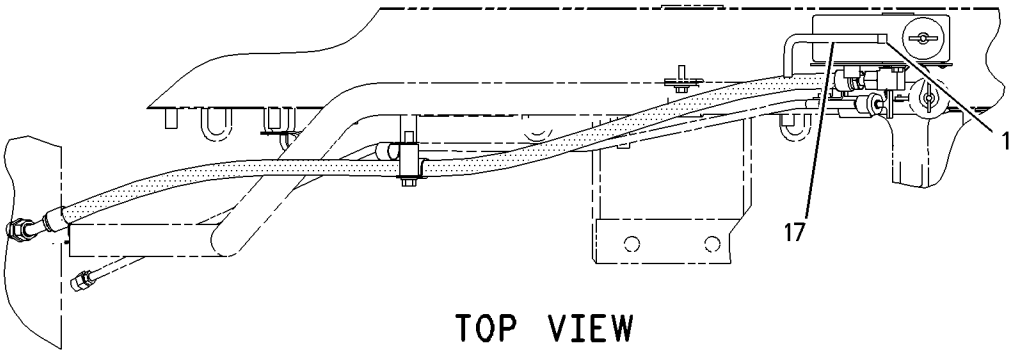

TOP VIEW

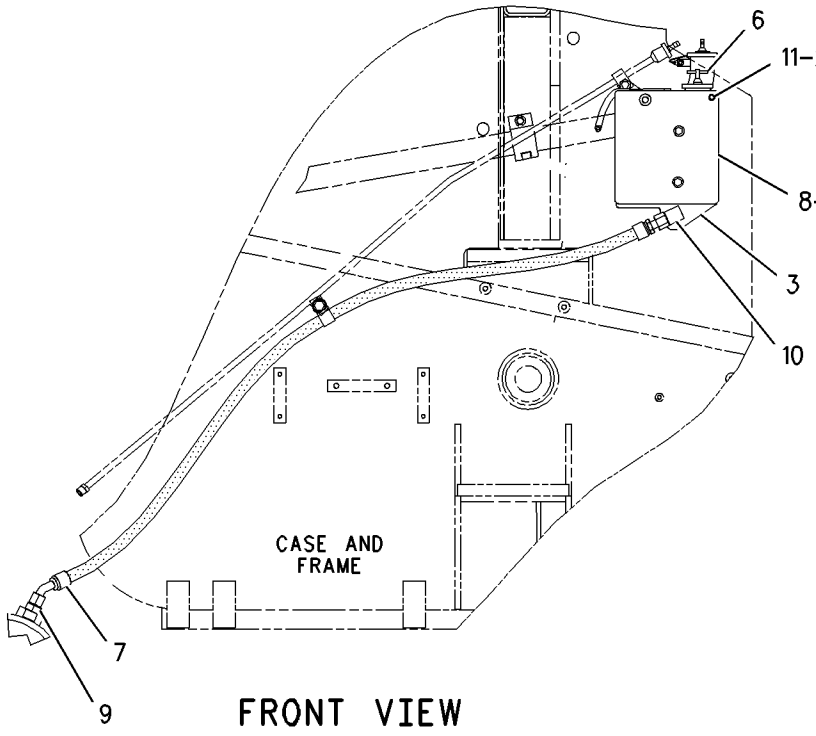

FRONT VIEW

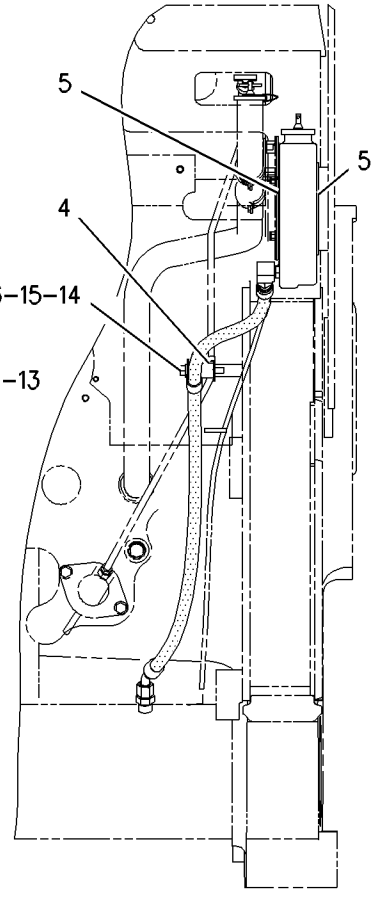

RIGHT SIDE VIEW

GRAPHIC #1 g00812480

UNDERCARRIAGE

172-1641 ROLLER AR-TRACK CARRIER

S/N: AKT1-UP
AN ATTACHMENT

SMCS-4154 **i01459885**

NOTE	PART NUMBER	QTY	PART NAME 1 2 3 4 5 6 (PRODUCT LEVEL)	SEE PAGE
Y	**195-5855**	2	ROLLER GP-TRACK-SINGLE FLANGE	447
	7X-0405	16	BOLT (1-8X2.75 IN)	
	7X-0444	8	BOLT (1-8X6.5 IN)	
	6T-4965	4	CAP-ROLLER IDLER	
	172-1643	1	FRAME AS-REAR (LH)	
	172-1642	1	FRAME AS-RH	
	1Q-3739	2	PLATE AS	
	1Q-3740	2	PLATE AS	
	6T-4964	4	CAP AS-TRACK ROLLER	
	1T-0068	1	PIN-SPRING	
	6T-4965	1	CAP-ROLLER IDLER	
	8T-5361	24	WASHER-HARD (28X49X5MM THK)	

Y-SEPARATE ILLUSTRATION

195-5856 ROLLER GP-TRACK-DOUBLE FLANGE

S/N: AKT1-UP

PART OF 171-5809 UNDERCARRIAGE AR

SMCS-4180 **i01436496**

NOTE	REF NO	GRAPHIC REF	PART NUMBER	QTY	PART NAME 1 2 3 4 5 6 (PRODUCT LEVEL)	SEE PAGE
	1	1	**5P-8245**	12	WASHER-HARD (13.5X25.5X3MM THK)	
	2	1	**8E-6619**	2	WASHER-THRUST	
	3	1	**1A-1460**	12	BOLT (1/2-13X2 IN)	
	4	1	**107-9616**	2	RETAINER	
	5	1	**8F-9516**	2	SEAL-O-RING (139.29MM ID)	
	6	1	**162-7863**	2	SEAL GP-DUO-CONE	
					(EACH INCLUDES)	
		1	**162-2167**	2	RING-TORIC	
	7	1	**107-4057**	2	SEAL-O-RING (67.94MM ID)	
	8	1	**107-3947**	2	COLLAR-SEAL	
	9	1	**6Y-0473**	1	PLUG-CLEAR	
		1	**9G-4872**	1	STOPPER-RUBBER	
	10	1	**154-3306**	1	SHAFT-TRACK ROLLER	
	11	1	**195-5854**	1	ROLLER & BEARING AS	
	12	1	**9W-9499**	2	BEARING-SLEEVE	

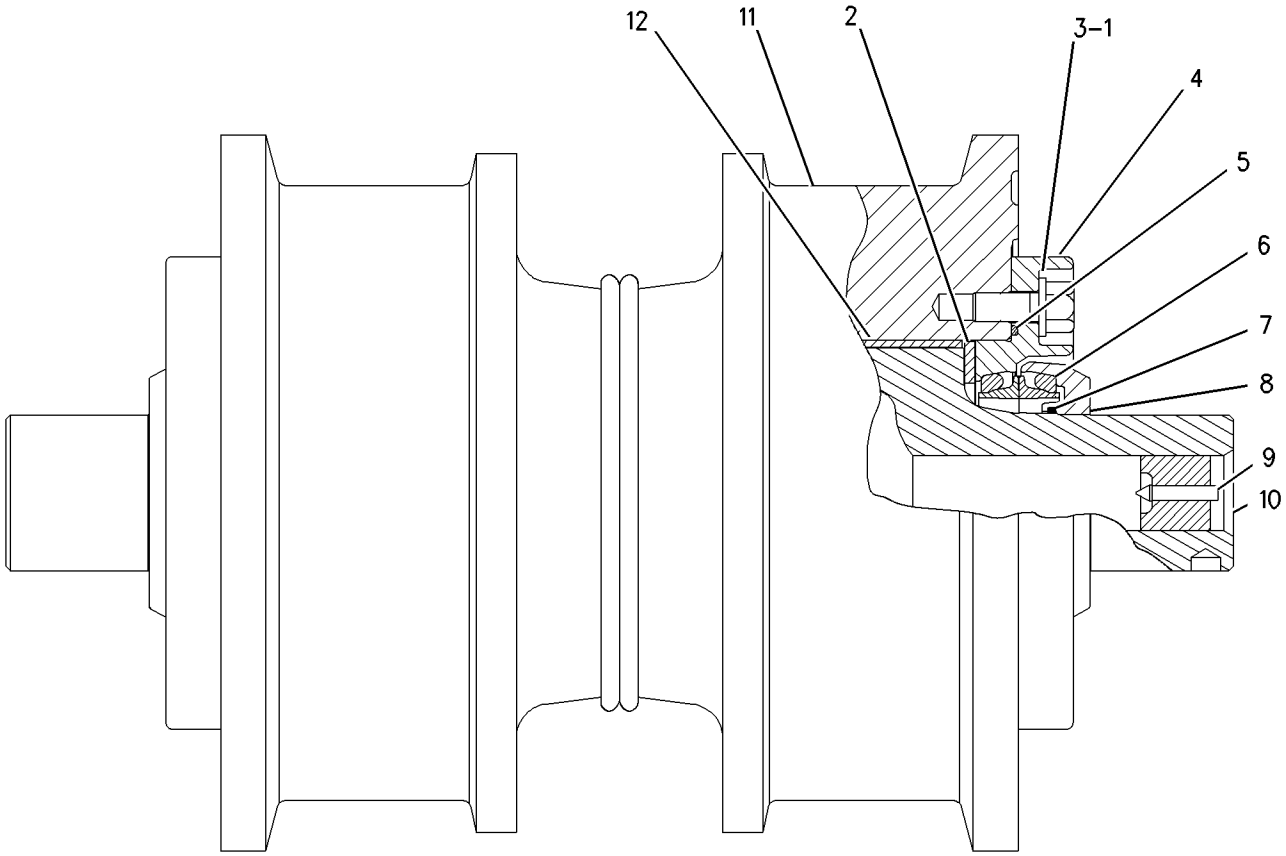

GRAPHIC #1 g00753536

197-8492 ROLLER GP-TRACK-DOUBLE FLANGE

S/N: AKT1-UP
PART OF 130-9719 ARCTIC AR
AN ATTACHMENT

SMCS-4180 **i01502311**

NOTE	REF NO	GRAPHIC REF	PART NUMBER	QTY	PART NAME 1 2 3 4 5 6 (PRODUCT LEVEL)	SEE PAGE
	1	1	**5P-8245**	12	WASHER-HARD (13.5X25.5X3MM THK)	
	2	1	**8E-6619**	2	WASHER-THRUST	
	3	1	**1A-1460**	12	BOLT (1/2-13X2 IN)	
	4	1	**107-9616**	2	RETAINER	
	5	1	**8F-9516**	2	SEAL-O-RING	
	6	1	**9W-8878**	2	SEAL GP-DUO-CONE	
					(EACH INCLUDES)	
		1	**107-4888**	2	RING-SEALING	
	7	1	**107-4057**	2	SEAL-O-RING	
	8	1	**107-3947**	2	COLLAR-SEAL	
	9	1	**6Y-0473**	1	PLUG-CLEAR	
		1	**9G-4872**	1	STOPPER-RUBBER	
	10	1	**154-3306**	1	SHAFT-TRACK ROLLER	
	11	1	**195-5854**	1	ROLLER & BEARING AS	
	12	1	**9W-9499**	2	BEARING-SLEEVE	

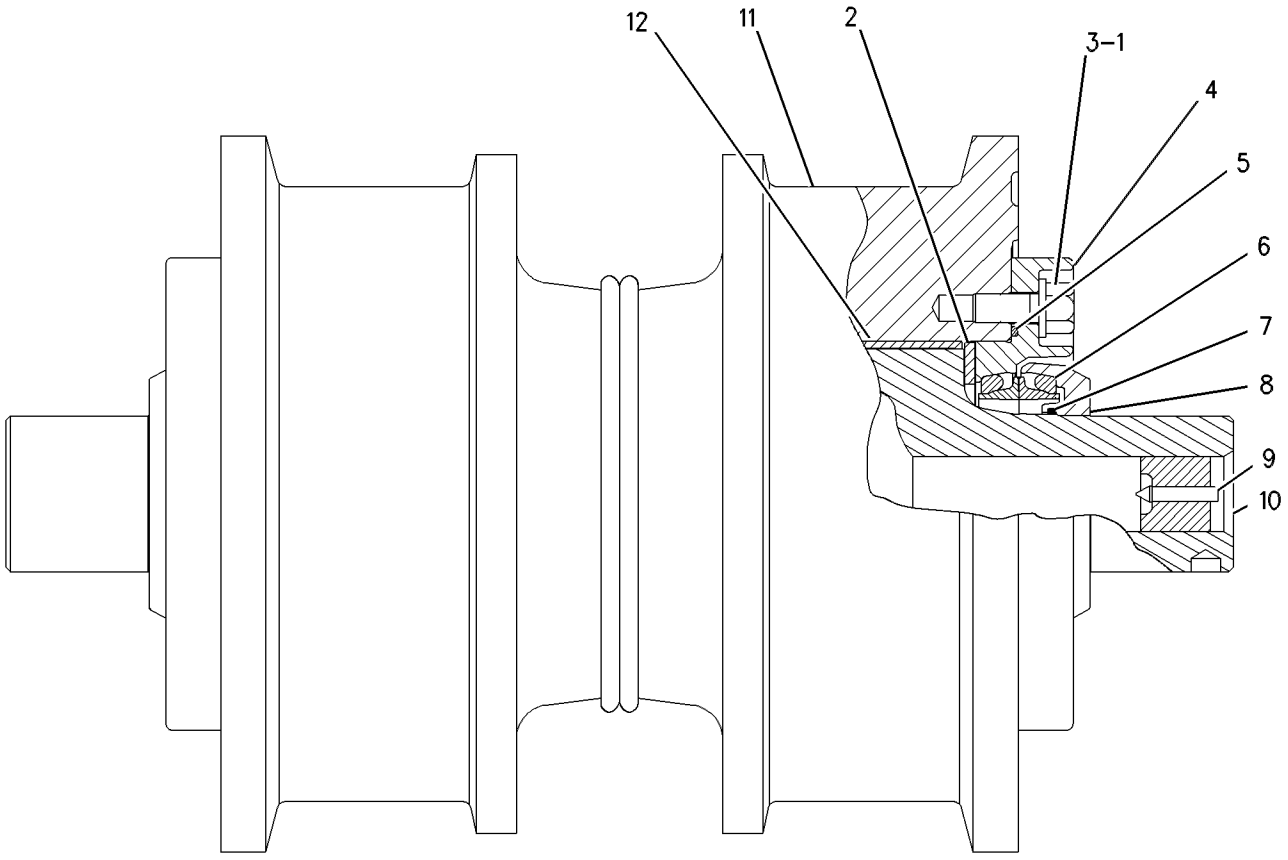

GRAPHIC #1 g00286452

195-5855 ROLLER GP-TRACK-SINGLE FLANGE

S/N: AKT1-UP

PART OF 172-1641 ROLLER AR-TRACK CARRIER, 171-5809 UNDERCARRIAGE AR

ALSO AN ATTACHMENT

SMCS-4180 **i01436466**

NOTE	REF NO	GRAPHIC REF	PART NUMBER	QTY	PART NAME 1 2 3 4 5 6 (PRODUCT LEVEL)	SEE PAGE
	1	1	**195-5853**	1	ROLLER & BEARING AS	
	2	1	**9W-9499**	2	BEARING-SLEEVE	
	3	1	**1A-1460**	12	BOLT (1/2-13X2 IN)	
	4	1	**107-9616**	2	RETAINER	
	5	1	**8F-9516**	2	SEAL-O-RING (139.29MM ID)	
	6	1	**162-7863**	2	SEAL GP-DUO-CONE	
					(EACH INCLUDES)	
		1	**162-2167**	2	RING-TORIC	
	7	1	**107-4057**	2	SEAL-O-RING (67.94MM ID)	
	8	1	**107-3947**	2	COLLAR-SEAL	
	9	1	**154-3306**	1	SHAFT-TRACK ROLLER	
	10	1	**5P-8245**	12	WASHER-HARD (13.5X25.5X3MM THK)	
	11	1	**6Y-0473**	1	PLUG-CLEAR	
	12	1	**9G-4872**	1	STOPPER-RUBBER	
	13	1	**8E-6619**	2	WASHER-THRUST	

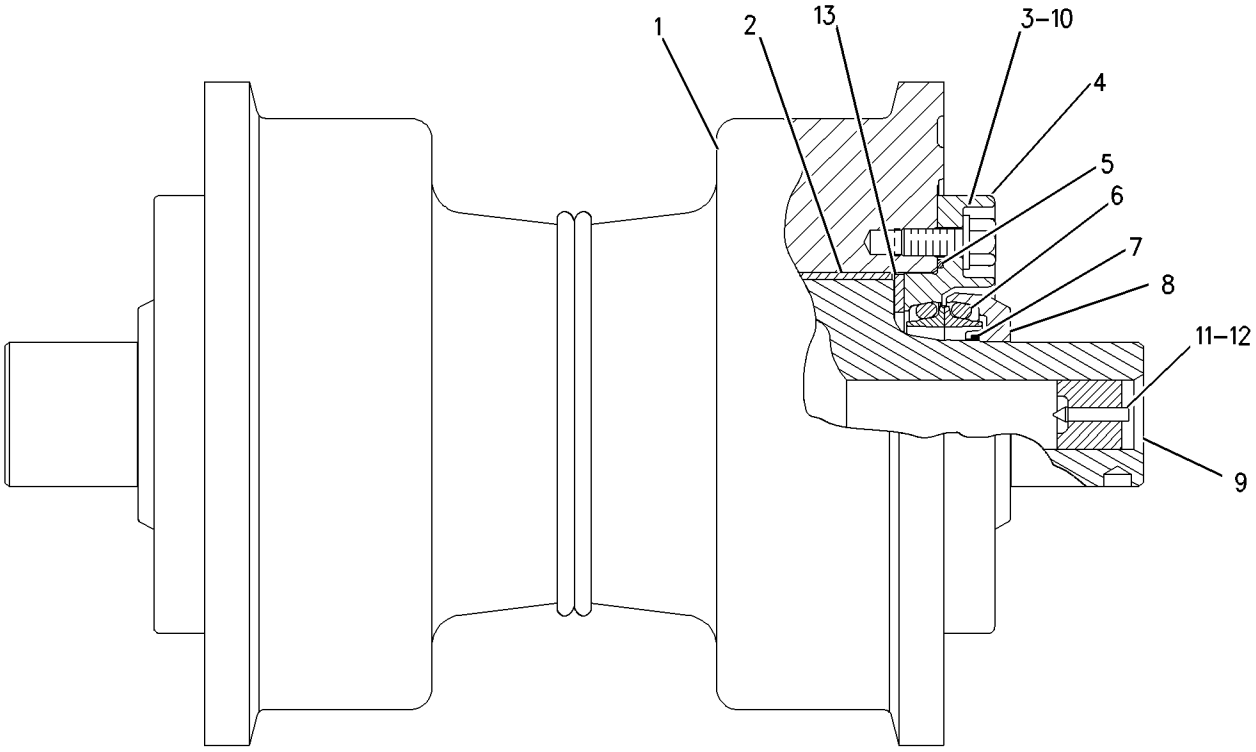

GRAPHIC #1 g00753527

197-8493 ROLLER GP-TRACK-SINGLE FLANGE

S/N: AKT1-UP
PART OF 130-9719 ARCTIC AR
AN ATTACHMENT

SMCS-4180 **i01502313**

NOTE	REF NO	GRAPHIC REF	PART NUMBER	QTY	PART NAME 1 2 3 4 5 6 (PRODUCT LEVEL)	SEE PAGE
	1	1	**195-5853**	1	ROLLER & BEARING AS	
		1	**9W-9499**	2	BEARING-SLEEVE	
	2	1	**8E-6619**	2	WASHER-THRUST	
	3	1	**1A-1460**	12	BOLT (1/2-13X2 IN)	
	4	1	**107-9616**	2	RETAINER	
	5	1	**8F-9516**	2	SEAL-O-RING	
	6	1	**9W-8878**	2	SEAL GP-DUO-CONE	
					(EACH INCLUDES)	
		1	**107-4888**	2	RING-SEALING	
	7	1	**107-4057**	2	SEAL-O-RING	
	8	1	**107-3947**	2	COLLAR-SEAL	
	9	1	**154-3306**	1	SHAFT-TRACK ROLLER	
	10	1	**5P-8245**	12	WASHER-HARD (13.5X25.5X3MM THK)	
	11	1	**6Y-0473**	1	PLUG-CLEAR	
	12	1	**9G-4872**	1	STOPPER-RUBBER	

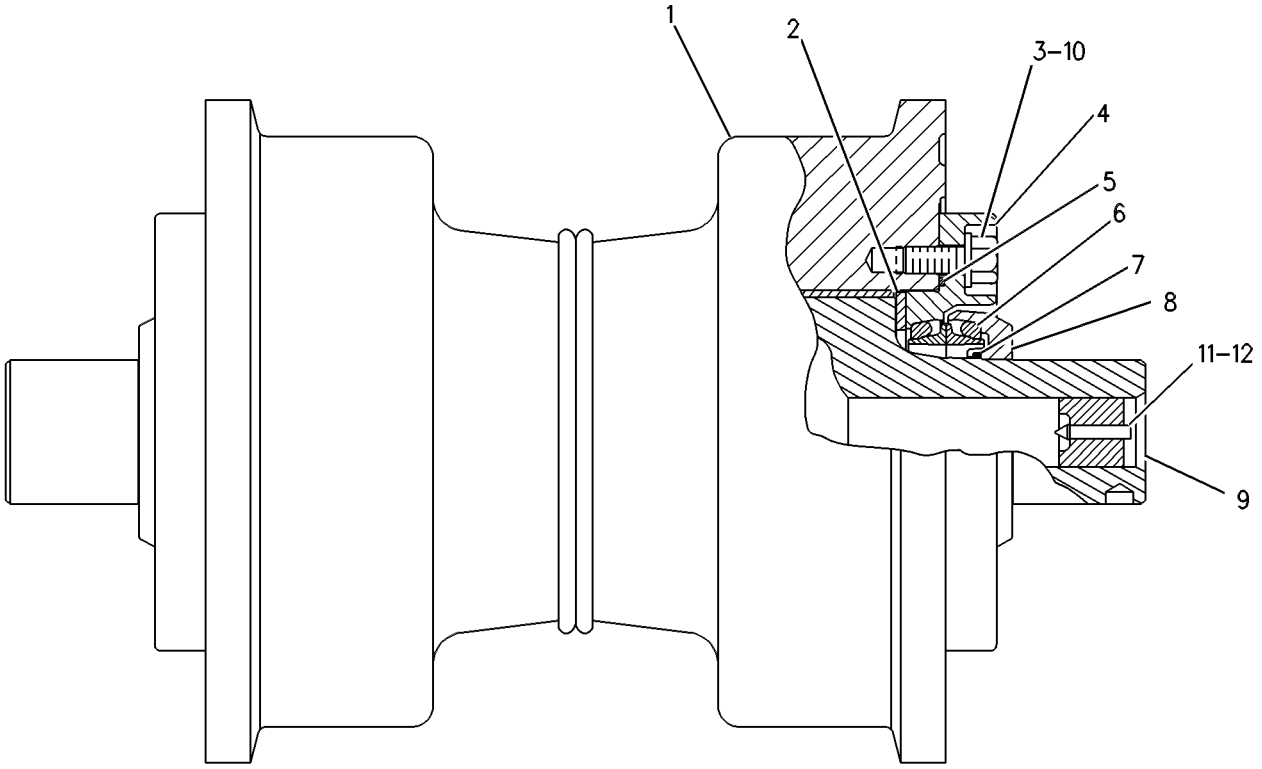

GRAPHIC #1 g00276968

MEMORANDA

UNDERCARRIAGE

156-4210 SUSPENSION GP-BOGIE

S/N: AKT1-UP

PART OF 171-5809 UNDERCARRIAGE AR

SMCS-7217 **i01637478**

NOTE	REF NO	GRAPHIC REF	PART NUMBER	QTY	PART NAME 1 2 3 4 5 6 (PRODUCT LEVEL)	SEE PAGE
	1	1	**7G-3907**	16	COVER-CARTRIDGE PIN	
	2	1	**7G-5221**	16	PLATE-RETAINER	
	3	1	**7T-0375**	4	BOGIE AS-TRACK	
	4	1	**7T-5959**	16	PAD AS-RESILIENT	
					(EACH INCLUDES)	
		1	**9P-2704**	1	PLATE	
	5	1	**7T-9309**	32	PIN AS-CARTRIDGE	
					(EACH INCLUDES)	
		1	**6Y-0473**	2	PLUG-CLEAR	
		1	**9G-4872**	2	STOPPER-RUBBER	
	6	1	**184-4396**	16	GUIDE	
	7	1	**8S-4756**	32	BOLT (1-14X1.75 IN)	
	8	1	**9W-4489**	8	INSERT	
	9	1	**126-8588**	2	BOGIE AS-TRACK	
	10	1	**128-4414**	2	BOGIE AS-TRACK	
	11	1	**156-4208**	8	BOGIE-MINOR (RH)	
	12	1	**156-4209**	8	BOGIE-MINOR (LH)	
	13	1	**067-3161**	16	RING-RETAINING	
	14	1	**5P-1076**	64	WASHER-HARD (13.5X30X4MM THK)	
	15	1	**5P-2228**	64	BOLT (1/2-13X1 IN)	
	16	1	**7X-0386**	32	BOLT (7/8-9X3.50IN)	
	17	1	**8C-6913**	32	WASHER-HARD (24X41.5X4MM THK)	

156-4210 **SUSPENSION GP-BOGIE** *(contd.)* **i01637478**

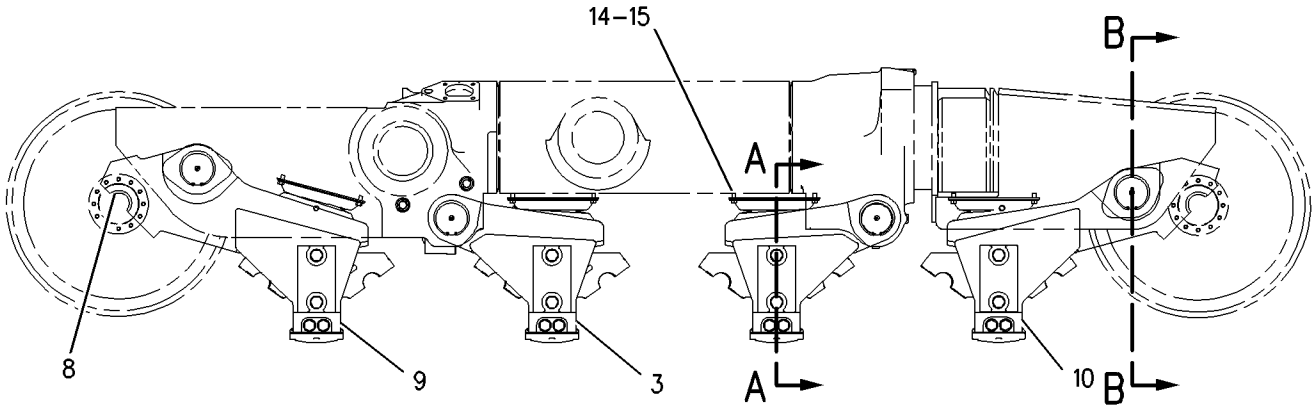

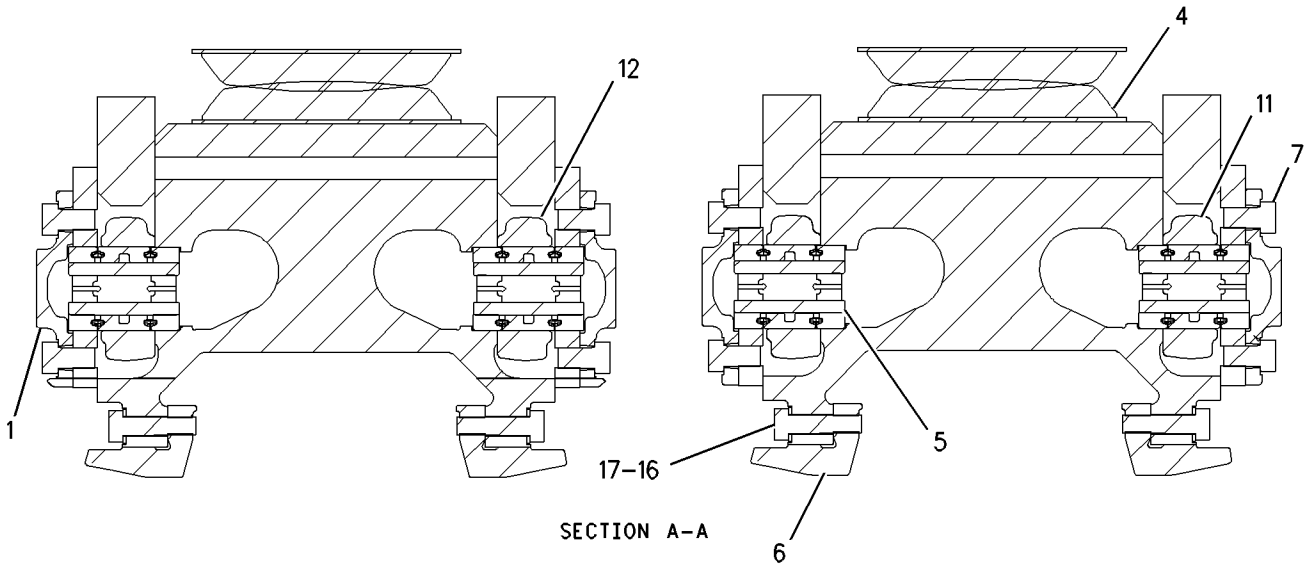

SECTION A–A

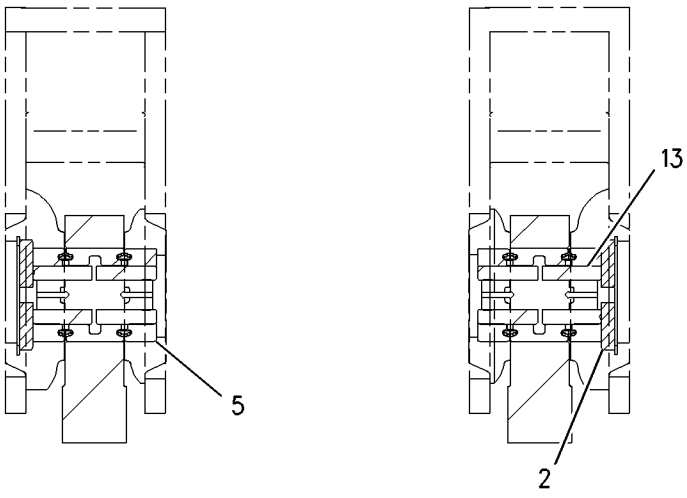

SECTION B–B

GRAPHIC #1 g00860606

UNDERCARRIAGE

196-8563 TRACK ADJUSTER & RECOIL GP

S/N: AKT1-UP

PART OF 171-5809 UNDERCARRIAGE AR

SMCS-4157, 4158 **i01436519**

NOTE	REF NO	GRAPHIC REF	PART NUMBER	QTY	PART NAME 1 2 3 4 5 6 (PRODUCT LEVEL)	SEE PAGE
	1	1	**1L-5081**	2	SPACER (0.41X0.75X0.56 IN THK)	
	2	1	**1P-7346**	2	WASHER-HARD (10.2X35X6MM THK)	
	3	1	**2S-5925**	2	VALVE AS-GREASE (FILL)	
	4	1	**2S-5926**	2	VALVE (RELIEF)	
	5	1	**7G-2421**	4	STOP	
	6	1	**7G-2425**	2	CYLINDER	
	7	1	**7G-4766**	2	RING	
	8	1	**6V-8801**	2	NUT (3/8-16 THD)	
	9	1	**187-6282**	2	SUPPORT AS	
	10	1	**7T-3926**	2	SPRING	
	11	1	**7T-3927**	2	GUIDE AS	
					(EACH INCLUDES)	
		1	**7G-2419**	1	BEARING-SLEEVE	
	12	1	**7T-3928**	2	PISTON	
	13	1	**7T-6192**	1	CYLINDER AS-RH	
	14	1	**7T-6193**	1	CYLINDER AS (LH)	
	15	1	**8P-5264**	4	RING	
	16	1	**8P-5265**	4	RING	
	17	1	**8T-1981**	2	SEAL-U-CUP	
	18	1	**156-4215**	2	RETAINER	
	19	1	**0L-1178**	8	BOLT (3/4-10X2 IN)	
	20	1	**1M-8653**	2	RING-RETAINING	
	21	1	**3B-1915**	2	BOLT (3/8-16X1.37 IN)	
	22	1	**6V-2360**	8	WASHER-HARD (20X32X3MM THK)	
	23	1	**7G-8282**	2	CABLE AS	
					(EACH INCLUDES)	
	23A	1	**1P-7405**	1	EYEBOLT	

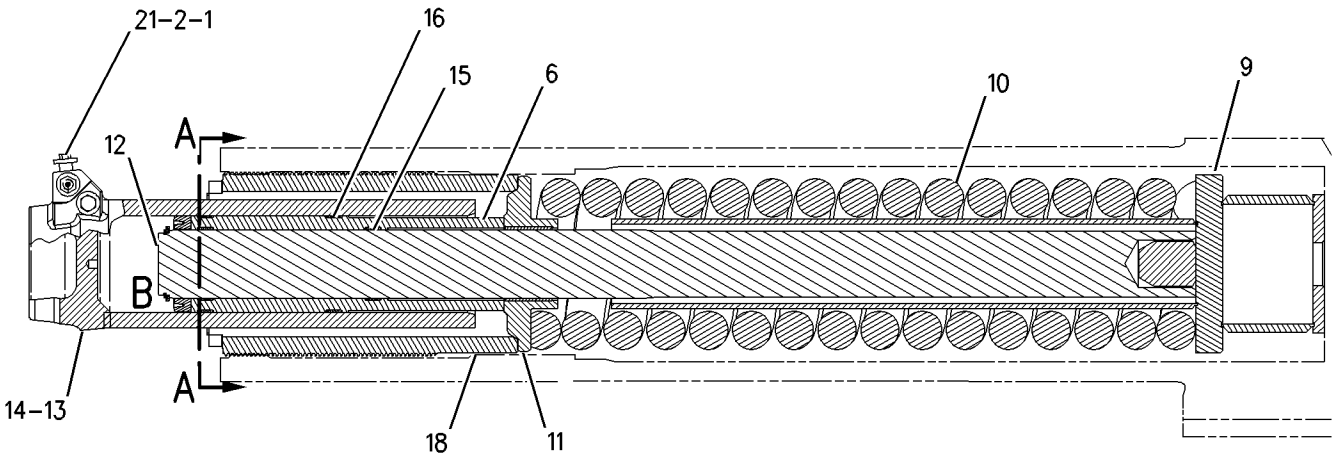

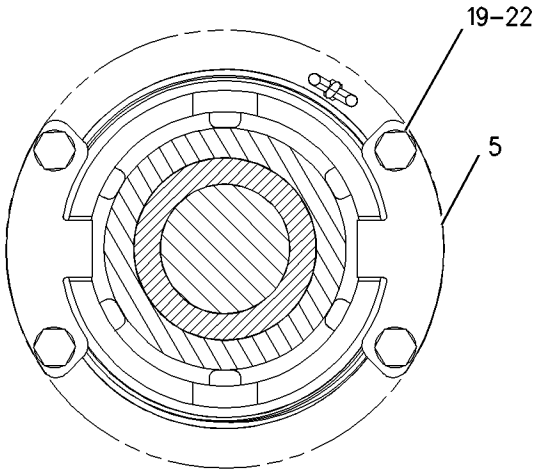

SECTION A–A

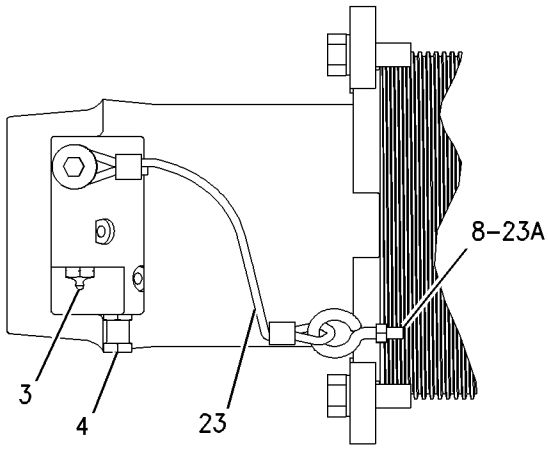

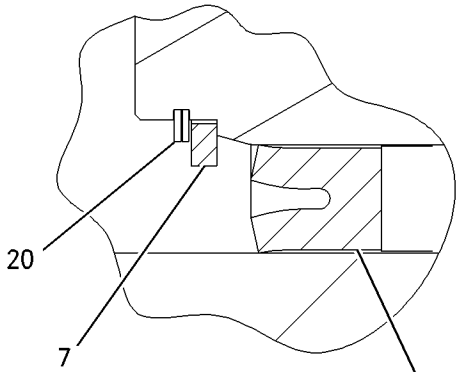

VIEW OF AREA B

GRAPHIC #1 g00812441

7T-0723 TRACK GP–2 REQUIRED

S/N: AKT1-UP

610MM (24 IN.) GROUSER SHOE.

SEALED & LUBRICATED-EXTREME SERVICE-POSITIVE PIN RETENTION

PART OF 171-5809 UNDERCARRIAGE AR

SMCS-4170 **i01403978**

NOTE	PART NUMBER	QTY	PART NAME 1 2 3 4 5 6 (PRODUCT LEVEL)	SEE PAGE
Y	**8E-7928**	1	LINK AS-TRACK	438
	7T-0998	2	BOLT-TRACK (1 1/8-12X6.46 IN)	
	7T-0999	2	BOLT-TRACK (1 1/8-12X5.28 IN)	
	7T-1000	172	BOLT-TRACK (1 1/8-12X3.8 IN)	
	5P-8221	172	NUT-TRACK (1 1/8-12 THD)	
	7T-0724	43	SHOE-TRACK	
	9W-1867	1	SHOE-MASTER TRACK	

Y-SEPARATE ILLUSTRATION

7T-4606 TRACK GP–2 REQUIRED

S/N: AKT1-UP
800MM (31.5 IN.) GROUSER SHOE.
SEALED & LUBRICATED-EXTREME SERVICE-POSITIVE PIN RETENTION
AN ATTACHMENT

SMCS-4170 **i01403981**

NOTE	PART NUMBER	QTY	PART NAME 1 2 3 4 5 6 (PRODUCT LEVEL)	SEE PAGE
Y	**8E-7928**	1	LINK AS-TRACK	438
	7T-0998	2	BOLT-TRACK (1 1/8-12X6.46 IN)	
	7T-0999	2	BOLT-TRACK (1 1/8-12X5.28 IN)	
	7T-1000	172	BOLT-TRACK (1 1/8-12X3.8 IN)	
	5P-8221	172	NUT-TRACK (1 1/8-12 THD)	
	7T-4605	43	SHOE-TRACK	
	9W-1869	1	SHOE-MASTER TRACK	

Y-SEPARATE ILLUSTRATION

7T-4608 TRACK GP–2 REQUIRED

S/N: AKT1-UP

710MM (28 IN.) GROUSER SHOE.

SEALED & LUBRICATED-EXTREME SERVICE-POSITIVE PIN RETENTION

AN ATTACHMENT

SMCS-4170 **i01403985**

NOTE	PART NUMBER	QTY	PART NAME 1 2 3 4 5 6 (PRODUCT LEVEL)	SEE PAGE
Y	**8E-7928**	1	LINK AS-TRACK	438
	7T-0998	2	BOLT-TRACK (1 1/8-12X6.46 IN)	
	7T-0999	2	BOLT-TRACK (1 1/8-12X5.28 IN)	
	7T-1000	172	BOLT-TRACK (1 1/8-12X3.8 IN)	
	5P-8221	172	NUT-TRACK (1 1/8-12 THD)	
	7T-4607	43	SHOE-TRACK	
	9W-1870	1	SHOE-MASTER TRACK	

Y-SEPARATE ILLUSTRATION

UNDERCARRIAGE

171-5809 UNDERCARRIAGE AR

S/N: AKT1-UP

PART OF 171-5800 GENERAL AR

SMCS-4150 **i01435772**

NOTE	PART NUMBER	QTY	PART NAME 1 2 3 4 5 6 (PRODUCT LEVEL)	SEE PAGE
Y	*127-3446*	4	CAP GP-TRACK IDLER	426
Y	*128-3504*	4	CAP GP-TRACK IDLER	427
Y	*6T-1141*	32	CAP GP-TRACK ROLLER	428
Y	*160-2540*	1	EQUALIZER BAR GP	430
Y	*196-8562*	1	FRAME GP-TELESCOPING RECOIL	434
Y	**125-3537**	4	IDLER GP-TRACK	437
Y	**195-5856**	8	ROLLER GP-TRACK-DOUBLE FLANGE	445
Y	**195-5855**	8	ROLLER GP-TRACK-SINGLE FLANGE	447
Y	*156-4210*	1	SUSPENSION GP-BOGIE	450
Y	**196-8563**	1	TRACK ADJUSTER & RECOIL GP	452
Y	**7T-0723**	2	TRACK GP	454

Y-SEPARATE ILLUSTRATION

124-2354 ADJUSTER GP-STEER & TMSN CONT

S/N: AKT1-UP

ELECTRIC

PART OF 124-2356 CONTROL GP-STEERING & TMSN

SMCS-4135 **i01700967**

NOTE	REF NO	GRAPHIC REF	PART NUMBER	QTY	PART NAME 1 2 3 4 5 6 (PRODUCT LEVEL)	SEE PAGE
	1	1	**8F-7702**	4	SEAL-LIP	
	2	1	**8T-1172**	4	SEAL-LIP	
M	3	1	**8T-2658**	1	LOCKNUT (M3X0.5 THD)	
	4	1	**8T-5410**	4	SEAL-LIP	
M	5	1	**8T-9006**	1	BOLT-SOCKET HEAD (M3X.5X20MM)	
	6	1	**9X-6772**	4	STRAP-CABLE	
	7	1	**110-7880**	1	SWITCH AS (ROCKER) (CONSOLE RAISE/LOWER)	
		1	**3E-3362**	1	WEDGE-PLUG LOCK (2 PIN)	
		1	**3E-3365**	1	WEDGE-RECEPTACLE LOCK (2 PIN)	
		1	**186-3735**	2	PIN-CONNECTOR	
		1	**186-3736**	2	SOCKET-CONNECTOR	
		1	**102-8802**	1	KIT-RECEPTACLE (2 PIN)	
					(INCLUDES WEDGE & RECEPTACLE AS)	
		1	**155-2270**	1	KIT-CONNECTING PLUG (2 PIN)	
					(INCLUDES WEDGE, PLUG AS & INTERFACE SEAL)	
	8	1	**149-4889**	1	ACTUATOR AS	
		1	**3E-3362**	1	WEDGE-PLUG LOCK (2 PIN)	
		1	**186-3736**	2	SOCKET-CONNECTOR	
		1	**155-2270**	1	KIT-CONNECTING PLUG (2 PIN)	
					(INCLUDES WEDGE, PLUG AS & INTERFACE SEAL)	
	9	1	**122-4268**	1	BRACKET AS	
M		1	**8T-3612**	1	NUT-WELD (M8X1.25 THD)	
	10	1	**122-4270**	1	BRACKET AS	
M		1	**5C-7261**	4	NUT (M8X1.25 THD)	
	10A	1	**122-6046**	1	MOUNT	
	11	1	**122-4271**	1	KNOB (ARMREST ADJUSTMENT)	
	12	1	**127-7494**	1	PLATE AS	
M		1	**8T-3490**	1	NUT-WELD (M10X1.5 THD)	
M	12A	1	**6V-9632**	2	NUT-WELD (M6X1 THD)	
	12B	1	**122-6049**	1	MOUNT	
	13	1	**122-6826**	1	PLATE AS	
M		1	**8T-3612**	2	NUT-WELD (M8X1.25 THD)	
M	13A	1	**6V-9632**	2	NUT-WELD (M6X1 THD)	
M	13B	1	**8T-3490**	1	NUT-WELD (M10X1.5 THD)	
	14	1	**122-6824**	1	PLATE	
	15	1	**122-6825**	1	SPACER	
	16	1	**8T-4205**	2	WASHER-HARD (7.2X14.5X2MM THK)	
	17	1	**124-0799**	1	SPRING	
	18	1	**7X-7729**	4	WASHER (11X25X3MM THK)	
	19	1	**130-0701**	1	SHAFT	
	20	1	**130-1985**	1	SLEEVE	
E	21	1	**130-7975**		SLEEVE-BRASS (4 CM)	
	22	1	**130-9989**	4	SLEEVE	
	23	1	**130-9990**	2	SLEEVE	
	24	1	**132-3581**	2	BEARING AS	
	25	1	**133-0155**	1	SHAFT	
	26	1	**133-6595**	1	BRACKET AS	
M		1	**8T-3490**	2	NUT-WELD (M10X1.5 THD)	
	27	1	**133-6974**	1	BRACKET AS	
M		1	**8T-3490**	2	NUT-WELD (M10X1.5 THD)	
	28	1	**133-7212**	1	PLATE	
	29	1	**133-7214**	1	SHAFT	
	30	1	**133-7230**	1	SHAFT	
	31	1	**133-7231**	1	PLATE	
	32	1	**5P-4116**	1	WASHER-HARD (8.8X20.5X2MM THK)	

124-2354 ADJUSTER GP-STEER & TMSN CONT *(contd.)* i01700967

NOTE	REF NO	GRAPHIC REF	PART NUMBER	QTY	PART NAME 1 2 3 4 5 6 (PRODUCT LEVEL)	SEE PAGE
M	33	1	**6V-2317**	1	BOLT (M8X1.25X30MM)	
	34	1	**8T-9368**	1	BOLT (1/4-20X2.25 IN)	
	35	1	**8T-4121**	6	WASHER-HARD (11X21X2.5MM THK)	
M	36	1	**8T-4133**	8	NUT (M10X1.5 THD)	
M	37	1	**8T-4136**	6	BOLT (M10X1.5X25MM)	
M	38	1	**8T-4189**	1	BOLT (M8X1.25X20MM)	
M	39	1	**8T-4195**	4	BOLT (M10X1.5X30MM)	
	40	1	**8T-4224**	3	WASHER-HARD (8.8X16X2MM THK)	
M	41	1	**8T-4908**	1	BOLT (M8X1.25X25MM)	
	42	1	**8T-7934**	12	WASHER-HARD (11X21X5MM THK)	
	43	1	**2D-6235**	2	LOCKNUT (1/4-20 THD)	
	44	1	**8T-9367**	1	BOLT (1/4-20X2 IN)	

E-ORDER BY THE CENTIMETER
M-METRIC PART

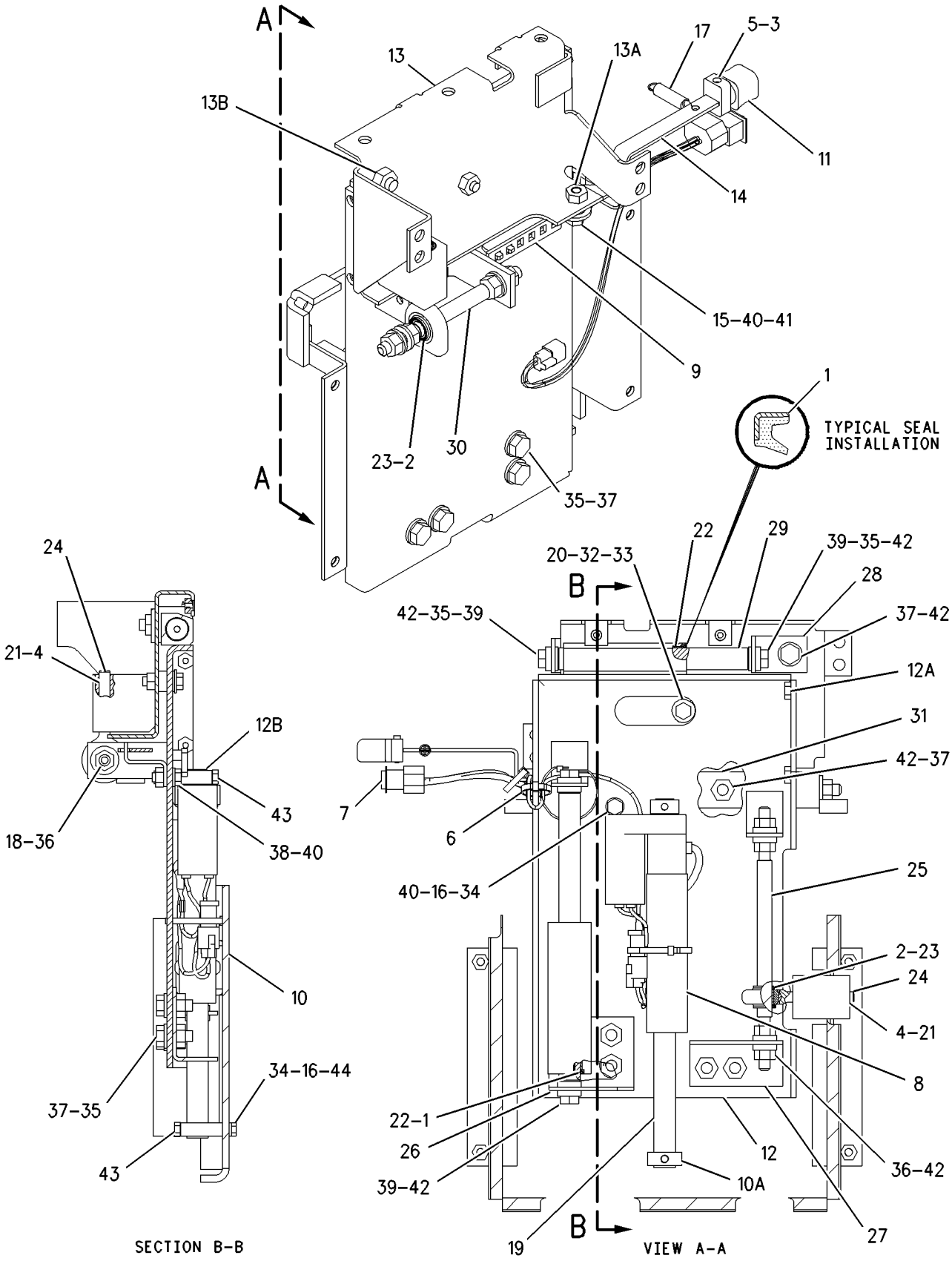

GRAPHIC #1

g00875985

MEMORANDA

STEERING AND BRAKING SYSTEM

106-0466 CLUTCH & BRAKE GP-STEERING*R

S/N: AKT1-UP

PART OF 171-5808 POWER TRAIN AR

SMCS-4101, 4109 **i01690715**

NOTE	REF NO	GRAPHIC REF	PART NUMBER	QTY	PART NAME 1 2 3 4 5 6 (PRODUCT LEVEL)	SEE PAGE
	1	1	**3P-3441**	1	RING-RETAINING	
	2	1	**4F-2129**	1	BALL BEARING	
	3	1	**6Y-3484**	1	BALL BEARING	
	4	1	**5L-4398**	17	BOLT (1/2-13X2.25IN)	
	5	1	**5P-3488**	1	RACE & ROLLER AS	
	6	1	**5P-3489**	1	RACE-BEARING OUTER	
	7	1	**6P-5317**	1	RING-SEAL	
	8	1	**6T-0840**	1	RING-SEAL	
	9	1	**6T-0841**	1	PLATE	
	10	1	**6T-0842**	1	PLATE	
	11	1	**6T-2037**	1	RING-SEAL	
	12	1	**6V-6572**	1	RING-RETAINING	
	13	1	**6Y-2875**	2	RING	
	14	1	**6Y-2876**	4	SPRING	
	15	1	**6Y-2878**	1	RETAINER	
	16	1	**7T-1885**	1	RING	
	17	1	**7T-6994**	7	PLATE-CLUTCH & BRAKE	
	18	1	**8P-8360**	8	DISC-FRICTION	
	19	1	**9G-2991**	3	RING-SEAL	
	20	1	**9S-8006**	6	PLUG	
C	21	1	**105-3372**	1	SPRING	
	22	1	**106-0468**	1	HUB	
	23	1	**106-0469**	1	PISTON	
	24	1	**106-0470**	1	HOUSING-BRAKE	
	25	1	**106-0471**	1	PISTON	
	26	1	**106-0472**	1	HUB-INPUT	
	27	1	**106-0476**	1	RETAINER	
	28	1	**215-8140**	10	DISC-FRICTION	
C	29	1	**109-0063**	10	PLATE-BRAKE	
	30	1	**116-2591**	1	PLATE-THRUST	
	31	1	**116-2592**	1	RING-SEAL	
	32	1	**121-0691**	1	SHAFT AS	
		1	**0L-1026**	1	PLUG-CUP	
	33	1	**123-8617**	1	SPOOL	
C	34	1	**129-9247**	1	RETAINER	
	35	1	**0S-1585**	10	BOLT (1/2-13X1.50 IN)	
	36	1	**1A-5822**	4	BOLT (1/2-13X2.75 IN)	
	37	1	**2M-9780**	6	SEAL-O-RING	
	38	1	**4F-7389**	3	SEAL-O-RING	
	39	1	**4K-5175**	4	BOLT-12 POINT HEAD (1/2-13X1.5 IN)	
	40	1	**5P-8245**	34	WASHER-HARD (13.5X25.5X3MM THK)	
	41	1	**8M-4389**	2	SEAL-O-RING	
	42	1	**9H-3360**	1	SEAL-O-RING	
	43	1	**9S-1366**	3	BOLT (1/2-13X2.5 IN)	

C-CHANGE FROM PREVIOUS TYPE

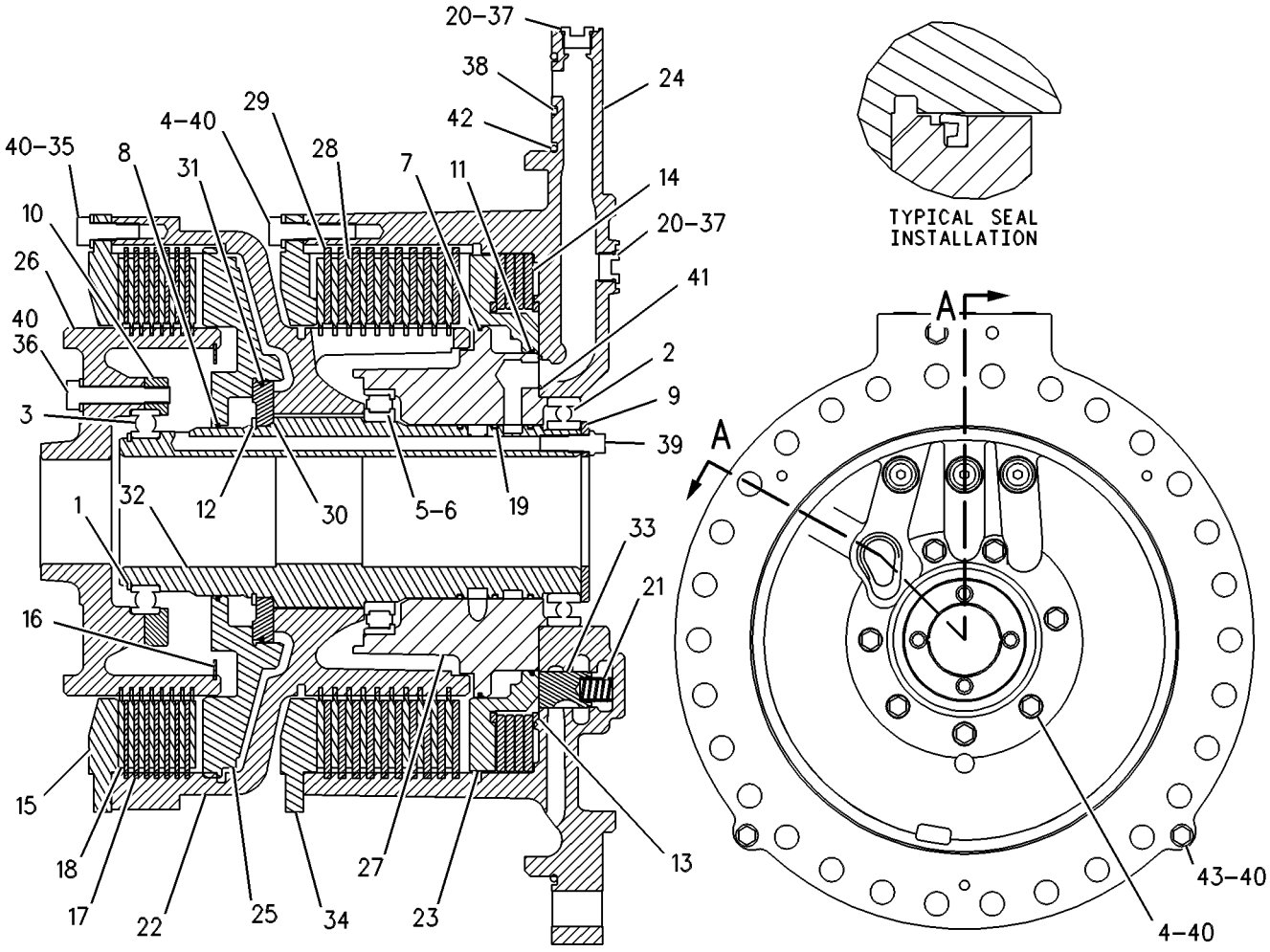

GRAPHIC #1

g00350283

STEERING AND BRAKING SYSTEM

123-6446 CONTROL GP-PARKING BRAKE

S/N: AKT1-UP

PART OF 122-1512 CONTROL GP-STEERING & TMSN

SMCS-4269, 4284 **i01665864**

NOTE	REF NO	GRAPHIC REF	PART NUMBER	QTY	PART NAME 1 2 3 4 5 6 (PRODUCT LEVEL)	SEE PAGE
	1	1	**6V-8118**	2	SCREW-SOCKET HEAD (6/32X0.625 IN)	
M	2	1	**9X-2546**	3	BOLT (M6X1X20MM)	
	3	1	**9X-6772**	1	STRAP-CABLE	
	4	1	**137-4830**	1	SPRING	
J	5	1	**123-0912**	1	LOCK AS-CYLINDER	
		1	**7F-9223**	1	LOCKWASHER	
		1	**8T-5004**	1	SCREW-MACHINE (1/4-28X0.375 IN)	
	6	1	**214-9184**	1	HOUSING AS	
	6A	1	**214-9183**	1	FILM	
	7	1	**118-0639**	1	SWITCH AS-ROCKER (PARKING BRAKE)	
		1	**8T-8729**	12	PIN-CONNECTOR	
		1	**102-8801**	1	KIT-RECEPTACLE (12 PIN)	
					(INCLUDES RECEPTACLE AS & WEDGE)	
		1	**3E-5180**	1	WEDGE-RECEPTACLE LOCK	

J-REQUIRES 5P8500 KEY
M-METRIC PART

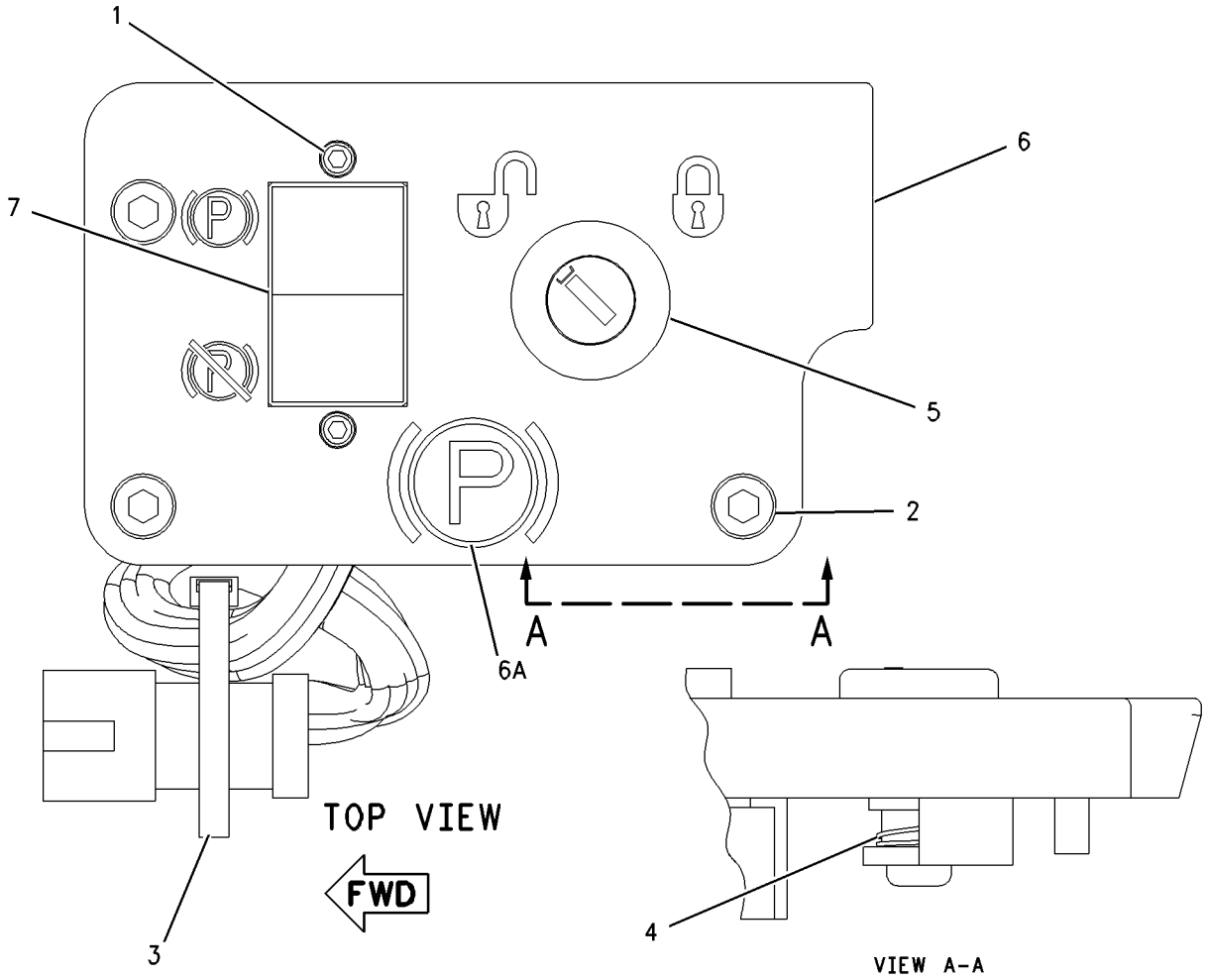

GRAPHIC #1 g00862385

127-2945 DETENT GP

S/N: AKT1-UP

PART OF 122-1512 CONTROL GP-STEERING & TMSN

i00745829

NOTE	REF NO	GRAPHIC REF	PART NUMBER	QTY	PART NAME 1 2 3 4 5 6 (PRODUCT LEVEL)	SEE PAGE
Z	1	1		4	BALL	
Z	2	1		1	DOWEL	
Z	3	1		1	PIN-SPRING	
Z	4	1		1	DETENT	
Z	5	1		1	BEARING	
Z	6	1		1	SHAFT	
Z	7	1		4	SPRING	

Z-NOT SERVICED SEPARATELY

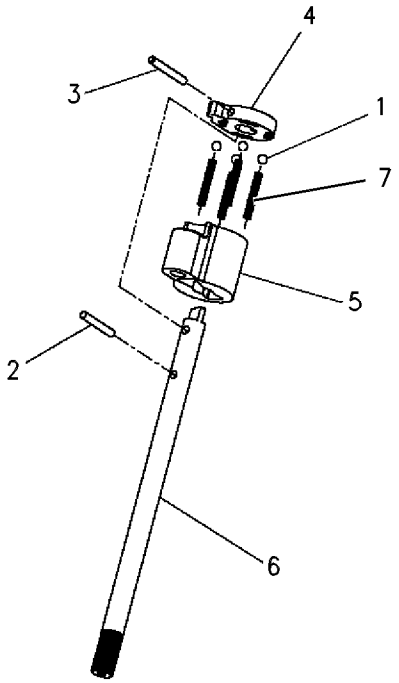

GRAPHIC #1

g00333449

122-7372 GEAR GP-STEERING

S/N: AKT1-UP

PART OF 122-1512 CONTROL GP-STEERING & TMSN

FIELD REPLACEMENT FOR 125-9664—PAGE 468

SMCS-4301 **i01232614**

NOTE	REF NO	GRAPHIC REF	PART NUMBER	QTY	PART NAME 1 2 3 4 5 6 (PRODUCT LEVEL)	SEE PAGE
Z	1	1		1	PLUG-PIPE	
Z	2	1		2	SEAL-LIP	
M	3	1	**129-3178**	1	LOCKNUT (M6X1.0 THD)	
Z	4	1		1	SETSCREW	
Z	5	1		3	BOLT-SOCKET HEAD	
Z	6	1		1	GEAR AS (40 TEETH)	
Z	7	1		1	GEAR AS (100 TEETH)	
Z	8	1		1	SLEEVE	
Z	9	1		1	SPRING-TORSION	
Z	10	1		1	SPRING-TORSION	
Z	11	1		1	PLATE	
Z	12	1		1	GASKET	
Z	13	1		1	HOUSING AS	
Z	14	1		1	COVER AS	
	15	1	**124-3702**	1	LEVER AS	
		1	**2K-8467**	1	PIN-SPRING	
M	16	1	**125-3298**	4	BOLT-SOCKET HEAD	
	17	1	**9X-8256**	1	WASHER (2MM THK)	

M-METRIC PART
Z-NOT SERVICED SEPARATELY

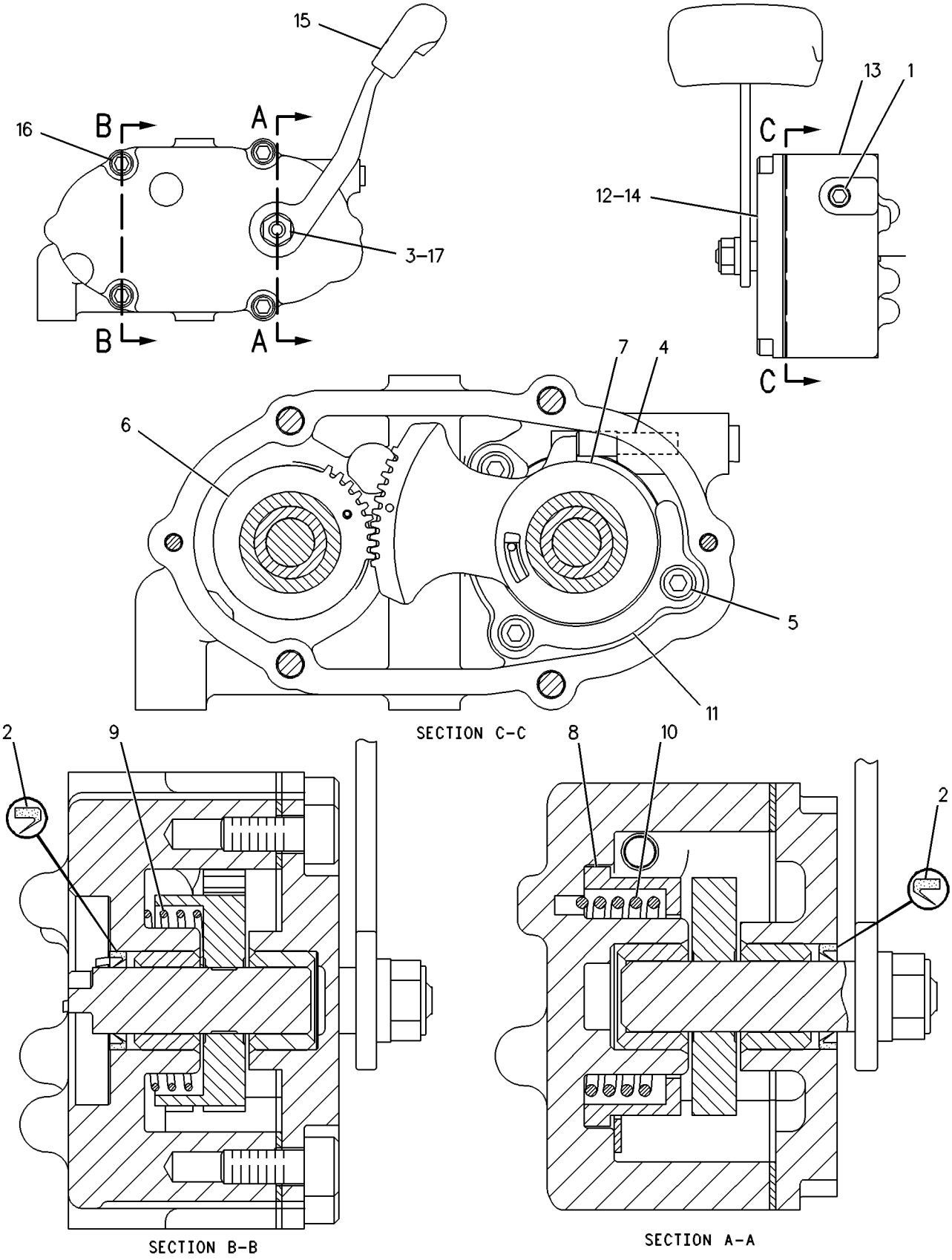

GRAPHIC #1

g00252547

125-9664 GEAR GP-STEERING

S/N: AKT1-UP

PART OF 122-1512 CONTROL GP-STEERING & TMSN

FIELD REPLACEMENT ORDER 122-7372—PAGE 466, 4-125-3299 BOLT-SOCKET HEAD

SMCS-4301 **i01232615**

NOTE	REF NO	GRAPHIC REF	PART NUMBER	QTY	PART NAME 1 2 3 4 5 6 (PRODUCT LEVEL)	SEE PAGE
Z	1	1		1	PLUG-PIPE	
Z	2	1		2	SEAL-LIP	
M	3	1	**129-3178**	1	LOCKNUT (M6X1.0 THD)	
Z	4	1		1	SETSCREW	
Z	5	1		3	BOLT-SOCKET HEAD	
Z	6	1		1	GEAR AS (40 TEETH)	
Z	7	1		1	GEAR AS (100 TEETH)	
Z	8	1		1	SLEEVE	
Z	9	1		1	SPRING-TORSION	
Z	10	1		1	SPRING-TORSION	
Z	11	1		1	PLATE	
Z	12	1		1	GASKET	
Z	13	1		1	HOUSING AS	
Z	14	1		1	COVER AS	
	15	1	**124-3702**	1	LEVER AS	
		1	**2K-8467**	1	PIN-SPRING	
M	16	1	**125-3299**	4	BOLT-SOCKET HEAD	
	17	1	**9X-8256**	1	WASHER (2MM THK)	

M-METRIC PART
Z-NOT SERVICED SEPARATELY

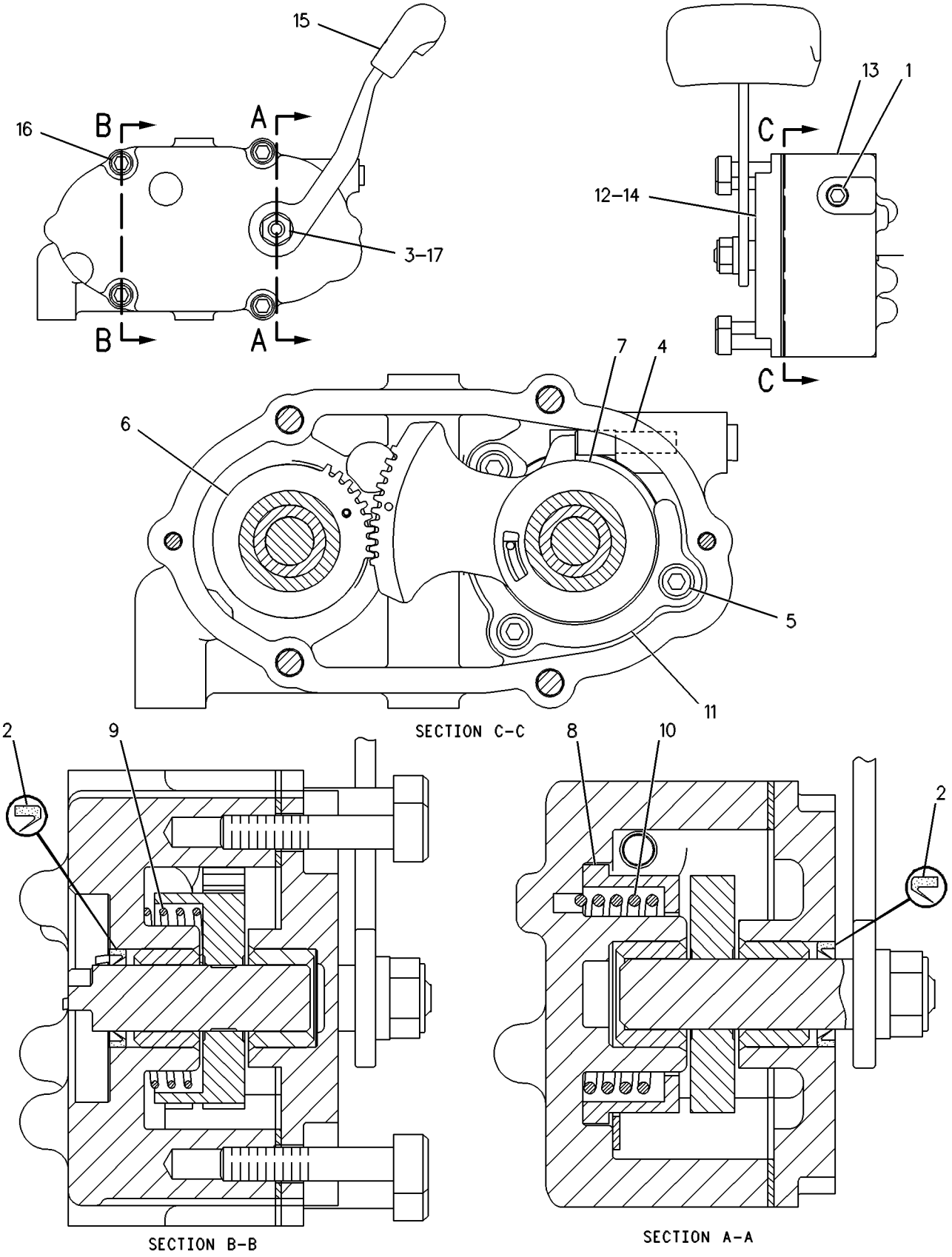

GRAPHIC #1

g00252542

STEERING AND BRAKING SYSTEM

125-0583 SUPPORT GP-CONTROL

S/N: AKT1-UP

PART OF 122-1512 CONTROL GP-STEERING & TMSN

SMCS-4122 **i01218266**

NOTE	REF NO	GRAPHIC REF	PART NUMBER	QTY	PART NAME 1 2 3 4 5 6 (PRODUCT LEVEL)	SEE PAGE
M	1	1	**9X-8902**	1	BOLT-SOCKET HEAD	
	2	1	**5P-8907**	1	SEAL-O-RING (47.35MM ID)	
	3	1	**125-0582**	1	COVER AS	
M	4	1	**125-3298**	1	BOLT-SOCKET HEAD	
	5	1	**125-8826**	1	COVER	
	6	1	**131-0447**	2	NUT	
	7	1	**132-7419**	1	SWITCH AS-PUSH BUTTON (DOWNSHIFT)	
		1	**144-0331**	1	CAP-PUSHBUTTON	
	8	1	**132-7450**	1	SWITCH AS-PUSH BUTTON (UPSHIFT)	
		1	**144-0331**	1	CAP-PUSHBUTTON	
	9	1	**151-9275**	1	KIT-RECEPTACLE (6 PIN)	
					(INCLUDES RECEPTACLE AS & WEDGE)	
	10	1	**8T-8729**	6	PIN-CONNECTOR	
	11	1	**3E-3383**	1	WEDGE-RECEPTACLE LOCK	
BD	12	1	**6V-2689**		TUBE-SHRINKABLE (6.35MM ID)	

B-USE AS REQUIRED
D-ORDER BY THE METER
M-METRIC PART

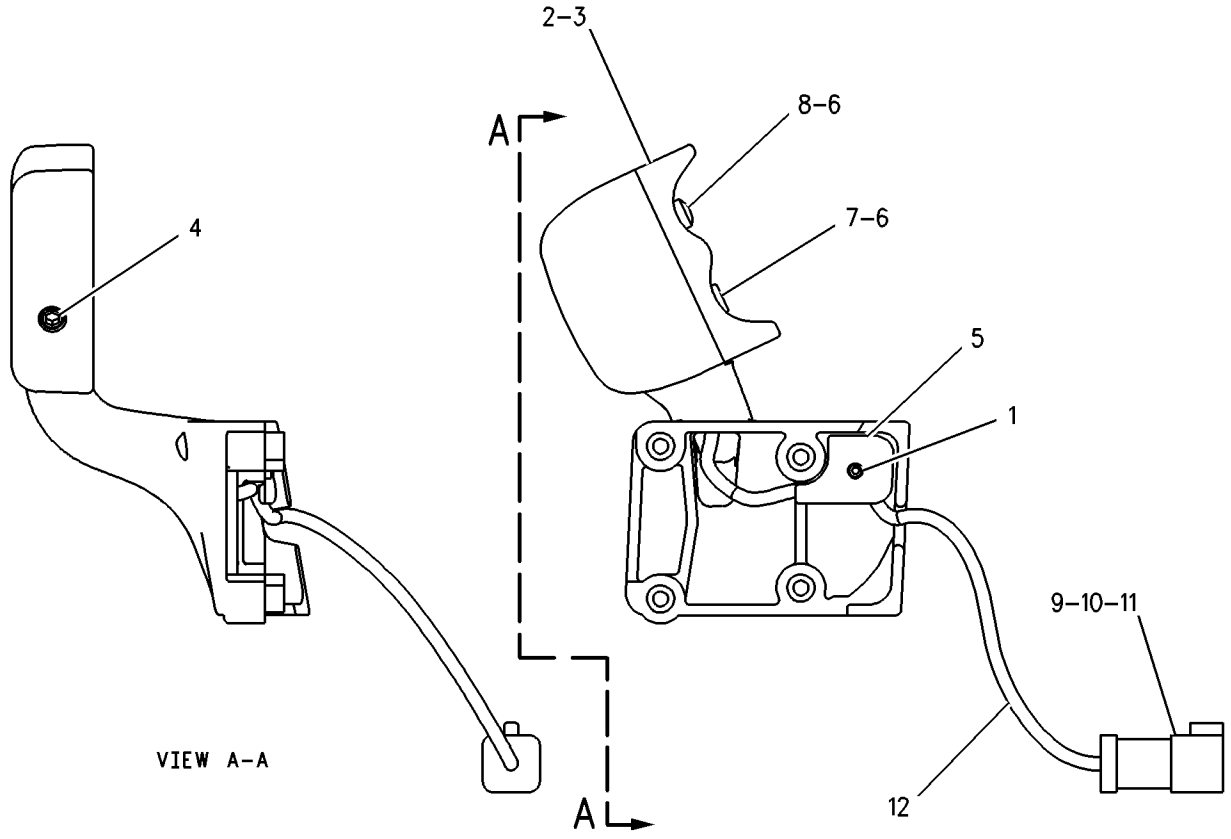

GRAPHIC #1 g00629711

STEERING AND BRAKING SYSTEM

202-7400 VALVE & MTG GP-STEERING

S/N: AKT1-UP

PART OF 171-5808 POWER TRAIN AR

SMCS-4307 **i01606857**

NOTE	REF NO	GRAPHIC REF	PART NUMBER	QTY	PART NAME 1 2 3 4 5 6 (PRODUCT LEVEL)	SEE PAGE
	1	1	**3S-0004**	4	WASHER (0.406X0.728X0.09 IN THK)	
	2	1	**8M-5254**	6	SEAL-O-RING	
	3	1	**9S-1018**	8	WASHER (9.73X19.05X.84MM THK)	
	4	1	**114-3926**	1	PLATE	
Y	5	1	**201-7272**	1	VALVE GP-CONTROL	370
	6	1	**1A-5183**	4	BOLT (3/8-16X4.75 IN)	
	7	1	**8M-4438**	4	SEAL-O-RING	
	8	1	**2M-9780**	2	SEAL-O-RING	
	9	1	**3J-1907**	4	SEAL-O-RING	
	10	1	**5P-1404**	2	ADAPTER-O-RING (STRAIGHT THREAD)	
	11	1	**6V-0852**	4	CAP-DUST	
	12	1	**6V-3965**	4	FITTING AS	

Y-SEPARATE ILLUSTRATION

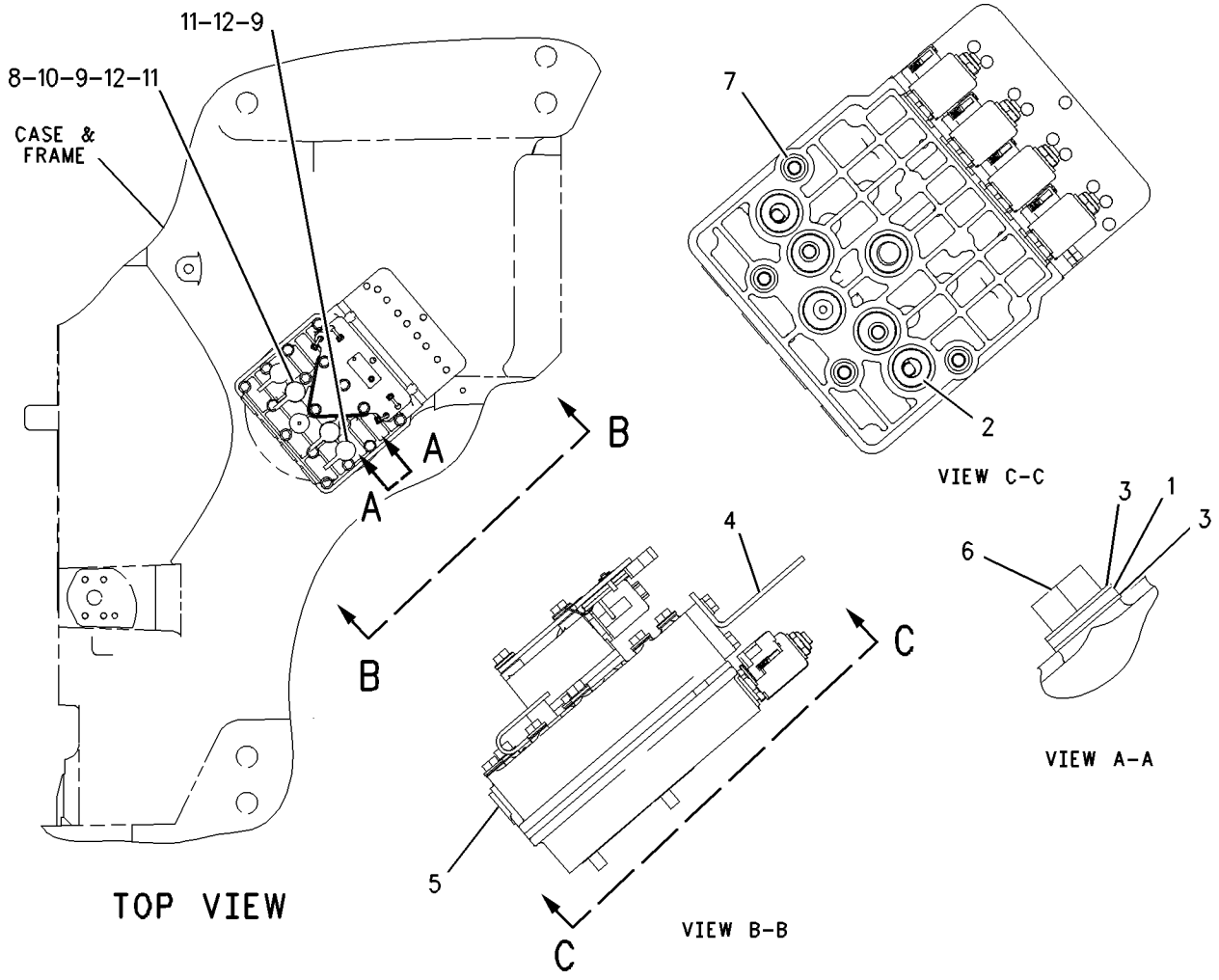

GRAPHIC #1 g00840700

4T-0417 CARTRIDGE GP-VANE PUMP*R

S/N: AKT1-UP
79 L/MIN (21 GPM)
PART OF 174-8147 PUMP GP-VANE

SMCS-5055 **i01701016**

NOTE	REF NO	GRAPHIC REF	PART NUMBER	QTY	PART NAME 1 2 3 4 5 6 (PRODUCT LEVEL)	SEE PAGE
	1	1	**8C-3078**	4	SEAL-O-RING	
	2	1	**3G-2192**	4	RETAINER-SEAL	
	3	1	**9T-5041**	2	DOWEL	
	4	1	**9T-5048**	1	PLATE-INLET	
	5	1	**064-7311**	1	KIT-VANE	
	6	1	**9T-5072**	1	RING	
	7	1	**6V-1197**	1	SEAL-O-RING	
	8	1	**8J-4351**	1	SEAL-O-RING	
	9	1	**9T-5086**	1	RING	
	10	1	**9T-5090**	1	PLATE-OUTLET	
	11	1	**3G-2193**	1	RING-SEAL	
	12	1	**9T-5099**	2	PLATE-FLEX	
	13	1	**064-7310**	1	ROTOR-PUMP	
	14	1	**9T-5110**	2	SCREW (#10-32 UNF X 2.25IN)	

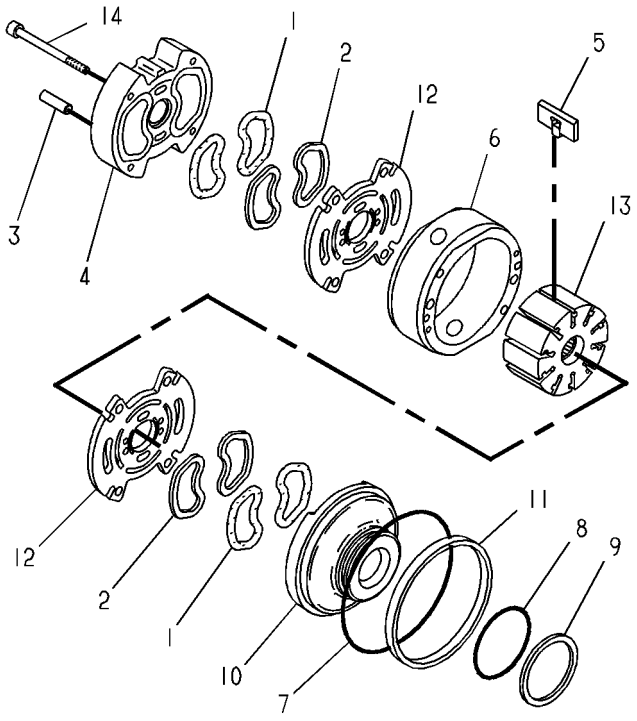

GRAPHIC #1 g00185223

9T-5336 CARTRIDGE GP-VANE PUMP*R

S/N: AKT1-UP

PART OF 174-8147 PUMP GP-VANE

SMCS-5055 **i01701020**

NOTE	REF NO	GRAPHIC REF	PART NUMBER	QTY	PART NAME 1 2 3 4 5 6 (PRODUCT LEVEL)	SEE PAGE
	1	1	**009-2062**	4	SEAL-O-RING	
	2	1	**3G-2241**	4	RETAINER-SEAL	
	3	1	**9T-5044**	2	DOWEL	
	4	1	**9T-5052**	1	PLATE-INLET	
	5	1	**9T-5058**	1	KIT-VANE	
	6	1	**9T-5080**	1	RING	
	7	1	**6V-1195**	1	SEAL-O-RING	
	8	1	**6V-1179**	1	SEAL-O-RING	
	9	1	**9T-5088**	1	RING	
	10	1	**9T-5095**	1	PLATE-OUTLET	
	11	1	**3G-2242**	1	RING-SEAL	
	12	1	**9T-5102**	2	PLATE-FLEX	
	13	1	**9T-5109**	1	ROTOR	
	14	1	**9T-5114**	2	SCREW (1/4-28X3.46 IN)	

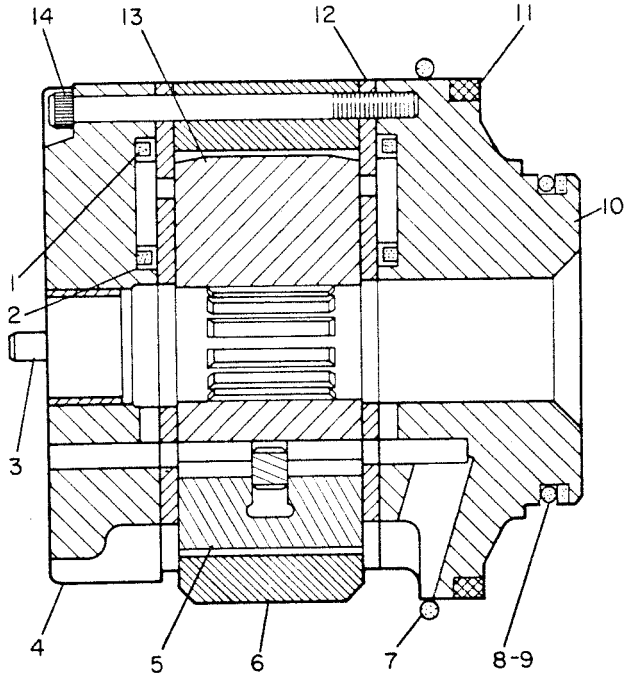

GRAPHIC #1 g00182794

HYDRAULIC SYSTEM

101-7771 CONTROL AR-HYDRAULIC

S/N: AKT1-UP
RIPPER PIN PULLER
AN ATTACHMENT

SMCS-5050 **i01597657**

NOTE	REF NO	GRAPHIC REF	PART NUMBER	QTY	PART NAME 1 2 3 4 5 6 (PRODUCT LEVEL)	SEE PAGE
	1	1	**146-0240**	1	SWITCH GP-TOGGLE (LOCKING)(RIPPER PIN PULLER)	
					(FOR D9R MODELS WITH MACHINE S/N ABK & ACL, D10R MODELS WITH MACHINE S/N AKT)	
		1	**3E-3371**	1	WEDGE-RECEPTACLE LOCK (3 PIN)	
		1	**6T-3631**	2	NUT-HEX (15/32-32 THD)	
		1	**6T-3632**	1	LOCKWASHER	
		1	**6T-3633**	1	RING-LOCKING	
		1	**8T-8729**	3	PIN-CONNECTOR	
		1	**102-8803**	1	KIT-RECEPTACLE (3 PIN)	
					(INCLUDES RECEPTACLE AS & WEDGE)	
					-OR-	
		1	**6T-6970**	1	SWITCH AS-TOGGLE (LOCKING)(RIPPER PIN PULLER)	
					(FOR D10R MODELS WITH MACHINE S/N 3KR)	
		1	**3L-8187**	3	LOCKWASHER	
		1	**6T-3631**	2	NUT-HEX (15/32-32 THD)	
		1	**6T-3632**	1	LOCKWASHER	
		1	**6T-3633**	1	RING-LOCKING	
		1	**6V-8374**	3	SCREW-MACHINE (6-32X0.25 IN)	
	2	1	**120-5821**	1	PLATE AS	
		1	**9F-2978**	2	NUT-WELD (3/8-16 THD)	
	3	1	**8T-4896**	4	WASHER-HARD (10.2X18.5X2.5MM THK)	
	4	1	**4P-7581**	1	CLIP	
B	5	1	**9X-6772**	5	STRAP-CABLE	
	6	1	*148-8378*	2	ELBOW GP	
					(EACH INCLUDES)	
		1	**3J-1907**	1	SEAL-O-RING	
		1	**6V-8397**	1	SEAL-O-RING	
		1	**6V-8724**	1	ELBOW	
	7	1	**120-5820**	1	PLATE	
	8	1	**4L-6454**	2	BOLT (3/8-16X1 IN)	
	9	1	**102-3679**	1	TUBE AS	
	10	1	*148-8336*	2	CONNECTOR GP	
					(EACH INCLUDES)	
		1	**3J-1907**	1	SEAL-O-RING	
		1	**6V-8397**	1	SEAL-O-RING	
		1	**6V-8636**	1	CONNECTOR	
CY	11	1	*188-6140*	1	VALVE & MTG GP-CONTROL	552
B	12	1	**5P-9938**	2	BOLT-LOCKING (3/8-16X1.375 IN)	
					(FOR D10R MODELS WITH MACHINE S/N 3KR)	
	13	1	**102-3680**	1	TUBE AS	
	14	1	**137-3936**	1	FILM-INSTRUCTION (RIPPER PIN PULLER SWITCH)	
	15	1	**7X-0290**	2	BOLT (3/8-16X3.50 IN)	
	16	1	**7X-0578**	4	WASHER-HARD (10.2X32X2.5MM THK)	
	17	1	**6V-8801**	2	NUT (3/8-16 THD)	
C	18	1	**124-3744**	1	HARNESS AS (PIN PULLER)	
					(FOR D10R MODELS WITH MACHINE S/N 3KR)	
C	19	1	**4P-8134**	1	CLIP	

B-USE AS REQUIRED
C-CHANGE FROM PREVIOUS TYPE
Y-SEPARATE ILLUSTRATION

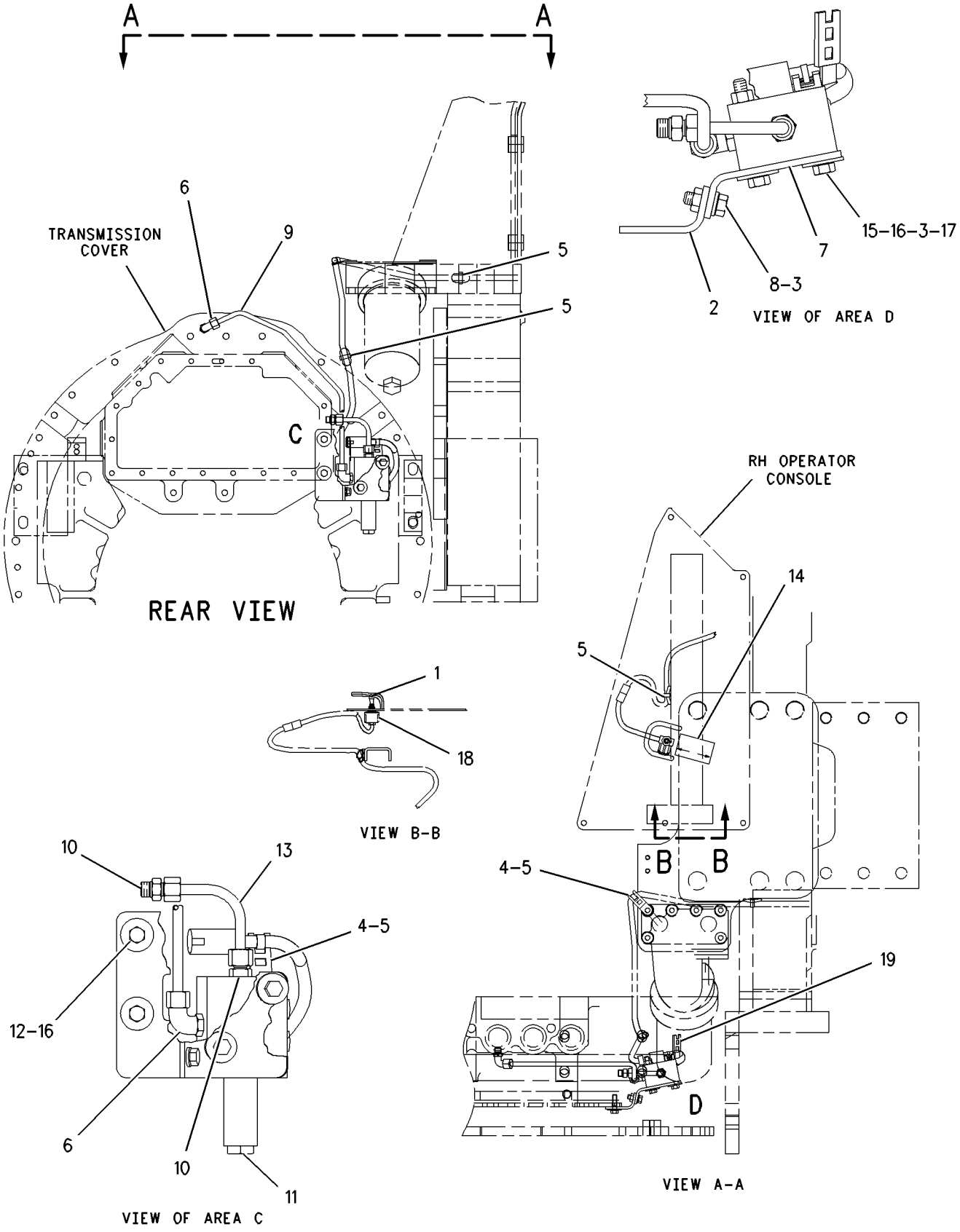

GRAPHIC #1 g00806332

HYDRAULIC SYSTEM

171-5803 CONTROL AR-HYDRAULIC

S/N: AKT1-UP

PART OF 171-5800 GENERAL AR

SMCS-5050 **i01689432**

NOTE	PART NUMBER	QTY	PART NAME 1 2 3 4 5 6 (PRODUCT LEVEL)	SEE PAGE
Y	*173-3263*	1	CONTROL & MTG GP-ELECTRONIC	204
Y	*199-4194*	1	CONTROL & MTG GP-IMPLEMENT	686
Y	*172-7184*	1	LINES GP-LIFT CYLINDER	504
Y	*172-7852*	1	LINES GP-MOTOR	506
Y	*173-7752*	1	LINES GP-PILOT	510
Y	*172-7183*	1	LINES GP-PUMP	516
Y	*172-7185*	1	LINES GP-TILT CYLINDER	534
Y	*174-8147*	1	PUMP GP-VANE	540
Y	*172-7821*	1	TANK & MTG GP-HYDRAULIC	546
Y	*173-7702*	1	VALVE & MTG GP-BULLDOZER	551

Y-SEPARATE ILLUSTRATION

HYDRAULIC SYSTEM

172-7626 CONTROL AR-HYDRAULIC

S/N: AKT1-UP
RIPPER
AN ATTACHMENT

SMCS-5050 **i01689471**

NOTE	PART NUMBER	QTY	PART NAME 1 2 3 4 5 6 (PRODUCT LEVEL)	SEE PAGE
Y	**135-0356**	1	CONTROL & MTG GP-IMPLEMENT	684
Y	*172-7189*	1	LINES GP-RIPPER	526
Y	*177-1407*	1	VALVE GP-CONTROL	558
Y	*173-3204*	1	VALVE GP-PILOT	566

Y-SEPARATE ILLUSTRATION

HYDRAULIC SYSTEM

174-9185 CONTROL AR-HYDRAULIC

S/N: AKT1-UP
DUAL TILT
AN ATTACHMENT

SMCS-5050 **i01666884**

NOTE	PART NUMBER	QTY	PART NAME 1 2 3 4 5 6 (PRODUCT LEVEL)	SEE PAGE
Y	**194-3684**	1	CONTROL & MTG GP-IMPLEMENT	685
Y	*173-1257*	1	LINES GP-TILT CYLINDER	536
Y	**151-0241**	1	VALVE GP-CONTROL	556
	137-3958	1	FILM-INSTRUCTION	
			ON RH CONSOLE COVER	
	137-3929	1	FILM-INSTRUCTION	
			MOUNTED ON RH COVER	

Y-SEPARATE ILLUSTRATION

MEMORANDA

177-4980 CONTROL GP-JOYSTICK

S/N: AKT1-UP

PART OF 194-3684 CONTROL & MTG GP-IMPLEMENT

AN ATTACHMENT

SMCS-5063 **i01615099**

NOTE	REF NO	GRAPHIC REF	PART NUMBER	QTY	PART NAME 1 2 3 4 5 6 (PRODUCT LEVEL)	SEE PAGE
Y	1	1	*180-9899*	1	CONTROL GP-JOYSTICK	482
	2	1	**188-1082**	1	BASE AS	
	3	1	**189-2305**	2	DETENT GP-CONTROL	
	4	1	**196-9565**	1	SENSOR GP-POSITION	
	5	1	**196-9566**	1	SENSOR GP-POSITION	
	6	1	**175-3265**	1	SCREW (8-16X0.63 IN)	
M	7	1	**192-4658**	4	SCREW-PAN HEAD (M4X.7X20MM)	
M	8	1	**8T-7500**	8	SCREW-MACHINE	
	9	1	**2K-4898**	1	CLAMP-TUBE	
	10	1	**4B-9808**	2	SETSCREW (1/4-20X0.5 IN)	
	11	1	**174-3091**	1	KIT-RECEPTACLE (12 PIN)	
					(INCLUDES RECEPTACLE AS & WEDGE)	
	12	1	**8T-8729**	11	PIN-CONNECTOR	
	13	1	**8T-8737**	1	PLUG-SEAL	
	14	1	**3E-5180**	1	WEDGE-RECEPTACLE LOCK	
	15	1	**3B-4501**	8	LOCKWASHER	
	16	1	**151-4977**	4	WASHER (4.445X9.525X1.0922MM THK)	
E	17	1	**208-6081**		SLEEVE (25CM)	

E-ORDER BY THE CENTIMETER
M-METRIC PART
Y-SEPARATE ILLUSTRATION

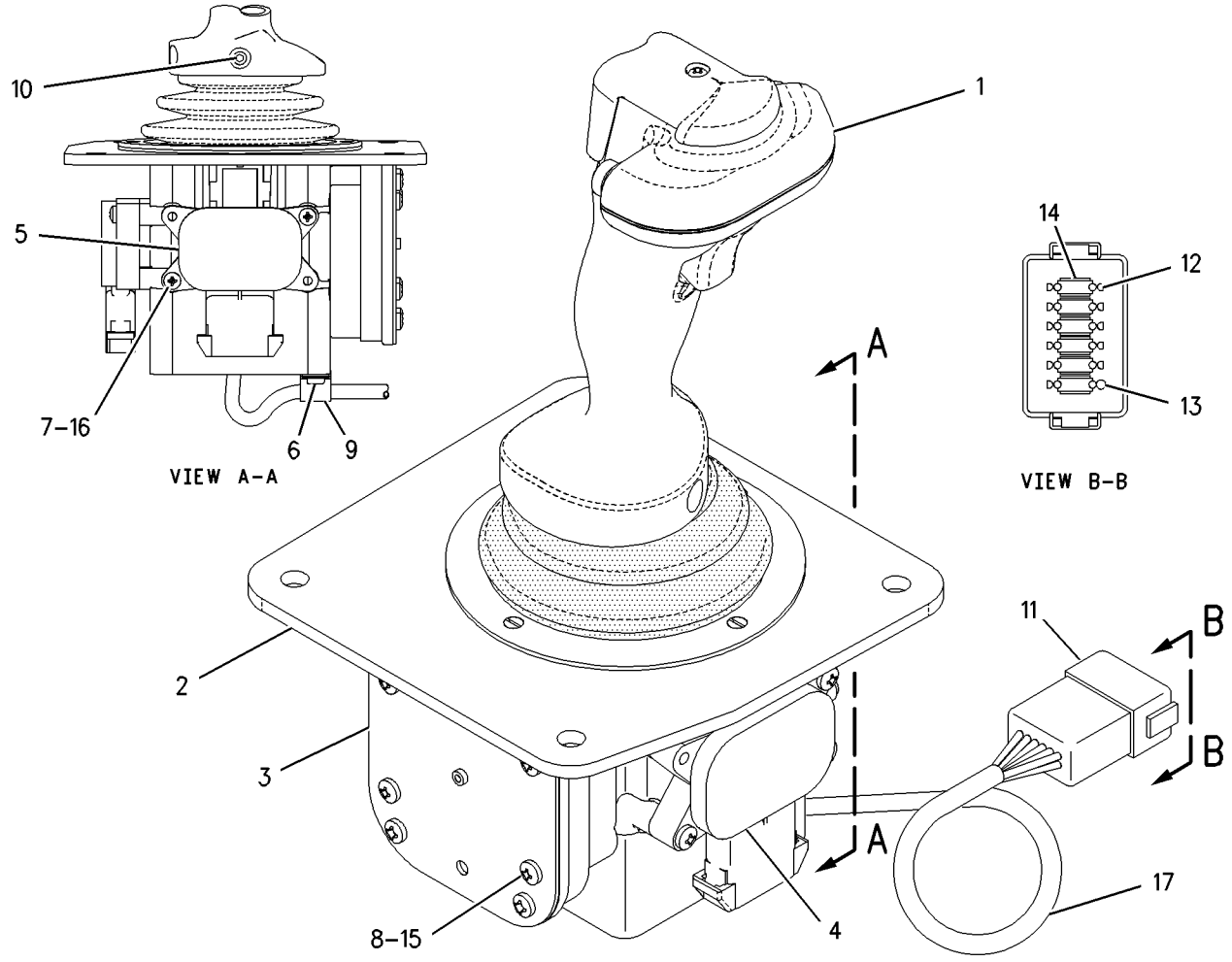

GRAPHIC #1

g00849181

HYDRAULIC SYSTEM

180-9899 CONTROL GP-JOYSTICK

S/N: AKT1-UP
PART OF 177-4980 CONTROL GP-JOYSTICK
AN ATTACHMENT

SMCS-5063 **i01437363**

NOTE	REF NO	GRAPHIC REF	PART NUMBER	QTY	PART NAME 1 2 3 4 5 6 (PRODUCT LEVEL)	SEE PAGE
	1	1	**162-8376**	1	CONTROL GP-OPERATOR HAND	
	2	1	**144-0331**	3	CAP-PUSHBUTTON	
	3	1	**164-6964**	1	HOUSING AS	
		1	**179-7376**	1	SWITCH AS-PUSH (AUTO BLADE MODE)	
		1	**196-1804**	1	SEAL-O-RING	
	4	1	**179-7376**	1	SWITCH AS-PUSH (BLADE PITCH)	
	5	1	**9B-1117**	2	LOCKWASHER	
	6	1	**175-4170**	2	SCREW-PAN HEAD (NO6X1.625 IN)	
	7	1	**162-8387**	1	LEVER	
	8	1	**162-8389**	1	PLATE	
BD	9	1	**6V-1614**		TUBE-HEAT SHRINK	
	10	1	**208-6081**	1	SLEEVE	
BE	11	1	**218-7136**		SLEEVE	

B-USE AS REQUIRED
D-ORDER BY THE METER
E-ORDER BY THE CENTIMETER

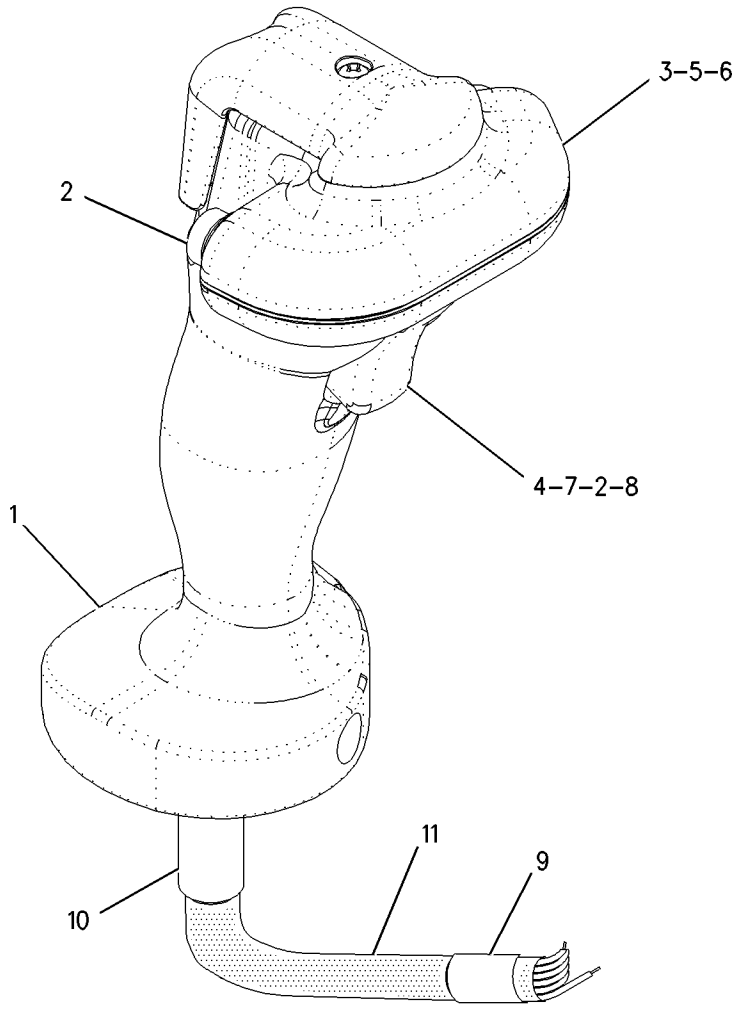

GRAPHIC #1 g00816189

185-8734 CONTROL GP-JOYSTICK

S/N: AKT1-UP

PART OF 199-4194 CONTROL & MTG GP-IMPLEMENT

SMCS-5063 **i01615104**

NOTE	REF NO	GRAPHIC REF	PART NUMBER	QTY	PART NAME 1 2 3 4 5 6 (PRODUCT LEVEL)	SEE PAGE
Y	1	1	*188-1079*	1	CONTROL GP-HANDLE	689
	2	1	**188-1082**	1	BASE AS	
	3	1	**189-2305**	2	DETENT GP-CONTROL	
	4	1	**196-9565**	1	SENSOR GP-POSITION	
	5	1	**196-9566**	1	SENSOR GP-POSITION	
M	6	1	**192-4658**	4	SCREW-PAN HEAD (M4X.7X20MM)	
M	7	1	**8T-7500**	8	SCREW-MACHINE	
	8	1	**4B-9808**	2	SETSCREW (1/4-20X0.5 IN)	
	9	1	**151-4977**	4	WASHER (4.445X9.525X1.0922MM THK)	
	10	1	**3B-4501**	8	LOCKWASHER	

M-METRIC PART
Y-SEPARATE ILLUSTRATION

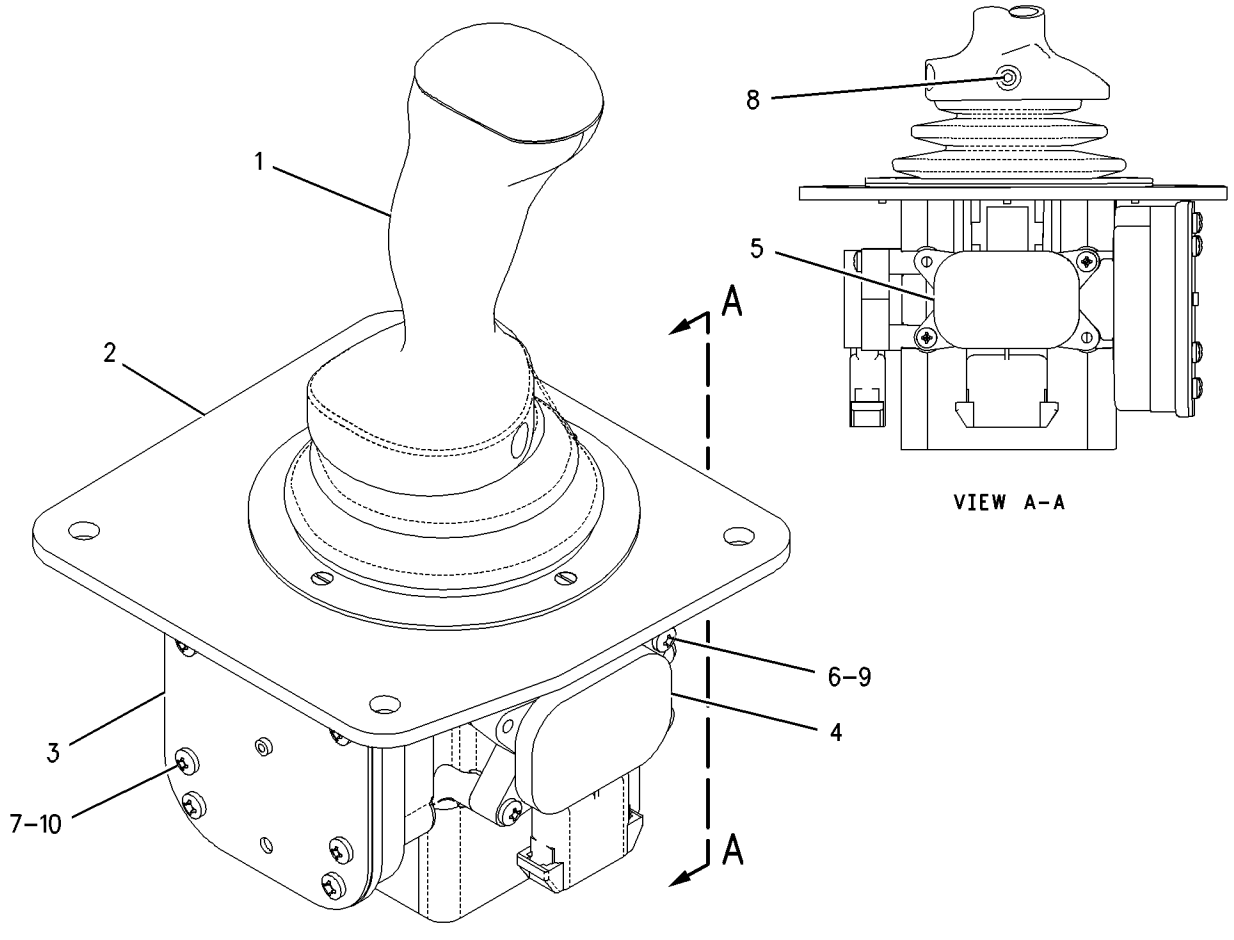

GRAPHIC #1 g00849123

9G-9288 COVER GP-HYDRAULIC TANK CAP

S/N: AKT1-UP

PART OF 172-7821 TANK & MTG GP-HYDRAULIC

SMCS-5056, 7315 **i01701067**

NOTE	REF NO	GRAPHIC REF	PART NUMBER	QTY	PART NAME 1 2 3 4 5 6 (PRODUCT LEVEL)	SEE PAGE
	1	1	**1L-5072**	1	DOWEL	
	2	1	**9M-7394**	1	LEVER (LOCKING)	
	3	1	**5D-1911**	1	COVER-HYDRAULIC CAP	
	4	1	**2J-7761**	1	RING-RETAINING	
	5	1	**5P-8502**	1	PADLOCK GP	
A		1	**5P-8500**	1	KEY	
A		1	**8Y-6364**	1	SLEEVE	

A-NOT PART OF THIS GROUP

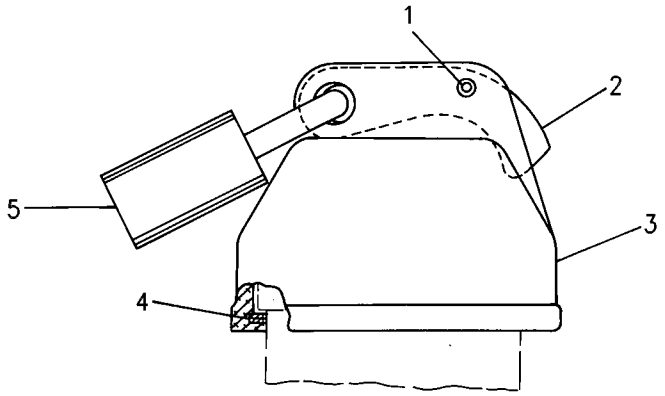

GRAPHIC #1 g00600453

HYDRAULIC SYSTEM

185-7891 CYLINDER AR-DUAL TILT

S/N: AKT1-UP
AN ATTACHMENT

SMCS-5104 **i01701075**

NOTE	PART NUMBER	QTY	PART NAME 1 2 3 4 5 6 (PRODUCT LEVEL)	SEE PAGE
Y	**9T-9203**	1	CYLINDER GP-BULLDOZER TILT (RH)	490
Y	**9T-9204**	1	CYLINDER GP-BULLDOZER TILT (LH)	492
Y	*117-5725*	1	LINES GP-TILT CYLINDER	528

Y-SEPARATE ILLUSTRATION

HYDRAULIC SYSTEM

9T-2869 CYLINDER GP-BULLDOZER LIFT

S/N: BHA1-UP; BHF1-UP; BHJ1-UP; BHP1-UP; AKT1-UP
158.75MM (6.25 IN.) BORE X 1652.9MM (65.1 IN.) STROKE
PART OF 7T-3829 VALVE & CYLINDER GP
AN ATTACHMENT

SMCS-5102 **i01380081**

NOTE	REF NO	GRAPHIC REF	PART NUMBER	QTY	PART NAME 1 2 3 4 5 6 (PRODUCT LEVEL)	SEE PAGE
	1	1	**2J-0564**	1	LOCKNUT (2-12 THD)	
	2	1	**2J-1740**	1	SPACER	
J	3	1	**5J-3326**	1	RING-WEAR	
J	4	1	**8T-1788**	1	SEAL	
	5	1	**142-2725**	1	PISTON AS	
	6	1	**9T-7059**	2	PLUNGER	
		1	**1J-8569**	4	INSERT-PISTON	
J	7	1	**132-4907**	1	RING-WEAR (ROD)	
CJ	8	1	**167-2211**	1	SEAL AS-BUFFER	
R	9	1	**9T-2865**	1	ROD AS	
	10	1	**1J-2192**	1	BUSHING	
C	11	1	**9X-7405**	1	SEAL-U-CUP	
CJ	12	1	**162-7209**	1	RING-BACKUP	
J	13	1	**6V-5657**	1	SEAL-O-RING	
	14	1	**2H-3856**	2	BOLT (7/8-9X3.75 IN)	
	15	1	**5P-8249**	6	WASHER-HARD (24X41.5X4MM THK)	
C	16	1	**162-7487**	1	HEAD	
	17	1	**1D-4628**	4	BOLT (7/8-9X3.25 IN)	
R	18	1	**9T-2868**	1	CYLINDER AS	
	19	1	**5J-1193**	2	BEARING-SLEEVE	
CJ	20	1	**167-2474**	1	SEAL-WIPER	
					AVAILABLE REPAIR KIT(S):	
J			**136-5158**	1	KIT-HYDRAULIC CYLINDER SEAL	
					(INCLUDES SEAL-U-CUP)	

C-CHANGE FROM PREVIOUS TYPE
J-KIT MARKED J ALSO INCLUDES PART(S) MARKED J
R-REMFG PART MAY BE AVAILABLE

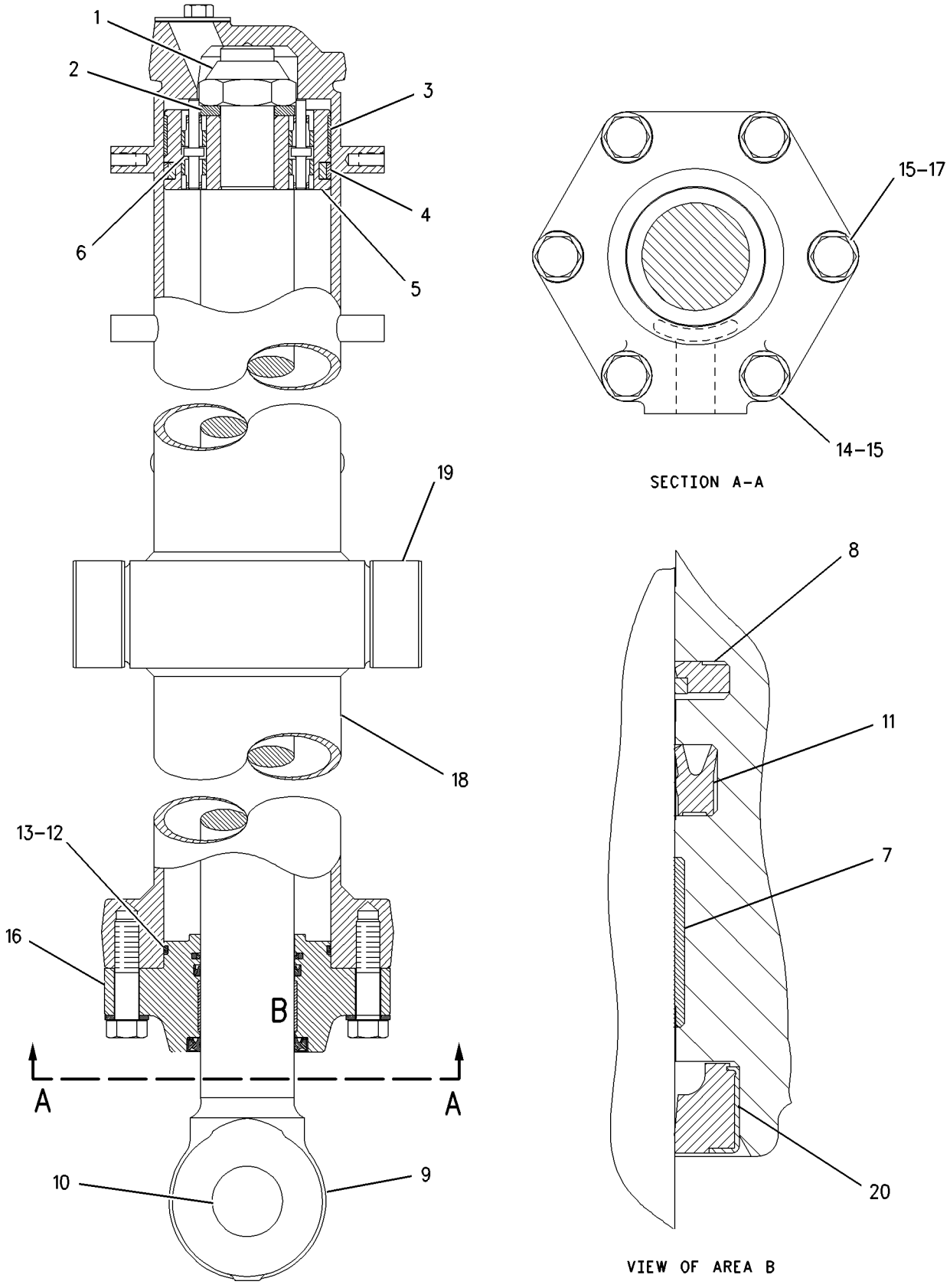

GRAPHIC #1 g00728782

9T-9202 CYLINDER GP-BULLDOZER TILT

S/N: BHA1-UP; BHF1-UP; BHJ1-UP; BHP1-UP
235MM (9.25 IN.) BORE X 238MM (9.40 IN.) STROKE
PART OF 171-6652 PUSH ARM GP-STABILIZER
AN ATTACHMENT

SMCS-5104 **i01423535**

NOTE	REF NO	GRAPHIC REF	PART NUMBER	QTY	PART NAME 1 2 3 4 5 6 (PRODUCT LEVEL)	SEE PAGE
R	1	1	**9T-9199**	1	CYLINDER AS	
	2	1	**4J-2379**	2	BEARING-SLEEVE	
	3	1	**7J-9250**	1	LOCKNUT (3 1/4-12 THD)	
J	4	1	**7J-2087**	1	RING-WEAR	
	5	1	**3G-8633**	1	PISTON	
J	6	1	**1U-3174**	1	SEAL-O-RING (221.62MM ID)	
	7	1	**9T-4447**	1	HEAD	
	8	1	**5J-1572**	6	BOLT (1 1/8-7X4.25IN)	
		1	**3S-1349**	6	WASHER-HARD (31X52.5X6MM THK)	
R	9	1	**9T-1181**	1	ROD AS	
	10	1	**5L-4756**	2	RING-RETAINING	
	11	1	**7T-5459**	1	BEARING AS	
JLN	12	1	**167-2482**	1	SEAL-WIPER	
JLN	13	1	**167-2331**	1	SEAL-U-CUP	
JLN	14	1	**8T-6747**	1	RING-WEAR	
JLN	15	1	**167-2216**	1	SEAL AS-BUFFER	
J	16	1	**4T-4143**	1	SEAL AS	
J	17	1	**158-3032**	1	RING-BACKUP	
	18	1	**3B-8489**	1	FITTING-GREASE	
	19	1	**8T-8383**	1	SEAL-HEAD	
					AVAILABLE REPAIR KIT(S):	
J			**132-4922**	1	KIT-HYDRAULIC CYLINDER SEAL	
					(INCLUDES SEAL-HEAD)	
L			**137-1724**	1	KIT-HYDRAULIC CYLINDER SEAL	
					(INCLUDES SEAL-O RING, RING-WEAR, SEAL AS & SEAL-HEAD)	
N			**137-1741**	1	KIT-HYDRAULIC CYLINDER SEAL	
					(INCLUDES SEAL-O RING, RING-WEAR, SEAL AS & SEAL-HEAD)	

J-KIT MARKED J SERVICES PART(S) MARKED J
L-KIT MARKED L SERVICES PART(S) MARKED L
N-KIT MARKED N SERVICES PART(S) MARKED N
R-REMFG PART MAY BE AVAILABLE

9T-9202 CYLINDER GP-BULLDOZER TILT *(contd.)* i01423535

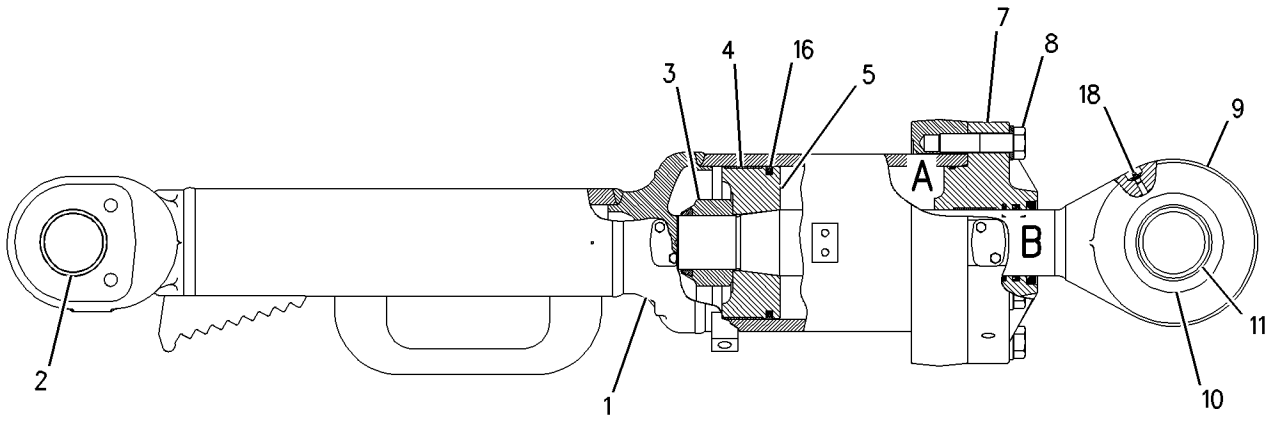

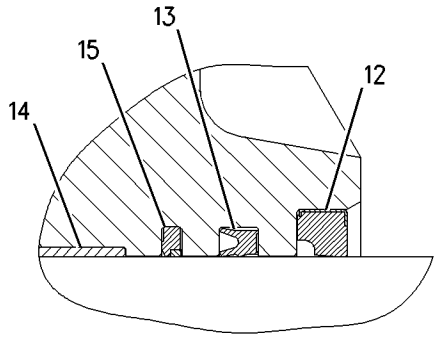

VIEW OF AREA B

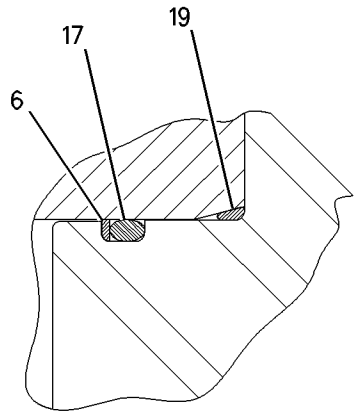

VIEW OF AREA A

GRAPHIC #1 g00747728

HYDRAULIC SYSTEM

9T-9203 CYLINDER GP-BULLDOZER TILT—RH

S/N: AKT1-UP
235MM (9.25IN) BORE X 238MM (9.40IN) STROKE. TWIN TILT BLADE
PART OF 185-7891 CYLINDER AR-DUAL TILT
AN ATTACHMENT

SMCS-5104 **i01440165**

NOTE	REF NO	GRAPHIC REF	PART NUMBER	QTY	PART NAME 1 2 3 4 5 6 (PRODUCT LEVEL)	SEE PAGE
R	1	1	**9T-9201**	1	CYLINDER AS-RH	
		1	**4J-2379**	2	BEARING-SLEEVE	
	2	1	**4J-8734**	1	LOCKNUT	
C	3	1	**118-0609**	1	PISTON AS	
	4	1	**118-0612**	2	PLUNGER	
	5	1	**118-0611**	4	INSERT	
	6	1	**5M-0544**	6	BOLT (1 1/8-7X4.5 IN)	
		1	**3S-1349**	6	WASHER-HARD (31X52.5X6MM THK)	
	7	1	**6E-3667**	1	HEAD	
C	8	1	**107-0576**	2	WASHER (85X120X4.76MM THK)	
R	9	1	**9T-9682**	1	ROD AS	
	10	1	**117-3006**	1	BEARING	
	11	1	**5L-4756**	1	RING-RETAINING	
C	12	1	**167-2482**	1	SEAL-WIPER	
C	13	1	**167-2331**	1	SEAL-U-CUP	
C	14	1	**167-2216**	1	SEAL AS-BUFFER	
	15	1	**8T-6747**	1	RING-WEAR	
C	16	1	**158-3032**	1	RING-BACKUP	
	17	1	**1U-3174**	1	SEAL-O-RING (221.62MM ID)	
	18	1	**4T-4143**	1	SEAL AS	
	19	1	**7J-2087**	1	RING-WEAR	
C	20	1	**3B-8489**	1	FITTING-GREASE	

C-CHANGE FROM PREVIOUS TYPE
R-REMFG PART MAY BE AVAILABLE

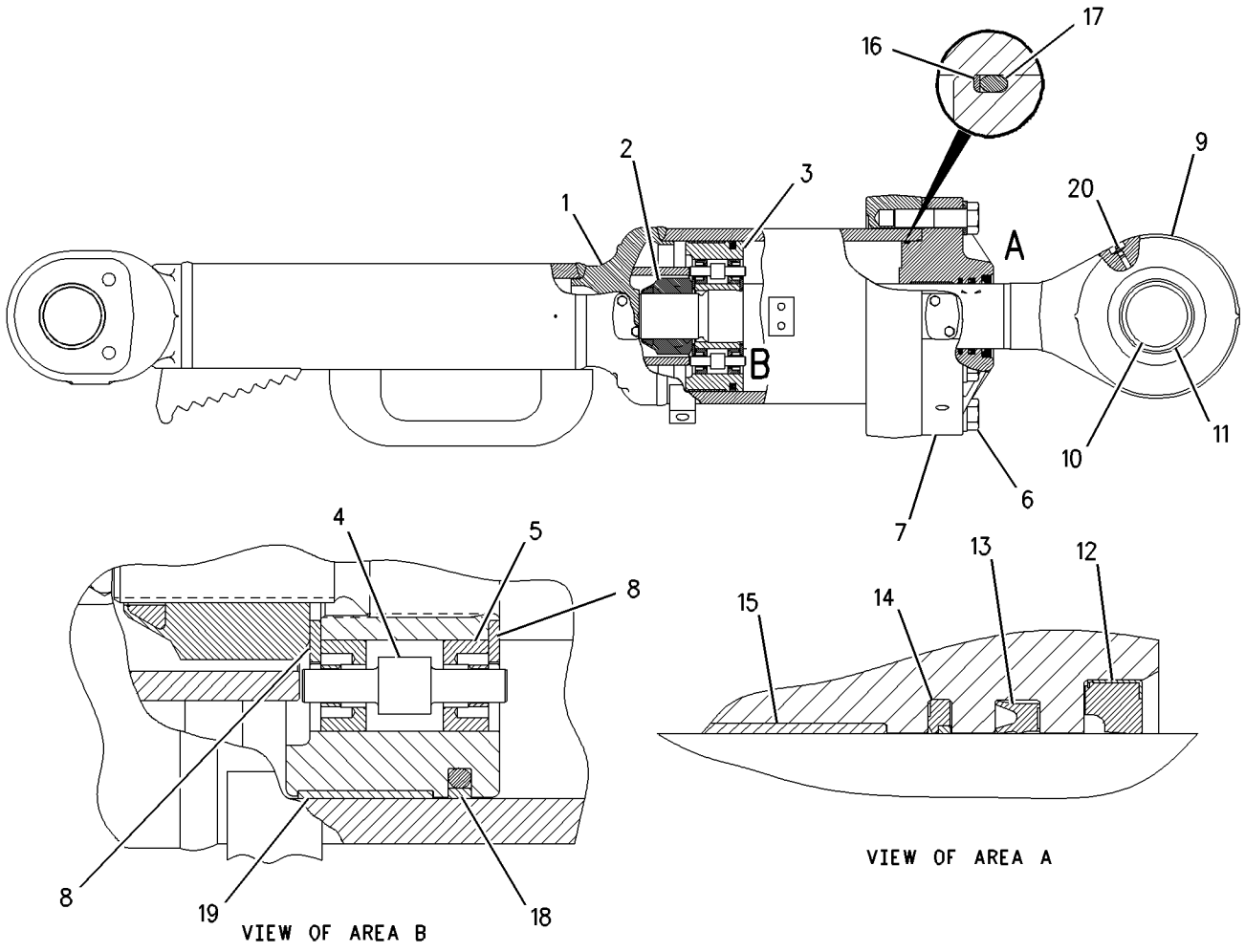

GRAPHIC #1 g00747689

HYDRAULIC SYSTEM

9T-9204 CYLINDER GP-BULLDOZER TILT—LH

S/N: AKT1-UP
235 MM (9.25 IN) BORE X 238 MM (9.40 IN) STROKE. TWIN TILT BLADE
PART OF 185-7891 CYLINDER AR-DUAL TILT
AN ATTACHMENT

SMCS-5104 **i01440161**

NOTE	REF NO	GRAPHIC REF	PART NUMBER	QTY	PART NAME 1 2 3 4 5 6 (PRODUCT LEVEL)	SEE PAGE
R	1	1	**9T-9200**	1	CYLINDER AS	
		1	**4J-2379**	2	BEARING-SLEEVE	
	2	1	**4J-8734**	1	LOCKNUT	
	3	1	**7J-2087**	1	RING-WEAR	
	4	1	**4T-4143**	1	SEAL AS	
C	5	1	**118-0609**	1	PISTON AS	
	6	1	**118-0611**	4	INSERT	
	7	1	**118-0612**	2	PLUNGER	
	8	1	**5M-0544**	6	BOLT (1 1/8-7X4.5 IN)	
		1	**3S-1349**	6	WASHER-HARD (31X52.5X6MM THK)	
	9	1	**6E-3667**	1	HEAD	
C	10	1	**107-0576**	2	WASHER (85X120X4.76MM THK)	
C	11	1	**167-2216**	1	SEAL AS-BUFFER	
C	12	1	**167-2331**	1	SEAL-U-CUP	
R	13	1	**9T-9682**	1	ROD AS	
		1	**5L-4756**	2	RING-RETAINING	
		1	**117-3006**	1	BEARING	
C	14	1	**167-2482**	1	SEAL-WIPER	
	15	1	**1U-3174**	1	SEAL-O-RING (221.62MM ID)	
C	16	1	**158-3032**	1	RING-BACKUP	
	17	1	**8T-6747**	1	RING-WEAR	
C	18	1	**3B-8489**	1	FITTING-GREASE	

C-CHANGE FROM PREVIOUS TYPE
R-REMFG PART MAY BE AVAILABLE

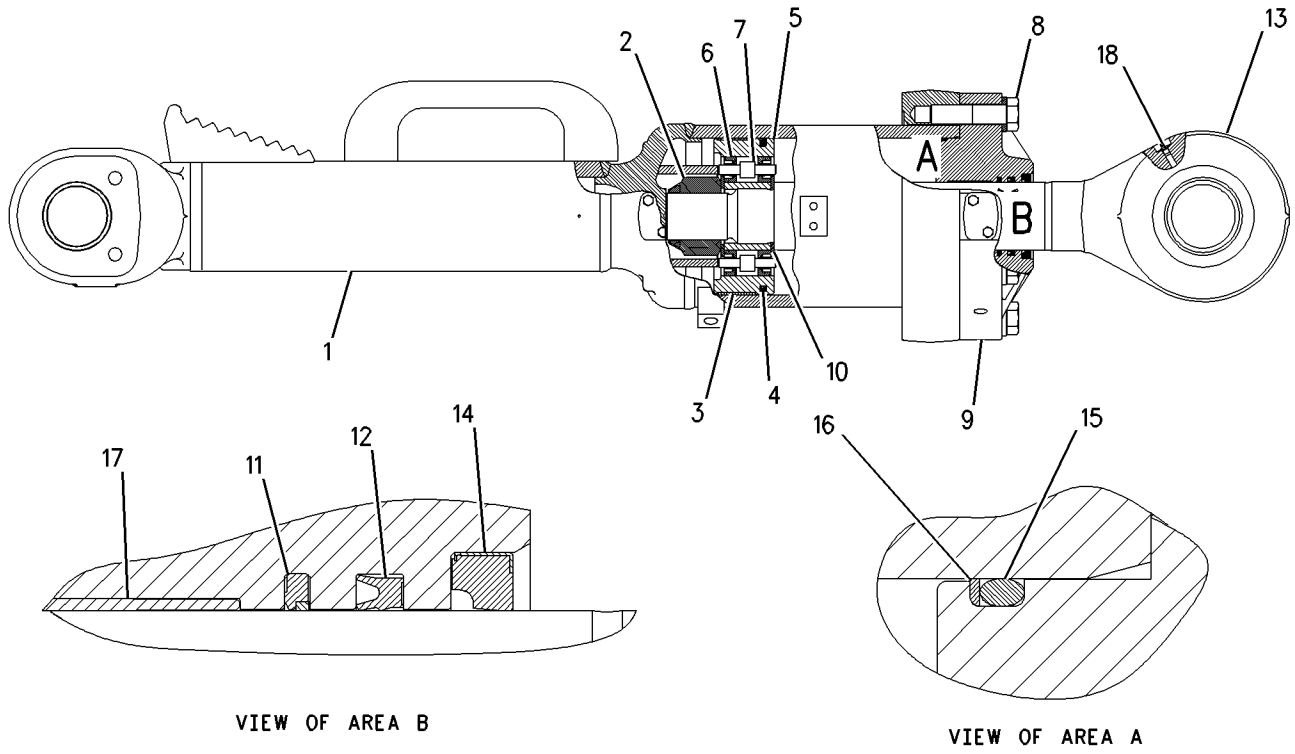

GRAPHIC #1 g00747697

HYDRAULIC SYSTEM

192-6445 CYLINDER GP-RIPPER LIFT

S/N: 4PP1-UP; BRT1-UP; BEY1-UP
234.95MM (9.25 IN) BORE X 535MM (21.06 IN) STROKE
PART OF 119-8210, 180-2401, 180-2404 RIPPER AR
AN ATTACHMENT

SMCS-5352 **i01436912**

NOTE	REF NO	GRAPHIC REF	PART NUMBER	QTY	PART NAME 1 2 3 4 5 6 (PRODUCT LEVEL)	SEE PAGE
R	1	1	**4T-5114**	1	CYLINDER AS	
		1	**7J-2086**	1	FLANGE	
		1	**3G-7624**	1	BEARING-SLEEVE	
	2	1	**4J-6888**	1	LOCKNUT (2 3/4-12 THD)	
	3	1	**173-7756**	2	WASHER (70.1X114.0X6.4MM THK)	
	4	1	**7J-2087**	1	RING-WEAR	
	5	1	**4T-4143**	1	SEAL AS	
	6	1	**7J-4083**	1	PISTON	
	7	1	**192-6448**	1	ROD AS	
		1	**9J-6549**	1	BEARING-SLEEVE	
	8	1	**1U-3173**	1	RING-BACKUP	
	9	1	**1U-3174**	1	SEAL-O-RING (221.62MM ID)	
	10	1	**8T-8383**	1	SEAL-HEAD	
	11	1	**192-6447**	1	HEAD	
	12	1	**3B-8489**	2	FITTING-GREASE	
	13	1	**132-4907**	1	RING-WEAR (ROD)	
	14	1	**167-2211**	1	SEAL AS-BUFFER	
	15	1	**167-2324**	1	SEAL-U-CUP	
	16	1	**167-2474**	1	SEAL-WIPER	
	17	1	**5P-8250**	6	WASHER (28X49X5MM THK)	
	18	1	**1D-4637**	6	BOLT (1-8X3.25 IN)	
	19	1	**1P-4577**	4	FLANGE-HALF	
	20	1	**5S-7382**	8	BOLT (3/8-16X1.375 IN)	
	21	1	**8T-4896**	8	WASHER-HARD (10.2X18.5X2.5MM THK)	
	22	1	**4J-0520**	2	SEAL-O-RING (32.92MM ID)	
	23	1	**5H-4019**	2	COVER	

R-REMFG PART MAY BE AVAILABLE

192-6445 CYLINDER GP-RIPPER LIFT *(contd.)* i01436912

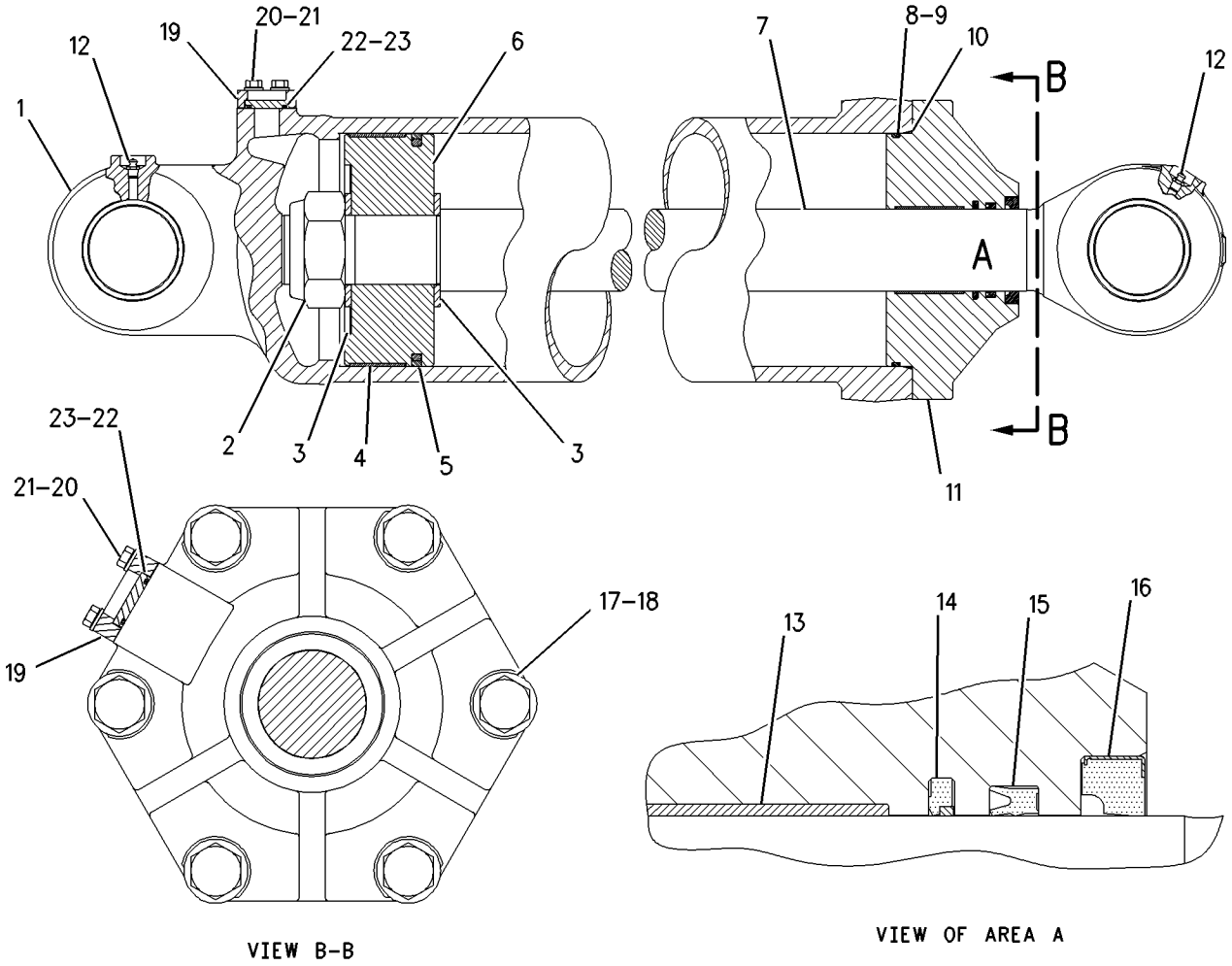

GRAPHIC #1 g00753368

HYDRAULIC SYSTEM

192-6446 CYLINDER GP-RIPPER LIFT

S/N: 4PP1-UP; BRT1-UP; BEY1-UP
234.95MM (9.25 IN) BORE X 535MM (21.06 IN)STROKE
PART OF 119-8210, 180-2401, 180-2404 RIPPER AR
AN ATTACHMENT

SMCS-5352 **i01701078**

NOTE	REF NO	GRAPHIC REF	PART NUMBER	QTY	PART NAME 1 2 3 4 5 6 (PRODUCT LEVEL)	SEE PAGE
R	1	1	**4T-5114**	1	CYLINDER AS	
		1	**7J-2086**	1	FLANGE	
		1	**3G-7624**	1	BEARING-SLEEVE	
	2	1	**4J-6888**	1	LOCKNUT	
	3	1	**173-7756**	2	WASHER (70.1X114.0X6.4MM THK)	
	4	1	**7J-2087**	1	RING-WEAR	
	5	1	**4T-4143**	1	SEAL AS	
	6	1	**7J-4083**	1	PISTON	
	7	1	**192-6448**	1	ROD AS	
		1	**9J-6549**	1	BEARING-SLEEVE	
	8	1	**1U-3173**	1	RING-BACKUP	
	9	1	**1U-3174**	1	SEAL-O-RING	
	10	1	**8T-8383**	1	SEAL-HEAD	
	11	1	**192-6447**	1	HEAD	
	12	1	**3B-8489**	2	FITTING-GREASE (1/8-27 THD)	
	13	1	**132-4907**	1	RING-WEAR (ROD)	
	14	1	**167-2211**	1	SEAL AS-BUFFER	
	15	1	**167-2324**	1	SEAL-U-CUP	
	16	1	**167-2474**	1	SEAL-WIPER	
	17	1	**5P-8250**	6	WASHER (28X49X5MM THK)	
	18	1	**1D-4637**	6	BOLT (1-8X3.25 IN)	
	19	1	**1P-4577**	4	FLANGE-HALF	
	20	1	**5S-7382**	8	BOLT (3/8-16X1.375 IN)	
	21	1	**8T-4896**	8	WASHER-HARD (10.2X18.5X2.5MM THK)	
	22	1	**4J-0520**	2	SEAL-O-RING	
	23	1	**5H-4019**	2	COVER	

R-REMFG PART MAY BE AVAILABLE

192-6446 CYLINDER GP-RIPPER LIFT *(contd.)* i01701078

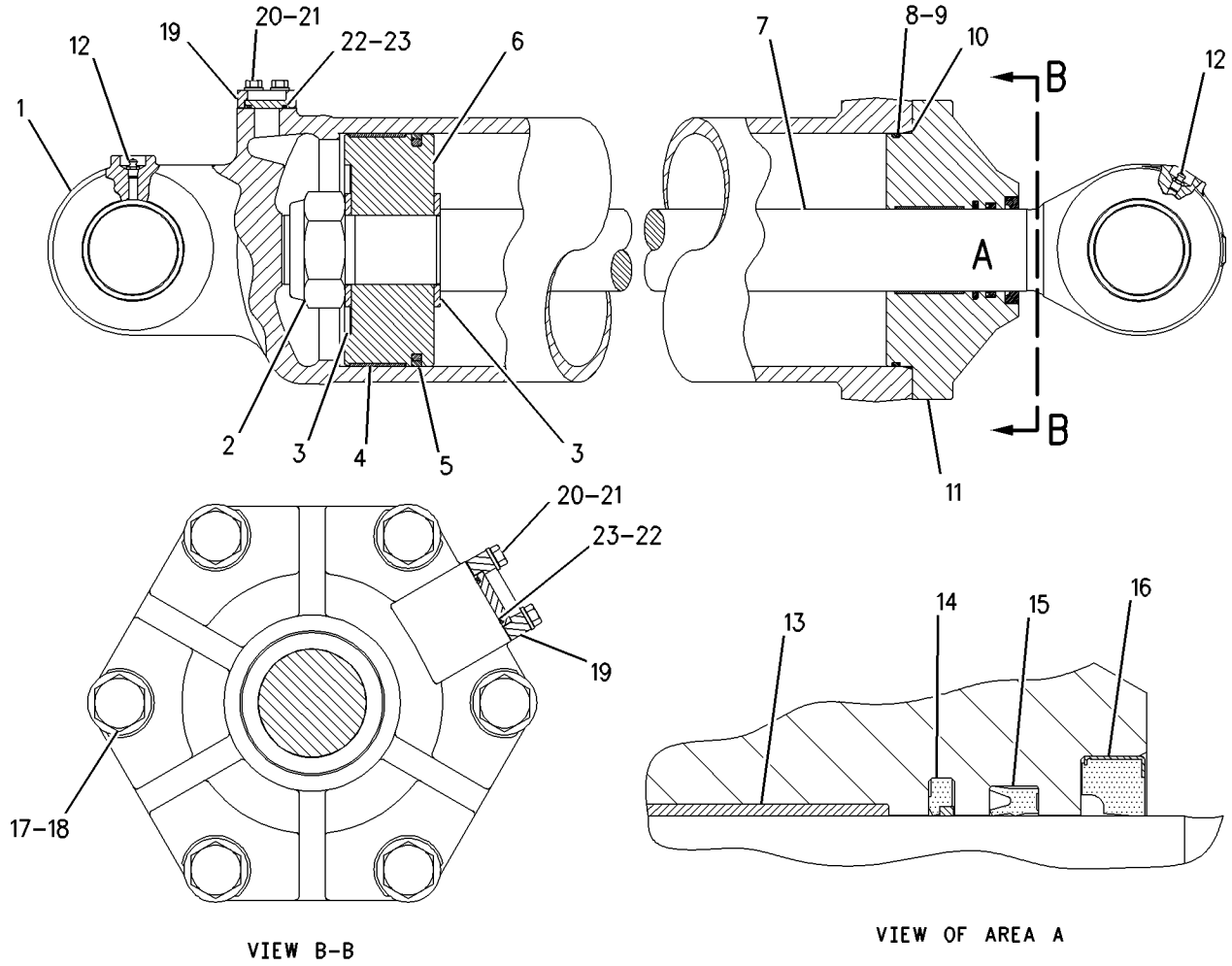

VIEW B-B

VIEW OF AREA A

GRAPHIC #1 g00753375

HYDRAULIC SYSTEM

6E-3113 CYLINDER GP-RIPPER PIN PULLER

S/N: AKT1-UP
101.6MM (4 IN.) BORE X 138.5MM (5.5 IN.) STROKE
PART OF 178-1784 PULLER AR-PIN
AN ATTACHMENT

SMCS-5354 **i01404527**

NOTE	REF NO	GRAPHIC REF	PART NUMBER	QTY	PART NAME 1 2 3 4 5 6 (PRODUCT LEVEL)	SEE PAGE
M	1	1	**173-9779**	1	BOLT-HEX HEAD (M24X3.0X80MM)	
	2	1	**6J-2797**	1	RING-WEAR	
	3	1	**5J-5402**	1	SEAL AS	
	4	1	**9T-3493**	1	PISTON	
	5	1	**6V-8237**	1	WASHER (26X44X4MM THK)	
	6	1	**4T-6907**	1	RING-WEAR	
	7	1	**6E-3980**	1	ROD AS	
	8	1	**167-2452**	1	SEAL-WIPER	
	9	1	**167-2300**	1	SEAL-U-CUP	
	10	1	**167-2190**	1	SEAL AS-BUFFER	
	11	1	**2K-6830**	1	RING-BACKUP	
	12	1	**175-7900**	1	SEAL-O-RING (98.02MM ID)	
	13	1	**6E-4976**	1	HEAD	
	14	1	**6E-3976**	1	CYLINDER AS	

M-METRIC PART

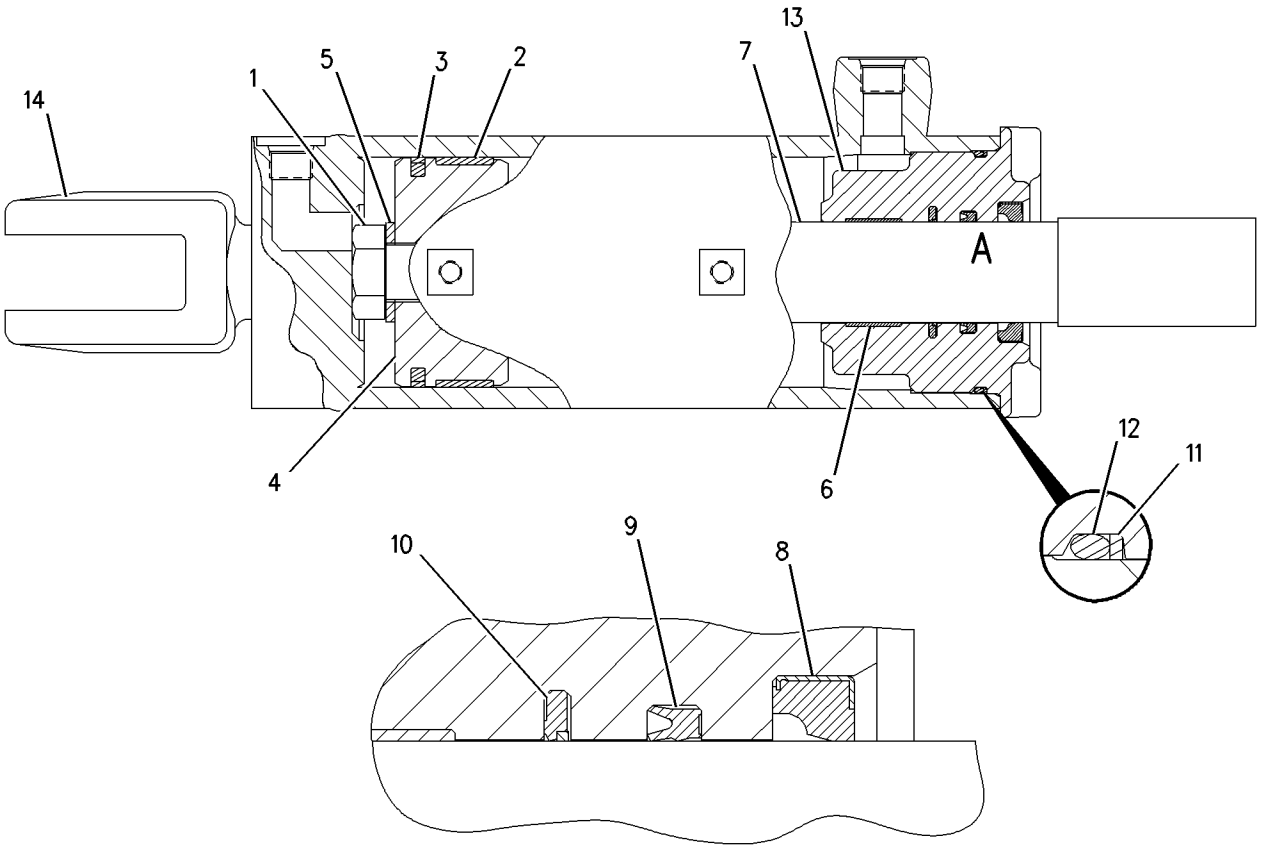

VIEW OF AREA A

GRAPHIC #1 g00719216

MEMORANDA

HYDRAULIC SYSTEM

4T-9977 CYLINDER GP-RIPPER TILT

S/N: 4PP1-UP; BRT1-UP; BEY1-UP
209.6MM (8.25 IN.) BORE X 660MM (26 IN.) STROKE
PART OF 119-8210, 180-2401, 180-2404 RIPPER AR
AN ATTACHMENT

SMCS-5356 **i01701081**

NOTE	REF NO	GRAPHIC REF	PART NUMBER	QTY	PART NAME 1 2 3 4 5 6 (PRODUCT LEVEL)	SEE PAGE
	1	1	**3B-8489**	2	FITTING-GREASE (1/8-27 THD)	
	2	1	**105-4172**	1	PISTON	
	3	1	**5J-3488**	1	LOCKNUT	
	4	1	**8T-6745**	1	RING-WEAR	
	5	1	**4J-7376**	1	RING-WEAR	
	6	1	**5J-5559**	1	SEAL AS	
	7	1	**119-8455**	2	WASHER (57.3X100X6.35MM THK)	
	8	1	**8J-4386**	1	SEAL-O-RING	
	9	1	**3G-3747**	1	RING-BACKUP	
	10	1	**1D-4631**	2	BOLT (7/8-9X4.25 IN)	
	11	1	**5P-8249**	8	WASHER-HARD (24X41.5X4MM THK)	
R	12	1	**105-4169**	1	ROD AS	
	12A	1	**3J-6484**	2	BEARING-SLEEVE	
	12B	1	**4J-4955**	1	SPACER	
	13	1	**8T-4896**	8	WASHER-HARD (10.2X18.5X2.5MM THK)	
	14	1	**167-2209**	1	SEAL AS-BUFFER	
	15	1	**167-2320**	1	SEAL-U-CUP	
	16	1	**167-2471**	1	SEAL-WIPER	
	17	1	**1D-4627**	6	BOLT (7/8-9X3 IN)	
	18	1	**100-9965**	1	HEAD	
R	19	1	**9T-0085**	1	CYLINDER AS	
	19A	1	**3J-6484**	2	BEARING-SLEEVE	
	19B	1	**4J-4955**	1	SPACER	
	20	1	**5S-7382**	8	BOLT (3/8-16X1.375 IN)	
	21	1	**1P-4577**	4	FLANGE-HALF	
	22	1	**8T-8382**	1	SEAL-HEAD	

R-REMFG PART MAY BE AVAILABLE

4T-9977 CYLINDER GP-RIPPER TILT *(contd.)* i01701081

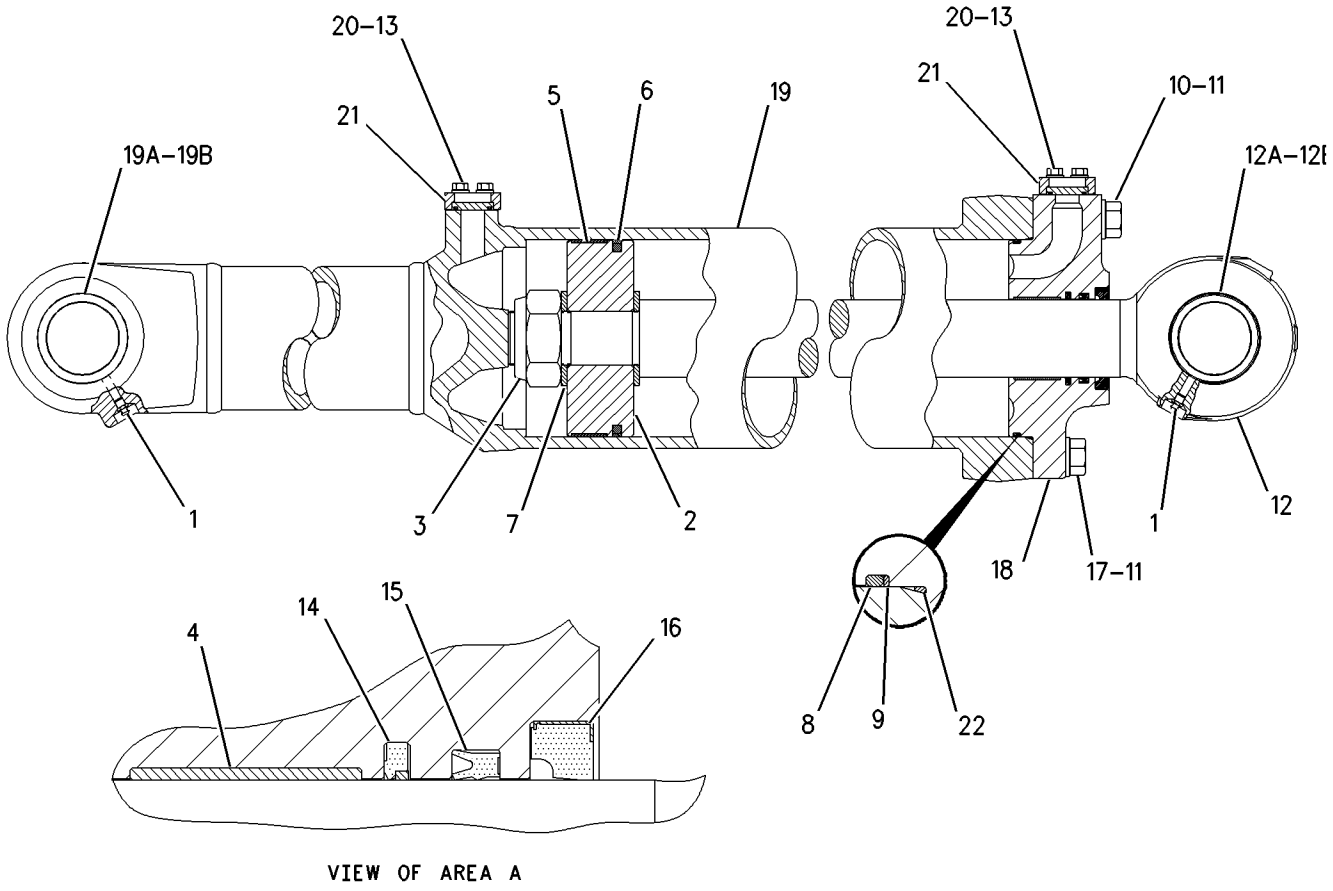

VIEW OF AREA A

GRAPHIC #1 g00860306

HYDRAULIC SYSTEM

155-6061 FILTER GP-OIL

S/N: AKT1-UP

PART OF 173-7752 LINES GP-PILOT

SMCS-5068 **i01665636**

NOTE	REF NO	GRAPHIC REF	PART NUMBER	QTY	PART NAME 1 2 3 4 5 6 (PRODUCT LEVEL)	SEE PAGE
	1	1	**134-0964**	1	FILTER ELEMENT-HYDRAULIC (ELECTRICAL/HYDRAULIC VALVE)	
	2	1	**3J-1907**	1	SEAL-O-RING	
	3	1	**6R-0365**	1	SEAL-O-RING	
	4	1	**136-7032**	1	HOUSING-HYDRAULIC OIL FILTER	
	5	1	**3K-0360**	1	SEAL-O-RING	
	6	1	**9S-4185**	1	PLUG	
	7	1	**156-1382**	1	SWITCH AS (DIFFERENTIAL PRESSURE)	
		1	**102-8802**	1	KIT-RECEPTACLE (2 PIN)	
					(INCLUDES RECEPTACLE AS & WEDGE)	
		1	**3E-3365**	1	WEDGE-RECEPTACLE LOCK (2 PIN)	
		1	**8T-8729**	2	PIN-CONNECTOR	
E		1	**9X-1813**		SLEEVE (14CM)	
	8	1	**5F-9144**	1	SEAL-O-RING	

E-ORDER BY THE CENTIMETER

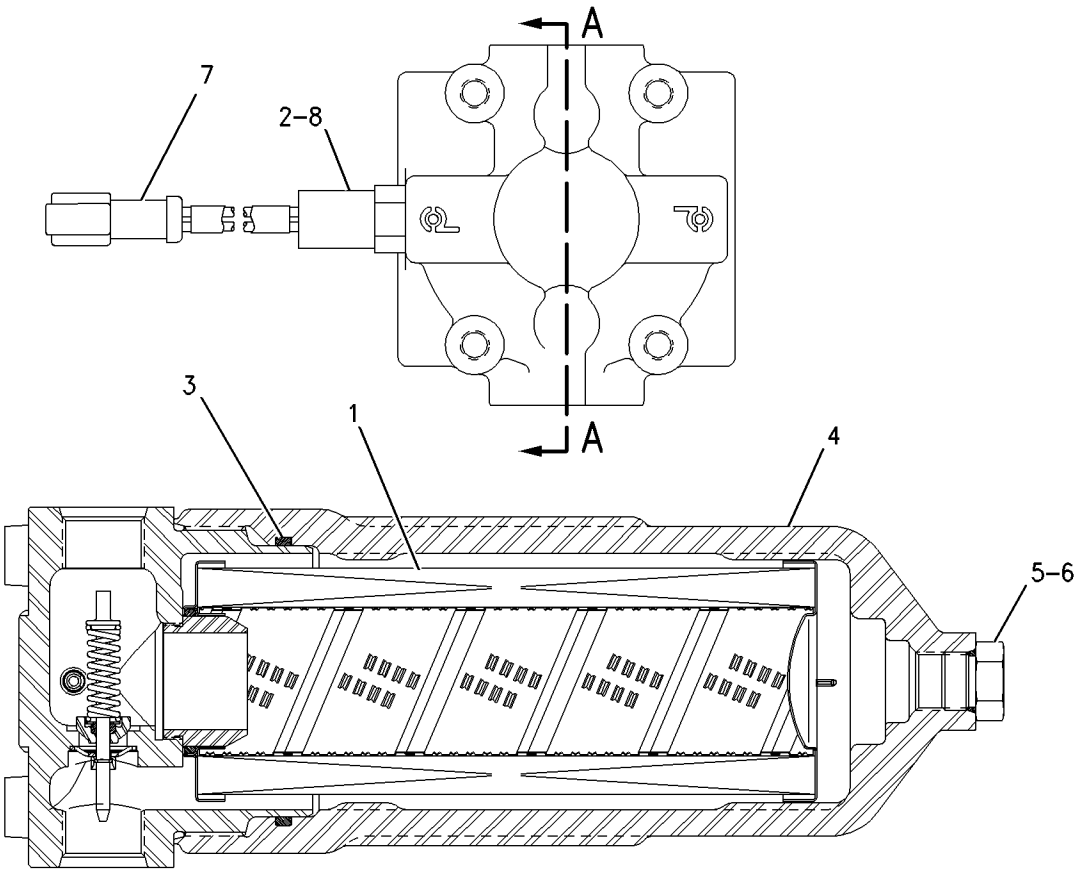

SECTION A-A

GRAPHIC #1 g00865259

MEMORANDA

HYDRAULIC SYSTEM

172-7184 LINES GP-LIFT CYLINDER

S/N: AKT1-UP

PART OF 171-5803 CONTROL AR-HYDRAULIC

SMCS-5057, 5102 **i01440869**

NOTE	REF NO	GRAPHIC REF	PART NUMBER	QTY	PART NAME 1 2 3 4 5 6 (PRODUCT LEVEL)	SEE PAGE
	1	1	**3P-6308**	2	ADAPTER	
	2	1	**116-9692**	1	MANIFOLD	
I	3	1	**174-3890**	2	HOSE AS	
	4	1	**179-4830**	1	TUBE AS	
	5	1	**179-4831**	1	TUBE AS	
	6	1	**187-1951**	1	MANIFOLD AS	
	7	1	**187-3057**	2	TUBE AS	
I	8	1	**198-9320**	2	HOSE AS	
	9	1	**199-2722**	1	PLATE AS	
	10	1	**199-5687**	1	GUARD	
	11	1	**115-8981**	1	CLIP	
	12	1	**1P-3705**	4	SEAL-RECTANGULAR (44.7MM ID)	
	13	1	**1P-4577**	8	FLANGE-HALF	
	14	1	**1P-4578**	12	FLANGE-HALF	
	15	1	**4J-0520**	4	SEAL-O-RING	
	16	1	**4J-0522**	8	SEAL-O-RING	
	17	1	**4L-6454**	2	BOLT (3/8-16X1 IN)	
	18	1	**5H-4019**	4	COVER	
	19	1	**5M-3062**	2	BOLT (3/8-16X0.75 IN)	
	20	1	**5P-1075**	2	WASHER-HARD (10.2X22.5X3MM THK)	
	21	1	**5P-2228**	2	BOLT (1/2-13X1 IN)	
	22	1	**5P-2566**	2	BOLT (1/2-13X1.5 IN)	
	23	1	**5S-7382**	16	BOLT (3/8-16X1.375 IN)	
	24	1	**5S-7383**	2	BOLT (3/8-16X1.75 IN)	
	25	1	**6V-8188**	2	NUT (1/2-13 THD)	
	26	1	**6V-8400**	2	SEAL-O-RING	
	27	1	**7G-3413**	1	CLIP (SLOT)	
	28	1	**7G-3414**	1	CLIP (TAB)	
	29	1	**7G-3415**	1	GROMMET	
	30	1	**7X-0311**	16	BOLT (7/16-14X2.25 IN)	
	31	1	**7X-0313**	8	BOLT (7/16-14X2.75IN)	
	32	1	**8T-4223**	8	WASHER-HARD (13.5X25.5X3MM THK)	
	33	1	**8T-4896**	20	WASHER-HARD (10.2X18.5X2.5MM THK)	
	34	1	**8T-5360**	40	WASHER (12X22.5X2.5MM THK)	
	35	1	**8T-8916**	16	BOLT (7/16-14X1.5 IN)	
	36	1	**8T-8919**	2	BOLT (1/2-13X1.75 IN)	
	37	1	**9D-6197**	2	CLIP (TAB)	
	38	1	**9V-5382**	2	GROMMET	

I-SEE HOSE FABRICATION GUIDE

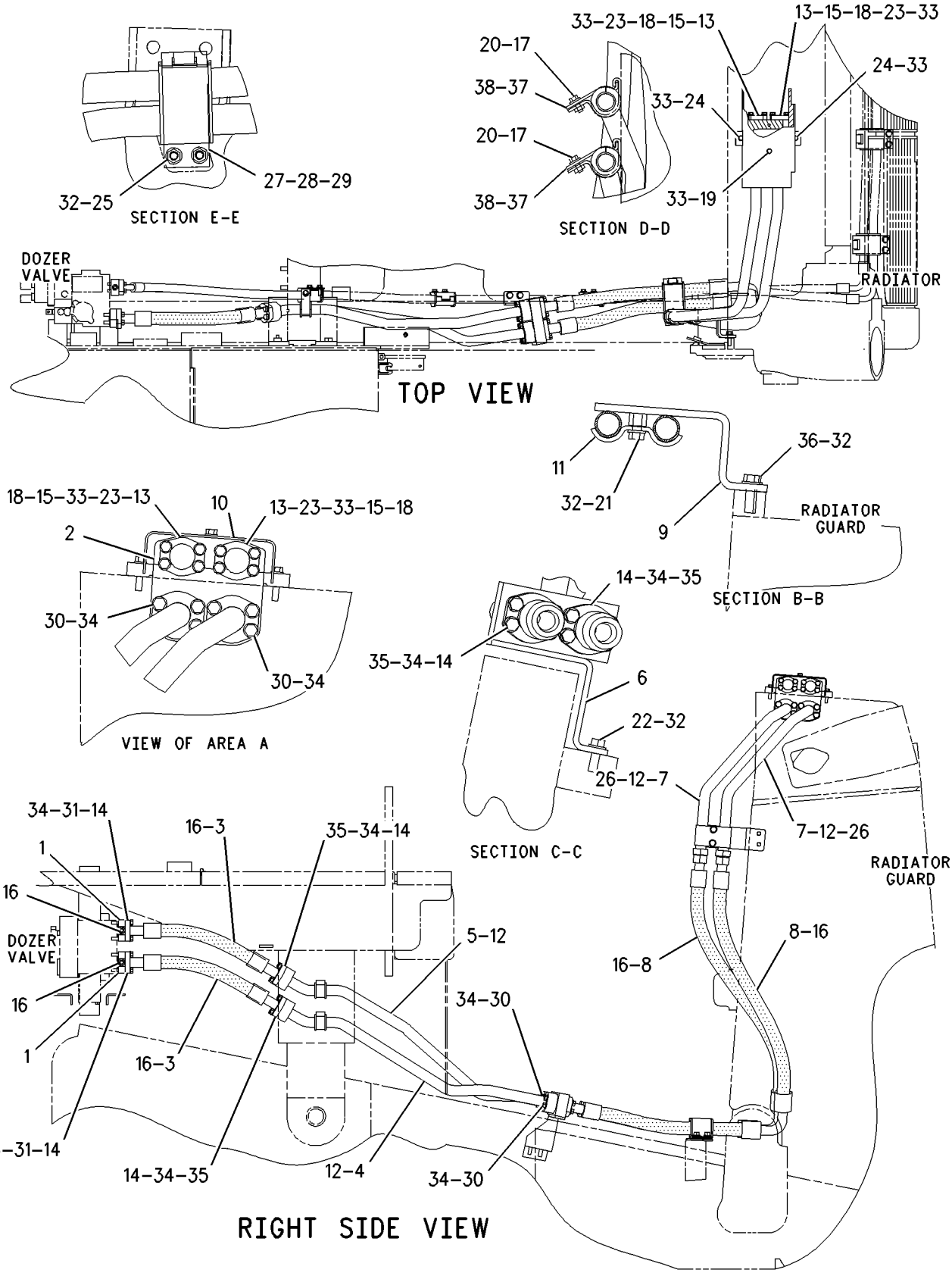

GRAPHIC #1 g00809497

HYDRAULIC SYSTEM

172-7852 LINES GP-MOTOR

S/N: AKT1-UP

PART OF 171-5803 CONTROL AR-HYDRAULIC

SMCS-5057 **i01690663**

NOTE	REF NO	GRAPHIC REF	PART NUMBER	QTY	PART NAME 1 2 3 4 5 6 (PRODUCT LEVEL)	SEE PAGE
	1	1	**6V-0852**	1	CAP-DUST	
	2	1	**7W-3447**	4	SPACER (10.2X19.05X10.2MM THK)	
	3	1	**9G-6935**	1	ELBOW	
	4	1	**9G-6936**	1	ELBOW	
Y	5	1	**174-0827**	1	VALVE GP-COMBINATION	553
I	6	1	**174-7823**	1	HOSE AS	
I	7	1	**174-7824**	1	HOSE AS	
I	8	1	**186-2499**	1	HOSE AS	
I	9	1	**186-2500**	1	HOSE AS	
I	10	1	**186-2501**	1	HOSE AS	
I	11	1	**186-2505**	1	HOSE AS	
I	12	1	**186-2506**	1	HOSE AS	
I	13	1	**186-2622**	1	HOSE AS	
	14	1	**200-7753**	1	TUBE AS	
	15	1	**200-7754**	1	TUBE AS	
	16	1	**200-7756**	1	TUBE AS	
	17	1	**207-5996**	1	PLATE AS	
	18	1	**211-2043**	1	MANIFOLD	
	19	1	**211-2073**	1	PLATE	
	20	1	**214-5098**	1	HOSE AS	
	21	1	**068-1577**	1	CLAMP	
	22	1	*148-8318*	1	CONNECTOR GP	
		1	**3K-0360**	1	SEAL-O-RING	
		1	**6V-8397**	1	SEAL-O-RING	
		1	**6V-8634**	1	CONNECTOR	
	23	1	*148-8335*	1	CONNECTOR GP	
		1	**5K-9090**	1	SEAL-O-RING	
		1	**6V-8635**	1	CONNECTOR	
		1	**7M-8485**	1	SEAL-O-RING	
	24	1	*148-8339*	3	CONNECTOR GP	
					(EACH INCLUDES)	
		1	**6V-8716**	1	CONNECTOR	
		1	**6V-9746**	1	SEAL-O-RING	
		1	**7M-8485**	1	SEAL-O-RING	
	25	1	*148-8340*	2	CONNECTOR GP	
					(EACH INCLUDES)	
		1	**3K-0360**	1	SEAL-O-RING	
		1	**6V-8398**	1	SEAL-O-RING	
		1	**6V-8639**	1	CONNECTOR	
	26	1	*148-8342*	2	CONNECTOR GP	
					(EACH INCLUDES)	
		1	**3K-0360**	1	SEAL-O-RING	
		1	**6V-8632**	1	CONNECTOR	
		1	**7J-9108**	1	SEAL-O-RING	
	27	1	*148-8378*	1	ELBOW GP	
		1	**6V-8397**	1	SEAL-O-RING	
		1	**3J-1907**	1	SEAL-O-RING	
		1	**6V-8724**	1	ELBOW	
	28	1	*148-8407*	1	PLUG GP	
		1	**3J-1907**	1	SEAL-O-RING	
		1	**9S-4191**	1	PLUG	
	29	1	*148-8421*	1	TEE AS-ORFS	
		1	**3D-2824**	1	SEAL-O-RING	
		1	**6V-8397**	1	SEAL-O-RING	
		1	**6V-9746**	1	SEAL-O-RING	
		1	**8T-2883**	1	TEE	

172-7852 **LINES GP-MOTOR** ***(contd.)*** **i01690663**

NOTE	REF NO	GRAPHIC REF	PART NUMBER	QTY	PART NAME 1 2 3 4 5 6 (PRODUCT LEVEL)	SEE PAGE
	30	1	*153-6237*	1	ELBOW GP	
		1	**6V-9746**	3	SEAL-O-RING	
		1	**3D-2824**	1	SEAL-O-RING	
		1	**6V-9004**	1	ELBOW	
	31	1	*164-5567*	1	FITTING GP (QUICK DISCONNECT)	
		1	**3J-1907**	1	SEAL-O-RING	
		1	**6V-3965**	1	FITTING AS	
	32	1	*164-6858*	1	TEE GP	
		1	**5K-9090**	2	SEAL-O-RING	
		1	**6V-8778**	1	TEE-FACE SEAL	
		1	**7M-8485**	1	SEAL-O-RING	
	33	1	**1P-4577**	4	FLANGE-HALF	
	34	1	**1P-4578**	2	FLANGE-HALF	
	35	1	**3G-8047**	1	GROMMET	
	36	1	**3G-8054**	1	CLIP (TAB)	
	37	1	**3G-8057**	1	CLIP (SLOT)	
	38	1	**4H-2633**	1	CLIP	
	39	1	**4J-0520**	4	SEAL-O-RING	
	40	1	**4J-0522**	1	SEAL-O-RING	
	41	1	**4L-6459**	4	BOLT (3/8-16X2.5 IN)	
	42	1	**4L-9337**	2	BOLT (3/8-16X1.5 IN)	
	43	1	**4M-2743**	1	STUD-TAPERLOCK (3/8-16 THD)	
	44	1	**5M-3062**	2	BOLT (3/8-16X0.75 IN)	
	45	1	**5P-7468**	1	CLIP (SLOT)	
	46	1	**5P-7469**	1	CLIP (TAB)	
	47	1	**5S-7382**	8	BOLT (3/8-16X1.375 IN)	
	48	1	**5S-7383**	4	BOLT (3/8-16X1.75 IN)	
	49	1	**6V-8397**	1	SEAL-O-RING	
	50	1	**6V-8398**	2	SEAL-O-RING	
	51	1	**6V-8801**	1	NUT (3/8-16 THD)	
	52	1	**6V-9169**	1	NUT-BULKHEAD (13/16-16 THD)	
	53	1	**6V-9746**	1	SEAL-O-RING	
	54	1	**6V-9829**	1	CAP AS	
		1	**6V-8553**	1	NUT	
		1	**6V-9355**	1	PLUG	
	55	1	**7J-9108**	1	SEAL-O-RING	
	56	1	**8M-2773**	1	CLIP	
	57	1	**8S-0948**	1	CLIP	
	58	1	**8T-2502**	2	BOLT (3/8-16X1.125 IN)	
	59	1	**8T-4896**	25	WASHER-HARD (10.2X18.5X2.5MM THK)	
	60	1	**8T-5360**	4	WASHER (12X22.5X2.5MM THK)	
	61	1	**8T-5465**	1	ELBOW	
	62	1	**8T-7087**	1	GROMMET	
	63	1	**8T-8915**	2	BOLT (3/8-16X3.25 IN)	
	64	1	**8T-8916**	4	BOLT (7/16-14X1.5 IN)	
	65	1	**9B-7237**	4	BOLT (3/8-16X1.25 IN)	
	66	1	**5P-8249**	1	WASHER-HARD (24X41.5X4MM THK)	

I-SEE HOSE FABRICATION GUIDE
Y-SEPARATE ILLUSTRATION

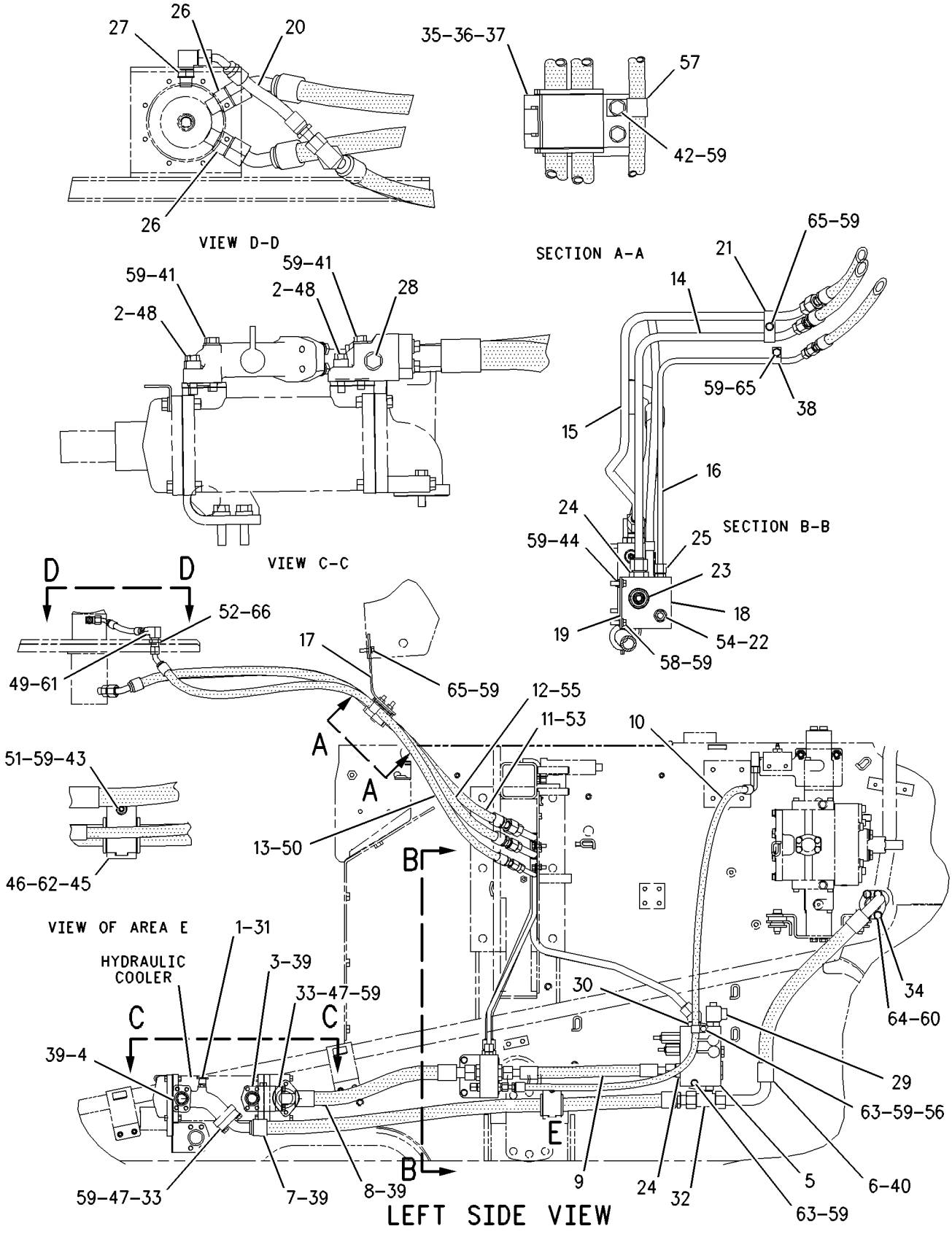

GRAPHIC #1 g00871075

MEMORANDA

HYDRAULIC SYSTEM

173-7752 LINES GP-PILOT

S/N: AKT1-UP

PART OF 171-5803 CONTROL AR-HYDRAULIC

SMCS-5057 **i01701123**

NOTE	REF NO	GRAPHIC REF	PART NUMBER	QTY	PART NAME 1 2 3 4 5 6 (PRODUCT LEVEL)	SEE PAGE
	1	1	**7T-9745**	1	MANIFOLD-VALVE	
I	2	2	**102-5912**	1	HOSE AS	
	3	1	**126-0814**	5	FITTING AS	
					(EACH INCLUDES)	
		1	**6V-0852**	1	CAP-DUST	
	4	1	**132-1204**	1	VALVE GP-CHECK	
		1	**3J-1907**	1	SEAL-O-RING	
		1	**6V-8397**	1	SEAL-O-RING	
Y	5	1	**173-3205**	1	VALVE GP-PILOT	568
	6	2	*148-8443*	1	TEE GP	
		2	**3J-1907**	1	SEAL-O-RING	
		2	**6V-8397**	1	SEAL-O-RING	
		2	**7X-2459**	1	TEE-O-RING	
Y	7	1	**152-8340**	1	VALVE GP-SOLENOID (24VDC)	577
I	8	1	**154-9763**	1	HOSE AS	
Y	9	1	**155-6061**	1	FILTER GP-OIL	502
	10	1	**156-7389**	1	BRACKET AS	
		1	**7T-1099**	1	LINK	
	11	1	**162-3892**	1	MANIFOLD	
	12	2	**162-5239**	1	MANIFOLD AS	
		2	**2M-9780**	1	SEAL-O-RING	
		2	**4B-9783**	1	BALL	
		2	**6J-3134**	1	SEAL-O-RING	
		2	**8J-1751**	1	PLUG	
		2	**8J-1752**	1	PLUNGER	
I	13	1	**175-0243**	1	HOSE AS	
	14	2	**175-0248**	1	BRACKET AS	
		2	**5P-2251**	2	GUSSET	
	15	1	**187-2659**	1	PLATE AS	
		1	**7T-1099**	2	LINK	
		1	**8X-7422**	1	BOSS	
	16	1	**189-6564**	1	PLATE AS	
	17	1	**199-7131**	1	TUBE AS	
	18	1	**211-2069**	1	ACCUMULATOR GP-HYDRAULIC	
	19	2	**200-3168**	1	VALVE GP-CONTROL	
I	20	2	**200-3777**	1	HOSE AS	
I	21	2	**200-3778**	1	HOSE AS	
I	22	2	**200-3780**	1	HOSE AS	
I	23	1	**200-3781**	1	HOSE AS	
	24	1	**200-3782**	1	HOSE AS	
	25	1	**200-3783**	1	HOSE AS	
	26	1	**200-3784**	1	HOSE AS	
	27	1	**200-3785**	1	HOSE AS	
I	28	1	**200-5289**	1	HOSE AS	
I	29	2	**200-5290**	1	HOSE AS	
	30	1	**200-5291**	1	HOSE AS	
I	31	1	**200-5292**	1	HOSE AS	
	32	1	**200-5942**	1	HOSE AS	
	33	1	**206-2832**	1	HOSE AS	
	34	2	*148-8326*	1	CONNECTOR GP	
		2	**3J-7354**	1	SEAL-O-RING	
		2	**6V-8397**	1	SEAL-O-RING	
		2	**6V-9872**	1	CONNECTOR	
	35	1,2	*148-8336*	8	CONNECTOR GP	
					(EACH INCLUDES)	
		1,2	**3J-1907**	1	SEAL-O-RING	

173-7752 **LINES GP-PILOT** ***(contd.)*** **i01701123**

NOTE	REF NO	GRAPHIC REF	PART NUMBER	QTY	PART NAME 1 2 3 4 5 6 (PRODUCT LEVEL)	SEE PAGE
		1,2	**6V-8397**	1	SEAL-O-RING	
		1,2	**6V-8636**	1	CONNECTOR	
	36	2	*148-8353*	2	ELBOW GP	
					(EACH INCLUDES)	
		2	**3J-1907**	1	SEAL-O-RING	
		2	**6V-8397**	1	SEAL-O-RING	
		2	**6V-9001**	1	ELBOW	
	37	2	*148-8361*	1	ELBOW GP	
		2	**3J-7354**	1	SEAL-O-RING	
		2	**6V-8397**	1	SEAL-O-RING	
		2	**6V-9200**	1	ELBOW	
	38	1,2	*148-8378*	9	ELBOW GP	
					(EACH INCLUDES)	
		1,2	**3J-1907**	1	SEAL-O-RING	
		1,2	**6V-8397**	1	SEAL-O-RING	
		1,2	**6V-8724**	1	ELBOW	
	39	1	*148-8435*	6	TEE GP	
					(EACH INCLUDES)	
		1	**3J-1907**	1	SEAL-O-RING	
		1	**6V-8397**	2	SEAL-O-RING	
		1	**6V-8781**	1	TEE-FACE SEAL	
	40	1	*150-3028*	2	ELBOW AS	
					(EACH INCLUDES)	
		1	**3D-2824**	1	SEAL-O-RING	
		1	**6V-8397**	1	SEAL-O-RING	
		1	**6V-9343**	1	ELBOW	
	41	1	*150-3036*	2	ELBOW GP	
					(EACH INCLUDES)	
		1	**3J-1907**	1	SEAL-O-RING	
		1	**6V-8397**	1	SEAL-O-RING	
		1	**8T-1905**	1	ELBOW	
	42	2	*150-4044*	1	CONNECTOR GP	
		2	**3J-1907**	1	SEAL-O-RING	
		2	**6V-8397**	1	SEAL-O-RING	
		2	**8T-1779**	1	CONNECTOR	
	43	1	*164-5561*	1	ADAPTER AS	
		1	**2M-9780**	1	SEAL-O-RING	
		1	**5P-1042**	1	ADAPTER-O-RING	
	44	1	**3D-2824**	1	SEAL-O-RING	
	45	1,2	**4L-6459**	4	BOLT (3/8-16X2.5 IN)	
	46	1	**5P-1075**	2	WASHER-HARD (10.2X22.5X3MM THK)	
	47	1	**5S-7379**	4	BOLT (3/8-16X0.875 IN)	
	48	2	**7X-0290**	2	BOLT (3/8-16X3.50 IN)	
	49	1,2	**8T-4121**	6	WASHER-HARD (11X21X2.5MM THK)	
M	50	2	**8T-4137**	4	BOLT (M10X1.5X20MM)	
	51	1	**8T-4223**	4	WASHER-HARD (13.5X25.5X3MM THK)	
	52	1,2	**8T-4896**	14	WASHER-HARD (10.2X18.5X2.5MM THK)	
	53	1	**8T-7008**	2	BOLT (3/8-16X3 IN)	
	54	1	**8T-8915**	2	BOLT (3/8-16X3.25 IN)	
	55	1	**8T-8917**	4	BOLT (1/2-13X1.25 IN)	
	56	1	**9B-7237**	4	BOLT (3/8-16X1.25 IN)	

I-SEE HOSE FABRICATION GUIDE
M-METRIC PART
Y-SEPARATE ILLUSTRATION

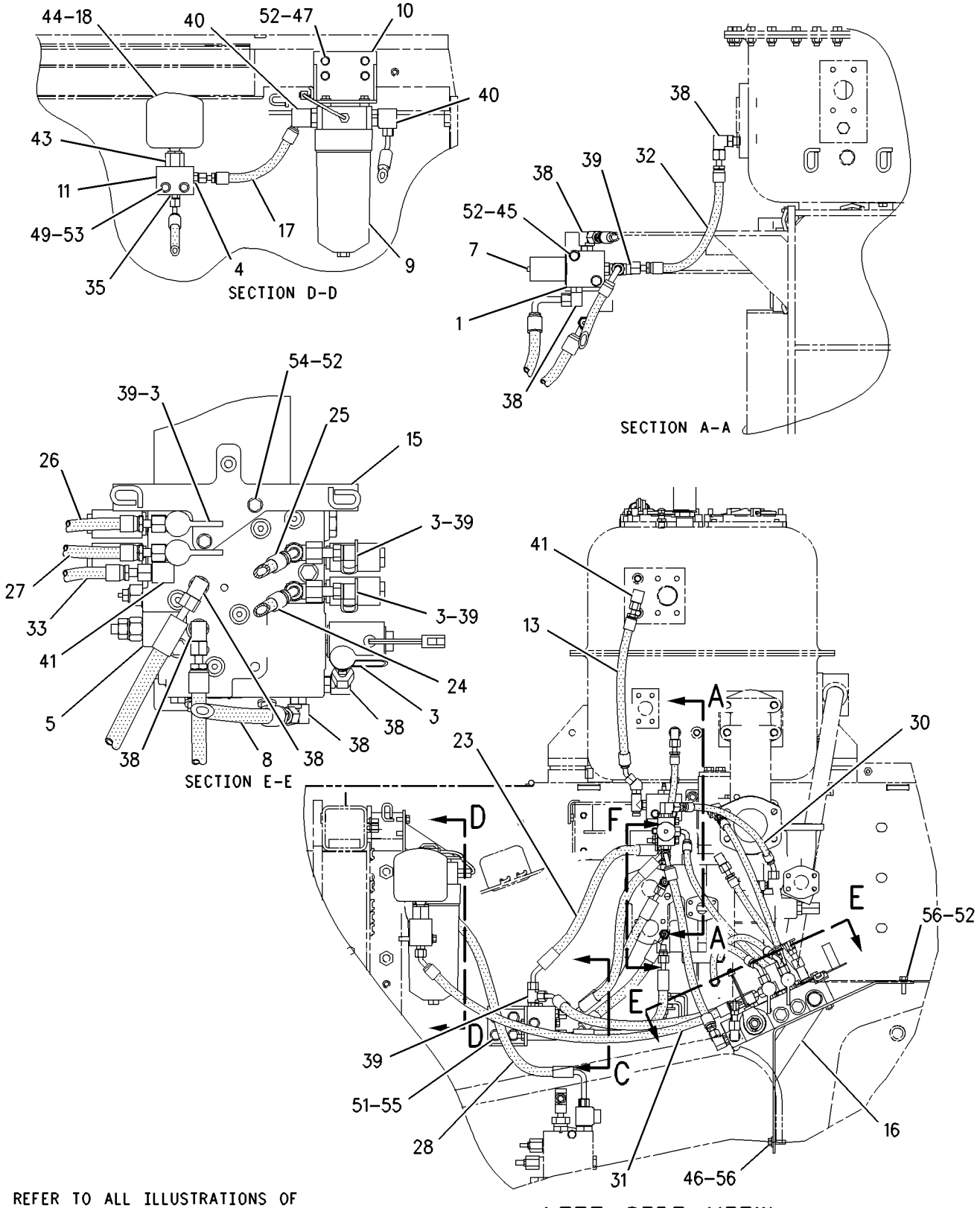

REFER TO ALL ILLUSTRATIONS OF THIS GROUP FOR AUXILIARY VIEWS

GRAPHIC #1

g00868249

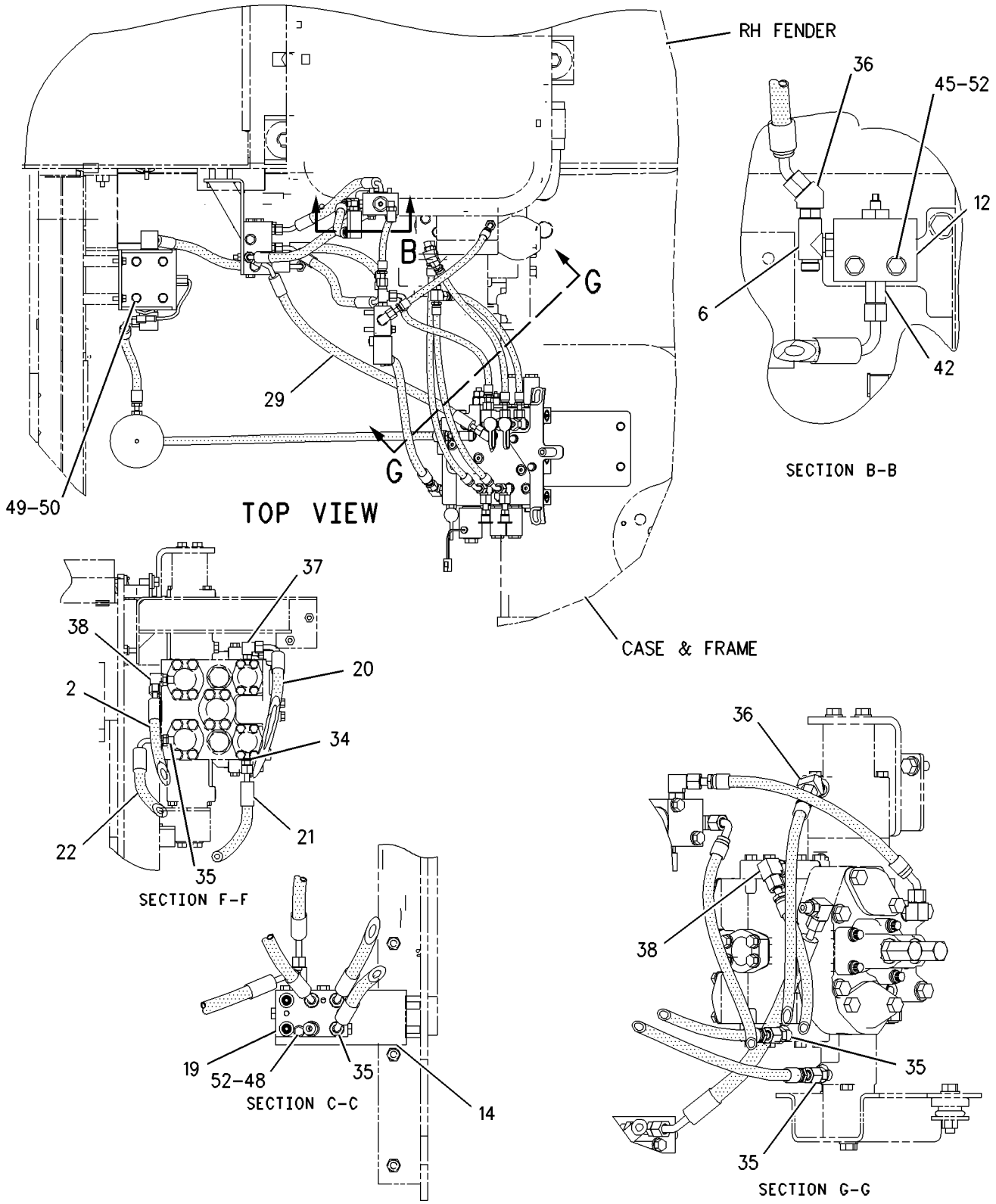

REFER TO ALL ILLUSTRATIONS OF
THIS GROUP FOR AUXILIARY VIEWS

GRAPHIC #2

g00868248

HYDRAULIC SYSTEM

210-6030 LINES GP-PIN PULLER CYLINDER

S/N: AKT1-UP
PART OF 178-1784 PULLER AR-PIN
AN ATTACHMENT

SMCS-5057, 5354 **i01682903**

NOTE	REF NO	GRAPHIC REF	PART NUMBER	QTY	PART NAME 1 2 3 4 5 6 (PRODUCT LEVEL)	SEE PAGE
I	1	1	**218-1837**	1	HOSE AS	
I	2	1	**218-1840**	1	HOSE AS	
	3	1	**3G-8047**	3	GROMMET	
	4	1	**3G-8054**	3	CLIP (TAB)	
	5	1	**3G-8057**	3	CLIP (SLOT)	
	6	1	**3J-1907**	2	SEAL-O-RING	
	7	1	**3K-0360**	2	SEAL-O-RING	
	8	1	**4L-9337**	1	BOLT (3/8-16X1.5 IN)	
	9	1	**5P-1075**	8	WASHER-HARD (10.2X22.5X3MM THK)	
	10	1	**6D-4244**	2	CLIP	
	11	1	**6V-8398**	4	SEAL-O-RING	
	12	1	**6V-8625**	1	ELBOW	
	13	1	**6V-9002**	1	ELBOW	
	14	1	**6V-9873**	1	CONNECTOR-SEAL	
	15	1	**8T-2502**	4	BOLT (3/8-16X1.125 IN)	
	16	1	**8T-5050**	1	CONNECTOR	
	17	1	**8T-7008**	2	BOLT (3/8-16X3 IN)	
	18	1	**9W-1991**	2	SPACER (13.94X17.14X40MM THK)	

I-SEE HOSE FABRICATION GUIDE

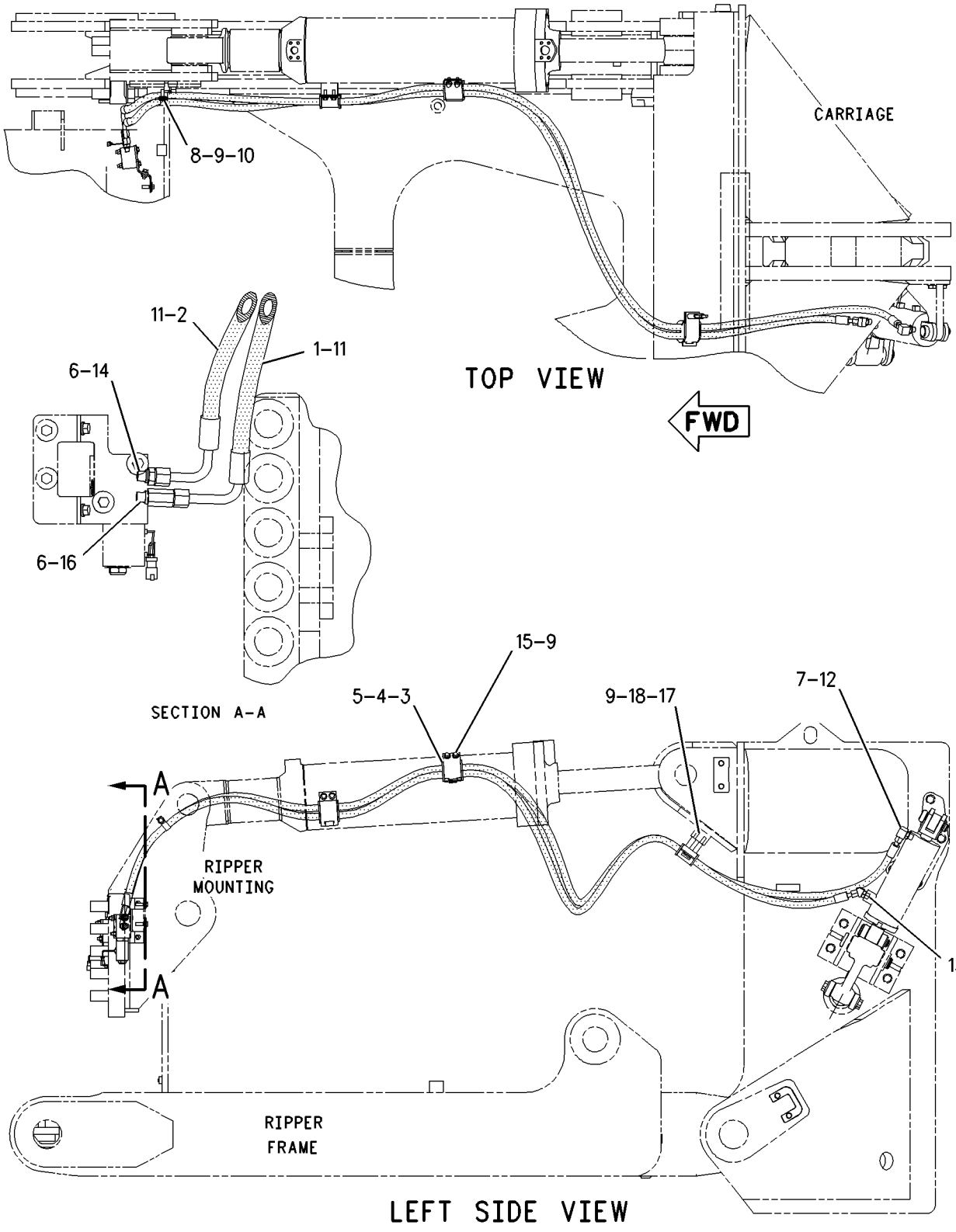

GRAPHIC #1

g00868040

HYDRAULIC SYSTEM

172-7183 LINES GP-PUMP

S/N: AKT1-UP

PART OF 171-5803 CONTROL AR-HYDRAULIC

SMCS-5057 **i01435912**

NOTE	REF NO	GRAPHIC REF	PART NUMBER	QTY	PART NAME 1 2 3 4 5 6 (PRODUCT LEVEL)	SEE PAGE
	1	1	**6T-4883**	1	SPACER	
	2	1	**6V-0852**	2	CAP-DUST	
	3	1	**7G-2384**	1	MANIFOLD	
	4	1	**7G-2385**	1	ELBOW	
	5	2	**7G-2386**	1	MANIFOLD	
I	6	1	**7G-2388**	1	HOSE AS	
	7	1	**7K-1181**	2	STRAP-CABLE	
	8	1	**8D-0983**	2	MOUNTING	
	9	1	**8D-7185**	2	WASHER (11.9X38.1X3MM THK)	
	10	1	**8P-9859**	1	ELBOW	
	11	2	**8X-1144**	2	CLAMP	
	12	2	**9G-6094**	1	MANIFOLD	
	13	2	**9G-6242**	1	ELBOW	
	14	2	**9X-2614**	1	CONNECTOR	
	15	2	**101-3677**	1	ADAPTER	
	16	2	*148-8334*	1	CONNECTOR GP	
		2	**2S-4078**	1	SEAL-O-RING	
		2	**6V-8400**	1	SEAL-O-RING	
		2	**8T-3611**	1	CONNECTOR	
Y	17	1	**155-3549**	2	SENSOR GP-PRESSURE	248
	18	1	**157-5555**	1	PLATE	
	19	1	**157-5558**	1	MANIFOLD	
	20	1	*164-5567*	2	FITTING GP (QUICK DISCONNECT)	
					(EACH INCLUDES)	
		1	**3J-1907**	1	SEAL-O-RING	
		1	**6V-3965**	1	FITTING AS	
	21	2	*164-5602*	1	PLUG AS	
		2	**2S-4078**	1	SEAL-O-RING	
		2	**8J-5914**	1	PLUG	
I	22	1	**174-6431**	1	HOSE AS	
	23	2	**174-8666**	1	CONNECTOR	
I	24	2	**178-7567**	1	HOSE AS	
I	25	2	**178-7568**	1	HOSE AS	
I	26	1	**178-7570**	1	HOSE AS	
I	27	1	**178-7571**	1	HOSE AS	
	28	1	**189-6303**	1	TUBE AS	
	29	1	**196-2781**	1	HOSE AS	
I	30	1	**198-3214**	1	HOSE AS	
I	31	2	**198-4017**	1	HOSE AS	
	32	2	**204-6998**	1	TUBE AS	
	33	1	*148-8353*	2	ELBOW GP	
					(EACH INCLUDES)	
		1	**3J-1907**	1	SEAL-O-RING	
		1	**6V-8397**	1	SEAL-O-RING	
		1	**6V-9001**	1	ELBOW	
	34	2	*148-8367*	1	ELBOW GP	
		2	**6V-8397**	1	SEAL-O-RING	
		2	**6V-9850**	1	ELBOW-SWIVEL	
	35	1	*148-8378*	1	ELBOW GP	
		1	**3J-1907**	1	SEAL-O-RING	
		1	**6V-8397**	1	SEAL-O-RING	
		1	**6V-8724**	1	ELBOW	
	36	2	*148-8411*	1	PLUG GP	
		2	**3K-0360**	1	SEAL-O-RING	
		2	**9S-4185**	1	PLUG	

172-7183 LINES GP-PUMP *(contd.)* i01435912

NOTE	REF NO	GRAPHIC REF	PART NUMBER	QTY	PART NAME 1 2 3 4 5 6 (PRODUCT LEVEL)	SEE PAGE
	37	2	*148-8421*	2	TEE AS-ORFS	
					(EACH INCLUDES)	
		2	**3D-2824**	1	SEAL-O-RING	
		2	**6V-8397**	1	SEAL-O-RING	
		2	**6V-9746**	1	SEAL-O-RING	
		2	**8T-2883**	1	TEE	
	38	1,2	**1P-3705**	4	SEAL-RECTANGULAR	
	39	1,2	**1P-4577**	4	FLANGE-HALF	
	40	1,2	**1P-4578**	6	FLANGE-HALF	
	41	1,2	**1P-4582**	4	FLANGE-HALF	
	42	1,2	**1P-4585**	4	FLANGE-HALF	
	43	2	**1S-1015**	1	CLIP	
	44	2	**1S-1445**	1	PLATE	
	45	1	**2H-3931**	1	SEAL-O-RING	
	46	1	**2H-3934**	1	SEAL-O-RING	
	47	1	**2H-6338**	2	SEAL-O-RING	
	48	2	**3J-1907**	1	SEAL-O-RING	
	49	2	**3J-7354**	1	SEAL-O-RING	
	50	1,2	**4J-0520**	4	SEAL-O-RING	
	51	1,2	**4J-0522**	4	SEAL-O-RING	
	52	1,2	**4J-0524**	3	SEAL-O-RING	
	53	1	**4J-0527**	3	SEAL-O-RING	
	54	1	**4L-6454**	2	BOLT (3/8-16X1 IN)	
	55	2	**4L-6459**	4	BOLT (3/8-16X2.5 IN)	
	56	1	**4P-8134**	2	CLIP	
	57	1	**5F-3106**	1	SEAL-O-RING	
	58	1	**5H-4019**	1	COVER	
	59	1,2	**5H-4020**	2	COVER	
	60	2	**5P-1075**	4	WASHER-HARD (10.2X22.5X3MM THK)	
	61	1,2	**5P-2566**	8	BOLT (1/2-13X1.5 IN)	
	62	1,2	**5P-8077**	4	FLANGE-HALF	
	63	1	**5S-7382**	6	BOLT (3/8-16X1.375 IN)	
	64	2	**6V-4432**	2	BOLT (1/2-13X4 IN)	
	65	2	**6V-8397**	2	SEAL-O-RING	
	66	2	**6V-9829**	1	CAP AS	
		2	**6V-9355**	1	PLUG	
	67	1	**7X-0311**	4	BOLT (7/16-14X2.25 IN)	
	68	2	**7X-0315**	4	BOLT (7/16-14X3.25 IN)	
	69	1	**7X-0325**	2	BOLT (1/2-13X2.5 IN)	
	70	2	**7X-0328**	4	BOLT (1/2-13X3.50 IN)	
	71	1	**7X-0331**	2	BOLT (1/2-13X4.25 IN)	
	72	1	**7X-0345**	2	BOLT (5/8-11X1.75 IN)	
	73	1,2	**7X-0346**	8	BOLT (5/8-11X2 IN)	
	74	1,2	**7X-0347**	8	BOLT (5/8-11X2.25 IN)	
	75	1	**7X-0349**	2	BOLT (5/8-11X3 IN)	
	76	1	**7X-0353**	2	BOLT (5/8-11X4.25 IN)	
	77	1	**7X-0356**	2	BOLT (5/8-11X5 IN)	
	78	1	**7X-0358**	2	BOLT (5/8-11X5.5 IN)	
	79	1	**8F-6437**	2	WASHER (13.5X50.8X4.76MM THK)	
	80	1	**8S-0023**	2	CLIP (SLOT)	
	81	1	**8S-0024**	2	CLIP (TAB)	
	82	1	**8T-2501**	2	BOLT (3/8-16X2 IN)	
	83	1,2	**8T-4122**	26	WASHER-HARD (17X32X3.5MM THK)	
	84	1,2	**8T-4223**	18	WASHER-HARD (13.5X25.5X3MM THK)	
	85	1,2	**8T-4896**	14	WASHER-HARD (10.2X18.5X2.5MM THK)	
	86	1,2	**8T-5360**	20	WASHER (12X22.5X2.5MM THK)	
	87	2	**8T-7008**	4	BOLT (3/8-16X3 IN)	
	88	2	**8T-8915**	2	BOLT (3/8-16X3.25 IN)	
	89	1,2	**8T-8916**	12	BOLT (7/16-14X1.5 IN)	

I-SEE HOSE FABRICATION GUIDE
Y-SEPARATE ILLUSTRATION

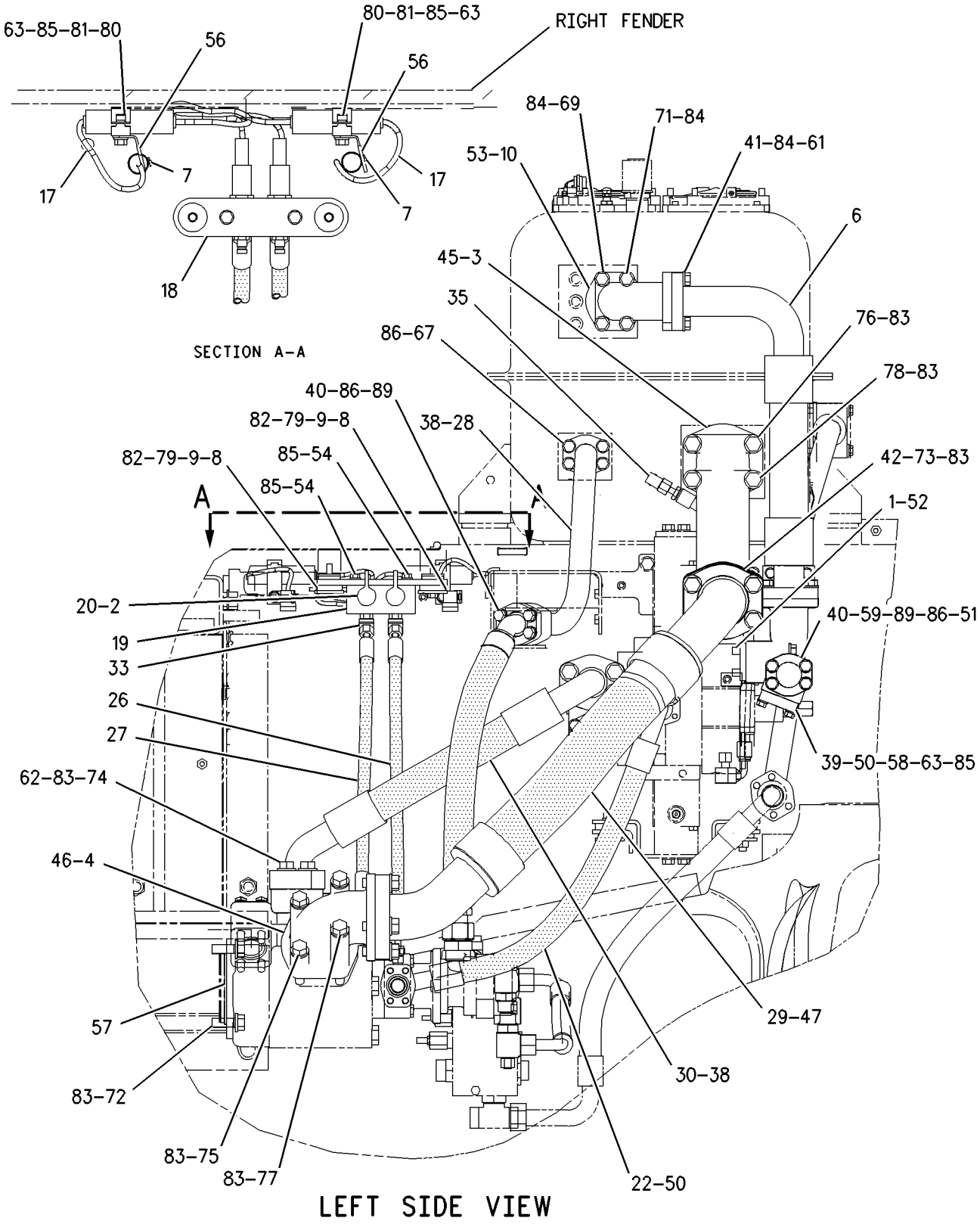

LEFT SIDE VIEW

GRAPHIC #1 g00807455

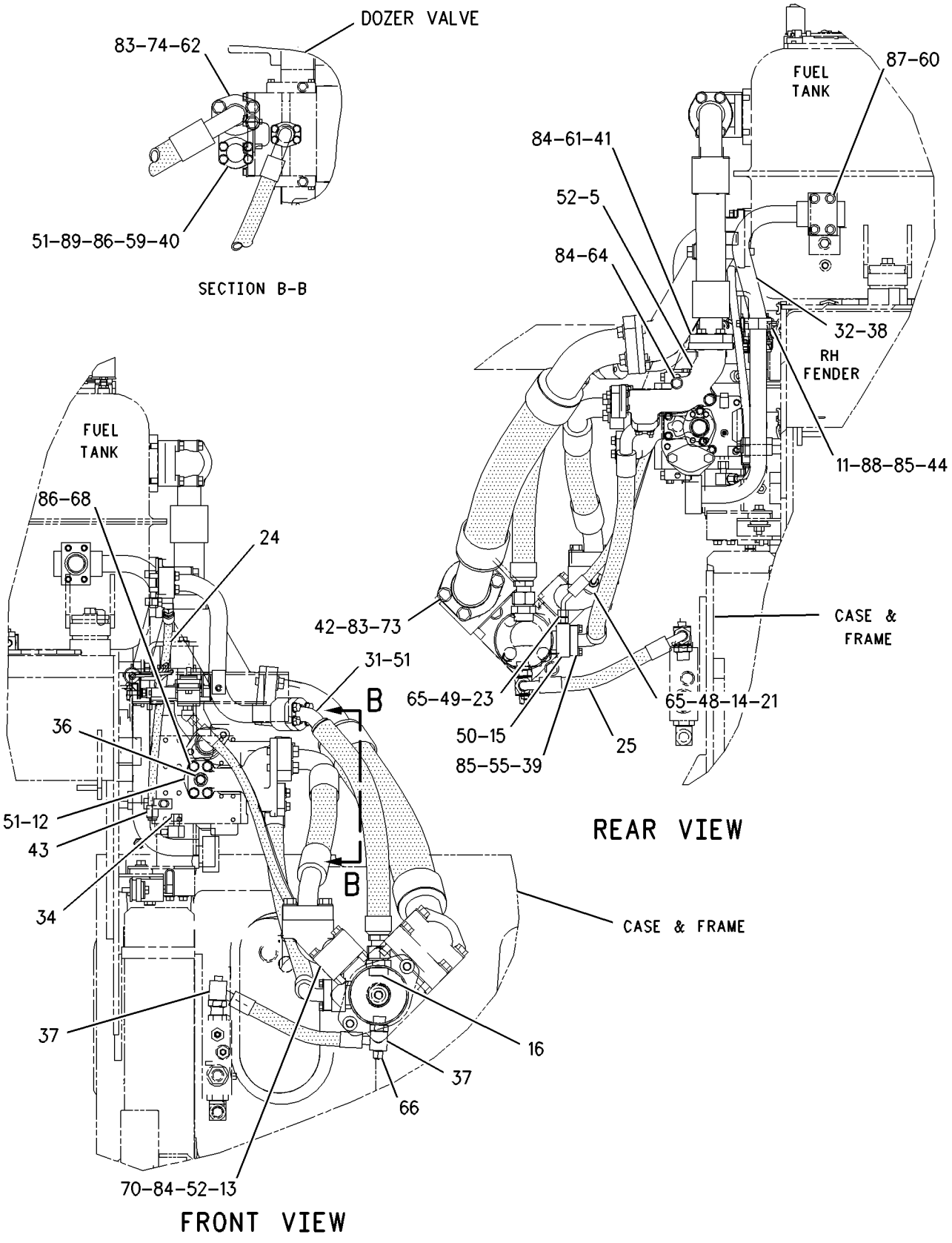

GRAPHIC #2

g00807456

MEMORANDA

HYDRAULIC SYSTEM

133-7145 LINES GP-RIPPER

S/N: 4PP1-UP; BRT1-UP; BEY1-UP
PART OF 119-8210, 180-2401, 180-2404 RIPPER AR
AN ATTACHMENT

SMCS-5057, 5352, 5356 **i01359637**

NOTE	REF NO	GRAPHIC REF	PART NUMBER	QTY	PART NAME 1 2 3 4 5 6 (PRODUCT LEVEL)	SEE PAGE
I	1	1	**7T-3912**	1	HOSE AS	
I	2	1	**7T-3913**	1	HOSE AS	
I	3	1	**7T-3914**	1	HOSE AS	
I	4	1	**7T-3915**	1	HOSE AS	
I	5	1	**7T-3916**	1	HOSE AS	
I	6	1	**8E-1040**	1	HOSE AS	
I	7	1	**8E-1041**	1	HOSE AS	
	8	1	**9M-2904**	8	CLAMP-HOSE	
I	9	1	**9W-8941**	1	HOSE AS-LH	
	10	1	**130-1977**	8	SHIELD	
	11	1	**130-9191**	4	GROMMET	
	12	1	**139-2455**	2	SHIELD-RH	
	13	1	**139-2456**	2	SHIELD-LH	
	14	1	**193-3080**	1	PLATE AS-RH	
	15	1	**193-3081**	1	PLATE AS-LH	
	16	1	**4J-0520**	16	SEAL-O-RING (32.92MM ID)	
	17	1	**4L-9337**	8	BOLT (3/8-16X1.5 IN)	
	18	1	**5P-8112**	2	GROMMET	
	19	1	**7X-0288**	4	BOLT (3/8-16X1.625 IN)	
	20	1	**8E-1042**	2	CLIP	
	21	1	**8E-1043**	2	CLIP	
	22	1	**8T-2502**	4	BOLT (3/8-16X1.125 IN)	
	23	1	**8T-4896**	4	WASHER-HARD (10.2X18.5X2.5MM THK)	

I-SEE HOSE FABRICATION GUIDE

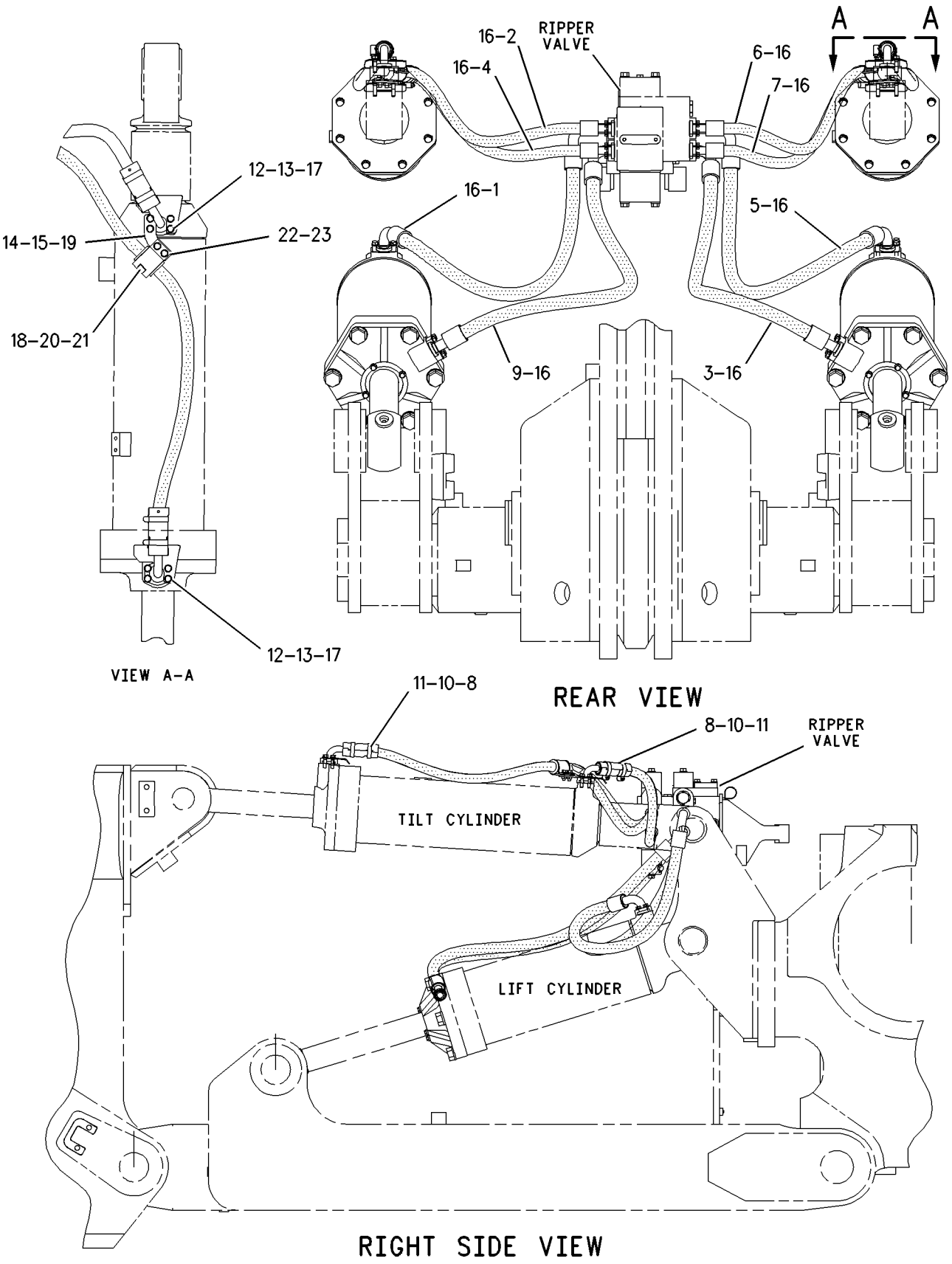

GRAPHIC #1 g00717897

HYDRAULIC SYSTEM

137-7372 LINES GP-RIPPER

S/N: AKT1-UP
COLD WEATHER
AN ATTACHMENT

SMCS-5057, 5352, 5356 **i00822001**

NOTE	PART NUMBER	QTY	PART NAME 1 2 3 4 5 6 (PRODUCT LEVEL)	SEE PAGE
I	**1Q-1492**	1	HOSE AS	
			87CM LENGTH	
			1-90 DEGREE & 1 STRAIGHT COUPLING	
I	**1Q-1493**	1	HOSE AS	
			1.68M LENGTH	
			1-90 DEGREE & 1 STRAIGHT COUPLING	
I	**1Q-1494**	1	HOSE AS	
			1.34M LENGTH	
			1-90 DEGREE & 1 STRAIGHT COUPLING	
I	**1Q-1495**	1	HOSE AS	
			1.19M LENGTH	
			90 DEGREE COUPLING EACH END	
I	**1Q-1496**	1	HOSE AS	
			1.17M LENGTH	
			90 DEGREE COUPLING EACH END	
I	**1Q-1497**	1	HOSE AS	
			1.43M LENGTH	
			1-90 DEGREE & 1 STRAIGHT COUPLING	
I	**1Q-3385**	1	HOSE AS	
			1.63M LENGTH	
			1-90 DEGREE & 1 STRAIGHT COUPLING	
I	**1Q-3386**	1	HOSE AS	
			82CM LENGTH	
			90 DEGREE COUPLING EACH END	

I-SEE HOSE FABRICATION GUIDE

MEMORANDA

HYDRAULIC SYSTEM

172-7189 LINES GP-RIPPER

S/N: AKT1-UP
PART OF 172-7626 CONTROL AR-HYDRAULIC
AN ATTACHMENT

SMCS-5057, 5352, 5356 **i01440896**

NOTE	REF NO	GRAPHIC REF	PART NUMBER	QTY	PART NAME 1 2 3 4 5 6 (PRODUCT LEVEL)	SEE PAGE
	1	1	**2B-0941**	3	SPACER (10.5X19X19MM THK)	
	2	1	**3T-4816**	1	GROMMET	
	3	1	**3T-4817**	1	CLAMP	
	4	1	**3T-4820**	1	PLATE	
	5	1	**7X-0289**	3	BOLT (3/8-16X1.875 IN)	
	6	1	**7X-0371**	4	BOLT (3/4-10X3.75 IN)	
	7	1	**8T-4896**	4	WASHER-HARD (10.2X18.5X2.5MM THK)	
	8	1	**8T-4994**	4	WASHER-HARD (20X36.5X3.5MM THK)	
	9	1	**6V-0852**	4	CAP-DUST	
	10	1	**127-5419**	1	BRACKET AS	
		1	**2K-8725**	1	BAR	
		1	**7T-1099**	1	LINK	
I	11	1	**186-4110**	1	HOSE AS	
	12	1	**200-2172**	1	HOSE AS	
	13	1	**200-2173**	1	HOSE AS	
	14	1	**200-2174**	1	HOSE AS	
	15	1	**200-2175**	1	HOSE AS	
I	16	1	**200-2304**	1	HOSE AS	
I	17	1	**200-2305**	1	HOSE AS	
I	18	1	**200-2582**	1	HOSE AS	
	19	1	*148-8336*	4	CONNECTOR GP	
					(EACH INCLUDES)	
		1	**3J-1907**	1	SEAL-O-RING	
		1	**6V-8397**	1	SEAL-O-RING	
		1	**6V-8636**	1	CONNECTOR	
	20	1	*148-8353*	1	ELBOW GP	
		1	**3J-1907**	1	SEAL-O-RING	
		1	**6V-8397**	1	SEAL-O-RING	
		1	**6V-9001**	1	ELBOW	
	21	1	*148-8378*	3	ELBOW GP	
					(EACH INCLUDES)	
		1	**3J-1907**	1	SEAL-O-RING	
		1	**6V-8397**	1	SEAL-O-RING	
		1	**6V-8724**	1	ELBOW	
	22	1	*148-8435*	4	TEE GP	
					(EACH INCLUDES)	
		1	**3J-1907**	1	SEAL-O-RING	
		1	**6V-8397**	2	SEAL-O-RING	
		1	**6V-8781**	1	TEE-FACE SEAL	
	23	1	**1J-8668**	3	STUD-TAPERLOCK	
	24	1	**1S-0994**	2	CLIP	
	25	1	**4J-0522**	4	SEAL-O-RING	
	26	1	**4L-6454**	1	BOLT (3/8-16X1 IN)	
	27	1	**6V-8801**	3	NUT (3/8-16 THD)	

I-SEE HOSE FABRICATION GUIDE

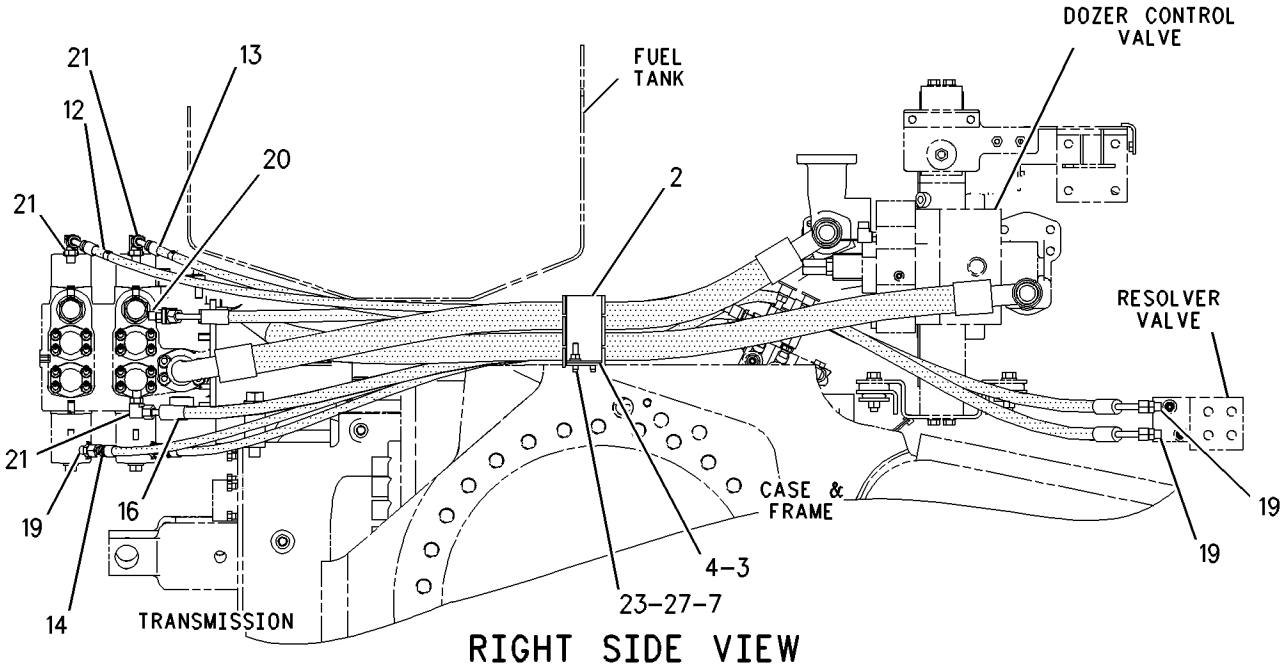

RIGHT SIDE VIEW

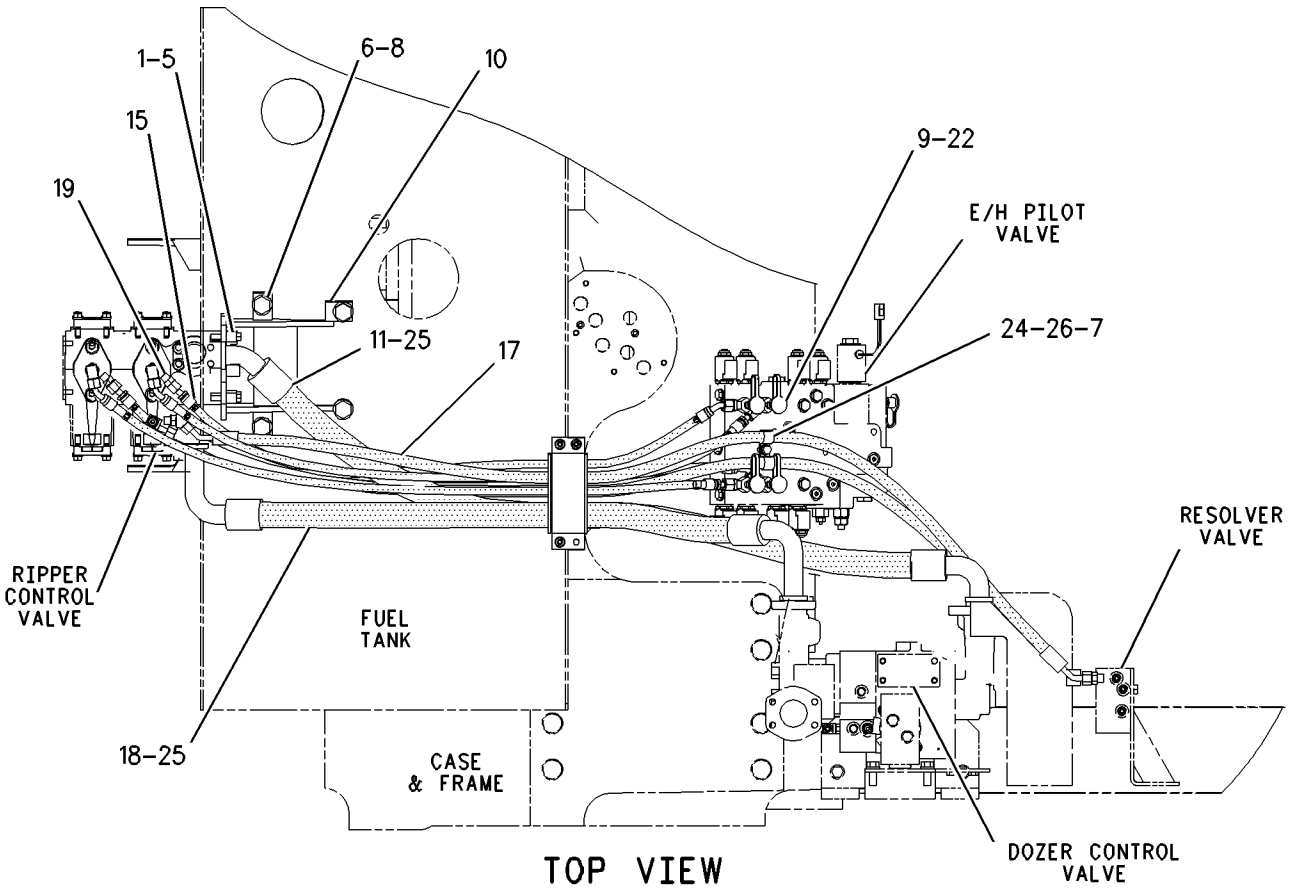

TOP VIEW

GRAPHIC #1 g00823157

HYDRAULIC SYSTEM

117-5725 LINES GP-TILT CYLINDER

S/N: AKT1-UP
PART OF 185-7891 CYLINDER AR-DUAL TILT
AN ATTACHMENT

SMCS-5057, 5104 **i01404643**

NOTE	REF NO	GRAPHIC REF	PART NUMBER	QTY	PART NAME 1 2 3 4 5 6 (PRODUCT LEVEL)	SEE PAGE
I	1	1	**6Y-6041**	2	HOSE AS	
	2	1	**9B-7237**	48	BOLT (3/8-16X1.25 IN)	
	3	1	**8T-4896**	56	WASHER-HARD (10.2X18.5X2.5MM THK)	
	4	1	**4J-0520**	4	SEAL-O-RING (32.92MM ID)	
	5	1	**1P-4577**	8	FLANGE-HALF	
I	6	1	**134-5419**	1	HOSE AS	
I	7	1	**134-5418**	1	HOSE AS	
I	8	1	**124-3347**	1	HOSE AS	
I	9	1	**124-3346**	1	HOSE AS	
	10	1	**4J-5267**	12	SEAL-O-RING (24.99MM ID)	
	11	1	**9W-2896**	1	GUARD	
	12	1	**1P-5760**	4	FLANGE-HALF	
	13	1	**1P-3703**	2	SEAL-RECTANGULAR	
	14	1	**7X-0288**	8	BOLT (3/8-16X1.625 IN)	
CI	15	1	**175-0289**	2	HOSE AS	
CI	16	1	**175-0288**	2	HOSE AS	
	17	1	**9W-2883**	2	TUBE AS	
C	18	1	**146-3672**	1	GUARD	
C	19	1	**8T-8917**	6	BOLT (1/2-13X1.25 IN)	
C	20	1	**5P-1076**	6	WASHER-HARD (13.5X30X4MM THK)	
	21	1	**9W-2881**	2	TUBE AS	
	22	1	**1P-4576**	16	FLANGE	
	23	2	**5P-1076**	4	WASHER-HARD (13.5X30X4MM THK)	
	24	2	**8T-8917**	10	BOLT (1/2-13X1.25 IN)	
	25	2	**9U-9488**	2	TUBE AS	
	26	2	**9W-2877**	2	CLAMP	
	27	2	**7X-0325**	2	BOLT (1/2-13X0.75 IN)	
	28	2	**9U-9487**	2	TUBE AS	
	29	2	**9B-7237**	18	BOLT (3/8-16X1.25 IN)	
	30	2	**5P-1075**	2	WASHER-HARD (10.2X22.5X3MM THK)	
	31	2	**1D-5875**	2	SPACER	
	32	2	**7S-3916**	4	CLIP (TAB)	
		2	**7S-3919**	4	CLIP (SLOT)	
	33	2	**9W-3215**	2	PLATE	
	34	2	**6V-8188**	4	NUT (1/2-13 THD)	
	35	2	**4T-3981**	6	CLIP	
	36	2	**8T-4223**	12	WASHER-HARD (13.5X25.5X3MM THK)	
	37	2	**5S-7379**	12	BOLT (3/8-16X.875 IN)	
	38	2	**8T-4896**	44	WASHER-HARD (10.2X18.5X2.5MM THK)	
	39	2	**8T-9400**	4	BOLT (7/8X9X2.5 IN)	
	40	2	**7X-0572**	8	WASHER-HARD (24X44.5X6MM THK)	
	41	2	**9W-2894**	2	TUBE AS-LH	
	42	2	**6Y-6044**	1	GUARD AS-LH	
	43	2	**9W-2893**	2	TUBE AS-RH	
	44	2	**4L-6459**	16	BOLT (3/8-16X2.5 IN)	
		2	**1P-3703**	4	SEAL-RECTANGULAR	
	45	2	**1P-4577**	8	FLANGE-HALF	
		2	**4J-0520**	4	SEAL-O-RING (32.92MM ID)	
	46	2	**7X-0381**	4	BOLT (7/8-9X2 IN)	
	47	2	**6Y-6043**	1	GUARD AS-RH	
	48	2	**1J-7468**	6	CLAMP	
	49	2	**110-4727**	1	GUARD AS	
	50	2	**8T-9393**	3	BOLT (5/8-11X1.50 IN)	
		2	**7X-0515**	3	WASHER-HARD (17X35X5MM THK)	
	51	2	**5S-7383**	6	BOLT (3/8-16X1.75 IN)	

117-5725 LINES GP-TILT CYLINDER *(contd.)* i01404643

NOTE	REF NO	GRAPHIC REF	PART NUMBER	QTY	PART NAME 1 2 3 4 5 6 (PRODUCT LEVEL)	SEE PAGE
		2	8T-2561	6	WASHER-HARD (10.5X28.5X5MM THK)	

C-CHANGE FROM PREVIOUS TYPE
I-SEE HOSE FABRICATION GUIDE

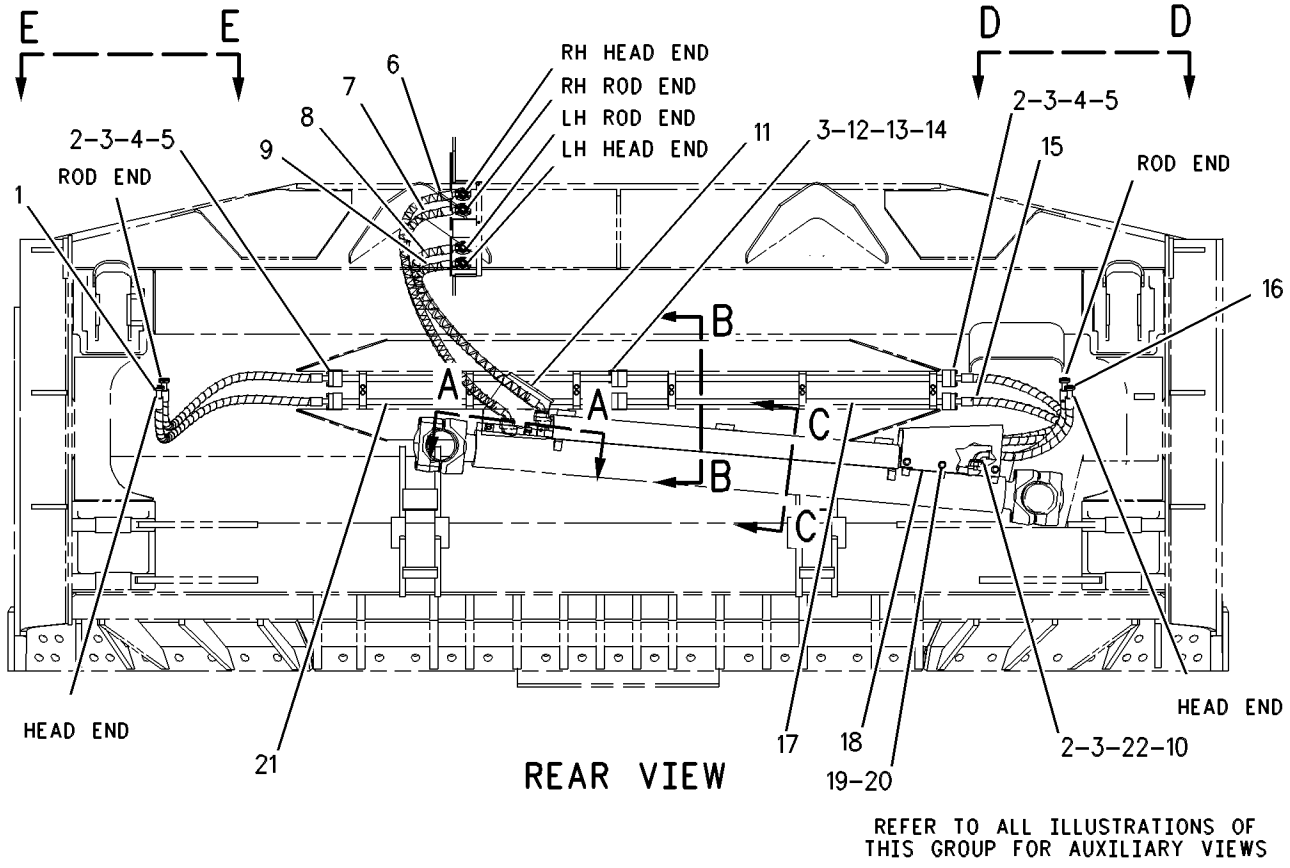

GRAPHIC #1 g00644947

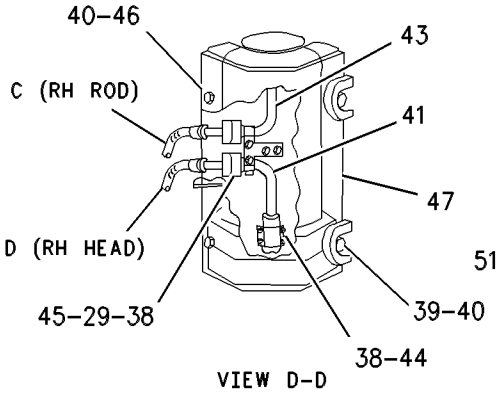

VIEW D-D

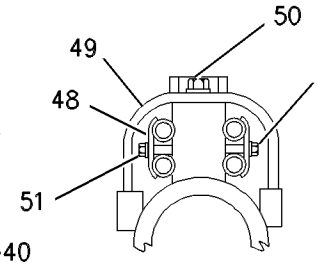

SECTION C-C

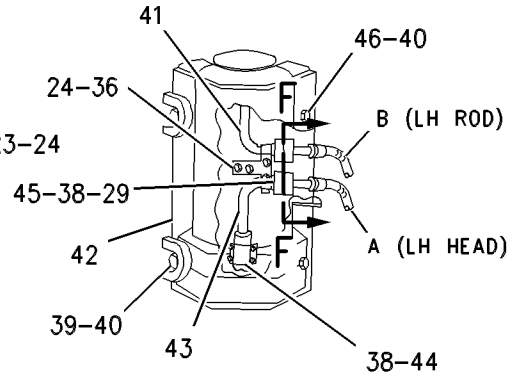

VIEW E-E

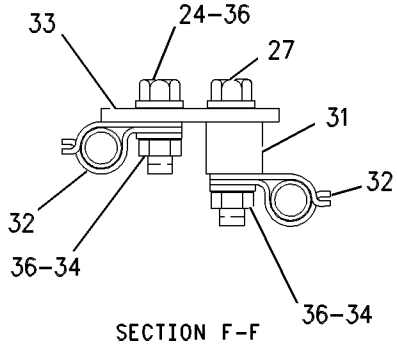

SECTION F-F

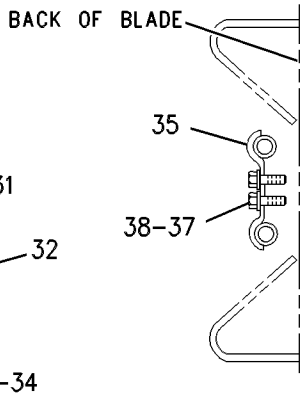

SECTION B-B

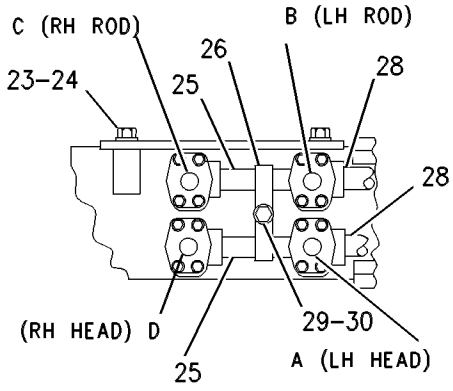

SECTION A-A

GRAPHIC #2

g00644949

MEMORANDA

HYDRAULIC SYSTEM

171-6655 LINES GP-TILT CYLINDER

S/N: BHA1-UP; BHF1-UP; BHJ1-UP; BHP1-UP
PART OF 171-6672, 171-6673, 171-6674, 171-6675, 171-6677, 171-6678, 171-6679, 171-6680 BULLDOZER AR
AN ATTACHMENT

SMCS-5057, 5104 **i01437076**

NOTE	REF NO	GRAPHIC REF	PART NUMBER	QTY	PART NAME 1 2 3 4 5 6 (PRODUCT LEVEL)	SEE PAGE
	1	1	**1D-5875**	1	SPACER (.53X1.25X1.13 IN THK)	
	2	1	**6Y-6043**	1	GUARD AS-RH	
		1	**6M-6078**	1	LUG	
		1	**6S-7119**	2	SPACER	
	3	1	**9U-9488**	2	TUBE AS	
	4	1	**9W-2877**	4	CLAMP	
	5	1	**9W-2893**	1	TUBE AS-RH	
	6	1	**9W-2894**	1	TUBE AS-LH	
	7	1	**9W-2896**	1	GUARD	
	8	1	**9W-3215**	1	PLATE	
	9	1	**110-4727**	1	GUARD AS	
		1	**8L-5771**	3	SPACER	
I	10	1	**134-5418**	1	HOSE AS	
I	11	1	**134-5419**	1	HOSE AS	
	12	1	**146-3672**	1	GUARD	
I	13	1	**175-0288**	2	HOSE AS	
	14	1	**1P-3703**	2	SEAL-RECTANGULAR	
	15	1	**1P-4576**	8	FLANGE	
	16	1	**1P-4577**	4	FLANGE-HALF	
	17	1	**4J-0520**	2	SEAL-O-RING	
	18	1	**4J-5267**	6	SEAL-O-RING	
	19	1	**4L-6459**	8	BOLT (3/8-16X2.5 IN)	
	20	1	**5P-1075**	4	WASHER-HARD (10.2X22.5X3MM THK)	
	21	1	**5P-1076**	10	WASHER-HARD (13.5X30X4MM THK)	
	22	1	**6V-8188**	2	NUT (1/2-13 THD)	
	23	1	**7S-3916**	2	CLIP (TAB)	
	24	1	**7S-3919**	2	CLIP (SLOT)	
	25	1	**7X-0325**	1	BOLT (1/2-13X2.5 IN)	
	26	1	**7X-0381**	2	BOLT (7/8-9X2 IN)	
	27	1	**7X-0515**	3	WASHER-HARD (17X35X5MM THK)	
	28	1	**7X-0572**	4	WASHER-HARD (24X44.5X6MM THK)	
	29	1	**8T-4223**	6	WASHER-HARD (13.5X25.5X3MM THK)	
	30	1	**8T-4896**	32	WASHER-HARD (10.2X18.5X2.5MM THK)	
	31	1	**8T-8917**	13	BOLT (1/2-13X1.25 IN)	
	32	1	**8T-9393**	3	BOLT (5/8-11X1.5 IN)	
	33	1	**8T-9400**	2	BOLT (7/8-9X2.5 IN)	
	34	1	**9B-7237**	28	BOLT (3/8-16X1.25 IN)	

I-SEE HOSE FABRICATION GUIDE

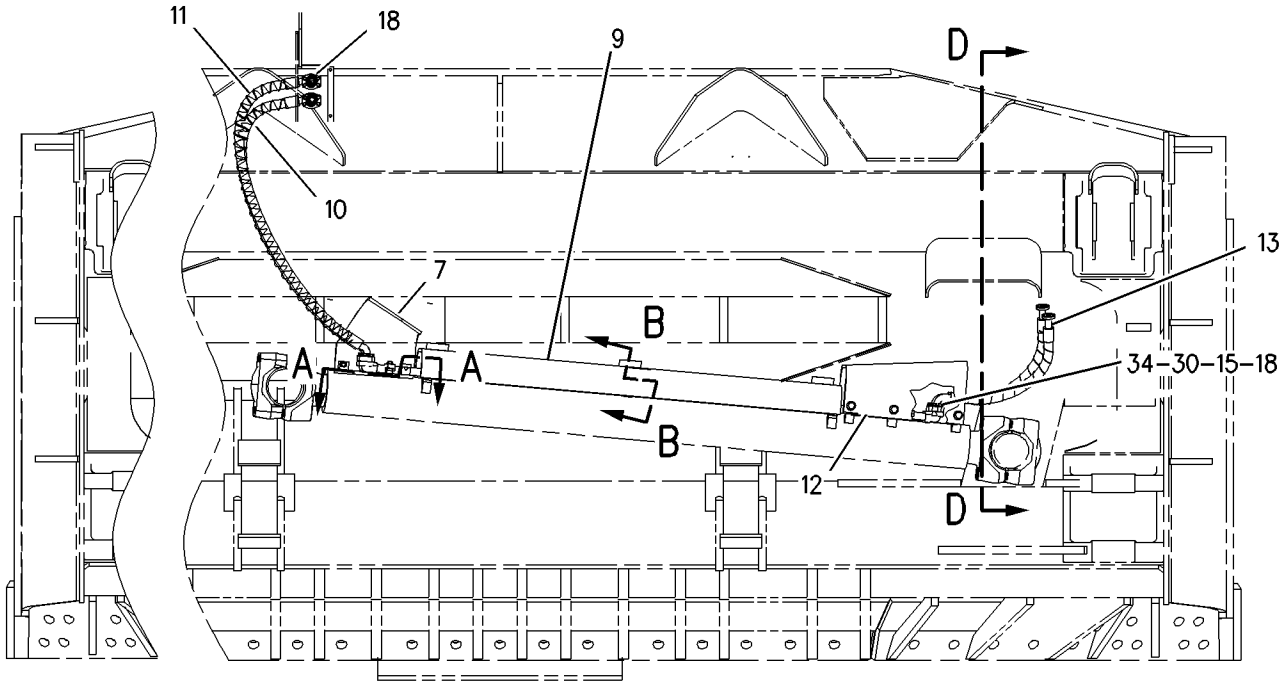

REAR VIEW

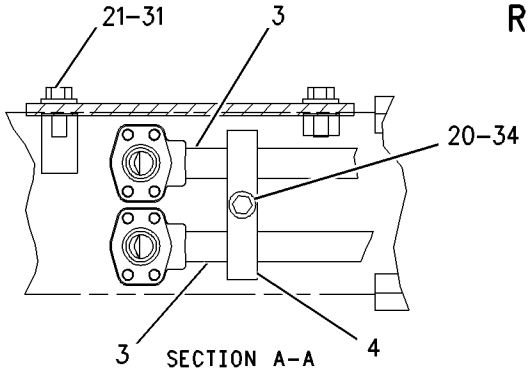

SECTION A-A

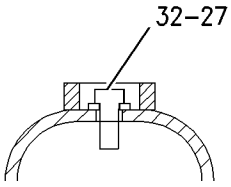

SECTION B-B

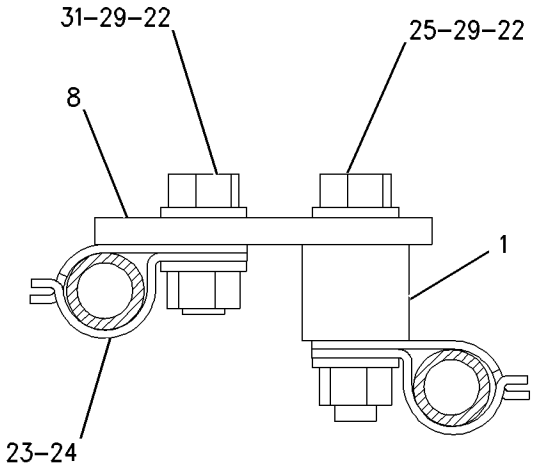

SECTION C-C

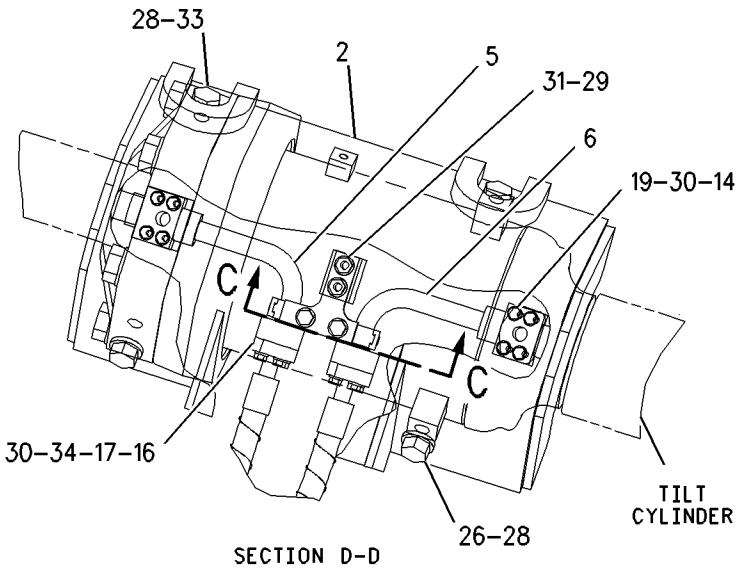

SECTION D-D

GRAPHIC #1

g00752582

HYDRAULIC SYSTEM

172-7185 LINES GP-TILT CYLINDER

S/N: AKT1-UP

PART OF 171-5803 CONTROL AR-HYDRAULIC

SMCS-5057, 5104 **i01665390**

NOTE	REF NO	GRAPHIC REF	PART NUMBER	QTY	PART NAME 1 2 3 4 5 6 (PRODUCT LEVEL)	SEE PAGE
	1	1	**6Y-3567**	1	ELBOW	
	2	1	**6Y-3568**	1	COVER	
	3	1	**101-3677**	2	ADAPTER	
I	4	1	**174-7797**	1	HOSE AS	
I	5	1	**174-7796**	1	HOSE AS	
	6	1	**1P-4576**	6	FLANGE-HALF	
	7	1	**1P-4577**	6	FLANGE-HALF	
	8	1	**4J-0520**	5	SEAL-O-RING	
	9	1	**4J-5267**	3	SEAL-O-RING	
	10	1	**4L-6454**	1	BOLT (3/8-16X1 IN)	
	11	1	**4L-6459**	8	BOLT (3/8-16X2.5 IN)	
	12	1	**5H-4018**	2	COVER	
	13	1	**5M-3062**	2	BOLT (3/8-16X0.75 IN)	
	14	1	**5P-1075**	7	WASHER-HARD (10.2X22.5X3MM THK)	
	15	1	**5S-7382**	16	BOLT (3/8-16X1.375 IN)	
	16	1	**6V-8188**	1	NUT (1/2-13 THD)	
	17	1	**7G-3832**	6	GROMMET	
	18	1	**7G-3833**	6	CLIP (TAB)	
	19	1	**7G-3834**	4	CLIP (SLOT)	
	20	1	**8T-4223**	7	WASHER-HARD (13.5X25.5X3MM THK)	
	21	1	**8T-4896**	28	WASHER-HARD (10.2X18.5X2.5MM THK)	
	22	1	**8T-7008**	2	BOLT (3/8-16X3 IN)	
	23	1	**8T-8917**	6	BOLT (1/2-13X1.25 IN)	
	24	1	**9B-7237**	6	BOLT (3/8-16X1.25 IN)	
	25	1	**9D-1829**	1	CLIP	

I-SEE HOSE FABRICATION GUIDE

172-7185 **LINES GP-TILT CYLINDER** ***(contd.)*** **i01665390**

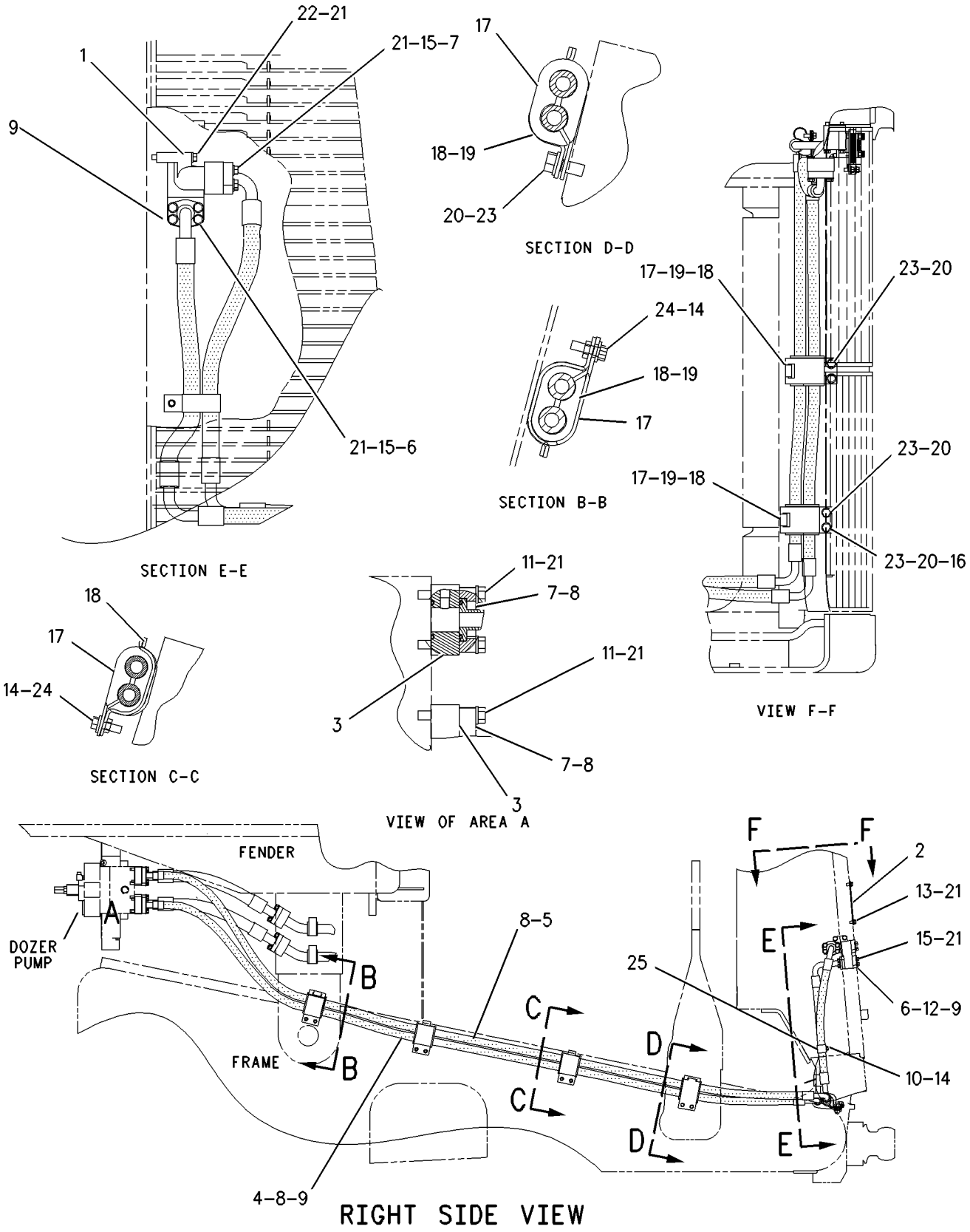

GRAPHIC #1 g00864265

HYDRAULIC SYSTEM

173-1257 LINES GP-TILT CYLINDER

S/N: AKT1-UP
PART OF 174-9185 CONTROL AR-HYDRAULIC
AN ATTACHMENT

SMCS-5057, 5104 **i01689478**

NOTE	REF NO	GRAPHIC REF	PART NUMBER	QTY	PART NAME 1 2 3 4 5 6 (PRODUCT LEVEL)	SEE PAGE
	1	1	**8E-7111**	1	PLATE	
	2	1	**8E-7112**	1	ELBOW	
	3	1	**9V-0999**	2	SPACER (13.8X30X50MM THK)	
	4	1	**9W-0875**	1	PLATE AS	
		1	**1F-0748**	1	NUT-WELD (1/2-13 THD)	
I	5	1	**174-9188**	1	HOSE AS	
I	6	1	**174-9189**	1	HOSE AS	
I	7	1	**174-9190**	1	HOSE AS	
	8	1	*148-8378*	1	ELBOW GP	
		1	**3J-1907**	1	SEAL-O-RING	
		1	**6V-8397**	1	SEAL-O-RING	
		1	**6V-8724**	1	ELBOW	
	9	1	*174-3181*	1	ELBOW AS	
		1	**3J-1907**	1	SEAL-O-RING	
		1	**6V-8398**	1	SEAL-O-RING	
		1	**8T-7521**	1	ELBOW	
	10	1	**1J-8668**	1	STUD-TAPERLOCK	
	11	1	**4J-0520**	2	SEAL-O-RING	
	12	1	**4J-5267**	1	SEAL-O-RING	
	13	1	**4L-6454**	1	BOLT (3/8-16X1 IN)	
	14	1	**5M-3062**	3	BOLT (3/8-16X0.75 IN)	
	15	1	**5P-1075**	5	WASHER-HARD (10.2X22.5X3MM THK)	
	16	1	**5P-2228**	1	BOLT (1/2-13X1 IN)	
	17	1	**5P-2566**	1	BOLT (1/2-13X1.5 IN)	
	18	1	**5P-7462**	1	CLIP (SLOT)	
	19	1	**5P-7463**	1	CLIP (TAB)	
	20	1	**6V-0683**	1	GROMMET	
	21	1	**7S-1912**	1	CLIP	
	22	1	**8T-4223**	1	WASHER-HARD (13.5X25.5X3MM THK)	
	23	1	**8T-4896**	4	WASHER-HARD (10.2X18.5X2.5MM THK)	
	24	1	**8T-5360**	3	WASHER (12X22.5X2.5MM THK)	
	25	1	**8T-9379**	4	BOLT (3/8-16X4.25 IN)	
	26	1	**8T-9380**	3	BOLT (7/16-14X1 IN)	
	27	1	**8T-9391**	2	BOLT (1/2-13X3.75IN)	
	28	1	**9P-2749**	5	CLIP (TAB)	
	29	1	**9P-2750**	5	CLIP (SLOT)	

I-SEE HOSE FABRICATION GUIDE

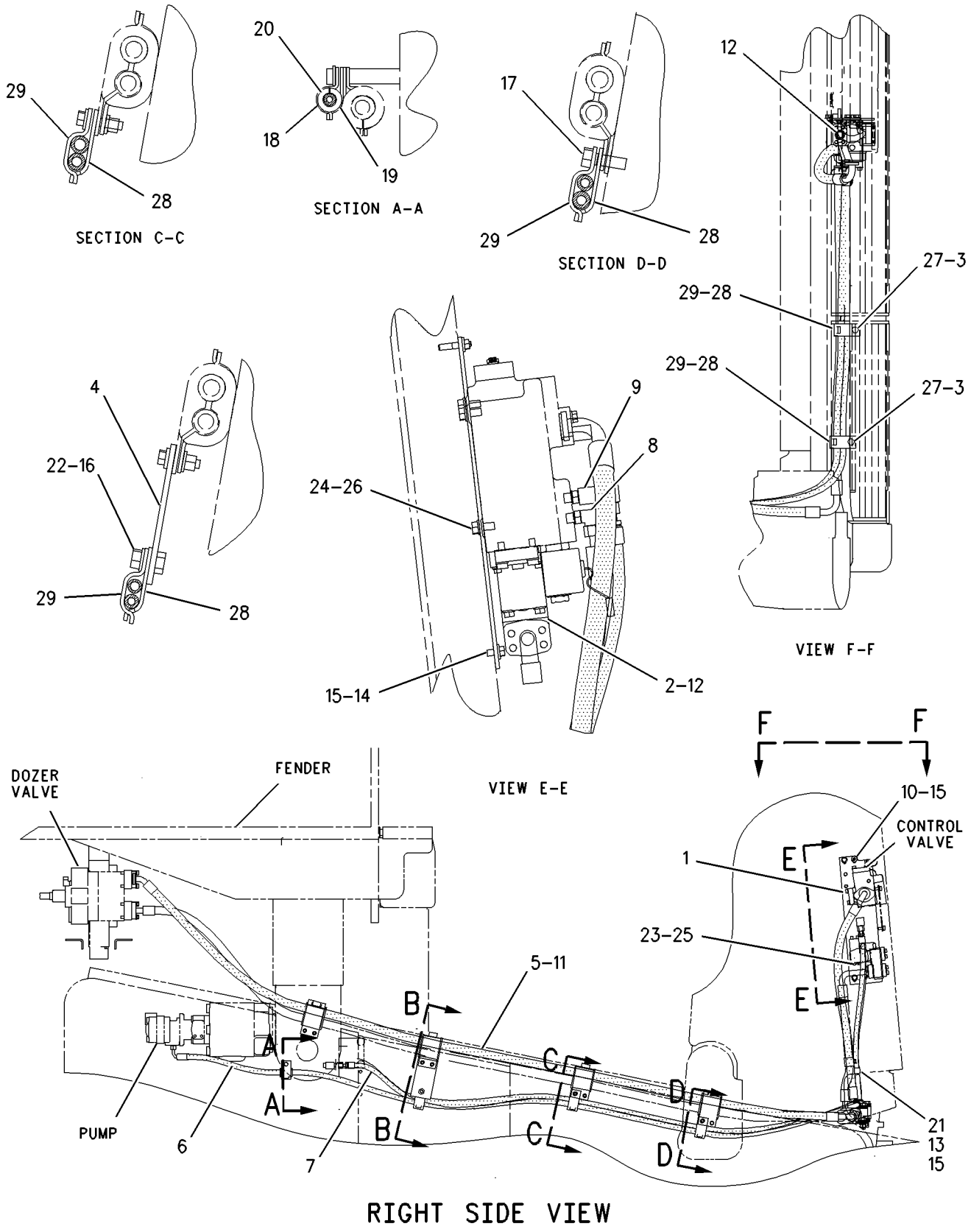

RIGHT SIDE VIEW

GRAPHIC #1 g00810462

HYDRAULIC SYSTEM

217-9277 MOTOR GP-FAN

S/N: AKT1-UP

PART OF 169-6450 AFTERCOOLER GP-AIR

SMCS-1386 **i01701127**

NOTE	REF NO	GRAPHIC REF	PART NUMBER	QTY	PART NAME 1 2 3 4 5 6 (PRODUCT LEVEL)	SEE PAGE
	1	1	**214-5976**	1	ADAPTER	
	2	1	**217-7101**	1	MOTOR GP-PISTON	
	3	1	**009-2062**	1	SEAL-O-RING	
M	4	1	**6V-7357**	8	BOLT (M6X1.0X25MM)	
	5	1	**9X-8256**	8	WASHER (6.6X12X2MM THK)	

M-METRIC PART

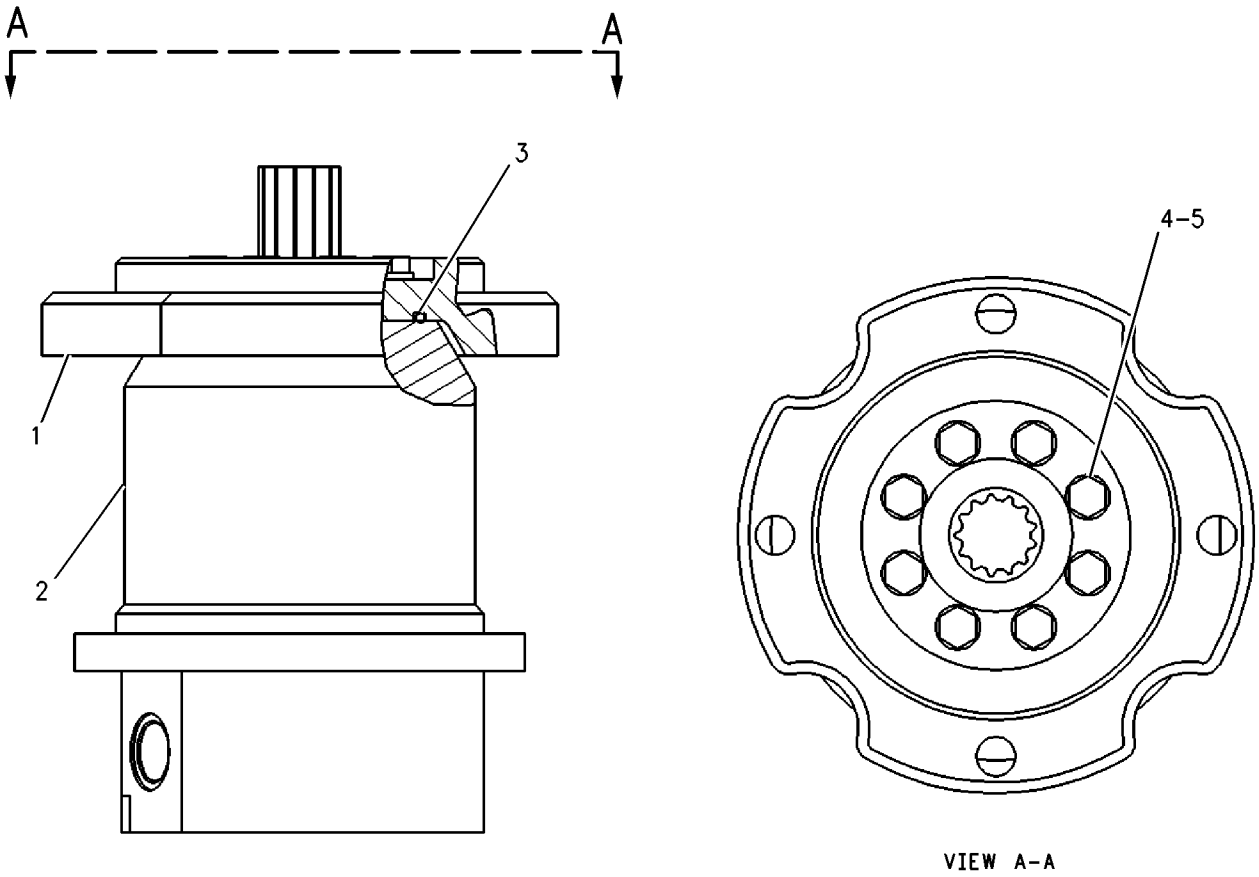

GRAPHIC #1 g00871702

MEMORANDA

HYDRAULIC SYSTEM

174-8147 PUMP GP-VANE

S/N: AKT1-UP

PART OF 171-5803 CONTROL AR-HYDRAULIC

SMCS-5055 **i01405129**

NOTE	REF NO	GRAPHIC REF	PART NUMBER	QTY	PART NAME 1 2 3 4 5 6 (PRODUCT LEVEL)	SEE PAGE
	1	1	**1U-2816**	1	SPRING	
	2	1	**6J-2925**	1	PLATE AS	
		1	**6J-2921**	1	BUSHING-TERMINAL	
	3	1	**2D-1511**	2	PIN	
J	4	1	**4T-9365**	1	ROTOR	
	5	1	**6J-9298**	1	BODY-PUMP	
	6	1	**4T-9366**	1	COVER	
YR	7	1	**4T-0417**	1	CARTRIDGE GP-VANE PUMP	472
	8	1	**1J-6474**	1	RING-RETAINING	
	9	1	**3J-7719**	1	RING-RETAINING	
	10	1	**2J-7763**	1	WASHER (2.19X3.08X.048 IN THK)	
	11	1	**5P-0904**	1	SEAL-LIP	
	12	1	**6V-2318**	1	SEAL-LIP	
	13	1	**4T-9367**	1	SHAFT-GOVERNOR CONTROL	
	14	1	**9T-5337**	1	BODY	
	15	1	**6E-2943**	1	PLUG	
	16	1	**3L-1425**	1	BALL BEARING	
YR	17	1	**9T-5336**	1	CARTRIDGE GP-VANE PUMP	473
	18	1	**9T-5338**	1	COVER AS	
		1	**7J-8080**	4	DAMPER-BOLT	
	19	1	**061-9457**	1	SEAL-O-RING (63.09MM ID)	
	20	1	**0S-1594**	4	BOLT (3/8-16X1 IN)	
J	21	1	**066-4133**	1	RING-VANE ROTOR	
	22	1	**2H-3931**	2	SEAL-O-RING (82.14MM ID)	
	23	1	**6J-9299**	1	COVER-PUMP	
	24	1	**0V-0375**	4	BOLT (1/2-13X3.25IN)	
	25	1	**2B-0947**	4	BOLT (1/2-13X2.25 IN)	
	26	1	**4J-3427**	4	BOLT (3/4-10X8.25 IN)	
	27	1	**3D-8317**	1	RING-RETAINING	
	28	1	**4T-9369**	1	COUPLING	
	29	1	**4T-9370**	1	SHAFT-GOVERNOR CONTROL	
	30	1	**1L-8490**	1	RING-RETAINING	
	31	1	**5F-8651**	1	BALL BEARING	
	32	1	**4M-7651**	1	RING-RETAINING	
	33	1	**9F-0836**	1	SEAL-LIP	
J	34	1	**4T-9368**	1	KIT-VANE	
					AVAILABLE REPAIR KIT(S):	
J			**4T-9378**	1	KIT-CARTRIDGE (REAR)	

J-KIT MARKED J SERVICES PART(S) MARKED J
R-REMFG PART MAY BE AVAILABLE
Y-SEPARATE ILLUSTRATION

174-8147 PUMP GP-VANE *(contd.)* i01405129

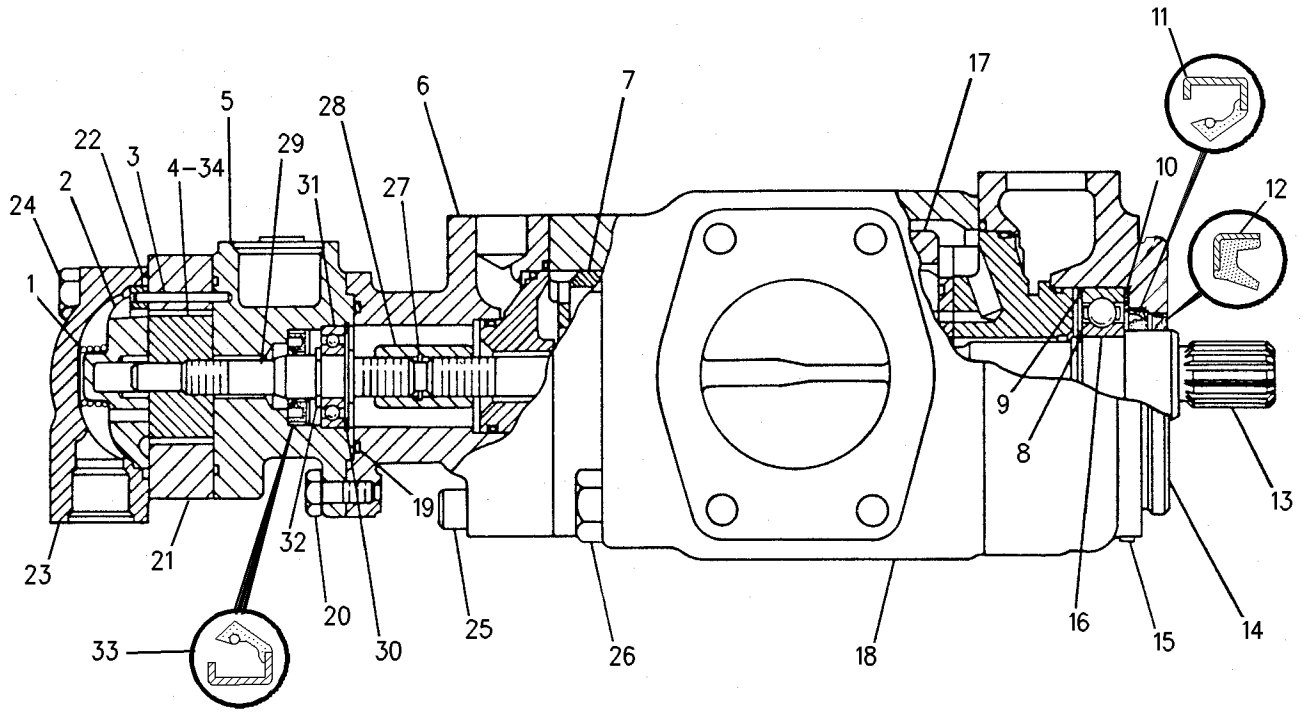

GRAPHIC #1 g00739554

HYDRAULIC SYSTEM

173-3202 TANK & FILTER GP-HYDRAULIC

S/N: AKT1-UP

PART OF 172-7821 TANK & MTG GP-HYDRAULIC

SMCS-5056, 5068 **i01691108**

NOTE	REF NO	GRAPHIC REF	PART NUMBER	QTY	PART NAME 1 2 3 4 5 6 (PRODUCT LEVEL)	SEE PAGE
	1	1	**1L-4349**	1	SPRING	
	2	1	**1R-0735**	2	FILTER ELEMENT AS-OIL (HYDRAULIC/REVERSE FLOW)	
	3	1	**4M-6921**	2	WASHER-SPRING	
	4	1	**6E-2059**	1	HOUSING	
	5	1	**6E-3332**	1	TUBE AS	
	6	1	**9J-1979**	2	RETAINER AS	
	7	1	**9J-1985**	1	TUBE AS	
	8	1	**9J-1986**	1	FLANGE	
	9	1	**9J-1988**	1	VALVE	
	10	1	**9T-7568**	1	BASE-FILTER	
	11	1	**9T-7569**	2	SPACER	
	12	1	**9T-7570**	1	VALVE-BYPASS	
	13	1	**9T-7571**	1	SCREEN AS	
	14	1	**9T-7572**	1	FLANGE	
	15	1	**9T-7578**	2	COVER AS	
	16	1	**139-1537**	1	FILTER ELEMENT AS-OIL (HYDRAULIC)	
	17	1	**139-9281**	1	RETAINER	
	18	1	**139-9282**	1	GROMMET	
	19	1	**139-9283**	1	PLATE-VIEW	
	20	1	**170-4017**	1	PLATE	
	21	1	**174-0778**	1	TANK AS-HYDRAULIC	
		1	**7J-5225**	1	FITTING	
		1	**100-4645**	1	FILLER	
	22	1	**174-0780**	1	TANK AS-HYDRAULIC	
	23	1	**178-3119**	1	BRACKET	
	24	1	**178-3828**	1	ROD	
	25	1	**178-4650**	1	TUBE AS	
	26	1	**178-5086**	1	TUBE AS	
	27	1	**185-0086**	1	BRACKET	
	28	1	**0L-0646**	1	SPRING-VALVE	
	29	1	**0S-1594**	62	BOLT (3/8-16X1 IN)	
	30	1	**0T-0065**	2	BOLT (3/8-16X3.5 IN)	
	31	1	**2D-4202**	1	PLATE	
	32	1	**2H-6124**	2	SEAL-O-RING	
	33	1	**2K-4973**	64	LOCKNUT (3/8-16 THD)	
	34	1	**2M-9780**	1	SEAL-O-RING	
	35	1	**3J-7354**	2	SEAL-O-RING	
	36	1	**5D-7927**	1	STRAINER AS	
	37	1	**5F-7054**	4	SEAL-O-RING	
	38	1	**5H-6733**	2	SEAL-O-RING	
	39	1	**5K-9107**	2	BOLT-LOCKING (3/8-16X0.75 IN)	
	40	1	**5M-2894**	16	WASHER-HARD (10.2X18.5X2.5MM THK)	
	41	1	**6H-9361**	1	RING-RETAINING	
M	42	1	**6V-7732**	2	BOLT (M10X1.5X25MM)	
M	43	1	**6V-7744**	16	LOCKNUT (M10X1.5 THD)	
M	44	1	**6V-8097**	6	BOLT (M12X1.75X30MM)	
	45	1	**7D-1195**	2	SEAL-O-RING	
	46	1	**7F-4781**	1	COVER	
	47	1	**7F-4782**	1	GASKET	
	48	1	**7H-1447**	1	CAP-FILLER	
	49	1	**8C-5230**	1	SEAL-O-RING	
	50	1	**8F-4994**	1	SEAL-O-RING	
	51	1	**8T-2275**	1	BALL	
	52	1	**5P-1075**	2	WASHER-HARD (10.2X22.5X3MM THK)	
	53	1	**9H-6454**	1	GASKET	
	54	1	**9L-9132**	4	WASHER (10.2X25.5X2.5MM THK)	

173-3202 TANK & FILTER GP-HYDRAULIC *(contd.)* i01691108

NOTE	REF NO	GRAPHIC REF	PART NUMBER	QTY	PART NAME 1 2 3 4 5 6 (PRODUCT LEVEL)	SEE PAGE
	55	1	**9S-4182**	2	PLUG	
	56	1	**9S-4190**	1	PLUG	
	57	1	**9S-8752**	8	NUT-FULL (3/8-16 THD)	
	58	1	**9T-7567**	1	STUD-TAPERLOCK	
BD	59	1	**5P-9119**		SEALANT	

B-USE AS REQUIRED
D-ORDER BY THE METER
M-METRIC PART

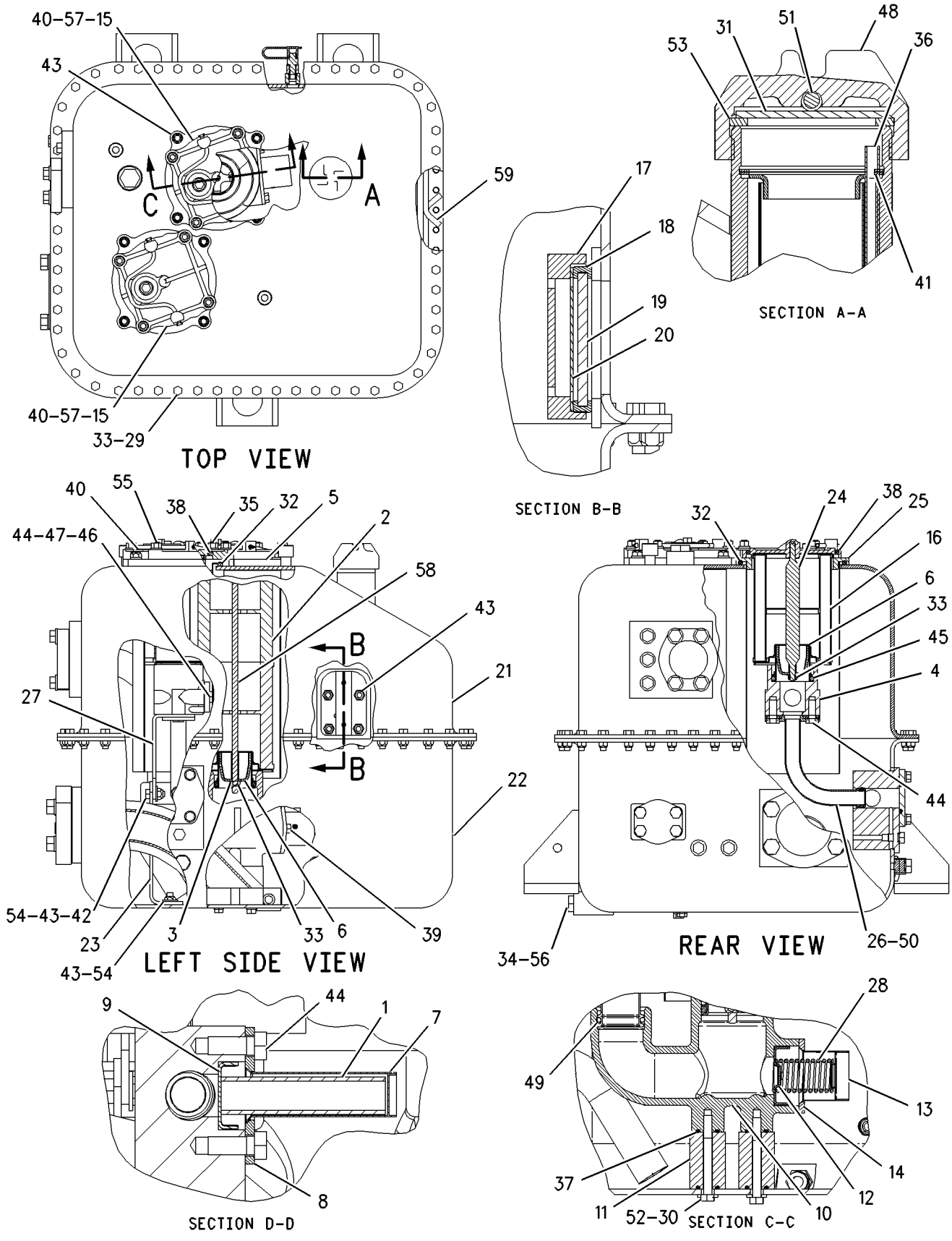

GRAPHIC #1

g00870955

MEMORANDA

HYDRAULIC SYSTEM

172-7821 TANK & MTG GP-HYDRAULIC

S/N: AKT1-UP

PART OF 171-5803 CONTROL AR-HYDRAULIC

SMCS-5056 **i01689483**

NOTE	REF NO	GRAPHIC REF	PART NUMBER	QTY	PART NAME 1 2 3 4 5 6 (PRODUCT LEVEL)	SEE PAGE
	1	1	**2G-0493**	3	WASHER-RETAINING (20X82.55X11MM THK)	
Y	2	1	*9G-9288*	1	COVER GP-HYDRAULIC TANK CAP	484
	3	1	**9P-3066**	6	MOUNTING	
	4	1	**110-5918**	1	VALVE-DRAIN	
	5	1	**117-7773**	1	SWITCH AS-PRESSURE	
		1	**102-8802**	1	KIT-RECEPTACLE (2 PIN)	
					(INCLUDES RECEPTACLE AS & WEDGE)	
		1	**8T-8729**	2	PIN-CONNECTOR	
BE		1	**9X-1813**		SLEEVE	
	6	1	**154-6165**	1	VALVE-CHECK (VACUUM BREATHER)	
Y	7	1	*173-3202*	1	TANK & FILTER GP-HYDRAULIC	542
	8	1	**2M-9780**	1	SEAL-O-RING	
	9	1	**3D-2824**	1	SEAL-O-RING	
	10	1	**3J-1907**	1	SEAL-O-RING	
	11	1	**5F-9144**	1	SEAL-O-RING	
	12	1	**8T-4122**	3	WASHER-HARD (17X32X3.5MM THK)	
	13	1	**8T-9396**	3	BOLT (5/8-11X3.25 IN)	

B-USE AS REQUIRED
E-ORDER BY THE CENTIMETER
Y-SEPARATE ILLUSTRATION

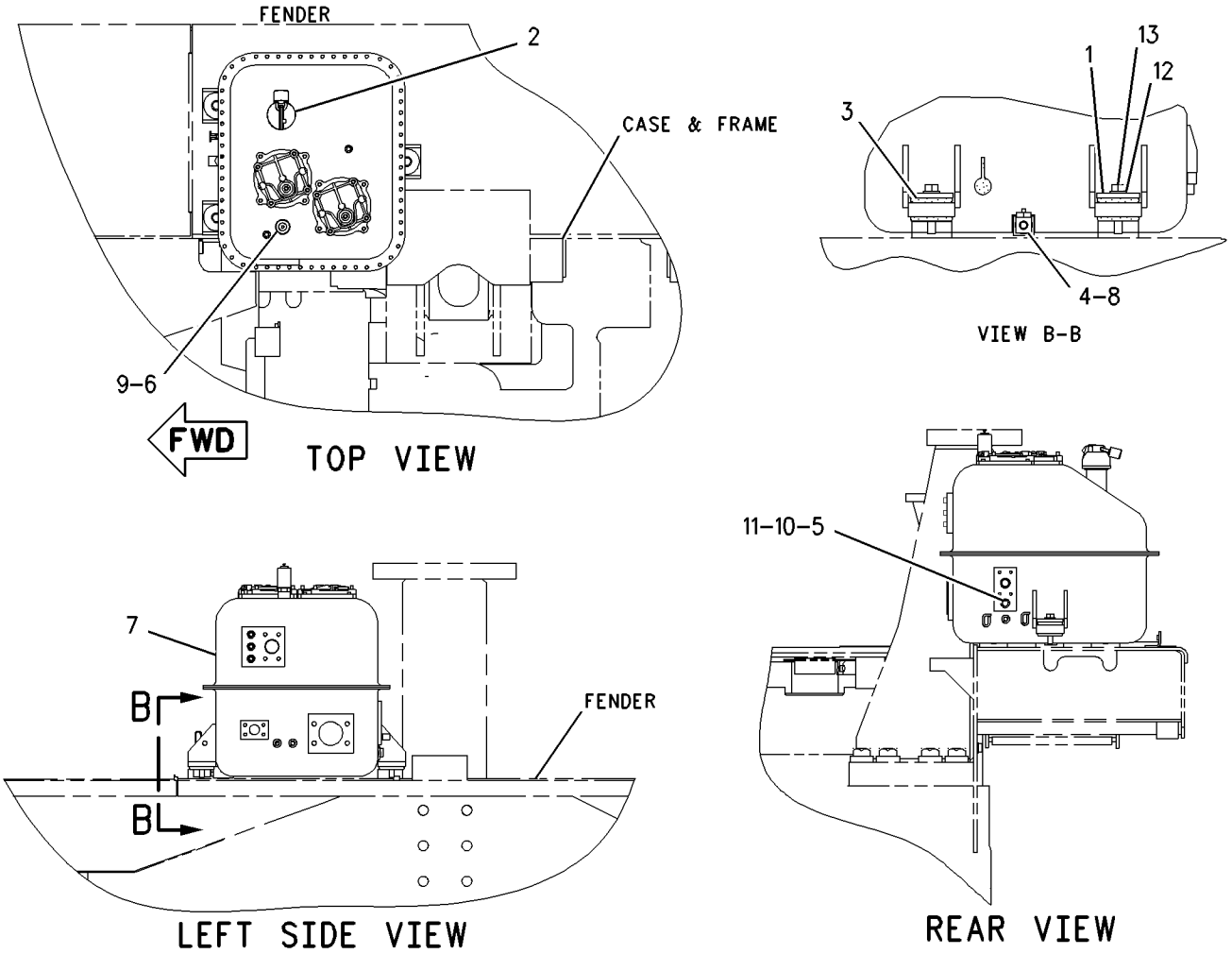

GRAPHIC #1

g00756055

HYDRAULIC SYSTEM

7T-3829 VALVE & CYLINDER GP

S/N: BHA1-UP; BHF1-UP; BHJ1-UP; BHP1-UP; AKT1-UP
PART OF 199-5513, 199-5514 VALVE & CYLINDER GP
AN ATTACHMENT

SMCS-5116 **i01405138**

NOTE	REF NO	GRAPHIC REF	PART NUMBER	QTY	PART NAME 1 2 3 4 5 6 (PRODUCT LEVEL)	SEE PAGE
Y	1	1	**4T-4205**	1	VALVE GP-QUICK-DROP	572
Y	2	1	**9T-2869**	1	CYLINDER GP-BULLDOZER LIFT	486
	3	1	**5S-7382**	8	BOLT (3/8-16X1.375 IN)	
		1	**8T-4896**	8	WASHER-HARD (10.2X18.5X2.5MM THK)	
	4	1	**7T-4890**	1	PLATE	
	5	1	**7X-0315**	4	BOLT (7/16-14X3.25 IN)	
	6	1	**8T-5360**	4	WASHER (12X22.5X2.5MM THK)	
	7	1	**9W-4888**	1	TUBE AS	
	8	1	**7S-8921**	1	CLIP (TAB)	
		1	**7S-8920**	1	CLIP (SLOT)	
	9	1	**5C-6565**	1	BOLT (1/2-13X1.25 IN)	
		1	**8T-4223**	1	WASHER-HARD (13.5X25.5X3MM THK)	
	10	1	**7X-0311**	4	BOLT (7/16-14X2.25 IN)	
	11	1	**1P-3705**	2	SEAL-RECTANGULAR	
	12	1	**1P-4577**	4	FLANGE-HALF	
	13	1	**7X-0589**	4	WASHER-HARD (12X28.5X5MM THK)	

Y-SEPARATE ILLUSTRATION

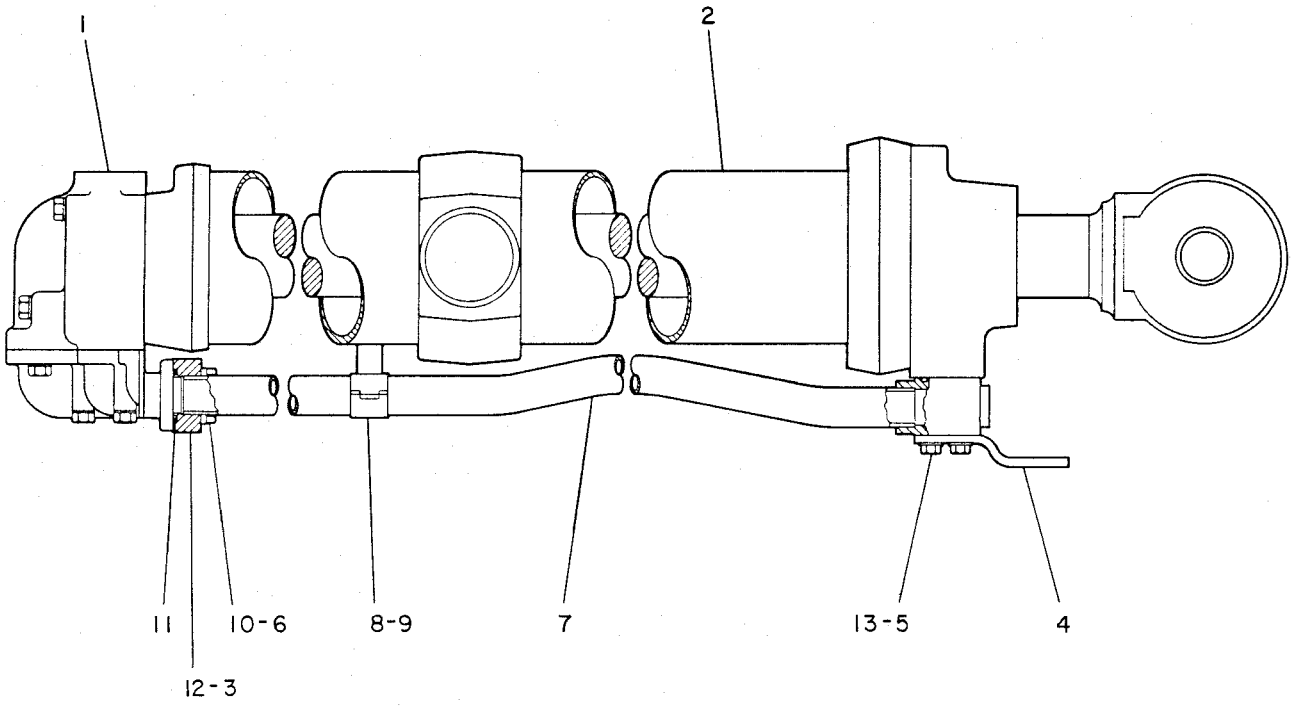

GRAPHIC #1 g00187885

199-5513 VALVE & CYLINDER GP

S/N: BHA1-UP; BHF1-UP; BHJ1-UP; BHP1-UP; AKT1-UP
PART OF 171-6672, 171-6673, 171-6674, 171-6675 BULLDOZER AR
FOR USE WITH 199-5514—PAGE 550, 114-6006—PAGE 239
AN ATTACHMENT

SMCS-5116 **i01437648**

NOTE	REF NO	GRAPHIC REF	PART NUMBER	QTY	PART NAME 1 2 3 4 5 6 (PRODUCT LEVEL)	SEE PAGE
Y	1	1	*7T-3829*	1	VALVE & CYLINDER GP	548
I	2	1	**199-5707**	1	HOSE AS	
I	3	1	**199-5708**	1	HOSE AS	
	4	1	**4J-0520**	4	SEAL-O-RING	

I-SEE HOSE FABRICATION GUIDE
Y-SEPARATE ILLUSTRATION

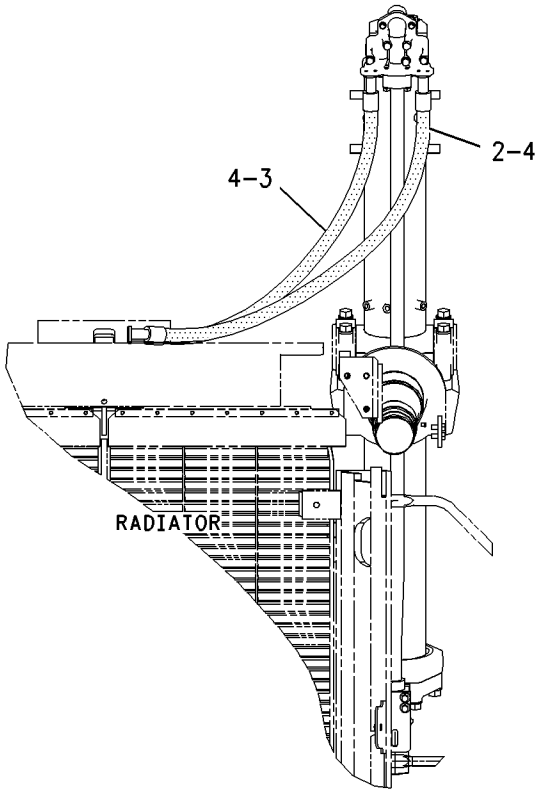

REAR VIEW

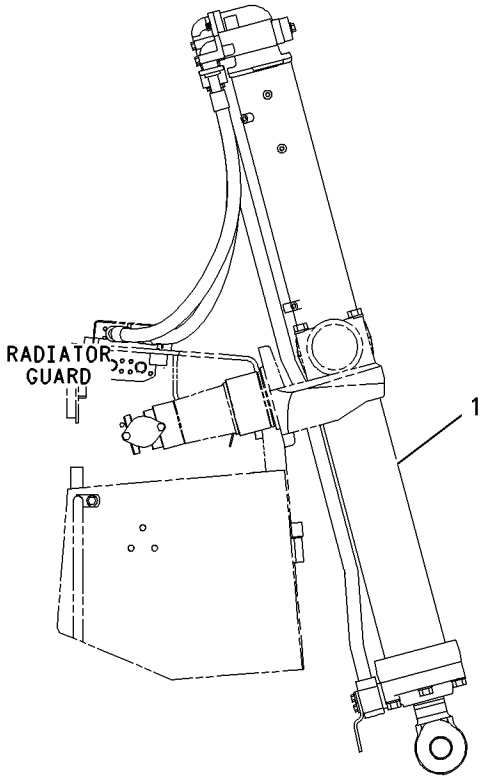

RIGHT SIDE VIEW

GRAPHIC #1 g00816575

199-5514 VALVE & CYLINDER GP

S/N: BHA1-UP; BHF1-UP; BHJ1-UP; BHP1-UP; AKT1-UP
PART OF 171-6672, 171-6673, 171-6674, 171-6675 BULLDOZER AR
FOR USE WITH 199-5513—PAGE 549, 114-6006—PAGE 239
AN ATTACHMENT

SMCS-5116 **i01437652**

NOTE	REF NO	GRAPHIC REF	PART NUMBER	QTY	PART NAME 1 2 3 4 5 6 (PRODUCT LEVEL)	SEE PAGE
Y	1	1	*7T-3829*	1	VALVE & CYLINDER GP	548
I	2	1	**199-5707**	1	HOSE AS	
I	3	1	**199-5708**	1	HOSE AS	
	4	1	**4J-0520**	4	SEAL-O-RING	

I-SEE HOSE FABRICATION GUIDE
Y-SEPARATE ILLUSTRATION

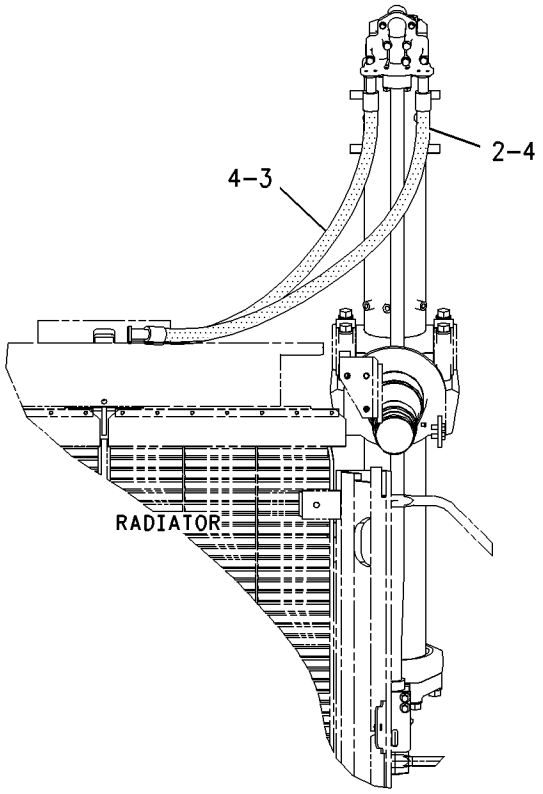

REAR VIEW

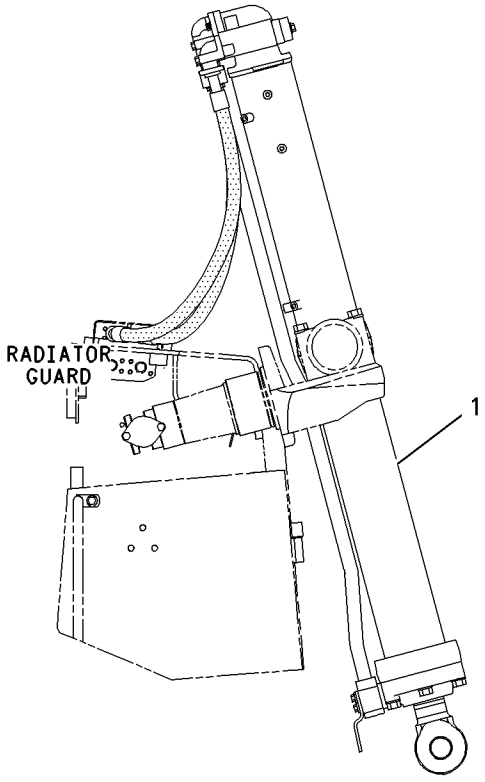

RIGHT SIDE VIEW

GRAPHIC #1 g00818792

HYDRAULIC SYSTEM

173-7702 VALVE & MTG GP-BULLDOZER

S/N: AKT1-UP

PART OF 171-5803 CONTROL AR-HYDRAULIC

SMCS-5051 **i01665543**

NOTE	REF NO	GRAPHIC REF	PART NUMBER	QTY	PART NAME 1 2 3 4 5 6 (PRODUCT LEVEL)	SEE PAGE
	1	1	**9G-0162**	3	MOUNTING	
	2	1	**174-7837**	1	PLATE	
	3	1	**174-7838**	1	PLATE AS	
		1	**1F-0750**	2	NUT-WELD (3/8-16 THD)	
	4	1	**174-7839**	1	BRACKET	
Y	5	1	**180-7930**	1	VALVE GP-CONTROL	560
	6	1	**208-2816**	1	BLOCK	
	7	1	**5P-2424**	5	BOLT (1/2-13X2.25 IN)	
	8	1	**6V-8188**	3	NUT (1/2-13 THD)	
	9	1	**8F-6437**	3	WASHER (13.5X50.8X4.76MM THK)	
	10	1	**8T-4223**	5	WASHER-HARD (13.5X25.5X3MM THK)	
	11	1	**7X-0589**	4	WASHER-HARD (12X28.5X5MM THK)	
	12	1	**8T-9382**	2	BOLT (7/16-14X1.25 IN)	
	13	1	**7X-0308**	2	BOLT (7/16-14X1.375 IN)	

Y-SEPARATE ILLUSTRATION

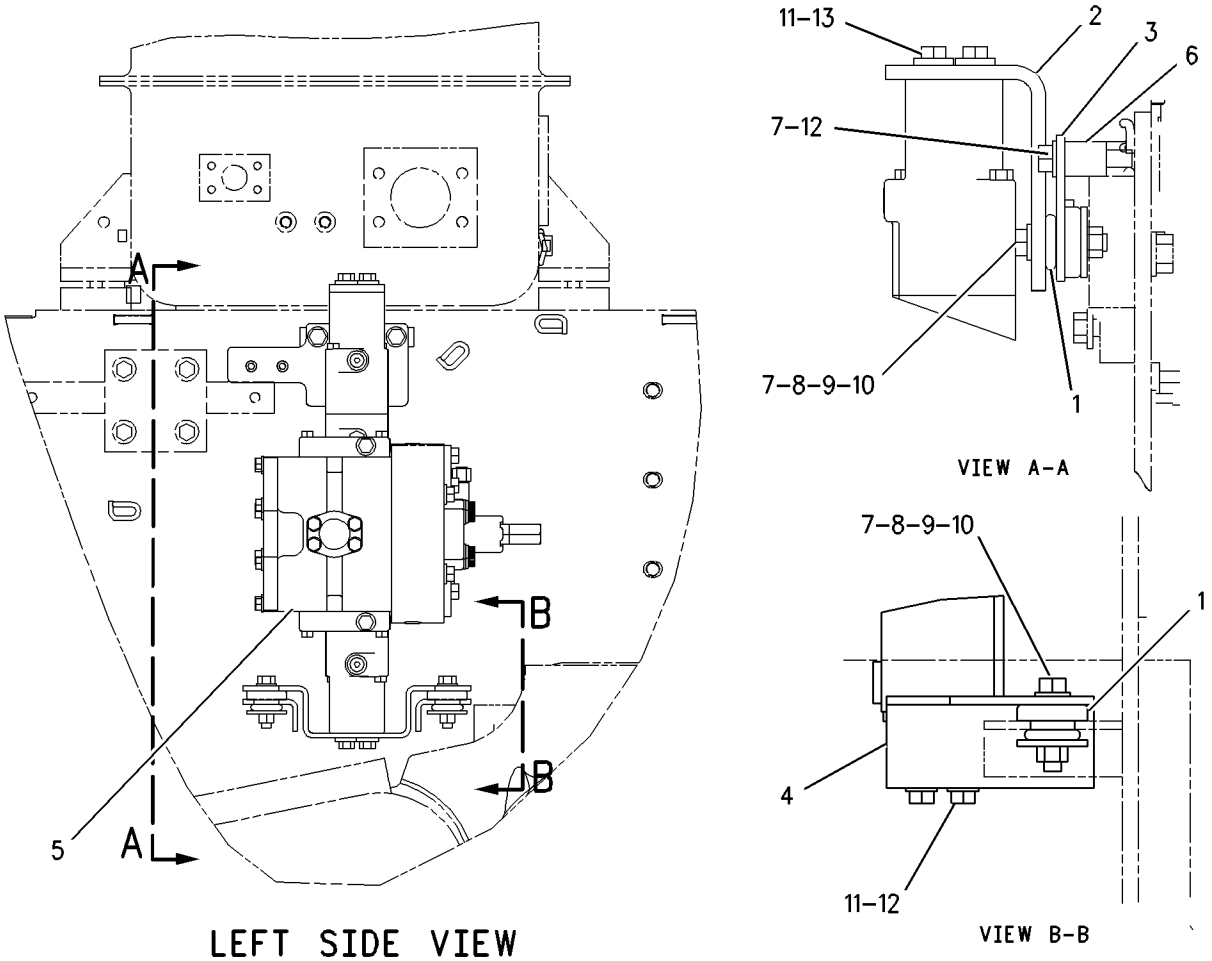

GRAPHIC #1 g00864944

188-6140 VALVE & MTG GP-CONTROL

S/N: AKT1-UP
PART OF 101-7771 CONTROL AR-HYDRAULIC
AN ATTACHMENT

SMCS-5051 **i01458524**

NOTE	REF NO	GRAPHIC REF	PART NUMBER	QTY	PART NAME 1 2 3 4 5 6 (PRODUCT LEVEL)	SEE PAGE
Y	1	1	**3E-8575**	1	VALVE GP-SOLENOID	574
	2	1	**188-6141**	1	MANIFOLD AS	
	2A	1	**3J-1907**	1	SEAL-O-RING	
	2B	1	**9S-8004**	1	PLUG	
	2C	1	**200-2964**	1	ORIFICE AS	
	2D	1	**4J-7533**	1	SEAL-O-RING	

Y-SEPARATE ILLUSTRATION

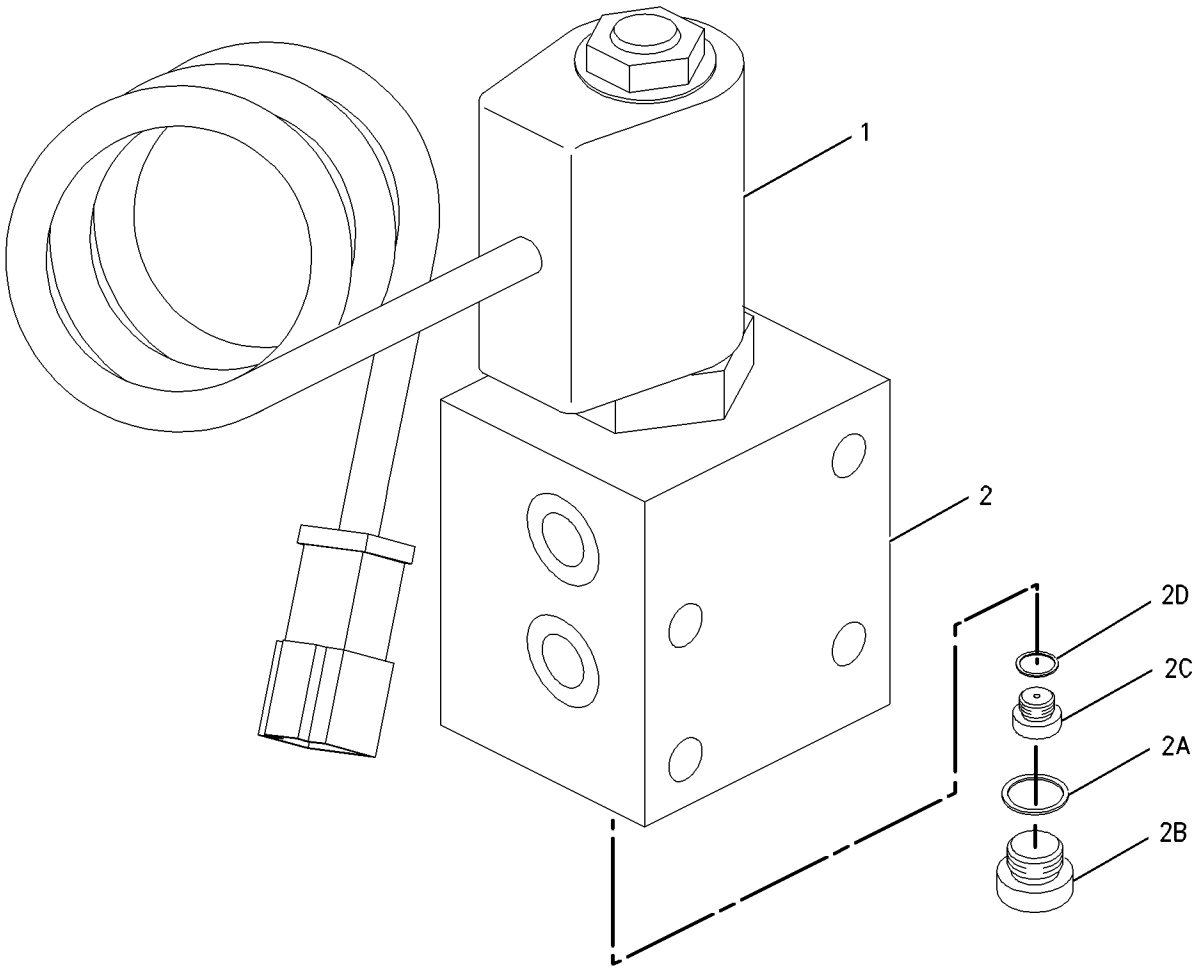

GRAPHIC #1 g00764266

174-0827 VALVE GP-COMBINATION

S/N: AKT1-UP

PART OF 172-7852 LINES GP-MOTOR

SMCS-5064 **i01435932**

NOTE	REF NO	GRAPHIC REF	PART NUMBER	QTY	PART NAME 1 2 3 4 5 6 (PRODUCT LEVEL)	SEE PAGE
	1	1	**6V-0852**	2	CAP-DUST	
	2	1	**124-8335**	1	VALVE AS-CONTROL	
	3	1	**179-0123**	1	VALVE GP-SEQUENCE	
		1	**200-6283**	1	KIT-SEAL	
					(INCLUDES SEAL-O-RINGS & BACUP RINGS)	
	4	1	**179-0124**	1	VALVE GP-RELIEF	
		1	**133-5545**	1	KIT-SEAL	
					(INCLUDES SEAL-O-RINGS & BACKUP RINGS)	
	5	1	**179-0125**	1	PLUG	
	6	1	**3J-1907**	2	SEAL-O-RING	
	7	1	**6V-3965**	2	FITTING	
	8	1	**6V-8218**	1	SEAL-O-RING	

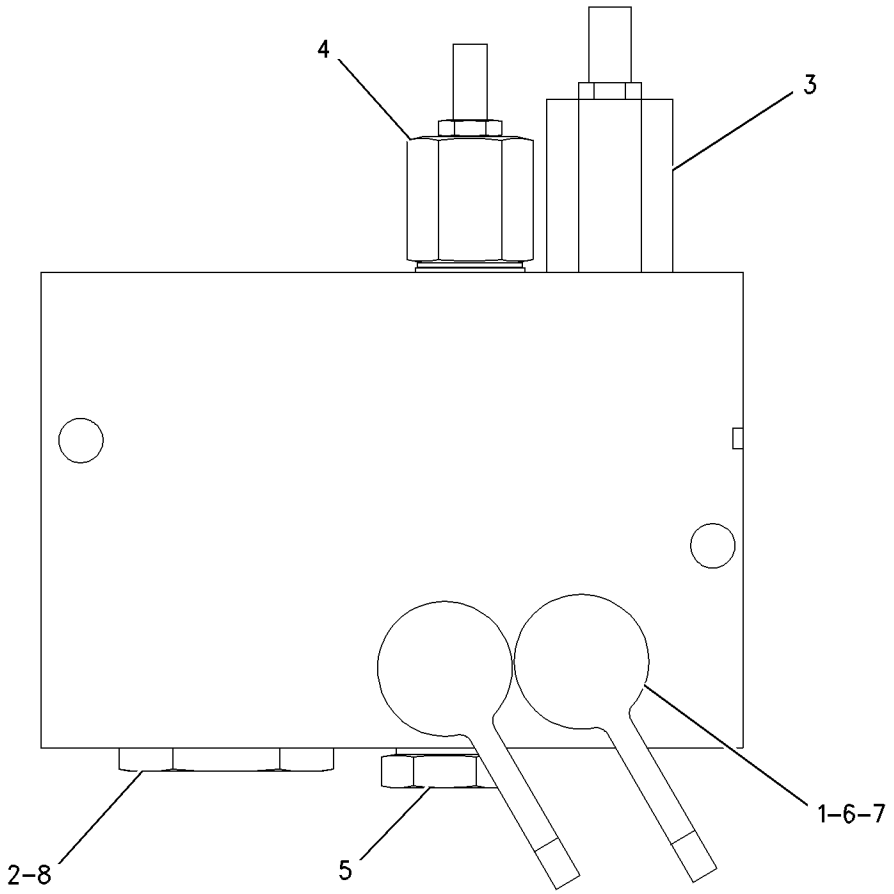

GRAPHIC #1 g00809448

HYDRAULIC SYSTEM

9T-5769 VALVE GP-CONTROL

S/N: AKT1-UP

PART OF 180-7930 VALVE GP-CONTROL

SMCS-5051 **i01691114**

NOTE	REF NO	GRAPHIC REF	PART NUMBER	QTY	PART NAME 1 2 3 4 5 6 (PRODUCT LEVEL)	SEE PAGE
	1	1	**4J-0523**	1	SEAL-O-RING	
	2	1	**9J-5756**	1	SPRING	
	3	1	**9S-8004**	4	PLUG	
	4	1	**9J-6491**	3	SEAL-O-RING	
	5	1	**3J-1907**	4	SEAL-O-RING	
	6	1	**4J-8997**	1	SEAL-O-RING	
	7	1	**3K-0360**	1	SEAL-O-RING	
	8	1	**9S-8005**	1	PLUG	
Y	9	1	**4T-4073**	1	VALVE GP-SHUTTLE	573
	10	1	**4J-0522**	2	SEAL-O-RING	
	11	1	**6J-1038**	3	SEAL-O-RING	
	12	1	**9S-4180**	3	PLUG	
	13	1	**4J-7533**	3	SEAL-O-RING	

Y-SEPARATE ILLUSTRATION

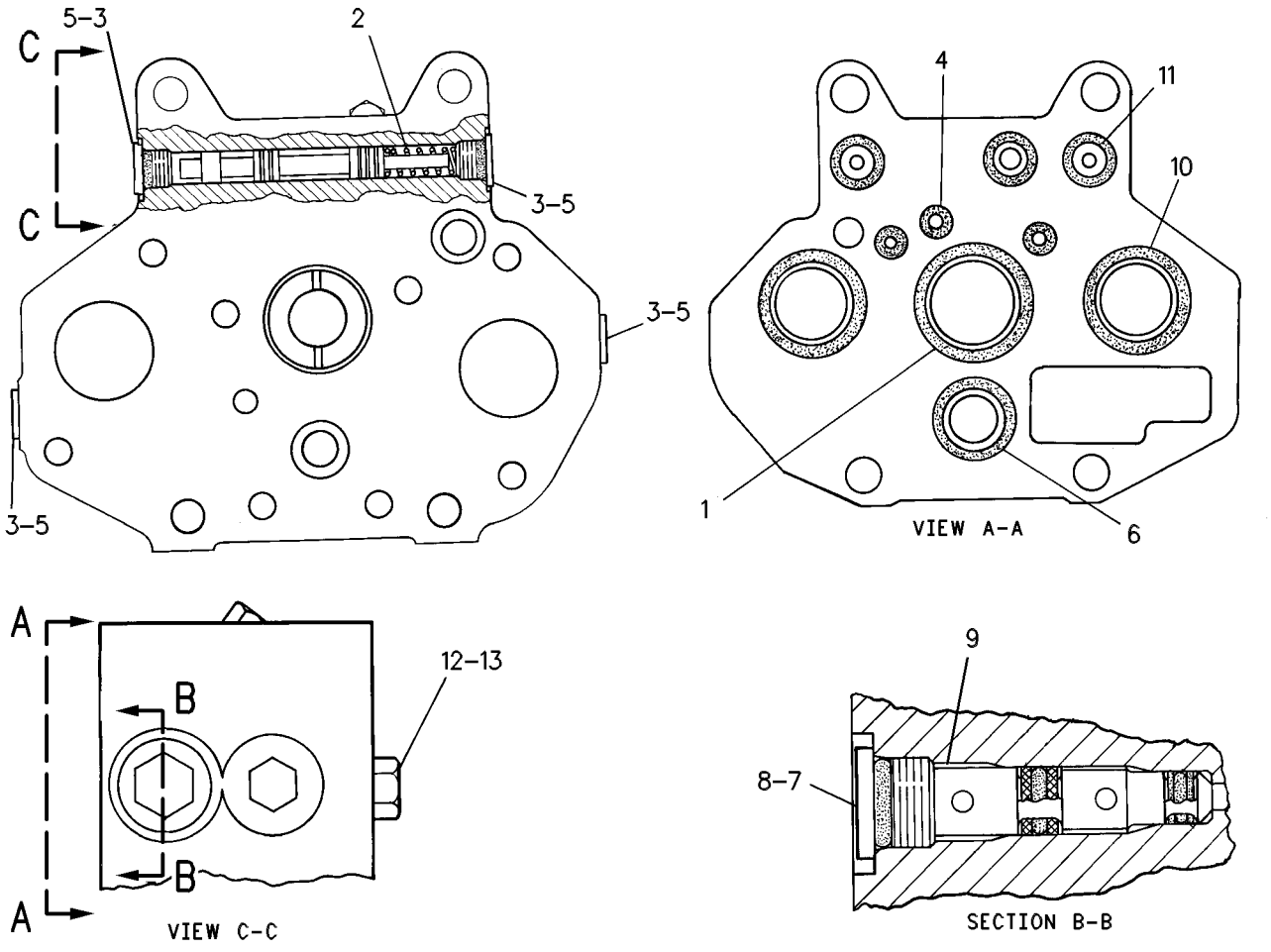

GRAPHIC #1 g00248438

MEMORANDA

HYDRAULIC SYSTEM

151-0241 VALVE GP-CONTROL

S/N: AKT1-UP
PART OF 174-9185 CONTROL AR-HYDRAULIC
AN ATTACHMENT

SMCS-5051 **i01622236**

NOTE	REF NO	GRAPHIC REF	PART NUMBER	QTY	PART NAME 1 2 3 4 5 6 (PRODUCT LEVEL)	SEE PAGE
	1	1	**9S-8004**	1	PLUG	
	2	1	**150-7683**	1	RETAINER	
	3	1	**150-7684**	1	COVER	
	4	1	**9S-8001**	4	PLUG	
	5	1	**9S-4191**	2	PLUG-STRAIGHT THREAD	
	6	1	**095-1609**	1	SEAL-O-RING	
	7	1	**9J-1722**	1	RETAINER	
	8	1	**1P-4576**	6	FLANGE	
	9	1	**1P-4577**	2	FLANGE-HALF	
	10	1	**3J-1907**	3	SEAL-O-RING	
	11	1	**4J-0522**	1	SEAL-O-RING	
	12	1	**4J-7533**	4	SEAL-O-RING	
	13	1	**5P-0076**	4	BOLT-12 POINT HEAD (3/8-16X1.50 IN)	
	14	1	**5S-7382**	16	BOLT (3/8-16X1.375 IN)	
Y	15	1	**3E-9205**	1	VALVE GP-SOLENOID	575
	16	1	**8J-8621**	2	SPRING	
	17	1	**8T-4896**	16	WASHER-HARD (10.2X18.5X2.5MM THK)	
	18	1	**9J-1716**	1	COVER	

Y-SEPARATE ILLUSTRATION

151-0241 VALVE GP-CONTROL *(contd.)* i01622236

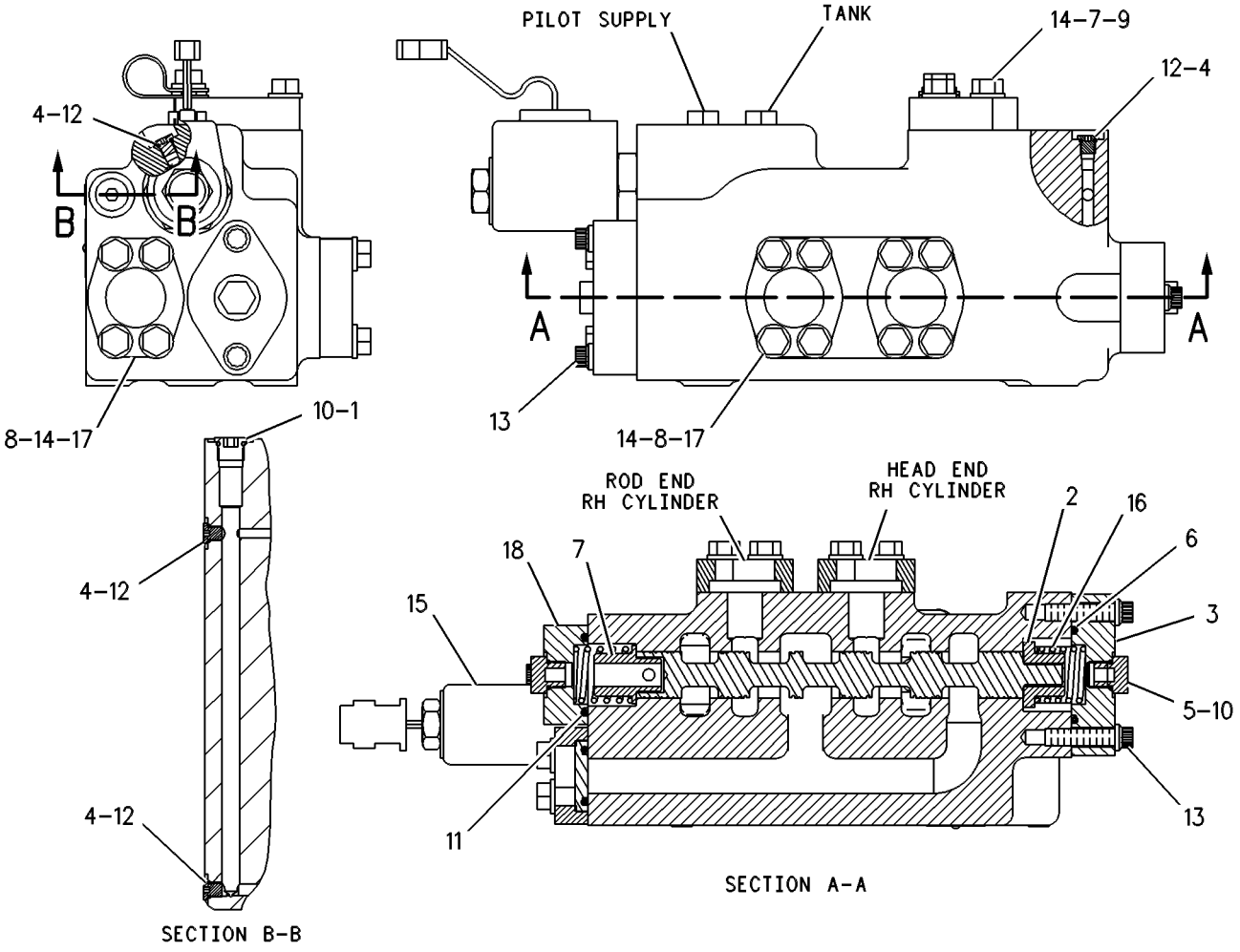

GRAPHIC #1 g00445968

HYDRAULIC SYSTEM

177-1407 VALVE GP-CONTROL

S/N: AKT1-UP
PART OF 172-7626 CONTROL AR-HYDRAULIC
AN ATTACHMENT

SMCS-5051 **i01565590**

NOTE	REF NO	GRAPHIC REF	PART NUMBER	QTY	PART NAME 1 2 3 4 5 6 (PRODUCT LEVEL)	SEE PAGE
	1	1	**1P-4577**	16	FLANGE-HALF	
	2	1	**1P-4578**	6	FLANGE-HALF	
	3	1	**2S-4078**	1	SEAL-O-RING	
	4	1	**3G-3475**	2	SPRING	
	5	1	**3G-8710**	2	PLUG-O-RING	
	6	1	**4J-0522**	1	SEAL-O-RING	
	7	1	**4J-0525**	2	SEAL-O-RING	
	8	1	**4J-0526**	2	SEAL-O-RING	
	9	1	**4T-2620**	2	SPRING	
	10	1	**5H-4020**	1	COVER	
	11	1	**5S-7379**	2	BOLT (3/8-16X0.875 IN)	
	12	1	**5S-7382**	32	BOLT (3/8-16X1.375 IN)	
	13	1	**6E-4343**	2	VALVE	
	14	1	**6E-4432**	4	RETAINER	
	15	1	**6E-4492**	2	HOUSING	
	16	1	**6V-4432**	4	BOLT (1/2-13X4 IN)	
	17	1	**7M-8485**	2	SEAL-O-RING	
	18	1	**7X-0308**	12	BOLT (7/16-14X1.375 IN)	
	19	1	**7X-0326**	4	BOLT (1/2-13X3 IN)	
	20	1	**8M-7145**	2	WASHER (10.2X28.5X5MM THK)	
	21	1	**8T-4223**	8	WASHER-HARD (13.5X25.5X3MM THK)	
	22	1	**8T-4896**	32	WASHER-HARD (10.2X18.5X2.5MM THK)	
	23	1	**8T-5360**	12	WASHER (12X22.5X2.5MM THK)	
	24	1	**9T-8206**	1	VALVE	
	25	1	**9T-8207**	1	PLUG-O-RING	
	26	1	**9T-8208**	1	SPRING	
	27	1	**9T-8210**	2	HOUSING	
	28	1	**164-4540**	1	VALVE GP-DIVERTER (COLD WEATHER CLIMATE ONLY)	
		1	**2M-9780**	1	SEAL-O-RING	
		1	**095-1751**	2	SEAL-O-RING	
		1	**169-1216**	1	TUBE AS	
					-OR-	
		1	**184-1192**	1	PLUG AS	
		1	**2M-9780**	1	SEAL-O-RING	
		1	**6V-3505**	1	RING-BACKUP	
		1	**095-1751**	1	SEAL-O-RING	

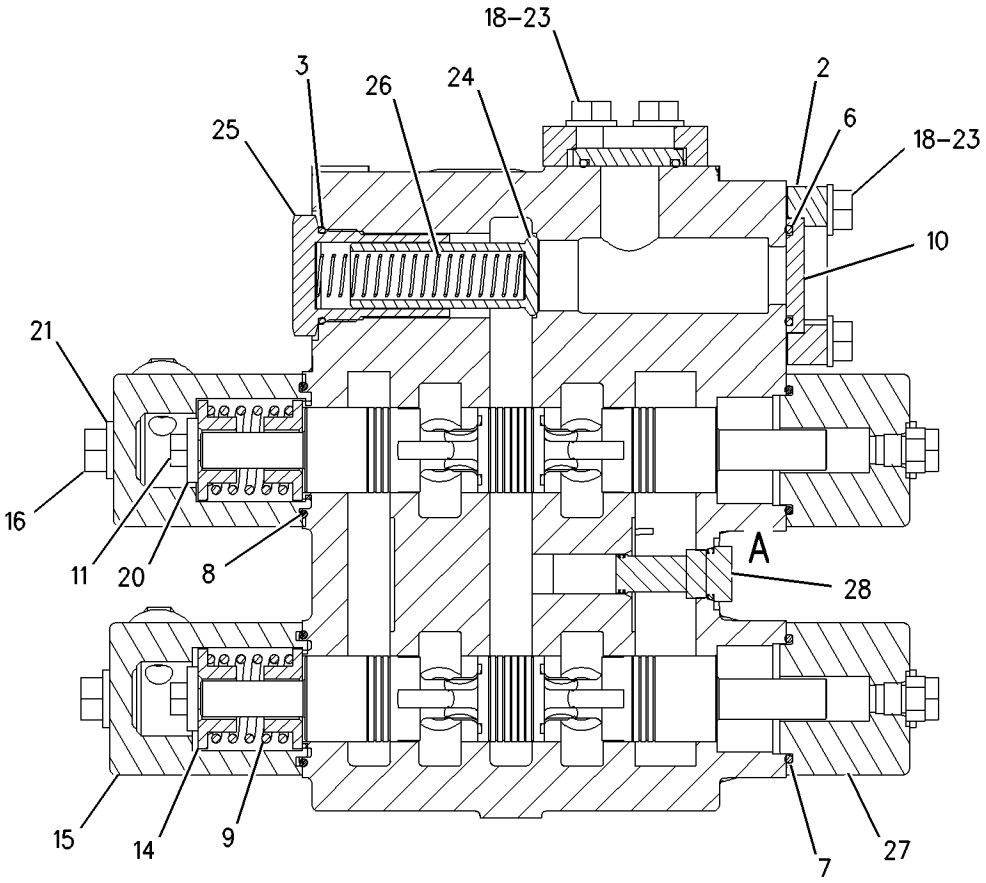

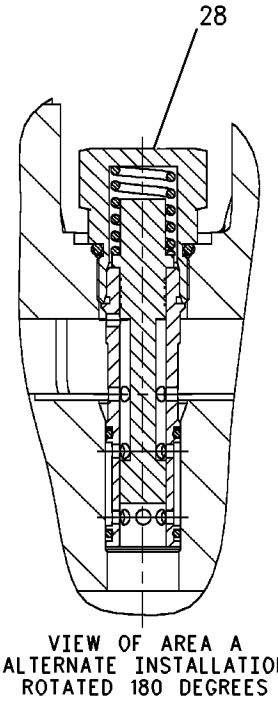

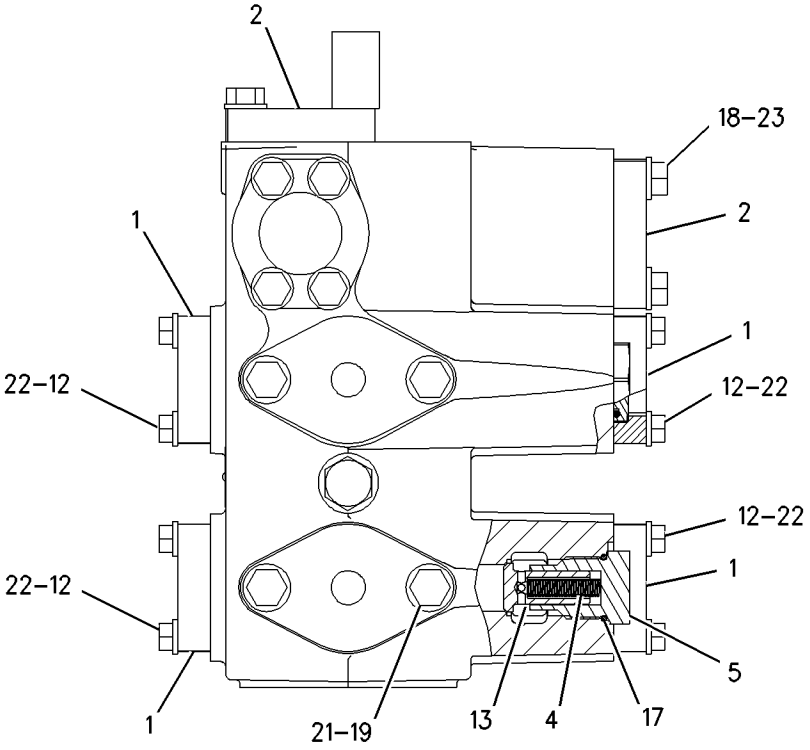

GRAPHIC #1 g00752796

HYDRAULIC SYSTEM

180-7930 VALVE GP-CONTROL

S/N: AKT1-UP

PART OF 173-7702 VALVE & MTG GP-BULLDOZER

SMCS-5051 **i01701131**

NOTE	REF NO	GRAPHIC REF	PART NUMBER	QTY	PART NAME 1 2 3 4 5 6 (PRODUCT LEVEL)	SEE PAGE
	1	2	**9T-3747**	2	VALVE	
	2	1	**6J-2561**	2	VALVE-RELIEF POPPET	
	3	1	**9T-3746**	1	VALVE	
	4	1	**205-3140**	2	HOUSING	
	5	1	**205-3144**	1	HOUSING	
	6	2	**177-4334**	1	SPRING	
	7	2	**177-4335**	1	SPRING	
	8	2	**177-4336**	2	SPRING	
	9	2	**205-3171**	1	RETAINER	
	10	2	**205-3176**	1	RETAINER	
	11	2	**205-3179**	1	RETAINER	
	12	2	**205-3180**	1	RETAINER	
	13	1	**197-5035**	1	PISTON	
	14	2	**177-7130**	2	SHIM (1MM THK)	
	15	1,2	**9S-8004**	6	PLUG	
B	16	2	**164-2273**	3	SHIM (0.30MM)	
	17	2	**1H-5728**	1	SEAL-O-RING	
	18	1	**1P-4577**	6	FLANGE-HALF	
	19	1	**1P-4578**	4	FLANGE-HALF	
Y	20	2	**9T-5769**	1	VALVE GP-CONTROL	554
	21	1	**1U-1799**	2	PLUG	
	22	1	**2A-5885**	1	SPRING	
	23	1	**2J-6089**	2	SPRING	
	24	2	**2M-4453**	1	SEAL-O-RING	
	25	1	**2M-9780**	2	SEAL-O-RING	
	26	2	**2N-7029**	2	SPRING-CONTROL PIN	
	27	1	**2S-4078**	1	SEAL-O-RING	
	28	1	**3F-4479**	2	PIN-SPRING	
	29	2	**3G-1258**	2	RETAINER	
	30	1	**3G-3475**	2	SPRING	
	31	1	**3G-8163**	2	SCREW-ADJUSTMENT	
	32	1	**3G-8164**	2	NUT (3/8-24 THD)	
	33	1	**3G-8165**	2	NUT (5/8-18 THD)	
	34	1	**3G-8415**	2	COVER	
	35	1	**3G-8710**	2	PLUG	
	36	1,2	**3J-1907**	8	SEAL-O-RING	
	37	2	**3J-7354**	1	SEAL-O-RING	
	38	1	**3J-7470**	4	SHIM (1.22MM THK)	
	39	1	**3J-7473**	12	SHIM (.12MM THK)	
	40	2	**3K-6113**	4	WASHER-HARD (12X18.5X3MM THK)	
	41	1	**3S-9233**	1	SEAL-O-RING	
	42	1	**4J-0520**	2	SEAL-O-RING	
	43	2	**4J-0522**	2	SEAL-O-RING	
	44	1,2	**4J-0523**	2	SEAL-O-RING	
	45	2	**4J-8996**	2	SEAL-O-RING	
	46	1	**4J-8997**	1	SEAL-O-RING	
	47	1	**5H-4019**	2	COVER	
	48	1	**5J-4664**	1	SPRING	
	49	2	**5P-2228**	2	BOLT (1/2-13X1 IN)	
	50	2	**5P-7892**	1	BOLT-12 POINT HEAD (7/16-14X2.75 IN)	
	51	2	**5P-7972**	4	BOLT-12 POINT HEAD (7/16-14X1.75 IN)	
	52	1	**5S-7382**	12	BOLT (3/8-16X1.375 IN)	
	53	1	**6E-4343**	2	VALVE	
	54	1	**6J-3134**	2	SEAL-O-RING	
	55	2	**6V-8397**	2	SEAL-O-RING	
	56	2	**6V-9200**	1	ELBOW	

180-7930 VALVE GP-CONTROL *(contd.)* i01701131

NOTE	REF NO	GRAPHIC REF	PART NUMBER	QTY	PART NAME 1 2 3 4 5 6 (PRODUCT LEVEL)	SEE PAGE
	57	2	**6V-9829**	2	CAP AS	
					(EACH INCLUDES)	
		2	**6V-8553**	1	NUT	
		2	**6V-9355**	1	PLUG	
	58	1	**7D-9749**	1	SEAL-O-RING	
	59	2	**7J-1592**	1	COVER	
	60	1	**7M-5717**	1	SPACER	
	61	1	**7M-8485**	2	SEAL-O-RING	
	62	1	**7X-0288**	8	BOLT (3/8-16X1.625 IN)	
	63	1	**7X-0291**	2	BOLT (3/8-16X3.75 IN)	
	64	1	**8C-7323**	2	BOLT (3/8-16X6 IN)	
	65	1	**7X-0308**	8	BOLT (7/16-14X1.375 IN)	
	66	2	**7X-0328**	4	BOLT (1/2-13X3.50 IN)	
	67	1	**8J-7360**	1	PLUG	
	68	2	**8J-7366**	2	PLUG	
	69	1	**8J-7462**	1	SEAT	
	70	1	**8J-7466**	1	SEAT	
	71	2	**8T-4223**	4	WASHER-HARD (13.5X25.5X3MM THK)	
	72	1	**8T-4896**	12	WASHER-HARD (10.2X18.5X2.5MM THK)	
	73	1	**8T-5360**	8	WASHER (12X22.5X2.5MM THK)	
	74	2	**8T-9041**	1	CONNECTOR	
	75	1	**9J-5498**	1	SPRING	
	76	1	**9J-5499**	1	SPRING	
	77	2	**9J-5753**	2	SPRING	
	78	2	**9J-5754**	2	SPRING	
	79	2	**8F-8882**	2	SEAL-O-RING	

B-USE AS REQUIRED
Y-SEPARATE ILLUSTRATION

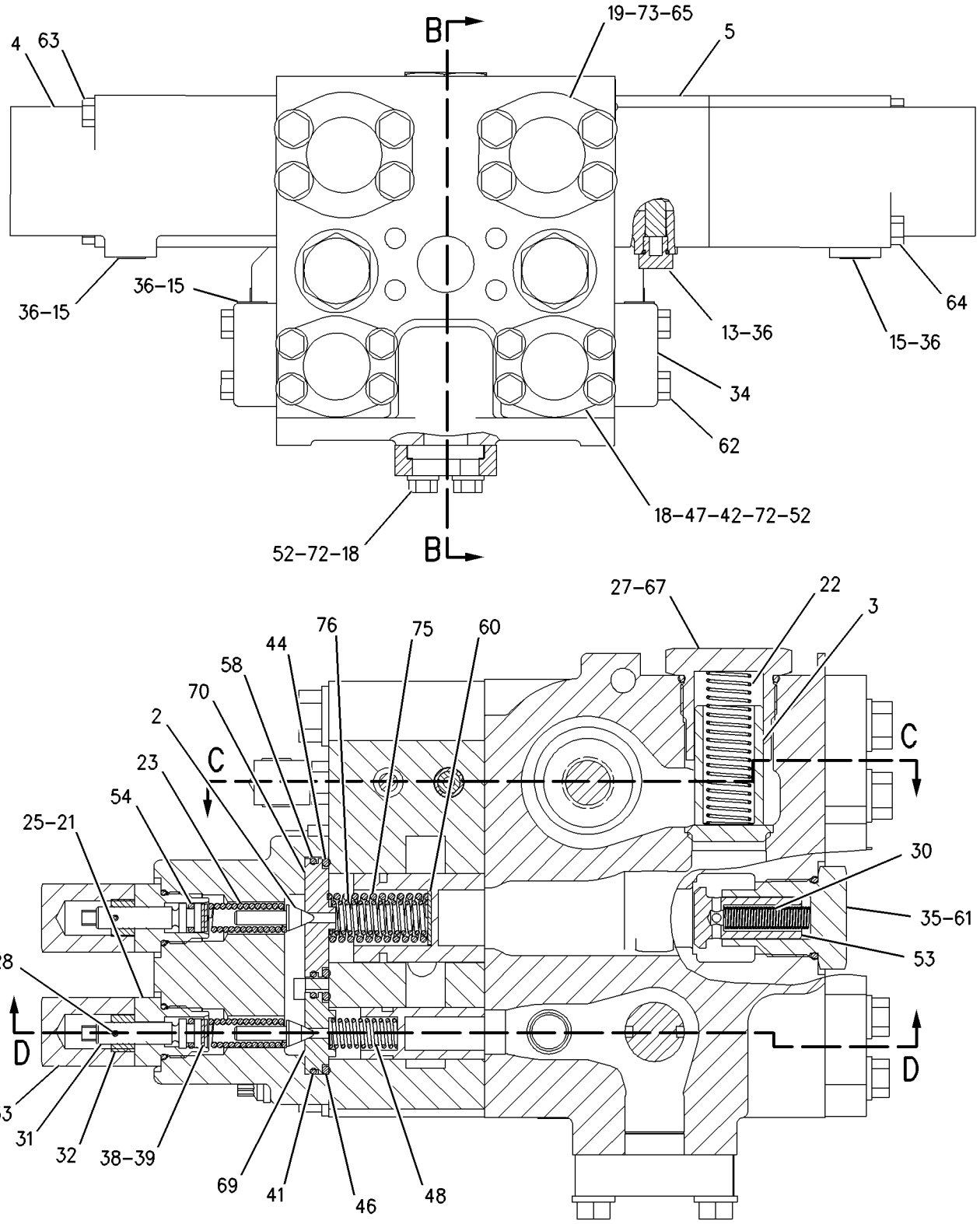

REFER TO ALL ILLUSTRATIONS OF THIS GROUP FOR AUXILIARY VIEWS

SECTION B-B

GRAPHIC #1

g00765712

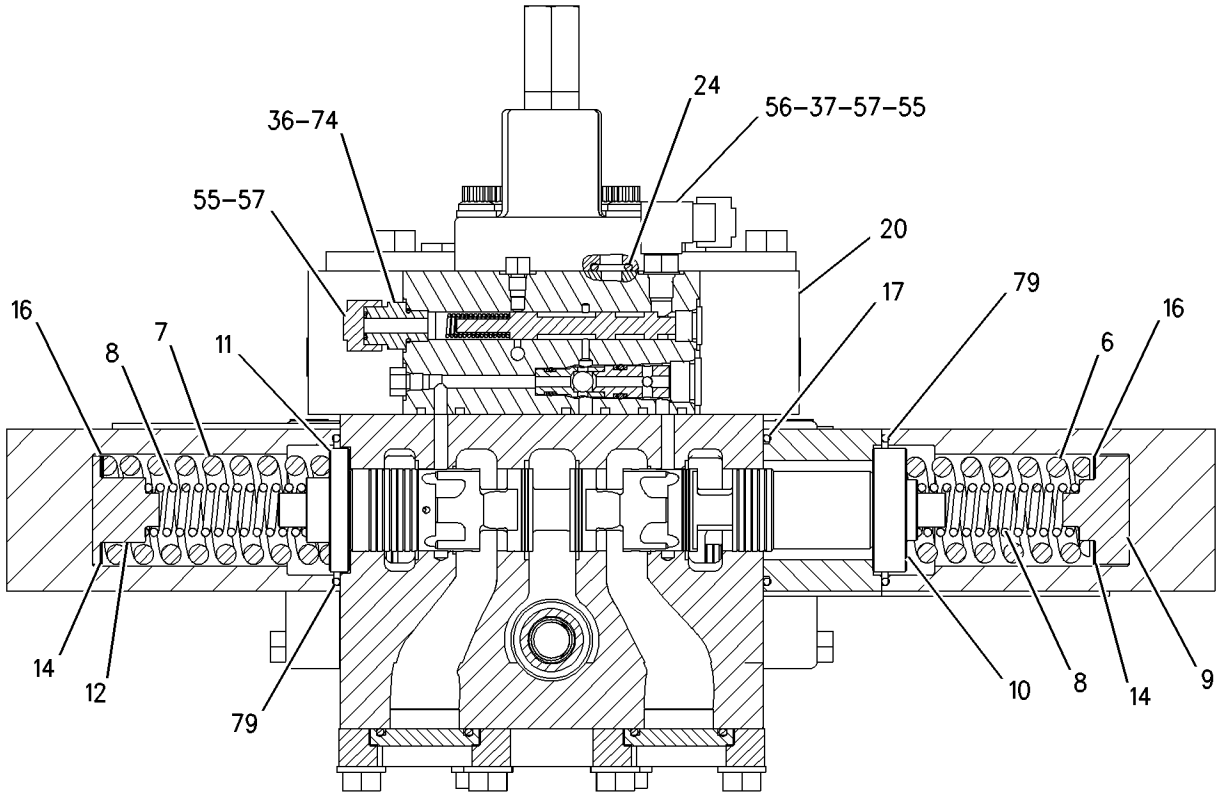

SECTION C-C

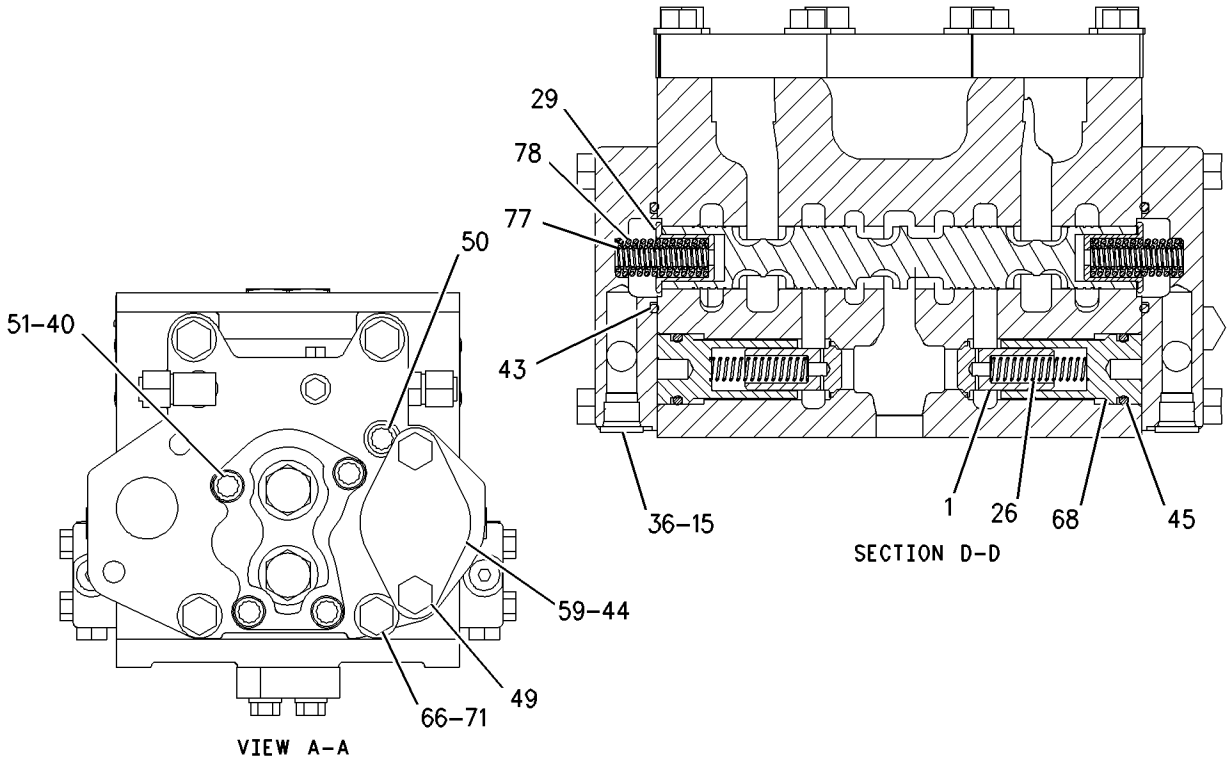

SECTION D-D

VIEW A-A

GRAPHIC #2 g00765719

HYDRAULIC SYSTEM

212-6024 VALVE GP-CONTROL

S/N: AKT1-UP
PART OF 173-3204, 173-3205 VALVE GP-PILOT
ALSO AN ATTACHMENT

SMCS-5051 **i01614404**

NOTE	REF NO	GRAPHIC REF	PART NUMBER	QTY	PART NAME 1 2 3 4 5 6 (PRODUCT LEVEL)	SEE PAGE
	1	1	**2M-9780**	1	SEAL-O-RING	
	2	1	**5P-2199**	1	RING-BACKUP	
	3	1	**6E-0410**	1	SEAL-O-RING	
	4	1	**6V-3505**	1	RING-BACKUP	
	5	1	**8C-3132**	1	SEAL-O-RING	

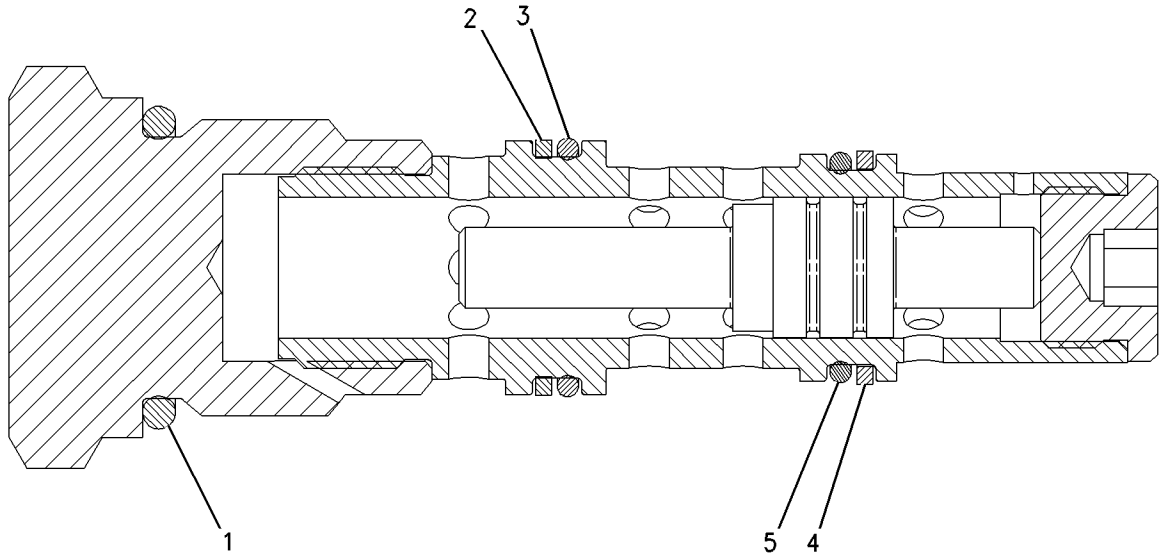

GRAPHIC #1 g00843244

MEMORANDA

HYDRAULIC SYSTEM

173-3204 VALVE GP-PILOT

S/N: AKT1-UP
PART OF 172-7626 CONTROL AR-HYDRAULIC
AN ATTACHMENT

SMCS-5059 **i01691101**

NOTE	REF NO	GRAPHIC REF	PART NUMBER	QTY	PART NAME 1 2 3 4 5 6 (PRODUCT LEVEL)	SEE PAGE
	1	1	**3J-1907**	26	SEAL-O-RING	
	2	1	**2M-9780**	1	SEAL-O-RING	
Y	3	1	**174-4916**	8	VALVE GP-SOLENOID	579
	4	1	**4M-8303**	6	SEAL-O-RING	
Y	5	1	**212-6024**	1	VALVE GP-CONTROL	564
	6	1	**6V-0852**	1	CAP-DUST	
	7	1	**6V-3965**	1	FITTING AS	
	8	1	**8T-4121**	3	WASHER-HARD (11X21X2.5MM THK)	
M	9	1	**8T-4198**	3	BOLT (M10X1.5X100MM)	
	10	1	**9S-4191**	13	PLUG	
	11	1	**9S-8004**	12	PLUG	
	12	1	**033-6043**	1	SEAL-O-RING	
Y	13	1	**114-1267**	1	VALVE GP-PRESSURE REDUCING	570
Y	14	1	**217-2713**	1	VALVE GP-PRESSURE REDUCING	571
Y	15	1	**152-6761**	1	VALVE GP-SOLENOID	576
	16	1	**125-6786**	1	PLUG	

M-METRIC PART
Y-SEPARATE ILLUSTRATION

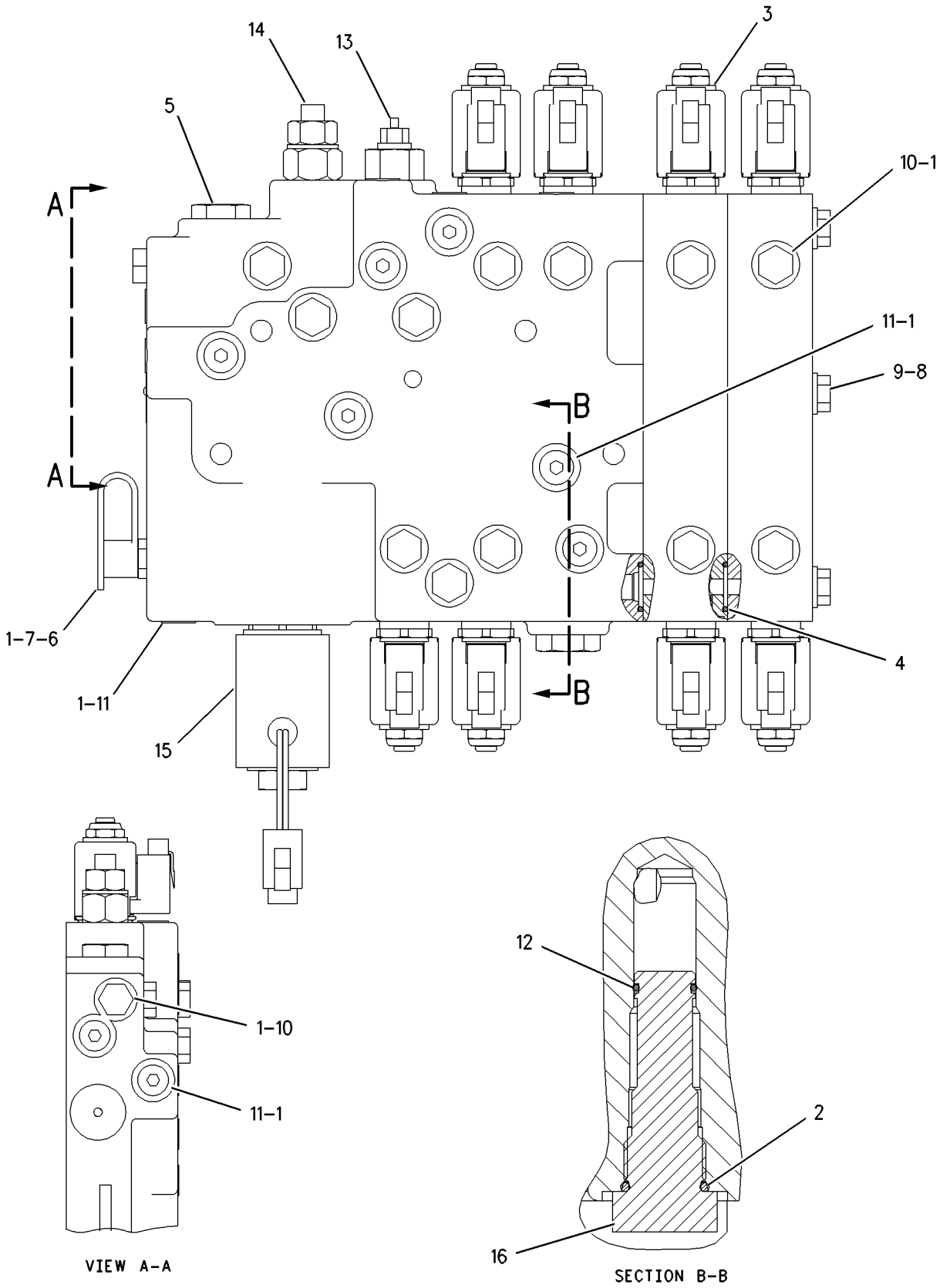

GRAPHIC #1 g00871238

HYDRAULIC SYSTEM

173-3205 VALVE GP-PILOT

S/N: AKT1-UP

PART OF 173-7752 LINES GP-PILOT

SMCS-5059 **i01691063**

NOTE	REF NO	GRAPHIC REF	PART NUMBER	QTY	PART NAME 1 2 3 4 5 6 (PRODUCT LEVEL)	SEE PAGE
	1	1	**9S-8004**	15	PLUG	
Y	2	1	**114-1267**	1	VALVE GP-PRESSURE REDUCING	570
	3	1	**033-6043**	1	SEAL-O-RING	
	4	1	**6V-3965**	1	FITTING AS	
Y	5	1	**217-2713**	1	VALVE GP-PRESSURE REDUCING	571
	6	1	**125-6786**	1	PLUG	
Y	7	1	**152-6761**	1	VALVE GP-SOLENOID	576
	8	1	**9S-4191**	9	PLUG	
Y	9	1	**174-4916**	4	VALVE GP-SOLENOID	579
	10	1	**2M-9780**	1	SEAL-O-RING	
	11	1	**3J-1907**	25	SEAL-O-RING	
Y	12	1	**212-6024**	1	VALVE GP-CONTROL	564
	13	1	**6V-0852**	1	CAP-DUST	

Y-SEPARATE ILLUSTRATION

173-3205 VALVE GP-PILOT ***(contd.)*** **i01691063**

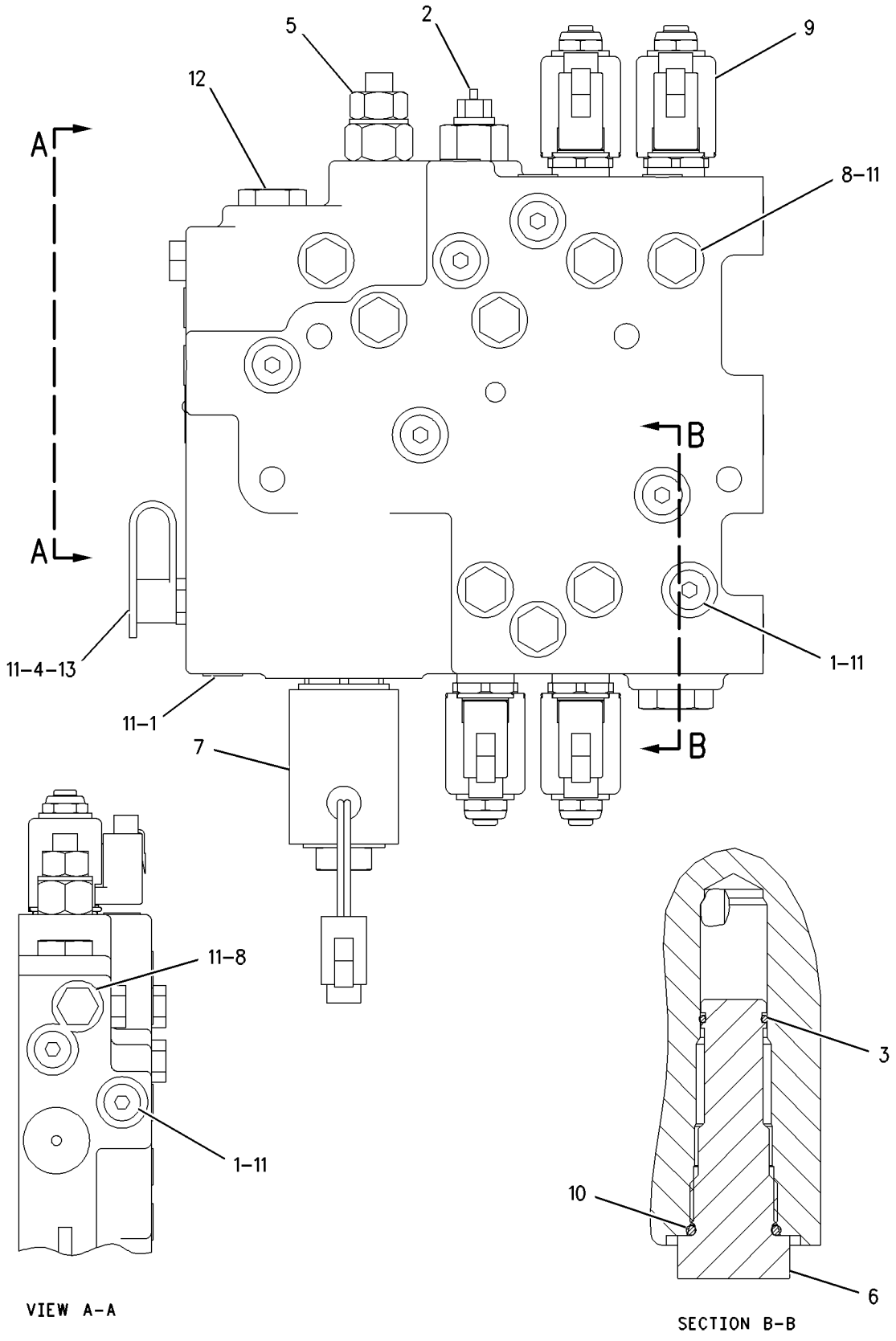

GRAPHIC #1 g00871228

HYDRAULIC SYSTEM

114-1267 VALVE GP-PRESSURE REDUCING

S/N: AKT1-UP
PART OF 173-3204, 173-3205 VALVE GP-PILOT
ALSO AN ATTACHMENT

SMCS-5117 **i01464060**

NOTE	REF NO	GRAPHIC REF	PART NUMBER	QTY	PART NAME 1 2 3 4 5 6 (PRODUCT LEVEL)	SEE PAGE
	1	1	**2M-9780**	1	SEAL-O-RING	
	2	1	**6V-3505**	1	RING-BACKUP	
	3	1	**8C-3132**	1	SEAL-O-RING	
	4	1	**6E-0410**	1	SEAL-O-RING	
	5	1	**5P-2199**	1	RING-BACKUP	

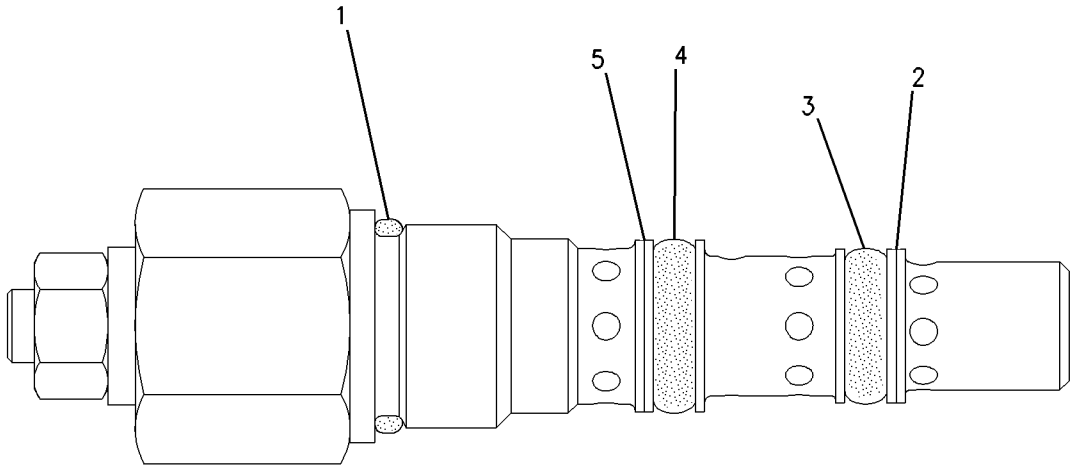

GRAPHIC #1 g00765132

HYDRAULIC SYSTEM

217-2713 VALVE GP-PRESSURE REDUCING

S/N: AKT1-UP
PART OF 173-3204, 173-3205 VALVE GP-PILOT
ALSO AN ATTACHMENT

SMCS-5117 **i01691080**

NOTE	REF NO	GRAPHIC REF	PART NUMBER	QTY	PART NAME 1 2 3 4 5 6 (PRODUCT LEVEL)	SEE PAGE
	1	1	**2M-9780**	1	SEAL-O-RING	
	2	1	**6V-3505**	1	RING-BACKUP	
	3	1	**8C-3132**	1	SEAL-O-RING	
	4	1	**6E-0410**	1	SEAL-O-RING	
	5	1	**5P-2199**	1	RING-BACKUP	

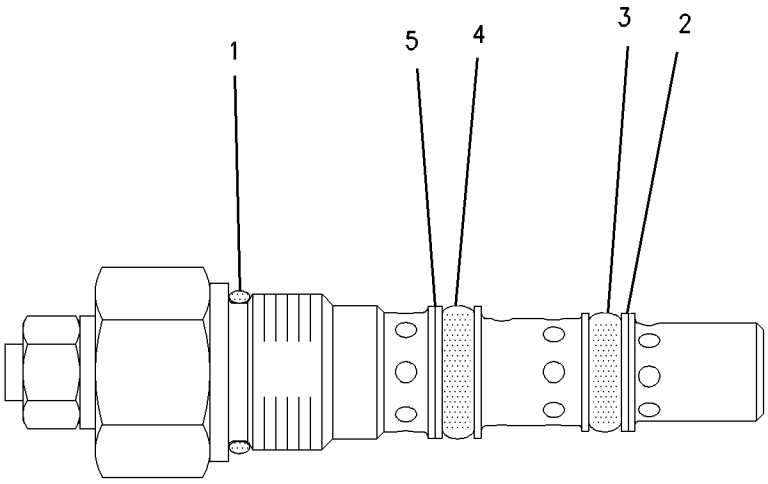

GRAPHIC #1 g00765123

HYDRAULIC SYSTEM

4T-4205 VALVE GP-QUICK-DROP

S/N: BHA1-UP; BHF1-UP; BHJ1-UP; BHP1-UP; AKT1-UP
PART OF 7T-3829 VALVE & CYLINDER GP
AN ATTACHMENT

SMCS-5110 **i01701151**

NOTE	REF NO	GRAPHIC REF	PART NUMBER	QTY	PART NAME 1 2 3 4 5 6 (PRODUCT LEVEL)	SEE PAGE
C	1	1	**8T-8919**	2	BOLT (1/2-13X1.75 IN)	
C		1	**5P-1076**	2	WASHER-HARD (13.5X30X4MM THK)	
	2	1	**6V-1849**	1	COVER	
	3	1	**4J-0526**	1	SEAL-O-RING	
C	4	1	**4T-4207**	1	PLUG-ORIFICE (1/16-27 THD)	
	5	1	**7M-1297**	1	SPRING	
C	6	1	**9T-4733**	1	MANIFOLD	
	7	1	**8M-2530**	2	BOLT-12 POINT HEAD (1/2-13X1.25 IN)	
	8	1	**4J-5573**	1	SEAL-O-RING	
	9	1	**1D-4566**	5	BOLT (1/2-13X3.5 IN)	
	10	1	**4J-0522**	3	SEAL-O-RING	
	11	1	**4J-0525**	1	SEAL-O-RING	
C	12	1	**7X-0358**	1	BOLT (5/8-11X5.5 IN)	
C	13	1	**7X-0352**	1	BOLT (5/8-11X4 IN)	
C	14	1	**3G-9105**	1	ORIFICE	

C-CHANGE FROM PREVIOUS TYPE

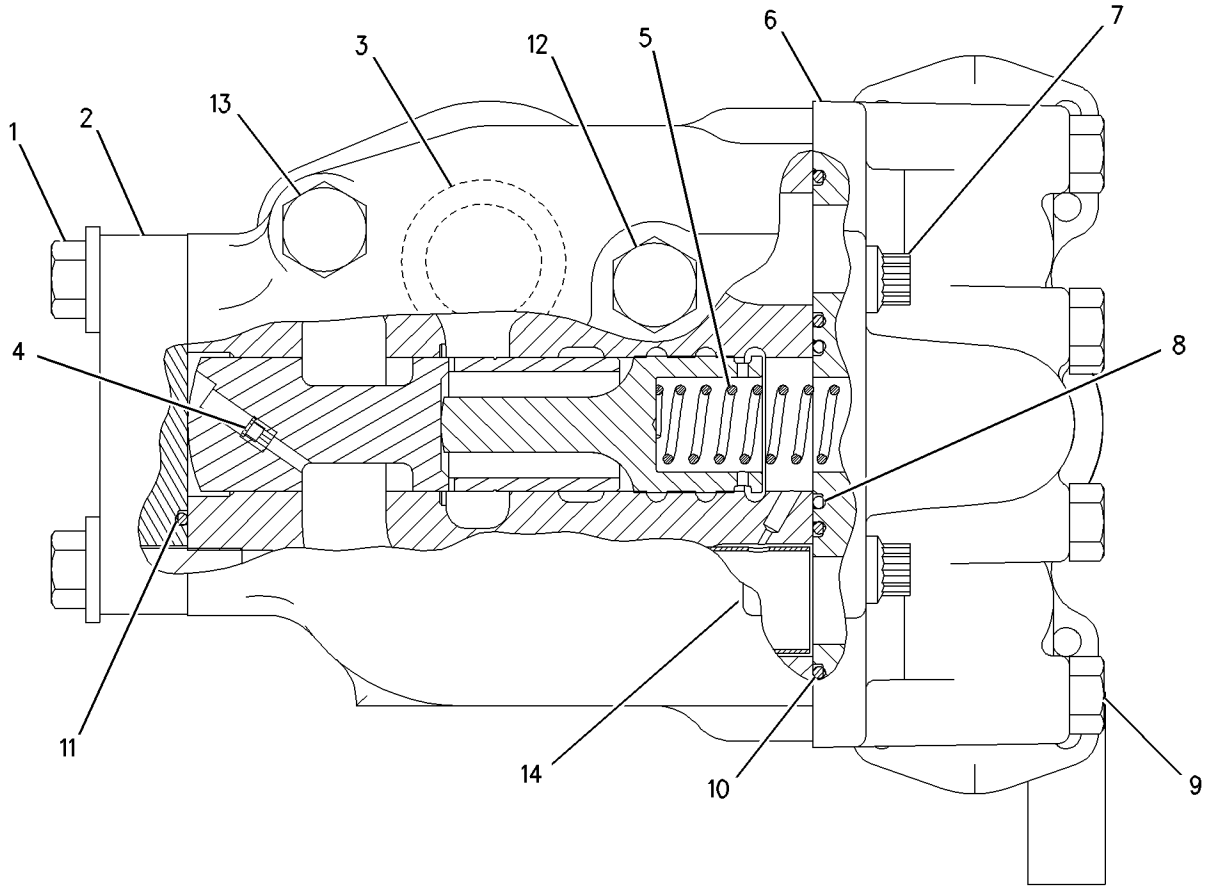

GRAPHIC #1 g00876050

HYDRAULIC SYSTEM

4T-4073 VALVE GP-SHUTTLE

S/N: AKT1-UP

PART OF 9T-5769 VALVE GP-CONTROL

SMCS-5079 **i01564592**

NOTE	REF NO	GRAPHIC REF	PART NUMBER	QTY	PART NAME 1 2 3 4 5 6 (PRODUCT LEVEL)	SEE PAGE
	1	1	**033-6039**	1	SEAL-O-RING	
	2	1	**8L-2777**	1	SEAL-O-RING	
	3	1	**6E-0382**	2	RING-BACKUP	
	4	1	**6E-0381**	2	RING-BACKUP	

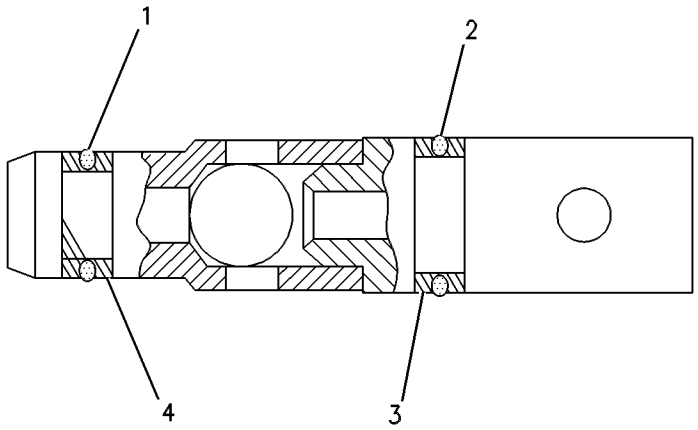

GRAPHIC #1 g00279740

HYDRAULIC SYSTEM

3E-8575 VALVE GP-SOLENOID

S/N: AKT1-UP
QUICK COUPLER
PART OF 188-6140 VALVE & MTG GP-CONTROL
AN ATTACHMENT

SMCS-5479 **i01565591**

NOTE	REF NO	GRAPHIC REF	PART NUMBER	QTY	PART NAME 1 2 3 4 5 6 (PRODUCT LEVEL)	SEE PAGE
	1	1	**6T-3382**	1	CARTRIDGE AS	
	2	1	**160-5843**	1	WASHER-IDENTIFICATION	
	3	1	**157-2284**	1	LOCKNUT-SPECIAL (5/8-18 THD)	
	4	1	**160-5844**	1	WASHER-SPRING	
	5	1	**3E-8581**	1	COIL AS	
	6	1	**102-8804**	1	KIT-RECEPTACLE (4 PIN)	
					(INCLUDES RECEPTACLE AS & WEDGE)	
	7	1	**186-3735**	4	PIN-CONNECTOR	
	8	1	**1S-9593**	2	STRAP-CABLE	
	9	1	**3E-3377**	1	WEDGE-RECEPTACLE LOCK	
					AVAILABLE REPAIR KIT(S):	
			126-5948	1	KIT-SEAL	
					(INCLUDES SEAL-O-RINGS & RING-BACKUPS)	

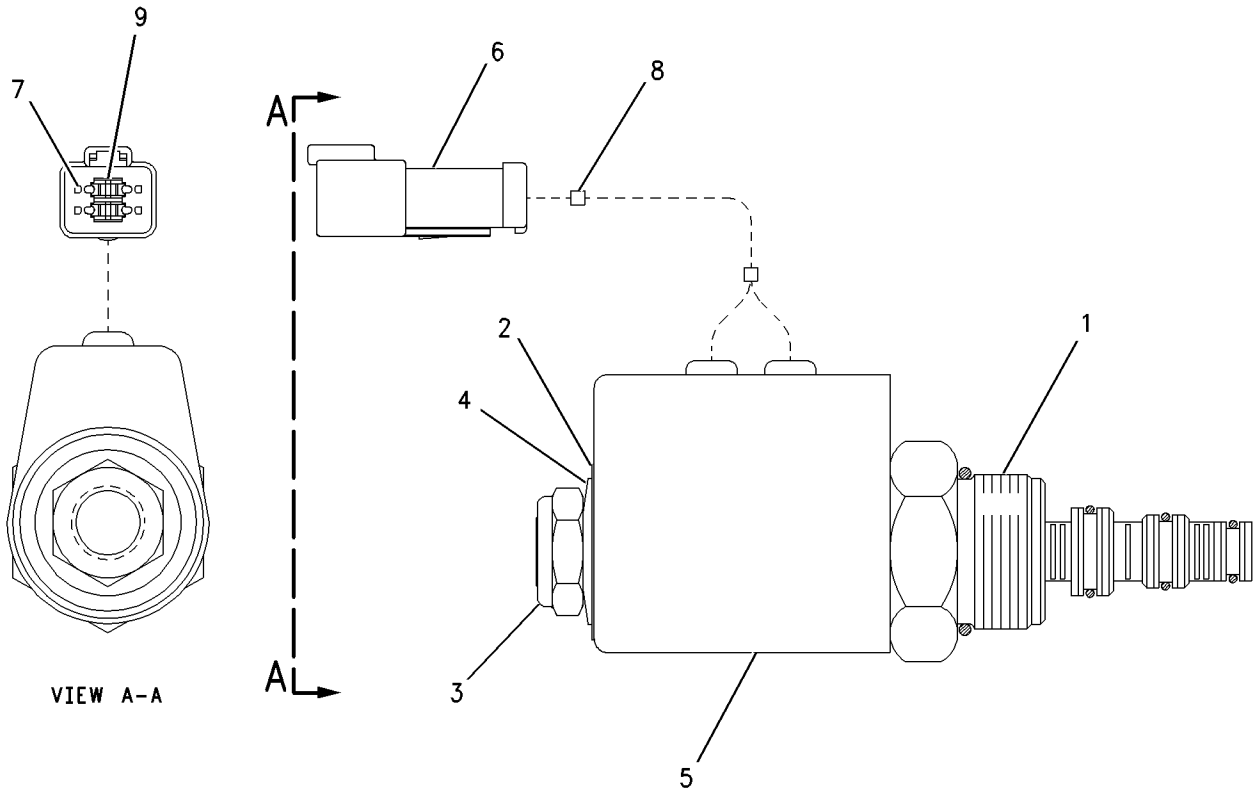

GRAPHIC #1 g00623320

3E-9205 VALVE GP-SOLENOID

S/N: AKT1-UP
24 VOLT
PART OF 151-0241 VALVE GP-CONTROL
AN ATTACHMENT

SMCS-5479 **i01437288**

NOTE	REF NO	GRAPHIC REF	PART NUMBER	QTY	PART NAME 1 2 3 4 5 6 (PRODUCT LEVEL)	SEE PAGE
	1	1	**6T-9244**	1	CARTRIDGE AS	
	2	1	**3E-8581**	1	COIL AS	
	3	1	**102-8804**	1	KIT-RECEPTACLE (4 PIN)	
					(INCLUDES RECEPTACLE AS & WEDGE)	
		1	**3E-3377**	1	WEDGE-RECEPTACLE LOCK	
		1	**186-3735**	4	PIN-CONNECTOR	
	4	1	**1S-9593**	2	STRAP-CABLE	
	5	1	**157-2284**	1	LOCKNUT-SPECIAL (5/8-18 THD)	
	6	1	**160-5843**	1	WASHER-IDENTIFICATION	
	7	1	**160-5844**	1	SPRING-BELLEVILLE	
					AVAILABLE REPAIR KIT(S):	
			126-5948	1	KIT-SEAL	
					(INCLUDES SEAL-O-RINGS & RING-BACKUPS)	

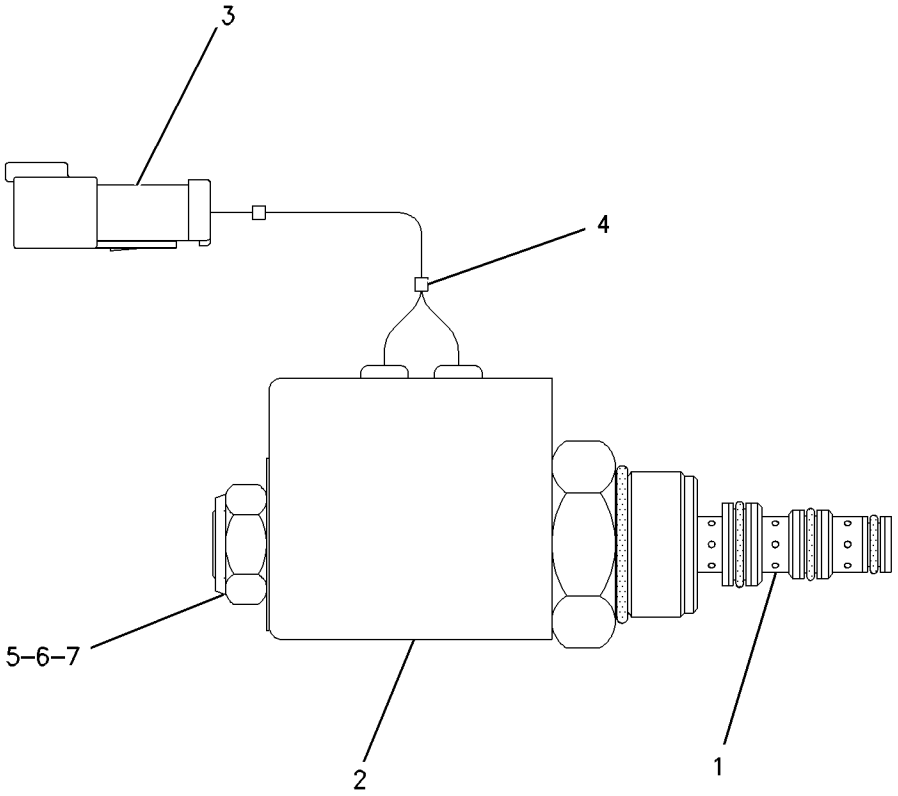

GRAPHIC #1 g00657410

HYDRAULIC SYSTEM

152-6761 VALVE GP-SOLENOID

S/N: AKT1-UP
PART OF 173-3204, 173-3205 VALVE GP-PILOT
FIELD REPLACEMENT ORDER 203-4157–PAGE 580
ALSO AN ATTACHMENT

SMCS-5479 **i01605797**

NOTE	REF NO	GRAPHIC REF	PART NUMBER	QTY	PART NAME 1 2 3 4 5 6 (PRODUCT LEVEL)	SEE PAGE
	1	1	**152-6760**	1	CARTRIDGE AS	
	1A	1	**8C-9987**	1	WASHER (8.3X28X2.5MM THK)	
	1B	1	**111-0343**	1	LOCKNUT (5/16-18 THD)	
	2	1	**189-0189**	1	COIL AS	
					AVAILABLE REPAIR KIT(S):	
			3G-8175	1	KIT-SEAL (PILOT PRESSURE SOLENOID VALVE)	
					(INCLUDES O-RINGS & BACK-UP RING)	

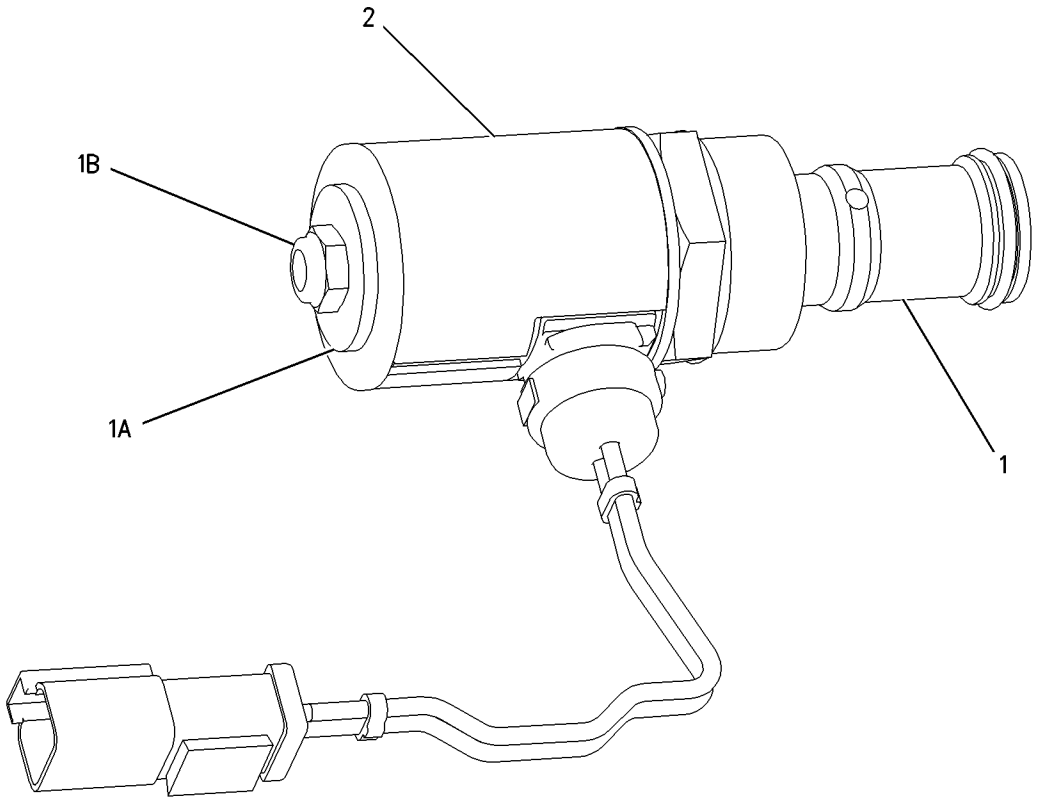

GRAPHIC #1 g00832156

152-8340 VALVE GP-SOLENOID

S/N: AKT1-UP
24 VOLTS DC
PART OF 173-7752 LINES GP-PILOT

SMCS-5479 **i01657686**

NOTE	REF NO	GRAPHIC REF	PART NUMBER	QTY	PART NAME 1 2 3 4 5 6 (PRODUCT LEVEL)	SEE PAGE
	1	1	**152-8338**	1	CARTRIDGE AS	
	2	1	**141-6787**	1	COIL AS	
	2A	1	**186-3735**	2	PIN-CONNECTOR	
J	2B	1	**3E-3365**	1	WEDGE-RECEPTACLE LOCK (2 PIN)	
J	2C	1	**102-8802**	1	KIT-RECEPTACLE (2 PIN)	
	2D	1	**1S-9593**	2	STRAP-CABLE	
	3	1	**111-0343**	1	LOCKNUT (5/16-18 THD)	
	4	1	**8C-9987**	1	WASHER (8.3X28X2.5MM THK)	
					AVAILABLE REPAIR KIT(S):	
			197-7701	1	KIT-SEAL	
					(INCLUDES SEALS AND RINGS)	

J-KIT MARKED J INCLUDES PART(S) MARKED J

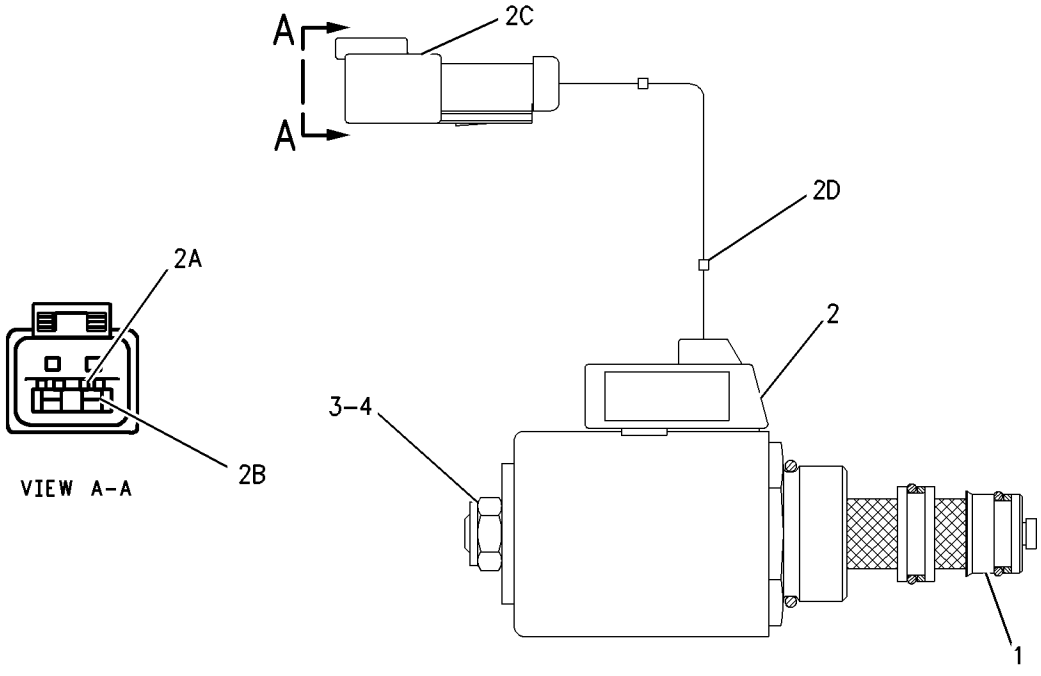

GRAPHIC #1 g00808548

HYDRAULIC SYSTEM

172-2392 VALVE GP-SOLENOID

S/N: AKT1-UP
24 VOLT
PART OF 175-4972 MANIFOLD & VALVE GP

SMCS-5479 **i01673487**

NOTE	REF NO	GRAPHIC REF	PART NUMBER	QTY	PART NAME 1 2 3 4 5 6 (PRODUCT LEVEL)	SEE PAGE
	1	1	**156-5970**	1	NUT (1/2-20-2B THD)	
	2	1	**133-2249**	1	COIL AS	
		1	**1S-9593**	2	STRAP-CABLE	
		1	**8T-8729**	2	PIN-CONNECTOR	
		1	**8T-8737**	2	PLUG-SEAL	
		1	**102-8804**	1	KIT-RECEPTACLE (4 PIN)	
					(INCLUDES RECEPTACLE AS & WEDGE)	
	3	1	**172-2391**	1	SPOOL AS	
		1	**156-5970**	1	NUT (1/2-20-2B THD)	
					AVAILABLE REPAIR KIT(S):	
			189-1839	1	KIT-SEAL	
					(INCLUDES SEALS & RING-BACK UP)	

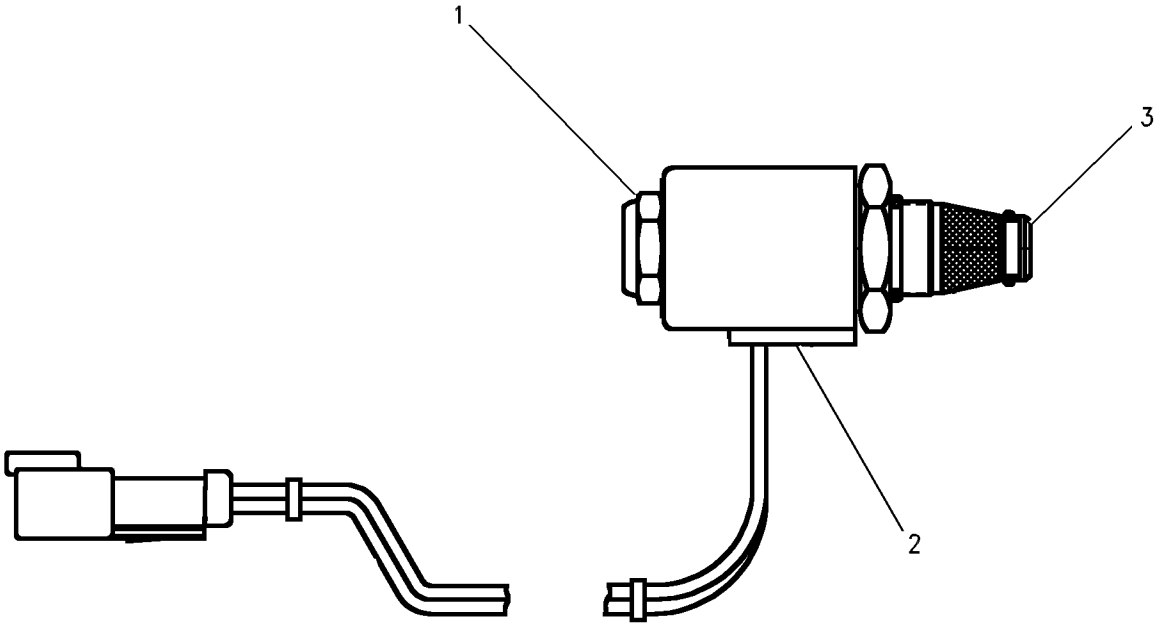

GRAPHIC #1 g00653409

174-4916 VALVE GP-SOLENOID

S/N: AKT1-UP
PART OF 173-3204, 173-3205 VALVE GP-PILOT
ALSO AN ATTACHMENT

SMCS-5479 **i01203728**

NOTE	REF NO	GRAPHIC REF	PART NUMBER	QTY	PART NAME 1 2 3 4 5 6 (PRODUCT LEVEL)	SEE PAGE
	1	1	**145-1144**	1	COIL AS	
	2	1	**164-2108**	1	WASHER (2.38MM THK)	
	3	1	**167-9524**	1	NUT-SELF LOCKING	
	4	1	**174-4917**	1	SPOOL AS-VALVE	
					AVAILABLE REPAIR KIT(S):	
			108-2148	1	KIT-SEAL	
					(INCLUDES SEAL-O-RINGS)	

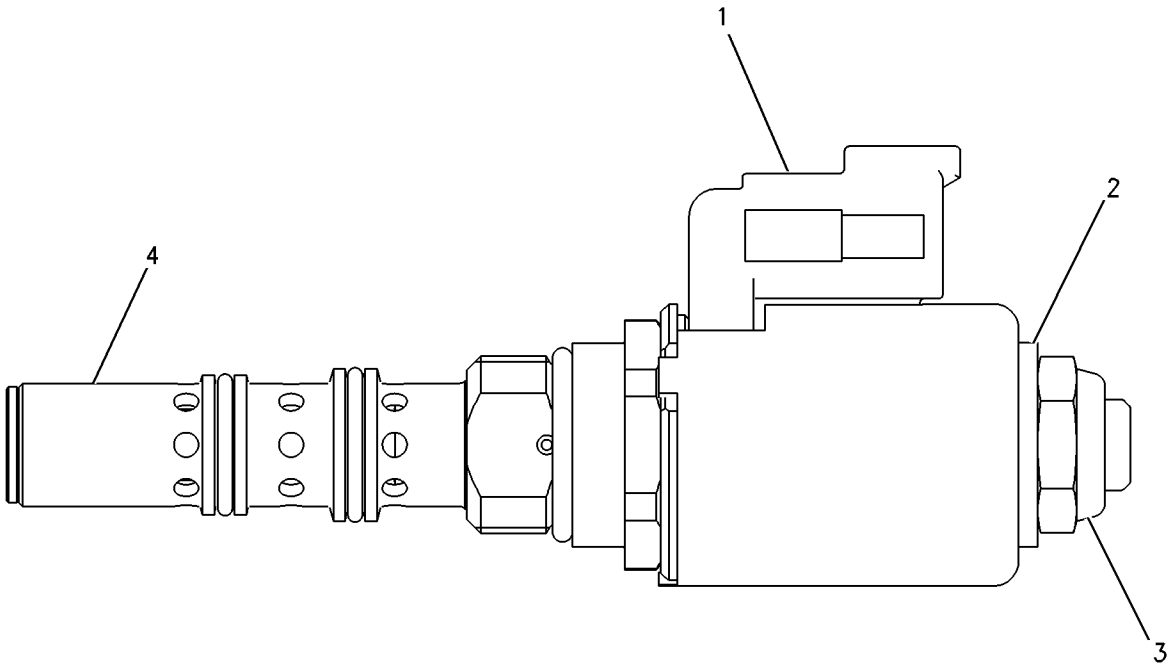

GRAPHIC #1 g00648328

203-4157 VALVE GP-SOLENOID—PILOT PRESSURE SUPPLY

S/N: AKT1-UP

FIELD REPLACEMENT FOR 152-6761—PAGE 576

SMCS-5479 **i01701254**

NOTE	REF NO	GRAPHIC REF	PART NUMBER	QTY	PART NAME 1 2 3 4 5 6 (PRODUCT LEVEL)	SEE PAGE
	1	1	**111-0343**	1	LOCKNUT (5/16-18 THD)	
	2	1	**8C-9987**	1	WASHER (8.3X28X2.5MM THK)	
	3	1	**189-0189**	1	COIL AS	
		1	**1S-9593**	2	STRAP-CABLE	
		1	**102-8802**	1	KIT-RECEPTACLE (2 PIN)	
					(INCLUDES RECEPTACLE AS & WEDGE)	
		1	**3E-3365**	1	WEDGE-RECEPTACLE LOCK (2 PIN)	
		1	**186-3735**	2	PIN-CONNECTOR	
	4	1	**152-6760**	1	CARTRIDGE AS	
		1	**8C-9987**	1	WASHER (8.3X28X2.5MM THK)	
		1	**111-0343**	1	LOCKNUT (5/16-18 THD)	
					AVAILABLE REPAIR KIT(S):	
			3G-8175	1	KIT-SEAL	
					(INCLUDES SEAL-O-RINGS AND RING-BACKUP)	

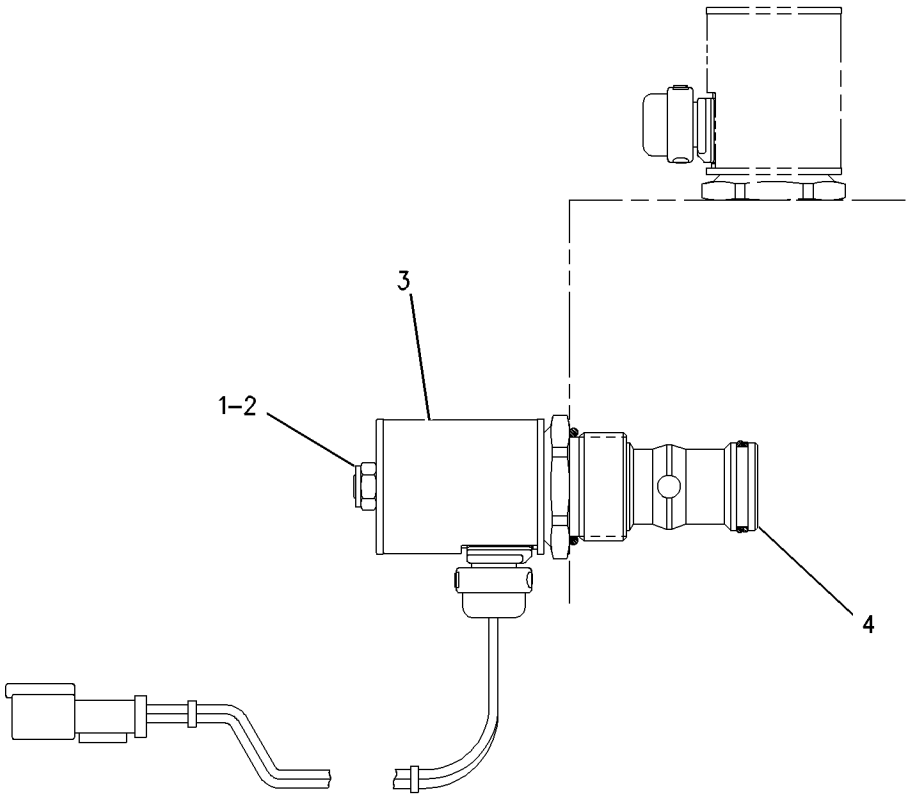

GRAPHIC #1 g00805789

IMPLEMENTS

180-2398 BLOCK GP-PUSH

S/N: AKT1-UP
FIELD CONVERSION
AN ATTACHMENT

SMCS-6062 **i01351611**

NOTE	REF NO	GRAPHIC REF	PART NUMBER	QTY	PART NAME 1 2 3 4 5 6 (PRODUCT LEVEL)	SEE PAGE
					(INDIVIDUAL PARTS ARE NOT SERVICED SEPARATELY)	

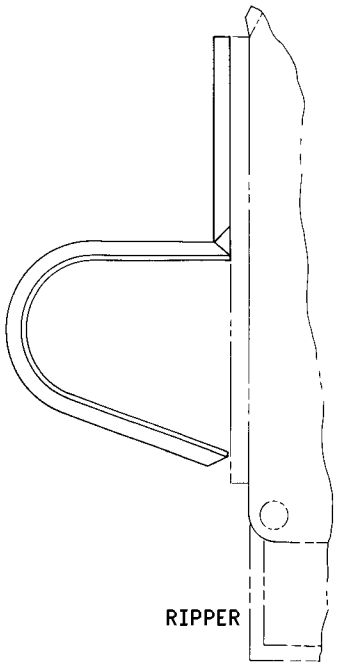

GRAPHIC #1 g00234472

185-1713 BLOCK GP-PUSH

S/N: AKT1-UP
FOR USE WITH 180-2401 RIPPER AR
AN ATTACHMENT

SMCS-6062 **i01360100**

NOTE	PART NUMBER	QTY	PART NAME 1 2 3 4 5 6 (PRODUCT LEVEL)	SEE PAGE
	180-2409	1	CARRIAGE AS	
	2V-0447	4	BEARING-SLEEVE	
	2V-1256	4	BEARING-SLEEVE (DIA 76.48MM)	
	2J-1227	2	RETAINER	
	3J-6035	2	RETAINER	

186-3302 BLOCK GP-PUSH

S/N: AKT1-UP
FOR USE WITH 180-2404—PAGE 625
AN ATTACHMENT

SMCS-6062 **i01360312**

NOTE	PART NUMBER	QTY	PART NAME 1 2 3 4 5 6 (PRODUCT LEVEL)	SEE PAGE
	186-3301	1	CARRIAGE AS	
	2J-1227	2	RETAINER	
	3J-6035	2	RETAINER	
	8P-9770	1	PLATE	
	9V-8427	1	BAR	

7T-7577 BRACE GP-BULLDOZER

S/N: BHA1-UP; BHF1-UP; BHJ1-UP; BHP1-UP
PART OF 171-6652 PUSH ARM GP-STABILIZER
AN ATTACHMENT

SMCS-6074 **i00594863**

NOTE	REF NO	GRAPHIC REF	PART NUMBER	QTY	PART NAME 1 2 3 4 5 6 (PRODUCT LEVEL)	SEE PAGE
	1	1	**7T-7578**	1	BRACE AS	
	2	1	**1U-3658**	1	HANDLE	
	3	1	**117-3006**	1	BEARING	
	4	1	**5L-4756**	1	RING-RETAINING	
	5	1	**9B-1948**	1	SPACER	
	6	1	**7X-0403**	1	BOLT (1-8X2.25IN)	
	7	1	**9J-6662**	1	PIN	
	8	1	**9J-2365**	1	RETAINER	
	9	1	**7X-0379**	2	BOLT (7/8-9X1.50IN)	
	10	1	**7T-7586**	1	LINK AS	
	11	1	**3B-8489**	1	FITTING-GREASE (1/8-27 THD)	

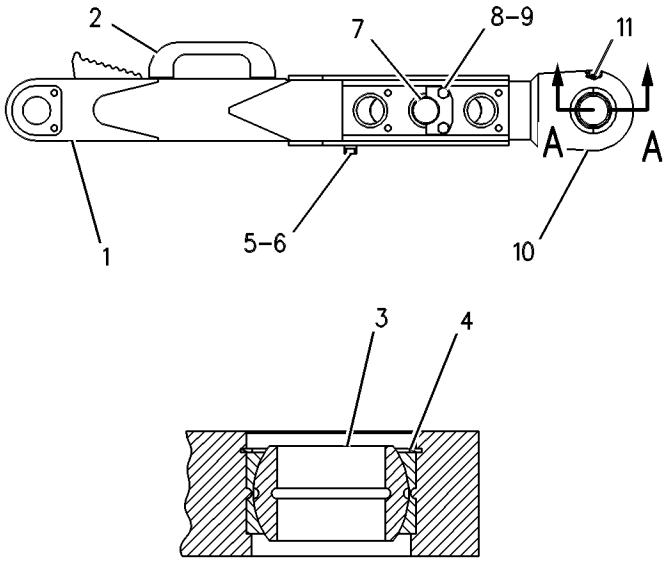

VIEW A-A

GRAPHIC #1 g00258570

IMPLEMENTS

171-6672 BULLDOZER AR

S/N: BHA1-UP
SEMI-UNIVERSAL
AN ATTACHMENT

SMCS-6050 **i01459351**

NOTE	PART NUMBER	QTY	PART NAME 1 2 3 4 5 6 (PRODUCT LEVEL)	SEE PAGE
Y	*4T-8183*	1	BLADE GP-SEMI-UNIVERSAL	644
Y	*114-6006*	1	LIGHTING GP-FRONT	239
Y	*171-6655*	1	LINES GP-TILT CYLINDER	532
Y	**9J-6006**	1	MOUNTING GP-CYLINDER	613
Y	*171-6652*	1	PUSH ARM GP-STABILIZER	622
Y	*9J-6073*	1	TRUNNION GP-BULLDOZER	626
Y	**199-5514**	1	VALVE & CYLINDER GP	550
Y	**199-5513**	1	VALVE & CYLINDER GP	549
	8T-7371	1	PLATE-SERIAL NUMBER	
	4B-4158	2	SCREW-DRIVE (3/16X0.25 IN)	

Y-SEPARATE ILLUSTRATION

IMPLEMENTS

171-6673 BULLDOZER AR

S/N: BHF1-UP
UNIVERSAL
AN ATTACHMENT

SMCS-6050 **i01459352**

NOTE	PART NUMBER	QTY	PART NAME 1 2 3 4 5 6 (PRODUCT LEVEL)	SEE PAGE
Y	*130-7660*	1	BLADE GP-UNIVERSAL	648
Y	*114-6006*	1	LIGHTING GP-FRONT	239
Y	*171-6655*	1	LINES GP-TILT CYLINDER	532
Y	**9J-6006**	1	MOUNTING GP-CYLINDER	613
Y	*171-6652*	1	PUSH ARM GP-STABILIZER	622
Y	*9J-6073*	1	TRUNNION GP-BULLDOZER	626
Y	*199-5513*	1	VALVE & CYLINDER GP	549
Y	*199-5514*	1	VALVE & CYLINDER GP	550
	8T-7371	1	PLATE-SERIAL NUMBER	
	4B-4158	2	SCREW-DRIVE (3/16X0.25 IN)	

Y-SEPARATE ILLUSTRATION

IMPLEMENTS

171-6674 BULLDOZER AR

S/N: BHJ1-UP
SEMI-UNIVERSAL, ABRASION APPLICATION
AN ATTACHMENT

SMCS-6050 **i01459355**

NOTE	PART NUMBER	QTY	PART NAME 1 2 3 4 5 6 (PRODUCT LEVEL)	SEE PAGE
Y	*8E-2173*	1	BLADE GP-SEMI-UNIVERSAL	645
Y	*114-6006*	1	LIGHTING GP-FRONT	239
Y	*171-6655*	1	LINES GP-TILT CYLINDER	532
Y	**9J-6006**	1	MOUNTING GP-CYLINDER	613
Y	*171-6652*	1	PUSH ARM GP-STABILIZER	622
Y	*9J-6073*	1	TRUNNION GP-BULLDOZER	626
Y	*199-5513*	1	VALVE & CYLINDER GP	549
Y	*199-5514*	1	VALVE & CYLINDER GP	550
	8T-7371	1	PLATE-SERIAL NUMBER	
	4B-4158	2	SCREW-DRIVE (3/16X0.25 IN)	

Y-SEPARATE ILLUSTRATION

IMPLEMENTS

171-6675 BULLDOZER AR

S/N: BHP1-UP
UNIVERSAL, ABRASION APPLICATION
AN ATTACHMENT

SMCS-6050 **i01459356**

NOTE	PART NUMBER	QTY	PART NAME 1 2 3 4 5 6 (PRODUCT LEVEL)	SEE PAGE
Y	*130-7658*	1	BLADE GP-UNIVERSAL	646
Y	*114-6006*	1	LIGHTING GP-FRONT	239
Y	*171-6655*	1	LINES GP-TILT CYLINDER	532
Y	**9J-6006**	1	MOUNTING GP-CYLINDER	613
Y	*171-6652*	1	PUSH ARM GP-STABILIZER	622
Y	*9J-6073*	1	TRUNNION GP-BULLDOZER	626
Y	*199-5513*	1	VALVE & CYLINDER GP	549
Y	*199-5514*	1	VALVE & CYLINDER GP	550
	8T-7371	1	PLATE-SERIAL NUMBER	
	4B-4158	2	SCREW-DRIVE (3/16X0.25 IN)	

Y-SEPARATE ILLUSTRATION

IMPLEMENTS

171-6677 BULLDOZER AR

S/N: BHA1-UP
SEMI-UNIVERSAL
AN ATTACHMENT

SMCS-6050 **i01206237**

NOTE	PART NUMBER	QTY	PART NAME 1 2 3 4 5 6 (PRODUCT LEVEL)	SEE PAGE
Y	*4T-8183*	1	BLADE GP-SEMI-UNIVERSAL	644
Y	*171-6655*	1	LINES GP-TILT CYLINDER	532
Y	*171-6652*	1	PUSH ARM GP-STABILIZER	622
Y	*9J-6073*	1	TRUNNION GP-BULLDOZER	626
	8T-7371	1	PLATE-SERIAL NUMBER	
	4B-4158	2	SCREW-DRIVE	

Y-SEPARATE ILLUSTRATION

IMPLEMENTS

171-6678 BULLDOZER AR

S/N: BHF1-UP
UNIVERSAL
AN ATTACHMENT

SMCS-6050 **i01206299**

NOTE	PART NUMBER	QTY	PART NAME 1 2 3 4 5 6 (PRODUCT LEVEL)	SEE PAGE
Y	*130-7660*	1	BLADE GP-UNIVERSAL	648
Y	*171-6655*	1	LINES GP-TILT CYLINDER	532
Y	*171-6652*	1	PUSH ARM GP-STABILIZER	622
Y	*9J-6073*	1	TRUNNION GP-BULLDOZER	626
	8T-7371	1	PLATE-SERIAL NUMBER	
	4B-4158	2	SCREW-DRIVE	

Y-SEPARATE ILLUSTRATION

IMPLEMENTS

171-6679 BULLDOZER AR

S/N: BHJ1-UP
SEMI UNIVERSAL, ABRASION APPLICATION
AN ATTACHMENT

SMCS-6050 **i01233988**

NOTE	PART NUMBER	QTY	PART NAME 1 2 3 4 5 6 (PRODUCT LEVEL)	SEE PAGE
Y	*8E-2173*	1	BLADE GP-SEMI-UNIVERSAL	645
Y	*171-6655*	1	LINES GP-TILT CYLINDER	532
Y	*171-6652*	1	PUSH ARM GP-STABILIZER	622
Y	*9J-6073*	1	TRUNNION GP-BULLDOZER	626
	8T-7371	1	PLATE-SERIAL NUMBER	
	4B-4158	2	SCREW-DRIVE	

Y-SEPARATE ILLUSTRATION

IMPLEMENTS

171-6680 BULLDOZER AR

S/N: BHP1-UP
UNIVERSAL, ABRASION APPLICATION
AN ATTACHMENT

SMCS-6050 **i01233985**

NOTE	PART NUMBER	QTY	PART NAME 1 2 3 4 5 6 (PRODUCT LEVEL)	SEE PAGE
Y	*130-7658*	1	BLADE GP-UNIVERSAL	646
Y	*171-6655*	1	LINES GP-TILT CYLINDER	532
Y	*171-6652*	1	PUSH ARM GP-STABILIZER	622
Y	*9J-6073*	1	TRUNNION GP-BULLDOZER	626
	8T-7371	1	PLATE-SERIAL NUMBER	
	4B-4158	2	SCREW-DRIVE	

Y-SEPARATE ILLUSTRATION

MEMORANDA

119-7830 FRAME GP-RIPPER

S/N: 4PP1-UP
MULTI-SHANK
PART OF 119-8210 RIPPER AR
AN ATTACHMENT

SMCS-6314, 7067 **i01701267**

NOTE	REF NO	GRAPHIC REF	PART NUMBER	QTY	PART NAME 1 2 3 4 5 6 (PRODUCT LEVEL)	SEE PAGE
	1	1	**3B-8489**	2	FITTING-GREASE (1/8-27 THD)	
	2	1	**3E-6756**	8	SEAL-LIP	
	3	1	**3E-6758**	8	SEAL-LIP	
	4	1	**7X-0365**	24	BOLT (3/4-10X1.5 IN)	
	5	1	**6Y-9287**	2	SPACER (76.8X170X40MM THK)	
	6	1	**7K-9211**	8	SEAL-LIP	
	7	1	**7T-7222**	2	PIN AS	
	8	1	**7T-7303**	2	PIN AS	
	9	1	**7T-7305**	12	PLATE	
	10	1	**9J-4782**	2	PROTECTOR	
	11	1	**9J-6691**	2	PIN AS	
	12	1	**9J-9055**	2	PIN AS	
I	13	1	**9R-6776**	2	HOSE AS	
	14	1	**9U-8404**	2	SPACER (89.4X180X35MM THK)	
	15	1	**9W-6343**	2	PIN AS	
B	16	1	**9W-6371**	24	SPACER (108X230X3MM THK)	
	17	1	**154-4492**	2	PLUG-ADAPTER	
	18	1	**111-2106**	2	PIN AS	
	19	1	**6V-8628**	2	ELBOW	
	20	1	**3J-7354**	4	SEAL-O-RING	
	21	1	**4J-5477**	4	SEAL-O-RING	
	22	1	**126-2372**	1	FRAME & BEARING AS	
		1	**4S-1722**	2	BOSS	
		1	**8P-9770**	1	PLATE	
	23	1	**3B-8489**	2	FITTING-GREASE (1/8-27 THD)	
	24	1	**7T-7190**	4	BEARING-SLEEVE	
	25	1	**2J-1227**	2	RETAINER	
	26	1	**3G-1877**	2	RETAINER	

B-USE AS REQUIRED
I-SEE HOSE FABRICATION GUIDE

119-7830 **FRAME GP-RIPPER** *(contd.)* **i01701267**

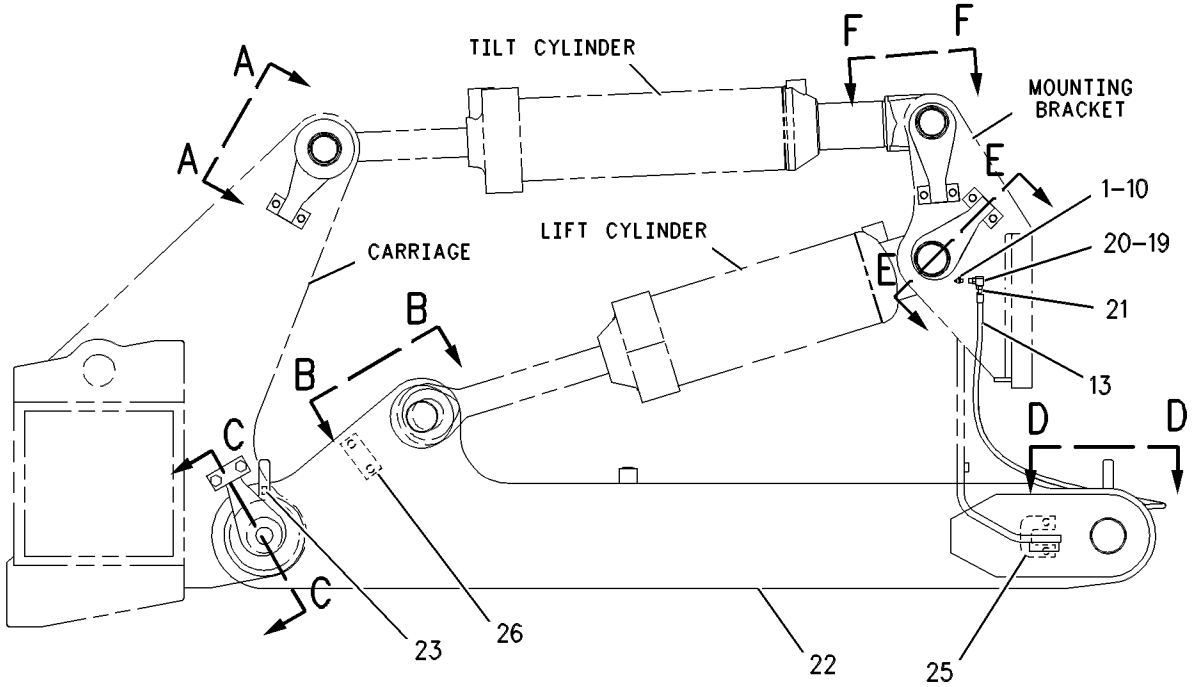

RIGHT SIDE VIEW

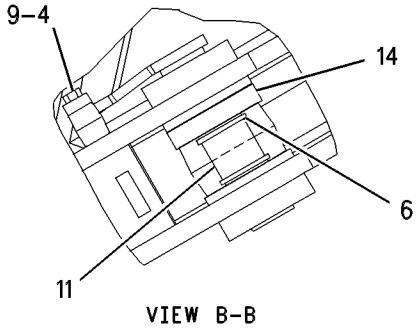

VIEW B-B

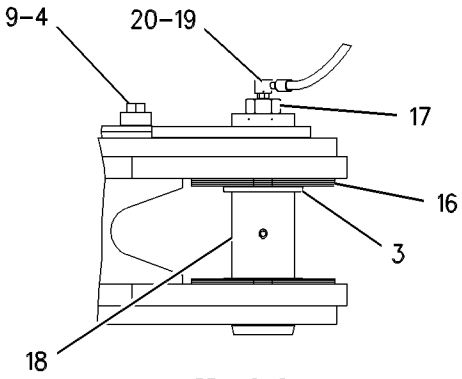

VIEW D-D

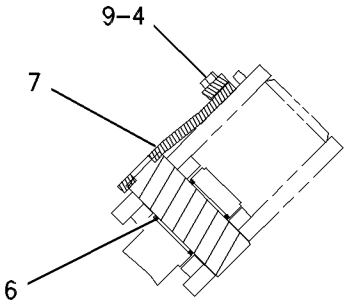

VIEW E-E

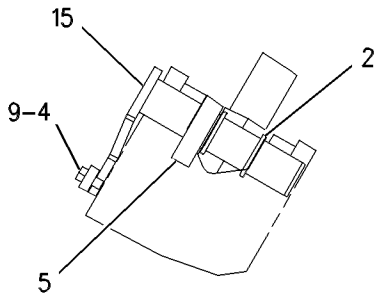

VIEW A-A

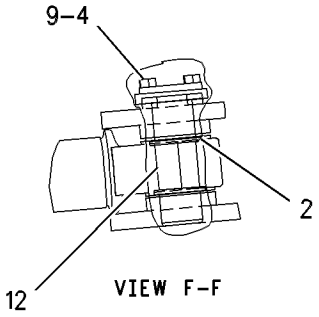

VIEW F-F

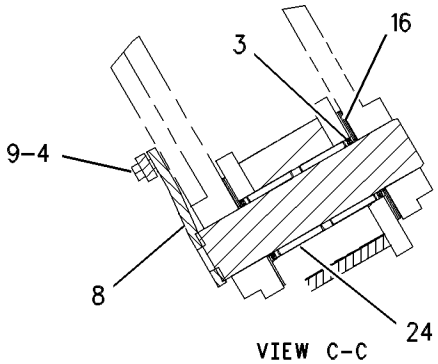

VIEW C-C

GRAPHIC #1 g00589872

180-2399 FRAME GP-RIPPER

S/N: BEY1-UP
SINGLE SHANK-BUSHED
PART OF 180-2401 RIPPER AR
AN ATTACHMENT

SMCS-6314, 7067 **i01701274**

NOTE	REF NO	GRAPHIC REF	PART NUMBER	QTY	PART NAME 1 2 3 4 5 6 (PRODUCT LEVEL)	SEE PAGE
	1	1	**3B-8489**	2	FITTING-GREASE (1/8-27 THD)	
	2	1	**3E-6756**	8	SEAL-LIP	
	3	1	**3E-6758**	8	SEAL-LIP	
	4	1	**7X-0365**	24	BOLT (3/4-10X1.5 IN)	
	5	1	**7K-9211**	8	SEAL-LIP	
	6	1	**7T-7222**	2	PIN AS	
	7	1	**7T-7305**	12	PLATE	
	8	1	**9J-4782**	2	PROTECTOR	
	9	1	**9J-6689**	2	PIN AS	
	10	1	**9J-6691**	2	PIN AS	
	11	1	**9J-9055**	2	PIN AS	
I	12	1	**9R-6776**	2	HOSE AS	
	13	1	**9U-8404**	2	SPACER (89.4X180X35MM THK)	
B	14	1	**9W-6371**	26	SPACER (108X230X3MM THK)	
	15	1	**154-4492**	2	PLUG-ADAPTER	
	16	1	**111-2106**	2	PIN AS	
	17	1	**6V-8628**	4	ELBOW	
	18	1	**3J-7354**	4	SEAL-O-RING	
	19	1	**4J-5477**	4	SEAL-O-RING	
	20	1	**133-0225**	1	FRAME & BEARING AS	
		1	**3G-1877**	2	RETAINER	
	21	1	**4S-1722**	2	BOSS	
	22	1	**2V-0447**	4	BEARING-SLEEVE	
	23	1	**3B-8489**	2	FITTING-GREASE (1/8-27 THD)	
	24	1	**4T-1422**	4	BEARING-SLEEVE	
	25	1	**133-2015**	4	BEARING-SLEEVE	
	26	1	**2J-1227**	2	RETAINER	
	27	1	**132-7994**	2	PIN AS	

B-USE AS REQUIRED
I-SEE HOSE FABRICATION GUIDE

180-2399 **FRAME GP-RIPPER** *(contd.)* **i01701274**

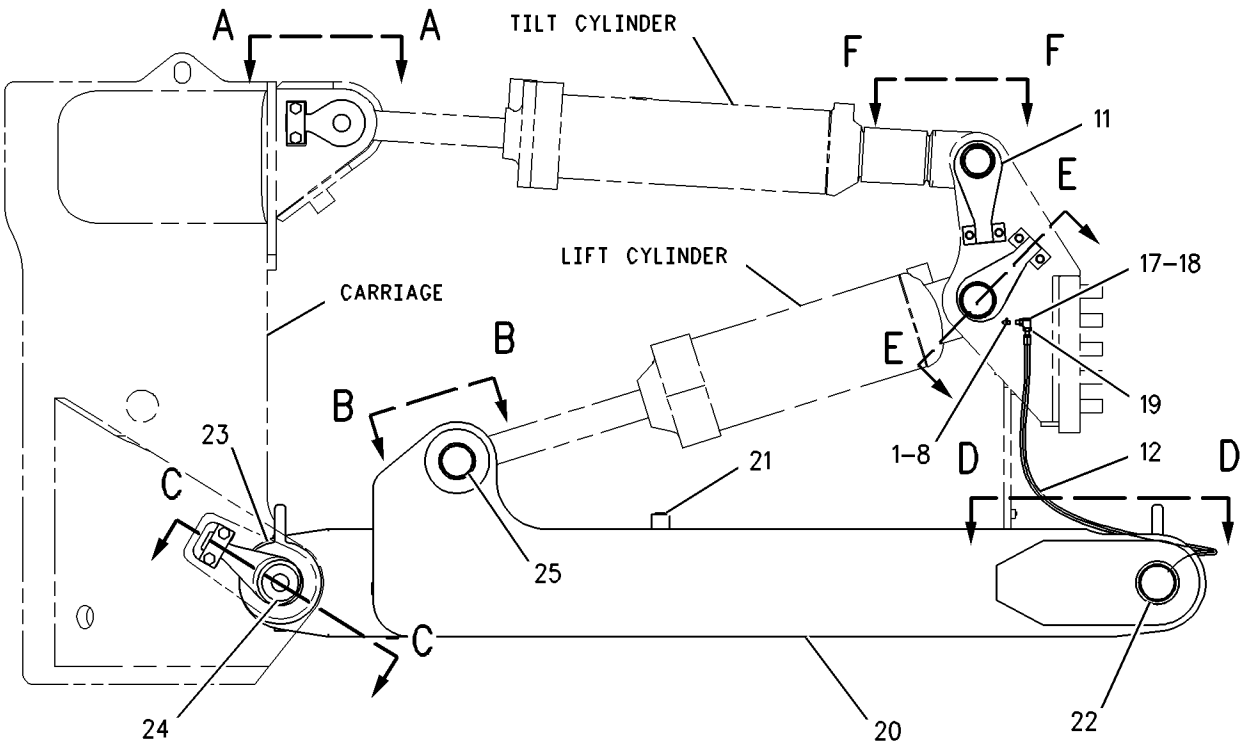

RIGHT SIDE VIEW

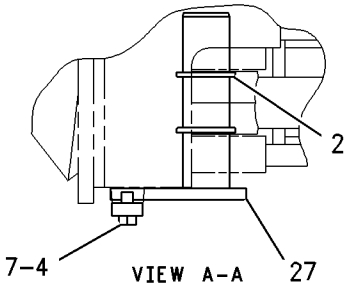

VIEW A-A

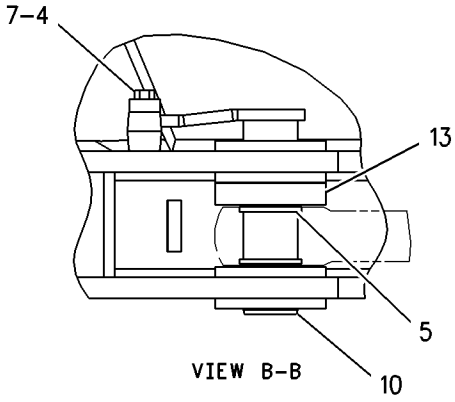

VIEW B-B

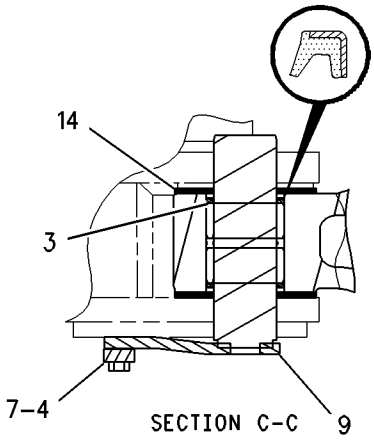

SECTION C-C

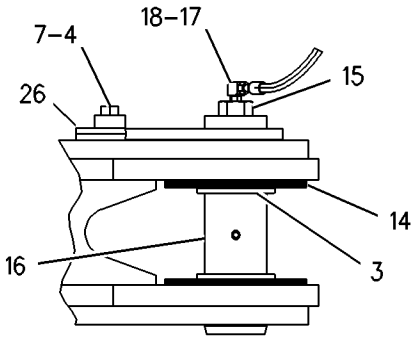

VIEW D-D

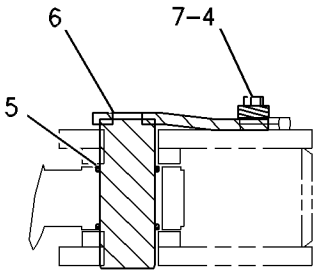

SECTION E-E

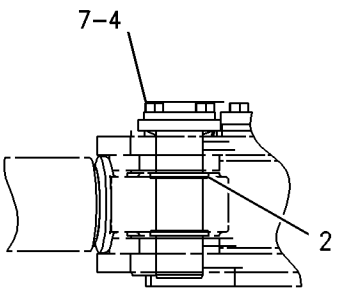

VIEW F-F

GRAPHIC #1 g00659326

185-1715 FRAME GP-RIPPER

S/N: BRT1-UP
SINGLE SHANK
PART OF 180-2404 RIPPER AR
AN ATTACHMENT

SMCS-6314, 7067 **i01334363**

NOTE	REF NO	GRAPHIC REF	PART NUMBER	QTY	PART NAME 1 2 3 4 5 6 (PRODUCT LEVEL)	SEE PAGE
	1	1	**3B-8489**	2	FITTING-GREASE	
	2	1	**3E-6756**	8	SEAL-LIP	
	3	1	**3E-6758**	8	SEAL-LIP	
	4	1	**5P-9899**	2	PLUG-PROTECTION	
	5	1	**7K-9211**	8	SEAL-LIP	
	6	1	**7T-7222**	2	PIN AS	
	7	1	**7T-7305**	12	PLATE	
	8	1	**9J-4782**	2	PROTECTOR-NIPPLE	
	9	1	**9J-6689**	2	PIN AS	
	10	1	**9J-6691**	2	PIN AS	
	11	1	**9J-9055**	2	PIN AS	
I	12	1	**9R-6776**	2	HOSE AS	
	13	1	**9U-8404**	2	SPACER	
B	14	1	**9W-6371**	26	SPACER	
	15	1	**111-2106**	2	PIN AS	
	16	1	**117-4995**	1	FRAME & BEARING AS	
		1	**3B-8489**	2	FITTING-GREASE	
		1	**4T-1422**	2	BEARING-SLEEVE	
	17	1	**132-7994**	2	PIN AS	
	18	1	**154-4492**	2	PLUG-ADAPTER	
	19	1	**3J-7354**	4	SEAL-O-RING (8.92MM ID)	
	20	1	**4J-5477**	4	SEAL-O-RING (8.61MM ID)	
	21	1	**6V-8628**	4	ELBOW-90 DEGREE	
	22	1	**7X-0365**	24	BOLT (3/4-10X1.50 IN)	

B-USE AS REQUIRED
I-SEE HOSE FABRICATION GUIDE

185-1715 **FRAME GP-RIPPER** *(contd.)* **i01334363**

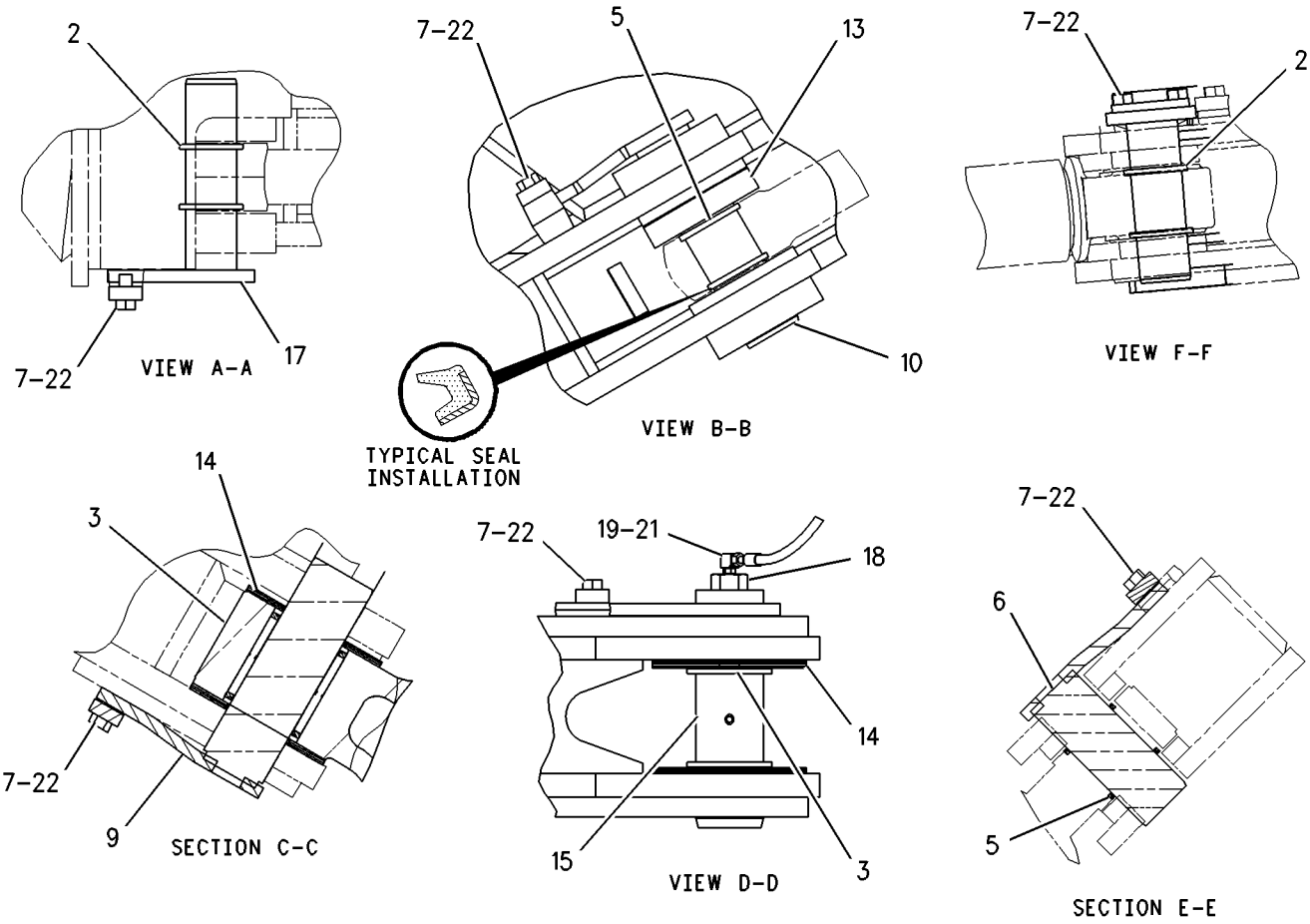

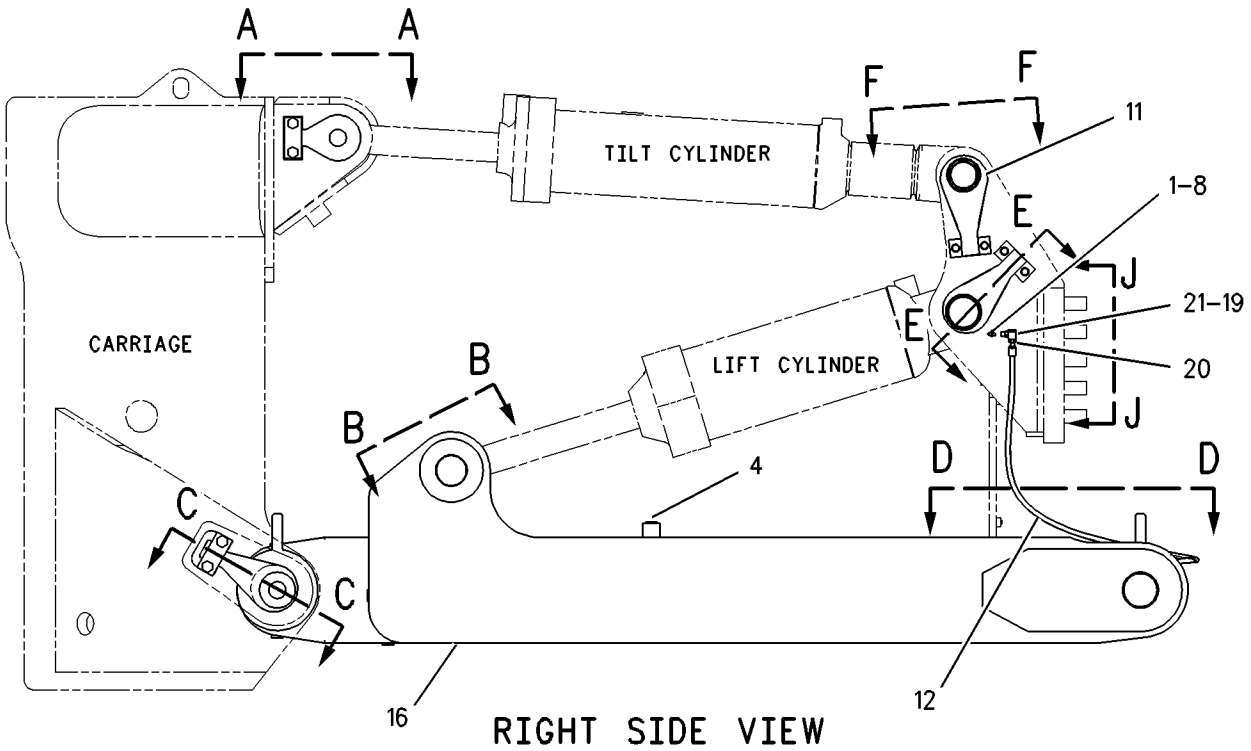

GRAPHIC #1 g00705851

180-0523 GEAR GP-ACCESSORY

S/N: 5JJ3200-UP
PART OF 171-5806, 206-3114 ENGINE AR
ALSO AN ATTACHMENT

SMCS-1206 **i01701279**

NOTE	REF NO	GRAPHIC REF	PART NUMBER	QTY	PART NAME 1 2 3 4 5 6 (PRODUCT LEVEL)	SEE PAGE
	1	1	**2W-8038**	1	GEAR-CAMSHAFT (44 TEETH)	
	2	1	**179-1556**	1	PULLEY	
	3	1	**179-2868**	1	BRACKET AS	
		1	**1F-0750**	2	NUT-WELD (3/8-16 THD)	
	4	1	**192-3438**	1	TUBE AS	
Y	5	1	*193-8414*	1	DRIVE GP-ACCESSORY	31
	6	1	**0S-1595**	2	BOLT (1/2-13X1.25 IN)	
	7	1	**1A-9579**	4	BOLT (5/16-18X1.5 IN)	
	8	1	**2B-2404**	1	CLIP	
	9	1	**2K-0337**	1	LOCKNUT (3/4-16 THD)	
	10	1	**3P-1823**	1	ADAPTER-PIPE	
	11	1	**4J-5477**	2	SEAL-O-RING	
	12	1	**7X-0492**	1	ELBOW	
	13	1	**7X-5331**	1	ELBOW	
	14	1	**9S-8752**	2	NUT-FULL (3/8-16 THD)	
	15	1	**9X-7371**	1	SEAL-O-RING	

Y-SEPARATE ILLUSTRATION

180-0523 **GEAR GP-ACCESSORY** ***(contd.)*** **i01701279**

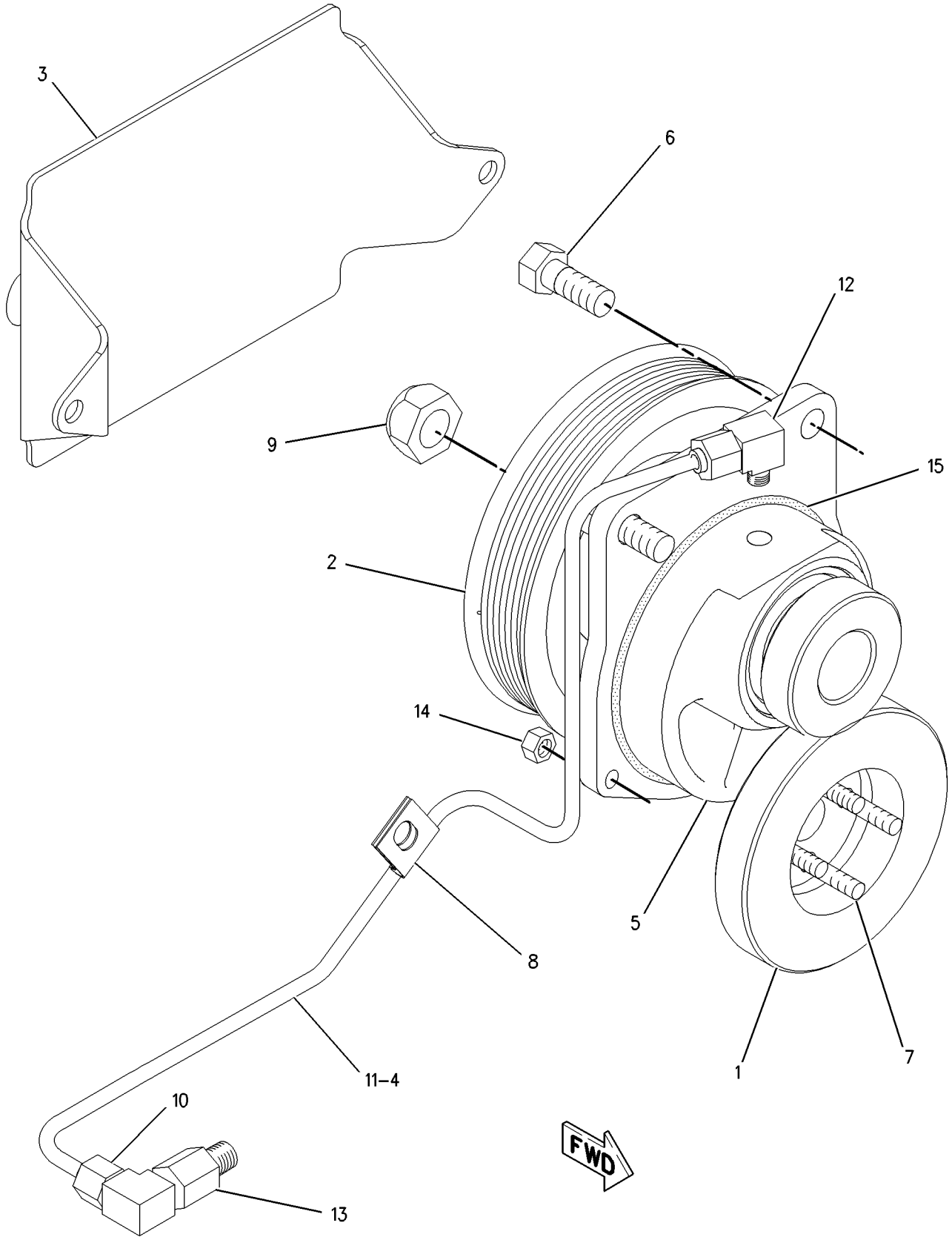

GRAPHIC #1 g00756335

IMPLEMENTS

111-0625 KIT-OVERPACK

S/N: AKT1-UP
FOR USE WITH ANY D10 BULLDOZER
AN ATTACHMENT

SMCS-6050 **i01436841**

NOTE	PART NUMBER	QTY	PART NAME 1 2 3 4 5 6 (PRODUCT LEVEL)	SEE PAGE
	4L-6459	12	BOLT (3/8-16X2.5 IN)	
	5C-6565	15	BOLT (1/2-13X1.25 IN)	
	5M-3062	2	BOLT (3/8-16X0.75 IN)	
	5P-2228	4	BOLT (1/2-13X1 IN)	
	5S-7379	9	BOLT (3/8-16X0.875 IN)	
	5S-7382	12	BOLT (3/8-16X1.375 IN)	
	5S-7383	6	BOLT (3/8-16X1.75 IN)	
	7X-0288	6	BOLT (3/8-16X1.625 IN)	
	7X-0311	6	BOLT (7/16-14X2.25 IN)	
	7X-0315	6	BOLT (7/16-14X3.25 IN)	
	7X-0325	2	BOLT (1/2-13X0.75 IN)	
	7X-0379	12	BOLT (7/8-9X1.50 IN)	
	7X-0381	4	BOLT (7/8-9X2 IN)	
	7X-0394	6	BOLT (7/8-9X7 IN)	
	7X-0396	6	BOLT (7/8-9X8.5 IN)	
	7X-0403	1	BOLT (1-8X2.25 IN)	
	7X-0405	14	BOLT (1-8X2.75 IN)	
	8K-5130	6	BOLT (1-8X11 IN)	
	8T-8911	2	BOLT (5/16-18X2 IN)	
	8T-8917	15	BOLT (1/2-13X1.25 IN)	
	8T-9393	3	BOLT (5/8-11X1.5 IN)	
	8T-9400	4	BOLT (7/8-9X2.5 IN)	
	9B-7237	19	BOLT (3/8-16X1.25 IN)	
	1J-7468	6	CLAMP	
	9W-2877	4	CLAMP	
	4T-3981	6	CLIP (HOLD DOWN)	
	5F-7055	4	CLIP (COMPRESSION)	
	7S-3916	4	CLIP (TAB)	
	7S-3919	4	CLIP (SLOT)	
	7S-8920	2	CLIP (SLOT)	
	7S-8921	2	CLIP (TAB)	
	3B-8489	2	FITTING-GREASE	
	1P-4576	12	FLANGE	
	1P-4577	12	FLANGE-HALF	
	1P-5760	4	FLANGE-HALF	
	5P-8522	2	GROMMET	
	9W-4361	6	MOUNT	
	6V-8801	12	NUT (3/8-16 THD)	
	6V-8188	4	NUT (1/2-13 THD)	
	6V-8189	2	NUT (5/16-18 THD)	
	2J-3507	6	NUT-FULL (1-8 THD)	
	7X-0449	6	NUT-FULL (7/8-9 THD)	
	5J-5365	2	PIN	
	9W-3215	2	PLATE	
	6J-5986	4	RETAINER	
	6J-7500	4	RETAINER	
	9J-2365	5	RETAINER	
	5L-4756	1	RING-RETAINING	
	5P-2322	2	SEAL-LIP	
	4J-0520	12	SEAL-O-RING (32.92MM ID)	
	4J-5267	9	SEAL-O-RING (24.99MM ID)	
	1P-3703	6	SEAL-RECTANGULAR	
	1P-3705	4	SEAL-RECTANGULAR	
B	**4T-9707**	15	SHIM (.8MM THK)	
B	**8E-1378**	15	SHIM (.8MM THK)	

111-0625 **KIT-OVERPACK** ***(contd.)*** **i01436841**

NOTE	PART NUMBER	QTY	PART NAME 1 2 3 4 5 6 (PRODUCT LEVEL)	SEE PAGE
	9B-1948	1	SPACER (1.03X1.63X1 IN THK)	
	1D-5875	2	SPACER (.53X1.25X1.13 IN THK)	
	7T-4809	4	SPACER (96.5X114.3X16.5MM THK)	
	7K-1181	4	STRAP-CABLE	
	8T-2561	6	WASHER-HARD (10.5X28.5X5MM THK)	
	8T-4122	3	WASHER-HARD (17X32X3.5MM THK)	
	8T-5360	6	WASHER (12X22.5X2.5MM THK)	
	5P-1075	14	WASHER-HARD (10.2X22.5X3MM THK)	
	7X-0525	6	WASHER-HARD (24X41.5X6MM THK)	
	7X-0572	6	WASHER-HARD (24X44.5X6MM THK)	
	7X-0589	6	WASHER-HARD (12X28.5X5MM THK)	
	8T-4223	15	WASHER-HARD (13.5X25.5X3MM THK)	
	8T-4224	4	WASHER-HARD (8.8X16X2MM THK)	
	8T-4896	30	WASHER-HARD (10.2X18.5X2.5MM THK)	
B-USE AS REQUIRED				

IMPLEMENTS

135-0821 KIT-OVERPACK

S/N: AKT1-UP
FOR USE WITH RIPPER AR
AN ATTACHMENT

SMCS-6050 **i01405795**

NOTE	PART NUMBER	QTY	PART NAME 1 2 3 4 5 6 (PRODUCT LEVEL)	SEE PAGE
	9U-9623	2	BAR	
	4L-6454	4	BOLT (3/8-16X1 IN)	
	4L-9337	6	BOLT (3/8-16X1.5 IN)	
	7X-0288	4	BOLT (3/8-16X1.625 IN)	
	7X-0345	8	BOLT (5/8-11X1.75 IN)	
	7X-0365	12	BOLT (3/4-10X1.50 IN)	
	7X-0405	12	BOLT (1-8X2.75 IN)	
	7X-0439	12	BOLT (1 1/2-6X5 IN)	
	8T-2502	12	BOLT (3/8-16X1.125 IN)	
	8T-7008	2	BOLT (3/8-16X3 IN)	
	6K-0138	4	BOLT-LOCKING (5/8-11X1.25 IN)	
	9M-2904	6	CLAMP-HOSE	
	3G-8054	3	CLIP (TAB)	
	3G-8057	3	CLIP (SLOT)	
	4P-7581	1	CLIP	
	8E-1042	2	CLIP	
	8E-1043	2	CLIP	
	6V-8724	1	ELBOW	
	6V-8628	4	ELBOW	
	6V-8723	2	ELBOW	
	8T-1905	1	ELBOW	
	3B-8489	2	FITTING-GREASE	
	1P-4577	12	FLANGE-HALF	
	5P-8112	2	GROMMET	
	6V-0974	3	GROMMET	
	130-9191	4	GROMMET	
	7T-4501	1	PIN	
	7T-4502	1	PIN	
	125-9215	1	PIN	
	135-5114	1	PIN	
	102-9062	1	PIN AS-G.E.T.	
	102-9073	1	SPRING	
	7T-7305	9	PLATE	
	193-3081	1	PLATE AS-LH	
	1F-0750	2	NUT-WELD (3/8-16 THD)	
	193-3080	1	PLATE AS-RH	
	1F-0750	2	NUT-WELD (3/8-16 THD)	
	9W-8576	2	PLUG	
	9J-4782	2	PROTECTOR-NIPPLE	
	6Y-1202	3	RETAINER AS	
	7M-9107	1	LOCK RING	
	6K-3630	1	RING	
	7J-4169	2	RING-SNAP	
	3E-6756	6	SEAL-LIP	
	3E-6758	6	SEAL-LIP	
	7K-9211	6	SEAL-LIP	
	3J-1907	2	SEAL-O-RING (11.89MM ID)	
	3J-7354	4	SEAL-O-RING (8.92MM ID)	
	3K-0360	2	SEAL-O-RING (16.36MM ID)	
	4J-0520	12	SEAL-O-RING (32.92MM ID)	
	4J-5477	4	SEAL-O-RING (7.67MM ID)	
	6V-8397	4	SEAL-O-RING (9.27MM ID)	
	130-1977	2	SHIELD	
	139-2456	2	SHIELD-LH	
	139-2455	2	SHIELD-RH	

135-0821 **KIT-OVERPACK** ***(contd.)*** **i01405795**

NOTE	PART NUMBER	QTY	PART NAME 1 2 3 4 5 6 (PRODUCT LEVEL)	SEE PAGE
	6Y-9287	2	SPACER (76.8X170X40MM THK)	
	9U-8404	2	SPACER (89.4X180X35MM THK)	
	9W-6371	12	SPACER	
	9W-1991	2	SPACER (13.94X17.14X40MM THK)	
	9X-6772	3	STRAP-CABLE	
	7X-0515	8	WASHER-HARD (17X35X5MM THK)	
	8T-4167	2	WASHER-HARD (26X44X4MM THK)	
	5P-1075	10	WASHER-HARD (10.2X22.5X3MM THK)	
	7X-0537	12	WASHER-HARD (40.5X67X6MM THK)	
	7X-0616	12	WASHER-HARD (28X57X6MM THK)	
	8T-4896	19	WASHER-HARD (10.2X18.5X2.5MM THK)	

IMPLEMENTS

196-5844 LINES GP-OIL

S/N: AKT1-UP

PART OF 197-7904 FAN AR, 206-7328 SUPPRESSION AR-SOUND

AN ATTACHMENT

SMCS-5057 **i01696794**

NOTE	REF NO	GRAPHIC REF	PART NUMBER	QTY	PART NAME 1 2 3 4 5 6 (PRODUCT LEVEL)	SEE PAGE
	1	2	**6T-2724**	1	BRACKET AS	
	2	1,2	**7K-1181**	11	STRAP-CABLE	
	3	2	**7N-1277**	1	BRACKET AS	
	4	2	**9L-6791**	1	BRACKET	
	5	2	*169-7402*	1	ADAPTER AS	
		2	**3J-7354**	1	SEAL-O-RING	
		2	**6V-8398**	1	SEAL-O-RING	
		2	**156-6131**	1	ADAPTER	
	6	1,2	**174-6052**	2	BRACKET AS	
	7	2	**178-1780**	1	CLIP	
	8	2	**178-1781**	2	CLIP	
	9	2	**180-7887**	1	TUBE AS	
	10	1	**180-9145**	1	CLIP	
	11	1	**180-9147**	1	CLIP	
Y	12	2	**192-0729**	1	VALVE & MTG GP-PILOT	366
	13	1	**197-5811**	1	TUBE AS	
	14	1	**197-5847**	1	BRACKET AS	
	15	2	**197-5849**	1	BRACKET	
I	16	1	**197-9455**	1	HOSE AS	
I	17	2	**197-9456**	1	HOSE AS	
I	18	2	**203-9037**	1	HOSE AS	
	19	2	**207-2837**	1	HARNESS AS	
	20	2	**220-3484**	1	TUBE AS	
	21	2	**220-3485**	1	TUBE AS	
	22	2	**033-6033**	5	SEAL-O-RING	
	23	2	*150-4043*	1	CONNECTOR GP	
		2	**3J-1907**	1	SEAL-O-RING	
		2	**6V-8398**	1	SEAL-O-RING	
		2	**6V-9873**	1	CONNECTOR-SEAL	
	24	1	**1P-3708**	1	SEAL-RECTANGULAR	
	25	2	**1S-0994**	5	CLIP	
	26	2	*216-4989*	1	ADAPTER AS	
		2	**3K-0360**	1	SEAL-O-RING	
		2	**8L-2779**	1	SEAL-O-RING	
		2	**127-9260**	1	ADAPTER	
		2	**205-6030**	1	PLUG-ORIFICE	
	27	1,2	**4L-6454**	9	BOLT (3/8-16X1 IN)	
	28	1,2	**5P-9757**	4	SEAL-O-RING	
	29	2	**6V-5049**	3	SEAL-O-RING	
	30	1	**6V-5185**	4	CLIP (SLOT)	
	31	1	**6V-5186**	4	CLIP (TAB)	
	32	2	**6V-8556**	1	NUT (1 3/16-12 THD)	
	33	2	**6V-8632**	1	CONNECTOR	
	34	2	**6V-8636**	1	CONNECTOR	
	35	2	**6V-8739**	1	UNION-FACE SEAL	
	36	2	**6V-8801**	2	NUT (3/8-16 THD)	
	37	2	**6V-8942**	1	REDUCER-O-RING (FACE)	
	38	2	**6V-9837**	1	TEE-SWIVEL	
	39	2	**6V-9839**	1	TEE-SWIVEL	
	40	2	**6V-9873**	1	CONNECTOR-SEAL	
	41	1	**8C-6874**	1	CONNECTOR	
	42	2	**8L-2746**	2	SEAL-O-RING	
	43	2	**8L-2779**	1	SEAL-O-RING	
	44	2	**8L-2786**	1	SEAL-O-RING	
	45	1,2	**8S-0948**	2	CLIP	

196-5844 **LINES GP-OIL** ***(contd.)*** **i01696794**

NOTE	REF NO	GRAPHIC REF	PART NUMBER	QTY	PART NAME 1 2 3 4 5 6 (PRODUCT LEVEL)	SEE PAGE
	46	1,2	**8T-4896**	15	WASHER-HARD (10.2X18.5X2.5MM THK)	
	47	2	**8T-6876**	1	ELBOW	
	48	2	**8T-9371**	1	BOLT (3/8-16X0.5 IN)	
	49	2	**8T-9377**	2	BOLT (3/8-16X2.25 IN)	
	50	2	**9B-7237**	3	BOLT (3/8-16X1.25 IN)	

I-SEE HOSE FABRICATION GUIDE
Y-SEPARATE ILLUSTRATION

REFER TO ALL ILLUSTRATIONS OF
THIS GROUP FOR AUXILIARY VIEWS

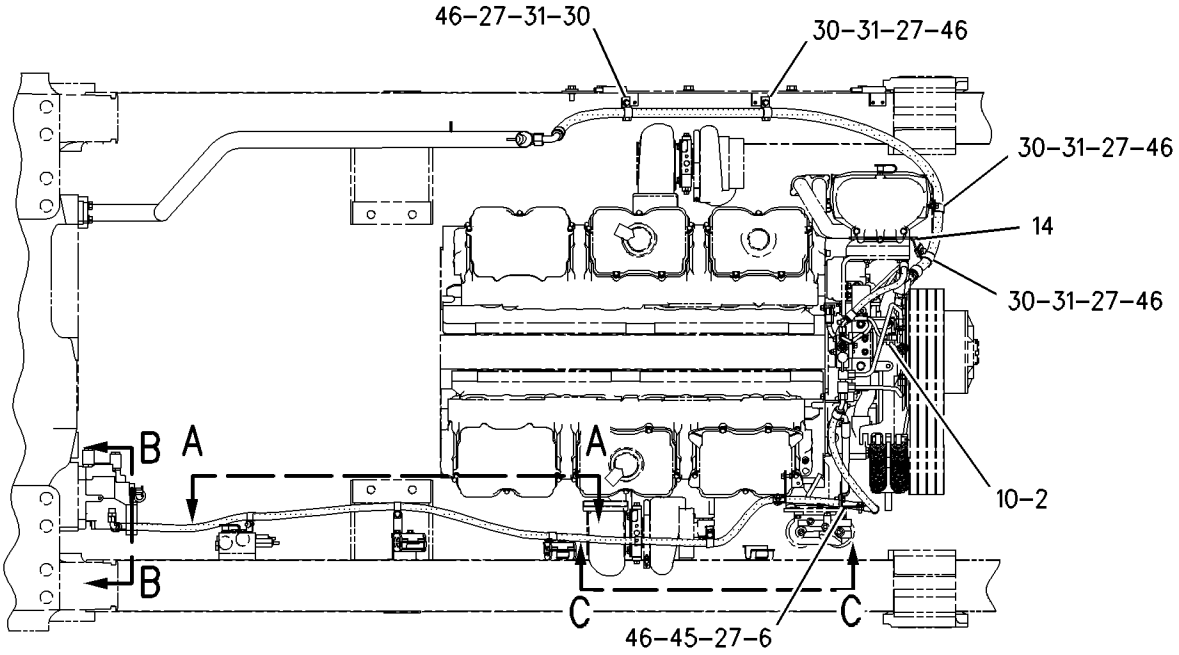

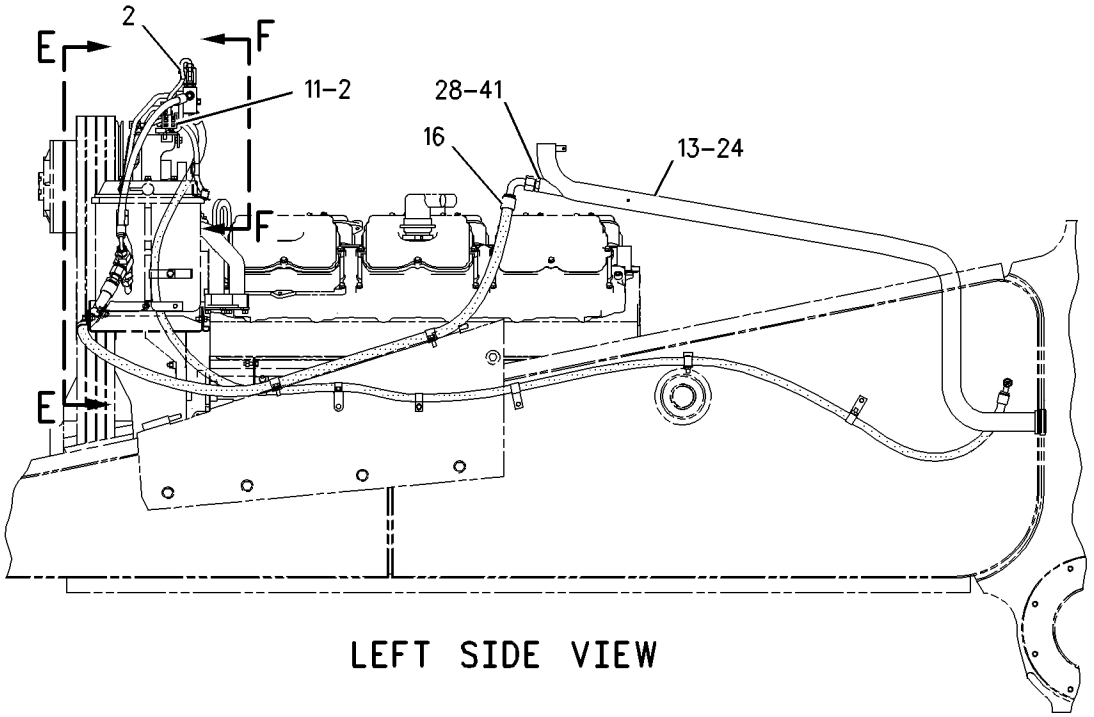

LEFT SIDE VIEW

GRAPHIC #1 g00873844

196-5844 **LINES GP-OIL** ***(contd.)*** **i01696794**

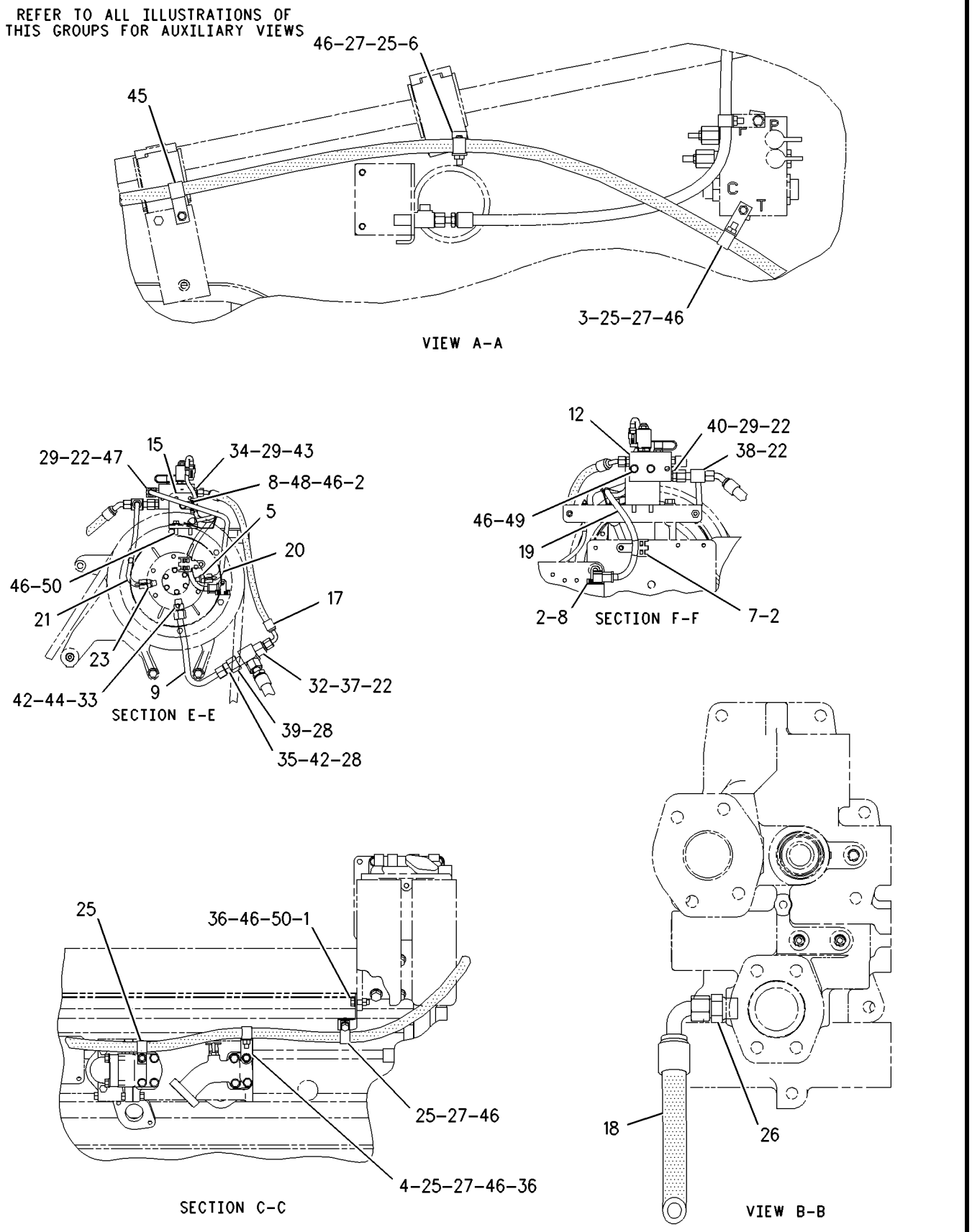

GRAPHIC #2 g00873845

110-4724 LINK GP-STABILIZER

S/N: BHA1-UP; BHF1-UP; BHJ1-UP; BHP1-UP
PART OF 171-6652 PUSH ARM GP-STABILIZER
AN ATTACHMENT

SMCS-6071, 7203 **i00764674**

NOTE	REF NO	GRAPHIC REF	PART NUMBER	QTY	PART NAME 1 2 3 4 5 6 (PRODUCT LEVEL)	SEE PAGE
	1	1	**7X-0396**	8	BOLT (7/8-9X8.5IN)	
	2	1	**9J-6062**	2	CAP-BEARING	
	3	1	**7X-0449**	8	NUT-FULL (7/8-9 THD)	
B	4	1	**8E-1378**	52	SHIM (.8MM THK)	
	5	1	**110-4729**	1	LINK AS	
		1	**3G-7891**	2	BEARING	
		1	**8P-9770**	1	PLATE (84MM X 25MM X 3MM)	

B-USE AS REQUIRED

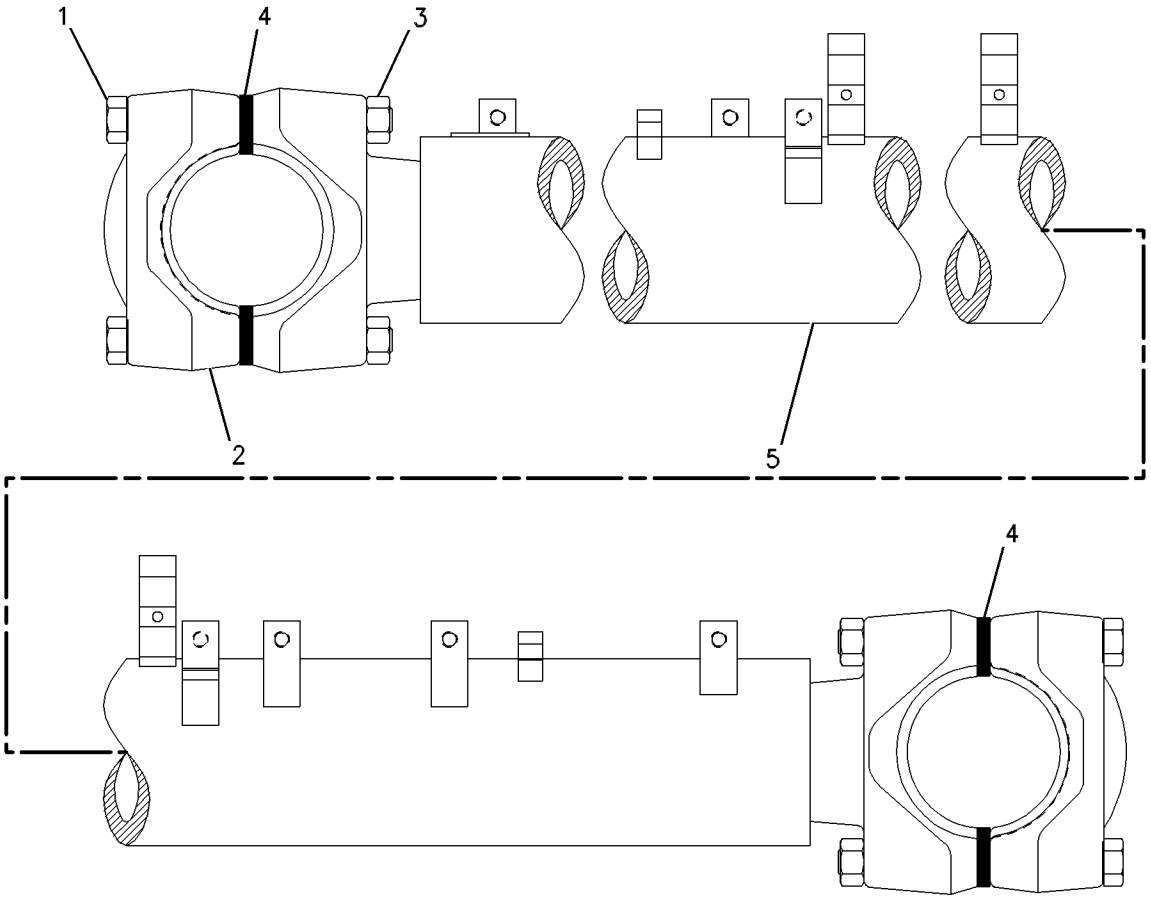

GRAPHIC #1 g00347934

200-2589 MODIFICATION AR-BULLDOZER

S/N: AKT1-UP
LANDFILL
AN ATTACHMENT

SMCS-7000 **i01459462**

NOTE	PART NUMBER	QTY	PART NAME 1 2 3 4 5 6 (PRODUCT LEVEL)	SEE PAGE
I	**135-1828**	1	HOSE AS	
I	**135-1829**	1	HOSE AS	
	200-8671	2	HOSE AS	

I-SEE HOSE FABRICATION GUIDE

IMPLEMENTS

200-2592 MODIFICATION AR-BULLDOZER

S/N: AKT1-UP
LANDFILL-DUAL TILT
AN ATTACHMENT

SMCS-7000 **i01459464**

NOTE	PART NUMBER	QTY	PART NAME 1 2 3 4 5 6 (PRODUCT LEVEL)	SEE PAGE
I	**135-1828**	1	HOSE AS	
I	**135-1829**	1	HOSE AS	
I	**135-1831**	1	HOSE AS	
I	**135-1832**	1	HOSE AS	
I	**135-1833**	2	HOSE AS	
I	**135-1834**	2	HOSE AS	
	200-2670	2	HOSE AS	

I-SEE HOSE FABRICATION GUIDE

9J-6006 MOUNTING GP-CYLINDER

S/N: BHA1-UP; BHF1-UP; BHJ1-UP; BHP1-UP; AKT1-UP
PART OF 171-6672, 171-6673, 171-6674, 171-6675 BULLDOZER AR
AN ATTACHMENT

SMCS-6068 **i01701288**

NOTE	REF NO	GRAPHIC REF	PART NUMBER	QTY	PART NAME 1 2 3 4 5 6 (PRODUCT LEVEL)	SEE PAGE
	1	1	**3B-8489**	2	FITTING-GREASE (1/8-27 THD)	
	2	1	**5J-5365**	2	PIN	
C	3	1	**7X-0394**	8	BOLT (7/8-9X7 IN) (7/8-9X7IN)	
		1	**7X-0525**	8	WASHER-HARD (24X41.5X6MM THK) (6MM THK)	
	4	1	**9J-6001**	4	CAP AS	
					(EACH INCLUDES)	
	5	1	**9J-5942**	1	BEARING-SLEEVE	
C	6	1	**6Y-2652**	2	YOKE	
	7	1	**5P-2322**	2	SEAL-LIP	

C-CHANGE FROM PREVIOUS TYPE

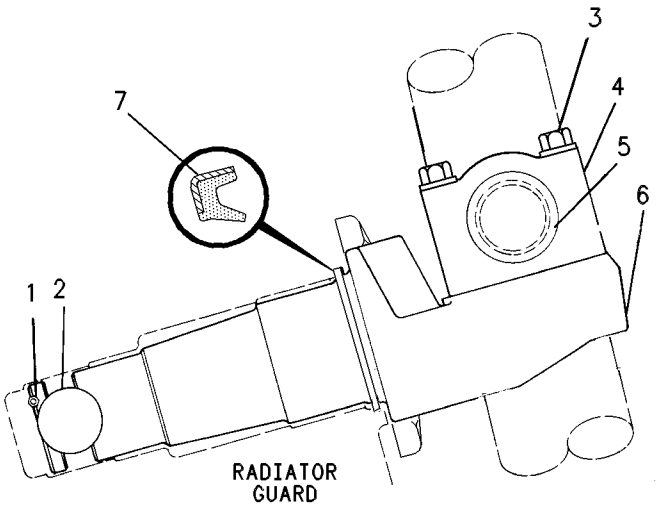

GRAPHIC #1 g00253688

133-0229 MOUNTING GP-RIPPER

S/N: 4PP1-UP; AKT1-UP; BRT1-UP; BEY1-UP
BUSHED JOINTS
PART OF 119-8210, 180-2401, 180-2404 RIPPER AR
AN ATTACHMENT

SMCS-6165, 6324 **i01701303**

NOTE	REF NO	GRAPHIC REF	PART NUMBER	QTY	PART NAME 1 2 3 4 5 6 (PRODUCT LEVEL)	SEE PAGE
	1	1	**119-7015**	1	GUARD AS	
		1	**3W-1809**	1	BAR	
C	2	1	**160-5458**	2	BAR	
C	3	1	**160-6765**	1	PLATE & BEARING AS (LH)	
C	4	1	**160-6767**	1	PLATE & BEARING AS (RH)	
					(EACH PLATE & BEARING AS INCLUDES)	
	5	1	**2V-1256**	2	BEARING-SLEEVE (95.4MM OD)	
	6	1	**3T-8459**	2	BEARING-SLEEVE (101.1MM OD)	
	7	1	**2J-1227**	2	RETAINER	
	8	1	**7X-0439**	20	BOLT (1 1/2-6X5 IN)	
	9	1	**7X-0537**	20	WASHER-HARD (40.5X67X6MM THK)	
	10	1	**7X-0616**	16	WASHER-HARD (28X57X6MM THK)	
C	11	1	**8C-8843**	4	BOLT (1-8X4.5 IN)	
C	12	1	**8T-2502**	2	BOLT (3/8-16X1.125 IN)	
C	13	1	**5P-1075**	2	WASHER-HARD (10.2X22.5X3MM THK)	
C	14	1	**7X-0405**	12	BOLT (1-8X2.75 IN)	
C	15	1	**165-6064**	1	GUARD AS	
	16	1	**5P-1075**	2	WASHER-HARD (10.2X22.5X3MM THK)	
		1	**8T-2502**	2	BOLT (3/8-16X1.125 IN)	
	17	1	**141-2723**	1	PLATE	
	18	1	**9W-8558**	2	BLOCK	

C-CHANGE FROM PREVIOUS TYPE

133-0229 **MOUNTING GP-RIPPER** *(contd.)* **i01701303**

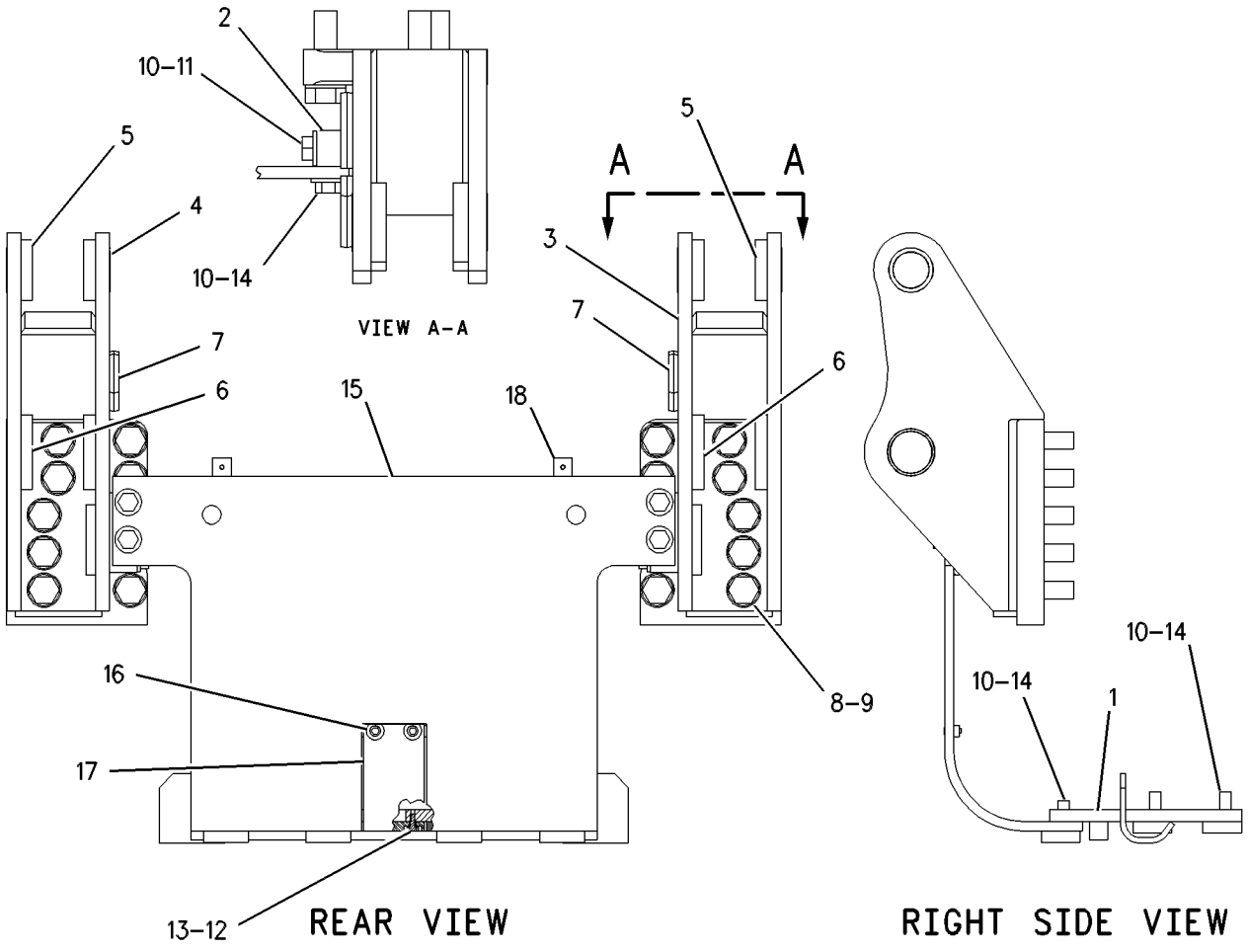

GRAPHIC #1

g00588810

178-1784 PULLER AR-PIN

S/N: AKT1-UP
FOR USE WITH 180-2401—PAGE 624
AN ATTACHMENT

SMCS-5353, 5354 **i01682895**

NOTE	REF NO	GRAPHIC REF	PART NUMBER	QTY	PART NAME 1 2 3 4 5 6 (PRODUCT LEVEL)	SEE PAGE
Y	1	1	**6E-3113**	1	CYLINDER GP-RIPPER PIN PULLER	498
Y	2	1	*178-1783*	1	PULLER GP-PIN	618
Y	3	1	**210-6030**	1	LINES GP-PIN PULLER CYLINDER	514

Y-SEPARATE ILLUSTRATION

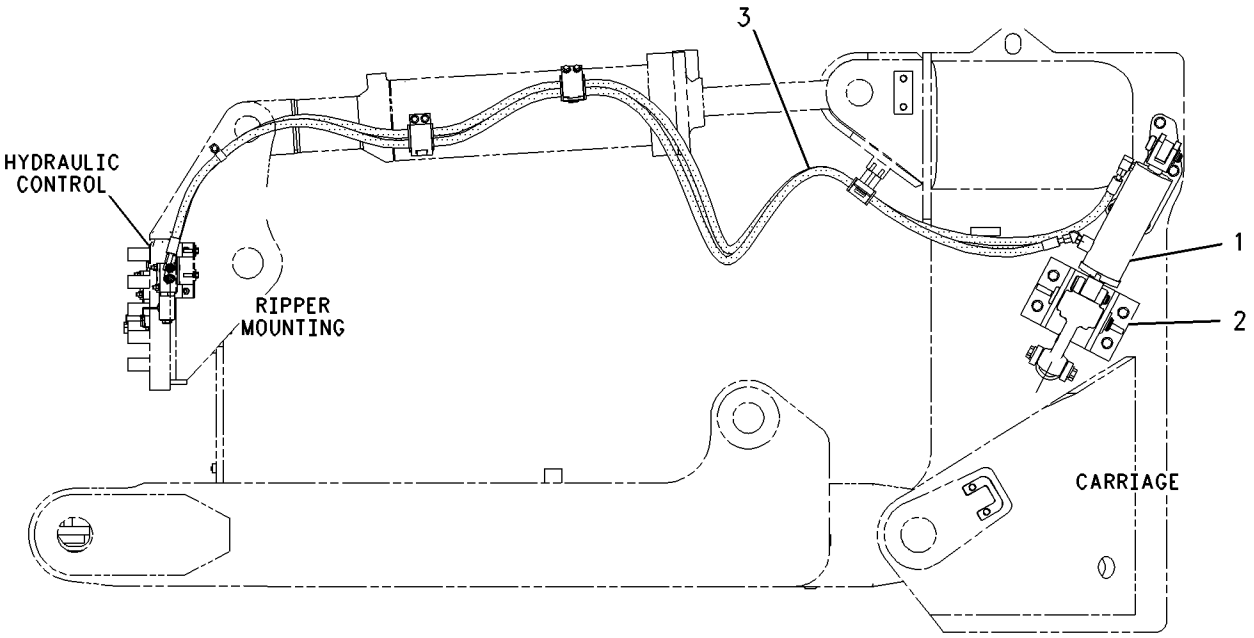

LEFT SIDE VIEW

GRAPHIC #1 g00868051

MEMORANDA

IMPLEMENTS

178-1783 PULLER GP-PIN

S/N: AKT1-UP
PART OF 178-1784 PULLER AR-PIN
AN ATTACHMENT

SMCS-5353, 5354 **i01405893**

NOTE	REF NO	GRAPHIC REF	PART NUMBER	QTY	PART NAME 1 2 3 4 5 6 (PRODUCT LEVEL)	SEE PAGE
	1	1	**7T-4501**	1	PIN	
	2	1	**7T-4502**	1	PIN	
	3	1	**9U-9622**	1	LEVER	
	4	1	**130-6366**	2	LINK	
	5	1	**135-5105**	1	PLATE AS	
	6	1	**135-5114**	1	PIN	
	7	1	**178-2552**	1	PIN	
	8	1	**178-2553**	1	PLATE AS	
	9	1	**6K-0138**	4	BOLT-LOCKING (5/8-11X1.25 IN)	
	10	1	**6K-3630**	1	RING	
	11	1	**7J-4169**	2	RING-SNAP	
	12	1	**7X-0345**	8	BOLT (5/8-11X1.75 IN)	
	13	1	**7X-0515**	4	WASHER-HARD (17X35X5MM THK)	
	14	1	**7X-0537**	1	WASHER-HARD (40.5X67X6MM THK)	
	15	1	**8E-8914**	2	PIN	
	16	1	**8T-4122**	8	WASHER-HARD (17X32X3.5MM THK)	
	17	1	**8T-4167**	2	WASHER-HARD (26X44X4MM THK)	

178-1783 **PULLER GP-PIN** *(contd.)* **i01405893**

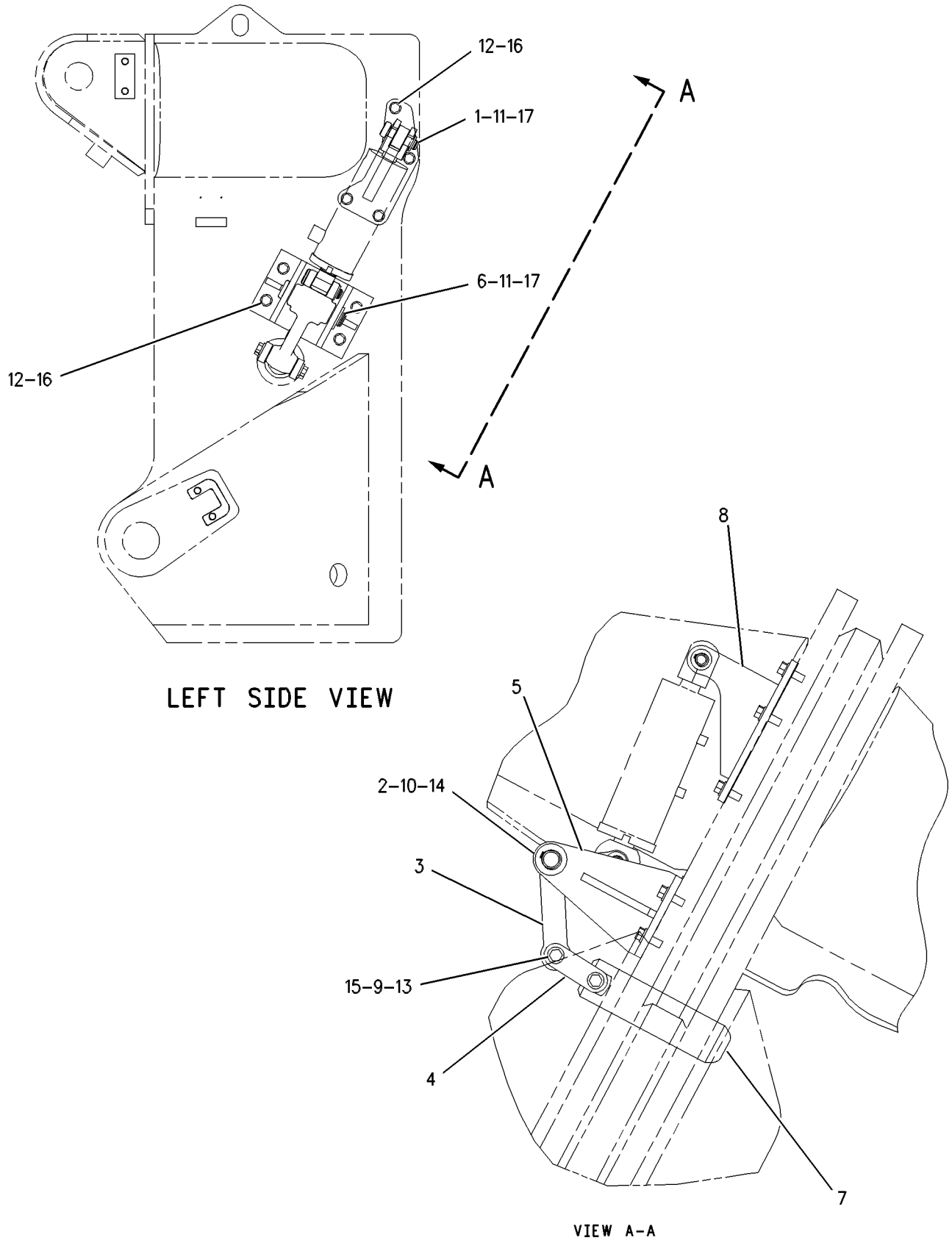

GRAPHIC #1 g00659325

4T-8182 PUSH ARM GP-LH

S/N: BHA1-UP; BHF1-UP; BHJ1-UP; BHP1-UP
PART OF 171-6652 PUSH ARM GP-STABILIZER
AN ATTACHMENT

SMCS-6061 **i01582677**

NOTE	REF NO	GRAPHIC REF	PART NUMBER	QTY	PART NAME 1 2 3 4 5 6 (PRODUCT LEVEL)	SEE PAGE
	1	1	**7T-4966**	1	CAP-BEARING	
	2	1	**8K-5130**	4	BOLT (1-8X11 IN)	
	3	1	**2J-3507**	4	NUT-FULL (1-8 THD)	
B	4	1	**4T-9707**	26	SHIM (.8MM THK)	
	5	1	**138-2833**	1	PUSH ARM AS-LH	
	6	1	**1U-1187**	1	BEARING AS	
		1	**4T-9702**	1	CAP-BEARING	
	7	1	**9W-9163**	1	BRACKET AS	
	8	1	**1U-2533**	1	BAR	
	9	1	**8P-9770**	1	PLATE	
	10	1	**166-4113**	1	STEP	
	11	1	**138-2835**	1	BRACKET AS-LH	
	12	1	**3G-8052**	1	BEARING	
	13	1	**3G-8051**	1	BEARING-SLEEVE	

B-USE AS REQUIRED

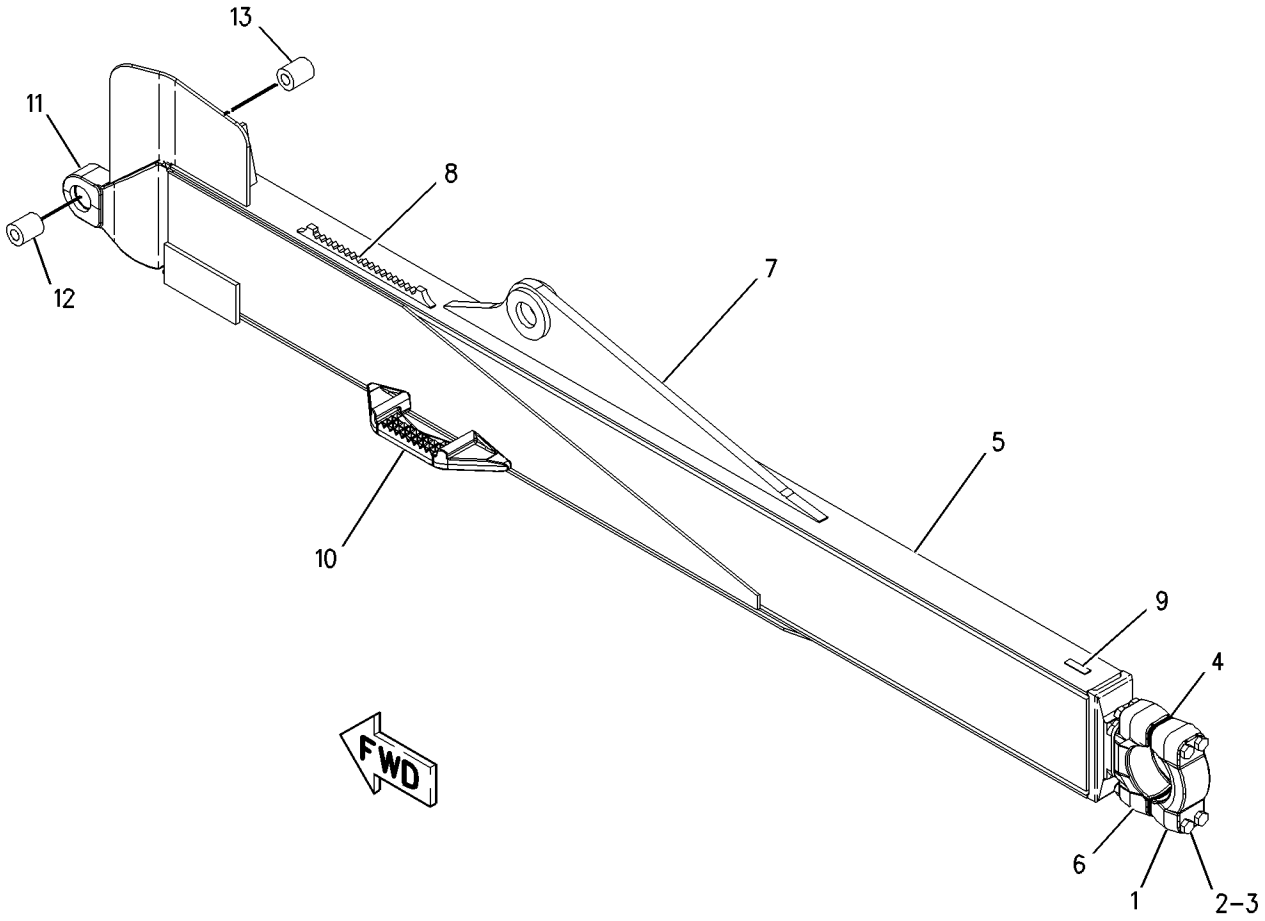

GRAPHIC #1 g00848416

4T-8181 PUSH ARM GP-RH

S/N: BHA1-UP; BHF1-UP; BHJ1-UP; BHP1-UP
PART OF 171-6652 PUSH ARM GP-STABILIZER
AN ATTACHMENT

SMCS-6061 **i01582676**

NOTE	REF NO	GRAPHIC REF	PART NUMBER	QTY	PART NAME 1 2 3 4 5 6 (PRODUCT LEVEL)	SEE PAGE
	1	1	**8K-5130**	4	BOLT (1-8X11 IN)	
		1	**2J-3507**	4	NUT-FULL (1-8 THD)	
	2	1	**7T-4966**	1	CAP-BEARING	
	3	1	**138-2829**	1	PUSH ARM AS-RH	
		1	**8J-5326**	1	PLATE	
	4	1	**138-2834**	1	BRACKET AS-RH	
	5	1	**3G-8051**	1	BEARING-SLEEVE	
	6	1	**3G-8052**	1	BEARING	
	7	1	**9W-9163**	1	BRACKET AS	
	8	1	**1U-1187**	1	BEARING AS	
		1	**4T-9702**	1	CAP-BEARING	
	9	1	**166-4113**	1	STEP	
	10	1	**1U-2533**	1	BAR	
	11	1	**8P-9770**	1	PLATE	
B	12	1	**4T-9707**	26	SHIM (.8MM THK)	

B-USE AS REQUIRED

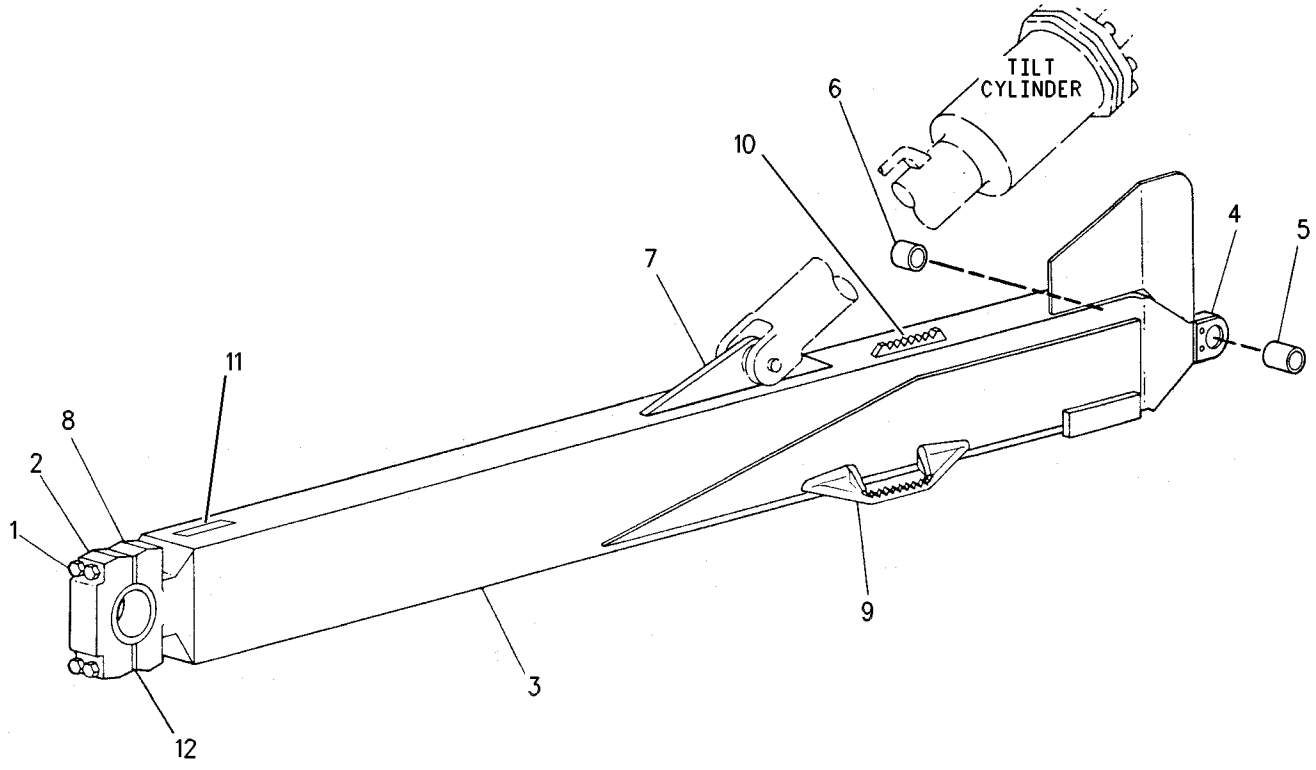

GRAPHIC #1 g00347933

171-6652 PUSH ARM GP-STABILIZER

S/N: BHA1-UP; BHF1-UP; BHJ1-UP; BHP1-UP
PART OF 171-6672, 171-6673, 171-6674, 171-6675, 171-6677, 171-6678, 171-6679, 171-6680 BULLDOZER AR
AN ATTACHMENT

SMCS-6061 **i01206038**

NOTE	REF NO	GRAPHIC REF	PART NUMBER	QTY	PART NAME 1 2 3 4 5 6 (PRODUCT LEVEL)	SEE PAGE
	1	1	**7X-0379**	8	BOLT (7/8-9X1.50IN)	
Y	2	1	*7T-7577*	1	BRACE GP-BULLDOZER	584
Y	3	1	**9T-9202**	1	CYLINDER GP-BULLDOZER TILT	488
Y	4	1	**110-4724**	1	LINK GP-STABILIZER	610
	5	1	**9J-6662**	2	PIN	
	6	1	**3G-8053**	2	PIN	
Y	7	1	*4T-8182*	1	PUSH ARM GP-LH	620
Y	8	1	*4T-8181*	1	PUSH ARM GP-RH	621
	9	1	**9J-2365**	2	RETAINER	
	10	1	**6J-7500**	2	RETAINER	
	11	1	**137-8479**	6	SPACER	

Y-SEPARATE ILLUSTRATION

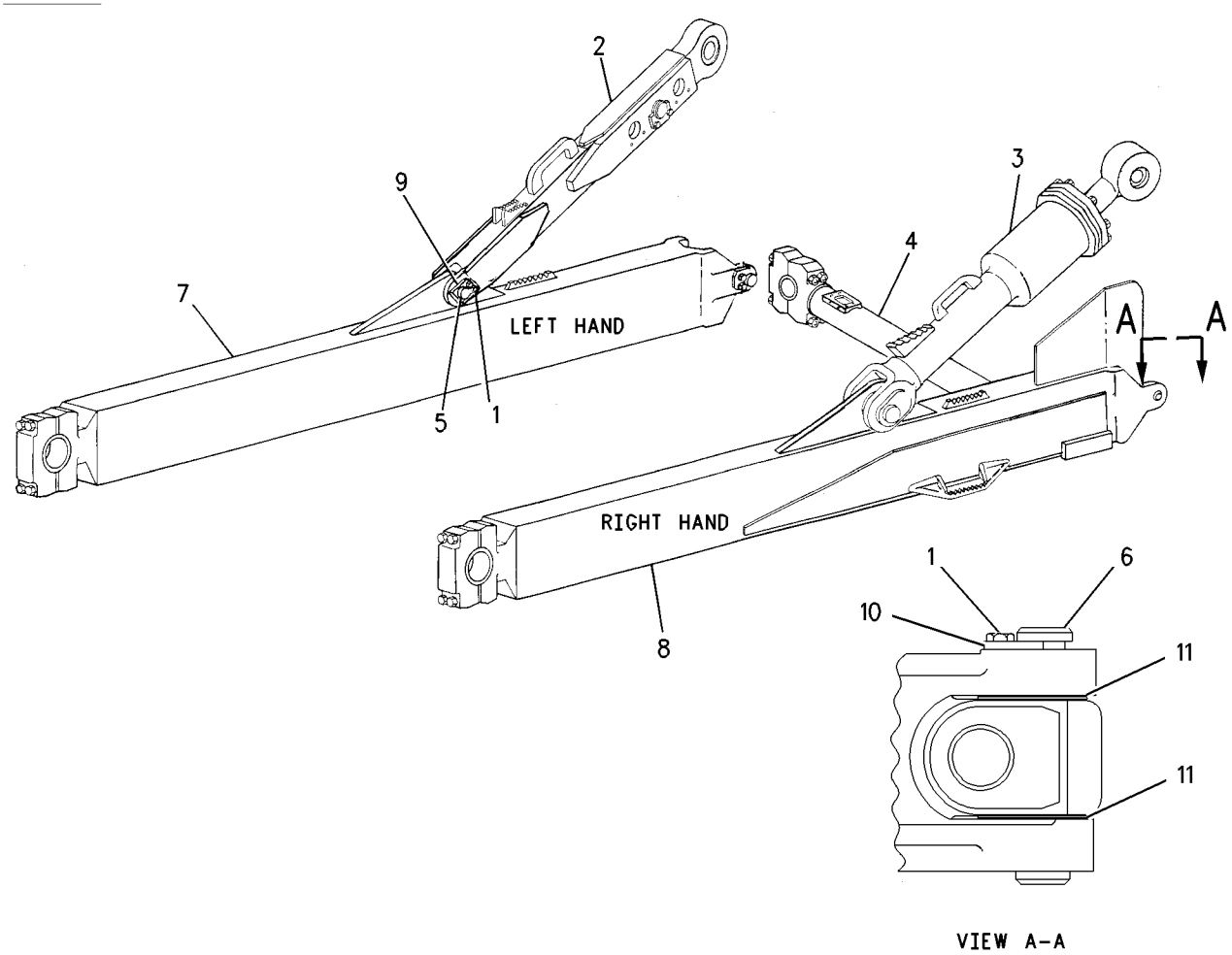

GRAPHIC #1 g00646074

IMPLEMENTS

119-8210 RIPPER AR

S/N: 4PP1-UP
MULTI-SHANK
AN ATTACHMENT

SMCS-6312, 6316 **i01436892**

NOTE	PART NUMBER	QTY	PART NAME 1 2 3 4 5 6 (PRODUCT LEVEL)	SEE PAGE
Y	**192-6446**	1	CYLINDER GP-RIPPER LIFT (LH)	496
Y	**192-6445**	1	CYLINDER GP-RIPPER LIFT (RH)	494
Y	**4T-9977**	2	CYLINDER GP-RIPPER TILT	500
Y	*119-7830*	1	FRAME GP-RIPPER	594
Y	*114-6005*	1	LIGHTING GP-RIPPER	242
Y	*133-7145*	1	LINES GP-RIPPER	522
Y	*133-0229*	1	MOUNTING GP-RIPPER	614
Y	*4T-8223*	1	RIPPER GP	651
	5P-1327	1	PLATE-SERIAL NUMBER	
			LOCATED ON RH SIDE OF RH TOWER	
	4B-4158	2	SCREW-DRIVE (3/16X0.25 IN)	

Y-SEPARATE ILLUSTRATION

180-2401 RIPPER AR

S/N: BEY1-UP
SINGLE SHANK/BUSHED
FOR USE WITH 178-1784—PAGE 616
AN ATTACHMENT

SMCS-6312, 6316 **i01437422**

NOTE	PART NUMBER	QTY	PART NAME 1 2 3 4 5 6 (PRODUCT LEVEL)	SEE PAGE
Y	**192-6446**	1	CYLINDER GP-RIPPER LIFT (LH)	496
Y	**192-6445**	1	CYLINDER GP-RIPPER LIFT (RH)	494
Y	**4T-9977**	2	CYLINDER GP-RIPPER TILT	500
Y	*180-2400*	1	RIPPER GP	652
Y	*114-6005*	1	LIGHTING GP-RIPPER	242
Y	*133-7145*	1	LINES GP-RIPPER	522
Y	*133-0229*	1	MOUNTING GP-RIPPER	614
Y	*180-2399*	1	FRAME GP-RIPPER	596
	5P-1327	1	PLATE-SERIAL NUMBER	
			LOCATED ON RH SIDE OF RH TOWER	
	4B-4158	2	SCREW-DRIVE (3/16X0.25 IN)	

Y-SEPARATE ILLUSTRATION

180-2404 RIPPER AR

S/N: BRT1-UP
SINGLE SHANK
FOR USE WITH 178-1784 PULLER AR-PIN. CANNOT BE USED WITH 118-8015 PULLER AR-PIN AN ATTACHMENT

SMCS-6312, 6316 **i01437427**

NOTE	PART NUMBER	QTY	PART NAME 1 2 3 4 5 6 (PRODUCT LEVEL)	SEE PAGE
Y	**192-6446**	1	CYLINDER GP-RIPPER LIFT (LH)	496
Y	**192-6445**	1	CYLINDER GP-RIPPER LIFT (RH)	494
Y	**4T-9977**	2	CYLINDER GP-RIPPER TILT	500
Y	*185-1715*	1	FRAME GP-RIPPER	598
Y	*114-6005*	1	LIGHTING GP-RIPPER	242
Y	*133-7145*	1	LINES GP-RIPPER	522
Y	*133-0229*	1	MOUNTING GP-RIPPER	614
Y	*185-1714*	1	RIPPER GP	653
	5P-1327	1	PLATE-SERIAL NUMBER	
			LOCATED ON RH SIDE OF RH TOWER	
	4B-4158	2	SCREW-DRIVE (3/16X0.25 IN)	

Y-SEPARATE ILLUSTRATION

9J-6073 TRUNNION GP-BULLDOZER

S/N: BHA1-UP; BHF1-UP; BHJ1-UP; BHP1-UP; AKT1-UP
PART OF 171-6672, 171-6673, 171-6674, 171-6675, 171-6677, 171-6678, 171-6679, 171-6680 BULLDOZER AR
AN ATTACHMENT

SMCS-6069 **i00763355**

NOTE	REF NO	GRAPHIC REF	PART NUMBER	QTY	PART NAME 1 2 3 4 5 6 (PRODUCT LEVEL)	SEE PAGE
C	1	1	**129-8169**	2	TRUNNION	
C	2	1	**129-8171**	2	BEARING-SPHERICAL SLEEVE	
C	3	1	**7X-0343**	8	BOLT (5/8-11X1.25IN)	
C	4	1	**129-8172**	2	RETAINER	
	5	1	**7X-0405**	28	BOLT (1-8X2.75IN)	

C-CHANGE FROM PREVIOUS TYPE

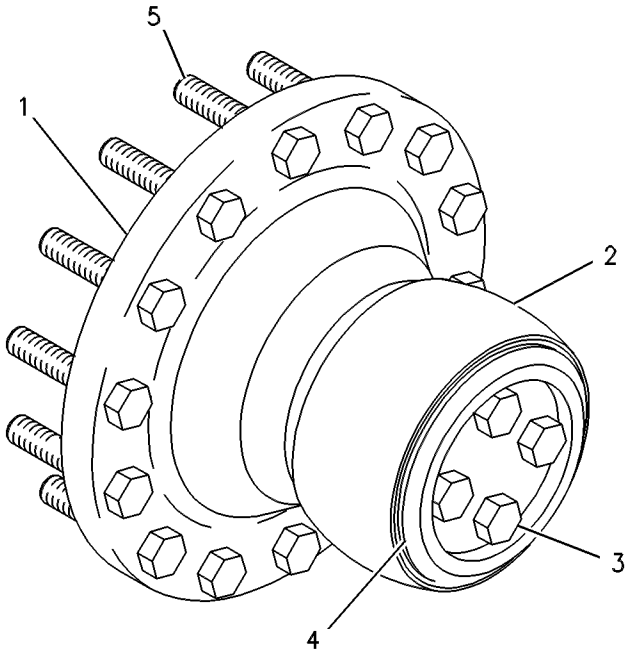

GRAPHIC #1 g00346436

7T-8712 BIT & CUTTING EDGE GP

S/N: BHA1-UP
PART OF 9U-8215 BLADE & EDGE GP
AN ATTACHMENT

SMCS-6801, 6804 **i00760761**

NOTE	REF NO	GRAPHIC REF	PART NUMBER	QTY	PART NAME 1 2 3 4 5 6 (PRODUCT LEVEL)	SEE PAGE
	1	1	**8E-4199**	1	BIT-END-RH	
	2	1	**8E-4198**	1	BIT-END-LH	
	3	1	**9W-6608**	2	EDGE-CUTTING	
	4	1	**5P-8823**	36	BOLT-PLOW (1 1/4-7X105MM)	
	5	1	**4K-0684**	36	WASHER-HARD (6MM THK)	
	6	1	**3K-9770**	36	NUT-FULL (1-1/4-7 THD)	
	7	1	**9W-6609**	2	EDGE-CUTTING	

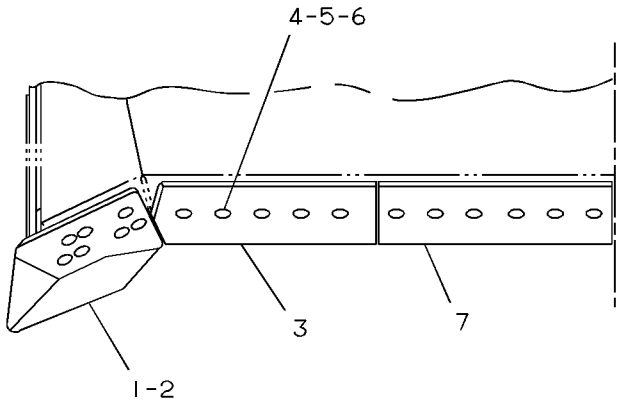

GRAPHIC #1 g00182908

7T-8713 BIT & CUTTING EDGE GP

S/N: BHF1-UP; AKT1-UP
PART OF 130-7659, 196-5856 BLADE & EDGE GP
AN ATTACHMENT

SMCS-6801, 6804 **i00594928**

NOTE	REF NO	GRAPHIC REF	PART NUMBER	QTY	PART NAME 1 2 3 4 5 6 (PRODUCT LEVEL)	SEE PAGE
	1	1	**8E-4199**	1	BIT-END-RH	
	2	1	**8E-4198**	1	BIT-END-LH	
	3	1	**9W-6608**	2	EDGE-CUTTING	
	4	1	**5P-8823**	39	BOLT-PLOW (1-1/4-7X105MM)	
	5	1	**4K-0684**	39	WASHER-HARD (6MM THK)	
	6	1	**3K-9770**	39	NUT-FULL (1-1/4-7 THD)	
	7	1	**9W-6615**	3	EDGE-CUTTING	

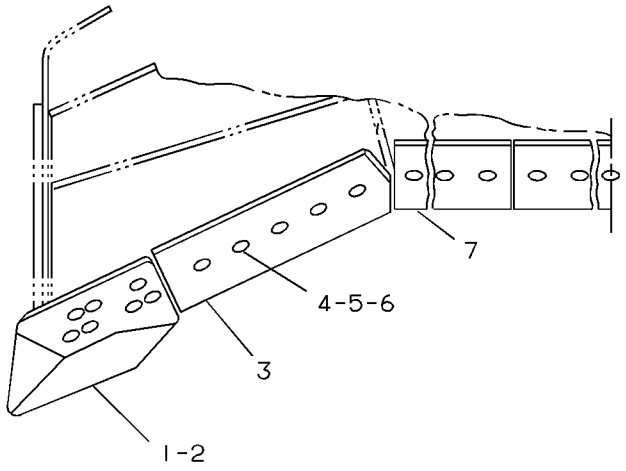

GRAPHIC #1 g00182967

9W-5652 BIT & CUTTING EDGE GP

S/N: BHJ1-UP
PART OF 9U-8216 BLADE & EDGE GP
AN ATTACHMENT

SMCS-6801, 6804 **i01320557**

NOTE	REF NO	GRAPHIC REF	PART NUMBER	QTY	PART NAME 1 2 3 4 5 6 (PRODUCT LEVEL)	SEE PAGE
	1	1	**8E-4541**	1	BIT-END	
		1	**8E-4542**	1	BIT-END	
	2	1	**9W-6657**	2	EDGE-CUTTING	
	3	1	**5P-8823**	36	BOLT-PLOW (1 1/4-7X4.13IN)	
		1	**4K-0684**	36	WASHER-HARD (6MM THK)	
		1	**3K-9770**	36	NUT-FULL (1-1/4-7 THD)	
	4	1	**9W-6656**	2	EDGE-CUTTING	

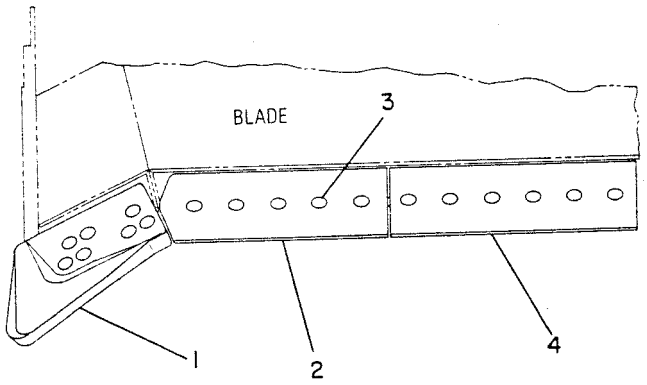

GRAPHIC #1 g00183222

WORK TOOLS

9W-5653 BIT & CUTTING EDGE GP

S/N: BHP1-UP
PART OF 130-7657 BLADE & EDGE GP
AN ATTACHMENT

SMCS-6801, 6804 **i01320559**

NOTE	REF NO	GRAPHIC REF	PART NUMBER	QTY	PART NAME 1 2 3 4 5 6 (PRODUCT LEVEL)	SEE PAGE
	1	1	**8E-4541**	1	BIT-END	
		1	**8E-4542**	1	BIT-END	
	2	1	**9W-6657**	2	EDGE-CUTTING	
	3	1	**5P-8823**	39	BOLT-PLOW (1 1/4-7X4.13IN)	
		1	**4K-0684**	39	WASHER-HARD (6MM THK)	
		1	**3K-9770**	39	NUT-FULL (1-1/4-7 THD)	
	4	1	**9W-6658**	3	EDGE-CUTTING	

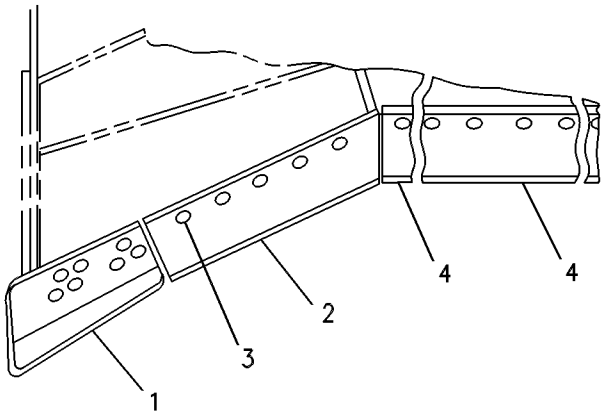

FRONT VIEW

GRAPHIC #1 g00257797

9U-8215 BLADE & EDGE GP

S/N: BHA1-UP
SEMI-UNIVERSAL, WITH PUSH PLATE
PART OF 4T-8183 BLADE GP-SEMI-UNIVERSAL
AN ATTACHMENT

SMCS-6060 **i00598040**

NOTE	PART NUMBER	QTY	PART NAME 1 2 3 4 5 6 (PRODUCT LEVEL)	SEE PAGE
Y	*7T-8712*	1	BIT & CUTTING EDGE GP	627
Y	**4T-8288**	1	BLADE AS	636

Y-SEPARATE ILLUSTRATION

9U-8216 BLADE & EDGE GP

S/N: BHJ1-UP
SEMI-UNIVERSAL, WITH ROCK GUARD, WEAR PLATES
PART OF 8E-2173 BLADE GP-SEMI-UNIVERSAL
AN ATTACHMENT

SMCS-6060 **i00736561**

NOTE	PART NUMBER	QTY	PART NAME 1 2 3 4 5 6 (PRODUCT LEVEL)	SEE PAGE
Y	*9W-5652*	1	BIT & CUTTING EDGE GP	629
Y	*8E-9010*	1	BLADE AS-SEMI-UNIVERSAL	638

Y-SEPARATE ILLUSTRATION

WORK TOOLS

130-7657 BLADE & EDGE GP

S/N: BHP1-UP
UNIVERSAL-WITH ROCK GUARD & WEAR PLATES
PART OF 130-7658 BLADE GP-UNIVERSAL
AN ATTACHMENT

SMCS-6060 **i00693425**

NOTE	PART NUMBER	QTY	PART NAME 1 2 3 4 5 6 (PRODUCT LEVEL)	SEE PAGE
Y	*9W-5653*	1	BIT & CUTTING EDGE GP	630
Y	**130-7751**	1	BLADE AS-UNIVERSAL	642

Y-SEPARATE ILLUSTRATION

130-7659 BLADE & EDGE GP

S/N: BHF1-UP
UNIVERSAL
PART OF 130-7660 BLADE GP-UNIVERSAL
AN ATTACHMENT

SMCS-6060 **i00693428**

NOTE	PART NUMBER	QTY	PART NAME 1 2 3 4 5 6 (PRODUCT LEVEL)	SEE PAGE
Y	*7T-8713*	1	BIT & CUTTING EDGE GP	628
Y	**132-8799**	1	BLADE AS-UNIVERSAL	643

Y-SEPARATE ILLUSTRATION

WORK TOOLS

196-5856 BLADE & EDGE GP

S/N: AKT1-UP
WITH ROCK GUARD
AN ATTACHMENT

SMCS-6060 **i01437634**

NOTE	PART NUMBER	QTY	PART NAME 1 2 3 4 5 6 (PRODUCT LEVEL)	SEE PAGE
Y	*7T-8713*	1	BIT & CUTTING EDGE GP	628
Y	**130-7749**	1	BLADE AS-UNIVERSAL	641

Y-SEPARATE ILLUSTRATION

WORK TOOLS

4T-8288 BLADE AS

S/N: BHA1-UP
PART OF 9U-8215 BLADE & EDGE GP
AN ATTACHMENT

SMCS-6060 **i00804855**

NOTE	REF NO	GRAPHIC REF	PART NUMBER	QTY	PART NAME 1 2 3 4 5 6 (PRODUCT LEVEL)	SEE PAGE
	1	1	**6Y-8865**	1	BLADE AS	
	2	1	**7T-5869**	1	GUARD	
	3	1	**9W-6118**	2	GUARD	
	4	1	**6Y-3233**	2	DEFLECTOR	
	5	1	**6Y-5493**	2	BRACKET AS	
					(EACH INCLUDES)	
		1	**3G-8052**	2	BEARING	
	6	1	**8E-3584**	1	TRUNNION AS	
		1	**9J-6067**	1	TRUNNION	
	7	1	**8E-3581**	2	SUPPORT-OUTER	
	8	1	**8P-9770**	1	PLATE	
	9	1	**4T-3980**	6	BLOCK	
	10	1	**8E-3582**	1	BRACKET-RH	
	11	1	**8E-3583**	1	BRACKET-LH	
	12	1	**8E-3600**	4	PLATE	
	13	1	**8E-3599**	2	ANGLE	
	14	1	**7T-4777**	1	CHANNEL	
	15	1	**9W-2409**	1	PLATE-PUSH	

4T-8288 BLADE AS *(contd.)* **i00804855**

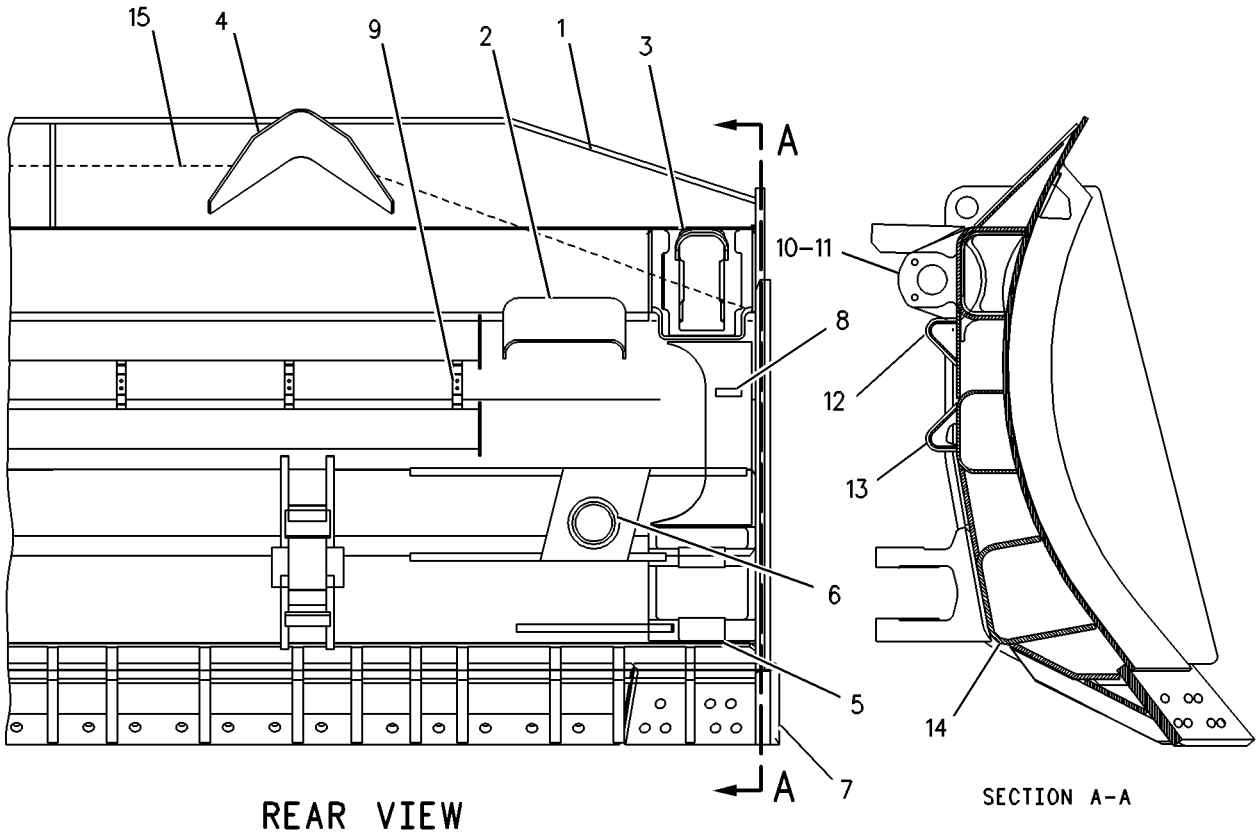

GRAPHIC #1 g00380587

8E-9010 BLADE AS-SEMI-UNIVERSAL

S/N: BHJ1-UP
WITH ROCK GUARD & WEAR PLATES
PART OF 9U-8216 BLADE & EDGE GP
AN ATTACHMENT

SMCS-6060 **i00804852**

NOTE	REF NO	GRAPHIC REF	PART NUMBER	QTY	PART NAME 1 2 3 4 5 6 (PRODUCT LEVEL)	SEE PAGE
	1	1	**6Y-8865**	1	BLADE AS	
	2	1	**7T-5869**	1	GUARD	
	3	1	**9W-6118**	2	GUARD	
	4	1	**6Y-3233**	2	DEFLECTOR	
	5	1	**6Y-5493**	2	BRACKET AS	
					(EACH INCLUDES)	
		1	**3G-8052**	2	BEARING	
	6	1	**8E-3584**	1	TRUNNION AS	
		1	**9J-6067**	1	TRUNNION	
	7	1	**8E-3581**	2	SUPPORT-OUTER	
	8	1	**8P-9770**	1	PLATE	
	9	1	**4T-3980**	6	BLOCK	
	10	1	**8E-3582**	1	BRACKET-RH	
	11	1	**8E-3583**	1	BRACKET-LH	
	12	1	**8E-3600**	4	PLATE	
	13	1	**8E-3599**	2	ANGLE	
	14	1	**7T-4777**	1	CHANNEL	
Y	15	1	*9W-2251*	1	PLATE GP-WEAR	649
Y	16	1	*8E-9570*	1	GUARD GP-ROCK	414

Y-SEPARATE ILLUSTRATION

8E-9010 BLADE AS-SEMI-UNIVERSAL *(contd.)* i00804852

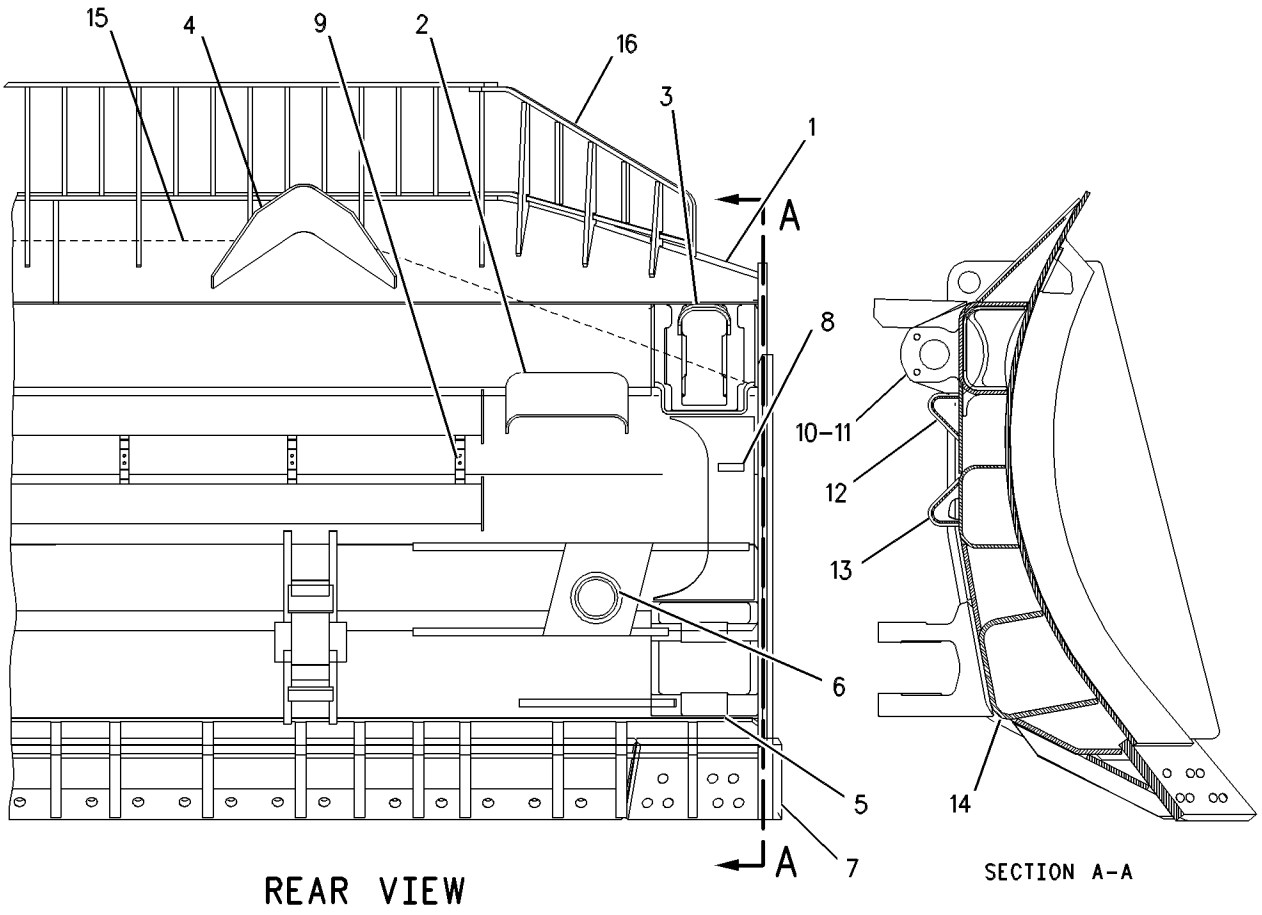

GRAPHIC #1 g00380588

WORK TOOLS

130-7656 BLADE AS-UNIVERSAL

S/N: BHF1-UP; BHP1-UP; AKT1-UP
PART OF 130-7751, 132-8799 BLADE AS-UNIVERSAL
AN ATTACHMENT

SMCS-6053, 6060 **i01526383**

NOTE	REF NO	GRAPHIC REF	PART NUMBER	QTY	PART NAME 1 2 3 4 5 6 (PRODUCT LEVEL)	SEE PAGE
	1	1	**6Y-3233**	2	DEFLECTOR	
	2	1	**9W-6118**	2	GUARD	
	3	1	**8P-9770**	1	PLATE	
	4	1	**113-4536**	1	TRUNNION AS	
	5	1	**6Y-5493**	2	BRACKET AS	
					(EACH INCLUDES)	
		1	**3G-8052**	2	BEARING	
	6	1	**129-5081**	6	BLOCK	
	7	1	**7T-5869**	1	GUARD	

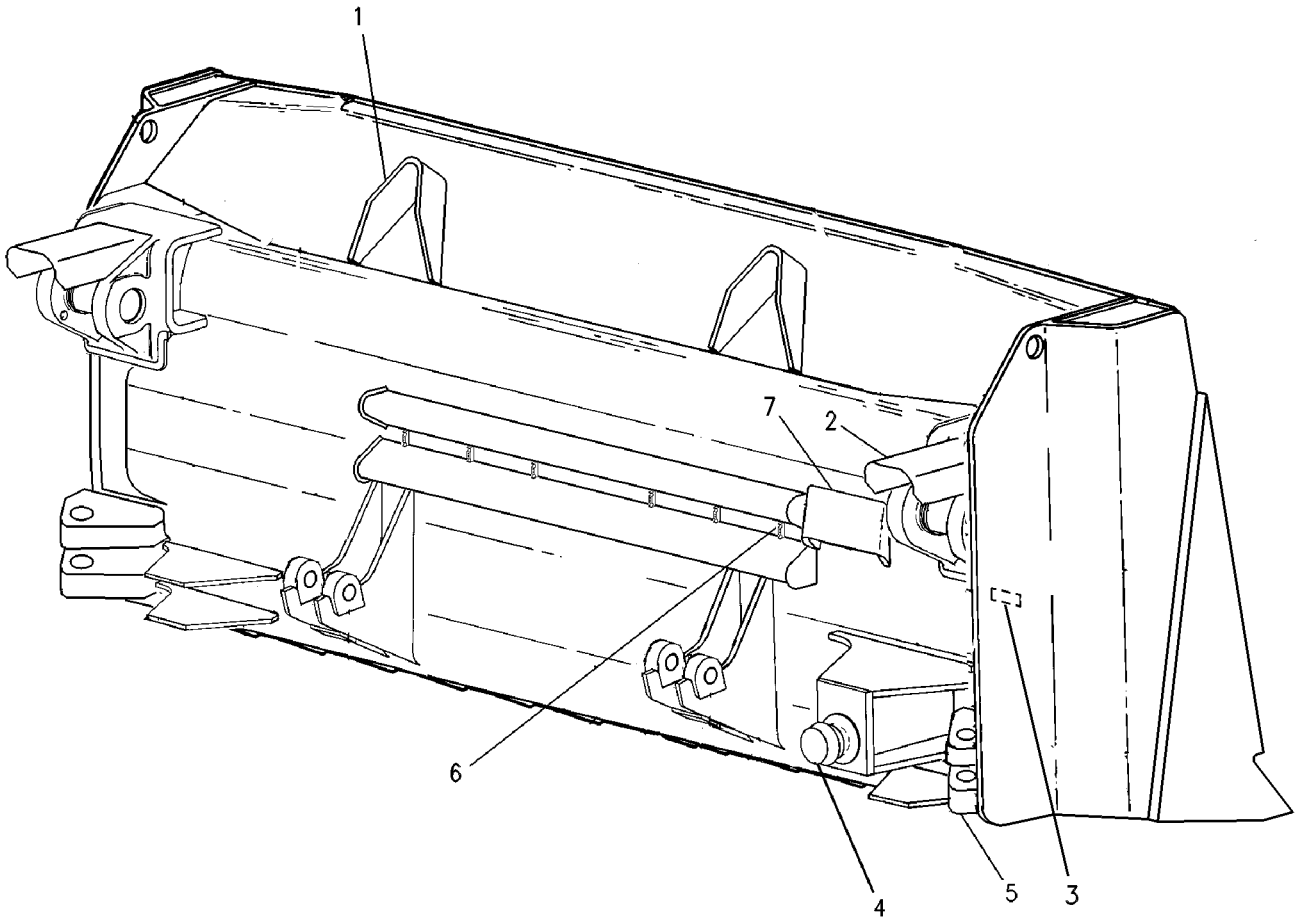

GRAPHIC #1 g00234818

WORK TOOLS

130-7749 BLADE AS-UNIVERSAL

S/N: AKT1-UP
PART OF 196-5856 BLADE & EDGE GP
AN ATTACHMENT

SMCS-6053, 6060 **i00695056**

NOTE	PART NUMBER	QTY	PART NAME 1 2 3 4 5 6 (PRODUCT LEVEL)	SEE PAGE
Y	**132-8799**	1	BLADE AS-UNIVERSAL	643
Y	*131-0785*	1	GUARD GP-ROCK	415

Y-SEPARATE ILLUSTRATION

130-7751 BLADE AS-UNIVERSAL

S/N: BHP1-UP
WITH ROCK GUARD & WEAR PLATES
PART OF 130-7657 BLADE & EDGE GP
AN ATTACHMENT

SMCS-6053, 6060 **i00733940**

NOTE	PART NUMBER	QTY	PART NAME 1 2 3 4 5 6 (PRODUCT LEVEL)	SEE PAGE
Y	**130-7656**	1	BLADE AS-UNIVERSAL	640
Y	*131-0785*	1	GUARD GP-ROCK	415
Y	*132-1485*	1	PLATE GP-WEAR	650

Y-SEPARATE ILLUSTRATION

WORK TOOLS

132-8799 BLADE AS-UNIVERSAL

S/N: BHF1-UP; AKT1-UP
PART OF 130-7659 BLADE & EDGE GP, 130-7749 BLADE AS-UNIVERSAL
AN ATTACHMENT

SMCS-6053, 6060 **i01205039**

NOTE	REF NO	GRAPHIC REF	PART NUMBER	QTY	PART NAME 1 2 3 4 5 6 (PRODUCT LEVEL)	SEE PAGE
Y	1	1	**130-7656**	1	BLADE AS-UNIVERSAL	640

Y-SEPARATE ILLUSTRATION

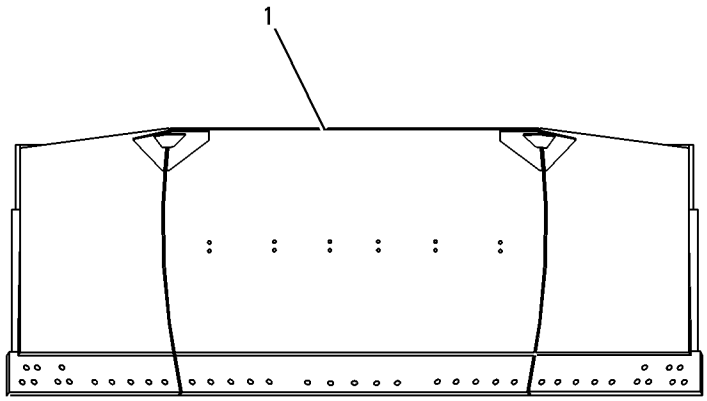

FRONT VIEW

GRAPHIC #1 g00258604

WORK TOOLS

4T-8183 BLADE GP-SEMI-UNIVERSAL

S/N: BHA1-UP
PART OF 171-6672, 171-6677 BULLDOZER AR
AN ATTACHMENT

SMCS-6060, 6078 **i00694889**

NOTE	REF NO	GRAPHIC REF	PART NUMBER	QTY	PART NAME 1 2 3 4 5 6 (PRODUCT LEVEL)	SEE PAGE
Y	1	1	*9U-8215*	1	BLADE & EDGE GP	631
	2	1	**4T-3797**	2	CONNECTOR	
		1	**6J-5985**	2	PIN	
	3	1	**6J-5986**	4	RETAINER	
	4	1	**7X-0379**	8	BOLT (7/8-9X1.50IN)	
	5	1	**9J-2365**	2	RETAINER	
	6	1	**7T-4810**	2	PIN	
		1	**7T-4809**	4	SPACER	
	7	1	**6J-7500**	2	RETAINER	
	8	1	**3G-8053**	2	PIN	
C	9	1	**138-2828**	2	CONNECTOR AS	
					(EACH INCLUDES)	
		1	**3G-8052**	4	BEARING	
	10	1	**9W-2939**	2	PIN	
	11	1	**8T-8917**	8	BOLT (1/2-13X1.25IN)	
C	12	1	**137-8479**	6	SPACER	

C-CHANGE FROM PREVIOUS TYPE
Y-SEPARATE ILLUSTRATION

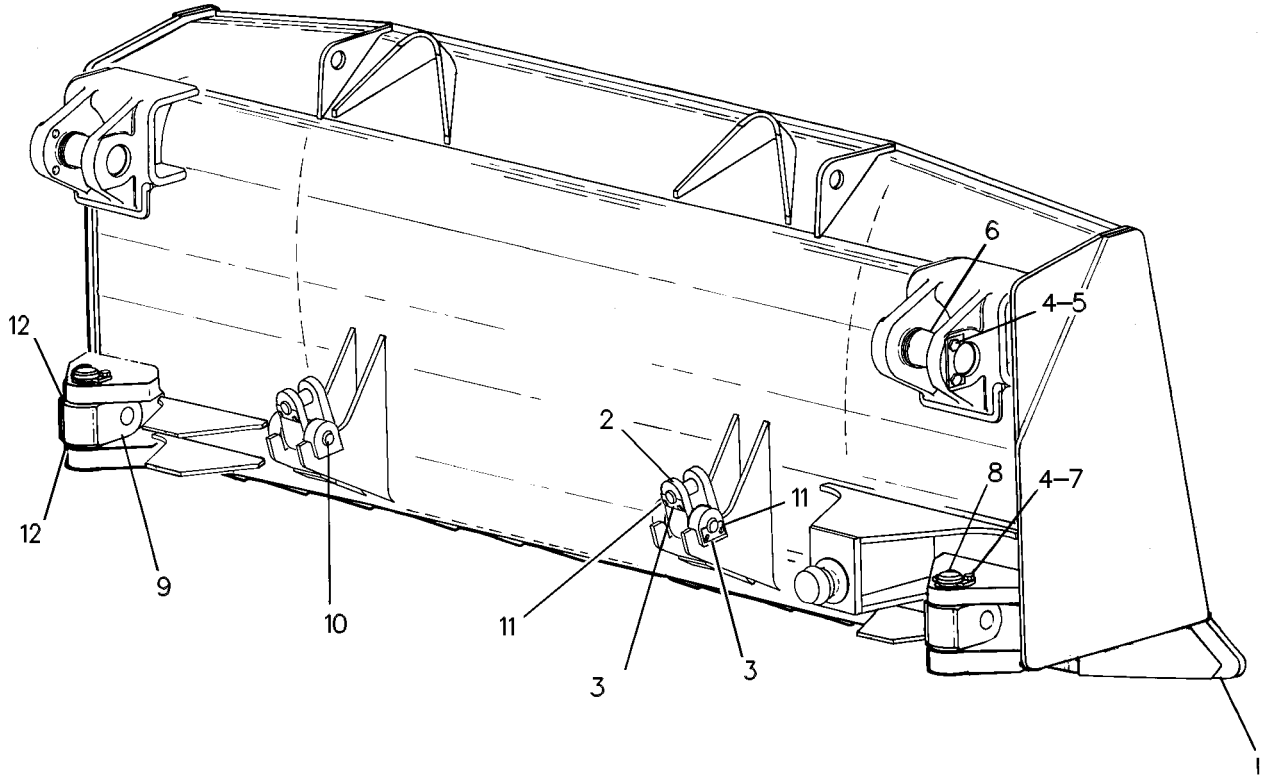

GRAPHIC #1 g00297036

WORK TOOLS

8E-2173 BLADE GP-SEMI-UNIVERSAL

S/N: BHJ1-UP
PART OF 171-6674, 171-6679 BULLDOZER AR
AN ATTACHMENT

SMCS-6060, 6078 **i00736587**

NOTE	REF NO	GRAPHIC REF	PART NUMBER	QTY	PART NAME 1 2 3 4 5 6 (PRODUCT LEVEL)	SEE PAGE
Y	1	1	*9U-8216*	1	BLADE & EDGE GP	632
	2	1	**4T-3797**	2	CONNECTOR	
		1	**6J-5985**	2	PIN	
	3	1	**6J-5986**	4	RETAINER	
	4	1	**7X-0379**	8	BOLT (7/8-9X1.50IN)	
	5	1	**9J-2365**	2	RETAINER	
	6	1	**7T-4810**	2	PIN	
		1	**7T-4809**	4	SPACER	
	7	1	**6J-7500**	2	RETAINER	
	8	1	**3G-8053**	2	PIN	
C	9	1	**138-2828**	2	CONNECTOR AS	
					(EACH INCLUDES)	
		1	**3G-8052**	4	BEARING	
	10	1	**9W-2939**	2	PIN	
	11	1	**8T-8917**	8	BOLT (1/2-13X1.25IN)	
C	12	1	**137-8479**	6	SPACER	

C-CHANGE FROM PREVIOUS TYPE
Y-SEPARATE ILLUSTRATION

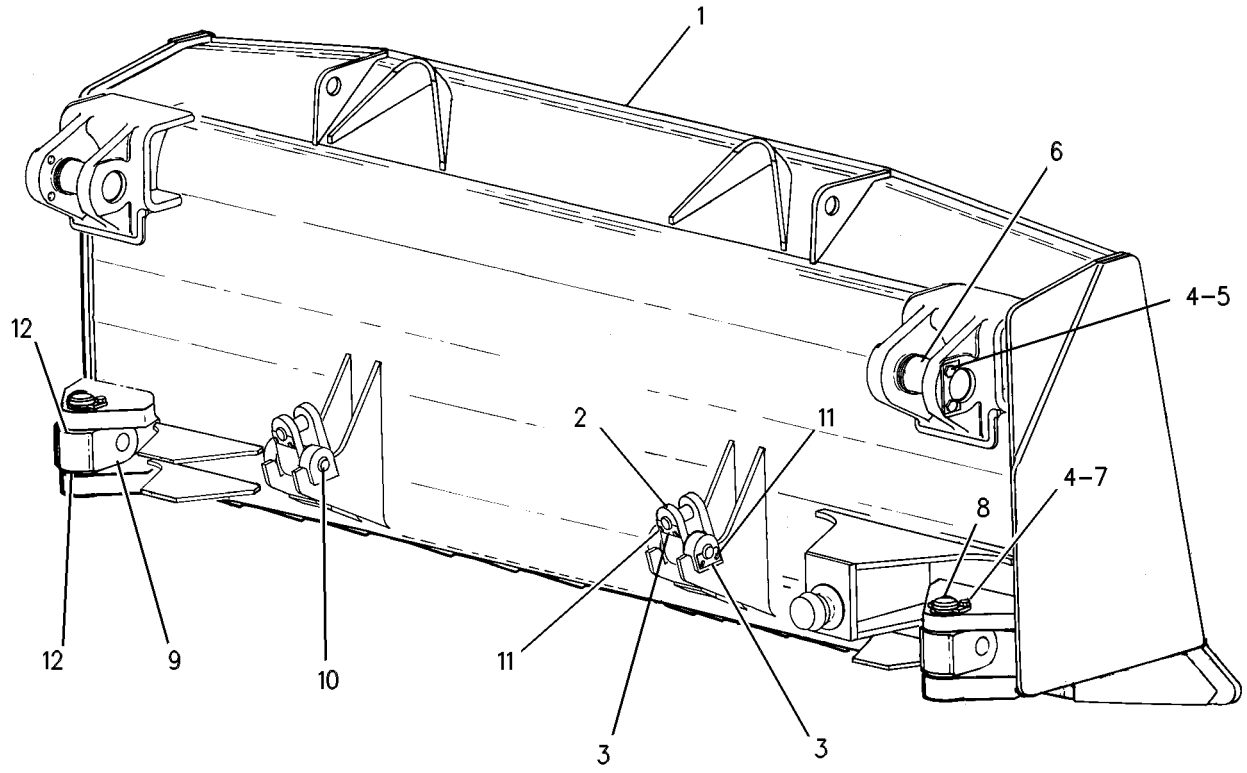

GRAPHIC #1 g00297040

WORK TOOLS

130-7658 BLADE GP-UNIVERSAL

S/N: BHP1-UP
PART OF 171-6675, 171-6680 BULLDOZER AR
AN ATTACHMENT

SMCS-6053, 6060 **i01701312**

NOTE	REF NO	GRAPHIC REF	PART NUMBER	QTY	PART NAME 1 2 3 4 5 6 (PRODUCT LEVEL)	SEE PAGE
Y	1	1	*130-7657*	1	BLADE & EDGE GP	633
	2	1	**6J-5985**	2	PIN	
	3	1	**7X-0379**	8	BOLT (7/8-9X1.50 IN)	
	4	1	**9J-2365**	2	RETAINER	
	5	1	**7T-4810**	2	PIN	
	6	1	**7T-4809**	4	SPACER (96.5X114.3X16.5MM THK)	
	7	1	**6J-7500**	2	RETAINER	
	8	1	**3G-8053**	2	PIN	
C	9	1	**138-2828**	2	CONNECTOR AS	
					(EACH INCLUDES)	
		1	**3G-8052**	1	BEARING	
	10	1	**9W-2939**	2	PIN	
	11	1	**6J-5986**	4	RETAINER	
	12	1	**8T-8917**	8	BOLT (1/2-13X1.25 IN)	
	13	1	**4T-3797**	2	CONNECTOR	
C	14	1	**137-8479**	6	SPACER	
					(USE ONE SPACER PER SIDE OF EACH CONNECTOR AS. MINIMUM AND THREE SPACERS PER PIN JOINT MAXIMUM)	

C-CHANGE FROM PREVIOUS TYPE
Y-SEPARATE ILLUSTRATION

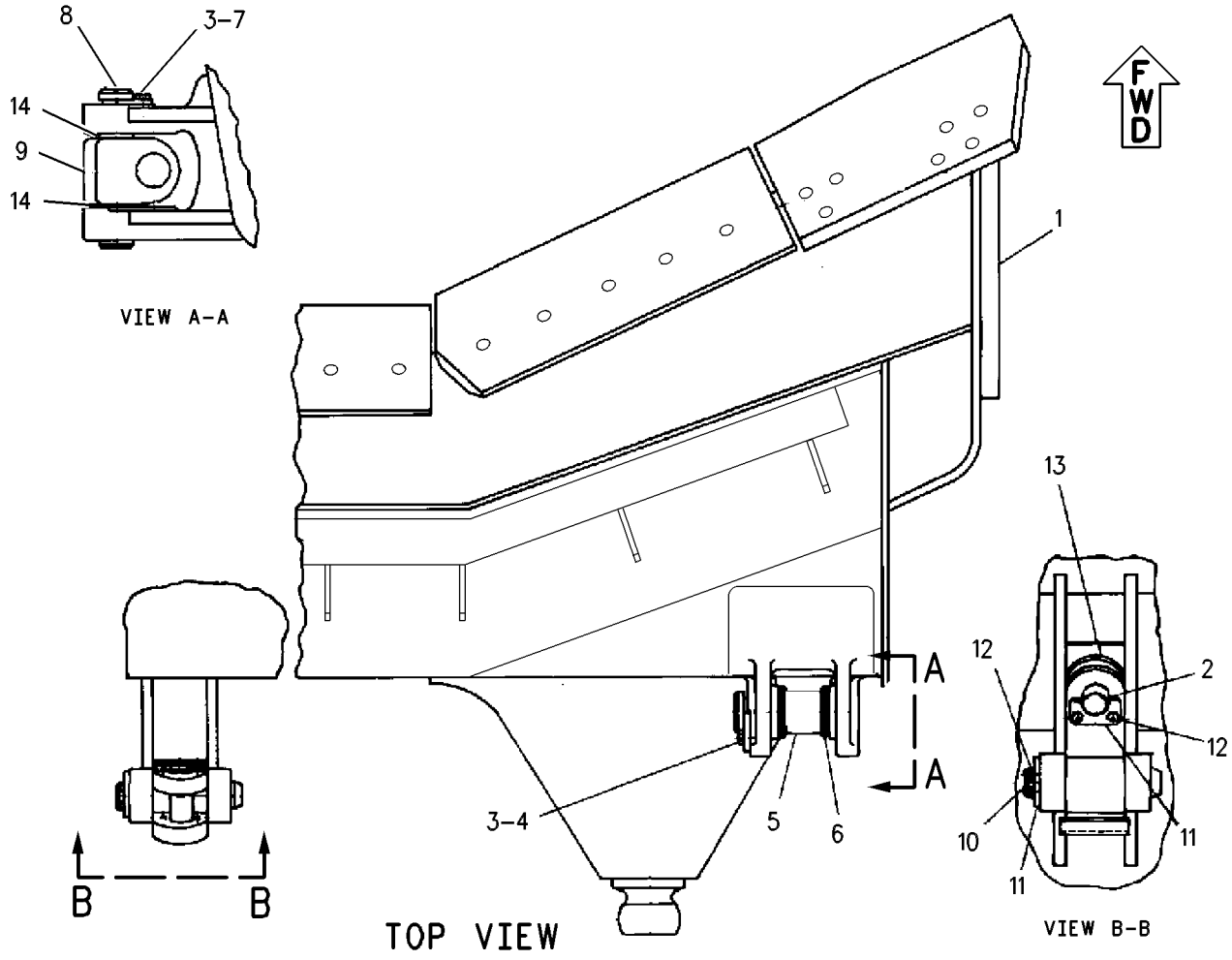

GRAPHIC #1 g00335362

WORK TOOLS

130-7660 BLADE GP-UNIVERSAL

S/N: BHF1-UP
PART OF 171-6673, 171-6678 BULLDOZER AR
AN ATTACHMENT

SMCS-6053, 6060 **i00691829**

NOTE	REF NO	GRAPHIC REF	PART NUMBER	QTY	PART NAME 1 2 3 4 5 6 (PRODUCT LEVEL)	SEE PAGE
Y	1	1	*130-7659*	1	BLADE & EDGE GP	634
	2	1	**6J-5985**	2	PIN	
	3	1	**7X-0379**	8	BOLT (7/8-9X1.50IN)	
	4	1	**9J-2365**	2	RETAINER	
	5	1	**7T-4810**	2	PIN	
	6	1	**7T-4809**	4	SPACER	
	7	1	**6J-7500**	2	RETAINER	
	8	1	**3G-8053**	2	PIN	
C	9	1	**138-2828**	2	CONNECTOR AS	
					(EACH INCLUDES)	
		1	**3G-8052**	1	BEARING	
	10	1	**9W-2939**	2	PIN	
	11	1	**6J-5986**	4	RETAINER	
	12	1	**8T-8917**	8	BOLT (1/2-13X1.25IN)	
	13	1	**4T-3797**	2	CONNECTOR	
C	14	1	**137-8479**	6	SPACER (2 EACH SIDE)	

C-CHANGE FROM PREVIOUS TYPE
Y-SEPARATE ILLUSTRATION

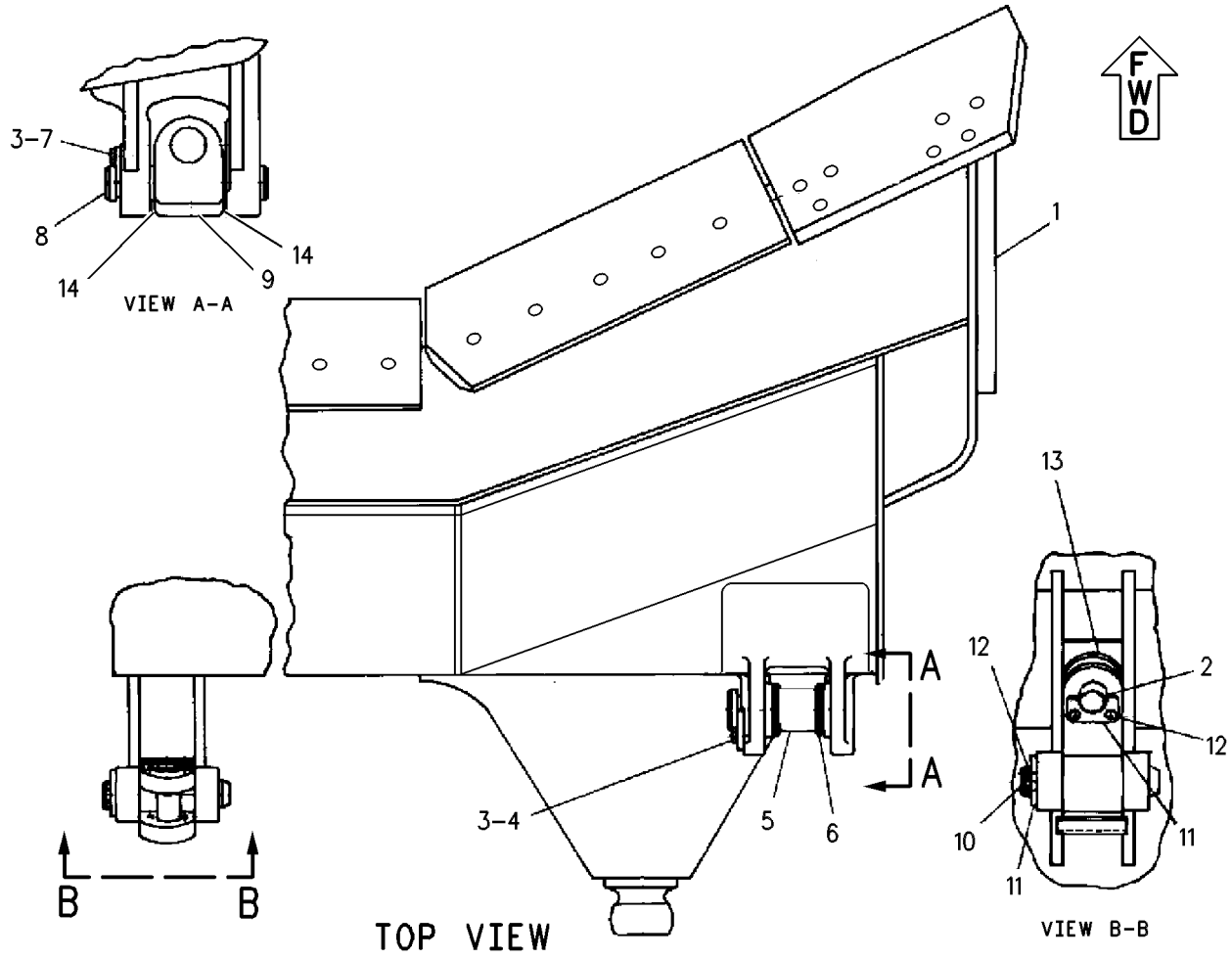

GRAPHIC #1 g00280865

WORK TOOLS

9W-2251 PLATE GP-WEAR

S/N: BHJ1-UP
PART OF 8E-9010 BLADE AS-SEMI-UNIVERSAL
AN ATTACHMENT

SMCS-6820 **i00760778**

NOTE	REF NO	GRAPHIC REF	PART NUMBER	QTY	PART NAME 1 2 3 4 5 6 (PRODUCT LEVEL)	SEE PAGE
C	1	1	**6Y-1011**	1	PLATE-WEAR	
	2	1	**9W-1261**	1	PLATE-LH	
	3	1	**9W-1258**	1	PLATE-RH	

C-CHANGE FROM PREVIOUS TYPE

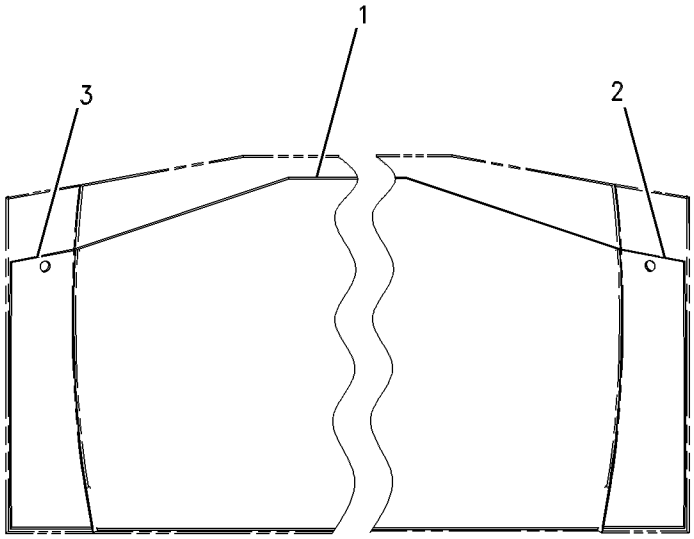

GRAPHIC #1 g00344453

WORK TOOLS

132-1485 PLATE GP-WEAR

S/N: BHP1-UP
PART OF 130-7751 BLADE AS-UNIVERSAL
AN ATTACHMENT

SMCS-6820 **i00601334**

NOTE	REF NO	GRAPHIC REF	PART NUMBER	QTY	PART NAME 1 2 3 4 5 6 (PRODUCT LEVEL)	SEE PAGE
	1	1	**132-1488**	1	PLATE-WEAR	
	2	1	**132-1487**	1	PLATE-LH	
	3	1	**132-1486**	1	PLATE-RH	

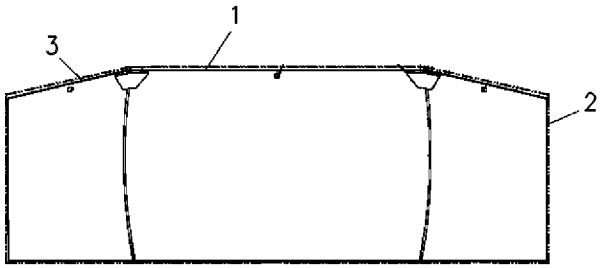

FRONT VIEW

GRAPHIC #1 g00258536

4T-8223 RIPPER GP

S/N: 4PP1-UP
PART OF 119-8210 RIPPER AR
AN ATTACHMENT

SMCS-6311, 6312, 6315, 6316, 6325 **i00763540**

NOTE	REF NO	GRAPHIC REF	PART NUMBER	QTY	PART NAME 1 2 3 4 5 6 (PRODUCT LEVEL)	SEE PAGE
Y	1	1	*6Y-6140*	1	TOOTH GP-RIPPER	654
C	2	1	**8E-1597**	1	BEAM AS	
	3	1	**2J-1227**	2	RETAINER	
	4	1	**3G-1877**	2	RETAINER	
	5	1	**8P-9770**	1	PLATE (84MM X 25MM X 3MM)	

C-CHANGE FROM PREVIOUS TYPE
Y-SEPARATE ILLUSTRATION

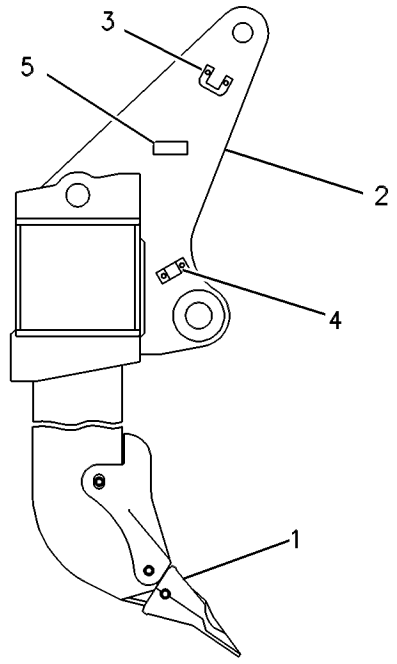

RIGHT SIDE VIEW

GRAPHIC #1 g00346437

WORK TOOLS

180-2400 RIPPER GP

S/N: BEY1-UP
SINGLE SHANK-BUSHED JOINT
PART OF 180-2401 RIPPER AR
AN ATTACHMENT

SMCS-6311, 6312, 6315, 6316, 6325 **i01232115**

NOTE	REF NO	GRAPHIC REF	PART NUMBER	QTY	PART NAME 1 2 3 4 5 6 (PRODUCT LEVEL)	SEE PAGE
	1	1	**102-9062**	2	PIN AS-G.E.T.	
		1	**102-9073**	1	SPRING	
	2	1	**178-9603**	1	PIN	
Y	3	1	*118-2141*	1	TOOTH GP-RIPPER	656
	4	1	**178-0589**	1	CARRIAGE AS	
	5	1	**2V-0447**	4	BEARING-SLEEVE	
	6	1	**2V-1256**	4	BEARING-SLEEVE (DIA 76.48MM)	
	7	1	**2J-1227**	2	RETAINER	
	8	1	**3J-6035**	2	RETAINER	

Y-SEPARATE ILLUSTRATION

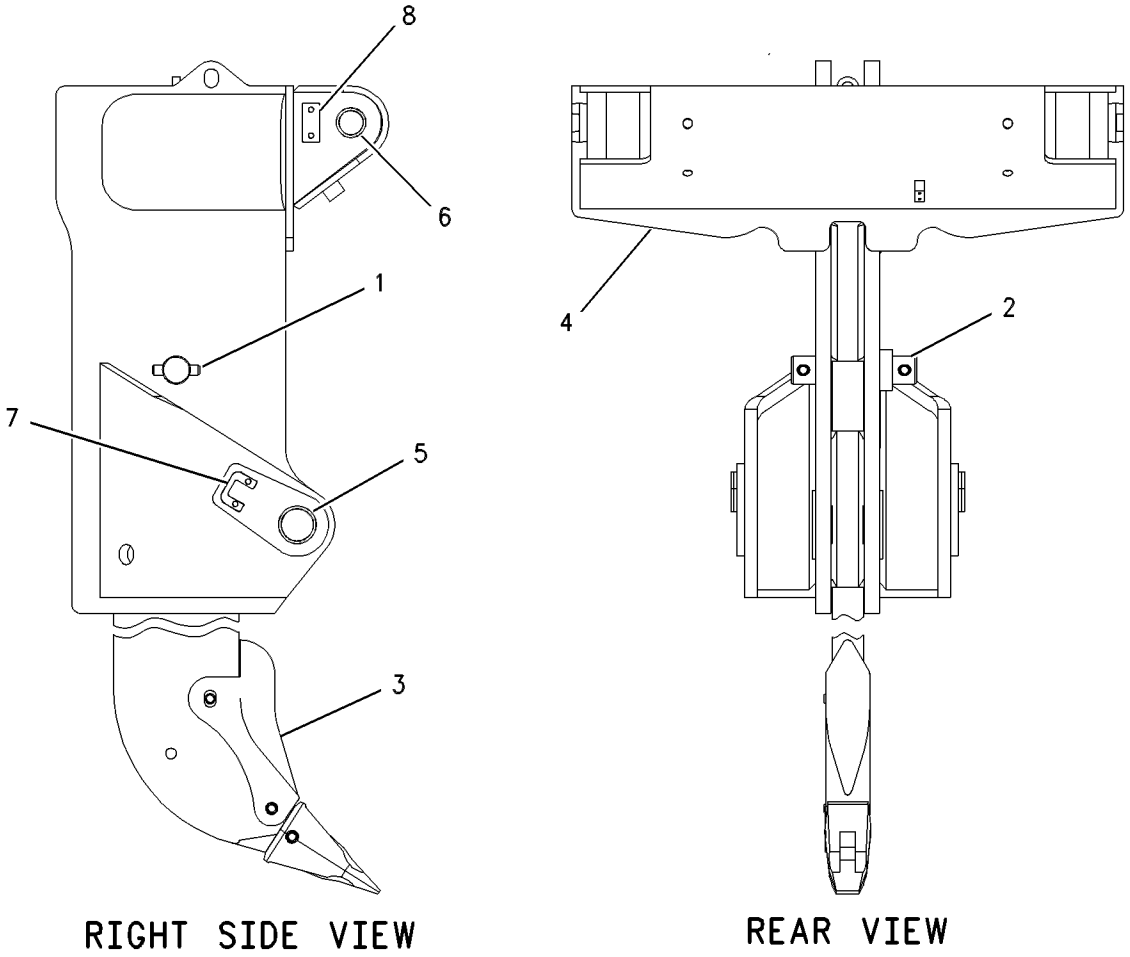

GRAPHIC #1 g00659172

WORK TOOLS

185-1714 RIPPER GP

S/N: BRT1-UP
PART OF 180-2404 RIPPER AR
AN ATTACHMENT

SMCS-6311, 6312, 6315, 6316, 6325 **i01405918**

NOTE	REF NO	GRAPHIC REF	PART NUMBER	QTY	PART NAME 1 2 3 4 5 6 (PRODUCT LEVEL)	SEE PAGE
	1	1	**102-9062**	2	PIN AS-G.E.T.	
					(EACH INCLUDES)	
	2	1	**102-9073**	1	SPRING	
	3	1	**178-9603**	1	PIN	
Y	4	1	*118-2141*	1	TOOTH GP-RIPPER	656
	5	1	**171-6959**	1	CARRIAGE AS	
	6	1	**2J-1227**	2	RETAINER	
	7	1	**8P-9770**	1	PLATE	
	8	1	**9V-8427**	1	BAR	
	9	1	**3J-6035**	2	RETAINER	

Y-SEPARATE ILLUSTRATION

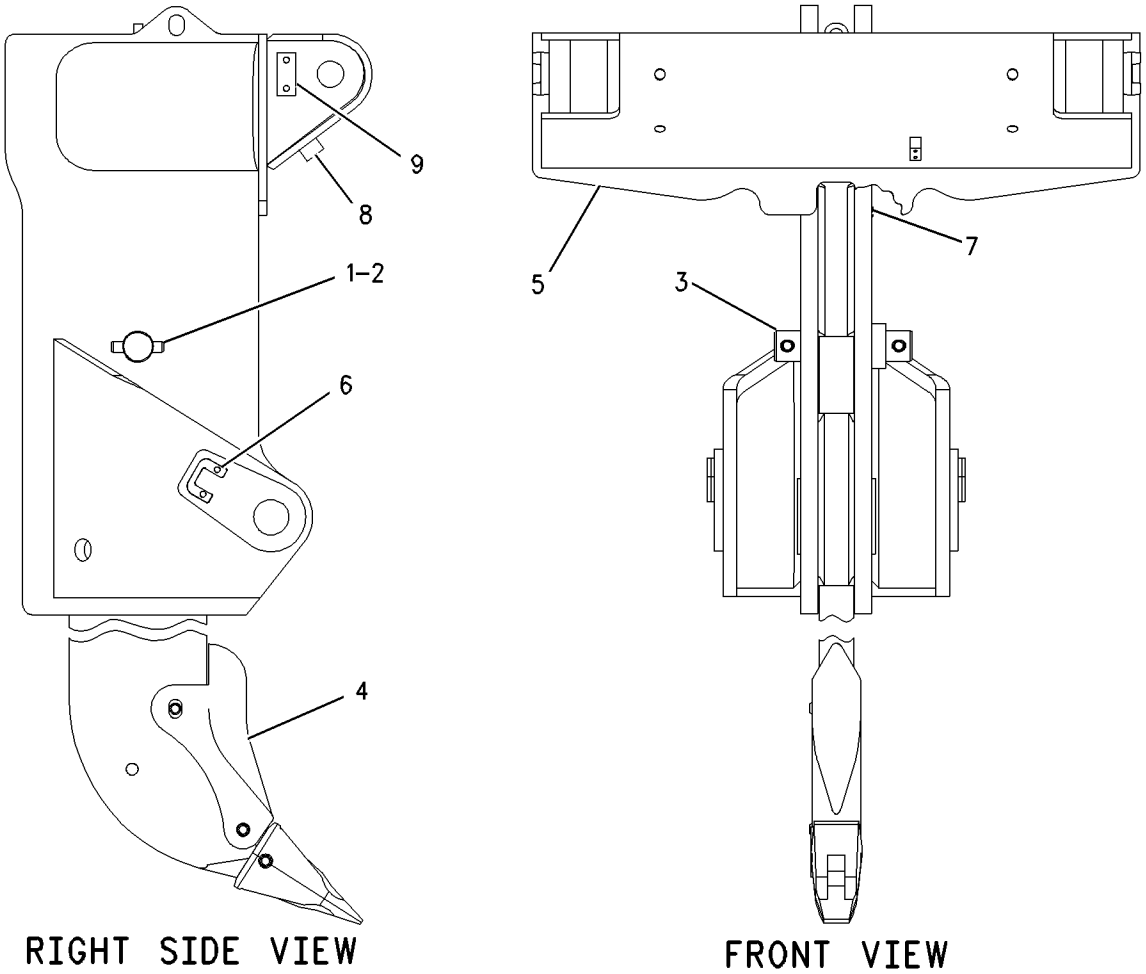

RIGHT SIDE VIEW

FRONT VIEW

GRAPHIC #1 g00740059

6Y-6140 TOOTH GP-RIPPER

S/N: 4PP1-UP; AKT1-UP
PART OF 4T-8223 RIPPER GP
FOR USE WITH 119-8210—PAGE 623
AN ATTACHMENT

SMCS-6808, 6810 **i00596639**

NOTE	REF NO	GRAPHIC REF	PART NUMBER	QTY	PART NAME 1 2 3 4 5 6 (PRODUCT LEVEL)	SEE PAGE
	1	1	**3G-6509**	1	PIN	
	2	1	**9W-8365**	1	PROTECTOR	
	3	1	**4T-5502**	1	TIP-RIPPER	
C	4	1	**102-9062**	2	PIN AS-G.E.T.	
					(EACH INCLUDES)	
	5	1	**102-9073**	1	SPRING	
C	6	1	**8E-8415**	1	SHANK AS-RIPPER	
	7	1	**3G-5596**	1	LUG	
C	8	1	**6Y-1204**	3	PIN-G.E.T.	
C	9	1	**6Y-1202**	3	RETAINER AS	
					(EACH INCLUDES)	
	10	1	**7M-9107**	1	LOCKRING	

C-CHANGE FROM PREVIOUS TYPE

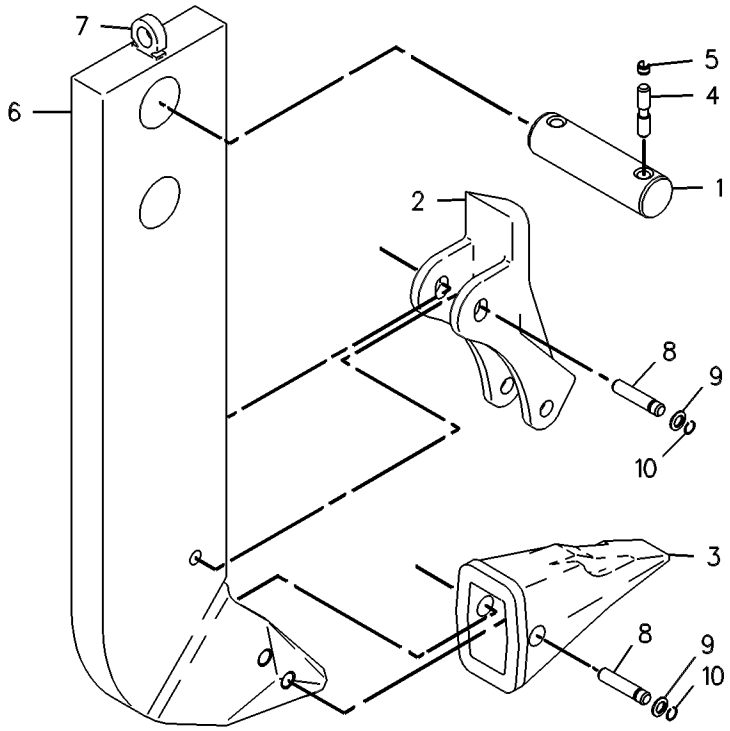

GRAPHIC #1 g00253703

WORK TOOLS

109-3134 TOOTH GP-RIPPER

S/N: AKT1-UP
DEEP RIP
FOR USE WITH HYDRAULIC PIN PULLER
AN ATTACHMENT

SMCS-6808, 6810 **i01701319**

NOTE	REF NO	GRAPHIC REF	PART NUMBER	QTY	PART NAME 1 2 3 4 5 6 (PRODUCT LEVEL)	SEE PAGE
C	1	1	**8E-8417**	1	SHANK AS-RIPPER	
		1	**3G-5596**	1	LUG	
	2	1	**9W-8365**	1	PROTECTOR	
	3	1	**4T-5502**	1	TIP-RIPPER	
C	4	1	**6Y-1204**	3	PIN-G.E.T.	
C		1	**6Y-1202**	3	RETAINER AS	
					(EACH INCLUDES)	
		1	**7M-9107**	1	RING-LOCK	

C-CHANGE FROM PREVIOUS TYPE

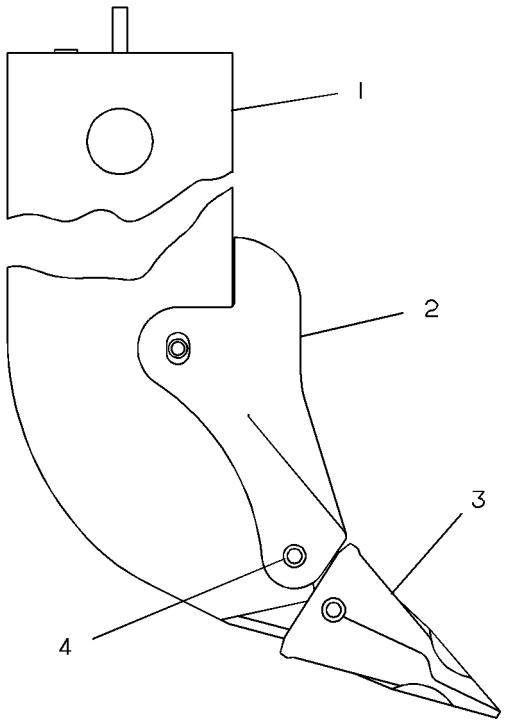

GRAPHIC #1 g00202833

WORK TOOLS

118-2141 TOOTH GP-RIPPER

S/N: BRT1-UP; BEY1-UP
PART OF 180-2400, 185-1714 RIPPER GP
AN ATTACHMENT

SMCS-6808, 6810 **i01701327**

NOTE	REF NO	GRAPHIC REF	PART NUMBER	QTY	PART NAME 1 2 3 4 5 6 (PRODUCT LEVEL)	SEE PAGE
C	1	1	**8E-8417**	1	SHANK AS-RIPPER	
		1	**3G-5596**	1	LUG	
	2	1	**9W-8365**	1	PROTECTOR	
	3	1	**4T-5502**	1	TIP-RIPPER	
C	4	1	**6Y-1204**	3	PIN-G.E.T.	
C		1	**6Y-1202**	3	RETAINER AS	
					(EACH INCLUDES)	
		1	**7M-9107**	1	RING-LOCK	

C-CHANGE FROM PREVIOUS TYPE

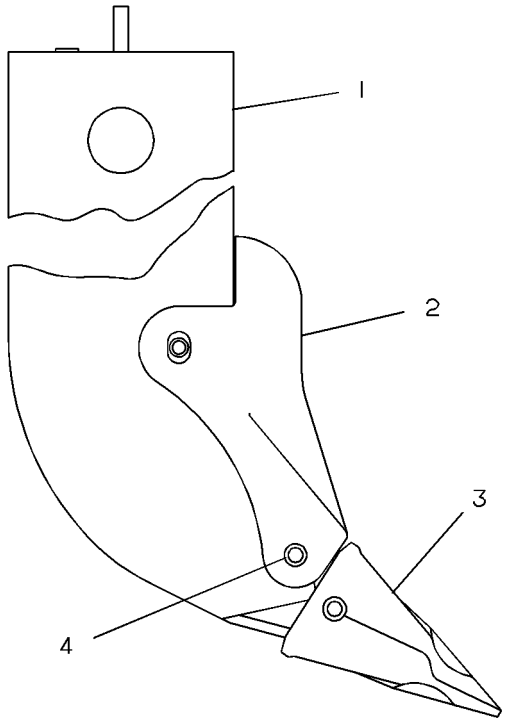

GRAPHIC #1 g00202833

OPERATOR STATION

173-1028 ADJUSTER GP-SEAT

S/N: AKT1-UP
PART OF 180-7304, 180-7306 SEAT GP
ALSO AN ATTACHMENT

SMCS-7321 **i01561316**

NOTE	REF NO	GRAPHIC REF	PART NUMBER	QTY	PART NAME 1 2 3 4 5 6 (PRODUCT LEVEL)	SEE PAGE
	1	1	**4V-8256**	4	SPRING	
	2	1	**117-4492**	1	ROD	
	3	1	**136-1544**	1	LATCH AS-LH	
	4	1	**156-5545**	1	LATCH AS-RH	
	5	1	**164-4531**	1	ROD	
	6	1	**170-1112**	1	PLATE AS	
	7	1	**170-1114**	1	HANDLE (SLIDE ADJUSTMENT)	
	8	1	**170-1115**	1	HANDLE (TILT ADJUSTMENT)	
	9	1	**132-0338**	2	WASHER-PLASTIC	
	10	1	**2K-4973**	2	LOCKNUT (3/8-16 THD)	
	11	1	**7X-0608**	2	WASHER-HARD (10.2X16X2.0MM THK)	

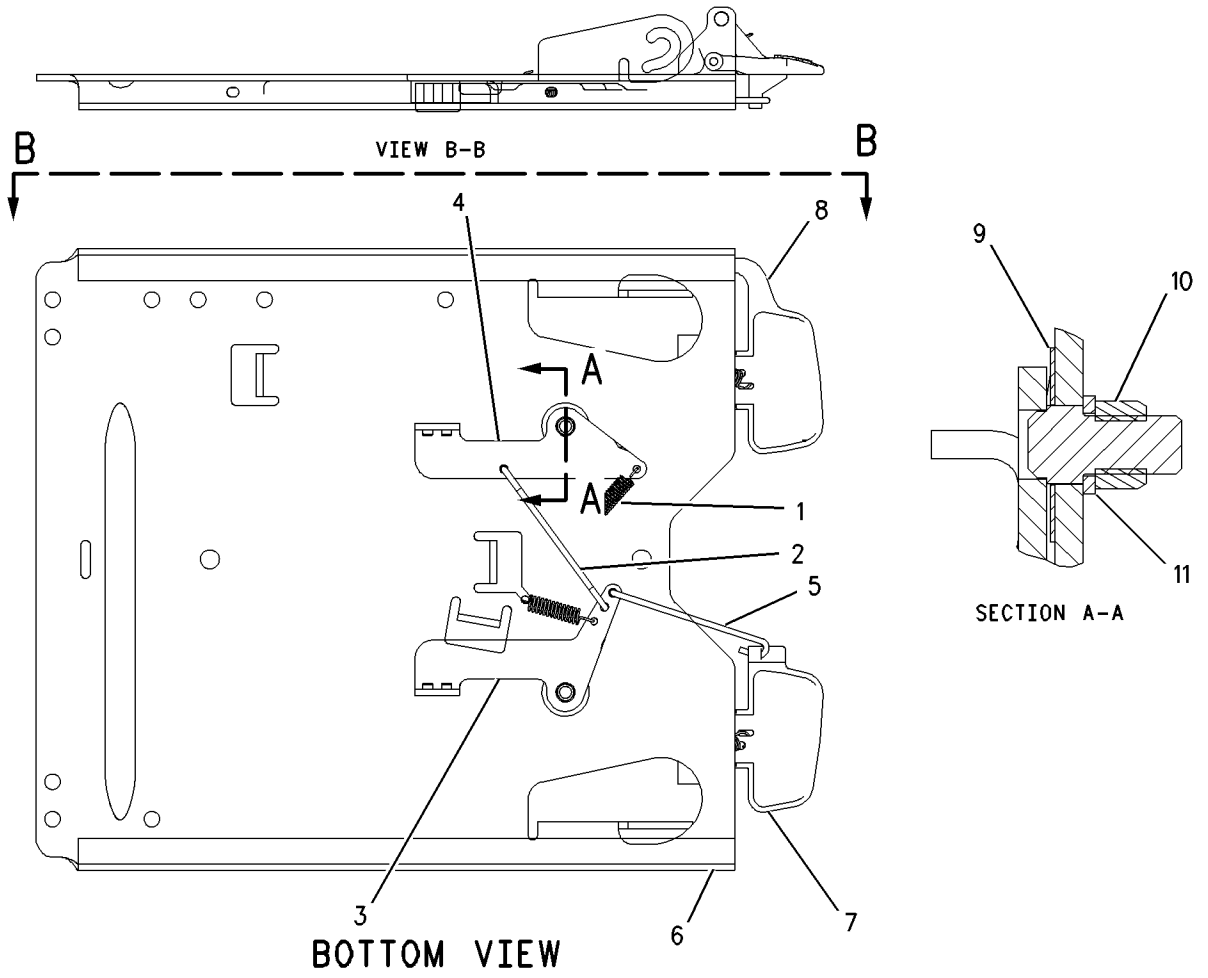

GRAPHIC #1 g00816460

OPERATOR STATION

174-3673 AIR CONDITIONER AR

S/N: AKT1-UP
R143A REFRIGERANT
AN ATTACHMENT

SMCS-7320 **i01701340**

NOTE	PART NUMBER	QTY	PART NAME 1 2 3 4 5 6 (PRODUCT LEVEL)	SEE PAGE
Y	**127-9138**	1	AIR CONDITIONER GP	660
Y	*177-0092*	1	COMPRESSOR GP-REFRIGERANT	676
Y	**103-9527**	1	CONDENSER GP-REFRIGERANT	682
Y	*172-5395*	1	LINES GP-AIR CONDITIONER	712
Y	*183-2089*	1	MIRROR GP-REAR VIEW	723
Y	*180-6597*	1	CONDENSER & MTG GP-REFRIGERANT	678
	110-6393	1	PLATE-INSTRUCTION (AIR CONDITIONER)	
			(INSTALL ON LH SIDE OF DASH SO IT CAN BE VIEWED THROUGH CAB DOOR	

Y-SEPARATE ILLUSTRATION

OPERATOR STATION

218-7128 AIR CONDITIONER AR

S/N: AKT1-UP

AN ATTACHMENT

SMCS-7320 **i01690994**

NOTE	PART NUMBER	QTY	PART NAME 1 2 3 4 5 6 (PRODUCT LEVEL)	SEE PAGE
Y	**127-9138**	1	AIR CONDITIONER GP	660
Y	**159-7226**	1	CAB AR	664
Y	*177-0092*	1	COMPRESSOR GP-REFRIGERANT	676
Y	**103-9527**	1	CONDENSER GP-REFRIGERANT	682
Y	**219-0610**	1	LINES GP-AIR CONDITIONER	716
Y	*219-3587*	1	CONDENSER & MTG GP-REFRIGERANT	680
Y	**1Q-1609**	1	ROPS AS	741
	110-6393	1	PLATE-INSTRUCTION (AIR CONDITIONER)	
			INSTALL ON LH SIDE OF DASH SO IT CAN BE SEEN THROUGH CAB DOOR	

Y-SEPARATE ILLUSTRATION

OPERATOR STATION

127-9138 AIR CONDITIONER GP

S/N: AKT1-UP
ELECTRONIC WATER VALVE
PART OF 174-3673, 218-7128 AIR CONDITIONER AR
AN ATTACHMENT

SMCS-7320 **i01701352**

NOTE	REF NO	GRAPHIC REF	PART NUMBER	QTY	PART NAME 1 2 3 4 5 6 (PRODUCT LEVEL)	SEE PAGE
BD	1	1	**5P-5908**		SEAL	
	2	1	**3B-4501**	2	LOCKWASHER (4.42X7.22X1.02M THK)	
	3	1	**3E-0400**	2	WHEEL-BLOWER	
	4	1	**3E-5464**	1	SWITCH AS-THERMOSTAT	
	5	1	**3S-2093**	5	STRAP-CABLE	
M	6	1	**5C-9553**	31	BOLT (M6X1X16MM)	
	7	1	**5P-4115**	14	WASHER-HARD (7.2X19X2MM THK)	
	8	1	**5P-6670**	1	FILM-INSTRUCTION (WATER IN/WATER OUT)	
	9	1	**5V-1474**	4	SCREW-FORMING (10-16X0.625 IN)	
	10	1	**6T-6708**	2	WASHER (7X28.6X4.1MM THK)	
	11	1	**6V-1668**	2	WASHER (6.5X29.1X3MM THK)	
	12	1	**8C-3756**	1	FILM-IDENTIFICATION (GROUP & SEQUENCE NO.)	
	13	1	**8C-4586**	2	CLAMP	
	14	1	**8P-5141**	2	PLATE-ORIFICE	
C	15	1	**8T-4205**	32	WASHER-HARD (7.2X14.5X2MM THK)	
	16	1	**8T-6631**	2	SCREW-MACHINE (8-32X0.5 IN)	
	17	1	**9X-2488**	6	CLAMP-HOSE	
M	18	1	**9X-8498**	1	BOLT (M6X1.0X180MM)	
	19	1	**091-8792**	2	CLIP	
	20	1	**125-9740**	1	RESISTOR	
M	21	1	**129-3178**	16	LOCKNUT (M6X1 THD)	
	22	1	**130-9214**	1	GASKET	
	23	1	**130-9215**	1	GASKET	
	24	1	**130-9216**	1	GASKET	
	25	1	**130-9218**	1	GASKET	
	26	1	**130-9219**	1	GASKET	
	27	1	**130-9220**	1	GASKET	
	28	1	**130-9221**	1	GASKET	
	29	1	**130-9224**	1	COIL AS-HEATER	
	30	1	**130-9225**	1	COIL AS-EVAPORATOR	
		1	**2H-3922**	1	LOCKWASHER (19.86X31.31X1.3MM THK)	
		1	**2H-3923**	1	LOCKWASHER	
		1	**7F-2050**	1	LOCKNUT (3/4-16 THD)	
		1	**7F-2060**	1	LOCKNUT (7/8-14 THD)	
	31	1	**130-9226**	1	BRACKET	
	32	1	**130-9227**	1	COVER	
	33	1	**130-9228**	1	CASE AS	
		1	**6T-6686**	2	PIN	
M		1	**6V-9632**	15	NUT-WELD (M6X1 THD)	
		1	**7T-1099**	1	LINK	
	34	1	**130-9233**	1	HOUSING AS	
M		1	**6V-9632**	2	NUT-WELD (M6X1 THD)	
	35	1	**130-9234**	1	PAN AS-HEATER	
M		1	**6V-9632**	1	NUT-WELD (M6X1 THD)	
	36	1	**131-0545**	1	PLATE AS	
M		1	**6V-9632**	1	NUT-WELD (M6X1 THD)	
	37	1	**131-2441**	1	COVER	
	38	1	**131-5354**	1	TUBE AS	
	39	1	**132-3871**	1	GASKET	
	40	1	**132-5793**	4	SCREW-WASHER HD (4-40X0.25 IN)	
	41	1	**149-8218**	1	CONTROL AS-BOARD	
	42	1	**172-9291**	1	HARNESS AS (BLOWER MOTOR)	
	43	1	**172-9292**	1	HARNESS AS (WATER VALVE CONTROL)	
	44	1	**174-1494**	1	MOTOR GP-ELECTRIC (27 VOLT)	

127-9138 **AIR CONDITIONER GP** ***(contd.)*** **i01701352**

NOTE	REF NO	GRAPHIC REF	PART NUMBER	QTY	PART NAME 1 2 3 4 5 6 (PRODUCT LEVEL)	SEE PAGE
		1	**3E-3365**	1	WEDGE-RECEPTACLE LOCK (2 PIN)	
		1	**9W-0852**	2	PIN-CONNECTOR	
		1	**102-8802**	1	KIT-RECEPTACLE (2 PIN)	
					(INCLUDES RECEPTACLE AS & WEDGE)	
	45	1	**210-7291**	1	VALVE AS	
		1	**8T-8737**	1	PLUG-SEAL	
		1	**9W-0852**	5	PIN-CONNECTOR	
		1	**102-8805**	1	KIT-RECEPTACLE (6 PIN)	
					(INCLUDES RECEPTACLE AS & WEDGE)	
	46	1	**4P-7581**	1	CLIP (LADDER)	
M	47	1	**6V-7728**	1	BOLT (M6X1.0X45MM)	
E	48	1	**136-1953**		HOSE (30CM)	
E	49	1	**136-1953**		HOSE (47CM)	
E	50	1	**136-1953**		HOSE (8CM)	
M	51	1	**8T-4189**	1	BOLT (M8X1.25X20MM)	
	52	1	**4S-1962**	1	CLIP	
M	53	1	**3T-0852**	1	LOCKNUT (M8)	
	54	1	**133-6036**	1	RECTIFIER AS	
	55	1	**5P-4116**	2	WASHER-HARD (8.8X20.5X2MM THK)	
BD	56	1	**5P-5673**		SEAL	
BD	57	1	**5P-5939**		SEAL	

B-USE AS REQUIRED
C-CHANGE FROM PREVIOUS TYPE
D-ORDER BY THE METER
E-ORDER BY THE CENTIMETER
M-METRIC PART

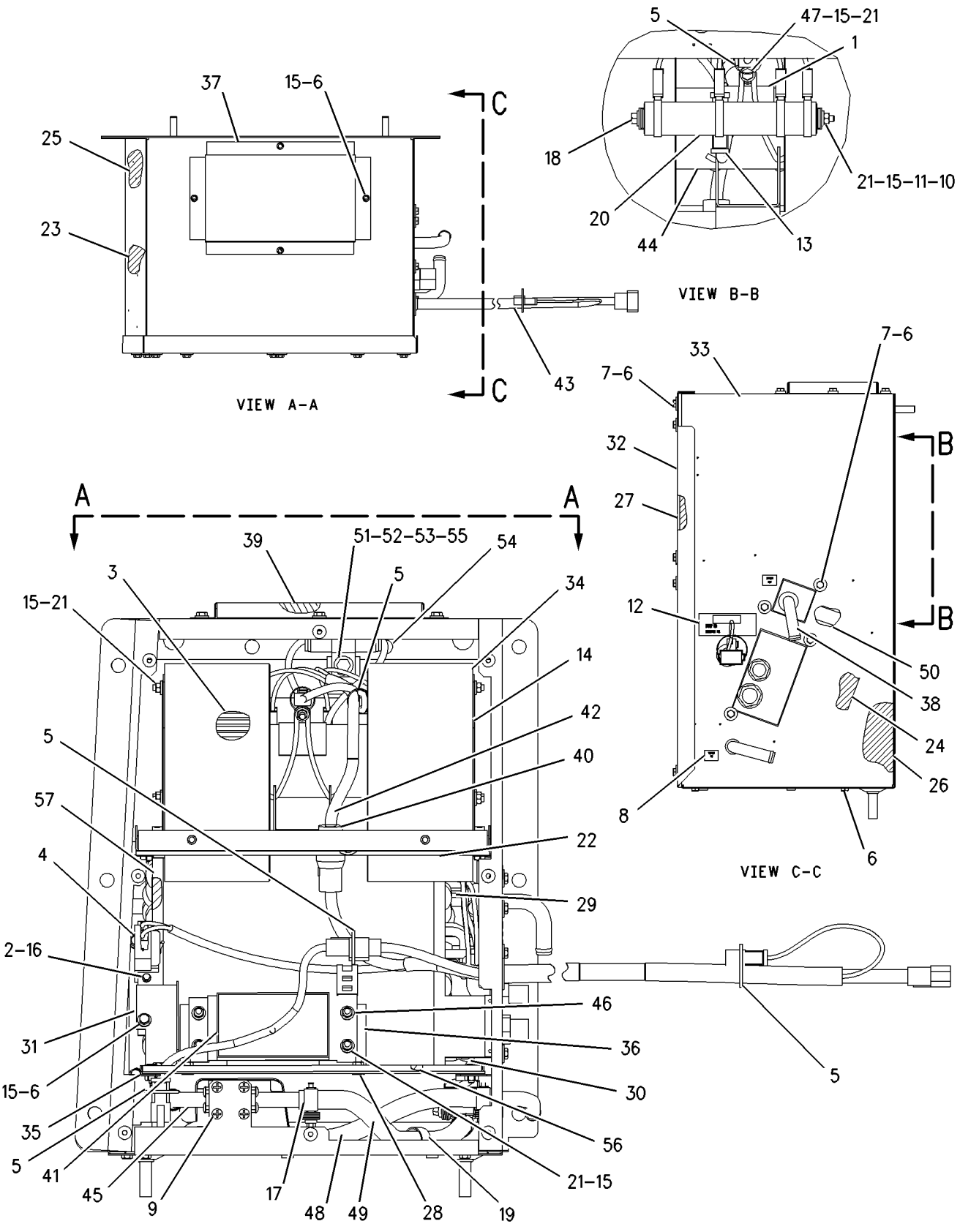

GRAPHIC #1

g00862509

OPERATOR STATION

157-4817 CAB AR

S/N: AKT1-UP

PART OF 159-7226, 171-1265, 201-0704 CAB AR

ALSO AN ATTACHMENT

SMCS-7301, 7325, 7335 **i01083926**

NOTE	PART NUMBER	QTY	PART NAME 1 2 3 4 5 6 (PRODUCT LEVEL)	SEE PAGE
Y	*157-3737*	1	CAB GP	670
Y	*8E-3284*	1	INSTALLATION GP-RADIO	707
Y	*8E-3270*	1	LINER GP-CAB	711
Y	*6Y-3712*	1	MIRROR GP-REAR VIEW	722
Y	*157-3736*	1	WASHER GP-WINDOW	764
Y	*157-3735*	1	WIPER GP-WINDOW	786

Y-SEPARATE ILLUSTRATION

OPERATOR STATION

159-7226 CAB AR

S/N: AKT1-UP
PART OF 218-7128 AIR CONDITIONER AR
AN ATTACHMENT

SMCS-7301, 7325, 7335 **i01446834**

NOTE	REF NO	GRAPHIC REF	PART NUMBER	QTY	PART NAME 1 2 3 4 5 6 (PRODUCT LEVEL)	SEE PAGE
Y	1	1	*157-4817*	1	CAB AR	663
	2	1	**6G-9102**	4	BOSS	
	3	1	**8T-9383**	4	BOLT (1/2-13X0.75 IN)	
	4	1	**8T-4223**	4	WASHER-HARD (13.5X25.5X3MM THK)	

Y-SEPARATE ILLUSTRATION

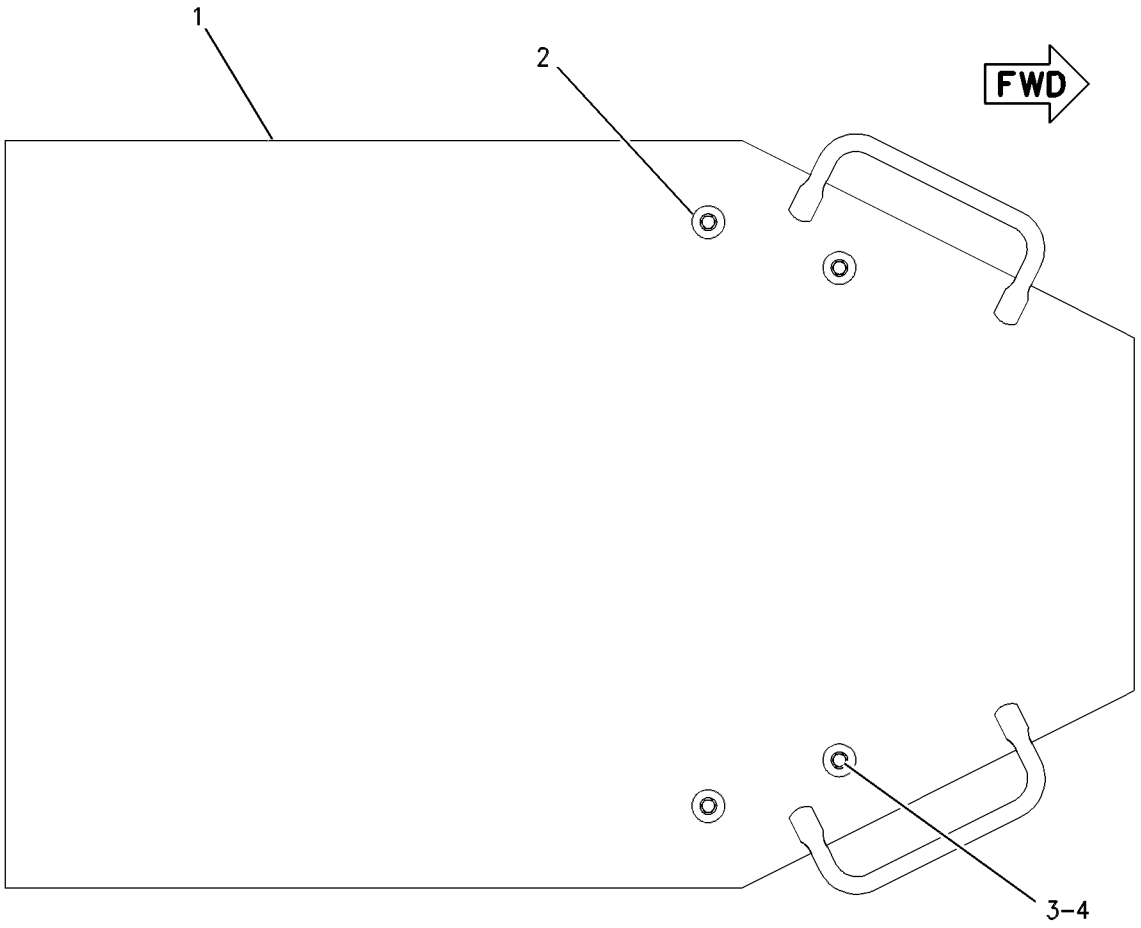

TOP VIEW

GRAPHIC #1 g00451387

OPERATOR STATION

171-1265 CAB AR

S/N: AKT1-UP

PART OF 171-5801 CHASSIS AR

SMCS-7301, 7325, 7335 **i01689495**

NOTE	PART NUMBER	QTY	PART NAME 1 2 3 4 5 6 (PRODUCT LEVEL)	SEE PAGE
Y	*186-5899*	1	TANK GP-WINDOW WASHER	762
Y	**157-4817**	1	CAB AR	663
Y	*157-2151*	1	HEATER GP-CAB	700
Y	*172-5394*	1	LINES GP-HEATER	720
Y	*117-1852*	1	MOUNTING GP-CAB	730

Y-SEPARATE ILLUSTRATION

OPERATOR STATION

197-7504 CAB AR

S/N: AKT1-UP

AN ATTACHMENT

SMCS-7301, 7325, 7335 **i01606635**

NOTE	REF NO	GRAPHIC REF	PART NUMBER	QTY	PART NAME 1 2 3 4 5 6 (PRODUCT LEVEL)	SEE PAGE
	1	1	**1Q-3762**	1	PLATE AS	
		1	**9F-6445**	3	NUT-WELD (1/4-20 THD)	
	2	1	**1Q-3764**	1	COVER	
	3	1	**8T-4224**	8	WASHER-HARD (8.8X16X2MM THK)	
	4	1	**5K-0906**	8	BOLT (5/16-18X0.63 IN)	
Y	5	1	**3E-7835**	2	FAN GP-DEFROSTER	694
	6	1	**7K-1181**	1	STRAP-CABLE	
	7	1	**1Q-3800**	1	WIRE AS	
Y	8	1	*201-0704*	1	CAB AR	668
	9	1	**6V-3884**	1	SCREW-HEX SOCKET (1/4-20X0.5 IN)	
	10	1	**5P-4115**	1	WASHER-HARD (7.2X19X2MM THK)	
	11	1	**6V-8547**	1	PLUG-BUTTON	
	12	1	**9D-3768**	1	GROMMET	

Y-SEPARATE ILLUSTRATION

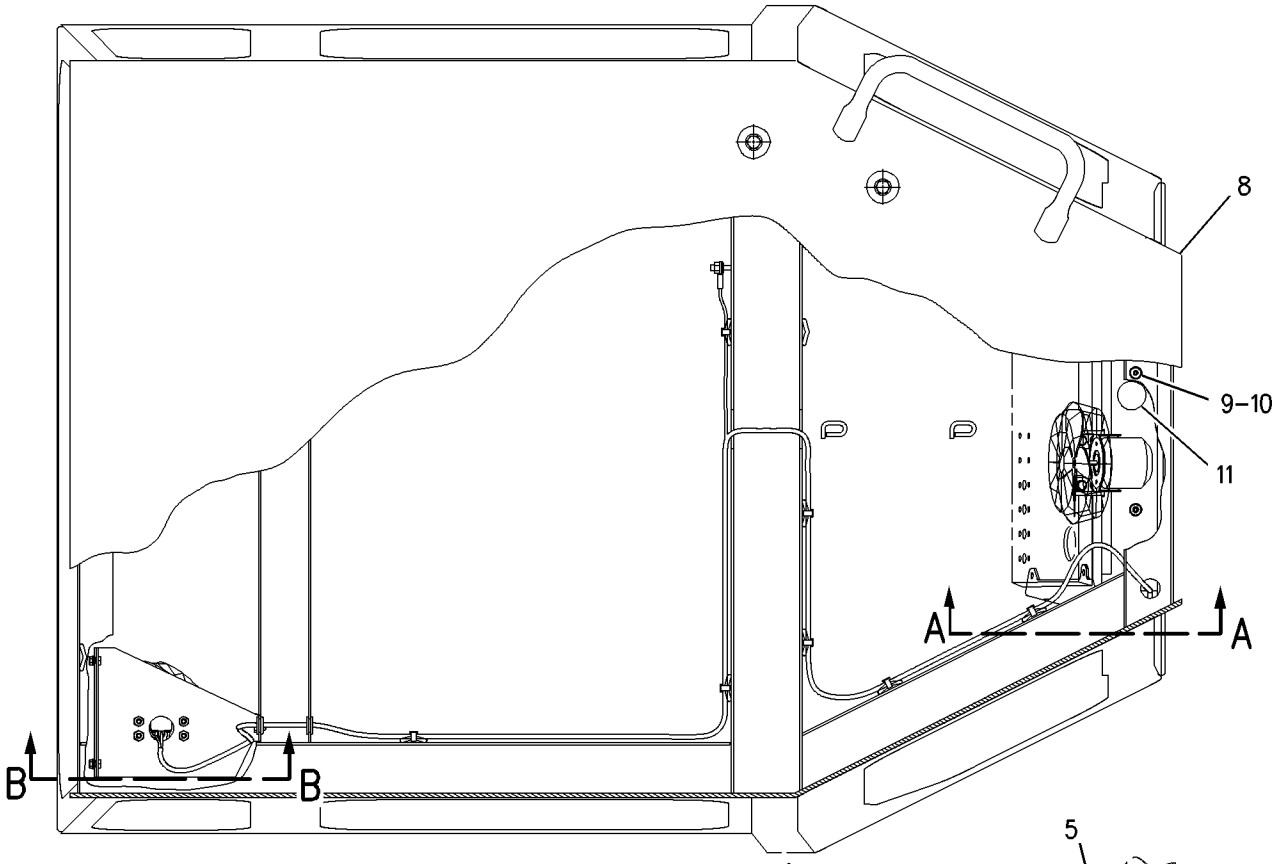

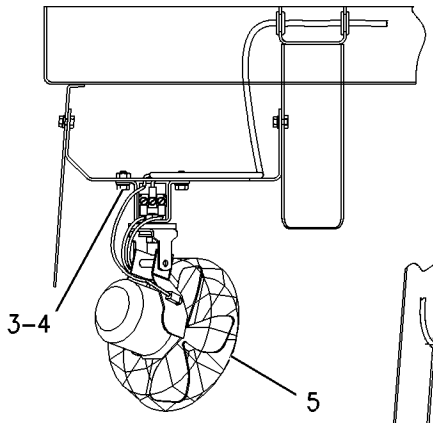

VIEW B-B

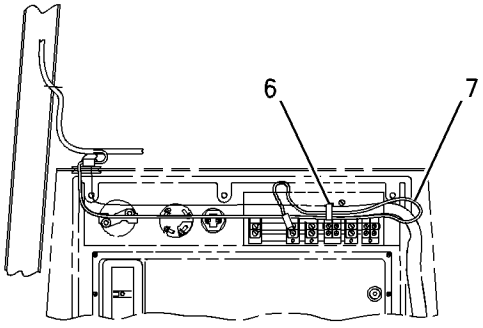

VIEW C-C

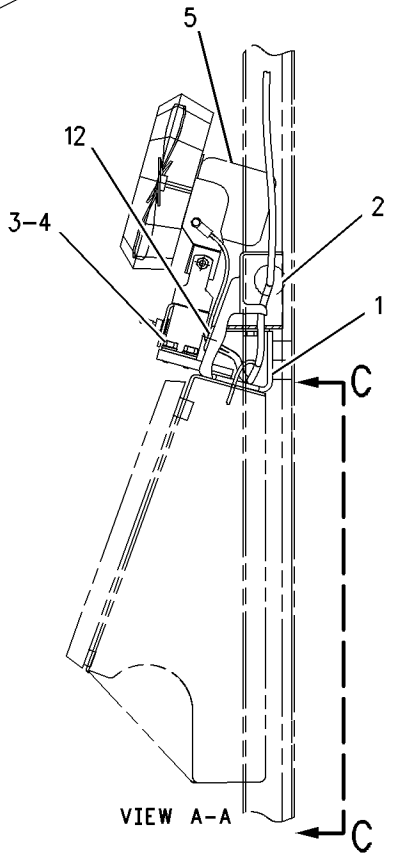

VIEW A-A

GRAPHIC #1

g00840986

OPERATOR STATION

201-0704 CAB AR

S/N: AKT1-UP
PART OF 197-7504 CAB AR
AN ATTACHMENT

SMCS-7301, 7325, 7335 **i01606647**

NOTE	REF NO	GRAPHIC REF	PART NUMBER	QTY	PART NAME 1 2 3 4 5 6 (PRODUCT LEVEL)	SEE PAGE
	1	1	**1Q-3760**	1	BRACKET AS	
		1	**4K-9097**	4	NUT-WELD (5/16-18 THD)	
		1	**9F-6445**	2	NUT-WELD (1/4-20 THD)	
	2	1	**9D-3768**	2	GROMMET	
	3	1	**1Q-3765**	1	HARNESS AS	
	4	1	**7K-1181**	7	STRAP-CABLE	
	5	1	**8T-4205**	3	WASHER-HARD (7.2X14.5X2MM THK)	
	6	1	**5S-7349**	3	BOLT (1/4-20X0.5 IN)	
Y	7	1	**157-4817**	1	CAB AR	663
	8	1	**188-2901**	1	GLASS (FRONT)	
	9	1	**208-1686**	1	GLASS (DOOR LH)	
	10	1	**188-2903**	2	GLASS (SIDE)	
	11	1	**188-2904**	2	GLASS (SIDE)	
	12	1	**208-1691**	1	GLASS (REAR LG)	
	13	1	**191-9292**	2	SHIM (22.2X56.7X0.05MM THK)	
	14	1	**208-1687**	1	GLASS (DOOR RH)	

Y-SEPARATE ILLUSTRATION

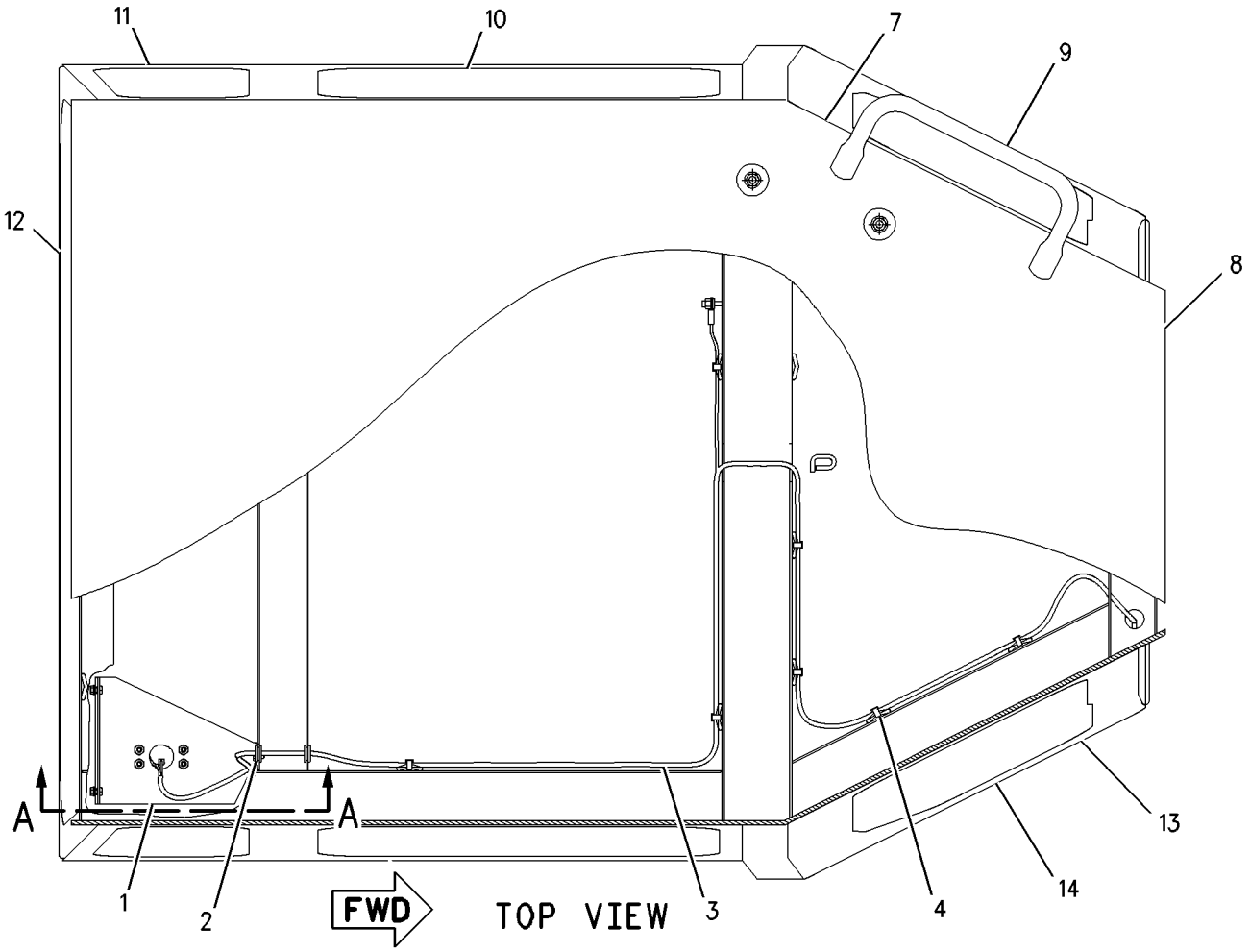

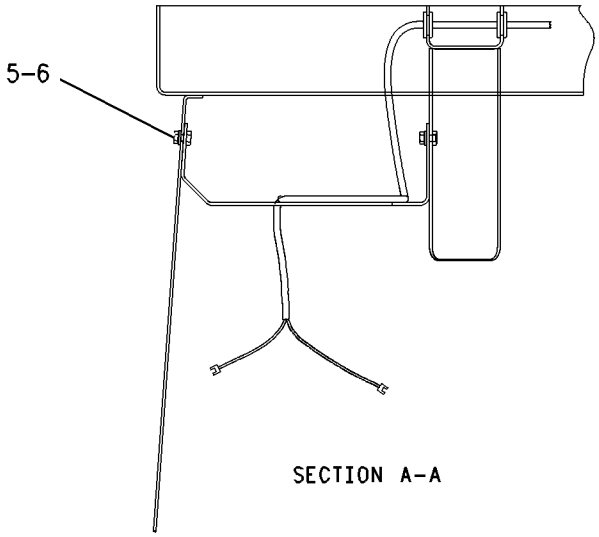

GRAPHIC #1 g00838849

OPERATOR STATION

157-3737 CAB GP

S/N: AKT1-UP
PART OF 157-4817 CAB AR
ALSO AN ATTACHMENT

SMCS-7301, 7325, 7335 **i01564902**

NOTE	REF NO	GRAPHIC REF	PART NUMBER	QTY	PART NAME 1 2 3 4 5 6 (PRODUCT LEVEL)	SEE PAGE
	1	1	**6Y-3682**	2	HANDHOLD	
	2	1	**7T-0601**	2	GLASS (TINTED) (CAB DOORS-FIXED)	
BD	3	1	**5P-6605**		SEAL	
	4	1	**9P-0575**	2	GLASS (TINTED) (CAB-SIDE-FIXED)	
Y	5	1	**8E-5114**	1	WINDOW AS-SLIDING (LH)	768
Y	6	1	**8Y-6456**	1	WINDOW GP-CAB (REAR-SLIDING)	779
	7	1	**157-3739**	1	CAB AS	
		1	**1F-0748**	6	NUT-WELD (1/2-13 THD)	
		1	**9F-6445**	27	NUT-WELD (1/4-20 THD)	
	8	1	**7G-2454**	1	GLASS (TINTED) (CAB-FRONT-FIXED)	
	9	1	**8E-5933**	1	DOOR AS (LH)	
	10	1	**8E-5932**	1	DOOR AS (RH)	
	11	1	**6V-8928**	1	HOOK-COAT	
	12	1	**4V-6981**	1	SCREW-BUTTON HEAD (1/4-20X0.75 IN)	
BD	13	2	**5P-7211**		SEAL	
	14	1	**7X-7729**	4	WASHER (11X25X3MM THK)	
	15	1	**9X-3994**	2	PLUG	
	16	2	**5P-1075**	16	WASHER-HARD (10.2X22.5X3MM THK)	
Y	17	2	**3E-6389**	1	LAMP GP-DOME (24 VOLT)(WITH SWITCH)	227
	18	2	**9S-2437**	3	SCREW-TAPPING (10-24X19.05MM)	
	19	1	**5P-2228**	4	BOLT (1/2-13X1 IN)	
Y	20	1	**8E-5113**	1	WINDOW AS-SLIDING (RH)	767
	21	1	**8T-4223**	4	WASHER-HARD (13.5X25.5X3MM THK)	
BD	22	2	**153-2681**		SEAL	
	23	2	**6V-7190**	2	LEVER AS	
					(EACH INCLUDES)	
	24	2	**6V-8129**	2	SETSCREW-SOCKET	
	25	1	**8T-2561**	6	WASHER-HARD (10.5X28.5X5MM THK)	
	26	2	**101-9398**	1	COVER (RH)	
	27	2	**101-9397**	1	COVER (LH)	
	28	2	**6V-2375**	2	HANDLE AS-INSIDE	
	29	2	**6V-3260**	8	BOLT-SOCKET HEAD (1/4-20X0.75 IN)	
	30	2	**6V-7636**	4	PIN AS-SPRING	
	31	2	**6V-8073**	2	LINK-CONNECTING	
	32	1,2	**4L-6454**	22	BOLT (3/8-16X1 IN)	
	33	2	**6V-3884**	4	SCREW-HEX SOCKET (1/4-20X0.5 IN)	
	34	2	**6V-2331**	2	HANDLE AS	
	35	2	**8T-1979**	1	LINKAGE AS (LH)	
	36	2	**8T-1980**	1	LINKAGE AS (RH)	
					(EACH LINKAGE AS INCLUDES)	
	37	2	**8T-8914**	1	SEAL-LINKAGE	
	38	2	**4M-5282**	8	BOLT (1/4-20X1.50 IN)	
	39	2	**2D-6235**	8	LOCKNUT (1/4-20 THD)	
B	40	2	**8T-0318**	14	SHIM (0.8MM THK)	
	41	1	**8T-2501**	4	BOLT (3/8-16X2 IN)	
	42	1	**184-6191**	1	BRACKET AS (RH)	
	43	1	**8E-5926**	1	BRACKET AS (LH)	
	44	1	**6Y-3732**	1	BRACKET (RH)	
	45	1	**8E-2685**	1	BRACKET (LH)	
	46	1	**5M-8500**	2	KNOB	
	47	1	**8E-5931**	2	ROD	
	48	1	**8E-5922**	2	LATCH	
	49	1	**9M-5884**	2	BUMPER	
	50	1	**3H-6660**	4	PIN-SPRING	
	51	1	**3K-6235**	2	SEAL-LIP	

157-3737 CAB GP *(contd.)*

i01564902

NOTE	REF NO	GRAPHIC REF	PART NUMBER	QTY	PART NAME 1 2 3 4 5 6 (PRODUCT LEVEL)	SEE PAGE
	52	2	**8C-3442**	2	SPRING-COIL	
	53	2	**8T-3848**	2	STRIKER AS-LATCH	
					(EACH INCLUDES)	
	54	2	**6V-4270**	1	LOCKWASHER	
	55	2	**8T-9049**	1	LATCH AS-DOOR (RH)	
	56	2	**8T-9048**	1	LATCH AS-DOOR (LH)	

B-USE AS REQUIRED
D-ORDER BY THE METER
Y-SEPARATE ILLUSTRATION

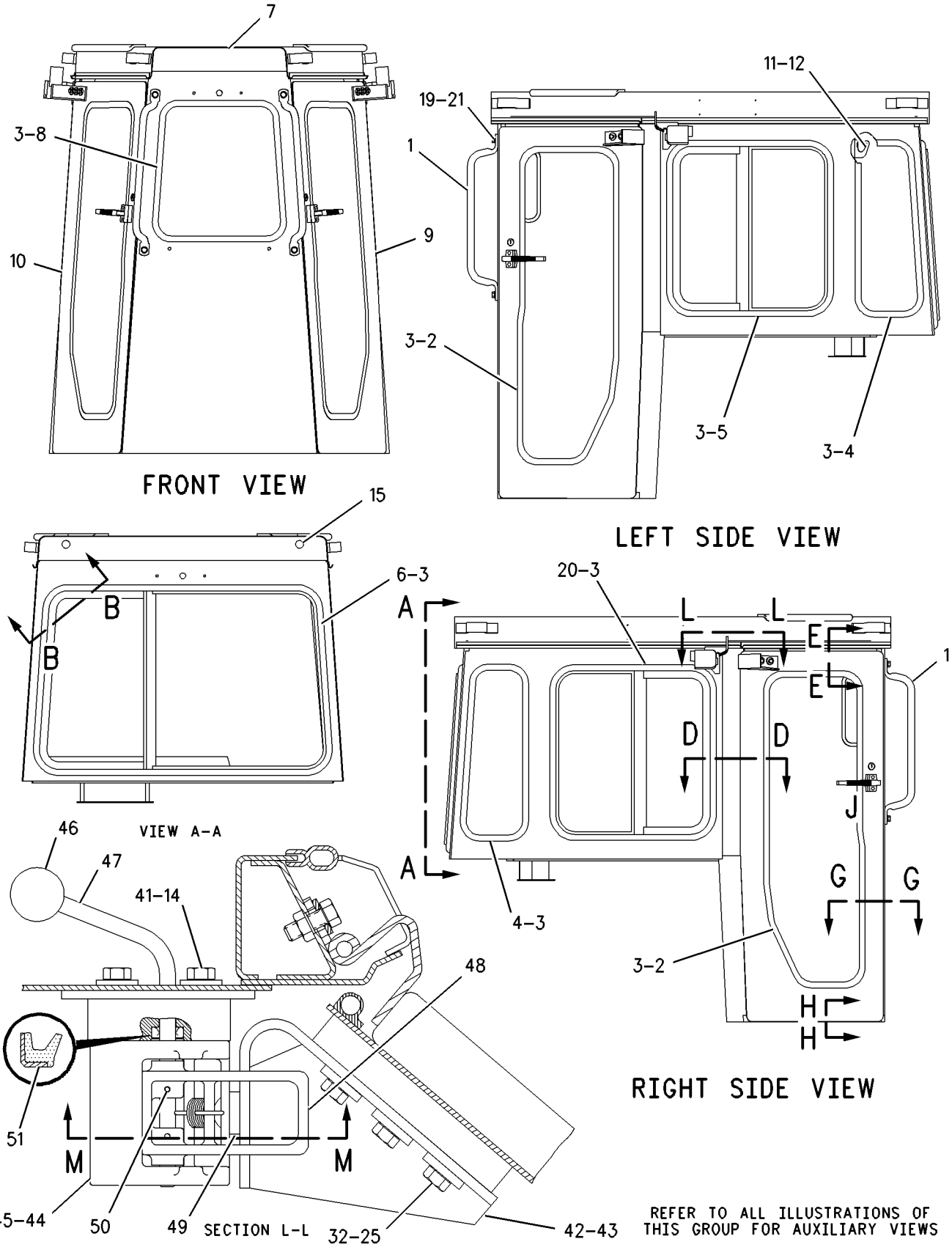

GRAPHIC #1 g00659413

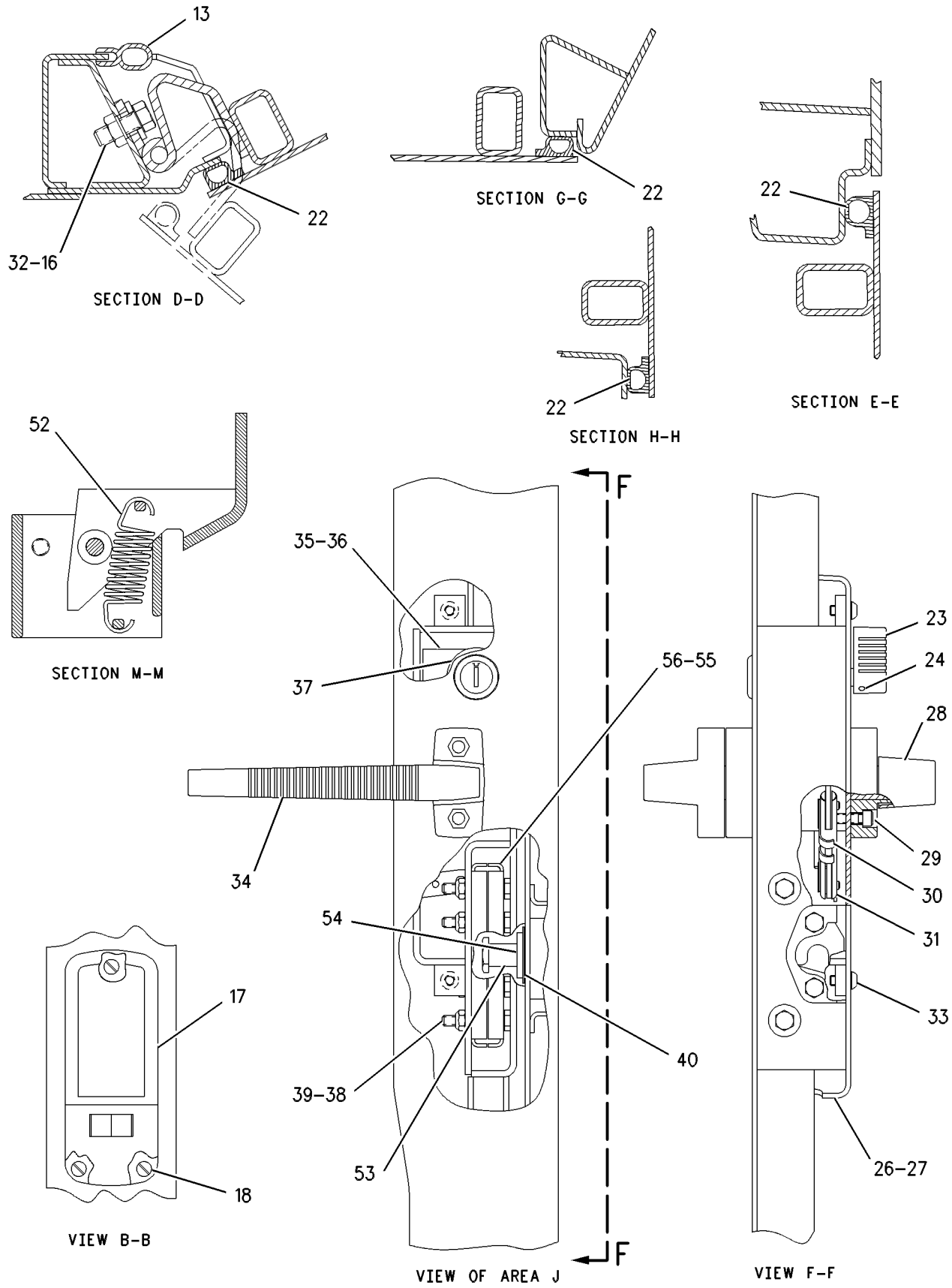

GRAPHIC #2

g00621939

OPERATOR STATION

106-5122 COMPRESSOR GP-REFRIGERANT

S/N: AKT1-UP

PART OF 177-0092 COMPRESSOR GP-REFRIGERANT

AN ATTACHMENT

SMCS-1802 **i00631866**

NOTE	REF NO	GRAPHIC REF	PART NUMBER	QTY	PART NAME 1 2 3 4 5 6 (PRODUCT LEVEL)	SEE PAGE
	1	1	**7T-4532**	1	PLUG AS	
	2	1	**9X-7385**	2	SEAL-O-RING (20.22MM ID)	

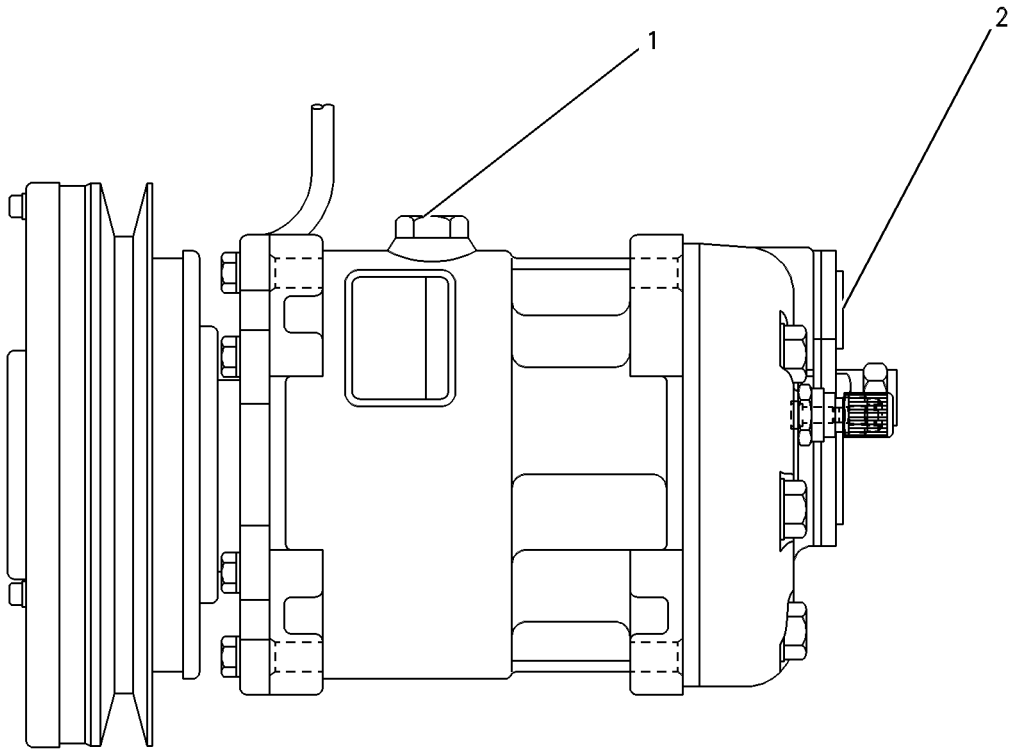

GRAPHIC #1 g00279110

MEMORANDA

OPERATOR STATION

177-0092 COMPRESSOR GP-REFRIGERANT

S/N: AKT1-UP
PART OF 174-3673, 218-7128 AIR CONDITIONER AR
AN ATTACHMENT

SMCS-1802 **i01690954**

NOTE	REF NO	GRAPHIC REF	PART NUMBER	QTY	PART NAME 1 2 3 4 5 6 (PRODUCT LEVEL)	SEE PAGE
	1	1	**2S-2743**	1	V-BELT	
	2	1	**4S-5780**	1	ROD	
	3	1	**9S-3784**	1	BLOCK	
Y	4	1	**106-5122**	1	COMPRESSOR GP-REFRIGERANT	674
	5	1	**179-2927**	1	BRACKET AS	
	6	1	**214-2966**	1	BRACKET	
	7	1	**214-2967**	1	BRACKET	
	8	1	**0S-1594**	2	BOLT (3/8-16X1 IN)	
	9	1	**4L-9337**	4	BOLT (3/8-16X1.5 IN)	
	10	1	**5M-2894**	2	WASHER-HARD (10.2X18.5X2.5MM THK)	
	11	1	**6V-8188**	1	NUT (1/2-13 THD)	
	12	1	**6V-8801**	7	NUT (3/8-16 THD)	
	13	1	**7X-0289**	2	BOLT (3/8-16X1.875 IN)	
	14	1	**7X-0346**	1	BOLT (5/8-11X2 IN)	
	15	1	**7X-0352**	1	BOLT (5/8-11X4 IN)	
	16	1	**7X-0448**	3	NUT (5/8-11 THD)	
	17	1	**7X-0471**	1	BOLT (1/2-13X8.5IN)	
	18	1	**8T-2501**	1	BOLT (3/8-16X2 IN)	
	19	1	**8T-4122**	5	WASHER-HARD (17X32X3.5MM THK)	
	20	1	**8T-4223**	2	WASHER-HARD (13.5X25.5X3MM THK)	
	21	1	**8T-4896**	14	WASHER-HARD (10.2X18.5X2.5MM THK)	
	22	1	**9H-1024**	1	WASHER-HARD (17X30X6MM THK)	
	23	1	**054-0977**	1	STOP	

Y-SEPARATE ILLUSTRATION

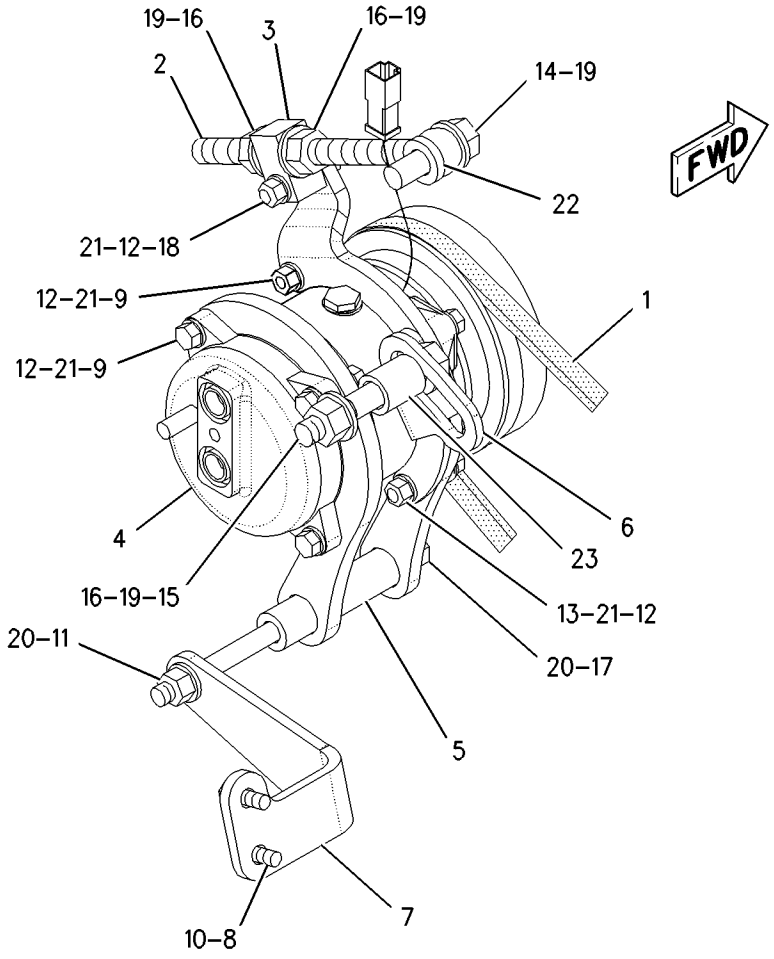

GRAPHIC #1

g00871254

OPERATOR STATION

180-6597 CONDENSER & MTG GP-REFRIGERANT

S/N: AKT1-UP
PART OF 174-3673 AIR CONDITIONER AR
AN ATTACHMENT

SMCS-1805 **i01437383**

NOTE	REF NO	GRAPHIC REF	PART NUMBER	QTY	PART NAME 1 2 3 4 5 6 (PRODUCT LEVEL)	SEE PAGE
	1	1	**8D-3786**	4	MOUNTING	
	2	1	**179-1532**	1	BRACKET	
	3	1	**179-8008**	1	HANDHOLD	
	4	1	**179-8230**	1	BRACKET AS	
		1	**1F-0750**	2	NUT-WELD (3/8-16 THD)	
	5	1	**179-8231**	1	BRACKET AS	
		1	**7T-1099**	1	LINK	
		1	**8D-3508**	1	BOSS (3/8-16 THD)	
	6	1	**4L-9337**	2	BOLT (3/8-16X1.5 IN)	
	7	1	**5C-6565**	2	BOLT (1/2-13X1.25 IN)	
	8	1	**5P-1075**	8	WASHER-HARD (10.2X22.5X3MM THK)	
	9	1	**5P-1076**	6	WASHER-HARD (13.5X30X4MM THK)	
	10	1	**5P-2566**	6	BOLT (1/2-13X1.5 IN)	
	11	1	**6V-8188**	4	NUT (1/2-13 THD)	
	12	1	**7X-0325**	2	BOLT (1/2-13X2.5 IN)	
	13	1	**7X-0326**	2	BOLT (1/2-13X3 IN)	
	14	1	**8T-4223**	10	WASHER-HARD (13.5X25.5X3MM THK)	
	15	1	**8T-4821**	4	WASHER-PLATED (3MM THK)	
M	16	1	**8T-4956**	4	BOLT (M12X1.75X35MM)	

M-METRIC PART

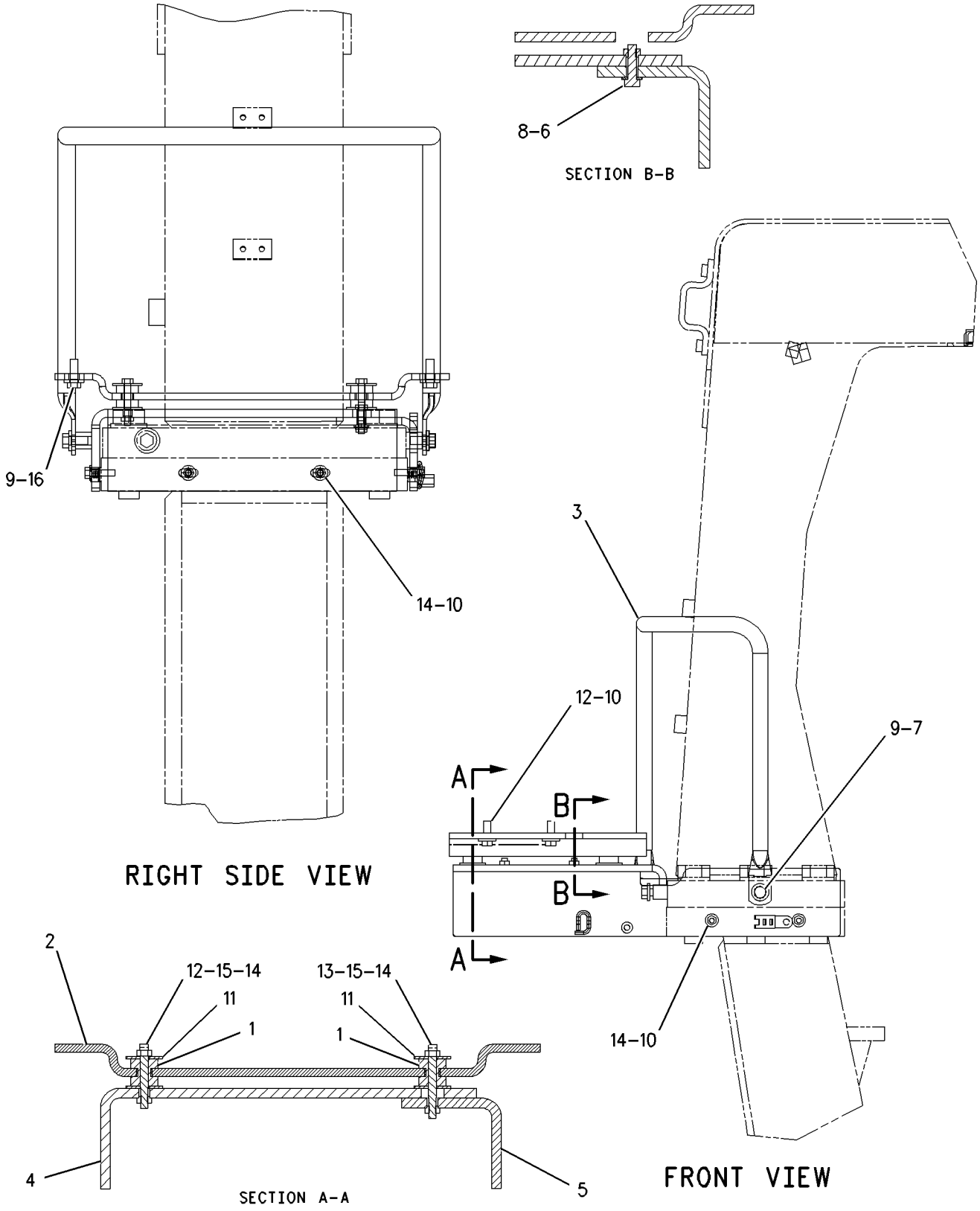

GRAPHIC #1

g00807219

OPERATOR STATION

219-3587 CONDENSER & MTG GP-REFRIGERANT

S/N: AKT1-UP
PART OF 218-7128 AIR CONDITIONER AR
AN ATTACHMENT

SMCS-1805 **i01691018**

NOTE	REF NO	GRAPHIC REF	PART NUMBER	QTY	PART NAME 1 2 3 4 5 6 (PRODUCT LEVEL)	SEE PAGE
	1	1	**8D-3932**	4	MOUNTING	
	2	1	**110-4506**	1	PLATE	
	3	1	**134-0165**	4	WASHER (13.8X45X3MM THK)	
M	4	1	**8T-4139**	4	BOLT (M12X1.75X30MM)	
	5	1	**8T-4223**	4	WASHER-HARD (13.5X25.5X3MM THK)	
	6	1	**8T-4835**	4	BOLT (1/2-13X2 IN)	

M-METRIC PART

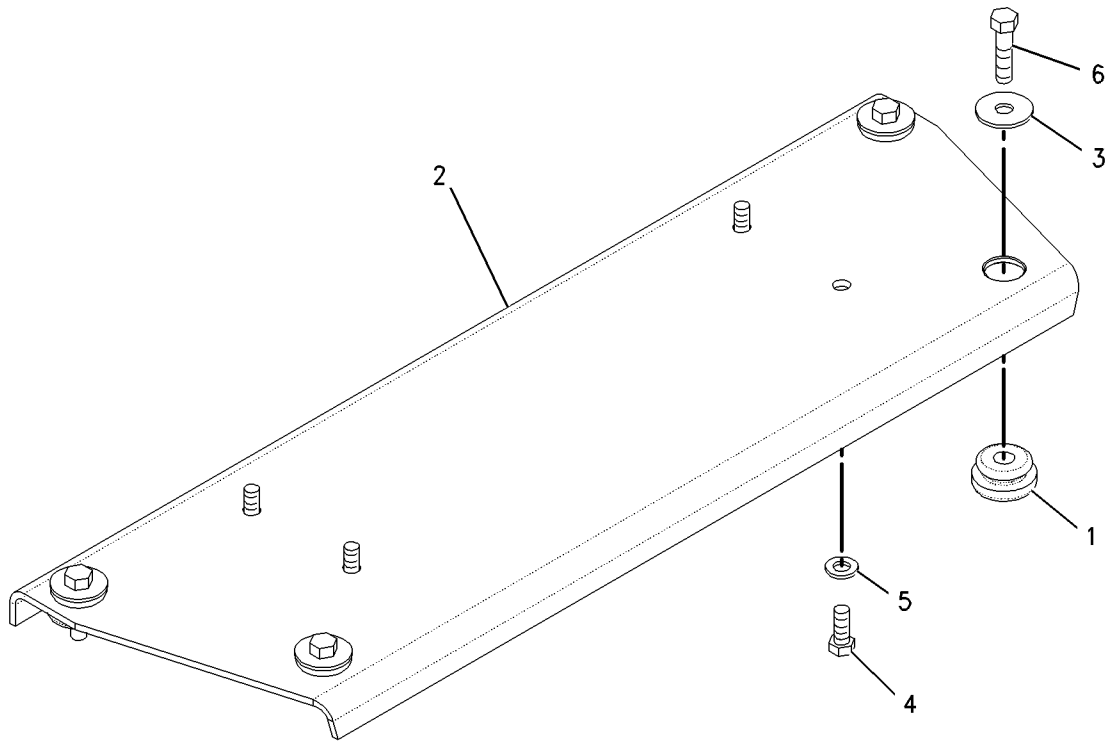

GRAPHIC #1 g00871074

MEMORANDA

OPERATOR STATION

103-9527 CONDENSER GP-REFRIGERANT

S/N: AKT1-UP
PART OF 174-3673, 218-7128 AIR CONDITIONER AR
AN ATTACHMENT

SMCS-1805 **i01693596**

NOTE	REF NO	GRAPHIC REF	PART NUMBER	QTY	PART NAME 1 2 3 4 5 6 (PRODUCT LEVEL)	SEE PAGE
	1	1	**3E-5239**	1	RELAY AS (24 VOLT) (CONDENSER BLOWER MOTOR)	
	2	1	**3S-2093**	7	STRAP-CABLE	
C	3	1	**7T-5856**	4	CLAMP	
	4	1	**8C-3756**	1	FILM-IDENTIFICATION (GROUP & SEQUENCE NO.)	
C	5	1	**8P-6363**	1	PLUG	
	6	1	**9X-3452**	2	GUARD AS-FAN	
	7	1	**124-8490**	1	HARNESS AS	
	8	1	**142-8620**	2	FAN AS	
	9	1	**174-1495**	2	MOTOR GP-ELECTRIC	
					(EACH INCLUDES)	
		1	**3E-3365**	1	WEDGE-RECEPTACLE LOCK (2 PIN)	
		1	**9W-0852**	2	PIN-CONNECTOR	
		1	**102-8802**	1	KIT-RECEPTACLE (2 PIN)	
					(INCLUDES WEDGE & RECEPTACLE AS)	
	10	1	**203-2070**	8	MOUNT	
	11	1	**204-9530**	4	TUBE	
	12	1	**204-9531**	1	COIL-CONDENSER	
	13	1	**204-9532**	1	CASE AS	
M		1	**8T-3490**	12	NUT-WELD (M10X1.5 THD)	
		1	**9G-9151**	2	CLIP	
		1	**7T-1099**	4	LINK	
M		1	**8T-3597**	12	NUT-WELD (M12X1.75 THD)	
M	14	1	**5C-2890**	1	NUT (M6X1 THD)	
	15	1	**5P-1075**	8	WASHER-HARD (10.2X22.5X3MM THK)	
C	16	1	**5P-8441**	1	GROMMET	
	17	1	**6D-4246**	2	CLIP	
	18	1	**7X-0578**	4	WASHER-HARD (10.2X32X2.5MM THK)	
	19	1	**8T-4121**	4	WASHER-HARD (11X21X2.5MM THK)	
M	20	1	**8T-4133**	4	NUT (M10X1.5 THD)	
M	21	1	**8T-4137**	8	BOLT (M10X1.5X20MM)	
M	22	1	**8T-4192**	12	BOLT (M12X1.75X25MM)	
	23	1	**8T-4205**	1	WASHER-HARD (7.2X14.5X2MM THK)	
	24	1	**8T-4223**	12	WASHER-HARD (13.5X25.5X3MM THK)	
M	25	1	**8T-6685**	4	BOLT (M10X1.50X110MM)	
C	26	1	**9X-7373**	1	GROMMET	
BD	27	1	**5P-5924**		SEAL	
BD	28	1	**5P-5673**		SEAL	

B-USE AS REQUIRED
C-CHANGE FROM PREVIOUS TYPE
D-ORDER BY THE METER
M-METRIC PART

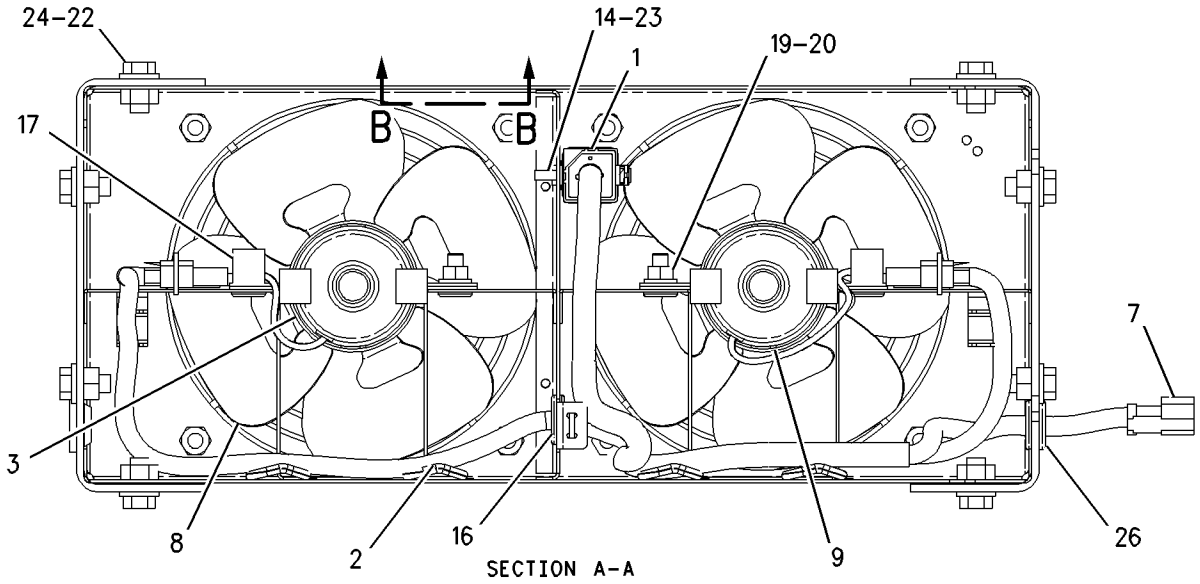

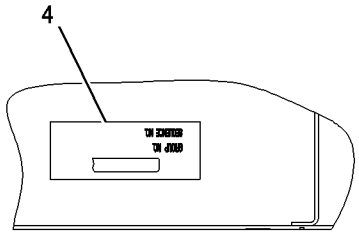

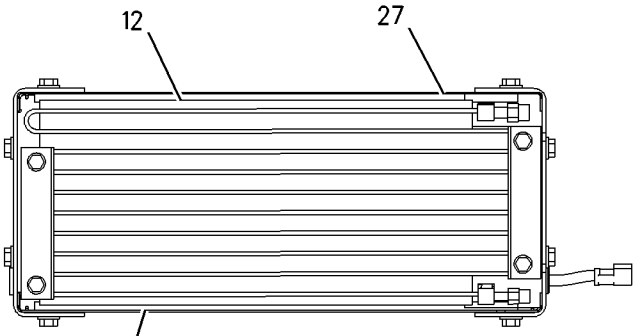

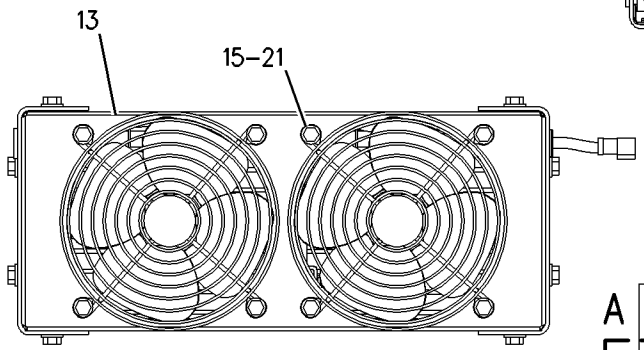

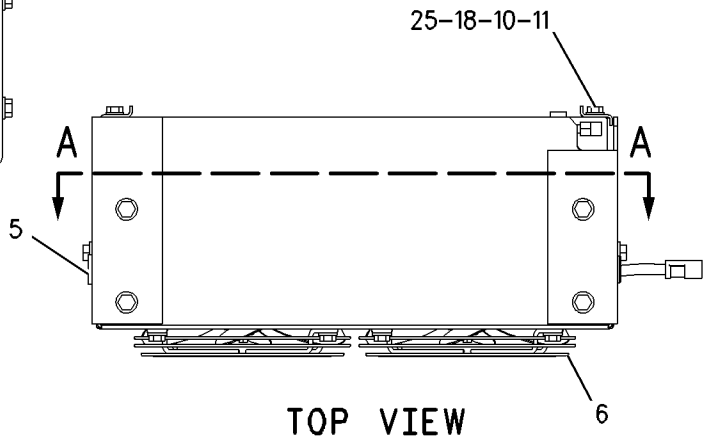

GRAPHIC #1 g00871829

OPERATOR STATION

135-0356 CONTROL & MTG GP-IMPLEMENT

S/N: AKT1-UP
PART OF 172-7626 CONTROL AR-HYDRAULIC
AN ATTACHMENT

SMCS-5100 **i01290854**

NOTE	REF NO	GRAPHIC REF	PART NUMBER	QTY	PART NAME 1 2 3 4 5 6 (PRODUCT LEVEL)	SEE PAGE
Y	1	1	**183-3208**	1	CONTROL GP-IMPLEMENT	690
	2	1	**8T-4896**	4	WASHER-HARD (2.5MM THK)	
	3	1	**137-3927**	1	FILM-INSTRUCTION	
	4	1	**137-3928**	1	FILM-INSTRUCTION	
	5	1	**8T-2502**	4	BOLT (3/8-16X1.125 IN)	

Y-SEPARATE ILLUSTRATION

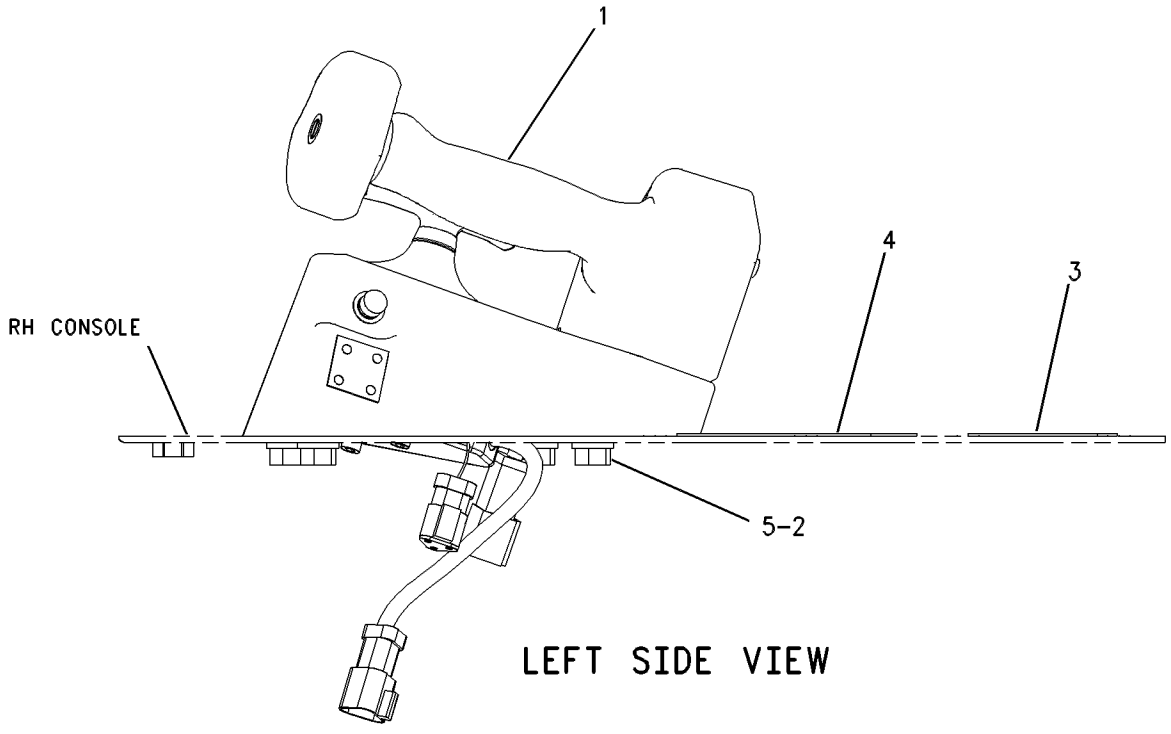

GRAPHIC #1 g00662835

OPERATOR STATION

194-3684 CONTROL & MTG GP-IMPLEMENT

S/N: AKT1-UP
PART OF 174-9185 CONTROL AR-HYDRAULIC
AN ATTACHMENT

SMCS-5100 **i01437324**

NOTE	REF NO	GRAPHIC REF	PART NUMBER	QTY	PART NAME 1 2 3 4 5 6 (PRODUCT LEVEL)	SEE PAGE
	1	1	**158-2286**	1	COVER	
Y	2	1	*177-4980*	1	CONTROL GP-JOYSTICK	480
	3	1	**188-7095**	1	BASE-MOUNTING	
M	4	1	**127-2170**	4	SCREW-TRUSS HEAD (M8X1.25X20MM)	
	5	1	**5P-1075**	8	WASHER-HARD (10.2X22.5X3MM THK)	
	6	1	**6J-0488**	4	SCREW-BUTTON HEAD (3/8-16X0.875 IN)	
	7	1	**6V-8801**	4	NUT (3/8-16 THD)	
	8	1	**8T-4121**	4	WASHER-HARD (11X21X2.5MM THK)	
M	9	1	**8T-4136**	4	BOLT (M10X1.5X25MM)	

M-METRIC PART
Y-SEPARATE ILLUSTRATION

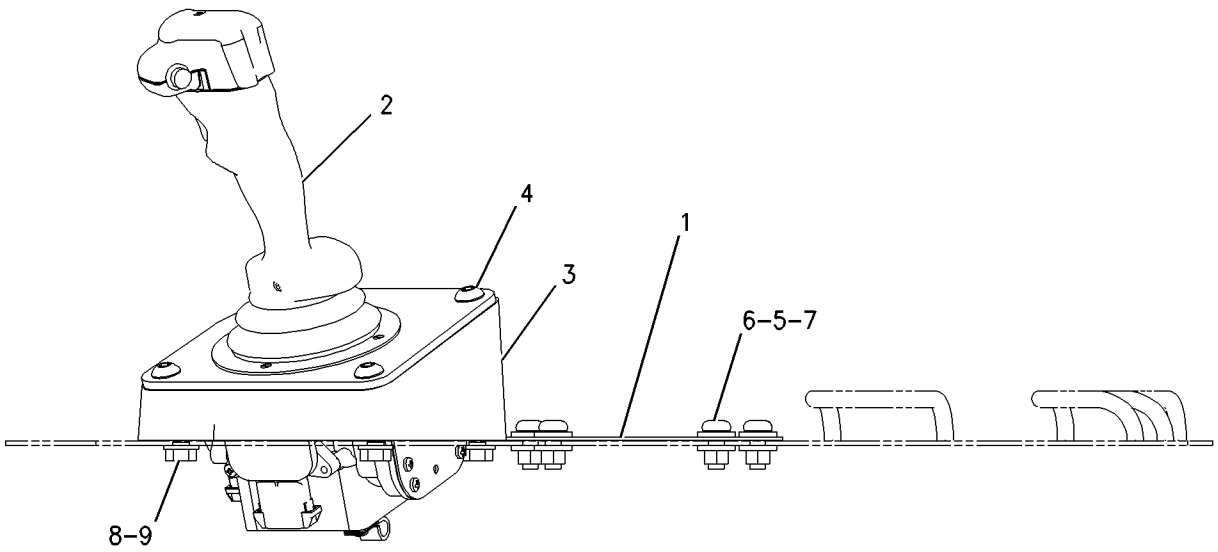

GRAPHIC #1 g00812757

OPERATOR STATION

199-4194 CONTROL & MTG GP-IMPLEMENT

S/N: AKT1-UP
SINGLE TILT DOZER CONTROL
PART OF 171-5803 CONTROL AR-HYDRAULIC

SMCS-5100 **i01446931**

NOTE	REF NO	GRAPHIC REF	PART NUMBER	QTY	PART NAME 1 2 3 4 5 6 (PRODUCT LEVEL)	SEE PAGE
	1	1	**158-2286**	1	COVER	
Y	2	1	**185-8734**	1	CONTROL GP-JOYSTICK	483
	3	1	**188-7095**	1	BASE-MOUNTING	
M	4	1	**127-2170**	4	SCREW-TRUSS HEAD (M8X1.25X20MM)	
	5	1	**5P-1075**	8	WASHER-HARD (10.2X22.5X3MM THK)	
	6	1	**6J-0488**	4	SCREW-BUTTON HEAD (3/8-16X0.875 IN)	
	7	1	**6V-8801**	4	NUT (3/8-16 THD)	
	8	1	**8T-4121**	4	WASHER-HARD (11X21X2.5MM THK)	
M	9	1	**8T-4136**	4	BOLT (M10X1.5X25MM)	

M-METRIC PART
Y-SEPARATE ILLUSTRATION

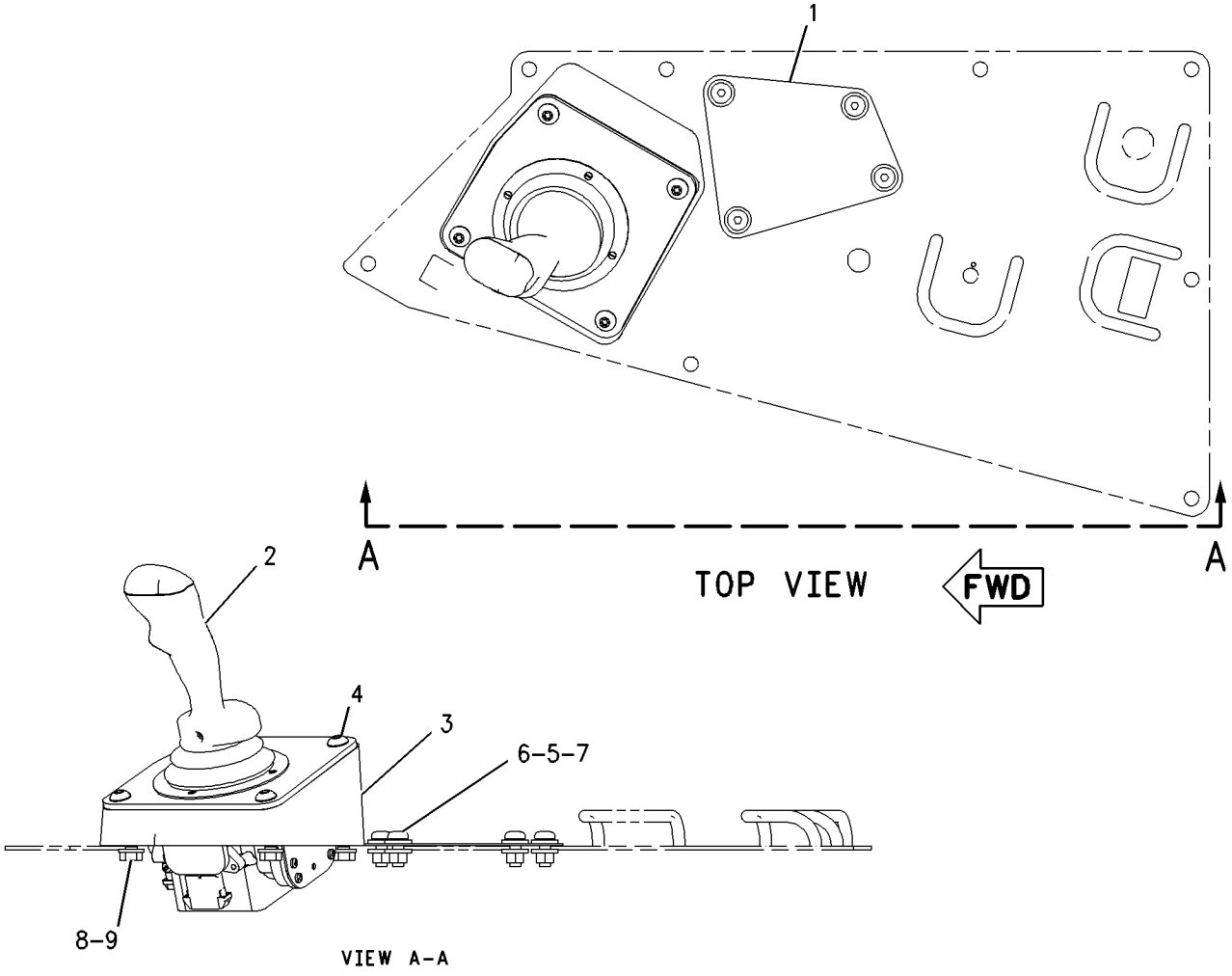

GRAPHIC #1 g00757607

OPERATOR STATION

125-3401 CONTROL GP-DISPLAY ELECTRONIC

S/N: AKT1-UP
LIGHT EMITTING DIODE DISPLAY
PART OF 170-7082 INSTRUMENT GP

SMCS-7603 **i01673928**

NOTE	REF NO	GRAPHIC REF	PART NUMBER	QTY	PART NAME 1 2 3 4 5 6 (PRODUCT LEVEL)	SEE PAGE
Z	1	1		1	BOARD AS	
	2	1	**102-8804**	1	KIT-RECEPTACLE (4 PIN)	
					(INCLUDES RECEPTACLE AS & WEDGE)	
	3	1	**3E-3377**	1	WEDGE-RECEPTACLE LOCK	
	4	1	**8T-8729**	4	PIN-CONNECTOR	
	5	1	**8L-8413**	1	STRAP-CABLE	

Z-NOT SERVICED SEPARATELY

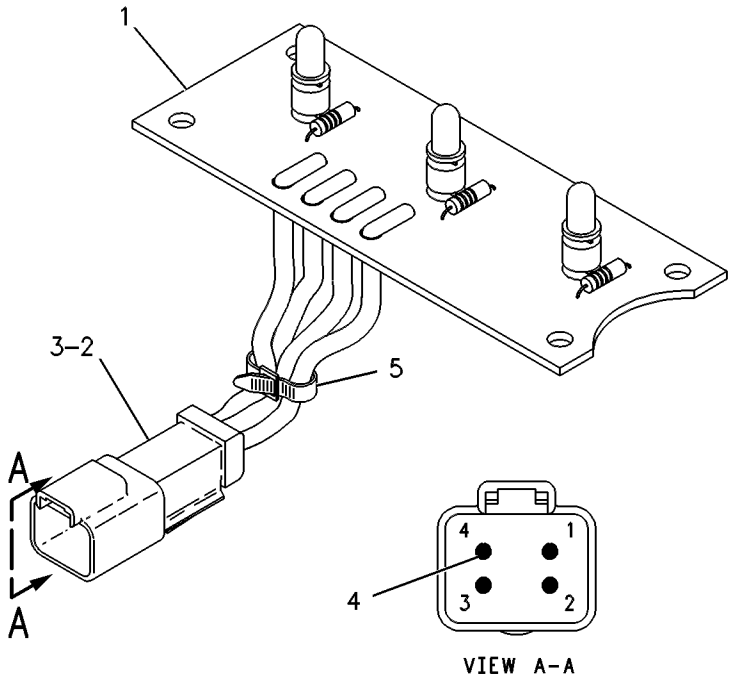

GRAPHIC #1 g00252614

OPERATOR STATION

149-6470 CONTROL GP-DISPLAY ELECTRONIC

S/N: AKT1-UP

PART OF 165-5018, 183-2076 CONTROL GP-ELECTRONIC

SMCS-7603 **i01426684**

NOTE	REF NO	GRAPHIC REF	PART NUMBER	QTY	PART NAME 1 2 3 4 5 6 (PRODUCT LEVEL)	SEE PAGE
	1	1	**8L-8413**	1	STRAP-CABLE	
	2	1	**102-8810**	1	KIT-CONNECTING PLUG (6 PINS)	
					(INCLUDES PLUG AS, WEDGE & SEAL INTERFACE)	
	3	1	**3E-3380**	1	WEDGE-PLUG LOCK	
		1	**102-8815**	1	SEAL-INTERFACE	
	4	1	**8T-8730**	6	SOCKET-CONNECTOR	

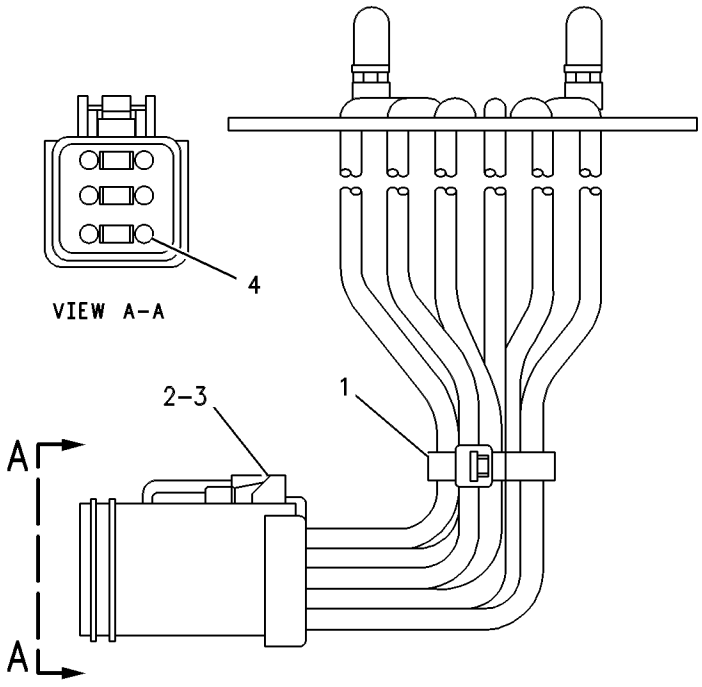

GRAPHIC #1 g00329749

OPERATOR STATION

188-1079 CONTROL GP-HANDLE

S/N: AKT1-UP

PART OF 185-8734 CONTROL GP-JOYSTICK

SMCS-5063 **i01499097**

NOTE	REF NO	GRAPHIC REF	PART NUMBER	QTY	PART NAME 1 2 3 4 5 6 (PRODUCT LEVEL)	SEE PAGE
Z	1	1		1	HANDGRIP AS	

Z-NOT SERVICED SEPARATELY

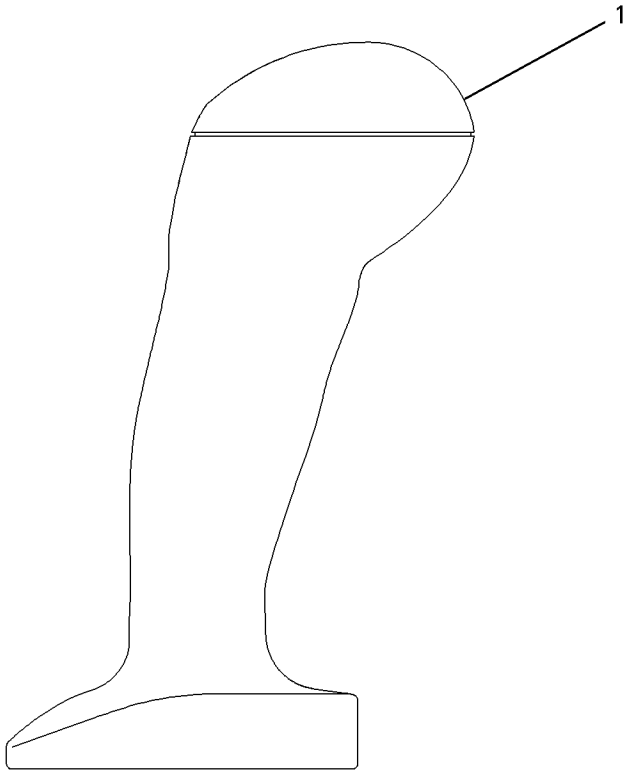

GRAPHIC #1 g00721034

OPERATOR STATION

183-3208 CONTROL GP-IMPLEMENT

S/N: AKT1-UP
PART OF 135-0356 CONTROL & MTG GP-IMPLEMENT
AN ATTACHMENT

SMCS-5063 **i01444585**

NOTE	REF NO	GRAPHIC REF	PART NUMBER	QTY	PART NAME 1 2 3 4 5 6 (PRODUCT LEVEL)	SEE PAGE
	1	1	**3E-3368**	1	WEDGE-PLUG LOCK	
	2	1	**3K-4897**	2	PIN-SPRING	
	3	1	**4B-1270**	2	SCREW-MACHINE (8-32X0.75 IN)	
	4	1	**5S-7383**	3	BOLT (3/8-16X1.75 IN)	
	5	1	**8T-5410**	2	SEAL-LIP	
M	6	1	**8T-6699**	4	BOLT-SOCKET HEAD (M5X0.8THDX35MM)	
	7	1	**112-0858**	4	BEARING	
BD	8	1	**8T-5677**		SLEEVE	
	9	1	**137-5815**	1	HANDLE	
	10	1	**137-5816**	1	LEVER-FINGER	
	11	1	**8T-8730**	3	SOCKET-CONNECTOR	
	12	1	**161-8939**	1	SENSOR GP-POSITION	
		1	**186-3735**	3	PIN-CONNECTOR	
		1	**3E-3371**	1	WEDGE-RECEPTACLE LOCK (3 PIN)	
		1	**102-8803**	1	KIT-RECEPTACLE (3 PIN)	
					(INCLUDES RECEPTACLE AS & WEDGE)	
BE		1	**9X-1813**		SLEEVE	
		1	**8T-8886**	1	SEAL-LIP	
BE	13	1	**7X-3159**		TUBE-SHRINKABLE	
	14	1	**8T-4121**	3	WASHER-HARD (11X21X2.5MM THK)	
	15	1	**142-2526**	2	PLATE	
	16	1	**142-2527**	2	GASKET	
	17	1	**8T-0328**	4	WASHER-HARD (5.5X10X1MM THK)	
	18	1	**144-0326**	1	SWITCH AS-PUSH BUTTON	
		1	**144-0331**	1	CAP-PUSHBUTTON	
	19	1	**161-8942**	1	SENSOR GP-POSITION	
		1	**3E-3377**	1	WEDGE-RECEPTACLE LOCK	
		1	**186-3735**	3	PIN-CONNECTOR	
		1	**9G-3695**	1	PLUG (GROMMET SEALING)	
		1	**8T-8886**	1	SEAL-LIP	
		1	**102-8804**	1	KIT-RECEPTACLE (4 PIN)	
					(INCLUDES RECEPTACLE AS & WEDGE)	
	20	1	**183-3205**	2	SPRING	
	21	1	**6V-0894**	2	SEAL-O-RING	
	22	1	**2L-5894**	4	PIN-SPRING	
	23	1	**155-2260**	1	KIT-CONNECTING PLUG (3 PIN)	
					(INCLUDES PLUG AS & WEDGE)	
	24	1	**1W-6448**	4	DOWEL	
B	25	1	**195-7869**	1	SHIM (0.15MM THK)	
B	26	1	**195-7870**	1	SHIM (0.51MM THK)	
B	27	1	**195-7871**	1	SHIM (0.25MM THK)	
B	28	1	**195-7872**	1	SHIM (0.41MM THK)	

B-USE AS REQUIRED
D-ORDER BY THE METER
E-ORDER BY THE CENTIMETER
M-METRIC PART

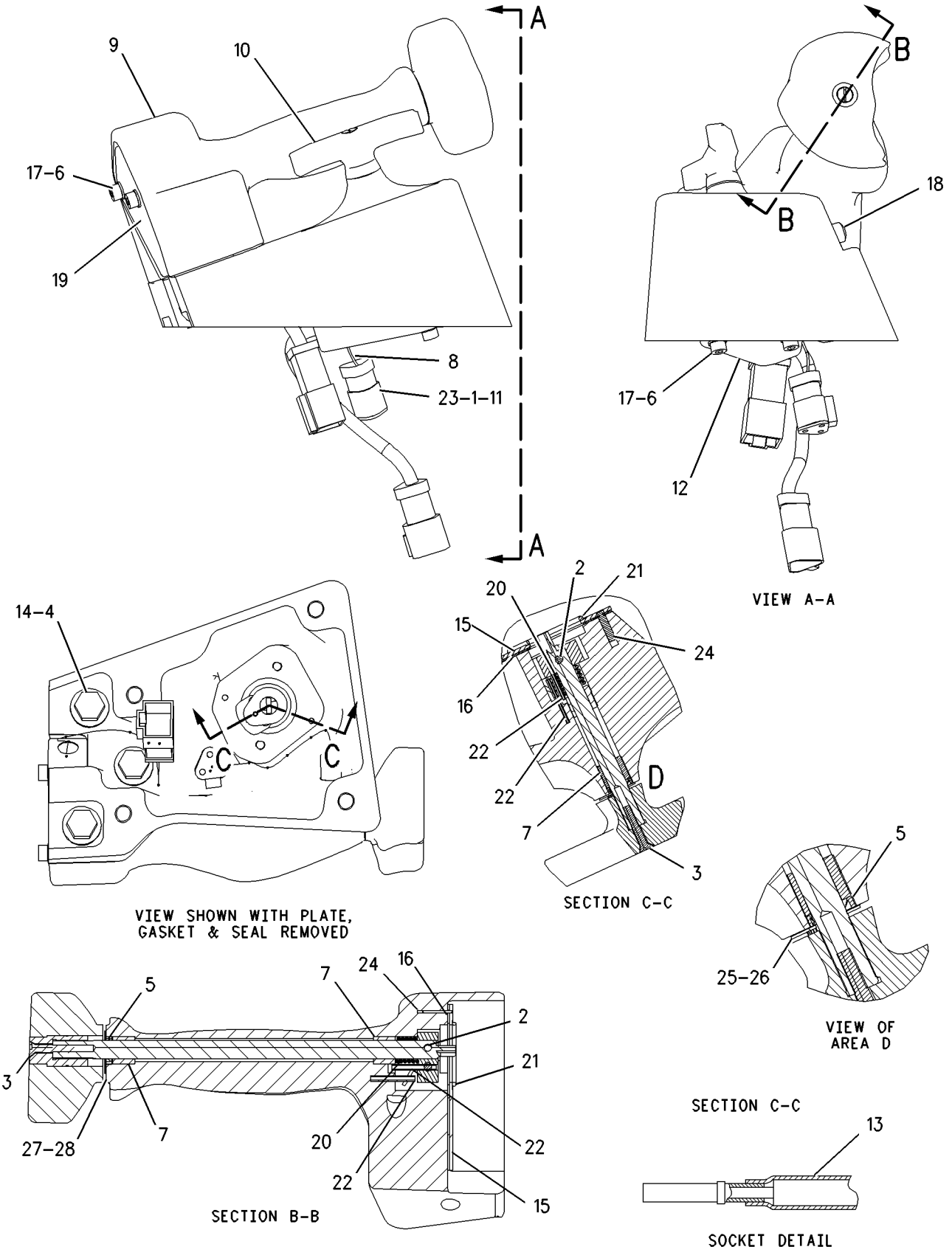

GRAPHIC #1 g00795595

OPERATOR STATION

103-5526 CONTROL GP-MONITOR SYS DIMMER

S/N: AKT1-UP

PART OF 172-5067 WIRING GP-PLATFORM

SMCS-7490 **i01632625**

NOTE	REF NO	GRAPHIC REF	PART NUMBER	QTY	PART NAME 1 2 3 4 5 6 (PRODUCT LEVEL)	SEE PAGE
	1	1	**5P-9132**	2	SCREW-WASHER HEAD (HEX) (6-32X.19 IN)	
J	2	1	**3E-3383**	1	WEDGE-RECEPTACLE LOCK	
	3	1	**186-3735**	6	PIN-CONNECTOR	
					AVAILABLE REPAIR KIT(S):	
J			**102-8805**	1	KIT-RECEPTACLE (6 PIN)	
J-KIT MARKED J INCLUDES PART MARKED J						

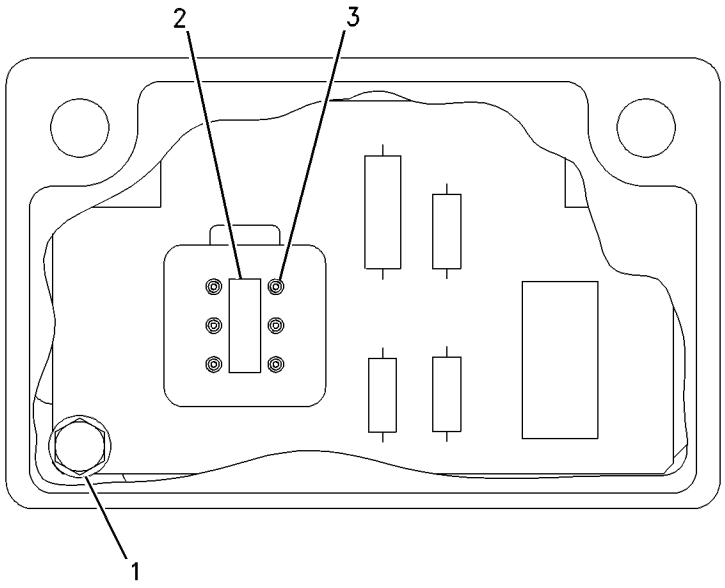

GRAPHIC #1 g00316579

OPERATOR STATION

197-4098 CONVERSION AR-ROPS

S/N: AKT1-UP

AN ATTACHMENT

SMCS-7325 **i01437642**

NOTE	PART NUMBER	QTY	PART NAME 1 2 3 4 5 6 (PRODUCT LEVEL)	SEE PAGE
	3F-6353	8	BOLT (1 1/4-7X2.5IN)	
	5C-6565	4	BOLT (1/2-13X1.25 IN)	
	9U-9957	1	HANDHOLD-LH	
	9U-9956	1	HANDHOLD-RH	
	6I-8212	2	PLATE AS	
	1F-0748	4	NUT-WELD (1/2-13 THD)	
	4K-0684	8	WASHER-HARD (34X55X6MM THK)	
	5P-1076	4	WASHER-HARD (13.5X30X4MM THK)	

OPERATOR STATION

3E-7835 FAN GP-DEFROSTER

S/N: AKT1-UP
PART OF 197-7504 CAB AR
AN ATTACHMENT

SMCS-7316 **i01673946**

NOTE	REF NO	GRAPHIC REF	PART NUMBER	QTY	PART NAME 1 2 3 4 5 6 (PRODUCT LEVEL)	SEE PAGE
	1	1	**2L-8075**	2	TERMINAL (14-16 GA) (4.17MM)	
	2	1	**7H-4543**	1	SCREW-TAPPING (NO10X.375 IN)	
	3	1	**1V-6652**	1	SWITCH GP-TOGGLE (FAN CONTROL)	
	4	1	**6T-3631**	2	NUT-HEX (15/32-32 THD)	
	5	1	**6T-3632**	1	LOCKWASHER	
		1	**6T-3633**	1	RING-LOCKING (12.3X18.26X.79MM THK)	
	6	1	**6V-8374**	3	SCREW-MACHINE (6-32X0.25 IN)	
		1	**3L-8187**	3	LOCKWASHER	
	7	1	**6N-6984**	1	MOUNT	
	8	1	**1M-1230**	2	NUT & LOCK AS	
	9	1	**4B-4274**	2	WASHER (5.5X13X1.2MM THK)	
	10	1	**9B-7237**	1	BOLT (3/8-16X1.25 IN)	
	11	1	**3E-7838**	1	BRACKET AS	
	12	1	**4B-4276**	1	WASHER (7X16X1.6MM THK)	
	13	1	**6T-9255**	1	PLATE	
	14	1	**6T-9256**	2	WASHER (7.14X12.7X1.6MM THK)	
	15	1	**6T-8943**	1	PLATE	
	16	1	**8T-4222**	1	WASHER-PLATED (11X32X2.5MM THK)	
	17	1	**2D-6235**	3	LOCKNUT (1/4-20 THD)	
	18	1	**7L-8316**	1	SETSCREW-SOCKET (10-32X.25IN)	
	19	1	**8T-9368**	1	BOLT (1/4-20X2.25 IN)	
	20	1	**3D-8748**	1	FAN AS	
	21	1	**3E-7839**	1	BRACKET AS	
	22	1	**3E-7837**	1	BASE AS	
		1	**9F-2978**	1	NUT-WELD (3/8-16 THD)	
	23	1	**3D-8749**	1	GUARD	
	24	1	**174-1503**	1	MOTOR AS-ELECTRIC	
	25	1	**2L-8075**	2	TERMINAL (14-16 GA) (4.17MM) (FOR NO. 8 SCREW)	
	26	1	**2L-8076**	1	TERMINAL-CRIMP (14-16 GA) (FOR NO. 10 SCREW)	
	27	1	**7X-0264**	1	BOLT (1/4-20X2.50 IN)	

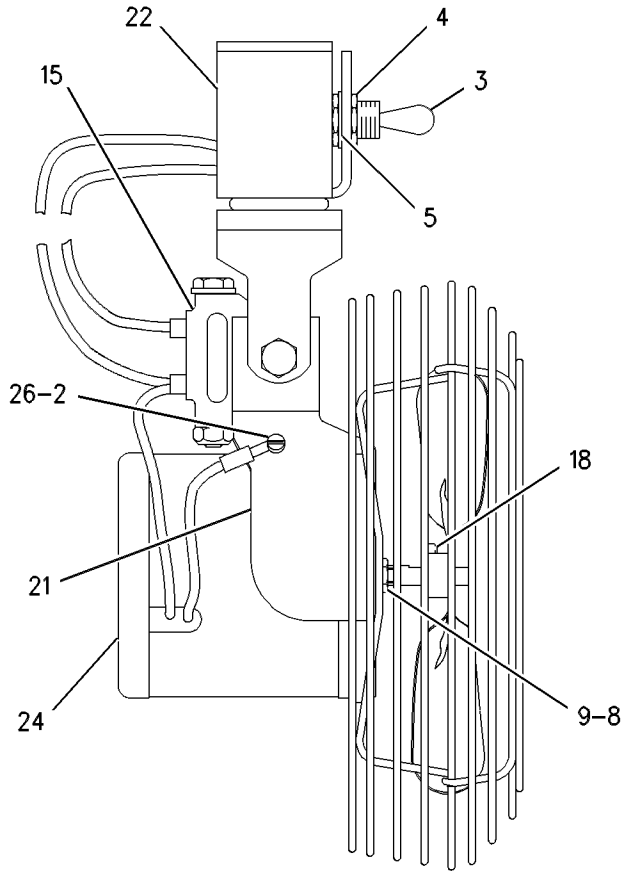

VIEW A-A

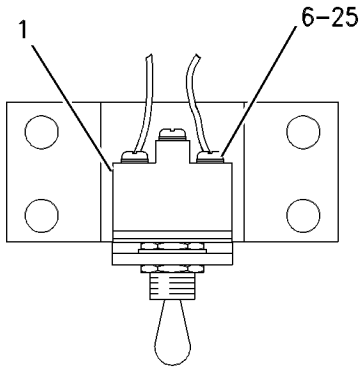

VIEW B-B

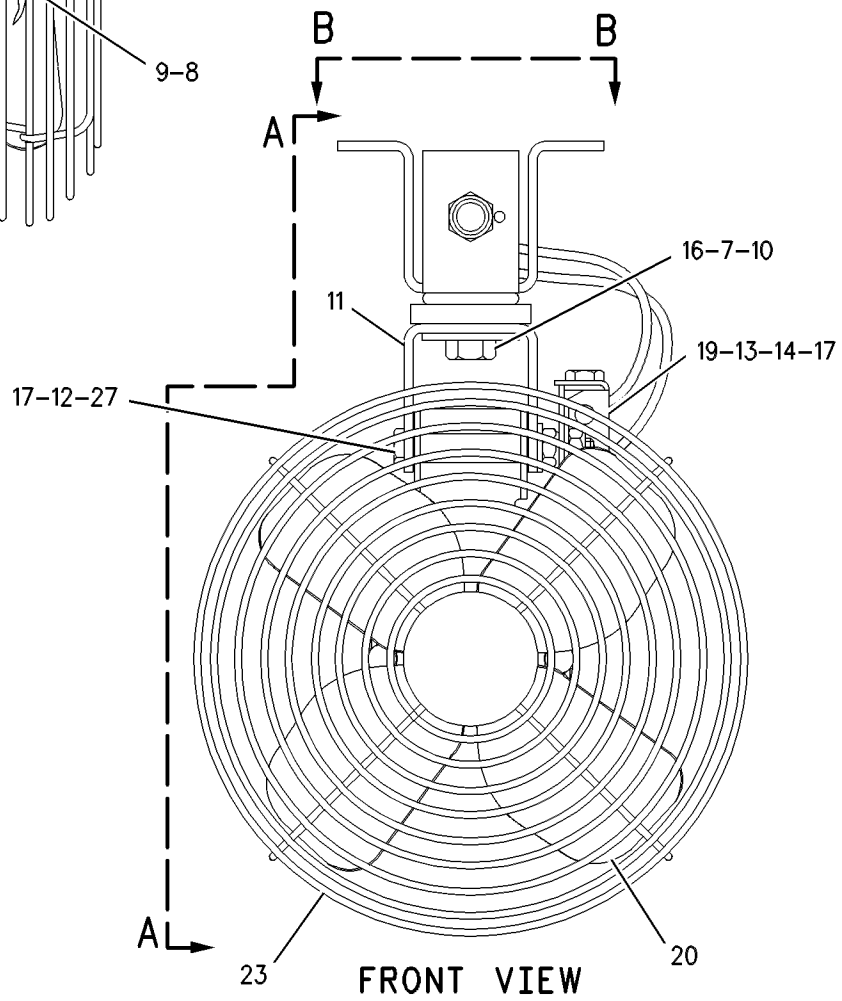

FRONT VIEW

GRAPHIC #1 g00537615

OPERATOR STATION

127-9136 HEATER GP-CAB

S/N: AKT1-UP
ELECTRONIC WATER VALVE
PART OF 157-2151 HEATER GP-CAB

SMCS-7304 **i01701357**

NOTE	REF NO	GRAPHIC REF	PART NUMBER	QTY	PART NAME 1 2 3 4 5 6 (PRODUCT LEVEL)	SEE PAGE
	1	1	**3E-0400**	2	WHEEL-BLOWER	
C	2	1	**3S-2093**	5	STRAP-CABLE	
M	3	1	**5C-9553**	29	BOLT (M6X1X16MM)	
	4	1	**5P-4115**	14	WASHER-HARD (7.2X19X2MM THK)	
	5	1	**5P-6670**	1	FILM-INSTRUCTION (WATER IN/WATER OUT)	
	6	1	**6T-6708**	2	WASHER (7X28.6X4.1MM THK)	
	7	1	**6V-1668**	2	WASHER (6.5X29.1X3MM THK)	
	8	1	**8C-3756**	1	FILM-IDENTIFICATION (GROUP & SEQUENCE NO.)	
	9	1	**8C-4586**	2	CLAMP	
	10	1	**8P-5141**	2	PLATE-ORIFICE	
	11	1	**8T-4205**	30	WASHER-HARD (7.2X14.5X2MM THK)	
	12	1	**9X-2488**	6	CLAMP-HOSE	
M	13	1	**9X-8498**	1	BOLT (M6X1.0X180MM)	
	14	1	**091-8792**	2	CLIP	
	15	1	**125-9740**	1	RESISTOR	
M	16	1	**129-3178**	16	LOCKNUT (M6X1 THD)	
	17	1	**130-9214**	1	GASKET	
	18	1	**130-9215**	1	GASKET	
	19	1	**130-9216**	1	GASKET	
	20	1	**130-9218**	1	GASKET	
	21	1	**130-9219**	1	GASKET	
	22	1	**130-9220**	1	GASKET	
	23	1	**130-9221**	1	GASKET	
	24	1	**130-9224**	1	COIL AS-HEATER	
	25	1	**130-9227**	1	COVER	
	26	1	**130-9228**	1	CASE AS	
		1	**6T-6686**	2	PIN	
M		1	**6V-9632**	15	NUT-WELD (M6X1 THD)	
		1	**7T-1099**	1	LINK	
	27	1	**130-9233**	1	HOUSING AS	
M		1	**6V-9632**	2	NUT-WELD (M6X1 THD)	
	28	1	**130-9234**	1	PAN AS-HEATER	
	29	1	**130-9235**	1	DOOR AS	
	30	1	**131-0545**	1	PLATE AS	
	31	1	**131-2441**	1	COVER	
	32	1	**131-5354**	1	TUBE AS	
	33	1	**132-3871**	1	GASKET	
	34	1	**132-5793**	4	SCREW-WASHER HD (4-40X0.25 IN)	
C	35	1	**210-7291**	1	VALVE AS (WATER)	
		1	**8T-8737**	1	PLUG-SEAL	
		1	**9W-0852**	5	PIN-CONNECTOR	
		1	**102-8805**	1	KIT-RECEPTACLE (6 PIN)	
					(INCLUDES RECEPTACLE AS & WEDGE)	
	36	1	**172-9291**	1	HARNESS AS (BLOWER MOTOR)	
	37	1	**172-9292**	1	HARNESS AS (FAN SPEED SWITCH)	
C	38	1	**174-1494**	1	MOTOR GP-ELECTRIC (27 VOLT)	
		1	**3E-3365**	1	WEDGE-RECEPTACLE LOCK (2 PIN)	
		1	**9W-0852**	2	PIN-CONNECTOR	
		1	**102-8802**	1	KIT-RECEPTACLE (2 PIN)	
					(INCLUDES RECEPTACLE AS & WEDGE)	
BD	39	1	**5P-5908**		SEAL	
	40	1	**149-8218**	1	CONTROL AS-BOARD	
C	41	1	**5V-1474**	4	SCREW-FORMING (10-16X0.625 IN)	
	42	1	**4P-7581**	1	CLIP (LADDER)	
CM	43	1	**6V-7728**	1	BOLT (M6X1.0X45MM)	

127-9136 **HEATER GP-CAB** ***(contd.)*** **i01701357**

NOTE	REF NO	GRAPHIC REF	PART NUMBER	QTY	PART NAME 1 2 3 4 5 6 (PRODUCT LEVEL)	SEE PAGE
E	44	1	**136-1953**		HOSE (30CM)	
E	45	1	**136-1953**		HOSE (47CM)	
E	46	1	**136-1953**		HOSE (8CM)	
M	47	1	**8T-4189**	1	BOLT (M8X1.25X20MM)	
	48	1	**4S-1962**	1	CLIP	
M	49	1	**3T-0852**	1	LOCKNUT (M8)	
	50	1	**133-6036**	1	RECTIFIER AS	
	51	1	**5P-4116**	2	WASHER-HARD (8.8X20.5X2MM THK)	
	52	1	**5P-5969**	1	SEAL	

B-USE AS REQUIRED
C-CHANGE FROM PREVIOUS TYPE
D-ORDER BY THE METER
E-ORDER BY THE CENTIMETER
M-METRIC PART

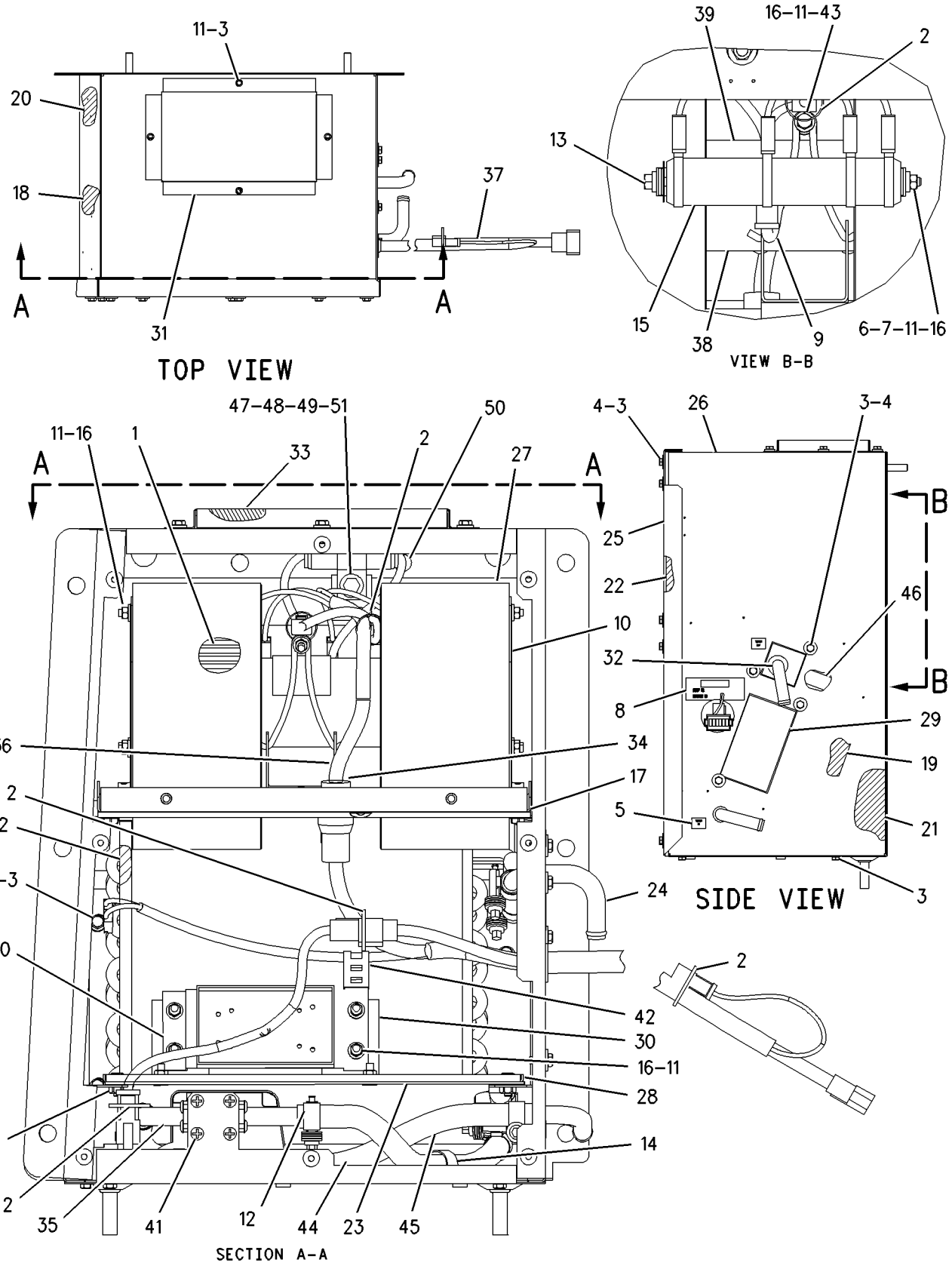

GRAPHIC #1

g00876183

MEMORANDA

OPERATOR STATION

157-2151 HEATER GP-CAB

S/N: AKT1-UP

PART OF 171-1265 CAB AR

SMCS-7304 **i01665081**

NOTE	REF NO	GRAPHIC REF	PART NUMBER	QTY	PART NAME 1 2 3 4 5 6 (PRODUCT LEVEL)	SEE PAGE
	1	1	**6J-0488**	3	SCREW-BUTTON HEAD (3/8-16X0.875 IN)	
	2	1	**5P-1075**	6	WASHER-HARD (10.2X22.5X3MM THK)	
	3	1	**144-3579**	1	DUCT-AIR	
	4	1	**8E-5975**	1	GASKET	
	5	1	**5P-5824**	1	HOLDER-ASH TRAY	
	6	1	**5P-5454**	1	ASHTRAY	
	7	1	**6K-4936**	5	BOLT-LOCKING (3/8-16X0.625 IN)	
	8	1	**6B-2882**	5	SPACER (.406X.75X.312 IN THK)	
	9	1	**7T-1890**	1	FILTER-AIR (CAB) (STANDARD)	
					—OR—	
A		1	**175-2832**	1	FILTER-AIR (CAB) (ODOR REDUCTION)	
					—OR—	
A		1	**175-2839**	1	FILTER-AIR (CAB) (HIGH EFFICIENCY)	
	10	1	**134-3992**	1	DOOR AS	
		1	**9F-6445**	2	NUT-WELD (1/4-20 THD)	
	11	1	**8E-1356**	2	KNOB AS	
					(EACH INCLUDES)	
		1	**8T-7566**	1	PIN-SPRING	
	12	1	**8E-5959**	1	SEAL	
	13	1	**8E-9253**	1	GASKET	
	14	1	**156-8180**	1	FILM-PANEL (AIR CONDITIONER & BLOWER)	
	15	1	**4L-6454**	8	BOLT (3/8-16X1 IN)	
	16	1	**7X-0772**	8	WASHER-HARD (10.2X25.5X2.5MM THK)	
	17	1	**133-5082**	1	DUCT-AIR	
	18	1	**8E-3250**	1	GASKET	
	19	1	**114-5985**	1	PLATE AS	
		1	**2R-2376**	2	WASHER (7X16X.8MM THK)	
		1	**6P-6926**	2	SCREW-KNURLED	
	20	1	**107-0266**	1	FILTER-CAB AIR (STANDARD)	
					—OR—	
A		1	**175-2841**	1	FILTER-AIR (CAB) (HIGH EFFICIENCY)	
	21	1	**6V-3884**	2	SCREW-HEX SOCKET (1/4-20X0.5 IN)	
	22	1	**116-3119**	1	PLATE	
	23	1	**2P-4339**	1	NUT-JAM (7/16-20 THD)	
	24	1	**157-1361**	1	SWITCH AS (BLOWER SPEED)	
		1	**9W-0852**	6	PIN-CONNECTOR	
		1	**102-8805**	1	KIT-RECEPTACLE (6 PIN)	
					(INCLUDES RECEPTACLE AS & WEDGE)	
	25	1	**110-6109**	1	KNOB-CONTROL (BLOWER SPEED)	
	26	1	**6T-3990**	1	SWITCH AS-ROCKER (AIR CONDITIONER ON/OFF)	
		1	**3L-8187**	2	LOCKWASHER	
		1	**6V-8374**	2	SCREW-MACHINE (6-32X0.25 IN)	
	27	1	**6V-8927**	2	BOLT-SOCKET HEAD (6-32X0.5 IN)	
	28	1	**6T-6329**	1	BEZEL-ROCKER SWITCH	
	29	1	**127-4540**	1	POTENTIOMETER AS (CAB TEMPERATURE CONTROL)	
		1	**102-8803**	1	KIT-RECEPTACLE (3 PIN)	
					(INCLUDES RECEPTACLE AS & WEDGE)	
		1	**3S-2093**	1	STRAP-CABLE	
		1	**9W-0852**	3	PIN-CONNECTOR	
	30	1	**030-8535**	3	BOLT-LOCKING (3/8-16X0.875 IN)	
	31	1	**130-4846**	1	WIRE AS	
Y	32	1	*127-9136*	1	HEATER GP-CAB	696
M	33	1	**8T-4171**	3	BOLT (M6X1X12MM)	
	34	1	**9X-8256**	3	WASHER (6.6X12X2MM THK)	
	35	1	**2H-3920**	1	LOCKWASHER	
	36	1	**8T-7566**	2	PIN-SPRING	

157-2151 **HEATER GP-CAB** *(contd.)* **i01665081**

NOTE	REF NO	GRAPHIC REF	PART NUMBER	QTY	PART NAME 1 2 3 4 5 6 (PRODUCT LEVEL)	SEE PAGE
	37	1	**7X-0575**	2	WASHER-HARD (10.2X22.5X5MM THK)	
	38	1	**134-3993**	2	PLATE AS	
	39	1	**8Y-6388**	8	LOUVER AS	
	40	1	**104-2091**	16	SCREW-FLAT HEAD (6-20X0.5 IN)	
BD	41	1	**5P-5643**		SEAL	
BD	42	1	**5P-5755**		SEAL	
	43	1	**1M-4543**	1	GROMMET	
	44	1	**110-6109**	1	KNOB-CONTROL (CAB TEMPERATURE)	
	45	1	**116-2590**	1	SEAL	
	46	1	**116-2589**	1	PLATE	

A-NOT PART OF THIS GROUP
B-USE AS REQUIRED
D-ORDER BY THE METER
M-METRIC PART
Y-SEPARATE ILLUSTRATION

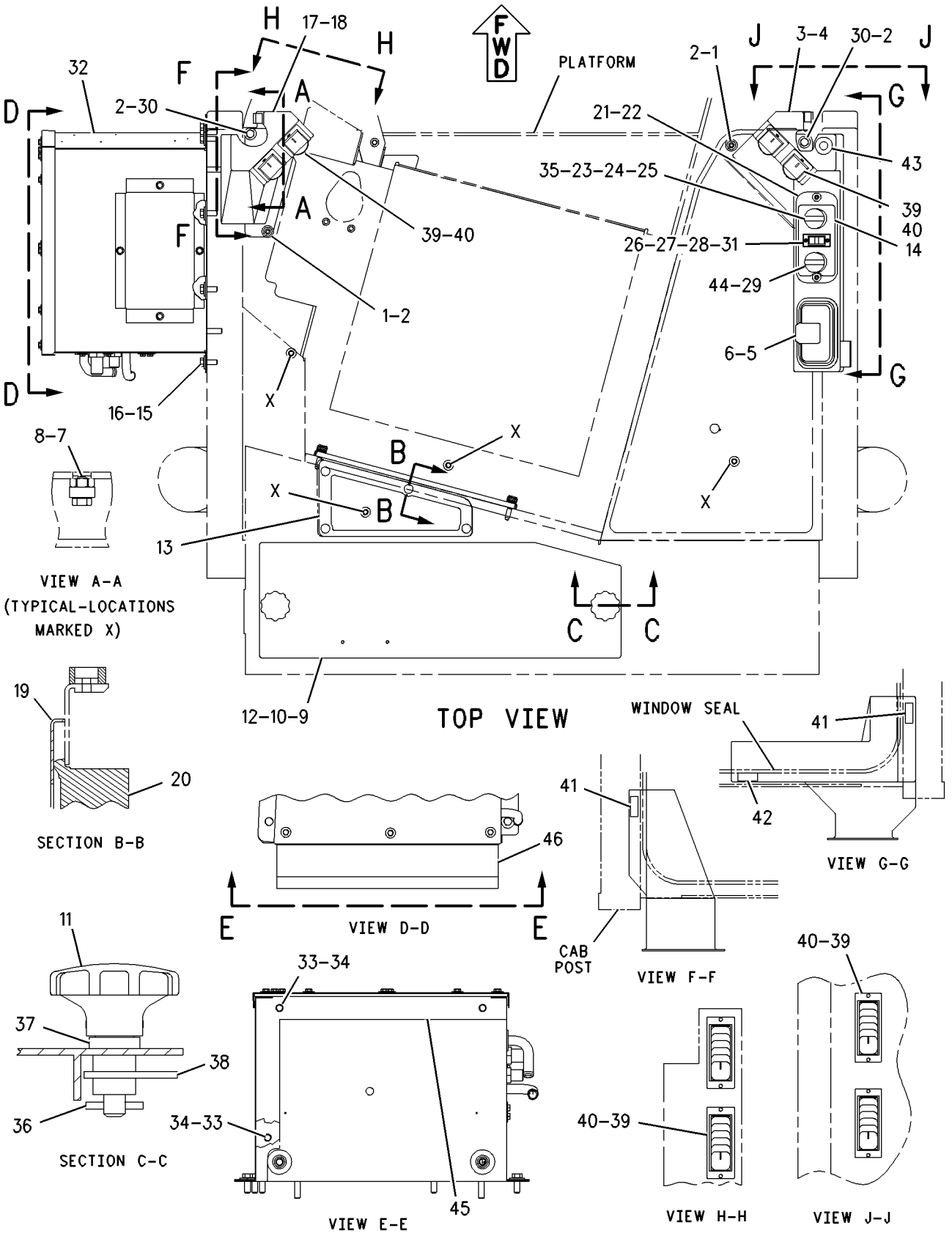

GRAPHIC #1 g00861610

MEMORANDA

OPERATOR STATION

174-2231 HOUSING GP-SEAT SUSPENSION

S/N: AKT1-UP
PART OF 160-7165 SUSPENSION GP-SEAT
ALSO AN ATTACHMENT

SMCS-7321 **i01564914**

NOTE	REF NO	GRAPHIC REF	PART NUMBER	QTY	PART NAME 1 2 3 4 5 6 (PRODUCT LEVEL)	SEE PAGE
	1	1	**1Y-7927**	1	PIN	
	2	1	**2D-6235**	2	LOCKNUT (1/4-20 THD)	
	3	1	**2M-7819**	4	RING-RETAINING	
	4	1	**3D-2975**	2	RING-RETAINING	
	5	1	**4B-5059**	6	WASHER (29.5X15X2.5MM THK)	
	6	1	**4N-2927**	2	RACE-THRUST BEARING	
	7	1	**5D-4822**	2	RING-RETAINING	
	8	1	**5P-8445**	4	RING-RETAINING	
	9	1	**5V-0770**	2	BOLT-CARRIAGE	
	10	1	**7M-7219**	1	BEARING-THRUST	
	11	1	**7V-5191**	2	SPACER (28X10X7.1MM THK)	
	12	1	**8L-8413**	2	STRAP-CABLE	
	13	1	**8S-7803**	4	RING-RETAINING	
	14	1	**8Y-6041**	1	ARM AS	
	15	1	**8Y-6045**	1	CAM	
	16	1	**8Y-6046**	1	PIN	
	17	1	**8Y-6047**	2	PIN	
	18	1	**8Y-6060**	2	ROLLER	
	19	1	**8Y-6062**	1	LINK-ACTUATOR-RH	
	20	1	**8Y-6063**	1	LINK-ACTUATOR-LH	
	21	1	**8Y-6064**	2	ROLLER-SLIDER	
	22	1	**8Y-6066**	1	SPRING	
	23	1	**8Y-6067**	1	SPACER (10.54MM THK)	
	24	1	**8Y-6068**	1	NUT (3/8 X 16 THD)	
	25	1	**8Y-6069**	1	ADJUSTER AS	
	26	1	**9X-8918**	3	SCREW-FLAT HEAD (8-32X0.50 IN)	
	27	1	**095-0878**	1	PIN-SPRING	
	28	1	**131-4242**	1	BOLT (3/8-16X5.18 IN)	
	29	1	**131-5167**	1	KNOB AS-WEIGHT	
	30	1	**161-5967**	1	SHAFT	
	31	1	**174-2237**	1	HOUSING AS-UPPER	
JZ	32	1		1	KNOB-HEIGHT	
JZ	33	1		1	KNOB-HEIGHT	
LZ	34	1		2	SPRING	
LZ	35	1		2	BUSHING	
VZ	36	1		2	SPRING	
VZ	37	1		2	SPACER	
VZ	38	1		2	BUSHING-GUIDE	
VZ	39	1		2	ROD	
PZ	40	1		1	TAPE-INDICATOR	
PZ	41	1		1	GUIDE	
SZ	42	1		1	PIN	
SZ	43	1		1	FOLLOWER-CAM	
TZ	44	1		1	PIN	
TZ	45	1		1	FOLLOWER-CAM	
UZ	46	1		2	ROLLER AS	
UZ	47	1		1	ROLLER AS	
QZ	48	1		3	BUMPER	
					AVAILABLE REPAIR KIT(S):	
J			**8Y-5945**	1	KIT-SUSPENSION KNOB	
L			**8Y-6859**	1	KIT-SPRING	
V			**8Y-6860**	1	KIT-SPRING	
P			**100-3224**	1	KIT-INDICATOR	
Q			**100-5179**	1	KIT-BUMPER	

174-2231 HOUSING GP-SEAT SUSPENSION *(contd.)* i01564914

NOTE	REF NO	GRAPHIC REF	PART NUMBER	QTY	PART NAME 1 2 3 4 5 6 (PRODUCT LEVEL)	SEE PAGE
S			**108-4086**	1	KIT-FOLLOWER	
T			**108-4087**	1	KIT-FOLLOWER	
U			**108-4103**	1	KIT-BEARING	

J-KIT MARKED J INCLUDES PARTS MARKED J
L-KIT MARKED L INCLUDES PARTS MARKED L AND RETAINING RING
P-KIT MARKED P INCLUDES PARTS MARKED P AND CABLE STRAP
Q-KIT MARKED Q INCLUDES PARTS MARKED Q
S-KIT MARKED S INCLUDES PARTS MARKED S
T-KIT MARKED T INCLUDES PARTS MARKED T
U-KIT MARKED U INCLUDES PARTS MARKED U
V-KIT MARKED V INCLUDES PARTS MARKED V
Z-NOT SERVICED SEPARATELY

174-2231 HOUSING GP-SEAT SUSPENSION *(contd.)* i01564914

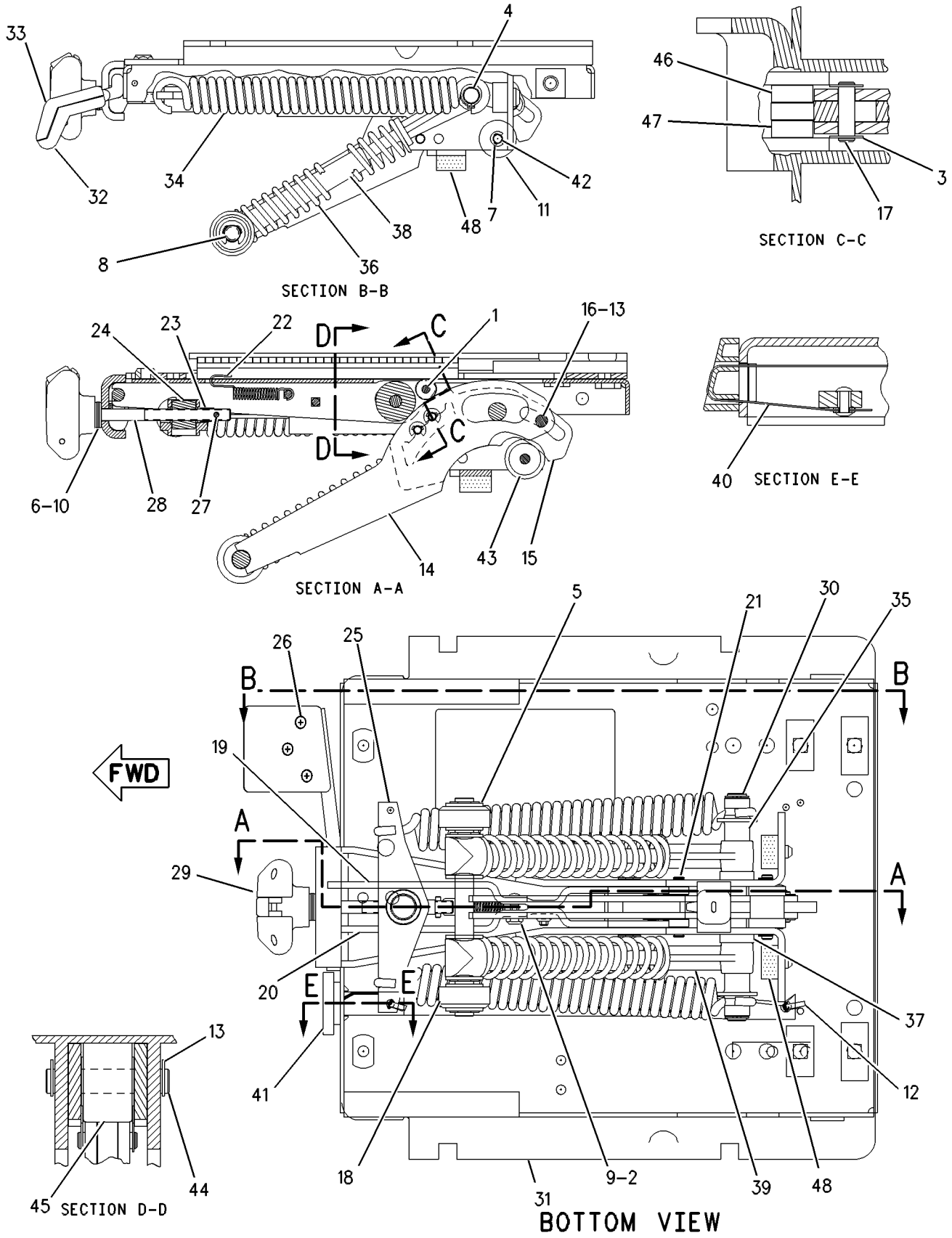

GRAPHIC #1 g00608620

OPERATOR STATION

8E-3284 INSTALLATION GP-RADIO

S/N: AKT1-UP
PART OF 157-4817 CAB AR
ALSO AN ATTACHMENT

SMCS-7338 **i01665087**

NOTE	REF NO	GRAPHIC REF	PART NUMBER	QTY	PART NAME 1 2 3 4 5 6 (PRODUCT LEVEL)	SEE PAGE
	1	1	**8E-9654**	1	PLATE AS	
		1	**9V-7451**	1	NUT-WELD (1/4-20 THD)	
	2	1	**4N-9915**	3	GROMMET AS	
	3	1	**6V-7646**	3	WASHER-HARD (7.2X25X2MM THK)	
	4	1	**0S-1616**	3	BOLT (1/4-20X1 IN)	
	5	1	**8E-9656**	1	BRACKET	
	6	1	**6V-8969**	1	SCREW-BUTTON HEAD	
	7	1	**9W-3073**	1	CABLE AS-COAXIAL	
	8	1	**217-8433**	1	FILM-NOTICE (RADIO)	
	9	1	**8K-1433**	1	GROMMET	
	10	1	**3E-4356**	3	WASHER-HARD (30X17.5X6MM THK)	
	11	1	**168-8772**	2	SPEAKER AS	
	12	1	**4B-2047**	8	NUT (10-24 THD)	
		1	**2N-3480**	8	SCREW-MACHINE (10-24X0.75 IN)	
	13	1	**8E-1118**	1	ANTENNA AS	

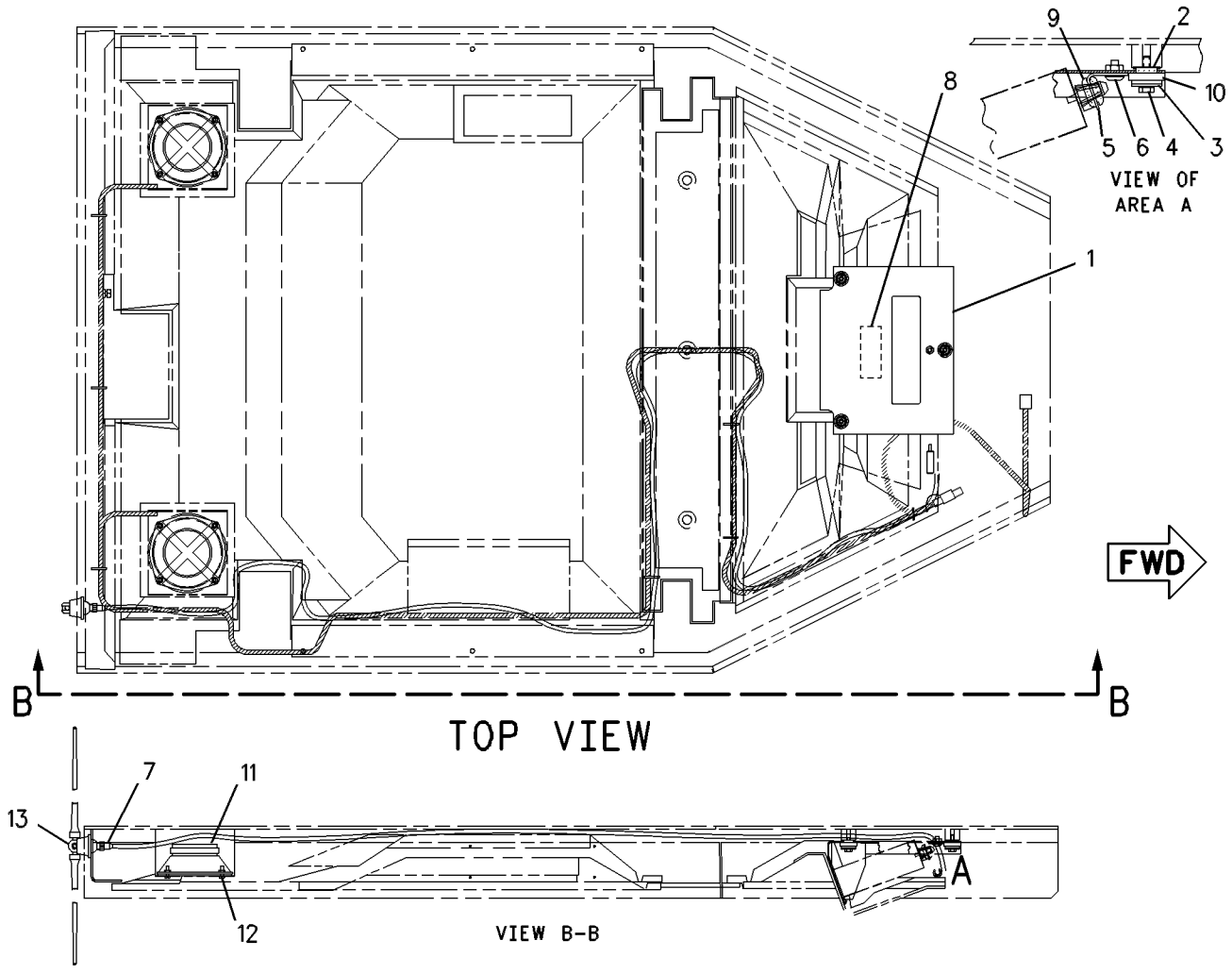

GRAPHIC #1 g00328993

OPERATOR STATION

170-7082 INSTRUMENT GP

S/N: AKT1-UP

PART OF 171-5801 CHASSIS AR

SMCS-7450, 7451 **i01665078**

NOTE	REF NO	GRAPHIC REF	PART NUMBER	QTY	PART NAME 1 2 3 4 5 6 (PRODUCT LEVEL)	SEE PAGE
	1	1	**3T-0304**	1	BASE-INDICATOR LIGHT	
		1	**6V-8374**	2	SCREW-MACHINE (6-32X0.25 IN)	
	2	1	**6I-8921**	1	FRAME AS	
		1	**1V-8442**	6	NUT (1/4-20 THD)	
	3	1	**6T-7058**	1	LENS-RED	
	4	1	**6Y-5094**	1	CABLE	
	5	1	**7N-1996**	1	LAMP (24 VOLT)	
		1	**171-1033**	1	LAMP-RED	
	6	1	**8C-5608**	4	SPACER (6.5X9.5X25.4MM THK)	
	7	1	**8E-2514**	1	HINGE	
	8	1	**9X-0438**	1	CONTROL AS-ELECTRONIC (DASH LIGHT)	
	9	1	**197-5110**	1	FILM-PANEL	
	10	1	**9X-9896**	8	MOUNT (ISOLATION)	
	11	1	**100-5568**	1	BEZEL	
M	12	1	**105-3480**	4	BOLT-HEX SOCKET (M5X0.8X16MM)	
	13	1	**106-4454**	1	PLATE	
	14	1	**197-5111**	1	FILM-PANEL	
	15	1	**116-7880**	3	BRACKET	
Y	16	1	**125-3401**	1	CONTROL GP-DISPLAY ELECTRONIC	687
Y	17	1	**125-6806**	1	MODULE GP-SPEEDOMETER & TACH	728
	18	1	**133-9405**	2	SWITCH AS-PUSH BUTTON	
					(EACH INCLUDES)	
		1	**3E-3371**	1	WEDGE-RECEPTACLE LOCK (3 PIN)	
		1	**3K-0835**	1	NUT (5/8-24 THD)	
		1	**6F-0253**	1	LOCKWASHER	
		1	**8T-8729**	3	PIN-CONNECTOR	
		1	**102-8803**	1	KIT-RECEPTACLE (3 PIN)	
					(INCLUDES RECEPTACLE AS & WEDGE)	
	19	1	**138-8886**	3	BOLT-SOCKET HEAD	
Y	20	1	**179-1730**	1	MODULE GP-MESSAGE CENTER	724
	21	1	**156-9421**	1	DASH AS	
		1	**2D-6327**	4	SCREW-MACHINE	
	22	1	**164-9933**	1	FILM-PANEL	
Y	23	1	**166-6928**	1	MODULE GP-QUAD GAUGE	727
	24	1	**179-5978**	1	FILM-PANEL	
	25	1	**107-1964**	8	SCREW-PAN HEAD (6-19X0.5 IN)	
	26	1	**2F-7306**	4	SCREW-MACHINE (6-32X.25 IN)	
	27	1	**3E-9865**	4	LOCKNUT (1/4-20 THD)	
	28	1	**4P-7581**	4	CLIP	
	29	1	**4P-8134**	2	CLIP	
	30	1	**5P-0537**	3	WASHER-HARD (7.2X14.5X2MM THK)	
	31	1	**5P-2675**	4	BOLT (1/4-20X1.75 IN)	
	32	1	**5P-4115**	18	WASHER-HARD (7.2X19X2MM THK)	
	33	1	**5S-7349**	2	BOLT (1/4-20X0.5 IN)	
	34	1	**6V-3884**	7	SCREW-HEX SOCKET (1/4-20X0.5 IN)	
M	35	1	**6V-7357**	4	BOLT (M6X1.0X25MM)	
	36	1	**8B-4338**	4	SCREW-TAPPING (6-20X.375 IN)	
M	37	1	**8T-4138**	2	BOLT (M6X1X20MM)	
M	38	1	**8T-4171**	6	BOLT (M6X1X12MM)	
	39	1	**8T-4205**	8	WASHER-HARD (7.2X14.5X2MM THK)	

M-METRIC PART
Y-SEPARATE ILLUSTRATION

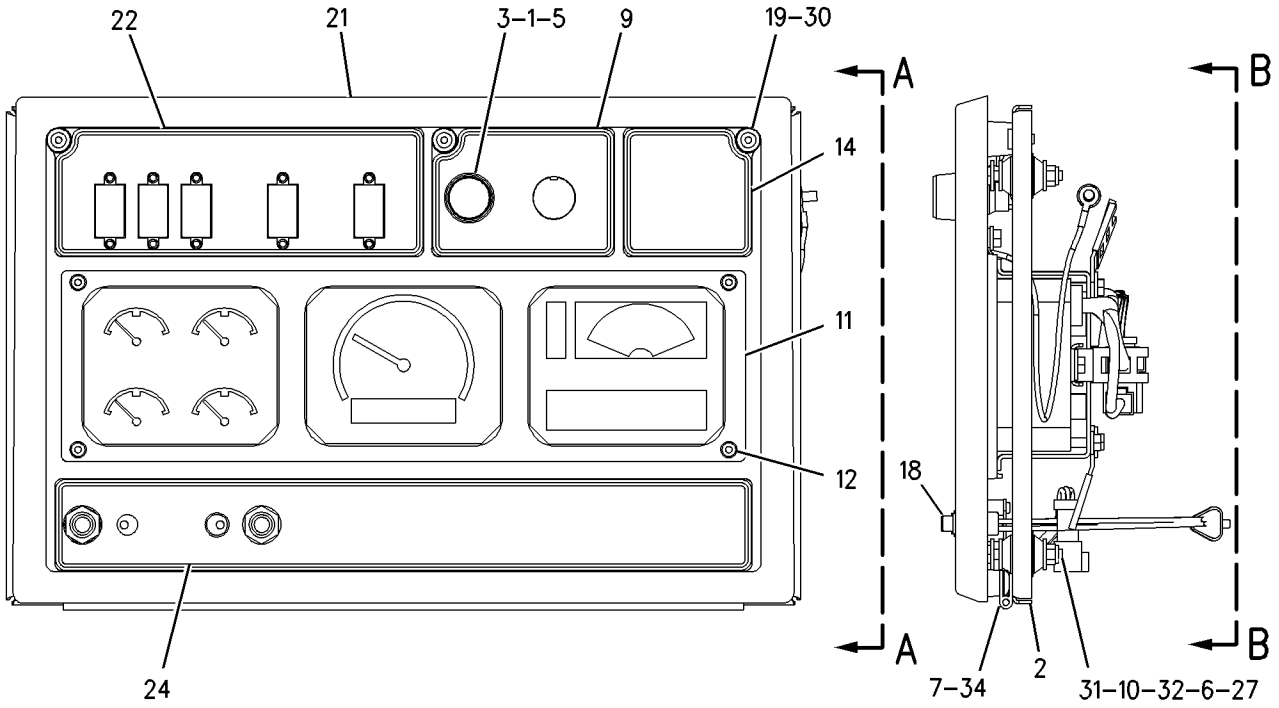

VIEW A-A

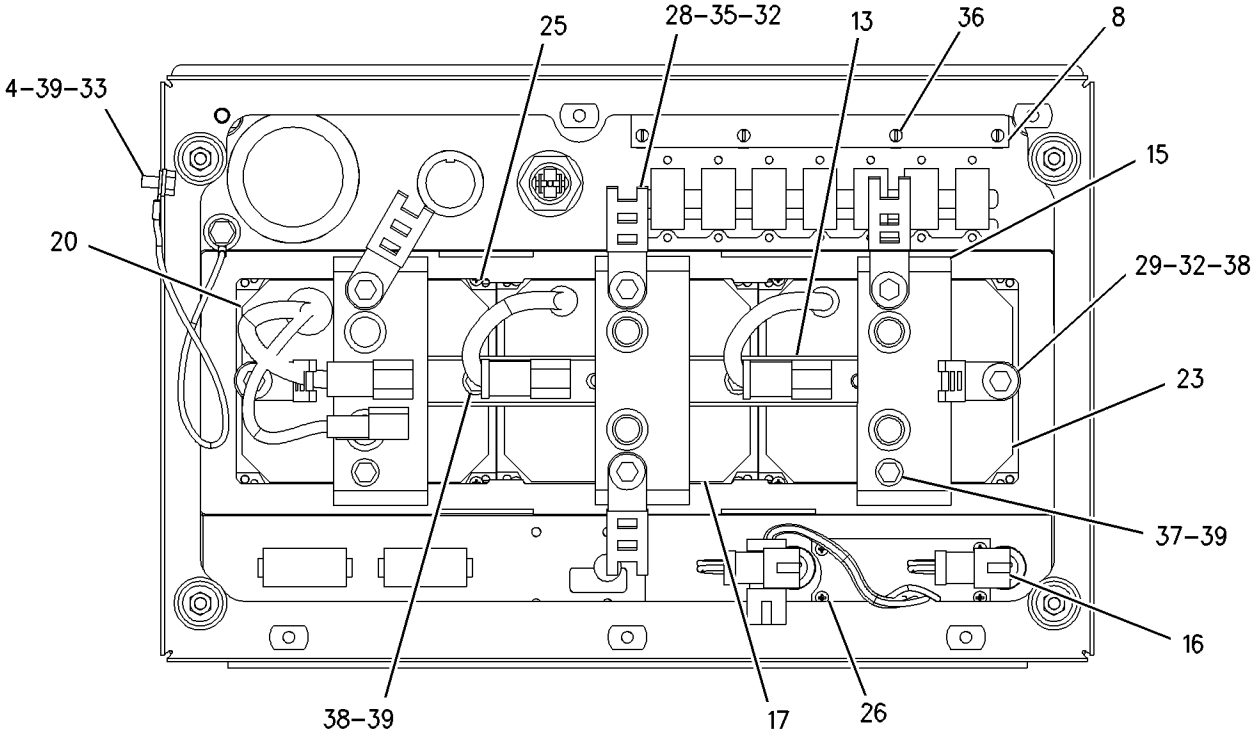

VIEW B-B

GRAPHIC #1 g00861585

OPERATOR STATION

197-2715 KIT-WINDOW

S/N: AKT1-UP

40 PSI ULTRA STRENGTH GLASS. LARGE REAR WINDOW

FIELD INSTALLATION

SMCS-7310 **i01667043**

NOTE	PART NUMBER	QTY	PART NAME 1 2 3 4 5 6 (PRODUCT LEVEL)	SEE PAGE
		1	GLASS (FRONT)	
		2	GLASS (SIDE)	
		2	GLASS (SIDE) (LH)	
		1	GLASS (DOOR) (LH)	
		1	GLASS (DOOR) (RH)	
		1	GLASS (REAR) (LG)	
		2	SHIM (22.2X56.7X0.05MM THK)	
			(INDIVIDUAL PARTS ARE NOT SERVICED SEPARATELY)	
			(SEE FORM SEHS9824-04)	

OPERATOR STATION

8E-3270 LINER GP-CAB

S/N: AKT1-UP
PART OF 157-4817 CAB AR
ALSO AN ATTACHMENT

SMCS-7329 **i01427171**

NOTE	REF NO	GRAPHIC REF	PART NUMBER	QTY	PART NAME 1 2 3 4 5 6 (PRODUCT LEVEL)	SEE PAGE
	1	1	**8E-3271**	1	LINER-REAR	
	2	1	**8E-3272**	1	LINER-FRONT	
	3	1	**8E-3278**	1	COVER AS	
	4	1	**8E-3280**	1	COVER AS-FRONT	
	5	1	**8E-3273**	2	PLATE	
	6	1	**8E-3274**	1	PLATE AS	
	7	1	**8E-3277**	1	COVER	
	8	1	**5S-7379**	2	BOLT (3/8-16X0.875 IN)	
		1	**5P-1075**	2	WASHER-HARD (10.2X22.5X3MM THK)	
	9	1	**102-0288**	2	PLATE	
		1	**008-9792**	2	SCREW-WASHER HEAD	
		1	**8T-4205**	2	WASHER-HARD (7.2X14.5X2MM THK)	
	10	1	**4V-6981**	5	SCREW-BUTTON HEAD (1/4-20X0.75 IN)	
	11	1	**6V-3884**	18	SCREW-HEX SOCKET (1/4-20X0.5 IN)	
	12	1	**6I-9534**	1	COVER (RH DOOR)	
	13	1	**6I-9535**	1	COVER (LH DOOR)	

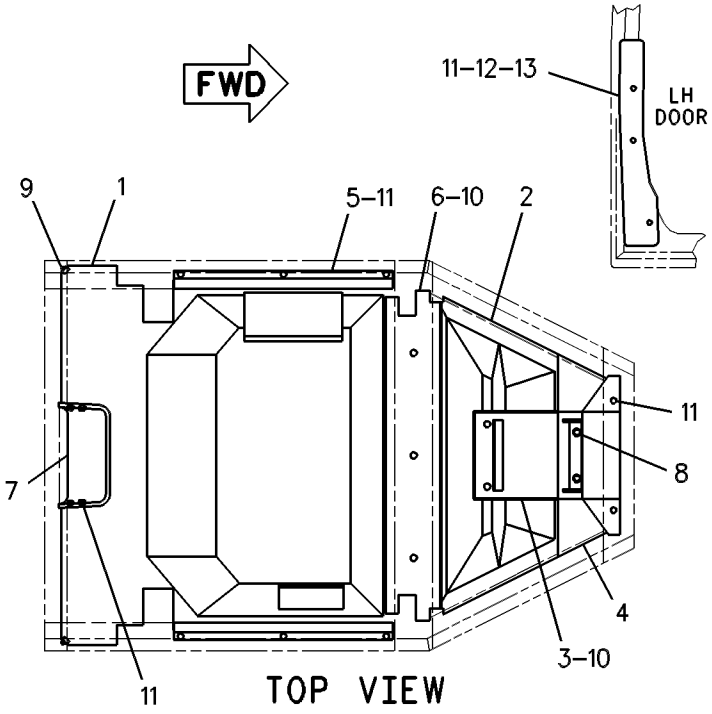

GRAPHIC #1 g00316574

OPERATOR STATION

172-5395 LINES GP-AIR CONDITIONER

S/N: AKT1-UP
PART OF 174-3673 AIR CONDITIONER AR
AN ATTACHMENT

SMCS-1808 **i01683041**

NOTE	REF NO	GRAPHIC REF	PART NUMBER	QTY	PART NAME 1 2 3 4 5 6 (PRODUCT LEVEL)	SEE PAGE
	1	2	**1P-6356**	1	PLATE	
	2	2	**3E-3535**	1	RECEIVER-DRYER GP (REFRIGERANT)	
		2	**7X-2049**	1	TUBE AS-REFRIGERANT ORIFICE	
	3	1	**5D-1026**	2	CLAMP-HOSE	
	4	2	**6T-3643**	1	CIRCUIT BREAKER AS (15 AMP)	
		2	**6V-8376**	2	SCREW-MACHINE (8-32X0.25 IN)	
		2	**9B-7233**	2	LOCKWASHER	
	5	2	**9X-6772**	4	STRAP-CABLE	
	6	2	**103-6100**	2	COUPLER AS-QUICK	
					(EACH INCLUDES)	
		2	**9X-7382**	2	SEAL-O-RING	
	7	2	**114-5333**	1	SWITCH AS-PRESSURE (HIGH/LOW)	
		2	**102-8802**	1	KIT-RECEPTACLE (2 PIN)	
					(INCLUDES RECEPTACLE AS & WEDGE)	
		2	**3E-3365**	1	WEDGE-RECEPTACLE LOCK (2 PIN)	
		2	**8T-8729**	2	PIN-CONNECTOR	
	8	2	**116-6202**	2	BOOT	
I	9	2	**130-6178**	1	HOSE AS	
	10	2	**149-6371**	1	SWITCH AS-PRESSURE (A/C)	
		2	**3E-3365**	1	WEDGE-RECEPTACLE LOCK (2 PIN)	
		2	**8T-8729**	2	PIN-CONNECTOR	
		2	**102-8802**	1	KIT-RECEPTACLE (2 PIN)	
					(INCLUDES RECEPTACLE AS & WEDGE)	
	11	1	**153-3946**	1	BRACKET	
	12	2	**169-7443**	1	TIMER AS-ON DELAY (24 VOLT)	
		2	**8T-8729**	4	PIN-CONNECTOR	
		2	**102-8804**	1	KIT-RECEPTACLE (4 PIN)	
					(INCLUDES RECEPTACLE AS & WEDGE)	
	13	1	**170-0235**	1	ACCUMULATOR-AIR CONDITIONER	
	14	2	**170-5293**	1	HARNESS AS-AIR CONDITIONER	
	15	2	**171-5855**	1	BRACKET AS	
	16	2	**174-4445**	1	HARNESS AS (A/C CONDENSER)	
I	17	1	**178-8037**	1	HOSE AS	
I	18	1	**178-8038**	1	HOSE AS	
I	19	1	**178-8039**	1	HOSE AS	
I	20	2	**178-8040**	1	HOSE AS	
	21	2	**183-6746**	1	FILM-FUSE	
	22	2	**192-7932**	1	WIRE AS	
	23	2	**068-4209**	2	SCREW (8-32X0.75 IN)	
	24	1	**109-1633**	1	CLIP (SLOT)	
	25	1	**109-1634**	1	CLIP (TAB)	
	26	1	**153-6781**	2	U-BOLT	
	27	2	**202-8695**	1	FITTING AS	
		2	**3E-4051**	1	CAP-SEAL (AIR CONDITIONER)(LOW SIDE)	
		2	**3E-4057**	1	VALVE AS-AIR CONDITIONER (LOW SIDE)	
		2	**172-4880**	1	CAP-SEAL (AIR CONDITIONER)	
		2	**180-7180**	1	CORE-VALVE	
	28	2	**202-8696**	1	FITTING AS	
		2	**3E-4052**	1	CAP-SEAL (AIR CONDITIONER)(HIGH SIDE)	
		2	**3E-4058**	1	VALVE AS-AIR CONDITIONER (HIGH SIDE)	
	29	1	**2K-4973**	4	LOCKNUT (3/8-16 THD)	
	30	1,2	**4D-7733**	6	CLIP	
	31	1,2	**4L-6454**	3	BOLT (3/8-16X1 IN)	
	32	2	**4P-7428**	2	CLIP	
	33	2	**4P-7429**	1	CLIP	

172-5395 LINES GP-AIR CONDITIONER *(contd.)* i01683041

NOTE	REF NO	GRAPHIC REF	PART NUMBER	QTY	PART NAME 1 2 3 4 5 6 (PRODUCT LEVEL)	SEE PAGE
	34	1	**4P-7581**	1	CLIP	
	35	1,2	**5M-3062**	5	BOLT (3/8-16X0.75 IN)	
	36	1,2	**5P-1075**	7	WASHER-HARD (10.2X22.5X3MM THK)	
	37	1,2	**6D-4247**	6	CLIP (SLOT)	
	38	1	**8T-2502**	2	BOLT (3/8-16X1.125 IN)	
	39	1,2	**8T-4896**	9	WASHER-HARD (10.2X18.5X2.5MM THK)	
M	40	2	**8T-6466**	1	BOLT (M10X1.50X60MM)	
	41	2	**9B-7237**	1	BOLT (3/8-16X1.25 IN)	
	42	2	**9M-8406**	2	CLIP	
	43	2	**9X-7378**	2	SEAL-O-RING	
	44	2	**9X-7380**	3	SEAL-O-RING	
	45	1,2	**9X-7381**	3	SEAL-O-RING	
	46	1,2	**9X-7382**	2	SEAL-O-RING	
	47	1	**9X-7383**	2	SEAL-O-RING	
	48	2	**9X-7385**	2	SEAL-O-RING	
BD	49	1	**5P-6129**		TUBE	
	50	1	**6D-4246**	1	CLIP	

B-USE AS REQUIRED
D-ORDER BY THE METER
I-SEE HOSE FABRICATION GUIDE
M-METRIC PART

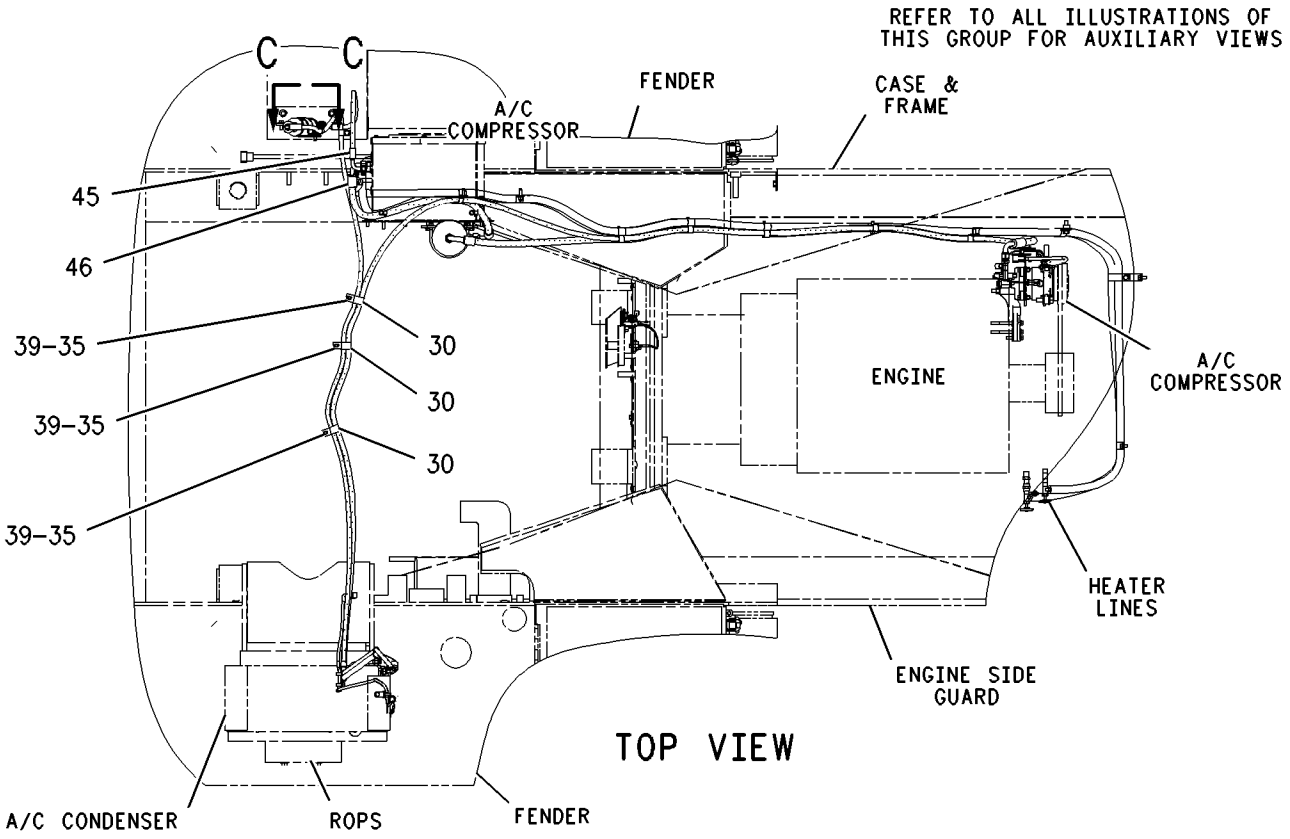

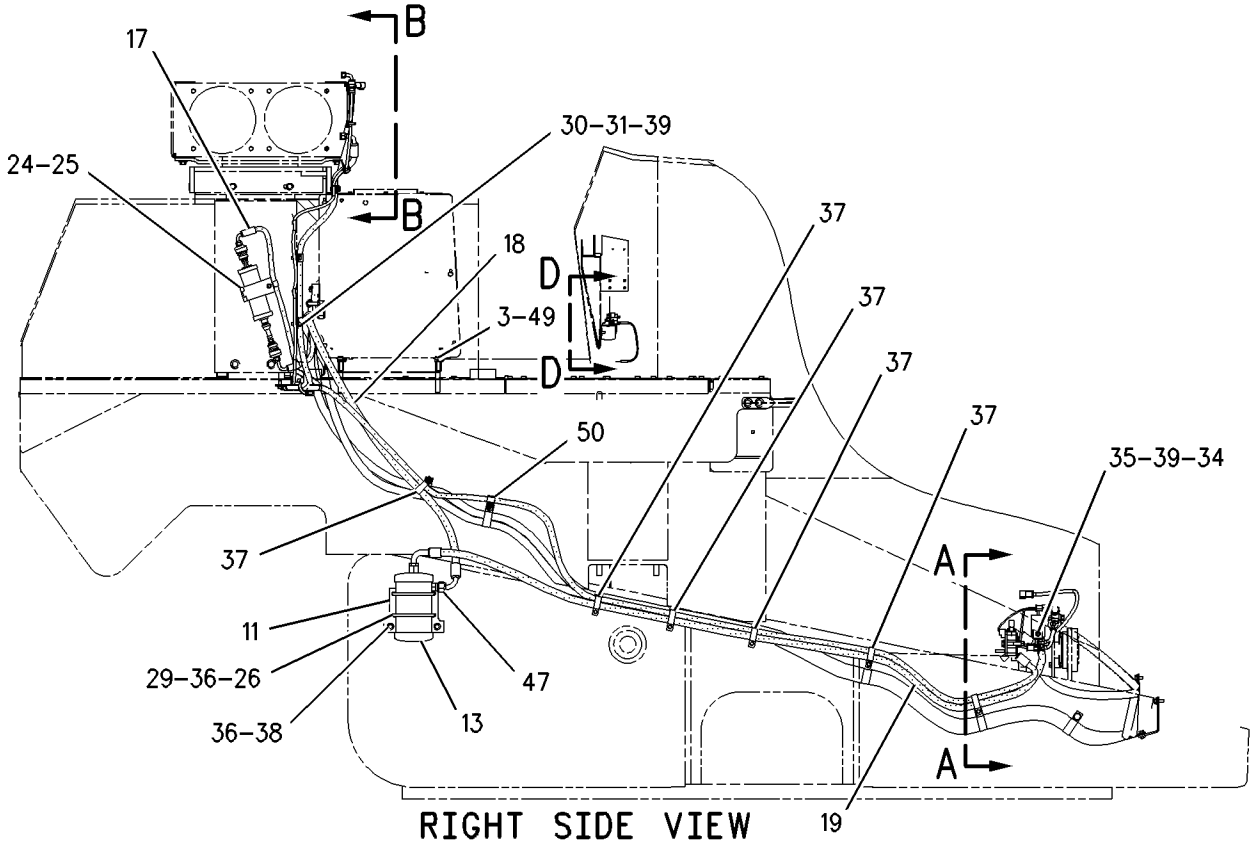

GRAPHIC #1 g00867933

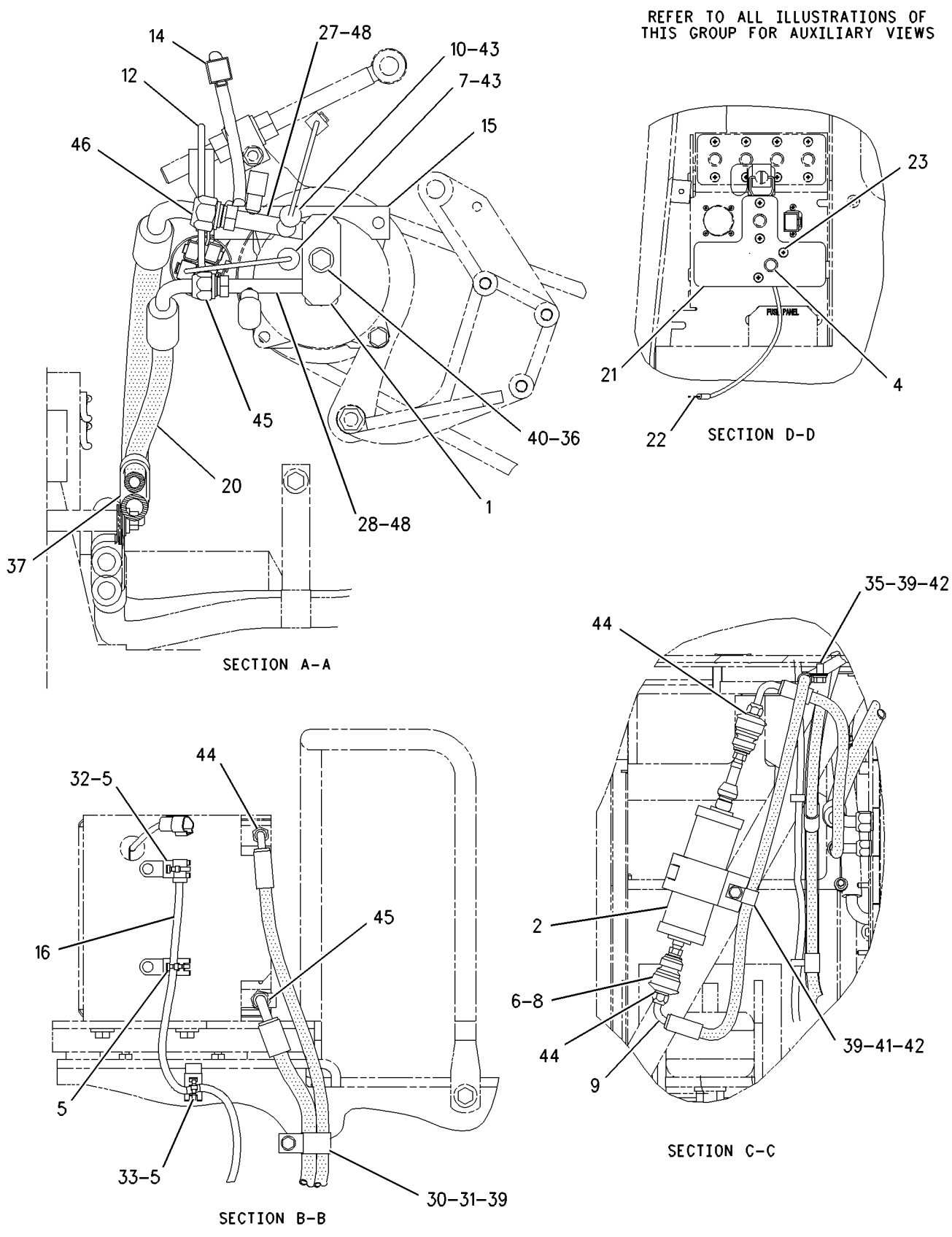

GRAPHIC #2 g00823357

OPERATOR STATION

219-0610 LINES GP-AIR CONDITIONER

S/N: AKT1-UP
PART OF 218-7128 AIR CONDITIONER AR
AN ATTACHMENT

SMCS-1808 **i01691009**

NOTE	REF NO	GRAPHIC REF	PART NUMBER	QTY	PART NAME 1 2 3 4 5 6 (PRODUCT LEVEL)	SEE PAGE
	1	1	**1P-6356**	1	PLATE	
I	2	1	**1Q-1742**	1	HOSE AS	
I	3	1	**1Q-1743**	1	HOSE AS	
	4	1	**175-7162**	1	RECEIVER-DRYER GP (AIR CONDITIONER)	
		1	**7X-2049**	1	TUBE AS-REFRIGERANT ORIFICE	
	5	1	**5D-1026**	2	CLAMP-HOSE	
	6	1	**5P-3948**	1	COUPLING AS-REFRIGERANT	
		1	**7F-8607**	1	SEAL-O-RING	
		1	**107-4399**	1	VALVE AS	
	7	1	**7K-1181**	8	STRAP-CABLE	
	8	1	**7K-3176**	1	COUPLING AS	
		1	**107-4393**	1	VALVE AS	
		1	**107-4394**	1	GASKET	
	9	1	**9X-0358**	1	FITTING AS	
	10	1	**103-6100**	3	COUPLER AS-QUICK	
					(EACH INCLUDES)	
		1	**9X-7382**	2	SEAL-O-RING	
	11	1	**114-5333**	1	SWITCH AS-PRESSURE	
		1	**102-8802**	1	KIT-RECEPTACLE (2 PIN)	
					(INCLUDES RECEPTACLE AS & WEDGE)	
		1	**8T-8729**	2	PIN-CONNECTOR	
	12	1	**116-6202**	2	BOOT	
I	13	1	**130-6178**	1	HOSE AS	
	14	1	**149-6371**	1	SWITCH AS-PRESSURE	
		1	**102-8802**	1	KIT-RECEPTACLE (2 PIN)	
					(INCLUDES RECEPTACLE AS & WEDGE)	
		1	**8T-8729**	2	PIN-CONNECTOR	
	15	1	**153-3946**	1	BRACKET	
	16	1	**169-7443**	1	TIMER AS-ON DELAY (24 VOLT)	
	17	1	**170-0235**	1	ACCUMULATOR-AIR CONDITIONER	
	18	1	**170-5293**	1	HARNESS AS-AIR CONDITIONER	
	19	1	**171-5855**	1	BRACKET AS	
		1	**1F-0750**	1	NUT-WELD (3/8-16 THD)	
I	20	1	**178-8038**	1	HOSE AS	
I	21	1	**178-8039**	1	HOSE AS	
I	22	1	**219-5179**	1	HOSE AS	
I	23	1	**219-5180**	1	HOSE AS	
	24	1	**109-1633**	1	CLIP (SLOT)	
	25	1	**109-1634**	1	CLIP (TAB)	
	26	1	**109-3875**	2	HARNESS AS	
	27	1	**153-6781**	2	U-BOLT	
	28	1	**174-4445**	1	HARNESS AS (A/C CONDENSER)	
	29	1	**202-8695**	1	FITTING AS	
		1	**3E-4051**	1	CAP-SEAL (AIR CONDITIONER)(LOW SIDE)	
		1	**3E-4057**	1	VALVE AS-AIR CONDITIONER (LOW SIDE)	
		1	**172-4880**	1	CAP-SEAL (AIR CONDITIONER)	
		1	**180-7180**	1	CORE-VALVE	
		1	**180-7181**	1	BODY-VALVE	
	30	1	**202-8696**	1	FITTING AS	
		1	**3E-4052**	1	CAP-SEAL (AIR CONDITIONER)(HIGH SIDE)	
		1	**3E-4058**	1	VALVE AS-AIR CONDITIONER (HIGH SIDE)	
	31	1	**2K-4973**	4	LOCKNUT (3/8-16 THD)	
	32	1	**4K-8302**	4	CLIP	
	33	1	**4P-7428**	8	CLIP	
	34	1	**4P-7581**	1	CLIP (LADDER)	

219-0610 LINES GP-AIR CONDITIONER *(contd.)* i01691009

NOTE	REF NO	GRAPHIC REF	PART NUMBER	QTY	PART NAME 1 2 3 4 5 6 (PRODUCT LEVEL)	SEE PAGE
	35	1	**5M-3062**	4	BOLT (3/8-16X0.75 IN)	
	36	1	**5P-1075**	7	WASHER-HARD (10.2X22.5X3MM THK)	
	37	1	**5P-4295**	4	CLIP	
	38	1	**6D-4246**	1	CLIP	
	39	1	**6D-4247**	6	CLIP	
	40	1	**8T-2502**	2	BOLT (3/8-16X1.125 IN)	
	41	1	**8T-4223**	4	WASHER-HARD (13.5X25.5X3MM THK)	
	42	1	**8T-4896**	5	WASHER-HARD (10.2X18.5X2.5MM THK)	
M	43	1	**8T-6466**	1	BOLT (M10X1.50X60MM)	
	44	1	**8T-8917**	4	BOLT (1/2-13X1.25 IN)	
	45	1	**9B-7237**	1	BOLT (3/8-16X1.25 IN)	
	46	1	**9X-6772**	1	STRAP-CABLE	
	47	1	**9X-7378**	2	SEAL-O-RING	
	48	1	**9X-7380**	5	SEAL-O-RING	
	49	1	**9X-7381**	3	SEAL-O-RING	
	50	1	**9X-7382**	2	SEAL-O-RING	
	51	1	**9X-7383**	4	SEAL-O-RING	
	52	1	**9X-7385**	2	SEAL-O-RING	
BD	53	1	**5P-6129**		TUBE	

B-USE AS REQUIRED
D-ORDER BY THE METER
I-SEE HOSE FABRICATION GUIDE
M-METRIC PART

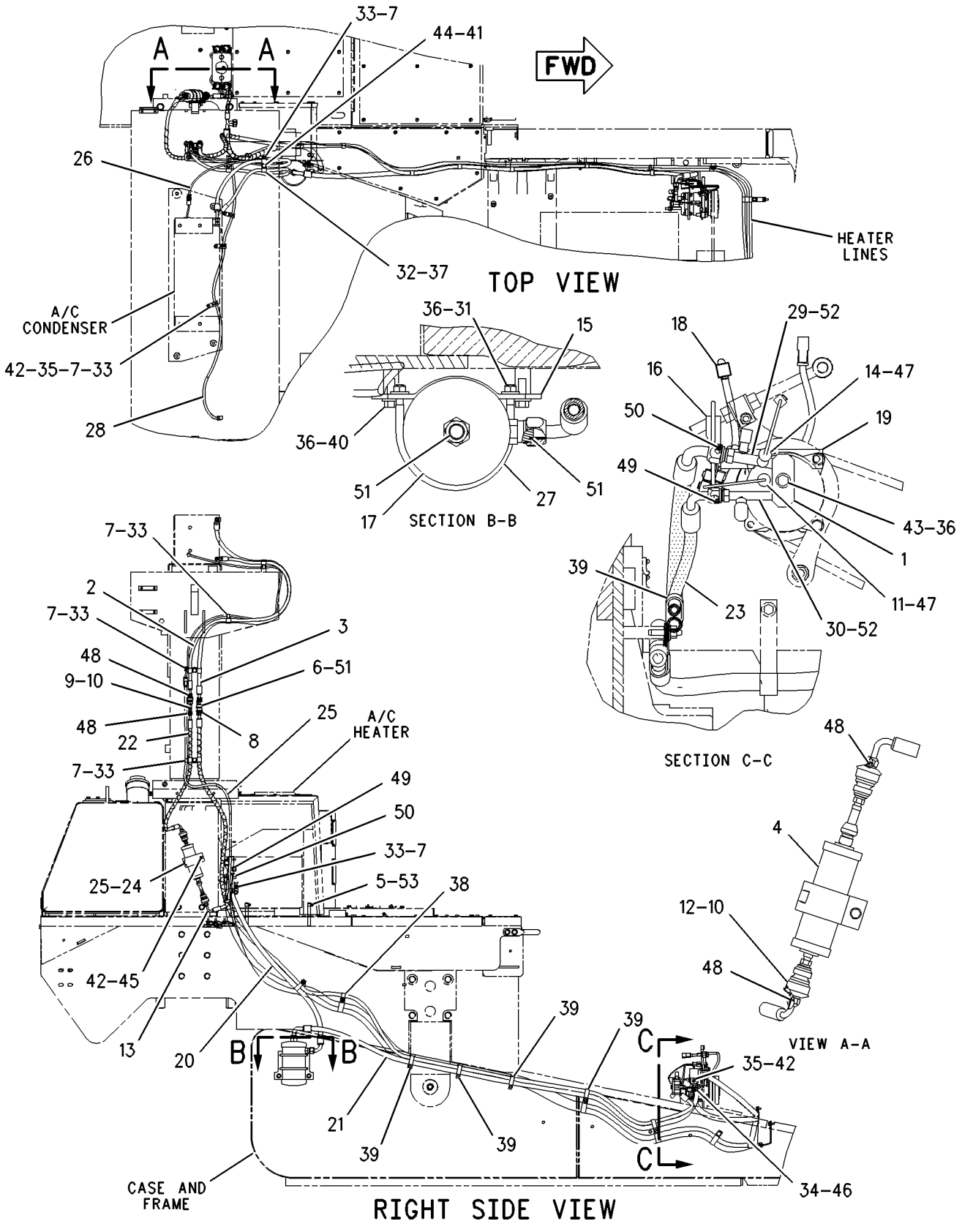

GRAPHIC #1 g00871122

MEMORANDA

OPERATOR STATION

172-5394 LINES GP-HEATER

S/N: AKT1-UP

PART OF 171-1265 CAB AR

SMCS-7304 **i01579151**

NOTE	REF NO	GRAPHIC REF	PART NUMBER	QTY	PART NAME 1 2 3 4 5 6 (PRODUCT LEVEL)	SEE PAGE
	1	1	**9D-4513**	1	WASHER	
	2	1	**9X-2488**	4	CLAMP-HOSE	
	3	1	**005-7889**	2	VALVE AS	
	4	1	**186-1721**	1	BRACKET AS	
		1	**1F-0750**	1	NUT-WELD (3/8-16 THD)	
	5	1	**003-9514**	2	COUPLING-PIPE	
	6	1	**030-7765**	2	FITTING	
	7	1	**1J-8668**	5	STUD-TAPERLOCK	
	8	1	**3B-7255**	1	BUSHING-REDUCING	
	9	1	**4L-6454**	1	BOLT (3/8-16X1 IN)	
	10	1	**5M-1719**	2	STUD-TAPERLOCK	
	11	1	**5M-3062**	1	BOLT (3/8-16X0.75 IN)	
	12	1	**5P-1075**	10	WASHER-HARD (10.2X22.5X3MM THK)	
	13	1	**5P-2566**	1	BOLT (1/2-13X1.5 IN)	
	14	1	**5P-6994**	1	CLIP	
	15	1	**6B-4661**	1	BUSHING-REDUCER	
	16	1	**6D-1641**	9	CLIP	
	17	1	**6V-8801**	7	NUT (3/8-16 THD)	
	18	1	**8T-4223**	1	WASHER-HARD (13.5X25.5X3MM THK)	
E	19	1	**5P-0767**		HOSE (500CM)	
E	20	1	**5P-0767**		HOSE (500CM)	
	21	1	**9B-7237**	1	BOLT (3/8-16X1.25 IN)	

E-ORDER BY THE CENTIMETER

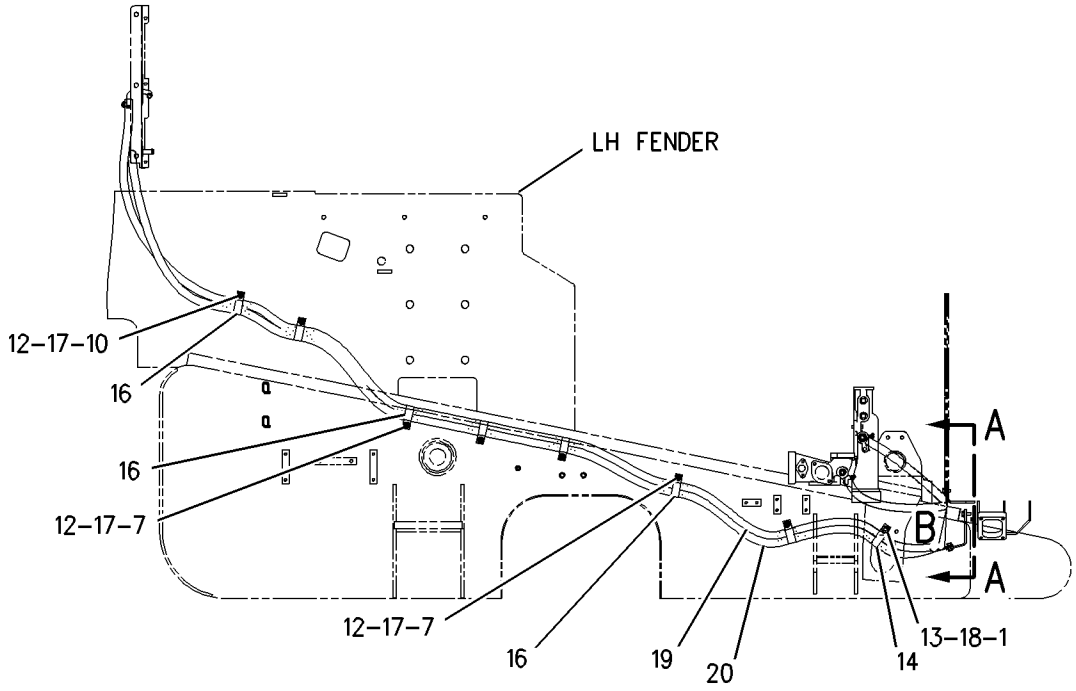

RIGHT SIDE VIEW

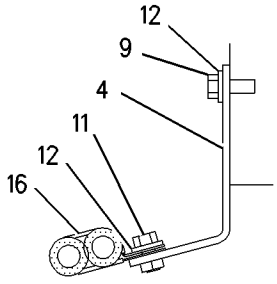

VIEW OF AREA B

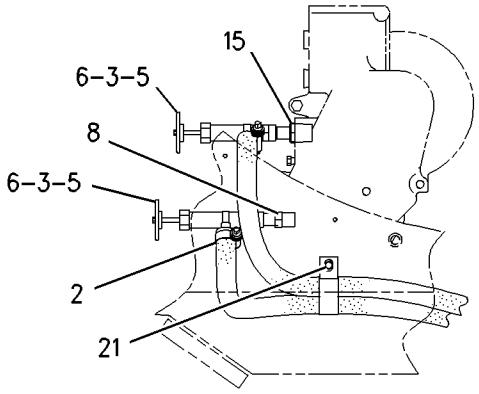

VIEW A–A

GRAPHIC #1 g00820210

OPERATOR STATION

6Y-3712 MIRROR GP-REAR VIEW

S/N: AKT1-UP
PART OF 157-4817 CAB AR
ALSO AN ATTACHMENT

SMCS-7319 **i00591391**

NOTE	REF NO	GRAPHIC REF	PART NUMBER	QTY	PART NAME 1 2 3 4 5 6 (PRODUCT LEVEL)	SEE PAGE
	1	1	**9P-9388**	1	KNOB	
	2	1	**5P-6874**	1	MIRROR	
	3	1	**5K-9179**	1	BOLT-ROUND HEAD	

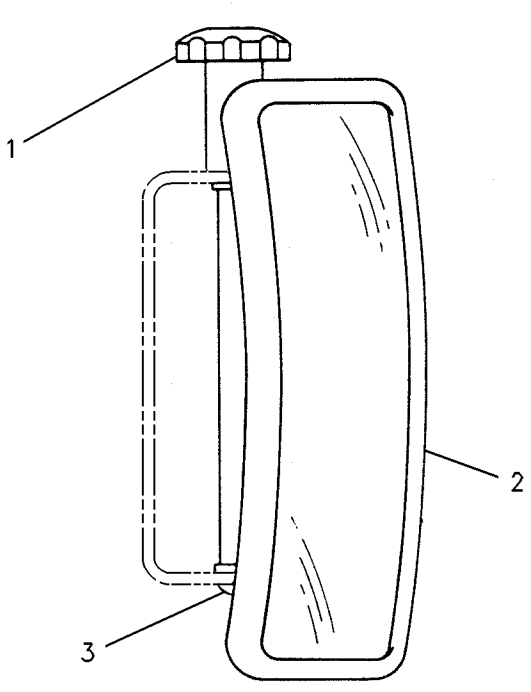

GRAPHIC #1 g00230747

OPERATOR STATION

183-2089 MIRROR GP-REAR VIEW

S/N: AKT1-UP
PART OF 174-3673 AIR CONDITIONER AR
AN ATTACHMENT

SMCS-7319 **i01700595**

NOTE	REF NO	GRAPHIC REF	PART NUMBER	QTY	PART NAME 1 2 3 4 5 6 (PRODUCT LEVEL)	SEE PAGE
	1	1	**6V-9156**	1	MIRROR	
	2	1	**133-2953**	1	PLATE AS	
	3	1	**4L-6454**	2	BOLT (3/8-16X1 IN)	
	4	1	**5P-1075**	4	WASHER-HARD (10.2X22.5X3MM THK)	
	5	1	**7X-0592**	2	WASHER-HARD (10.2X32X5MM THK)	
	6	1	**8T-2502**	4	BOLT (3/8-16X1.125 IN)	

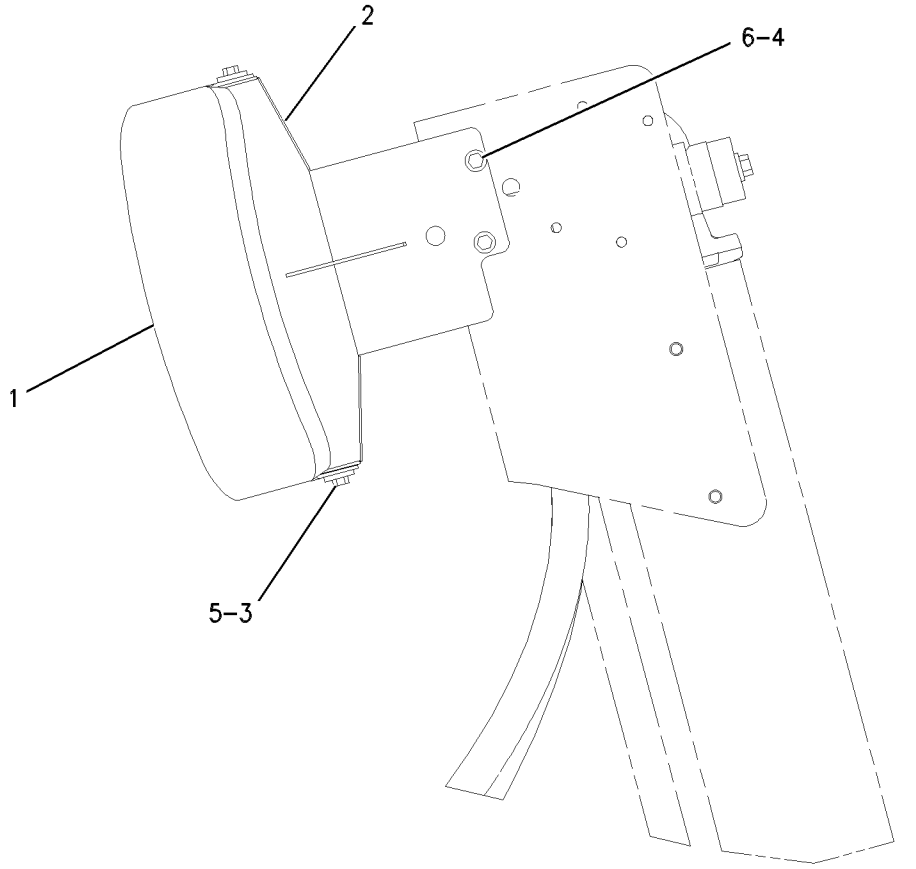

RIGHT SIDE VIEW

GRAPHIC #1 g00648080

OPERATOR STATION

179-1730 MODULE GP-MESSAGE CENTER

S/N: AKT1-UP

PART OF 170-7082 INSTRUMENT GP

SMCS-7601 **i01700597**

NOTE	PART NUMBER	QTY	PART NAME 1 2 3 4 5 6 (PRODUCT LEVEL)	SEE PAGE
	186-1681	1	CONTROL AS-ELECTRONIC	
	102-8802	1	KIT-RECEPTACLE (2 PIN)	
			(INCLUDES RECEPTACLE AS & WEDGE)	
	102-8805	1	KIT-RECEPTACLE (6 PIN)	
			(INCLUDES RECEPTACLE AS & WEDGE)	

165-4639 MODULE GP-MONITOR KEYPAD

S/N: AKT1-UP
(ENGLISH VERSION)
PART OF 165-5018 CONTROL GP-ELECTRONIC

SMCS-7490 **i01435821**

NOTE	REF NO	GRAPHIC REF	PART NUMBER	QTY	PART NAME 1 2 3 4 5 6 (PRODUCT LEVEL)	SEE PAGE
	1	1	**3E-3377**	1	WEDGE-RECEPTACLE LOCK	
	2	1	**102-8804**	1	KIT-RECEPTACLE (4 PIN)	
					(INCLUDES RECEPTACLE AS & WEDGE)	
	3	1	**186-3735**	3	PIN-CONNECTOR	
	4	1	**8T-8737**	1	PLUG-SEAL	
	5	1	**179-5991**	1	FILM-KEYPAD	
Z	6	1		1	BOARD AS (ELECTRONIC)	

Z-NOT SERVICED SEPARATELY

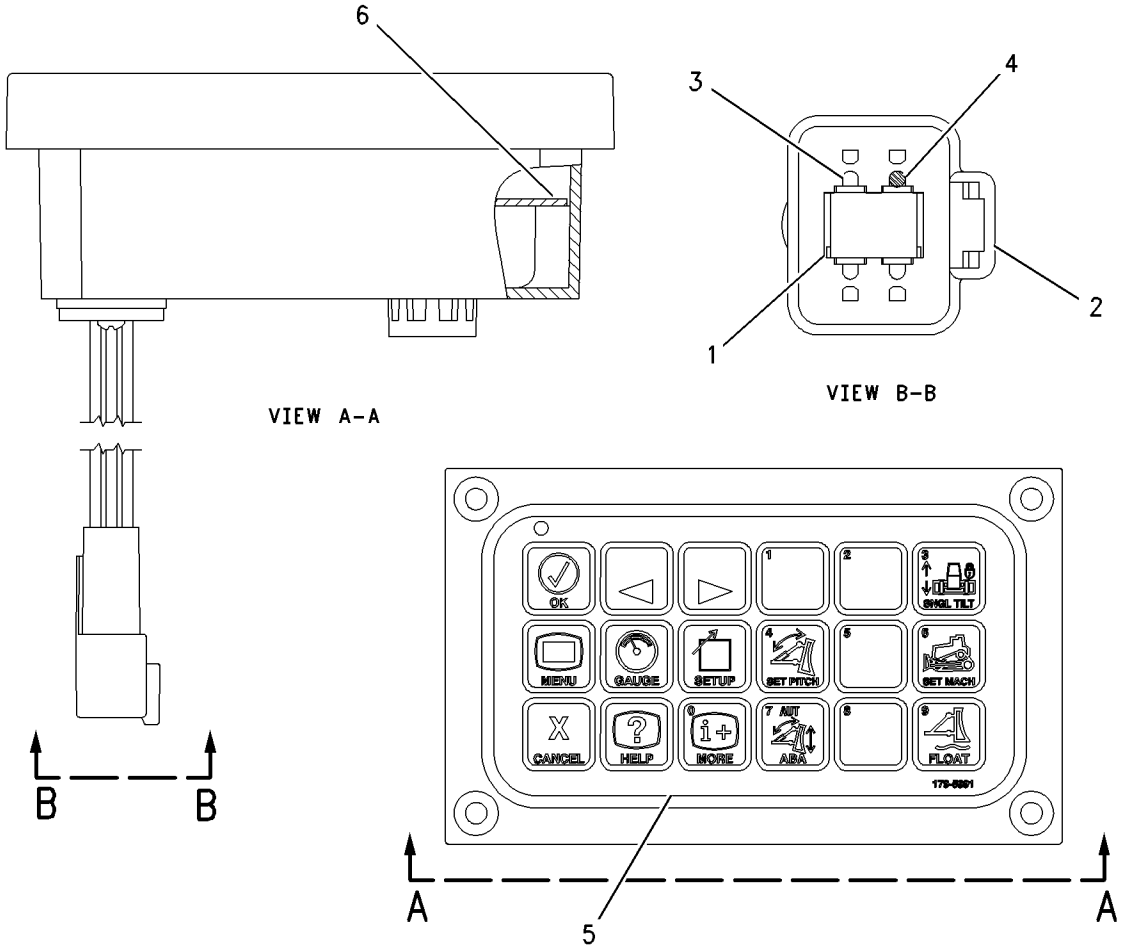

GRAPHIC #1 g00753125

OPERATOR STATION

183-2009 MODULE GP-MONITOR KEYPAD

S/N: AKT1-UP
(INTERNATIONAL VERSION)
PART OF 183-2076 CONTROL GP-ELECTRONIC

SMCS-7490 **i01290941**

NOTE	REF NO	GRAPHIC REF	PART NUMBER	QTY	PART NAME 1 2 3 4 5 6 (PRODUCT LEVEL)	SEE PAGE
	1	1	**178-3951**	1	FILM-KEYPAD	
	2	1	**102-8804**	1	KIT-RECEPTACLE (4 PIN)	
					(INCLUDES RECEPTACLE AS & WEDGE)	
	3	1	**8T-8729**	3	PIN-CONNECTOR	
	4	1	**8T-8737**	1	PLUG-SEAL	
	5	1	**3E-3377**	1	WEDGE-RECEPTACLE LOCK	

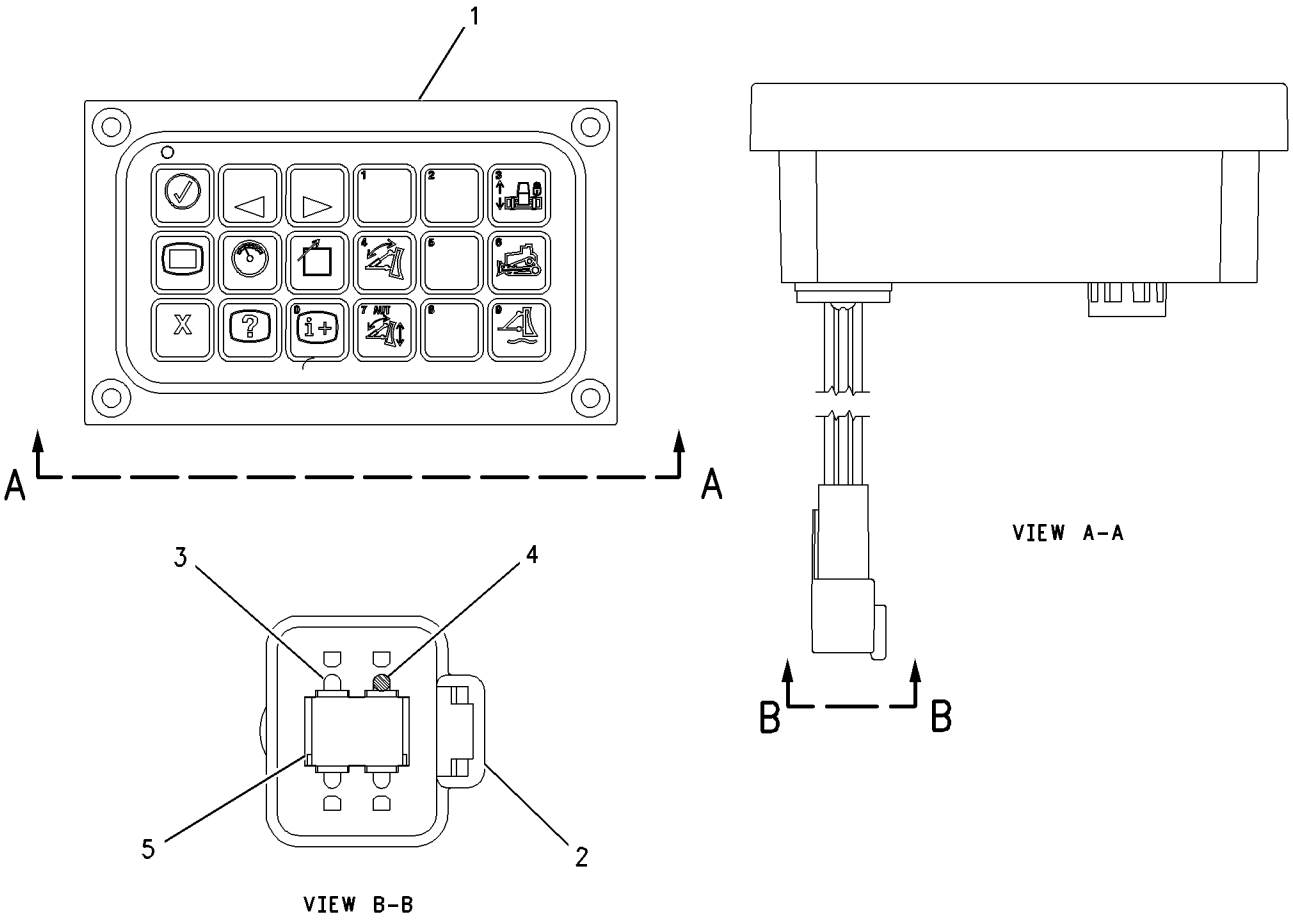

GRAPHIC #1 g00664936

OPERATOR STATION

166-6928 MODULE GP-QUAD GAUGE

S/N: AKT1-UP

PART OF 170-7082 INSTRUMENT GP

SMCS-7450, 7451 **i01218984**

NOTE	REF NO	GRAPHIC REF	PART NUMBER	QTY	PART NAME 1 2 3 4 5 6 (PRODUCT LEVEL)	SEE PAGE
	1	1	**102-8805**	1	KIT-RECEPTACLE (6 PIN)	
					(INCLUDES RECEPTACLE AS & WEDGE)	
	2	1	**8T-8729**	6	PIN-CONNECTOR	

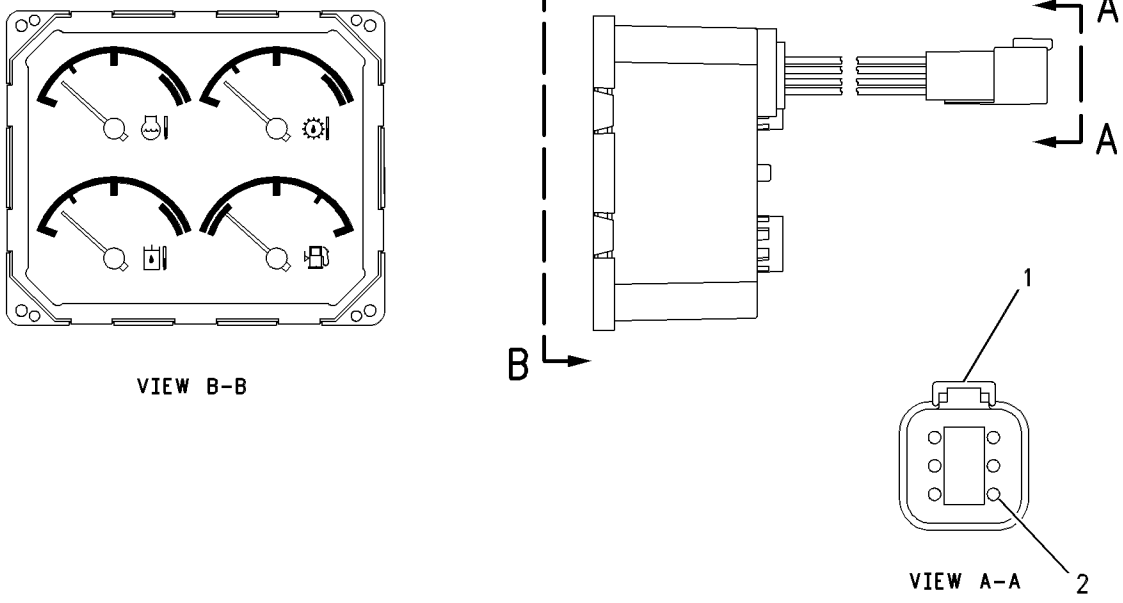

GRAPHIC #1 g00587276

OPERATOR STATION

125-6806 MODULE GP-SPEEDOMETER & TACH

S/N: AKT1-UP

PART OF 170-7082 INSTRUMENT GP

SMCS-7462, 7463 **i01590925**

NOTE	REF NO	GRAPHIC REF	PART NUMBER	QTY	PART NAME 1 2 3 4 5 6 (PRODUCT LEVEL)	SEE PAGE
	1	1	**102-8805**	1	KIT-RECEPTACLE (6 PIN)	
					(INCLUDES RECEPTACLE AS & WEDGE)	
	2	1	**3E-3383**	1	WEDGE-RECEPTACLE LOCK	
	3	1	**8T-8729**	6	PIN-CONNECTOR	

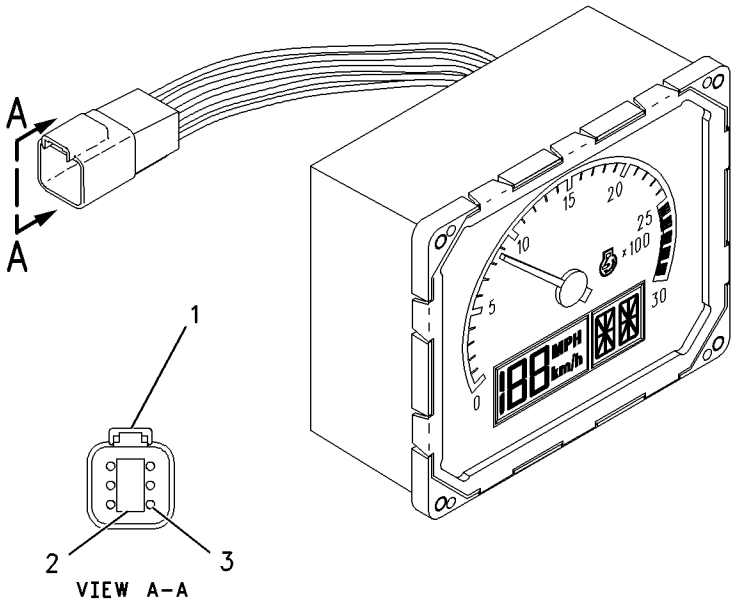

GRAPHIC #1 g00678223

MEMORANDA

OPERATOR STATION

117-1852 MOUNTING GP-CAB

S/N: AKT1-UP

PART OF 171-1265 CAB AR

SMCS-7266, 7301 **i01692468**

NOTE	REF NO	GRAPHIC REF	PART NUMBER	QTY	PART NAME 1 2 3 4 5 6 (PRODUCT LEVEL)	SEE PAGE
	1	1	**121-9258**	1	FLOOR MAT-UPPER	
BD	2	1	**5P-7513**		SEAL	
	3	1	**154-3079**	1	STRAP	
	4	1	**5S-7379**	12	BOLT (3/8-16X0.875 IN)	
	5	1	**7X-0772**	6	WASHER-HARD (10.2X25.5X2.5MM THK)	
	6	1	**5P-1075**	8	WASHER-HARD (10.2X22.5X3MM THK)	
	7	1	**121-9259**	1	FLOOR MAT-LOWER	
	8	1	**111-7090**	1	LINER	
	9	1	**9P-2262**	1	SEAL	
	10	1	**7G-1785**	1	PLATE AS	
		1	**1F-0750**	3	NUT-WELD (3/8-16 THD)	
	11	1	**7G-1786**	1	PLATE AS	
		1	**1F-0750**	3	NUT-WELD (3/8-16 THD)	
	12	1	**7G-1744**	1	PLATE	
	13	1	**8E-6834**	1	PLATE AS	
		1	**9F-6445**	2	NUT-WELD (1/4-20 THD)	
	14	1	**8E-6877**	1	COVER	
	15	1	**6V-3884**	10	SCREW-HEX SOCKET (1/4-20X0.5 IN)	
	16	1	**9X-2038**	4	WASHER (7X19X2MM THK)	
	17	1	**3E-6918**	3	BOLT (1/2-13X1 IN)	
	18	1	**7X-0618**	6	WASHER-HARD (13.5X40X5MM THK)	
	19	1	**9X-2508**	3	BOLT-12 POINT HEAD (1/2-13X1.25 IN)	
	20	1	**3E-6919**	11	BOLT (1/2-13X2.25 IN)	
	21	1	**7X-3392**	22	WASHER-HARD (13.5X22.5X3MM THK)	
	22	1	**3E-6920**	4	BOLT (1/2-13X3 IN)	
	23	1	**105-3380**	1	COVER	
	24	1	**8E-7238**	1	COVER	
	25	1	**124-6838**	1	COVER	
	26	1	**8E-7235**	1	TRAY	
	27	1	**8E-7236**	1	COVER	
	28	1	**8E-7237**	1	COVER	
	29	1	**6Y-0206**	6	RETAINER	
	30	1	**8T-1572**	17	SCREW-HEX SOCKET (1/4-20X1 IN)	
	31	1	**7G-4824**	2	STRAP	
	32	1	**8E-7791**	2	STRAP	
BD	33	1	**5P-5755**		SEAL	
	34	1	**7G-4823**	1	STRAP	
	35	1	**9B-7237**	5	BOLT (3/8-16X1.25 IN)	
		1	**9P-4898**	5	SPACER (12.7X19.05X19MM THK)	
	36	1	**7K-3222**	9	WASHER (10.3X44.4X2MM THK)	
	37	1	**3K-6060**	4	LOCKNUT (3/8-16 THD)	
	38	1	**8E-9595**	1	LINER	
	39	1	**8E-9592**	1	PLATE AS	
		1	**1F-0748**	4	NUT-WELD (1/2-13 THD)	
		1	**8J-9383**	4	STUD-WELD (3/8-16X1.75 IN OAL)	
	40	1	**111-7091**	1	LINER	
	41	1	**8E-7239**	1	COVER	
	42	1	**8T-2502**	2	BOLT (3/8-16X1.125 IN)	
	43	1	**135-1823**	1	HOLDER	

B-USE AS REQUIRED
D-ORDER BY THE METER

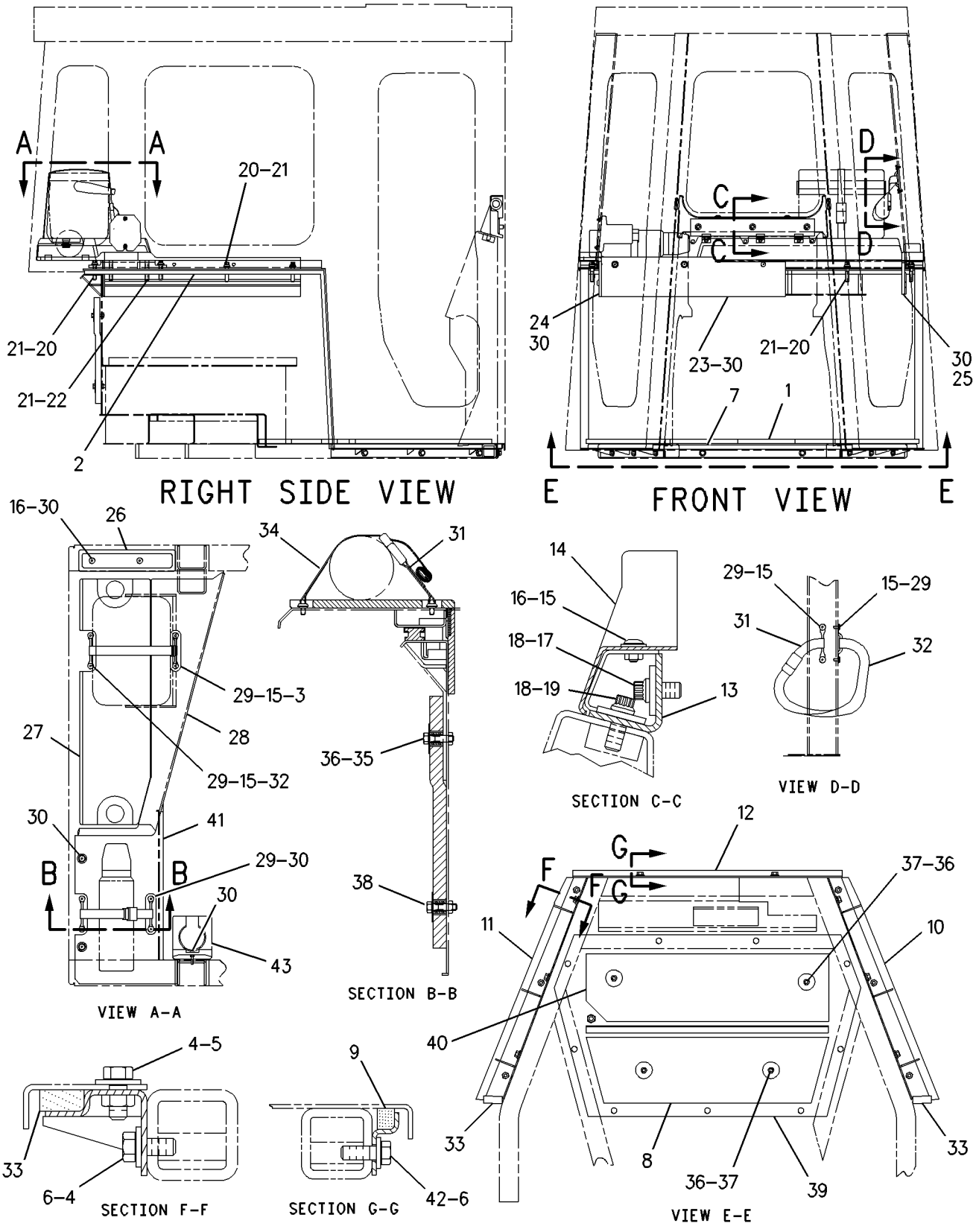

GRAPHIC #1 g00748985

OPERATOR STATION

9U-9552 MOUNTING GP-CB

S/N: AKT1-UP
RADIO
AN ATTACHMENT

SMCS-7338 **i01336073**

NOTE	PART NUMBER	QTY	PART NAME 1 2 3 4 5 6 (PRODUCT LEVEL)	SEE PAGE
	3E-6601	1	FILM-NOTICE	
	3E-8362	1	FILM-NOTICE	
	6V-8185	2	NUT (1/4-20 THD)	
	8E-4836	1	PLATE	
	6V-8969	3	SCREW-BUTTON HEAD	

OPERATOR STATION

112-4398 MOUNTING GP-ROPS

S/N: AKT1-UP

PART OF 171-5801 CHASSIS AR

SMCS-7266 **i00602685**

NOTE	REF NO	GRAPHIC REF	PART NUMBER	QTY	PART NAME 1 2 3 4 5 6 (PRODUCT LEVEL)	SEE PAGE
	1	1	**6V-8953**	16	BOLT	
	2	1	**7G-6176**	16	SPACER	
	3	1	**112-4400**	2	SUPPORT AS	

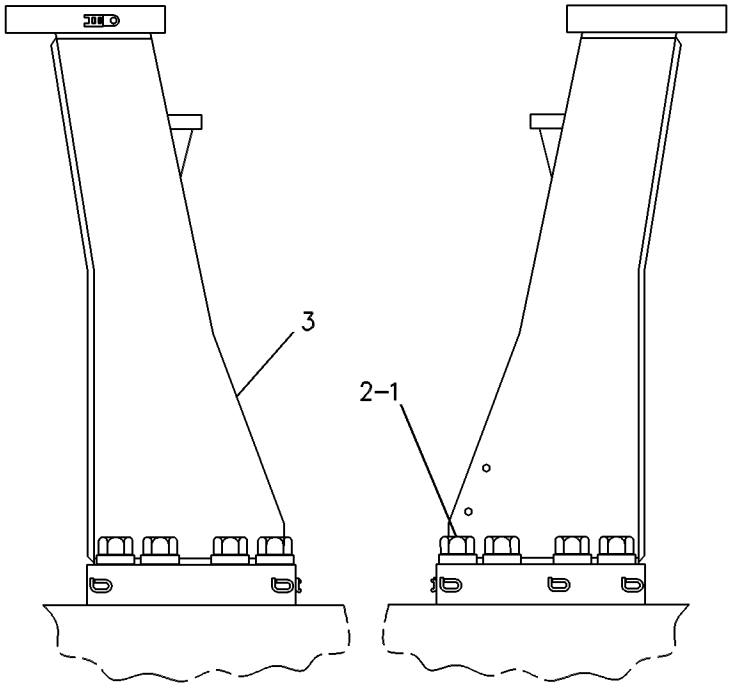

GRAPHIC #1 g00252704

OPERATOR STATION

178-0605 PAN GP-BACKREST

S/N: AKT1-UP

PART OF 180-7305, 180-7307 PAN GP-BACKREST

ALSO AN ATTACHMENT

SMCS-7312 **i01508995**

NOTE	REF NO	GRAPHIC REF	PART NUMBER	QTY	PART NAME 1 2 3 4 5 6 (PRODUCT LEVEL)	SEE PAGE
	1	1	**4K-9429**	8	RIVET-POP	
	2	1	**5P-7957**	1	LANYARD	
	3	1	**136-1543**	1	PLATE AS-LUMBAR	
	4	1	**173-2052**	1	RETAINER	
	5	1	**178-7907**	1	HOLDER	
	6	1	**177-4930**	1	PAN AS-BACK	

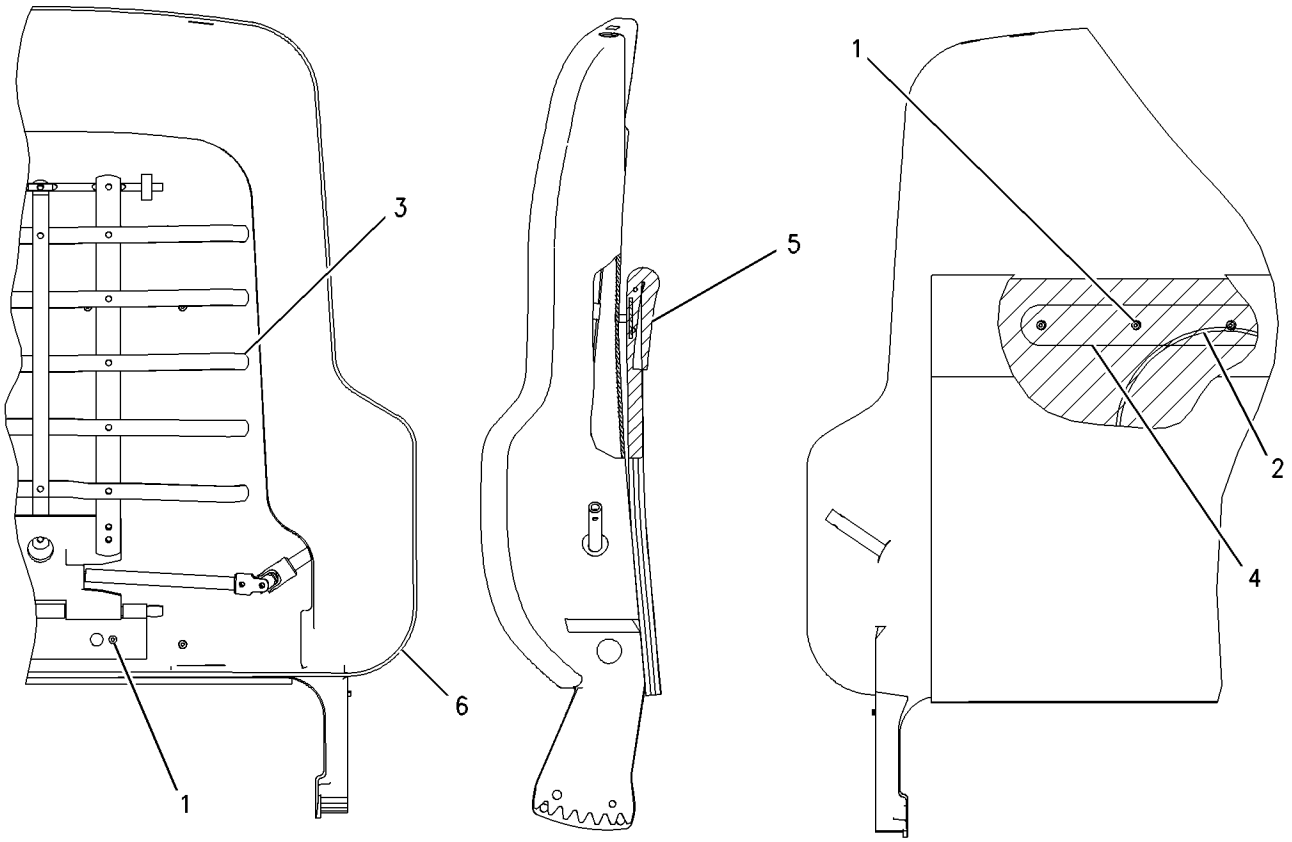

GRAPHIC #1 g00716497

OPERATOR STATION

180-7305 PAN GP-BACKREST

S/N: AKT1-UP
PART OF 180-7304 SEAT GP
AN ATTACHMENT

SMCS-7312 **i01653940**

NOTE	REF NO	GRAPHIC REF	PART NUMBER	QTY	PART NAME 1 2 3 4 5 6 (PRODUCT LEVEL)	SEE PAGE
	1	1	**164-4883**	1	KNOB-LUMBAR	
	2	1	**169-0697**	1	CUSHION AS	
		1	**184-2300**	1	FILM (SEAT CUSHION IDENTIFICATION)	
Y	3	1	*178-0605*	1	PAN GP-BACKREST	734
	4	1	**8T-7566**	1	PIN-SPRING	

Y-SEPARATE ILLUSTRATION

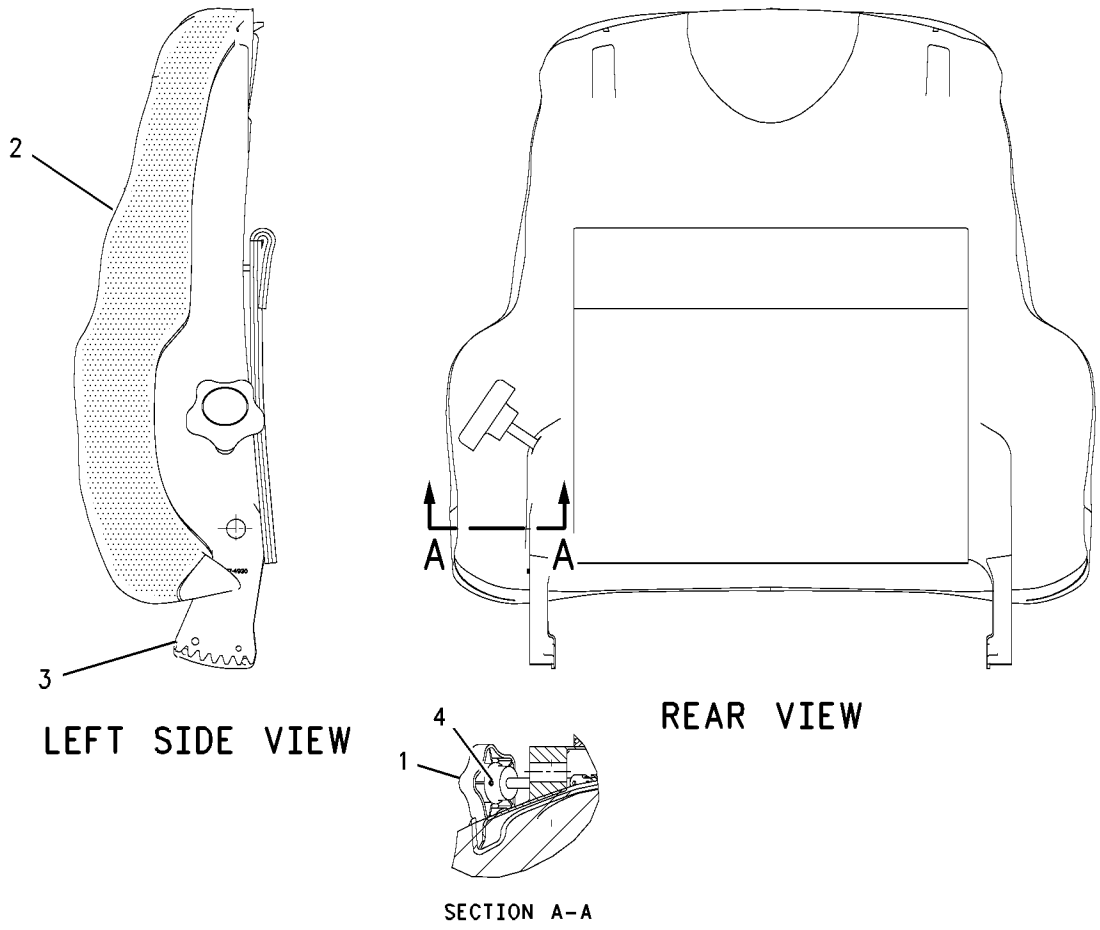

GRAPHIC #1 g00678939

OPERATOR STATION

180-7307 PAN GP-BACKREST

S/N: AKT1-UP
BROWN/THIN
PART OF 180-7306 SEAT GP
ALSO AN ATTACHMENT

SMCS-7312 **i01445959**

NOTE	REF NO	GRAPHIC REF	PART NUMBER	QTY	PART NAME 1 2 3 4 5 6 (PRODUCT LEVEL)	SEE PAGE
	1	1	**164-4883**	1	KNOB-LUMBAR	
	2	1	**169-1024**	1	CUSHION AS-BACK	
		1	**184-2300**	1	FILM (SEAT CUSHION IDENTIFICATION)	
Y	3	1	*178-0605*	1	PAN GP-BACKREST	734
	4	1	**8T-7566**	1	PIN-SPRING	

Y-SEPARATE ILLUSTRATION

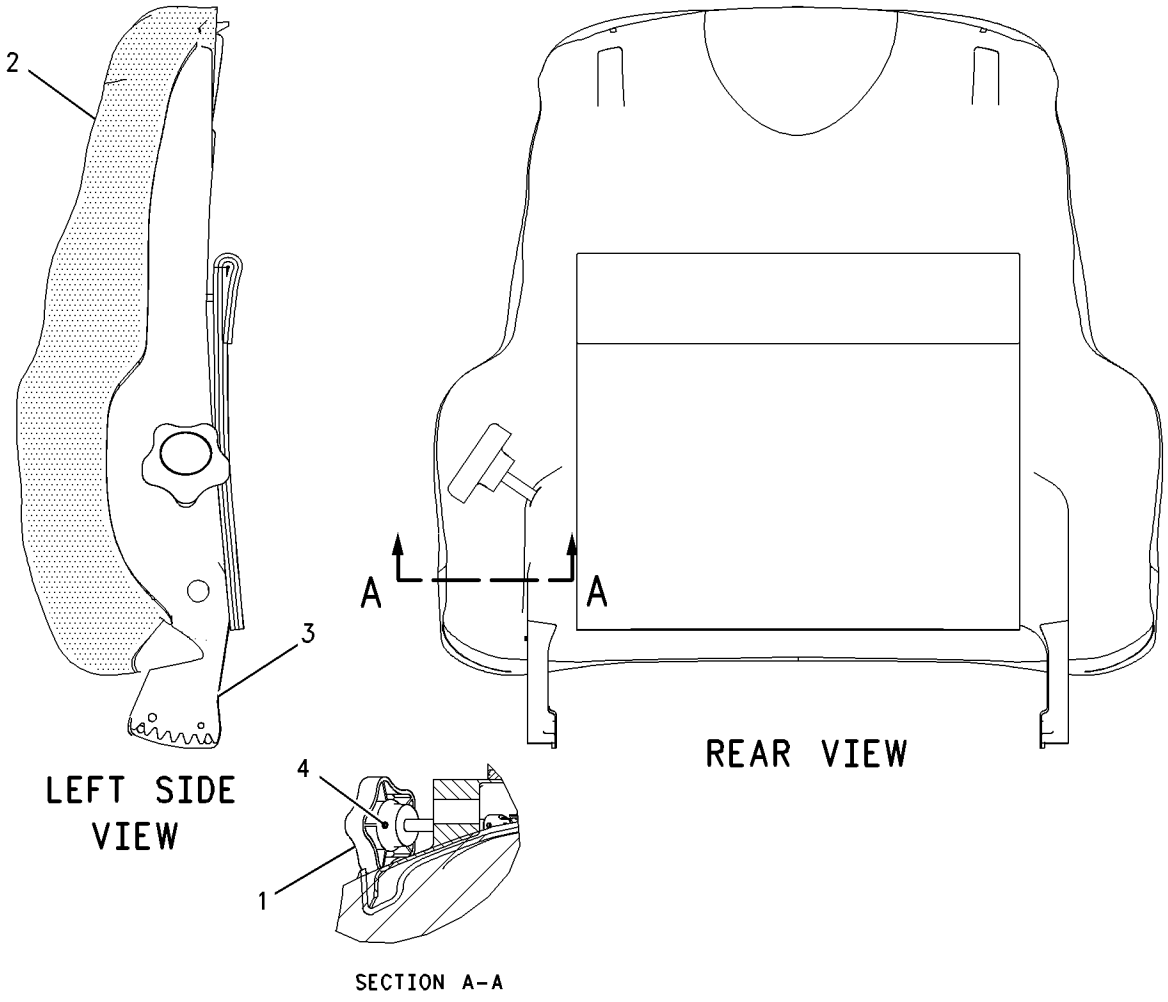

GRAPHIC #1 g00687153

MEMORANDA

OPERATOR STATION

204-2643 PLATFORM GP-CAB

S/N: AKT1-UP

PART OF 171-5801 CHASSIS AR

SMCS-7253 **i01502414**

NOTE	REF NO	GRAPHIC REF	PART NUMBER	QTY	PART NAME 1 2 3 4 5 6 (PRODUCT LEVEL)	SEE PAGE
	1	1	**3E-4898**	4	SLEEVE	
	2	1	**3T-6280**	1	PLATE AS	
	3	1	**3T-6281**	1	SEAL	
	4	1	**6V-1950**	2	PLUG-BUTTON	
	5	1	**7G-6723**	1	COVER	
	6	1	**7G-6724**	1	GASKET	
	7	1	**189-9809**	1	PLATE	
	8	1	**7T-0135**	1	SEAL	
	9	1	**189-9810**	1	PLATE AS	
		1	**6G-2914**	1	LATCH	
		1	**9N-1995**	2	RIVET-POP	
		1	**189-9816**	1	HINGE	
		1	**1F-0750**	6	NUT-WELD (3/8-16 THD)	
	10	1	**7T-0138**	1	GASKET	
	11	1	**7V-8087**	1	PLUG-BUTTON	
	12	1	**8E-5978**	1	GASKET	
	13	1	**9P-1444**	2	SUPPORT AS-FOOT	
	14	1	**9P-6571**	1	PLUG	
	15	1	**9W-9027**	4	PLATE	
	16	1	**117-8131**	8	MOUNT	
	17	1	**125-4992**	1	COVER	
	18	1	**188-7097**	1	COVER AS	
	19	1	**136-9595**	1	MODULE AS-OPERATOR	
	20	1	**5M-3062**	38	BOLT (3/8-16X0.75 IN)	
	21	1	**5P-1075**	46	WASHER-HARD (10.2X22.5X3MM THK)	
	22	1	**5P-1076**	4	WASHER-HARD (13.5X30X4MM THK)	
	23	1	**5P-2228**	4	BOLT (1/2-13X1 IN)	
	24	1	**6J-0488**	8	SCREW-BUTTON HEAD (3/8-16X0.875 IN)	
	25	1	**7X-0392**	2	BOLT (7/8-9X6 IN)	
	26	1	**7X-0572**	2	WASHER-HARD (24X44.5X6MM THK)	
	27	1	**7X-0582**	2	WASHER-HARD (20X44.5X6MM THK)	
	28	1	**8T-9312**	2	BOLT (3/4-10X6 IN)	

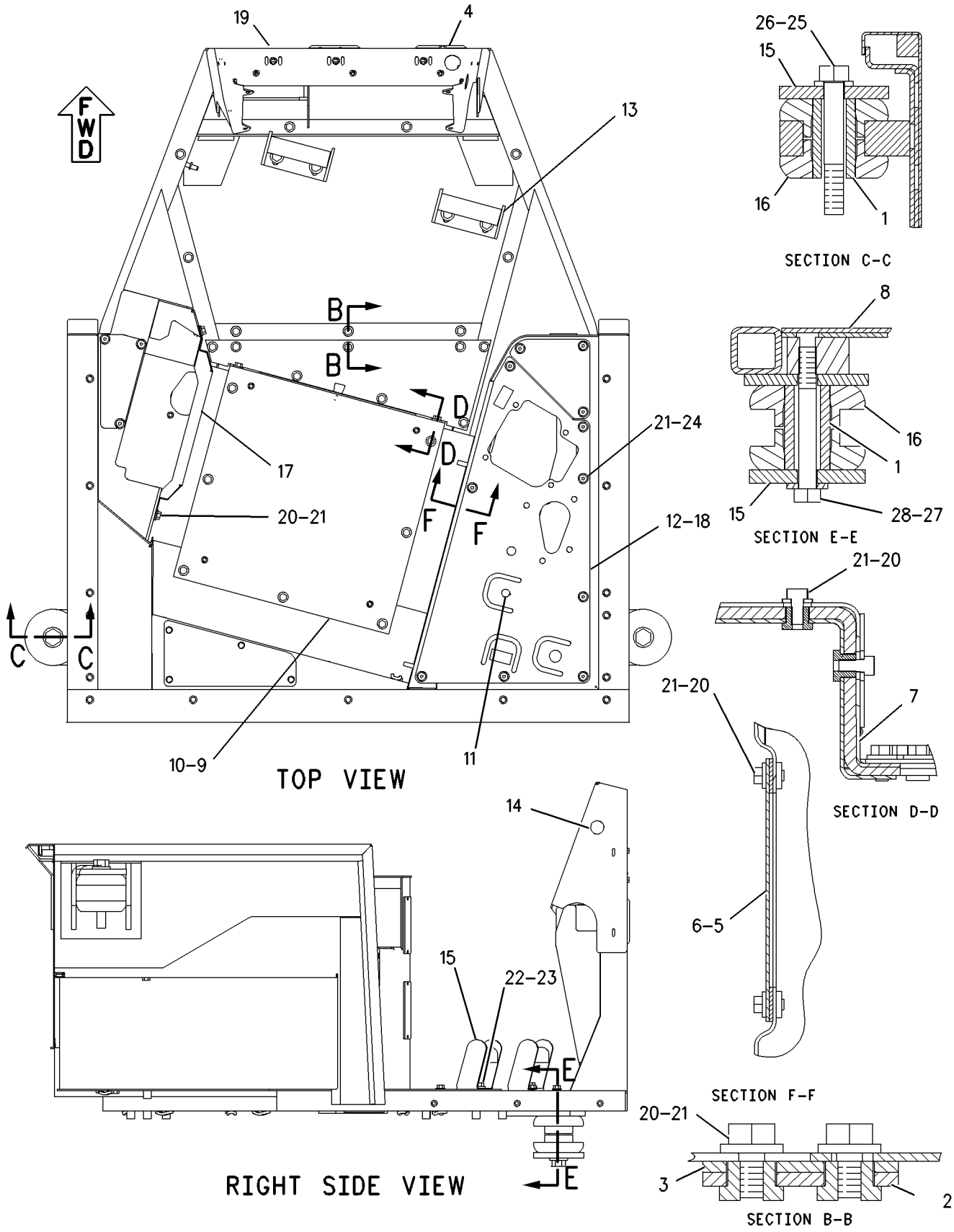

GRAPHIC #1

g00817082

OPERATOR STATION

177-4935 RECLINER GP-SEAT

S/N: AKT1-UP
PART OF 180-7304, 180-7306 SEAT GP
ALSO AN ATTACHMENT

SMCS-7312 **i01682915**

NOTE	REF NO	GRAPHIC REF	PART NUMBER	QTY	PART NAME 1 2 3 4 5 6 (PRODUCT LEVEL)	SEE PAGE
	1	1	**217-7933**	1	LATCH	
	2	1	**164-4146**	1	SPRING	
	3	1	**177-1860**	1	GEAR (14 TEETH) (LOCK)	
	4	1	**177-1862**	1	BRACKET	
	5	1	**178-0607**	1	SHAFT AS	
	5A	1	**2K-9111**	2	PIN-SPRING	
	5B	1	**9M-6803**	2	DOWEL	
	5C	1	**170-8590**	1	SPRING	
	6	1	**178-0608**	1	BRACKET AS	
	7	1	**178-0609**	1	BRACKET AS	
	8	1	**031-0214**	1	BOLT-LOCKING (1/4-20X0.5 IN)	
	9	1	**101-2867**	1	WASHER-HARD (7.2X25X2MM THK)	
	10	1	**4M-6425**	1	BOLT (5/16-18X1 IN)	
	11	1	**5S-7383**	1	BOLT (3/8-16X1.75 IN)	
	12	1	**8T-4224**	1	WASHER-HARD (8.8X16X2MM THK)	

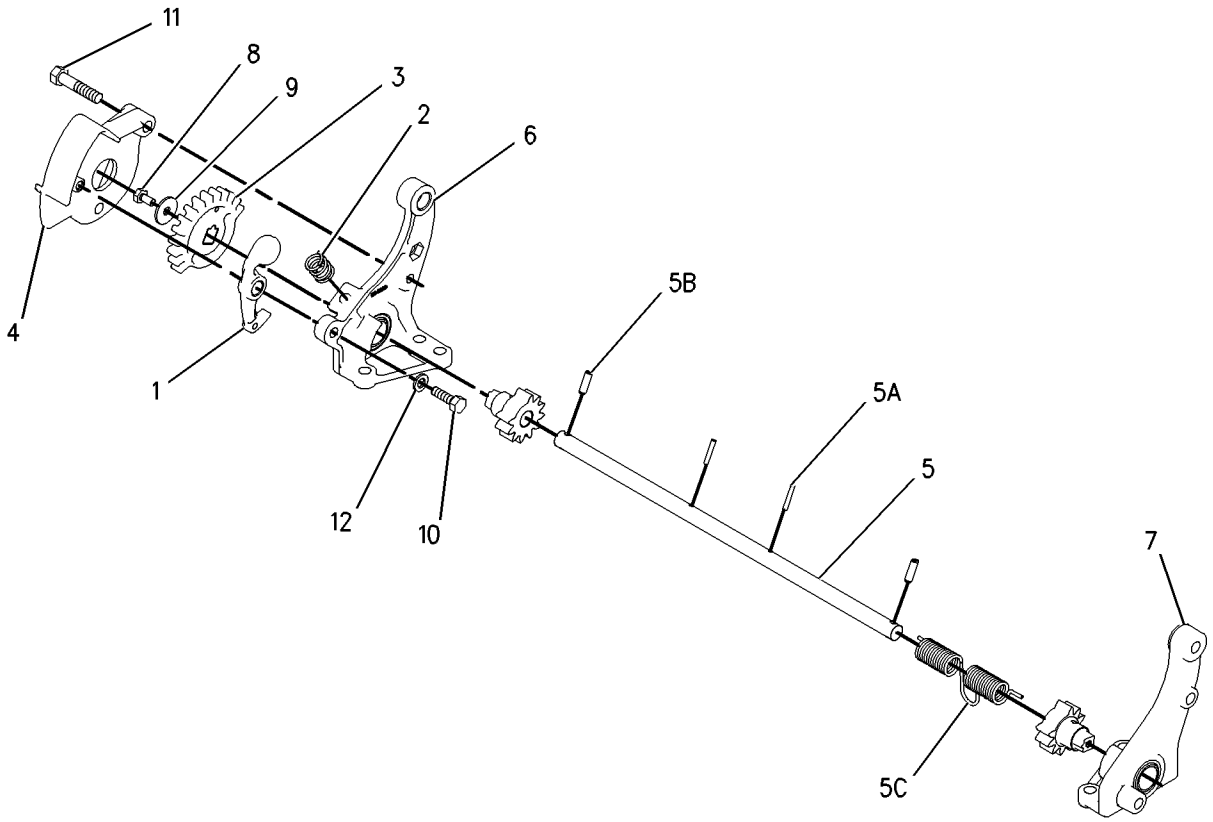

GRAPHIC #1 g00673022

OPERATOR STATION

1Q-1609 ROPS AS

S/N: AKT1-UP
PART OF 218-7128 AIR CONDITIONER AR
AN ATTACHMENT

SMCS-7323 **i00742782**

NOTE	REF NO	GRAPHIC REF	PART NUMBER	QTY	PART NAME 1 2 3 4 5 6 (PRODUCT LEVEL)	SEE PAGE
	1	1	**9W-7313**	1	ROPS AS	

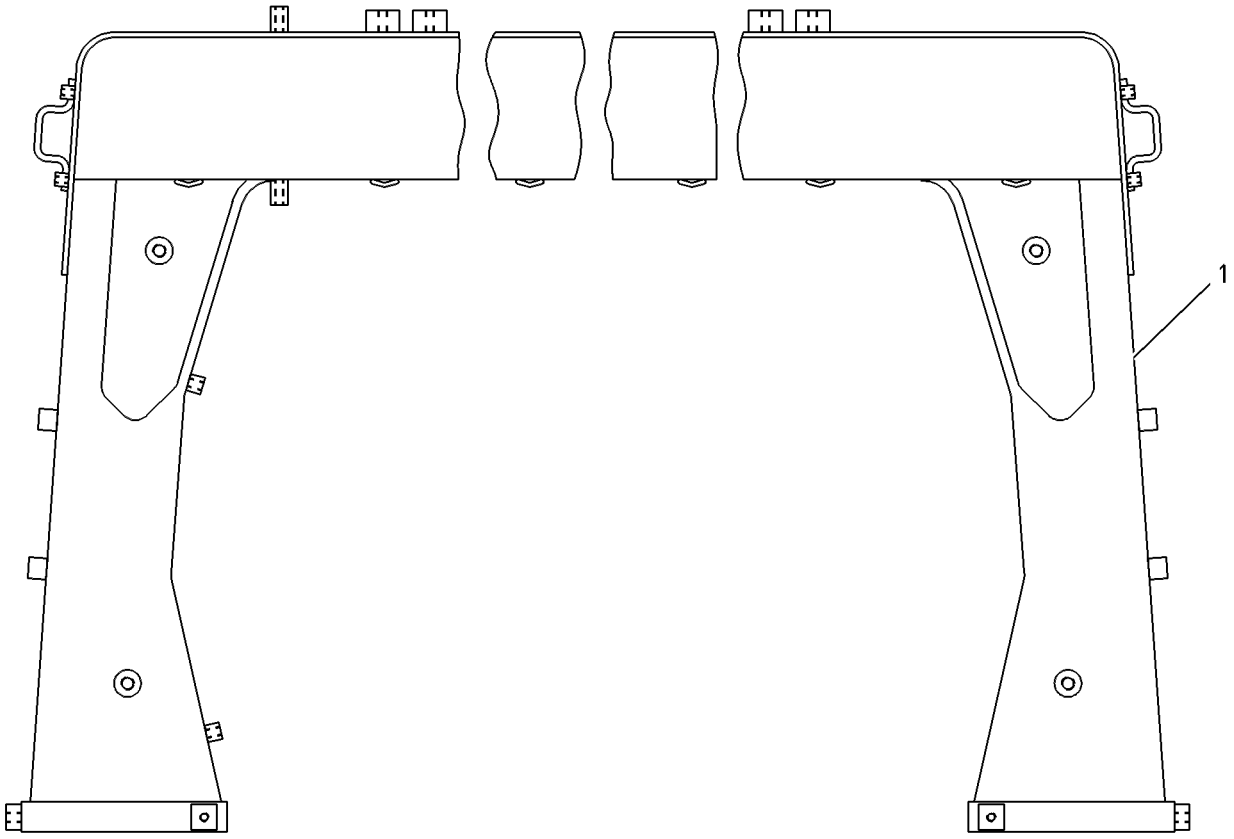

REAR VIEW

GRAPHIC #1 g00330570

OPERATOR STATION

9W-7311 ROPS GP

S/N: AKT1-UP

PART OF 171-5801 CHASSIS AR

SMCS-7323, 7325 **i01406400**

NOTE	REF NO	GRAPHIC REF	PART NUMBER	QTY	PART NAME 1 2 3 4 5 6 (PRODUCT LEVEL)	SEE PAGE
	1	1	**9W-7313**	1	ROPS AS	
	2	1	**7X-0429**	12	BOLT (1 1/4-7X4.50 IN)	
		1	**7X-0533**	12	WASHER-HARD (34X55X6MM THK)	
	3	1	**9U-9956**	1	HANDHOLD-RH	
	4	1	**9U-9957**	1	HANDHOLD-LH	
	5	1	**5C-6565**	4	BOLT (1/2-13X1.25 IN)	
		1	**5P-1076**	4	WASHER-HARD (13.5X30X4MM THK)	

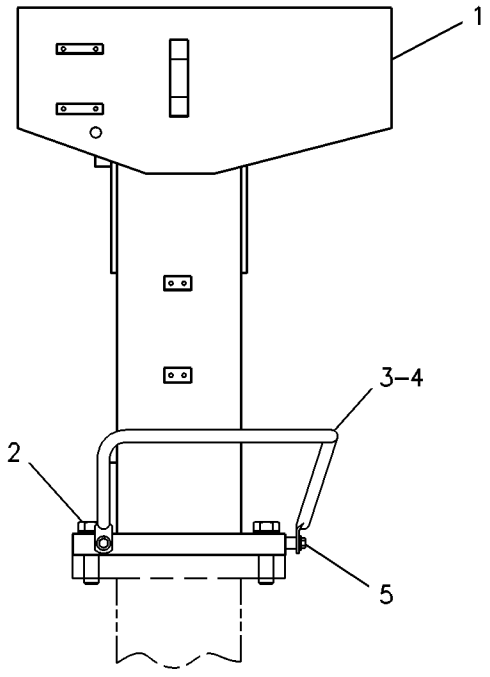

GRAPHIC #1 g00233794

OPERATOR STATION

9U-9634 SCREEN GP-PROTECTION

S/N: AKT1-UP
AN ATTACHMENT

SMCS-7165 **i01423005**

NOTE	REF NO	GRAPHIC REF	PART NUMBER	QTY	PART NAME 1 2 3 4 5 6 (PRODUCT LEVEL)	SEE PAGE
	1	1	**9U-9638**	1	SCREEN AS	
	2	1	**9U-9635**	2	PLATE AS	
					(EACH INCLUDES)	
		1	**8J-7236**	3	NUT-WELD (3/4-10 THD)	
		1	**7T-1099**	4	LINK	
	3	1	**7X-0582**	4	WASHER-HARD (20X44.5X6MM THK)	
	4	1	**7X-0365**	8	BOLT (3/4-10X1.5 IN)	
	5	1	**8T-4994**	6	WASHER-HARD (20X36.5X5MM THK)	
	6	1	**1K-5760**	2	SPACER (.78X1.38X.81 IN THK)	
	7	1	**7X-0366**	2	BOLT (3/4-10X2 IN)	

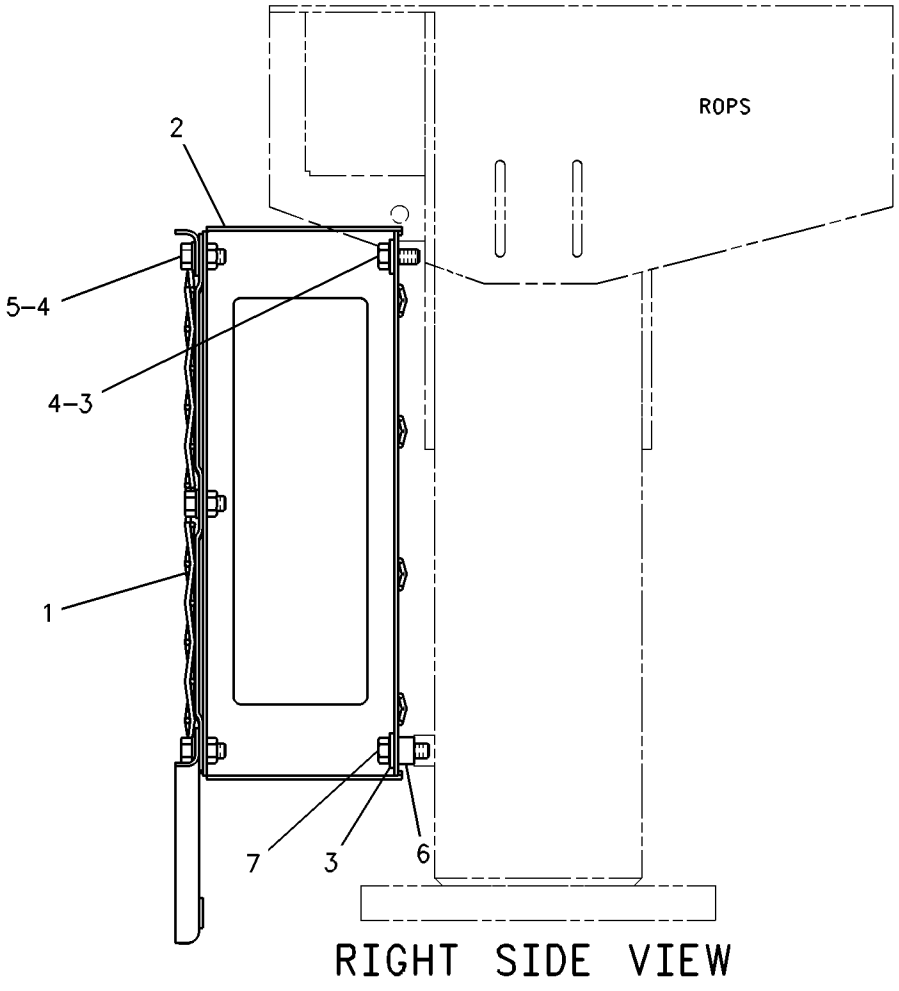

GRAPHIC #1 g00749505

OPERATOR STATION

164-9429 SEAT AR

S/N: AKT1-UP
VINYL
AN ATTACHMENT

SMCS-7312 **i01445950**

NOTE	PART NUMBER	QTY	PART NAME 1 2 3 4 5 6 (PRODUCT LEVEL)	SEE PAGE
Y	*159-2950*	1	SEAT GP-SUSPENSION	753

Y-SEPARATE ILLUSTRATION

OPERATOR STATION

156-7418 SEAT GP

S/N: AKT1-UP

PART OF 171-5801 CHASSIS AR

SMCS-7312 **i01565500**

NOTE	REF NO	GRAPHIC REF	PART NUMBER	QTY	PART NAME 1 2 3 4 5 6 (PRODUCT LEVEL)	SEE PAGE
Y	1	1	*159-2951*	1	SEAT GP-SUSPENSION	754
	2	1	**138-1015**	1	CUSHION AS-RH	
	3	1	**137-7369**	1	CUSHION AS	
	4	1	**138-1025**	1	PLATE	
	5	1	**7X-0469**	2	BOLT (3/8-24X0.88 IN)	
	6	1	**7X-0603**	4	WASHER-HARD (9.9X35X2.5MM THK)	
	7	1	**5M-3062**	4	BOLT (3/8-16X0.75 IN)	
	8	1	**5P-1075**	6	WASHER-HARD (10.2X22.5X3MM THK)	
M	9	1	**9X-2045**	2	SCREW-TRUSS HEAD (M6X1X20MM)	
	10	1	**9X-2038**	2	WASHER (7X19X2MM THK)	
	11	1	**6D-6812**	2	KNOB AS	
	12	1	**153-8498**	1	SCREW-FLAT HEAD (5/16-18X0.75 IN)	

M-METRIC PART
Y-SEPARATE ILLUSTRATION

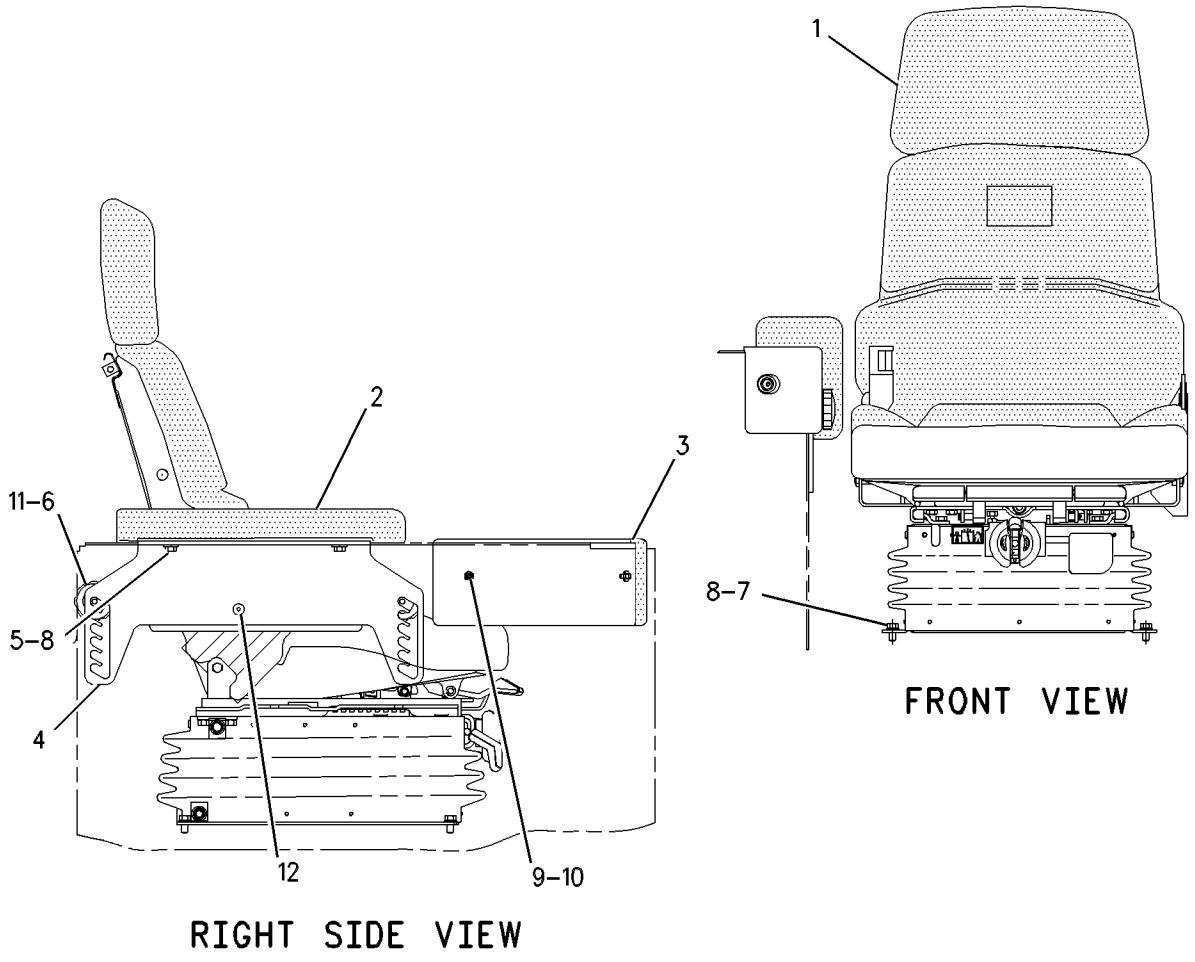

RIGHT SIDE VIEW

FRONT VIEW

GRAPHIC #1 g00445003

OPERATOR STATION

180-7304 SEAT GP

S/N: AKT1-UP
VINYL
PART OF 184-6011 SEAT GP
AN ATTACHMENT

SMCS-7312 **i01700599**

NOTE	REF NO	GRAPHIC REF	PART NUMBER	QTY	PART NAME 1 2 3 4 5 6 (PRODUCT LEVEL)	SEE PAGE
	1	1	**6K-3273**	5	RIVET-POP	
		1	**169-1026**	1	CUSHION AS	
	2	1	**143-1288**	8	LOCKNUT-FLANGE (3/8-16 THD)	
	3	1	**171-1230**	6	SCREW-BUTTON HEAD (3/8-16X1 IN)	
	4	1	**171-6682**	1	BAR-RECLINER	
	5	1	**172-2416**	2	PIN	
Y	6	1	*173-1028*	1	ADJUSTER GP-SEAT	657
	7	1	**177-1863**	2	BOLT-PIVOT (3/8-16X2.89 IN)	
Y	8	1	*177-4935*	1	RECLINER GP-SEAT	740
Y	9	1	*180-7305*	1	PAN GP-BACKREST	735
	10	1	**184-2298**	1	ROD	
	11	1	**184-2299**	4	WASHER (7X25.4X2.54MM THK)	
	12	1	**095-0843**	2	PIN-COTTER	
	13	1	**8Y-6277**	2	SPACER (10.5X28.6X10MM THK)	
	14	1	**5V-1496**	2	RETAINER	
	15	1	**6V-7646**	2	WASHER-HARD (7.2X25X2MM THK)	
	16	1	**8T-0328**	1	WASHER-HARD (5.5X10X1MM THK)	
	17	1	**8T-4205**	1	WASHER-HARD (7.2X14.5X2MM THK)	

Y-SEPARATE ILLUSTRATION

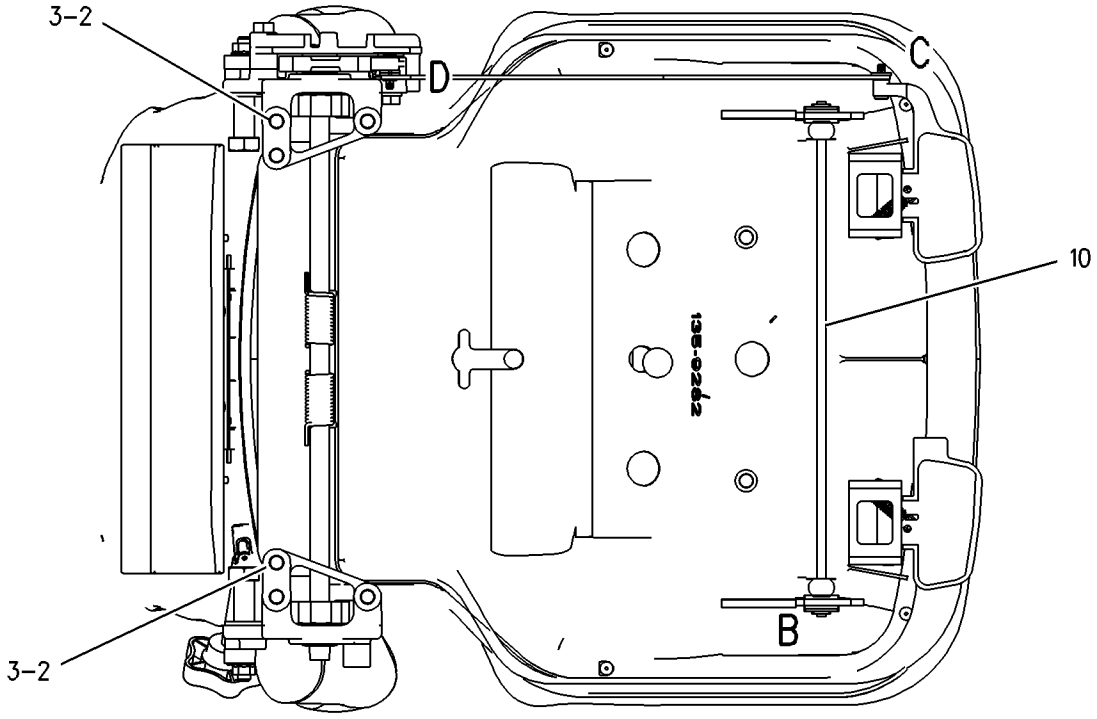

SECTION A-A

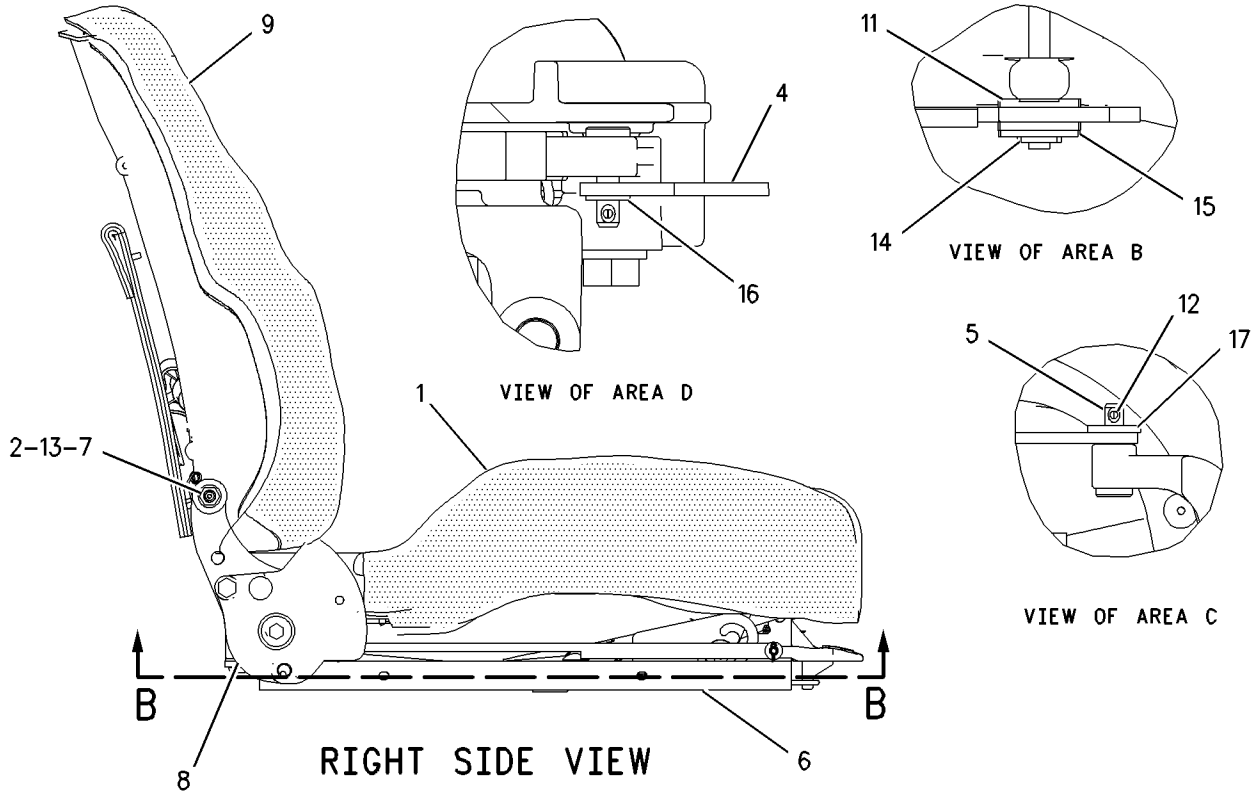

GRAPHIC #1 g00726860

OPERATOR STATION

180-7306 SEAT GP

S/N: AKT1-UP
FABRIC
PART OF 184-6012 SEAT GP
ALSO AN ATTACHMENT

SMCS-7312 **i01674154**

NOTE	REF NO	GRAPHIC REF	PART NUMBER	QTY	PART NAME 1 2 3 4 5 6 (PRODUCT LEVEL)	SEE PAGE
	1	1	**172-6581**	1	PAN AS	
		1	**169-1025**	1	CUSHION AS	
	1A	1	**6K-3273**	5	RIVET-POP	
	2	1	**143-1288**	8	LOCKNUT-FLANGE (3/8-16 THD)	
	3	1	**171-1230**	6	SCREW-BUTTON HEAD (3/8-16X1 IN)	
	4	1	**171-6682**	1	BAR-RECLINER	
	5	1	**172-2416**	2	PIN	
Y	6	1	*173-1028*	1	ADJUSTER GP-SEAT	657
	7	1	**177-1863**	2	BOLT-PIVOT (3/8-16X2.89 IN)	
Y	8	1	*177-4935*	1	RECLINER GP-SEAT	740
Y	9	1	**180-7307**	1	PAN GP-BACKREST	736
	10	1	**184-2298**	1	ROD	
	11	1	**184-2299**	4	WASHER (7X25.4X2.54MM THK)	
	12	1	**095-0843**	2	PIN-COTTER	
	13	1	**8Y-6277**	2	SPACER (10.5X28.6X10MM THK)	
	14	1	**5V-1496**	2	RETAINER	
	15	1	**6V-7646**	2	WASHER-HARD (7.2X25X2MM THK)	
	16	1	**8T-0328**	1	WASHER-HARD (5.5X10X1MM THK)	
	17	1	**8T-4205**	1	WASHER-HARD (7.2X14.5X2MM THK)	

Y-SEPARATE ILLUSTRATION

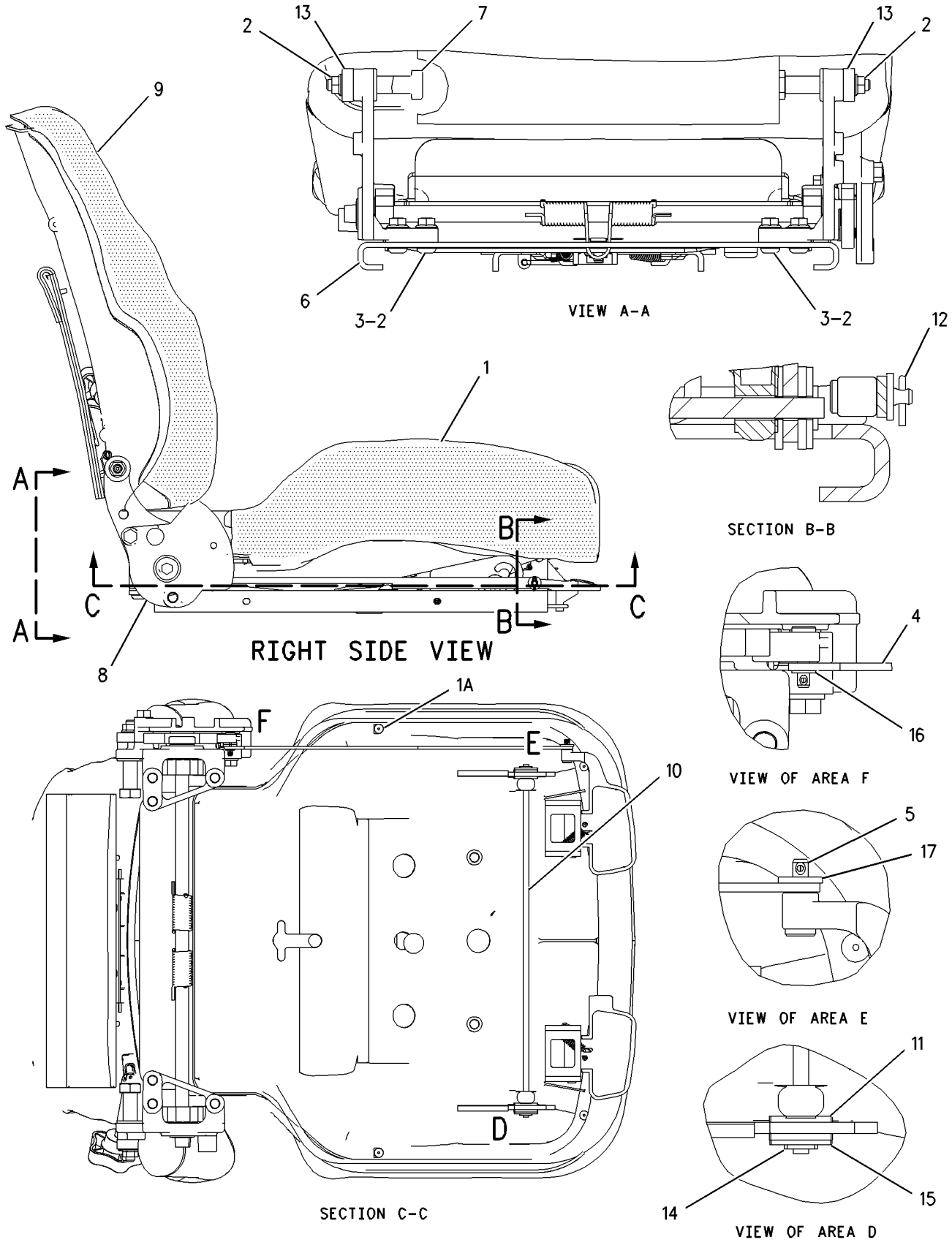

GRAPHIC #1 g00756257

OPERATOR STATION

184-6011 SEAT GP

S/N: AKT1-UP
VINYL
PART OF 159-2950 SEAT GP-SUSPENSION
AN ATTACHMENT

SMCS-7312 **i01654131**

NOTE	REF NO	GRAPHIC REF	PART NUMBER	QTY	PART NAME 1 2 3 4 5 6 (PRODUCT LEVEL)	SEE PAGE
	1	1	**173-3083**	1	EXTENSION GP-BACKREST	
	2	1	**177-4937**	1	SPACER (11.7X19.8X20.3MM THK)	
	3	1	**180-5559**	1	SCREW-PAN HEAD (7/16-20X1.75 IN)	
	4	1	**180-5560**	1	SCREW-PAN HEAD (7/16-20X1.25 IN)	
Y	5	1	**180-7304**	1	SEAT GP (VINYL)	746
	6	1	**183-3648**	1	SEAT BELT GP	

Y-SEPARATE ILLUSTRATION

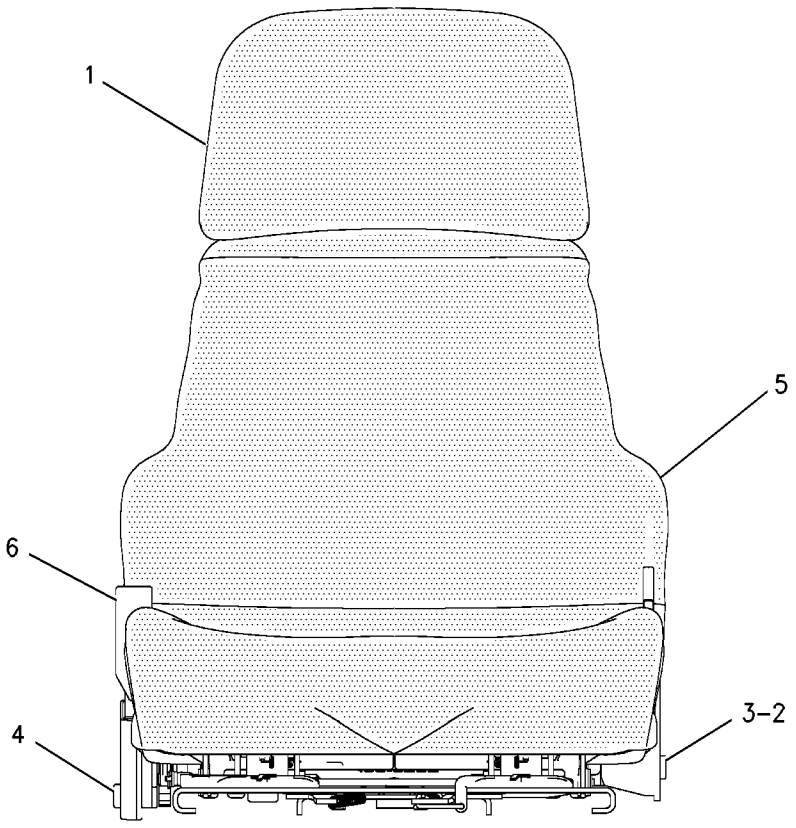

FRONT VIEW

GRAPHIC #1 g00683843

184-6012 SEAT GP

S/N: AKT1-UP
PART OF 159-2951, 159-2952 SEAT GP-SUSPENSION
ALSO AN ATTACHMENT

SMCS-7312 **i01654137**

NOTE	REF NO	GRAPHIC REF	PART NUMBER	QTY	PART NAME 1 2 3 4 5 6 (PRODUCT LEVEL)	SEE PAGE
	1	1	**173-3084**	1	EXTENSION GP-BACKREST	
	2	1	**177-4937**	1	SPACER (11.7X19.8X20.3MM THK)	
	3	1	**180-5559**	1	SCREW-PAN HEAD (7/16-20X1.75 IN)	
	4	1	**180-5560**	1	SCREW-PAN HEAD (7/16-20X1.25 IN)	
Y	5	1	**180-7306**	1	SEAT GP	748
	6	1	**183-3648**	1	SEAT BELT GP	

Y-SEPARATE ILLUSTRATION

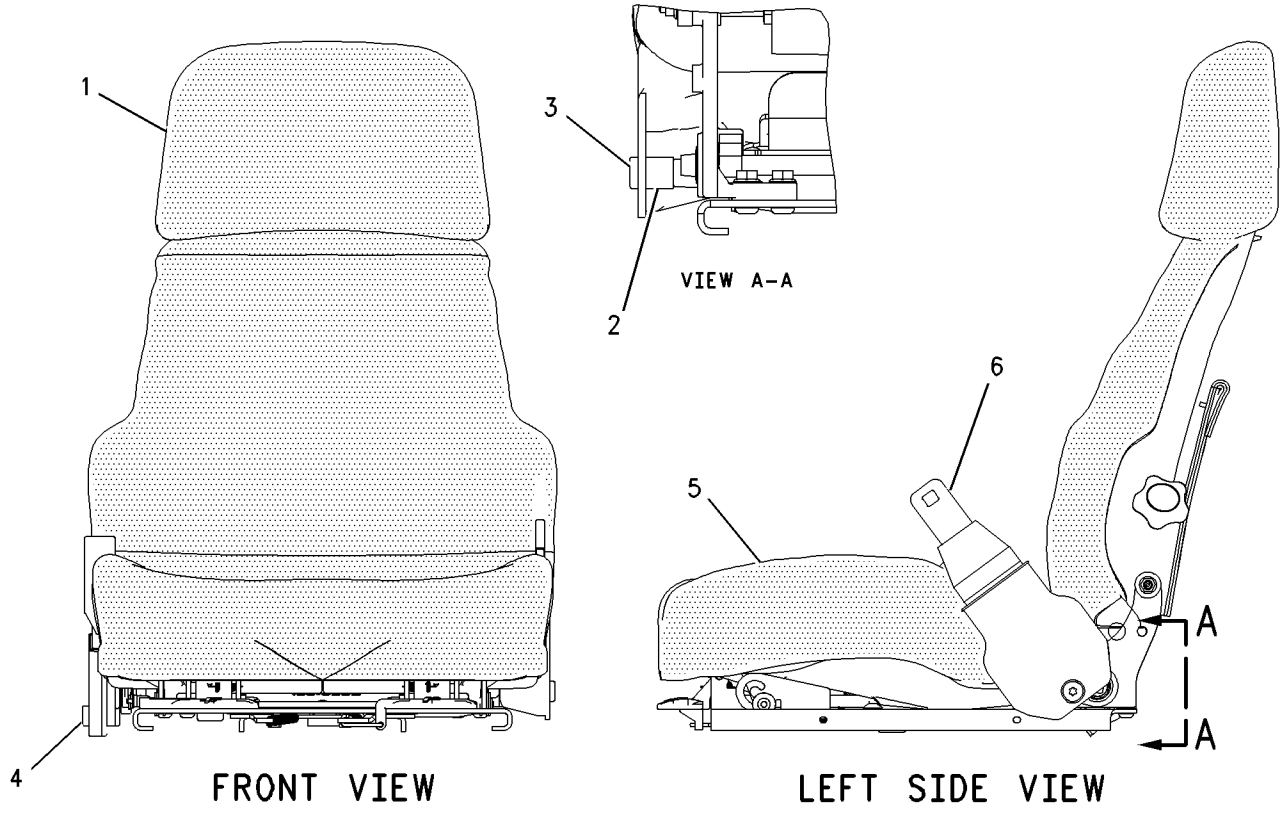

GRAPHIC #1 g00682472

OPERATOR STATION

156-7419 SEAT GP-SUSPENSION

S/N: AKT1-UP
AN ATTACHMENT

SMCS-7321, 7324, 7336 **i00860115**

NOTE	REF NO	GRAPHIC REF	PART NUMBER	QTY	PART NAME 1 2 3 4 5 6 (PRODUCT LEVEL)	SEE PAGE
Y	1	1	**159-2952**	1	SEAT GP-SUSPENSION	755

Y-SEPARATE ILLUSTRATION

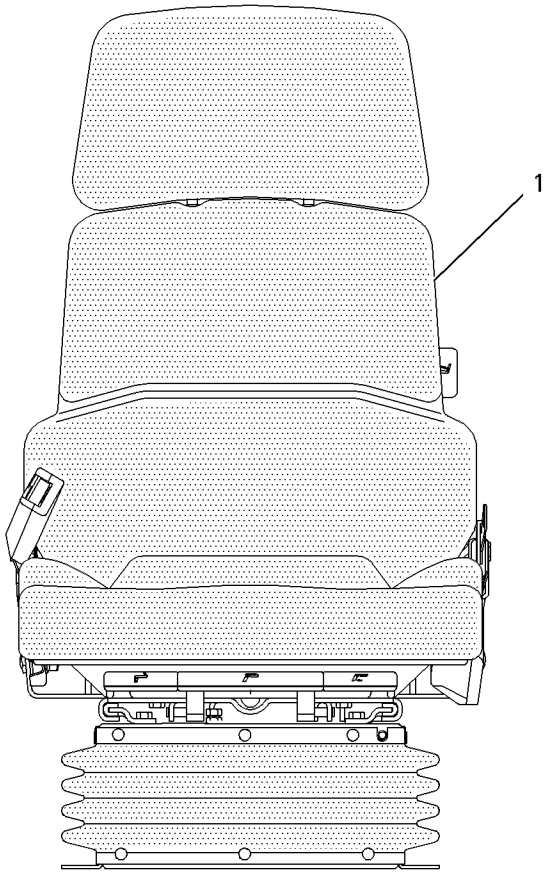

FRONT VIEW

GRAPHIC #1 g00444688

OPERATOR STATION

159-2950 SEAT GP-SUSPENSION–VINYL

S/N: AKT1-UP
PART OF 164-9429 SEAT AR
AN ATTACHMENT

SMCS-7321, 7324, 7336 **i01573609**

NOTE	REF NO	GRAPHIC REF	PART NUMBER	QTY	PART NAME 1 2 3 4 5 6 (PRODUCT LEVEL)	SEE PAGE
Y	1	1	**160-7165**	1	SUSPENSION GP-SEAT	756
Y	2	1	*184-6011*	1	SEAT GP	750
JZ	3	1		4	BLOCK-SLIDER	
	4	1	**4F-4879**	1	BOLT (3/8-16X.5 IN)	
	5	1	**203-7703**	2	WASHER-HARD (10.2X22.22X2.38MM THK)	
J	6	1	**173-5787**	4	SETSCREW	
					AVAILABLE REPAIR KIT(S):	
J			**173-7035**	1	KIT-SLIDER BLOCK	

J-KIT MARKED J INCLUDES PART(S) MARKED J
Y-SEPARATE ILLUSTRATION
Z-NOT SERVICED SEPARATELY

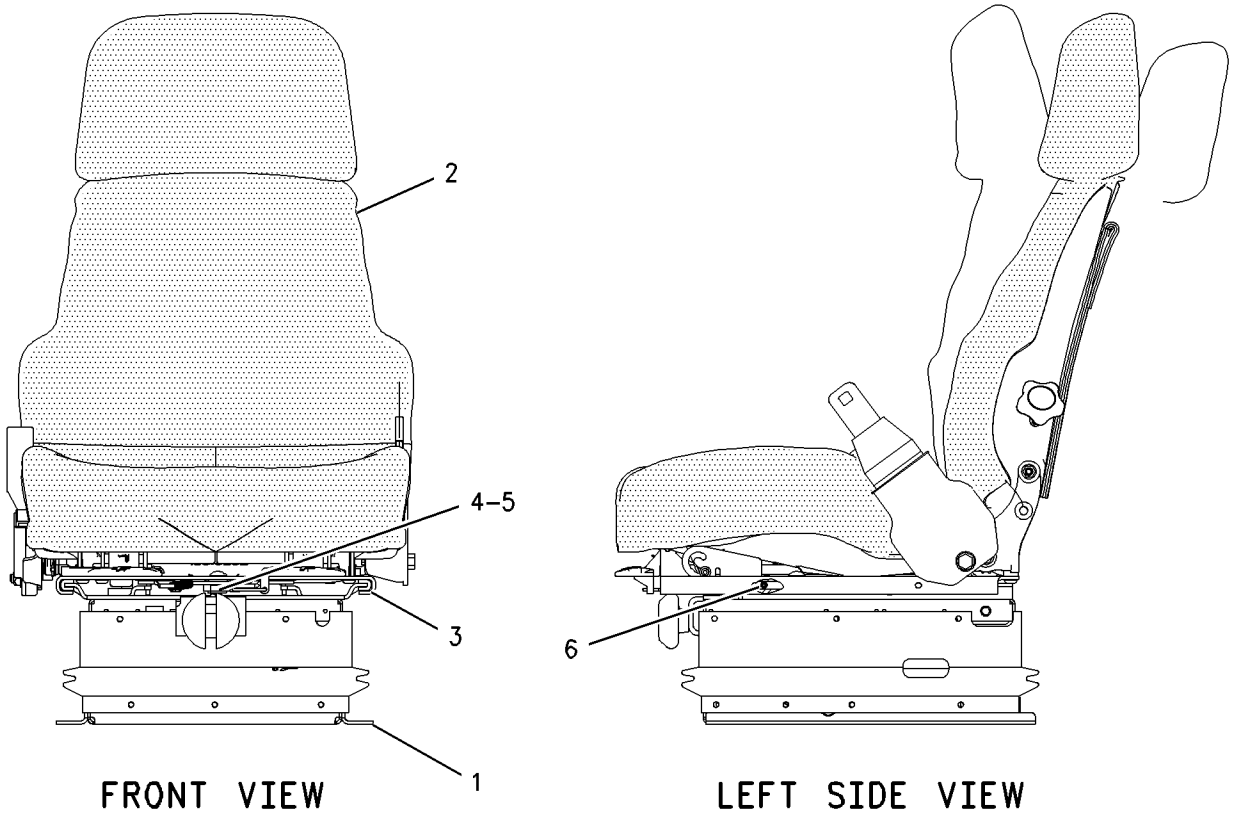

GRAPHIC #1 g00819547

OPERATOR STATION

159-2951 SEAT GP-SUSPENSION

S/N: AKT1-UP
FABRIC
PART OF 156-7418 SEAT GP

SMCS-7321, 7324, 7336 **i01657640**

NOTE	REF NO	GRAPHIC REF	PART NUMBER	QTY	PART NAME 1 2 3 4 5 6 (PRODUCT LEVEL)	SEE PAGE
Y	1	1	**160-7165**	1	SUSPENSION GP-SEAT	756
Y	2	1	*184-6012*	1	SEAT GP	751
JZ	3	1		4	BLOCK-SLIDER	
J	4	1	**4F-4879**	1	BOLT (3/8-16X.5 IN)	
J		1	**203-7703**	2	WASHER-HARD (10.2X22.22X2.38MM THK)	
J	5	1	**173-5787**	4	SETSCREW	
					AVAILABLE REPAIR KIT(S):	
J			**173-7035**	1	KIT-SLIDER BLOCK	

J-KIT MARKED J INCLUDES PARTS MARKED J
Y-SEPARATE ILLUSTRATION
Z-NOT SERVICED SEPARATELY

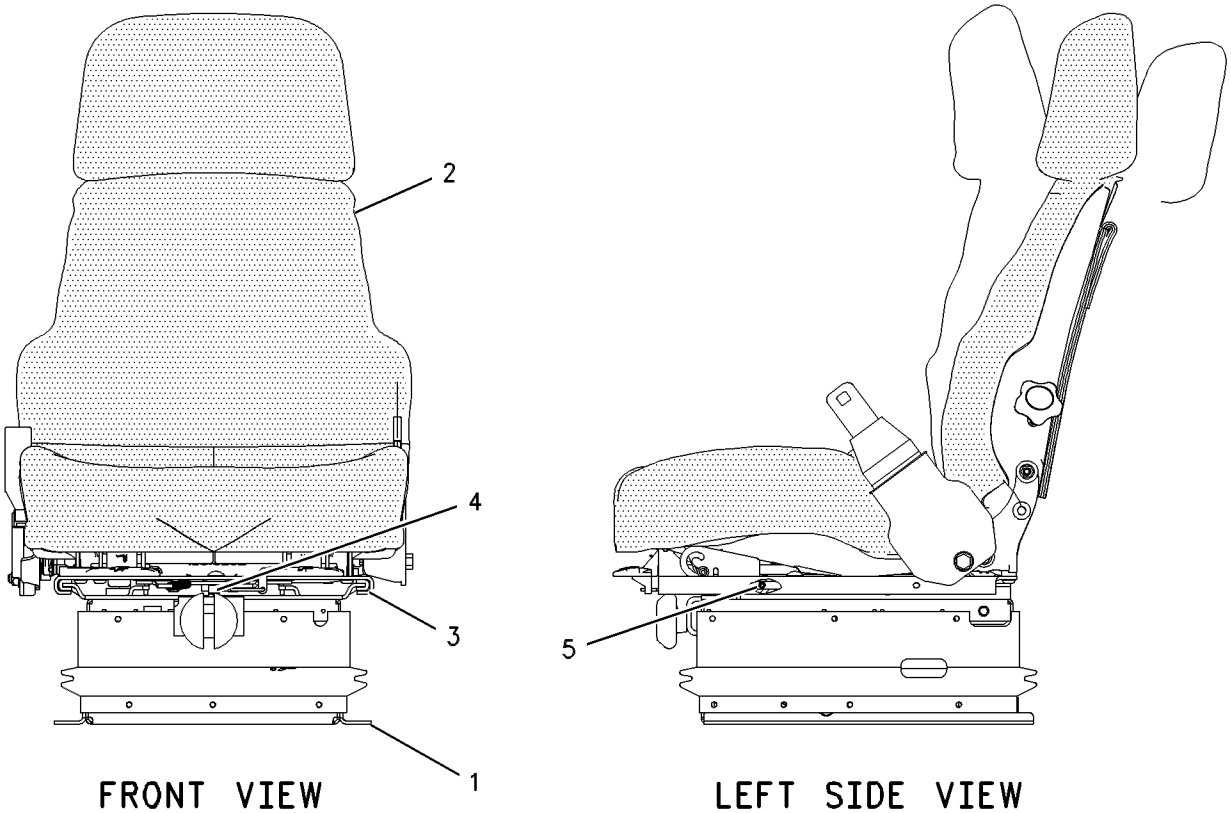

GRAPHIC #1 g00610923

OPERATOR STATION

159-2952 SEAT GP-SUSPENSION

S/N: AKT1-UP
FABRIC
PART OF 156-7419 SEAT GP-SUSPENSION
AN ATTACHMENT

SMCS-7321, 7324, 7336 **i01550343**

NOTE	REF NO	GRAPHIC REF	PART NUMBER	QTY	PART NAME 1 2 3 4 5 6 (PRODUCT LEVEL)	SEE PAGE
Y	1	1	**161-7539**	1	SUSPENSION GP-SEAT (AIR)	758
JZ	2	1		4	BLOCK-SLIDER	
J	3	1	**173-5787**	4	SETSCREW	
Y	4	1	**184-6012**	1	SEAT GP	751
J	5	1	**4F-4879**	1	BOLT (3/8-16X.5 IN)	
J	6	1	**203-7703**	2	WASHER-HARD (10.2X22.22X2.38MM THK)	
					AVAILABLE REPAIR KIT(S):	
J			**173-7035**	1	KIT-SLIDER BLOCK	

J-KIT MARKED J INCLUDES PARTS MARKED J
Y-SEPARATE ILLUSTRATION
Z-NOT SERVICED SEPARATELY

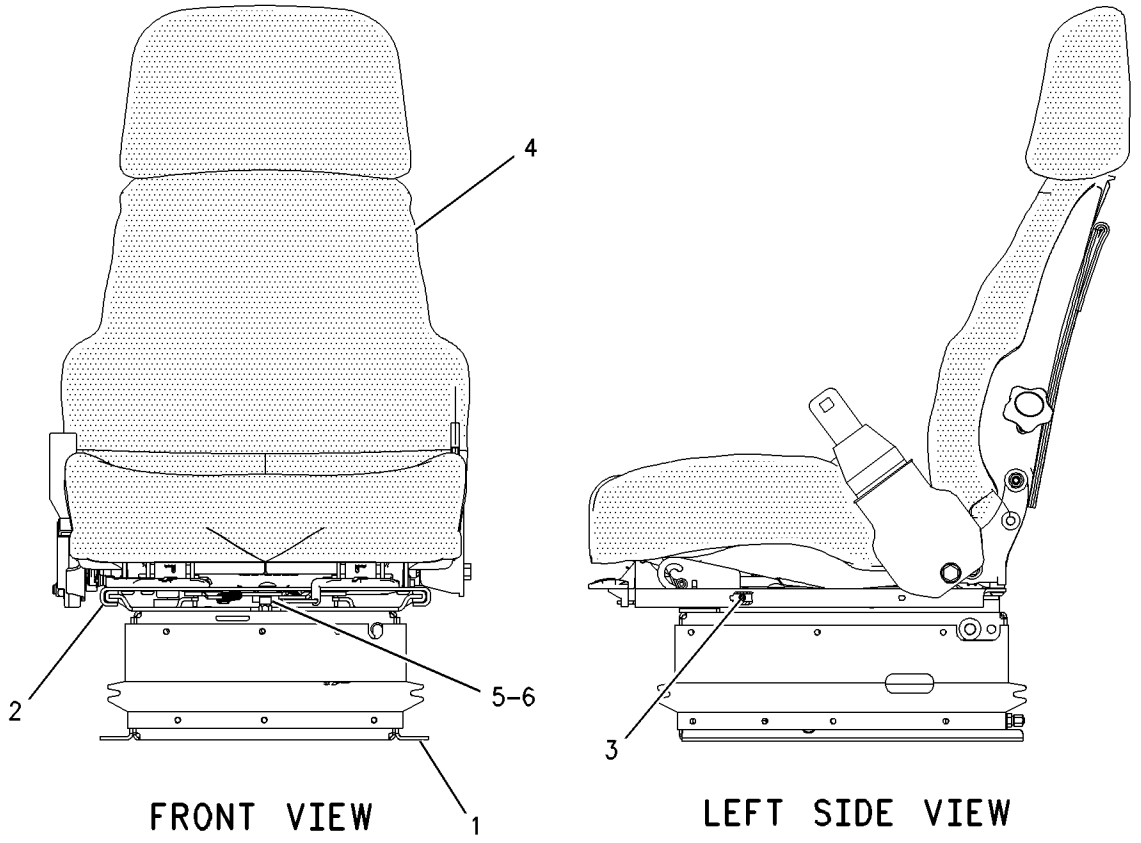

GRAPHIC #1 g00827877

OPERATOR STATION

160-7165 SUSPENSION GP-SEAT

S/N: AKT1-UP

PART OF 159-2950, 159-2951 SEAT GP-SUSPENSION

ALSO AN ATTACHMENT

SMCS-7324 **i01591029**

NOTE	REF NO	GRAPHIC REF	PART NUMBER	QTY	PART NAME 1 2 3 4 5 6 (PRODUCT LEVEL)	SEE PAGE
	1	1	**2K-4973**	2	LOCKNUT (3/8-16 THD)	
	2	1	**4V-7884**	2	BEARING	
	3	1	**4V-8577**	4	BEARING	
	4	1	**5V-1497**	1	RETAINER	
	5	1	**8Y-5965**	1	ABSORBER-SHOCK	
	6	1	**8Y-6012**	1	ARM AS-SUSPENSION	
	7	1	**8Y-6014**	1	HOUSING AS-LOWER	
	8	1	**8Y-6024**	2	SHAFT AS	
J	9	1	**101-0003**	20	FASTENER	
J	10	1	**166-6781**	3	FASTENER (15.9MM OD)	
J		1	**197-7689**	3	FASTENER (5.9MM OD)	
J	11	1	**163-1146**	3	FASTENER	
	12	1	**145-0326**	1	FILM-INSTRUCTION (SEAT ADJUSTMENT)	
	13	1	**169-7380**	1	BOLT-SOCKET HEAD (3/8-16X0.375 IN)	
Y	14	1	**174-2231**	1	HOUSING GP-SEAT SUSPENSION	704
	15	1	**197-7689**	3	FASTENER	
					AVAILABLE REPAIR KIT(S):	
J			**8Y-5944**	1	KIT-SUSPENSION BOOT	
					(INCLUDES BOOT, RETAINER, FASTENERS & PARTS MARKED J)	
			101-4194	1	KIT-BELT TETHER	
			101-4195	1	KIT-SUSPENSION ROLLER	

J-KIT MARKED J SERVICES PART(S) MARKED J
Y-SEPARATE ILLUSTRATION

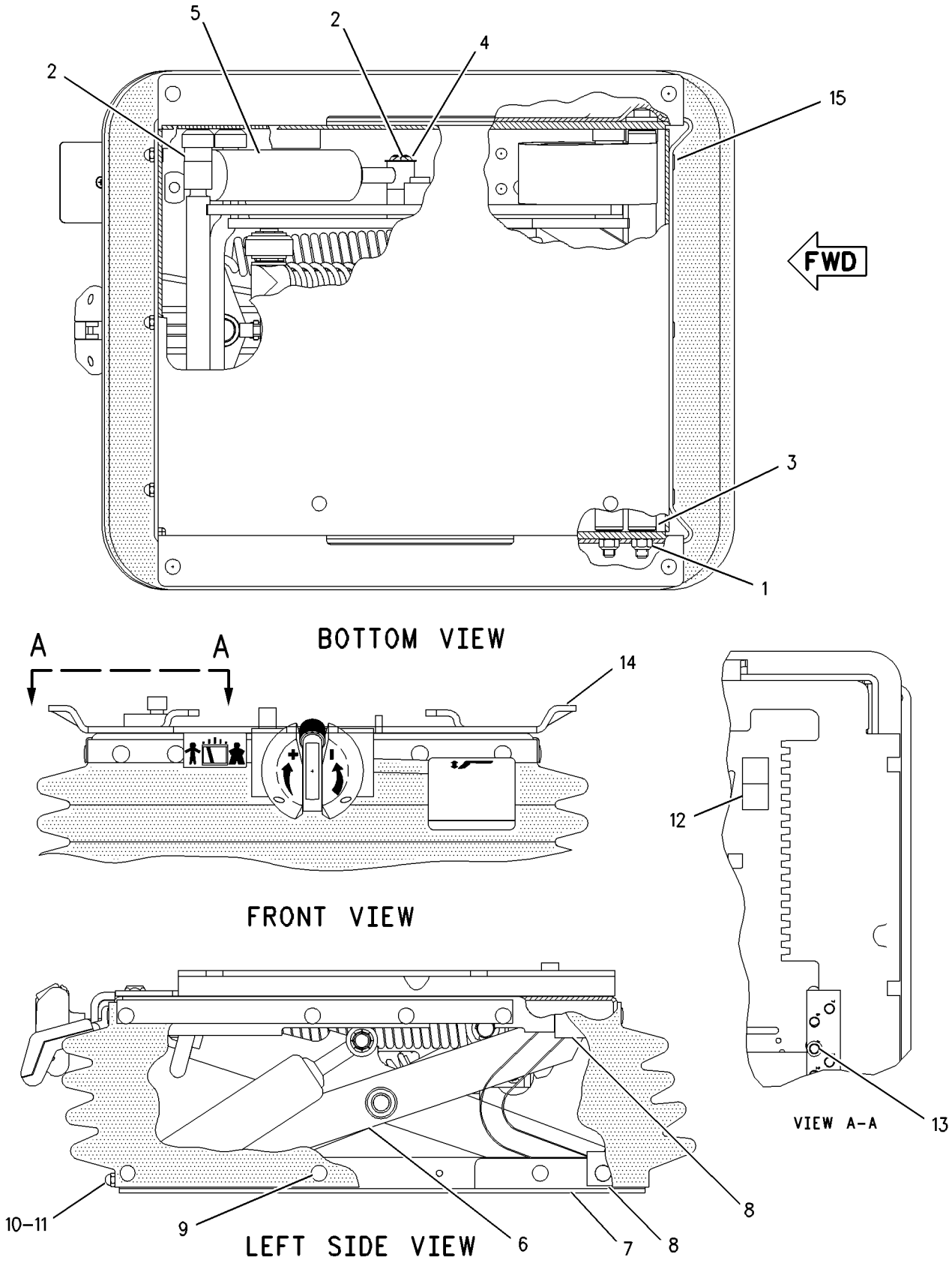

GRAPHIC #1 g00801013

OPERATOR STATION

161-7539 SUSPENSION GP-SEAT

S/N: AKT1-UP
24 VOLT. AIR
PART OF 159-2952 SEAT GP-SUSPENSION
AN ATTACHMENT

SMCS-7324 **i01611735**

NOTE	REF NO	GRAPHIC REF	PART NUMBER	QTY	PART NAME 1 2 3 4 5 6 (PRODUCT LEVEL)	SEE PAGE
	1	1	**1B-4430**	4	NUT-JAM (1/2-20 THD)	
	2	1	**3J-4818**	4	LOCKWASHER	
	3	1	**4V-7884**	2	BEARING	
	4	1	**4V-8556**	1	BOLT (3/8-16X2.34 IN)	
	5	1	**6K-0806**	1	STRAP-CABLE	
	6	1	**8L-8413**	5	STRAP-CABLE	
	7	1	**8Y-6917**	1	BOOT	
	8	1	**166-7401**	1	HOUSING AS	
	9	1	**9M-0164**	1	CLAMP-HOSE	
	10	1	**102-6317**	4	BUMPER	
	11	1	**123-8157**	2	SHAFT	
	12	1	**123-9131**	1	ABSORBER-SHOCK	
	13	1	**124-7128**	1	BUSHING-RELIEF	
	14	1	**128-0686**	2	SPACER (9.78X15.88X27.8MM THK)	
	15	1	**147-4549**	2	FITTING-ELBOW	
	16	1	**147-6522**	1	SPRING	
	17	1	**147-6523**	1	COMPRESSOR	
	18	1	**148-3749**	1	SCISSORS AS	
	19	1	**160-7765**	1	WASHER (16.26X22.23X1.97MM THK)	
B	20	1	**160-7766**	3	WASHER (16.26X22.23X0.51MM THK)	
B	21	1	**160-7767**	8	WASHER (3.68X12.57X0.51MM THK)	
	22	1	**164-5951**	1	HOUSING AS	
		1	**2K-4973**	1	LOCKNUT (3/8-16 THD)	
	23	1	**2K-4973**	3	LOCKNUT (3/8-16 THD)	
	24	1	**5P-8167**	1	BOLT (3/8-16X0.625 IN)	
	25	1	**8M-3267**	1	SCREW-HEX SOCKET (3/8-16X0.75 IN)	
	26	1	**8T-2501**	2	BOLT (3/8-16X2 IN)	
BE	27	1	**147-6541**		TUBE	
	28	1	**128-0613**	1	KIT-TETHER	
					(INCLUDES 2 TETHERS)	
JZ	29	1		27	CLIP	
LZ	30	1		4	ROLLER	
LZ	31	1		4	BEARING	
PZ	32	1		1	HARNESS	
PZ	33	1		1	NUT	
PZ		1		1	WASHER (0.38X0.88X0.02 IN THK)	
PZ		1		1	WASHER	
	34	1	**169-7380**	1	BOLT-SOCKET HEAD (3/8-16X0.375 IN)	
	35	1	**145-0326**	1	FILM-INSTRUCTION (SEAT ADJUSTMENT)	
					AVAILABLE REPAIR KIT(S):	
J			**8Y-6928**	1	KIT-FASTENER	
L			**123-9128**	1	KIT-ROLLER	
					(INCLUDES TIE WRAP)	
P			**123-8266**	1	KIT-WIRING HARNESS (AIR SUSPENSION SEAT)	
					(INCLUDES TIE WRAPS)	

B-USE AS REQUIRED
E-ORDER BY THE CENTIMETER
J-REPAIR KIT MARKED J INCLUDES PART(S) MARKED J
L-REPAIR KIT MARKED L INCLUDES PART(S) MARKED L
P-REPAIR KIT MARKED P INCLUDES PART(S) MARKED P
Z-NOT SERVICED SEPARATELY

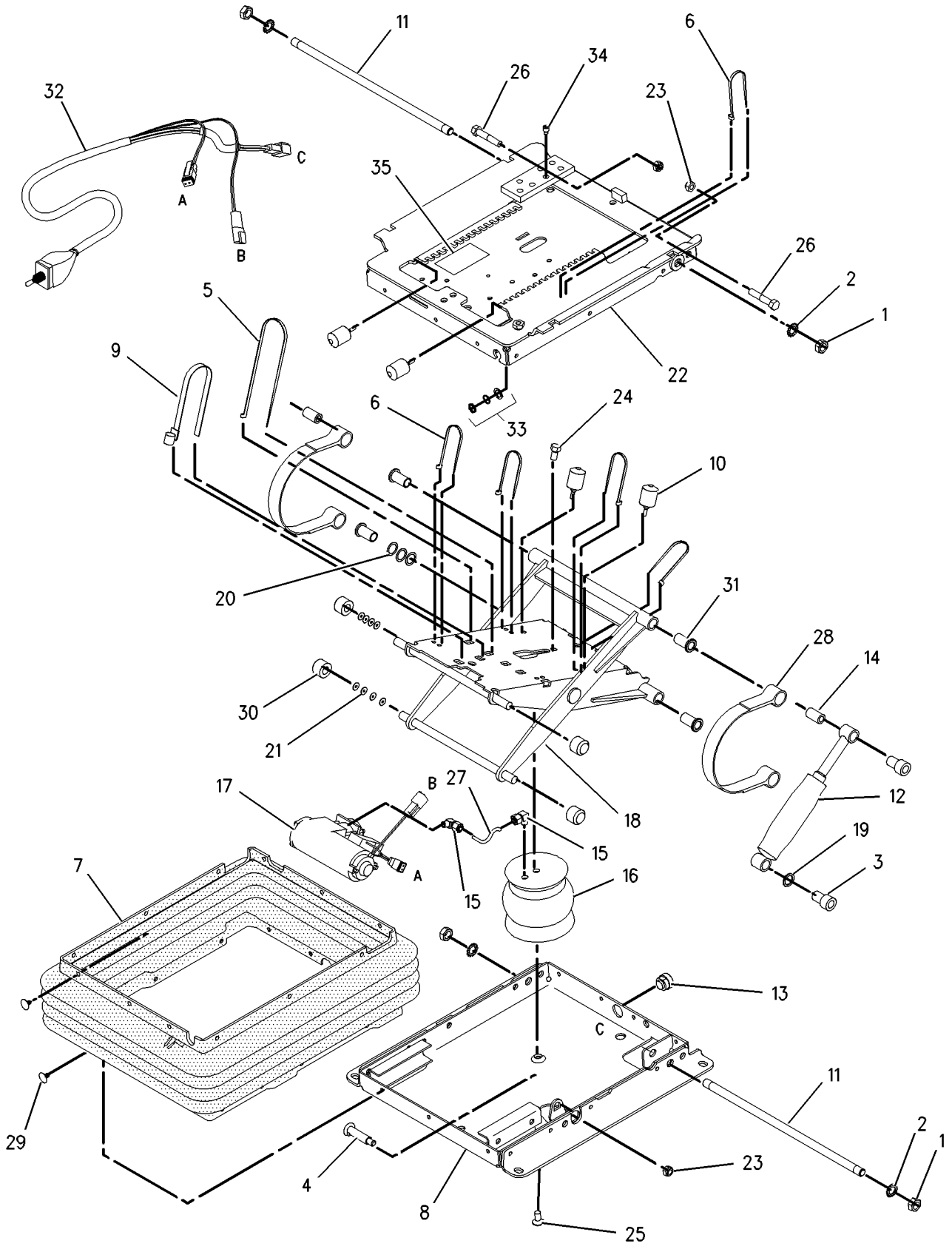

GRAPHIC #1 g00835357

OPERATOR STATION

169-9649 TANK GP-WINDOW WASHER

S/N: AKT1-UP

PART OF 186-5899 TANK GP-WINDOW WASHER

SMCS-7306 **i01674169**

NOTE	REF NO	GRAPHIC REF	PART NUMBER	QTY	PART NAME 1 2 3 4 5 6 (PRODUCT LEVEL)	SEE PAGE
	1	1	**169-9650**	1	TANK-WASHER	
	2	1	**8E-8292**	1	CAP-VENTED	
E	3	1	**144-0195**		HOSE (61CM EACH)	
	4	1	**186-4857**	1	HARNESS AS (WATER BOTTLE)	
BD	5	1	**6V-5817**		CONDUIT-FLEXIBLE	
	6	1	**7T-8891**	4	PUMP AS-WASHER	
B	7	1	**3S-2093**	6	STRAP-CABLE	
E	8	1	**144-0195**		HOSE (15CM EACH)	
E	9	1	**144-0195**		HOSE (57CM EACH)	

B-USE AS REQUIRED
D-ORDER BY THE METER
E-ORDER BY THE CENTIMETER

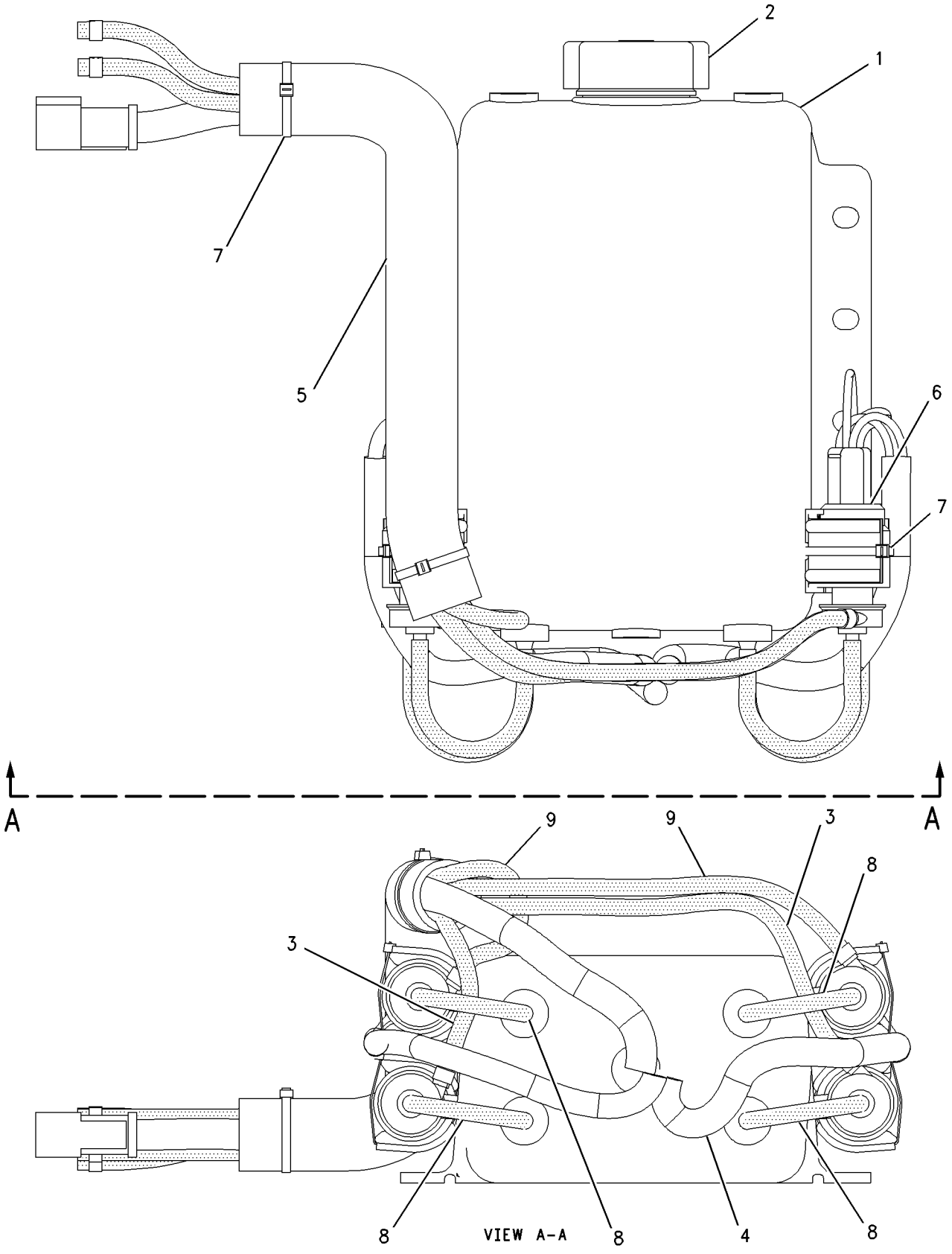

GRAPHIC #1 g00824992

OPERATOR STATION

186-5899 TANK GP-WINDOW WASHER

S/N: AKT1-UP

PART OF 171-1265 CAB AR

SMCS-7306 **i01446832**

NOTE	REF NO	GRAPHIC REF	PART NUMBER	QTY	PART NAME 1 2 3 4 5 6 (PRODUCT LEVEL)	SEE PAGE
	1	1	**8T-9364**	1	BOLT (1/4-20X0.625 IN)	
	2	1	**8T-5383**	4	VALVE AS-CHECK (WIPER/WASHER SYSTEM)	
	3	1	**9X-6772**	5	STRAP-CABLE	
Y	4	1	**169-9649**	1	TANK GP-WINDOW WASHER	760
	5	1	**156-6175**	1	CLIP	
	6	1	**3E-9865**	4	LOCKNUT (1/4-20 THD)	
	7	1	**8T-4205**	4	WASHER-HARD (7.2X14.5X2MM THK)	

Y-SEPARATE ILLUSTRATION

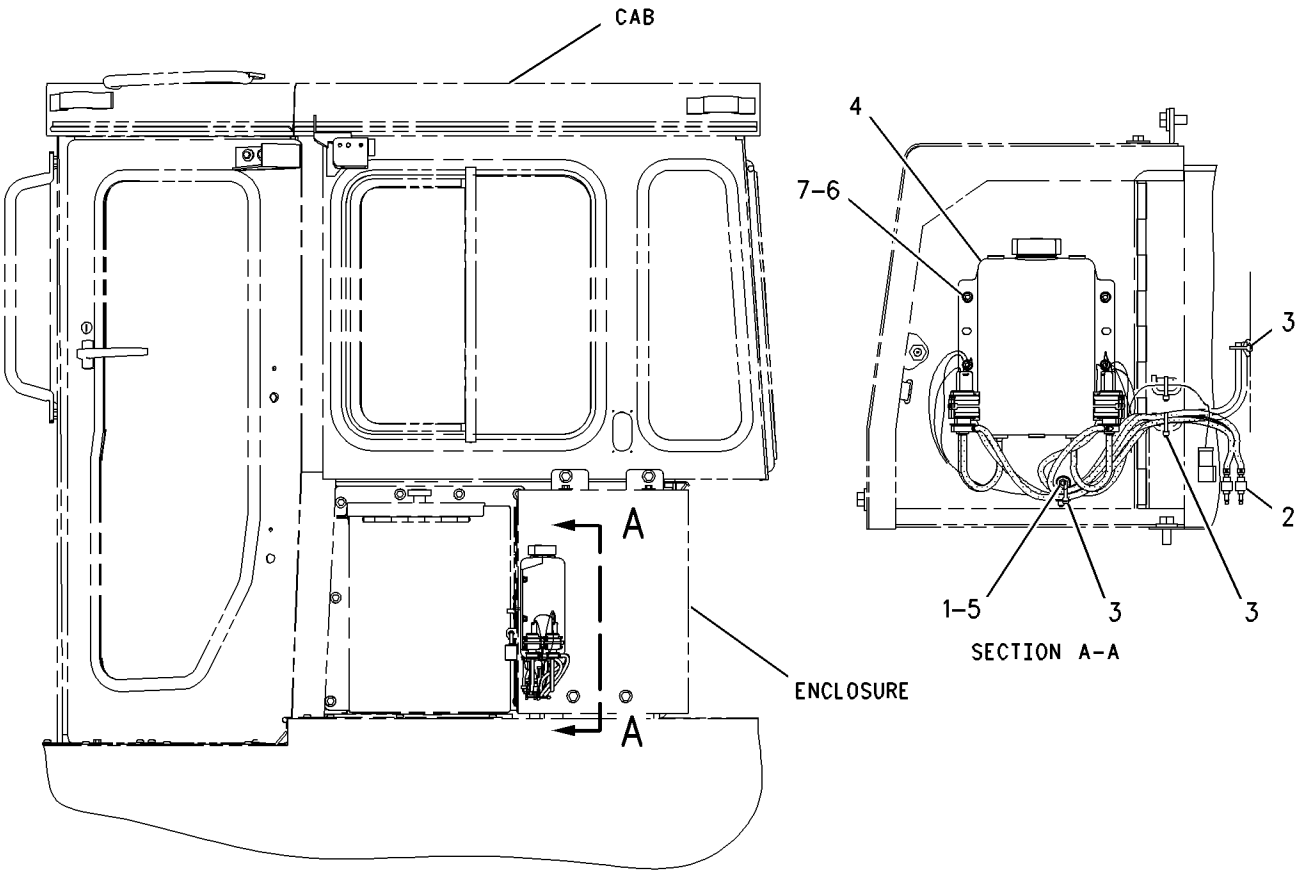

LEFT SIDE VIEW

GRAPHIC #1 g00688043

MEMORANDA

OPERATOR STATION

157-3736 WASHER GP-WINDOW

S/N: AKT1-UP
PART OF 157-4817 CAB AR
ALSO AN ATTACHMENT

SMCS-7306 **i01665126**

NOTE	REF NO	GRAPHIC REF	PART NUMBER	QTY	PART NAME 1 2 3 4 5 6 (PRODUCT LEVEL)	SEE PAGE
	1	1	**157-5129**	1	HARNESS AS	
	2	1	**9U-9048**	1	HARNESS AS-RADIO	
E	3	1	**144-0195**		HOSE (405CM)	
	4	1	**9D-3768**	8	GROMMET	
E	5	1	**7X-7702**		CONDUIT-FLEXIBLE (122CM)	
	6	1,2	**8T-5400**	6	CONNECTOR	
M	7	1,2	**6V-6889**	6	NUT (M8X1.25 THD)	
	8	1	**6V-8801**	1	NUT (3/8-16 THD)	
	9	1,2	**2P-4337**	4	SCREW-TAPPING	
	10	1	**5S-7349**	2	BOLT (1/4-20X0.5 IN)	
	11	2	**9N-1995**	4	RIVET-POP	
BD	12	1,2	**5P-7086**		TRIM	
	13	1	**8E-2589**	2	CLIP	
	14	1,2	**4P-7581**	2	CLIP	
	15	1,2	**6K-9632**	2	TEE	
	16	2	**102-8803**	1	KIT-RECEPTACLE (3 PIN)	
					(INCLUDES RECEPTACLE AS & WEDGE)	
	17	2	**8E-6856**	1	COVER	
B	18	1	**8L-8413**	28	STRAP-CABLE	
	19	1,2	**8T-4205**	6	WASHER-HARD (7.2X14.5X2MM THK)	
	20	1	**8T-4896**	1	WASHER-HARD (10.2X18.5X2.5MM THK)	
	21	2	**2D-0388**	2	GROMMET	
E	22	2	**144-0195**		HOSE (422CM)	
	23	1,2	**4P-8134**	2	CLIP	
E	24	1,2	**144-0195**		HOSE (480CM)	
EJ	25	1,2	**144-0195**	2	HOSE (290CM EACH)	
EJ	26	1,2	**144-0195**	2	HOSE (160CM EACH)	
	27	1,2	**8T-8737**	3	PLUG-SEAL	
	28	2	**3E-3371**	1	WEDGE-RECEPTACLE LOCK (3 PIN)	

B-USE AS REQUIRED
D-ORDER BY THE METER
E-ORDER BY THE CENTIMETER
J-QUANTITIES SHOWN ARE THOSE REQUIRED FOR BOTH LH & RH SIDES
M-METRIC PART

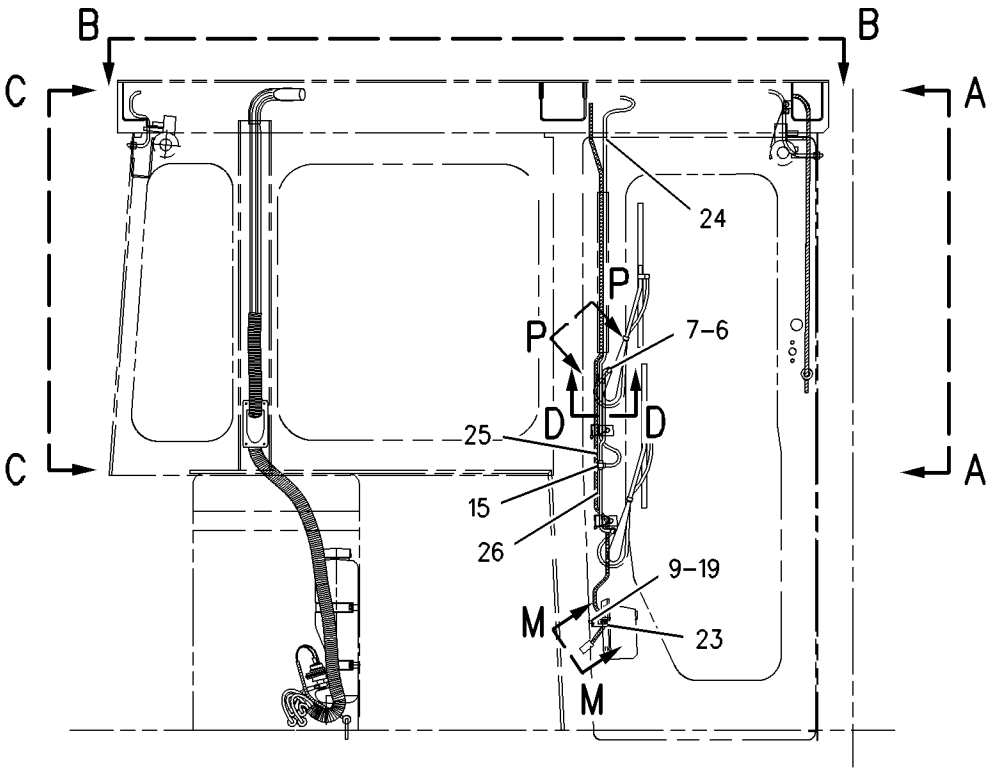

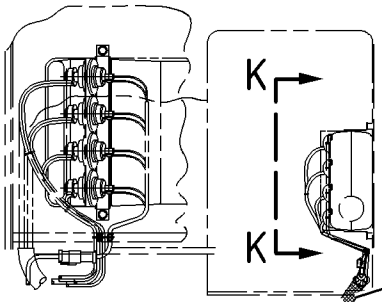

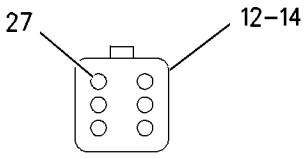

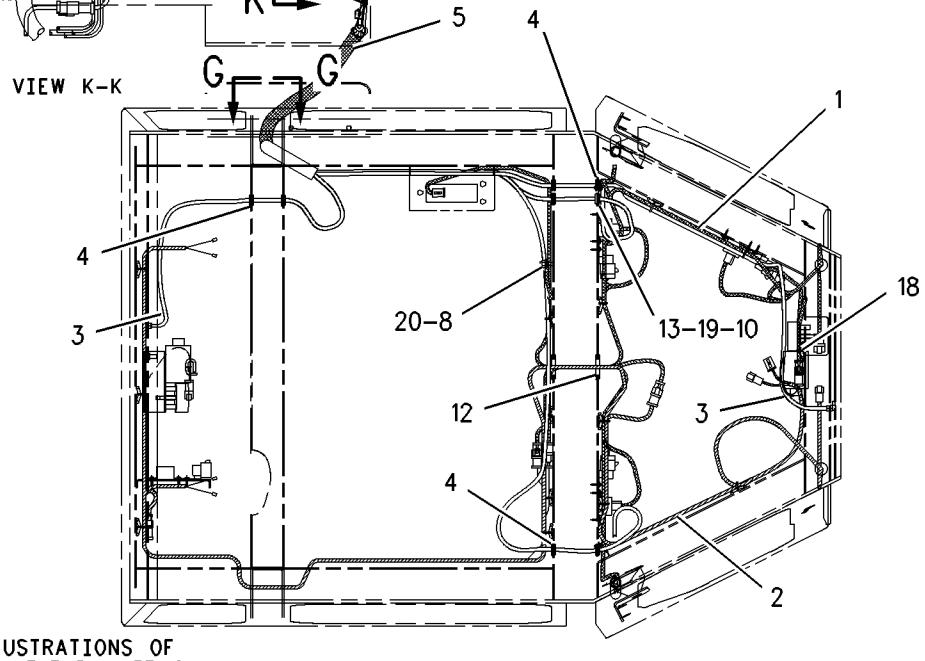

REFER TO ALL ILLUSTRATIONS OF THIS GROUP FOR AUXILIARY VIEWS

GRAPHIC #1 g00862542

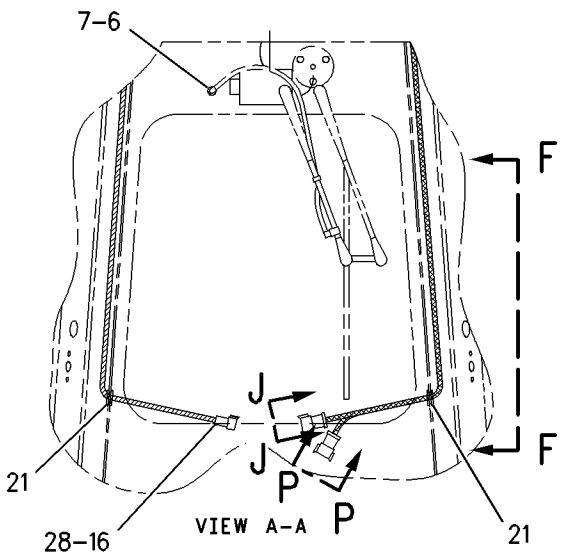

VIEW A-A

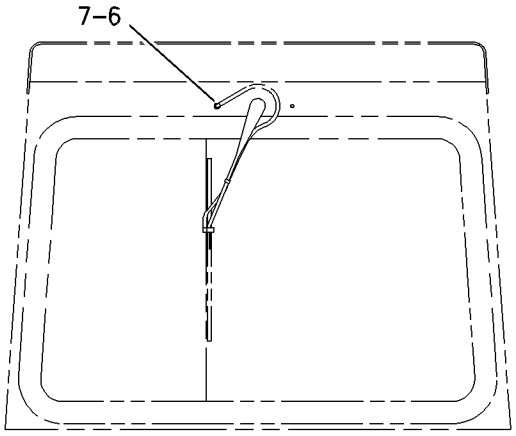

VIEW C-C

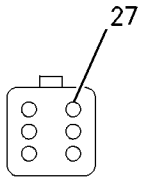

VIEW N-N

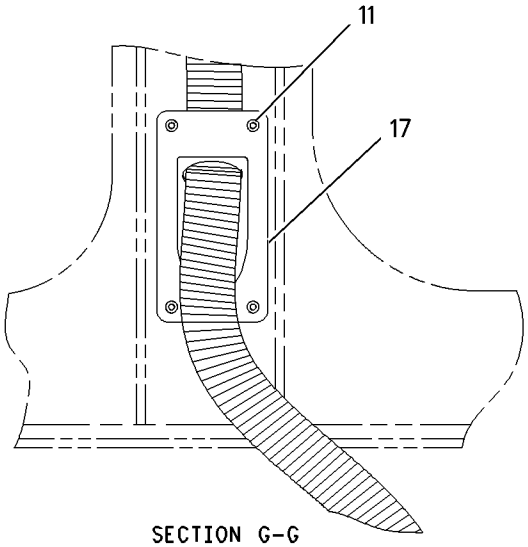

SECTION G-G

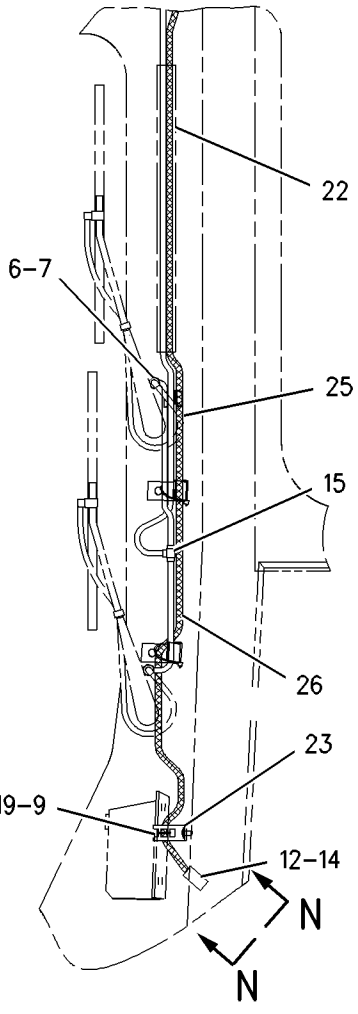

SECTION F-F

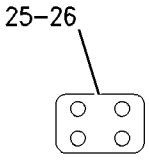

VIEW P-P

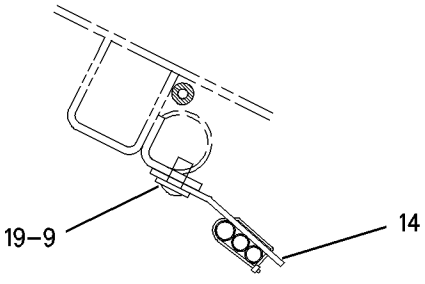

SECTION D-D

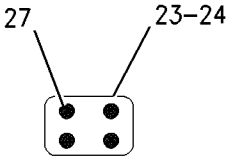

VIEW J-J

GRAPHIC #2

g00862541

OPERATOR STATION

8E-5113 WINDOW AS-SLIDING—RH

S/N: AKT1-UP
PART OF 157-3737 CAB GP
ALSO AN ATTACHMENT

SMCS-7310 **i01219822**

NOTE	PART NUMBER	QTY	PART NAME 1 2 3 4 5 6 (PRODUCT LEVEL)	SEE PAGE
Y	*6T-8402*	1	WINDOW GP-CAB (RH)(SLIDING)	769
			—OR—	
Y	*8E-3446*	1	WINDOW GP-CAB (RH)(SLIDING)	773

Y-SEPARATE ILLUSTRATION

OPERATOR STATION

8E-5114 WINDOW AS-SLIDING—LH

S/N: AKT1-UP
PART OF 157-3737 CAB GP
ALSO AN ATTACHMENT

SMCS-7310 **i01219825**

NOTE	PART NUMBER	QTY	PART NAME 1 2 3 4 5 6 (PRODUCT LEVEL)	SEE PAGE
Y	*6T-8403*	1	WINDOW GP-CAB (LH)(SLIDING)	770
			—OR—	
Y	*8E-3447*	1	WINDOW GP-CAB (LH)(SLIDING)	774

Y-SEPARATE ILLUSTRATION

6T-8402 WINDOW GP-CAB–RH

S/N: AKT1-UP
SLIDING
PART OF 8E-5113 WINDOW AS-SLIDING
ALSO AN ATTACHMENT

SMCS-7310 **i01692475**

NOTE	REF NO	GRAPHIC REF	PART NUMBER	QTY	PART NAME 1 2 3 4 5 6 (PRODUCT LEVEL)	SEE PAGE
Y	1	1	**7T-1068**	1	WINDOW GP-CAB (RH)	771
	2	1	**7T-1330**	1	GLASS (TINTED)	
D	3	1	**5P-5680**		SEAL (1.14M)	
DB	4	1	**8T-0687**		FILLER	
D	5	1	**5P-5680**		SEAL (.66M)	
D	6	1	**6V-5833**		SEAL (.64M)	
E	7	1	**8Y-6839**		SEAL (64CM)	

B-USE AS REQUIRED
D-ORDER BY THE METER
E-ORDER BY THE CENTIMETER
Y-SEPARATE ILLUSTRATION

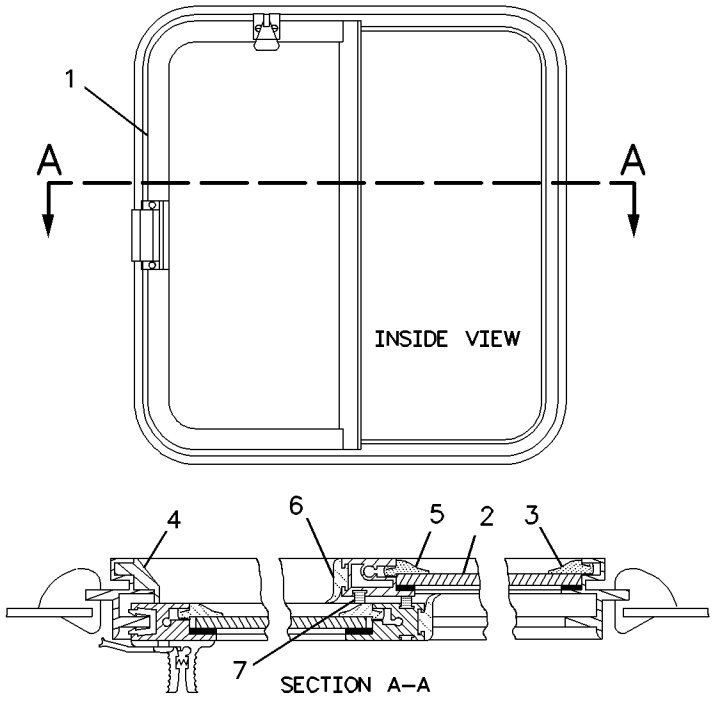

GRAPHIC #1 g00844619

6T-8403 WINDOW GP-CAB—LH

S/N: AKT1-UP
SLIDING
PART OF 8E-5114 WINDOW AS-SLIDING
ALSO AN ATTACHMENT

SMCS-7310 **i01625888**

NOTE	REF NO	GRAPHIC REF	PART NUMBER	QTY	PART NAME 1 2 3 4 5 6 (PRODUCT LEVEL)	SEE PAGE
BD	1	1	**5P-5680**		SEAL	
BD	2	1	**8T-0687**		FILLER	
BD	3	1	**6V-5833**		SEAL	
Y	4	1	**7T-1069**	1	WINDOW GP-CAB (LH)	772
BE	5	1	**8Y-6839**		SEAL	
	6	1	**7T-1330**	1	GLASS (TINTED)	

B-USE AS REQUIRED
D-ORDER BY THE METER
E-ORDER BY THE CENTIMETER
Y-SEPARATE ILLUSTRATION

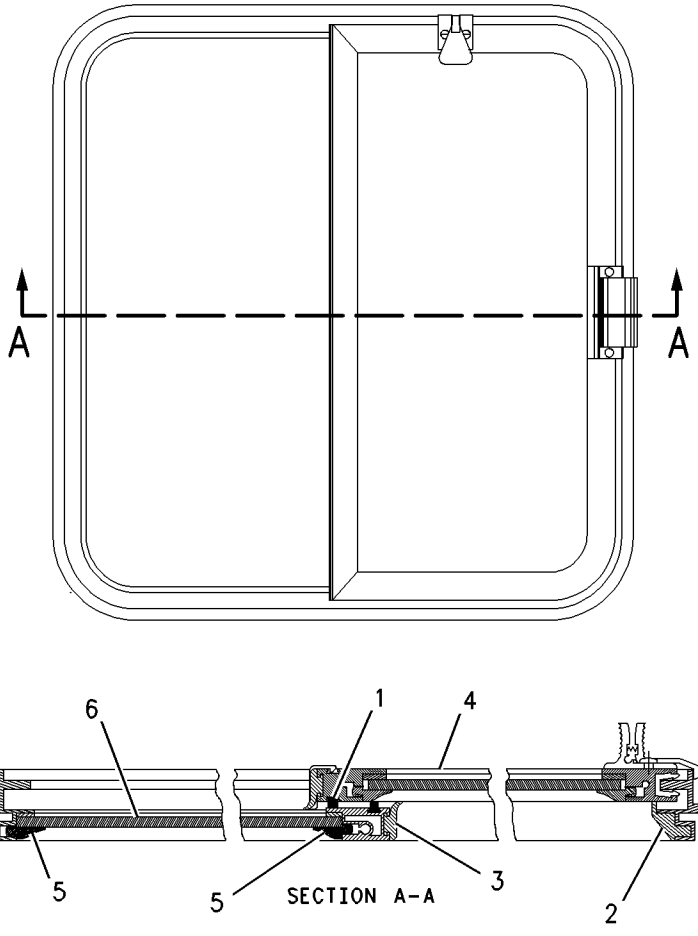

GRAPHIC #1 g00842070

OPERATOR STATION

7T-1068 WINDOW GP-CAB–RH

S/N: AKT1-UP
PART OF 6T-8402 WINDOW GP-CAB
ALSO AN ATTACHMENT

SMCS-7310 **i01612444**

NOTE	REF NO	GRAPHIC REF	PART NUMBER	QTY	PART NAME 1 2 3 4 5 6 (PRODUCT LEVEL)	SEE PAGE
	1	1	**3T-1121**	1	LOCK AS	
	2	1	**2H-6622**	2	SCREW-MACHINE	
	3	1	**9P-7860**	1	LOCK AS	
	4	1	**9P-7859**	2	SCREW	
BD	5	1	**5P-5680**		SEAL	
BD	6	1	**6V-5833**		SEAL	
BD	7	1	**5P-8918**		SEAL	
BD	8	1	**8Y-6448**	1	GLASS	
BE	9	1	**8Y-6839**		SEAL	

B-USE AS REQUIRED
D-ORDER BY THE METER
E-ORDER BY THE CENTIMETER

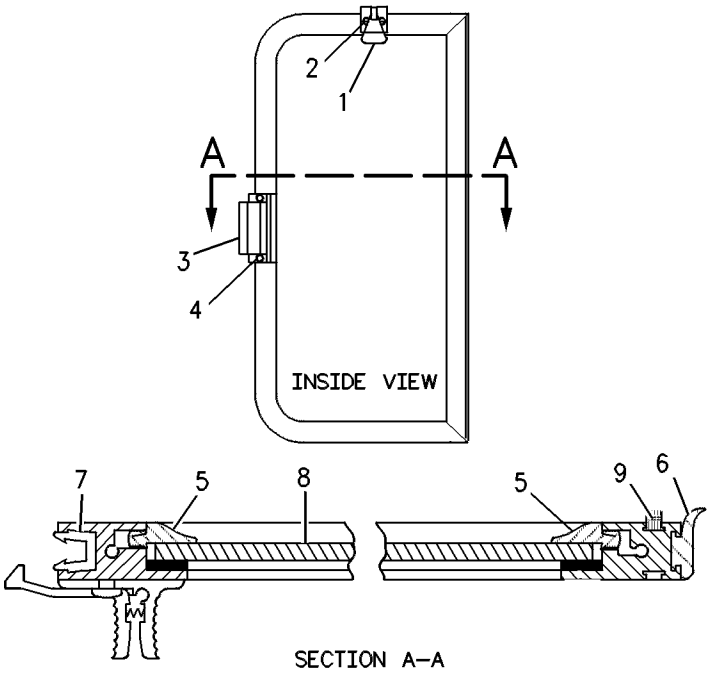

GRAPHIC #1 g00834657

OPERATOR STATION

7T-1069 WINDOW GP-CAB—LH

S/N: AKT1-UP
PART OF 6T-8403 WINDOW GP-CAB
ALSO AN ATTACHMENT

SMCS-7310 **i01612493**

NOTE	REF NO	GRAPHIC REF	PART NUMBER	QTY	PART NAME 1 2 3 4 5 6 (PRODUCT LEVEL)	SEE PAGE
	1	1	**3T-1121**	1	LOCK AS	
	2	1	**2H-6622**	2	SCREW-MACHINE	
	3	1	**9P-7860**	1	LOCK AS	
	4	1	**9P-7859**	2	SCREW	
BD	5	1	**5P-5680**		SEAL	
BD	6	1	**6V-5833**		SEAL	
BD	7	1	**5P-8918**		SEAL	
	8	1	**8Y-6448**	1	GLASS	
BE	9	1	**8Y-6839**		SEAL	

B-USE AS REQUIRED
D-ORDER BY THE METER
E-ORDER BY THE CENTIMETER

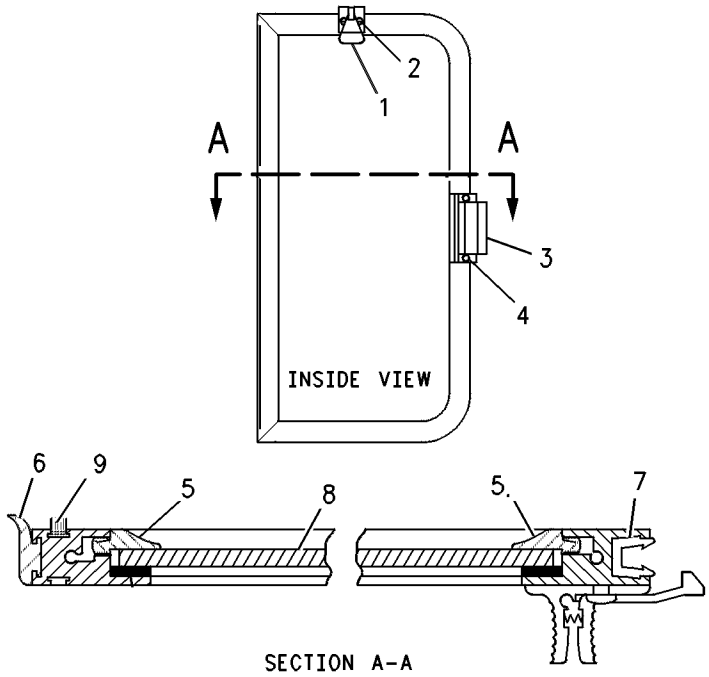

SECTION A-A

GRAPHIC #1 g00834641

8E-3446 WINDOW GP-CAB–RH

S/N: AKT1-UP
SLIDING
PART OF 8E-5113 WINDOW AS-SLIDING
ALSO AN ATTACHMENT

SMCS-7310 **i01233119**

NOTE	REF NO	GRAPHIC REF	PART NUMBER	QTY	PART NAME 1 2 3 4 5 6 (PRODUCT LEVEL)	SEE PAGE
BE	1	1	**8Y-6423**		SEAL	
BE	2	1	**8Y-6459**		TAPE-BUTYL	
	3	1	**8Y-6430**	1	SEAL-WINDOW	
Y	4	1	**8Y-6433**	1	WINDOW GP-CAB (RH)	778
	5	1	**8Y-6462**	1	KIT-LEAF SPRING	
					(INCLUDES SPRING AS & RIVET)	
	6	1	**8Y-6432**	1	GLASS-FIXED-RH (TINTED)	
BE	7	1	**8Y-6424**		SEAL	
BE	8	1	**8Y-6910**		WEATHERSTRIP	

B-USE AS REQUIRED
E-ORDER BY THE CENTIMETER
Y-SEPARATE ILLUSTRATION

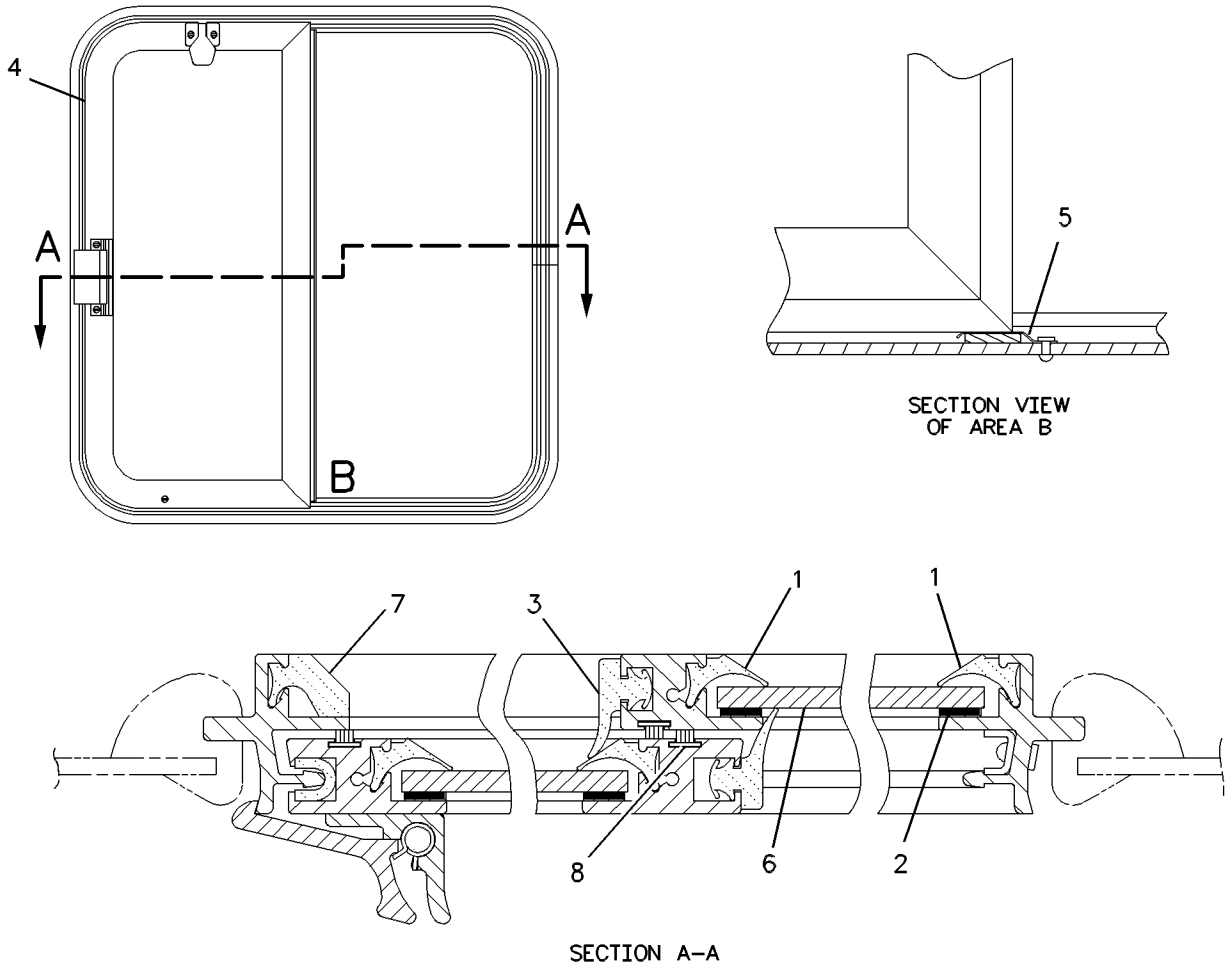

GRAPHIC #1 g00544799

OPERATOR STATION

8E-3447 WINDOW GP-CAB—LH

S/N: AKT1-UP
SLIDING
PART OF 8E-5114 WINDOW AS-SLIDING
ALSO AN ATTACHMENT

SMCS-7310 **i01290960**

NOTE	REF NO	GRAPHIC REF	PART NUMBER	QTY	PART NAME 1 2 3 4 5 6 (PRODUCT LEVEL)	SEE PAGE
BE	1	1	**8Y-6423**		SEAL	
BE	2	1	**8Y-6459**		TAPE-BUTYL	
	3	1	**8Y-6430**	1	SEAL-WINDOW	
Y	4	1	**8Y-6420**	1	WINDOW GP-CAB (LH)	776
	5	1	**8Y-6462**	1	KIT-LEAF SPRING	
					(INCLUDES SPRING AS & RIVET)	
	6	1	**8Y-6419**	1	GLASS-FIXED-LH (TINTED)	
BE	7	1	**8Y-6424**		SEAL	
BE	8	1	**8Y-6910**		WEATHERSTRIP	

B-USE AS REQUIRED
E-ORDER BY THE CENTIMETER
Y-SEPARATE ILLUSTRATION

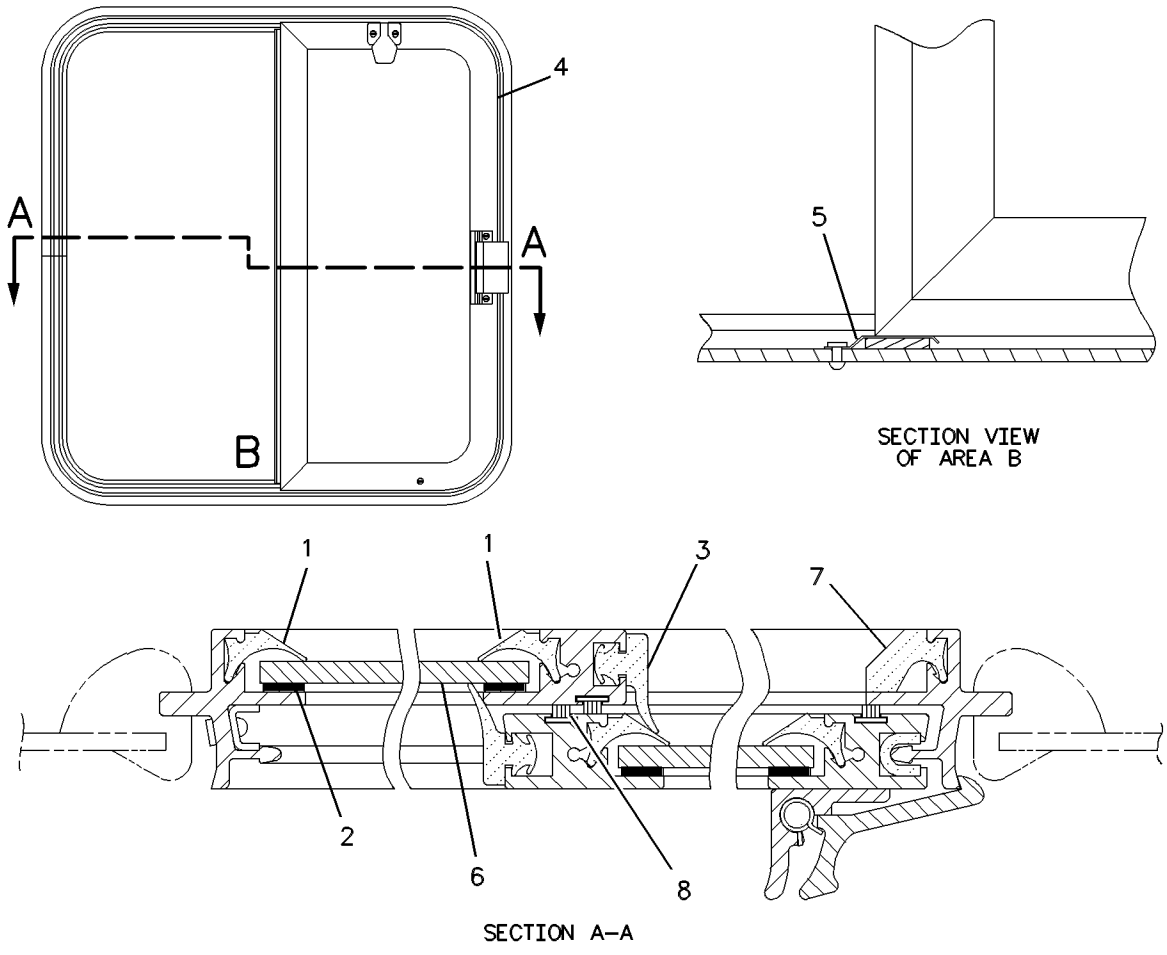

GRAPHIC #1 g00544804

MEMORANDA

OPERATOR STATION

8Y-6420 WINDOW GP-CAB—LH

S/N: AKT1-UP
PART OF 8E-3447 WINDOW GP-CAB
ALSO AN ATTACHMENT

SMCS-7310 **i01674246**

NOTE	REF NO	GRAPHIC REF	PART NUMBER	QTY	PART NAME 1 2 3 4 5 6 (PRODUCT LEVEL)	SEE PAGE
	1	1	**8Y-6454**	1	KIT-CATCH	
					(INCLUDES CATCH AS & PARTS MARKED J)	
JM	2	1	**084-4111**	2	SCREW-PAN HEAD	
	3	1	**8Y-6455**	1	KIT-CATCH	
					(INCLUDES CATCH AS & 2 SCREWS)	
M	4	1	**8T-4777**	2	SCREW-MACHINE (M5X0.8X12MM)	
	5	1	**8Y-6460**	1	KIT-RUNNER GUIDE	
					(INCLUDES GUIDE & SCREW)	
	6	1	**3S-9557**	2	SCREW-PAN HEAD (4-40X0.5 IN)	
	7	1	**8Y-6461**	1	KIT-RUNNER GUIDE	
					(INCLUDES A GUIDE & PARTS MARKED L)	
LM	8	1	**6V-2312**	2	SCREW-MACHINE (M6X1X25MM)	
BE	9	1	**8Y-6423**		SEAL	
	10	1	**8Y-6430**	1	SEAL-WINDOW	
BE	11	1	**8Y-6459**		TAPE-BUTYL	
	12	1	**8Y-6422**	1	GLASS-SLIDER (LH) (TINTED)	
BE	13	1	**8Y-6910**		WEATHERSTRIP	

B-USE AS REQUIRED
E-ORDER BY THE CENTIMETER
J-INCLUDED IN 8Y6454 CATCH KIT
L-INCLUDED IN 8Y6461 GUIDE RUNNER KIT
M-METRIC PART

8Y-6420 WINDOW GP-CAB *(contd.)* **i01674246**

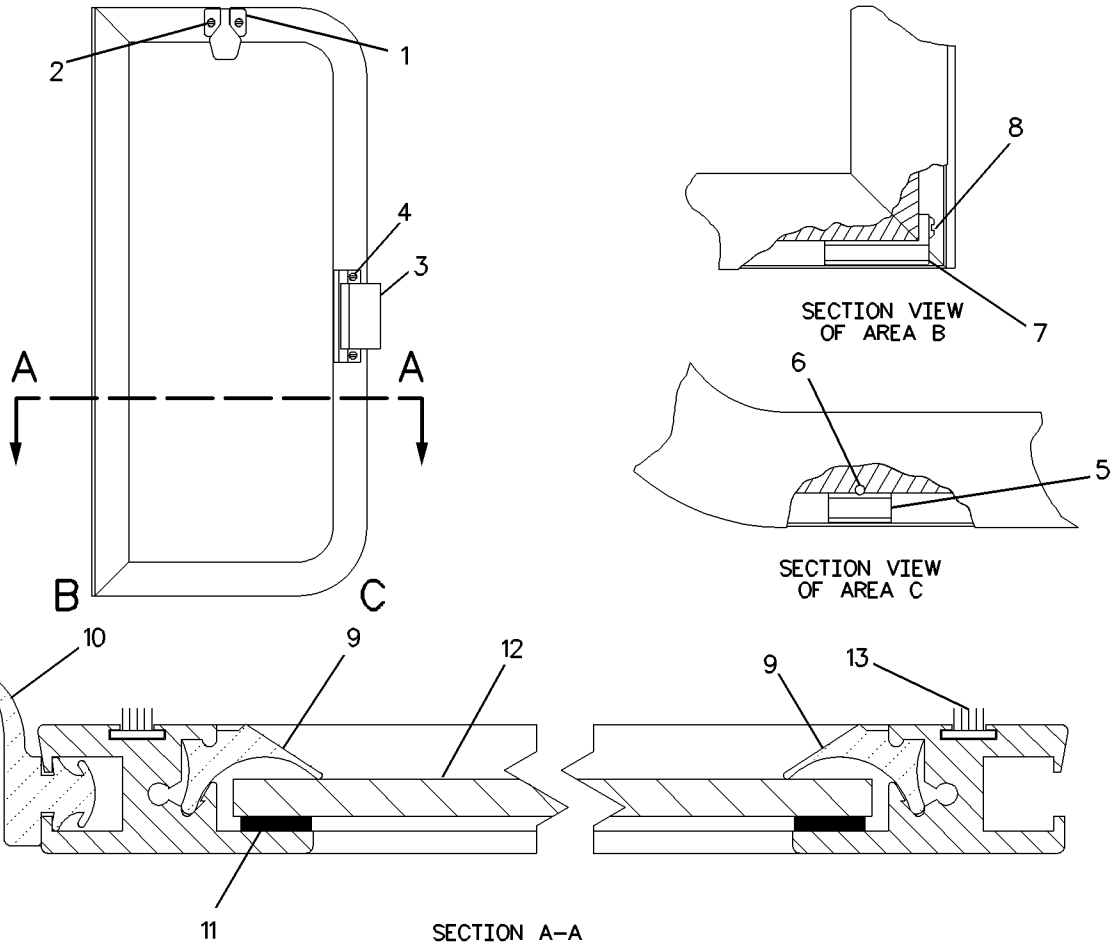

GRAPHIC #1 g00864814

OPERATOR STATION

8Y-6433 WINDOW GP-CAB—RH

S/N: AKT1-UP
PART OF 8E-3446 WINDOW GP-CAB
ALSO AN ATTACHMENT

SMCS-7310 **i01233124**

NOTE	REF NO	GRAPHIC REF	PART NUMBER	QTY	PART NAME 1 2 3 4 5 6 (PRODUCT LEVEL)	SEE PAGE
	1	1	**8Y-6454**	1	KIT-CATCH	
					(INCLUDES CATCH AS & 2 SCREWS)	
M	2	1	**084-4111**	2	SCREW-PAN HEAD	
	3	1	**8Y-6455**	1	KIT-CATCH	
					(INCLUDES CATCH AS & 2 SCREWS)	
M	4	1	**8T-4777**	2	SCREW-MACHINE (M5X0.8X12MM)	
	5	1	**8Y-6460**	1	KIT-RUNNER GUIDE	
					(INCLUDES GUIDE & SCREW)	
M	6	1	**6V-2312**	2	SCREW-MACHINE (M6X1X25MM)	
	7	1	**8Y-6461**	1	KIT-RUNNER GUIDE	
					(INCLUDES GUIDE & SCREW)	
E	8	1	**8Y-6423**		SEAL (125CM)	
	9	1	**8Y-6430**	1	SEAL-WINDOW	
BE	10	1	**8Y-6459**		TAPE-BUTYL	
E	11	1	**8Y-6423**		SEAL (59CM)	
	12	1	**8Y-6431**	1	GLASS-SLIDER-RH (TINTED)	
BE	13	1	**8Y-6910**		WEATHERSTRIP	

B-USE AS REQUIRED
E-ORDER BY THE CENTIMETER
M-METRIC PART

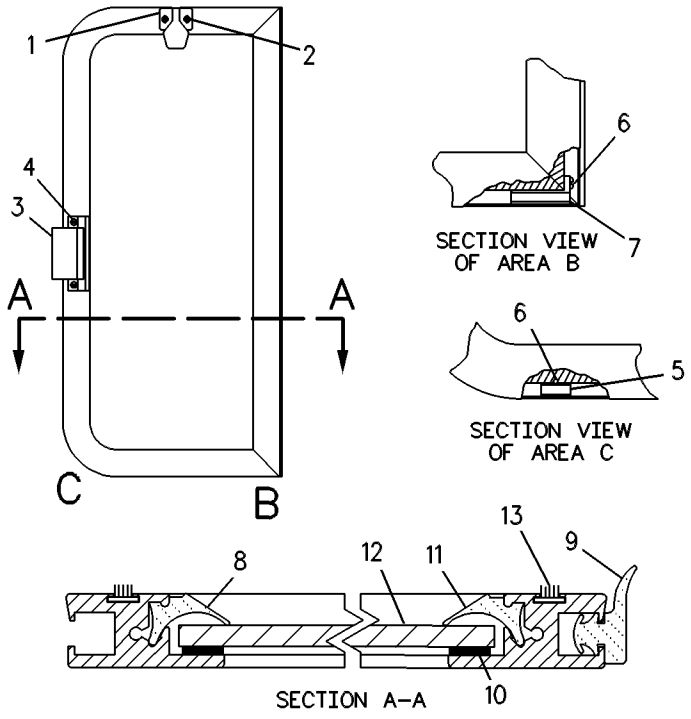

GRAPHIC #1 g00326281

OPERATOR STATION

8Y-6456 WINDOW GP-CAB

S/N: AKT1-UP
REAR, SLIDING
PART OF 157-3737 CAB GP
ALSO AN ATTACHMENT

SMCS-7310 **i01612528**

NOTE	REF NO	GRAPHIC REF	PART NUMBER	QTY	PART NAME 1 2 3 4 5 6 (PRODUCT LEVEL)	SEE PAGE
Y	1	1	**8Y-6826**	1	WINDOW GP-CAB (REAR)	780
BD	2	1	**5P-5680**		SEAL	
	3	1	**8Y-6828**	1	GLASS (TINTED)	
BD	4	1	**6V-5833**		SEAL	
DB	5	1	**8T-0687**		FILLER	
BE	6	1	**8Y-6839**		SEAL	

B-USE AS REQUIRED
D-ORDER BY THE METER
E-ORDER BY THE CENTIMETER
Y-SEPARATE ILLUSTRATION

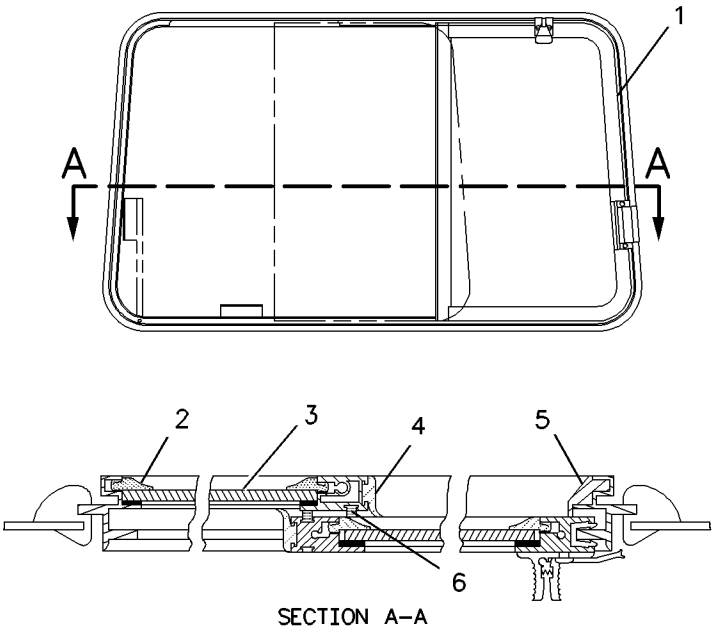

SECTION A–A

GRAPHIC #1 g00834678

OPERATOR STATION

8Y-6826 WINDOW GP-CAB–REAR

S/N: AKT1-UP
PART OF 8Y-6456 WINDOW GP-CAB
ALSO AN ATTACHMENT

SMCS-7310 **i01612539**

NOTE	REF NO	GRAPHIC REF	PART NUMBER	QTY	PART NAME 1 2 3 4 5 6 (PRODUCT LEVEL)	SEE PAGE
	1	1	**3T-1121**	1	LOCK AS	
	2	1	**2H-6622**	2	SCREW-MACHINE	
	3	1	**9P-7860**	1	LOCK AS	
	4	1	**9P-7859**	2	SCREW	
BD	5	1	**5P-5680**		SEAL	
BD	6	1	**6V-5833**		SEAL	
BD	7	1	**5P-8918**		SEAL	
	8	1	**8Y-6827**	1	GLASS (TINTED)(GREEN)	
BE	9	1	**8Y-6839**		SEAL	

B-USE AS REQUIRED
D-ORDER BY THE METER
E-ORDER BY THE CENTIMETER

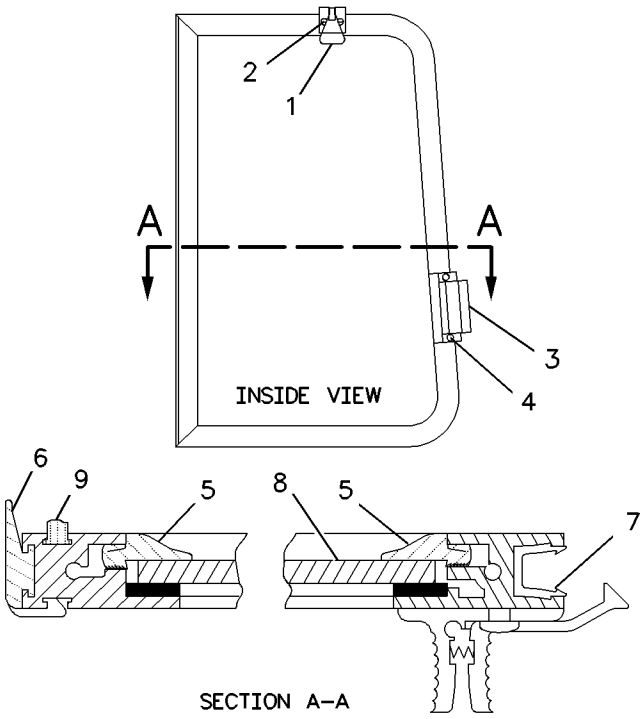

GRAPHIC #1 g00834647

MEMORANDA

OPERATOR STATION

3E-9177 WIPER GP-WINDOW

S/N: AKT1-UP
24 VOLT
PART OF 157-3735 WIPER GP-WINDOW
ALSO AN ATTACHMENT

SMCS-7305 **i01446867**

NOTE	REF NO	GRAPHIC REF	PART NUMBER	QTY	PART NAME 1 2 3 4 5 6 (PRODUCT LEVEL)	SEE PAGE
M	1	1	**5C-9553**	3	BOLT (M6X1X16MM)	
	2	1	**5P-0537**	3	WASHER-HARD (7.2X14.5X2MM THK)	
	3	1	**3T-7086**	1	CRANK AS	
M	4	1	**6V-6889**	2	NUT (M8X1.25 THD)	
	5	1	**6V-6888**	1	WASHER-SPRING	
	6	1	**6V-6208**	1	LINK-CONNECTING	
M	7	1	**3C-1884**	4	SCREW-MACHINE (M5X0.8 BG THD)	
	8	1	**6V-6206**	1	SHAFT AS-DRIVE	
M	9	1	**6V-6213**	1	NUT (M20X1 THD)	
	10	1	**6V-6214**	1	WASHER (20.15X29.6X1MM THK)	
	11	1	**6V-6209**	1	CAP	
	12	1	**6A-9718**	1	WASHER (8.1X12.5X1MM THK)	
	13	1	**3T-7059**	1	BRACKET	
	14	1	**3E-6388**	1	MOTOR AS-WINDOW WIPER	
	15	1	**3E-3383**	1	WEDGE-RECEPTACLE LOCK	
	16	1	**8T-8729**	5	PIN-CONNECTOR	
	17	1	**8T-8737**	1	PLUG-SEAL	
	18	1	**102-8805**	1	KIT-RECEPTACLE (6 PIN)	
					(INCLUDES RECEPTACLE AS & WEDGE)	

M-METRIC PART

3E-9177 WIPER GP-WINDOW ***(contd.)*** **i01446867**

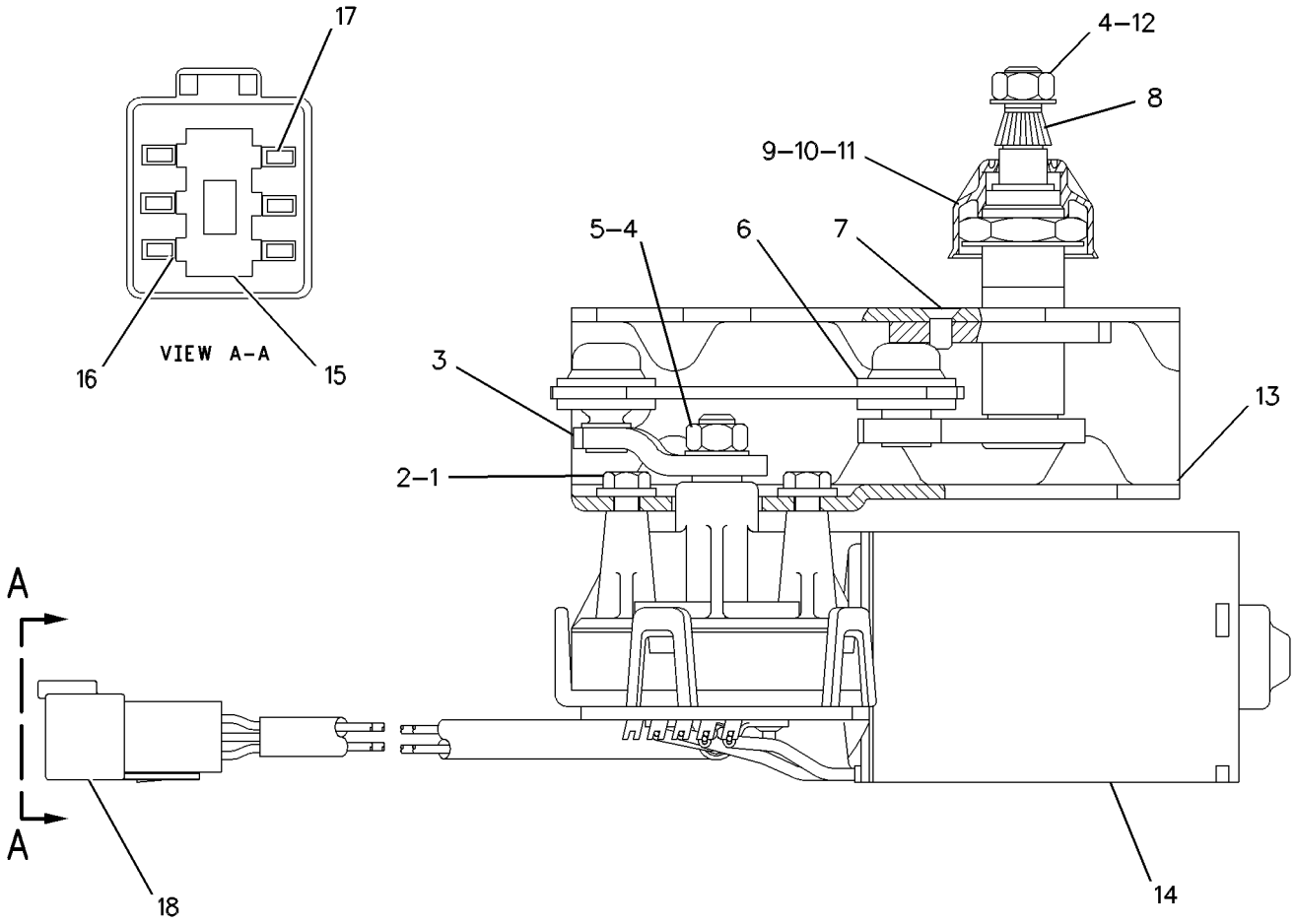

GRAPHIC #1 g00317475

OPERATOR STATION

102-3001 WIPER GP-WINDOW

S/N: AKT1-UP
24 VOLT
PART OF 157-3735 WIPER GP-WINDOW
ALSO AN ATTACHMENT

SMCS-7305 **i01446868**

NOTE	REF NO	GRAPHIC REF	PART NUMBER	QTY	PART NAME 1 2 3 4 5 6 (PRODUCT LEVEL)	SEE PAGE
	1	1	**3T-7059**	1	BRACKET	
M	2	1	**5C-9553**	3	BOLT (M6X1X16MM)	
	3	1	**3T-7086**	1	CRANK AS	
M	4	1	**6V-6889**	2	NUT (M8X1.25 THD)	
	5	1	**6V-6888**	1	WASHER-SPRING	
	6	1	**6V-6218**	1	LINK-CONNECTING	
M	7	1	**3C-1884**	4	SCREW-MACHINE (M5X0.8 BG THD)	
	8	1	**6V-6215**	1	SHAFT AS-DRIVE	
	9	1	**6V-6209**	1	CAP	
M	10	1	**6V-6213**	1	NUT (M20X1 THD)	
	11	1	**6V-6214**	1	WASHER (20.15X29.6X1MM THK)	
	12	1	**6A-9718**	1	WASHER (8.1X12.5X1MM THK)	
	13	1	**5P-0537**	3	WASHER-HARD (7.2X14.5X2MM THK)	
	14	1	**3E-6388**	1	MOTOR AS-WINDOW WIPER	
		1	**102-8805**	2	KIT-RECEPTACLE (6 PIN)	
					(EACH INCLUDES RECEPTACLE AS & WEDGE)	
		1	**3E-3383**	1	WEDGE-RECEPTACLE LOCK	
		1	**8T-8729**	5	PIN-CONNECTOR	
		1	**8T-8737**	1	PLUG-SEAL	

M-METRIC PART

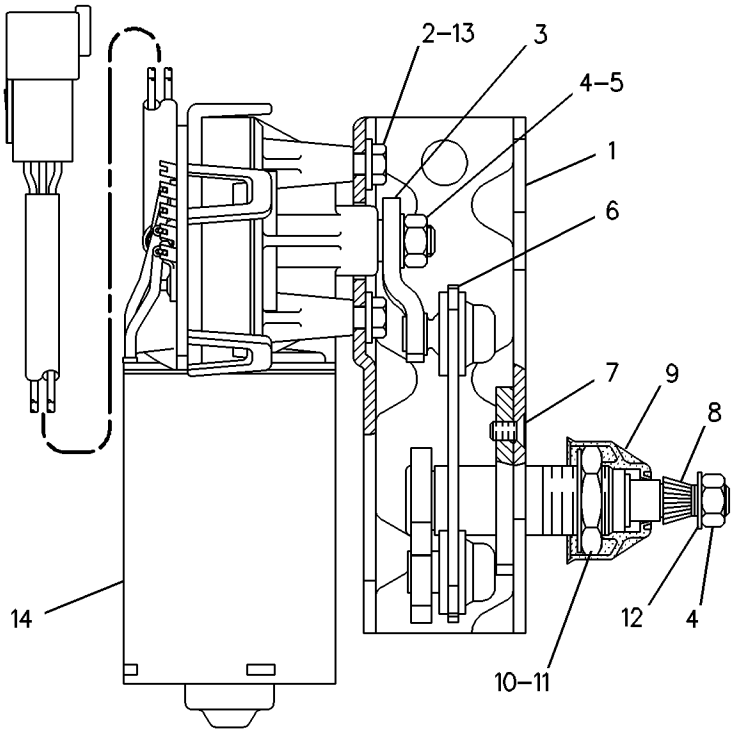

GRAPHIC #1 g00234142

MEMORANDA

OPERATOR STATION

157-3735 WIPER GP-WINDOW

S/N: AKT1-UP
PART OF 157-4817 CAB AR
ALSO AN ATTACHMENT

SMCS-7305 **i01613122**

NOTE	REF NO	GRAPHIC REF	PART NUMBER	QTY	PART NAME 1 2 3 4 5 6 (PRODUCT LEVEL)	SEE PAGE
Y	1	1	*102-3001*	1	WIPER GP-WINDOW	784
	2	2	**6V-3960**	1	BOLT (1/4-28X0.875 IN)	
	3	2	**6N-7523**	1	WASHER (6.48X11.9X1.57MM THK)	
	4	2	**8T-1739**	2	WASHER-HARD (21X40X3.5MM THK)	
	5	1	**8T-2174**	4	GASKET-SPACER	
	6	2	**145-8741**	1	ARM AS-WIPER (FRONT)	
	7	2	**6V-5851**	1	BLADE AS-WIPER (FRONT)	
	8	1	**6T-0303**	2	CRANK-DRIVE	
	9	2	**8E-2593**	1	CONSOLE-SWITCH (WIPER)	
	10	2	**6V-8969**	3	SCREW-BUTTON HEAD	
	11	2	**157-5127**	1	HARNESS AS (WIPER SWITCHES)	
	12	1	**6V-6212**	2	SHAFT AS-DRIVE	
	13	1	**6T-0302**	2	LINK AS	
	14	2	**155-2701**	4	SWITCH AS (FRONT,REAR,RH & LH DOOR)	
					(EACH INCLUDES)	
		2	**2H-3920**	1	LOCKWASHER	
		2	**3E-3383**	1	WEDGE-RECEPTACLE LOCK	
		2	**6V-8369**	1	NUT (7/16-28 THD)	
		2	**110-7889**	1	KNOB	
		2	**186-3735**	6	PIN-CONNECTOR	
		2	**014-0816**	1	SETSCREW (8-32X.5 IN)	
		2	**102-8805**	1	KIT-RECEPTACLE (6 PIN)	
					(INCLUDES RECEPTACLE AS & WEDGE)	
	15	2	**7X-7763**	1	FILM-INSTRUCTION	
Y	16	2	*6V-6561*	1	WIPER PIVOT GP	790
Y	17	1	**3E-9177**	1	WIPER GP-WINDOW	782
	18	2	**5P-4115**	1	WASHER-HARD (7.2X19X2MM THK)	
	19	2	**7X-3182**	1	BOLT (1/4-28X0.5 IN)	
	20	2	**5C-8811**	1	BLADE AS-WIPER (REAR)	
	21	2	**8Y-6343**	1	ARM AS-WIPER (REAR)	
	22	1	**6V-6211**	2	SHAFT AS-DRIVE	
J	23	1	**6V-5849**	4	BLADE AS-WIPER (LH DOOR)	
	24	1	**3E-6388**	2	MOTOR AS-WINDOW WIPER	
					(EACH INCLUDES)	
		1	**102-8805**	1	KIT-RECEPTACLE (6 PIN)	
					(INCLUDES RECEPTACLE AS & WEDGE)	
		1	**8T-8729**	5	PIN-CONNECTOR	
		1	**3E-3383**	1	WEDGE-RECEPTACLE LOCK	
		1	**8T-8737**	1	PLUG-SEAL	
	25	1	**6V-6214**	4	WASHER (20.15X29.6X1MM THK)	
	26	1	**7T-1078**	1	LINK AS-LH	
M	27	1	**6V-6213**	4	NUT (M20X1 THD)	
	28	1	**145-8740**	2	ARM AS-WIPER (LH DOOR)	
	29	1	**145-8739**	2	ARM AS-WIPER (RH DOOR)	
	30	1	**6A-9718**	4	WASHER (8.1X12.5X1MM THK)	
M	31	1	**6V-6889**	6	NUT (M8X1.25 THD)	
	32	1	**7T-0942**	2	BRACKET AS	
					(EACH INCLUDES)	
		1	**9F-6445**	1	NUT-WELD (1/4-20 THD)	
M	33	1	**5C-9553**	6	BOLT (M6X1X16MM)	
	34	1	**6V-6888**	2	WASHER-SPRING	
	35	1	**5S-7379**	4	BOLT (3/8-16X0.875 IN)	
	36	1	**5P-1075**	4	WASHER-HARD (10.2X22.5X3MM THK)	
	37	1	**6V-6209**	4	CAP	
	38	2	**157-5128**	1	HARNESS AS (REAR WIPER)	

157-3735 **WIPER GP-WINDOW** ***(contd.)*** **i01613122**

NOTE	REF NO	GRAPHIC REF	PART NUMBER	QTY	PART NAME 1 2 3 4 5 6 (PRODUCT LEVEL)	SEE PAGE
	39	2	**8T-5360**	4	WASHER (12X22.5X2.5MM THK)	
	40	1	**6V-8801**	1	NUT (3/8-16 THD)	
	41	1	**8T-4896**	1	WASHER-HARD (10.2X18.5X2.5MM THK)	
	42	1	**7T-4761**	1	LINK AS-RH	
	43	2	**9X-1138**	1	CONTROL AS-ELECTRONIC	
	44	2	**8B-4338**	5	SCREW-TAPPING	
	45	1	**5P-8394**	12	SCREW-MACHINE (8-32X.75IN)	
	46	1	**163-6088**	4	MODULE AS	
	47	1	**4B-4274**	12	WASHER (5.5X13X1.2MM THK)	
	48	1	**3E-5239**	4	RELAY AS (24 VOLT)	
					AVAILABLE REPAIR KIT(S):	
J			**8C-5060**	1	KIT-WIPER BLADE	
					(INCLUDES 2 REFILL BLADES)	

J-REPAIR KIT(S) MARKED J AVAILABLE FOR PART MARKED J
M-METRIC PART
Y-SEPARATE ILLUSTRATION

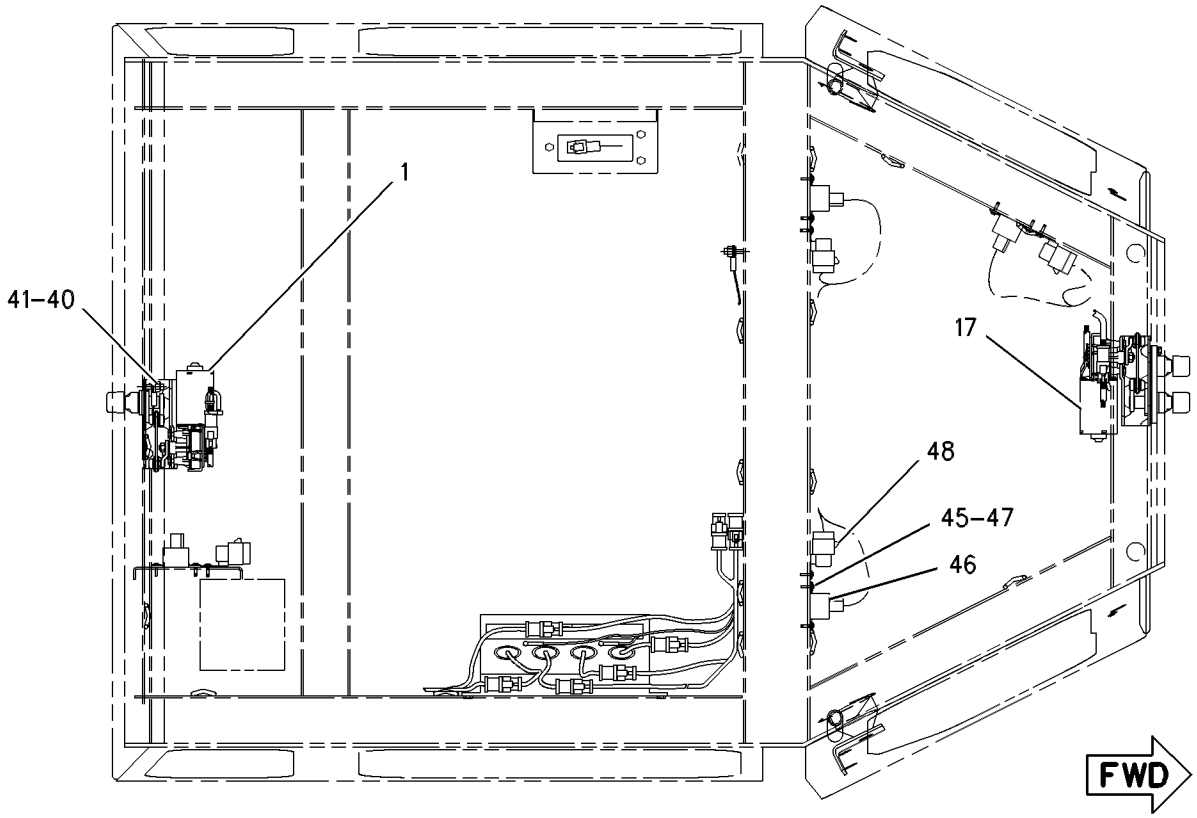

TOP VIEW

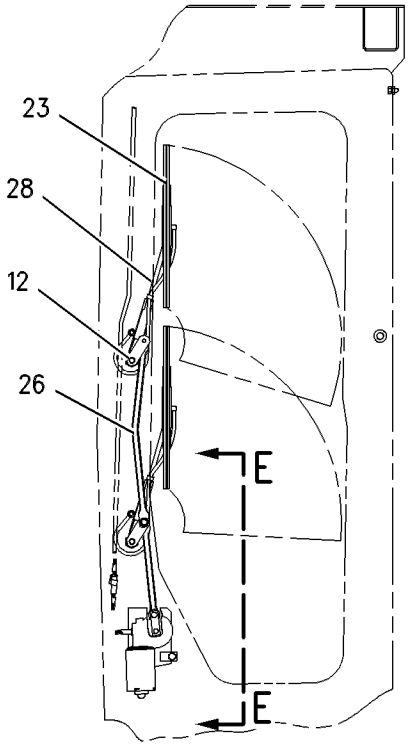

LH DOOR

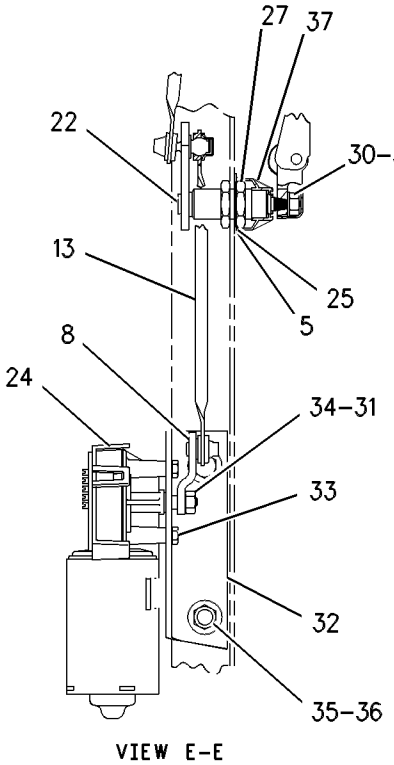

VIEW E-E

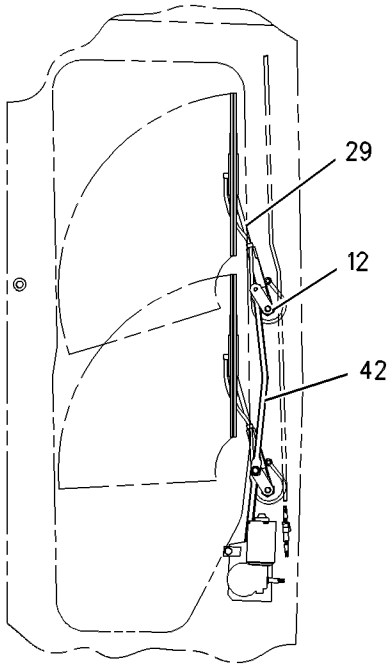

RH DOOR

GRAPHIC #1 g00567392

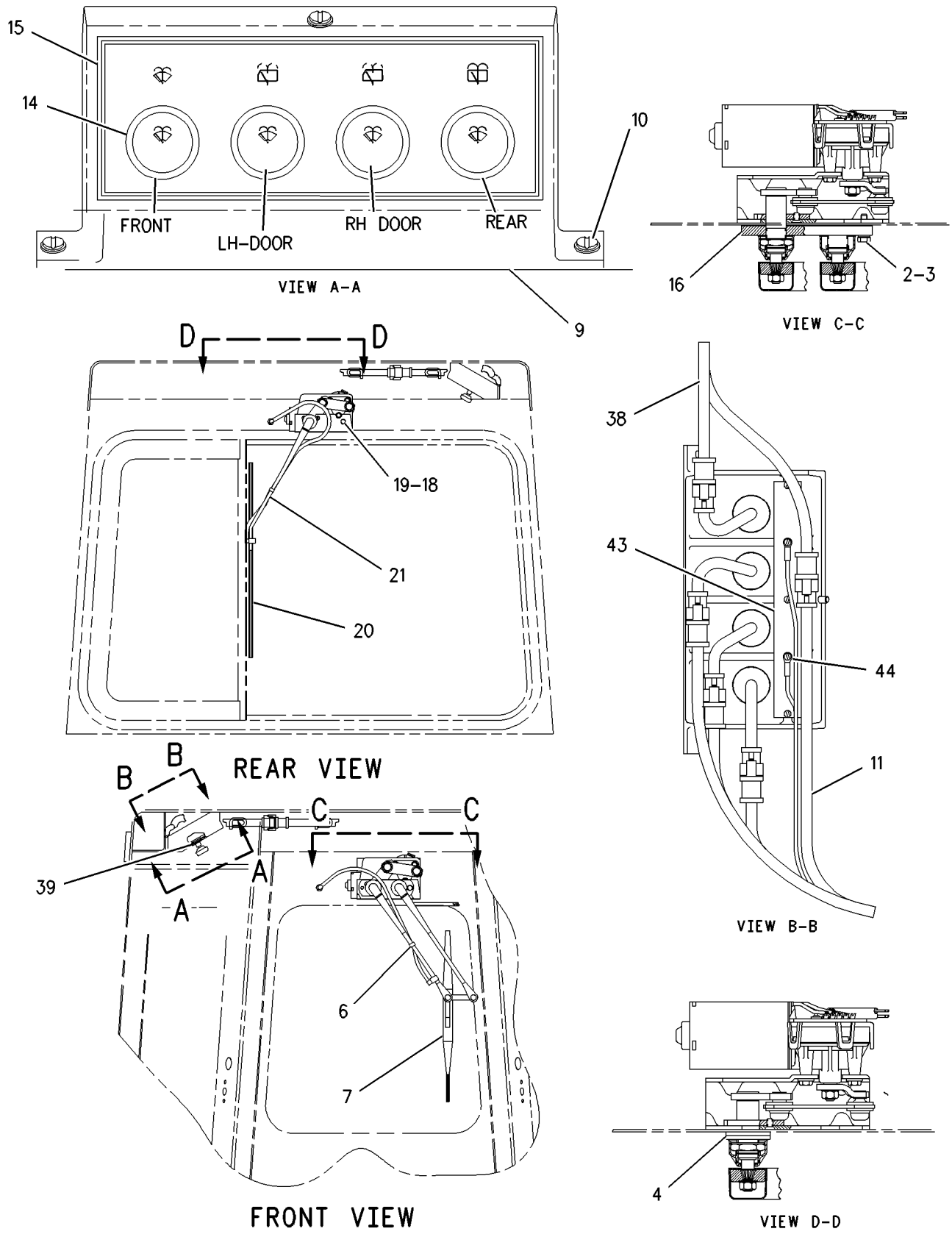

GRAPHIC #2

g00817723

OPERATOR STATION

6V-6561 WIPER PIVOT GP

S/N: AKT1-UP
PART OF 157-3735 WIPER GP-WINDOW
ALSO AN ATTACHMENT

SMCS-7305 **i01011513**

NOTE	REF NO	GRAPHIC REF	PART NUMBER	QTY	PART NAME 1 2 3 4 5 6 (PRODUCT LEVEL)	SEE PAGE
	1	1	**6V-6207**	1	SHAFT AS-PIVOT	
	2	1	**6V-6209**	1	CAP	
M	3	1	**6V-6889**	1	NUT (M8X1.25 THD)	
	4	1	**6A-9718**	1	WASHER	
	5	1	**6V-6210**	1	GASKET-SHAFT	

M-METRIC PART

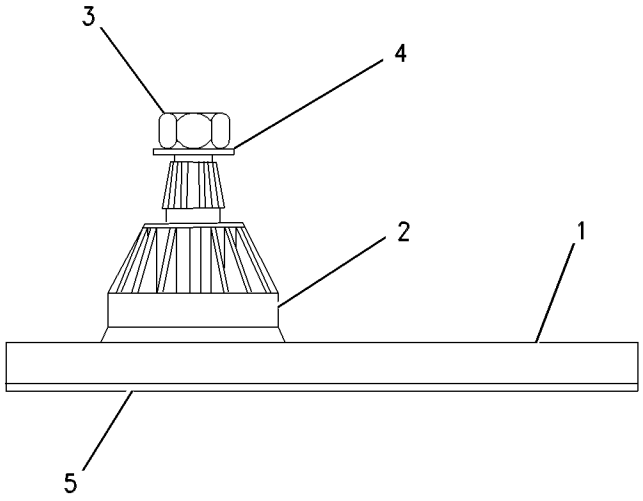

GRAPHIC #1 g00316575

SERVICE EQUIPMENT AND SUPPLIES

183-6698 FILM GP

S/N: AKT1-UP

PART OF 173-1647 PLATE & FILM GP

SMCS-7000 **i01459702**

NOTE	REF NO	GRAPHIC REF	PART NUMBER	QTY	PART NAME 1 2 3 4 5 6 (PRODUCT LEVEL)	SEE PAGE
	1	1	**3E-9459**	2	FILM-STRIPE (CAT) (RH SIDE)(FRONT)	
	2	1	**183-6750**	1	FILM-STRIPE (RH SIDE)(HYDRAULIC TANK)	
	3	1	**9X-5727**	1	FILM-STRIPE (CATERPILLAR) (FRONT)(RADIATOR GUARD)	
	4	1	**129-9379**	1	FILM-STRIPE (D10R) (LH SIDE)(FUEL TANK)	
	5	1	**129-9380**	1	FILM-STRIPE (LH SIDE)(HYDRAULIC TANK)	
	6	1	**129-9378**	1	FILM-STRIPE-RH (D10R) (RH SIDE)(FUEL TANK)	
	7	1	**129-9382**	1	FILM-STRIPE (LH)(REAR)(FUEL TANK)	
	8	1	**129-9377**	1	FILM-STRIPE-REAR (CATERPILLAR) (ROPS)	
	9	1	**129-9385**	1	FILM-STRIPE (LH)(REAR)(FUEL TANK)	
	10	1	**129-9383**	1	FILM-STRIPE-REAR (CENTER)(FUEL TANK)	
	11	1	**129-9384**	1	FILM-STRIPE-RH (REAR)(FUEL TANK)	
	12	1	**129-9381**	1	FILM-STRIPE-RH (REAR)(FUEL TANK)	

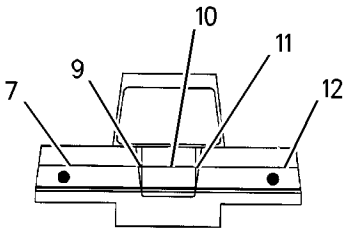

REAR

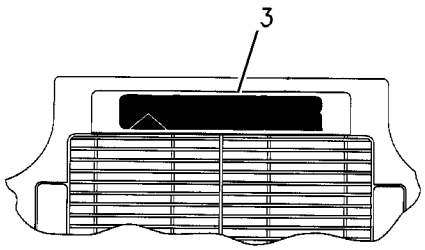

FRONT

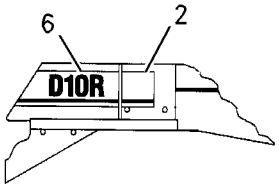

RIGHT SIDE VIEW

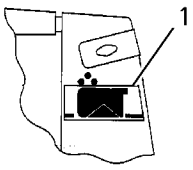

RIGHT SIDE VIEW
FRONT

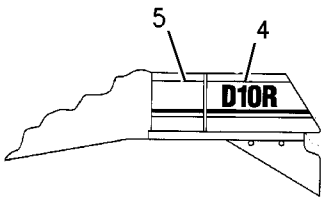

LEFT SIDE VIEW

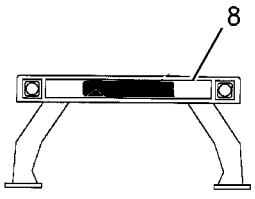

REAR
ROPS

GRAPHIC #1 g00812668

SERVICE EQUIPMENT AND SUPPLIES

173-1647 PLATE & FILM GP

S/N: AKT1-UP

PART OF 171-5801 CHASSIS AR

SMCS-7557, 7563 **i01665268**

NOTE	PART NUMBER	QTY	PART NAME 1 2 3 4 5 6 (PRODUCT LEVEL)	SEE PAGE
Y	*183-6698*	1	FILM GP	791
A	**3N-3790**	1	PLATE-SERIAL NUMBER (ENGINE)	
			INSTALL ON LH SIDE OF BLOCK NEAR FRONT FACE AT BOTTOM OF WATER JACKET	
	5P-9466	1	PLATE-WARNING (READ OPERATION MANUAL)	
			LH VERTICAL WALL ADJACENT TO STEERING CONTROL	
	8T-9905	1	PLATE-IDENTIFICATION (TRANSMISSION OIL FILL TUBE)	
			ON THE CAP TAG CHAIN	
	9X-1878	1	PLATE (PRODUCT IDENTIFICATION)	
			ON UPPER LH REAR OF CASE BELOW FENDER AND ROPS	
	9X-1883	1	PLATE-INFORMATION (SERVICE NUMBERS)	
			ON LH SIDE OF DASH	
	9F-6656	1	RING-RETAINING	
	9N-1995	8	RIVET-POP	
	4B-4158	8	SCREW-DRIVE (3/16X0.25 IN)	
	1P-2807	4	FILM (LIFT EYE LOCATION)	
			4-MACHINES WITHOUT RIPPER ON TRACK ROLLER FRAMES BETWEEN FRONT IDLER & FRONT ROLLER & BETWEEN REAR IDLER & REAR ROLLER.	
			4-MACHINES WITH RIPPER ON TRACK ROLLER FRAMES BETWEEN FRONT IDLER & FRONT ROLLER & ON BOTH SIDES OF RIPPER FRAME.	
	3E-2378	1	FILM-INSTRUCTION (PIVOT SHAFT LUBRICATION)	
			ON FRONT OF PIVOT SHAFT LUBRICATION RESERVOIR BOTTLE	
	4P-6464	3	FILM-AIR CLEANER (RADIAL SEAL)	
			ON TOP OF EACH AIR CLEANER	
	5P-9884	1	FILM (HYDRAULIC OIL)	
			ON TOP OF HYDRAULIC TANK ADJACENT TO FILLER SPOUT	
	7X-7644	9	FILM-TIE DOWN	
			1-FRONT TOWING EYE	
			6-ON TRACK ROLLER FRAME, AT FRONT & REAR MAJOR BOGIE CARTRIDGE PINS & CENTERED BETWEEN FRONT & REAR IDLERS AT REAR	
			1-ON REAR OF DRAWBAR OR COUNTERWEIGHT	
			2-ON BOTH SIDES OF RIPPER FRAME JUST AHEAD OF CARRIAGE OR BEAM MOUNTING PINS, NOT REQUIRED ON MACHINES WITHOUT DRAWBAR,	
			COUNTERWEIGHT OR RIPPER.	
	8C-3221	1	FILM-OIL LEVEL (TRANSMISSION)	
			ON INSIDE OF POWERTRAIN OIL FILL COVER	
	8C-8902	2	FILM-IDENTIFICATION (ENGINE OIL FILTER)	
			ON ENGINE OIL FILTER	
	8T-4999	1	FILM-INSTRUCTION (BATTERY DISCONNECT)	
			UNDER DISCONNECT SWITCH	
	9X-6333	1	FILM-NOTICE	
			ON RH FENDER BELOW STEP	
	9Y-4294	4	FILM-WARNING (FUEL INJECTOR)	
			2-LOWER REAR CORNER OF ENGINE REAR VALVE COVERS.	
			2-LOWER FRONT CORNER OF ENGINE FRONT VALVE COVERS.	

173-1647 **PLATE & FILM GP** ***(contd.)*** **i01665268**

NOTE	PART NUMBER	QTY	PART NAME 1 2 3 4 5 6 (PRODUCT LEVEL)	SEE PAGE
	102-2913	1	FILM-INSTRUCTION (DOZER CONTROL)	
			ON UPPER RH CONSOLE	
	106-7408	1	FILM-INFORMATION (ENGINE OIL)	
			LOCATE OVER ENGINE OIL FILLER CAP	
	114-5988	2	FILM-IDENTIFICATION (FUEL FILTER)	
			ON FUEL FILTER	
	134-7258	1	FILM-IDENTIFICATION (EXTENDED LIFE COOLANT)	
			INSIDE OF DOOR TO RADIATOR FILL	
	137-3929	1	FILM-INSTRUCTION	
			ON UPPER RH CONSOLE	
			FOR CAB EQUIPPED TRACTORS, INSTALL ON RH COVER	
	137-3933	1	FILM-IDENTIFICATION	
			ALIGN FILM TO IMPLEMENT DEACTIVATION SWITCH ON RH CONSOLE IN CAB	
	137-3957	1	FILM-INSTRUCTION	
			ALIGN FILM UNDER THE IMPLEMENT DEACTIVATION SWITCH ON RH CONSOLE IN CAB	
	179-0160	2	FILM-INFORMATION (FUEL FILTER/WATER SEPARATOR)	
			ON PRIMARY FUEL FILTER/WATER SEPARATOR	
	190-5386	2	FILM-REFLECTOR (RED)	
			ONE EACH ON REAR LH & RH SIDE OF MACHINE ON FILM STRIPE	
	211-1808	2	FILM (IDENTIFICATION)	
			EQUALIZER BAR LUBRICATION ON CASE AND FRAME SIDE PLATE ABOVE EQUALIZER BAR (ONE EACH SIDE)	
	215-9802	1	FILM-WARNING	
			ON UNDERSIDE OF BATTERY COMPARTMENT COVER	

A-NOT PART OF THIS GROUP
Y-SEPARATE ILLUSTRATION

MEMORANDA

PART NUMBER INDEX

Part	Page
0	
0L-0646	542
0L-1026	462
0L-1143	63
	65
	76
	94
	176
0L-1178	452
0L-1351	68
	74
	92
	94
	106
0L-1352	44
	94
	112
	114
	132
0L-2070	68
	74
	132
	138
	172
0R-8521	334
0S-0509	8
	10
	72
	94
	172
0S-1566	12
0S-1571	38
	50
	76
	92
	98
	266
0S-1573	62
0S-1585	30
	68
	358
	462
0S-1587	48
	50
	138
	358
0S-1588	11
	14
	68
	74
	92
	94
	132
	176
0S-1590	14
	44
	46
	65
	92
0S-1591	14
	74
	94
	98
	104
	344
0S-1594	11
	14
	66
	68
	72
	74
	92
	94
	98
	102
	112
	172
	296
	346
	376
	382
	540
	542
	676
0S-1595	74
	600
0S-1604	357
	365
0S-1608	74
	98
	112
0S-1616	707
0S-1617	178
	180
0S-1618	162
0S-1619	44
	68
	94
	316
0S-1621	141
0S-1627	184
0T-0055	14
	50
	114
0T-0065	74
	94
	542
0T-0573	38
	46
	94
0T-0768	74
	98
0V-0375	540
1	
1A-1135	61
	104
1A-1460	445
	446
	447
	448
1A-2029	40
	44
	68
	94
	132
	316
	350
	360
	362
1A-2161	144
1A-5183	94
	132
	471
1A-5822	360
	462
1A-5964	44
	46
	94
	132
	179
1A-9579	16
	600
1B-2578	80
	158
1B-2790	16
	172
1B-2886	344
1B-3057	338
1B-3978	326
	330
	334
1B-3980	326
	330
	334
1B-4367	358
1B-4430	758
1B-4971	132
1B-5675	350
1B-7182	104
	168
	316
1B-8705	10
	38
	354
1B-8706	158
1B-8714	310
1B-8736	354
1B-9575	162
	172
1C-2251	94
	138
1D-4540	316
1D-4541	28
	162
1D-4556	74
1D-4566	40
	572
1D-4627	60
	500
1D-4628	486
1D-4631	60
	500
1D-4637	494
	496
1D-4640	327
	330
	334
1D-4706	95
1D-5117	199
1D-5875	528
	532
	603
1F-0748	150
	382
	398
	400
	412
	418
	536
	670
	693
	730
1F-0750	68
	70
	74
	78
	88
	90
	106
	110
	118
	134
	138
	158
	164
	189
	193
	234
	236
	337
	382
	398
	400
	418
	551
	600
	604
	678
	716
	720
	730
	738
1F-4417	100
1H-1023	272
	276
	282
1H-2629	272
	276
	282
1H-3244	190
	293
1H-4106	394
1H-5728	560
1H-8128	150
	152
	154
	156
	185
1J-2192	486
1J-6474	540
1J-7468	528
	602
1J-8569	486
1J-8668	339
	526
	536

► **PRIMARY REFERENCE**

PART NUMBER INDEX

Part	Page
	720
1J-9671	150
	152
	154
	156
1K-4649	32
1K-5760	743
1K-6870	152
	400
1K-6872	152
	310
	416
1K-6985	122
1K-8850	418
1K-9415	388
1L-3162	374
1L-4349	542
1L-4775	64
1L-5072	484
1L-5081	452
1L-7203	326
	330
	334
1L-7319	326
	330
	334
1L-8490	540
1M-1230	694
1M-3464	338
1M-3780	352
1M-3909	352
	354
1M-4543	208
	210
	701
1M-4982	268
1M-4983	268
1M-6119	192
	193
	268
1M-6120	192
	193
	268
1M-6573	320
1M-8653	452
1M-8657	346
1M-9968	272
	276
	283
1M-9971	273
	277
1N-5999	28
1P-0436	168
	172
1P-1367	74
1P-1744	342
1P-2807	792
1P-3703	528
	532
	602
1P-3705	504
	517
	548
	602
1P-3708	606
1P-4278	110
	118
1P-4576	338
	528
	532
	534
	556
	602
1P-4577	494
	496
	500
	504
	507
	517
	528
	532
	534
	548
	556
	558
	560
	602
	604
1P-4578	504
	507
	517
	558
	560
1P-4579	339
1P-4582	150
	152
	154
	156
	339
	517
1P-4585	517
1P-5760	528
	602
1P-5763	339
1P-6356	712
	716
1P-7346	38
	452
1P-7404	368
	374
1P-7405	452
1P-8481	128
1P-9254	434
1P-9261	346
1P-9328	118
1P-9390	126
1Q-1492	524
1Q-1493	524
1Q-1494	524
1Q-1495	524
1Q-1496	524
1Q-1497	524
1Q-1592	232
	240
1Q-1609	659
	▶741
1Q-1742	716
1Q-1743	716
1Q-3385	524
1Q-3386	524
1Q-3392	154
	156
1Q-3453	425
1Q-3458	422
	▶424
1Q-3459	▶386
1Q-3460	386
1Q-3462	424
1Q-3463	424
1Q-3465	425
1Q-3466	425
1Q-3467	424
1Q-3468	422
	▶425
1Q-3626	409
1Q-3627	409
1Q-3739	444
1Q-3740	444
1Q-3760	668
1Q-3762	666
1Q-3764	666
1Q-3765	668
1Q-3800	666
1R-0716	68
1R-0735	542
1R-0749	172
1R-0769	167
1S-0004	78
	80
1S-0994	526
	606
1S-1015	517
1S-1445	517
1S-4295	146
1S-4915	192
	193
	194
	268
	269
	298
1S-5582	350
1S-7251	192
	193
	194
	268
	269
1S-7252	193
	268
	269
1S-7446	272
	276
	282
1S-8385	320
1S-8517	374
1S-8687	8
1S-9110	362
1S-9209	32
	35
1S-9593	379
	574
	575
	577
	578
	580
1T-0068	426
	427
	428
	444
1T-0141	362
1T-0278	360
1T-0416	368
1T-0550	40
1T-0720	40
1T-0738	370
1T-0765	76
1T-0795	360
1T-1402	122
1U-1187	620
	621
1U-1799	560
1U-2533	620
	621
1U-2816	540
1U-3173	494
	496
1U-3174	488
	490
	492
	494
	496
1U-3658	584
1U-8846	14
	28
1V-6341	255
1V-6652	694
1V-8442	708
1W-1116	74
1W-2835	70
1W-3014	62
1W-3136	44
1W-3189	44
1W-3862	66
1W-5283	25
1W-6448	312
	690
1W-8620	130
1W-8795	74
1W-9860	376
1Y-7927	704
1Z-0749	▶409
	2
2A-0762	147
2A-1531	344
2A-1538	60
2A-3223	122
2A-3746	162
	362
2A-4429	27
2A-4639	98
	347
2A-5885	560
2B-0858	310
	358
2B-0941	526
2B-0947	540
2B-2404	600
2B-2695	38

▶ **PRIMARY REFERENCE**

PART NUMBER INDEX

Part	Page
	287
2B-9373	352
2D-0388	764
2D-1511	540
2D-4202	542
2D-4534	150
	152
	154
	156
2D-5658	347
2D-6235	292
	459
	670
	694
	704
2D-6327	708
2D-6374	30
2D-6392	272
	276
	282
2D-6648	122
2D-9457	360
2F-5326	430
	432
2F-6678	272
	276
	283
2F-7306	708
2G-0493	418
	546
2H-1190	49
	162
	436
	437
2H-1537	394
2H-3429	273
	277
	282
2H-3745	430
2H-3755	303
	316
2H-3855	347
2H-3856	486
2H-3920	700
	786
2H-3922	286
	298
	660
2H-3923	660
2H-3931	322
	517
	540
2H-3932	434
2H-3934	517
2H-6124	542
2H-6338	517
2H-6488	44
2H-6622	771
	772
	780
2J-0564	486
2J-1227	582
	583
	594
	596
	614
	651
	652
	653
2J-1740	486
2J-3507	391
	602
	620
	621
2J-5245	194
	269
2J-6089	560
2J-6356	158
	310
2J-7761	484
2J-7763	540
2J-8163	272
	276
	282
2J-8348	391
2K-0337	600
2K-2813	28
2K-4821	190
2K-4898	480
2K-4973	46
	126
	382
	418
	542
	657
	712
	716
	756
	758
2K-5254	358
2K-6830	498
2K-7471	320
2K-7979	158
2K-8467	466
	468
2K-8725	526
2K-9111	740
2L-2685	74
2L-3650	360
2L-5894	690
2L-6679	272
	276
	283
2L-8075	694
2L-8076	694
2L-8077	293
2M-0849	350
	358
2M-1538	126
2M-2488	14
2M-2742	8
2M-3530	430
2M-3974	350
2M-4453	560
2M-5656	356
2M-5795	400
	418
2M-6095	412
2M-7819	704
2M-9780	80
	164
	222
	380
	462
	471
	510
	511
	542
	546
	558
	560
	564
	566
	568
	570
	571
2N-2765	146
2N-2766	140
	146
2N-3162	158
	310
2N-3480	707
2N-7029	560
2N-7174	28
2N-7228	59
2N-8109	16
	66
2P-1286	78
2P-2508	126
2P-2772	44
2P-2975	194
2P-3203	50
2P-3204	50
2P-3206	179
2P-3209	50
2P-4337	764
2P-4339	700
2P-4437	92
2P-4538	374
2P-8421	194
2P-9845	63
2R-2376	700
2R-4330	376
2S-0613	326
	330
	334
2S-2053	70
	74
2S-2743	676
2S-2760	84
2S-3029	64
2S-3770	172
2S-4078	118
	194
	306
	324
	326
	330
	334
	374
	376
	516
	558
	560
2S-5925	452
2S-5926	452
2S-6150	8
2S-6151	8
2S-6160	8
2S-8939	346
2S-9006	8
2T-1888	106
2T-1922	106
2T-2305	440
2T-3019	8
2V-0447	582
	596
	652
2V-1256	582
	614
	652
2V-2043	78
2V-5019	398
2V-9923	440
2W-0985	98
2W-1734	17
2W-3815	18
	20
2W-3875	38
2W-4087	38
2W-4474	140
2W-6000	18
2W-7610	40
2W-7614	40
2W-7615	40
2W-8038	600
2W-8225	68
2W-9978	98
3	
3B-0623	25
3B-0645	22
	24
	25
3B-1915	38
	50
	172
	350
	452
3B-2968	60
3B-4501	298
	480
	483
	660
3B-4610	396
	412
3B-4617	8
	410
3B-6677	406
3B-7255	720
3B-8485	8
	32
3B-8489	430
	432
	488
	490
	492
	494

► **PRIMARY REFERENCE**

PART NUMBER INDEX

Part	Page
	496
	500
	584
	594
	596
	598
	602
	604
	613
3C-1884	782
	784
3D-0472	440
3D-2824	78
	106
	164
	194
	285
	324
	338
	380
	442
	506
	507
	511
	517
	546
3D-2871	44
3D-2975	704
3D-7943	342
3D-8012	394
3D-8241	358
3D-8317	368
	540
3D-8748	694
3D-8749	694
3D-9133	326
	330
	334
3D-9348	57
	58
3D-9799	224
	225
3E-0400	660
	696
3E-2378	792
3E-3362	458
3E-3365	80
	188
	255
	256
	257
	266
	268
	285
	291
	292
	298
	458
	502
	577
	580
	661
	682
	696
	712
3E-3368	249
	251
	252
	254
	690
3E-3371	94
	132
	172
	227
	246
	247
	253
	259
	260
	474
	690
	708
	764
3E-3377	244
	574
	575
	687
	690
	725
	726
3E-3380	688
3E-3383	243
	299
	470
	692
	728
	782
	784
	786
3E-3535	712
3E-4051	712
	716
3E-4052	712
	716
3E-4057	712
	716
3E-4058	712
	716
3E-4352	16
3E-4356	707
3E-4875	319
3E-4876	319
3E-4880	319
3E-4898	738
3E-5180	464
	480
3E-5239	266
	682
	787
3E-5464	660
3E-6328	▶188
	298
3E-6333	266
3E-6388	782
	784
	786
3E-6389	▶227
	670
3E-6601	732
3E-6747	179
3E-6756	594
	596
	598
	604
3E-6758	594
	596
	598
	604
3E-6772	28
3E-6900	213
3E-6918	730
3E-6919	730
3E-6920	730
3E-7424	126
3E-7447	126
3E-7753	192
3E-7768	273
	277
	282
3E-7771	272
	276
3E-7835	666
	▶694
3E-7837	694
3E-7838	694
3E-7839	694
3E-8362	732
3E-8575	552
	▶574
3E-8581	574
	575
3E-8646	217
3E-8825	299
3E-9044	299
3E-9177	▶782
	786
3E-9205	556
	▶575
3E-9459	791
3E-9865	269
	708
	762
3F-0379	272
	276
	282
3F-4479	560
3F-6353	693
3F-9556	190
3G-1258	560
3G-1877	594
	596
	651
3G-2192	472
3G-2193	472
3G-2241	473
3G-2242	473
3G-2292	38
3G-3250	380
3G-3475	558
	560
3G-3747	500
3G-5596	654
	655
	656
3G-6509	654
3G-7624	494
	496
3G-7891	610
3G-8047	507
	514
3G-8051	620
	621
3G-8052	620
	621
	636
	638
	640
	644
	645
	646
	648
3G-8053	622
	644
	645
	646
	648
3G-8054	507
	514
	604
3G-8057	507
	514
	604
3G-8163	560
3G-8164	560
3G-8165	560
3G-8175	576
	580
3G-8415	560
3G-8633	488
3G-8710	558
	560
3G-9105	572
3H-0703	8
3H-3243	206
3H-4776	382
3H-5932	206
3H-6660	670
3H-7654	436
	437
3H-9675	434
3J-1907	164
	194
	306
	324
	339
	358
	372
	374
	376
	380
	471
	474
	502
	506
	507
	510
	511
	514
	516
	517

▶ **PRIMARY REFERENCE**

PART NUMBER INDEX

Part	Page	Part	Page	Part	Page	Part	Page
	526	3K-5234	428		490		283
	536	3K-6060	194		492	3T-4710	272
	546		199	3S-1356	430		276
	552		269	3S-2093	118		283
	553		730		202	3T-4711	276
	554	3K-6113	560		204	3T-4816	526
	556	3K-6235	670		293	3T-4817	526
	560	3K-7942	312		316	3T-4820	526
	566	3K-9770	394		370	3T-5355	350
	568		627		660	3T-5830	344
	604		628		682	3T-6191	418
	606		629		696	3T-6280	738
3J-4278	430		630		700	3T-6281	738
3J-4818	758	3L-1425	540		760	3T-6457	316
3J-5169	412	3L-3380	272	3S-2708	347	3T-7059	782
3J-6035	582		276		362		784
	583		282	3S-4115	128	3T-7086	782
	652	3L-6917	350	3S-6162	386		784
	653	3L-8187	299		388	3T-7566	386
3J-6484	500		474		394		388
3J-7354	112		694	3S-6605	22	3T-7567	386
	114		700		24		388
	118	3N-3763	273		162		394
	194		277	3S-8652	324	3T-8459	614
	339		283	3S-8665	107	3T-8791	394
	432	3N-3790	792	3S-9233	560	3T-8792	394
	440	3P-0246	374	3S-9557	292	3T-9476	398
	510	3P-0653	358		776	3T-9494	272
	511	3P-0747	352	3S-9643	112		273
	517	3P-1155	339		114		276
	542	3P-1323	18	3T-0304	298		277
	560		20		708		283
	594	3P-1823	600	3T-0852	661	3T-9524	272
	596	3P-1849	330		697		276
	598	3P-1932	339	3T-1121	771		282
	604	3P-2792	346		772	3T-9525	272
	606	3P-2793	346		780		276
3J-7470	560	3P-2794	346	3T-2662	292		283
3J-7473	560	3P-3103	346	3T-2710	338	3T-9549	192
3J-7719	540	3P-3321	347	3T-2977	400	3T-9658	382
3K-0360	80	3P-3441	462	3T-3294	326	3W-1809	614
	164	3P-3839	299		330	3W-2647	406
	222	3P-6308	504		334	3W-3110	400
	326	3P-7447	347	3T-3418	272	3Y-7829	382
	330	3P-7489	346		276		400
	334	3P-7570	346	3T-3422	272		
	339	3P-8820	326		276		
	374		330		282	**4**	
	434		334	3T-3423	272		
	442	3P-8822	326		276	4B-0418	172
	502		330		283	4B-1270	312
	506		334	3T-3424	272		690
	514	3P-8827	326		276	4B-2047	707
	516		330		283	4B-2049	264
	554		334	3T-3434	273		273
	604	3R-8801	272		277		277
	606		276		282		282
3K-0835	708		282	3T-3811	360	4B-3609	158
3K-1470	176	3S-0004	352	3T-4214	430	4B-3611	158
3K-2889	386		354	3T-4391	320	4B-4158	422
	388		471	3T-4403	316		434
	394	3S-0036	44	3T-4704	▶264		585
3K-3256	46	3S-1349	391		276		586
	144		394	3T-4709	272		587
3K-4897	690		488		276		588

▶ **PRIMARY REFERENCE**

PART NUMBER INDEX

Part	Page	Part	Page	Part	Page	Part	Page
	589		549		628		720
	590		550		629		723
	591		560		630	4L-6459	100
	592		602		693		507
	623		604	4K-5175	306		511
	624	4J-0522	504		436		517
	625		507		437		528
	792		517		462		532
4B-4161	68		526	4K-8302	716		534
4B-4274	264		554	4K-8501	418		602
	339		556	4K-9097	266	4L-6499	80
	442		558		668	4L-7124	282
	694		560	4K-9429	734	4L-9337	118
	787		572	4L-2729	273		122
4B-4276	694	4J-0523	554		277		339
4B-4314	66		560	4L-6454	8		507
4B-5059	704	4J-0524	517		49		514
4B-5324	296	4J-0525	558		68		522
4B-7739	100		572		70		604
4B-8641	46	4J-0526	558		78		676
	68		572		88		678
4B-9044	80	4J-0527	150		90	4M-0061	118
4B-9783	510		152		100		266
4B-9785	306		154		107	4M-0189	122
	320		156		110	4M-1336	104
4B-9808	480		517		122	4M-1815	264
	483	4J-2379	488		130		283
4B-9880	368		490		131	4M-1827	273
4D-1326	80		492		134		277
4D-3704	36	4J-3427	540		136		282
4D-4508	434	4J-4262	412		138	4M-1828	272
4D-6267	382	4J-4955	500		150		276
4D-6716	106	4J-5267	528		152		282
	192		532		154	4M-1829	272
4D-7388	72		534		156		276
	100		536		164		282
	266		602		185	4M-1831	272
4D-7733	440	4J-5477	440		194		276
	712		594		204		282
4D-8148	306		596		222	4M-1853	273
4D-9517	118		598		224		277
4E-3447	92		600		225		282
4F-0411	14		604		230	4M-1854	273
4F-2041	360	4J-5573	572		232		277
4F-2129	462	4J-5977	394		240		282
4F-2294	289	4J-6888	494		242	4M-1896	273
4F-4879	753		496		266		277
	754	4J-7083	410		337		283
	755	4J-7376	500		339	4M-2381	368
4F-7389	462	4J-7533	370		396	4M-2743	507
4F-8503	357		552		398	4M-5281	80
4F-8965	74		554		400		266
4H-1641	38		556		404		299
4H-2633	507	4J-8734	490		440	4M-5282	670
4H-7728	418		492		474	4M-5905	368
4J-0520	494	4J-8820	150		504	4M-6425	8
	496	4J-8996	560		517		740
	504	4J-8997	554		526	4M-6921	542
	507		560		534	4M-7651	540
	517	4K-0684	386		536	4M-8239	376
	522		388		604	4M-8303	566
	528		394		606	4M-8910	358
	532		426		670	4N-0205	14
	534		427		700	4N-0342	10
	536		627		712	4N-0614	18

PART NUMBER INDEX

Part	Page
4N-0683	22
	62
4N-0684	17
	40
4N-0685	18
	20
4N-0848	40
4N-0861	74
4N-0864	11
	94
	224
	225
4N-0865	74
4N-0913	74
4N-0914	74
4N-0932	56
4N-0933	44
	176
4N-0955	32
	35
4N-1114	12
4N-1151	50
4N-1232	40
4N-1235	40
4N-1650	22
4N-1682	11
4N-1684	11
4N-1779	94
4N-1946	94
4N-1948	104
4N-2199	94
4N-2481	5
	6
	▶65
4N-2514	36
4N-2564	132
4N-2803	27
4N-2927	704
4N-3329	255
4N-3808	322
4N-3841	287
4N-4307	94
4N-4668	16
4N-5339	84
4N-5614	59
4N-5837	5
	6
	▶102
4N-5858	20
4N-5893	25
4N-6658	18
	20
4N-6672	49
4N-6876	5
	6
	▶12
4N-7183	40
4N-8411	74
4N-8770	74
4N-9915	707
4P-0519	50
4P-3864	94
4P-5544	7
	▶60
4P-5546	60
4P-6464	792
4P-7233	172
4P-7428	224
	225
	239
	712
	716
4P-7429	194
	230
	239
	712
4P-7581	80
	194
	230
	240
	242
	266
	296
	314
	316
	474
	604
	661
	696
	708
	713
	716
	764
4P-8134	80
	194
	202
	204
	296
	299
	474
	517
	708
	764
4S-1722	594
	596
4S-1962	194
	661
	697
4S-4455	78
4S-5367	8
4S-5780	676
4S-8033	412
4S-8537	346
	347
4S-9191	98
4T-0417	▶472
	540
4T-1422	596
	598
4T-2069	434
4T-2620	558
4T-3797	644
	645
	646
	648
4T-3980	636
	638
4T-3981	528
	602
4T-4073	554
	▶573
4T-4143	488
	490
	492
	494
	496
4T-4205	548
	▶572
4T-4207	572
4T-5114	494
	496
4T-5502	654
	655
	656
4T-6907	498
4T-8181	▶621
	622
4T-8182	▶620
	622
4T-8183	585
	589
	▶644
4T-8223	623
	▶651
4T-8288	631
	▶636
4T-9365	540
4T-9366	540
4T-9367	540
4T-9368	540
4T-9369	540
4T-9370	540
4T-9378	540
4T-9702	620
	621
4T-9707	602
	620
	621
4T-9977	▶500
	623
	624
	625
4V-4548	382
4V-6981	670
	711
4V-7884	756
	758
4V-8256	657
4V-8556	758
4V-8577	756
4W-4588	18
	20
4W-4794	112
	114
4W-5492	17
4W-5702	52
4W-5703	52
4W-5998	63
4W-6061	18
	20
5B-3180	368
5B-4274	84
5B-7890	140
5B-9603	14
	95
5C-2890	268
	292
	682
5C-3240	347
5C-6565	78
	194
	222
	230
	239
	318
	337
	339
	396
	401
	410
	412
	418
	430
	548
	602
	678
	693
	742
5C-7261	458
5C-8811	786
5C-9553	314
	440
	660
	696
	782
	784
	786
5D-0353	310
	326
	330
	334
5D-1026	712
	716
5D-1911	484
5D-4822	704
5D-6657	357
5D-6659	320
5D-7523	326
	330
	334
5D-7635	232
	240
5D-7927	542
5F-1678	430
	432
5F-3106	517
5F-3999	32
5F-4639	412
5F-4899	84
5F-7054	326
	330
	334
	542
5F-7055	602
5F-7845	382
5F-8651	540

5

▶ **PRIMARY REFERENCE**

PART NUMBER INDEX

Part	Page
5F-9144	167
	502
	546
5F-9757	299
5G-1713	92
5G-5503	412
5G-6504	318
5H-0135	74
5H-0244	100
5H-1504	28
	63
5H-2068	74
5H-4018	534
5H-4019	494
	496
	504
	517
	560
5H-4020	517
	558
5H-4279	350
5H-6733	542
5H-6734	150
	152
	154
	156
	185
	434
5H-7153	339
5H-7704	134
5H-8803	386
	388
5H-8985	104
	362
5H-9394	382
5J-1193	486
5J-1572	488
5J-3326	486
5J-3488	500
5J-4664	560
5J-5314	273
	277
	282
5J-5365	602
	613
5J-5402	498
5J-5559	500
5J-5793	344
5J-7386	362
5K-0906	666
5K-1770	185
	339
5K-3772	32
5K-3931	320
5K-3932	320
5K-5120	306
5K-7143	326
	330
	335
5K-9065	40
5K-9090	78
	80
	338
	506
	507
5K-9107	306
	320
	542
5K-9179	722
5K-9235	306
5K-9238	338
5K-9592	74
5K-9989	306
5L-2683	36
5L-2952	440
5L-4019	303
5L-4398	462
5L-4756	488
	490
	492
	584
	602
5L-4758	342
5L-7200	298
5L-8854	136
5M-0544	394
	490
	492
5M-1719	720
5M-1932	35
5M-2894	11
	14
	28
	38
	40
	44
	46
	50
	63
	65
	68
	74
	76
	84
	92
	95
	98
	132
	138
	140
	160
	172
	296
	306
	316
	339
	344
	346
	350
	360
	362
	542
	676
5M-3034	273
	277
	282
5M-3062	78
	80
	126
	164
	189
	194
	201
	202
	222
	233
	234
	236
	242
	269
	299
	308
	404
	440
	504
	507
	534
	536
	602
	713
	717
	720
	738
	745
5M-4480	347
5M-6126	346
5M-6187	347
5M-6213	132
5M-6214	134
	410
5M-8009	32
5M-8500	670
5M-9548	374
5M-9623	374
5M-9624	374
5M-9735	8
5N-0093	18
	20
5P-0063	56
5P-0076	160
	556
5P-0537	147
	168
	172
	708
	782
	784
5P-0597	130
	131
5P-0695	192
	193
	194
	268
	269
	298
5P-0747	192
	193
	268
	269
5P-0761	192
	193
	194
	268
5P-0764	107
5P-0767	720
5P-0840	339
5P-0904	540
5P-1042	511
5P-1075	68
	70
	78
	88
	90
	107
	110
	122
	126
	134
	136
	138
	144
	158
	164
	185
	189
	194
	199
	201
	222
	230
	232
	233
	234
	236
	240
	266
	269
	299
	310
	337
	339
	382
	398
	401
	404
	410
	418
	442
	504
	511
	514
	517
	528
	532
	534
	536
	542
	603
	605
	614
	670
	678
	682
	685
	686
	700
	711
	713
	717
	720

► **PRIMARY REFERENCE**

PART NUMBER INDEX

Part	Page	Part	Page	Part	Page	Part	Page
	723		100		771	5P-8221	454
	730		150		772		455
	738		152		779		456
	745		154		780	5P-8244	74
	786		156	5P-5755	701	5P-8245	44
5P-1076	122		199		730		48
	126		339	5P-5824	700		74
	141		358	5P-5855	38		122
	164		386		178		138
	199		388	5P-5901	299		178
	394		396	5P-5908	660		320
	396		398		696		326
	398		412	5P-5924	682		331
	401		418	5P-5939	661		335
	410		504	5P-5969	208		344
	412		517		210		346
	418		536		697		358
	450		678	5P-5991	165		360
	528		720	5P-6025	194		445
	532	5P-2618	150	5P-6129	713		446
	572		152		717		447
	678		154	5P-6254	347		448
	693		156	5P-6264	299		462
	738	5P-2675	708	5P-6298	272	5P-8247	12
	742	5P-2937	118		283		40
5P-1251	118	5P-2955	233	5P-6313	266		61
5P-1255	70		234	5P-6314	266		190
5P-1262	94		236	5P-6605	670		306
	100	5P-3092	434	5P-6652	184		320
5P-1327	623	5P-3414	346	5P-6670	660	5P-8248	60
	624	5P-3488	462		696		401
	625	5P-3489	462	5P-6874	722	5P-8249	60
5P-1370	40	5P-3501	338	5P-6887	194		486
5P-1404	54	5P-3620	324	5P-6944	339		500
	471	5P-3629	360	5P-6994	222		507
5P-1465	110	5P-3948	716		720	5P-8250	327
	118	5P-4115	80	5P-7086	764		330
5P-1695	165		660	5P-7179	434		335
5P-1981	320		666	5P-7211	401		356
5P-2199	564		696		670		391
	570		708	5P-7462	536		494
	571		786	5P-7463	536		496
5P-2226	230	5P-4116	122	5P-7468	339	5P-8356	22
5P-2228	126		314		507	5P-8394	787
	134		458	5P-7469	339	5P-8429	40
	164		661		507	5P-8441	682
	194		697	5P-7470	339	5P-8445	704
	239	5P-4143	320	5P-7471	339	5P-8500	7
	396	5P-4295	269	5P-7513	730		164
	418		717	5P-7684	28		184
	450	5P-4625	32		374		268
	504	5P-5297	360	5P-7701	50		396
	536	5P-5405	362	5P-7815	176		400
	560	5P-5422	356	5P-7816	338		484
	602	5P-5454	700	5P-7892	560	5P-8502	7
	670	5P-5598	76	5P-7957	734		164
	738	5P-5643	701	5P-7972	560		184
5P-2251	510	5P-5673	661	5P-8066	339		268
5P-2322	602		682	5P-8068	74		396
	613	5P-5677	243	5P-8077	517		400
5P-2369	70		291	5P-8112	522		484
	78		293		604	5P-8522	238
5P-2424	339		299	5P-8167	194		239
	551	5P-5680	769		758		602
5P-2566	90		770	5P-8211	350	5P-8823	627

► **PRIMARY REFERENCE**

PART NUMBER INDEX

Part	Page
	628
	629
	630
5P-8831	68
5P-8837	412
5P-8907	470
5P-8918	771
	772
	780
5P-8944	326
	330
	334
5P-8998	306
5P-9119	543
5P-9132	692
5P-9297	8
5P-9299	118
5P-9466	792
5P-9519	306
	344
5P-9597	122
5P-9658	322
5P-9757	606
5P-9884	792
5P-9890	74
	160
5P-9899	598
5P-9938	474
5R-5927	122
5R-7755	279
	280
5S-0003	368
	374
5S-0581	104
5S-7349	190
	299
	668
	708
	764
5S-7379	78
	100
	107
	118
	194
	240
	269
	337
	358
	401
	418
	442
	511
	528
	558
	602
	711
	730
	786
5S-7382	339
	494
	496
	500
	504
	507
	517
	534
	548
	556
	558
	560
	602
5S-7383	194
	319
	504
	507
	528
	602
	690
	740
5T-4896	386
	388
	394
5V-0770	704
5V-1474	660
	696
5V-1496	401
	746
	748
5V-1497	756

6

Part	Page
6A-9718	782
	784
	786
	790
6B-0533	398
	412
6B-1124	8
6B-1557	14
6B-2882	92
	140
	700
6B-4594	410
6B-4661	95
	720
6B-6863	346
6B-7254	14
6C-3680	192
6D-1641	720
6D-1746	396
	412
6D-4244	92
	514
6D-4246	682
	713
	717
6D-4247	713
	717
6D-4636	164
6D-6812	745
6D-7146	132
6E-0381	573
6E-0382	573
6E-0410	564
	570
	571
6E-2059	542
6E-2943	540
6E-3113	▶498
	616
6E-3332	542
6E-3667	490
	492
6E-3976	498
6E-3980	498
6E-4343	558
	560
6E-4432	558
6E-4492	558
6E-4976	498
6F-0156	347
6F-0253	708
6F-0711	382
6F-7012	308
6F-7045	286
6F-8146	326
	331
	335
6G-2914	738
6G-9102	664
6H-1717	360
6H-3956	360
	398
	412
6H-3957	122
6H-4746	80
6H-9361	542
6I-0975	32
6I-0976	32
6I-0977	32
6I-1418	200
	202
6I-1684	32
6I-2431	110
6I-2435	110
6I-2505	128
6I-2506	128
6I-2922	36
6I-4265	131
6I-4611	22
6I-8212	693
6I-8361	158
6I-8363	158
6I-8921	708
6I-9255	346
6I-9534	711
6I-9535	711
6J-0488	401
	410
	685
	686
	700
	738
6J-0499	382
	442
6J-1038	554
6J-1323	382
6J-2419	316
	380
6J-2561	560
6J-2797	498
6J-2921	540
6J-2925	540
6J-3134	510
	560
6J-5985	644
	645
	646
	648
6J-5986	602
	644
	645
	646
	648
6J-7500	602
	622
	644
	645
	646
	648
6J-9298	540
6J-9299	540
6K-0138	604
	618
6K-0806	758
6K-3273	746
	748
6K-3630	604
	618
6K-4936	700
6K-6307	374
6K-9632	764
6L-1651	339
6L-2609	440
6L-3005	136
6L-4428	22
6L-4784	350
	368
6L-6560	362
6L-9284	306
	344
6L-9965	306
6M-6078	532
6N-0008	94
6N-0977	38
6N-1025	38
6N-1027	38
6N-1029	84
6N-1186	8
6N-1378	5
	6
	▶61
6N-2206	66
6N-2229	5
	6
	▶30
6N-2343	84
6N-2469	50
6N-2508	14
6N-2509	14
6N-2656	78
	80
6N-2723	46
6N-2946	172
6N-2985	338
6N-3279	273
	277
	282

▶ **PRIMARY REFERENCE**

PART NUMBER INDEX

Part	Page
6N-3826	272
	276
	282
6N-3896	60
6N-3897	60
6N-4414	172
6N-6037	30
6N-6872	63
6N-6984	694
6N-7145	94
6N-7523	253
	786
6N-7654	30
6N-7692	128
6N-8942	52
6N-9135	22
6P-3223	352
	354
6P-3458	347
6P-3901	362
6P-5317	462
6P-6641	299
6P-6739	346
6P-6926	700
6P-7564	346
6P-8339	358
6P-8340	358
6P-8829	391
	406
6P-8901	392
6R-0365	502
6S-4039	192
6S-5993	440
6S-7119	532
6S-8948	382
6S-9470	418
6T-0302	786
6T-0303	786
6T-0362	264
	273
6T-0363	272
	276
	283
6T-0371	272
	276
	283
6T-0372	272
	276
	283
6T-0410	386
	388
	394
6T-0609	326
	330
	335
6T-0840	462
6T-0841	462
6T-0842	462
6T-1119	264
6T-1120	264
	283
6T-1139	428
6T-1141	▶428
	457
6T-1698	418
6T-2037	462
6T-2724	606
6T-3382	574
6T-3583	▶388
6T-3584	388
6T-3588	386
	388
	390
6T-3589	388
6T-3590	386
	388
6T-3591	386
	388
6T-3631	474
	694
6T-3632	474
	694
6T-3633	474
	694
6T-3642	292
6T-3643	292
	712
6T-3764	225
6T-3990	299
	700
6T-4883	516
6T-4964	444
6T-4965	444
6T-5814	299
6T-5941	406
6T-6066	299
6T-6079	184
	410
6T-6080	184
6T-6329	700
6T-6566	326
	330
	334
6T-6686	660
	696
6T-6708	660
	696
6T-6970	474
6T-7058	298
	708
6T-8402	767
	▶769
6T-8403	768
	▶770
6T-8943	694
6T-9099	400
6T-9180	337
6T-9244	575
6T-9255	694
6T-9256	694
6V-0457	320
6V-0458	320
6V-0513	▶272
	279
6V-0683	536
6V-0709	422
	434
6V-0836	346
6V-0852	54
	306
	338
	366
	374
	376
	471
	506
	510
	516
	526
	553
	566
	568
6V-0894	310
	312
	690
6V-0928	▶276
	280
6V-0974	604
6V-1179	213
	473
6V-1193	401
6V-1195	138
	473
6V-1196	350
	358
6V-1197	178
	472
6V-1322	272
	276
	282
	398
6V-1355	118
6V-1614	482
6V-1653	326
	330
	334
6V-1668	660
	696
6V-1748	299
6V-1849	572
6V-1904	339
6V-1950	738
6V-2312	776
	778
6V-2317	459
6V-2318	540
6V-2331	670
6V-2360	452
6V-2375	670
6V-2492	118
6V-2686	150
	266
6V-2689	470
6V-2722	226
6V-3260	670
6V-3298	326
	330
	334
6V-3319	40
6V-3505	558
	564
	570
	571
6V-3536	59
6V-3549	160
6V-3830	50
	68
	74
6V-3831	16
	66
6V-3884	208
	210
	666
	670
	700
	708
	711
	730
6V-3960	786
6V-3965	54
	306
	339
	366
	372
	374
	376
	471
	507
	516
	553
	566
	568
6V-4270	671
6V-4315	360
6V-4367	76
6V-4368	339
6V-4432	32
	517
	558
6V-4589	14
	40
	54
	68
	76
	160
	186
	378
6V-5048	28
	68
	168
	172
	178
6V-5049	28
	54
	160
	162
	167
	172
	606
6V-5050	76
6V-5051	194
6V-5065	350
6V-5100	16
6V-5134	176
6V-5142	170
6V-5185	606
6V-5186	606
6V-5266	28
	339
	352

▶ **PRIMARY REFERENCE**

PART NUMBER INDEX

Part	Page	Part	Page	Part	Page	Part	Page
6V-5553	362	6V-8129	670	6V-8398	92		100
6V-5645	292	6V-8183	292		107		107
6V-5656	339	6V-8185	292		118		118
6V-5657	486		293		164		130
6V-5782	122		732		506		144
6V-5817	760	6V-8186	289		507		150
6V-5833	769	6V-8188	32		514		164
	770		35		536		194
	771		122		606		199
	772		189	6V-8400	504		202
	779		194		516		204
	780		222	6V-8547	666		230
6V-5849	786		264	6V-8553	507		233
6V-5851	786		272		561		234
6V-6206	782		276	6V-8556	606		266
6V-6207	790		282	6V-8625	118		269
6V-6208	782		440		514		296
6V-6209	782		504	6V-8626	176		299
	784		528	6V-8628	594		308
	786		532		596		339
	790		534		598		452
6V-6210	790		551		604		474
6V-6211	786		602	6V-8632	80		507
6V-6212	786		676		506		526
6V-6213	782		678		606		602
	784	6V-8189	190	6V-8634	172		606
	786		233		506		676
6V-6214	782		234	6V-8635	78		685
	784		236		80		686
	786		602		506		720
6V-6215	784	6V-8190	406	6V-8636	172		764
6V-6218	784	6V-8218	553		474		787
6V-6561	786	6V-8237	498		511	6V-8849	434
	►790	6V-8260	64		526	6V-8927	298
6V-6572	462	6V-8281	326		606		700
6V-6703	216		330	6V-8637	106	6V-8928	670
6V-6716	192		334	6V-8639	506	6V-8942	606
6V-6757	442	6V-8358	164	6V-8642	76	6V-8953	733
6V-6888	782	6V-8362	290	6V-8676	170	6V-8969	707
	784	6V-8369	786		180		732
	786	6V-8370	298	6V-8713	164		786
6V-6889	764	6V-8373	264		442	6V-8970	386
	782		283	6V-8714	338		388
	784	6V-8374	299	6V-8716	506		394
	786		300	6V-8722	164	6V-9000	440
	790		474		222	6V-9001	511
6V-6923	186		694		442		516
6V-7190	670		700	6V-8723	604		526
6V-7357	538		708	6V-8724	172	6V-9002	514
	708	6V-8376	292		474	6V-9003	176
6V-7423	40		310		506	6V-9004	507
6V-7607	158		712		511	6V-9005	78
	310	6V-8378	80		516	6V-9007	106
6V-7636	670	6V-8397	440		526	6V-9009	176
6V-7646	707		474		536	6V-9156	723
	746		506		604	6V-9169	92
	748		507	6V-8738	164		507
6V-7728	661		510	6V-8739	606	6V-9176	362
	696		511	6V-8778	507	6V-9197	418
6V-7732	542		516	6V-8781	511	6V-9200	511
6V-7744	542		517		526		560
6V-8001	338		526	6V-8801	70	6V-9343	511
6V-8073	670		536		78	6V-9355	507
6V-8097	542		560		88		517
6V-8118	464		604		90		561

► **PRIMARY REFERENCE**

PART NUMBER INDEX

Part	Page
6V-9481	434
6V-9632	312
	314
	458
	660
	696
6V-9746	106
	506
	507
	517
6V-9829	507
	517
	561
6V-9830	164
6V-9833	78
	80
6V-9837	606
6V-9839	606
6V-9840	78
	80
6V-9850	516
6V-9872	440
	510
6V-9873	172
	514
	606
6W-5698	440
6Y-0091	150
6Y-0206	730
6Y-0471	438
6Y-0473	1
	436
	437
	438
	445
	446
	447
	448
	450
6Y-0634	268
6Y-1011	649
6Y-1202	604
	654
	655
	656
6Y-1204	654
	655
	656
6Y-1579	438
6Y-2057	438
6Y-2090	60
6Y-2130	319
6Y-2546	320
6Y-2547	320
6Y-2652	613
6Y-2875	462
6Y-2876	462
6Y-2878	462
6Y-3233	636
	638
	640
6Y-3484	346
	462
6Y-3567	534
6Y-3568	534
6Y-3682	670
6Y-3712	663
	▶722
6Y-3732	670
6Y-4638	368
6Y-5094	708
6Y-5493	636
	638
	640
6Y-5812	382
	400
6Y-5888	362
6Y-6041	528
6Y-6043	528
	532
6Y-6044	528
6Y-6140	651
	▶654
6Y-6584	192
6Y-7651	32
6Y-7652	32
6Y-8865	636
	638
6Y-9287	594
	605
7	
7B-1251	194
7B-2742	168
	172
7B-3028	368
7B-3235	48
7C-0145	94
7C-0307	95
	98
7C-0754	222
7C-1511	84
7C-1512	84
7C-1527	84
7C-1772	5
	6
	▶84
7C-4938	74
7C-5287	189
7C-6514	16
7C-7225	354
7C-7407	22
7C-9614	22
	24
7D-1195	542
7D-1649	68
	320
7D-4726	382
7D-6055	418
7D-6922	293
7D-7233	118
7D-7735	164
7D-9749	561
7E-4039	92
7E-5346	168
7E-5665	52
7E-6508	303
7E-7312	28
7E-9262	17
7F-0560	226
7F-2050	660
7F-2060	660
7F-3488	272
	276
	282
7F-3491	272
	276
	282
7F-3525	272
	276
	283
7F-4781	542
7F-4782	542
7F-5711	394
7F-6112	430
7F-8607	716
7F-9223	464
7G-1060	192
7G-1744	730
7G-1785	730
7G-1786	730
7G-1814	406
7G-1815	406
7G-1952	434
7G-1958	422
	434
7G-2176	84
7G-2248	350
7G-2325	320
7G-2384	516
7G-2385	516
7G-2386	516
7G-2388	516
7G-2419	452
7G-2421	452
7G-2425	452
7G-2454	670
7G-2476	346
7G-2704	430
7G-3413	504
7G-3414	504
7G-3415	504
7G-3832	534
7G-3833	534
7G-3834	382
	534
7G-3907	450
7G-3945	400
7G-4332	438
7G-4766	452
7G-4817	346
7G-4823	730
7G-4824	730
7G-4998	324
7G-5186	106
7G-5221	450
7G-5622	362
7G-6059	360
7G-6114	360
7G-6115	360
7G-6171	400
7G-6176	733
7G-6503	406
7G-6623	394
7G-6723	738
7G-6724	738
7G-6757	406
7G-7156	418
7G-7684	158
7G-8150	164
7G-8282	452
7G-8420	310
7G-8839	122
7G-9709	434
7H-1447	542
7H-4543	694
7I-8663	440
7J-0204	374
7J-1337	410
7J-1338	410
7J-1592	561
7J-2086	494
	496
7J-2087	488
	490
	492
	494
	496
7J-3296	429
	432
7J-4083	494
	496
7J-4169	604
	618
7J-5225	542
7J-5606	266
7J-6525	347
7J-7778	400
7J-8080	540
7J-8814	400
7J-9018	310
7J-9108	80
	164
	222
	442
	506
	507
7J-9250	488
7K-1181	80
	192
	224
	225
	240
	242
	268
	293
	296
	298
	516
	603
	606
	666
	668
	716
7K-3176	716
7K-3222	730
7K-6413	410
7K-6956	391

▶ **PRIMARY REFERENCE**

PART NUMBER INDEX

Part	Page	Part	Page	Part	Page	Part	Page
7K-9211	594	7N-3864	106		454	7T-4761	787
	596	7N-4932	106		455	7T-4777	636
	598	7N-5168	98		456		638
	604	7N-5876	298	7T-0999	438	7T-4809	603
7L-2894	272	7N-6252	74		454		644
	276	7N-6253	74		455		645
	282	7N-6494	279		456		646
7L-8316	694		280	7T-1000	454		648
7L-9061	362	7N-6654	94		455	7T-4810	644
7M-0324	272	7N-7049	7		456		645
	276		▶279	7T-1068	769		646
	282	7N-7559	76		▶771		648
7M-0325	272	7N-7628	92	7T-1069	770	7T-4890	548
	276	7N-7672	147		▶772	7T-4966	620
	282	7N-7673	147	7T-1078	786		621
7M-0326	272	7N-7688	100	7T-1099	193	7T-5459	488
	276	7N-7878	92		230	7T-5856	682
	282	7N-9212	74		232	7T-5869	636
7M-0327	272	7N-9801	266		233		638
	276	7N-9802	50		234		640
7M-0475	344	7N-9943	227		239	7T-5959	450
7M-1199	346	7P-4190	310		240	7T-6040	▶392
7M-1297	324	7R-8872	436		299	7T-6192	452
	572		437		382	7T-6193	452
7M-5717	561	7S-1912	164		400	7T-6799	290
7M-7219	704		536		510	7T-6992	360
7M-8480	306	7S-3916	382		526	7T-6994	462
	346		528		660	7T-7190	594
	347		532		678	7T-7222	594
	382		602		682		596
7M-8485	78	7S-3919	382		696		598
	80		528		743	7T-7303	594
	324		532	7T-1330	769	7T-7305	594
	338		602		770		596
	339	7S-4326	326	7T-1885	462		598
	368		331	7T-1890	700		604
	374		335	7T-3829	▶548	7T-7577	▶584
	506	7S-4411	▶129		549		622
	507		130		550	7T-7578	584
	558		131	7T-3877	434	7T-7586	584
	561	7S-5005	17	7T-3912	522	7T-7678	360
7M-8651	272		38	7T-3913	522	7T-7942	▶394
	276	7S-8920	548	7T-3914	522	7T-8006	434
7M-9107	604		602	7T-3915	522	7T-8331	122
	654	7S-8921	548	7T-3916	522	7T-8712	▶627
	655		602	7T-3926	452		631
	656	7T-0020	227	7T-3927	452	7T-8713	▶628
7N-0060	194	7T-0135	738	7T-3928	452		634
	269	7T-0138	738	7T-4129	434		635
7N-0210	224	7T-0375	450	7T-4131	434	7T-8891	760
	225	7T-0601	670	7T-4132	434	7T-9014	382
7N-0719	192	7T-0715	438	7T-4133	434		410
	▶286	7T-0716	438	7T-4134	434	7T-9123	264
7N-1210	62	7T-0717	438	7T-4135	382		273
7N-1277	118	7T-0718	438	7T-4145	434		277
	606	7T-0719	438	7T-4501	604		283
7N-1639	106	7T-0720	438		618	7T-9309	450
7N-1996	298	7T-0723	▶454	7T-4502	604	7T-9310	1
	708		457		618	7T-9515	298
7N-2059	266	7T-0724	454	7T-4515	379	7T-9745	510
7N-2155	84	7T-0905	310	7T-4532	674	7V-5191	704
7N-2156	84	7T-0942	786	7T-4605	455	7V-8087	738
7N-2213	84	7T-0961	436	7T-4606	▶455	7W-3144	134
7N-2443	38		437	7T-4607	456	7W-3145	134
7N-2628	106	7T-0998	438	7T-4608	▶456	7W-3447	28

▶ **PRIMARY REFERENCE**

PART NUMBER INDEX

Part	Page
	68
	266
	506
7W-5157	78
7W-5532	106
7W-6492	18
	24
	100
7W-6528	84
7W-6534	24
	54
7W-7000	94
7W-7141	84
7W-7233	106
7W-7346	106
7X-0264	694
7X-0288	310
	522
	528
	561
	602
	604
7X-0289	526
	676
7X-0290	339
	474
	511
7X-0291	194
	561
7X-0308	551
	558
	561
7X-0311	504
	517
	548
	602
7X-0313	504
7X-0315	517
	548
	602
7X-0323	432
7X-0325	517
	528
	532
	602
	678
7X-0326	442
	558
	678
7X-0328	32
	35
	416
	517
	561
7X-0331	517
7X-0333	100
7X-0340	122
	150
	189
7X-0341	152
7X-0342	434
7X-0343	64
	418
	626
7X-0344	408
7X-0345	412
	434
	517
	604
	618
7X-0346	410
	517
	676
7X-0347	386
	388
	412
	418
	517
7X-0349	394
	517
7X-0350	107
7X-0352	572
	676
7X-0353	517
7X-0356	517
7X-0358	517
	572
7X-0365	594
	596
	598
	604
	743
7X-0366	743
7X-0370	419
7X-0371	526
7X-0375	152
7X-0379	584
	602
	622
	644
	645
	646
	648
7X-0381	528
	532
	602
7X-0386	450
7X-0392	738
7X-0394	602
	613
7X-0396	602
	610
7X-0403	392
	406
	584
	602
7X-0405	406
	444
	602
	604
	614
	618
7X-0418	406
7X-0420	424
	425
7X-0422	406
	424
	425
7X-0429	742
7X-0439	604
7X-0440	122
7X-0444	406
	444
7X-0448	676
7X-0449	602
	610
7X-0469	745
7X-0471	676
7X-0482	122
7X-0492	600
7X-0515	528
	532
	605
	618
7X-0525	603
	613
7X-0531	406
	424
	425
	430
7X-0533	430
	742
7X-0537	605
	614
	618
7X-0549	406
7X-0555	401
7X-0562	264
	272
	276
	282
7X-0572	528
	532
	603
	738
7X-0575	701
7X-0578	474
	682
7X-0582	232
	240
	738
	743
7X-0584	412
7X-0589	548
	551
	603
7X-0590	430
7X-0592	723
7X-0603	745
7X-0608	292
	657
7X-0616	605
	614
7X-0618	730
7X-0620	80
7X-0772	396
	700
	730
7X-0818	200
	202
7X-2031	253
7X-2049	712
	716
7X-2459	510
7X-2537	380
7X-2541	370
7X-2623	358
7X-3159	690
7X-3178	158
7X-3182	786
7X-3373	273
	277
	282
7X-3392	730
7X-5331	600
7X-6315	213
	214
	215
	216
7X-7644	792
7X-7700	185
7X-7702	764
7X-7715	92
7X-7729	458
	670
7X-7731	56
	95
7X-7763	786
7X-7888	312
7X-7958	118
7Y-3948	192
7Y-7256	208
	210
	8
8B-1312	346
8B-2327	8
8B-4338	708
	787
8B-4624	396
8C-3075	320
8C-3078	472
8C-3089	273
	277
	282
8C-3132	564
	570
	571
8C-3185	401
8C-3221	792
8C-3334	368
8C-3442	671
8C-3445	68
8C-3446	68
	339
8C-3447	338
8C-3681	118
8C-3756	660
	682
	696
8C-4436	118
	398
	419
8C-4586	660
	696
8C-5060	787
8C-5222	32

► **PRIMARY REFERENCE**

PART NUMBER INDEX

Part	Page
8C-5230	68
	542
8C-5608	158
	708
8C-5917	192
	268
8C-5918	268
8C-6354	293
8C-6358	226
8C-6561	335
8C-6711	187
8C-6761	347
8C-6871	92
8C-6872	107
8C-6874	606
8C-6876	138
8C-6913	326
	330
	334
	450
8C-7323	107
	561
8C-7514	164
8C-8843	614
8C-8844	150
8C-8902	792
8C-9660	273
	277
	282
8C-9987	576
	577
	580
8D-0983	516
8D-3508	678
8D-3786	678
8D-3932	680
8D-4771	326
	330
	334
8D-7185	516
8D-9947	78
8E-0618	304
8E-0992	400
8E-1040	522
8E-1041	522
8E-1042	522
	604
8E-1043	522
	604
8E-1118	707
8E-1356	700
8E-1378	602
	610
8E-1597	651
8E-2173	587
	591
	▶645
8E-2485	391
8E-2514	708
8E-2589	764
8E-2593	786
8E-2685	670
8E-2729	347
8E-2827	434
8E-2900	434
8E-2901	434
8E-2902	434
8E-3124	326
	331
	335
8E-3241	236
8E-3250	700
8E-3270	663
	▶711
8E-3271	711
8E-3272	711
8E-3273	711
8E-3274	711
8E-3277	711
8E-3278	711
8E-3280	711
8E-3284	663
	▶707
8E-3446	767
	▶773
8E-3447	768
	▶774
8E-3581	636
	638
8E-3582	636
	638
8E-3583	636
	638
8E-3584	636
	638
8E-3599	636
	638
8E-3600	636
	638
8E-4198	627
	628
8E-4199	627
	628
8E-4541	629
	630
8E-4542	629
	630
8E-4815	410
8E-4836	732
8E-5113	670
	▶767
8E-5114	670
	▶768
8E-5170	319
8E-5922	670
8E-5926	670
8E-5931	670
8E-5932	670
8E-5933	670
8E-5959	700
8E-5975	700
8E-5978	738
8E-6619	445
	446
	447
	448
8E-6757	414
8E-6834	730
8E-6856	764
8E-6866	414
8E-6877	730
8E-7111	536
8E-7112	536
8E-7235	730
8E-7236	730
8E-7237	730
8E-7238	730
8E-7239	730
8E-7791	730
8E-7838	358
8E-7928	▶438
	454
	455
	456
8E-8152	360
8E-8153	360
8E-8155	360
8E-8157	360
8E-8158	358
8E-8159	360
8E-8160	360
8E-8161	360
8E-8162	360
8E-8292	760
8E-8304	346
8E-8310	347
8E-8316	362
8E-8415	654
8E-8417	655
	656
8E-8630	386
	388
8E-8914	618
8E-8994	358
8E-9010	632
	▶638
8E-9052	▶390
8E-9253	700
8E-9289	386
	388
	394
8E-9570	▶414
	638
8E-9592	730
8E-9595	730
8E-9654	707
8E-9656	707
8E-9938	414
8E-9947	414
	415
8F-1434	80
	264
	273
	277
	282
8F-4994	542
8F-5340	310
8F-6350	352
8F-6437	517
	551
8F-6711	95
8F-7702	458
8F-8544	347
8F-8733	436
	437
8F-8882	561
8F-9516	445
	446
	447
	448
8F-9836	400
8G-9794	152
8H-3127	253
8H-5303	286
8H-5306	286
8H-5727	391
8H-8769	206
	368
8J-0422	31
8J-0423	31
8J-1751	510
8J-1752	510
8J-2288	100
8J-4351	74
	339
	350
	352
	354
	472
8J-4386	500
8J-4916	382
	400
8J-5326	621
8J-5914	306
	516
8J-6307	374
8J-6709	376
8J-7236	400
	743
8J-7360	561
8J-7366	561
8J-7462	561
8J-7466	561
8J-8322	362
8J-8621	556
8J-9383	730
8K-1433	707
8K-2692	347
8K-5130	602
	620
	621
8L-2746	76
	378
	606
8L-2777	573
8L-2779	172
	606
8L-2786	11
	118
	172
	178
	254
	606
8L-3441	52
8L-5008	8
8L-5449	202
	204
8L-5771	532
8L-8413	687
	688

▶ **PRIMARY REFERENCE**

PART NUMBER INDEX

Part	Page	Part	Page	Part	Page	Part	Page
	704	8P-5265	452	8T-1779	511	8T-3848	671
	758	8P-5698	326	8T-1788	486	8T-4121	312
	764		330	8T-1887	172		459
8M-0139	350		334	8T-1888	172		511
8M-1013	368	8P-6334	382	8T-1905	511		566
8M-1047	132	8P-6363	682		604		682
8M-2530	572	8P-7598	382	8T-1979	670		685
8M-2537	374		410	8T-1980	670		686
8M-2770	118	8P-8360	462	8T-1981	452		690
8M-2771	312	8P-9142	429	8T-2174	786	8T-4122	107
8M-2773	172		432	8T-2225	192		401
	507	8P-9265	360		193		408
8M-3175	134	8P-9382	430		194		410
8M-3267	758	8P-9770	583		248		412
8M-4389	462		594		268		419
8M-4395	347		610		269		434
8M-4432	316		620		298		517
8M-4438	471		621	8T-2275	542		546
8M-4443	95		636	8T-2501	194		603
8M-4986	376		638		306		618
8M-4992	376		640		319		676
8M-5254	471		651		358	8T-4133	459
8M-5266	306		653		517		682
8M-5661	347	8P-9859	516		670	8T-4136	459
8M-6393	324	8R-7699	8		676		685
8M-6802	162	8S-0023	176		758		686
8M-7145	558		517	8T-2502	110	8T-4137	312
8M-8157	339	8S-0024	176		136		511
8M-8489	84		517		158		682
	352	8S-0948	507		236	8T-4138	312
	354		606		326		708
8M-9124	44	8S-2332	279		331	8T-4139	680
8N-0301	100		280		335	8T-4167	310
8N-0396	74	8S-2634	194		382		605
8N-0397	74	8S-4211	192		507		618
8N-0422	50	8S-4756	450		514	8T-4171	700
8N-0423	50	8S-5653	436		522		708
8N-0610	74	8S-7803	704		604	8T-4177	370
8N-0612	74	8S-9130	306		614	8T-4189	459
8N-0869	192		358		684		661
	193	8S-9191	74		713		697
	194		346		717	8T-4191	300
	268	8T-0192	126		723	8T-4192	682
8N-0881	98	8T-0208	434		730	8T-4195	459
8N-0882	98	8T-0267	312	8T-2530	222	8T-4198	566
8N-0883	98	8T-0318	670	8T-2561	419	8T-4200	165
8N-2104	74	8T-0328	264		529		222
8N-4247	164		273		603		314
8N-6739	68		277		670	8T-4205	80
	74		282	8T-2658	458		122
8N-6740	74		310	8T-2883	506		158
8N-7257	106		312		517		190
8N-7806	40		690	8T-3490	312		266
8N-8753	268		746		458		269
	►280		748		682		272
8P-0058	306	8T-0687	769	8T-3491	164		276
8P-0612	400		770	8T-3518	226		282
8P-4047	347		779	8T-3519	226		293
8P-4617	347	8T-1141	346	8T-3597	682		299
8P-4661	436	8T-1172	458	8T-3611	516		398
	437	8T-1444	347	8T-3612	202		458
8P-5056	362	8T-1572	730		312		660
8P-5141	660	8T-1674	338		458		668
	696	8T-1686	172	8T-3647	204		682
8P-5264	452	8T-1739	786		370		696

► **PRIMARY REFERENCE**

PART NUMBER INDEX

Part	Page	Part	Page	Part	Page	Part	Page
	708		717		299		603
	711		720		308		787
	746	8T-4224	118		310	8T-5361	150
	748		138		319		392
	762		164		324		406
	764		190		326		412
8T-4222	406		200		331		430
	694		202		335		444
8T-4223	32		204		337	8T-5383	762
	35		206		339	8T-5400	764
	78		222		358	8T-5410	458
	88		233		382		690
	90		234		398	8T-5465	507
	107		236		440	8T-5677	690
	118		266		474	8T-5911	400
	134		314		494		406
	150		335		496		418
	152		380		500	8T-5912	400
	154		459		504		406
	156		603		507	8T-6466	713
	189		666		511		717
	194		740		517	8T-6631	660
	222	8T-4226	401		522	8T-6638	164
	230	8T-4777	776		526	8T-6675	100
	239		778		528	8T-6684	76
	269	8T-4821	678		532	8T-6685	682
	310	8T-4835	78		534	8T-6699	690
	318		318		536	8T-6745	500
	327		339		548	8T-6747	488
	331		394		556		490
	335		410		558		492
	337		416		561	8T-6757	17
	339		680		603		22
	358	8T-4896	8		605		24
	386		70		607		54
	388		78		676	8T-6761	44
	396		80		684		50
	409		88		713	8T-6762	56
	410		90		717		95
	412		100		764		306
	416		110		787	8T-6763	22
	419		118	8T-4897	382		24
	430		122	8T-4908	459		122
	432		126	8T-4956	678	8T-6764	28
	434		130	8T-4984	94		95
	440		131	8T-4986	106		104
	442		134	8T-4987	138		107
	504		150	8T-4988	138	8T-6765	44
	511		152	8T-4990	106	8T-6767	98
	517		154	8T-4994	152	8T-6869	204
	528		156		398	8T-6870	202
	532		165		401	8T-6871	107
	534		185		419		401
	536		189		526		408
	548		194		743	8T-6876	164
	551		202	8T-4999	792		172
	558		204	8T-5004	464		607
	561		222	8T-5050	514	8T-7008	189
	603		230	8T-5360	504		224
	664		233		507		225
	670		240		517		511
	676		242		536		514
	678		266		548		517
	680		269		558		534
	682		296		561		604

► **PRIMARY REFERENCE**

PART NUMBER INDEX

Part	Page
8T-7087	507
8T-7371	585
	586
	587
	588
	589
	590
	591
	592
8T-7500	480
	483
8T-7521	536
8T-7529	442
8T-7547	380
8T-7566	700
	735
	736
8T-7926	338
8T-7934	459
8T-7970	76
	78
8T-7971	339
	400
8T-8382	500
8T-8383	488
	494
	496
8T-8729	227
	243
	244
	245
	246
	247
	253
	257
	259
	260
	266
	379
	464
	470
	474
	480
	502
	546
	578
	687
	708
	712
	716
	726
	727
	728
	782
	784
	786
8T-8730	248
	254
	688
	690
8T-8731	248
8T-8737	243
	298
	480
	578
	661
	696
	725
	726
	764
	782
	784
	786
8T-8886	690
8T-8908	122
8T-8911	602
8T-8914	670
8T-8915	324
	507
	511
	517
8T-8916	504
	507
	517
8T-8917	32
	118
	141
	327
	331
	335
	339
	398
	401
	434
	511
	528
	532
	534
	602
	644
	645
	646
	648
	717
8T-8919	88
	150
	152
	154
	156
	310
	339
	358
	406
	504
	572
8T-8920	107
	189
8T-8924	152
8T-9006	458
8T-9041	561
8T-9048	671
8T-9049	671
8T-9312	738
8T-9364	762
8T-9367	80
	299
	459
8T-9368	459
	694
8T-9371	396
	607
8T-9377	122
	165
	607
8T-9378	338
8T-9379	536
8T-9380	536
8T-9382	551
8T-9383	194
	269
	419
	664
8T-9386	80
8T-9389	409
	434
8T-9391	536
8T-9393	410
	419
	528
	532
	602
8T-9396	546
8T-9397	232
	240
8T-9398	410
8T-9399	401
8T-9400	326
	330
	334
	528
	532
	602
8T-9407	269
8T-9412	326
	330
	334
8T-9636	217
8T-9655	200
	202
	204
	206
8T-9756	193
8T-9757	192
	193
	268
8T-9905	792
8V-0622	192
	268
8W-9912	365
8X-1144	516
8X-7422	510
8Y-5944	756
8Y-5945	704
8Y-5965	756
8Y-6012	756
8Y-6014	756
8Y-6024	756
8Y-6041	704
8Y-6045	704
8Y-6046	704
8Y-6047	704
8Y-6060	704
8Y-6062	704
8Y-6063	704
8Y-6064	704
8Y-6066	704
8Y-6067	704
8Y-6068	704
8Y-6069	704
8Y-6277	746
	748
8Y-6343	786
8Y-6364	7
	164
	184
	268
	396
	400
	484
8Y-6388	701
8Y-6419	774
8Y-6420	774
	▶776
8Y-6422	776
8Y-6423	773
	774
	776
	778
8Y-6424	773
	774
8Y-6430	773
	774
	776
8Y-6431	778
8Y-6432	773
8Y-6433	773
	▶778
8Y-6448	771
	772
8Y-6454	776
	778
8Y-6455	776
	778
8Y-6456	670
	▶779
8Y-6459	773
	774
	776
	778
8Y-6460	776
	778
8Y-6461	776
	778
8Y-6462	773
	774
8Y-6826	779
	▶780
8Y-6827	780
8Y-6828	779
8Y-6839	769
	770
	771
	772
	779
	780
8Y-6859	704
8Y-6860	704
8Y-6910	773
	774

▶ **PRIMARY REFERENCE**

PART NUMBER INDEX

Part	Page
	776
	778
8Y-6917	758
8Y-6928	758
9	
9B-1117	482
9B-1948	584
	603
9B-7233	290
	292
	310
	712
9B-7237	32
	35
	88
	90
	107
	110
	122
	130
	134
	138
	158
	165
	199
	230
	310
	338
	400
	406
	410
	419
	507
	511
	528
	532
	534
	602
	607
	694
	713
	717
	720
	730
9D-0630	150
	152
	154
	156
9D-1829	534
9D-3768	238
	666
	668
	764
9D-4439	202
	204
9D-4513	720
9D-6197	504
9F-0836	540
9F-2773	354
9F-2978	92
	474
	694
9F-5599	272
	276
	283
9F-5644	286
	292
9F-6304	74
9F-6445	80
	208
	210
	266
	666
	668
	670
	700
	730
	786
9F-6656	792
9G-0002	193
9G-0003	192
	193
	268
9G-0004	192
	268
9G-0005	268
9G-0162	551
9G-0371	152
9G-0772	158
9G-1919	347
9G-1935	386
	388
9G-2398	429
	432
9G-2401	430
9G-2991	462
9G-3464	320
9G-3695	299
	690
9G-4101	272
	276
9G-4328	398
9G-4872	1
	436
	437
	445
	446
	447
	448
	450
9G-5127	338
9G-5209	310
9G-5211	310
9G-5212	310
9G-5213	310
9G-6094	516
9G-6242	516
9G-6655	224
9G-6770	264
	283
9G-6935	506
9G-6936	506
9G-7516	434
9G-7641	▶290
	298
9G-8327	418
9G-8615	306
9G-8909	193
	194
	268
	269
9G-9151	682
9G-9288	▶484
	546
9G-9325	▶391
9G-9543	352
9H-1024	676
9H-1031	18
	20
9H-3360	462
9H-3757	272
	276
	282
9H-6454	542
9J-1716	556
9J-1722	556
9J-1979	542
9J-1985	542
9J-1986	542
9J-1988	542
9J-2365	584
	602
	622
	644
	645
	646
	648
9J-4782	594
	596
	598
	604
9J-5498	374
	561
9J-5499	561
9J-5753	561
9J-5754	561
9J-5756	554
9J-5942	613
9J-6001	613
9J-6006	585
	586
	587
	588
	▶613
9J-6062	610
9J-6067	382
	636
	638
9J-6073	585
	586
	587
	588
	589
	590
	591
	592
	▶626
9J-6491	554
9J-6549	494
	496
9J-6662	584
	622
9J-6689	596
	598
9J-6691	594
	596
	598
9J-9055	594
	596
	598
9K-3050	382
9L-1775	98
9L-5854	18
9L-6770	190
9L-6791	606
9L-7712	59
9L-9068	370
9L-9132	74
	98
	176
	542
9M-0164	758
9M-1503	347
9M-1974	16
	168
	172
	178
	287
	303
	316
	350
	368
9M-2074	362
9M-2076	362
9M-2744	320
9M-2904	70
	522
	604
9M-3835	400
	418
9M-4007	360
9M-4225	44
9M-4313	374
9M-4355	347
9M-4370	352
	354
9M-5590	100
9M-5731	310
9M-5732	338
9M-5733	442
9M-5884	670
9M-5894	326
	330
	334
	434
9M-6527	104
9M-6738	106
9M-6803	740
9M-7394	484
9M-7606	272
	276
	282
9M-7609	272
	276
	282
9M-7961	118
9M-8406	713

▶ **PRIMARY REFERENCE**

PART NUMBER INDEX

Part	Page
9M-9647	306
	344
9N-0869	162
	200
	202
	204
	206
9N-1995	434
	738
	764
	792
9N-2038	147
9N-3666	118
9N-4622	400
9P-0575	670
9P-1444	738
9P-2262	730
9P-2704	450
9P-2749	536
9P-2750	536
9P-3066	546
9P-3555	326
	330
	334
9P-3657	326
	330
	334
9P-3801	326
	330
	334
9P-4057	362
9P-4898	730
9P-6571	201
	738
9P-7121	184
9P-7859	771
	772
	780
9P-7860	771
	772
	780
9P-8663	418
9P-9150	370
9P-9388	722
9P-9548	418
9P-9549	418
9P-9550	418
9P-9555	338
9R-6776	594
	596
	598
9S-1018	471
9S-1343	347
9S-1350	306
9S-1366	462
9S-1367	320
9S-1803	164
9S-2075	398
9S-2437	670
9S-2544	272
	276
	282
9S-3784	676
9S-4167	168
	172
9S-4180	182
	554
9S-4181	50
	339
9S-4182	112
	114
	172
	543
9S-4185	11
	326
	330
	334
	374
	434
	502
	516
9S-4190	14
	24
	54
	68
	380
	543
9S-4191	172
	306
	324
	358
	360
	374
	506
	556
	566
	568
9S-4368	360
9S-4372	358
9S-6465	310
9S-7710	306
9S-8001	182
	556
9S-8002	168
	182
	432
9S-8004	28
	162
	172
	173
	182
	552
	554
	556
	560
	566
	568
9S-8005	554
9S-8006	28
	462
9S-8007	182
	374
9S-8008	324
	380
9S-8010	324
	374
	376
9S-8752	14
	28
	50
	66
	68
	72
	74
	92
	98
	102
	132
	543
	600
9S-9334	324
	374
9T-0085	500
9T-1181	488
9T-2865	486
9T-2868	486
9T-2869	▶486
	548
9T-3493	498
9T-3746	560
9T-3747	560
9T-4447	488
9T-4733	572
9T-5041	472
9T-5044	473
9T-5048	472
9T-5052	473
9T-5058	473
9T-5072	472
9T-5080	473
9T-5086	472
9T-5088	473
9T-5090	472
9T-5095	473
9T-5099	472
9T-5102	473
9T-5109	473
9T-5110	472
9T-5114	473
9T-5336	▶473
	540
9T-5337	540
9T-5338	540
9T-5769	▶554
	560
9T-7059	486
9T-7567	543
9T-7568	542
9T-7569	542
9T-7570	542
9T-7571	542
9T-7572	542
9T-7578	542
9T-8206	558
9T-8207	558
9T-8208	558
9T-8210	558
9T-9199	488
9T-9200	492
9T-9201	490
9T-9202	▶488
	622
9T-9203	485
	▶490
9T-9204	485
9T-9682	490
	492
9U-8215	▶631
	644
9U-8216	▶632
	645
9U-8241	360
9U-8404	594
	596
	598
	605
9U-8537	438
9U-9048	764
9U-9409	442
9U-9487	528
9U-9488	528
	532
9U-9552	▶732
9U-9622	618
9U-9623	604
9U-9634	▶743
9U-9635	743
9U-9638	743
9U-9956	693
	742
9U-9957	693
	742
9V-0999	536
9V-5382	504
9V-7451	707
9V-8427	583
	653
9W-0352	400
9W-0648	400
9W-0742	192
	▶226
9W-0852	661
	682
	696
	700
9W-0875	536
9W-1258	649
9W-1261	649
9W-1441	293
9W-1442	293
9W-1446	293
9W-1599	164
9W-1694	442
9W-1867	454
9W-1869	455
9W-1870	456
9W-1991	514
	605
9W-2251	638
	▶649
9W-2380	434
9W-2409	636
9W-2770	418
9W-2877	528
	532
	602
9W-2881	528
9W-2883	528
9W-2893	528

▶ **PRIMARY REFERENCE**

PART NUMBER INDEX

Part	Page
	532
9W-2894	528
	532
9W-2896	528
	532
9W-2938	192
9W-2939	644
	645
	646
	648
9W-3073	707
9W-3215	528
	532
	602
9W-3273	354
9W-4162	320
9W-4163	320
9W-4194	436
	437
9W-4361	233
	234
	602
9W-4488	426
	427
9W-4489	450
9W-4888	548
9W-4904	394
9W-5568	368
9W-5575	434
9W-5652	▶629
	632
9W-5653	▶630
	633
9W-6118	636
	638
	640
9W-6343	594
9W-6371	594
	596
	598
	605
9W-6608	627
	628
9W-6609	627
9W-6615	628
9W-6656	629
9W-6657	629
	630
9W-6658	630
9W-6958	400
9W-6991	346
	360
9W-7007	410
9W-7311	385
	▶742
9W-7313	741
	742
9W-8100	152
9W-8277	442
9W-8365	654
	655
	656
9W-8394	222
9W-8558	614
9W-8576	604
9W-8878	446
	448
9W-8941	522
9W-9027	738
9W-9132	326
	330
	334
9W-9133	326
	330
	334
9W-9134	326
	330
	334
9W-9135	326
	330
	334
9W-9136	326
	330
	334
9W-9163	620
	621
9W-9300	438
9W-9499	445
	446
	447
	448
9W-9856	347
9W-9978	152
9X-0199	298
9X-0262	178
9X-0263	28
	192
9X-0358	716
9X-0438	708
9X-0941	199
9X-1138	787
9X-1386	255
	256
	260
	268
	292
9X-1484	187
9X-1813	94
	172
	244
	248
	249
	250
	251
	253
	254
	257
	258
	259
	285
	291
	298
	502
	546
	690
9X-1878	792
9X-1883	792
9X-2029	400
9X-2038	730
	745
9X-2043	314
9X-2045	745
9X-2201	134
9X-2205	185
9X-2488	222
	660
	696
	720
9X-2498	217
	299
9X-2508	730
9X-2546	464
9X-2614	516
9X-3401	298
	299
9X-3402	250
9X-3452	682
9X-3463	228
	229
9X-3994	670
9X-4008	126
9X-4588	434
9X-4609	352
9X-5535	187
9X-5727	791
9X-6258	293
	296
9X-6259	208
	210
9X-6281	310
9X-6333	792
9X-6458	14
	28
	66
	68
	72
	92
	95
	132
9X-6615	312
9X-6772	217
	230
	232
	238
	239
	296
	298
	312
	314
	458
	464
	474
	605
	712
	717
9X-7202	379
9X-7371	102
	600
9X-7373	682
9X-7378	713
	717
9X-7380	713
	717
9X-7381	713
	717
9X-7382	712
	713
	716
	717
9X-7383	713
	717
9X-7385	674
	713
	717
9X-7405	486
9X-7487	1
9X-7500	429
	432
9X-7680	170
	182
9X-7681	179
9X-7734	176
9X-8256	312
	314
	440
	466
	468
	538
	700
9X-8498	660
	696
9X-8600	185
9X-8874	320
9X-8880	306
9X-8881	320
9X-8883	320
9X-8902	312
	470
9X-8918	704
9X-9730	194
	269
9X-9896	708
9Y-1800	84
9Y-3368	18
	20
9Y-4294	792
9Y-6089	12
9Y-6188	52
9Y-6189	52
9Y-6190	52
9Y-9497	52
9Y-9929	40
0	
000-6281	31
003-9514	720
005-7889	720
008-9792	711
009-2062	473
	538
014-0816	786
030-7765	720
030-8194	40
030-8535	700
030-8538	326
	330
	334

▶ **PRIMARY REFERENCE**

PART NUMBER INDEX

Part	Page
031-0213	386
031-0214	740
031-1119	116
031-2701	162
032-0676	320
032-1267	40
033-0512	390
033-5853	170
033-6027	28
	170
033-6028	187
033-6032	379
033-6033	172
	186
	253
	606
033-6034	303
033-6039	170
	187
	573
033-6042	170
	360
033-6043	566
	568
033-6783	164
033-8755	292
033-9412	418
034-3557	306
036-9821	272
	276
	282
036-9823	272
	276
	282
045-4065	264
	273
	277
	283
054-0977	676
061-7278	269
061-7540	68
	74
061-8561	28
	338
	350
061-9455	338
061-9457	540
064-7310	472
064-7311	472
066-4133	540
067-3161	450
068-1577	506
068-4209	292
	712
082-2817	4
084-4111	776
	778
091-8792	660
	696
095-0843	398
	746
	748
095-0878	704
095-1609	556
095-1751	558
095-7950	347
096-5962	310
096-6166	208
	210
098-5687	172

1

Part	Page
100-3224	704
100-4336	194
100-4417	5
	6
	▶287
100-4645	542
100-5179	704
100-5568	708
100-6889	63
100-7401	140
100-9965	500
101-0003	756
101-0523	22
101-0852	216
101-2749	102
101-2867	740
101-3121	192
101-3374	10
101-3677	516
	534
101-4194	756
101-4195	756
101-6713	38
101-7771	▶474
101-7788	63
101-8240	222
101-8917	22
101-9397	670
101-9398	670
102-0288	711
102-2240	94
	172
102-2913	793
102-3001	▶784
	786
102-3679	474
102-3680	474
102-4394	▶232
102-4395	▶238
102-5912	510
102-6317	758
102-7494	26
	27
102-7535	172
	▶186
102-8801	464
102-8802	80
	188
	255
	256
	257
	266
	268
	285
	291
	292
	293
	296
	298
	379
	458
	502
	546
	577
	580
	661
	682
	696
	712
	716
	724
102-8803	94
	132
	172
	227
	245
	246
	247
	253
	258
	259
	260
	293
	296
	298
	474
	690
	700
	708
	764
102-8804	244
	293
	296
	299
	316
	574
	575
	578
	687
	690
	712
	725
	726
102-8805	243
	299
	661
	692
	696
	700
	724
	727
	728
	782
	784
	786
102-8806	299
102-8807	293
102-8810	688
102-8813	254
102-8815	688
102-9062	604
102-9073	379
	458
	502
	546
103-5526	577
	580
103-6100	661
	682
103-6262	696
103-9527	712
	716
	724
104-2091	701
104-5771	396
104-5773	396
104-6202	194
104-6729	316
104-6730	316
105-1515	158
105-2508	168
105-3372	462
105-3380	730
105-3480	708
105-4169	500
105-4172	500
105-6122	206
	474
105-9149	299
105-9152	80
106-0466	349
	764
106-0468	462
106-0469	462
106-0470	462
106-0471	462
106-0472	462
106-0476	462
106-0735	178
	578
106-1792	28
106-1793	140
106-4150	306
	725
	726
106-4454	708
106-4572	110
106-5122	661
	692
106-5472	310
106-5823	222
106-7099	362
106-7408	727
106-8186	728
106-8187	782
106-9212	784
106-9488	786
106-9586	299
107-0266	293
107-0576	688
	254
107-0677	688
	604
	▶652
	653
	654
	604
	652
	653
	654
	298
	▶692
	712
	716
	312
	658
	659
	▶682
	701
	396
	396
	194
	316
	316
	158
	168
	462
	730
	708
	500
	500
	206
	▶212
	299
	80
	349
	▶462
	462
	462
	462
	462
	462
	462
	178
	▶258
	28
	140
	306
	▶322
	358
	708
	110
	▶674
	676
	310
	222
	362
	793
	382
	382
	368
	16
	76
	700
	490
	492
	182
	▶187

▶ **PRIMARY REFERENCE**

PART NUMBER INDEX

Part	Page
107-1954	▶59
	63
107-1964	708
107-3202	176
107-3752	5
	6
	▶36
107-3947	445
	446
	447
	448
107-4057	445
	446
	447
	448
107-4393	716
107-4394	716
107-4399	716
107-4888	446
	448
107-6761	303
107-8618	132
107-9326	179
107-9570	28
107-9616	445
	446
	447
	448
107-9617	1
	▶436
107-9620	436
	437
107-9621	436
108-0219	28
108-1874	5
	6
	▶63
108-1887	▶27
	28
108-2148	579
108-2735	347
108-2736	347
108-3612	140
108-3956	16
108-4086	705
108-4087	705
108-4103	705
108-4430	380
108-4433	380
108-4434	370
108-5603	59
108-5803	28
	170
108-5806	28
108-6043	320
108-6044	320
108-7930	104
108-8105	94
109-0063	462
109-0072	98
109-0074	94
109-0076	74
	94
109-0077	94
109-0401	5
	6
	▶303
109-0642	92
109-1633	712
	716
109-1634	712
	716
109-1645	192
109-2811	94
109-3134	▶655
109-3206	170
109-3875	716
109-3969	368
109-5735	192
109-5839	50
109-9010	5
	6
	▶22
109-9685	170
110-2220	18
110-2637	▶304
	349
110-2655	▶326
	349
110-2662	326
	330
	334
110-2663	326
	330
	334
110-2664	326
	330
110-2665	326
	330
	334
110-2670	327
	330
	334
110-2671	326
	330
	334
110-2674	327
	330
	334
110-2780	1
	▶330
110-4506	680
110-4724	▶610
	622
110-4727	528
	532
110-4729	610
110-5918	546
110-5975	410
110-5982	401
110-6030	410
110-6031	410
110-6109	700
	701
110-6157	70
110-6393	658
	659
110-7880	458
110-7889	786
110-8318	78
110-8319	78
110-8826	78
110-8827	78
110-9243	347
110-9251	347
110-9255	346
	347
110-9258	346
110-9262	346
110-9264	346
110-9269	346
110-9272	346
110-9274	346
110-9276	346
110-9278	346
110-9281	346
110-9282	346
110-9283	346
110-9284	346
110-9285	346
110-9286	346
110-9287	347
110-9288	347
110-9289	347
110-9291	306
110-9299	306
110-9300	306
110-9301	320
110-9302	320
110-9303	320
110-9304	320
110-9305	320
110-9306	320
110-9307	320
110-9309	320
110-9311	357
111-0343	576
	577
	580
111-0611	400
111-0613	400
111-0625	▶602
111-2106	594
	596
	598
111-2721	104
111-3199	342
111-3203	373
111-4402	192
111-4919	350
111-7003	▶243
	298
111-7090	730
111-7091	730
111-7421	110
111-8314	233
	234
	236
111-8411	213
111-8919	346
111-8920	347
111-9289	222
111-9827	222
111-9862	282
111-9864	282
111-9866	283
112-0858	690
112-1102	94
112-1289	320
112-1574	94
112-1579	102
112-1580	102
112-4398	385
	▶733
112-4400	733
112-4509	346
112-4511	347
112-4512	306
112-4550	132
112-5282	94
112-7317	320
112-7686	310
112-9217	38
112-9265	172
113-1921	176
113-4316	192
113-4323	50
113-4536	640
114-0325	320
114-1267	566
	568
	▶570
114-2368	234
114-3107	▶240
114-3824	68
114-3825	68
114-3926	471
114-4427	24
114-4652	347
114-4653	346
114-4654	347
114-4655	306
114-5333	712
	716
114-5985	700
114-5988	793
114-6005	▶242
	623
	624
	625
114-6006	▶239
	585
	586
	587
	588
114-6009	▶230
114-8684	16
114-9223	68
	140
	146
114-9363	233
114-9365	232
	240
115-1032	230
115-1250	230
	239
115-1888	240
115-1889	232
115-3598	169
115-6469	206

▶ **PRIMARY REFERENCE**

PART NUMBER INDEX

Part	Page	Part	Page	Part	Page	Part	Page
115-7411	▶310	118-8157	178	123-3295	312		239
	349	118-8475	48	123-3296	312		240
115-7412	▶308	118-9115	48	123-3826	312		242
	349	119-1708	179	123-5150	80	125-3298	466
115-8384	68	119-4166	34	123-5889	35		470
115-8981	504		▶253	123-6377	312	125-3299	468
116-2589	701	119-4287	88	123-6392	312	125-3401	▶687
116-2590	701		90	123-6446	312		708
116-2591	462	119-4290	88		▶464	125-3431	5
116-2592	462		90	123-6449	192		6
116-3119	700	119-4774	110		▶291		▶160
116-4501	299	119-6676	▶412	123-6801	400	125-3537	▶437
116-4502	299	119-6677	412	123-8157	758		457
116-4503	299	119-6678	412	123-8266	758	125-4490	298
116-6202	712	119-6679	412	123-8617	462	125-4992	738
	716	119-7015	614	123-8686	80	125-5341	316
116-7220	63	119-7258	106		▶282	125-5835	162
116-7221	179	119-7259	106	123-9052	11	125-6392	412
116-7222	169	119-7830	▶594	123-9128	758	125-6393	412
116-7880	708		623	123-9131	758	125-6533	272
116-9692	504	119-8210	▶623	123-9176	314		282
117-0610	282	119-8455	500	123-9294	208	125-6535	273
117-1620	180	119-8582	5		210		277
117-1852	665		6	123-9773	283		283
	▶730		▶50	123-9776	283	125-6536	273
117-3006	490	119-9015	16	123-9812	312		277
	492	120-4897	214	124-0799	458		282
	584	120-5820	474	124-2354	314	125-6537	277
117-4492	657	120-5821	474		▶458		282
117-4995	598	121-0596	296	124-2356	308	125-6786	566
117-5725	485	121-0691	462		▶314		568
	▶528	121-4034	5	124-2375	326	125-6797	172
117-5794	362		6		330	125-6806	708
117-7127	358		▶176		334		▶728
117-7773	546	121-9258	730	124-2463	150	125-7875	293
117-8131	738	121-9259	730		152	125-8826	470
117-8301	68	121-9871	320		154	125-9215	604
117-8547	382	122-0163	59		156	125-9664	312
117-8806	360	122-0321	27	124-3346	528		▶468
117-9512	▶18	122-0322	27	124-3347	528	125-9740	660
	22	122-0333	320	124-3702	466		696
117-9650	176	122-1512	▶312		468	125-9794	68
117-9712	38		314	124-3744	474	126-0587	326
117-9758	310	122-2738	298	124-4456	5		330
118-0609	490	122-3608	100		6		334
	492	122-4268	458		▶56	126-0588	326
118-0611	490	122-4270	458	124-6625	28		330
	492	122-4271	458	124-6626	28		334
118-0612	490	122-4575	320	124-6640	162	126-0814	510
	492	122-6046	458	124-6838	730	126-1372	▶20
118-0639	464	122-6049	458	124-7128	758		24
118-2141	652	122-6824	458	124-7609	38	126-1373	▶24
	653	122-6825	458	124-8335	553	126-1767	299
	▶656	122-6826	458	124-8490	682	126-2267	5
118-2900	330	122-7372	312	124-9325	192		6
118-4548	410		▶466		▶244		▶48
118-5068	72	122-8026	314	125-0473	80	126-2372	594
118-6330	32	122-8079	418	125-0582	470	126-2487	312
	35	122-8682	▶344	125-0583	312	126-5948	574
118-6335	160		349		▶470		575
118-6365	192	123-0555	172	125-1302	268	126-7574	213
118-6840	90	123-0912	464		292	126-8588	450
118-7214	94	123-2923	94	125-2000	242	127-0116	326
118-7226	192	123-3132	187	125-2001	▶234		334
	▶259	123-3283	314		238	127-0843	429

▶ **PRIMARY REFERENCE**

PART NUMBER INDEX

Part	Page
	432
127-2170	685
	686
127-2419	292
127-2945	312
	▶465
127-3445	426
127-3446	▶426
	457
127-3511	5
	6
	▶11
127-3516	5
	6
	▶38
127-4326	68
127-4540	700
127-4978	150
127-5419	526
127-5485	292
127-5486	292
127-7494	458
127-8949	68
127-8950	68
127-8953	14
127-9136	▶696
	700
127-9138	658
	659
	▶660
127-9189	410
127-9260	606
127-9619	242
128-0317	104
128-0613	758
128-0686	758
128-3339	7
	▶64
128-3340	64
128-3341	64
128-3503	427
128-3504	▶427
	457
128-3813	64
128-4414	450
128-6157	292
128-7098	404
128-7135	172
128-8405	268
128-8557	168
129-1609	338
	352
	354
129-1610	350
129-2861	98
129-3178	208
	210
	466
	468
	660
	696
129-5081	640
129-6628	46
	▶254
129-7213	350
129-8169	626
129-8171	626
129-8172	626
129-9208	356
129-9247	462
129-9377	791
129-9378	791
129-9379	791
129-9380	791
129-9381	791
129-9382	791
129-9383	791
129-9384	791
129-9385	791
129-9452	140
130-0701	458
130-1977	522
	604
130-1985	458
130-3374	131
130-4846	700
130-5300	296
130-6178	712
	716
130-6366	618
130-6889	326
	334
130-7656	▶640
	642
	643
130-7657	▶633
	646
130-7658	588
	592
	▶646
130-7659	▶634
	648
130-7660	586
	590
	▶648
130-7749	635
	▶641
130-7751	633
	▶642
130-7975	458
130-9191	522
	604
130-9214	660
	696
130-9215	660
	696
130-9216	660
	696
130-9218	660
	696
130-9219	660
	696
130-9220	660
	696
130-9221	660
	696
130-9224	660
	696
130-9225	660
130-9226	660
130-9227	660
	696
130-9228	660
	696
130-9233	660
	696
130-9234	660
	696
130-9235	696
130-9719	▶1
130-9989	458
130-9990	458
131-0136	338
131-0447	470
131-0545	660
	696
131-0782	415
131-0783	415
131-0785	▶415
	641
	642
131-0786	415
131-1650	428
131-2441	660
	696
131-3718	122
131-4242	704
131-5167	704
131-5354	660
	696
131-6833	172
131-7123	38
132-0338	657
132-1204	510
132-1485	642
	▶650
132-1486	650
132-1487	650
132-1488	650
132-3581	458
132-3871	660
	696
132-4907	486
	494
	496
132-4922	488
132-5538	347
132-5546	347
132-5789	80
	296
	316
132-5793	660
	696
132-7077	310
132-7419	470
132-7450	470
132-7994	596
	598
132-8799	634
	641
	▶643
132-8876	324
132-9455	343
132-9899	370
132-9900	370
133-0155	458
133-0225	596
133-0229	▶614
	623
	624
	625
133-0772	368
133-1279	324
133-1705	170
133-2015	596
133-2198	324
133-2249	578
133-2953	723
133-3489	202
	204
133-3867	14
133-3868	14
133-4772	368
133-5082	700
133-5545	553
133-5631	430
	432
133-6036	661
	697
133-6567	368
133-6589	360
133-6595	458
133-6974	458
133-7145	▶522
	623
	624
	625
133-7212	458
133-7214	458
133-7230	458
133-7231	458
133-8468	312
133-9405	708
133-9528	106
133-9529	106
134-0165	680
134-0964	502
134-0978	▶236
	385
134-2252	192
	▶260
134-2263	59
134-3992	700
134-3993	701
134-4126	214
	215
134-5418	528
	532
134-5419	528
	532
134-7258	793
135-0356	477
	▶684
135-0821	▶604
135-1823	730
135-1828	611
	612
135-1829	611
	612
135-1831	612

▶ **PRIMARY REFERENCE**

PART NUMBER INDEX

Part	Page
135-1832	612
135-1833	612
135-1834	612
135-2652	170
	182
135-2655	170
135-3173	410
135-3225	59
135-4553	110
135-4928	104
135-5105	618
135-5114	604
	618
135-8581	312
135-9880	14
136-1107	104
136-1543	734
136-1544	657
136-1869	169
136-1953	661
	697
136-5158	486
136-6140	208
	210
136-6142	208
	210
136-7032	502
136-9595	738
137-1339	102
	▶104
137-1344	104
137-1724	488
137-1741	488
137-1970	104
137-3927	684
137-3928	684
137-3929	478
	793
137-3933	793
137-3936	474
137-3937	298
137-3957	793
137-3958	478
137-4550	147
137-4830	464
137-5532	346
137-5815	690
137-5816	690
137-6500	27
137-6501	27
137-7369	745
137-7372	▶524
137-8199	318
137-8479	622
	644
	645
	646
	648
137-8793	342
137-8794	342
138-1015	745
138-1025	745
138-2828	644
	645
	646
138-2829	621
138-2833	620
138-2834	621
138-2835	620
138-3094	252
138-4309	182
138-4311	182
138-4313	182
138-6256	▶170
	182
138-6744	104
138-8745	172
138-8886	708
139-1537	542
139-2455	522
	604
139-2456	522
	604
139-9281	542
139-9282	542
139-9283	542
140-3108	80
141-2723	614
141-6607	28
141-6787	577
141-9497	338
142-0406	150
142-2526	690
142-2527	690
142-2725	486
142-2805	436
	437
142-5867	17
142-6217	18
142-7072	18
142-8620	682
143-0013	314
143-1288	746
	748
143-3615	▶25
	26
	27
143-3974	208
	210
143-7543	▶405
143-9484	208
	210
143-9666	202
144-0195	442
	760
	764
144-0326	690
144-0331	470
	482
	690
144-3579	700
144-7090	382
144-7091	382
145-0326	756
	758
145-0487	204
145-1144	372
	378
	579
145-8503	84
145-8739	786
145-8740	786
145-8741	786
146-0240	474
146-3672	528
	532
146-6204	110
147-0071	326
	330
	335
147-0319	▶228
	233
	234
147-0633	283
147-1226	304
147-1680	▶245
	310
	312
147-4549	758
147-5330	408
147-5331	408
147-5332	408
147-5333	408
147-5352	434
147-5353	434
147-6522	758
147-6523	758
147-6541	758
147-7109	134
148-0334	298
148-2712	310
148-2713	310
148-2714	310
148-3663	310
148-3664	310
148-3749	758
148-8317	338
148-8318	506
148-8326	440
	510
148-8327	106
148-8334	516
148-8335	78
	80
	506
148-8336	474
	510
	526
148-8339	506
148-8340	506
148-8341	164
	442
148-8342	80
	506
148-8347	106
148-8353	511
	516
	526
148-8355	78
148-8361	511
148-8365	164
148-8367	516
148-8378	474
	506
148-8385	440
148-8407	506
148-8411	516
148-8421	506
	517
148-8429	78
	80
148-8435	511
	526
148-8443	510
148-9104	147
149-1950	180
149-4889	458
149-6371	712
	716
149-6470	208
	210
	▶688
149-8218	660
	696
149-9129	164
	222
149-9935	164
150-1156	52
150-1302	304
150-1960	32
	35
150-2392	162
150-3028	511
150-3036	511
150-3037	222
150-3059	338
150-4043	606
150-4044	511
150-4048	164
	222
	442
150-6259	204
150-7683	556
150-7684	556
151-0241	478
	▶556
151-1396	293
151-1397	293
151-1398	293
151-2940	17
151-2941	17
151-2946	38
151-4854	230
	239
151-4977	480
	483
151-9275	470
152-0277	118
152-2938	176
152-2939	176
152-6760	576
	580
152-6761	566
	568
	▶576

▶ **PRIMARY REFERENCE**

PART NUMBER INDEX

Part	Page
152-8338	577
152-8340	510
	▶577
152-8427	230
	232
	▶233
153-0976	232
	240
153-1157	338
153-1256	104
153-1370	429
	432
153-2073	▶229
	236
153-2681	670
153-3946	712
	716
153-5481	346
153-5482	346
153-6230	80
153-6237	507
153-6240	164
153-6281	192
	268
153-6781	712
	716
153-8498	745
153-9078	5
	6
	▶178
153-9516	110
154-3079	730
154-3306	445
	446
	447
	448
154-3308	436
	437
154-4492	594
	596
	598
154-6165	546
154-6734	182
154-6735	182
154-9024	95
154-9763	510
155-1556	292
155-1996	292
155-1998	292
155-2001	292
155-2260	249
	250
	251
	252
	254
	296
	299
	690
155-2261	289
155-2270	289
	296
	316
	458
155-2271	293
	296
155-2276	298
155-2701	786
155-2745	422
155-3549	▶248
	516
155-4426	373
155-4788	61
155-6061	▶502
	510
155-6637	162
156-1382	502
156-4208	450
156-4209	450
156-4210	▶450
	457
156-4215	452
156-5462	396
156-5545	657
156-5970	379
	578
156-6131	606
156-6175	762
156-7389	510
156-7418	385
	▶745
156-7419	▶752
156-8180	700
156-9421	708
157-0670	95
157-1361	700
157-2151	665
	▶700
157-2284	574
	575
157-3735	663
	▶786
157-3736	663
	▶764
157-3737	663
	▶670
157-3739	670
157-4817	▶663
	664
	665
	668
157-5127	786
157-5128	786
157-5129	764
157-5555	516
157-5558	516
158-0248	228
	229
158-0250	228
	229
158-0252	228
	229
158-2286	685
	686
158-3032	488
	490
	492
158-3528	130
	131
158-6632	298
158-8077	▶200
	349
159-2943	292
159-2950	744
	▶753
159-2951	745
	▶754
159-2952	752
	▶755
159-3449	298
159-4689	292
159-4696	292
159-4697	292
159-5200	▶217
159-7226	659
	▶664
159-7351	312
159-7352	312
159-7488	122
159-8047	192
	193
	298
159-8050	193
160-0633	217
160-0638	298
160-2443	158
	▶246
160-2540	▶430
	457
160-4928	326
	330
	334
	▶356
160-5458	614
160-5843	574
	575
160-5844	574
	575
160-6765	614
160-6767	614
160-7165	753
	754
	▶756
160-7765	758
160-7766	758
160-7767	758
160-8178	52
160-8408	316
	▶372
161-0832	398
161-5967	704
161-7293	44
161-7539	755
	▶758
161-8627	182
161-8939	690
161-8942	690
161-8979	▶247
	312
161-9227	▶429
	430
161-9926	192
	▶249
162-0150	162
162-0151	162
162-0152	162
162-0160	162
162-2167	445
	447
162-2168	437
162-2501	176
162-3892	510
162-5239	510
162-7209	486
162-7487	486
162-7863	445
	447
162-7864	437
162-8376	482
162-8387	482
162-8389	482
163-1101	▶422
163-1146	756
163-1201	194
163-3103	140
163-5455	150
	152
	154
	156
163-6088	787
164-0759	182
164-2108	372
	373
	378
	579
164-2273	560
164-3417	185
164-4146	740
164-4531	657
164-4540	558
164-4883	735
	736
164-5025	32
164-5561	511
164-5567	507
	516
164-5573	164
	222
164-5602	516
164-5618	266
164-5621	266
164-5951	758
164-6093	▶342
	370
164-6858	507
164-6964	482
164-7577	192
	▶285
164-9429	▶744
164-9436	192
	▶199
164-9933	708
164-9980	292
165-3930	296
165-4639	208
	▶725
165-4852	358
165-4854	358
165-5018	201
	▶208
165-5070	94

▶ **PRIMARY REFERENCE**

PART NUMBER INDEX

Part	Page
165-5631	347
165-6064	614
165-7783	360
165-7787	316
165-8079	324
166-4113	620
	621
166-5425	5
	6
	▶132
166-5427	5
	6
	▶46
166-5428	7
	▶134
166-5431	5
	6
	▶76
166-5433	5
	6
	▶92
166-5435	5
	6
	▶94
166-5436	5
	6
	▶98
166-5441	5
	6
	▶146
166-5442	5
	6
	▶296
166-5985	182
166-6781	756
166-6928	708
	▶727
166-7164	292
166-7265	347
166-7401	758
166-7432	122
166-7731	204
	▶214
	262
166-9145	46
167-0138	▶289
	292
167-1709	28
	▶250
167-1795	164
167-2190	498
167-2209	500
167-2211	486
	494
	496
167-2216	488
	490
	492
167-2300	498
167-2320	500
167-2324	494
	496
167-2331	488
	490
	492
167-2452	498
167-2471	500
167-2474	486
	494
	496
167-2482	488
	490
	492
167-3830	292
167-7494	▶292
	298
167-7499	292
167-8132	30
167-9270	147
167-9524	372
	373
	378
	579
168-0264	292
168-0265	292
168-0267	292
168-0269	293
168-0270	292
168-0275	293
168-5063	7
	▶32
168-8316	122
168-8502	122
168-8772	707
168-9886	318
169-0486	368
169-0489	202
	▶215
	261
169-0697	735
169-0902	142
169-0903	142
169-1024	736
169-1025	748
169-1026	746
169-1216	558
169-2559	385
	▶418
169-2561	418
169-5886	112
169-5887	114
169-5888	112
169-5889	114
169-5890	94
169-6443	122
169-6450	7
	▶122
169-6452	7
	▶130
169-7055	346
169-7380	756
	758
169-7402	606
169-7443	712
	716
169-9649	▶760
	762
169-9650	760
170-0235	712
	716
170-0610	68
170-1112	657
170-1114	657
170-1115	657
170-1163	338
	▶350
170-1164	350
	▶352
170-1166	352
170-1167	352
170-1169	352
170-1171	352
170-1173	352
170-1175	352
170-1177	350
	▶354
170-1178	354
170-1180	354
170-1182	354
170-1185	354
170-1188	354
170-3461	298
170-3715	▶201
	385
170-3793	193
	298
170-3794	193
170-3795	192
	299
170-3849	347
170-3851	347
170-3852	346
170-4017	542
170-5293	712
	716
170-5344	354
170-6070	100
170-6071	100
170-7082	385
	▶708
170-7196	347
170-8541	110
170-8590	740
170-9060	347
171-1033	708
171-1230	746
	748
171-1265	385
	▶665
171-5349	255
	256
	257
171-5800	▶3
171-5801	3
	▶385
171-5803	3
	▶476
171-5805	▶2
	3
171-5806	3
	▶5
171-5807	3
	▶7
171-5808	3
	▶349
171-5809	3
	▶457
171-5855	712
	716
171-6652	585
	586
	587
	588
	589
	590
	591
	592
	▶622
171-6655	▶532
	585
	586
	587
	588
	589
	590
	591
	592
171-6672	▶585
171-6673	▶586
171-6674	▶587
171-6675	▶588
171-6677	▶589
171-6678	▶590
171-6679	▶591
171-6680	▶592
171-6682	746
	748
171-6959	653
171-7174	347
171-8708	287
	▶288
172-0802	212
	▶213
172-1641	▶444
172-1642	444
172-1643	444
172-1717	338
	▶374
172-1718	▶316
	364
172-1719	316
	▶368
172-1720	338
	▶376
172-2260	▶320
	364
172-2263	▶306
	364
172-2267	▶346
	364
172-2268	349
	▶364
172-2391	578
172-2392	343
	▶578
172-2399	349
	▶358
172-2416	746
	748
172-3262	346

▶ **PRIMARY REFERENCE**

PART NUMBER INDEX

Part	Page
172-3263	347
172-3264	347
172-3467	320
172-3473	306
172-3891	385
	▶396
172-4275	306
172-4277	398
172-4347	7
	▶106
172-4352	7
	▶126
172-4353	7
	▶131
172-4354	7
	▶141
172-4355	7
	▶118
172-4365	106
	▶110
172-4367	122
172-4880	712
	716
172-5066	▶192
	385
172-5067	▶298
	385
172-5071	385
	▶400
172-5215	382
172-5216	▶382
	385
172-5243	▶266
	385
172-5275	94
172-5393	▶164
	385
172-5394	665
	▶720
172-5395	658
	▶712
172-5396	▶222
172-5964	192
172-5965	192
172-5966	192
172-5967	192
172-5969	192
172-5970	192
172-5972	298
172-5973	298
172-5974	298
172-6037	110
172-6038	110
172-6039	106
172-6040	106
172-6089	116
172-6504	318
172-6507	5
	6
	▶28
172-6508	28
172-6510	68
172-6511	5
	6
	▶68
172-6513	132
172-6514	132
172-6515	132
172-6518	110
172-6519	▶116
	118
172-6581	748
172-7183	476
	▶516
172-7184	476
	▶504
172-7185	476
	▶534
172-7189	477
	▶526
172-7597	94
172-7598	94
172-7599	94
172-7622	94
	▶112
172-7623	94
	▶114
172-7626	▶477
172-7821	476
	▶546
172-7852	476
	▶506
172-7857	7
	▶100
172-7938	▶158
	385
172-9291	660
	696
172-9292	660
	696
172-9313	46
172-9389	200
	▶216
	263
172-9400	▶337
	385
173-0147	52
173-0148	52
173-0239	▶338
	349
173-0245	349
	▶357
173-0246	357
	▶365
173-0247	365
173-0623	2
	▶219
173-0894	106
173-1028	▶657
	746
	748
173-1030	7
	▶136
173-1257	478
	▶536
173-1566	293
173-1646	208
	210
173-1647	385
	▶792
173-2046	112
173-2047	114
173-2052	734
173-3083	750
173-3084	751
173-3202	▶542
	546
173-3204	477
	▶566
173-3205	510
	▶568
173-3262	▶202
	385
173-3263	▶204
	476
173-4014	362
173-4027	385
	▶410
173-4028	410
173-4030	410
173-4031	410
173-5787	753
	754
	755
173-6623	299
173-7035	753
	754
	755
173-7126	167
173-7188	26
	27
173-7220	337
173-7221	337
173-7222	337
173-7623	94
173-7702	476
	▶551
173-7752	476
	▶510
173-7756	494
	496
173-8351	172
173-8352	140
173-8353	140
173-8354	106
173-9690	106
173-9779	498
174-0036	266
174-0037	338
174-0038	338
174-0040	338
174-0041	338
174-0044	338
174-0046	338
174-0049	▶150
174-0050	150
	152
	154
	156
174-0051	▶152
174-0052	▶78
174-0053	78
174-0054	78
174-0055	338
174-0778	542
174-0780	542
174-0827	506
	▶553
174-1471	146
	▶147
174-1494	660
	696
174-1495	682
174-1503	694
174-2231	▶704
	756
174-2237	704
174-2370	92
174-2371	94
174-3091	480
174-3181	536
174-3230	▶324
	338
174-3231	324
174-3389	316
174-3621	347
174-3673	▶658
174-3890	504
174-4354	2
	▶220
174-4445	712
	716
174-4909	342
	▶378
174-4916	566
	568
	▶579
174-4917	579
174-6042	368
174-6052	268
	606
174-6098	122
174-6431	516
174-7108	358
174-7468	▶184
	385
174-7469	185
174-7502	338
174-7526	169
174-7527	▶169
	179
174-7609	110
174-7796	534
174-7797	534
174-7823	506
174-7824	506
174-7837	551
174-7838	551
174-7839	551
174-7875	193
174-8147	476
	▶540
174-8666	516
174-8943	182
174-9185	▶478
174-9188	536
174-9189	536
174-9190	536
175-0243	510
175-0248	510

▶ **PRIMARY REFERENCE**

PART NUMBER INDEX

Part	Page
175-0288	528
	532
175-0289	528
175-2432	106
175-2580	136
175-2582	136
175-2583	136
175-2592	136
175-2593	136
175-2605	136
175-2832	700
175-2839	700
175-2841	700
175-3248	418
175-3250	418
175-3265	480
175-3578	193
175-3616	366
175-3656	385
	▶398
175-3663	398
175-4170	482
175-4411	138
175-4464	126
175-4972	▶343
	370
175-7033	164
175-7148	7
	▶318
175-7162	716
175-7460	296
175-7463	296
175-7506	318
175-7508	7
	▶404
175-7542	7
	▶142
175-7864	5
	6
	▶66
175-7865	5
	6
	▶72
175-7871	100
175-7900	498
176-0258	370
176-0259	370
176-0265	138
176-0266	138
176-0267	132
176-0356	350
176-0739	132
176-0781	106
176-1364	7
	▶189
176-1854	136
176-1857	7
	▶138
176-2494	122
176-2497	122
176-2603	118
176-3533	172
176-5321	366
	▶373
176-5322	373
176-5618	▶167
	168
176-5717	396
176-6496	379
176-6672	5
	6
	▶172
176-7330	110
176-7332	110
176-8297	338
176-9966	338
177-0038	122
177-0092	658
	659
	▶676
177-0233	92
177-0265	106
177-0266	106
177-0267	106
177-0268	106
177-0273	350
177-1407	477
	▶558
177-1860	740
177-1862	740
177-1863	746
	748
177-2176	404
177-2222	134
177-3036	31
177-4308	80
177-4334	560
177-4335	560
177-4336	560
177-4924	7
	▶70
177-4930	734
177-4935	▶740
	746
	748
177-4937	750
	751
177-4980	▶480
	685
177-6855	110
177-7130	560
177-7496	52
177-7788	400
177-8016	385
	▶442
177-8839	164
177-9007	126
	▶128
177-9008	126
177-9123	122
177-9388	88
177-9429	70
177-9431	70
177-9853	193
	194
178-0589	652
178-0605	▶734
	735
	736
178-0607	740
178-0608	740
178-0609	740
178-1673	76
178-1674	76
178-1780	193
	268
	296
	606
178-1781	193
	268
	296
	606
178-1783	616
	▶618
178-1784	▶616
178-2552	618
178-2553	618
178-3119	542
178-3586	193
	194
178-3712	350
178-3828	542
178-3951	726
178-4202	5
	6
	▶16
178-4650	542
178-5086	542
178-5190	374
178-5199	374
178-7567	516
178-7568	516
178-7570	516
178-7571	516
178-7578	374
178-7580	374
178-7581	374
178-7584	374
178-7587	400
178-7589	400
178-7907	734
178-8037	712
178-8038	712
	716
178-8039	712
	716
178-8040	712
178-8521	193
178-8523	193
178-8599	193
178-9410	138
178-9603	652
	653
179-0006	80
179-0123	553
179-0124	553
179-0125	553
179-0160	793
179-1252	57
179-1253	7
	▶57
179-1255	31
179-1532	678
179-1537	368
179-1556	600
179-1730	708
	▶724
179-1734	338
179-1735	338
179-1736	338
179-1939	418
179-1940	418
179-1959	418
179-2125	442
179-2129	442
179-2809	126
179-2868	600
179-2927	676
179-3623	138
179-3624	138
179-3687	172
179-3688	172
179-4230	31
179-4830	504
179-4831	504
179-4994	138
179-4995	138
179-4997	134
179-5450	189
179-5616	418
179-5617	418
179-5978	708
179-5991	725
179-7086	5
	6
	▶62
179-7087	303
179-7376	482
179-8008	678
179-8230	678
179-8231	678
179-9317	266
179-9318	266
179-9373	418
179-9374	418
179-9970	338
179-9971	338
179-9972	338
179-9973	338
179-9974	338
180-0523	5
	6
	▶600
180-1461	338
180-2398	▶581
180-2399	▶596
	624
180-2400	624
	▶652
180-2401	▶624
180-2404	▶625
180-2409	582
180-2449	130
180-2916	299
180-4186	2
	▶218
180-4323	78
180-4328	122
180-4363	338
180-4364	338

▶ **PRIMARY REFERENCE**

PART NUMBER INDEX

Part	Page
180-4526	32
180-5141	134
180-5559	750
	751
180-5560	750
	751
180-5571	130
180-6597	658
	▶678
180-6644	160
	▶162
180-6645	162
180-6646	162
180-6647	162
180-7180	712
	716
180-7181	716
180-7304	▶746
	750
180-7305	▶735
	746
180-7306	▶748
	751
180-7307	▶736
	748
180-7887	606
180-7930	551
	▶560
180-9145	606
180-9147	606
180-9340	251
	252
180-9639	32
180-9899	480
	▶482
183-2009	210
	▶726
183-2076	201
	▶210
183-2089	658
	▶723
183-3205	690
183-3208	684
	▶690
183-3648	750
	751
183-5116	▶34
	35
183-6698	▶791
	792
183-6746	712
183-6750	791
184-1192	558
184-2298	746
	748
184-2299	746
	748
184-2300	735
	736
184-2472	215
184-4396	450
184-5498	189
184-6011	▶750
	753
184-6012	▶751
	754
	755
184-6191	670
185-0086	542
185-1713	▶582
185-1714	625
	▶653
185-1715	▶598
	625
185-2638	190
185-2639	190
185-2644	190
185-2645	190
185-2647	190
185-2648	190
185-2650	190
185-2651	190
185-2653	190
185-2654	190
185-2655	190
185-2656	190
185-2657	190
185-2658	190
185-3502	370
185-3503	370
185-7891	▶485
185-7909	5
	6
	▶10
185-7912	10
185-7979	122
185-8734	▶483
	686
185-9977	164
	▶168
186-1681	724
186-1721	720
186-2499	506
186-2500	506
186-2501	506
186-2505	506
186-2506	506
186-2622	506
186-3161	306
186-3301	583
186-3302	▶583
186-3735	80
	94
	132
	172
	188
	255
	256
	258
	268
	285
	291
	292
	298
	458
	574
	575
	577
	580
	690
	692
	725
	786
186-3736	289
	458
186-4110	526
186-4763	400
186-4857	760
186-5899	665
	▶762
187-1507	52
187-1679	185
187-1951	504
187-2659	510
187-3057	504
187-5177	299
187-5196	193
187-6282	452
187-6289	434
187-8677	299
188-1079	483
	▶689
188-1082	480
	483
188-2008	78
188-2034	68
188-2901	668
188-2903	668
188-2904	668
188-3548	34
188-3549	34
188-5095	150
	152
	154
	156
188-6140	474
	▶552
188-6141	552
188-7067	380
188-7068	380
188-7069	380
188-7095	685
	686
188-7097	738
188-8849	228
	229
189-0189	576
	580
189-0981	68
189-1839	578
189-2305	480
	483
189-2319	299
189-3063	335
189-3064	334
189-3065	334
189-5746	255
189-6244	335
189-6303	516
189-6564	510
189-8869	334
189-8874	334
189-9809	738
189-9810	738
189-9816	738
190-5069	31
190-5386	793
190-7653	5
	6
	▶17
191-1814	396
191-4959	8
191-6506	5
	6
	▶255
191-7782	16
191-8242	32
191-8726	193
191-8727	193
191-8728	268
191-8729	268
191-8730	193
191-8731	193
191-8732	268
191-8733	269
191-8734	194
	269
191-9292	668
192-0722	▶334
	405
192-0729	▶366
	606
192-0829	7
	▶224
192-0830	▶225
192-1322	▶26
192-1633	76
192-2209	52
192-3438	600
192-4658	480
	483
192-5425	118
192-6148	35
192-6156	4
	▶35
	86
192-6445	▶494
	623
	624
	625
192-6446	▶496
	623
	624
	625
192-6447	494
	496
192-6448	494
	496
192-7300	400
192-7305	400
192-7932	712
192-8807	52
192-8809	5
	6
	▶52
192-9464	269
193-0421	▶256
	347
193-0711	316
193-0714	94

▶ **PRIMARY REFERENCE**

PART NUMBER INDEX

Part	Page
193-1221	5
	6
	▶206
193-2185	5
	6
	▶40
193-2186	5
	6
	▶44
193-2550	194
	▶257
	347
193-3080	522
	604
193-3081	522
	604
193-5463	376
193-8131	354
193-8414	▶31
	600
194-1606	94
194-1818	400
194-1819	400
194-3684	478
	▶685
194-5041	31
194-5226	249
194-5227	249
194-5631	400
194-6722	160
	▶251
194-6724	28
	▶252
194-6725	178
194-7034	158
194-9617	▶421
195-1239	296
195-1243	296
195-2906	5
	6
	▶14
195-5853	447
	448
195-5854	445
	446
195-5855	444
	▶447
	457
195-5856	▶445
	457
195-7869	690
195-7870	690
195-7871	690
195-7872	690
196-0123	224
196-1804	482
196-1954	225
196-2781	516
196-3829	▶154
196-3847	147
196-4195	189
196-5844	4
	86
	▶606
196-5856	▶635
196-6108	▶268
196-8562	▶434
	457
196-8563	▶452
	457
196-8565	▶408
196-9565	480
	483
196-9566	480
	483
197-2715	▶710
197-4098	▶693
197-4652	352
197-5035	560
197-5110	708
197-5111	708
197-5811	606
197-5847	606
197-5849	606
197-7504	▶666
197-7689	756
197-7701	577
197-7904	▶86
197-8492	1
	▶446
197-8493	1
	▶448
197-8504	154
197-8820	189
	▶190
197-8974	194
197-9455	606
197-9456	606
198-0964	400
198-2787	131
198-2788	49
198-2817	269
198-3038	44
198-3085	110
198-3137	8
198-3138	8
198-3214	516
198-4017	516
198-4605	379
198-4607	374
	▶379
198-6002	122
198-6578	7
	▶8
198-7711	440
198-9320	504
199-1084	▶319
	349
199-1085	319
199-2572	418
199-2573	418
199-2722	504
199-4194	476
	▶686
199-4203	376
199-4272	122
199-5513	▶549
	585
	586
	587
	588
199-5514	▶550
	585
	586
	587
	588
199-5687	504
199-5707	549
	550
199-5708	549
	550
199-7131	510
199-8367	398
199-9100	398
	2
200-0830	▶80
200-1066	80
200-1841	398
200-1996	100
200-2172	526
200-2173	526
200-2174	526
200-2175	526
200-2304	526
200-2305	526
200-2582	526
200-2589	▶611
200-2592	▶612
200-2670	612
200-2737	418
200-2964	552
200-3168	510
200-3777	510
200-3778	510
200-3780	510
200-3781	510
200-3782	510
200-3783	510
200-3784	510
200-3785	510
200-4420	398
200-5005	222
200-5289	510
200-5290	510
200-5291	510
200-5292	510
200-5942	510
200-6283	553
200-6345	118
	194
200-7133	385
	▶406
200-7134	406
200-7135	406
200-7136	406
200-7753	506
200-7754	506
200-7756	506
200-7839	80
200-7840	80
200-8671	611
201-0357	8
201-0704	666
	▶668
201-4155	182
201-4201	178
	▶180
201-4202	180
	▶182
201-4203	182
201-5537	418
201-7270	370
	▶380
201-7272	▶370
	471
202-3572	84
202-7400	349
	▶471
202-8695	712
	716
202-8696	712
	716
203-2070	682
203-4006	76
203-4157	▶580
203-7086	76
203-7087	92
203-7703	753
	754
	755
203-9037	606
203-9380	▶416
203-9381	416
203-9382	416
203-9383	416
204-2281	194
	269
204-2643	385
	▶738
204-6998	516
204-9530	682
204-9531	682
204-9532	682
205-0626	190
205-1336	70
205-1337	70
205-3140	560
205-3144	560
205-3171	560
205-3176	560
205-3179	560
205-3180	560
205-3244	4
205-4276	184
	▶185
205-6030	606
205-6344	144
205-6345	144
205-6346	144
205-7303	▶148
205-7843	74
206-2832	510
206-3114	4
	▶6
206-6900	410
206-7043	72
206-7044	72

▶ **PRIMARY REFERENCE**

PART NUMBER INDEX

Part	Page	Part	Page	Part	Page	Part	Page
206-7328	▶4	210-9126	130	218-1837	514		
206-7507	88	211-0243	440	218-1840	514		
	90	211-1541	219	218-1946	298		
206-7508	88		263	218-1959	134		
	90	211-1542	219	218-2828	4		
207-2682	▶432		▶263		86		
207-2837	606	211-1808	793		▶90		
207-5996	506	211-2043	506	218-5074	404		
207-9816	7	211-2069	510	218-7128	▶659		
	▶88	211-2073	506	218-7136	482		
208-1686	668	211-5337	122	218-7168	122		
208-1687	668	211-8727	7	218-9823	189		
208-1691	668		▶144	218-9961	78		
208-2264	88	211-8767	141	219-0610	659		
	90	211-8768	141		▶716		
208-2266	88	212-1447	5	219-1066	136		
	90		6	219-1828	189		
208-2816	551		▶74	219-3571	398		
208-2823	410	212-2787	92	219-3587	659		
208-4826	▶156	212-2788	92		▶680		
208-4831	156	212-4246	5	219-5179	716		
208-6081	480		6	219-5180	716		
	482		▶140	219-7227	134		
209-0381	299	212-6024	▶564	219-9914	130		
209-2785	5		566		131		
	6		568	220-3484	606		
	▶179	213-0016	134	220-3485	606		
209-3186	430	213-0017	134				
209-3717	220	213-1111	66				
	261	213-7322	430				
209-3723	220	213-8517	122				
	▶261	214-0624	5				
209-6266	218		6				
	262		▶49				
209-6267	218	214-1048	122				
	▶262	214-2296	122				
209-6749	5	214-2966	676				
	6	214-2967	676				
	▶54	214-3386	5				
210-1610	360	214-3391	6				
210-1611	▶360	214-5098	506				
	362	214-5976	538				
210-1612	358	214-9183	464				
	▶362	214-9184	464				
210-4719	385	214-9367	136				
	▶440	215-8140	462				
210-4720	440	215-8320	172				
210-4721	440	215-9000	222				
210-4722	440	215-9001	164				
210-4723	440	215-9002	164				
210-4726	440		222				
210-5519	134	215-9802	269				
210-5520	134		793				
210-6030	▶514	215-9804	66				
	616	216-4989	606				
210-7291	661	217-2195	122				
	696	217-2196	122				
210-7721	58	217-2713	566				
210-7723	4		568				
	▶58		▶571				
	86	217-7101	538				
210-8580	440	217-7933	740				
210-9123	131	217-8433	707				
210-9124	130	217-9277	122				
210-9125	130		▶538				

▶ **PRIMARY REFERENCE**



© 2002 Caterpillar
All Rights Reserved

Printed in U.S.A.