CATERPILLAR®

SEBP3655-11
December 2005

RUTHZIL TRATOR COMERCIAL DE PEÇAS LTDA 11 97083-6812 ROLANDO CITRANGULO

Parts Manual

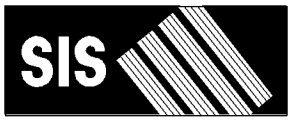

See "General Information" for New Parts Manual Features.

D10T Track-Type Tractor

RJG1-Up (Machine)
EHX1-Up (Engine)
DRL1-Up (Transmission)
BHA1-Up (Bulldozer)
BHF1-Up (Bulldozer)
BHJ1-Up (Bulldozer)
BHP1-Up (Bulldozer)
4PP1-Up (Ripper)
BEY1-Up (Ripper)
BRT1-Up (Ripper)
TCK1-Up (Torque Converter)

Powered By C27 Engine
This Parts Manual is also available in .PDF format on Compact Disc (CD-ROM)-Caterpillar Form No. SERP3655-11

Product and Dealer Information

Note: For product identification plate locations, see the section “Product Identification Information” in the Operation and Maintenance Manual.

Delivery Date: _____

Product Information

Model: _____

Product Identification Number: _____

Engine Serial Number: _____

Transmission Serial Number: _____

Generator Serial Number: _____

Attachment Serial Numbers: _____

Attachment Information: _____

Customer Equipment Number: _____

Dealer Equipment Number: _____

Dealer Information

Name: _____ Branch: _____

Address: _____

_____

_____

	Dealer Contact	Phone Number	Hours
Sales:	_____	_____	_____
Parts:	_____	_____	_____
Service:	_____	_____	_____

Informations produit et concessionnaire

Nota: Voir l'emplacement de la plaque signalétique du produit au chapitre "Informations produit" du guide d'utilisation et d'entretien.

Date de livraison: _____

Informations produit

Modèle: _____

Numéro d'identification produit: _____

Numéro de série du moteur: _____

Numéro de série de la boîte de vitesses: _____

Numéro de série de l'alternateur: _____

Numéros de série d'équipement: _____

Informations sur l'équipement: _____

Numéro matériel client: _____

Numéro matériel concessionnaire: _____

Informations concessionnaire

Nom: _____ Agence: _____

Adresse: _____

_____

_____

	Contact concessionnaire	Numéro de téléphone	Heures
Ventes:			
Pièces:			
Service:			

Información del Producto/Distribuidor

Nota: Para saber la ubicación de las placas de identificación del producto, ver la sección “Información sobre identificación del producto” en el Manual de Operación y Mantenimiento.

Fecha de entrega: _____

Información del producto

Modelo: _____

Número de identificación del producto: _____

Número de serie del motor: _____

Número de serie de la transmisión: _____

Número de serie del generador: _____

Números de serie de los accesorios: _____

Información sobre los accesorios: _____

Número del equipo del cliente: _____

Número del equipo del distribuidor: _____

Información del distribuidor

Nombre: _____ Sucursal: _____

Dirección: _____

_____

_____

Comunicación con el distribuidor	Número de teléfono	Horas
Ventas: _____	_____	_____
Piezas: _____	_____	_____
Servicio: _____	_____	_____

Informações Sobre Produto e Revendedor

Nota: Para localizações da placa de identificação do produto, consulte a seção, “Informações Sobre Identificação do Produto” no Manual de Operação e Manutenção.

Data de Entrega: _____

Informações Sobre o Produto

Modelo: _____

Número de Identificação do Produto: _____

Número de Série do Motor: _____

Número de Série da Transmissão: _____

Número de Série do Gerador: _____

Números de Série de Acessórios: _____

Informações Sobre Acessórios: _____

Número do Equipamento do Cliente: _____

Número do Equipamento do Revendedor: _____

Informações Sobre o Revendedor

Nome: _____ Filial: _____

Endereço: _____

_____

_____

	Contato do Revendedor	Telefone	Horas
Vendas:	_____	_____	_____
Peças:	_____	_____	_____
Serviço:	_____	_____	_____

Produkt- und Händlerinformation

Anmerkung: Für die Lage der Produkt-Identnummer und Seriennummern siehe Abschnitt “Produkt-Identinformation” im Betriebs- und Wartungshandbuch.

Lieferdatum: _____

Produkt-Identinformation

Modell: _____

Produkt-Identnummer: _____

Seriennummer des Motors: _____

Seriennummer des Getriebes: _____

Seriennummer des Generators: _____

Seriennummern der Arbeitsgeräte: _____

Arbeitsgeräteinformation: _____

Kundennummer: _____

Händlernummer: _____

Händlerinformation

Name: _____ Niederlassung: _____

Adresse: _____

_____

_____

	Kontaktperson beim Händler	Telefon	Dienststunden
Verkauf:	_____	_____	_____
Ersatzteile:	_____	_____	_____
Service:	_____	_____	_____

MEMORANDA

TABLE OF CONTENTS

Name	Page
GENERAL INFORMATION	A25
REPAIR ALTERNATIVES	A44
SUPPLEMENTAL COOLANT ADDITIVES	A49
MAINTENANCE PARTS	A54
INDEX	A80
MACHINE ARRANGEMENT	1
CHASSIS AR	1
COLD WEATHER AR	2
GENERAL AR	3
MINING AR	3
STOCKPILE AR	4
WASTE HANDLING AR	4
ENGINE ARRANGEMENT	10
ENGINE AR-COMPLETE	10
ENGINE AR-CORE	13
INSTALLATION AR-ENGINE	16
BASIC ENGINE	18
BASE GP-VALVE COVER & INJ HARN	18
CAMSHAFT GP	20
COVER GP-CYLINDER BLOCK	21
COVER GP-REAR HOUSING	24
CRANKSHAFT GP	26
CYLINDER BLOCK AS	27
CYLINDER BLOCK GP	30
CYLINDER HEAD AS	32
CYLINDER HEAD GP	33
DAMPER GP	36
FASTENER GP-CYLINDER HEAD	38
FLYWHEEL GP	39
GEAR GP-FRONT	40
GEAR GP-REAR	42
HOUSING GP-FLYWHEEL	46
HOUSING GP-FRONT	47
HOUSING GP-REAR	48
LIFTING GP-ENGINE	49
MECHANISM GP-FUEL PUMP & VALVE	51
MOUNTING GP-ALTERNATOR	53
PAN GP-OIL	54
PISTON & ROD GP	56
PLUG GP-CYLINDER BLOCK	57
PLUG GP-CYLINDER HEAD	58
PULLEY GP-CRANKSHAFT	59
ROCKER ARM GP	60
SUPPORT GP-ENGINE	63
SUPPRESSION AR-SOUND	66
TRUNNION GP-ENGINE	67
VALVE MECHANISM GP	68
LUBRICATION SYSTEM	69
BREATHER GP	69
FASTENER GP-OIL PUMP MOUNTING	70
FILLER GP-ENGINE OIL	71
FILLER GP-OIL	72
FILTER GP-ENGINE OIL	73
FUMES DISPOSAL GP	75
GAUGE GP-OIL LEVEL (DIPSTICK)	76
LINES GP-ENGINE OIL	77
LINES GP-TURBOCHARGER OIL	79
OIL CHANGE GP-HIGH SPEED	81
PRELUBRICATION AR-ENGINE	83
PUMP & MOTOR GP-PRELUBRICATION	85
PUMP GP-ENGINE OIL	86
COOLING SYSTEM	88
FAN AR-REVERSIBLE	88
FAN GP-SUCTION	89
LINES GP-WATER	90
PUMP GP-WATER	107
RADIATOR AR	109
RADIATOR GP	110
TANK GP-COOLANT	120
AIR INLET AND EXHAUST SYSTEM	127
AFTERCOOLER GP-AIR	127
AIR CLEANER GP	131
DUST EJECTOR GP	135
KIT-INSTALLATION	140
LINES GP-AIR	142
MANIFOLD GP-EXHAUST	151
MUFFLER GP	152
PRECLEANER AR	154
PRECLEANER AR-TURBINE	155
PRECLEANER GP	160
SHIELD GP-HEAT	162
SUPPORT GP-AFTERCOOLER	163
TURBOCHARGER GP	165
FUEL SYSTEM	169
ADAPTER GP-FAST FILL FUEL	169
FILTER & LINES GP-FUEL	175
FILTER GP-FUEL	178
FILTER GP-WATER SEP & FUEL	183
LINES GP-FUEL	184
LINES GP-FUEL FILTER	187
PUMP & MTG GP-FUEL TRANSFER	190
PUMP GP-FUEL INJECTION	191
PUMP GP-FUEL PRM & SEC FILTER	192
PUMP GP-FUEL TRANSFER	193
TANK GP-FUEL	194

TABLE OF CONTENTS

Name	Page
VALVE GP-CHECK	197
ELECTRICAL AND STARTING SYSTEM	198
ALARM GP	198
ALTERNATOR GP-CHARGING	199
BATTERY & WIRING GP	207
BATTERY GP	228
CONNECTION GP-ELECTRICAL	229
CONTROL & MTG GP-ENGINE ELEK	230
CONTROL GP-ELECTRONIC	231
CONTROL GP-ENGINE ELECTRONIC	232
CONTROL GP-UNPROGRAMMED	234
CONVERTER GP-ELECTRICAL	235
ELECTRONICS AR-MACHINE	236
ELECTRONICS GP-COMMUNICATION	237
ELECTRONICS GP-IMPLEMENT	238
ELECTRONICS GP-MONITOR	238
ELECTRONICS GP-POWER TRAIN	238
HEATER GP-FUEL	239
HEATER GP-JACKET WATER	241
INSTALLATION GP-COMMUNICATION	243
INSTALLATION GP-GRADE CONTROL	245
LAMP GP-FLOOD	246
LAMP GP-HEAD	251
LIGHTING GP-FLOOD	252
LIGHTING GP-RIPPER	270
PANEL GP-FUSE	271
RESISTOR GP-CAB HEATER	275
SENSOR & MTG GP-GROUND SPEED	276
SENSOR GP-ENGINE	278
SENSOR GP-FUEL LEVEL	280
SENSOR GP-POSITION	281
SENSOR GP-PRESSURE	284
SENSOR GP-SPEED	292
SENSOR GP-TEMPERATURE	296
STARTING AID GP-ETHER	300
STARTING AR-COLD WEATHER	302
STARTING MOTOR GP-ELECTRIC	305
SWITCH GP-BYPASS	312
SWITCH GP-DISCONNECT	313
SWITCH GP-FLOW	314
SWITCH GP-MAGNETIC	316
SWITCH GP-PRESSURE	318
SWITCH GP-PUSH BUTTON	319
SWITCH GP-TOGGLE	320
VALVE GP-ETHER STARTING	321
WIRING GP-CAB	322
WIRING GP-ELECTRONIC CONTROL	324
WIRING GP-ENGINE	326
WIRING GP-PLATFORM	336
WIRING GP-UNIT INJECTOR	341
POWER TRAIN	342
AXLE GP-POWER TRAIN	342
CASE & PARTS GP-PLANETARY	343
CONTROL GP-TRANSMISSION HYD	345
COUPLING GP-PUMP	347
DRAIN GP-ECOLOGY	348
FILTER GP-OIL	349
FINAL DRIVE GP	351
GEAR GP-BEVEL & TRANSFER	363
LINES GP-POWER TRAIN OIL	365
MOUNTING GP-TRANSMISSION	370
PLANETARY GP-TRANSMISSION	371
POWER TRAIN AR	375
PUMP GP-GEAR	376
SEGMENT GP-SPROCKET	380
SHAFT GP-DRIVE	381
SLIP JOINT GP	382
TORQUE CONVERTER GP	383
TRANSMISSION AR	389
UNIVERSAL JOINT GP	390
VALVE GP-MODULATING	391
VALVE GP-RELIEF	392
FRAME AND BODY	394
CASE & FRAME GP	394
COUNTERWEIGHT GP	397
DOOR GP-ACCESS	402
DRAWBAR GP	409
ENCLOSURE GP-ENGINE	411
FENDER GP	421
GUARD AR-FINAL DRIVE	428
GUARD AR-IDLER	428
GUARD GP-BOTTOM	429
GUARD GP-BRUSH	434
GUARD GP-DRIVE SHAFT	436
GUARD GP-FINAL DRIVE	437
GUARD GP-IDLER	438
GUARD GP-PIVOT SHAFT	439
GUARD GP-POWER TRAIN	440
GUARD GP-RADIATOR	442
GUARD GP-REAR	446
GUARD GP-ROCK	448
HOOD & GUARD GP	450
LATCH GP	452
PLATE GP-REINFORCEMENT	453
UNDERCARRIAGE	454
BAR AR-STRIKER	454
BAR GP-EQUALIZER	456
BAR GP-STRIKER	461
CAP GP-TRACK IDLER	464
CAP GP-TRACK ROLLER	466
FRAME GP-TELESCOPING RECOIL	467
IDLER GP-TRACK	469
LINK AS-TRACK	473

TABLE OF CONTENTS

Name	Page
LUBRICATION GP-EQUALIZER BAR	477
LUBRICATION GP-PIVOT SHAFT	479
ROLLER AR-TRACK	481
ROLLER AR-TRACK CARRIER	481
ROLLER GP-TRACK-DOUBLE FLANGE	483
ROLLER GP-TRACK-SINGLE FLANGE	485
SEAL SET	487
SHOE-TRACK	488
SHOE-TRACK MASTER	491
SUSPENSION GP-BOGIE	494
TRACK ADJUSTER & RECOIL GP	497
TRACK GP	499
UNDERCARRIAGE AR	505
STEERING AND BRAKING SYSTEM	507
ADJUSTER GP-STEER & TMSN CONT	507
CLUTCH & BRAKE GP-STEERING	509
CONTROL GP-STEERING	513
CONTROL GP-STEERING & TMSN	514
DETENT GP	518
GEAR GP-STEERING	519
MANIFOLD & VALVE GP	521
SUPPORT GP-CONTROL	523
VALVE & MTG GP-STEER & BRAKE	524
VALVE GP-SOLENOID	526
VALVE GP-STEERING & BRAKE CONT	528
HYDRAULIC SYSTEM	532
ACCUMULATOR GP-HYDRAULIC	532
ACCUMULATOR GP-PILOT OIL	533
CONTROL AR-DUAL TILT	534
CONTROL AR-HYD PIN PULLER	535
CONTROL AR-HYDRAULIC	537
CONTROL GP-HANDLE	538
CONTROL GP-JOYSTICK	541
CONTROL GP-RIPPER	547
COOLER GP-HYDRAULIC OIL	549
COVER GP-HYDRAULIC TANK CAP	550
CYLINDER & LINES GP-LIFT	551
CYLINDER & SENSOR GP-LIFT	554
CYLINDER & VALVE GP-LIFT	555
CYLINDER AR-DUAL TILT	557
CYLINDER GP-DUAL TILT	558
CYLINDER GP-BULLDOZER LIFT	560
CYLINDER GP-LIFT	562
CYLINDER GP-RIPPER LIFT	564
CYLINDER GP-RIPPER PIN PULLER	568
CYLINDER GP-RIPPER TILT	569
CYLINDER GP-TILT	571
HANDLE GP-CONTROL	575
HYDRAULIC AR	576
LINES GP-BULLDOZER	577
LINES GP-HYDRAULIC	582
LINES GP-HYDRAULIC FAN	584
LINES GP-LIFT CYLINDER	587
LINES GP-MOTOR	590
LINES GP-PILOT	595
LINES GP-PIN PULLER CYLINDER	599
LINES GP-PUMP	603
LINES GP-RIPPER	606
LINES GP-TILT CYLINDER	611
MANIFOLD GP-CONTROL	623
MOTOR GP-PISTON	628
MOUNTING GP-CYLINDER	633
PUMP GP-GEAR	634
PUMP GP-PISTON	637
ROTATING GP-MOTOR	639
ROTATING GP-PUMP	640
SECTION GP-GEAR PUMP	643
TANK & FILTER GP-HYDRAULIC	649
TANK & MTG GP-HYDRAULIC	653
TANK GP-EXPANSION	655
VALVE & MTG GP-BULLDOZER	657
VALVE & MTG GP-CONTROL	659
VALVE & MTG GP-HYDRAULIC FAN	660
VALVE & MTG GP-MAIN CONTROL	662
VALVE GP-CHECK	664
VALVE GP-CONTROL	665
VALVE GP-DIVERTER	676
VALVE GP-PRESSURE REDUCING	678
VALVE GP-PUMP CONTROL	679
VALVE GP-QUICK-DROP	680
VALVE GP-RELIEF	681
VALVE GP-SEQUENCE	682
VALVE GP-SHUTTLE	683
VALVE GP-SOLENOID	684
VALVE GP-TILT CONTROL	690
IMPLEMENTS	691
BLOCK GP-PUSH	691
BRACE GP-BULLDOZER	694
BULLDOZER AR-SEMI-UNIVERSAL	695
BULLDOZER AR-UNIVERSAL	699
COVER GP-TRUNNION	703
LINK GP-STABILIZER	704
MODIFICATION AR-BULLDOZER	705
PUSH ARM GP	708
PUSH ARM GP-STABILIZER	710
TRUNNION GP-BULLDOZER	711
WORK TOOLS	712
BLADE & EDGE GP-SEMI-UNIVERSAL	712
BLADE & EDGE GP-UNIVERSAL	712
BLADE AS-SEMI-UNIVERSAL	717
BLADE AS-UNIVERSAL	721

TABLE OF CONTENTS

Name	Page
BLADE GP-SEMI-UNIVERSAL	726
BLADE GP-UNIVERSAL	728
EDGE GP-BIT & CUTTING	731
FRAME GP-RIPPER	735
MODIFICATION AR-RIPPER	741
MOUNTING GP-RIPPER	743
PLATE GP-WEAR	745
PULLER AR-PIN	747
PULLER GP-PIN	748
RIPPER AR	751
RIPPER GP	754
TOOTH GP-RIPPER	758
OPERATOR STATION	762
ADJUSTER GP-SEAT	762
AIR COMPRESSOR GP-SEAT	763
AIR CONDITIONER AR	764
BOX GP-STORAGE	766
BRACKET GP-MOUNTING	767
CAB AR	770
CAB GP	772
COMPRESSOR GP-REFRIGERANT	776
CONDENSER & MTG GP-REFRIGERANT	779
CONDENSER GP-REFRIGERANT	784
CONSOLE GP-FRONT	786
CONSOLE GP-OPERATOR	787
CONTROL & MTG GP-IMPLEMENT	789
CONTROL & MTG GP-PEDAL	790
COVER GP-CAB	792
DISPLAY GP-MONITOR	794
DOOR GP-CAB	795
FILTER GP-CAB AIR	797
HEATER GP-CAB	799
HOUSING GP-SEAT SUSPENSION	805
INSTALLATION GP-RADIO	808
LINER GP-CAB	810
LINES GP-AIR CONDITIONER	812
LINES GP-HEATER	825
MIRROR GP-REAR VIEW	829
MOUNTING GP-CAB	831
MOUNTING GP-CONDENSER	832
MOUNTING GP-RADIO	836
MOUNTING GP-ROPS	838
OPERATOR AR	839
PAN GP-BACKREST	841
PANEL GP-CONTROL	844
PEDAL GP-GOVERNOR & BRAKE	846
PLATFORM AR	849
PLATFORM GP	850
RECLINER GP-SEAT	853
ROPS GP	854
SCREEN GP-PROTECTION	855
SEAT & MOUNTING GP	856
SEAT GP	857
SEAT GP-SUSPENSION	865
SUSPENSION GP-SEAT	868
TANK GP-WINDOW WASHER	872
WASHER GP-WINDOW	875
WINDOW AS-REAR	877
WINDOW GP-CAB	877
WINDOW GP-SLIDING	879
WIPER GP-WINDOW	881
WIPER PIVOT GP	886
SERVICE EQUIPMENT AND SUPPLIES	888
PLATE & FILM GP	888
PLATE GP-ENGINE IDENTIFICATION	893
PART NUMBER INDEX	B1

TABLE DES MATIÈRES

Désignation	Page
GÉNÉRALITÉS	A28
OPTIONS DE RÉPARATION	A45
ADDITIFS POUR LIQUIDE DE REFROIDISSEMENT	A50
PIÈCES DE RECHANGE	A59
INDEX	A93
VERSION DE MACHINE	1
VERSION DE CHASSIS	1
TEMPS FROID (VERSION)	2
VUE DU MODÈLE	3
VERSION POUR APPLICATION MINIÈRE	3
VERSION DE REPRISE AU TAS	4
ÉLIMINATION DES DÉCHETS (VERSION)	4
VERSION DE MOTEUR	10
VERSION DE MOTEUR COMPLET	10
MOTEUR - PARTIE CENTRALE (VERSION)	13
MONTAGE DE MOTEUR (VERSION)	16
MOTEUR STANDARD	18
SUPPORT DE CACHE-SOUPAPE ET FAISC. DE CABL. D'IN.	18
ARBRE A CAMES (ASS)	20
BLOC-CYLINDRES - COUVERCLE (ASS)	21
COUVERCLE - CARTER AR (ASS)	24
VILEBREQUIN (ASS)	26
BLOC-CYLINDRES (ENS)	27
BLOC-CYLINDRES (ASS)	30
CULASSE (ENS)	32
CULASSE (ASS)	33
AMORTISSEUR DE VIBRATIONS (ASS)	36
BOULONNERIE DE LA CULASSE (ASS)	38
VOLANT MOTEUR (ASS)	39
PIGNONNERIE AV (ASS)	40
PIGNON AR (ASS)	42
CARTER DE VOLANT (ASS)	46
CARTER AV (ASS)	47
CARTER ARRIERE (ASS)	48
OEILLETONS DE LEVAGE MOTEUR (ASS)	49
CULBUTERIE ET POMPE A CARBURANT (ASS)	51
MONTAGE D'ALTERNATEUR (ASS)	53
HUILE MOTEUR - CARTER (ASS)	54
PISTON ET BIELLE (ASS)	56
BOUCHON DE BLOC-CYLINDRES (ASS)	57
BOUCHON - CULASSE (ASS)	58
VILEBREQUIN - POULIE (ASS)	59
AXE DE CULBUTEUR (ASS)	60
SUPPORT DE MOTEUR (ASS)	63
INSONORISATION (VERSION)	66
TOURILLON DE MOTEUR (ASS)	67
CULBUTERIE (ASS)	68
CIRCUIT DE GRAISSAGE	69
RENIFLARD (ASS)	69
BOULONNERIE DE MONTAGE DE LA POMPE A HUILE (ASS)	70
BOUCHON DE REMPLISSAGE D'HUILE MOTEUR (ASS)	71
GOULOTTE D'HUILE MOTEUR (ASS)	72
FILTRE À HUILE MOTEUR (ASS)	73
DISPOSITIF D'EVACUATION DES VAPEURS DE CARTER	75
JAUGE D'HUILE MOTEUR (BAIONNETTE) (ASS)	76
CANALISATIONS D'HUILE MOTEUR (ASS)	77
CANALISATIONS D'HUILE DE TURBOCOMPRESSEUR (ASS)	79
DISPOSITIF DE VIDANGE RAPIDE D'HUILE (ASS)	81
VERSION DE PRÉGRAISSAGE DE MOTEUR	83
POMPE ET MOTEUR DE PRÉ-GRAISSAGE (ASS)	85
POMPE A HUILE MOTEUR (ASS)	86
CIRCUIT DE REFROIDISSEMENT	88
VENTILATEUR À PALES RÉVERSIBLES (VERSION)	88
VENTILATEUR ASPIRANT (ASS)	89
CANALISATIONS D'EAU (ASS)	90
POMPE A EAU (ASS)	107
RADIATEUR (VERSION)	109
RADIATEUR (ASS)	110
RÉSERVOIR DU LIQUIDE DE REFROIDISSEMENT (ASS)	120
CIRCUIT D'ADMISSION D'AIR ET D'ECHAPPEMENT	127
REFROIDISSEUR D'ADMISSION D'AIR (ASS)	127
FILTRE A AIR (ASS)	131

* TRADUCTION NON DISPONIBLE AU MOMENT DE LA PUBLICATION

TABLE DES MATIÈRES

Désignation	Page
ÉJECTEUR AUTOMATIQUE DE POUSSIÈRE (ASS)	135
KIT DE MONTAGE	140
CANALISATIONS D'AIR (ASS)	142
COLLECTEUR D'ÉCHAPPEMENT (ASS)	151
SILENCIEUX (ASS)	152
PREFILTRE (VERSION)	154
VERSION DE PRÉFILTRE DE TURBINE	155
PREFILTRE (ASS)	160
ÉCRAN THERMIQUE (ASS)	162
SUPPORT DE REFROIDISSEUR D'ADMISSION (ASS)	163
TURBOCOMPRESSEUR (ASS)	165
CIRCUIT DE CARBURANT	169
ADAPTATEUR DE REMPLIS. RAPIDE DE CARBURANT (ASS)	169
FILTRE ET CANALISATIONS DE CARBURANT (ASS)	175
FILTRE A CARBURANT (ASS)	178
FILTRE DE SÉPARATEUR D'EAU ET DE CARBURANT (ASS)	183
CANALISATIONS DE CARBURANT (ASS)	184
CANALISATIONS DU FILTRE A CARBURANT (ASS)	187
POMPE D'ALIMENTATION ET MONTAGE (ASS)	190
POMPE D'INJECTION DE CARBURANT (ASS)	191
POMPE D'AMORCAGE DE CARBURANT ET FILTRE SECONDAIRE	192
POMPE D'ALIMENTATION EN CARBURANT (ASS)	193
RÉSERVOIR DE CARBURANT (ASS)	194
CLAPET DE RETENUE (ENS)	197
CIRCUIT DE DÉMARRAGE ET ÉLECTRIQUE	198
AVERTISSEUR (ASS)	198
ALTERNATEUR DE CHARGE (ASS)	199
BATTERIE ET CÂBLAGE	207
BATTERIE (ASS)	228
BRANCHEMENT ÉLECTRIQUE (ASS)	229
COMMANDE ET MONTAGE - MOTEUR	230
COMMANDE ELECTRONIQUE DE BOITE (ASS)	231
COMMANDE ELECTRONIQUE DE MOTEUR (ASS)	232
COMMANDE NON PROGRAMMEE (ASS)	234
TRANSFORMATION ELECTRIQUE (ASS)	235
COMPOSANTS ÉLECTRONIQUES DE LA MACHINE (VERSION)	236
ÉLECTRONIQUE - COMMUNICATION (ASS)	237
COMMANDE ÉLECTRONIQUE D'ÉQUIPEMENT (ASS)	238
ÉLECTRONIQUE-MONITEUR (ASS)	238
ÉLECTRONIQUE DE TRANSMISSION (ASS)	238
RECHAUFFEUR DE CARBURANT (ASS)	239
EAU DES CHEMISES - RECHAUFFEUR (ASS)	241
MONTAGE-COMMUNICATION (ASS)	243
MONTAGE DE COMMANDE DE PROFIL LONGITUDINAL (ASS)	245
LAMPE - PHARE (ASS)	246
PHARE AV (ASS)	251
ÉCLAIRAGE - PROJECTEURS (ASS)	252
ECLAIRAGE DE RIPPER (ASS)	270
PANNEAU - FUSIBLES (ASS)	271
RÉSISTANCE DE CHAUFFAGE DE CABINE (ASS)	275
CAPTEUR ET MONTAGE-VITESSE DE TRANSLATION (ASS)	276
CAPTEUR - MOTEUR (ASS)	278
CAPTEUR DE NIVEAU DE CARBURANT (ASS)	280
SONDE - CIRCUIT DE CARBURANT	281
CAPTEUR DE PRESSION (ASS)	284
CAPTEUR DE VITESSE (ASS)	292
CAPTEUR DE TEMPERATURE (ASS)	296
AUXILIAIRE DE DÉMARRAGE À L'ÉTHER	300
DÉMARRAGE PAR TEMPS FROID (VERSION)	302
DÉMARREUR ÉLECTRIQUE (ASS)	305
INTERRUPTEUR - DÉRIVATION (ASS)	312
ROBINET DE BATTERIE (ASS)	313
CONTACTEUR DE DEBIT (ASS)	314
CONTACTEUR MAGNETIQUE (ASS)	316
MANOCONTACT	318
CONTACTEUR DE BOUTON-POUSSOIR (ASS)	319
INTERRUPTEUR À BASCULE (ASS)	320
SOUPAPE DE DÉMARRAGE À L'ÉTHER (ASS)	321
CABLAGE DE CABINE (ASS)	322

* TRADUCTION NON DISPONIBLE AU MOMENT DE LA PUBLICATION

TABLE DES MATIÈRES

Désignation	Page
COMMANDE ÉLECTRONIQUE - CABLAGE	324
CABLAGE DE MOTEUR (ASS)	326
CABLAGE - PLATE-FORME (ASS)	336
CABLAGE D'INJECTEUR	341
TRANSMISSION	342
ARBRE DE TRANSMISSION (ASS)	342
TRAINS PLANÉTAIRES - CARTER ET PIÈCES	343
COMMANDE HYDRAULIQUE DE BOÎTE (ASS)	345
ACCOUPLEMENT DE POMPE (ASS)	347
VIDANGE-ÉCOLOGIE (ASS)	348
FILTRE A HUILE (ASS)	349
RÉDUCTEURS (ASS)	351
COURONNE ET ENGRENAGES DE TRANSFERT (ASS)	363
CANALISATIONS D'HUILE DE TRANSMISSION (ASS)	365
REDUCTEUR MARIN - MONTAGE (ASS)	370
BOÎTE PLANÉTAIRE (ASS)	371
TRANSMISSION (VERSION)	375
POMPE A ENGRENAGES (ASS)	376
SEGMENT DE BARBOTIN (ASS)	380
ARBRE D'ENTRAÎNEMENT (ASS)	381
CARDAN COULISSANT (ASS)	382
CONVERTISSEUR DE COUPLE (ASS)	383
BOÎTE DE VITESSES (VERSION)	389
JOINT UNIVERSEL (ASS)	390
SOUPAPE DE MODULATION (ASS)	391
CLAPET DE DECHARGE (ASS)	392
CHÂSSIS ET BENNE	394
CHÂSSIS ET CARTER (ASS)	394
CONTREPOIDS (ASS)	397
PORTE DE VISITE (ASS)	402
BARRE D'ATTELAGE (ASS)	409
CARENAGE DE MOTEUR (ASS)	411
GARDE-BOUE (ASS)	421
PROTECTEUR DE RÉDUCTEURS (VERSION)	428
PROTECTION DE ROUE LIBRE (VERSION)	428
BLINDAGE INFÉRIEUR (ASS)	429
PARE-BROUSSAILLES (ASS)	434
BLINDAGE D'ARBRE DE TRANSMISSION (ASS)	436
PROTECTEUR DE RÉDUCTEURS (ASS)	437
BLINDAGE DE ROUE AV (ASS)	438
PROTECTION D'ARBRE PIVOT (ASS)	439
BLINDAGE DE TRANSMISSION (ASS)	440
PROTÈGE-RADIATEUR (ASS)	442
BLINDAGE AR	446
PARE-PIERRES (ASS)	448
CAPOT ET PROTECTION (ASS)	450
VERROU (ASS)	452
PLAQUE DE RENFORT (ASS)	453
TRAIN DE ROULEMENT	454
BARRE DÉFLECTRICE (VERSION)	454
BALANCIER DE SUSPENSION (ASS)	456
BARRE DÉFLECTRICE (ASS)	461
CHAPEAU DE ROUE AV (CHAINE) (ASS)	464
CHAPEAU DE GALET INFERIEUR (ASS)	466
CARTER TELESCOPIQUE DE MECANISME AMORTISSEUR	467
ROUE AV - CHAINES (ASS)	469
MAILLON DE CHAINE (ENS)	473
GRAISSAGE DE BALANCIER DE SUSPENSION (ASS)	477
GRAISSAGE DE LA TRAVERSE-PIVOT	479
GALET INFÉRIEUR (VERSION)	481
GALET SUPERIEUR (VERSION)	481
GALET A BOUDIN DOUBLE (ASS)	483
GALET A BOUDIN SIMPLE (ASS)	485
KIT DE JOINTS	487
PATIN DE CHAÎNE	488
MAÎTRE PATIN	491
SUSPENSION A BOGIES (ASS)	494
MECANISME AMORTISSEUR ET REGLAGE DE CHAINES (ASS)	497
CHAINES (ASS)	499
TRAIN DE ROULEMENT	505
CIRCUIT DE DIRECTION ET DE FREIN	507
RÉGLAGE DE COMMANDE DE DIRECT. ET DE BOÎTE	507
EMBRAYAGE ET FREIN DE DIRECTION (ASS)	509
COMMANDE DE DIRECTION (ASS)	513
COMMANDE DE DIRECTION ET BOITE DE VITESSES	514
DISPOSITIF D'ARRÊT	518
ENGRENAGE DE DIRECTION (ASS)	519
COLLECTEUR ET SOUPAPE (ASS)	521
SUPPORT - COMMANDE (ASS)	523
SOUPAPE DE DIRECTION ET FREIN ET MONTAGE (ASS)	524
SOUPAPE - SOLÉNOÏDE (ASS)	526

* TRADUCTION NON DISPONIBLE AU MOMENT DE LA PUBLICATION

TABLE DES MATIÈRES

Désignation	Page
DISTRIBUTEUR DE FREIN ET DE DIRECTION	528
CIRCUIT HYDRAULIQUE	532
ACCUMULATEUR HYDRAULIQUE (ASS)	532
ACCUMULATEUR - HUILE PILOTE (ASS)	533
COMMANDE DE DOUBLE DEVERS (VERSION)	534
VERSION DE COMMANDE HYDRAULIQUE D'EXTRACTEUR DE BROCHE	535
COMMANDE HYDRAULIQUE (VERSION)	537
COMMANDE DE POIGNÉE (ASS)	538
PALONNIER - GROUPE DE COMMANDE (ASS)	541
COMMANDE DE RIPPER (ASS)	547
REFROIDISSEUR D'HUILE HYDRAULIQUE (ASS)	549
COUVERCLE DE RÉSERVOIR HYDRAULIQUE	550
VÉRIN DE LEVAGE ET CANALISATIONS (ASS)	551
VÉRIN DE LEVAGE ET CAPTEUR (ASS)	554
VÉRIN ET SOUPAPE DE LEVAGE (ASS)	555
VÉRIN À DOUBLE INCLINAISON (VERSION)	557
VÉRIN D'INCLINAISON DOUBLE (ASS)	558
VÉRIN DE LEVAGE DE LAME DE BULLDOZER (ASS)	560
VÉRIN DE LEVAGE (ASS)	562
VERIN DE LEVAGE DE RIPPER (ASS)	564
VERIN D'EXTRACTEUR DE BROCHE DE RIPPER (ASS)	568
VERIN D'INCLINAISON DU RIPPER (ASS)	569
VÉRIN D'INCLINAISON (ASS)	571
POIGNÉE DE COMMANDE (ASS)	575
VERSION HYDRAULIQUE	576
CANALISATIONS DE BULLDOZER (ASS)	577
CANALISATIONS HYDRAULIQUES (ASS)	582
CANALISATIONS HYDRAULIQUES DE VENTILATEUR (ASS)	584
CANALISATIONS DE VÉRIN DE LEVAGE (ASS)	587
CANALISATIONS DU MOTEUR (ASS)	590
CANALISATIONS A COMMANDE PILOTE (ASS)	595
CANALISATIONS D'EXTRACTEUR DE BROCHE (ASS)	599
CANALISATIONS DE POMPE (ASS)	603
CANALISATIONS DU RIPPER (ASS)	606
CANALISATIONS DU VÉRIN D'INCLINAISON (ASS)	611
COLLECTEUR - COMMANDE (ASS)	623
GROUPE DE MOTEUR A PISTONS	628
MONTAGE DE VÉRIN (ASS)	633
POMPE A ENGRENAGES (ASS)	634
POMPE A PISTONS (ASS)	637
GROUPE DE ROTATION DE MOTEUR	639
GROUPE DE ROTATION DE POMPE	640
CORPS DE POMPE À ENGRENAGE (ASS)	643
RÉSERVOIR HYDRAULIQUE ET FILTRE (ASS)	649
RÉSERVOIR HYDRAULIQUE ET MONTAGE (ASS)	653
RESERVOIR D'EXPANSION (ASS)	655
SOUPAPE DE BULLDOZER ET MONTAGE (ASS)	657
DISTRIBUTEUR ET MONTAGE (ASS)	659
SOUPAPE ET MONTAGE - VENTILATEUR HYDRAULIQUE (ASS)	660
COMMANDE PRINCIPALE DE SOUPAPE ET MONTAGE (ASS)	662
CLAPET DE RETENUE (ENS)	664
DISTRIBUTEUR (ASS)	665
SOUPAPE DE DERIVATION (ASS)	676
SOUPAPE RÉDUCTRICE DE PRESSION (ASS)	678
DISTRIBUTEUR DE POMPE (ASS)	679
SOUPAPE D'ABAISSEMENT RAPIDE (ASS)	680
CLAPET DE DECHARGE (ASS)	681
SOUPAPE DE SÉQUENCE (ASS)	682
VANNE PILOTE (ASS)	683
SOUPAPE - SOLÉNOÏDE (ASS)	684
DISTRIBUTEUR D'INCLINAISON (ASS)	690
ÉQUIPEMENTS	691
TAMPON DE POUSSÉE (ASS)	691
TIRANT DE BULLDOZER (ASS)	694
LAME DE BULLDOZER SEMI-UNIVERSELLE (VERSION)	695
LAME DE BULLDOZER UNIVERSELLE (VERSION)	699
COUVERCLE DE TOURILLON (ASS)	703

* TRADUCTION NON DISPONIBLE AU MOMENT DE LA PUBLICATION

TABLE DES MATIÈRES

Désignation	Page
STABILISATEUR - BRAS DE POUSSEE (ASS)	704
MODIFICATION -BULLDOZER	705
BRAS DE POUSSÉE (ASS)	708
STABILISATEUR DU BRAS DE POUSSEE (ASS)	710
TOURILLON DE BULLDOZER (ASS)	711
OUTILS DE TRAVAIL	712
LAME DE COUPE SEMI-UNIVERSELLE (ASS)	712
LAME ET BORD UNIVERSELS (ASS)	712
LAME SEMI-UNIVERSELLE (ENS)	717
LAME UNIVERSELLE (ENS)	721
LAME SEMI-UNIVERSELLE (ASS)	726
LAME UNIVERSELLE (ASS)	728
EMBOUT ET LAME DE COUPE (ASS)	731
BATI DE RIPPER (ASS)	735
VERSION DE TRANSFORMATION DE RIPPER	741
MONTAGE DE RIPPER (ASS)	743
PLAQUE D'USURE (ASS)	745
EXTRACTEUR DE BROCHE (VERSION)	747
EXTRACTEUR DE BROCHE (ASS)	748
RIPPER (VERSION)	751
RIPPER (ASS)	754
DENT DE RIPPER (ASS)	758
POSTE DE CONDUITE	762
REGLAGE DE SIEGE (ASS)	762
SIÈGE - COMPRESSEUR D'AIR (ASS)	763
CLIMATISEUR (VERSION)	764
COFFRE DE RANGEMENT (ASS)	766
SUPPORT - MONTAGE (ASS)	767
CABINE (VERSION)	770
CABINE (ASS)	772
COMPRESSEUR DE REFRIGERANT (ASS)	776
CONDENSATEUR ET MONTAGE (RÉFRIGÉRANT)	779
CONDENSEUR DE RÉFRIGÉRANT	784
CONSOLE AV (ASS)	786
CONSOLE DE CONDUITE (ASS)	787
COMMANDE D'ÉQUIPEMENT	789
COMMANDE ET MONTAGE DE PÉDALE (ASS)	790
COUVERCLE - CABINE (ASS)	792
ÉCRAN DU MONITEUR (ASS)	794
PORTIÈRE DE CABINE (ASS)	795
FILTRE À AIR DE CABINE (ASS)	797
CHAUFFAGE DE CABINE (ASS)	799
SUSPENSION DE SIEGE - CARTER (ASS)	805
MONTAGE DE RADIO (ASS)	808
CABINE - REVÊTEMENT (ASS)	810
CANALISATIONS DE CLIMATISEUR (ASS)	812
CANALISATIONS DE CHAUFFAGE (ASS)	825
RÉTROVISEUR (ASS)	829
MONTAGE DE CABINE (ASS)	831
MONTAGE DE CONDENSEUR (ASS)	832
MONTAGE DE RADIO (ASS)	836
MONTAGE DU TOIT ROPS (ASS)	838
POSTE DE CONDUITE (VERSION)	839
COUVERCLE INFÉRIEUR-DOSSIER (ASS)	841
PANNEAU DE COMMANDE (ASS)	844
PÉDALE DE RÉGULATEUR ET DE FREIN (ASS)	846
PLATE-FORME (VERSION)	849
PLATE-FORME (ASS)	850
SIÈGE INCLINABLE (ASS)	853
TOIT ROPS (ASS)	854
GRILLE DE PROTECTION (ASS)	855
SIÈGE ET MONTAGE (ASS)	856
SIÈGE (ASS)	857
SIÈGE AVEC SUSPENSION (ASS)	865
RÉSERVOIR - LAVE-GLACE (ASS)	872
LAVE-GLACE - VITRE (ASS)	875
GLACE AR (ENS)	877
*WINDOW GP-CAB	877
VITRE DE CABINE (ASS)	878
FENETRE COULISSANTE (ASS)	879
ESSUIE-GLACE (ASS)	881
PIVOT D'ESSUIE-GLACE (ASS)	886
MATÉRIEL ET FOURNITURES D'ENTRETIEN	888
PLAQUES SIGNALETIQUES ET AUTOCOLLANTS (ASS)	888
PLAQUE D'IDENTIFICATION MOTEUR (ASS)	893
INDEX DE NUMÉROS DE PIÈCES	B1

* TRADUCTION NON DISPONIBLE AU MOMENT DE LA PUBLICATION

CONTENIDO

Nombre	Página
INFORMACIÓN GENERAL	A32
ALTERNATIVAS DE REPARACIÓN	A46
ADITIVOS DE REFRIGERANTE SUPLEMENTARIOS	A51
PIEZAS DE MANTENIMIENTO	A64
INDICE	A108
CONFIGURACIÓN DE MÁQUINA	1
CHASIS (CONFIG)	1
CONFIGURACIÓN PARA CLIMA FRÍO	2
CONFIGURACIÓN GENERAL	3
CONFIGURACION PARA MINERIA	3
CONFIGURACION DE APILAMIENTO	4
CONFIGURACIÓN DE ELIMINACIÓN DE BASURAS	4
CONFIGURACIÓN DE MOTOR	10
MOTOR COMPLETO (CONFIG)	10
MOTOR - NÚCLEO (CONFIG)	13
CONFIGURACIÓN DE INSTALACIÓN DEL MOTOR	16
MOTOR BÁSICO	18
BASE DE LA TAPA DE VÁLVULAS Y MAZO DE CABLES DE INYECTOR (GR)	18
ÁRBOL DE LEVAS (GR)	20
TAPA DEL BLOQUE MOTOR (GR)	21
TAPA DE LA CAJA TRASERA (GR)	24
CIGÜEÑAL (GR)	26
BLOQUE MOTOR (CONJ)	27
BLOQUE MOTOR (GR)	30
CULATA DE CILINDROS (CONJ)	32
CULATA DE CILINDROS (GR)	33
AMORTIGUADOR DE VIBRACIONES (GR)	36
CULATA DE CILINDROS - TORNILLERÍA DE LA (GR)	38
VOLANTE (GR)	39
ENGRANAJE DELANTERO (GR)	40
ENGRANAJE TRASERO (GR)	42
VOLANTE - CAJA DE (GR)	46
CAJA DELANTERA (GR)	47
*HOUSING GP-REAR	48
CÁNCAMOS DE LEVANTAMIENTO DEL MOTOR (GR)	49
BOMBA DE COMBUSTIBLE Y MECANISMO DE VÁLVULAS (GR)	51
MONTAJE DEL ALTERNADOR (GR)	53
CÁRTER - COLECTOR DEL (GR)	54
PISTÓN Y BIELA (GR)	56
TAPÓN DEL BLOQUE MOTOR (GR)	57
TAPÓN DE CULATA (GR)	58
CIGÜEÑAL - POLEA DE (GR)	59
BALANCÍN (GR)	60
MOTOR - SOPORTE DEL (GR)	63
INSONORIZADOR (CONFIG)	66
MUÑÓN DEL MOTOR (GR)	67
MECANISMO DE VÁLVULAS (GR)	68
SISTEMA DE LUBRICACIÓN	69
RESPIRADERO (GR)	69
TORNILLERÍA DE MONT. DE LA BOMBA DE ACEITE (GR)	70
TUBO DE LLENADO DE ACEITE (GR)	71
FILTRO DE ACEITE DEL MOTOR (GR)	73
ESCAPE DE GASES (GR)	75
INDICADOR DEL NIVEL DE ACEITE (VARILLA) (GR)	76
TUBERÍAS DE ACEITE DEL MOTOR (GR)	77
TURBOCOMPRESOR - TUBERÍAS DE ACEITE DEL (GR)	79
CAMBIO RÁPIDO DE ACEITE (GR)	81
PRELUBRICACION DEL MOTOR (CONFIG)	83
BOMBA Y MOTOR DE PRELUBRICACIÓN (CONJ)	85
BOMBA DE ACEITE DEL MOTOR (GR)	86
SISTEMA DE ENFRIAMIENTO	88
VENTILADOR REVERSIBLE (CONFIG)	88
SUCCIÓN - VENTILADOR DE (GR)	89
TUBERÍAS DEL AGUA (GR)	90
BOMBA DE AGUA (GR)	107
RADIADOR (CONFIG)	109
RADIADOR (GR)	110
TANQUE DE REFRIGERANTE (GR)	120
SISTEMA DE ADMISIÓN Y ESCAPE DE AIRE	127
POSENFRIADOR DE AIRE (GR)	127
FILTRO DE AIRE (GR)	131
EXPULSOR DE POLVO (GR)	135
JUEGO DE INSTALACIÓN	140
AIRE - TUBERÍAS DE (GR)	142
MÚLTIPLE DE ESCAPE (GR)	151
SILENCIADOR (GR)	152
ANTEFILTRO (CONFIG)	154
CONFIG. DE FILTROS-TURBINA	155
ANTEFILTRO (GR)	160

* NO HAY TRADUCCION DISPONIBLE EN EL MOMENTO DE LA IMPRESION

CONTENIDO

Nombre	Página
PROTECTOR TÉRMICO (GR)	162
*SUPPORT GP-AFTERCOOLER	163
TURBOCOMPRESOR (GR)	165
SISTEMA DE COMBUSTIBLE	169
ADAPTADOR DE LLENADO RÁPIDO DE COMBUSTIBLE (GR)	169
FILTRO Y TUBERÍAS DE COMBUSTIBLE (GR)	175
FILTRO DE COMBUSTIBLE (GR)	178
FILTRO DE COMBUSTIBLE Y SEPARADOR DE AGUA (GR)	183
TUBERÍAS DE COMBUSTIBLE (GR)	184
TUBERÍAS DEL FILTRO DE COMBUSTIBLE	187
BOMBA DE TRANSFERENCIA DE COMBUSTIBLE Y MONTAJE (GR)	190
BOMBA DE INYECCIÓN DE COMBUSTIBLE (GR)	191
BOMBA DE CEBADO Y FILTRO SECUNDARIO (GR)	192
BOMBA DE TRANSFERENCIA DE COMBUSTIBLE (GR)	193
COMBUSTIBLE - TANQUE DE (GR)	194
VÁLVULA DE RETENCIÓN (GR)	197
SISTEMA ELÉCTRICO Y DE ARRANQUE	198
ALARMA (GR)	198
CARGA - ALTERNADOR DE (GR)	199
BATERÍA Y CABLES (GR)	207
BATERÍA (GR)	228
CONEXIÓN ELÉCTRICA (GR)	229
CONTROL ELECTRÓNICO DEL MOTOR Y MONTAJE	230
CONTROL ELECTRÓNICO (GR)	231
CONTROL ELECTRÓNICO DEL MOTOR (GR)	232
CONTROL NO PROGRAMADO (GR)	234
CONVERTIDOR ELÉCTRICO (GR)	235
CONFIGURACIÓN ELECTRÓNICA DE LA MÁQUINA	236
GRUPO ELECTRONICO-COMUNICACION	237
IMPLEMENTOS (GR ELECTRÓNICO)	238
ELECTRONICA DE MONITOR (GR)	238
TREN DE FUERZA-GRUPO ELECTRÓNICO	238
CALENTADOR DEL COMBUSTIBLE (GR)	239
AGUA DE LAS CAMISAS - CALENTADOR DEL (GR)	241
INSTALACION DE COMUNICACION (GR)	243
GRUPO DE INSTALACION, CONTROL DE GRADO	245
REFLECTOR (GR)	246
LÁMPARA DE FARO DELANTERO (GR)	251
LUCES DE REFLECTOR (GR)	252
LUCES DEL DESGARRADOR (GR)	270
PANEL DE FUSIBLES (GR)	271
*RESISTOR GP-CAB HEATER	275
SENSOR Y MONTAJE DE VELOCIDAD DE DESPLAZAMIENTO (GR)	276
SENSOR DEL MOTOR (GR)	278
SENSOR DE NIVEL DE COMBUSTIBLE (GR)	280
DETECTOR DE POSICIÓN (SISTEMA DE COMBUST.) (GR)	281
SENSOR DE PRESIÓN (GR)	284
SENSOR DE VELOCIDAD (GR)	292
SENSOR DE TEMPERATURA (GR)	296
AUXILIAR DE ARRANQUE CON ÉTER (GR)	300
ARRANQUE EN TIEMPO FRIO (CONFIG)	302
MOTOR DE ARRANQUE ELÉCTRICO (GR)	305
INTERRUPTOR DE DERIVACIÓN	312
DISYUNTOR (GR)	313
INTERRUPTOR DE FLUJO (GR)	314
INTERRUPTOR MAGNÉTICO (GR)	316
INTERRUPTOR DE PRESIÓN (GR)	318
GRUPO DE INTERRUPTOR-BOTON PULSADOR	319
INTERRUPTOR DE VOLQUETE (GR)	320
GRUPO DE VÁLVULA-ARRANQUE CON ÉTER	321
CABLES DE LA CABINA (GR)	322
CABLES DEL CONTROL ELECTRÓNICO (GR)	324
CABLES DEL MOTOR (GR)	326
CABLES DE LA PLATAFORMA (GR)	336
CABLES DE INYECTOR (GR)	341
TREN DE FUERZA	342
EJE DEL TREN DE FUERZA (GR)	342
CAJA Y PIEZAS DE LOS PLANETARIOS	343
CONTROL HIDRÁULICO DE LA TRANSMISIÓN (GR)	345
ACOPLAMIENTO DE BOMBA (GR)	347
DRENAJE DE SEGURIDAD ECOLÓGICA (GR)	348

* NO HAY TRADUCCION DISPONIBLE EN EL MOMENTO DE LA IMPRESION

CONTENIDO

Nombre	Página
FILTRO DE ACEITE (GR)	349
MANDO FINAL (GR)	351
ENGRANAJE DE TRANSFERENCIA Y CORONA (GR)	363
TUBERÍAS DE ACEITE DEL TREN DE FUERZA (GR)	365
MONTAJE DE LA TRANSMISIÓN (GR)	370
TRANSMISIÓN PLANETARIA (GR)	371
TREN DE FUERZA (CONFIG)	375
BOMBA DE ENGRANAJES (GR)	376
SEGMENTO DE RUEDA MOTRIZ (GR)	380
EJE DE MANDO (GR)	381
JUNTA DESLIZANTE (GR)	382
CONVERTIDOR DE PAR (GR)	383
TRANSMISION (CONFIG)	389
JUNTA UNIVERSAL (GR)	390
VÁLVULA DE MODULACIÓN (GR)	391
VÁLVULA DE ALIVIO (GR)	392
BASTIDOR Y CAJA	394
CAJA Y BASTIDOR (GR)	394
CONTRAPESO (GR)	397
PUERTA DE ACCESO (GR)	402
BARRA DE TIRO (GR)	409
COMPARTIMIENTO DEL MOTOR (GR)	411
GUARDABARROS (GR)	421
PROTECTOR DE MANDO FINAL (GR)	428
PROTECTOR DE LA RUEDA GUÍA (CONFIG)	428
PROTECTOR INFERIOR (GR)	429
MALEZA - PROTECTOR (GR)	434
PROTECTOR DEL EJE IMPULSOR (GR)	436
PROTECTOR DE LOS MANDOS FINALES (GR)	437
PROTECTOR DE RUEDA GUÍA	438
PROTECTOR DEL EJE PIVOTE (GR)	439
PROTECTOR DEL TREN DE FUERZA (GR)	440
PROTECTOR DEL RADIADOR (GR)	442
PROTECTOR POSTERIOR (GR)	446
PROTECTOR CONTRA ROCAS (GR)	448
CAPO Y PROTECTOR (GR)	450
RETÉN (GR)	452
PLANCHA DE REFUERZO (GR)	453
TREN DE RODAJE	454
BARRA LIMPIADORA(CONFIG)	454
BARRA COMPENSADORA (GR)	456
BARRA LIMPIADORA (GR)	461
TAPA DE RUEDA GUÍA (GR)	464
TAPA DE RODILLO INFERIOR	466
BASTIDOR TELESCÓPICO DEL RESORTE TENSOR (GR)	467
RUEDA GUÍA DE CADENA (GR)	469
ESLABÓN DE CADENA (CONJ)	473
GRUPO DE LUBRICACIÓN DE BARRA ESTABILIZADORA	477
LUBRICACIÓN DE EJE PIVOTE (GR)	479
RODILLO DE CADENA (CONFIG)	481
RODILLO SUPERIOR DE CADENAS (CONFIG)	481
RODILLOS DE PESTAÑA DOBLE (GR)	483
RODILLOS DE PESTAÑA SIMPLE (GR)	485
JUEGO DE SELLOS	487
ZAPATA DE CADENA	488
ZAPATA-MAESTRA	491
SOPORTE BASCULANTE (GR)	494
RESORTE TENSOR Y AJUSTADOR DE LA CADENA (GR)	497
CADENAS (GR)	499
TREN DE RODAJE (CONFIG)	505
SISTEMA DE FRENOS Y DIRECCIÓN	507
AJUSTADOR DEL CONTROL DE DIRECCIÓN Y TRANSMISIÓN (GR)	507
FRENO Y EMBRAGUE DE DIRECCIÓN (GR)	509
CONTROL DE DIRECCIÓN (GR)	513
CONTROL DE DIRECCIÓN Y TRANSMISIÓN (GR)	514
TOPE (GR)	518
ENGRANAJE DE DIRECCIÓN (GR)	519
MÚLTIPLE Y VÁLVULA (GR)	521
SOPORTE DE CONTROL (GR)	523
VÁLVULA Y MONTAJE DE DIRECCIÓN Y FRENO (GR)	524
VÁLVULA DE SOLENOIDE (GR)	526
VÁLVULA GR-DIRECCIÓN Y CONTROL DE FRENO	528
SISTEMA HIDRÁULICO	532
ACUMULADOR HIDRAULICO (GR)	532
ACUMULADOR DE ACEITE PILOTO (GR)	533
CONTROL DE INCLINACIÓN DUAL (CONFIG)	534
CONTROL HIDRÁULICO DEL EXTRACTOR DE PASADORES	535
CONTROL HIDRÁULICO (CONFIG)	537
CONTROL DE MANIJA (GR)	538
PALANCA UNIVERSAL DE CONTROL (GR)	541
*CONTROL GP-RIPPER	547

* NO HAY TRADUCCION DISPONIBLE EN EL MOMENTO DE LA IMPRESION

CONTENIDO

Nombre	Página
ENFRIADOR DEL ACEITE HIDRAULICO (GR)	549
TAPA DEL TAPÓN DEL TANQUE HIDRÁULICO (GR)	550
CILINDRO DE LEVANTAMIENTO Y TUBERÍAS (GR)	551
SENSOR Y CILINDRO DE LEVANTAMIENTO (GR)	554
VÁLVULA Y CILINDRO DE LEVANTAMIENTO (GR)	555
CILINDRO DE DOBLE INCLINACION (CONFIG)	557
CILINDRO DE DOBLE INCLINACIÓN (GR)	558
CILINDRO DE LEVANTAMIENTO DE LA HOJA TOPADORA (GR)	560
CILINDRO DE LEVANTAMIENTO (GR)	562
CILINDRO DE LEVANTAMIENTO DEL DESGARRADOR (GR)	564
CILINDRO DEL EXTRACTOR DE PASADOR DEL DESGARRADOR (GR)	568
CILINDRO DE INCLINACIÓN DEL DESGARRADOR (GR)	569
INCLINACIÓN HORIZONTAL - CILINDRO DE (GR)	571
PERILLA DE CONTROL (GR)	575
HIDRÁULICA (CONFIG)	576
TUBERÍAS DE LA HOJA TOPADORA	577
TUBERÍAS HIDRÁULICAS (GR)	582
TUBERÍAS HIDRÁULICAS DEL VENTILADOR (GR)	584
CILINDRO DE LEVANTAMIENTO - TUBERÍAS DEL (GR)	587
TUBERIAS DEL MOTOR (GR)	590
TUBERÍAS CON SERVOMANDO (GR)	595
TUBERÍAS DE CILINDRO DE EXTRACTOR DE PASADORES	599
BOMBA - TUBERÍAS DE (GR)	603
TUBERÍAS DEL DESGARRADOR (GR)	606
TUBERÍAS DEL CILINDRO DE INCLINACIÓN (GR)	611
CONTROL DEL MULTIPLE (GR)	623
PISTONES DEL MOTOR (GR)	628
MONTAJE DE CILINDRO (GR)	633
BOMBA DE ENGRANAJES (GR)	634
BOMBA DE PISTONES (GR)	637
GRUPO DE ROTACIÓN DEL MOTOR (GR)	639
GRUPO GIRATORIO DE BOMBA	640
SECCION DE BOMBA DE ENGRANAJE (GR)	643
TANQUE Y FILTRO HIDRÁULICOS (GR)	649
TANQUE HIDRÁULICO Y MONTAJE (GR)	653
TANQUE DE EXPANSIÓN (GR)	655
GRUPO DE MONTAJE Y VÁLVULA, HOJA TOPADORA	657
VÁLVULA DE CONTROL Y MONTAJE (GR)	659
VÁLVULA Y MONTAJE DEL VENTILADOR HIDRÁULICO (GR)	660
MONTAJE Y VALVULA DEL CONTROL PRINCIPAL (GR)	662
VÁLVULA DE RETENCIÓN (GR)	664
VÁLVULA DE CONTROL (GR)	665
VÁLVULA DE DERIVACIÓN (GR)	676
VÁLVULA REDUCTORA DE PRESIÓN (GR)	678
VALVULA DE CONTROL DE LA BOMBA (GR)	679
VÁLVULA DE CAÍDA RÁPIDA (GR)	680
VÁLVULA DE ALIVIO (GR)	681
VÁLVULA DE SECUENCIA (GR)	682
VÁLVULA DE LANZADERA (GR)	683
VÁLVULA DE SOLENOIDE (GR)	684
VALVULA DE CONTROL DE INCLINACION (GR)	690
IMPLEMENTOS	691
BLOQUE DE EMPUJE (GR)	691
SOPORTE DE LA HOJA TOPADORA	694
HOJA TOPADORA SEMIUNIVERSAL	695
HOJA TOPADORA UNIVERSAL (CONFIG)	699
TAPA DEL MUÑÓN (GR)	703
ESTABILIZADOR DEL BRAZO DE EMPUJE (GR)	704
MODIFICACIÓN DEL TRACTOR TOPADOR (CONFIG)	705
BRAZO DE EMPUJE (GR)	708
ESTABILIZADOR DEL BRAZO DE EMPUJE (GR)	710
MUÑÓN DE LA HOJA TOPADORA (GR)	711
HERRAMIENTAS	712
HOJA Y CUCHILLA SEMIUNIVERSAL (GR)	712
GRUPO DE HOJA Y CUCHILLA UNIVERSAL	712
HOJA SEMIUNIVERSAL (CONJ)	717
HOJA UNIVERSAL (CONJ)	721
HOJA SEMIUNIVERSAL (GR)	726

* NO HAY TRADUCCION DISPONIBLE EN EL MOMENTO DE LA IMPRESION

CONTENIDO

Nombre	Página
HOJA UNIVERSAL (GR)	728
GRUPO DE CANTONERA Y CUCHILLA	731
BASTIDOR DEL DESGARRADOR (GR)	735
*MODIFICATION AR-RIPPER	741
MONTAJE DEL DESGARRADOR (GR)	743
PLANCHA DE DESGASTE (GR)	745
EXTRACTOR DE PASADOR (CONFIG)	747
EXTRACTOR DE PASADOR (GR)	748
DESGARRADOR (CONFIG)	751
DESGARRADOR (GR)	754
DIENTE DE DESGARRADOR (GR)	758
CABINA DEL OPERADOR	762
AJUSTADOR DEL ASIENTO (GR)	762
COMPRESOR DE AIRE DEL ASIENTO (GR)	763
ACONDICIONADOR DE AIRE (CONFIG)	764
CAJA DE ALMACENAMIENTO	766
SOPORTE DE MONTAJE (GR)	767
CABINA (CONFIG)	770
CABINA (GR)	772
COMPRESOR DE REFRIGERANTE (GR)	776
CONDENSADOR DEL REFRIGERANTE Y MONTAJE (GR)	779
CONDENSADOR DE REFRIGERANTE (GR)	784
CONSOLA DELANTERA (GR)	786
CONSOLA DEL OPERADOR (GR)	787
CONTROL DE IMPLEMENTOS Y MONTAJE (GR)	789
PEDAL-GRUPO DE CONTROL Y MONTAJE	790
TAPA DE LA CABINA (GR)	792
PANTALLA DEL MONITOR (GR)	794
PUERTA DE CABINA	795
FILTRO DE AIRE DE LA CABINA (GR)	797
CALEFACCIÓN DE LA CABINA (GR)	799
CAJA DE LA SUSPENSIÓN DEL ASIENTO (GR)	805
INSTALACIÓN DE RADIO (GR)	808
REVESTIMIENTO DE LA CABINA (GR)	810
TUBERÍAS DE ACONDICIONADOR DE AIRE (GR)	812
TUBERÍAS DE LA CALEFACCIÓN (GR)	825
RETROVISOR (GR)	829
GRUPO DE MONTAJE DE LA CABINA	831
MONTAJE (GR)-CONDENSADOR	832
MONTAJE DE LA RADIO (GR)	836
MONTAJE DE LA ESTRUCTURA ROPS (GR)	838
COMPARTIMIENTO DEL OPERADOR (CONFIG)	839
SOPORTE DEL RESPALDO (GR)	841
TABLERO DE CONTROL (GR)	844
REGULADOR Y PEDAL DEL FRENO (GR)	846
PLATAFORMA (CONFIG)	849
PLATAFORMA (GR)	850
RECLINACION DE ASIENTO (GR)	853
ESTRUCTURA ROPS (GR)	854
REJILLA PROTECTORA (GR)	855
ASIENTO Y MONTAJE (GR)	856
ASIENTO (GR)	857
SUSPENSIÓN - ASIENTO CON (GR)	865
ASIENTO CON SUSPENSIÓN (GR)	868
TANQUE DEL LAVAPARABRISAS (GR)	872
LAVAPARABRISAS DE LA VENTANA (GR)	875
VENTANA POSTERIOR (CONJ)	877
*WINDOW GP-CAB	877
VENTANA DE LA CABINA (GR)	878
VENTANA DESLIZANTE (GR)	879
LIMPIAPARABRISAS DE LA VENTANA (GR)	881
PIVOTE DEL LIMPIADOR (GR)	886
EQUIPOS Y SUMINISTRO DE SERVICIOS	888
CALCOMANÍAS Y PLACAS DE IDENTIFICACIÓN (GR)	888
PLACA DE IDENTIFICACIÓN DEL MOTOR (GR)	893
INDICE DE NUMEROS DE PIEZA	B1

* NO HAY TRADUCCION DISPONIBLE EN EL MOMENTO DE LA IMPRESION

ÍNDICE

Designação	Página
INFORMAÇÃO GERAL	A36
ALTERNATIVAS DE REPARO	A47
ADITIVOS SUPLEMENTARES DO LÍQUIDO ARREFECEDOR	A52
PEÇAS DE MANUTENÇÃO	A70
ÍNDICE	A123
MÁQUINA - ARRANJO	1
CHASSI	1
CLIMA FRIO - ARRANJO	2
ARRANJO GERAL	3
MINERAÇÃO	3
PILHA DE MATERIAL	4
ATERRO SANITÁRIO	4
MOTOR - ARRANJO	10
MOTOR COMPLETO	10
MOTOR - NÚCLEO	13
GRUPO DE INSTALAÇÃO - MOTOR	16
MOTOR BÁSICO	18
GR. BÁSICO - TAMPA DAS VÁLVULAS E CHICOTE DE INJEÇÃO	18
EIXO-COMANDO DE VÁLVULA	20
TAMPA - BLOCO DO MOTOR	21
TAMPA - CAIXA TRASEIRA	24
VIRABREQUIM	26
BLOCO DO MOTOR	27
CABEÇOTE DO MOTOR	32
AMORTECEDOR	36
FIXADORES - CABEÇOTE DO MOTOR	38
VOLANTE DO MOTOR	39
ENGRENAGENS DE DISTRIBUIÇÃO	40
ENGRENAGENS DE COMANDO TRASEIRO	42
CAIXA DO VOLANTE DO MOTOR	46
CAIXA DIANTEIRA	47
CAIXA TRASEIRA	48
LEVANTAMENTO DO MOTOR	49
MECANISMO DAS VÁLVULAS E BOMBA DE COMBUSTÍVEL	51
MONTAGEM - ALTERNADOR	53
CÁRTER DO ÓLEO DO MOTOR	54
PISTÃO E BIELA	56
BUJÃO DO BLOCO DO CILINDRO	57
BUJÃO - CABEÇA DO CILINDRO	58
POLIA DO VIRABREQUIM	59
BALANCIM	60
SUPORTE DO MOTOR	63
RUÍDO - ARRANJO PARA SUPRESSÃO	66
MUNHÃO DO MOTOR	67
MECANISMO DAS VÁLVULAS	68
SISTEMA DE LUBRIFICAÇÃO	69
RESPIRO	69
FIXADORES - BOMBA DE ÓLEO DO MOTOR	70
BOCAL DE ENCHIMENTO DE ÓLEO DO MOTOR	71
BOCAL DE ENCHIMENTO DE ÓLEO	72
FILTRO - ÓLEO DO MOTOR	73
ELIMINAÇÃO DE VAPORES DO CÁRTER	75
INDICADOR - NÍVEL DO ÓLEO (VARETA)	76
TUBOS - ÓLEO DO MOTOR	77
TUBOS - ÓLEO DO TURBOALIMENTADOR	79
ÓLEO - ARRANJO PARA TROCA RÁPIDA	81
PRÊ-LUBRIFICAÇÃO	83
BOMBA E MOTOR - PRÉ-LUBRIFICAÇÃO	85
BOMBA DE ÓLEO - MOTOR	86
SISTEMA DE ARREFECIMENTO	88
VENTILADOR REVERSÍVEL	88
VENTILADOR DE SUCÇÃO	89
TUBOS - ÁGUA	90
BOMBA DE ÁGUA	107
RADIADOR	109
TANQUE - LÍQUIDO ARREFECEDOR	120
SISTEMA DA ADMISSÃO DE AR E DE ESCAPE	127
PÓS-ARREFECEDOR DA ADMISSÃO DE AR	127
PURIFICADOR DE AR	131
EJETOR DE POEIRA	135
JOGO DE INSTALAÇÃO	140
TUBOS - AR	142
COLETOR DE ESCAPE	151
SILENCIADOR	152
PRÉ-PURIFICADOR	154
PRÉ-PURIFICADOR-TURBINA	155
PRÉ-PURIFICADOR	160
DEFLETOR TÉRMICO DE CALOR	162
SUPORTE - PÓS-ARREFECEDOR	163
TURBOALIMENTADOR	165

* TRADUÇÃO NÃO DISPONÍVEL NO MOMENTO DA IMPRESSÃO

ÍNDICE

Designação	Página
SISTEMA DE COMBUSTÍVEL	169
ADAPTADOR - ABASTECIMENTO RÁPIDO DE COMBUSTÍVEL	169
FILTRO E TUBOS - COMBUSTÍVEL	175
FILTRO - COMBUSTÍVEL	178
FILTRO DE COMBUSTÍVEL E SEPARADOR DE ÁGUA	183
TUBOS - COMBUSTÍVEL	184
TUBOS - FILTRO DO COMBUSTÍVEL	187
BOMBA E MONTAGEM - TRANSFERÊNCIA DE COMBUSTÍVEL	190
BOMBA DE INJEÇÃO DO COMBUSTÍVEL	191
BOMBA DO FILTRO SECUNDÁRIO E ESCORVA DO COMBUSTÍVEL	192
BOMBA DE TRANSFERÊNCIA DO COMBUSTÍVEL	193
TANQUE DE COMBUSTÍVEL	194
VÁLVULA DE RETENÇÃO	197
SISTEMA ELÉTRICO E DE PARTIDA	198
ALARME	198
ALTERNADOR DE CORRENTE	199
BATERIA E CABOS / FIOS ELÉTRICOS	207
BATERIA	228
CONEXÃO - ELÉTRICA	229
CONTROLE ELETRÔNICO E MONTAGEM - MOTOR	230
CONTROLE ELETRÔNICO	231
CONTROLE ELETRÔNICO - MOTOR	232
CONTROLE - NÃO PROGRAMADO	234
CONVERSOR ELÉTRICO	235
SISTEMA ELETRÔNICO - MÁQUINA	236
SISTEMA ELETRÔNICO-COMUNICAÇÃO	237
SIST. ELETRÔNICO - ACESSÓRIO	238
SISTEMA ELETRÔNICO - MONITOR	238
SISTEMA ELETRÔNICO - TREM DE FORÇA	238
AQUECEDOR DO COMBUSTÍVEL	239
AQUECEDOR DA ÁGUA DO MOTOR	241
INSTALAÇÃO-COMUNICAÇÃO	243
INSTALAÇÃO-CONTROLE DA INCLINAÇÃO	245
LÂMPADA - FAROL	246
FAROL DIANTEIRO	251
SISTEMA DE ILUMINAÇÃO - FARÓIS	252
ILUMINAÇÃO - RÍPER	270
PAINEL DE FUSÍVEIS	271
RESISTOR-AQUECEDOR DA CABINE	275
SENSOR E MONTAGEM - VELOCIDADE DE PERCURSO	276
SENSOR DO MOTOR	278
SENSOR - NÍVEL DE COMBUSTÍVEL	280
EMISSOR - POSIÇÃO	281
SENSOR - PRESSÃO	284
SENSOR DE VELOCIDADE	292
SENSOR - TEMPERATURA	296
AUXILIAR DE PARTIDA A ÉTER	300
PARTIDA EM TEMPO FRIO - ARRANJO	302
MOTOR ELÉTRICO DE PARTIDA	305
INTERRUPTOR DE DERIVAÇÃO	312
CHAVE GERAL	313
INTERRUPTOR - FLUXO	314
INTERRUPTOR - MAGNÉTICO	316
INTERRUPTOR - PRESSÃO	318
INTERRUPTOR-BOTÃO	319
INTERRUPTOR - BALANCIM	320
VALVULA - PARTIDA A ETER	321
CABOS/FIOS ELÉTRICOS - CABINE	322
CABOS/FIOS ELÉTRICOS - CONTROLE ELETRÔNICO	324
CABOS/FIOS ELÉTRICOS - MOTOR	326
CABOS/FIOS ELÉTRICOS - PLATAFORMA	336
CABOS/FIOS ELÉTRICOS - INJETOR	341
TREM DE FORÇA	342
SEMI-EIXO - TREM DE FORÇA	342
CARCAÇA DAS ENGRENAGENS PLANETÁRIAS E COMPONENTES	343
CONTROLE HIDRÁULICO DA TRANSMISSÃO	345
ACOPLAMENTO DA BOMBA	347
DRENO - ECOLOGIA	348
FILTRO - ÓLEO	349
COMANDO FINAL	351
COROA E ENGRENAGEM DE TRANFERÊNCIA	363
TUBOS - ÓLEO DA TRANSMISSÃO	365
MONTAGEM - TRANSMISSÃO	370
ENGRENAGENS PLANETÁRIAS - TRANSMISSÃO	371
TREM DE FORÇA	375
BOMBA DE ENGRENAGENS	376
SEGMENTO DA RODA MOTRIZ	380
EIXO DE TRANSMISSÃO	381
JUNTA CORREDIÇA	382
CONVERSOR DE TORQUE	383
TRANSMISSÃO	389
JUNTA UNIVERSAL	390
VÁLVULA DE MODULAÇÃO	391
VÁLVULA DE ALÍVIO	392

* TRADUÇÃO NÃO DISPONÍVEL NO MOMENTO DA IMPRESSÃO

ÍNDICE

Designação	Página
CHASSI E CARROCERIA	394
CAIXA E CHASSI	394
CONTRAPESO	397
PORTA DE ACESSO	402
BARRA DE TRAÇÃO	409
COBERTURA DO MOTOR	411
PÁRA-LAMA	421
PROTETOR - COMANDO FINAL	428
PROTETOR - RODA-GUIA	428
PROTETOR INFERIOR	429
DESMATAMENTO - PROTETOR	434
PROTETOR - EIXO DE TRANSMISSÃO	436
PROTETOR DO COMANDO FINAL	437
PROTETOR - RODA-GUIA	438
PROTETOR - EIXO PIVÔ	439
PROTETOR - TREM DE FORÇA	440
PROTETOR - RADIADOR	442
PROTETOR - TRASEIRO	446
PROTETOR - ROCHA	448
CAPÔ E PROTETOR	450
TRINCO	452
PLACA-REFORÇO	453
MATERIAL RODANTE	454
BARRA LIMPADORA DOS ROLOS	454
BARRA DE SUSPENSÃO	456
BARRA LIMPADORA DOS ROLOS	461
TAMPA DA RODA-GUIA	464
TAMPA - ROLETE DAS ESTEIRAS	466
ARMAÇÃO TELESCÓPICA DA MOLA TENSORA	467
RODA-GUIA DAS ESTEIRAS	469
ELO DA ESTEIRA	473
LUBRIFICAÇÃO-BARRA EQUALIZADORA	477
EIXO PIVÔ - LUBRIFICAÇÃO	479
ROLETE DAS ESTEIRAS	481
ROLETE SUPERIOR DA ESTEIRA	481
ROLETE DE ESTEIRA DE FLANGE DUPLO	483
ROLETE DE ESTEIRA DE FLANGE SIMPLES	485
JOGO DE RETENTOR	487
SAPATA DA ESTEIRA DO TRATOR	488
SAPATA MESTRE DA ESTEIRA	491
SUSPENSÃO - TRUQUE	494
AJUSTADOR DE ESTEIRAS E MOLA TENSORA	497
ESTEIRA	499
MATERIAL RODANTE	505

Designação	Página
SISTEMA DE DIREÇÃO E DE FREIO	507
AJUSTADOR DO CONTROLE DA DIREÇÃO E TRANSMISSÃO	507
EMBREAGEM DE DIREÇÃO E FREIOS	509
CONTROLE DE DIREÇÃO	513
CONTROLE DE DIREÇÃO E TRANSMISSÃO	514
RETEM	518
MECANISMO DE DIREÇÃO	519
COLETOR E VÁLVULA	521
SUPORTE - CONTROLE	523
VÁLVULA E MONTAGEM-DIREÇÃO E FREIO	524
VÁLVULA SOLENÓIDE	526
VÁLVULA -CONT DA DIREÇÃO E DO FREIO	528
SISTEMA HIDRÁULICO	532
ACUMULADOR HIDRÁULICO	532
ACUMULADOR D ÓLEO - PILOTO	533
CONTROLE DE INCLINAÇÃO DUPLA	534
CONTROLE - EXTRATOR DO PINO HIDRÁULICO	535
CONTROLE HIDRÁULICO	537
CONTROLE-CABO	538
CONTROLE - ALAVANCA	541
CONTROLE-RÍPER	547
ARREFECEDOR DO ÓLEO HIDRÁULICO	549
TAMPA - TANQUE HIDRÁULICO	550
CILINDRO DE LEVANTAMENTO E TUBOS	551
CILINDRO DE LEVANTAMENTO E SENSOR	554
CILINDRO E VÁLVULA DE LEVANTAMENTO	555
CILINDRO DUPLO DE INCLINAÇÃO	557
CILINDRO DE INCLINAÇÃO DUAL	558
CILINDRO - LEVANTAMENTO DA LÂMINA	560
CILINDRO DE LEVANTAMENTO	562
CILINDRO DE LEVANTAMENTO DO RIPER	564
CILINDRO DO SACADOR DE PINO DO RIPER	568
CILINDRO DE INCLINAÇÃO DO RÍPER	569
CILINDRO DE INCLINAÇÃO	571
ALAVANCA DE CONTROLE	575
COMANDO HIDRÁULICO	576
TUBOS - LÂMINA	577
TUBOS - ÓLEO HIDRÁULICO	582

* TRADUÇÃO NÃO DISPONÍVEL NO MOMENTO DA IMPRESSÃO

ÍNDICE

Designação	Página
TUBOS - VENTILADOR HIDRÁULICOS	584
TUBOS - CILINDRO DE LEVANTAMENTO	587
TUBOS - MOTOR	590
TUBOS - CIRCUITO PILOTO	595
TUBOS - CILINDRO DO SACA-PINO	599
TUBOS - BOMBA	603
TUBOS - RIPER	606
TUBOS - CILINDRO DE INCLINAÇÃO	611
COLETOR - CONTROLE	623
MOTOR - PISTÃO	628
MONTAGEM - CILINDRO	633
BOMBA DE ENGRENAGENS	634
BOMBA DE PISTÃO	637
MOTOR DO GRUPO ROTATIVO	639
GRUPO ROTATIVO DA BOMBA	640
SEÇÃO - BOMBA DE ENGRENAGENS	643
TANQUE HIDRÁULICO E FILTRO	649
TANQUE DE ÓLEO HIDRÁULICO E MONTAGEM	653
TANQUE DE EXPANSÃO	655
VÁLVULA E MONTAGEM - LÂMINA	657
VÁLVULA DE CONTROLE E MONTAGEM	659
VÁLVULA DO VENTILADOR HIDRÁULICO	660
VÁLVULA DO CONTROLE PRINCIPAL E MONTAGEM	662
VÁLVULA DE RETENÇÃO	664
VÁLVULA DE CONTROLE	665
VÁLVULA DESVIADORA	676
VÁLVULA DE REDUÇÃO DE PRESSÃO	678
VÁLVULA DE CONTROLE DA BOMBA	679
VÁLVULA DE QUEDA RÁPIDA	680
VÁLVULA DE ALÍVIO	681
VÁLVULA DE SEQUÊNCIA	682
VÁLVULA DE SEPARAÇÃO	683
VÁLVULA SOLENÓIDE	684
VÁLVULA DE CONTROLE DE INCLINAÇÃO	690
ACESSÓRIOS	691
BLOCO DE EMPUXO	691
TIRANTE DA LÂMINA	694
LÂMINA SEMI-UNIVERSAL	695
LÂMINA UNIVERSAL	699
TAMPA - MUNHÃO	703
ELO ESTABILIZADOR	704
GRUPO DE CONVERSÃO - LÂMINA	705
BRAÇO DE EMPUXO	708
BRAÇO DE EMPUXO - ESTABILIZADOR	710
MUNHÃO DA LÂMINA	711
FERRAMENTAS DE TRABALHO	712
LÂMINA E BORDA CORTANTE SEMI-UNIVERSAL	712
LÂMINA E BORDA - UNIVERSAL	712
LÂMINA SEMI-UNIVERSAL	717
LÂMINA UNIVERSAL	721
LÂMINA SEMI-UNIVERSAL	726
LÂMINA UNIVERSAL	728
BEIRA - PONTA CORTANTE	731
ARMAÇÃO DO RIPER	735
MODIFICAÇÃO-RÍPER	741
MONTAGEM - RIPER	743
PLACA DE DESGASTE	745
SACA-PINO	747
RIPER	751
DENTE DO RÍPER	758
POSTO DO OPERADOR	762
AJUSTADOR DO ASSENTO	762
COMPRESSOR DE AR - ASSENTO	763
CONDICIONADOR DE AR	764
CAIXA DE ARMAZENAMENTO	766
SUPORTE - MONTAGEM	767
CABINE	770
COMPRESSOR DE REFRIGERANTE	776
CONDENSADOR DO REFRIGERANTE E MONTAGEM	779
CONDENSADOR DE REFRIGERANTE	784
POSTO DE CONTROLE/CONSOLE DIANTEIRO	786
CONSOLE DO OPERADOR	787
CONTROLE DO ACESSÓRIO E MONTAGEM	789
CONTROLE DO PEDAL E MONTAGEM	790
TAMPA - CABINE	792
VISOR - MONITOR	794
PORTA DA CABINE	795
FILTRO - AR DA CABINE	797
AQUECEDOR DA CABINE	799
CAIXA - SUSPENSÃO DO ASSENTO	805
INSTALAÇÃO DO RÁDIO	808
REVESTIMENTO DA CABINE	810
TUBOS - AR CONDICIONADO	812
TUBOS - AQUECEDOR	825
ESPELHO RETROVISOR	829
MONTAGEM - CABINE	831
MONTAGEM - CONDENSADOR	832

* TRADUÇÃO NÃO DISPONÍVEL NO MOMENTO DA IMPRESSÃO

ÍNDICE

Designação	Página	Designação	Página
MONTAGEM - RÁDIO	836		
MONTAGEM - ESTRUTURA ROPS	838		
CABINE	839		
FUNDO - ENCOSTO	841		
PAINEL DE CONTROLE	844		
PEDAL - GOVERNADOR E FREIO	846		
PISO	849		
PLATAFORMA	850		
RECLINAÇÃO - ASSENTO	853		
ESTRUTURA ROPS	854		
TELA DE PROTEÇÃO	855		
ASSENTO E MONTAGEM	856		
ASSENTO	857		
ASSENTO COM SUSPENSÃO	865		
SUSPENSÃO - ASSENTO	868		
TANQUE - LAVADOR DE JANELA	872		
LAVADOR DO VIDRO	875		
VIDRO TRASEIRO	877		
*WINDOW GP-CAB	877		
JANELA DA CABINE	878		
VIDRO - DESLIZANTE	879		
LIMPADOR DO VIDRO	881		
PIVÔ DO LIMPADOR	886		
EQUIPAMENTO DE SERVIÇO E SUPRIMENTOS	888		
PLACA E DECALQUE	888		
PLACA - IDENTIFICAÇÃO DO MOTOR	893		
ÍNDICE DE NÚMERO DE PEÇA	B1		

* TRADUÇÃO NÃO DISPONÍVEL NO MOMENTO DA IMPRESSÃO

INHALTSVERZEICHNIS

Bezeichnung	Seite
ALLGEMEINE HINWEISE	A40
REPARATURALTERNATIVEN	A48
KÜHLMITTELZUSATZ	A53
WARTUNGSTEILE	A75
STICHWORTVERZEICHNIS	A137
MASCHINE	1
FAHRWERK	1
KALTWETTERAUSRÜSTUNG	2
GRUNDAUSFÜHRUNG	3
BERGBAUAUSFÜHRUNG	3
HALDENAUFÜHRUNG	4
ABFALLBESEITIGUNGSMONTAGE	4
MOTORAUSFÜHRUNG	10
MOTOR, KOMPLETT	10
MOTORKÜHLERBLOCK	13
MOTOR-EINBAUSATZ	16
MOTOR (GRUNDAUSFÜHRUNG)	18
SOCKEL FÜR VENTILDECKEL U. EINSPRITZKABELBAUM	18
NOCKENWELLE	20
MOTORBLOCKDECKEL	21
GEHÄUSEDECKEL, HINTEN	24
KURBELWELLE	26
MOTORBLOCK	27
ZYLINDERKOPF	32
DÄMPFER	36
ZYLINDERKOPF-HALTETEILE	38
SCHWUNGRAD	39
STIRNRAD	40
ZAHNRADVORGELEGE	42
SCHWUNGRADGEHÄUSE	46
STIRNRADGEHÄUSE	47
GEHÄUSE, HINTEN	48
MOTORHUBÖSE	49
KRAFTOFFPUMPE UND VENTILSTEUERUNG	51
DREHSTROMGENERATOR - BEFESTIGUNG	53
ÖLWANNE	54
PLEUELSTANGE UND KOLBEN	56
ZYLINDERBLOCKSCHRAUBE	57
ZYLINDERKOPFSTOPFEN	58
KURBELWELLEN-RIEMENSCHEIBE	59
VENTILKIPPHEBEL	60
MOTORAUFHÄNGUNG	63
SCHALLDÄMPFUNG	66
MONTAGEZAPFEN	67
VENTILSTEUERUNG	68
SCHMIERSYSTEM	69
ENTLÜFTER	69
ÖLPUMPEN-BEFESTIGUNGSTEILE	70
MOTORÖLEINFÜLLSTUTZEN	71
ÖLEINFÜLLSTUTZEN	72
ÖLFILTER	73
ENTDUNSTER	75
ÖLMESSSTAB	76
MOTORÖLLEITUNGEN	77
TURBOLADERÖLLEITUNGEN	79
ÖLSCHNELLWECHSELANSCHLUSS	81
MOTORVORSCHMIERUNG	83
VORSCHMIERPUMPE UND MOTOR	85
SCHMIERPUMPE	86
KÜHLSYSTEM	88
UMKEHRLÜFTER	88
SAUGLÜFTER	89
KÜHLWASSERLEITUNGEN	90
KÜHLWASSERPUMPE	107
KÜHLER	109
KÜHLMITTELBEHÄLTER	120
LUFTEINLASS- UND ABGASSYSTEM	127
LADELUFTKÜHLER	127
LUFTREINIGER	131
STAUBAUSWERFER	135
EINBAUSATZ	140
DRUCKLUFTLEITUNGEN	142
AUSPUFFKRÜMMER	151
SCHALLDÄMPFER	152
VORREINIGER	154
VORREINIGER-TURBINE	155
VORREINIGER	160
WÄRMESCHIRM	162
LADELUFTKÜHLERTRÄGER	163
TURBOLADER	165
KRAFTSTOFFSYSTEM	169
SCHNELLBETANKUNGSANSCHLUSS	169
KRAFTSTOFFILTER UND LEITUNGEN	175
KRAFTSTOFFILTER	178
WASSERABSCHEIDER- U. KRAFTSTOFFILTER	183
KRAFTSTOFFLEITUNGEN	184
KRAFTSTOFFILTERLEITUNGEN	187
KRAFTSTOFFÖRDERPUMPE UND BEFESTIGUNGSTEILE	190

* ÜBERSETZUNG ZUM ZEITPUNKT DER DRUCKLEGUNG NICHT VORHANDEN

INHALTSVERZEICHNIS

Bezeichnung	Seite
KRAFTSTOFFEINSPRITZPUMPE	191
KRAFTSTOFFENTLÜFTUNGSPUMPE U. SICHERHEITSFILTER	192
KRAFTSTOFFÖRDERPUMPE	193
KRAFTSTOFFTANK	194
SPERRVENTIL	197
ELEKTRISCHE ANLAGE UND STARTSYSTEM	198
WARNVORRICHTUNG	198
DREHSTROMGENERATOR	199
BATTERIE UND VERDRAHTUNG	207
BATTERIE	228
ANSCHLUSS, ELEKTR.	229
STEUERUNGSEINHEIT, ELEKTRON. FÜR MOTOR UND BEFEST.	230
STEUERUNG, ELEKTRON.	231
MOTORSTEUERUNG, ELEKTRON.	232
STEUERUNG - NICHT PROGRAMMIERT	234
ELEKTR. UMFORMER	235
ELEKTRONIK - MASCHINE	236
ELEKTRONIK, KOMMUNIKATION	237
ARBEITSGERÄTEELEKTRONIK	238
ELEKTRONIK - MONITOR	238
KRAFTÜBERTRAGUNGSELEKTRONIK	238
KRAFTSTOFFHEIZUNG	239
UMLAUFKÜHLWASSERHEIZUNG	241
KOMMUNIKATIONSEINBAUSATZ	243
EINBAUSATZ - PLANIERSTEUERUNG	245
ARBEITSLEUCHTEN	246
FRONTSCHEINWERFER	251
ARBEITSLEUCHTEN	252
BELEUCHTUNGSANLAGE (AUFREISSER)	270
INSTRUMENTENTAFEL-SICHERUNG	271
*RESISTOR GP-CAB HEATER	275
FAHRGESCHWINDIGKEITSSENSOR U. BEFESTIGUNG	276
MOTORSENSOR	278
KRAFTSTOFFSTANDSENSOR	280
STELLUNGSSENSOR	281
DRUCKSENSOR	284
DREHZAHLSENSOR	292
TEMPERATURSENSOR	296
ÄTHERSTARTHILFE	300
KALTWETTERSTARTANLAGE	302
STARTERMOTOR	305
UMGEHUNGSSCHALTER	312
TRENNSCHALTER	313
STRÖMUNGSSCHALTER	314
MAGNETSCHALTER	316
DRUCKSCHALTER	318
DRUCKKOPFSCHALTER	319
KIPPSCHALTER	320
ÄTHERSTARTVENTIL	321
FAHRERHAUSVERDRAHTUNG	322
VERDRAHTUNG (ELEKTRON. STEUERUNG)	324
MOTORVERDRAHTUNG	326
FAHRERPLATTFORMVERDRAHTUNG	336
VERDRAHTUNG (EINSPRITZEINHEIT)	341
KRAFTÜBERTRAGUNG	342
KRAFTÜBERTRAGUNGSACHSE	342
PLANETENANTRIEBSGEHÄUSE U. TEILE	343
GETRIEBEHYDRAULIK	345
PUMPENANSCHLUSS	347
ABLASS (UMWELTFREUNDLICH)	348
ÖLFILTER	349
SEITENANTRIEB	351
TELLERRAD- UND VORGELEGERADSATZ	363
ÖLLEITUNGEN - KRAFTÜBERTRAGUNG	365
GETRIEBEAUFLAGER	370
PLANETENGETRIEBE	371
KRAFTÜBERTRAGUNG	375
ZAHNRADPUMPE	376
KETTENRADSEGMENT	380
ANTRIEBSWELLE	381
ANTRIEBSWELLEN-KEILVERZAHNUNG	382
DREHMOMENTWANDLER	383
GETRIEBE	389
KREUZGELENK	390
MODULATORVENTIL	391
ÜBERDRUCKVENTIL	392
RAHMEN UND AUFBAU	394
RAHMEN UND GEHÄUSE	394
GEGENGEWICHT	397
ZUGANGSKLAPPE	402
ZUGHAKEN	409
MOTORVERKLEIDUNG	411
SCHUTZBLECHE	421
SEITENANTRIEBSVERKLEIDUNG	428
LEITRADSCHUTZ	428
PANZERWANNE	429
MOTORSEITENVERKLEIDUNG	434
ANTRIEBSWELLENVERKLEIDUNG	436

* ÜBERSETZUNG ZUM ZEITPUNKT DER DRUCKLEGUNG NICHT VORHANDEN

INHALTSVERZEICHNIS

Bezeichnung	Seite
SEITENANTRIEBSVERKLEIDUNG	437
LEITRADSCHUTZ	438
DREHZAPFENVERKLEIDUNG	439
ANTRIEBSSCHUTZ	440
KÜHLERSCHUTZ	442
HECKVERKLEIDUNG	446
STEINSCHUTZ	448
MOTORHAUBE UND VERKLEIDUNG	450
VERRIEGELUNG	452
VERSTÄRKUNGSPLATTE	453
LAUFWERK	454
ABSTREIFBALKEN	454
QUERTRAVERSE	456
ABSTREIFBALKEN	461
LEITRADAUFSATZ	464
LAUFROLLENAUFSATZ	466
LAUFROLLENRAHMEN (TELESKOPRÜCKLAUF)	467
LEITRAD	469
KETTENGLIEDER	473
SCHMIERVORRICHTUNG - QUERTRAVERSE	477
ACHSWELLENSCHMIERUNG	479
LAUFROLLE	481
TRAGROLLEN	481
DOPPELFLANSCHROLLEN	483
EINZELFLANSCHROLLEN	485
DICHTUNGSSATZ	487
BODENPLATTE	488
KETTENENDBODENPLATTE	491
LAUFROLLENRAHMEN-KNICKFEDERUNG	494
KETTENSPANNER UND -FEDERRÜCKLAUF	497
LAUFWERKSKETTE	499
LAUFWERKSRAHMEN	505
LENK- UND BREMSSYSTEM	507
LENK- UND GETRIEBEEINSTELLER	507
LENKKUPPLUNG UND BREMSE	509
LENKBETÄTIGUNG	513
LENK- UND GETRIEBESTEUERUNG	514
RASTE	518
LENKTRIEB	519
KRÜMMER UND VENTIL	521
STÜTZGRUPPE - STEUERUNG	523
LENKUNGS- U. BREMSVENTIL	524
MAGNETVENTIL	526
LENKUNGS- U. BREMSSTEUERVENTIL	528
HYDRAULIKSYSTEM	532
HYDRAULIKDRUCKSPEICHER	532
VORSTEUERÖLDRUCKSAMMLER	533
DOPPELKIPPZYLINDERSTEUERUNG	534
HYDR. BOLZENZIEHER STEUERUNG	535
HYDRAULIKSTEUERUNG	537
STEUERHEBEL	538
JOYSTICK -STEUERUNG	541
REISSERSTEUERUNG	547
HYDRAULIKÖLKÜHLER	549
ZUGANGSKLAPPE - HYDRAULIKTANKKAPPE	550
HUBZYLINDER U. LEITUNGEN	551
HUBZYLINDER UND SENSOR	554
HUBZYLINDER U. VENTIL	555
DOPPELKIPPZYLINDER	557
DOPPELNEIGEZYLINDER	558
PLANIERSCHILDHUBZYLINDER	560
HUBZYLINDER	562
AUFREISSERHUBZYLINDER	564
AUFREISSER-BOLZENZIEHERZYLINDER	568
AUFREISSERKIPPZYLINDER	569
KIPPZYLINDER	571
STEUERHEBEL	575
HYDRAULIKSYSTEM	576
PLANIERSCHILDLEITUNGEN	577
HYDRAULIKLEITUNGEN	582
HYDRAULIKLÜFTERLEITUNGEN	584
HUBZYLINDERLEITUNGEN	587
MOTORLEITUNGEN	590
VORSTEUERLEITUNGEN	595
BOLZENZIEHERZYLINDERLEITUNGEN	599
HYDRAULIKPUMPE UND LEITUNGEN	603
AUFREISSERLEITUNGEN	606
NEIGEZYLINDERLEITUNGEN	611
STEUERKRÜMMER	623
KOLBENMOTOR	628
ZYLINDERAUFHÄNGUNG	633
ZAHNRADPUMPE	634
KOLBENPUMPE	637
MOTORDREHVORRICHTUNG	639
KOLBENPUMPENUMLAUFSATZ	640
ZAHNRADPUMPENABSCHNITT	643
HYDRAULIKTANK UND SCHMIERFILTER	649
HYDRAULIKTANK UND BEFESTIGUNGSTEILE	653
AUSGLEICHSBEHÄLTER	655
VENTIL U. BEFESTIGUNG - DOZER	657

* ÜBERSETZUNG ZUM ZEITPUNKT DER DRUCKLEGUNG NICHT VORHANDEN

INHALTSVERZEICHNIS

Bezeichnung	Seite
STEUERVENTIL UND BEFESTIGUNGSTEILE	659
HYDRAULIKLÜFTERVENTIL U. BEFESTIGUNGSTEILE	660
VENTIL UND BEFESTIGUNGSTEILE - HAUPTSTEUERUNG	662
SPERRVENTIL	664
STEUERVENTIL	665
UMLEITVENTIL	676
DRUCKREDUZIERVENTIL	678
PUMPENSTEUERVENTIL	679
SCHNELLSENKVENTIL	680
ÜBERDRUCKVENTIL	681
FOLGEVENTIL	682
PENDELVENTIL	683
MAGNETVENTIL	684
KIPPSTEUERVENTIL	690
ARBEITSGERÄTE	691
SCHUBBLOCK	691
SCHILDSTREBE	694
SU-SCHILD	695
U-PLANIERSCHILDEINRICHTUNG	699
MONTAGEZAPFENVERKLEIDUNG	703
STABILISATORGELENK	704
PLANIERSCHILD-UMRÜSTSATZ	705
SCHUBARM	708
SCHUBARM - STABILISATOR	710
MONTAGEZAPFEN (PLANIERSCHILDEINRICHTUNG)	711
ARBEITSGERÄTE	712
SU-PLANIERSCHILD U. ECKMESSER	712
UNIVERSALSCHILD U. KANTE	712
SU-SCHILD	717
U-SCHILD	721
SU-SCHILD	726
U-SCHILD	728
SCHNEIDMESSER UND EINSATZSTÜCK	731
AUFREISSERRAHMEN	735
*MODIFICATION AR-RIPPER	741
AUFREISSERBEFESTIGUNG	743
VERSCHLEISSPLATTEN	745
BOLZENZIEHER	747
AUFREISSER	751
AUFREISSERZAHN	758
FAHRERHAUS	762
FAHRERSITZVERSTELLER	762
LUFTKOMPRESSORSITZ	763
KLIMAANLAGE	764
VERSTAUKASTEN	766
BEFESTIGUNGSHALTERUNG	767
FAHRERHAUS	770
KÄLTEMITTELKOMPRESSOR	776
KÄLTEMITTELKONDENSATOR U. BEFESTIGUNGSTEILE	779
KÄLTEMITTELKONDENSATOR	784
FRONTSTEUERPULT	786
STEUERKONSOLE	787
ARBEITSGERÄTEHEBEL UND BEFESTIGUNGSTEILE	789
STEUERPEDAL U. BEFESTIGUNG	790
FAHRERHAUSABDECKUNG	792
MONITORDISPLAY	794
FAHRERHAUSTÜR	795
FAHRERHAUSLUFTFILTER	797
FAHRERHAUSHEIZUNG	799
FAHRERSITZFEDERUNGSGEHÄUSE	805
RADIOEINBAUSATZ	808
FAHRERHAUSAUSKLEIDUNG	810
KLIMAANLAGENLEITUNGEN	812
HEIZUNGSLEITUNGEN	825
RÜCKSPIEGEL	829
FAHRERHAUSANBAUSATZ	831
KONDENSATORBEFESTIGUNG	832
RADIOANBAUSATZ	836
ÜBERROLLSCHUTZAUFLAGER	838
FAHRERHAUSAUSRÜSTUNG	839
SCHALE - RÜCKENLEHNE	841
SCHALTTAFEL	844
GAS- U. BREMSPEDAL	846
PLATTFORM	849
VERSTELLBARER SITZ	853
ÜBERROLLSCHUTZ	854
SCHUTZGITTER	855
FAHRERSITZ UND UNTERBAU	856
FAHRERSITZ	857
SCHWINGSITZ	865
FAHRERSITZFEDERUNG	868
SCHEIBENWASCHMITTELBEHÄLTER	872
SCHEIBENWASCHANLAGE	875
HECKFENSTER	877
*WINDOW GP-CAB	877
FAHRERHAUSFENSTER	878
SCHIEBEFENSTER	879
SCHEIBENWISCHER	881
WISCHERARM	886
WARTUNGSAUSRÜSTUNG UND -ZUBEHÖR	888
SCHILD UND AUFKLEBER	888
MOTOR ID-SCHILD	893

* ÜBERSETZUNG ZUM ZEITPUNKT DER DRUCKLEGUNG NICHT VORHANDEN

INHALTSVERZEICHNIS

Bezeichnung	Seite	Bezeichnung	Seite
ERSATZTEILNUMMERNINDEX	B1		

* ÜBERSETZUNG ZUM ZEITPUNKT DER DRUCKLEGUNG NICHT VORHANDEN

GENERAL INFORMATION

1. MACHINE IDENTIFICATION

Caterpillar machines are identified by Product Identification Numbers (PIN). Some components included in a machine may be identified by Serial Numbers (S/N). Typical components that will be serialized include engines, transmissions, bulldozers, and rippers. The machine and engine are further identified by arrangement numbers and in some cases modification numbers. These numbers are shown on the product identification plate(s) and on the master plate in the operator's compartment.

Caterpillar dealers need all of these numbers to determine accurate parts identification.

SIS *New Feature*

Effective First Quarter 2001 the Caterpillar Product Identification Number (PIN) changed from 8 to 17 characters. In an effort to provide uniform equipment identification, Caterpillar and other construction equipment manufacturers are moving to comply with the latest version of the product identification numbering standard. Non-road machine PINs are defined by ISO 10261. The new PIN format will apply to all Caterpillar machines and generator sets. The PIN plates and frame marking will display the 17 character PIN. The new format will look like the following:

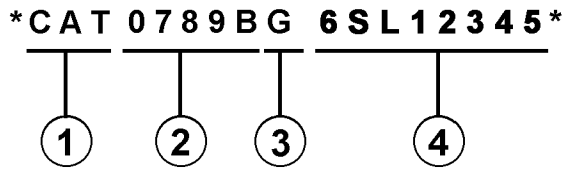

Where:

1. Caterpillar's World Manufacturing Code (characters 1-3)

2. Machine Descriptor (characters 4-8)

3. Check Character (character 9)

4. Machine Indicator Section (MIS) or Product Sequence Number (characters 10-17). These were previously referred to as the Serial Number.

Machines and generator sets produced before First Quarter 2001 will maintain their 8 character PIN format.

Components such as engines, transmissions, axles, etc. and work tools will continue to use an 8 character Serial Number (S/N).

2. ORDERING PARTS

⚠ WARNING

When replacement parts are required for this product Caterpillar recommends using Caterpillar replacement parts or parts with equivalent specifications including, but not limited to, physical dimensions, type, strength and material.

Failure to heed this warning can lead to premature failures, product damage, personal injury or death.

Quality Caterpillar replacement parts are available from Caterpillar dealers throughout the world. Their parts inventories are up to date and include all parts normally required to protect your investment in Caterpillar machines. Dealers may offer repair kits or remanufactured parts to allow selection of the most effective repair alternative for a particular situation. When ordering parts, your order should specify the quantity, part number, part name, and the serial number/product identification number of the machine for which the parts are needed.

3. PARTS MANUAL ORGANIZATION

Product information in this manual is presented as "information elements" that represent all of the components for the specific model. Engine Arrangement and Seat Group are examples of information elements. The information elements are organized alphabetically by part name and secondarily by part number within each major section of the manual.

4. TABLE OF CONTENTS

A table of contents (TOC) is found at the beginning of the manual. The TOC lists each section of the manual with a complete list of all information elements organized as they appear in the manual. Page numbers are provided for quick reference to detailed parts identification illustrations and serviceable consist lists.

5. MAINTENANCE PARTS INDEX

The Maintenance Parts Index, located near the beginning of the manual, references most frequently used maintenance part numbers, providing description, quantity, usage and page number. This information is organized alphabetically by part description.

6. INDEX

The index located near the front of the manual is an alphabetical listing of all information elements included in the manual. Page numbers are provided for quick reference to detailed parts identification illustrations and serviceable consist lists.

7. PART NUMBER INDEX

A numerical index listing all part numbers and the corresponding page number(s) appears at the back of the manual.

8. CAPTIONS

Captions located at the beginning of each information element identify the part number and part name along with additional descriptive information. PIN and S/N information found in each caption should be used to select correct information for a specific machine. Field replacement options, identification of optional attachment components, and where used ("part of") information is also provided.

The first line of a caption is shown in larger type font to indicate the beginning of an information element. Captions for additional pages that may be required to illustrate an information element will be shown in standard type font and will include the term *(contd.)* .

9. NON-SERVICED PARTS

In some instances it is necessary to display non-serviced parts that are a link to a lower level serviceable consist lists. These non-serviced part numbers are shown in *italic* type indicating that they are not available.

10. PARTS LIST REFERENCE NUMBERS

Numbers shown in the Ref No column correspond to numbers used in the associated graphic(s). An alphabetic suffix may be added to a reference number to identify lower level consist items. Numbers shown in the Graphic Ref column refer to the graphic number identifier displayed in the lower left corner of each illustration. The Graphic Ref number may be used in combination with the item Ref No to determine the correct part number. There may be intentional omission of a Ref No in a consist list as information is updated to reflect the latest serviceable part numbers.

11. INDENTED PART NAMES

When a part name is indented in a parts list, it is part of (included in) the group or assembly under which it is indented.

12. ILLUSTRATION REFERENCE LETTERS

When necessary, illustrations contain reference letters (A, B, C etc.) that are intended to track lines and harnesses from one point to another. They are also used to show where to reconnect illustrations that have been separated.

13. ABBREVIATIONS AND SYMBOLS

O.D. – Outside Diameter
I.D. – Inside Diameter
A – Not Part Of This Group
B – Use As Required
C – Change From Previous Type
D – Order By The Meter
E – Order By The Centimeter
F – Not Shown
G – Order By The Inch
I – Refer To Hydraulic Information System
M – Metric Part
R – Remfg Part May Be Available
Y – Separate Illustration
Z – Not Serviced Separately

SIS *New Feature*

14.<END>

This symbol indicates the end of an information element.

NOTE:

Continuing improvement and advancement of product design may cause changes to your machine which may not be included in this publication. Whenever a question arises regarding your caterpillar product or this publication, please consult your caterpillar dealer for the latest available information.

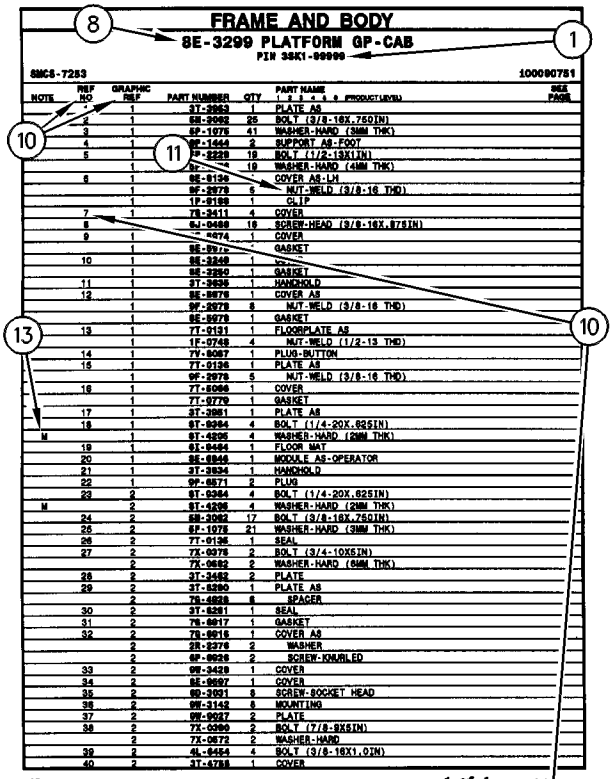
FRAME AND BODY
8E-3299 PLATFORM GP-CAB
100090751
1 of 4

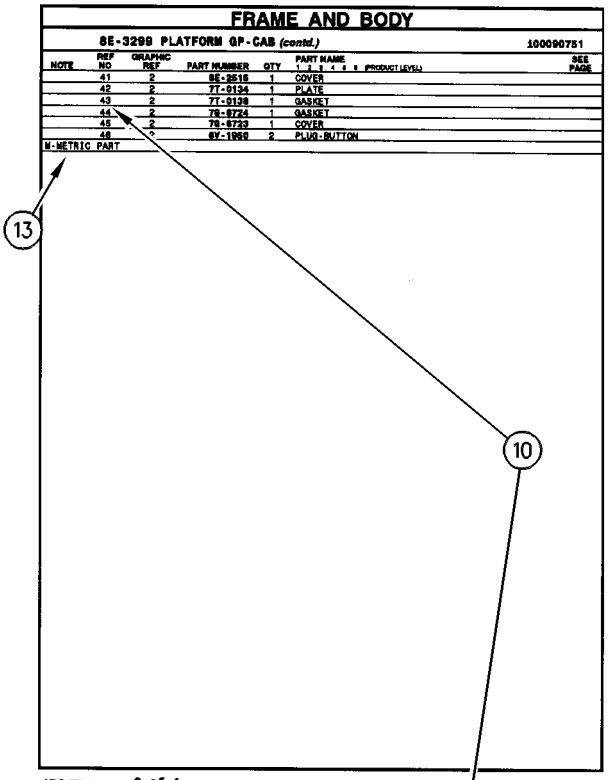
FRAME AND BODY
8E-3299 PLATFORM GP-CAB (contd.)
100090751
2 of 4

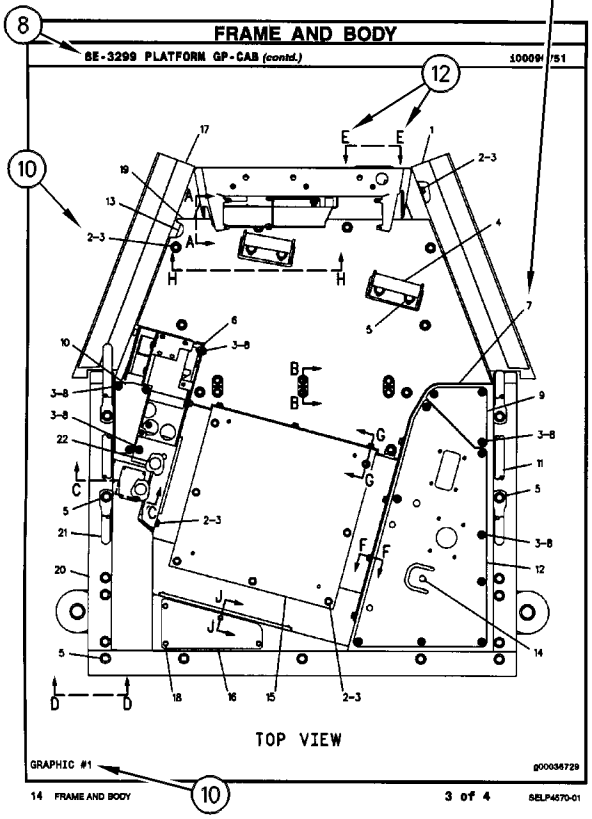
FRAME AND BODY
8E-3299 PLATFORM GP-CAB (contd.)
TOP VIEW
GRAPHIC #1
g00036729
3 of 4

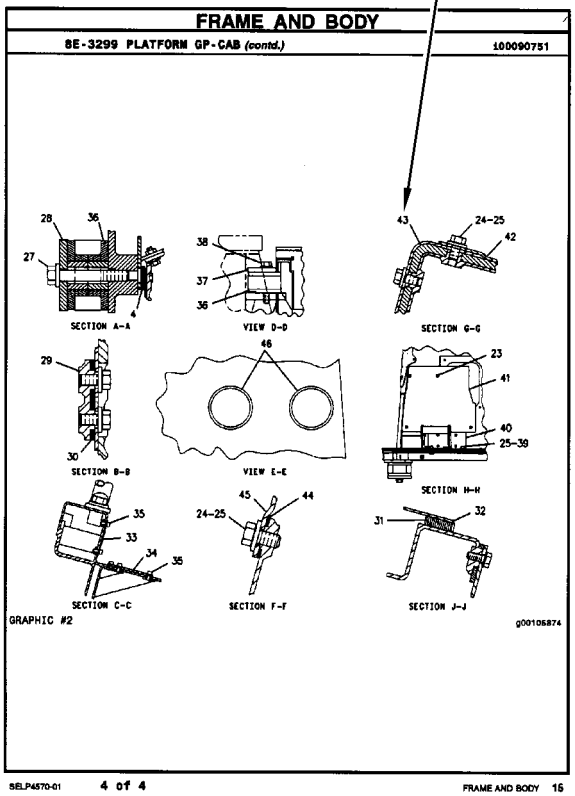
FRAME AND BODY
8E-3299 PLATFORM GP-CAB (contd.)
100090751
SECTION A-A
VIEW D-D
SECTION G-G
SECTION B-B
VIEW E-E
SECTION H-H
SECTION C-C
SECTION F-F
SECTION J-J
GRAPHIC #2
g00105874
4 of 4

1. IDENTIFICATION DE LA MACHINE

Toutes les machines Caterpillar portent un numéro d'identification (PIN). Certains composants des machines peuvent porter des numéros de série (S/N). En général, parmi les composants qui portent des numéros de série il y a les moteurs, les transmissions, les bulldozers et les rippers. En plus, la machine et le moteur peuvent recevoir des numéros de version, et dans certains cas, de modification. Ces numéros figurent sur les plaques de numéro de série et sur la plaque signalétique principale qui se trouve dans le poste de conduite.

Les concessionnaires Caterpillar doivent connaître tous ces numéros pour identifier correctement les pièces.

SIS *Nouvelle Caractéristique*

À partir du premier trimestre 2001, le numéro d'identification produit (PIN) Caterpillar passe de 8 à 17 caractères. Afin de permettre une identification uniforme des matériels, Caterpillar et d'autres constructeurs de machines de travaux publics s'efforcent de se conformer à la norme la plus récente portant sur les numéros d'identification des produits. Les numéros d'identification (PIN) de machines de chantier sont définis par la norme ISO 10261. Le nouveau format du numéro d'identification est valable pour toutes les machines et tous les groupes électrogènes Caterpillar. Le numéro d'identification produit (PIN) figurant sur la plaque et sur le châssis se composera de 17 caractères. Le nouveau format ressemblera à ceci:

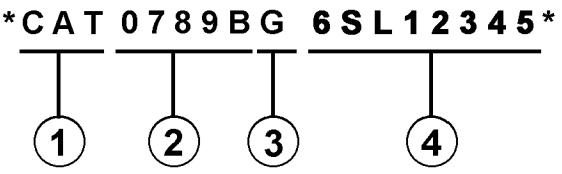

Il se décomposera de la façon suivante:

1. Code international de fabrication de Caterpillar (caractères 1 à 3)

2. Descriptif de la machine (caractères 4 à 8)

3. Contrôle (caractère 9)

4. Indicateur machine (MIS) ou numéro de séquence produit (caractères 10 à 17). Ceux-ci étaient auparavant désignés sous le terme de numéro de série.

Les machines et les groupes électrogènes construits avant le premier trimestre 2001 garderont le format à 8 caractères du numéro d'identification produit (PIN).

Les organes tels que les moteurs, les boîtes de vitesses, les essieux, etc., continueront d'être désignés par un numéro de série (S/N) à 8 caractères.

2. COMMANDE DE PIÈCES

⚠ DANGER

Lorsqu'il faut remplacer des pièces de rechange pour ce produit Caterpillar recommande d'utiliser les pièces de rechange Caterpillar ou les pièces qui ont des spécifications équivalentes dont les dimensions physiques, le type, la force et le matériau. Ces équivalences ne se limitent pas à l'énoncé précédent.

L'inobservation de cette mise en garde peut entraîner des défaillances prématurées, des dommages au produit, des blessures ou même la mort.

Les concessionnaires Caterpillar fournissent dans le monde entier des pièces de rechange de qualité Caterpillar. Leurs stocks de pièces sont constamment réapprovisionnés et comptent toutes les pièces nécessaires pour assurer la bonne marche de vos machines Caterpillar. Certains concessionnaires proposent également des kits de réparation ou des pièces rénovées, ce qui permet de choisir la solution la plus économique dans une situation donnée. Lors des commandes de pièces, mentionner la quantité, le numéro et la désignation des pièces ainsi que le numéro de série ou le numéro d'identification (PIN) de la machine pour laquelle ces pièces sont requises.

3. ORGANISATION DU CATALOGUE DE PIÈCES

Les renseignements sur les produits sont présentés sous forme de "Information element" (élément d'information) représentant tous les composants d'un modèle donné. "Engine Arrangement" (version de moteur) et "Seat Group" (assemblage de siège)" sont des exemples d'éléments d'information. Les éléments d'information sont classés par ordre alphabétique par la désignation standard des pièces et par numéros de pièces dans chaque partie importante du manuel.

4. TABLE DES MATIÈRES

SIS *Nouvelle Caractéristique*

La table des matières se trouve au début du manuel. La table des matières fournit la liste de tous les chapitres du manuel avec une liste complète de tous les éléments d'information classés par ordre d'apparition dans le manuel. Les numéros de page sont fournis afin que l'utilisateur puisse trouver rapidement les illustrations détaillées concernant l'identification des pièces et les listes des pièces d'entretien.

5. INDEX DES PIÈCES D'ENTRETIEN

La rubrique "Index des pièces d'entretien" qui se trouve au début du manuel renvoie aux pièces d'entretien les plus fréquemment utilisées en précisant la désignation, la quantité, là où la pièce est utilisée et le numéro de page. Ces pièces sont classés par ordre alphabétique.

6. INDEX

L'index qui se trouve vers le début du manuel est une liste alphabétique de tous les éléments d'information du manuel. Les numéros de page sont fournis afin que l'utilisateur puisse trouver rapidement les illustrations détaillées concernant l'identification des pièces et les listes des pièces d'entretien.

7. INDEX DES NUMÉROS DE PIÈCES

Une liste numérique de tous les numéros de pièces et des pages correspondantes se trouve à la fin du manuel.

8. LÉGENDES

Les légendes qui se trouvent en haut de chaque page de chaque élément d'information fournissent le numéro de pièce, la désignation ainsi que des renseignements supplémentaires sur les pièces. Les renseignements concernant les numéros de série (S/N) qui se trouvent dans chaque légende doivent être utilisés pour sélectionner les informations correctes pour un moteur donné. Les informations concernant les options de remplacement sur le chantier, l'identification des composants des équipements offerts en option et les lieux d'application sont aussi fournies.

SIS *Nouvelle Caractéristique*

Les lettres de la première ligne d'une légende sont présentées en police plus grande afin d'indiquer le début d'une unité d'information. Les légendes qui pourraient être requises pour des pages supplémentaires afin d'illustrer une unité d'information seront présentées en police standard et comprendront le terme (à suivre).

9. PIÈCES NON FOURNIES

SIS *Nouvelle Caractéristique*

Dans certains cas, il est nécessaire d'indiquer les pièces non fournies qui sont en aval de la liste des pièces d'entretien. Les numéros des pièces non fournies dans la liste des pièces et les légendes seront en italique pour signaler qu'ils ne sont pas disponibles.

10. NUMÉROS DE RÉFÉRENCE DE LA LISTE DES PIÈCES

SIS *Nouvelle Caractéristique*

Les numéros indiqués dans la colonne des numéros de références correspondent aux numéros utilisés dans les illustrations auxquelles ils sont associés. Un suffixe alphabétique peut être ajouté à un numéro de référence pour identifier la liste des articles en aval. Les numéros indiqués dans la colonne de référence de l'illustration renvoient à l'identification du numéro affiché dans le coin inférieur gauche de chaque illustration. Le numéro de référence de l'illustration pourrait être utilisé avec le numéro de référence de l'article pour déterminer le numéro de pièce correct. Il peut y avoir une omission intentionnelle d'un numéro de référence dans une liste de pièces suite à la mise à jour des informations en vue de refléter les numéros de pièces les plus récentes.

11. DÉSIGNATIONS DE PIÈCES EN RETRAIT

Lorsqu'une désignation de pièce est en retrait, cela veut dire que l'article en regard fait partie de l'ensemble sous lequel il figure.

12. LETTRES DE RÉFÉRENCE DES ILLUSTRATIONS

Quand cela est nécessaire, les illustrations comportent des lettres de référence (A, B, C, etc.) pour montrer le trajet des canalisations et faisceaux de câbles d'un point à l'autre. Elles sont utilisées également pour indiquer où relier les illustrations séparées auparavant.

13. ABRÉVIATIONS ET SYMBOLES

O.D. – Diamètre extérieur
I.D. – Diamètre intérieur
A – Ne fait pas partie de ce groupe
B – Utiliser selon besoin
C – Modification
D – Commander par mètre
E – Commander par centimètre
F – Non représenté
G – Commander par pouce
I – Voir "Hydraulic Information System"
M – Pièce métrique
R – Pièce rénovée éventuellement disponible
Y – Illustration séparée
Z – Non fourni séparément

NOTA:

En raison du progrès technique et des améliorations continuelles apportées au matériel, votre machine comporte peut-être des modifications qui n'apparaissent pas dans la présente publication. En cas de doute sur un détail de votre machine Caterpillar ou sur le texte de la présente publication, adressez-vous à votre concessionnaire Caterpillar.

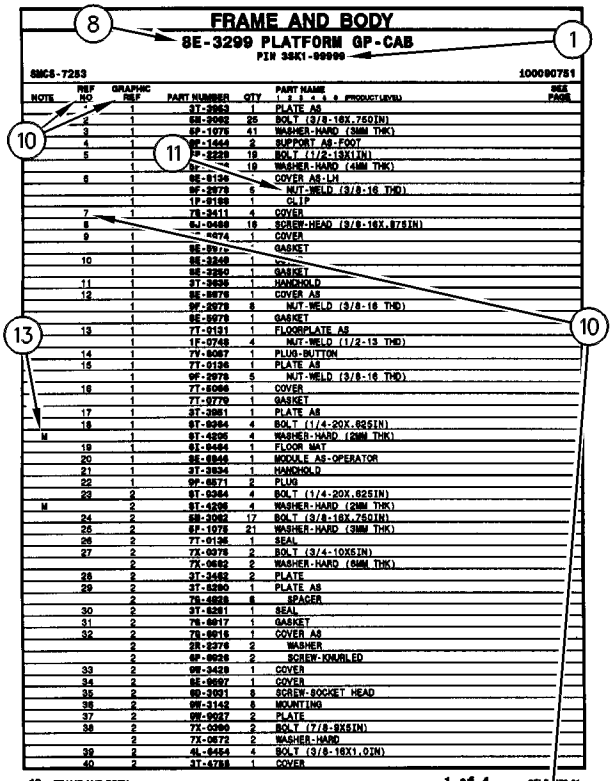

FRAME AND BODY

8E-3299 PLATFORM GP-CAB

PIN 3SK1-99999

SMCS-7253 100090751

NOTE	REF NO	GRAPHIC REF	PART NUMBER	QTY	PART NAME 1 2 3 4 5 (PRODUCT LEVEL)	SEE PAGE
	*	1	3T-2953	1	PLATE AS	
	2	1	5S-2062	25	BOLT (3/8-16X.750IN)	
	3	1	9F-1075	41	WASHER-HARD (3MM THK)	
	4	1	9W-1444	2	SUPPORT AS-FOOT	
	5	1	5P-2229	18	BOLT (1/2-13X1IN)	
		1	9F-	18	WASHER-HARD (4MM THK)	
	6	1	8E-6136	1	COVER AS-LH	
		1	9F-2978	5	NUT-WELD (3/8-16 THD)	
		1	1P-0169	1	CLIP	
	7	1	7S-2411	4	COVER	
	8	1	9J-0498	18	SCREW-HEAD (3/8-16X.875IN)	
	9	1	-4474	1	COVER	
		1	8E-897	1	GASKET	
	10	1	8E-3248	1		
		1	8E-3250	1	GASKET	
	11	1	3T-2636	1	HANDHOLD	
	12	1	8E-8878	1	COVER AS	
		1	9F-2978	8	NUT-WELD (3/8-16 THD)	
		1	8E-8878	1	GASKET	
	13	1	7T-0131	1	FLOORPLATE AS	
		1	1F-0748	4	NUT-WELD (1/2-13 THD)	
	14	1	7V-8087	1	PLUG-BUTTON	
	15	1	7T-0136	1	PLATE AS	
		1	9F-2978	5	NUT-WELD (3/8-16 THD)	
	16	1	7T-8066	1	COVER	
		1	7T-8779	1	GASKET	
	17	1	3T-3951	1	PLATE AS	
	18	1	6T-8364	4	BOLT (1/4-20X.625IN)	
M		1	9T-4205	4	WASHER-HARD (2MM THK)	
	19	1	6L-8494	1	FLOOR MAT	
	20	1	8E-8846	1	MODULE AS-OPERATOR	
	21	1	3T-3834	1	HANDHOLD	
	22	1	9P-8671	2	PLUG	
	23	2	6T-8364	4	BOLT (1/4-20X.625IN)	
M		2	9T-4205	4	WASHER-HARD (2MM THK)	
	24	2	5S-2062	17	BOLT (3/8-16X.750IN)	
	25	2	9F-1075	21	WASHER-HARD (3MM THK)	
	26	2	7T-0135	1	SEAL	
	27	2	7X-0075	2	BOLT (3/4-10X5IN)	
		2	7X-0682	2	WASHER-HARD (6MM THK)	
	28	2	3T-3452	2	PLATE	
	29	2	3T-8290	1	PLATE AS	
		2	7S-4828	8	SPACER	
	30	2	3T-8281	1	SEAL	
	31	2	7S-8817	1	GASKET	
	32	2	7S-8815	1	COVER AS	
		2	2S-2276	2	WASHER	
		2	9F-8926	2	SCREW-KNURLED	
	33	2	9W-3429	1	COVER	
	34	2	8E-8897	1	COVER	
	35	2	9D-3031	8	SCREW-SOCKET HEAD	
	36	2	9W-3142	8	MOUNTING	
	37	2	9W-8027	2	PLATE	
	38	2	7X-0090	2	BOLT (7/8-9X8IN)	
		2	7X-0672	2	WASHER-HARD	
	39	2	4L-8454	4	BOLT (3/8-16X1.0IN)	
	40	2	3T-4788	1	COVER	

12 FRAME AND BODY 1 of 4 SELP4570-01

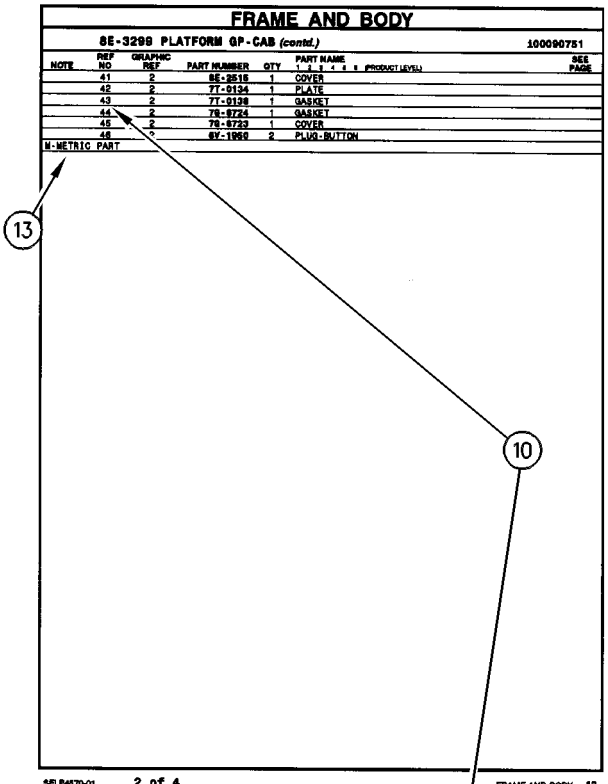

FRAME AND BODY

8E-3299 PLATFORM GP-CAB (contd.) 100090751

NOTE	REF NO	GRAPHIC REF	PART NUMBER	QTY	PART NAME 1 2 3 4 5 (PRODUCT LEVEL)	SEE PAGE
	41	2	8E-2516	1	COVER	
	42	2	7T-0134	1	PLATE	
	43	2	7T-0138	1	GASKET	
	44	2	7S-8724	1	GASKET	
	45	2	7S-8723	1	COVER	
	46	2	6V-1950	2	PLUG-BUTTON	

M-METRIC PART

SELP4570-01 2 of 4 FRAME AND BODY 13

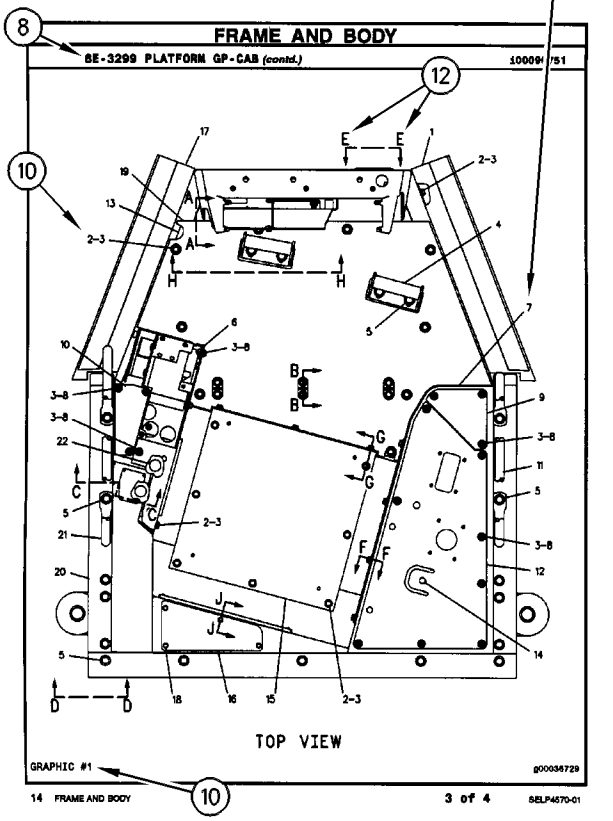

FRAME AND BODY

8E-3299 PLATFORM GP-CAB (contd.) 100090751

TOP VIEW

GRAPHIC #1 g00036729

14 FRAME AND BODY 3 of 4 SELP4570-01

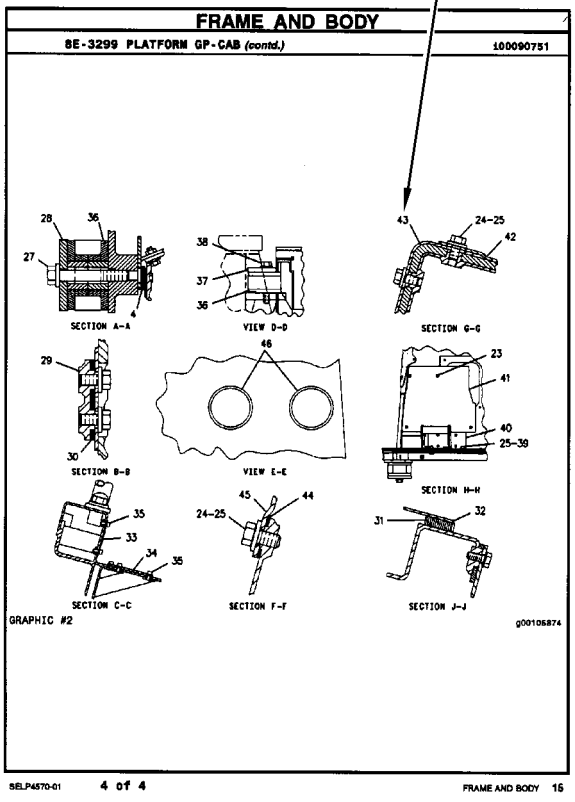

FRAME AND BODY

8E-3299 PLATFORM GP-CAB (contd.) 100090751

SECTION A-A

VIEW D-D

SECTION G-G

SECTION B-B

VIEW E-E

SECTION H-H

SECTION C-C

SECTION F-F

SECTION J-J

GRAPHIC #2 g00105874

SELP4570-01 4 of 4 FRAME AND BODY 16

INFORMACIÓN GENERAL

1. MÁQUINAS

Las máquinas Caterpillar se identifican con Números de Identificación del Producto (PIN). Algunos componentes incluídos en la máquina pueden estar identificados con Números de Serie (N/S). Los componentes que tienen típicamente esta identificación incluyen motores, transmisiones, hojas topadoras y desgarradores. La máquina y el motor se identifican además con Números de Configuración y en algunos casos, Números de Modificación. Estos números están en las placas de identificación del producto o en la placa principal en la cabina del operador.

Los distribuidores Caterpillar necesitan estos números para identificar con exactitud los números de piezas de repuesto.

SIS *Nueva Característica*

A partir del primer trimestre del 2001, el Número de Identificación de Producto (PIN) de Caterpillar cambió de 8 a 17 caracteres. Para hacer más uniforme el método de identificación de equipos, Caterpillar y otros fabricantes de equipo de construcción han tomado medidas para cumplir con la versión más reciente de la norma de numeración de identificación de productos. Los Números de Identificación de Producto para máquinas que no se operan en carreteras son definidos por la norma ISO 10261. El nuevo formato PIN corresponderá a todas las máquinas y grupos electrógenos Caterpillar. Las placas y los caracteres PIN estampados en el bastidor mostrarán el PIN de 17 caracteres. El nuevo formato tendrá la apariencia siguiente:

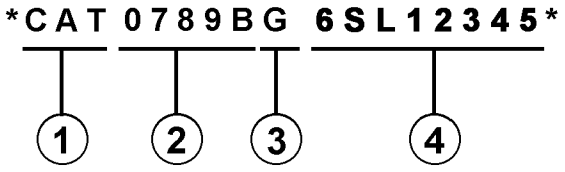

Significado de los caracteres:

1. Código de Fabricación Mundial de Caterpillar (caracteres 1-3)

2. Sección Descriptor de la Máquina (caracteres 4-8)

3. Carácter de Verificación (carácter 9)

4. Sección Indicador de la Máquina (MIS) o Número de Secuencia de Producto (caracteres 10-17). Anteriormente, estos caracteres constituían el Número de Serie.

Las máquinas y grupos electrógenos producidos antes del primer semestre del 2001 mantendrán su formato PIN de 8 caracteres.

Los componentes como motores, transmisiones, ejes, herramientas de trabajo, etc., continuarán usando un Número de Serie (S/N) de 8 caracteres.

2. COMO PEDIR REPUESTOS

⚠ ADVERTENCIA

Cuando se necesiten piezas de repuesto para este producto, Caterpillar recomienda usar piezas de repuesto Caterpillar o piezas que tengan especificaciones equivalentes incluyendo, pero sin estar limitadas a, dimensiones físicas, tipo, fortaleza y material.

El no hacer caso de esta advertencia puede llevar a fallas prematuras, daños al producto y lesiones graves o mortales.

Las piezas de repuesto Caterpillar de calidad están a la disposición de los distribuidores Caterpillar en todo el mundo. Sus existencias actualizadas incluyen todas las piezas normalmente requeridas para proteger su inversión en máquinas Caterpillar. Los distribuidores pueden tener juegos de reparación o piezas remanufacturadas para permitir la selección de la mejor alternativa de reparación en un caso en particular. Al pedir piezas de repuesto, especifique en su pedido la cantidad, el número de pieza, el nombre de la pieza y el número de serie/número de identificación del producto, de la máquina para la cual se necesitan estas piezas.

3. ORGANIZACION DEL MANUAL DE PIEZAS

La información sobre el producto, se presenta en este manual, como "elementos de información" que representan todos los componentes de un modelo específico. Las configuraciones de motores y los grupos de asientos son ejemplos de elementos de información. Los elementos de información están organizados primeramente por nombres de piezas en orden alfabético y en segundo lugar, por el número de pieza dentro de cada sección principal del manual.

4. CONTENIDO

La página de Contenido se encuentra al principio del manual. El Contenido indica cada sección del manual con una lista completa de todos los elementos de información organizados en el orden que aparecen en el manual. Los números de página proporcionan una referencia rápida a las ilustraciones detalladas de identificación de piezas y a las listas de componentes de repuesto de dichas piezas.

5. ÍNDICE DE PIEZAS DE MANTENIMIENTO

Al principio de este catálogo se encuentra un índice de los números de piezas utilizadas más frecuentemente para el mantenimiento, que incluye descripción, cantidad necesaria, lugar de utilización y número de página. Esta información está organizada alfabéticamente, por descripción de la pieza.

6. ÍNDICE

El Índice, ubicado cerca del principio del manual, es una lista en orden alfabético de todos los elementos de información incluídos en el manual. Los números de página proporcionan una referencia rápida a las ilustraciones detalladas de identificación de piezas y a las listas de componentes de repuesto de dichas piezas.

7. INDICE NUMÉRICO DE PIEZAS

Un índice numérico de piezas con el correspondiente número de página aparece al final de este catálogo.

8. TÍTULOS

Los títulos ubicados al principio de cada elemento de información identifican el número y el nombre de la pieza junto con información descriptiva. Se debe usar información sobre los Números de Identificación de Pieza (PIN) y los números de serie (S/N) para seleccionar la información que corresponda a una máquina en particular. También se suministra información sobre las opciones de reparación en el campo, la identificación de componentes de accesorios optativos y el lugar de ubicación de la pieza ("es parte de").

La primera línea del título se muestra con un tipo de letra más grande para indicar el comienzo de un elemento de información. Si se requieren páginas adicionales para ilustrar un elemento de información, los títulos se muestran con un tipo de letra normal y la continuación se indica entre paréntesis.

9. PIEZAS QUE NO SE SUMINISTRAN COMO REPUESTO

En algunos casos es necesario indicar piezas que no se suministran como repuesto pero que pueden estar conectadas a listas de componentes de otras piezas de repuesto. En tal caso, dichas piezas se muestran en cursiva para indicar que no son piezas disponibles.

10. NÚMEROS DE REFERENCIA

Los números en la columna de No. de Referencia corresponden a los números indicados en la ilustración que pertenece a ese número de pieza. Los números que tienen un sufijo alfabético identifican artículos de las listas de componentes de piezas. Los números en la columna de Referencia de la ilustración se identifican en la esquina inferior izquierda de cada ilustración. Para determinar el número de pieza correcto se puede utilizar tanto el No. de Referencia de la ilustración como el No. de Referencia del artículo. A medida que se actualiza la información para indicar los más recientes números de piezas de repuesto, puede omitirse intencionalmente un No. de Referencia en una lista de componentes de piezas.

11. NOMBRES DE PIEZA SANGRADOS

Cuando el nombre de una pieza está sangrado en una lista, significa que esta pieza forma parte del grupo o conjunto del renglón inmediatamente superior.

12. LETRAS DE REFERENCIA DE ILUSTRACIONES

Las ilustraciones contienen algunas veces letras de referencia (A, B, C etc.) cuyo propósito es seguir el trayecto de líneas y mazos de cables de un punto a otro. También se utilizan para mostrar dónde volver a unir ilustraciones que se habían separado.

13. ABREVIATURAS Y SIMBOLOS

O.D. – Diámetro exterior
I.D. – Diámetro interior
A – No es pieza de este grupo
B – Utilizado según la demanda
C – Indica cambio
D – Se pide por metro
E – Se pide por centímetro
F – No se muestra
G – Se pide por pulgada
I – Consulte el sistema de información hidráulica
M – Pieza métrica
R – Puede estar disponible como pieza remanufacturada
Y – Ilustración separada
Z – No se suministra por separado

SIS *Nueva Característica*

14.<END>

Este símbolo indica el final de un elemento de información.

NOTA:

Las contínuas mejoras y adelantos en diseño podrían originar cambios a su máquina que no se incluyen en esta publicación. Cuando tenga alguna pregunta acerca de su producto Caterpillar o de esta publicación, consulte al distribuidor Caterpillar para obtener la información más reciente.

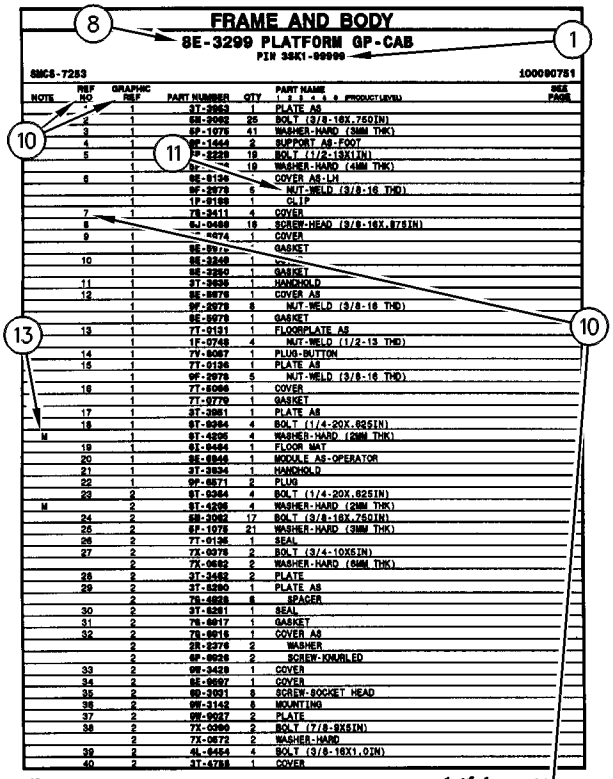
FRAME AND BODY
8E-3299 PLATFORM GP-CAB
PIN 35K1-99999
SMCS-7253
100090751
NOTE | REF NO | GRAPHIC REF | PART NUMBER | QTY | PART NAME | SEE PAGE
1 | 1 | 3T-2953 | PLATE AS
2 | 1 | 5E-2062 | 25 | BOLT (3/8-16X.750IN)
3 | 1 | 9F-1075 | 41 | WASHER-HARD (3MM THK)
4 | 1 | 9F-1444 | 2 | SUPPORT AS-FOOT
5 | 1 | 7P-2229 | 19 | BOLT (1/2-13X1IN)
1 | 19 | WASHER-HARD (4MM THK)
6 | 1 | 8E-6136 | COVER AS-LH
1 | 9F-2978 | 5 | NUT-WELD (3/8-16 THD)
1 | 1P-0189 | 1 | CLIP
7 | 1 | 7S-2411 | 4 | COVER
8 | 9J-0498 | 18 | SCREW-HEAD (3/8-16X.875IN)
9 | 1 | 4474 | 1 | COVER
1 | 8E-8976 | GASKET
10 | 1 | 8E-3248 | 1
1 | 8E-3250 | 1 | GASKET
11 | 1 | 3T-2936 | 1 | HANDHOLD
12 | 1 | 8E-8978 | 1 | COVER AS
1 | 9F-2978 | 8 | NUT-WELD (3/8-16 THD)
1 | 8E-8979 | 1 | GASKET
13 | 1 | 7T-0131 | 1 | FLOORPLATE AS
1 | 1F-0748 | 4 | NUT-WELD (1/2-13 THD)
14 | 1 | 7V-8087 | 1 | PLUG-BUTTON
15 | 1 | 7T-0136 | 1 | PLATE AS
1 | 9F-2978 | 5 | NUT-WELD (3/8-16 THD)
16 | 1 | 7T-8966 | 1 | COVER
1 | 7T-8779 | 1 | GASKET
17 | 1 | 3T-3951 | 1 | PLATE AS
18 | 1 | 6T-8364 | 4 | BOLT (1/4-20X.625IN)
M | 1 | 9T-4205 | 4 | WASHER-HARD (2MM THK)
19 | 1 | 6L-8494 | 1 | FLOOR MAT
20 | 1 | 8E-8846 | 1 | MODULE AS-OPERATOR
21 | 1 | 3T-3934 | 1 | HANDHOLD
22 | 1 | 9P-8571 | 2 | PLUG
23 | 2 | 6T-8364 | 4 | BOLT (1/4-20X.625IN)
M | 2 | 9T-4205 | 4 | WASHER-HARD (2MM THK)
24 | 2 | 5E-2062 | 17 | BOLT (3/8-16X.750IN)
25 | 2 | 9F-1075 | 21 | WASHER-HARD (3MM THK)
26 | 2 | 7T-0135 | 1 | SEAL
27 | 2 | 7X-0975 | 2 | BOLT (3/4-10X5IN)
2 | 7X-0652 | 2 | WASHER-HARD (6MM THK)
28 | 2 | 3T-3452 | 2 | PLATE
29 | 2 | 3T-8290 | 1 | PLATE AS
2 | 7S-4828 | 8 | SPACER
30 | 2 | 3T-8281 | 1 | SEAL
31 | 2 | 7S-8817 | 1 | GASKET
32 | 2 | 7S-8815 | 1 | COVER AS
2 | 2R-3276 | 2 | WASHER
2 | 9F-9926 | 2 | SCREW-KNURLED
33 | 2 | 9W-3429 | 1 | COVER
34 | 2 | 8E-8897 | 1 | COVER
35 | 2 | 9D-3931 | 8 | SCREW-SOCKET HEAD
36 | 2 | 9W-3142 | 8 | MOUNTING
37 | 2 | 9W-9027 | 2 | PLATE
38 | 2 | 7X-0990 | 2 | BOLT (7/8-9X8IN)
2 | 7X-0672 | 2 | WASHER-HARD
39 | 2 | 4L-8454 | 4 | BOLT (3/8-16X1.0IN)
40 | 2 | 3T-4788 | 1 | COVER
12 FRAME AND BODY
1 of 4
SELP4570-01

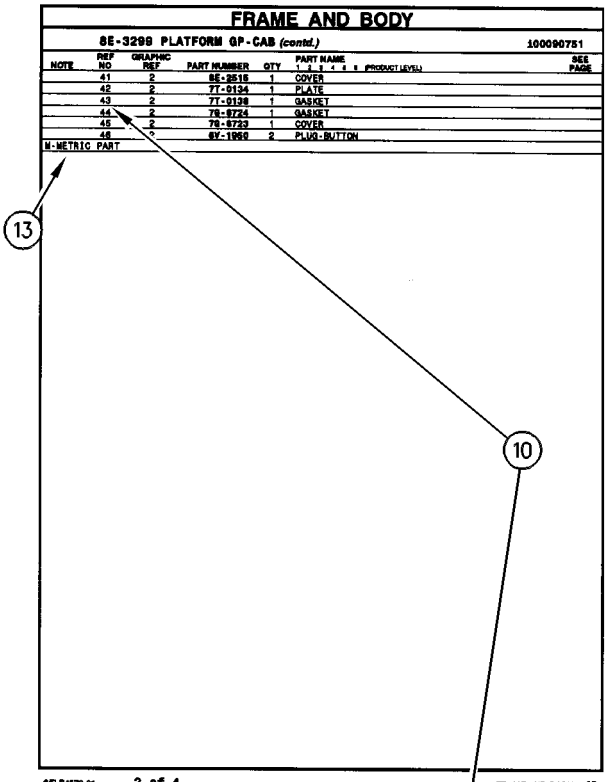
FRAME AND BODY
8E-3299 PLATFORM GP-CAB (contd.)
100090751
NOTE | REF NO | GRAPHIC REF | PART NUMBER | QTY | PART NAME | SEE PAGE
41 | 2 | 8E-2516 | 1 | COVER
42 | 2 | 7T-0134 | 1 | PLATE
43 | 2 | 7T-0138 | 1 | GASKET
44 | 2 | 7S-8724 | 1 | GASKET
45 | 2 | 7S-8723 | 1 | COVER
46 | 6V-1950 | 2 | PLUG-BUTTON
M-METRIC PART
SELP4570-01
2 of 4
FRAME AND BODY 13

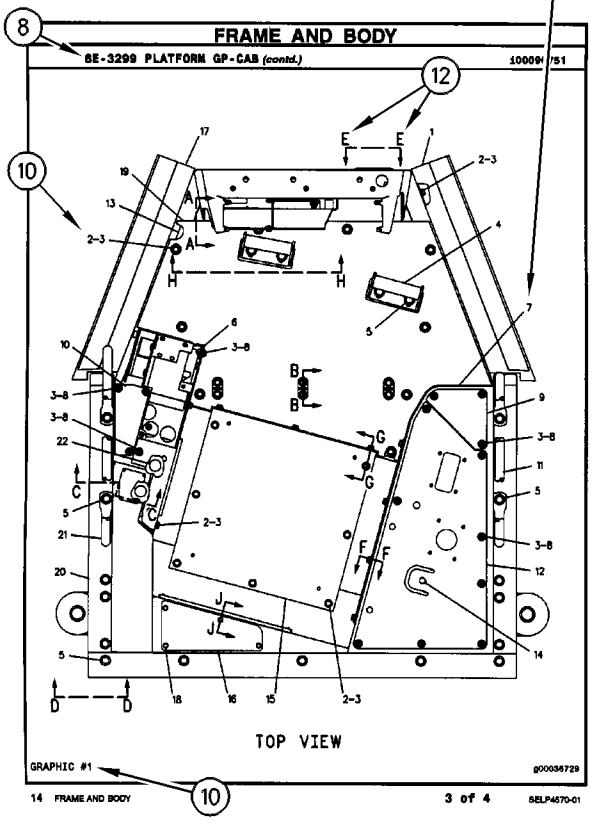
FRAME AND BODY
8E-3299 PLATFORM GP-CAB (contd.)
100090751
TOP VIEW
GRAPHIC #1
g00036729
14 FRAME AND BODY
3 of 4
SELP4570-01

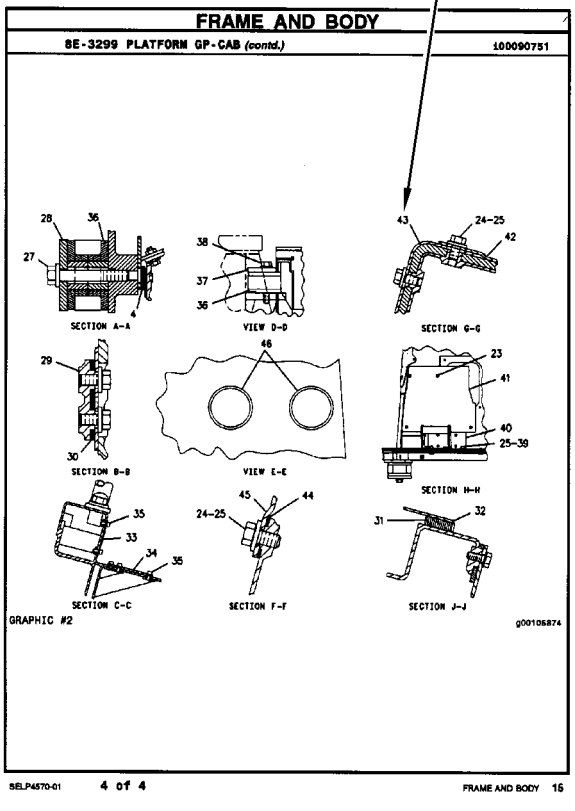
FRAME AND BODY
8E-3299 PLATFORM GP-CAB (contd.)
100090751
SECTION A-A
VIEW D-D
SECTION G-G
SECTION B-B
VIEW E-E
SECTION H-H
SECTION C-C
SECTION F-F
SECTION J-J
GRAPHIC #2
g00105874
SELP4570-01
4 of 4
FRAME AND BODY 15

INFORMAÇÃO GERAL

1. IDENTIFICAÇÃO DA MÁQUINA

As máquinas Caterpillar são identificadas pelos Números de Informação do Produto (PIN). Alguns componentes incluídos numa máquina podem ser identificados por Números de Série (S/N). Componentes típicos que serão enumerados com números de série incluem motores, transmissões, lâminas e ríperes. Além do número de série, a máquina e o motor são ainda identificados por números de arranjo e, em alguns casos, números de modificações. Tais números encontram-se na(s) placa(s) de identificação do produto e na placa mestre no compartimento do operador.

SIS *Novidades*

A partir do primeiro trimestre de 2001 o Número de Identificação de Produto da Caterpillar (PIN) precisa ser mudado de 8 para 17 caracteres. Esforçando-se para fornecer uma identificação uniforme de equipamentos, a Caterpillar e outros fabricantes de equipamento de construção estão mudando para atender a versão mais atualizada do padrão de identificação de produtos. Os números de PIN para produtos de aplicações não rodoviárias são definidos pela ISO 10261. O novo formato de número PIN será adotado em todas as máquinas e grupos geradores Caterpillar. As placas e as marcações do chassi mostrarão os 17 dígitos de PIN. O novo formato terá a seguinte disposição:

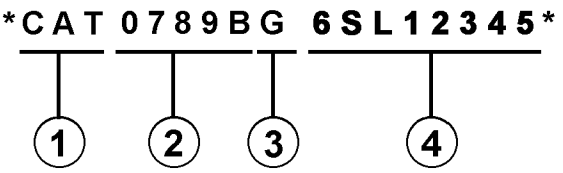

Onde:

1. Código de Fabricação Mundial da Caterpillar (dígitos 1-3)

2. Descrição da Máquina (dígitos 4-8)

3. Dígito de Verificação (dígito 9)

4. Seção de Indicador da Máquina (MIS) ou Número de Seqüência de Produto (dígitos 10-17). Estes eram anteriormente chamados de Número de Série.

Máquinas e grupos geradores produzidos antes do primeiro trimestre de 2001 manterão o formato de 8 caracteres de PIN.

Componentes como motores, transmissões, eixos, ferramentas de trabalho, etc. continuarão a usar Número de Série (S/N) com oito caracteres.

2. COMO OBTER PEÇAS

⚠ CUIDADO

Quando peças de substituição são exigidas para este produto, a Caterpillar recomenda a utilização de peças de substituição Caterpillar ou peças com as especificações equivalentes incluindo, mas não limitadas, à dimensões físicas, tipos, resistência e materiais.

A inobservância desta advertência poderá resultar em falhas prematuras, danos ao produto, ferimentos ou morte.

As Peças de Reposição de Qualidade Caterpillar encontram-se disponíveis nos revendedores Caterpillar no mundo inteiro. Seus estoques de peças são atualizados e incluem todas as peças normalmente necessárias para proteger seu investimento em máquinas Caterpillar. Alguns revendedores podem oferecer jogos de reparo ou peças de troca/remanufaturadas disponíveis como uma opção da alternativa de reparo mais eficaz para uma situação específica. Ao encomendar peças, seu pedido deve especificar a quantidade, o número e o nome da peça e o número de série/número de identificação do produto referentes à máquina para a qual as peças se destinam.

3. ORGANIZAÇÃO DO MANUAL DE PEÇAS

A informação do produto neste manual é apresentada em forma de "elementos de informação" que representam todos os componentes para o modelo específico. Arranjo de Motor e Grupo de Assento são exemplos de elementos de informação. Os elementos de informação são organizados em ordem alfabética por nome de peça ou secundariamente, por número de peça incluído em cada seção principal do manual.

4. LISTA DE CONTEÚDOS

A Lista de Conteúdos (TOC) se encontra no princípio do manual. A Lista de Conteúdos (TOC) relaciona em cada seção do manual uma lista completa com todos os elementos de informação organizados conforme aparecem no manual. Números de página são fornecidos para que se tenha referência rápida de ilustrações de peças detalhadas e listas de conteúdos que podem receber serviço de manutenção.

5. ÍNDICE DE PEÇAS DE MANUTENÇÃO

O Índice de Peças de Manutenção, localizado perto do princípio do manual, faz referência aos números de peça de manutenção usados com maior frequência, fornecendo uma descrição, a quantidade, o uso e o número de página. Esta informação é organizada com a descrição da peça em ordem alfabética.

6. ÍNDICE

O Índice localizado perto do princípio do manual, consiste de uma lista em ordem alfabética de todos os elementos de informação incluídos no manual. Números de página são fornecidos para que se tenha referência rápida de ilustrações de peças detalhadas e listas de conteúdos que podem receber serviço de manutenção.

7. ÍNDICE DE NÚMERO DE PEÇA

Um índice numérico relacionando todos os números de peça e a(s) página(s) correspondentes, aparece no final do manual.

8. LEGENDAS

As legendas localizadas no início de cada elemento de informação identificam o número e o nome de peça, juntamente com informação descritiva adicional. Informações sobre o Número de Informação do Produto (PIN) e o Número de Série (S/N) encontradas em cada legenda devem ser usadas para selecionar a informação correta sobre uma máquina específica. Opções de substituição no campo, identificação de componentes de acessórios opcionais e informações sobre onde são utilizados ("parte de") são também fornecidas.

A primeira linha de uma legenda é indicada em tipo maior para indicar o princípio de um elemento de informação. Legendas para páginas adicionais que podem ser necessárias para ilustrar um elemento de informação serão apresentadas em tipo padrão e incluirão o termo *(continua)* .

9. NÃO DISPONÍVEL SEPARADAMENTE

Em alguns casos, é necessário mostrar peças não disponíveis separadamente que têm uma ligação com listas de conteúdos de nível inferior que podem receber serviço de manutenção. Os números de peça destes componentes não disponíveis aparecerão em *itálico* , a fim de indicar que não estão disponíveis.

10. NÙMEROS DE REFERÊNCIA À LISTA DE PEÇAS

Os números indicados na coluna Ref No (No. de Referência) correspondem-se aos números usados no(s) gráfico(s) correspondente(s). Um sufixo com letras pode ser acrescentado a um número de referência para identificar itens de conteúdo de nível inferior. Os números indicados na coluna Graphic Ref (Referência de Gráfico) referem-se ao identificador de número de gráfico presente no canto esquerdo inferior de cada ilustração. O número de Referência de Gráfico pode ser usado em combinação com o item Ref No para determinar-se o número de peça correto. Poderá haver omissão intencional de um número de referência (Ref No) de uma lista de conteúdos uma vez que as informações são atualizadas para refletir os números de peça mais recentes que podem receber serviço de manutenção.

11. NOMES DE PEÇAS DESALINHADOS

Quando um nome de peça encontra-se desalinhado numa lista de peças, significa que tal item faz parte do (está incluído no) grupo ou conjunto sob o qual está relacionado.

12. LETRAS DE REFERÊNCIA NAS ILUSTRAÇÕES

Quando necessário, as ilustrações contêm letras de referência (A, B, C, etc.) que são utilizadas para seguir tubulações e cabos elétricos de um ponto a outro. Também foram utilizadas para indicar onde se pode reconectar as ilustrações que foram separadas.

13. ABREVIAÇÕES E SÍMBOLOS

O.D. – "Outside Diameter" (Diâmetro Externo)
I.D. – "Inside Diameter" (Diâmetro Interno)
A – Não faz parte deste grupo
B – Use conforme necessário
C – Indica modificação
D – Vendido por metro
E – Vendido por centímetro
F – Não ilustrado
G – Vendido por polegada
I – Consultar o Sistema de Informações Hidráulicas
M – Peça métrica
R – Peça remanufaturada pode estar disponível; consulte o seu revendedor Cat
Y – Ilustração separada
Z – Não disponível separadamente

SIS *Novidades*

14. <END>

Este símbolo indica o final de um elemento de informação.

INFORMAÇÃO GERAL

NOTA:

Os contínuos aperfeiçoamentos e avanços no projeto do produto podem ocasionar modificações em sua máquina que talvez ainda não estejam incluídas nesta publicação. Sempre que surgirem dúvidas quanto a um produto Caterpillar ou quanto à presente publicação, consulte o seu revendedor Caterpillar para obter as informações mais recentes disponíveis.

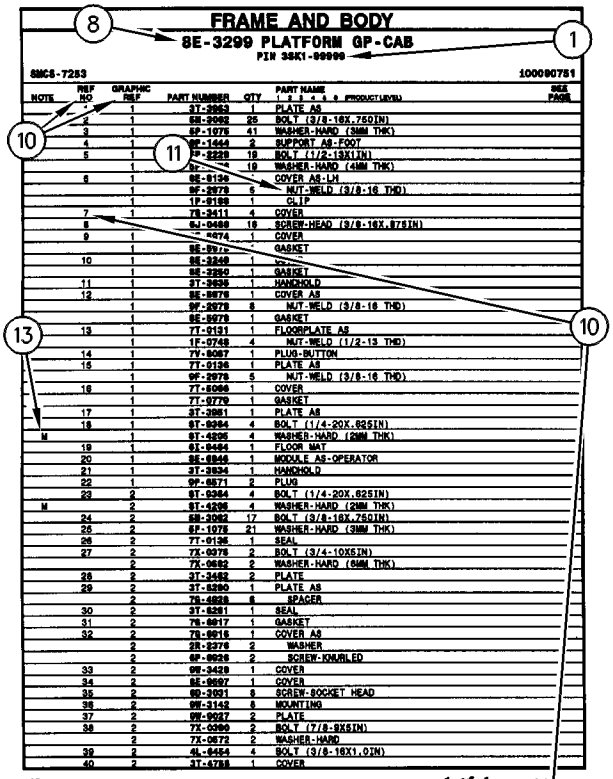

FRAME AND BODY

8E-3299 PLATFORM GP-CAB

PIN 3SK1-99999

SMCS-7253 100090751

NOTE	REF NO	GRAPHIC REF	PART NUMBER	QTY	PART NAME 1 2 3 4 5 6 (PRODUCT LEVEL)	SEE PAGE
		1	3T-2953	1	PLATE AS	
	2	1	5S-2062	25	BOLT (3/8-16X.750IN)	
	3	1	9F-1075	41	WASHER-HARD (3MM THK)	
	4	1	9F-1444	2	SUPPORT AS-FOOT	
	5	1	7P-2229	19	BOLT (1/2-13X1IN)	
		1	9F-	19	WASHER-HARD (4MM THK)	
	6	1	8E-6136	1	COVER AS-LH	
		1	9F-2978	5	NUT-WELD (3/8-16 THD)	
		1	1P-0169	1	CLIP	
	7	1	7S-2411	4	COVER	
	8	1	9J-0498	18	SCREW-HEAD (3/8-16X.875IN)	
	9	1	-4474	1	COVER	
		1	8E-8976	1	GASKET	
	10	1	8E-3248	1		
		1	8E-3250	1	GASKET	
	11	1	3T-2636	1	HANDHOLD	
	12	1	8E-8978	1	COVER AS	
		1	9F-2978	8	NUT-WELD (3/8-16 THD)	
		1	8E-8979	1	GASKET	
	13	1	7T-0131	1	FLOORPLATE AS	
		1	1F-0748	4	NUT-WELD (1/2-13 THD)	
	14	1	7V-8087	1	PLUG-BUTTON	
	15	1	7T-0136	1	PLATE AS	
		1	9F-2978	5	NUT-WELD (3/8-16 THD)	
	16	1	7T-8066	1	COVER	
		1	7T-8779	1	GASKET	
	17	1	3T-3951	1	PLATE AS	
	18	1	6T-8364	4	BOLT (1/4-20X.625IN)	
M		1	9T-4205	4	WASHER-HARD (2MM THK)	
	19	1	6L-8494	1	FLOOR MAT	
	20	1	8E-8846	1	MODULE AS-OPERATOR	
	21	1	3T-3834	1	HANDHOLD	
	22	1	9P-8671	2	PLUG	
	23	2	6T-8364	4	BOLT (1/4-20X.625IN)	
M		2	9T-4205	4	WASHER-HARD (2MM THK)	
	24	2	5S-2062	17	BOLT (3/8-16X.750IN)	
	25	2	9F-1075	21	WASHER-HARD (3MM THK)	
	26	2	7T-0135	1	SEAL	
	27	2	7X-0075	2	BOLT (3/4-10X5IN)	
		2	7X-0682	2	WASHER-HARD (6MM THK)	
	28	2	3T-3452	2	PLATE	
	29	2	3T-8290	1	PLATE AS	
		2	7S-4828	8	SPACER	
	30	2	3T-8281	1	SEAL	
	31	2	7S-8817	1	GASKET	
	32	2	7S-8815	1	COVER AS	
		2	2S-2276	2	WASHER	
		2	9F-8926	2	SCREW-KNURLED	
	33	2	9W-3429	1	COVER	
	34	2	8E-8697	1	COVER	
	35	2	9D-3931	8	SCREW-SOCKET HEAD	
	36	2	9W-3142	8	MOUNTING	
	37	2	9W-8027	2	PLATE	
	38	2	7X-0090	2	BOLT (7/8-9X8IN)	
		2	7X-0672	2	WASHER-HARD	
	39	2	4L-8454	4	BOLT (3/8-16X1.0IN)	
	40	2	3T-4788	1	COVER	

12 FRAME AND BODY 1 of 4 SELP4570-01

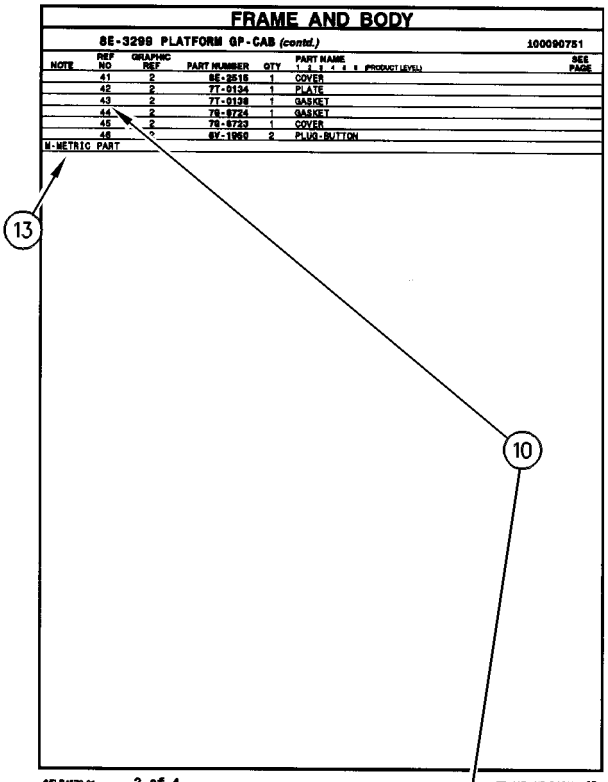

FRAME AND BODY

8E-3299 PLATFORM GP-CAB (contd.) 100090751

NOTE	REF NO	GRAPHIC REF	PART NUMBER	QTY	PART NAME 1 2 3 4 5 6 (PRODUCT LEVEL)	SEE PAGE
	41	2	8E-2516	1	COVER	
	42	2	7T-0134	1	PLATE	
	43	2	7T-0138	1	GASKET	
	44	2	7S-8724	1	GASKET	
	45	2	7S-8723	1	COVER	
	46	2	6V-1950	2	PLUG-BUTTON	

M-METRIC PART

SELP4570-01 2 of 4 FRAME AND BODY 13

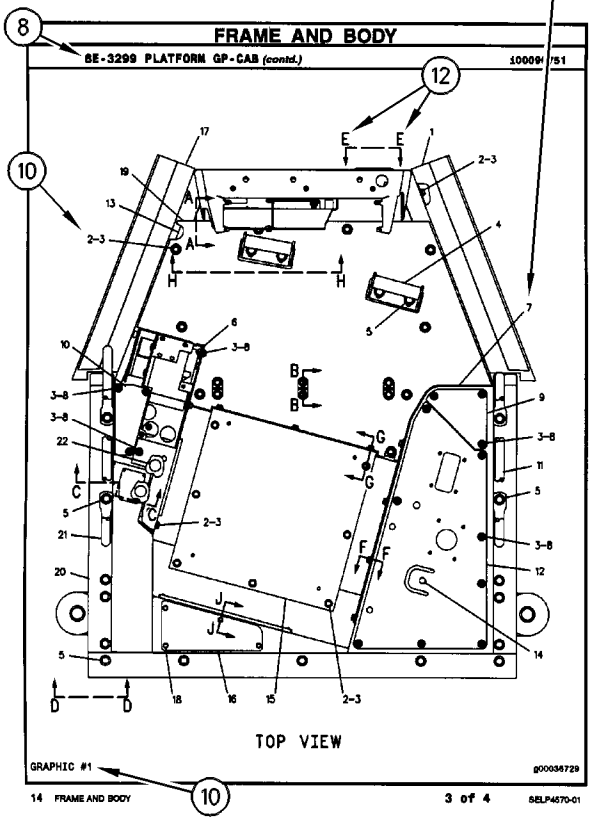

FRAME AND BODY

8E-3299 PLATFORM GP-CAB (contd.) 100090751

TOP VIEW

GRAPHIC #1 g00036729

14 FRAME AND BODY 3 of 4 SELP4570-01

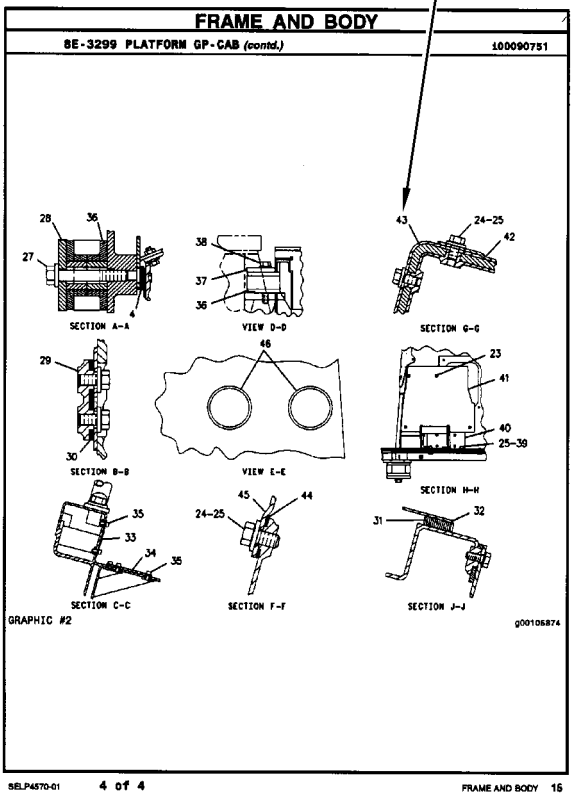

FRAME AND BODY

8E-3299 PLATFORM GP-CAB (contd.) 100090751

SECTION A-A

VIEW D-D

SECTION G-G

SECTION B-B

VIEW E-E

SECTION H-H

SECTION C-C

SECTION F-F

SECTION J-J

GRAPHIC #2 g00105874

SELP4570-01 4 of 4 FRAME AND BODY 16

ALLGEMEINE HINWEISE

1. MASCHINENKENNZEICHNUNG

Caterpillar-Maschinen sind mit PRODUCT IDENTIFICATION NUMBERS (PIN) (Produkt-Identnummern) gekennzeichnet. Einige Baugruppen, z.B. Motoren, Getriebe, Planierschilde und Aufreißer, sind mit SERIAL NUMBERS (S/N) (Seriennummern) gekennzeichnet. An der Maschine und am Motor befinden sich außerdem ARRANGEMENT NUMBERS (Ausrüstungsnummern) sowie in einigen Fällen MODIFICATION NUMBERS (Änderungsnummern). Sie befinden sich auf den PIN-Schildern und auf dem Typenschild im Fahrerhaus.

Bei Ersatzteilbestellungen müssen dem Händler alle diese Nummern zur Verfügung gestellt werden.

SIS *Neu im Parts Manual*

Vom ersten Quartal 2001 ab wurde die Caterpillar Produkt-Identnummer (PIN) von 8 auf 17 Zeichen geändert. Um zur Standardisierung der Produkt-Identnummer beizutragen, sind Caterpillar und andere Baumaschinenhersteller bestrebt, die aktuellste Norm zur Produkt-Identnummerierung einzuführen. Produkt-Identnummern für Baumaschinen sind durch ISO 10261 definiert. Das neue Format der Produkt-Identnummern gilt für alle Caterpillar-Maschinen und -Stromaggregate. Die Produkt-Identschilder und -Identrahmenmarkierung enthalten die aus 17 Zeichen bestehende Identnummer. Das neue Format hat folgende Abschnitte:

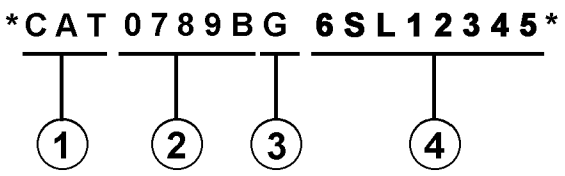

Abschnitte:

1. Caterpillars weltweiter Herstellungscode (Zeichen 1-3)

2. Modell (Zeichen 4-8)

3. Kontrollzeichen (Zeichen 9)

4. Maschinenspezifische Kennung (MIS) oder Produktsequenznummer (Zeichen 10-17). Diese wurde früher als Seriennummer bezeichnet.

Für vor dem ersten Quartal 2001 hergestellte Maschinen und Stromaggregate wird das aus 8 Zeichen bestehende PIN-Format beibehalten.

Bauteile wie z.B. Motoren, Getriebe, Achsen sowie Arbeitsgeräte werden weiterhin eine aus 8 Zeichen bestehende Seriennummer (S/N) aufweisen.

2. BESTELLEN VON ERSATZTEILEN

⚠ WARNUNG

Wenn für diese Maschine Ersatzteile benötigt werden, empfiehlt Caterpillar, ausschließlich Caterpillar-Ersatzteile oder solche zu verwenden, die die gleichen technischen Merkmale hinsichtlich Typ, Festigkeit, Werkzeugeigenschaften und die gleichen Maße aufweisen.

Bei Nichtbeachtung dieser Warnung besteht Verletzungs- oder sogar Lebensgefahr! Ferner kann Nichtbeachtung vorzeitige Ausfälle der Teile und Beschädigung der Maschine zur Folge haben.

Original Caterpillar-Ersatzteile können weltweit bei jedem Caterpillar-Händlern bestellt werden. Die umfangreichen Händlerlager enthalten normalerweise alle Teile, die Sie für Ihre Caterpillar-Maschine benötigen. Einige Händler bieten Reparatursätze, Austausch- oder werküberholte Teile an, so daß Sie eine Auswahl unter verschiedenen Reparaturmöglichkeiten treffen können. Ihre Bestellung muß folgende Angaben enthalten: Anzahl der benötigten Teile, Bestellnummer, Bezeichnung des Teils, Serien-Nr./Produkt-Ident-Nr., Ausrüstungs-Nr. und Änderungs-Nr. der Maschine, für die diese Teile benötigt werden.

3. AUFBAU DES PARTS MANUAL

Die Produktinformationen für alle Komponenten eines bestimmten Modells sind in INFORMATION ELEMENTS (Informationseinheiten) gegliedert. ENGINE ARRANGEMENT (Motorausführung) und SEAT GROUP (Fahrersitz) sind Beispiele für solche Informationseinheiten. Sie sind innerhalb jeder Gruppe alphabetisch, entsprechend der Ersatzteilbezeichnung, und zusätzlich numerisch, entsprechend der Ersatzteilnummer, geordnet.

4. INHALTSVERZEICHNIS

Das Inhaltsverzeichnis befindet sich am Anfang des Buches. Im Inhaltsverzeichnis werden die einzelnen Abschnitte des Buches aufgeführt. Die Abschnitte enthalten eine vollständige Aufstellung aller Informationseinheiten. Diese sind entsprechend ihrem Erscheinen im Buch geordnet. Das Inhaltsverzeichnis enthält Seitenangaben für Schnellverweise auf detaillierte Abbildungen und Teillisten.

ALLGEMEINE HINWEISE

5. INDEX FÜR WARTUNGSTEILE

Der Index für Wartungsteile vorn im Buch enthält die Bestellnummern, Seitenangaben, Mengenangaben und Informationen über den Einsatzbereich für die am häufigsten benötigten Ersatzteile. Die Angaben sind alphabetisch entsprechend der Teilebezeichnung geordnet.

6. INDEX

Der Index vorn im Buch enthält eine alphabetische Liste aller Informationseinheiten. Er enthält Seitenangaben für Schnellverweise auf detaillierte Abbildungen und Teillisten.

7. INDEX FÜR BESTELLNUMMERN

Hinten im Buch befindet sich ein numerischer Index, mit allen Bestellnummern und dem Hinweis auf die Seite, auf der sich die betreffende Abbildung befindet.

8. ÜBERSCHRIFTEN

Die Überschriften, die sich am Anfang jeder der Informationseinheiten befinden, enthalten Bestellnummern, Ersatzteilbezeichnungen und zusätzliche beschreibende Informationen. Produkt-Ident- und Seriennummern in den Überschriften sollten zur Auswahl der richtigen Informationen für die betreffende Maschine verwendet werden. Die Überschriften enthalten außerdem Informationen über möglichen Außendienstersatz, mögliche Baugerätekomponenten und die Baugruppe, zu der das Teil gehört.

Die erste Zeile einer Überschrift erscheint in einer größeren Schriftart, um den Anfang einer Informationseinheit zu kennzeichnen. Überschriften für zusätzliche Seiten, die zur Erläuterung einer Informationseinheit notwendig sind, erscheinen in normaler Schriftart und enthalten den Begriff "(contd.)".

9. NICHT EINZELN LIEFERBARE TEILE

In einigen Fällen ist es notwendig nicht lieferbare Teile, die selbst mit einer eigenen Teilliste im Buch vertreten sind, aufzuführen. Die Bestellnummern dieser nicht einzeln lieferbaren Teile erscheinen kursiv, wodurch angezeigt wird, daß sie nur in Verbindung mit anderen Teilen lieferbar sind.

10. REFERENZNUMMER FÜR ERSATZTEILE

Die Zahlen, die in der Spalte "Ref No" aufgeführt sind, stimmen mit den Zahlen in den beigefügten Abbildungen überein. Ein Buchstaben-Suffix kann zu einer Referenznummer hinzugefügt werden, um zu kennzeichnen, daß das Teil mit einer eigenen Teilliste im Buch aufgeführt ist. Die in der Spalte "Graphic Ref" angeführten Zahlen verweisen auf die Identifikationsnummer der Abbildung, die sich in der linken unteren Ecke der Abbildung befindet. Diese Nummer kann zusammen mit der Referenznummer des Teils angegeben werden, um die richtige Ersatzteilnummer zu ermitteln. Referenznummern können absichtlich weggelassen werden, da die Nummern der lieferbaren Ersatzteile ständig aktualisiert werden.

11. EINGERÜCKTE BEZEICHNUNGEN

Wenn eine Bezeichnung eingerückt ist, wird dadurch angezeigt, daß das Teil zu einer Baugruppe gehört, unter deren Bezeichnung es eingerückt ist.

12. REFERENZBUCHSTABEN

Falls erforderlich sind in den Abbildungen Referenzbuchstaben enthalten (z.B. A, B, C, usw.), die Leitungen und Kabelbäume von einem Punkt zum anderen verfolgen. Außerdem geben sie die Stelle an, an der getrennte Abbildungen fortgesetzt werden.

13. ABKÜRZUNGEN UND SYMBOLE

O.D. – Außendurchmesser
I.D. – Innendurchmesser
A – kein Teil dieser Gruppe
B – nach Bedarf verwenden
C – Hinweis auf eine Änderung
D – in Meter-Länge bestellen
E – in Zentimeter-Länge bestellen
F – nicht gezeigt
G – in Zoll-Länge bestellen
I – siehe Hydraulikinformationssystem
M – metrisches Teil
R – werküberholtes Teil unter Umständen lieferbar
Y – separate Abbildung
Z – nicht einzeln lieferbar

SIS *Neu im Parts Manual*

14. <END>

Dieses Symbol zeigt das Ende eines Informationselements an.

ALLGEMEINE HINWEISE

ANMERKUNG:

Ständig vorgenommene Verbesserungen und Weiterentwicklungen an Ihrer Maschine können Änderungen verursachen, die in der vorliegenden Ausgabe noch nicht berücksichtigt sind. Fragen zu Ihrer Caterpillar-Maschine oder diesem Ersatzteilbuch beantwortet Ihr Caterpillar-Händler.

ALLGEMEINE HINWEISE

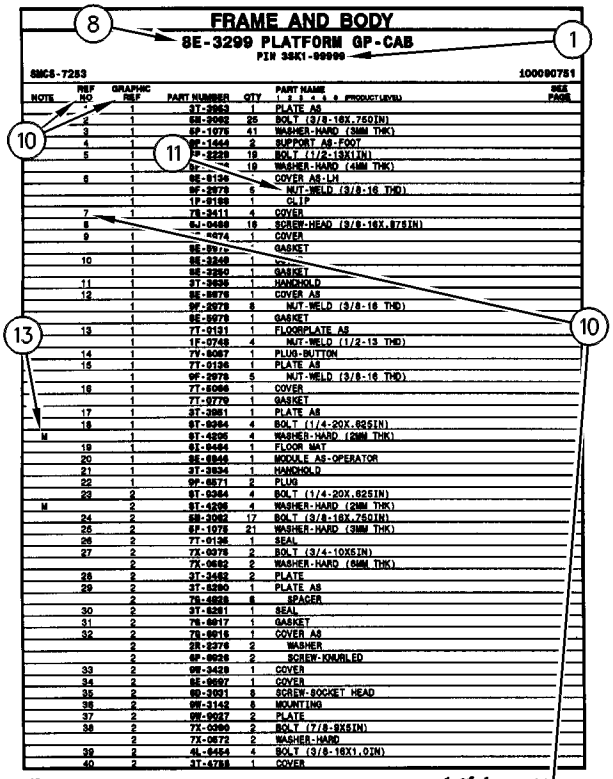

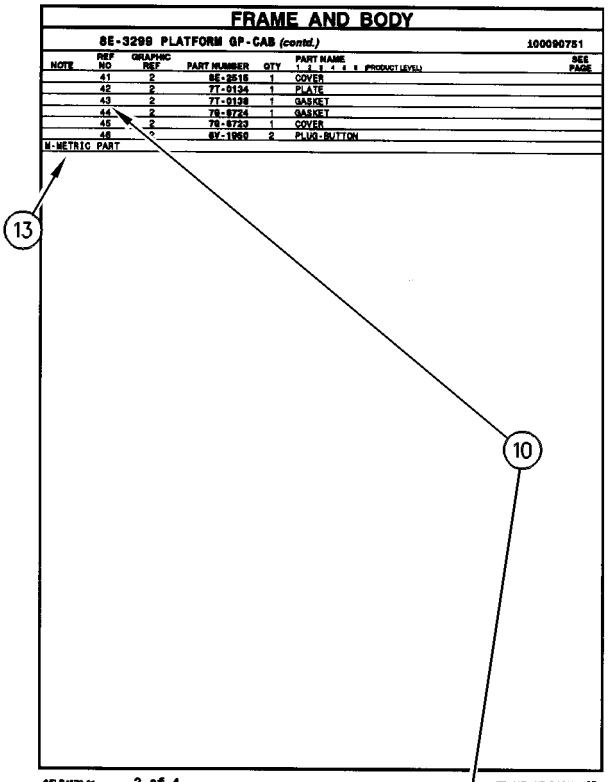

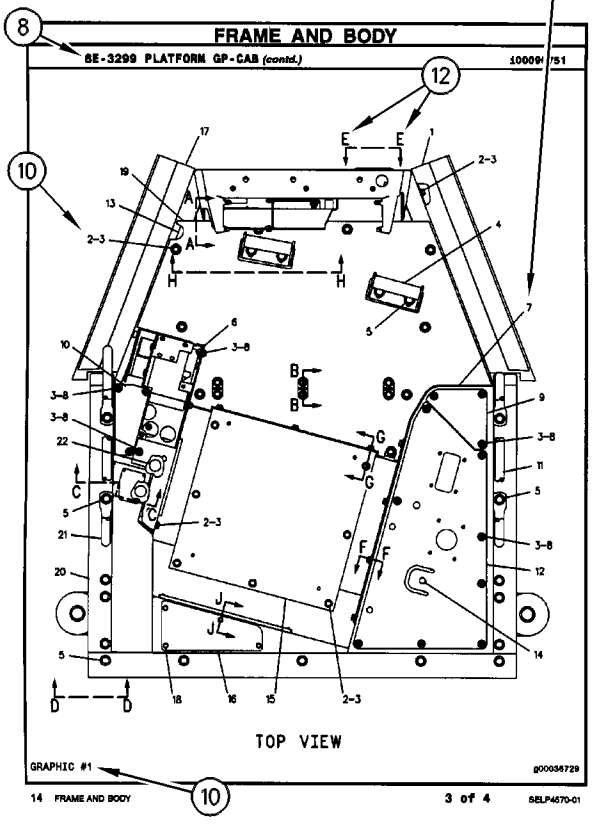

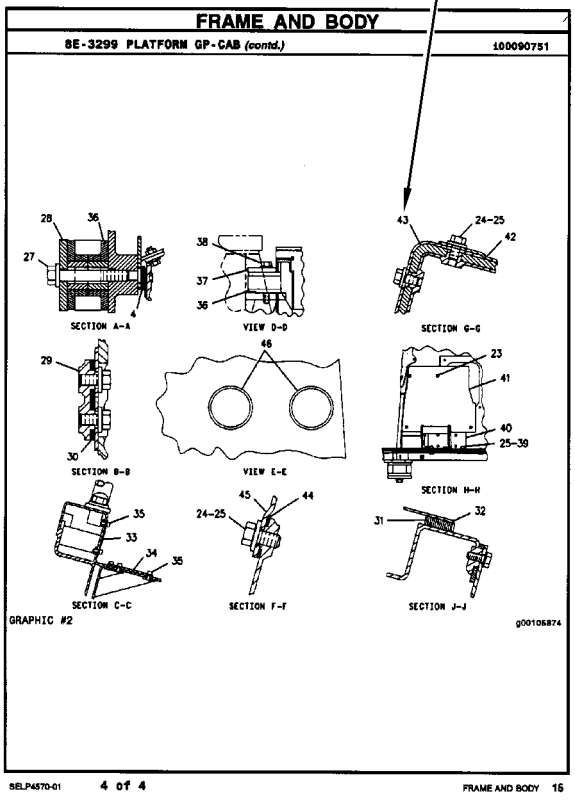

REPAIR ALTERNATIVES

REMANUFACTURED COMPONENTS

As an option when making repairs consider Caterpillar Remanufactured Components. Components that are available through the Caterpillar Remanufactured Program are identified three ways in the parts book:

- with the letter R in the note field of the parts list
- with an R* at the beginning of the first line of the caption
- with an *R at the end of the first line of the caption

Typical components included in the Remanufacturing Program include:

ALTERNATORS
CONNECTING RODS
CRANKSHAFTS - UNDERSIZE
CRANKSHAFTS - UPGRADE TO NEW
CYLINDER HEADS
ELECTRONIC CONTROL MODULES (ECM)
ELECTRONIC SENSORS
FUEL INJECTORS
FUEL NOZZLES
FUEL PUMPS
GOVERNORS
OIL PUMPS
PISTONS
SHORT BLOCKS
STARTERS
TURBOCHARGERS - COMPLETE
TURBOCHARGER CARTRIDGES
WATER PUMPS

Caterpillar Remanufactured engines for many engine arrangements are also available.

OPTIONS DE RÉPARATION

COMPOSANTS RÉNOVÉS

Comme option de réparation, considérer les composants rénovés Caterpillar. Les composants disponibles dans le cadre du programme Caterpillar de composants rénovés sont identifiés de trois façons dans le catalogue de pièces:

- avec la lettre "R" dans l'espace note de la liste des pièces
- avec R* au début de la première ligne des légendes
- avec *R à la fin de la première ligne des légendes

Les composants suivants figurent parmi les composants typiques du programme de rénovation:

ALTERNATEURS
BIELLES
VILEBREQUINS - SOUS-DIMENSIONNÉS
VILEBREQUINS - REMIS À NEUF
CULASSES
MODULES DE COMMANDE ÉLECTRONIQUE (ECM)
CAPTEURS ÉLECTRONIQUES
INJECTEURS
TÊTES D'INJECTEURS
POMPES À CARBURANT
RÉGULATEURS
POMPES À HUILE
PISTONS
BLOCS EMBIELLÉS
DÉMARREURS
TURBOCOMPRESSEURS - COMPLETS
CARTOUCHES DE TURBOCOMPRESSEUR
POMPES À EAU

Des moteurs rénovés sont aussi disponibles pour plusieurs versions de moteur.

ALTERNATIVAS DE REPARACIÓN

COMPONENTES REMANUFACTURADOS

Al hacer reparaciones, tenga en cuenta la opción de Componentes Remanufacturados Caterpillar. Los componentes que están disponibles por medio del programa de Productos Remanufacturados Caterpillar se identifican de tres maneras en el manual de piezas:

- con la letra R en el espacio de Nota de la lista de piezas
- con una R* al comienzo de la primera línea de la leyenda
- con una *R al final de la primera línea de la leyenda

Los componentes que se incluyen típicamente en el Programa de Productos Remanufacturados son:

ALTERNADORES
BIELAS
CIGÜEÑALES - BAJOMEDIDA
CIGÜEÑALES - REMANUFACTURADOS A NUEVO
CULATAS
MÓDULOS DE CONTROL ELECTRÓNICO (ECM)
SENSORES ELECTRONICOS
INYECTORES
BOQUILLAS
BOMBAS DE COMBUSTIBLE
REGULADORES
BOMBAS DE ACEITE
PISTONES
MONOBLOQUES
MOTORES DE ARRANQUE
TURBOCOMPRESORES - COMPLETOS
NÚCLEOS DE TURBOCOMPRESOR
BOMBAS DE AGUA

También hay disponibles motores Remanufacturados Caterpillar para muchas de las configuraciones de motores.

ALTERNATIVAS DE REPARO

COMPONENTES REMANUFATURADOS

Considere o uso de Componentes Remanufaturados Caterpillar ao efetuar reparos. Os componentes disponíveis através do Programa de Remanufatura Caterpillar são identificados de três formas no manual de peças:

- com um R na área da nota da lista de peças
- com um R* no princípio da primeira linha da legenda
- com um *R no final da primeira linha da legenda

Os componentes típicos que constam no Programa de Remanufatura incluem:

ALTERNADORES
BIELAS
VIRABREQUINS - SUBMEDIDAS
VIRABREQUINS - ATUALIZAÇÃO
CABEÇOTES
MÓDULOS DE CONTROLE ELETRÔNICO (ECM)
SENSORES ELETRÔNICOS
INJETORES DE COMBUSTÍVEL
BICOS DE ABASTECIMENTO DE COMBUSTÍVEL
BOMBAS DE COMBUSTÍVEL
GOVERNADORES
BOMBAS DE ÓLEO
PISTÕES
BLOCOS BÁSICOS DO MOTOR
MOTORES DE PARTIDA
TURBOALIMENTADORES - COMPLETOS
CARTUCHOS DE TURBOALIMENTADORES
BOMBAS D'ÁGUA

Motores Remanufaturados Caterpillar também encontram-se disponíveis para diversos arranjos de motor.

REPARATURALTERNATIVEN

WERKÜBERHOLTE AT-PRODUKTE

Bei Reparaturen sollten werküberholte AT-Produkte von Caterpillar in Betracht gezogen werden. Die durch das AT-Programm von Caterpillar erhältlichen Teile sind im Parts Book auf drei verschiedene Arten gekennzeichnet:

- mit dem Buchstaben R in der Spalte NOTE der Ersatzteilliste
- mit einem R* am Anfang der ersten Zeile der Überschrift
- mit einem *R am Ende der ersten Zeile der Überschrift

Das AT-Programm umfaßt u.a. folgende Produkte:

DREHSTROMGENERATOREN
PLEUELSTANGEN
KURBELWELLEN - MIT UNTERMASS
KURBELWELLEN - MIT ORIGINALMASS
ZYLINDERKÖPFE
ELEKTRONISCHE STEUEREINHEITEN (EMC)
ELEKTRONISCHE SENSOREN
PUMPENDÜSEN
EINSPRITZDÜSEN
KRAFTSTOFFPUMPEN
DREHZAHLREGLER
ÖLPUMPEN
KOLBEN
TEILMOTOREN
ANLASSER
TURBOLADER - KOMPLETT
TURBOLADERLAUFZEUGE
KÜHLWASSERPUMPEN

Viele Motoren können durch werküberholte AT-Motoren von Caterpillar ersetzt werden.

SUPPLEMENTAL COOLANT ADDITIVES

CUSTOMER BENEFITS:

Protects against cavitation, foam, erosion, corrosion, and scale buildup in cooling systems.

- Provides measured coolant conditioner.

DESCRIPTION:

Additives deplete from the coolant with normal operation. For this reason, Supplemental Coolant Additives (SCA) must be added to all heavy duty coolants at regular intervals. In addition, when not using a fully formulated, pre-charged antifreeze, like Caterpillar's DEAC, an initial charge of SCA must be added to the cooling system. The amount of SCA added to the system is dependent on the capacity of the system.

The SCA for initial fill is provided as a liquid. SCA's for maintenance intervals are available in liquid form and as a spin-on element. (No Spin-on available for 3600 Family of Engines)

NOTE:

The amount of SCA added at initial fill is not the same as the amount added at maintenance intervals.

The coolant additive elements can be used with any ethylene or propylene glycol type antifreeze which meets ASTM D4985 or ASTM D5345 Specifications.

NOTE:

For use with standard heavy duty coolant only, not for use with Extended Life Coolant.

PARTS NEEDED:

Cooling System Capacity		Liquid SCA at Initial Fill	Liquid SCA at Maintenance*	Spin-on SCA Maintenance Element*
Liters	Gallons			
22-30	(6-8)	3P-2044 (1)	6V-3542 (1)	111-2370 (1)
30-38	(8-10)	3P-2044 (1) 6V-3542 (1)	111-2372 (1)	111-2369 (1)
38-49	(10-13)	3P-2044 (1) 8T-1589 (1)	111-2372 (1)	111-2369 (1)
49-64	(13-17)	3P-2044 (2)	8T-1589 (1)	9N-3368 (1)
64-83	(17-22)	3P-2044 (2) 8T-1589 (1)	111-2372 (1) 6V-3542 (1)	111-2371 (1)
83-114	(22-30)	3P-2044 (3) 8T-1589 (1)	3P-2044 (1)	9N-3718 (1)
114-163	(30-43)	3P-2044 (5)	3P-2044 (1) 6V-3542 (1)	111-2371 (2)
163-242	(43-64)	3P-2044 (8)	3P-2044 (2)	9N-3718 (2)

** Normal maintenance period is 250 hrs. See your Operation and Maintenance Manual for complete coolant maintenance instructions.*

( ) Indicates quantity required.

ADDITIFS POUR LIQUIDE DE REFROIDISSEMENT

AVANTAGES POUR LE CLIENT

L'additif protège contre la cavitation, la mousse, l'érosion, la corrosion et l'accumulation de dépôts dans le circuit de refroidissement.

- L'additif complémentaire fournit une quantité mesurée d'additif.

DESCRIPTION:

Les additifs s'épuisent pendant l'utilisation du moteur. C'est pourquoi l'on doit ajouter de l'additif au liquide de refroidissement/antigel pour moteurs diesel à intervalles réguliers. En plus, si l'on n'utilise pas de l'antigel entièrement formulé et pré-chargé comme le liquide de refroidissement/antigel Caterpillar pour moteurs diesel, une quantité initiale d'additif doit être ajoutée au circuit de refroidissement. La quantité d'additif à ajouter au circuit dépend de la contenance du circuit.

L'additif pour le remplissage initial est fourni sous forme liquide. L'additif pour l'entretien ultérieur est disponible sous forme liquide et sous forme d'élément à visser. (Il n'y a pas d'élément à visser pour les moteurs de la famille 3600).

NOTA:

La quantité d'additif à ajouter au remplissage initial diffère de la quantité à ajouter aux intervalles d'entretien.

Les éléments d'additif peuvent être utilisés avec tout antigel de type éthylène ou propylène-glycol conforme à la norme ASTM D4985 ou ASTM D5345.

NOTA:

A utiliser uniquement avec du liquide de refroidissement pour moteurs diesel et non avec le liquide de refroidissement longue durée.

PIÈCES NÉCESSAIRES:

Contenance du circuit de refroidissement		Additif liquide au remplissage initial	Additif liquide aux intervalles d'entretien*	Elément d'additif à visser aux intervalles d'entretien*
Litres	Gallons U.S.			
22-30	(6-8)	3P-2044 (1)	6V-3542 (1)	111-2370 (1)
30-38	(8-10)	3P-2044 (1) 6V-3542 (1)	111-2372 (1)	111-2369 (1)
38-49	(10-13)	3P-2044 (1) 8T-1589 (1)	111-2372 (1)	111-2369 (1)
49-64	(13-17)	3P-2044 (2)	8T-1589 (1)	9N-3368 (1)
64-83	(17-22)	3P-2044 (2) 8T-1589 (1)	111-2372 (1) 6V-3542 (1)	111-2371 (1)
83-114	(22-30)	3P-2044 (3) 8T-1589 (1)	3P-2044 (1)	9N-3718 (1)
114-163	(30-43)	3P-2044 (5)	3P-2044 (1) 6V-3542 (1)	111-2371 (2)
163-242	(43-64)	3P-2044 (8)	3P-2044 (2)	9N-3718 (2)

** L'intervalle d'entretien normal est de 250 heures-service. Voir le Guide d'utilisation et d'entretien pour de plus amples renseignements concernant l'entretien du circuit de refroidissement.*

( ) Indique la quantité exigée.

ADITIVOS DE REFRIGERANTE SUPLEMENTARIOS

VENTAJAS PARA EL USUARIO:

Protegen contra la cavitación, la formación de espuma, la corrosión y la acumulación de escamas en los sistemas de enfriamiento.

- Suministra un acondicionador dosificado de refrigerante.

DESCRIPCIÓN:

Los aditivos en el refrigerante se agotan con la operación normal. Por esta razón, se debe agregar Aditivo de refrigerante suplementario (SCA) a todos los refrigerantes para servicio pesado, a intervalos regulares. Además, cuando no se usa un anticongelante de precarga completo, tal como el DEAC de Caterpillar, es necesario agregar una cantidad de aditivo de refrigerante suplementario inicial al sistema de enfriamiento. La cantidad de aditivo que se debe agregar depende de la capacidad del sistema.

El SCA de llenado inicial es líquido. El que se usa para el mantenimiento está disponible tanto en líquido como en un elemento enroscable. (No hay elemento enroscable disponible para la Familia de Motores 3600).

NOTA:

La cantidad de aditivo de llenado inicial no es la misma que se agrega en los intervalos de mantenimiento.

Los elementos de aditivo de refrigerante se pueden usar con cualquier anticongelante de tipo glicol etilénico o propílico que esté de acuerdo con las especificaciones de las normas ASTM D4985 o ASTM D5345.

NOTA:

Se debe utilizar únicamente con refrigerante estándar para servicio pesado; no se debe usar con Refrigerante de Larga Duración.

PIEZAS NECESARIAS:

Capacidad del Sistema de Enfriamiento		SCA líquido de llenado inicial	SCA líquido de mantenimiento*	Elemento de mantenimiento enroscable*
litros	gal EE.UU.			
22-30	6-8	3P-2044 (1)	6V-3542 (1)	111-2370 (1)
30-38	8-10	3P-2044 (1) 6V-3542 (1)	111-2372 (1)	111-2369 (1)
38-49	10-13	3P-2044 (1) 8T-1589 (1)	111-2372 (1)	111-2369 (1)
49-64	13-17	3P-2044 (2)	8T-1589 (1)	9N-3368 (1)
64-83	17-22	3P-2044 (2) 8T-1589 (1)	111-2372 (1) 6V-3542 (1)	111-2371 (1)
83-114	22-30	3P-2044 (3) 8T-1589 (1)	3P-2044 (1)	9N-3718 (1)
114-163	30-43	3P-2044 (5)	3P-2044 (1) 6V-3542 (1)	111-2371 (2)
163-242	43-64	3P-2044 (8)	3P-2044 (2)	9N-3718 (2)

** El período normal de mantenimiento es de 250 horas. Para ver las instrucciones completas sobre el mantenimiento del refrigerante, consulte el Manual de Operación y Mantenimiento.*

( ) Indica la cantidad necesaria.

ADITIVOS SUPLEMENTARES DO LÍQUIDO ARREFECEDOR

BENEFÍCIOS PARA O CLIENTE:

Protege contra cavitação, espuma, erosão, corrosão e acúmulo de crostas nos sistemas de arrefecimento.

- Fornece uma quantidade pré-determinada de condicionador de arrefecimento.

DESCRIÇÃO:

Com a operação normal, os aditivos se esgotam do líquido arrefecedor. Por isso, Aditivos Suplementares do Líquido Arrefecedor (SCA) devem ser acrescentados a todos os líquidos arrefecedores para serviço pesado em intervalos regulares. Além disso, quando um anticongelante pré-carregado, totalmente formulado não for usado, como o DEAC Caterpillar, uma carga inicial de SCA deve ser acrescentada ao sistema de arrefecimento. A quantidade de SCA acrescentada ao sistema depende da capacidade do sistema.

O SCA para abastecimento inicial é fornecido em forma de líquido. Os aditivos suplementares (SCA) para intervalos de manutenção estão à disposição em forma líquida e como um elemento com roscas. (Exceto os Motores da Família 3600)

NOTA:

A quantidade de SCA adicionada no abastecimento inicial não é a mesma que a acrescentada nos intervalos de manutenção.

Os elementos do aditivo do líquido arrefecedor podem ser usados com qualquer tipo de anticongelante etileno ou propileno que satisfaz as Especificações ASTM D4985 ou ASTM D5345.

NOTA:

Para uso apenas com líquido arrefecedor para serviço pesado padrão, não deve ser usado com Líquido Arrefecedor de Vida Longa.

PEÇAS NECESSÁRIAS:

Capacidade do Sistema de Arrefecimento		Líquido SCA Durante Abastecimento Inicial	Líquido SCA Durante Manutenção*	Elemento de Manutenção de SCA com Roscas*
Litros	Galões			
22-30	6-8	3P-2044 (1)	6V-3542 (1)	111-2370 (1)
30-38	8-10	3P-2044 (1) 6V-3542 (1)	111-2372 (1)	111-2369 (1)
38-49	10-13	3P-2044 (1) 8T-1589 (1)	111-2372 (1)	111-2369 (1)
49-64	13-17	3P-2044 (2)	8T-1589 (1)	9N-3368 (1)
64-83	17-22	3P-2044 (2) 8T-1589 (1)	111-2372 (1) 6V-3542 (1)	111-2371 (1)
83-114	22-30	3P-2044 (3) 8T-1589 (1)	3P-2044 (1)	9N-3718 (1)
114-163	30-43	3P-2044 (5)	3P-2044 (1) 6V-3542 (1)	111-2371 (2)
163-242	43-64	3P-2044 (8)	3P-2044 (2)	9N-3718 (2)

** O período normal de manutenção é de 250 horas. Consulte o Manual de Operação e Manutenção para obter instruções completas quanto à manutenção do líquido arrefecedor.*

( ) Indica a quantidade exigida.

KÜHLMITTELZUSATZ

VORTEILE FÜR DEN KUNDEN:

Schutz gegen Kavitation, Schaumbildung, Erosion, Korrosion und Kesselsteinbildung in Kühlsystemen.

- Richtig dosierter Kühlmittelzusatz

BESCHREIBUNG:

Additive erschöpfen sich während des Motorbetriebs. Deshalb muß allen HD-Kühlmitteln regelmäßig Kühlmittelzusatz beigefügt werden. Wenn bei Erstfüllung kein vollwertiges Fertigkühlmittel, wie das Frostschutz- und Kühlmittel für Dieselmotoren von Caterpiller (DEAC), verwendet wird, muß bei Erstfüllung Kühlmittelzusatz beigefügt werden. Wieviel Kühlmittelzusatz beigefügt werden muß, hängt vom Inhalt des Kühlsystems ab.

Für Erstfüllung ist Kühlmittelzusatz nur in flüssiger Form erhältlich. Für Wartungsintervalle ist Kühlmittelzusatz in flüssiger Form und als Zusatzelement erhältlich. (Für die Motorbaureihe 3600 sind keine Zusatzelemente erhältlich.)

ANMERKUNG:

Die Kühlmittelmenge bei Erstfüllung ist nicht die gleiche Menge, die bei Wartungsintervallen beigefügt werden muß.

Die Kühlmittelzusatzelemente können mit allen Frostschutzmitteln auf Ethylen- oder Propylenglykolbasis verwendet werden, die den Standards nach ASTM D4985 oder ASTM D5345 entsprechen.

ANMERKUNG:

Den Kühlmittelzusatz nicht mit Langzeitkühlmittel (ELC) von Caterpillar verwenden. Der Kühlmittelzusatz ist nur für HD-Kühlmittel bestimmt.

TEILEBEZEICHNUNG:

Kühlsysteminhalt		Kühlmittelzusatz bei Erstfüllung	Flüssiger Kühlmittelzusatz bei Wartung*	Kühlmittelzusatzelement bei Wartung*
Liter	US-Gall.			
22-30	(6-8)	3P-2044 (1)	6V-3542 (1)	111-2370 (1)
30-38	(8-10)	3P-2044 (1) 6V-3542 (1)	111-2372 (1)	111-2369 (1)
38-49	(10-13)	3P-2044 (1) 8T-1589 (1)	111-2372 (1)	111-2369 (1)
49-64	(13-17)	3P-2044 (2)	8T-1589 (1)	9N-3368 (1)
64-83	(17-22)	3P-2044 (2) 8T-1589 (1)	111-2372 (1) 6V-3542 (1)	111-2371 (1)
83-114	(22-30)	3P-2044 (3) 8T-1589 (1)	3P-2044 (1)	9N-3718 (1)
114-163	(30-43)	3P-2044 (5)	3P-2044 (1) 6V-3542 (1)	111-2371 (2)
163-242	(43-64)	3P-2044 (8)	3P-2044 (2)	9N-3718 (2)

** Der normale Wartungsintervall beträgt 250 Betriebsstunden. Für vollständige Anweisungen zur Wartung des Kühlsystems, siehe Betriebs- und Wartungshandbuch.*

( ) Erforderliche Anzahl

MAINTENANCE PARTS

DESCRIPTION	PART NUMBER	QTY	WHERE USED	PAGE
AIR INLET AND EXHAUST SYSTEM				
BATTERY GP (24-VOLT)	167-8984	1	KIT-INSTALLATION	140
CAP AS-RAIN	7S-4411	1	DUST EJECTOR GP	136
		1	DUST EJECTOR GP	137
	7S-5003	2	DUST EJECTOR GP	139
ELEMENT AS-AIR CLEANER	6I-2505	1	AIR CLEANER GP	132
	6I-2506	1	AIR CLEANER GP	132
SCREEN AS (ENGINE, AFTERCOOLER)	248-6942	4	PRECLEANER AR-TURBINE	155
SCREEN AS (ENGINE, AFTERCOOLER) (FINE FILTRATION)	248-6951	4	PRECLEANER AR-TURBINE	155
BASIC ENGINE				
PLUG-OIL DRAIN	109-5839	1	PAN GP-OIL	54
SEAL-ISOLATION (VALVE COVER)	224-7506	6	VALVE MECHANISM GP	68
COOLING SYSTEM				
CAP AS-RADIATOR	031-1119	1	TANK GP-COOLANT	122
		1	TANK GP-COOLANT	126
FILTER (WATER PUMP)	111-2721	1	PUMP GP-WATER	107
PLUG-DRAIN (WATER)	7N-1447	1	LINES GP-WATER	90
REGULATOR-WATER TEMPERATURE (92-DEG C)	248-5513	2	LINES GP-WATER	99
SEAL-LIP TYPE	3S-9643	2	LINES GP-WATER	99

MAINTENANCE PARTS

DESCRIPTION	PART NUMBER	QTY	WHERE USED	PAGE
ELECTRICAL AND STARTING SYSTEM				
BATTERY (12-VOLT, MAINTENANCE FREE)	153-5710	2	BATTERY & WIRING GP	207
		2	BATTERY & WIRING GP	215
		2	BATTERY & WIRING GP	222
BATTERY (12-VOLT, MAINTENANCE FREE) (LOW TEMP STARTING)	153-5710	2	STARTING AR-COLD WEATHER	302
CAP-RAIN	164-5798	1	ALTERNATOR GP-CHARGING	205
CIRCUIT BREAKER AS (15-AMPERE) (MAIN POWER)	6T-3643	1	PANEL GP-FUSE	271
ELEMENT AS-JACKET WATER HEATER (120-VOLT, 1500-WATT)	230-3525	2	HEATER GP-JACKET WATER	241
ELEMENT AS-JACKET WATER HEATER (240-VOLT, 1500-WATT)	239-8051	2	HEATER GP-JACKET WATER	242
FILTER (ATMOSPHERIC PRESSURE SENSOR)	125-5835	1	SENSOR GP-ENGINE	278
FILTER-FOAM (FUEL TANK)	111-4402	1	BATTERY & WIRING GP	207
		1	BATTERY & WIRING GP	215
		1	BATTERY & WIRING GP	222
FUSE (10-AMPERE)	9W-1442	6	PANEL GP-FUSE	271
FUSE (15-AMPERE)	9W-1441	18	PANEL GP-FUSE	271
	133-9012	1	RESISTOR GP-CAB HEATER	275
FUSE (175-AMPERE) (ALTERNATOR, MAIN)	239-8107	2	PANEL GP-FUSE	271
FUSE (20-AMPERE)	9W-1446	4	PANEL GP-FUSE	271
LAMP AS-DOME (24-VOLT)	226-2811	1	WIRING GP-CAB	322
LAMP AS-FLOOD (24-VOLT, 70-WATT)	213-4998	1	LAMP GP-FLOOD	249
		1	LAMP GP-FLOOD	250
LAMP AS-INDICATOR (ACTION LIGHT)	170-3461	1	WIRING GP-PLATFORM	336
LAMP-HALOGEN (24-VOLT, 65-WATT)	9X-3463	1	LAMP GP-FLOOD	246
		1	LAMP GP-FLOOD	247
		1	LAMP GP-HEAD	251
LAMP-HALOGEN (24-VOLT, 65-WATT) (FLOODLIGHT)	9X-3463	1	LAMP GP-FLOOD	248
LAMP (24-VOLT) (REAR ACTION)	7N-1996	1	WIRING GP-PLATFORM	336
LAMP (24-VOLT, 21-WATT) (DOME)	9X-4493	1	WIRING GP-CAB	322
LENS AS (FLOODLIGHT)	158-0248	1	LAMP GP-FLOOD	246
PADLOCK GP (BATTERY BOX)	246-2641	1	STARTING AR-COLD WEATHER	302
SCREEN	226-4909	1	ALTERNATOR GP-CHARGING	205
V-BELT (ALTERNATOR)	245-7481	1	ALTERNATOR GP-CHARGING	201
		1	ALTERNATOR GP-CHARGING	203
		1	ALTERNATOR GP-CHARGING	205
ENGINE ARRANGEMENT				
PADLOCK GP (ENGINE ENCLOSURE)	246-2641	1	INSTALLATION AR-ENGINE	17
PADLOCK GP (VANDALISM GUARD)	246-2641	1	INSTALLATION AR-ENGINE	16

MAINTENANCE PARTS

DESCRIPTION	PART NUMBER	QTY	WHERE USED	PAGE
FRAME AND BODY				
PADLOCK GP (BATTERY BOX)	246-2641	2	FENDER GP	423
PADLOCK GP (ENGINE ENCLOSURE)	246-2641	5	ENCLOSURE GP-ENGINE	411
		5	ENCLOSURE GP-ENGINE	417
		5	ENCLOSURE GP-ENGINE	419
		5	HOOD & GUARD GP	450
PADLOCK GP (FUEL PRIMING PUMP ON, OFF)	246-2641	1	DOOR GP-ACCESS	402
PADLOCK GP (POWER TRAIN OIL FILLER)	246-2641	2	FENDER GP	421
PLUG (DRAIN) (TRANSMISSION CASE)	106-8187	1	CASE & FRAME GP	394
		1	CASE & FRAME GP	395
FUEL SYSTEM				
CAP AS-FILLER (FUEL TANK)	7X-7700	1	TANK GP-FUEL	195
FILTER AS-FUEL	1R-0771	1	FILTER GP-WATER SEP & FUEL	183
FILTER AS-FUEL (HIGH EFFICIENCY)	1R-0755	1	FILTER GP-FUEL	178
		1	FILTER GP-FUEL	180
PADLOCK GP (FUEL TANK)	246-2641	1	TANK GP-FUEL	194
PADLOCK GP (FUEL TANK DRAIN)	246-2641	1	FILTER & LINES GP-FUEL	175
SEAL (FUEL)	179-7400	2	PUMP GP-FUEL PRM & SEC FILTER	192
SEAL (FUEL, WATER SEPARATOR)	220-8678	1	FILTER GP-WATER SEP & FUEL	183
STRAINER-FUEL	9P-7121	1	TANK GP-FUEL	195
HYDRAULIC SYSTEM				
CAP-FILLER (HYDRAULIC TANK)	7H-1447	1	TANK & FILTER GP-HYDRAULIC	649
ELEMENT AS-FILTER (REVERSE FLOW, DISPOSABLE)	249-2337	1	TANK & FILTER GP-HYDRAULIC	649
FILTER AS-OIL	130-3212	1	LINES GP-PILOT	595
FILTER ELEMENT AS-OIL (ADVANCED EFFICIENCY)	1R-0777	2	TANK & FILTER GP-HYDRAULIC	649
FILTER ELEMENT AS-OIL (FIRE RESISTANT FLUID)	104-6931	2	TANK & FILTER GP-HYDRAULIC	649
FILTER ELEMENT AS-OIL (STANDARD EFFICIENCY)	1R-0735	2	TANK & FILTER GP-HYDRAULIC	649
FILTER ELEMENT AS-OIL (ULTRA HIGH EFFICIENCY)	139-1537	2	TANK & FILTER GP-HYDRAULIC	649
FILTER GP-OIL (IMPLEMENT PILOT OIL)	249-1751	1	LINES GP-PILOT	595
PADLOCK GP (HYDRAULIC TANK FILL)	246-2641	1	COVER GP-HYDRAULIC TANK CAP	550
SCREEN AS (HYDRAULIC TANK, MAIN RETURN)	9T-7571	2	TANK & FILTER GP-HYDRAULIC	649
SCREEN (HYDRAULIC)	118-8693	1	TANK & FILTER GP-HYDRAULIC	649
SCREEN (IMPLEMENT PILOT OIL)	6E-5066	1	MANIFOLD GP-CONTROL	626
STRAINER AS (HYDRAULIC TANK FILL)	5D-7927	1	TANK & FILTER GP-HYDRAULIC	649
LUBRICATION SYSTEM				
CAP AS (ENGINE OIL FILLER)	261-0011	1	FILLER GP-OIL	72
ELEMENT-BREATHER (CRANKCASE)	238-9204	1	BREATHER GP	69
FILTER AS-ENGINE OIL	1R-0716	2	FILTER GP-ENGINE OIL	73
MACHINE ARRANGEMENT				
PADLOCK GP (LITERATURE COMPARTMENT)	246-2641	1	CHASSIS AR	1

MAINTENANCE PARTS

DESCRIPTION	PART NUMBER	QTY	WHERE USED	PAGE
OPERATOR STATION				
ACCUMULATOR-REFRIGERANT	170-0235	1	LINES GP-AIR CONDITIONER	818
		1	LINES GP-AIR CONDITIONER	822
ACCUMULATOR-REFRIGERANT (AIR CONDITIONER)	170-0235	1	LINES GP-AIR CONDITIONER	812
		1	LINES GP-AIR CONDITIONER	815
BLADE AS-WIPER (FRONT)	6V-5851	1	WIPER GP-WINDOW	881
BLADE AS-WIPER (REAR)	5C-8811	1	WIPER GP-WINDOW	881
BLADE AS-WIPER (RH, LH, REAR)	6V-6864	2	WIPER GP-WINDOW	884
BLADE AS-WIPER (SIDE)	128-5040	4	WIPER GP-WINDOW	881
CAP AS-RAIN	235-0320	1	FILTER GP-CAB AIR	797
CIRCUIT BREAKER AS (15-AMPERE)	6T-3643	1	LINES GP-AIR CONDITIONER	812
		1	LINES GP-AIR CONDITIONER	818
FILTER-AIR (HIGH EFFICIENCY)	265-3857	1	FILTER GP-CAB AIR	797
FILTER-AIR (HIGH EFFICIENCY) (CAB)	265-3857	1	HEATER GP-CAB	802
FILTER-AIR (STANDARD) (CAB)	238-0479	1	HEATER GP-CAB	802
FILTER ELEMENT AS-AIR (CAB)	209-8217	1	HEATER GP-CAB	802
PADLOCK GP (CAB HEATER)	246-2641	1	HEATER GP-CAB	802
RECEIVER-DRYER GP (AIR CONDITIONER)	175-7162	1	LINES GP-AIR CONDITIONER	815
		1	LINES GP-AIR CONDITIONER	822
		1	LINES GP-AIR CONDITIONER	812
SEAT BELT GP (RETRACTABLE)	222-0345	1	SEAT GP	859
V-BELT (COMPRESSOR PULLEY)	4N-2745	1	COMPRESSOR GP-REFRIGERANT	777
POWER TRAIN				
BREATHER AS (TRANSMISSION)	9G-5127	1	LINES GP-POWER TRAIN OIL	365
CAP AS-FILLER (HYDRAULIC TANK FILL)	6N-2985	1	LINES GP-POWER TRAIN OIL	365
FILTER ELEMENT AS-OIL (TORQUE CONVERTER CHARGING)	1R-1809	1	LINES GP-POWER TRAIN OIL	365
FILTER ELEMENT AS-OIL (TRANSMISSION)	1R-1809	1	FILTER GP-OIL	349
FILTER ELEMENT AS-OIL (TRANSMISSION CHARGING)	1R-1809	1	LINES GP-POWER TRAIN OIL	365
PLUG-MAGNETIC (FINAL DRIVE)	6V-3298	1	FINAL DRIVE GP	360
PLUG-MAGNETIC (FINAL DRIVE OIL DRAIN)	6V-3298	1	FINAL DRIVE GP	354
PLUG-MAGNETIC (FINAL DRIVE, OIL FILL)	6V-3298	1	FINAL DRIVE GP	351
		1	FINAL DRIVE GP	357
SCREEN AS-SUCTION (POWER TRAIN OIL SUMP)	9P-9555	1	LINES GP-POWER TRAIN OIL	365
SCREEN-SUCTION (TORQUE CONVERTER OIL)	8S-9130	1	TORQUE CONVERTER GP	387
SCREEN-SUCTION (TRANSMISSION SCAVENGE)	8S-9130	1	CASE & PARTS GP-PLANETARY	343

MAINTENANCE PARTS

DESCRIPTION	PART NUMBER	QTY	WHERE USED	PAGE
UNDERCARRIAGE				
BREATHER AS (PIVOT SHAFT OIL TANK)	9G-5127	1	LUBRICATION GP-PIVOT SHAFT	479
BREATHER (LUBRICATION TANK)	198-7711	1	LUBRICATION GP-EQUALIZER BAR	477
CAP AS-FILLER (LUBRICATION TANK)	5L-2952	1	LUBRICATION GP-EQUALIZER BAR	477
CAP-OIL FILLER (PIVOT SHAFT OIL TANK)	221-0812	1	LUBRICATION GP-PIVOT SHAFT	479
PLUG-DRAIN (PIVOT SHAFT OIL DRAIN)	4T-2069	4	FRAME GP-TELESCOPING RECOIL	467
PLUG-DRAIN (PIVOT SHAFT OIL FILL)	4T-2069	2	FRAME GP-TELESCOPING RECOIL	467
WORK TOOLS				
SCREEN AS	134-6737	1	BLADE AS-UNIVERSAL	725

PIÈCES DE RECHANGE

DESCRIPTION	NUMÉRO DE PIECÈS	QTÉ	DOMAINE D'APPLICATION	PAGE
CHÂSSIS ET BENNE				
BOUCHON FILETÉ (VIDANGE) (CARTER DE BOITE DE VITESSES)	106-8187	1	CHÂSSIS ET CARTER (ASS)	394
		1	CHÂSSIS ET CARTER (ASS)	395
CADENAS (ASS) (CARENAGE DE MOTEUR)	246-2641	5	CAPOT ET PROTECTION (ASS)	450
		5	CARENAGE DE MOTEUR (ASS)	411
		5	CARENAGE DE MOTEUR (ASS)	417
		5	CARENAGE DE MOTEUR (ASS)	419
CADENAS (ASS) (COMPARTIMENT DE BATTERIE)	246-2641	2	GARDE-BOUE (ASS)	423
CADENAS (ASS) (MARCHE, ARRÊT DE POMPE D'AMORÇAGE DE CARBURANT)	246-2641	1	PORTE DE VISITE (ASS)	402
CADENAS (ASS) (REMPLISSAGE D'HUILE DE TRANSMISSION)	246-2641	2	GARDE-BOUE (ASS)	421
CIRCUIT D'ADMISSION D'AIR ET D'ECHAPPEMENT				
BATTERIE (ASS) (24 VOLTS)	167-8984	1	KIT DE MONTAGE	140
DÉFLECTEUR DE PLUIE (ENS)	7S-4411	1	ÉJECTEUR AUTOMATIQUE DE POUSSIÈRE (ASS)	136
		1	ÉJECTEUR AUTOMATIQUE DE POUSSIÈRE (ASS)	137
	7S-5003	2	ÉJECTEUR AUTOMATIQUE DE POUSSIÈRE (ASS)	139
ÉCRAN (ENS) (*ENGINE, AFTERCOOLER)	248-6942	4	VERSION DE PRÉFILTRE DE TURBINE	155
ÉCRAN (ENS) (*ENGINE, AFTERCOOLER) (FILTRATION FINE)	248-6951	4	VERSION DE PRÉFILTRE DE TURBINE	155
ÉLÉMENT DE FILTRE À AIR (ENS)	6I-2505	1	FILTRE A AIR (ASS)	132
	6I-2506	1	FILTRE A AIR (ASS)	132
CIRCUIT DE CARBURANT				
BOUCHON DE GOULOTTE DE REMPLISSAGE (ENS) (RÉSERVOIR DE CARBURANT)	7X-7700	1	RÉSERVOIR DE CARBURANT (ASS)	195
BOURRELET D'ÉTANCHÉITÉ (CARBURANT)	179-7400	2	POMPE D'AMORCAGE DE CARBURANT ET FILTRE SECONDAIRE	192
BOURRELET D'ÉTANCHÉITÉ (SÉPARATEUR D'EAU, CARBURANT)	220-8678	1	FILTRE DE SÉPARATEUR D'EAU ET DE CARBURANT (ASS)	183
CADENAS (ASS) (RESERVOIR DE CARBURANT)	246-2641	1	RÉSERVOIR DE CARBURANT (ASS)	194
CADENAS (ASS) (VIDANGE DU RÉSERVOIR DE CARBURANT)	246-2641	1	FILTRE ET CANALISATIONS DE CARBURANT (ASS)	175
FILTRE À CARBURANT	9P-7121	1	RÉSERVOIR DE CARBURANT (ASS)	195
FILTRE A CARBURANT (ENS)	1R-0771	1	FILTRE DE SÉPARATEUR D'EAU ET DE CARBURANT (ASS)	183
FILTRE A CARBURANT (ENS) (GRANDE EFFICACITÉ)	1R-0755	1	FILTRE A CARBURANT (ASS)	178
		1	FILTRE A CARBURANT (ASS)	180

* TRADUCTION NON DISPONIBLE AU MOMENT DE LA PUBLICATION

PIÈCES DE RECHANGE

DESCRIPTION	NUMÉRO DE PIECÈS	QTÉ	DOMAINE D'APPLICATION	PAGE
CIRCUIT DE DÉMARRAGE ET ÉLECTRIQUE				
AMPOULE (24 VOLTS) (MOUVEMENT ARRIÈRE)	7N-1996	1	CABLAGE - PLATE-FORME (ASS)	336
AMPOULE (24V, 21W) (PLAFONNIER)	9X-4493	1	CABLAGE DE CABINE (ASS)	322
BATTERIE (12V, SANS ENTRETIEN)	153-5710	2	BATTERIE ET CÂBLAGE	207
		2	BATTERIE ET CÂBLAGE	215
		2	BATTERIE ET CÂBLAGE	222
BATTERIE (12V, SANS ENTRETIEN) (DÉMARRAGE À BASSE TEMPÉRATURE)	153-5710	2	DÉMARRAGE PAR TEMPS FROID (VERSION)	302
BOUCHON CONTRE LA PLUIE	164-5798	1	ALTERNATEUR DE CHARGE (ASS)	205
CADENAS (ASS) (COMPARTIMENT DE BATTERIE)	246-2641	1	DÉMARRAGE PAR TEMPS FROID (VERSION)	302
COURROIE TRAPEZOIDALE (ALTERNATEUR)	245-7481	1	ALTERNATEUR DE CHARGE (ASS)	201
		1	ALTERNATEUR DE CHARGE (ASS)	203
		1	ALTERNATEUR DE CHARGE (ASS)	205
DISJONCTEUR (ENS) (15A) (PUISSANCE PRINCIPALE)	6T-3643	1	PANNEAU - FUSIBLES (ASS)	271
ÉCRAN	226-4909	1	ALTERNATEUR DE CHARGE (ASS)	205
ÉLÉMENT DU RÉCHAUFFEUR D'EAU DES CHEMISES (ENS) (120V, 1500W)	230-3525	2	EAU DES CHEMISES - RECHAUFFEUR (ASS)	241
ÉLÉMENT DU RÉCHAUFFEUR D'EAU DES CHEMISES (ENS) (240V, 1500W)	239-8051	2	EAU DES CHEMISES - RECHAUFFEUR (ASS)	242
FILTRE A MOUSSE (RESERVOIR DE CARBURANT)	111-4402	1	BATTERIE ET CÂBLAGE	207
		1	BATTERIE ET CÂBLAGE	215
		1	BATTERIE ET CÂBLAGE	222
FILTRE (CAPTEUR DE PRESSION ATMOSPHÉRIQUE)	125-5835	1	CAPTEUR - MOTEUR (ASS)	278
FUSIBLE (10A)	9W-1442	6	PANNEAU - FUSIBLES (ASS)	271
FUSIBLE (15A)	9W-1441	18	PANNEAU - FUSIBLES (ASS)	271
	133-9012	1	RÉSISTANCE DE CHAUFFAGE DE CABINE (ASS)	275
FUSIBLE (175A) (ALTERNATEUR PRINCIPAL)	239-8107	2	PANNEAU - FUSIBLES (ASS)	271
FUSIBLE (20A)	9W-1446	4	PANNEAU - FUSIBLES (ASS)	271
LAMPE - PHARE (ENS) (24V, 70W)	213-4998	1	LAMPE - PHARE (ASS)	249
		1	LAMPE - PHARE (ASS)	250
LAMPE DE TÉMOIN (ENS) (TÉMOIN D'ACTIONNEMENT)	170-3461	1	CABLAGE - PLATE-FORME (ASS)	336
LAMPE HALOGÈNE (24V, 65W)	9X-3463	1	LAMPE - PHARE (ASS)	246
		1	LAMPE - PHARE (ASS)	247
		1	PHARE AV (ASS)	251
LAMPE HALOGÈNE (24V, 65W) (PROJECTEUR)	9X-3463	1	LAMPE - PHARE (ASS)	248
LENTILLE (ENS) (PROJECTEUR)	158-0248	1	LAMPE - PHARE (ASS)	246
PLAFONNIER (ENS) (24 VOLTS)	226-2811	1	CABLAGE DE CABINE (ASS)	322

* TRADUCTION NON DISPONIBLE AU MOMENT DE LA PUBLICATION

PIÈCES DE RECHANGE

DESCRIPTION	NUMÉRO DE PIECÈS	QTÉ	DOMAINE D'APPLICATION	PAGE
CIRCUIT DE GRAISSAGE				
CHAPEAU (ENS) (GOULOTTE DE REMPLISSAGE D'HUILE MOTEUR)	261-0011	1	GOULOTTE D'HUILE MOTEUR (ASS)	72
ELEMENT DE RENIFLARD (CARTER)	238-9204	1	RENIFLARD (ASS)	69
FILTRE A HUILE MOTEUR (ENS)	1R-0716	2	FILTRE À HUILE MOTEUR (ASS)	73
CIRCUIT DE REFROIDISSEMENT				
BOUCHON DE RADIATEUR (ENS)	031-1119	1	RÉSERVOIR DU LIQUIDE DE REFROIDISSEMENT (ASS)	122
		1	RÉSERVOIR DU LIQUIDE DE REFROIDISSEMENT (ASS)	126
BOUCHON DE VIDANGE (EAU)	7N-1447	1	CANALISATIONS D'EAU (ASS)	90
FILTRE (POMPE À EAU)	111-2721	1	POMPE A EAU (ASS)	107
THERMOSTAT-TEMPÉRATURE D'EAU (92-DEG C)	248-5513	2	CANALISATIONS D'EAU (ASS)	99
TYPE LÈVRE À JOINT	3S-9643	2	CANALISATIONS D'EAU (ASS)	99
CIRCUIT HYDRAULIQUE				
BOUCHON DE GOULOTTE DE REMPLISSAGE (RÉSERVOIR HYDRAULIQUE)	7H-1447	1	RÉSERVOIR HYDRAULIQUE ET FILTRE (ASS)	649
CADENAS (ASS) (REMPLISSAGE DE RÉSERVOIR HYDRAULIQUE)	246-2641	1	COUVERCLE DE RÉSERVOIR HYDRAULIQUE	550
CREPINE (ENS) (REMPLISSAGE DE RÉSERVOIR HYDRAULIQUE)	5D-7927	1	RÉSERVOIR HYDRAULIQUE ET FILTRE (ASS)	649
ÉCRAN (ENS) (RÉSERVOIR HYDRAULIQUE, RETOUR PRINCIPAL)	9T-7571	2	RÉSERVOIR HYDRAULIQUE ET FILTRE (ASS)	649
ÉCRAN (HUILE PILOTE D'ÉQUIPEMENT)	6E-5066	1	COLLECTEUR - COMMANDE (ASS)	626
ÉCRAN (HYDRAULIQUE)	118-8693	1	RÉSERVOIR HYDRAULIQUE ET FILTRE (ASS)	649
ÉLÉMENT DE FILTRE À HUILE (ENS) (EFFICACITÉ AMÉLIORÉE)	1R-0777	2	RÉSERVOIR HYDRAULIQUE ET FILTRE (ASS)	649
ÉLÉMENT DE FILTRE À HUILE (ENS) (EFFICACITÉ STANDARD)	1R-0735	2	RÉSERVOIR HYDRAULIQUE ET FILTRE (ASS)	649
ÉLÉMENT DE FILTRE À HUILE (ENS) (LIQUIDE RÉSISTANT AU FEU)	104-6931	2	RÉSERVOIR HYDRAULIQUE ET FILTRE (ASS)	649
ÉLÉMENT DE FILTRE À HUILE (ENS) (TRÈS GRANDE EFFICACITÉ)	139-1537	2	RÉSERVOIR HYDRAULIQUE ET FILTRE (ASS)	649
ÉLÉMENT DE FILTRE (ENS) (*REVERSE FLOW, DISPOSABLE)	249-2337	1	RÉSERVOIR HYDRAULIQUE ET FILTRE (ASS)	649
FILTRE A HUILE (ASS) (HUILE PILOTE D'ÉQUIPEMENT)	249-1751	1	CANALISATIONS A COMMANDE PILOTE (ASS)	595
FILTRE À HUILE (ENS)	130-3212	1	CANALISATIONS A COMMANDE PILOTE (ASS)	595
MOTEUR STANDARD				
BOUCHON DE VIDANGE D'HUILE	109-5839	1	HUILE MOTEUR - CARTER (ASS)	54
JOINT ISOLANT (CACHE-SOUPAPES)	224-7506	6	CULBUTERIE (ASS)	68
OUTILS DE TRAVAIL				
ÉCRAN (ENS)	134-6737	1	LAME UNIVERSELLE (ENS)	725

* TRADUCTION NON DISPONIBLE AU MOMENT DE LA PUBLICATION

PIÈCES DE RECHANGE

DESCRIPTION	NUMÉRO DE PIECÈS	QTÉ	DOMAINE D'APPLICATION	PAGE
POSTE DE CONDUITE				
ACCUMULATEUR - RÉFRIGÉRANT	170-0235	1	CANALISATIONS DE CLIMATISEUR (ASS)	818
		1	CANALISATIONS DE CLIMATISEUR (ASS)	822
ACCUMULATEUR - RÉFRIGÉRANT (CLIMATISEUR)	170-0235	1	CANALISATIONS DE CLIMATISEUR (ASS)	812
		1	CANALISATIONS DE CLIMATISEUR (ASS)	815
BALAI D'ESSUIE-GLACE (ENS) (ARRIÈRE)	5C-8811	1	ESSUIE-GLACE (ASS)	881
BALAI D'ESSUIE-GLACE (ENS) (AVANT)	6V-5851	1	ESSUIE-GLACE (ASS)	881
BALAI D'ESSUIE-GLACE (ENS) (LATÉRAL)	128-5040	4	ESSUIE-GLACE (ASS)	881
BALAI D'ESSUIE-GLACE (ENS) (*RH, LH, REAR)	6V-6864	2	ESSUIE-GLACE (ASS)	884
CADENAS (ASS) (RÉCHAUFFEUR DE CABINE)	246-2641	1	CHAUFFAGE DE CABINE (ASS)	802
CEINTURE DE SECURITE (ASS) (RÉTRACTABLE)	222-0345	1	SIÈGE (ASS)	859
COURROIE TRAPEZOIDALE (POULIE DE COMPRESSEUR)	4N-2745	1	COMPRESSEUR DE REFRIGERANT (ASS)	777
DÉFLECTEUR DE PLUIE (ENS)	235-0320	1	FILTRE À AIR DE CABINE (ASS)	797
DISJONCTEUR (ENS) (15A)	6T-3643	1	CANALISATIONS DE CLIMATISEUR (ASS)	812
		1	CANALISATIONS DE CLIMATISEUR (ASS)	818
ÉLÉMENT DE FILTRE À AIR (ENS) (CABINE)	209-8217	1	CHAUFFAGE DE CABINE (ASS)	802
FILTRE À AIR (GRANDE EFFICACITÉ)	265-3857	1	FILTRE À AIR DE CABINE (ASS)	797
FILTRE À AIR (GRANDE EFFICACITÉ) (CABINE)	265-3857	1	CHAUFFAGE DE CABINE (ASS)	802
FILTRE À AIR (STANDARD) (CABINE)	238-0479	1	CHAUFFAGE DE CABINE (ASS)	802
RÉCEPTEUR-DÉSHYDRATEUR (ASS) (CLIMATISEUR)	175-7162	1	CANALISATIONS DE CLIMATISEUR (ASS)	815
		1	CANALISATIONS DE CLIMATISEUR (ASS)	822
		1	CANALISATIONS DE CLIMATISEUR (ASS)	812

* TRADUCTION NON DISPONIBLE AU MOMENT DE LA PUBLICATION

PIÈCES DE RECHANGE

DESCRIPTION	NUMÉRO DE PIECÈS	QTÉ	DOMAINE D'APPLICATION	PAGE
TRAIN DE ROULEMENT				
BOUCHON DE GOULOTTE DE REMPLISSAGE D'HUILE (RÉSERVOIR D'HUILE D'ARBRE-PIVOT)	221-0812	1	GRAISSAGE DE LA TRAVERSE-PIVOT	479
BOUCHON DE GOULOTTE DE REMPLISSAGE (ENS) (RÉSERVOIR DE GRAISSAGE)	5L-2952	1	GRAISSAGE DE BALANCIER DE SUSPENSION (ASS)	477
BOUCHON DE VIDANGE (*PIVOT SHAFT OIL DRAIN)	4T-2069	4	CARTER TELESCOPIQUE DE MECANISME AMORTISSEUR	467
BOUCHON DE VIDANGE (REMPLISSAGE D'HUILE D'ARBRE D'ARTICULATION)	4T-2069	2	CARTER TELESCOPIQUE DE MECANISME AMORTISSEUR	467
RENIFLARD (ENS) (RÉSERVOIR D'HUILE D'ARBRE-PIVOT)	9G-5127	1	GRAISSAGE DE LA TRAVERSE-PIVOT	479
RENIFLARD (RÉSERVOIR DE GRAISSAGE)	198-7711	1	GRAISSAGE DE BALANCIER DE SUSPENSION (ASS)	477
TRANSMISSION				
BOUCHON AIMANTÉ (RÉDUCTEUR)	6V-3298	1	RÉDUCTEURS (ASS)	360
BOUCHON AIMANTÉ (RÉDUCTEUR, REMPLISSAGE D'HUILE)	6V-3298	1	RÉDUCTEURS (ASS)	351
		1	RÉDUCTEURS (ASS)	357
BOUCHON AIMANTÉ (VIDANGE D'HUILE DE RÉDUCTEUR)	6V-3298	1	RÉDUCTEURS (ASS)	354
BOUCHON DE GOULOTTE DE REMPLISSAGE (ENS) (REMPLISSAGE DE RÉSERVOIR HYDRAULIQUE)	6N-2985	1	CANALISATIONS D'HUILE DE TRANSMISSION (ASS)	365
ÉLÉMENT DE FILTRE À HUILE (ENS) (BOîTE DE VITESSES)	1R-1809	1	FILTRE A HUILE (ASS)	349
ÉLÉMENT DE FILTRE À HUILE (ENS) (CHARGE DE BOÎTE DE VITESSES)	1R-1809	1	CANALISATIONS D'HUILE DE TRANSMISSION (ASS)	365
ÉLÉMENT DE FILTRE À HUILE (ENS) (CHARGE DE CONVERTISSEUR DE COUPLE)	1R-1809	1	CANALISATIONS D'HUILE DE TRANSMISSION (ASS)	365
FILTRE ASPIRANT (CARTER D'HUILE DE TRANSMISSION)	9P-9555	1	CANALISATIONS D'HUILE DE TRANSMISSION (ASS)	365
RENIFLARD (ENS) (BOîTE DE VITESSES)	9G-5127	1	CANALISATIONS D'HUILE DE TRANSMISSION (ASS)	365
TAMIS D'ASPIRATION (HUILE DU CONV. DE COUPLE)	8S-9130	1	CONVERTISSEUR DE COUPLE (ASS)	387
TAMIS D'ASPIRATION (REPRISE DE BOÎTE)	8S-9130	1	TRAINS PLANÉTAIRES - CARTER ET PIÈCES	343
VERSION DE MACHINE				
CADENAS (ASS) (COMPARTIMENT POUR LA DOCUMENTATION)	246-2641	1	VERSION DE CHASSIS	1
VERSION DE MOTEUR				
CADENAS (ASS) (CARENAGE DE MOTEUR)	246-2641	1	MONTAGE DE MOTEUR (VERSION)	17
CADENAS (ASS) (PROTECTION ANTIVANDALISME)	246-2641	1	MONTAGE DE MOTEUR (VERSION)	16

* TRADUCTION NON DISPONIBLE AU MOMENT DE LA PUBLICATION

PIEZAS DE MANTENIMIENTO

DESCRIPCION	NUMERO DE PIEZA	CANT	SE UTILIZA EN	PAGINA
BASTIDOR Y CAJA				
CANDADO (GR) (BOMBA DE CEBADO DE COMBUSTIBLE, ACTIVADA/DESACTIVADA)	246-2641	1	PUERTA DE ACCESO (GR)	402
CANDADO (GR) (COMPARTIMENTO DE BATERIA)	246-2641	2	GUARDABARROS (GR)	423
CANDADO (GR) (RECINTO DE MOTOR)	246-2641	5	CAPO Y PROTECTOR (GR)	450
		5	COMPARTIMIENTO DEL MOTOR (GR)	411
		5	COMPARTIMIENTO DEL MOTOR (GR)	417
		5	COMPARTIMIENTO DEL MOTOR (GR)	419
CANDADO (GR) (TUBO DE LLENADO DE TREN DE FUERZA)	246-2641	2	GUARDABARROS (GR)	421
TAPÓN (DRENAJE) (CAJA DE TRANSMISION)	106-8187	1	CAJA Y BASTIDOR (GR)	394
		1	CAJA Y BASTIDOR (GR)	395

* NO HAY TRADUCCION DISPONIBLE EN EL MOMENTO DE LA IMPRESION

PIEZAS DE MANTENIMIENTO

DESCRIPCION	NUMERO DE PIEZA	CANT	SE UTILIZA EN	PAGINA
CABINA DEL OPERADOR				
ACUMULADOR DE REFRIGERANTE	170-0235	1	TUBERÍAS DE ACONDICIONADOR DE AIRE (GR)	818
		1	TUBERÍAS DE ACONDICIONADOR DE AIRE (GR)	822
ACUMULADOR DE REFRIGERANTE (AIRE ACONDICIONADO)	170-0235	1	TUBERÍAS DE ACONDICIONADOR DE AIRE (GR)	812
		1	TUBERÍAS DE ACONDICIONADOR DE AIRE (GR)	815
CANDADO (GR) (CALENTADOR DE CABINA)	246-2641	1	CALEFACCIÓN DE LA CABINA (GR)	802
CINTURÓN DE SEGURIDAD (GR) (RETRACTIL)	222-0345	1	ASIENTO (GR)	859
CORREA TRAPEZOIDAL (*COMPRESSOR PULLEY)	4N-2745	1	COMPRESOR DE REFRIGERANTE (GR)	777
DISYUNTOR (CONJ) (15 AMPERIOS)	6T-3643	1	TUBERÍAS DE ACONDICIONADOR DE AIRE (GR)	818
		1	TUBERÍAS DE ACONDICIONADOR DE AIRE (GR)	812
ELEMENTO DEL FILTRO DE AIRE (CONJ) (CABINA)	209-8217	1	CALEFACCIÓN DE LA CABINA (GR)	802
FILTRO DE AIRE (ALTA EFICIENCIA)	265-3857	1	FILTRO DE AIRE DE LA CABINA (GR)	797
FILTRO DE AIRE (ALTA EFICIENCIA) (CABINA)	265-3857	1	CALEFACCIÓN DE LA CABINA (GR)	802
FILTRO DE AIRE (ESTANDAR) (CABINA)	238-0479	1	CALEFACCIÓN DE LA CABINA (GR)	802
HOJA DE LIMPIAPARABRISAS (CONJ) (DELANTERO)	6V-5851	1	LIMPIAPARABRISAS DE LA VENTANA (GR)	881
HOJA DE LIMPIAPARABRISAS (CONJ) (LADO)	128-5040	4	LIMPIAPARABRISAS DE LA VENTANA (GR)	881
HOJA DE LIMPIAPARABRISAS (CONJ) (PARTE TRASERA)	5C-8811	1	LIMPIAPARABRISAS DE LA VENTANA (GR)	881
HOJA DE LIMPIAPARABRISAS (CONJ) (*RH, LH, REAR)	6V-6864	2	LIMPIAPARABRISAS DE LA VENTANA (GR)	884
RECEPTOR-SECADOR (GR) (ACONDICIONADOR DE AIRE)	175-7162	1	TUBERÍAS DE ACONDICIONADOR DE AIRE (GR)	812
		1	TUBERÍAS DE ACONDICIONADOR DE AIRE (GR)	815
		1	TUBERÍAS DE ACONDICIONADOR DE AIRE (GR)	822
TAPA CONTRA LA LLUVIA (CONJ)	235-0320	1	FILTRO DE AIRE DE LA CABINA (GR)	797
CONFIGURACIÓN DE MÁQUINA				
CANDADO (GR) (COMPARTIMENTO PARA LA LITERATURA)	246-2641	1	CHASIS (CONFIG)	1
CONFIGURACIÓN DE MOTOR				
CANDADO (GR) (PROTECCIÓN CONTRA BANDALISMO)	246-2641	1	CONFIGURACIÓN DE INSTALACIÓN DEL MOTOR	16
CANDADO (GR) (RECINTO DE MOTOR)	246-2641	1	CONFIGURACIÓN DE INSTALACIÓN DEL MOTOR	17

* NO HAY TRADUCCION DISPONIBLE EN EL MOMENTO DE LA IMPRESION

PIEZAS DE MANTENIMIENTO

DESCRIPCION	NUMERO DE PIEZA	CANT	SE UTILIZA EN	PAGINA
HERRAMIENTAS				
PANTALLA (CONJ)	134-6737	1	HOJA UNIVERSAL (CONJ)	725
MOTOR BÁSICO				
SELLO-AISLAMIENTO (TAPA DE VÁLVULA)	224-7506	6	MECANISMO DE VÁLVULAS (GR)	68
TAPON DE DRENAJE DE ACEITE	109-5839	1	CÁRTER - COLECTOR DEL (GR)	54
SISTEMA DE ADMISIÓN Y ESCAPE DE AIRE				
BATERÍA (GR) (24 VOLTIOS)	167-8984	1	JUEGO DE INSTALACIÓN	140
ELEMENTO DEL FILTRO DE AIRE (CONJ)	6I-2505	1	FILTRO DE AIRE (GR)	132
	6I-2506	1	FILTRO DE AIRE (GR)	132
PANTALLA (CONJ) (*ENGINE, AFTERCOOLER)	248-6942	4	CONFIG. DE FILTROS-TURBINA	155
PANTALLA (CONJ) (*ENGINE, AFTERCOOLER) (*FINE FILTRATION)	248-6951	4	CONFIG. DE FILTROS-TURBINA	155
TAPA CONTRA LA LLUVIA (CONJ)	7S-4411	1	EXPULSOR DE POLVO (GR)	136
		1	EXPULSOR DE POLVO (GR)	137
	7S-5003	2	EXPULSOR DE POLVO (GR)	139
SISTEMA DE COMBUSTIBLE				
CANDADO (GR) (DRENAJE DE TANQUE DE COMBUSTIBLE)	246-2641	1	FILTRO Y TUBERÍAS DE COMBUSTIBLE (GR)	175
CANDADO (GR) (TANQUE DE COMBUSTIBLE)	246-2641	1	COMBUSTIBLE - TANQUE DE (GR)	194
COLADOR DE COMBUSTIBLE	9P-7121	1	COMBUSTIBLE - TANQUE DE (GR)	195
FILTRO DE COMBUSTIBLE (CONJ)	1R-0771	1	FILTRO DE COMBUSTIBLE Y SEPARADOR DE AGUA (GR)	183
FILTRO DE COMBUSTIBLE (CONJ) (ALTA EFICIENCIA)	1R-0755	1	FILTRO DE COMBUSTIBLE (GR)	178
		1	FILTRO DE COMBUSTIBLE (GR)	180
SELLO (COMBUSTIBLE)	179-7400	2	BOMBA DE CEBADO Y FILTRO SECUNDARIO (GR)	192
SELLO (SEPARADOR DE COMBUSTIBLE Y AGUA)	220-8678	1	FILTRO DE COMBUSTIBLE Y SEPARADOR DE AGUA (GR)	183
TAPA DE LLENADO (CONJ) (TANQUE DE COMBUSTIBLE)	7X-7700	1	COMBUSTIBLE - TANQUE DE (GR)	195
SISTEMA DE ENFRIAMIENTO				
FILTRO (BOMBA DE AGUA)	111-2721	1	BOMBA DE AGUA (GR)	107
REGULADOR DE TEMPERATURA DEL AGUA (92 GRADOS CENTÍGRADOS)	248-5513	2	TUBERÍAS DEL AGUA (GR)	99
SELLO DE LABIO	3S-9643	2	TUBERÍAS DEL AGUA (GR)	99
TAPA DE RADIADOR (CONJ)	031-1119	1	TANQUE DE REFRIGERANTE (GR)	122
		1	TANQUE DE REFRIGERANTE (GR)	126
TAPÓN DE DRENAJE (AGUA)	7N-1447	1	TUBERÍAS DEL AGUA (GR)	90

* NO HAY TRADUCCION DISPONIBLE EN EL MOMENTO DE LA IMPRESION

PIEZAS DE MANTENIMIENTO

DESCRIPCION	NUMERO DE PIEZA	CANT	SE UTILIZA EN	PAGINA
SISTEMA DE LUBRICACIÓN				
ELEMENTO DEL RESPIRADERO (CÁRTER DEL MOTOR)	238-9204	1	RESPIRADERO (GR)	69
FILTRO DE ACEITE DEL MOTOR (CONJ)	1R-0716	2	FILTRO DE ACEITE DEL MOTOR (GR)	73
TAPÓN (CONJ) (LLENADO DE ACEITE DE MOTOR)	261-0011	1	TUBO DE LLENADO DE ACEITE (GR)	72
SISTEMA ELÉCTRICO Y DE ARRANQUE				
BATERÍA (12-VOLTIOS, LIBRE DE MANTENIMIENTO)	153-5710	2	BATERÍA Y CABLES (GR)	207
		2	BATERÍA Y CABLES (GR)	215
		2	BATERÍA Y CABLES (GR)	222
BATERÍA (12-VOLTIOS, LIBRE DE MANTENIMIENTO) (*LOW TEMP STARTING)	153-5710	2	ARRANQUE EN TIEMPO FRIO (CONFIG)	302
CANDADO (GR) (COMPARTIMENTO DE BATERIA)	246-2641	1	ARRANQUE EN TIEMPO FRIO (CONFIG)	302
CONFIGURACION DE LAMPARA DE REFLECTOR (24-VOLTIOS, 70-VATIOS)	213-4998	1	REFLECTOR (GR)	249
		1	REFLECTOR (GR)	250
CORREA TRAPEZOIDAL (ALTERNADOR)	245-7481	1	CARGA - ALTERNADOR DE (GR)	201
		1	CARGA - ALTERNADOR DE (GR)	203
		1	CARGA - ALTERNADOR DE (GR)	205
DISYUNTOR (CONJ) (15 AMPERIOS) (CORRIENTE PRINCIPAL)	6T-3643	1	PANEL DE FUSIBLES (GR)	271
ELEMENTO DEL CALENTADOR DEL AGUA DE LAS CAMISAS (120 VOLTIOS, 1500 VATIOS)	230-3525	2	AGUA DE LAS CAMISAS - CALENTADOR DEL (GR)	241
ELEMENTO DEL CALENTADOR DEL AGUA DE LAS CAMISAS (240 VOLTIOS, 1500 VATIOS)	239-8051	2	AGUA DE LAS CAMISAS - CALENTADOR DEL (GR)	242
FILTRO ESPONJOSO (TANQUE DE COMBUSTIBLE)	111-4402	1	BATERÍA Y CABLES (GR)	207
		1	BATERÍA Y CABLES (GR)	215
		1	BATERÍA Y CABLES (GR)	222
FILTRO (SENSOR DE PRESION ATMOSFERICA)	125-5835	1	SENSOR DEL MOTOR (GR)	278
FUSIBLE (10-AMPERIOS)	9W-1442	6	PANEL DE FUSIBLES (GR)	271
FUSIBLE (15 AMPERIOS)	9W-1441	18	PANEL DE FUSIBLES (GR)	271
	133-9012	1	*RESISTOR GP-CAB HEATER	275
FUSIBLE (175-AMPERIOS) (*ALTERNATOR, MAIN)	239-8107	2	PANEL DE FUSIBLES (GR)	271
FUSIBLE (20-AMPERIOS)	9W-1446	4	PANEL DE FUSIBLES (GR)	271
LAMPARA DEL TECHO (CONJ) (24 VOLTIOS)	226-2811	1	CABLES DE LA CABINA (GR)	322
LAMPARA INDICADORA (CONJ) (LUZ DE ACCIÓN)	170-3461	1	CABLES DE LA PLATAFORMA (GR)	336
LÁMPARA (24 VOLTIOS) (ACCIÓN TRASERA)	7N-1996	1	CABLES DE LA PLATAFORMA (GR)	336
LÁMPARA (24-VOLTIOS, 21 VATIOS) (CÚPULA)	9X-4493	1	CABLES DE LA CABINA (GR)	322

* NO HAY TRADUCCION DISPONIBLE EN EL MOMENTO DE LA IMPRESION

PIEZAS DE MANTENIMIENTO

DESCRIPCION	NUMERO DE PIEZA	CANT	SE UTILIZA EN	PAGINA
LUCES DE ALÓGENO (24 VOLTIOS, 65 VATIOS)	9X-3463	1	LÁMPARA DE FARO DELANTERO (GR)	251
		1	REFLECTOR (GR)	246
		1	REFLECTOR (GR)	247
LUCES DE ALÓGENO (24 VOLTIOS, 65 VATIOS) (REFLECTOR)	9X-3463	1	REFLECTOR (GR)	248
REJILLA	226-4909	1	CARGA - ALTERNADOR DE (GR)	205
TAPA PARA LLUVIA	164-5798	1	CARGA - ALTERNADOR DE (GR)	205
VIDRIO (CONJ) (REFLECTOR)	158-0248	1	REFLECTOR (GR)	246
SISTEMA HIDRÁULICO				
CANDADO (GR) (LLENADO DEL TANQUE HIDRÁULICO)	246-2641	1	TAPA DEL TAPÓN DEL TANQUE HIDRÁULICO (GR)	550
COLADOR (CONJ) (LLENADO DEL TANQUE HIDRÁULICO)	5D-7927	1	TANQUE Y FILTRO HIDRÁULICOS (GR)	649
*ELEMENT AS-FILTER (*REVERSE FLOW, DISPOSABLE)	249-2337	1	TANQUE Y FILTRO HIDRÁULICOS (GR)	649
ELEMENTO DE FILTRO DE ACEITE (CONJ) (*ADVANCED EFFICIENCY)	1R-0777	2	TANQUE Y FILTRO HIDRÁULICOS (GR)	649
ELEMENTO DE FILTRO DE ACEITE (CONJ) (EFICIENCIA ULTRA ALTA)	139-1537	2	TANQUE Y FILTRO HIDRÁULICOS (GR)	649
ELEMENTO DE FILTRO DE ACEITE (CONJ) (FLUÍDO RESISTENTE AL FUEGO)	104-6931	2	TANQUE Y FILTRO HIDRÁULICOS (GR)	649
ELEMENTO DE FILTRO DE ACEITE (CONJ) (GRUPO DE LAMPARA-TABLERO)	1R-0735	2	TANQUE Y FILTRO HIDRÁULICOS (GR)	649
FILTRO DE ACEITE (CONJ)	130-3212	1	TUBERÍAS CON SERVOMANDO (GR)	595
FILTRO DE ACEITE (GR) (*IMPLEMENT PILOT OIL)	249-1751	1	TUBERÍAS CON SERVOMANDO (GR)	595
PANTALLA (CONJ) (TANQUE HIDRÁULICO, RETORNO PRINCIPAL)	9T-7571	2	TANQUE Y FILTRO HIDRÁULICOS (GR)	649
REJILLA (HIDRÁULICO)	118-8693	1	TANQUE Y FILTRO HIDRÁULICOS (GR)	649
REJILLA (*IMPLEMENT PILOT OIL)	6E-5066	1	CONTROL DEL MULTIPLE (GR)	626
TAPA DEL TUBO DE LLENADO (TANQUE HIDRÁULICO)	7H-1447	1	TANQUE Y FILTRO HIDRÁULICOS (GR)	649

* NO HAY TRADUCCION DISPONIBLE EN EL MOMENTO DE LA IMPRESION

PIEZAS DE MANTENIMIENTO

DESCRIPCION	NUMERO DE PIEZA	CANT	SE UTILIZA EN	PAGINA
TREN DE FUERZA				
ELEMENTO DE FILTRO DE ACEITE (CONJ) (CARGA DE CONVERTIDOR DE PAR)	1R-1809	1	TUBERÍAS DE ACEITE DEL TREN DE FUERZA (GR)	365
ELEMENTO DE FILTRO DE ACEITE (CONJ) (CARGADO DE TRANSMISION)	1R-1809	1	TUBERÍAS DE ACEITE DEL TREN DE FUERZA (GR)	365
ELEMENTO DE FILTRO DE ACEITE (CONJ) (TRANSMISION)	1R-1809	1	FILTRO DE ACEITE (GR)	349
REJILLA DE SUCCIÓN (ACEITE DE CONVERTIDOR DE PAR)	8S-9130	1	CONVERTIDOR DE PAR (GR)	387
REJILLA DE SUCCIÓN (BARRIDO DE TRANSMISION)	8S-9130	1	CAJA Y PIEZAS DE LOS PLANETARIOS	343
REJILLA DE SUCCION (SUMIDERO DE ACEITE DE TREN DE FUERZA)	9P-9555	1	TUBERÍAS DE ACEITE DEL TREN DE FUERZA (GR)	365
RESPIRADERO (CONJ) (TRANSMISION)	9G-5127	1	TUBERÍAS DE ACEITE DEL TREN DE FUERZA (GR)	365
TAPA DE LLENADO (CONJ) (LLENADO DEL TANQUE HIDRÁULICO)	6N-2985	1	TUBERÍAS DE ACEITE DEL TREN DE FUERZA (GR)	365
TAPÓN MAGNÉTICO (DRENAJE DE ACEITE DE MANDO FINAL)	6V-3298	1	MANDO FINAL (GR)	354
TAPÓN MAGNÉTICO (MANDO FINAL)	6V-3298	1	MANDO FINAL (GR)	360
TAPÓN MAGNÉTICO (MANDO FINAL, LLENADO DE ACEITE)	6V-3298	1	MANDO FINAL (GR)	351
		1	MANDO FINAL (GR)	357
TREN DE RODAJE				
RESPIRADERO (CONJ) (EJE PIVOTE, TANQUE DE COMBUSTIBLE)	9G-5127	1	LUBRICACIÓN DE EJE PIVOTE (GR)	479
RESPIRADERO (TANQUE DE LUBRICACION)	198-7711	1	GRUPO DE LUBRICACIÓN DE BARRA ESTABILIZADORA	477
TAPA DE LLENADO (CONJ) (TANQUE DE LUBRICACION)	5L-2952	1	GRUPO DE LUBRICACIÓN DE BARRA ESTABILIZADORA	477
TAPA DEL TUBO DE LLENADO DE ACEITE (EJE PIVOTE, TANQUE DE COMBUSTIBLE)	221-0812	1	LUBRICACIÓN DE EJE PIVOTE (GR)	479
TAPÓN DE DRENAJE (LLENADO DEL ACEITE DEL EJE PIVOTE)	4T-2069	2	BASTIDOR TELESCÓPICO DEL RESORTE TENSOR (GR)	467
TAPÓN DE DRENAJE (*PIVOT SHAFT OIL DRAIN)	4T-2069	4	BASTIDOR TELESCÓPICO DEL RESORTE TENSOR (GR)	467

* NO HAY TRADUCCION DISPONIBLE EN EL MOMENTO DE LA IMPRESION

PEÇAS DE MANUTENÇÃO

DESCRIÇÃO	NÚMERO DE PEÇA	QUANT	UTILIZADA EM	PÁGINA
CHASSI E CARROCERIA				
CADEADO (BOCAL DE ENCHIMENTO DE ÓLEO DE TREM DE FORÇA)	246-2641	2	PÁRA-LAMA	421
CADEADO (BOMBA DE ESCORVA DE COMBUSTÍVEL, LIGAR-DESLIGAR)	246-2641	1	PORTA DE ACESSO	402
CADEADO (CAIXA DA BATERIA)	246-2641	2	PÁRA-LAMA	423
CADEADO (COBERTURA DO MOTOR)	246-2641	5	CAPÔ E PROTETOR	450
		5	COBERTURA DO MOTOR	411
		5	COBERTURA DO MOTOR	417
		5	COBERTURA DO MOTOR	419
TAMPÃO (DRENAGEM) (CAIXA DE TRANSMISSÃO)	106-8187	1	CAIXA E CHASSI	394
		1	CAIXA E CHASSI	395
FERRAMENTAS DE TRABALHO				
TELA FILTRANTE	134-6737	1	LÂMINA UNIVERSAL	725
MÁQUINA - ARRANJO				
CADEADO (COMPARTIMENTO PARA PUBLICAÇÕES)	246-2641	1	CHASSI	1
MATERIAL RODANTE				
BUJÃO DO DRENO (DRENO DO ÓLEO DO EIXO PIVÔ)	4T-2069	4	ARMAÇÃO TELESCÓPICA DA MOLA TENSORA	467
BUJÃO DO DRENO (ENCHIMENTO DO ÓLEO DO EIXO PIVÔ)	4T-2069	2	ARMAÇÃO TELESCÓPICA DA MOLA TENSORA	467
RESPIRO (TANQUE DE LUBRIFICAÇÃO)	198-7711	1	LUBRIFICAÇÃO-BARRA EQUALIZADORA	477
RESPIRO (TANQUE DE ÓLEO DO EIXO PILOTO)	9G-5127	1	EIXO PIVÔ - LUBRIFICAÇÃO	479
TAMPA - BOCAL DE ENCHIMENTO DE ÓLEO (TANQUE DE ÓLEO DO EIXO PILOTO)	221-0812	1	EIXO PIVÔ - LUBRIFICAÇÃO	479
TAMPA - BOCAL DE ENCHIMENTO (TANQUE DE LUBRIFICAÇÃO)	5L-2952	1	LUBRIFICAÇÃO-BARRA EQUALIZADORA	477
MOTOR - ARRANJO				
CADEADO (COBERTURA DO MOTOR)	246-2641	1	GRUPO DE INSTALAÇÃO - MOTOR	17
CADEADO (PROTETOR CONTRA VANDALISMO)	246-2641	1	GRUPO DE INSTALAÇÃO - MOTOR	16
MOTOR BÁSICO				
BUJÃO - DRENAGEM DO ÓLEO	109-5839	1	CÁRTER DO ÓLEO DO MOTOR	54
RETENTOR - ISOLAMENTO (MECANISMO DAS VÁLVULAS - TAMPA)	224-7506	6	MECANISMO DAS VÁLVULAS	68

PEÇAS DE MANUTENÇÃO

DESCRIÇÃO	NÚMERO DE PEÇA	QUANT	UTILIZADA EM	PÁGINA
POSTO DO OPERADOR				
ACUMULADOR - REFRIGERANTE	170-0235	1	TUBOS - AR CONDICIONADO	818
		1	TUBOS - AR CONDICIONADO	822
ACUMULADOR - REFRIGERANTE (AR CONDICIONADO)	170-0235	1	TUBOS - AR CONDICIONADO	812
		1	TUBOS - AR CONDICIONADO	815
CADEADO (AQUECEDOR DA CABINE)	246-2641	1	AQUECEDOR DA CABINE	802
CINTO DE SEGURANÇA (RETRÁTIL)	222-0345	1	ASSENTO	859
CORREIA EM V (POLIA DO COMPRESSOR)	4N-2745	1	COMPRESSOR DE REFRIGERANTE	777
DISJUNTOR AUTOMÁTICO DE CIRCUITO (15 AMPERES)	6T-3643	1	TUBOS - AR CONDICIONADO	812
		1	TUBOS - AR CONDICIONADO	818
ELEMENTO DO FILTRO DE AR (CABINE)	209-8217	1	AQUECEDOR DA CABINE	802
FILTRO - AR (ALTA EFICIÊNCIA)	265-3857	1	FILTRO - AR DA CABINE	797
FILTRO - AR (ALTA EFICIÊNCIA) (CABINE)	265-3857	1	AQUECEDOR DA CABINE	802
FILTRO - AR (PADRÃO) (CABINE)	238-0479	1	AQUECEDOR DA CABINE	802
LÂMINA DO LIMPADOR DE PÁRA-BRISA (DIANTEIRO)	6V-5851	1	LIMPADOR DO VIDRO	881
LÂMINA DO LIMPADOR DE PÁRA-BRISA (LATERAL)	128-5040	4	LIMPADOR DO VIDRO	881
LÂMINA DO LIMPADOR DE PÁRA-BRISA (TRASEIRA DIREITA, ESQUERDA)	6V-6864	2	LIMPADOR DO VIDRO	884
LÂMINA DO LIMPADOR DE PÁRA-BRISA (TRASEIRO)	5C-8811	1	LIMPADOR DO VIDRO	881
PROTETOR CONTRA CHUVA	235-0320	1	FILTRO - AR DA CABINE	797
RECEPTOR - SECADOR (CONDICIONADOR DE AR)	175-7162	1	TUBOS - AR CONDICIONADO	812
		1	TUBOS - AR CONDICIONADO	815
		1	TUBOS - AR CONDICIONADO	822
SISTEMA DA ADMISSÃO DE AR E DE ESCAPE				
BATERIA (24 VOLTS)	167-8984	1	JOGO DE INSTALAÇÃO	140
ELEMENTO FILTRANTE - PURIFICADOR DE AR	6I-2505	1	PURIFICADOR DE AR	132
	6I-2506	1	PURIFICADOR DE AR	132
PROTETOR CONTRA CHUVA	7S-4411	1	EJETOR DE POEIRA	136
		1	EJETOR DE POEIRA	137
	7S-5003	2	EJETOR DE POEIRA	139
TELA FILTRANTE (MOTOR, ARREFECEDOR DA ADMISSÃO)	248-6942	4	PRÉ-PURIFICADOR-TURBINA	155
TELA FILTRANTE (MOTOR, ARREFECEDOR DA ADMISSÃO) (FILTRAÇÃO PRECISA)	248-6951	4	PRÉ-PURIFICADOR-TURBINA	155

PEÇAS DE MANUTENÇÃO

DESCRIÇÃO	NÚMERO DE PEÇA	QUANT	UTILIZADA EM	PÁGINA
SISTEMA DE ARREFECIMENTO				
BUJÃO DO DRENO (ÁGUA)	7N-1447	1	TUBOS - ÁGUA	90
FILTRO (BOMBA D'ÁGUA)	111-2721	1	BOMBA DE ÁGUA	107
REGULADOR DE TEMPERATURA DA ÁGUA (92 GRAUS C)	248-5513	2	TUBOS - ÁGUA	99
TAMPA - RADIADOR	031-1119	1	TANQUE - LÍQUIDO ARREFECEDOR	122
		1	TANQUE - LÍQUIDO ARREFECEDOR	126
VEDADOR TIPO LABIO	3S-9643	2	TUBOS - ÁGUA	99
SISTEMA DE COMBUSTÍVEL				
CADEADO (DRENAGAM DO TANQUE DE COMBUSTÍVEL)	246-2641	1	FILTRO E TUBOS - COMBUSTÍVEL	175
CADEADO (TANQUE DE COMBUSTÍVEL)	246-2641	1	TANQUE DE COMBUSTÍVEL	194
FILTRO - COMBUSTÍVEL	1R-0771	1	FILTRO DE COMBUSTÍVEL E SEPARADOR DE ÁGUA	183
	9P-7121	1	TANQUE DE COMBUSTÍVEL	195
FILTRO - COMBUSTÍVEL (ALTA EFICIÊNCIA)	1R-0755	1	FILTRO - COMBUSTÍVEL	178
		1	FILTRO - COMBUSTÍVEL	180
RETENTOR (COMBUSTÍVEL)	179-7400	2	BOMBA DO FILTRO SECUNDÁRIO E ESCORVA DO COMBUSTÍVEL	192
RETENTOR (SEPARADOR DE ÁGUA E COMBUSTÍVEL)	220-8678	1	FILTRO DE COMBUSTÍVEL E SEPARADOR DE ÁGUA	183
TAMPA - BOCAL DE ENCHIMENTO (TANQUE DE COMBUSTÍVEL)	7X-7700	1	TANQUE DE COMBUSTÍVEL	195
SISTEMA DE LUBRIFICAÇÃO				
ELEMENTO - RESPIRO (CÁRTER DO MOTOR)	238-9204	1	RESPIRO	69
FILTRO - ÓLEO DO MOTOR	1R-0716	2	FILTRO - ÓLEO DO MOTOR	73
TAMPA (BOCAL DE ENCHIMENTO DO OLEO DO MOTOR)	261-0011	1	BOCAL DE ENCHIMENTO DE ÓLEO	72

PEÇAS DE MANUTENÇÃO

DESCRIÇÃO	NÚMERO DE PEÇA	QUANT	UTILIZADA EM	PÁGINA
SISTEMA ELÉTRICO E DE PARTIDA				
BATERIA (12 VOLTS, ISENTO DE MANUTENÇÃO)	153-5710	2	BATERIA E CABOS / FIOS ELÉTRICOS	207
		2	BATERIA E CABOS / FIOS ELÉTRICOS	215
		2	BATERIA E CABOS / FIOS ELÉTRICOS	222
BATERIA (12 VOLTS, ISENTO DE MANUTENÇÃO) (PARTIDA EM BAIXA TEMP)	153-5710	2	PARTIDA EM TEMPO FRIO - ARRANJO	302
CADEADO (CAIXA DA BATERIA)	246-2641	1	PARTIDA EM TEMPO FRIO - ARRANJO	302
CORREIA EM V (ALTERNADOR)	245-7481	1	ALTERNADOR DE CORRENTE	201
		1	ALTERNADOR DE CORRENTE	203
		1	ALTERNADOR DE CORRENTE	205
DISJUNTOR AUTOMÁTICO DE CIRCUITO (15 AMPERES) (POTÊNCIA PRINCIPAL)	6T-3643	1	PAINEL DE FUSÍVEIS	271
ELEMENTO - AQUECEDOR DE ÁGUA DA CAMISA (120 VOLTS, 1500 WATTS)	230-3525	2	AQUECEDOR DA ÁGUA DO MOTOR	241
ELEMENTO - AQUECEDOR DE ÁGUA DA CAMISA (240 VOLTS, 1500 WATTS)	239-8051	2	AQUECEDOR DA ÁGUA DO MOTOR	242
FILTRO - ESPUMA (TANQUE DE COMBUSTÍVEL)	111-4402	1	BATERIA E CABOS / FIOS ELÉTRICOS	207
		1	BATERIA E CABOS / FIOS ELÉTRICOS	215
		1	BATERIA E CABOS / FIOS ELÉTRICOS	222
FILTRO (SENSOR DE PRESSÃO ATMOSFÉRICA)	125-5835	1	SENSOR DO MOTOR	278
FUSÍVEL (10 AMPERES)	9W-1442	6	PAINEL DE FUSÍVEIS	271
FUSÍVEL (15 AMPERES)	9W-1441	18	PAINEL DE FUSÍVEIS	271
	133-9012	1	RESISTOR-AQUECEDOR DA CABINE	275
FUSÍVEL (175 AMPÈRES) (ALTERNADOR PRINCIPAL)	239-8107	2	PAINEL DE FUSÍVEIS	271
FUSÍVEL (20-AMPERES)	9W-1446	4	PAINEL DE FUSÍVEIS	271
LÂMPADA - FAROL (24 VOLTS, 70 WATTS)	213-4998	1	LÂMPADA - FAROL	249
		1	LÂMPADA - FAROL	250
LÂMPADA - HALOGÊNEO (24 VOLTS, 65 WATTS)	9X-3463	1	FAROL DIANTEIRO	251
		1	LÂMPADA - FAROL	246
		1	LÂMPADA - FAROL	247
LÂMPADA - HALOGÊNEO (24 VOLTS, 65 WATTS) (FAROL)	9X-3463	1	LÂMPADA - FAROL	248
LÂMPADA DO TETO (24 VOLTS)	226-2811	1	CABOS/FIOS ELÉTRICOS - CABINE	322
LÂMPADA INDICADORA (LUZ DE AÇÃO)	170-3461	1	CABOS/FIOS ELÉTRICOS - PLATAFORMA	336
LÂMPADA (24 VOLTS) (AÇÃO TRASEIRA)	7N-1996	1	CABOS/FIOS ELÉTRICOS - PLATAFORMA	336
LÂMPADA (24 VOLTS, 21 WATTS) (TETO)	9X-4493	1	CABOS/FIOS ELÉTRICOS - CABINE	322
LENTE (FAROL)	158-0248	1	LÂMPADA - FAROL	246
TAMPA - CHUVA	164-5798	1	ALTERNADOR DE CORRENTE	205
TELA FILTRANTE	226-4909	1	ALTERNADOR DE CORRENTE	205

PEÇAS DE MANUTENÇÃO

DESCRIÇÃO	NÚMERO DE PEÇA	QUANT	UTILIZADA EM	PÁGINA
SISTEMA HIDRÁULICO				
CADEADO (ENCHIMENTO DO TANUQE HIDRÁULICO)	246-2641	1	TAMPA - TANQUE HIDRÁULICO	550
ELEMENTO FILTRANTE - ÓLEO (EFICIÊNCIA AVANÇADA)	1R-0777	2	TANQUE HIDRÁULICO E FILTRO	649
ELEMENTO FILTRANTE - ÓLEO (EFICIÊNCIA PADRÃO)	1R-0735	2	TANQUE HIDRÁULICO E FILTRO	649
ELEMENTO FILTRANTE - ÓLEO (EFICIÊNCIA ULTRA ALTA)	139-1537	2	TANQUE HIDRÁULICO E FILTRO	649
ELEMENTO FILTRANTE - ÓLEO (FLUIDO RESISTENTE A FOGO)	104-6931	2	TANQUE HIDRÁULICO E FILTRO	649
ELEMENTO FILTRANTE (FLUXO INVERTIDO, DESCARTÁVEL)	249-2337	1	TANQUE HIDRÁULICO E FILTRO	649
FILTRO - ÓLEO	130-3212	1	TUBOS - CIRCUITO PILOTO	595
FILTRO - ÓLEO (ÓLEO PILOTO DO IMPLEMENTO)	249-1751	1	TUBOS - CIRCUITO PILOTO	595
TAMPA - BOCAL DE ENCHIMENTO (TANQUE HIDRÁULICO)	7H-1447	1	TANQUE HIDRÁULICO E FILTRO	649
TELA FILTRANTE (ENCHIMENTO DO TANUQE HIDRÁULICO)	5D-7927	1	TANQUE HIDRÁULICO E FILTRO	649
TELA FILTRANTE (HIDRÁULICO)	118-8693	1	TANQUE HIDRÁULICO E FILTRO	649
TELA FILTRANTE (ÓLEO PILOTO DO IMPLEMENTO)	6E-5066	1	COLETOR - CONTROLE	626
TELA FILTRANTE (TANQUE HIDRÁULICO, RETORNO PRINCIPAL)	9T-7571	2	TANQUE HIDRÁULICO E FILTRO	649
TREM DE FORÇA				
BUJÃO MAGNÉTICO (COMANDO FINAL)	6V-3298	1	COMANDO FINAL	360
BUJÃO MAGNÉTICO (COMANDO FINAL, ENCHIMENTO DE ÓLEO)	6V-3298	1	COMANDO FINAL	351
		1	COMANDO FINAL	357
BUJÃO MAGNÉTICO (DRENO DO ÓLEO DO COMANDO FINAL)	6V-3298	1	COMANDO FINAL	354
ELEMENTO FILTRANTE - ÓLEO (CARREGAMENTO DA TRANSMISSÃO)	1R-1809	1	TUBOS - ÓLEO DA TRANSMISSÃO	365
ELEMENTO FILTRANTE - ÓLEO (CARREGANDO O CONVERSOR DE TORQUE)	1R-1809	1	TUBOS - ÓLEO DA TRANSMISSÃO	365
ELEMENTO FILTRANTE - ÓLEO (TRANSMISSÃO)	1R-1809	1	FILTRO - ÓLEO	349
RESPIRO (TRANSMISSÃO)	9G-5127	1	TUBOS - ÓLEO DA TRANSMISSÃO	365
TAMPA - BOCAL DE ENCHIMENTO (ENCHIMENTO DO TANUQE HIDRÁULICO)	6N-2985	1	TUBOS - ÓLEO DA TRANSMISSÃO	365
TELA DE SUCÇÃO (ÓLEO DO CONVERSOR DE TORQUE)	8S-9130	1	CONVERSOR DE TORQUE	387
TELA DE SUCÇÃO (RETORNO - TRANSMISSÃO)	8S-9130	1	CARCAÇA DAS ENGRENAGENS PLANETÁRIAS E COMPONENTES	343
TELA FILTRANTE DE SUCÇÃO (CÁRTER DO TREM DE FORÇA)	9P-9555	1	TUBOS - ÓLEO DA TRANSMISSÃO	365

WARTUNGSTEILE

BESCHREIBUNG	ERSATZTEIL-NUMMER	MENGE	VERWENDET IN	SEITE
ARBEITSGERÄTE				
SIEB	134-6737	1	U-SCHILD	725
ELEKTRISCHE ANLAGE UND STARTSYSTEM				
ABDECKGLAS (ARBEITSSCHEINWERFER)	158-0248	1	ARBEITSLEUCHTEN	246
ARBEITSLEUCHTEN (24 V, 70 W)	213-4998	1	ARBEITSLEUCHTEN	249
		1	ARBEITSLEUCHTEN	250
BATTERIE (12 V, WARTUNGSFREI)	153-5710	2	BATTERIE UND VERDRAHTUNG	207
		2	BATTERIE UND VERDRAHTUNG	215
		2	BATTERIE UND VERDRAHTUNG	222
BATTERIE (12 V, WARTUNGSFREI) (TIEFTEMPERATURSTART)	153-5710	2	KALTWETTERSTARTANLAGE	302
FAHRERHAUS-INNENLEUCHTE (24 V)	226-2811	1	FAHRERHAUSVERDRAHTUNG	322
FILTER (LUFTDRUCKSENSOR)	125-5835	1	MOTORSENSOR	278
HALOGENSCHINWERFER (24V)(65W)	9X-3463	1	ARBEITSLEUCHTEN	246
		1	ARBEITSLEUCHTEN	247
		1	FRONTSCHEINWERFER	251
HALOGENSCHINWERFER (24V)(65W) (ARBEITSSCHEINWERFER)	9X-3463	1	ARBEITSLEUCHTEN	248
KEILRIEMEN (DREHSTROMGENERATOR)	245-7481	1	DREHSTROMGENERATOR	201
		1	DREHSTROMGENERATOR	203
		1	DREHSTROMGENERATOR	205
KONTROLLEUCHTE (WARNLEUCHTE)	170-3461	1	FAHRERPLATTFORMVERDRAHTUNG	336
LEUCHTE (24 V) (AKTION HECK)	7N-1996	1	FAHRERPLATTFORMVERDRAHTUNG	336
LEUCHTE (24V, 21W) (FAHRERHAUSDACH)	9X-4493	1	FAHRERHAUSVERDRAHTUNG	322
REGENSCHUTZKAPPE	164-5798	1	DREHSTROMGENERATOR	205
SCHAUMFILTER (KRAFTSTOFFTANK)	111-4402	1	BATTERIE UND VERDRAHTUNG	207
		1	BATTERIE UND VERDRAHTUNG	215
		1	BATTERIE UND VERDRAHTUNG	222
SCREEN	226-4909	1	DREHSTROMGENERATOR	205
SICHERUNG (10 A)	9W-1442	6	INSTRUMENTENTAFEL-SICHERUNG	271
SICHERUNG (15 A)	9W-1441	18	INSTRUMENTENTAFEL-SICHERUNG	271
	133-9012	1	*RESISTOR GP-CAB HEATER	275
SICHERUNG (175 A) (*ALTERNATOR, MAIN)	239-8107	2	INSTRUMENTENTAFEL-SICHERUNG	271
SICHERUNG (20 A)	9W-1446	4	INSTRUMENTENTAFEL-SICHERUNG	271
UMLAUFKÜHLWASSERHEIZUNGSELEMENT (120 V, 1500 W)	230-3525	2	UMLAUFKÜHLWASSERHEIZUNG	241
UMLAUFKÜHLWASSERHEIZUNGSELEMENT (240 V, 1500 W)	239-8051	2	UMLAUFKÜHLWASSERHEIZUNG	242
UNTERBRECHER (15 A) (HAUPTSTROM)	6T-3643	1	INSTRUMENTENTAFEL-SICHERUNG	271
VORHÄNGESCHLOSS (BATTERIEKASTEN)	246-2641	1	KALTWETTERSTARTANLAGE	302

* ÜBERSETZUNG ZUM ZEITPUNKT DER DRUCKLEGUNG NICHT VORHANDEN

WARTUNGSTEILE

BESCHREIBUNG	ERSATZTEIL-NUMMER	MENGE	VERWENDET IN	SEITE
FAHRERHAUS				
KÄLTEMITTEL-DRUCKSPEICHER	170-0235	1	KLIMAANLAGENLEITUNGEN	818
		1	KLIMAANLAGENLEITUNGEN	822
KÄLTEMITTEL-DRUCKSPEICHER (KLIMAANLAGE)	170-0235	1	KLIMAANLAGENLEITUNGEN	812
		1	KLIMAANLAGENLEITUNGEN	815
KÄLTEMITTELTROCKNER (KLIMAANLAGE)	175-7162	1	KLIMAANLAGENLEITUNGEN	812
		1	KLIMAANLAGENLEITUNGEN	815
		1	KLIMAANLAGENLEITUNGEN	822
KEILRIEMEN (KOMPRESSORRIEMENSCHEIBE)	4N-2745	1	KÄLTEMITTELKOMPRESSOR	777
LUFTFILTER (FAHRERHAUS)	209-8217	1	FAHRERHAUSHEIZUNG	802
LUFTFILTER (HOCHLEISTUNG)	265-3857	1	FAHRERHAUSLUFTFILTER	797
LUFTFILTER (HOCHLEISTUNG) (FAHRERHAUS)	265-3857	1	FAHRERHAUSHEIZUNG	802
LUFTFILTER (STANDARD) (FAHRERHAUS)	238-0479	1	FAHRERHAUSHEIZUNG	802
REGENKAPPE	235-0320	1	FAHRERHAUSLUFTFILTER	797
SCHEIBENWISCHERBLATT (HINTEN)	5C-8811	1	SCHEIBENWISCHER	881
SCHEIBENWISCHERBLATT (*RH, LH, REAR)	6V-6864	2	SCHEIBENWISCHER	884
SCHEIBENWISCHERBLATT (SEITE)	128-5040	4	SCHEIBENWISCHER	881
SCHEIBENWISCHERBLATT (VORNE)	6V-5851	1	SCHEIBENWISCHER	881
SICHERHEITSGURT (AUSZIEHBAR)	222-0345	1	FAHRERSITZ	859
UNTERBRECHER (15 A)	6T-3643	1	KLIMAANLAGENLEITUNGEN	818
		1	KLIMAANLAGENLEITUNGEN	812
VORHÄNGESCHLOSS (FAHRERHAUSHEIZUNG)	246-2641	1	FAHRERHAUSHEIZUNG	802

* ÜBERSETZUNG ZUM ZEITPUNKT DER DRUCKLEGUNG NICHT VORHANDEN

WARTUNGSTEILE

BESCHREIBUNG	ERSATZTEIL-NUMMER	MENGE	VERWENDET IN	SEITE
HYDRAULIKSYSTEM				
EINFÜLLSTUTZENKAPPE (HYDRAULIKTANK)	7H-1447	1	HYDRAULIKTANK UND SCHMIERFILTER	649
FILTERELEMENT (*REVERSE FLOW, DISPOSABLE)	249-2337	1	HYDRAULIKTANK UND SCHMIERFILTER	649
FILTERSIEB (HYDRAULIKTANKEIN-FÜLLSIEB)	5D-7927	1	HYDRAULIKTANK UND SCHMIERFILTER	649
ÖLFILTER	130-3212	1	VORSTEUERLEITUNGEN	595
ÖLFILTER (ARBIETSGERÄTEVOR-STEUERÖL)	249-1751	1	VORSTEUERLEITUNGEN	595
ÖLFILTERELEMENT (ADVANCED EFFICIENCY)	1R-0777	2	HYDRAULIKTANK UND SCHMIERFILTER	649
ÖLFILTERELEMENT (SCHWER ENTFLAMMBARE FLÜSSIGKEIT)	104-6931	2	HYDRAULIKTANK UND SCHMIERFILTER	649
ÖLFILTERELEMENT (STANDRAD EFFIZIENZ)	1R-0735	2	HYDRAULIKTANK UND SCHMIERFILTER	649
ÖLFILTERELEMENT (ULTRA HOCHLEISTUNG)	139-1537	2	HYDRAULIKTANK UND SCHMIERFILTER	649
SCREEN (ARBIETSGERÄTEVOR-STEUERÖL)	6E-5066	1	STEUERKRÜMMER	626
SCREEN (HYDRAULIK)	118-8693	1	HYDRAULIKTANK UND SCHMIERFILTER	649
SIEB (HYDRAULIKTANK HAUPTRÜCKFÜHRUNG)	9T-7571	2	HYDRAULIKTANK UND SCHMIERFILTER	649
VORHÄNGESCHLOSS (HYDRAULIKTANKEINFÜLLSIEB)	246-2641	1	ZUGANGSKLAPPE - HYDRAULIKTANKKAPPE	550
KRAFTSTOFFSYSTEM				
DICHTUNG (KRAFTSTOFF)	179-7400	2	KRAFTSTOFFENTLÜFTUNGSPUMPE U. SICHERHEITSFILTER	192
DICHTUNG (KRAFTSTOFF, WASSERABSCHEIDER)	220-8678	1	WASSERABSCHEIDER- U. KRAFTSTOFFILTER	183
EINFÜLLKAPPE (KRAFTSTOFFTANK)	7X-7700	1	KRAFTSTOFFTANK	195
KRAFTSTOFFILTER	1R-0771	1	WASSERABSCHEIDER- U. KRAFTSTOFFILTER	183
KRAFTSTOFFILTER (HOCHLEISTUNG)	1R-0755	1	KRAFTSTOFFILTER	178
		1	KRAFTSTOFFILTER	180
KRAFTSTOFFSIEB	9P-7121	1	KRAFTSTOFFTANK	195
VORHÄNGESCHLOSS (KRAFTSTOFFABLASS)	246-2641	1	KRAFTSTOFFILTER UND LEITUNGEN	175
VORHÄNGESCHLOSS (KRAFTSTOFFTANK)	246-2641	1	KRAFTSTOFFTANK	194

* ÜBERSETZUNG ZUM ZEITPUNKT DER DRUCKLEGUNG NICHT VORHANDEN

WARTUNGSTEILE

BESCHREIBUNG	ERSATZTEIL-NUMMER	MENGE	VERWENDET IN	SEITE
KRAFTÜBERTRAGUNG				
ANSAUGSIEB (DREHMOMENT-WANDLERÖL)	8S-9130	1	DREHMOMENTWANDLER	387
ANSAUGSIEB (GETRIEBESPÜLUNG)	8S-9130	1	PLANETENANTRIEBSGEHÄUSE U. TEILE	343
ANSAUGSIEB (KRAFTÜBERTRAGUNG - ÖLSUMPF)	9P-9555	1	ÖLLEITUNGEN - KRAFTÜBERTRAGUNG	365
EINFÜLLKAPPE (HYDRAULIKTANK-EINFÜLLSIEB)	6N-2985	1	ÖLLEITUNGEN - KRAFTÜBERTRAGUNG	365
ENTLÜFTER (GETRIEBE)	9G-5127	1	ÖLLEITUNGEN - KRAFTÜBERTRAGUNG	365
MAGNETSTOPFEN (SEITENANTRIEB)	6V-3298	1	SEITENANTRIEB	360
MAGNETSTOPFEN (SEITENANTRIEB ÖLABLASS)	6V-3298	1	SEITENANTRIEB	354
MAGNETSTOPFEN (SEITENANTRIEB, ÖLEINFÜLLUNG)	6V-3298	1	SEITENANTRIEB	357
		1	SEITENANTRIEB	351
ÖLFILTERELEMENT (GETRIEBE)	1R-1809	1	ÖLFILTER	349
ÖLFILTERELEMENT (GETRIEBESPEISUNG)	1R-1809	1	ÖLLEITUNGEN - KRAFTÜBERTRAGUNG	365
ÖLFILTERELEMENT (*TORQUE CONVERTER CHARGING)	1R-1809	1	ÖLLEITUNGEN - KRAFTÜBERTRAGUNG	365
KÜHLSYSTEM				
ABLASSSTOPFEN (WASSER)	7N-1447	1	KÜHLWASSERLEITUNGEN	90
FILTER (WASSERPUMPE)	111-2721	1	KÜHLWASSERPUMPE	107
KÜHLERKAPPE	031-1119	1	KÜHLMITTELBEHÄLTER	122
		1	KÜHLMITTELBEHÄLTER	126
LIPPENDICHTUNG	3S-9643	2	KÜHLWASSERLEITUNGEN	99
WASSERTEMPERATURREGLER (92 GRAD)	248-5513	2	KÜHLWASSERLEITUNGEN	99
LAUFWERK				
ABLASSSTOPFEN (ÖLFÜLLDREHWELLE)	4T-2069	2	LAUFROLLENRAHMEN (TELESKOPRÜCKLAUF)	467
ABLASSSTOPFEN (*PIVOT SHAFT OIL DRAIN)	4T-2069	4	LAUFROLLENRAHMEN (TELESKOPRÜCKLAUF)	467
EINFÜLLKAPPE (SCHMIERMITTEL-TANK)	5L-2952	1	SCHMIERVORRICHTUNG - QUERTRAVERSE	477
ENTLÜFTER (DREHZAPFENÖLTANK)	9G-5127	1	ACHSWELLENSCHMIERUNG	479
ENTLÜFTER (SCHMIERMITTELTANK)	198-7711	1	SCHMIERVORRICHTUNG - QUERTRAVERSE	477
ÖLEINFÜLLKAPPE (DREHZAPFENÖLTANK)	221-0812	1	ACHSWELLENSCHMIERUNG	479

* ÜBERSETZUNG ZUM ZEITPUNKT DER DRUCKLEGUNG NICHT VORHANDEN

WARTUNGSTEILE

BESCHREIBUNG	ERSATZTEIL-NUMMER	MENGE	VERWENDET IN	SEITE
LUFTEINLASS- UND ABGASSYSTEM				
BATTERIE (24 V)	167-8984	1	EINBAUSATZ	140
LUFTREINIGERELEMENT	6I-2505	1	LUFTREINIGER	132
	6I-2506	1	LUFTREINIGER	132
REGENKAPPE	7S-4411	1	STAUBAUSWERFER	136
		1	STAUBAUSWERFER	137
	7S-5003	2	STAUBAUSWERFER	139
SIEB (*ENGINE, AFTERCOOLER)	248-6942	4	VORREINIGER-TURBINE	155
SIEB (*ENGINE, AFTERCOOLER) (*FINE FILTRATION)	248-6951	4	VORREINIGER-TURBINE	155
MASCHINE				
VORHÄNGESCHLOSS (LTERATURFACH)	246-2641	1	FAHRWERK	1
MOTOR (GRUNDAUSFÜHRUNG)				
ISOLIERDICHTUNG (VENTILDECKEL)	224-7506	6	VENTILSTEUERUNG	68
ÖLABLASSSCHRAUBE	109-5839	1	ÖLWANNE	54
MOTORAUSFÜHRUNG				
VORHÄNGESCHLOSS (MOTORVERKLEIDUNG)	246-2641	1	MOTOR-EINBAUSATZ	17
VORHÄNGESCHLOSS (VANDALISMUSSCHUTZ)	246-2641	1	MOTOR-EINBAUSATZ	16
RAHMEN UND AUFBAU				
SCHRAUBE (ABLASS) (GETRIEBEGEHÄUSE)	106-8187	1	RAHMEN UND GEHÄUSE	394
		1	RAHMEN UND GEHÄUSE	395
VORHÄNGESCHLOSS (BATTERIEKASTEN)	246-2641	2	SCHUTZBLECHE	423
VORHÄNGESCHLOSS (KRAFTSTOFFENTLÜFTUNGSPUMPE EIN/AUS)	246-2641	1	ZUGANGSKLAPPE	402
VORHÄNGESCHLOSS (KRAFTSÜBERTRAGUNG - ÖLEINFÜLLUNG)	246-2641	2	SCHUTZBLECHE	421
VORHÄNGESCHLOSS (MOTORVERKLEIDUNG)	246-2641	5	MOTORHAUBE UND VERKLEIDUNG	450
		5	MOTORVERKLEIDUNG	411
		5	MOTORVERKLEIDUNG	417
		5	MOTORVERKLEIDUNG	419
SCHMIERSYSTEM				
ENTLÜFTERELEMENT (KURBELGEHÄUSE)	238-9204	1	ENTLÜFTER	69
KAPPE (MOTORÖLEINFÜLLUNG)	261-0011	1	ÖLEINFÜLLSTUTZEN	72
ÖLFILTER	1R-0716	2	ÖLFILTER	73

* ÜBERSETZUNG ZUM ZEITPUNKT DER DRUCKLEGUNG NICHT VORHANDEN

INDEX

Name	Page
A	
ACCUMULATOR GP-HYDRAULIC	590
ACCUMULATOR GP-HYDRAULIC–CHARGED	532
ACCUMULATOR GP-PILOT OIL–UNCHARGED	533
ACCUMULATOR-REFRIGERANT	818 822
ACCUMULATOR-REFRIGERANT (AIR CONDITIONER)	812 815
ADAPTER GP-FAST FILL FUEL	169 171 173
ADAPTER GP-FAST FILL FUEL–WITH COUNTERWEIGHT	171
ADJUSTER GP-SEAT	762
ADJUSTER GP-STEER & TMSN CONT	507
AFTERCOOLER GP-AIR	127 129
AIR CLEANER GP	131 132 133
AIR COMPRESSOR GP-SEAT	763
AIR CONDITIONER AR	764 765
AIR CONDITIONER AR–FENDER MOUNTED CONDENSER	764
AIR CONDITIONER AR–ROPS MOUNTED CONDENSER	765
ALARM GP–ACTION	198
ALTERNATOR GP-CHARGING	199 201 205
ALTERNATOR GP-CHARGING–DUCTED	203
ARM GP-WINDOW WIPER (FRONT, CENTER)	881
ARM GP-WINDOW WIPER (LH, FRONT)	881
ARM GP-WINDOW WIPER (REAR, LH)	884
ARM GP-WINDOW WIPER (REAR, RH)	884
ARM GP-WINDOW WIPER (RH, FRONT)	881
ASHTRAY (CAB)	792
AXLE GP-POWER TRAIN	342
B	
BAR AR-STRIKER	454
BAR GP-EQUALIZER	457 459
BAR GP-EQUALIZER–COLD WEATHER	460
BAR GP-EQUALIZER–ROLLER FRAME, STRAIGHT	456
BAR GP-STRIKER	463
BAR GP-STRIKER–LH	462
BAR GP-STRIKER–RH	461
BASE GP-VALVE COVER & INJ HARN	18 19
BATTERY & WIRING GP	207 215 222
BATTERY GP	228
BATTERY GP (24-VOLT)	140
BATTERY (12-VOLT, MAINTENANCE FREE)	207 215 222
BATTERY (12-VOLT, MAINTENANCE FREE) (LOW TEMP STARTING)	302
BLADE & EDGE GP-SEMI-UNIVERSAL	712
BLADE & EDGE GP-UNIVERSAL	712 713 715 716
BLADE & EDGE GP-UNIVERSAL–LANDFILL	714
BLADE AS-SEMI-UNIVERSAL	717 719
BLADE AS-UNIVERSAL	721 722 723 724 725
BLADE AS-WIPER (FRONT)	881
BLADE AS-WIPER (REAR)	881
BLADE AS-WIPER (RH, LH, REAR)	884
BLADE AS-WIPER (SIDE)	881
BLADE GP-SEMI-UNIVERSAL	726 727
BLADE GP-UNIVERSAL	728 730
BLOCK GP-PUSH	691
BLOCK GP-PUSH–RIPPER	692 693
BOX GP-STORAGE	766
BRACE GP-BULLDOZER	694
BRACKET GP-MOUNTING–DOOR	767
BRACKET GP-MOUNTING–FIRST AID KIT	768
BREATHER AS (PIVOT SHAFT OIL TANK)	479
BREATHER AS (TRANSMISSION)	365
BREATHER GP–CRANKCASE	69
BREATHER (LUBRICATION TANK)	477
BULLDOZER AR-SEMI-UNIVERSAL	695 696 697 698
BULLDOZER AR-UNIVERSAL	699 700 701 702

INDEX

Name	Page
C	
CAB AR	770, 771
CAB GP	772, 774
CAMSHAFT GP	20
CAP AS (ENGINE OIL FILLER)	72
CAP AS-FILLER (FUEL TANK)	195
CAP AS-FILLER (HYDRAULIC TANK FILL)	365
CAP AS-FILLER (LUBRICATION TANK)	477
CAP AS-RADIATOR	122, 126
CAP AS-RAIN	136, 137, 139, 797
CAP-FILLER (HYDRAULIC TANK)	649
CAP GP-TRACK IDLER	464, 465
CAP GP-TRACK ROLLER	466
CAP-OIL FILLER (PIVOT SHAFT OIL TANK)	479
CAP-RAIN	205
CASE & FRAME GP	394, 395
CASE & PARTS GP-PLANETARY	343
CHASSIS AR	1
CIRCUIT BREAKER AS (15-AMPERE)	812, 818
CIRCUIT BREAKER AS (15-AMPERE) (MAIN POWER)	271
CLUTCH & BRAKE GP-STEERING	509, 511
COLD WEATHER AR	3
COLD WEATHER AR–DOUBLE FLANGE ROLLERS	2
COLD WEATHER AR–SINGLE FLANGE ROLLERS	2
COMPRESSOR GP-REFRIGERANT	776, 777
CONDENSER & MTG GP-REFRIGERANT	779, 781, 783
CONDENSER GP-REFRIGERANT	784
CONNECTION GP-ELECTRICAL	229
CONSOLE GP-FRONT	786
CONSOLE GP-OPERATOR	787
CONTROL & MTG GP-ENGINE ELEK	230
CONTROL & MTG GP-IMPLEMENT–RIPPER	789
CONTROL & MTG GP-PEDAL–GOVERNOR, BRAKE	790, 791
CONTROL AR-DUAL TILT	534
CONTROL AR-HYD PIN PULLER	535
CONTROL AR-HYDRAULIC–AUTO CARRY	537
CONTROL AR-HYDRAULIC–RIPPER	537
CONTROL AS-ELECTRONIC (DASH LIGHT)	844
CONTROL GP-ELECTRONIC	231, 337
CONTROL GP-ENGINE ELECTRONIC	232, 233
CONTROL GP-HANDLE–BULLDOZER	540
CONTROL GP-HANDLE–WITH TRIGGER–DUAL TILT	538
CONTROL GP-HEAT & AIR COND	844
CONTROL GP-JOYSTICK–BULLDOZER	543, 545
CONTROL GP-JOYSTICK–DUAL TILT	541
CONTROL GP-RIPPER	547
CONTROL GP-STEERING–STEERING, TRANSMISSION	513
CONTROL GP-STEERING & TMSN	514, 516, 517
CONTROL GP-TRANSMISSION HYD	345
CONTROL GP-UNPROGRAMMED–PRODUCT LINK 300	234
CONTROL GP-UNPROGRAMMED (IMPLEMENT)	337
CONTROL GP-UNPROGRAMMED (MONITOR)	337
CONTROL GP-UNPROGRAMMED (POWER TRAIN)	337
CONTROL GP-UNPROGRAMMED (PRODUCT LINK 121SR)	243
CONVERTER GP-ELECTRICAL	235
COOLANT HEATER LINES	825, 827
COOLER GP-HYDRAULIC OIL	549
CORE AS (AIR CONDITIONER)	779, 781
CORE AS-OIL COOLER	101, 549
CORE AS-OIL COOLER (ENGINE OIL)	104
CORE AS-RADIATOR	109, 114, 119
CORE GP-OIL COOLER	101, 104
COUNTERWEIGHT GP–BOTTOM	397
COUNTERWEIGHT GP–REAR	398, 400
COUPLING GP-PUMP	347
COVER GP-CAB	792
COVER GP-CYLINDER BLOCK	21, 23
COVER GP-HYDRAULIC TANK CAP	550
COVER GP-REAR HOUSING	24
COVER GP-TRUNNION	703
CRANKSHAFT GP	26

INDEX

Name	Page
CYLINDER & LINES GP-LIFT–LH	552
CYLINDER & LINES GP-LIFT–RH	551
CYLINDER & LINES GP-LIFT–RH, POSITION SENSING	553
CYLINDER & SENSOR GP-LIFT–POSITION SENSING, RH	554
CYLINDER & VALVE GP-LIFT	555
CYLINDER & VALVE GP-LIFT–POSITION SENSING, RH	556
CYLINDER AR-DUAL TILT	557
CYLINDER AS-ETHER	300
CYLINDER BLOCK AS	27 29
CYLINDER BLOCK GP	30
CYLINDER GP-BULLDOZER LIFT	560
CYLINDER GP-DUAL TILT	558
CYLINDER GP-LIFT–BULLDOZER	562
CYLINDER GP-LIFT (BULLDOZER)	555
CYLINDER GP-RIPPER LIFT–LH	566
CYLINDER GP-RIPPER LIFT–RH	564
CYLINDER GP-RIPPER PIN PULLER	568
CYLINDER GP-RIPPER TILT	569
CYLINDER GP-TILT	571
CYLINDER GP-TILT–RH	573
CYLINDER HEAD AS	32
CYLINDER HEAD GP	33 35

D

DAMPER GP	36 37
DETENT GP–STEERING	518
DETENT GP-CONTROL (BLADE LIFT, LOWER)	541
DETENT GP-CONTROL (BLADE LIFT, LOWER)	543
DETENT GP-CONTROL (BLADE LIFT, LOWER)	545
DETENT GP-CONTROL (BLADE TILT)	541 543
DETENT GP-CONTROL (BLADE TILT)	545
DISPLAY GP-MONITOR	794
DOOR GP-ACCESS	123 402
DOOR GP-ACCESS–LH–ENGINE ENCLOSURE	404 408
DOOR GP-ACCESS–RH–ENGINE ENCLOSURE	405 406 407
DOOR GP-ACCESS (RADIATOR CAP)	120
DOOR GP-CAB–LH	796
DOOR GP-CAB–RH	795
DRAIN GP-ECOLOGY–POWER TRAIN	348
DRAWBAR GP	409
DUST EJECTOR GP	139
DUST EJECTOR GP–ATAAC, LH	137
DUST EJECTOR GP–ATAAC, RH	135 136

E

EDGE GP-BIT & CUTTING–SEMI-UNIVERSAL	731
EDGE GP-BIT & CUTTING–SEMI-UNIVERSAL BLADE	733
EDGE GP-BIT & CUTTING–UNIVERSAL BLADE	732 734
ELECTRONICS AR-MACHINE	236
ELECTRONICS GP-COMMUNICATION–PRODUCT LINK 300	237
ELECTRONICS GP-IMPLEMENT	238
ELECTRONICS GP-MONITOR	238
ELECTRONICS GP-POWER TRAIN	238
ELEMENT AS-AIR CLEANER	132
ELEMENT AS-FILTER (REVERSE FLOW, DISPOSABLE)	649
ELEMENT AS-JACKET WATER HEATER (120-VOLT, 1500-WATT)	241
ELEMENT AS-JACKET WATER HEATER (240-VOLT, 1500-WATT)	242
ELEMENT-BREATHER (CRANKCASE)	69
ENCLOSURE GP-ENGINE	417 419
ENCLOSURE GP-ENGINE–LH	414
ENCLOSURE GP-ENGINE–LH–STOCKPILE–WASTE HANDLER	416
ENCLOSURE GP-ENGINE–PERFORATED–STOCKPILE–WASTE HANDLER	411
ENCLOSURE GP-ENGINE–RH	413
ENCLOSURE GP-ENGINE–RH–STOCKPILE–WASTE HANDLER	415
ENGINE AR-COMPLETE	10 11 12
ENGINE AR-CORE	13 14 15
EXTENSION GP-BACKREST (CLOTH)	859
EXTENSION GP-BACKREST (VINYL)	862

F

FAN AR-REVERSIBLE	88
FAN GP-SUCTION	89
FASTENER GP-CYLINDER HEAD	33 38

INDEX

Name	Page
FASTENER GP-OIL PUMP MOUNTING–ENGINE	70
FENDER GP	421, 423
FENDER GP–LH	426
FENDER GP–RH	427
FILLER GP-ENGINE OIL	71
FILLER GP-OIL–ENGINE	72
FILM-IDENTIFICATION (AUTOMATIC BLADE)	534
FILM-IDENTIFICATION (DUAL TILT)	534
FILM-IDENTIFICATION (GROUP NUMBER) (REFRIGERANT CONDENSER)	784
FILM-IDENTIFICATION (PRELUBRICATION PUMP)	83
FILM-IDENTIFICATION (12-VOLT)	888
FILM-INFORMATION (AUTOMATIC RIPPER)	547
FILM-INFORMATION (24-VOLT)	302
FILM-INSTRUCTION (ENGINE OIL)	890
FILM-INSTRUCTION (RIPPER CONTROL)	789
FILM-INSTRUCTION (SEAT ADJUSTMENT)	868, 870
FILM-INSTRUCTION (WASHER FLUID)	890
FILM-NOTICE (RADIO)	808
FILM-PANEL (WIPER CONTROL)	844
FILM-WARNING (ACCUMULATOR)	532, 533
FILM-WARNING (COMPRESSED SPRING, READ OMM)	467
FILM-WARNING (ELECTRICAL SHOCK)	892
FILM-WARNING (HIGH PRESSURE, READ OMM, ANSI)	890
FILM-WARNING (HIGH PRESSURE, READ OMM, ISO)	892
FILM-WARNING (JUMP START, READ OMM)	303, 890
FILM-WARNING (NO WELD, NO DRILL, READ OMM)	890
FILM-WARNING (PRODUCT LINK 300, ANSI)	243
FILM-WARNING (SHOCK HAZARD)	890
FILM-WASTE HANDLER	5, 7, 9
FILTER & LINES GP-FUEL	175
FILTER-AIR (HIGH EFFICIENCY)	797
FILTER-AIR (HIGH EFFICIENCY) (CAB)	802
FILTER-AIR (STANDARD) (CAB)	802
FILTER AS-ENGINE OIL	73
FILTER AS-FUEL	183
FILTER AS-FUEL (HIGH EFFICIENCY)	178, 180
FILTER AS-OIL	595
FILTER (ATMOSPHERIC PRESSURE SENSOR)	278
FILTER ELEMENT AS-AIR (CAB)	802
FILTER ELEMENT AS-OIL (ADVANCED EFFICIENCY)	649
FILTER ELEMENT AS-OIL (FIRE RESISTANT FLUID)	649
FILTER ELEMENT AS-OIL (STANDARD EFFICIENCY)	649
FILTER ELEMENT AS-OIL (TORQUE CONVERTER CHARGING)	365
FILTER ELEMENT AS-OIL (TRANSMISSION)	349
FILTER ELEMENT AS-OIL (TRANSMISSION CHARGING)	365
FILTER ELEMENT AS-OIL (ULTRA HIGH EFFICIENCY)	649
FILTER-FOAM (FUEL TANK)	207, 215, 222
FILTER GP-CAB AIR	797
FILTER GP-ENGINE OIL	73
FILTER GP-FUEL	178, 180
FILTER GP-OIL–TRANSMISSION–TMSN, TORQUE CONVERTER CHARGE	349
FILTER GP-OIL (IMPLEMENT PILOT OIL)	595
FILTER GP-WATER SEP & FUEL	183
FILTER-SECONDARY	192
FILTER (WATER PUMP)	107
FINAL DRIVE GP	351, 354
FINAL DRIVE GP–COLD WEATHER	357
FINAL DRIVE GP–WASTE HANDLER	360
FLOOR MAT-LOWER	839
FLOOR MAT-LOWER (CAB)	792
FLOOR MAT-UPPER	839
FLOOR MAT-UPPER (CAB)	792
FLYWHEEL GP	39
FRAME GP-RIPPER–MULTI SHANK	735
FRAME GP-RIPPER–SINGLE SHANK	737, 739
FRAME GP-TELESCOPING RECOIL	467
FUMES DISPOSAL GP	75
FUSE (10-AMPERE)	271
FUSE (15-AMPERE)	271, 275
FUSE (175-AMPERE) (ALTERNATOR, MAIN)	271
FUSE (20-AMPERE)	271

G

Name	Page
GAUGE AS-OIL LEVEL (DIPSTICK) (TRANSMISSION CASE)	365
GAUGE GP-OIL LEVEL (DIPSTICK)–ENGINE	76
GAUGE-LIQUID LEVEL (SIGHT GLASS) (HYDRAULIC TANK OIL)	649
GAUGE-SIGHT (WATER TANK)	120, 123

INDEX

Name	Page
GEAR GP-BEVEL & TRANSFER	363
GEAR GP-FRONT	40
GEAR GP-REAR	42, 44
GEAR GP-STEERING–STEERING CLUTCH, BRAKE, LH	519
GEAR GP-STEERING–STEERING CLUTCH, BRAKE, RH	520
GENERAL AR	3
GUARD AR-FINAL DRIVE–WASTE HANDLING	428
GUARD AR-IDLER–WASTE HANDLING	428
GUARD GP-BOTTOM	430
GUARD GP-BOTTOM–STOCKPILE	429
GUARD GP-BOTTOM–WASTE HANDLER	432
GUARD GP-BRUSH	435
GUARD GP-BRUSH–REVERSIBLE FAN	434
GUARD GP-DRIVE SHAFT	436
GUARD GP-FINAL DRIVE	437
GUARD GP-IDLER	438
GUARD GP-PIVOT SHAFT	439
GUARD GP-POWER TRAIN	440
GUARD GP-RADIATOR	442, 444
GUARD GP-REAR	446
GUARD GP-ROCK–SEMI-UNIVERSAL BLADE	448
GUARD GP-ROCK–UNIVERSAL BLADE	449

H

Name	Page
HANDLE GP-CONTROL–BULLDOZER	575
HANDLE GP-CONTROL (BULLDOZER CONTROL)	543
HARNESS AS-CAB	322
HARNESS AS-CHASSIS	224
HARNESS AS-CHASSIS (FENDER, LH)	208, 216, 223
HARNESS AS-CHASSIS (FENDER, RH)	208, 216, 222
HARNESS AS-CHASSIS (RADIATOR GUARD)	208, 216
HARNESS AS-CONSOLE (RH)	336
HARNESS AS-CONSOLE (STEERING, TRANSMISSION)	514
HARNESS AS-CONTROL	140
HARNESS AS-CONTROL (AUTO CARRY)	276
HARNESS AS-CONTROL (AUTO CARRY)	140
HARNESS AS-CONTROL (AUTO CARRY) (SENSOR, VALVE)	276
HARNESS AS-CONTROL (PRODUCT LINK)	243
HARNESS AS-DASH	337
HARNESS AS-ENGINE	326, 333
HARNESS AS-ENGINE (ENGINE)	330
HARNESS AS (FUEL FILTER)	178, 180
HARNESS AS-HEATER & AIR COND	799, 818
HARNESS AS-HEATER & AIR COND (COMPRESSOR)	818, 822
HARNESS AS-HEATER & AIR COND (COMPRESSOR)	812, 815
HARNESS AS-HEATER & AIR COND (CONDENSER)	818
HARNESS AS-HEATER & AIR COND (CONDENSER BLOWER MOTORS)	784
HARNESS AS-LIGHTING (FRONT FLOODLIGHTS)	253, 263
HARNESS AS-LIGHTING (FRONT FLOODLIGHTS) (CYLINDER LIGHTS)	259
HARNESS AS-LIGHTING (FRONT FLOODLIGHTS) (CYLINDER MOUNTED FLOODLAMPS)	257
HARNESS AS-LIGHTING (FRONT FLOODLIGHTS) (CYLINDER MOUNTED LIGHTS)	255
HARNESS AS-LIGHTING (REAR FLOODLIGHT)	253, 263, 268
HARNESS AS-LIGHTING (REAR FLOODLIGHT) (ROPS)	259
HARNESS AS-LIGHTING (REAR FLOODLIGHT) (ROPS FLOODLAMPS)	257
HARNESS AS-LIGHTING (RIPPER)	270
HARNESS AS-MONITOR	140
HARNESS AS-MONITOR (ADVISOR)	337
HARNESS AS-MOTOR (PRELUBRICATION)	83
HARNESS AS-PANEL (FUSE)	271
HARNESS AS-PLATFORM	336
HARNESS AS-POWER	140
HARNESS AS-POWER (UNDERHOOD SERVICE LIGHT)	224
HARNESS AS-SENSOR (ELECTRONIC CONTROL MODULE)	324
HARNESS AS-SENSOR (TRANSMISSION OUTPUT SPEED)	372
HARNESS AS-SOLENOID (BLADE, RIPPER, BLADE TILT)	595
HARNESS AS-SWITCH (SERVICE BRAKE)	846
HARNESS AS-TRANSMISSION	208, 217

INDEX

Name	Page
	223
	345
HARNESS AS (UNIT INJECTORS)	19
HARNESS AS-VALVE (SEAT AIR COMPRESSOR)	870
HARNESS AS-WIRING (CRANK WITHOUT INJECT)	326
	330
	333
HARNESS AS-WIRING (FERRITE)	140
HARNESS AS-WIRING (SPEED SENSOR)	293
HARNESS AS-WIRING (WINDOW WASHER)	872
HEATER GP-CAB	799
	802
	804
HEATER GP-FUEL	239
HEATER GP-JACKET WATER	241
	242
HOOD & GUARD GP	450
HORN AS (24-VOLT, LOW TONE)	209
	217
	224
HOUSING GP-FLYWHEEL	46
HOUSING GP-FRONT	47
HOUSING GP-REAR	48
HOUSING GP-SEAT SUSPENSION	805
HYDRAULIC AR	576

I

IDLER GP-TRACK	469
IDLER GP-TRACK–COLD WEATHER	472
IDLER GP-TRACK–WASTE HANDLER	470
INSTALLATION AR-ENGINE	16
	17
INSTALLATION GP-COMMUNICATION–PRODUCT LINK 321SR	243
INSTALLATION GP-GRADE CONTROL	245
INSTALLATION GP-RADIO	808

K

KIT-AIR CLEANER CLAMP	132
KIT-AIR VALVE (SUSPENSION SEAT)	870
KIT-BEARING (ALTERNATOR)	199
KIT-BEARING (MOTOR ROTATING GROUP)	641
KIT-BEARING (SUSPENSION SEAT)	806
KIT-BUMPER (WEIGHT ADJUSTMENT) (SUSPENSION SEAT)	806
KIT-CAP FILTER (FUEL TANK)	195
KIT-FOLLOWER (SUSPENSION SEAT)	806
KIT-HARDWARE (ALTERNATOR)	199
KIT-INDICATOR (WEIGHT ADJUSTMENT) (SUSPENSION SEAT)	806
KIT-INSTALLATION	140
KIT-INSTALLATION (TURBINE PRECLEANER)	161
KIT-PRECLEANER (TURBINE)	156
	158
	161
KIT-PUMP (PRELUBRICATION)	85
KIT-SEAL	880
KIT-SEAL (CHECK VALVE)	664
KIT-SEAL (CHECK VALVE) (HYDRAULIC FAN, REVERSING)	584
KIT-SEAL (DIVERTER VALVE) (DIVERTER VALVE)	677
KIT-SEAL (DIVERTER VALVE) (HYDRAULIC FAN, REVERSING)	623
KIT-SEAL (GEAR PUMP)	634
	643
	645
	647
KIT-SEAL (GEAR PUMP) (IMPLEMENT)	636
	648
KIT-SEAL (LIFT)	560
KIT-SEAL (PISTON MOTOR) (HYDRAULIC FAN)	628
KIT-SEAL (PISTON MOTOR) (REVERSING FAN)	629
KIT-SEAL (REAR WINDOW)	877
KIT-SEAL (RELIEF VALVE)	625
	681
KIT-SEAL (RELIEF VALVE) (HYDRAULIC FAN, REVERSING)	623
KIT-SEAL (SEQUENCE VALVE)	682
KIT-SEAL (SOLENOID VALVE)	526
	684
	685
	686
	687
	688
	689
KIT-SEAL (WINDOW)	879
KIT-SHOCK ABSORBER (SUSPENSION SEAT)	870
KIT-SLIDER BLOCK (SUSPENSION SEAT)	865
	866
	867
KIT-SPRING (HEIGHT ADJUSTMENT) (SUSPENSION SEAT)	805
KIT-SPRING (SUSPENSION SEAT)	805
KIT-SUSPENSION KNOB (HEIGHT ADJUSTMENT) (SUSPENSION SEAT)	805
KIT-TERMINAL (ALTERNATOR)	199
KIT-TERMINAL (LOCK)	271
KIT-TERMINAL (STARTING MOTOR)	306
KIT-TETHER (SUSPENSION SEAT)	870

INDEX

Name	Page

L

LAMP AS-DOME (24-VOLT) 322
LAMP AS-FLOOD (24-VOLT, 70-WATT) 249, 250
LAMP AS-INDICATOR (ACTION LIGHT) 336
LAMP GP-FLOOD–SUSPENDED MOUNT 246
LAMP GP-FLOOD–SUSPENDED MOUNT–HID–ROPS, CYLINDER MOUNTED 249
LAMP GP-FLOOD–VERTICAL MOUNT 247
LAMP GP-FLOOD–VERTICAL MOUNT–HID–ROPS MOUNTED 250
LAMP GP-FLOOD–VERTICAL MOUNT–UNDERHOOD SERVICE LIGHT 248
LAMP GP-HEAD–SUSPENDED MOUNT–ROPS 251
LAMP-HALOGEN (24-VOLT, 65-WATT) 246, 247, 251
LAMP-HALOGEN (24-VOLT, 65-WATT) (FLOODLIGHT) 248
LAMP (24-VOLT) (REAR ACTION) 336
LAMP (24-VOLT, 21-WATT) (DOME) 322
LATCH GP–ENGINE ENCLOSURE 452
LENS AS (FLOODLIGHT) 246
LIFTING GP-ENGINE 49
LIGHTING GP-FLOOD–1-LAMP–ROPS, CYLINDER MOUNTED 252
LIGHTING GP-FLOOD–10-LAMP, ROPS, FENDER, CYL MT 253, 257
LIGHTING GP-FLOOD–10-LAMP, ROPS, LIFT CYL MOUNT 259
LIGHTING GP-FLOOD–11-LAMP, ROPS, FENDER, CYL MT–HID 263
LIGHTING GP-FLOOD–4-LAMP, FRONT, REAR FENDER 267
LIGHTING GP-FLOOD–6-LAMP, FENDER, LIFT CYLINDER 255
LIGHTING GP-FLOOD–7-LAMP, ROPS, FRONT, REAR FENDER 268
LIGHTING GP-RIPPER 270
LINER GP-CAB 810
LINES GP-AIR 146, 148, 150
LINES GP-AIR–ATAAC–REMOTE 145
LINES GP-AIR–ENGINE INLET 144
LINES GP-AIR–INLET, EXHAUST 142
LINES GP-AIR CONDITIONER 815, 822
LINES GP-AIR CONDITIONER–FENDER MOUNTED CONDENSER 812
LINES GP-AIR CONDITIONER–ROPS MOUNTED CONDENSER 818
LINES GP-BULLDOZER 577, 580
LINES GP-ENGINE OIL 77
LINES GP-FUEL 184
LINES GP-FUEL FILTER 187
LINES GP-HEATER 825, 827
LINES GP-HYDRAULIC–AUTO CARRY 582
LINES GP-HYDRAULIC FAN 584
LINES GP-LIFT CYLINDER 587
LINES GP-LIFT CYLINDER–COLD WEATHER 589
LINES GP-MOTOR 593
LINES GP-MOTOR–HYDRAULIC FAN 590
LINES GP-PILOT 595
LINES GP-PIN PULLER CYLINDER 600
LINES GP-PIN PULLER CYLINDER–COLD WEATHER 599
LINES GP-PIN PULLER CYLINDER–MULTI-SHANK RIPPER 602
LINES GP-POWER TRAIN OIL 365
LINES GP-PUMP–IMPLEMENT, HYDRAULIC FAN 603
LINES GP-RIPPER 606, 608
LINES GP-RIPPER–COLD WEATHER 610
LINES GP-TILT CYLINDER 611, 621
LINES GP-TILT CYLINDER–DUAL 614
LINES GP-TILT CYLINDER–DUAL TILT 618
LINES GP-TILT CYLINDER–SINGLE TILT 616
LINES GP-TURBOCHARGER OIL 79
LINES GP-WATER 99, 101, 104
LINES GP-WATER–ENGINE 92, 94, 96
LINES GP-WATER–RADIATOR 90
LINK AS-TRACK 473, 474, 475, 476
LINK GP-STABILIZER 704
LUBRICATION GP-EQUALIZER BAR 477
LUBRICATION GP-PIVOT SHAFT 479

M

MANIFOLD & VALVE GP–PARKING BRAKE, SECONDARY BRAKE 522
MANIFOLD & VALVE GP–STEERING CLUTCH, BRAKE, RH, LH 521
MANIFOLD GP-CONTROL–HYDRAULIC FAN MOTOR 625

INDEX

Name	Page
MANIFOLD GP-CONTROL–IMPLEMENT PILOT	626
MANIFOLD GP-CONTROL–REVERSING FAN	623
MANIFOLD GP-EXHAUST	151
MECHANISM GP-FUEL PUMP & VALVE	51, 52
MINING AR	3
MIRROR GP-REAR VIEW	829, 830
MODIFICATION AR-BULLDOZER–DUAL TILT	707
MODIFICATION AR-BULLDOZER–SINGLE TILT	706
MODIFICATION AR-BULLDOZER–TRUNNION	705
MODIFICATION AR-RIPPER	741, 742
MOTOR & PUMP GP-PRELUBRICATION	85
MOTOR GP-ELECTRIC	85
MOTOR GP-ELECTRIC (CONDENSER BLOWER)	784
MOTOR GP-PISTON	632
MOTOR GP-PISTON–AFTERCOOLER, AIR	630, 632
MOTOR GP-PISTON–HYDRAULIC FAN	628
MOTOR GP-PISTON–REVERSIBLE FAN	629
MOTOR GP-WINDOW WIPER (24-VOLT, 2-SPEED) (CENTER, FRONT)	881
MOTOR GP-WINDOW WIPER (24-VOLT, 2-SPEED) (LH, FRONT)	881
MOTOR GP-WINDOW WIPER (24-VOLT, 2-SPEED) (REAR)	884
MOTOR GP-WINDOW WIPER (24-VOLT, 2-SPEED) (REAR)	881
MOTOR GP-WINDOW WIPER (24-VOLT, 2-SPEED) (RH, FRONT)	881
MOUNTING GP-ALTERNATOR	53
MOUNTING GP-CAB	831
MOUNTING GP-CONDENSER–FENDER	834
MOUNTING GP-CONDENSER–ROPS MOUNTED	832
MOUNTING GP-CYLINDER	633
MOUNTING GP-RADIO	837
MOUNTING GP-RADIO–GRADE CONTROL	836
MOUNTING GP-RIPPER	743
MOUNTING GP-ROPS	838
MOUNTING GP-TRANSMISSION	370
MUFFLER GP	152, 153

O

Name	Page
OIL CHANGE GP-HIGH SPEED	81
OPERATOR AR	839

P

Name	Page
PADLOCK GP (BATTERY BOX)	302, 423
PADLOCK GP (CAB HEATER)	802
PADLOCK GP (ENGINE ENCLOSURE)	17, 411, 417, 419, 450
PADLOCK GP (FUEL PRIMING PUMP ON, OFF)	402
PADLOCK GP (FUEL TANK)	194
PADLOCK GP (FUEL TANK DRAIN)	175
PADLOCK GP (HYDRAULIC TANK FILL)	550
PADLOCK GP (LITERATURE COMPARTMENT)	1
PADLOCK GP (POWER TRAIN OIL FILLER)	421
PADLOCK GP (VANDALISM GUARD)	16
PAN GP-BACKREST	842
PAN GP-BACKREST–CLOTH	841
PAN GP-BACKREST–VINYL	843
PAN GP-OIL	54
PANEL GP-CONTROL	844
PANEL GP-FUSE	271
PEDAL GP-GOVERNOR & BRAKE	846
PISTON & ROD GP	56
PLANETARY GP-TRANSMISSION	371
PLATE	704, 708, 709, 721, 754, 755, 757
PLATE & FILM GP	888, 891, 892
PLATE GP-ENGINE IDENTIFICATION	893
PLATE GP-REINFORCEMENT–LH–ENGINE ENCLOSURE	453
PLATE GP-WEAR–SEMI-UNIVERSAL BLADE	745
PLATE GP-WEAR–UNIVERSAL BLADE	746
PLATE-INSTRUCTION (AIR CONDITIONER)	764, 765
PLATE-SERIAL NUMBER (BULLDOZER)	695, 696, 697, 698, 699, 700, 701, 702
PLATE-SERIAL NUMBER (RIPPER)	751, 752

INDEX

Name	Page
	753
PLATE-SERIAL NUMBER (TRANSMISSION)	372
PLATE-WARNING (HIGH PRESSURE CYLINDER)	467
PLATE-WARNING (RECOIL SPRING)	454
	467
PLATFORM AR	849
PLATFORM GP	850
PLUG AS-CODE (IMPLEMENT)	337
PLUG AS-CODE (POWER TRAIN)	337
PLUG-DRAIN (PIVOT SHAFT OIL DRAIN)	467
PLUG-DRAIN (PIVOT SHAFT OIL FILL)	467
PLUG (DRAIN) (TRANSMISSION CASE)	394
	395
PLUG-DRAIN (WATER)	90
PLUG GP-CYLINDER BLOCK	57
PLUG GP-CYLINDER HEAD	58
PLUG-MAGNETIC (FINAL DRIVE)	360
PLUG-MAGNETIC (FINAL DRIVE OIL DRAIN)	354
PLUG-MAGNETIC (FINAL DRIVE, OIL FILL)	351
	357
PLUG-OIL DRAIN	54
POWER TRAIN AR	375
PRECLEANER AR–WITH SCREEN	154
PRECLEANER AR-TURBINE	155
	158
PRECLEANER GP	160
PRECLEANER GP–WITH SCREEN	161
PRECLEANER GP (CAB AIR)	797
PRELUBRICATION AR-ENGINE	83
PULLER AR-PIN	747
PULLER GP-PIN	749
PULLER GP-PIN–LONG SHANK	748
PULLEY GP-CRANKSHAFT	59
PUMP & MOTOR GP-PRELUBRICATION	83
	85
PUMP & MTG GP-FUEL TRANSFER	190
PUMP GP-ENGINE OIL	86
PUMP GP-FUEL INJECTION	191
PUMP GP-FUEL PRM & SEC FILTER	192
PUMP GP-FUEL TRANSFER	193
PUMP GP-GEAR–IMPLEMENT	634
	636
PUMP GP-GEAR–POWER TRAIN	378
PUMP GP-GEAR–TMSN SCAVENGE, TMSN CHARGE, CONVERTER SCAVENGE, CONVERTER CHARGE–TRANSMISSION, TORQUE CONVERTER	376
PUMP GP-PISTON–HYDRAULIC FAN	637
PUMP GP-WATER	107
	108
PUSH ARM GP–LH	709
PUSH ARM GP–RH	708
PUSH ARM GP-STABILIZER	710

R

Name	Page
RADIATOR AR	109
RADIATOR GP	110
	112
	114
	115
	117
	119
RADIO GP-COMMUNICATION (PRODUCT LINK 121SR)	243
RECEIVER-DRYER GP (AIR CONDITIONER)	812
	815
	822
RECEIVER-DRYER (REFRIGERANT)	818
RECEIVER GP (GLOBAL POSITIONING SYSTEM)	245
RECLINER GP-SEAT	853
REGULATOR AS-VOLTAGE (24-VOLT) (ALTERNATOR)	199
REGULATOR-WATER TEMPERATURE (92-DEG C)	99
RELAY AS (24-VOLT) (AIR CONDITIONER, HEATER)	336
RELAY AS (24-VOLT) (CONDENSER BLOWER MOTOR)	784
RELAY AS (24-VOLT) (CONDENSER BLOWER MOTOR)	336
RELAY AS (24-VOLT) (HEATER, AIR CONDITIONER)	799
RELAY AS (24-VOLT) (PRESSURIZER, CAB)	336
RESISTOR GP-CAB HEATER	275
RIPPER AR–MULTI SHANK	753
RIPPER AR–SINGLE SHANK	751
	752
RIPPER GP	754
	756
	757
RIPPER GP–LONG SHANK	755
ROCKER ARM GP	60
	61
ROLLER AR-TRACK–SINGLE FLANGE	481
ROLLER AR-TRACK CARRIER–COLD WEATHER	481
ROLLER AR-TRACK CARRIER–STOCKPILE	482
ROLLER GP-TRACK-DOUBLE FLANGE	483
ROLLER GP-TRACK-DOUBLE FLANGE–COLD WEATHER	484
ROLLER GP-TRACK-SINGLE FLANGE	485
ROLLER GP-TRACK-SINGLE FLANGE–COLD WEATHER	486
ROPS GP	854
ROTATING GP-MOTOR–AFTERCOOLER AIR FAN	639
ROTATING GP-PUMP–HYDRAULIC FAN	640

INDEX

Name	Page
	641

S

Name	Page
SCREEN	205
SCREEN AS	725
SCREEN AS (ENGINE, AFTERCOOLER)	155
SCREEN AS (ENGINE, AFTERCOOLER) (FINE FILTRATION)	155
SCREEN AS (HYDRAULIC TANK, MAIN RETURN)	649
SCREEN AS-SUCTION (POWER TRAIN OIL SUMP)	365
SCREEN GP-PROTECTION–REAR	855
SCREEN (HYDRAULIC)	649
SCREEN (IMPLEMENT PILOT OIL)	626
SCREEN-SUCTION (TORQUE CONVERTER OIL)	387
SCREEN-SUCTION (TRANSMISSION SCAVENGE)	343
SEAL (FUEL)	192
SEAL (FUEL, WATER SEPARATOR)	183
SEAL GP-CRANKSHAFT	26
	46
SEAL GP (WATER PUMP)	107
SEAL-ISOLATION (VALVE COVER)	68
SEAL-LIP TYPE	99
SEAL SET–TRACK LINK	487
SEAT & MOUNTING GP–CLOTH	856
SEAT BELT GP (RETRACTABLE)	859
SEAT GP–AIR SUSPENSION, CLOTH	863
SEAT GP–AIR SUSPENSION, VINYL	864
SEAT GP–CLOTH	857
	859
SEAT GP–VINYL	860
	862
SEAT GP-SUSPENSION–AIR–CLOTH	867
SEAT GP-SUSPENSION–CLOTH	866
SEAT GP-SUSPENSION–VINYL	865
SECTION GP-GEAR PUMP–CENTER–IMPLEMENT PUMP, TILT	643
SECTION GP-GEAR PUMP–FRONT–IMPLEMENT PUMP, LIFT	645
SECTION GP-GEAR PUMP–REAR–IMPLEMENT	647
	648
SEGMENT GP-SPROCKET	380
SENSOR & MTG GP-GROUND SPEED–AUTO CARRY	276
SENSOR GP-ENGINE	278
SENSOR GP-FUEL LEVEL	207
	215
	280
SENSOR GP-GROUND SPEED (RADAR)	276
SENSOR GP-MACHINE LEVEL (AUTO CARRY)	276
SENSOR GP-POSITION–CYLINDER, RH	283
SENSOR GP-POSITION–DECELERATOR PEDAL	282
SENSOR GP-POSITION–ROTARY–STEERING CLUTCH, BRAKE, RH, LH	281
SENSOR GP-POSITION (BLADE)	283
SENSOR GP-POSITION (BLADE LIFT, LOWER)	541
	543
	545
SENSOR GP-POSITION (BLADE TILT)	541
	543
	545
SENSOR GP-POSITION (RIPPER RAISE, LOWER)	547
SENSOR GP-POSITION (RIPPER SHANK IN, OUT)	547
SENSOR GP-POSITION (SERVICE BRAKE PEDAL)	846
SENSOR GP-POSITION (TRANSMISSION CONTROL)	514
SENSOR GP-PRESSURE	287
	290
	291
SENSOR GP-PRESSURE–ATMOSPHERIC	285
SENSOR GP-PRESSURE–ATMOSPHERIC AIR	289
SENSOR GP-PRESSURE–ENGINE OIL	288
SENSOR GP-PRESSURE–ENGINE OIL–ENGINE OIL, FUEL	290
SENSOR GP-PRESSURE–INTAKE AIR	286
	291
SENSOR GP-PRESSURE–TURBOCHARGER INLET	284
SENSOR GP-PRESSURE (TURBO INLET)	326
	330
SENSOR GP-PRESSURE (TURBOCHARGER INLET)	333
SENSOR GP-SPEED–ENGINE–TORQUE CONVERTER	292
SENSOR GP-SPEED–LOW OUTPUT–TIMING, CRANKSHAFT	293
SENSOR GP-SPEED–TIMING, CAMSHAFT	295
SENSOR GP-SPEED–TIMING, CRANKSHAFT	294
SENSOR GP-SPEED (ENGINE)	278
SENSOR GP-SPEED (TORQUE CONVERTER)	326
	330
	333
SENSOR GP-SPEED (TRANSMISSION OUTPUT, LEADING)	373

INDEX

Name	Page
SENSOR GP-SPEED (TRANSMISSION OUTPUT, TRAILING)	372
SENSOR GP-TEMPERATURE–COOLANT	299
SENSOR GP-TEMPERATURE–FUEL	296
SENSOR GP-TEMPERATURE–INTAKE AIR	298
SENSOR GP-TEMPERATURE–TORQUE CONVERTER OIL	297
SENSOR GP-TEMPERATURE (2-PIN)	298, 299
SENSOR GP-TEMPERATURE (2-PIN) (FUEL)	178, 180
SERVICE GP-COMMUNICATION (PRODUCT LINK 300)	237
SHAFT GP-DRIVE	381
SHIELD GP-HEAT	162
SHOE-TRACK–ABRASIVE RESISTANT MATERIAL	488, 489, 490
SHOE-TRACK MASTER–ABRASIVE RESISTANT MATERIAL	491, 492, 493
SLIP JOINT GP	382
SOFTWARE GP-COMMUNICATION (PRODUCT LINK 121SR)	243
SOFTWARE GP-COMMUNICATION (PRODUCT LINK 300)	237
SOFTWARE GP-IMPLEMENT (ACCUGRADE)	537
SOFTWARE GP-POWER TRAIN (ENGINE PRELUBRICATION)	83
SOLENOID AS-STARTING MOTOR	305
SOLENOID GP-PROPORTIONAL (12-VDC) (HYDRAULIC FAN)	679
SPIDER & BEARING GP	390
STARTING AID GP-ETHER	300
STARTING AR-COLD WEATHER	302
STARTING MOTOR GP-ELECTRIC	309, 310
STARTING MOTOR GP-ELECTRIC–COLD WEATHER	305, 308
STOCKPILE AR	4
STRAINER AS (HYDRAULIC TANK FILL)	649
STRAINER-FUEL	195
SUPPORT GP-AFTERCOOLER	163, 164
SUPPORT GP-CONTROL–UPSHIFT, DOWNSHIFT	523
SUPPORT GP-ENGINE	63, 65
SUPPORT GP-ENGINE–FRONT	64
SUPPRESSION AR-SOUND	66
SUSPENSION GP-BOGIE	495
SUSPENSION GP-BOGIE–MINING	494
SUSPENSION GP-SEAT	868
SUSPENSION GP-SEAT–AIR	870
SWITCH AS (DOME LIGHT)	322
SWITCH AS-LIMIT (DOME LIGHT)	322
SWITCH AS-LIMIT (FORWARD,REVERSE)	513
SWITCH AS-LIMIT (SERVICE BRAKE PEDAL)	846
SWITCH AS-PRESSURE	818
SWITCH AS-PRESSURE (A/C COMPRESSOR)	818
SWITCH AS-PRESSURE (COMPRESSOR, HIGH SIDE)	812, 815
SWITCH AS-PRESSURE (COMPRESSOR, LOW SIDE)	812, 815
SWITCH AS-PRESSURE (HIGH SIDE)	822
SWITCH AS-PRESSURE (HYDRAULIC TANK)	209, 217
SWITCH AS-PRESSURE (IMP/FAN TANK RETURN BYPASS)	224
SWITCH AS-PRESSURE (REFRIGERANT COMPR, LOW SIDE)	822
SWITCH AS-PUSH BUTTON (BULLDOZER TILT)	538
SWITCH AS-PUSH BUTTON (DOWNSHIFT)	523
SWITCH AS-PUSH BUTTON (RIPPER AUTOMATIC STOW)	547
SWITCH AS-PUSH BUTTON (UPSHIFT)	523
SWITCH AS-ROCKER (AIR CONDITIONER ON, OFF)	844
SWITCH AS-ROCKER (AUTO CARRY)	276
SWITCH AS-ROCKER (AUTO DOWN SHIFT)	337
SWITCH AS-ROCKER (AUTOMATIC BLADE)	534
SWITCH AS-ROCKER (BI-DIRECTIONAL SHIFT)	337
SWITCH AS-ROCKER (CONSOLE RAISE, LOWER)	507
SWITCH AS-ROCKER (CYLINDER FLOOD)	263
SWITCH AS-ROCKER (CYLINDER LIGHT)	337
SWITCH AS-ROCKER (DUAL TILT CYLINDER)	534
SWITCH AS-ROCKER (FENDER LIGHT)	337
SWITCH AS-ROCKER (FLOODLAMPS,CYLINDER)	259
SWITCH AS-ROCKER (FLOODLAMPS,ROPS)	259, 263
SWITCH AS-ROCKER (FRONT FLOODLIGHTS)	253
SWITCH AS-ROCKER (FRONT WORK LIGHTS)	268

INDEX

Name	Page
SWITCH AS-ROCKER (HYDRAULIC PIN PULLER)	535
SWITCH AS-ROCKER (IMPLEMENT LOCKOUT)	337
SWITCH AS-ROCKER (PARKING BRAKE)	514
SWITCH AS-ROCKER (REAR FLOODLIGHTS)	253
SWITCH AS-ROCKER (REAR WORK LIGHTS)	268
SWITCH AS-ROCKER (REVERSING FAN MANUAL PURGE)	88
SWITCH AS-ROCKER (ROPS FLOODLAMPS)	257
SWITCH AS-ROCKER (THROTTLE)	337
SWITCH AS-ROTARY (A/C CONTROL)	844
SWITCH AS-TEMPERATURE (HEATER, AIR CONDITIONER)	799
SWITCH AS-TOGGLE (UNDERHOOD SERVICE LIGHT)	207
	215
	222
SWITCH AS-WIPER (24-VOLT) (FRONT INTERMITTENT)	844
SWITCH AS-WIPER (24-VOLT) (LH DOOR)	844
SWITCH AS-WIPER (24-VOLT) (REAR INTERMITTENT)	844
SWITCH AS-WIPER (24-VOLT) (RH DOOR)	844
SWITCH GP-BYPASS–PTO FILTER	312
SWITCH GP-DISCONNECT–BATTERY	313
SWITCH GP-DISCONNECT (BATTERY)	207
	215
SWITCH GP-FLOW–ENGINE COOLANT	314
	315
SWITCH GP-MAGNETIC–MAIN RELAY	317
SWITCH GP-MAGNETIC–START RELAY	316
SWITCH GP-MAGNETIC (24-VOLT) (MAIN RELAY)	271
SWITCH GP-PRESSURE	318
SWITCH GP-PUSH BUTTON	319
SWITCH GP-START (KEY)	337
SWITCH GP-TOGGLE– FUEL PRIMING PUMP ON, OFF	320

T

Name	Page
TANK & FILTER GP-HYDRAULIC	649
TANK & MTG GP-HYDRAULIC	653
TANK GP-COOLANT	120
	123
	126
TANK GP-COOLANT–RADIATOR	120
	122
TANK GP-EXPANSION	655
	656
TANK GP-EXPANSION (AIR)	655
	656
TANK GP-FUEL	194
	195
TANK GP-WINDOW WASHER	872
	874
TOOTH GP-RIPPER	758
	761
TOOTH GP-RIPPER–LONG SHANK	759
	760
TORQUE CONVERTER GP	383
	385
	387
TRACK ADJUSTER & RECOIL GP	497
TRACK GP–2 REQUIRED	501
TRACK GP–2-REQUIRED	499
	500
	501
	502
	503
	504
	505
TRANSMISSION AR	389
TRUNNION GP-BULLDOZER	711
TRUNNION GP-ENGINE	67
TURBOCHARGER GP	165
	166
	167
	168

U

Name	Page
UNDERCARRIAGE AR	505
UNDERCARRIAGE AR– ROLLER FRAME, STRAIGHT	506
UNIVERSAL JOINT GP	390

V

Name	Page
V-BELT (ALTERNATOR)	201
	203
	205
V-BELT (COMPRESSOR PULLEY)	777
VALVE & MTG GP-BULLDOZER	657
VALVE & MTG GP-CONTROL– HYDRAULIC PIN PULLER	659
VALVE & MTG GP-HYDRAULIC FAN	660
VALVE & MTG GP-MAIN CONTROL– IMPLEMENT PILOT PRESSURE	662
VALVE & MTG GP-STEER & BRAKE	524
VALVE-BALL (FUEL DRAIN)	175
VALVE-CHECK (FUEL FILTER, WATER SEPARATOR)	175
VALVE GP-CHECK–FUEL	197
VALVE GP-CHECK–REVERSING FAN	664

INDEX

Name	Page
VALVE GP-CONTROL– BLADE RAISE, LOWER, TILT	665 666
VALVE GP-CONTROL–RIPPER	670 672
VALVE GP-CONTROL–TRANSMISSION	674
VALVE GP-DIVERTER–AUTO CARRY	676
VALVE GP-DIVERTER– IMPLEMENT PILOT OIL	677
VALVE GP-DIVERTER (HYDRAULIC FAN)	623
VALVE GP-ETHER STARTING–24-VOLT	321
VALVE GP-MODULATING– TORQUE CONVERTER LOCKUP CLUTCH	391
VALVE GP-PRESSURE REDUCING– IMPLEMENT PILOT OIL	678
VALVE GP-PUMP CONTROL– PRESSURE, FLOW COMPENSATOR– HYDRAULIC FAN	679
VALVE GP-QUICK-DROP	680
VALVE GP-RELIEF–IMPLEMENT PILOT	681
VALVE GP-RELIEF– LUBRICATION DISTRIBUTION	393
VALVE GP-RELIEF– TORQUE CONVERTER OUTLET	392
VALVE GP-RELIEF (HYDRAULIC FAN, REVERSING)	623
VALVE GP-RELIEF (MANIFOLD PRESSURE)	625
VALVE GP-RELIEF (REFRIGERANT COMPRESSOR)	776
VALVE GP-SEQUENCE– MANIFOLD TO VALVE	682
VALVE GP-SHUTOFF (CAB HEATER)	825 827
VALVE GP-SHUTTLE	683
VALVE GP-SOLENOID–AUTO CARRY– HYDRAULIC FAN	686
VALVE GP-SOLENOID– BULLDOZER CONTROL	687
VALVE GP-SOLENOID– DUAL TILT CONTROL	685
VALVE GP-SOLENOID–HYDRAULIC FAN– HYDRAULIC LOCKOUT	688
VALVE GP-SOLENOID– HYDRAULIC PIN PULLER	684
VALVE GP-SOLENOID– PARKING, SECONDARY BRAKE	526
VALVE GP-SOLENOID–RIPPER CONTROL	689
VALVE GP-SOLENOID–STEERING, BRAKE	527
VALVE GP-STEERING & BRAKE CONT	528 530
VALVE GP-TILT CONTROL–DUAL	690
VALVE MECHANISM GP	68

W

Name	Page
WASHER GP-WINDOW	875
WASTE HANDLING AR	4 5 7 9
WINDOW AS-REAR	877
WINDOW GP-CAB	877 878
WINDOW GP-CAB–COLD WEATHER	879
WINDOW GP-SLIDING	879
WINDOW GP-SLIDING–LH	880
WIPER GP-WINDOW	881
WIPER GP-WINDOW–REAR–REAR CAB	884
WIPER PIVOT GP–REAR, LH	886
WIPER PIVOT GP–REAR, RH	887
WIRING GP-CAB	322
WIRING GP-ELECTRONIC CONTROL	324
WIRING GP-ENGINE	326 330 333
WIRING GP-PANEL (FUSE)	271
WIRING GP-PLATFORM	336
WIRING GP-UNIT INJECTOR	341

INDEX

Désignation	Page

A

ACCOUPLEMENT DE POMPE (ASS)	347
ACCUMULATEUR - HUILE PILOTE (ASS)	533
ACCUMULATEUR - RÉFRIGÉRANT	818 822
ACCUMULATEUR - RÉFRIGÉRANT (CLIMATISEUR)	812 815
ACCUMULATEUR HYDRAULIQUE (ASS)	532 590
ADAPTATEUR DE REMPLIS. RAPIDE DE CARBURANT (ASS)	169 171 173
ALTERNATEUR DE CHARGE (ASS)	201 203 205
ALTERNATEUR DE CHARGE (ASS)	199
AMORTISSEUR DE VIBRATIONS (ASS)	36 37
AMPOULE (24 VOLTS) (MOUVEMENT ARRIÈRE)	336
AMPOULE (24V, 21W) (PLAFONNIER)	322
ARBRE A CAMES (ASS)	20
ARBRE DE TRANSMISSION (ASS)	342
ARBRE D'ENTRAÎNEMENT (ASS)	381
AUTOCOLLANT - ÉQUIPEMENT DE MANUTENTION DE DÉCHET	5 7 9
AUTOCOLLANT DE MISE EN GARDE (ACCUMULATEUR)	533
AUTOCOLLANT DE MISE EN GARDE (ACCUMULATEUR)	532
AUTOCOLLANT DE MISE EN GARDE (*COMPRESSED SPRING, READ OMM)	467
AUTOCOLLANT DE MISE EN GARDE (DÉMARRAGE AVEC CÂBLES VOLANTS, LIRE LE GUIDE)	303 890
AUTOCOLLANT DE MISE EN GARDE (ÉLECTROCUTION)	892
AUTOCOLLANT DE MISE EN GARDE (HAUTE PRESSION, LIRE LE GUIDE D'UTILISATION ET D'ENTRETIEN, ANSI)	890
AUTOCOLLANT DE MISE EN GARDE (HAUTE PRESSION, LIRE LE GUIDE D'UTILISATION ET D'ENTRETIEN, ISO)	892
AUTOCOLLANT DE MISE EN GARDE (PAS DE SOUDAGE, PAS DE PERÇAGE, LIRE LE GUIDE D'UTILISATION ET D'ENTRETIEN)	890
AUTOCOLLANT DE MISE EN GARDE (*PRODUCT LINK 300, ANSI)	243
AUTOCOLLANT DE MISE EN GARDE (RISQUE D'ÉLECTROCUTION)	890
AUTOCOLLANT D'IDENTIFICATION (DOUBLE DÉVERS)	534
AUTOCOLLANT D'IDENTIFICATION (DOUBLE DÉVERS)	534
AUTOCOLLANT D'IDENTIFICATION (LAME AUTOMATIQUE)	534
AUTOCOLLANT D'IDENTIFICATION (NUMÉRO D'ASSEMBLAGE) (CONDENSEUR DE RÉFRIGÉRANT)	784
AUTOCOLLANT D'IDENTIFICATION (POMPE DE PRÉGRAISSAGE)	83
AUTOCOLLANT D'IDENTIFICATION (12 VOLTS)	888
AUTOCOLLANT DU PANNEAU (COMMANDE D'ESSUIE-GLACE)	844
AUTOCOLLANT-INFORMATION (RIPPER AUTOMATIQUE)	547
AUTOCOLLANT-INFORMATION (24 VOLTS)	302
AUXILIAIRE DE DÉMARRAGE À L'ÉTHER	300
AVERTISSEUR (ASS)	198
AXE DE CULBUTEUR (ASS)	60 61

B

BALAI D'ESSUIE-GLACE (ENS) (ARRIÈRE)	881
BALAI D'ESSUIE-GLACE (ENS) (AVANT)	881
BALAI D'ESSUIE-GLACE (ENS) (LATÉRAL)	881
BALAI D'ESSUIE-GLACE (ENS) (*RH, LH, REAR)	884
BALANCIER DE SUSPENSION (ASS)	456 457 459 460
BARRE D'ATTELAGE (ASS)	409
BARRE DÉFLECTRICE (ASS)	461 462 463
BARRE DÉFLECTRICE (VERSION)	454
BATI DE RIPPER (ASS)	735 737 739
BATTERIE (ASS)	228
BATTERIE (ASS) (24 VOLTS)	140
BATTERIE ET CÂBLAGE	207 215 222
BATTERIE (12V, SANS ENTRETIEN)	207 215 222

* TRADUCTION NON DISPONIBLE AU MOMENT DE LA PUBLICATION

INDEX

Désignation	Page
BATTERIE (12V, SANS ENTRETIEN) (DÉMARRAGE À BASSE TEMPÉRATURE)	302
BLINDAGE AR	446
BLINDAGE D'ARBRE DE TRANSMISSION (ASS)	436
BLINDAGE DE ROUE AV (ASS)	438
BLINDAGE DE TRANSMISSION (ASS)	440
BLINDAGE INFÉRIEUR (ASS)	429 430 432
BLOC-CYLINDRES - COUVERCLE (ASS)	21 23
BLOC-CYLINDRES (ASS)	30
BLOC-CYLINDRES (ENS)	27 29
BOÎTE DE VITESSES (VERSION)	389
BOÎTE PLANÉTAIRE (ASS)	371
BOUCHON - CULASSE (ASS)	58
BOUCHON AIMANTÉ (RÉDUCTEUR)	360
BOUCHON AIMANTÉ (RÉDUCTEUR, REMPLISSAGE D'HUILE)	351 357
BOUCHON AIMANTÉ (VIDANGE D'HUILE DE RÉDUCTEUR)	354
BOUCHON CONTRE LA PLUIE	205
BOUCHON DE BLOC-CYLINDRES (ASS)	57
BOUCHON DE GOULOTTE DE REMPLISSAGE D'HUILE (RÉSERVOIR D'HUILE D'ARBRE-PIVOT)	479
BOUCHON DE GOULOTTE DE REMPLISSAGE (ENS) (REMPLISSAGE DE RÉSERVOIR HYDRAULIQUE)	365
BOUCHON DE GOULOTTE DE REMPLISSAGE (ENS) (RÉSERVOIR DE CARBURANT)	195
BOUCHON DE GOULOTTE DE REMPLISSAGE (ENS) (RÉSERVOIR DE GRAISSAGE)	477
BOUCHON DE GOULOTTE DE REMPLISSAGE (RÉSERVOIR HYDRAULIQUE)	649
BOUCHON DE RADIATEUR (ENS)	122 126
BOUCHON DE REMPLISSAGE D'HUILE MOTEUR (ASS)	71
BOUCHON DE VIDANGE D'HUILE	54
BOUCHON DE VIDANGE (EAU)	90
BOUCHON DE VIDANGE (*PIVOT SHAFT OIL DRAIN)	467
BOUCHON DE VIDANGE (REMPLISSAGE D'HUILE D'ARBRE D'ARTICULATION)	467
BOUCHON FILETÉ (VIDANGE) (CARTER DE BOITE DE VITESSES)	394 395
BOULONNERIE DE LA CULASSE (ASS)	33 38
BOULONNERIE DE MONTAGE DE LA POMPE A HUILE (ASS)	70
BOURRELET D'ÉTANCHÉITÉ (CARBURANT)	192
BOURRELET D'ÉTANCHÉITÉ (SÉPARATEUR D'EAU, CARBURANT)	183
BRANCHEMENT ÉLECTRIQUE (ASS)	229
BRAS DE POUSSÉE (ASS)	708 709
BRAS D'ESSUIE-GLACE (ASS) (ARRIÈRE, CÔTÉ DROIT)	884
BRAS D'ESSUIE-GLACE (ASS) (ARRIÈRE GAUCHE)	884
BRAS D'ESSUIE-GLACE (ASS) (AVANT DROIT)	881
BRAS D'ESSUIE-GLACE (ASS) (AVANT GAUCHE)	881
BRAS D'ESSUIE-GLACE (ASS) (*FRONT, CENTER)	881

C

CABINE - REVÊTEMENT (ASS)	810
CABINE (ASS)	772 774
CABINE-FAISCEAU DE CÂBLES (ENS)	322
CABINE (VERSION)	770 771
CABLAGE - PLATE-FORME (ASS)	336
CABLAGE DE CABINE (ASS)	322
CABLAGE DE MOTEUR (ASS)	326 330 333
CÂBLAGE DE PANNEAU (ASS) (FUSIBLE)	271
CABLAGE D'INJECTEUR	341
CÂBLAGE-MONITEUR	140
CÂBLAGE-MONITEUR (ADVISOR)	337
CABLAGE MOTEUR (ENS)	326 333
CABLAGE MOTEUR (ENS) (MOTEUR)	330
CADENAS (ASS) (CARENAGE DE MOTEUR)	17 411 417 419 450
CADENAS (ASS) (COMPARTIMENT DE BATTERIE)	302 423
CADENAS (ASS) (COMPARTIMENT POUR LA DOCUMENTATION)	1
CADENAS (ASS) (MARCHE, ARRÊT DE POMPE D'AMORÇAGE DE CARBURANT)	402

* TRADUCTION NON DISPONIBLE AU MOMENT DE LA PUBLICATION

INDEX

Désignation	Page
CADENAS (ASS) (PROTECTION ANTIVANDALISME)	16
CADENAS (ASS) (RÉCHAUFFEUR DE CABINE)	802
CADENAS (ASS) (REMPLISSAGE DE RÉSERVOIR HYDRAULIQUE)	550
CADENAS (ASS) (REMPLISSAGE D'HUILE DE TRANSMISSION)	421
CADENAS (ASS) (RESERVOIR DE CARBURANT)	194
CADENAS (ASS) (VIDANGE DU RÉSERVOIR DE CARBURANT)	175
CANALISATIONS A COMMANDE PILOTE (ASS)	595
CANALISATIONS D'AIR (ASS)	142
	144
	145
	146
	148
	150
CANALISATIONS DE BULLDOZER (ASS)	577
	580
CANALISATIONS DE CARBURANT (ASS)	184
CANALISATIONS DE CHAUFFAGE (ASS)	825
	827
CANALISATIONS DE CLIMATISEUR (ASS)	815
	818
	822
CANALISATIONS DE CLIMATISEUR (ASS)	812
CANALISATIONS DE POMPE (ASS)	603
CANALISATIONS DE RÉCHAUFFEUR DE LIQUIDE DE REFROIDISSEMENT	825
	827
CANALISATIONS DE VÉRIN DE LEVAGE (ASS)	587
	589
CANALISATIONS D'EAU (ASS)	90
	92
	94
	96
	99
	101
CANALISATIONS D'EAU (ASS)	104
CANALISATIONS D'EXTRACTEUR DE BROCHE (ASS)	599
	600
	602
CANALISATIONS D'HUILE DE TRANSMISSION (ASS)	365
CANALISATIONS D'HUILE DE TURBOCOMPRESSEUR (ASS)	79
CANALISATIONS D'HUILE MOTEUR (ASS)	77
CANALISATIONS DU FILTRE A CARBURANT (ASS)	187
CANALISATIONS DU MOTEUR (ASS)	590
CANALISATIONS DU MOTEUR (ASS)	593
CANALISATIONS DU RIPPER (ASS)	606
	608
	610
CANALISATIONS DU VÉRIN D'INCLINAISON (ASS)	611
	614
	616
	618
	621
CANALISATIONS HYDRAULIQUES (ASS)	582
CANALISATIONS HYDRAULIQUES DE VENTILATEUR (ASS)	584
CAPOT ET PROTECTION (ASS)	450
CAPTEUR - MOTEUR (ASS)	278
CAPTEUR DE NIVEAU DE CARBURANT (ASS)	207
	215
	280
CAPTEUR DE NIVEAU DE LA MACHINE (ASS) (TRANSPORT AUTOMATIQUE)	276
CAPTEUR DE PRESSION (ASS)	284
	285
	286
	287
	288
	289
	290
	291
CAPTEUR DE PRESSION (ASS) (ADMISSION DE TURBOCOMPRESSEUR)	326
	330
	333
CAPTEUR DE TEMPERATURE (ASS)	296
	297
	298
	299
CAPTEUR DE TEMPERATURE (ASS) (2 BROCHES)	298
	299
CAPTEUR DE TEMPERATURE (ASS) (2 BROCHES) (CARBURANT)	178
CAPTEUR DE TEMPERATURE (ASS) (2 BROCHES) (CARBURANT)	180
CAPTEUR DE VITESSE (ASS)	292
	293
	294
	295
CAPTEUR DE VITESSE (ASS) (CÂBLE DE SORTIE DE TRANSMISSION)	373

* TRADUCTION NON DISPONIBLE AU MOMENT DE LA PUBLICATION

INDEX

Désignation	Page
CAPTEUR DE VITESSE (ASS) (CONVERTISSEUR DE COUPLE)	326
CAPTEUR DE VITESSE (ASS) (CONVERTISSEUR DE COUPLE)	330
	333
CAPTEUR DE VITESSE (ASS) (MOTEUR)	278
CAPTEUR DE VITESSE (ASS) (SORTIE DE TRANSMISSION, ARRIÈRE)	372
CAPTEUR DE VITESSE DE TRANSLATION (RADAR)	276
CAPTEUR ET MONTAGE-VITESSE DE TRANSLATION (ASS)	276
CARDAN COULISSANT (ASS)	382
CARENAGE DE MOTEUR (ASS)	411
	413
	414
	415
	416
	417
	419
CARTER ARRIERE (ASS)	48
CARTER AV (ASS)	47
CARTER DE VOLANT (ASS)	46
CARTER TELESCOPIQUE DE MECANISME AMORTISSEUR	467
CEINTURE DE SECURITE (ASS) (RÉTRACTABLE)	859
CENDRIER (CABINE)	792
CHAINES (ASS)	499
	500
	501
	502
	503
	504
	505
CHAPEAU DE GALET INFERIEUR (ASS)	466
CHAPEAU DE ROUE AV (CHAINE) (ASS)	464
	465
CHAPEAU (ENS) (GOULOTTE DE REMPLISSAGE D'HUILE MOTEUR)	72
CHÂSSIS ET CARTER (ASS)	395
CHÂSSIS ET CARTER (ASS)	394
CHAUFFAGE DE CABINE (ASS)	799
	802
	804
CLAPET A BILLE (VIDANGE DE CARBURANT)	175
CLAPET ANTI-RETOUR (FILTRE À CARBURANT, SÉPARATEUR D'EAU)	175
CLAPET DE DECHARGE (ASS)	392
	393
	681
CLAPET DE DECHARGE (ASS) (COMPRESSEUR DE RÉFRIGÉRANT)	776
CLAPET DE DECHARGE (ASS) (INVERSION DE ROTATION DU VENTILATEUR HYDRAULIQUE)	623
CLAPET DE DECHARGE (ASS) (PRESSION DANS LE COLLECTEUR)	625
CLAPET DE RETENUE (ENS)	197
	664
CLIMATISEUR (VERSION)	764
	765
CLIMATISEUR (VERSION)	764
COFFRE DE RANGEMENT (ASS)	766
COLLECTEUR - COMMANDE (ASS)	623
	625
	626
COLLECTEUR D'ÉCHAPPEMENT (ASS)	151
COLLECTEUR ET SOUPAPE (ASS)	521
	522
COMMANDE DE CHALEUR ET DE CLIMATISATION (ASS)	844
COMMANDE DE DIRECTION (ASS)	513
COMMANDE DE DIRECTION ET BOITE DE VITESSES	514
	516
	517
COMMANDE DE DOUBLE DEVERS (VERSION)	534
COMMANDE DE FAISCEAU (ENS)	140
COMMANDE DE FAISCEAU (ENS) (AUTO CARRY)	276
COMMANDE DE FAISCEAU (ENS) (AUTO CARRY)	140
COMMANDE DE FAISCEAU (ENS) (AUTO CARRY) (CAPTEUR, SOUPAPE)	276
COMMANDE DE FAISCEAU (ENS) (LIAISON DE PRODUIT)	243
COMMANDE DE POIGNÉE (ASS)	540
COMMANDE DE POIGNÉE (ASS)	538
COMMANDE DE RIPPER (ASS)	547
COMMANDE D'ÉQUIPEMENT	789
COMMANDE ÉLECTRONIQUE - CABLAGE	324
COMMANDE ELECTRONIQUE DE BOITE (ASS)	231
	337
COMMANDE ELECTRONIQUE DE MOTEUR (ASS)	232
	233
COMMANDE ÉLECTRONIQUE D'ÉQUIPEMENT (ASS)	238
COMMANDE ELECTRONIQUE (ENS) (LAMPE DE TABLEAU DE BORD)	844
COMMANDE ET MONTAGE - MOTEUR	230

* TRADUCTION NON DISPONIBLE AU MOMENT DE LA PUBLICATION

INDEX

Désignation	Page
COMMANDE ET MONTAGE DE PÉDALE (ASS)	790, 791
COMMANDE HYDRAULIQUE DE BOÎTE (ASS)	345
COMMANDE HYDRAULIQUE (VERSION)	537
COMMANDE NON PROGRAMMEE (ASS)	234
COMMANDE NON PROGRAMMEE (ASS) (ÉQUIPEMENT)	337
COMMANDE NON PROGRAMMEE (ASS) (MONITEUR)	337
COMMANDE NON PROGRAMMEE (ASS) (PRODUCT LINK 121SR)	243
COMMANDE NON PROGRAMMEE (ASS) (TRANSMISSION)	337
COMMANDE PRINCIPALE DE SOUPAPE ET MONTAGE (ASS)	662
COMPOSANTS ÉLECTRONIQUES DE LA MACHINE (VERSION)	236
COMPRESSEUR DE REFRIGERANT (ASS)	776, 777
CONDENSATEUR ET MONTAGE (RÉFRIGÉRANT)	779, 781, 783
CONDENSEUR DE RÉFRIGÉRANT	784
CONSOLE AV (ASS)	786
CONSOLE DE CONDUITE (ASS)	787
CONSOLE DE FAISCEAU (ENS) (DIRECTION, TRANSMISSION)	514
CONSOLE DE FAISCEAU (ENS) (DROITE)	336
CONTACTEUR DE BOUTON-POUSSOIR (ASS)	319
CONTACTEUR DE DEBIT (ASS)	314, 315
CONTACTEUR (ENS) (PLAFONNIER)	322
CONTACTEUR MAGNETIQUE (ASS)	316, 317
CONTACTEUR MAGNETIQUE (ASS) (24 VOLTS) (RELAIS PRINCIPAL)	271
CONTREPOIDS (ASS)	397, 398, 400
CONVERTISSEUR DE COUPLE (ASS)	383, 385, 387
CORPS DE POMPE À ENGRENAGE (ASS)	643, 645, 647, 648
COURONNE ET ENGRENAGES DE TRANSFERT (ASS)	363
COURROIE TRAPEZOIDALE (ALTERNATEUR)	201, 203, 205
COURROIE TRAPEZOIDALE (POULIE DE COMPRESSEUR)	777
COUVERCLE - CABINE (ASS)	792
COUVERCLE - CARTER AR (ASS)	24
COUVERCLE DE RÉSERVOIR HYDRAULIQUE	550
COUVERCLE DE TOURILLON (ASS)	703
COUVERCLE INFÉRIEUR-DOSSIER (ASS)	841, 842, 843
CRAN DE COMMANDE (ASS) (INCLINAISON DE LAME)	541, 543, 545
CRAN DE COMMANDE (ASS) (LEVAGE, ABAISSEMENT DE LAME)	541, 543, 545
CREPINE (ENS) (REMPLISSAGE DE RÉSERVOIR HYDRAULIQUE)	649
CROISILLON ET ROULEMENT	390
CULASSE (ASS)	33, 35
CULASSE (ENS)	32
CULBUTERIE (ASS)	68
CULBUTERIE ET POMPE A CARBURANT (ASS)	51, 52
CYLINDRE D'ETHER (ENS)	300

D

Désignation	Page
DÉFLECTEUR DE PLUIE (ENS)	136, 137, 139, 797
DÉMARRAGE PAR TEMPS FROID (VERSION)	302
DÉMARREUR ÉLECTRIQUE (ASS)	305, 308, 309, 310
DENT DE RIPPER (ASS)	758, 759, 760, 761
DISJONCTEUR DE SECURITE (ENS) (MARCHE AVANT, MARCHE ARRIÈRE)	513

* TRADUCTION NON DISPONIBLE AU MOMENT DE LA PUBLICATION

INDEX

Désignation	Page
DISJONCTEUR DE SECURITE (ENS) (PÉDALE DE FREIN DE MANOEUVRE)	846
DISJONCTEUR DE SECURITE (ENS) (PLAFONNIER)	322
DISJONCTEUR (ENS) (15A)	812, 818
DISJONCTEUR (ENS) (15A) (PUISSANCE PRINCIPALE)	271
DISPOSITIF D'ARRÊT	518
DISPOSITIF DE VIDANGE RAPIDE D'HUILE (ASS)	81
DISPOSITIF D'EVACUATION DES VAPEURS DE CARTER	75
DISTRIBUTEUR (ASS)	665, 666, 670, 672, 674
DISTRIBUTEUR DE FREIN ET DE DIRECTION	528, 530
DISTRIBUTEUR DE POMPE (ASS)	679
DISTRIBUTEUR D'INCLINAISON (ASS)	690
DISTRIBUTEUR ET MONTAGE (ASS)	659

E

Désignation	Page
EAU DES CHEMISES - RECHAUFFEUR (ASS)	241, 242
ÉCLAIRAGE - PROJECTEURS (ASS)	252, 253
ÉCLAIRAGE - PROJECTEURS (ASS)	255, 257, 259, 263, 267, 268
ECLAIRAGE DE RIPPER (ASS)	270
ÉCRAN	205
ÉCRAN DU MONITEUR (ASS)	794
ÉCRAN (ENS)	725
ÉCRAN (ENS) (*ENGINE, AFTERCOOLER)	155
ÉCRAN (ENS) (*ENGINE, AFTERCOOLER) (FILTRATION FINE)	155
ÉCRAN (ENS) (RÉSERVOIR HYDRAULIQUE, RETOUR PRINCIPAL)	649
ÉCRAN (HUILE PILOTE D'ÉQUIPEMENT)	626
ÉCRAN (HYDRAULIQUE)	649
ÉCRAN THERMIQUE (ASS)	162
ÉJECTEUR AUTOMATIQUE DE POUSSIÈRE (ASS)	135, 136, 137, 139
ÉLECTRONIQUE - COMMUNICATION (ASS)	237
ÉLECTRONIQUE DE TRANSMISSION (ASS)	238
ÉLECTRONIQUE-MONITEUR (ASS)	238
ÉLÉMENT DE FILTRE À AIR (ENS)	132
ÉLÉMENT DE FILTRE À AIR (ENS) (CABINE)	802
ÉLÉMENT DE FILTRE À HUILE (ENS) (BOÎTE DE VITESSES)	349
ÉLÉMENT DE FILTRE À HUILE (ENS) (CHARGE DE BOÎTE DE VITESSES)	365
ÉLÉMENT DE FILTRE À HUILE (ENS) (CHARGE DE CONVERTISSEUR DE COUPLE)	365
ÉLÉMENT DE FILTRE À HUILE (ENS) (EFFICACITÉ AMÉLIORÉE)	649
ÉLÉMENT DE FILTRE À HUILE (ENS) (EFFICACITÉ STANDARD)	649
ÉLÉMENT DE FILTRE À HUILE (ENS) (LIQUIDE RÉSISTANT AU FEU)	649
ÉLÉMENT DE FILTRE À HUILE (ENS) (TRÈS GRANDE EFFICACITÉ)	649
ÉLÉMENT DE FILTRE (ENS) (*REVERSE FLOW, DISPOSABLE)	649
ELEMENT DE RENIFLARD (CARTER)	69
ÉLÉMENT DU RÉCHAUFFEUR D'EAU DES CHEMISES (ENS) (120V, 1500W)	241
ÉLÉMENT DU RÉCHAUFFEUR D'EAU DES CHEMISES (ENS) (240V, 1500W)	242
ÉLIMINATION DES DÉCHETS (VERSION)	4, 5, 7, 9
EMBOUT ET LAME DE COUPE (ASS)	731, 732, 733, 734
EMBRAYAGE ET FREIN DE DIRECTION (ASS)	509, 511
ENGRENAGE DE DIRECTION (ASS)	519, 520
ENTRETIEN - COMMUNICATION (ASS) (PRODUCT LINK 300)	237
ESSUIE-GLACE (ASS)	881, 884
EXTRACTEUR DE BROCHE (ASS)	748, 749
EXTRACTEUR DE BROCHE (VERSION)	747

F

Désignation	Page
FAISCEAU-BOÎTE DE TRANSMISSION	208, 217

* TRADUCTION NON DISPONIBLE AU MOMENT DE LA PUBLICATION

INDEX

Désignation	Page
	223
	345
FAISCEAU DE CABLES - CAPTEUR (ENS) (MODULE DE COMMANDE ÉLECTRONIQUE)	324
FAISCEAU DE CABLES - CAPTEUR (ENS) (VITESSE DE SORTIE DE TRANSMISSION)	372
FAISCEAU DE CABLES DE LA PLATE-FORME	336
FAISCEAU DE CABLES DU TABLEAU DE BORD (ENS)	337
FAISCEAU DE CABLES (ENS) (CAPTEUR DE VITESSE)	293
FAISCEAU DE CABLES (ENS) (FERRITE)	140
FAISCEAU DE CABLES (ENS) (FILTRE À CARBURANT)	178
	180
FAISCEAU DE CABLES (ENS) (LANCEMENT DU MOTEUR SANS INJECTION)	326
	330
FAISCEAU DE CABLES (ENS) (LANCEMENT DU MOTEUR SANS INJECTION)	333
FAISCEAU DE CABLES (ENS) (LAVE-VITRE)	872
FAISCEAU DE CABLES (ENS) (*UNIT INJECTORS)	19
FAISCEAU DE CHÂSSIS (ENS)	224
FAISCEAU DE CHÂSSIS (ENS) (GARDE-BOUE DROIT)	208
	216
	222
FAISCEAU DE CHÂSSIS (ENS) (GARDE-BOUE GAUCHE)	208
	216
	223
FAISCEAU DE CHÂSSIS (ENS) (PROTÈGE-RADIATEUR)	208
	216
FAISCEAU DE CHAUFFAGE ET CLIMATISATION	799
	818
FAISCEAU DE CHAUFFAGE ET CLIMATISATION (COMPRESSEUR)	818
	822
FAISCEAU DE CHAUFFAGE ET CLIMATISATION (COMPRESSEUR)	812
	815
FAISCEAU DE CHAUFFAGE ET CLIMATISATION (CONDENSEUR)	818
FAISCEAU DE CHAUFFAGE ET CLIMATISATION (MOTEURS DE VENTILATEUR DE CONDENSEUR)	784
FAISCEAU DE CONTACTEUR (ENS) (FREIN DE MANOEUVRE)	846
FAISCEAU DE MOTEUR (ENS) (PRÉ-GRAISSAGE)	83
FAISCEAU DE SOLÉNOÏDE (ENS) (LAME, RIPPER, INCLINAISON DE LAME)	595
FAISCEAU DE SOUPAPE (ENS) (COMPRESSEUR PNEUMATIQUE DE SIÈGE)	870
FAISCEAU D'ÉCLAIRAGE (ENS) (PROJECTEUR ARRIÈRE)	253
	263
	268
FAISCEAU D'ÉCLAIRAGE (ENS) (PROJECTEUR ARRIÈRE) (PROJECTEURS MONTÉS SUR CADRE ROPS)	257
FAISCEAU D'ÉCLAIRAGE (ENS) (PROJECTEUR ARRIÈRE) (ROPS)	259
FAISCEAU D'ÉCLAIRAGE (ENS) (PROJECTEURS AVANT)	253
FAISCEAU D'ÉCLAIRAGE (ENS) (PROJECTEURS AVANT)	263
FAISCEAU D'ÉCLAIRAGE (ENS) (PROJECTEURS AVANT) (DISPOSITIFS D'ÉCLAIRAGE SUR VÉRIN)	259
FAISCEAU D'ÉCLAIRAGE (ENS) (PROJECTEURS AVANT) (PROJECTEURS MONTÉS SUR VÉRIN)	255
	257
FAISCEAU D'ÉCLAIRAGE (ENS) (RIPPER)	270
FAISCEAU DU REFROIDISSEUR D'HUILE (ASS)	101
	104
FAISCEAU DU REFROIDISSEUR D'HUILE (ENS)	101
	549
FAISCEAU DU REFROIDISSEUR D'HUILE (ENS) (HUILE MOTEUR)	104
FAISCEAU (ENS) (CLIMATISEUR)	779
	781
FENETRE COULISSANTE (ASS)	879
	880
FILTRE A AIR (ASS)	131
	132
	133
FILTRE À AIR DE CABINE (ASS)	797
FILTRE À AIR (GRANDE EFFICACITÉ)	797
FILTRE À AIR (GRANDE EFFICACITÉ) (CABINE)	802
FILTRE À AIR (STANDARD) (CABINE)	802
FILTRE À CARBURANT	195
FILTRE A CARBURANT (ASS)	178
	180

* TRADUCTION NON DISPONIBLE AU MOMENT DE LA PUBLICATION

INDEX

Désignation	Page
FILTRE A CARBURANT (ENS)	183
FILTRE A CARBURANT (ENS) (GRANDE EFFICACITÉ)	178, 180
FILTRE A HUILE (ASS)	349
FILTRE A HUILE (ASS) (HUILE PILOTE D'ÉQUIPEMENT)	595
FILTRE À HUILE (ENS)	595
FILTRE À HUILE MOTEUR (ASS)	73
FILTRE A HUILE MOTEUR (ENS)	73
FILTRE A MOUSSE (RESERVOIR DE CARBURANT)	207, 215, 222
FILTRE ASPIRANT (CARTER D'HUILE DE TRANSMISSION)	365
FILTRE (CAPTEUR DE PRESSION ATMOSPHÉRIQUE)	278
FILTRE DE SÉPARATEUR D'EAU ET DE CARBURANT (ASS)	183
FILTRE ET CANALISATIONS DE CARBURANT (ASS)	175
FILTRE (POMPE À EAU)	107
FILTRE SECONDAIRE	192
FUSIBLE (10A)	271
FUSIBLE (15A)	271, 275
FUSIBLE (175A) (ALTERNATEUR PRINCIPAL)	271
FUSIBLE (20A)	271

G

Désignation	Page
GALET A BOUDIN DOUBLE (ASS)	483, 484
GALET A BOUDIN SIMPLE (ASS)	485, 486
GALET INFÉRIEUR (VERSION)	481
GALET SUPERIEUR (VERSION)	481, 482
GARDE-BOUE (ASS)	421, 423, 426, 427
GLACE AR (ENS)	877
GOULOTTE D'HUILE MOTEUR (ASS)	72
GRAISSAGE DE BALANCIER DE SUSPENSION (ASS)	477
GRAISSAGE DE LA TRAVERSE-PIVOT	479
GRILLE DE PROTECTION (ASS)	855
GROUPE DE MOTEUR A PISTONS	628, 629, 630, 632
GROUPE DE ROTATION DE MOTEUR	639
GROUPE DE ROTATION DE POMPE	640, 641

H

Désignation	Page
HUILE MOTEUR - CARTER (ASS)	54

I

Désignation	Page
INSONORISATION (VERSION)	66
INTERRUPTEUR - BOUTON-POUSSOIR (ENS) (ARRIMAGE AUTOMATIQUE DE RIPPER)	547
INTERRUPTEUR - BOUTON-POUSSOIR (ENS) (CHANG. DE VITESSE)	523
INTERRUPTEUR - BOUTON-POUSSOIR (ENS) (INCLINAISON DE LAME)	538
INTERRUPTEUR - BOUTON-POUSSOIR (ENS) (PASSAGE DE VITESSE)	523
INTERRUPTEUR - DÉRIVATION (ASS)	312
INTERRUPTEUR À BASCULE (ASS)	320
INTERRUPTEUR À BASCULE (ENS) (TÉMOIN D'ENTRETIEN SOUS LE CAPOT)	207, 215, 222
INTERRUPTEUR BALANCIER (ENS) (ACCÉLÉRATEUR)	337
INTERRUPTEUR BALANCIER (ENS) (AUTO CARRY)	276
INTERRUPTEUR BALANCIER (ENS) (CHANGEMENT BI-DIRECTIONNEL)	337
INTERRUPTEUR BALANCIER (ENS) (EXTRACTEUR DE BROCHE HYDRAULIQUE)	535
INTERRUPTEUR BALANCIER (ENS) (FREIN DE STATIONNEMENT)	514
INTERRUPTEUR BALANCIER (ENS) (LAME AUTOMATIQUE)	534
INTERRUPTEUR BALANCIER (ENS) (MARCHE, ARRÊT DE CLIMATISEUR)	844
INTERRUPTEUR BALANCIER (ENS) (PHARE DE VÉRIN)	337
INTERRUPTEUR BALANCIER (ENS) (PHARE SUR GARDE-BOUE)	337
INTERRUPTEUR BALANCIER (ENS) (PROJECTEUR SUR VÉRIN)	263
INTERRUPTEUR BALANCIER (ENS) (PROJECTEURS ARRIÈRE)	253
INTERRUPTEUR BALANCIER (ENS) (PROJECTEURS ARRIÈRE)	268
INTERRUPTEUR BALANCIER (ENS) (PROJECTEURS AVANT)	253

* TRADUCTION NON DISPONIBLE AU MOMENT DE LA PUBLICATION

INDEX

Désignation	Page
INTERRUPTEUR BALANCIER (ENS) (PROJECTEURS AVANT)	268
INTERRUPTEUR BALANCIER (ENS) (PROJECTEURS MONTÉS SUR CADRE ROPS)	257
INTERRUPTEUR BALANCIER (ENS) (PROJECTEURS, VÉRIN)	259
INTERRUPTEUR BALANCIER (ENS) (PROJECTEURS,ROPS)	259 263
INTERRUPTEUR BALANCIER (ENS) (PURGE MANUELLE D'INVERSION DU SENS DE ROTATION DU VENTILATEUR)	88
INTERRUPTEUR BALANCIER (ENS) (RELEVAGE, ABAISSEMENT DE CONSOLE)	507
INTERRUPTEUR BALANCIER (ENS) (RÉTROGRADAGE AUTOMATIQUE)	337
INTERRUPTEUR BALANCIER (ENS) (VÉRIN DOUBLE DÉVERS)	534
INTERRUPTEUR BALANCIER (ENS) (VERROUILLAGE D'ÉQUIPEMENT)	337
INTERRUPTEUR DE DÉMARRAGE (ASS) (CLAVETTE)	337
INTERRUPTEUR D'ESSUIE-GLACE (24 VOLTS) (AV, INTERMITTENT)	844
INTERRUPTEUR D'ESSUIE-GLACE (24 VOLTS) (INTERMITTENT ARRIÈRE)	844
INTERRUPTEUR D'ESSUIE-GLACE (24 VOLTS) (PORTE GAUCHE)	844
INTERRUPTEUR D'ESSUIE-GLACE (24 VOLTS) (PORTIERE DROITE)	844
INTERRUPTEUR ROTATIF (ENS) (COMMANDE DE CLIMATISATION)	844

J

Désignation	Page
JAUGE DE NIVEAU D'HUILE (REGARD) (HUILE DE RÉSERVOIR HYDRAULIQUE)	649
JAUGE D'HUILE MOTEUR (BAIONNETTE) (ASS)	76
JAUGE D'HUILE MOTEUR (BAÏONNETTE) (ENS) (CARTER DE BOITE DE VITESSES)	365
JOINT (ASS) (POMPE À EAU)	107
JOINT DE VILEBREQUIN (ASS)	26
JOINT DE VILEBREQUIN (ASS)	46
JOINT ISOLANT (CACHE-SOUPAPES)	68
JOINT UNIVERSEL (ASS)	390

K

Désignation	Page
KIT D'AMORTISSEUR (SIEGE A SUSPENSION)	870
KIT D'ATTACHE (SIEGE A SUSPENSION)	870
KIT DE BLOC COULISSANT (SIEGE A SUSPENSION)	865 866 867
KIT DE BORNE (ALTERNATEUR)	199
KIT DE BORNE (DÉMARREUR)	306
KIT DE BORNE (VERROUILLAGE)	271
KIT DE BOULONNERIE (ALTERNATEUR)	199
KIT DE BOUTON (REGLAGE DE HAUTEUR) (SIEGE A SUSPENSION)	805
KIT DE BRIDE DE FIXATION DE FILTRE A AIR	132
KIT DE CHAPEAU DE FILTRE (RÉSERVOIR DE CARBURANT)	195
KIT DE COUSSINET (ALTERNATEUR)	199
KIT DE COUSSINET (ASSEMBLAGE DE ROTATION DE MOTEUR)	641
KIT DE COUSSINET (SIEGE A SUSPENSION)	806
KIT DE JOINTS	487 880
KIT DE JOINTS (CLAPET DE DÉCHARGE)	625
KIT DE JOINTS (CLAPET DE DÉCHARGE)	681
KIT DE JOINTS (CLAPET DE DÉCHARGE) (INVERSION DE ROTATION DU VENTILATEUR HYDRAULIQUE)	623
KIT DE JOINTS (CLAPET DE RETENUE)	664
KIT DE JOINTS (CLAPET DE RETENUE) (INVERSION DE ROTATION DU VENTILATEUR HYDRAULIQUE)	584
KIT DE JOINTS (ÉLECTROVANNE)	526 684 685 686 687 688 689
KIT DE JOINTS (GLACE)	879
KIT DE JOINTS (LEVAGE)	560
KIT DE JOINTS (MOTEUR À PISTON) (VENTILATEUR EN MARCHE ARRIÈRE)	629
KIT DE JOINTS (MOTEUR À PISTON) (VENTILATEUR HYDRAULIQUE)	628
KIT DE JOINTS (POMPE D'ENGRENAGE)	643 645 647
KIT DE JOINTS (POMPE D'ENGRENAGE)	634
KIT DE JOINTS (POMPE D'ENGRENAGE) (ÉQUIPEMENT)	648
KIT DE JOINTS (POMPE D'ENGRENAGE) (ÉQUIPEMENT)	636

* TRADUCTION NON DISPONIBLE AU MOMENT DE LA PUBLICATION

INDEX

Désignation	Page
KIT DE JOINTS (SOUPAPE DE DÉRIVATION) (INVERSION DE ROTATION DU VENTILATEUR HYDRAULIQUE)	623
KIT DE JOINTS (SOUPAPE DE DÉRIVATION) (SOUPAPE DE DÉRIVATION)	677
KIT DE JOINTS (SOUPAPE DE PRIORITÉ)	682
KIT DE JOINTS (VITRE ARRIÈRE)	877
KIT DE MONTAGE	140
KIT DE MONTAGE (PRÉFILTRE DE TURBINE)	161
KIT DE PARE-CHOCS (RÉGLAGE DU POIDS) (SIEGE A SUSPENSION)	806
KIT DE POMPE (PRÉ-GRAISSAGE)	85
KIT DE POUSSOIR (SIEGE A SUSPENSION)	806
KIT DE PRÉFILTRE (TURBINE)	156 158 161
KIT DE RESSORTS (REGLAGE DE HAUTEUR) (SIEGE A SUSPENSION)	805
KIT DE RESSORTS (SIEGE A SUSPENSION)	805
KIT DE SOUPAPE PNEUMATIQUE (SIEGE A SUSPENSION)	870
KIT D'INDICATEUR (RÉGLAGE DU POIDS) (SIEGE A SUSPENSION)	806
KLAXON (ENS) (24V, FAIBLE)	209 217
KLAXON (ENS) (24V, FAIBLE)	224

L

Désignation	Page
LAME DE BULLDOZER SEMI-UNIVERSELLE (VERSION)	695 696 697 698
LAME DE BULLDOZER UNIVERSELLE (VERSION)	699 700 701 702
LAME DE COUPE SEMI-UNIVERSELLE (ASS)	712
LAME ET BORD UNIVERSELS (ASS)	712 713 714 715 716
LAME SEMI-UNIVERSELLE (ASS)	726 727
LAME SEMI-UNIVERSELLE (ENS)	717 719
LAME UNIVERSELLE (ASS)	728 730
LAME UNIVERSELLE (ENS)	721 722 723 724 725
LAMPE - PHARE (ASS)	246
LAMPE - PHARE (ASS)	247
LAMPE - PHARE (ASS)	248 249 250
LAMPE - PHARE (ENS) (24V, 70W)	249 250
LAMPE DE TÉMOIN (ENS) (TÉMOIN D'ACTIONNEMENT)	336
LAMPE HALOGÈNE (24V, 65W)	246 247
LAMPE HALOGÈNE (24V, 65W)	251
LAMPE HALOGÈNE (24V, 65W) (PROJECTEUR)	248
LAVE-GLACE - VITRE (ASS)	875
LENTILLE (ENS) (PROJECTEUR)	246
LOGICIEL - TRANSMISSION (ENS) (PRÉGRAISSAGE DE MOTEUR)	83
LOGICIEL DE COMMUNICATION (ASS) (PRODUCT LINK 121SR)	243
LOGICIEL DE COMMUNICATION (ASS) (PRODUCT LINK 300)	237
LOGICIEL-ÉQUIPEMENT (ASS) (ACCUGRADE)	537

M

Désignation	Page
MAILLON DE CHAINE (ENS)	473 474 475 476
MAÎTRE PATIN	491 492 493
MANOCONTACT	318
MANOCONTACT (ENS)	818
MANOCONTACT (ENS) (COMPRESSEUR, CÔTÉ ÉLEVÉ)	812 815
MANOCONTACT (ENS) (COMPRESSEUR, CÔTÉ INFÉRIEUR)	812 815
MANOCONTACT (ENS) (COMPRESSEUR DE CLIMATISEUR)	818
MANOCONTACT (ENS) (CÔTÉ SUPÉRIEUR)	822
MANOCONTACT (ENS) (*IMP/FAN TANK RETURN BYPASS)	224

* TRADUCTION NON DISPONIBLE AU MOMENT DE LA PUBLICATION

INDEX

Désignation	Page
MANOCONTACT (ENS) (*REFRIGERANT COMPR, LOW SIDE)	822
MANOCONTACT (ENS) (RÉSERVOIR HYDRAULIQUE)	209 217
MECANISME AMORTISSEUR ET REGLAGE DE CHAINES (ASS)	497
MODIFICATION -BULLDOZER	705 706 707
MONTAGE-COMMUNICATION (ASS)	243
MONTAGE D'ALTERNATEUR (ASS)	53
MONTAGE DE CABINE (ASS)	831
MONTAGE DE COMMANDE DE PROFIL LONGITUDINAL (ASS)	245
MONTAGE DE CONDENSEUR (ASS)	832 834
MONTAGE DE MOTEUR (VERSION)	16 17
MONTAGE DE RADIO (ASS)	808
MONTAGE DE RADIO (ASS)	836 837
MONTAGE DE RIPPER (ASS)	743
MONTAGE DE VÉRIN (ASS)	633
MONTAGE DU TOIT ROPS (ASS)	838
MOTEUR - PARTIE CENTRALE (VERSION)	13 14 15
MOTEUR D'ESSUIE-GLACE (ASS) (24V, 2 VITESSES) (ARRIÈRE)	884
MOTEUR D'ESSUIE-GLACE (ASS) (24V, 2 VITESSES) (ARRIÈRE)	881
MOTEUR D'ESSUIE-GLACE (ASS) (24V, 2 VITESSES) (AVANT DROIT)	881
MOTEUR D'ESSUIE-GLACE (ASS) (24V, 2 VITESSES) (AVANT GAUCHE)	881
MOTEUR D'ESSUIE-GLACE (ASS) (24V, 2 VITESSES) (CENTRE, AVANT)	881
MOTEUR ELECTRIQUE (ASS)	85
MOTEUR ELECTRIQUE (ASS) (SOUFFLANTE DE CONDENSEUR)	784

O

Désignation	Page
OEILLETONS DE LEVAGE MOTEUR (ASS)	49

P

Désignation	Page
PALONNIER - GROUPE DE COMMANDE (ASS)	541 543 545
PANNEAU - FUSIBLES (ASS)	271
PANNEAU DE COMMANDE (ASS)	844
PANNEAU DE FAISCEAU (ENS) (FUSIBLE)	271
PARE-BROUSSAILLES (ASS)	434 435
PARE-PIERRES (ASS)	448 449
PATIN DE CHAÎNE	488 489 490
PÉDALE DE RÉGULATEUR ET DE FREIN (ASS)	846
PHARE AV (ASS)	251
PIGNON AR (ASS)	42 44
PIGNONNERIE AV (ASS)	40
PISTON ET BIELLE (ASS)	56
PIVOT D'ESSUIE-GLACE (ASS)	886 887
PLAFONNIER (ENS) (24 VOLTS)	322
PLAQUE	704 708 709 721 754 755 757
PLAQUE - AVERTISSEMENT (RESSORT AMORTISSEUR)	454
PLAQUE - AVERTISSEMENT (RESSORT AMORTISSEUR)	467
PLAQUE - AVERTISSEMENT (VÉRIN HAUTE PRESSION)	467
PLAQUE DE NUMÉRO DE SÉRIE (BOITE DE VITESSE)	372
PLAQUE DE NUMÉRO DE SÉRIE (BULLDOZER)	695 696 697 698 699 700 701 702
PLAQUE DE NUMÉRO DE SÉRIE (RIPPER)	751 752 753
PLAQUE DE RENFORT (ASS)	453
PLAQUE D'IDENTIFICATION MOTEUR (ASS)	893
PLAQUE D'INSTRUCTIONS (CLIMATISEUR)	764 765
PLAQUE D'USURE (ASS)	745 746

* TRADUCTION NON DISPONIBLE AU MOMENT DE LA PUBLICATION

INDEX

Désignation	Page
PLAQUE SIGNALÉTIQUE (REMARQUE) (RADIO)	808
PLAQUES SIGNALETIQUES ET AUTOCOLLANTS (ASS)	888
PLAQUES SIGNALETIQUES ET AUTOCOLLANTS (ASS)	891
	892
PLATE-FORME (ASS)	850
PLATE-FORME (VERSION)	849
POIGNÉE DE COMMANDE (ASS)	575
POIGNÉE DE COMMANDE (ASS) (COMMANDE DE BULLDOZER)	543
POMPE A EAU (ASS)	107
	108
POMPE A ENGRENAGES (ASS)	376
	378
	634
	636
POMPE A HUILE MOTEUR (ASS)	86
POMPE A PISTONS (ASS)	637
POMPE D'ALIMENTATION EN CARBURANT (ASS)	193
POMPE D'ALIMENTATION ET MONTAGE (ASS)	190
POMPE D'AMORCAGE DE CARBURANT ET FILTRE SECONDAIRE	192
POMPE D'INJECTION DE CARBURANT (ASS)	191
POMPE ET MOTEUR DE PRÉ-GRAISSAGE (ASS)	83
	85
PORTE DE VISITE (ASS)	123
PORTE DE VISITE (ASS)	402
	404
	405
	406
	407
	408
PORTE DE VISITE (ASS) (BOUCHON DE RADIATEUR)	120
PORTIÈRE DE CABINE (ASS)	795
	796
POSTE DE CONDUITE (VERSION)	839
PREFILTRE (ASS)	160
	161
PREFILTRE (ASS) (AÉRATION DE LA CABINE)	797
PREFILTRE (VERSION)	154
PRÉGRAISSAGE DE MOTEUR ET DE POMPE	85
PRISE CODE (ENS) (ÉQUIPEMENT)	337
PRISE CODE (ENS) (TRANSMISSION)	337
PROTECTEUR DE RÉDUCTEURS (ASS)	437
PROTECTEUR DE RÉDUCTEURS (VERSION)	428
PROTECTION D'ARBRE PIVOT (ASS)	439
PROTECTION DE ROUE LIBRE (VERSION)	428
PROTÈGE-RADIATEUR (ASS)	442
	444
PUISSANCE DE FAISCEAU (ENS)	140
PUISSANCE DE FAISCEAU (ENS) (TÉMOIN D'ENTRETIEN SOUS LE CAPOT)	224

R

RADIATEUR (ASS)	110
	112
	114
	115
	117
	119
RADIATEUR-CORPS (ENS)	109
	114
	119
RADIATEUR (VERSION)	109
RADIO -COMMUNICATION (ASS) (PRODUCT LINK 121SR)	243
RALLONGE DU DOSSIER DE SIEGE (TOILE)	859
RALLONGE DU DOSSIER DE SIEGE (VINYLE)	862
*RECEIVER GP (SYSTÈME DE POSITIONNEMENT PAR SATELLITE)	245
RÉCEPTEUR-DÉSHYDRATEUR (ASS) (CLIMATISEUR)	812
	815
	822
RECHAUFFEUR DE CARBURANT (ASS)	239
REDUCTEUR MARIN - MONTAGE (ASS)	370
RÉDUCTEURS (ASS)	351
	354
	357
	360
REFROIDISSEUR D'ADMISSION D'AIR (ASS)	127
	129
REFROIDISSEUR D'HUILE HYDRAULIQUE (ASS)	549
REGARD DE NIVEAU (RÉSERVOIR D'EAU)	120
	123
RÉGLAGE DE COMMANDE DE DIRECT. ET DE BOÎTE	507
REGLAGE DE SIEGE (ASS)	762
REGULATEUR DE LA TENSION (ENS) (24 VOLTS) (ALTERNATEUR)	199
RELAIS (ENS) (24 VOLTS) (CLIMATISATION, CHAUFFAGE)	336

* TRADUCTION NON DISPONIBLE AU MOMENT DE LA PUBLICATION

INDEX

Désignation	Page
RELAIS (ENS) (24 VOLTS) (MOTEUR SOUFFLANT DE CONDENSATEUR)	784
RELAIS (ENS) (24 VOLTS) (MOTEUR SOUFFLANT DE CONDENSATEUR)	336
RELAIS (ENS) (24 VOLTS) (PRESSURISATION DE CABINE)	336
RELAIS (ENS) (24 VOLTS) (RÉCHAUFFEUR, CLIMATISEUR)	799
RENIFLARD (ASS)	69
RENIFLARD (ENS) (BOÎTE DE VITESSES)	365
RENIFLARD (ENS) (RÉSERVOIR D'HUILE D'ARBRE-PIVOT)	479
RENIFLARD (RÉSERVOIR DE GRAISSAGE)	477
RÉSERVOIR - LAVE-GLACE (ASS)	872
RÉSERVOIR - LAVE-GLACE (ASS)	874
RÉSERVOIR DE CARBURANT (ASS)	194
	195
RÉSERVOIR DÉSHYDRATEUR (RÉFRIGÉRANT)	818
RESERVOIR D'EXPANSION (ASS)	655
	656
RESERVOIR D'EXPANSION (ASS) (AIR)	655
	656
RÉSERVOIR DU LIQUIDE DE REFROIDISSEMENT (ASS)	120
RÉSERVOIR DU LIQUIDE DE REFROIDISSEMENT (ASS)	122
	123
	126
RÉSERVOIR HYDRAULIQUE ET FILTRE (ASS)	649
RÉSERVOIR HYDRAULIQUE ET MONTAGE (ASS)	653
RÉSISTANCE DE CHAUFFAGE DE CABINE (ASS)	275
RÉTROVISEUR (ASS)	829
	830
RIPPER (ASS)	754
	755
	756
	757
RIPPER (VERSION)	751
	752
	753
ROBINET DE BATTERIE (ASS)	313
ROBINET DE BATTERIE (ASS) (BATTERIE)	207
ROBINET DE BATTERIE (ASS) (BATTERIE)	215
ROTATION DE LA ROUE DU VENTILATEUR SOUFFLANT (COMMANDE DE RIPPER)	789
ROTATION DE LA ROUE DU VENTILATEUR SOUFFLANT (HUILE MOTEUR)	890
ROTATION DE LA ROUE DU VENTILATEUR SOUFFLANT (LIQUIDE LAVE-GLACE)	890
ROTATION DE LA ROUE DU VENTILATEUR SOUFFLANT (RÉGLAGE DU SIÈGE)	868
	870
ROUE AV - CHAINES (ASS)	469
	470
	472

S

Désignation	Page
SEGMENT DE BARBOTIN (ASS)	380
SIÈGE - COMPRESSEUR D'AIR (ASS)	763
SIÈGE (ASS)	857
	859
	860
	862
	863
	864
SIÈGE AVEC SUSPENSION (ASS)	865
	870
SIÈGE AVEC SUSPENSION (ASS)	866
	867
	868
SIÈGE ET MONTAGE (ASS)	856
SIÈGE INCLINABLE (ASS)	853
SILENCIEUX (ASS)	152
	153
SOLÉNOÏDE DE DÉMARREUR (ENS)	305
SOLÉNOÏDE PROPORTIONNEL (ASS) (12V CC) (VENTILATEUR HYDRAULIQUE)	679
SONDE - CIRCUIT DE CARBURANT	281
	282
	283
SONDE - CIRCUIT DE CARBURANT (COMMANDE DE BOÎTE DE VITESSES)	514
SONDE - CIRCUIT DE CARBURANT (ENTRÉE, SORTIE DE DENT DE RIPPER)	547
SONDE - CIRCUIT DE CARBURANT (INCLINAISON DE LAME)	541
	543
	545
SONDE - CIRCUIT DE CARBURANT (LAME)	283
SONDE - CIRCUIT DE CARBURANT (LEVAGE, ABAISSEMENT DE LAME)	541
	543
	545
SONDE - CIRCUIT DE CARBURANT (PÉDALE DE FREIN DE MANOEUVRE)	846
SONDE - CIRCUIT DE CARBURANT (RELEVAGE, ABAISSEMENT DE RIPPER)	547
SOUPAPE - SOLÉNOÏDE (ASS)	526
	527
	684
	685

* TRADUCTION NON DISPONIBLE AU MOMENT DE LA PUBLICATION

INDEX

Désignation	Page
	686
	687
	688
	689
SOUPAPE D'ABAISSEMENT RAPIDE (ASS)	680
SOUPAPE D'ARRÊT (ASS) (RÉCHAUFFEUR DE CABINE)	825
	827
SOUPAPE DE BULLDOZER ET MONTAGE (ASS)	657
SOUPAPE DE DÉMARRAGE À L'ÉTHER (ASS)	321
SOUPAPE DE DERIVATION (ASS)	676
	677
SOUPAPE DE DERIVATION (ASS) (VENTILATEUR HYDRAULIQUE)	623
SOUPAPE DE DIRECTION ET FREIN ET MONTAGE (ASS)	524
SOUPAPE DE MODULATION (ASS)	391
SOUPAPE DE SÉQUENCE (ASS)	682
SOUPAPE ET MONTAGE - VENTILATEUR HYDRAULIQUE (ASS)	660
SOUPAPE RÉDUCTRICE DE PRESSION (ASS)	678
STABILISATEUR - BRAS DE POUSSEE (ASS)	704
STABILISATEUR DU BRAS DE POUSSEE (ASS)	710
SUPPORT - COMMANDE (ASS)	523
SUPPORT - MONTAGE (ASS)	767
	768
SUPPORT DE CACHE-SOUPAPE ET FAISC. DE CABL. D'IN.	18
	19
SUPPORT DE MOTEUR (ASS)	63
	64
	65
SUPPORT DE REFROIDISSEUR D'ADMISSION (ASS)	163
	164
SUSPENSION A BOGIES (ASS)	494
	495
SUSPENSION DE SIEGE - CARTER (ASS)	805

T

TAMIS D'ASPIRATION (HUILE DU CONV. DE COUPLE)	387
TAMIS D'ASPIRATION (REPRISE DE BOÎTE)	343
TAMPON DE POUSSÉE (ASS)	691
	692
	693
TAPIS DE SOL (INFERIEUR)	839
TAPIS DE SOL (INFERIEUR) (CABINE)	792
TAPIS DE SOL (SUPERIEUR)	839
TAPIS DE SOL (SUPERIEUR) (CABINE)	792
TEMPS FROID (VERSION)	2
	3
THERMOCONTACT (ENS) (RÉCHAUFFEUR, CLIMATISEUR)	799
THERMOSTAT-TEMPÉRATURE D'EAU (92-DEG C)	99
TIRANT DE BULLDOZER (ASS)	694
TOIT ROPS (ASS)	854
TOURILLON DE BULLDOZER (ASS)	711
TOURILLON DE MOTEUR (ASS)	67
TRAIN DE ROULEMENT	505
	506
TRAINS PLANÉTAIRES - CARTER ET PIÈCES	343
TRANSFORMATION ELECTRIQUE (ASS)	235
TRANSMISSION (VERSION)	375
TURBOCOMPRESSEUR (ASS)	165
	166
	167
	168
TYPE LÈVRE À JOINT	99

V

VANNE PILOTE (ASS)	683
VENTILATEUR À PALES RÉVERSIBLES (VERSION)	88
VENTILATEUR ASPIRANT (ASS)	89
VÉRIN À DOUBLE INCLINAISON (VERSION)	557
VÉRIN DE LEVAGE (ASS)	562
VÉRIN DE LEVAGE (ASS) (BULLDOZER)	555
VÉRIN DE LEVAGE DE LAME DE BULLDOZER (ASS)	560
VERIN DE LEVAGE DE RIPPER (ASS)	564
	566
VÉRIN DE LEVAGE ET CANALISATIONS (ASS)	551
	552
	553
VÉRIN DE LEVAGE ET CAPTEUR (ASS)	554
VERIN D'EXTRACTEUR DE BROCHE DE RIPPER (ASS)	568
VÉRIN D'INCLINAISON (ASS)	571
	573
VÉRIN D'INCLINAISON DOUBLE (ASS)	558
VERIN D'INCLINAISON DU RIPPER (ASS)	569
VÉRIN ET SOUPAPE DE LEVAGE (ASS)	556
VÉRIN ET SOUPAPE DE LEVAGE (ASS)	555
VERROU (ASS)	452
VERSION DE CHASSIS	1

* TRADUCTION NON DISPONIBLE AU MOMENT DE LA PUBLICATION

INDEX

Désignation	Page	Désignation	Page
VERSION DE COMMANDE HYDRAULIQUE D'EXTRACTEUR DE BROCHE	535		
VERSION DE MOTEUR COMPLET	10		
	11		
	12		
VERSION DE PRÉFILTRE DE TURBINE	155		
	158		
VERSION DE PRÉGRAISSAGE DE MOTEUR	83		
VERSION DE REPRISE AU TAS	4		
VERSION DE TRANSFORMATION DE RIPPER	741		
	742		
VERSION HYDRAULIQUE	576		
VERSION POUR APPLICATION MINIÈRE	3		
VIDANGE-ÉCOLOGIE (ASS)	348		
VILEBREQUIN - POULIE (ASS)	59		
VILEBREQUIN (ASS)	26		
VITRE DE CABINE (ASS)	878		
	879		
VOLANT MOTEUR (ASS)	39		
VUE DU MODÈLE	3		

W

*WINDOW GP-CAB	877		

* TRADUCTION NON DISPONIBLE AU MOMENT DE LA PUBLICATION

INDICE

Nombre	Página
A	
ACONDICIONADOR DE AIRE (CONFIG)	764
	765
ACOPLAMIENTO DE BOMBA (GR)	347
ACUMULADOR DE ACEITE PILOTO (GR)	533
ACUMULADOR DE REFRIGERANTE	818
	822
ACUMULADOR DE REFRIGERANTE (AIRE ACONDICIONADO)	812
	815
ACUMULADOR HIDRAULICO (GR)	532
ACUMULADOR HIDRAULICO (GR)	590
ADAPTADOR DE LLENADO RÁPIDO DE COMBUSTIBLE (GR)	169
	171
	173
AGUA DE LAS CAMISAS - CALENTADOR DEL (GR)	241
	242
AIRE - TUBERÍAS DE (GR)	142
	144
	145
	146
	148
	150
AJUSTADOR DEL ASIENTO (GR)	762
AJUSTADOR DEL CONTROL DE DIRECCIÓN Y TRANSMISIÓN (GR)	507
ALARMA (GR)	198
ALFOMBRILLA INFERIOR	839
ALFOMBRILLA INFERIOR (CABINA)	792
ALFOMBRILLA SUPERIOR	839
ALFOMBRILLA SUPERIOR (CABINA)	792
AMORTIGUADOR DE VIBRACIONES (GR)	36
	37
ANTEFILTRO (CONFIG)	154
ANTEFILTRO (GR)	160
	161
ANTEFILTRO (GR) (AIRE DE LA CABINA)	797
ÁRBOL DE LEVAS (GR)	20
ARRANQUE - INTERRUPTOR DE (GR) (LLAVE)	337
ARRANQUE EN TIEMPO FRIO (CONFIG)	302
ASIENTO CON SUSPENSIÓN (GR)	870
ASIENTO CON SUSPENSIÓN (GR)	868
ASIENTO (GR)	857
	859
	860
	862
	863
	864
ASIENTO Y MONTAJE (GR)	856
AUXILIAR DE ARRANQUE CON ÉTER (GR)	300

Nombre	Página
B	
BALANCÍN (GR)	60
	61
BARRA COMPENSADORA (GR)	456
	457
	459
	460
BARRA DE TIRO (GR)	409
BARRA LIMPIADORA (GR)	461
	462
	463
BARRA LIMPIADORA(CONFIG)	454
BASE DE LA TAPA DE VÁLVULAS Y MAZO DE CABLES DE INYECTOR (GR)	18
	19
BASTIDOR DEL DESGARRADOR (GR)	735
	737
	739
BASTIDOR TELESCÓPICO DEL RESORTE TENSOR (GR)	467
BATERÍA (GR)	228
BATERÍA (GR) (24 VOLTIOS)	140
BATERÍA Y CABLES (GR)	207
	215
	222
BATERÍA (12-VOLTIOS, LIBRE DE MANTENIMIENTO)	207
	215
	222
BATERÍA (12-VOLTIOS, LIBRE DE MANTENIMIENTO) (*LOW TEMP STARTING)	302
BLOQUE DE EMPUJE (GR)	691
	692
	693
BLOQUE DESLIZANTE-JUEGO (ASIENTO DE SUSPENSION)	865
	866
	867
BLOQUE MOTOR (CONJ)	27
	29
BLOQUE MOTOR (GR)	30
BOCINA (CONJ) (24-VOLTIOS, TONO BAJO)	224
BOCINA (CONJ) (24-VOLTIOS, TONO BAJO)	209
	217
BOMBA - TUBERÍAS DE (GR)	603
BOMBA DE ACEITE DEL MOTOR (GR)	86
BOMBA DE AGUA (GR)	107
	108
BOMBA DE CEBADO Y FILTRO SECUNDARIO (GR)	192
BOMBA DE COMBUSTIBLE Y MECANISMO DE VÁLVULAS (GR)	51

* NO HAY TRADUCCION DISPONIBLE EN EL MOMENTO DE LA IMPRESION

INDICE

Nombre	Página
	52
BOMBA DE ENGRANAJES (GR)	634
	636
BOMBA DE ENGRANAJES (GR)	376
	378
BOMBA DE INYECCIÓN DE COMBUSTIBLE (GR)	191
BOMBA DE PISTONES (GR)	637
BOMBA DE TRANSFERENCIA DE COMBUSTIBLE (GR)	193
BOMBA DE TRANSFERENCIA DE COMBUSTIBLE Y MONTAJE (GR)	190
BOMBA Y MOTOR DE PRELUBRICACIÓN (CONJ)	85
BOMBA Y MOTOR DE PRELUBRICACIÓN (CONJ)	83
BRAZO DE EMPUJE (GR)	708
	709
BRAZO DE LIMPIAPARABRISAS (GR) (*FRONT, CENTER)	881
BRAZO DE LIMPIAPARABRISAS (GR) (LADO DERECHO, DELANTERO)	881
BRAZO DE LIMPIAPARABRISAS (GR) (LADO IZQUIERDO, DELANTERO)	881
BRAZO DE LIMPIAPARABRISAS (GR) (TRASERO, MANO DERECHA)	884
BRAZO DE LIMPIAPARABRISAS (GR) (TRASERO MANO IZQUIERDA)	884

C

CABINA - MAZO DE CABLES DE LA	322
CABINA (CONFIG)	770
	771
CABINA (GR)	772
	774
CABLES DE INYECTOR (GR)	341
CABLES DE LA CABINA (GR)	322
CABLES DE LA PLATAFORMA (GR)	336
CABLES DEL CONTROL ELECTRÓNICO (GR)	324
CABLES DEL MOTOR (GR)	326
CABLES DEL MOTOR (GR)	330
	333
CABLES DEL TABLERO (GR) (FUSIBLE)	271
CADENAS (GR)	499
	500
	501
	502
	503
	504
	505
CAJA DE ALMACENAMIENTO	766
CAJA DE LA SUSPENSIÓN DEL ASIENTO (GR)	805
CAJA DELANTERA (GR)	47
CAJA Y BASTIDOR (GR)	394
	395
CAJA Y PIEZAS DE LOS PLANETARIOS	343
CALCOMANÍA DE ADVERTENCIA (ACEITE DE MOTOR)	890
CALCOMANÍA DE ADVERTENCIA (ACUMULADOR)	532
	533
CALCOMANÍA DE ADVERTENCIA (ASIENTO AJUSTABLE)	868
	870
CALCOMANÍA DE ADVERTENCIA (*COMPRESSED SPRING, READ OMM)	467
CALCOMANÍA DE ADVERTENCIA (DESCARGA ELECTRICA)	892
CALCOMANÍA DE ADVERTENCIA (FLUIDO LAVADOR)	890
CALCOMANÍA DE ADVERTENCIA (*HIGH PRESSURE, READ OMM, ANSI)	890
CALCOMANÍA DE ADVERTENCIA (*HIGH PRESSURE, READ OMM, ISO)	892
CALCOMANÍA DE ADVERTENCIA (*JUMP START, READ OMM)	303
	890
CALCOMANÍA DE ADVERTENCIA (NO SUELDE, NO TALADRE, LEA EL OMM)	890
CALCOMANÍA DE ADVERTENCIA (PELIGRO)	890
CALCOMANÍA DE ADVERTENCIA (*PRODUCT LINK 300, ANSI)	243
CALCOMANÍA DE ADVERTENCIA (RADIO)	808
CALCOMANÍA DE ADVERTENCIA (*RIPPER CONTROL)	789
CALCOMANÍA DE IDENTIFICACIÓN (BOMBA DE PRELUBRICACION)	83
CALCOMANÍA DE IDENTIFICACIÓN (HOJA AUTOMÁTICA)	534
CALCOMANÍA DE IDENTIFICACIÓN (INCLINACIÓN DOBLE)	534
CALCOMANÍA DE IDENTIFICACIÓN (NOMBRE DE GRUPO) (CONDENSADOR DE REFRIGERANTE)	784
CALCOMANÍA DE IDENTIFICACIÓN (12 VOLTIOS)	888
CALCOMANÍA DE MANIPULADOR DE BASURAS	5
	7
	9

* NO HAY TRADUCCION DISPONIBLE EN EL MOMENTO DE LA IMPRESION

INDICE

Nombre	Página
CALCOMANÍAS Y PLACAS DE IDENTIFICACIÓN (GR)	888, 891, 892
CALEFACCIÓN DE LA CABINA (GR)	799, 802, 804
CALENTADOR DEL COMBUSTIBLE (GR)	239
CAMBIO RÁPIDO DE ACEITE (GR)	81
CÁNCAMOS DE LEVANTAMIENTO DEL MOTOR (GR)	49
CANDADO (GR) (BOMBA DE CEBADO DE COMBUSTIBLE, ACTIVADA/DESACTIVADA)	402
CANDADO (GR) (CALENTADOR DE CABINA)	802
CANDADO (GR) (COMPARTIMENTO DE BATERIA)	302
CANDADO (GR) (COMPARTIMENTO DE BATERIA)	423
CANDADO (GR) (COMPARTIMENTO PARA LA LITERATURA)	1
CANDADO (GR) (DRENAJE DE TANQUE DE COMBUSTIBLE)	175
CANDADO (GR) (LLENADO DEL TANQUE HIDRÁULICO)	550
CANDADO (GR) (PROTECCIÓN CONTRA BANDALISMO)	16
CANDADO (GR) (RECINTO DE MOTOR)	17, 411, 417, 419, 450
CANDADO (GR) (TANQUE DE COMBUSTIBLE)	194
CANDADO (GR) (TUBO DE LLENADO DE TREN DE FUERZA)	421
CAPO Y PROTECTOR (GR)	450
CARGA - ALTERNADOR DE (GR)	199, 201, 203, 205
CÁRTER - COLECTOR DEL (GR)	54
CENICERO (CABINA)	792
CHASIS (CONFIG)	1
CIGÜEÑAL - POLEA DE (GR)	59
CIGÜEÑAL (GR)	26
CILINDRO DE DOBLE INCLINACION (CONFIG)	557
CILINDRO DE DOBLE INCLINACIÓN (GR)	558
CILINDRO DE ÉTER (CONJ)	300
CILINDRO DE INCLINACIÓN DEL DESGARRADOR (GR)	569
CILINDRO DE LEVANTAMIENTO - TUBERÍAS DEL (GR)	587, 589
CILINDRO DE LEVANTAMIENTO DE LA HOJA TOPADORA (GR)	560
CILINDRO DE LEVANTAMIENTO DEL DESGARRADOR (GR)	564, 566
CILINDRO DE LEVANTAMIENTO (GR)	562
CILINDRO DE LEVANTAMIENTO (GR) (*BULLDOZER)	555
CILINDRO DE LEVANTAMIENTO Y TUBERÍAS (GR)	551, 552, 553
CILINDRO DEL EXTRACTOR DE PASADOR DEL DESGARRADOR (GR)	568
CINTURÓN DE SEGURIDAD (GR) (RETRACTIL)	859
COLADOR (CONJ) (LLENADO DEL TANQUE HIDRÁULICO)	649
COLADOR DE COMBUSTIBLE	195
COMBUSTIBLE - TANQUE DE (GR)	194, 195
COMPARTIMIENTO DEL MOTOR (GR)	411, 413, 414, 415, 416, 417, 419
COMPARTIMIENTO DEL OPERADOR (CONFIG)	839
COMPRESOR DE AIRE DEL ASIENTO (GR)	763
COMPRESOR DE REFRIGERANTE (GR)	776, 777
CONDENSADOR DE REFRIGERANTE (GR)	784
CONDENSADOR DEL REFRIGERANTE Y MONTAJE (GR)	779, 781, 783
CONEXIÓN ELÉCTRICA (GR)	229
CONFIG. DE FILTROS-TURBINA	155, 158
CONFIGURACION DE APILAMIENTO	4
CONFIGURACIÓN DE CABLERIA, CALENTADOR Y ACONDICIONADOR DE AIRE	799, 818
CONFIGURACIÓN DE CABLERIA, CALENTADOR Y ACONDICIONADOR DE AIRE (COMPRESOR)	812, 815

* NO HAY TRADUCCION DISPONIBLE EN EL MOMENTO DE LA IMPRESION

INDICE

Nombre	Página
	818
	822
CONFIGURACIÓN DE CABLERIA, CALENTADOR Y ACONDICIONADOR DE AIRE (*CONDENSER)	818
CONFIGURACIÓN DE CABLERIA, CALENTADOR Y ACONDICIONADOR DE AIRE (*CONDENSER BLOWER MOTORS)	784
CONFIGURACIÓN DE ELIMINACIÓN DE BASURAS	4
	5
	7
	9
CONFIGURACIÓN DE INSTALACIÓN DEL MOTOR	16
	17
CONFIGURACION DE LAMPARA DE REFLECTOR (24-VOLTIOS, 70-VATIOS)	249
	250
CONFIGURACIÓN ELECTRÓNICA DE LA MÁQUINA	236
CONFIGURACIÓN GENERAL	3
CONFIGURACIÓN PARA CLIMA FRÍO	2
	3
CONFIGURACION PARA MINERIA	3
CONJUNTO DE CABLES, VÁLVULA (COMPRESOR DE AIRE DEL ASIENTO)	870
CONJUNTO DE ENCHUFE DE CODIGO (IMPLEMENTO)	337
CONJUNTO DE ENCHUFE DE CODIGO (TREN DE FUERZA)	337
CONJUNTO DE MAZO DE CABLES DE LA CONSOLA (DIRECCIÓN, TRANSMISION)	514
CONJUNTO DE MAZO DE CABLES DE LA CONSOLA (LADO DERECHO)	336
CONJUNTO DE MAZO DE CABLES DE SOLENOIDE (*BLADE, RIPPER, BLADE TILT)	595
CONJUNTO DE NÚCLEO (AIRE ACONDICIONADO)	779
	781
CONSOLA DEL OPERADOR (GR)	787
CONSOLA DELANTERA (GR)	786
CONTRAPESO (GR)	397
	398
	400
CONTROL DE DIRECCIÓN (GR)	513
CONTROL DE DIRECCIÓN Y TRANSMISIÓN (GR)	516
	517
CONTROL DE DIRECCIÓN Y TRANSMISIÓN (GR)	514
CONTROL DE IMPLEMENTOS Y MONTAJE (GR)	789
CONTROL DE INCLINACIÓN DUAL (CONFIG)	534
CONTROL DE MANIJA (GR)	540
CONTROL DE MANIJA (GR)	538
CONTROL DEL MULTIPLE (GR)	623
	625
	626
CONTROL ELECTRÓNICO (CONJ) (LUZ DE TABLERO)	844
CONTROL ELECTRÓNICO DEL MOTOR (GR)	232
	233
CONTROL ELECTRÓNICO DEL MOTOR Y MONTAJE	230
CONTROL ELECTRÓNICO (GR)	231
	337
*CONTROL GP-RIPPER	547
CONTROL HIDRÁULICO (CONFIG)	537
CONTROL HIDRÁULICO DE LA TRANSMISIÓN (GR)	345
CONTROL HIDRÁULICO DEL EXTRACTOR DE PASADORES	535
CONTROL NO PROGRAMADO (GR)	234
CONTROL NO PROGRAMADO (GR) (IMPLEMENTO)	337
CONTROL NO PROGRAMADO (GR) (MONITOR)	337
CONTROL NO PROGRAMADO (GR) (*PRODUCT LINK 121SR)	243
CONTROL NO PROGRAMADO (GR) (TREN DE FUERZA)	337
CONVERTIDOR DE PAR (GR)	383
	385
	387
CONVERTIDOR ELÉCTRICO (GR)	235
CORREA TRAPEZOIDAL (ALTERNADOR)	201
	203
	205
CORREA TRAPEZOIDAL (*COMPRESSOR PULLEY)	777
CRUCETA Y COJINETE (GR)	390
CULATA DE CILINDROS - TORNILLERÍA DE LA (GR)	33
	38
CULATA DE CILINDROS (CONJ)	32
CULATA DE CILINDROS (GR)	33
	35

D

DESGARRADOR (CONFIG)	752

* NO HAY TRADUCCION DISPONIBLE EN EL MOMENTO DE LA IMPRESION

INDICE

Nombre	Página
	753
DESGARRADOR (CONFIG)	751
DESGARRADOR (GR)	754
	755
	756
	757
DETECTOR DE LA NIVELACION DE LA MAQUINA (GR) (*AUTO CARRY)	276
DETECTOR DE POSICIÓN (SISTEMA DE COMBUST.) (GR)	281
	282
	283
DETECTOR DE POSICIÓN (SISTEMA DE COMBUST.) (GR) (CONTROL DE LA TRANSMISIÓN)	514
DETECTOR DE POSICIÓN (SISTEMA DE COMBUST.) (GR) (DESGARRADOR LEVANTAR, BAJAR)	547
DETECTOR DE POSICIÓN (SISTEMA DE COMBUST.) (GR) (HOJA)	283
DETECTOR DE POSICIÓN (SISTEMA DE COMBUST.) (GR) (INCLINACION DE HOJA)	541
	543
	545
DETECTOR DE POSICIÓN (SISTEMA DE COMBUST.) (GR) (LEVANTAMIENTO DE LA HOJA, BAJAR)	541
	543
	545
DETECTOR DE POSICIÓN (SISTEMA DE COMBUST.) (GR) (PEDAL DE FRENO DE SEVICIO)	846
DETECTOR DE POSICIÓN (SISTEMA DE COMBUST.) (GR) (VASTAGO DEL DESGARRADOR DENTRO, FUERA)	547
DIENTE DE DESGARRADOR (GR)	758
	759
	760
	761
DISYUNTOR (CONJ) (15 AMPERIOS)	812
	818
DISYUNTOR (CONJ) (15 AMPERIOS) (CORRIENTE PRINCIPAL)	271
DISYUNTOR (GR)	313
DISYUNTOR (GR) (BATERÍA)	207
	215
DRENAJE DE SEGURIDAD ECOLÓGICA (GR)	348

E

EJE DE MANDO (GR)	381
EJE DEL TREN DE FUERZA (GR)	342
ELECTRONICA DE MONITOR (GR)	238
*ELEMENT AS-FILTER (*REVERSE FLOW, DISPOSABLE)	649
ELEMENTO DE FILTRO DE ACEITE (CONJ) (*ADVANCED EFFICIENCY)	649
ELEMENTO DE FILTRO DE ACEITE (CONJ) (CARGA DE CONVERTIDOR DE PAR)	365
ELEMENTO DE FILTRO DE ACEITE (CONJ) (CARGADO DE TRANSMISION)	365
ELEMENTO DE FILTRO DE ACEITE (CONJ) (EFICIENCIA ULTRA ALTA)	649
ELEMENTO DE FILTRO DE ACEITE (CONJ) (FLUÍDO RESISTENTE AL FUEGO)	649
ELEMENTO DE FILTRO DE ACEITE (CONJ) (GRUPO DE LAMPARA-TABLERO)	649
ELEMENTO DE FILTRO DE ACEITE (CONJ) (TRANSMISION)	349
ELEMENTO DEL CALENTADOR DEL AGUA DE LAS CAMISAS (120 VOLTIOS, 1500 VATIOS)	241
ELEMENTO DEL CALENTADOR DEL AGUA DE LAS CAMISAS (240 VOLTIOS, 1500 VATIOS)	242
ELEMENTO DEL FILTRO DE AIRE (CONJ)	132
ELEMENTO DEL FILTRO DE AIRE (CONJ) (CABINA)	802
ELEMENTO DEL RESPIRADERO (CÁRTER DEL MOTOR)	69
ENFRIADOR DEL ACEITE HIDRAULICO (GR)	549
ENGRANAJE DE DIRECCIÓN (GR)	519
	520
ENGRANAJE DE TRANSFERENCIA Y CORONA (GR)	363
ENGRANAJE DELANTERO (GR)	40
ENGRANAJE TRASERO (GR)	42
	44
ESCAPE DE GASES (GR)	75
ESLABÓN DE CADENA (CONJ)	473
	474
	475
	476
ESTABILIZADOR DEL BRAZO DE EMPUJE (GR)	704
	710
ESTRUCTURA ROPS (GR)	854
EXPULSOR DE POLVO (GR)	137
	139
EXPULSOR DE POLVO (GR)	135
	136
EXTENSIÓN DEL RESPALDO (GR) (DE TELA)	859

* NO HAY TRADUCCION DISPONIBLE EN EL MOMENTO DE LA IMPRESION

INDICE

Nombre	Página
EXTENSIÓN DEL RESPALDO (GR) (VINILO)	862
EXTRACTOR DE PASADOR (CONFIG)	747
EXTRACTOR DE PASADOR (GR)	748 749

F

FILTRO (BOMBA DE AGUA)	107
FILTRO DE ACEITE (CONJ)	595
FILTRO DE ACEITE DEL MOTOR (CONJ)	73
FILTRO DE ACEITE DEL MOTOR (GR)	73
FILTRO DE ACEITE (GR)	349
FILTRO DE ACEITE (GR) (*IMPLEMENT PILOT OIL)	595
FILTRO DE AIRE (ALTA EFICIENCIA)	797
FILTRO DE AIRE (ALTA EFICIENCIA) (CABINA)	802
FILTRO DE AIRE DE LA CABINA (GR)	797
FILTRO DE AIRE (ESTANDAR) (CABINA)	802
FILTRO DE AIRE (GR)	131 132 133
FILTRO DE COMBUSTIBLE (CONJ)	183
FILTRO DE COMBUSTIBLE (CONJ) (ALTA EFICIENCIA)	178 180
FILTRO DE COMBUSTIBLE (GR)	178 180
FILTRO DE COMBUSTIBLE Y SEPARADOR DE AGUA (GR)	183
FILTRO ESPONJOSO (TANQUE DE COMBUSTIBLE)	207 215 222
FILTRO SECUNDARIO	192
FILTRO (SENSOR DE PRESION ATMOSFERICA)	278
FILTRO Y TUBERÍAS DE COMBUSTIBLE (GR)	175
FRENO Y EMBRAGUE DE DIRECCIÓN (GR)	509 511
FUSIBLE (10-AMPERIOS)	271
FUSIBLE (15 AMPERIOS)	271
FUSIBLE (15 AMPERIOS)	275
FUSIBLE (175-AMPERIOS) (*ALTERNATOR, MAIN)	271
FUSIBLE (20-AMPERIOS)	271

G

GRUPO DE CANTONERA Y CUCHILLA	731 732 733 734
GRUPO DE CONTROL, CALEFACIÓN Y ACONDICIONADOR DE AIRE	844
GRUPO DE HOJA Y CUCHILLA UNIVERSAL	712 713 714 715 716
GRUPO DE INSTALACION, CONTROL DE GRADO	245
GRUPO DE INTERRUPTOR-BOTON PULSADOR	319
GRUPO DE LUBRICACIÓN DE BARRA ESTABILIZADORA	477
GRUPO DE MONTAJE DE LA CABINA	831
GRUPO DE MONTAJE Y VÁLVULA, HOJA TOPADORA	657
GRUPO DE ROTACIÓN DEL MOTOR (GR)	639
GRUPO DE SELLO (BOMBA DE AGUA)	107
GRUPO DE SOFTWARE, COMUNICACIÓN (*PRODUCT LINK 121SR)	243
GRUPO DE SOFTWARE, COMUNICACIÓN (*PRODUCT LINK 300)	237
GRUPO DE TOPE, CONTROL (INCLINACION DE HOJA)	541 543 545
GRUPO DE TOPE, CONTROL (LEVANTAMIENTO DE LA HOJA, BAJAR)	541 543 545
GRUPO DE VÁLVULA-ARRANQUE CON ÉTER	321
GRUPO ELECTRONICO-COMUNICACION	237
GRUPO GIRATORIO DE BOMBA	640 641
GUARDABARROS (GR)	421 423 426 427

H

HIDRÁULICA (CONFIG)	576
HOJA DE LIMPIAPARABRISAS (CONJ) (DELANTERO)	881
HOJA DE LIMPIAPARABRISAS (CONJ) (LADO)	881
HOJA DE LIMPIAPARABRISAS (CONJ) (PARTE TRASERA)	881
HOJA DE LIMPIAPARABRISAS (CONJ) (*RH, LH, REAR)	884
HOJA SEMIUNIVERSAL (CONJ)	717

* NO HAY TRADUCCION DISPONIBLE EN EL MOMENTO DE LA IMPRESION

INDICE

Nombre	Página
	719
HOJA SEMIUNIVERSAL (GR)	726
	727
HOJA TOPADORA SEMIUNIVERSAL	695
	696
	697
	698
HOJA TOPADORA UNIVERSAL (CONFIG)	699
	700
	701
	702
HOJA UNIVERSAL (CONJ)	721
	722
	723
	724
	725
HOJA UNIVERSAL (GR)	728
	730
HOJA Y CUCHILLA SEMIUNIVERSAL (GR)	712
*HOUSING GP-REAR	48

I

Nombre	Página
IMPLEMENTOS (GR ELECTRÓNICO)	238
INCLINACIÓN HORIZONTAL - CILINDRO DE (GR)	571
	573
INDICADOR DEL NIVEL DE ACEITE (VARILLA) (GR)	76
INDICADOR DEL NIVEL DEL ACEITE (VARILLA) (CONJ) (CAJA DE TRANSMISION)	365
INSONORIZADOR (CONFIG)	66
INSTALACION DE COMUNICACION (GR)	243
INSTALACIÓN DE RADIO (GR)	808
INTERRUPTOR (CONJ) (LUZ DEL TECHO)	322
INTERRUPTOR DE DERIVACIÓN	312
INTERRUPTOR DE FLUJO (GR)	314
	315
INTERRUPTOR DE LÍMITE (CONJ) (*FORWARD,REVERSE)	513
INTERRUPTOR DE LÍMITE (CONJ) (LUZ DEL TECHO)	322
INTERRUPTOR DE LÍMITE (CONJ) (PEDAL DE FRENO DE SEVICIO)	846
INTERRUPTOR DE PRESIÓN (CONJ)	818
INTERRUPTOR DE PRESIÓN (CONJ) (COMPRESOR DEL ACONDICIONADOR DE AIRE)	818
INTERRUPTOR DE PRESIÓN (CONJ) (COMPRESOR, LADO ALTO)	812
INTERRUPTOR DE PRESIÓN (CONJ) (COMPRESOR, LADO ALTO)	815
INTERRUPTOR DE PRESIÓN (CONJ) (COMPRESOR, LADO BAJO)	812
INTERRUPTOR DE PRESIÓN (CONJ) (COMPRESOR, LADO BAJO)	815
INTERRUPTOR DE PRESIÓN (CONJ) (*IMP/FAN TANK RETURN BYPASS)	224
INTERRUPTOR DE PRESIÓN (CONJ) (LADO ALTO)	822
INTERRUPTOR DE PRESIÓN (CONJ) (*REFRIGERANT COMPR, LOW SIDE)	822
INTERRUPTOR DE PRESIÓN (CONJ) (TANQUE HIDRÁULICO)	209
	217
INTERRUPTOR DE PRESIÓN (GR)	318
INTERRUPTOR DE TEMPERATURA (CONJ) (CALENTADOR, ACONDICIONADOR DE AIRE)	799
INTERRUPTOR DE VOLQUETE (CONJ) (ACELERACIÓN)	337
INTERRUPTOR DE VOLQUETE (CONJ) (ACONDICIONADOR DE AIRE ACTIVO, INACTIVO)	844
INTERRUPTOR DE VOLQUETE (CONJ) (CARGADOR AUTOMÁTICO)	276
INTERRUPTOR DE VOLQUETE (CONJ) (CONSOLA LEVANTAMIENTO, BAJO)	507
INTERRUPTOR DE VOLQUETE (CONJ) (*CYLINDER FLOOD)	263
INTERRUPTOR DE VOLQUETE (CONJ) (DESPLAZAMIENTO BIDIRECCIONAL)	337
INTERRUPTOR DE VOLQUETE (CONJ) (*DUAL TILT CYLINDER)	534
INTERRUPTOR DE VOLQUETE (CONJ) (EXTRACTOR DE PASADOR HIDRÁULICO)	535
INTERRUPTOR DE VOLQUETE (CONJ) (*FLOODLAMPS,CYLINDER)	259
INTERRUPTOR DE VOLQUETE (CONJ) (*FLOODLAMPS,ROPS)	259
	263
INTERRUPTOR DE VOLQUETE (CONJ) (FRENO DE ESTACIONAMIENTO)	514
INTERRUPTOR DE VOLQUETE (CONJ) (HOJA AUTOMATICA)	534
INTERRUPTOR DE VOLQUETE (CONJ) (*IMPLEMENT LOCKOUT)	337
INTERRUPTOR DE VOLQUETE (CONJ) (LUCES DE TRABAJO DELANTERAS)	268
INTERRUPTOR DE VOLQUETE (CONJ) (LUCES DE TRABAJO TRASERAS)	268
INTERRUPTOR DE VOLQUETE (CONJ) (LUZ DEL CILINDRO)	337

* NO HAY TRADUCCION DISPONIBLE EN EL MOMENTO DE LA IMPRESION

INDICE

Nombre	Página
INTERRUPTOR DE VOLQUETE (CONJ) (LUZ DEL GUARDABARROS)	337
INTERRUPTOR DE VOLQUETE (CONJ) (PALANCA DE AUTO DESCONEXIÓN)	337
INTERRUPTOR DE VOLQUETE (CONJ) (REFLECTORES DELANTEROS)	253
INTERRUPTOR DE VOLQUETE (CONJ) (REFLECTORES TRASEROS)	253
INTERRUPTOR DE VOLQUETE (CONJ) (*REVERSING FAN MANUAL PURGE)	88
INTERRUPTOR DE VOLQUETE (CONJ) (*ROPS FLOODLAMPS)	257
INTERRUPTOR DE VOLQUETE (CONJ) (*UNDERHOOD SERVICE LIGHT)	222
INTERRUPTOR DE VOLQUETE (CONJ) (*UNDERHOOD SERVICE LIGHT)	207 215
INTERRUPTOR DE VOLQUETE (GR)	320
INTERRUPTOR DEL LIMPIAPARABRISAS (CONJ) (24 VOLTIOS) (INTERMITENTE DELANTERO)	844
INTERRUPTOR DEL LIMPIAPARABRISAS (CONJ) (24 VOLTIOS) (INTERMITENTE TRASERO)	844
INTERRUPTOR DEL LIMPIAPARABRISAS (CONJ) (24 VOLTIOS) (PUERTA DE LADO DERECHO)	844
INTERRUPTOR DEL LIMPIAPARABRISAS (CONJ) (24 VOLTIOS) (PUERTA IZQUIERDA)	844
INTERRUPTOR MAGNÉTICO (GR)	316 317
INTERRUPTOR MAGNÉTICO (GR) (24 VOLTIOS) (RELE PRINCIPAL)	271
INTERRUPTOR PULSADOR (CONJ) (CAMBIAR A UNA MARCHA SUPERIOR)	523
INTERRUPTOR PULSADOR (CONJ) (CAMBIO DESCENDENTE)	523
INTERRUPTOR PULSADOR (CONJ) (DESGARRADOR APILADOR AUTOMÁTICO)	547
INTERRUPTOR PULSADOR (CONJ) (INCLINACIÓN DE LA HOJA TOPADORA)	538
INTERRUPTOR ROTATIVO (CONJ) (CONTROL DE ACONDICIONADOR DE AIRE)	844
JUEGO DE AMORTIGUADOR (ASIENTO DE SUSPENSION)	870
JUEGO DE ATADURA (ASIENTO DE SUSPENSION)	870
JUEGO DE BOMBA (PRELUBRICACIÓN)	85
JUEGO DE BOTÓN (AJUSTE DE ALTURA) (ASIENTO DE SUSPENSION)	805
JUEGO DE COJINETES (ALTERNADOR)	199
JUEGO DE COJINETES (ASIENTO DE SUSPENSION)	806
JUEGO DE COJINETES (GRUPO GIRATORIO DEL MOTOR)	641
JUEGO DE FILTRO DE TAPA (TANQUE DE COMBUSTIBLE)	195
JUEGO DE INDICADOR (AJUSTE DE PESO) (ASIENTO DE SUSPENSION)	806
JUEGO DE INSTALACIÓN	140
JUEGO DE INSTALACIÓN (LIMPIEZA DE TURBINA)	161
JUEGO DE PARAGOLPES (AJUSTE DE PESO) (ASIENTO DE SUSPENSION)	806
JUEGO DE RESORTES (AJUSTE DE ALTURA) (ASIENTO DE SUSPENSION)	805
JUEGO DE RESORTES (ASIENTO DE SUSPENSION)	805
JUEGO DE SEGUIDOR (ASIENTO DE SUSPENSION)	806
JUEGO DE SELLOS	487 880
JUEGO DE SELLOS (BOMBA DE ENGRANAJE)	634 643 645 647
JUEGO DE SELLOS (BOMBA DE ENGRANAJE) (IMPLEMENTO)	636 648
JUEGO DE SELLOS (LEVANTAMIENTO)	560
JUEGO DE SELLOS (*PISTON MOTOR) (REVERSA, VENTILADOR)	629
JUEGO DE SELLOS (*PISTON MOTOR) (VENTILADOR HIDRAULICO)	628
JUEGO DE SELLOS (VALVULA DE ALIVIO)	625 681
JUEGO DE SELLOS (VALVULA DE ALIVIO) (VENTILADOR HIDRAULICO, REVERSA)	623
JUEGO DE SELLOS (VÁLVULA DE DERIVADOR) (VALVULA DE DERIVACION)	677
JUEGO DE SELLOS (VÁLVULA DE DERIVADOR) (VENTILADOR HIDRAULICO, REVERSA)	623
JUEGO DE SELLOS (VÁLVULA DE RETENCIÓN)	664
JUEGO-ANTEFILTRO (TURBINA)	158 161
JUEGO-ANTEFILTRO (TURBINA)	156
JUEGO DE ABRAZADERA DEL FILTRO DE AIRE	132

J

* NO HAY TRADUCCION DISPONIBLE EN EL MOMENTO DE LA IMPRESION

INDICE

Nombre	Página
JUEGO DE SELLOS (VÁLVULA DE RETENCIÓN) (VENTILADOR HIDRAULICO, REVERSA)	584
JUEGO DE SELLOS (VÁLVULA DE SECUENCIA)	682
JUEGO DE SELLOS (VALVULA DE SOLENOIDE)	526
JUEGO DE SELLOS (VALVULA DE SOLENOIDE)	684
	685
	686
	687
	688
	689
JUEGO DE SELLOS (VENTANA)	879
JUEGO DE SELLOS (VENTANA POSTERIOR)	877
JUEGO DE TERMINAL (ALTERNADOR)	199
JUEGO DE TERMINAL (MOTOR DE ARRANQUE)	306
JUEGO DE TERMINAL (TRABA)	271
JUEGO DE TORNILLERÍA (ALTERNADOR)	199
JUEGO DE VALVULA DE AIRE (ASIENTO DE SUSPENSION)	870
JUNTA DESLIZANTE (GR)	382
JUNTA UNIVERSAL (GR)	390

L

LÁMPARA DE FARO DELANTERO (GR)	251
LAMPARA DEL TECHO (CONJ) (24 VOLTIOS)	322
LAMPARA INDICADORA (CONJ) (LUZ DE ACCIÓN)	336
LÁMPARA (24 VOLTIOS) (ACCIÓN TRASERA)	336
LÁMPARA (24-VOLTIOS, 21 VATIOS) (CÚPULA)	322
LAVAPARABRISAS DE LA VENTANA (GR)	875
LIMPIAPARABRISAS DE LA VENTANA (GR)	881
	884
LUBRICACIÓN DE EJE PIVOTE (GR)	479
LUCES DE ALÓGENO (24 VOLTIOS, 65 VATIOS)	246
	247
LUCES DE ALÓGENO (24 VOLTIOS, 65 VATIOS)	251
LUCES DE ALÓGENO (24 VOLTIOS, 65 VATIOS) (REFLECTOR)	248
LUCES DE REFLECTOR (GR)	252
	253
LUCES DE REFLECTOR (GR)	255
	257
	259
	263
	267
	268
LUCES DEL DESGARRADOR (GR)	270

M

MALEZA - PROTECTOR (GR)	434
	435
MANDO FINAL (GR)	351
	354
	357
	360
MAZO DE CABLES (CONJ) (CARTER SIN INYECCIÓN)	326
	330
	333
MAZO DE CABLES (CONJ) (FERRITA)	140
MAZO DE CABLES (CONJ) (LAVAPARABRISAS)	872
MAZO DE CABLES (CONJ) (SENSOR DE VELOCIDAD)	293
MAZO DE CABLES DE CONTROL (CONJ)	140
MAZO DE CABLES DE CONTROL (CONJ) (CARGADOR AUTOMÁTICO)	276
MAZO DE CABLES DE CONTROL (CONJ) (CARGADOR AUTOMÁTICO)	140
MAZO DE CABLES DE CONTROL (CONJ) (CARGADOR AUTOMÁTICO) (*SENSOR, VALVE)	276
MAZO DE CABLES DE CONTROL (CONJ) (ESLABON DE PRODUCTO)	243
MAZO DE CABLES DE LA PLATAFORMA (CONJ)	336
MAZO DE CABLES DE LA TRANSMISION	208
	217
	223
	345
MAZO DE CABLES DE POTENCIA (CONJ)	140
MAZO DE CABLES DE POTENCIA (CONJ) (*UNDERHOOD SERVICE LIGHT)	224
MAZO DE CABLES DE SENSOR (CONJ) (MODULO DE CONTROL ELECTRONICO)	324
MAZO DE CABLES DE SENSOR (CONJ) (VELOCIDAD DE SALIDA DE TRANSMISION)	372
MAZO DE CABLES DEL CHASIS (CONJ)	224
MAZO DE CABLES DEL CHASIS (CONJ) (*FENDER, LH)	208
	216
MAZO DE CABLES DEL CHASIS (CONJ) (*FENDER, LH)	223
MAZO DE CABLES DEL CHASIS (CONJ) (GUARDABARROS, LADO DERECHO)	208

* NO HAY TRADUCCION DISPONIBLE EN EL MOMENTO DE LA IMPRESION

INDICE

Nombre	Página
	216
	222
MAZO DE CABLES DEL CHASIS (CONJ) (*RADIATOR GUARD)	208
	216
MAZO DE CABLES DEL INTERRUPTOR (CONFIG) (FRENO DE SERVICIO)	846
MAZO DE CABLES DEL MONITOR (CONJ)	140
MAZO DE CABLES DEL MONITOR (CONJ) (SEÑALIZADOR)	337
MAZO DE CABLES DEL MOTOR (CONJ)	326
	333
MAZO DE CABLES DEL MOTOR (CONJ) (MOTOR)	330
MAZO DE CABLES DEL TABLERO (CONJ)	337
MAZO DE CABLES DEL TABLERO (CONJ) (FUSIBLE)	271
MAZO DE CABLES (FILTRO DE COMBUSTIBLE)	178
	180
MAZO DE CABLES, LUCES (DESGARRADOR)	270
MAZO DE CABLES, LUCES (REFLECTORES DELANTEROS)	253
MAZO DE CABLES, LUCES (REFLECTORES DELANTEROS)	263
MAZO DE CABLES, LUCES (REFLECTORES DELANTEROS) (*CYLINDER MOUNTED FLOODLAMPS)	257
MAZO DE CABLES, LUCES (REFLECTORES DELANTEROS) (*CYLINDER MOUNTED LIGHTS)	255
MAZO DE CABLES, LUCES (REFLECTORES DELANTEROS) (LUCES DE CILINDRO)	259
MAZO DE CABLES, LUCES (REFLECTORES TRASEROS)	253
	263
	268
MAZO DE CABLES, LUCES (REFLECTORES TRASEROS) (ROPS)	259
MAZO DE CABLES, LUCES (REFLECTORES TRASEROS) (*ROPS FLOODLAMPS)	257
MAZO DE CABLES-MOTOR (PRELUBRICACIÓN)	83
MAZO DE CABLES (*UNIT INJECTORS)	19
MECANISMO DE VÁLVULAS (GR)	68
MEDIDOR DEL NIVEL DE LÍQUIDO (MIRILLA DE CRISTAL) (ACEITE DEL TANQUE HIDRAULICO)	649
MIRILLA (TANQUE DE AGUA)	120
	123
MODIFICACIÓN DEL TRACTOR TOPADOR (CONFIG)	705
	706
	707
*MODIFICATION AR-RIPPER	741
	742
MONTAJE DE CILINDRO (GR)	633
MONTAJE DE LA ESTRUCTURA ROPS (GR)	838
MONTAJE DE LA RADIO (GR)	836
	837
MONTAJE DE LA TRANSMISIÓN (GR)	370
MONTAJE DEL ALTERNADOR (GR)	53
MONTAJE DEL DESGARRADOR (GR)	743
MONTAJE (GR)-CONDENSADOR	832
	834
MONTAJE Y VALVULA DEL CONTROL PRINCIPAL (GR)	662
MOTOR - NÚCLEO (CONFIG)	13
	14
	15
MOTOR - SOPORTE DEL (GR)	63
	64
	65
MOTOR COMPLETO (CONFIG)	10
	11
	12
MOTOR DE ARRANQUE ELÉCTRICO (GR)	305
	308
	309
	310
MOTOR ELÉCTRICO (GR)	85
MOTOR ELÉCTRICO (GR) (SOPLADOR DEL CONDENSADOR)	784
MOTOR-LIMPIAPARABRISAS (GR) (24 VOLTIOS, 2 VELOCIDADES) (CENTRO, DELANTERO)	881
MOTOR-LIMPIAPARABRISAS (GR) (24 VOLTIOS, 2 VELOCIDADES) (LADO DERECHO, DELANTERO)	881
MOTOR-LIMPIAPARABRISAS (GR) (24 VOLTIOS, 2 VELOCIDADES) (LADO IZQUIERDO, DELANTERO)	881
MOTOR-LIMPIAPARABRISAS (GR) (24 VOLTIOS, 2 VELOCIDADES) (PARTE TRASERA)	881
MOTOR-LIMPIAPARABRISAS (GR) (24 VOLTIOS, 2 VELOCIDADES) (PARTE TRASERA)	884
MOTOR Y BOMBA GR-PRELUBRICACIÓN	85
MÚLTIPLE DE ESCAPE (GR)	151
MÚLTIPLE Y VÁLVULA (GR)	521
	522
MUÑÓN DE LA HOJA TOPADORA (GR)	711

* NO HAY TRADUCCION DISPONIBLE EN EL MOMENTO DE LA IMPRESION

INDICE

Nombre	Página
MUÑÓN DEL MOTOR (GR)	67

N

Nombre	Página
NUCLEO DE RADIADOR (CONJ)	109
	114
	119
NÚCLEO DEL ENFRIADOR DE ACEITE (CONJ)	101
NÚCLEO DEL ENFRIADOR DE ACEITE (CONJ)	549
NÚCLEO DEL ENFRIADOR DE ACEITE (CONJ) (ACEITE DEL MOTOR)	104
NÚCLEO DEL ENFRIADOR DE ACEITE (GR)	101
	104

P

Nombre	Página
PALANCA UNIVERSAL DE CONTROL (GR)	543
	545
PALANCA UNIVERSAL DE CONTROL (GR)	541
PANEL DE FUSIBLES (GR)	271
PANTALLA (CONJ)	725
PANTALLA (CONJ) (*ENGINE, AFTERCOOLER)	155
PANTALLA (CONJ) (*ENGINE, AFTERCOOLER) (*FINE FILTRATION)	155
PANTALLA (CONJ) (TANQUE HIDRÁULICO, RETORNO PRINCIPAL)	649
PANTALLA DEL MONITOR (GR)	794
PEDAL-GRUPO DE CONTROL Y MONTAJE	790
	791
PERILLA DE CONTROL (GR)	575
PERILLA DE CONTROL (GR) (CONTROL DE HOJA TOPADORA)	543
PISTÓN Y BIELA (GR)	56
PISTONES DEL MOTOR (GR)	628
	629
	630
	632
PIVOTE DEL LIMPIADOR (GR)	886
	887
PLACA	704
	708
	709
	721
	754
	755
	757
PLACA DE ADVERTENCIA (CILINDRO PARA ALTA PRESION)	467
PLACA DE ADVERTENCIA (RESORTE DE AMORTIGUACION)	454
	467
PLACA DE IDENTIFICACIÓN DEL MOTOR (GR)	893
PLACA DE INFORMACION (DESGARRADOR AUTOMÁTICO)	547
PLACA DE INFORMACION (24 VOLTIOS)	302
PLACA DE INSTRUCCIONES (ACONDICIONADOR DE AIRE)	764
	765
PLACA DEL NÚMERO DE SERIE (DESGARRADOR)	751
	752
	753
PLACA DEL NÚMERO DE SERIE (HOJA TOPADORA)	695
	696
	697
	698
	699
	700
	701
	702
PLACA DEL NÚMERO DE SERIE (TRANSMISION)	372
PLACA DEL TABLERO (CONTROL DEL LIMPIAPARABRISAS)	844
PLANCHA DE DESGASTE (GR)	745
	746
PLANCHA DE REFUERZO (GR)	453
PLATAFORMA (CONFIG)	849
PLATAFORMA (GR)	850
POSENFRIADOR DE AIRE (GR)	127
	129
PRELUBRICACION DEL MOTOR (CONFIG)	83
PROTECTOR CONTRA ROCAS (GR)	448
	449
PROTECTOR DE LA RUEDA GUÍA (CONFIG)	428
PROTECTOR DE LOS MANDOS FINALES (GR)	437
PROTECTOR DE MANDO FINAL (GR)	428
PROTECTOR DE RUEDA GUÍA	438
PROTECTOR DEL EJE IMPULSOR (GR)	436
PROTECTOR DEL EJE PIVOTE (GR)	439
PROTECTOR DEL RADIADOR (GR)	442
	444
PROTECTOR DEL TREN DE FUERZA (GR)	440
PROTECTOR INFERIOR (GR)	429
	430
	432
PROTECTOR POSTERIOR (GR)	446
PROTECTOR TÉRMICO (GR)	162
PUERTA DE ACCESO (GR)	123
	404

* NO HAY TRADUCCION DISPONIBLE EN EL MOMENTO DE LA IMPRESION

INDICE

Nombre	Página
	405
	406
	407
	408
PUERTA DE ACCESO (GR)	402
PUERTA DE ACCESO (GR) (TAPA DE RADIADOR)	120
PUERTA DE CABINA	795
	796

R

RADIADOR (CONFIG)	109
RADIADOR (GR)	110
	112
	114
	115
	117
	119
RADIO (GR)-COMUNICACION (*PRODUCT LINK 121SR)	243
*RECEIVER GP (*GLOBAL POSITIONING SYSTEM)	245
RECEPTOR-SECADOR (GR) (ACONDICIONADOR DE AIRE)	812
	815
	822
RECEPTOR-SECADOR (REFRIGERANTE)	818
RECLINACION DE ASIENTO (GR)	853
REFLECTOR (GR)	246
	247
	248
	249
	250
REGULADOR DE TEMPERATURA DEL AGUA (92 GRADOS CENTÍGRADOS)	99
REGULADOR DE VOLTAJE (24 VOLTIOS) (ALTERNADOR)	199
REGULADOR Y PEDAL DEL FRENO (GR)	846
REJILLA	205
REJILLA DE SUCCIÓN (ACEITE DE CONVERTIDOR DE PAR)	387
REJILLA DE SUCCIÓN (BARRIDO DE TRANSMISION)	343
REJILLA DE SUCCION (SUMIDERO DE ACEITE DE TREN DE FUERZA)	365
REJILLA (HIDRÁULICO)	649
REJILLA (*IMPLEMENT PILOT OIL)	626
REJILLA PROTECTORA (GR)	855
RELÉ (CONJ) (24 VOLTIOS) (AIRE ACONDICIONADO, CALENTADOR)	336
RELÉ (CONJ) (24 VOLTIOS) (CALENTADOR, ACONDICIONADOR DE AIRE)	799
RELÉ (CONJ) (24 VOLTIOS) (*CONDENSER BLOWER MOTOR)	336
RELÉ (CONJ) (24 VOLTIOS) (MOTOR DE SOPLADOR DE CONDENSADOR)	784
RELÉ (CONJ) (24 VOLTIOS) (*PRESSURIZER, CAB)	336
*RESISTOR GP-CAB HEATER	275
RESORTE TENSOR Y AJUSTADOR DE LA CADENA (GR)	497
RESPIRADERO (CONJ) (EJE PIVOTE, TANQUE DE COMBUSTIBLE)	479
RESPIRADERO (CONJ) (TRANSMISION)	365
RESPIRADERO (GR)	69
RESPIRADERO (TANQUE DE LUBRICACION)	477
RETÉN (GR)	452
RETROVISOR (GR)	829
	830
REVESTIMIENTO DE LA CABINA (GR)	810
RODILLO DE CADENA (CONFIG)	481
RODILLO SUPERIOR DE CADENAS (CONFIG)	481
	482
RODILLOS DE PESTAÑA DOBLE (GR)	483
	484
RODILLOS DE PESTAÑA SIMPLE (GR)	485
	486
RUEDA GUÍA DE CADENA (GR)	469
	470
	472

S

SECCION DE BOMBA DE ENGRANAJE (GR)	643
	645
	647
	648
SEGMENTO DE RUEDA MOTRIZ (GR)	380
SELLO-AISLAMIENTO (TAPA DE VÁLVULA)	68
SELLO (COMBUSTIBLE)	192
SELLO DE CIGÜEÑAL (GR)	26
	46
SELLO DE LABIO	99
SELLO (SEPARADOR DE COMBUSTIBLE Y AGUA)	183
SENSOR DE NIVEL DE COMBUSTIBLE (GR)	207
	215
	280
SENSOR DE PRESIÓN (GR)	284
	285
	286
	287
	288

* NO HAY TRADUCCION DISPONIBLE EN EL MOMENTO DE LA IMPRESION

INDICE

Nombre	Página
	289
	290
	291
SENSOR DE PRESIÓN (GR) (ENTRADA DE TURBOALIMENTADOR)	333
SENSOR DE PRESIÓN (GR) (ENTRADA DE TURBOCOMPRESOR)	326
	330
SENSOR DE TEMPERATURA (GR)	296
	297
	298
	299
SENSOR DE TEMPERATURA (GR) (2 CLAVIJAS)	298
	299
SENSOR DE TEMPERATURA (GR) (2 CLAVIJAS) (COMBUSTIBLE)	178
	180
SENSOR DE VELOCIDAD DE DESPLAZAMIENTO (GR) (*RADAR)	276
SENSOR DE VELOCIDAD (GR)	292
	293
SENSOR DE VELOCIDAD (GR)	294
	295
SENSOR DE VELOCIDAD (GR) (CONVERTIDOR DE PAR)	326
	330
	333
SENSOR DE VELOCIDAD (GR) (MOTOR)	278
SENSOR DE VELOCIDAD (GR) (*TRANSMISSION OUTPUT, LEADING)	373
SENSOR DE VELOCIDAD (GR) (*TRANSMISSION OUTPUT, TRAILING)	372
SENSOR DEL MOTOR (GR)	278
SENSOR Y CILINDRO DE LEVANTAMIENTO (GR)	554
SENSOR Y MONTAJE DE VELOCIDAD DE DESPLAZAMIENTO (GR)	276
*SERVICE GP-COMMUNICATION (*PRODUCT LINK 300)	237
SILENCIADOR (GR)	152
	153
SOFTWARE DE IMPLEMENTO (GR) (*ACCUGRADE)	537
SOFTWARE DEL TREN DE FUERZA (GR) (*ENGINE PRELUBRICATION)	83
SOLENOIDE DEL MOTOR DE ARRANQUE (CONJ)	305
SOLENOIDE PROPORCIONAL (GR) (12-V CD) (VENTILADOR HIDRAULICO)	679
SOPORTE BASCULANTE (GR)	494
	495
SOPORTE DE CONTROL (GR)	523
SOPORTE DE LA HOJA TOPADORA	694
SOPORTE DE MONTAJE (GR)	767
	768
SOPORTE DEL RESPALDO (GR)	841
	842
	843
SUCCIÓN - VENTILADOR DE (GR)	89
*SUPPORT GP-AFTERCOOLER	163
	164
SUSPENSIÓN - ASIENTO CON (GR)	866
	867
SUSPENSIÓN - ASIENTO CON (GR)	865

T

TABLERO DE CONTROL (GR)	844
TANQUE DE EXPANSIÓN (GR)	655
	656
TANQUE DE EXPANSIÓN (GR) (AIRE)	655
	656
TANQUE DE REFRIGERANTE (GR)	120
TANQUE DE REFRIGERANTE (GR)	122
	123
TANQUE DE REFRIGERANTE (GR)	120
	126
TANQUE DEL LAVAPARABRISAS (GR)	872
	874
TANQUE HIDRÁULICO Y MONTAJE (GR)	653
TANQUE Y FILTRO HIDRÁULICOS (GR)	649
TAPA CONTRA LA LLUVIA (CONJ)	136
	137
	139
	797
TAPA DE LA CABINA (GR)	792
TAPA DE LA CAJA TRASERA (GR)	24
TAPA DE LLENADO (CONJ) (LLENADO DEL TANQUE HIDRÁULICO)	365
TAPA DE LLENADO (CONJ) (TANQUE DE COMBUSTIBLE)	195
TAPA DE LLENADO (CONJ) (TANQUE DE LUBRICACION)	477
TAPA DE RADIADOR (CONJ)	122
TAPA DE RADIADOR (CONJ)	126
TAPA DE RODILLO INFERIOR	466
TAPA DE RUEDA GUÍA (GR)	464
	465
TAPA DEL BLOQUE MOTOR (GR)	21
	23
TAPA DEL MUÑÓN (GR)	703
TAPA DEL TAPÓN DEL TANQUE HIDRÁULICO (GR)	550
TAPA DEL TUBO DE LLENADO DE ACEITE (EJE PIVOTE, TANQUE DE COMBUSTIBLE)	479

* NO HAY TRADUCCION DISPONIBLE EN EL MOMENTO DE LA IMPRESION

INDICE

Nombre	Página
TAPA DEL TUBO DE LLENADO (TANQUE HIDRÁULICO)	649
TAPA PARA LLUVIA	205
TAPÓN (CONJ) (LLENADO DE ACEITE DE MOTOR)	72
TAPÓN DE CULATA (GR)	58
TAPÓN DE DRENAJE (AGUA)	90
TAPON DE DRENAJE DE ACEITE	54
TAPÓN DE DRENAJE (LLENADO DEL ACEITE DEL EJE PIVOTE)	467
TAPÓN DE DRENAJE (*PIVOT SHAFT OIL DRAIN)	467
TAPÓN DEL BLOQUE MOTOR (GR)	57
TAPÓN (DRENAJE) (CAJA DE TRANSMISION)	394
	395
TAPÓN MAGNÉTICO (DRENAJE DE ACEITE DE MANDO FINAL)	354
TAPÓN MAGNÉTICO (MANDO FINAL)	360
TAPÓN MAGNÉTICO (MANDO FINAL, LLENADO DE ACEITE)	351
TAPÓN MAGNÉTICO (MANDO FINAL, LLENADO DE ACEITE)	357
TOPE (GR)	518
TORNILLERÍA DE MONT. DE LA BOMBA DE ACEITE (GR)	70
TRANSMISION (CONFIG)	389
TRANSMISIÓN PLANETARIA (GR)	371
TREN DE FUERZA (CONFIG)	375
TREN DE FUERZA-GRUPO ELECTRÓNICO	238
TREN DE RODAJE (CONFIG)	505
	506
TUBERÍAS CON SERVOMANDO (GR)	595
TUBERÍAS DE ACEITE DEL MOTOR (GR)	77
TUBERÍAS DE ACEITE DEL TREN DE FUERZA (GR)	365
TUBERÍAS DE ACONDICIONADOR DE AIRE (GR)	812
	815
	818
	822
TUBERIAS DE CALEFACCION	825
	827
TUBERÍAS DE CILINDRO DE EXTRACTOR DE PASADORES	599
	600
	602
TUBERÍAS DE COMBUSTIBLE (GR)	184
TUBERÍAS DE LA CALEFACCIÓN (GR)	825
	827
TUBERÍAS DE LA HOJA TOPADORA	577
	580
TUBERÍAS DEL AGUA (GR)	90
	101
	104
TUBERÍAS DEL AGUA (GR)	92
	94
	96
	99
TUBERÍAS DEL CILINDRO DE INCLINACIÓN (GR)	611
	614
	616
	618
	621
TUBERÍAS DEL DESGARRADOR (GR)	606
	608
	610
TUBERÍAS DEL FILTRO DE COMBUSTIBLE	187
TUBERIAS DEL MOTOR (GR)	590
	593
TUBERÍAS HIDRÁULICAS DEL VENTILADOR (GR)	584
TUBERÍAS HIDRÁULICAS (GR)	582
TUBO DE LLENADO DE ACEITE (GR)	71
	72
TURBOCOMPRESOR - TUBERÍAS DE ACEITE DEL (GR)	79
TURBOCOMPRESOR (GR)	165
	166
	167
	168

V

VÁLVULA - ESFERA (DRENAJE DE COMBUSTIBLE)	175
VÁLVULA DE ALIVIO (GR)	681
VÁLVULA DE ALIVIO (GR)	392
	393
VÁLVULA DE ALIVIO (GR) (COMPRESOR DEL REFRIGERANTE)	776
VÁLVULA DE ALIVIO (GR) (*MANIFOLD PRESSURE)	625
VÁLVULA DE ALIVIO (GR) (VENTILADOR HIDRAULICO, REVERSA)	623
VÁLVULA DE CAÍDA RÁPIDA (GR)	680
VALVULA DE CONTROL DE INCLINACION (GR)	690
VALVULA DE CONTROL DE LA BOMBA (GR)	679
VÁLVULA DE CONTROL (GR)	665
	666
	670
	672
	674
VÁLVULA DE CONTROL Y MONTAJE (GR)	659

* NO HAY TRADUCCION DISPONIBLE EN EL MOMENTO DE LA IMPRESION

INDICE

Nombre	Página
VÁLVULA DE CORTE (GR) (CALENTADOR DE CABINA)	825
	827
VÁLVULA DE DERIVACIÓN (GR)	676
	677
VÁLVULA DE DERIVACIÓN (GR) (VENTILADOR HIDRAULICO)	623
VÁLVULA DE LANZADERA (GR)	683
VÁLVULA DE MODULACIÓN (GR)	391
VÁLVULA DE RETENCIÓN (GR)	197
	664
VÁLVULA DE SECUENCIA (GR)	682
VÁLVULA DE SOLENOIDE (GR)	526
	527
	684
	685
	686
	687
	688
	689
VALVULA (FILTRO SEPARDOR COMBUSTIBLE/AGUA)	175
VÁLVULA GR-DIRECCIÓN Y CONTROL DE FRENO	528
	530
VÁLVULA REDUCTORA DE PRESIÓN (GR)	678
VÁLVULA Y CILINDRO DE LEVANTAMIENTO (GR)	556
VÁLVULA Y CILINDRO DE LEVANTAMIENTO (GR)	555
VÁLVULA Y MONTAJE DE DIRECCIÓN Y FRENO (GR)	524
VÁLVULA Y MONTAJE DEL VENTILADOR HIDRÁULICO (GR)	660
VENTANA DE LA CABINA (GR)	878
	879
VENTANA DESLIZANTE (GR)	879
	880
VENTANA POSTERIOR (CONJ)	877
VENTILADOR REVERSIBLE (CONFIG)	88
VIDRIO (CONJ) (REFLECTOR)	246
VOLANTE - CAJA DE (GR)	46
VOLANTE (GR)	39

W

*WINDOW GP-CAB	877

Z

ZAPATA DE CADENA	488
	489
ZAPATA-MAESTRA	490
	491
	492
	493

* NO HAY TRADUCCION DISPONIBLE EN EL MOMENTO DE LA IMPRESION

ÍNDICE

Designação	Página
A	
ACOPLAMENTO DA BOMBA	347
ACUMULADOR - REFRIGERANTE	818
	822
ACUMULADOR - REFRIGERANTE (AR CONDICIONADO)	812
	815
ACUMULADOR D ÓLEO - PILOTO	533
ACUMULADOR HIDRÁULICO	532
	590
ADAPTADOR - ABASTECIMENTO RÁPIDO DE COMBUSTÍVEL	169
	171
	173
AJUSTADOR DE ESTEIRAS E MOLA TENSORA	497
AJUSTADOR DO ASSENTO	762
AJUSTADOR DO CONTROLE DA DIREÇÃO E TRANSMISSÃO	507
ALARME	198
ALAVANCA DE CONTROLE	575
ALAVANCA DE CONTROLE (CONTROLE DA LÂMINA)	543
ALTERNADOR DE CORRENTE	199
	201
	203
	205
AMORTECEDOR	36
	37
AQUECEDOR DA ÁGUA DO MOTOR	241
	242
AQUECEDOR DA CABINE	799
	802
	804
AQUECEDOR DO COMBUSTÍVEL	239
ARMAÇÃO DO RIPER	735
	737
	739
ARMAÇÃO TELESCÓPICA DA MOLA TENSORA	467
ARRANJO GERAL	3
ARREFECEDOR DO ÓLEO HIDRÁULICO	549
ASSENTO	857
	859
	860
	862
	863
	864
ASSENTO COM SUSPENSÃO	865
	866
	867
ASSENTO E MONTAGEM	856
ATERRO SANITÁRIO	4
	5
	7
	9
AUXILIAR DE PARTIDA A ÉTER	300
B	
BALANCIM	60
	61
BARRA DE SUSPENSÃO	456
	457
	459
	460
BARRA DE TRAÇÃO	409
BARRA LIMPADORA DOS ROLOS	454
	461
	462
	463
BATERIA	228
BATERIA E CABOS / FIOS ELÉTRICOS	207
BATERIA E CABOS / FIOS ELÉTRICOS	215
	222
BATERIA (12 VOLTS, ISENTO DE MANUTENÇÃO)	207
	215
	222
BATERIA (12 VOLTS, ISENTO DE MANUTENÇÃO) (PARTIDA EM BAIXA TEMP)	302
BATERIA (24 VOLTS)	140
BEIRA - PONTA CORTANTE	731
	732
	733
	734
BLOCO DE EMPUXO	691
	692
	693
BLOCO DO MOTOR	27
	29
	30
BOCAL DE ENCHIMENTO DE ÓLEO	72
BOCAL DE ENCHIMENTO DE ÓLEO DO MOTOR	71
BOMBA DE ÁGUA	107
	108
BOMBA DE ENGRENAGENS	376
	378
	634
	636
BOMBA DE INJEÇÃO DO COMBUSTÍVEL	191
BOMBA DE ÓLEO - MOTOR	86
BOMBA DE PISTÃO	637

* TRADUÇÃO NÃO DISPONÍVEL NO MOMENTO DA IMPRESSÃO

ÍNDICE

Designação	Página
BOMBA DE TRANSFERÊNCIA DO COMBUSTÍVEL	193
BOMBA DO FILTRO SECUNDÁRIO E ESCORVA DO COMBUSTÍVEL	192
BOMBA E MONTAGEM - TRANSFERÊNCIA DE COMBUSTÍVEL	190
BOMBA E MOTOR - PRÉ-LUBRIFICAÇÃO	83 85
BRAÇO DE EMPUXO	708 709
BRAÇO DE EMPUXO - ESTABILIZADOR	710
BRAÇO DO LIMPADOR (DIANTEIRO, CENTRO)	881
BRAÇO DO LIMPADOR (DIREITO, DIANTEIRO)	881
BRAÇO DO LIMPADOR (ESQUERDO, DIANTEIRO)	881
BRAÇO DO LIMPADOR (TRASEIRA, DIREITA)	884
BRAÇO DO LIMPADOR (TRASEIRO, ESQUERDO)	884
BUJÃO - CABEÇA DO CILINDRO	58
BUJÃO - CÓDIGO (IMPLEMENTO)	337
BUJÃO - CÓDIGO (TREM DE FORÇA)	337
BUJÃO - DRENAGEM DO ÓLEO	54
BUJÃO DO BLOCO DO CILINDRO	57
BUJÃO DO DRENO (ÁGUA)	90
BUJÃO DO DRENO (DRENO DO ÓLEO DO EIXO PIVÔ)	467
BUJÃO DO DRENO (ENCHIMENTO DO ÓLEO DO EIXO PIVÔ)	467
BUJÃO MAGNÉTICO (COMANDO FINAL)	360
BUJÃO MAGNÉTICO (COMANDO FINAL, ENCHIMENTO DE ÓLEO)	351 357
BUJÃO MAGNÉTICO (DRENO DO ÓLEO DO COMANDO FINAL)	354
BUZINA (24 VOLTS, TOM BAIXO)	209 217 224

C

Designação	Página
CABEÇOTE DO MOTOR	32 33 35
CABINE	770 771 772 774 839
CABOS/FIOS ELÉTRICOS - CABINE	322
CABOS/FIOS ELÉTRICOS - CONTROLE ELETRÔNICO	324
CABOS/FIOS ELÉTRICOS - INJETOR	341
CABOS/FIOS ELÉTRICOS - MOTOR	326 330 333
CABOS/FIOS ELÉTRICOS - PAINEL (FUSÍVEL)	271
CABOS/FIOS ELÉTRICOS - PLATAFORMA	336
CADEADO (AQUECEDOR DA CABINE)	802
CADEADO (BOCAL DE ENCHIMENTO DE ÓLEO DE TREM DE FORÇA)	421
CADEADO (BOMBA DE ESCORVA DE COMBUSTÍVEL, LIGAR-DESLIGAR)	402
CADEADO (CAIXA DA BATERIA)	302 423
CADEADO (COBERTURA DO MOTOR)	17 411 417 419 450
CADEADO (COMPARTIMENTO PARA PUBLICAÇÕES)	1
CADEADO (DRENAGAM DO TANQUE DE COMBUSTÍVEL)	175
CADEADO (ENCHIMENTO DO TANUQE HIDRÁULICO)	550
CADEADO (PROTETOR CONTRA VANDALISMO)	16
CADEADO (TANQUE DE COMBUSTÍVEL)	194
CAIXA - SUSPENSÃO DO ASSENTO	805
CAIXA DE ARMAZENAMENTO	766
CAIXA DIANTEIRA	47
CAIXA DO VOLANTE DO MOTOR	46
CAIXA E CHASSI	394 395
CAIXA TRASEIRA	48
CAPÔ E PROTETOR	450
CARCAÇA DAS ENGRENAGENS PLANETÁRIAS E COMPONENTES	343
CÁRTER DO ÓLEO DO MOTOR	54
CHASSI	1
CHAVE GERAL	313
CHAVE GERAL (BATERIA)	207 215
CHICOTE - CABINE	322
CHICOTE - CABOS ELÉTRICOS (FERRITA)	140
CHICOTE - CABOS ELÉTRICOS (LAVADOR DE VIDROS)	872
CHICOTE - CABOS ELÉTRICOS (PARTIDA SEM INJEÇÃO)	326 330 333

* TRADUÇÃO NÃO DISPONÍVEL NO MOMENTO DA IMPRESSÃO

ÍNDICE

Designação	Página
CHICOTE - CABOS ELÉTRICOS (SENSOR DE VELOCIDADE)	293
CHICOTE - CHASSI	224
CHICOTE - CHASSI (PÁRA-LAMA, DIREITO)	208, 216, 222
CHICOTE - CHASSI (PÁRA-LAMA, ESQUERDO)	208, 216, 223
CHICOTE - CHASSI (PROTETOR DO RADIADOR)	208, 216
CHICOTE - CONSOLO (DIREÇÃO, TRANSMISSÃO)	514
CHICOTE - CONSOLO (LADO DIREITO)	336
CHICOTE - ILUMINAÇÃO (FARÓIS DIANTEIROS)	263
CHICOTE - ILUMINAÇÃO (FARÓIS DIANTEIROS)	253
CHICOTE - ILUMINAÇÃO (FARÓIS DIANTEIROS) (FARÓIS MONTADOS NO CILINDRO)	257
CHICOTE - ILUMINAÇÃO (FARÓIS DIANTEIROS) (LUZES DO CILINDRO)	259
CHICOTE - ILUMINAÇÃO (FARÓIS DIANTEIROS) (LUZES MONTADAS NO CILINDRO)	255
CHICOTE - ILUMINAÇÃO (HOLOFOTE TRASEIRO)	263, 268
CHICOTE - ILUMINAÇÃO (HOLOFOTE TRASEIRO)	253
CHICOTE - ILUMINAÇÃO (HOLOFOTE TRASEIRO) (FARÓIS DA ROPS)	257
CHICOTE - ILUMINAÇÃO (HOLOFOTE TRASEIRO) (ROPS)	259
CHICOTE - ILUMINAÇÃO (RÍPER)	270
CHICOTE - MONITOR	140
CHICOTE - MONITOR (CONSULTOR)	337
CHICOTE - MOTOR	326, 333
CHICOTE - MOTOR (MOTOR)	330
CHICOTE - PAINEL DE INSTRUMENTOS	337
CHICOTE - PLATAFORMA	336
CHICOTE - SENSOR (MÓDULO DE CONTROLE ELETRÔNICO)	324
CHICOTE - SENSOR (VELOCIDADE DE SAÍDA DA TRANSMISSÃO)	372
CHICOTE - SOLENÓIDE (LÂMINA, RÍPER, INCLINAÇÃO DA LÂMINA)	595
CHICOTE - TRANSMISSÃO	208, 217, 223, 345
CHICOTE - VÁLVULA (COMPRESSOR DE AR DO ASSENTO)	870
CHICOTE (FILTRO DE COMBUSTÍVEL)	178, 180
CHICOTE (UNIDADES INJETORAS)	19
CILINDRO - LEVANTAMENTO DA LÂMINA	560
CILINDRO DE ÉTER	300
CILINDRO DE INCLINAÇÃO	571, 573
CILINDRO DE INCLINAÇÃO DO RÍPER	569
CILINDRO DE INCLINAÇÃO DUAL	558
CILINDRO DE LEVANTAMENTO	562
CILINDRO DE LEVANTAMENTO DO RIPER	564, 566
CILINDRO DE LEVANTAMENTO E SENSOR	554
CILINDRO DE LEVANTAMENTO E TUBOS	551, 552, 553
CILINDRO DE LEVANTAMENTO (LÂMINA)	555
CILINDRO DO SACADOR DE PINO DO RIPER	568
CILINDRO DUPLO DE INCLINAÇÃO	557
CILINDRO E VÁLVULA DE LEVANTAMENTO	555, 556
CINTO DE SEGURANÇA (RETRÁTIL)	859
CINZEIRO (CABINE)	792
CLIMA FRIO - ARRANJO	2, 3
COBERTURA DO MOTOR	411, 413, 414, 415, 416, 417, 419
COLETOR - CONTROLE	623, 625, 626
COLETOR DE ESCAPE	151
COLETOR E VÁLVULA	521, 522
COLMÉIA - ARREFECEDOR DE ÓLEO	101, 104, 549
COLMÉIA - ARREFECEDOR DE ÓLEO (ÓLEO DO MOTOR)	104
COLMÉIA (AR CONDICIONADO)	779, 781
COLMEIA DO RADIADOR	109

* TRADUÇÃO NÃO DISPONÍVEL NO MOMENTO DA IMPRESSÃO

ÍNDICE

Designação	Página
	114
	119
COMANDO FINAL	351
	354
	357
	360
COMANDO HIDRÁULICO	576
COMPRESSOR DE AR - ASSENTO	763
COMPRESSOR DE REFRIGERANTE	776
	777
CONDENSADOR DE REFRIGERANTE	784
CONDENSADOR DO REFRIGERANTE E MONTAGEM	779
	781
	783
CONDICIONADOR DE AR	764
	765
CONEXÃO - ELÉTRICA	229
CONSOLE DO OPERADOR	787
CONTRAPESO	397
	398
	400
CONTROLE - ALAVANCA	541
	543
	545
CONTROLE - AQUECIMENTO E AR CONDICIONADO	844
CONTROLE - EXTRATOR DO PINO HIDRÁULICO	535
CONTROLE - NÃO PROGRAMADO	234
CONTROLE - NÃO PROGRAMADO (IMPLEMENTO)	337
CONTROLE - NÃO PROGRAMADO (MONITOR)	337
CONTROLE - NÃO PROGRAMADO (PRODUCT LINK 121SR)	243
CONTROLE - NÃO PROGRAMADO (TREM DE FORÇA)	337
CONTROLE-CABO	538
	540
CONTROLE DE DIREÇÃO	513
CONTROLE DE DIREÇÃO E TRANSMISSÃO	514
	516
	517
CONTROLE DE INCLINAÇÃO DUPLA	534
CONTROLE DO ACESSÓRIO E MONTAGEM	789
CONTROLE DO PEDAL E MONTAGEM	790
	791
CONTROLE ELETRÔNICO	231
	337
CONTROLE ELETRÔNICO - MOTOR	232
	233
CONTROLE ELETRÔNICO E MONTAGEM - MOTOR	230
CONTROLE ELETRÔNICO (LUZ DO PAINEL DE INSTRUMENTOS)	844
CONTROLE HIDRÁULICO	537
CONTROLE HIDRÁULICO DA TRANSMISSÃO	345
CONTROLE-RÍPER	547
CONVERSOR DE TORQUE	383
	385
	387
CONVERSOR ELÉTRICO	235
COROA E ENGRENAGEM DE TRANFERÊNCIA	363
CORREIA EM V (ALTERNADOR)	201
	203
	205
CORREIA EM V (POLIA DO COMPRESSOR)	777
CRUZETA E MANCAL	390

D

Designação	Página
DECALQUE - ADVERTÊNCIA (ACUMULADOR)	532
	533
DECALQUE - ADVERTÊNCIA (ALTA PRESSÃO, CONSULTAR OMM, ANSI)	890
DECALQUE - ADVERTÊNCIA (ALTA PRESSÃO, LER OMM, ISO)	892
DECALQUE - ADVERTÊNCIA (CHOQUE ELÉTRICO)	892
DECALQUE - ADVERTÊNCIA (MOLA COMPRIMIDA, CONSULTAR OMM)	467
DECALQUE - ADVERTÊNCIA (NÃO SOLDAR, NÃO PERFURAR, CONSULTAR OMM)	890
DECALQUE - ADVERTÊNCIA (PARTIDA COM CABO AUXILIAR, CONSULTAR OMM)	890
DECALQUE - ADVERTÊNCIA (PARTIDA COM CABO AUXILIAR, CONSULTAR OMM)	303
DECALQUE - ADVERTÊNCIA (PERIGO DE CHOQUE)	890
DECALQUE - ADVERTÊNCIA (*PRODUCT LINK 300, ANSI)	243
DECALQUE - AVISO (RÁDIO)	808
DECALQUE - IDENTIFICAÇÃO (BOMBA DE PRÉ-LUBRIFICAÇÃO)	83
DECALQUE - IDENTIFICAÇÃO (INCLINAÇÃO DUPLA)	534
DECALQUE - IDENTIFICAÇÃO (LÂMINA AUTOMÁTICA)	534
DECALQUE - IDENTIFICAÇÃO (NÚMERO DE GRUPO) (CONDENSADOR DO REFRIGERANTE)	784

* TRADUÇÃO NÃO DISPONÍVEL NO MOMENTO DA IMPRESSÃO

ÍNDICE

Designação	Página
DECALQUE - IDENTIFICAÇÃO (12-VOLTS)	888
DECALQUE - INFORMAÇÕES (RÍPER AUTOMÁTICO)	547
DECALQUE - INFORMAÇÕES (24 VOLTS)	302
DECALQUE - INSTRUÇÃO (AJUSTE DO ASSENTO)	868 870
DECALQUE - INSTRUÇÃO (CONTROLE DO RÍPER)	789
DECALQUE - INSTRUÇÃO (FLUIDO LAVADOR)	890
DECALQUE - INSTRUÇÃO (ÓLEO DO MOTOR)	890
DECALQUE - MANUSEADOR DE DETRITOS	5 7 9
DECALQUE - PAINEL (CONTROLE DO LIMPADOR DE VIDROS)	844
DEFLETOR TÉRMICO DE CALOR	162
DENTE DO RÍPER	758 759 760 761
DESMATAMENTO - PROTETOR	434 435
DISJUNTOR AUTOMÁTICO DE CIRCUITO (15 AMPERES)	812 818
DISJUNTOR AUTOMÁTICO DE CIRCUITO (15 AMPERES) (POTÊNCIA PRINCIPAL)	271
DRENO - ECOLOGIA	348

E

EIXO-COMANDO DE VÁLVULA	20
EIXO DE TRANSMISSÃO	381
EIXO PIVÔ - LUBRIFICAÇÃO	479
EJETOR DE POEIRA	135 136 137 139
ELEMENTO - AQUECEDOR DE ÁGUA DA CAMISA (120 VOLTS, 1500 WATTS)	241
ELEMENTO - AQUECEDOR DE ÁGUA DA CAMISA (240 VOLTS, 1500 WATTS)	242
ELEMENTO - RESPIRO (CÁRTER DO MOTOR)	69
ELEMENTO DO FILTRO DE AR (CABINE)	802
ELEMENTO FILTRANTE - ÓLEO (CARREGAMENTO DA TRANSMISSÃO)	365
ELEMENTO FILTRANTE - ÓLEO (CARREGANDO O CONVERSOR DE TORQUE)	365
ELEMENTO FILTRANTE - ÓLEO (EFICIÊNCIA AVANÇADA)	649
ELEMENTO FILTRANTE - ÓLEO (EFICIÊNCIA PADRÃO)	649
ELEMENTO FILTRANTE - ÓLEO (EFICIÊNCIA ULTRA ALTA)	649
ELEMENTO FILTRANTE - ÓLEO (FLUIDO RESISTENTE A FOGO)	649
ELEMENTO FILTRANTE - ÓLEO (TRANSMISSÃO)	349
ELEMENTO FILTRANTE - PURIFICADOR DE AR	132
ELEMENTO FILTRANTE (FLUXO INVERTIDO, DESCARTÁVEL)	649
ELIMINAÇÃO DE VAPORES DO CÁRTER	75
ELO DA ESTEIRA	473 474 475 476
ELO ESTABILIZADOR	704
EMBREAGEM DE DIREÇÃO E FREIOS	509 511
EMISSOR - POSIÇÃO	281 282 283
EMISSOR - POSIÇÃO (INCLINAÇÃO DA LÂMINA)	541 543 545
EMISSOR - POSIÇÃO (LÂMINA)	283
EMISSOR - POSIÇÃO (LEVANTAMENTO DA LÂMINA, INFERIOR)	541 543 545
EMISSOR - POSIÇÃO (LEVANTAR, ABAIXAR RÍPER)	547
EMISSOR - POSIÇÃO (PEDALDO FREIO DE SERVIÇO)	846
EMISSOR - POSIÇÃO (PORTA-DENTE DO RÍPER - RETRAIR, ESTENDER)	547
EMISSOR - POSIÇÃO (TRANSMISSÃO - CONTRÔLE DAS MARCHAS)	514
ENGRENAGENS DE COMANDO TRASEIRO	42 44
ENGRENAGENS DE DISTRIBUIÇÃO	40
ENGRENAGENS PLANETÁRIAS - TRANSMISSÃO	371
ESPELHO RETROVISOR	829 830
ESTEIRA	499 500 501 502

* TRADUÇÃO NÃO DISPONÍVEL NO MOMENTO DA IMPRESSÃO

ÍNDICE

Designação	Página
	503
	504
	505
ESTRUTURA ROPS	854
EXTENSÃO - ENCOSTO (TECIDO)	859
EXTENSÃO - ENCOSTO (VINIL)	862

F

FAROL DIANTEIRO	251
FIAÇÃO - AQUECEDOR E AR CONDICIONADO	799
	818
FIAÇÃO - AQUECEDOR E AR CONDICIONADO (COMPRESSOR)	812
	815
	818
FIAÇÃO - AQUECEDOR E AR CONDICIONADO (COMPRESSOR)	822
FIAÇÃO - AQUECEDOR E AR CONDICIONADO (CONDENSADOR)	818
FIAÇÃO - AQUECEDOR E AR CONDICIONADO (MOTORES DO SOPRADOR DO CONDENSADOR)	784
FIAÇÃO - CONTROLE	140
FIAÇÃO - CONTROLE (CARREGAMENTO AUTOMÁTICO)	140
	276
FIAÇÃO - CONTROLE (CARREGAMENTO AUTOMÁTICO) (SENSOR, VÁLVULA)	276
FIAÇÃO - CONTROLE (PRODUCT LINK)	243
FIAÇÃO - INTERRUPTOR (FREIO DE SERVIÇO)	846
FIAÇÃO - PAINEL (FUSÍVEL)	271
FIAÇÃO ELÉTRICA	140
FIAÇÃO ELÉTRICA (LUZ DE SERVIÇO SOB O CAPÔ)	224
FIAÇÃO-MOTOR (PRÉ-LUBRIFICAÇÃO)	83
FILTRO - AR (ALTA EFICIÊNCIA)	797
FILTRO - AR (ALTA EFICIÊNCIA) (CABINE)	802
FILTRO - AR DA CABINE	797
FILTRO - AR (PADRÃO) (CABINE)	802
FILTRO - COMBUSTÍVEL	178
	180
	183
	195
FILTRO - COMBUSTÍVEL (ALTA EFICIÊNCIA)	178
	180
FILTRO - ESPUMA (TANQUE DE COMBUSTÍVEL)	207
	215
FILTRO - ESPUMA (TANQUE DE COMBUSTÍVEL)	222
FILTRO - ÓLEO	349
	595
FILTRO - ÓLEO DO MOTOR	73
FILTRO - ÓLEO (ÓLEO PILOTO DO IMPLEMENTO)	595
FILTRO (BOMBA D'ÁGUA)	107
FILTRO DE COMBUSTÍVEL E SEPARADOR DE ÁGUA	183
FILTRO E TUBOS - COMBUSTÍVEL	175
FILTRO SECUNDÁRIO	192
FILTRO (SENSOR DE PRESSÃO ATMOSFÉRICA)	278
FIXADORES - BOMBA DE ÓLEO DO MOTOR	70
FIXADORES - CABEÇOTE DO MOTOR	33
	38
FUNDO - ENCOSTO	841
	842
	843
FUSÍVEL (10 AMPERES)	271
FUSÍVEL (15 AMPERES)	271
	275
FUSÍVEL (175 AMPÈRES) (ALTERNADOR PRINCIPAL)	271
FUSÍVEL (20-AMPERES)	271

G

GR. BÁSICO - TAMPA DAS VÁLVULAS E CHICOTE DE INJEÇÃO	18
	19
GRUPO DE CONVERSÃO - LÂMINA	705
	706
	707
GRUPO DE INSTALAÇÃO - MOTOR	16
	17
GRUPO ROTATIVO DA BOMBA	640
	641

I

ILUMINAÇÃO - RÍPER	270
INDICADOR - NÍVEL DE LÍQUIDO (VISOR DE VIDRO) (ÓLEO DO TANQUE HIDRÁULICO)	649
INDICADOR - NÍVEL DO ÓLEO (VARETA)	76
INDICADOR - VARETA DO NÍVEL DE ÓLEO (CAIXA DE TRANSMISSÃO)	365
INSTALAÇÃO-COMUNICAÇÃO	243
INSTALAÇÃO-CONTROLE DA INCLINAÇÃO	245
INSTALAÇÃO DO RÁDIO	808
INTERRUPTOR - BALANCIM	320

* TRADUÇÃO NÃO DISPONÍVEL NO MOMENTO DA IMPRESSÃO

ÍNDICE

Designação	Página
INTERRUPTOR - BALANCIM (ACELERADOR)	337
INTERRUPTOR - BALANCIM (CARREGAMENTO AUTOMÁTICO)	276
INTERRUPTOR - BALANCIM (CILINDRO DE DUPLA INCLINAÇÃO)	534
INTERRUPTOR - BALANCIM (CONDICIONADOR DE AR, LIGAR-DESLIGAR)	844
INTERRUPTOR - BALANCIM (EXTRATOR DO PINO HIDRÁULICO)	535
INTERRUPTOR - BALANCIM (FARÓIS DA ROPS)	257
INTERRUPTOR - BALANCIM (FARÓIS DIANTEIROS)	253
INTERRUPTOR - BALANCIM (FARÓIS TRASEIROS)	253
INTERRUPTOR - BALANCIM (FARÓIS,CILINDRO)	259
INTERRUPTOR - BALANCIM (FARÓIS,ROPS)	259 263
INTERRUPTOR - BALANCIM (FLUXO DO CILINDRO)	263
INTERRUPTOR - BALANCIM (FREIO DE ESTACIONAMENTO)	514
INTERRUPTOR - BALANCIM (LÂMINA AUTOMÁTICA)	534
INTERRUPTOR - BALANCIM (LEVANTAMENTO, ABAIXAMENTO DO CONSOLE)	507
INTERRUPTOR - BALANCIM (LUZ DE SERVIÇO SOB O CAPÔ)	207 215 222
INTERRUPTOR - BALANCIM (LUZ DO CILINDRO)	337
INTERRUPTOR - BALANCIM (LUZ DO PARA-CHOQUE)	337
INTERRUPTOR - BALANCIM (LUZES DE TRABALHO DIANTEIRAS)	268
INTERRUPTOR - BALANCIM (LUZES TRASEIRAS DE TRABALHO)	268
INTERRUPTOR - BALANCIM (MUDANÇA AUTOMÁTICA PARA MARCHA MAIS BAIXA)	337
INTERRUPTOR - BALANCIM (MUDANÇA BIDIRECIONAL)	337
INTERRUPTOR - BALANCIM (PURGA MANUAL DO VENTILADOR INVERTIDO)	88
INTERRUPTOR - BALANCIM (TRAVA DO IMPLEMENTO)	337
INTERRUPTOR - BOTÃO (EMPILHAMENTO AUTOMÁTICO DO RÍPER)	547
INTERRUPTOR - BOTÃO (INCLINAÇÃO DA LÂMINA)	538
INTERRUPTOR - BOTÃO (MUDANÇA MARCHAS ACIMA)	523
INTERRUPTOR - BOTÃO (REDUÇÃO DE MARCHA)	523
INTERRUPTOR - FLUXO	314 315
INTERRUPTOR - LIMITADOR (AVANTE, RÉ)	513
INTERRUPTOR - LIMITADOR (LUZ DO TETO)	322
INTERRUPTOR - LIMITADOR (PEDALDO FREIO DE SERVIÇO)	846
INTERRUPTOR - LIMPADOR (24 VOLTS) (INTERMITENTE TRASEIRA)	844
INTERRUPTOR - LIMPADOR (24 VOLTS) (PISCA-PISCA DIANTEIRA)	844
INTERRUPTOR - LIMPADOR (24 VOLTS) (PORTA - LADO ESQUERDO)	844
INTERRUPTOR - LIMPADOR (24 VOLTS) (PORTA-LADO DIREITO)	844
INTERRUPTOR - MAGNÉTICO	316 317
INTERRUPTOR - MAGNÉTICO (24 VOLTS) (RELÉ PRINCIPAL)	271
INTERRUPTOR - PARTIDA (CHAVE)	337
INTERRUPTOR - PRESSÃO	318 818
INTERRUPTOR - PRESSÃO (COMPRESSOR DO CONDICIONADOR DE AR)	818
INTERRUPTOR - PRESSÃO (COMPRESSOR DO REFRIGERANTE, LADO INFERIOR)	822
INTERRUPTOR - PRESSÃO (COMPRESSOR, LADO ALTO)	812 815
INTERRUPTOR - PRESSÃO (COMPRESSOR, LADO BAIXO)	812 815
INTERRUPTOR - PRESSÃO (DERIVAÇÃO DE RETORNO DO TANQUE DO IMP/VENTILADOR)	224
INTERRUPTOR - PRESSÃO (LADO ALTO)	822
INTERRUPTOR - PRESSÃO (TANQUE HIDRÁULICO)	209 217
INTERRUPTOR - ROTATIVO (CONTROLE DO AR CONDICIONADO)	844
INTERRUPTOR - TEMPERATURA (AQUECEDOR, AR CONDICIONADO)	799
INTERRUPTOR-BOTÃO	319
INTERRUPTOR DE DERIVAÇÃO	312
INTERRUPTOR (LUZ DO TETO)	322

* TRADUÇÃO NÃO DISPONÍVEL NO MOMENTO DA IMPRESSÃO

ÍNDICE

Designação	Página

J

JANELA DA CABINE 878
879
JOGO - PRÉ-PURIFICADOR (TURBINA) 156
158
161
JOGO DE ABRAÇADEIRA DO PURIFICADOR DE AR 132
JOGO DE AMORTECEDOR DE CHOQUES (ASSENTO DA SUSPENSÃO) 870
JOGO DE BLOCO DESLIZADOR (ASSENTO DA SUSPENSÃO) 865
866
867
JOGO DE BOMBA (PRÉ-LUBRIFICAÇÃO) 85
JOGO DE BOTÃO DE SUSPENSÃO (AJUSTE DE ALTURA) (ASSENTO DA SUSPENSÃO) 805
JOGO DE CORDÃO (ASSENTO DA SUSPENSÃO) 870
JOGO DE FILTRO DA TAMPA (TANQUE DE COMBUSTÍVEL) 195
JOGO DE FIXADORES (ALTERNADOR) 199
JOGO DE INDICADOR (AJUSTAGEM DO PESO) (ASSENTO DA SUSPENSÃO) 806
JOGO DE INSTALAÇÃO 140
JOGO DE INSTALAÇÃO (PRÉ-PURIFICADOR DA TURBINA) 161
JOGO DE MANCAL (ALTERNADOR) 199
JOGO DE MANCAL (ASSENTO DA SUSPENSÃO) 806
JOGO DE MANCAL (GRUPO ROTAÇÃO MOTOR) 641
JOGO DE MOLA (AJUSTE DE ALTURA) (ASSENTO DA SUSPENSÃO) 805
JOGO DE MOLA (ASSENTO DA SUSPENSÃO) 805
JOGO DE PÁRA-CHOQUE (AJUSTAGEM DO PESO) (ASSENTO DA SUSPENSÃO) 806
JOGO DE RETENTOR 487
880
JOGO DE RETENTOR (BOMBA DA ENGRENAGEM) 634
643
645
647
JOGO DE RETENTOR (BOMBA DA ENGRENAGEM) (IMPLEMENTO) 636
648
JOGO DE RETENTOR (JANELA) 879
JOGO DE RETENTOR (LEVANTAMENTO) 560
JOGO DE RETENTOR (MOTOR DO PISTÃO) (VENTILADOR HIDRÁULICO) 628
JOGO DE RETENTOR (MOTOR DO PISTÃO) (VENTILDOR INVERTIDO) 629
JOGO DE RETENTOR (VALVULA DE ALIVIO) . . . 681
JOGO DE RETENTOR (VALVULA DE ALIVIO) . . . 625
JOGO DE RETENTOR (VALVULA DE ALIVIO) (VENTILADOR HIDRÁULICO, INVERSÃO) . . . 623
JOGO DE RETENTOR (VÁLVULA DE DESVIO) (VÁLVULA DESVIADORA) 677
JOGO DE RETENTOR (VÁLVULA DE DESVIO) (VENTILADOR HIDRÁULICO, INVERSÃO) . . . 623
JOGO DE RETENTOR (VÁLVULA DE RETENÇÃO) 664
JOGO DE RETENTOR (VÁLVULA DE RETENÇÃO) (VENTILADOR HIDRÁULICO, INVERSÃO) . . . 584
JOGO DE RETENTOR (VÁLVULA DE SEQÜÊNCIA) 682
JOGO DE RETENTOR (VÁLVULA SOLENÓIDE) 526
684
685
686
687
688
689
JOGO DE RETENTOR (VIDRO TRASEIRO) 877
JOGO DE SEGUIDOR (ASSENTO DA SUSPENSÃO) 806
JOGO DE TERMINAL (ALTERNADOR) 199
JOGO DE TERMINAL (MOTOR DE PARTIDA) . . . 306
JOGO DE TERMINAL (TRAVA) 271
JOGO DE VÁLVULA DE AR (ASSENTO DA SUSPENSÃO) 870
JUNTA CORREDIÇA 382
JUNTA UNIVERSAL 390

L

LÂMINA DO LIMPADOR DE PÁRA-BRISA (DIANTEIRO) 881
LÂMINA DO LIMPADOR DE PÁRA-BRISA (LATERAL) 881
LÂMINA DO LIMPADOR DE PÁRA-BRISA (TRASEIRA DIREITA, ESQUERDA) 884
LÂMINA DO LIMPADOR DE PÁRA-BRISA (TRASEIRO) 881
LÂMINA E BORDA - UNIVERSAL 712
713
714
715
716

* TRADUÇÃO NÃO DISPONÍVEL NO MOMENTO DA IMPRESSÃO

ÍNDICE

Designação	Página
LÂMINA E BORDA CORTANTE SEMI-UNIVERSAL	712
LÂMINA SEMI-UNIVERSAL	695
	696
	697
	698
	717
	719
	726
	727
LÂMINA UNIVERSAL	699
	700
	701
	702
	721
	722
	723
	724
	725
	728
	730
LÂMPADA - FAROL	246
	247
	248
	249
	250
LÂMPADA - FAROL (24 VOLTS, 70 WATTS)	249
	250
LÂMPADA - HALOGÊNEO (24 VOLTS, 65 WATTS)	246
	247
	251
LÂMPADA - HALOGÊNEO (24 VOLTS, 65 WATTS) (FAROL)	248
LÂMPADA DO TETO (24 VOLTS)	322
LÂMPADA INDICADORA (LUZ DE AÇÃO)	336
LÂMPADA (24 VOLTS) (AÇÃO TRASEIRA)	336
LÂMPADA (24 VOLTS, 21 WATTS) (TETO)	322
LAVADOR DO VIDRO	875
LENTE (FAROL)	246
LEVANTAMENTO DO MOTOR	49
LIMPADOR DO VIDRO	881
	884
LUBRIFICAÇÃO-BARRA EQUALIZADORA	477

M

MATERIAL RODANTE	505
	506
MECANISMO DAS VÁLVULAS	68
MECANISMO DAS VÁLVULAS E BOMBA DE COMBUSTÍVEL	51
	52
MECANISMO DE DIREÇÃO	519
	520
MINERAÇÃO	3
MODIFICAÇÃO-RÍPER	741
	742
MONTAGEM - ALTERNADOR	53
MONTAGEM - CABINE	831
MONTAGEM - CILINDRO	633
MONTAGEM - CONDENSADOR	832
	834
MONTAGEM - ESTRUTURA ROPS	838
MONTAGEM - RÁDIO	836
	837
MONTAGEM - RIPER	743
MONTAGEM - TRANSMISSÃO	370
MOTOR - LIMPADOR DO VIDRO (24 VOLTS, 2 VELOCIDADES) (CENTRO, DIANTEIRO)	881
MOTOR - LIMPADOR DO VIDRO (24 VOLTS, 2 VELOCIDADES) (DIREITO, DIANTEIRO)	881
MOTOR - LIMPADOR DO VIDRO (24 VOLTS, 2 VELOCIDADES) (ESQUERDO, DIANTEIRO)	881
MOTOR - LIMPADOR DO VIDRO (24 VOLTS, 2 VELOCIDADES) (TRASEIRO)	884
MOTOR - LIMPADOR DO VIDRO (24 VOLTS, 2 VELOCIDADES) (TRASEIRO)	881
MOTOR - NÚCLEO	13
	14
	15
MOTOR - PISTÃO	628
	629
	630
	632
MOTOR COMPLETO	10
	11
	12
MOTOR DO GRUPO ROTATIVO	639
MOTOR E BOMBA-PRÉ-LUBRIFICAÇÃO	85
MOTOR ELÉTRICO	85
MOTOR ELÉTRICO (COMPRESSOR DO CONDENSADOR)	784
MOTOR ELÉTRICO DE PARTIDA	305
	308
	309
	310
MUNHÃO DA LÂMINA	711
MUNHÃO DO MOTOR	67

* TRADUÇÃO NÃO DISPONÍVEL NO MOMENTO DA IMPRESSÃO

ÍNDICE

Designação	Página
O	
ÓLEO - ARRANJO PARA TROCA RÁPIDA	81
P	
PAINEL DE CONTROLE	844
PAINEL DE FUSÍVEIS	271
PÁRA-LAMA	421
	423
	426
	427
PARTIDA EM TEMPO FRIO - ARRANJO	302
PEDAL - GOVERNADOR E FREIO	846
PILHA DE MATERIAL	4
PISO	849
PISTÃO E BIELA	56
PIVÔ DO LIMPADOR	886
	887
PLACA - IDENTIFICAÇÃO DO MOTOR	893
PLACA - NÚMERO DE SÉRIE (LÃMINA)	695
	696
	697
	698
	699
	700
	701
	702
PLACA - NÚMERO DE SÉRIE (RÍPER)	751
	752
	753
PLACA - NÚMERO DE SÉRIE (TRANSMISSÃO)	372
PLACA DE ADVERTÊNCIA (CILINDRO DE ALTA PRESSÃO)	467
PLACA DE ADVERTÊNCIA (MOLA TENSORA)	454
	467
PLACA DE DESGASTE	745
	746
PLACA DE INSTRUÇÃO (CONDICIONADOR DE AR)	764
	765
PLACA E DECALQUE	888
	891
	892
PLACA-REFORÇO	453
PLACA/CHAPA	704
	708
	709
	721
	754
	755
	757
PLATAFORMA	850
POLIA DO VIRABREQUIM	59
PORTA DA CABINE	795
	796
PORTA DE ACESSO	123
	402
	404
	405
	406
	407
	408
PORTA DE ACESSO (TAMPA DO RADIADOR)	120
PÓS-ARREFECEDOR DA ADMISSÃO DE AR	127
	129
POSTO DE CONTROLE/CONSOLE DIANTEIRO	786
PRÊ-LUBRIFICAÇÃO	83
PRÉ-PURIFICADOR	154
	160
	161
PRÉ-PURIFICADOR (AR DA CABINE)	797
PRÉ-PURIFICADOR-TURBINA	155
	158
PROTETOR - COMANDO FINAL	428
PROTETOR - EIXO DE TRANSMISSÃO	436
PROTETOR - EIXO PIVÔ	439
PROTETOR - RADIADOR	442
	444
PROTETOR - ROCHA	448
	449
PROTETOR - RODA-GUIA	428
	438
PROTETOR - TRASEIRO	446
PROTETOR - TREM DE FORÇA	440
PROTETOR CONTRA CHUVA	136
	137
	139
	797
PROTETOR DO COMANDO FINAL	437
PROTETOR INFERIOR	429
	430
	432
PURIFICADOR DE AR	131
	132
	133
R	
RADIADOR	109
	110
	112
	114

* TRADUÇÃO NÃO DISPONÍVEL NO MOMENTO DA IMPRESSÃO

ÍNDICE

Designação	Página
	115
	117
	119
RÁDIO - COMUNICAÇÃO (PRODUCT LINK 121SR)	243
RECEPTOR - SECADOR (CONDICIONADOR DE AR)	812
	815
	822
RECEPTOR-SECADOR (REFRIGERANTE)	818
RECEPTOR (SISTEMA DE POSICIONAMENTO GLOBAL)	245
RECLINAÇÃO - ASSENTO	853
REGULADOR DE TEMPERATURA DA ÁGUA (92 GRAUS C)	99
REGULADOR DE VOLTAGEM (24 VOLTS) (ALTERNADOR)	199
RELÉ (CONJ) (24 VOLTS) (AQUECEDOR, AR CONDICIONADO)	799
RELÉ (CONJ) (24 VOLTS) (CONDICIONADOR DE AR, AQUECEDOR)	336
RELÉ (CONJ) (24 VOLTS) (MOTOR DO VENTILADOR DO CONDENSADOR)	336
	784
RELÉ (CONJ) (24 VOLTS) (PRESSURIZADOR, CABINE)	336
RESISTOR-AQUECEDOR DA CABINE	275
RESPIRO	69
RESPIRO (TANQUE DE LUBRIFICAÇÃO)	477
RESPIRO (TANQUE DE ÓLEO DO EIXO PILOTO)	479
RESPIRO (TRANSMISSÃO)	365
RETEM	518
RETÉM - CONTROLE (INCLINAÇÃO DA LÂMINA)	541
	543
	545
RETÉM - CONTROLE (LEVANTAMENTO DA LÂMINA, INFERIOR)	541
RETÉM - CONTROLE (LEVANTAMENTO DA LÂMINA, INFERIOR)	543
	545
RETENTOR - ISOLAMENTO (MECANISMO DAS VÁLVULAS - TAMPA)	68
RETENTOR (COMBUSTÍVEL)	192
RETENTOR DO VIRABREQUIM	26
	46
RETENTOR (SEPARADOR DE ÁGUA E COMBUSTÍVEL)	183
REVESTIMENTO DA CABINE	810
RIPER	751
	752
	753
	754
	755
	756
	757
RODA-GUIA DAS ESTEIRAS	469
	470
	472
ROLETE DAS ESTEIRAS	481
ROLETE DE ESTEIRA DE FLANGE DUPLO	483
	484
ROLETE DE ESTEIRA DE FLANGE SIMPLES	485
	486
ROLETE SUPERIOR DA ESTEIRA	481
	482
RUÍDO - ARRANJO PARA SUPRESSÃO	66

S

SACA-PINO	747
	748
	749
SAPATA DA ESTEIRA DO TRATOR	488
	489
	490
SAPATA MESTRE DA ESTEIRA	491
	492
	493
SEÇÃO - BOMBA DE ENGRENAGENS	643
	645
	647
	648
SEGMENTO DA RODA MOTRIZ	380
SEMI-EIXO - TREM DE FORÇA	342
SENSOR - NÍVEL DE COMBUSTÍVEL	207
	215
	280
SENSOR - PRESSÃO	284
	285
	286
	287
	288
	289
	290
	291
SENSOR - PRESSÃO (ADMISSÃO DO TURBOALIMENTADOR)	333
SENSOR - PRESSÃO (ENTRADA DO TURBOALIMENTADOR)	326
	330
SENSOR - TEMPERATURA	296
	297
	298
	299

* TRADUÇÃO NÃO DISPONÍVEL NO MOMENTO DA IMPRESSÃO

ÍNDICE

Designação	Página
SENSOR - TEMPERATURA (2 PINOS)	298, 299
SENSOR - TEMPERATURA (2 PINOS) (COMBUSTÍVEL)	178, 180
SENSOR - VELOCIDADE ABSOLUTA (RADAR)	276
SENSOR DE NÍVEL DA MÁQUINA (CARREGAMENTO AUTOMÁTICO)	276
SENSOR DE VELOCIDADE	292, 293, 294, 295
SENSOR DE VELOCIDADE (CONVERSOR DE TORQUE)	326, 330, 333
SENSOR DE VELOCIDADE (MOTOR)	278
SENSOR DE VELOCIDADE (SAÍDA DA TRANSMISSÃO, DIANTEIRA)	373
SENSOR DE VELOCIDADE (SAÍDA DA TRANSMISSÃO, TRASEIRA)	372
SENSOR DO MOTOR	278
SENSOR E MONTAGEM - VELOCIDADE DE PERCURSO	276
SERVIÇO-COMUNICAÇÃO (PRODUCT LINK 300)	237
SILENCIADOR	152, 153
SIST. ELETRÔNICO - ACESSÓRIO	238
SISTEMA DE ILUMINAÇÃO - FARÓIS	252, 253, 255, 257, 259, 263, 267, 268
SISTEMA ELETRÔNICO - MÁQUINA	236
SISTEMA ELETRÔNICO - MONITOR	238
SISTEMA ELETRÔNICO - TREM DE FORÇA	238
SISTEMA ELETRÔNICO-COMUNICAÇÃO	237
SOFTWARE - ACESSÓRIO (ACCUGRADE)	537
SOFTWARE - COMUNICAÇÃO (PRODUCT LINK 121SR)	243
SOFTWARE - COMUNICAÇÃO (PRODUCT LINK 300)	237
SOFTWARE - TREM DE FORÇA (PRÉ-LUBRIFICAÇÃO DO MOTOR)	83
SOLENÓIDE DO MOTOR DE ARRANQUE	305
SOLENÓIDE PROPORCIONAL (12 VDC) (VENTILADOR HIDRÁULICO)	679
SUPORTE - CONTROLE	523
SUPORTE - MONTAGEM	767, 768
SUPORTE - PÓS-ARREFECEDOR	163, 164
SUPORTE DO MOTOR	63, 64, 65
SUSPENSÃO - ASSENTO	868, 870
SUSPENSÃO - TRUQUE	494, 495

T

Designação	Página
TAMPA - BLOCO DO MOTOR	21, 23
TAMPA - BOCAL DE ENCHIMENTO DE ÓLEO (TANQUE DE ÓLEO DO EIXO PILOTO)	479
TAMPA - BOCAL DE ENCHIMENTO (ENCHIMENTO DO TANUQE HIDRÁULICO)	365
TAMPA - BOCAL DE ENCHIMENTO (TANQUE DE COMBUSTÍVEL)	195
TAMPA - BOCAL DE ENCHIMENTO (TANQUE DE LUBRIFICAÇÃO)	477
TAMPA - BOCAL DE ENCHIMENTO (TANQUE HIDRÁULICO)	649
TAMPA - CABINE	792
TAMPA - CAIXA TRASEIRA	24
TAMPA - CHUVA	205
TAMPA - MUNHÃO	703
TAMPA - RADIADOR	122, 126
TAMPA - ROLETE DAS ESTEIRAS	466
TAMPA - TANQUE HIDRÁULICO	550
TAMPA (BOCAL DE ENCHIMENTO DO OLEO DO MOTOR)	72
TAMPA DA RODA-GUIA	464, 465
TAMPÃO (DRENAGEM) (CAIXA DE TRANSMISSÃO)	394, 395
TANQUE - LAVADOR DE JANELA	872, 874
TANQUE - LÍQUIDO ARREFECEDOR	120, 122, 123, 126
TANQUE DE COMBUSTÍVEL	194, 195
TANQUE DE EXPANSÃO	655, 656
TANQUE DE EXPANSÃO (AR)	655

* TRADUÇÃO NÃO DISPONÍVEL NO MOMENTO DA IMPRESSÃO

ÍNDICE

Designação	Página
	656
TANQUE DE ÓLEO HIDRÁULICO E MONTAGEM	653
TANQUE HIDRÁULICO E FILTRO	649
TAPETE INFERIOR	839
TAPETE INFERIOR (CABINE)	792
TAPETE SUPERIOR	839
TAPETE SUPERIOR (CABINE)	792
TELA DE PROTEÇÃO	855
TELA DE SUCÇÃO (ÓLEO DO CONVERSOR DE TORQUE)	387
TELA DE SUCÇÃO (RETORNO - TRANSMISSÃO)	343
TELA FILTRANTE	205
	725
TELA FILTRANTE DE SUCÇÃO (CÁRTER DO TREM DE FORÇA)	365
TELA FILTRANTE (ENCHIMENTO DO TANUQE HIDRÁULICO)	649
TELA FILTRANTE (HIDRÁULICO)	649
TELA FILTRANTE (MOTOR, ARREFECEDOR DA ADMISSÃO)	155
TELA FILTRANTE (MOTOR, ARREFECEDOR DA ADMISSÃO) (FILTRAÇÃO PRECISA)	155
TELA FILTRANTE (ÓLEO PILOTO DO IMPLEMENTO)	626
TELA FILTRANTE (TANQUE HIDRÁULICO, RETORNO PRINCIPAL)	649
TIRANTE DA LÂMINA	694
TRANSMISSÃO	389
TREM DE FORÇA	375
TRINCO	452
TUBOS - ÁGUA	90
	92
	94
	96
	99
	101
	104
TUBOS - AQUECEDOR	825
	827
TUBOS - AR	142
	144
	145
	146
	148
	150
TUBOS - AR CONDICIONADO	812
	815
	818
	822
TUBOS - BOMBA	603
TUBOS - CILINDRO DE INCLINAÇÃO	611
	614
	616
	618
	621
TUBOS - CILINDRO DE LEVANTAMENTO	587
	589
TUBOS - CILINDRO DO SACA-PINO	599
	600
	602
TUBOS - CIRCUITO PILOTO	595
TUBOS - COMBUSTÍVEL	184
TUBOS - FILTRO DO COMBUSTÍVEL	187
TUBOS - LÂMINA	577
	580
TUBOS - MOTOR	590
	593
TUBOS - ÓLEO DA TRANSMISSÃO	365
TUBOS - ÓLEO DO MOTOR	77
TUBOS - ÓLEO DO TURBOALIMENTADOR	79
TUBOS - ÓLEO HIDRÁULICO	582
TUBOS - RIPER	606
	608
	610
TUBOS - VENTILADOR HIDRÁULICOS	584
TUBOS DO AQUECEDOR	825
	827
TURBOALIMENTADOR	165
	166
	167
	168

V

VÁLVULA - ESFERA (DRENAGEM DO COMBUSTÍVEL)	175
VALVULA - PARTIDA A ETER	321
VÁLVULA -CONT DA DIREÇÃO E DO FREIO	528
	530
VÁLVULA DE ALÍVIO	392
	393
	681
VÁLVULA DE ALÍVIO (COMPRESSOR DO REFRIGERANTE)	776
VÁLVULA DE ALÍVIO (PRESSÃO DO COLETOR)	625
VÁLVULA DE ALÍVIO (VENTILADOR HIDRÁULICO, INVERSÃO)	623
VÁLVULA DE CONTROLE	665
	666
	670
	672
	674

* TRADUÇÃO NÃO DISPONÍVEL NO MOMENTO DA IMPRESSÃO

ÍNDICE

Designação	Página
VÁLVULA DE CONTROLE DA BOMBA	679
VÁLVULA DE CONTROLE DE INCLINAÇÃO	690
VÁLVULA DE CONTROLE E MONTAGEM	659
VÁLVULA DE MODULAÇÃO	391
VÁLVULA DE PARADA (AQUECEDOR DA CABINE)	825 827
VÁLVULA DE QUEDA RÁPIDA	680
VÁLVULA DE REDUÇÃO DE PRESSÃO	678
VÁLVULA DE RETENÇÃO	197 664
VÁLVULA DE RETENÇÃO (FILTRO DE COMBUSTÍVEL, SEPARADOR DE ÁGUA)	175
VÁLVULA DE SEPARAÇÃO	683
VÁLVULA DE SEQUÊNCIA	682
VÁLVULA DESVIADORA	676 677
VÁLVULA DESVIADORA (VENTILADOR HIDRÁULICO)	623
VÁLVULA DO CONTROLE PRINCIPAL E MONTAGEM	662
VÁLVULA DO VENTILADOR HIDRÁULICO	660
VÁLVULA E MONTAGEM - LÂMINA	657
VÁLVULA E MONTAGEM-DIREÇÃO E FREIO	524
VÁLVULA SOLENÓIDE	526 527 684 685 686 687 688 689
VEDADOR (BOMBA D'ÁGUA)	107
VEDADOR TIPO LABIO	99
VENTILADOR DE SUCÇÃO	89
VENTILADOR REVERSÍVEL	88
VIDRO - DESLIZANTE	879 880
VIDRO TRASEIRO	877
VIGIA (TANQUE DE ÁGUA)	120 123
VIRABREQUIM	26
VISOR - MONITOR	794
VOLANTE DO MOTOR	39

W

*WINDOW GP-CAB	877

* TRADUÇÃO NÃO DISPONÍVEL NO MOMENTO DA IMPRESSÃO

STICHWORTVERZEICHNIS

Bezeichnung	Seite
A	
ABDECKGLAS (ARBEITSSCHEINWERFER)	246
ABFALLBESEITIGUNGSMONTAGE	4, 5, 7, 9
ABLASS (UMWELTFREUNDLICH)	348
ABLASSSTOPFEN (ÖLFÜLLDREHWELLE)	467
ABLASSSTOPFEN (*PIVOT SHAFT OIL DRAIN)	467
ABLASSSTOPFEN (WASSER)	90
ABSPERRVENTIL (FAHRERHAUSHEIZUNG)	825, 827
ABSTREIFBALKEN	454, 461, 462, 463
ACHSWELLENSCHMIERUNG	479
ANSAUGSIEB (DREHMOMENTWANDLER-ÖL)	387
ANSAUGSIEB (GETRIEBESPÜLUNG)	343
ANSAUGSIEB (KRAFTÜBERTRAGUNG - ÖLSUMPF)	365
ANSCHLUSS, ELEKTR.	229
ANSCHLUSSKLEMMENSATZ (DREHSTROM-GENERATOR)	199
ANSCHLUSSKLEMMENSATZ (SPERRE)	271
ANSCHLUSSKLEMMENSATZ (STARTERMOTOR)	306
ANTRIEBSSCHUTZ	440
ANTRIEBSWELLE	381
ANTRIEBSWELLEN-KEILVERZAHNUNG	382
ANTRIEBSWELLENVERKLEIDUNG	436
ANZEIGEN-EINBAUSATZ (GEWICHTSEINSTELLUNG) (SCHWINGSITZ)	806
ANZUGSLEINE (SCHWINGSITZ)	870
ARBEITSGERÄTE-SOFTWARE (ACCUGRADE)	537
ARBEITSGERÄTEELEKTRONIK	238
ARBEITSGERÄTEHEBEL UND BEFESTIGUNGSTEILE	789
ARBEITSLEUCHTEN	246, 247, 248, 249, 250, 252, 253, 255, 257, 259, 263, 267, 268
ARBEITSLEUCHTEN (24 V, 70 W)	249, 250
ASCHENBECHER (FAHRERHAUS)	792
ÄTHERSTARTHILFE	300
ÄTHERSTARTHILFEZYLINDER	300
ÄTHERSTARTVENTIL	321
AUFKLEBER - INFORMATION (AUTOM. AUFREISSER)	547
AUFKLEBER - INFORMATION (24 V)	302
AUFKLEBER - MÜLLVERTEILSCHILD	5, 7, 9
AUFKLEBER (RADIO)	808
AUFREISSER	751, 752, 753, 754, 755, 756, 757
AUFREISSER-BOLZENZIEHERZYLINDER	568
AUFREISSERBEFESTIGUNG	743
AUFREISSERHUBZYLINDER	564, 566
AUFREISSERKIPPZYLINDER	569
AUFREISSERLEITUNGEN	606, 608, 610
AUFREISSERRAHMEN	735, 737, 739
AUFREISSERZAHN	758, 759, 760, 761
AUSGLEICHSBEHÄLTER	655, 656
AUSGLEICHSBEHÄLTER (LUFTFILTER)	655, 656
AUSPUFFKRÜMMER	151
B	
BATTERIE	228
BATTERIE UND VERDRAHTUNG	207, 215, 222
BATTERIE (12 V, WARTUNGSFREI)	207, 215, 222
BATTERIE (12 V, WARTUNGSFREI) (TIEFTEMPERATURSTART)	302

* ÜBERSETZUNG ZUM ZEITPUNKT DER DRUCKLEGUNG NICHT VORHANDEN

STICHWORTVERZEICHNIS

Bezeichnung	Seite
BATTERIE (24 V)	140
BEFESTIGUNGSHALTERUNG	767
	768
BEFESTIGUNGSTEILE (DREHSTROMGENERATOR)	199
BELEUCHTUNGSANLAGE (AUFREISSER)	270
BELEUCHTUNGSKABELSTRANG (AUFREISSER)	270
BELEUCHTUNGSKABELSTRANG (HINTERER ARBEITSSCHEINWERFER)	263
	268
BELEUCHTUNGSKABELSTRANG (HINTERER ARBEITSSCHEINWERFER)	253
BELEUCHTUNGSKABELSTRANG (HINTERER ARBEITSSCHEINWERFER) (ÜBERROLLSCHUTZ)	259
BELEUCHTUNGSKABELSTRANG (HINTERER ARBEITSSCHEINWERFER) (ÜBERROLLSCHUTZ, ARBEITSSCHEINWERFER)	257
BELEUCHTUNGSKABELSTRANG (VORDERE ARBEITSSCHEINWERFER)	253
BELEUCHTUNGSKABELSTRANG (VORDERE ARBEITSSCHEINWERFER)	263
BELEUCHTUNGSKABELSTRANG (VORDERE ARBEITSSCHEINWERFER) (AM ZYLINDER BEFESTIGTE ARBEITSSCHEINWERFER)	257
BELEUCHTUNGSKABELSTRANG (VORDERE ARBEITSSCHEINWERFER) (LEUCHTEN AM ZYLINDER)	255
BELEUCHTUNGSKABELSTRANG (VORDERE ARBEITSSCHEINWERFER) (ZYLINDERLEUCHTEN)	259
BERGBAUAUSFÜHRUNG	3
BLOCK (KLIMAANLAGE)	779
	781
BODENPLATTE	488
	489
	490
BOLZENZIEHER	747
	748
	749
BOLZENZIEHERZYLINDERLEITUNGEN	599
	600
	602

C

CODESTECKER (ARBEITSGERÄT)	337
CODESTECKER (KRAFTÜBERTRAGUNG)	337

D

DÄMPFER	36
	37
DICHTUNG (KRAFTSTOFF)	192
DICHTUNG (KRAFTSTOFF, WASSERABSCHEIDER)	183
DICHTUNG (WASSERPUMPE)	107
DICHTUNGSSATZ	487
	880
DICHTUNGSSATZ (AUSGELEICHSVENTIL)	625
	681
DICHTUNGSSATZ (AUSGELEICHSVENTIL) (HYDRAULIKFILTER, UMKEHRUNG)	623
DICHTUNGSSATZ (FENSTER)	879
DICHTUNGSSATZ (FENSTER, HINTEN)	877
DICHTUNGSSATZ (HEBEN)	560
DICHTUNGSSATZ (*PISTON MOTOR) (HYDRAULIKLÜFTER)	628
DICHTUNGSSATZ (*PISTON MOTOR) (LÜFTER MIT DREHRICHTUNGSUMKEHRUNG)	629
DICHTUNGSSATZ (RÜCKSCHLAGVENTIL)	664
DICHTUNGSSATZ (RÜCKSCHLAGVENTIL) (HYDRAULIKFILTER, UMKEHRUNG)	584
DICHTUNGSSATZ (SEQUENZVENTIL)	682
DICHTUNGSSATZ (SOLENOIDVENTIL)	526
	684
	685
	686
	687
	688
	689
DICHTUNGSSATZ (VERTEILERVENTIL) (HYDRAULIKFILTER, UMKEHRUNG)	623
DICHTUNGSSATZ (VERTEILERVENTIL) (VERTEILERVENTIL)	677
DICHTUNGSSATZ (ZAHNRADPUMPE)	634
	643
	645
	647
DICHTUNGSSATZ (ZAHNRADPUMPE) (ARBEITSGERÄT)	636
DICHTUNGSSATZ (ZAHNRADPUMPE) (ARBEITSGERÄT)	648
DOPPELFLANSCHROLLEN	483
	484
DOPPELKIPPZYLINDER	557
DOPPELKIPPZYLINDERSTEUERUNG	534
DOPPELNEIGEZYLINDER	558
DREHKNOPFSCHALTER (KLIMAANLAGENSTEUERUNG)	844
DREHMOMENTWANDLER	383
	385
	387
DREHSTROMGENERATOR	199
	201

* ÜBERSETZUNG ZUM ZEITPUNKT DER DRUCKLEGUNG NICHT VORHANDEN

STICHWORTVERZEICHNIS

Bezeichnung	Seite
	203
	205
DREHSTROMGENERATOR - BEFESTIGUNG	53
DREHZAHLSENSOR	292
	293
	294
	295
DREHZAHLSENSOR (DREHMOMENTWANDLER)	326
	330
	333
DREHZAHLSENSOR (GETRIEBEAUSGANG, FÜHREN)	373
DREHZAHLSENSOR (GETRIEBEAUSGANG, NACHLAUFEN)	372
DREHZAHLSENSOR (MOTOR)	278
DREHZAPFENVERKLEIDUNG	439
DRUCKKNOPFSCHALTER (AUFREISEER, AUTOM. AUFBEWAHRUNG)	547
DRUCKKNOPFSCHALTER (DOZER NEIGEN)	538
DRUCKKNOPFSCHALTER (HERUNTERSCHALTEN)	523
DRUCKKNOPFSCHALTER (HOCHSCHALTEN)	523
DRUCKKOPFSCHALTER	319
DRUCKLUFTLEITUNGEN	142
	144
	145
	146
	148
	150
DRUCKLUFTVENTILSATZ (SCHWINGSITZ)	870
DRUCKREDUZIERVENTIL	678
DRUCKSCHALTER	318
	818
DRUCKSCHALTER (HOHE SEITE)	822
DRUCKSCHALTER (HYDRAULIKTANK)	209
	217
DRUCKSCHALTER (*IMP/FAN TANK RETURN BYPASS)	224
DRUCKSCHALTER (KLIMAANLAGEN-KOMPRESSOR)	818
DRUCKSCHALTER (KOMPRESSOR, OBERE SEITE)	812
	815
DRUCKSCHALTER (KOMPRESSOR, UNTERE SEITE)	812
	815
DRUCKSCHALTER (*REFRIGERANT COMPR, LOW SIDE)	822
DRUCKSENSOR	284
	285
	286
	287
	288
	289
	290
	291
DRUCKSENSOR (TURBILADEREINLASS)	333
DRUCKSENSOR (TURBOEINLASS)	326
	330

E

Bezeichnung	Seite
EINBAUSATZ	140
EINBAUSATZ - PLANIERSTEUERUNG	245
EINBAUSATZ (TURBINENVORREINIGER)	161
EINFÜLLKAPPE (HYDRAULIKTANKEINFÜLLSIEB)	365
EINFÜLLKAPPE (KRAFTSTOFFTANK)	195
EINFÜLLKAPPE (SCHMIERMITTELTANK)	477
EINFÜLLSTUTZENKAPPE (HYDRAULIKTANK)	649
EINZELFLANSCHROLLEN	485
	486
ELEKTR. UMFORMER	235
ELEKTRON. STEUERUNG (INSTRUMENTENBRETTBELEUCHTUNG)	844
ELEKTRONIK - MASCHINE	236
ELEKTRONIK - MONITOR	238
ELEKTRONIK, KOMMUNIKATION	237
ENDSCHALTER (BETRIEBSBREMSPEDAL)	846
ENDSCHALTER (FAHRERHAUSBELEUCHTUNG)	322
ENDSCHALTER (VORWÄRTS, RÜCKWÄRTS)	513
ENTDUNSTER	75
ENTLÜFTER	69
ENTLÜFTER (DREHZAPFENÖLTANK)	479
ENTLÜFTER (GETRIEBE)	365
ENTLÜFTER (SCHMIERMITTELTANK)	477
ENTLÜFTERELEMENT (KURBELGEHÄUSE)	69

F

Bezeichnung	Seite
FAHRERHAUS	770
	771
	772
	774
FAHRERHAUS-INNENLEUCHTE (24 V)	322
FAHRERHAUS-KABELBAUM	322
FAHRERHAUSABDECKUNG	792
FAHRERHAUSANBAUSATZ	831
FAHRERHAUSAUSKLEIDUNG	810
FAHRERHAUSAUSRÜSTUNG	839

* ÜBERSETZUNG ZUM ZEITPUNKT DER DRUCKLEGUNG NICHT VORHANDEN

STICHWORTVERZEICHNIS

Bezeichnung	Seite
FAHRERHAUSFENSTER	878, 879
FAHRERHAUSHEIZUNG	799, 802, 804
FAHRERHAUSLUFTFILTER	797
FAHRERHAUSTÜR	795, 796
FAHRERHAUSVERDRAHTUNG	322
FAHRERPLATTFORM-KABELSTRANG	336
FAHRERPLATTFORMVERDRAHTUNG	336
FAHRERSITZ	857, 859, 860, 862, 863, 864
FAHRERSITZ UND UNTERBAU	856
FAHRERSITZFEDERUNG	868, 870
FAHRERSITZFEDERUNGSGEHÄUSE	805
FAHRERSITZVERSTELLER	762
FAHRGESCHWINDIGKEITSSENSOR (*RADAR)	276
FAHRGESCHWINDIGKEITSSENSOR U. BEFESTIGUNG	276
FAHRWERK	1
FAHRWERK-KABELBAUM	224
FAHRWERK-KABELBAUM (KÜHLER-SCHUTZ)	208, 216
FAHRWERK-KABELBAUM (SCHUTZBLECH, LINKS)	223
FAHRWERK-KABELBAUM (SCHUTZBLECH, LINKS)	208, 216
FAHRWERK-KABELBAUM (SCHUTZBLECH, RECHTS)	208, 216, 222
FEDER-EINBAUSATZ (HÖHENEINSTELLUNG) (SCHWINGSITZ)	805
FEDER-EINBAUSATZ (SCHWINGSITZ)	805
FEDERUNGS-EINBAUSATZ (EINSTELLKNOPF) (HÖHENEINSTELLUNG) (SCHWINGSITZ)	805
FILTER (LUFTDRUCKSENSOR)	278
FILTER (WASSERPUMPE)	107
FILTERELEMENT (*REVERSE FLOW, DISPOSABLE)	649
FILTERSIEB (HYDRAULIKTANKEINFÜLL-SIEB)	649
FOLGEVENTIL	682
FRONTSCHEINWERFER	251
FRONTSTEUERPULT	786
FUSSMATTE (OBERE)	839
FUSSMATTE (OBERE) (FAHRERHAUS)	792
FUSSMATTE (UNTERE)	839
FUSSMATTE (UNTERE) (FAHRERHAUS)	792

G

Bezeichnung	Seite
GAS- U. BREMSPEDAL	846
GEGENGEWICHT	397, 398, 400
GEHÄUSE, HINTEN	48
GEHÄUSEDECKEL, HINTEN	24
GETRIEBE	389
GETRIEBE-KABELBAUM	208, 217, 223, 345
GETRIEBEAUFLAGER	370
GETRIEBEHYDRAULIK	345
GLEITSCHIENENBLOCK-EINBAUSATZ (SCHWINGSITZ)	865, 866, 867
GRUNDAUSFÜHRUNG	3

H

Bezeichnung	Seite
HALDENAUFÜHRUNG	4
HALOGENSCHINWERFER (24V)(65W)	246
HALOGENSCHINWERFER (24V)(65W)	247, 251
HALOGENSCHINWERFER (24V)(65W) (ARBEITSSCHEINWERFER)	248
HECKFENSTER	877
HECKVERKLEIDUNG	446
HEIZUNGS- U. KLIMAANLAGENSTEUE-RUNG	844
HEIZUNGSLEITUNGEN	825, 827
HUBZYLINDER	562
HUBZYLINDER (*BULLDOZER)	555
HUBZYLINDER U. LEITUNGEN	551, 552, 553
HUBZYLINDER U. VENTIL	555, 556
HUBZYLINDER UND SENSOR	554
HUBZYLINDERLEITUNGEN	587, 589
HYDR. BOLZENZIEHER STEUERUNG	535
HYDRAULIKDRUCKSPEICHER	532

* ÜBERSETZUNG ZUM ZEITPUNKT DER DRUCKLEGUNG NICHT VORHANDEN

STICHWORTVERZEICHNIS

Bezeichnung	Seite
	590
HYDRAULIKLEITUNGEN	582
HYDRAULIKLÜFTERLEITUNGEN	584
HYDRAULIKLÜFTERVENTIL U. BEFESTIGUNGSTEILE	660
HYDRAULIKÖLKÜHLER	549
HYDRAULIKPUMPE UND LEITUNGEN	603
HYDRAULIKSTEUERUNG	537
HYDRAULIKSYSTEM	576
HYDRAULIKTANK UND BEFESTIGUNGSTEILE	653
HYDRAULIKTANK UND SCHMIERFILTER	649

I

IDENTIFIZIERUNGS-AUFKLEBER (AUTOM. SCHILD)	534
IDENTIFIZIERUNGS-AUFKLEBER (DOPPELNEIGUNG)	534
IDENTIFIZIERUNGS-AUFKLEBER (DOPPELNEIGUNG)	534
IDENTIFIZIERUNGS-AUFKLEBER (GRUPPENNUMMER) (KÄLTEMITTELKONDENSATOR)	784
IDENTIFIZIERUNGS-AUFKLEBER (VORSCHMIERPUMPE)	83
IDENTIFIZIERUNGS-AUFKLEBER (12 V)	888
INSTRUKTIONS-AUFKLEBER (AUFREISSERSTEUERUNG)	789
INSTRUKTIONS-AUFKLEBER (FÜR SITZVERSTELLUNG)	868
	870
INSTRUKTIONS-AUFKLEBER (MOTORÖL)	890
INSTRUKTIONS-AUFKLEBER (SCHEIBENWASCHMITTEL)	890
INSTRUKTONSSCHILD (KLIMAANLAGE)	764
	765
INSTRUMENTENBRETT-AUFKLEBER (WISCHERSTEUERUNG)	844
INSTRUMENTENTAFEL-KABELSTRANG (SICHERUNG)	271
INSTRUMENTENTAFEL-SICHERUNG	271
INTRUMENTENBRETTVERKABELSTRANG	337
ISOLIERDICHTUNG (VENTILDECKEL)	68

J

JOYSTICK -STEUERUNG	541
	543
	545

K

KABELSTRANG	140
KABELSTRANG - HEIZUNG U. KLIMAANLAGE	799
	818
KABELSTRANG - HEIZUNG U. KLIMAANLAGE (*CONDENSER)	818
KABELSTRANG - HEIZUNG U. KLIMAANLAGE (KOMPRESSOR)	822
KABELSTRANG - HEIZUNG U. KLIMAANLAGE (KOMPRESSOR)	812
	815
	818
KABELSTRANG - HEIZUNG U. KLIMAANLAGE (KONDENSATORGEBLÄSEMOTOREN)	784
KABELSTRANG - MOTOR (VORSCHMIERUNG)	83
KABELSTRANG (KRAFTSTOFFILTER)	178
	180
KABELSTRANG (*UNIT INJECTORS)	19
KABELSTRANG (WARTUNGSLEUCHTE UNTER DER HAUBE)	224
KÄLTEMITTEL-DRUCKSPEICHER	818
	822
KÄLTEMITTEL-DRUCKSPEICHER (KLIMAANLAGE)	812
	815
KÄLTEMITTELKOMPRESSOR	776
	777
KÄLTEMITTELKONDENSATOR	784
KÄLTEMITTELKONDENSATOR U. BEFESTIGUNGSTEILE	779
	781
	783
KÄLTEMITTELTROCKNER (KLIMAANLAGE)	812
	815
	822
KÄLTEMITTELTROCKNER (KÜHLMITTEL)	818
KALTWETTERAUSRÜSTUNG	2
	3
KALTWETTERSTARTANLAGE	302
KAPPE (MOTORÖLEINFÜLLUNG)	72
KAPPENFILTERSATZ (KRAFTSTOFFTANK)	195
KEILRIEMEN (DREHSTROMGENERATOR)	201
	203
	205
KEILRIEMEN (KOMPRESSORRIEMENSCHEIBE)	777
KETTENENDBODENPLATTE	491
	492
	493
KETTENGLIEDER	473
	474

* ÜBERSETZUNG ZUM ZEITPUNKT DER DRUCKLEGUNG NICHT VORHANDEN

STICHWORTVERZEICHNIS

Bezeichnung	Seite
	475
	476
KETTENRADSEGMENT	380
KETTENSPANNER UND -FEDERRÜCKLAUF	497
KIPPSCHALTER	320
KIPPSCHALTER (ARBEITSGERÄTESPERRUNG)	337
KIPPSCHALTER (ARBEITSSCHEINWERFER, ÜBERROLLLSCHUTZ)	259
	263
KIPPSCHALTER (ARBIETSSCHEINWERFER, ZYLINDER)	259
KIPPSCHALTER (AUTO CARRY)	276
KIPPSCHALTER (AUTOM. HERUNTERSCHALTEN)	337
KIPPSCHALTER (AUTOM. SCHILD)	534
KIPPSCHALTER (BIDIREKTIONALE SCHALTUNG)	337
KIPPSCHALTER (*CYLINDER FLOOD)	263
KIPPSCHALTER (DOPPELNEIGEZYLINDER)	534
KIPPSCHALTER (FESTSTELLBREMSE)	514
KIPPSCHALTER (GASSTEUERUNG)	337
KIPPSCHALTER (HINTERE ARBEITSLEUCHTEN)	253
	268
KIPPSCHALTER (HYDRAULISCHER BOLZENZIEHER)	535
KIPPSCHALTER (KLIMAANLAGE EIN/AUS)	844
KIPPSCHALTER (KONSOLE ANHEBEN, ABSENKEN)	507
KIPPSCHALTER (SCHUTZBLECHBELEUCHTUNG)	337
KIPPSCHALTER (ÜBERROLLSCHUTZ, ARBEITSSCHEINWERFER)	257
KIPPSCHALTER (UMKEHRLÜFTER, MANUELLE ENTLÜFTUNG)	88
KIPPSCHALTER (VORDERE ARBEITSLEUCHTEN)	253
KIPPSCHALTER (VORDERE ARBEITSSCHEINWERFER)	268
KIPPSCHALTER (WARTUNGSLEUCHTE UNTER DER HAUBE)	207
	215
	222
KIPPSCHALTER (ZYLINDERBELEUCHTUNG)	337
KIPPSTEUERVENTIL	690
KIPPZYLINDER	571
	573
KLIMAANLAGE	764
	765
KLIMAANLAGENLEITUNGEN	812
	815
	818
	822
KOLBENMOTOR	628
	629
	630
	632
KOLBENPUMPE	637
KOLBENPUMPENUMLAUFSATZ	640
	641
KOMMUNIKATIONSEINBAUSATZ	243
KONDENSATORBEFESTIGUNG	832
	834
KONSOLEN-VERDRAHTUNG (LEISTUNG, GETRIEBE)	514
KONSOLEN-VERDRAHTUNG (RECHTS)	336
KONTROLLEUCHTE (WARNLEUCHTE)	336
KRAFTOFFPUMPE UND VENTILSTEUERUNG	51
	52
KRAFTSTOFFEINSPRITZPUMPE	191
KRAFTSTOFFENTLÜFTUNGSPUMPE U. SICHERHEITSFILTER	192
KRAFTSTOFFHEIZUNG	239
KRAFTSTOFFILTER	178
	180
	183
KRAFTSTOFFILTER (HOCHLEISTUNG)	178
	180
KRAFTSTOFFILTER UND LEITUNGEN	175
KRAFTSTOFFILTERLEITUNGEN	187
KRAFTSTOFFLEITUNGEN	184
KRAFTSTOFFÖRDERPUMPE	193
KRAFTSTOFFÖRDERPUMPE UND BEFESTIGUNGSTEILE	190
KRAFTSTOFFSIEB	195
KRAFTSTOFFSTANDSENSOR	207
	215
	280
KRAFTSTOFFTANK	194
	195
KRAFTÜBERTRAGUNG	375
KRAFTÜBERTRAGUNGSACHSE	342
KRAFTÜBERTRAGUNGSELEKTRONIK	238
KREUZGELENK	390
KREUZGELENK UND LAGER	390
KRÜMMER UND VENTIL	521
	522
KUGELVENTIL (KRAFTSTOFFABLASS)	175
KÜHLER	109
	110
	112
	114
	115

* ÜBERSETZUNG ZUM ZEITPUNKT DER DRUCKLEGUNG NICHT VORHANDEN

STICHWORTVERZEICHNIS

Bezeichnung	Seite
	117
	119
KÜHLERBLOCK	109
	114
	119
KÜHLERKAPPE	122
	126
KÜHLERSCHUTZ	442
	444
KÜHLMITTELBEHÄLTER	120
	122
	123
	126
KÜHLWASSERLEITUNGEN	90
	92
	94
	96
	99
	101
	104
KÜHLWASSERPUMPE	107
	108
KURBELWELLE	26
KURBELWELLEN-RIEMENSCHEIBE	59
KURBELWELLENDICHTUNG	26
	46

L

LADELUFTKÜHLER	127
	129
LADELUFTKÜHLERTRÄGER	163
	164
LAGERSATZ (DREHSTROMGENERATOR)	199
LAGERSATZ (MOTORROTATIONSGRUPPE)	641
LAGERSATZ (SCHWINGSITZ)	806
LAUFROLLE	481
LAUFROLLENAUFSATZ	466
LAUFROLLENRAHMEN-KNICKFEDERUNG	494
	495
LAUFROLLENRAHMEN (TELESKOPRÜCK-LAUF)	467
LAUFWERKSKETTE	499
	500
	501
	502
	503
	504
	505
LAUFWERKSRAHMEN	505
	506
LEITRAD	469
	470
	472
LEITRADAUFSATZ	464
	465
LEITRADSCHUTZ	428
	438
LENK- UND GETRIEBEEINSTELLER	507
LENK- UND GETRIEBESTEUERUNG	514
	516
	517
LENKBETÄTIGUNG	513
LENKKUPPLUNG UND BREMSE	509
	511
LENKTRIEB	519
	520
LENKUNGS- U. BREMSSTEUERVENTIL	528
	530
LENKUNGS- U. BREMSVENTIL	524
LEUCHTE (24 V) (AKTION HECK)	336
LEUCHTE (24V, 21W) (FAHRERHAUSDACH)	322
LIPPENDICHTUNG	99
LUFTFILTER (FAHRERHAUS)	802
LUFTFILTER (HOCHLEISTUNG)	797
LUFTFILTER (HOCHLEISTUNG) (FAHRERHAUS)	802
LUFTFILTER (STANDARD) (FAHRERHAUS)	802
LUFTKOMPRESSORSITZ	763
LUFTREINIGER	131
	132
	133
LUFTREINIGERELEMENT	132
LUFTREINIGERKLEMMEN-EINBAUSATZ	132

M

MAGNETSCHALTER	316
	317
MAGNETSCHALTER (24 V) (HAUPTRELAIS)	271
MAGNETSPULE - ANLASSMOTOR (ELEKTR.)	305
MAGNETSTOPFEN (SEITENANTRIEB)	360
MAGNETSTOPFEN (SEITENANTRIEB ÖLABLASS)	354
MAGNETSTOPFEN (SEITENANTRIEB, ÖLEINFÜLLUNG)	351
	357
MAGNETVENTIL	526
	527
	684
	685
	686
	687
	688
	689

* ÜBERSETZUNG ZUM ZEITPUNKT DER DRUCKLEGUNG NICHT VORHANDEN

STICHWORTVERZEICHNIS

Bezeichnung	Seite
MASCHINENNIVELLIERSENSOR (AUTO CARRY)	276
*MODIFICATION AR-RIPPER	741
	742
MODULATORVENTIL	391
MONITOR - KABELBAUM	140
MONITOR - KABELBAUM (RATGEBER)	337
MONITORDISPLAY	794
MONTAGEZAPFEN	67
MONTAGEZAPFEN (PLANIERSCHILDEINRICHTUNG)	711
MONTAGEZAPFENVERKLEIDUNG	703
MOTOR-EINBAUSATZ	16
	17
MOTOR, ELEKTR.	85
MOTOR, ELEKTR. (KONDENSATORGEBLÄSE)	784
MOTOR ID-SCHILD	893
MOTOR, KOMPLETT	10
	11
	12
MOTORAUFHÄNGUNG	63
	64
	65
MOTORBLOCK	27
	29
	30
MOTORBLOCKDECKEL	21
	23
MOTORDREHVORRICHTUNG	639
MOTORHAUBE UND VERKLEIDUNG	450
MOTORHUBÖSE	49
MOTORKABELSTRANG	326
	333
MOTORKABELSTRANG (MOTOR)	330
MOTORKÜHLERBLOCK	13
	14
	15
MOTORLEITUNGEN	590
	593
MOTORÖLEINFÜLLSTUTZEN	71
MOTORÖLLEITUNGEN	77
MOTORSEITENVERKLEIDUNG	434
	435
MOTORSENSOR	278
MOTORSTEUERUNG, ELEKTRON.	232
	233
MOTORVERDRAHTUNG	326
	330
	333
MOTORVERKLEIDUNG	411
	413
	414
	415
	416
	417
	419
MOTORVORSCHMIERUNG	83

N

NEIGEZYLINDERLEITUNGEN	611
	614
	616
	618
	621
NOCKENWELLE	20

O

ÖLABLASSSCHRAUBE	54
ÖLEINFÜLLKAPPE (DREHZAPFENÖLTANK)	479
ÖLEINFÜLLSTUTZEN	72
ÖLFILTER	73
	349
	595
ÖLFILTER (ARBIETSGERÄTEVORSTEUERÖL)	595
ÖLFILTERELEMENT (ADVANCED EFFICIENCY)	649
ÖLFILTERELEMENT (GETRIEBE)	349
ÖLFILTERELEMENT (GETRIEBESPEISUNG)	365
ÖLFILTERELEMENT (SCHWER ENTFLAMMBARE FLÜSSIGKEIT)	649
ÖLFILTERELEMENT (STANDRAD EFFIZIENZ)	649
ÖLFILTERELEMENT (*TORQUE CONVERTER CHARGING)	365
ÖLFILTERELEMENT (ULTRA HOCHLEISTUNG)	649
ÖLKÜHLERBLOCK	101
	104
	549
ÖLKÜHLERBLOCK (MOTORÖL)	104
ÖLLEITUNGEN - KRAFTÜBERTRAGUNG	365
ÖLMESSSTAB	76
ÖLMESSSTAB (GETRIEBEGEHÄUSE)	365
ÖLPUMPEN-BEFESTIGUNGSTEILE	70
ÖLSCHNELLWECHSELANSCHLUSS	81
ÖLWANNE	54

P

PANZERWANNE	429
	430
	432

* ÜBERSETZUNG ZUM ZEITPUNKT DER DRUCKLEGUNG NICHT VORHANDEN

STICHWORTVERZEICHNIS

Bezeichnung	Seite
PENDELVENTIL	683
PLANETENANTRIEBSGEHÄUSE U. TEILE	343
PLANETENGETRIEBE	371
PLANIERSCHILD-UMRÜSTSATZ	705
	706
	707
PLANIERSCHILDHUBZYLINDER	560
PLANIERSCHILDLEITUNGEN	577
	580
PLATTE	704
	708
	709
	721
	754
	755
	757
PLATTFORM	849
	850
PLEUELSTANGE UND KOLBEN	56
PROPORTIONALSOLENOID (12 VDC) (HYDRAULIKLÜFTER)	679
PUMPEN-EINBAUSATZ (VORSCHMIERUNG)	85
PUMPENANSCHLUSS	347
PUMPENSTEUERVENTIL	679

Q

QUERTRAVERSE	456
	457
	459
	460

R

RADIO - KOMMUNIKATION (PRODUCT LINK 212SR)	243
RADIOANBAUSATZ	836
	837
RADIOEINBAUSATZ	808
RAHMEN UND GEHÄUSE	394
	395
RASTE	518
RASTE - STEUERUNG (SCHILDHUB, ABSENKEN)	543
	545
RASTE - STEUERUNG (SCHILDHUB, ABSENKEN)	541
RASTE - STEUERUNG (SCHILDNEIGUNG)	543
	545
RASTE - STEUERUNG (SCHILDNEIGUNG)	541
*RECEIVER GP (*GLOBAL POSITIONING SYSTEM)	245
REGENKAPPE	136
	137
	139
	797
REGENSCHUTZKAPPE	205
REISSERSTEUERUNG	547
RELAIS (24 V) (HEIZUNG, KLIMAANLAGE)	799
RELAIS (24 V) (KLIMAANLAGE, HEIZUNG)	336
RELAIS (24 V) (KONDENSATORGEBLÄSEMOTOR)	336
	784
RELAIS (24 V) (*PRESSURIZER, CAB)	336
*RESISTOR GP-CAB HEATER	275
RÜCKLEHNENVERLÄNGERUNG (PVC)	862
RÜCKLEHNENVERLÄNGERUNG (STOFF)	859
RÜCKSPIEGEL	829
	830

S

SAUGLÜFTER	89
SCHALE - RÜCKENLEHNE	841
	842
	843
SCHALLDÄMPFER	152
	153
SCHALLDÄMPFUNG	66
SCHALTER (FAHRERHAUSBELEUCHTUNG)	322
SCHALTERKABELSTRANG (BETRIEBSBREMSE)	846
SCHALTTAFEL	844
SCHAUGLAS - FLÜSSIGKEITSSTAND (SCHAUGLAS) (HYDRAULIKTANKÖL)	649
SCHAUGLAS (WASSERTANK)	123
SCHAUGLAS (WASSERTANK)	120
SCHAUMFILTER (KRAFTSTOFFTANK)	222
SCHAUMFILTER (KRAFTSTOFFTANK)	207
	215
SCHEIBENWASCHANLAGE	875
SCHEIBENWASCHMITTELBEHÄLTER	872
	874
SCHEIBENWISCHER	881
	884
SCHEIBENWISCHERARM (*FRONT, CENTER)	881
SCHEIBENWISCHERARM (HINTEN, LINKS)	884
SCHEIBENWISCHERARM (HINTEN, RECHTS)	884
SCHEIBENWISCHERARM (LINKS, VORN)	881
SCHEIBENWISCHERARM (RECHTS, VORN)	881
SCHEIBENWISCHERBLATT (HINTEN)	881
SCHEIBENWISCHERBLATT (*RH, LH, REAR)	884

* ÜBERSETZUNG ZUM ZEITPUNKT DER DRUCKLEGUNG NICHT VORHANDEN

STICHWORTVERZEICHNIS

Bezeichnung	Seite
SCHEIBENWISCHERBLATT (SEITE)	881
SCHEIBENWISCHERBLATT (VORNE)	881
SCHEIBENWISCHERMOTOR (24V, 2 GESCHWINDIGKEITEN) (HINTEN)	884
SCHEIBENWISCHERMOTOR (24V, 2 GESCHWINDIGKEITEN) (HINTEN)	881
SCHEIBENWISCHERMOTOR (24V, 2 GESCHWINDIGKEITEN) (LINKS, VORN)	881
SCHEIBENWISCHERMOTOR (24V, 2 GESCHWINDIGKEITEN) (MITTE, VORN)	881
SCHEIBENWISCHERMOTOR (24V, 2 GESCHWINDIGKEITEN) (RECHTS, VORN)	881
SCHEIBENWISCHERSCHALTER (24 V) (HINTEN, INTERVAL)	844
SCHEIBENWISCHERSCHALTER (24 V) (LINKE TÜR)	844
SCHEIBENWISCHERSCHALTER (24 V) (RECHTE TÜRY)	844
SCHEIBENWISCHERSCHALTER (24 V) (VORN, INTERVALLSCHALTUNG)	844
SCHIEBEFENSTER	879
	880
SCHILD UND AUFKLEBER	888
	891
	892
SCHILDSTREBE	694
SCHMIERPUMPE	86
SCHMIERVORRICHTUNG - QUERTRAVERSE	477
SCHNEIDMESSER UND EINSATZSTÜCK	731
	732
	733
	734
SCHNELLBETANKUNGSANSCHLUSS	169
	171
	173
SCHNELLSENKVENTIL	680
SCHRAUBE (ABLASS) (GETRIEBEGEHÄUSE)	394
	395
SCHUBARM	708
	709
SCHUBARM - STABILISATOR	710
SCHUBBLOCK	691
	692
	693
SCHUTZBLECHE	421
	423
	426
	427
SCHUTZGITTER	855
SCHWINGSITZ	865
	866
	867
SCHWUNGRAD	39
SCHWUNGRADGEHÄUSE	46
SCREEN	205
SCREEN (ARBIETSGERÄTEVORSTEUERÖL)	626
SCREEN (HYDRAULIK)	649
SEITENANTRIEB	351
	354
	357
	360
SEITENANTRIEBSVERKLEIDUNG	428
	437
SENSOR, KABELSTRANG (ELEKTRON. STEUERMODUL)	324
SENSOR, KABELSTRANG (GETRIEBEAUSGANGSDREHZAHL)	372
SERIENNUMMERNSCHILD (AUFREISSER)	751
	752
	753
SERIENNUMMERNSCHILD (GETRIEBE)	372
SERIENNUMMERNSCHILD (PLANIERSCHILD)	695
	696
	697
	698
	699
	700
	701
	702
SERVICE GP- KOMMUNIKATION (PRODUCT LINK 300)	237
SICHERHEITSFILTER	192
SICHERHEITSGURT (AUSZIEHBAR)	859
SICHERUNG (10 A)	271
SICHERUNG (15 A)	271
	275
SICHERUNG (175 A) (*ALTERNATOR, MAIN)	271
SICHERUNG (20 A)	271
SIEB	725
SIEB (*ENGINE, AFTERCOOLER)	155
SIEB (*ENGINE, AFTERCOOLER) (*FINE FILTRATION)	155
SIEB (HYDRAULIKTANK HAUPTRÜCKFÜHRUNG)	649
SOCKEL FÜR VENTILDECKEL U. EINSPRITZKABELBAUM	18
	19
SOFTWARE - KOMMUNIKATION (PRODUCT LINK 212SR)	243
SOFTWARE - KOMMUNIKATION (PRODUCT LINK 300)	237

* ÜBERSETZUNG ZUM ZEITPUNKT DER DRUCKLEGUNG NICHT VORHANDEN

STICHWORTVERZEICHNIS

Bezeichnung	Seite
SOFTWARE - KRAFTÜBERTRAGUNG (*ENGINE PRELUBRICATION)	83
SPANNUNGSREGLER (24 V) (DREHSTROMGENERATOR)	199
SPERRVENTIL	197 664
SPERRVENTIL (KRAFTSTOFFFILTER, WASSERABSCHEIDER)	175
STABILISATORGELENK	704
STARTERMOTOR	305 308 309 310
STARTSCHALTER (TASTE)	337
STAUBAUSWERFER	135 136 137 139
STEINSCHUTZ	448 449
STELLUNGSSENSOR	281 282 283
STELLUNGSSENSOR (BETRIEBSBREMSPEDAL)	846
STELLUNGSSENSOR (GETRIEBESTEUERUNG)	514
STELLUNGSSENSOR (REISSSCHENKEL ANHEBEN, ABSENKEN)	547
STELLUNGSSENSOR (REISSSCHENKEL EIN/AUS)	547
STELLUNGSSENSOR (SCHILD)	283
STELLUNGSSENSOR (SCHILDHUB, ABSENKEN)	541 543 545
STELLUNGSSENSOR (SCHILDNEIGUNG)	541 543 545
STEUERHEBEL	538 540 575
STEUERHEBEL (SCHILDSTEUERUNG)	543
STEUERKONSOLE	787
STEUERKRÜMMER	623 625 626
STEUERPEDAL U. BEFESTIGUNG	790 791
STEUERUNG - NICHT PROGRAMMIERT	234
STEUERUNG - NICHT PROGRAMMIERT (ARBEITSGERÄT)	337
STEUERUNG - NICHT PROGRAMMIERT (KRAFTÜBERTRAGUNG)	337
STEUERUNG - NICHT PROGRAMMIERT (PRODUCT LINK 121SR)	243
STEUERUNG - NICHT PROGRAMMIERT (ÜBERWACHUNGSTAFEL)	337
STEUERUNG, ELEKTRON.	231 337
STEUERUNGS-KABELSTRANG	140
STEUERUNGS-KABELSTRANG (AUTO CARRY)	140 276
STEUERUNGS-KABELSTRANG (AUTO CARRY) (*SENSOR, VALVE)	276
STEUERUNGS-KABELSTRANG (PRODUCT LINK RADIO)	243
STEUERUNGSEINHEIT, ELEKTRON. FÜR MOTOR UND BEFEST.	230
STEUERVENTIL	665 666 670 672 674
STEUERVENTIL UND BEFESTIGUNGSTEILE	659
STIRNRAD	40
STIRNRADGEHÄUSE	47
STOSSDÄMPFER-REPARATURSATZ (SCHWINGSITZ)	870
STOSSSTANGEN-EINBAUSATZ (GEWICHTSEINSTELLUNG) (SCHWINGSITZ)	806
STRÖMUNGSSCHALTER	314 315
STÜTZGRUPPE - STEUERUNG	523
SU-PLANIERSCHILD U. ECKMESSER	712
SU-SCHILD	695 696 697 698 717 719 726 727

T

TAFELVERDRAHTUNG (SICHERUNG)	271
TELLERRAD- UND VORGELEGERADSATZ	363
TEMPERATURSCHALTER (HEIZUNG, KLIMAANLAGE)	799
TEMPERATURSENSOR	296 297 298

* ÜBERSETZUNG ZUM ZEITPUNKT DER DRUCKLEGUNG NICHT VORHANDEN

STICHWORTVERZEICHNIS

Bezeichnung	Seite
	299
TEMPERATURSENSOR (2POLIG)	298
	299
TEMPERATURSENSOR (2POLIG) (KRAFTSTOFF)	178
	180
TRAGROLLEN	481
	482
TRENNSCHALTER	313
TRENNSCHALTER (BATTERIE)	207
	215
TURBOLADER	165
	166
	167
	168
TURBOLADERÖLLEITUNGEN	79

U

U-PLANIERSCHILDEINRICHTUNG	699
	700
	701
	702
U-SCHILD	721
	722
	723
	724
	725
	728
	730
ÜBERDRUCKVENTIL	392
	393
	681
ÜBERDRUCKVENTIL (HYDRAULIKFILTER, UMKEHRUNG)	623
ÜBERDRUCKVENTIL (KÄLTEMITTELKOMPRESSOR)	776
ÜBERDRUCKVENTIL (*MANIFOLD PRESSURE)	625
ÜBERROLLSCHUTZ	854
ÜBERROLLSCHUTZAUFLAGER	838
UMGEHUNGSSCHALTER	312
UMKEHRLÜFTER	88
UMLAUFKÜHLWASSERHEIZUNG	241
	242
UMLAUFKÜHLWASSERHEIZUNGS-ELEMENT (120 V, 1500 W)	241
UMLAUFKÜHLWASSERHEIZUNGS-ELEMENT (240 V, 1500 W)	242
UMLEITVENTIL	676
	677
UMLEITVENTIL (HYDRAULIKLÜFTER)	623
UNIVERSALSCHILD U. KANTE	712
	713
	714
	715
	716
UNTERBRECHER (15 A)	812
	818
UNTERBRECHER (15 A) (HAUPTSTROM)	271

V

VEDRAHTUNG - SOLENOID (*BLADE, RIPPER, BLADE TILT)	595
VENTIL U. BEFESTIGUNG - DOZER	657
VENTIL UND BEFESTIGUNGSTEILE - HAUPTSTEUERUNG	662
VENTILKABELSTRANG (SITZ LUFTKOMPRESSOR)	870
VENTILKIPPHEBEL	60
	61
VENTILSTEUERUNG	68
VENTILSTÖSSELSATZ (SCHWINGSITZ)	806
VERDRAHTUNG (EINSPRITZEINHEIT)	341
VERDRAHTUNG (ELEKTRON. STEUERUNG)	324
VERDRAHTUNGSKABELBAUM (DREHZAHLSENSOR)	293
VERDRAHTUNGSKABELBAUM (DURCHDREHEN OHNE EINSPRITZUNG)	326
	330
	333
VERDRAHTUNGSKABELBAUM (*FERRITE)	140
VERDRAHTUNGSKABELBAUM (SCHEIBENWASCHER)	872
VERRIEGELUNG	452
VERSCHLEISSPLATTEN	745
	746
VERSTÄRKUNGSPLATTE	453
VERSTAUKASTEN	766
VERSTELLBARER SITZ	853
VORHÄNGESCHLOSS (BATTERIEKASTEN)	302
VORHÄNGESCHLOSS (BATTERIEKASTEN)	423
VORHÄNGESCHLOSS (FAHRERHAUSHEIZUNG)	802
VORHÄNGESCHLOSS (HYDRAULIKTANKEINFÜLLSIEB)	550
VORHÄNGESCHLOSS (KRAFTSTOFFABLASS)	175
VORHÄNGESCHLOSS (KRAFTSTOFFENTLÜFTUNGSPUMPE EIN/AUS)	402
VORHÄNGESCHLOSS (KRAFTSTOFFTANK)	194
VORHÄNGESCHLOSS (KRAFTSÜBERTRAGUNG - ÖLEINFÜLLUNG)	421
VORHÄNGESCHLOSS (LTERATURFACH)	1

* ÜBERSETZUNG ZUM ZEITPUNKT DER DRUCKLEGUNG NICHT VORHANDEN

STICHWORTVERZEICHNIS

Bezeichnung	Seite
VORHÄNGESCHLOSS (MOTORVERKLEIDUNG)	450
VORHÄNGESCHLOSS (MOTORVERKLEIDUNG)	17
VORHÄNGESCHLOSS (MOTORVERKLEIDUNG)	411 417 419
VORHÄNGESCHLOSS (VANDALISMUSSCHUTZ)	16
VORREINIGER	154 160 161
VORREINIGER (FAHRERHAUSLUFT)	797
VORREINIGER-TURBINE	155 158
VORREINIGERSATZ (TURBINE)	156 158 161
VORSCHMIERPUMPE UND MOTOR	83 85
VORSCHMIERUNG - MOTOR U. PUMPE	85
VORSTEUERLEITUNGEN	595
VORSTEUERÖLDRUCKSAMMLER	533

W

WÄRMESCHIRM	162
WARNAUFKLEBER (*COMPRESSED SPRING, READ OMM)	467
WARNAUFKLEBER (DRUCKSPEICHER)	532 533
WARNAUFKLEBER (HOCHDRUCK, HANDBUCH LESEN, ANSI)	890
WARNAUFKLEBER (HOCHDRUCK, HANDBUCH LESEN, ISO)	892
WARNAUFKLEBER (NICHT SCHWEISSEN, NICHT BOHREN, HANDBUCH LESEN)	890
WARNAUFKLEBER (*PRODUCT LINK 300, ANSI)	243
WARNAUFKLEBER (STARTHILFEKABEL, HANDBUCH LESEN)	890
WARNAUFKLEBER (STARTHILFEKABEL, HANDBUCH LESEN)	303
WARNAUFKLEBER (STROMSCHLAGGEFAHR)	890 892
WARNHORN (24 V, NIEDRIGER TON)	224
WARNHORN (24 V, NIEDRIGER TON)	209 217
WARNSCHILD (HOCHDRUCKZYLINDER)	467
WARNSCHILD (KETTENSPANNFEDER)	454
WARNSCHILD (KETTENSPANNFEDER)	467
WARNVORRICHTUNG	198
WASSERABSCHEIDER- U. KRAFTSTOFFILTER	183
WASSERTEMPERATURREGLER (92 GRAD)	99
*WINDOW GP-CAB	877
WISCHERARM	886 887

Z

ZAHNRADPUMPE	376 378 634 636
ZAHNRADPUMPENABSCHNITT	643 645 647 648
ZAHNRADVORGELEGE	42 44
ZUGANGSKLAPPE	123 402 404 405 406 407 408
ZUGANGSKLAPPE - HYDRAULIKTANKKAPPE	550
ZUGANGSKLAPPE (KÜHLERKAPPE)	120
ZUGHAKEN	409
ZYLINDERAUFHÄNGUNG	633
ZYLINDERBLOCKSCHRAUBE	57
ZYLINDERKOPF	32 33 35
ZYLINDERKOPF-HALTETEILE	33 38
ZYLINDERKOPFSTOPFEN	58

* ÜBERSETZUNG ZUM ZEITPUNKT DER DRUCKLEGUNG NICHT VORHANDEN

MEMORANDA

MACHINE ARRANGEMENT

212-2741 CHASSIS AR

S/N: RJG1-UP

PART OF 212-2740 GENERAL AR

SMCS-7000 **i02467667**

NOTE	PART NUMBER	QTY	PART NAME 1 2 3 4 5 6 (PRODUCT LEVEL)	SEE PAGE
Y	*213-7003*	1	BATTERY & WIRING GP	207
Y	*205-8640*	1	CAB AR	770
Y	*213-0496*	1	CASE & FRAME GP	394
Y	*213-1121*	1	DOOR GP-ACCESS	402
Y	*213-1082*	1	FENDER GP	421
Y	*213-0047*	1	FILTER & LINES GP-FUEL	175
Y	*231-8147*	1	GUARD GP-BOTTOM	430
Y	*213-1141*	1	GUARD GP-DRIVE SHAFT	436
Y	*213-6973*	1	GUARD GP-RADIATOR	442
			S/N: RJG1-528	
Y	*270-7539*	1	GUARD GP-RADIATOR	444
			S/N: RJG529-UP	
Y	*213-1117*	1	HOOD & GUARD GP	450
			S/N: RJG1-528	
Y	*270-0517*	1	ENCLOSURE GP-ENGINE	417
			S/N: RJG529-UP	
Y	*247-4927*	1	LIGHTING GP-FLOOD (4-LAMP, FRONT, REAR)	267
Y	*213-0048*	1	LINES GP-HEATER	825
Y	*231-4590*	1	LUBRICATION GP-EQUALIZER BAR	477
Y	*231-1381*	1	LUBRICATION GP-PIVOT SHAFT	479
Y	*213-7065*	1	MOUNTING GP-ROPS	838
Y	*214-0067*	1	PLATE & FILM GP	888
Y	*219-4135*	1	PLATFORM AR	849
Y	*213-7067*	1	ROPS GP	854
Y	*214-1096*	1	SEAT & MOUNTING GP	856
Y	*209-6934*	1	TANK GP-FUEL	194
	6V-1971	1	LITERATURE GP (MACHINE)	
	246-2641	1	PADLOCK GP (LITERATURE COMPARTMENT)	
			ON LITERATURE COMPARTMENT	
	5P-8500	2	KEY	

Y-SEPARATE ILLUSTRATION

<END>

MACHINE ARRANGEMENT

238-4491 COLD WEATHER AR—SINGLE FLANGE ROLLERS

S/N: RJG1-UP

CANNOT BE USED WITH 199-7735—PAGE 481

AN ATTACHMENT

SMCS-7000 **i02274737**

NOTE	PART NUMBER	QTY	PART NAME 1 2 3 4 5 6 (PRODUCT LEVEL)	SEE PAGE
Y	**226-0463**	1	BAR GP-EQUALIZER	460
Y	**110-2780**	2	FINAL DRIVE GP	357
Y	**245-9947**	4	IDLER GP-TRACK	472
Y	**245-9948**	16	ROLLER GP-TRACK-SINGLE FLANGE	486
	251-3273	32	PIN AS-TRACK	
			(EACH INCLUDES)	
	6Y-0473	2	PLUG-CLEAR	
	9G-4872	2	STOPPER-RUBBER	
	9X-7487	2	SEAL AS-SHAFT	

Y-SEPARATE ILLUSTRATION

<END>

238-4492 COLD WEATHER AR—DOUBLE FLANGE ROLLERS

S/N: RJG1-UP

CANNOT BE USED WITH 199-7735—PAGE 481

AN ATTACHMENT

SMCS-7000 **i02274601**

NOTE	PART NUMBER	QTY	PART NAME 1 2 3 4 5 6 (PRODUCT LEVEL)	SEE PAGE
Y	**226-0463**	1	BAR GP-EQUALIZER	460
Y	**110-2780**	2	FINAL DRIVE GP	357
Y	**245-9947**	4	IDLER GP-TRACK	472
Y	**245-9949**	8	ROLLER GP-TRACK-DOUBLE FLANGE	484
Y	**245-9948**	8	ROLLER GP-TRACK-SINGLE FLANGE	486
	251-3273	32	PIN AS-TRACK	
			(EACH INCLUDES)	
	6Y-0473	2	PLUG-CLEAR	
	9G-4872	2	STOPPER-RUBBER	
	9X-7487	2	SEAL AS-SHAFT	

Y-SEPARATE ILLUSTRATION

<END>

MACHINE ARRANGEMENT

240-2037 COLD WEATHER AR

S/N: RJG1-UP

AN ATTACHMENT

SMCS-7000 **i02275347**

NOTE	PART NUMBER	QTY	PART NAME 1 2 3 4 5 6 (PRODUCT LEVEL)	SEE PAGE
	251-3273	32	PIN AS-TRACK	
			(EACH INCLUDES)	
	6Y-0473	2	PLUG-CLEAR	
	9G-4872	2	STOPPER-RUBBER	

<END>

212-2740 GENERAL AR

S/N: RJG1-UP

SMCS-7000 **i02439503**

NOTE	PART NUMBER	QTY	PART NAME 1 2 3 4 5 6 (PRODUCT LEVEL)	SEE PAGE
Y	*212-2741*	1	CHASSIS AR	1
Y	*212-2743*	1	ELECTRONICS AR-MACHINE	236
Y	**271-2219**	1	ENGINE AR-COMPLETE	12
Y	*269-8382*	1	HYDRAULIC AR	576
Y	*267-2900*	1	INSTALLATION AR-ENGINE	17
Y	*212-2746*	1	POWER TRAIN AR	375
Y	*212-2747*	1	UNDERCARRIAGE AR	505

Y-SEPARATE ILLUSTRATION

<END>

238-4494 MINING AR

S/N: RJG1-UP

AN ATTACHMENT

SMCS-7000 **i02279772**

NOTE	PART NUMBER	QTY	PART NAME 1 2 3 4 5 6 (PRODUCT LEVEL)	SEE PAGE
Y	*213-1112*	1	AIR CONDITIONER AR	764
Y	*199-7735*	1	ROLLER AR-TRACK (SINGLE FLANGE)	481
Y	*1Z-0919*	1	SUSPENSION GP-BOGIE	494
	1Z-0886	1	PAINT GP (BLACK)	

Y-SEPARATE ILLUSTRATION

<END>

MACHINE ARRANGEMENT

238-4498 STOCKPILE AR

S/N: RJG1-UP

FOR USE WITH 268-6651—PAGE 158. CANNOT BE USED WITH 269-8387—PAGE 765

AN ATTACHMENT

SMCS-7000 **i02474039**

NOTE	PART NUMBER	QTY	PART NAME 1 2 3 4 5 6 (PRODUCT LEVEL)	SEE PAGE
Y	*239-8035*	1	ALTERNATOR GP-CHARGING (24-VOLT, 95-AMPERE)	203
			S/N: RJG1-528	
Y	*268-7801*	1	ALTERNATOR GP-CHARGING (24-VOLT, 95-AMPERE)	205
			S/N: RJG529-UP	
Y	*240-0228*	1	ENCLOSURE GP-ENGINE	411
			S/N: RJG1-528	
Y	*270-0525*	1	ENCLOSURE GP-ENGINE	419
			S/N: RJG529-UP	
Y	*220-0261*	1	FAN AR-REVERSIBLE	88
Y	*225-3161*	1	GUARD GP-BOTTOM (STOCKPILE)	429
Y	*247-1828*	1	RADIATOR GP	114
			S/N: RJG1-528	
Y	*267-2901*	1	RADIATOR AR	109
			S/N: RJG529-UP	
Y	*213-4312*	1	ROLLER AR-TRACK CARRIER	482

Y-SEPARATE ILLUSTRATION

<END>

238-4495 WASTE HANDLING AR

S/N: RJG1-UP

FOR USE WITH 240-6905—PAGE 155

AN ATTACHMENT

SMCS-7000 **i02467697**

NOTE	PART NUMBER	QTY	PART NAME 1 2 3 4 5 6 (PRODUCT LEVEL)	SEE PAGE
Y	*239-8035*	1	ALTERNATOR GP-CHARGING (24-VOLT, 95-AMPERE)	203
			S/N: RJG1-528	
Y	*268-7801*	1	ALTERNATOR GP-CHARGING (24-VOLT, 95-AMPERE)	205
			S/N: RJG529-UP	
Y	*143-7543*	1	GUARD AR-FINAL DRIVE	428
Y	*167-1949*	1	GUARD AR-IDLER	428
Y	*238-4496*	1	WASTE HANDLING AR	5

Y-SEPARATE ILLUSTRATION

<END>

MACHINE ARRANGEMENT

238-4496 WASTE HANDLING AR

S/N: RJG1-417

PART OF 238-4495 WASTE HANDLING AR

AN ATTACHMENT

SMCS-7000 **i02282701**

NOTE	REF NO	GRAPHIC REF	PART NUMBER	QTY	PART NAME 1 2 3 4 5 6 (PRODUCT LEVEL)	SEE PAGE
Y	1	1	*1Z-0749*	1	GUARD GP-PIVOT SHAFT	439
	3	1	**110-7935**	2	FILM-WASTE HANDLER	
Y	4	1	*240-0228*	1	ENCLOSURE GP-ENGINE	411
Y	5	1	*243-1653*	1	GUARD GP-BOTTOM	432

Y-SEPARATE ILLUSTRATION

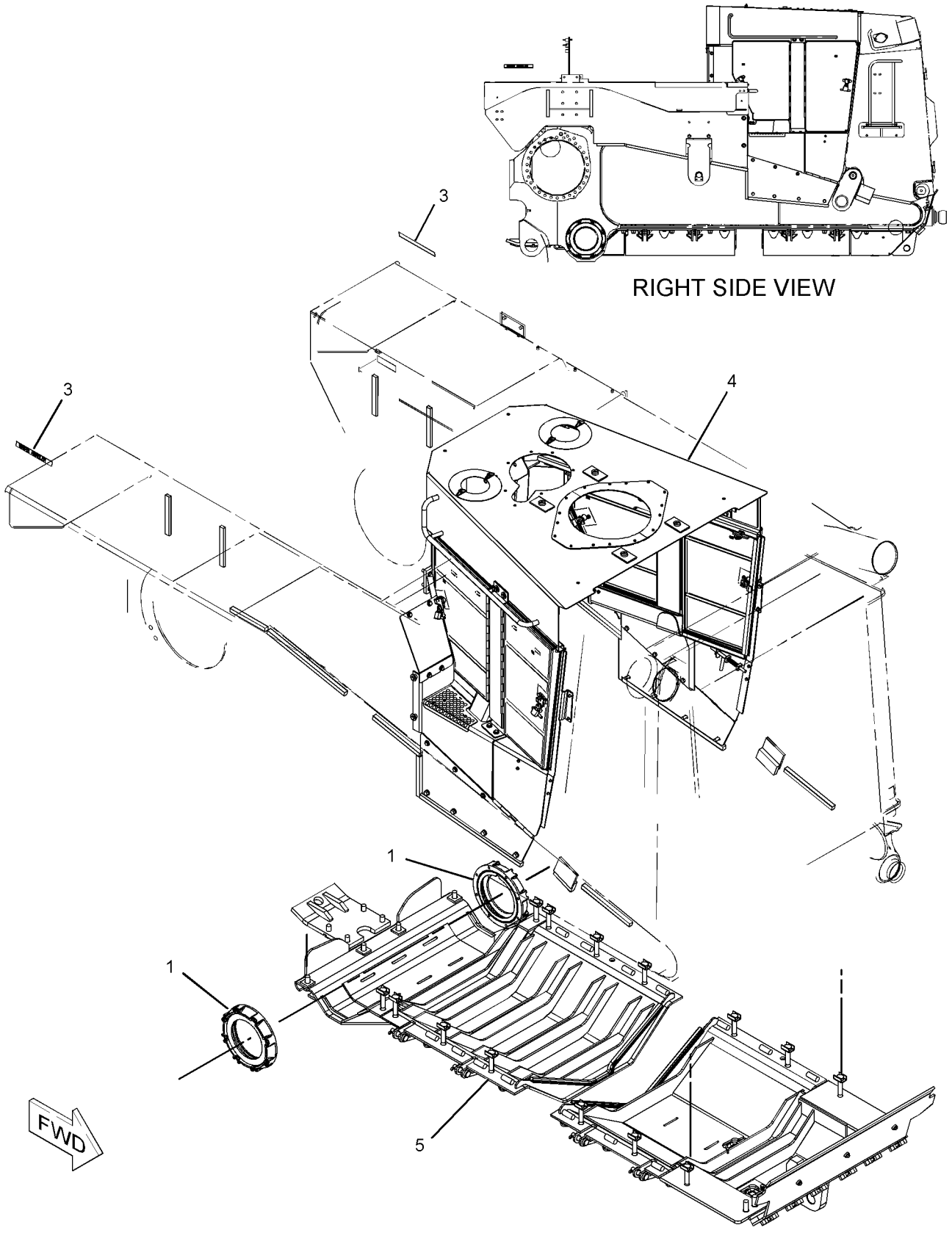

GRAPHIC #1 **<END>** g01140162

MACHINE ARRANGEMENT

238-4496 WASTE HANDLING AR

S/N: RJG418-528

PART OF 238-4495 WASTE HANDLING AR

AN ATTACHMENT

SMCS-7000 **i02474044**

NOTE	REF NO	GRAPHIC REF	PART NUMBER	QTY	PART NAME 1 2 3 4 5 6 (PRODUCT LEVEL)	SEE PAGE
Y	1	1	*1Z-0749*	1	GUARD GP-PIVOT SHAFT	439
	3	1	**110-7935**	2	FILM-WASTE HANDLER	
Y	4	1	*240-0228*	1	ENCLOSURE GP-ENGINE	411
Y	5	1	*243-1653*	1	GUARD GP-BOTTOM	432

Y-SEPARATE ILLUSTRATION

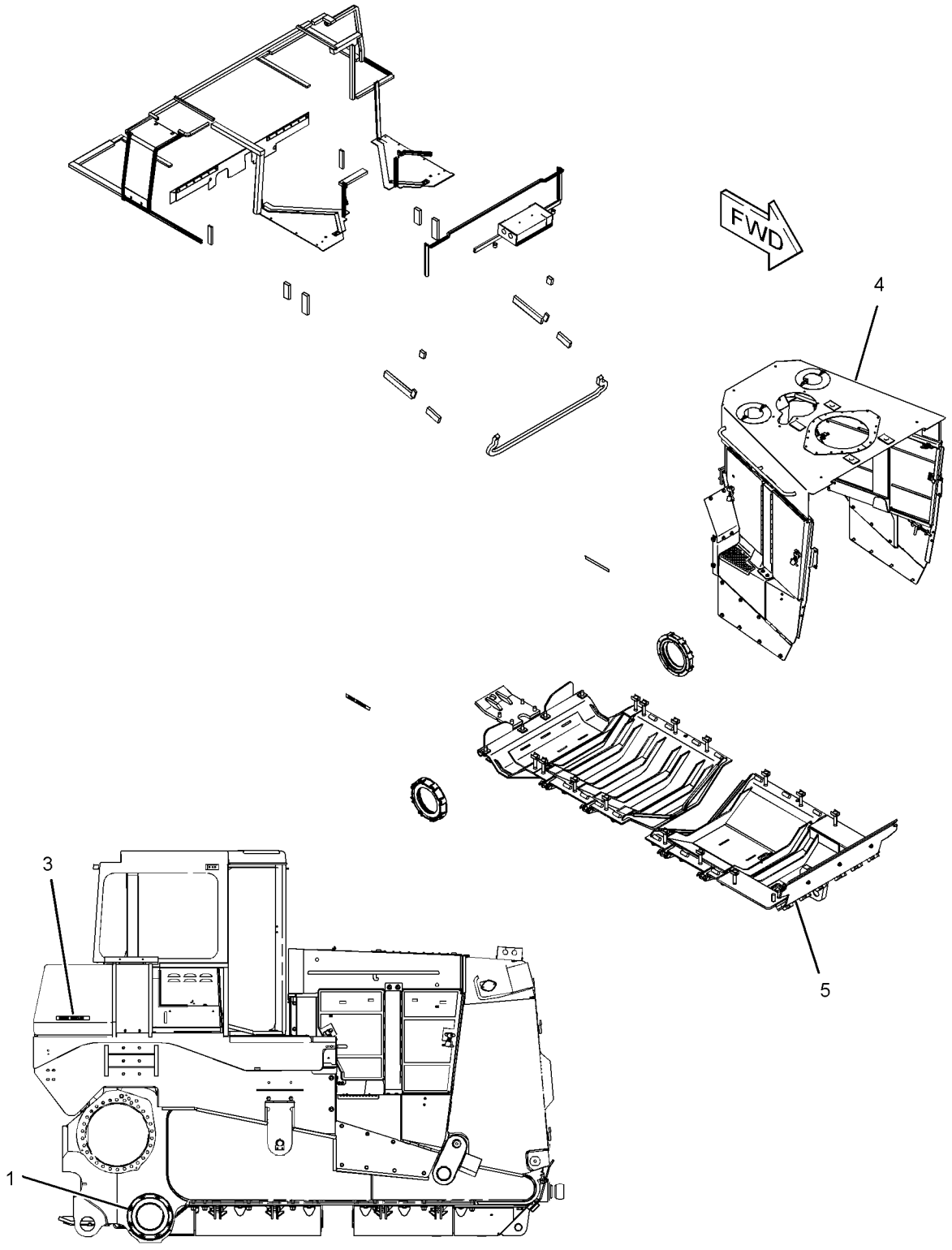

RIGHT SIDE VIEW

GRAPHIC #1 **<END>** g01234457

MACHINE ARRANGEMENT

238-4496 WASTE HANDLING AR

S/N: RJG529-UP

PART OF 238-4495 WASTE HANDLING AR

AN ATTACHMENT

SMCS-7000 **i02474045**

NOTE	REF NO	GRAPHIC REF	PART NUMBER	QTY	PART NAME 1 2 3 4 5 6 (PRODUCT LEVEL)	SEE PAGE
Y	1	1	*1Z-0749*	1	GUARD GP-PIVOT SHAFT	439
Y	2	1	*243-1653*	1	GUARD GP-BOTTOM	432
	3	1	**110-7935**	2	FILM-WASTE HANDLER	
CY	4	1	*270-0525*	1	ENCLOSURE GP-ENGINE	419

C-CHANGE FROM PREVIOUS TYPE
Y-SEPARATE ILLUSTRATION

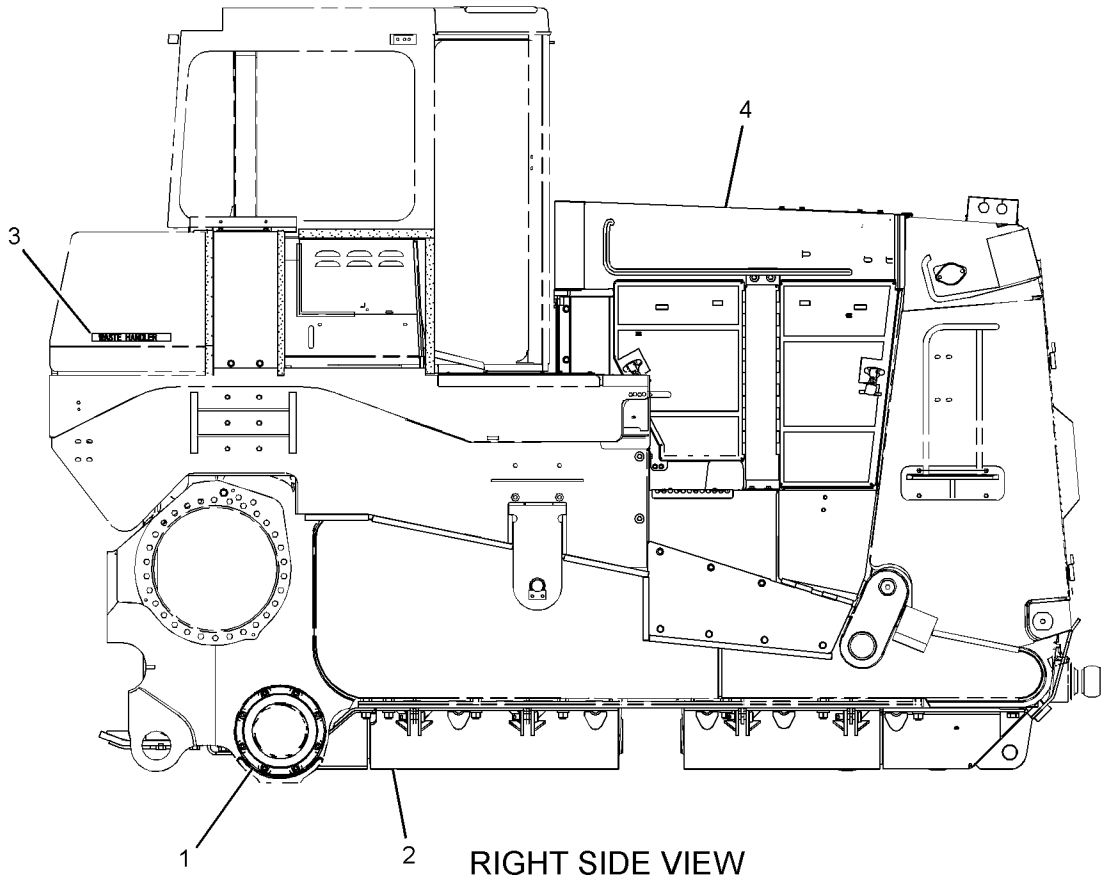

RIGHT SIDE VIEW

GRAPHIC #1 **<END>** g01234453

ENGINE ARRANGEMENT

212-2737 ENGINE AR-COMPLETE

S/N: EHX1-UP
PART OF 257-5846 SUPPRESSION AR-SOUND
AN ATTACHMENT

SMCS-1000 **i02470612**

NOTE	PART NUMBER	QTY	PART NAME 1 2 3 4 5 6 (PRODUCT LEVEL)	SEE PAGE
Y	*243-1554*	1	CONTROL & MTG GP-ENGINE ELEK	230
Y	*235-4102*	1	COVER GP-CYLINDER BLOCK (FRONT STRUCTURE)	21
Y	*235-7135*	1	COVER GP-CYLINDER BLOCK (CENTRAL STRUCTURE)	23
Y	*230-4156*	1	COVER GP-REAR HOUSING	24
Y	*6N-2229*	1	DAMPER GP	36
Y	*261-1507*	1	ENGINE AR-CORE	14
Y	*249-8533*	1	FASTENER GP-CYLINDER HEAD	38
Y	*216-0820*	1	FILLER GP-ENGINE OIL	71
			S/N: EHX1-2500	
Y	*281-0202*	1	FILLER GP-ENGINE OIL	72
			S/N: EHX2501-UP	
Y	*216-0819*	1	FILTER GP-ENGINE OIL	73
Y	*235-6504*	1	FILTER GP-FUEL	178
			S/N: EHX1-2500	
Y	*279-5730*	1	FILTER GP-FUEL	180
			S/N: EHX2501-UP	
Y	*216-0811*	1	FLYWHEEL GP	39
Y	*216-0821*	1	GAUGE GP-OIL LEVEL (DIPSTICK) (ENGINE)	76
Y	*216-0812*	1	GEAR GP-REAR	42
Y	*226-0297*	1	HOUSING GP-FLYWHEEL	46
Y	*235-2014*	1	LIFTING GP-ENGINE	49
Y	*216-0826*	1	LINES GP-AIR	146
Y	*216-0810*	1	LINES GP-ENGINE OIL	77
Y	*216-0829*	1	LINES GP-FUEL	184
			S/N: EHX1-2500	
Y	*282-5926*	1	LINES GP-FUEL FILTER	187
			S/N: EHX2501-UP	
Y	*216-0828*	1	LINES GP-TURBOCHARGER OIL	79
Y	*216-0823*	1	LINES GP-WATER	92
Y	*216-0824*	1	LINES GP-WATER	99
Y	*216-0825*	1	LINES GP-WATER	101
Y	*217-6686*	1	MANIFOLD GP-EXHAUST	151
Y	*219-7677*	1	MOUNTING GP-ALTERNATOR	53
Y	*119-8582*	1	PAN GP-OIL	54
Y	*256-9738*	1	PLATE GP-ENGINE IDENTIFICATION (ACERT)	893
Y	*227-9516*	1	PLUG GP-CYLINDER BLOCK	57
Y	*223-6407*	1	PLUG GP-CYLINDER HEAD	58
Y	*223-6421*	1	PUMP & MTG GP-FUEL TRANSFER	190
Y	*230-4172*	1	PUMP GP-WATER	108
Y	*235-8210*	1	SENSOR GP-ENGINE	278
Y	*234-5913*	1	SUPPORT GP-AFTERCOOLER	163
Y	*248-4821*	1	SUPPORT GP-ENGINE	65
Y	*100-4417*	1	SWITCH GP-FLOW	314
Y	*7N-1346*	1	TRUNNION GP-ENGINE	67
Y	*234-1622*	1	VALVE MECHANISM GP	68
Y	*248-6886*	1	WIRING GP-ELECTRONIC CONTROL	324
			PLEASE USE THE GASKET KIT LINK IN SIS OR CONTACT YOUR LOCAL DEALER FOR THE LATEST GASKET KIT INFORMATION	

Y-SEPARATE ILLUSTRATION

ENGINE ARRANGEMENT

212-2744 ENGINE AR-COMPLETE

S/N: EHX1-UP

PART OF 212-2740 GENERAL AR

SMCS-1000 **i02285942**

NOTE	PART NUMBER	QTY	PART NAME 1 2 3 4 5 6 (PRODUCT LEVEL)	SEE PAGE
Y	*243-1554*	1	CONTROL & MTG GP-ENGINE ELEK	230
Y	*235-7135*	1	COVER GP-CYLINDER BLOCK (CENTRAL STRUCTURE)	23
Y	*235-4102*	1	COVER GP-CYLINDER BLOCK (FRONT STRUCTURE)	21
Y	*230-4156*	1	COVER GP-REAR HOUSING	24
Y	*6N-2229*	1	DAMPER GP	36
Y	*260-9527*	1	ENGINE AR-CORE	13
Y	*249-8533*	1	FASTENER GP-CYLINDER HEAD	38
Y	*216-0820*	1	FILLER GP-ENGINE OIL	71
Y	*216-0819*	1	FILTER GP-ENGINE OIL	73
Y	*235-6504*	1	FILTER GP-FUEL	178
Y	*216-0811*	1	FLYWHEEL GP	39
Y	*216-0821*	1	GAUGE GP-OIL LEVEL (DIPSTICK)	76
Y	*216-0812*	1	GEAR GP-REAR	42
Y	*226-0297*	1	HOUSING GP-FLYWHEEL	46
Y	*235-2014*	1	LIFTING GP-ENGINE	49
Y	*216-0826*	1	LINES GP-AIR	146
Y	*216-0810*	1	LINES GP-ENGINE OIL	77
Y	*216-0829*	1	LINES GP-FUEL	184
Y	*216-0828*	1	LINES GP-TURBOCHARGER OIL	79
Y	*216-0823*	1	LINES GP-WATER	92
Y	*216-0824*	1	LINES GP-WATER	99
Y	*216-0825*	1	LINES GP-WATER	101
Y	*217-6686*	1	MANIFOLD GP-EXHAUST	151
Y	*219-7677*	1	MOUNTING GP-ALTERNATOR	53
Y	*119-8582*	1	PAN GP-OIL	54
Y	*256-9738*	1	PLATE GP-ENGINE IDENTIFICATION (ACERT)	893
Y	*227-9516*	1	PLUG GP-CYLINDER BLOCK	57
Y	*223-6407*	1	PLUG GP-CYLINDER HEAD	58
Y	*223-6421*	1	PUMP & MTG GP-FUEL TRANSFER	190
Y	*230-4172*	1	PUMP GP-WATER	108
Y	*235-8210*	1	SENSOR GP-ENGINE	278
Y	*234-5913*	1	SUPPORT GP-AFTERCOOLER	163
Y	*248-4821*	1	SUPPORT GP-ENGINE	65
Y	*100-4417*	1	SWITCH GP-FLOW	314
Y	*7N-1346*	1	TRUNNION GP-ENGINE	67
Y	*234-1622*	1	VALVE MECHANISM GP	68
Y	*248-6886*	1	WIRING GP-ELECTRONIC CONTROL	324
			GASKET KITS WILL BE PROVIDED WHEN AVAILABLE	

Y-SEPARATE ILLUSTRATION

ENGINE ARRANGEMENT

271-2219 ENGINE AR-COMPLETE

S/N: EHX2581-UP

PART OF 212-2740 GENERAL AR

SMCS-1000 **i02440971**

NOTE	PART NUMBER	QTY	PART NAME 1 2 3 4 5 6 (PRODUCT LEVEL)	SEE PAGE
Y	*243-1554*	1	CONTROL & MTG GP-ENGINE ELEK	230
Y	*235-4102*	1	COVER GP-CYLINDER BLOCK (FRONT STRUCTURE)	21
Y	*235-7135*	1	COVER GP-CYLINDER BLOCK (CENTRAL STRUCTURE)	23
Y	*230-4156*	1	COVER GP-REAR HOUSING	24
Y	*6N-2229*	1	DAMPER GP	36
Y	*276-9586*	1	ENGINE AR-CORE	15
Y	*249-8533*	1	FASTENER GP-CYLINDER HEAD	38
Y	*281-0202*	1	FILLER GP-ENGINE OIL	72
Y	*216-0819*	1	FILTER GP-ENGINE OIL	73
Y	*279-5730*	1	FILTER GP-FUEL	180
Y	*216-0811*	1	FLYWHEEL GP	39
Y	*216-0821*	1	GAUGE GP-OIL LEVEL (DIPSTICK)	76
Y	*216-0812*	1	GEAR GP-REAR	42
Y	*226-0297*	1	HOUSING GP-FLYWHEEL	46
Y	*235-2014*	1	LIFTING GP-ENGINE	49
Y	*216-0826*	1	LINES GP-AIR	146
Y	*216-0810*	1	LINES GP-ENGINE OIL	77
Y	*282-5926*	1	LINES GP-FUEL FILTER	187
Y	*216-0828*	1	LINES GP-TURBOCHARGER OIL	79
Y	*216-0823*	1	LINES GP-WATER	92
Y	*216-0824*	1	LINES GP-WATER	99
Y	*216-0825*	1	LINES GP-WATER	101
Y	*217-6686*	1	MANIFOLD GP-EXHAUST	151
Y	*219-7677*	1	MOUNTING GP-ALTERNATOR	53
Y	*119-8582*	1	PAN GP-OIL	54
Y	*256-9738*	1	PLATE GP-ENGINE IDENTIFICATION (ACERT)	893
Y	*227-9516*	1	PLUG GP-CYLINDER BLOCK	57
Y	*223-6407*	1	PLUG GP-CYLINDER HEAD	58
Y	*223-6421*	1	PUMP & MTG GP-FUEL TRANSFER	190
Y	*230-4172*	1	PUMP GP-WATER	108
Y	*235-8210*	1	SENSOR GP-ENGINE	278
Y	*234-5913*	1	SUPPORT GP-AFTERCOOLER	163
Y	*6N-1378*	1	SUPPORT GP-ENGINE	64
Y	*100-4417*	1	SWITCH GP-FLOW	314
Y	*7N-1346*	1	TRUNNION GP-ENGINE	67
Y	*234-1622*	1	VALVE MECHANISM GP	68
Y	*248-6886*	1	WIRING GP-ELECTRONIC CONTROL	324
			PLEASE USE THE GASKET KIT LINK IN SIS OR CONTACT YOUR LOCAL DEALER FOR THE LATEST GASKET KIT INFORMATION	

Y-SEPARATE ILLUSTRATION

ENGINE ARRANGEMENT

260-9527 ENGINE AR-CORE

S/N: EHX1-UP

PART OF 212-2744 ENGINE AR-COMPLETE

SMCS-1000 **i02270799**

NOTE	PART NUMBER	QTY	PART NAME 1 2 3 4 5 6 (PRODUCT LEVEL)	SEE PAGE
Y	*223-6408*	1	BASE GP-VALVE COVER & INJ HARN	18
Y	*260-9306*	1	CAMSHAFT GP	20
Y	*225-6052*	1	CRANKSHAFT GP	26
Y	*237-0842*	1	CYLINDER BLOCK GP	30
Y	*223-6397*	1	CYLINDER HEAD GP	33
Y	*4N-2481*	1	FASTENER GP-OIL PUMP MOUNTING	70
Y	*235-7134*	1	GEAR GP-FRONT	40
Y	*238-9862*	1	HOUSING GP-FRONT	47
Y	*233-2462*	1	HOUSING GP-REAR	48
Y	*260-9631*	1	MECHANISM GP-FUEL PUMP & VALVE	51
Y	*213-4836*	12	PISTON & ROD GP	56
YR	**7C-1772**	1	PUMP GP-ENGINE OIL	86
Y	*238-0489*	12	PUMP GP-FUEL INJECTION	191
Y	*217-6570*	1	TURBOCHARGER GP	165
	223-3265	1	ELECTRONICS GP-ENGINE RATINGS	

R-REMFG PART MAY BE AVAILABLE
Y-SEPARATE ILLUSTRATION

ENGINE ARRANGEMENT

261-1507 ENGINE AR-CORE

S/N: EHX1-UP
PART OF 212-2737 ENGINE AR-COMPLETE
AN ATTACHMENT

SMCS-1000 **i02271969**

NOTE	PART NUMBER	QTY	PART NAME 1 2 3 4 5 6 (PRODUCT LEVEL)	SEE PAGE
Y	*223-6408*	1	BASE GP-VALVE COVER & INJ HARN	18
Y	*260-9306*	1	CAMSHAFT GP	20
Y	*225-6052*	1	CRANKSHAFT GP	26
Y	*237-0842*	1	CYLINDER BLOCK GP	30
Y	*223-6397*	1	CYLINDER HEAD GP	33
Y	*4N-2481*	1	FASTENER GP-OIL PUMP MOUNTING	70
Y	*235-7134*	1	GEAR GP-FRONT	40
Y	*238-9862*	1	HOUSING GP-FRONT	47
Y	*233-2462*	1	HOUSING GP-REAR	48
Y	*260-9631*	1	MECHANISM GP-FUEL PUMP & VALVE	51
Y	*213-4836*	12	PISTON & ROD GP	56
YR	**7C-1772**	1	PUMP GP-ENGINE OIL	86
Y	*238-0489*	12	PUMP GP-FUEL INJECTION	191
Y	*217-6570*	1	TURBOCHARGER GP	165
	229-2767	1	ELECTRONICS GP-ENGINE RATINGS	

R-REMFG PART MAY BE AVAILABLE
Y-SEPARATE ILLUSTRATION

ENGINE ARRANGEMENT

276-9586 ENGINE AR-CORE

S/N: EHX2581-UP

PART OF 271-2219 ENGINE AR-COMPLETE

SMCS-1000 **i02441106**

NOTE	PART NUMBER	QTY	PART NAME 1 2 3 4 5 6 (PRODUCT LEVEL)	SEE PAGE
Y	*223-6408*	1	BASE GP-VALVE COVER & INJ HARN	18
Y	*260-9306*	1	CAMSHAFT GP	20
Y	*225-6052*	1	CRANKSHAFT GP	26
Y	*237-0842*	1	CYLINDER BLOCK GP	30
Y	*223-6397*	1	CYLINDER HEAD GP	33
Y	*4N-2481*	1	FASTENER GP-OIL PUMP MOUNTING	70
Y	*235-7134*	1	GEAR GP-FRONT	40
Y	*238-9862*	1	HOUSING GP-FRONT	47
Y	*233-2462*	1	HOUSING GP-REAR	48
Y	*260-9631*	1	MECHANISM GP-FUEL PUMP & VALVE	51
Y	*213-4836*	12	PISTON & ROD GP	56
YR	**7C-1772**	1	PUMP GP-ENGINE OIL	86
Y	*238-0489*	12	PUMP GP-FUEL INJECTION	191
Y	*217-6570*	1	TURBOCHARGER GP	165
	276-5458	1	ELECTRONICS GP-ENGINE RATINGS	

R-REMFG PART MAY BE AVAILABLE
Y-SEPARATE ILLUSTRATION

ENGINE ARRANGEMENT

212-2745 INSTALLATION AR-ENGINE

S/N: RJG1-528

PART OF 212-2740 GENERAL AR

SMCS-1000 **i02273873**

NOTE	PART NUMBER	QTY	PART NAME 1 2 3 4 5 6 (PRODUCT LEVEL)	SEE PAGE
Y	*212-7532*	1	AFTERCOOLER GP-AIR	127
Y	*212-7683*	1	AIR CLEANER GP	131
Y	*218-4962*	1	ALTERNATOR GP-CHARGING	201
Y	*214-6665*	1	COOLER GP-HYDRAULIC OIL	549
Y	*212-7679*	1	DUST EJECTOR GP (ATAAC) (RH)	135
Y	*212-7684*	1	DUST EJECTOR GP (ATAAC) (LH)	137
Y	*213-8358*	1	FAN GP-SUCTION	89
Y	*212-7678*	1	FUMES DISPOSAL GP	75
Y	*212-9645*	1	LINES GP-AIR (EXHAUST)	142
Y	*212-9646*	1	LINES GP-AIR (ENGINE INLET)	144
Y	*212-9647*	1	LINES GP-AIR (ATAAC) (REMOTE)	145
Y	*212-7682*	1	LINES GP-WATER	90
Y	*212-7680*	1	MUFFLER GP	152
Y	*175-7542*	1	PRECLEANER GP	160
Y	*212-9648*	1	PULLEY GP-CRANKSHAFT	59
Y	*212-7587*	1	RADIATOR GP	110
Y	*212-7688*	1	SHIELD GP-HEAT	162
Y	*221-1814*	1	STARTING AID GP-ETHER	300
Y	*105-4729*	1	STARTING MOTOR GP-ELECTRIC	309
Y	*4P-5544*	1	SUPPORT GP-ENGINE	63
Y	*212-7681*	1	TANK GP-COOLANT	120
Y	*213-7004*	1	WIRING GP-ENGINE	326
	246-2641	1	PADLOCK GP (VANDALISM GUARD)	
	5P-8500	2	KEY	

Y-SEPARATE ILLUSTRATION

ENGINE ARRANGEMENT

267-2900 INSTALLATION AR-ENGINE

S/N: RJG529-UP

PART OF 212-2740 GENERAL AR

SMCS-1000 **i02439505**

NOTE	PART NUMBER	QTY	PART NAME 1 2 3 4 5 6 (PRODUCT LEVEL)	SEE PAGE
Y	*267-2880*	1	AFTERCOOLER GP-AIR	129
Y	*268-6368*	1	AIR CLEANER GP	133
Y	*218-4962*	1	ALTERNATOR GP-CHARGING	201
Y	*214-6665*	1	COOLER GP-HYDRAULIC OIL	549
Y	*269-0889*	1	DUST EJECTOR GP	139
Y	*213-8358*	1	FAN GP-SUCTION	89
Y	*212-7678*	1	FUMES DISPOSAL GP	75
Y	*212-9645*	1	LINES GP-AIR (EXHAUST)	142
Y	*267-2890*	1	LINES GP-AIR (AFTERCOOLER)	148
Y	*267-2905*	1	LINES GP-AIR (INTAKE)	150
Y	*212-7682*	1	LINES GP-WATER	90
Y	*269-7113*	1	MUFFLER GP	153
Y	*212-9648*	1	PULLEY GP-CRANKSHAFT	59
Y	*267-2860*	1	RADIATOR GP	115
Y	*212-7688*	1	SHIELD GP-HEAT	162
Y	*221-1814*	1	STARTING AID GP-ETHER	300
Y	*105-4729*	1	STARTING MOTOR GP-ELECTRIC	309
Y	*4P-5544*	1	SUPPORT GP-ENGINE	63
Y	*267-2875*	1	TANK GP-COOLANT	123
Y	*213-7004*	1	WIRING GP-ENGINE	326
	246-2641	1	PADLOCK GP (ENGINE ENCLOSURE)	
	5P-8500	2	KEY	

Y-SEPARATE ILLUSTRATION

223-6408 BASE GP-VALVE COVER & INJ HARN

S/N: EHX1-UP

PART OF 260-9527, 261-1507, 276-9586 ENGINE AR-CORE

ALSO AN ATTACHMENT

SMCS-1120, 1408 **i02230983**

NOTE	REF NO	GRAPHIC REF	PART NUMBER	QTY	PART NAME 1 2 3 4 5 6 (PRODUCT LEVEL)	SEE PAGE
	1	1	**7E-6508**	12	CAP AS (UNIT INJECTOR)	
Y	2	1	*226-4927*	2	BASE GP-VALVE COVER & INJ HARN	19
	3	1	**1A-9579**	32	BOLT (5/16-18X1.5-IN)	
	4	1	**9M-1974**	32	WASHER-HARD (8.8X16X2-MM THK)	

Y-SEPARATE ILLUSTRATION

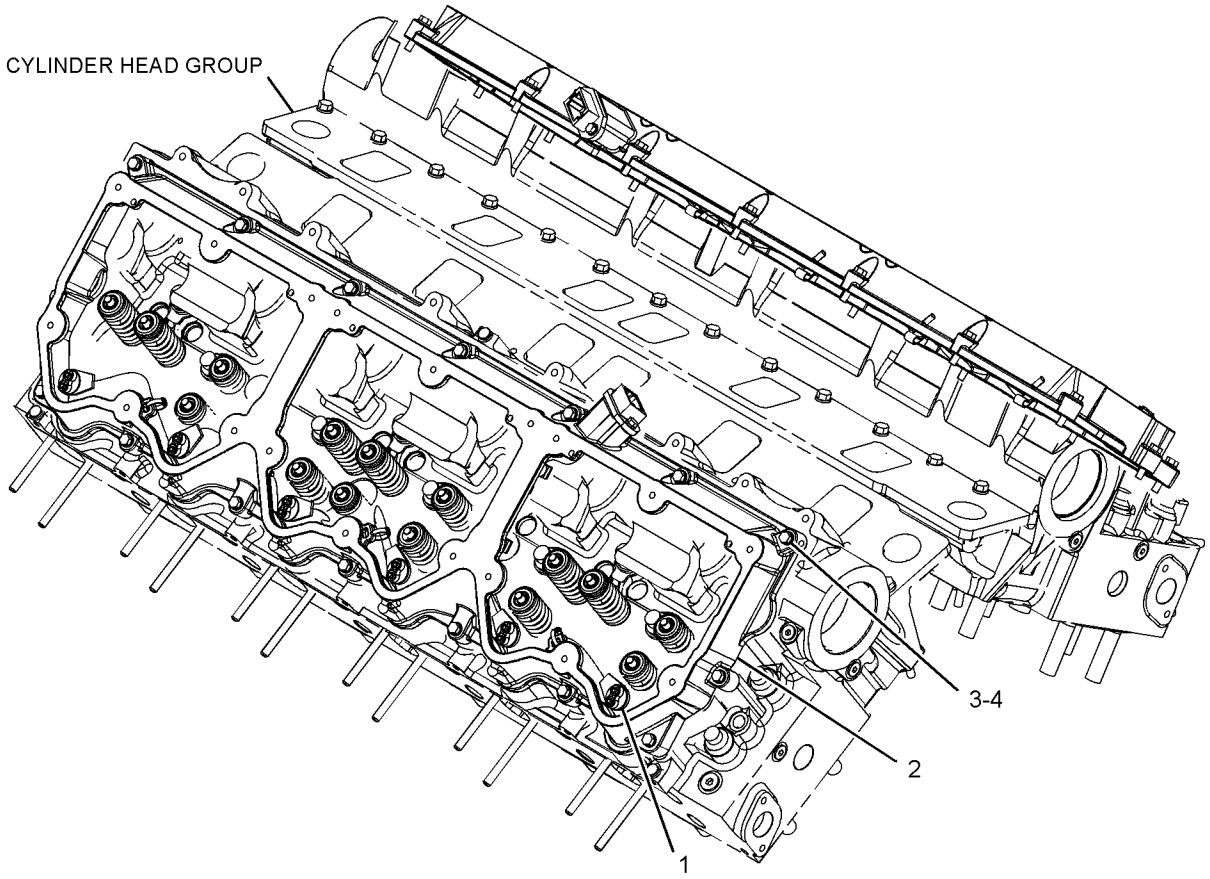

GRAPHIC #1 **<END>** g01051256

226-4927 BASE GP-VALVE COVER & INJ HARN

S/N: EHX1-UP

PART OF 223-6408 BASE GP-VALVE COVER & INJ HARN

ALSO AN ATTACHMENT

SMCS-1120, 1408 **i02432437**

NOTE	REF NO	GRAPHIC REF	PART NUMBER	QTY	PART NAME 1 2 3 4 5 6 (PRODUCT LEVEL)	SEE PAGE
	1	1	**6V-0128**	1	SEAL-CONNECTOR	
	2	1	**100-5218**	4	CLIP	
	3	1	**222-6953**	1	BASE-COVER	
	4	1	**232-4517**	1	HARNESS AS (UNIT INJECTORS)	
		1	**103-8134**	1	KIT-RECEPTACLE (12-PIN)	
					(INCLUDES RECEPTACLE AS AND WEDGE)	
		1	**8T-8737**	3	PLUG-SEAL	
	5	1	**100-5219**	2	CLIP	
	6	1	**123-3202**	3	STRAP-CABLE	
	7	1	**4F-7957**	2	BOLT (1/4-20X0.875-IN)	
	8	1	**5P-0537**	8	WASHER-HARD (7.2X14.5X2-MM THK)	
	9	1	**8H-3127**	6	BOLT (1/4-20X0.75-IN)	
	10	1	**222-6456**	1	SEAL	

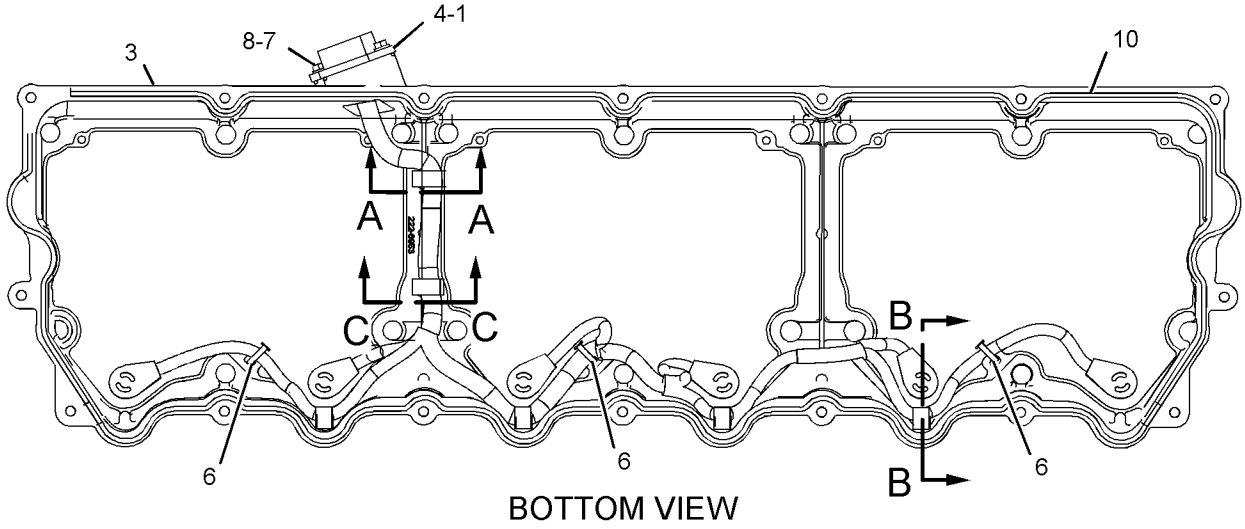

BOTTOM VIEW

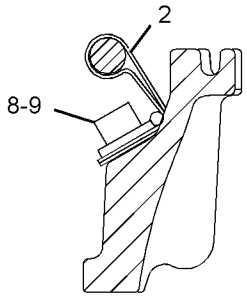

SECTION B-B

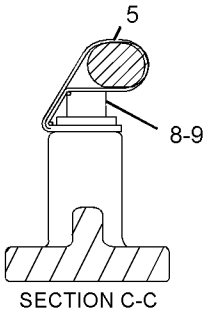

SECTION C-C

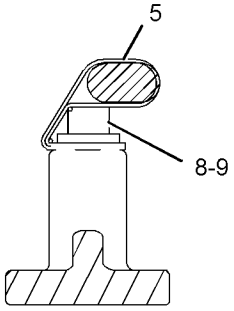

SECTION A-A

GRAPHIC #1 **<END>** g01051193

BASIC ENGINE

260-9306 CAMSHAFT GP

S/N: EHX1-UP

PART OF 260-9527, 261-1507, 276-9586 ENGINE AR-CORE

ALSO AN ATTACHMENT

SMCS-1210 **i02270802**

NOTE	REF NO	GRAPHIC REF	PART NUMBER	QTY	PART NAME 1 2 3 4 5 6 (PRODUCT LEVEL)	SEE PAGE
	1	1	**255-3547**	1	CAMSHAFT (RIGHT BANK)	
	2	1	**260-3201**	1	CAMSHAFT (LEFT BANK)	

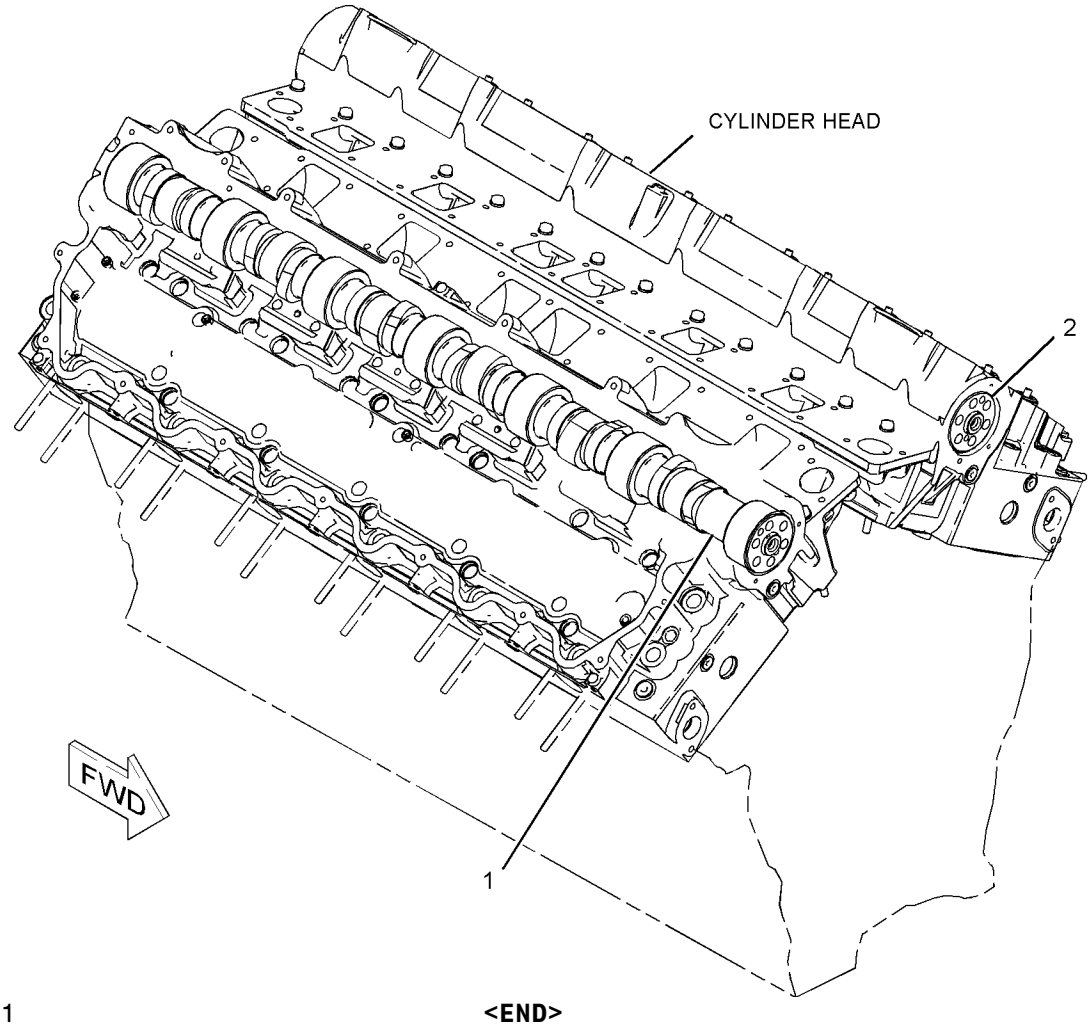

GRAPHIC #1 **<END>** g01051265

235-4102 COVER GP-CYLINDER BLOCK

S/N: EHX1-UP

PART OF 212-2737, 212-2744, 271-2219 ENGINE AR-COMPLETE

ALSO AN ATTACHMENT

SMCS-1201 **i02044229**

NOTE	REF NO	GRAPHIC REF	PART NUMBER	QTY	PART NAME 1 2 3 4 5 6 (PRODUCT LEVEL)	SEE PAGE
	1	1	**4P-7820**	1	COVER-ACCESSORY DRIVE	
	2	1	**234-3441**	2	SUPPORT	
	3	1	**238-9857**	1	COVER-CAMSHAFT	
	4	1	**238-9864**	1	COVER-CAMSHAFT	
	5	1	**239-1139**	2	SEAL	
	6	1	**125-9794**	1	SEAL-O-RING	
	7	1	**0S-1590**	4	BOLT (3/8-16X2-IN)	
	8	1	**0S-1594**	3	BOLT (3/8-16X1-IN)	
	9	1	**0T-0573**	4	BOLT (3/8-16X2.75-IN)	
	10	1	**2M-1538**	1	STUD-TAPERLOCK (3/8-16X1.6-IN)	
	11	1	**2P-1974**	3	STUD-TAPERLOCK (3/8-16X4.2-IN)	
	12	1	**3K-3256**	1	STUD-TAPERLOCK (3/8-16X1.7-IN)	
	13	1	**5F-4899**	2	BOLT (3/8-16X5.5-IN)	
	14	1	**5M-2894**	5	WASHER-HARD (10.2X18.5X2.5-MM THK)	
	15	1	**9S-8752**	6	NUT-FULL (3/8-16-THD)	
	16	1	**9X-6458**	14	WASHER-HARD (10.2X22.5X3-MM THK)	

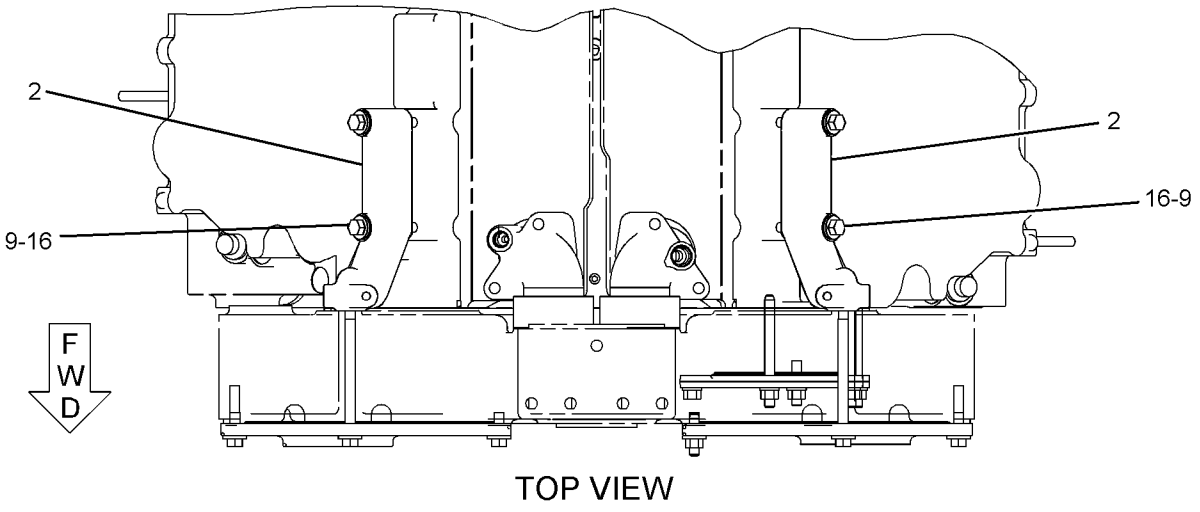

TOP VIEW

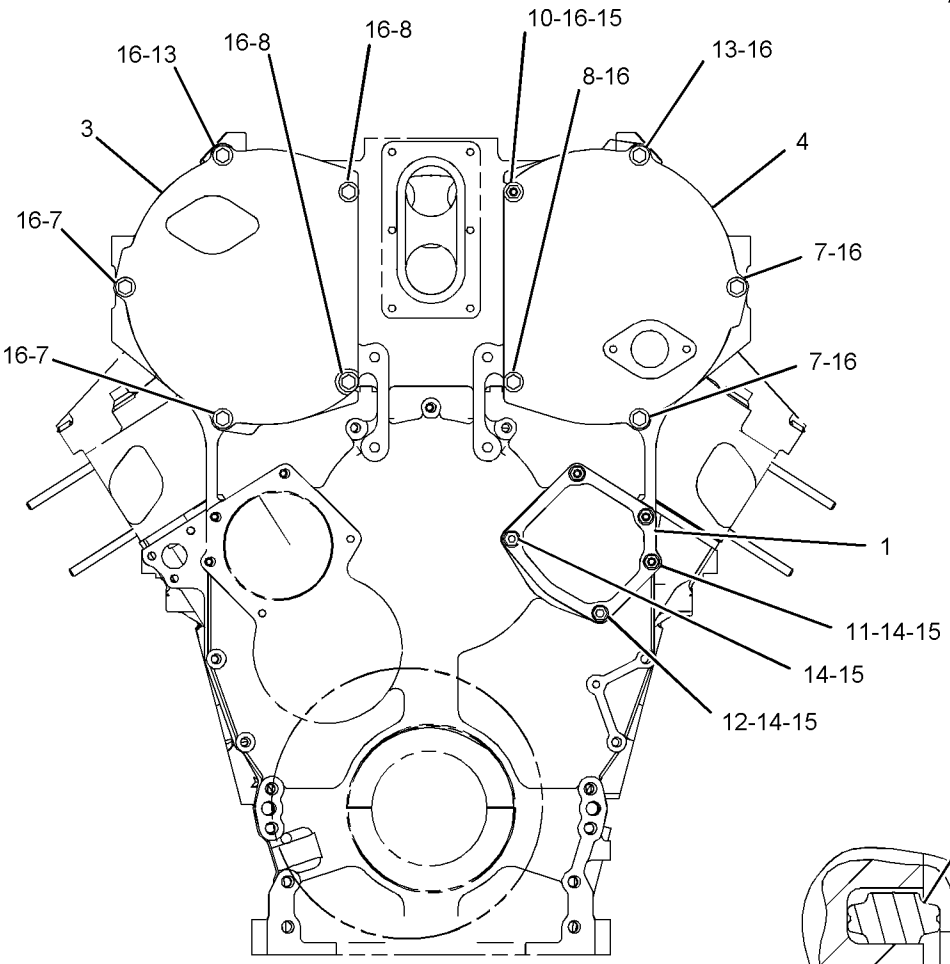

FRONT VIEW

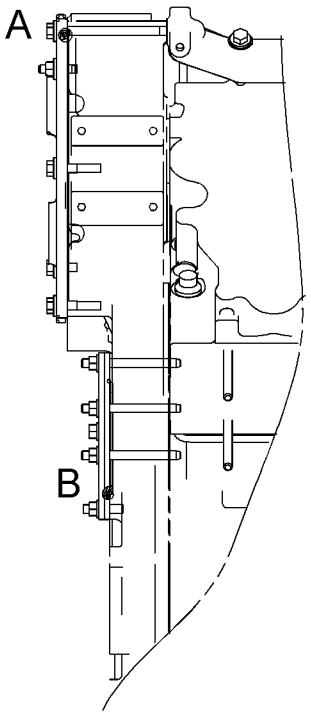

LEFT SIDE VIEW

VIEW OF AREA A

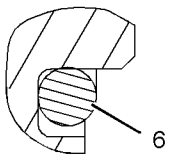

VIEW OF AREA B

GRAPHIC #1 **<END>** g01052694

235-7135 COVER GP-CYLINDER BLOCK

S/N: EHX1-UP

PART OF 212-2737, 212-2744, 271-2219 ENGINE AR-COMPLETE

ALSO AN ATTACHMENT

SMCS-1201 **i02044731**

NOTE	REF NO	GRAPHIC REF	PART NUMBER	QTY	PART NAME 1 2 3 4 5 6 (PRODUCT LEVEL)	SEE PAGE
	1	1	**4N-0864**	1	GASKET	
	2	1	**4N-1682**	1	COVER	
	3	1	**4N-1683**	1	COVER	
	4	1	**239-5571**	1	SEAL-INTEGRAL	
	5	1	**0S-1594**	9	BOLT (3/8-16X25.4-IN)	
	6	1	**5M-2894**	9	WASHER-HARD (10.2X18.5X2.5-MM THK)	

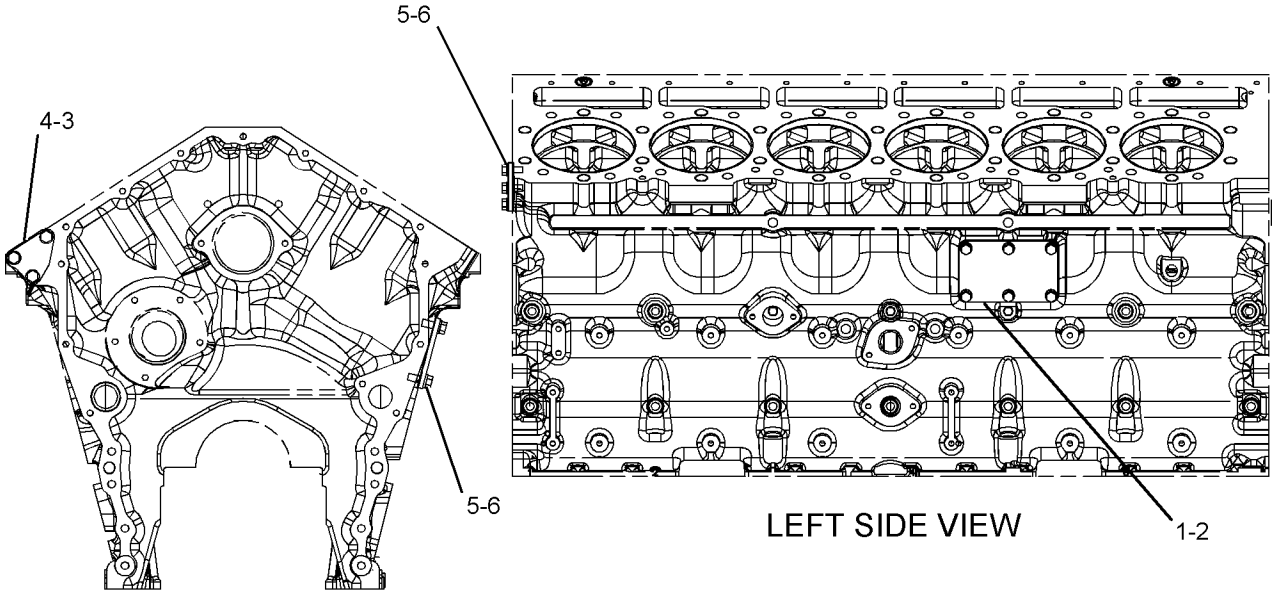

GRAPHIC #1 **<END>** g01052975

BASIC ENGINE

230-4156 COVER GP-REAR HOUSING

S/N: EHX1-UP

PART OF 212-2737, 212-2744, 271-2219 ENGINE AR-COMPLETE

ALSO AN ATTACHMENT

SMCS-1157 **i02044905**

NOTE	REF NO	GRAPHIC REF	PART NUMBER	QTY	PART NAME 1 2 3 4 5 6 (PRODUCT LEVEL)	SEE PAGE
	1	1	**4N-1114**	1	COVER	
	2	1	**6V-5553**	2	SEAL-O-RING	
	3	1	**9Y-6089**	1	GASKET	
	4	1	**230-4157**	2	COVER	
Y	5	1	*231-9330*	1	BREATHER GP	69
	6	1	**234-8937**	2	SEAL-INTEGRAL	
	7	1	**238-6646**	1	SEAL-O-RING	
	8	1	**0S-0509**	8	BOLT (3/8-16X0.75-IN)	
	9	1	**0S-1566**	3	BOLT (5/8-11X1.5-IN)	
	10	1	**0S-1619**	2	BOLT (3/8-16X3-IN)	
	11	1	**1A-2029**	6	BOLT (3/8-16X1.125-IN)	
	12	1	**2P-2772**	2	COVER	
	13	1	**5M-2894**	16	WASHER-HARD (10.2X18.5X2.5-MM THK)	
	14	1	**5P-8247**	3	WASHER-HARD (17X32X3.5-MM THK)	

Y-SEPARATE ILLUSTRATION

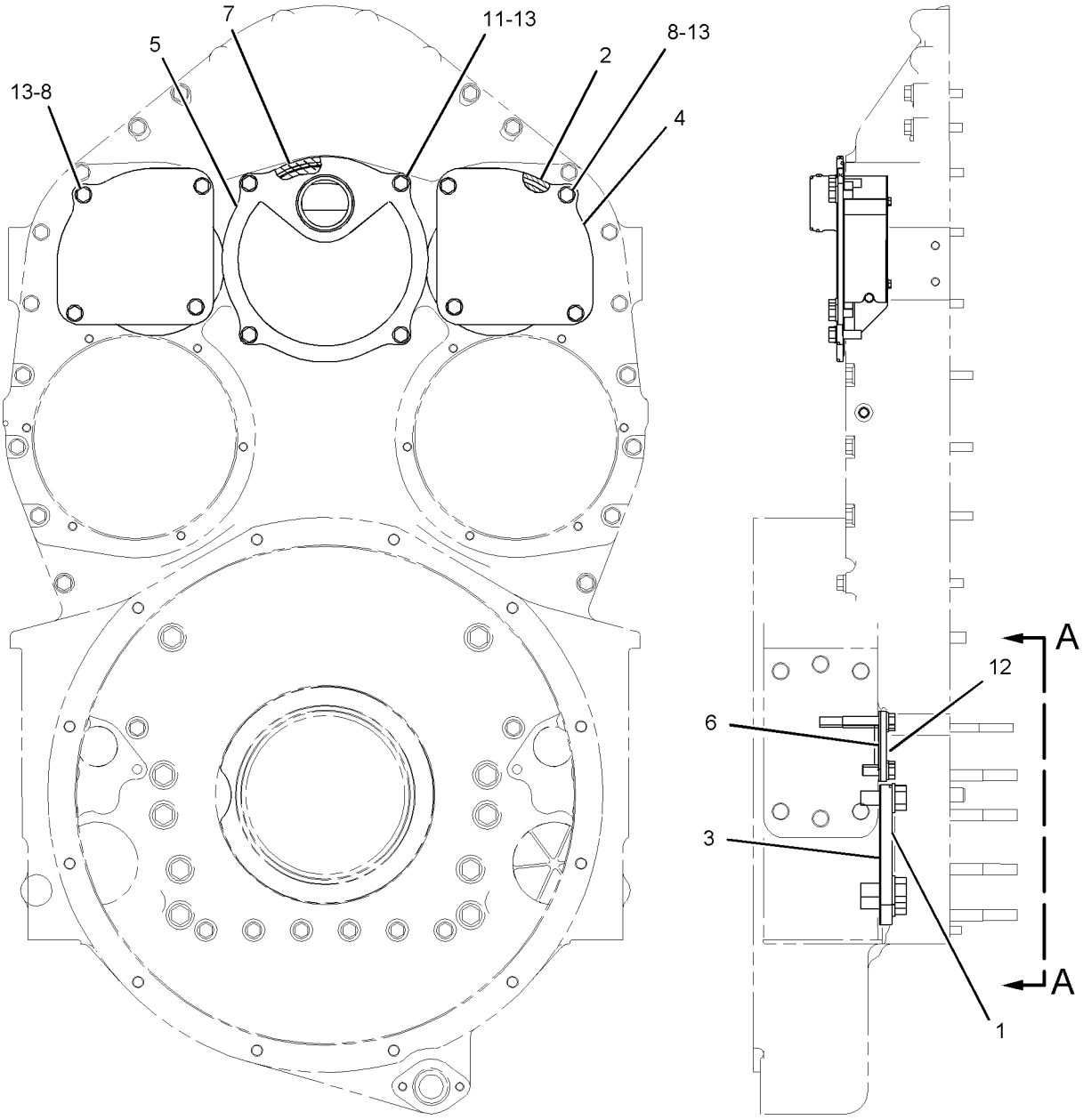

GRAPHIC #1

<END>

g01054559

BASIC ENGINE

225-6052 CRANKSHAFT GP

S/N: EHX1-UP
PART OF 260-9527, 261-1507, 276-9586 ENGINE AR-CORE
ALSO AN ATTACHMENT

SMCS-1202 **i02041101**

NOTE	REF NO	GRAPHIC REF	PART NUMBER	QTY	PART NAME 1 2 3 4 5 6 (PRODUCT LEVEL)	SEE PAGE
	1	1	**7E-9262**	2	PLATE-THRUST	
	2	1	**142-5867**	1	SEAL GP-CRANKSHAFT	
	3	1	**211-0592**	7	BEARING-MAIN (STANDARD)	
AB		1	**4W-5698**	1	BEARING-MAIN (0.63-MM US)	
AB		1	**4W-5699**	1	BEARING-MAIN (1.27-MM US)	
AB		1	**4W-5700**	1	BEARING-MAIN (0.63-MM OS)	
AB		1	**4W-5701**	1	BEARING-MAIN (0.63-MM US, 0.63-MM OS)	
	4	1	**225-6053**	1	CRANKSHAFT AS	
	4A	1	**4N-0684**	1	DOWEL	
	4B	1	**7S-5005**	1	DOWEL	
	4C	1	**223-9135**	1	GEAR-CRANKSHAFT (99-TEETH)	

A-NOT PART OF THIS GROUP
B-USE AS REQUIRED

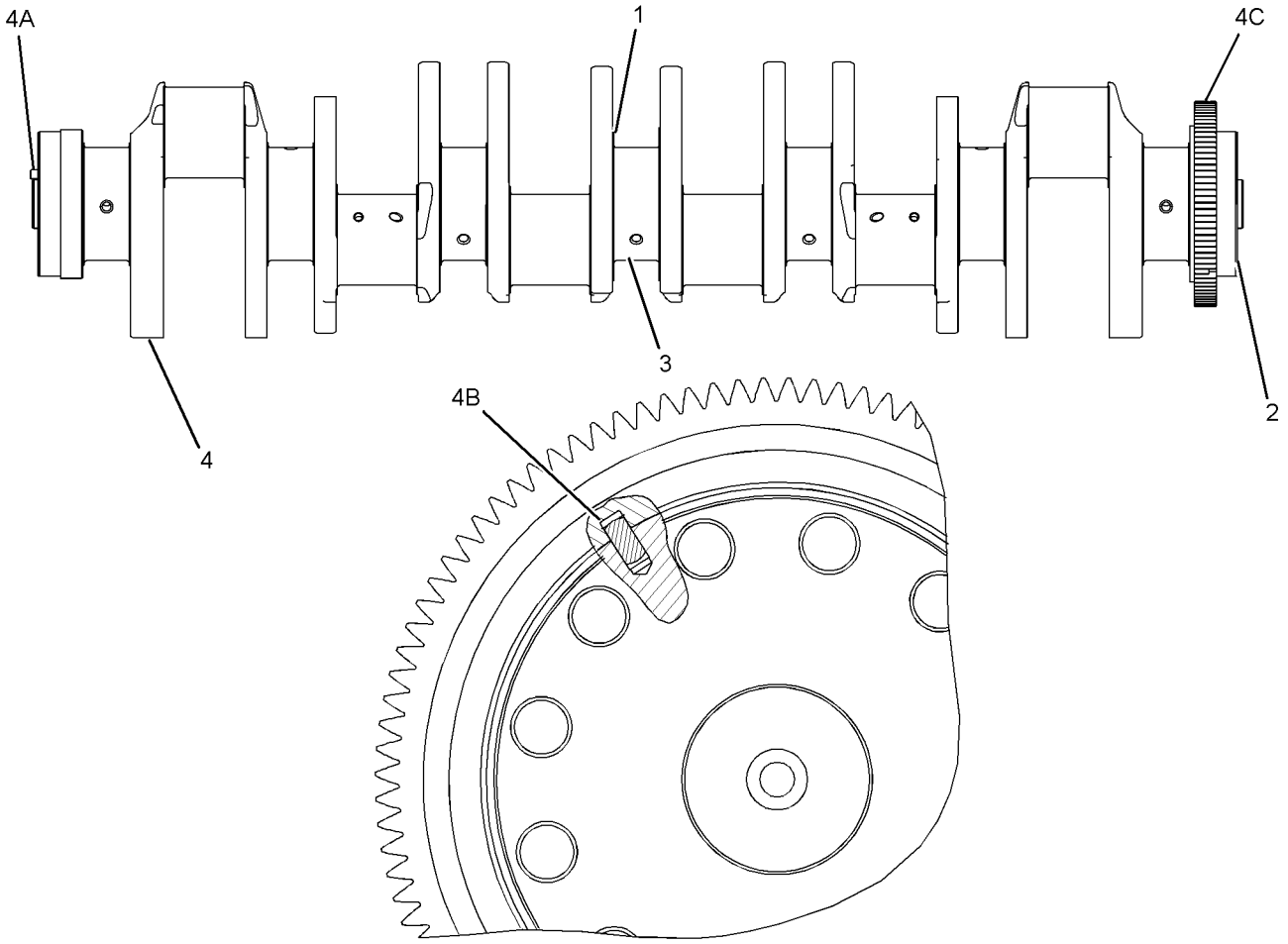

GRAPHIC #1

<END>

g01051082

230-7181 CYLINDER BLOCK AS

S/N: EHX1-UP

PART OF 230-7182 CYLINDER BLOCK AS

ALSO AN ATTACHMENT

SMCS-1201 **i02334359**

NOTE	REF NO	GRAPHIC REF	PART NUMBER	QTY	PART NAME 1 2 3 4 5 6 (PRODUCT LEVEL)	SEE PAGE
	1	1	**3P-1323**	14	BOLT-BEARING CAP (7/8-14X7.75-IN)	
	2	1	**225-5965**	4	SLEEVE	
	3	1	**225-5966**	1	SLEEVE	
	4	1	**226-0916**	1	CYLINDER BLOCK	
	5	1	**232-7607**	7	CAP-CRANKSHAFT	
	6	1	**234-6902**	14	BOLT-12 POINT HEAD (M11X1.25X50-MM)	
	8	1	**4N-0685**	1	BEARING-SLEEVE (1-IN WIDE)	
	9	1	**4N-6658**	1	BEARING-SLEEVE (1.3-IN WIDE)	
	10	1	**7W-6492**	2	PLUG-PIPE	
	11	1	**9H-1031**	14	WASHER-HARD (24X41.5X6-MM THK)	

230-7181 CYLINDER BLOCK AS *(contd.)* i02334359

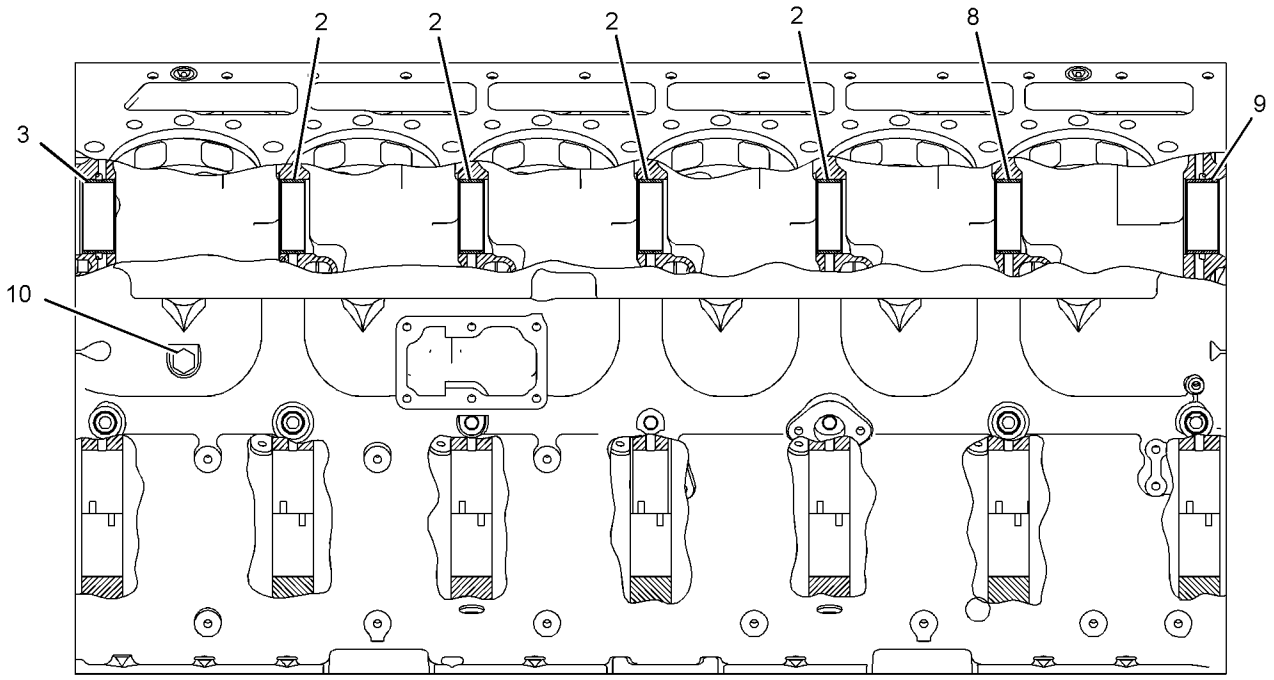

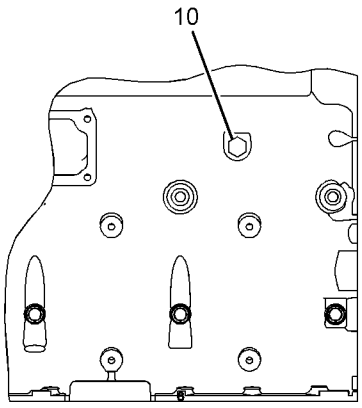

VIEW A-A

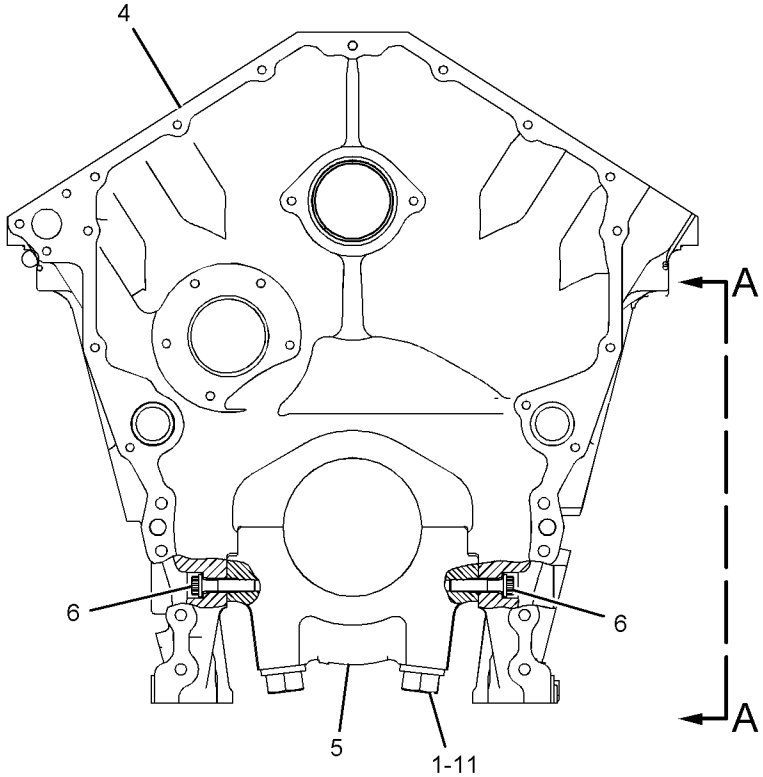

GRAPHIC #1 **<END>** g01108162

230-7182 CYLINDER BLOCK AS

S/N: EHX1-UP
PART OF 237-0842 CYLINDER BLOCK GP
ALSO AN ATTACHMENT

SMCS-1201 **i02043813**

NOTE	REF NO	GRAPHIC REF	PART NUMBER	QTY	PART NAME 1 2 3 4 5 6 (PRODUCT LEVEL)	SEE PAGE
Y	1	1	**230-7181**	1	CYLINDER BLOCK AS	27
	2	1	**197-9322**	12	LINER-CYLINDER	
	3	1	**9L-5854**	12	BAND-FILLER (130.2-MM ID)	
	4	1	**110-2220**	12	SEAL-LINER (141-MM ID)	
	5	1	**142-7072**	12	SEAL-LINER (140.2-MM ID)	
	6	1	**142-6217**	12	SEAL-O-RING	

Y-SEPARATE ILLUSTRATION

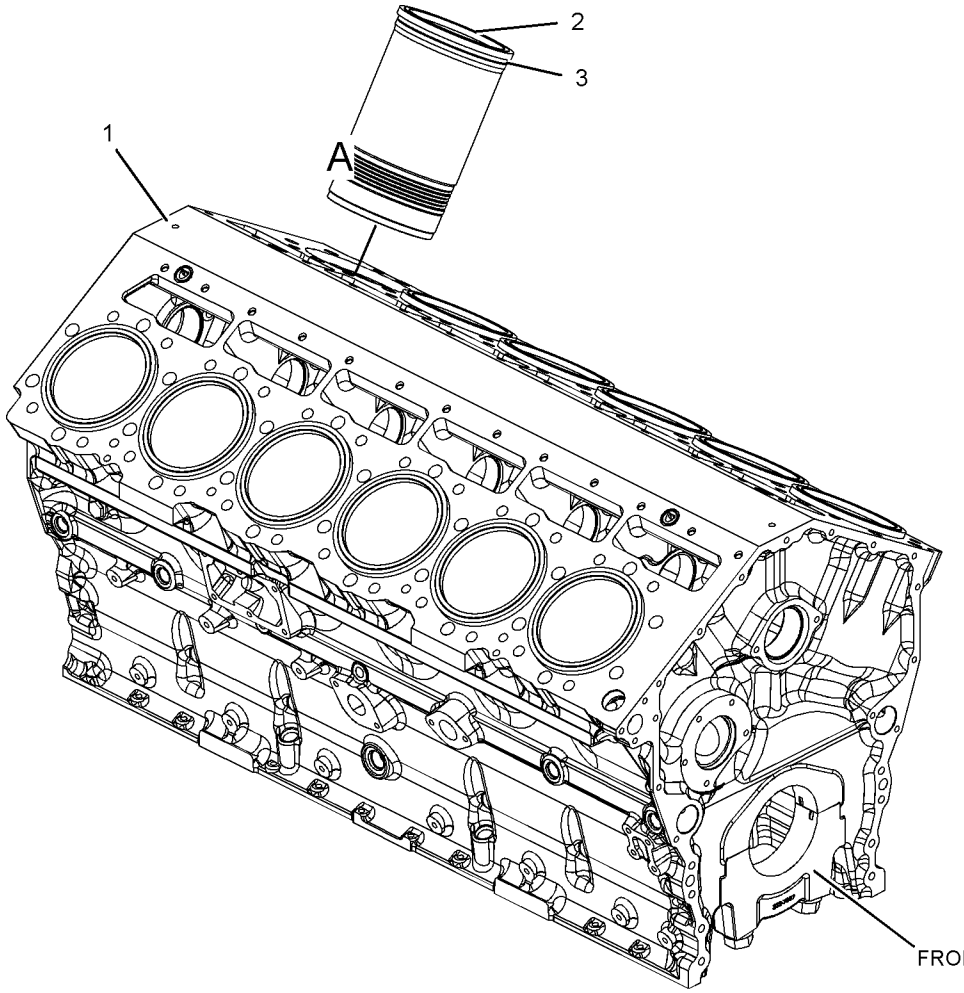

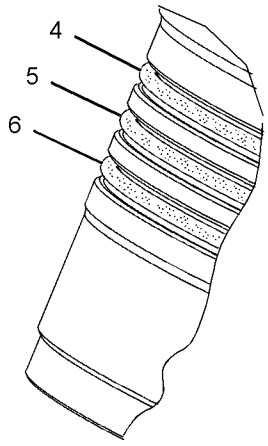

VIEW OF AREA A

GRAPHIC #1 **<END>** g01051844

BASIC ENGINE

237-0842 CYLINDER BLOCK GP

S/N: EHX1-UP

PART OF 260-9527, 261-1507, 276-9586 ENGINE AR-CORE

ALSO AN ATTACHMENT

SMCS-1201 **i02468422**

NOTE	REF NO	GRAPHIC REF	PART NUMBER	QTY	PART NAME 1 2 3 4 5 6 (PRODUCT LEVEL)	SEE PAGE
Y	1	1	**230-7182**	1	CYLINDER BLOCK AS	29
	2	1	**3B-0645**	1	PLUG-CUP	
	3	1	**5P-8356**	4	SEAL-O-RING	
	4	1	**4N-1650**	4	DOWEL	
	5	1	**225-3101**	2	GASKET-PLATE	
	6	1	**225-3100**	2	PLATE-SPACER	
	7	1	**7C-9614**	4	PLUG-TAPERLOCK (1-5/8-12-2A-THD)	
	8	1	**4N-0683**	4	DOWEL	
	9	1	**214-1728**	1	STUD	
	10	1	**6L-4428**	3	STUD-TAPERLOCK (3/8-16X4.01-IN)	
	11	1	**8T-6757**	2	PLUG-PIPE	
	12	1	**6V-5050**	2	SEAL-O-RING	
	13	1	**9S-8008**	2	PLUG (1 1/16-12 THD)	
	14	1	**240-9543**	14	WASHER	

Y-SEPARATE ILLUSTRATION

237-0842 **CYLINDER BLOCK GP** *(contd.)* **i02468422**

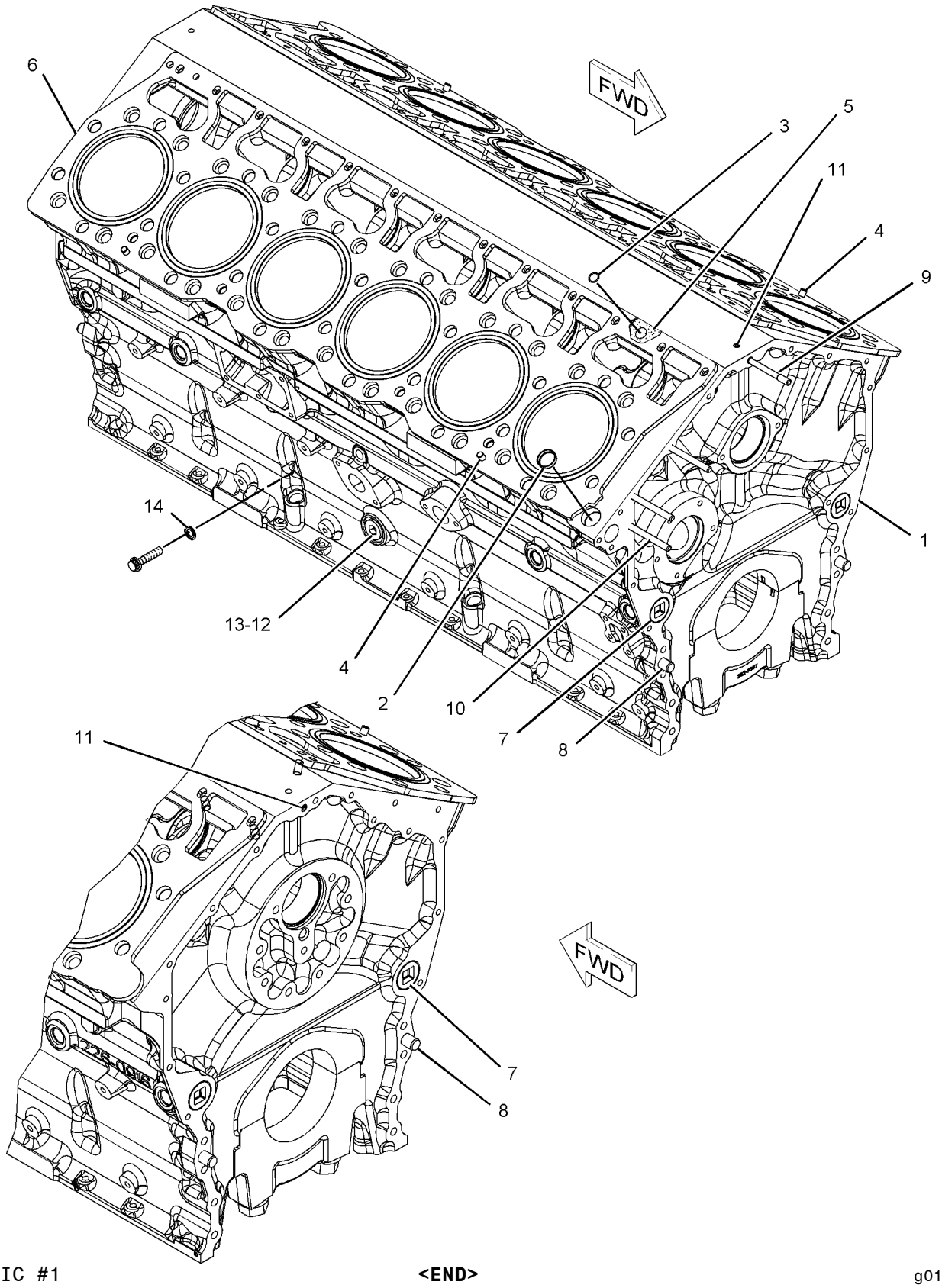

GRAPHIC #1 **<END>** g01100708

223-6432 CYLINDER HEAD AS

S/N: EHX1-UP
PART OF 223-6431 CYLINDER HEAD GP
ALSO AN ATTACHMENT

SMCS-1100, 1101 **i02288732**

NOTE	REF NO	GRAPHIC REF	PART NUMBER	QTY	PART NAME 1 2 3 4 5 6 (PRODUCT LEVEL)	SEE PAGE
	1	1	**3B-0623**	36	PLUG-CUP	
	2	1	**122-7375**	24	GUIDE-VALVE	
	3	1	**216-5582**	7	BEARING-SLEEVE	
	4	1	**223-6433**	1	CYLINDER HEAD AS	
	4A	1	**224-3983**	12	INSERT-SEAT (INLET)	
	4B	1	**226-5561**	12	INSERT-VALVE (EXHAUST)	
	5	1	**227-4239**	6	SLEEVE-INJECTOR	
	6	1	**166-2903**	6	SEAL-O-RING	
	7	1	**166-2904**	6	SEAL-O-RING	
	8	1	**3B-0645**	2	PLUG-CUP	
	9	1	**8T-6757**	3	PLUG-PIPE	
	10	1	**9X-7430**	6	SEAL-O-RING	

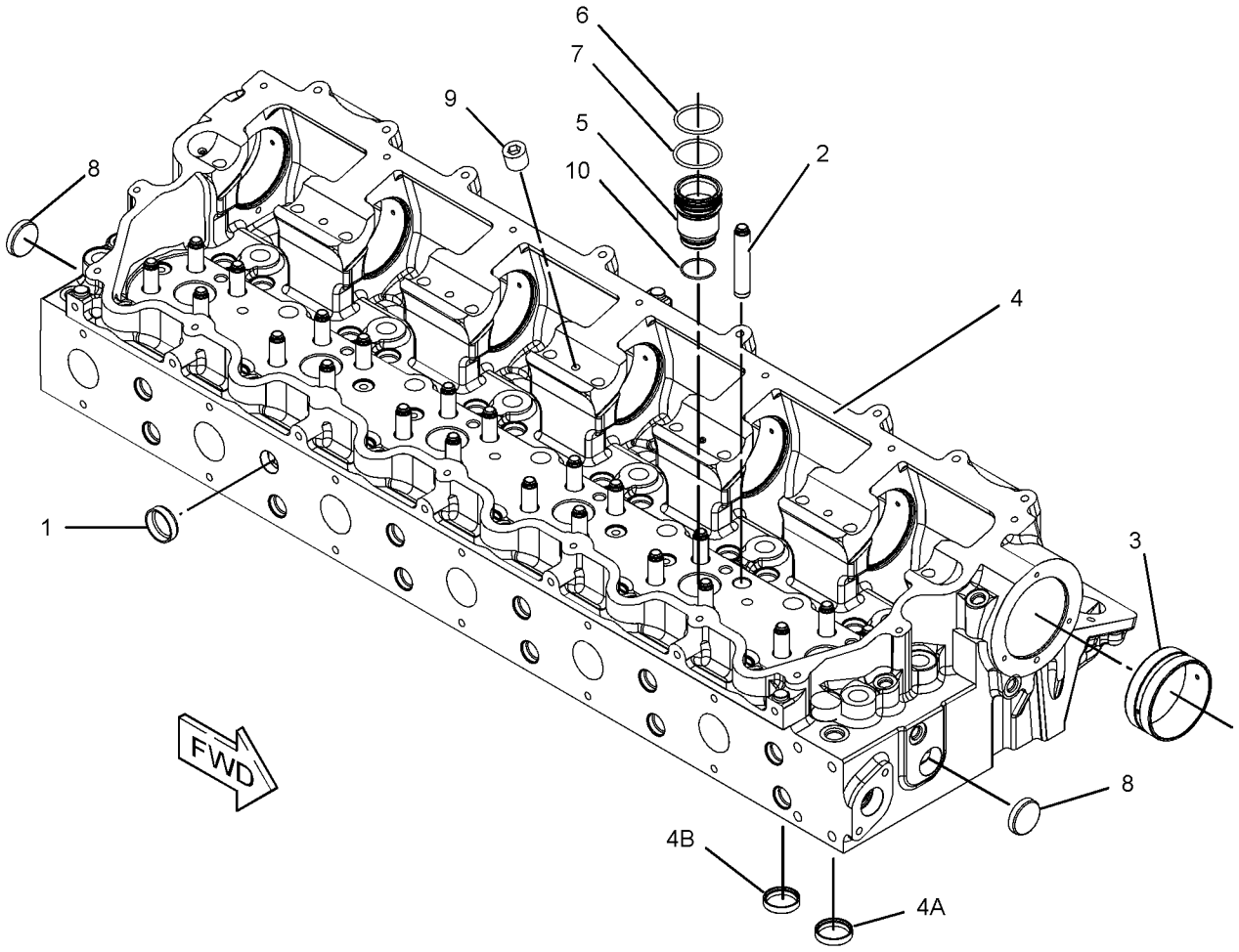

GRAPHIC #1 **<END>** g01162584

223-6397 CYLINDER HEAD GP

S/N: EHX1-UP

PART OF 260-9527, 261-1507, 276-9586 ENGINE AR-CORE

ALSO AN ATTACHMENT

SMCS-1100 **i02195255**

NOTE	REF NO	GRAPHIC REF	PART NUMBER	QTY	PART NAME 1 2 3 4 5 6 (PRODUCT LEVEL)	SEE PAGE
	1	1	**3E-6772**	48	SEAL	
	2	1	*6I-4025*	32	FASTENER GP-CYLINDER HEAD	
					(EACH INCLUDES)	
		1	**5H-1504**	1	WASHER-HARD (20X33.5X5-MM THK)	
		1	**124-1855**	1	BOLT-12 POINT HEAD (3/4-16X7.638-IN)	
	3	1	**106-1792**	24	STUD-TAPERLOCK (3/8-16X4-IN)	
	4	1	*106-5673*	20	FASTENER GP-CYLINDER HEAD	
					(EACH INCLUDES)	
		1	**5H-1504**	1	WASHER-HARD (20X33.5X5-MM THK)	
		1	**124-1855**	1	BOLT-12 POINT HEAD (3/4-16X7.638-IN)	
Y	5	1	**223-6431**	2	CYLINDER HEAD GP	35
	6	1	**225-3099**	2	GASKET-CYLINDER HEAD	
	7	1	**248-0036**	26	BOLT-WASHER HEAD (3/8-16X6-IN)	
	9	1	**6V-5049**	9	SEAL-O-RING	
	10	1	**6V-6609**	4	SEAL-O-RING	
	11	1	**9S-8004**	9	PLUG	
	12	1	**9S-8005**	4	PLUG-O RING	

Y-SEPARATE ILLUSTRATION

223-6397 **CYLINDER HEAD GP** *(contd.)* **i02195255**

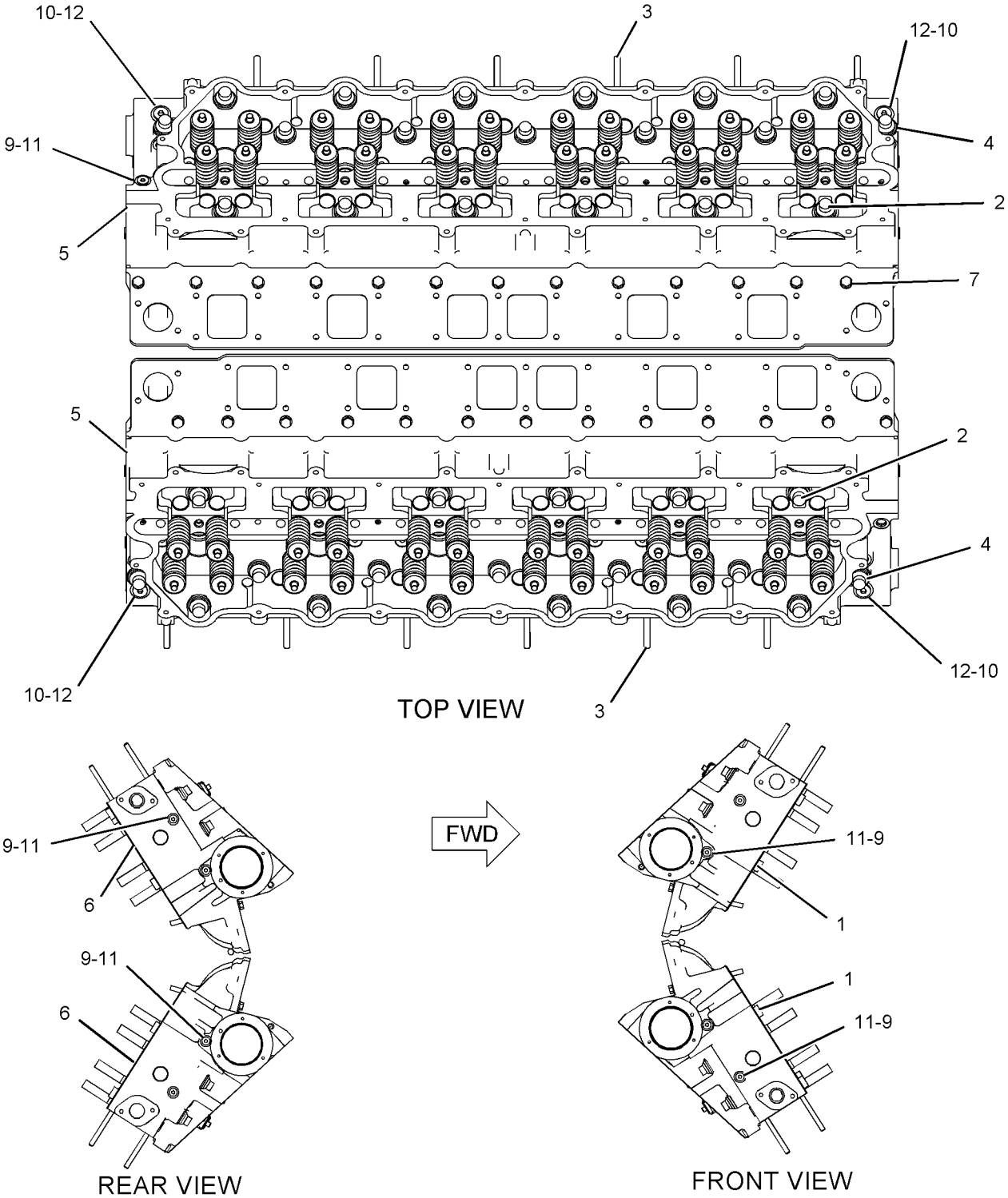

GRAPHIC #1 **<END>** g01108895

223-6431 CYLINDER HEAD GP

S/N: EHX1-UP

PART OF 223-6397 CYLINDER HEAD GP

ALSO AN ATTACHMENT

SMCS-1100 **i02331906**

NOTE	REF NO	GRAPHIC REF	PART NUMBER	QTY	PART NAME 1 2 3 4 5 6 (PRODUCT LEVEL)	SEE PAGE
	1	1	**2A-4429**	48	LOCK-RETAINER	
	2	1	**6I-0928**	24	WASHER	
	3	1	**153-7023**	12	VALVE-INLET	
	4	1	**153-7024**	12	VALVE-EXHAUST	
	5	1	**211-3122**	24	SPRING-VALVE	
	6	1	**211-3123**	24	SPRING-VALVE	
Y	7	1	**223-6432**	1	CYLINDER HEAD AS	32
	8	1	**163-2478**	24	SEAL-VALVE STEM	
	9	1	**186-2001**	24	ROTOCOIL AS	

Y-SEPARATE ILLUSTRATION

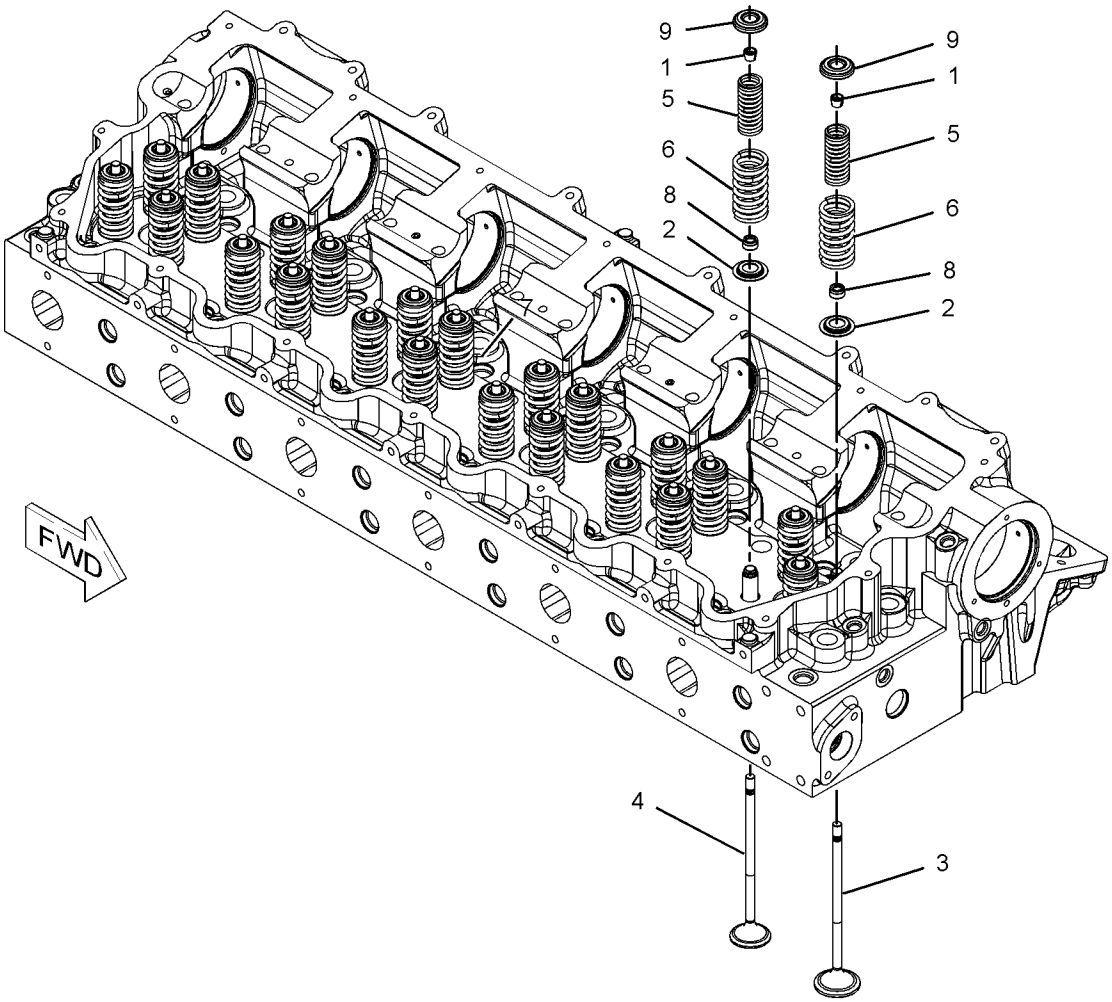

GRAPHIC #1 **<END>** g01164026

6N-2229 DAMPER GP

S/N: EHX1-UP

PART OF 212-2737, 212-2744, 271-2219 ENGINE AR-COMPLETE

ALSO AN ATTACHMENT

SMCS-1205 **i01846526**

NOTE	REF NO	GRAPHIC REF	PART NUMBER	QTY	PART NAME 1 2 3 4 5 6 (PRODUCT LEVEL)	SEE PAGE
	1	1	**6N-6037**	1	ADAPTER-DAMPER	
	2	1	**2D-6374**	8	BOLT (5/8-18X6.75IN)	
	3	1	**0S-1585**	12	BOLT (1/2-13X1.50 IN)	
	4	1	**6N-7654**	1	SPACER	
R	5	1	**167-8130**	1	DAMPER AS	

R-REMFG PART MAY BE AVAILABLE

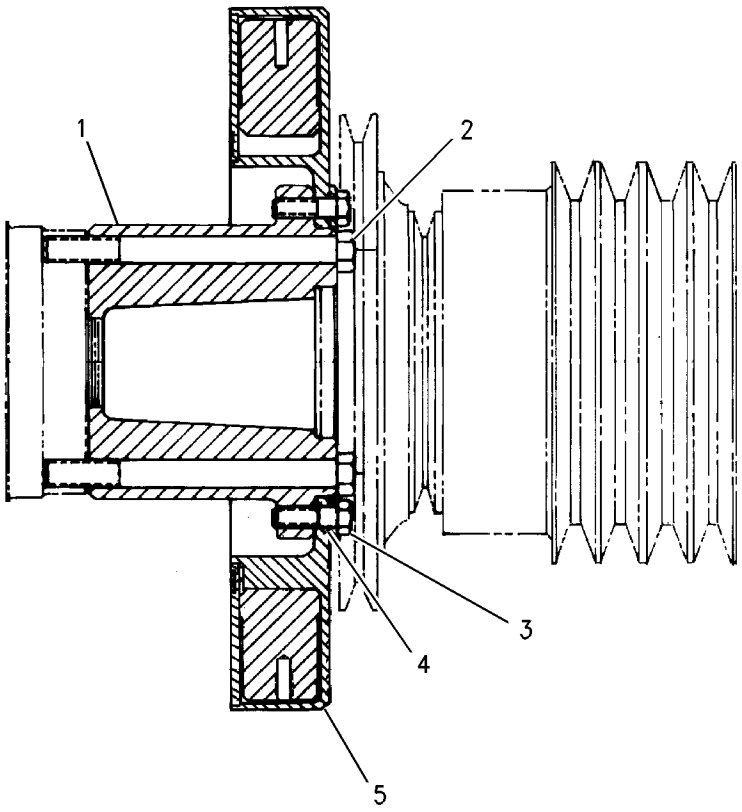

GRAPHIC #1 **<END>** g00672248

BASIC ENGINE

234-1579 DAMPER GP

S/N: EHX1-UP
PART OF 235-7134 GEAR GP-FRONT
ALSO AN ATTACHMENT

SMCS-1205 **i02067224**

NOTE	REF NO	GRAPHIC REF	PART NUMBER	QTY	PART NAME 1 2 3 4 5 6 (PRODUCT LEVEL)	SEE PAGE
	1	1	**103-0126**	1	DOWEL	
	2	1	**9X-8872**	16	BOLT-LOCKING (3/8-16X0.875-IN)	

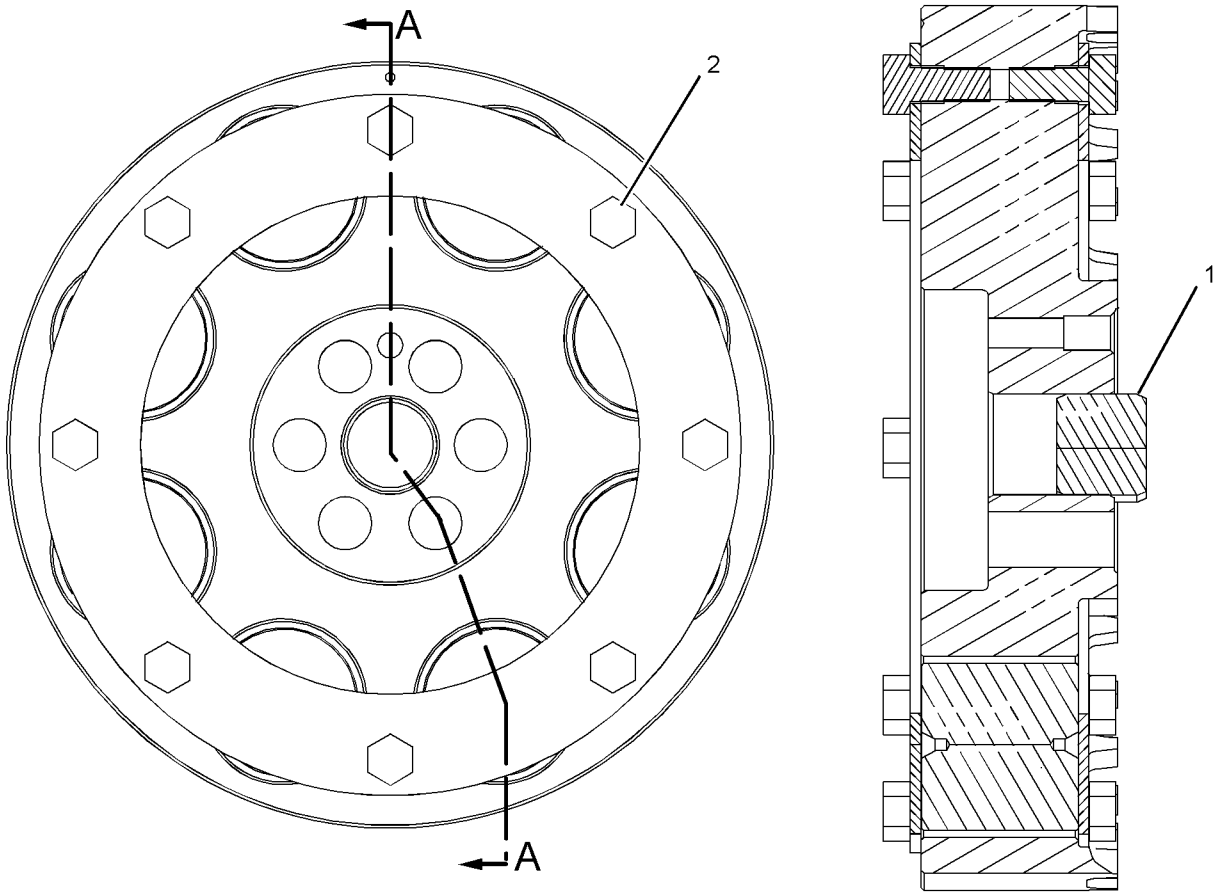

FRONT VIEW

SECTION A-A

GRAPHIC #1 **<END>** g01051809

BASIC ENGINE

249-8533 FASTENER GP-CYLINDER HEAD

S/N: EHX1-UP

PART OF 212-2737, 212-2744, 271-2219 ENGINE AR-COMPLETE

ALSO AN ATTACHMENT

SMCS-1100 **i02378829**

NOTE	REF NO	GRAPHIC REF	PART NUMBER	QTY	PART NAME 1 2 3 4 5 6 (PRODUCT LEVEL)	SEE PAGE
	1	1	**5P-8134**	11	CAP-PROTECTIVE	
		1	**0S-0699**	11	STUD	

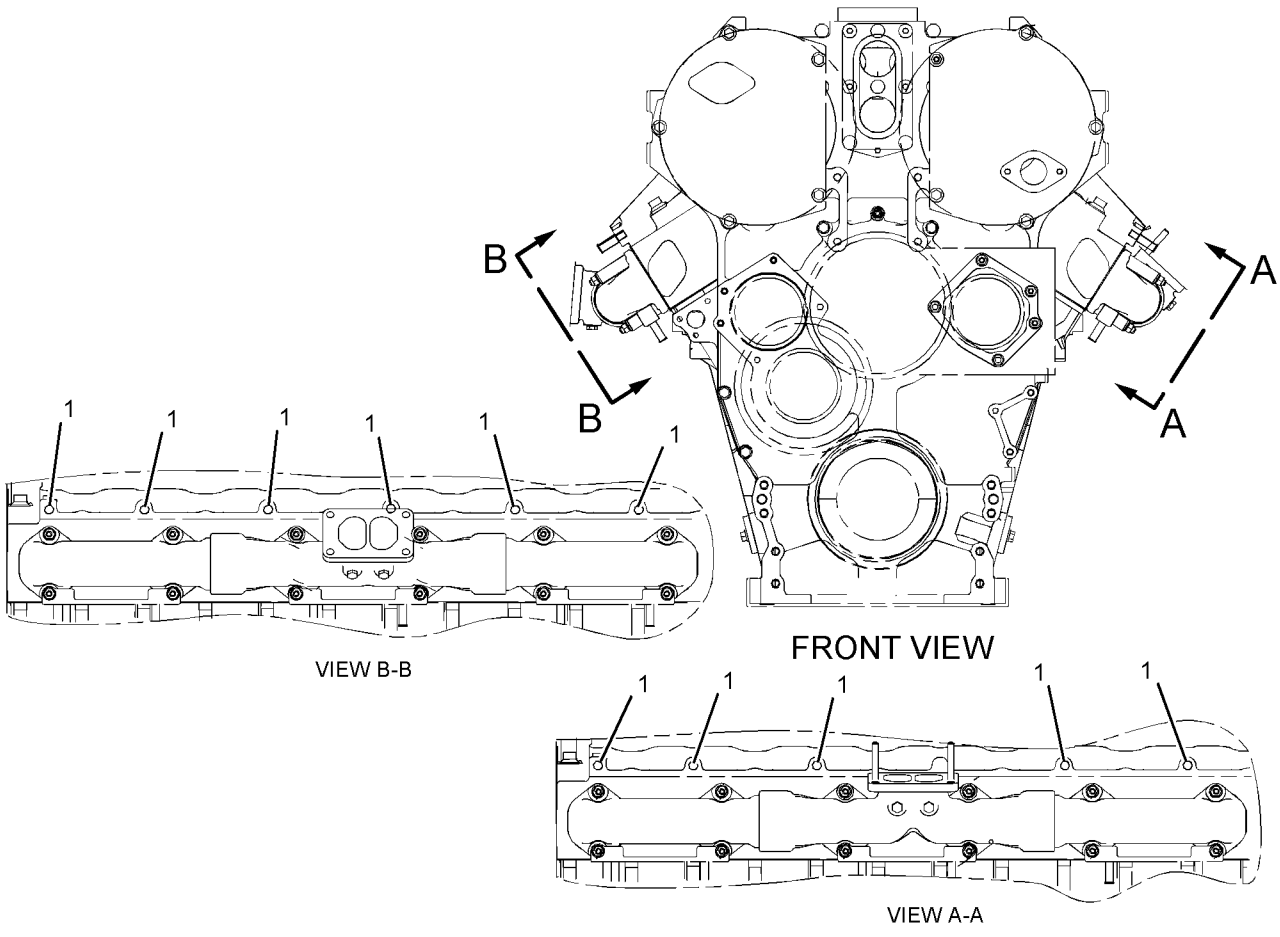

GRAPHIC #1 **<END>** g01137904

216-0811 FLYWHEEL GP

S/N: EHX1-UP

PART OF 212-2737, 212-2744, 271-2219 ENGINE AR-COMPLETE

ALSO AN ATTACHMENT

SMCS-1156 **i02044736**

NOTE	REF NO	GRAPHIC REF	PART NUMBER	QTY	PART NAME 1 2 3 4 5 6 (PRODUCT LEVEL)	SEE PAGE
	1	1	**213-3212**	1	FLYWHEEL AS	
	1A	1	**4N-2514**	1	GEAR (113-TEETH)	
	2	1	**1B-3623**	12	BOLT (5/8-18X7-IN)	
	3	1	**4D-3704**	12	WASHER-HARD (17X30X5-MM THK)	

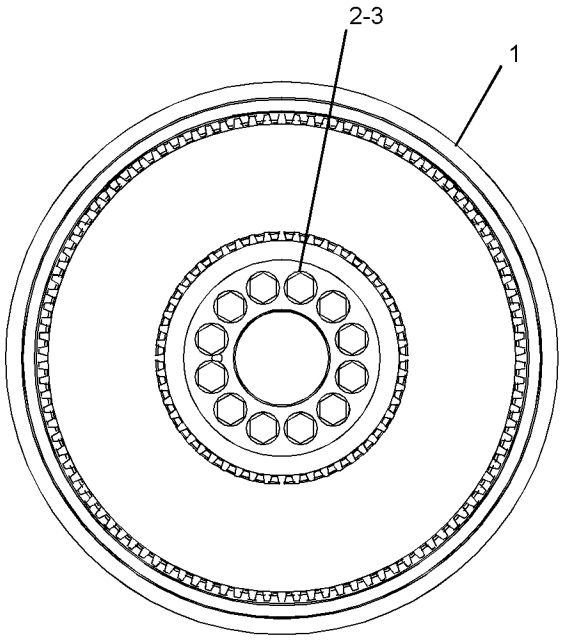

FRONT VIEW

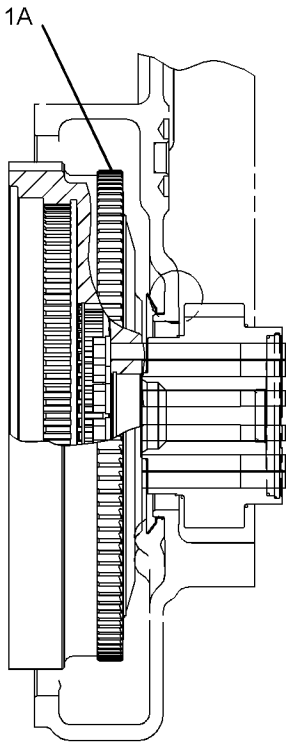

LEFT SIDE VIEW

GRAPHIC #1 **<END>** g01052142

BASIC ENGINE

235-7134 GEAR GP-FRONT

S/N: EHX1-UP

PART OF 260-9527, 261-1507, 276-9586 ENGINE AR-CORE

ALSO AN ATTACHMENT

SMCS-1206 **i02114108**

NOTE	REF NO	GRAPHIC REF	PART NUMBER	QTY	PART NAME 1 2 3 4 5 6 (PRODUCT LEVEL)	SEE PAGE
	1	1	**2W-3875**	1	GEAR-OIL PUMP DRIVE (56-TEETH)	
	2	1	**2W-4087**	1	GEAR AS-IDLER (35-TEETH)	
		1	**6N-0977**	1	BEARING-SLEEVE	
	3	1	**3G-2292**	5	BOLT-LOCKING (3/8-16X0.87-IN)	
	4	1	**4N-0342**	1	PLATE	
	5	1	*6N-1026*	1	SHAFT AS-IDLER	
		1	**4H-1641**	1	PIN-SPRING	
		1	**6N-1025**	1	SHAFT-PUMP IDLER	
		1	**7S-5005**	2	DOWEL	
	6	1	**6N-1027**	1	PLATE-THRUST	
	7	1	**7N-2443**	1	WASHER-THRUST (2.508X3.5X0.188-IN THK)	
	8	1	**112-9217**	1	PLATE-THRUST	
	9	1	**117-9712**	1	SHAFT-DRIVE IDLER	
	10	1	**151-2946**	1	GEAR AS-IDLER (99, 43-TEETH)	
		1	**1B-8705**	1	KEY-WOODRUFF	
		1	**131-7123**	1	BEARING-SLEEVE	
	11	1	**223-9137**	1	GEAR AS (86-TEETH) (CAMSHAFT)	
		1	**101-3374**	1	GEAR-CAMSHAFT DRIVE (86-TEETH)	
	12	1	**224-5332**	2	PLATE-SEALING	
Y	13	1	*234-1579*	2	DAMPER GP	37
	14	1	**236-4136**	2	ADAPTER AS	
					(EACH INCLUDES)	
		1	**4N-0684**	2	DOWEL	
		1	**236-4096**	1	ADAPTER	
	15	1	**031-5085**	6	BOLT-LOCKING (1/4-20X1-IN)	
	16	1	**0S-0509**	2	BOLT (3/8-16X0.75-IN)	
	17	1	**0S-1571**	1	BOLT (3/8-16X1.75-IN)	
	18	1	**0T-0573**	1	BOLT (3/8-16X2.75-IN)	
	19	1	**117-8801**	2	SEAL-O-RING	
	20	1	**1B-8705**	1	KEY-WOODRUFF	
	21	1	**1P-7346**	1	WASHER-HARD (10.2X35X6-MM THK)	
	22	1	**2B-2695**	4	BOLT (5/16-18X0.875-IN)	
	23	1	**3B-1915**	2	BOLT (3/8-16X1-3/8-IN)	
	24	1	**5E-8771**	2	SEAL-O-RING	
	25	1	**5M-2894**	3	WASHER-HARD (10.2X18.5X2.5-MM THK)	
	26	1	**5P-0537**	6	WASHER-HARD (7.2X14.5X2-MM THK)	
	27	1	**7K-3116**	12	BOLT-12 POINT HEAD	

Y-SEPARATE ILLUSTRATION

235-7134 **GEAR GP-FRONT** *(contd.)* **i02114108**

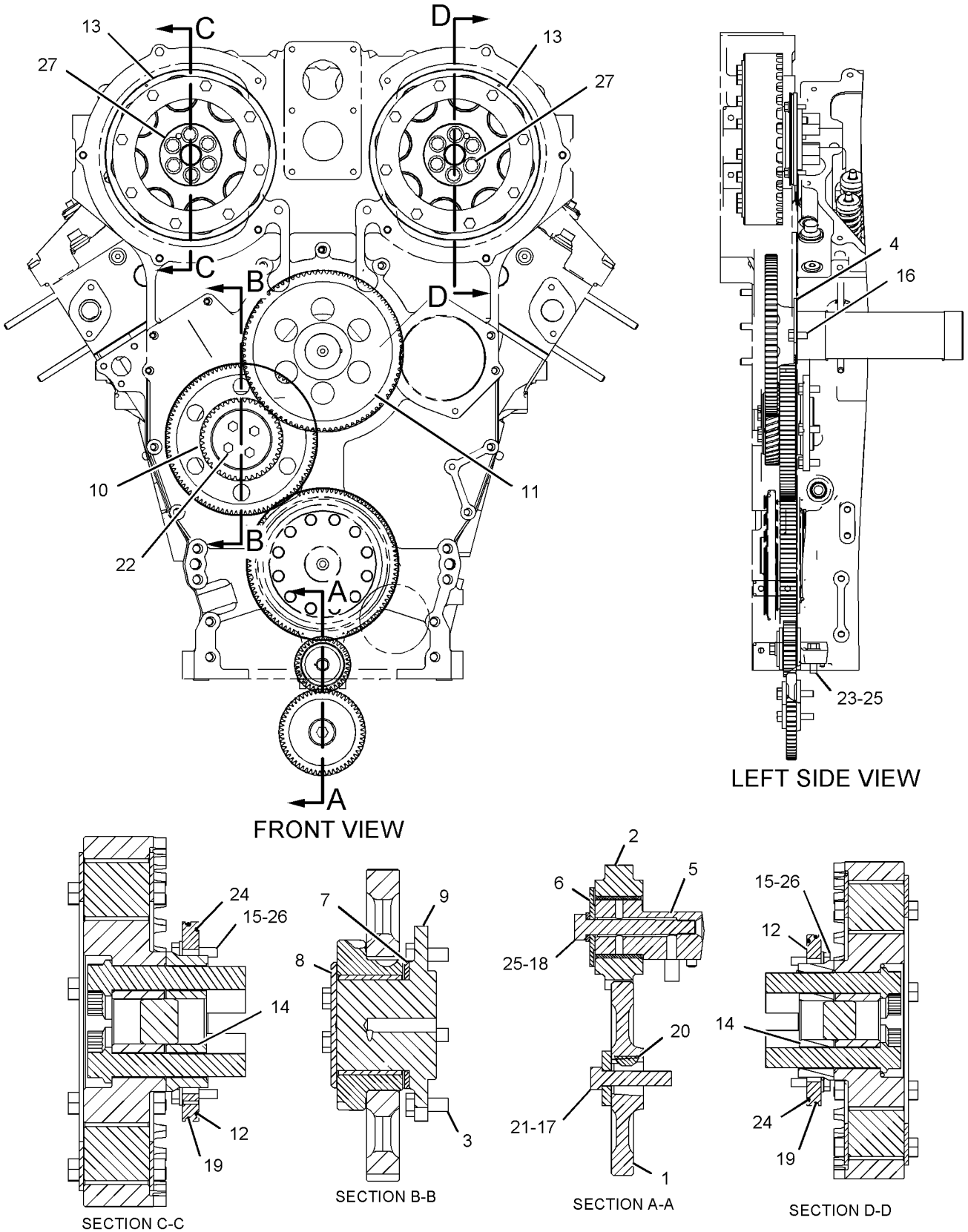

GRAPHIC #1 **<END>** g01052458

BASIC ENGINE

216-0812 GEAR GP-REAR

S/N: EHX1-2328
PART OF 212-2737, 212-2744 ENGINE AR-COMPLETE
ALSO AN ATTACHMENT

SMCS-1204 **i02116177**

NOTE	REF NO	GRAPHIC REF	PART NUMBER	QTY	PART NAME 1 2 3 4 5 6 (PRODUCT LEVEL)	SEE PAGE
	1	1	**4N-0848**	1	SLEEVE-WEAR	
	2	1	**4N-7183**	2	RING-RETAINING	
	3	1	**5B-0213**	6	BOLT (3/8-16X2.375-IN)	
	4	1	**5F-7403**	2	LOCKWASHER	
	5	1	**5F-7404**	2	LOCKNUT-BEARING	
	6	1	**5P-1370**	2	BEARING AS-ROLLER	
	7	1	**102-5861**	2	PLATE-THRUST	
	8	1	**185-1497**	1	GEAR AS-IDLER (79-TEETH)	
		1	**224-9664**	1	BEARING-SLEEVE	
	9	1	**194-0620**	2	HOSE AS	
	10	1	**217-7219**	2	ADAPTER-HYDRAULIC PUMP	
	11	1	**222-3920**	2	GEAR (17-TEETH)	
	12	1	**224-1219**	1	SHAFT-STUB	
	13	1	**224-1220**	1	PLATE	
	14	1	**224-1221**	1	SHAFT-STUB	
	15	1	**224-1223**	2	GEAR AS-CAMSHAFT (56-TEETH)	
					(EACH INCLUDES)	
		1	**9N-0575**	1	DOWEL	
	16	1	**224-5332**	2	PLATE-SEALING	
	17	1	**224-9657**	2	ADAPTER AS	
					(EACH INCLUDES)	
		1	**4N-0684**	1	DOWEL	
	18	1	**226-6036**	1	GEAR AS-IDLER (70-TEETH)	
		1	**1B-8705**	1	KEY-WOODRUFF	
		1	**226-6052**	1	BEARING-SLEEVE	
	19	1	**227-0159**	1	SHAFT-STUB	
	20	1	**228-5813**	1	GEAR AS-CRANKSHAFT (49-TEETH)	
		1	**4N-0684**	1	DOWEL	
	21	1	**229-1663**	1	PLATE-THRUST	
	22	1	**230-6202**	1	GEAR AS (70/83-TEETH) (83-TEETH)	
		1	**209-8622**	1	BEARING-SLEEVE	
		1	**224-9664**	1	BEARING-SLEEVE	
	23	1	**031-5085**	6	BOLT-LOCKING (1/4-20X1-IN)	
	24	1	**117-8801**	2	SEAL-O-RING	
	25	1	**1A-2029**	16	BOLT (3/8-16X1.125-IN)	
	26	1	**1T-0720**	12	BOLT-12 POINT HEAD (3/8-16X1.25-IN)	
	27	1	**245-3804**	1	BOLT	
	28	1	**4K-6297**	2	ELBOW	
	29	1	**5E-8771**	2	SEAL-O-RING	
	30	1	**5P-4318**	2	ELBOW	
	31	1	**5P-8429**	2	SEAL-O-RING	
	32	1	**6J-3913**	12	BOLT-12 POINT HEAD (5/8-11X3.25-IN)	
	33	1	**6V-3319**	1	SEAL-O-RING	
	34	1	**6V-4589**	2	SEAL-O-RING	
	35	1	**6V-5049**	2	SEAL-O-RING	
	36	1	**7B-3235**	8	BOLT (1/2-13X1.375-IN)	

216-0812 **GEAR GP-REAR** *(contd.)* **i02116177**

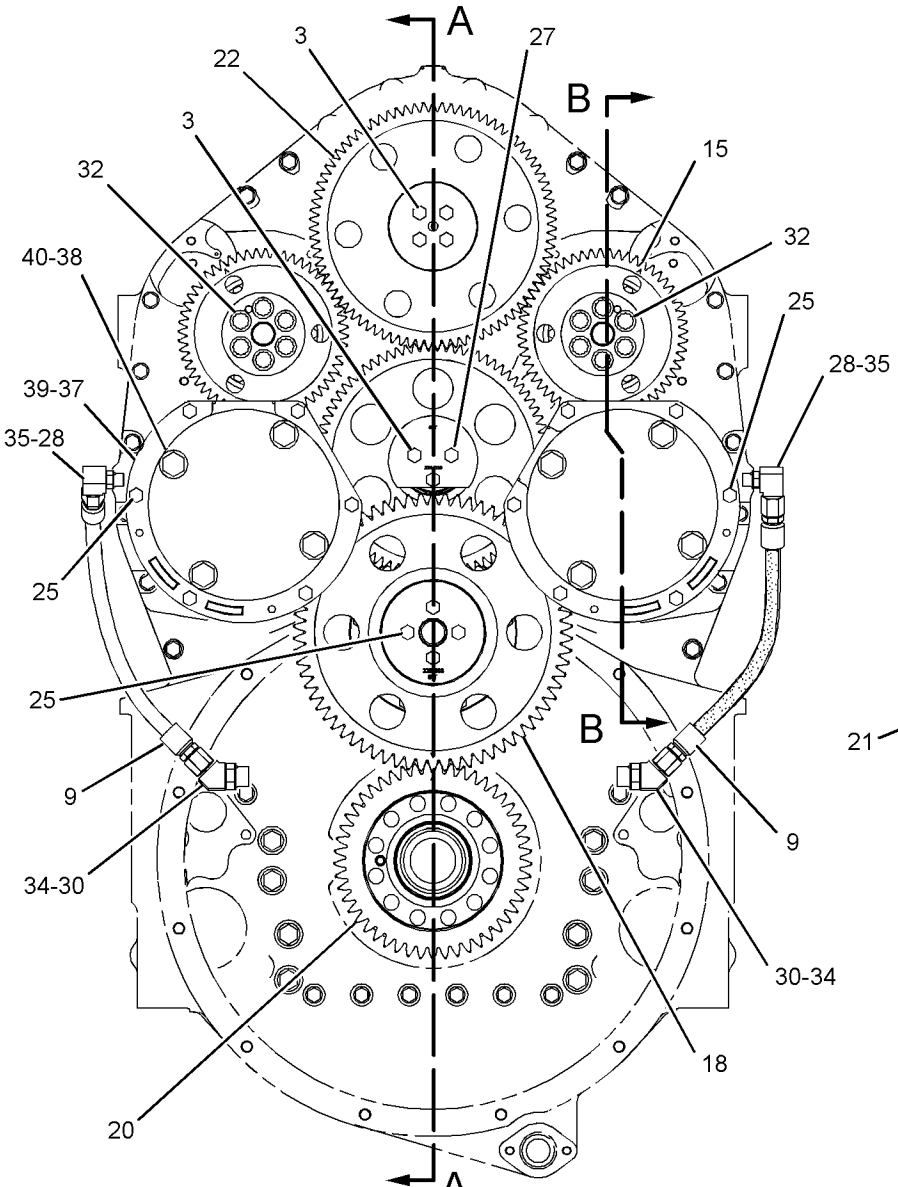

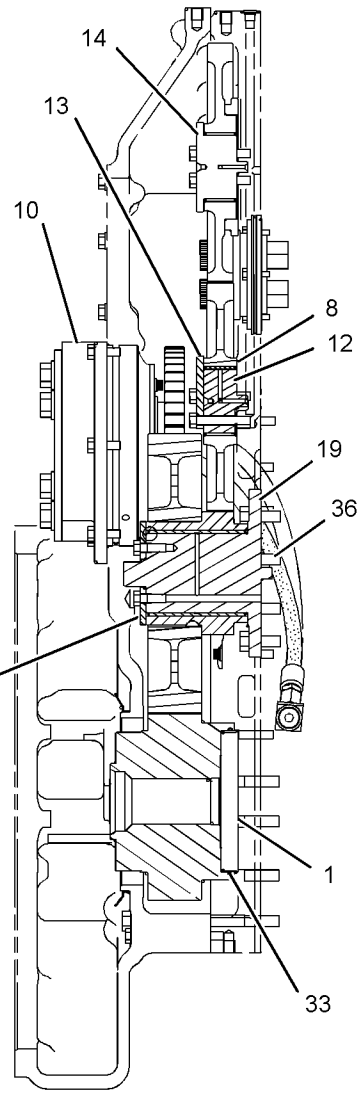

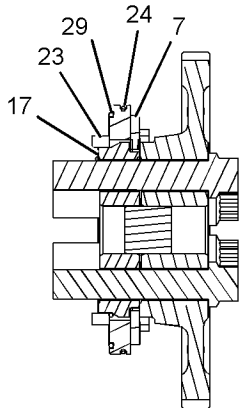

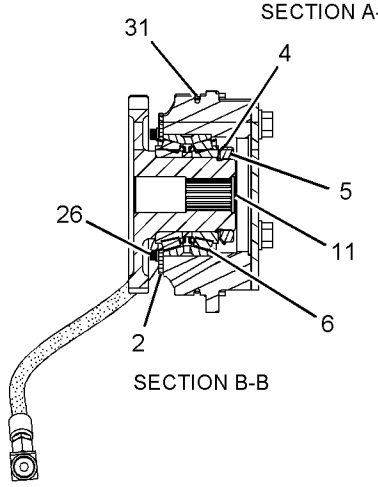

GRAPHIC #1 **<END>** g01054544

BASIC ENGINE

216-0812 GEAR GP-REAR

S/N: EHX2329-UP

PART OF 212-2737, 212-2744, 271-2219 ENGINE AR-COMPLETE

ALSO AN ATTACHMENT

SMCS-1204 **i02368680**

NOTE	REF NO	GRAPHIC REF	PART NUMBER	QTY	PART NAME 1 2 3 4 5 6 (PRODUCT LEVEL)	SEE PAGE
	1	1	**4N-0848**	1	SLEEVE-WEAR	
	2	1	**4N-7183**	2	RING-RETAINING	
	3	1	**5B-0213**	6	BOLT (3/8-16X2.375-IN)	
	4	1	**5F-7403**	2	LOCKWASHER	
	5	1	**5F-7404**	2	LOCKNUT-BEARING	
	6	1	**5P-1370**	2	BEARING AS-ROLLER	
	7	1	**102-5861**	2	PLATE-THRUST	
	8	1	**185-1497**	1	GEAR AS-IDLER (79-TEETH)	
		1	**224-9664**	1	BEARING-SLEEVE	
	9	1	**194-0620**	2	HOSE AS	
	10	1	**217-7219**	2	ADAPTER-HYDRAULIC PUMP	
	11	1	**222-3920**	2	GEAR (17-TEETH)	
	12	1	**224-1219**	1	SHAFT-STUB	
	13	1	**224-1220**	1	PLATE	
	14	1	**224-1221**	1	SHAFT-STUB	
C	15	1	**264-0544**	2	GEAR AS-CAMSHAFT (56-TEETH)	
					(EACH INCLUDES)	
		1	**9N-0575**	1	DOWEL	
	16	1	**224-5332**	2	PLATE-SEALING	
	17	1	**224-9657**	2	ADAPTER AS	
					(EACH INCLUDES)	
		1	**4N-0684**	1	DOWEL	
	18	1	**226-6036**	1	GEAR AS-IDLER (70-TEETH)	
		1	**1B-8705**	1	KEY-WOODRUFF	
		1	**226-6052**	1	BEARING-SLEEVE	
	19	1	**227-0159**	1	SHAFT-STUB	
	20	1	**228-5813**	1	GEAR AS-CRANKSHAFT (49-TEETH)	
		1	**4N-0684**	1	DOWEL	
	21	1	**229-1663**	1	PLATE-THRUST	
	22	1	**230-6202**	1	GEAR AS (70/83-TEETH) (83-TEETH)	
		1	**209-8622**	1	BEARING-SLEEVE	
		1	**224-9664**	1	BEARING-SLEEVE	
	23	1	**031-5085**	6	BOLT-LOCKING (1/4-20X1-IN)	
	24	1	**117-8801**	2	SEAL-O-RING	
	25	1	**1A-2029**	16	BOLT (3/8-16X1.125-IN)	
	26	1	**1T-0720**	12	BOLT-12 POINT HEAD (3/8-16X1.25-IN)	
	27	1	**245-3804**	1	BOLT	
	28	1	**4K-6297**	2	ELBOW	
	29	1	**5E-8771**	2	SEAL-O-RING	
	30	1	**5P-4318**	2	ELBOW	
	31	1	**5P-8429**	2	SEAL-O-RING	
	32	1	**6J-3913**	12	BOLT-12 POINT HEAD (5/8-11X3.25-IN)	
	33	1	**6V-3319**	1	SEAL-O-RING	
	34	1	**6V-4589**	2	SEAL-O-RING	
	35	1	**6V-5049**	2	SEAL-O-RING	
	36	1	**7B-3235**	8	BOLT (1/2-13X1.375-IN)	

C-CHANGE FROM PREVIOUS TYPE

216-0812 **GEAR GP-REAR** *(contd.)* **i02368680**

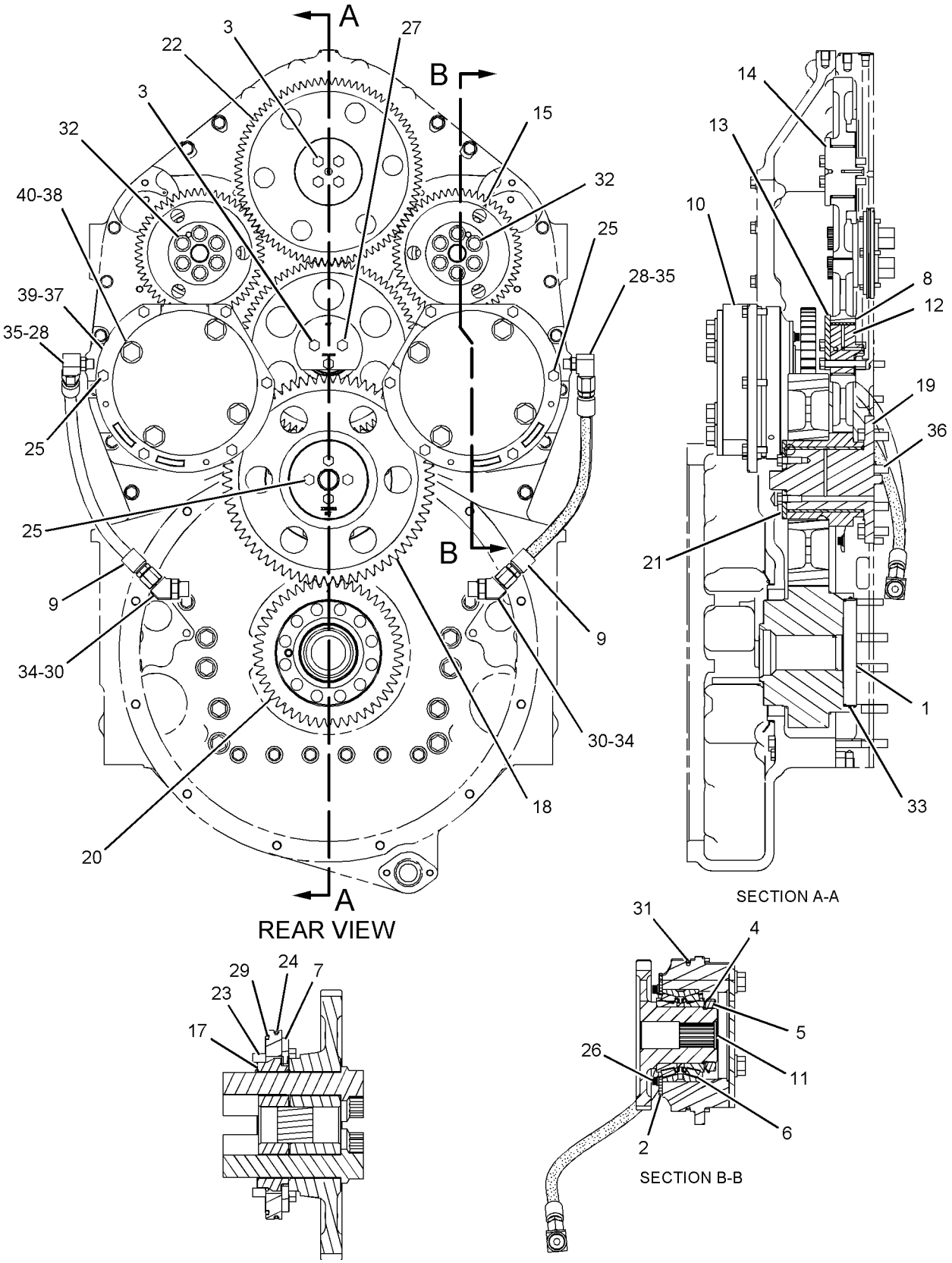

GRAPHIC #1 **<END>** g01054544

226-0297 HOUSING GP-FLYWHEEL

S/N: EHX1-UP

PART OF 212-2737, 212-2744, 271-2219 ENGINE AR-COMPLETE

ALSO AN ATTACHMENT

SMCS-1157 **i02044812**

NOTE	REF NO	GRAPHIC REF	PART NUMBER	QTY	PART NAME 1 2 3 4 5 6 (PRODUCT LEVEL)	SEE PAGE
	1	1	**7G-9724**	4	SPACER (10.5X18X19-MM THK)	
	2	1	**142-5868**	1	SEAL GP-CRANKSHAFT	
	3	1	**225-1242**	1	GASKET	
	4	1	**226-0301**	1	HOUSING AS-FLYWHEEL	
		1	**1W-3136**	1	BAFFLE	
		1	**238-9860**	2	DOWEL	
	5	1	**0S-1619**	2	BOLT (3/8-16X3-IN)	
	6	1	**170-0612**	4	STUD	
	7	1	**231-4470**	2	BOLT	
	8	1	**231-4471**	8	BOLT	
	9	1	**5B-2638**	14	BOLT (3/8-16X5.25-IN)	
	10	1	**5M-2894**	28	WASHER-HARD (10.2X18.5X2.5-MM THK)	
	11	1	**5P-7814**	1	SEAL-O-RING	
	12	1	**5P-8245**	8	WASHER-HARD (13.5X25.5X3-MM THK)	
	13	1	**8S-9191**	6	BOLT (3/8-16X4-IN)	
	14	1	**9S-8003**	1	PLUG	

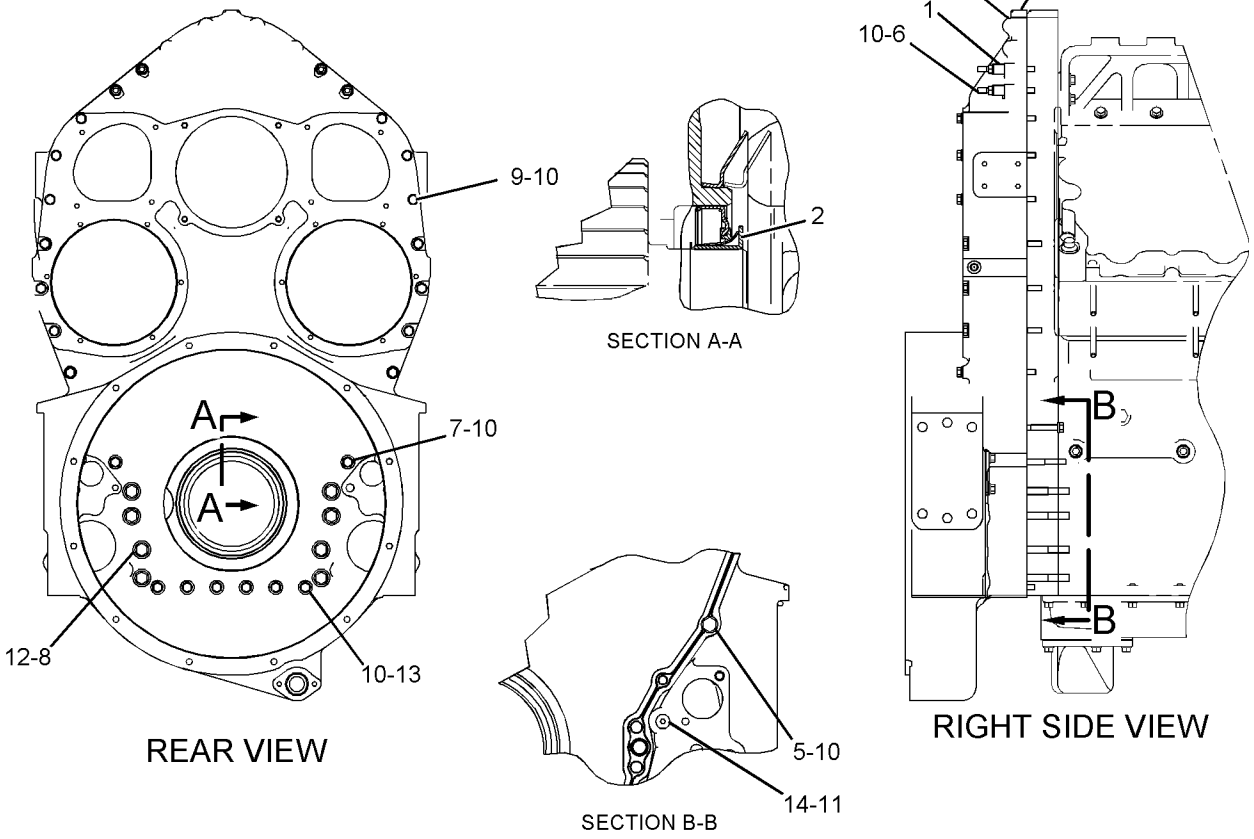

GRAPHIC #1

<END>

g01054567

238-9862 HOUSING GP-FRONT

S/N: EHX1-UP

PART OF 260-9527, 261-1507, 276-9586 ENGINE AR-CORE

ALSO AN ATTACHMENT

SMCS-1151, 1162 **i02041111**

NOTE	REF NO	GRAPHIC REF	PART NUMBER	QTY	PART NAME 1 2 3 4 5 6 (PRODUCT LEVEL)	SEE PAGE
	1	1	**214-1727**	1	GASKET (CYLINDER BLOCK)	
	2	1	**238-9861**	1	HOUSING AS	
		1	**238-2800**	1	HOUSING	
	2A	1	**238-9860**	2	DOWEL	
	3	1	**0L-1352**	4	BOLT (3/8-16X3.25-IN)	
	4	1	**2K-4973**	1	LOCKNUT (3/8-16-THD)	
	5	1	**3K-3256**	2	STUD-TAPERLOCK (3/8-16X1.7-IN)	
	6	1	**5M-2894**	5	WASHER-HARD (10.2X18.5X2.5-MM THK)	

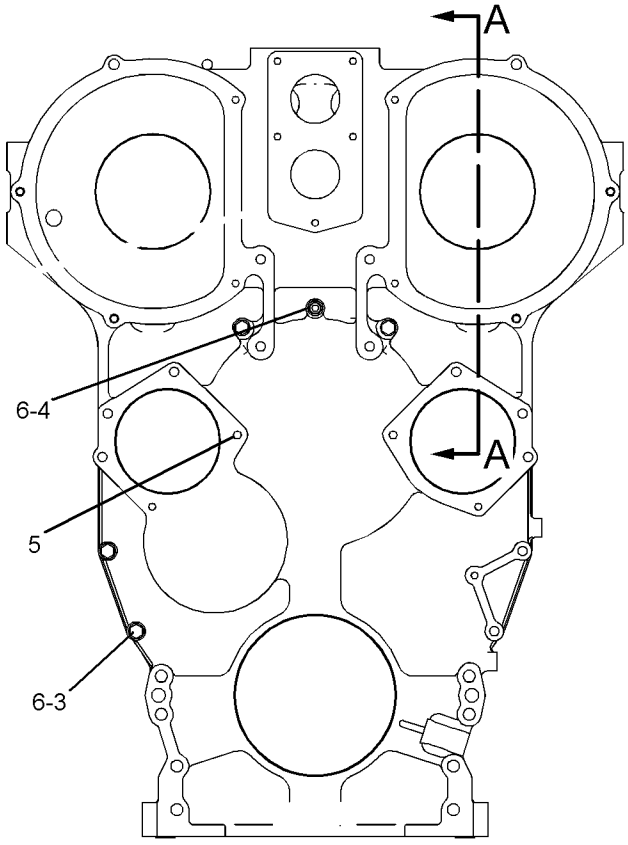

FRONT VIEW

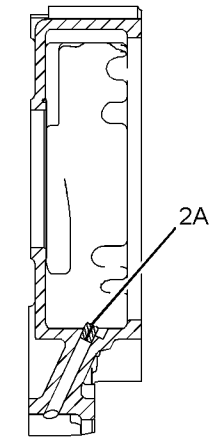

SECTION A-A

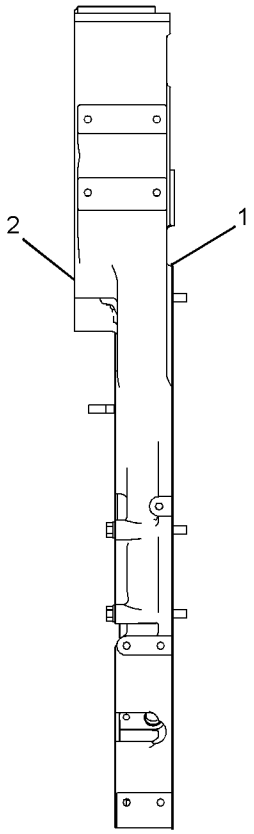

LEFT SIDE VIEW

GRAPHIC #1 **<END>** g01050949

BASIC ENGINE

233-2462 HOUSING GP-REAR

S/N: EHX1-UP
PART OF 260-9527, 261-1507, 276-9586 ENGINE AR-CORE
ALSO AN ATTACHMENT

SMCS-1166 **i02041104**

NOTE	REF NO	GRAPHIC REF	PART NUMBER	QTY	PART NAME 1 2 3 4 5 6 (PRODUCT LEVEL)	SEE PAGE
	1	1	**161-7293**	1	GASKET-CYLINDER	
	2	1	**224-5322**	1	HOSE AS	
	3	1	**232-3643**	1	HOUSING AS-REAR	
		1	**4N-0683**	2	DOWEL	
	4	1	**234-4279**	1	FLANGE	
	5	1	**030-7946**	1	ELBOW	
	6	1	**053-2294**	2	BOLT-12 POINT HEAD (3/8-16X1.75-IN)	
	7	1	**061-8639**	1	SEAL-O-RING	
	8	1	**0S-1616**	2	BOLT (1/4-20X1-IN)	
	9	1	**3S-0127**	8	BOLT-12 POINT HEAD (3/8-16X2.25-IN)	
	10	1	**5P-0537**	2	WASHER-HARD (7.2X14.5X2-MM THK)	
	11	1	**6V-5048**	2	SEAL-O-RING	
	12	1	**9S-8002**	1	PLUG	
B	13	1	**4C-9612**		SEALANT-SILICONE	

B-USE AS REQUIRED

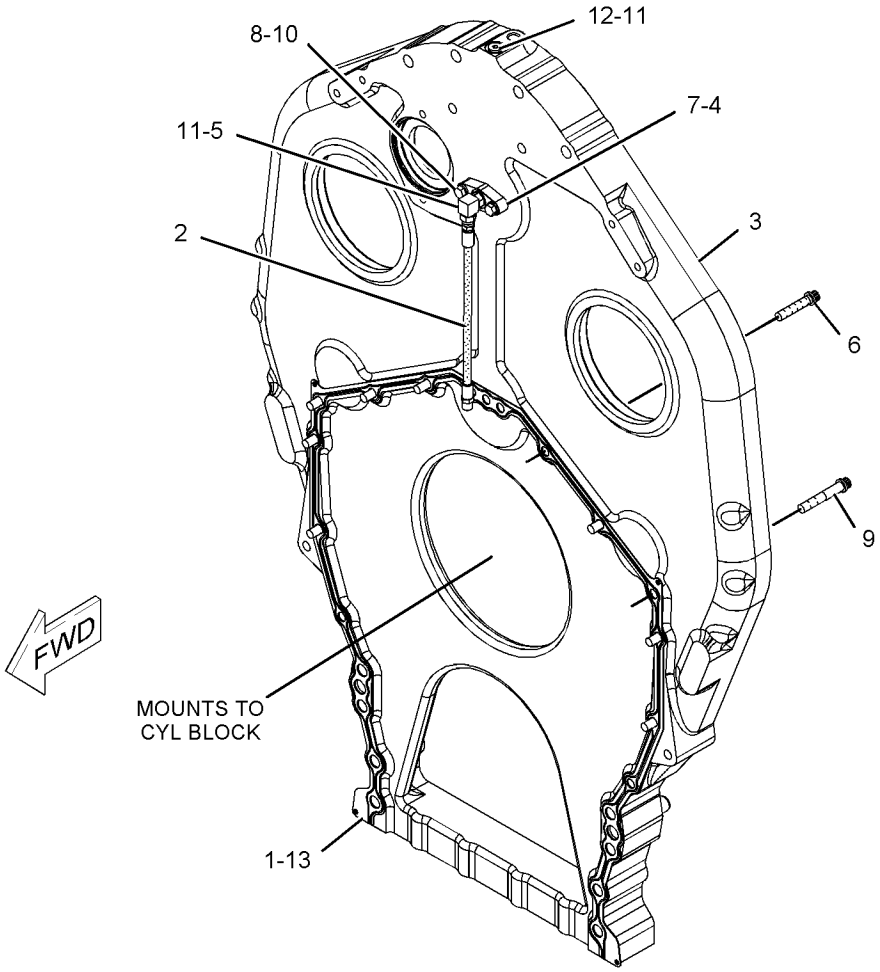

GRAPHIC #1 **<END>** g01051089

235-2014 LIFTING GP-ENGINE

S/N: EHX1-UP

PART OF 212-2737, 212-2744, 271-2219 ENGINE AR-COMPLETE

ALSO AN ATTACHMENT

SMCS-1122 **i02040826**

NOTE	REF NO	GRAPHIC REF	PART NUMBER	QTY	PART NAME 1 2 3 4 5 6 (PRODUCT LEVEL)	SEE PAGE
	1	1	**230-1550**	1	EYE AS-LIFTING	
	2	1	**235-1861**	1	EYE-LIFTING	
	3	1	**5P-8245**	5	WASHER-HARD (13.5X25.5X3-MM THK)	
	4	1	**7B-3235**	7	BOLT (1/2-13X1.375-IN)	
	5	1	**7D-1649**	6	WASHER-HARD (13.5X32X5-MM THK)	
	6	1	**9X-8875**	4	BOLT (1/2-13X3.5-IN)	

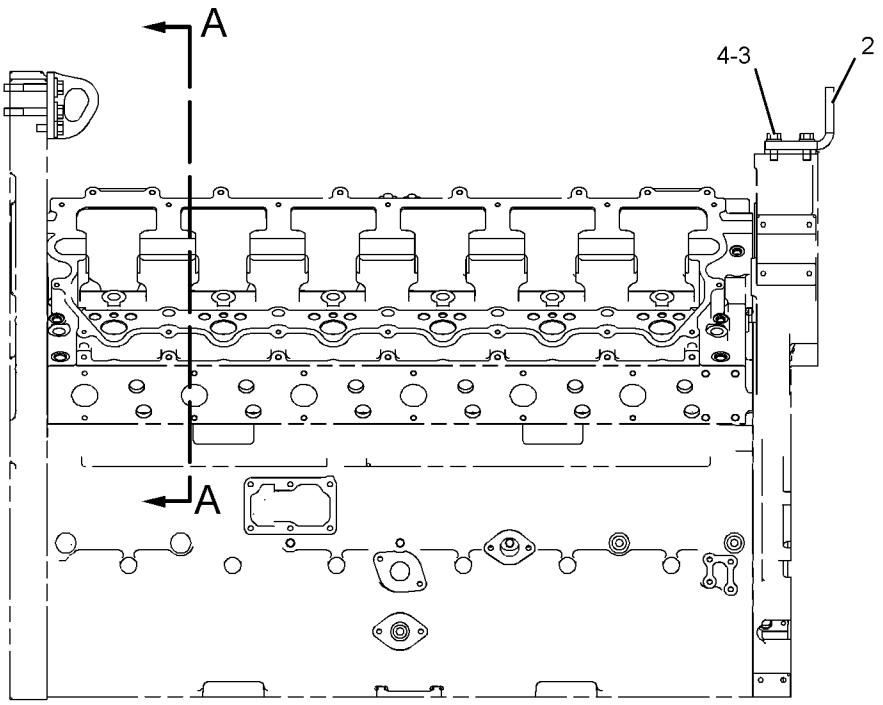

RIGHT SIDE VIEW

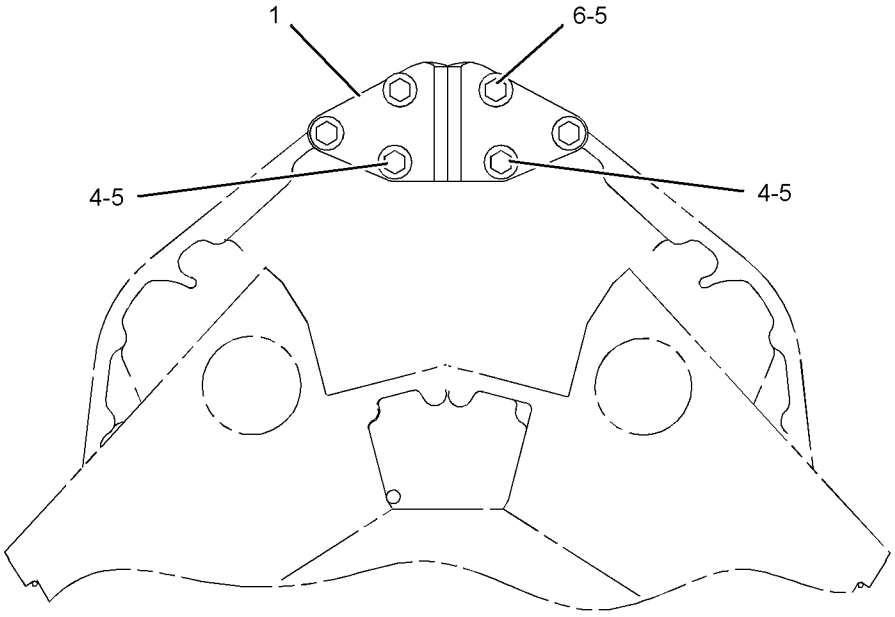

SECTION A-A

GRAPHIC #1

<END>

g01051242

260-9631 MECHANISM GP-FUEL PUMP & VALVE

S/N: EHX1-UP

PART OF 260-9527, 261-1507 ENGINE AR-CORE

ALSO AN ATTACHMENT

SMCS-1102, 1123 **i02215826**

NOTE	REF NO	GRAPHIC REF	PART NUMBER	QTY	PART NAME 1 2 3 4 5 6 (PRODUCT LEVEL)	SEE PAGE
	1	1	**6I-1458**	24	BRIDGE-VALVE	
Y	2	1	*243-2468*	6	ROCKER ARM GP	60
	3	1	**5J-5794**	24	BOLT (1/2-13X3.5-IN)	

Y-SEPARATE ILLUSTRATION

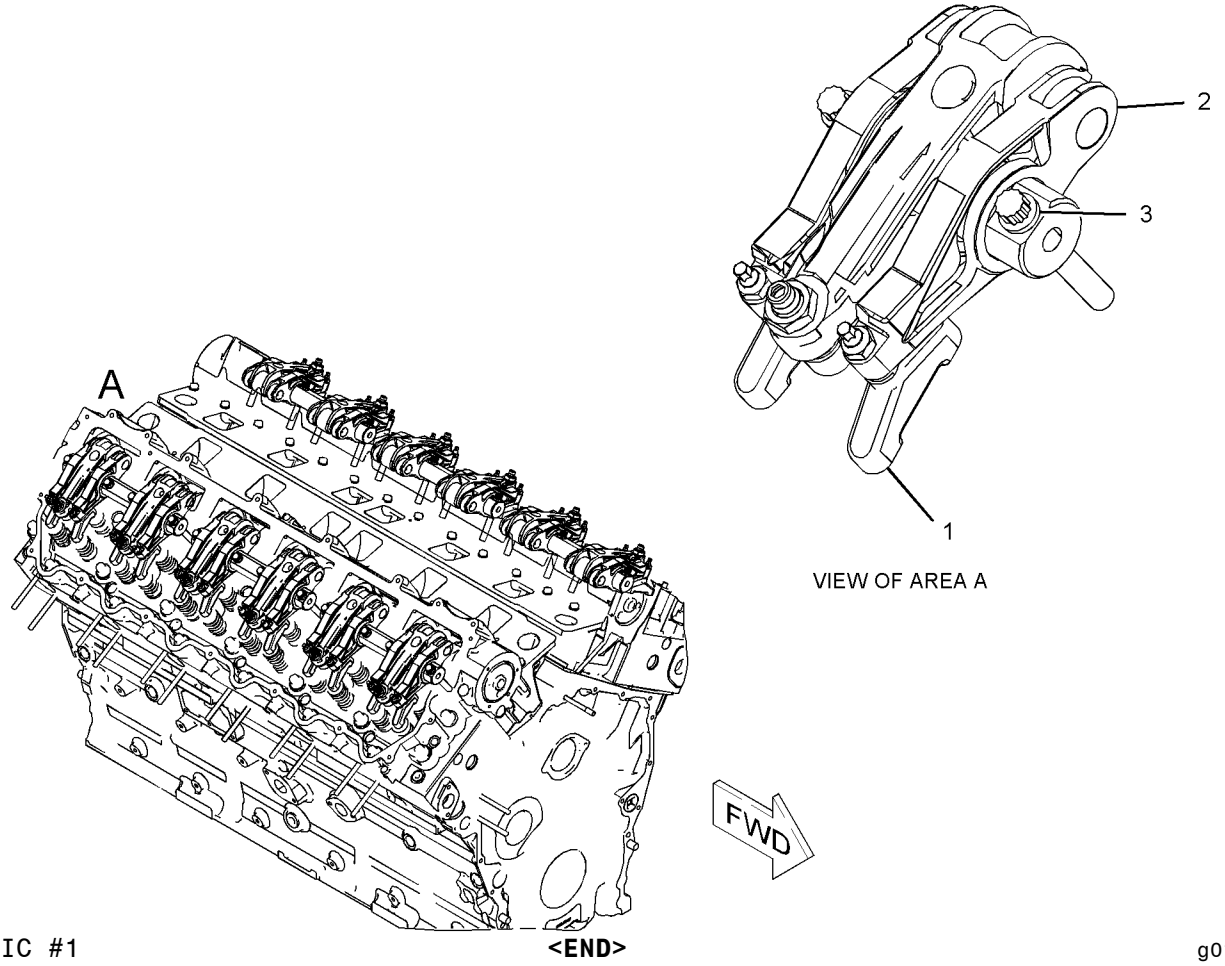

GRAPHIC #1 **<END>** g01051266

260-9631 MECHANISM GP-FUEL PUMP & VALVE

S/N: EHX2581-UP

PART OF 276-9586 ENGINE AR-CORE

SMCS-1102, 1123 **i02423747**

NOTE	REF NO	GRAPHIC REF	PART NUMBER	QTY	PART NAME 1 2 3 4 5 6 (PRODUCT LEVEL)	SEE PAGE
	1	1	**6I-1458**	24	BRIDGE-VALVE	
CY	2	1	*280-8043*	6	ROCKER ARM GP	61
	3	1	**5J-5794**	24	BOLT (1/2-13X3.5-IN)	

C-CHANGE FROM PREVIOUS TYPE
Y-SEPARATE ILLUSTRATION

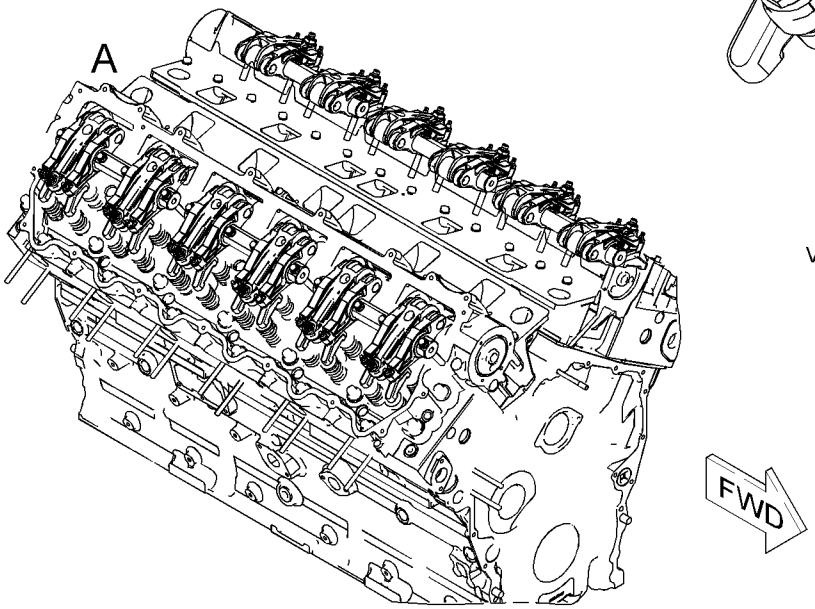

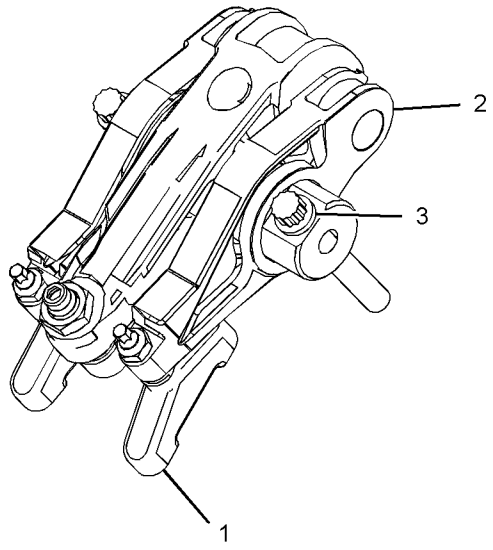

VIEW OF AREA A

GRAPHIC #1 **<END>** g01051266

BASIC ENGINE

219-7677 MOUNTING GP-ALTERNATOR

S/N: EHX1-UP

PART OF 212-2737, 212-2744, 271-2219 ENGINE AR-COMPLETE

ALSO AN ATTACHMENT

SMCS-1405 **i02231183**

NOTE	REF NO	GRAPHIC REF	PART NUMBER	QTY	PART NAME 1 2 3 4 5 6 (PRODUCT LEVEL)	SEE PAGE
	1	1	**219-6922**	1	SUPPORT-ALTERNATOR	
	2	1	**219-7678**	1	BRACKET AS	
	3	1	**0L-1351**	1	BOLT (3/8-16X0.875-IN)	
	4	1	**0S-1585**	4	BOLT (1/2-13X1.5-IN)	
	5	1	**0T-0573**	1	BOLT (3/8-16X2.75-IN)	
	6	1	**5B-9603**	2	BOLT (3/8-16X5-IN)	
	7	1	**5M-2894**	3	WASHER-HARD (10.2X18.5X2.5-MM THK)	
	8	1	**5P-8245**	4	WASHER-HARD (13.5X25.5X3-MM THK)	
	9	1	**9X-6458**	1	WASHER-HARD (10.2X22.5X3-MM THK)	

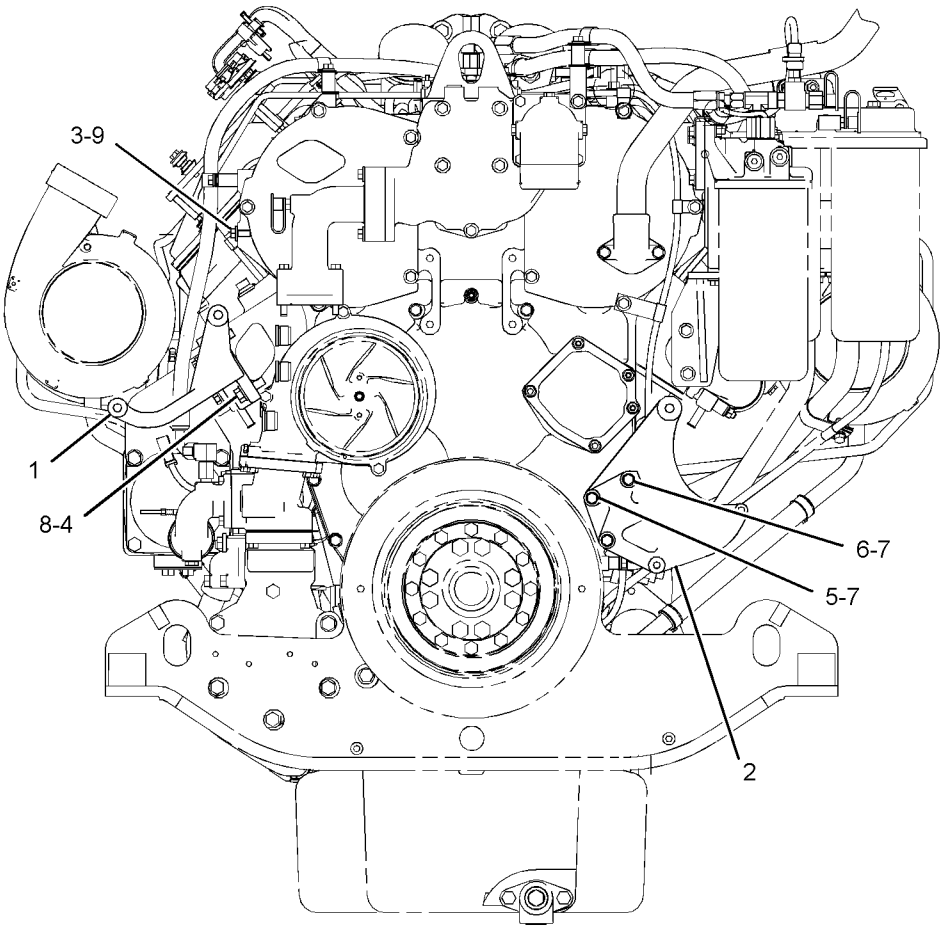

FRONT VIEW

GRAPHIC #1 **<END>** g01125633

BASIC ENGINE

119-8582 PAN GP-OIL

S/N: EHX1-UP

PART OF 212-2737, 212-2744, 271-2219 ENGINE AR-COMPLETE

ALSO AN ATTACHMENT

SMCS-1302 **i01439740**

NOTE	REF NO	GRAPHIC REF	PART NUMBER	QTY	PART NAME 1 2 3 4 5 6 (PRODUCT LEVEL)	SEE PAGE
	1	1	**2P-3203**	30	BOLT-WASHER HEAD (3/8-16X1.25-IN)	
	2	1	**2P-3204**	2	BOLT-WASHER HEAD	
	3	1	**2P-3209**	4	BOLT-WASHER HEAD	
	4	1	**4P-0519**	1	ADAPTER AS-DRAIN	
	4A	1	**109-5839**	1	PLUG-OIL DRAIN	
	5	1	**4N-1151**	1	GASKET	
	6	1	**6N-2469**	1	GASKET-OIL PAN	
	7	1	**7N-9802**	1	PAN-FRONT OIL	
	8	1	**8N-0422**	1	GASKET	
	9	1	**8N-0423**	1	PAN-OIL	
	10	1	**113-4323**	1	PAN-OIL	
	11	1	**0S-1571**	6	BOLT (3/8-16X1.75-IN)	
	12	1	**0S-1587**	2	BOLT (1/2-13X1.75-IN)	
	13	1	**0T-0055**	4	BOLT (3/8-16X4.25-IN)	
	14	1	**3B-1915**	6	BOLT (3/8-16X1.375-IN)	
	15	1	**5M-2894**	22	WASHER-HARD (10.2X18.5X2.5-MM THK)	
	16	1	**5P-7701**	1	SEAL-O-RING	
	17	1	**6V-3830**	1	SEAL-O-RING	
	18	1	**8T-6761**	1	PLUG-PIPE	
	19	1	**9S-4181**	1	PLUG	
	20	1	**9S-8752**	6	NUT-FULL (3/8-16-THD)	

119-8582 **PAN GP-OIL** *(contd.)* **i01439740**

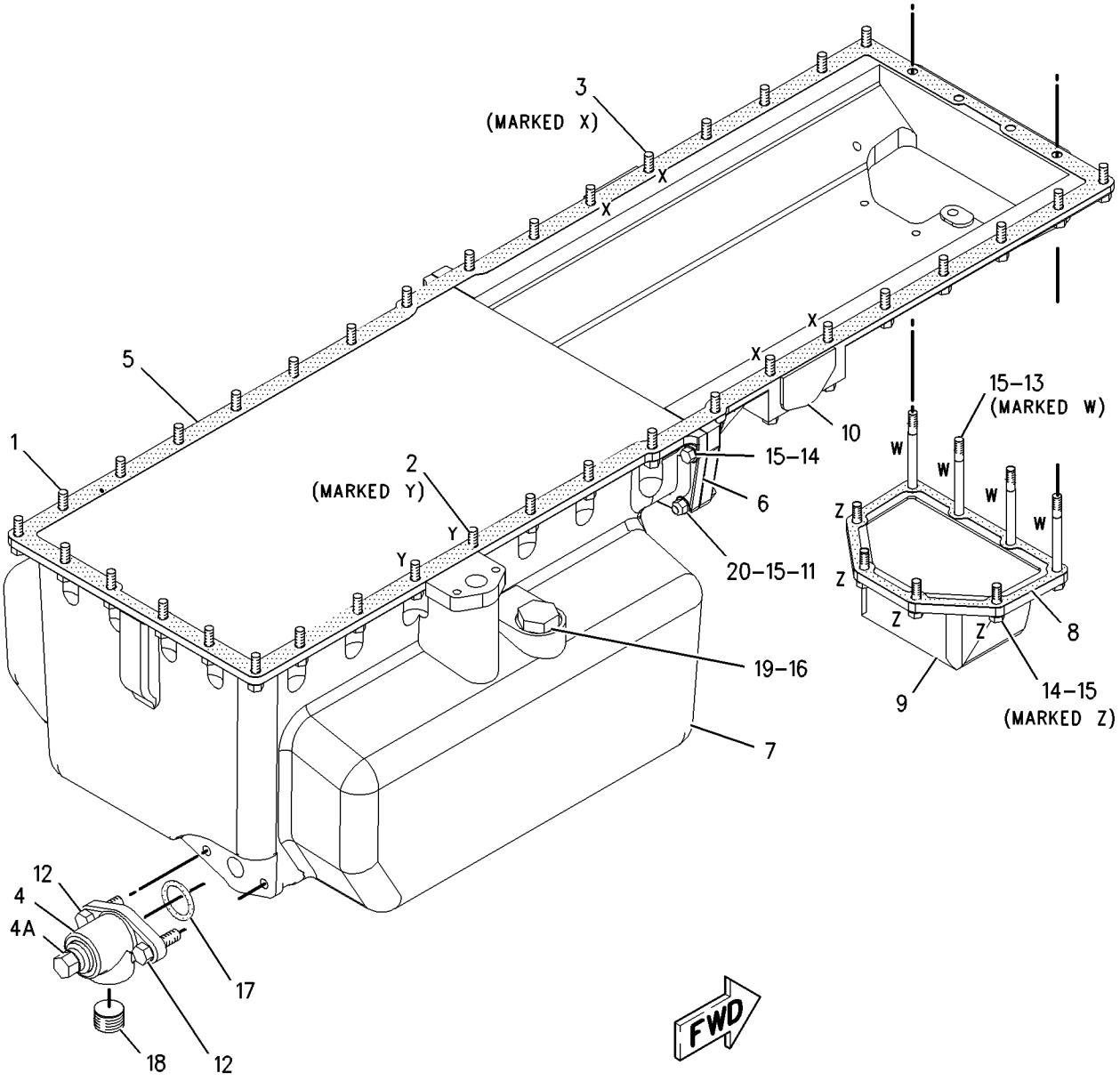

GRAPHIC #1 **<END>** g00757065

213-4836 PISTON & ROD GP

S/N: EHX1-UP

PART OF 260-9527, 261-1507, 276-9586 ENGINE AR-CORE

ALSO AN ATTACHMENT

SMCS-1225 **i02194013**

NOTE	REF NO	GRAPHIC REF	PART NUMBER	QTY	PART NAME 1 2 3 4 5 6 (PRODUCT LEVEL)	SEE PAGE
	1	1	**150-1156**	1	BOLT	
	2	1	**164-4187**	1	RING-PISTON (INTERMEDIATE)	
	3	1	**180-7350**	1	PIN-PISTON	
	4	1	**230-2569**	2	RETAINER-PIN	
	5	1	**232-3226**	1	BEARING-CONNECTING ROD	
	6	1	**232-3232**	1	ROD AS	
	6A	1	**213-3217**	4	BOLT (MJ11X1.25X84-MM)	
	6B	1	**219-4458**	2	PIN-DOWEL	
	6C	1	**229-6259**	1	BEARING	
	7	1	**234-2519**	1	TUBE AS-OIL JET	
	8	1	**247-7792**	1	BODY AS	
	9	1	**247-6130**	1	RING-PISTON-TOP	
	10	1	**238-0294**	1	RING-PISTON-OIL	

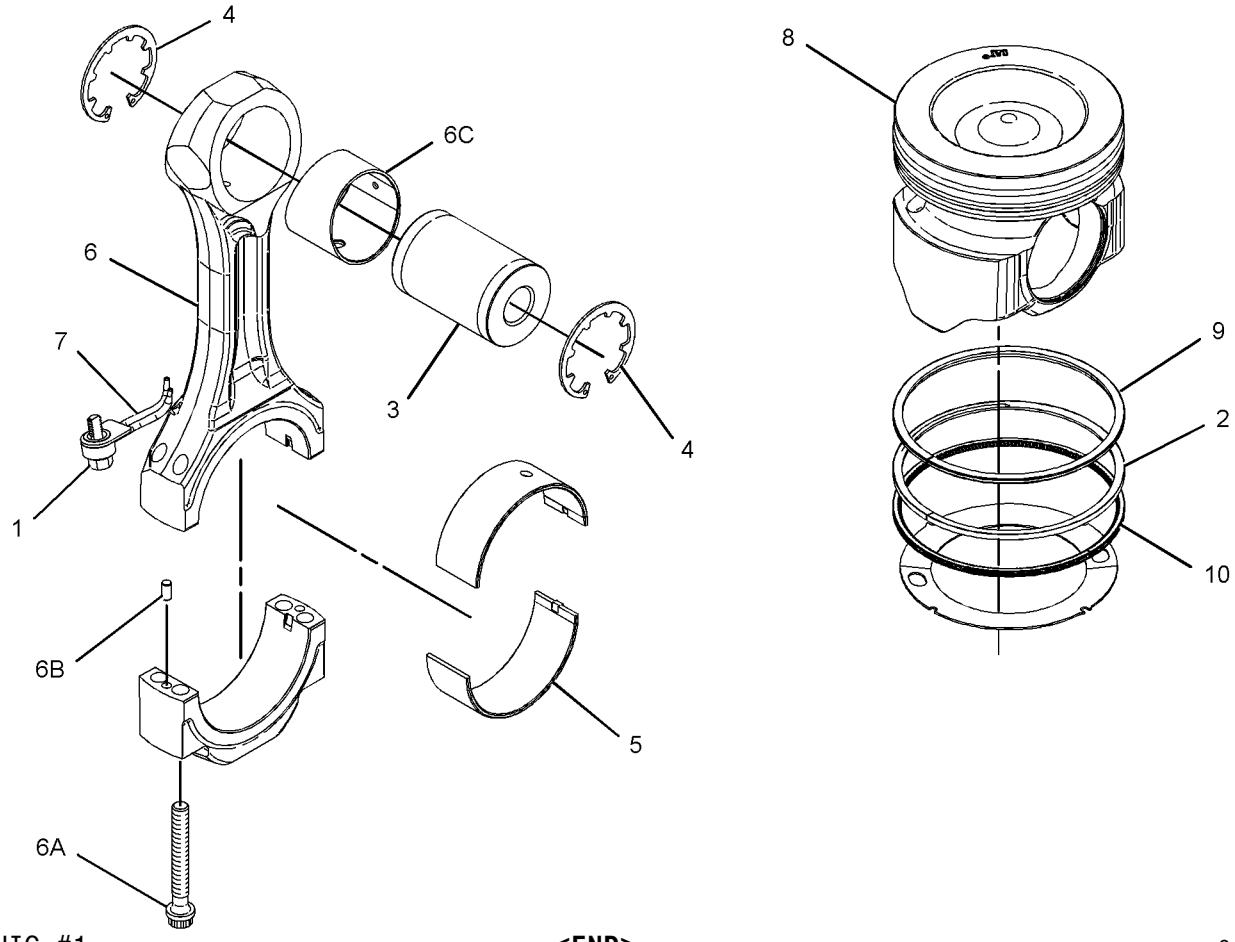

GRAPHIC #1 **<END>** g01108263

227-9516 PLUG GP-CYLINDER BLOCK

S/N: EHX1-UP

PART OF 212-2737, 212-2744, 271-2219 ENGINE AR-COMPLETE

ALSO AN ATTACHMENT

SMCS-1201 **i02040805**

NOTE	REF NO	GRAPHIC REF	PART NUMBER	QTY	PART NAME 1 2 3 4 5 6 (PRODUCT LEVEL)	SEE PAGE
	1	1	**6V-4589**	4	SEAL-O-RING	
	2	1	**7W-6534**	4	PLUG-PIPE	
	3	1	**8T-6757**	1	PLUG-PIPE	
	4	1	**9S-8006**	4	PLUG	

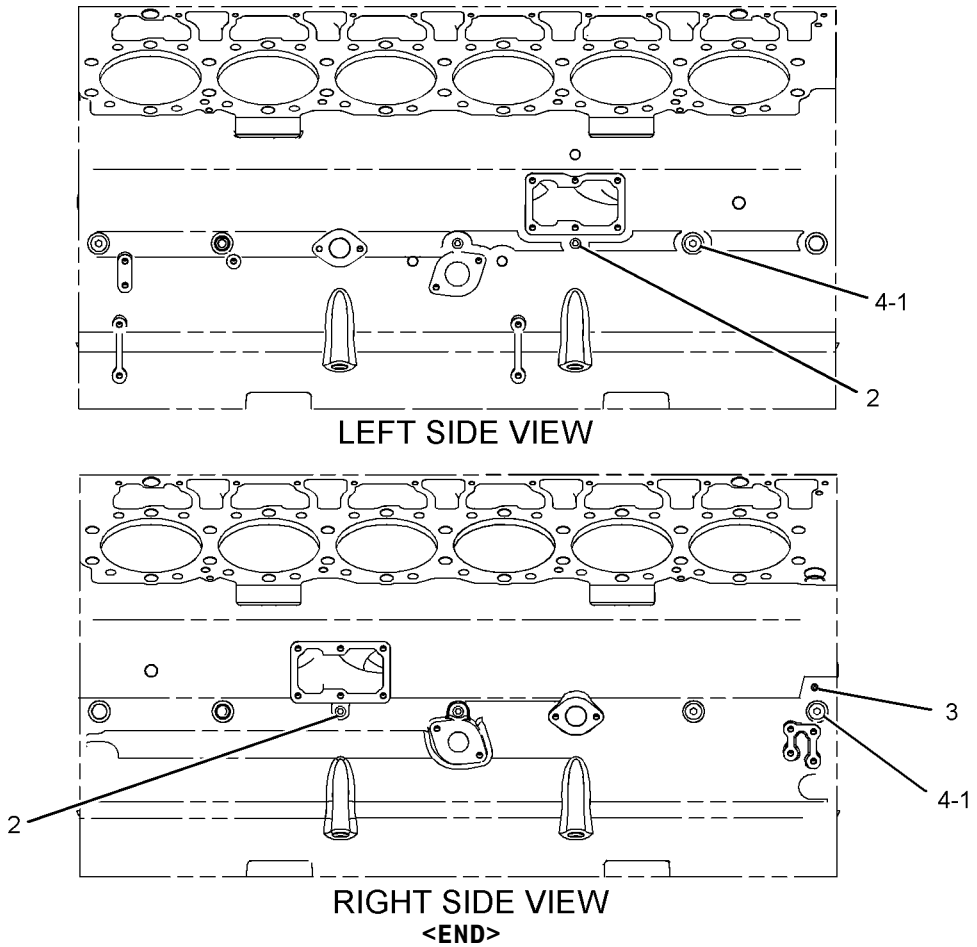

GRAPHIC #1

<END>

g01051079

BASIC ENGINE

223-6407 PLUG GP-CYLINDER HEAD

S/N: EHX1-UP

PART OF 212-2737, 212-2744, 271-2219 ENGINE AR-COMPLETE

ALSO AN ATTACHMENT

SMCS-1100, 1101 **i02040812**

NOTE	REF NO	GRAPHIC REF	PART NUMBER	QTY	PART NAME 1 2 3 4 5 6 (PRODUCT LEVEL)	SEE PAGE
	1	1	**3B-0645**	4	PLUG-CUP	

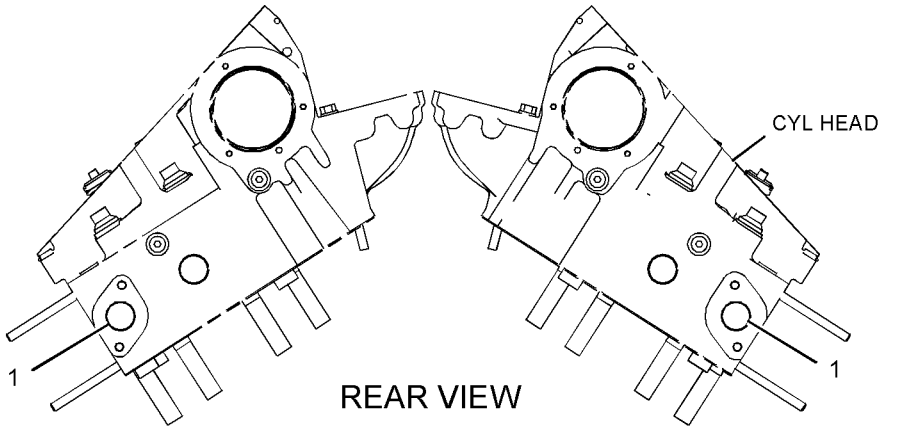

REAR VIEW

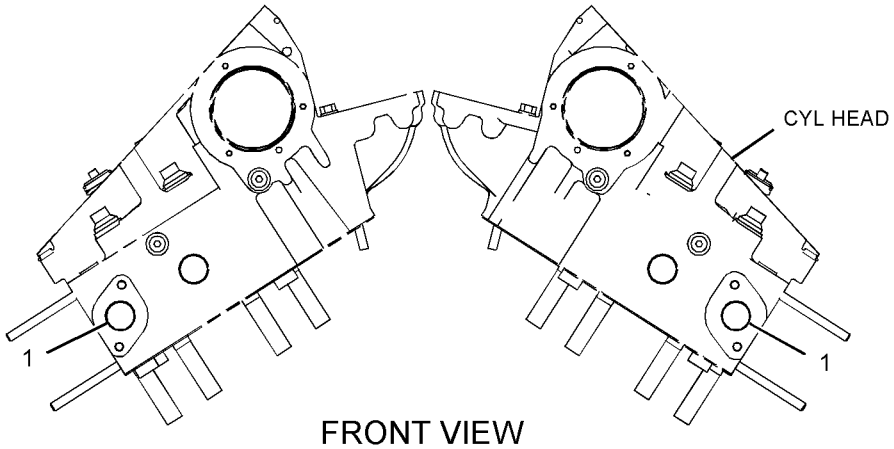

FRONT VIEW

GRAPHIC #1

<END>

g01051070

212-9648 PULLEY GP-CRANKSHAFT

S/N: RJG1-UP

PART OF 212-2745, 267-2900 INSTALLATION AR-ENGINE

SMCS-1205 **i02049491**

NOTE	REF NO	GRAPHIC REF	PART NUMBER	QTY	PART NAME 1 2 3 4 5 6 (PRODUCT LEVEL)	SEE PAGE
	1	1	**213-6922**	1	PULLEY	
	2	1	**6V-4432**	4	BOLT (1/2-13X4-IN)	

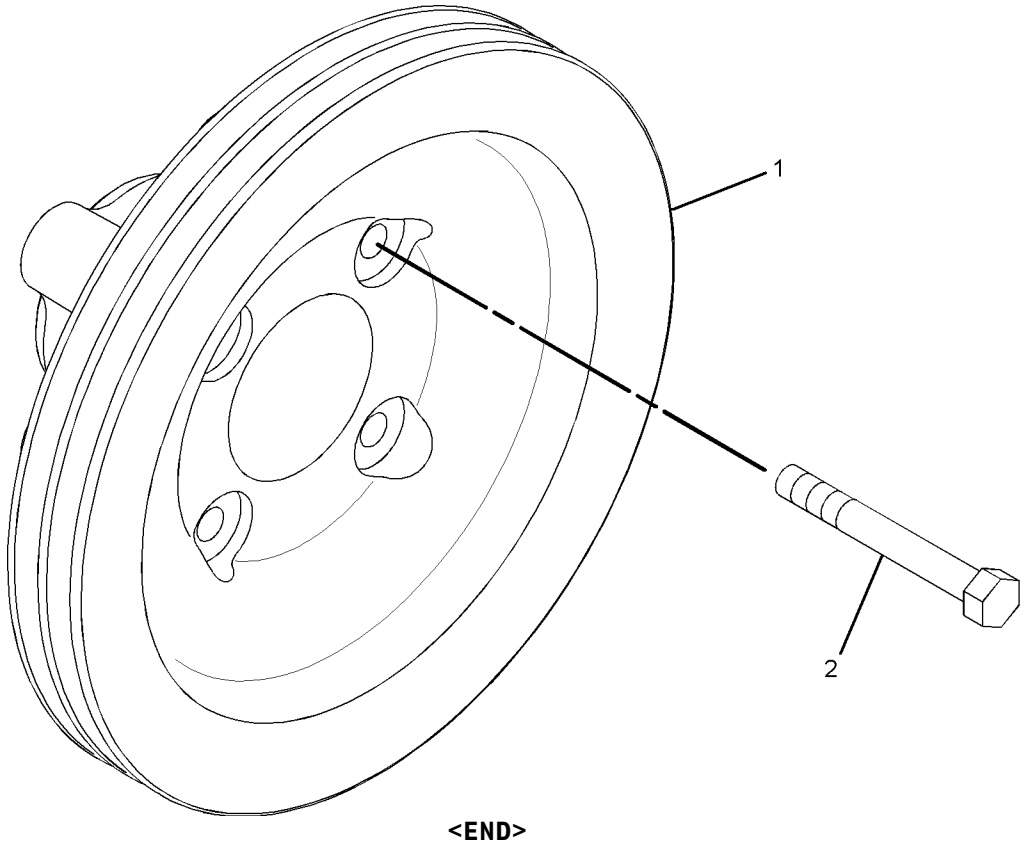

GRAPHIC #1 **<END>** g01052656

243-2468 ROCKER ARM GP

S/N: EHX1-UP
PART OF 260-9631 MECHANISM GP-FUEL PUMP & VALVE
ALSO AN ATTACHMENT

SMCS-1123 **i02218822**

NOTE	REF NO	GRAPHIC REF	PART NUMBER	QTY	PART NAME 1 2 3 4 5 6 (PRODUCT LEVEL)	SEE PAGE
	1	1	**9L-7712**	4	NUT (3/8-24-THD)	
	2	1	**104-9270**	4	BUTTON	
	3	1	**192-4151**	2	BUTTON	
	4	1	**196-5069**	2	SCREW	
	5	1	**196-5070**	2	NUT-JAM (9/16-18-THD)	
	6	1	**223-1127**	1	SHAFT AS (ROCKER ARM)	
		1	**4B-9782**	2	BALL	
	7	1	**232-0253**	4	SCREW	
	8	1	**259-6122**	4	ROCKER ARM AS (VALVE)	
	9	1	**243-2466**	2	ARM AS (UNIT INJECTOR ROCKER)	
	10	1	**061-8639**	2	SEAL-O-RING	
	11	1	**8L-2777**	4	SEAL-O-RING	

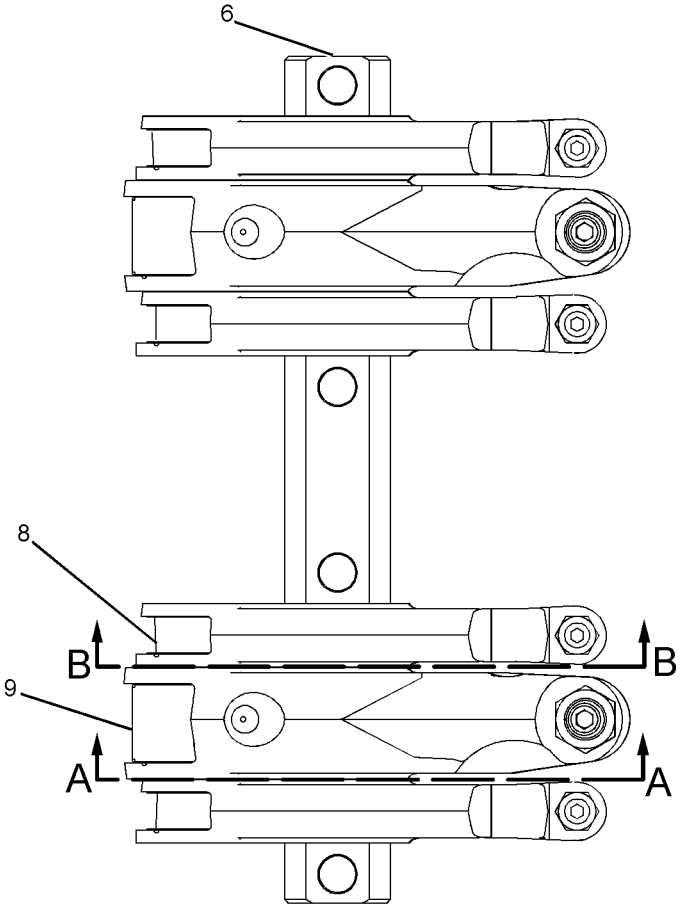

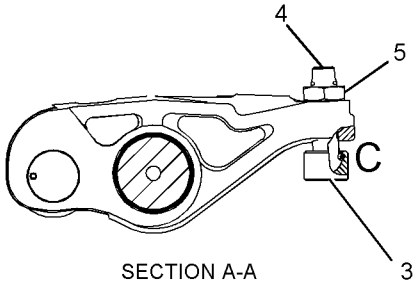

SECTION A-A

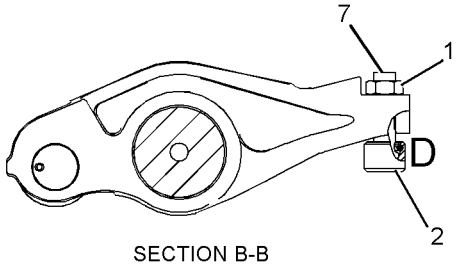

SECTION B-B

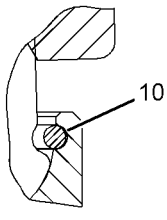

VIEW OF AREA C

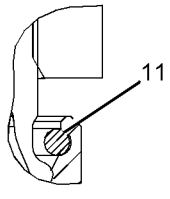

VIEW OF AREA D

GRAPHIC #1 **<END>** g01051161

280-8043 ROCKER ARM GP

S/N: EHX2581-UP

PART OF 260-9631 MECHANISM GP-FUEL PUMP & VALVE

SMCS-1123 **i02453954**

NOTE	REF NO	GRAPHIC REF	PART NUMBER	QTY	PART NAME 1 2 3 4 5 6 (PRODUCT LEVEL)	SEE PAGE
	1	1	**258-8721**	4	BUTTON	
	2	1	**192-4151**	2	BUTTON	
	3	1	**196-5069**	2	SCREW	
	4	1	**196-5070**	2	NUT-JAM (9/16-18-THD)	
	5	1	**223-1127**	1	SHAFT AS (ROCKER ARM)	
		1	**4B-9782**	2	BALL	
	6	1	**232-0253**	4	SCREW	
	7	1	**276-4132**	2	ROCKER ARM AS (VALVE)	
	8	1	**276-5317**	4	NUT-FULL (3/8-24-THD)	
	9	1	**278-1363**	2	ROCKER ARM AS (UNIT INJECTOR)	
	10	1	**061-8639**	2	SEAL-O-RING	
	11	1	**8L-2777**	4	SEAL-O-RING	
R	12	1	**203-8824**	2	ROCKER ARM AS	
					(EACH INCLUDES)	
		1	**10R-1365**	1	ROCKER ARM AS	

R-REMFG PART MAY BE AVAILABLE

280-8043 **ROCKER ARM GP** *(contd.)* **i02453954**

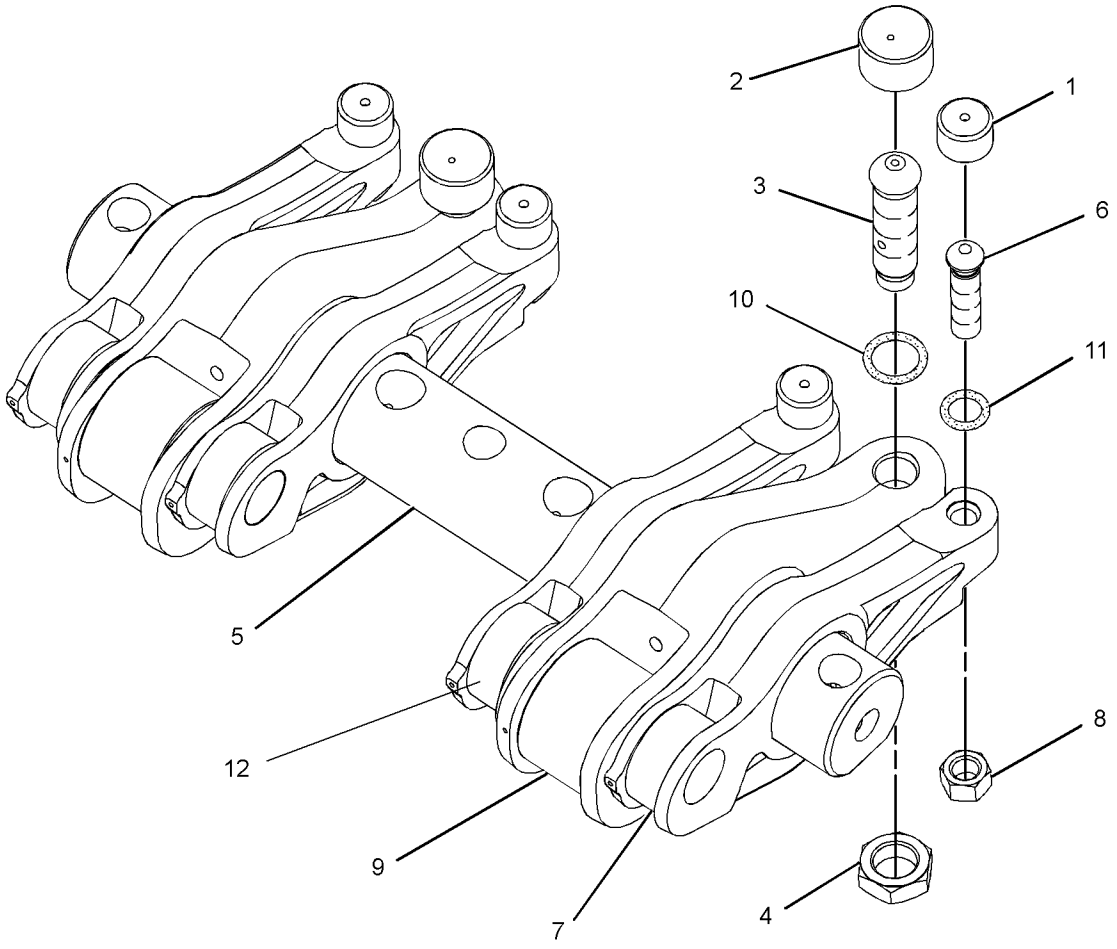

GRAPHIC #1 **<END>** g01224710

4P-5544 SUPPORT GP-ENGINE

S/N: RJG1-UP

PART OF 212-2745, 267-2900 INSTALLATION AR-ENGINE

SMCS-1154 **i01740006**

NOTE	REF NO	GRAPHIC REF	PART NUMBER	QTY	PART NAME 1 2 3 4 5 6 (PRODUCT LEVEL)	SEE PAGE
	1	1	**6N-3897**	2	SUPPORT-ENGINE	
	2	1	**2A-1538**	12	BOLT (3/4-10X2.25 IN)	
	3	1	**6Y-2090**	2	MOUNT AS	
	4	1	**6N-3896**	2	CAP	
	5	1	**4P-5546**	2	SUPPORT	
	6	1	**3B-2968**	4	BOLT (3/4-10X3.5 IN)	
	7	1	**1D-4627**	4	BOLT (7/8-9X3 IN)	
	8	1	**1D-4631**	4	BOLT (7/8-9X4.25 IN)	
	9	1	**5P-8248**	16	WASHER-HARD (20X36.5X3.5MM THK)	
	10	1	**5P-8249**	8	WASHER-HARD (24X41.5X4MM THK)	

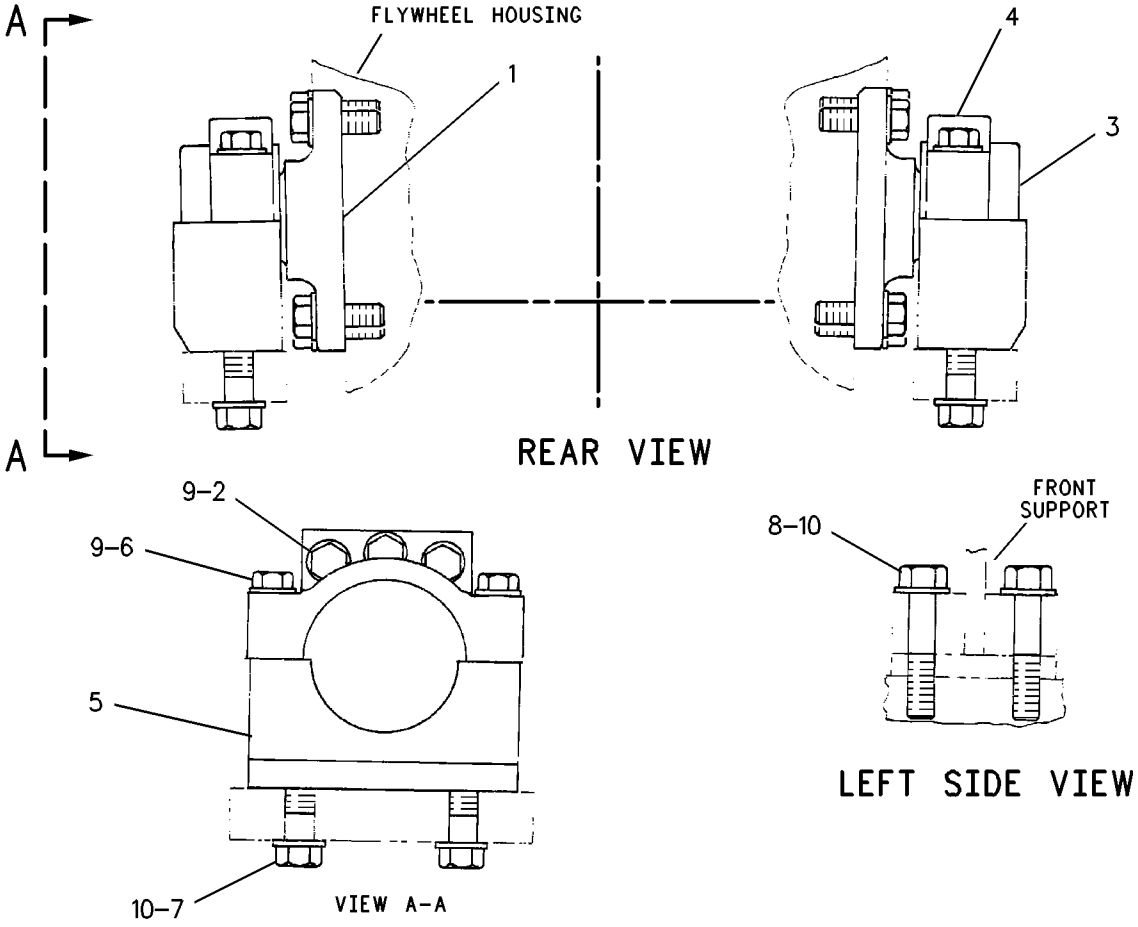

GRAPHIC #1 **<END>** g00234594

BASIC ENGINE

6N-1378 SUPPORT GP-ENGINE–FRONT

S/N: EHX2581-UP

PART OF 271-2219 ENGINE AR-COMPLETE

SMCS-1154 **i02209567**

NOTE	REF NO	GRAPHIC REF	PART NUMBER	QTY	PART NAME 1 2 3 4 5 6 (PRODUCT LEVEL)	SEE PAGE
	1	1	**1A-1135**	4	BOLT (5/8-11X2-IN)	
C	2	1	**248-4820**	1	SUPPORT AS	
C	3	1	**092-9012**	4	SPACER (17X32X9-MM THK)	

C-CHANGE FROM PREVIOUS TYPE

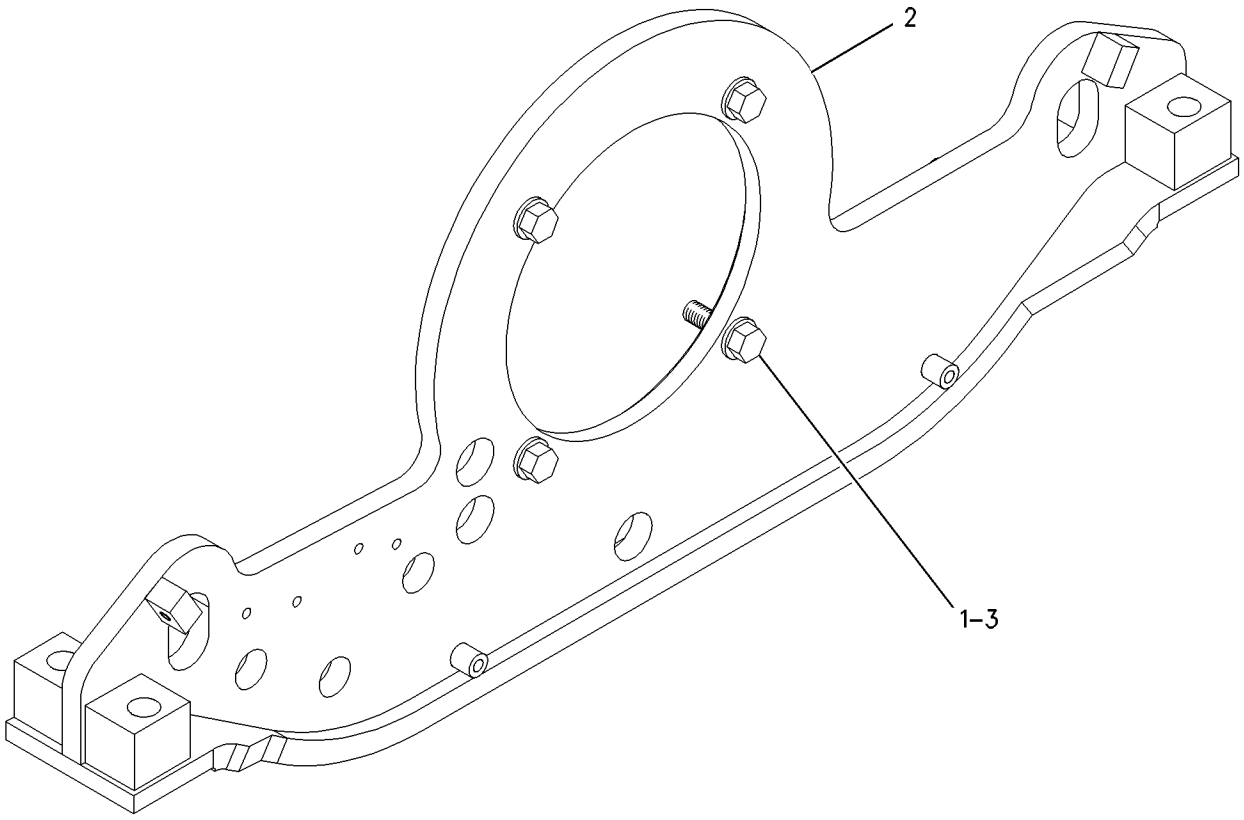

GRAPHIC #1 **<END>** g00674296

248-4821 SUPPORT GP-ENGINE

S/N: EHX1-UP
PART OF 212-2737, 212-2744 ENGINE AR-COMPLETE
ALSO AN ATTACHMENT

SMCS-1154 **i02044893**

NOTE	REF NO	GRAPHIC REF	PART NUMBER	QTY	PART NAME 1 2 3 4 5 6 (PRODUCT LEVEL)	SEE PAGE
	1	1	**1A-1135**	4	BOLT (5/8-11X2-IN)	
	2	1	**092-9012**	4	SPACER (17X32X9-MM THK)	
	3	1	**248-4820**	1	SUPPORT AS (ENGINE)	
	3A	1	**8F-9836**	3	BOSS-THREADED (3/8-16-THD)	

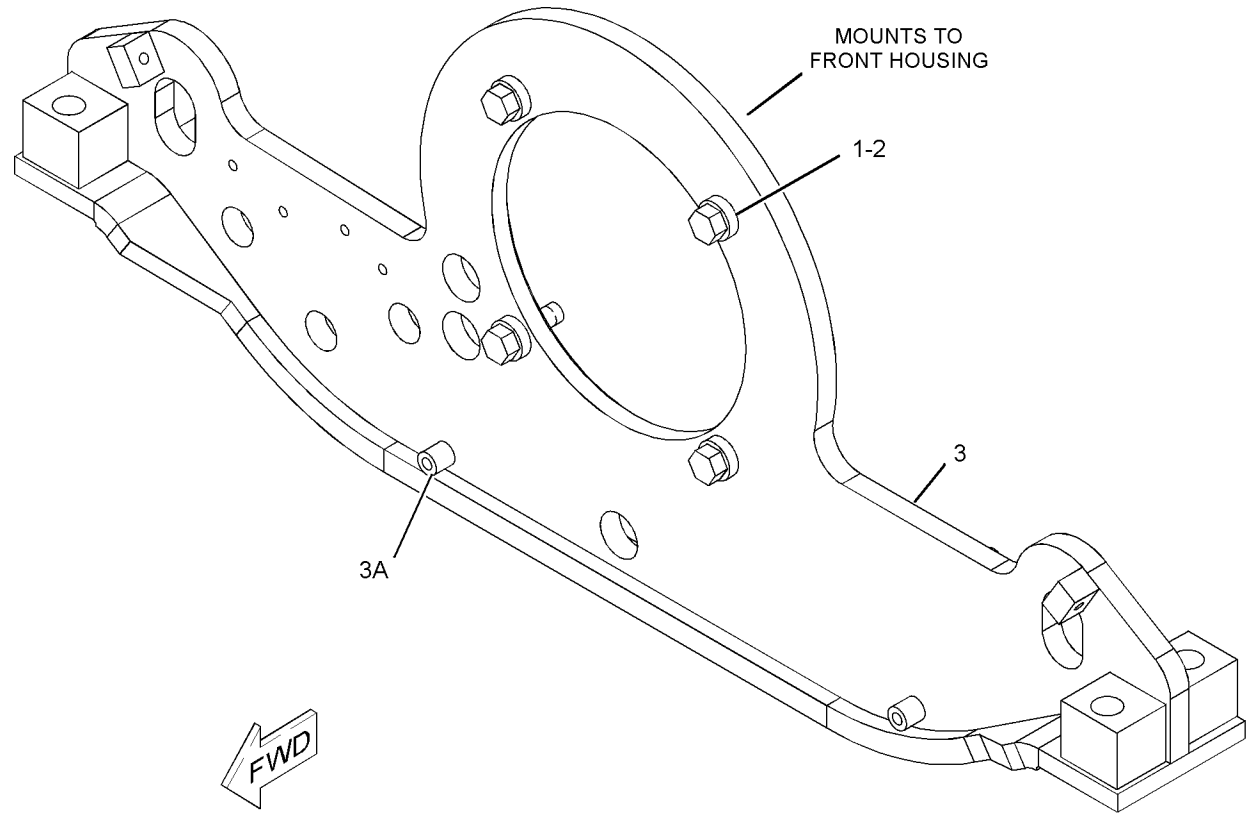

GRAPHIC #1 **<END>** g01051825

BASIC ENGINE

257-5846 SUPPRESSION AR-SOUND

S/N: RJG1-UP

AN ATTACHMENT

SMCS-1801 **i02273957**

NOTE	PART NUMBER	QTY	PART NAME 1 2 3 4 5 6 (PRODUCT LEVEL)	SEE PAGE
Y	**212-2737**	1	ENGINE AR-COMPLETE	10

Y-SEPARATE ILLUSTRATION

<END>

BASIC ENGINE

7N-1346 TRUNNION GP-ENGINE

S/N: EHX1-UP

PART OF 212-2737, 212-2744, 271-2219 ENGINE AR-COMPLETE

ALSO AN ATTACHMENT

SMCS-1153 **i00581402**

NOTE	REF NO	GRAPHIC REF	PART NUMBER	QTY	PART NAME 1 2 3 4 5 6 (PRODUCT LEVEL)	SEE PAGE
C	1	1	**1W-3014**	1	ADAPTER AS	
	2	1	**4N-0683**	2	DOWEL	
	3	1	**7N-1210**	1	MOUNT AS (RESILIENT)	
C	4	1	**0S-1573**	6	BOLT (1/2-13X4IN)	
C	5	1	**1D-4569**	2	BOLT (1/2-13X4.25IN)	

C-CHANGE FROM PREVIOUS TYPE

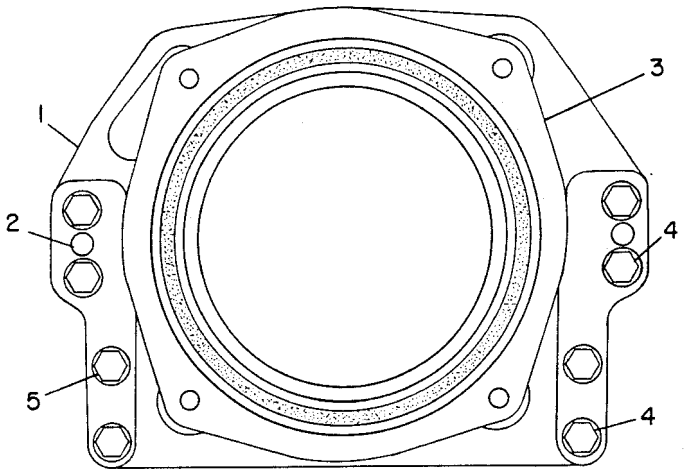

GRAPHIC #1 **<END>** g00182241

234-1622 VALVE MECHANISM GP

S/N: EHX1-UP

PART OF 212-2737, 212-2744, 271-2219 ENGINE AR-COMPLETE

ALSO AN ATTACHMENT

SMCS-1102 **i02427046**

NOTE	REF NO	GRAPHIC REF	PART NUMBER	QTY	PART NAME 1 2 3 4 5 6 (PRODUCT LEVEL)	SEE PAGE
	1	1	**212-7728**	36	ISOLATOR AS	
	2	1	**224-7506**	6	SEAL-ISOLATION (VALVE COVER)	
	3	1	**224-9907**	4	STUD	
	4	1	**238-9850**	6	COVER	
	5	1	**198-4776**	4	WASHER-HARD (8.8X20X8-MM THK)	
	6	1	**5P-4116**	4	WASHER-HARD (8.8X20.5X2-MM THK)	
	7	1	**7X-0440**	28	BOLT (5/16-18X1.56-IN)	
	8	1	**8T-4224**	32	WASHER-HARD (8.8X16X2-MM THK)	
	9	1	**8T-8912**	4	BOLT (5/16-18X2.25-IN)	

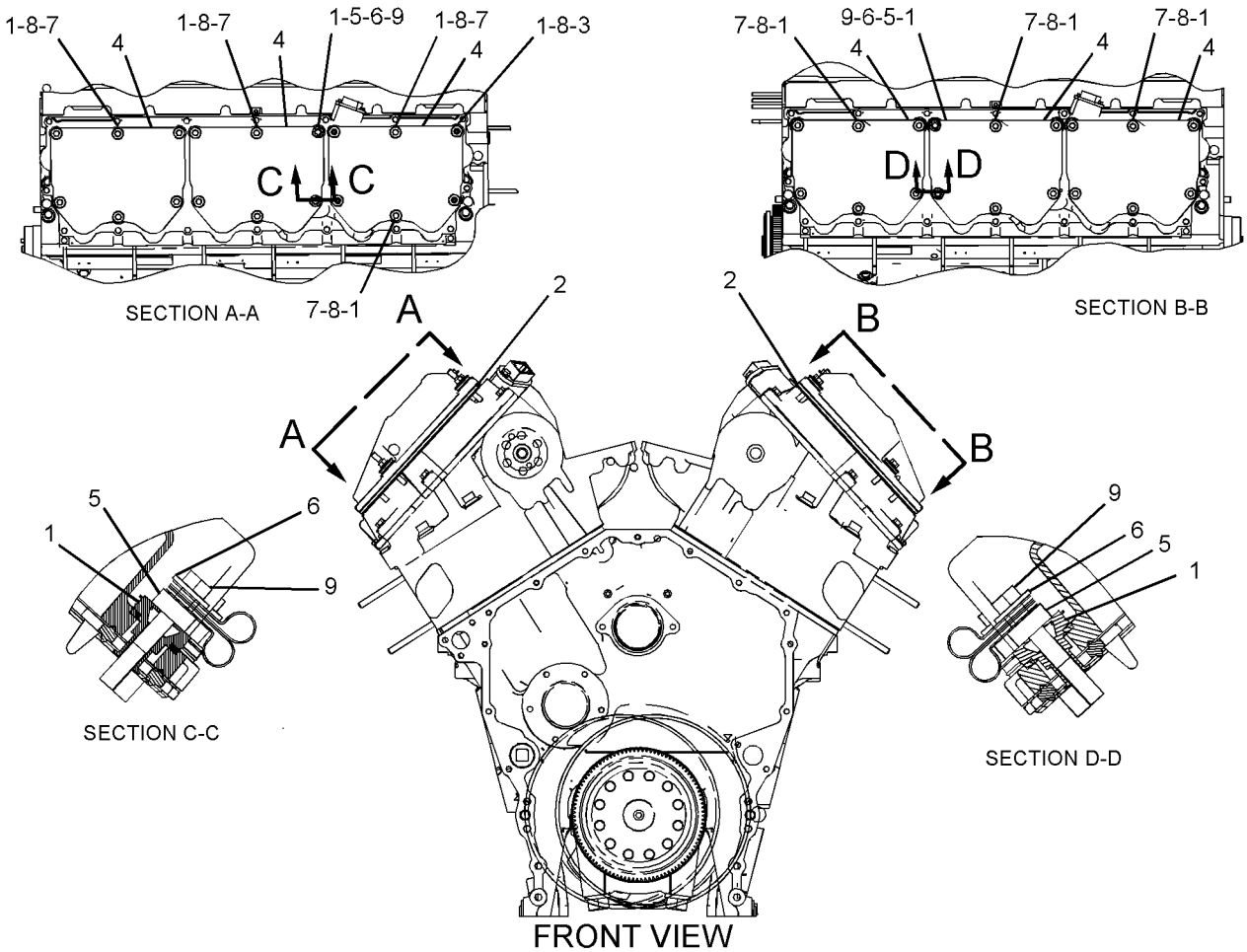

GRAPHIC #1

<END>

g01052203

231-9330 BREATHER GP–CRANKCASE

S/N: EHX1-UP
PART OF 230-4156 COVER GP-REAR HOUSING
ALSO AN ATTACHMENT

SMCS-1317 **i02462932**

NOTE	REF NO	GRAPHIC REF	PART NUMBER	QTY	PART NAME 1 2 3 4 5 6 (PRODUCT LEVEL)	SEE PAGE
	1	1	**238-9204**	1	ELEMENT-BREATHER (CRANKCASE)	
	2	1	**238-9205**	1	BASE	
	3	1	**238-9206**	1	PLATE-BREATHER	
	4	1	**030-9612**	6	SCREW-FORMING (10-24X0.5-IN)	

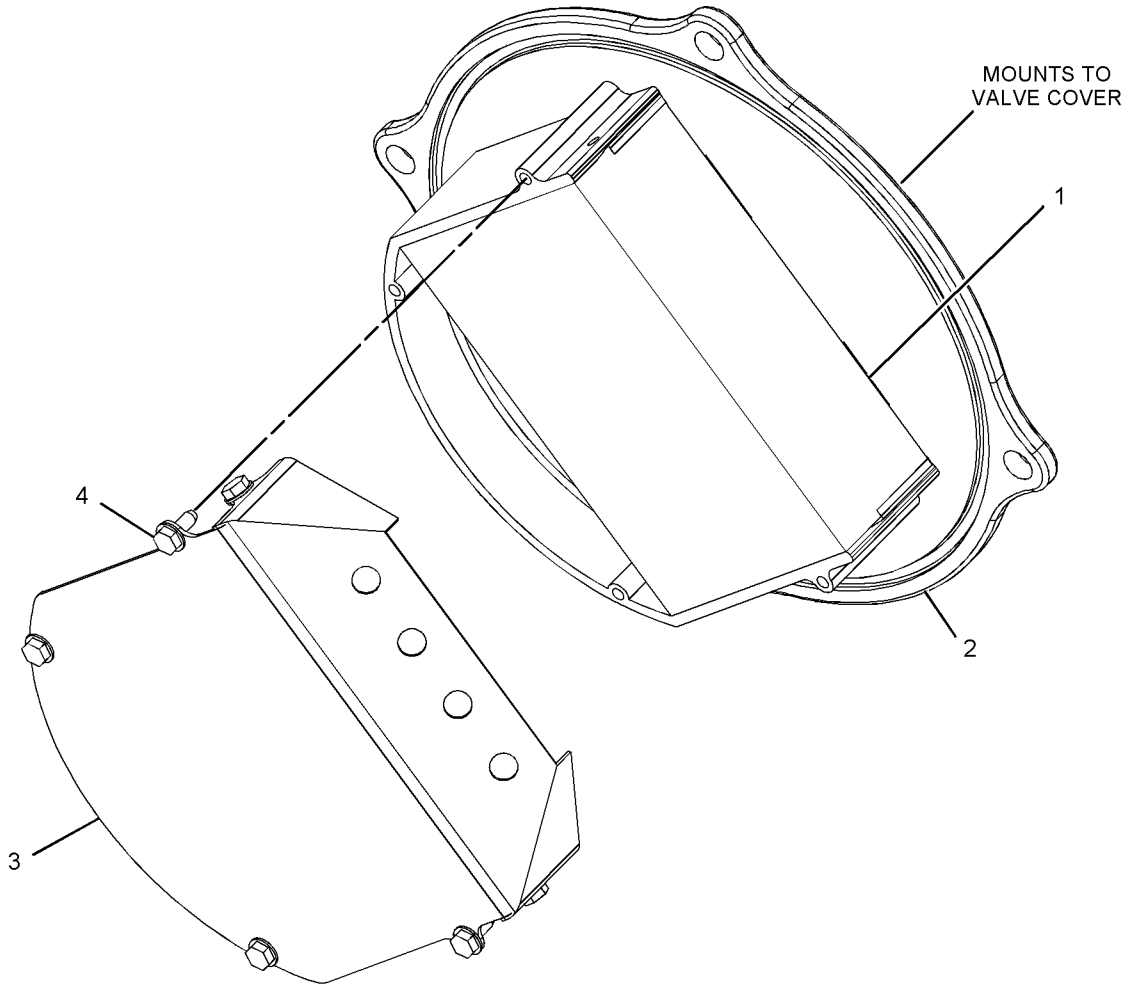

GRAPHIC #1 **<END>** g01054629

4N-2481 FASTENER GP-OIL PUMP MOUNTING—ENGINE

S/N: EHX1-UP

PART OF 260-9527, 261-1507, 276-9586 ENGINE AR-CORE

ALSO AN ATTACHMENT

SMCS-1304 **i01446823**

NOTE	REF NO	GRAPHIC REF	PART NUMBER	QTY	PART NAME 1 2 3 4 5 6 (PRODUCT LEVEL)	SEE PAGE
	1	1	**0L-1143**	2	BOLT (3/8-16X2.50 IN)	
	2	1	**0S-1590**	1	BOLT (3/8-16X2 IN)	
	3	1	**5M-2894**	3	WASHER-HARD (10.2X18.5X2.5MM THK)	

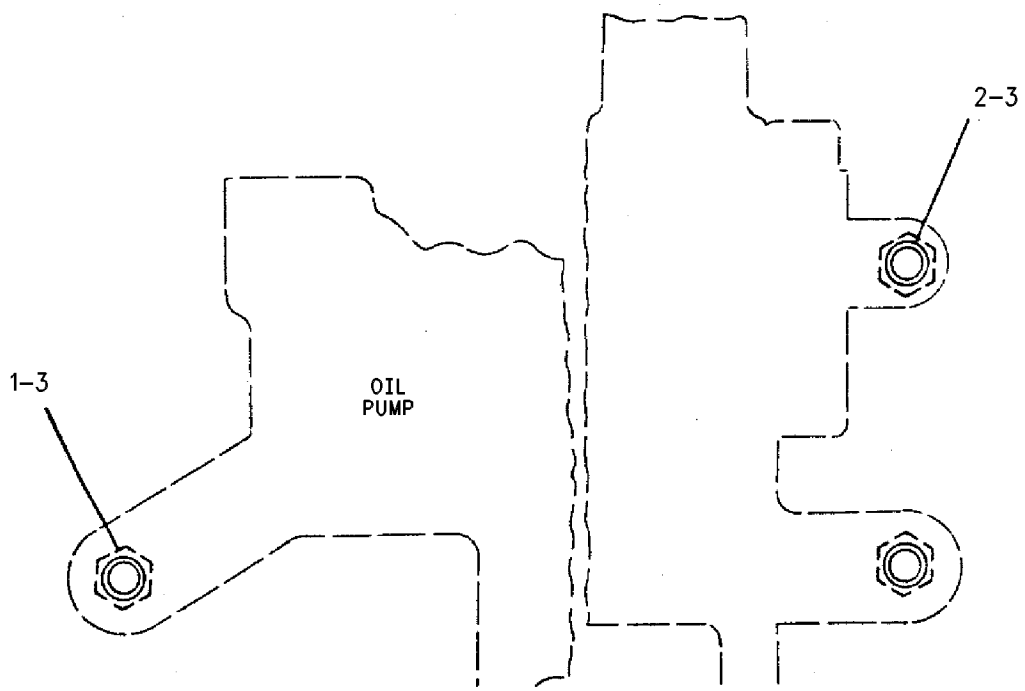

GRAPHIC #1 **<END>** g00604525

216-0820 FILLER GP-ENGINE OIL

S/N: EHX1-UP
PART OF 212-2737, 212-2744 ENGINE AR-COMPLETE
ALSO AN ATTACHMENT

SMCS-1316 **i02229936**

NOTE	REF NO	GRAPHIC REF	PART NUMBER	QTY	PART NAME 1 2 3 4 5 6 (PRODUCT LEVEL)	SEE PAGE
	1	1	**260-6616**	1	TUBE AS	
	2	1	**217-6663**	1	BRACKET AS	
		1	**1F-0750**	2	NUT-WELD (3/8-16-THD)	
	3	1	**1A-2029**	2	BOLT (3/8-16X1.125-IN)	
	4	1	**0S-1588**	2	BOLT (3/8-16X1.25-IN)	
	5	1	**5M-2894**	2	WASHER-HARD (10.2X18.5X2.5-MM THK)	
	6	1	**5P-8211**	1	SEAL-O-RING	
	7	1	**9S-8752**	5	NUT-FULL (3/8-16-THD)	
	8	1	**9X-6458**	10	WASHER-HARD (10.2X22.5X3-MM THK)	

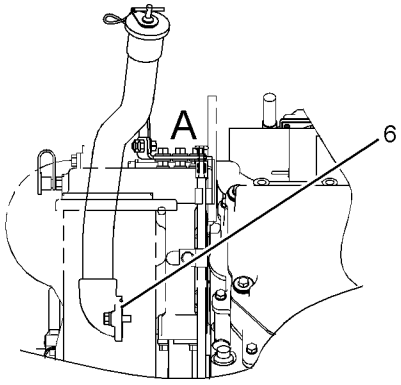

LEFT SIDE VIEW

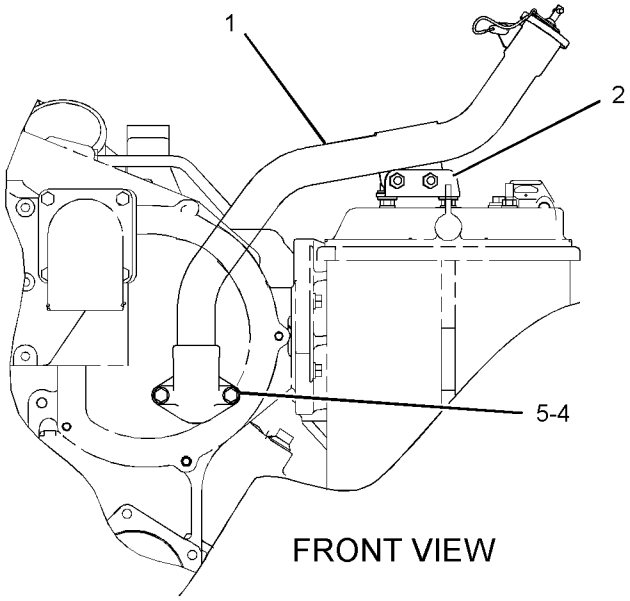

FRONT VIEW

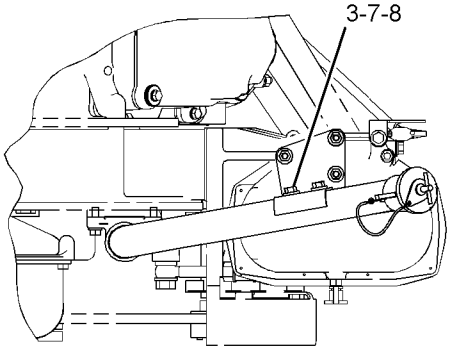

TOP VIEW

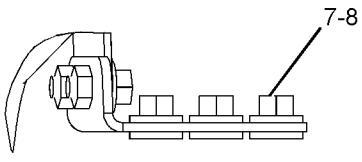

VIEW OF AREA A

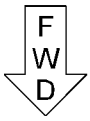

GRAPHIC #1

<END>

g01095953

281-0202 FILLER GP-OIL–ENGINE

S/N: EHX2581-UP
PART OF 212-2737, 271-2219 ENGINE AR-COMPLETE
ALSO AN ATTACHMENT

SMCS-1316 **i02441001**

NOTE	REF NO	GRAPHIC REF	PART NUMBER	QTY	PART NAME 1 2 3 4 5 6 (PRODUCT LEVEL)	SEE PAGE
	1	1	**3F-6156**	1	HOOK	
	2	1	**261-0011**	1	CAP AS (ENGINE OIL FILLER)	
	3	1	**279-5729**	1	TUBE AS-OIL FILLER	
	4	1	**280-2688**	1	ELBOW	
	5	1	**281-0193**	1	HOSE	
	6	1	**0S-1588**	2	BOLT (3/8-16X1.25-IN)	
	7	1	**212-6933**	2	CLAMP	
	8	1	**5M-2894**	2	WASHER-HARD (10.2X18.5X2.5-MM THK)	
	9	1	**5P-8211**	1	SEAL-O-RING	
	10	1	**9S-8752**	3	NUT-FULL (3/8-16-THD)	
	11	1	**9X-6458**	6	WASHER-HARD (10.2X22.5X3-MM THK)	

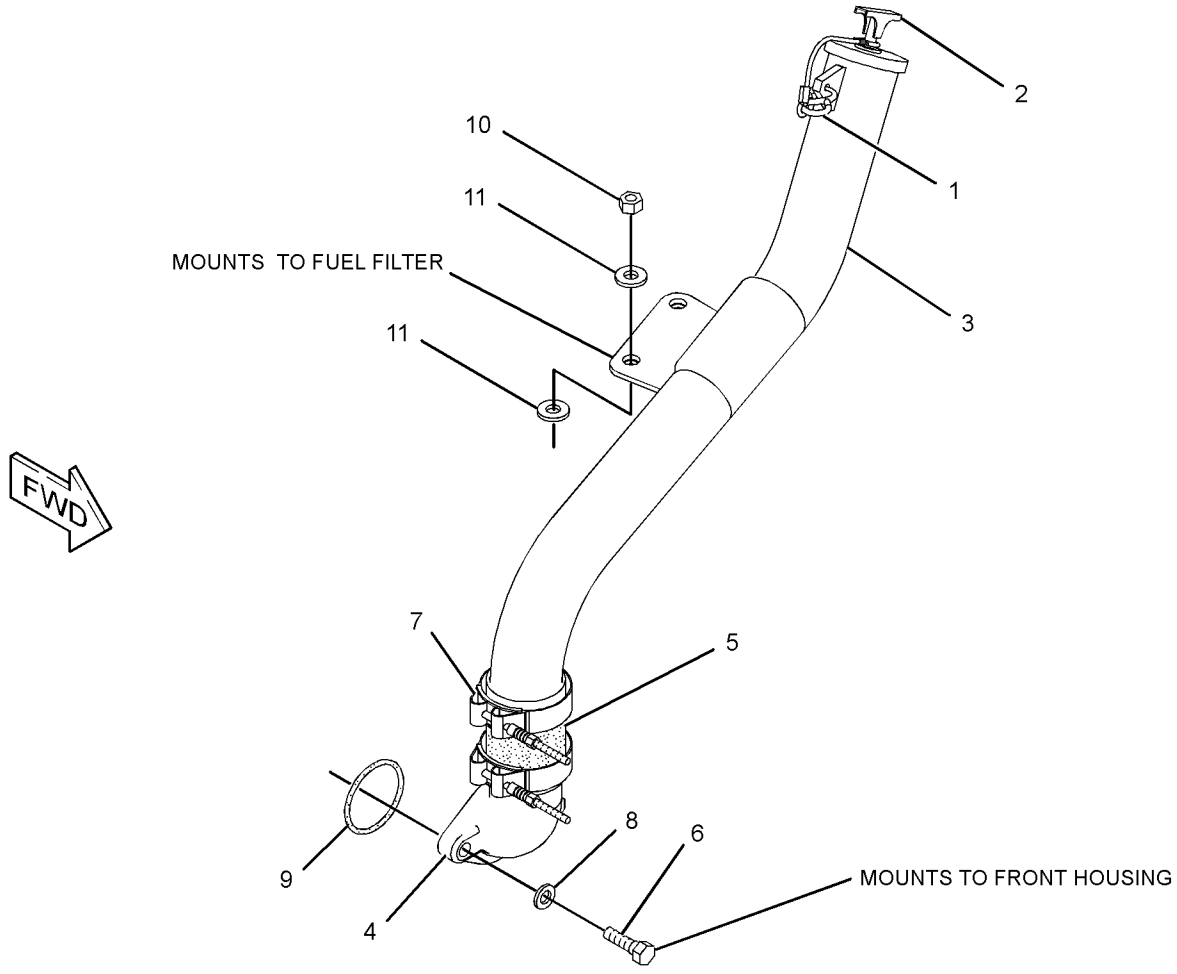

GRAPHIC #1 **<END>** g01221027

216-0819 FILTER GP-ENGINE OIL

S/N: EHX1-UP

PART OF 212-2737, 212-2744, 271-2219 ENGINE AR-COMPLETE

ALSO AN ATTACHMENT

SMCS-1306, 1308 **i02044741**

NOTE	REF NO	GRAPHIC REF	PART NUMBER	QTY	PART NAME 1 2 3 4 5 6 (PRODUCT LEVEL)	SEE PAGE
	1	1	**6V-0852**	1	CAP-DUST	
	2	1	**8C-3445**	1	CAP-DUST	
	3	1	**8N-6739**	2	RING-RETAINING	
	4	1	**114-3824**	1	GASKET	
	5	1	**114-9223**	1	SPACER (11.13X19.05X19-MM THK)	
	6	1	**115-8384**	4	RETAINER	
	7	1	**117-8301**	1	SHIELD	
	8	1	**189-0981**	1	BASE AS-OIL FILTER	
		1	**2W-8225**	2	STUD-TAPERLOCK	
	9	1	**217-6574**	1	BRACKET AS	
	10	1	**218-5002**	1	SUPPORT	
	11	1	**219-6330**	1	TUBE AS	
	12	1	**219-6335**	1	TUBE AS	
	13	1	**061-7540**	1	SEAL-O-RING	
	14	1	**0L-1351**	4	BOLT (3/8-16X0.875-IN)	
	15	1	**0S-1594**	1	BOLT (3/8-16X1-IN)	
	16	1	**0S-1619**	1	BOLT (3/8-16X3-IN)	
	17	1	**151-5145**	1	ELBOW	
	18	1	**170-0610**	1	STUD (3/8-16-THD)	
	19	1	**170-0612**	3	STUD	
	20	1	**1A-2029**	6	BOLT (3/8-16X1.125-IN)	
	21	1	**1R-0716**	2	FILTER AS-ENGINE OIL	
	22	1	**2A-4639**	4	BOLT (3/8-16X1.625-IN)	
	23	1	**4B-4161**	6	SCREW-DRIVE (NO 6X3/8)	
	24	1	**5M-2894**	14	WASHER-HARD (10.2X18.5X2.5-MM THK)	
	25	1	**6V-0484**	1	ADAPTER-O-RING	
	26	1	**6V-3830**	2	SEAL-O-RING	
	27	1	**6V-4433**	1	FITTING	
	28	1	**6V-4589**	1	SEAL-O-RING	
	29	1	**6V-5048**	2	SEAL-O-RING	
	30	1	**6V-5049**	2	SEAL-O-RING	
	31	1	**8C-3446**	1	VALVE-FLUID SAMPLING (OIL)	
	32	1	**8C-5230**	1	SEAL-O-RING	
	33	1	**9S-4190**	1	PLUG	
	34	1	**9X-6458**	4	WASHER-HARD (10.2X22.5X3-MM THK)	

216-0819 **FILTER GP-ENGINE OIL** *(contd.)* **i02044741**

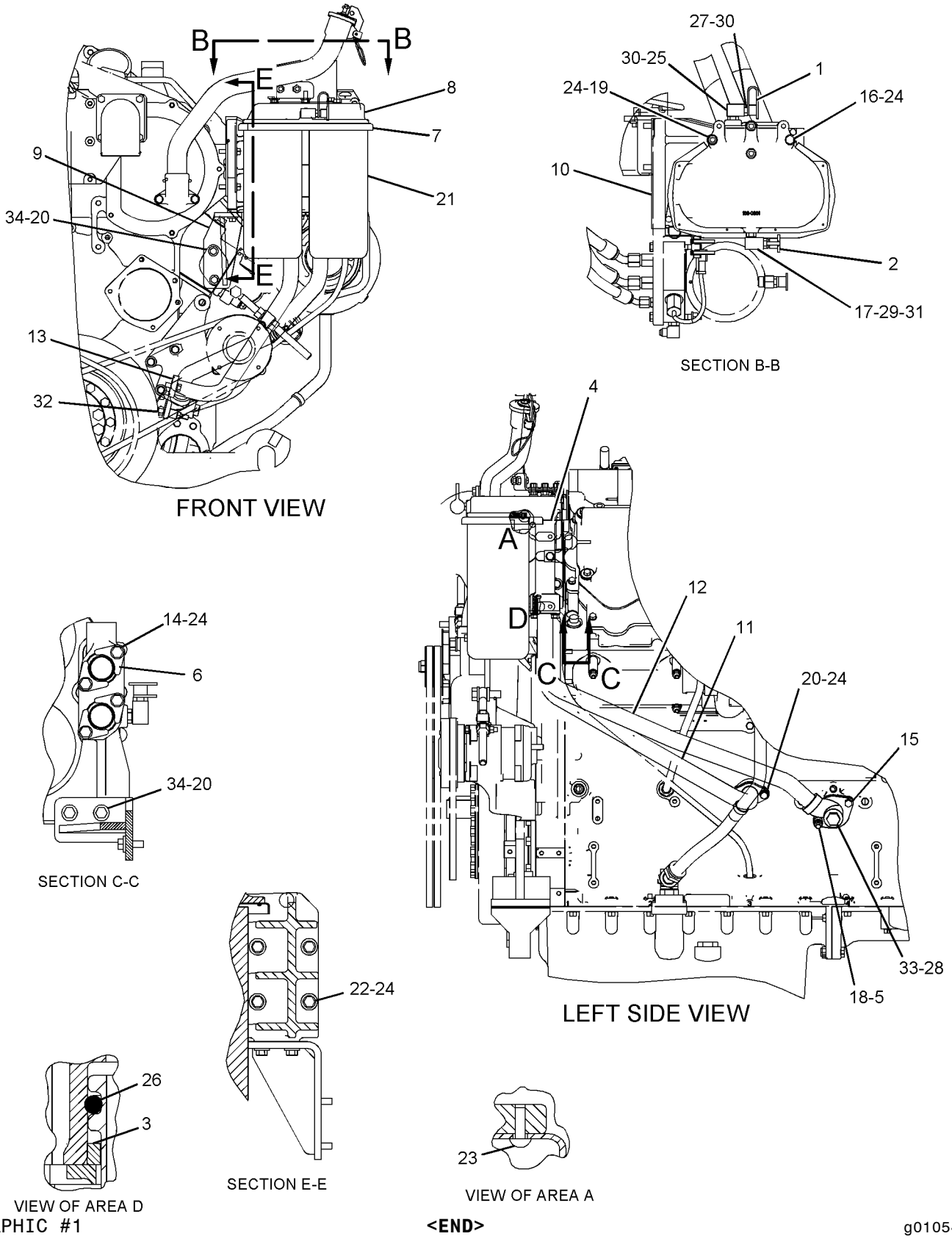

GRAPHIC #1

<END>

g01054632

212-7678 FUMES DISPOSAL GP

S/N: RJG1-UP

PART OF 212-2745, 267-2900 INSTALLATION AR-ENGINE

SMCS-1317 **i02274213**

NOTE	REF NO	GRAPHIC REF	PART NUMBER	QTY	PART NAME 1 2 3 4 5 6 (PRODUCT LEVEL)	SEE PAGE
	1	1	**5P-0597**	1	CLAMP-HOSE	
	2	1	**5P-4868**	1	CLAMP-HOSE	
	3	1	**141-7143**	1	HOSE-ELBOW	
	4	1	**235-8022**	1	TUBE	
	5	1	**235-8751**	1	BRACKET AS	
M		1	**8T-3490**	2	NUT-WELD (M10X1.5-THD)	
	6	1	**239-1358**	1	BRACKET AS	
		1	**1F-0750**	1	NUT-WELD (3/8-16-THD)	
	7	1	**4L-6454**	2	BOLT (3/8-16X1-IN)	
	8	1	**5M-3062**	1	BOLT (3/8-16X0.75-IN)	
	9	1	**5P-8245**	1	WASHER-HARD (13.5X25.5X3-MM THK)	
	10	1	**6F-0295**	1	CLIP	
	11	1	**6V-2235**	2	CLIP	
	12	1	**8T-4896**	4	WASHER-HARD (10.2X18.5X2.5-MM THK)	
	13	1	**9B-7237**	1	BOLT (3/8-16X1.25-IN)	

M-METRIC PART

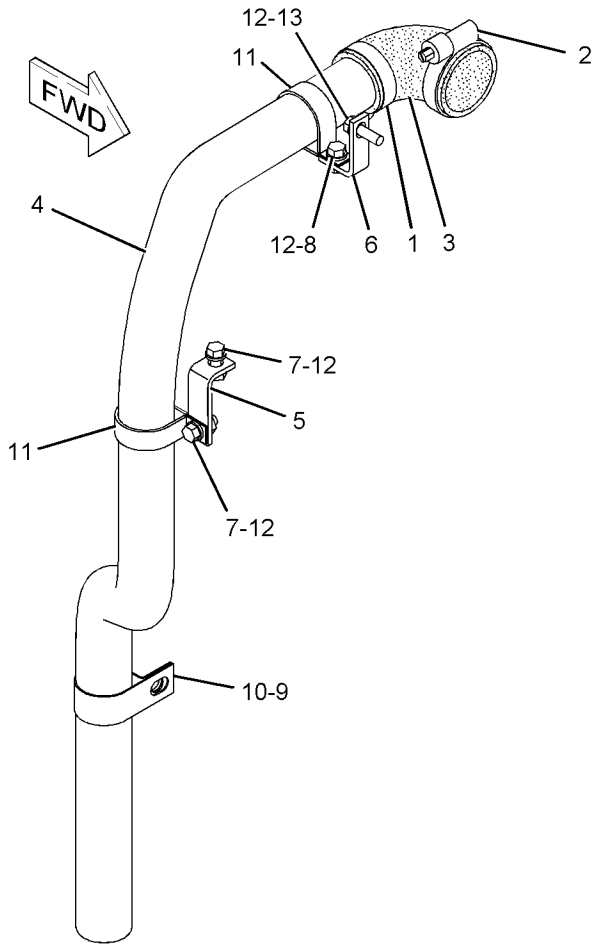

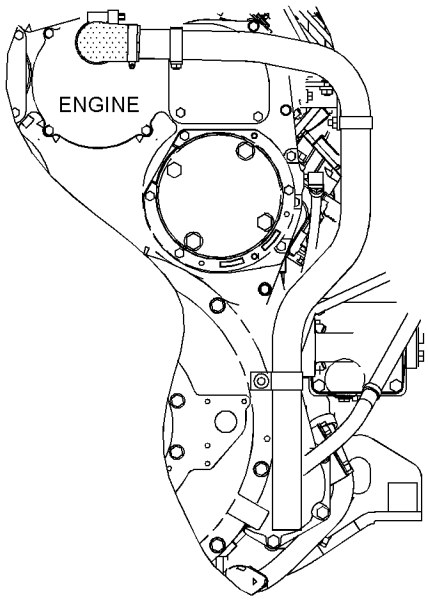

REAR VIEW

GRAPHIC #1 **<END>** g01052199

216-0821 GAUGE GP-OIL LEVEL (DIPSTICK)—ENGINE

S/N: EHX1-UP

PART OF 212-2737, 212-2744, 271-2219 ENGINE AR-COMPLETE

ALSO AN ATTACHMENT

SMCS-1326 **i02462938**

NOTE	REF NO	GRAPHIC REF	PART NUMBER	QTY	PART NAME 1 2 3 4 5 6 (PRODUCT LEVEL)	SEE PAGE
J	1	1	**165-6170**	3	PLUG	
	2	1	**206-7044**	1	GAUGE AS-OIL LEVEL (DIPSTICK) (ENGINE)	
	3	1	**219-6033**	1	TUBE AS-GUIDE	
	4	1	**0S-0509**	2	BOLT (3/8-16X0.75-IN)	
	5	1	**0S-1588**	1	BOLT (3/8-16X1.25-IN)	
	6	1	**112-3102**	1	SEAL-O-RING	
	7	1	**4B-0418**	1	CLIP	
	8	1	**5M-2894**	2	WASHER-HARD (10.2X18.5X2.5-MM THK)	
	9	1	**9S-8752**	1	NUT-FULL (3/8-16-THD)	
	10	1	**9X-2503**	1	CLIP	
	11	1	**9X-6458**	2	WASHER-HARD (10.2X22.5X3-MM THK)	

J-USE TO PLUG OPTIONAL DIPSTICK LOCATIONS

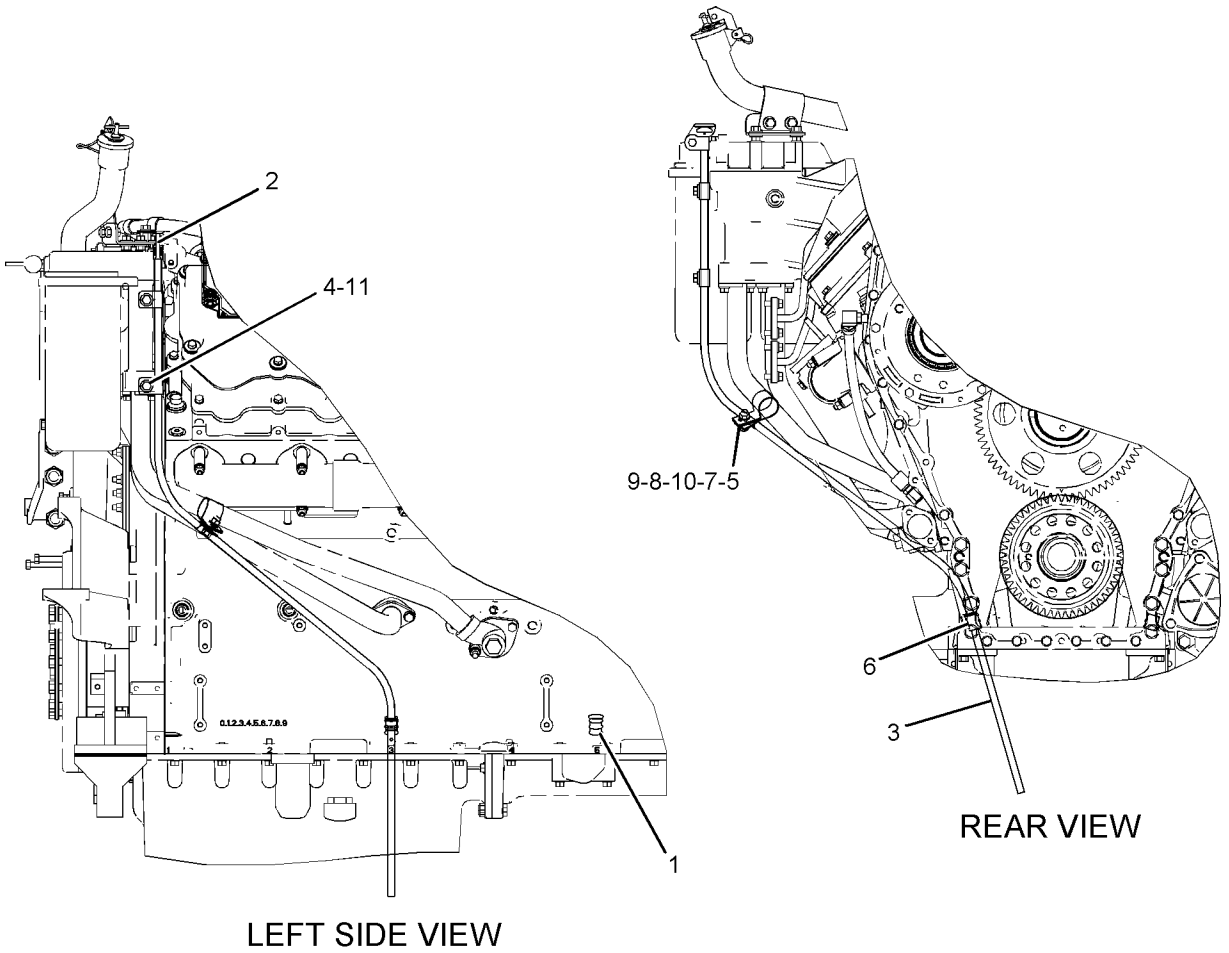

GRAPHIC #1 **<END>** g01054552

LUBRICATION SYSTEM

216-0810 LINES GP-ENGINE OIL

S/N: EHX1-UP

PART OF 212-2737, 212-2744, 271-2219 ENGINE AR-COMPLETE

ALSO AN ATTACHMENT

SMCS-1307 **i02375524**

NOTE	REF NO	GRAPHIC REF	PART NUMBER	QTY	PART NAME 1 2 3 4 5 6 (PRODUCT LEVEL)	SEE PAGE
	1	1	**1W-1116**	1	BODY-BYPASS	
	2	1	**1W-8795**	1	BRACKET	
	3	1	**4N-0861**	1	COVER	
	4	1	**4N-0865**	1	GASKET	
	5	1	**4N-0913**	1	SCREEN AS	
	6	1	**4N-0914**	1	CLIP	
	7	1	**4N-8411**	1	TUBE-COOLER BYPASS	
	8	1	**5K-9592**	2	ANGLE	
	9	1	**7N-6252**	1	TUBE AS-LH	
	10	1	**7N-9212**	1	TUBE AS	
	11	1	**8N-0396**	1	SUPPORT	
	12	1	**8N-0397**	1	PIPE AS	
	13	1	**8N-0610**	1	TUBE AS (CROSSOVER)	
	14	1	**8N-0612**	1	TUBE AS	
	15	1	**8N-2104**	1	BELL AS-SUCTION	
	16	1	**8N-6739**	1	RING-RETAINING	
	17	1	**8N-6740**	1	RETAINER	
	18	1	**9F-6304**	2	SPRING	
	19	1	**9M-0853**	2	PLUNGER-VALVE (OIL COOLER)	
	20	1	**257-0540**	1	TUBE AS	
	21	1	**257-0541**	1	ELBOW	
	22	1	**257-0542**	1	ADAPTER	
	23	1	**061-7540**	2	SEAL-O-RING	
	24	1	**0L-1351**	3	BOLT (3/8-16X0.875-IN)	
	25	1	**0L-2070**	1	BOLT (3/8-16X2.25-IN)	
	26	1	**0S-1590**	2	BOLT (3/8-16X2-IN)	
	27	1	**0S-1591**	4	BOLT (3/8-16X1.5-IN)	
	28	1	**0S-1594**	21	BOLT (3/8-16X1-IN)	
	29	1	**0S-1595**	1	BOLT (1/2-13X1.25-IN)	
	30	1	**0S-1608**	2	BOLT (3/8-16X3.75-IN)	
	31	1	**0T-0065**	1	BOLT (3/8-16X3.5-IN)	
	32	1	**0T-0319**	2	BOLT (7/16-14X2-IN)	
	33	1	**0T-0768**	1	BOLT (7/16-14X1.75-IN)	
	34	1	**113-5304**	3	SEAL-O-RING	
	35	1	**1D-4556**	1	BOLT (7/16-14X2.75-IN)	
	36	1	**2L-2685**	2	CLIP	
	38	1	**2S-2053**	1	CLIP (LOOP)	
	39	1	**8C-0624**	1	SEAL-O-RING	
	40	1	**4F-8965**	4	BOLT (7/16-14X1.125-IN)	
	41	1	**4N-8770**	1	ELBOW-COOLER OUTLET	
	42	1	**5H-0135**	1	GASKET	
	43	1	**5H-2068**	1	COVER	
	44	1	**5M-2894**	21	WASHER-HARD (10.2X18.5X2.5-MM THK)	
	45	1	**5P-8068**	5	SEAL-O-RING	
	46	1	**5P-8244**	4	WASHER-HARD (12X22.5X2.5-MM THK)	
	47	1	**5P-8245**	3	WASHER-HARD (13.5X25.5X3-MM THK)	
	48	1	**5P-9890**	2	SEAL-O-RING	
	49	1	**6V-3830**	2	SEAL-O-RING	
	50	1	**7C-4938**	1	PLATE-FRONT PAN	
	51	1	**8J-4351**	1	SEAL-O-RING	
	52	1	**8S-9191**	2	BOLT (3/8-16X4-IN)	
	53	1	**9L-9132**	3	WASHER (10.2X25.5X2.5-MM THK)	
	54	1	**9S-8752**	4	NUT-FULL (3/8-16-THD)	

216-0810 **LINES GP-ENGINE OIL** *(contd.)* **i02375524**

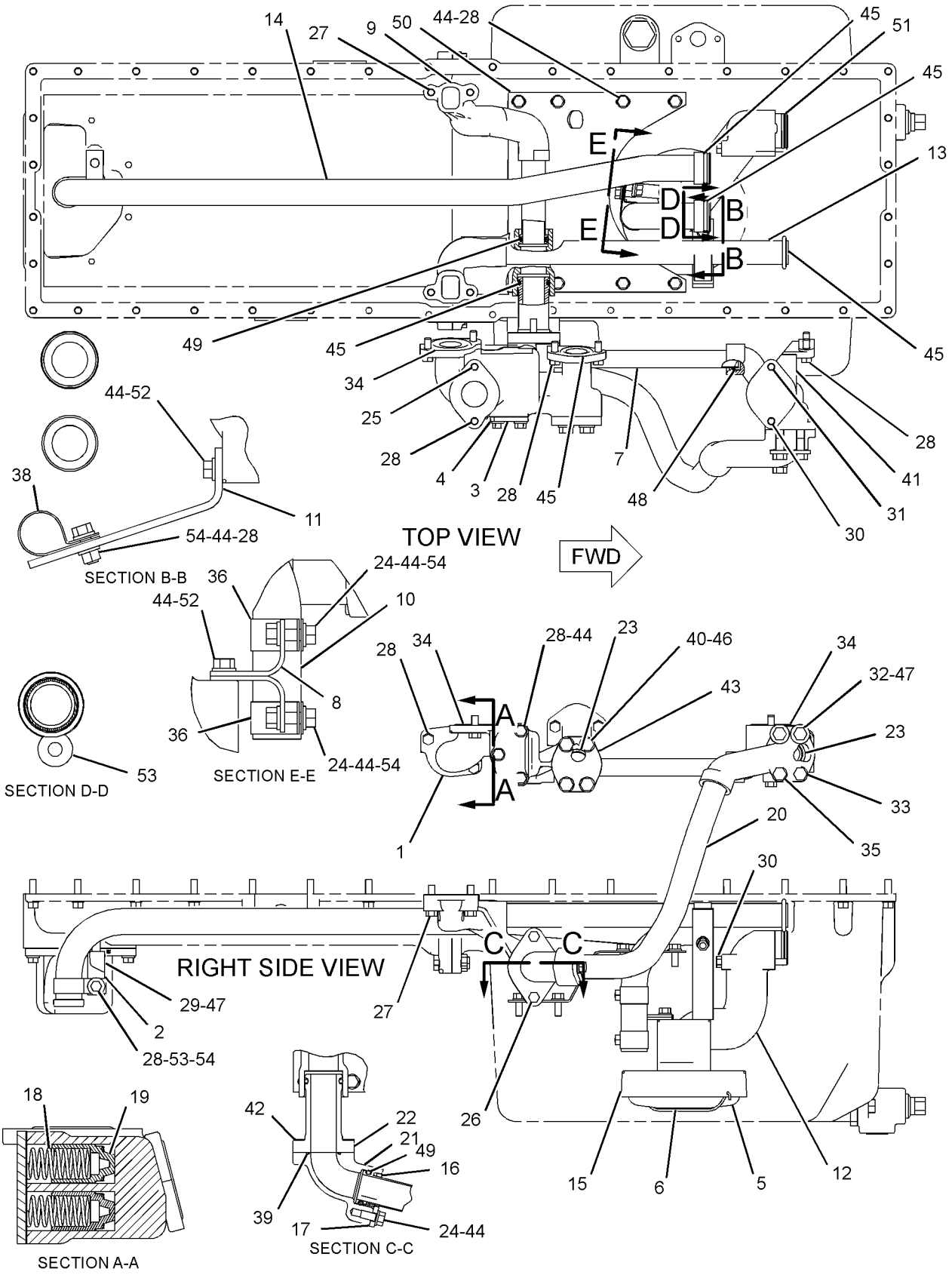

GRAPHIC #1 **<END>** g01187840

216-0828 LINES GP-TURBOCHARGER OIL

S/N: EHX1-UP

PART OF 212-2737, 212-2744, 271-2219 ENGINE AR-COMPLETE

ALSO AN ATTACHMENT

SMCS-1052, 1307 **i02404798**

NOTE	REF NO	GRAPHIC REF	PART NUMBER	QTY	PART NAME 1 2 3 4 5 6 (PRODUCT LEVEL)	SEE PAGE
	1	1	**5P-1230**	1	CONNECTOR	
	2	1	**7N-7559**	2	GASKET	
	3	1	**9M-2564**	2	CLAMP-TUBE	
	4	1	**219-6012**	1	TUBE AS	
	5	1	**219-6014**	1	TUBE AS	
	6	1	**269-8788**	4	CLAMP-BAND	
	7	1	**251-6775**	2	HOSE	
	8	1	**260-0716**	1	TUBE AS	
	9	1	**260-0717**	1	TUBE AS	
	10	1	**260-0718**	1	TUBE AS	
	11	1	**0S-1571**	4	BOLT (3/8-16X1.75-IN)	
	12	1	**0S-1588**	1	BOLT (3/8-16X1.25-IN)	
	13	1	**1A-2029**	4	BOLT (3/8-16X1.125-IN)	
	14	1	**3B-1915**	2	BOLT (3/8-16X1.375-IN)	
	15	1	**5M-2894**	8	WASHER-HARD (10.2X18.5X2.5-MM THK)	
	16	1	**6V-4589**	2	SEAL-O-RING	
	17	1	**6V-5050**	1	SEAL-O-RING	
	18	1	**210-9246**	1	SEAL-O-RING	
	19	1	**6V-8626**	1	ELBOW	
	20	1	**6V-9003**	1	ELBOW	
	21	1	**7N-8875**	2	GASKET	
	22	1	**8L-2746**	2	SEAL-O-RING	
	23	1	**9S-8752**	1	NUT-FULL (3/8-16-THD)	

216-0828 **LINES GP-TURBOCHARGER OIL** *(contd.)* **i02404798**

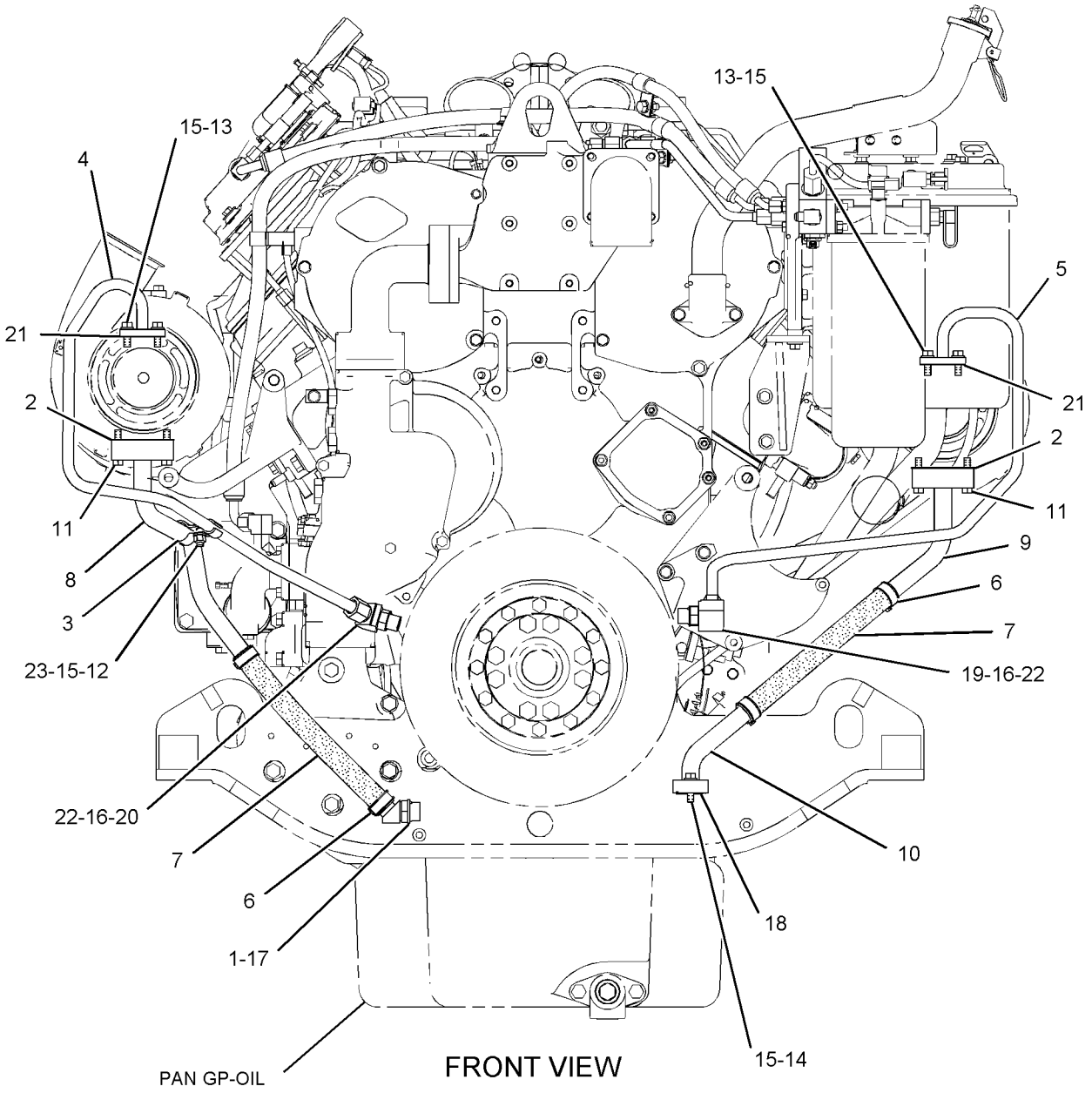

GRAPHIC #1 **<END>** g01126431

221-1813 OIL CHANGE GP-HIGH SPEED

S/N: RJG1-UP
AN ATTACHMENT

SMCS-1325 **i02362266**

NOTE	REF NO	GRAPHIC REF	PART NUMBER	QTY	PART NAME 1 2 3 4 5 6 (PRODUCT LEVEL)	SEE PAGE
	1	1	**1F-7854**	1	SPACER (11.01X19.05X49.21-MM THK)	
	2	1	**2P-1286**	1	LOCKNUT-BULKHEAD (1-5/16-12-THD)	
	3	1	**2V-2043**	1	LOCKNUT-FLARED (1-5/8-12-THD)	
	4	1	**6N-2656**	1	TUBE AS-OIL CHANGE	
	6	1	**110-8319**	1	FITTING AS (QUICK DISCONNECT) (POWER TRAIN OIL)	
		1	**110-8318**	1	CAP-DUST	
	7	1	**110-8827**	1	FITTING AS (QUICK DISCONNECT) (ENGINE OIL)	
		1	**110-8826**	1	CAP-DUST	
	8	1	**180-4323**	1	BRACKET AS	
	9	1	*188-2008*	1	ELBOW AS	
		1	**8T-7970**	1	ELBOW	
		1	**3D-2824**	1	SEAL-O-RING	
		1	**5K-9090**	1	SEAL-O-RING	
I	10	1	**221-1829**	1	HOSE AS	
I	11	1	**233-3729**	1	HOSE AS	
	12	1	*148-8335*	3	CONNECTOR AS	
					(EACH INCLUDES)	
		1	**6V-8635**	1	CONNECTOR	
		1	**5K-9090**	1	SEAL-O-RING	
		1	**7M-8485**	1	SEAL-O-RING	
	13	1	*148-8429*	1	TEE AS	
		1	**6V-9840**	1	TEE-SWIVEL	
		1	**5K-9090**	2	SEAL-O-RING	
	14	1	**1S-0004**	1	SEAL-O-RING	
	15	1	**8T-2602**	2	CLIP (TAB)	
	16	1	**8T-2603**	2	CLIP (SLOT)	
	17	1	**6V-9833**	1	CAP AS	
	19	1	**8T-1897**	1	CLIP (SLOT)	
	20	1	**8T-1898**	1	CLIP (TAB)	
	21	1	**8T-4121**	2	WASHER-HARD (11X21X2.5-MM THK)	
M	23	1	**8T-4195**	1	BOLT (M10X1.5X30-MM)	
M	25	1	**8T-5005**	1	BOLT (M10X1.5X70-MM)	

I-REFER TO HYDRAULIC INFORMATION SYSTEM
M-METRIC PART

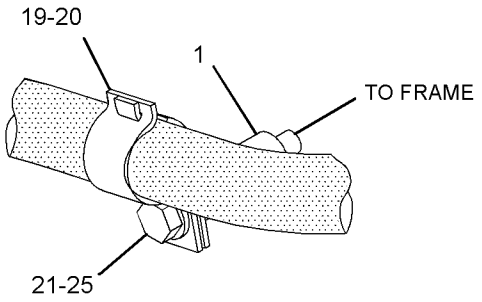

VIEW OF AREA A

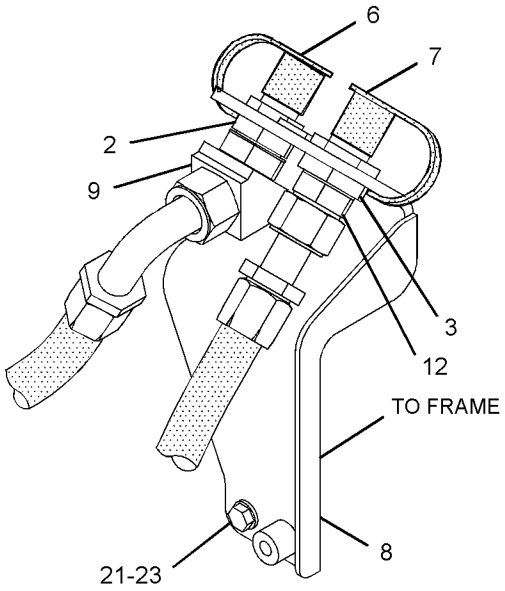

VIEW OF AREA B

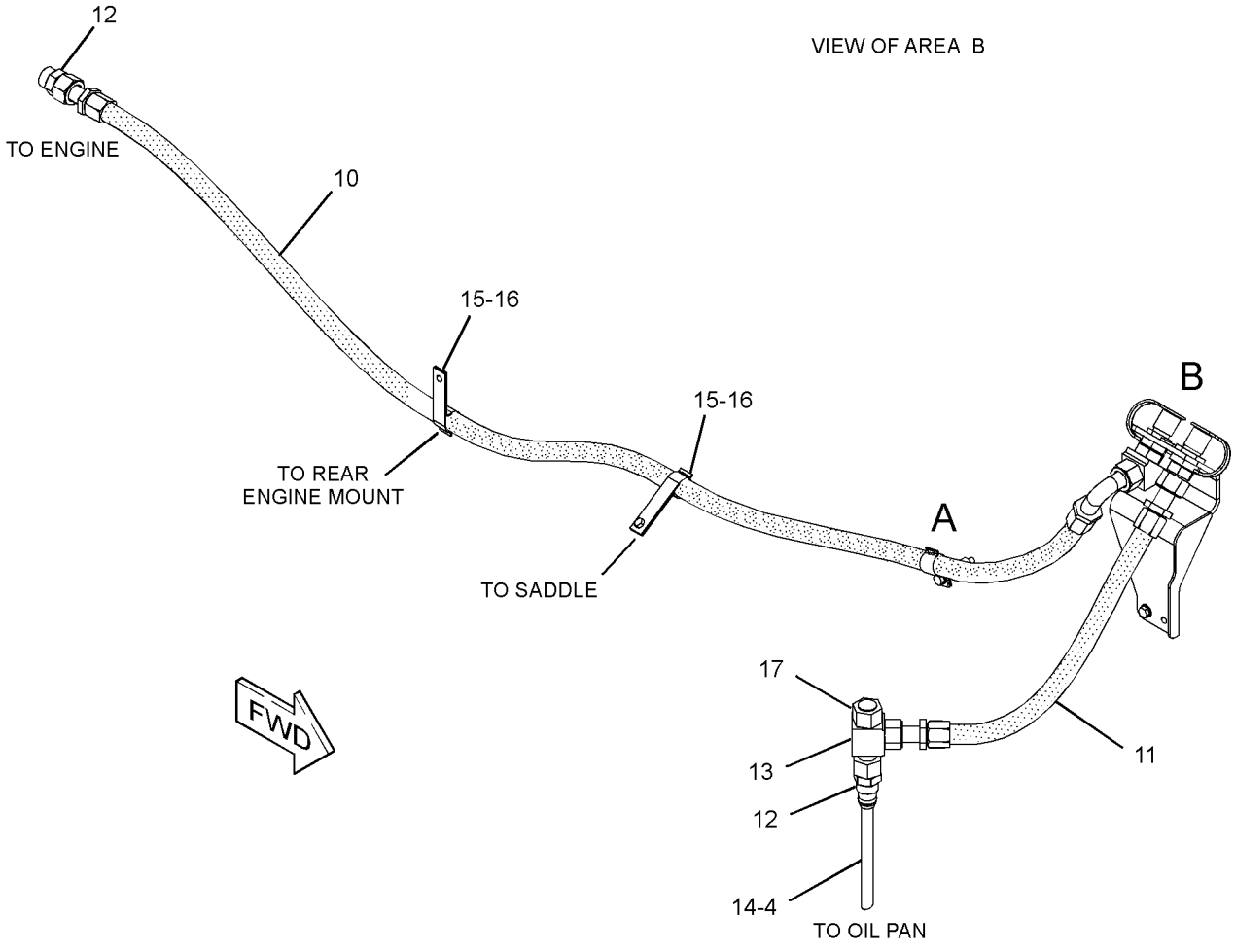

GRAPHIC #1 **<END>** g01227072

LUBRICATION SYSTEM

214-1070 PRELUBRICATION AR-ENGINE

S/N: RJG1-UP

AN ATTACHMENT

SMCS-1319, 1469 **i02469278**

NOTE	REF NO	GRAPHIC REF	PART NUMBER	QTY	PART NAME 1 2 3 4 5 6 (PRODUCT LEVEL)	SEE PAGE
	1	1	**6N-2656**	1	TUBE AS-OIL CHANGE	
	2	1	**6V-9833**	1	CAP AS	
	3	1	**7G-1060**	1	STRAP AS-GROUND	
	4	1	**7K-1181**	6	STRAP-CABLE	
	5	1	**123-5150**	1	VALVE-CHECK	
Y	6	1	**228-8553**	1	PUMP & MOTOR GP-PRELUBRICATION	85
	7	1	**230-4089**	1	PLATE AS	
I	8	1	**234-4405**	1	HOSE AS	
I	9	1	**234-4406**	1	HOSE AS	
	10	1	**234-4407**	1	HARNESS AS-MOTOR (PRELUBRICATION)	
		1	**102-8802**	1	KIT-RECEPTACLE (2-PIN)	
					(INCLUDES RECEPTACLE AS & WEDGE)	
	11	1	*148-8335*	1	CONNECTOR AS	
		1	**6V-8635**	1	CONNECTOR	
		1	**5K-9090**	1	SEAL-O-RING	
		1	**7M-8485**	1	SEAL-O-RING	
	12	1	*148-8342*	1	CONNECTOR AS	
		1	**6V-8632**	1	CONNECTOR	
		1	**3K-0360**	1	SEAL-O-RING	
		1	**7J-9108**	1	SEAL-O-RING	
	13	1	*148-8352*	1	ELBOW AS	
		1	**6V-9854**	1	ELBOW (SWIVEL)	
		1	**5K-9090**	1	SEAL-O-RING	
	14	1	*148-8429*	1	TEE AS	
		1	**6V-9840**	1	TEE-SWIVEL	
		1	**5K-9090**	2	SEAL-O-RING	
	15	1	*153-6230*	1	CONNECTOR GP	
		1	**8T-9386**	1	CONNECTOR	
		1	**2M-9780**	1	SEAL-O-RING	
		1	**5K-9090**	1	SEAL-O-RING	
	16	1	**1S-0004**	1	SEAL-O-RING	
	17	1	**233-5070**	1	FILM-IDENTIFICATION (PRELUBRICATION PUMP)	
	18	1	**4P-7581**	3	CLIP	
	19	1	**5P-1075**	5	WASHER-HARD (10.2X22.5X3-MM THK)	
M	20	1	**8T-4133**	4	NUT (M10X1.5 THD)	
M	21	1	**8T-4136**	4	BOLT (M10X1.5X25-MM)	
M	22	1	**8T-4191**	1	BOLT (M10X1.5X16-MM)	
	23	1	**8T-4896**	4	WASHER-HARD (10.2X18.5X2.5-MM THK)	
F			**261-5735**	1	SOFTWARE GP-POWER TRAIN (ENGINE PRELUBRICATION)	
					(DLR INSTALL CONFIG: SEE IRM: EES03-01)	

F-NOT SHOWN
I-REFER TO HYDRAULIC INFORMATION SYSTEM
M-METRIC PART
Y-SEPARATE ILLUSTRATION

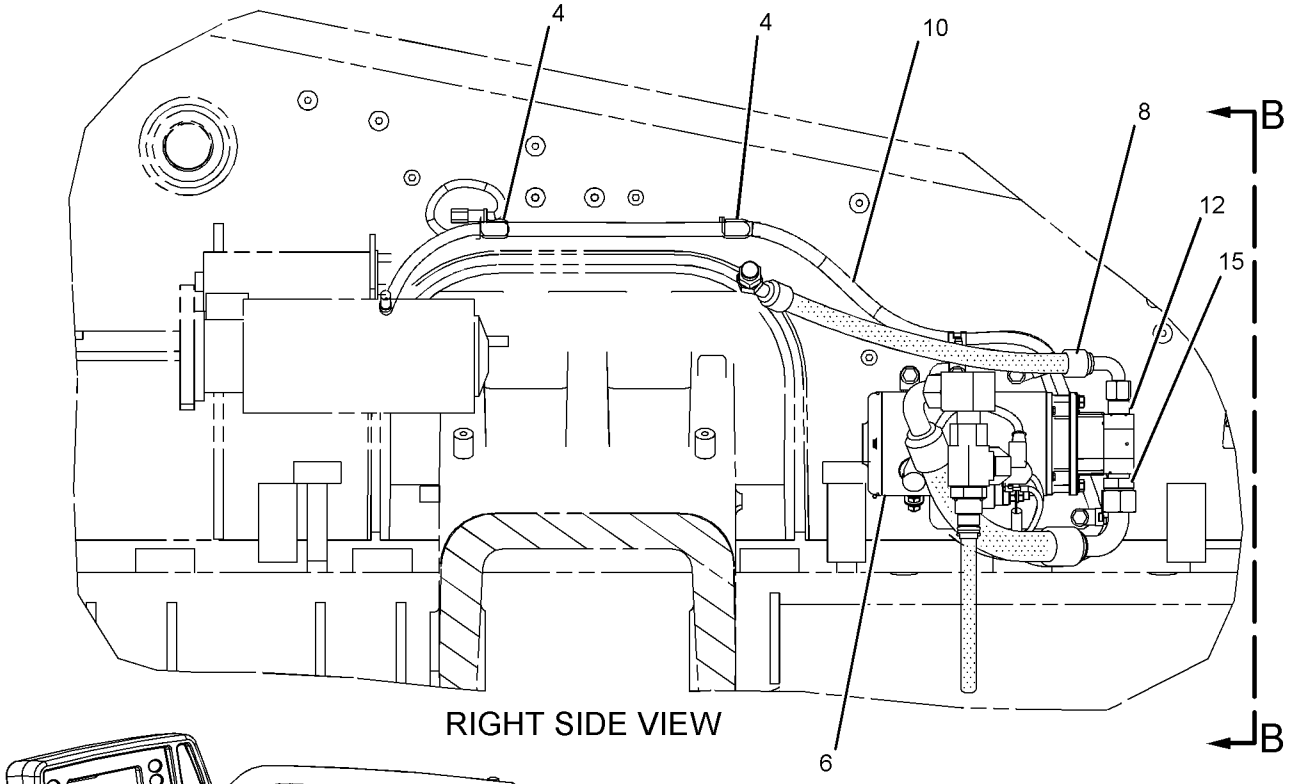

RIGHT SIDE VIEW

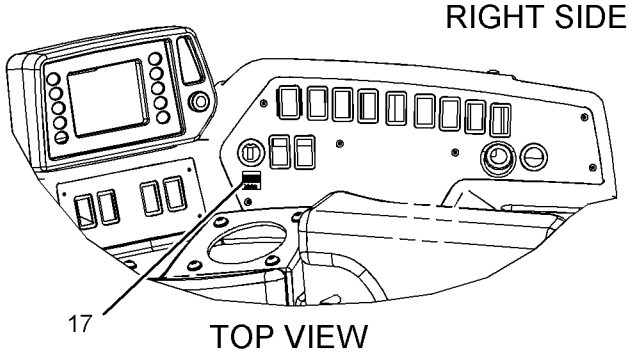

TOP VIEW
(RIGHT HAND CONSOLE)

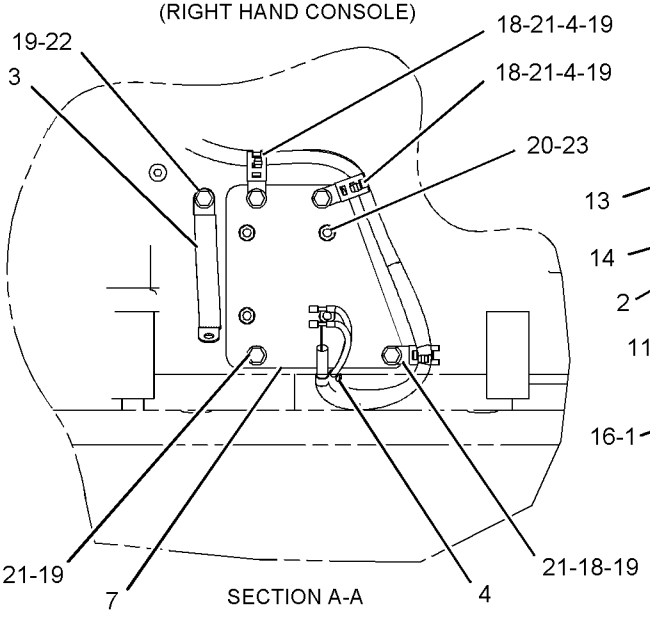

SECTION A-A

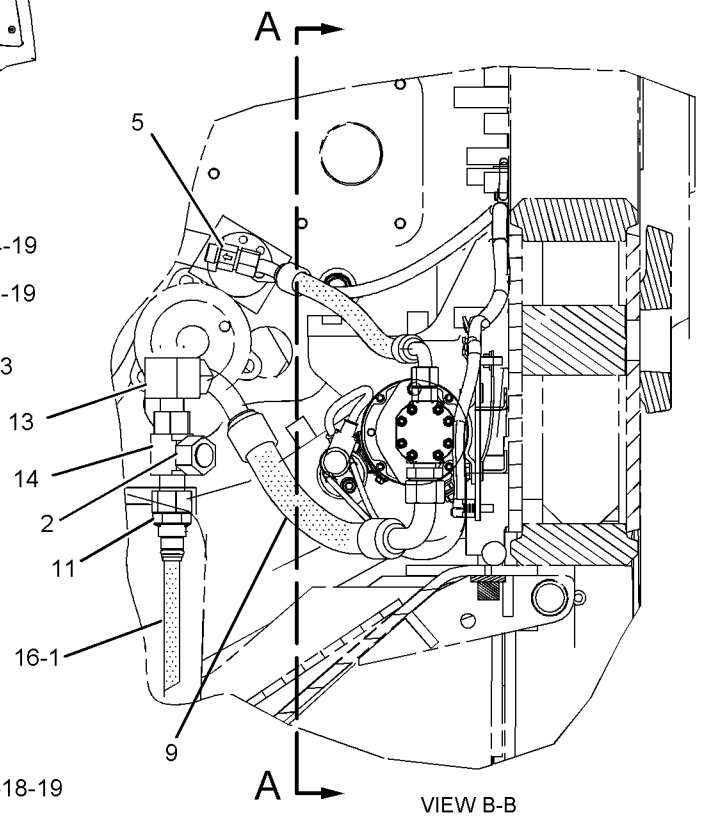

VIEW B-B

GRAPHIC #1 **<END>** g01138725

228-8553 PUMP & MOTOR GP-PRELUBRICATION

S/N: RJG1-UP
PART OF 214-1070 PRELUBRICATION AR-ENGINE
AN ATTACHMENT

SMCS-1319, 5927 **i02397481**

NOTE	REF NO	GRAPHIC REF	PART NUMBER	QTY	PART NAME 1 2 3 4 5 6 (PRODUCT LEVEL)	SEE PAGE
	1	1	**183-6967**	1	MOTOR GP-ELECTRIC	
	2	1	**183-6970**	1	RELAY	
	3	1	**183-6971**	1	CABLE AS	
	4	1	**1H-3338**	2	LOCKWASHER	
	5	1	**273-1761**	1	KIT-PUMP (PRELUBRICATION)	
	6	1	**273-2536**	2	COVER-TERMINAL	
	7	1	**5L-4041**	8	BOLT-12 POINT HEAD (1/4-20X1.5-IN)	
	8	1	**6V-1322**	2	BOLT (1/4-20X0.375-IN)	
	9	1	**8T-4205**	2	WASHER-HARD (7.2X14.5X2-MM THK)	

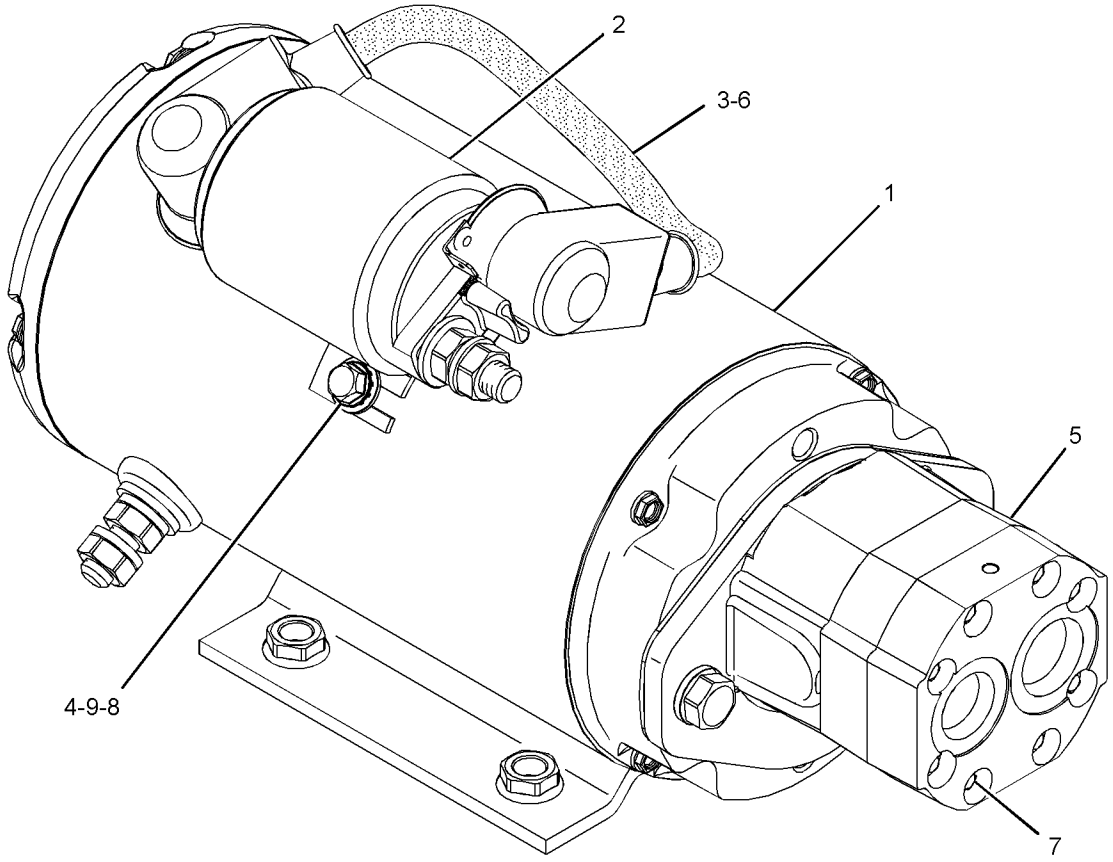

GRAPHIC #1 **<END>** g01218828

LUBRICATION SYSTEM

7C-1772 PUMP GP-ENGINE OIL*R

S/N: EHX1-UP

PART OF 260-9527, 261-1507, 276-9586 ENGINE AR-CORE

ALSO AN ATTACHMENT

SMCS-1304, 1315 **i02285829**

NOTE	REF NO	GRAPHIC REF	PART NUMBER	QTY	PART NAME 1 2 3 4 5 6 (PRODUCT LEVEL)	SEE PAGE
	1	1	**4N-5339**	1	SPACER AS-OIL PUMP	
		1	**7N-2155**	2	BEARING-SLEEVE	
	2	1	**6N-2343**	1	BODY AS-PUMP	
		1	**7N-2213**	2	BEARING-SLEEVE	
	3	1	**7C-1511**	1	RING-PLUNGER	
	4	1	**7C-1512**	1	PLUNGER	
	5	1	**7G-2176**	4	DAMPER-BOLT	
	6	1	**7W-6528**	1	GEAR-PUMP (8-TEETH)	
	7	1	**7W-7141**	1	GEAR-PUMP (8-TEETH)	
	8	1	**9Y-1800**	1	RETAINER	
	9	1	**145-8503**	1	SHAFT AS-IDLER	
	10	1	**202-3572**	1	SHAFT AS-DRIVE	
	11	1	**235-1587**	1	BODY AS	
		1	**7N-2156**	2	BEARING-SLEEVE	
		1	**8M-8489**	2	DOWEL	
	12	1	**236-6733**	1	SPRING	
	13	1	**1M-0644**	2	BOLT (3/8-16X2.25-IN)	
	14	1	**5F-4899**	4	BOLT (3/8-16X5.5-IN)	
	15	1	**5M-2894**	2	WASHER-HARD (10.2X18.5X2.5-MM THK)	

7C-1772 PUMP GP-ENGINE OIL *(contd.)* **i02285829**

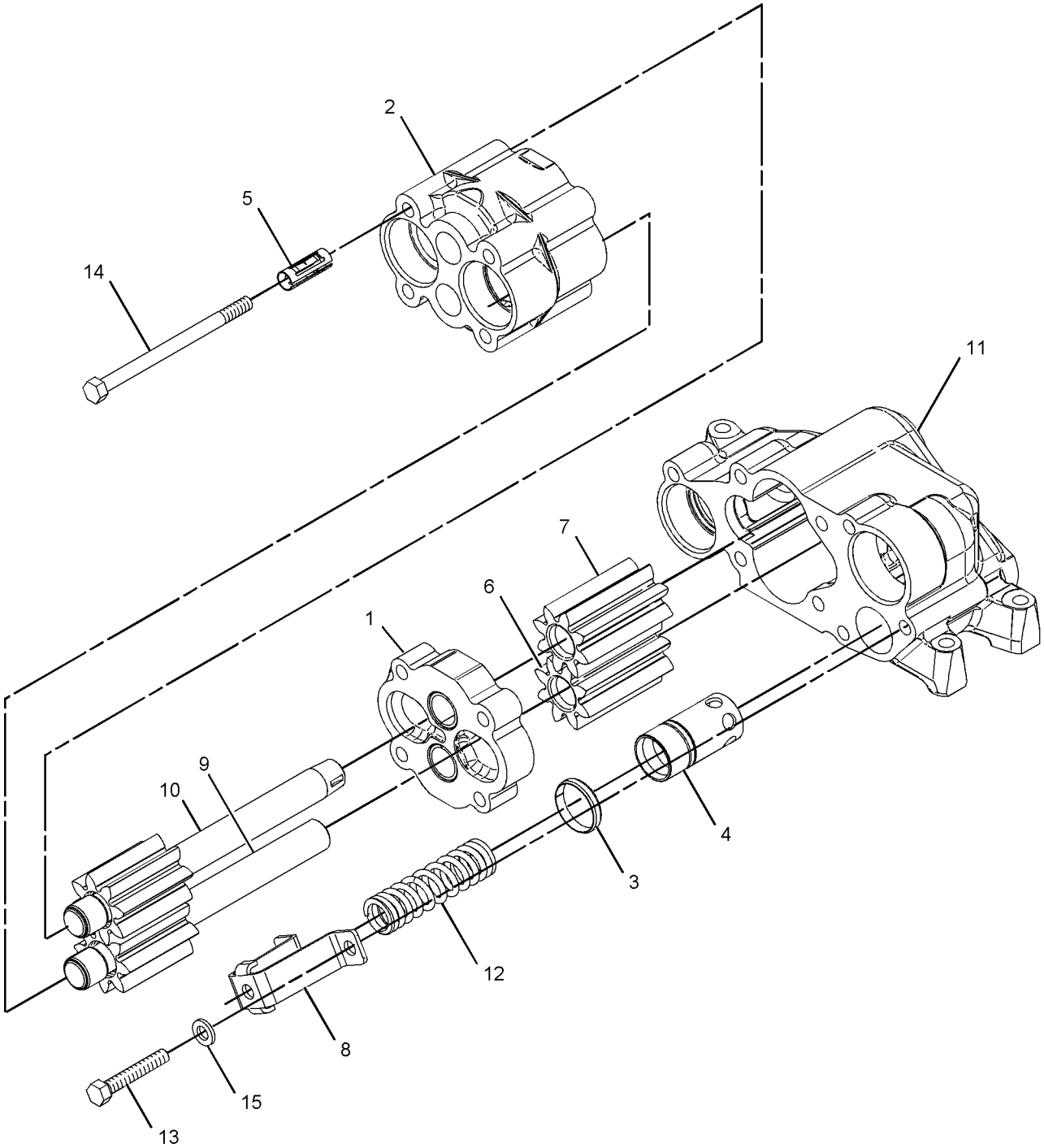

GRAPHIC #1 **<END>** g01057597

COOLING SYSTEM

220-0261 FAN AR-REVERSIBLE

S/N: RJG1-UP
PART OF 238-4498 STOCKPILE AR
AN ATTACHMENT

SMCS-1356, 1360 **i02274745**

NOTE	PART NUMBER	QTY	PART NAME 1 2 3 4 5 6 (PRODUCT LEVEL)	SEE PAGE
Y	*255-1302*	1	GUARD GP-BRUSH	434
Y	**212-4977**	1	MOTOR GP-PISTON	629
Y	*220-0550*	1	VALVE & MTG GP-HYDRAULIC FAN	660
	222-7887	1	SWITCH AS-ROCKER (REVERSING FAN MANUAL PURGE)	

Y-SEPARATE ILLUSTRATION

<END>

213-8358 FAN GP-SUCTION

S/N: RJG1-UP

PART OF 212-2745, 267-2900 INSTALLATION AR-ENGINE

SMCS-1356 **i02390867**

NOTE	REF NO	GRAPHIC REF	PART NUMBER	QTY	PART NAME 1 2 3 4 5 6 (PRODUCT LEVEL)	SEE PAGE
	1	1	**6I-9471**	1	RETAINER	
	2	1	**156-5782**	8	SPACER (17.5X30X10-MM THK)	
	3	1	**251-1253**	1	SPIDER AS-FAN (8-BLADE)	
	4	1	**213-8359**	1	ADAPTER-FAN	
	5	1	**248-6258**	1	BLOCK	
	6	1	**248-6259**	1	SUPPORT	
M	7	1	**7X-2554**	1	BOLT (M16X2X70-MM)	
	8	1	**8T-4121**	8	WASHER-HARD (11X21X2.5-MM THK)	
M	9	1	**8T-4140**	8	BOLT (M16X2X60-MM)	
M	10	1	**8T-4186**	8	BOLT (M10X1.5X40-MM)	

M-METRIC PART

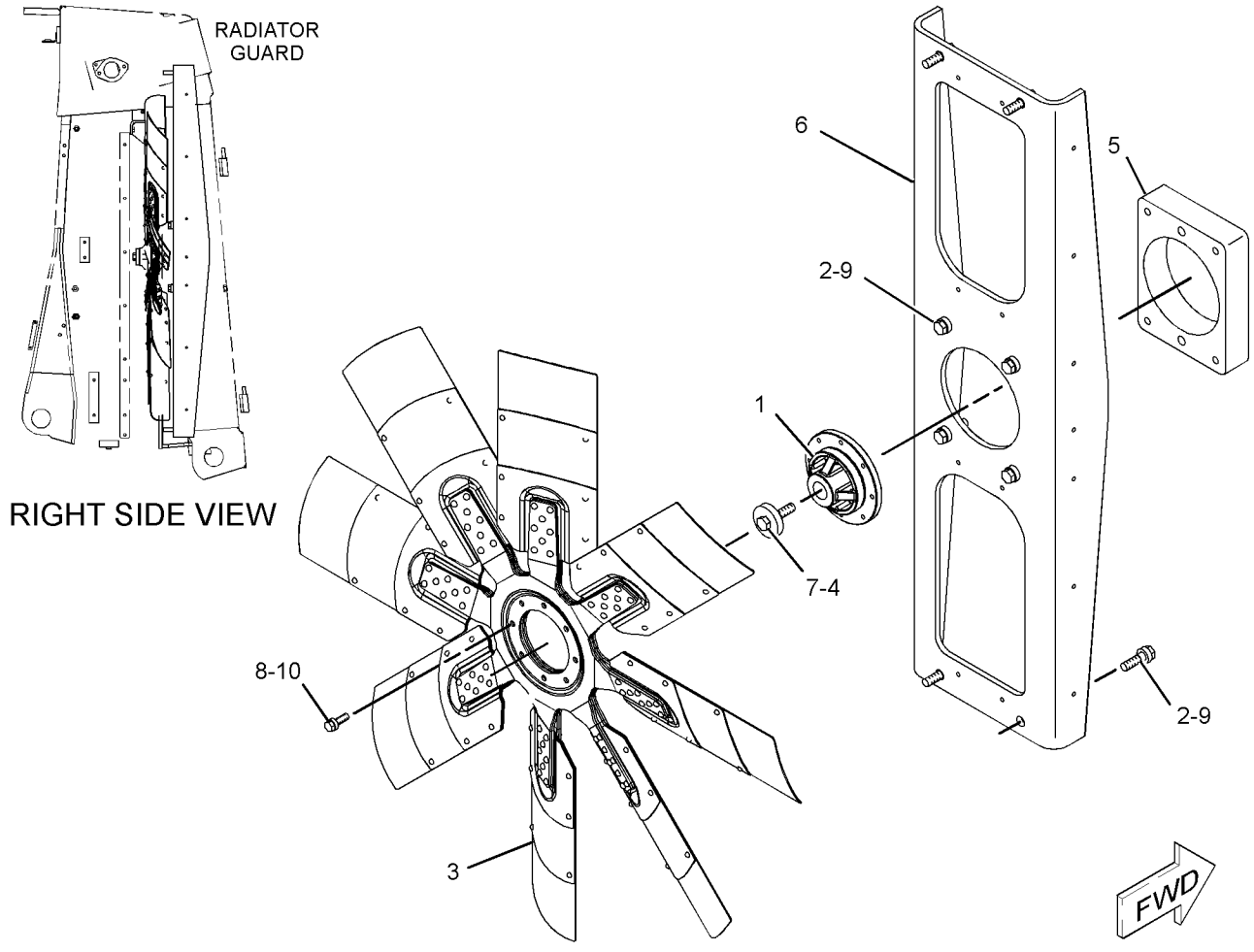

GRAPHIC #1 **<END>** g01225665

COOLING SYSTEM

212-7682 LINES GP-WATER—RADIATOR

S/N: RJG1-UP

PART OF 212-2745, 267-2900 INSTALLATION AR-ENGINE

SMCS-1355, 1380, 1393 **i02262704**

NOTE	REF NO	GRAPHIC REF	PART NUMBER	QTY	PART NAME 1 2 3 4 5 6 (PRODUCT LEVEL)	SEE PAGE
	1	1	**2W-7622**	1	PLATE-DRAIN	
	2	1	**7S-8780**	1	HOSE	
	3	1	**8B-6561**	1	SPACER (5.56X22.22X55.58-MM THK)	
	4	1	**9M-3116**	1	GASKET	
	5	1	**9V-3418**	1	ANGLE AS	
		1	**1F-0750**	1	NUT-WELD (3/8-16-THD)	
	6	1	**209-4590**	4	CLAMP (M5X0.8-THD)	
	7	1	**213-6795**	1	BONNET-INLET	
	8	1	**213-6796**	1	BONNET-OUTLET	
	9	1	**219-4474**	2	GASKET	
I	10	1	**222-1428**	1	HOSE AS	
I	11	1	**222-1430**	1	HOSE AS	
	12	1	**222-1433**	1	BRACKET AS	
		1	**1F-0750**	1	NUT-WELD (3/8-16-THD)	
	13	1	**230-0079**	1	ELBOW	
	14	1	**230-2521**	1	BRACKET	
	15	1	*249-3833*	1	VALVE GP-DRAIN	
	15A	1	**3B-0551**	1	PLUG-PIPE	
	15B	1	**7N-1447**	1	PLUG-DRAIN (WATER)	
		1	**7X-2501**	1	BOLT (1/4-20X1.25-IN)	
		1	**249-3832**	1	ADAPTER	
	16	1	**0L-1351**	1	BOLT (3/8-16X0.875-IN)	
	17	1	*169-4279*	1	CONNECTOR GP	
		1	**8C-6872**	1	CONNECTOR	
		1	**6V-8398**	1	SEAL-O-RING	
	18	1	**170-0610**	1	STUD (3/8-16-THD)	
	19	1	**3D-2824**	1	SEAL-O-RING	
	20	1	**3J-1907**	1	SEAL-O-RING	
	21	1	**3K-0360**	2	SEAL-O-RING	
	22	1	**3S-8665**	5	CLIP	
	23	1	**4L-6454**	2	BOLT (3/8-16X1-IN)	
	24	1	**4L-6459**	2	BOLT (3/8-16X2.5-IN)	
	25	1	**4L-9337**	4	BOLT (3/8-16X1.5-IN)	
	26	1	**5P-8874**	1	ADAPTER	
	27	1	**5S-7383**	7	BOLT (3/8-16X1.75-IN)	
	28	1	**6V-8398**	2	SEAL-O-RING	
	29	1	**6V-8637**	1	CONNECTOR	
	30	1	**6V-8775**	1	TEE-FACE SEAL	
	31	1	**6V-8801**	14	NUT (3/8-16-THD)	
	32	1	**6V-9746**	1	SEAL-O-RING	
	33	1	**7R-0042**	1	ADAPTER	
	34	1	**7X-0290**	1	BOLT (3/8-16X3.5-IN)	
	35	1	**8T-4896**	28	WASHER-HARD (10.2X18.5X2.5-MM THK)	
	36	1	**9B-7237**	9	BOLT (3/8-16X1.25-IN)	
	37	1	**9X-2493**	1	ADAPTER	
E	38	1	**5P-1268**		HOSE (13-CM)	
	39	1	*148-8328*	1	CONNECTOR AS	
		1	**6V-8633**	1	CONNECTOR	
		1	**3D-2824**	1	SEAL-O-RING	
		1	**6V-8398**	1	SEAL-O-RING	

E-ORDER BY THE CENTIMETER
I-REFER TO HYDRAULIC INFORMATION SYSTEM

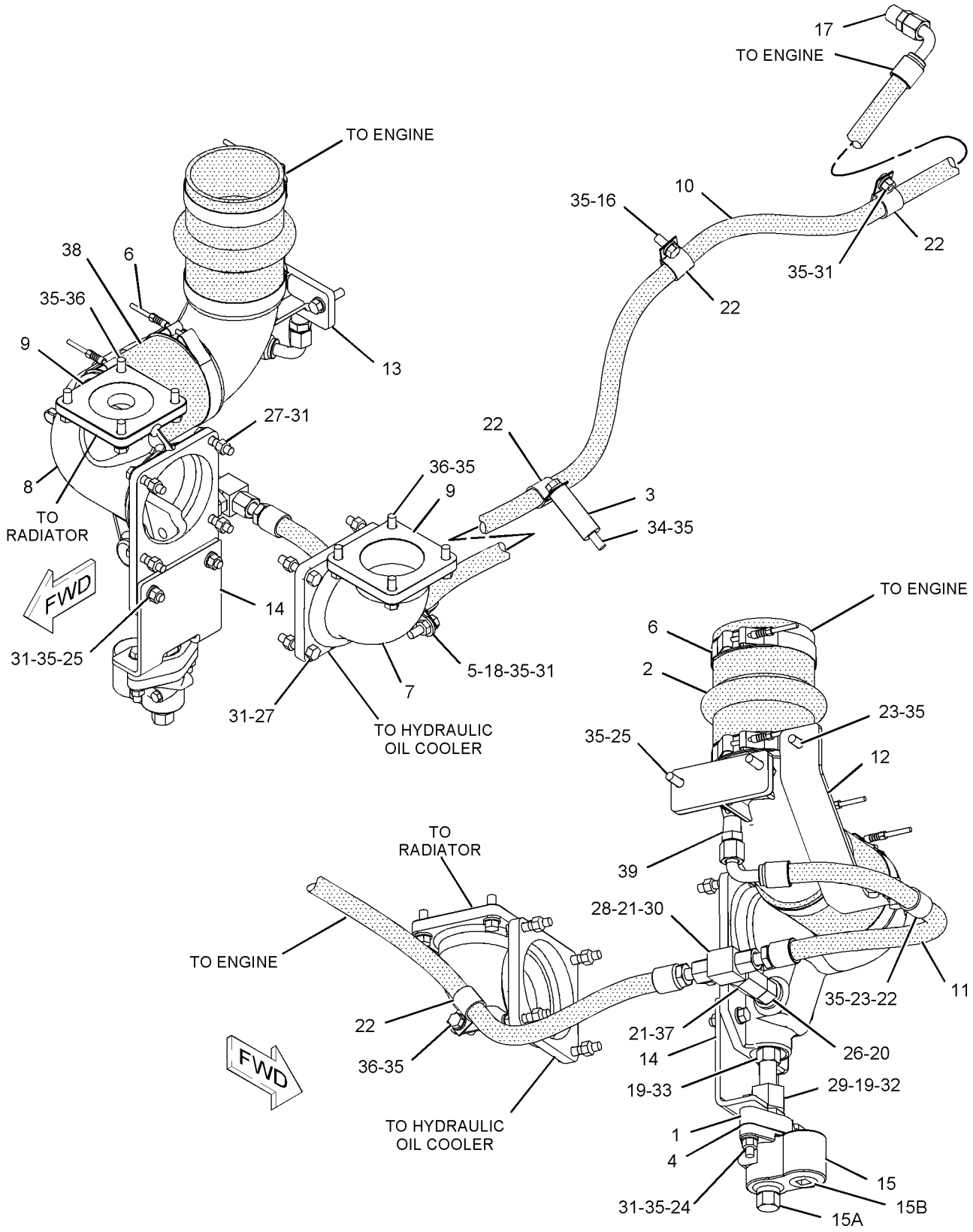

GRAPHIC #1 **<END>** g01136408

216-0823 LINES GP-WATER—ENGINE

S/N: EHX1-2328

PART OF 212-2737, 212-2744 ENGINE AR-COMPLETE

ALSO AN ATTACHMENT

SMCS-1355, 1380, 1393 **i02466502**

NOTE	REF NO	GRAPHIC REF	PART NUMBER	QTY	PART NAME 1 2 3 4 5 6 (PRODUCT LEVEL)	SEE PAGE
	1	1	**7N-7628**	8	GASKET	
	2	1	**7N-7878**	4	PLATE-COVER	
	3	1	**9G-7101**	2	SPACER (10.5X20X30-MM THK)	
	4	1	**219-6027**	1	TUBE AS	
	5	1	**219-6028**	1	TUBE AS	
	6	1	**219-6029**	1	TUBE AS	
	7	1	**219-6030**	1	TUBE AS	
	8	1	**229-5122**	1	BRACKET	
I	9	1	**236-5418**	1	HOSE AS	
	10	1	**067-2551**	2	CLIP	
	11	1	**0S-1590**	2	BOLT (3/8-16X2-IN)	
	12	1	**0S-1594**	16	BOLT (3/8-16X1-IN)	
	13	1	**180-8424**	5	SEAL-O-RING	
	14	1	**1B-3057**	4	CLIP	
	15	1	**4B-0418**	4	CLIP	
	16	1	**5M-2894**	21	WASHER-HARD (10.2X18.5X2.5-MM THK)	
	17	1	**6V-9169**	2	NUT-BULKHEAD (13/16-16-THD)	
	18	1	**7E-4039**	1	ORIFICE	
	19	1	**7L-7262**	1	ELBOW-FLARED	
	20	1	**7X-7715**	2	TEE	
	21	1	**1A-5183**	3	BOLT (3/8-16X4.75-IN)	

I-REFER TO HYDRAULIC INFORMATION SYSTEM

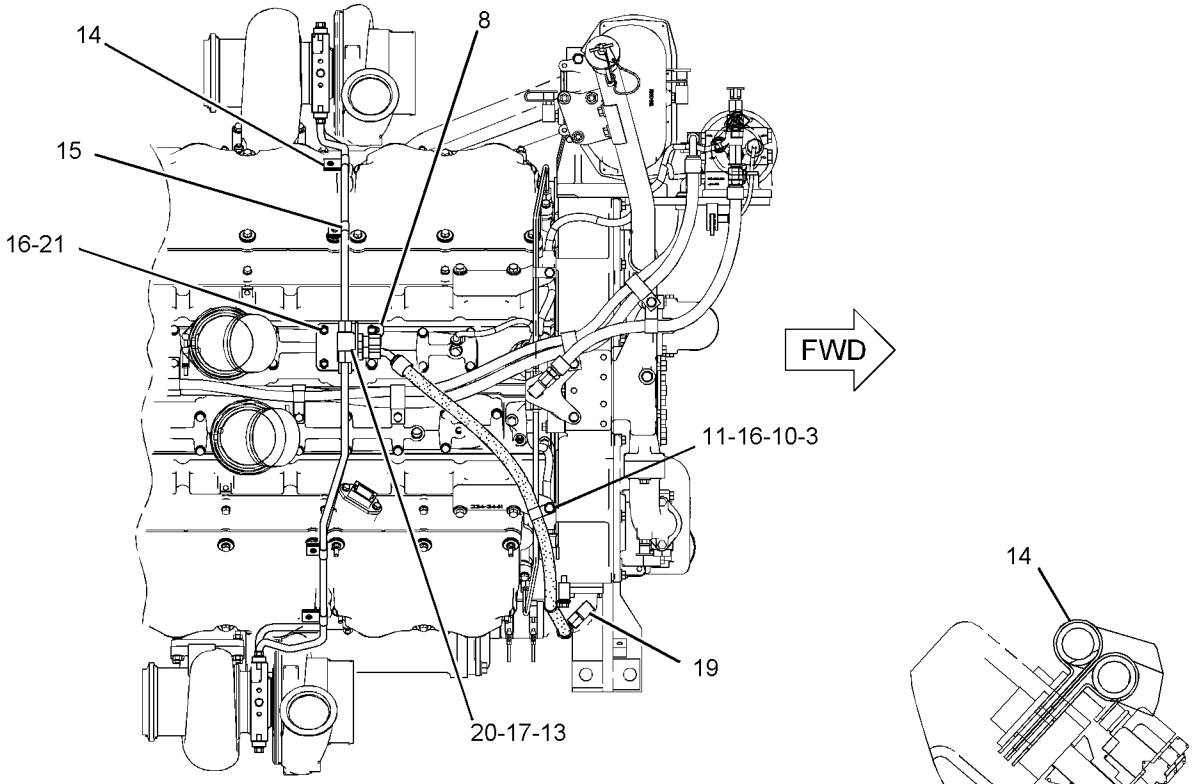

GRAPHIC #1

<END>

g01126016

216-0823 LINES GP-WATER—ENGINE

S/N: EHX2329-2584

PART OF 212-2737, 212-2744, 271-2219 ENGINE AR-COMPLETE

ALSO AN ATTACHMENT

SMCS-1355, 1380, 1393 **i02466807**

NOTE	REF NO	GRAPHIC REF	PART NUMBER	QTY	PART NAME 1 2 3 4 5 6 (PRODUCT LEVEL)	SEE PAGE
	1	1	**7N-7628**	8	GASKET	
	2	1	**7N-7878**	4	PLATE-COVER	
	3	1	**9G-7101**	2	SPACER (10.5X20X30-MM THK)	
	4	1	**219-6027**	1	TUBE AS	
	5	1	**219-6028**	1	TUBE AS	
	6	1	**219-6029**	1	TUBE AS	
	7	1	**219-6030**	1	TUBE AS	
	8	1	**229-5122**	1	BRACKET	
I	9	1	**236-5418**	1	HOSE AS	
	10	1	**067-2551**	2	CLIP	
	11	1	**0S-1590**	2	BOLT (3/8-16X2-IN)	
C	12	1	**0S-1594**	12	BOLT (3/8-16X1-IN)	
	13	1	**180-8424**	5	SEAL-O-RING	
	14	1	**1B-3057**	4	CLIP	
	15	1	**4B-0418**	4	CLIP	
	16	1	**5M-2894**	21	WASHER-HARD (10.2X18.5X2.5-MM THK)	
	17	1	**6V-9169**	2	NUT-BULKHEAD (13/16-16-THD)	
	18	1	**7E-4039**	1	ORIFICE	
	19	1	**7L-7262**	1	ELBOW-FLARED	
	20	1	**7X-7715**	2	TEE	
	21	1	**1A-5183**	3	BOLT (3/8-16X4.75-IN)	
C	22	1	**0L-1143**	2	BOLT (3/8-16X2.5-IN)	
C	23	1	**0S-1619**	2	BOLT (3/8-16X3-IN)	
C	24	1	**2Y-6508**	2	SPACER (10.5X19X50.8-MM THK)	
C	25	1	**4W-7627**	2	SPACER (11X19X37-MM THK)	

C-CHANGE FROM PREVIOUS TYPE
I-REFER TO HYDRAULIC INFORMATION SYSTEM

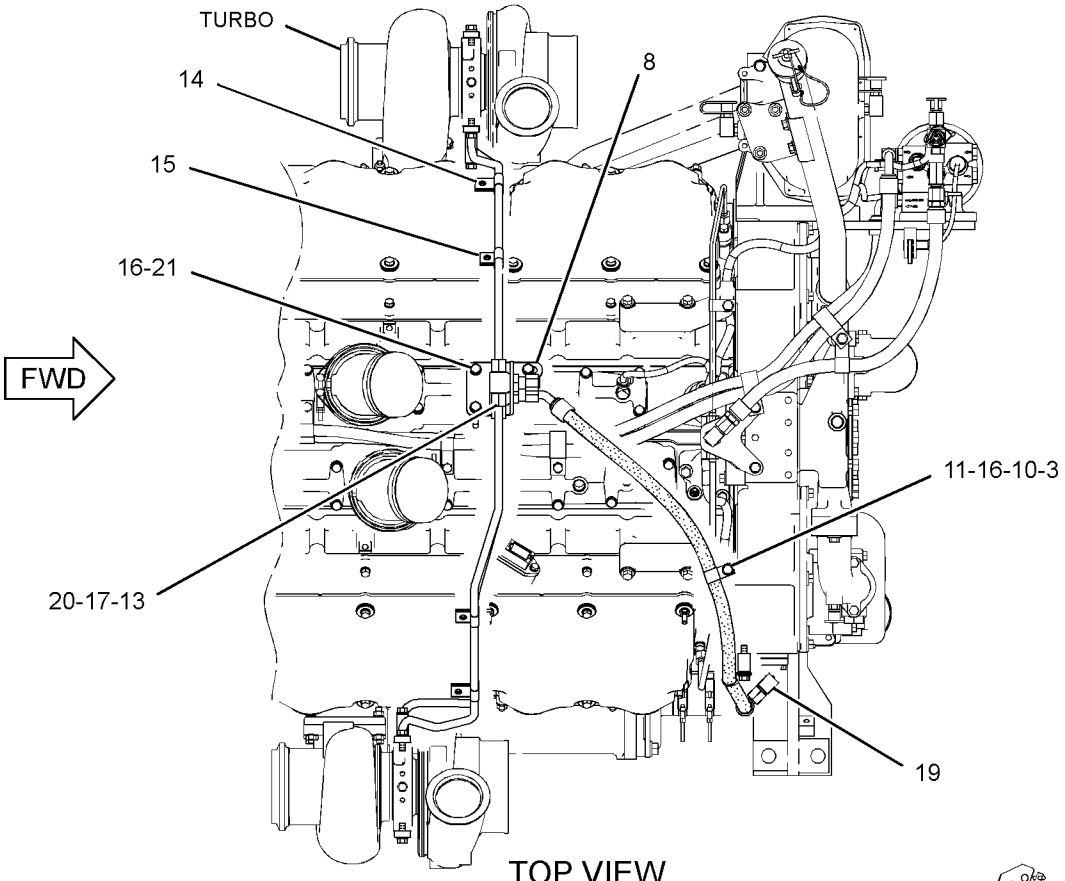

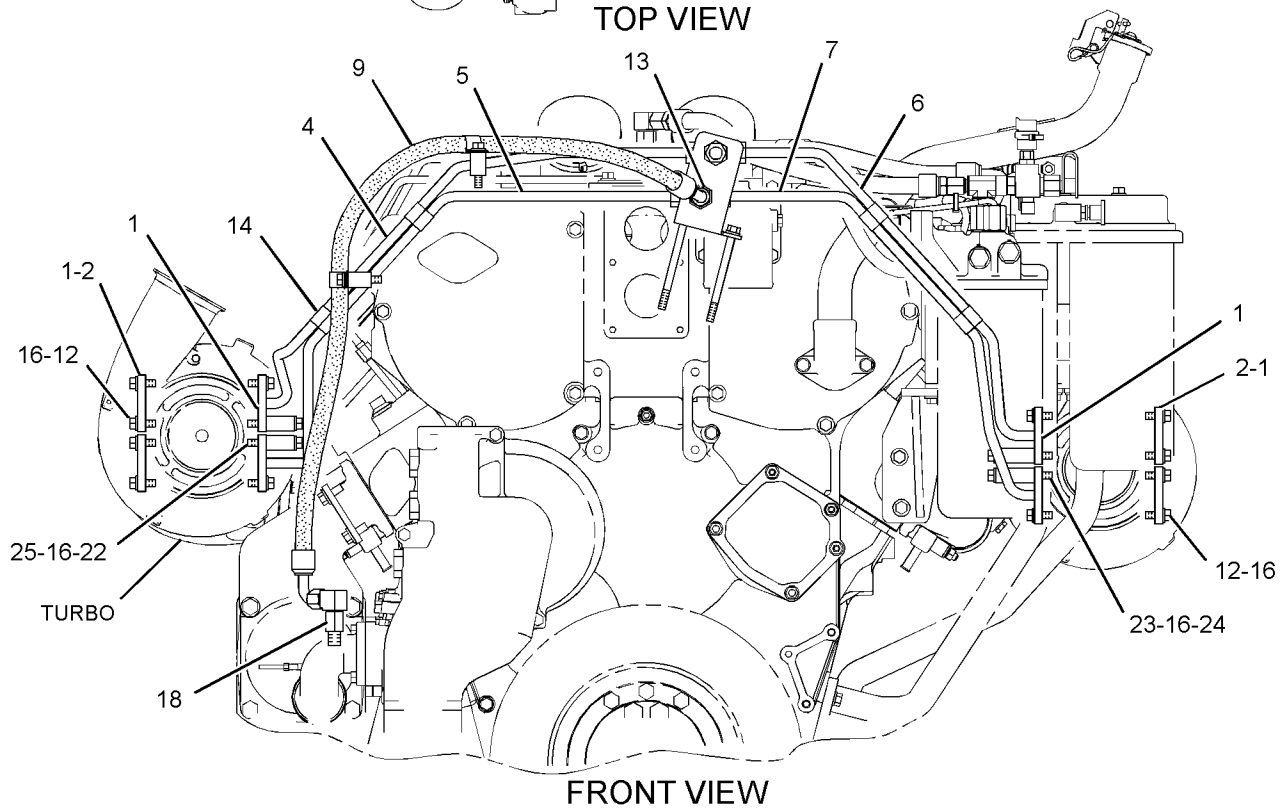

GRAPHIC #1

<END>

g01232578

216-0823 LINES GP-WATER—ENGINE

S/N: EHX2585-UP

PART OF 212-2737, 271-2219 ENGINE AR-COMPLETE

ALSO AN ATTACHMENT

SMCS-1355, 1380, 1393 **i02470602**

NOTE	REF NO	GRAPHIC REF	PART NUMBER	QTY	PART NAME 1 2 3 4 5 6 (PRODUCT LEVEL)	SEE PAGE
	1	2	**4W-7627**	2	SPACER (11X19X37-MM THK)	
	2	2	**7N-7628**	8	GASKET	
	3	2	**7N-7878**	4	PLATE-COVER	
C	4	2	**7W-9094**	2	SPACER (10.5X20X9-MM THK)	
C	5	2	**118-0911**	1	TEE-O-RING PORT	
C	6	2	**157-0670**	1	CAP-DUST	
	7	2	**219-6027**	1	TUBE AS	
	8	2	**219-6028**	1	TUBE AS	
	9	2	**219-6029**	1	TUBE AS	
	10	2	**219-6030**	1	TUBE AS	
	11	1	**229-5122**	1	BRACKET	
C	12	2	**277-6718**	1	HOSE AS	
	13	2	**067-2551**	2	CLIP	
	14	2	**0L-1143**	2	BOLT (3/8-16X2.5-IN)	
C	15	2	**0S-1588**	1	BOLT (3/8-16X1.25-IN)	
	16	2	**0S-1594**	12	BOLT (3/8-16X1-IN)	
	17	2	**0S-1619**	2	BOLT (3/8-16X3-IN)	
C	18	2	**154-9023**	1	VALVE-SAMPLING (COOLANT)	
C	19	1	**180-8424**	6	SEAL-O-RING	
	20	1	**1A-5183**	3	BOLT (3/8-16X4.75-IN)	
	21	1,2	**1B-3057**	4	CLIP	
	22	2	**2Y-6508**	2	SPACER (10.5X19X50.8-MM THK)	
C	23	2	**3P-1932**	1	ADAPTER	
C	24	2	**3K-0360**	3	SEAL-O-RING	
	25	1	**4B-0418**	4	CLIP	
	26	1,2	**5M-2894**	21	WASHER-HARD (10.2X18.5X2.5-MM THK)	
C	27	1	**6V-8639**	1	CONNECTOR	
C	28	2	**6V-9027**	1	SEAL-O-RING	
	29	1	**6V-9169**	2	NUT-BULKHEAD (13/16-16-THD)	
	30	1	**7X-7715**	2	TEE	

C-CHANGE FROM PREVIOUS TYPE

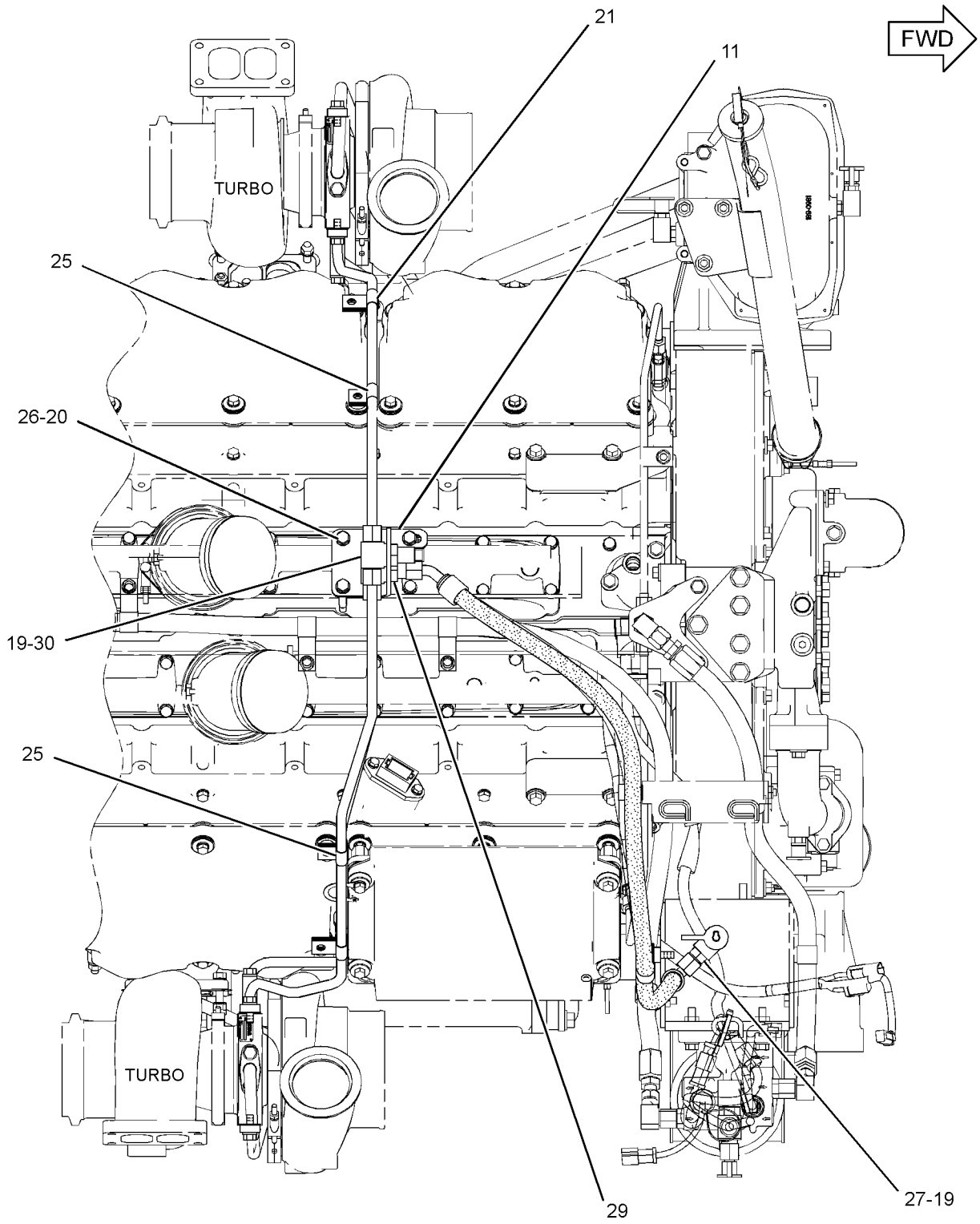

TOP VIEW

GRAPHIC #1 g01233817

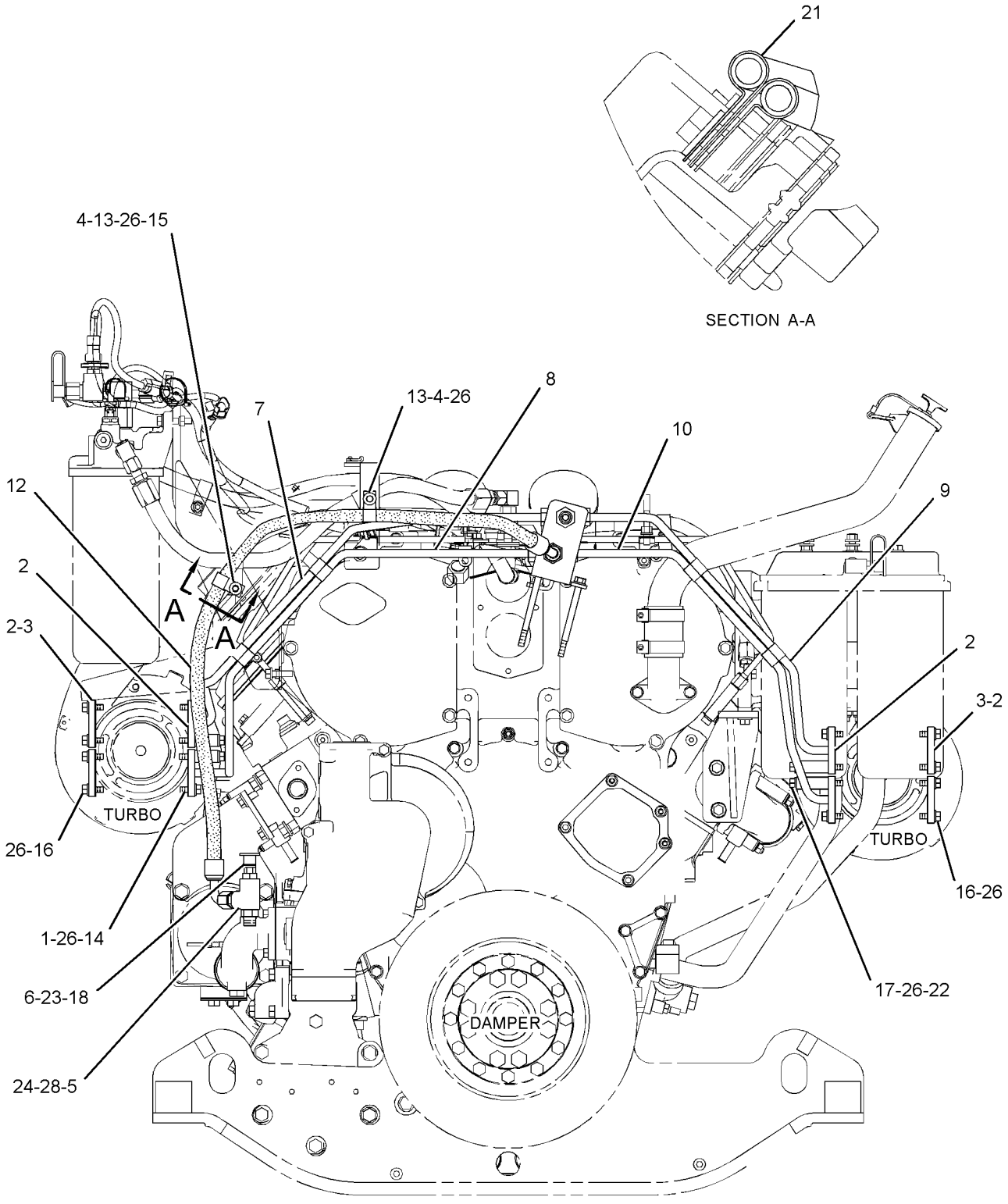

FRONT VIEW

GRAPHIC #2 **<END>** g01233958

216-0824 LINES GP-WATER

S/N: EHX1-UP

PART OF 212-2737, 212-2744, 271-2219 ENGINE AR-COMPLETE

ALSO AN ATTACHMENT

SMCS-1355, 1380, 1393 **i02176997**

NOTE	REF NO	GRAPHIC REF	PART NUMBER	QTY	PART NAME 1 2 3 4 5 6 (PRODUCT LEVEL)	SEE PAGE
	1	1	**248-5513**	2	REGULATOR-WATER TEMPERATURE (92-DEG C)	
	2	1	**157-0670**	1	CAP-DUST	
	3	1	**230-1294**	1	ELBOW	
	4	1	**230-1296**	1	ELBOW	
	5	1	**230-1302**	3	FLANGE	
	6	1	**231-4708**	5	SEAL-O-RING	
	7	1	**234-3438**	1	ELBOW	
	8	1	**236-2502**	2	COVER	
	9	1	**239-5225**	1	HOUSING AS	
		1	**3B-0622**	1	PLUG-CUP	
		1	**3S-9643**	2	SEAL-LIP TYPE	
		1	**111-4374**	1	VALVE AS-VENT LINE	
	11	1	**0S-1594**	4	BOLT (3/8-16X1-IN)	
	12	1	**0S-1608**	5	BOLT (3/8-16X3.75-IN)	
	13	1	**0T-0055**	4	BOLT (3/8-16X4.25-IN)	
	14	1	**0T-0573**	2	BOLT (3/8-16X2.75-IN)	
	15	1	**107-5769**	2	SEAL-O-RING	
	16	1	**109-0076**	3	SEAL-O-RING	
	17	1	**154-9023**	1	VALVE-SAMPLING	
	18	1	**1C-2251**	6	BOLT (3/8-16X1.87-IN)	
	19	1	**5M-2894**	4	WASHER-HARD (10.2X18.5X2.5-MM THK)	
	20	1	**6V-6609**	1	SEAL-O-RING	
	21	1	**6V-9027**	1	SEAL-O-RING	
	22	1	**8T-1703**	3	SEAL-O-RING	
	23	1	**9S-8005**	1	PLUG-O RING	
	24	1	**9X-6458**	10	WASHER-HARD (10.2X22.5X3-MM THK)	

216-0824 **LINES GP-WATER** *(contd.)* **i02176997**

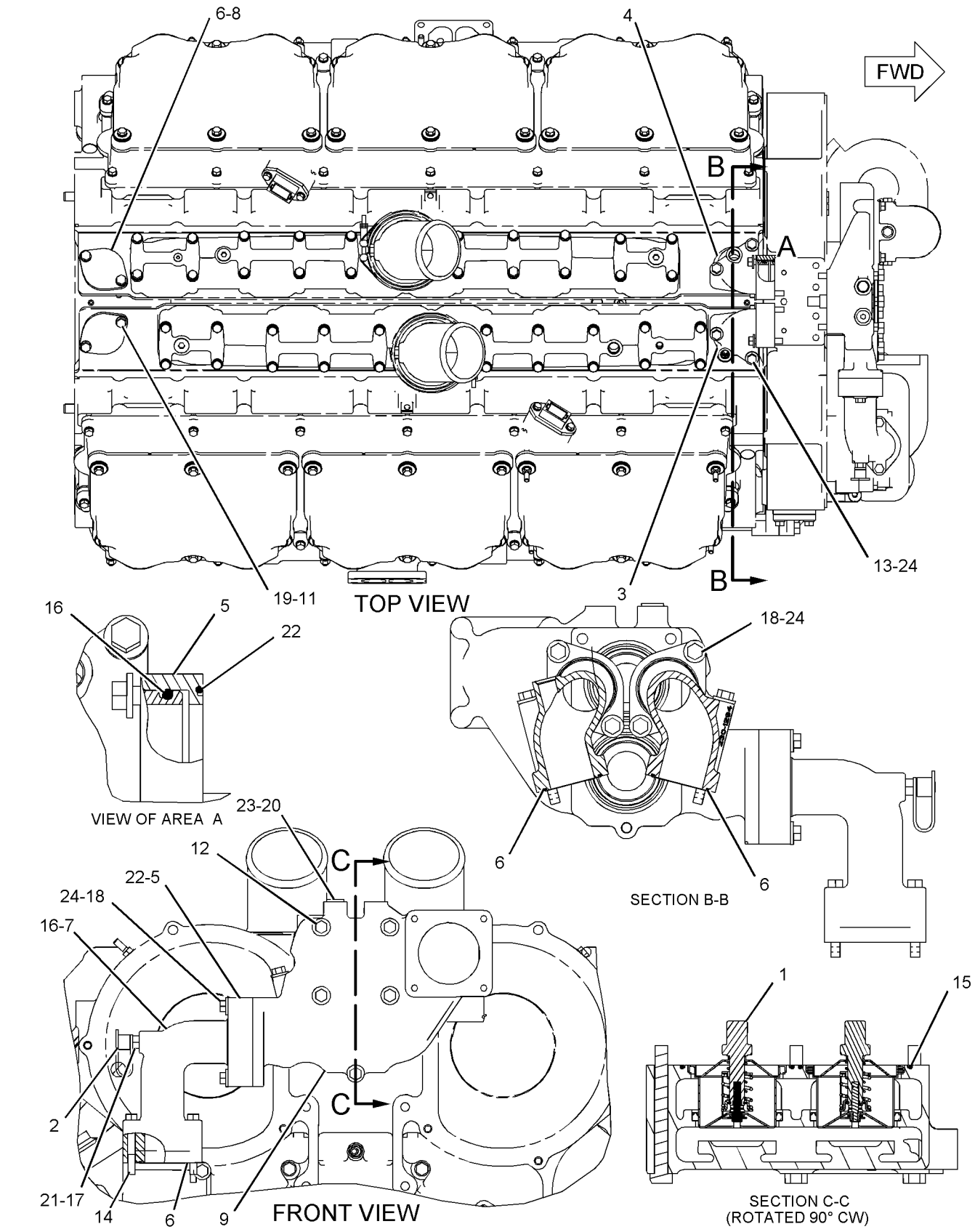

GRAPHIC #1 **<END>** g01103226

COOLING SYSTEM

216-0825 LINES GP-WATER

S/N: EHX1-2584

PART OF 212-2737, 212-2744, 271-2219 ENGINE AR-COMPLETE

ALSO AN ATTACHMENT

SMCS-1355, 1380, 1393 **i02044750**

NOTE	REF NO	GRAPHIC REF	PART NUMBER	QTY	PART NAME 1 2 3 4 5 6 (PRODUCT LEVEL)	SEE PAGE
	1	1	**4N-0864**	1	GASKET	
	2	1	**4N-1946**	1	GASKET	
	3	1	**4N-2198**	1	FLANGE	
	4	1	**4N-2199**	2	GASKET	
	5	1	**4N-2380**	1	SPACER	
	6	1	**4N-8452**	1	SUPPORT	
R	7	1	**4W-5412**	1	CORE GP-OIL COOLER	
	8	1	**6N-0008**	1	ADAPTER	
R	9	1	**7C-0145**	1	CORE AS-OIL COOLER	
		1	**0R-5513**	1	CORE AS-OIL COOLER	
	10	1	**7S-8767**	2	GASKET	
	11	1	**190-3832**	1	CORE GP-OIL COOLER	
		1	**6V-5049**	1	SEAL-O-RING	
		1	**9S-4191**	1	PLUG-O RING	
	12	1	**192-4309**	1	SEAL-O-RING	
	13	2	**200-6410**	1	SEAL-O-RING	
	14	1	**217-6643**	1	BONNET-INLET	
	15	1	**217-6645**	1	BONNET-OUTLET	
	16	1	**217-6649**	1	PLATE	
	17	1	**217-6652**	1	ELBOW	
	18	2	**233-4877**	1	COVER-WATER PUMP	
	19	2	**235-4753**	1	ELBOW	
	20	1	**236-5423**	1	HOSE	
	21	1	**238-0283**	1	BONNET	
	22	1	**238-0292**	1	BONNET	
	23	1	**238-0994**	1	BONNET	
	24	2	**249-5544**	1	BRACKET AS	
	25	2	**0L-1143**	2	BOLT (3/8-16X2.5-IN)	
	26	2	**0S-1587**	5	BOLT (1/2-13X1.75-IN)	
	27	1,2	**0S-1588**	5	BOLT (3/8-16X1.25-IN)	
	28	1	**0S-1591**	2	BOLT (3/8-16X1.5-IN)	
	29	1,2	**0S-1594**	7	BOLT (3/8-16X1-IN)	
	30	1	**0S-1619**	6	BOLT (3/8-16X3-IN)	
	31	1	**109-0074**	1	SEAL-O-RING	
	32	1	**109-0075**	1	SEAL-O-RING	
	33	1	**109-0077**	2	SEAL-O-RING	
	34	1	**1A-2029**	6	BOLT (3/8-16X1.125-IN)	
	35	1,2	**1B-2886**	4	BOLT (1/2-13X3.75-IN)	
	36	2	**1C-2251**	1	BOLT (3/8-16X1.87-IN)	
	37	1	**215-4013**	2	CLAMP	
	38	1	**3B-1915**	3	BOLT (3/8-16X1.375-IN)	
	39	2	**5P-8245**	6	WASHER-HARD (13.5X25.5X3-MM THK)	
	40	1	**6V-5063**	5	SEAL-O-RING	
	41	1	**6V-5064**	1	SEAL-O-RING	
	42	2	**6V-9027**	3	SEAL-O-RING	
	43	1,2	**7B-3235**	6	BOLT (1/2-13X1.375-IN)	
	44	1,2	**7C-0307**	2	GASKET	
	45	1	**8T-6767**	1	PLUG-PIPE	
	46	1	**9M-8546**	2	GASKET	
	47	1	**9S-1366**	3	BOLT (1/2-13X2.5-IN)	
	48	2	**9S-4182**	3	PLUG	
	49	1	**9S-8008**	5	PLUG	
	51	1,2	**9X-6458**	3	WASHER-HARD (10.2X22.5X3-MM THK)	
	52	2	**9X-8874**	2	BOLT (1/2-13X3-IN)	

R-REMFG PART MAY BE AVAILABLE

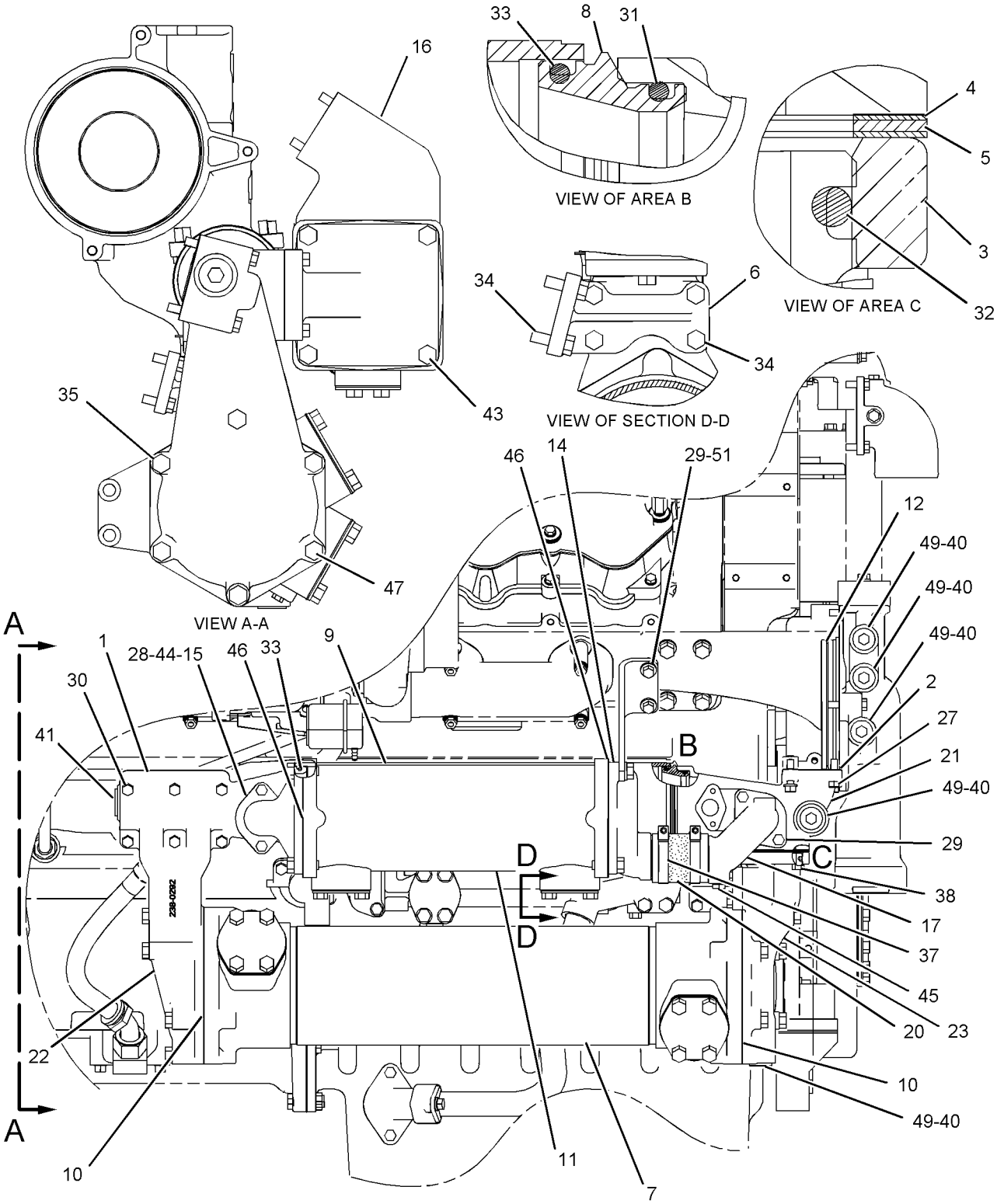

RIGHT SIDE VIEW

GRAPHIC #1 g01052181

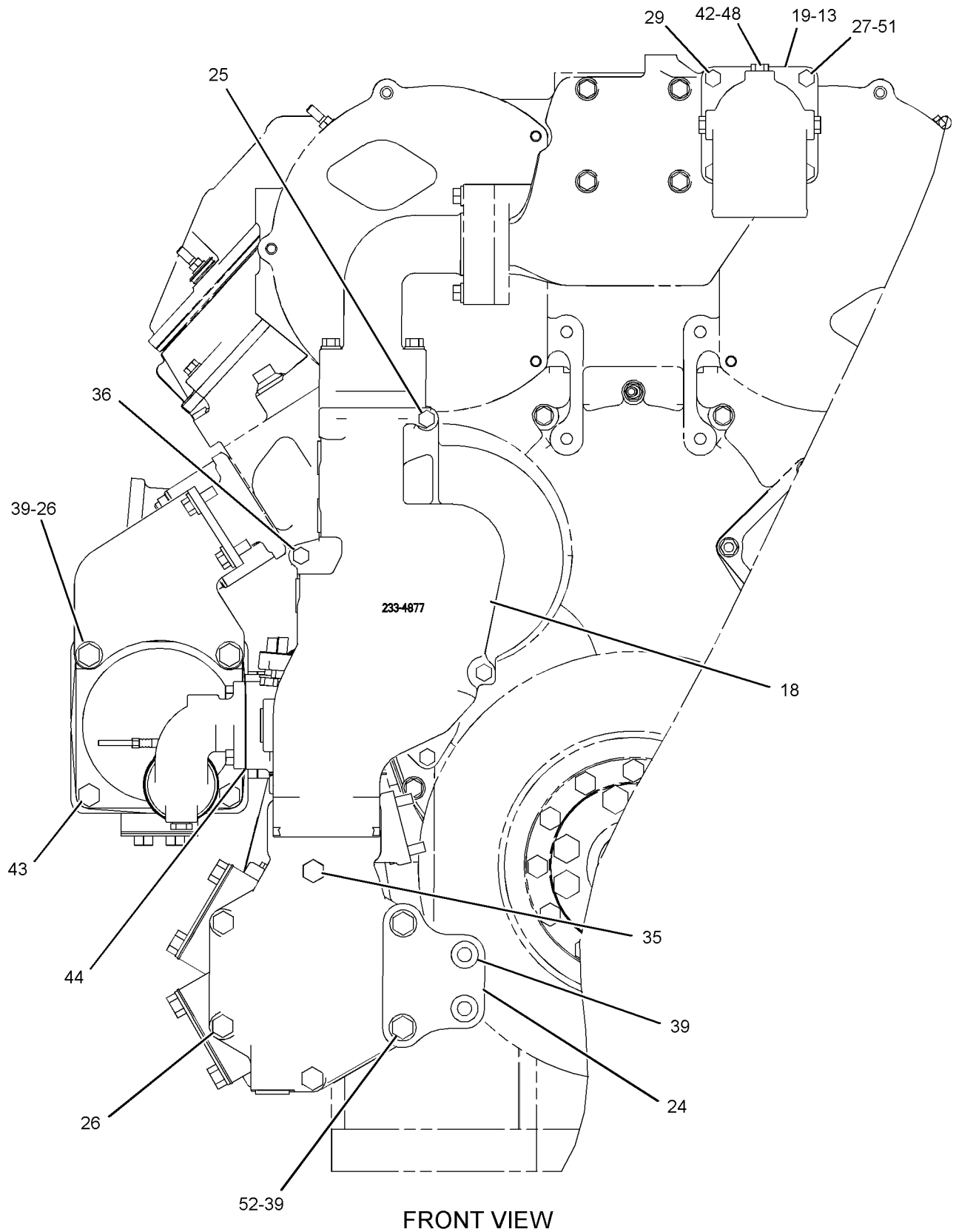

FRONT VIEW

GRAPHIC #2

<END>

g01052525

COOLING SYSTEM

216-0825 LINES GP-WATER

S/N: EHX2585-UP

PART OF 212-2737, 271-2219 ENGINE AR-COMPLETE

ALSO AN ATTACHMENT

SMCS-1355, 1380, 1393 **i02470605**

NOTE	REF NO	GRAPHIC REF	PART NUMBER	QTY	PART NAME 1 2 3 4 5 6 (PRODUCT LEVEL)	SEE PAGE
	1	1	**4N-0864**	1	GASKET	
	2	1	**4N-1946**	1	GASKET	
	3	1	**4N-2198**	1	FLANGE	
	4	1	**4N-2199**	2	GASKET	
	5	1	**4N-2380**	1	SPACER	
	6	1	**4N-8452**	1	SUPPORT	
R	7	1	**4W-5412**	1	CORE GP-OIL COOLER	
	8	1	**6N-0008**	1	ADAPTER	
R	9	1	**7C-0145**	1	CORE AS-OIL COOLER (ENGINE OIL)	
		1	**0R-5513**	1	CORE AS-OIL COOLER	
	10	1	**7S-8767**	2	GASKET	
	11	1	**190-3832**	1	CORE GP-OIL COOLER	
		1	**6V-5049**	1	SEAL-O-RING	
		1	**9S-4191**	1	PLUG-O RING	
	12	1	**192-4309**	1	SEAL-O-RING	
	13	2	**200-6410**	1	SEAL-O-RING	
	14	1	**217-6643**	1	BONNET-INLET	
	15	1	**217-6645**	1	BONNET-OUTLET	
	16	1	**217-6649**	1	PLATE	
C	17	1	**277-6717**	1	ELBOW	
	18	2	**233-4877**	1	COVER-WATER PUMP	
	19	2	**235-4753**	1	ELBOW	
	20	1	**236-5423**	1	HOSE	
	21	1	**238-0283**	1	BONNET	
	22	1	**238-0292**	1	BONNET	
	23	1	**238-0994**	1	BONNET	
	24	2	**249-5544**	1	BRACKET AS	
	25	2	**0L-1143**	2	BOLT (3/8-16X2.5-IN)	
	26	2	**0S-1587**	5	BOLT (1/2-13X1.75-IN)	
	27	1,2	**0S-1588**	5	BOLT (3/8-16X1.25-IN)	
	28	1	**0S-1591**	2	BOLT (3/8-16X1.5-IN)	
	29	1,2	**0S-1594**	7	BOLT (3/8-16X1-IN)	
	30	1	**0S-1619**	6	BOLT (3/8-16X3-IN)	
	31	1	**109-0074**	1	SEAL-O-RING	
	32	1	**109-0075**	1	SEAL-O-RING	
	33	1	**109-0077**	2	SEAL-O-RING	
	34	1	**1A-2029**	6	BOLT (3/8-16X1.125-IN)	
	35	1,2	**1B-2886**	4	BOLT (1/2-13X3.75-IN)	
	36	2	**1C-2251**	1	BOLT (3/8-16X1.87-IN)	
	37	1	**215-4013**	2	CLAMP	
	38	1	**3B-1915**	3	BOLT (3/8-16X1.375-IN)	
	39	2	**5P-8245**	6	WASHER-HARD (13.5X25.5X3-MM THK)	
	40	1	**6V-5063**	5	SEAL-O-RING	
	41	1	**6V-5064**	1	SEAL-O-RING	
	42	2	**6V-9027**	3	SEAL-O-RING	
	43	1,2	**7B-3235**	6	BOLT (1/2-13X1.375-IN)	
	44	1,2	**7C-0307**	2	GASKET	
C	45	1	**9S-4185**	1	PLUG	
	46	1	**9M-8546**	2	GASKET	
	47	1	**9S-1366**	3	BOLT (1/2-13X2.5-IN)	
	48	2	**9S-4182**	3	PLUG	
	49	1	**9S-8008**	5	PLUG	
	51	1,2	**9X-6458**	3	WASHER-HARD (10.2X22.5X3-MM THK)	
	52	2	**9X-8874**	2	BOLT (1/2-13X3-IN)	
C	53	1	**3K-0360**	1	SEAL-O-RING	

216-0825 **LINES GP-WATER** *(contd.)* **i02470605**

C-CHANGE FROM PREVIOUS TYPE
R-REMFG PART MAY BE AVAILABLE

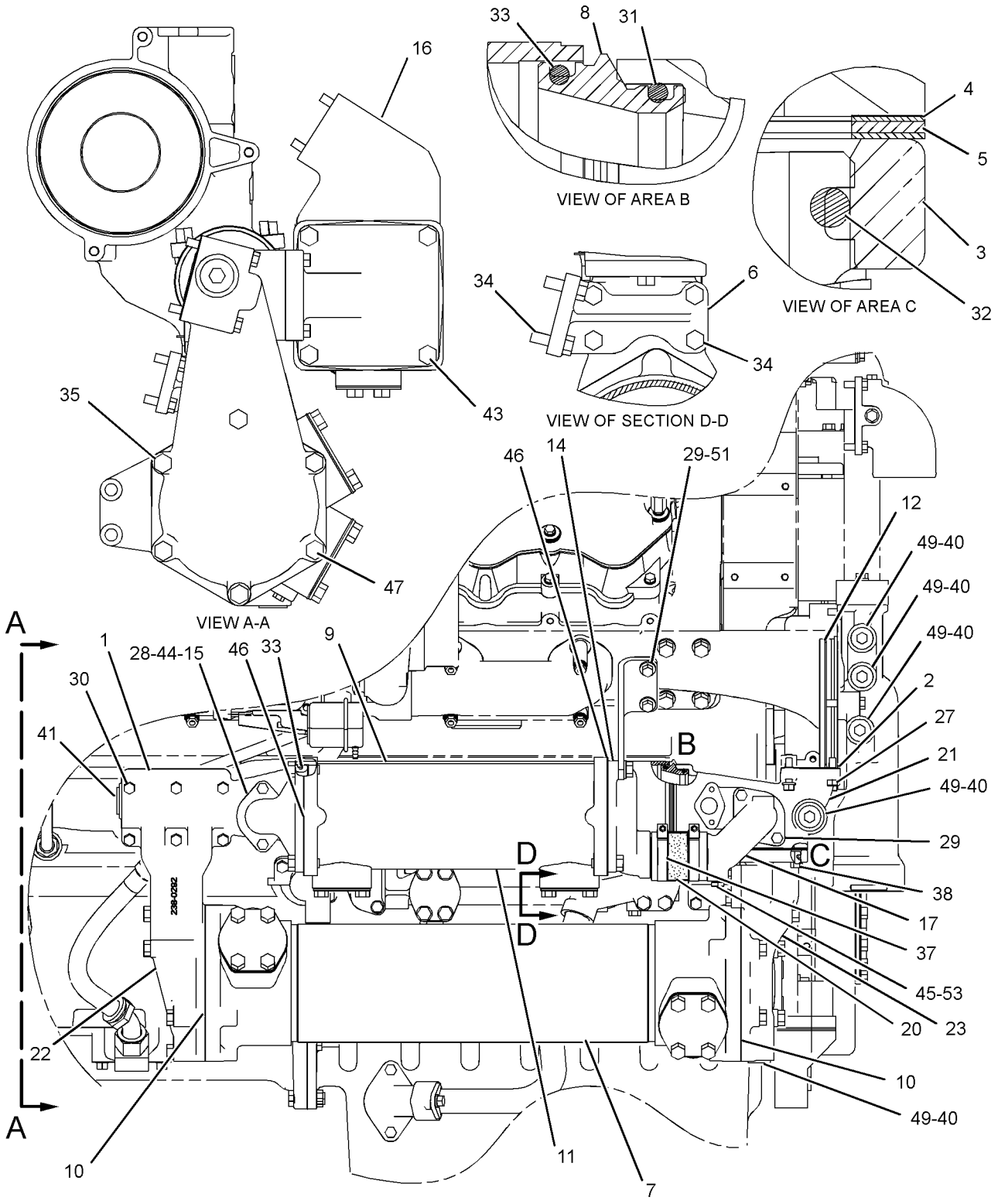

RIGHT SIDE VIEW

GRAPHIC #1 g01233396

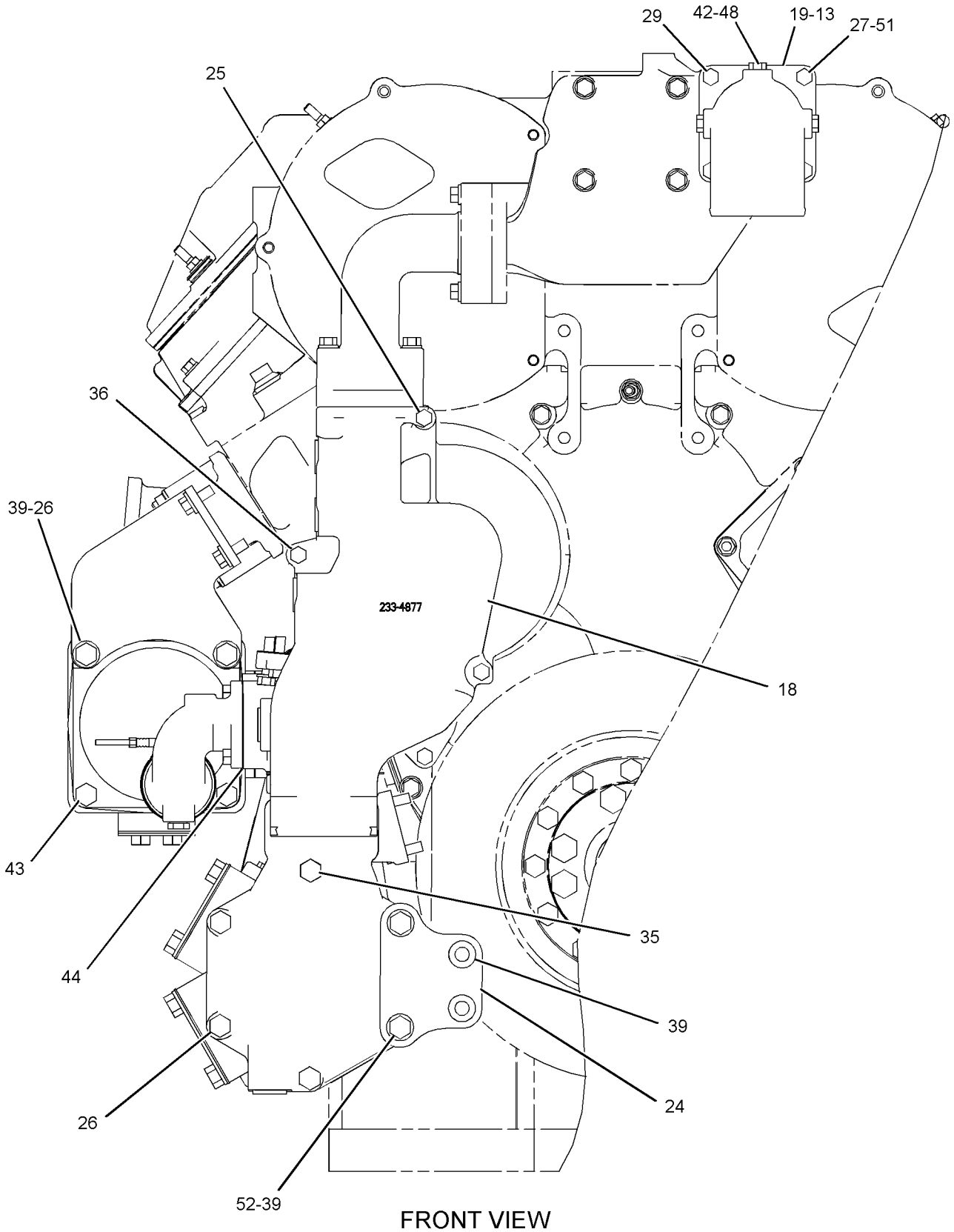

FRONT VIEW

GRAPHIC #2

<END>

g01052525

COOLING SYSTEM

216-0657 PUMP GP-WATER

S/N: EHX1-UP
PART OF 230-4172 PUMP GP-WATER
ALSO AN ATTACHMENT

SMCS-1361 **i02044733**

NOTE	REF NO	GRAPHIC REF	PART NUMBER	QTY	PART NAME 1 2 3 4 5 6 (PRODUCT LEVEL)	SEE PAGE
	1	1	**1A-1135**	1	BOLT (5/8-11X2-IN)	
	2	1	**4N-1948**	1	GEAR (43-TEETH)	
	3	1	**108-7930**	1	BEARING AS-ROLLER	
	4	1	**128-0317**	1	SEAL GP (WATER PUMP)	
	5	1	**135-4928**	1	SHAFT-WATER PUMP	
	6	1	**136-1107**	1	RETAINER	
	7	1	**153-1256**	1	SEAL-LIP TYPE	
	8	1	**219-4455**	1	IMPELLER-PUMP	
	9	1	**219-4456**	1	HOUSING AS-PUMP	
	9A	1	**4M-1336**	1	FERRULE	
	9B	1	**111-2721**	1	FILTER (WATER PUMP)	
	9C	1	**8T-6764**	1	PLUG-PIPE	
	10	1	**0S-1591**	1	BOLT (3/8-16X1.5-IN)	
	11	1	**1B-7182**	4	BOLT (5/16-18X1.25-IN)	
	12	1	**5S-0581**	1	WASHER-HARD (17X38X8-MM THK)	
	13	1	**9M-6527**	1	WASHER-HARD (10.2X25.5X5-MM THK)	

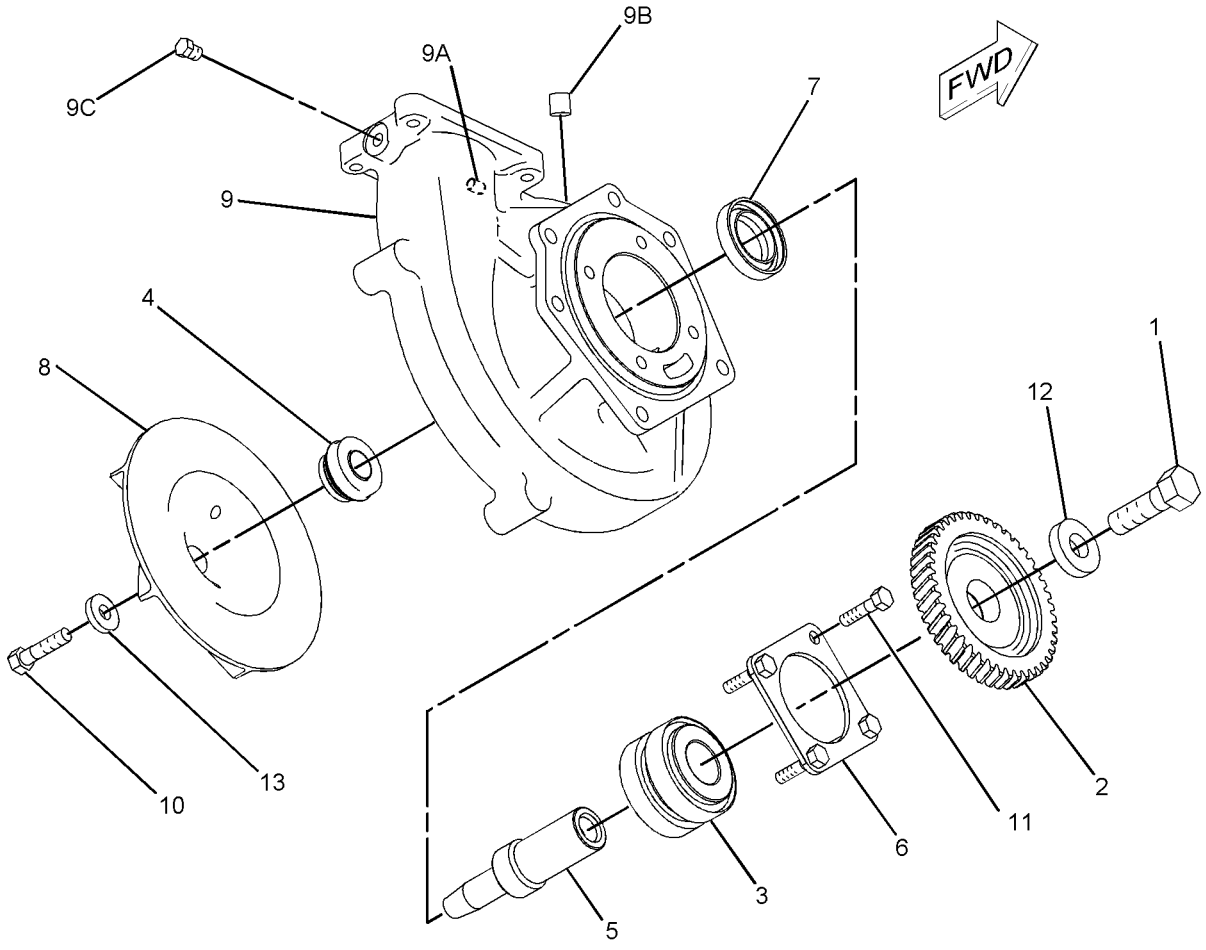

GRAPHIC #1 **<END>** g01051646

COOLING SYSTEM

230-4172 PUMP GP-WATER

S/N: EHX1-UP

PART OF 212-2737, 212-2744, 271-2219 ENGINE AR-COMPLETE

ALSO AN ATTACHMENT

SMCS-1361 **i02044819**

NOTE	REF NO	GRAPHIC REF	PART NUMBER	QTY	PART NAME 1 2 3 4 5 6 (PRODUCT LEVEL)	SEE PAGE
Y	1	1	*216-0657*	1	PUMP GP-WATER	107
	2	1	**0S-1594**	1	BOLT (3/8-16X1-IN)	
	3	1	**9S-8752**	4	NUT-FULL (3/8-16-THD)	
	4	1	**9X-7371**	1	SEAL-O-RING	

Y-SEPARATE ILLUSTRATION

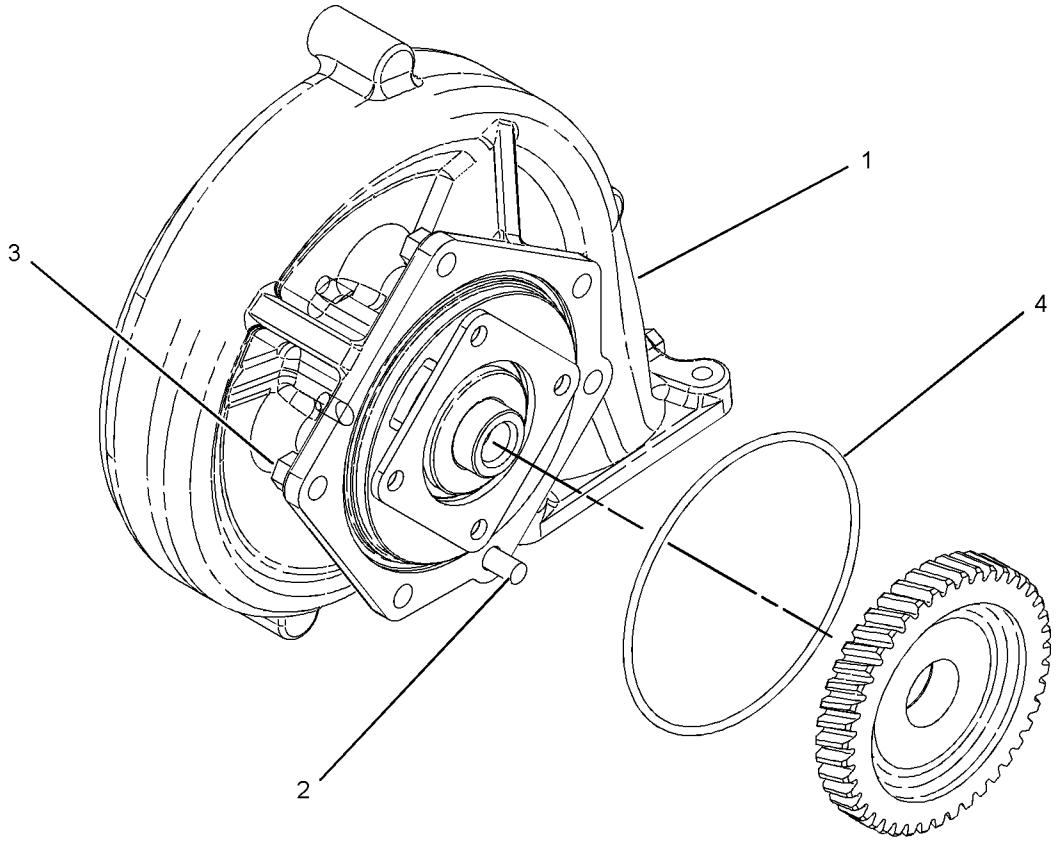

GRAPHIC #1 **<END>** g01052763

COOLING SYSTEM

267-2901 RADIATOR AR

S/N: RJG1-UP
TRASH RESISTANT
PART OF 238-4498 STOCKPILE AR
AN ATTACHMENT

SMCS-1353 **i02467382**

NOTE	PART NUMBER	QTY	PART NAME 1 2 3 4 5 6 (PRODUCT LEVEL)	SEE PAGE
	163-4057	2	CORE AS-RADIATOR	
	256-2090	10	CORE AS-RADIATOR	

<END>

COOLING SYSTEM

212-7587 RADIATOR GP

S/N: RJG1-528

PART OF 212-2745 INSTALLATION AR-ENGINE

SMCS-1353 **i02362251**

NOTE	REF NO	GRAPHIC REF	PART NUMBER	QTY	PART NAME 1 2 3 4 5 6 (PRODUCT LEVEL)	SEE PAGE
	1	1	**8T-4990**	2	CLAMP-HOSE	
	2	1	**176-0781**	2	DUCT	
Y	3	1	*213-6738*	1	RADIATOR GP	112
	4	1	**219-4284**	1	ELBOW	
	5	1	**219-4474**	1	GASKET	
	6	1	**221-4038**	4	PLATE	
	7	1	**223-2642**	2	BAFFLE AS	
					(EACH INCLUDES)	
		1	**5I-8748**	2	SPACER (11X18X5-MM THK)	
	8	1	**223-2643**	1	BAFFLE AS	
		1	**6B-4594**	13	RIVET	
	9	1	**223-2644**	1	BAFFLE AS (LH)	
		1	**6B-4594**	10	RIVET	
	10	1	**223-2645**	1	BAFFLE AS (RH)	
		1	**6B-4594**	10	RIVET	
	11	1	**223-2646**	1	PLATE (LH)	
	12	1	**223-2647**	1	PLATE (RH)	
	13	1	**228-4078**	1	TUBE AS	
	14	1	**209-4588**	4	CLAMP	
	15	1	**4L-6459**	1	BOLT (3/8-16X2.5-IN)	
	16	1	**7X-7729**	4	WASHER (11X25X3-MM THK)	
	17	1	**8T-2502**	4	BOLT (3/8-16X1.125-IN)	
	18	1	**8T-4121**	36	WASHER-HARD (11X21X2.5-MM THK)	
M	19	1	**8T-4136**	12	BOLT (M10X1.5X25-MM)	
M	20	1	**8T-4195**	28	BOLT (M10X1.5X30-MM)	
	21	1	**8T-4896**	5	WASHER-HARD (10.2X18.5X2.5-MM THK)	
E	22	1	**5P-0764**		HOSE (12-CM)	
E	22A	1	**5P-0764**		HOSE (20-CM)	
E	23	1	**234-2515**		SEAL (12-CM EACH)	
E	23A	1	**234-2515**		SEAL (16-CM EACH)	

E-ORDER BY THE CENTIMETER
M-METRIC PART
Y-SEPARATE ILLUSTRATION

212-7587 **RADIATOR GP** *(contd.)* **i02362251**

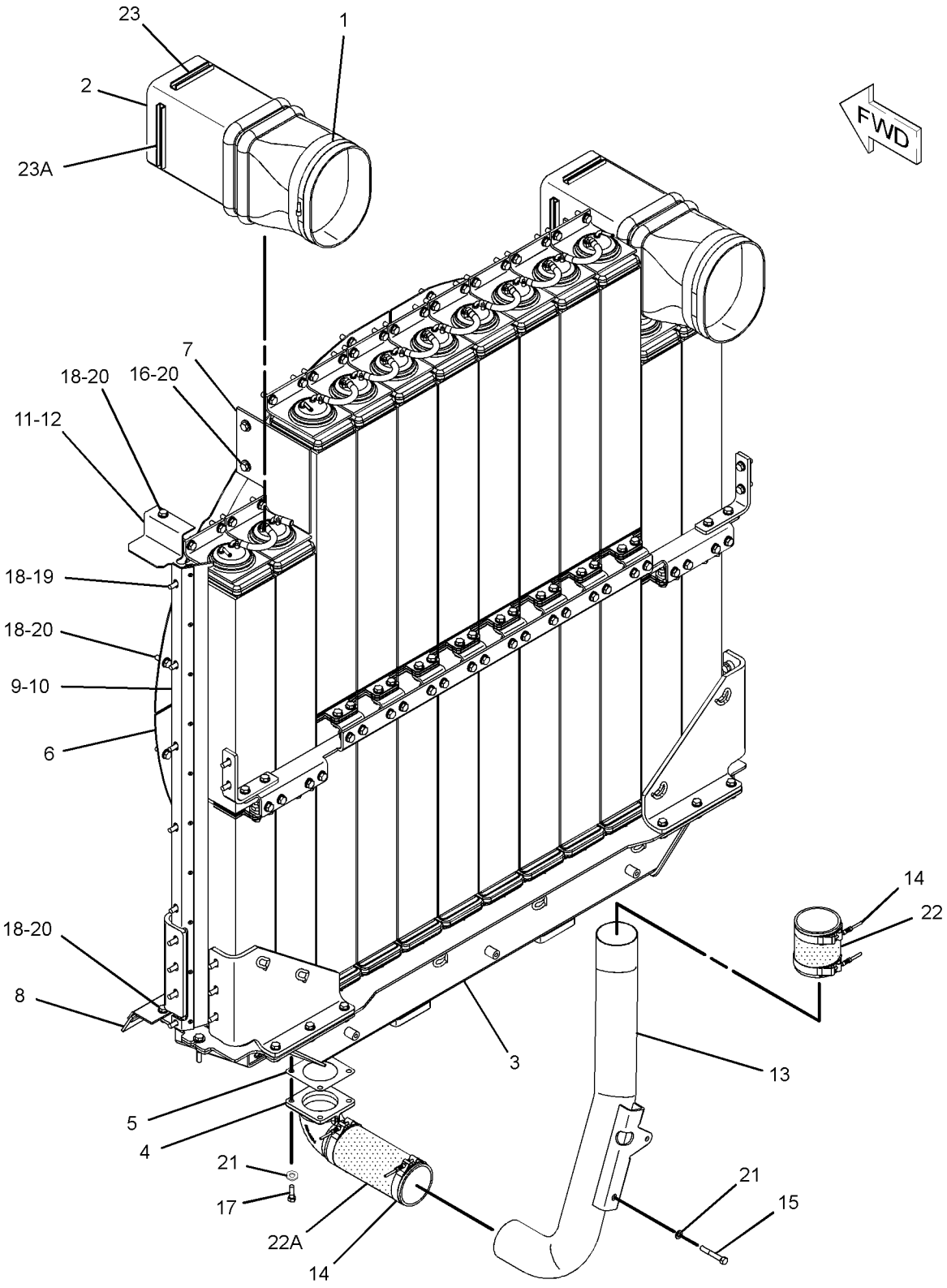

GRAPHIC #1 **<END>** g01193070

COOLING SYSTEM

213-6738 RADIATOR GP

S/N: RJG1-528

PART OF 212-7587 RADIATOR GP

SMCS-1353 **i02262743**

NOTE	REF NO	GRAPHIC REF	PART NUMBER	QTY	PART NAME 1 2 3 4 5 6 (PRODUCT LEVEL)	SEE PAGE
	1	1	**1P-4278**	20	CLAMP-HOSE	
	2	1	**6I-2431**	12	SEAL	
	3	1	**6I-2435**	12	SPACER (RUBBER)	
	4	1	**6I-2436**	12	RETAINER	
	5	1	**106-4572**	9	HOSE	
	6	1	**111-7421**	2	CAP	
	7	1	**213-6739**	1	TANK AS-RADIATOR	
		1	**7T-1099**	8	LINK	
M		1	**8T-3490**	18	NUT-WELD (M10X1.5-THD)	
		1	**9R-2613**	3	BOSS-WELD (M10X1.5X25-MM OAL)	
	8	1	**213-9906**	8	CORE AS-RADIATOR	
	9	1	**213-9907**	4	CORE AS-RADIATOR	
	10	1	**221-6826**	12	BRACKET AS	
					(EACH INCLUDES)	
M		1	**8T-3490**	4	NUT-WELD (M10X1.5-THD)	
	11	1	**221-7070**	2	BRACKET	
	12	1	**224-6687**	1	BRACKET AS	
M		1	**8T-3490**	4	NUT-WELD (M10X1.5-THD)	
	13	1	**244-5578**	2	GUSSET AS	
					(EACH INCLUDES)	
		1	**7T-1099**	2	LINK	
	14	1	**244-5579**	2	GUSSET AS	
					(EACH INCLUDES)	
		1	**7T-1099**	2	LINK	
	15	1	**198-4777**	12	WASHER-HARD (11X25X10-MM THK)	
	16	1	**7X-7729**	2	WASHER (11X25X3-MM THK)	
	17	1	**8T-4121**	91	WASHER-HARD (11X21X2.5-MM THK)	
	18	1	**183-7121**	12	BOLT (M10X1.5X35-MM)	
M	19	1	**8T-4195**	55	BOLT (M10X1.5X30-MM)	
M	20	1	**8T-4196**	36	BOLT (M10X1.5X35-MM)	
M	21	1	**8T-6466**	2	BOLT (M10X1.5X60-MM)	

M-METRIC PART

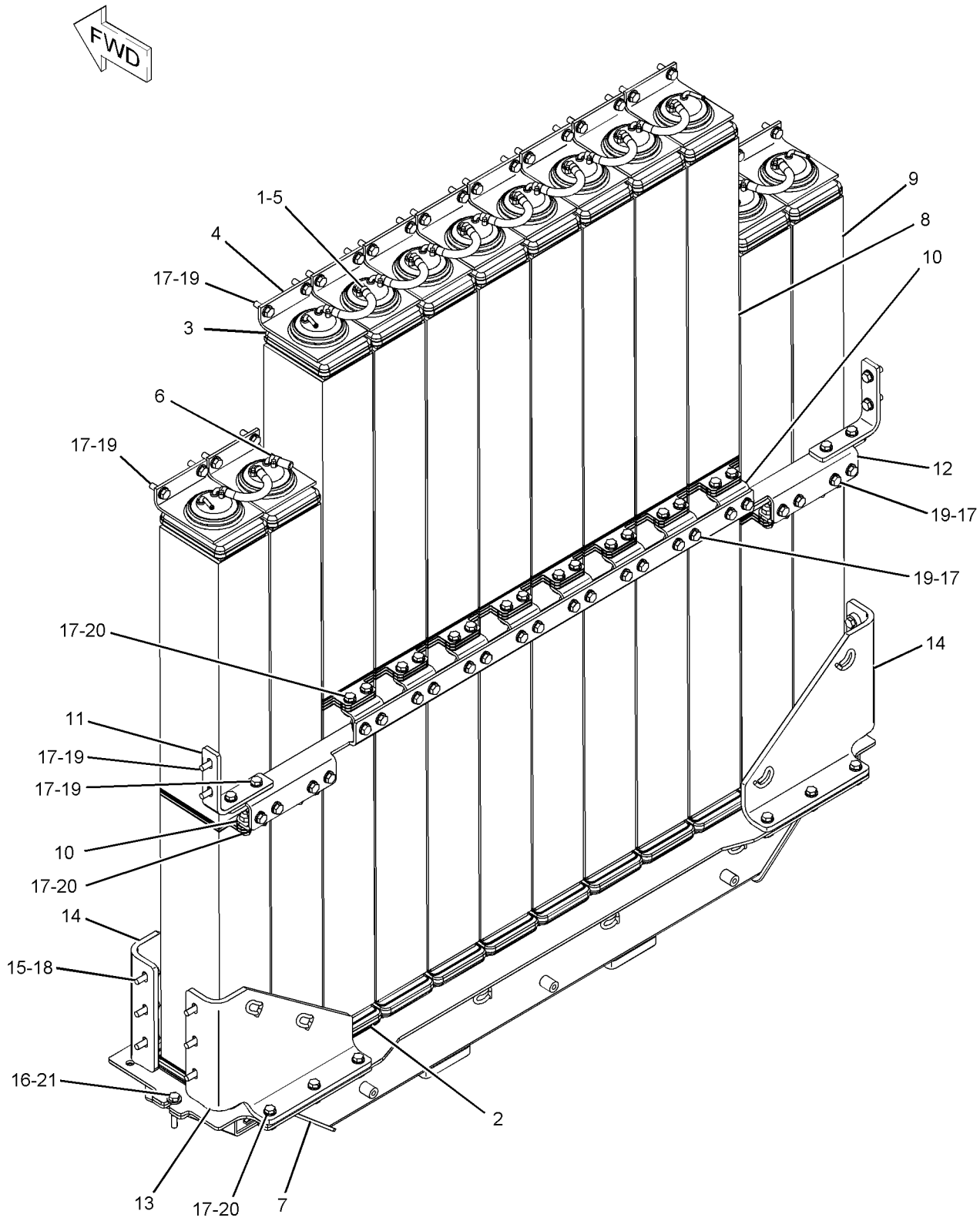

GRAPHIC #1 **<END>** g01052472

COOLING SYSTEM

247-1828 RADIATOR GP

S/N: RJG1-UP
PART OF 238-4498 STOCKPILE AR
AN ATTACHMENT

SMCS-1353 **i02462684**

NOTE	PART NUMBER	QTY	PART NAME 1 2 3 4 5 6 (PRODUCT LEVEL)	SEE PAGE
	243-5780	8	CORE AS-RADIATOR	
	247-1781	4	CORE AS-RADIATOR	

<END>

267-2860 RADIATOR GP

S/N: RJG529-UP

PART OF 267-2900 INSTALLATION AR-ENGINE

SMCS-1353 **i02440734**

NOTE	REF NO	GRAPHIC REF	PART NUMBER	QTY	PART NAME 1 2 3 4 5 6 (PRODUCT LEVEL)	SEE PAGE
	1	1	**219-4284**	1	ELBOW	
	2	1	**219-4474**	1	GASKET	
	3	1	**221-4038**	4	PLATE	
	4	1	**223-2643**	1	BAFFLE AS	
		1	**6B-4594**	13	RIVET	
	5	1	**228-4078**	1	TUBE AS	
Y	6	1	*267-2861*	1	RADIATOR GP	117
	7	1	**267-2867**	1	BAFFLE AS	
		1	**6B-4594**	11	RIVET	
	8	1	**267-2868**	1	BAFFLE AS	
		1	**6B-4594**	11	RIVET	
	9	1	**267-2873**	1	PLATE	
	10	1	**267-2874**	1	PLATE	
	11	1	**209-4588**	4	CLAMP	
	12	1	**4L-6459**	1	BOLT (3/8-16X2.5-IN)	
	13	1	**8T-2502**	4	BOLT (3/8-16X1.125-IN)	
	14	1	**8T-4121**	36	WASHER-HARD (11X21X2.5-MM THK)	
M	15	1	**8T-4136**	12	BOLT (M10X1.5X25-MM)	
M	16	1	**8T-4195**	24	BOLT (M10X1.5X30-MM)	
	17	1	**8T-4896**	5	WASHER-HARD (10.2X18.5X2.5-MM THK)	
E	18	1	**5P-0764**		HOSE (13-CM)	
E	18A	1	**5P-0764**		HOSE (20-CM)	

E-ORDER BY THE CENTIMETER
M-METRIC PART
Y-SEPARATE ILLUSTRATION

267-2860 **RADIATOR GP** *(contd.)* **i02440734**

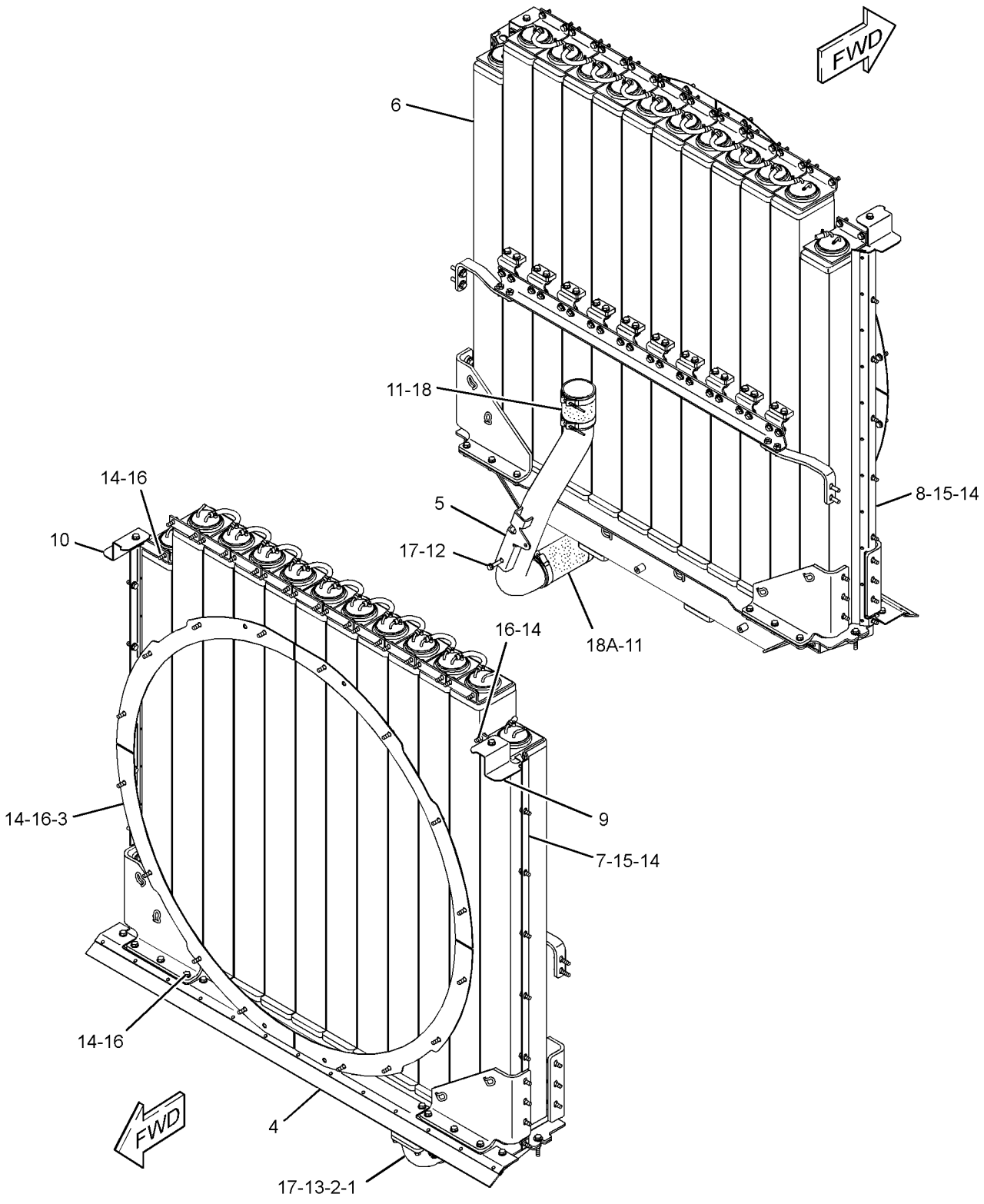

GRAPHIC #1 **<END>** g01222849

COOLING SYSTEM

267-2861 RADIATOR GP

S/N: RJG1-UP

PART OF 267-2860 RADIATOR GP

SMCS-1353 **i02440739**

NOTE	REF NO	GRAPHIC REF	PART NUMBER	QTY	PART NAME 1 2 3 4 5 6 (PRODUCT LEVEL)	SEE PAGE
	1	1	**1P-4278**	20	CLAMP-HOSE	
	2	1	**6I-2431**	12	SEAL	
	3	1	**6I-2435**	12	SPACER (RUBBER)	
	4	1	**6I-2436**	12	RETAINER	
	5	1	**106-4572**	9	HOSE	
	6	1	**111-7421**	2	CAP	
	7	1	**204-7184**	2	CORE AS-RADIATOR	
	8	1	**213-6739**	1	TANK AS-RADIATOR	
		1	**7T-1099**	8	LINK	
M		1	**8T-3490**	18	NUT-WELD (M10X1.5-THD)	
		1	**9R-2613**	3	BOSS-WELD (M10X1.5X25-MM OAL)	
	9	1	**213-9906**	10	CORE AS-RADIATOR	
	10	1	**244-5578**	2	GUSSET AS	
					(EACH INCLUDES)	
		1	**7T-1099**	2	LINK	
	11	1	**244-5579**	2	GUSSET AS	
					(EACH INCLUDES)	
		1	**7T-1099**	2	LINK	
	12	1	**267-2862**	1	PLATE AS	
M		1	**8T-3490**	4	NUT-WELD (M10X1.5-THD)	
	13	1	**267-2863**	1	PLATE	
	14	1	**267-2864**	1	PLATE	
	15	1	**267-2865**	10	PLATE AS	
					(EACH INCLUDES)	
M		1	**8T-3490**	4	NUT-WELD (M10X1.5-THD)	
	16	1	**183-7121**	12	BOLT (M10X1.5X35-MM)	
	17	1	**198-4777**	12	WASHER-HARD (11X25X10-MM THK)	
	18	1	**7X-7729**	30	WASHER (11X25X3-MM THK)	
	19	1	**8T-4121**	56	WASHER-HARD (11X21X2.5-MM THK)	
M	20	1	**8T-4136**	20	BOLT (M10X1.5X25-MM)	
M	21	1	**8T-4182**	4	BOLT (M10X1.5X45-MM)	
M	22	1	**8T-4195**	28	BOLT (M10X1.5X30-MM)	
M	23	1	**8T-4196**	32	BOLT (M10X1.5X35-MM)	
M	24	1	**8T-6466**	2	BOLT (M10X1.5X60-MM)	

M-METRIC PART

267-2861 **RADIATOR GP** *(contd.)* **i02440739**

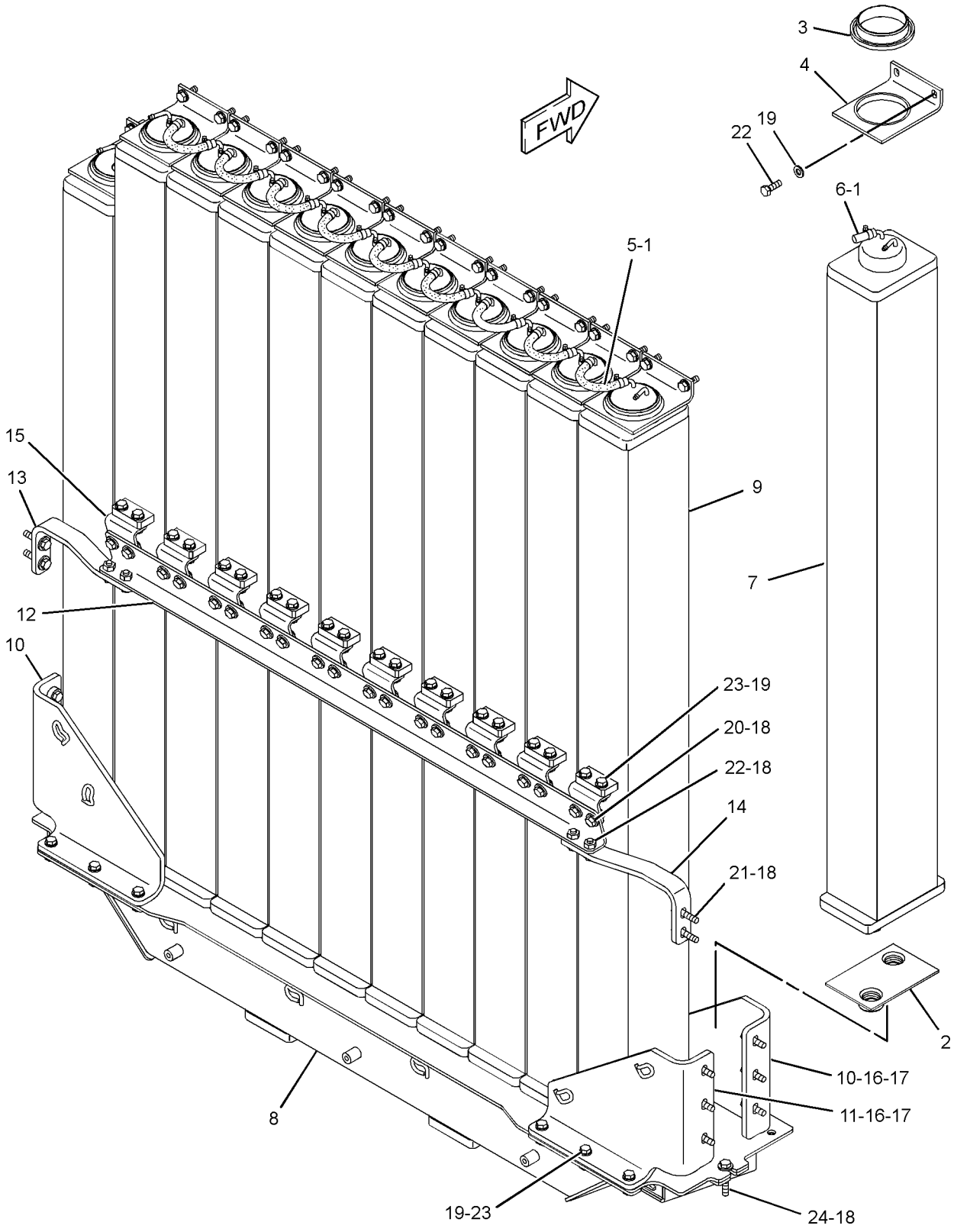

GRAPHIC #1 **<END>** g01221466

COOLING SYSTEM

272-5508 RADIATOR GP

S/N: RJG1-UP
TRASH RESISTANT
AN ATTACHMENT

SMCS-1353 **i02363979**

NOTE	PART NUMBER	QTY	PART NAME 1 2 3 4 5 6 (PRODUCT LEVEL)	SEE PAGE
	188-3989	4	CORE AS-RADIATOR	
	256-2090	8	CORE AS-RADIATOR	

<END>

COOLING SYSTEM

212-7681 TANK GP-COOLANT—RADIATOR

S/N: RJG1-528

PART OF 212-2745 INSTALLATION AR-ENGINE

SMCS-1377 **i02362275**

NOTE	REF NO	GRAPHIC REF	PART NUMBER	QTY	PART NAME 1 2 3 4 5 6 (PRODUCT LEVEL)	SEE PAGE
	1	1	**2V-4868**	1	FITTING	
	2	1	**3E-4041**	1	ELBOW	
	3	1	**5P-5528**	1	ADAPTER-O-RING	
	4	1	**6V-8245**	3	ELBOW	
	5	1	**7X-7958**	2	CLAMP-HOSE	
	6	1	**8B-6561**	1	SPACER (5.56X22.22X55.58-MM THK)	
	7	1	**9Y-9236**	1	GAUGE-SIGHT (WATER TANK)	
	8	1	**192-5425**	2	TEE	
Y	9	1	*213-6831*	1	TANK GP-COOLANT	122
I	10	1	**222-5455**	1	HOSE AS	
	11	1	*246-5772*	1	DOOR GP-ACCESS (RADIATOR CAP)	
	11A	1	**203-6066**	1	LATCH AS	
	11B	1	**246-5771**	1	DOOR AS	
		1	**1V-8284**	1	HINGE	
	12	1	**1P-4278**	14	CLAMP-HOSE	
	13	1	**2T-2396**	1	ELBOW	
	14	1	**3J-7354**	4	SEAL-O-RING	
	15	1	**4D-9517**	3	CLIP	
	16	1	**5P-8167**	2	BOLT (3/8-16X0.625-IN)	
	17	1	**6D-4244**	1	CLIP	
	18	1	**6V-5063**	1	SEAL-O-RING	
	19	1	**6V-8398**	2	SEAL-O-RING	
	20	1	**7D-7233**	1	CLIP	
	21	1	**7M-8485**	1	SEAL-O-RING	
	22	1	**8T-4121**	1	WASHER-HARD (11X21X2.5-MM THK)	
M	23	1	**8T-4137**	1	BOLT (M10X1.5X20-MM)	
M	24	1	**8T-4196**	6	BOLT (M10X1.5X35-MM)	
	25	1	**8T-4896**	2	WASHER-HARD (10.2X18.5X2.5-MM THK)	
	26	1	**8T-7934**	6	WASHER-HARD (11X21X5-MM THK)	
	27	1	**9F-2773**	1	BOLT (3/8-16X8.5-IN)	
	28	1	**9X-6458**	2	WASHER-HARD (10.2X22.5X3-MM THK)	
E	29	1	**5P-1251**		HOSE (130-CM)	
E	30	1	**5P-1465**		HOSE (103-CM)	
E	30A	1	**5P-1465**		HOSE (13-CM EACH)	
E	30B	1	**5P-1465**		HOSE (24-CM EACH)	
E	30C	1	**5P-1465**		HOSE (52-CM EACH)	
E	30D	1	**5P-1465**		HOSE (196-CM)	

E-ORDER BY THE CENTIMETER
I-REFER TO HYDRAULIC INFORMATION SYSTEM
M-METRIC PART
Y-SEPARATE ILLUSTRATION

212-7681 **TANK GP-COOLANT** *(contd.)* **i02362275**

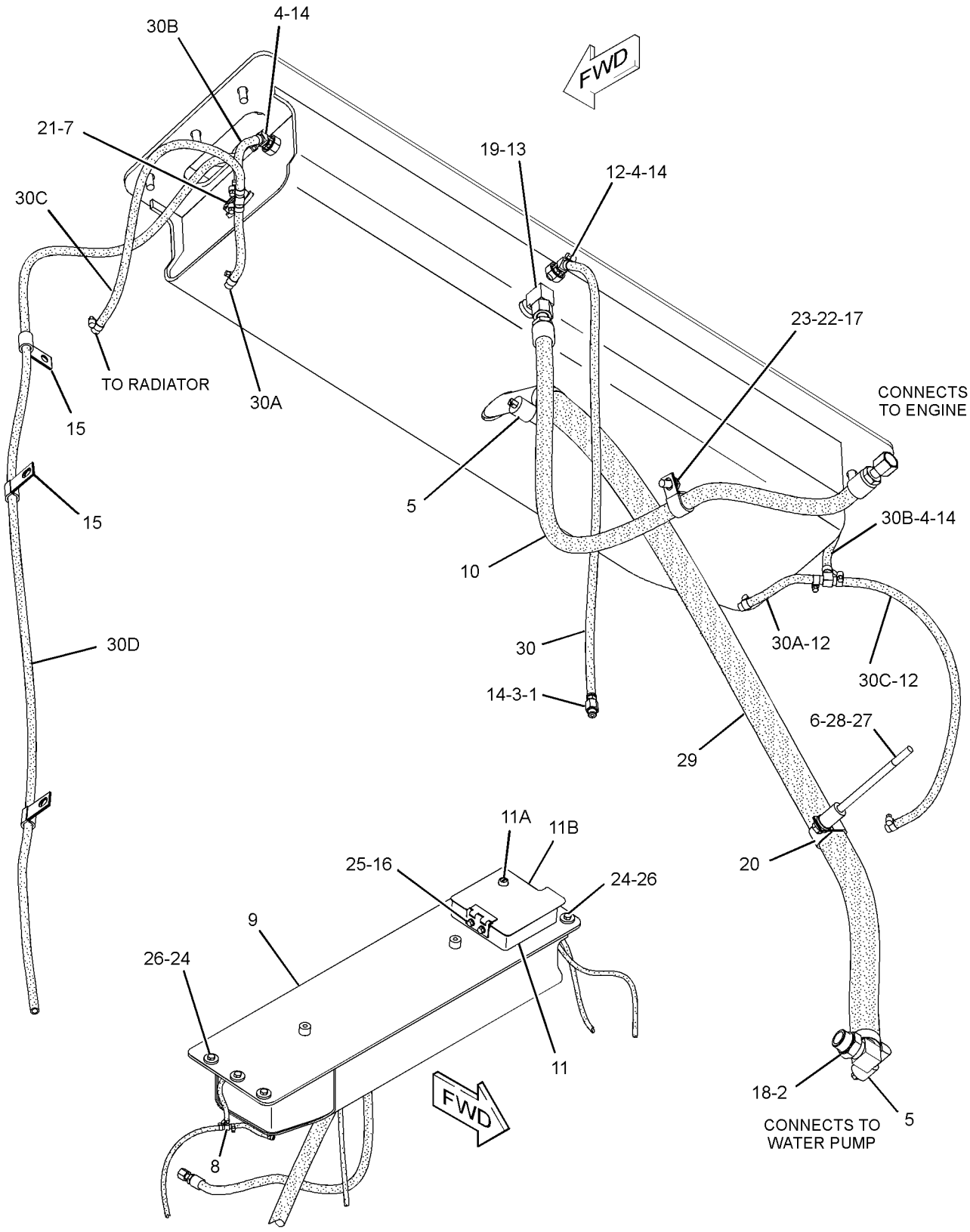

GRAPHIC #1 **<END>** g01184830

COOLING SYSTEM

213-6831 TANK GP-COOLANT–RADIATOR

S/N: RJG1-528

PART OF 212-7681 TANK GP-COOLANT

SMCS-1377 **i02462784**

NOTE	REF NO	GRAPHIC REF	PART NUMBER	QTY	PART NAME 1 2 3 4 5 6 (PRODUCT LEVEL)	SEE PAGE
	1	1	**031-1119**	1	CAP AS-RADIATOR	
	2	1	**219-2630**	1	TANK AS-WATER	
	2A	1	**1F-0750**	2	NUT-WELD (3/8-16-THD)	
	2B	1	**5I-3272**	2	BOSS	
		1	**8N-8846**	1	NECK-FILLER	

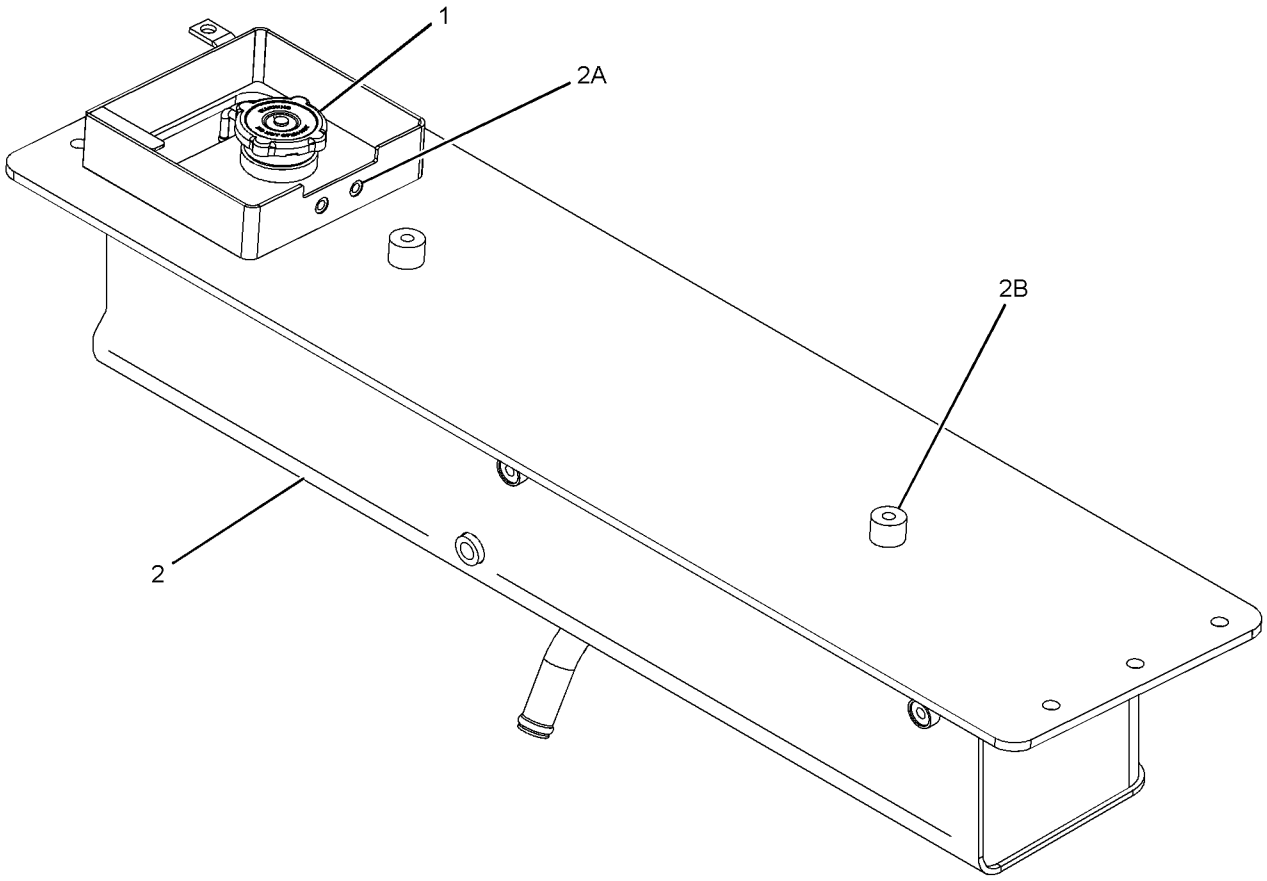

GRAPHIC #1 **<END>** g01136896

COOLING SYSTEM

267-2875 TANK GP-COOLANT

S/N: RJG529-UP

PART OF 267-2900 INSTALLATION AR-ENGINE

SMCS-1377 **i02440742**

NOTE	REF NO	GRAPHIC REF	PART NUMBER	QTY	PART NAME 1 2 3 4 5 6 (PRODUCT LEVEL)	SEE PAGE
	1	1	**1W-2860**	1	BRACKET	
	2	1	**2V-4868**	1	FITTING	
	3	1	**3E-4041**	1	ELBOW	
	4	1	**5P-5528**	1	ADAPTER-O-RING	
	5	1	**6V-8245**	3	ELBOW	
	6	1	**7X-7958**	4	CLAMP-HOSE	
	7	1	**9M-4136**	1	SPACER (0.438X0.75X0.5-IN THK)	
	8	1	**9Y-9236**	1	GAUGE-SIGHT (WATER TANK)	
	9	1	**192-5425**	2	TEE	
	10	1	*246-5772*	1	DOOR GP-ACCESS	
		1	**203-6066**	1	LATCH AS	
		1	**246-5771**	1	DOOR AS	
		1	**1V-8284**	1	HINGE	
	11	1	**267-2876**	1	BRACKET AS	
M		1	**8T-3490**	1	NUT-WELD (M10X1.5-THD)	
I	12	1	**267-2888**	1	HOSE AS	
	13	1	**267-2889**	1	TUBE	
	14	1	**267-2898**	1	BRACKET AS	
M		1	**8T-3490**	1	NUT-WELD (M10X1.5-THD)	
	15	1	**267-2899**	2	BRACKET AS	
					(EACH INCLUDES)	
M		1	**8T-3597**	1	NUT-WELD (M12X1.75-THD)	
Y	16	1	*267-2902*	1	TANK GP-COOLANT	126
	17	1	*148-8340*	1	CONNECTOR AS	
		1	**6V-8639**	1	CONNECTOR	
		1	**3K-0360**	1	SEAL-O-RING	
		1	**6V-8398**	1	SEAL-O-RING	
	18	1	**1P-4278**	14	CLAMP-HOSE	
	19	1	**1S-0994**	1	CLIP	
	20	1	**1S-1015**	1	CLIP	
	21	1	**3J-7354**	4	SEAL-O-RING	
	22	1	**4D-9517**	4	CLIP	
	23	1	**4H-3539**	1	GROMMET	
	24	1	**5P-9299**	1	CLIP	
	25	1	**6K-5535**	3	CLIP (SLOT)	
	26	1	**6K-5536**	3	CLIP (TAB)	
	27	1	**6V-5063**	1	SEAL-O-RING	
	28	1	**6V-8398**	1	SEAL-O-RING	
	29	1	**7M-8485**	1	SEAL-O-RING	
	30	1	**8T-4121**	10	WASHER-HARD (11X21X2.5-MM THK)	
M	31	1	**8T-4133**	1	NUT (M10X1.5 THD)	
M	32	1	**8T-4136**	7	BOLT (M10X1.5X25-MM)	
M	33	1	**8T-4191**	2	BOLT (M10X1.5X16-MM)	
M	34	1	**8T-4195**	2	BOLT (M10X1.5X30-MM)	
M	35	1	**8T-4196**	6	BOLT (M10X1.5X35-MM)	
	36	1	**8T-4896**	2	WASHER-HARD (10.2X18.5X2.5-MM THK)	
	37	1	**8T-7934**	6	WASHER-HARD (11X21X5-MM THK)	
E	38	1	**5P-1251**		HOSE (52-CM)	
E	38A	1	**5P-1251**		HOSE (41.6-CM)	
E	39	1	**5P-1465**		HOSE (128.8-CM)	
E	39A	1	**5P-1465**		HOSE (184-CM)	
E	39B	1	**5P-1465**		HOSE (24-CM EACH)	
E	39C	1	**5P-1465**		HOSE (8-CM EACH)	
E	39D	1	**5P-1465**		HOSE (25.5-CM)	
E	39E	1	**5P-1465**		HOSE (34.5-CM)	

267-2875 **TANK GP-COOLANT** *(contd.)* **i02440742**

E-ORDER BY THE CENTIMETER
I-REFER TO HYDRAULIC INFORMATION SYSTEM
M-METRIC PART
Y-SEPARATE ILLUSTRATION

267-2875 **TANK GP-COOLANT** *(contd.)* **i02440742**

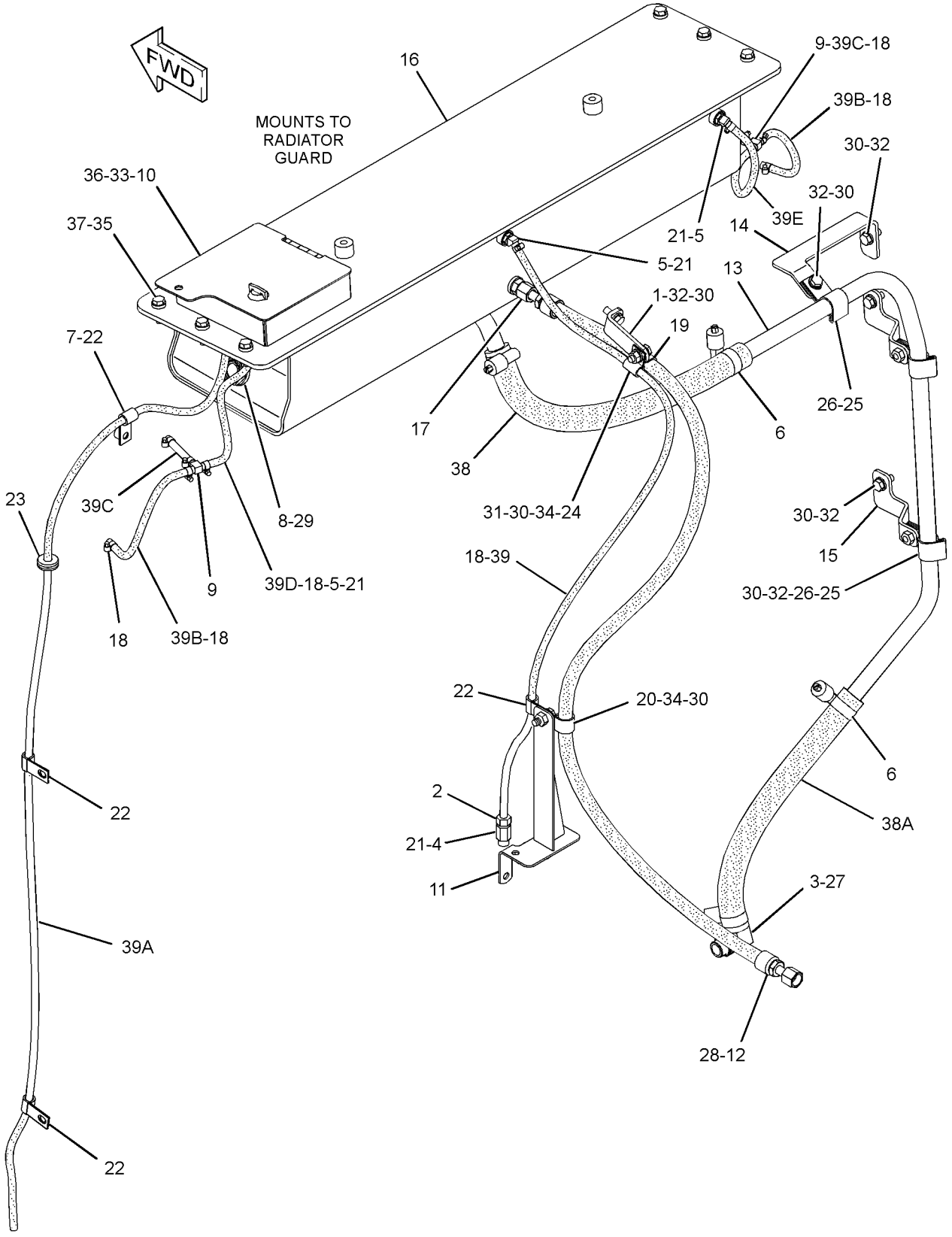

GRAPHIC #1 **<END>** g01222843

COOLING SYSTEM

267-2902 TANK GP-COOLANT

S/N: RJG529-UP

PART OF 267-2875 TANK GP-COOLANT

SMCS-1377 **i02440836**

NOTE	REF NO	GRAPHIC REF	PART NUMBER	QTY	PART NAME 1 2 3 4 5 6 (PRODUCT LEVEL)	SEE PAGE
	1	1	**031-1119**	1	CAP AS-RADIATOR	
	2	1	**267-2904**	1	TANK AS-COOLANT	
		1	**5I-3272**	2	BOSS	
		1	**8N-8846**	1	NECK-FILLER	

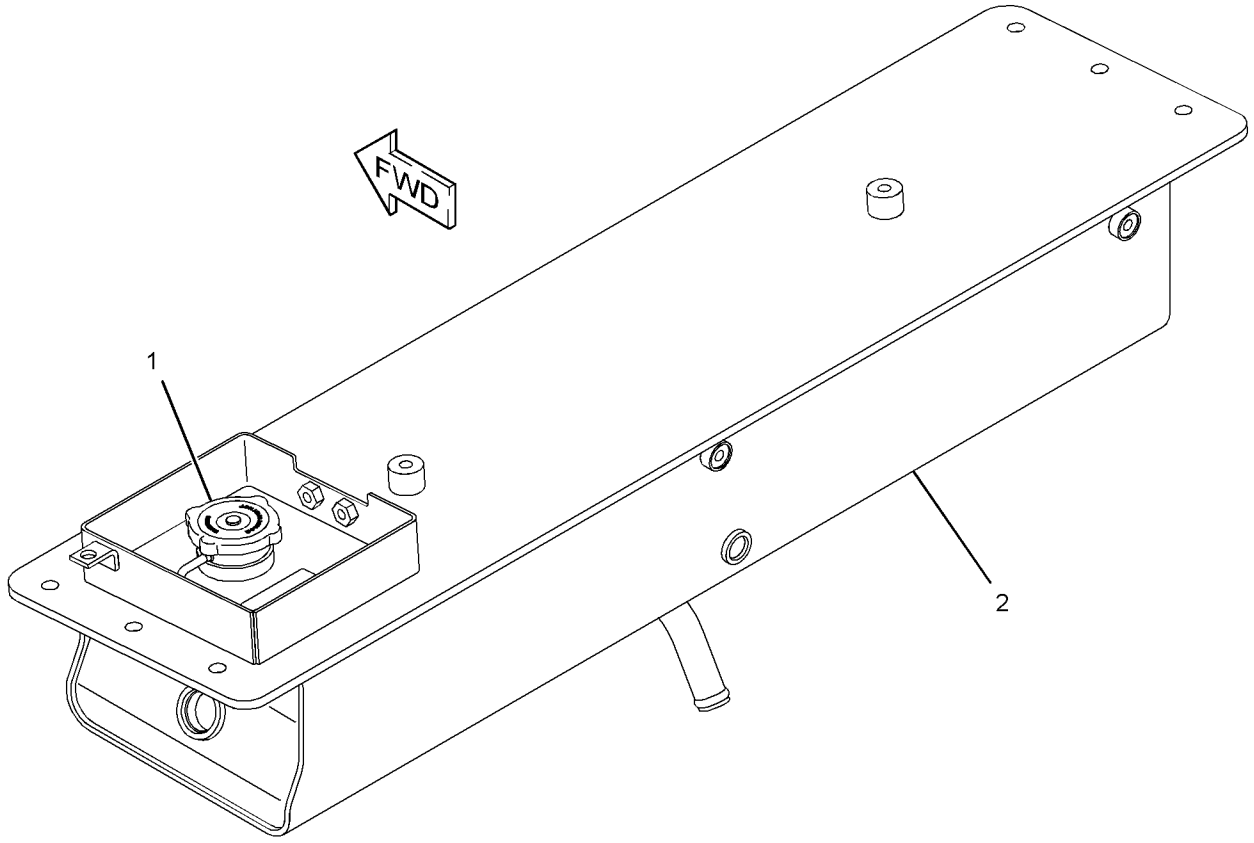

GRAPHIC #1 **<END>** g01221558

AIR INLET AND EXHAUST SYSTEM

212-7532 AFTERCOOLER GP-AIR

S/N: RJG1-528

PART OF 212-2745 INSTALLATION AR-ENGINE

SMCS-1063 **i02391912**

NOTE	REF NO	GRAPHIC REF	PART NUMBER	QTY	PART NAME 1 2 3 4 5 6 (PRODUCT LEVEL)	SEE PAGE
	1	1	**265-6639**	4	MOUNTING AS	
	2	1	**7T-8331**	8	MOUNTING	
	3	1	**8C-5238**	1	SEAL-V-RING	
	4	1	**166-7432**	2	AFTERCOOLER AS	
	5	1	**250-5798**	1	ENCLOSURE AS	
		1	**1F-0750**	16	NUT-WELD (3/8-16-THD)	
		1	**1F-2417**	1	BOSS	
		1	**8F-9836**	3	BOSS-THREADED (3/8-16-THD)	
		1	**260-3125**	2	HINGE	
	6	1	**168-8502**	2	SEAL	
	7	1	**169-6443**	1	SEAL AS	
	8	1	**262-7757**	2	SEAL	
	11	1	**177-0038**	2	HANDHOLD	
M	12	1	**8T-6385**	2	BOLT (M16X2X180-MM)	
	13	1	**185-7979**	1	FAN	
	14	1	**213-8517**	1	ADAPTER-FAN	
	15	1	**214-1048**	8	SPACER (8.8X16X4-MM THK)	
	16	1	**214-2297**	1	BLOCK AS-BEARING	
	16A	1	**1K-6985**	1	RING-RETAINING	
	16B	1	**2D-6648**	1	RING-RETAINING	
	16C	1	**5P-9597**	1	SEAL-LIP TYPE	
	16D	1	**6H-3957**	2	BALL BEARING	
	16E	1	**211-5337**	1	HOUSING	
	16F	1	**214-2296**	1	SHAFT	
	17	1	**250-5902**	1	MANIFOLD AS (ATAAC)	
	18	1	**250-5903**	1	MANIFOLD AS (ATAAC)	
Y	19	1	*217-9277*	1	MOTOR GP-PISTON (AFTERCOOLER, AIR)	632
	20	1	**268-4121**	8	WASHER-HARD (16.2X70X6-MM THK)	
	21	1	**131-3718**	1	SEAL-O-RING	
	22	1	**267-8821**	4	WASHER (17X36X12-MM THK)	
	23	1	**199-4272**	8	WASHER-HARD (13.5X50X2.5-MM THK)	
	24	1	**1T-1402**	1	RETAINER-SHAFT	
	25	1	**2A-3223**	1	BOLT (1/2-20X1.875-IN)	
	26	1	**4L-6454**	8	BOLT (3/8-16X1-IN)	
	27	1	**4L-9337**	8	BOLT (3/8-16X1.5-IN)	
	28	1	**4M-0189**	1	SEAL-O-RING	
	29	1	**8T-8908**	8	BOLT (1/4-20X1-IN)	
	30	1	**5P-1075**	8	WASHER-HARD (10.2X22.5X3-MM THK)	
	31	1	**5P-1076**	1	WASHER-HARD (13.5X30X4-MM THK)	
	32	1	**250-9540**	2	SEAL	
	33	1	**5P-4116**	14	WASHER-HARD (8.8X20.5X2-MM THK)	
	34	1	**6V-5782**	14	BOLT (5/16-18X1.125-IN)	
	35	1	**6V-8188**	8	NUT (1/2-13-THD)	
	36	1	**7G-8839**	8	SPACER (13.5X57X6-MM THK)	
M	37	1	**8T-6383**	2	BOLT (M16X2X200-MM)	
	38	1	**7X-0440**	8	BOLT (5/16-18X1.56-IN)	
	39	1	**7X-0482**	8	BOLT (1/2-13X9.75-IN)	
	40	1	**8T-4205**	8	WASHER-HARD (7.2X14.5X2-MM THK)	
	41	1	**8T-4223**	8	WASHER-HARD (13.5X25.5X3-MM THK)	
	42	1	**8T-4896**	16	WASHER-HARD (10.2X18.5X2.5-MM THK)	
	43	1	**8T-6763**	1	PLUG-PIPE	
	44	1	**8T-9377**	4	BOLT (3/8-16X2.25-IN)	
	45	1	**9B-7237**	4	BOLT (3/8-16X1.25-IN)	
M	46	1	**8T-4132**	4	NUT (M16X2-THD)	

M-METRIC PART
Y-SEPARATE ILLUSTRATION

212-7532 **AFTERCOOLER GP-AIR** *(contd.)* **i02391912**

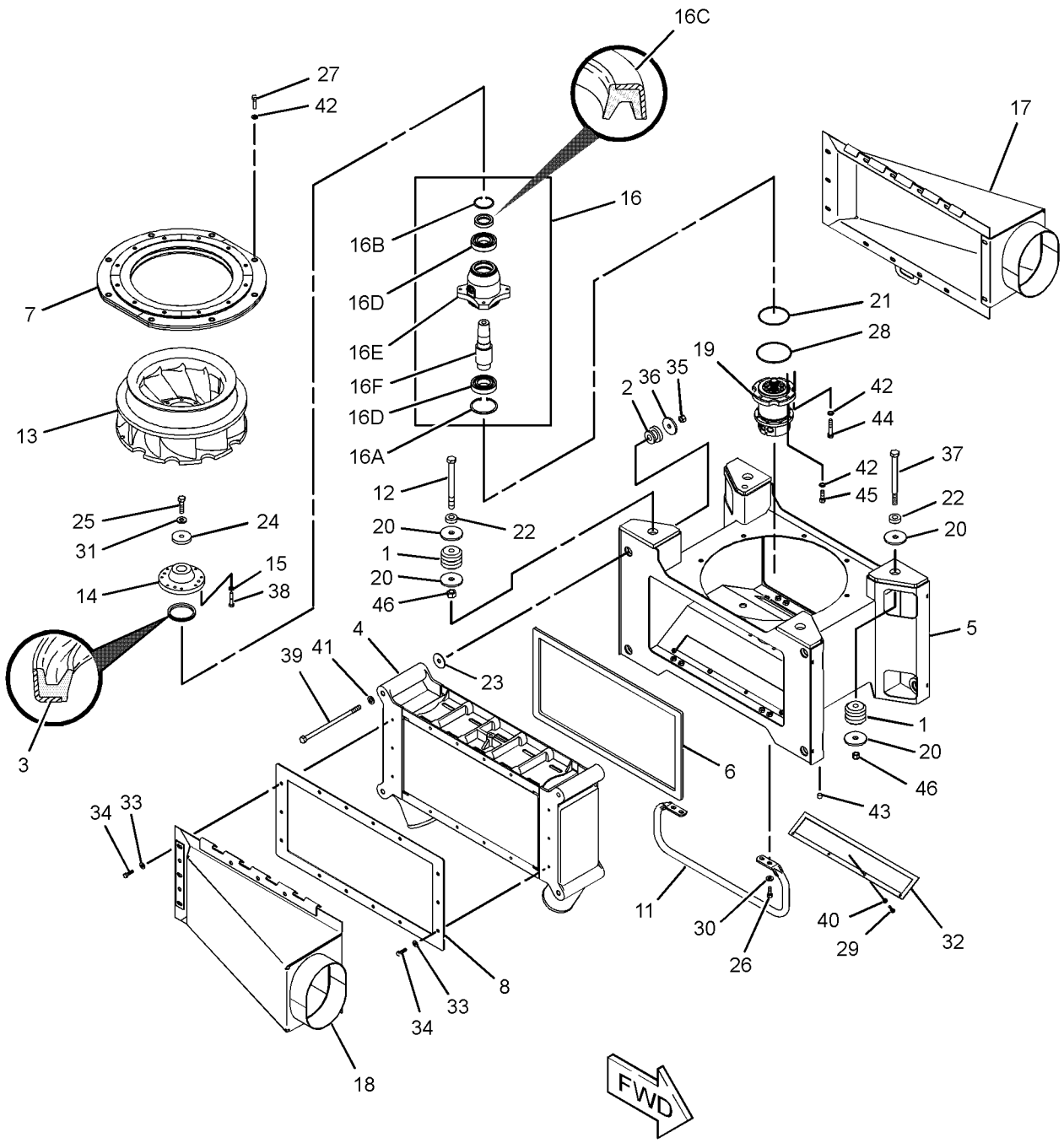

GRAPHIC #1 **<END>** g01198959

AIR INLET AND EXHAUST SYSTEM

267-2880 AFTERCOOLER GP-AIR

S/N: RJG529-UP

PART OF 267-2900 INSTALLATION AR-ENGINE

SMCS-1063 **i02440764**

NOTE	REF NO	GRAPHIC REF	PART NUMBER	QTY	PART NAME 1 2 3 4 5 6 (PRODUCT LEVEL)	SEE PAGE
	1	1	**7T-8331**	8	MOUNTING	
	2	1	**267-2881**	1	BRACKET AS	
M		1	**8T-3490**	1	NUT-WELD (M10X1.5-THD)	
	3	1	**267-2882**	1	BRACKET AS	
M		1	**8T-3597**	2	NUT-WELD (M12X1.75-THD)	
	4	1	**267-2883**	1	BRACKET AS	
M		1	**8T-3597**	2	NUT-WELD (M12X1.75-THD)	
	5	1	**267-2884**	1	BRACKET AS	
M		1	**8T-3490**	1	NUT-WELD (M10X1.5-THD)	
M		1	**8T-3597**	8	NUT-WELD (M12X1.75-THD)	
	6	1	**267-2885**	1	BRACKET	
	7	1	**267-2886**	1	BRACKET	
	8	1	**267-9441**	1	CORE AS-AFTERCOOLER	
	9	1	**267-9442**	1	CORE AS-AFTERCOOLER	
	10	1	**5P-1076**	16	WASHER-HARD (13.5X30X4-MM THK)	
	11	1	**7X-0590**	8	WASHER-HARD (13.5X44.5X6-MM THK)	
M	12	1	**8T-4184**	8	BOLT (M12X1.75X45-MM)	
M	13	1	**8T-4648**	4	BOLT (M12X1.75X70-MM)	
M	14	1	**8T-4910**	8	BOLT (M12X1.75X60-MM)	
M	15	1	**8T-4956**	4	BOLT (M12X1.75X35-MM)	

M-METRIC PART

267-2880 **AFTERCOOLER GP-AIR** *(contd.)* **i02440764**

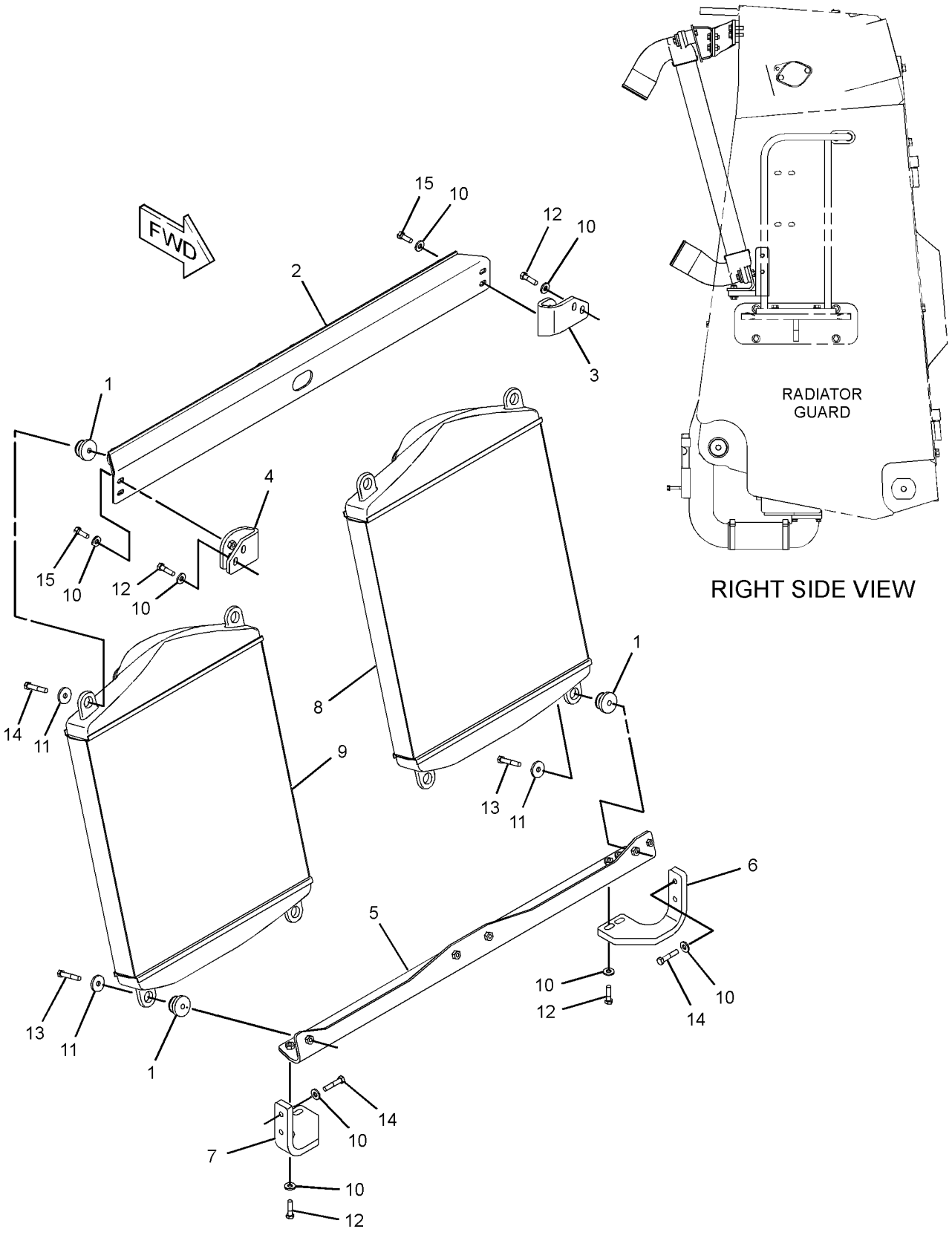

GRAPHIC #1 **<END>** g01222166

AIR INLET AND EXHAUST SYSTEM

212-7683 AIR CLEANER GP

S/N: RJG1-528

PART OF 212-2745 INSTALLATION AR-ENGINE

SMCS-1051, 1054 **i02263500**

NOTE	REF NO	GRAPHIC REF	PART NUMBER	QTY	PART NAME 1 2 3 4 5 6 (PRODUCT LEVEL)	SEE PAGE
	1	1	**1P-9390**	2	GASKET-OUTLET	
	2	1	**2P-2508**	1	COVER AS-PRECLEANER	
	3	1	**3E-7447**	1	CLAMP-HOSE	
	4	1	**175-4464**	1	ELBOW	
	5	1	**228-2767**	1	BODY AS	
	6	1	**231-8825**	2	CLAMP AS	
	7	1	**231-8842**	2	PLATE	
Y	8	1	**235-4177**	2	AIR CLEANER GP	132
	9	1	**235-5915**	2	HOSE	
	10	1	**219-0313**	4	CLAMP	
M	11	1	**6V-4248**	10	BOLT (M10X1.5X25-MM)	
	12	1	**6V-5839**	10	WASHER (11X21X2.5-MM THK)	
M	13	1	**6V-7744**	20	LOCKNUT (M10X1.5-THD)	
	14	1	**7X-7729**	8	WASHER (11X25X3-MM THK)	
	15	1	**8T-4121**	20	WASHER-HARD (11X21X2.5-MM THK)	
M	16	1	**8T-4195**	8	BOLT (M10X1.5X30-MM)	
M	17	1	**8T-7044**	20	STUD-TAPERLOCK (M10X1.5X40-MM)	

M-METRIC PART
Y-SEPARATE ILLUSTRATION

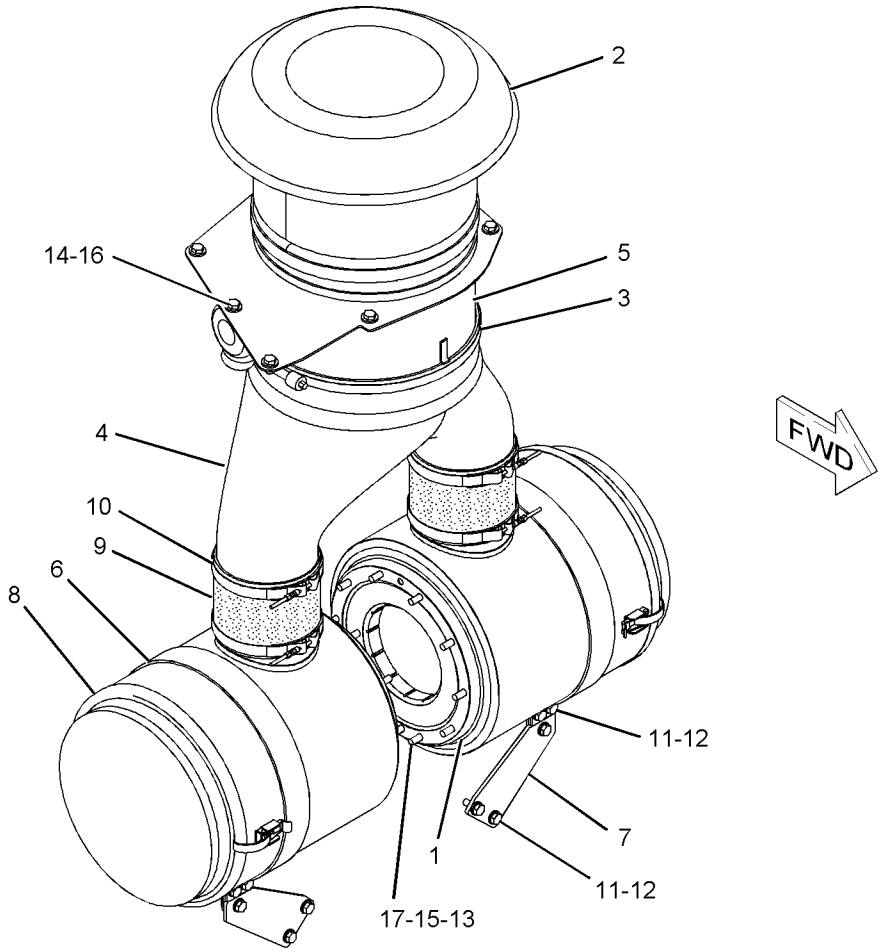

GRAPHIC #1 **<END>** g01052741

AIR INLET AND EXHAUST SYSTEM

235-4177 AIR CLEANER GP

S/N: RJG1-UP

PART OF 212-7683, 268-6368 AIR CLEANER GP

SMCS-1051, 1054 **i02049432**

NOTE	REF NO	GRAPHIC REF	PART NUMBER	QTY	PART NAME 1 2 3 4 5 6 (PRODUCT LEVEL)	SEE PAGE
	1	1	**6I-2505**	1	ELEMENT AS-AIR CLEANER	
	2	1	**6I-2506**	1	ELEMENT AS-AIR CLEANER	
	3	1	**8N-4617**	2	KIT-AIR CLEANER CLAMP	
					(EACH INCLUDES RIVET,CLIP AS)	
	4	1	**6I-4465**	1	COVER AS-AIR CLEANER	

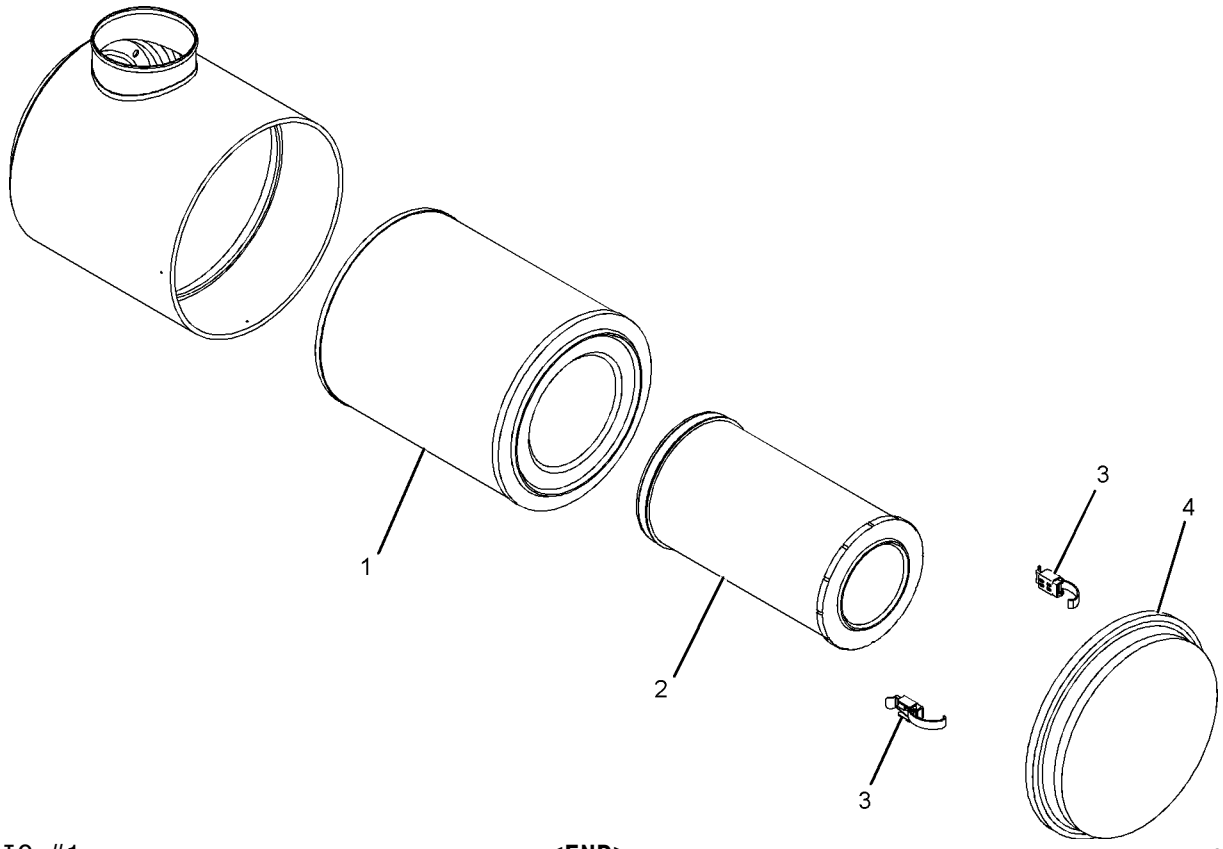

GRAPHIC #1 **<END>** g01052730

AIR INLET AND EXHAUST SYSTEM

268-6368 AIR CLEANER GP

S/N: RJG529-UP

PART OF 267-2900 INSTALLATION AR-ENGINE

SMCS-1051, 1054 **i02440790**

NOTE	REF NO	GRAPHIC REF	PART NUMBER	QTY	PART NAME 1 2 3 4 5 6 (PRODUCT LEVEL)	SEE PAGE
	1	1	**1P-9390**	2	GASKET-OUTLET	
	2	1	**5P-4869**	4	CLAMP-HOSE	
	3	1	**7S-8817**	2	PRECLEANER AS	
					(EACH INCLUDES)	
		1	**0S-1591**	1	BOLT (3/8-16X1.5-IN)	
		1	**6V-8801**	1	NUT (3/8-16-THD)	
	4	1	**123-6857**	1	BODY AS-PRECLEANER (LH)	
	5	1	**123-6858**	1	BODY AS-PRECLEANER (RH)	
	6	1	**231-8825**	2	CLAMP AS	
	7	1	**231-8842**	2	PLATE	
Y	8	1	**235-4177**	2	AIR CLEANER GP	132
	9	1	**268-6682**	2	ELBOW	
	10	1	**5M-3062**	8	BOLT (3/8-16X0.75-IN)	
M	11	1	**6V-4248**	10	BOLT (M10X1.5X25-MM)	
	12	1	**6V-5839**	10	WASHER (11X21X2.5-MM THK)	
M	13	1	**6V-7744**	20	LOCKNUT (M10X1.15-THD)	
	14	1	**8T-4121**	20	WASHER-HARD (11X21X2.5-MM THK)	
	15	1	**8T-4896**	8	WASHER-HARD (10.2X18.5X2.5-MM THK)	
M	16	1	**8T-7044**	20	STUD-TAPERLOCK (M10X1.5X40-MM)	

M-METRIC PART
Y-SEPARATE ILLUSTRATION

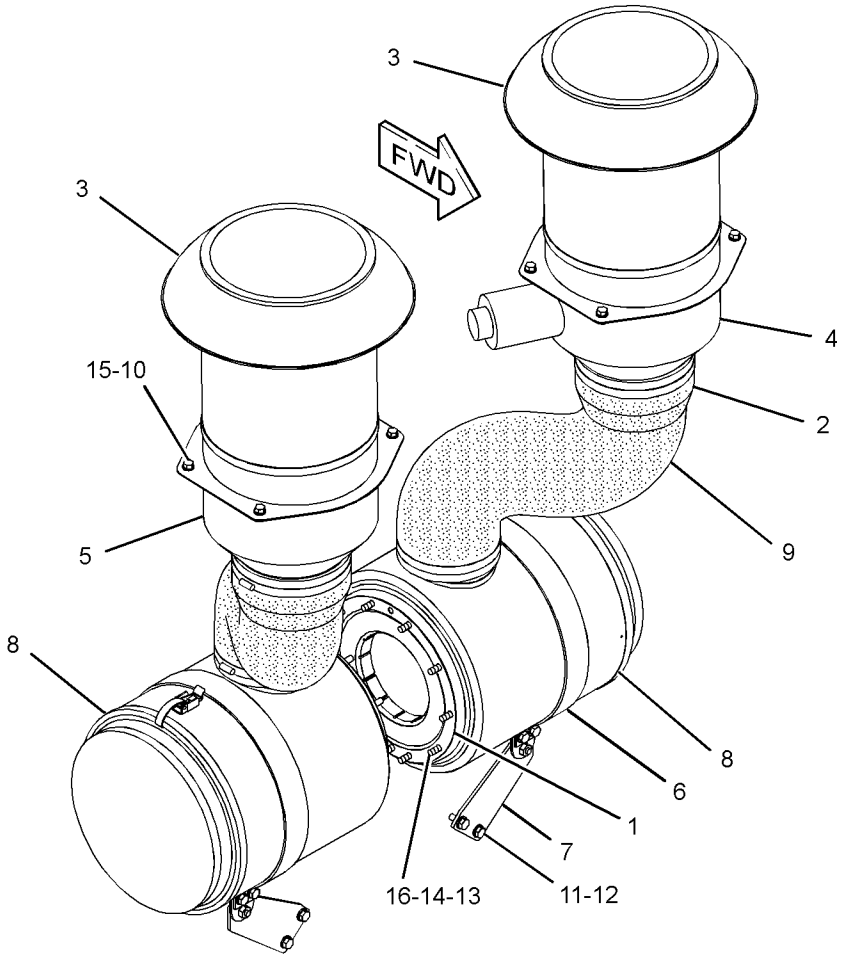

GRAPHIC #1 **<END>** g01221565

AIR INLET AND EXHAUST SYSTEM

212-7679 DUST EJECTOR GP–ATAAC, RH

S/N: RJG1-109

PART OF 212-2745 INSTALLATION AR-ENGINE

SMCS-1068 **i02147152**

NOTE	REF NO	GRAPHIC REF	PART NUMBER	QTY	PART NAME 1 2 3 4 5 6 (PRODUCT LEVEL)	SEE PAGE
	1	1	**5P-0597**	2	CLAMP-HOSE	
	2	1	**7S-4411**	1	CAP AS-RAIN	
E	3	1	**5P-1471**		HOSE (76-CM)	
	4	1	**219-9914**	1	EJECTOR AS	
		1	**158-3528**	1	CLAMP-BENT BOLT	
	5	1	**242-9536**	1	SHIELD AS-HEAT	
	6	1	**130-3374**	2	CLIP	
	7	1	**2N-2766**	1	LOCKNUT (3/8-16-THD)	
	8	1	**2P-7418**	1	CLAMP	
	9	1	**0S-1590**	1	BOLT (3/8-16X2-IN)	
	10	1	**5M-2894**	1	WASHER-HARD (10.2X18.5X2.5-MM THK)	
	11	1	**8T-4896**	2	WASHER-HARD (10.2X18.5X2.5-MM THK)	
	12	1	**9B-7237**	2	BOLT (3/8-16X1.25-IN)	

E-ORDER BY THE CENTIMETER

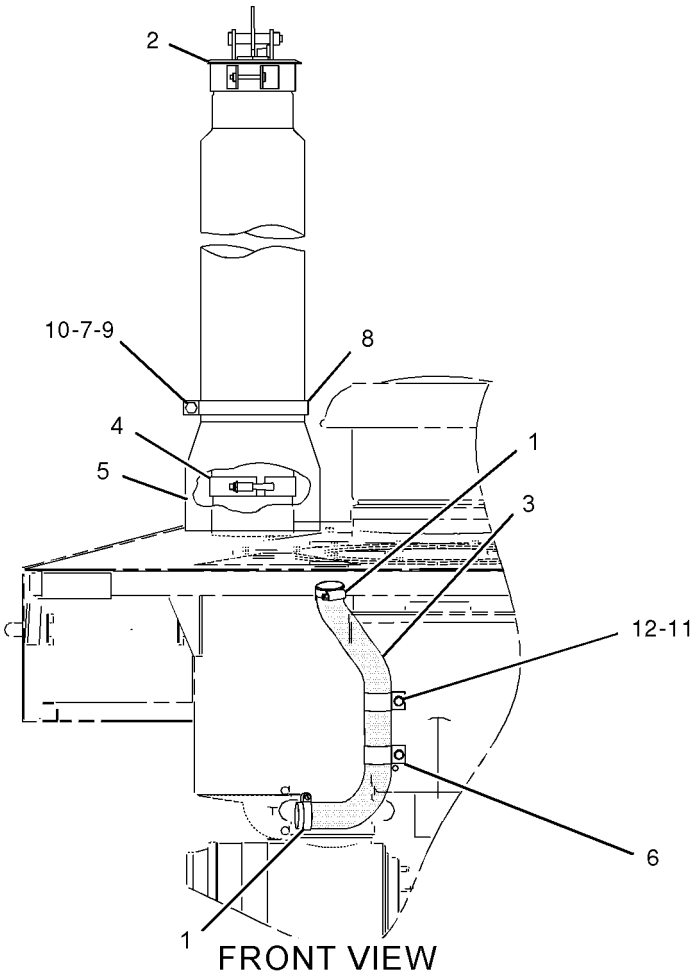

GRAPHIC #1

<END>

g01053795

AIR INLET AND EXHAUST SYSTEM

212-7679 DUST EJECTOR GP–ATAAC, RH

S/N: RJG110-528

PART OF 212-2745 INSTALLATION AR-ENGINE

SMCS-1068 **i02308804**

NOTE	REF NO	GRAPHIC REF	PART NUMBER	QTY	PART NAME 1 2 3 4 5 6 (PRODUCT LEVEL)	SEE PAGE
	1	1	**5P-0597**	2	CLAMP-HOSE	
	2	1	**7S-4411**	1	CAP AS-RAIN	
	3	1	**210-9123**		HOSE	
	4	1	**219-9914**	1	EJECTOR AS	
		1	**158-3528**	1	CLAMP-BENT BOLT	
	5	1	**242-9536**	1	SHIELD AS-HEAT	
	6	1	**130-3374**	2	CLIP	
	7	1	**2N-2766**	1	LOCKNUT (3/8-16-THD)	
	8	1	**2P-7418**	1	CLAMP	
	9	1	**0S-1590**	1	BOLT (3/8-16X2-IN)	
	10	1	**5M-2894**	1	WASHER-HARD (10.2X18.5X2.5-MM THK)	
	11	1	**8T-4121**	2	WASHER-HARD (11X21X2.5-MM THK)	
M	12	1	**8T-4195**	2	BOLT (M10X1.5X30-MM)	

M-METRIC PART

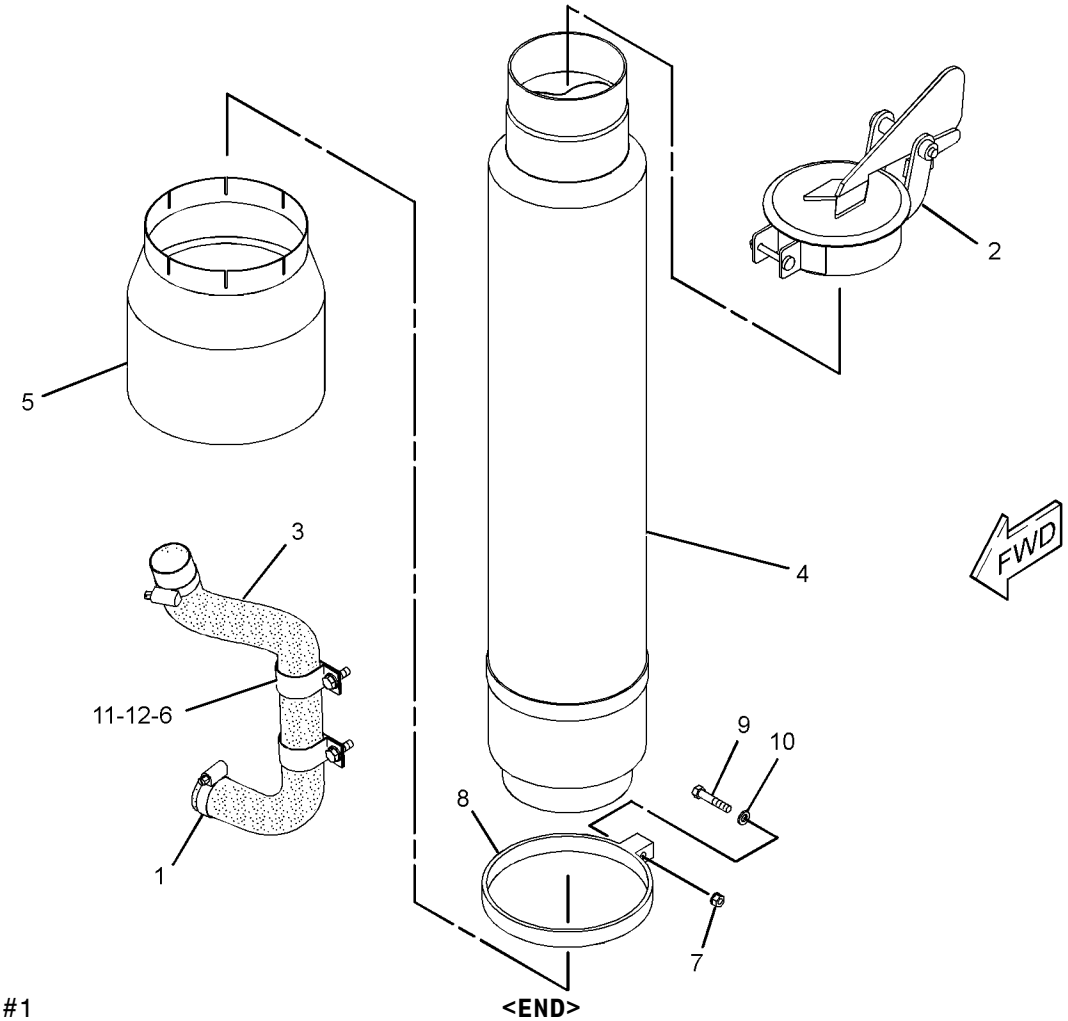

GRAPHIC #1 **<END>** g01227071

212-7684 DUST EJECTOR GP–ATAAC, LH

S/N: RJG1-528

PART OF 212-2745 INSTALLATION AR-ENGINE

SMCS-1068 **i02441123**

NOTE	REF NO	GRAPHIC REF	PART NUMBER	QTY	PART NAME 1 2 3 4 5 6 (PRODUCT LEVEL)	SEE PAGE
	1	1	**1W-8620**	1	VALVE AS-CHECK	
	2	1	**5P-0597**	8	CLAMP-HOSE	
	3	1	**7S-4411**	1	CAP AS-RAIN	
	4	1	**180-2449**	1	ELBOW	
	5	1	**180-5571**	1	BRACKET	
E	6	1	**5P-1471**		HOSE (62-CM EACH)	
E	6A	1	**5P-1471**		HOSE (30.5-CM)	
	8	1	**210-9126**	1	HOSE	
	9	1	**219-9914**	1	EJECTOR AS	
		1	**158-3528**	1	CLAMP-BENT BOLT	
	10	1	**242-9536**	1	SHIELD AS-HEAT	
	11	1	**2N-2766**	1	LOCKNUT (3/8-16-THD)	
	12	1	**2P-7418**	1	CLAMP	
M	13	1	**8T-4195**	3	BOLT (M10X1.5X30-MM)	
	14	1	**4P-7581**	1	CLIP	
	15	1	**4P-8134**	1	CLIP	
	16	1	**0S-1590**	1	BOLT (3/8-16X2-IN)	
M	17	1	**8T-4133**	1	NUT (M10X1.5 THD)	
	18	1	**7K-1181**	2	STRAP-CABLE	
	19	1	**5M-2894**	1	WASHER-HARD (10.2X18.5X2.5-MM THK)	
	20	1	**8T-4896**	3	WASHER-HARD (10.2X18.5X2.5-MM THK)	
	21	1	**9B-7237**	3	BOLT (3/8-16X1.25-IN)	
	22	1	**8T-4121**	4	WASHER-HARD (11X21X2.5-MM THK)	

E-ORDER BY THE CENTIMETER
M-METRIC PART

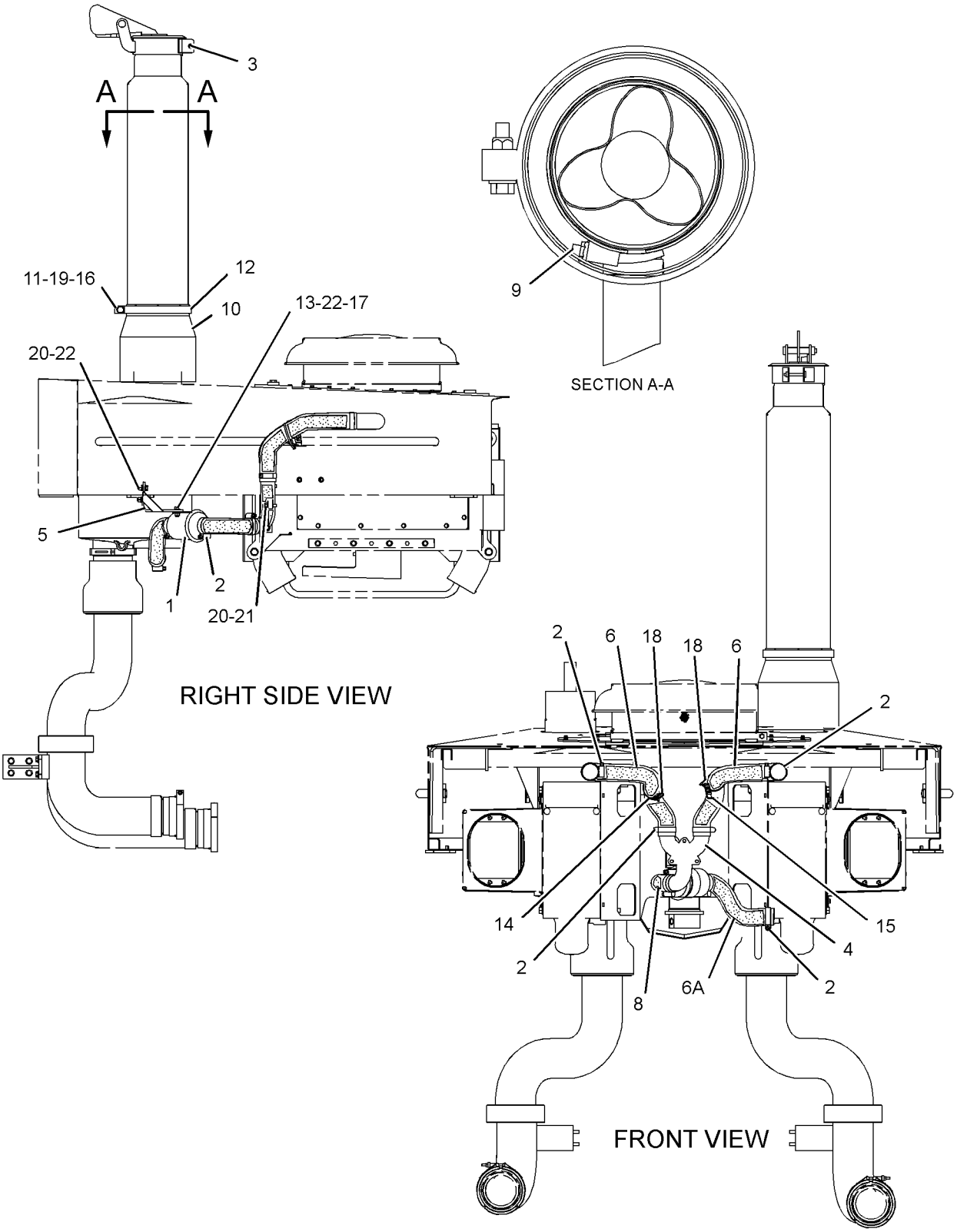

GRAPHIC #1 **<END>** g01222795

AIR INLET AND EXHAUST SYSTEM

269-0889 DUST EJECTOR GP

S/N: RJG529-UP

PART OF 267-2900 INSTALLATION AR-ENGINE

SMCS-1068 **i02440795**

NOTE	REF NO	GRAPHIC REF	PART NUMBER	QTY	PART NAME 1 2 3 4 5 6 (PRODUCT LEVEL)	SEE PAGE
	1	1	**5P-0597**	4	CLAMP-HOSE	
	2	1	**7S-5003**	2	CAP AS-RAIN	
	3	1	**269-0892**	2	EJECTOR AS	
	4	1	**5P-1076**	8	WASHER-HARD (13.5X30X4-MM THK)	
	5	1	**5P-4325**	4	CLIP	
	6	1	**8T-4121**	4	WASHER-HARD (11X21X2.5-MM THK)	
M	7	1	**8T-4137**	4	BOLT (M10X1.5X20-MM)	
M	8	1	**8T-4183**	8	BOLT (M12X1.75X40-MM)	
E	9	1	**5P-1471**		HOSE (98-CM EACH)	

E-ORDER BY THE CENTIMETER
M-METRIC PART

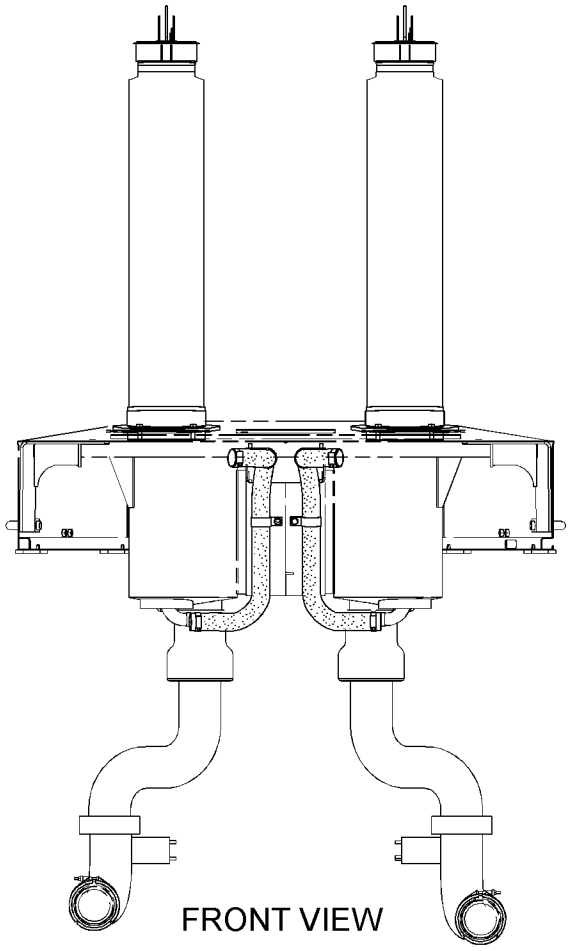

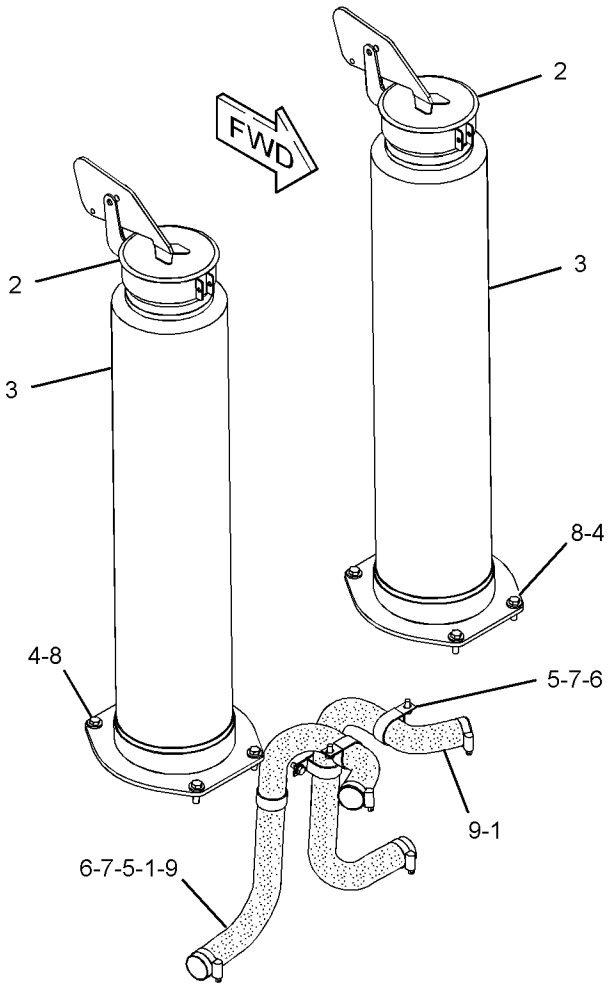

GRAPHIC #1 **<END>** g01221924

AIR INLET AND EXHAUST SYSTEM

255-9372 KIT-INSTALLATION

S/N: RJG1-UP

AN ATTACHMENT

SMCS-1051 **i02358532**

NOTE	PART NUMBER	QTY	PART NAME 1 2 3 4 5 6 (PRODUCT LEVEL)	SEE PAGE
Y	**167-8984**	1	BATTERY GP (24-VOLT)	228
Y	*243-5158*	1	MOUNTING GP-RADIO	836
	167-8712	1	ALARM	
	167-8713	1	BAFFLE AS	
M	**8T-4139**	4	BOLT (M12X1.75X30-MM)	
M	**8T-4196**	4	BOLT (M10X1.5X35-MM)	
M	**8T-4200**	3	BOLT (M8X1.25X16-MM)	
M	**8T-7852**	4	BOLT (M4X0.7X10-MM)	
	8T-9397	2	BOLT (3/4-10X1.25-IN)	
	252-6949	1	BRACKET	
	239-0283	1	BRACKET AS	
	261-7991	1	GROMMET	
	254-5681	1	HARNESS AS-CONTROL (AUTO CARRY)	
	102-8801	1	KIT-RECEPTACLE (12-PIN)	
			(INCLUDES RECEPTACLE AS & WEDGE)	
	134-2540	2	RECEPTACLE AS-CONNECTOR (3-PIN)	
	155-2255	2	KIT-CONNECTING PLUG (12-PIN)	
	155-2271	1	KIT-CONNECTING PLUG (4-PIN)	
	174-0503	2	KIT-CONNECTING PLUG (3-PIN)	
			(EACH INCLUDES PLUG AS, WEDGE, & INTERFACE SEAL)	
	254-5682	1	HARNESS AS-CONTROL	
	102-8801	1	KIT-RECEPTACLE (12-PIN)	
	254-5679	1	HARNESS AS-MONITOR	
	160-7689	1	PLUG AS-CONNECTOR (70-PIN)	
	190-7613	1	RECEPTACLE AS-CONNECTOR (12-PIN)	
	102-8805	1	KIT-RECEPTACLE (6-PIN)	
	102-8806	1	KIT-RECEPTACLE (8-PIN)	
	102-8801	1	KIT-RECEPTACLE (12-PIN)	
			(EACH INCLUDES RECEPTACLE AS & WEDGE)	
	155-2265	1	KIT-CONNECTING PLUG (8-PIN)	
	155-2274	1	KIT-CONNECTING PLUG (6-PIN)	
			(EACH INCLUDES PLUG AS, WEDGE, & INTERFACE SEAL)	
	254-5680	1	HARNESS AS-POWER	
	102-8802	1	KIT-RECEPTACLE (2-PIN)	
	102-8803	1	KIT-RECEPTACLE (3-PIN)	
			(EACH INCLUDES RECEPTACLE AS & WEDGE)	
	155-2270	1	KIT-CONNECTING PLUG (2-PIN)	
	155-2260	1	KIT-CONNECTING PLUG (3-PIN)	
			(EACH INCLUDES PLUG AS, WEDGE, & INTERFACE SEAL)	
	240-5283	1	HARNESS AS-WIRING (FERRITE)	
	102-8802	1	KIT-RECEPTACLE (2-PIN)	
			(INCLUDES RECEPTACLE AS & WEDGE)	
	155-2270	1	KIT-CONNECTING PLUG (2-PIN)	
			(INCLUDES PLUG AS, WEDGE, & INTERFACE SEAL)	
M	**8T-4133**	4	NUT (M10X1.5 THD)	
	257-3710	1	PLATE	
	1Q-1592	1	PLATE AS	
	1Q-1591	1	PLATE	
	254-5678	1	PLATE AS	
M	**8T-3612**	1	NUT-WELD (M8X1.25-THD)	
M	**165-8718**	4	NUT-WELD (M4X0.07-THD)	
	259-0022	4	PLUG	

255-9372 KIT-INSTALLATION *(contd.)*

i02358532

NOTE	PART NUMBER	QTY	PART NAME 1 2 3 4 5 6 (PRODUCT LEVEL)	SEE PAGE
	7K-1181	35	STRAP-CABLE	
	7X-0582	2	WASHER-HARD (20X44.5X6-MM THK)	
	8T-0328	4	WASHER-HARD (5.5X10X1-MM THK)	
	8T-4121	8	WASHER-HARD (11X21X2.5-MM THK)	
	8T-4223	4	WASHER-HARD (13.5X25.5X3-MM THK)	
	8T-4224	3	WASHER-HARD (8.8X16X2-MM THK)	

M-METRIC PART
Y-SEPARATE ILLUSTRATION

<END>

AIR INLET AND EXHAUST SYSTEM

212-9645 LINES GP-AIR—INLET, EXHAUST

S/N: RJG1-UP

PART OF 212-2745, 267-2900 INSTALLATION AR-ENGINE

SMCS-1071 **i02259739**

NOTE	REF NO	GRAPHIC REF	PART NUMBER	QTY	PART NAME 1 2 3 4 5 6 (PRODUCT LEVEL)	SEE PAGE
	1	1	**5L-8854**	4	RING-SEALING	
	2	1	**9N-1941**	2	CLAMP-V-BAND	
					(EACH INCLUDES)	
		1	**8T-0122**	1	NUT-FULL (1/4-28-THD)	
	3	1	**175-2582**	4	RING-METAL SEAL	
	4	1	**175-2583**	2	SEAL-EXHAUST	
	5	1	**175-2592**	2	COUPLING AS	
	6	1	**229-2689**	1	BRACKET AS	
	7	1	**229-2690**	1	BRACKET AS	
		1	**9R-2613**	1	BOSS-WELD (M10X1.5X25-MM OAL)	
	8	1	**230-5440**	2	COUPLING AS	
					(EACH INCLUDES)	
		1	**9N-1940**	1	ADAPTER-EXHAUST PIPE	
	9	1	**255-3544**	2	TUBE AS	
	10	1	**255-3545**	1	ELBOW AS	
	11	1	**255-3546**	1	ELBOW AS	
					(EACH ELBOW AS INCLUDES)	
		1	**1F-0750**	2	NUT-WELD (3/8-16-THD)	
	12	1	**214-9367**	2	CLAMP-BAND	
	13	1	**4L-6454**	4	BOLT (3/8-16X1-IN)	
	14	1,1	**5P-1075**	12	WASHER-HARD (10.2X22.5X3-MM THK)	
	15	1	**9B-7237**	8	BOLT (3/8-16X1.25-IN)	

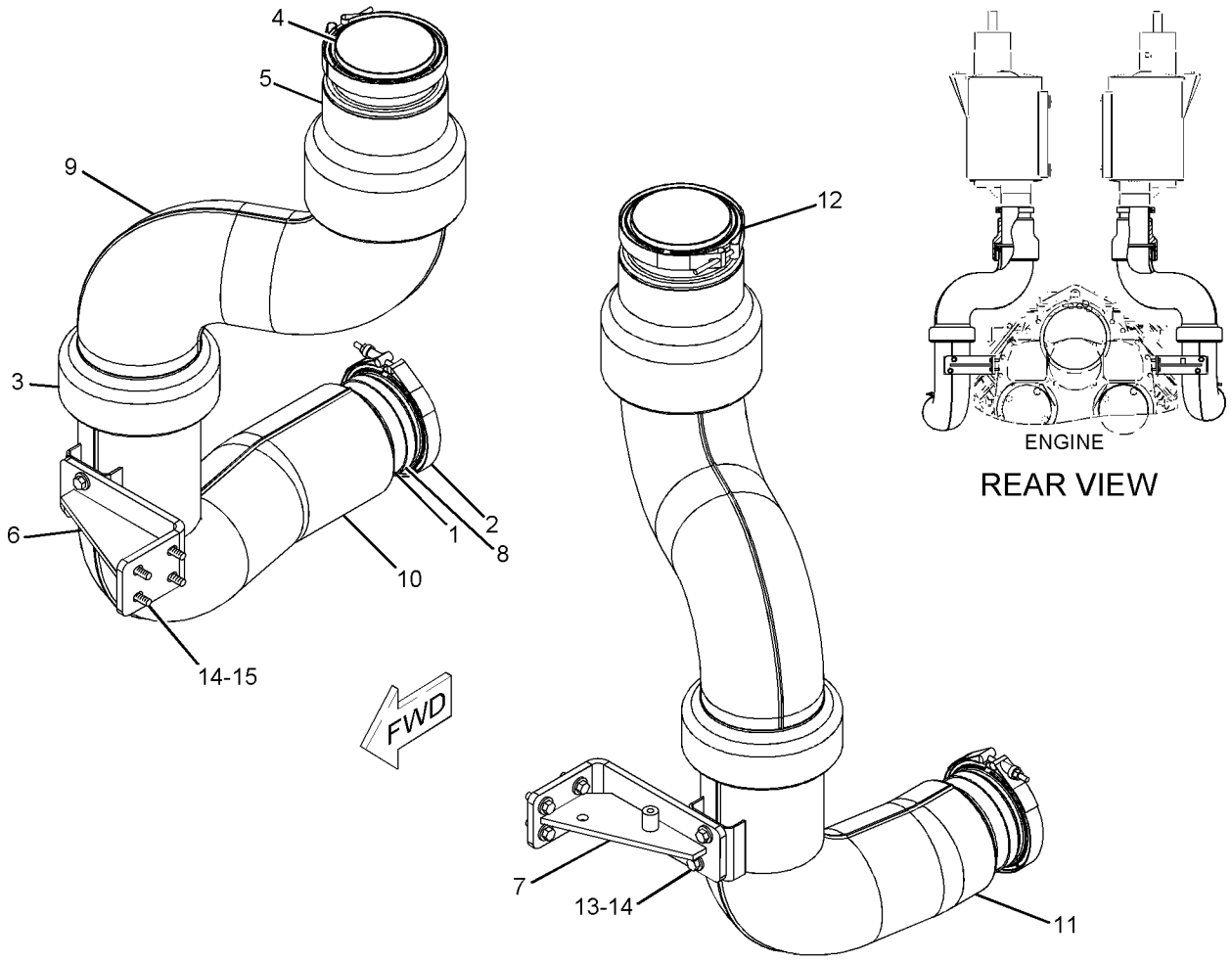

GRAPHIC #1 **<END>** g01137814

AIR INLET AND EXHAUST SYSTEM

212-9646 LINES GP-AIR—ENGINE INLET

S/N: RJG1-528

PART OF 212-2745 INSTALLATION AR-ENGINE

SMCS-1071 **i02262710**

NOTE	REF NO	GRAPHIC REF	PART NUMBER	QTY	PART NAME 1 2 3 4 5 6 (PRODUCT LEVEL)	SEE PAGE
	1	1	**9N-9545**	2	ELBOW	
	2	1	**213-6907**	1	SUPPORT-COVER	
	3	1	**213-6908**	1	TUBE AS	
	4	1	**213-6909**	1	TUBE AS	
	5	1	**235-3172**	2	BRACKET AS	
					(EACH INCLUDES)	
M		1	**8T-3490**	2	NUT-WELD (M10X1.5-THD)	
	6	1	**223-7485**	2	CLAMP	
	7	1	**239-5609**	2	CLAMP	
	8	1	**5P-1075**	4	WASHER-HARD (10.2X22.5X3-MM THK)	
	9	1	**6V-1195**	2	SEAL-O-RING	
	10	1	**7X-7729**	2	WASHER (11X25X3-MM THK)	
M	11	1	**8T-4137**	2	BOLT (M10X1.5X20-MM)	
M	12	1	**8T-4185**	8	BOLT (M10X1.5X50-MM)	
M	13	1	**8T-4186**	8	BOLT (M10X1.5X40-MM)	
	14	1	**8T-7008**	4	BOLT (3/8-16X3-IN)	
	15	1	**8T-7934**	16	WASHER-HARD (11X21X5-MM THK)	

M-METRIC PART

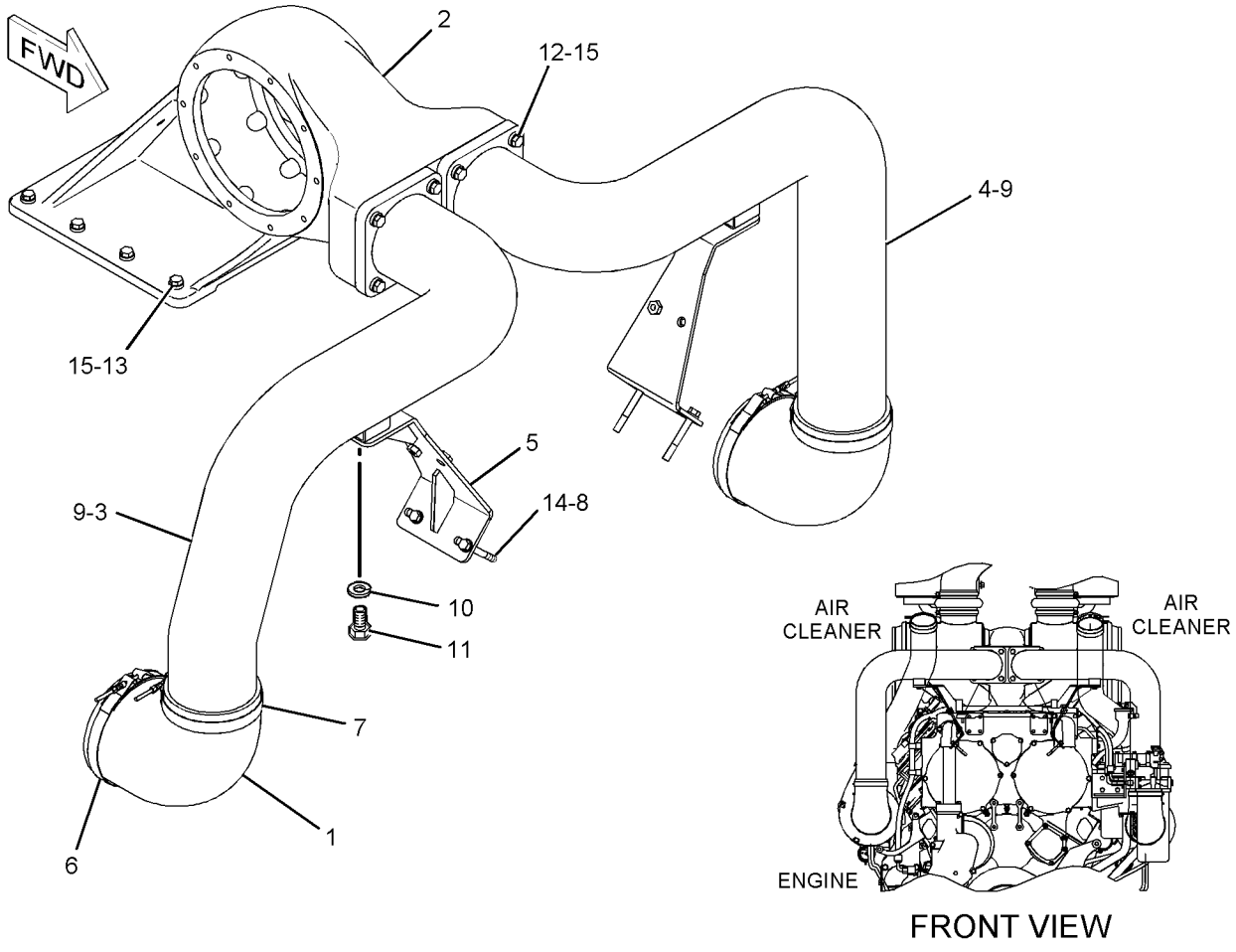

GRAPHIC #1 **<END>** g01136387

AIR INLET AND EXHAUST SYSTEM

212-9647 LINES GP-AIR–ATAAC–REMOTE

S/N: RJG1-528

PART OF 212-2745 INSTALLATION AR-ENGINE

SMCS-1071 **i02358474**

NOTE	REF NO	GRAPHIC REF	PART NUMBER	QTY	PART NAME 1 2 3 4 5 6 (PRODUCT LEVEL)	SEE PAGE
	1	1	**127-0929**	2	CLAMP	
					(EACH INCLUDES)	
		1	**8T-0122**	1	NUT-FULL (1/4-28-THD)	
	2	1	**129-6400**	1	ADAPTER	
	3	1	**213-6383**	1	HOSE	
	4	1	**213-6386**	1	HOSE	
	5	1	**217-8947**	1	ELBOW (AFTERCOOLER, OUTLET)	
	6	1	**255-3680**	1	HOSE	
	7	1	**255-3681**	1	HOSE	
	8	1	**6V-5048**	1	SEAL-O-RING	
	9	1	**9S-8002**	1	PLUG	
	10	1	**9X-2201**	16	CLAMP-HOSE	
	11	1	**8C-3089**	2	SEAL-O-RING	

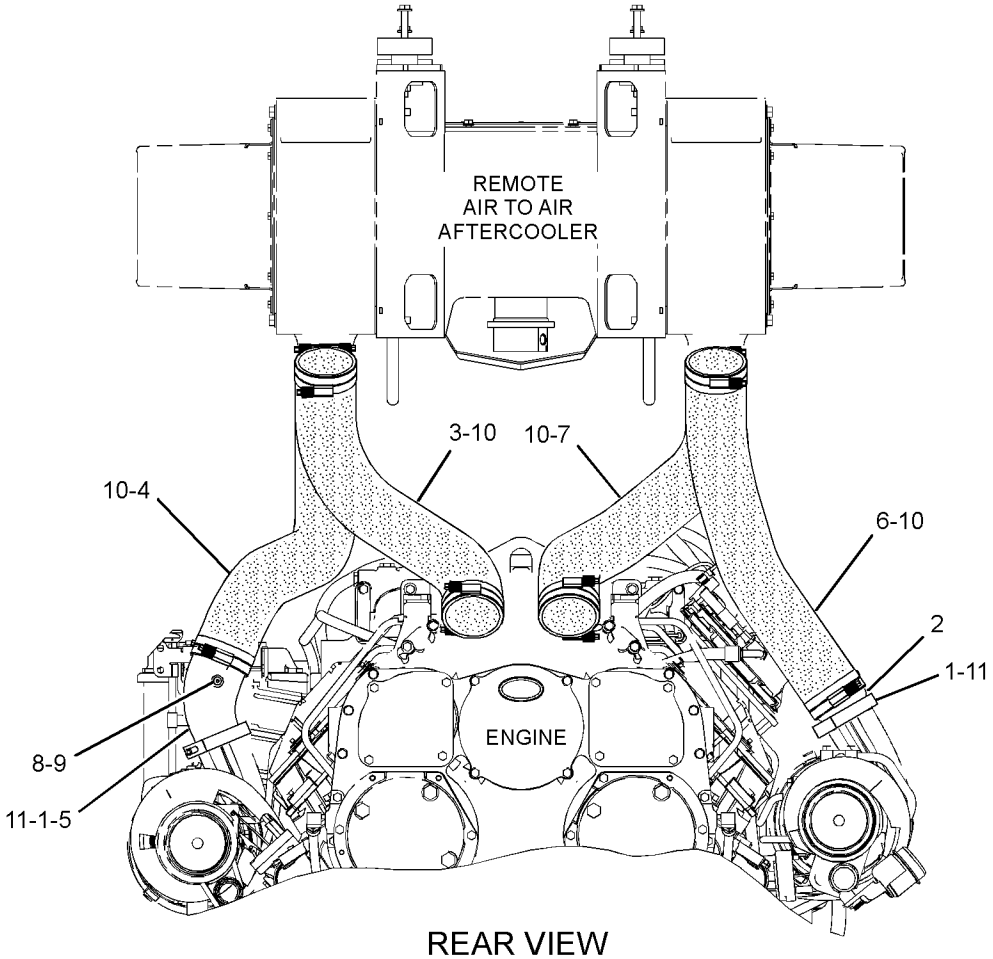

REAR VIEW

GRAPHIC #1 **<END>** g01227093

AIR INLET AND EXHAUST SYSTEM

216-0826 LINES GP-AIR

S/N: EHX1-UP

PART OF 212-2737, 212-2744, 271-2219 ENGINE AR-COMPLETE

ALSO AN ATTACHMENT

SMCS-1071 **i02230636**

NOTE	REF NO	GRAPHIC REF	PART NUMBER	QTY	PART NAME 1 2 3 4 5 6 (PRODUCT LEVEL)	SEE PAGE
	1	1	**2P-3213**	21	BOLT-WASHER HEAD	
	2	1	**9N-6379**	2	BOOT-AIR CLEANER ADAPTER	
	3	1	**034-1432**	2	STRAP-CABLE	
	4	1	**217-5684**	2	ELBOW	
	5	1	**223-1998**	2	MANIFOLD-INLET	
	6	1	**226-5613**	2	GASKET	
	7	1	**136-7227**	1	SEAL-O-RING	
	8	1	*148-8407*	2	PLUG AS	
					(EACH INCLUDES)	
		1	**3J-1907**	1	SEAL-O-RING	
		1	**9S-4191**	1	PLUG-O RING	
	9	1	**1A-5183**	4	BOLT (3/8-16X4.75-IN)	
	10	1	**2P-7557**	14	BOLT (3/8-16X3.75-IN)	
	11	1	**5M-2894**	4	WASHER-HARD (10.2X18.5X2.5-MM THK)	
	12	1	**6L-3005**	2	CLAMP-BAND	
		1	**8T-0122**	1	NUT-FULL (1/4-28-THD)	
	13	1	**6V-5048**	1	SEAL-O-RING	
	14	1	**6V-6353**	2	SEAL-O-RING	
	15	1	**8L-2786**	1	SEAL-O-RING	
	16	1	**9S-8002**	1	PLUG	
	17	1	**9S-8005**	1	PLUG-O RING	
	18	1	**9S-8006**	1	PLUG	

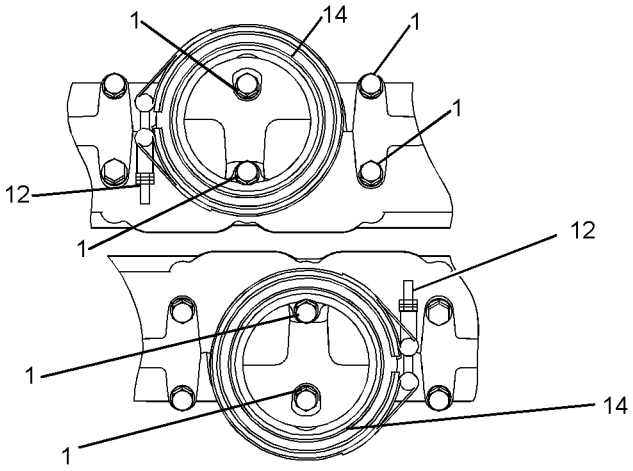

VIEW OF AREA A
(TUBES REMOVED)

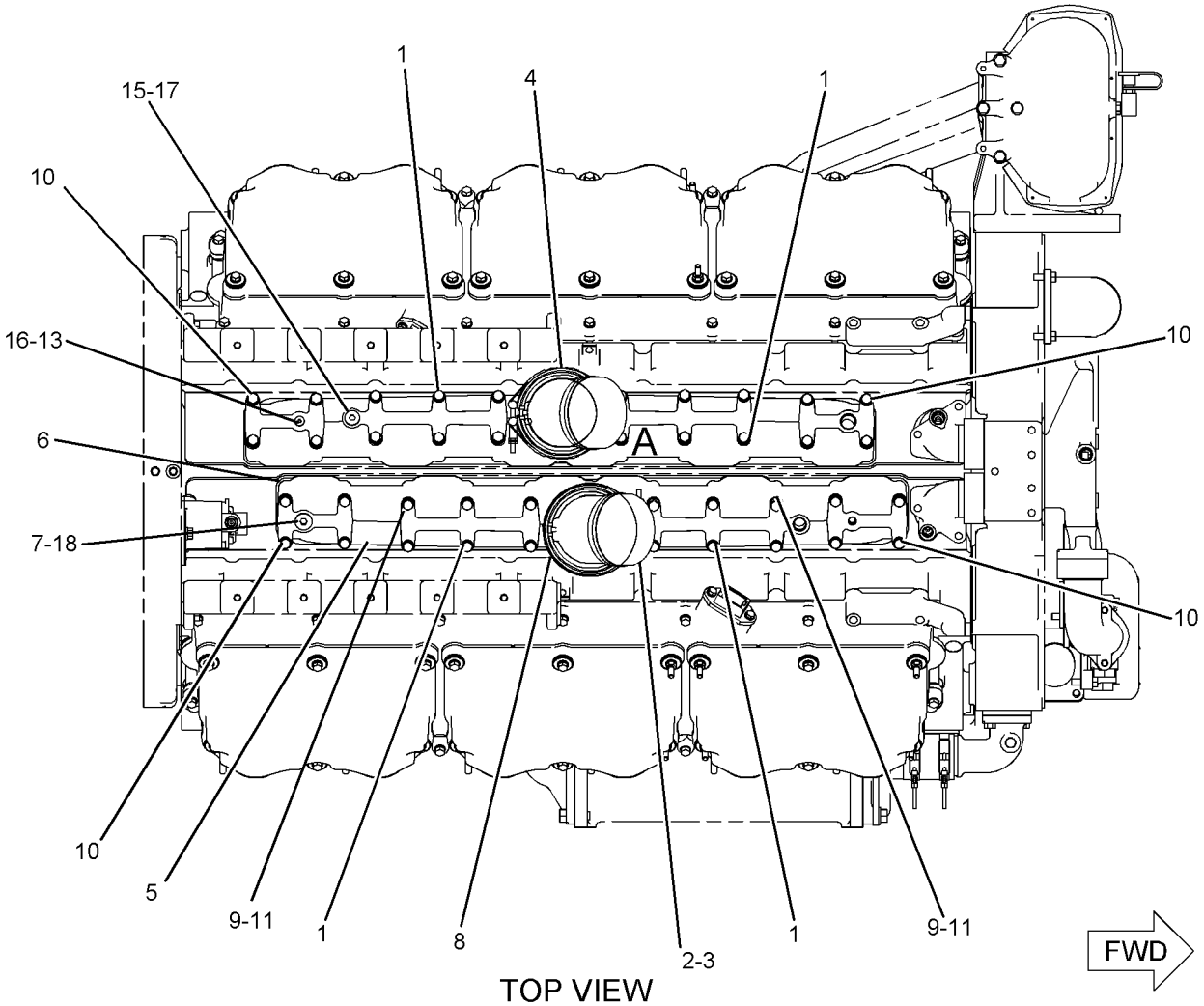

TOP VIEW
<END>

GRAPHIC #1 g01125938

AIR INLET AND EXHAUST SYSTEM

267-2890 LINES GP-AIR

S/N: RJG529-UP

PART OF 267-2900 INSTALLATION AR-ENGINE

SMCS-1071 **i02440769**

NOTE	REF NO	GRAPHIC REF	PART NUMBER	QTY	PART NAME 1 2 3 4 5 6 (PRODUCT LEVEL)	SEE PAGE
	1	1	**7C-3910**	2	HOSE	
	2	1	**7E-8630**	2	HOSE-AIR INLET	
	3	1	**127-0929**	2	CLAMP	
	4	1	**129-6400**	1	ADAPTER	
	5	1	**186-2002**	2	HOSE	
	6	1	**217-8947**	1	ELBOW (AFTERCOOLER, OUTLET)	
	7	1	**267-2891**	1	TUBE	
	8	1	**267-2892**	1	TUBE	
	9	1	**267-2894**	1	TUBE	
	10	1	**267-2895**	1	TUBE	
	11	1	**267-2896**	1	BRACKET AS	
		1	**7Y-8763**	1	BOSS (M10X1.5X25-MM)	
	12	1	**267-2897**	1	BRACKET AS	
		1	**7Y-8763**	1	BOSS (M10X1.5X25-MM)	
	13	1	**269-1882**	2	ELBOW	
	14	1	**6V-5048**	1	SEAL-O-RING	
	15	1	**6V-6782**	4	CLIP (SLOT)	
	16	1	**6V-6783**	4	CLIP (TAB)	
	17	1	**8C-3089**	2	SEAL-O-RING	
	18	1	**8T-4121**	4	WASHER-HARD (11X21X2.5-MM THK)	
M	19	1	**8T-4186**	4	BOLT (M10X1.5X40-MM)	
	20	1	**9S-8002**	1	PLUG	
	21	1	**9X-2201**	32	CLAMP-HOSE	

M-METRIC PART

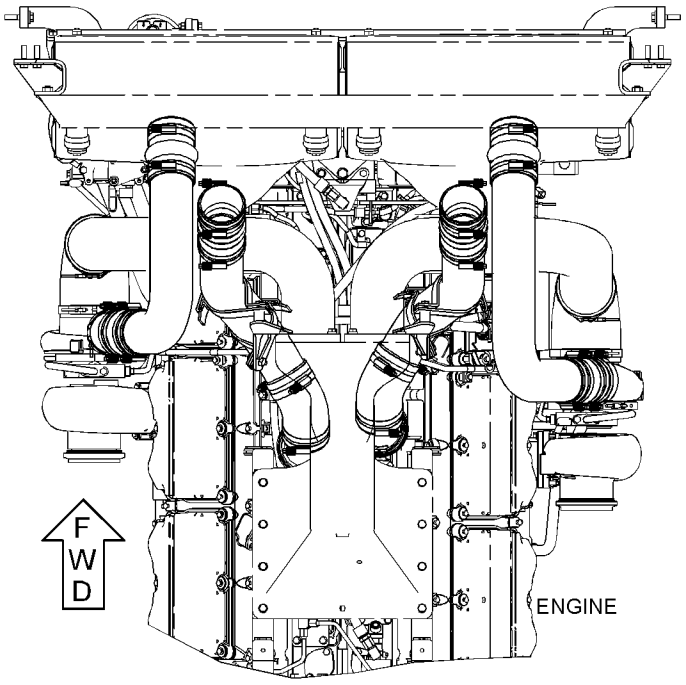

TOP VIEW

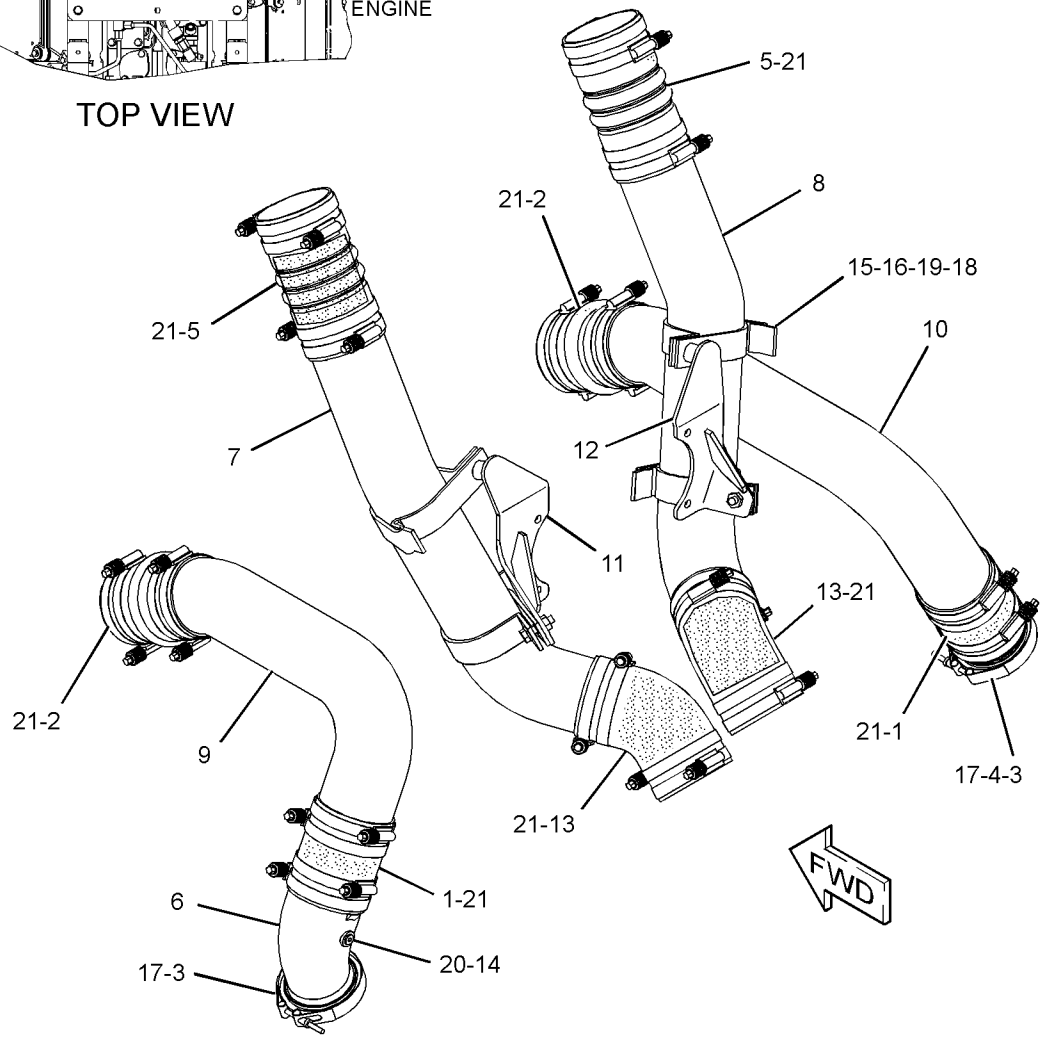

GRAPHIC #1 **<END>** g01221845

AIR INLET AND EXHAUST SYSTEM

267-2905 LINES GP-AIR

S/N: RJG529-UP

PART OF 267-2900 INSTALLATION AR-ENGINE

SMCS-1071 **i02440776**

NOTE	REF NO	GRAPHIC REF	PART NUMBER	QTY	PART NAME 1 2 3 4 5 6 (PRODUCT LEVEL)	SEE PAGE
	1	1	**9N-9545**	2	ELBOW	
	2	1	**213-6907**	1	SUPPORT-COVER	
	3	1	**267-2906**	1	TUBE AS	
	4	1	**267-2907**	1	TUBE AS	
	5	1	**272-0365**	2	BRACKET AS	
	6	1	**223-7485**	2	CLAMP	
	7	1	**239-5609**	2	CLAMP	
	8	1	**5P-1075**	4	WASHER-HARD (10.2X22.5X3-MM THK)	
	9	1	**6V-1195**	2	SEAL-O-RING	
	10	1	**7X-7729**	2	WASHER (11X25X3-MM THK)	
M	11	1	**8T-4137**	2	BOLT (M10X1.5X20-MM)	
M	12	1	**8T-4185**	8	BOLT (M10X1.5X50-MM)	
M	13	1	**8T-4186**	8	BOLT (M10X1.5X40-MM)	
	14	1	**8T-7008**	4	BOLT (3/8-16X3-IN)	
	15	1	**8T-7934**	16	WASHER-HARD (11X21X5-MM THK)	

M-METRIC PART

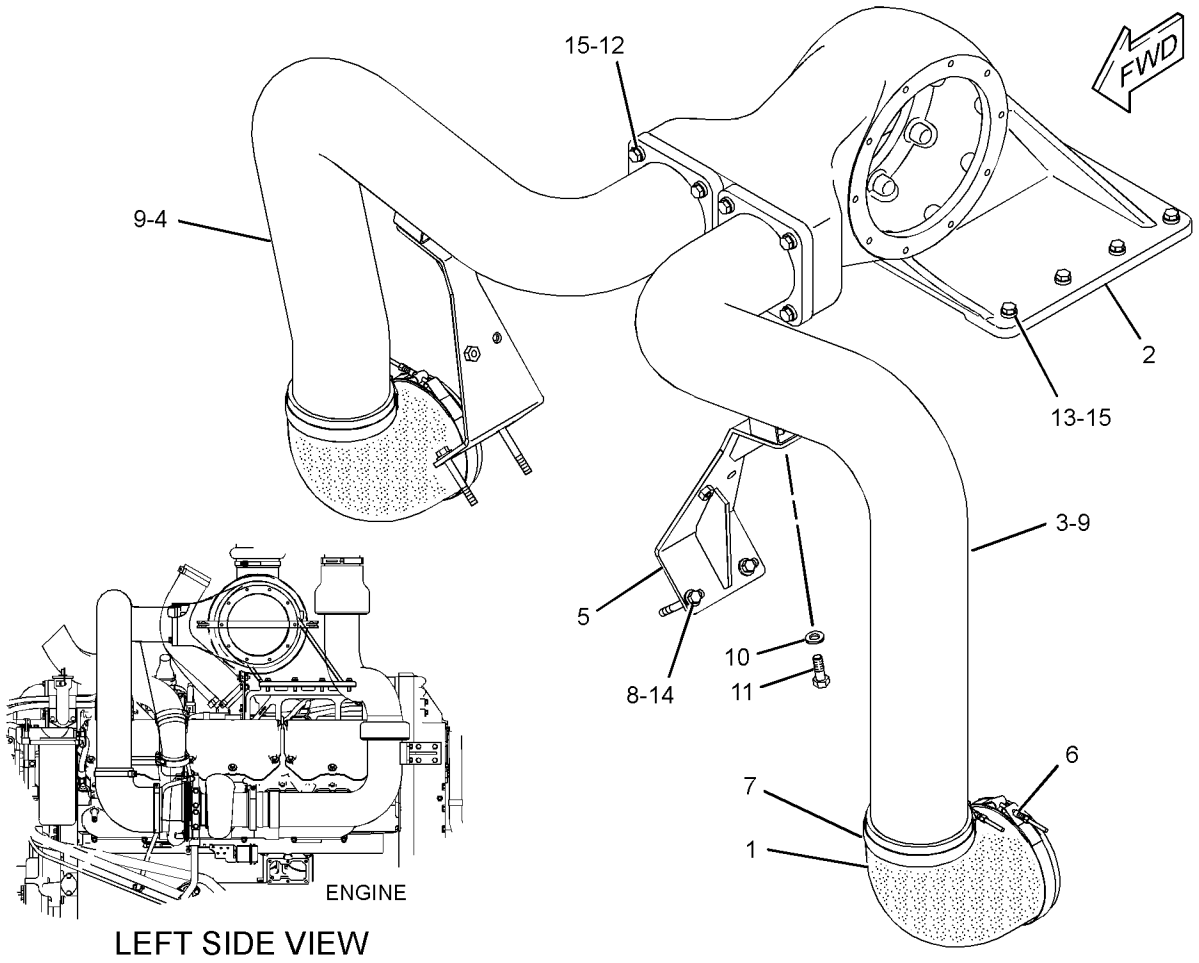

LEFT SIDE VIEW

GRAPHIC #1 **<END>** g01221795

217-6686 MANIFOLD GP-EXHAUST

S/N: EHX1-UP

PART OF 212-2737, 212-2744, 271-2219 ENGINE AR-COMPLETE

ALSO AN ATTACHMENT

SMCS-1059 **i02450420**

NOTE	REF NO	GRAPHIC REF	PART NUMBER	QTY	PART NAME 1 2 3 4 5 6 (PRODUCT LEVEL)	SEE PAGE
	1	1	**2W-4474**	6	BRACKET	
	2	1	**5P-8134**	12	CAP-PROTECTIVE	
	3	1	**100-7401**	8	SEAL AS-EXHAUST	
	4	1	**108-3612**	12	SPACER (11.13X19.05X53-MM THK)	
	5	1	**114-9223**	12	SPACER (11.13X19.05X19-MM THK)	
	6	1	**129-9452**	12	GASKET-EXHAUST MANIFOLD	
	7	1	**163-3103**	4	MANIFOLD-EXHAUST (END)	
	8	1	**217-6459**	1	MANIFOLD-EXHAUST (CENTER, RH)	
	9	1	**217-6460**	1	MANIFOLD-EXHAUST (CENTER, LH)	
	10	1	**106-1793**	2	STUD-TAPERLOCK	
	11	1	**2N-2766**	24	LOCKNUT (3/8-16-THD)	
	12	1	**3K-3256**	12	STUD-TAPERLOCK (3/8-16X1.7-IN)	
	13	1	**5B-7890**	4	PLUG-PIPE	
	14	1	**5M-2894**	24	WASHER-HARD (10.2X18.5X2.5-MM THK)	
	15	1	**6B-2882**	12	SPACER (0.406X0.75X0.312-IN THK)	
	16	1	**0S-0509**	1	BOLT (3/8-16X0.75-IN)	
	17	1	**7X-0546**	1	WASHER-HARD (12X25.5X2-MM THK)	

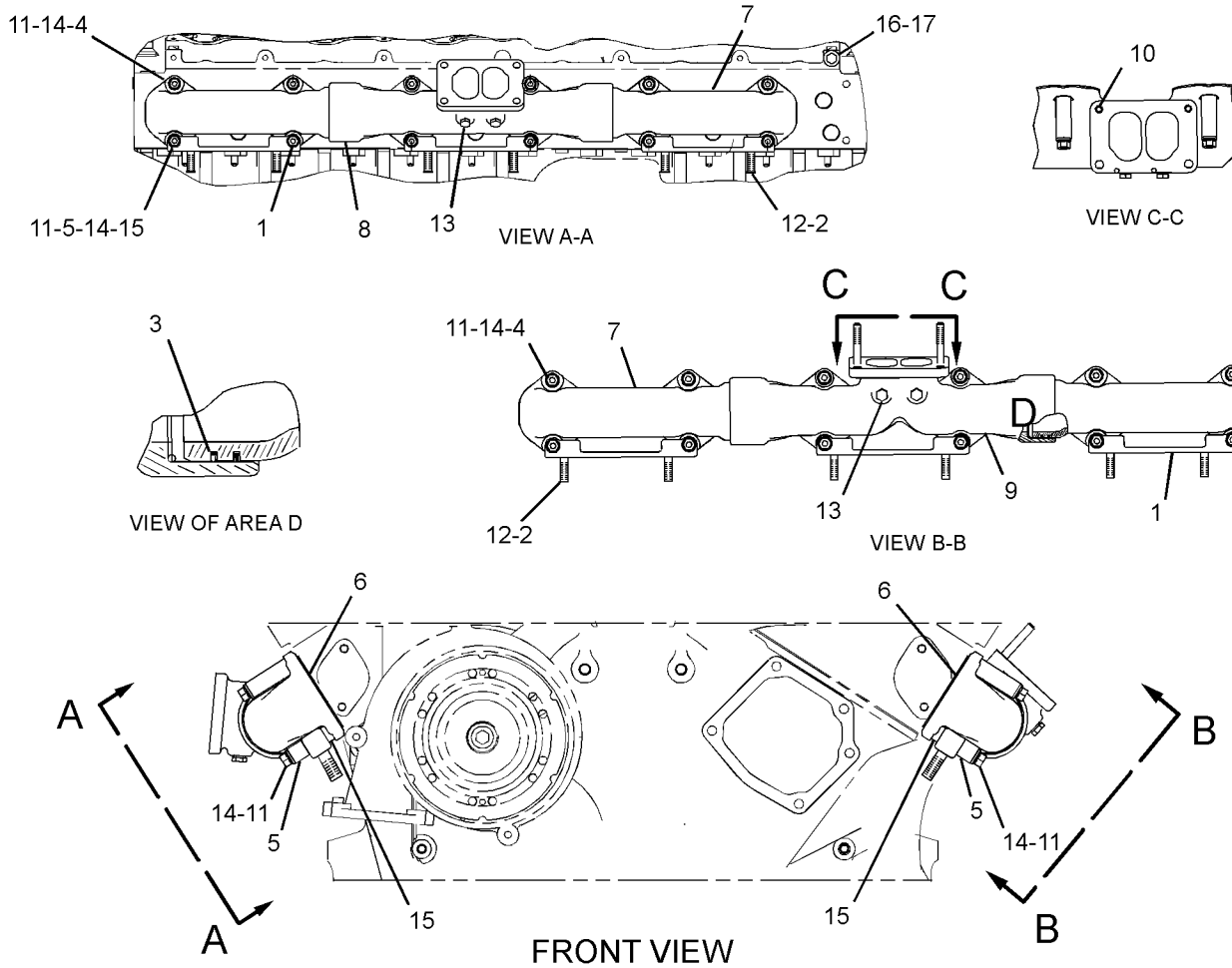

GRAPHIC #1

<END>

g01224173

AIR INLET AND EXHAUST SYSTEM

212-7680 MUFFLER GP

S/N: RJG1-528

PART OF 212-2745 INSTALLATION AR-ENGINE

SMCS-1062 **i02049351**

NOTE	REF NO	GRAPHIC REF	PART NUMBER	QTY	PART NAME 1 2 3 4 5 6 (PRODUCT LEVEL)	SEE PAGE
	1	1	**5R-5927**	4	WASHER (14X65X6-MM THK)	
	2	1	**213-6732**	1	MUFFLER AS (LH)	
	3	1	**213-6733**	1	MUFFLER AS (RH)	
	4	1	**5P-1076**	2	WASHER-HARD (13.5X30X4-MM THK)	
M	5	1	**6V-3668**	6	BOLT (M12X1.75X30-MM)	

M-METRIC PART

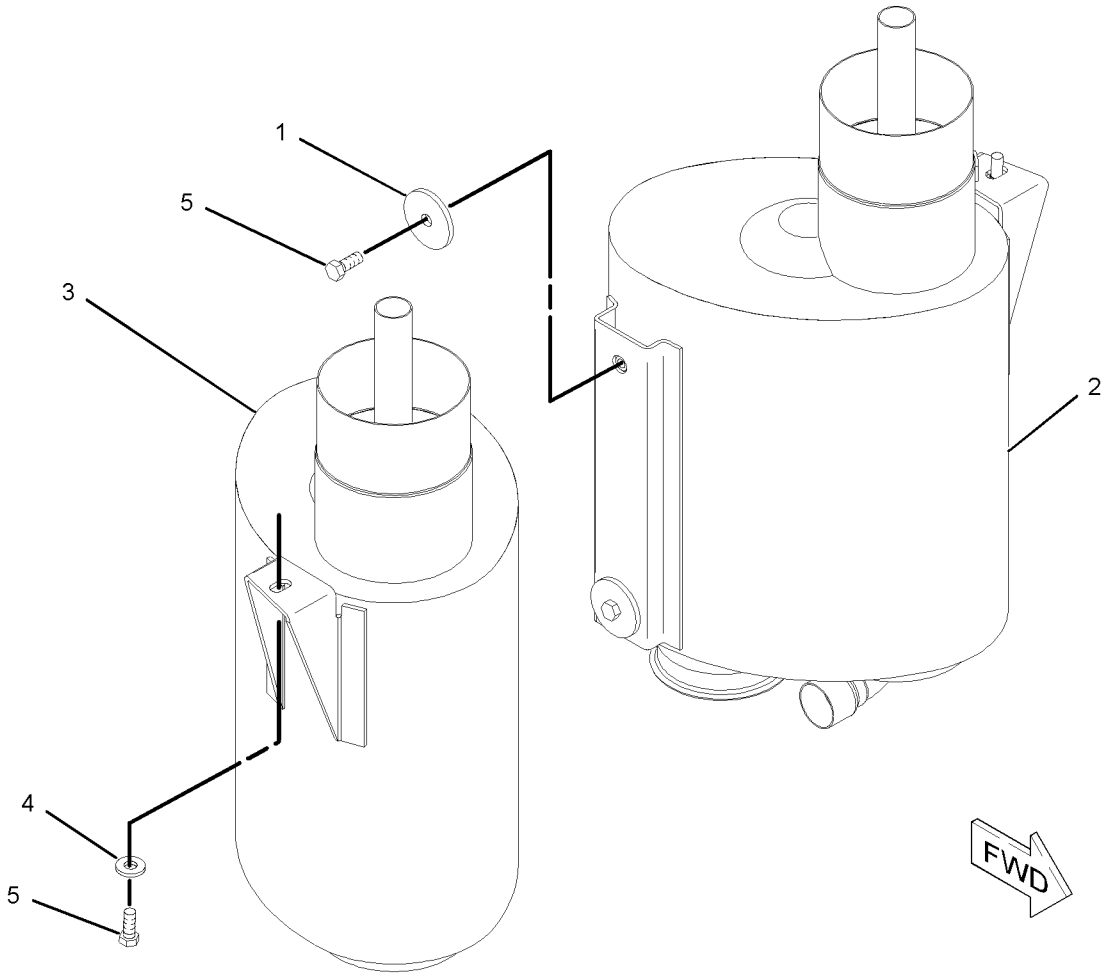

GRAPHIC #1 **<END>** g01052206

AIR INLET AND EXHAUST SYSTEM

269-7113 MUFFLER GP

S/N: RJG529-UP

PART OF 267-2900 INSTALLATION AR-ENGINE

SMCS-1062 **i02440682**

NOTE	REF NO	GRAPHIC REF	PART NUMBER	QTY	PART NAME 1 2 3 4 5 6 (PRODUCT LEVEL)	SEE PAGE
	1	1	**5R-5927**	4	WASHER (14X65X6-MM THK)	
	2	1	**269-7114**	1	MUFFLER AS (LH)	
	3	1	**269-7115**	1	MUFFLER AS (RH)	
	4	1	**5P-1076**	2	WASHER-HARD (13.5X30X4-MM THK)	
M	5	1	**6V-3668**	6	BOLT (M12X1.75X30-MM)	

M-METRIC PART

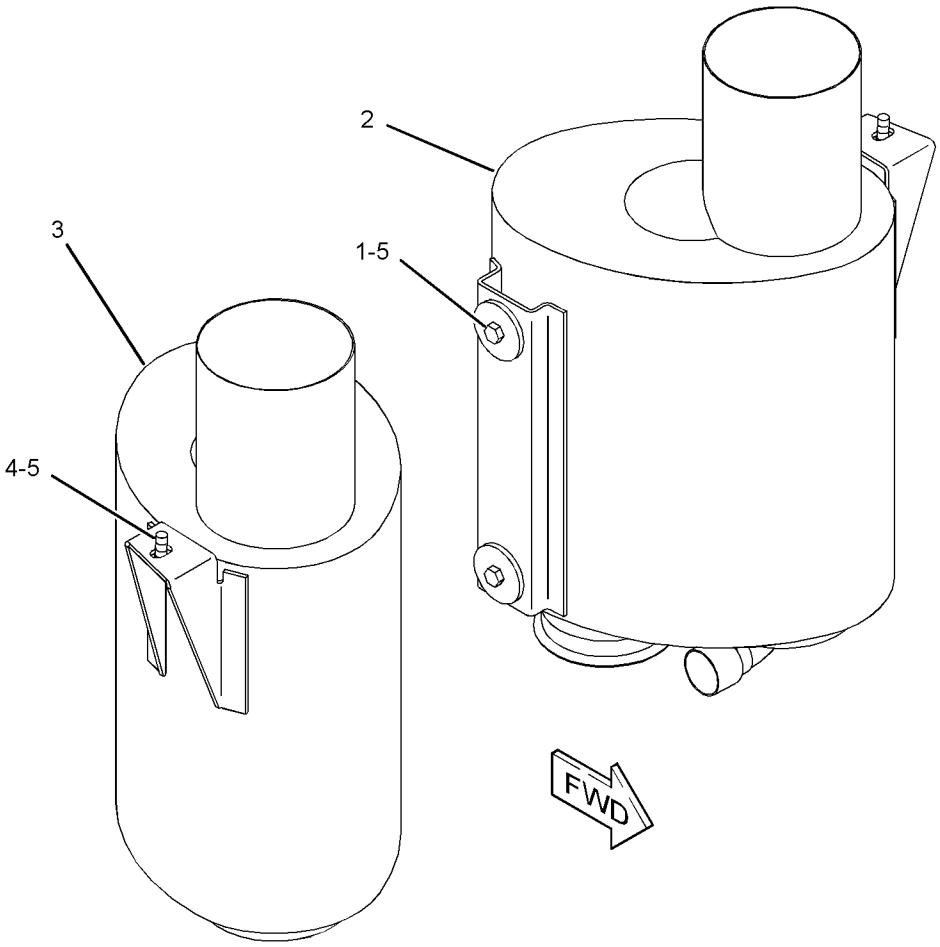

GRAPHIC #1 **<END>** g01222040

AIR INLET AND EXHAUST SYSTEM

240-6904 PRECLEANER AR—WITH SCREEN

S/N: RJG1-UP

AN ATTACHMENT

SMCS-1055 **i02274665**

NOTE	PART NUMBER	QTY	PART NAME 1 2 3 4 5 6 (PRODUCT LEVEL)	SEE PAGE
Y	*203-6549*	4	PRECLEANER GP	161

Y-SEPARATE ILLUSTRATION

<END>

AIR INLET AND EXHAUST SYSTEM

240-6905 PRECLEANER AR-TURBINE

S/N: RJG1-UP

AN ATTACHMENT

SMCS-1055 **i02467354**

NOTE	REF NO	GRAPHIC REF	PART NUMBER	QTY	PART NAME 1 2 3 4 5 6 (PRODUCT LEVEL)	SEE PAGE
	1	1	**1W-8620**	2	VALVE AS-CHECK (EXHAUST)	
	2	1	**3E-7424**	8	CLAMP-HOSE	
	3	1	**3E-7447**	2	CLAMP-HOSE	
	4	1	**5P-0597**	16	CLAMP-HOSE	
	5	1	**6N-3356**	1	HOSE	
	6	1	**9M-3835**	4	LATCH-RUBBER	
	7	1	**9X-4008**	4	HOSE	
	8	1	**180-2449**	2	ELBOW	
	9	1	**244-8822**	1	HOOD AS	
	10	1	**248-6931**	4	PRECLEANER AS (TURBINE)	
					(EACH INCLUDES)	
	10A	1	**130-3281**	1	PRECLEANER AS (AIR TURBINE)	
JZ	10B	1		1	PRESCREEN AS	
	10C	1	**145-6669**	6	SCREW-SELF-TAPPING	
	10D	1	**145-9987**	1	ADAPTER AS	
Z	10E	1		1	TUBE AS	
	11	1	**248-6934**	2	BOX AS (PRECLEANER)	
	12	1	**248-6935**	1	BOX AS (AFTERCOOLER)	
	13	1	**248-6936**	1	TUBE AS	
	14	1	**248-6937**	1	TUBE AS	
	15	1	**248-6938**	1	COVER AS (FRONT)	
	16	1	**248-6939**	1	COVER AS (REAR)	
	17	1	**248-6940**	1	BOX AS (SCREEN) (LH)	
	18	1	**248-6941**	1	BOX AS (SCREEN) (RH)	
	19	1	**248-6942**	4	SCREEN AS (ENGINE, AFTERCOOLER)	
					—OR—	
F			**248-6951**	4	SCREEN AS (ENGINE, AFTERCOOLER) (FINE FILTRATION)	
	20	1	**253-8285**	2	TUBE AS (LH)	
	21	1	**253-8286**	2	TUBE AS (RH)	
	22	1	**259-6123**	2	TUBE	
	23	1	**263-8623**	1	SUPPORT AS	
		1	**8F-9836**	3	BOSS-THREADED (3/8-16-THD)	
	24	1	**2M-5795**	4	PIN-CLEVIS	
	25	1	**4L-6454**	24	BOLT (3/8-16X1-IN)	
	26	1	**5P-1075**	24	WASHER-HARD (10.2X22.5X3-MM THK)	
	27	1	**5P-1076**	12	WASHER-HARD (13.5X30X4-MM THK)	
	28	1	**5V-1496**	4	RETAINER	
	29	1	**7X-4736**	4	GROMMET	
	30	1	**7X-7729**	17	WASHER (11X25X3-MM THK)	
	31	1	**8T-2501**	8	BOLT (3/8-16X2-IN)	
M	32	1	**8T-4133**	2	NUT (M10X1.5 THD)	
M	33	1	**8T-4139**	12	BOLT (M12X1.75X30-MM)	
M	34	1	**8T-4186**	10	BOLT (M10X1.5X40-MM)	
M	35	1	**8T-4196**	5	BOLT (M10X1.5X35-MM)	
	36	1	**8T-4896**	14	WASHER-HARD (10.2X18.5X2.5-MM THK)	
	37	1	**9B-7237**	6	BOLT (3/8-16X1.25-IN)	
E	38	1	**5P-1471**		HOSE (97-CM)	
E	38A	1	**5P-1471**		HOSE (17-CM)	
E	38B	1	**5P-1471**		HOSE (63-CM EACH)	
E	38C	1	**5P-1471**		HOSE (52-CM)	
E	38D	1	**5P-1471**		HOSE (100-CM)	
E	38E	1	**5P-1471**		HOSE (31-CM EACH)	
D	39	1	**5P-7211**		SEAL (0.11-M EACH)	
D	39A	1	**5P-7211**		SEAL (0.16-M EACH)	
E	40	1	**120-5281**		SEAL (38-CM)	

240-6905 **PRECLEANER AR-TURBINE** *(contd.)* **i02467354**

NOTE	REF NO	GRAPHIC REF	PART NUMBER	QTY	PART NAME 1 2 3 4 5 6 (PRODUCT LEVEL)	SEE PAGE
E	40A	1	**120-5281**		SEAL (37.5-CM)	
E	41	1	**249-0409**		SEAL (45.2-CM EACH)	
E	41A	1	**249-0409**		SEAL (18-CM EACH)	
E	41B	1	**249-0409**		SEAL (23-CM EACH)	
E	41C	1	**249-0409**		SEAL (11.8-CM EACH)	
E	42	1	**145-5664**		SEAL (42.3-CM EACH)	
E	42A	1	**145-5664**		SEAL (17.5-CM EACH)	
					AVAILABLE REPAIR KIT(S):	
J			**153-1278**	1	KIT-PRECLEANER (TURBINE)	
					(KIT INCLUDES PRESCREEN, SCREWS, DAMPER, TUBE, & CLAMPS)	

D-ORDER BY THE METER
E-ORDER BY THE CENTIMETER
F-NOT SHOWN
J-KIT MARKED J SERVICES PART MARKED J
M-METRIC PART
Z-NOT SERVICED SEPARATELY

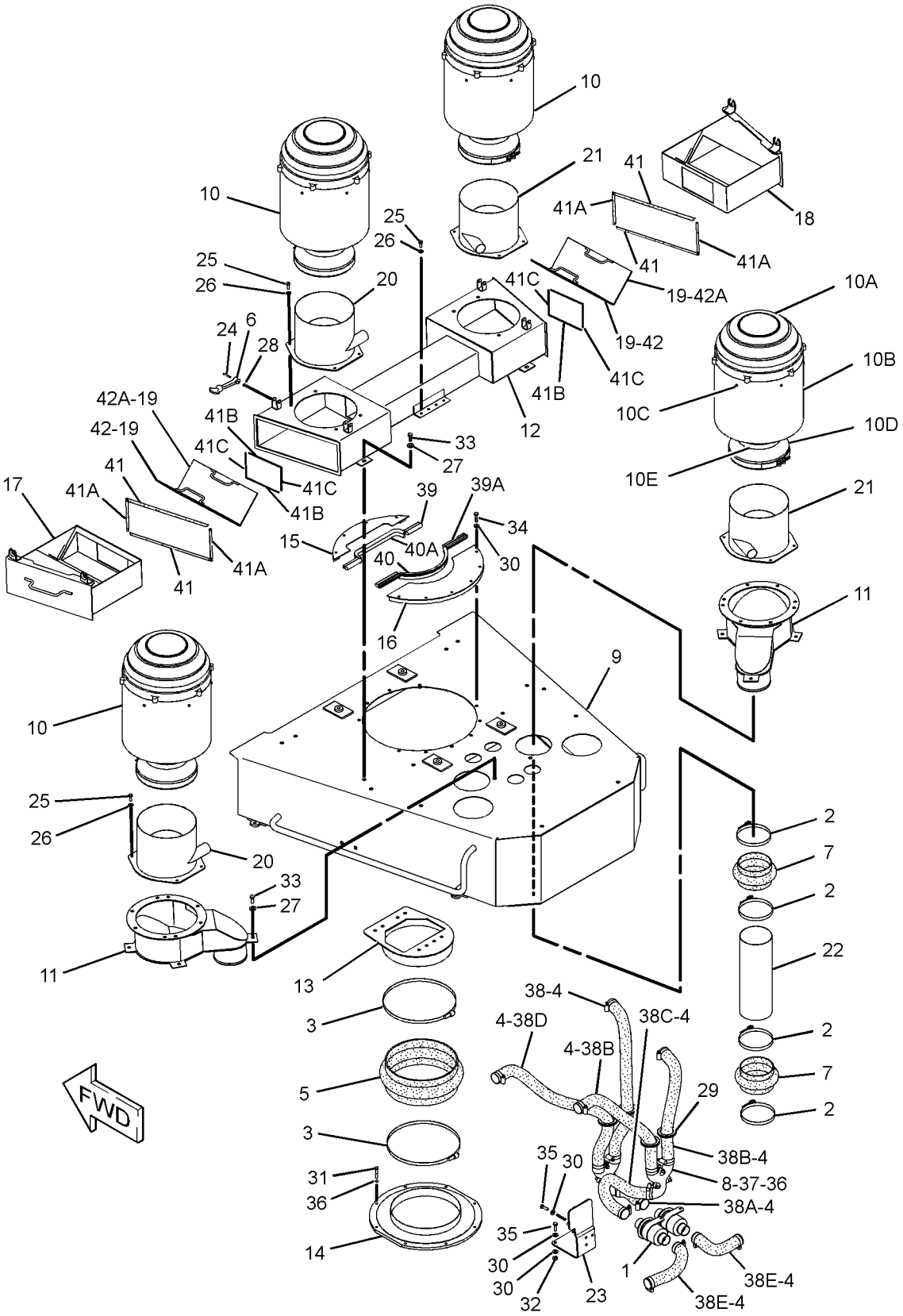

GRAPHIC #1 **<END>** g01234368

AIR INLET AND EXHAUST SYSTEM

268-6651 PRECLEANER AR-TURBINE

S/N: RJG1-UP
AN ATTACHMENT

SMCS-1055 **i02465459**

NOTE	REF NO	GRAPHIC REF	PART NUMBER	QTY	PART NAME 1 2 3 4 5 6 (PRODUCT LEVEL)	SEE PAGE
	1	1	**5P-0597**	4	CLAMP-HOSE	
	2	1	**248-6931**	2	PRECLEANER AS (TURBINE)	
					(EACH INCLUDES)	
	2A	1	**130-3281**	1	PRECLEANER AS (AIR TURBINE)	
		1	**174-4895**	2	CLAMP	
HZ	2B	1		1	PRESCREEN AS	
	2C	1	**145-6669**	6	SCREW-SELF-TAPPING	
	2D	1	**145-9987**	1	ADAPTER AS	
	2E	1	**244-3462**	1	TUBE AS	
	3	1	**268-9447**	1	PIPE AS	
	4	1	**268-9448**	1	PIPE AS	
	5	1	**4L-6454**	8	BOLT (3/8-16X1-IN)	
	6	1	**5P-4325**	2	CLIP	
	7	1	**8T-4121**	2	WASHER-HARD (11X21X2.5-MM THK)	
M	8	1	**8T-4137**	2	BOLT (M10X1.5X20-MM)	
	9	1	**8T-4896**	8	WASHER-HARD (10.2X18.5X2.5-MM THK)	
E	10	1	**5P-1471**		HOSE (96-CM)	
E	10A	1	**5P-1471**		HOSE (94-CM)	
					AVAILABLE REPAIR KIT(S):	
H			**153-1278**	1	KIT-PRECLEANER (TURBINE)	
					(INCLUDES PRESCREEN, SCREWS, DAMPER, TUBE, & CLAMPS)	

E-ORDER BY THE CENTIMETER
H-PARTS MARKED H INCLUDED IN KIT MARKED H
M-METRIC PART
Z-NOT SERVICED SEPARATELY

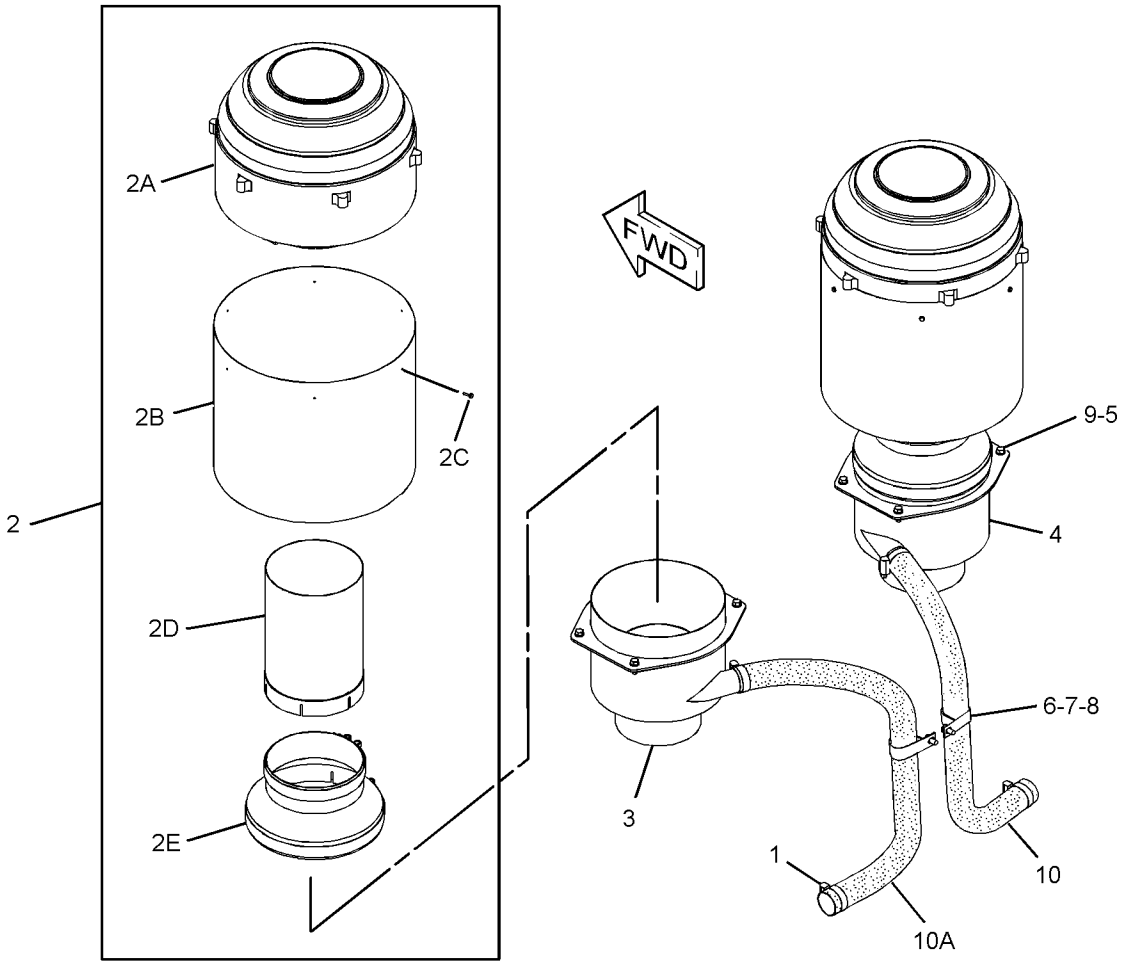

GRAPHIC #1 **<END>** g01231687

AIR INLET AND EXHAUST SYSTEM

175-7542 PRECLEANER GP

S/N: RJG1-528

PART OF 212-2745 INSTALLATION AR-ENGINE

SMCS-1055 **i01449409**

NOTE	REF NO	GRAPHIC REF	PART NUMBER	QTY	PART NAME 1 2 3 4 5 6 (PRODUCT LEVEL)	SEE PAGE
	1	1	**169-0902**	1	BODY-PRECLEANER	
	2	1	**169-0903**	1	COVER AS-PRECLEANER	

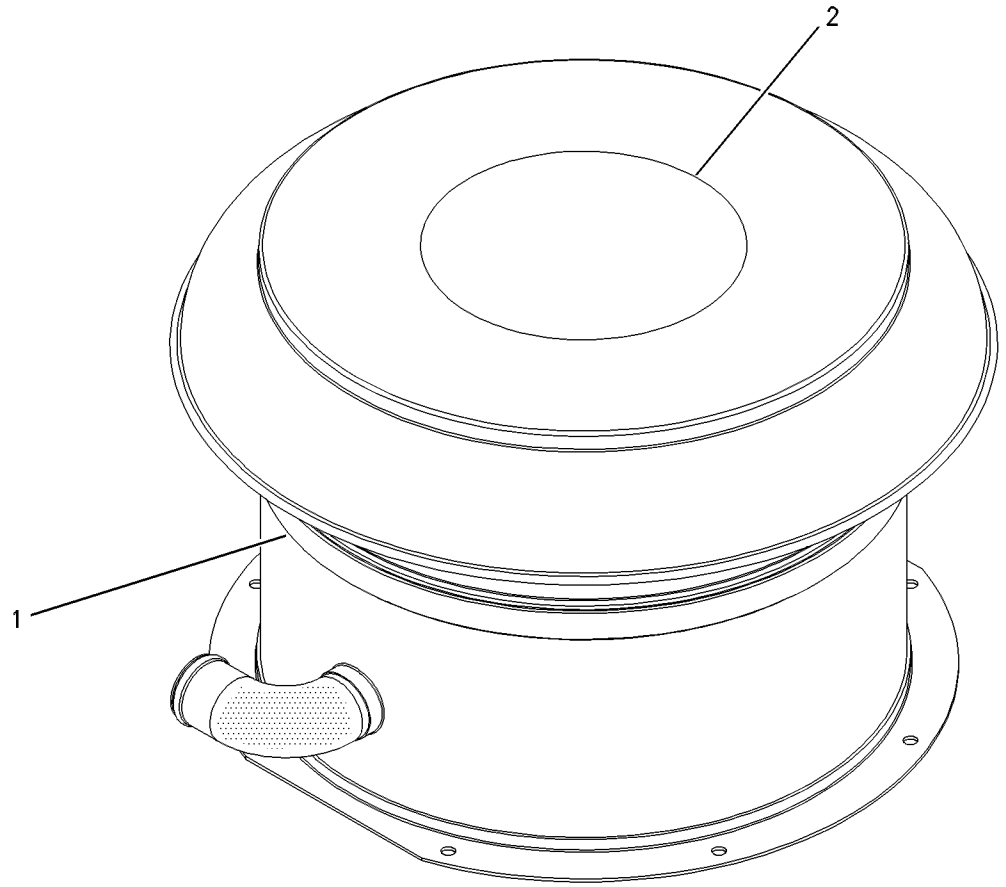

GRAPHIC #1 **<END>** g00653640

AIR INLET AND EXHAUST SYSTEM

203-6549 PRECLEANER GP—WITH SCREEN

S/N: RJG1-UP
PART OF 240-6904 PRECLEANER AR
FIELD REPLACEMENT ORDER 130-3281 PRECLEANER AS, 153-1278 KIT-PRECLEANER, 163-5748 KIT-INSTALLATION
AN ATTACHMENT

SMCS-1055 **i02403472**

NOTE	REF NO	GRAPHIC REF	PART NUMBER	QTY	PART NAME 1 2 3 4 5 6 (PRODUCT LEVEL)	SEE PAGE
HJ	1	1	**107-7495**	2	DAMPER	
	2	1	**130-3281**	1	PRECLEANER AS (AIR TURBINE)	
		1	**174-4895**	2	CLAMP	
JZ	3	1		1	PRESCREEN AS	
	4	1	**145-6669**	6	SCREW-SELF-TAPPING (#10)	
HZ	5	1		1	PIPE AS	
					AVAILABLE REPAIR KIT(S):	
H			**163-5748**	1	KIT-INSTALLATION (TURBINE PRECLEANER)	
					(INCLUDES GASKET, DAMPERS, PIPE ASSEMBLIES, BOLTS, WASHERS, & COVER)	
J			**153-1278**	1	KIT-PRECLEANER (TURBINE)	
					(INCLUDES PRESCREEN, SCREWS, DAMPER, TUBE, & CLAMPS)	

H-(PARTS MARKED H INCLUDED IN KIT MARKED H)
J-(PART MARKED J INCLUDED IN KIT MARKED J)
Z-NOT SERVICED SEPARATELY

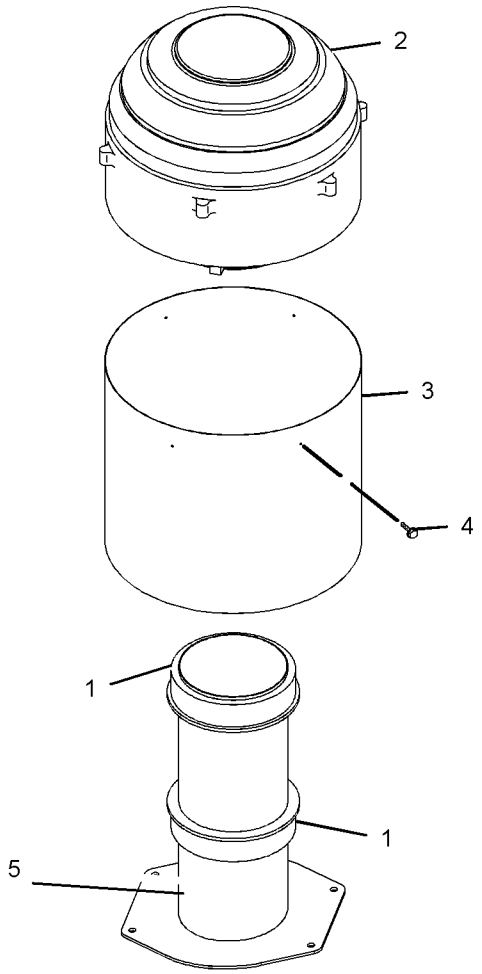

GRAPHIC #1

<END>

g01110833

AIR INLET AND EXHAUST SYSTEM

212-7688 SHIELD GP-HEAT

S/N: RJG1-UP

PART OF 212-2745, 267-2900 INSTALLATION AR-ENGINE

SMCS-1067 **i02274208**

NOTE	REF NO	GRAPHIC REF	PART NUMBER	QTY	PART NAME 1 2 3 4 5 6 (PRODUCT LEVEL)	SEE PAGE
	1	1	**213-6864**	2	SHIELD AS-HEAT (TURBOCHARGER)	
	2	1	**213-6865**	1	SHIELD AS-HEAT (LH)	
	3	1	**213-6866**	1	SHIELD AS-HEAT (RH-FRONT)	
	4	1	**239-1464**	1	SHIELD AS-HEAT (RH-REAR)	
	5	1	**260-9421**	1	BRACKET	
	6	1	**260-9423**	1	BRACKET	
	7	1	**260-9424**	2	BRACKET	
	8	1	**265-9370**	1	SHIELD AS-TURBOCHARGER	
	9	1	**5P-1075**	20	WASHER-HARD (10.2X22.5X3-MM THK)	
	10	1	**6V-8801**	20	NUT (3/8-16 THD)	

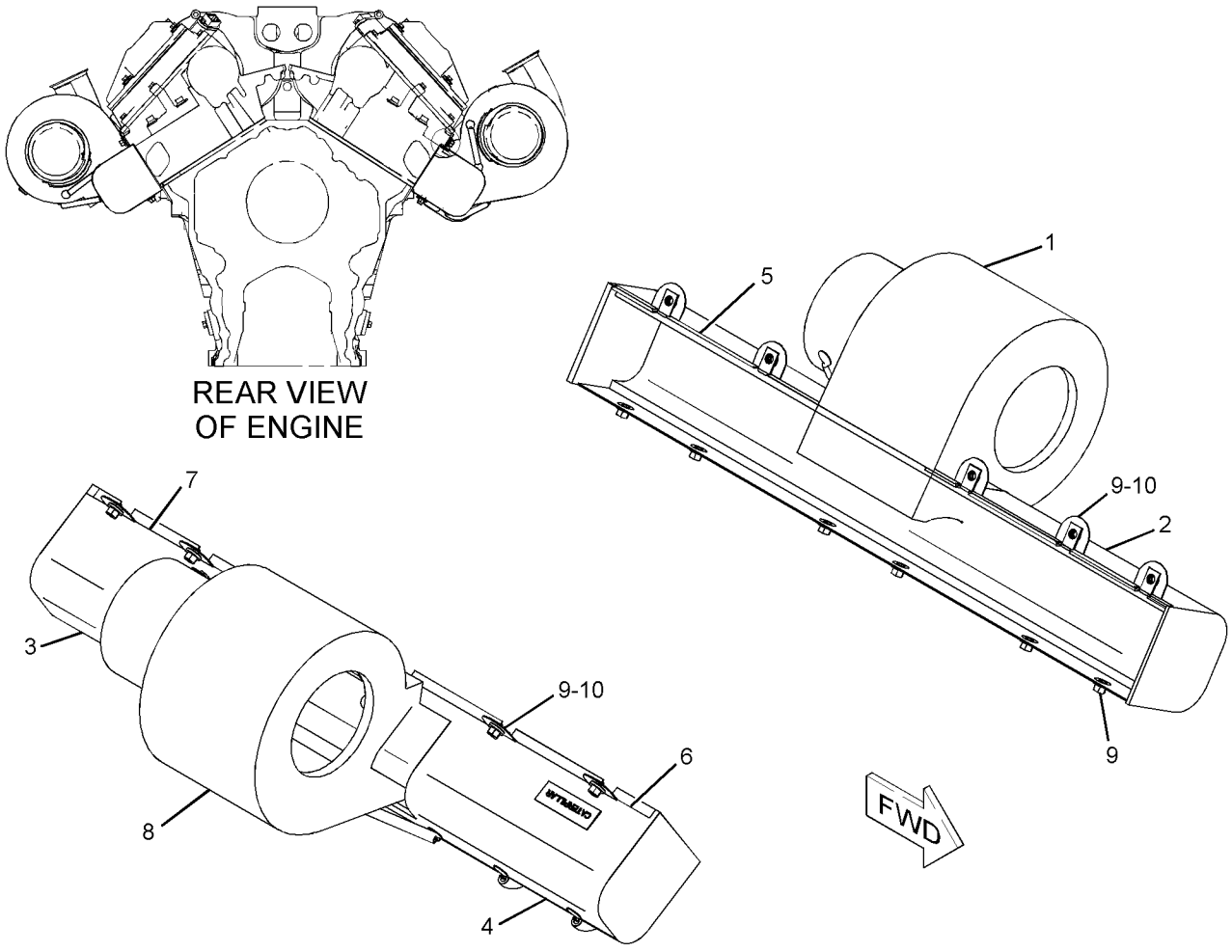

GRAPHIC #1 **<END>** g01140863

AIR INLET AND EXHAUST SYSTEM

234-5913 SUPPORT GP-AFTERCOOLER

S/N: EHX1-2309
PART OF 212-2737, 212-2744 ENGINE AR-COMPLETE
ALSO AN ATTACHMENT

SMCS-1063 **i02378770**

NOTE	REF NO	GRAPHIC REF	PART NUMBER	QTY	PART NAME 1 2 3 4 5 6 (PRODUCT LEVEL)	SEE PAGE
	1	1	**219-6923**	1	BRACE	
	2	1	**224-3158**	1	BRACE	
	3	1	**3B-1915**	10	BOLT (3/8-16X1-3/8-IN)	
	4	1	**7N-1637**	2	STUD	
	5	1	**9X-6458**	12	WASHER-HARD (10.2X22.5X3-MM THK)	

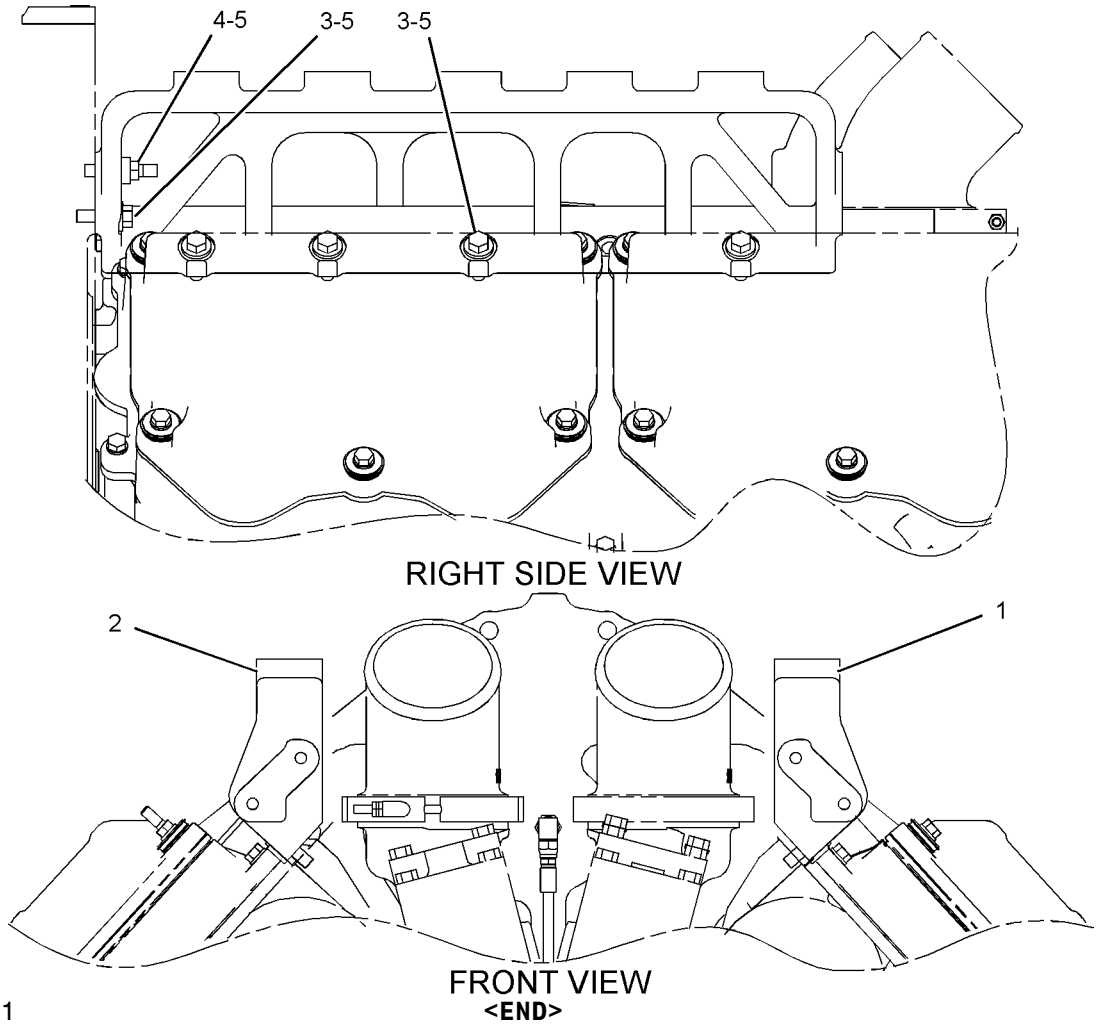

GRAPHIC #1 g01125910

<END>

AIR INLET AND EXHAUST SYSTEM

234-5913 SUPPORT GP-AFTERCOOLER

S/N: EHX2310-UP

PART OF 212-2737, 212-2744, 271-2219 ENGINE AR-COMPLETE

ALSO AN ATTACHMENT

SMCS-1063 **i02390276**

NOTE	REF NO	GRAPHIC REF	PART NUMBER	QTY	PART NAME 1 2 3 4 5 6 (PRODUCT LEVEL)	SEE PAGE
	1	1	**219-6923**	1	BRACE	
	2	1	**224-3158**	1	BRACE	
C	3	1	**3B-1915**	8	BOLT (3/8-16X1.375-IN)	
C	4	1	**7N-1637**	4	STUD	
	5	1	**9X-6458**	12	WASHER-HARD (10.2X22.5X3-MM THK)	

C-CHANGE FROM PREVIOUS TYPE

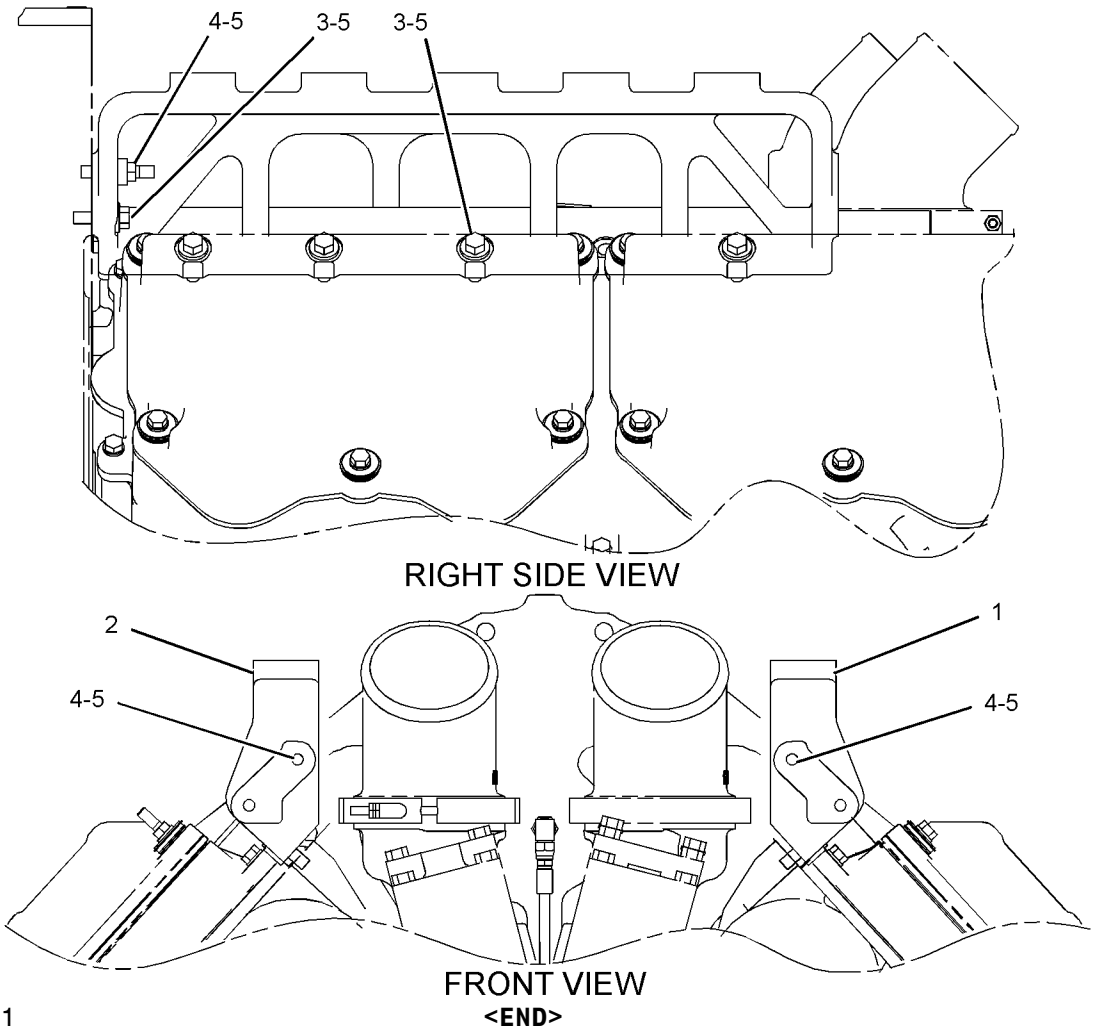

GRAPHIC #1

<END>

g01208367

AIR INLET AND EXHAUST SYSTEM

217-6570 TURBOCHARGER GP

S/N: EHX1-2381
PART OF 260-9527, 261-1507 ENGINE AR-CORE
ALSO AN ATTACHMENT

SMCS-1052, 1053 **i02044300**

NOTE	REF NO	GRAPHIC REF	PART NUMBER	QTY	PART NAME 1 2 3 4 5 6 (PRODUCT LEVEL)	SEE PAGE
	1	1	**1S-4295**	2	GASKET	
	2	1	**2N-2765**	6	BOLT-HIGH TEMPERATURE (3/8-16X1.75-IN)	
	3	1	**114-9223**	2	SPACER (11.13X19.05X19-MM THK)	
Y	4	1	*234-1524*	2	TURBOCHARGER GP	167
	5	1	**2N-2766**	8	LOCKNUT (3/8-16-THD)	

Y-SEPARATE ILLUSTRATION

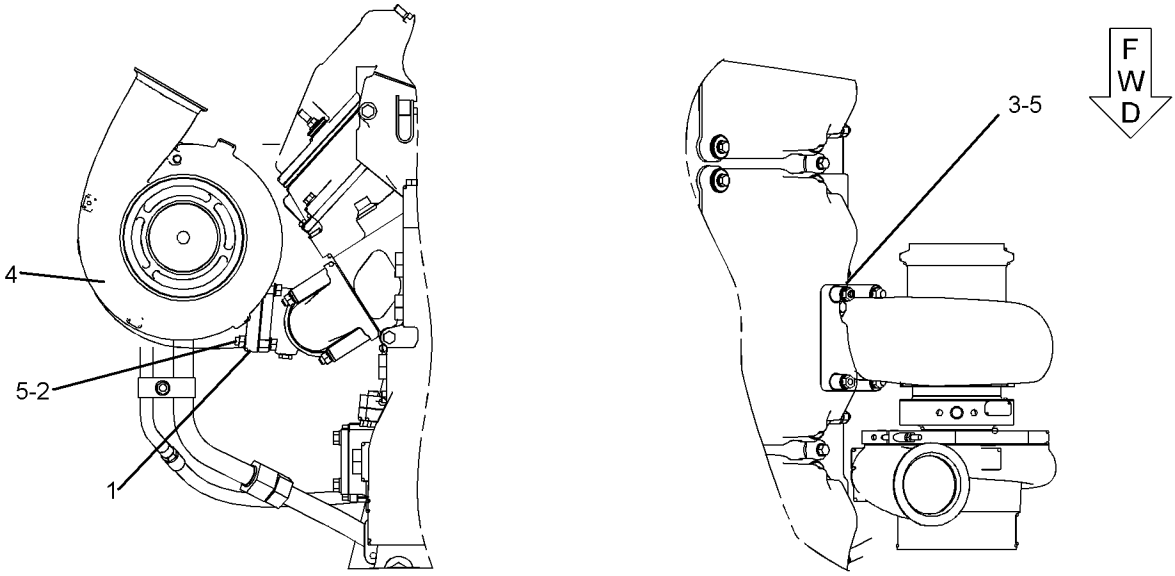

FRONT VIEW TOP VIEW

GRAPHIC #1 **<END>** g01052314

217-6570 TURBOCHARGER GP

S/N: EHX2382-UP
PART OF 260-9527, 261-1507, 276-9586 ENGINE AR-CORE
ALSO AN ATTACHMENT

SMCS-1052, 1053 **i02422998**

NOTE	REF NO	GRAPHIC REF	PART NUMBER	QTY	PART NAME 1 2 3 4 5 6 (PRODUCT LEVEL)	SEE PAGE
	1	1	**1S-4295**	2	GASKET (TURBOCHARGER)	
	2	1	**2N-2765**	6	BOLT-HIGH TEMPERATURE (3/8-16X1.75-IN)	
	3	1	**114-9223**	2	SPACER (11.13X19.05X19-MM THK)	
Y	4	1	*234-1524*	1	TURBOCHARGER GP	167
	5	1	**2N-2766**	8	LOCKNUT (3/8-16-THD)	
Y	6	1	**268-3295**	1	TURBOCHARGER GP	168

Y-SEPARATE ILLUSTRATION

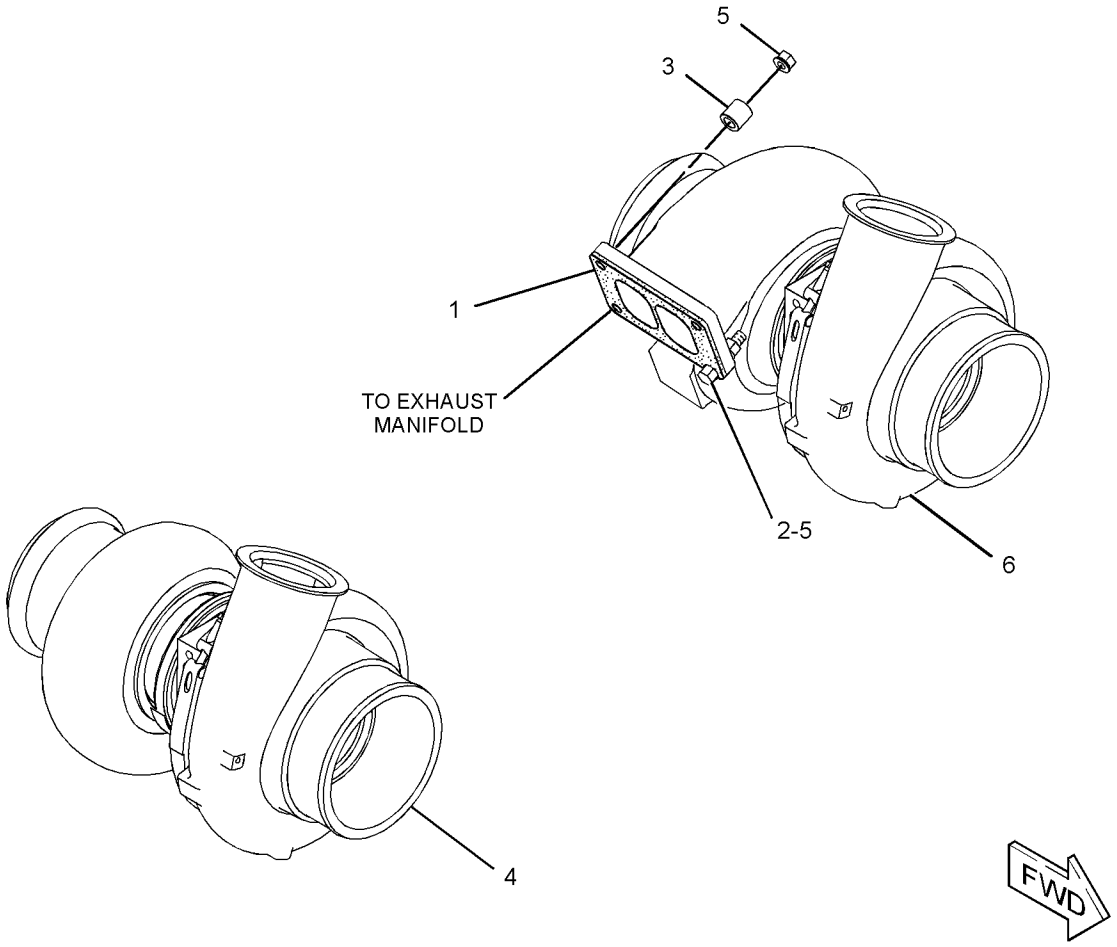

GRAPHIC #1 **<END>** g01224162

234-1524 TURBOCHARGER GP

S/N: EHX1-UP
PART OF 217-6570 TURBOCHARGER GP
FIELD REPLACEMENT FOR 268-3295—PAGE 168
ALSO AN ATTACHMENT

SMCS-1052, 1053 **i02049707**

NOTE	REF NO	GRAPHIC REF	PART NUMBER	QTY	PART NAME 1 2 3 4 5 6 (PRODUCT LEVEL)	SEE PAGE
	1	1	**7W-2297**	1	CLAMP AS (COMPRESSOR)	
	2	1	**9N-2038**	1	CLAMP AS (TURBINE)	
	3	1	**245-0767**	1	CARTRIDGE GP-TURBOCHARGER	

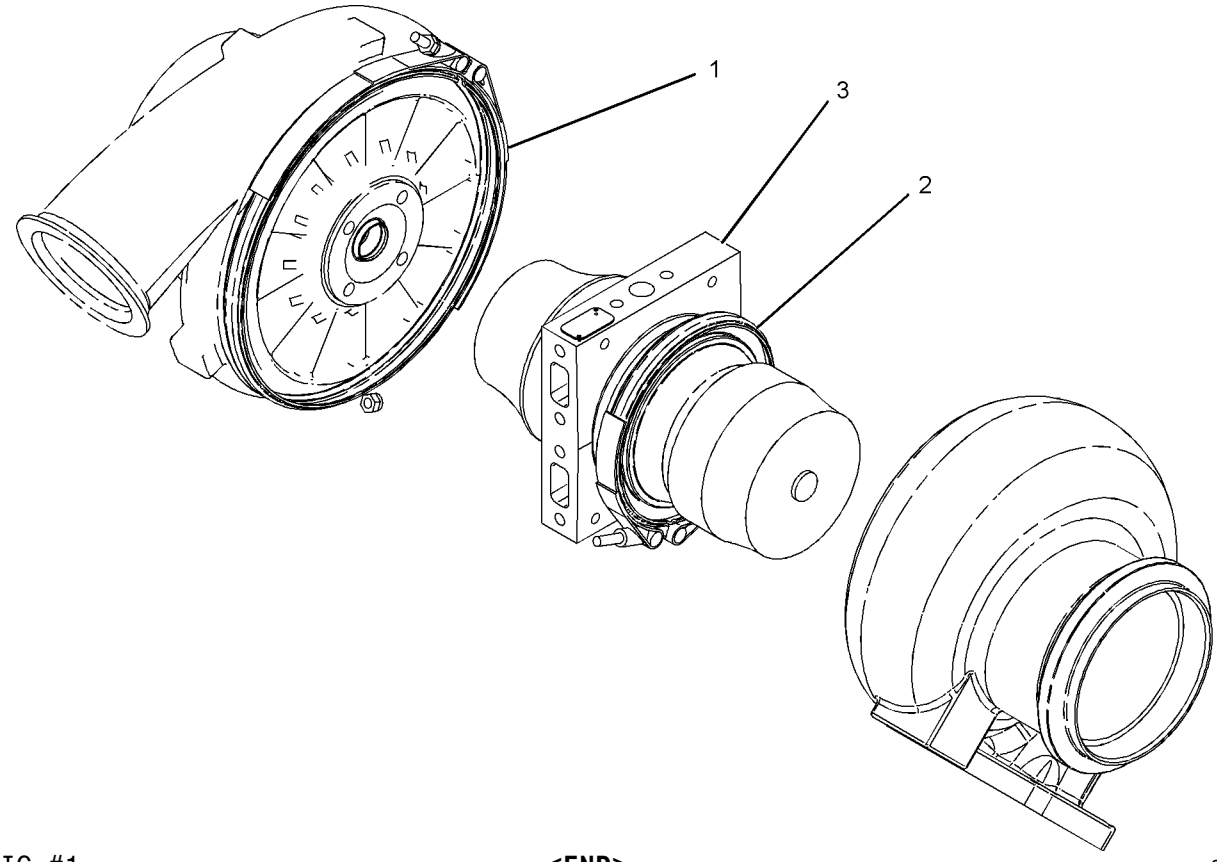

GRAPHIC #1 **<END>** g01052883

AIR INLET AND EXHAUST SYSTEM

268-3295 TURBOCHARGER GP

S/N: EHX2382-UP
WATER COOLED
PART OF 217-6570 TURBOCHARGER GP
FIELD REPLACEMENT ORDER 234-1524—PAGE 167
ALSO AN ATTACHMENT

SMCS-1052, 1053 **i02423025**

NOTE	REF NO	GRAPHIC REF	PART NUMBER	QTY	PART NAME 1 2 3 4 5 6 (PRODUCT LEVEL)	SEE PAGE
	1	1	**7W-2297**	1	CLAMP AS (COMPRESSOR)	
	2	1	**9N-2038**	1	CLAMP AS (TURBINE)	
	3	1	**245-0767**	1	CARTRIDGE GP-TURBOCHARGER	

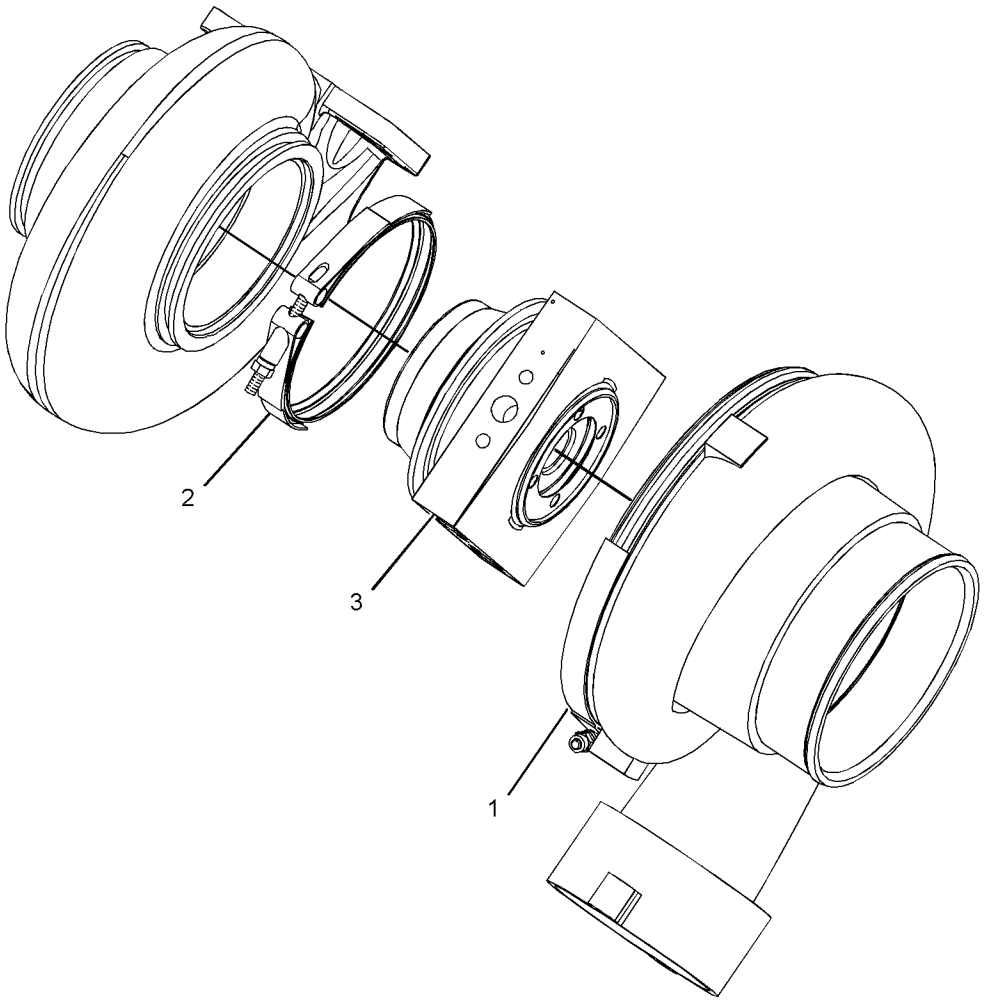

GRAPHIC #1 **<END>** g01224764

222-1449 ADAPTER GP-FAST FILL FUEL

S/N: RJG1-UP

AN ATTACHMENT

SMCS-1710 **i02402557**

NOTE	REF NO	GRAPHIC REF	PART NUMBER	QTY	PART NAME 1 2 3 4 5 6 (PRODUCT LEVEL)	SEE PAGE
	1	1	**4J-8820**	2	SPACER (1.25X2X1.5-IN THK)	
	2	1	**6Y-0091**	1	BLOCK AS	
	3	1	**9D-0630**	1	CAP-DUST	
	4	1	**124-2463**	1	ADAPTER GP-FAST FILL FUEL	
I	5	1	**127-4978**	1	HOSE AS	
	6	1	**142-0406**	1	BRACKET AS	
	7	1	**163-5455**	1	VALVE AS (FAST FILL FUEL)	
	8	1	**188-5095**	1	VENT AS	
	9	1	**174-0050**	1	HOSE AS	
	10	1	**1H-8128**	1	SEAL-O-RING	
	11	1	**1J-9671**	2	SEAL-O-RING	
	12	1	**1P-4582**	4	FLANGE-HALF	
	13	1	**4J-0527**	2	SEAL-O-RING	
	14	1	**5H-6734**	1	SEAL-O-RING	
	15	1	**5P-2566**	4	BOLT (1/2-13X1.5-IN)	
	16	1	**5P-2618**	2	CONNECTOR	
	17	1	**6V-2686**	1	CLIP	
	18	1	**6V-5839**	6	WASHER (11X21X2.5-MM THK)	
	19	1	**7X-0340**	2	BOLT (1/2-13X6.5-IN)	
	20	1	**8C-8844**	2	BOLT (1-8X5-IN)	
M	21	1	**8T-1159**	6	BOLT-SOCKET HEAD (M10X1.5X25-MM)	
M	22	1	**8T-4133**	1	NUT (M10X1.5 THD)	
M	23	1	**8T-4136**	7	BOLT (M10X1.5X25-MM)	
	24	1	**8T-4223**	10	WASHER-HARD (13.5X25.5X3-MM THK)	
	25	1	**8T-5361**	2	WASHER-HARD (28X49X5-MM THK)	
	26	1	**8T-8919**	4	BOLT (1/2-13X1.75-IN)	
	27	1	**8T-4121**	8	WASHER-HARD (11X21X2.5-MM THK)	

I-REFER TO HYDRAULIC INFORMATION SYSTEM
M-METRIC PART

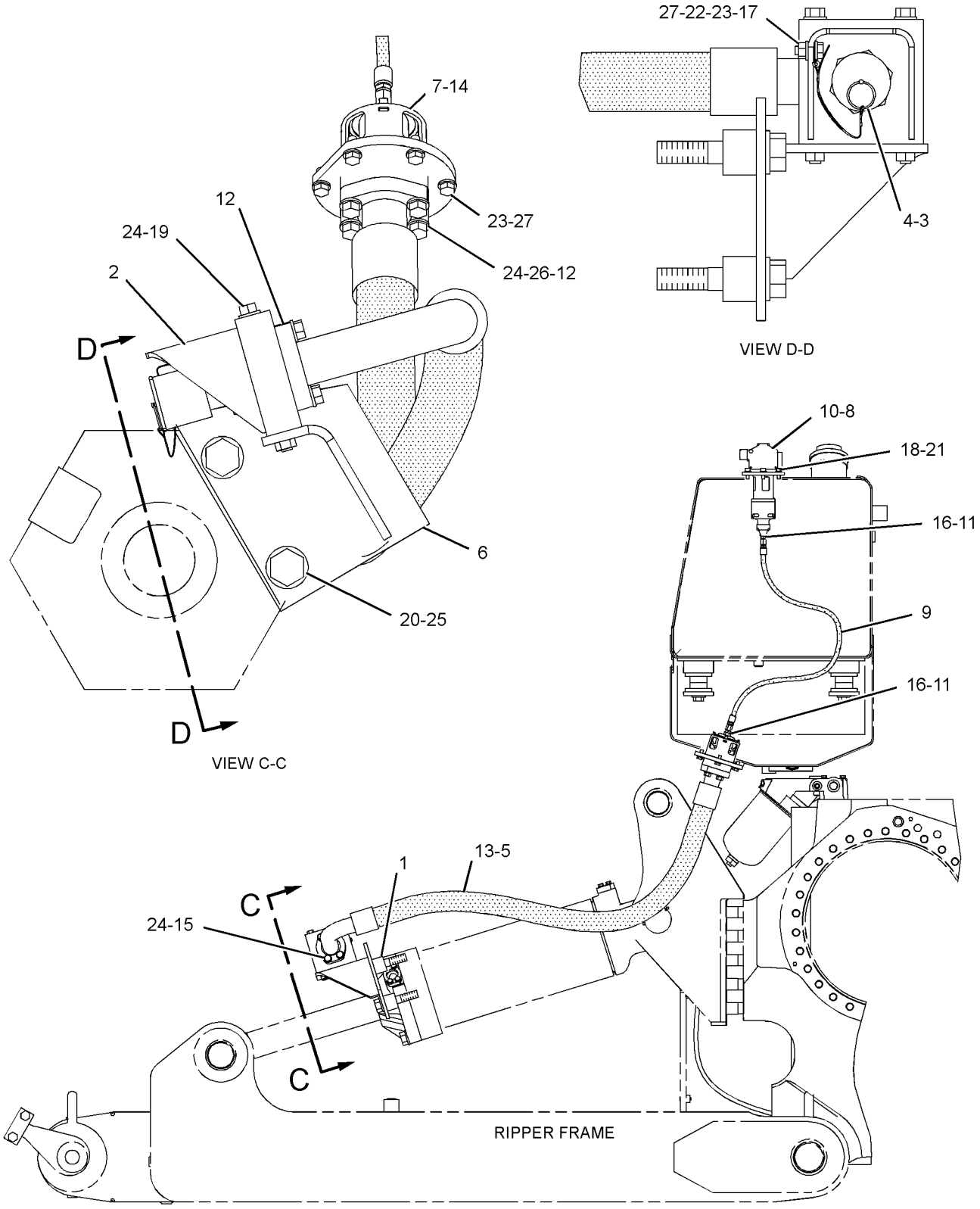

RIGHT SIDE VIEW

GRAPHIC #1

<END>

g01200172

226-3768 ADAPTER GP-FAST FILL FUEL–

WITH COUNTERWEIGHT

S/N: RJG1-UP

CANNOT BE USED WITH TRACTORS EQUIPPED WITH A RIPPER OR WINCH AN ATTACHMENT

SMCS-1710 **i02451473**

NOTE	REF NO	GRAPHIC REF	PART NUMBER	QTY	PART NAME 1 2 3 4 5 6 (PRODUCT LEVEL)	SEE PAGE
	1	1	**6Y-0091**	1	BLOCK AS	
	2	1	**9D-0630**	1	CAP-DUST	
	3	1	**124-2463**	1	ADAPTER GP-FAST FILL FUEL	
	4	1	**163-5455**	1	VALVE AS (FAST FILL FUEL)	
	5	1	**174-0050**	1	HOSE AS	
	6	1	**188-5095**	1	VENT AS	
I	7	1	**257-3469**	1	HOSE AS	
	8	1	**1H-8128**	1	SEAL-O-RING	
	9	1	**1J-9671**	2	SEAL-O-RING	
	10	1	**1P-4582**	4	FLANGE-HALF	
	11	1	**4J-0527**	2	SEAL-O-RING	
	12	1	**5H-6734**	1	SEAL-O-RING	
	13	1	**5P-2566**	4	BOLT (1/2-13X1.5-IN)	
	14	1	**5P-2618**	2	CONNECTOR	
	15	1	**6V-2686**	1	CLIP	
	16	1	**6V-5839**	6	WASHER (11X21X2.5-MM THK)	
	17	1	**7X-0340**	2	BOLT (1/2-13X6.5-IN)	
M	18	1	**8T-1159**	6	BOLT-SOCKET HEAD (M10X1.5X25-MM)	
	19	1	**8T-4121**	8	WASHER-HARD (11X21X2.5-MM THK)	
M	20	1	**8T-4133**	1	NUT (M10X1.5 THD)	
M	21	1	**8T-4136**	7	BOLT (M10X1.5X25-MM)	
	22	1	**8T-4223**	10	WASHER-HARD (13.5X25.5X3-MM THK)	
	23	1	**8T-8919**	4	BOLT (1/2-13X1.75-IN)	

I-REFER TO HYDRAULIC INFORMATION SYSTEM
M-METRIC PART

226-3768 **ADAPTER GP-FAST FILL FUEL** *(contd.)* **i02451473**

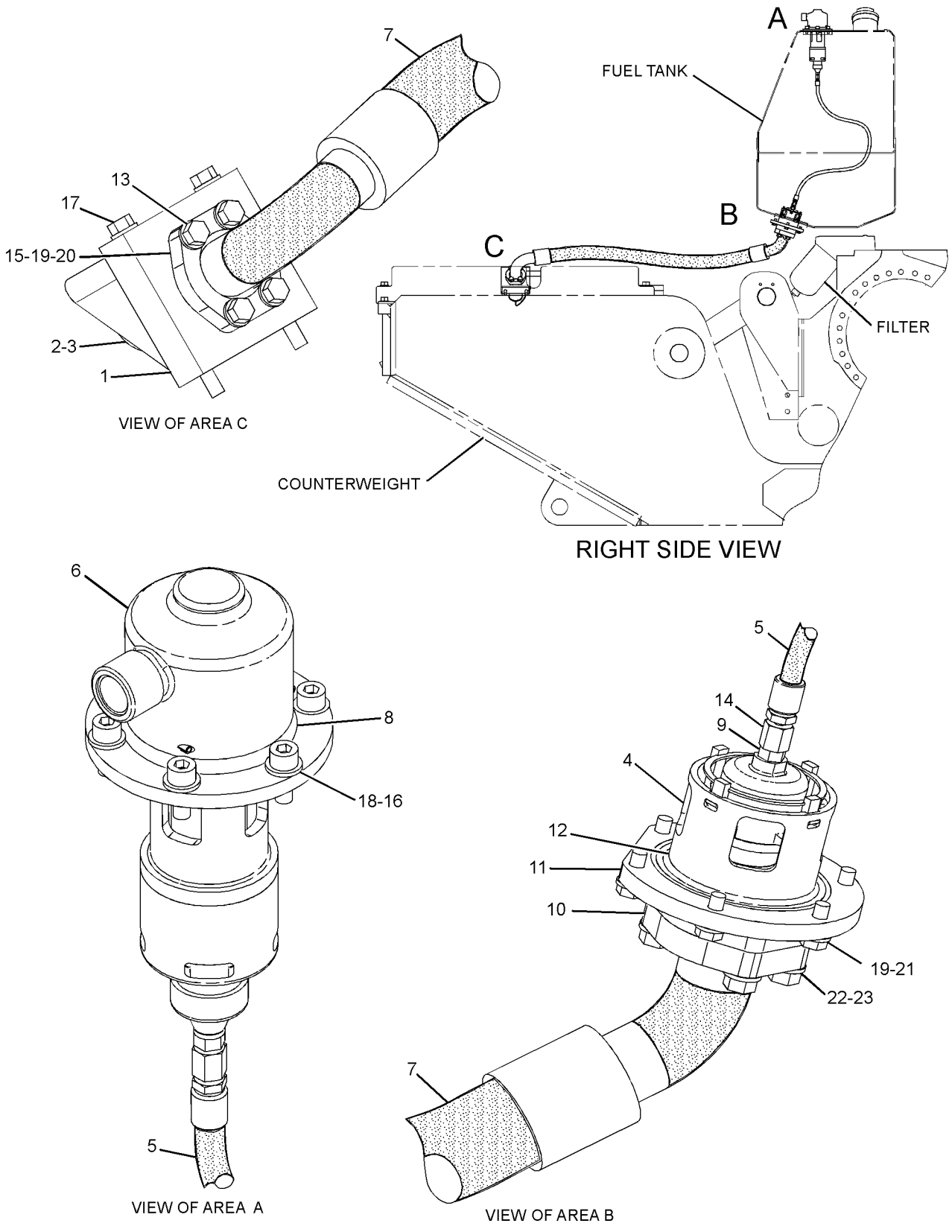

GRAPHIC #1 **<END>** g01224038

FUEL SYSTEM

256-3087 ADAPTER GP-FAST FILL FUEL

S/N: RJG1-UP

AN ATTACHMENT

SMCS-1710 **i02465094**

NOTE	REF NO	GRAPHIC REF	PART NUMBER	QTY	PART NAME 1 2 3 4 5 6 (PRODUCT LEVEL)	SEE PAGE
	1	1	**9D-0630**	1	CAP-DUST	
	2	1	**9G-0371**	1	BLOCK AS	
	3	1	**9W-8100**	1	PLATE	
	4	1	**124-2463**	1	ADAPTER GP-FAST FILL FUEL	
	5	1	**163-5455**	1	VALVE AS	
	6	1	**188-5095**	1	VENT AS	
	7	1	**174-0050**	1	HOSE AS	
	8	1	**1H-8128**	1	SEAL-O-RING	
	9	1	**1J-9671**	2	SEAL-O-RING	
	10	1	**1K-6870**	2	LOCKNUT (3/4-10-THD)	
	11	1	**1K-6872**	2	LOCKNUT (1/2-13-THD)	
	12	1	**1P-4582**	4	FLANGE-HALF	
	13	1	**4J-0527**	2	SEAL-O-RING	
	14	1	**5H-6734**	1	SEAL-O-RING	
	15	1	**5P-2566**	4	BOLT (1/2-13X1.5-IN)	
	16	1	**5P-2618**	2	CONNECTOR	
	17	1	**7X-0341**	2	BOLT (1/2-13X7-IN)	
M	18	1	**8T-1159**	6	BOLT-SOCKET HEAD (M10X1.5X25-MM)	
	19	1	**8T-4121**	6	WASHER-HARD (11X21X2.5-MM THK)	
M	20	1	**8T-4136**	6	BOLT (M10X1.5X25-MM)	
	21	1	**8T-4223**	12	WASHER-HARD (13.5X25.5X3-MM THK)	
	22	1	**8T-4994**	4	WASHER-HARD (20X36.5X3.5-MM THK)	
	23	1	**8T-8919**	4	BOLT (1/2-13X1.75-IN)	
	24	1	**8T-8924**	2	BOLT (3/4-10X2.5-IN)	
I	25	1	**9W-9978**	1	HOSE AS	
	26	1	**6V-5839**	6	WASHER (11X21X2.5-MM THK)	

I-REFER TO HYDRAULIC INFORMATION SYSTEM
M-METRIC PART

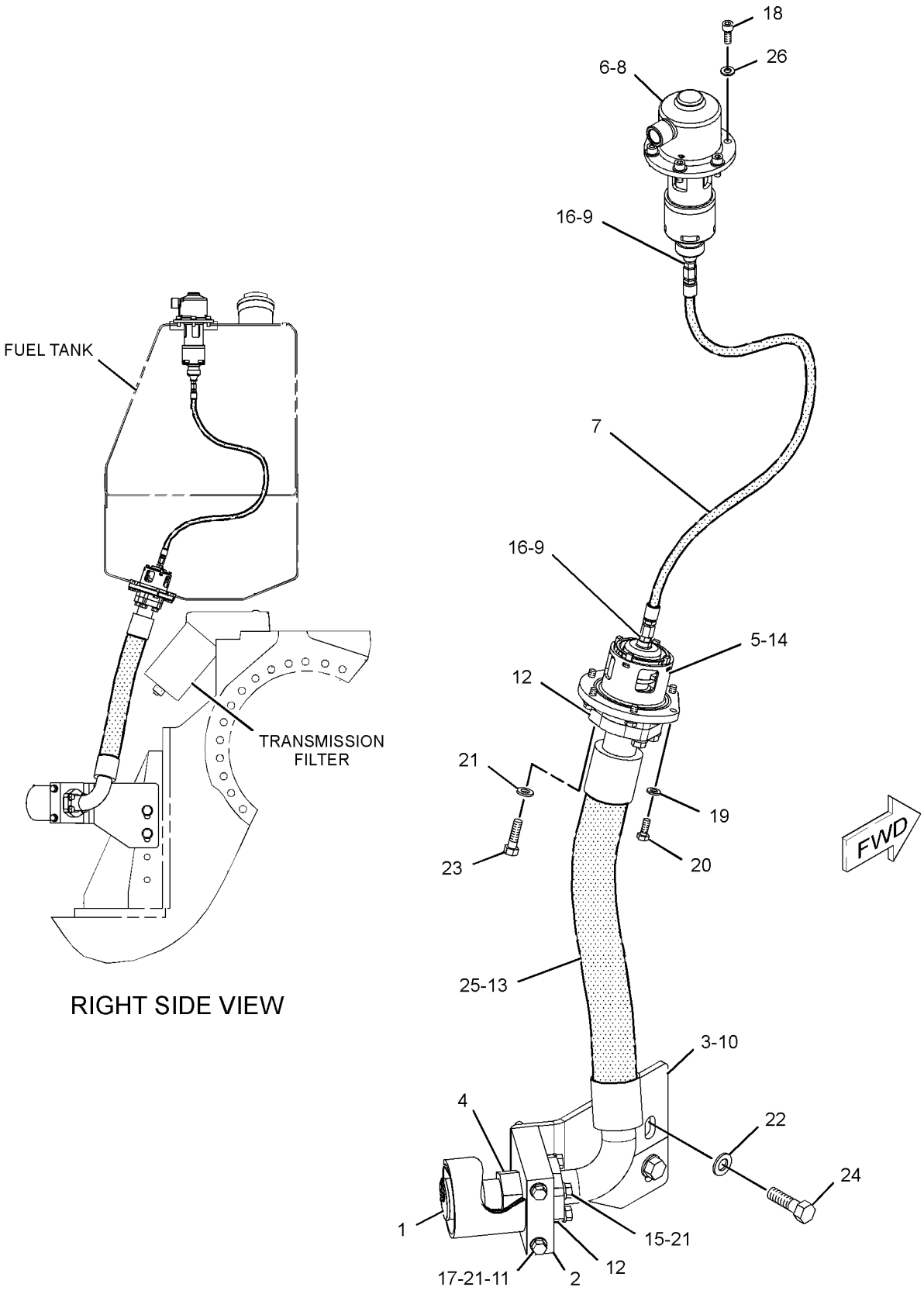

GRAPHIC #1

<END>

g01230251

FUEL SYSTEM

213-0047 FILTER & LINES GP-FUEL

S/N: RJG1-UP

PART OF 212-2741 CHASSIS AR

SMCS-1261, 1274 **i02362273**

NOTE	REF NO	GRAPHIC REF	PART NUMBER	QTY	PART NAME 1 2 3 4 5 6 (PRODUCT LEVEL)	SEE PAGE
	1	1	**1W-8793**	1	SPACER (13.8X30X20-MM THK)	
	2	1	**246-2641**	1	PADLOCK GP (FUEL TANK DRAIN)	
		1	**5P-8500**	2	KEY	
	3	1	**6V-8358**	1	VALVE-BALL (FUEL SHUTOFF)	
	4	1	**8T-6639**	1	VALVE-BALL (FUEL DRAIN)	
	5	1	**8T-9655**	6	MOUNT-ISOLATION	
	6	1	**9W-1599**	1	VALVE-CHECK (FUEL FILTER, WATER SEPARATOR)	
	7	1	**034-3679**	1	FITTING	
	8	1	**103-0010**	1	BRACKET AS	
M		1	**8T-3490**	1	NUT-WELD (M10X1.5-THD)	
	9	1	**124-3019**	1	BRACKET AS	
M		1	**8T-3490**	1	NUT-WELD (M10X1.5-THD)	
	10	1	**136-9699**	1	BRACKET AS	
	11	1	**153-6240**	1	TEE AS	
		1	**8C-7514**	1	TEE	
		1	**2M-9780**	1	SEAL-O-RING	
		1	**6V-8398**	1	SEAL-O-RING	
Y	12	1	**165-5970**	1	SWITCH GP-TOGGLE (FUEL PRIMING PUMP ON, OFF)	320
	13	1	*167-1795*	1	ELBOW AS	
		1	**8T-3491**	1	ELBOW	
		1	**3D-2824**	1	SEAL-O-RING	
	14	1	**191-1782**	1	SPACER (8.5X12.7X38.2-MM THK)	
	15	1	**191-1783**	2	SPACER (8.5X12.7X87.3-MM THK)	
Y	16	1	**217-8342**	1	PUMP GP-FUEL PRM & SEC FILTER	192
I	17	1	**222-2185**	1	HOSE AS	
I	18	1	**222-2186**	1	HOSE AS	
I	19	1	**222-2187**	1	HOSE AS	
	20	1	**226-3492**	1	BRACKET AS	
	21	1	**230-7515**	1	PLATE	
M	22	1	**133-7810**	1	STUD-TAPERLOCK (M10X1.15-THD)	
	23	1	*148-8346*	1	ELBOW AS	
		1	**8T-1686**	1	ELBOW	
		1	**3K-0360**	1	SEAL-O-RING	
		1	**6V-8398**	1	SEAL-O-RING	
	24	1	*148-8364*	1	ELBOW AS	
		1	**6V-8625**	1	ELBOW	
		1	**3K-0360**	1	SEAL-O-RING	
		1	**6V-8398**	1	SEAL-O-RING	
	25	1	*148-8382*	1	ELBOW AS	
		1	**8T-0404**	1	ELBOW	
		1	**3D-2824**	1	SEAL-O-RING	
		1	**7J-9108**	1	SEAL-O-RING	
	26	1	*148-8390*	1	ELBOW AS	
		1	**6V-8626**	1	ELBOW	
		1	**2M-9780**	1	SEAL-O-RING	
		1	**7J-9108**	1	SEAL-O-RING	
	27	1	**1P-4278**	1	CLAMP-HOSE	
	28	1	**1S-0996**	1	CLIP	
	29	1	**2M-9780**	3	SEAL-O-RING	
	30	1	**3D-2824**	1	SEAL-O-RING	
	31	1	**3K-0360**	2	SEAL-O-RING	
	32	1	**5P-1075**	2	WASHER-HARD (10.2X22.5X3-MM THK)	
	33	1	**5P-1076**	1	WASHER-HARD (13.5X30X4-MM THK)	
	34	1	**5S-7382**	1	BOLT (3/8-16X1.375-IN)	
	35	1	**6D-4636**	1	CLIP	
M	36	1	**6V-3821**	2	BOLT (M8X1.25X110-MM)	

213-0047 FILTER & LINES GP-FUEL *(contd.)* i02362273

NOTE	REF NO	GRAPHIC REF	PART NUMBER	QTY	PART NAME 1 2 3 4 5 6 (PRODUCT LEVEL)	SEE PAGE
	37	1	**6V-8801**	1	NUT (3/8-16-THD)	
	38	1	**6V-9830**	1	CAP AS	
	39	1	**7J-9108**	1	SEAL-O-RING	
	40	1	**7S-1912**	6	CLIP	
	41	1	**7X-7729**	6	WASHER (11X25X3-MM THK)	
M	42	1	**8T-0100**	1	BOLT (M8X1.25X60-MM)	
	43	1	**8T-4121**	1	WASHER-HARD (11X21X2.5-MM THK)	
M	44	1	**8T-4133**	1	NUT (M10X1.5 THD)	
M	45	1	**8T-4136**	5	BOLT (M10X1.5X25-MM)	
M	46	1	**8T-4137**	1	BOLT (M10X1.5X20-MM)	
M	47	1	**8T-4184**	1	BOLT (M12X1.75X45-MM)	
	48	1	**9N-0869**	6	WASHER-HARD (8.8X25.5X2-MM THK)	
	49	1	**9S-4190**	1	PLUG	
	50	1	**9S-8006**	1	PLUG	
D	51	1	**5P-5991**		HOSE (0.11-M)	
E	52	1	**5P-1505**		HOSE (60-CM)	
	53	1	**8T-4223**	1	WASHER-HARD (13.5X25.5X3-MM THK)	
	54	1	**8J-8197**	1	CLIP	
	55	1	**5P-2228**	1	BOLT (1/2-13X1-IN)	

D-ORDER BY THE METER
E-ORDER BY THE CENTIMETER
I-REFER TO HYDRAULIC INFORMATION SYSTEM
M-METRIC PART
Y-SEPARATE ILLUSTRATION

213-0047 **FILTER & LINES GP-FUEL** *(contd.)* **i02362273**

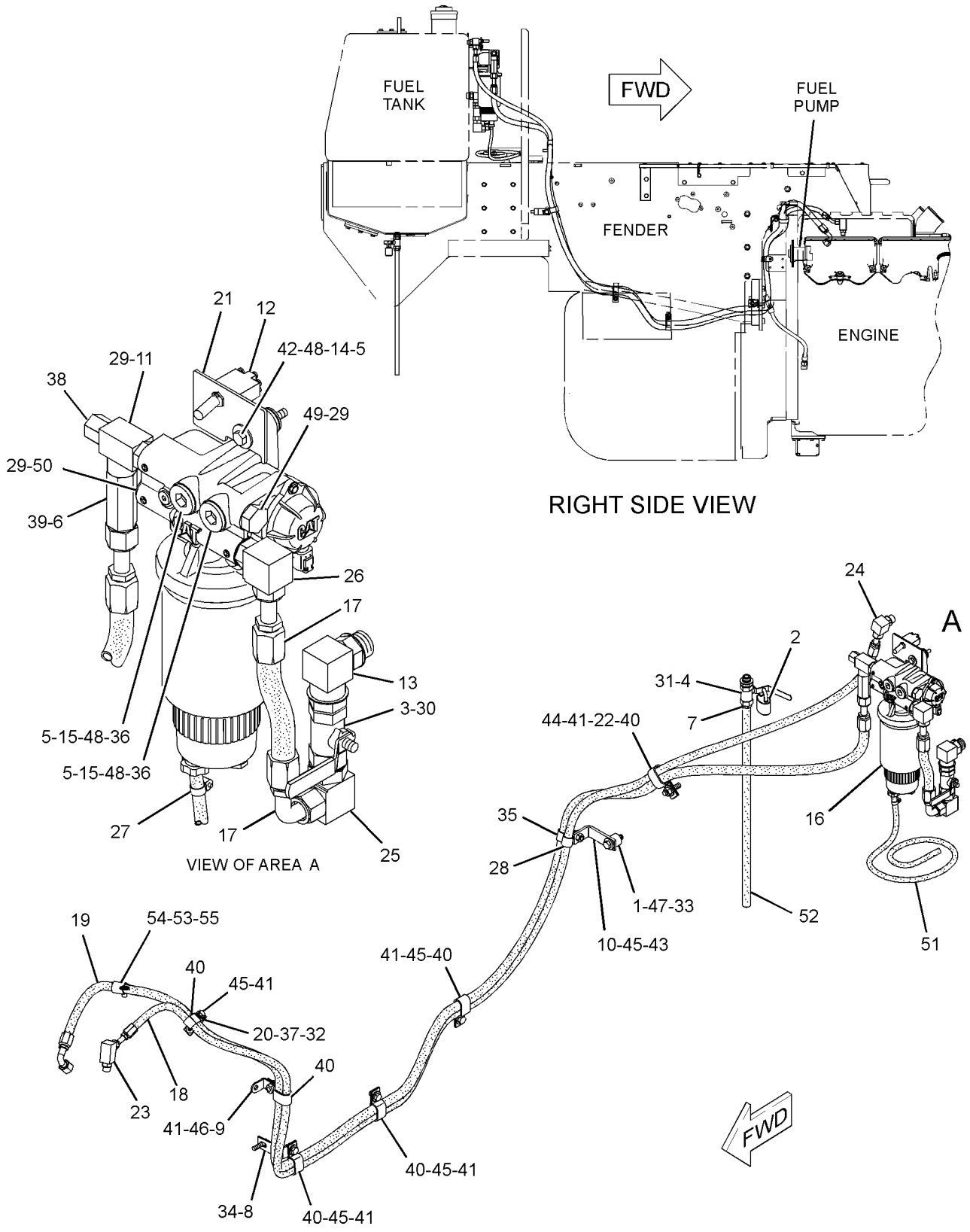

GRAPHIC #1 **<END>** g01194509

235-6504 FILTER GP-FUEL

S/N: EHX1-UP
PART OF 212-2737, 212-2744 ENGINE AR-COMPLETE
ALSO AN ATTACHMENT

SMCS-1261 **i02372929**

NOTE	REF NO	GRAPHIC REF	PART NUMBER	QTY	PART NAME 1 2 3 4 5 6 (PRODUCT LEVEL)	SEE PAGE
	1	1	**3S-2093**	7	STRAP-CABLE (PLASTIC)	
	2	1	**6N-1127**	1	SHIELD (OIL FILTER)	
	3	1	**6V-0852**	1	CAP-DUST	
	4	1	**8C-6416**	1	FITTING	
	5	1	**8T-6338**	1	TEE-O-RING PORT	
Y	6	1	**130-9811**	1	SENSOR GP-TEMPERATURE (2-PIN) (FUEL)	296
	7	1	**235-0560**	1	HARNESS AS (FUEL FILTER)	
		1	**155-2260**	2	KIT-CONNECTING PLUG (3-PIN)	
					(EACH INCLUDES PLUG AS,INTERFACE SEAL & WEDGE)	
		1	**155-2260**	1	KIT-CONNECTING PLUG (3-PIN)	
					(INCLUDES PLUG AS,INTERFACE SEAL & WEDGE)	
E		1	**125-7874**		TUBE-HEAT SHRINK (10-CM)	
		1	**102-8803**	1	KIT-RECEPTACLE (3-PIN)	
					(INCLUDES RECEPTACLE AS AND WEDGE)	
		1	**102-8806**	1	KIT-RECEPTACLE (8-PIN)	
					(INCLUDES RECEPTACLE AS AND WEDGE)	
		1	**155-2270**	1	KIT-CONNECTING PLUG (2-PIN)	
					(INCLUDES PLUG AS AND WEDGE)	
	8	1	**237-9307**	1	BASE AS-FUEL FILTER	
		1	**201-4340**	1	PLUG AS	
		1	**237-9323**	1	STUD	
Y	9	1	*239-2396*	1	SENSOR GP-PRESSURE (FUEL)	290
	10	1	**242-9362**	1	PLATE	
Y	11	1	**258-0883**	1	SWITCH GP-PRESSURE (DIFFERENTIAL) (FUEL)	318
	12	1	**118-4728**	1	ELBOW (90-DEG)	
	13	1	**033-6033**	1	SEAL-O-RING	
	14	1	**120-9127**	1	TEE	
	15	1	**132-5789**	5	CLIP (LADDER)	
	16	1	**1C-2251**	2	BOLT (3/8-16X1.87-IN)	
	17	1	**1R-0755**	1	FILTER AS-FUEL (HIGH EFFICIENCY)	
	18	1	**238-4664**	1	STUD	
	19	1	**3B-1915**	4	BOLT (3/8-16X1.375-IN)	
	20	1	**204-1611**	1	STRAP-CABLE	
	21	1	**5M-2894**	9	WASHER-HARD (10.2X18.5X2.5-MM THK)	
	22	1	**6V-5049**	1	SEAL-O-RING	
	23	1	**6V-8554**	1	NUT (13/16-16-THD)	
	24	1	**7F-9090**	2	SCREW-DRIVE (NO 8X3/8-IN)	
	25	1	**8L-2786**	8	SEAL-O-RING	
	26	1	**8T-1715**	1	ADAPTER	
	27	1	**9S-8005**	3	PLUG-O RING (STRAIGHT THREAD O-RING)	
	28	1	**9S-8752**	2	NUT-FULL (3/8-16-THD)	
	29	1	**9X-0261**	1	ADAPTER	

E-ORDER BY THE CENTIMETER
Y-SEPARATE ILLUSTRATION

235-6504 **FILTER GP-FUEL** *(contd.)* **i02372929**

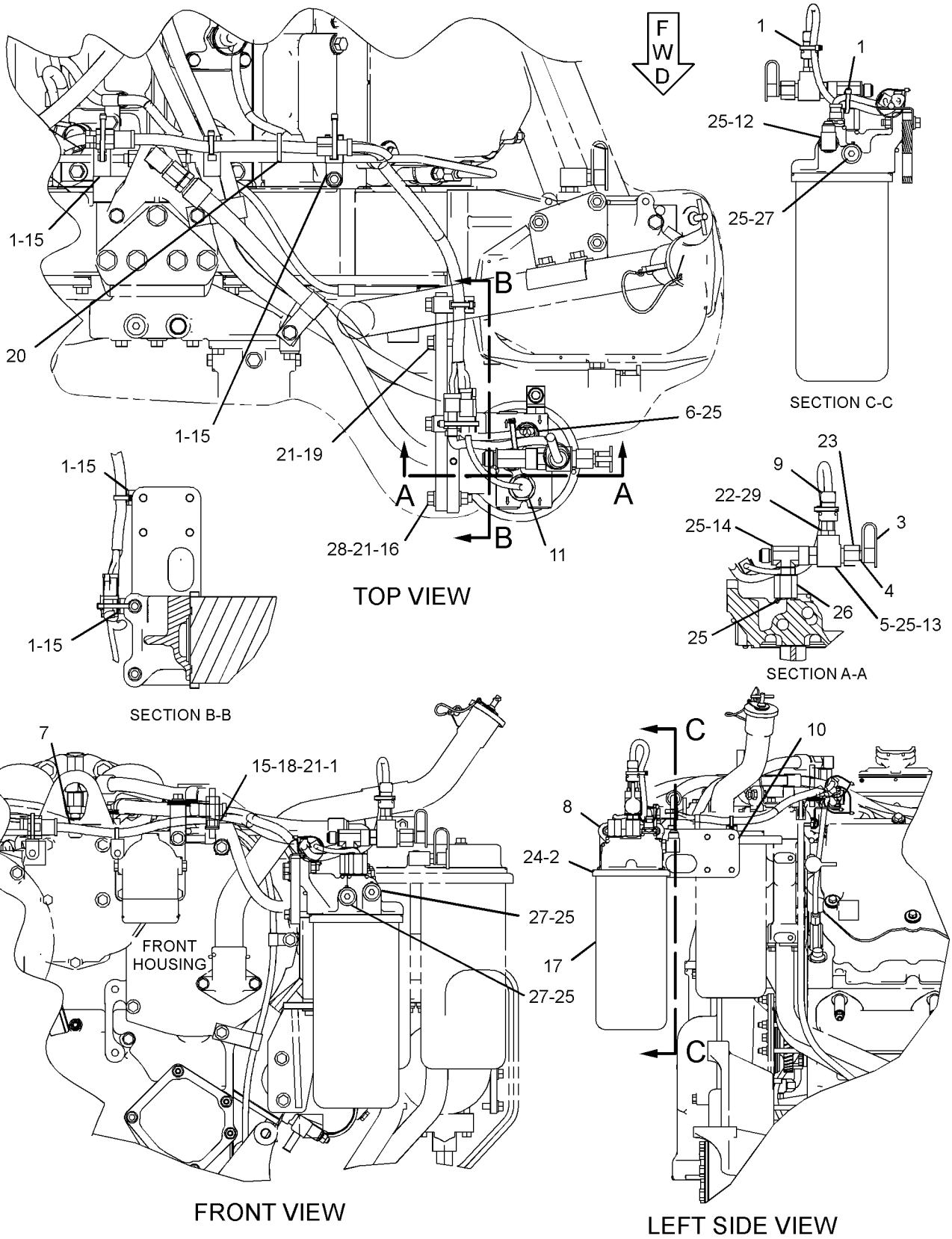

GRAPHIC #1 **<END>** g01224146

FUEL SYSTEM

279-5730 FILTER GP-FUEL

S/N: EHX2581-UP

PART OF 212-2737, 271-2219 ENGINE AR-COMPLETE

ALSO AN ATTACHMENT

SMCS-1261 **i02445786**

NOTE	REF NO	GRAPHIC REF	PART NUMBER	QTY	PART NAME 1 2 3 4 5 6 (PRODUCT LEVEL)	SEE PAGE
	1	1,2	**3S-2093**	5	STRAP-CABLE	
	2	1	**6N-1127**	1	SHIELD (FUEL FILTER)	
	3	2	**8C-6416**	1	FITTING	
	4	1	**8T-6338**	1	TEE-O-RING PORT	
Y	5	2	**130-9811**	1	SENSOR GP-TEMPERATURE (2-PIN) (FUEL)	296
	6	1	**235-0560**	1	HARNESS AS (FUEL FILTER)	
		1	**102-8803**	2	KIT-RECEPTACLE (3-PIN)	
		1	**102-8806**	1	KIT-RECEPTACLE (8-PIN)	
					(EACH RECEPTACLE KIT INCLUDES RECEPTACLE AS AND WEDGE)	
		1	**155-2270**	4	KIT-CONNECTING PLUG (2-PIN)	
					(EACH PLUG KIT INCLUDES PLUG AS AND WEDGE)	
	7	1	**237-9307**	1	BASE AS-FUEL FILTER	
		1	**237-9323**	1	STUD	
Y	8	1	*239-2396*	1	SENSOR GP-PRESSURE (FUEL)	290
Y	9	1	**258-0883**	1	SWITCH GP-PRESSURE (DIFFERENTIAL) (FUEL)	318
	10	2	**274-9565**	1	BRACKET AS	
	11	2	**275-6274**	1	PLATE	
	12	1	**033-6033**	1	SEAL-O-RING	
	13	2	**132-5789**	1	CLIP	
	14	1	**1A-2029**	1	BOLT (3/8-16X1.125-IN)	
	15	1	**1C-2251**	2	BOLT (3/8-16X1.87-IN)	
	16	2	**1R-0755**	1	FILTER AS-FUEL (HIGH EFFICIENCY)	
	17	2	**238-4664**	1	STUD	
	18	1	**3B-1915**	4	BOLT (3/8-16X1.375-IN)	
	19	1	**4P-7581**	1	CLIP	
	20	1,2	**5M-2894**	8	WASHER-HARD (10.2X18.5X2.5-MM THK)	
	21	1	**6E-5102**	1	PLATE	
	22	1	**6V-0852**	1	CAP-DUST	
	23	1	**6V-5049**	1	SEAL-O-RING	
	24	1	**6V-8554**	1	NUT (13/16-16-THD)	
	25	1	**7F-9090**	2	SCREW-DRIVE (NO 8X3/8-IN)	
	26	1,2	**8L-2786**	8	SEAL-O-RING	
	27	1	**8M-0505**	2	CONNECTOR	
	28	1	**8M-0547**	2	ELBOW	
	29	1	**8T-0119**	1	ELBOW	
	30	1	**8T-1715**	1	ADAPTER	
	31	2	**9S-8005**	2	PLUG-O RING	
	32	1	**9X-0261**	1	ADAPTER	

Y-SEPARATE ILLUSTRATION

279-5730 **FILTER GP-FUEL** *(contd.)* **i02445786**

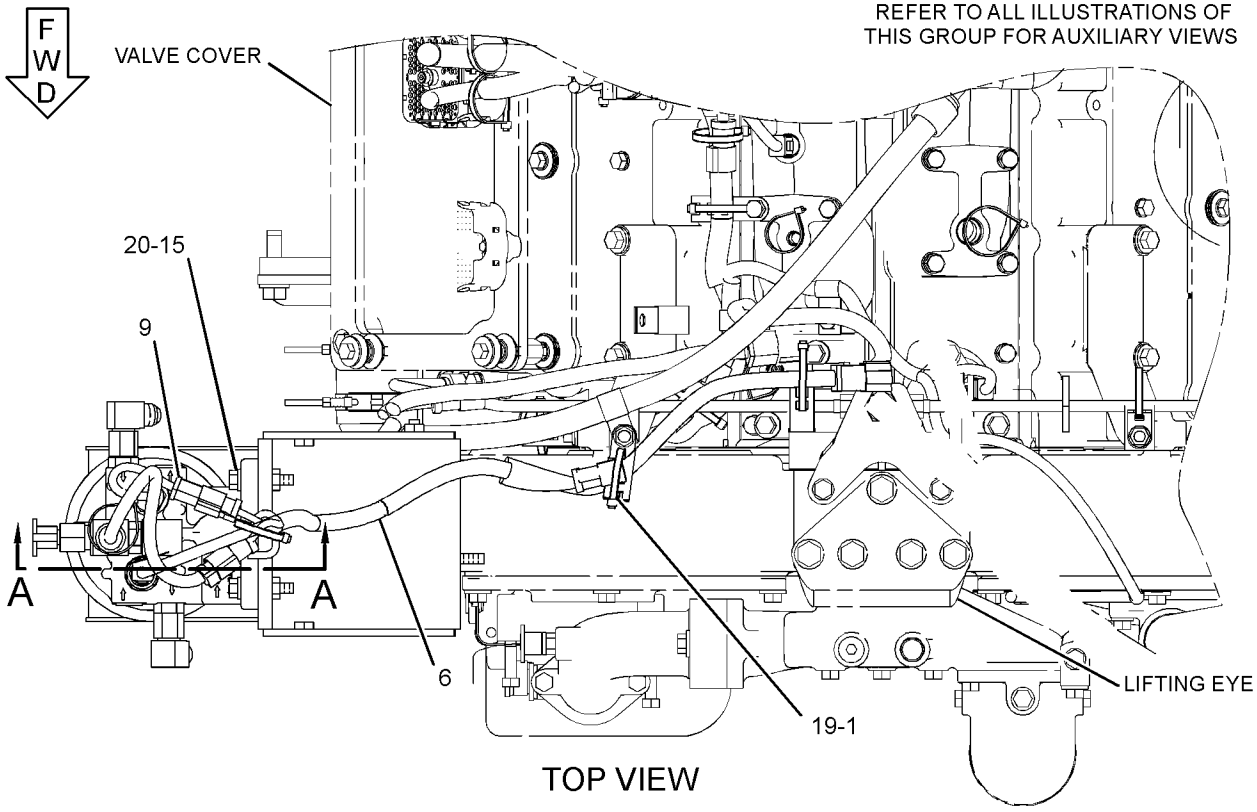

TOP VIEW

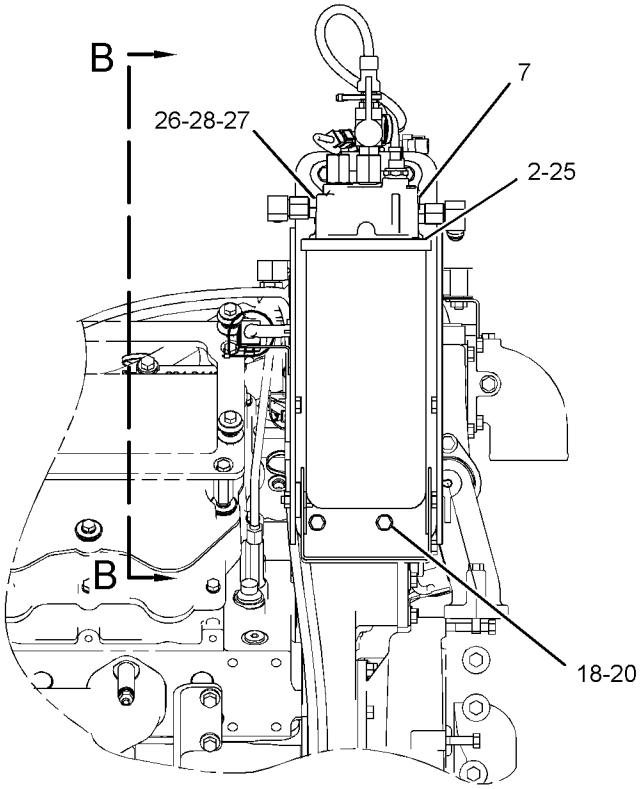

RIGHT SIDE VIEW

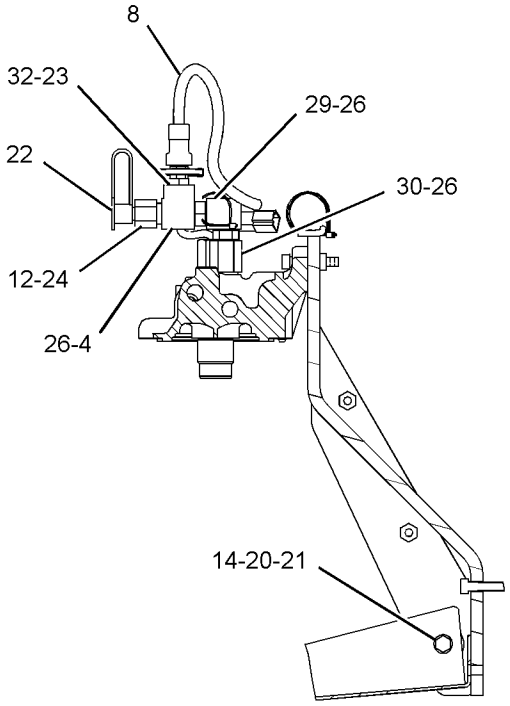

SECTION A-A

GRAPHIC #1 g01221201

279-5730 **FILTER GP-FUEL** *(contd.)* **i02445786**

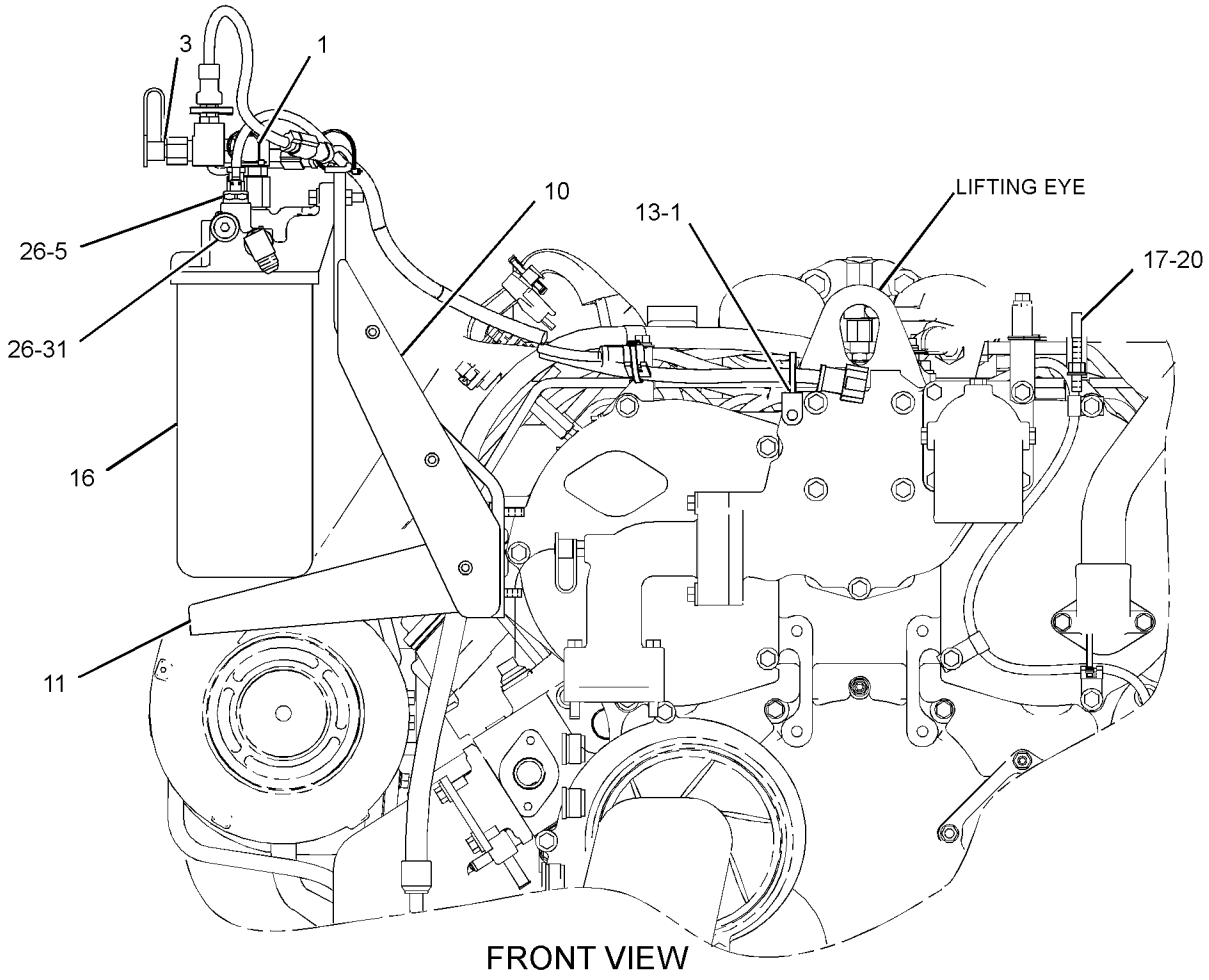

FRONT VIEW

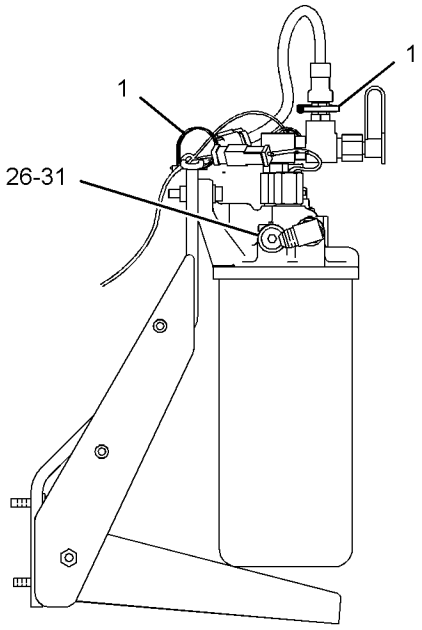

VIEW B-B

GRAPHIC #2

<END>

g01221221

212-9580 FILTER GP-WATER SEP & FUEL

S/N: RJG1-UP

PART OF 217-8342 PUMP GP-FUEL PRM & SEC FILTER

SMCS-1261, 1263 **i02432251**

NOTE	REF NO	GRAPHIC REF	PART NUMBER	QTY	PART NAME 1 2 3 4 5 6 (PRODUCT LEVEL)	SEE PAGE
	1	1	**1R-0771**	1	FILTER AS-FUEL	
	1A	1	**220-8678**	1	SEAL (FUEL, WATER SEPARATOR)	
	2	1	**270-5320**	1	BOWL AS	

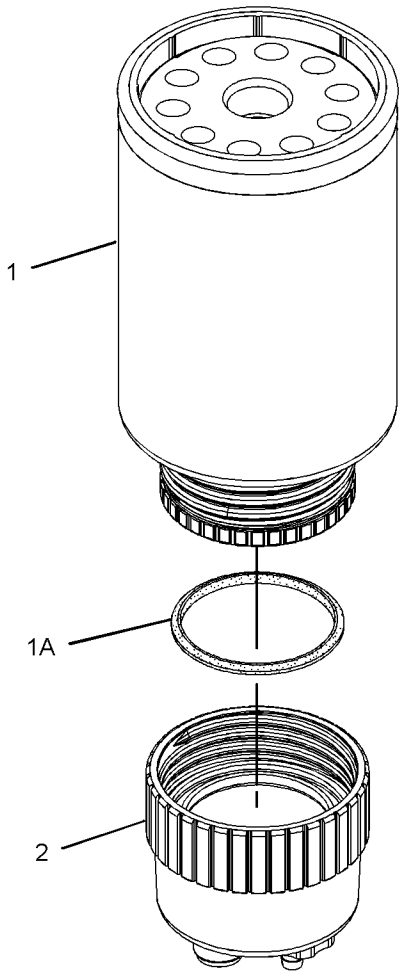

GRAPHIC #1

<END>

g01179858

FUEL SYSTEM

216-0829 LINES GP-FUEL

S/N: EHX1-UP

PART OF 212-2737, 212-2744 ENGINE AR-COMPLETE

ALSO AN ATTACHMENT

SMCS-1274 **i02387259**

NOTE	REF NO	GRAPHIC REF	PART NUMBER	QTY	PART NAME 1 2 3 4 5 6 (PRODUCT LEVEL)	SEE PAGE
	1	1	**9G-7101**	2	SPACER (10.5X20X30-MM THK)	
Y	2	1	**228-7381**	1	VALVE GP-CHECK (FUEL)	197
	3	2	**235-4754**	2	TUBE AS	
	4	2	**236-4185**	1	PLATE	
	5	1	**237-4895**	1	MANIFOLD	
	6	2	**246-8809**	1	PLATE AS	
	7	2	**256-3366**	1	BRACKET AS	
I	8	2	**260-9648**	1	HOSE AS	
I	9	2	**260-9649**	1	HOSE AS	
I	10	2	**278-8794**	1	HOSE AS	
I	11	2	**278-8795**	1	HOSE AS	
	12	1	**278-9029**	2	PLATE	
	13	1,2	**030-7937**	4	CONNECTOR-PORT	
	14	1	**030-7942**	1	ELBOW (45-DEG)	
	15	1	**030-7947**	1	ELBOW (90-DEG)	
	16	2	**118-4728**	1	ELBOW (90-DEG)	
	17	1	**0L-2070**	1	BOLT (3/8-16X2.25-IN)	
	18	2	**0S-0509**	1	BOLT (3/8-16X0.75-IN)	
	19	1	**0S-1590**	3	BOLT (3/8-16X2-IN)	
	20	1	**0S-1594**	2	BOLT (3/8-16X1-IN)	
	21	1	**132-5789**	2	CLIP	
	22	1,2	**136-7227**	1	SEAL-O-RING	
	23	1,2	**1B-2578**	6	NUT (3/8-16-THD)	
	24	1	**2P-7213**	1	TEE-BULKHEAD	
	25	1,2	**5M-2894**	14	WASHER-HARD (10.2X18.5X2.5-MM THK)	
	26	1,2	**6D-4244**	3	CLIP	
	27	1,2	**6V-5049**	6	SEAL-O-RING	
	28	2	**6V-9003**	1	ELBOW	
	29	1	**7F-2050**	1	LOCKNUT (3/4-16-THD)	
	30	2	**8L-2786**	1	SEAL-O-RING	
	31	1	**8M-0547**	1	ELBOW	
	32	1,2	**8M-2773**	4	CLIP	
	33	2	**8S-0948**	4	CLIP	
	34	2	**8S-8820**	2	CLIP	
	35	1	**8S-9191**	2	BOLT (3/8-16X4-IN)	
	36	1	**9X-6458**	2	WASHER-HARD (10.2X22.5X3-MM THK)	

I-REFER TO HYDRAULIC INFORMATION SYSTEM
Y-SEPARATE ILLUSTRATION

216-0829 **LINES GP-FUEL** *(contd.)* **i02387259**

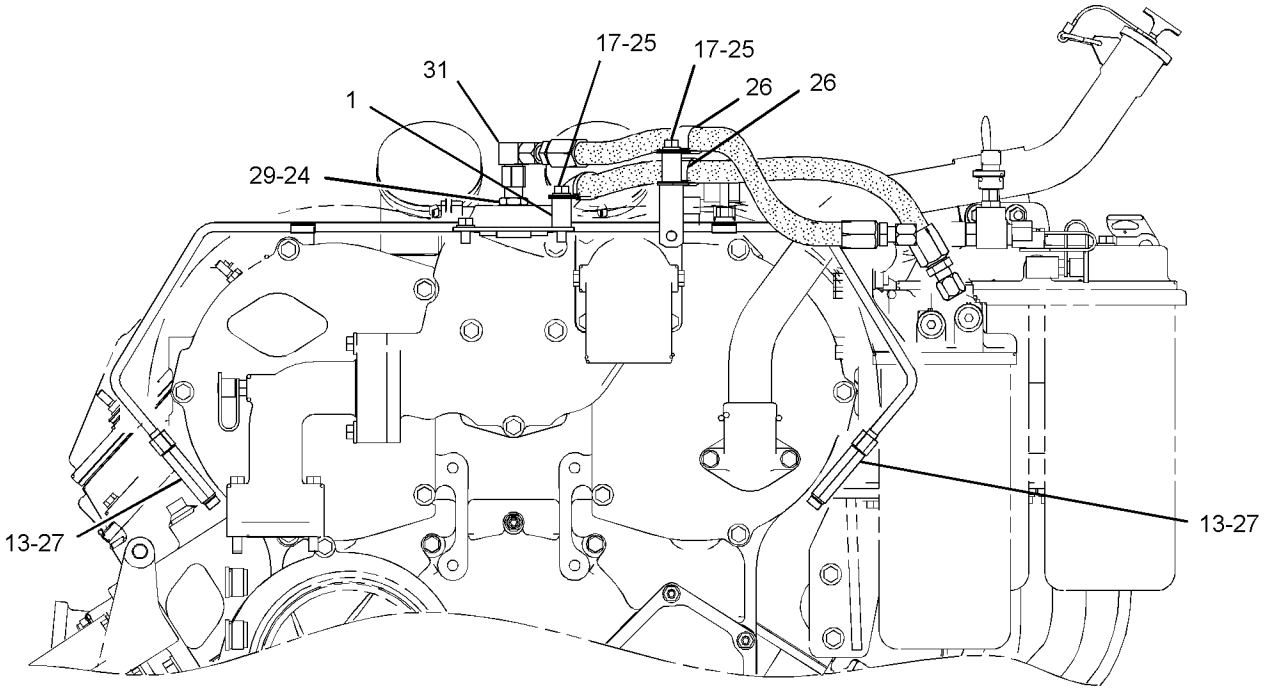

FRONT VIEW

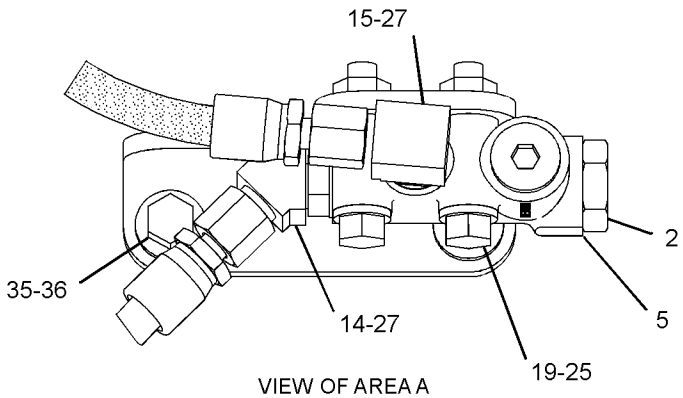

VIEW OF AREA A

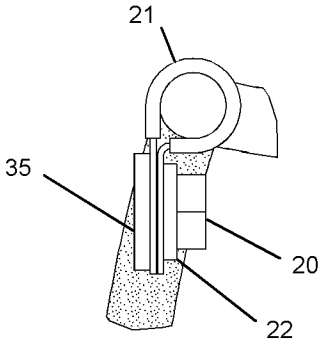

SECTION B-B

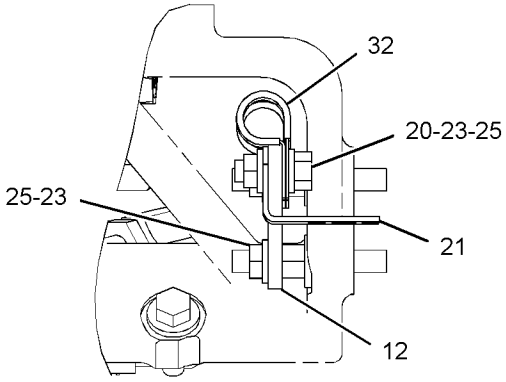

SECTION F-F

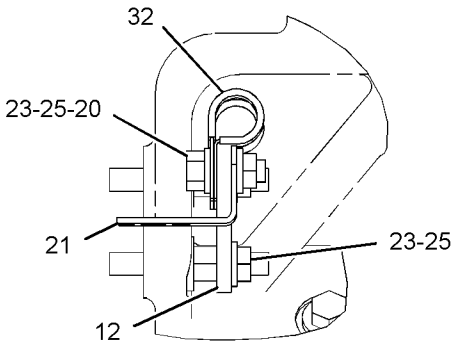

SECTION E-E

GRAPHIC #1 g01191950

REFER TO ALL ILLUSTRATIONS OF
THIS GROUP FOR AUXILIARY VIEWS

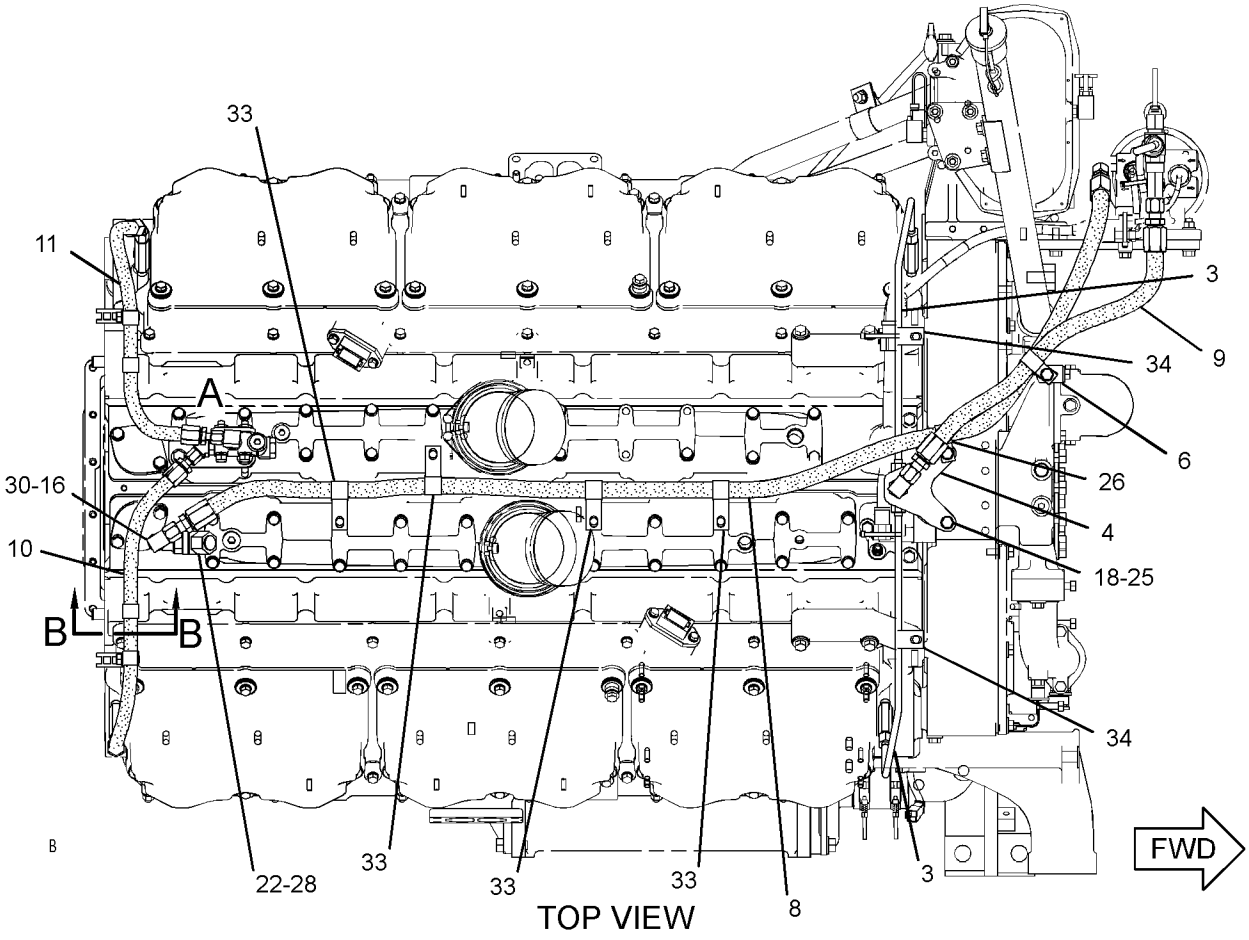

TOP VIEW

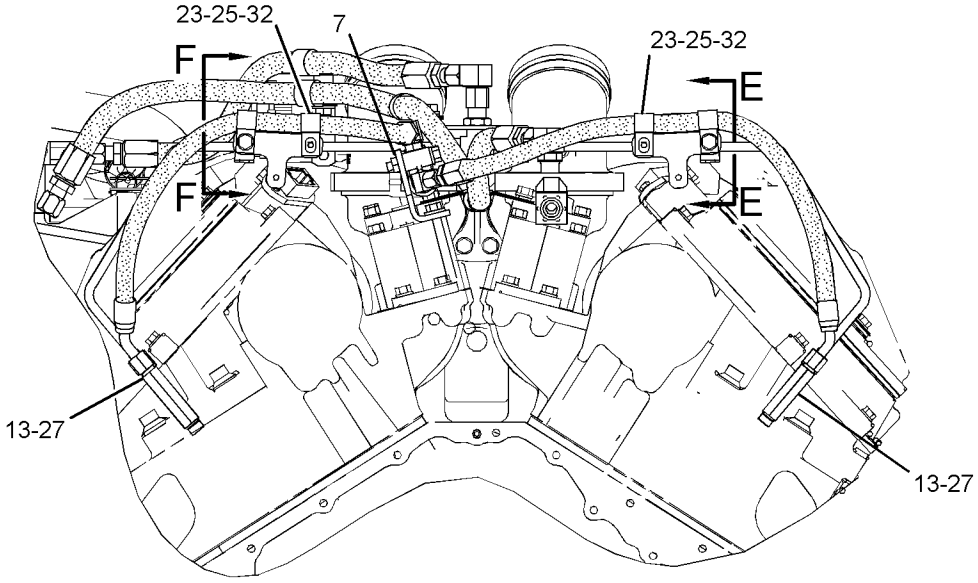

REAR VIEW

GRAPHIC #2 **<END>** g01191951

282-5926 LINES GP-FUEL FILTER

S/N: EHX2581-UP
PART OF 212-2737, 271-2219 ENGINE AR-COMPLETE
ALSO AN ATTACHMENT

SMCS-1261, 1274 **i02441027**

NOTE	REF NO	GRAPHIC REF	PART NUMBER	QTY	PART NAME 1 2 3 4 5 6 (PRODUCT LEVEL)	SEE PAGE
	1	1	**7W-9094**	1	SPACER (10.5X20X9-MM THK)	
	2	2	**172-0197**	2	SPACER (10X20X5.29-MM THK)	
Y	3	1	**228-7381**	1	VALVE GP-CHECK (FUEL)	197
	4	1,2	**235-4754**	2	TUBE AS	
	5	1	**236-4185**	1	PLATE	
	6	1	**237-4895**	1	MANIFOLD	
	7	2	**256-3366**	1	BRACKET AS	
I	8	1	**260-9648**	1	HOSE AS	
	9	2	**274-9566**	1	BRACKET AS	
I	10	1	**274-9569**	1	HOSE AS	
I	11	1	**278-8794**	1	HOSE AS	
I	12	1	**278-8795**	1	HOSE AS	
	13	1	**278-9029**	2	PLATE	
	14	2	**030-7937**	4	CONNECTOR-PORT	
	15	1	**030-7942**	1	ELBOW	
	16	1	**030-7947**	1	ELBOW (90-DEG)	
	17	1	**118-4728**	1	ELBOW	
	18	2	**0L-1351**	1	BOLT (3/8-16X0.875-IN)	
	19	1	**0S-0509**	2	BOLT (3/8-16X0.75-IN)	
	20	2	**0S-1588**	2	BOLT (3/8-16X1.25-IN)	
	21	1	**0S-1590**	3	BOLT (3/8-16X2-IN)	
	22	1	**0S-1594**	2	BOLT (3/8-16X1-IN)	
	23	1	**132-5789**	2	CLIP	
	24	1	**136-7227**	1	SEAL-O-RING	
	25	1,2	**1B-2578**	6	NUT (3/8-16-THD)	
	26	2	**2P-7213**	1	TEE-BULKHEAD	
	27	1,2	**5M-2894**	17	WASHER-HARD (10.2X18.5X2.5-MM THK)	
	28	1,2	**6D-4244**	3	CLIP	
	29	1,2	**6V-5049**	6	SEAL-O-RING	
	30	1	**6V-8801**	1	NUT (3/8-16-THD)	
	31	1	**6V-9003**	1	ELBOW	
	32	2	**7F-2050**	1	LOCKNUT (3/4-16-THD)	
	33	1	**8L-2786**	1	SEAL-O-RING	
	34	2	**8M-0547**	1	ELBOW	
	35	1,2	**8M-2773**	4	CLIP	
	36	1,2	**8S-0948**	5	CLIP	
	37	1	**8S-8820**	2	CLIP	
	38	1	**8S-9191**	2	BOLT (3/8-16X4-IN)	
	39	1	**8T-2502**	1	BOLT (3/8-16X1.125-IN)	
	40	1	**9X-6458**	2	WASHER-HARD (10.2X22.5X3-MM THK)	

I-REFER TO HYDRAULIC INFORMATION SYSTEM
Y-SEPARATE ILLUSTRATION

282-5926 **LINES GP-FUEL FILTER** *(contd.)* **i02441027**

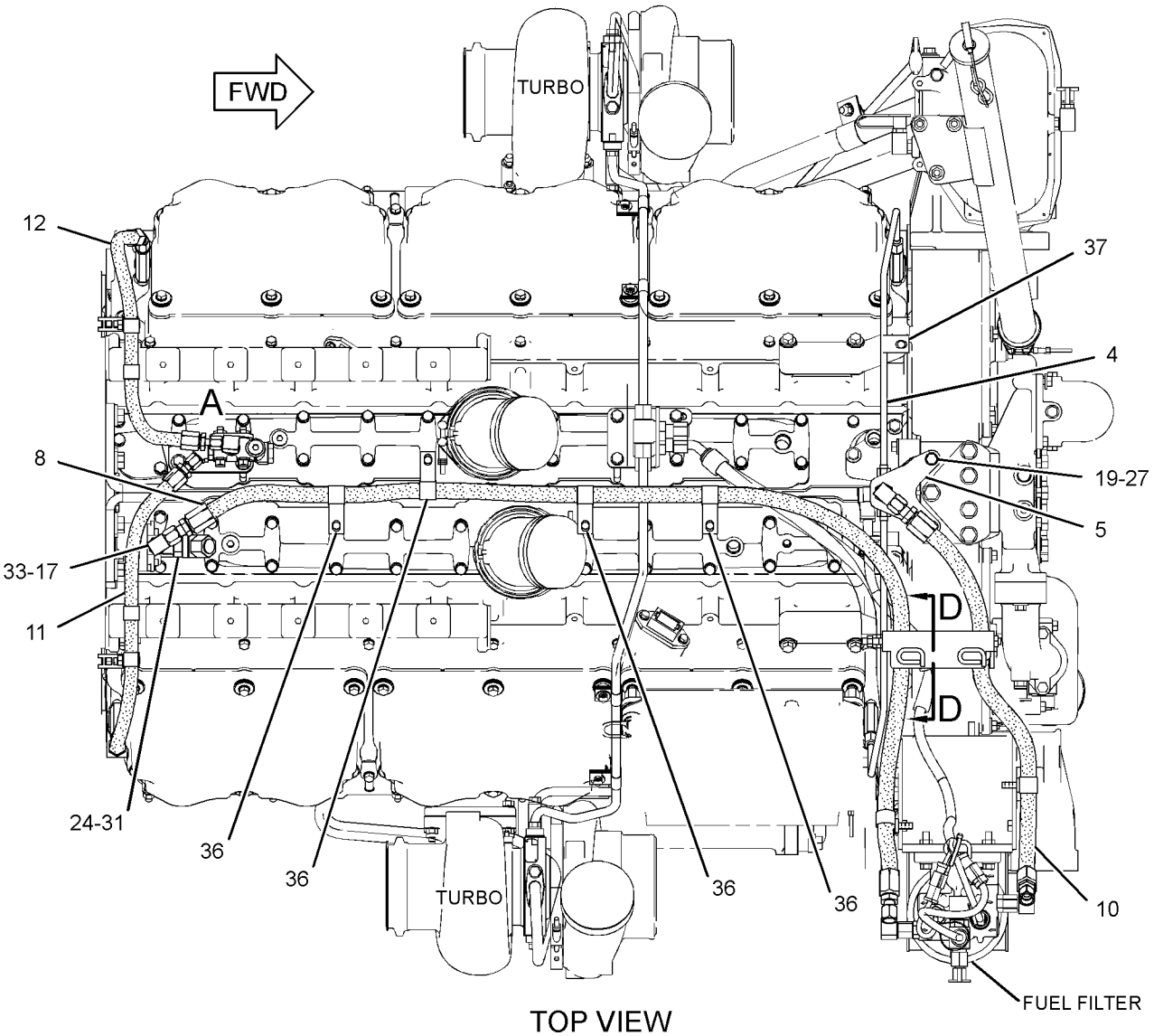

TOP VIEW

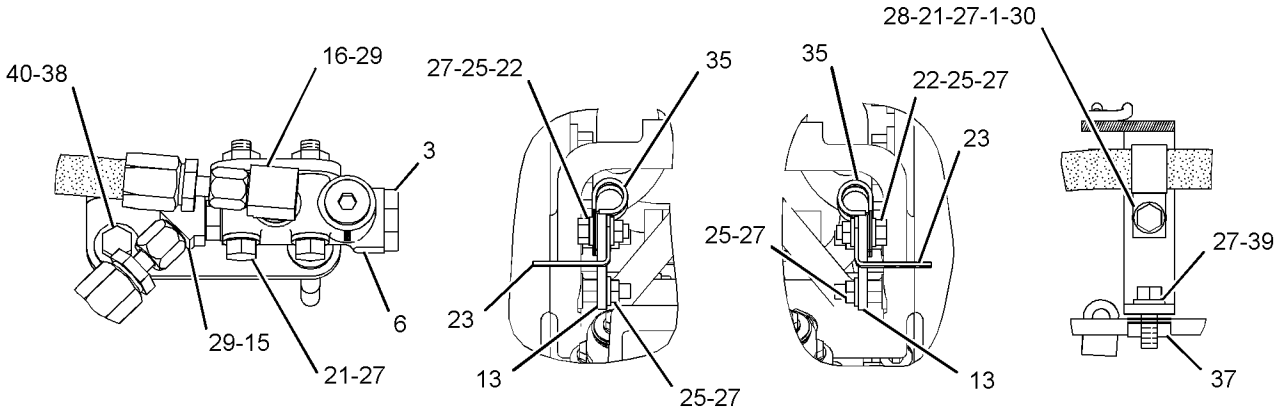

VIEW OF AREA A SECTION B-B SECTION C-C SECTION D-D

GRAPHIC #1 g01221638

282-5926 **LINES GP-FUEL FILTER** *(contd.)* **i02441027**

REFER TO ALL ILLUSTRATIONS OF THIS GROUP FOR AUXILIARY VIEWS

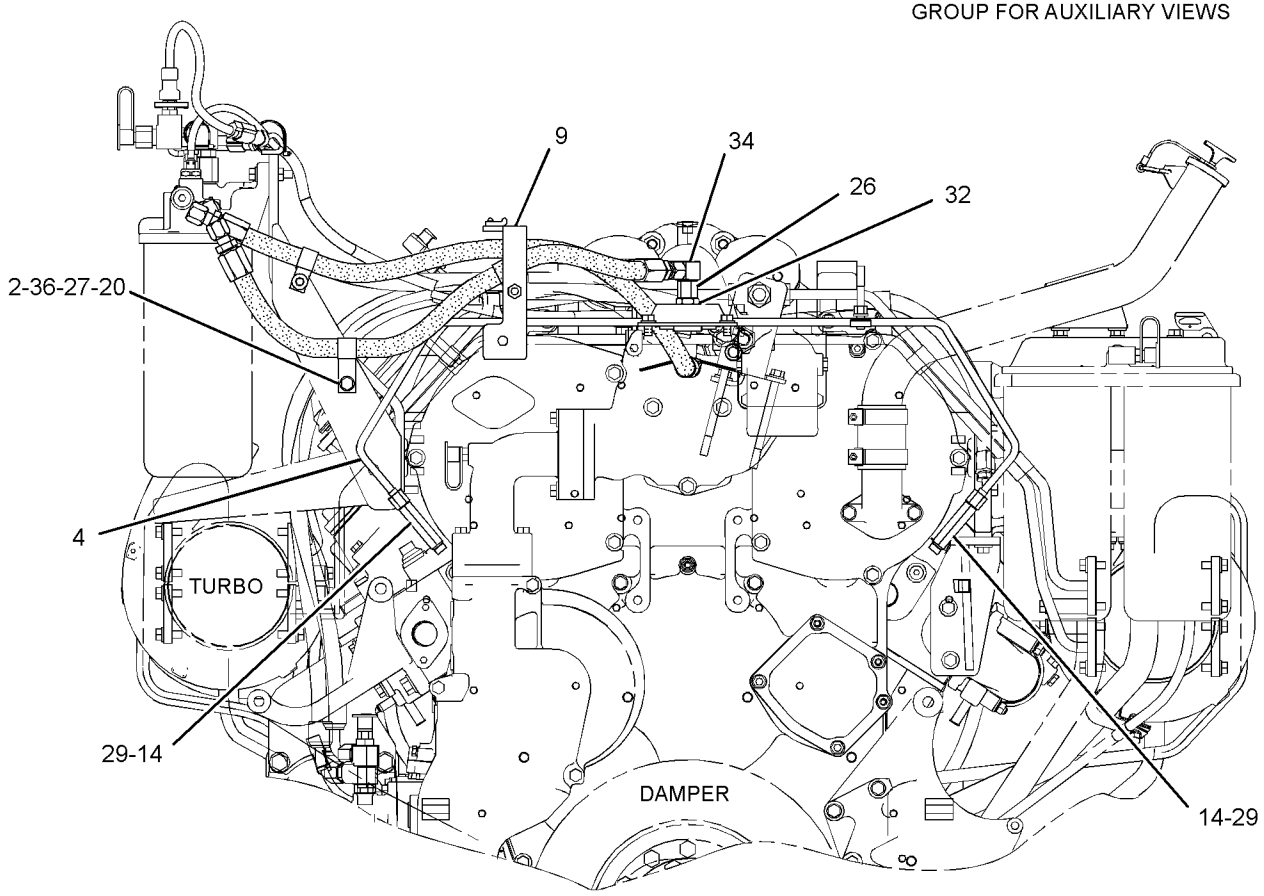

FRONT VIEW

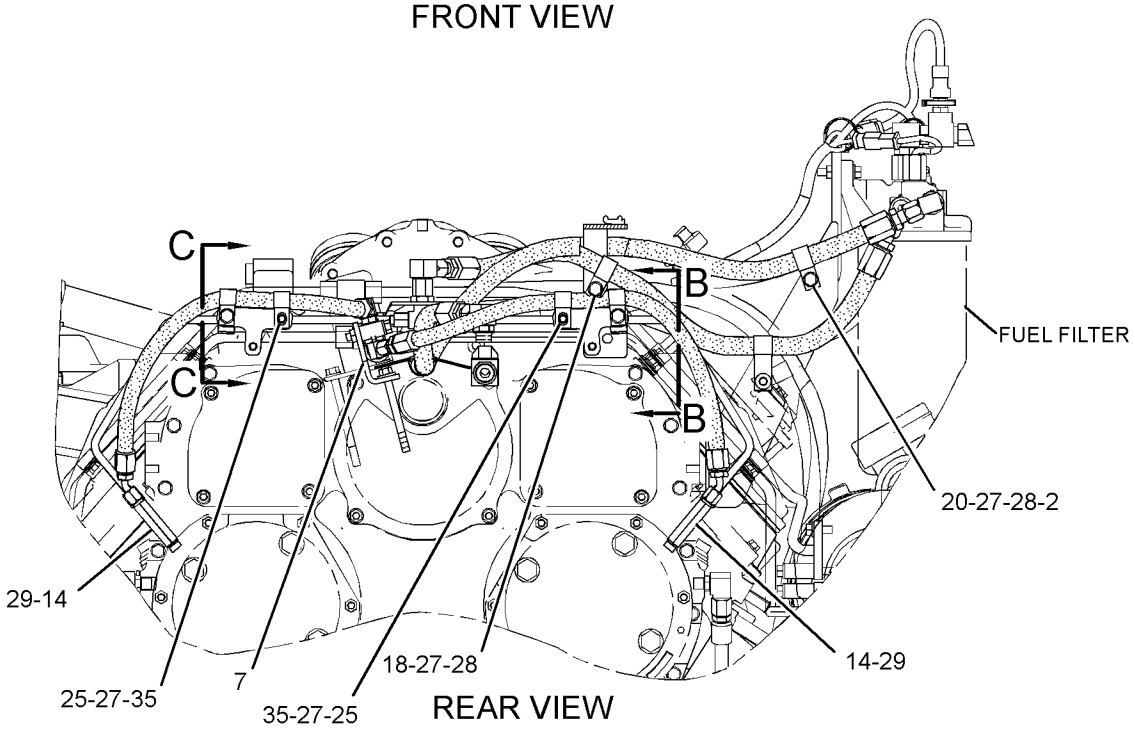

REAR VIEW

GRAPHIC #2 **<END>** g01223828

223-6421 PUMP & MTG GP-FUEL TRANSFER

S/N: EHX1-UP

PART OF 212-2737, 212-2744, 271-2219 ENGINE AR-COMPLETE

ALSO AN ATTACHMENT

SMCS-1256 **i02041100**

NOTE	REF NO	GRAPHIC REF	PART NUMBER	QTY	PART NAME 1 2 3 4 5 6 (PRODUCT LEVEL)	SEE PAGE
Y	1	1	*242-5174*	1	PUMP GP-FUEL TRANSFER	193
	2	1	**3B-1915**	2	BOLT (3/8-16X1-3/8-IN)	
	3	1	**5M-2894**	2	WASHER-HARD (10.2X18.5X2.5-MM THK)	
	4	1	**8C-3089**	1	SEAL-O-RING	

Y-SEPARATE ILLUSTRATION

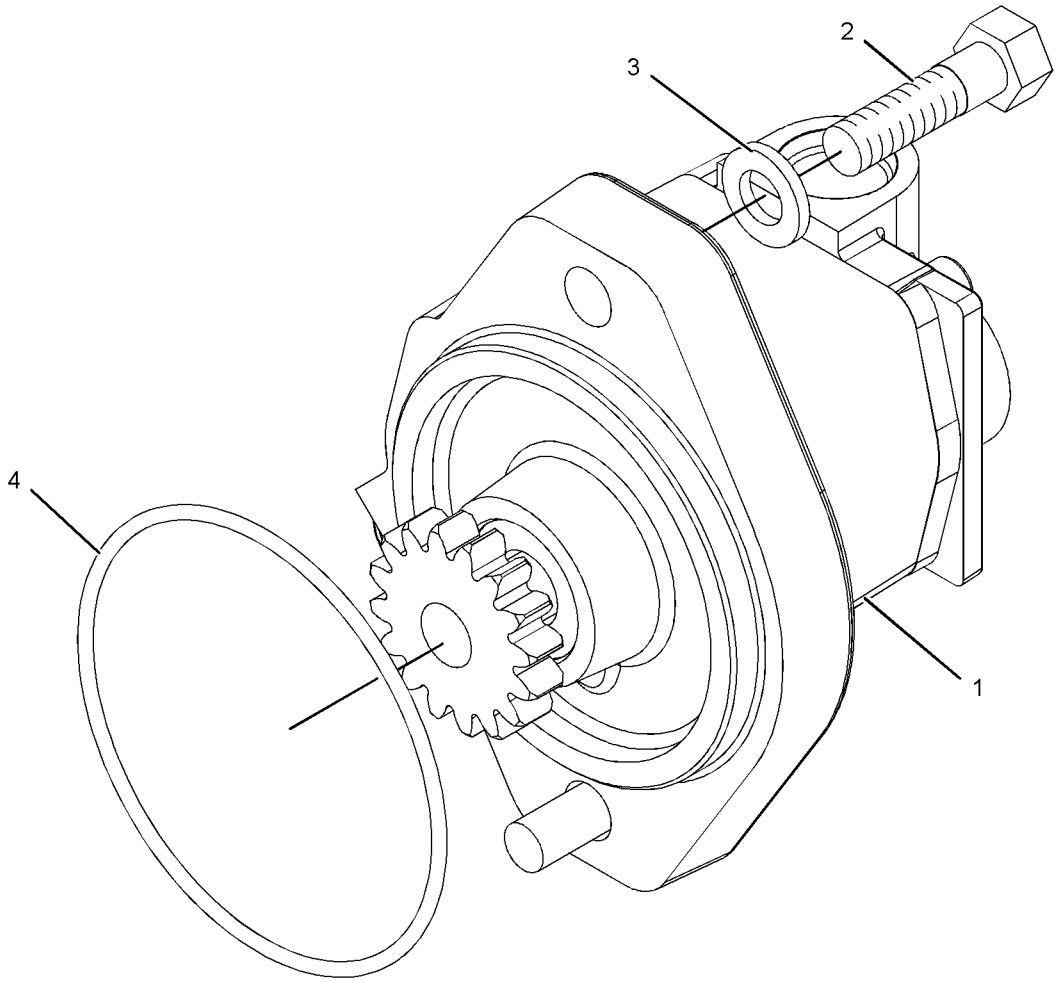

GRAPHIC #1 **<END>** g01051199

238-0489 PUMP GP-FUEL INJECTION

S/N: EHX1-UP

PART OF 260-9527, 261-1507, 276-9586 ENGINE AR-CORE

ALSO AN ATTACHMENT

SMCS-1251, 1290 **i02234565**

NOTE	REF NO	GRAPHIC REF	PART NUMBER	QTY	PART NAME 1 2 3 4 5 6 (PRODUCT LEVEL)	SEE PAGE
	1	1	**6I-0213**	1	CLAMP	
	2	1	**100-5072**	1	SPACER (9.8X15.85X37.6-MM THK)	
R	3	1	**253-0617**	1	INJECTOR GP-FUEL	
	3A	1	**9X-7317**	1	SEAL-O-RING	
	3B	1	**230-3728**	1	SEAL-O-RING	
	3C	1	**230-3775**	1	SEAL-O-RING	
	4	1	**8S-9191**	1	BOLT (3/8-16X4-IN)	

R-REMFG PART MAY BE AVAILABLE

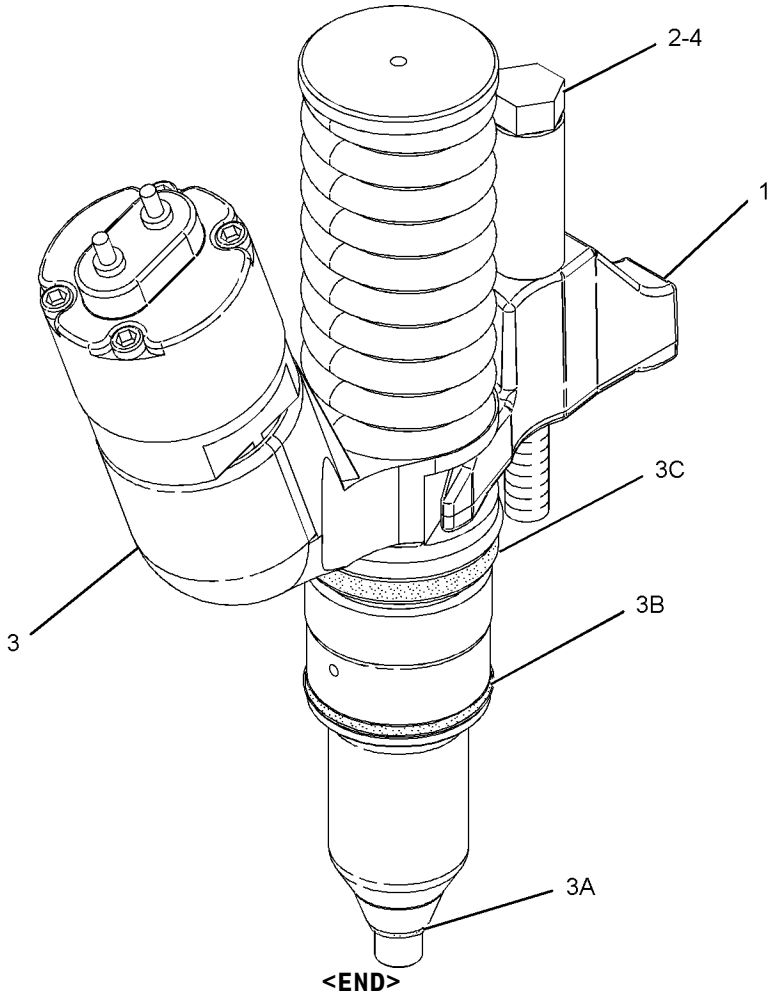

GRAPHIC #1 **<END>** g01051246

217-8342 PUMP GP-FUEL PRM & SEC FILTER

S/N: RJG1-UP

PART OF 213-0047 FILTER & LINES GP-FUEL

SMCS-1258, 1261 **i02455709**

NOTE	REF NO	GRAPHIC REF	PART NUMBER	QTY	PART NAME 1 2 3 4 5 6 (PRODUCT LEVEL)	SEE PAGE
Y	1	1	*212-9580*	1	FILTER GP-WATER SEP & FUEL	183
	2	1	**217-8339**	1	BASE AS-FUEL FILTER	
		1	**6D-5801**	2	LOCKNUT (8-32-MM THD)	
		1	**9S-2437**	3	SCREW-TAPPING (10-24X19.05-MM)	
		1	**9S-8002**	1	PLUG	
		1	**179-7400**	2	SEAL (FUEL)	

Y-SEPARATE ILLUSTRATION

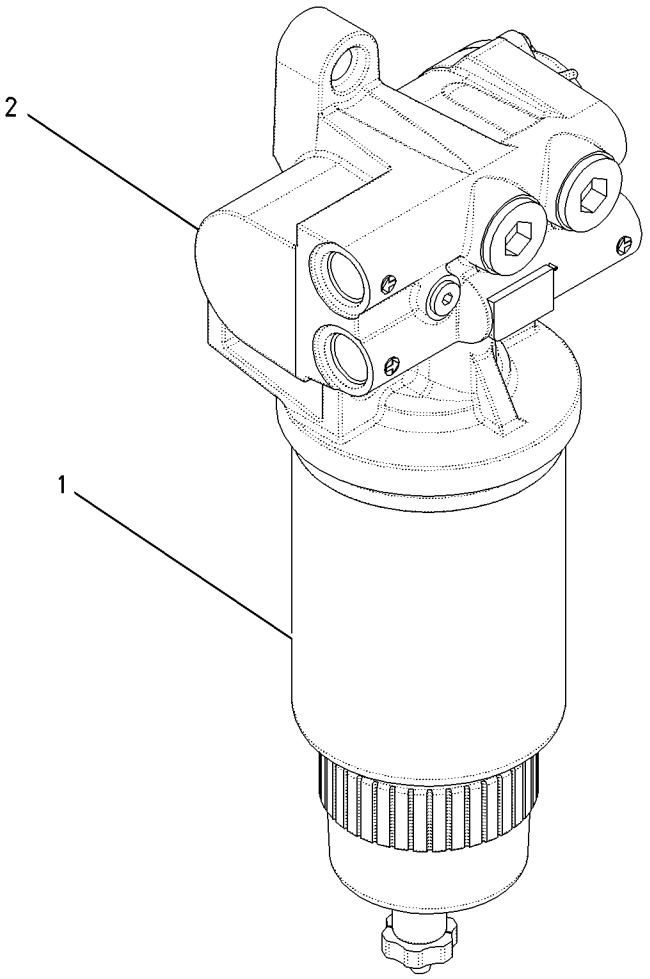

GRAPHIC #1 **<END>** g00929334

242-5174 PUMP GP-FUEL TRANSFER

S/N: EHX1-UP

PART OF 223-6421 PUMP & MTG GP-FUEL TRANSFER

ALSO AN ATTACHMENT

SMCS-1256 **i02171685**

NOTE	REF NO	GRAPHIC REF	PART NUMBER	QTY	PART NAME 1 2 3 4 5 6 (PRODUCT LEVEL)	SEE PAGE
	1	1	**224-3242**	1	GEAR-FUEL PUMP (16-TEETH)	
	2	1	**242-6106**	1	PUMP GP-FUEL TRANSFER	

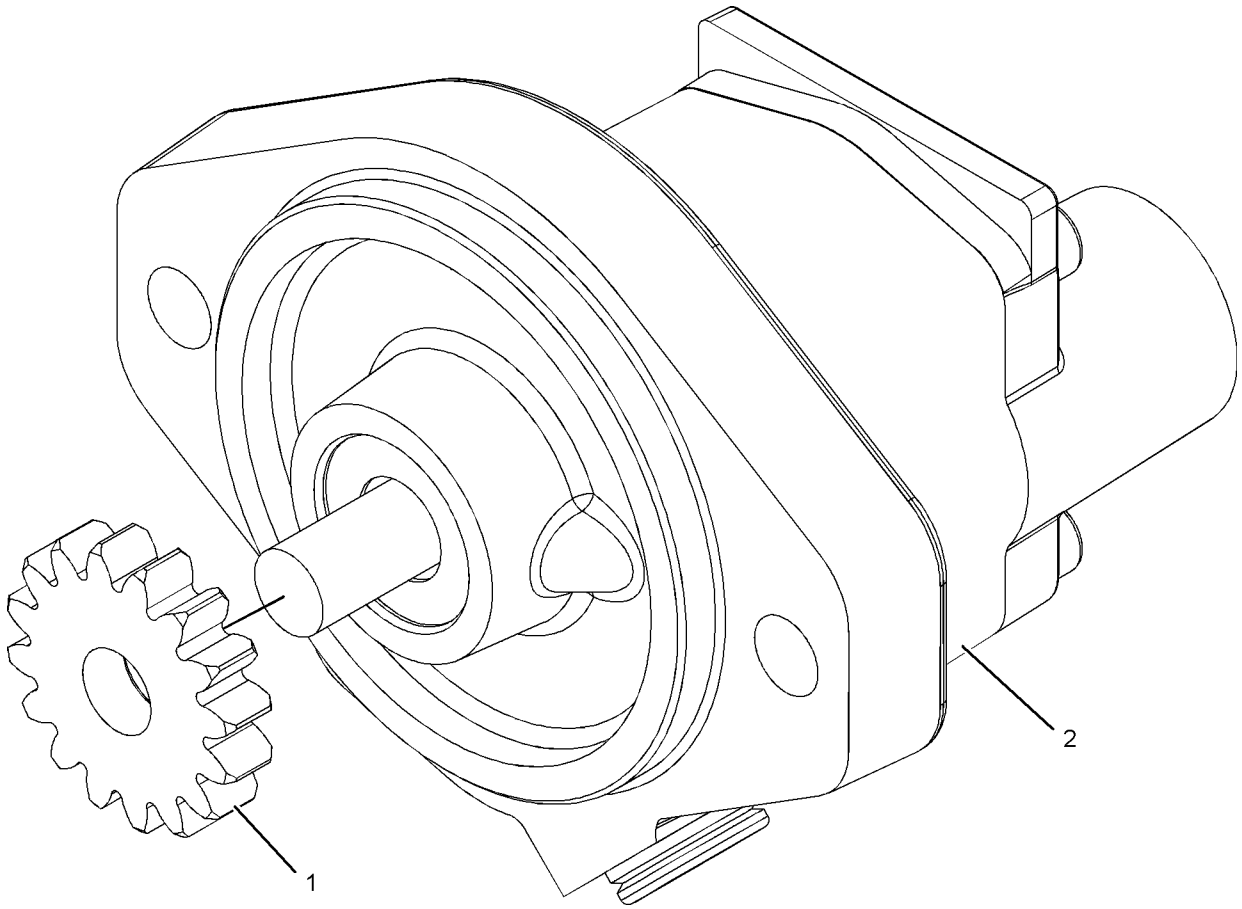

GRAPHIC #1 **<END>** g01051149

209-6934 TANK GP-FUEL

S/N: RJG1-UP
1207-LITERS (319-GALLONS)
PART OF 212-2741 CHASSIS AR

SMCS-1273 **i02250484**

NOTE	REF NO	GRAPHIC REF	PART NUMBER	QTY	PART NAME 1 2 3 4 5 6 (PRODUCT LEVEL)	SEE PAGE
	1	1	**246-2641**	1	PADLOCK GP (FUEL TANK)	
		1	**5P-8500**	2	KEY	
	2	1	**6T-6080**	8	MOUNT-RUBBER	
	3	1	**8T-5439**	4	WASHER (21.5X45X6-MM THK)	
Y	4	1	**209-6935**	1	TANK GP-FUEL	195
	5	1	**3A-4703**	4	WASHER (23X100X12-MM THK)	
M	6	1	**7X-2566**	4	BOLT (M20X2.5X110-MM)	

M-METRIC PART
Y-SEPARATE ILLUSTRATION

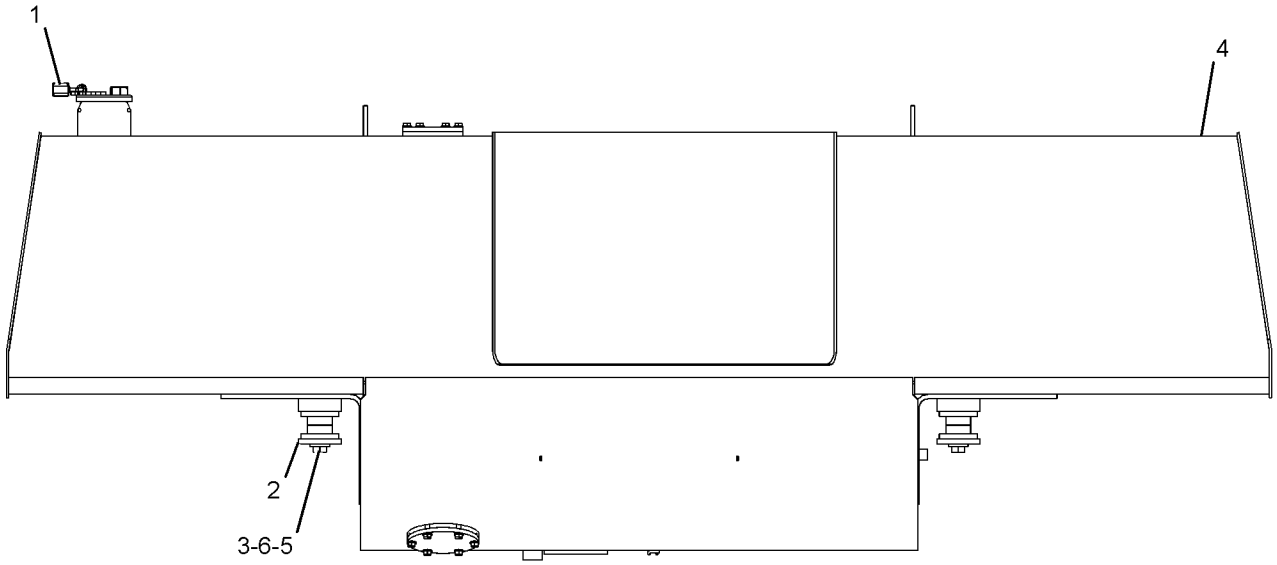

REAR VIEW

GRAPHIC #1 **<END>** g01050763

FUEL SYSTEM

209-6935 TANK GP-FUEL

S/N: RJG1-UP
1207-LITERS (319-GALLONS)
PART OF 209-6934 TANK GP-FUEL

SMCS-1273 **i02253504**

NOTE	REF NO	GRAPHIC REF	PART NUMBER	QTY	PART NAME 1 2 3 4 5 6 (PRODUCT LEVEL)	SEE PAGE
	1	1	**7X-7700**	1	CAP AS-FILLER (FUEL TANK)	
		1	**9X-2205**	1	KIT-CAP FILTER (FUEL TANK)	
					(INCLUDES FILTER AS, GASKETS, VALVE & SCREWS)	
		1	**9X-8600**	1	SEAL-O-RING	
	2	1	**9P-7121**	1	STRAINER-FUEL	
	3	1	**164-3417**	1	COVER	
	4	1	**187-1679**	1	COVER	
	6	1	**1H-8128**	1	SEAL-O-RING	
	7	1	**5H-6734**	1	SEAL-O-RING	
	8	1	**8T-4121**	12	WASHER-HARD (11X21X2.5-MM THK)	
M	9	1	**8T-4136**	12	BOLT (M10X1.5X25-MM)	

M-METRIC PART

209-6935 TANK GP-FUEL *(contd.)* **i02253504**

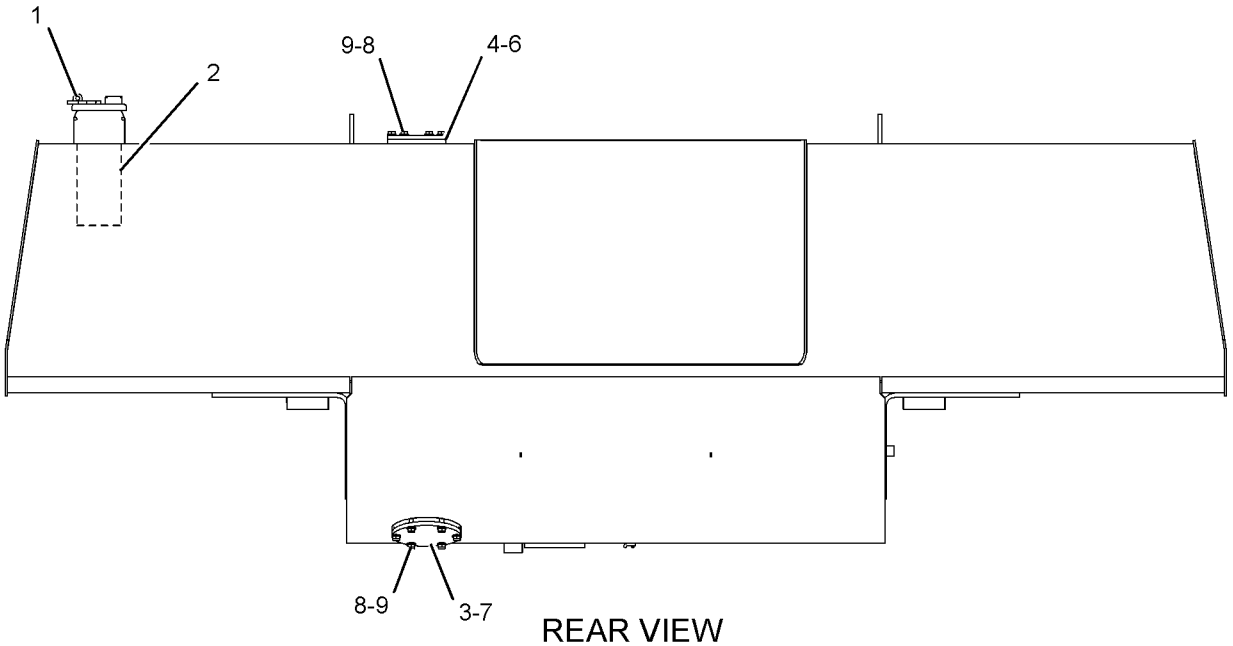

REAR VIEW

GRAPHIC #1 **<END>** g01136194

228-7381 VALVE GP-CHECK–FUEL

S/N: EHX1-UP

PART OF 216-0829 LINES GP-FUEL, 282-5926 LINES GP-FUEL FILTER

ALSO AN ATTACHMENT

SMCS-1262 **i02048634**

NOTE	REF NO	GRAPHIC REF	PART NUMBER	QTY	PART NAME 1 2 3 4 5 6 (PRODUCT LEVEL)	SEE PAGE
	1	1	**033-6033**	1	SEAL-O-RING	
	2	1	**6V-4589**	1	SEAL-O-RING	
	3	1	**6V-6923**	1	RING-BACKUP	

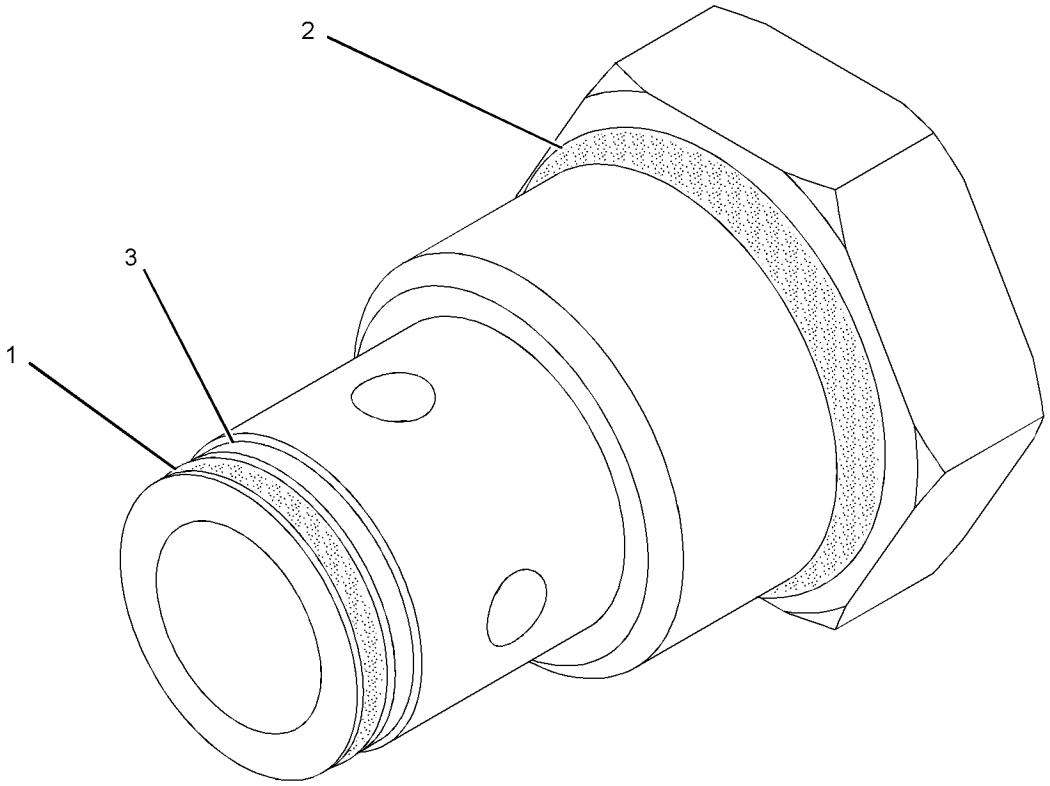

GRAPHIC #1 **<END>** g01051243

3E-6328 ALARM GP–ACTION

S/N: RJG1-UP
24-VOLT
PART OF 218-7063 WIRING GP-PLATFORM

SMCS-7400, 7402, 7407 **i02160203**

NOTE	REF NO	GRAPHIC REF	PART NUMBER	QTY	PART NAME 1 2 3 4 5 6 (PRODUCT LEVEL)	SEE PAGE
	1	1	**102-8802**	1	KIT-RECEPTACLE (2-PIN)	
					(INCLUDES RECEPTACLE AS & WEDGE)	
	2	1	**186-3735**	2	PIN-CONNECTOR	
	3	1	**3E-3365**	1	WEDGE-RECEPTACLE LOCK (2-PIN)	

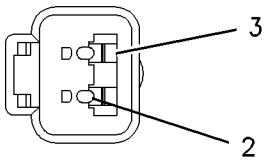

VIEW A–A

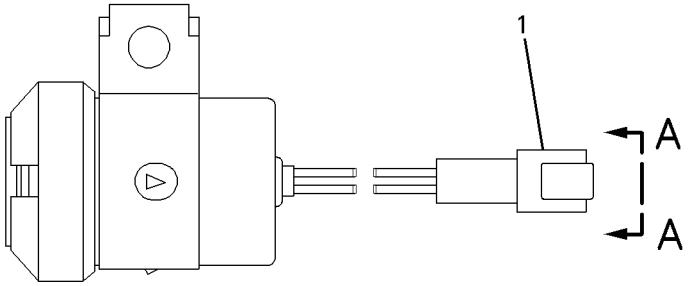

GRAPHIC #1 **<END>** g00826023

197-8820 ALTERNATOR GP-CHARGING*R

S/N: RJG1-UP
24-VOLT, 95-AMPERE
PART OF 218-4962, 239-8035, 268-7801 ALTERNATOR GP-CHARGING
ALSO AN ATTACHMENT

SMCS-1405 **i02197631**

NOTE	REF NO	GRAPHIC REF	PART NUMBER	QTY	PART NAME 1 2 3 4 5 6 (PRODUCT LEVEL)	SEE PAGE
	1	1	**185-2653**	1	FRAME	
	2	1	**5S-7349**	1	BOLT (1/4-20X0.5-IN)	
	3	1	**185-2639**	1	FAN AS	
	4	1	**1H-3244**	1	LOCKWASHER	
	5	1	**185-2645**	1	FRAME	
	6	1	**2K-4821**	1	LOCKNUT (5/8-18-THD)	
	7	1	**5P-8247**	1	WASHER-HARD (17X32X3.5-MM THK)	
	8	1	**185-2651**	1	COVER	
	9	1	**8T-4205**	1	WASHER-HARD (7.2X14.5X2-MM THK)	
	10	1	**185-2647**	1	GROMMET	
	11	1	**9L-6770**	1	CAP	
	12	1	**205-0626**	1	STATOR AS-ALTERNATOR	
	13	1	**185-2638**	2	COLLAR	
	14	1	**185-2654**	1	PLATE	
	15	1	**185-2650**	1	ROTOR AS	
	16	1	**185-2644**	1	COIL AS	
	17	1	**185-2648**	1	REGULATOR AS-VOLTAGE (24-VOLT) (ALTERNATOR)	
	18	1	**6V-8189**	1	NUT (5/16-18-THD)	
	19	1	**8T-4224**	1	WASHER-HARD (8.8X16X2-MM THK)	
	20	1	**3F-9556**	1	LOCKWASHER	
					AVAILABLE REPAIR KIT(S):	
			185-2655	1	KIT-BEARING (ALTERNATOR)	
					(INCLUDES 2 BEARINGS)	
			199-8436	1	KIT-TERMINAL (ALTERNATOR)	
					(INCLUDES HOLDER AS, PLATE, INSULATOR, PIN, BOLTS, GROMMET, AND NUT)	
			199-7891	1	KIT-TERMINAL (ALTERNATOR)	
					(INCLUDES INSULATORS, WASHERS, AND NUTS)	
			185-2658	1	KIT-HARDWARE (ALTERNATOR)	
					(INCLUDES BOLTS)	

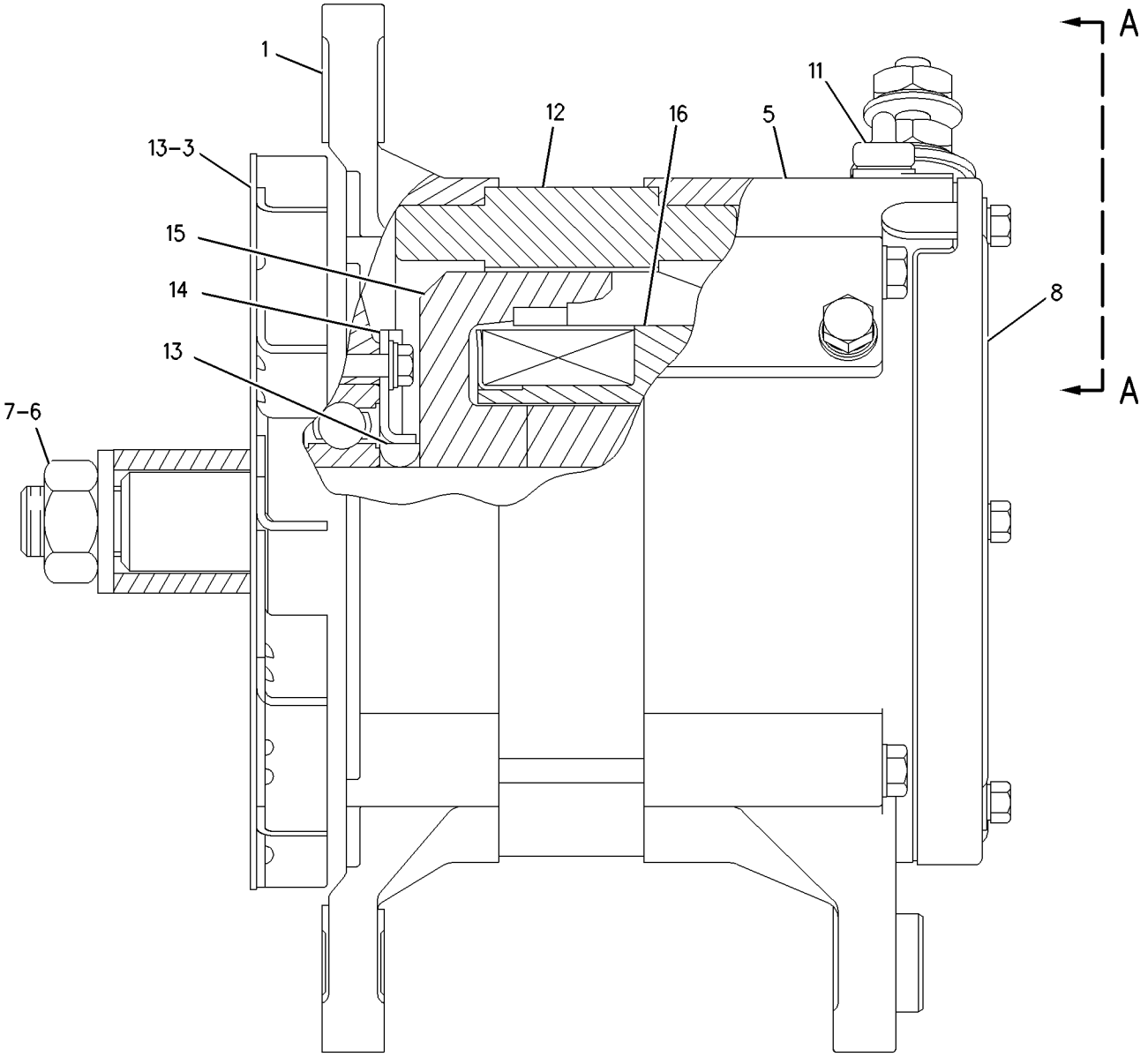

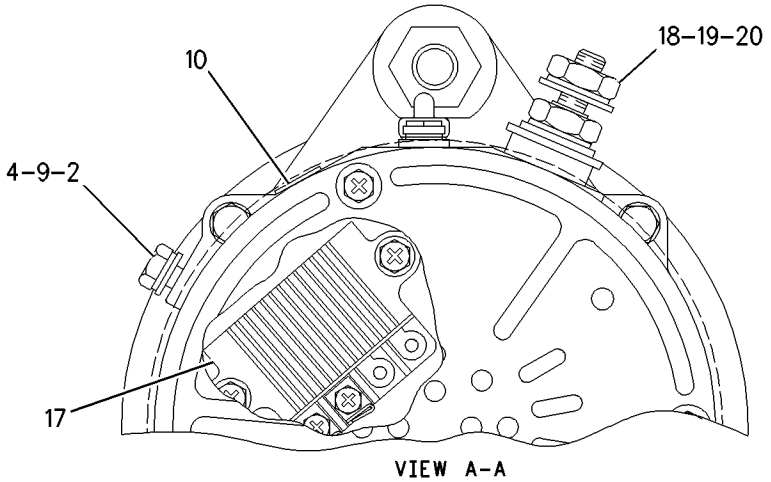

VIEW A-A

GRAPHIC #1 **<END>** g00873198

218-4962 ALTERNATOR GP-CHARGING

S/N: RJG1-UP
24-VOLT, 95-AMPERE
PART OF 212-2745, 267-2900 INSTALLATION AR-ENGINE

SMCS-1405 **i02465005**

NOTE	REF NO	GRAPHIC REF	PART NUMBER	QTY	PART NAME 1 2 3 4 5 6 (PRODUCT LEVEL)	SEE PAGE
	1	1	**4D-3704**	1	WASHER-HARD (17X30X5-MM THK)	
	2	1	**2K-5804**	1	ROD END	
	3	1	**6W-8509**	1	PUSHROD	
	4	1	**9S-1354**	1	NUT (5/8-18-THD)	
	5	1	**8S-5383**	1	BLOCK	
YR	6	1	**197-8820**	1	ALTERNATOR GP-CHARGING (24-VOLT, 95-AMPERE)	199
	7	1	**9Y-4056**	1	PULLEY-ALTERNATOR	
	8	1	**219-4263**	1	GUARD	
	9	1	**8T-4223**	3	WASHER-HARD (13.5X25.5X3-MM THK)	
	10	1	**1H-2415**	1	BOLT (0.5-13X2.5-IN)	
	11	1	**6V-8188**	1	NUT (1/2-13-THD)	
M	12	1	**8T-4122**	1	WASHER-HARD (17X32X3.5-MM THK)	
	13	1	**7X-0346**	1	BOLT (5/8-11X2-IN)	
	14	1	**7X-0591**	2	WASHER-HARD (17X29X3-MM THK)	
	15	1	**6V-8181**	2	NUT-FULL (5/8-18-THD)	
	16	1	**7X-0339**	1	BOLT (1/2-13X6.25-IN)	
	17	1	**245-7481**	1	V-BELT (ALTERNATOR)	
	18	1	**9S-1240**	1	NUT AS	
		1	**1F-0748**	1	NUT-WELD (1/2-13-THD)	
	19	1	**285-0986**	1	BRACKET AS	

M-METRIC PART
R-REMFG PART MAY BE AVAILABLE
Y-SEPARATE ILLUSTRATION

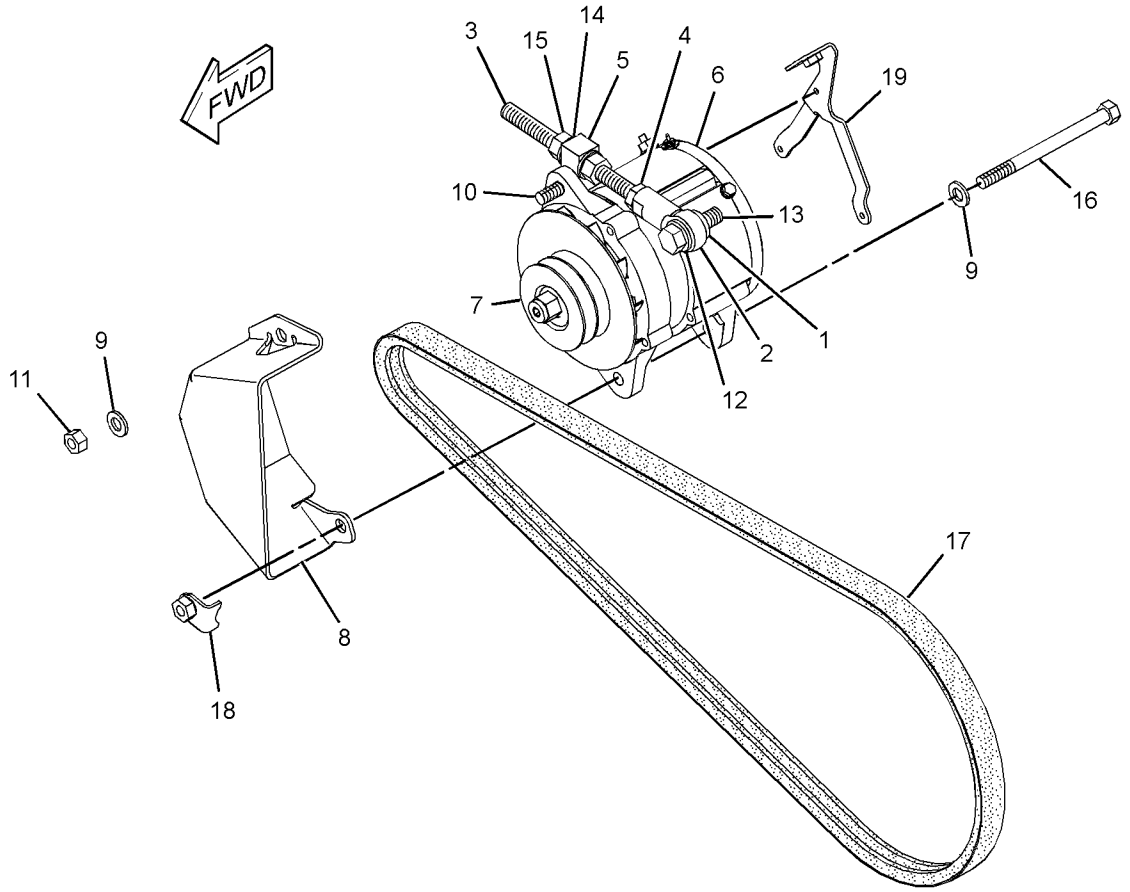

GRAPHIC #1 **<END>** g01231260

ELECTRICAL AND STARTING SYSTEM

239-8035 ALTERNATOR GP-CHARGING—DUCTED

S/N: RJG1-528
24-VOLT, 95-AMPERES
PART OF 238-4498 STOCKPILE AR, 238-4495 WASTE HANDLING AR
AN ATTACHMENT

SMCS-1405 **i02265135**

NOTE	REF NO	GRAPHIC REF	PART NUMBER	QTY	PART NAME 1 2 3 4 5 6 (PRODUCT LEVEL)	SEE PAGE
	1	1	**1W-4724**	2	CLAMP-HOSE	
	2	1	**2K-5804**	1	ROD END	
	3	1	**6W-8509**	1	PUSHROD	
	4	1	**8S-5383**	1	BLOCK	
	5	1	**9S-1240**	1	NUT AS	
		1	**1F-0748**	1	NUT-WELD (1/2-13-THD)	
	6	1	**9S-1354**	1	NUT (5/8-18-THD)	
	7	1	**9Y-4056**	1	PULLEY-ALTERNATOR	
	8	1	**184-5498**	1	BRACKET AS	
YR	9	1	**197-8820**	1	ALTERNATOR GP-CHARGING (24-VOLT, 95-AMPERE)	199
	10	1	**219-4263**	1	GUARD	
	11	1	**245-7481**	1	V-BELT (ALTERNATOR)	
	12	1	**247-4918**	1	MANIFOLD AS	
	13	1	**258-5035**	1	COVER AS	
	14	1	**1H-2415**	1	BOLT (0.5-13X2.5-IN)	
	15	1	**4D-3704**	1	WASHER-HARD (17X30X5-MM THK)	
	16	1	**5P-4325**	1	CLIP	
	17	1	**6V-8181**	2	NUT-FULL (5/8-18-THD)	
	18	1	**6V-8188**	1	NUT (1/2-13-THD)	
	19	1	**7W-2033**	1	CLIP (TAB)	
	20	1	**7W-2034**	1	CLIP (SLOT)	
	21	1	**7X-0339**	1	BOLT (1/2-13X6.25-IN)	
	22	1	**7X-0346**	1	BOLT (5/8-11X2-IN)	
	23	1	**7X-0591**	2	WASHER-HARD (17X29X3-MM THK)	
	24	1	**8T-4121**	2	WASHER-HARD (11X21X2.5-MM THK)	
M	25	1	**8T-4122**	1	WASHER-HARD (17X32X3.5-MM THK)	
M	26	1	**8T-4133**	1	NUT (M10X1.5 THD)	
M	27	1	**8T-4186**	1	BOLT (M10X1.5X40-MM)	
	28	1	**8T-4223**	3	WASHER-HARD (13.5X25.5X3-MM THK)	
E	29	1	**5P-1471**		HOSE (113-CM)	
BD	30	1	**6V-2495**		SEAL	

B-USE AS REQUIRED
D-ORDER BY THE METER
E-ORDER BY THE CENTIMETER
M-METRIC PART
R-REMFG PART MAY BE AVAILABLE
Y-SEPARATE ILLUSTRATION

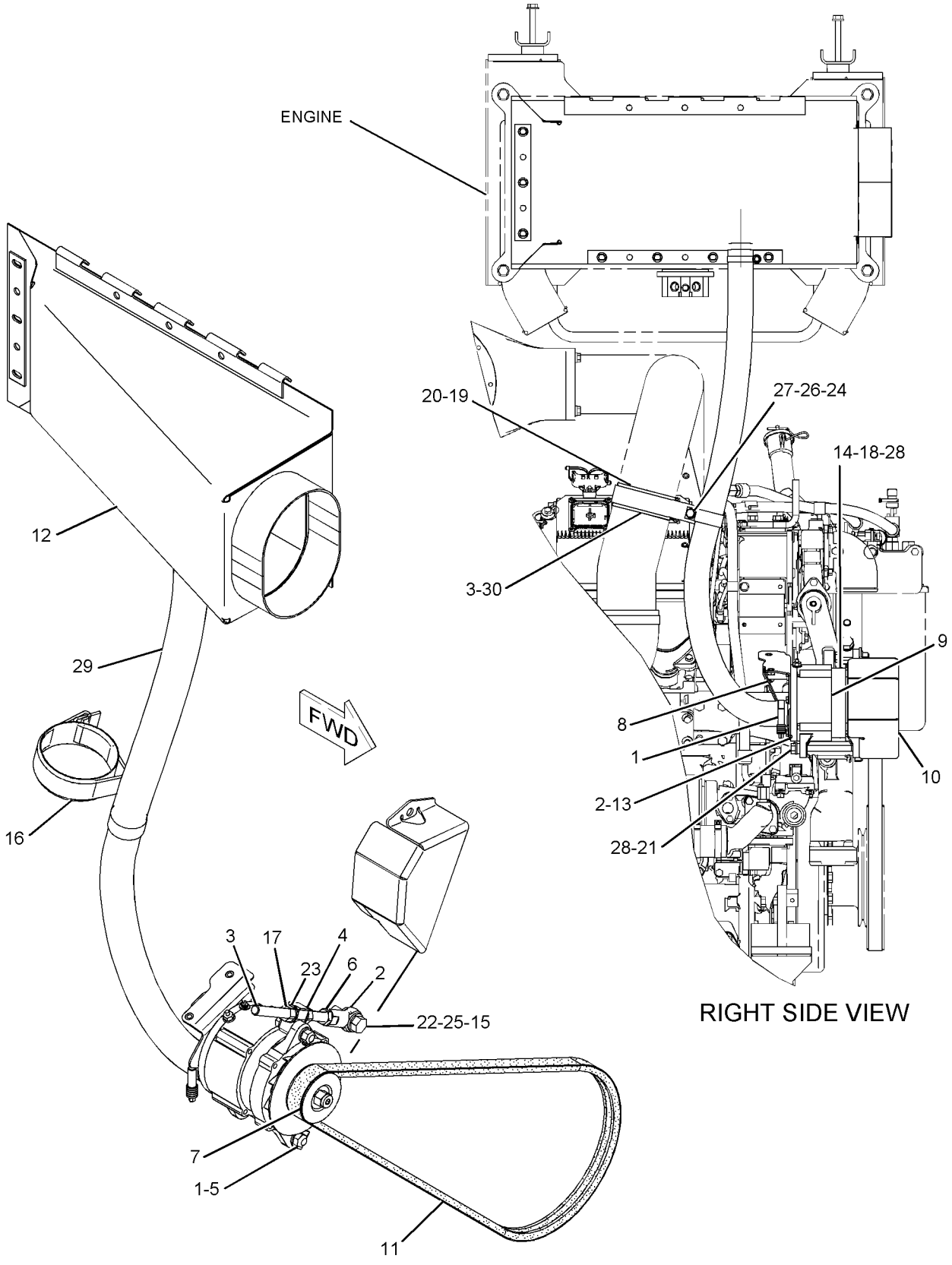

GRAPHIC #1 **<END>** g01137751

268-7801 ALTERNATOR GP-CHARGING

S/N: RJG529-UP

PART OF 238-4498 STOCKPILE AR, 238-4495 WASTE HANDLING AR

CANNOT BE USED WITH 269-8387—PAGE 765, 238-4495—PAGE 4, 238-4498—PAGE 4

AN ATTACHMENT

SMCS-1405 **i02468932**

NOTE	REF NO	GRAPHIC REF	PART NUMBER	QTY	PART NAME 1 2 3 4 5 6 (PRODUCT LEVEL)	SEE PAGE
	1	1	**1W-4724**	2	CLAMP-HOSE	
	2	1	**2K-5804**	1	ROD END	
	3	1	**5P-0597**	1	CLAMP-HOSE	
	4	1	**6W-8509**	1	PUSHROD	
	5	1	**8P-5411**	1	BUTTON-PLUG	
	6	1	**8S-5383**	1	BLOCK	
	7	1	**9S-1240**	1	NUT AS	
		1	**1F-0748**	1	NUT-WELD (1/2-13-THD)	
	8	1	**9S-1354**	1	NUT (5/8-18-THD)	
	9	1	**9Y-4056**	1	PULLEY-ALTERNATOR	
	10	1	**164-5798**	1	CAP-RAIN	
YR	11	1	**197-8820**	1	ALTERNATOR GP-CHARGING (24-VOLT, 95-AMPERE)	199
	12	1	**219-4263**	1	GUARD	
	13	1	**226-4909**	1	SCREEN	
	14	1	**245-7481**	1	V-BELT (ALTERNATOR)	
	15	1	**246-2925**	1	PLATE AS	
	16	1	**258-5035**	1	COVER AS	
D		1	**8T-6936**	1	SEAL (0.5-M)	
		1	**232-1318**	1	COVER AS	
	17	1	**270-0523**	1	COVER AS-ACCESS	
	18	1	**285-0986**	1	BRACKET AS	
	19	1	**1H-2415**	1	BOLT (0.5-13X2.5-IN)	
	20	1	**4D-3704**	1	WASHER-HARD (17X30X5-MM THK)	
	21	1	**5P-4325**	1	CLIP	
	22	1	**6V-8181**	2	NUT-FULL (5/8-18-THD)	
	23	1	**6V-8188**	1	NUT (1/2-13-THD)	
	24	1	**7W-2033**	1	CLIP (TAB)	
	25	1	**7W-2034**	1	CLIP (SLOT)	
	26	1	**7X-0339**	1	BOLT (1/2-13X6.25-IN)	
	27	1	**7X-0346**	1	BOLT (5/8-11X2-IN)	
	28	1	**7X-0591**	2	WASHER-HARD (17X29X3-MM THK)	
	29	1	**8T-4121**	6	WASHER-HARD (11X21X2.5-MM THK)	
M	30	1	**8T-4122**	1	WASHER-HARD (17X32X3.5-MM THK)	
M	31	1	**8T-4133**	1	NUT (M10X1.5 THD)	
M	32	1	**8T-4137**	4	BOLT (M10X1.5X20-MM)	
M	33	1	**8T-4186**	1	BOLT (M10X1.5X40-MM)	
	34	1	**8T-4223**	3	WASHER-HARD (13.5X25.5X3-MM THK)	
E	35	1	**5P-1471**		HOSE (163-CM)	
D	36	1	**6V-2495**		SEAL (0.4-M)	

D-ORDER BY THE METER
E-ORDER BY THE CENTIMETER
M-METRIC PART
R-REMFG PART MAY BE AVAILABLE
Y-SEPARATE ILLUSTRATION

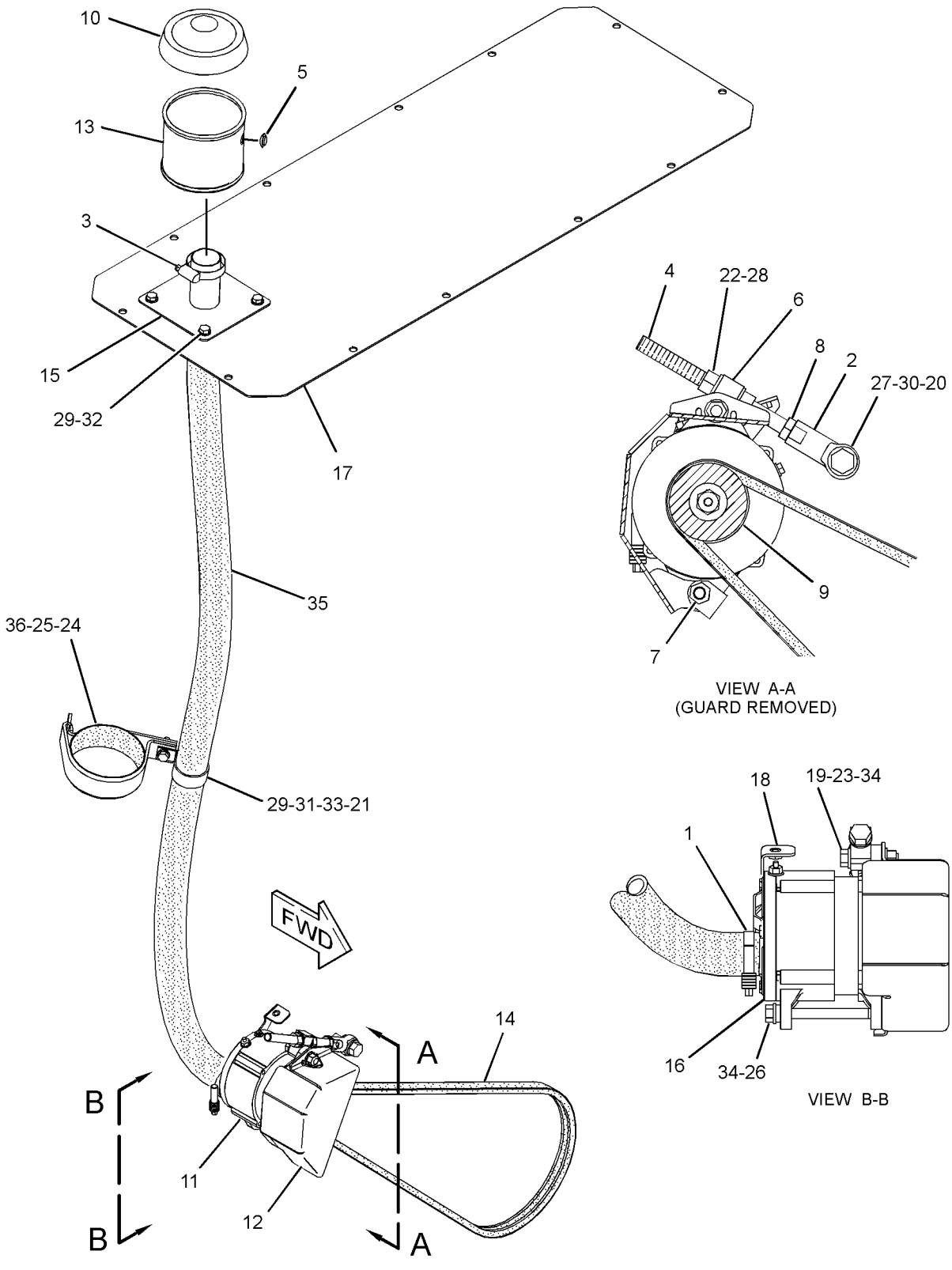

GRAPHIC #1 **<END>** g01230600

ELECTRICAL AND STARTING SYSTEM

213-7003 BATTERY & WIRING GP

S/N: RJG1-109

PART OF 212-2741 CHASSIS AR

SMCS-1401, 1402, 1408 **i02283477**

NOTE	REF NO	GRAPHIC REF	PART NUMBER	QTY	PART NAME 1 2 3 4 5 6 (PRODUCT LEVEL)	SEE PAGE
	1	1	**3E-7753**	1	FLOAT AS	
	2	4	**3T-9549**	1	ADAPTER	
	3	2	**6Y-6584**	1	STRAP AS-GROUND	
	4	1,2	**7G-1060**	3	STRAP AS-GROUND	
	5	1,2,3, 4	**7K-1181**	118	STRAP-CABLE	
Y	6	4	**7N-0719**	2	SWITCH GP-DISCONNECT (BATTERY)	313
	7	2	**7Y-3948**	1	CABLE AS	
		2	**1S-7251**	2	TERMINAL-RING (FOR 1/2-IN BOLT)	
E		2	**5P-0747**		CABLE (00-GA, BLACK) (42-CM)	
	8	4	**8S-4211**	2	PLATE	
	9	1	**8V-0622**	1	CABLE AS (POS BATTERY TO PASS THROUGH)	
		1	**1M-6119**	2	BOLT (5/16-18X1.375-IN)	
		1	**1M-6120**	2	NUT (5/16-18-THD)	
E		1	**5P-0761**		CABLE (00-GA, RED) (14-CM)	
		1	**9G-0003**	1	COVER-TERMINAL (BLACK)	
		1	**9G-0004**	1	COVER-TERMINAL (RED)	
		1	**8C-5917**	1	TERMINAL AS-BATTERY (POSITIVE)	
		1	**8T-9757**	1	TERMINAL AS-BATTERY (NEGATIVE)	
	10	3,4	**103-0010**	2	BRACKET AS	
					(EACH INCLUDES)	
M		3,4	**8T-3490**	1	NUT-WELD (M10X1.5-THD)	
	11	1	**111-4402**	1	FILTER-FOAM (FUEL TANK)	
Y	12	1	**124-9325**	1	SENSOR GP-FUEL LEVEL	280
	13	3	**139-2116**	2	SWITCH AS-TOGGLE (UNDERHOOD SERVICE LIGHT)	
					(EACH INCLUDES)	
		3	**186-3735**	3	PIN-CONNECTOR (16-GA TO 18-GA)	
		3	**3E-3371**	1	WEDGE-RECEPTACLE LOCK (3-PIN)	
		3	**6T-3631**	2	NUT-HEX (15/32-32-THD)	
		3	**6T-3632**	1	LOCKWASHER	
		3	**6T-3633**	1	RING-LOCKING	
		3	**102-8803**	1	KIT-RECEPTACLE (3-PIN)	
					(INCLUDES RECEPTACLE AS, WEDGE)	
	14	1	**153-5710**	2	BATTERY (12-VOLT, MAINTENANCE FREE)	
	15	1	**153-6281**	1	HOLD-DOWN-BATTERY	
	16	2	**164-3651**	1	ADAPTER	
Y	17	4	**164-7577**	1	SWITCH GP-BYPASS (POWER TRAIN OIL FILTER)	312
	18	3	**174-7875**	1	HORN AS (24-VOLT, HIGH TONE)	
	19	1	**191-8726**	1	CABLE AS (POS BATTERY TO PASS THROUGH)	
E		1	**114-8843**		SLEEVE-PLASTIC	
		1	**1S-4915**	2	LINER (CONDUIT)	
		1	**1S-7251**	1	TERMINAL-RING (FOR 1/2-IN BOLT)	
E		1	**5P-0695**		CONDUIT (52-CM)	
E		1	**5P-0761**		CABLE (00-GA, RED) (69-CM)	
		1	**8N-0869**	1	COVER-TERMINAL (RED)	
E		1	**8T-2225**		TUBE-HEAT SHRINK	
		1	**9G-0002**	1	COVER-TERMINAL (RED)	
		1	**8L-8413**	1	STRAP-CABLE	
	20	1	**191-8727**	1	CABLE AS (NEG BATTERY TO PASS THROUGH)	
		1	**1S-7252**	1	TERMINAL-RING (FOR 3/8-IN BOLT)	
		1	**9G-0003**	1	COVER-TERMINAL (BLACK)	
		1	**9G-8909**	1	COVER-TERMINAL (BLACK)	
BE		1	**114-8843**		SLEEVE-PLASTIC	
E		1	**159-8050**		CABLE (00-GA, BLACK) (33-CM)	
	21	2	**199-9800**	1	JUNCTION BLOCK	
	22	2	**204-8000**	3	ANCHOR-TIE	

213-7003 **BATTERY & WIRING GP** *(contd.)* **i02283477**

NOTE	REF NO	GRAPHIC REF	PART NUMBER	QTY	PART NAME 1 2 3 4 5 6 (PRODUCT LEVEL)	SEE PAGE
	23	2	**205-3079**	1	ADAPTER	
	24	1	**213-7005**	1	HARNESS AS-CHASSIS (FENDER, RH)	
		1	**102-8802**	2	KIT-RECEPTACLE (2-PIN)	
		1	**102-8803**	3	KIT-RECEPTACLE (3-PIN)	
		1	**102-8804**	1	KIT-RECEPTACLE (4-PIN)	
		1	**102-8801**	1	KIT-RECEPTACLE (12-PIN)	
					(EACH INCLUDES RECEPTACLE AS & WEDGE)	
		1	**155-2255**	1	KIT-CONNECTING PLUG (12-PIN)	
		1	**155-2260**	2	KIT-CONNECTING PLUG (3-PIN)	
		1	**155-2270**	8	KIT-CONNECTING PLUG (2-PIN)	
		1	**155-2271**	1	KIT-CONNECTING PLUG (4-PIN)	
					(EACH INCLUDES PLUG AS & WEDGE)	
	25	3	**213-7007**	1	HARNESS AS-CHASSIS (RADIATOR GUARD)	
		3	**102-8802**	1	KIT-RECEPTACLE (2-PIN)	
		3	**102-8805**	1	KIT-RECEPTACLE (6-PIN)	
		3	**102-8801**	1	KIT-RECEPTACLE (12-PIN)	
		3	**190-7615**	1	KIT-RECEPTACLE (12-PIN)	
					(EACH INCLUDES RECEPTACLE AS & WEDGE)	
		3	**155-2260**	2	KIT-CONNECTING PLUG (3-PIN)	
		3	**155-2270**	6	KIT-CONNECTING PLUG (2-PIN)	
		3	**155-2271**	1	KIT-CONNECTING PLUG (4-PIN)	
		3	**174-0503**	2	KIT-CONNECTING PLUG (3-PIN)	
		3	**155-2274**	3	KIT-CONNECTING PLUG (6-PIN)	
					(EACH INCLUDES PLUG AS & WEDGE)	
	26	4	**213-7021**	1	RECEPTACLE AS-AUXILIARY START	
		4	**1S-4915**	2	LINER (CONDUIT)	
		4	**1S-7251**	1	TERMINAL-RING (FOR 1/2-IN BOLT)	
		4	**4D-1248**	1	TERMINAL (FOR 13/32-IN BOLT)	
E		4	**5P-0695**		CONDUIT (66-CM)	
E		4	**5P-0747**		CABLE (00-GA, BLACK) (30-CM)	
E		4	**5P-0761**		CABLE (00-GA, RED) (100-CM)	
		4	**8N-0869**	1	COVER-TERMINAL (RED)	
BE		4	**8T-2225**		TUBE-HEAT SHRINK	
BE		4	**114-8843**		SLEEVE-PLASTIC	
	27	1	**213-9100**	1	ALARM AS	
		1	**102-8802**	1	KIT-RECEPTACLE (2-PIN)	
					(INCLUDES RECEPTACLE AS & WEDGE)	
D		1	**5P-5623**		WIRE-ELECTRICAL (16-GA, BLACK)	
		1	**186-3735**	2	PIN-CONNECTOR (16-GA TO 18-GA)	
		1	**3E-3365**	1	WEDGE-RECEPTACLE LOCK (2-PIN)	
E		1	**9X-1813**		SLEEVE (31-CM)	
	28	1	**214-1067**	1	HARNESS AS-CHASSIS (FENDER, LH)	
		1	**102-8802**	2	KIT-RECEPTACLE (2-PIN)	
		1	**102-8804**	1	KIT-RECEPTACLE (4-PIN)	
		1	**102-8801**	3	KIT-RECEPTACLE (12-PIN)	
					(EACH INCLUDES RECEPTACLE AS & WEDGE)	
		1	**155-2255**	3	KIT-CONNECTING PLUG (12-PIN)	
		1	**155-2260**	1	KIT-CONNECTING PLUG (3-PIN)	
		1	**155-2270**	12	KIT-CONNECTING PLUG (2-PIN)	
		1	**155-2271**	4	KIT-CONNECTING PLUG (4-PIN)	
		1	**155-2274**	1	KIT-CONNECTING PLUG (6-PIN)	
					(EACH INCLUDES PLUG AS & WEDGE)	
	29	4	**224-6316**	1	ADAPTER	
	30	1	**231-3472**	1	PLATE AS	
		1	**7T-1099**	3	LINK	
	31	1	**233-2804**	1	HARNESS AS-TRANSMISSION	
		1	**102-8801**	1	KIT-RECEPTACLE (12-PIN)	
					(INCLUDES RECEPTACLE AS & WEDGE)	

213-7003 **BATTERY & WIRING GP** *(contd.)* **i02283477**

NOTE	REF NO	GRAPHIC REF	PART NUMBER	QTY	PART NAME 1 2 3 4 5 6 (PRODUCT LEVEL)	SEE PAGE
		1	**155-2255**	1	KIT-CONNECTING PLUG (12-PIN)	
					(INCLUDES PLUG AS & WEDGE)	
	32	3	**233-9843**	2	BRACKET	
	33	4	**235-1594**	1	PLATE AS	
		4	**7T-1099**	6	LINK	
	34	1	**235-9762**	1	PLATE AS	
		1	**7T-1099**	3	LINK	
	35	4	**236-0846**	1	CABLE AS (BUS TO PASS THROUGH)	
		4	**1S-4915**	2	LINER (CONDUIT)	
		4	**1S-7251**	2	TERMINAL-RING (FOR 1/2-IN BOLT)	
E		4	**5P-0695**		CONDUIT (68-CM)	
E		4	**5P-0761**		CABLE (00-GA, RED) (880-CM)	
		4	**8N-0869**	2	COVER-TERMINAL (RED)	
BE		4	**8T-2225**		TUBE-HEAT SHRINK	
BE		4	**114-8843**		SLEEVE-PLASTIC	
	36	4	**236-0847**	1	CABLE AS (DISCONNECT TO PASS THROUGH)	
		4	**1S-4915**	2	LINER (CONDUIT)	
		4	**1S-7252**	2	TERMINAL-RING (FOR 3/8-IN BOLT)	
E		4	**5P-0695**		CONDUIT (41-CM)	
E		4	**5P-0747**		CABLE (00-GA, BLACK) (80-CM)	
BE		4	**8T-2225**		TUBE-HEAT SHRINK	
		4	**9G-8909**	2	COVER-TERMINAL (BLACK)	
BE		4	**114-8843**		SLEEVE-PLASTIC	
	37	4	**236-0848**	1	CABLE AS (DISCONNECT TO GROUND)	
		4	**1S-7252**	1	TERMINAL-RING (FOR 3/8-IN BOLT)	
		4	**4D-1248**	1	TERMINAL (FOR 13/32-IN BOLT)	
E		4	**5P-0747**		CABLE (00-GA, BLACK) (100-CM)	
BE		4	**114-8843**		SLEEVE-PLASTIC	
	38	4	**236-0849**	1	CABLE AS (PASS THROUGH TO STARTER)	
		4	**1S-4915**	2	LINER (CONDUIT)	
		4	**1S-7251**	2	TERMINAL-RING (FOR 1/2-IN BOLT)	
E		4	**5P-0695**		CONDUIT (155-CM)	
E		4	**5P-0761**		CABLE (00-GA, RED) (180-CM)	
		4	**8N-0869**	1	COVER-TERMINAL (RED)	
BE		4	**8T-2225**		TUBE-HEAT SHRINK	
BE		4	**114-8843**		SLEEVE-PLASTIC	
	39	2	**117-7773**	1	SWITCH AS-PRESSURE (HYDRAULIC TANK)	
		2	**102-8802**	1	KIT-RECEPTACLE (2-PIN)	
					(INCLUDES RECEPTACLE AS & WEDGE)	
		2	**3E-3365**	1	WEDGE-RECEPTACLE LOCK (2-PIN)	
		2	**186-3735**	2	PIN-CONNECTOR (16-GA TO 18-GA)	
BE		2	**9X-1813**		SLEEVE	
	40	2,4	**132-5789**	2	CLIP	
Y	41	4	**145-7028**	1	SENSOR GP-TEMPERATURE (HYDRAULIC OIL)	297
Y	41A	2	**145-7028**	1	SENSOR GP-TEMPERATURE (TRANSMISSION SUMP)	297
	42	3	**150-5931**	1	GROMMET	
	43	3	**163-1201**	1	HORN AS (24-VOLT, LOW TONE)	
	44	1,2,4	**193-3973**	11	TIE (WRAP)	
	45	2	**1J-9671**	2	SEAL-O-RING	
Y	46	3	**219-6485**	2	LAMP GP-FLOOD (24-VOLT, VERTICAL MOUNT) (UNDERHOOD SERVICE LIGHT)	248
Y	47	2	**237-0957**	2	SENSOR GP-PRESSURE (MAIN, TILT PUMP)	288
	48	2	**2M-9780**	1	SEAL-O-RING	
	49	4	**2S-4078**	1	SEAL-O-RING	
	50	4	**3D-2824**	1	SEAL-O-RING	
	51	2	**3J-1907**	3	SEAL-O-RING	
	52	2	**3K-0360**	1	SEAL-O-RING	
	53	1	**3K-6060**	2	LOCKNUT (3/8-16-THD)	
	54	4	**4L-6454**	4	BOLT (3/8-16X1-IN)	
	55	2	**4P-7428**	1	CLIP	

213-7003 **BATTERY & WIRING GP** *(contd.)* **i02283477**

NOTE	REF NO	GRAPHIC REF	PART NUMBER	QTY	PART NAME 1 2 3 4 5 6 (PRODUCT LEVEL)	SEE PAGE
	56	1	**4P-7429**	3	CLIP	
	57	4	**4P-7581**	2	CLIP	
	58	3,4	**4P-8134**	3	CLIP	
	59	2	**5P-1404**	1	ADAPTER-O-RING	
	60	2	**5P-4674**	1	ADAPTER-O-RING	
	61	3	**5S-7379**	2	BOLT (3/8-16X0.875-IN)	
	62	1	**6V-5051**	1	SEAL-O-RING	
	63	1,3	**7B-1251**	7	GROMMET	
	64	2,4	**7J-0204**	2	SEAL-O-RING	
	65	1,4	**7X-7729**	3	WASHER (11X25X3-MM THK)	
	66	3	**8K-1433**	1	GROMMET	
	67	4	**8S-0948**	2	CLIP	
	68	4	**8S-2634**	1	COVER AS	
		4	**2P-2975**	2	SEAL-O-RING	
	69	1,2,3,4	**8T-4121**	31	WASHER-HARD (11X21X2.5-MM THK)	
M	70	1,2,3,4	**8T-4137**	27	BOLT (M10X1.5X20-MM)	
M	71	1	**8T-4139**	3	BOLT (M12X1.75X30-MM)	
M	72	2	**8T-4179**	3	BOLT (M12X1.75X20-MM)	
M	73	1	**8T-4185**	4	BOLT (M10X1.5X50-MM)	
M	74	2,4	**8T-4195**	3	BOLT (M10X1.5X30-MM)	
	75	1,2	**8T-4223**	6	WASHER-HARD (13.5X25.5X3-MM THK)	
	76	1,3,4	**8T-4896**	8	WASHER-HARD (10.2X18.5X2.5-MM THK)	
M	77	2	**9X-6032**	3	BOLT-SOCKET HEAD (M10X1.5X30-MM)	

B-USE AS REQUIRED
D-ORDER BY THE METER
E-ORDER BY THE CENTIMETER
M-METRIC PART
Y-SEPARATE ILLUSTRATION

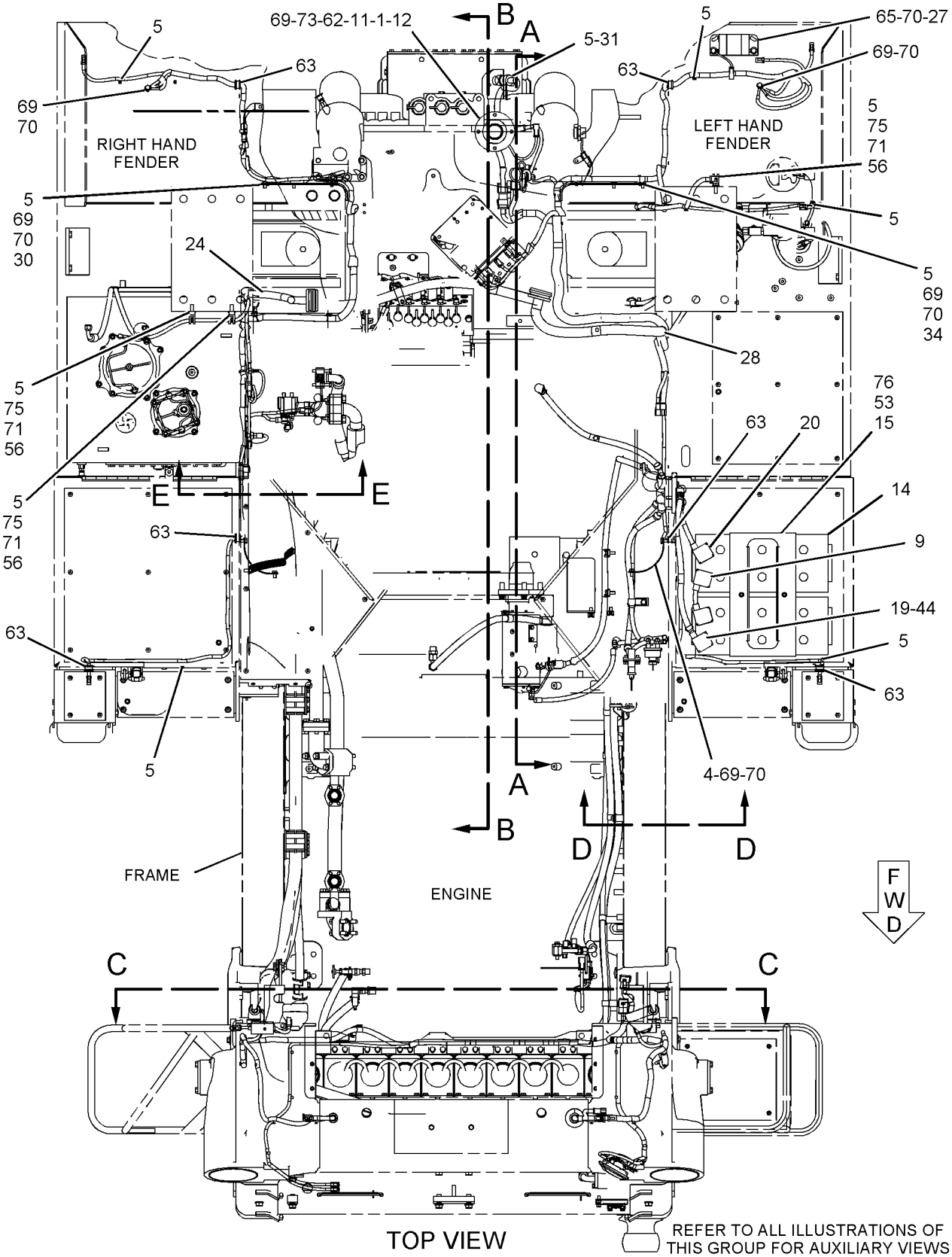

TOP VIEW

REFER TO ALL ILLUSTRATIONS OF THIS GROUP FOR AUXILIARY VIEWS

GRAPHIC #1

g01051368

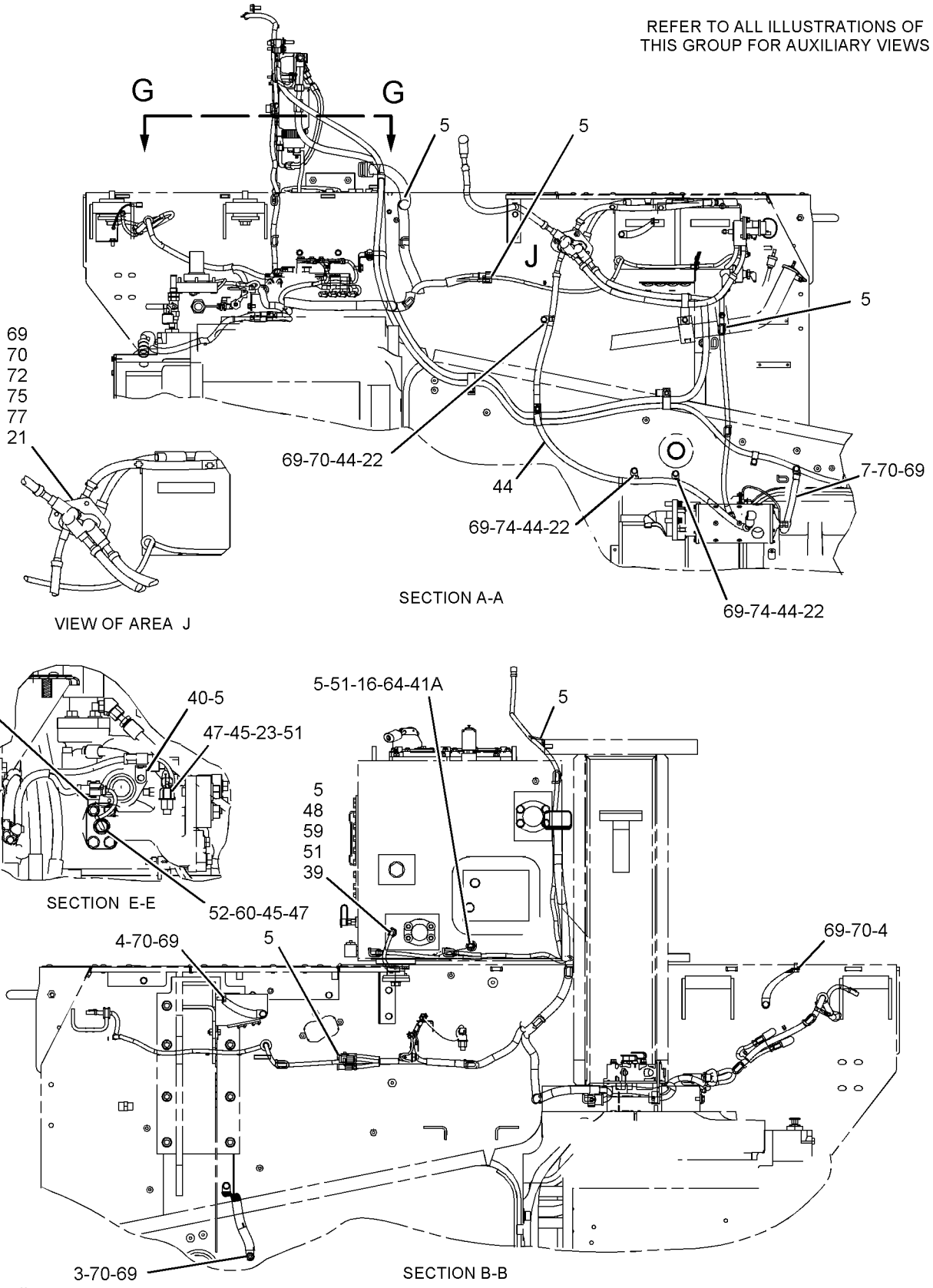

GRAPHIC #2

g01051369

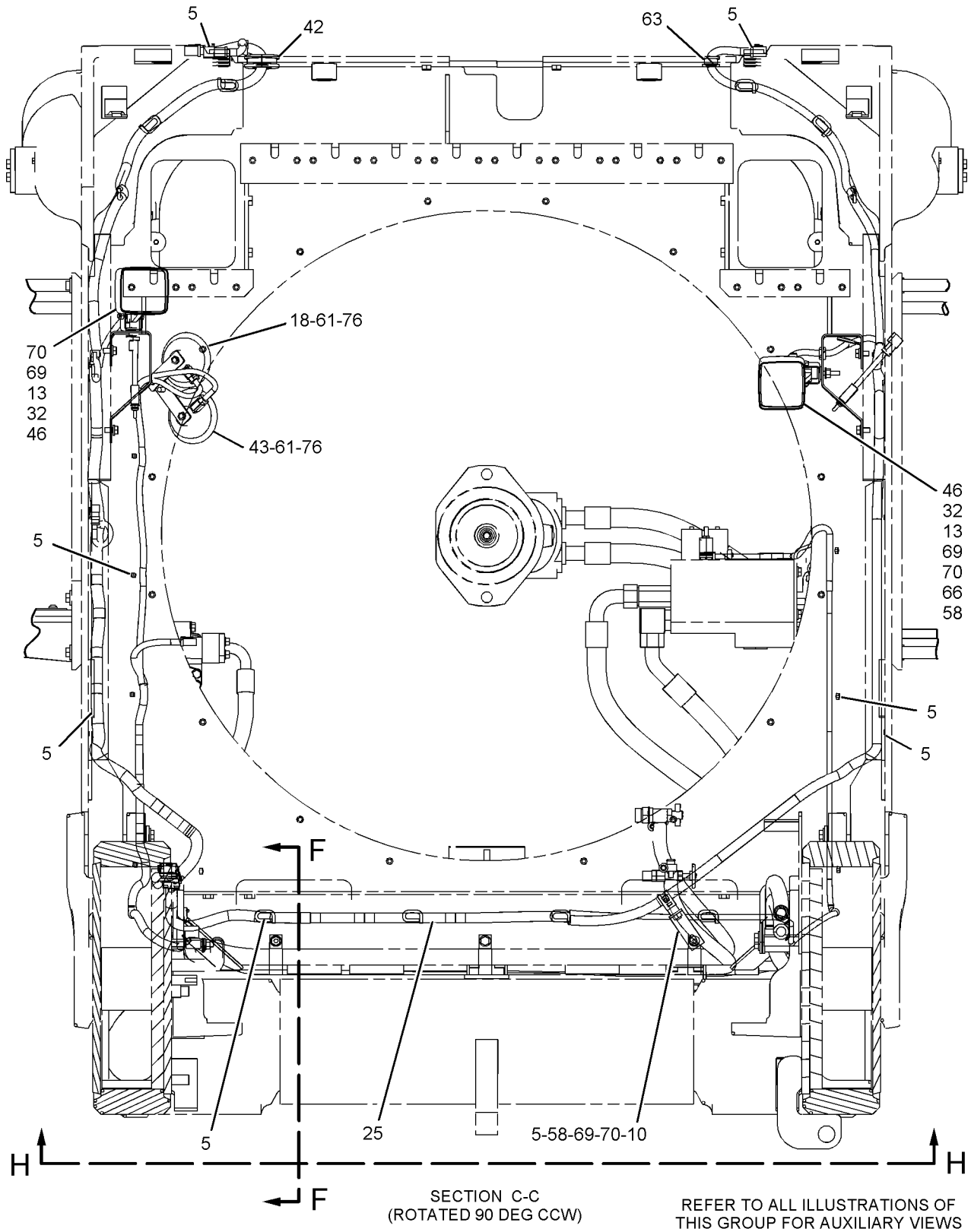

SECTION C-C
(ROTATED 90 DEG CCW)

REFER TO ALL ILLUSTRATIONS OF THIS GROUP FOR AUXILIARY VIEWS

GRAPHIC #3

g01051370

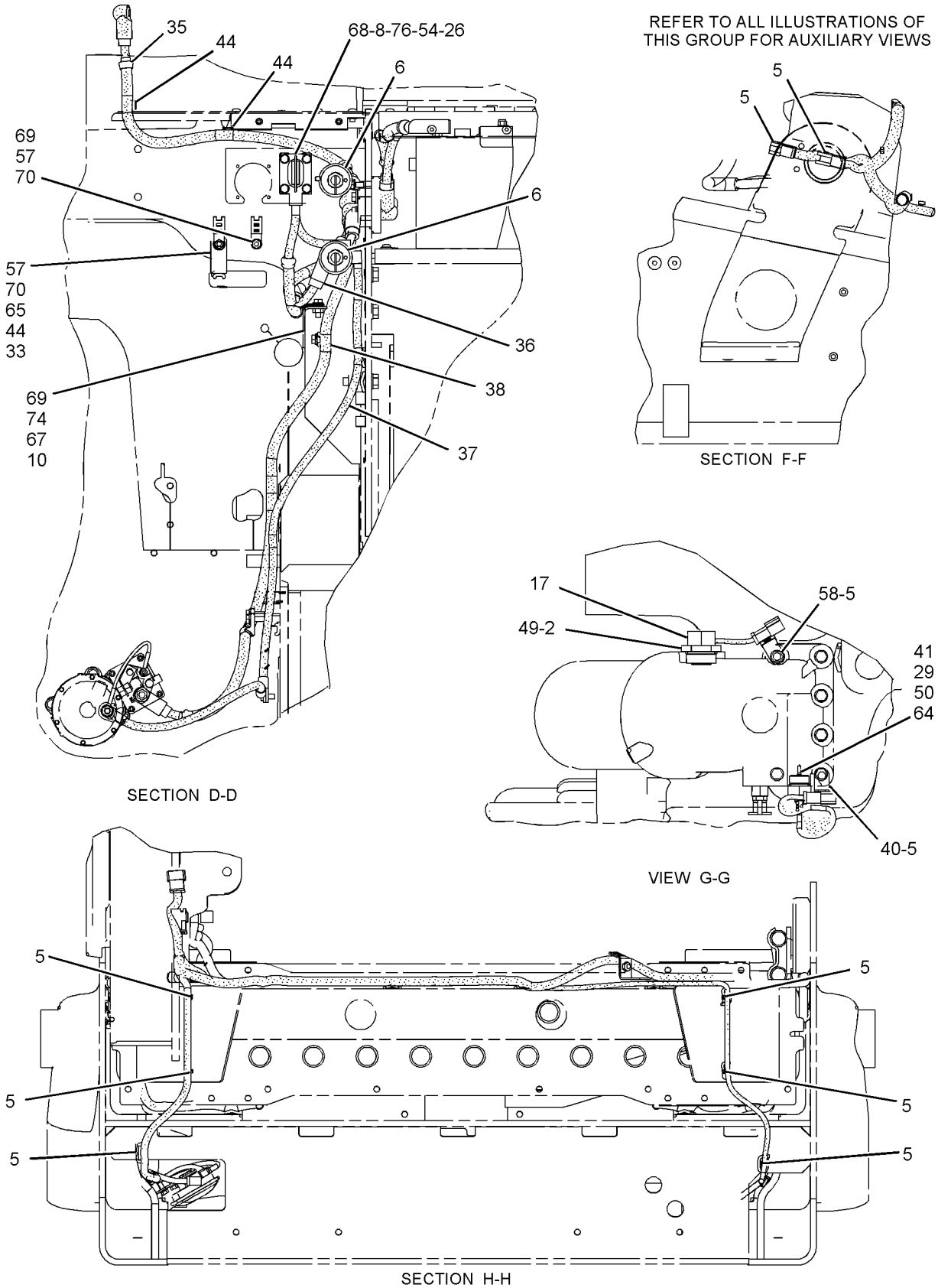

GRAPHIC #4

<END>

g01051371

ELECTRICAL AND STARTING SYSTEM

213-7003 BATTERY & WIRING GP

S/N: RJG110-528

PART OF 212-2741 CHASSIS AR

SMCS-1401, 1402, 1408 **i02351773**

NOTE	REF NO	GRAPHIC REF	PART NUMBER	QTY	PART NAME 1 2 3 4 5 6 (PRODUCT LEVEL)	SEE PAGE
	1	1	**3E-7753**	1	FLOAT AS	
	2	3	**3T-9549**	1	ADAPTER	
	3	2	**6Y-6584**	1	STRAP AS-GROUND	
C	4	1,2	**7G-1060**	3	STRAP AS-GROUND	
	5	1,2,3	**7K-1181**	120	STRAP-CABLE	
Y	6	3	**7N-0719**	2	SWITCH GP-DISCONNECT (BATTERY)	313
	7	2	**061-7661**	1	CABLE AS	
E		2	**5P-0747**		CABLE (00-GA, BLACK) (42-CM)	
		2	**1S-7251**	2	TERMINAL-RING (FOR 1/2-IN BOLT)	
	8	3	**8S-4211**	2	PLATE	
	9	1	**8V-0622**	1	CABLE AS (BATTERY 1 TO BATTERY 2)	
E		1	**5P-0761**		CABLE (00-GA, RED) (14-CM)	
		1	**9G-0003**	1	COVER-TERMINAL (BLACK)	
		1	**9G-0004**	1	COVER-TERMINAL (RED)	
		1	**8C-5917**	1	TERMINAL AS-BATTERY (POSITIVE)	
		1	**8T-9757**	1	TERMINAL AS-BATTERY (NEGATIVE)	
					(EACH TERMINAL AS INCLUDES)	
		1	**1M-6119**	1	BOLT (5/16-18X1.375-IN)	
		1	**1M-6120**	1	NUT (5/16-18-THD)	
	10	3	**103-0010**	1	BRACKET AS	
M		3	**8T-3490**	1	NUT-WELD (M10X1.5-THD)	
	11	1	**111-4402**	1	FILTER-FOAM (FUEL TANK)	
Y	12	1	**124-9325**	1	SENSOR GP-FUEL LEVEL	280
C	13	3	**139-2116**	1	SWITCH AS-TOGGLE (UNDERHOOD SERVICE LIGHT)	
		3	**186-3735**	3	PIN-CONNECTOR (16-GA TO 18-GA)	
		3	**6T-3631**	2	NUT-HEX (15/32-32-THD)	
		3	**6T-3632**	1	LOCKWASHER	
		3	**6T-3633**	1	RING-LOCKING	
		3	**102-8803**	1	KIT-RECEPTACLE (3-PIN)	
					(INCLUDES RECEPTACLE AS & WEDGE)	
	14	1	**153-5710**	2	BATTERY (12-VOLT, MAINTENANCE FREE)	
	15	1	**153-6281**	1	HOLD-DOWN-BATTERY	
	16	2	**164-3651**	1	ADAPTER	
Y	17	3	**164-7577**	1	SWITCH GP-BYPASS (POWER TRAIN OIL FILTER)	312
	18	3	**174-7875**	1	HORN AS (24-VOLT, HIGH TONE)	
	19	1	**191-8726**	1	CABLE AS (POS BATTERY TO PASS THROUGH)	
E		1	**5P-0761**		CABLE (00-GA, RED) (69-CM)	
		1	**1S-4915**	2	LINER (CONDUIT)	
		1	**1S-7251**	1	TERMINAL-RING (FOR 1/2-IN BOLT)	
E		1	**5P-0695**		CONDUIT (52-CM)	
		1	**8N-0869**	1	COVER-TERMINAL (RED)	
E		1	**8T-2225**		TUBE-HEAT SHRINK (16-CM)	
		1	**9G-0002**	1	COVER-TERMINAL (RED)	
		1	**8T-9756**	1	TERMINAL AS (POSITIVE)	
		1	**1M-6119**	1	BOLT (5/16-18X1.375-IN)	
		1	**1M-6120**	1	NUT (5/16-18-THD)	
E		1	**114-8843**		SLEEVE-PLASTIC (40-CM)	
	20	1	**191-8727**	1	CABLE AS (NEG BATTERY TO PASS THROUGH)	
E		1	**159-8050**		CABLE (00-GA, BLACK) (33-CM)	
		1	**1S-7252**	1	TERMINAL-RING (FOR 3/8-IN BOLT)	
		1	**9G-0003**	1	COVER-TERMINAL (BLACK)	
		1	**9G-8909**	1	COVER-TERMINAL (BLACK)	
		1	**8T-9757**	1	TERMINAL AS-BATTERY (NEGATIVE)	
		1	**1M-6119**	1	BOLT (5/16-18X1.375-IN)	
		1	**1M-6120**	1	NUT (5/16-18-THD)	
E		1	**114-8843**		SLEEVE-PLASTIC (40-CM)	

213-7003 **BATTERY & WIRING GP** *(contd.)* **i02351773**

NOTE	REF NO	GRAPHIC REF	PART NUMBER	QTY	PART NAME 1 2 3 4 5 6 (PRODUCT LEVEL)	SEE PAGE
	21	2	**199-9800**	1	JUNCTION BLOCK	
	22	2	**204-8000**	3	ANCHOR-TIE	
	23	2	**205-3079**	1	ADAPTER	
	24	1	**213-7005**	1	HARNESS AS-CHASSIS (FENDER, RH)	
		1	**126-1774**	1	COVER	
		1	**9X-6772**	2	STRAP-CABLE	
		1	**106-8704**	2	SUPPRESSOR AS-ARC	
		1	**155-2272**	1	PLUG AS-CONNECTOR (4-PIN)	
		1	**160-7689**	1	PLUG AS-CONNECTOR (70-PIN)	
		1	**102-8802**	2	KIT-RECEPTACLE (2-PIN)	
		1	**102-8803**	3	KIT-RECEPTACLE (3-PIN)	
		1	**102-8804**	1	KIT-RECEPTACLE (4-PIN)	
		1	**102-8801**	1	KIT-RECEPTACLE (12-PIN)	
					(EACH INCLUDES RECEPTACLE AS & WEDGE)	
		1	**155-2255**	1	KIT-CONNECTING PLUG (12-PIN)	
		1	**155-2260**	2	KIT-CONNECTING PLUG (3-PIN)	
		1	**155-2270**	8	KIT-CONNECTING PLUG (2-PIN)	
					(EACH INCLUDES PLUG AS, WEDGE, & INTERFACE SEAL)	
		1	**251-7591**	1	WIRE AS (UNDERHOOD SERVICE LIGHT)	
	25	3	**213-7007**	1	HARNESS AS-CHASSIS (RADIATOR GUARD)	
		3	**102-8802**	3	KIT-RECEPTACLE (2-PIN)	
		3	**102-8805**	3	KIT-RECEPTACLE (6-PIN)	
		3	**102-8801**	1	KIT-RECEPTACLE (12-PIN)	
					(EACH INCLUDES RECEPTACLE AS & WEDGE)	
		3	**190-7613**	1	RECEPTACLE AS-CONNECTOR (12-PIN)	
		3	**134-2540**	2	RECEPTACLE AS-CONNECTOR (3-PIN)	
		3	**155-2272**	1	PLUG AS-CONNECTOR (4-PIN)	
		3	**155-2260**	2	KIT-CONNECTING PLUG (3-PIN)	
		3	**155-2270**	6	KIT-CONNECTING PLUG (2-PIN)	
		3	**174-0503**	2	KIT-CONNECTING PLUG (3-PIN)	
		3	**155-2274**	3	KIT-CONNECTING PLUG (6-PIN)	
					(EACH INCLUDES PLUG AS, WEDGE, & INTERFACE SEAL)	
	26	3	**213-7021**	1	RECEPTACLE AS-AUXILIARY START	
		3	**1S-4915**	2	LINER (CONDUIT)	
		3	**1S-7251**	1	TERMINAL-RING (FOR 1/2-IN BOLT)	
		3	**4D-1248**	1	TERMINAL (FOR 13/32-IN BOLT)	
E		3	**5P-0695**		CONDUIT (66-CM)	
E		3	**5P-0747**		CABLE (00-GA, BLACK) (30-CM)	
E		3	**5P-0761**		CABLE (00-GA, RED) (100-CM)	
		3	**8N-0869**	1	COVER-TERMINAL (RED)	
E		3	**8T-2225**		TUBE-HEAT SHRINK (16-CM)	
E		3	**114-8843**		SLEEVE-PLASTIC (40-CM)	
	27	1	**213-9100**	1	ALARM AS	
		1	**102-8802**	1	KIT-RECEPTACLE (2-PIN)	
					(INCLUDES RECEPTACLE AS & WEDGE)	
BD		1	**5P-5623**		WIRE-ELECTRICAL (16-GA, BLACK)	
		1	**186-3735**	2	PIN-CONNECTOR (16-GA TO 18-GA)	
E		1	**9X-1813**		SLEEVE (31-CM)	
	28	1	**214-1067**	1	HARNESS AS-CHASSIS (FENDER, LH)	
		1	**160-7689**	1	PLUG AS-CONNECTOR (70-PIN)	
		1	**155-2272**	4	PLUG AS-CONNECTOR (4-PIN)	
		1	**102-8802**	2	KIT-RECEPTACLE (2-PIN)	
		1	**102-8804**	1	KIT-RECEPTACLE (4-PIN)	
		1	**102-8801**	2	KIT-RECEPTACLE (12-PIN)	
					(EACH INCLUDES RECEPTACLE AS & WEDGE)	
		1	**155-2255**	3	KIT-CONNECTING PLUG (12-PIN)	
		1	**155-2260**	1	KIT-CONNECTING PLUG (3-PIN)	
		1	**155-2270**	12	KIT-CONNECTING PLUG (2-PIN)	

213-7003 **BATTERY & WIRING GP** *(contd.)* **i02351773**

NOTE	REF NO	GRAPHIC REF	PART NUMBER	QTY	PART NAME 1 2 3 4 5 6 (PRODUCT LEVEL)	SEE PAGE
		1	**155-2274**	1	KIT-CONNECTING PLUG (6-PIN)	
					(EACH INCLUDES PLUG AS, WEDGE, & INTERFACE SEAL)	
CY	29	3	**219-6485**	1	LAMP GP-FLOOD (24-VOLT, VERTICAL MOUNT) (UNDERHOOD SERVICE LIGHT)	248
C	30	2	**220-8397**	1	WIRE AS	
	31	3	**224-6316**	1	ADAPTER	
	32	1	**231-3472**	1	PLATE AS	
	33	1	**233-2804**	1	HARNESS AS-TRANSMISSION	
		1	**108-6259**	1	PLUG AS-CONNECTOR (17-PIN)	
		1	**102-8801**	1	KIT-RECEPTACLE (12-PIN)	
					(INCLUDES RECEPTACLE AS & WEDGE)	
		1	**155-2255**	1	KIT-CONNECTING PLUG (12-PIN)	
					(INCLUDES PLUG AS, WEDGE, & INTERFACE SEAL)	
C	34	3	**233-9843**	1	BRACKET	
	35	3	**235-1594**	1	PLATE AS	
	36	1	**235-9762**	1	PLATE AS	
	37	3	**236-0846**	1	CABLE AS (BUS TO PASS THROUGH)	
E		3	**5P-0761**		CABLE (00-GA, RED) (880-CM)	
		3	**1S-4915**	2	LINER (CONDUIT)	
		3	**1S-7251**	2	TERMINAL-RING (FOR 1/2-IN BOLT)	
E		3	**5P-0695**		CONDUIT (68-CM)	
		3	**8N-0869**	2	COVER-TERMINAL (RED)	
E		3	**8T-2225**		TUBE-HEAT SHRINK (16-CM)	
E		3	**114-8843**		SLEEVE-PLASTIC (40-CM)	
	38	3	**236-0847**	1	CABLE AS (DISCONNECT TO PASS THROUGH)	
E		3	**5P-0747**		CABLE (00-GA, BLACK) (72-CM)	
		3	**1S-4915**	2	LINER (CONDUIT)	
		3	**1S-7252**	2	TERMINAL-RING (FOR 3/8-IN BOLT)	
E		3	**5P-0695**		CONDUIT (47-CM)	
E		3	**8T-2225**		TUBE-HEAT SHRINK (16-CM)	
		3	**9G-8909**	2	COVER-TERMINAL (BLACK)	
E		3	**114-8843**		SLEEVE-PLASTIC (40-CM)	
	39	3	**236-0848**	1	CABLE AS (DISCONNECT TO GROUND)	
E		3	**5P-0747**		CABLE (00-GA, BLACK) (100-CM)	
		3	**1S-7252**	1	TERMINAL-RING (FOR 3/8-IN BOLT)	
		3	**4D-1248**	1	TERMINAL (FOR 13/32-IN BOLT)	
E		3	**114-8843**		SLEEVE-PLASTIC (40-CM)	
	40	3	**236-0849**	1	CABLE AS (PASS THROUGH TO STARTER)	
E		3	**5P-0761**		CABLE (00-GA, RED) (180-CM)	
		3	**1S-4915**	2	LINER (CONDUIT)	
		3	**1S-7251**	2	TERMINAL-RING (FOR 1/2-IN BOLT)	
E		3	**5P-0695**		CONDUIT (155-CM)	
		3	**8N-0869**	1	COVER-TERMINAL (RED)	
E		3	**8T-2225**		TUBE-HEAT SHRINK (21-CM)	
E		3	**114-8843**		SLEEVE-PLASTIC (40-CM)	
	41	2	**253-2673**	1	SWITCH AS-PRESSURE (HYDRAULIC TANK)	
		2	**102-8802**	1	KIT-RECEPTACLE (2-PIN)	
					(EACH INCLUDES RECEPTACLE AS & WEDGE)	
		2	**186-3735**	2	PIN-CONNECTOR (16-GA TO 18-GA)	
E		2	**9X-1813**		SLEEVE (14-CM)	
	42	2,3	**132-5789**	2	CLIP	
Y	43	2	**145-7028**	1	SENSOR GP-TEMPERATURE (HYDRAULIC OIL)	297
Y	43A	3	**145-7028**	1	SENSOR GP-TEMPERATURE (TRANSMISSION SUMP)	297
	44	3	**150-5931**	1	GROMMET	
	45	3	**163-1201**	1	HORN AS (24-VOLT, LOW TONE)	
	46	1,2,3	**193-3973**	11	TIE (WRAP)	
	47	2	**1J-9671**	2	SEAL-O-RING	
Y	48	2	**237-0957**	2	SENSOR GP-PRESSURE (MAIN, TILT PUMP)	288

213-7003 **BATTERY & WIRING GP** *(contd.)* **i02351773**

NOTE	REF NO	GRAPHIC REF	PART NUMBER	QTY	PART NAME 1 2 3 4 5 6 (PRODUCT LEVEL)	SEE PAGE
	49	3	**2S-4078**	1	SEAL-O-RING	
	50	3	**3D-2824**	1	SEAL-O-RING	
	51	2	**3J-1907**	3	SEAL-O-RING	
	52	2	**3K-0360**	1	SEAL-O-RING	
	53	1	**3K-6060**	2	LOCKNUT (3/8-16-THD)	
	54	3	**4L-6454**	4	BOLT (3/8-16X1-IN)	
	55	2	**4P-7428**	1	CLIP	
	56	1	**4P-7429**	3	CLIP	
	57	3	**4P-7581**	3	CLIP	
	58	2,3	**4P-8134**	4	CLIP	
	59	2	**5P-4674**	1	ADAPTER-O-RING	
	60	3	**5S-7379**	2	BOLT (3/8-16X0.875-IN)	
	61	1	**6V-5051**	1	SEAL-O-RING	
	62	1,3	**7B-1251**	7	GROMMET	
	63	2,3	**7J-0204**	2	SEAL-O-RING	
	64	1,3	**7X-7729**	3	WASHER (11X25X3-MM THK)	
	65	3	**8S-0948**	2	CLIP	
	66	3	**8S-2634**	1	COVER AS	
		3	**2P-2975**	2	SEAL-O-RING	
C	67	1,2,3	**8T-4121**	32	WASHER-HARD (11X21X2.5-MM THK)	
M	68	2	**8T-4136**	1	BOLT (M10X1.5X25-MM)	
CM	69	1,2,3	**8T-4137**	27	BOLT (M10X1.5X20-MM)	
M	70	1	**8T-4139**	3	BOLT (M12X1.75X30-MM)	
M	71	2	**8T-4179**	3	BOLT (M12X1.75X20-MM)	
M	72	1	**8T-4185**	4	BOLT (M10X1.5X50-MM)	
M	73	2,3	**8T-4195**	3	BOLT (M10X1.5X30-MM)	
	74	1,2	**8T-4223**	6	WASHER-HARD (13.5X25.5X3-MM THK)	
	75	1,3	**8T-4896**	8	WASHER-HARD (10.2X18.5X2.5-MM THK)	
M	76	2	**9X-6032**	3	BOLT-SOCKET HEAD (M10X1.5X30-MM)	

B-USE AS REQUIRED
C-CHANGE FROM PREVIOUS TYPE
D-ORDER BY THE METER
E-ORDER BY THE CENTIMETER
M-METRIC PART
Y-SEPARATE ILLUSTRATION

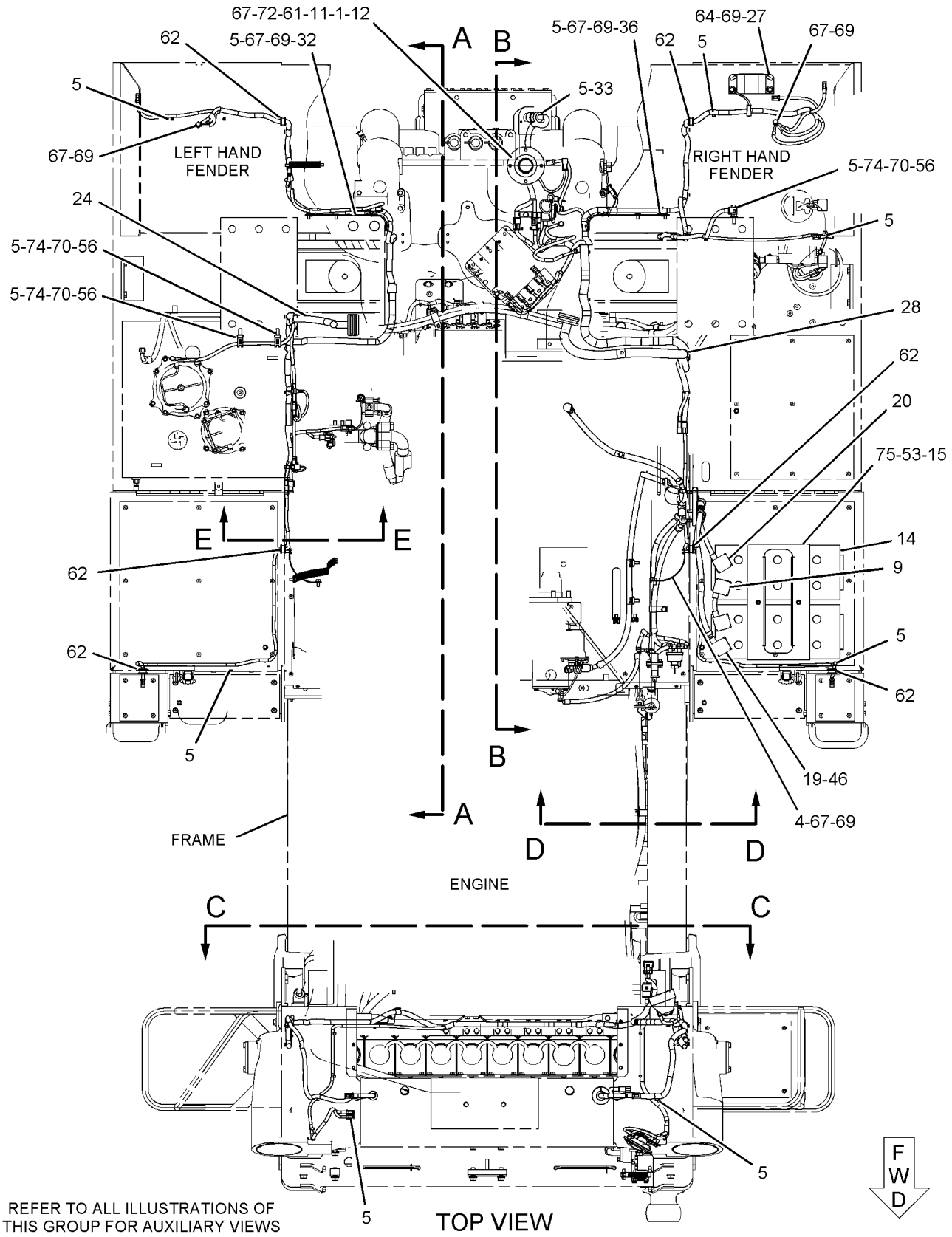

GRAPHIC #1 g01140983

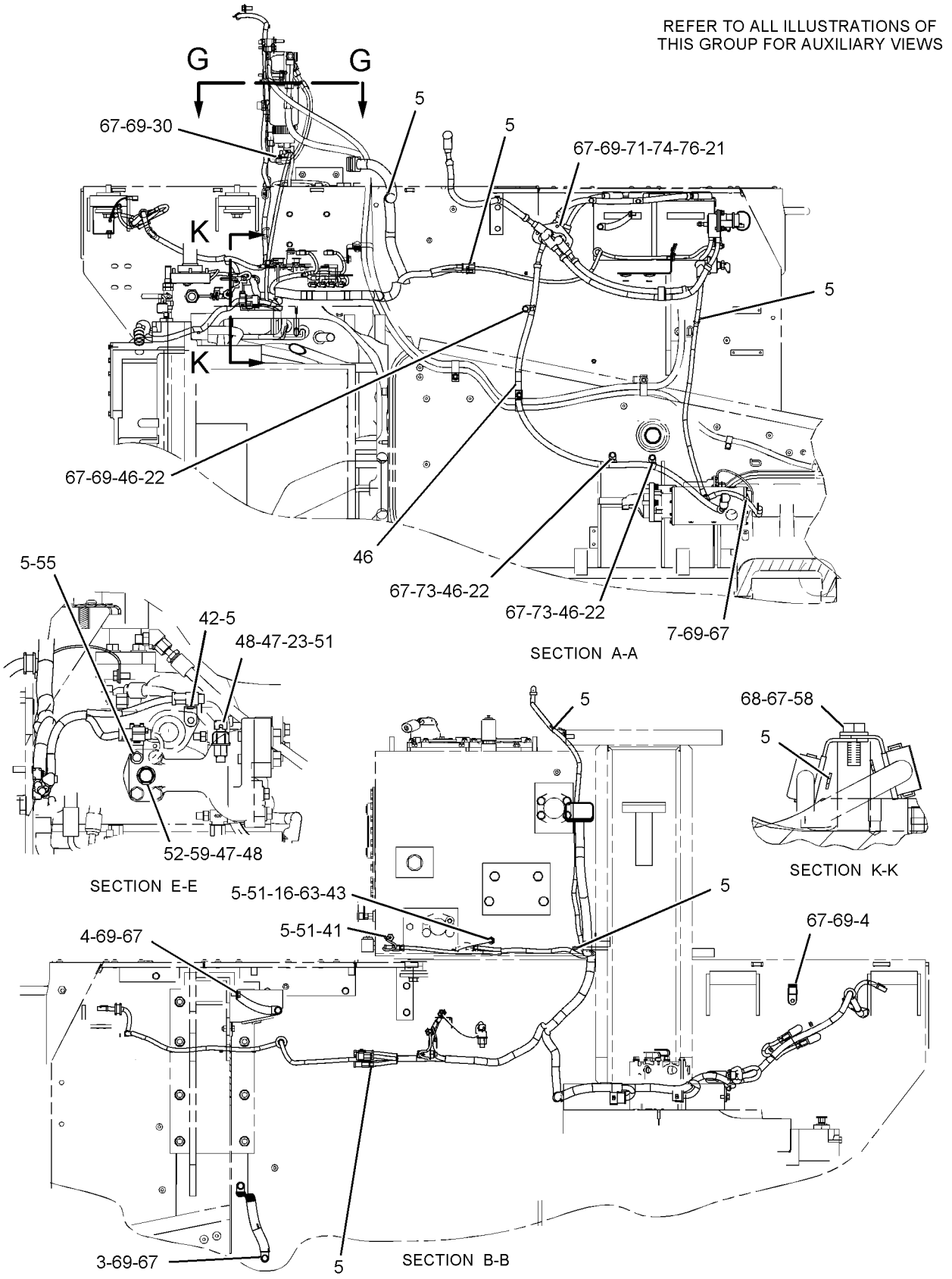

GRAPHIC #2

g01140984

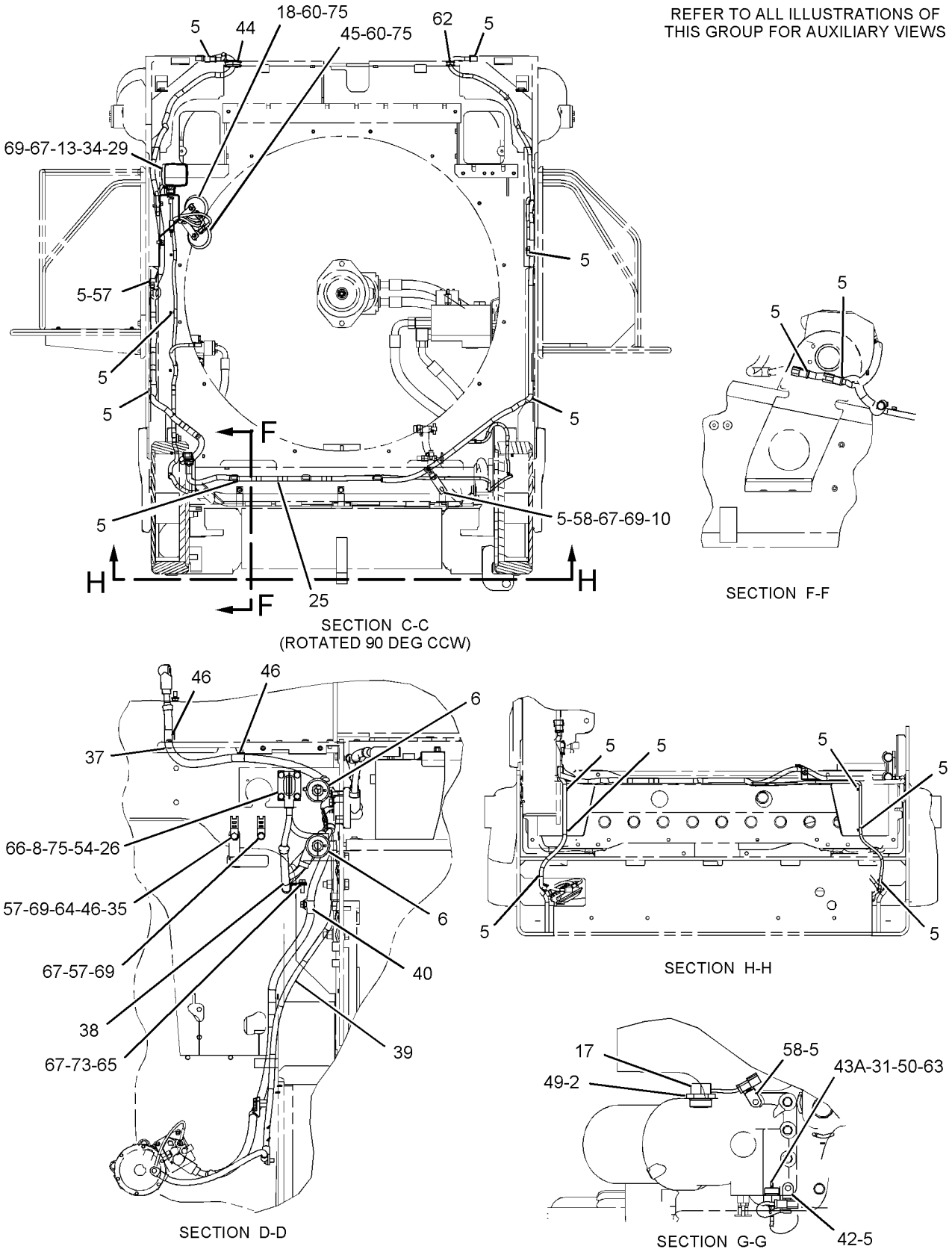

GRAPHIC #3 **<END>** g01140985

ELECTRICAL AND STARTING SYSTEM

213-7003 BATTERY & WIRING GP

S/N: RJG529-UP

PART OF 212-2741 CHASSIS AR

SMCS-1401, 1402, 1408 **i02467665**

NOTE	REF NO	GRAPHIC REF	PART NUMBER	QTY	PART NAME 1 2 3 4 5 6 (PRODUCT LEVEL)	SEE PAGE
	1	1	**3E-7753**	1	FLOAT AS	
	2	1	**3T-9549**	1	ADAPTER	
	3	1	**6Y-6584**	1	STRAP AS-GROUND	
	4	1,2	**7G-1060**	3	STRAP AS-GROUND	
C	5	1,2	**7K-1181**	109	STRAP-CABLE	
Y	6	2	**7N-0719**	1	SWITCH GP-DISCONNECT (BATTERY)	313
Y	6A	2	**7N-0719**	1	SWITCH GP-DISCONNECT (BATTERY) (STARTER)	313
C	7	1	**7Y-3948**	1	CABLE AS	
		1	**1S-7251**	2	TERMINAL-RING (FOR 1/2-IN BOLT)	
		1	**5P-0747**	1	CABLE (00-GA, BLACK)	
	8	2	**8S-4211**	2	PLATE	
	9	2	**8V-0622**	1	CABLE AS (BATTERY 1 TO BATTERY 2)	
E		2	**5P-0761**		CABLE (00-GA, RED) (14-CM)	
		2	**9G-0003**	1	COVER-TERMINAL (BLACK)	
		2	**9G-0004**	1	COVER-TERMINAL (RED)	
		2	**8C-5917**	1	TERMINAL AS-BATTERY (POSITIVE)	
		2	**8T-9757**	1	TERMINAL AS-BATTERY (NEGATIVE)	
					(EACH TERMINAL AS INCLUDES)	
		2	**1M-6119**	1	BOLT (5/16-18X1.375-IN)	
		2	**1M-6120**	1	NUT (5/16-18-THD)	
	10	1	**111-4402**	1	FILTER-FOAM (FUEL TANK)	
Y	11	1	**124-9325**	1	SENSOR GP-FUEL LEVEL	280
C	12	1	**139-2116**	2	SWITCH AS-TOGGLE (UNDERHOOD SERVICE LIGHT)	
		1	**186-3735**	3	PIN-CONNECTOR (16-GA TO 18-GA)	
		1	**6T-3631**	2	NUT-HEX (15/32-32-THD)	
		1	**6T-3632**	1	LOCKWASHER	
		1	**6T-3633**	1	RING-LOCKING	
		1	**102-8803**	1	KIT-RECEPTACLE (3-PIN)	
					(INCLUDES RECEPTACLE AS & WEDGE)	
	13	2	**153-5710**	2	BATTERY (12-VOLT, MAINTENANCE FREE)	
	14	2	**153-6281**	1	HOLD-DOWN-BATTERY	
	15	1	**164-3651**	1	ADAPTER	
Y	16	1	**164-7577**	1	SWITCH GP-BYPASS (POWER TRAIN OIL FILTER)	312
	17	1	**174-7875**	1	HORN AS (24-VOLT, HIGH TONE)	
	18	1,2	**204-8000**	3	ANCHOR-TIE	
	19	1	**205-3079**	1	ADAPTER	
	20	1	**213-7005**	1	HARNESS AS-CHASSIS (FENDER, RH)	
		1	**126-1774**	1	COVER	
		1	**9X-6772**	2	STRAP-CABLE	
		1	**106-8704**	2	SUPPRESSOR AS-ARC	
		1	**155-2272**	1	PLUG AS-CONNECTOR (4-PIN)	
		1	**160-7689**	1	PLUG AS-CONNECTOR (70-PIN)	
		1	**102-8802**	2	KIT-RECEPTACLE (2-PIN)	
		1	**102-8803**	3	KIT-RECEPTACLE (3-PIN)	
		1	**102-8804**	1	KIT-RECEPTACLE (4-PIN)	
		1	**102-8801**	1	KIT-RECEPTACLE (12-PIN)	
					(EACH INCLUDES RECEPTACLE AS & WEDGE)	
		1	**155-2255**	1	KIT-CONNECTING PLUG (12-PIN)	
		1	**155-2260**	2	KIT-CONNECTING PLUG (3-PIN)	
		1	**155-2270**	8	KIT-CONNECTING PLUG (2-PIN)	
					(EACH INCLUDES PLUG AS, WEDGE, & INTERFACE SEAL)	
		1	**251-7591**	1	WIRE AS (UNDERHOOD SERVICE LIGHT)	
	21	2	**213-7021**	1	RECEPTACLE AS-AUXILIARY START	
		2	**1S-4915**	2	LINER (CONDUIT)	
		2	**1S-7251**	1	TERMINAL-RING (FOR 1/2-IN BOLT)	

213-7003 **BATTERY & WIRING GP** *(contd.)* **i02467665**

NOTE	REF NO	GRAPHIC REF	PART NUMBER	QTY	PART NAME 1 2 3 4 5 6 (PRODUCT LEVEL)	SEE PAGE
		2	**4D-1248**	1	TERMINAL (FOR 13/32-IN BOLT)	
E		2	**5P-0695**		CONDUIT (66-CM)	
E		2	**5P-0747**		CABLE (00-GA, BLACK) (30-CM)	
E		2	**5P-0761**		CABLE (00-GA, RED) (100-CM)	
		2	**8N-0869**	1	COVER-TERMINAL (RED)	
E		2	**8T-2225**		TUBE-HEAT SHRINK (16-CM)	
E		2	**114-8843**		SLEEVE-PLASTIC (40-CM)	
	22	1	**213-9100**	1	ALARM AS (BACKUP)	
		1	**102-8802**	1	KIT-RECEPTACLE (2-PIN)	
					(INCLUDES RECEPTACLE AS & WEDGE)	
BD		1	**5P-5623**		WIRE-ELECTRICAL (16-GA, BLACK)	
		1	**186-3735**	2	PIN-CONNECTOR (16-GA TO 18-GA)	
E		1	**9X-1813**		SLEEVE (31-CM)	
	23	1	**214-1067**	1	HARNESS AS-CHASSIS (FENDER, LH)	
		1	**160-7689**	1	PLUG AS-CONNECTOR (70-PIN)	
		1	**155-2272**	4	PLUG AS-CONNECTOR (4-PIN)	
		1	**102-8802**	2	KIT-RECEPTACLE (2-PIN)	
		1	**102-8804**	1	KIT-RECEPTACLE (4-PIN)	
		1	**102-8801**	2	KIT-RECEPTACLE (12-PIN)	
					(EACH INCLUDES RECEPTACLE AS & WEDGE)	
		1	**155-2255**	3	KIT-CONNECTING PLUG (12-PIN)	
		1	**155-2260**	1	KIT-CONNECTING PLUG (3-PIN)	
		1	**155-2270**	12	KIT-CONNECTING PLUG (2-PIN)	
		1	**155-2274**	1	KIT-CONNECTING PLUG (6-PIN)	
					(EACH INCLUDES PLUG AS, WEDGE, & INTERFACE SEAL)	
CY	24	1	**219-6485**	2	LAMP GP-FLOOD (24-VOLT, VERTICAL MOUNT) (UNDERHOOD SERVICE LIGHT)	248
	25	1	**220-8397**	1	WIRE AS	
	26	1	**224-6316**	1	ADAPTER	
	27	1	**231-3472**	1	PLATE AS	
	28	1	**233-2804**	1	HARNESS AS-TRANSMISSION	
		1	**108-6259**	1	PLUG AS-CONNECTOR (17-PIN)	
		1	**102-8801**	1	KIT-RECEPTACLE (12-PIN)	
					(INCLUDES RECEPTACLE AS & WEDGE)	
		1	**155-2255**	1	KIT-CONNECTING PLUG (12-PIN)	
					(INCLUDES PLUG AS, WEDGE, & INTERFACE SEAL)	
	29	2	**235-1594**	1	PLATE AS	
	30	1	**235-9762**	1	PLATE AS	
	31	2	**236-0846**	1	CABLE AS (DISCONNECT TO PASS THROUGH)	
E		2	**5P-0761**		CABLE (00-GA, RED) (880-CM)	
		2	**1S-4915**	2	LINER (CONDUIT)	
		2	**1S-7251**	2	TERMINAL-RING (FOR 1/2-IN BOLT)	
E		2	**5P-0695**		CONDUIT (68-CM)	
E		2	**8T-2225**		TUBE-HEAT SHRINK (16-CM)	
		2	**8N-0869**	2	COVER-TERMINAL (RED)	
E		2	**114-8843**		SLEEVE-PLASTIC (40-CM)	
	32	2	**236-0848**	1	CABLE AS (DISCONNECT TO GROUND)	
E		2	**5P-0747**		CABLE (00-GA, BLACK) (100-CM)	
		2	**1S-7252**	1	TERMINAL-RING (FOR 3/8-IN BOLT)	
		2	**4D-1248**	1	TERMINAL (FOR 13/32-IN BOLT)	
E		2	**114-8843**		SLEEVE-PLASTIC (40-CM)	
	33	2	**236-0849**	1	CABLE AS (PASS THROUGH TO STARTER)	
E		2	**5P-0761**		CABLE (00-GA, RED) (180-CM)	
		2	**1S-4915**	2	LINER (CONDUIT)	
		2	**1S-7251**	2	TERMINAL-RING (FOR 1/2-IN BOLT)	
E		2	**5P-0695**		CONDUIT (155-CM)	
		2	**8N-0869**	1	COVER-TERMINAL (RED)	
E		2	**8T-2225**		TUBE-HEAT SHRINK (21-CM)	
E		2	**114-8843**		SLEEVE-PLASTIC (40-CM)	

213-7003 **BATTERY & WIRING GP** *(contd.)* **i02467665**

NOTE	REF NO	GRAPHIC REF	PART NUMBER	QTY	PART NAME 1 2 3 4 5 6 (PRODUCT LEVEL)	SEE PAGE
	34	1	**253-2673**	1	SWITCH AS-PRESSURE (IMP/FAN TANK RETURN BYPASS)	
		1	**102-8802**	1	KIT-RECEPTACLE (2-PIN)	
					(EACH INCLUDES RECEPTACLE AS & WEDGE)	
		1	**186-3735**	2	PIN-CONNECTOR (16-GA TO 18-GA)	
E		1	**9X-1813**		SLEEVE (14-CM)	
C	35	1	**275-2393**	1	HARNESS AS-CHASSIS	
		1	**102-8802**	3	KIT-RECEPTACLE (2-PIN)	
		1	**102-8805**	3	KIT-RECEPTACLE (6-PIN)	
		1	**102-8801**	1	KIT-RECEPTACLE (12-PIN)	
					(EACH KIT INCLUDES RECEPTACLE AS & WEDGE)	
		1	**134-2540**	2	RECEPTACLE AS-CONNECTOR (3-PIN)	
		1	**155-2272**	1	PLUG AS-CONNECTOR (4-PIN)	
		1	**174-0503**	2	KIT-CONNECTING PLUG (3-PIN)	
		1	**155-2270**	5	KIT-CONNECTING PLUG (2-PIN)	
		1	**155-2274**	3	KIT-CONNECTING PLUG (6-PIN)	
					(EACH KIT INCLUDES PLUG AS, WEDGE, & INTERFACE SEAL)	
		1	**190-7613**	1	RECEPTACLE AS-CONNECTOR (12-PIN)	
C	36	1	**276-3507**	1	HARNESS AS-POWER (UNDERHOOD SERVICE LIGHT)	
		1	**102-8802**	2	KIT-RECEPTACLE (2-PIN)	
					(INCLUDES RECEPTACLE AS & WEDGE)	
		1	**155-2260**	2	KIT-CONNECTING PLUG (3-PIN)	
		1	**155-2270**	2	KIT-CONNECTING PLUG (2-PIN)	
					(EACH KIT INCLUDES PLUG AS, WEDGE, & INTERFACE SEAL)	
C	37	2	**277-0642**	1	JUNCTION BLOCK	
C	38	2	**280-7095**	1	CABLE AS (BUS TO PASS THROUGH)	
E		2	**5P-0747**		CABLE (00-GA, BLACK) (68-CM)	
		2	**1S-4915**	2	LINER (CONDUIT)	
		2	**1S-7252**	2	TERMINAL-RING (FOR 3/8-IN BOLT)	
E		2	**5P-0695**		CONDUIT (40-CM)	
		2	**9G-8909**	1	COVER-TERMINAL (BLACK)	
		2	**9X-0195**	1	TERMINAL (FOR 3/8-IN BOLT)	
		2	**9X-5699**	1	BOOT	
E		2	**8T-2225**		TUBE-HEAT SHRINK (16-CM)	
E		2	**114-8843**		SLEEVE-PLASTIC (40-CM)	
C	39	2	**280-7128**	1	PLATE AS	
C	40	1	**132-5789**	3	CLIP	
Y	41	1	**145-7028**	1	SENSOR GP-TEMPERATURE (HYDRAULIC OIL)	297
Y	41A	1	**145-7028**	1	SENSOR GP-TEMPERATURE (TRANSMISSION SUMP)	297
C	42	1	**150-5931**	3	GROMMET	
	43	1	**163-1201**	1	HORN AS (24-VOLT, LOW TONE)	
C	44	1,2	**193-3973**	27	TIE (WRAP)	
	45	1	**1J-9671**	2	SEAL-O-RING	
Y	46	1	**237-0957**	2	SENSOR GP-PRESSURE (MAIN, TILT PUMP)	288
	47	1	**2S-4078**	1	SEAL-O-RING	
	48	1	**3D-2824**	1	SEAL-O-RING	
	49	1	**3J-1907**	3	SEAL-O-RING	
	50	1	**3K-0360**	1	SEAL-O-RING	
	51	2	**3K-6060**	2	LOCKNUT (3/8-16-THD)	
	52	2	**4L-6454**	4	BOLT (3/8-16X1-IN)	
	53	1	**4P-7428**	1	CLIP	
	54	1	**4P-7429**	3	CLIP	
C	55	2	**4P-7581**	2	CLIP	
C	56	1	**4P-8134**	3	CLIP	
	57	1	**5P-4674**	1	ADAPTER-O-RING	
	58	1	**5S-7379**	2	BOLT (3/8-16X0.875-IN)	
	59	1	**6V-5051**	1	SEAL-O-RING	
	60	1,2	**7B-1251**	7	GROMMET	

213-7003 **BATTERY & WIRING GP** *(contd.)* **i02467665**

NOTE	REF NO	GRAPHIC REF	PART NUMBER	QTY	PART NAME 1 2 3 4 5 6 (PRODUCT LEVEL)	SEE PAGE
	61	1	**7J-0204**	2	SEAL-O-RING	
	62	1,2	**7X-7729**	3	WASHER (11X25X3-MM THK)	
C	63	2	**8S-0948**	1	CLIP	
	64	2	**8S-2634**	1	COVER AS	
		2	**2P-2975**	2	SEAL-O-RING	
	65	1,2	**8T-4121**	32	WASHER-HARD (11X21X2.5-MM THK)	
M	66	1	**8T-4136**	1	BOLT (M10X1.5X25-MM)	
CM	67	1,2	**8T-4137**	24	BOLT (M10X1.5X20-MM)	
M	68	1	**8T-4139**	3	BOLT (M12X1.75X30-MM)	
CM	69	2	**8T-4179**	2	BOLT (M12X1.75X20-MM)	
CM	70	2	**8T-4182**	3	BOLT (M10X1.5X45-MM)	
M	71	1	**8T-4185**	4	BOLT (M10X1.5X50-MM)	
M	72	1,2	**8T-4195**	3	BOLT (M10X1.5X30-MM)	
C	73	1,2	**8T-4223**	5	WASHER-HARD (13.5X25.5X3-MM THK)	
	74	1,2	**8T-4896**	8	WASHER-HARD (10.2X18.5X2.5-MM THK)	

B-USE AS REQUIRED
C-CHANGE FROM PREVIOUS TYPE
D-ORDER BY THE METER
E-ORDER BY THE CENTIMETER
M-METRIC PART
Y-SEPARATE ILLUSTRATION

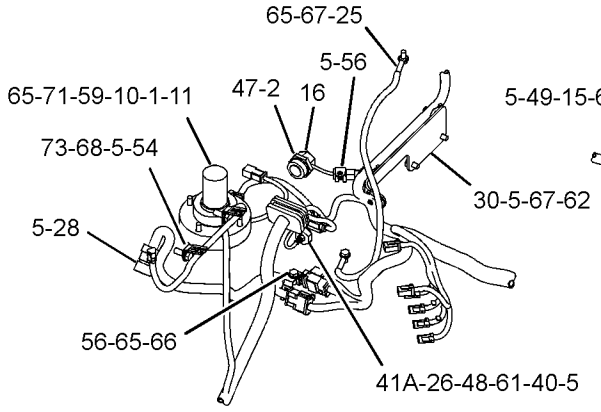

VIEW OF AREA A

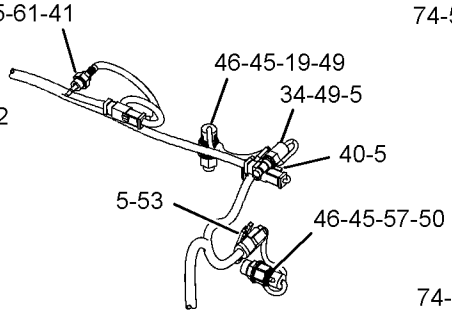

VIEW OF AREA B

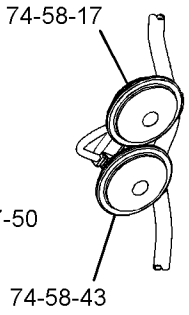

VIEW OF AREA C

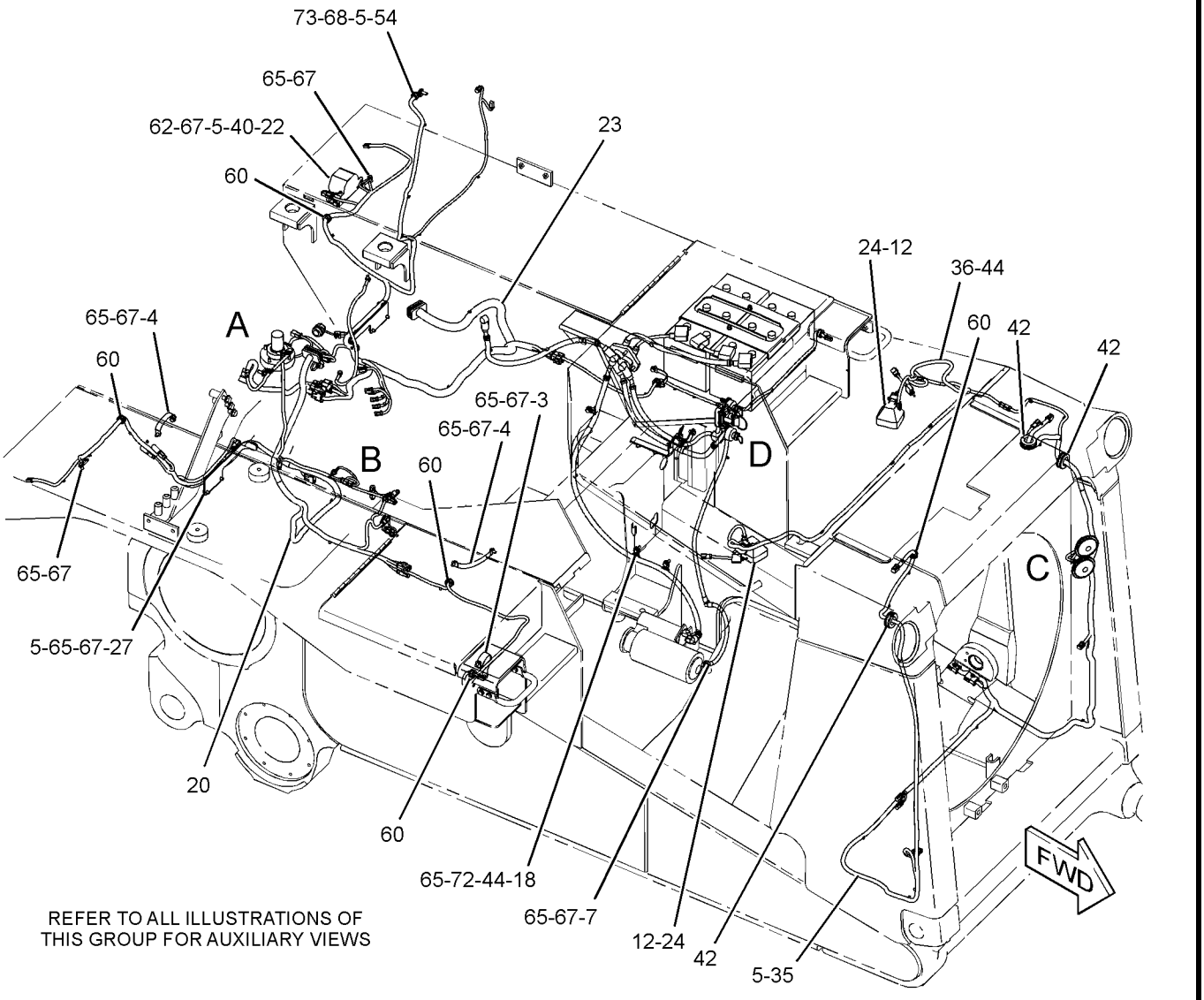

REFER TO ALL ILLUSTRATIONS OF THIS GROUP FOR AUXILIARY VIEWS

GRAPHIC #1

g01232932

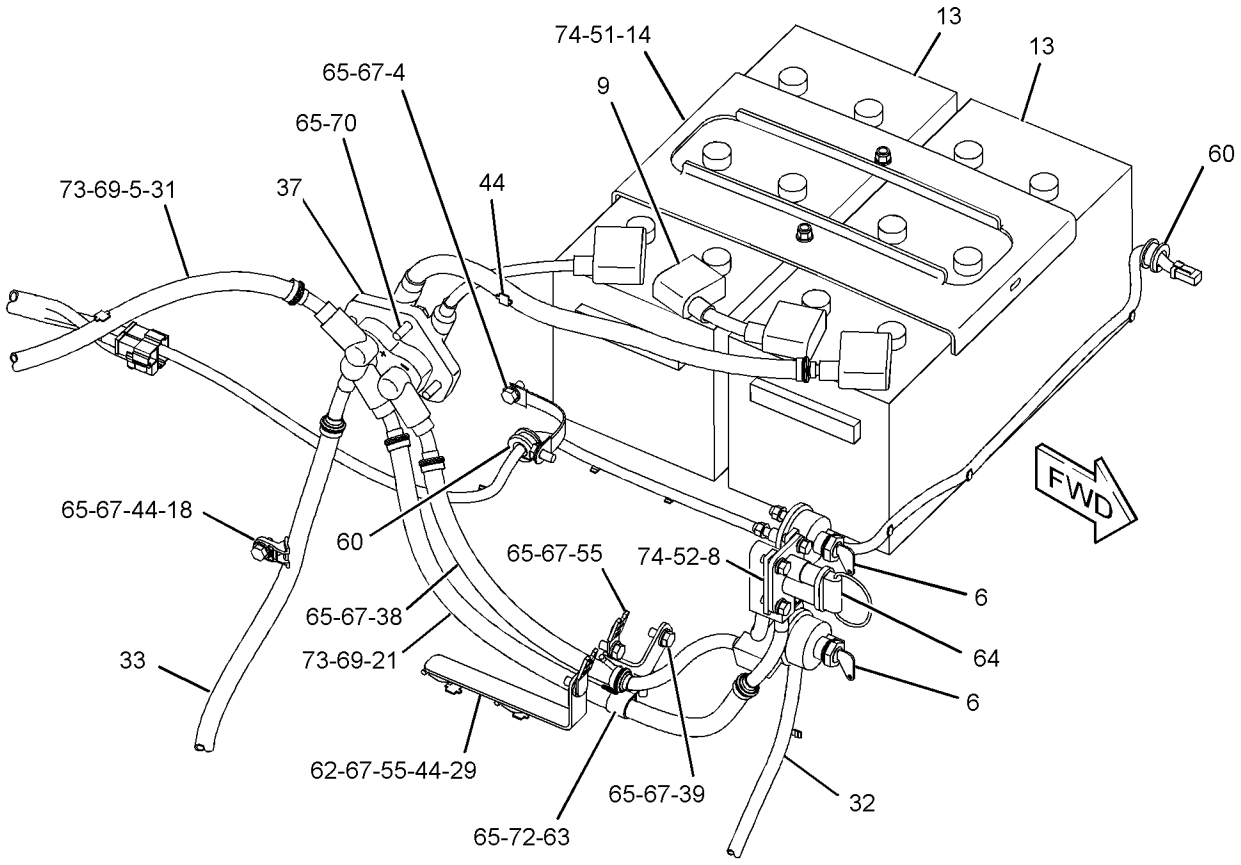

VIEW OF AREA D

GRAPHIC #2 **<END>** g01232936

167-8984 BATTERY GP

S/N: RJG1-UP
24 VOLT. CAES ULTRA
PART OF 255-9372 KIT-INSTALLATION
AN ATTACHMENT

SMCS-1401 **i02279216**

NOTE	REF NO	GRAPHIC REF	PART NUMBER	QTY	PART NAME 1 2 3 4 5 6 (PRODUCT LEVEL)	SEE PAGE
	1	1	**102-8803**	1	KIT-RECEPTACLE (3-PIN)	
					(KIT INCLUDES RECEPTACLE AS AND WEDGE)	
	2	1	**155-2260**	1	KIT-CONNECTING PLUG (3-PIN)	
					(KIT INCLUDES RECEPTACLE AS AND WEDGE)	
	3	1	**7X-6085**	1	GROMMET AS-SEAL	
		1	**5S-7348**	1	SCREW-MACHINE (6-32X0.375-IN)	

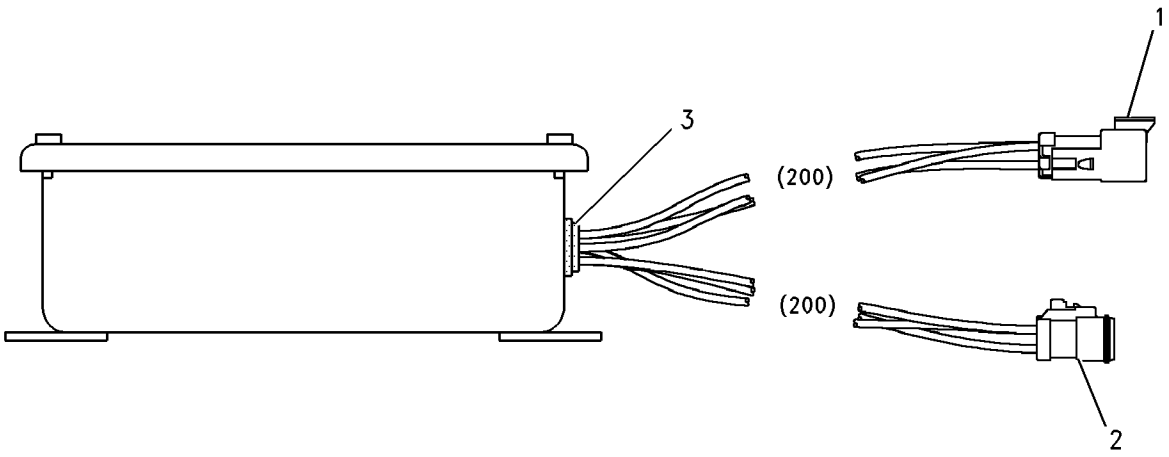

GRAPHIC #1 **<END>** g00989583

239-1466 CONNECTION GP-ELECTRICAL

S/N: EHX1-UP
PART OF 235-8210 SENSOR GP-ENGINE
ALSO AN ATTACHMENT

SMCS-1408 **i02047003**

NOTE	REF NO	GRAPHIC REF	PART NUMBER	QTY	PART NAME 1 2 3 4 5 6 (PRODUCT LEVEL)	SEE PAGE
	1	1	**7W-8106**	1	SPACER (15-MM THK)	
	2	1	**3B-1915**	1	BOLT (3/8-16X1-3/8-IN)	
	3	1	**5M-2894**	1	WASHER-HARD (10.2X18.5X2.5-MM THK)	

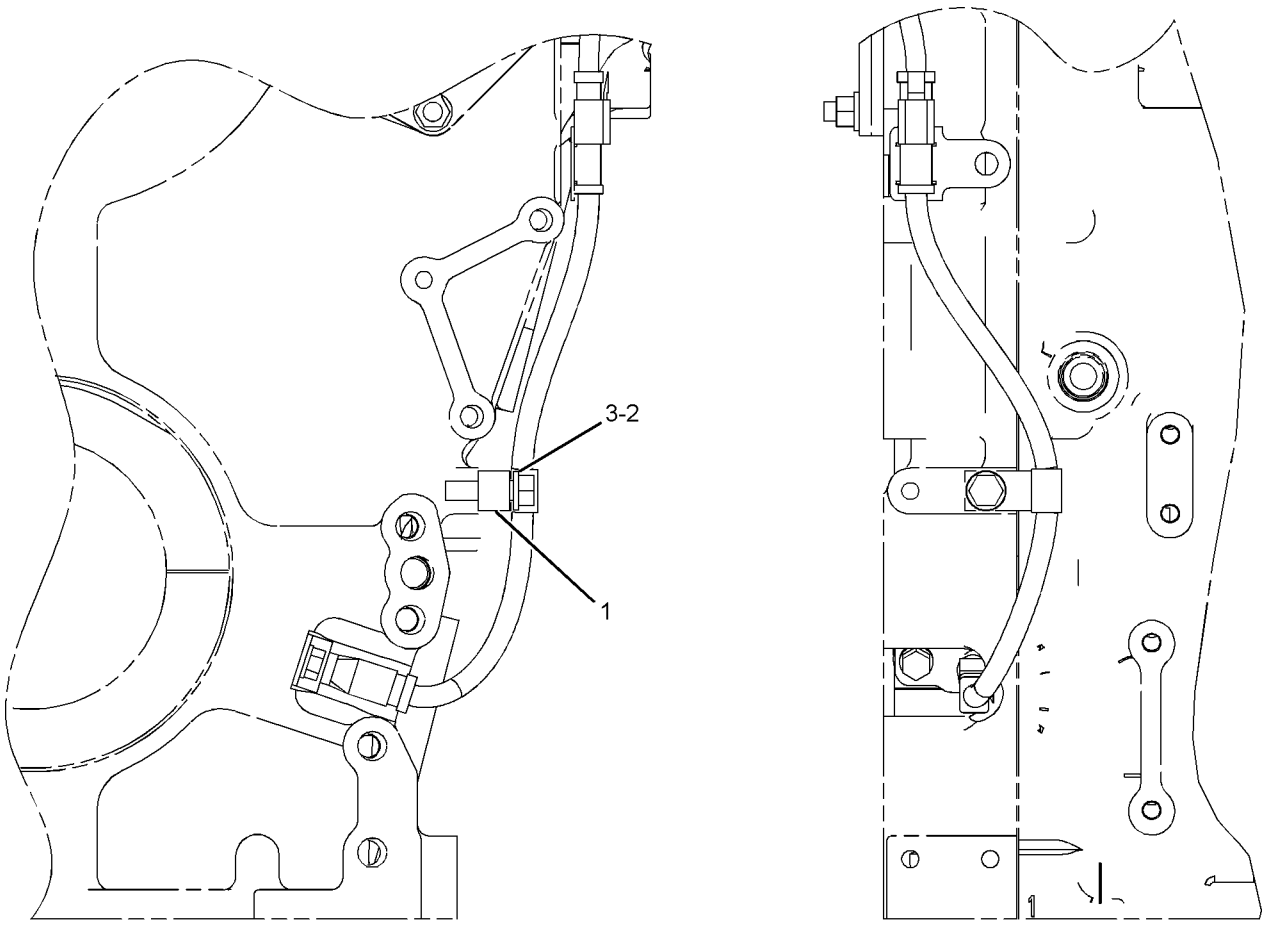

FRONT VIEW LEFT SIDE VIEW

GRAPHIC #1 **<END>** g01052119

243-1554 CONTROL & MTG GP-ENGINE ELEK

S/N: EHX1-UP

PART OF 212-2737, 212-2744, 271-2219 ENGINE AR-COMPLETE

ALSO AN ATTACHMENT

SMCS-1901, 7620 **i02295998**

NOTE	REF NO	GRAPHIC REF	PART NUMBER	QTY	PART NAME 1 2 3 4 5 6 (PRODUCT LEVEL)	SEE PAGE
	1	1	**6I-1418**	4	SPACER (8.2X12.7X28.7-MM THK)	
	2	1	**8T-9655**	8	MOUNT-ISOLATION	
	3	1	**221-2616**	4	SPACER	
	4	1	**225-6309**	1	BRACKET	
	5	1	**233-0891**	2	BRACKET AS	
Y	6	1	*239-7902*	1	CONTROL GP-ENGINE ELECTRONIC	232
	7	1	**4M-6425**	4	BOLT (5/16-18X1-IN)	
	8	1	**7X-0440**	4	BOLT (5/16-18X1.75-IN)	
	9	1	**8T-4224**	5	WASHER-HARD (8.8X16X2-MM THK)	
	10	1	**9N-0869**	4	WASHER-HARD (8.8X25.5X2-MM THK)	

Y-SEPARATE ILLUSTRATION

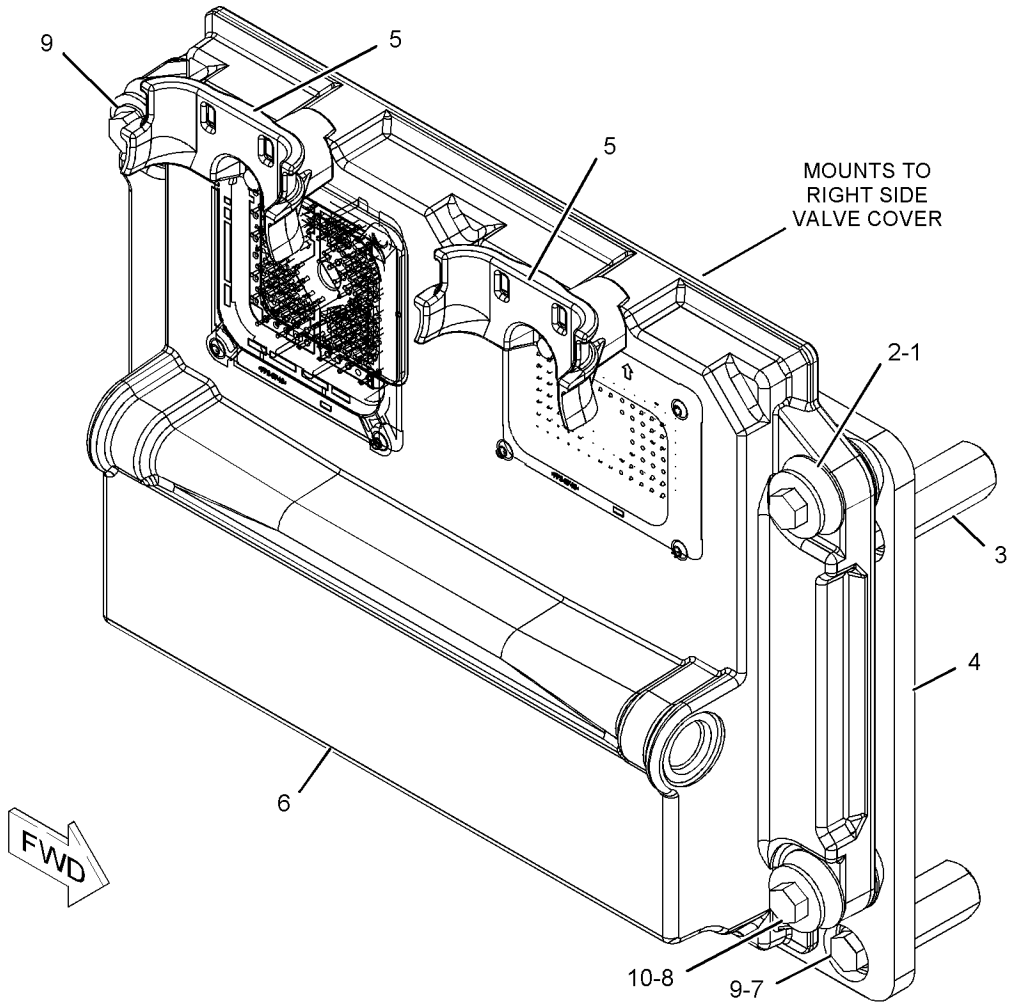

GRAPHIC #1 **<END>** g01150080

255-5282 CONTROL GP-ELECTRONIC

S/N: EHX1-UP
PART OF 239-7902 CONTROL GP-ENGINE ELECTRONIC
FIELD REPLACEMENT FOR 239-7902—PAGE 232
ALSO AN ATTACHMENT

SMCS-7418, 7490 **i02204424**

NOTE	REF NO	GRAPHIC REF	PART NUMBER	QTY	PART NAME 1 2 3 4 5 6 (PRODUCT LEVEL)	SEE PAGE
					(NO SERVICED PARTS)	

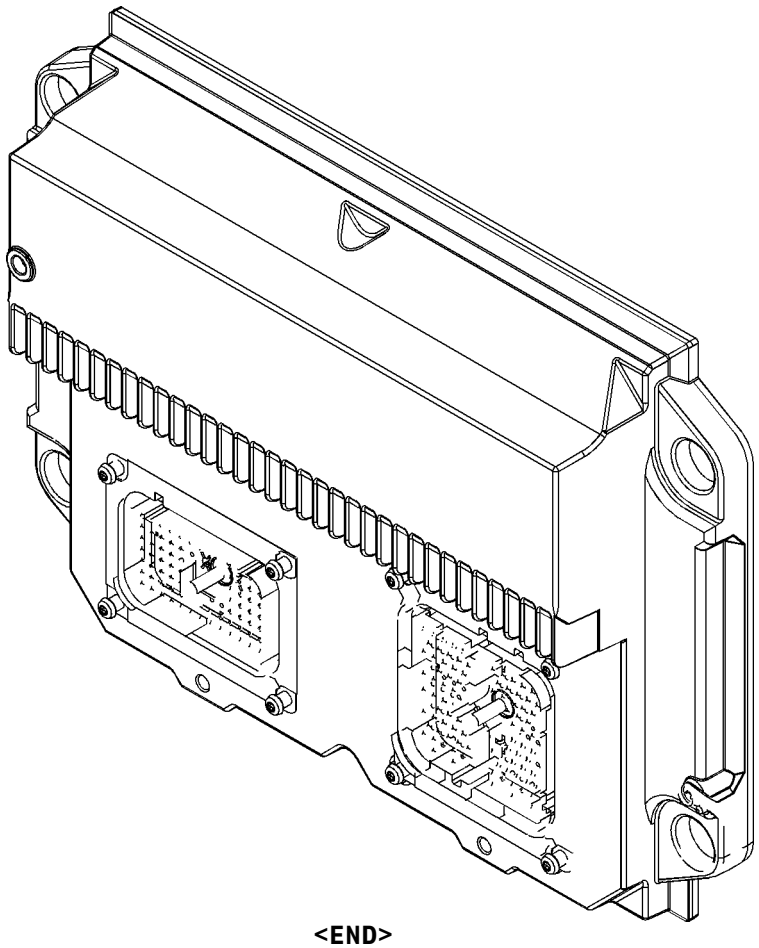

GRAPHIC #1 **<END>** g01040021

239-7902 CONTROL GP-ENGINE ELECTRONIC

S/N: EHX1-UP
FULL FEATURE
PART OF 243-1554 CONTROL & MTG GP-ENGINE ELEK
FIELD REPLACEMENT ORDER 255-5282—PAGE 231
ALSO AN ATTACHMENT
TYPE 1

SMCS-1901 **i02457709**

NOTE	REF NO	GRAPHIC REF	PART NUMBER	QTY	PART NAME 1 2 3 4 5 6 (PRODUCT LEVEL)	SEE PAGE
Y	1	1	**255-5282**	1	CONTROL GP-ELECTRONIC	231

Y-SEPARATE ILLUSTRATION

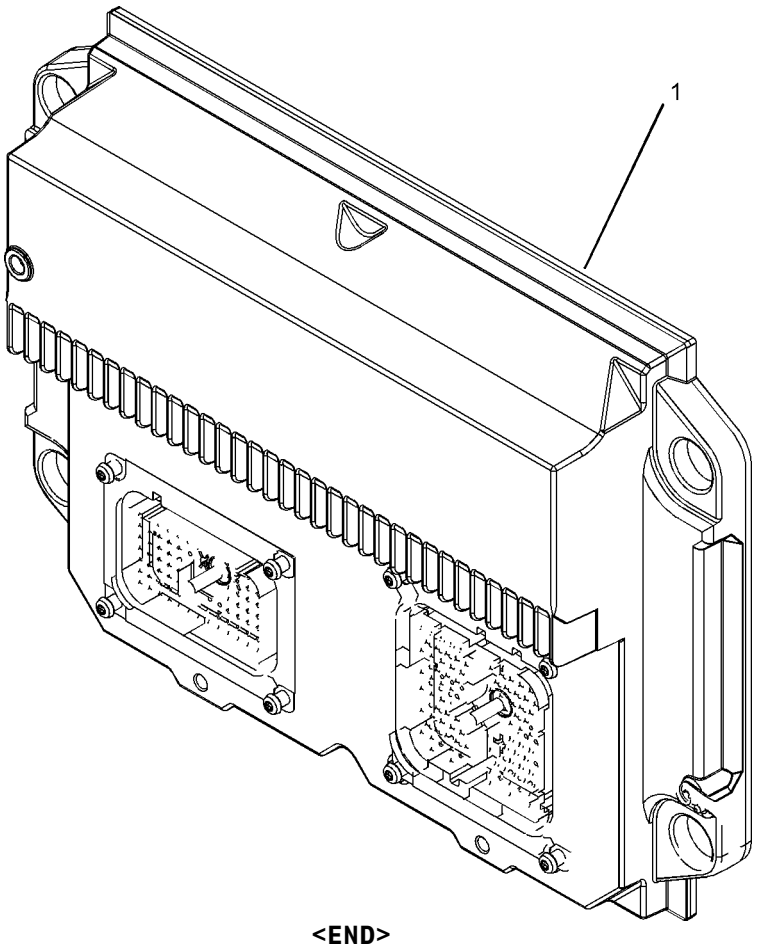

GRAPHIC #1 **<END>** g01040016

239-7902 CONTROL GP-ENGINE ELECTRONIC

S/N: EHX1-UP
FULL FEATURE
PART OF 243-1554 CONTROL & MTG GP-ENGINE ELEK
FIELD REPLACEMENT ORDER 255-5282—PAGE 231
ALSO AN ATTACHMENT
TYPE 2

SMCS-1901 **i02458265**

NOTE	REF NO	GRAPHIC REF	PART NUMBER	QTY	PART NAME 1 2 3 4 5 6 (PRODUCT LEVEL)	SEE PAGE
	1	1	**262-2876**	1	CONTROL GP-ENGINE ELECTRONIC	

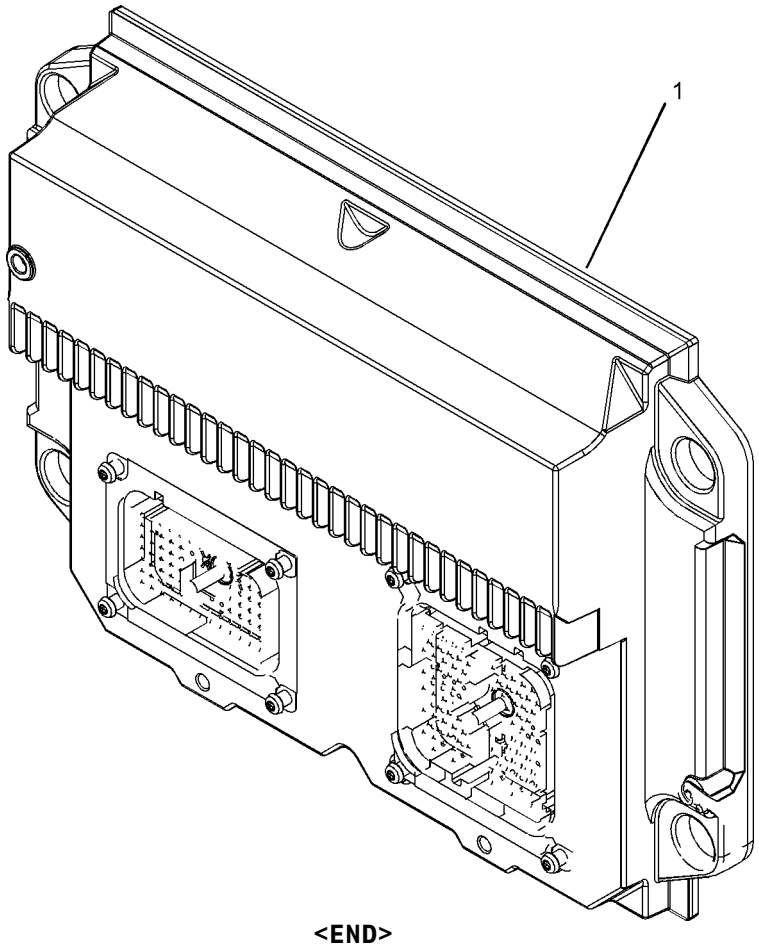

GRAPHIC #1 **<END>** g01040016

239-9954 CONTROL GP-UNPROGRAMMED–PRODUCT LINK 300

S/N: RJG1-UP

PART OF 255-4206 INSTALLATION GP-COMMUNICATION

AN ATTACHMENT

SMCS-7610 **i02293389**

NOTE	REF NO	GRAPHIC REF	PART NUMBER	QTY	PART NAME 1 2 3 4 5 6 (PRODUCT LEVEL)	SEE PAGE
	1	1	**7X-6315**	1	STRAP AS-GROUND	
	2	1	**126-7574**	1	SCREW-PAN HEAD (8-32X9.52-MM)	
	3	1	**134-4126**	1	WASHER (4.52X8.28X0.76-MM THK)	

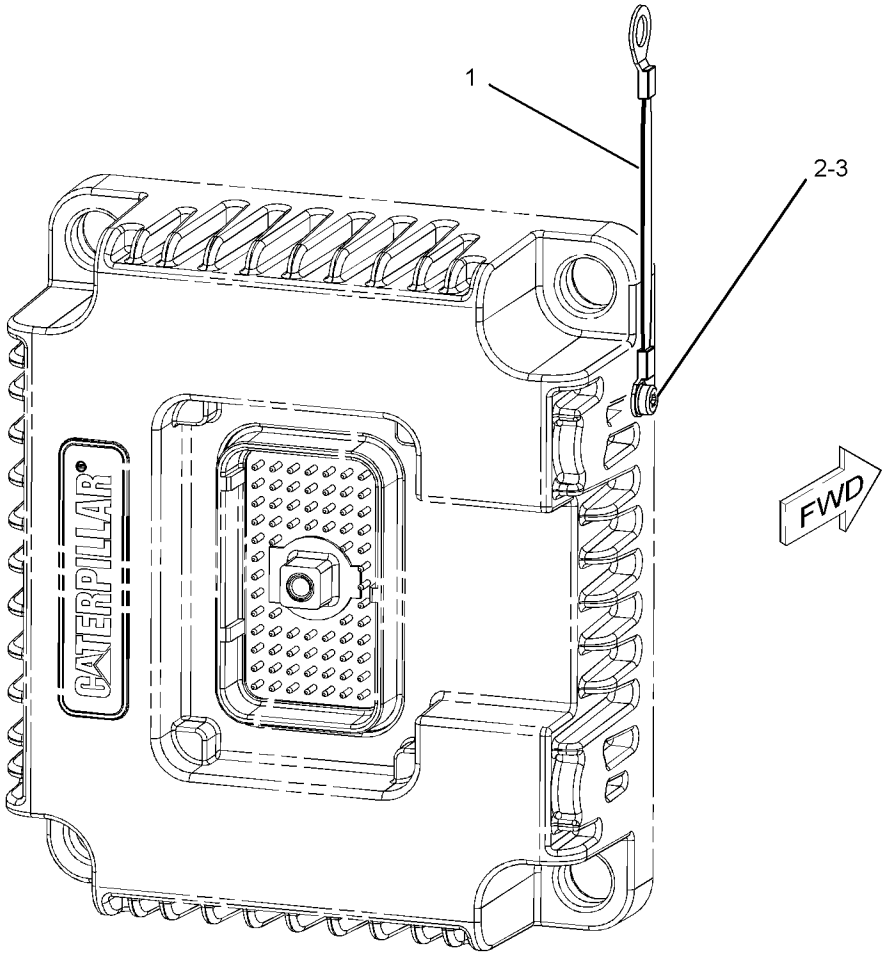

GRAPHIC #1 **<END>** g01145801

214-2540 CONVERTER GP-ELECTRICAL

S/N: RJG1-UP
24-VOLT TO 12-VOLT, 20-AMPERE
AN ATTACHMENT

SMCS-1421 **i01998293**

NOTE	REF NO	GRAPHIC REF	PART NUMBER	QTY	PART NAME 1 2 3 4 5 6 (PRODUCT LEVEL)	SEE PAGE
	1	1	**239-3902**	1	CONVERTER-ELECTRICAL (24-VOLT TO 12-VOLT)	
M	2	1	**9X-2042**	4	SCREW-TRUSS HEAD	

M-METRIC PART

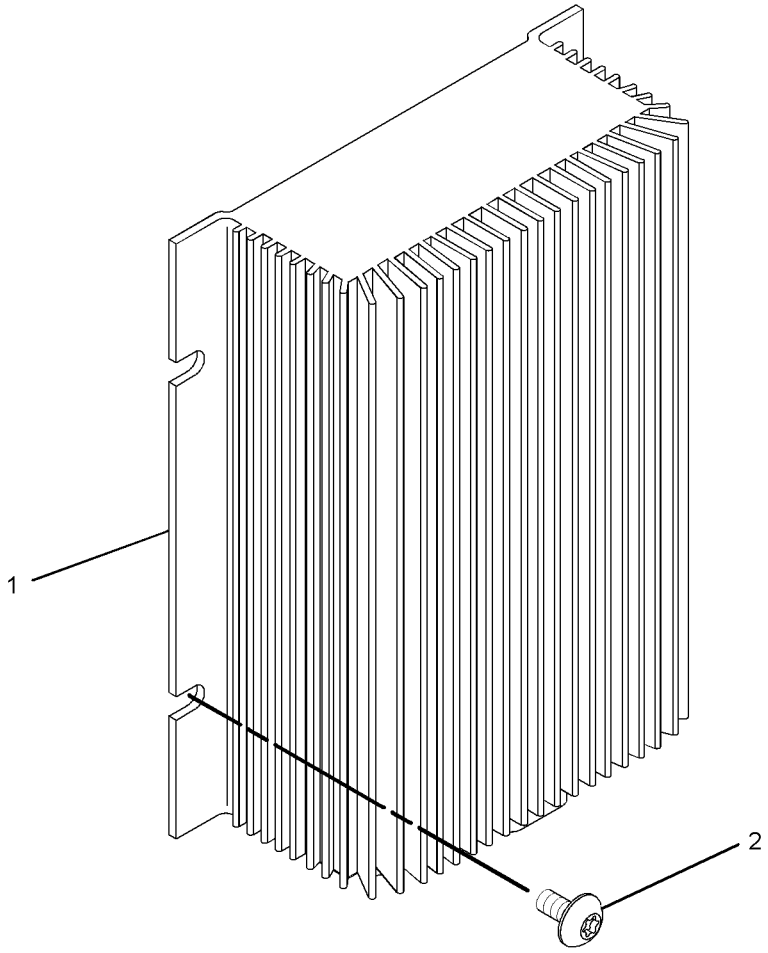

GRAPHIC #1 **<END>** g01037155

212-2743 ELECTRONICS AR-MACHINE

S/N: RJG1-UP

PART OF 212-2740 GENERAL AR

SMCS-7610, 7620 **i02275880**

NOTE	PART NUMBER	QTY	PART NAME 1 2 3 4 5 6 (PRODUCT LEVEL)	SEE PAGE
Y	*214-1002*	1	ELECTRONICS GP-IMPLEMENT	238
Y	*214-1001*	1	ELECTRONICS GP-MONITOR	238
Y	*214-1000*	1	ELECTRONICS GP-POWER TRAIN	238

Y-SEPARATE ILLUSTRATION

<END>

262-2043 ELECTRONICS GP-COMMUNICATION–

PRODUCT LINK 300

S/N: RJG1-UP

PART OF 255-4206 INSTALLATION GP-COMMUNICATION

AN ATTACHMENT

SMCS-7606, 7610, 7620 **i02357697**

NOTE	REF NO	GRAPHIC REF	PART NUMBER	QTY	PART NAME 1 2 3 4 5 6 (PRODUCT LEVEL)	SEE PAGE
	1	1	**265-9642**	1	SOFTWARE GP-COMMUNICATION (PRODUCT LINK 300)	
					-OR-	
					(OPTIONAL SERVICE REPLACEMENT)	
	2	1	**265-9643**	1	SERVICE GP-COMMUNICATION (PRODUCT LINK 300)	
					(INCLUDES CONTROL GP AND SOFTWARE)	
	3	1	**7X-6315**	1	STRAP AS-GROUND	
	4	1	**126-7574**	1	SCREW-PAN HEAD (8-32X9.52-MM)	
	5	1	**134-4126**	1	WASHER (4.52X8.28X0.76-MM THK)	

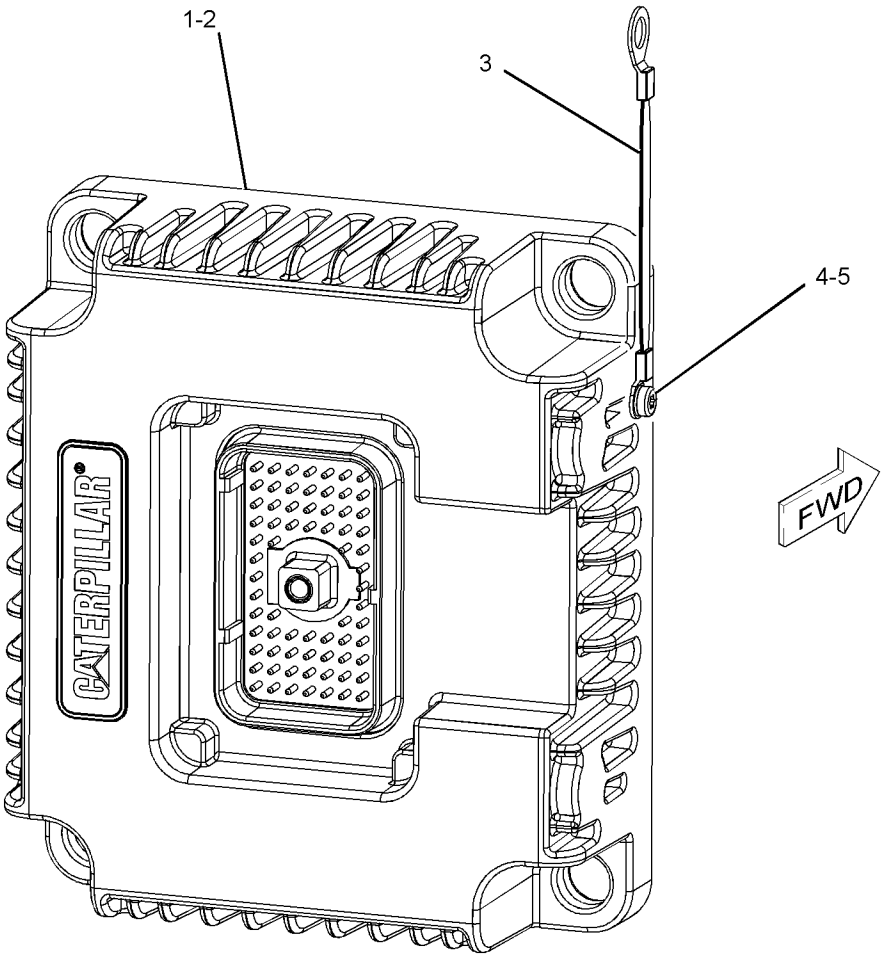

GRAPHIC #1 **<END>** g01157176

ELECTRICAL AND STARTING SYSTEM

214-1002 ELECTRONICS GP-IMPLEMENT

S/N: RJG1-UP

PART OF 212-2743 ELECTRONICS AR-MACHINE

SMCS-5701, 7610, 7620 **i02460279**

NOTE	PART NUMBER	QTY	PART NAME 1 2 3 4 5 6 (PRODUCT LEVEL)	SEE PAGE
	283-2239	1	SOFTWARE GP-IMPLEMENT	
			(SOFTWARE ONLY)	
			-OR-	
			(OPTIONAL SERVICE REPLACEMENT)	
	283-2240	1	SERVICE GP-IMPLEMENT	
			(INCLUDES CONTROL GP & SOFTWARE)	

<END>

214-1001 ELECTRONICS GP-MONITOR

S/N: RJG1-UP

PART OF 212-2743 ELECTRONICS AR-MACHINE

SMCS-7490, 7601, 7603, 7610, 7620 **i02460278**

NOTE	PART NUMBER	QTY	PART NAME 1 2 3 4 5 6 (PRODUCT LEVEL)	SEE PAGE
	283-6333	1	SOFTWARE GP-MONITOR	
			(SOFTWARE ONLY)	
			-OR-	
			(OPTIONAL SERVICE REPLACEMENT)	
	283-6334	1	SERVICE GP-MONITOR	
			(INCLUDES CONTROL GP & SOFTWARE)	

<END>

214-1000 ELECTRONICS GP-POWER TRAIN

S/N: RJG1-UP

PART OF 212-2743 ELECTRONICS AR-MACHINE

SMCS-4800, 4808, 7610, 7620 **i02460277**

NOTE	PART NUMBER	QTY	PART NAME 1 2 3 4 5 6 (PRODUCT LEVEL)	SEE PAGE
	283-2247	1	SOFTWARE GP-POWER TRAIN	
			(SOFTWARE ONLY)	
			-OR-	
			(OPTIONAL SERVICE REPLACEMENT)	
	283-2248	1	SERVICE GP-POWER TRAIN	
			(INCLUDES CONTROL GP & SOFTWARE)	

<END>

213-0050 HEATER GP-FUEL

S/N: RJG1-UP
FOR USE WITH CAB HEATER
AN ATTACHMENT

SMCS-1296 **i02262757**

NOTE	REF NO	GRAPHIC REF	PART NUMBER	QTY	PART NAME 1 2 3 4 5 6 (PRODUCT LEVEL)	SEE PAGE
	1	1	**7C-0754**	2	TEE	
	2	1	**9W-8394**	1	ORIFICE	
	3	1	**9X-2488**	9	CLAMP-HOSE	
	4	1	**101-8240**	1	BRACKET	
J	5	1	**106-5823**	2	HOSE	
	6	1	**111-9289**	1	HEATER AS (FUEL, COOLANT)	
		1	**111-9827**	2	ADAPTER	
		1	**2M-9780**	2	SEAL-O-RING	
I	7	1	**222-2196**	1	HOSE AS	
I	8	1	**222-2197**	1	HOSE AS	
	9	1	*150-4048*	2	ELBOW AS	
					(EACH INCLUDES)	
		1	**6V-8722**	1	ELBOW	
		1	**3K-0360**	1	SEAL-O-RING	
		1	**7J-9108**	1	SEAL-O-RING	
	10	1	**4L-6454**	4	BOLT (3/8-16X1-IN)	
	11	1	**5P-6994**	1	CLIP	
M	12	1	**6V-4248**	2	BOLT (M10X1.5X25-MM)	
	13	1	**6V-5839**	2	WASHER (11X21X2.5-MM THK)	
M	15	1	**8T-4139**	1	BOLT (M12X1.75X30-MM)	
	16	1	**8T-4223**	1	WASHER-HARD (13.5X25.5X3-MM THK)	
M	17	1	**8T-4244**	1	NUT (M12X1.75-THD)	
	18	1	**8T-4896**	4	WASHER-HARD (10.2X18.5X2.5-MM THK)	

I-REFER TO HYDRAULIC INFORMATION SYSTEM
J-(SHORTEN AS REQUIRED FOR PROPER ROUTING)
M-METRIC PART

213-0050 **HEATER GP-FUEL** *(contd.)* **i02262757**

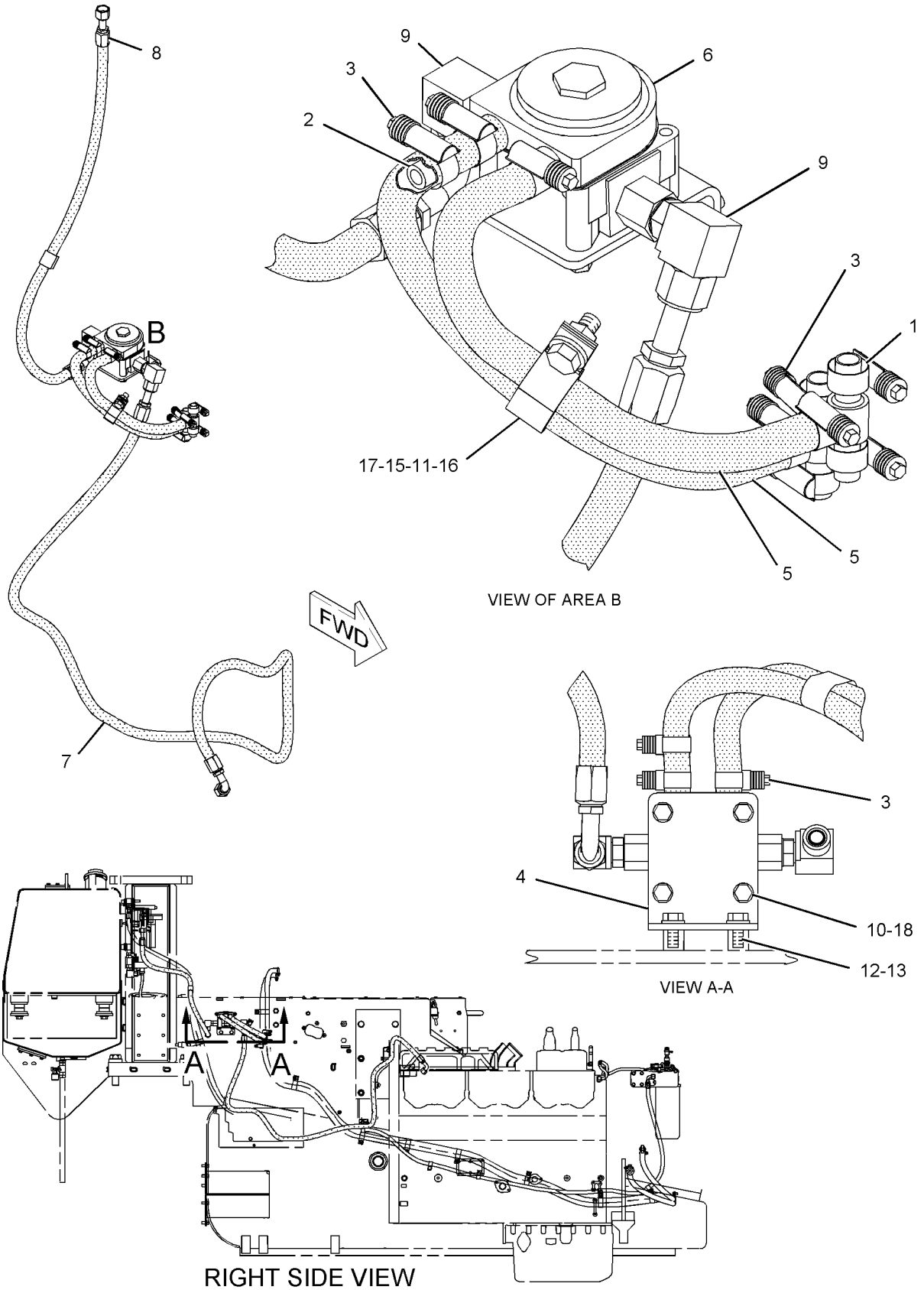

GRAPHIC #1 **<END>** g01136470

214-1068 HEATER GP-JACKET WATER

S/N: RJG1-UP
120-VOLT, 30-AMPERE
AN ATTACHMENT

SMCS-1383 **i02273282**

NOTE	REF NO	GRAPHIC REF	PART NUMBER	QTY	PART NAME 1 2 3 4 5 6 (PRODUCT LEVEL)	SEE PAGE
	1	1	**4N-0864**	1	GASKET	
	2	1	**230-3525**	2	ELEMENT AS-JACKET WATER HEATER (120-VOLT, 1500-WATT)	
	3	1	**234-4300**	1	CORD AS-JACKET WATER HEATER	
	4	1	**238-0293**	1	ADAPTER (WATER HEATER)	
	5	1	**3D-9799**	4	SCREW-MACHINE (8-32X0.875-IN)	
	6	1	**4L-6454**	1	BOLT (3/8-16X1-IN)	
	7	1	**4P-7429**	1	CLIP	
	8	1	**4P-7581**	2	CLIP	
	9	1	**5P-2228**	1	BOLT (1/2-13X1-IN)	
	10	1	**7K-1181**	10	STRAP-CABLE	
	11	1	**8T-4223**	1	WASHER-HARD (13.5X25.5X3-MM THK)	
	12	1	**8T-7008**	5	BOLT (3/8-16X3-IN)	

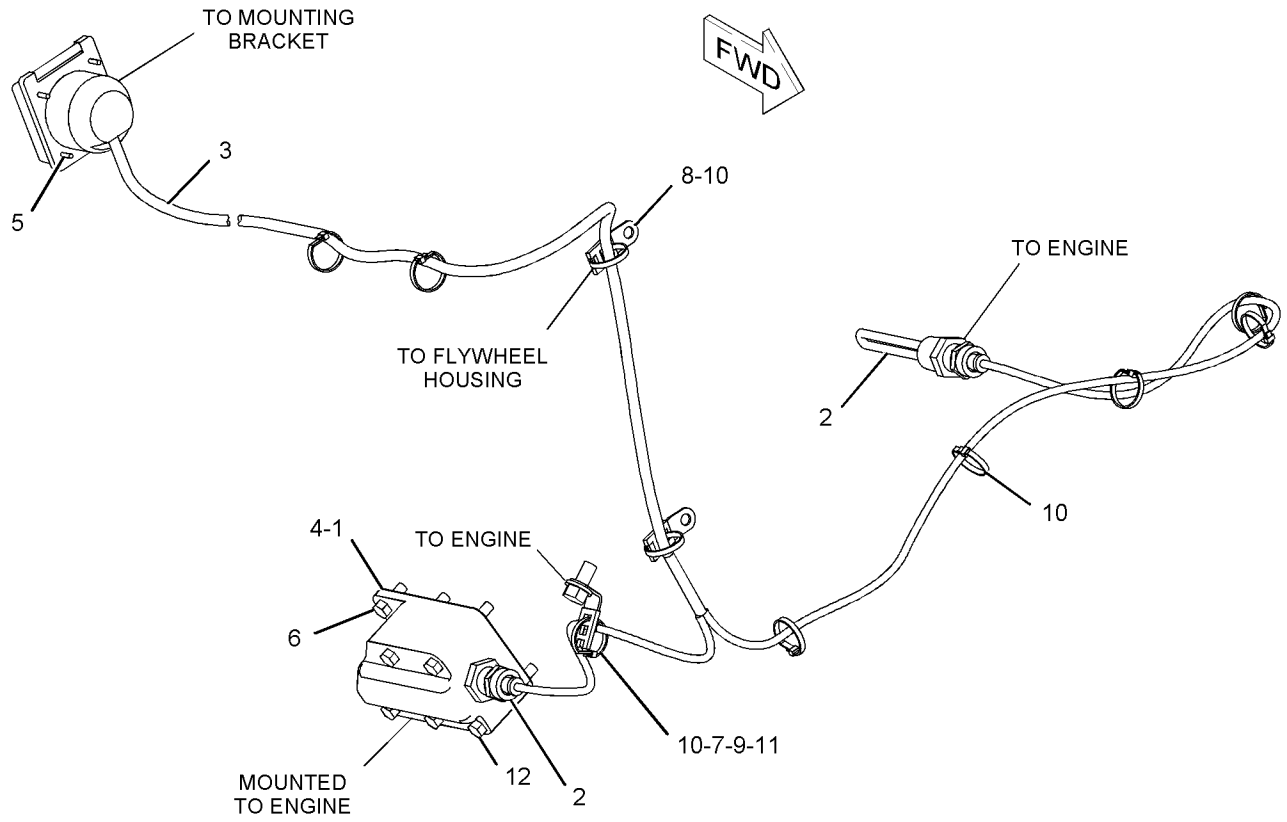

GRAPHIC #1 **<END>** g01138614

214-1069 HEATER GP-JACKET WATER

S/N: RJG1-UP
240-VOLT, 30-AMPERES
AN ATTACHMENT

SMCS-1383 **i02467652**

NOTE	REF NO	GRAPHIC REF	PART NUMBER	QTY	PART NAME 1 2 3 4 5 6 (PRODUCT LEVEL)	SEE PAGE
	1	1	**4N-0864**	1	GASKET	
	2	1	**238-0293**	1	ADAPTER	
	3	1	**239-8051**	2	ELEMENT AS-JACKET WATER HEATER (240-VOLT, 1500-WATT)	
					(EACH INCLUDES)	
		1	**7M-8485**	1	SEAL-O-RING	
	4	1	**246-4258**	1	CORD AS-JACKET WATER HEATER	
	5	1	**3D-9799**	4	SCREW-MACHINE (8-32X0.875-IN)	
	6	1	**4L-6454**	1	BOLT (3/8-16X1-IN)	
	7	1	**4P-7429**	1	CLIP	
	8	1	**4P-7581**	2	CLIP	
	9	1	**5P-2228**	1	BOLT (1/2-13X1-IN)	
	10	1	**7K-1181**	10	STRAP-CABLE	
	11	1	**8T-4223**	1	WASHER-HARD (13.5X25.5X3-MM THK)	
	12	1	**8T-7008**	5	BOLT (3/8-16X3-IN)	

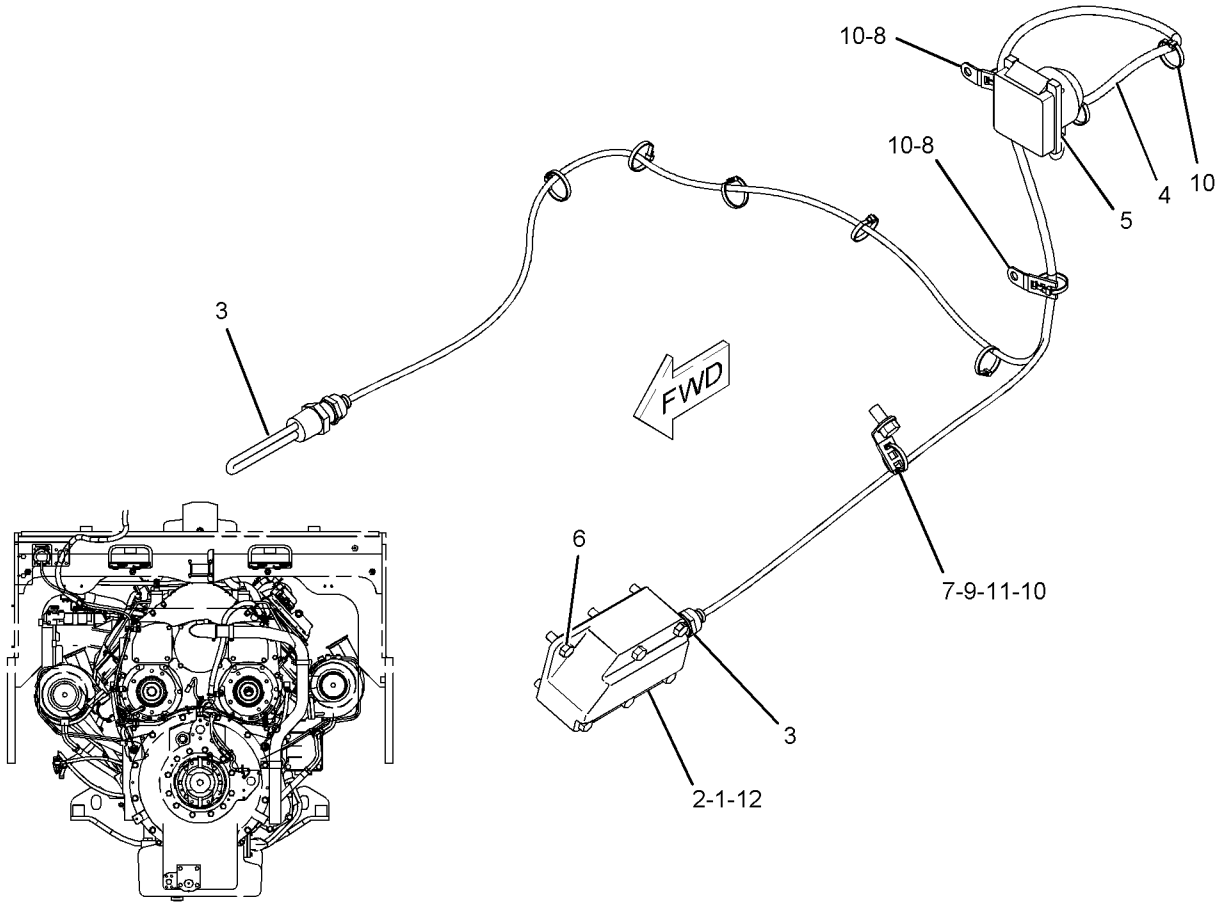

REAR VIEW OF ENGINE

GRAPHIC #1 **<END>** g01138696

255-4206 INSTALLATION GP-COMMUNICATION–
PRODUCT LINK 321SR
S/N: RJG1-UP
AN ATTACHMENT

SMCS-7606 **i02404628**

NOTE	REF NO	GRAPHIC REF	PART NUMBER	QTY	PART NAME 1 2 3 4 5 6 (PRODUCT LEVEL)	SEE PAGE
BC	1	1	**7K-1181**	13	STRAP-CABLE	
	2	1	**8C-5608**	4	SPACER (6.5X9.5X25.4-MM THK)	
Y	3	1	**239-9954**	1	CONTROL GP-UNPROGRAMMED (PRODUCT LINK 300)	234
C	4	1	**242-9964**	1	SPACER	
	5	1	**255-4517**	1	HARNESS AS-CONTROL (PRODUCT LINK)	
		1	**126-1774**	1	COVER	
		1	**9X-6772**	2	STRAP-CABLE	
		1	**102-8806**	1	KIT-RECEPTACLE (8-PIN)	
					(INCLUDES RECEPTACLE AS & WEDGE)	
		1	**155-2255**	1	KIT-CONNECTING PLUG (12-PIN)	
					(INCLUDES PLUG AS, WEDGE & INTERFACE SEAL)	
		1	**160-7690**	1	PLUG AS-CONNECTOR (70-PIN)	
	6	1	**260-7652**	1	FILM-WARNING (PRODUCT LINK 300, ANSI)	
C	7	1	**263-9088**	1	RADIO GP-COMMUNICATION (PRODUCT LINK 121SR)	
		1	**262-6125**	1	CONTROL GP-UNPROGRAMMED (PRODUCT LINK 121SR)	
		1	**267-4603**	1	SOFTWARE GP-COMMUNICATION (PRODUCT LINK 121SR)	
C	8	1	**266-2861**	1	ANTENNA AS (PRODUCT LINK)	
		1	**223-4296**	1	ANTENNA	
C	9	1	**277-6370**	1	PLATE AS	
CM	10	1	**5C-9553**	2	BOLT (M6X1X16-MM)	
M	11	1	**8C-8451**	4	BOLT (M6X1X40-MM)	
CM	12	1	**8T-4138**	4	BOLT (M6X1X20-MM)	
	13	1	**9X-6165**	8	WASHER (6.5X22X2.5-MM THK)	
C	14	1	**9X-8256**	8	WASHER (6.6X12X2-MM THK)	
	15	1	**9X-9896**	8	MOUNT (ISOLATION)	
Y	16	1	**262-2043**	1	ELECTRONICS GP-COMMUNICATION (PRODUCT LINK 300)	237

B-USE AS REQUIRED
C-CHANGE FROM PREVIOUS TYPE
M-METRIC PART
Y-SEPARATE ILLUSTRATION

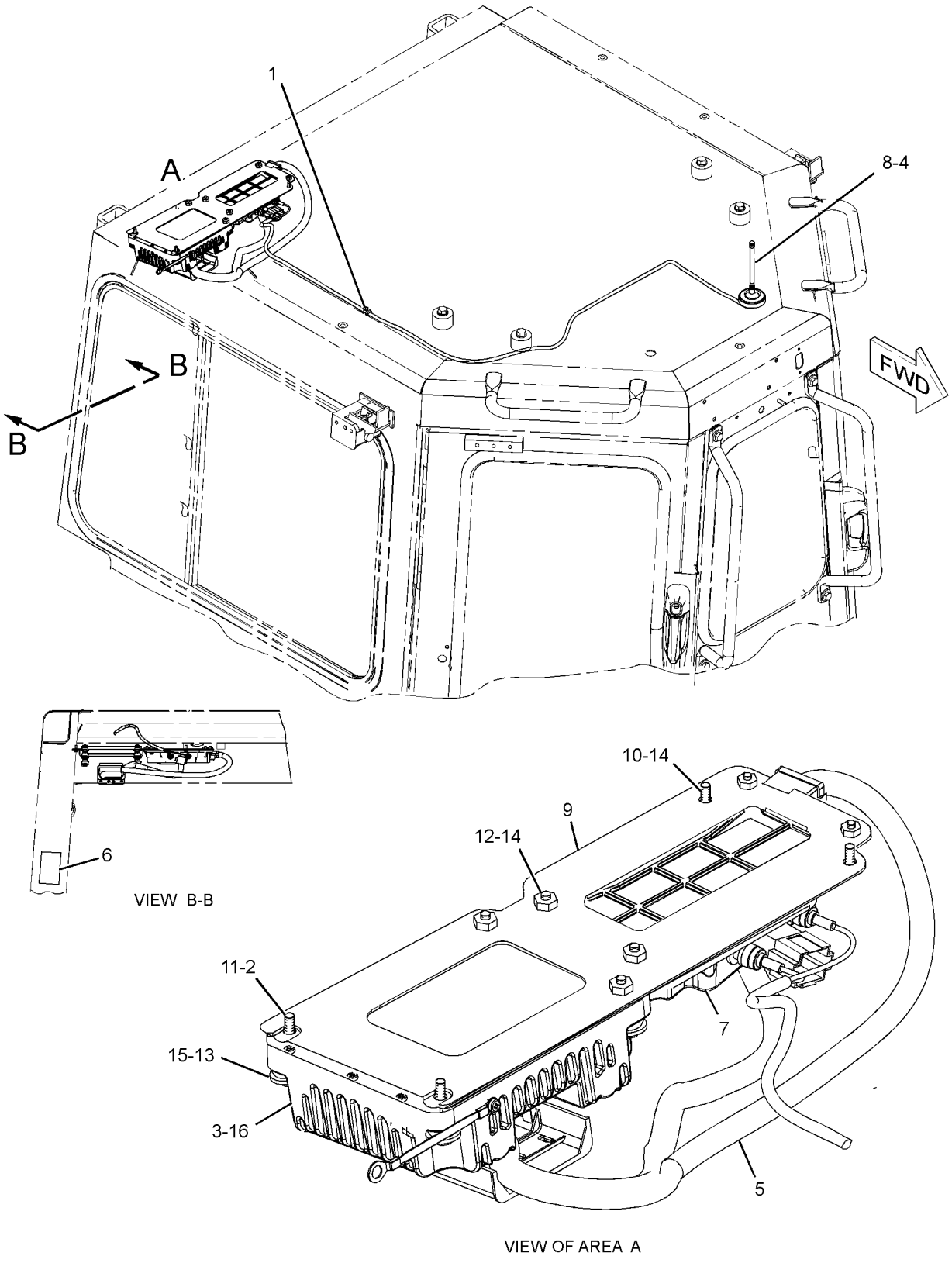

GRAPHIC #1 **<END>** g01205907

257-5849 INSTALLATION GP-GRADE CONTROL

S/N: RJG1-UP
AN ATTACHMENT

SMCS-7220 **i02447449**

NOTE	PART NUMBER	QTY	PART NAME 1 2 3 4 5 6 (PRODUCT LEVEL)	SEE PAGE
Y	*277-0493*	1	DISPLAY GP-MONITOR	794
M	**8T-4136**	4	BOLT (M10X1.5X25-MM)	
	8T-9364	4	BOLT (1/4-20X0.625-IN)	
	244-1717	1	RECEIVER GP (GLOBAL POSITIONING SYSTEM)	
	273-5662	1	SOFTWARE GP-ENG RATINGS ELEK	
	5P-4115	4	WASHER-HARD (7.2X19X2-MM THK)	
	8T-4121	4	WASHER-HARD (11X21X2.5-MM THK)	

M-METRIC PART
Y-SEPARATE ILLUSTRATION

<END>

147-0319 LAMP GP-FLOOD–SUSPENDED MOUNT

S/N: RJG1-UP; 4PP1-UP; BRT1-UP; BEY1-UP
24-VOLT
PART OF 125-2001, 231-3071 LIGHTING GP-FLOOD
AN ATTACHMENT

SMCS-1434 **i02358050**

NOTE	REF NO	GRAPHIC REF	PART NUMBER	QTY	PART NAME 1 2 3 4 5 6 (PRODUCT LEVEL)	SEE PAGE
	1	1	**9X-3463**	1	LAMP-HALOGEN (24-VOLT, 65-WATT)	
	2	1	**158-0250**	1	BODY AS-LAMP	
	3	1	**158-0248**	1	LENS AS (FLOODLIGHT)	
	4	1	**158-0252**	1	BEZEL	
	5	1	**188-8849**	2	CLAMP	

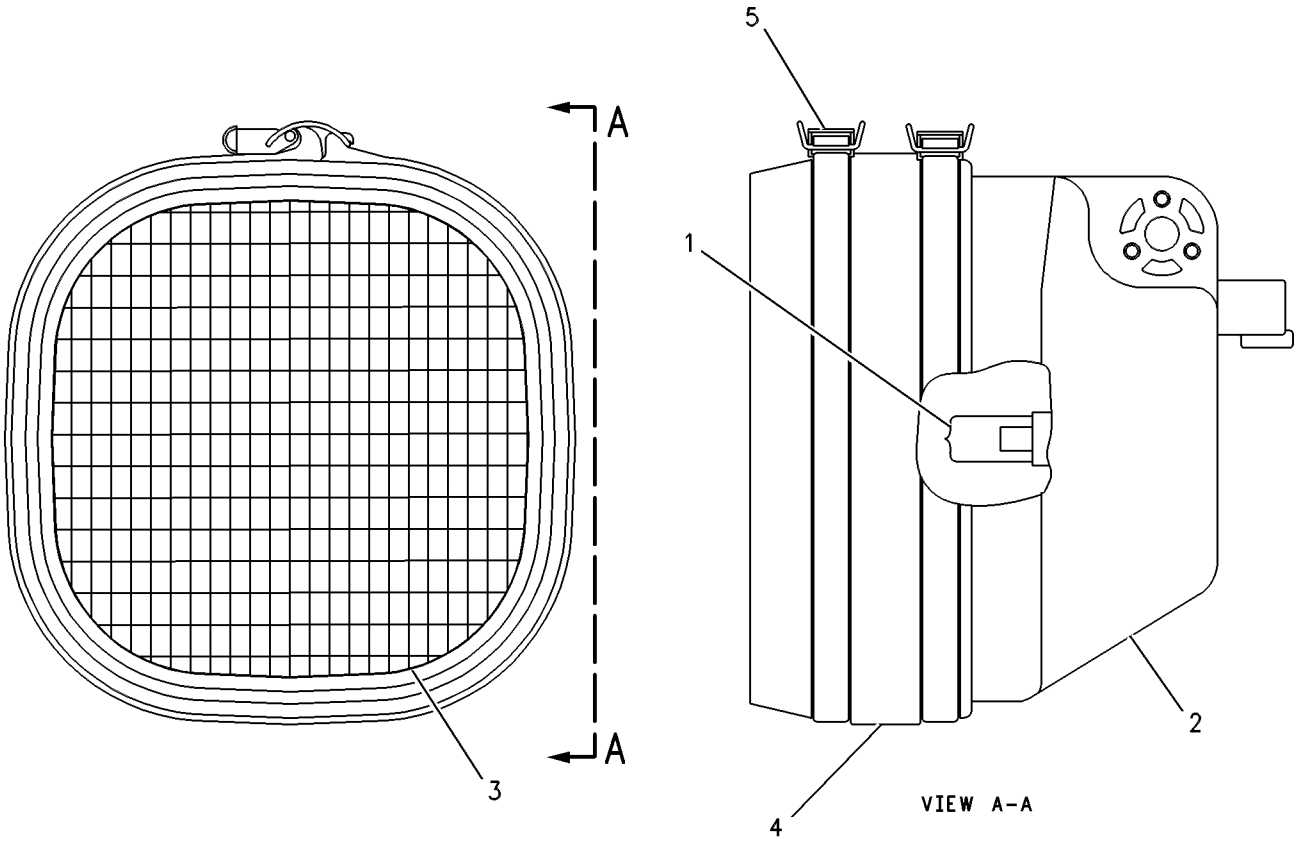

GRAPHIC #1 **<END>** g00458549

153-2073 LAMP GP-FLOOD–VERTICAL MOUNT

S/N: RJG1-UP
24-VOLT
PART OF 224-5140, 231-3069, 231-3070, 231-3071, 231-3072, 247-4927, 276-1365
LIGHTING GP-FLOOD
ALSO AN ATTACHMENT

SMCS-1434 **i02430826**

NOTE	REF NO	GRAPHIC REF	PART NUMBER	QTY	PART NAME 1 2 3 4 5 6 (PRODUCT LEVEL)	SEE PAGE
	1	1	**9X-3463**	1	LAMP-HALOGEN (24-VOLT, 65-WATT)	
	2	1	**158-0250**	1	BODY AS-LAMP	
	3	1	**158-0248**	1	LENS AS (FLOODLIGHT)	
	4	1	**158-0252**	1	BEZEL	
	5	1	**188-8849**	2	CLAMP	

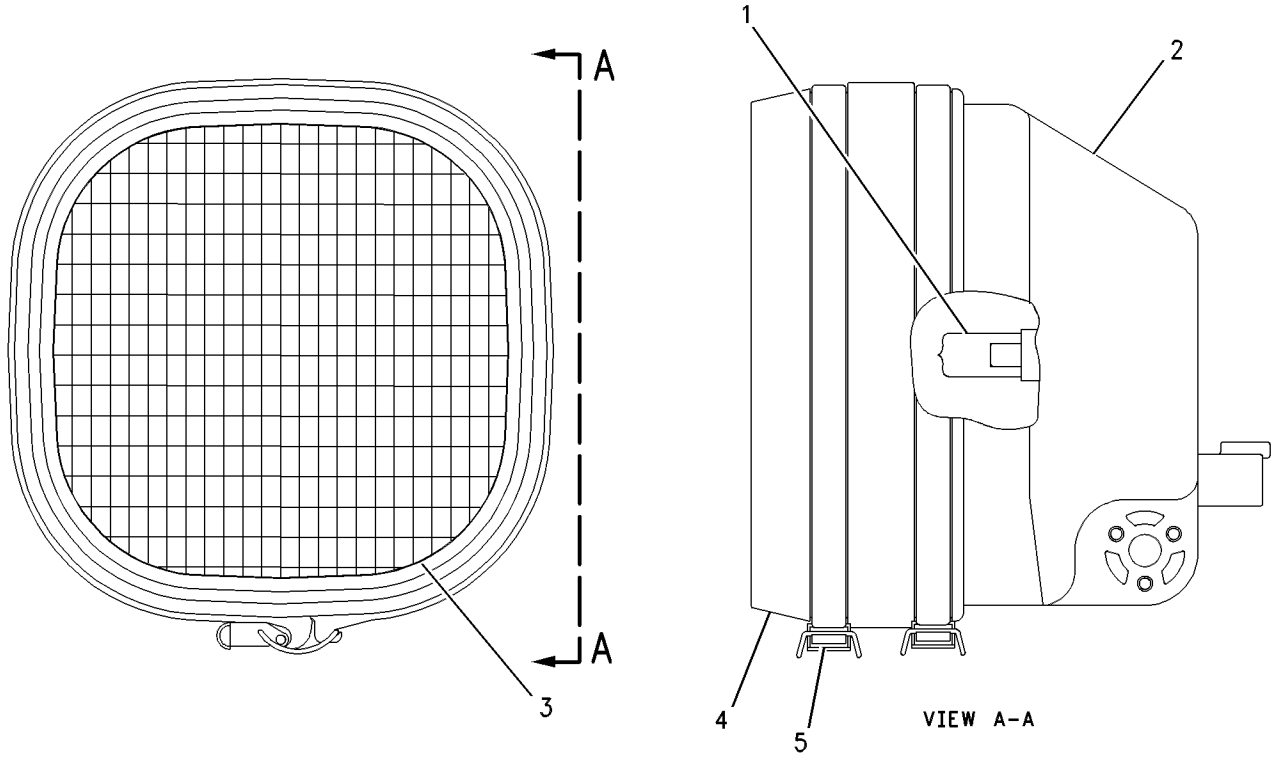

GRAPHIC #1 **<END>** g00449633

219-6485 LAMP GP-FLOOD–VERTICAL MOUNT–
UNDERHOOD SERVICE LIGHT
S/N: RJG1-UP
24-VOLT
PART OF 213-7003 BATTERY & WIRING GP

SMCS-1434 **i02325184**

NOTE	REF NO	GRAPHIC REF	PART NUMBER	QTY	PART NAME 1 2 3 4 5 6 (PRODUCT LEVEL)	SEE PAGE
	1	1	**9X-3463**	1	LAMP-HALOGEN (24-VOLT, 65-WATT) (FLOODLIGHT)	
	2	1	**9X-4244**	2	SCREW	
	4	1	**202-6614**	1	LENS AS (FLOODLIGHT)	
	5	1	**175-4292**	1	BODY AS	
	6	1	**164-7556**	1	CLIP	
	7	1	**247-4285**	1	BOLT (M8X1.25X50-MM)	
M	8	1	**5C-7261**	1	NUT (M8X1.25-THD)	
	9	1	**8T-4224**	2	WASHER-HARD (8.8X16X2-MM THK)	
	10	1	**175-4291**	1	BRACKET AS	

M-METRIC PART

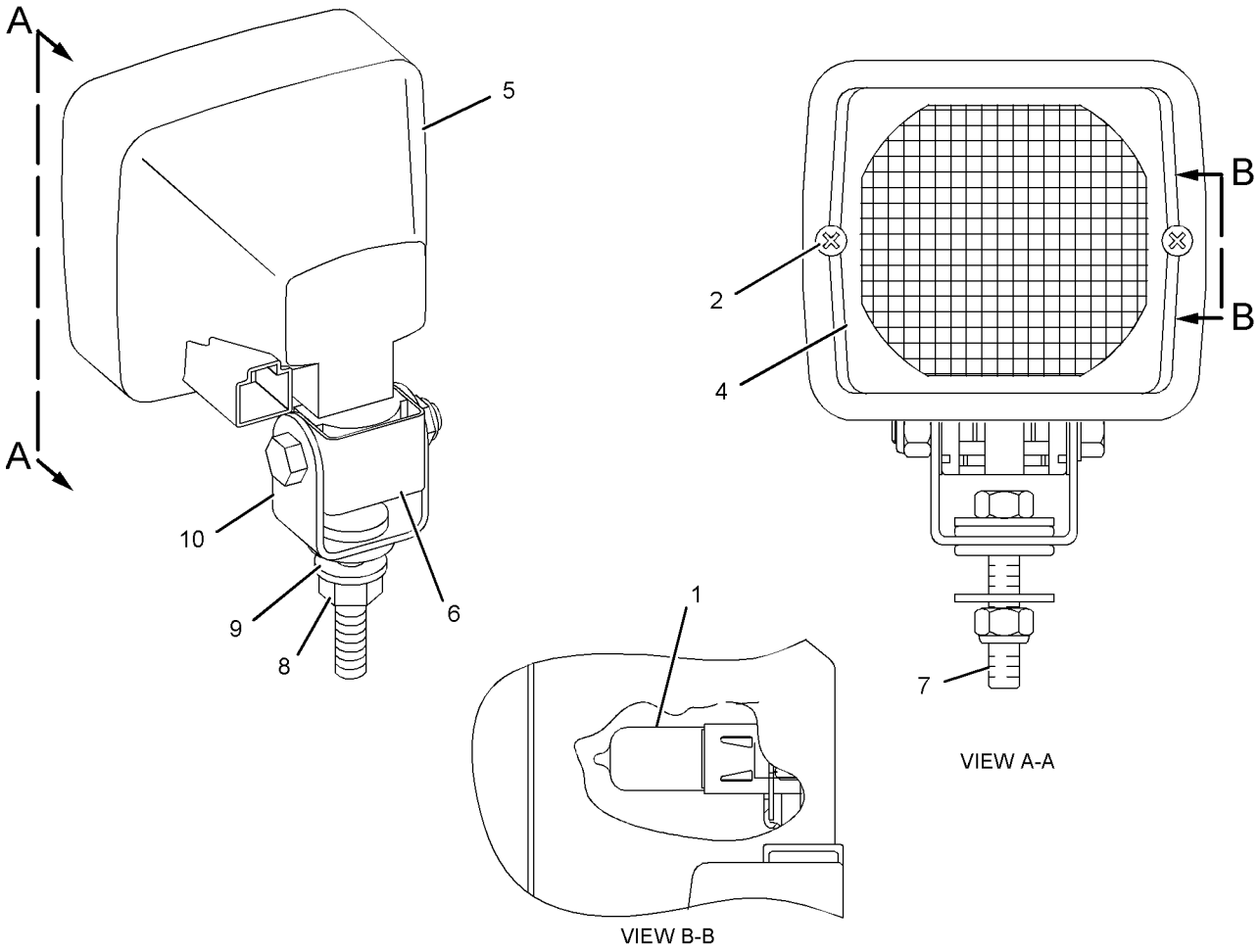

GRAPHIC #1 **<END>** g01146647

247-0293 LAMP GP-FLOOD–SUSPENDED MOUNT–HID–ROPS, CYLINDER MOUNTED

S/N: RJG1-UP
24-VOLT
PART OF 231-3072, 276-1365 LIGHTING GP-FLOOD
AN ATTACHMENT

SMCS-1434 **i02047240**

NOTE	REF NO	GRAPHIC REF	PART NUMBER	QTY	PART NAME 1 2 3 4 5 6 (PRODUCT LEVEL)	SEE PAGE
	1	1	**213-4998**	1	LAMP AS-FLOOD (24-VOLT, 70-WATT)	
	2	1	**9X-9896**	8	MOUNT (ISOLATION)	
	3	1	**8C-5608**	4	SPACER (6.5X9.5X25.4-MM THK)	
	4	1	**9X-6165**	4	WASHER (6.5X22X2.5-MM THK)	
M	5	1	**120-9027**	4	SCREW-PAN HEAD (M3X0.5X16-MM)	
M	6	1	**7X-2533**	4	BOLT (M6X1X35-MM)	
M	7	1	**8T-6868**	1	BOLT (M12X1.75X80-MM)	
M	8	1	**129-3180**	1	LOCKNUT (M12X1.75-THD)	
	9	1	**215-1933**	1	BRACKET	
	10	1	**246-6720**	1	BEZEL	

M-METRIC PART

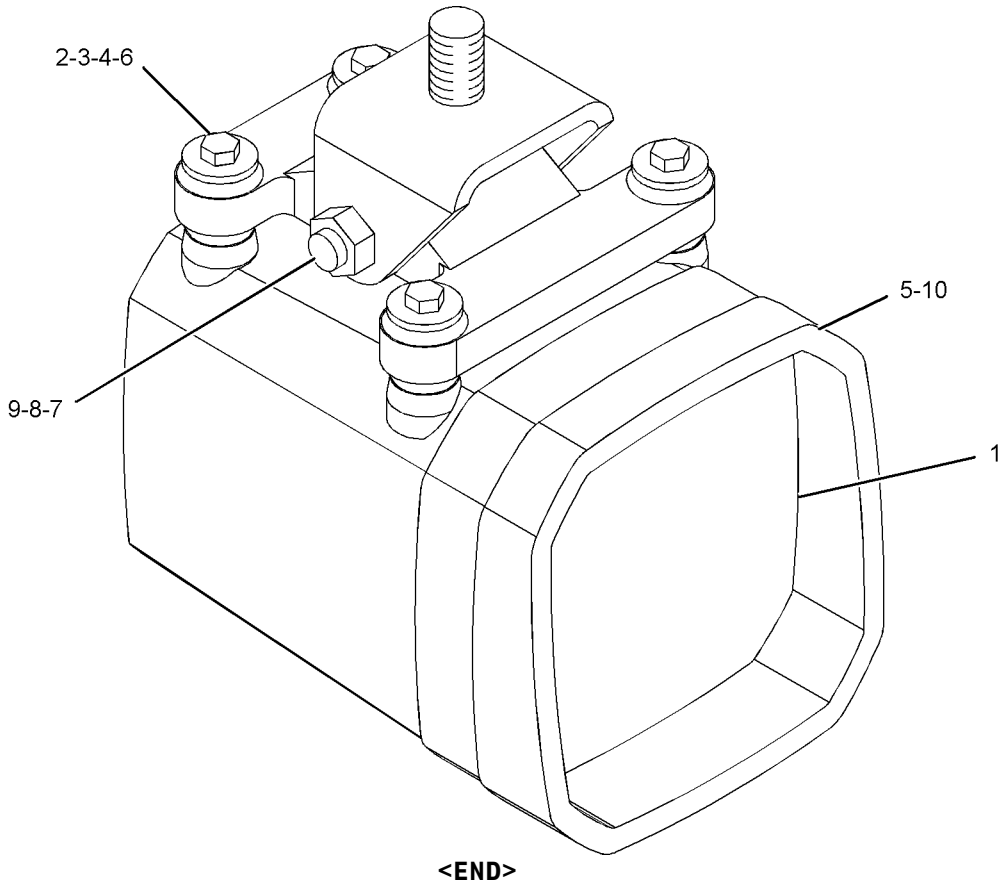

GRAPHIC #1 **<END>** g01052218

247-0294 LAMP GP-FLOOD–VERTICAL MOUNT–HID–ROPS MOUNTED

S/N: RJG1-UP
24-VOLT
PART OF 231-3072, 276-1365 LIGHTING GP-FLOOD
AN ATTACHMENT

SMCS-1434 **i02047506**

NOTE	REF NO	GRAPHIC REF	PART NUMBER	QTY	PART NAME 1 2 3 4 5 6 (PRODUCT LEVEL)	SEE PAGE
	1	1	**213-4998**	1	LAMP AS-FLOOD (24-VOLT, 70-WATT)	
	2	1	**9X-9896**	8	MOUNT (ISOLATION)	
	3	1	**8C-5608**	4	SPACER (6.5X9.5X25.4-MM THK)	
	4	1	**9X-6165**	4	WASHER (6.5X22X2.5-MM THK)	
M	5	1	**120-9027**	4	SCREW-PAN HEAD (M3X0.5X16-MM)	
M	6	1	**7X-2533**	4	BOLT (M6X1X35-MM)	
M	7	1	**8T-6868**	1	BOLT (M12X1.75X80-MM)	
M	8	1	**129-3180**	1	LOCKNUT (M12X1.75-THD)	
	9	1	**215-1933**	1	BRACKET	
	10	1	**246-6720**	1	BEZEL	

M-METRIC PART

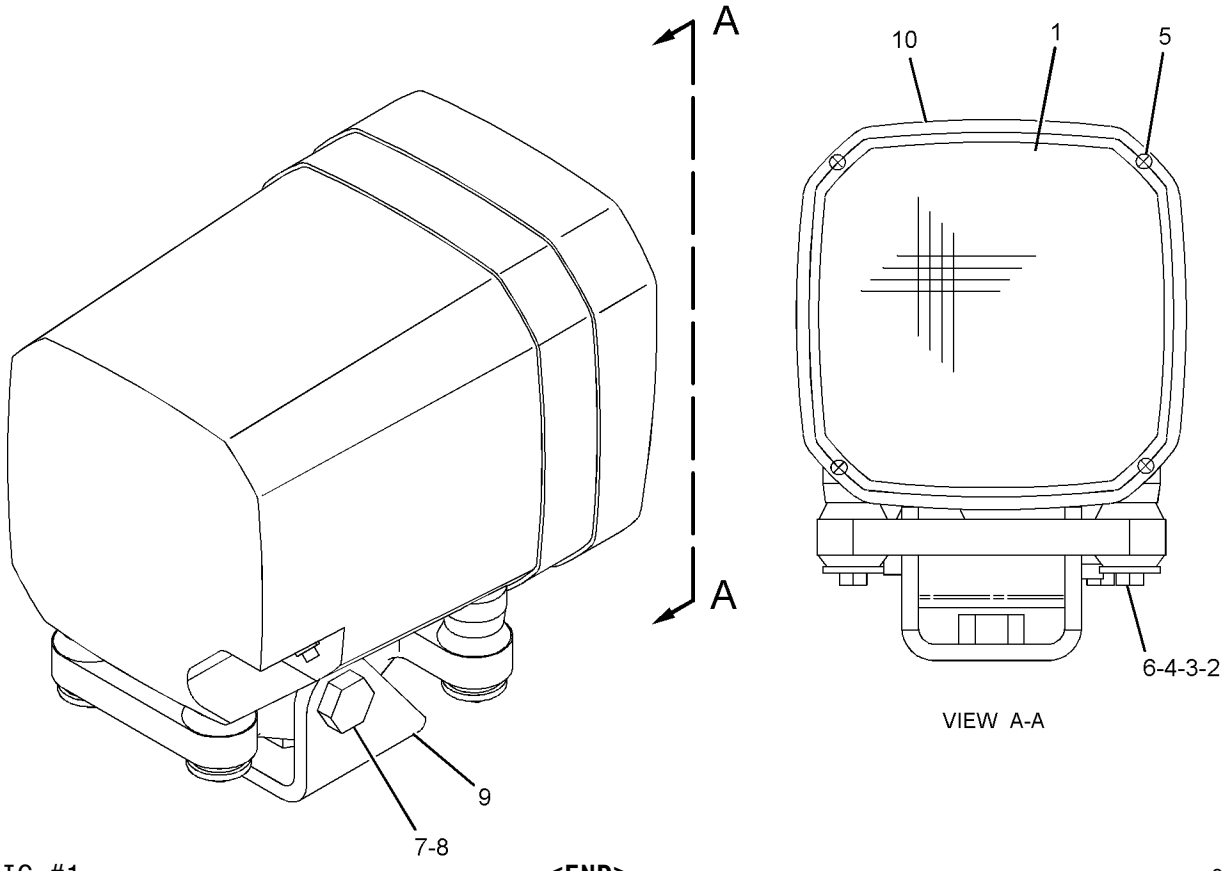

GRAPHIC #1 **<END>** g01052442

157-0305 LAMP GP-HEAD–SUSPENDED MOUNT–ROPS

S/N: RJG1-UP
24-VOLT
PART OF 224-5140 LIGHTING GP-FLOOD
AN ATTACHMENT

SMCS-1429 **i02237572**

NOTE	REF NO	GRAPHIC REF	PART NUMBER	QTY	PART NAME 1 2 3 4 5 6 (PRODUCT LEVEL)	SEE PAGE
	1	1	**188-8849**	2	CLAMP	
	2	1	**9X-3463**	1	LAMP-HALOGEN (24-VOLT, 65-WATT)	
	3	1	**158-0250**	1	BODY AS-LAMP	
	4	1	**158-0249**	1	LENS AS (HEADLIGHT, HIGH BEAM)	
	5	1	**158-0252**	1	BEZEL	

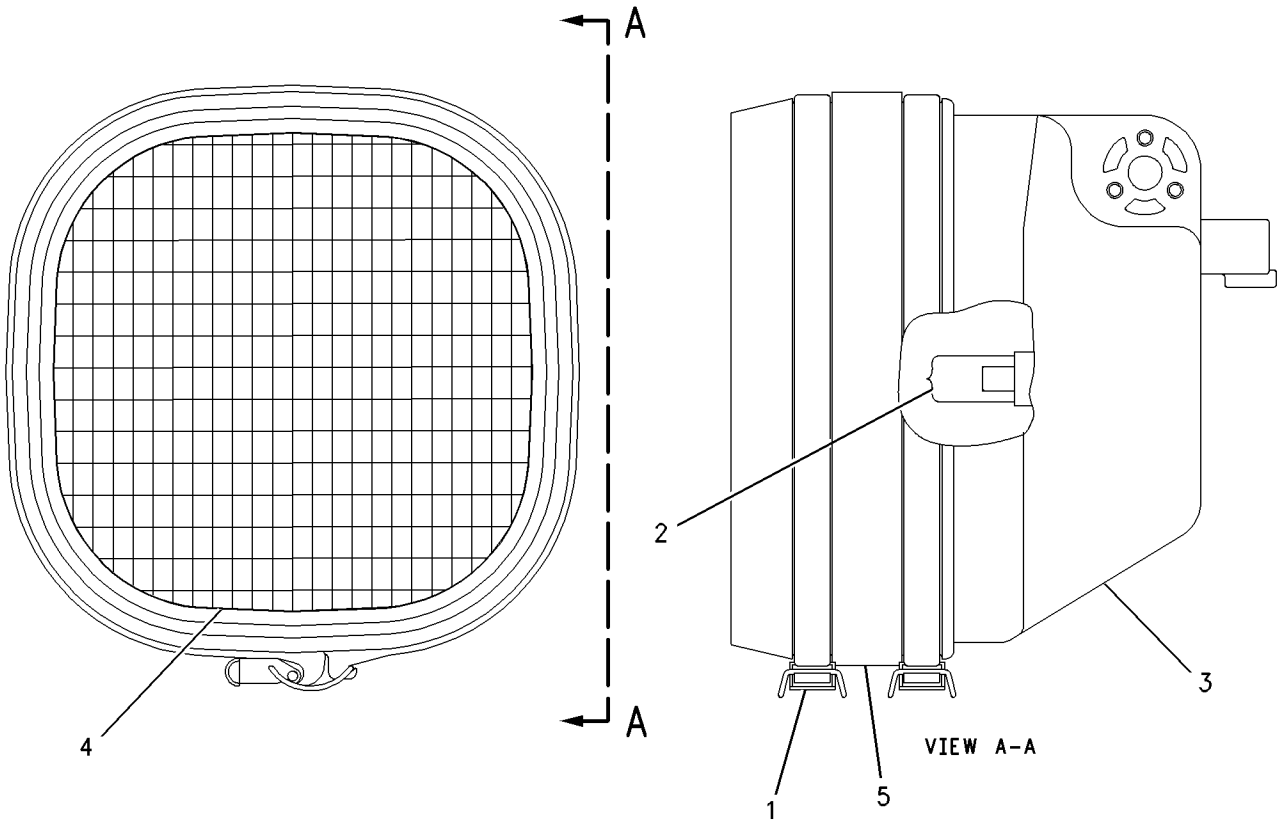

GRAPHIC #1 **<END>** g00725230

125-2001 LIGHTING GP-FLOOD–1-LAMP–

ROPS, CYLINDER MOUNTED

S/N: RJG1-UP; 4PP1-UP; BRT1-UP; BEY1-UP

PART OF 224-5140, 231-3069, 231-3070, 231-3072 LIGHTING GP-FLOOD, 217-7739 LIGHTING GP-RIPPER

AN ATTACHMENT

SMCS-1434 **i01714235**

NOTE	REF NO	GRAPHIC REF	PART NUMBER	QTY	PART NAME 1 2 3 4 5 6 (PRODUCT LEVEL)	SEE PAGE
	1	1	**9W-4361**	4	MOUNT-FLEXIBLE	
	2	1	**111-8314**	1	BRACKET AS	
		1	**1F-0750**	1	NUT-WELD (3/8-16-THD)	
Y	3	1	**147-0319**	1	LAMP GP-FLOOD (24-VOLT, SUSPENDED MOUNT)	246
	4	1	**167-1884**	1	GUARD	
	5	1	**5M-3062**	1	BOLT (3/8-16X0.75-IN)	
	6	1	**5P-1075**	9	WASHER-HARD (10.2X22.5X3-MM THK)	
	7	1	**5P-2955**	1	BOLT (5/16-18X2.5-IN)	
	8	1	**6V-8189**	1	NUT (5/16-18-THD)	
	9	1	**6V-8801**	8	NUT (3/8-16-THD)	
	10	1	**8T-4224**	2	WASHER-HARD (8.8X16X2-MM THK)	

Y-SEPARATE ILLUSTRATION

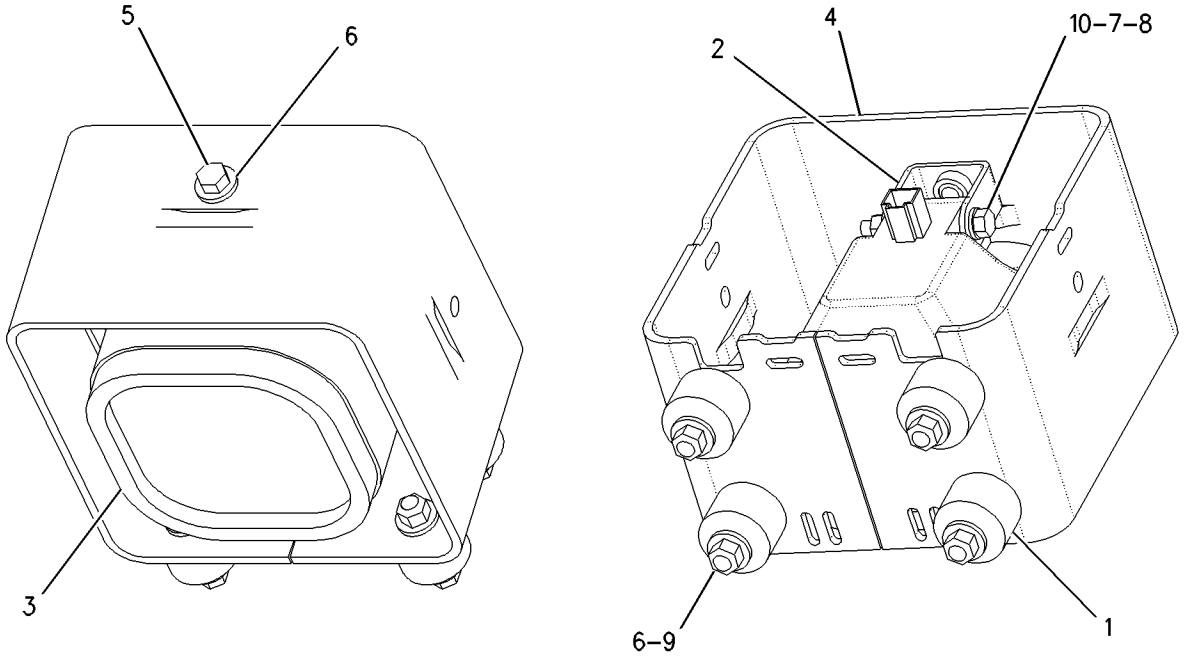

GRAPHIC #1 **<END>** g00887298

224-5140 LIGHTING GP-FLOOD–
10-LAMP, ROPS, FENDER, CYL MT

S/N: RJG1-UP

FOR USE WITH CYLINDERS. CANNOT BE USED WITH 231-3069–PAGE 255, 231-3070–PAGE 257, 231-3071–PAGE 259, 231-3072–PAGE 263 AN ATTACHMENT

SMCS-1434 **i02253496**

NOTE	REF NO	GRAPHIC REF	PART NUMBER	QTY	PART NAME 1 2 3 4 5 6 (PRODUCT LEVEL)	SEE PAGE
	1	1	**1Q-1592**	1	PLATE AS	
	2	1	**7K-1181**	36	STRAP-CABLE	
	3	1	**8E-3241**	4	BRACKET AS	
					(EACH INCLUDES)	
		1	**1F-0750**	1	NUT-WELD (3/8-16-THD)	
	4	1	**9W-4361**	8	MOUNT-FLEXIBLE	
	5	1	**111-8314**	8	BRACKET AS	
	6	1	**114-9363**	2	GUARD AS	
	7	1	**114-9365**	2	PLATE	
Y	8	1	*125-2001*	2	LIGHTING GP-FLOOD (1-LAMP) (CYLINDER MOUNTED)	252
Y	9	1	**153-2073**	4	LAMP GP-FLOOD (24-VOLT, VERTICAL MOUNT) (FENDER LIGHTS)	247
Y	10	1	**157-0305**	4	LAMP GP-HEAD (24-VOLT, SUSPENDED MOUNT) (ROPS MOUNTED)	251
	11	1	**234-0825**	2	HARNESS AS-LIGHTING (FRONT FLOODLIGHTS)	
					(EACH INCLUDES)	
		1	**102-8802**	2	KIT-RECEPTACLE (2-PIN)	
		1	**102-8804**	1	KIT-RECEPTACLE (4-PIN)	
		1	**102-8805**	1	KIT-RECEPTACLE (6-PIN)	
					(EACH INCLUDES RECEPTACLE AS & WEDGE)	
		1	**155-2270**	3	KIT-CONNECTING PLUG (2-PIN)	
		1	**155-2271**	1	KIT-CONNECTING PLUG (4-PIN)	
					(EACH INCLUDES PLUG AS & WEDGE)	
	12	1	**246-5625**	1	SWITCH AS-ROCKER (FRONT FLOODLIGHTS)	
	13	1	**246-5626**	1	SWITCH AS-ROCKER (REAR FLOODLIGHTS)	
	14	1	**247-0495**	1	HARNESS AS-LIGHTING (REAR FLOODLIGHT)	
		1	**102-8802**	5	KIT-RECEPTACLE (2-PIN)	
		1	**102-8805**	1	KIT-RECEPTACLE (6-PIN)	
					(EACH INCLUDES RECEPTACLE AS & WEDGE)	
		1	**155-2270**	6	KIT-CONNECTING PLUG (2-PIN)	
					(EACH INCLUDES PLUG AS & WEDGE)	
	15	1	**4L-6454**	8	BOLT (3/8-16X1-IN)	
	16	1	**4L-6459**	2	BOLT (3/8-16X2.5-IN)	
	17	1	**4P-7428**	4	CLIP	
	18	1	**5D-7635**	2	GROMMET	
	19	1	**5M-3062**	8	BOLT (3/8-16X0.75-IN)	
	20	1	**5P-1075**	36	WASHER-HARD (10.2X22.5X3-MM THK)	
	21	1	**5P-2228**	4	BOLT (1/2-13X1-IN)	
	22	1	**5P-2955**	8	BOLT (5/16-18X2.5-IN)	
	23	1	**6V-8189**	8	NUT (5/16-18-THD)	
	24	1	**6V-8801**	16	NUT (3/8-16-THD)	
	25	1	**7X-0582**	2	WASHER-HARD (20X44.5X6-MM THK)	
	26	1	**8T-2502**	2	BOLT (3/8-16X1.125-IN)	
	27	1	**8T-4223**	4	WASHER-HARD (13.5X25.5X3-MM THK)	
	28	1	**8T-4224**	16	WASHER-HARD (8.8X16X2-MM THK)	
	29	1	**8T-9397**	2	BOLT (3/4-10X1.25-IN)	

Y-SEPARATE ILLUSTRATION

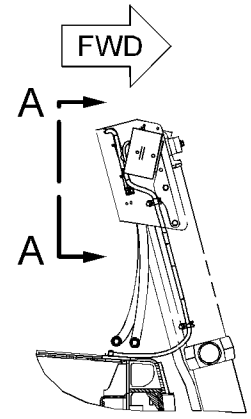

RIGHT SIDE VIEW

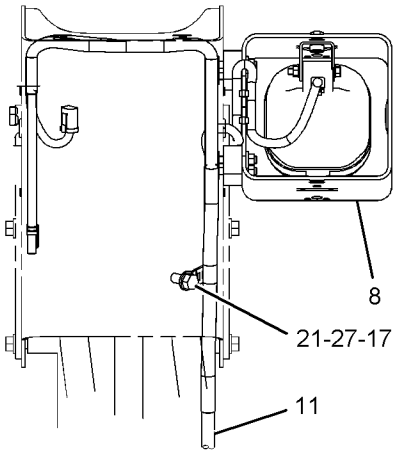

VIEW A-A

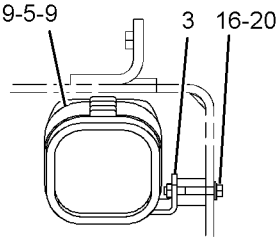

VIEW B-B

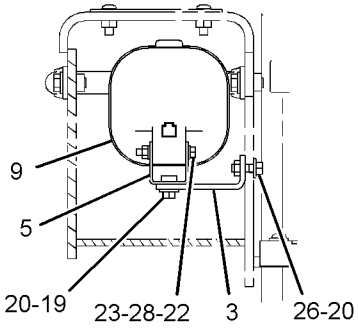

VIEW C-C

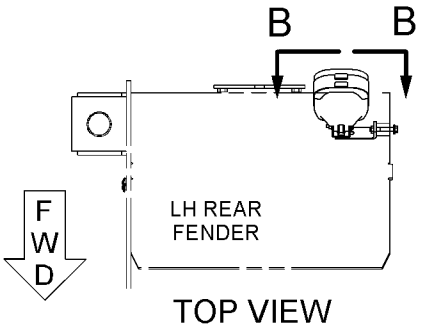

TOP VIEW

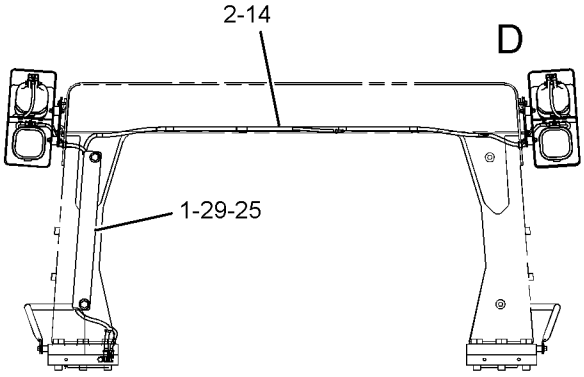

REAR VIEW OF ROPS

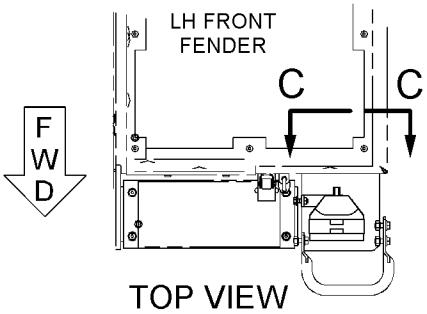

TOP VIEW

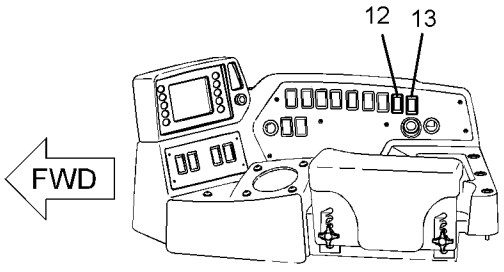

RH CONSOLE

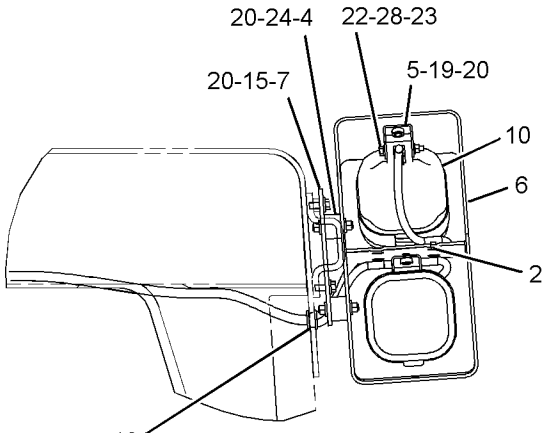

VIEW OF AREA D

GRAPHIC #1 **<END>** g01136139

231-3069 LIGHTING GP-FLOOD–
6-LAMP, FENDER, LIFT CYLINDER

S/N: RJG1-UP

FOR USE WITH CYLINDERS. CANNOT BE USED WITH 224-5140–PAGE 253, 231-3070–PAGE 257, 231-3071–PAGE 259, 231-3072–PAGE 263 AN ATTACHMENT

SMCS-1434 **i02253493**

NOTE	REF NO	GRAPHIC REF	PART NUMBER	QTY	PART NAME 1 2 3 4 5 6 (PRODUCT LEVEL)	SEE PAGE
	1	1	**7K-1181**	20	STRAP-CABLE	
	2	1	**8E-3241**	4	BRACKET AS	
					(EACH INCLUDES)	
		1	**1F-0750**	1	NUT-WELD (3/8-16-THD)	
	3	1	**111-8314**	4	BRACKET AS	
Y	4	1	*125-2001*	2	LIGHTING GP-FLOOD (1-LAMP) (CYLINDER MOUNTED)	252
Y	5	1	**153-2073**	4	LAMP GP-FLOOD (24-VOLT, VERTICAL MOUNT) (FRONT FENDER)	247
	6	1	**234-0825**	2	HARNESS AS-LIGHTING (FRONT FLOODLIGHTS) (CYLINDER MOUNTED LIGHTS)	
					(EACH INCLUDES)	
		1	**102-8802**	2	KIT-RECEPTACLE (2-PIN)	
		1	**102-8804**	1	KIT-RECEPTACLE (4-PIN)	
		1	**102-8805**	1	KIT-RECEPTACLE (6-PIN)	
					(EACH INCLUDES RECEPTACLE AS & WEDGE)	
		1	**155-2270**	3	KIT-CONNECTING PLUG (2-PIN)	
		1	**155-2271**	1	KIT-CONNECTING PLUG (4-PIN)	
					(EACH INCLUDES PLUG AS & WEDGE)	
	7	1	**4L-6459**	2	BOLT (3/8-16X2.5-IN)	
	8	1	**4P-7428**	4	CLIP	
	9	1	**5M-3062**	4	BOLT (3/8-16X0.75-IN)	
	10	1	**5P-1075**	8	WASHER-HARD (10.2X22.5X3-MM THK)	
	11	1	**5P-2228**	4	BOLT (1/2-13X1-IN)	
	12	1	**5P-2955**	4	BOLT (5/16-18X2.5-IN)	
	13	1	**5P-8522**	2	GROMMET	
	14	1	**6V-8189**	4	NUT (5/16-18-THD)	
	15	1	**8T-2502**	2	BOLT (3/8-16X1.125-IN)	
	16	1	**8T-4223**	4	WASHER-HARD (13.5X25.5X3-MM THK)	
	17	1	**8T-4224**	8	WASHER-HARD (8.8X16X2-MM THK)	

Y-SEPARATE ILLUSTRATION

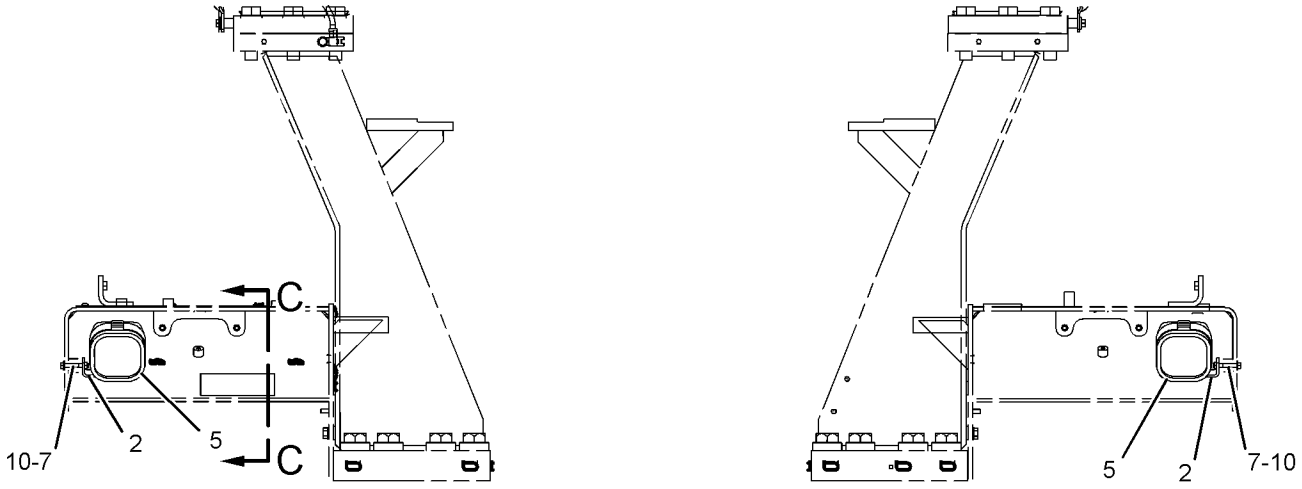

REAR VIEW
(FENDER LIGHTS)

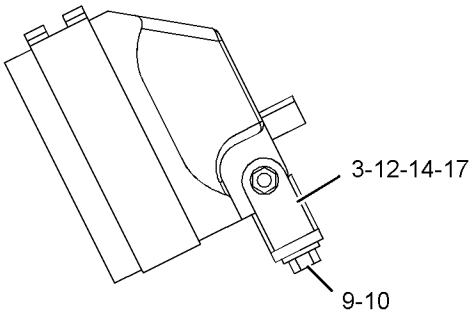

VIEW C-C

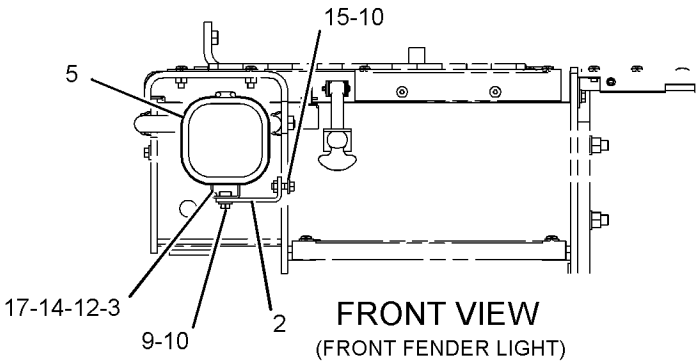

FRONT VIEW
(FRONT FENDER LIGHT)

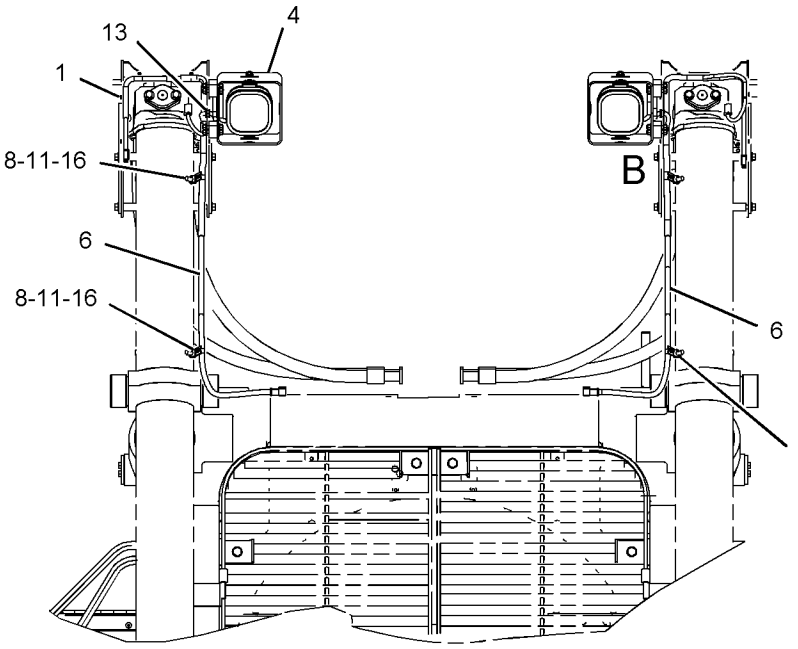

FRONT VIEW

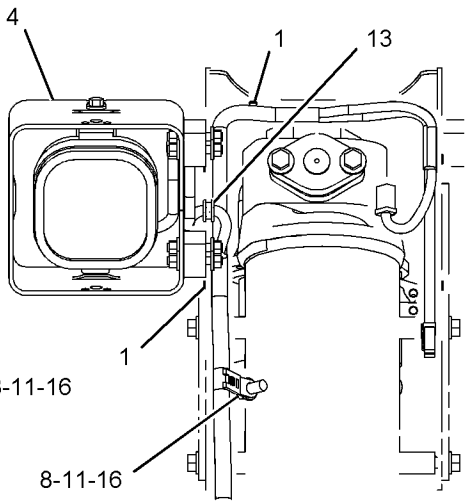

VIEW OF AREA B

GRAPHIC #1 **<END>** g01052828

231-3070 LIGHTING GP-FLOOD–
10-LAMP, ROPS, FENDER, CYL MT

S/N: RJG1-UP

MINE SPECIFIC DESIGN

FOR USE WITH CYLINDERS. CANNOT BE USED WITH 224-5140–PAGE 253, 231-3071–PAGE 259, 231-3072–PAGE 263

AN ATTACHMENT

SMCS-1434 **i02283763**

NOTE	REF NO	GRAPHIC REF	PART NUMBER	QTY	PART NAME 1 2 3 4 5 6 (PRODUCT LEVEL)	SEE PAGE
	1	1	**1Q-1592**	1	PLATE AS	
		1	**7T-1099**	4	LINK	
	2	1	**7K-1181**	39	STRAP-CABLE	
	3	1	**8E-3241**	4	BRACKET AS	
					(EACH INCLUDES)	
		1	**1F-0750**	1	NUT-WELD (3/8-16-THD)	
	4	1	**111-8314**	4	BRACKET AS	
	5	1	**114-9365**	2	PLATE	
Y	6	1	*125-2001*	6	LIGHTING GP-FLOOD (1-LAMP) (ROPS, CYLINDER MOUNTED)	252
Y	7	1	**153-2073**	4	LAMP GP-FLOOD (24-VOLT, VERTICAL MOUNT) (FENDER LIGHTS)	247
	8	1	**234-0825**	2	HARNESS AS-LIGHTING (FRONT FLOODLIGHTS) (CYLINDER MOUNTED FLOODLAMPS)	
					(EACH INCLUDES)	
		1	**102-8802**	2	KIT-RECEPTACLE (2-PIN)	
		1	**102-8804**	1	KIT-RECEPTACLE (4-PIN)	
		1	**102-8805**	1	KIT-RECEPTACLE (6-PIN)	
					(EACH INCLUDES RECEPTACLE AS,WEDGE)	
		1	**155-2270**	3	KIT-CONNECTING PLUG (2-PIN)	
		1	**155-2271**	1	KIT-CONNECTING PLUG (4-PIN)	
					(EACH INCLUDES PLUG AS,WEDGE)	
	9	1	**246-5626**	1	SWITCH AS-ROCKER (ROPS FLOODLAMPS)	
	10	1	**247-0495**	1	HARNESS AS-LIGHTING (REAR FLOODLIGHT) (ROPS FLOODLAMPS)	
		1	**102-8802**	5	KIT-RECEPTACLE (2-PIN)	
		1	**102-8805**	1	KIT-RECEPTACLE (6-PIN)	
					(EACH INCLUDES RECEPTACLE AS,WEDGE)	
		1	**155-2270**	6	KIT-CONNECTING PLUG (2-PIN)	
					(EACH INCLUDES PLUG AS,WEDGE)	
	11	1	**4L-6454**	8	BOLT (3/8-16X1-IN)	
	12	1	**4L-6459**	2	BOLT (3/8-16X2.5-IN)	
	13	1	**4P-7428**	5	CLIP	
	14	1	**5D-7635**	2	GROMMET	
	15	1	**5M-3062**	4	BOLT (3/8-16X0.75-IN)	
	16	1	**5P-1075**	16	WASHER-HARD (10.2X22.5X3-MM THK)	
	17	1	**5P-2228**	4	BOLT (1/2-13X1-IN)	
	18	1	**5P-2955**	4	BOLT (5/16-18X2.5-IN)	
	19	1	**5P-8522**	4	GROMMET	
	20	1	**6V-8189**	4	NUT (5/16-18-THD)	
	21	1	**7X-0582**	2	WASHER-HARD (20X44.5X6-MM THK)	
	22	1	**8T-2502**	2	BOLT (3/8-16X1.125-IN)	
M	23	1	**8T-4179**	1	BOLT (M12X1.75X20-MM)	
	24	1	**8T-4223**	5	WASHER-HARD (13.5X25.5X3-MM THK)	
	25	1	**8T-4224**	8	WASHER-HARD (8.8X16X2-MM THK)	
	26	1	**8T-9397**	2	BOLT (3/4-10X1.25-IN)	

M-METRIC PART
Y-SEPARATE ILLUSTRATION

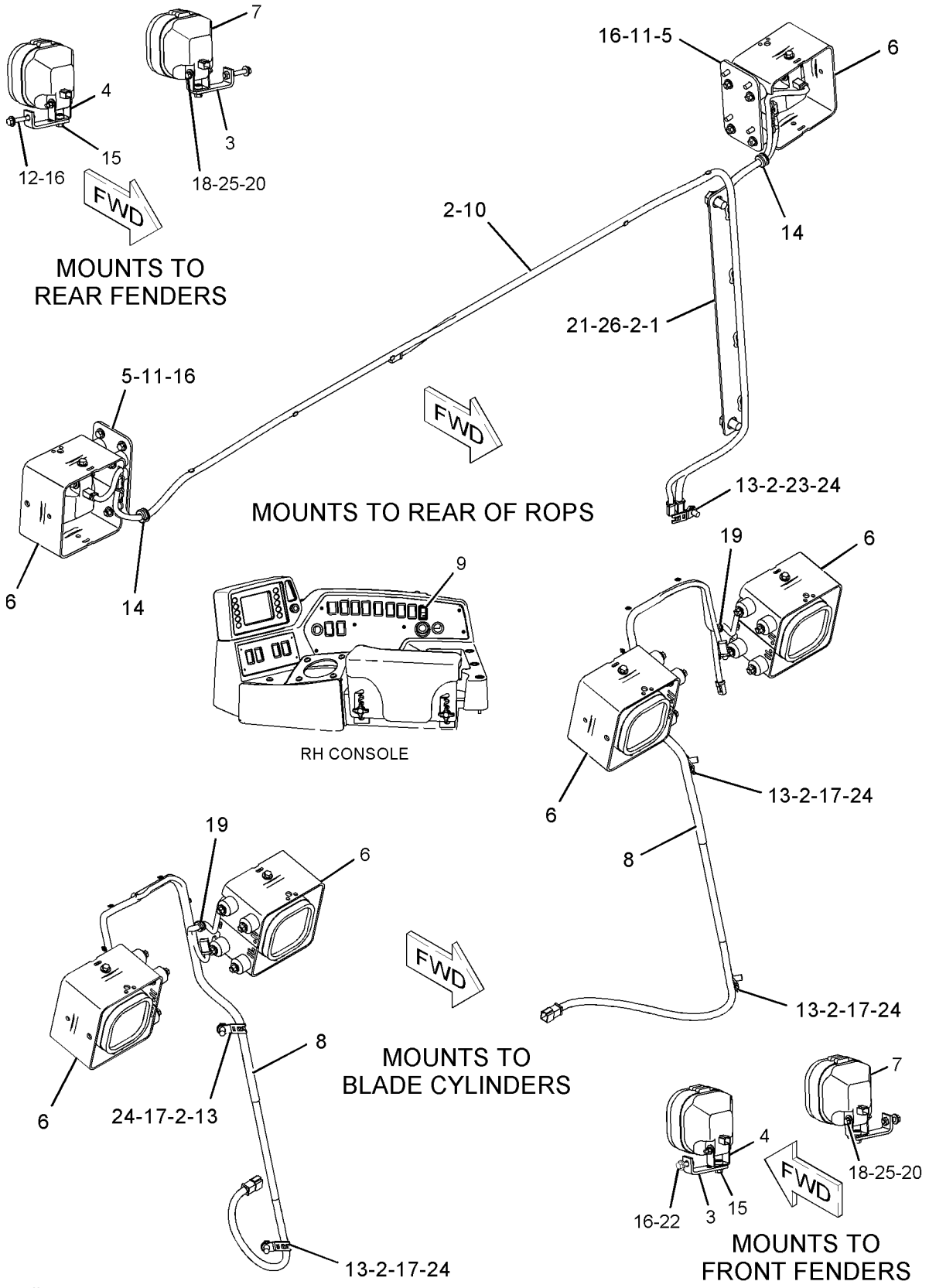

GRAPHIC #1 **<END>** g01052603

231-3071 LIGHTING GP-FLOOD–
10-LAMP, ROPS, LIFT CYL MOUNT
S/N: RJG1-UP
WASTE DISPOSAL
FOR USE WITH CYLINDER. CANNOT BE USED WITH 224-5140–PAGE 253, 231-3069–PAGE 255, 231-3070–PAGE 257, 231-3072–PAGE 263 AN ATTACHMENT

SMCS-1434 **i02047232**

NOTE	REF NO	GRAPHIC REF	PART NUMBER	QTY	PART NAME 1 2 3 4 5 6 (PRODUCT LEVEL)	SEE PAGE
	1	1	**1Q-1592**	1	PLATE AS	
		1	**7T-1099**	1	LINK	
	2	1,2	**7K-1181**	37	STRAP-CABLE	
	3	3	**8E-3241**	2	BRACKET AS	
					(EACH INCLUDES)	
		3	**1F-0750**	1	NUT-WELD (3/8-16-THD)	
	4	2	**9W-4361**	16	MOUNT-FLEXIBLE	
	5	2,3	**111-8314**	10	BRACKET AS	
	6	1	**114-9363**	4	GUARD AS	
	7	1	**114-9365**	2	PLATE	
	8	1	**115-1032**	2	BRACKET	
Y	9	1,2	**147-0319**	8	LAMP GP-FLOOD (24-VOLT, SUSPENDED MOUNT) (CYLINDER MOUNTED)	246
Y	10	3	**153-2073**	2	LAMP GP-FLOOD (24-VOLT, VERTICAL MOUNT) (FENDER LIGHTS)	247
	11	2	**183-1961**	2	BRACKET	
	12	1	**234-0825**	2	HARNESS AS-LIGHTING (FRONT FLOODLIGHTS) (CYLINDER LIGHTS)	
					(EACH INCLUDES)	
		1	**102-8802**	2	KIT-RECEPTACLE (2-PIN)	
		1	**102-8804**	1	KIT-RECEPTACLE (4-PIN)	
		1	**102-8805**	1	KIT-RECEPTACLE (6-PIN)	
					(EACH INCLUDES RECEPTACLE AS,WEDGE)	
		1	**155-2270**	1	KIT-CONNECTING PLUG (2-PIN)	
		1	**155-2271**	1	KIT-CONNECTING PLUG (4-PIN)	
					(EACH INCLUDES PLUG AS,WEDGE)	
	13	2	**246-5625**	1	SWITCH AS-ROCKER (FLOODLAMPS,CYLINDER)	
	14	2	**246-5626**	1	SWITCH AS-ROCKER (FLOODLAMPS,ROPS)	
	15	1	**247-0495**	1	HARNESS AS-LIGHTING (REAR FLOODLIGHT) (ROPS)	
		1	**102-8802**	5	KIT-RECEPTACLE (2-PIN)	
		1	**102-8805**	1	KIT-RECEPTACLE (6-PIN)	
					(EACH INCLUDES RECEPTACLE AS,WEDGE)	
		1	**155-2270**	6	KIT-CONNECTING PLUG (2-PIN)	
					(EACH INCLUDES PLUG AS,WEDGE)	
	16	1,2	**4L-6454**	12	BOLT (3/8-16X1-IN)	
	17	1,2	**4P-7428**	5	CLIP	
	18	2	**5D-7635**	2	GROMMET	
	19	2,3	**5M-3062**	10	BOLT (3/8-16X0.75-IN)	
	20	1,2,3	**5P-1075**	84	WASHER-HARD (10.2X22.5X3-MM THK)	
	21	2	**5P-2228**	4	BOLT (1/2-13X1-IN)	
	22	2,3	**5P-2955**	10	BOLT (5/16-18X2.5-IN)	
	23	2,3	**6V-8189**	10	NUT (5/16-18-THD)	
	24	1,2	**6V-8801**	48	NUT (3/8-16-THD)	
	25	1	**7X-0582**	2	WASHER-HARD (20X44.5X6-MM THK)	
	26	3	**8T-2502**	2	BOLT (3/8-16X1.125-IN)	
M	27	1	**8T-4179**	1	BOLT (M12X1.75X20-MM)	
	28	1,2	**8T-4223**	5	WASHER-HARD (13.5X25.5X3-MM THK)	
	29	2,3	**8T-4224**	20	WASHER-HARD (8.8X16X2-MM THK)	
	30	1	**8T-9397**	2	BOLT (3/4-10X1.25-IN)	
	31	1	**9B-7237**	12	BOLT (3/8-16X1.25-IN)	

M-METRIC PART
Y-SEPARATE ILLUSTRATION

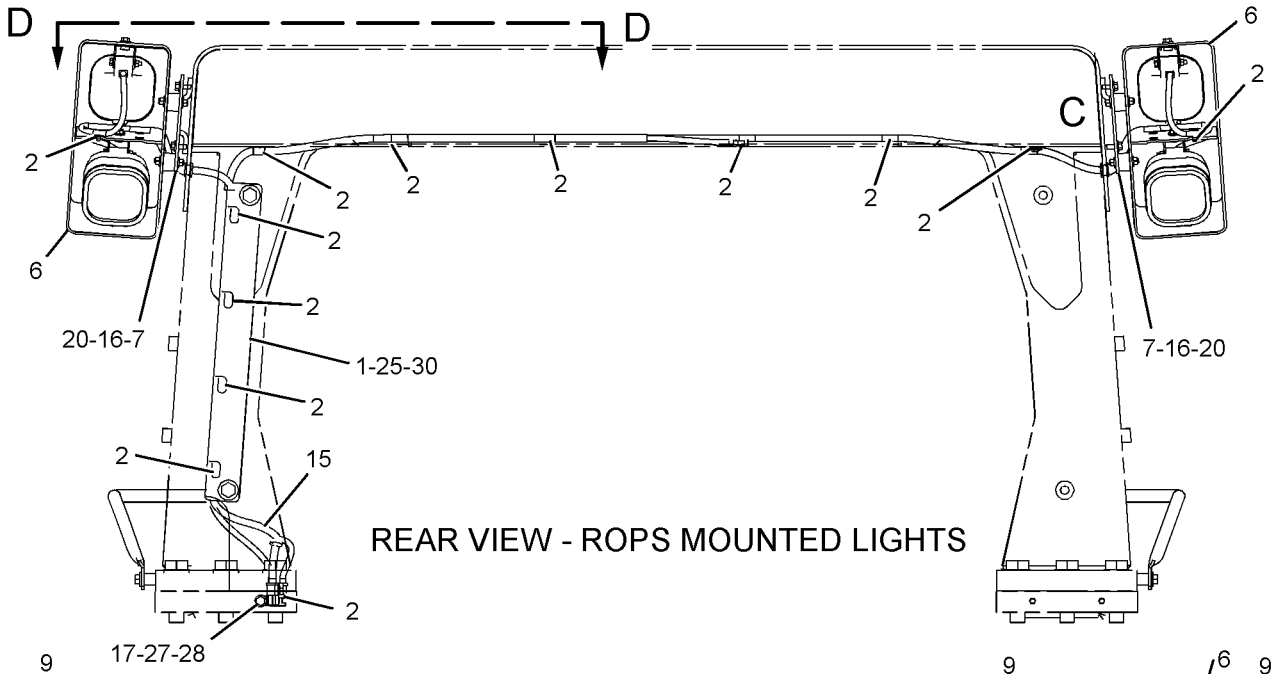

REAR VIEW - ROPS MOUNTED LIGHTS

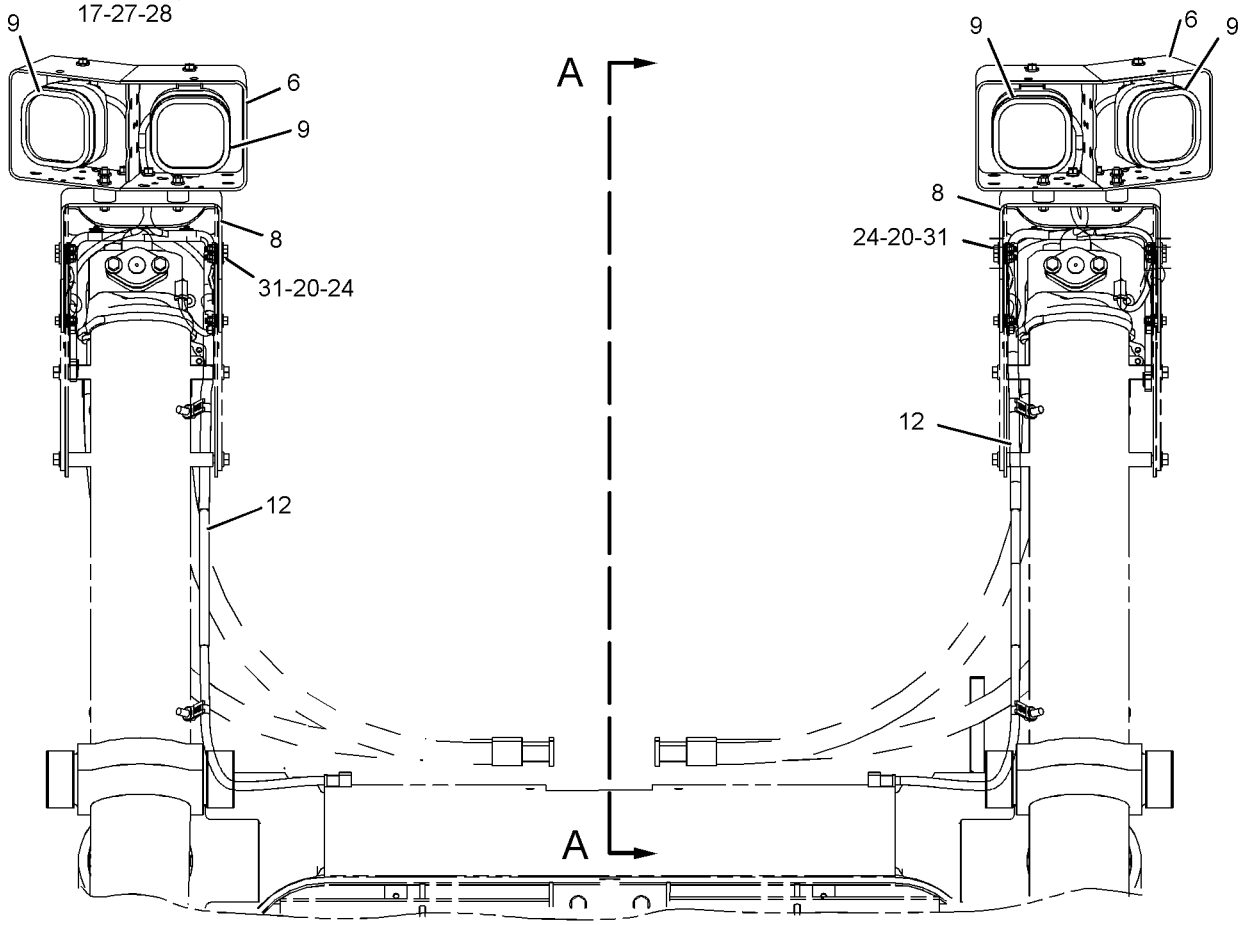

FRONT VIEW - CYLINDER MOUNTED LIGHTS

REFER TO ALL ILLUSTRATIONS OF
THIS GROUP FOR AUXILIARY VIEWS

GRAPHIC #1

g01053201

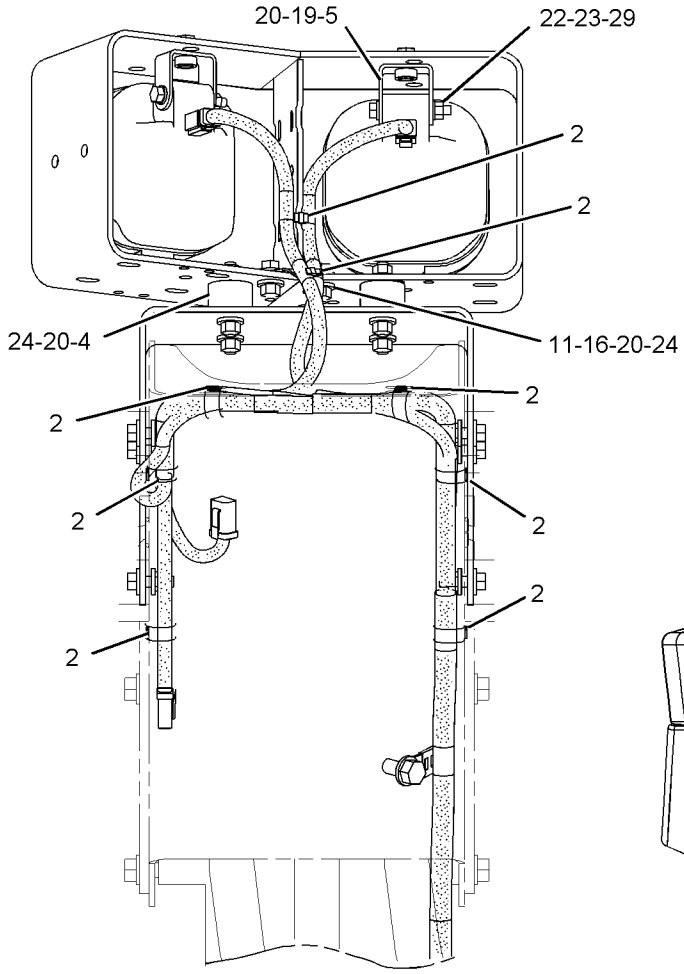

SECTION B-B

REFER TO ALL ILLUSTRATIONS OF THIS GROUP FOR AUXILIARY VIEWS

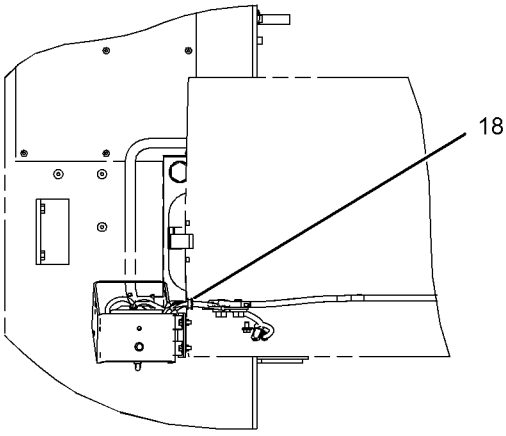

SECTION D-D

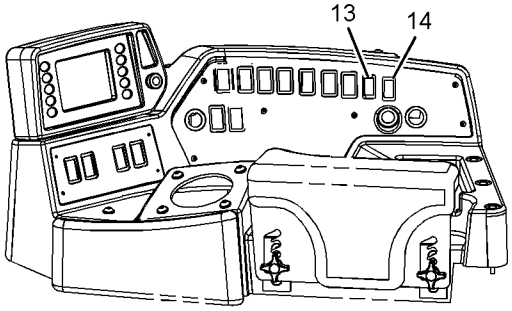

VIEW OF RH CONSOLE

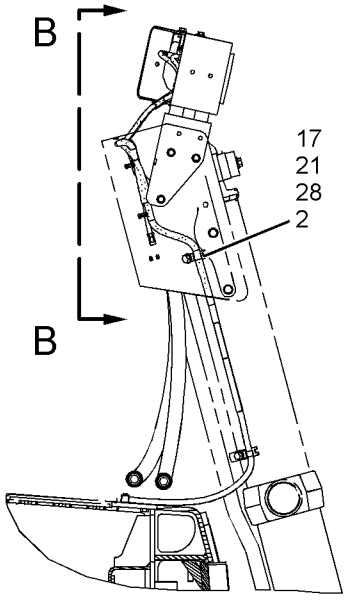

SECTION A-A

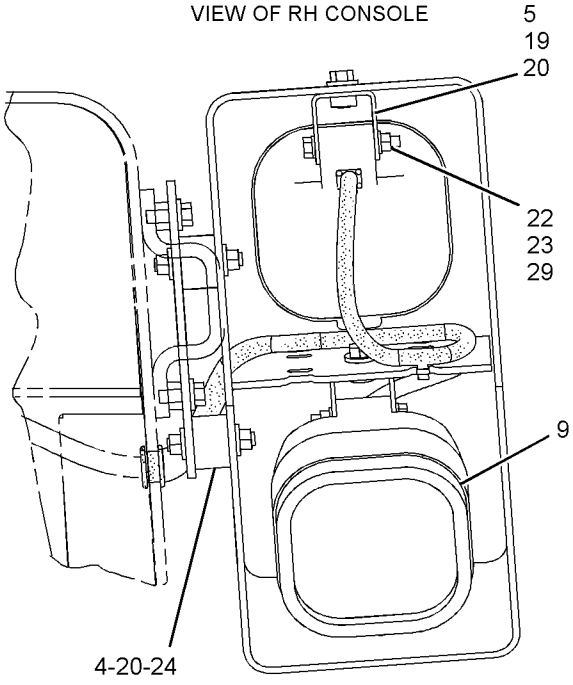

VIEW OF AREA C

GRAPHIC #2

g01053202

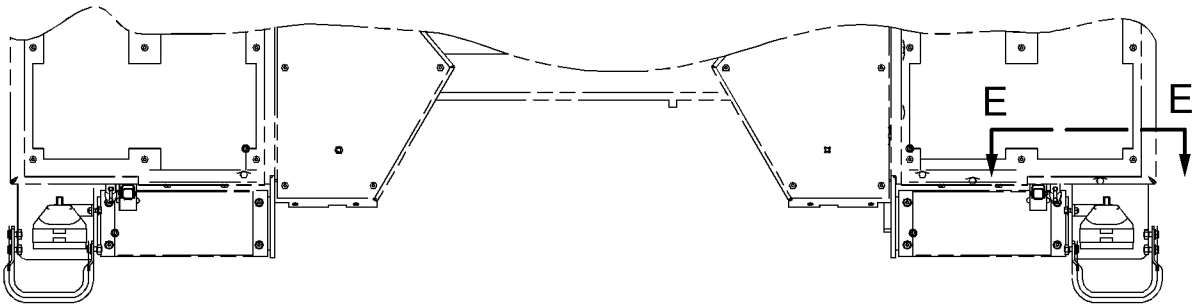

TOP VIEW - FRONT FENDER LIGHTS
(TOP COVER PLATES REMOVED)

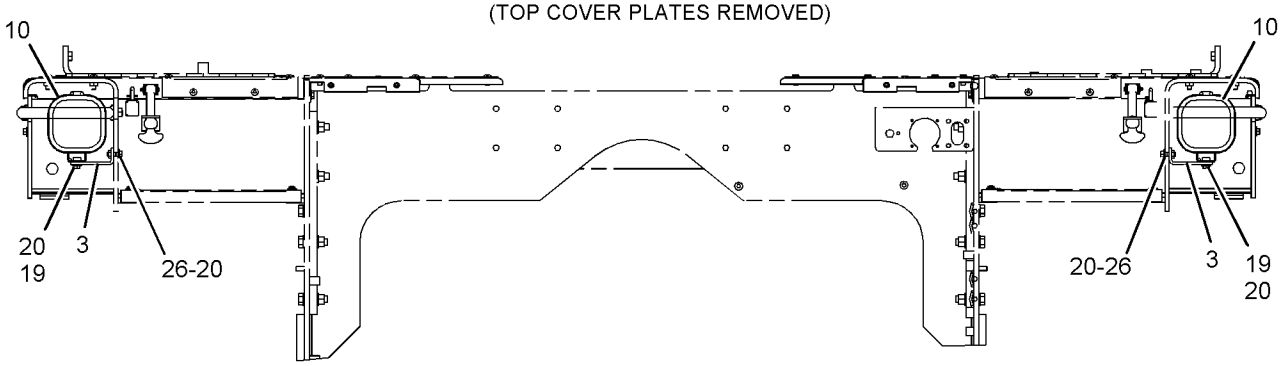

FRONT VIEW - FRONT FENDER LIGHTS

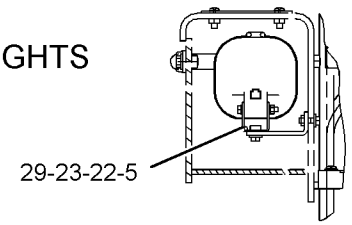

SECTION E-E

REFER TO ALL ILLUSTRATIONS OF
THIS GROUP FOR AUXILIARY VIEWS

GRAPHIC #3 **<END>** g01053203

231-3072 LIGHTING GP-FLOOD–
11-LAMP, ROPS, FENDER, CYL MT–HID

S/N: RJG1-UP

FOR USE WITH CYLINDERS. CANNOT BE USED WITH 224-5140–PAGE 253, 231-3069–PAGE 255, 231-3070–PAGE 257, 231-3071–PAGE 259 AN ATTACHMENT

SMCS-1434 **i02283636**

NOTE	REF NO	GRAPHIC REF	PART NUMBER	QTY	PART NAME 1 2 3 4 5 6 (PRODUCT LEVEL)	SEE PAGE
	1	1	**1Q-1592**	1	PLATE AS	
		1	**7T-1099**	4	LINK	
	2	1	**7K-1181**	56	STRAP-CABLE	
	3	2	**8E-3241**	4	BRACKET AS	
					(EACH INCLUDES)	
		2	**1F-0750**	1	NUT-WELD (3/8-16-THD)	
	4	1,2	**9W-4361**	20	MOUNT-FLEXIBLE	
	5	2	**111-8314**	4	BRACKET AS	
Y	6	1	*125-2001*	2	LIGHTING GP-FLOOD (1-LAMP) (CYLINDER MOUNTED)	252
	7	1	**143-2466**	5	GUARD-LIGHT	
Y	8	2	**153-2073**	4	LAMP GP-FLOOD (24-VOLT, VERTICAL MOUNT) (FENDER LIGHTS)	247
	9	2	**229-8779**	1	BRACKET	
	10	2	**231-1946**	1	BRACKET	
	11	1	**231-1947**	1	BRACKET	
	12	2	**231-9306**	1	SWITCH AS-ROCKER (CYLINDER FLOOD)	
	13	1,2	**233-6020**	2	BRACKET AS	
	14	1	**234-0825**	2	HARNESS AS-LIGHTING (FRONT FLOODLIGHTS)	
					(EACH INCLUDES)	
		1	**102-8802**	2	KIT-RECEPTACLE (2-PIN)	
		1	**102-8804**	1	KIT-RECEPTACLE (4-PIN)	
		1	**102-8805**	1	KIT-RECEPTACLE (6-PIN)	
					(EACH INCLUDES RECEPTACLE AS & WEDGE)	
		1	**155-2270**	3	KIT-CONNECTING PLUG (2-PIN)	
		1	**155-2271**	1	KIT-CONNECTING PLUG (4-PIN)	
					(EACH INCLUDES PLUG AS & WEDGE)	
	15	1	**242-9228**	2	BRACKET	
	16	2	**246-5626**	1	SWITCH AS-ROCKER (FLOODLAMPS,ROPS)	
Y	17	1	**247-0293**	4	LAMP GP-FLOOD (24-VOLT, SUSPENDED MOUNT) (ROPS, CYLINDER MOUNTED)	249
Y	18	1	**247-0294**	1	LAMP GP-FLOOD (24-VOLT, VERTICAL MOUNT) (ROPS MOUNTED)	250
	19	1	**247-0495**	1	HARNESS AS-LIGHTING (REAR FLOODLIGHT)	
		1	**102-8802**	5	KIT-RECEPTACLE (2-PIN)	
		1	**102-8805**	1	KIT-RECEPTACLE (6-PIN)	
					(EACH INCLUDES RECEPTACLE AS & WEDGE)	
		1	**155-2270**	6	KIT-CONNECTING PLUG (2-PIN)	
					(EACH INCLUDES PLUG AS & WEDGE)	
	20	1,2	**4L-6454**	20	BOLT (3/8-16X1-IN)	
	21	2	**4L-6459**	2	BOLT (3/8-16X2.5-IN)	
	22	1	**4P-7428**	5	CLIP	
	23	2	**5D-7635**	2	GROMMET	
	24	2	**5M-3062**	4	BOLT (3/8-16X0.75-IN)	
	25	1,2	**5P-1075**	76	WASHER-HARD (10.2X22.5X3-MM THK)	
	26	1	**5P-1076**	5	WASHER-HARD (13.5X30X4-MM THK)	
	27	1	**5P-2228**	4	BOLT (1/2-13X1-IN)	
	28	2	**5P-2955**	4	BOLT (5/16-18X2.5-IN)	
	29	1	**5P-8522**	4	GROMMET	
	30	2	**5S-7382**	4	BOLT (3/8-16X1.375-IN)	
	31	2	**6V-8189**	4	NUT (5/16-18-THD)	
	32	1,2	**6V-8801**	44	NUT (3/8-16-THD)	
	33	1	**7X-0582**	2	WASHER-HARD (20X44.5X6-MM THK)	
	34	2	**8T-2502**	2	BOLT (3/8-16X1.125-IN)	

231-3072 **LIGHTING GP-FLOOD** *(contd.)* **i02283636**

NOTE	REF NO	GRAPHIC REF	PART NUMBER	QTY	PART NAME 1 2 3 4 5 6 (PRODUCT LEVEL)	SEE PAGE
M	35	1	**8T-4139**	5	BOLT (M12X1.75X30-MM)	
M	36	1	**8T-4179**	1	BOLT (M12X1.75X20-MM)	
	37	1	**8T-4223**	5	WASHER-HARD (13.5X25.5X3-MM THK)	
	38	2	**8T-4224**	8	WASHER-HARD (8.8X16X2-MM THK)	
	39	1	**8T-9397**	2	BOLT (3/4-10X1.25-IN)	

M-METRIC PART
Y-SEPARATE ILLUSTRATION

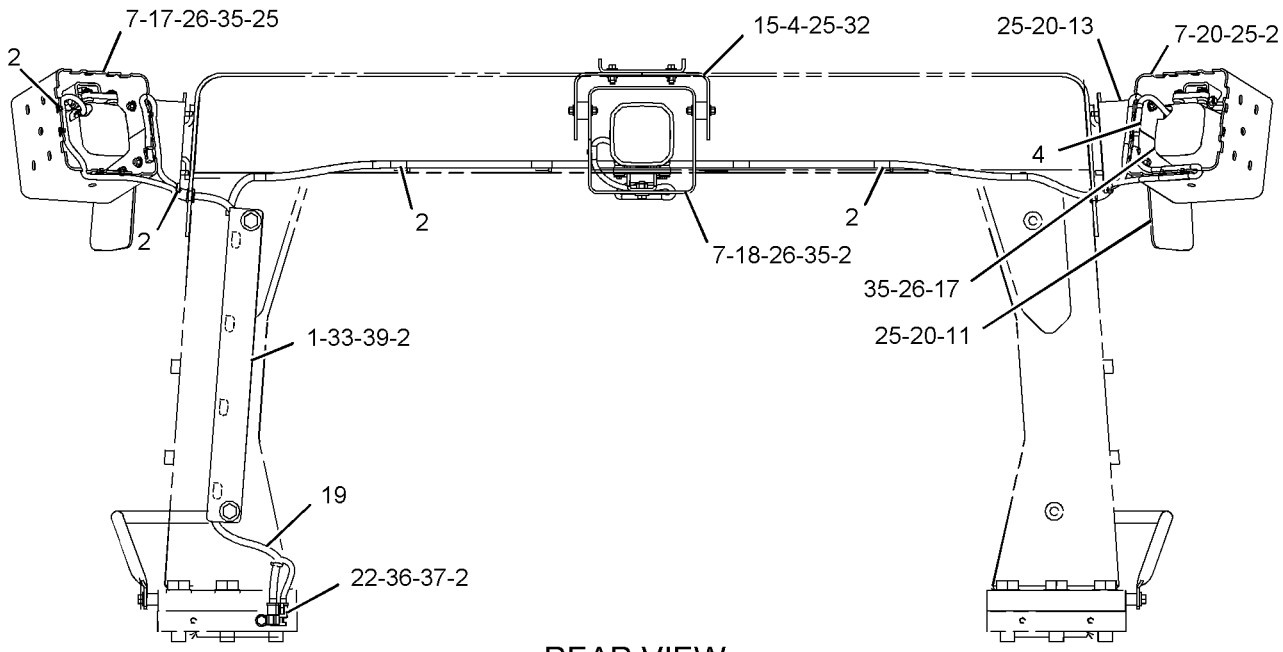

REAR VIEW
(ROPS MOUNTED LIGHTS)

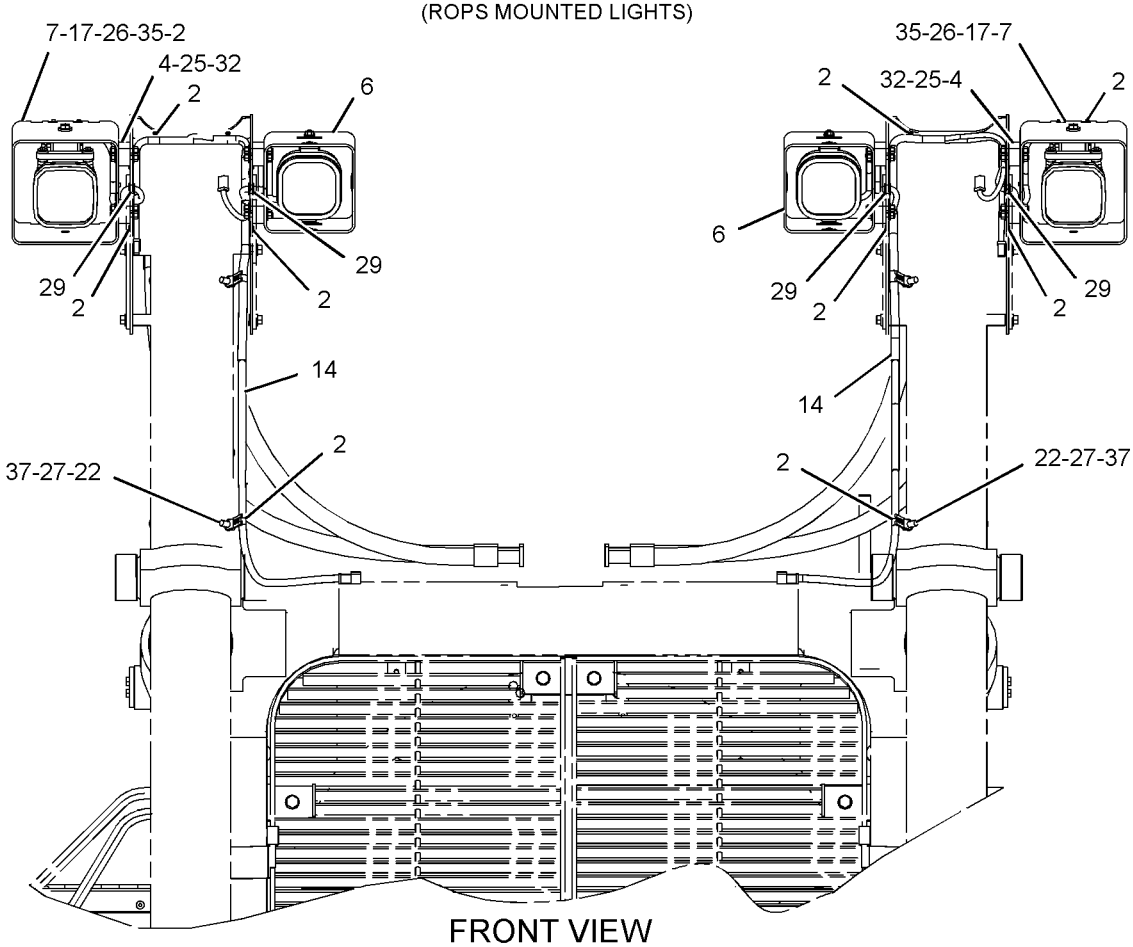

FRONT VIEW
(CYLINDER MOUNTED LIGHTS)

GRAPHIC #1

g01054975

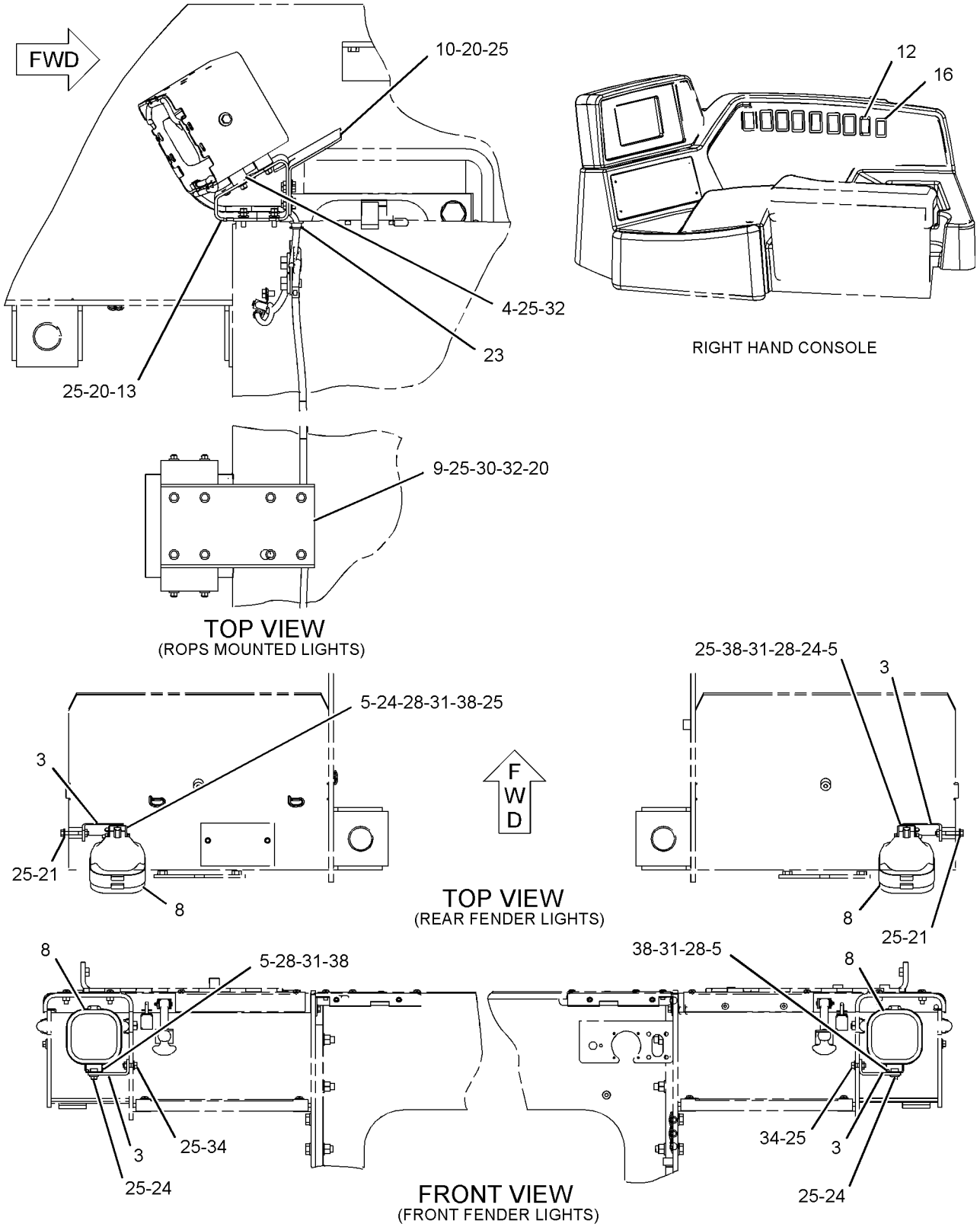

GRAPHIC #2

<END>

g01136380

247-4927 LIGHTING GP-FLOOD—4-LAMP, FRONT, REAR FENDER

S/N: RJG1-UP

PART OF 212-2741 CHASSIS AR

SMCS-1434 **i02379514**

NOTE	REF NO	GRAPHIC REF	PART NUMBER	QTY	PART NAME 1 2 3 4 5 6 (PRODUCT LEVEL)	SEE PAGE
	1	1	**8E-3241**	4	BRACKET AS	
					(EACH INCLUDES)	
		1	**1F-0750**	1	NUT-WELD (3/8-16-THD)	
	2	1	**111-8314**	4	BRACKET AS	
					(EACH INCLUDES)	
		1	**1F-0750**	1	NUT-WELD (3/8-16-THD)	
		1	**115-0617**	1	BRACKET	
Y	3	1	**153-2073**	4	LAMP GP-FLOOD (24-VOLT, VERTICAL MOUNT)	247
	4	1	**4L-6459**	2	BOLT (3/8-16X2.5-IN)	
	5	1	**5M-3062**	4	BOLT (3/8-16X0.75-IN)	
	6	1	**5P-1075**	8	WASHER-HARD (10.2X22.5X3-MM THK)	
	7	1	**5P-2955**	4	BOLT (5/16-18X2.5-IN)	
	8	1	**6V-8189**	4	NUT (5/16-18-THD)	
	9	1	**8T-2502**	2	BOLT (3/8-16X1.125-IN)	
	10	1	**8T-4224**	8	WASHER-HARD (8.8X16X2-MM THK)	

Y-SEPARATE ILLUSTRATION

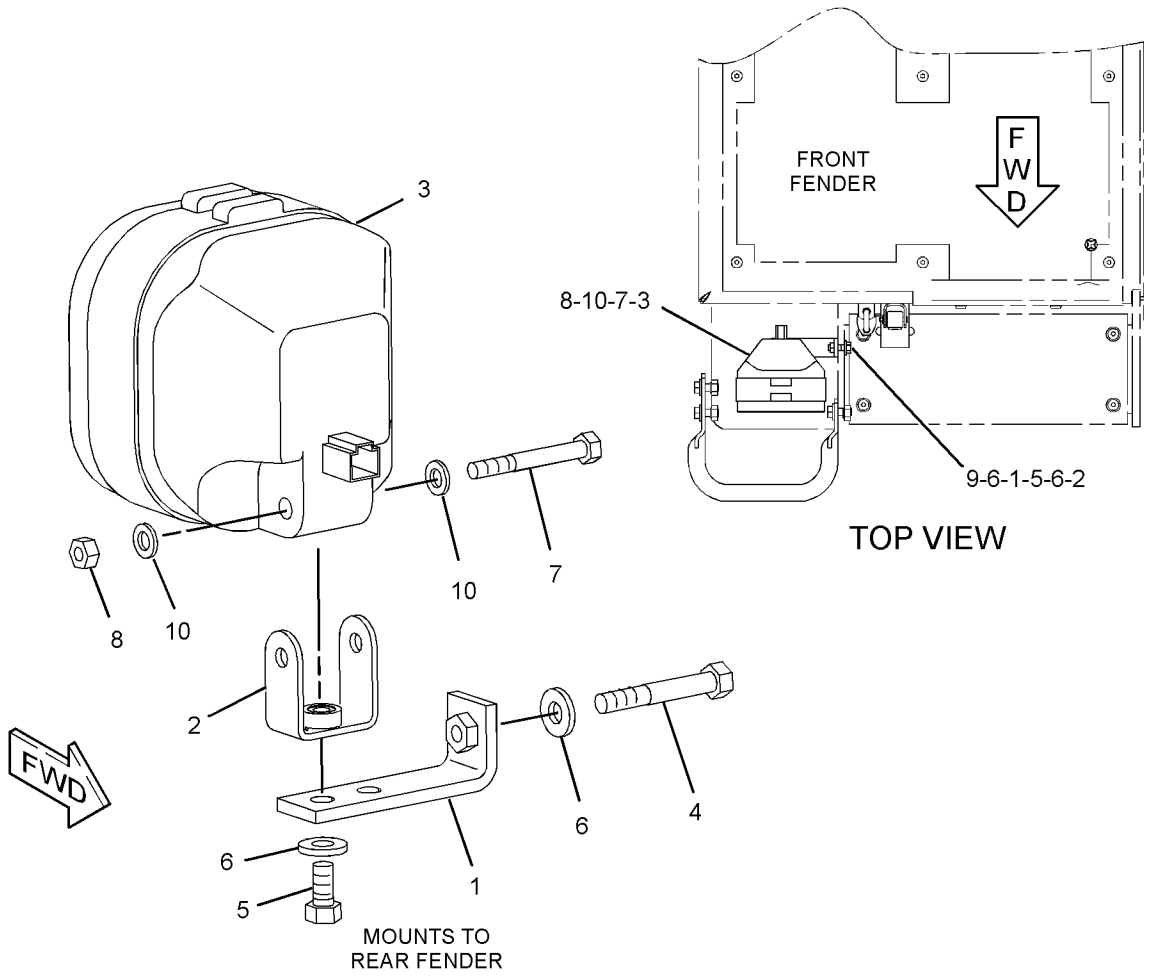

GRAPHIC #1 **<END>** g01225948

276-1365 LIGHTING GP-FLOOD–
7-LAMP, ROPS, FRONT, REAR FENDER
S/N: RJG1-UP

CANNOT BE USED WITH 216-2481–PAGE 551, 216-2482–PAGE 552
AN ATTACHMENT

SMCS-1434 **i02360777**

NOTE	REF NO	GRAPHIC REF	PART NUMBER	QTY	PART NAME 1 2 3 4 5 6 (PRODUCT LEVEL)	SEE PAGE
	1	1	**1Q-1592**	1	PLATE AS	
		1	**1Q-1591**	1	PLATE	
	2	1	**7K-1181**	28	STRAP-CABLE	
	3	1	**8E-3241**	4	BRACKET AS	
					(EACH INCLUDES)	
		1	**1F-0750**	1	NUT-WELD (3/8-16-THD)	
	4	1	**9W-4361**	12	MOUNT-FLEXIBLE	
	5	1	**111-8314**	4	BRACKET AS	
	6	1	**143-2466**	3	GUARD-LIGHT	
Y	7	1	**153-2073**	4	LAMP GP-FLOOD (24-VOLT, VERTICAL MOUNT)	247
	8	1	**229-8779**	1	BRACKET	
	9	1	**231-1946**	1	BRACKET	
	10	1	**231-1947**	1	BRACKET	
	11	1	**231-9306**	1	SWITCH AS-ROCKER (FRONT WORK LIGHTS)	
	12	1	**233-6020**	2	BRACKET AS	
	13	1	**242-9228**	2	BRACKET	
					(EACH INCLUDES)	
		1	**1F-0750**	2	NUT-WELD (3/8-16-THD)	
	14	1	**246-5626**	1	SWITCH AS-ROCKER (REAR WORK LIGHTS)	
	15	1	**247-0495**	1	HARNESS AS-LIGHTING (REAR FLOODLIGHT)	
		1	**102-8802**	5	KIT-RECEPTACLE (2-PIN)	
		1	**102-8805**	1	KIT-RECEPTACLE (6-PIN)	
					(EACH INCLUDES RECEPTACLE AS & WEDGE)	
		1	**155-2270**	6	KIT-CONNECTING PLUG (2-PIN)	
					(INCLUDES PLUG AS, WEDGE, & INTERFACE SEAL)	
Y	16	1	**247-0293**	2	LAMP GP-FLOOD (24-VOLT, SUSPENDED MOUNT)	249
Y	17	1	**247-0294**	1	LAMP GP-FLOOD (24-VOLT, VERTICAL MOUNT)	250
	18	1	**4L-6454**	20	BOLT (3/8-16X1-IN)	
	19	1	**4L-6459**	2	BOLT (3/8-16X2.5-IN)	
	20	1	**4P-7428**	1	CLIP	
	21	1	**5D-7635**	2	GROMMET	
	22	1	**5M-3062**	4	BOLT (3/8-16X0.75-IN)	
	23	1	**5P-1075**	60	WASHER-HARD (10.2X22.5X3-MM THK)	
	24	1	**5P-1076**	3	WASHER-HARD (13.5X30X4-MM THK)	
	25	1	**5P-2955**	4	BOLT (5/16-18X2.5-IN)	
	26	1	**5S-7382**	4	BOLT (3/8-16X1.375-IN)	
	27	1	**6V-8189**	4	NUT (5/16-18-THD)	
	28	1	**6V-8801**	28	NUT (3/8-16-THD)	
	29	1	**7X-0582**	2	WASHER-HARD (20X44.5X6-MM THK)	
	30	1	**8T-2502**	2	BOLT (3/8-16X1.125-IN)	
M	31	1	**8T-4139**	3	BOLT (M12X1.75X30-MM)	
M	32	1	**8T-4179**	1	BOLT (M12X1.75X20-MM)	
	33	1	**8T-4223**	1	WASHER-HARD (13.5X25.5X3-MM THK)	
	34	1	**8T-4224**	8	WASHER-HARD (8.8X16X2-MM THK)	
	35	1	**8T-9397**	2	BOLT (3/4-10X1.25-IN)	

M-METRIC PART
Y-SEPARATE ILLUSTRATION

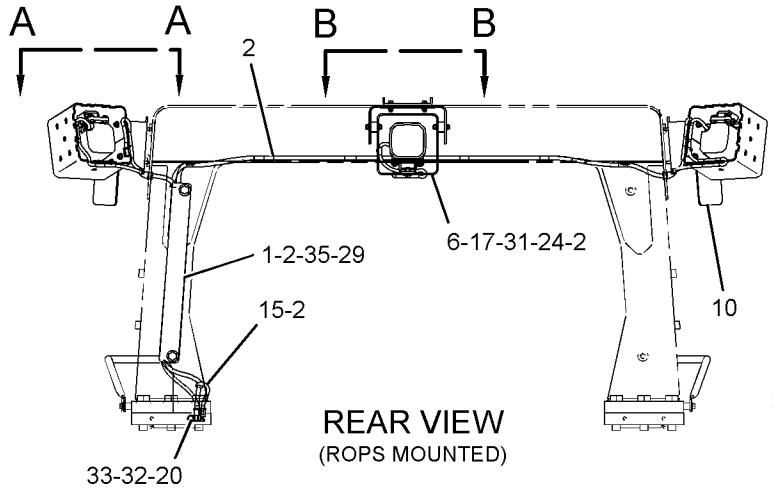

REAR VIEW
(ROPS MOUNTED)

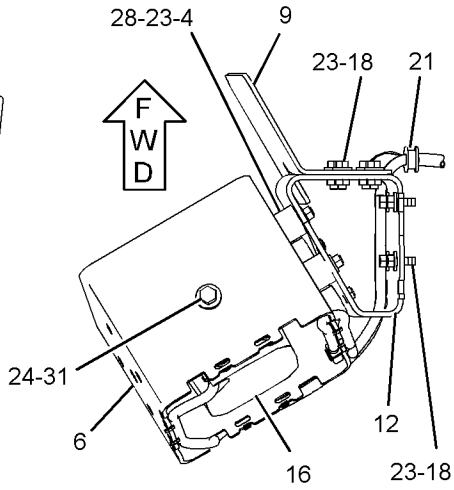

VIEW A-A

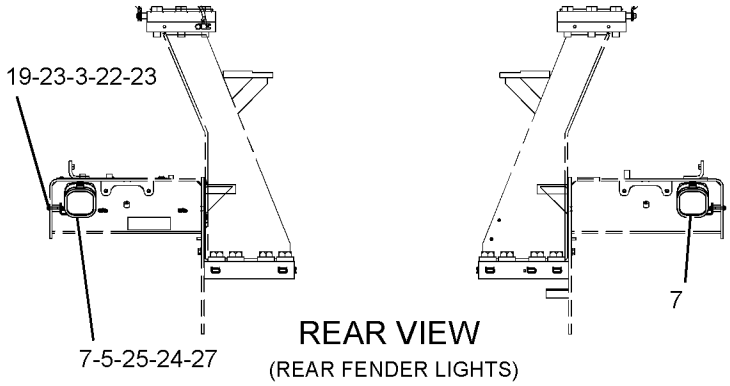

REAR VIEW
(REAR FENDER LIGHTS)

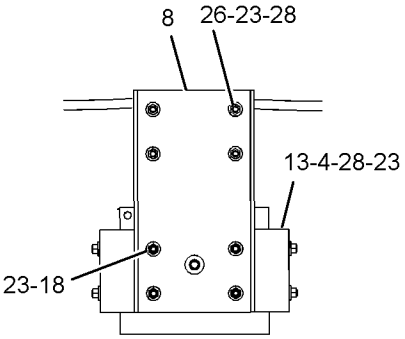

VIEW B-B

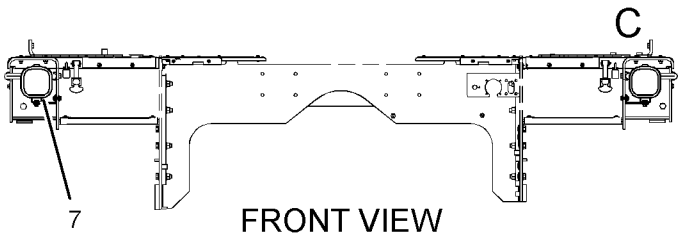

FRONT VIEW
(FRONT FENDER LIGHTS)

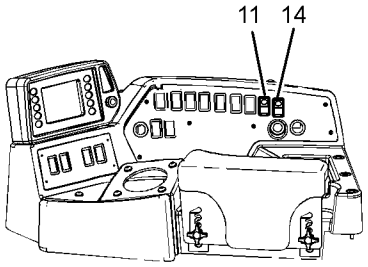

RH CONSOLE

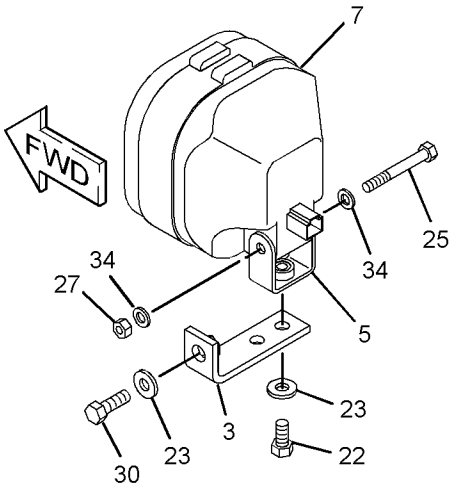

VIEW OF AREA C
(EXPLODED)

GRAPHIC #1 **<END>** g01227233

217-7739 LIGHTING GP-RIPPER

S/N: 4PP1-UP; BRT1-UP; BEY1-UP
PART OF 216-0120, 216-0121, 216-0122 RIPPER AR
AN ATTACHMENT

SMCS-1429 **i02274216**

NOTE	REF NO	GRAPHIC REF	PART NUMBER	QTY	PART NAME 1 2 3 4 5 6 (PRODUCT LEVEL)	SEE PAGE
	1	1	**7K-1181**	8	STRAP-CABLE	
	2	1	**125-2000**	1	HARNESS AS-LIGHTING (RIPPER)	
		1	**155-2270**	2	KIT-CONNECTING PLUG (2-PIN)	
					(EACH INCLUDES PLUG AS & WEDGE)	
Y	3	1	*125-2001*	1	LIGHTING GP-FLOOD (1-LAMP) (RIPPER)	252
	4	1	**237-0843**	1	BRACKET	
	5	1	**4L-6454**	2	BOLT (3/8-16X1-IN)	
	6	1	**4P-7581**	3	CLIP	
	7	1	**5M-3062**	1	BOLT (3/8-16X0.75-IN)	
	8	1	**8T-4896**	3	WASHER-HARD (10.2X18.5X2.5-MM THK)	

Y-SEPARATE ILLUSTRATION

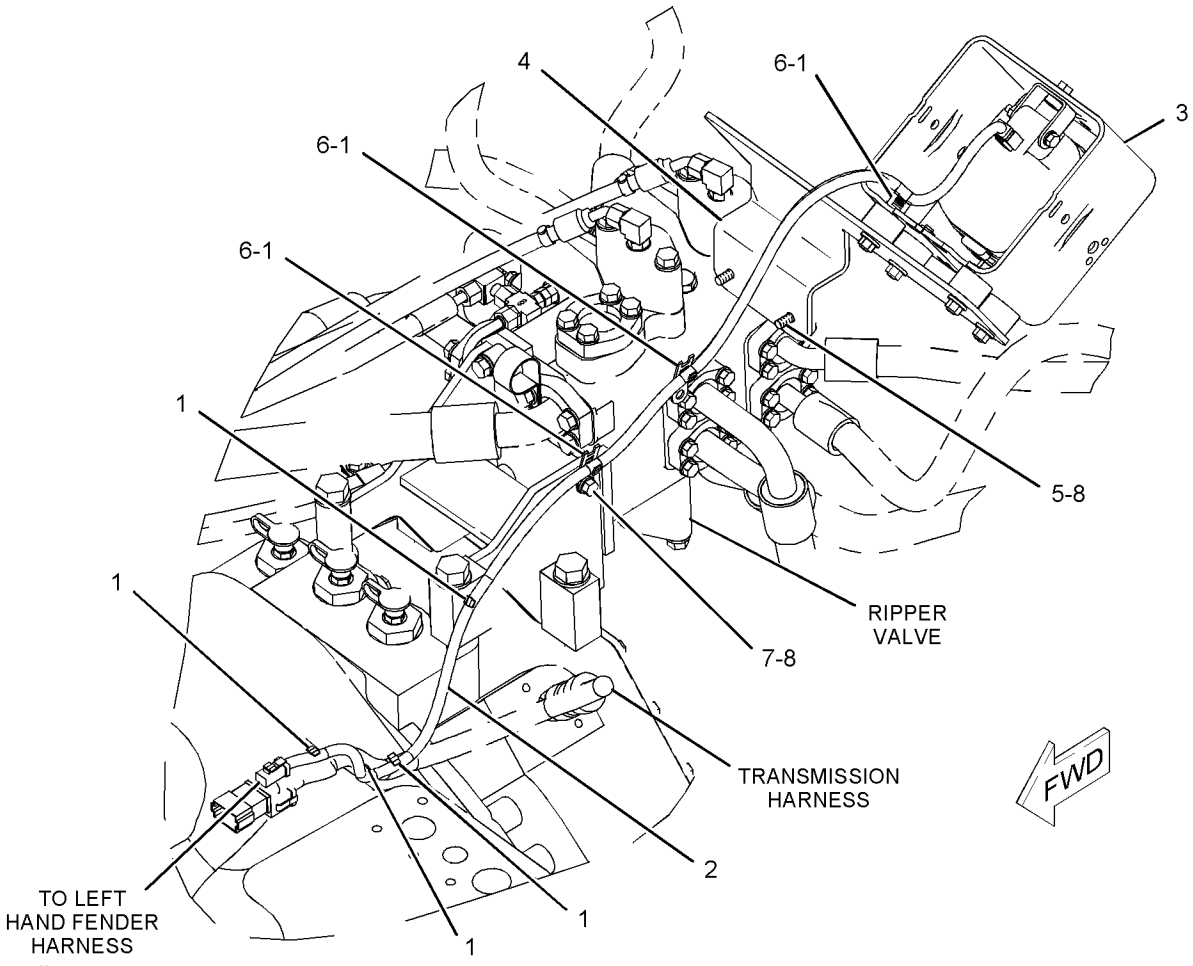

GRAPHIC #1 **<END>** g01140547

223-8176 PANEL GP-FUSE

S/N: RJG1-UP

PART OF 218-7063 WIRING GP-PLATFORM

SMCS-1417 **i02473263**

NOTE	REF NO	GRAPHIC REF	PART NUMBER	QTY	PART NAME 1 2 3 4 5 6 (PRODUCT LEVEL)	SEE PAGE
	1	1	**6T-3643**	1	CIRCUIT BREAKER AS (15-AMPERE) (MAIN POWER)	
		1	**6V-8376**	2	SCREW-MACHINE (8-32X0.25-IN)	
		1	**9B-7233**	2	LOCKWASHER	
	2	1	**9W-1441**	18	FUSE (15-AMPERE)	
	3	1	**9W-1442**	6	FUSE (10-AMPERE)	
	4	1	**9W-1446**	4	FUSE (20-AMPERE)	
	5	2	**117-2311**	1	RECEPTACLE AS-POWER (12-VOLT)	
Y	6	1	**125-1302**	1	SWITCH GP-MAGNETIC (24-VOLT) (START RELAY)	316
	7	1	**128-6157**	1	PLATE	
	8	1	**172-4863**	1	JUNCTION BLOCK	
	9	1	**189-3158**	1	SUPPRESSOR-ARC	
	10	1	**202-4327**	1	PULLER-FUSE	
	11	2	**204-8000**	1	ANCHOR-TIE	
	12	1	**211-3686**	1	WIRING GP-PANEL (FUSE)	
		1	**225-8553**	1	BLOCK AS-FUSE	
		1	**151-1398**	2	KIT-TERMINAL (LOCK)	
					(INCLUDES LOCK)	
		1	**227-0912**	1	BLOCK AS-FUSE	
		1	**1H-3244**	2	LOCKWASHER	
		1	**6V-8185**	2	NUT (1/4-20-THD)	
		1	**8T-4205**	2	WASHER-HARD (7.2X14.5X2-MM THK)	
		1	**213-2304**	1	HARNESS AS-PANEL (FUSE)	
		1	**9X-0196**	1	TERMINAL AS	
		1	**9W-1951**	1	RECEPTACLE (9-PIN)	
		1	**214-4208**	1	RECEPTACLE AS-CONNECTOR (70-PIN)	
		1	**102-8802**	2	KIT-RECEPTACLE (2-PIN)	
					(INCLUDES RECEPTACLE AS & WEDGE)	
		1	**155-2270**	3	KIT-CONNECTING PLUG (2-PIN)	
					(INCLUDES PLUG AS, WEDGE, & INTERFACE SEAL)	
	13	2	**212-6167**	1	STRAP	
	14	2	**212-6168**	1	STRAP	
	15	1	**212-6169**	1	STRAP	
	16	2	**213-3064**	1	GASKET	
	17	1	**214-1703**	1	WIRE AS	
	18	1	**215-3712**	1	COVER AS	
		1	**6V-2491**	2	RIVET-POP	
		1	**185-9464**	1	LATCH AS	
		1	**211-3703**	1	COVER	
		1	**212-6157**	1	HINGE AS	
	19	2	**223-8173**	1	HOLDER AS-FUSE	
	20	1	**223-8175**	1	CAP AS	
	21	2	**225-3797**	1	BOX AS-FUSE	
	22	1	**225-5928**	1	COVER PLATE	
	23	2	**231-6270**	1	GASKET	
	24	1	**234-5880**	1	BRACKET	
	25	1	**234-6845**	1	COVER	
	26	1,2	**239-8107**	2	FUSE (175-AMPERE) (ALTERNATOR, MAIN)	
Y	27	2	**241-8368**	1	SWITCH GP-MAGNETIC (24-VOLT) (MAIN RELAY)	317
	28	1	**249-0951**	1	GASKET	
	29	1	**068-4209**	2	SCREW (8-32X0.75-IN)	
	30	1	**3S-9557**	4	SCREW-PAN HEAD (4-40X0.5-IN)	
	31	2	**4F-8711**	2	BUTTON-PLUG	
M	32	2	**5C-2890**	4	NUT (M6X1-THD)	
	33	1	**6D-5801**	2	LOCKNUT (8-32-MM THD)	
	34	1	**6V-5645**	4	SCREW-MACHINE (10-32X0.87-IN)	

223-8176 PANEL GP-FUSE *(contd.)* i02473263

NOTE	REF NO	GRAPHIC REF	PART NUMBER	QTY	PART NAME 1 2 3 4 5 6 (PRODUCT LEVEL)	SEE PAGE
M	35	1	**6V-5683**	4	BOLT (M6X1X16-MM)	
	36	1	**7K-1181**	4	STRAP-CABLE	
	37	1	**7U-4892**	2	SCREW (8-32X0.75-IN)	
M	38	2	**7X-2548**	2	BOLT (M12X1.75X16-MM)	
M	39	1	**8T-0267**	3	BOLT-SOCKET HEAD (M6X1X12-MM)	
	40	1,2	**8T-4121**	3	WASHER-HARD (11X21X2.5-MM THK)	
M	41	1	**8T-4136**	1	BOLT (M10X1.5X25-MM)	
M	42	2	**8T-4191**	2	BOLT (M10X1.5X16-MM)	
M	43	2	**8T-4199**	2	BOLT (M8X1.25X12-MM)	
M	44	2	**8T-4200**	2	BOLT (M8X1.25X16-MM)	
	45	2	**8T-4223**	2	WASHER-HARD (13.5X25.5X3-MM THK)	
	46	2	**8T-4224**	4	WASHER-HARD (8.8X16X2-MM THK)	
M	47	1,2	**9X-2042**	15	SCREW-TRUSS HEAD (M6X1X12-MM)	
	48	2	**9X-8256**	4	WASHER (6.6X12X2-MM THK)	
E	49	1	**6V-9023**		TUBE-HEAT SHRINK (5-CM)	

E-ORDER BY THE CENTIMETER
M-METRIC PART
Y-SEPARATE ILLUSTRATION

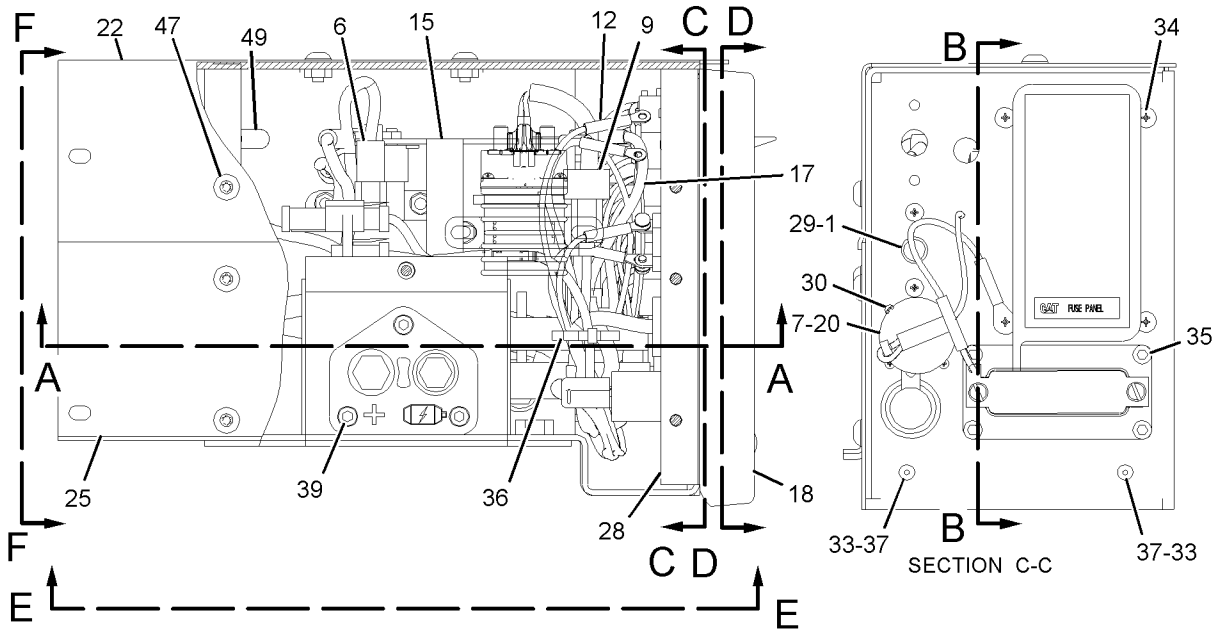

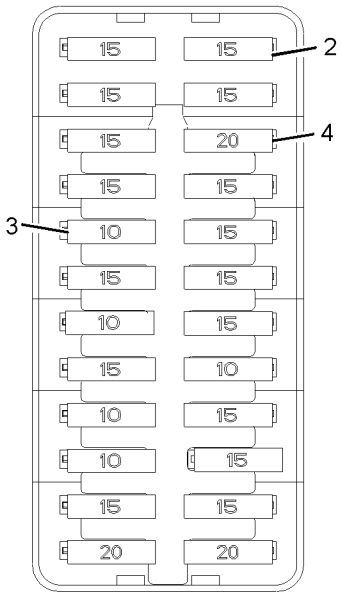

VIEW OF FUSE LOCATIONS

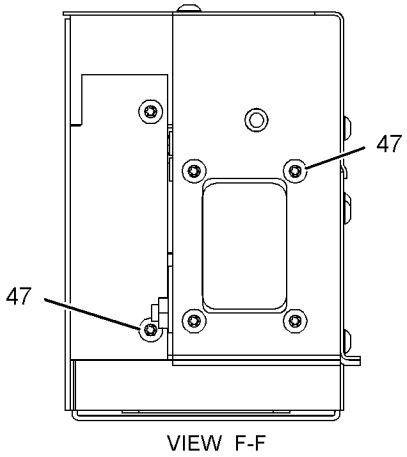

VIEW F-F

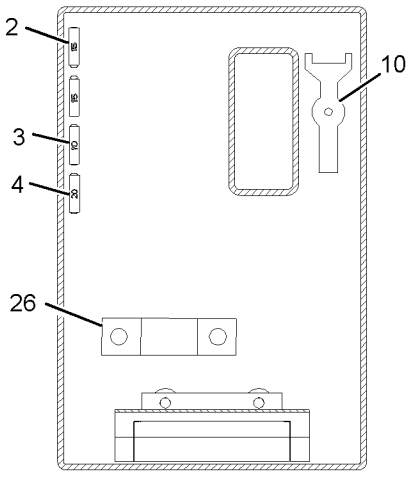

SECTION D-D

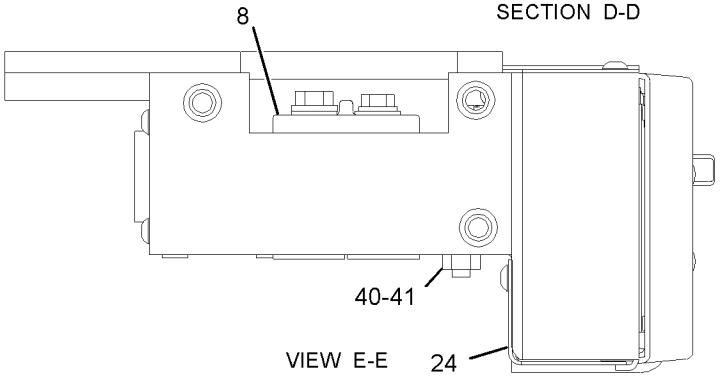

VIEW E-E

REFER TO ALL ILLUSTRATIONS OF THIS GROUP FOR AUXILIARY VIEWS

GRAPHIC #1 g01227586

223-8176 PANEL GP-FUSE *(contd.)* i02473263

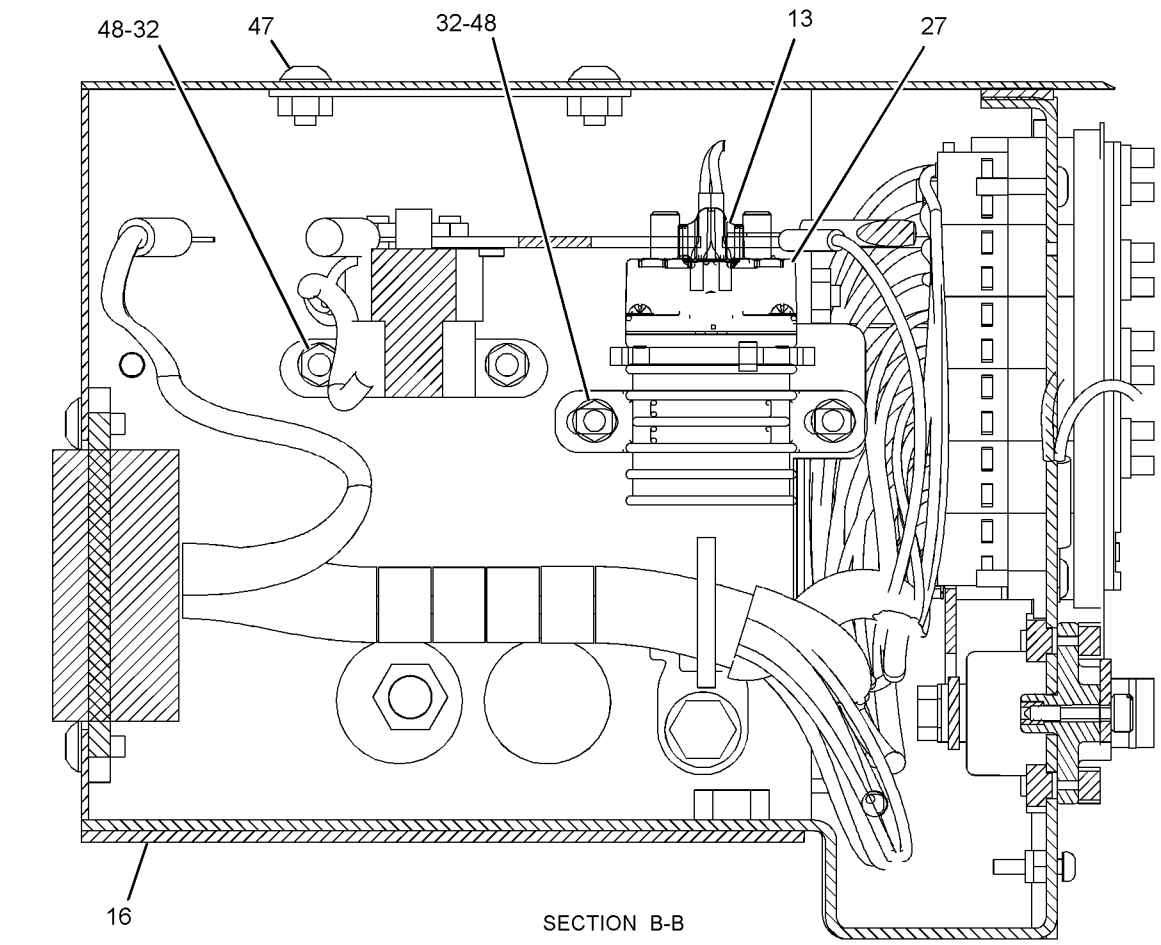

SECTION B-B

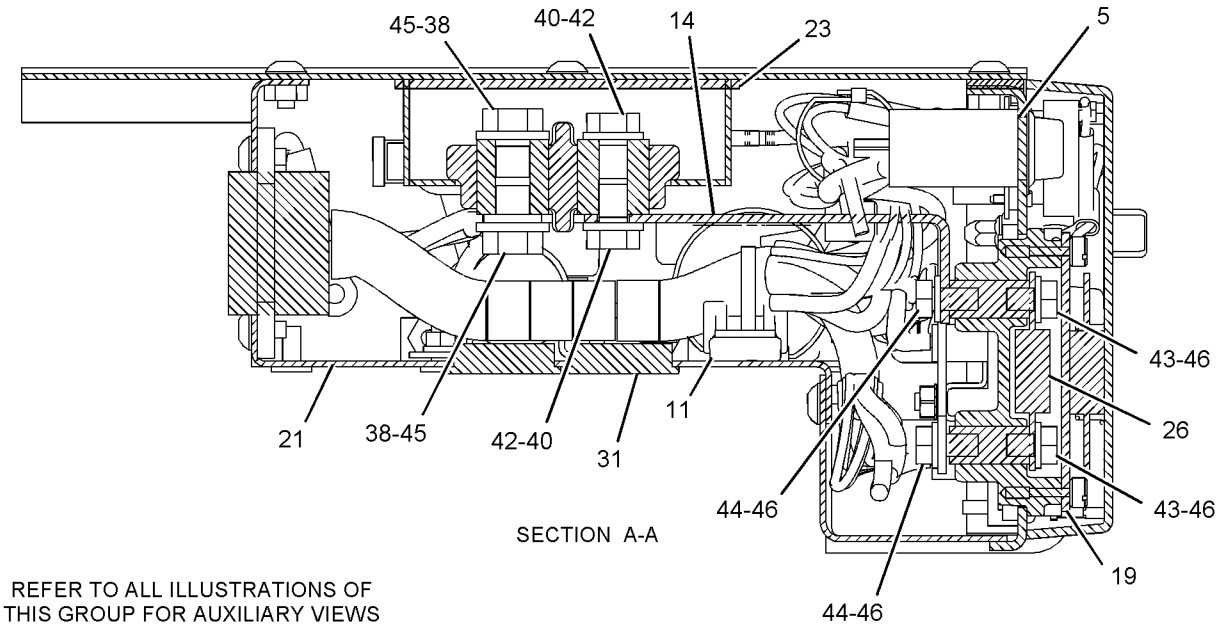

SECTION A-A

REFER TO ALL ILLUSTRATIONS OF
THIS GROUP FOR AUXILIARY VIEWS

GRAPHIC #2 **<END>** g01111808

ELECTRICAL AND STARTING SYSTEM

248-2921 RESISTOR GP-CAB HEATER

S/N: RJG1-UP

PART OF 205-3645 HEATER GP-CAB

SMCS-1437, 7304 **i02335506**

NOTE	REF NO	GRAPHIC REF	PART NUMBER	QTY	PART NAME 1 2 3 4 5 6 (PRODUCT LEVEL)	SEE PAGE
	1	1	**6T-6708**	2	WASHER (7X28.6X4.1-MM THK)	
	2	1	**125-9740**	1	RESISTOR	
	3	1	**133-9012**	1	FUSE (15-AMPERE)	
	4	1	**248-2922**	1	BRACKET AS	
M	5	1	**129-3178**	1	LOCKNUT (M6X1 THD)	
M	6	1	**141-9784**	1	BOLT (M6X1X190-MM)	
	7	1	**6V-1668**	2	WASHER (6.5X29.1X3-MM THK)	
M	8	1	**8C-7581**	1	SCREW-MACHINE (M4X0.7X8-MM)	
	9	1	**8T-4205**	2	WASHER-HARD (7.2X14.5X2-MM THK)	

M-METRIC PART

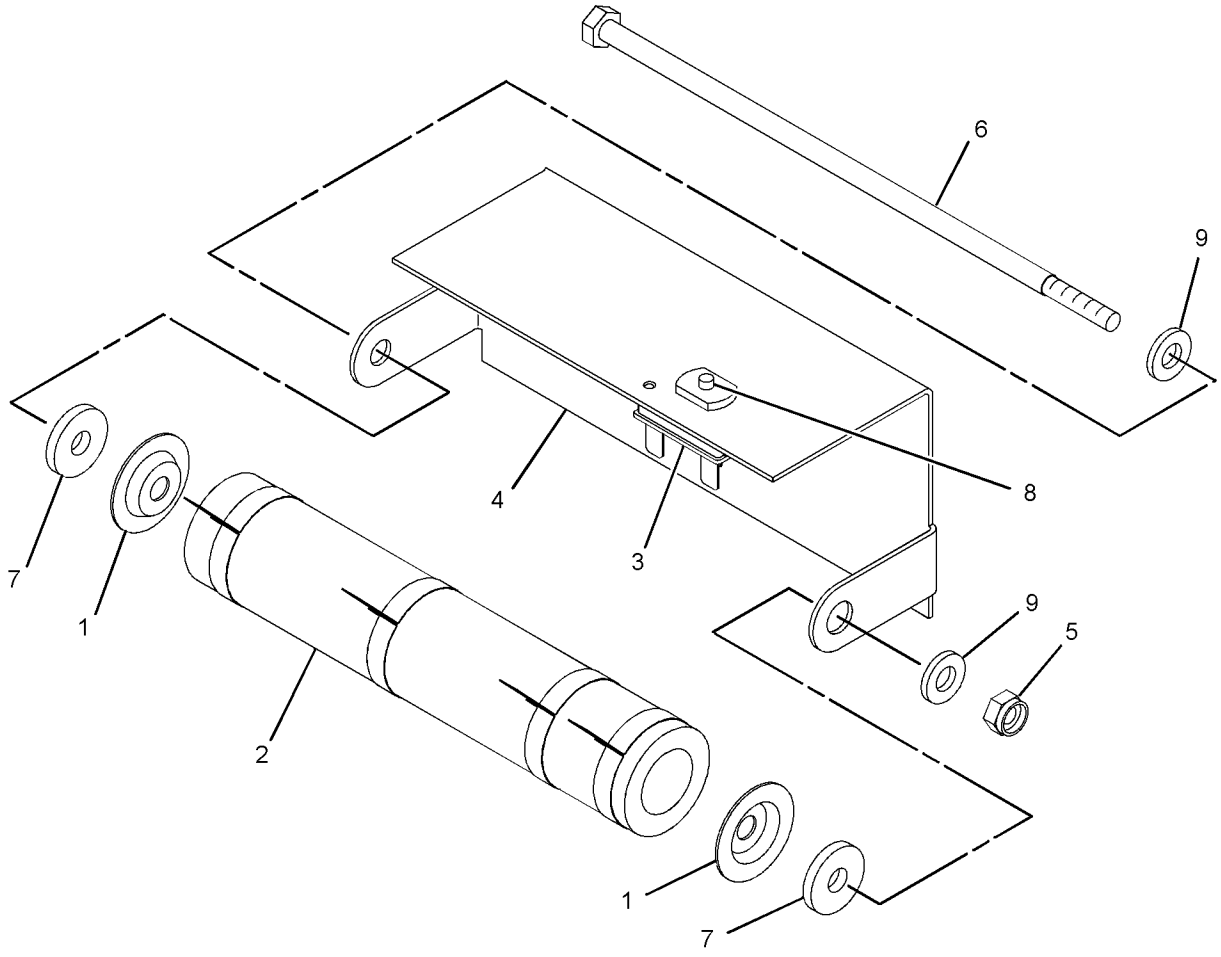

GRAPHIC #1 **<END>** g01166051

232-1134 SENSOR & MTG GP-GROUND SPEED—AUTO CARRY

S/N: RJG1-UP
PART OF 216-2554 CONTROL AR-HYDRAULIC
AN ATTACHMENT

SMCS-7493 **i02362255**

NOTE	REF NO	GRAPHIC REF	PART NUMBER	QTY	PART NAME 1 2 3 4 5 6 (PRODUCT LEVEL)	SEE PAGE
	1	1	**5V-6103**	1	SPACER (14.27X22.23X70-MM THK)	
	2	1	**222-7881**	1	SWITCH AS-ROCKER (AUTO CARRY)	
	3	1	**241-1781**	1	SENSOR GP-GROUND SPEED (RADAR)	
		1	**102-8804**	1	KIT-RECEPTACLE (4-PIN)	
					(INCLUDES RECEPTACLE AS & WEDGE)	
		1	**186-3735**	4	PIN-CONNECTOR (16-GA TO 18-GA)	
	4	1	**254-5681**	1	HARNESS AS-CONTROL (AUTO CARRY)	
		1	**102-8801**	1	KIT-RECEPTACLE (12-PIN)	
					(INCLUDES RECEPTACLE AS & WEDGE)	
		1	**134-2540**	2	RECEPTACLE AS-CONNECTOR (3-PIN)	
		1	**155-2271**	1	KIT-CONNECTING PLUG (4-PIN)	
		1	**174-0503**	2	KIT-CONNECTING PLUG (3-PIN)	
		1	**155-2255**	2	KIT-CONNECTING PLUG (12-PIN)	
					(EACH INCLUDES PLUG AS, WEDGE, & INTERFACE SEAL)	
	5	1	**259-2988**	1	PLATE	
	6	1	**263-3805**	1	HARNESS AS-CONTROL (AUTO CARRY) (SENSOR, VALVE)	
		1	**102-8802**	1	KIT-RECEPTACLE (2-PIN)	
					(INCLUDES RECEPTACLE AS & WEDGE)	
		1	**155-2271**	1	KIT-CONNECTING PLUG (4-PIN)	
		1	**155-2270**	1	KIT-CONNECTING PLUG (2-PIN)	
		1	**155-2255**	1	KIT-CONNECTING PLUG (12-PIN)	
					(EACH INCLUDES PLUG AS, WEDGE, & INTERFACE SEAL)	
		1	**9X-4385**	1	PLUG AS-CONNECTOR (6-PIN)	
	7	1	**249-5648**	1	SENSOR GP-MACHINE LEVEL (AUTO CARRY)	
		1	**265-7924**	1	SOFTWARE GP-IMPLEMENT	
	8	1	**4P-7429**	1	CLIP	
	9	1	**4P-8134**	3	CLIP	
M	10	1	**5C-7261**	2	NUT (M8X1.25-THD)	
M	11	1	**6V-5219**	4	BOLT (M8X1.25X40-MM)	
	12	1	**7K-1181**	25	STRAP-CABLE	
	13	1	**7X-0605**	1	WASHER-HARD (13X28X1.6-MM THK)	
M	14	1	**8T-4176**	1	BOLT (M12X1.75X90-MM)	
	15	1	**8T-4224**	8	WASHER-HARD (8.8X16X2-MM THK)	
M	16	1	**8T-4908**	2	BOLT (M8X1.25X25-MM)	
M	17	1	**5C-9553**	3	BOLT (M6X1X16-MM)	
	18	1	**9X-8256**	3	WASHER (6.6X12X2-MM THK)	

M-METRIC PART

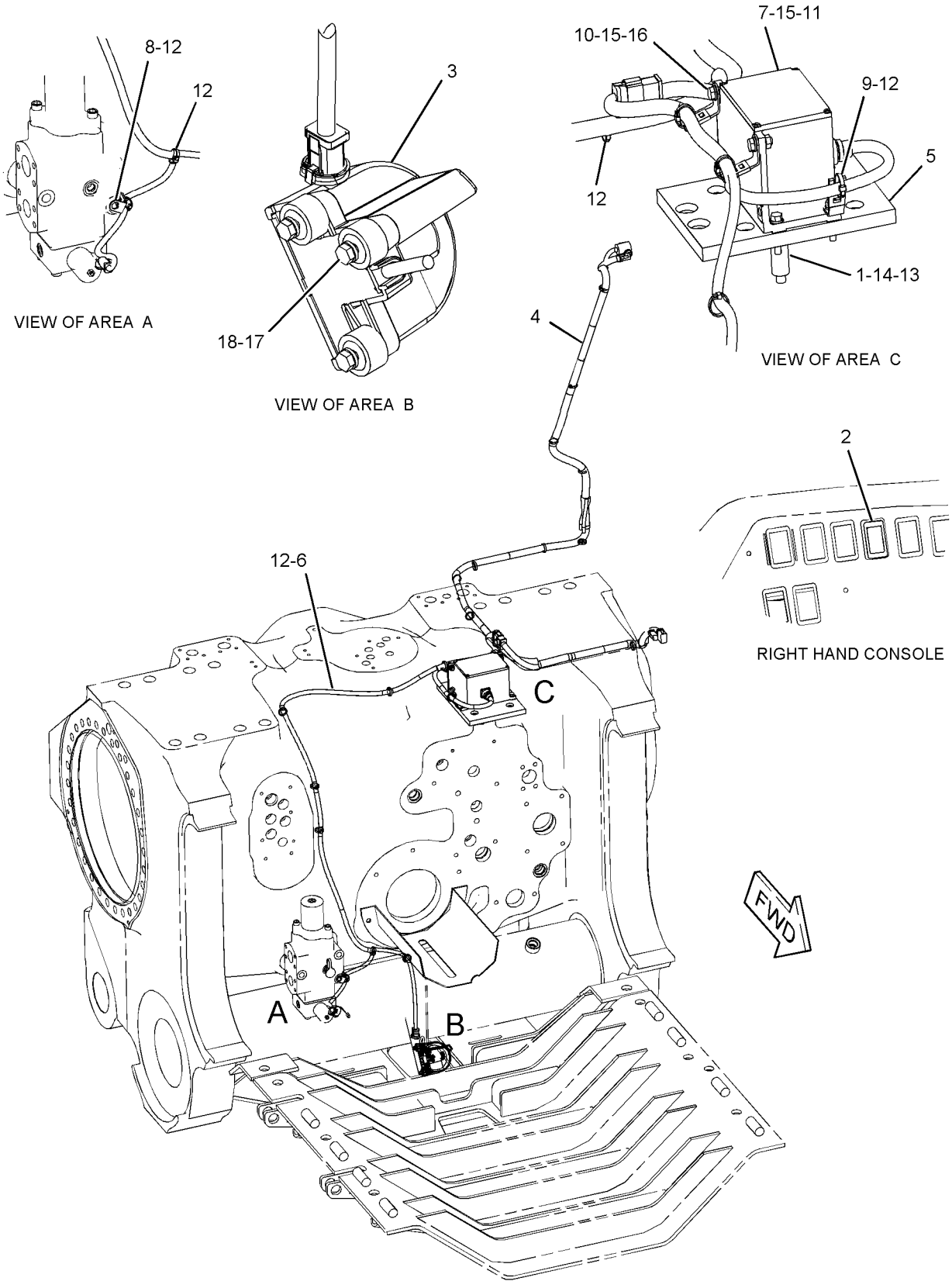

GRAPHIC #1 **<END>** g01225435

235-8210 SENSOR GP-ENGINE

S/N: EHX1-UP

PART OF 212-2737, 212-2744, 271-2219 ENGINE AR-COMPLETE

ALSO AN ATTACHMENT

SMCS-1000, 1718, 1906, 1907, 1912, 1917, 1923, 1924, 1925, 1928, 1929, 7400, 7422 **i02044829**

NOTE	REF NO	GRAPHIC REF	PART NUMBER	QTY	PART NAME 1 2 3 4 5 6 (PRODUCT LEVEL)	SEE PAGE
	1	1	**8K-4739**	1	ADAPTER (STRAIGHT THREAD-O RING)	
	2	1	**9X-0262**	2	ADAPTER	
	3	1	**125-5835**	1	FILTER (ATMOSPHERIC PRESSURE SENSOR)	
Y	4	1	**189-5746**	1	SENSOR GP-SPEED (ENGINE)	292
Y	5	1	*197-8391*	1	SENSOR GP-TEMPERATURE (INTAKE AIR)	298
Y	6	1	*197-8392*	1	SENSOR GP-TEMPERATURE (COOLANT)	299
Y	7	1	**230-7149**	1	SENSOR GP-SPEED (CRANK GEAR)	294
Y	8	1	*239-1466*	1	CONNECTION GP-ELECTRICAL	229
Y	9	1	*239-2395*	1	SENSOR GP-PRESSURE (ATMOSPHERIC)	289
Y	10	1	*239-2396*	1	SENSOR GP-PRESSURE (ENGINE OIL)	290
Y	11	1	*239-2397*	1	SENSOR GP-SPEED (CAM GEAR)	295
	12	1	**249-8550**	1	SEAL	
	13	1	**0S-0509**	1	BOLT (3/8-16X0.75-IN)	
	14	1	**130-5300**	1	CLIP	
	15	1	**136-7227**	1	SEAL-O-RING	
Y	16	1	*240-2035*	1	SENSOR GP-PRESSURE (LEFT INTAKE AIR)	291
	17	1	**2H-3755**	2	BOLT (5/16-18X0.43-IN)	
	18	1	**4N-3329**	1	WASHER (16.25X25.65X0.79-MM)	
	19	1	**5M-2894**	1	WASHER-HARD (10.2X18.5X2.5-MM THK)	
	20	1	**6V-3265**	1	CLIP	
	21	1	**6V-5048**	2	SEAL-O-RING	
	22	1	**6V-5049**	1	SEAL-O-RING	
	23	1	**9M-1974**	2	WASHER-HARD (8.8X16X2-MM THK)	
	24	1	**9X-0261**	1	ADAPTER	
Y	25	1	*240-2035*	1	SENSOR GP-PRESSURE (RIGHT INTAKE AIR)	291

Y-SEPARATE ILLUSTRATION

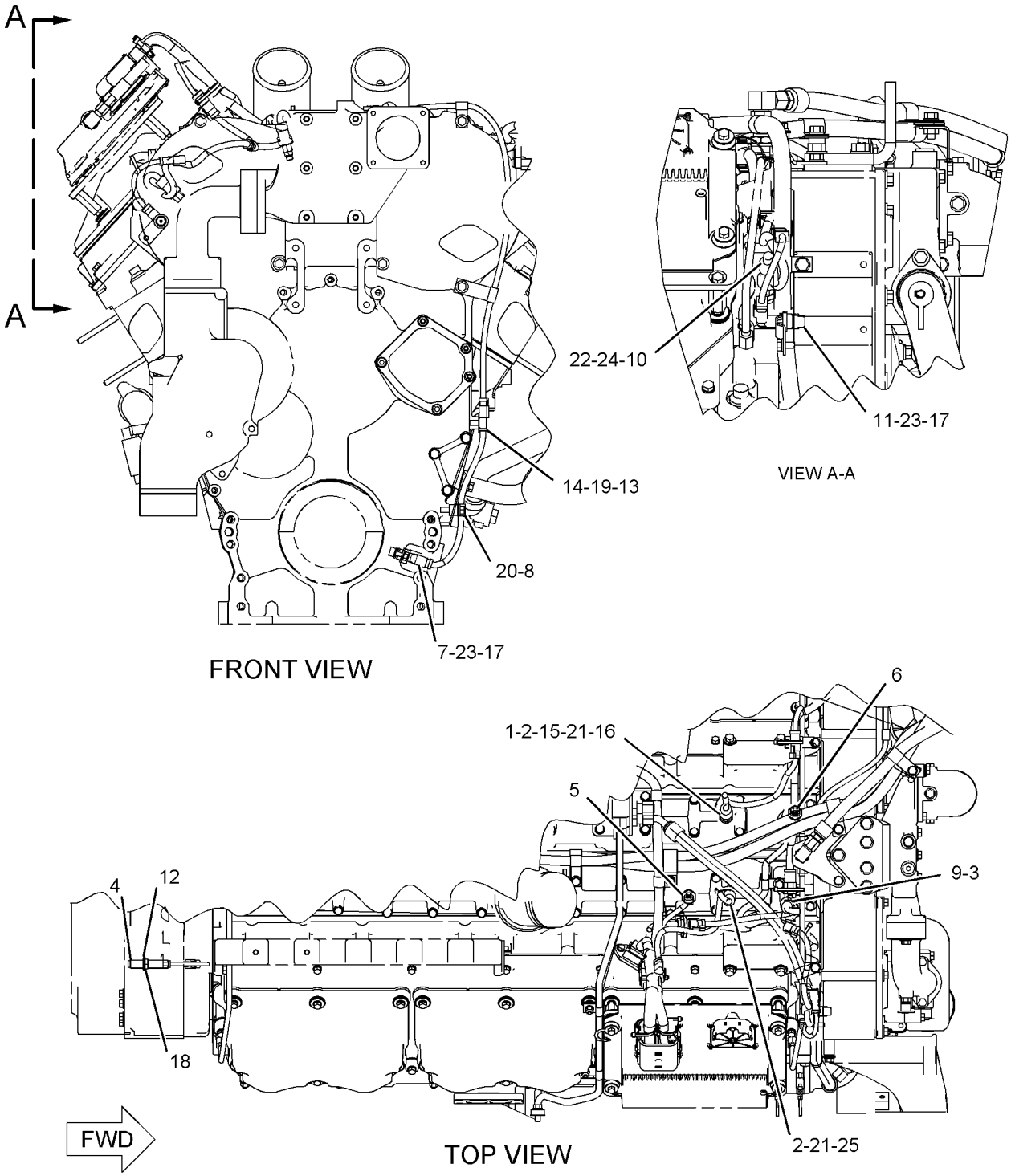

GRAPHIC #1

<END>

g01051814

124-9325 SENSOR GP-FUEL LEVEL

S/N: RJG1-UP

PART OF 213-7003 BATTERY & WIRING GP

SMCS-7400, 7481 **i02247340**

NOTE	REF NO	GRAPHIC REF	PART NUMBER	QTY	PART NAME 1 2 3 4 5 6 (PRODUCT LEVEL)	SEE PAGE
	1	1	**102-8804**	1	KIT-RECEPTACLE (4-PIN)	
					(INCLUDES RECEPTACLE AS & WEDGE)	
	2	1	**3E-3377**	1	WEDGE-RECEPTACLE LOCK (4-PIN)	
	3	1	**186-3735**	4	PIN-CONNECTOR (16-GA TO 18-GA)	
E	4	1	**9X-1813**		SLEEVE (34-CM)	

E-ORDER BY THE CENTIMETER

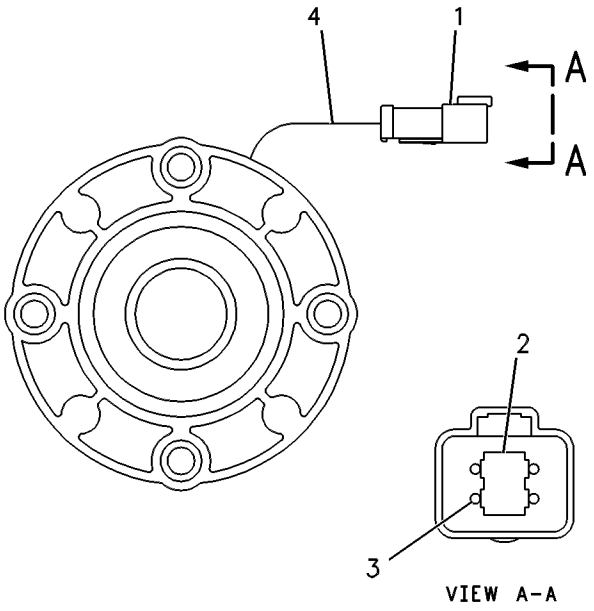

GRAPHIC #1 **<END>** g00085712

160-2443 SENSOR GP-POSITION–ROTARY–

STEERING CLUTCH, BRAKE, RH, LH

S/N: RJG1-UP

PART OF 212-0694 CONTROL GP-STEERING & TMSN, 231-7314 PEDAL GP-GOVERNOR & BRAKE

ALSO AN ATTACHMENT

SMCS-1905, 1911 **i02249656**

NOTE	REF NO	GRAPHIC REF	PART NUMBER	QTY	PART NAME 1 2 3 4 5 6 (PRODUCT LEVEL)	SEE PAGE
	1	1	**102-8803**	1	KIT-RECEPTACLE (3-PIN)	
					(INCLUDES RECEPTACLE AS & WEDGE)	
	2	1	**8T-8729**	3	PIN-CONNECTOR	
	3	1	**3E-3371**	1	WEDGE-RECEPTACLE LOCK (3-PIN)	

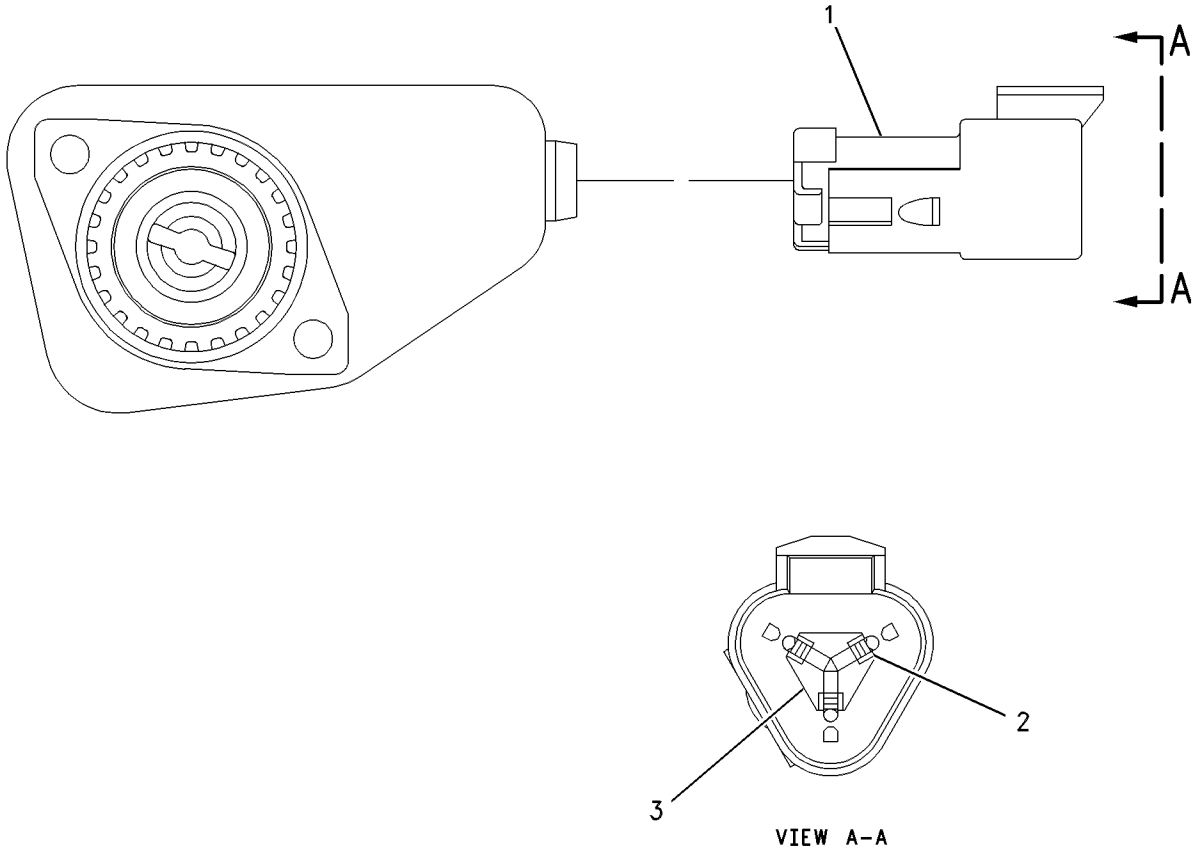

VIEW A–A

GRAPHIC #1 **<END>** g00637818

224-5530 SENSOR GP-POSITION–DECELERATOR PEDAL

S/N: RJG1-UP

PART OF 231-7314 PEDAL GP-GOVERNOR & BRAKE

ALSO AN ATTACHMENT

SMCS-1905, 1911 **i02241488**

NOTE	REF NO	GRAPHIC REF	PART NUMBER	QTY	PART NAME 1 2 3 4 5 6 (PRODUCT LEVEL)	SEE PAGE
	2	1	**102-8803**	1	KIT-RECEPTACLE (3-PIN)	
					(INCLUDES RECEPTACLE AS & WEDGE)	
	3	1	**8T-8729**	3	PIN-CONNECTOR	
	4	1	**3E-3371**	1	WEDGE-RECEPTACLE LOCK (3-PIN)	
E	5	1	**9X-1813**		SLEEVE (13-CM)	

E-ORDER BY THE CENTIMETER

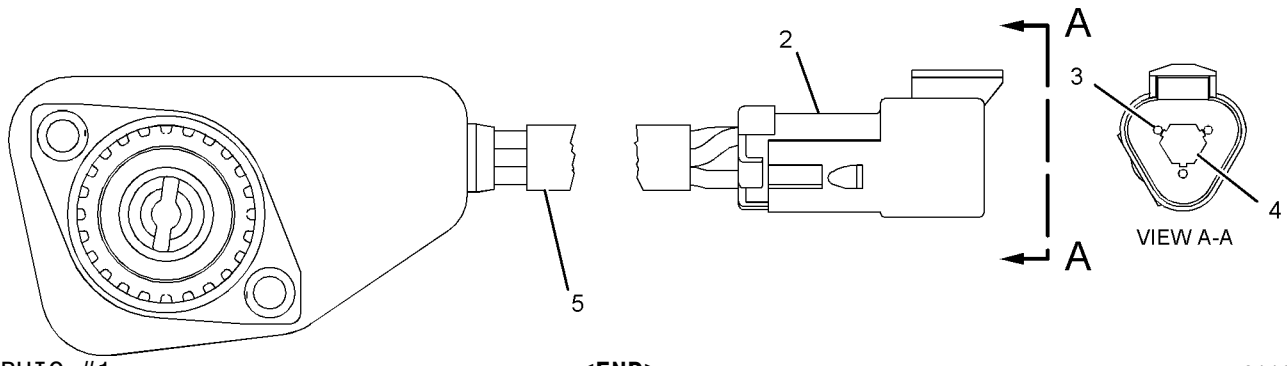

GRAPHIC #1 **<END>** g01107385

234-7689 SENSOR GP-POSITION–CYLINDER, RH

S/N: RJG1-UP

PART OF 234-9182 CYLINDER & SENSOR GP-LIFT

AN ATTACHMENT

SMCS-1905, 1911 **i02046064**

NOTE	REF NO	GRAPHIC REF	PART NUMBER	QTY	PART NAME 1 2 3 4 5 6 (PRODUCT LEVEL)	SEE PAGE
	2	1	**212-0907**	1	PLATE-CONNECTOR	
	3	1	**217-8763**	1	COVER-PROTECTION	
	4	1	**231-4627**	1	SENSOR GP-POSITION (BLADE)	
		1	**9X-3401**	3	PIN-CONNECTOR (16-GA TO 18-GA)	
	5	1	**234-8999**	1	HOUSING	
	6	1	**095-0879**	1	PIN-SPRING	
	7	1	**102-8804**	1	KIT-RECEPTACLE (4-PIN)	
					(INCLUDES RECEPTACLE AS & WEDGE)	
	8	1	**134-1375**	1	SCREW-BUTTON HEAD	
	9	1	**188-2199**	1	SEAL-O-RING	
	10	1	**215-1942**	1	RING-BACKUP	
	11	1	**3J-7354**	2	SEAL-O-RING	
	12	1	**3V-2431**	2	WASHER (10.2X16X2-MM THK)	
	13	1	**4S-5565**	2	BOLT (3/8-16X0.875-IN)	
	14	1	**8T-5070**	1	SETSCREW-SOCKET (3/8-16X0.5-IN)	
	15	1	**8T-8737**	1	PLUG-SEAL	
	16	1	**9S-8002**	2	PLUG	
BE	17	1	**9X-1386**		SLEEVE	

B-USE AS REQUIRED
E-ORDER BY THE CENTIMETER

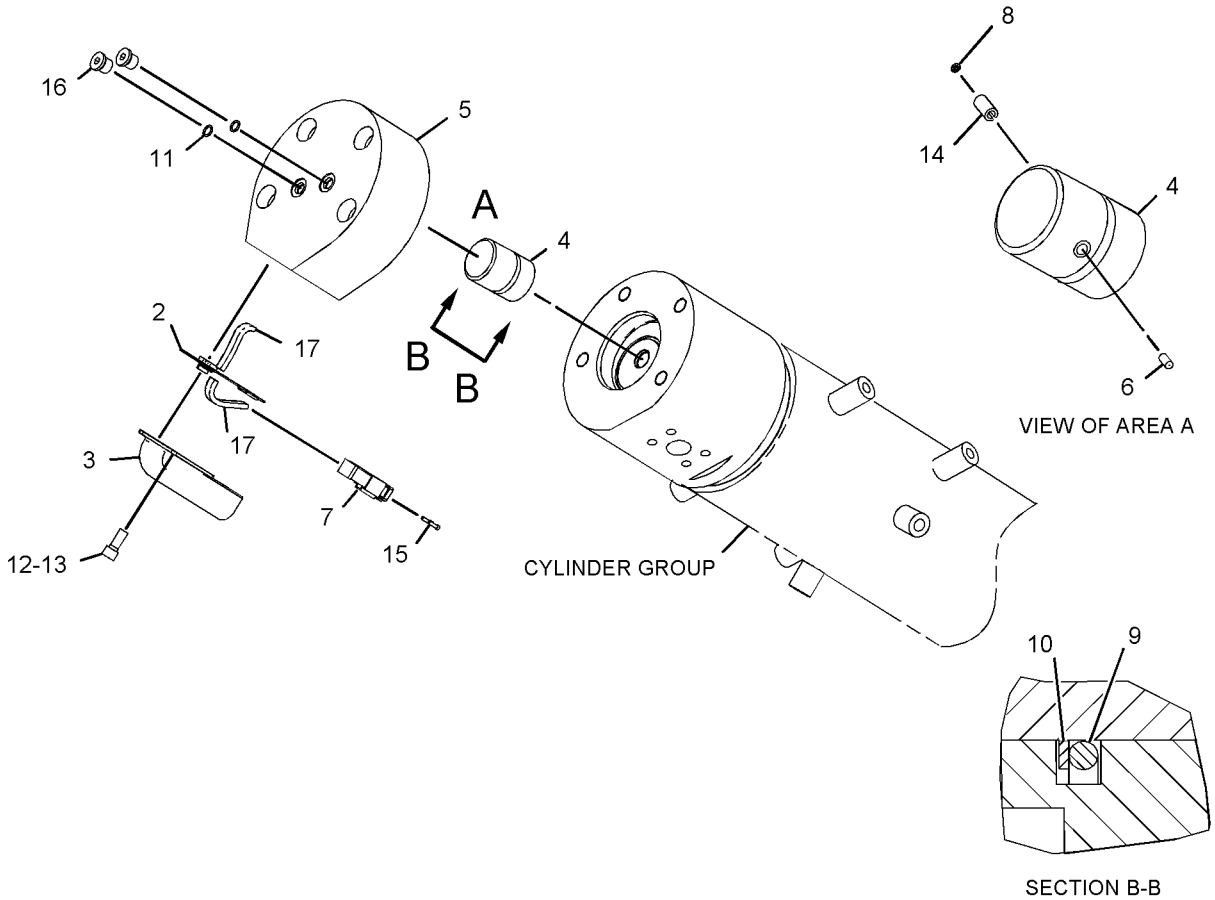

GRAPHIC #1 **<END>** g01051434

161-9926 SENSOR GP-PRESSURE–TURBOCHARGER INLET

S/N: RJG1-UP

PART OF 213-7004 WIRING GP-ENGINE

SMCS-1718, 1916, 1917, 1923, 1924, 1925 **i02456867**

NOTE	REF NO	GRAPHIC REF	PART NUMBER	QTY	PART NAME 1 2 3 4 5 6 (PRODUCT LEVEL)	SEE PAGE
E	1	1	**9X-1813**		SLEEVE (34-CM)	
	2	1	**155-2260**	1	KIT-CONNECTING PLUG (3-PIN)	
					(INCLUDES PLUG AS AND WEDGE)	
	3	1	**180-9340**	3	SOCKET-CONNECTOR	
	4	1	**3E-3368**	1	WEDGE-PLUG LOCK (3-PIN)	

E-ORDER BY THE CENTIMETER

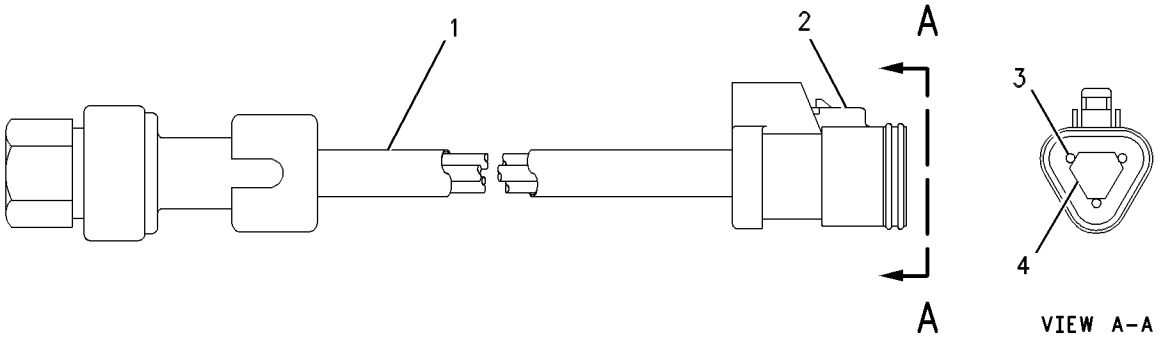

GRAPHIC #1 **<END>** g00513129

194-6722 SENSOR GP-PRESSURE–ATMOSPHERIC

S/N: EHX1-UP

PART OF 239-2395 SENSOR GP-PRESSURE

ALSO AN ATTACHMENT

SMCS-1718, 1916, 1917, 1923, 1924, 1925 **i02230727**

NOTE	REF NO	GRAPHIC REF	PART NUMBER	QTY	PART NAME 1 2 3 4 5 6 (PRODUCT LEVEL)	SEE PAGE
BE	1	1	**9X-1813**		SLEEVE	
	2	1	**155-2260**	1	KIT-CONNECTING PLUG (3-PIN)	
					(INCLUDES PLUG AS & WEDGE)	
	3	1	**180-9340**	3	SOCKET-CONNECTOR	
	4	1	**3E-3368**	1	WEDGE-PLUG LOCK (3-PIN)	

B-USE AS REQUIRED
E-ORDER BY THE CENTIMETER

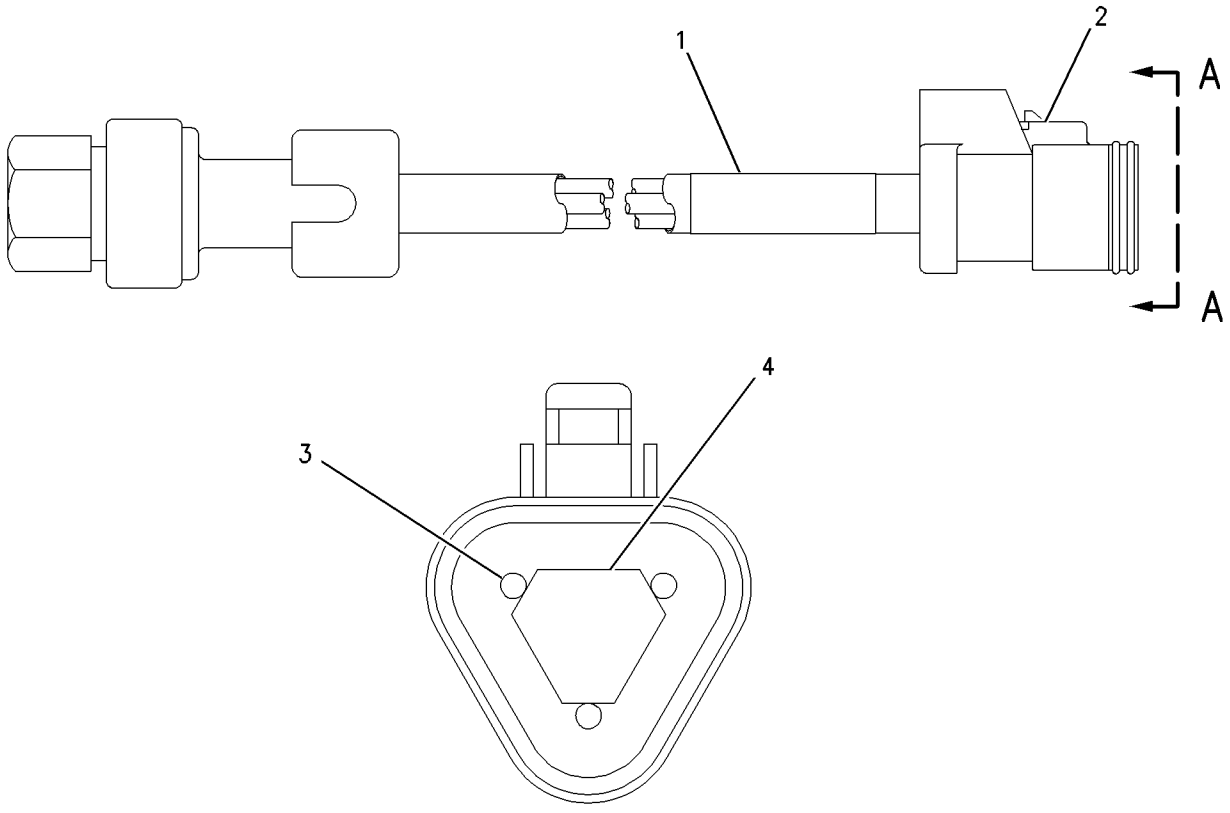

VIEW A-A

GRAPHIC #1 **<END>** g00934579

194-6724 SENSOR GP-PRESSURE–INTAKE AIR

S/N: EHX1-UP
PART OF 240-2035 SENSOR GP-PRESSURE
ALSO AN ATTACHMENT

SMCS-1718, 1916, 1917, 1923, 1924, 1925 **i02201378**

NOTE	REF NO	GRAPHIC REF	PART NUMBER	QTY	PART NAME 1 2 3 4 5 6 (PRODUCT LEVEL)	SEE PAGE
E	1	1	**9X-1813**		SLEEVE (34-CM)	
	2	1	**155-2260**	1	KIT-CONNECTING PLUG (3-PIN)	
					(INCLUDES PLUG AS AND WEDGE)	
	3	1	**194-5226**	3	WIRE AS-HARNESS (16-GA TO 18-GA)	
	4	1	**3E-3368**	1	WEDGE-PLUG LOCK (3-PIN)	

E-ORDER BY THE CENTIMETER

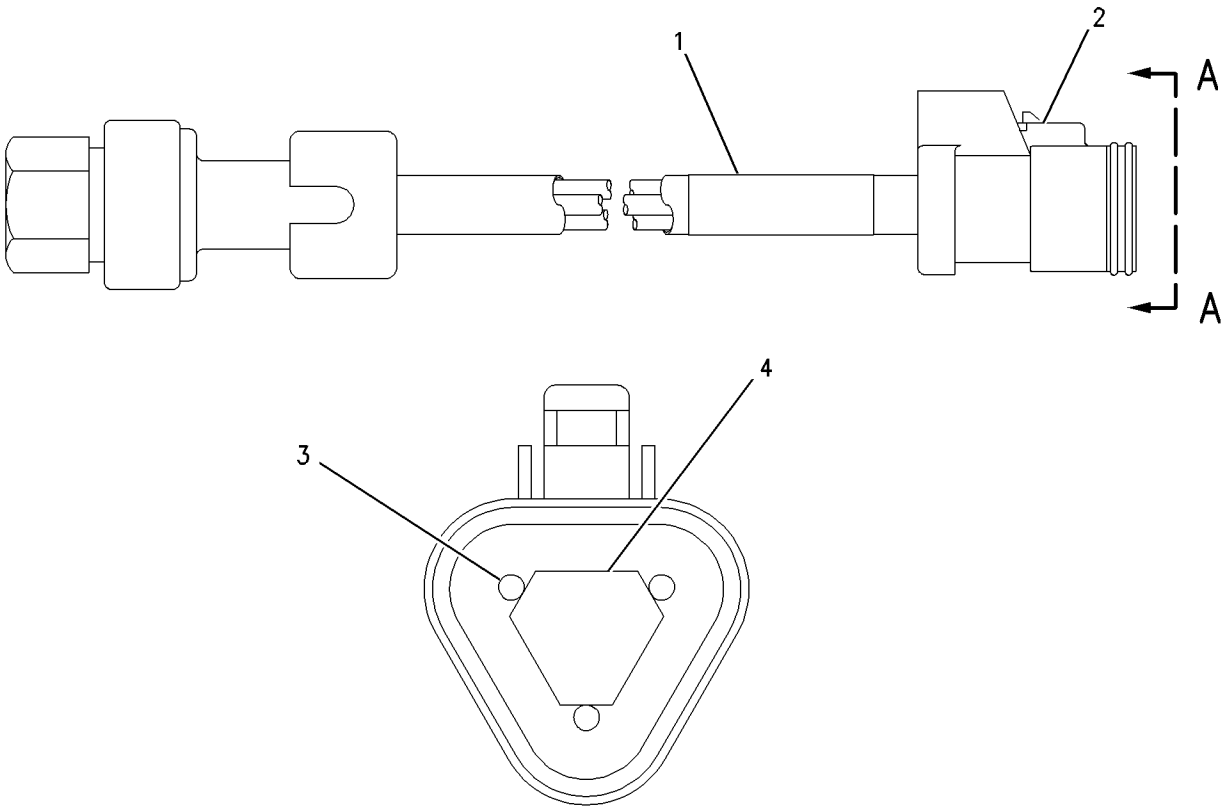

VIEW A–A

GRAPHIC #1 **<END>** g00851220

194-6725 SENSOR GP-PRESSURE

S/N: EHX1-UP

PART OF 239-2396 SENSOR GP-PRESSURE

ALSO AN ATTACHMENT

SMCS-1718, 1916, 1917, 1923, 1924, 1925 **i02456869**

NOTE	REF NO	GRAPHIC REF	PART NUMBER	QTY	PART NAME 1 2 3 4 5 6 (PRODUCT LEVEL)	SEE PAGE
E	1	1	**9X-1813**		SLEEVE (34-CM)	
	2	1	**155-2260**	1	KIT-CONNECTING PLUG (3-PIN)	
					(INCLUDES PLUG AS AND WEDGE)	
	3	1	**194-5226**	3	WIRE AS-HARNESS (16-GA TO 18-GA)	
	4	1	**3E-3368**	1	WEDGE-PLUG LOCK (3-PIN)	

E-ORDER BY THE CENTIMETER

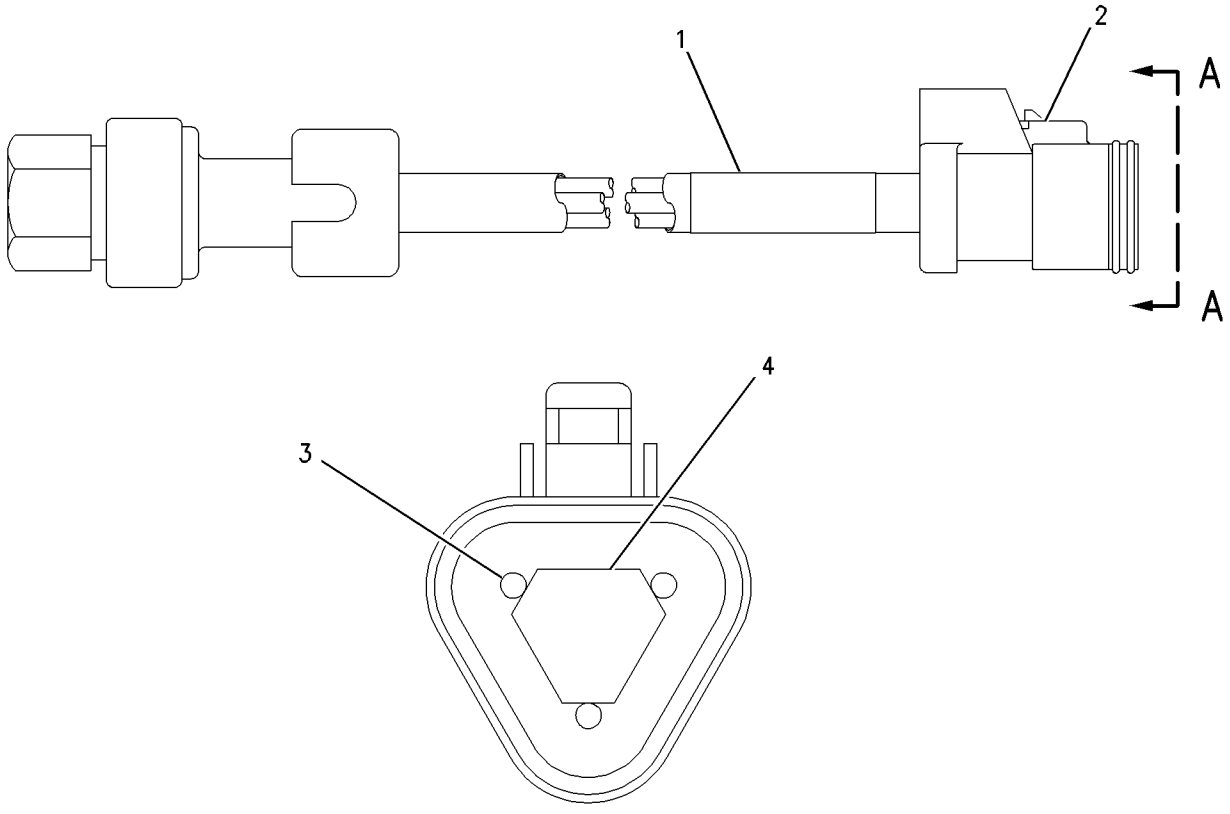

VIEW A-A

GRAPHIC #1 **<END>** g00851220

237-0957 SENSOR GP-PRESSURE–ENGINE OIL

S/N: RJG1-UP

PART OF 213-7003 BATTERY & WIRING GP, 213-7004 WIRING GP-ENGINE

SMCS-1718, 1916, 1917, 1923, 1924, 1925 **i02254217**

NOTE	REF NO	GRAPHIC REF	PART NUMBER	QTY	PART NAME 1 2 3 4 5 6 (PRODUCT LEVEL)	SEE PAGE
BE	1	1	**9X-1813**		SLEEVE	
	2	1	**155-2260**	1	KIT-CONNECTING PLUG (3-PIN)	
					(INCLUDES PLUG AS & WEDGE)	

B-USE AS REQUIRED
E-ORDER BY THE CENTIMETER

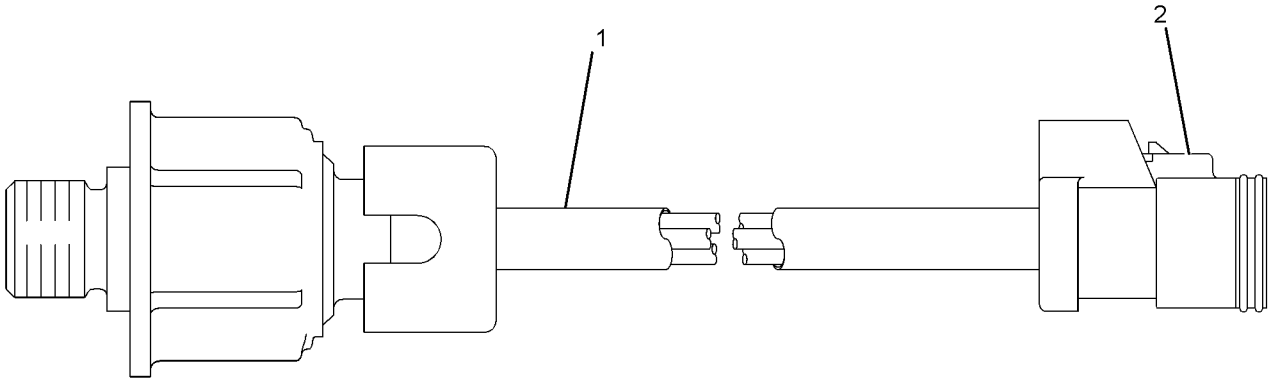

GRAPHIC #1 **<END>** g01131622

239-2395 SENSOR GP-PRESSURE–ATMOSPHERIC AIR

S/N: EHX1-UP

PART OF 235-8210 SENSOR GP-ENGINE

ALSO AN ATTACHMENT

SMCS-1718, 1916, 1917, 1923, 1924, 1925 **i02427685**

NOTE	REF NO	GRAPHIC REF	PART NUMBER	QTY	PART NAME 1 2 3 4 5 6 (PRODUCT LEVEL)	SEE PAGE
Y	1	1	**194-6722**	1	SENSOR GP-PRESSURE	285
	2	1	**6V-5049**	1	SEAL-O-RING	

Y-SEPARATE ILLUSTRATION

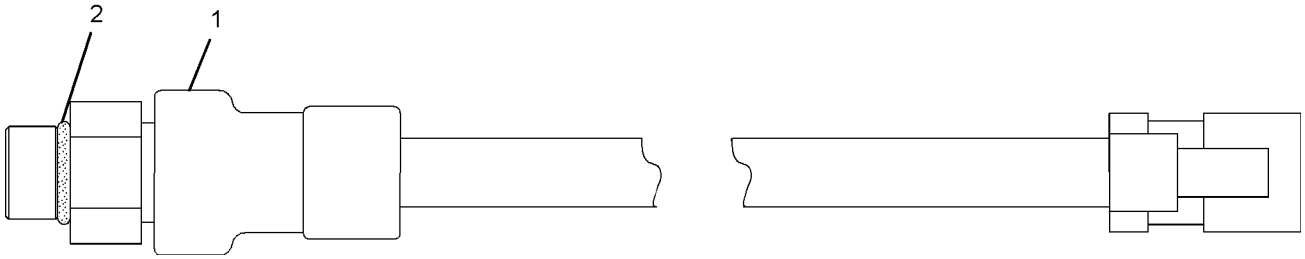

GRAPHIC #1 **<END>** g01019702

239-2396 SENSOR GP-PRESSURE–ENGINE OIL–
ENGINE OIL, FUEL
S/N: EHX1-UP

PART OF 235-6504, 279-5730 FILTER GP-FUEL, 235-8210 SENSOR GP-ENGINE
ALSO AN ATTACHMENT

SMCS-1718, 1916, 1917, 1923, 1924, 1925 **i02427644**

NOTE	REF NO	GRAPHIC REF	PART NUMBER	QTY	PART NAME 1 2 3 4 5 6 (PRODUCT LEVEL)	SEE PAGE
Y	1	1	**194-6725**	1	SENSOR GP-PRESSURE	287
	2	1	**6V-5048**	1	SEAL-O-RING	

Y-SEPARATE ILLUSTRATION

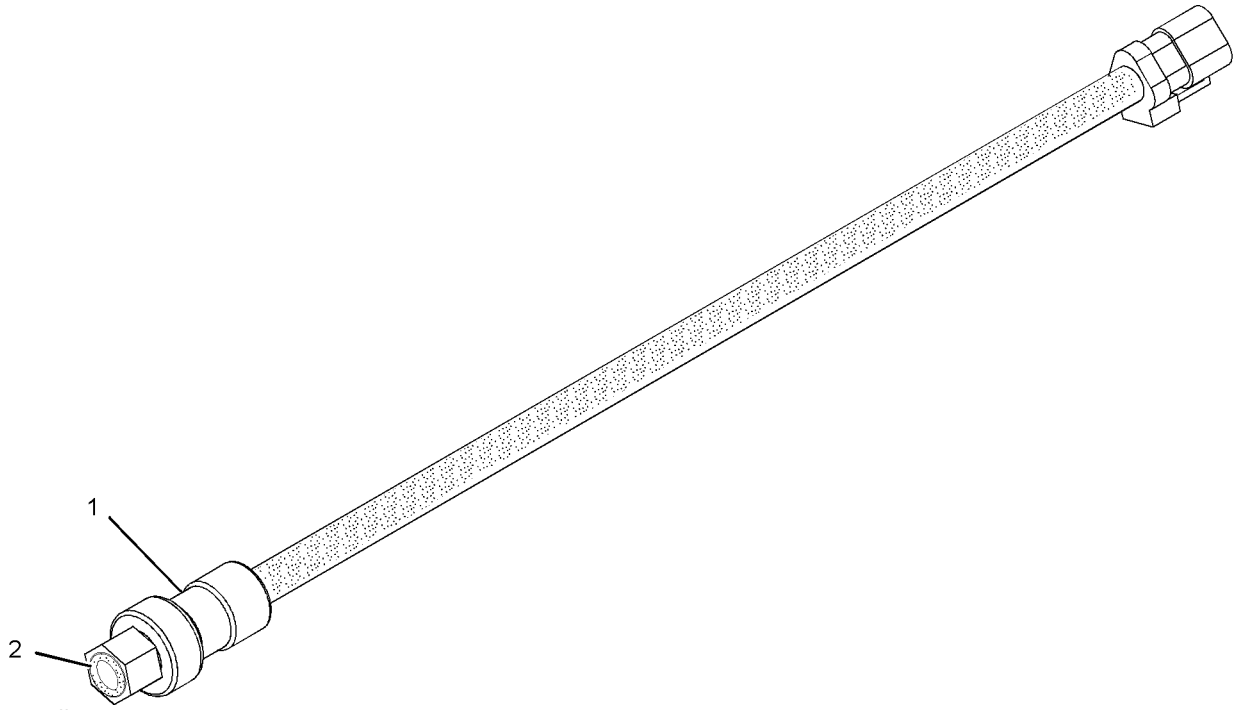

GRAPHIC #1 **<END>** g01019323

240-2035 SENSOR GP-PRESSURE–INTAKE AIR

S/N: EHX1-UP

PART OF 235-8210 SENSOR GP-ENGINE

ALSO AN ATTACHMENT

SMCS-1718, 1916, 1917, 1923, 1924, 1925 **i02427689**

NOTE	REF NO	GRAPHIC REF	PART NUMBER	QTY	PART NAME 1 2 3 4 5 6 (PRODUCT LEVEL)	SEE PAGE
Y	1	1	**194-6724**	1	SENSOR GP-PRESSURE	286
	2	1	**6V-5048**	1	SEAL-O-RING	

Y-SEPARATE ILLUSTRATION

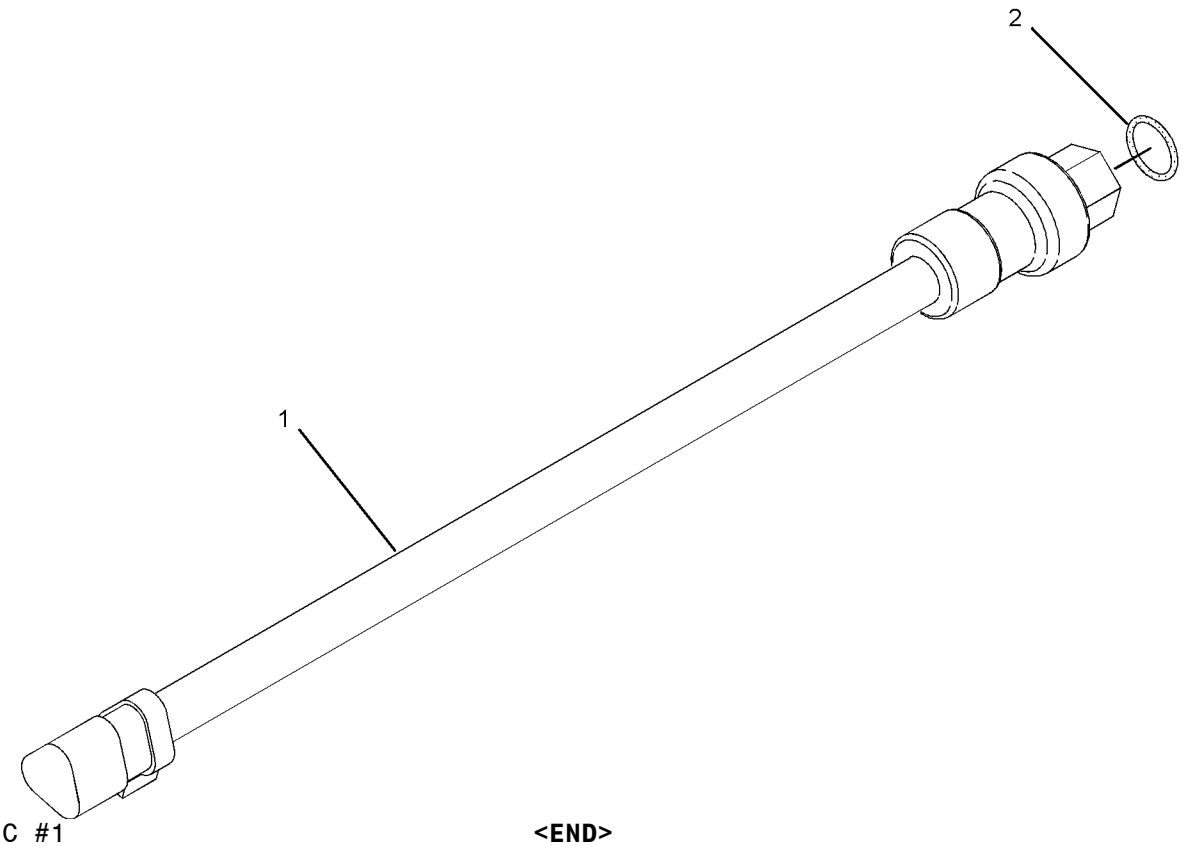

GRAPHIC #1 **<END>** g01051156

189-5746 SENSOR GP-SPEED–ENGINE–TORQUE CONVERTER

S/N: RJG1-UP; EHX1-UP

PART OF 235-8210 SENSOR GP-ENGINE, 213-7004 WIRING GP-ENGINE

ALSO AN ATTACHMENT

SMCS-1907 **i02300261**

NOTE	REF NO	GRAPHIC REF	PART NUMBER	QTY	PART NAME 1 2 3 4 5 6 (PRODUCT LEVEL)	SEE PAGE
	1	1	**171-5349**	1	STRAP-MARKER	
	2	1	**102-8802**	1	KIT-RECEPTACLE (2-PIN)	
					(INCLUDES RECEPTACLE AS AND WEDGE)	
	3	1	**186-3735**	2	PIN-CONNECTOR (16-GA TO 18-GA)	
	4	1	**3E-3365**	1	WEDGE-RECEPTACLE LOCK (2-PIN)	
E	5	1	**9X-1386**		SLEEVE (14-CM)	

E-ORDER BY THE CENTIMETER

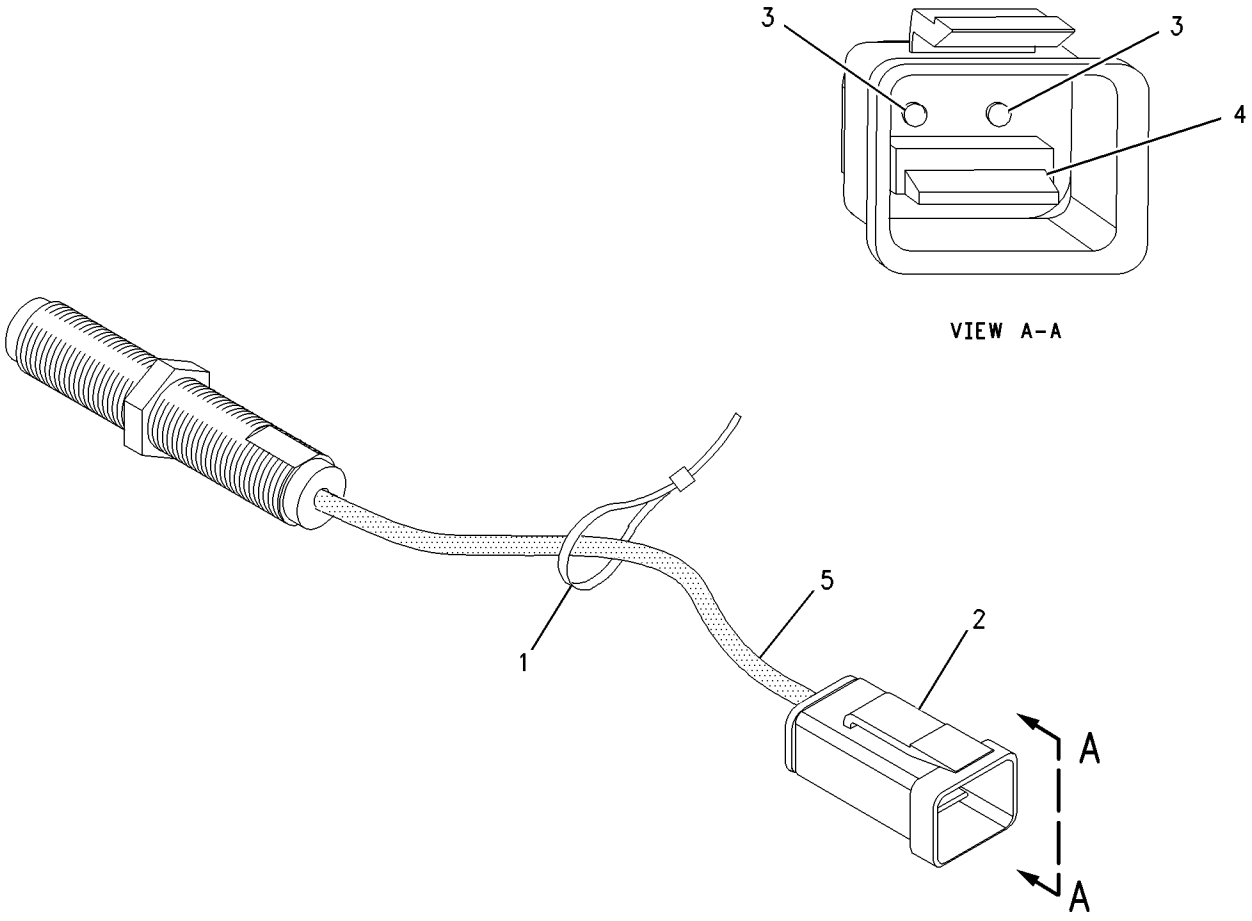

GRAPHIC #1 **<END>** g00837278

201-6615 SENSOR GP-SPEED–LOW OUTPUT–TIMING, CRANKSHAFT

S/N: EHX1-UP

PART OF 230-7149 SENSOR GP-SPEED

ALSO AN ATTACHMENT

SMCS-1907 **i02235021**

NOTE	REF NO	GRAPHIC REF	PART NUMBER	QTY	PART NAME 1 2 3 4 5 6 (PRODUCT LEVEL)	SEE PAGE
	1	1	**133-0260**	1	BRACKET	
	2	1	**188-9429**	1	HARNESS AS-WIRING (SPEED SENSOR)	
		1	**102-8802**	1	KIT-RECEPTACLE (2-PIN)	
					(INCLUDES RECEPTACLE AS AND WEDGE)	
		1	**155-2270**	1	KIT-CONNECTING PLUG (2-PIN)	
					(INCLUDES PLUG AS AND WEDGE)	

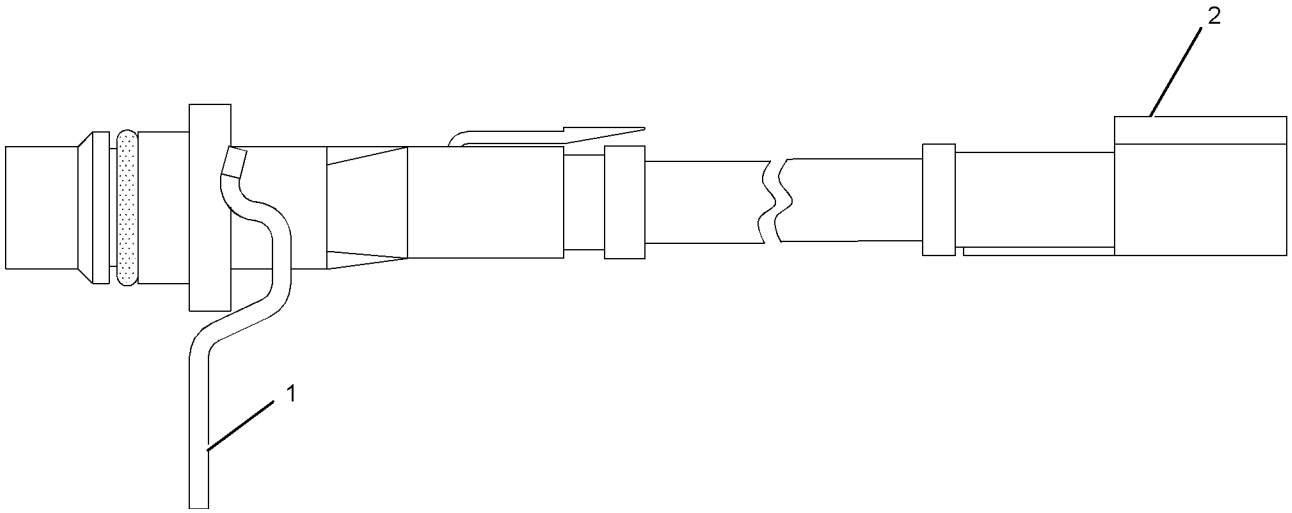

GRAPHIC #1 **<END>** g01009894

230-7149 SENSOR GP-SPEED–TIMING, CRANKSHAFT

S/N: EHX1-UP
PART OF 235-8210 SENSOR GP-ENGINE
ALSO AN ATTACHMENT

SMCS-1907 **i02426137**

NOTE	REF NO	GRAPHIC REF	PART NUMBER	QTY	PART NAME 1 2 3 4 5 6 (PRODUCT LEVEL)	SEE PAGE
Y	1	1	*201-6615*	1	SENSOR GP-SPEED (LOW OUTPUT)	293
	2	1	**228-4947**	1	SEAL-O-RING	

Y-SEPARATE ILLUSTRATION

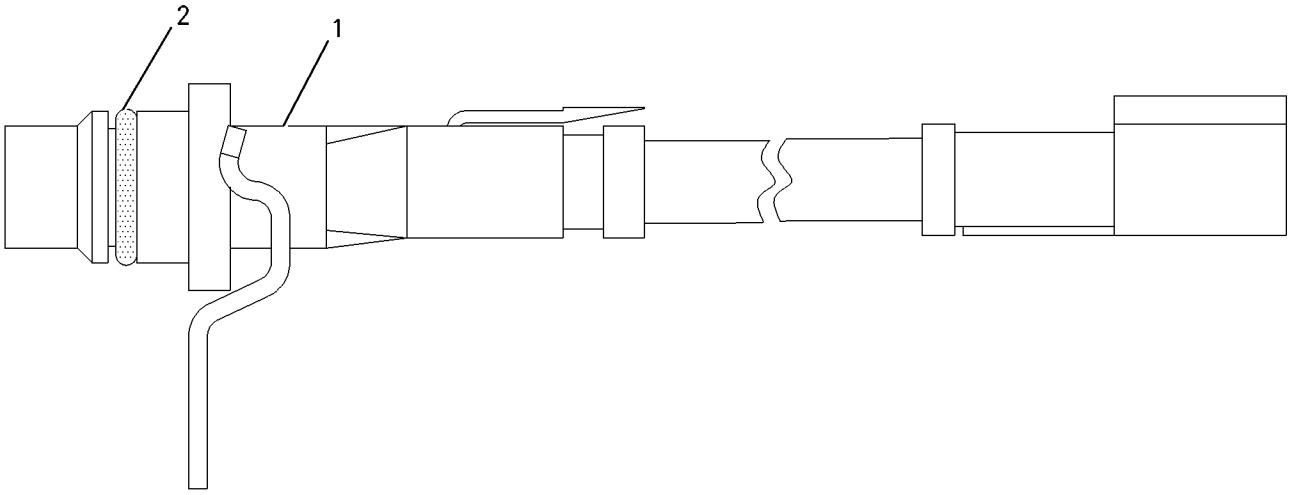

GRAPHIC #1 **<END>** g01007584

239-2397 SENSOR GP-SPEED–TIMING, CAMSHAFT

S/N: EHX1-UP
PART OF 235-8210 SENSOR GP-ENGINE
ALSO AN ATTACHMENT

SMCS-1907 **i02235592**

NOTE	REF NO	GRAPHIC REF	PART NUMBER	QTY	PART NAME 1 2 3 4 5 6 (PRODUCT LEVEL)	SEE PAGE
	1	1	**228-4947**	1	SEAL-O-RING	
	2	1	**201-6616**	1	SENSOR GP-SPEED	

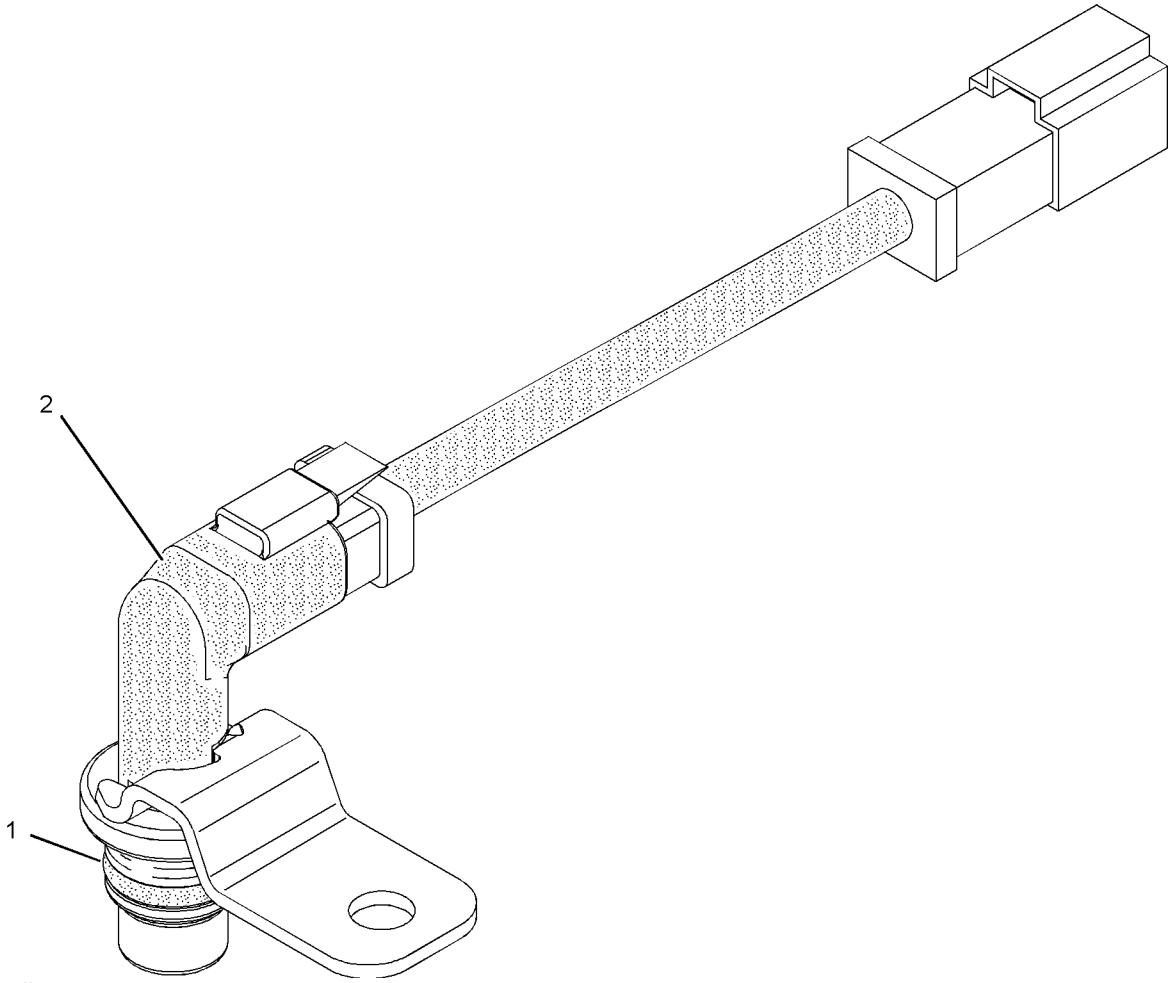

GRAPHIC #1 **<END>** g01019337

130-9811 SENSOR GP-TEMPERATURE–FUEL

S/N: EHX1-UP

PART OF 235-6504, 279-5730 FILTER GP-FUEL

ALSO AN ATTACHMENT

SMCS-1906, 1919, 1921, 1922, 1928, 1929 **i02430735**

NOTE	REF NO	GRAPHIC REF	PART NUMBER	QTY	PART NAME 1 2 3 4 5 6 (PRODUCT LEVEL)	SEE PAGE
					(NO SERVICED PARTS)	

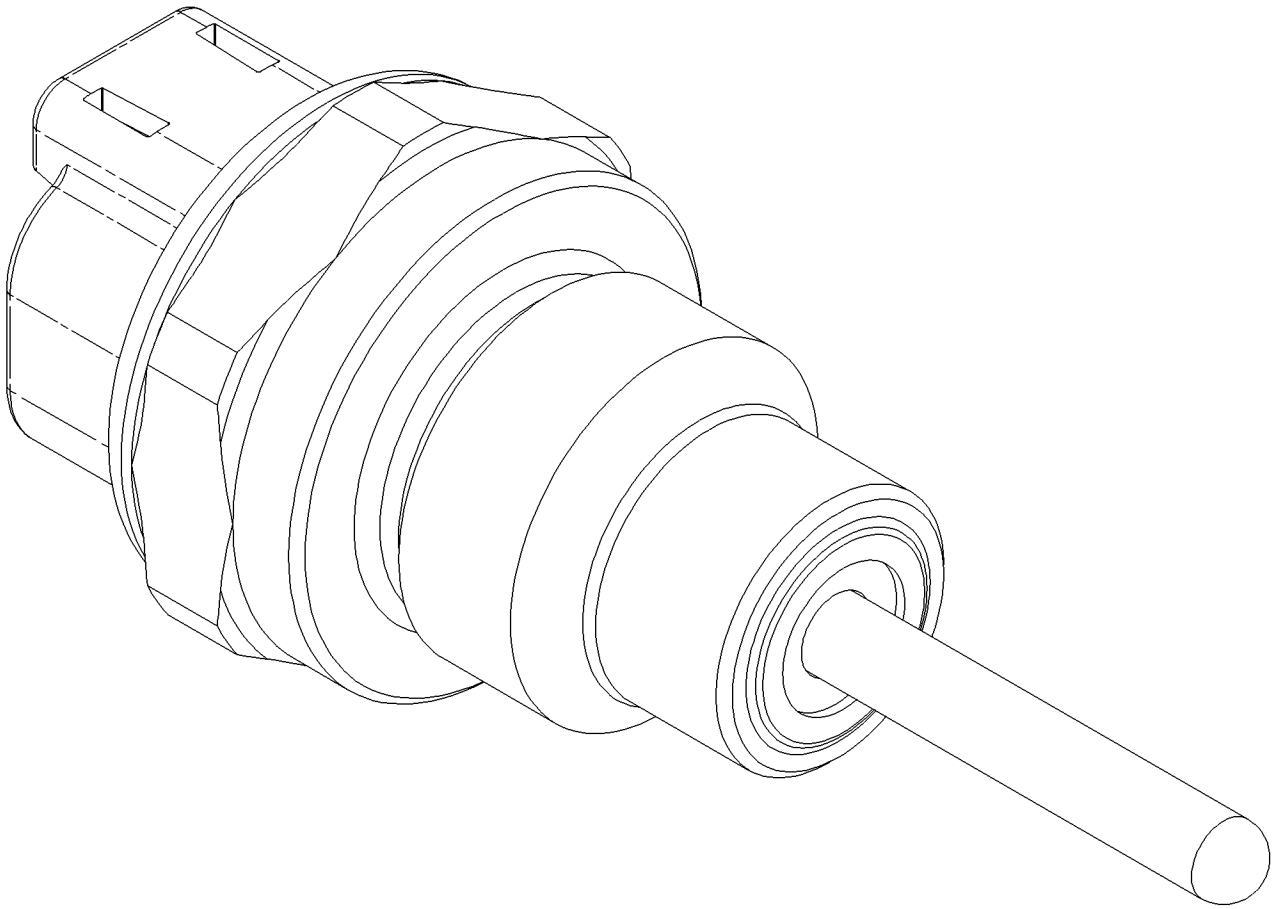

GRAPHIC #1 **<END>** g00945099

145-7028 SENSOR GP-TEMPERATURE–TORQUE CONVERTER OIL

S/N: RJG1-UP

PART OF 213-7003 BATTERY & WIRING GP, 213-7004 WIRING GP-ENGINE

SMCS-1906, 1919, 1921, 1922, 1928, 1929 **i02430737**

NOTE	REF NO	GRAPHIC REF	PART NUMBER	QTY	PART NAME 1 2 3 4 5 6 (PRODUCT LEVEL)	SEE PAGE
	1	1	**102-8802**	1	KIT-RECEPTACLE (2-PIN)	
					(INCLUDES RECEPTACLE AS AND WEDGE)	
J	2	1	**153-5043**		SLEEVE (3-DM)	
	3	1	**8T-8729**	2	PIN-CONNECTOR	
	4	1	**3E-3365**	1	WEDGE-RECEPTACLE LOCK (2-PIN)	
J-ORDER BY THE DECIMETER						

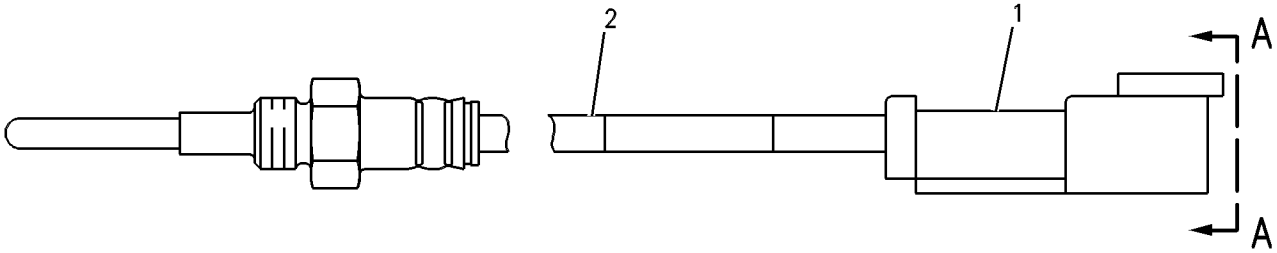

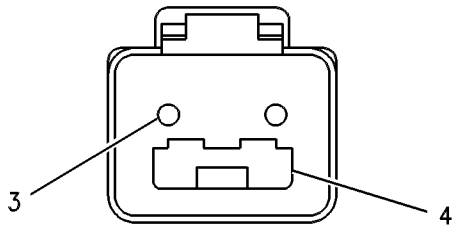

VIEW A-A

GRAPHIC #1 **<END>** g00334570

197-8391 SENSOR GP-TEMPERATURE–INTAKE AIR

S/N: EHX1-UP

PART OF 235-8210 SENSOR GP-ENGINE

ALSO AN ATTACHMENT

SMCS-1906, 1919, 1921, 1922, 1928, 1929 **i02427624**

NOTE	REF NO	GRAPHIC REF	PART NUMBER	QTY	PART NAME 1 2 3 4 5 6 (PRODUCT LEVEL)	SEE PAGE
	1	1	**130-9811**	1	SENSOR GP-TEMPERATURE (2-PIN)	
	2	1	**8L-2786**	1	SEAL-O-RING	

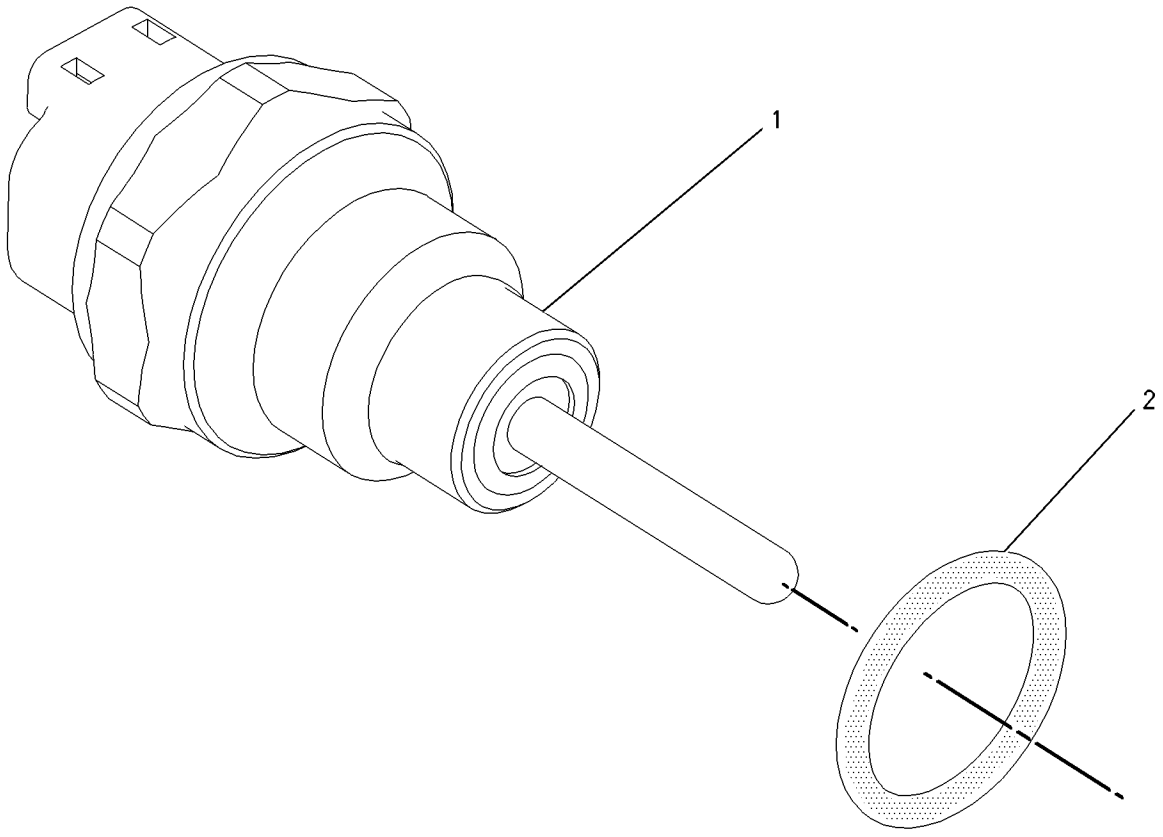

GRAPHIC #1 **<END>** g00856011

197-8392 SENSOR GP-TEMPERATURE–COOLANT

S/N: EHX1-UP

PART OF 235-8210 SENSOR GP-ENGINE

ALSO AN ATTACHMENT

SMCS-1906, 1919, 1921, 1922, 1928, 1929 **i02355629**

NOTE	REF NO	GRAPHIC REF	PART NUMBER	QTY	PART NAME 1 2 3 4 5 6 (PRODUCT LEVEL)	SEE PAGE
	1	1	**130-9811**	1	SENSOR GP-TEMPERATURE (2-PIN)	
	2	1	**6V-6609**	1	SEAL-O-RING	

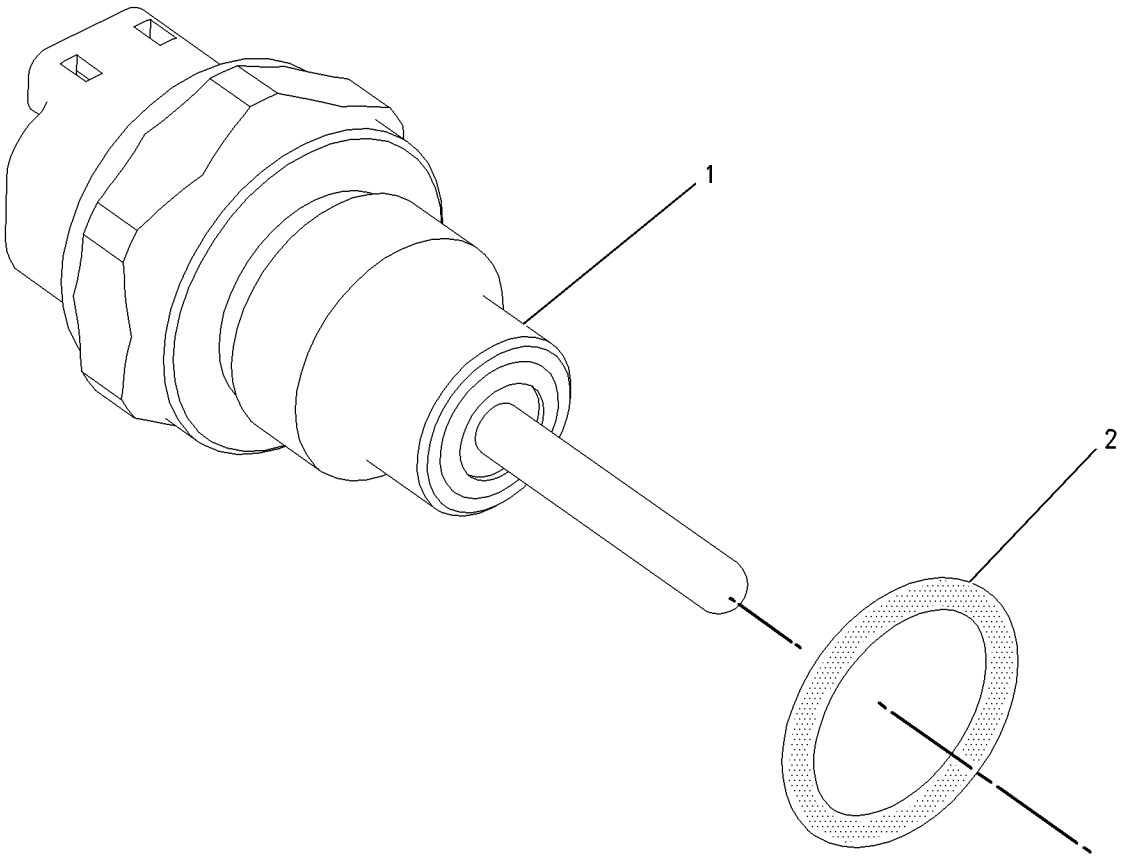

GRAPHIC #1 **<END>** g00856005

ELECTRICAL AND STARTING SYSTEM

221-1814 STARTING AID GP-ETHER

S/N: RJG1-UP

PART OF 212-2745, 267-2900 INSTALLATION AR-ENGINE

SMCS-1456 **i02441121**

NOTE	REF NO	GRAPHIC REF	PART NUMBER	QTY	PART NAME 1 2 3 4 5 6 (PRODUCT LEVEL)	SEE PAGE
	1	1	**5P-6313**	5	NUT-FLARELESS (5/16-24-THD)	
	2	1	**5P-6314**	5	SLEEVE	
	3	1	**6W-6672**	2	SPACER (10.5X20X38-MM THK)	
	4	1	**7N-2059**	1	CLAMP AS	
	5	1	**8C-9006**	1	TEE-UNION	
	6	1	*148-8331*	2	CONNECTOR AS	
					(EACH INCLUDES)	
		1	**3Y-2888**	1	CONNECTOR	
		1	**3J-1907**	1	SEAL-O-RING	
	7	1	**230-1437**	1	FITTING	
	8	1	**234-1374**	2	ATOMIZER AS	
	9	1	**235-0543**	1	BRACKET AS	
M		1	**8T-3490**	2	NUT-WELD (M10X1.5-THD)	
Y	10	1	**239-1134**	1	VALVE GP-ETHER STARTING (24-VOLT)	321
	11	1	**4P-7581**	1	CLIP	
	12	1	**5P-6312**	1	UNION	
	13	1	**6V-2686**	5	CLIP	
	14	1	**8C-7323**	2	BOLT (3/8-16X6-IN)	
	15	1	**8T-4121**	3	WASHER-HARD (11X21X2.5-MM THK)	
M	16	1	**8T-4137**	3	BOLT (M10X1.5X20-MM)	
M	17	1	**8T-4189**	4	BOLT (M8X1.25X20-MM)	
	18	1	**8T-4224**	4	WASHER-HARD (8.8X16X2-MM THK)	
	19	1	**8T-4896**	2	WASHER-HARD (10.2X18.5X2.5-MM THK)	
E	20	1	**174-9169**		TUBE (17-CM EACH)	
E	20A	1	**174-9169**		TUBE (40-CM)	
E	20B	1	**174-9169**		TUBE (73-CM)	
AF			**7N-0296**	1	CYLINDER AS-ETHER	

A-NOT PART OF THIS GROUP
E-ORDER BY THE CENTIMETER
F-NOT SHOWN
M-METRIC PART
Y-SEPARATE ILLUSTRATION

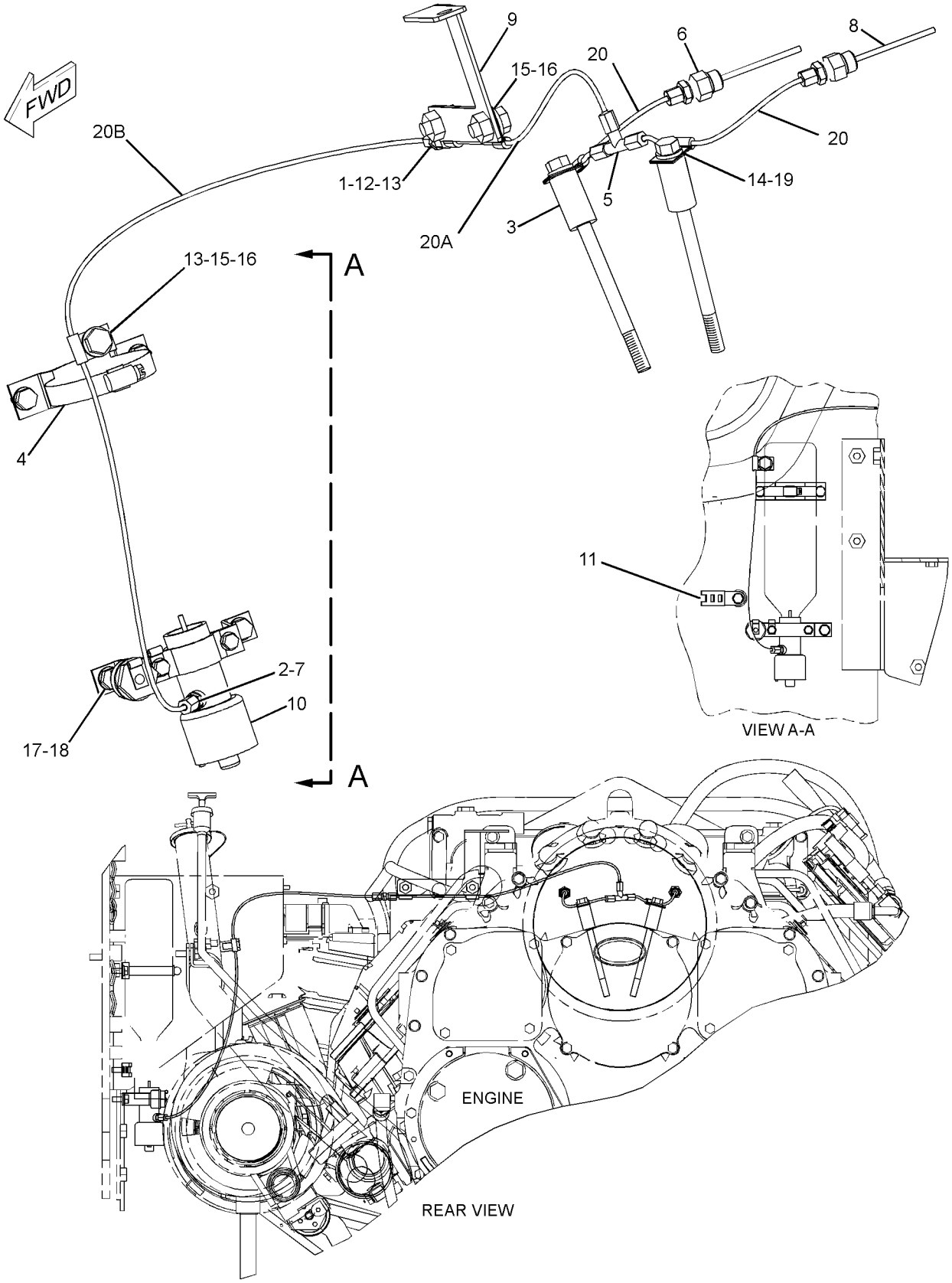

GRAPHIC #1 **<END>** g01220612

ELECTRICAL AND STARTING SYSTEM

214-1072 STARTING AR-COLD WEATHER

S/N: RJG1-UP

AN ATTACHMENT

SMCS-1450 **i02451476**

NOTE	REF NO	GRAPHIC REF	PART NUMBER	QTY	PART NAME 1 2 3 4 5 6 (PRODUCT LEVEL)	SEE PAGE
	1	1	**246-2641**	1	PADLOCK GP (BATTERY BOX)	
		1	**5P-8500**	2	KEY	
Y	2	1	*8N-8753*	1	STARTING MOTOR GP-ELECTRIC	308
	3	1	**8V-0622**	1	CABLE AS	
		1	**5P-0761**		CABLE (00-GA, RED) (14-CM)	
		1	**8T-9757**	1	TERMINAL AS-BATTERY (NEGATIVE)	
		1	**8C-5917**	1	TERMINAL AS-BATTERY (POSITIVE)	
					(EACH INCLUDES)	
		1	**1M-6119**	1	BOLT (5/16-18X1.375-IN)	
		1	**1M-6120**	1	NUT (5/16-18-THD)	
		1	**9G-0003**	1	COVER-TERMINAL (BLACK)	
		1	**9G-0004**	1	COVER-TERMINAL (RED)	
	4	1	**061-7661**	1	CABLE AS	
E		1	**5P-0747**		CABLE (00-GA, BLACK) (42-CM)	
		1	**1S-7251**	1	TERMINAL-RING (FOR 1/2-IN BOLT)	
Y	5	1	**125-1302**	1	SWITCH GP-MAGNETIC (24-VOLT) (LOW TEMPERATURE START RELAY)	316
	6	1	**146-6747**	1	FILM-INFORMATION (24-VOLT)	
	7	1	**153-5710**	2	BATTERY (12-VOLT, MAINTENANCE FREE) (LOW TEMP STARTING)	
	8	1	**153-6281**	1	HOLD-DOWN-BATTERY	
	9	1	**191-8728**	1	CABLE AS	
E		1	**5P-0761**		CABLE (00-GA, RED) (33-CM)	
		1	**1S-4915**	2	LINER (CONDUIT)	
E		1	**5P-0695**		CONDUIT (14-CM)	
E		1	**8T-2225**		TUBE-HEAT SHRINK (16-CM)	
		1	**8N-0869**	1	COVER-TERMINAL (RED)	
		1	**9G-0004**	1	COVER-TERMINAL (RED)	
E		1	**114-8843**		SLEEVE-PLASTIC (40-CM)	
		1	**1S-7251**	1	TERMINAL-RING (FOR 1/2-IN BOLT)	
		1	**8C-5917**	1	TERMINAL AS-BATTERY (POSITIVE)	
		1	**1M-6119**	1	BOLT (5/16-18X1.375-IN)	
		1	**1M-6120**	1	NUT (5/16-18-THD)	
	10	1	**191-8729**	1	CABLE AS	
E		1	**5P-0747**		CABLE (00-GA, BLACK) (70-CM)	
		1	**1S-4915**	2	LINER (CONDUIT)	
E		1	**5P-0695**		CONDUIT (52-CM)	
E		1	**8T-2225**		TUBE-HEAT SHRINK (16-CM)	
		1	**9G-0005**	1	COVER-TERMINAL (BLACK)	
		1	**9G-8909**	1	COVER-TERMINAL (BLACK)	
E		1	**114-8843**		SLEEVE-PLASTIC (40-CM)	
		1	**1S-7252**	1	TERMINAL-RING (FOR 3/8-IN BOLT)	
		1	**8C-5918**	1	TERMINAL AS (NEGATIVE)	
		1	**1M-6119**	1	BOLT (5/16-18X1.375-IN)	
		1	**1M-6120**	1	NUT (5/16-18-THD)	
	11	1	**192-9464**	1	PLATE	
	12	1	**199-9800**	1	JUNCTION BLOCK	
	13	1	**200-6345**	1	MOUNT (DUAL SWIVEL)	
	14	1	**204-2281**	15	TIE	
	15	1	**213-1046**	1	STRAP	
	16	1	**213-7016**	1	CABLE AS	
E		1	**5P-0761**		CABLE (00-GA, RED) (200-CM)	
		1	**1S-4915**	2	LINER (CONDUIT)	
E		1	**5P-0695**		CONDUIT (179-CM)	
E		1	**8T-2225**		TUBE-HEAT SHRINK (21-CM)	
		1	**8N-0869**	1	COVER-TERMINAL (RED)	

214-1072 **STARTING AR-COLD WEATHER** *(contd.)* **i02451476**

NOTE	REF NO	GRAPHIC REF	PART NUMBER	QTY	PART NAME 1 2 3 4 5 6 (PRODUCT LEVEL)	SEE PAGE
E		1	**114-8843**		SLEEVE-PLASTIC (40-CM)	
		1	**1S-7251**	2	TERMINAL-RING (FOR 1/2-IN BOLT)	
	17	1	**213-7018**	1	CABLE AS	
E		1	**5P-0761**		CABLE (00-GA, RED) (150-CM)	
		1	**1S-4915**	2	LINER (CONDUIT)	
E		1	**5P-0695**		CONDUIT (119-CM)	
E		1	**8T-2225**		TUBE-HEAT SHRINK (32-CM)	
		1	**8N-0869**	2	COVER-TERMINAL (RED)	
E		1	**114-8843**		SLEEVE-PLASTIC (40-CM)	
		1	**1S-7251**	2	TERMINAL-RING (FOR 1/2-IN BOLT)	
	18	1	**213-7020**	1	CABLE AS	
E		1	**5P-0747**		CABLE (00-GA, BLACK) (210-CM)	
		1	**1S-4915**	2	LINER (CONDUIT)	
E		1	**5P-0695**		CONDUIT (178-CM)	
E		1	**8T-2225**		TUBE-HEAT SHRINK (21-CM)	
		1	**260-2998**	1	COVER-TERMINAL (00-GA, BLACK)	
		1	**1S-7252**	2	TERMINAL-RING (FOR 3/8-IN BOLT)	
		1	**4D-1248**	1	TERMINAL (FOR 13/32-IN BOLT)	
	19	1	**225-0313**	1	FILM-WARNING (JUMP START, READ OMM)	
	21	1	**235-1594**	3	PLATE AS	
					(EACH INCLUDES)	
		1	**7T-1099**	2	LINK	
	22	1	**1S-0994**	1	CLIP	
	23	1	**253-7138**	1	WIRE AS	
	24	1	**3K-6060**	2	LOCKNUT (3/8-16-THD)	
	25	1	**4P-7581**	2	CLIP	
M	26	1	**5C-2890**	1	NUT (M6X1-THD)	
	27	1	**5M-3062**	1	BOLT (3/8-16X0.75-IN)	
	28	1	**5P-1075**	6	WASHER-HARD (10.2X22.5X3-MM THK)	
	29	1	**6D-4247**	2	CLIP	
	30	1	**6V-8801**	3	NUT (3/8-16-THD)	
	31	1	**7K-1181**	5	STRAP-CABLE	
	33	1	**8T-4121**	6	WASHER-HARD (11X21X2.5-MM THK)	
M	34	1	**8T-4137**	6	BOLT (M10X1.5X20-MM)	
M	35	1	**8T-4192**	3	BOLT (M12X1.75X25-MM)	
	36	1	**8T-4223**	3	WASHER-HARD (13.5X25.5X3-MM THK)	
	37	1	**8T-9407**	3	BOLT-CARRIAGE (3/8-16X1.25-IN)	
M	38	1	**9X-6032**	3	BOLT-SOCKET HEAD (M10X1.5X30-MM)	
	39	1	**9X-8256**	1	WASHER (6.6X12X2-MM THK)	

E-ORDER BY THE CENTIMETER
M-METRIC PART
Y-SEPARATE ILLUSTRATION

214-1072 **STARTING AR-COLD WEATHER** *(contd.)* **i02451476**

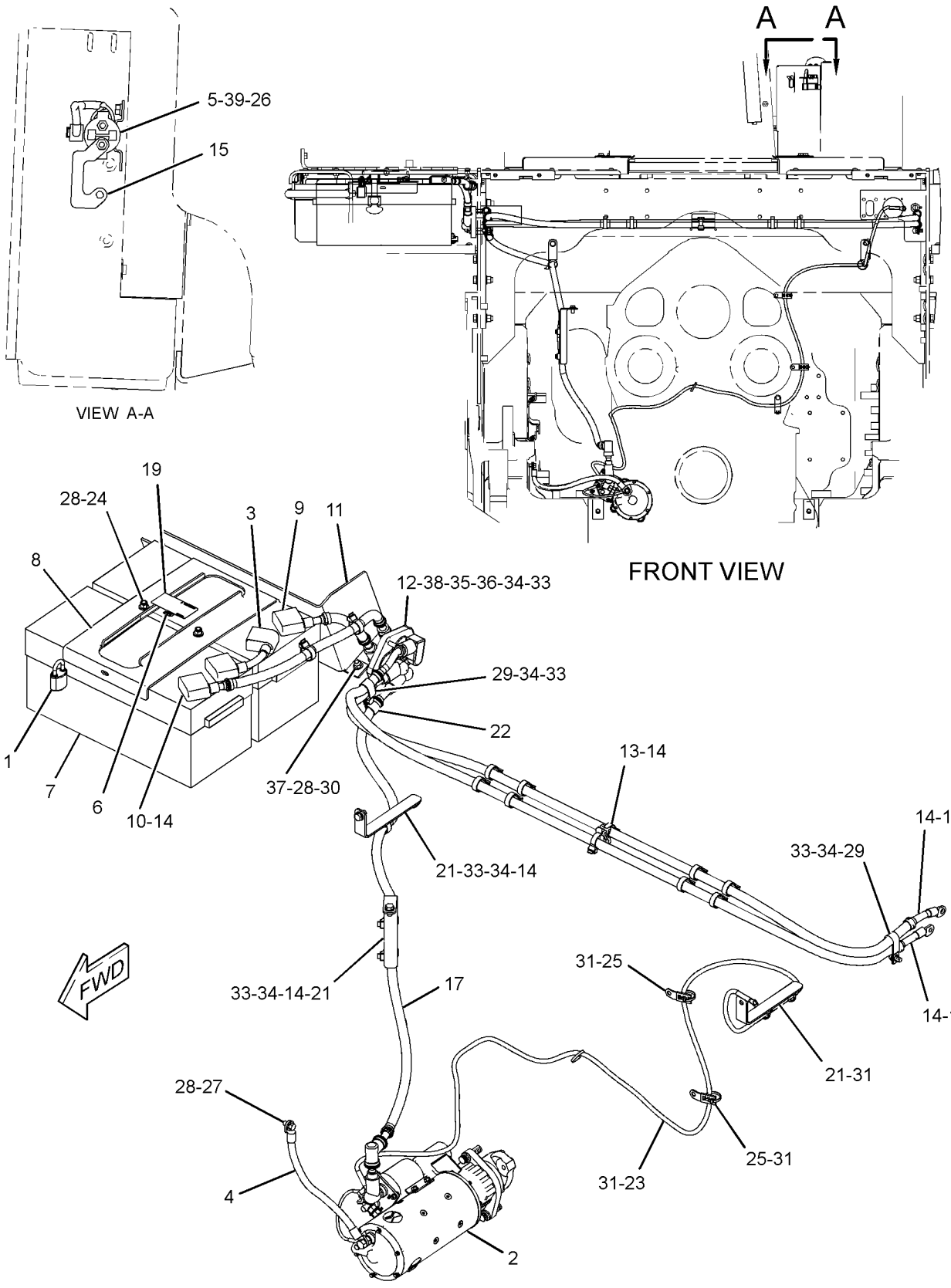

GRAPHIC #1 **<END>** g01225438

ELECTRICAL AND STARTING SYSTEM

6V-0928 STARTING MOTOR GP-ELECTRIC—COLD WEATHER

S/N: RJG1-UP

PART OF 8N-8753 STARTING MOTOR GP-ELECTRIC

AN ATTACHMENT

SMCS-1453 **i02247446**

NOTE	REF NO	GRAPHIC REF	PART NUMBER	QTY	PART NAME 1 2 3 4 5 6 (PRODUCT LEVEL)	SEE PAGE
	1	1	**036-9823**	13	BOLT (1/4-28X1-IN)	
	2	1	**3L-3380**	1	BUSHING-TERMINAL	
	3	1	**3T-3418**	1	FRAME AS-END	
	4	1	**3T-3423**	1	CUP	
	5	1	**9G-4101**	1	BUSHING-END	
	6	1	**3T-3424**	1	PLUG-FELT	
	7	1	**7M-0327**	1	WASHER-THRUST (17.4X25.4X1.6-MM THK)	
	8	1	**7M-8651**	1	ARMATURE AS	
	9	1	**7M-0324**	1	COIL AS-FIELD	
	10	1	**9H-3757**	2	WASHER (0.516X1X0.094-IN THK)	
	11	1	**7X-0562**	6	WASHER-HARD (13.5X19X0.8-MM THK)	
	12	1	**6V-8188**	6	NUT (1/2-13-THD)	
	13	1	**7M-0326**	1	CONNECTOR	
	14	1	**8T-4205**	4	WASHER-HARD (7.2X14.5X2-MM THK)	
	15	1	**238-1851**	1	SOLENOID AS-STARTING MOTOR	
	16	1	**6V-1322**	4	BOLT (1/4-20X0.375-IN)	
	17	1	**4M-1831**	4	PLUG-LEVER HOUSING	
	18	1	**7L-2894**	4	GASKET	
	19	1	**3F-0379**	12	SCREW-POLE SHOE (3/8-24-THD)	
	20	1	**7M-0325**	1	INSULATOR	
	21	1	**7F-3488**	6	SHOE-POLE	
	22	1	**1S-7446**	3	SCREW-MACHINE (8-32X0.437-IN)	
	23	1	**3T-9524**	6	BRUSH AS	
	24	1	**9S-2544**	9	SCREW-HEX HEAD (8-32X11.13-MM)	
	25	1	**3T-9525**	1	PLATE AS-BRUSH	
	26	1	**6T-0371**	1	INSULATOR	
	27	1	**3T-4711**	12	SCREW AS	
		1	**9F-5599**	12	LOCKWASHER	
	28	1	**7F-3525**	6	WASHER-BUSHING (0.207X0.39X0.09-IN THK)	
	29	1	**6T-0372**	1	PLATE	
	30	1	**3T-4709**	3	PLATE	
	31	1	**2L-6679**	3	PLATE-INSULATOR	
	32	1	**3T-4710**	3	PLATE	
	33	1	**6T-0363**	6	HOLDER AS-BRUSH	
					(EACH INCLUDES)	
	34	1	**3T-9494**	1	SPRING	
	35	1	**2D-6392**	1	SEAL-O-RING	
	36	1	**2J-8163**	2	SEAL-O-RING	
	37	1	**7F-3491**	2	WASHER (0.516X1X0.094-IN THK)	
	38	1	**3R-8801**	1	CLAMP	
	39	1	**6N-3826**	1	DRIVE AS-MOTOR	
	40	1	**1H-2629**	3	STRIP-INSULATION	
	41	1	**3T-3422**	1	WIRE AS	
	43	1	**036-9821**	1	WASHER	
	44	1	**4M-1829**	1	BOOT-RUBBER	
	45	1	**4M-1828**	1	RETAINER-SPRING	
	46	1	**9M-7609**	1	SPRING (SHIFT LEVER)	
	47	1	**1H-1023**	1	SEAL-O-RING	
	48	1	**3E-7771**	1	HOUSING AS	
	49	1	**3T-3424**	3	PLUG-FELT	
	50	1	**3T-3423**	3	CUP	
	51	1	**1M-9968**	1	BUSHING	
	52	1	**2F-6678**	1	SEAL-LIP TYPE	
	53	1	**4L-2729**	1	WASHER (0.844X1.9X0.188-IN THK)	
	54	1	**4M-1854**	1	SHAFT-LEVER	

6V-0928 **STARTING MOTOR GP-ELECTRIC** *(contd.)* **i02247446**

NOTE	REF NO	GRAPHIC REF	PART NUMBER	QTY	PART NAME 1 2 3 4 5 6 (PRODUCT LEVEL)	SEE PAGE
	55	1	**2H-3429**	2	RING-RETAINING	
	56	1	**4M-1853**	1	LEVER AS-SHIFT	
	57	1	**5M-3034**	1	LOCKNUT (5/16-24-THD)	
	58	1	**1M-9971**	1	SPACER (0.835X1.72X0.188-IN THK)	
	59	1	**4M-1827**	1	RETAINER-SPRING	
	60	1	**8C-3089**	1	SEAL-O-RING	
	61	1	**3E-7768**	1	HOUSING AS	
	62	1	**4M-1896**	1	BUSHING-TERMINAL	
	63	1	**8C-9660**	3	WASHER (4.6X7.9X0.8-MM THK)	
	64	1	**3T-9494**	6	SPRING	
	65	1	**5J-5314**	5	BOLT (5/16-18X1.5-IN)	
	66	1	**3N-3763**	1	KIT-TERMINAL (STARTING MOTOR)	
					(INCLUDES INSULATOR, BUSHINGS, WASHER)	
	70	1	**7X-3373**	1	BOLT (5/16-18X0.88-IN)	
	71	1	**6N-3279**	1	INSULATOR	
	72	1	**4B-2049**	6	NUT (10-32-THD)	
	73	1	**8T-0328**	10	WASHER-HARD (5.5X10X1-MM THK)	
	74	1	**8F-1434**	2	LOCKWASHER	
B	75	1	**3T-3434**	6	PLUG	
	76	1	**125-6537**	1	INSULATOR	
	77	1	**045-4065**	4	SCREW-MACHINE (10-32X0.75-IN)	
	78	1	**125-6536**	1	TERMINAL AS	
	79	1	**7T-9123**	1	GASKET-PLATE	
	80	1	**125-6535**	1	COVER-STARTING MOTOR	

B-USE AS REQUIRED

6V-0928 **STARTING MOTOR GP-ELECTRIC** *(contd.)* **i02247446**

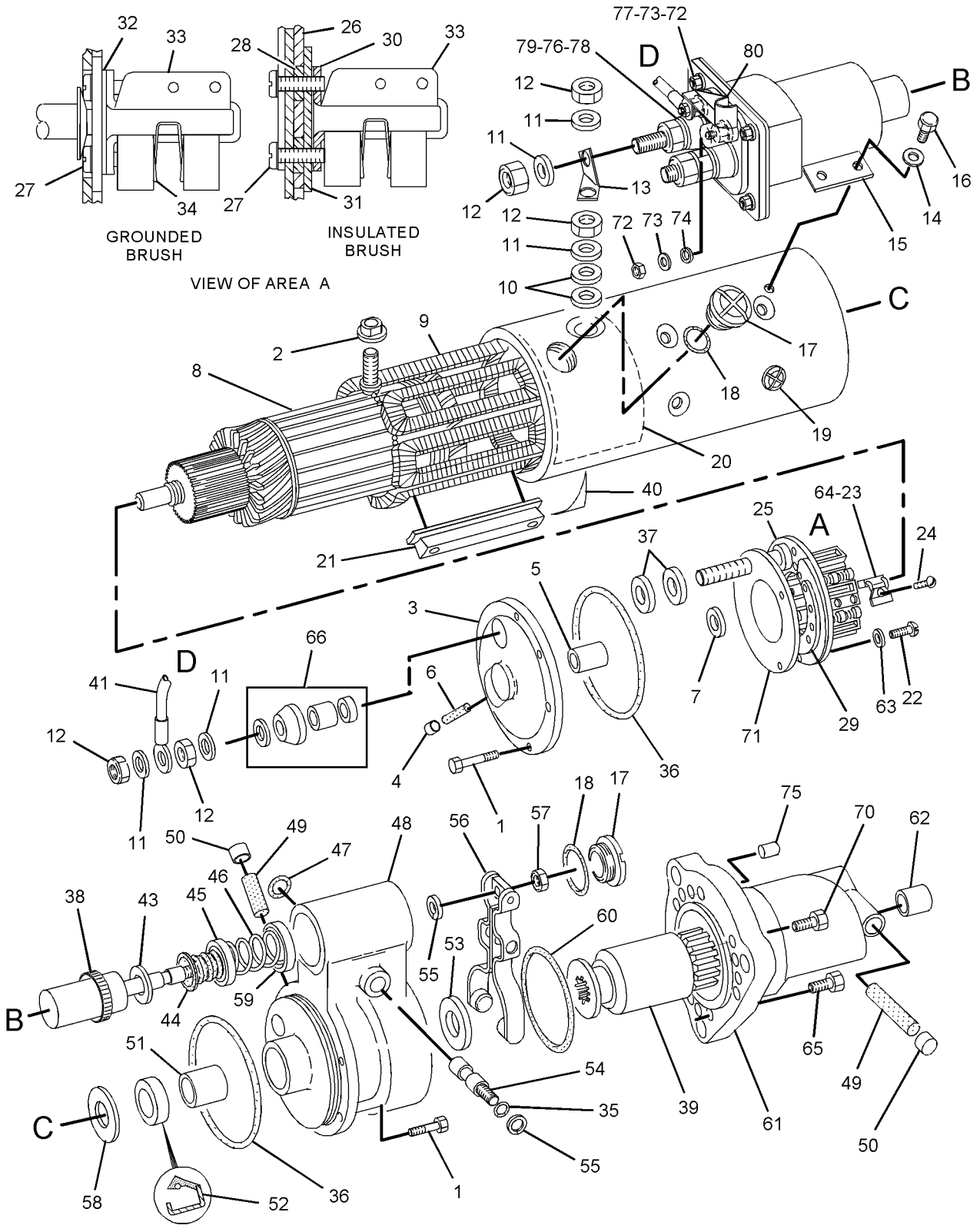

GRAPHIC #1 **<END>** g01133593

8N-8753 STARTING MOTOR GP-ELECTRIC—COLD WEATHER

S/N: RJG1-UP
24 VOLT
PART OF 214-1072 STARTING AR-COLD WEATHER
AN ATTACHMENT

SMCS-1453 **i00596795**

NOTE	REF NO	GRAPHIC REF	PART NUMBER	QTY	PART NAME 1 2 3 4 5 6 (PRODUCT LEVEL)	SEE PAGE
CY	1	1	*6V-0928*	1	STARTING MOTOR GP-ELECTRIC	305
	2	1	**8S-2332**	3	BOLT-12 POINT HEAD (5/8-11X1.75IN)	
	3	1	**7N-6494**	1	GASKET	
	4	1	**5R-7755**	1	WIRE AS	

C-CHANGE FROM PREVIOUS TYPE
Y-SEPARATE ILLUSTRATION

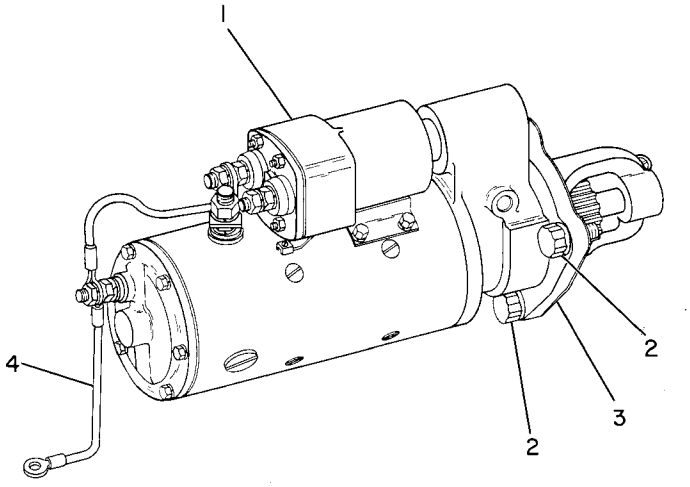

GRAPHIC #1 **<END>** g00282511

105-4729 STARTING MOTOR GP-ELECTRIC

S/N: RJG1-UP
24-VOLT
PART OF 212-2745, 267-2900 INSTALLATION AR-ENGINE

SMCS-1453 **i02283838**

NOTE	REF NO	GRAPHIC REF	PART NUMBER	QTY	PART NAME 1 2 3 4 5 6 (PRODUCT LEVEL)	SEE PAGE
	1	1	**8S-2332**	3	BOLT-12 POINT HEAD (5/8-11X1.75-IN)	
	2	1	**4N-1059**	1	GASKET	
YR	3	1	**237-1962**	1	STARTING MOTOR GP-ELECTRIC	310
	4	1	**105-4728**	1	WIRE AS	

R-REMFG PART MAY BE AVAILABLE
Y-SEPARATE ILLUSTRATION

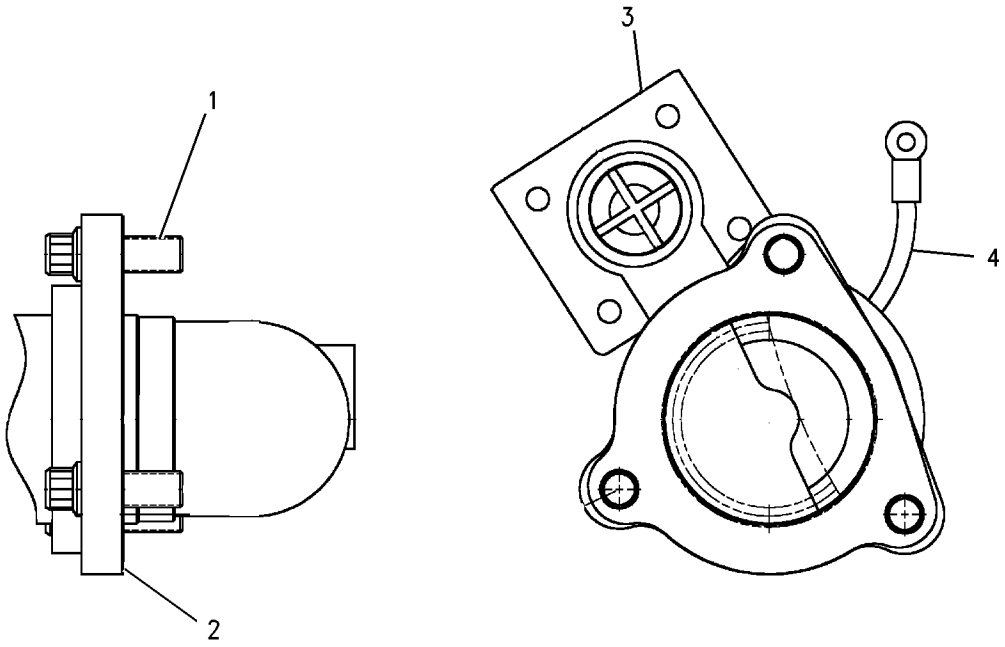

GRAPHIC #1 **<END>** g00658745

237-1962 STARTING MOTOR GP-ELECTRIC*R

S/N: RJG1-UP

24-VOLT

PART OF 105-4729 STARTING MOTOR GP-ELECTRIC

SMCS-1453 **i02467607**

NOTE	REF NO	GRAPHIC REF	PART NUMBER	QTY	PART NAME 1 2 3 4 5 6 (PRODUCT LEVEL)	SEE PAGE
	1	1	**7M-0326**	1	CONNECTOR	
	2	1	**9H-3757**	2	WASHER (0.516X1X0.094-IN THK)	
	3	1	**1S-7446**	3	SCREW-MACHINE (8-32X0.437-IN)	
	4	1	**8C-9660**	3	WASHER (4.6X7.9X0.8-MM THK)	
	5	1	**9S-2544**	9	SCREW-HEX HEAD (8-32X11.13-MM)	
	6	1	**7M-0327**	1	WASHER-THRUST (17.4X25.4X1.6-MM THK)	
	7	1	**3T-3418**	1	FRAME AS-END	
		1	**3T-3423**	1	CUP	
		1	**3T-3424**	1	PLUG-FELT	
		1	**9G-4101**	1	BUSHING-END	
	8	1	**3T-9525**	1	PLATE AS-BRUSH	
	8A	1	**6T-0371**	1	INSULATOR	
	8B	1	**5P-6298**	12	SCREW-MACHINE (10-32X0.5-IN)	
		1	**9F-5599**	12	LOCKWASHER	
	8C	1	**7F-3525**	6	WASHER-BUSHING (0.207X0.39X0.09-IN THK)	
	8D	1	**6T-0372**	1	PLATE	
	8E	1	**3T-4709**	3	PLATE	
	8F	1	**2L-6679**	3	PLATE-INSULATOR	
	8G	1	**3T-4710**	3	PLATE	
	8H	1	**6T-0363**	6	HOLDER AS-BRUSH (STARTING MOTOR)	
					(EACH INCLUDES)	
	8J	1	**3T-9494**	1	SPRING (STARTING MOTOR)	
	9	1	**7F-3491**	2	WASHER (0.516X1X0.094-IN THK)	
	10	1	**3T-3422**	1	WIRE AS	
	11	1	**2J-8163**	2	SEAL-O-RING	
	12	1	**7X-3373**	1	BOLT (5/16-18X0.88-IN)	
	13	1	**3T-3434**	6	PLUG	
	14	1	**5J-5314**	5	BOLT (5/16-18X1.5-IN)	
	15	1	**3L-3380**	1	BUSHING-TERMINAL	
	16	1	**036-9821**	1	WASHER	
	17	1	**4M-1828**	1	RETAINER-SPRING	
	18	1	**4M-1829**	1	BOOT-RUBBER	
	19	1	**9M-7609**	1	SPRING (SHIFT LEVER)	
	20	1	**4M-1827**	1	RETAINER-SPRING	
	21	1	**8C-3089**	1	SEAL-O-RING	
	22	1	**4M-1853**	1	LEVER AS-SHIFT	
	23	1	**5M-3034**	1	LOCKNUT (5/16-24-THD)	
	24	1	**7L-2894**	4	GASKET	
	25	1	**4M-1831**	4	PLUG-LEVER HOUSING	
	26	1	**4M-1854**	1	SHAFT-LEVER	
	27	1	**1H-1023**	1	SEAL-O-RING	
	28	1	**2D-6392**	1	SEAL-O-RING	
	29	1	**7T-3974**	1	HOUSING AS-DRIVE	
	30	1	**6N-3826**	1	DRIVE AS-MOTOR	
	31	1	**2H-3429**	2	RING-RETAINING	
	32	1	**6V-1322**	4	BOLT (1/4-20X0.375-IN)	
	33	1	**8T-4205**	4	WASHER-HARD (7.2X14.5X2-MM THK)	
	34	1	**6N-3279**	1	INSULATOR	

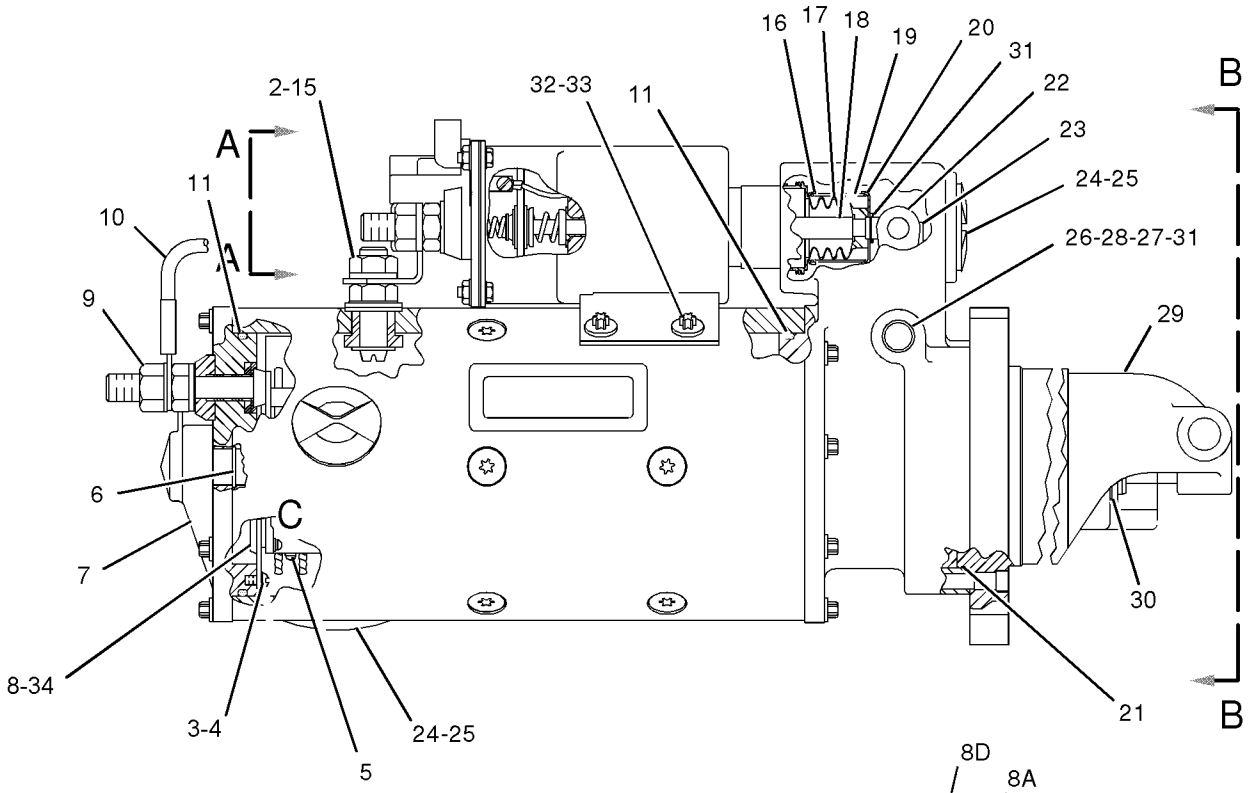

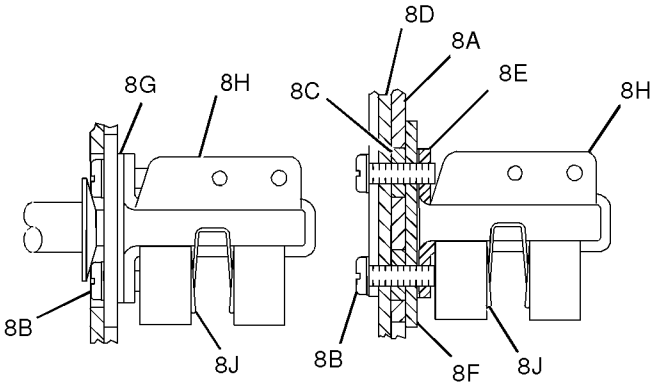

VIEW OF AREA C

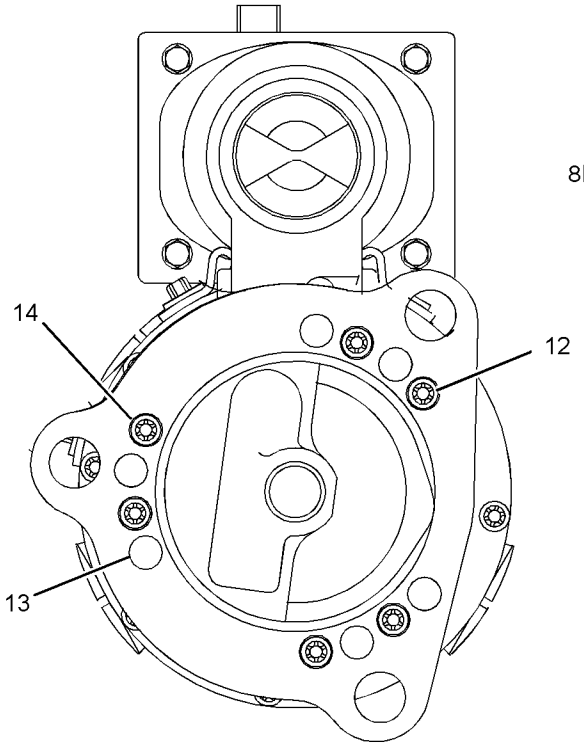

VIEW B-B

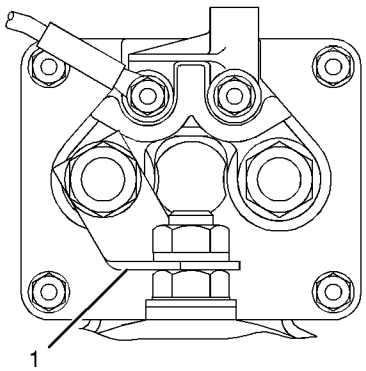

VIEW A-A

GRAPHIC #1 **<END>** g01026778

164-7577 SWITCH GP-BYPASS–PTO FILTER

S/N: RJG1-UP

PART OF 213-7003 BATTERY & WIRING GP

SMCS-1408, 1435 **i02406443**

NOTE	REF NO	GRAPHIC REF	PART NUMBER	QTY	PART NAME 1 2 3 4 5 6 (PRODUCT LEVEL)	SEE PAGE
E	1	1	**9X-1813**		SLEEVE (19-CM)	
	2	1	**102-8802**	1	KIT-RECEPTACLE (2-PIN)	
					(INCLUDES RECEPTACLE AS & WEDGE)	
	3	1	**186-3735**	2	PIN-CONNECTOR (16-GA TO 18-GA)	
	4	1	**3E-3365**	1	WEDGE-RECEPTACLE LOCK (2-PIN)	
	5	1	**3D-2824**	1	SEAL-O-RING	
Z	6	1		1	SWITCH AS (FILTER BYPASS)	

E-ORDER BY THE CENTIMETER
Z-NOT SERVICED SEPARATELY

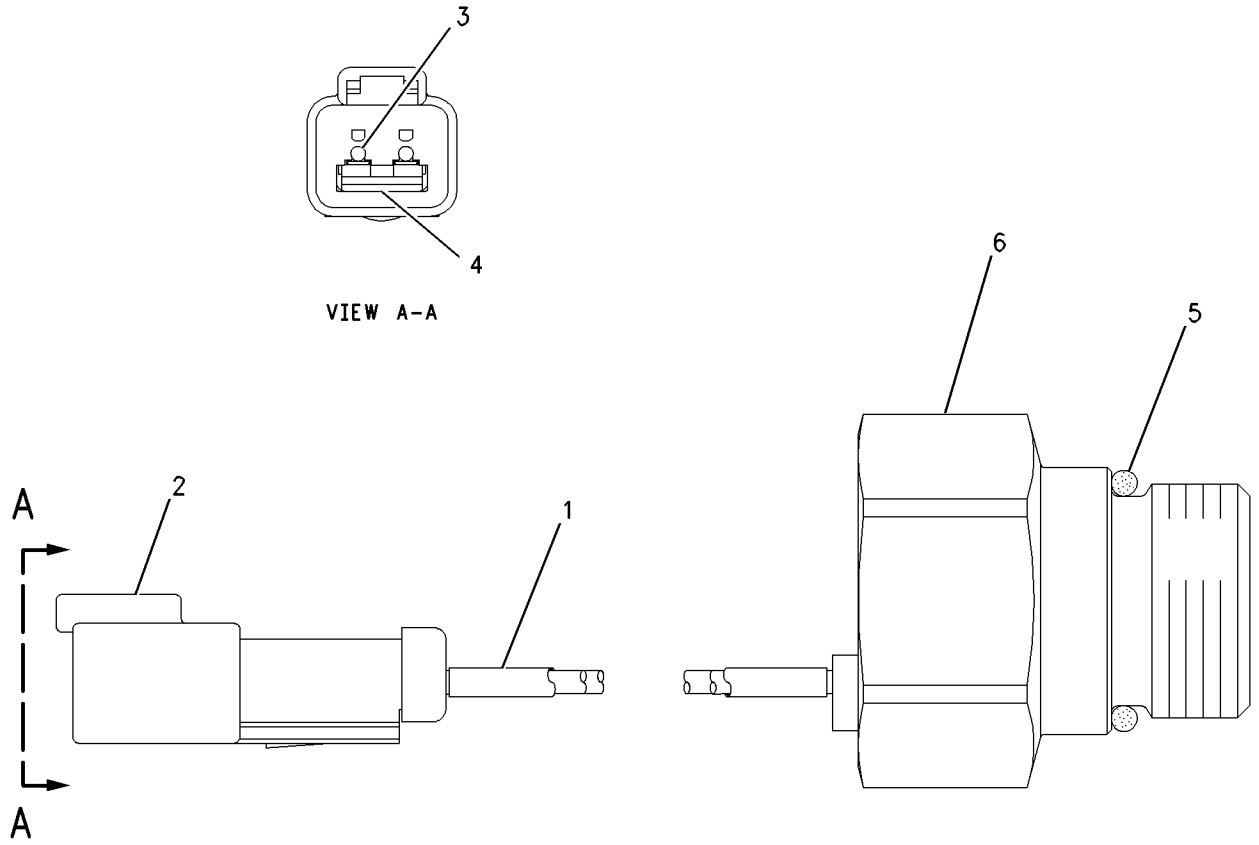

GRAPHIC #1 **<END>** g00750019

7N-0719 SWITCH GP-DISCONNECT–BATTERY

S/N: RJG1-UP

PART OF 213-7003 BATTERY & WIRING GP

SMCS-1411 **i01289277**

NOTE	REF NO	GRAPHIC REF	PART NUMBER	QTY	PART NAME 1 2 3 4 5 6 (PRODUCT LEVEL)	SEE PAGE
	1	1	**8H-5306**	1	KEY (BATTERY DISCONNECT)	
	2	1	**8H-5303**	1	NUT (3/4-16-THD)	
	3	1	**2H-3922**	2	LOCKWASHER	
	4	1	**9F-5644**	2	LOCKWASHER	
	5	1	**6F-7045**	2	NUT-FULL (3/8X24-THD)	

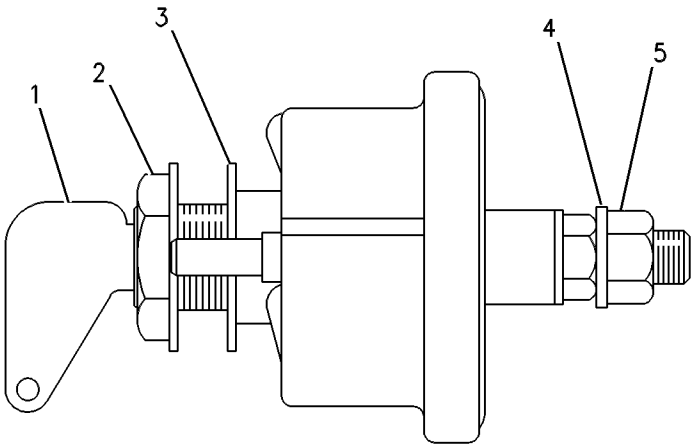

GRAPHIC #1 **<END>** g00117885

100-4417 SWITCH GP-FLOW–ENGINE COOLANT

S/N: EHX1-UP

PART OF 212-2737, 212-2744, 271-2219 ENGINE AR-COMPLETE

ALSO AN ATTACHMENT

SMCS-1438 **i01827364**

NOTE	REF NO	GRAPHIC REF	PART NUMBER	QTY	PART NAME 1 2 3 4 5 6 (PRODUCT LEVEL)	SEE PAGE
Y	1	1	**171-8708**	1	SWITCH GP-FLOW (ENGINE COOLANT)	315
	2	1	**2B-2695**	2	BOLT (5/16-18X0.875 IN)	
	3	1	**9M-1974**	2	WASHER-HARD (8.8X16X2MM THK)	
	4	1	**4N-3841**	1	GASKET	

Y-SEPARATE ILLUSTRATION

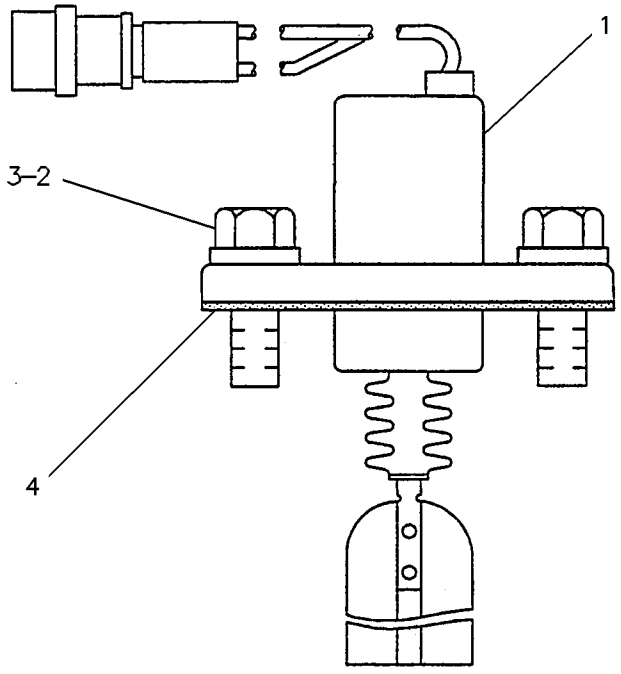

GRAPHIC #1 **<END>** g00083292

171-8708 SWITCH GP-FLOW–ENGINE COOLANT

S/N: EHX1-UP

PART OF 100-4417 SWITCH GP-FLOW

ALSO AN ATTACHMENT

SMCS-1438 **i01582521**

NOTE	REF NO	GRAPHIC REF	PART NUMBER	QTY	PART NAME 1 2 3 4 5 6 (PRODUCT LEVEL)	SEE PAGE
					(NO SERVICED PARTS)	

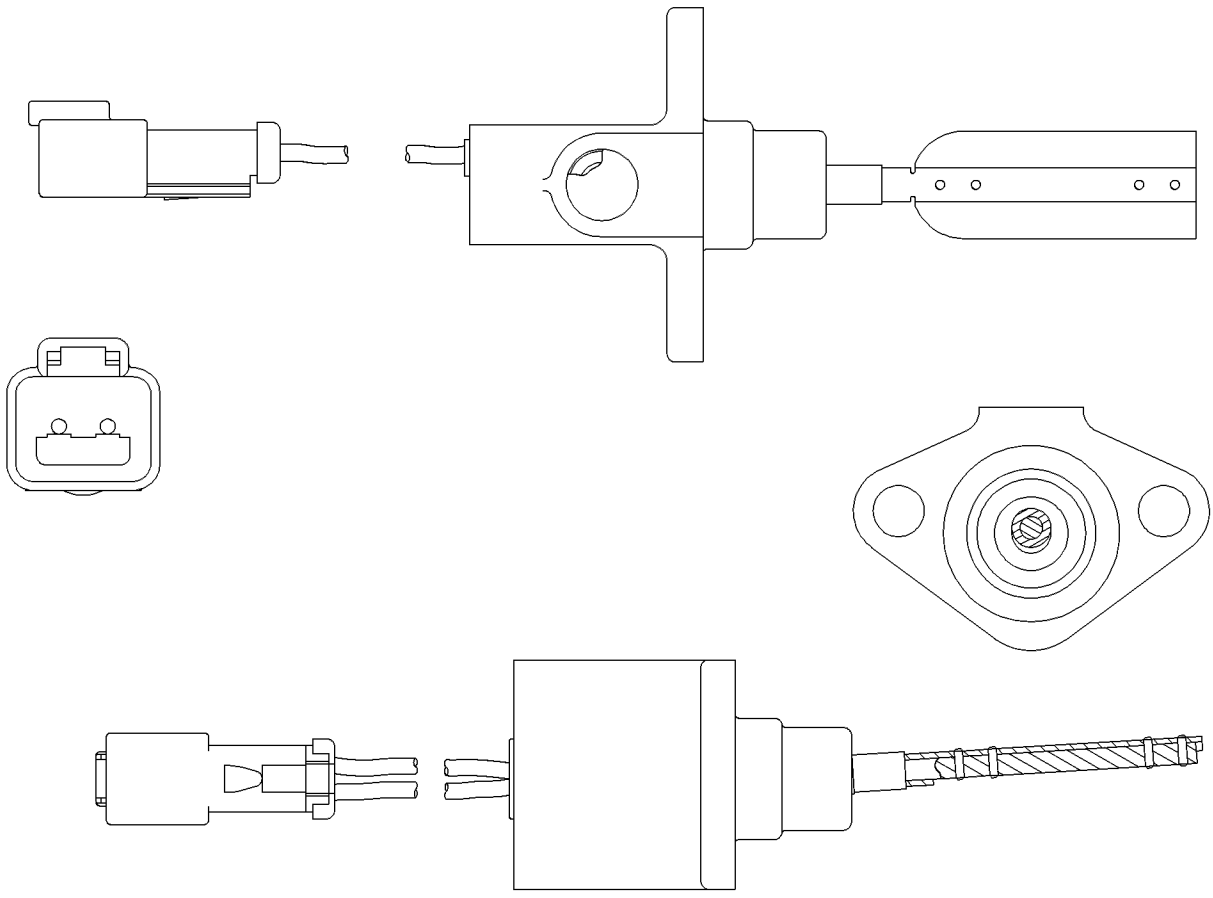

GRAPHIC #1 **<END>** g00613049

125-1302 SWITCH GP-MAGNETIC–START RELAY

S/N: RJG1-UP
24-VOLT
PART OF 223-8176 PANEL GP-FUSE, 214-1072 STARTING AR-COLD WEATHER
ALSO AN ATTACHMENT

SMCS-7499 **i02415548**

NOTE	REF NO	GRAPHIC REF	PART NUMBER	QTY	PART NAME 1 2 3 4 5 6 (PRODUCT LEVEL)	SEE PAGE
	1	1	**102-8802**	1	KIT-RECEPTACLE (2-PIN)	
					(INCLUDES RECEPTACLE AS & WEDGE)	
	2	1	**186-3735**	2	PIN-CONNECTOR (16-GA TO 18-GA)	
	3	1	**1H-3338**	2	LOCKWASHER	
	4	1	**012-0380**	2	LOCKWASHER	
M	5	1	**5C-2890**	2	NUT (M6X1-THD)	
E	6	1	**9X-1813**		SLEEVE (16-CM)	

E-ORDER BY THE CENTIMETER
M-METRIC PART

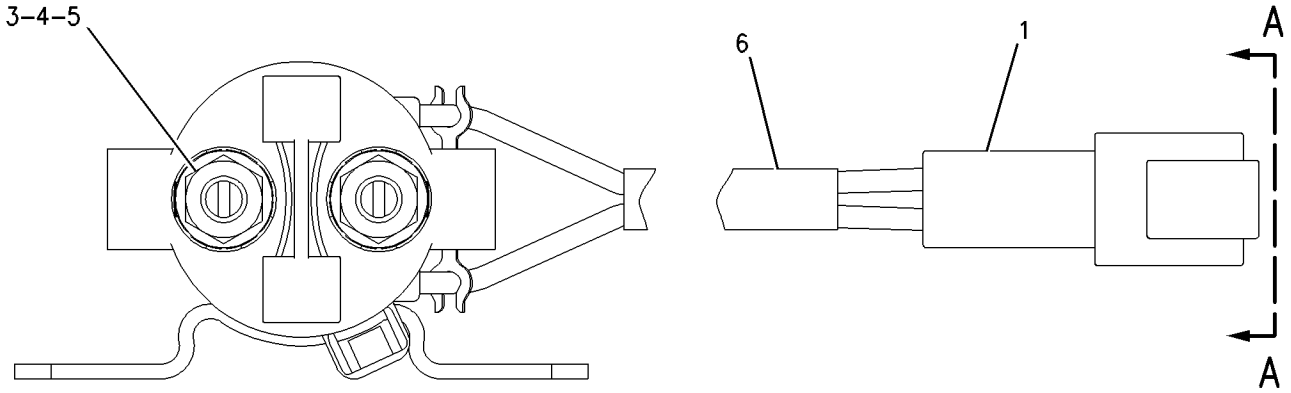

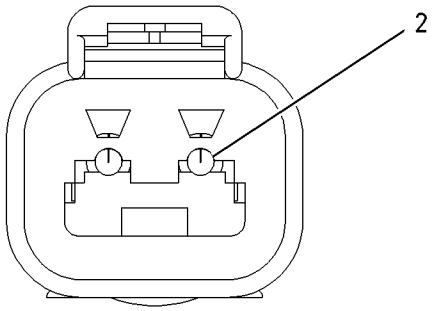

VIEW A–A

GRAPHIC #1 **<END>** g00988001

241-8368 SWITCH GP-MAGNETIC–MAIN RELAY

S/N: RJG1-UP
24-VOLTS
PART OF 223-8176 PANEL GP-FUSE

SMCS-7499 **i02325242**

NOTE	REF NO	GRAPHIC REF	PART NUMBER	QTY	PART NAME 1 2 3 4 5 6 (PRODUCT LEVEL)	SEE PAGE
	1	1	**155-2270**	1	KIT-CONNECTING PLUG (2-PIN)	
					(INCLUDES PLUG AS, WEDGE & INTERFACE SEAL)	
	2	1	**4F-2294**	2	NUT-JAM (5/16-24-THD)	
	3	1	**186-3736**	2	SOCKET-CONNECTOR (16-GA TO 18-GA)	

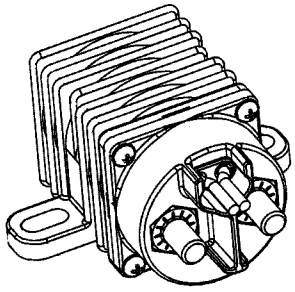

ISOMETRIC VIEW

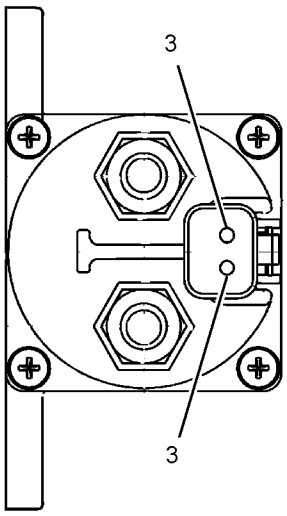

VIEW A-A

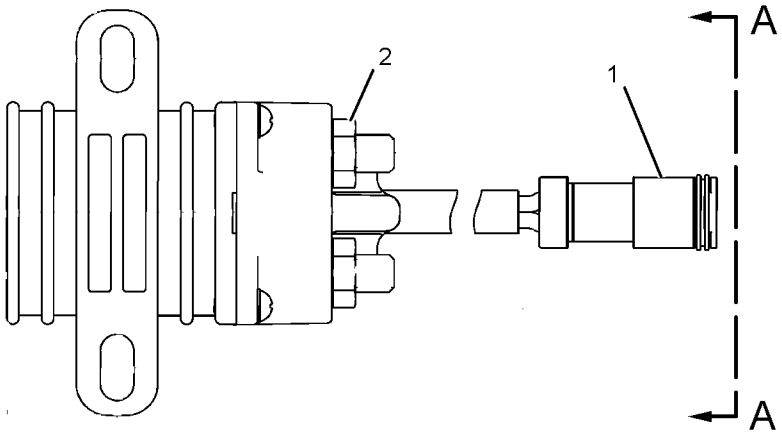

GRAPHIC #1 **<END>** g01077362

258-0883 SWITCH GP-PRESSURE

S/N: EHX1-UP
PART OF 235-6504, 279-5730 FILTER GP-FUEL
ALSO AN ATTACHMENT

SMCS-7400, 7421 **i02267120**

NOTE	REF NO	GRAPHIC REF	PART NUMBER	QTY	PART NAME 1 2 3 4 5 6 (PRODUCT LEVEL)	SEE PAGE
	1	1	**102-8802**	1	KIT-RECEPTACLE (2-PIN)	
					(INCLUDES RECEPTACLE AS AND WEDGE)	
	2	1	**3E-3365**	1	WEDGE-RECEPTACLE LOCK (2-PIN)	
	3	1	**186-3735**	2	PIN-CONNECTOR (16-GA TO 18-GA)	
E	4	1	**9X-1813**		SLEEVE (14-CM)	
	5	1	**6V-4589**	1	SEAL-O-RING	
	6	1	**7L-9061**	1	SEAL-O-RING	

E-ORDER BY THE CENTIMETER

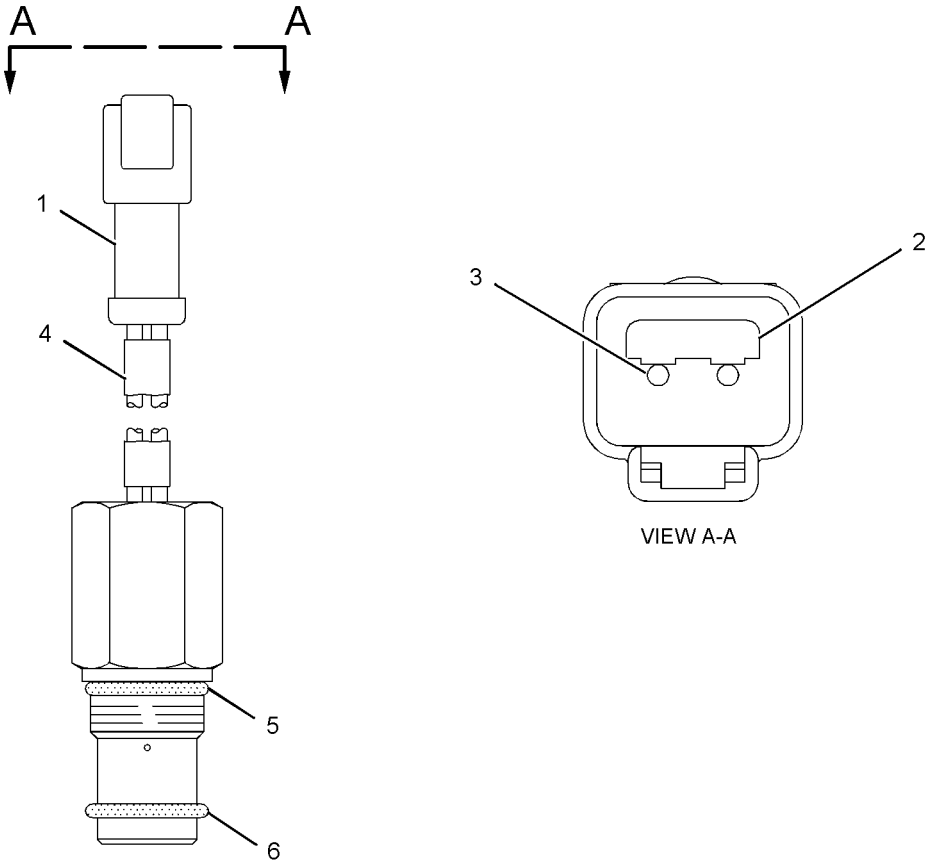

GRAPHIC #1 **<END>** g01072091

158-6632 SWITCH GP-PUSH BUTTON

S/N: RJG1-UP

PART OF 218-7063 WIRING GP-PLATFORM

SMCS-1435, 7332 **i01963642**

NOTE	REF NO	GRAPHIC REF	PART NUMBER	QTY	PART NAME 1 2 3 4 5 6 (PRODUCT LEVEL)	SEE PAGE
	1	1	**9X-0199**	1	BOOT-SWITCH	
	2	1	**7T-9515**	1	KNOB-HORN	
	3	1	**5L-7200**	1	SCREW (8-32X0.375-IN)	
	4	1	**3B-4501**	1	LOCKWASHER	
	5	1	**6V-8370**	1	NUT-HEX (3/4-32-THD)	
	6	1	**2H-3922**	1	LOCKWASHER	
	7	1	**102-8802**	1	KIT-RECEPTACLE (2-PIN) (HORN SWITCH)	
					(INCLUDES RECEPTACLE AS & WEDGE)	
	8	1	**9X-3401**	2	PIN-CONNECTOR (16-GA TO 18-GA)	
	9	1	**3E-3365**	1	WEDGE-RECEPTACLE LOCK (2-PIN)	

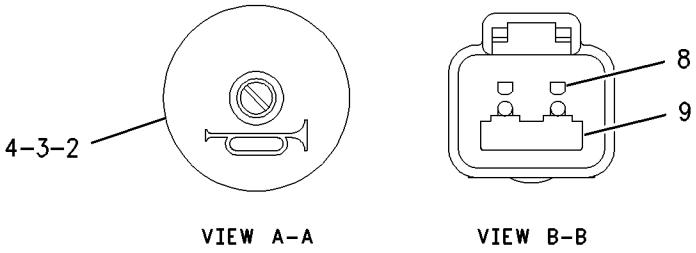

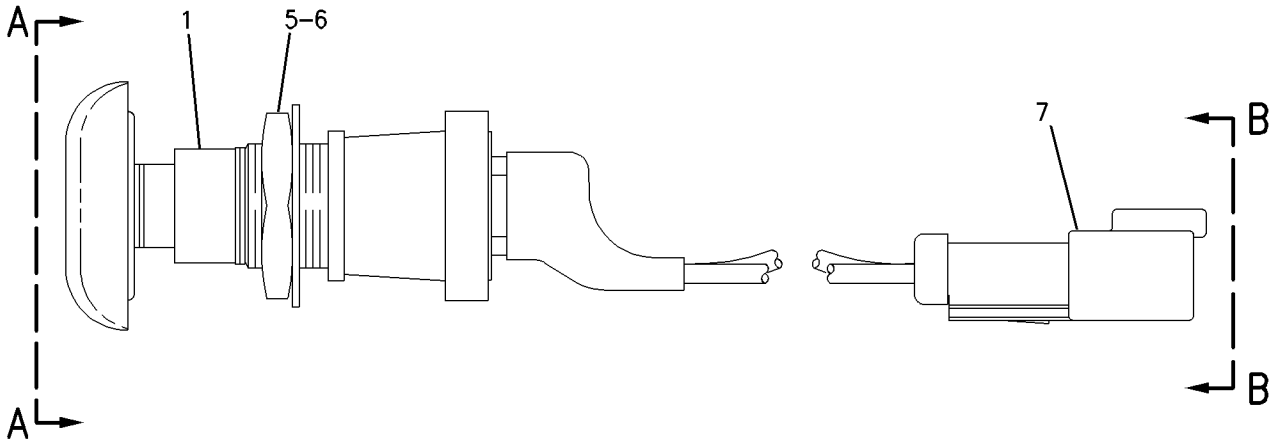

GRAPHIC #1 **<END>** g00942674

165-5970 SWITCH GP-TOGGLE–FUEL PRIMING PUMP ON, OFF

S/N: RJG1-UP

PART OF 213-0047 FILTER & LINES GP-FUEL

SMCS-7332 **i02262653**

NOTE	REF NO	GRAPHIC REF	PART NUMBER	QTY	PART NAME 1 2 3 4 5 6 (PRODUCT LEVEL)	SEE PAGE
	1	1	**6T-3631**	2	NUT-HEX (15/32-32 THD)	
	2	1	**6T-3632**	1	LOCKWASHER	
	3	1	**6T-3633**	1	RING-LOCKING	
	4	1	**102-8803**	1	KIT-RECEPTACLE (3-PIN)	
					(INCLUDES RECEPTACLE AS & WEDGE)	
	5	1	**3E-3371**	1	WEDGE-RECEPTACLE LOCK (3-PIN)	
	6	1	**186-3735**	3	PIN-CONNECTOR (16-GA TO 18-GA)	

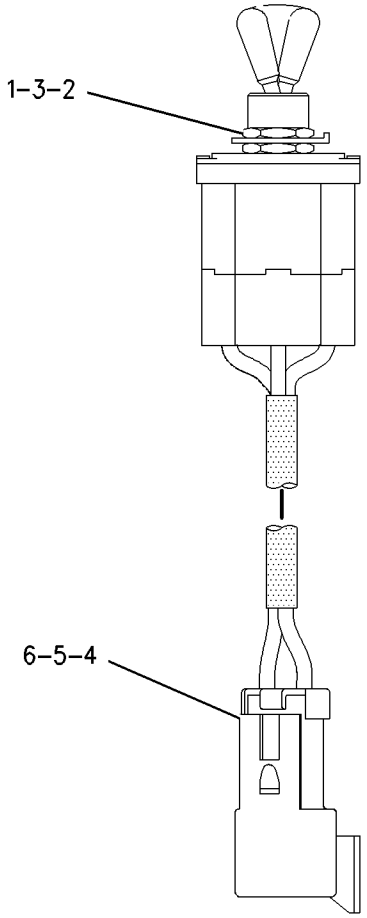

GRAPHIC #1 **<END>** g00749466

239-1134 VALVE GP-ETHER STARTING–24-VOLT

S/N: RJG1-UP

PART OF 221-1814 STARTING AID GP-ETHER

SMCS-1456 **i02145416**

NOTE	REF NO	GRAPHIC REF	PART NUMBER	QTY	PART NAME 1 2 3 4 5 6 (PRODUCT LEVEL)	SEE PAGE
	1	1	**3E-3365**	1	WEDGE-RECEPTACLE LOCK (2-PIN)	
	2	1	**7N-9801**	1	GASKET	
	3	1	**102-8802**	1	KIT-RECEPTACLE (2-PIN)	
					(KIT INCLUDES RECEPTACLE AS & WEDGE)	
	4	1	**186-3735**	2	PIN-CONNECTOR (16-GA TO 18-GA)	

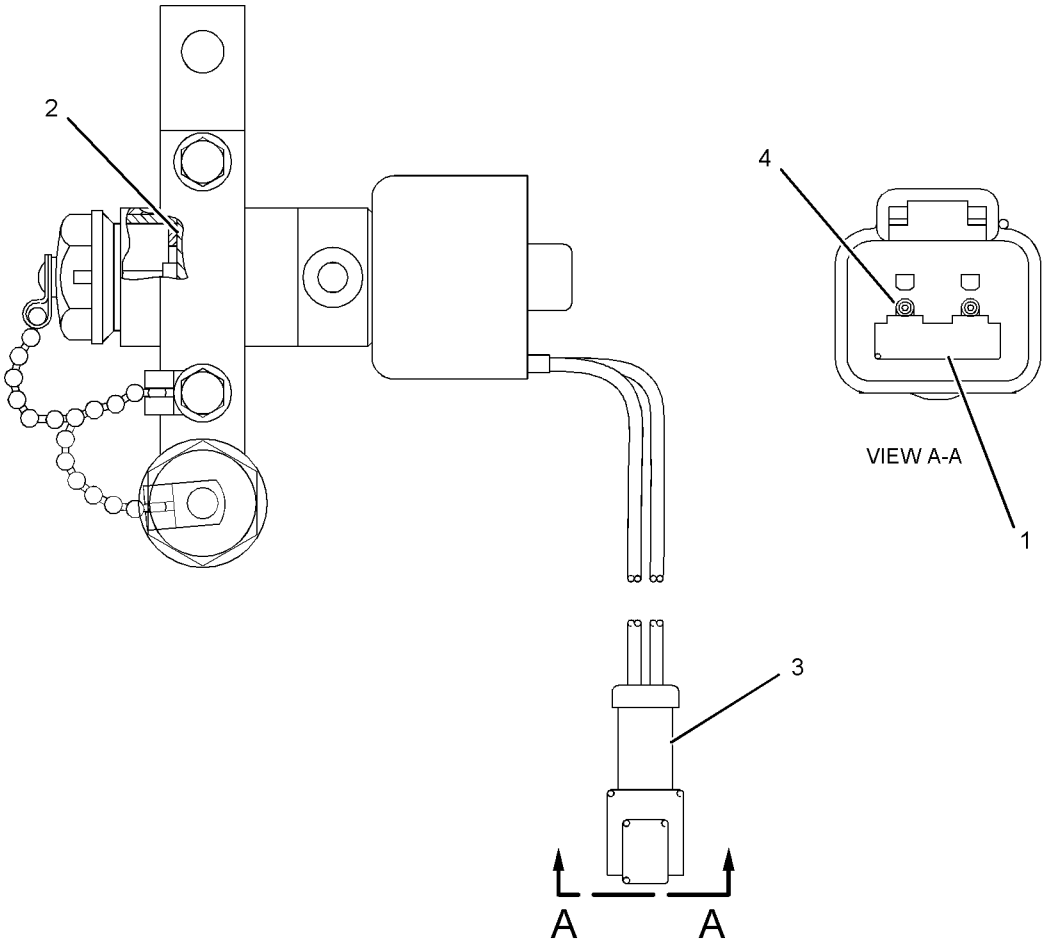

GRAPHIC #1 **<END>** g01053000

214-4763 WIRING GP-CAB

S/N: RJG1-UP

PART OF 213-1100 CAB AR

SMCS-1408, 7301 **i02358091**

NOTE	REF NO	GRAPHIC REF	PART NUMBER	QTY	PART NAME 1 2 3 4 5 6 (PRODUCT LEVEL)	SEE PAGE
	1	1	**1S-2342**	1	STRAP AS-GROUND	
B	2	1	**7K-1181**	20	STRAP-CABLE	
	3	1	**213-1280**	1	HARNESS AS-CAB	
		1	**102-8803**	1	KIT-RECEPTACLE (3-PIN)	
		1	**102-8801**	1	KIT-RECEPTACLE (12-PIN)	
					(EACH INCLUDES RECEPTACLE AS & WEDGE)	
	4	1	**221-0851**	2	SWITCH AS (DOME LIGHT)	
					(EACH INCLUDES)	
		1	**105-8034**	1	SWITCH AS-LIMIT (DOME LIGHT)	
	4A	1	**3E-3371**	1	WEDGE-RECEPTACLE LOCK (3-PIN)	
	4B	1	**110-0203**	1	CONNECTOR AS	
	4C	1	**102-8803**	1	KIT-RECEPTACLE (3-PIN)	
					(INCLUDES RECEPTACLE AS & WEDGE)	
	4D	1	**144-1636**	3	PIN-CONNECTOR (14-GA WIRE)	
	5	1	**226-2811**	1	LAMP AS-DOME (24-VOLT)	
		1	**9X-4493**	1	LAMP (24-VOLT, 21-WATT) (DOME)	
Y	6	1	*231-9290*	1	PANEL GP-CONTROL (OVERHEAD)	844
M	7	1	**3E-8020**	6	SCREW-TRUSS HEAD (M6X1X25-MM)	
	8	1	**8T-4121**	2	WASHER-HARD (11X21X2.5-MM THK)	
M	9	1	**8T-4137**	1	BOLT (M10X1.5X20-MM)	
M	10	1	**8T-4191**	1	BOLT (M10X1.5X16-MM)	
	11	1	**6T-8115**	2	NUT (1/2-24-THD)	

B-USE AS REQUIRED
M-METRIC PART
Y-SEPARATE ILLUSTRATION

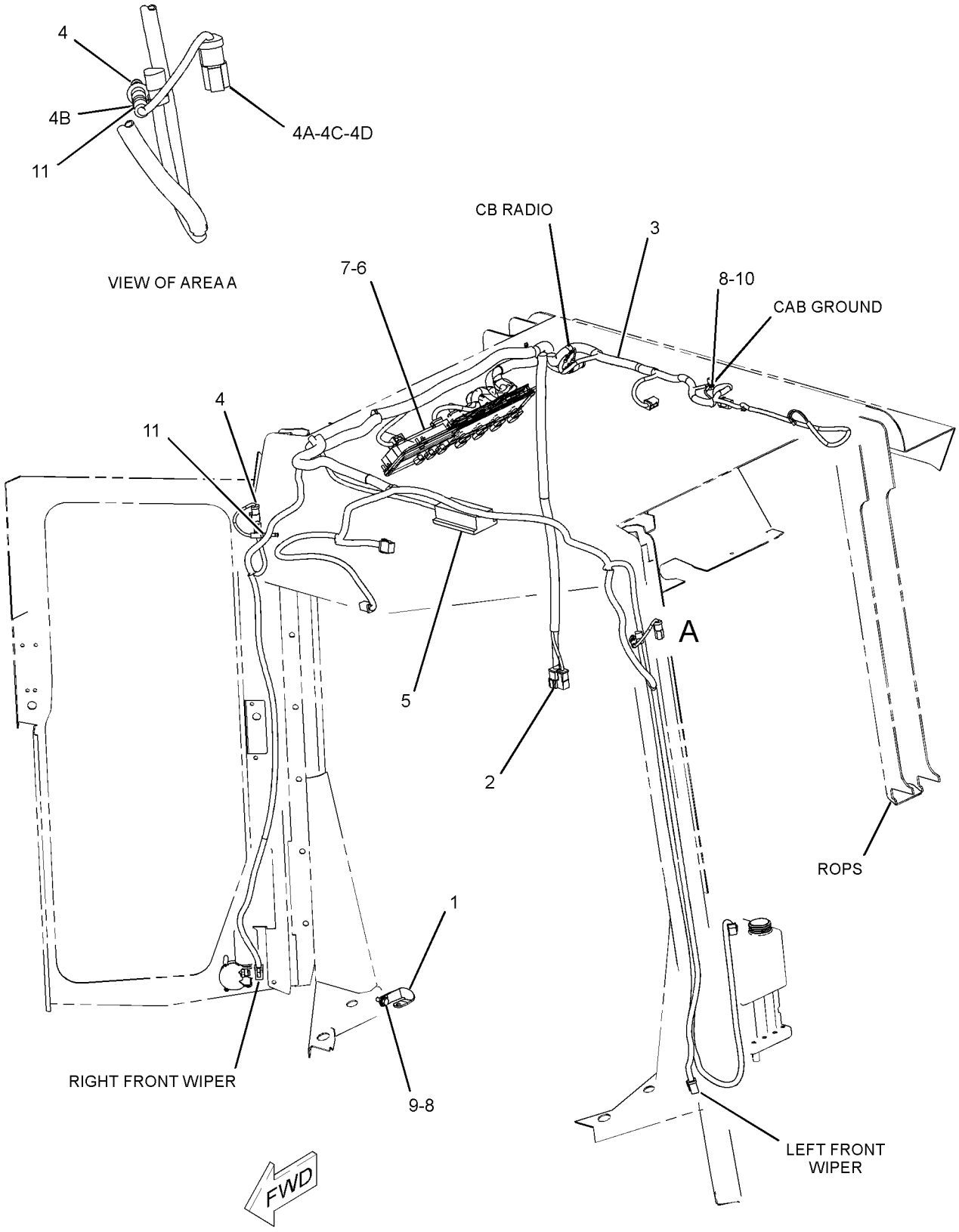

GRAPHIC #1 **<END>** g01164682

248-6886 WIRING GP-ELECTRONIC CONTROL

S/N: EHX1-UP

PART OF 212-2737, 212-2744, 271-2219 ENGINE AR-COMPLETE

ALSO AN ATTACHMENT

SMCS-1408, 1900 **i02462963**

NOTE	REF NO	GRAPHIC REF	PART NUMBER	QTY	PART NAME 1 2 3 4 5 6 (PRODUCT LEVEL)	SEE PAGE
	1	1	**3S-2093**	15	STRAP-CABLE (PLASTIC)	
	2	1	**267-4524**	1	HARNESS AS-SENSOR (ELECTRONIC CONTROL MODULE)	
		1	**211-6807**	1	CONNECTOR	
E		1	**119-3662**		TUBE-HEAT SHRINK (7-CM)	
E		1	**125-7875**		TUBE-HEAT SHRINK (15-CM)	
E		1	**125-7876**		TUBE-HEAT SHRINK (50-CM)	
		1	**102-8802**	1	KIT-RECEPTACLE (2-PIN)	
					(INCLUDES RECEPTACLE AS AND WEDGE)	
		1	**102-8803**	3	KIT-RECEPTACLE (3-PIN)	
					(EACH INCLUDES RECEPTACLE AS AND WEDGE)	
		1	**155-2255**	2	KIT-CONNECTING PLUG (12-PIN)	
					(EACH INCLUDES PLUG AS, INTERFACE SEAL, AND WEDGE)	
		1	**102-8806**	1	KIT-RECEPTACLE (8-PIN)	
					(INCLUDES PLUG AS AND WEDGE)	
		1	**155-2270**	5	KIT-CONNECTING PLUG (2-PIN)	
					(EACH INCLUDES PLUG AS, INTERFACE SEAL, AND WEDGE)	
		1	**227-4002**	1	PLUG AS-CONNECTOR (108-PIN)	
	3	1	**067-2551**	1	CLIP	
	4	1	**0S-0509**	1	BOLT (3/8-16X0.75-IN)	
	5	1	**132-5789**	2	CLIP	
	6	1	**4D-8123**	1	CLIP	
	7	1	**4K-8864**	1	CLIP	
	8	1	**4P-7429**	1	CLIP	
	9	1	**4P-7581**	1	CLIP	
	10	1	**4P-8134**	1	CLIP	
	11	1	**5M-2894**	1	WASHER-HARD (10.2X18.5X2.5-MM THK)	
	12	1	**5P-9085**	2	CLIP	
	13	1	**6D-3479**	4	CLIP	
	14	1	**6V-3265**	1	CLIP	

E-ORDER BY THE CENTIMETER

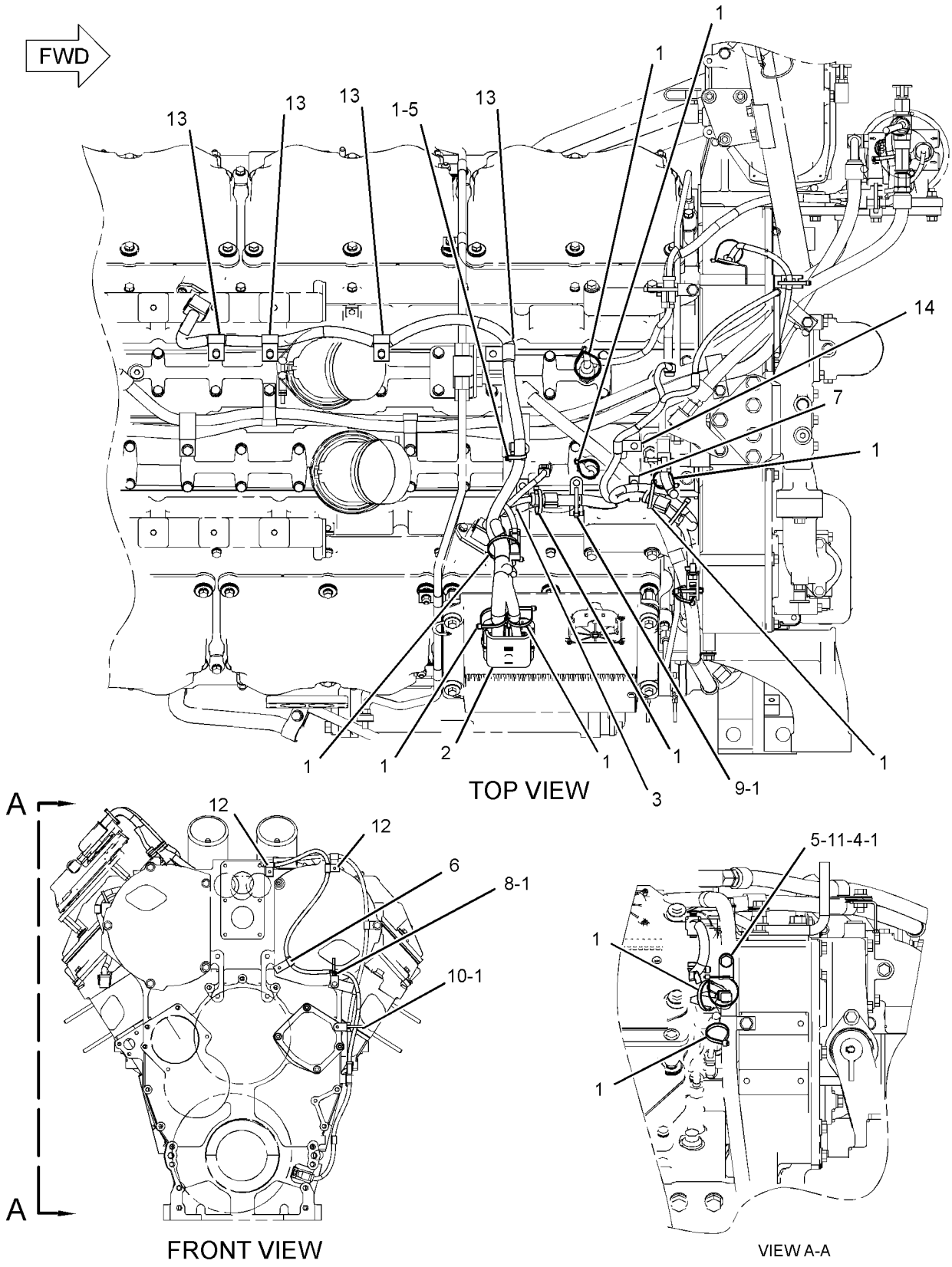

GRAPHIC #1 **<END>** g01184350

ELECTRICAL AND STARTING SYSTEM

213-7004 WIRING GP-ENGINE

S/N: RJG1-231

PART OF 212-2745 INSTALLATION AR-ENGINE

SMCS-1000, 1408 **i02351733**

NOTE	REF NO	GRAPHIC REF	PART NUMBER	QTY	PART NAME 1 2 3 4 5 6 (PRODUCT LEVEL)	SEE PAGE
	1	1,2	**7N-1277**	2	BRACKET AS	
					(EACH INCLUDES)	
		1,2	**1F-0750**	1	NUT-WELD (3/8-16-THD)	
	2	1	**9G-7101**	9	SPACER (10.5X20X30-MM THK)	
	3	1,2	**9M-4136**	2	SPACER (0.438X0.75X0.5-IN THK)	
	4	2	**9X-0263**	1	ADAPTER	
Y	5	1	**145-7028**	1	SENSOR GP-TEMPERATURE (TORQUE CONVERTER OIL)	297
Y	6	1	**189-5746**	1	SENSOR GP-SPEED (TORQUE CONVERTER)	292
	7	1,2	**204-8000**	6	ANCHOR-TIE	
	8	2	**205-3079**	1	ADAPTER	
	9	1	**208-4622**	1	STRAP AS	
	10	1	**213-7006**	1	HARNESS AS-ENGINE	
		1	**110-8769**	1	WIRE AS	
		1	**126-1774**	1	COVER	
		1	**102-8802**	2	KIT-RECEPTACLE (2-PIN)	
		1	**102-8803**	2	KIT-RECEPTACLE (3-PIN)	
					(EACH INCLUDES RECEPTACLE AS & WEDGE)	
		1	**134-2540**	1	RECEPTACLE AS-CONNECTOR (3-PIN)	
		1	**155-2255**	1	KIT-CONNECTING PLUG (12-PIN)	
		1	**155-2257**	1	KIT-CONNECTING PLUG (12-PIN)	
		1	**155-2260**	1	KIT-CONNECTING PLUG (3-PIN)	
		1	**155-2270**	7	KIT-CONNECTING PLUG (2-PIN)	
		1	**155-2274**	1	KIT-CONNECTING PLUG (6-PIN)	
		1	**174-0503**	1	KIT-CONNECTING PLUG (3-PIN)	
					(EACH INCLUDES PLUG AS, WEDGE, & INTERFACE SEAL)	
		1	**160-7689**	1	PLUG AS-CONNECTOR (70-PIN)	
		1	**121-2844**	1	HARNESS AS-WIRING (CRANK WITHOUT INJECT)	
		1	**209-6630**	1	TAG-INFORMATION	
		1	**102-8803**	2	KIT-RECEPTACLE (3-PIN)	
					(INCLUDES RECEPTACLE AS & WEDGE)	
		1	**155-2260**	1	KIT-CONNECTING PLUG (3-PIN)	
					(INCLUDES PLUG AS, WEDGE, & INTERFACE SEAL)	
	11	1	**213-7009**	1	CABLE AS (ALTERNATOR)	
		1	**1S-4915**	4	LINER (CONDUIT)	
		1	**1S-7251**	1	TERMINAL-RING (FOR 1/2-IN BOLT)	
E		1	**5P-0695**		CONDUIT (345-CM)	
E		1	**5P-0760**		CABLE (00-GA, RED) (380-CM)	
		1	**8N-0869**	2	COVER-TERMINAL (RED)	
E		1	**8T-2225**		TUBE-HEAT SHRINK (32-CM)	
E		1	**114-8843**		SLEEVE-PLASTIC (40-CM)	
		1	**170-3794**	1	RING-TERMINAL	
	12	1	**239-2240**	1	BRACKET AS	
	13	1	**0L-1143**	4	BOLT (3/8-16X2.5-IN)	
	14	1	**0S-1590**	2	BOLT (3/8-16X2-IN)	
	15	1,2	**104-6202**	2	CLIP	
	16	1,2	**132-5789**	3	CLIP	
Y	17	2	**161-9926**	1	SENSOR GP-PRESSURE (TURBO INLET)	284
	18	1,2	**193-3973**	6	TIE (WRAP)	
	19	1,2	**1S-0994**	5	CLIP	
Y	20	2	**237-0957**	1	SENSOR GP-PRESSURE (ENGINE OIL)	288
	21	1	**3E-4353**	2	WASHER-HARD (11X25X3-MM THK)	
	22	2	**3J-1907**	1	SEAL-O-RING	
	23	2	**3J-7354**	1	SEAL-O-RING	
	24	1	**4L-6454**	3	BOLT (3/8-16X1-IN)	

213-7004 **WIRING GP-ENGINE** *(contd.)* **i02351733**

NOTE	REF NO	GRAPHIC REF	PART NUMBER	QTY	PART NAME 1 2 3 4 5 6 (PRODUCT LEVEL)	SEE PAGE
	25	1	**4L-6459**	1	BOLT (3/8-16X2.5-IN)	
	26	2	**4P-7428**	3	CLIP	
	27	1,2	**4P-7429**	10	CLIP	
	28	2	**4P-7581**	2	CLIP	
	29	1	**4P-7582**	1	CLIP	
	30	1,2	**4P-8134**	11	CLIP	
	31	1	**5C-6266**	2	BOLT (5/8-11X1-IN)	
	32	1	**5P-2228**	2	BOLT (1/2-13X1-IN)	
	33	1,2	**6V-5839**	7	WASHER (11X21X2.5-MM THK)	
M	34	1	**6V-6317**	2	BOLT (M10X1.5X20-MM)	
M	35	1	**6V-7357**	4	BOLT (M6X1X25-MM)	
	36	1	**6V-8801**	1	NUT (3/8-16-THD)	
	37	2	**6V-9028**	1	SEAL-O-RING	
	38	1	**7J-0204**	1	SEAL-O-RING	
	39	1,2	**7K-1181**	44	STRAP-CABLE	
	40	1,2	**8T-4121**	20	WASHER-HARD (11X21X2.5-MM THK)	
M	41	1	**8T-4122**	2	WASHER-HARD (17X32X3.5-MM THK)	
M	42	2	**8T-4133**	1	NUT (M10X1.5 THD)	
M	43	1	**8T-4136**	2	BOLT (M10X1.5X25-MM)	
M	44	2	**8T-4137**	1	BOLT (M10X1.5X20-MM)	
M	45	1	**8T-4185**	1	BOLT (M10X1.5X50-MM)	
M	46	2	**8T-4195**	4	BOLT (M10X1.5X30-MM)	
	47	1	**8T-4223**	2	WASHER-HARD (13.5X25.5X3-MM THK)	
M	48	1	**8T-6466**	1	BOLT (M10X1.5X60-MM)	
	49	2	**9B-7237**	1	BOLT (3/8-16X1.25-IN)	
	50	1	**9X-8256**	4	WASHER (6.6X12X2-MM THK)	
	51	2	**269-5324**	1	PLATE AS	
	52	2	**4T-8050**	1	SPACER (11X19X57-MM THK)	
	53	2	**0T-0065**	1	BOLT (3/8-16X3.5-IN)	

E-ORDER BY THE CENTIMETER
M-METRIC PART
Y-SEPARATE ILLUSTRATION

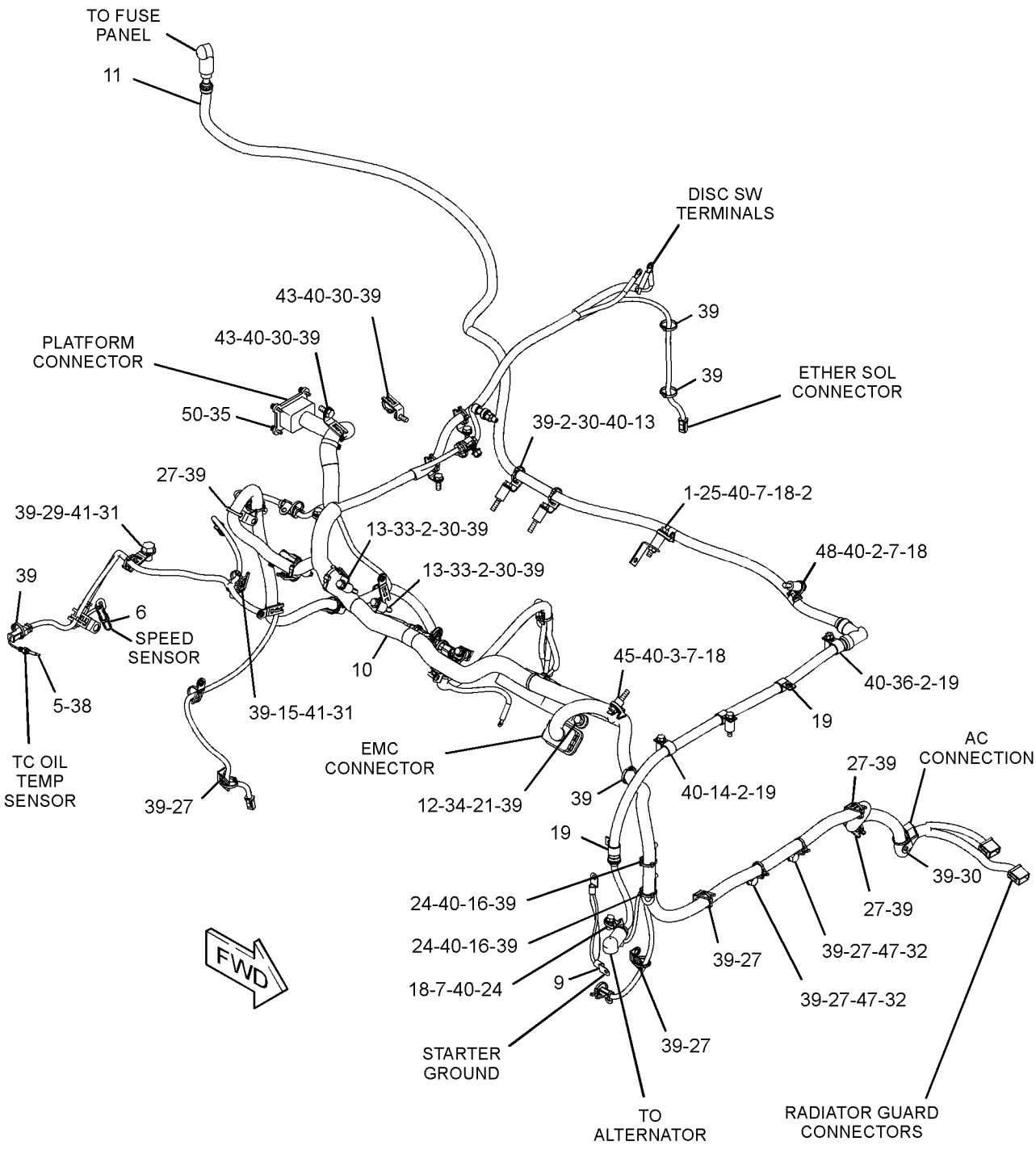

GRAPHIC #1 g01194583

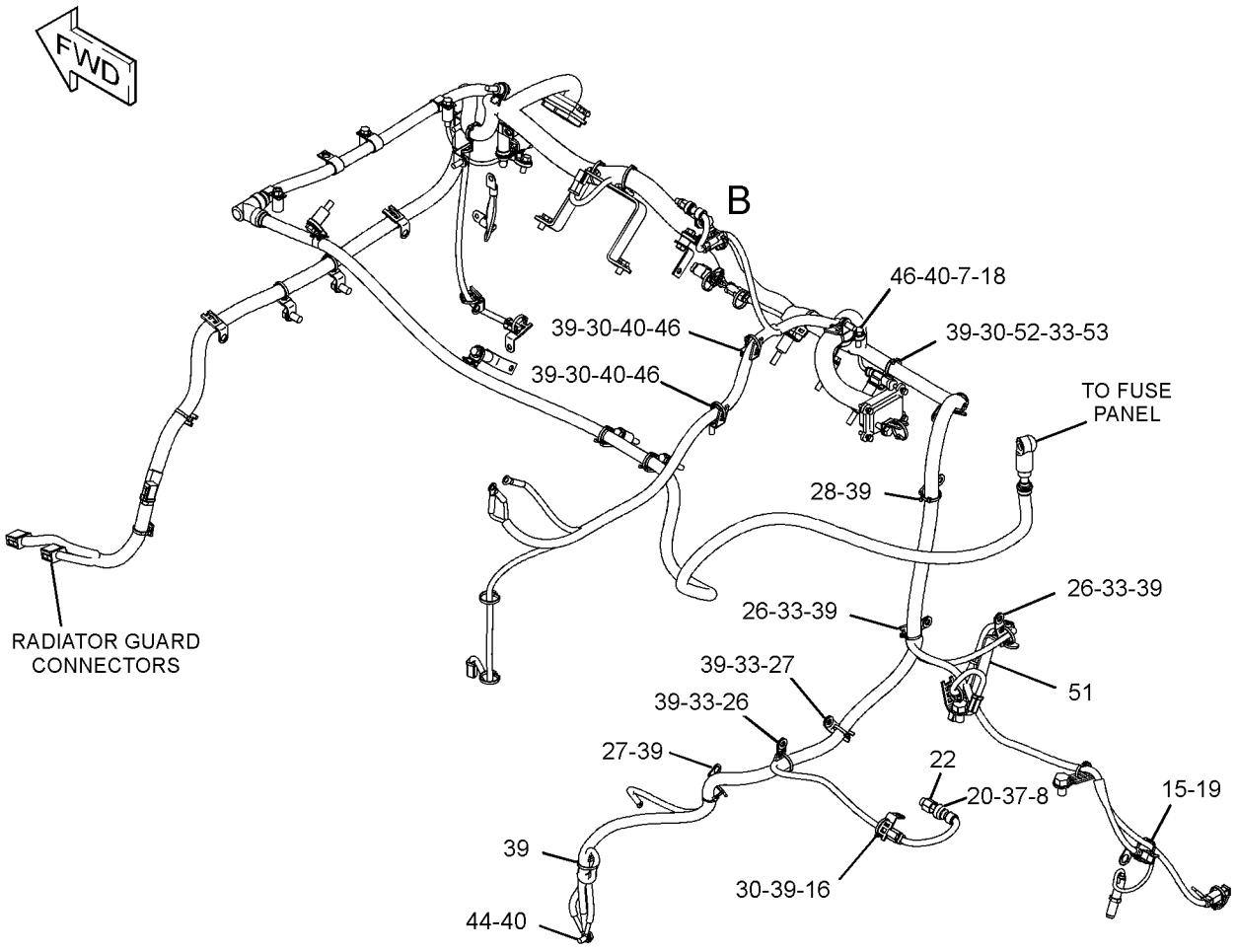

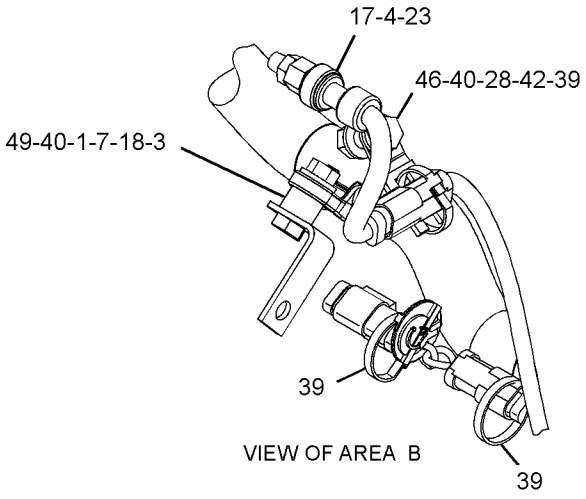

GRAPHIC #2 **<END>** g01194587

ELECTRICAL AND STARTING SYSTEM

213-7004 WIRING GP-ENGINE

S/N: RJG232-528

PART OF 212-2745 INSTALLATION AR-ENGINE

SMCS-1000, 1408 **i02397762**

NOTE	REF NO	GRAPHIC REF	PART NUMBER	QTY	PART NAME 1 2 3 4 5 6 (PRODUCT LEVEL)	SEE PAGE
	1	1	**4T-8050**	1	SPACER (11X19X57-MM THK)	
	2	1	**7N-1277**	2	BRACKET AS	
					(EACH INCLUDES)	
		1	**1F-0750**	1	NUT-WELD (3/8-16-THD)	
	3	1	**9G-7101**	9	SPACER (10.5X20X30-MM THK)	
	4	1	**9M-4136**	2	SPACER (0.438X0.75X0.5-IN THK)	
	5	1	**9X-0263**	1	ADAPTER	
Y	6	1	**145-7028**	1	SENSOR GP-TEMPERATURE (TORQUE CONVERTER OIL)	297
Y	7	1	**189-5746**	1	SENSOR GP-SPEED (TORQUE CONVERTER)	292
C	8	1	**204-8000**	7	ANCHOR-TIE	
	9	1	**205-3079**	1	ADAPTER	
	10	1	**208-4622**	1	STRAP AS	
	11	1	**213-7006**	1	HARNESS AS-ENGINE (ENGINE)	
		1	**110-8769**	1	WIRE AS	
		1	**126-1774**	1	COVER	
		1	**102-8802**	2	KIT-RECEPTACLE (2-PIN)	
		1	**102-8803**	2	KIT-RECEPTACLE (3-PIN)	
					(EACH INCLUDES RECEPTACLE AS & WEDGE)	
		1	**134-2540**	1	RECEPTACLE AS-CONNECTOR (3-PIN)	
		1	**155-2255**	1	KIT-CONNECTING PLUG (12-PIN)	
		1	**155-2257**	1	KIT-CONNECTING PLUG (12-PIN)	
		1	**155-2260**	1	KIT-CONNECTING PLUG (3-PIN)	
		1	**155-2270**	7	KIT-CONNECTING PLUG (2-PIN)	
		1	**155-2274**	1	KIT-CONNECTING PLUG (6-PIN)	
		1	**174-0503**	1	KIT-CONNECTING PLUG (3-PIN)	
					(EACH INCLUDES PLUG AS, WEDGE, & INTERFACE SEAL)	
		1	**160-7689**	1	PLUG AS-CONNECTOR (70-PIN)	
		1	**121-2844**	1	HARNESS AS-WIRING (CRANK WITHOUT INJECT)	
		1	**209-6630**	1	TAG-INFORMATION	
		1	**102-8803**	2	KIT-RECEPTACLE (3-PIN)	
					(INCLUDES RECEPTACLE AS & WEDGE)	
		1	**155-2260**	1	KIT-CONNECTING PLUG (3-PIN)	
					(INCLUDES PLUG AS, WEDGE, & INTERFACE SEAL)	
	12	1	**213-7009**	1	CABLE AS (ALTERNATOR)	
		1	**1S-4915**	4	LINER (CONDUIT)	
		1	**1S-7251**	1	TERMINAL-RING (FOR 1/2-IN BOLT)	
E		1	**5P-0695**		CONDUIT (345-CM)	
E		1	**5P-0760**		CABLE (00-GA, RED) (380-CM)	
		1	**8N-0869**	2	COVER-TERMINAL (RED)	
E		1	**8T-2225**		TUBE-HEAT SHRINK (32-CM)	
E		1	**114-8843**		SLEEVE-PLASTIC (40-CM)	
		1	**170-3794**	1	RING-TERMINAL	
	13	1	**239-2240**	1	BRACKET AS	
	14	1	**269-5324**	1	PLATE AS	
	15	1	**0L-1143**	4	BOLT (3/8-16X2.5-IN)	
	16	1	**0S-1590**	2	BOLT (3/8-16X2-IN)	
	17	1	**0T-0065**	1	BOLT (3/8-16X3.5-IN)	
	18	1	**104-6202**	2	CLIP	
	19	1	**132-5789**	3	CLIP	
Y	20	1	**161-9926**	1	SENSOR GP-PRESSURE (TURBO INLET)	284
C	21	1	**193-3973**	7	TIE (WRAP)	
	22	1	**1S-0994**	5	CLIP	
Y	23	1	**237-0957**	1	SENSOR GP-PRESSURE (ENGINE OIL)	288
	24	1	**3E-4353**	2	WASHER-HARD (11X25X3-MM THK)	

213-7004 **WIRING GP-ENGINE** *(contd.)* **i02397762**

NOTE	REF NO	GRAPHIC REF	PART NUMBER	QTY	PART NAME 1 2 3 4 5 6 (PRODUCT LEVEL)	SEE PAGE
	25	1	**3J-1907**	1	SEAL-O-RING	
	26	1	**3J-7354**	1	SEAL-O-RING	
	27	1	**4L-6454**	3	BOLT (3/8-16X1-IN)	
	28	1	**4L-6459**	1	BOLT (3/8-16X2.5-IN)	
	29	1	**4P-7428**	3	CLIP	
	30	1	**4P-7429**	11	CLIP	
	31	1	**4P-7581**	2	CLIP	
	32	1	**4P-7582**	1	CLIP	
C	33	1	**4P-8134**	10	CLIP	
	34	1	**5C-6266**	2	BOLT (5/8-11X1-IN)	
	35	1	**5P-2228**	2	BOLT (1/2-13X1-IN)	
	36	1	**6V-5839**	7	WASHER (11X21X2.5-MM THK)	
M	37	1	**6V-6317**	2	BOLT (M10X1.5X20-MM)	
M	38	1	**6V-7357**	4	BOLT (M6X1X25-MM)	
	39	1	**6V-8801**	1	NUT (3/8-16-THD)	
	40	1	**6V-9028**	1	SEAL-O-RING	
	41	1	**7J-0204**	1	SEAL-O-RING	
	42	1	**7K-1181**	44	STRAP-CABLE	
	43	1	**8T-4121**	20	WASHER-HARD (11X21X2.5-MM THK)	
M	44	1	**8T-4122**	2	WASHER-HARD (17X32X3.5-MM THK)	
M	45	1	**8T-4133**	1	NUT (M10X1.5 THD)	
M	46	1	**8T-4136**	2	BOLT (M10X1.5X25-MM)	
M	47	1	**8T-4137**	1	BOLT (M10X1.5X20-MM)	
CM	48	1	**8T-4186**	1	BOLT (M10X1.5X40-MM)	
M	49	1	**8T-4195**	4	BOLT (M10X1.5X30-MM)	
	50	1	**8T-4223**	2	WASHER-HARD (13.5X25.5X3-MM THK)	
M	51	1	**8T-6466**	1	BOLT (M10X1.5X60-MM)	
	52	1	**9B-7237**	1	BOLT (3/8-16X1.25-IN)	
	53	1	**9X-8256**	4	WASHER (6.6X12X2-MM THK)	

C-CHANGE FROM PREVIOUS TYPE
E-ORDER BY THE CENTIMETER
M-METRIC PART
Y-SEPARATE ILLUSTRATION

213-7004 **WIRING GP-ENGINE** *(contd.)* **i02397762**

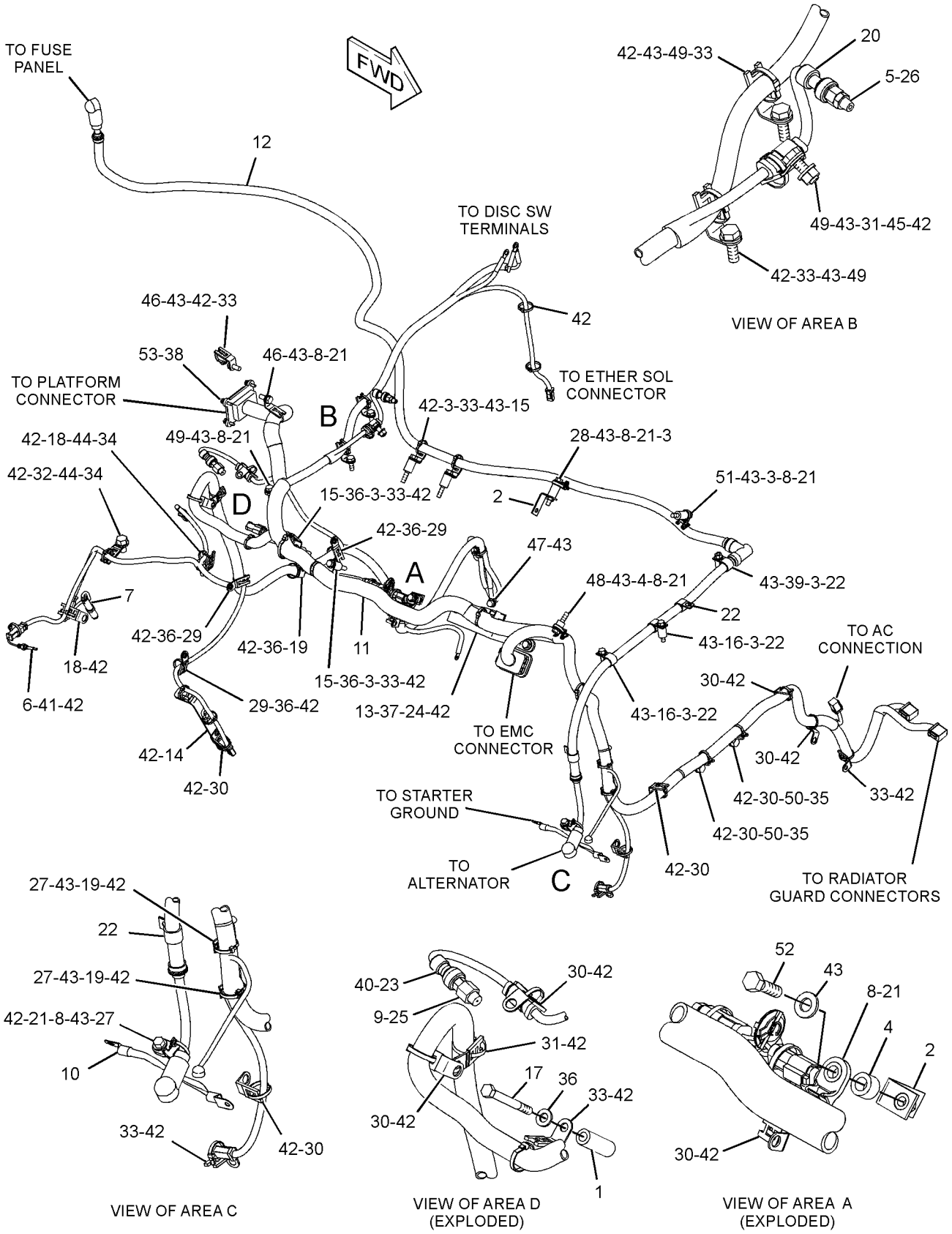

GRAPHIC #1 **<END>** g01226986

ELECTRICAL AND STARTING SYSTEM

213-7004 WIRING GP-ENGINE

S/N: RJG529-UP

PART OF 267-2900 INSTALLATION AR-ENGINE

SMCS-1000, 1408 **i02467704**

NOTE	REF NO	GRAPHIC REF	PART NUMBER	QTY	PART NAME 1 2 3 4 5 6 (PRODUCT LEVEL)	SEE PAGE
	1	1	**6B-6205**	1	SPACER (0.438X0.875X1.281-IN THK)	
	2	1	**7N-1277**	2	BRACKET AS	
					(EACH INCLUDES)	
		1	**1F-0750**	1	NUT-WELD (3/8-16-THD)	
	3	1	**9G-7101**	8	SPACER (10.5X20X30-MM THK)	
	4	1	**9M-4136**	2	SPACER (0.438X0.75X0.5-IN THK)	
	5	1	**9X-0263**	1	ADAPTER	
Y	6	1	**145-7028**	1	SENSOR GP-TEMPERATURE (TORQUE CONVERTER OIL)	297
Y	7	1	**189-5746**	1	SENSOR GP-SPEED (TORQUE CONVERTER)	292
	8	1	**204-8000**	11	ANCHOR-TIE	
	9	1	**205-3079**	1	ADAPTER	
	10	1	**208-4622**	1	STRAP AS (GROUND)	
	11	1	**213-7009**	1	CABLE AS (ALTERNATOR)	
		1	**1S-4915**	4	LINER (CONDUIT)	
		1	**1S-7251**	1	TERMINAL-RING (FOR 1/2-IN BOLT)	
E		1	**5P-0695**		CONDUIT (345-CM)	
E		1	**5P-0760**		CABLE (00-GA, RED) (380-CM)	
		1	**8N-0869**	2	COVER-TERMINAL (RED)	
E		1	**8T-2225**		TUBE-HEAT SHRINK (32-CM)	
E		1	**114-8843**		SLEEVE-PLASTIC (40-CM)	
		1	**170-3794**	1	RING-TERMINAL	
	12	1	**239-2240**	1	BRACKET AS	
	13	1	**269-5324**	1	PLATE AS	
	14	1	**275-6230**	1	HARNESS AS-ENGINE	
		1	**110-8769**	1	WIRE AS	
		1	**126-1774**	1	COVER	
		1	**102-8802**	2	KIT-RECEPTACLE (2-PIN)	
		1	**102-8803**	2	KIT-RECEPTACLE (3-PIN)	
					(EACH INCLUDES RECEPTACLE AS & WEDGE)	
		1	**134-2540**	1	RECEPTACLE AS-CONNECTOR (3-PIN)	
		1	**214-4208**	1	RECEPTACLE AS-CONNECTOR (70-PIN)	
		1	**155-2255**	1	KIT-CONNECTING PLUG (12-PIN)	
		1	**155-2257**	1	KIT-CONNECTING PLUG (12-PIN)	
		1	**155-2260**	1	KIT-CONNECTING PLUG (3-PIN)	
		1	**155-2270**	7	KIT-CONNECTING PLUG (2-PIN)	
		1	**155-2274**	1	KIT-CONNECTING PLUG (6-PIN)	
		1	**174-0503**	1	KIT-CONNECTING PLUG (3-PIN)	
					(EACH INCLUDES PLUG AS, WEDGE, & INTERFACE SEAL)	
		1	**160-7689**	1	PLUG AS-CONNECTOR (70-PIN)	
		1	**121-2844**	1	HARNESS AS-WIRING (CRANK WITHOUT INJECT)	
		1	**209-6630**	1	TAG-INFORMATION	
		1	**102-8803**	2	KIT-RECEPTACLE (3-PIN)	
					(EACH INCLUDES RECEPTACLE AS & WEDGE)	
		1	**155-2260**	1	KIT-CONNECTING PLUG (3-PIN)	
					(INCLUDES PLUG AS, WEDGE, & INTERFACE SEAL)	
	15	1	**0L-1143**	4	BOLT (3/8-16X2.5-IN)	
	16	1	**0S-1590**	1	BOLT (3/8-16X2-IN)	
	17	1	**104-6202**	2	CLIP	
	18	1	**132-5789**	1	CLIP	
Y	19	1	**161-9926**	1	SENSOR GP-PRESSURE (TURBOCHARGER INLET)	284
C	20	1	**193-3973**	15	TIE (WRAP)	
	21	1	**1S-0994**	2	CLIP	
Y	22	1	**237-0957**	1	SENSOR GP-PRESSURE (ENGINE OIL)	288
	23	1	**3E-4353**	2	WASHER-HARD (11X25X3-MM THK)	

213-7004 **WIRING GP-ENGINE** *(contd.)* **i02467704**

NOTE	REF NO	GRAPHIC REF	PART NUMBER	QTY	PART NAME 1 2 3 4 5 6 (PRODUCT LEVEL)	SEE PAGE
	24	1	**3J-1907**	1	SEAL-O-RING	
	25	1	**3J-7354**	1	SEAL-O-RING	
	26	1	**4L-6459**	1	BOLT (3/8-16X2.5-IN)	
	27	1	**4P-7428**	3	CLIP	
	28	1	**4P-7429**	11	CLIP	
	29	1	**4P-7581**	2	CLIP	
	30	1	**4P-7582**	1	CLIP	
C	31	1	**4P-8134**	9	CLIP	
	32	1	**5C-6266**	2	BOLT (5/8-11X1-IN)	
	33	1	**5P-2228**	2	BOLT (1/2-13X1-IN)	
	34	1	**6B-1557**	1	BOLT (3/8-16X7.5-IN)	
	35	1	**6V-5839**	6	WASHER (11X21X2.5-MM THK)	
M	36	1	**6V-6317**	2	BOLT (M10X1.5X20-MM)	
M	37	1	**6V-7357**	4	BOLT (M6X1X25-MM)	
	38	1	**6V-8801**	1	NUT (3/8-16-THD)	
	39	1	**6V-9028**	1	SEAL-O-RING	
	40	1	**7J-0204**	1	SEAL-O-RING	
C	41	1	**7K-1181**	41	STRAP-CABLE	
	42	1	**8T-4121**	18	WASHER-HARD (11X21X2.5-MM THK)	
M	43	1	**8T-4122**	2	WASHER-HARD (17X32X3.5-MM THK)	
M	44	1	**8T-4133**	2	NUT (M10X1.5 THD)	
M	45	1	**8T-4136**	3	BOLT (M10X1.5X25-MM)	
M	46	1	**8T-4137**	1	BOLT (M10X1.5X20-MM)	
M	47	1	**8T-4186**	3	BOLT (M10X1.5X40-MM)	
M	48	1	**8T-4195**	2	BOLT (M10X1.5X30-MM)	
	49	1	**8T-4223**	2	WASHER-HARD (13.5X25.5X3-MM THK)	
M	50	1	**8T-6466**	1	BOLT (M10X1.5X60-MM)	
	51	1	**9B-7237**	1	BOLT (3/8-16X1.25-IN)	
	52	1	**9X-6458**	1	WASHER-HARD (10.2X22.5X3-MM THK)	
	53	1	**9X-8256**	4	WASHER (6.6X12X2-MM THK)	

C-CHANGE FROM PREVIOUS TYPE
E-ORDER BY THE CENTIMETER
M-METRIC PART
Y-SEPARATE ILLUSTRATION

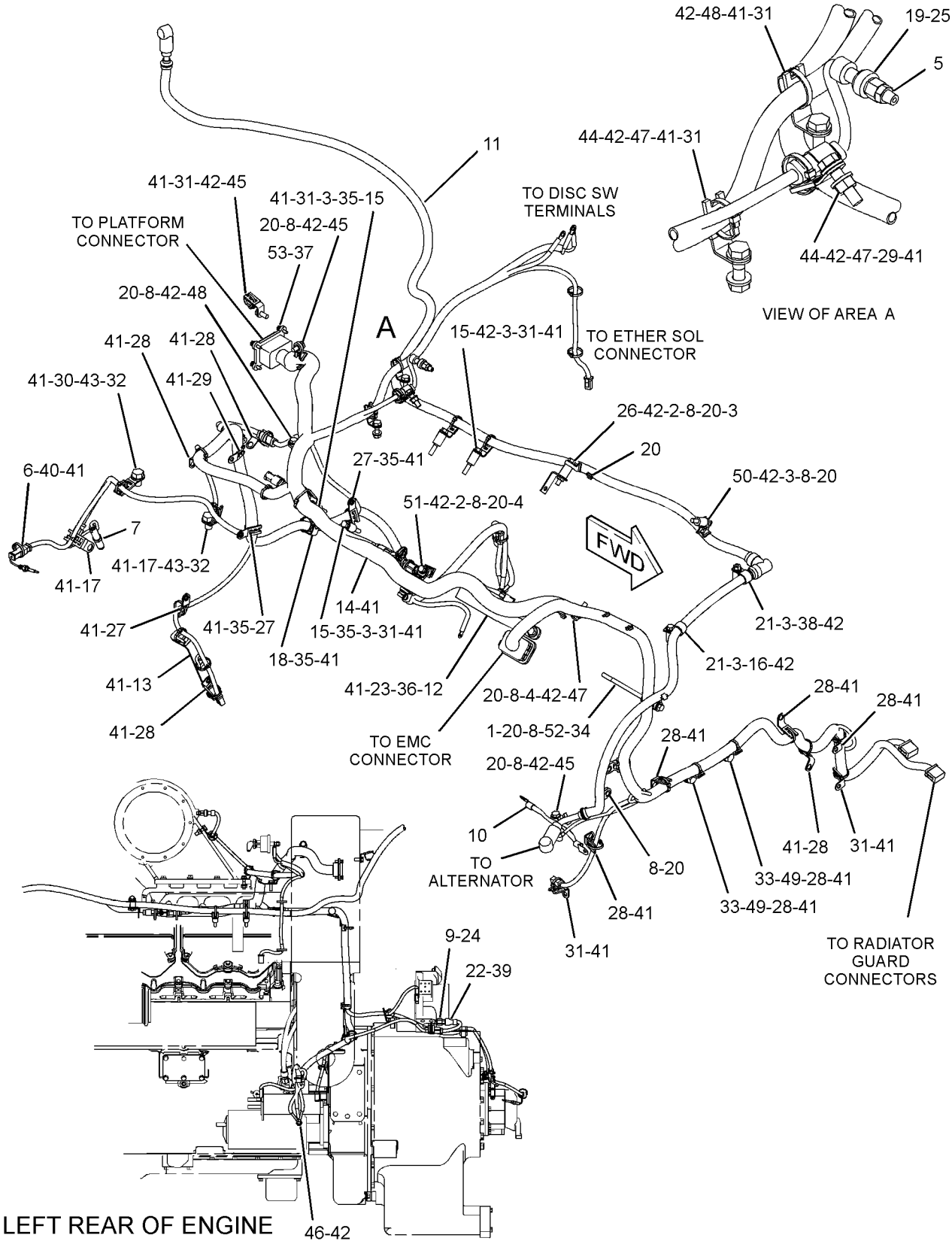

GRAPHIC #1 **<END>** g01233063

ELECTRICAL AND STARTING SYSTEM

218-7063 WIRING GP-PLATFORM

S/N: RJG1-UP

PART OF 219-4135 PLATFORM AR

SMCS-1408 **i02462810**

NOTE	REF NO	GRAPHIC REF	PART NUMBER	QTY	PART NAME 1 2 3 4 5 6 (PRODUCT LEVEL)	SEE PAGE
	1	1	**3E-5239**	1	RELAY AS (24-VOLT) (CONDENSER BLOWER MOTOR)	
	1A	1	**3E-5239**	1	RELAY AS (24-VOLT) (PRESSURIZER, CAB)	
	1B	1	**3E-5239**	1	RELAY AS (24-VOLT) (AIR CONDITIONER, HEATER)	
Y	2	1	**3E-6328**	1	ALARM GP (24-VOLT) (ACTION)	198
	3	1	**6I-1418**	8	SPACER (8.2X12.7X28.7-MM THK)	
	4	2	**7N-1996**	1	LAMP (24-VOLT) (REAR ACTION)	
	5	1	**8T-9655**	16	MOUNT-ISOLATION	
	6	2	**117-2311**	1	RECEPTACLE AS-POWER (12-VOLT)	
Y	7	1	**158-6632**	1	SWITCH GP-PUSH BUTTON	319
	8	2	**170-3461**	1	LAMP AS-INDICATOR (ACTION LIGHT)	
D		2	**5P-5623**		WIRE-ELECTRICAL (16-GA, BLACK) (0.3-M)	
		2	**186-3735**	2	PIN-CONNECTOR (16-GA TO 18-GA)	
		2	**3T-0304**	1	BASE-INDICATOR LIGHT	
		2	**102-8802**	1	KIT-RECEPTACLE (2-PIN)	
					(INCLUDES RECEPTACLE AS & WEDGE)	
		2	**3E-3365**	1	WEDGE-RECEPTACLE LOCK (2-PIN)	
E		2	**9X-1813**		SLEEVE (8-CM)	
D		2	**6V-2689**		TUBE-HEAT SHRINK (1-M)	
B	9	1	**204-2281**	21	TIE	
	10	1,2	**204-8000**	7	ANCHOR-TIE	
	11	1	**209-0381**	1	CONVERTER-POWER (24-VOLT TO 12-VOLT)	
	12	1	**210-3301**	1	HARNESS AS-PLATFORM	
		1	**126-1774**	4	COVER	
		1	**102-8802**	1	KIT-RECEPTACLE (2-PIN)	
		1	**102-8803**	2	KIT-RECEPTACLE (3-PIN)	
		1	**102-8806**	2	KIT-RECEPTACLE (8-PIN)	
		1	**102-8801**	1	KIT-RECEPTACLE (12-PIN)	
		1	**166-5229**	1	KIT-RECEPTACLE (12-PIN)	
		1	**177-9653**	4	KIT-RECEPTACLE (4-PIN)	
		1	**102-8805**	1	KIT-RECEPTACLE (6-PIN)	
					(EACH INCLUDES RECEPTACLE AS & WEDGE)	
		1	**134-2540**	6	RECEPTACLE AS-CONNECTOR (3-PIN)	
		1	**214-4208**	2	RECEPTACLE AS-CONNECTOR (70-PIN)	
		1	**155-2256**	1	KIT-CONNECTING PLUG (12-PIN)	
		1	**155-2255**	3	KIT-CONNECTING PLUG (12-PIN)	
		1	**155-2265**	1	KIT-CONNECTING PLUG (8-PIN)	
		1	**155-2260**	1	KIT-CONNECTING PLUG (3-PIN)	
		1	**155-2270**	1	KIT-CONNECTING PLUG (2-PIN)	
		1	**155-2271**	3	KIT-CONNECTING PLUG (4-PIN)	
		1	**155-2274**	3	KIT-CONNECTING PLUG (6-PIN)	
		1	**177-9656**	2	KIT-CONNECTING PLUG (4-PIN)	
		1	**174-0503**	3	KIT-CONNECTING PLUG (3-PIN)	
					(EACH INCLUDES PLUG AS, WEDGE, & INTERFACE SEAL)	
		1	**147-1446**	2	PLUG AS-CONNECTOR (70-PIN)	
		1	**147-1445**	2	PLUG AS-CONNECTOR (70-PIN)	
		1	**3E-5519**	1	PLUG AS-CONNECTOR (5-PIN)	
		1	**9X-1054**	2	PLUG AS-CONNECTOR (4-PIN)	
		1	**160-7689**	4	PLUG AS-CONNECTOR (70-PIN)	
Y	13	1	**223-8176**	1	PANEL GP-FUSE	271
	14	2	**223-8177**	1	HARNESS AS-CONSOLE (RH)	
		2	**9X-0196**	1	TERMINAL AS	
		2	**102-8803**	2	KIT-RECEPTACLE (3-PIN)	
		2	**102-8804**	1	KIT-RECEPTACLE (4-PIN)	
		2	**102-8805**	1	KIT-RECEPTACLE (6-PIN)	

218-7063 **WIRING GP-PLATFORM** ***(contd.)*** **i02462810**

NOTE	REF NO	GRAPHIC REF	PART NUMBER	QTY	PART NAME 1 2 3 4 5 6 (PRODUCT LEVEL)	SEE PAGE
		2	**102-8801**	1	KIT-RECEPTACLE (12-PIN)	
					(EACH INCLUDES RECEPTACLE AS & WEDGE)	
		2	**214-4208**	1	RECEPTACLE AS-CONNECTOR (70-PIN)	
		2	**180-0050**	2	KIT-CONNECTING PLUG (4-PIN)	
		2	**155-2255**	1	KIT-CONNECTING PLUG (12-PIN)	
		2	**155-2260**	2	KIT-CONNECTING PLUG (3-PIN)	
		2	**155-2270**	2	KIT-CONNECTING PLUG (2-PIN)	
		2	**155-2271**	2	KIT-CONNECTING PLUG (4-PIN)	
		2	**155-2274**	1	KIT-CONNECTING PLUG (6-PIN)	
					(EACH INCLUDES PLUG AS, WEDGE, & INTERFACE SEAL)	
	15	1	**224-9222**	1	BRACKET	
	16	1	**227-3127**	1	PLUG AS-CODE (POWER TRAIN)	
	16A	1	**227-3127**	1	PLUG AS-CODE (IMPLEMENT)	
					(EACH PLUG AS INCLUDES)	
		1	**9X-3401**	3	PIN-CONNECTOR (16-GA TO 18-GA)	
		1	**8T-8737**	3	PLUG-SEAL	
		1	**102-8805**	1	KIT-RECEPTACLE (6-PIN)	
					(INCLUDES RECEPTACLE AS & WEDGE)	
	17	2	**228-6089**	8	PLUG	
	18	2	**229-0774**	1	SWITCH AS-ROCKER (CYLINDER LIGHT)	
	19	2	**246-4311**	1	GUARD (SWITCH)	
	20	1	**252-5880**	1	CONTROL GP-ELECTRONIC	
	21	2	**259-2093**	1	LENS (RED)	
	22	1	**262-1408**	1	CONTROL GP-UNPROGRAMMED (POWER TRAIN)	
	22A	1	**262-1408**	1	CONTROL GP-UNPROGRAMMED (IMPLEMENT)	
M	23	1	**107-3786**	4	BOLT (M4X0.7X12-MM)	
J	24	2	**110-7887**	1	SWITCH GP-START (KEY)	
		2	**7T-6799**	1	NUT-MOUNTING (1-32-THD)	
		2	**102-8804**	1	KIT-RECEPTACLE (4-PIN)	
					(INCLUDES RECEPTACLE AS & WEDGE)	
		2	**186-3735**	4	PIN-CONNECTOR (16-GA TO 18-GA)	
	25	1,2	**130-5300**	4	CLIP	
	26	1	**156-6175**	1	CLIP	
	27	2	**222-7877**	1	SWITCH AS-ROCKER (THROTTLE)	
	28	2	**222-7879**	1	SWITCH AS-ROCKER (BI-DIRECTIONAL SHIFT)	
	29	2	**222-7880**	1	SWITCH AS-ROCKER (AUTO DOWN SHIFT)	
	30	2	**222-7883**	1	SWITCH AS-ROCKER (IMPLEMENT LOCKOUT)	
	31	2	**222-7884**	1	SWITCH AS-ROCKER (FENDER LIGHT)	
	32	2	**254-8195**	1	CONTROL GP-UNPROGRAMMED (MONITOR)	
	33	2	**211-4232**	1	HARNESS AS-MONITOR (ADVISOR)	
		2	**3S-2093**	10	STRAP-CABLE	
		2	**102-8804**	1	KIT-RECEPTACLE (4-PIN)	
		2	**102-8801**	1	KIT-RECEPTACLE (12-PIN)	
					(EACH INCLUDES RECEPTACLE AS & WEDGE)	
		2	**147-1444**	1	PLUG AS-CONNECTOR (70-PIN)	
	34	1	**216-1319**	1	HARNESS AS-DASH	
		1	**102-8801**	1	KIT-RECEPTACLE (12-PIN)	
					(INCLUDES RECEPTACLE AS & WEDGE)	
		1	**190-7613**	1	RECEPTACLE AS-CONNECTOR (12-PIN)	
		1	**214-4208**	1	RECEPTACLE AS-CONNECTOR (70-PIN)	
		1	**155-2255**	1	KIT-CONNECTING PLUG (12-PIN)	
		1	**155-2257**	1	KIT-CONNECTING PLUG (12-PIN)	
		1	**155-2270**	1	KIT-CONNECTING PLUG (2-PIN)	
		1	**155-2274**	1	KIT-CONNECTING PLUG (6-PIN)	
		1	**155-2260**	2	KIT-CONNECTING PLUG (3-PIN)	
					(EACH INCLUDES PLUG AS, WEDGE, & INTERFACE SEAL)	
		1	**155-2272**	1	PLUG AS-CONNECTOR (4-PIN)	
		1	**7X-6222**	1	PLUG AS-CONNECTOR (24-PIN)	

218-7063 **WIRING GP-PLATFORM** *(contd.)* **i02462810**

NOTE	REF NO	GRAPHIC REF	PART NUMBER	QTY	PART NAME 1 2 3 4 5 6 (PRODUCT LEVEL)	SEE PAGE
	35	1	**4P-7581**	2	CLIP	
	36	1,2	**4P-8134**	7	CLIP	
M	37	1	**5C-9553**	1	BOLT (M6X1X16-MM)	
M	38	2	**5P-7970**	2	NUT (M8X1.25-THD)	
B	39	1,2	**7K-1181**	21	STRAP-CABLE	
M	40	1	**7X-0818**	8	BOLT (M8X1.25X45-MM)	
M	41	1	**8T-0326**	6	BOLT (M5X0.5X25-MM)	
	42	1	**8T-0328**	6	WASHER-HARD (5.5X10X1-MM THK)	
	43	1,2	**8T-4121**	18	WASHER-HARD (11X21X2.5-MM THK)	
M	44	1	**8T-4136**	10	BOLT (M10X1.5X25-MM)	
M	45	1,2	**8T-4137**	5	BOLT (M10X1.5X20-MM)	
M	46	1,2	**8T-4138**	14	BOLT (M6X1X20-MM)	
M	47	1	**8T-4191**	2	BOLT (M10X1.5X16-MM)	
M	48	1	**8T-4195**	1	BOLT (M10X1.5X30-MM)	
M	49	1	**8T-4200**	4	BOLT (M8X1.25X16-MM)	
	50	1,2	**8T-4224**	8	WASHER-HARD (8.8X16X2-MM THK)	
M	51	2	**8T-4908**	2	BOLT (M8X1.25X25-MM)	
	52	1	**9N-0869**	16	WASHER-HARD (8.8X25.5X2-MM THK)	
M	53	1	**9X-1046**	2	SCREW (M4X0.7X18-MM)	
M	54	1,2	**9X-2042**	9	SCREW-TRUSS HEAD (M6X1X12-MM)	
	55	1,2	**9X-8256**	19	WASHER (6.6X12X2-MM THK)	

B-USE AS REQUIRED
D-ORDER BY THE METER
E-ORDER BY THE CENTIMETER
J-REQUIRES 5P-8500 KEY
M-METRIC PART
Y-SEPARATE ILLUSTRATION

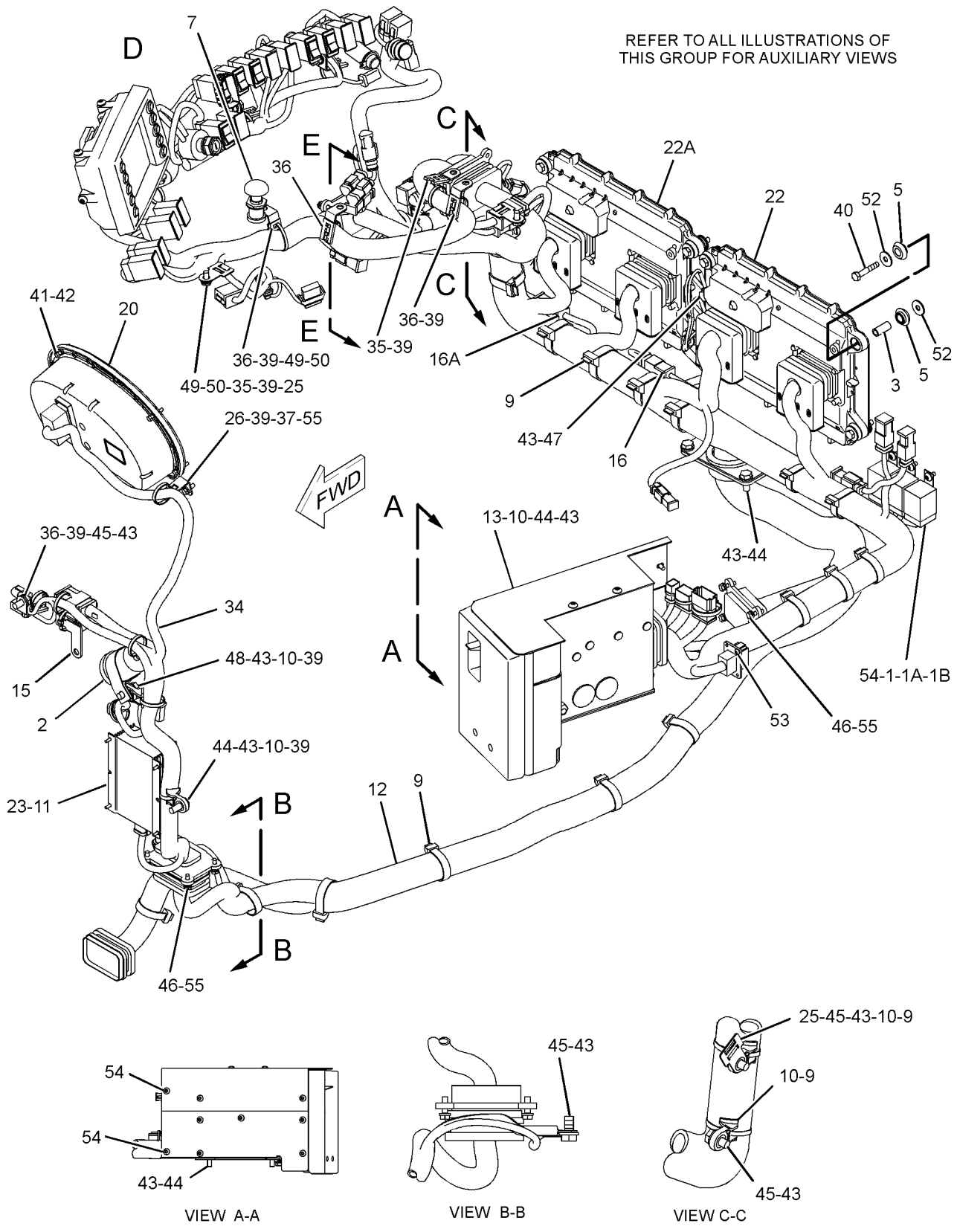

GRAPHIC #1 g01229150

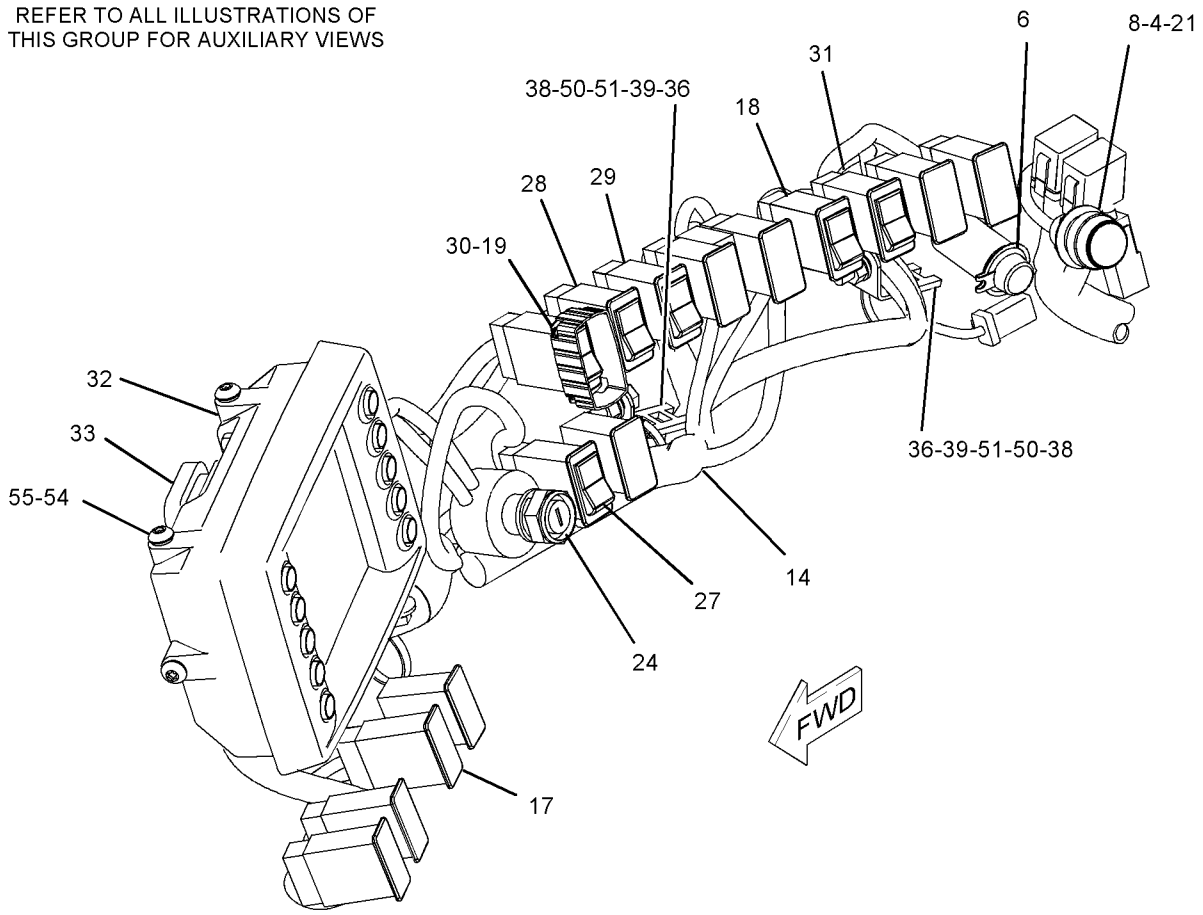

VIEW OF AREA D

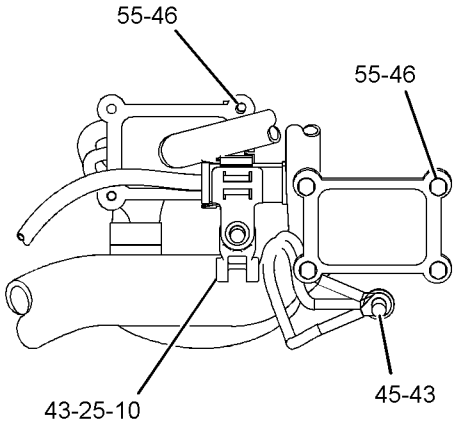

VIEW E-E

GRAPHIC #2 **<END>** g01142573

257-4183 WIRING GP-UNIT INJECTOR

S/N: RJG1-UP

FOR USE AS SERVICE REPAIR FOR INJECTOR HARNESSES WITH THE 7E-6513 CONNECTOR

FIELD INSTALLATION

SMCS-1290, 1408, 1900 **i02231604**

NOTE	PART NUMBER	QTY	PART NAME 1 2 3 4 5 6 (PRODUCT LEVEL)	SEE PAGE
			(NO SERVICED PARTS)	

<END>

110-2637 AXLE GP-POWER TRAIN

S/N: RJG1-UP

PART OF 212-2746 POWER TRAIN AR

SMCS-3282 **i01401277**

NOTE	REF NO	GRAPHIC REF	PART NUMBER	QTY	PART NAME 1 2 3 4 5 6 (PRODUCT LEVEL)	SEE PAGE
	1	1	**147-1226**	2	SHAFT AS	
					(EACH SHAFT AS INCLUDES)	
		1	**8E-0618**	1	BEARING-THRUST	
C	2	1	**150-1302**	2	SHAFT AS	
					(EACH SHAFT AS INCLUDES)	
		1	**8E-0618**	1	BEARING-THRUST	

QUANTITIES SHOWN ARE THOSE REQUIRED FOR BOTH LH AND RH SIDES
C-CHANGE FROM PREVIOUS TYPE

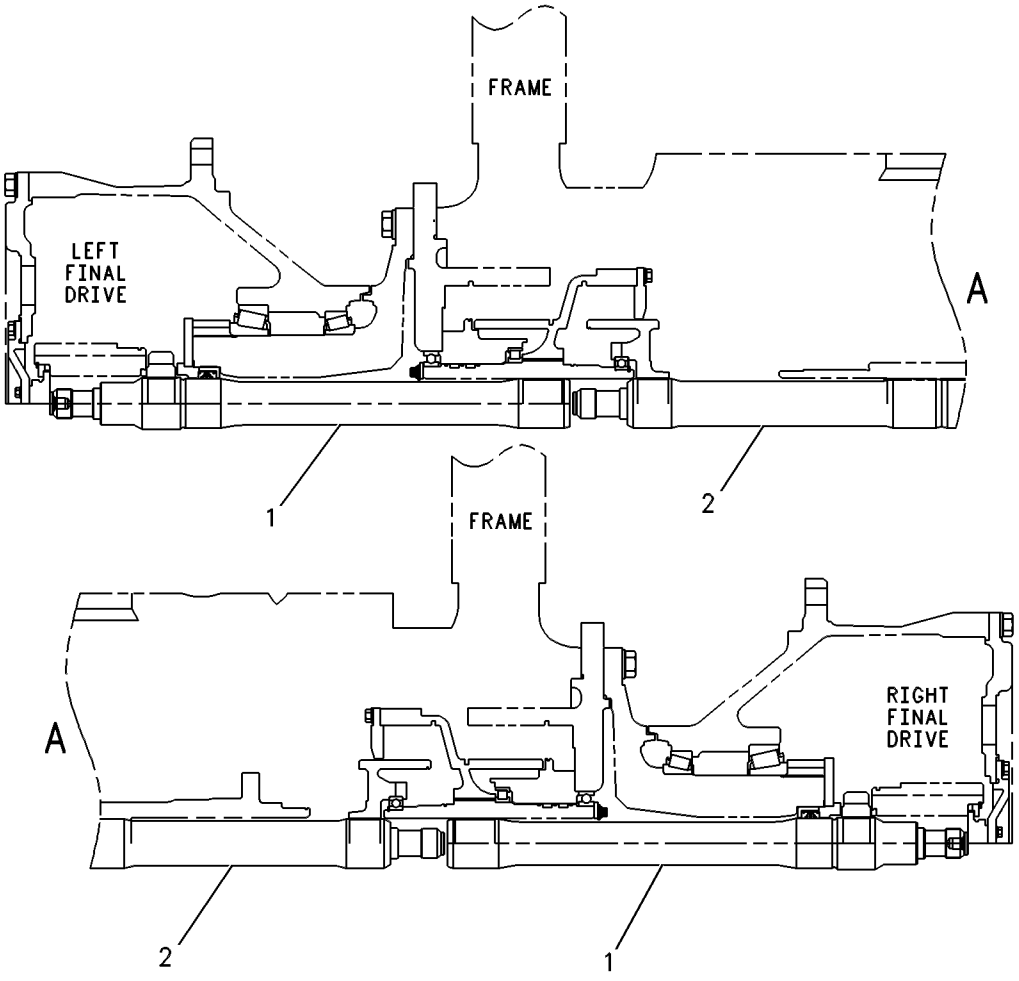

GRAPHIC #1 **<END>** g00252802

172-2263 CASE & PARTS GP-PLANETARY

S/N: DRL1-UP

PART OF 213-5171 TRANSMISSION AR

SMCS-3064 **i02284123**

NOTE	REF NO	GRAPHIC REF	PART NUMBER	QTY	PART NAME 1 2 3 4 5 6 (PRODUCT LEVEL)	SEE PAGE
	1	1	**110-9291**	1	COVER AS	
		1	**7M-8480**	2	DOWEL	
	2	1	**9M-9647**	3	SEAL-O-RING	
	3	1	**5P-8998**	1	FITTING	
	4	1	**172-3473**	1	CASE AS	
		1	**4B-9785**	3	BALL	
		1	**4D-8148**	2	DOWEL	
		1	**114-4655**	1	PLUG-CUP	
	5	1	**5P-9519**	1	SEAL-O-RING	
	6	1	**6L-9284**	1	SEAL-O-RING	
	7	1	**8S-9130**	1	SCREEN-SUCTION (TRANSMISSION SCAVENGE)	
	8	1	**8T-6762**	1	PLUG-PIPE	
Y	9	1	**106-4150**	1	DRAIN GP-ECOLOGY (TRANSMISSION CASE)	348
	10	1	**6L-9965**	1	SEAL-O-RING	
	11	1	**8T-2501**	4	BOLT (3/8-16X2-IN)	
	12	1	**9G-8615**	1	COVER	
	13	1	**8P-0058**	1	GASKET-COVER	
	14	1	**034-3557**	25	BOLT-LOCKING (3/8-16X1.125-IN)	
	15	1	**5K-9107**	2	BOLT-LOCKING (3/8-16XO.75-IN)	
	16	1	**5K-5120**	1	STRIP	
	17	1	**9S-7710**	1	ELBOW-FLARED	
	18	1	**5M-2894**	1	WASHER-HARD (10.2X18.5X2.5-MM THK)	
	19	1	**9S-1350**	1	CLIP	
	20	1	**172-4275**	1	COVER	
	21	1	**186-3161**	1	GASKET-COVER	
	22	1	**9S-4191**	4	PLUG-O RING	
	23	1	**3J-1907**	7	SEAL-O-RING	
	24	1	**2S-4078**	3	SEAL-O-RING	
	25	1	**8J-5914**	3	PLUG	
	26	1	**6V-0852**	3	CAP-DUST	
	27	1	**6V-3965**	3	FITTING AS (QUICK DISCONNECT)	
	28	1	**110-9299**	1	TUBE AS	
	29	1	**4K-5175**	4	BOLT-12 POINT HEAD (1/2-13X1.5-IN)	
	30	1	**5K-9235**	1	ELBOW-FLARED	
	31	1	**110-9300**	1	TUBE AS	
	32	1	**5K-9989**	1	TEE-FLARED	
	33	1	**8M-5266**	2	SEAL-O-RING	
	34	1	**112-4512**	1	TUBE	
	35	1	**9X-8880**	15	BOLT (5/8-11X2-IN)	
	36	1	**5P-8247**	15	WASHER-HARD (17X32X3.5-MM THK)	

Y-SEPARATE ILLUSTRATION

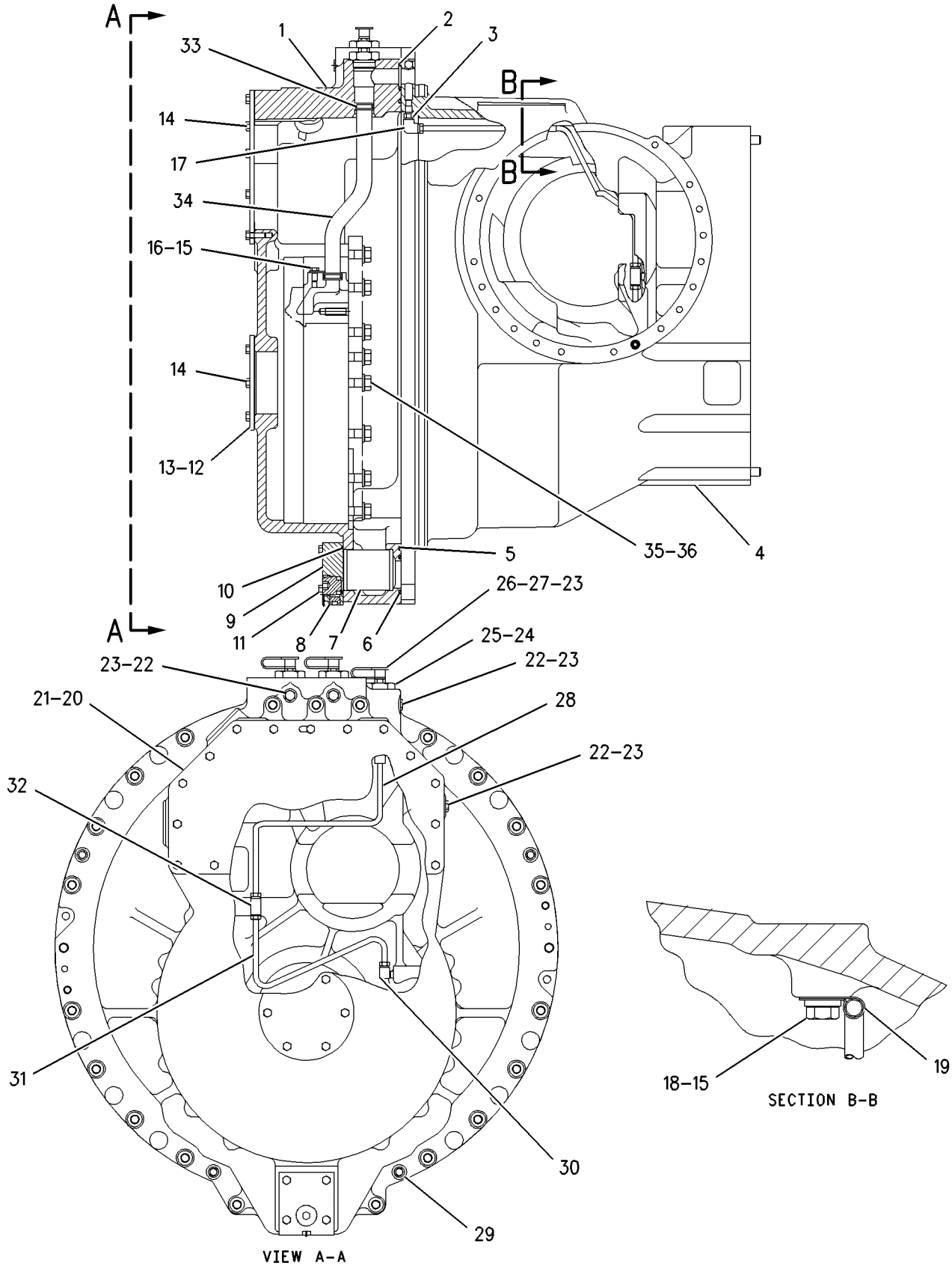

GRAPHIC #1 **<END>** g00753493

219-3034 CONTROL GP-TRANSMISSION HYD

S/N: DRL1-UP

PART OF 213-5171 TRANSMISSION AR

SMCS-3073, 3167 **i02467708**

NOTE	REF NO	GRAPHIC REF	PART NUMBER	QTY	PART NAME 1 2 3 4 5 6 (PRODUCT LEVEL)	SEE PAGE
	1	1	**219-3035**	1	HARNESS AS-TRANSMISSION	
		1	**6J-2419**	1	SEAL-O-RING	
		1	**102-8804**	1	KIT-RECEPTACLE (4-PIN)	
					(INCLUDES RECEPTACLE AS & WEDGE)	
		1	**155-2270**	7	KIT-CONNECTING PLUG (2-PIN)	
					(EACH INCLUDES PLUG AS, WEDGE, & INTERFACE SEAL)	
Y	2	1	*244-7000*	1	VALVE GP-CONTROL (TRANSMISSION)	674
	4	1	**132-5789**	3	CLIP	
	5	1	**3T-6457**	2	SLEEVE	
	6	1	**8M-4432**	4	SEAL-O-RING	
	7	1	**3S-2093**	5	STRAP-CABLE	
Y	8	1	**244-3114**	1	VALVE GP-MODULATING (24-VOLT) (TRANSMISSION REVERSE)	391
Y	8A	1	**244-3114**	1	VALVE GP-MODULATING (24-VOLT) (TRANSMISSION FORWARD)	391
Y	8B	1	**244-3114**	1	VALVE GP-MODULATING (24-VOLT) (TRANSMISSION 3RD GEAR)	391
Y	8C	1	**244-3114**	1	VALVE GP-MODULATING (24-VOLT) (TRANSMISSION 2ND GEAR)	391
Y	8D	1	**244-3114**	1	VALVE GP-MODULATING (24-VOLT) (TRANSMISSION 1ST GEAR)	391
	9	1	**5M-2894**	4	WASHER-HARD (10.2X18.5X2.5-MM THK)	
	10	1	**0S-1619**	4	BOLT (3/8-16X3-IN)	
	11	1	**9M-1974**	13	WASHER-HARD (8.8X16X2-MM THK)	
	12	1	**1D-4540**	10	BOLT (5/16-18X2.75-IN)	
	13	1	**104-6729**	1	RETAINER	
	14	1	**104-6730**	1	GASKET	
	15	1	**1A-2029**	2	BOLT (3/8-16X1.125-IN)	
	16	1	**2H-3755**	1	BOLT (5/16-18X0.43-IN)	
	17	1	**4P-7581**	2	CLIP	
	18	1	**1B-7182**	2	BOLT (5/16-18X1.25-IN)	
	19	1	**3T-4403**	2	SPRING	
	20	1	**193-0711**	1	COVER	

Y-SEPARATE ILLUSTRATION

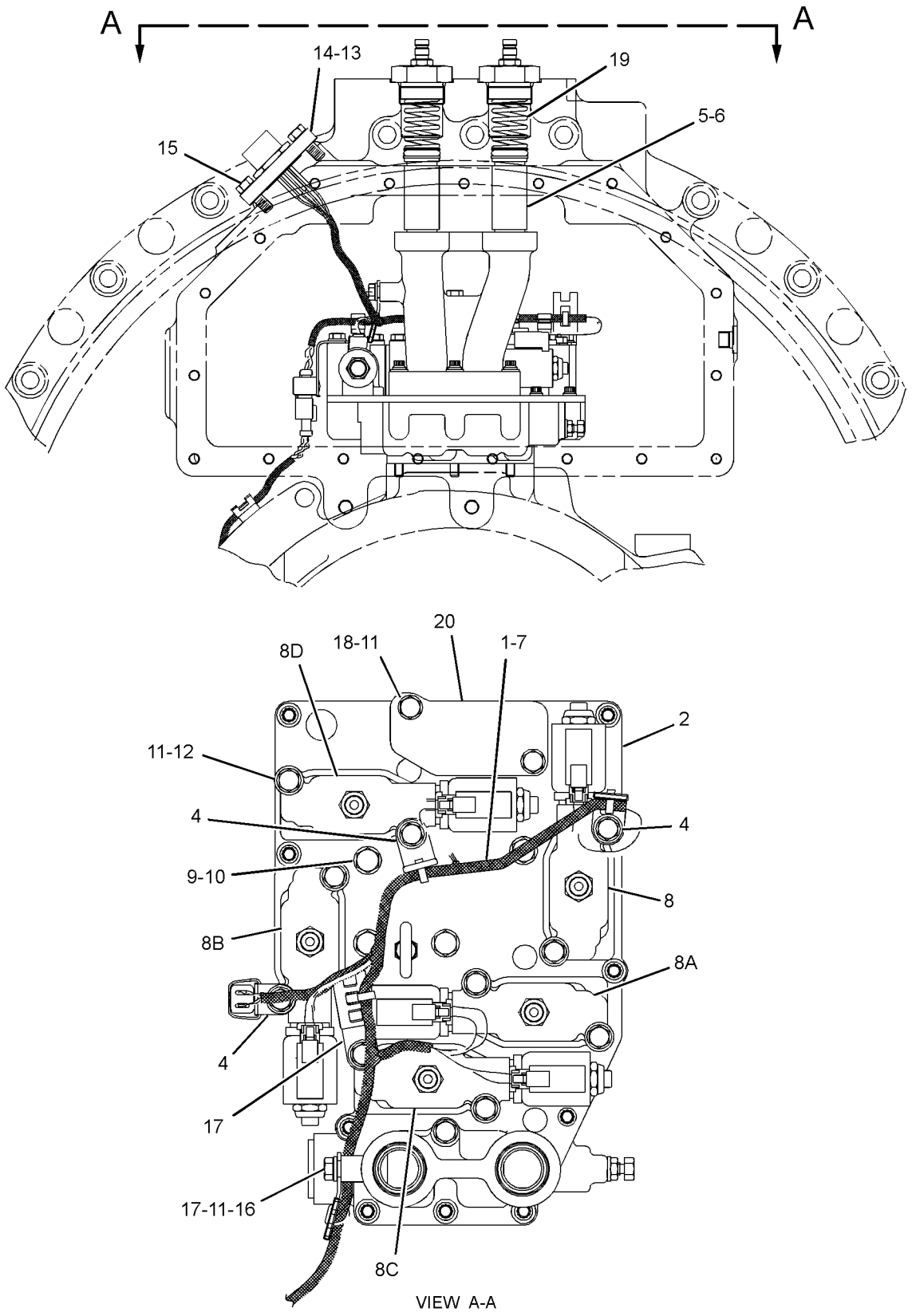

GRAPHIC #1 **<END>** g01230780

220-5548 COUPLING GP-PUMP

S/N: RJG1-UP

PART OF 212-2746 POWER TRAIN AR

SMCS-5062 **i02050402**

NOTE	REF NO	GRAPHIC REF	PART NUMBER	QTY	PART NAME 1 2 3 4 5 6 (PRODUCT LEVEL)	SEE PAGE
	1	1	**211-9087**	2	COUPLING AS	
					(EACH INCLUDES)	
	1A	1	**6Y-2130**	3	BUSHING AS	
	1B	1	**211-9085**	3	BUSHING AS	
Y	2	1	*220-5549*	1	SLIP JOINT GP	382
	3	1	**8T-4121**	12	WASHER-HARD (11X21X2.5-MM THK)	
M	4	1	**8T-4182**	6	BOLT (M10X1.5X45-MM)	
M	5	1	**8T-4185**	6	BOLT (M10X1.5X50-MM)	

M-METRIC PART
Y-SEPARATE ILLUSTRATION

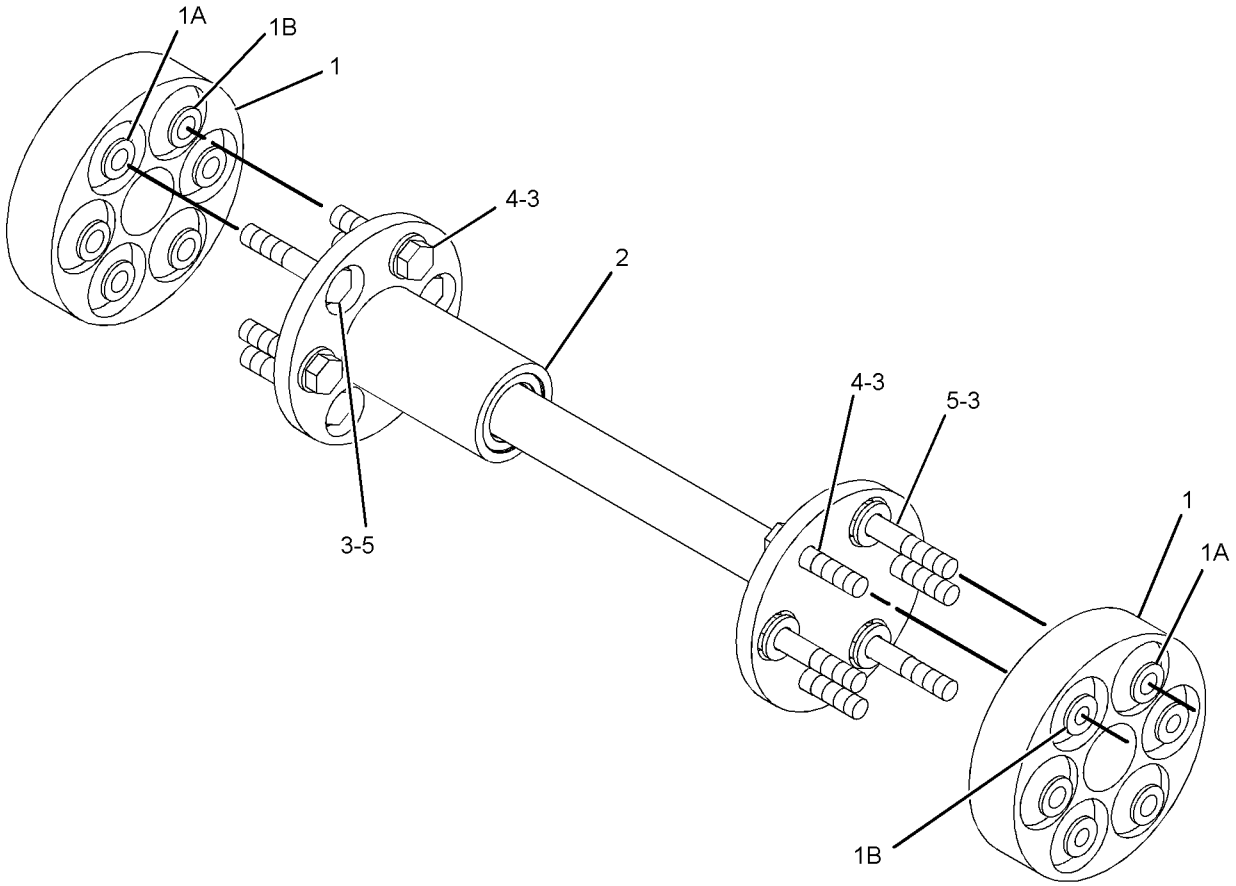

GRAPHIC #1 **<END>** g01052722

106-4150 DRAIN GP-ECOLOGY—POWER TRAIN

S/N: RJG1-UP; DRL1-UP

PART OF 172-2263 CASE & PARTS GP-PLANETARY, 226-7614 TORQUE CONVERTER GP

SMCS-3100 **i02128166**

NOTE	REF NO	GRAPHIC REF	PART NUMBER	QTY	PART NAME 1 2 3 4 5 6 (PRODUCT LEVEL)	SEE PAGE
	1	1	**4N-3808**	1	PIN-SPRING	
	2	1	**5P-9658**	1	SEAL-O-RING	

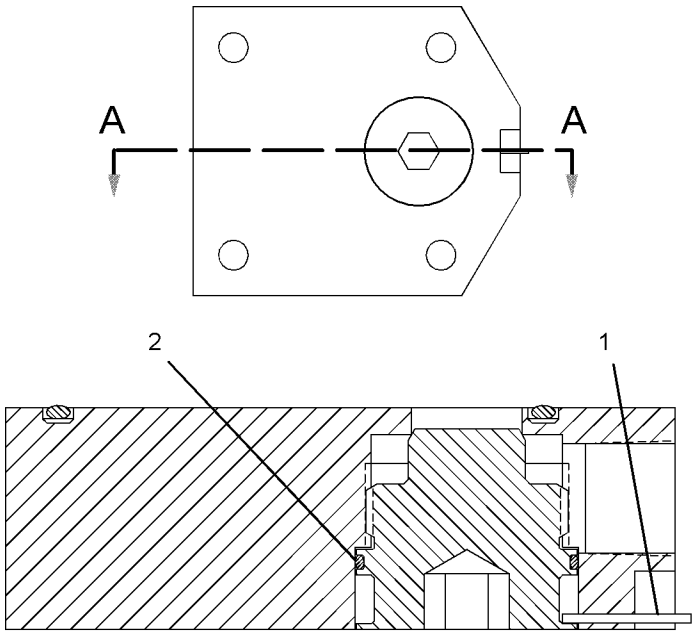

SEC-
TION
A-A

GRAPHIC #1 **<END>** g01083446

245-6555 FILTER GP-OIL–TRANSMISSION–
TMSN, TORQUE CONVERTER CHARGE
S/N: RJG1-UP
WITH HOUSING
PART OF 213-5172 LINES GP-POWER TRAIN OIL

SMCS-3004, 3067 **i02001505**

NOTE	REF NO	GRAPHIC REF	PART NUMBER	QTY	PART NAME 1 2 3 4 5 6 (PRODUCT LEVEL)	SEE PAGE
	1	1	**1R-1809**	1	FILTER ELEMENT AS-OIL (TRANSMISSION)	
	1A	1	**5P-8286**	1	SEAL-O-RING	
	3	1	**7G-4998**	1	SPOOL-BYPASS	
	4	1	**7M-1297**	1	SPRING	
	5	1	**133-2198**	1	SPRING	
	6	1	**241-3352**	1	HOUSING AS	
	6A	1	**9S-4191**	1	PLUG-O RING	
	6B	1	**3J-1907**	1	SEAL-O-RING	
	7	1	**245-6520**	1	BASE AS	
	9	1	**2S-4078**	1	SEAL-O-RING	
	10	1	**3D-2824**	1	SEAL-O-RING	
	11	1	**3J-1907**	1	SEAL-O-RING	
	12	1	**7M-8485**	1	SEAL-O-RING	
	13	1	**8T-4896**	6	WASHER-HARD (10.2X18.5X2.5-MM THK)	
	14	1	**8T-8915**	6	BOLT (3/8-16X3.25-IN)	
	15	1	**9S-4191**	1	PLUG-O RING	
	16	1	**9S-8008**	1	PLUG	
	17	1	**9S-8010**	1	PLUG	
	18	1	**9S-9334**	1	PLUG	

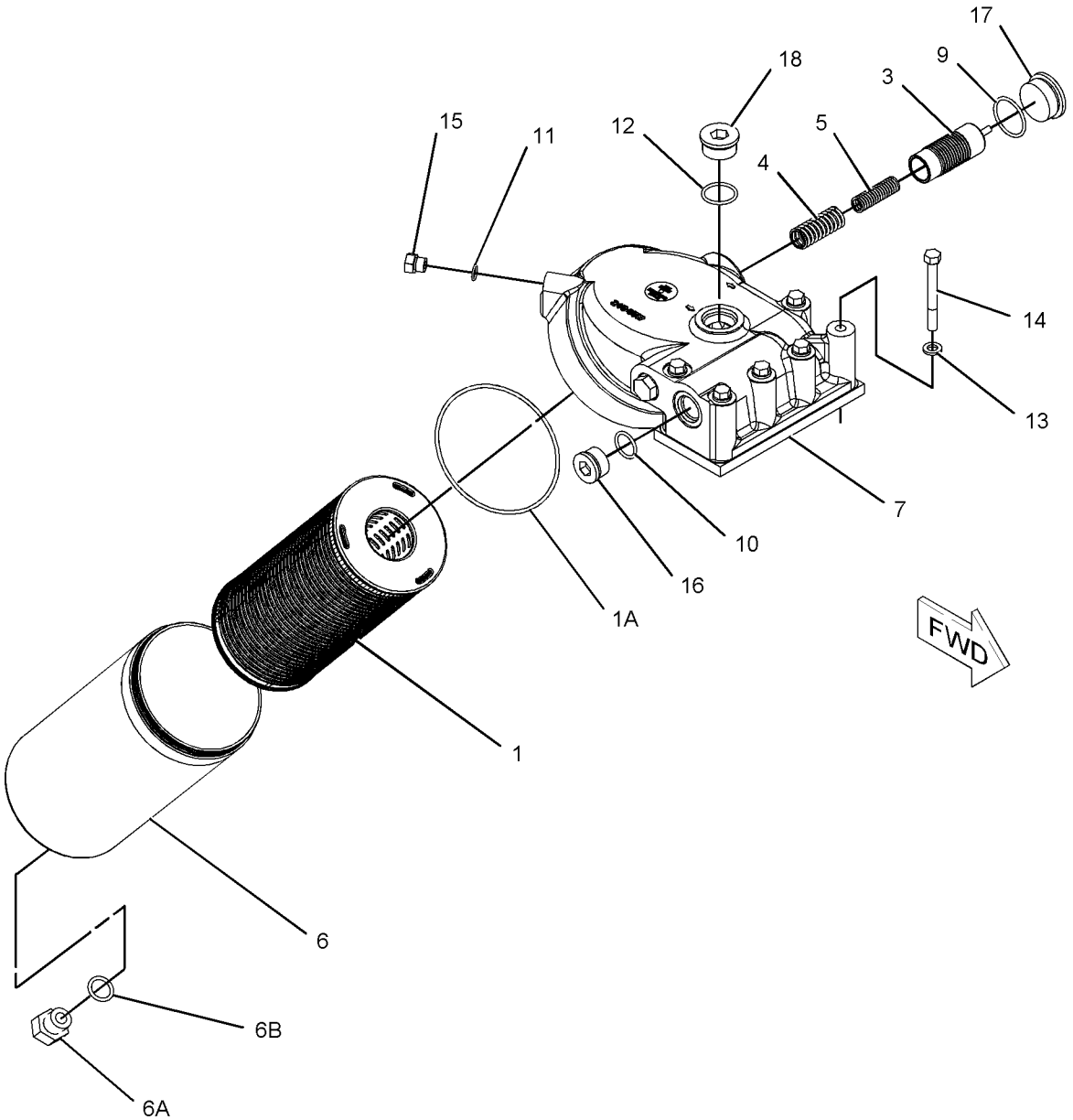

GRAPHIC #1 **<END>** g01039950

POWER TRAIN

110-2655 FINAL DRIVE GP

S/N: RJG1-UP

PART OF 212-2746 POWER TRAIN AR

FIELD REPLACEMENT ORDER 110-2656—PAGE 354

SMCS-4050 **i02284138**

NOTE	REF NO	GRAPHIC REF	PART NUMBER	QTY	PART NAME 1 2 3 4 5 6 (PRODUCT LEVEL)	SEE PAGE
	1	1	**8D-4771**	1	SEAL-O-RING	
	2	1	**8T-9412**	3	BOLT-12 POINT HEAD (1/2-13X1.5-IN)	
R	3	1	**110-2663**	1	HUB-SPINDLE	
	4	1	**130-6889**	1	SEAL GP-DUO-CONE	
		1	**127-0116**	2	RING-TORIC	
	5	1	**126-0588**	1	CONE-SPECIAL TAPERED	
	6	1	**3D-9133**	1	CUP-BEARING	
	7	1	**6V-8281**	1	CUP-BEARING	
	8	1	**126-0587**	1	CONE-SPECIAL TAPERED	
	9	1	**110-2664**	1	HUB-SPROCKET	
	10	1	**9W-9135**	1	HUB-REACTION	
	11	1	**5D-0353**	8	BOLT-LOCKING (3/8-16X1-IN)	
	12	1	**8P-5698**	4	PLATE	
CY	13	1	*160-4928*	1	SEGMENT GP-SPROCKET	380
	14	1	**9W-9132**	4	GEAR-PLANETARY (27-TEETH)	
	15	1	**9P-3657**	4	RING-LOCK	
	16	1	**1B-3978**	8	CUP-BEARING (TAPERED ROLLER)	
	17	1	**156-4593**	8	CONE-BEARING (TAPERED ROLLER)	
	18	1	**110-2665**	4	SHAFT-PLANETARY	
	19	1	**9P-3801**	4	SHAFT	
	20	1	**1L-7319**	8	CUP-BEARING	
	21	1	**1L-7203**	8	CONE-BEARING	
	22	1	**9W-9134**	4	GEAR-PLANETARY (25-TEETH)	
	23	1	**3T-3294**	1	CARRIER-PLANETARY	
	24	1	**8T-9400**	35	BOLT (7/8-9X2.5-IN)	
	25	1	**8C-6913**	35	WASHER-HARD (24X41.5X4-MM THK)	
	26	1	**5D-7523**	1	SEAL-O-RING	
	27	1	**6V-1653**	4	SEAL-QUAD RING	
	28	1	**3P-8827**	4	PLATE	
	29	1	**030-8538**	8	BOLT (1/2-13X1.25-IN)	
	30	1	**9M-5894**	1	SEAL-O-RING	
	31	1	**3P-8820**	1	RING-THRUST	
	32	1	**3P-8822**	1	COVER	
	33	1	**110-2674**	1	RING-THRUST	
	34	1	**9W-9133**	1	GEAR-SUN (22-TEETH)	
	35	1	**2S-0613**	1	RING-RETAINING	
	36	1	**6V-3298**	1	PLUG-MAGNETIC (FINAL DRIVE, OIL FILL)	
	37	1	**2S-4078**	1	SEAL-O-RING	
	38	1	**9S-4185**	1	PLUG (FINAL DRIVE, OIL DRAIN)	
	39	1	**3K-0360**	1	SEAL-O-RING	
	40	1	**5F-7054**	1	SEAL-O-RING	
	41	1	**9P-3555**	1	GEAR-RING (74-TEETH)	
	42	1	**9W-9136**	1	CARRIER-PLANETARY	
	43	1	**6T-6566**	1	RING-RETAINING	
	44	1	**5P-8944**	1	RING-RETAINING	
	45	1	**110-2662**	1	GEAR-SUN (18-TEETH)	
	46	1	**110-2671**	1	RETAINER	
	47	1	**124-2375**	1	SEAL-LIP TYPE	
	48	1	**110-2670**	1	HOLDER	
	49	1	**1D-4640**	30	BOLT (1-8X4.25-IN)	
	50	1	**5P-8250**	30	WASHER (28X49X5-MM THK)	
	51	1	**147-0071**	1	BEARING-THRUST	
	52	1	**5K-7143**	16	BOLT-SELF-LOCKING (1/2-13X1.5-IN)	
	53	1	**6T-0609**	16	PIN	
	54	1	**5P-8245**	8	WASHER-HARD (13.5X25.5X3-MM THK)	

110-2655 **FINAL DRIVE GP** *(contd.)* **i02284138**

NOTE	REF NO	GRAPHIC REF	PART NUMBER	QTY	PART NAME 1 2 3 4 5 6 (PRODUCT LEVEL)	SEE PAGE
	55	1	**7S-4326**	1	DOWEL	
	56	1	**8T-2502**	3	BOLT (3/8-16X1.125-IN)	
	57	1	**8T-4896**	3	WASHER-HARD (10.2X18.5X2.5-MM THK)	
	58	1	**8E-3124**	1	RETAINER	
	59	1	**6F-8146**	1	SEAL-O-RING	
	60	1	**8T-8917**	4	BOLT (1/2-13X1.25-IN)	
	61	1	**8T-4223**	4	WASHER-HARD (13.5X25.5X3-MM THK)	

C-CHANGE FROM PREVIOUS TYPE
R-REMFG PART MAY BE AVAILABLE
Y-SEPARATE ILLUSTRATION

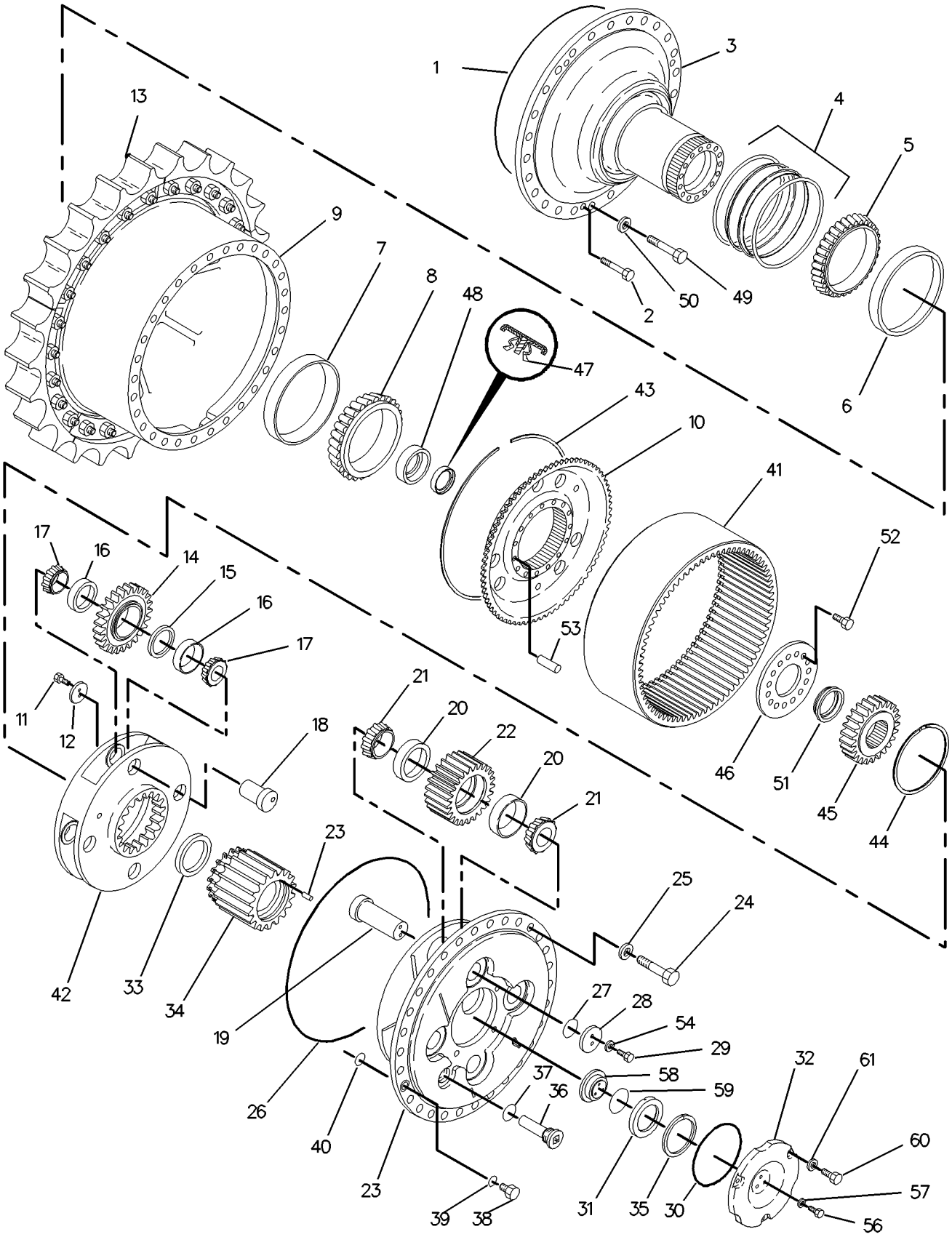

GRAPHIC #1 **<END>** g00998460

POWER TRAIN

110-2656 FINAL DRIVE GP*R

S/N: RJG1-UP

FIELD REPLACEMENT FOR 110-2655—PAGE 351

SMCS-4050 **i02284134**

NOTE	REF NO	GRAPHIC REF	PART NUMBER	QTY	PART NAME 1 2 3 4 5 6 (PRODUCT LEVEL)	SEE PAGE
	1	1	**8T-2502**	3	BOLT (3/8-16X1.125-IN)	
	2	1	**8T-4896**	3	WASHER-HARD (10.2X18.5X2.5-MM THK)	
	3	1	**030-8538**	8	BOLT (1/2-13X1.25-IN)	
	4	1	**5P-8245**	8	WASHER-HARD (13.5X25.5X3-MM THK)	
	5	1	**3P-8822**	1	COVER	
	6	1	**6V-3298**	1	PLUG-MAGNETIC (FINAL DRIVE OIL DRAIN)	
	7	1	**2S-4078**	1	SEAL-O-RING	
	8	1	**9S-4185**	1	PLUG	
	9	1	**3K-0360**	1	SEAL-O-RING	
	10	1	**5F-7054**	1	SEAL-O-RING	
	11	1	**3T-3294**	1	CARRIER-PLANETARY	
	12	1	**5D-7523**	1	SEAL-O-RING	
	13	1	**9M-5894**	1	SEAL-O-RING	
	14	1	**2S-0613**	1	RING-RETAINING	
	15	1	**3P-8827**	4	PLATE	
	16	1	**6V-1653**	4	SEAL-QUAD RING	
	17	1	**8T-9400**	35	BOLT (7/8-9X2.5-IN)	
	18	1	**8C-6913**	35	WASHER-HARD (24X41.5X4-MM THK)	
	19	1	**1L-7203**	8	CONE-BEARING	
	20	1	**1L-7319**	8	CUP-BEARING	
	21	1	**9W-9134**	4	GEAR-PLANETARY (25-TEETH)	
	22	1	**9W-9133**	1	GEAR-SUN (22-TEETH)	
	23	1	**7S-4326**	1	DOWEL	
	24	1	**9W-9136**	1	CARRIER-PLANETARY	
	25	1	**3P-8820**	1	RING-THRUST	
	26	1	**6F-8146**	1	SEAL-O-RING	
	27	1	**8E-3124**	1	RETAINER	
	28	1	**5K-7143**	16	BOLT-SELF-LOCKING (1/2-13X1.5-IN)	
	29	1	**110-2665**	4	SHAFT-PLANETARY	
	30	1	**5P-8944**	1	RING-RETAINING	
	31	1	**8P-5698**	4	PLATE	
	32	1	**5D-0353**	8	BOLT-LOCKING (3/8-16X1-IN)	
	33	1	**110-2662**	1	GEAR-SUN (18-TEETH)	
	34	1	**9P-3801**	4	SHAFT	
C	35	1	**147-0071**	1	BEARING-THRUST	
	36	1	**110-2671**	1	RETAINER	
	37	1	**9P-3555**	1	GEAR-RING (74-TEETH)	
	38	1	**156-4593**	8	CONE-BEARING (TAPERED ROLLER)	
	39	1	**1B-3978**	8	CUP-BEARING (TAPERED ROLLER)	
	40	1	**9W-9132**	4	GEAR-PLANETARY (27-TEETH)	
	41	1	**9P-3657**	4	RING-LOCK	
	42	1	**6T-0609**	16	PIN	
	43	1	**9W-9135**	1	HUB-REACTION	
	44	1	**6T-6566**	1	RING-RETAINING	
	45	1	**124-2375**	1	SEAL-LIP TYPE	
	46	1	**126-0587**	1	CONE-SPECIAL TAPERED	
	47	1	**6V-8281**	1	CUP-BEARING	
	48	1	**110-2664**	1	HUB-SPROCKET	
	49	1	**3D-9133**	1	CUP-BEARING	
	50	1	**126-0588**	1	CONE-SPECIAL TAPERED	
	51	1	**130-6889**	1	SEAL GP-DUO-CONE	
		1	**127-0116**	2	RING-TORIC	
R	52	1	**110-2663**	1	HUB-SPINDLE	
	53	1	**8D-4771**	1	SEAL-O-RING	
	54	1	**8T-4223**	4	WASHER-HARD (13.5X25.5X3-MM THK)	
	55	1	**8T-8917**	4	BOLT (1/2-13X1.25-IN)	

110-2656 FINAL DRIVE GP *(contd.)* i02284134

NOTE	REF NO	GRAPHIC REF	PART NUMBER	QTY	PART NAME 1 2 3 4 5 6 (PRODUCT LEVEL)	SEE PAGE
	56	1	**110-2670**	1	HOLDER	
	57	1	**110-2674**	1	RING-THRUST	

C-CHANGE FROM PREVIOUS TYPE
R-REMFG PART MAY BE AVAILABLE

110-2656 FINAL DRIVE GP *(contd.)* i02284134

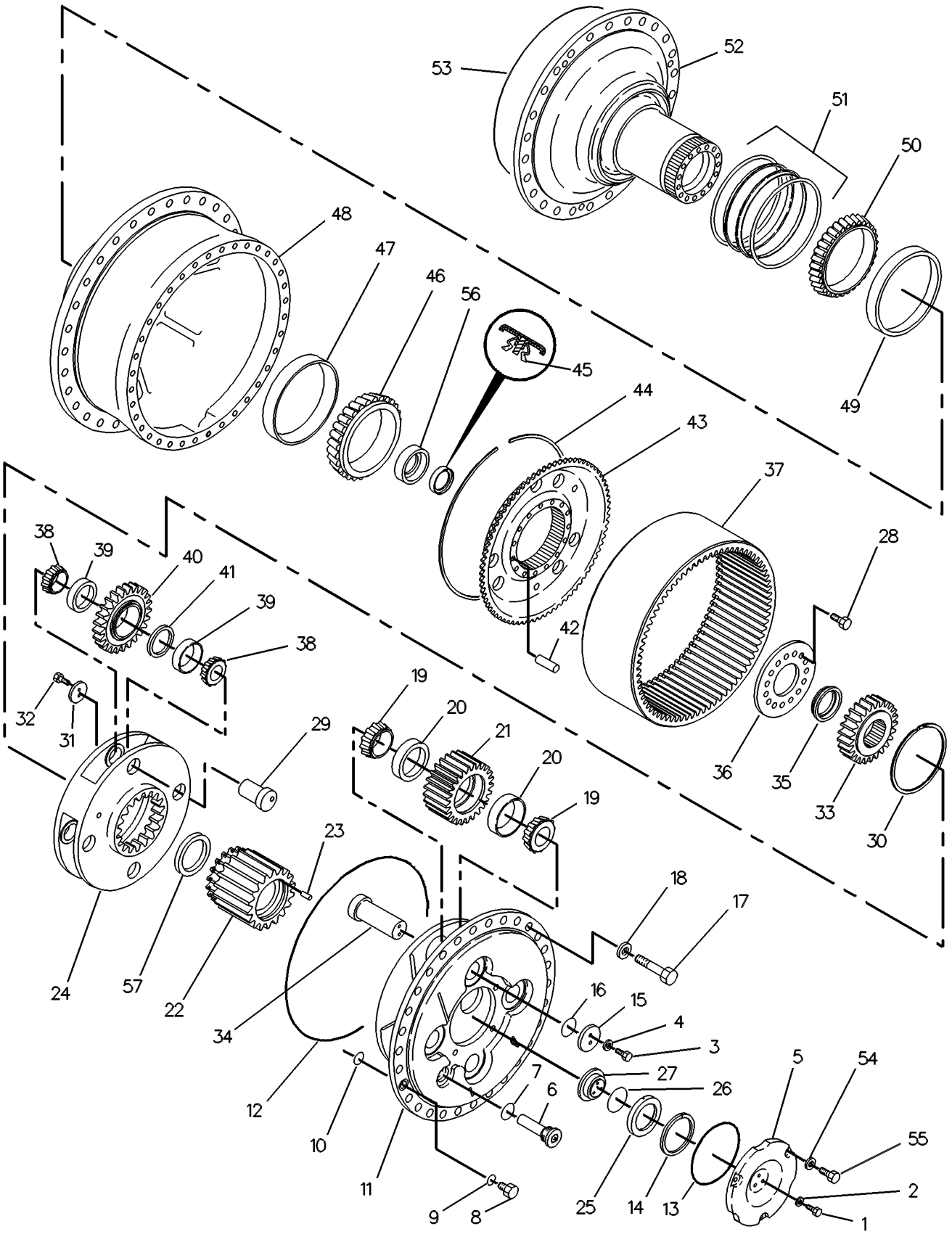

GRAPHIC #1 **<END>** g00252846

POWER TRAIN

110-2780 FINAL DRIVE GP—COLD WEATHER

S/N: RJG1-UP

PART OF 238-4491, 238-4492 COLD WEATHER AR

AN ATTACHMENT

SMCS-4050 **i02023877**

NOTE	REF NO	GRAPHIC REF	PART NUMBER	QTY	PART NAME 1 2 3 4 5 6 (PRODUCT LEVEL)	SEE PAGE
	1	1	**8D-4771**	1	SEAL-O-RING	
	2	1	**8T-9412**	3	BOLT-12 POINT HEAD (1/2-13X1.5-IN)	
R	3	1	**110-2663**	1	HUB-SPINDLE	
	4	1	**118-2900**	1	SEAL GP-DUO-CONE	
		1	**3P-1849**	2	RING-SEALING	
	5	1	**126-0588**	1	CONE-SPECIAL TAPERED	
	6	1	**3D-9133**	1	CUP-BEARING	
	7	1	**6V-8281**	1	CUP-BEARING	
	8	1	**126-0587**	1	CONE-SPECIAL TAPERED	
	9	1	**110-2664**	1	HUB-SPROCKET	
	10	1	**9W-9135**	1	HUB-REACTION	
	11	1	**5D-0353**	8	BOLT-LOCKING (3/8-16X1-IN)	
	12	1	**8P-5698**	4	PLATE	
CY	13	1	*160-4928*	1	SEGMENT GP-SPROCKET	380
	14	1	**9W-9132**	4	GEAR-PLANETARY (27-TEETH)	
	15	1	**9P-3657**	4	RING-LOCK	
	16	1	**1B-3978**	8	CUP-BEARING (TAPERED ROLLER)	
	17	1	**156-4593**	8	CONE-BEARING (TAPERED ROLLER)	
	18	1	**110-2665**	4	SHAFT-PLANETARY	
	19	1	**9P-3801**	4	SHAFT	
	20	1	**1L-7319**	8	CUP-BEARING	
	21	1	**1L-7203**	8	CONE-BEARING	
	22	1	**9W-9134**	4	GEAR-PLANETARY (25-TEETH)	
	23	1	**3T-3294**	1	CARRIER-PLANETARY	
	24	1	**8T-9400**	35	BOLT (7/8-9X2.5-IN)	
	25	1	**8C-6913**	35	WASHER-HARD (24X41.5X4-MM THK)	
	26	1	**5D-7523**	1	SEAL-O-RING	
	27	1	**6V-1653**	4	SEAL-QUAD RING	
	28	1	**3P-8827**	4	PLATE	
	29	1	**030-8538**	8	BOLT (1/2-13X1.25-IN)	
	30	1	**9M-5894**	1	SEAL-O-RING	
	31	1	**3P-8820**	1	RING-THRUST	
	32	1	**3P-8822**	1	COVER	
	33	1	**110-2674**	1	RING-THRUST	
	34	1	**9W-9133**	1	GEAR-SUN (22-TEETH)	
	35	1	**2S-0613**	1	RING-RETAINING	
	36	1	**6V-3298**	1	PLUG-MAGNETIC (FINAL DRIVE, OIL FILL)	
	37	1	**2S-4078**	1	SEAL-O-RING	
	38	1	**9S-4185**	1	PLUG (FINAL DRIVE, OIL DRAIN)	
	39	1	**3K-0360**	1	SEAL-O-RING	
	40	1	**5F-7054**	1	SEAL-O-RING	
	41	1	**9P-3555**	1	GEAR-RING (74-TEETH)	
	42	1	**9W-9136**	1	CARRIER-PLANETARY	
	43	1	**6T-6566**	1	RING-RETAINING	
	44	1	**5P-8944**	1	RING-RETAINING	
	45	1	**110-2662**	1	GEAR-SUN (18-TEETH)	
	46	1	**110-2671**	1	RETAINER	
	47	1	**124-2375**	1	SEAL-LIP TYPE	
	48	1	**110-2670**	1	HOLDER	
	49	1	**1D-4640**	30	BOLT (1-8X4.25-IN)	
	50	1	**5P-8250**	30	WASHER (28X49X5-MM THK)	
	51	1	**147-0071**	1	BEARING-THRUST	
	52	1	**5K-7143**	16	BOLT-SELF-LOCKING (1/2-13X1.5-IN)	
	53	1	**6T-0609**	16	PIN	
	54	1	**5P-8245**	8	WASHER-HARD (13.5X25.5X3-MM THK)	

110-2780 FINAL DRIVE GP *(contd.)* i02023877

NOTE	REF NO	GRAPHIC REF	PART NUMBER	QTY	PART NAME 1 2 3 4 5 6 (PRODUCT LEVEL)	SEE PAGE
	55	1	**7S-4326**	1	DOWEL	
	56	1	**8T-2502**	3	BOLT (3/8-16X1.125-IN)	
	57	1	**8T-4896**	3	WASHER-HARD (10.2X18.5X2.5-MM THK)	
	58	1	**8E-3124**	1	RETAINER	
	59	1	**6F-8146**	1	SEAL-O-RING	
	60	1	**8T-8917**	4	BOLT (1/2-13X1.25-IN)	
	61	1	**8T-4223**	4	WASHER-HARD (13.5X25.5X3-MM THK)	

C-CHANGE FROM PREVIOUS TYPE
R-REMFG PART MAY BE AVAILABLE
Y-SEPARATE ILLUSTRATION

110-2780 FINAL DRIVE GP *(contd.)* **i02023877**

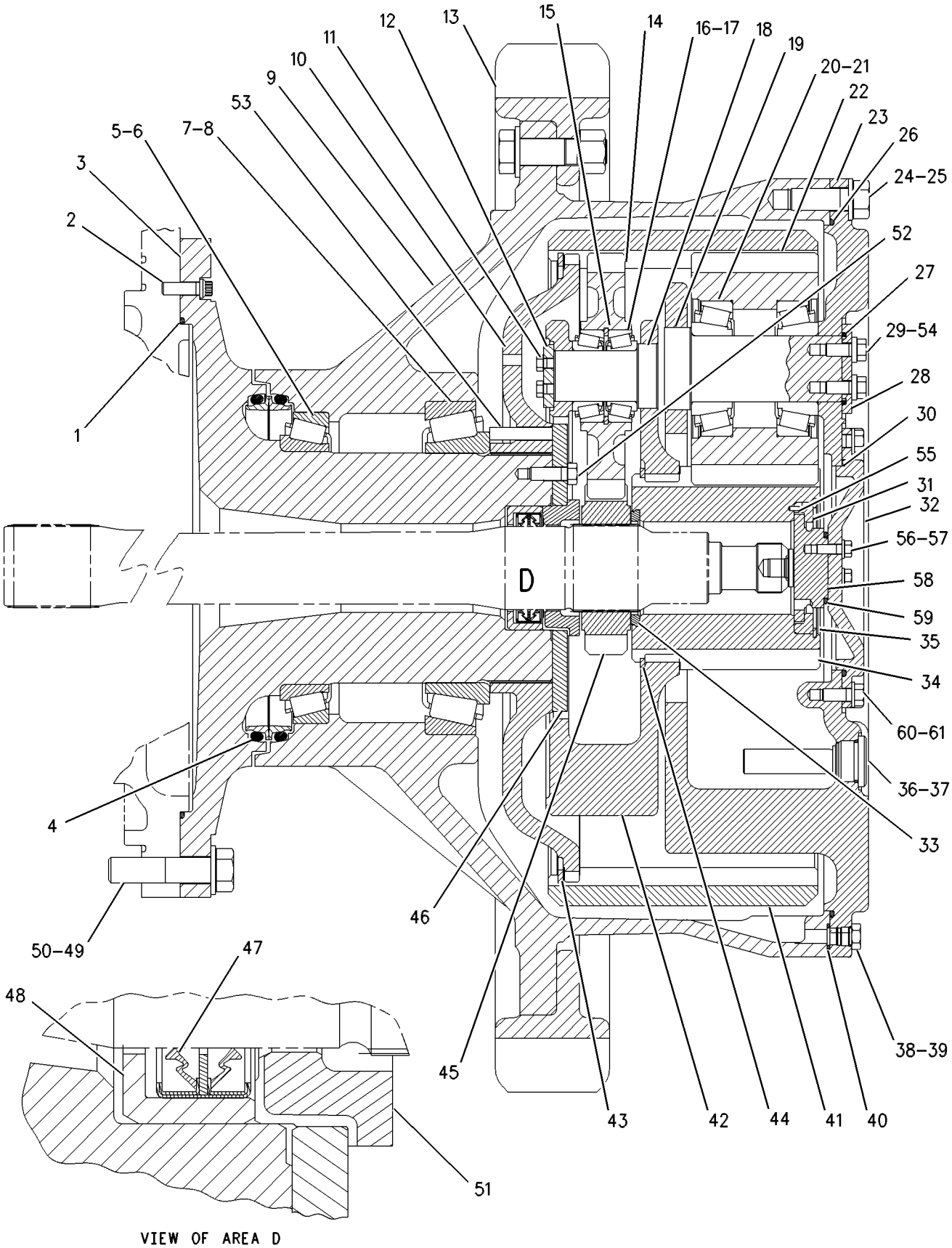

VIEW OF AREA D

GRAPHIC #1 **<END>** g00516326

192-0722 FINAL DRIVE GP—WASTE HANDLER

S/N: RJG1-UP

PART OF 143-7543 GUARD AR-FINAL DRIVE

AN ATTACHMENT

SMCS-4050 **i02034237**

NOTE	REF NO	GRAPHIC REF	PART NUMBER	QTY	PART NAME 1 2 3 4 5 6 (PRODUCT LEVEL)	SEE PAGE
	1	1	**8D-4771**	1	SEAL-O-RING	
	2	1	**8T-9412**	3	BOLT-12 POINT HEAD (1/2-13X1.5-IN)	
	3	1	**189-8874**	1	SPINDLE AS	
		1	**0R-8521**	1	HUB-SPROCKET	
					—OR—	
R		1	**110-2663**	1	HUB-SPINDLE	
		1	**189-3064**	1	GUARD	
	4	1	**130-6889**	1	SEAL GP-DUO-CONE	
		1	**127-0116**	2	RING-TORIC	
	5	1	**126-0588**	1	CONE-SPECIAL TAPERED	
	6	1	**3D-9133**	1	CUP-BEARING	
	7	1	**6V-8281**	1	CUP-BEARING	
	8	1	**126-0587**	1	CONE-SPECIAL TAPERED	
	9	1	**189-8869**	1	HUB AS-SPROCKET	
		1	**189-3065**	1	GUARD	
	10	1	**9W-9135**	1	HUB-REACTION	
	11	1	**5D-0353**	8	BOLT-LOCKING (3/8-16X1-IN)	
	12	1	**8P-5698**	4	PLATE	
Y	13	1	*160-4928*	1	SEGMENT GP-SPROCKET	380
	14	1	**9W-9132**	4	GEAR-PLANETARY (27-TEETH)	
	15	1	**9P-3657**	4	RING-LOCK	
	16	1	**1B-3978**	8	CUP-BEARING (TAPERED ROLLER)	
	17	1	**156-4593**	8	CONE-BEARING (TAPERED ROLLER)	
	18	1	**110-2665**	4	SHAFT-PLANETARY	
	19	1	**9P-3801**	4	SHAFT	
	20	1	**1L-7319**	8	CUP-BEARING	
	21	1	**1L-7203**	8	CONE-BEARING	
	22	1	**9W-9134**	4	GEAR-PLANETARY (25-TEETH)	
	23	1	**3T-3294**	1	CARRIER-PLANETARY	
	24	1	**8T-9400**	35	BOLT (7/8-9X2.5-IN)	
	25	1	**8C-6913**	35	WASHER-HARD (24X41.5X4-MM THK)	
	26	1	**5D-7523**	1	SEAL-O-RING	
	27	1	**6V-1653**	4	SEAL-QUAD RING	
	28	1	**3P-8827**	4	PLATE	
	29	1	**030-8538**	8	BOLT (1/2-13X1.25-IN)	
	30	1	**9M-5894**	1	SEAL-O-RING	
	31	1	**3P-8820**	1	RING-THRUST	
	32	1	**3P-8822**	1	COVER	
	33	1	**110-2674**	1	RING-THRUST	
	34	1	**9W-9133**	1	GEAR-SUN (22-TEETH)	
	35	1	**2S-0613**	1	RING-RETAINING	
	36	1	**6V-3298**	1	PLUG-MAGNETIC (FINAL DRIVE)	
	37	1	**2S-4078**	1	SEAL-O-RING	
	38	1	**9S-4185**	1	PLUG	
	39	1	**3K-0360**	1	SEAL-O-RING	
	40	1	**5F-7054**	1	SEAL-O-RING	
	41	1	**9P-3555**	1	GEAR-RING (74-TEETH)	
	42	1	**9W-9136**	1	CARRIER-PLANETARY	
	43	1	**6T-6566**	1	RING-RETAINING	
	44	1	**5P-8944**	1	RING-RETAINING	
	45	1	**110-2662**	1	GEAR-SUN (18-TEETH)	
	46	1	**110-2671**	1	RETAINER	
	47	1	**124-2375**	1	SEAL-LIP TYPE	
	48	1	**110-2670**	1	HOLDER	
	49	1	**1D-4640**	30	BOLT (1-8X4.25-IN)	

192-0722 FINAL DRIVE GP *(contd.)* i02034237

NOTE	REF NO	GRAPHIC REF	PART NUMBER	QTY	PART NAME 1 2 3 4 5 6 (PRODUCT LEVEL)	SEE PAGE
	50	1	**5P-8250**	30	WASHER (28X49X5-MM THK)	
	51	1	**147-0071**	1	BEARING-THRUST	
	52	1	**5K-7143**	16	BOLT-SELF-LOCKING (1/2-13X1.5-IN)	
	53	1	**6T-0609**	16	PIN	
	54	1	**5P-8245**	8	WASHER-HARD (13.5X25.5X3-MM THK)	
	55	1	**7S-4326**	1	DOWEL	
	56	1	**8T-2502**	3	BOLT (3/8-16X1.125-IN)	
	57	1	**8T-4896**	3	WASHER-HARD (10.2X18.5X2.5-MM THK)	
	58	1	**8E-3124**	1	RETAINER	
	59	1	**6F-8146**	1	SEAL-O-RING	
	60	1	**8T-8917**	4	BOLT (1/2-13X1.25-IN)	
	61	1	**8T-4223**	4	WASHER-HARD (13.5X25.5X3-MM THK)	
	62	1	**189-6244**	2	SEAL	
	63	1	**189-3063**	2	RETAINER	
	64	1	**8C-6561**	16	BOLT (5/16-18X1.375-IN)	
	65	1	**8T-4224**	16	WASHER-HARD (8.8X16X2-MM THK)	

R-REMFG PART MAY BE AVAILABLE
Y-SEPARATE ILLUSTRATION

192-0722 FINAL DRIVE GP *(contd.)* **i02034237**

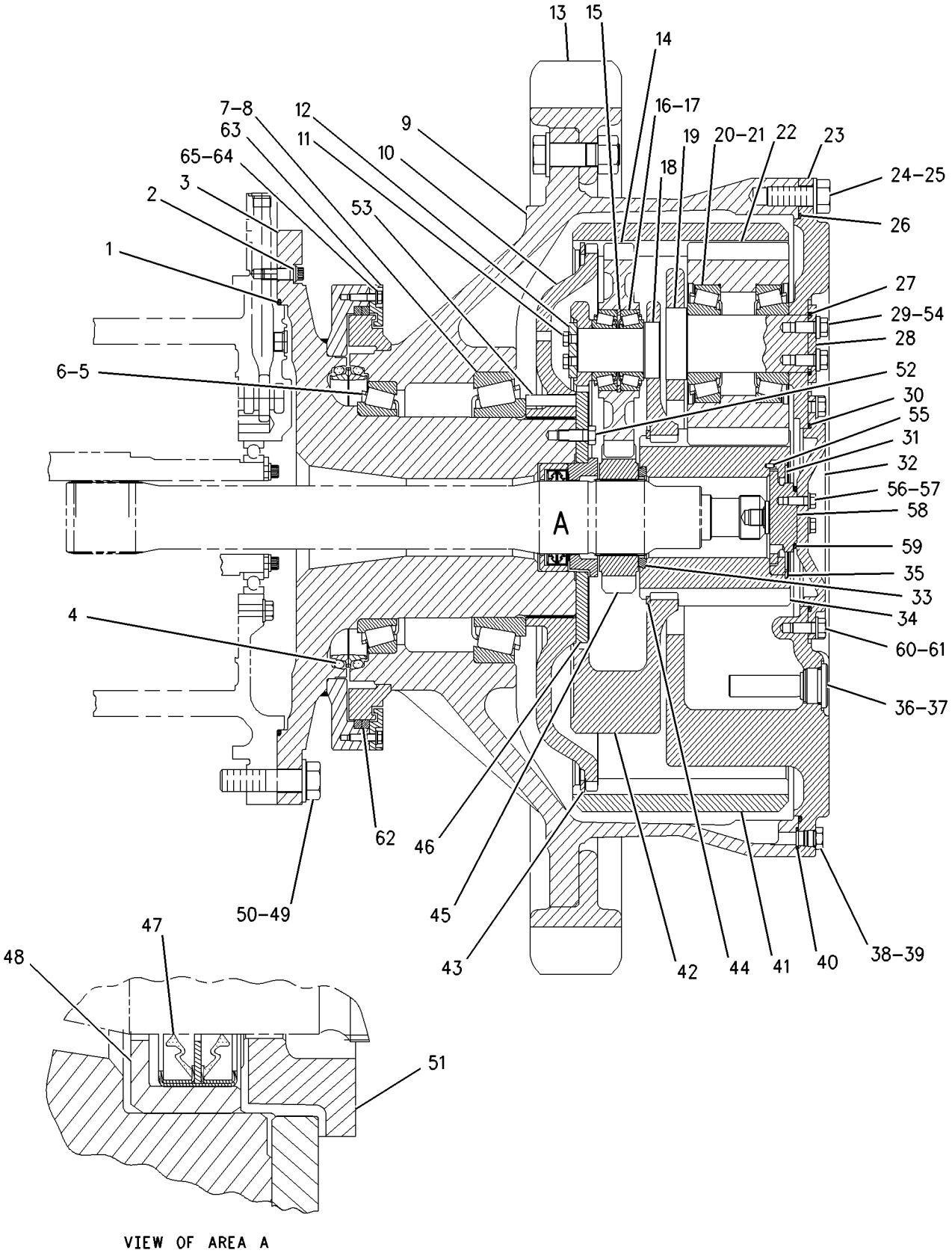

GRAPHIC #1 **<END>** g00753252

213-5173 GEAR GP-BEVEL & TRANSFER

S/N: DRL1-UP

PART OF 213-5171 TRANSMISSION AR

SMCS-3011 **i02050074**

NOTE	REF NO	GRAPHIC REF	PART NUMBER	QTY	PART NAME 1 2 3 4 5 6 (PRODUCT LEVEL)	SEE PAGE
	1	1	**112-1289**	1	PLATE AS	
		1	**4B-9785**	2	BALL	
	2	1	**9X-8881**	15	BOLT (5/8-11X2.25-IN)	
	3	1	**5P-8247**	19	WASHER-HARD (17X32X3.5-MM THK)	
	4	1	**5P-4143**	41	BOLT-LOCKING (1/2-13X2-IN)	
	5	1	**5P-8245**	41	WASHER-HARD (13.5X25.5X3-MM THK)	
	6	1	**110-9302**	1	CAGE-BEARING	
	7	1	**110-9303**	1	CAGE-BEARING	
	8	1	**110-9309**	1	BRACKET AS	
	9	1	**9X-8874**	2	BOLT (1/2-13X3-IN)	
	10	1	**7D-1649**	2	WASHER-HARD (13.5X32X5-MM THK)	
	11	1	**9G-3464**	2	BUSHING-TERMINAL	
	12	1	**6V-0458**	1	CUP-BEARING	
	13	1	**6V-0457**	1	CONE-BEARING	
	14	1	**110-9301**	1	PINION-BEVEL (23-TEETH)	
	15	1	**213-5175**	1	GEAR-TRANSFER (36-TEETH)	
B	16	1	**7G-2325**	4	SHIM PACK (INCLUDES 14-SHIMS)	
	17	1	**5K-3931**	1	CUP-BEARING	
	18	1	**5K-3932**	1	CONE-BEARING	
	19	1	**032-0676**	1	BOLT-LOCKING (5/8-11X3-IN)	
	20	1	**114-0325**	1	RETAINER	
	21	1	**5D-6659**	1	RACE & ROLLER AS	
	22	1	**213-5174**	1	GEAR-TRANSFER (33-TEETH)	
	23	1	**6Y-2546**	1	CONE-BEARING	
	24	1	**6Y-2547**	1	CUP-BEARING	
	25	1	**1M-6573**	1	CUP-BEARING	
	26	1	**9M-2744**	1	CONE-BEARING	
	27	1	**216-0273**	1	SEAL-LIP TYPE	
	28	1	**110-9306**	1	GEAR-BEVEL (29-TEETH)	
	29	1	**110-9307**	1	CAGE-BEARING	
	30	1	**9W-4163**	1	RACE-ROLLER BEARING	
	31	1	**9W-4162**	1	BEARING	
	32	1	**5P-1981**	1	RING-RETAINING	
	33	1	**9S-1367**	10	BOLT (1-14X3.75-IN)	
	34	1	**2K-7471**	10	LOCKNUT (1-14-THD)	
	35	1	**110-9305**	1	SHAFT-BEVEL GEAR (52-TEETH)	
B	36	1	**3T-4391**	2	SHIM PACK (INCLUDES 18-SHIMS)	
	37	1	**110-9304**	1	CAGE-BEARING	
	38	1	**112-7317**	1	BEARING AS	
	39	1	**121-9871**	1	NUT-BEARING	
	40	1	**122-4575**	1	LOCKWASHER-BEARING	
	41	1	**122-0333**	1	WASHER (112X155X7.14-MM THK)	
	42	1	**9X-8883**	4	BOLT (5/8-11X2.75-IN)	
	43	1	**1S-8385**	1	RING-RETAINING	
	44	1	**172-3467**	1	PLATE	
	45	1	**5K-9107**	4	BOLT-LOCKING (3/8-16XO.75-IN)	

B-USE AS REQUIRED

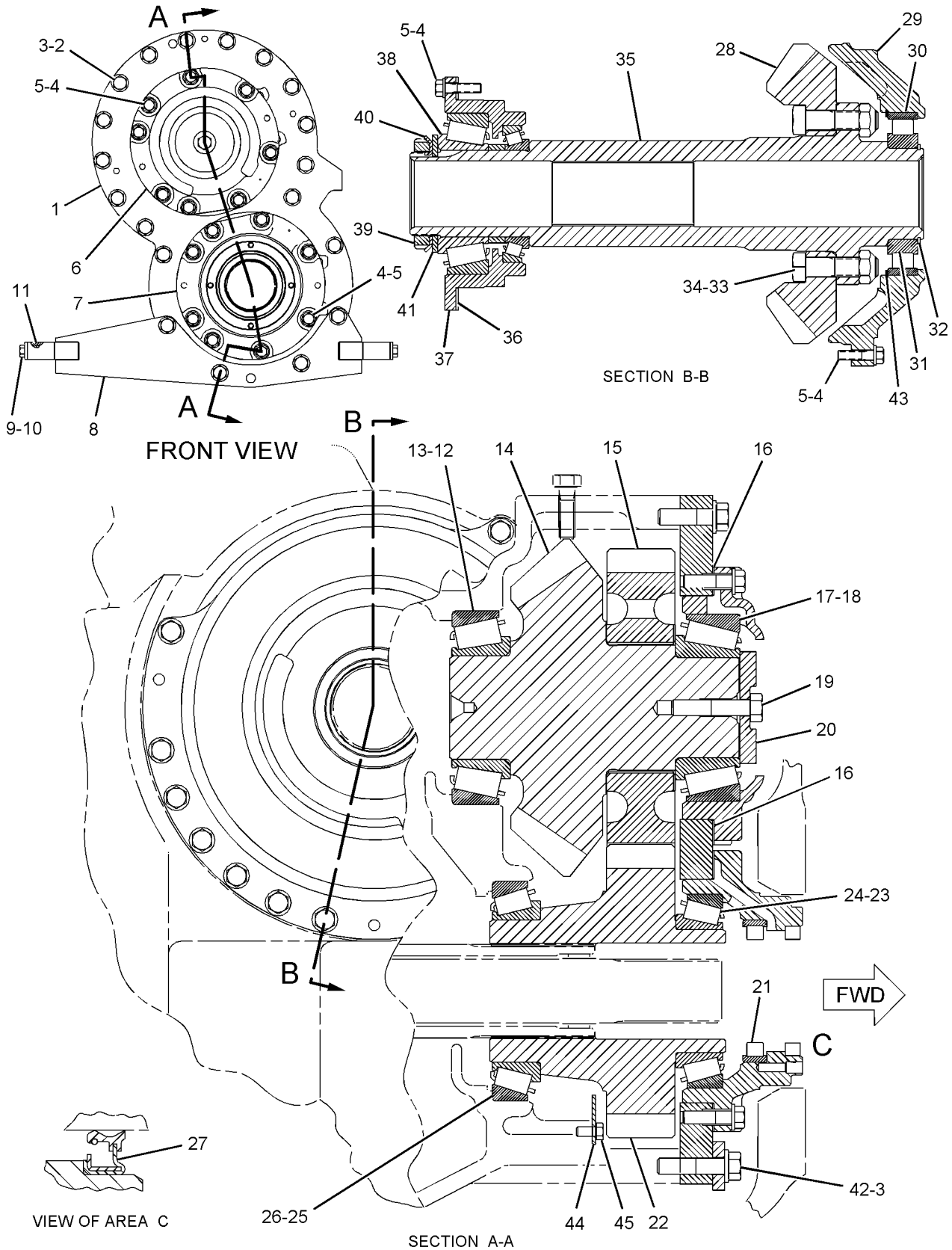

GRAPHIC #1

<END>

g01054330

POWER TRAIN

213-5172 LINES GP-POWER TRAIN OIL

S/N: RJG1-UP

PART OF 212-2746 POWER TRAIN AR

SMCS-3016 **i02462850**

NOTE	REF NO	GRAPHIC REF	PART NUMBER	QTY	PART NAME 1 2 3 4 5 6 (PRODUCT LEVEL)	SEE PAGE
	1	1	**1R-1809**	1	FILTER ELEMENT AS-OIL (TRANSMISSION CHARGING)	
	1A	1	**1R-1809**	1	FILTER ELEMENT AS-OIL (TORQUE CONVERTER CHARGING)	
					(EACH INCLUDES)	
		1	**130-0229**	1	SEAL-O-RING	
	2	1	**3T-4014**	4	CLAMP	
	3	2	**5K-9238**	1	CONNECTOR	
	4	1	**6N-2985**	1	CAP AS-FILLER (HYDRAULIC TANK FILL)	
	5	1	**6V-0852**	1	CAP-DUST	
	6	2	**6V-8001**	1	SEAL-O-RING	
	7	1	**7C-8246**	1	SPACER (10.5X20X24-MM THK)	
	8	1	**8C-3447**	1	CAP-DUST	
I	9	1	**8W-2644**	1	HOSE AS	
	10	1	**9G-5127**	1	BREATHER AS (TRANSMISSION)	
	11	1	**9M-5732**	1	RIVET-POP	
	12	1	**9P-9555**	1	SCREEN AS-SUCTION (POWER TRAIN OIL SUMP)	
	13	2	**131-0136**	1	TUBE AS	
	14	1	*162-5709*	1	CONNECTOR GP	
		1	**109-6511**	1	TEE-O-RING	
		1	**7M-8485**	1	SEAL-O-RING	
		1	**6V-9746**	1	SEAL-O-RING	
	15	1	**176-9966**	1	COVER-TOP	
Y	16	1	**201-8389**	1	PUMP GP-GEAR (TRANSMISSION, TORQUE CONVERTER)	376
	17	1	**216-2600**	1	TUBE AS	
	18	1	**216-2603**	1	TUBE AS	
	19	2	**216-4349**	1	SLEEVE	
Y	20	1	**217-5393**	1	VALVE GP-RELIEF (TORQUE CONVERTER OUTLET)	392
	21	1	*219-9654*	1	CONNECTOR AS	
		1	**109-3657**	1	CONNECTOR	
		1	**6K-6307**	1	SEAL-O-RING	
		1	**6V-8400**	1	SEAL-O-RING	
	22	1	**221-1831**	1	HOUSING	
	23	1	**221-1832**	1	TUBE AS	
	24	1	**221-1833**	1	TUBE AS	
	25	1	**221-1834**	1	GAUGE AS-OIL LEVEL (DIPSTICK) (TRANSMISSION CASE)	
	26	1	**221-1835**	1	TUBE AS	
	27	1	**221-1836**	1	TUBE AS	
	28	1	**221-1839**	1	TUBE AS	
I	29	1	**221-1840**	1	HOSE AS	
I	30	1	**221-1841**	1	HOSE AS	
I	31	1	**221-1842**	1	HOSE AS	
I	32	1	**221-1843**	1	HOSE AS	
	33	1	**229-5682**	1	MANIFOLD	
	34	1	**229-5683**	1	MANIFOLD	
	35	2	**231-2188**	1	ADAPTER	
Y	36	1	**232-3374**	1	VALVE GP-RELIEF (LUBRICATION DISTRIBUTION)	393
Y	37	1	*245-6555*	1	FILTER GP-OIL (TRANSMISSION CHARGING)	349
Y	37A	1	*245-6555*	1	FILTER GP-OIL (TORQUE CONVERTER CHARGING)	349
	38	2	**061-8561**	4	SEAL-O-RING	
	39	2	**061-9455**	3	SEAL-O-RING	
	40	1	**109-0076**	2	SEAL-O-RING	
	41	2	**112-1574**	2	SEAL-O-RING	
	42	1	*148-8305*	1	ADAPTER AS	
		1	**5P-9617**	1	ADAPTER	
		1	**3J-1907**	1	SEAL-O-RING	

213-5172 LINES GP-POWER TRAIN OIL *(contd.)* i02462850

NOTE	REF NO	GRAPHIC REF	PART NUMBER	QTY	PART NAME 1 2 3 4 5 6 (PRODUCT LEVEL)	SEE PAGE
	43	1	*148-8313*	1	ADAPTER AS	
		1	**5P-6944**	1	ADAPTER	
		1	**3K-0360**	1	SEAL-O-RING	
	44	1	*148-8325*	1	CONNECTOR AS	
		1	**6V-8641**	1	CONNECTOR	
		1	**3J-1907**	1	SEAL-O-RING	
		1	**4J-5477**	1	SEAL-O-RING	
	45	1	*148-8327*	1	CONNECTOR AS	
		1	**6V-8637**	1	CONNECTOR	
		1	**3D-2824**	1	SEAL-O-RING	
		1	**6V-9746**	1	SEAL-O-RING	
	46	1	*153-6235*	1	ELBOW GP	
		1	**3E-7433**	1	ELBOW	
		1	**6K-6307**	1	SEAL-O-RING	
		1	**6V-8400**	1	SEAL-O-RING	
	47	2	*164-4180*	1	PLUG AS	
		2	**9S-4181**	1	PLUG	
		2	**7M-8485**	1	SEAL-O-RING	
	48	1	*164-5567*	1	FITTING AS	
		1	**6V-3965**	1	FITTING AS (QUICK DISCONNECT)	
		1	**3J-1907**	1	SEAL-O-RING	
	49	1	*164-5590*	1	VALVE AS-FLUID SAMPLING (TRANSMISSION OIL)	
		1	**8C-3446**	1	VALVE-FLUID SAMPLING	
		1	**3J-7354**	1	SEAL-O-RING	
	50	2	**1J-8668**	2	STUD-TAPERLOCK (3/8-16X1.97-IN)	
	51	1	**1P-3708**	1	SEAL-RECTANGULAR	
	52	1	**1P-3709**	1	SEAL-RECTANGULAR	
	53	2	**1P-4576**	2	FLANGE-HALF	
	54	1	**1P-4577**	2	FLANGE-HALF	
	55	1	**1P-4578**	2	FLANGE-HALF	
	56	1,2	**1P-4579**	4	FLANGE-HALF	
	57	1,2	**1P-4582**	8	FLANGE-HALF	
	58	2	**1P-5763**	2	FLANGE-HALF	
	59	1	**1S-0996**	1	CLIP	
	60	1	**4B-4274**	1	WASHER (5.5X13X1.2-MM THK)	
	61	1	**4J-0520**	1	SEAL-O-RING	
	62	1	**4J-0522**	2	SEAL-O-RING	
	63	1	**4J-0527**	2	SEAL-O-RING	
	64	1	**4J-5267**	1	SEAL-O-RING	
	65	1	**4J-5477**	1	SEAL-O-RING	
	66	1	**4L-9337**	4	BOLT (3/8-16X1.5-IN)	
	67	1	**9M-8406**	1	CLIP	
	68	2	**5D-5957**	2	SEAL-O-RING	
	69	1	**5H-7153**	2	SEAL-O-RING	
	70	1	**5K-1770**	1	SEAL-O-RING	
	71	2	**5P-0840**	1	SEAL-O-RING	
	72	1	**5P-1075**	4	WASHER-HARD (10.2X22.5X3-MM THK)	
	73	1,2	**5P-2566**	14	BOLT (1/2-13X1.5-IN)	
	74	2	**5P-4889**	1	SEAL-O-RING	
	75	1	**5P-7468**	1	CLIP (SLOT)	
	76	1	**5P-7469**	1	CLIP (TAB)	
	77	2	**5S-7382**	4	BOLT (3/8-16X1.375-IN)	
	78	1	**6F-8146**	1	SEAL-O-RING	
	79	1	**6L-1651**	4	SEAL-O-RING	
	80	1	**6V-1904**	1	SEAL-O-RING	
	81	1	**6V-5134**	1	SEAL-O-RING	
	82	2	**6V-5656**	1	SEAL-O-RING	
	83	2	**6V-8801**	2	NUT (3/8-16-THD)	
	84	1	**7D-4069**	2	CLAMP	

213-5172 LINES GP-POWER TRAIN OIL *(contd.)* i02462850

NOTE	REF NO	GRAPHIC REF	PART NUMBER	QTY	PART NAME 1 2 3 4 5 6 (PRODUCT LEVEL)	SEE PAGE
	85	1	**7X-0290**	3	BOLT (3/8-16X3.5-IN)	
	86	1	**7X-0308**	8	BOLT (7/16-14X1.375-IN)	
	87	1	**7X-0326**	2	BOLT (1/2-13X3-IN)	
	88	1	**8T-9391**	4	BOLT (1/2-13X3.75-IN)	
	89	1	**8C-5230**	1	SEAL-O-RING	
	90	1	**8M-4390**	2	SEAL-O-RING	
	91	1	**8M-4443**	1	SEAL-O-RING	
	92	1	**8M-5661**	2	SEAL-O-RING	
	93	1	**8M-8157**	1	SEAL-O-RING	
	94	1	**8T-2501**	2	BOLT (3/8-16X2-IN)	
	95	1	**8T-4121**	7	WASHER-HARD (11X21X2.5-MM THK)	
M	96	1	**8T-4133**	3	NUT (M10X1.5 THD)	
M	97	1	**8T-4195**	3	BOLT (M10X1.5X30-MM)	
	98	1,2	**8T-4223**	42	WASHER-HARD (13.5X25.5X3-MM THK)	
	99	2	**8T-4835**	4	BOLT (1/2-13X2-IN)	
	100	1,2	**8T-4896**	21	WASHER-HARD (10.2X18.5X2.5-MM THK)	
	101	1	**8T-5360**	8	WASHER (12X22.5X2.5-MM THK)	
M	102	1	**8T-6466**	1	BOLT (M10X1.5X60-MM)	
	103	1	**8T-6776**	1	ADAPTER	
	104	2	**8T-8915**	2	BOLT (3/8-16X3.25-IN)	
	105	2	**8T-8917**	2	BOLT (1/2-13X1.25-IN)	
	106	1,2	**8T-8919**	16	BOLT (1/2-13X1.75-IN)	
	107	2	**8T-9377**	4	BOLT (3/8-16X2.25-IN)	
	108	1	**9B-7237**	4	BOLT (3/8-16X1.25-IN)	
	109	2	**9M-7539**	1	SEAL-O-RING	
	110	1	**193-3973**	2	TIE (WRAP)	
	111	1	**200-6345**	1	MOUNT (DUAL SWIVEL)	

I-REFER TO HYDRAULIC INFORMATION SYSTEM
M-METRIC PART
Y-SEPARATE ILLUSTRATION

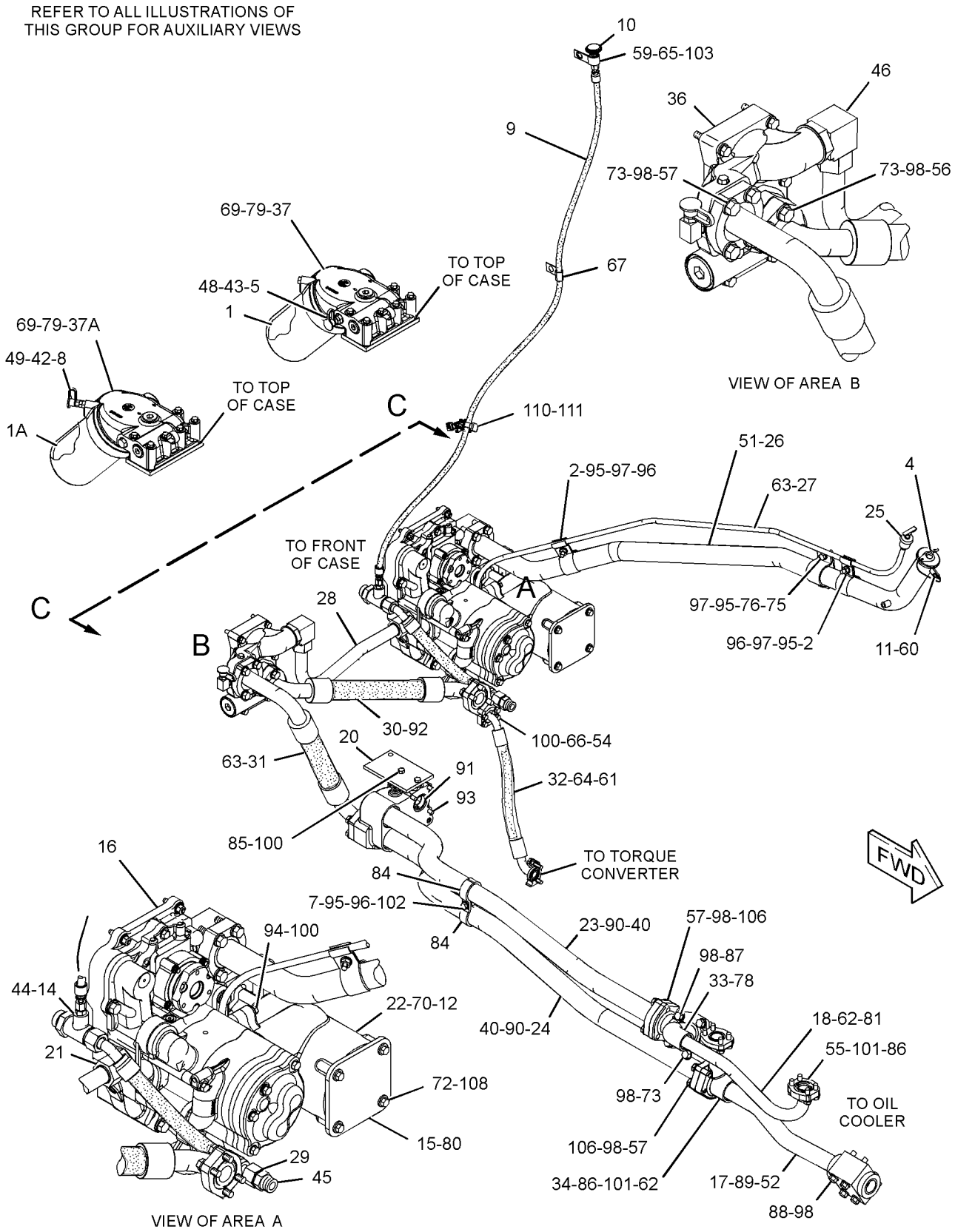

GRAPHIC #1 g01194520

213-5172 **LINES GP-POWER TRAIN OIL** *(contd.)* **i02462850**

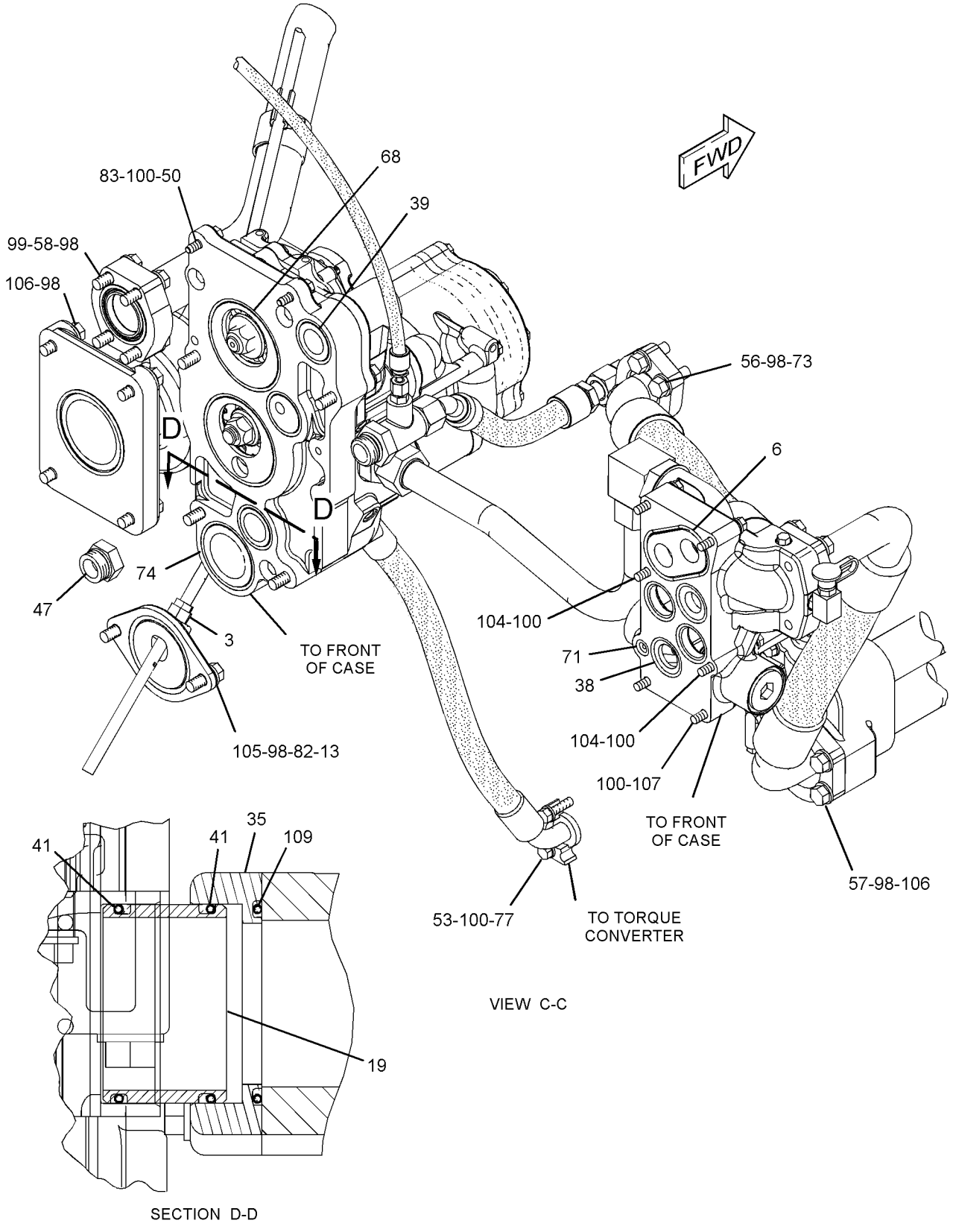

GRAPHIC #2 **<END>** g01194517

122-8682 MOUNTING GP-TRANSMISSION

S/N: RJG1-UP

PART OF 212-2746 POWER TRAIN AR

SMCS-3082 **i01743034**

NOTE	REF NO	GRAPHIC REF	PART NUMBER	QTY	PART NAME 1 2 3 4 5 6 (PRODUCT LEVEL)	SEE PAGE
	1	1	**5J-5793**	2	BOLT-12 POINT HEAD (1/2-13X1.75-IN)	
	2	1	**1B-2886**	18	BOLT (1/2-13X3.75-IN)	
	3	1	**2A-1531**	3	BOLT (1/2-13X6.5-IN)	
	4	1	**5P-8245**	23	WASHER-HARD (13.5X25.5X3-MM THK)	
	5	1	**9M-9647**	3	SEAL-O-RING	
	6	1	**6L-9284**	1	SEAL-O-RING	
	7	1	**5P-9519**	1	SEAL-O-RING	
	8	1	**7M-0475**	1	RING-SEALING	
	9	1	**3T-5830**	1	PLATE	
	10	1	**0S-1591**	4	BOLT (3/8-16X1.5-IN)	
	11	1	**5M-2894**	4	WASHER-HARD (10.2X18.5X2.5-MM THK)	

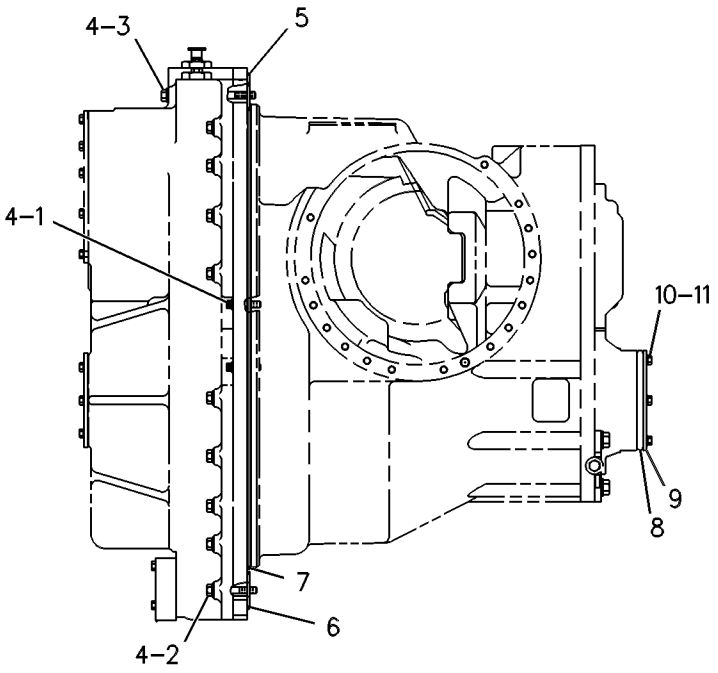

GRAPHIC #1 **<END>** g00252752

POWER TRAIN

219-3033 PLANETARY GP-TRANSMISSION

S/N: DRL1-UP

PART OF 213-5171 TRANSMISSION AR

SMCS-3160 **i02276928**

NOTE	REF NO	GRAPHIC REF	PART NUMBER	QTY	PART NAME 1 2 3 4 5 6 (PRODUCT LEVEL)	SEE PAGE
	1	1	**110-9264**	1	HOUSING AS	
		1	**7M-8480**	4	DOWEL	
	2	1	**110-9258**	1	CARRIER-PLANETARY	
	3	1	**110-9262**	1	GEAR-SUN (50-TEETH)	
	4	1	**110-9269**	1	HOUSING-CLUTCH	
	5	1	**221-1444**	2	PISTON	
R	6	1	**3P-7489**	5	PLATE-CLUTCH	
	7	1	**6I-9255**	6	DISC-FRICTION	
	8	1	**110-9274**	1	HOUSING AS	
		1	**8B-1312**	3	DOWEL	
		1	**110-9273**	1	HOUSING-ROTATING	
	9	1	**183-2264**	1	HOUSING AS	
		1	**4S-8537**	1	DOWEL	
		1	**6P-7564**	1	CARRIER-RING	
		1	**112-4509**	1	BEARING-SLEEVE	
	10	1	**8S-9191**	20	BOLT (3/8-16X4-IN)	
	11	1	**5M-2894**	26	WASHER-HARD (10.2X18.5X2.5-MM THK)	
	12	1	**3P-2792**	1	SEAL-RING	
	13	1	**153-5482**	1	PISTON-CLUTCH	
	14	1	**110-9272**	1	HUB AS	
		1	**4S-8537**	1	DOWEL	
	15	1	**1P-9261**	1	SEAL-RING	
	16	1	**0S-1594**	4	BOLT (3/8-16X1-IN)	
	17	1	**6Y-3484**	3	BALL BEARING	
	18	1	**8T-1141**	3	RING-RETAINING	
	19	1	**201-8117**	1	SHAFT-TRANSMISSION INPUT	
	20	1	**172-3262**	1	SHAFT AS-OUTPUT	
		1	**3P-3103**	1	CARRIER-RING	
		1	**111-8919**	1	BEARING-ROLLER	
	21	1	**7J-6525**	2	RING-RETAINING	
	22	1	**239-5363**	1	ROTOR	
	23	1	**137-5532**	1	SEAL-LIP TYPE	
	24	1	**240-8586**	1	PLATE	
	25	1	**6V-0836**	3	RING-RETAINING	
	26	1	**9W-6991**	2	RING-SEAL	
	27	1	**2S-8939**	1	RING-RETAINING	
	28	1	**110-9283**	3	SPRING-DISC	
	29	1	**110-9282**	1	PLATE-RETAINER	
	30	1	**110-9278**	1	MANIFOLD AS	
		1	**7M-8480**	2	DOWEL	
	31	1	**5P-3414**	1	RING-RETAINING	
	32	1	**1M-8657**	21	BOLT (1/2-13X15.69-IN)	
	33	1	**5P-8245**	23	WASHER-HARD (13.5X25.5X3-MM THK)	
	34	1	**3P-2794**	3	SEAL-RING	
	35	1	**3P-2793**	3	SEAL-RING	
	36	1	**219-3036**	6	DOWEL-REACTION	
	37	1	**169-7055**	7	DISC-CLUTCH	
	38	1	**8E-8304**	10	DISC-THRUST	
	39	1	**110-9284**	1	GEAR-RING (90-TEETH)	
	40	1	**7G-2476**	5	GEAR-PLANETARY (20-TEETH)	
	41	1	**5M-6126**	5	BEARING AS-ROLLER	
	42	1	**6P-6739**	5	SHAFT-PLANETARY	
	43	1	**7M-1199**	24	SPRING	
	44	1	**110-9285**	1	GEAR-RING (79-TEETH)	
	45	1	**110-9286**	10	GEAR-PLANETARY (22-TEETH)	
	46	1	**7G-4817**	1	RING-SEAL	

219-3033 **PLANETARY GP-TRANSMISSION** *(contd.)* **i02276928**

NOTE	REF NO	GRAPHIC REF	PART NUMBER	QTY	PART NAME 1 2 3 4 5 6 (PRODUCT LEVEL)	SEE PAGE
	47	1	**3P-7570**	1	RING-SEAL	
	48	1	**111-8920**	2	BALL BEARING	
	49	1	**205-3257**	1	PISTON	
	50	1	**112-4511**	5	PIN-SPRING	
	51	1	**5P-6254**	15	BEARING	
	52	1	**9W-9856**	6	DISC AS-FRICTION	
	53	1	**232-7572**	12	ROD	
	54	1	**110-9287**	5	SHAFT-PLANETARY	
	55	1	**110-9288**	1	GEAR-RING (79-TEETH)	
	56	1	**9G-1919**	5	GEAR-PLANETARY (25-TEETH)	
	57	1	**114-4652**	12	SPRING	
R	58	1	**3P-7447**	15	PLATE-CLUTCH	
	59	1	**219-3037**	6	DOWEL-REACTION	
	60	1	**172-3263**	1	HOUSING AS	
		1	**9S-1343**	2	PLUG-CUP	
	61	1	**232-7575**	2	PLATE-CLUTCH	
	62	1	**110-9289**	1	GEAR-RING	
	63	1	**3S-2708**	10	PIN-SPRING	
	64	1	**8P-4047**	5	SHAFT-PLANETARY	
	65	1	**7G-0897**	30	DISC-THRUST	
	66	1	**8K-2692**	1	RING-RETAINING	
	67	1	**2D-5658**	1	BALL BEARING	
	68	1	**8M-5661**	1	SEAL-O-RING	
	69	1	**8C-6761**	1	RING-RETAINING	
	70	1	**6P-3458**	1	SPACER (2.179X3X0.366-IN THK)	
	71	1	**6F-0156**	2	RING-METAL SEAL	
	72	1	**3P-3321**	2	SEAL-METAL RING	
	73	1	**207-3673**	1	PISTON	
	74	1	**132-5546**	1	GEAR-SUN (34-TEETH)	
	75	1	**9W-5768**	1	GEAR-RING (86-TEETH)	
	76	1	**110-9243**	1	CARRIER AS	
		1	**4S-8537**	1	DOWEL	
	77	1	**8P-4617**	1	SEAL-METAL RING	
	78	1	**110-9248**	1	PLATE AS	
		1	**7M-8480**	1	DOWEL	
		1	**8T-1444**	2	DOWEL	
		1	**110-9246**	1	PLATE-CENTER	
	79	1	**8M-4395**	2	SEAL-O-RING	
	80	1	**108-2736**	2	RING-LOCK	
	81	1	**5M-4480**	2	RING-RETAINING	
	82	1	**132-5538**	1	GEAR-SUN (36-TEETH)	
	83	1	**110-9251**	1	CARRIER-PLANETARY	
	84	1	**8F-8544**	2	BOLT (3/8-16X6.25-IN)	
	85	1	**110-9255**	1	HOUSING-CLUTCH	
	86	1	**095-7950**	1	RING-RETAINING	
	87	1	**5M-6187**	1	RING-METAL SEAL	
	88	1	**9M-4355**	21	DAMPER-BOLT	
	89	1	**108-2735**	1	RING-LOCK	
	90	1	**9M-1503**	1	RING-METAL SEAL	
	91	1	**237-9601**	1	BRACKET AS	
		1	**8M-8489**	2	DOWEL	
	92	1	**0S-1619**	2	BOLT (3/8-16X3-IN)	
	93	1	**191-8304**	1	SENSOR GP-SPEED (TRANSMISSION OUTPUT, TRAILING)	
	94	1	**6V-1720**	1	PLATE-SERIAL NUMBER (TRANSMISSION)	
	95	1	**240-8587**	1	HARNESS AS-SENSOR (TRANSMISSION OUTPUT SPEED)	
		1	**155-2270**	2	KIT-CONNECTING PLUG (2-PIN) (EACH INCLUDES PLUG AS & WEDGE)	
		1	**155-2272**	1	PLUG AS-CONNECTOR (4-PIN)	
	96	1	**2H-3855**	2	BOLT (1/2-13X0.875-IN)	

219-3033 **PLANETARY GP-TRANSMISSION** *(contd.)* **i02276928**

NOTE	REF NO	GRAPHIC REF	PART NUMBER	QTY	PART NAME 1 2 3 4 5 6 (PRODUCT LEVEL)	SEE PAGE
	97	1	**2H-3755**	2	BOLT (5/16-18X0.43-IN)	
	98	1	**3E-4352**	2	WASHER-HARD (8.8X20.5X2.5-MM THK)	
	99	1	**4P-7429**	3	CLIP	
	100	1	**3S-2093**	3	STRAP-CABLE	
	101	1	**191-8305**	1	SENSOR GP-SPEED (TRANSMISSION OUTPUT, LEADING)	
	102	1	**117-1385**	2	SEAL-O-RING	
	103	1	**8E-2729**	6	DISC AS-FRICTION	

R-REMFG PART MAY BE AVAILABLE

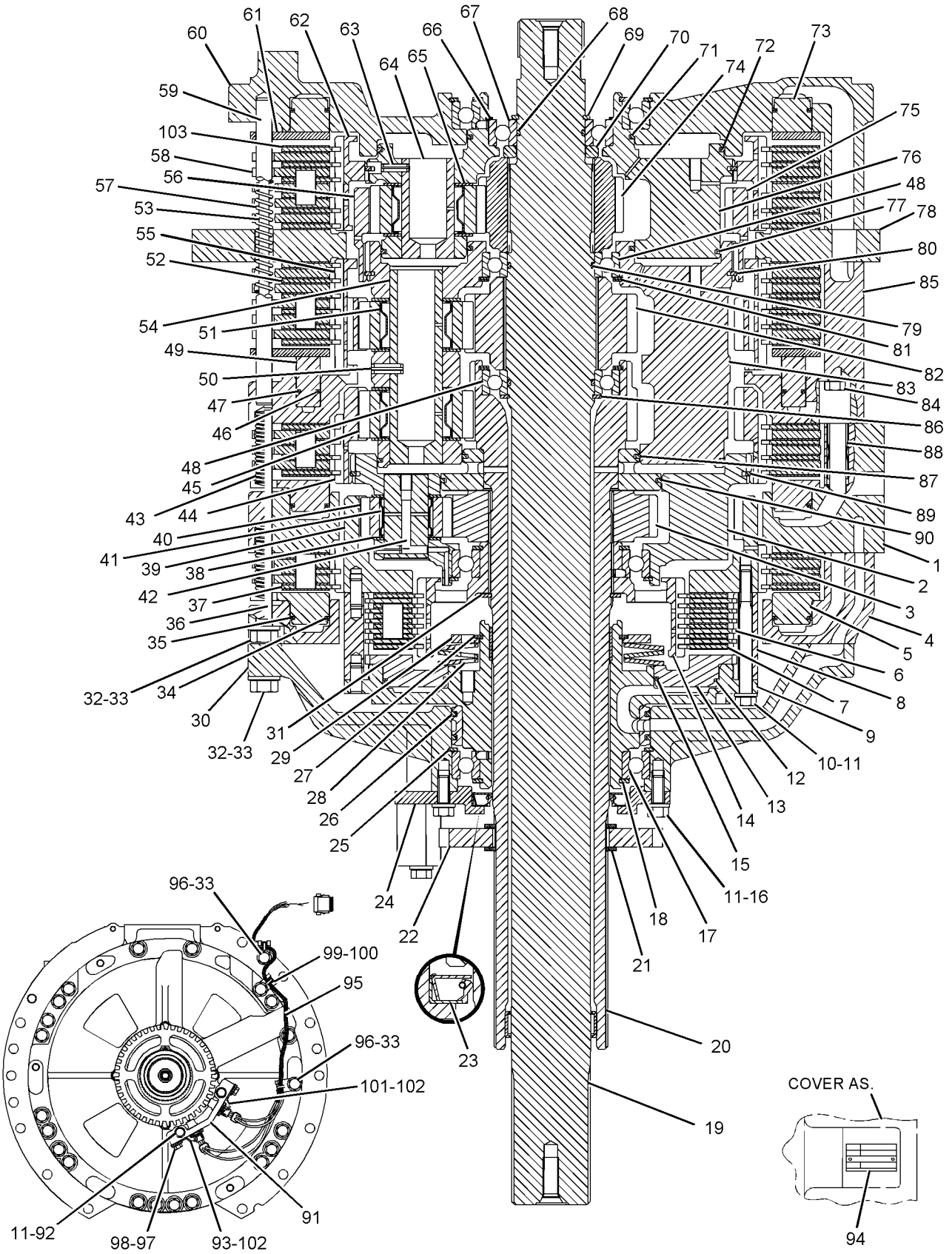

GRAPHIC #1 **<END>** g01140198

POWER TRAIN

212-2746 POWER TRAIN AR

S/N: RJG1-UP

PART OF 212-2740 GENERAL AR

SMCS-3000, 4000 **i02273829**

NOTE	PART NUMBER	QTY	PART NAME 1 2 3 4 5 6 (PRODUCT LEVEL)	SEE PAGE
Y	*110-2637*	1	AXLE GP	342
YR	**106-0466**	2	CLUTCH & BRAKE GP-STEERING	509
			S/N: RJG1-109	
Y	**237-1017**	2	CLUTCH & BRAKE GP-STEERING	511
			S/N: RJG110-UP	
Y	*232-6622*	1	CONTROL & MTG GP-PEDAL	790
Y	*212-0710*	1	CONTROL GP-STEERING & TMSN (DIRECTION, SPEED, STEERING)	517
Y	*220-5548*	1	COUPLING GP-PUMP	347
Y	*110-2655*	2	FINAL DRIVE GP	351
Y	*213-5172*	1	LINES GP-POWER TRAIN OIL	365
Y	*122-8682*	1	MOUNTING GP-TRANSMISSION	370
Y	*173-0245*	1	SHAFT GP-DRIVE	381
Y	*226-7614*	1	TORQUE CONVERTER GP	387
Y	*213-5171*	1	TRANSMISSION AR	389
Y	*221-0867*	1	VALVE & MTG GP-STEER & BRAKE	524

R-REMFG PART MAY BE AVAILABLE
Y-SEPARATE ILLUSTRATION

<END>

201-8389 PUMP GP-GEAR–TMSN SCAVENGE, TMSN CHARGE, CONVERTER SCAVENGE, CONVERTER CHARGE–TRANSMISSION, TORQUE CONVERTER

S/N: RJG1-UP

4-SECTION

PART OF 213-5172 LINES GP-POWER TRAIN OIL

SMCS-3066, 3115, 5073 **i02322909**

NOTE	REF NO	GRAPHIC REF	PART NUMBER	QTY	PART NAME 1 2 3 4 5 6 (PRODUCT LEVEL)	SEE PAGE
	1	1	**5H-4279**	1	PLUG-CUP	
	2	1	**5P-9439**	1	BALL BEARING	
	4	1	**7G-2248**	1	CAGE-BEARING	
Y	5	1	**201-8390**	1	PUMP GP-GEAR (POWER TRAIN)	378
	6	1	**201-8394**	1	PLATE-MOUNTING	
	7	1	**206-4475**	1	GEAR (25-TEETH)	
	8	1	**208-7524**	1	SHAFT	
	9	1	**234-6928**	1	FLANGE	
	11	1	**061-9455**	2	SEAL-O-RING	
	12	1	**0S-1591**	4	BOLT (3/8-16X1.5-IN)	
	13	1	**0T-0573**	1	BOLT (3/8-16X2.75-IN)	
	14	1	**111-4919**	1	SEAL-LIP TYPE	
	15	1	**1B-5675**	1	BALL BEARING AS	
	16	1	**1B-8714**	1	KEY-WOODRUFF	
	17	1	**2H-5549**	1	RING-RETAINING	
	18	1	**2K-0337**	1	LOCKNUT (3/4-16-THD)	
	19	1	**2M-3974**	1	RING-RETAINING	
	20	1	**5P-4889**	1	SEAL-O-RING	
	21	1	**5P-8245**	4	WASHER-HARD (13.5X25.5X3-MM THK)	
	22	1	**6K-8714**	1	WASHER (20X51X3-MM THK)	
	23	1	**6L-4784**	4	BOLT-12 POINT HEAD (5/16-18X1.56-IN)	
	24	1	**6V-1196**	1	SEAL-O-RING	
	25	1	**7L-7524**	1	BOLT (3/8-16X10.25-IN)	
	26	1	**7X-0326**	1	BOLT (1/2-13X3-IN)	
	27	1	**7X-0335**	2	BOLT (1/2-13X5.25-IN)	
	28	1	**8T-9392**	1	BOLT (1/2-13X7.5-IN)	
	29	1	**9M-1974**	4	WASHER-HARD (8.8X16X2-MM THK)	
B	30	1	**1U-8846**		SEALANT-GASKET	

B-USE AS REQUIRED
Y-SEPARATE ILLUSTRATION

201-8389 PUMP GP-GEAR *(contd.)* **i02322909**

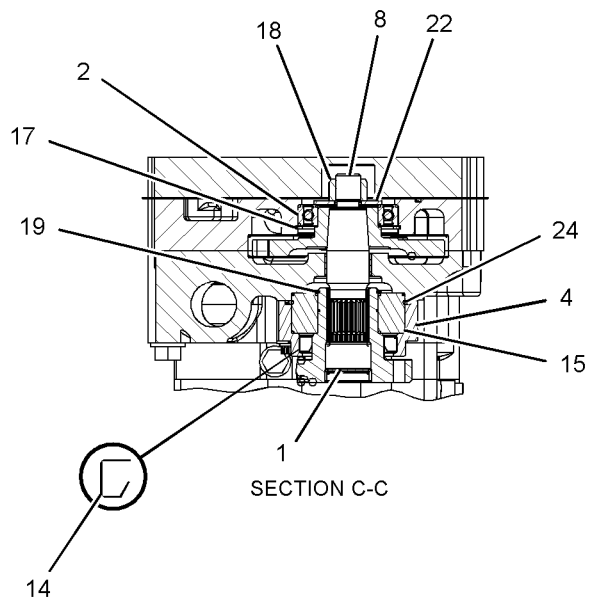

SECTION C-C

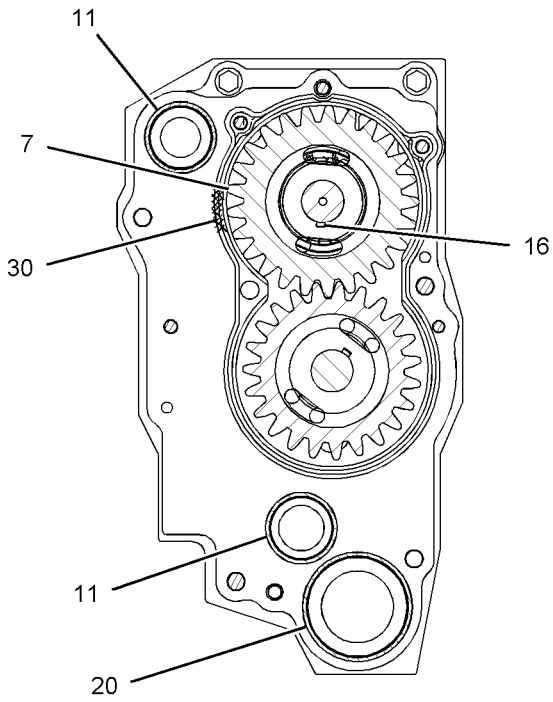

SECTION B-B

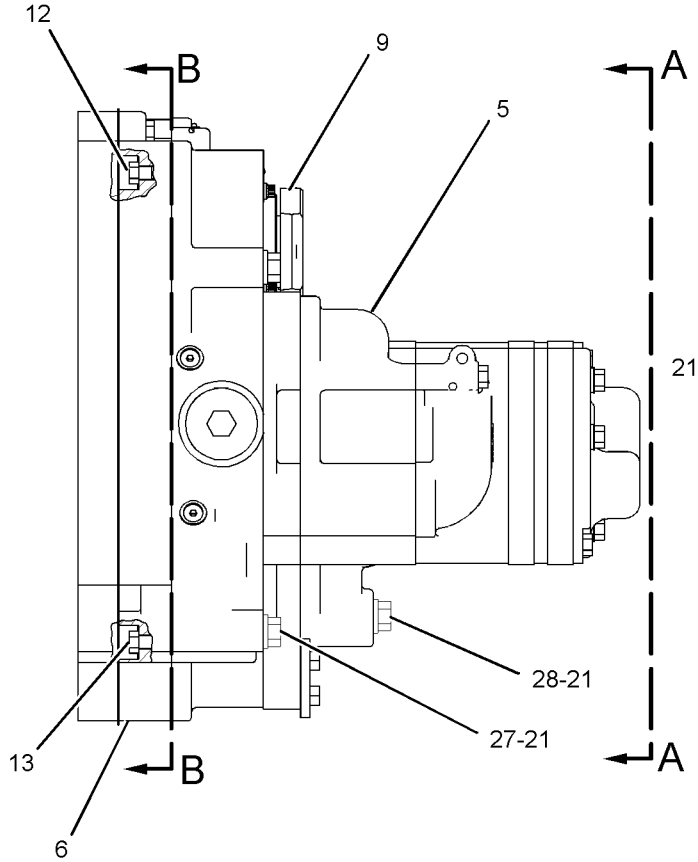

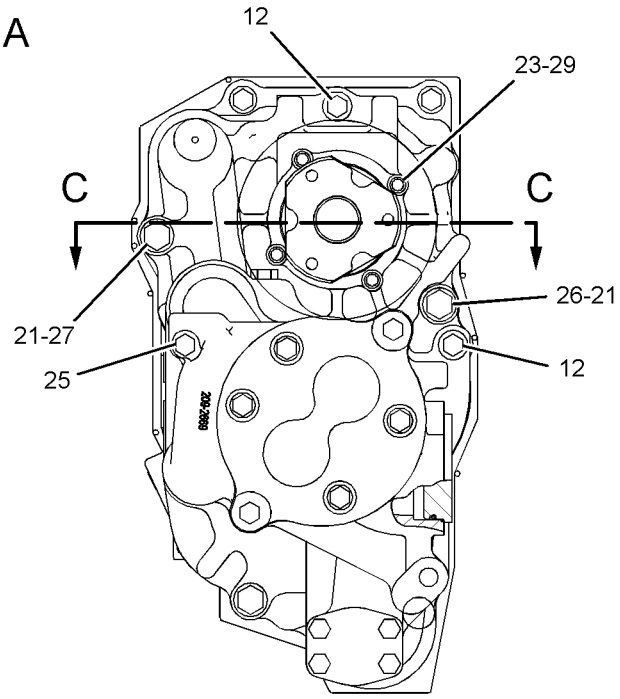

VIEW A-A

GRAPHIC #1 **<END>** g01054595

201-8390 PUMP GP-GEAR—POWER TRAIN

S/N: RJG1-UP
4-SECTION
PART OF 201-8389 PUMP GP-GEAR

SMCS-3066, 3115, 5073 **i02141207**

NOTE	REF NO	GRAPHIC REF	PART NUMBER	QTY	PART NAME 1 2 3 4 5 6 (PRODUCT LEVEL)	SEE PAGE
	1	1	**3S-0004**	4	WASHER (0.406X0.728X0.09-IN THK)	
	2	1	**3T-3663**	4	GEAR (8-TEETH)	
	4	1	**9P-8078**	2	GEAR (12-TEETH)	
	5	1	**9S-1018**	8	WASHER (9.73X19.05X0.84-MM THK)	
	6	1	**9W-3273**	1	SPACER (OIL PUMP)	
	7	1	**129-1609**	7	SEAL-O-RING	
	8	1	**201-8391**	1	BODY AS (OIL PUMP)	
	9	1	**201-8395**	1	BODY AS (OIL PUMP)	
	10	1	**201-8396**	1	BODY-OIL PUMP	
	11	1	**201-8398**	1	GEAR AS (OIL PUMP)	
	12	1	**201-8401**	1	GEAR AS (OIL PUMP)	
	13	1	**201-8425**	1	COVER AS (OIL PUMP)	
	14	1	**206-4473**	1	GEAR (23-TEETH)	
	15	1	**208-8899**	2	GEAR (8-TEETH)	
	16	1	**209-2667**	1	CARRIER AS (OIL PUMP)	
	17	1	**231-6565**	2	BODY AS (OIL PUMP)	
	19	1	**1B-8705**	3	KEY-WOODRUFF	
	20	1	**1B-8714**	1	KEY-WOODRUFF	
	21	1	**2B-9373**	1	KEY-WOODRUFF	
	22	1	**2K-0337**	1	LOCKNUT (3/4-16-THD)	
	23	1	**3J-1907**	1	SEAL-O-RING	
	24	1	**4S-9134**	1	WASHER-HARD (20X30X3-MM THK)	
	25	1	**5P-4268**	5	SEAL-O-RING	
	26	1	**5P-6718**	1	SEAL-O-RING	
	27	1	**7L-7524**	6	BOLT (3/8-16X10.25-IN)	
	28	1	**9S-4191**	1	PLUG-O RING	

201-8390 PUMP GP-GEAR *(contd.)* **i02141207**

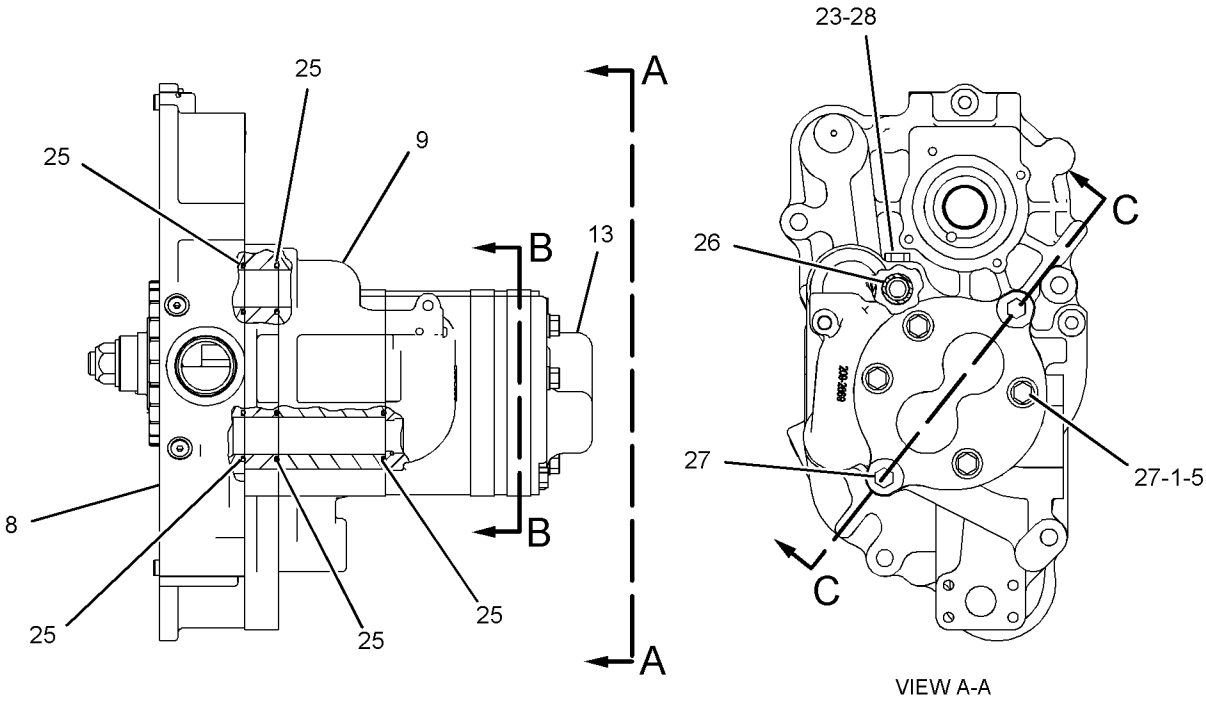

VIEW A-A

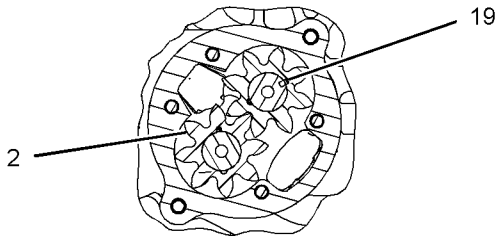

SECTION B-B

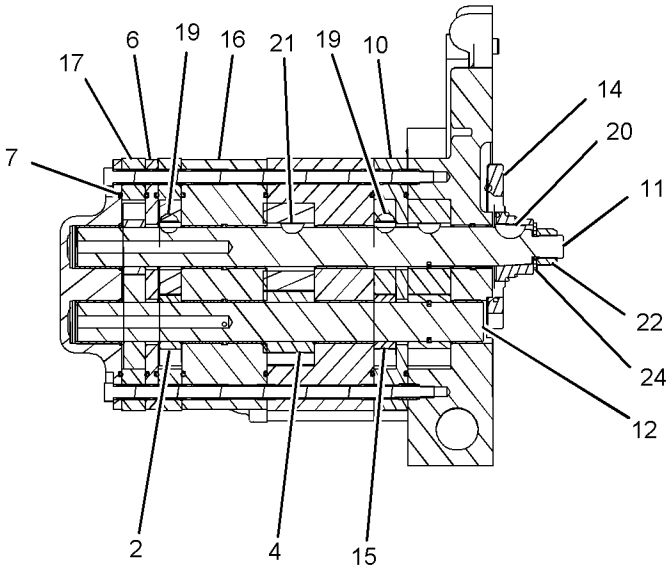

SECTION C-C

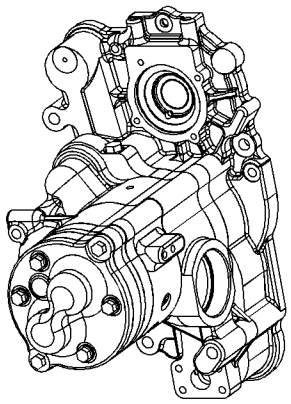

ISOMETRIC VIEW

GRAPHIC #1 **<END>** g01054700

160-4928 SEGMENT GP-SPROCKET

S/N: RJG1-UP

PART OF 110-2655, 110-2780, 192-0722 FINAL DRIVE GP

ALSO AN ATTACHMENT

SMCS-4155 **i01401469**

NOTE	REF NO	GRAPHIC REF	PART NUMBER	QTY	PART NAME 1 2 3 4 5 6 (PRODUCT LEVEL)	SEE PAGE
	1	1	**2M-5656**	30	NUT (1-14 THD)	
	2	1	**5P-5422**	30	BOLT (1-14X3.64 IN)	
	3	1	**129-9208**	5	SEGMENT-SPROCKET	
	4	1	**5P-8250**	30	WASHER (28X49X5MM THK)	

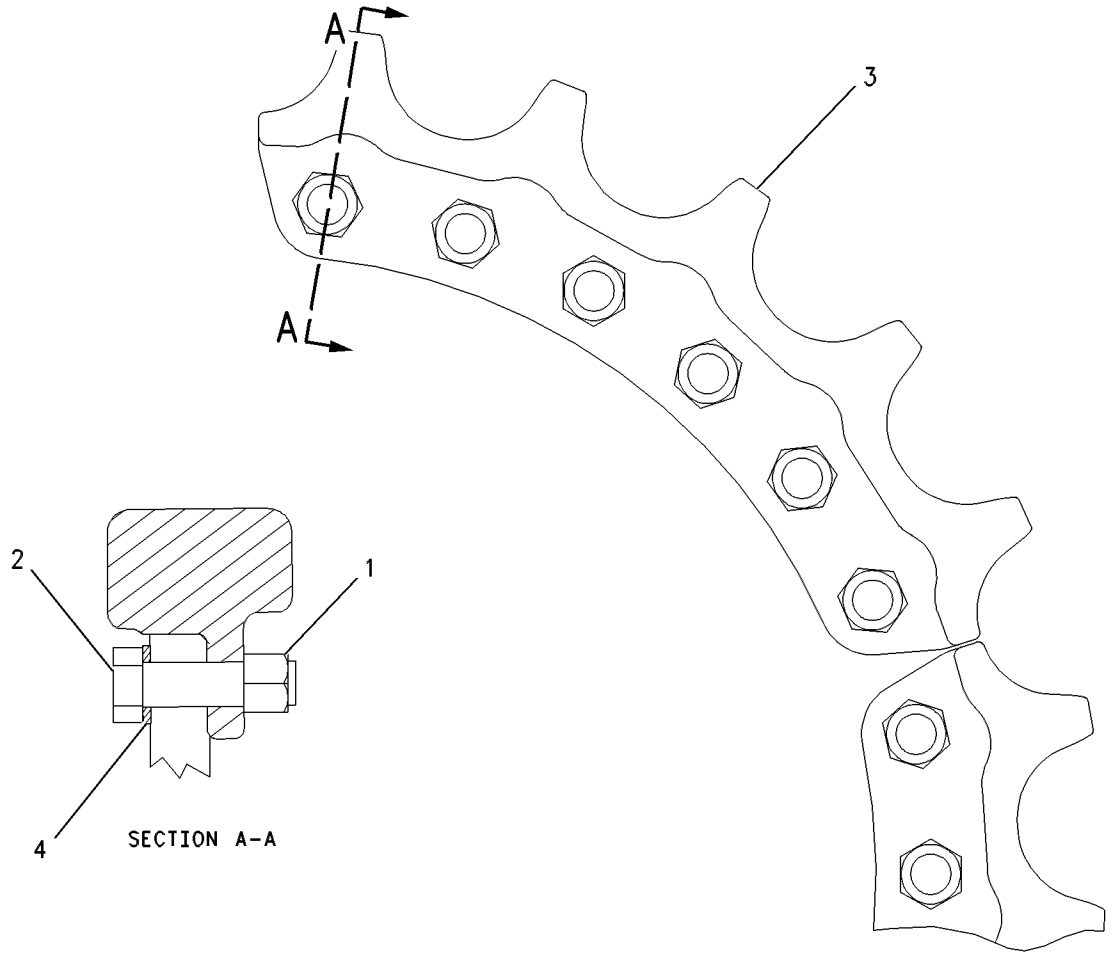

GRAPHIC #1 **<END>** g00602916

173-0245 SHAFT GP-DRIVE

S/N: RJG1-UP

PART OF 212-2746 POWER TRAIN AR

SMCS-3253 **i01689320**

NOTE	REF NO	GRAPHIC REF	PART NUMBER	QTY	PART NAME 1 2 3 4 5 6 (PRODUCT LEVEL)	SEE PAGE
	1	1	**110-9311**	1	YOKE AS	
		1	**4F-8503**	1	PLUG-CUP	
Y	2	1	**173-0246**	1	UNIVERSAL JOINT GP	390
	3	1	**0S-1604**	8	BOLT (1/2-20X2.5 IN)	
	4	1	**5D-6657**	1	RACE	

Y-SEPARATE ILLUSTRATION

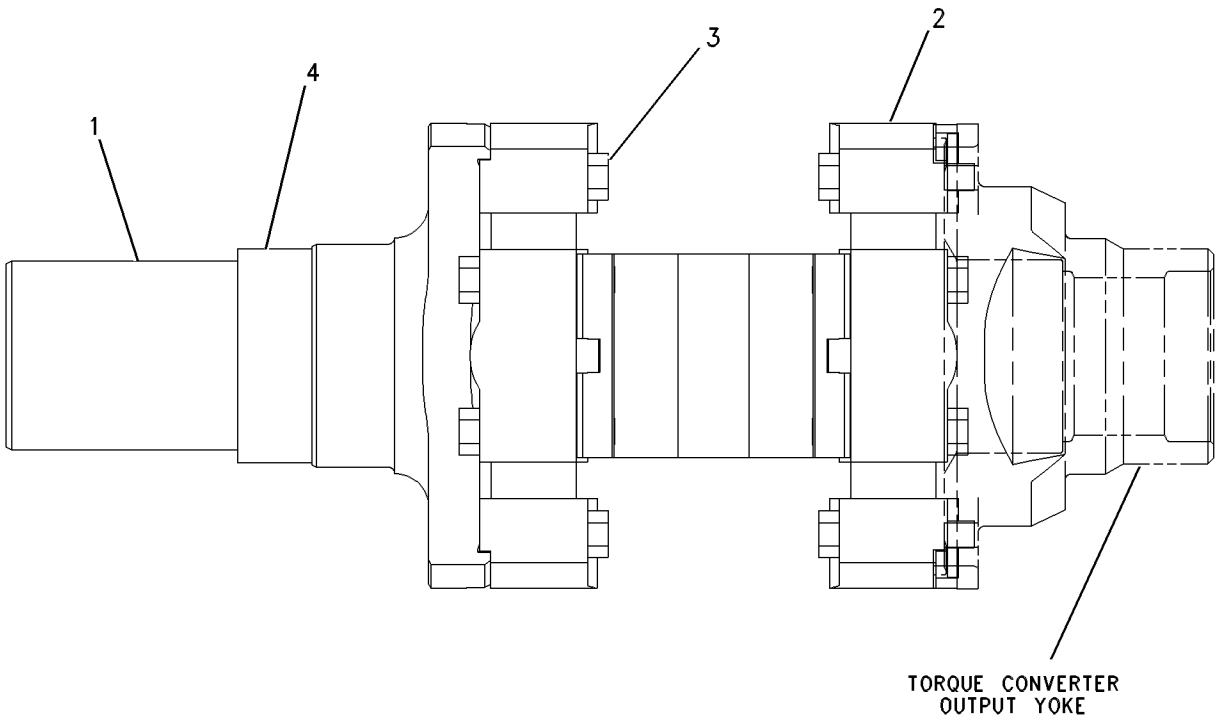

GRAPHIC #1 **<END>** g00648254

220-5549 SLIP JOINT GP

S/N: RJG1-UP

PART OF 220-5548 COUPLING GP-PUMP

SMCS-3251 **i02050415**

NOTE	REF NO	GRAPHIC REF	PART NUMBER	QTY	PART NAME 1 2 3 4 5 6 (PRODUCT LEVEL)	SEE PAGE
	1	1	**2J-8333**	1	SEAL-LIP TYPE	
	2	1	**5H-4279**	1	PLUG-CUP	
	3	1	**209-3424**	1	YOKE	
	4	1	**220-5550**	1	YOKE	

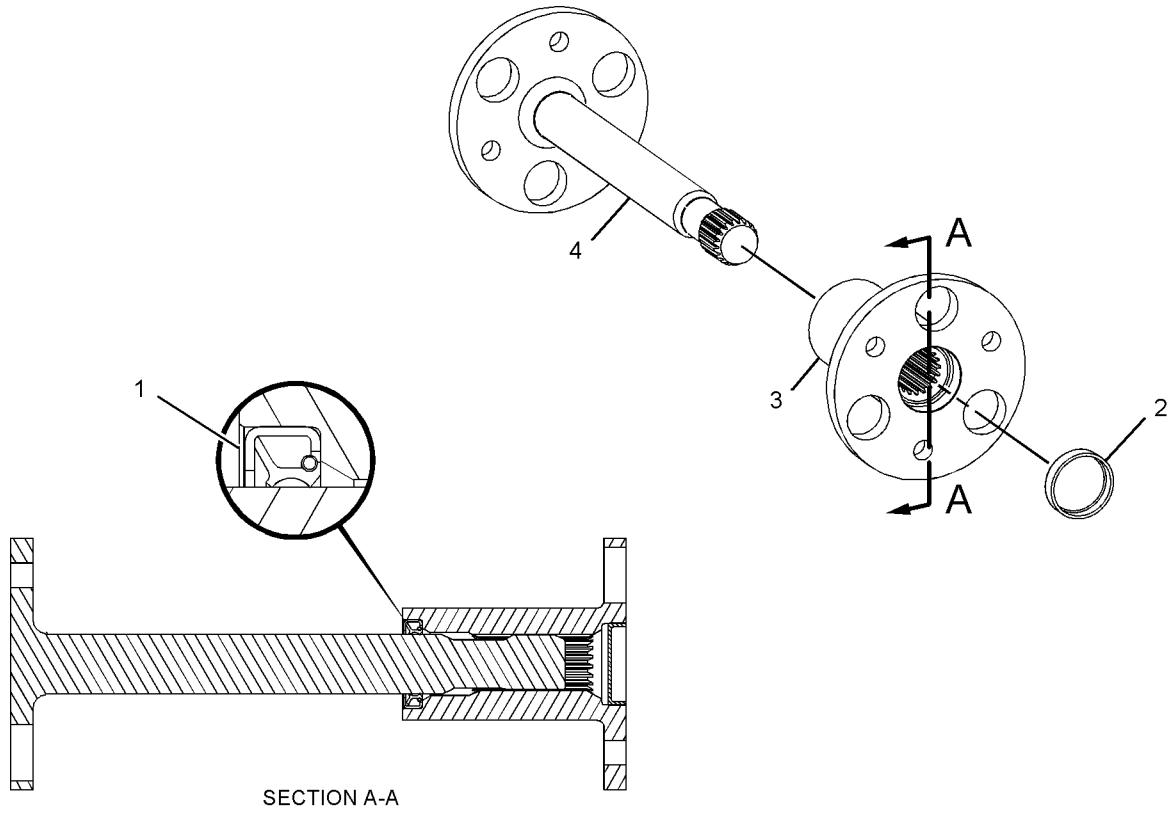

GRAPHIC #1 **<END>** g01039052

226-7612 TORQUE CONVERTER GP

S/N: TCK1-UP

PART OF 226-7613 TORQUE CONVERTER GP

SMCS-3101 **i02050969**

NOTE	REF NO	GRAPHIC REF	PART NUMBER	QTY	PART NAME 1 2 3 4 5 6 (PRODUCT LEVEL)	SEE PAGE
	1	1	**5D-7449**	1	CUP-BEARING	
	2	1	**5F-1248**	1	CONE-BEARING	
	3	1	**1T-0229**	1	LOCKNUT-BEARING	
	4	1	**1T-0242**	1	LOCKWASHER-BEARING	
	5	1	**6P-3904**	1	RETAINER-BEARING	
	6	1	**6P-9163**	1	CARRIER-RING	
	7	1	**6Y-5636**	1	IMPELLER-CONVERTER	
	8	1	**6Y-5793**	1	RING-SEAL	
	9	1	**7G-5671**	1	HUB-IMPELLER	
	10	1	**7G-9922**	1	RING-SEAL	
	11	1	**7T-6993**	1	TURBINE-CONVERTER	
	12	1	**8P-6817**	1	HUB	
	13	1	**8P-9266**	1	STATOR-CONVERTER	
	14	1	**106-7098**	1	FLANGE AS	
		1	**1T-0278**	2	BEARING-SLEEVE	
	15	1	**226-7615**	1	HOUSING-ROTATING	
	16	1	**226-7617**	1	SUPPORT-STATOR	
	17	1	**226-7618**	1	CARRIER-STATOR	
	18	1	**226-7620**	1	FLANGE AS	
	18A	1	**9S-4191**	2	PLUG-O RING	
	18B	1	**033-6042**	2	SEAL-O-RING	
		1	**9M-4007**	2	DOWEL	
	19	1	**242-8030**	1	CARRIER-SEAL	
	20	1	**242-8031**	1	SLEEVE-WEAR	
	21	1	**242-8033**	1	PLATE-THRUST	
	22	1	**1A-2029**	32	BOLT (3/8-16X1.125-IN)	
	23	1	**1T-0241**	1	SETSCREW (5/16-18XO.75-IN)	
	24	1	**1T-0610**	1	BALL BEARING	
	25	1	**2L-3650**	5	PIN-SPRING	
	26	1	**5M-2894**	32	WASHER-HARD (10.2X18.5X2.5-MM THK)	
	27	1	**5P-6393**	2	RING-RETAINING	
	28	1	**5P-8245**	36	WASHER-HARD (13.5X25.5X3-MM THK)	
	29	1	**5S-2389**	12	BOLT-SOCKET HEAD (1/2-13X2.75-IN)	
	30	1	**6H-1717**	36	BOLT (1/2-13X1.125-IN)	

226-7612 **TORQUE CONVERTER GP** *(contd.)* **i02050969**

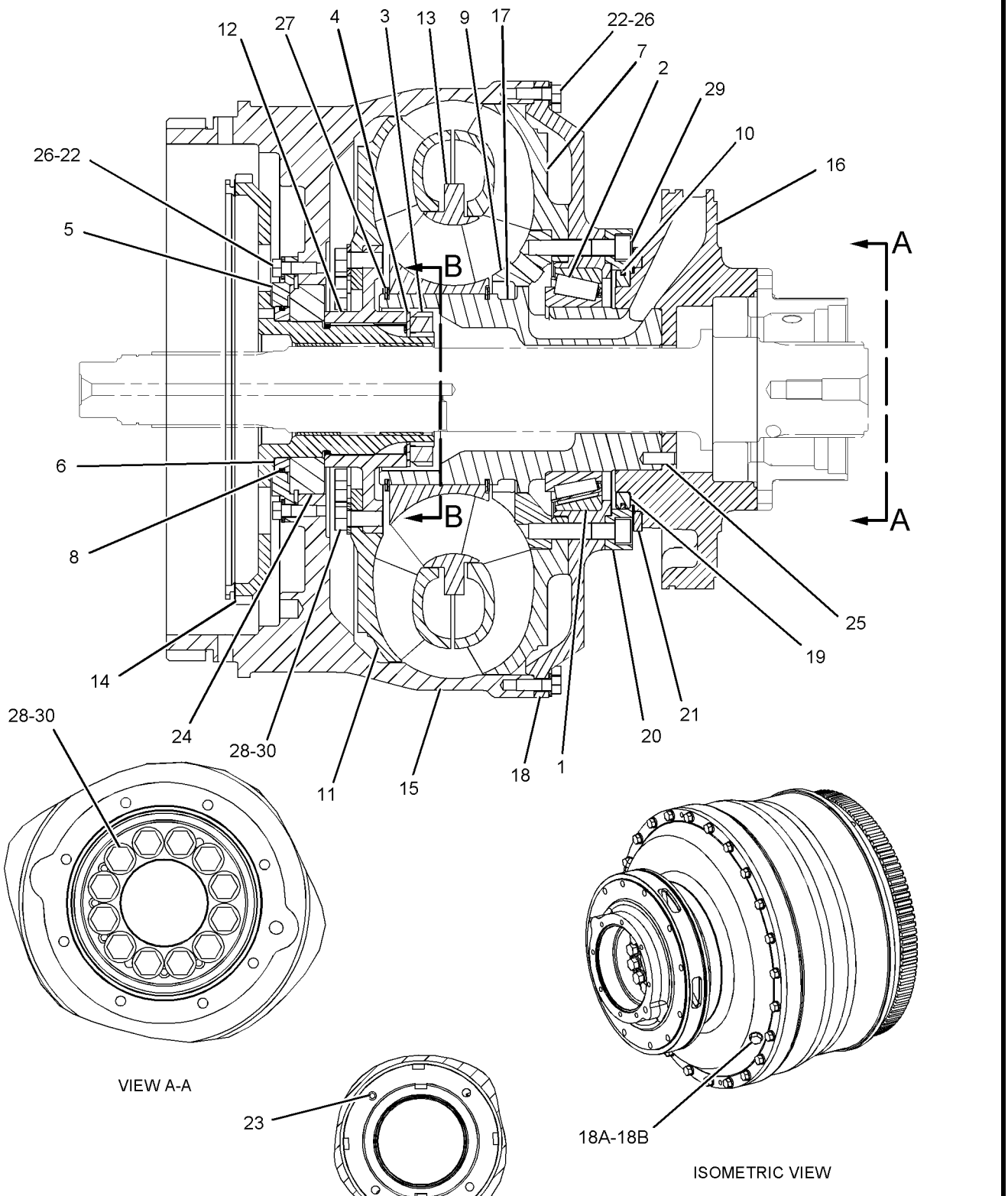

GRAPHIC #1

<END>

g01054863

226-7613 TORQUE CONVERTER GP

S/N: TCK1-UP

PART OF 226-7614 TORQUE CONVERTER GP

SMCS-3101 **i02050935**

NOTE	REF NO	GRAPHIC REF	PART NUMBER	QTY	PART NAME 1 2 3 4 5 6 (PRODUCT LEVEL)	SEE PAGE
Y	1	1	*226-7612*	1	TORQUE CONVERTER GP	383
	2	1	**5H-8985**	2	PIN-SPRING	
	3	1	**9M-2076**	1	RING-SNAP	
	4	1	**9M-2074**	1	GEAR-RING (106-TEETH)	
	5	1	**106-7099**	1	CARRIER-PLANETARY	
	6	1	**6L-6560**	1	RING-RETAINING	
	7	1	**9P-4057**	1	SPACER (58X63.50X9.08-MM THK)	
	8	1	**8J-8322**	1	RING-RETAINING	
	9	1	**117-5792**	1	SHAFT-OUTPUT	
	10	1	**5P-5405**	1	RACE-BEARING INNER	
	11	1	**6V-9176**	1	BALL BEARING	
	12	1	**8E-8316**	6	DISC-THRUST	
	13	1	**7G-5622**	3	GEAR-PLANETARY (35-TEETH)	
	14	1	**1S-9110**	3	ROLLER AS	
	15	1	**3S-2708**	3	PIN-SPRING	
	16	1	**1T-0141**	1	RING-METAL SEAL	
	17	1	**7L-9061**	1	SEAL-O-RING	
	18	1	**6Y-5888**	1	RING-SEAL	
	19	1	**226-7619**	1	RETAINER-BEARING	
	20	1	**8P-5056**	1	CARRIER-RING	
	21	1	**1A-2029**	8	BOLT (3/8-16X1.125-IN)	
	22	1	**5M-2894**	8	WASHER-HARD (10.2X18.5X2.5-MM THK)	
	23	1	**6V-5553**	1	SEAL-O-RING	
	24	1	**6P-3901**	3	SHAFT AS	
					(EACH INCLUDES)	
		1	**2A-3746**	1	PLUG-CUP	
		1	**6P-3902**	1	SHAFT-PLANETARY	

Y-SEPARATE ILLUSTRATION

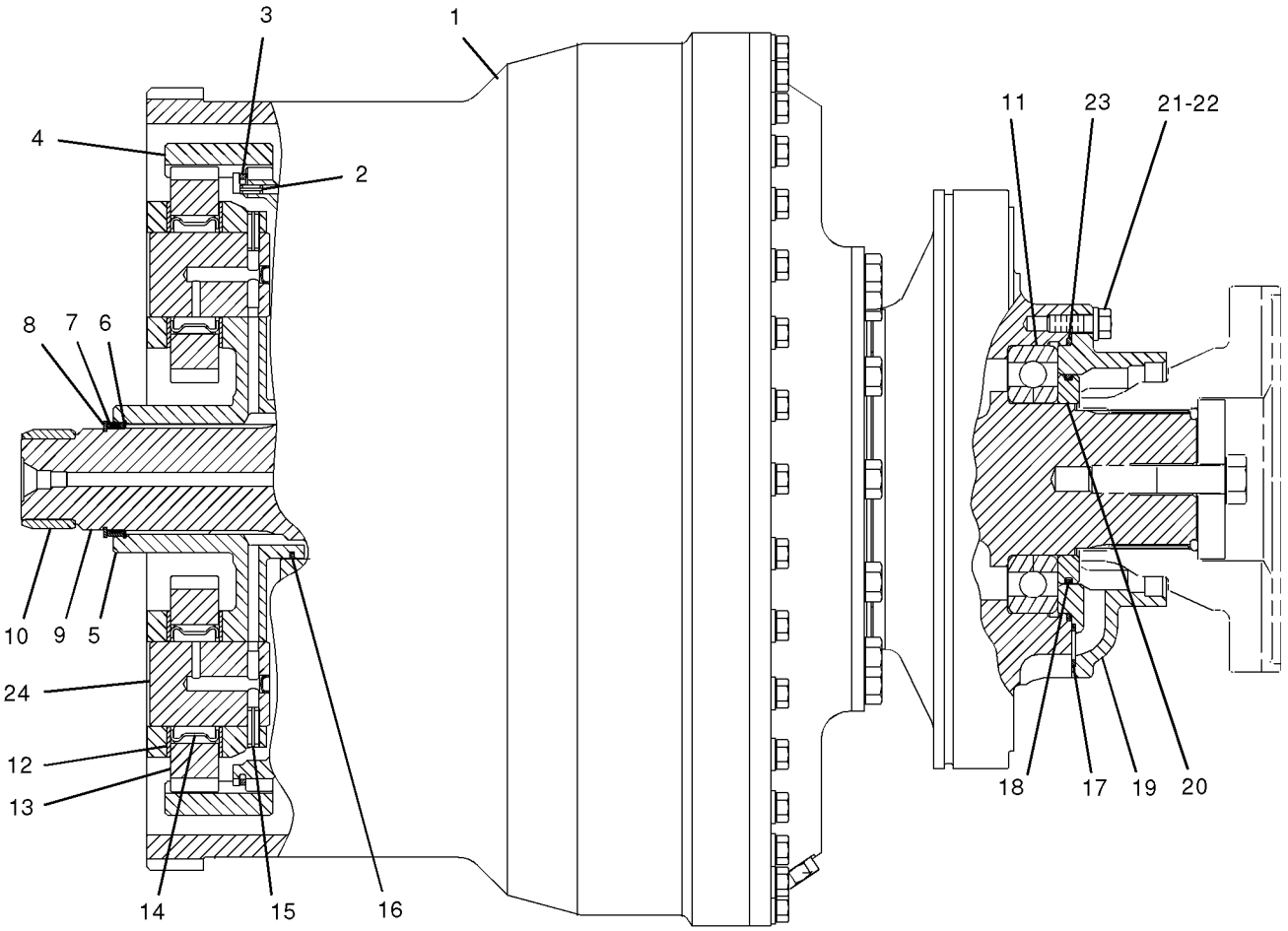

GRAPHIC #1 **<END>** g01055307

226-7614 TORQUE CONVERTER GP

S/N: RJG1-UP

PART OF 212-2746 POWER TRAIN AR

SMCS-3101 **i02052128**

NOTE	REF NO	GRAPHIC REF	PART NUMBER	QTY	PART NAME 1 2 3 4 5 6 (PRODUCT LEVEL)	SEE PAGE
	1	1	**6P-8339**	1	LOCK	
	2	1	**6P-8340**	1	SLEEVE	
	3	1	**8E-7838**	1	GEAR-SUN (35-TEETH)	
	4	1	**8S-9130**	1	SCREEN-SUCTION (TORQUE CONVERTER OIL)	
	5	1	**9S-4372**	1	RETAINER	
Y	6	1	**106-4150**	1	DRAIN GP-ECOLOGY (TORQUE CONVERTER)	348
	7	1	**174-3777**	1	YOKE	
	8	1	**226-7610**	1	COVER	
Y	9	1	**226-7613**	1	TORQUE CONVERTER GP	385
	10	1	**0S-1585**	11	BOLT (1/2-13X1.5-IN)	
	11	1	**0S-1587**	1	BOLT (1/2-13X1.75-IN)	
	12	1	**117-7127**	1	SEAL-LIP TYPE	
	13	1	**165-4852**	2	SEAL-O-RING	
	14	1	**165-4854**	2	SEAL-O-RING	
	15	1	**1B-4367**	1	BOLT (5/8-11X3-IN)	
	16	1	**2K-5254**	1	BEARING-OUTER	
	17	1	**2M-0849**	1	WASHER-HARD (13.5X25.5X5-MM THK)	
	18	1	**3D-8241**	1	SEAL-O-RING	
	19	1	**3J-1907**	1	SEAL-O-RING	
	20	1	**3P-0653**	1	SEAL-O-RING	
	21	1	**4M-8910**	1	RING-RETAINING	
	22	1	**5P-2566**	11	BOLT (1/2-13X1.5-IN)	
	23	1	**5P-8245**	11	WASHER-HARD (13.5X25.5X3-MM THK)	
	24	1	**5S-7379**	1	BOLT (3/8-16X0.875-IN)	
	25	1	**6V-1196**	1	SEAL-O-RING	
	26	1	**7X-2623**	1	RING-RETAINING	
	27	1	**8E-8994**	1	SEAL-RING	
	28	1	**8T-2501**	4	BOLT (3/8-16X2-IN)	
	29	1	**8T-4223**	12	WASHER-HARD (13.5X25.5X3-MM THK)	
	30	1	**8T-4896**	1	WASHER-HARD (10.2X18.5X2.5-MM THK)	
	31	1	**8T-6762**	1	PLUG-PIPE	
	32	1	**8T-8919**	1	BOLT (1/2-13X1.75-IN)	
	33	1	**9S-4191**	1	PLUG-O RING	

Y-SEPARATE ILLUSTRATION

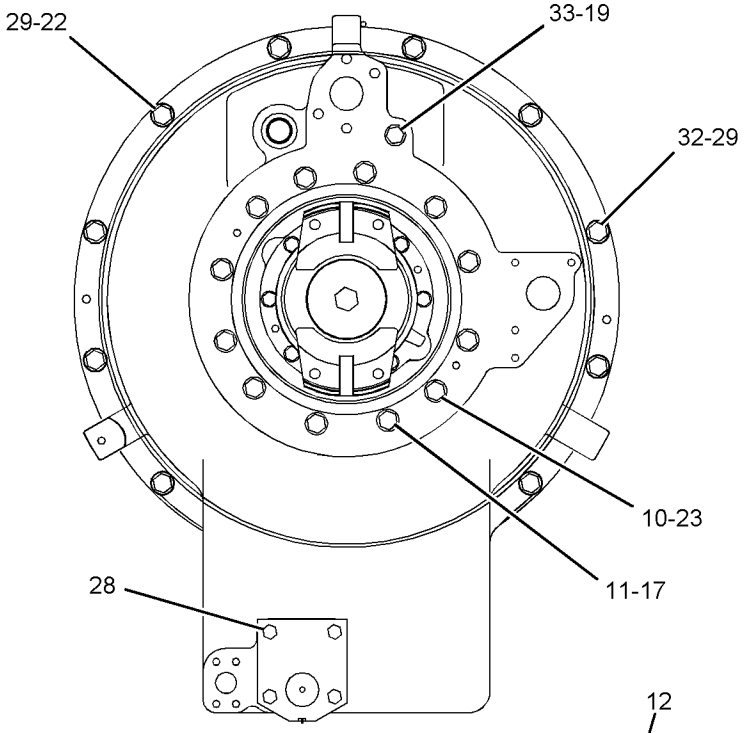

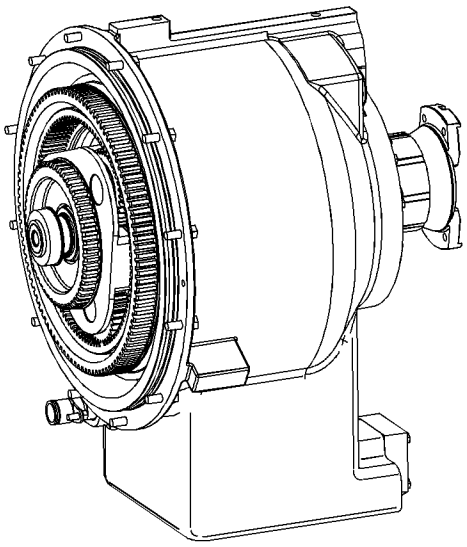

ISOMETRIC VIEW

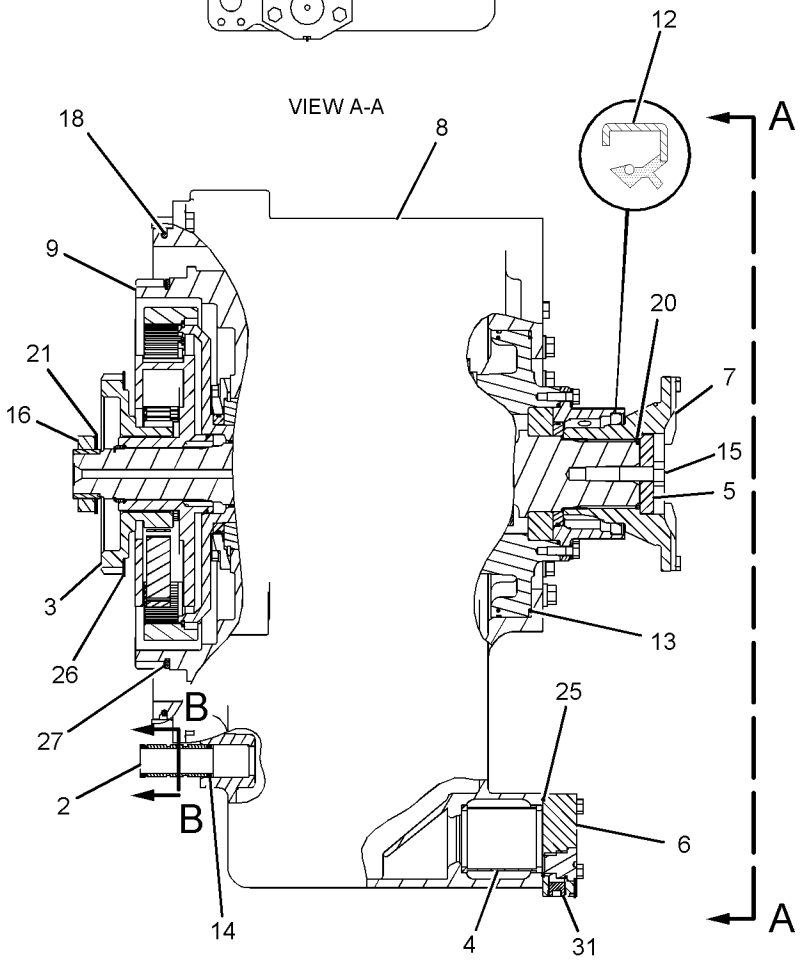

VIEW A-A

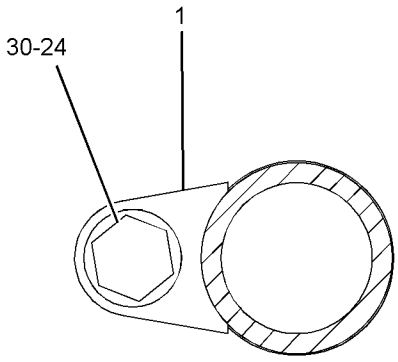

SECTION B-B

GRAPHIC #1 **<END>** g01055906

213-5171 TRANSMISSION AR

S/N: DRL1-UP

PART OF 212-2746 POWER TRAIN AR

SMCS-3030 **i02050027**

NOTE	PART NUMBER	QTY	PART NAME 1 2 3 4 5 6 (PRODUCT LEVEL)	SEE PAGE
Y	*172-2263*	1	CASE & PARTS GP-PLANETARY	343
Y	*219-3034*	1	CONTROL GP-TRANSMISSION HYD	345
Y	*213-5173*	1	GEAR GP-BEVEL & TRANSFER	363
Y	*219-3033*	1	PLANETARY GP-TRANSMISSION	371

Y-SEPARATE ILLUSTRATION

<END>

173-0246 UNIVERSAL JOINT GP

S/N: RJG1-UP

PART OF 173-0245 SHAFT GP-DRIVE

SMCS-3251, 3253 **i01689398**

NOTE	REF NO	GRAPHIC REF	PART NUMBER	QTY	PART NAME 1 2 3 4 5 6 (PRODUCT LEVEL)	SEE PAGE
	1	1	**8W-9912**	2	SPIDER & BEARING GP	
	2	1	**173-0247**	1	YOKE-COUPLING	
	3	1	**0S-1604**	8	BOLT (1/2-20X2.5 IN)	

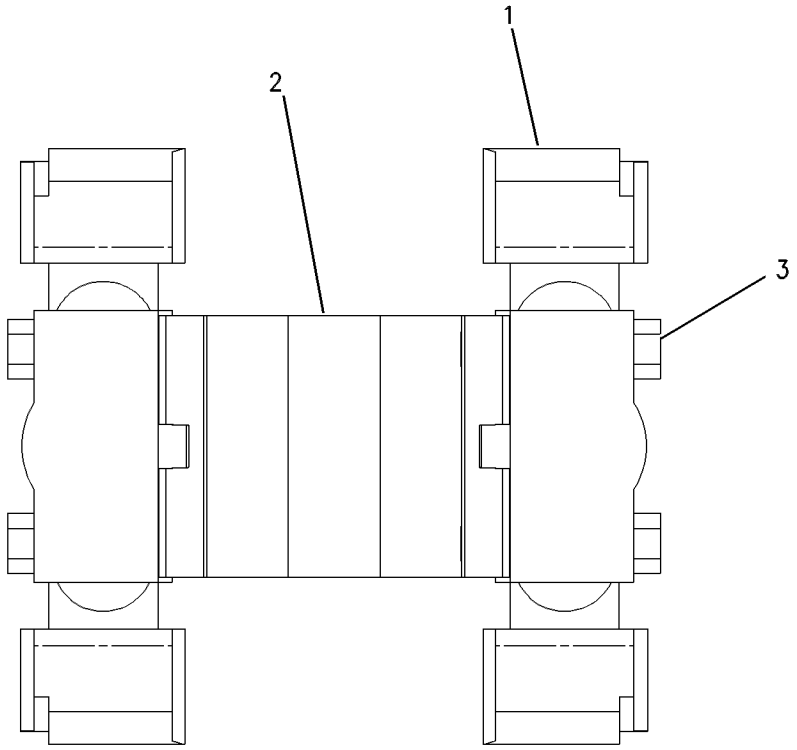

GRAPHIC #1 **<END>** g00648256

244-3114 VALVE GP-MODULATING–
TORQUE CONVERTER LOCKUP CLUTCH
S/N: DRL1-UP
24-VOLT
PART OF 219-3034 CONTROL GP-TRANSMISSION HYD

SMCS-3139 **i02288027**

NOTE	REF NO	GRAPHIC REF	PART NUMBER	QTY	PART NAME 1 2 3 4 5 6 (PRODUCT LEVEL)	SEE PAGE
	1	1	**6V-3965**	1	FITTING AS (QUICK DISCONNECT)	
	2	1	**226-9622**	1	COIL AS (24 VOLT)	
	3	1	**3J-1907**	1	SEAL-O-RING	
	4	1	**164-2108**	1	WASHER (13.03X25.4X2.38-MM THK)	
	5	1	**167-9524**	1	NUT-SELF-LOCKING (1/2-28-THD)	

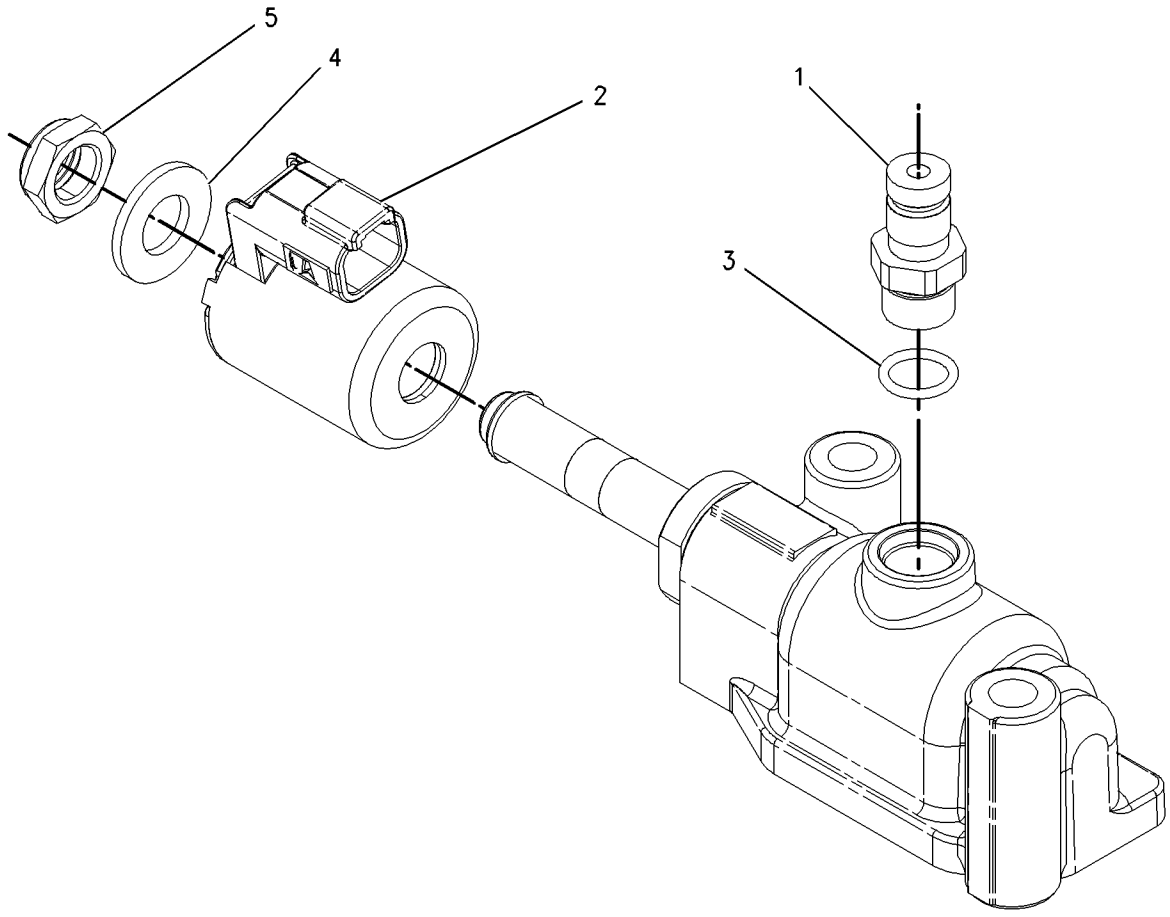

GRAPHIC #1 **<END>** g00919065

217-5393 VALVE GP-RELIEF–TORQUE CONVERTER OUTLET

S/N: RJG1-UP

PART OF 213-5172 LINES GP-POWER TRAIN OIL

SMCS-3133, 3182 **i02308708**

NOTE	REF NO	GRAPHIC REF	PART NUMBER	QTY	PART NAME 1 2 3 4 5 6 (PRODUCT LEVEL)	SEE PAGE
	1	1	**1W-9860**	1	SPRING	
	2	1	**6V-0852**	2	CAP-DUST	
	4	1	**8E-6927**	1	PLATE	
	5	1	**193-5463**	1	SPOOL	
	8	1	**0S-1594**	4	BOLT (3/8-16X1-IN)	
	9	1	**2S-4078**	1	SEAL-O-RING	
	10	1	**3J-1907**	2	SEAL-O-RING	
	11	1	**4M-8239**	1	COVER	
B	12	1	**5M-9622**	2	SHIM (1.6-MM THK)	
B	13	1	**5M-9623**	3	SHIM (0.9-MM THK)	
B	14	1	**5M-9624**	1	SHIM (0.25-MM THK)	
	15	1	**6V-3965**	2	FITTING AS (QUICK DISCONNECT)	
	16	1	**8M-4986**	1	SEAL-O-RING	
	17	1	**8M-4992**	1	SEAL-O-RING	
	18	1	**8T-6762**	1	PLUG-PIPE	
	19	1	**9S-8010**	1	PLUG	
	20	1	**7X-0290**	3	BOLT (3/8-16X3.5-IN)	
	21	1	**8T-4896**	3	WASHER-HARD (10.2X18.5X2.5-MM THK)	

B-USE AS REQUIRED

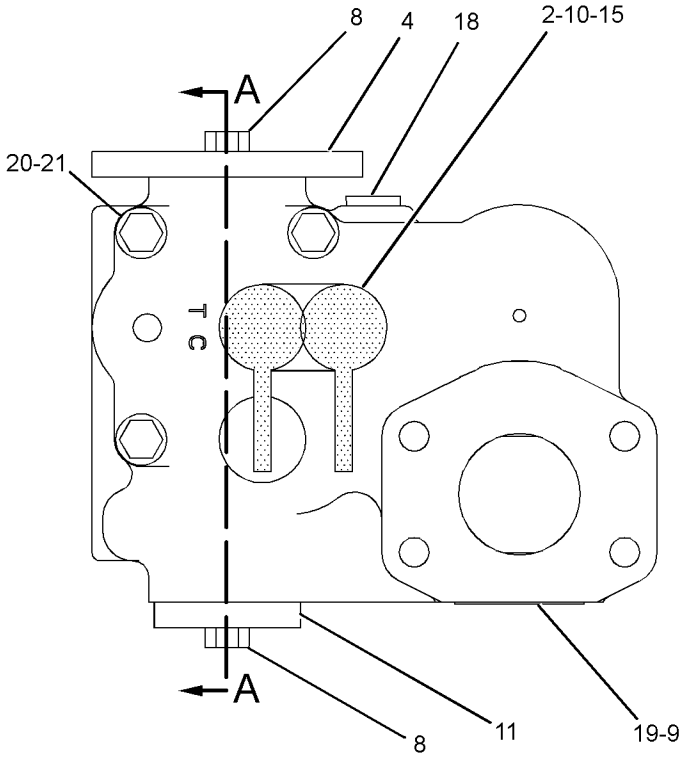

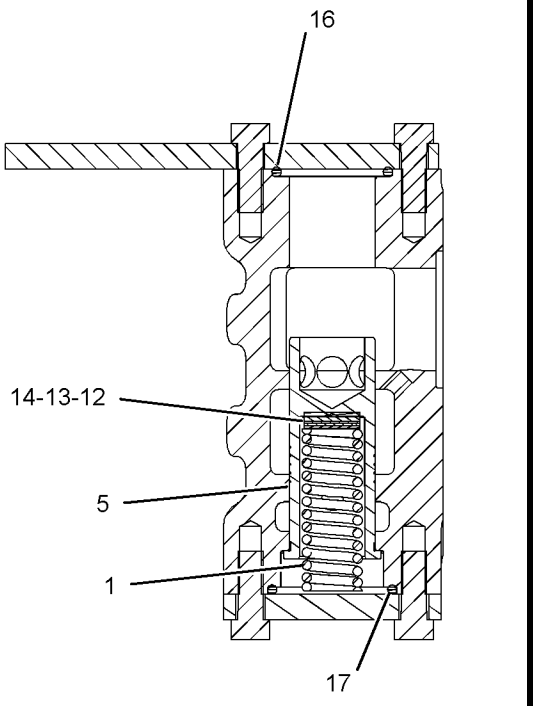

SECTION A-A

GRAPHIC #1 **<END>** g01225536

232-3374 VALVE GP-RELIEF—LUBRICATION DISTRIBUTION

S/N: RJG1-UP

PART OF 213-5172 LINES GP-POWER TRAIN OIL

SMCS-3133, 3182 **i02050395**

NOTE	REF NO	GRAPHIC REF	PART NUMBER	QTY	PART NAME 1 2 3 4 5 6 (PRODUCT LEVEL)	SEE PAGE
	1	1	**2P-4538**	1	SPOOL AS-RELIEF	
	1A	1	**1L-3162**	1	RING-RETAINING	
	1B	1	**5M-9548**	1	SPRING	
	1C	1	**8M-2537**	1	RETAINER	
	1D	1	**9M-4313**	1	POPPET	
	2	1	**2S-4078**	2	SEAL-O-RING	
	3	1	**3P-0246**	1	SPRING	
	4	1	**6V-0852**	2	CAP-DUST	
	5	1	**6V-3965**	2	FITTING AS (QUICK DISCONNECT)	
	9	1	**085-7356**	1	FITTING	
	10	1	**3J-1907**	3	SEAL-O-RING	
B	11	1	**5M-9622**	2	SHIM (1.6-MM THK)	
B	12	1	**5M-9623**	3	SHIM (0.9-MM THK)	
B	13	1	**5M-9624**	1	SHIM (0.25-MM THK)	
	14	1	**9S-8010**	2	PLUG	

B-USE AS REQUIRED

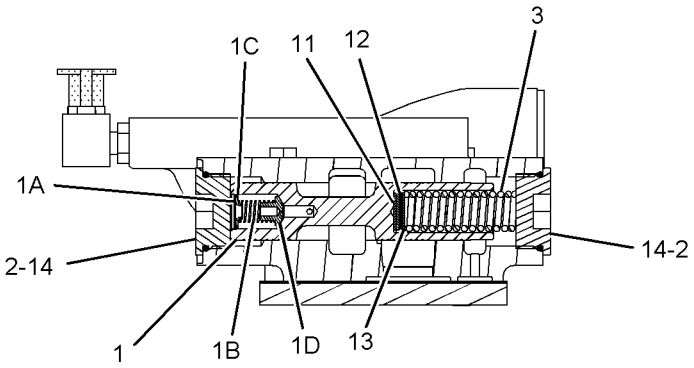

SECTION A-A

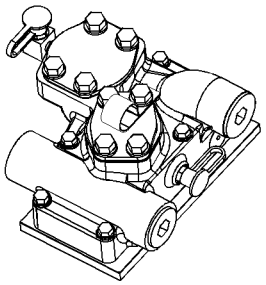

ISOMETRIC VIEW

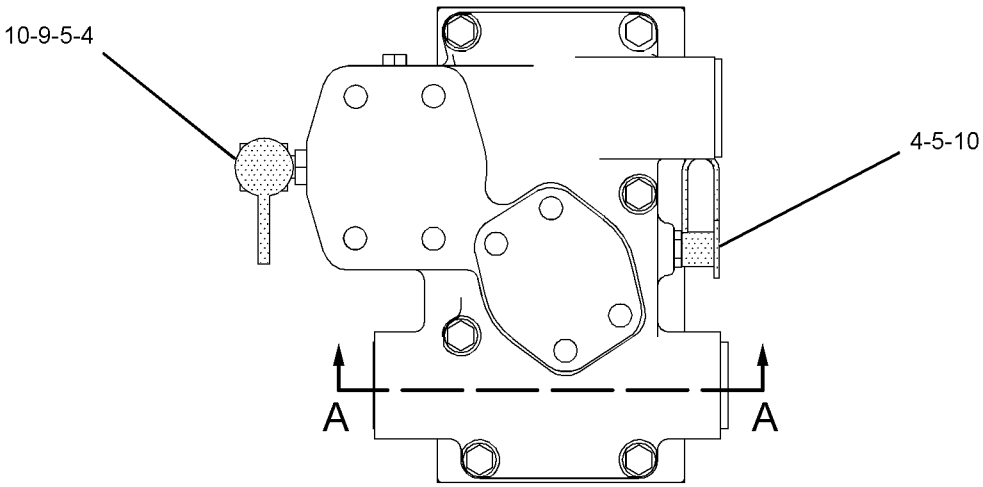

GRAPHIC #1

<END>

g01054186

FRAME AND BODY

213-0496 CASE & FRAME GP

S/N: RJG1-UP

PART OF 212-2741 CHASSIS AR

SMCS-7051 **i02284268**

NOTE	REF NO	GRAPHIC REF	PART NUMBER	QTY	PART NAME 1 2 3 4 5 6 (PRODUCT LEVEL)	SEE PAGE
	1	1	**7T-4135**	2	BEARING	
	2	1	**106-8186**	1	VALVE AS-DRAIN (TRANSMISSION CASE)	
	3	1	**106-8187**	1	PLUG (DRAIN) (TRANSMISSION CASE)	
	4	1	**117-8547**	2	TUBE AS	
	5	1	**213-0495**	1	CASE & FRAME AS	
		1	**9J-6067**	1	TRUNNION	
	6	1	**3T-9658**	2	BEARING-SLEEVE	
	7	1	**6F-0711**	1	SEAL-O-RING	
	8	1	**7M-8480**	1	DOWEL	
	9	1	**7T-9014**	4	BEARING-SLEEVE	
	10	1	**8P-0420**	2	BEARING	
	11	1	**8P-7598**	2	BEARING-SLEEVE	
	12	1	**8T-2502**	4	BOLT (3/8-16X1.125-IN)	
	13	1	**8T-4896**	4	WASHER-HARD (10.2X18.5X2.5-MM THK)	

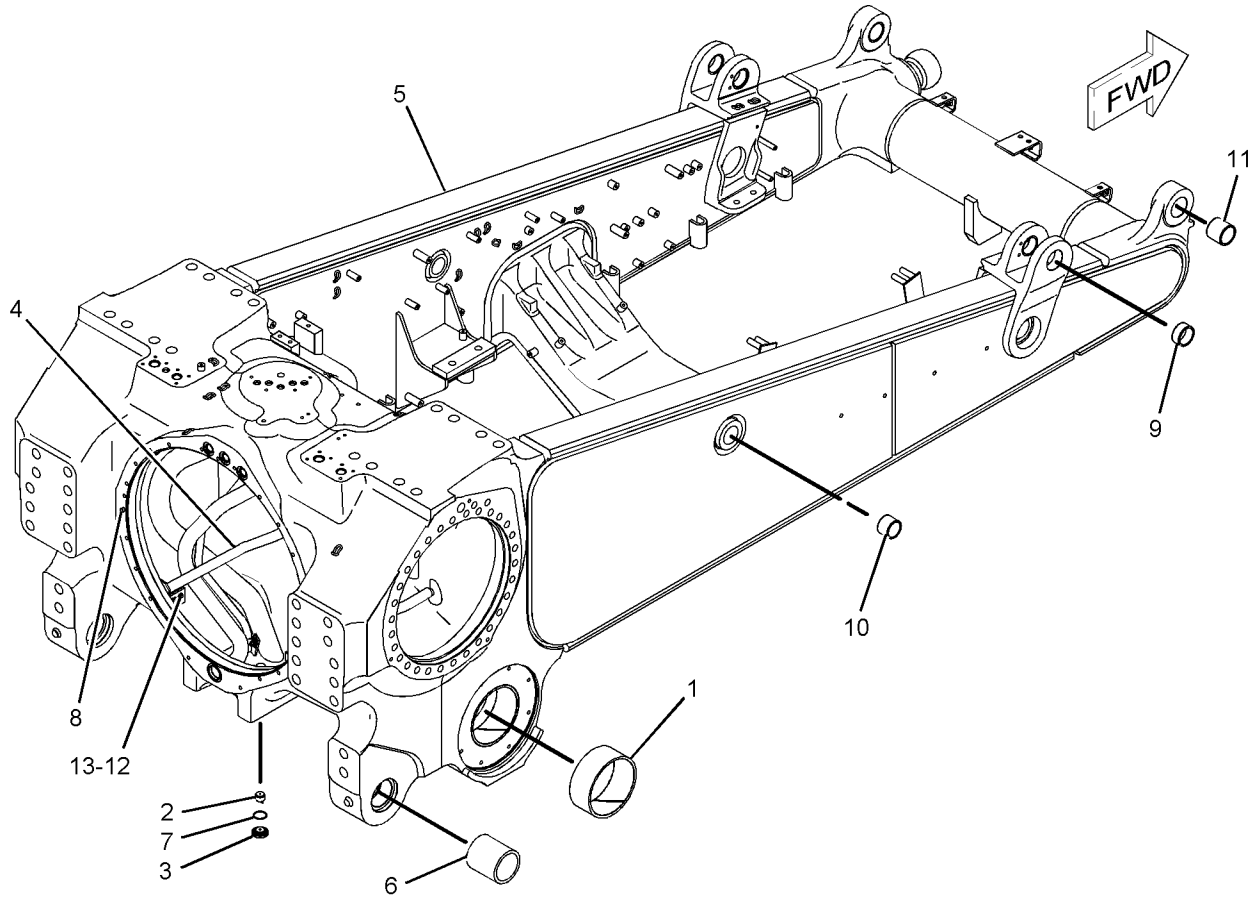

GRAPHIC #1 **<END>** g01051999

FRAME AND BODY

239-0601 CASE & FRAME GP

S/N: RJG1-UP
PART OF 238-4490 MODIFICATION AR-BULLDOZER
AN ATTACHMENT

SMCS-7051 **i02284163**

NOTE	REF NO	GRAPHIC REF	PART NUMBER	QTY	PART NAME 1 2 3 4 5 6 (PRODUCT LEVEL)	SEE PAGE
	1	1	**7T-4135**	2	BEARING	
	2	1	**106-8186**	1	VALVE AS-DRAIN (TRANSMISSION CASE)	
	3	1	**106-8187**	1	PLUG (DRAIN) (TRANSMISSION CASE)	
	4	1	**117-8547**	2	TUBE AS	
	5	1	**239-0600**	1	CASE & FRAME AS	
	5A	1	**3G-7698**	2	TRUNNION	
	6	1	**3T-9658**	2	BEARING-SLEEVE	
	7	1	**6F-0711**	1	SEAL-O-RING	
	8	1	**7M-8480**	1	DOWEL	
	9	1	**7T-9014**	4	BEARING-SLEEVE	
	10	1	**8P-0420**	2	BEARING	
	11	1	**8P-7598**	2	BEARING-SLEEVE	
	12	1	**8T-2502**	4	BOLT (3/8-16X1.125-IN)	
	13	1	**8T-4896**	4	WASHER-HARD (10.2X18.5X2.5-MM THK)	

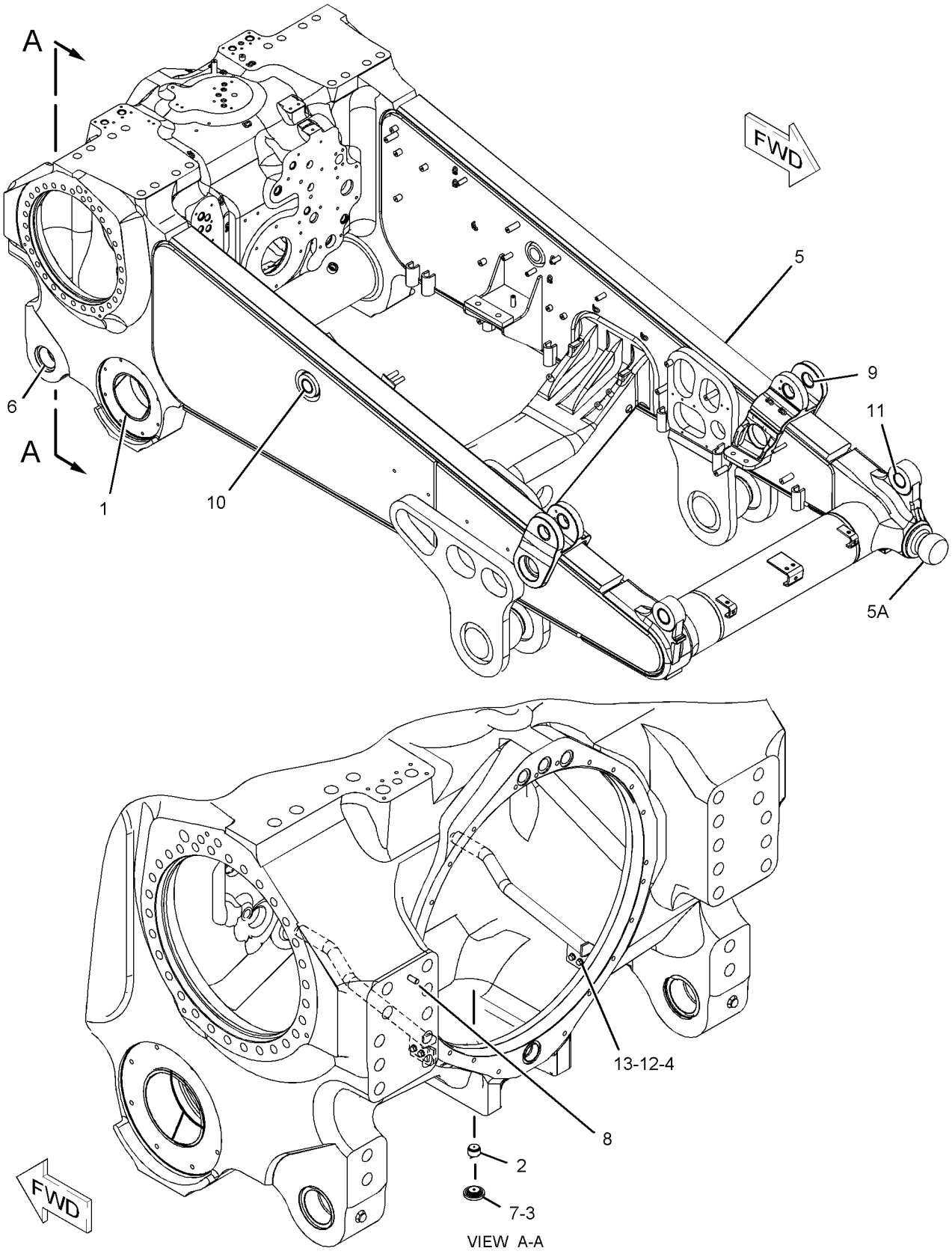

GRAPHIC #1 **<END>** g01140632

223-5567 COUNTERWEIGHT GP–BOTTOM

S/N: RJG1-UP
2132-KG (4690-LBS)
AN ATTACHMENT

SMCS-7056 **i02020665**

NOTE	REF NO	GRAPHIC REF	PART NUMBER	QTY	PART NAME 1 2 3 4 5 6 (PRODUCT LEVEL)	SEE PAGE
	1	1	**6P-8829**	2	RETAINER	
	2	1	**223-5568**	1	COUNTERWEIGHT AS	
	2A	1	**3S-1349**	6	WASHER-HARD (31X52.5X6-MM THK)	
	3	1	**223-9672**	1	COVER	
	4	1	**2J-3507**	1	NUT-FULL (1-8-THD)	
	5	1	**2J-8348**	2	BOLT (1-8X10-IN)	
	6	1	**3S-1349**	4	WASHER-HARD (31X52.5X6-MM THK)	
	7	1	**5P-1076**	1	WASHER-HARD (13.5X30X4-MM THK)	
	8	1	**5P-2566**	1	BOLT (1/2-13X1.5-IN)	
	9	1	**5P-8250**	2	WASHER (28X49X5-MM THK)	
	10	1	**7K-6956**	2	BLOCK	
	11	1	**8H-5727**	4	BOLT (1 1/8-7X6-IN)	

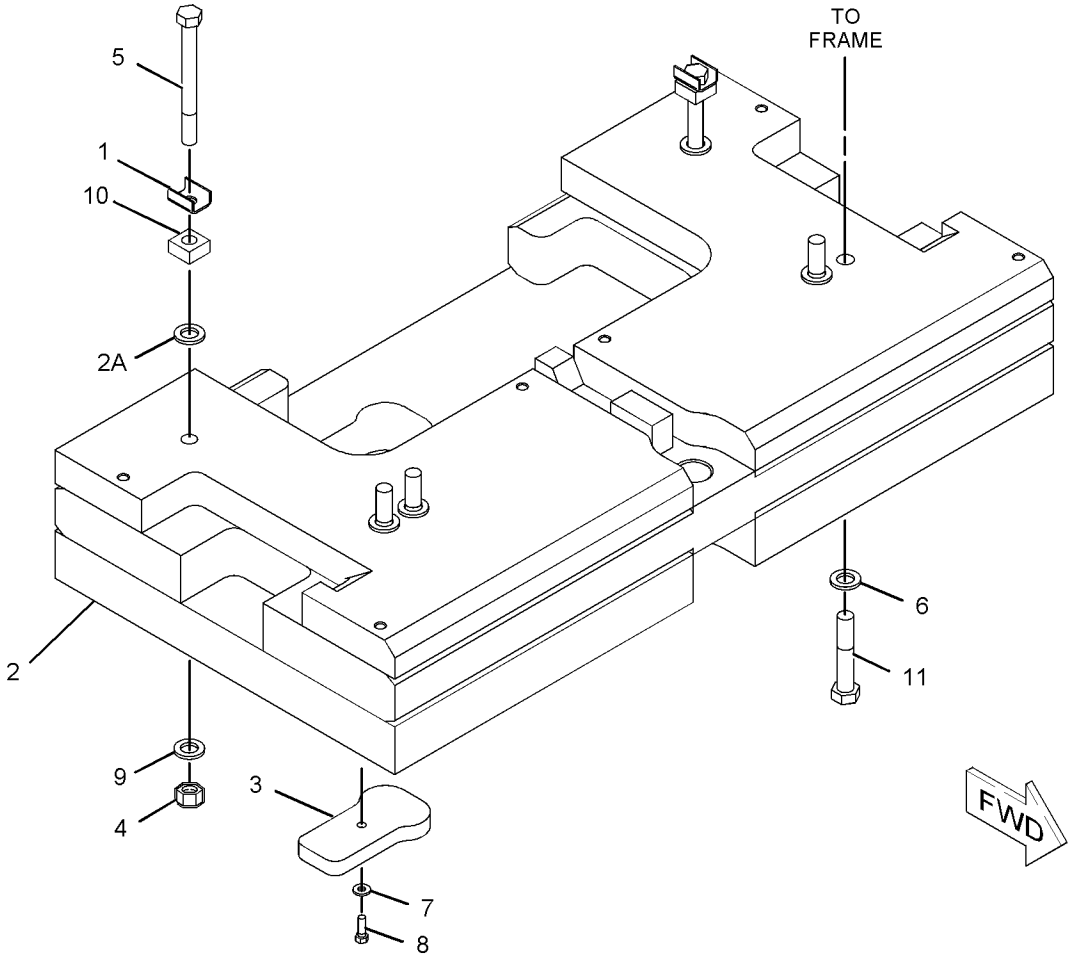

GRAPHIC #1 **<END>** g01054326

248-6690 COUNTERWEIGHT GP–REAR

S/N: RJG1-UP
8619-KG (19002-LB)
CANNOT BE USED WITH 247-1267–PAGE 440
AN ATTACHMENT

SMCS-7056 **i02256125**

NOTE	REF NO	GRAPHIC REF	PART NUMBER	QTY	PART NAME 1 2 3 4 5 6 (PRODUCT LEVEL)	SEE PAGE
	1	1	**4T-1389**	2	PIN AS	
	2	1	**7X-0857**	20	BOLT (1-1/2-6X4-IN)	
	3	1	**7T-7222**	2	PIN AS	
	4	1	**7T-7305**	6	PLATE	
	5	1	**9J-6689**	2	PIN AS	
	6	1	**9W-6371**	6	SPACER (108X230X3-MM THK)	
	7	1	**126-0186**	4	PLATE	
	8	1	**144-0344**	4	COUNTERWEIGHT	
	9	1	**248-6691**	1	COUNTERWEIGHT AS	
	10	1	**248-6713**	1	PLATE	
	11	1	**248-6715**	1	BRACKET AS (LH)	
	12	1	**248-6716**	1	BRACKET AS (RH)	
	13	1	**248-6720**	2	LINK AS	
	14	1	**248-6722**	2	PLATE	
	15	1	**7X-0365**	12	BOLT (3/4-10X1.5-IN)	
	16	1	**7X-0379**	8	BOLT (7/8-9X1.5-IN)	
	17	1	**7X-0389**	8	BOLT (7/8-9X4.75-IN)	
	18	1	**7X-0405**	4	BOLT (1-8X2.75-IN)	
	19	1	**7X-0537**	20	WASHER-HARD (40.5X67X6-MM THK)	
	20	1	**8C-6913**	16	WASHER-HARD (24X41.5X4-MM THK)	

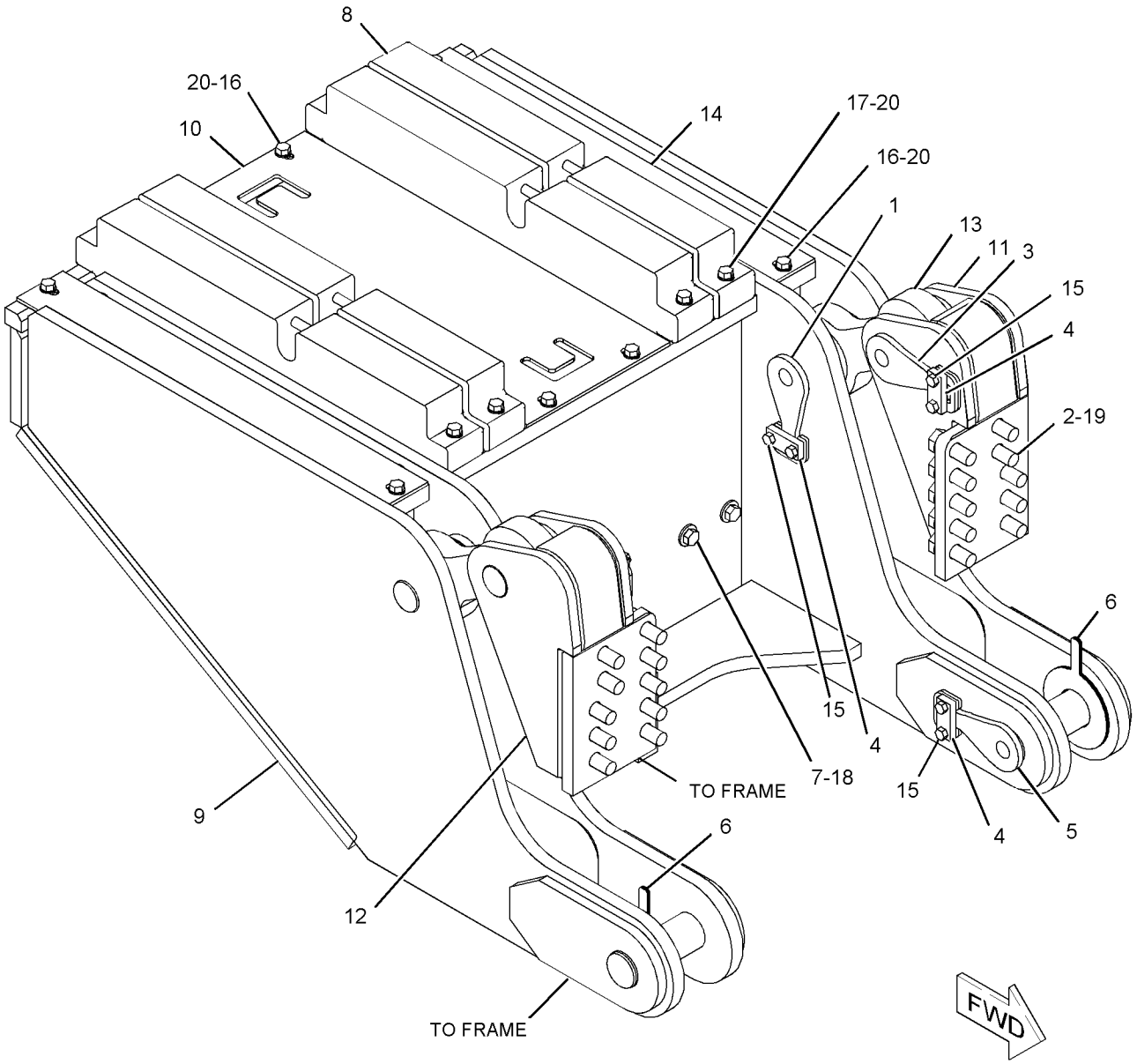

GRAPHIC #1 **<END>** g01053606

248-6727 COUNTERWEIGHT GP–REAR

S/N: RJG1-UP
7562-KG (16671-LB)
CANNOT BE USED WITH 247-1267–PAGE 440
AN ATTACHMENT

SMCS-7056 **i02256348**

NOTE	REF NO	GRAPHIC REF	PART NUMBER	QTY	PART NAME 1 2 3 4 5 6 (PRODUCT LEVEL)	SEE PAGE
	1	1	**4T-1389**	2	PIN AS	
	2	1	**7T-7222**	2	PIN AS	
	3	1	**7T-7305**	6	PLATE	
	4	1	**7X-0857**	20	BOLT (1-1/2-6X4-IN)	
	5	1	**9J-6689**	2	PIN AS	
	6	1	**9W-6371**	6	SPACER (108X230X3-MM THK)	
	7	1	**126-0186**	3	PLATE	
	8	1	**144-0344**	3	COUNTERWEIGHT	
	9	1	**248-6691**	1	COUNTERWEIGHT AS	
	10	1	**248-6715**	1	BRACKET AS (LH)	
	11	1	**248-6716**	1	BRACKET AS (RH)	
	12	1	**248-6720**	2	LINK AS	
	13	1	**248-6722**	2	PLATE	
	14	1	**248-6724**	2	PLATE	
	15	1	**7X-0365**	12	BOLT (3/4-10X1.5-IN)	
	16	1	**7X-0379**	12	BOLT (7/8-9X1.5-IN)	
	17	1	**7X-0389**	7	BOLT (7/8-9X4.75-IN)	
	18	1	**7X-0405**	3	BOLT (1-8X2.75-IN)	
	19	1	**7X-0537**	20	WASHER-HARD (40.5X67X6-MM THK)	
	20	1	**8C-6913**	19	WASHER-HARD (24X41.5X4-MM THK)	

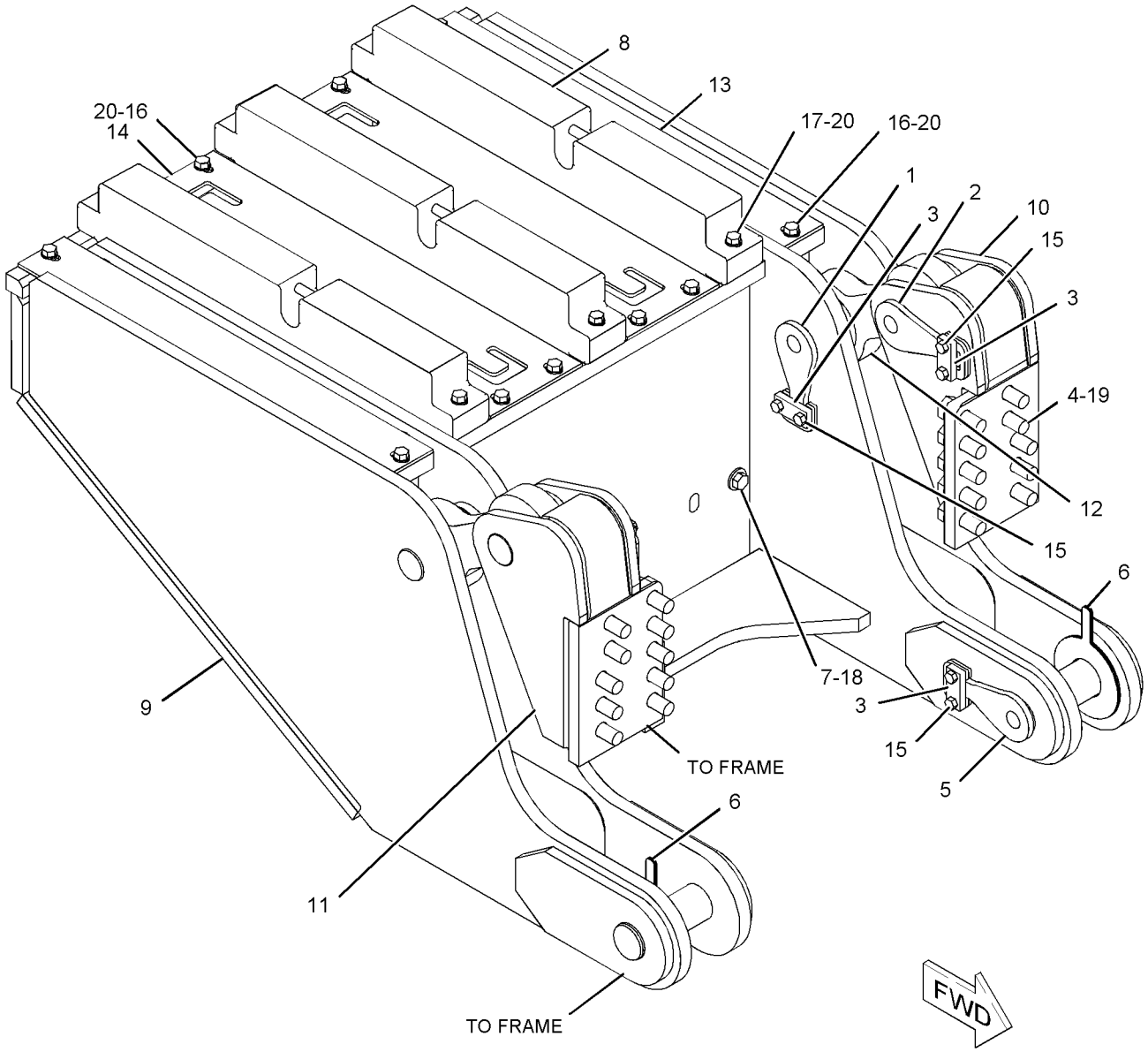

GRAPHIC #1 **<END>** g01136295

FRAME AND BODY

213-1121 DOOR GP-ACCESS

S/N: RJG1-UP

PART OF 212-2741 CHASSIS AR

SMCS-7273 **i02360239**

NOTE	REF NO	GRAPHIC REF	PART NUMBER	QTY	PART NAME 1 2 3 4 5 6 (PRODUCT LEVEL)	SEE PAGE
	1	1	**246-2641**	1	PADLOCK GP (FUEL PRIMING PUMP ON, OFF)	
		1	**5P-8500**	2	KEY	
	2	1	**8E-7561**	1	KNOB AS	
		1	**8E-1205**	1	KNOB	
		1	**7S-2042**	1	STUD	
		1	**8T-7566**	1	PIN-SPRING	
	3	1	**9S-8230**	1	PLATE AS	
		1	**1F-0750**	1	NUT-WELD (3/8-16-THD)	
	4	1	**104-5771**	1	PLATE	
	5	1	**104-5773**	1	PLATE	
	6	1	**218-8461**	1	COVER AS	
	7	1	**218-8462**	1	COVER	
	8	1	**235-1046**	2	PLATE AS	
	9	1	**4H-1641**	1	PIN-SPRING	
	10	1	**5P-1076**	8	WASHER-HARD (13.5X30X4-MM THK)	
	11	1	**7X-7729**	3	WASHER (11X25X3-MM THK)	
M	12	1	**8T-4136**	4	BOLT (M10X1.5X25-MM)	
M	13	1	**8T-4137**	1	BOLT (M10X1.5X20-MM)	
M	14	1	**8T-4139**	12	BOLT (M12X1.75X30-MM)	
	15	1	**8T-4222**	2	WASHER-PLATED (11X32X2.5-MM THK)	
	17	1	**8T-4223**	4	WASHER-HARD (13.5X25.5X3-MM THK)	
	18	1	**8T-7934**	2	WASHER-HARD (11X21X5-MM THK)	

M-METRIC PART

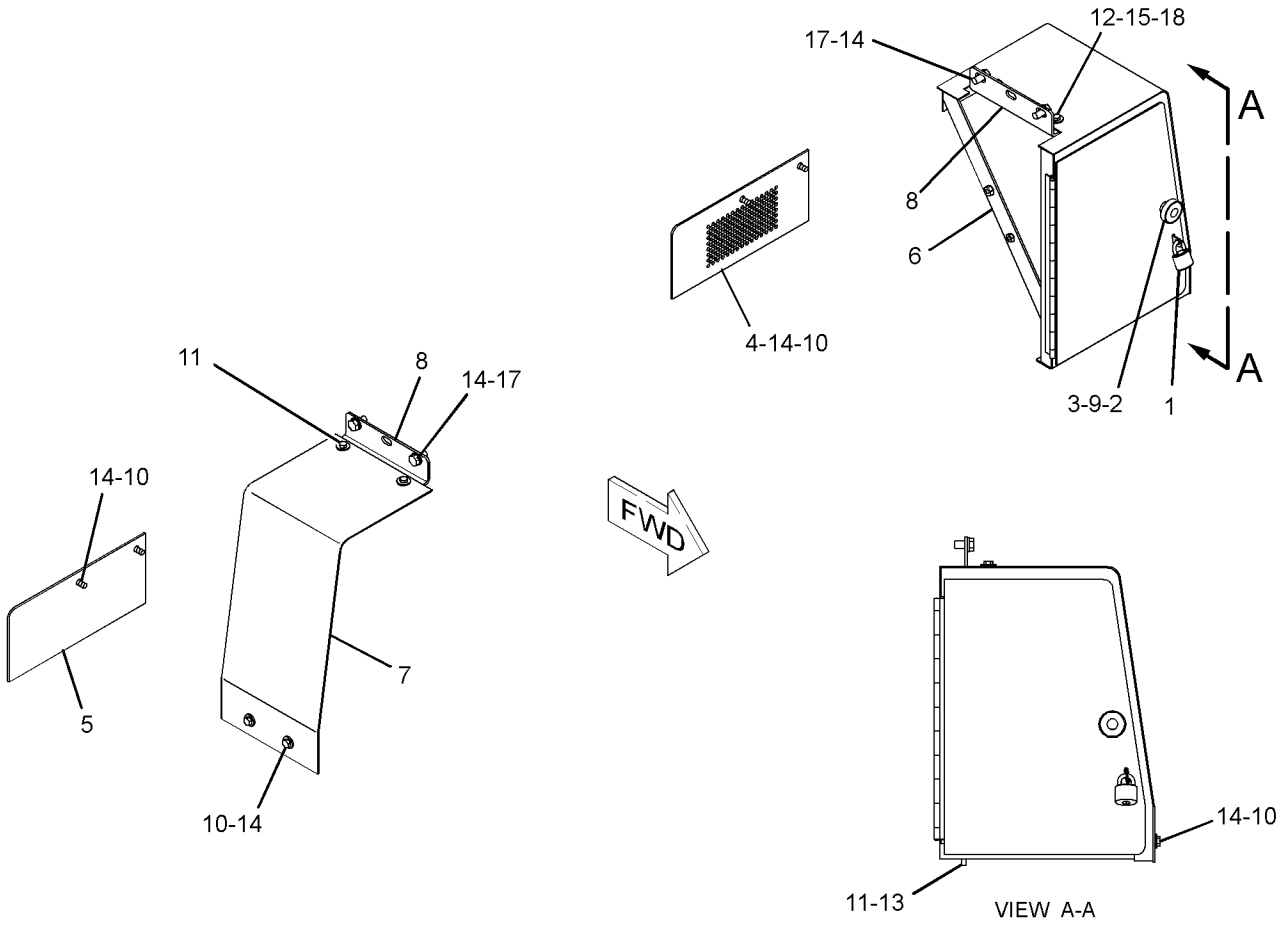

GRAPHIC #1 **<END>** g01184892

FRAME AND BODY

250-2610 DOOR GP-ACCESS—LH—ENGINE ENCLOSURE

S/N: RJG1-UP

PART OF 250-2615 ENCLOSURE GP-ENGINE

SMCS-7273 **i02252361**

NOTE	REF NO	GRAPHIC REF	PART NUMBER	QTY	PART NAME 1 2 3 4 5 6 (PRODUCT LEVEL)	SEE PAGE
	1	1	**3V-9399**	2	ROD AS	
					(EACH INCLUDES)	
		1	**4B-4278**	2	WASHER (10.2X20.5X1.6-MM THK)	
	2	1	**4B-4278**	2	WASHER (10.2X20.5X1.6-MM THK)	
	3	1	**4H-2558**	2	GROMMET	
	4	1	**6B-0533**	3	SPRING	
	5	1	**9S-2075**	3	SPACER	
	6	1	**161-0832**	3	HANDLE AS	
	7	1	**218-8457**	1	DOOR AS (LH)	
	8	1	**231-2082**	6	GUIDE AS	
					(EACH INCLUDES)	
M		1	**8T-3490**	2	NUT-WELD (M10X1.5-THD)	
	9	1	**3B-4605**	2	PIN-COTTER	
	10	1	**4M-7470**	2	GROMMET	
	11	1	**6H-3956**	3	PIN	
	12	1	**7X-7729**	12	WASHER (11X25X3-MM THK)	
M	13	1	**8T-4136**	12	BOLT (M10X1.5X25-MM)	

M-METRIC PART

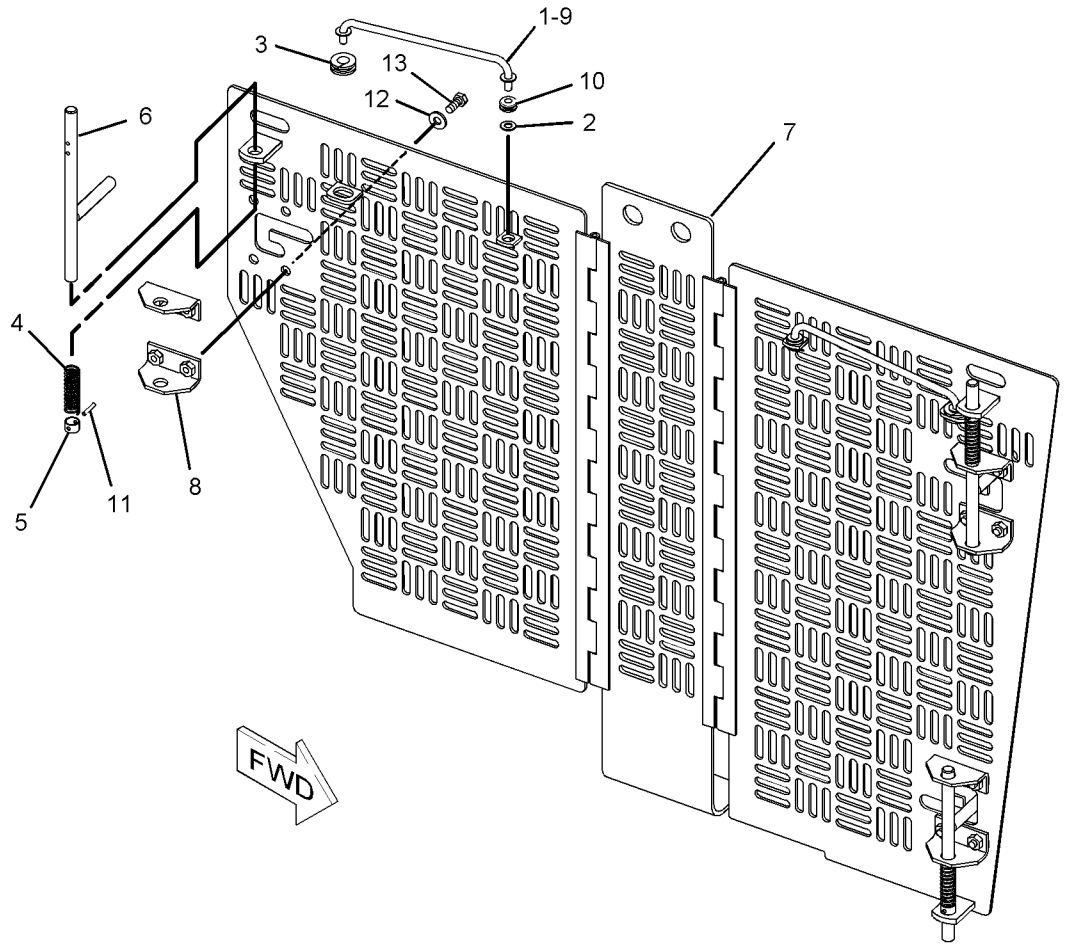

GRAPHIC #1 **<END>** g01134401

FRAME AND BODY

250-2611 DOOR GP-ACCESS—RH—ENGINE ENCLOSURE

S/N: RJG1-UP

PART OF 250-2614 ENCLOSURE GP-ENGINE

SMCS-7273 **i02252280**

NOTE	REF NO	GRAPHIC REF	PART NUMBER	QTY	PART NAME 1 2 3 4 5 6 (PRODUCT LEVEL)	SEE PAGE
	1	1	**3V-9399**	2	ROD AS	
					(EACH INCLUDES)	
		1	**4B-4278**	2	WASHER (10.2X20.5X1.6-MM THK)	
	2	1	**4B-4278**	2	WASHER (10.2X20.5X1.6-MM THK)	
	3	1	**4H-2558**	2	GROMMET	
	4	1	**6B-0533**	3	SPRING	
	5	1	**9S-2075**	3	SPACER	
	6	1	**161-0832**	3	HANDLE AS	
	7	1	**218-8456**	1	DOOR AS	
	8	1	**231-2082**	6	GUIDE AS	
					(EACH INCLUDES)	
M		1	**8T-3490**	2	NUT-WELD (M10X1.5-THD)	
	9	1	**3B-4605**	2	PIN-COTTER	
	10	1	**4M-7470**	2	GROMMET	
	11	1	**6H-3956**	3	PIN	
	12	1	**7X-7729**	12	WASHER (11X25X3-MM THK)	
M	13	1	**8T-4136**	12	BOLT (M10X1.5X25-MM)	

M-METRIC PART

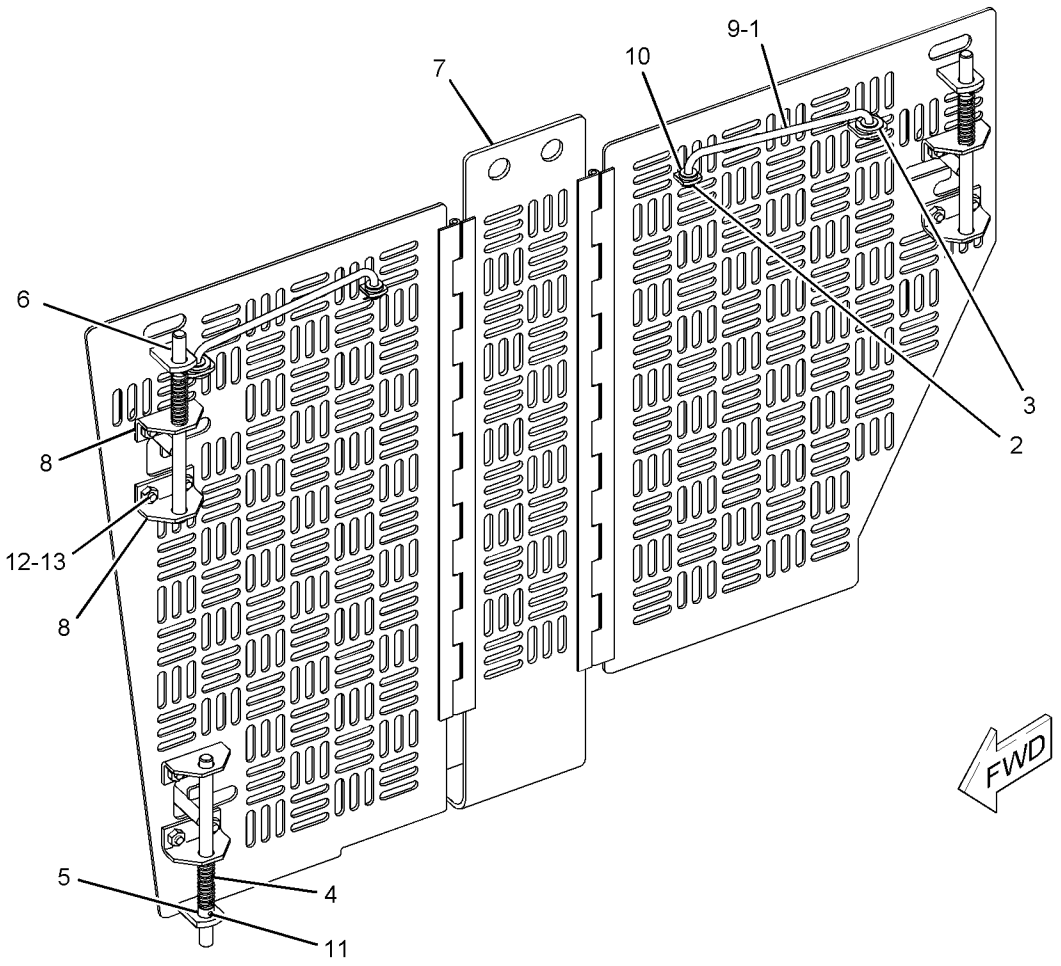

GRAPHIC #1 **<END>** g01136175

250-8441 DOOR GP-ACCESS–RH–ENGINE ENCLOSURE

S/N: RJG1-UP

PART OF 250-2614, 250-8543 ENCLOSURE GP-ENGINE

ALSO AN ATTACHMENT

SMCS-7273 **i02252303**

NOTE	REF NO	GRAPHIC REF	PART NUMBER	QTY	PART NAME 1 2 3 4 5 6 (PRODUCT LEVEL)	SEE PAGE
	1	1	**218-8471**	1	PLATE AS (RH)	
	2	1	**250-2379**	1	TREAD (RH)	
M	3	1	**8C-8585**	2	SCREW-BUTTON HEAD (M10X1.5X20-MM)	

M-METRIC PART

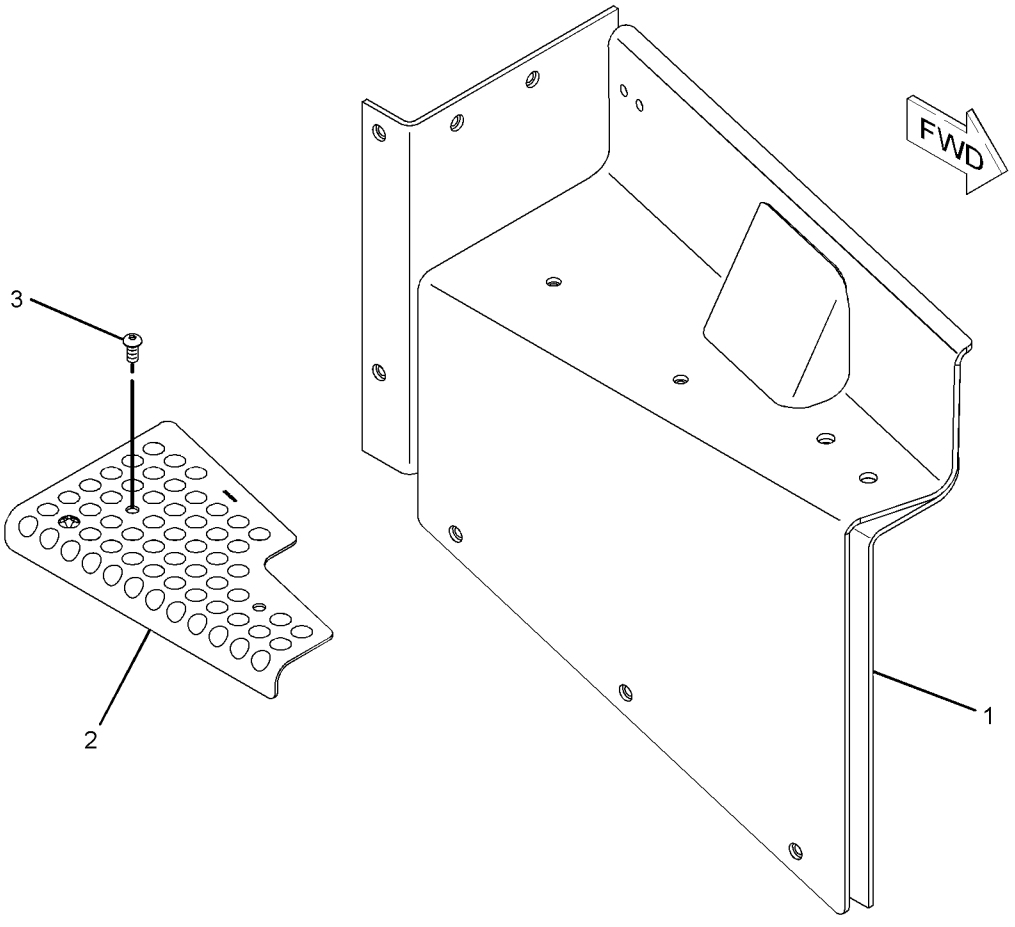

GRAPHIC #1 **<END>** g01134148

FRAME AND BODY

250-8539 DOOR GP-ACCESS—RH—ENGINE ENCLOSURE

S/N: RJG1-UP
PART OF 250-8543 ENCLOSURE GP-ENGINE
AN ATTACHMENT

SMCS-7273 **i02258657**

NOTE	REF NO	GRAPHIC REF	PART NUMBER	QTY	PART NAME 1 2 3 4 5 6 (PRODUCT LEVEL)	SEE PAGE
	1	1	**3B-4605**	2	PIN-COTTER	
	2	1	**3V-9399**	2	ROD AS	
					(EACH INCLUDES)	
		1	**4B-4278**	2	WASHER (10.2X20.5X1.6-MM THK)	
	3	1	**4B-4278**	2	WASHER (10.2X20.5X1.6-MM THK)	
	4	1	**4H-2558**	2	GROMMET	
	5	1	**8C-8584**	2	PAWL-T-BAR LATCH	
	6	1	**8T-9496**	4	LOCKNUT (9/16-18-THD)	
Y	7	1	**8Y-6400**	2	LATCH GP	452
	8	1	**250-8537**	1	DOOR AS (RH)	
	9	1	**4M-7470**	2	GROMMET	
M	10	1	**6V-7744**	4	LOCKNUT (M10X1.5-THD)	
	11	1	**8T-4121**	4	WASHER-HARD (11X21X2.5-MM THK)	
M	12	1	**8T-4136**	4	BOLT (M10X1.5X25-MM)	

M-METRIC PART
Y-SEPARATE ILLUSTRATION

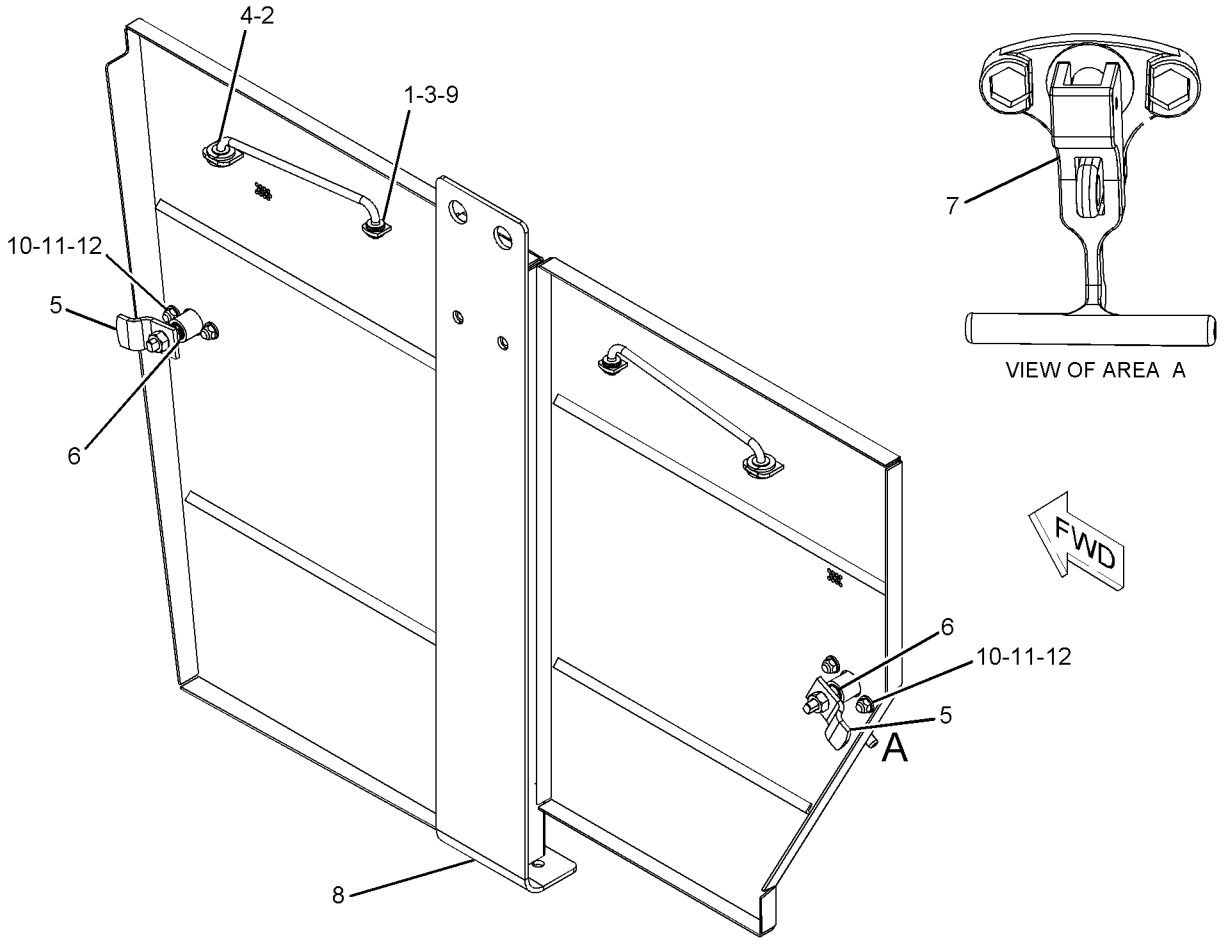

GRAPHIC #1 **<END>** g01137791

250-8540 DOOR GP-ACCESS—LH—ENGINE ENCLOSURE

S/N: RJG1-UP
PART OF 250-8544 ENCLOSURE GP-ENGINE
AN ATTACHMENT

SMCS-7273 **i02259651**

NOTE	REF NO	GRAPHIC REF	PART NUMBER	QTY	PART NAME 1 2 3 4 5 6 (PRODUCT LEVEL)	SEE PAGE
	1	1	**3B-4605**	2	PIN-COTTER	
	2	1	**3V-9399**	2	ROD AS	
					(EACH INCLUDES)	
		1	**4B-4278**	2	WASHER (10.2X20.5X1.6-MM THK)	
	3	1	**4B-4278**	2	WASHER (10.2X20.5X1.6-MM THK)	
	4	1	**4H-2558**	2	GROMMET	
	5	1	**8C-8584**	2	PAWL-T-BAR LATCH	
	6	1	**8T-9496**	4	LOCKNUT (9/16-18-THD)	
Y	7	1	**8Y-6400**	2	LATCH GP	452
	8	1	**250-8538**	1	DOOR AS (LH)	
	9	1	**4M-7470**	2	GROMMET	
M	10	1	**6V-7744**	4	LOCKNUT (M10X1.5-THD)	
	11	1	**8T-4121**	4	WASHER-HARD (11X21X2.5-MM THK)	
M	12	1	**8T-4136**	4	BOLT (M10X1.5X25-MM)	

M-METRIC PART
Y-SEPARATE ILLUSTRATION

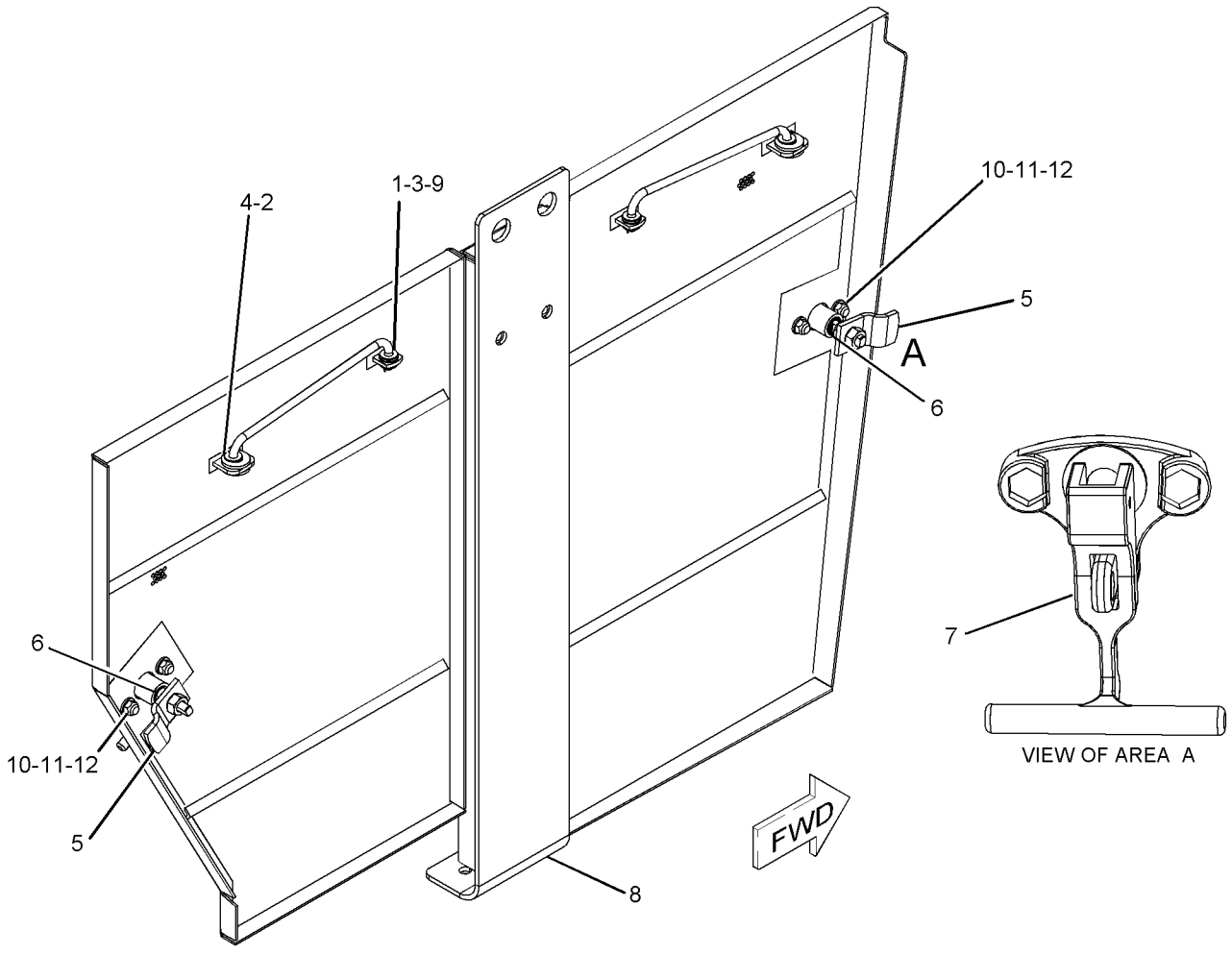

GRAPHIC #1 **<END>** g01137827

7T-7942 DRAWBAR GP

S/N: RJG1-UP

CANNOT BE USED WITH OTHER REAR MOUNTED EQUIPMENT, 254-7275—PAGE 446

AN ATTACHMENT

SMCS-7105, 7119 **i02039673**

NOTE	REF NO	GRAPHIC REF	PART NUMBER	QTY	PART NAME 1 2 3 4 5 6 (PRODUCT LEVEL)	SEE PAGE
	1	1	**3T-8792**	1	BRACKET AS	
	2	1	**5P-1076**	4	WASHER-HARD (13.5X30X4-MM THK)	
	3	1	**3T-7567**	2	BAR	
	4	1	**8T-4835**	4	BOLT (1/2-13X2-IN)	
	5	1	**6T-0410**	2	PIN	
	6	1	**7F-5711**	8	WASHER (1 9/32X3X5/8-IN THK)	
	7	1	**3S-1349**	16	WASHER-HARD (31X52.5X6-MM THK)	
	8	1	**5M-0544**	8	BOLT (1 1/8-7X4.5-IN)	
	9	1	**3T-8791**	1	BRACKET AS	
	10	1	**9W-4904**	1	DRAWBAR AS	
	11	1	**4J-5977**	8	NUT-FULL (1-1/8-7-THD)	
	12	1	**3D-8012**	8	SPACER (32.4X44.5X31-MM THK)	
	13	1	**8E-9289**	1	LATCH	
	14	1	**2H-1537**	6	BOLT (1 1/4-7X6-IN)	
		1	**3K-9770**	6	NUT-FULL (1 1/4X7-THD)	
		1	**4K-0684**	12	WASHER-HARD (34X55X6-MM THK)	
	15	1	**7X-0349**	1	BOLT (5/8-11X3-IN)	
		1	**3K-2889**	1	LOCKNUT (5/8-11-THD)	
	16	1	**7G-6623**	1	HITCH	
	17	1	**1H-4106**	1	PIN AS-DRAWBAR	
	18	1	**5T-4896**	6	SPACER (40.5X67X12-MM THK)	
	19	1	**6V-8970**	6	BOLT (1 1/2-6-THD)	
	20	1	**3S-6162**	6	WASHER-HARD (40.5X67X6-MM THK)	

7T-7942 **DRAWBAR GP** *(contd.)* **i02039673**

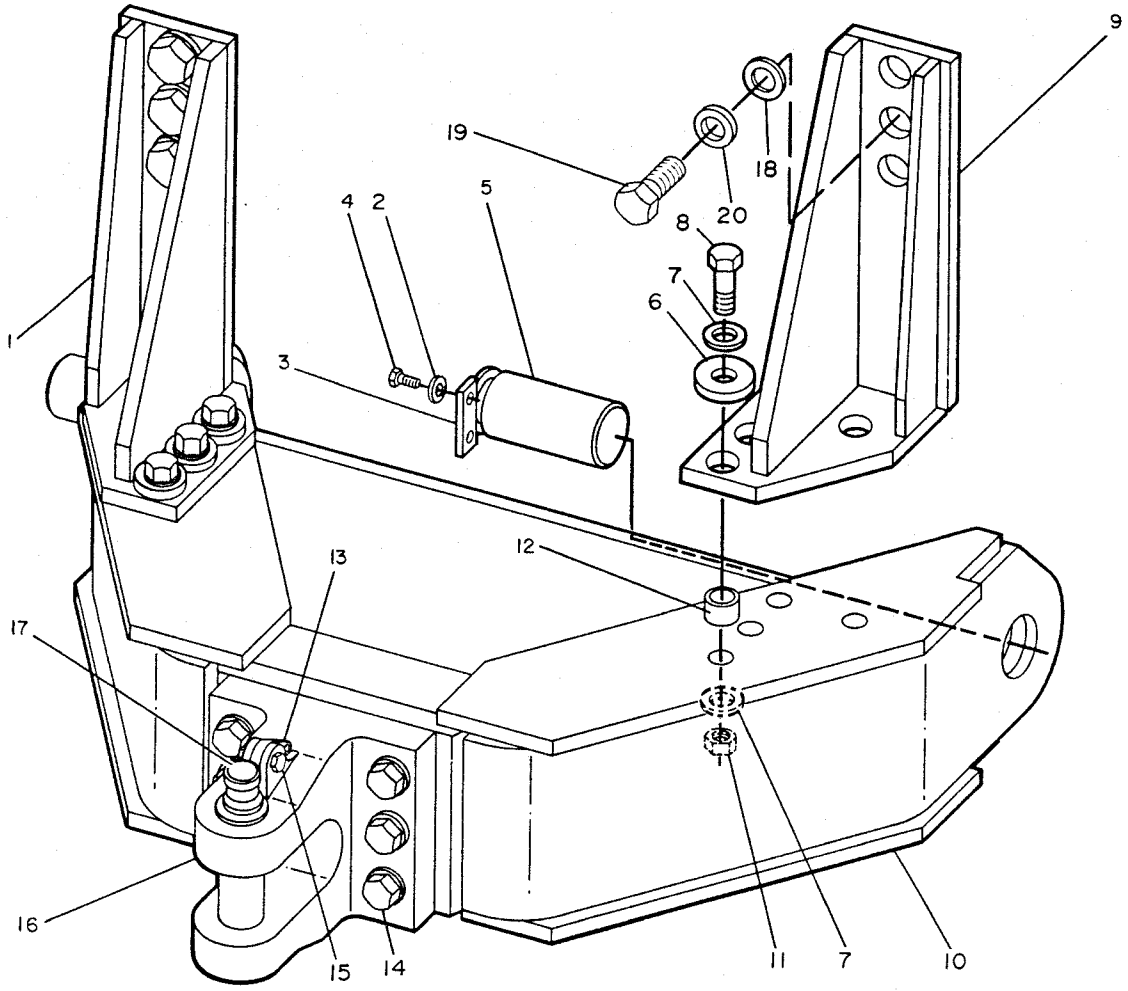

GRAPHIC #1 **<END>** g00192501

240-0228 ENCLOSURE GP-ENGINE—PERFORATED—STOCKPILE—WASTE HANDLER

S/N: RJG1-528

PART OF 238-4498 STOCKPILE AR, 238-4496 WASTE HANDLING AR

CANNOT BE USED WITH 238-4498—PAGE 4

AN ATTACHMENT

SMCS-7263 **i02467663**

NOTE	REF NO	GRAPHIC REF	PART NUMBER	QTY	PART NAME 1 2 3 4 5 6 (PRODUCT LEVEL)	SEE PAGE
	1	1	**246-2641**	5	PADLOCK GP (ENGINE ENCLOSURE)	
					(EACH INCLUDES)	
		1	**5P-8500**	2	KEY	
	2	1	**6T-9927**	2	SLIDE	
	3	1	**7T-1819**	2	MOUNTING AS	
	4	1	**8E-4072**	4	SPACER (13.8X23.75X16-MM THK)	
	5	1	**8V-2671**	4	SPACER (10X13.1X3.7-MM)	
	6	1	**9P-8663**	4	SPACER (13.8X38X13-MM THK)	
	7	1	**282-8985**	4	PLATE	
	8	1	**218-8470**	1	HOOD AS	
	8A	1	**262-0862**	1	HANDHOLD	
	8B	1	**262-0863**	1	HANDHOLD	
	9	1	**233-6310**	1	SUPPORT AS	
Y	10	1	*250-8543*	1	ENCLOSURE GP-ENGINE (RH)	415
Y	11	1	*250-8544*	1	ENCLOSURE GP-ENGINE (LH)	416
	12	1	**030-7335**	8	BOLT-LOCKING (5/8-11X1.5-IN)	
	13	1	**3E-4356**	8	WASHER-HARD (17.5X30X6-MM THK)	
	14	1	**5P-1076**	22	WASHER-HARD (13.5X30X4-MM THK)	
	15	1	**5P-4116**	4	WASHER-HARD (8.8X20.5X2-MM THK)	
	16	1	**6T-8714**	2	WASHER-HARD (28X125X12-MM THK)	
M	17	1	**6V-7743**	4	LOCKNUT (M6X1-THD)	
	18	1	**7X-0618**	4	WASHER-HARD (13.5X40X5-MM THK)	
	19	1	**8T-4121**	4	WASHER-HARD (11X21X2.5-MM THK)	
M	20	1	**8T-4136**	2	BOLT (M10X1.5X25-MM)	
M	21	1	**8T-4137**	2	BOLT (M10X1.5X20-MM)	
M	22	1	**8T-4138**	4	BOLT (M6X1X20-MM)	
M	23	1	**8T-4140**	8	BOLT (M16X2X60-MM)	
	24	1	**8T-4167**	1	WASHER-HARD (26X44X4-MM THK)	
M	25	1	**8T-4179**	4	BOLT (M12X1.75X20-MM)	
M	26	1	**8T-4183**	4	BOLT (M12X1.75X40-MM)	
M	27	1	**8T-4189**	8	BOLT (M8X1.25X20-MM)	
M	28	1	**8T-4192**	4	BOLT (M12X1.75X25-MM)	
	29	1	**8T-4223**	4	WASHER-HARD (13.5X25.5X3-MM THK)	
	30	1	**8T-4224**	4	WASHER-HARD (8.8X16X2-MM THK)	
M	31	1	**8T-4956**	22	BOLT (M12X1.75X35-MM)	
M	32	1	**8T-6380**	1	BOLT (M24X3X130-MM)	
	33	1	**9X-8256**	8	WASHER (6.6X12X2-MM THK)	
	34	1	**9X-8257**	8	WASHER (17.5X30X3.5-MM THK)	
E	35	1	**113-9159**		SEAL (52-CM EACH)	
E	35A	1	**113-9159**		SEAL (42-CM EACH)	
E	35B	1	**113-9159**		SEAL (178-CM EACH)	
E	35C	1	**113-9159**		SEAL (87-CM EACH)	

E-ORDER BY THE CENTIMETER
M-METRIC PART
Y-SEPARATE ILLUSTRATION

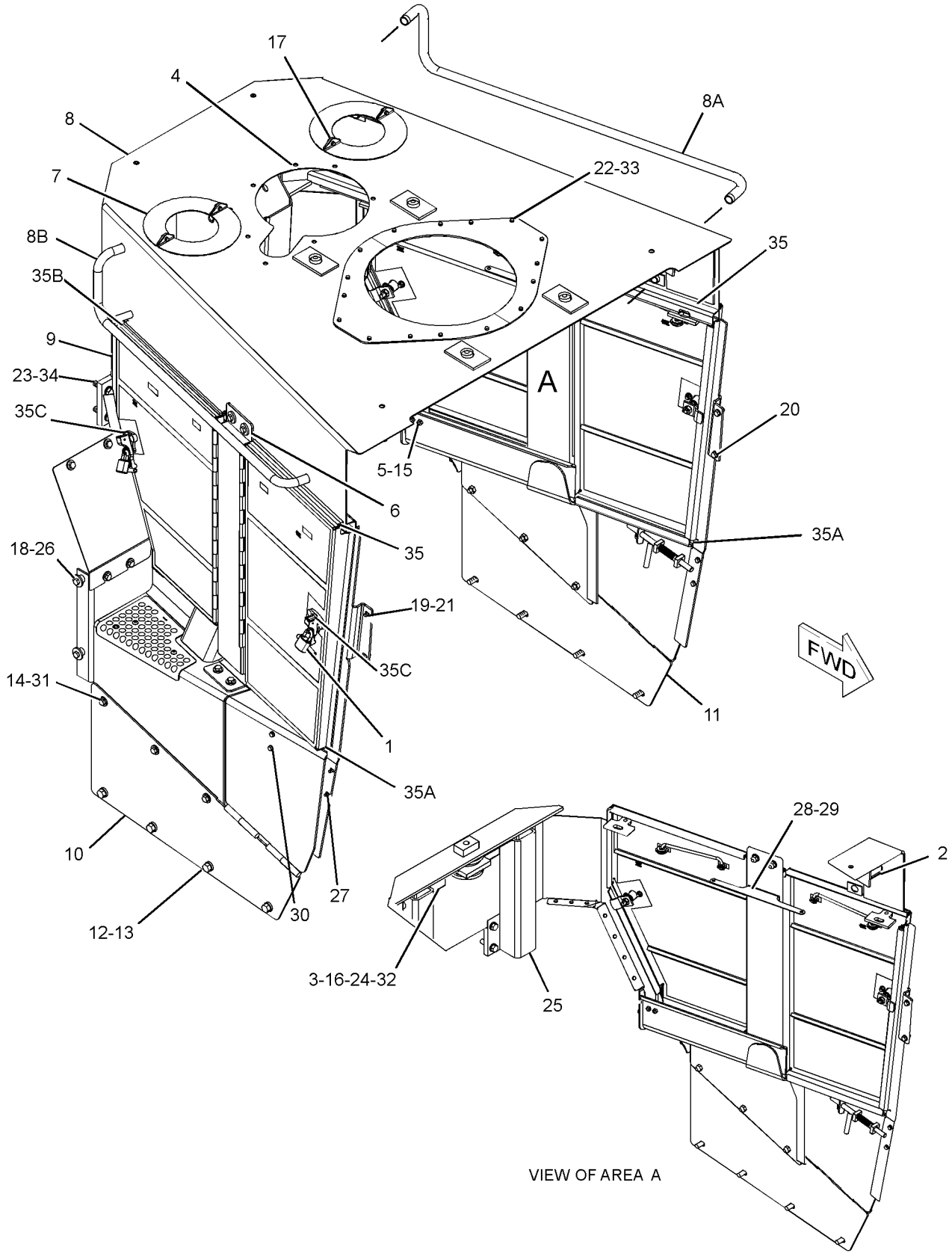

GRAPHIC #1 **<END>** g01231068

250-2614 ENCLOSURE GP-ENGINE–RH

S/N: RJG1-UP

PART OF 270-0517 ENCLOSURE GP-ENGINE, 213-1117 HOOD & GUARD GP

SMCS-7263 **i02251892**

NOTE	REF NO	GRAPHIC REF	PART NUMBER	QTY	PART NAME 1 2 3 4 5 6 (PRODUCT LEVEL)	SEE PAGE
	1	1	**218-8474**	1	PLATE AS	
	2	1	**218-8480**	1	PLATE	
	3	1	**231-1166**	1	PLATE AS	
	4	1	**231-1168**	1	PLATE	
Y	5	1	*250-2611*	1	DOOR GP-ACCESS (RH)	405
Y	6	1	*250-8441*	1	DOOR GP-ACCESS (RH)	406
	7	1	**250-8464**	1	PLATE AS (RH)	
	8	1	**263-4924**	1	PLATE AS	

Y-SEPARATE ILLUSTRATION

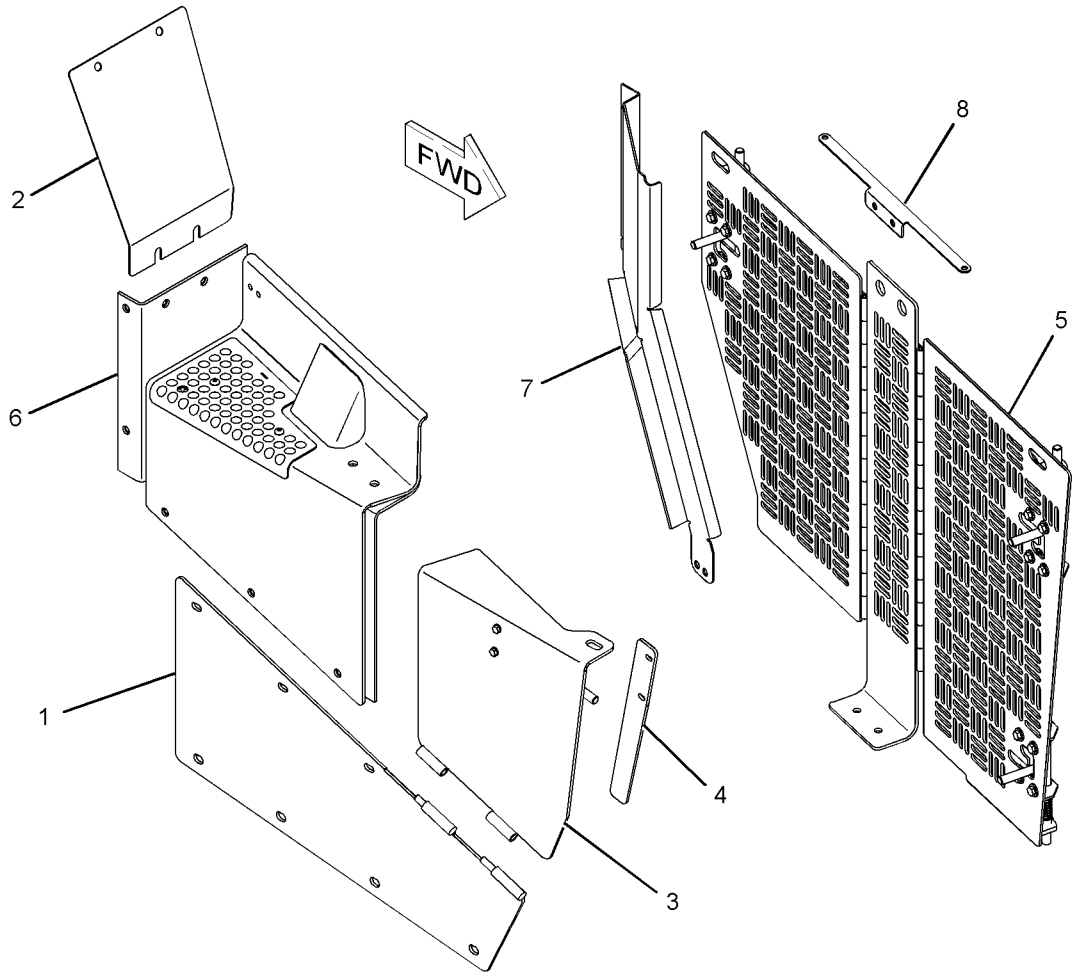

GRAPHIC #1 **<END>** g01135094

250-2615 ENCLOSURE GP-ENGINE–LH

S/N: RJG1-UP

PART OF 270-0517 ENCLOSURE GP-ENGINE, 213-1117 HOOD & GUARD GP

SMCS-7263 **i02252337**

NOTE	REF NO	GRAPHIC REF	PART NUMBER	QTY	PART NAME 1 2 3 4 5 6 (PRODUCT LEVEL)	SEE PAGE
	1	1	**218-8475**	1	PLATE AS	
	2	1	**218-8476**	1	PLATE AS	
	3	1	**231-1167**	1	PLATE AS	
	4	1	**231-1168**	1	PLATE	
Y	5	1	*250-2610*	1	DOOR GP-ACCESS (LH)	404
Y	6	1	*250-8443*	1	PLATE GP-REINFORCEMENT (LH)	453
	7	1	**250-8465**	1	PLATE AS (LH)	
	8	1	**263-4924**	1	PLATE AS	

Y-SEPARATE ILLUSTRATION

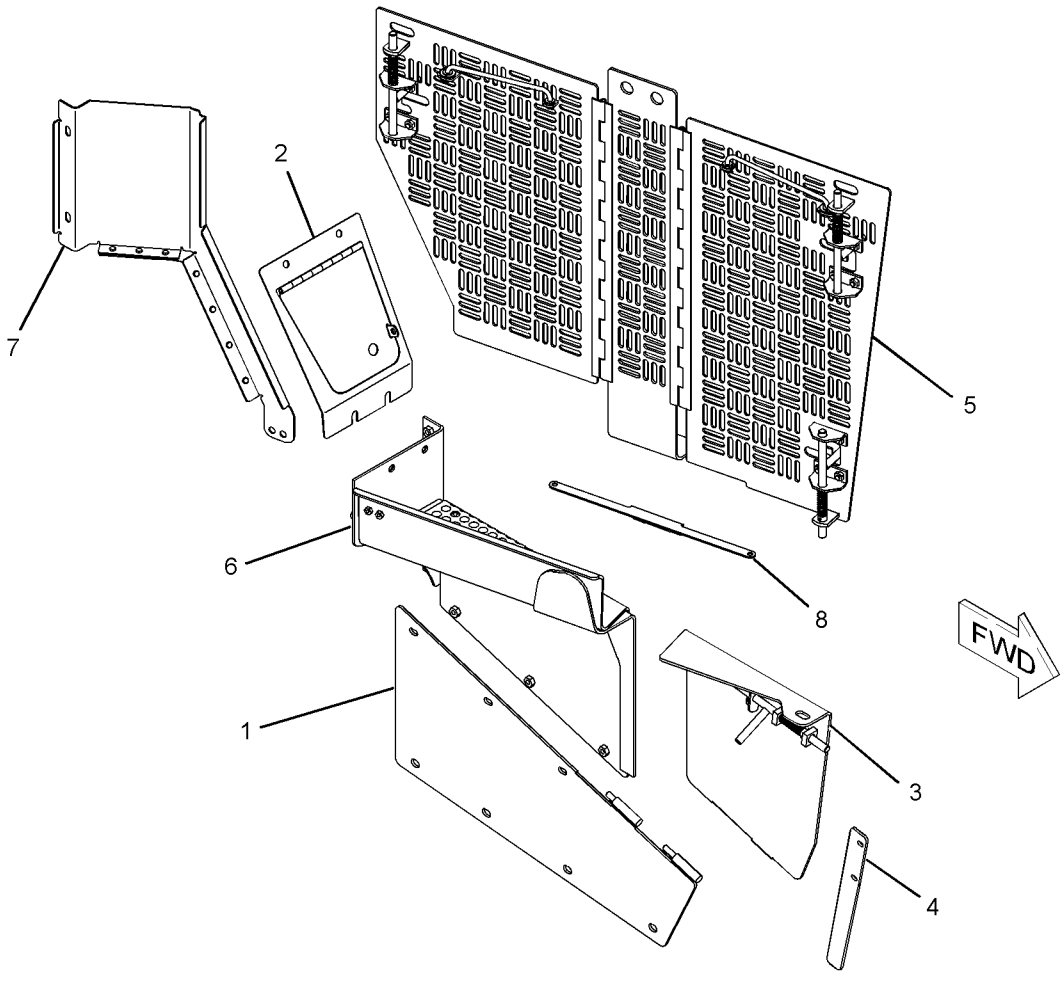

GRAPHIC #1 **<END>** g01134425

250-8543 ENCLOSURE GP-ENGINE–RH–STOCKPILE–

WASTE HANDLER

S/N: RJG1-UP

PART OF 240-0228, 270-0525 ENCLOSURE GP-ENGINE

AN ATTACHMENT

SMCS-7263 **i02258609**

NOTE	REF NO	GRAPHIC REF	PART NUMBER	QTY	PART NAME 1 2 3 4 5 6 (PRODUCT LEVEL)	SEE PAGE
	1	1	**218-8474**	1	PLATE AS	
	2	1	**218-8480**	1	PLATE	
Y	3	1	*250-8441*	1	DOOR GP-ACCESS (RH)	406
	4	1	**250-8450**	1	PLATE AS (RH)	
	5	1	**250-8464**	1	PLATE AS (RH)	
	6	1	**250-8536**	1	PLATE	
Y	7	1	*250-8539*	1	DOOR GP-ACCESS (RH)	407
	8	1	**250-8541**	1	PLATE (RH)	

Y-SEPARATE ILLUSTRATION

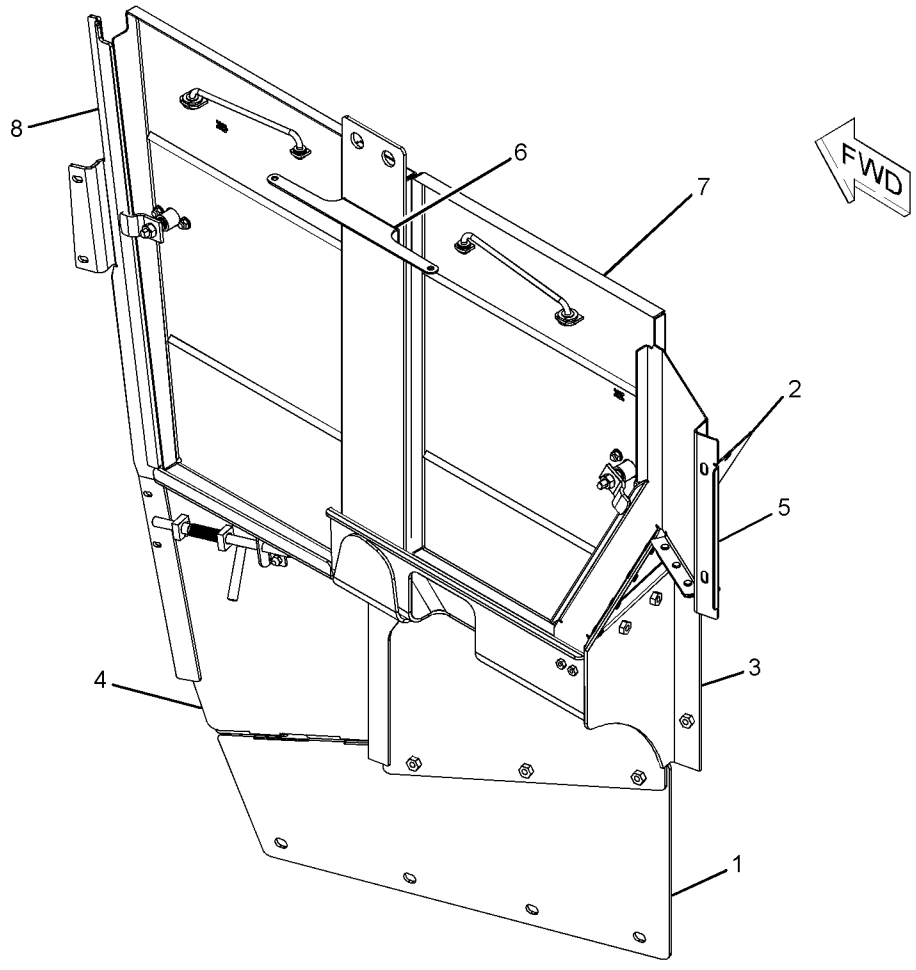

GRAPHIC #1 **<END>** g01137779

250-8544 ENCLOSURE GP-ENGINE–LH–STOCKPILE–

WASTE HANDLER

S/N: RJG1-UP

PART OF 240-0228, 270-0525 ENCLOSURE GP-ENGINE

AN ATTACHMENT

SMCS-7263 **i02258884**

NOTE	REF NO	GRAPHIC REF	PART NUMBER	QTY	PART NAME 1 2 3 4 5 6 (PRODUCT LEVEL)	SEE PAGE
	1	1	**218-8475**	1	PLATE AS	
	2	1	**218-8476**	1	PLATE AS	
Y	3	1	*250-8443*	1	PLATE GP-REINFORCEMENT (LH)	453
	4	1	**250-8452**	1	PLATE AS (LH)	
	5	1	**250-8465**	1	PLATE AS (LH)	
	6	1	**250-8536**	1	PLATE	
Y	7	1	*250-8540*	1	DOOR GP-ACCESS (LH)	408
	8	1	**250-8542**	1	PLATE (LH)	

Y-SEPARATE ILLUSTRATION

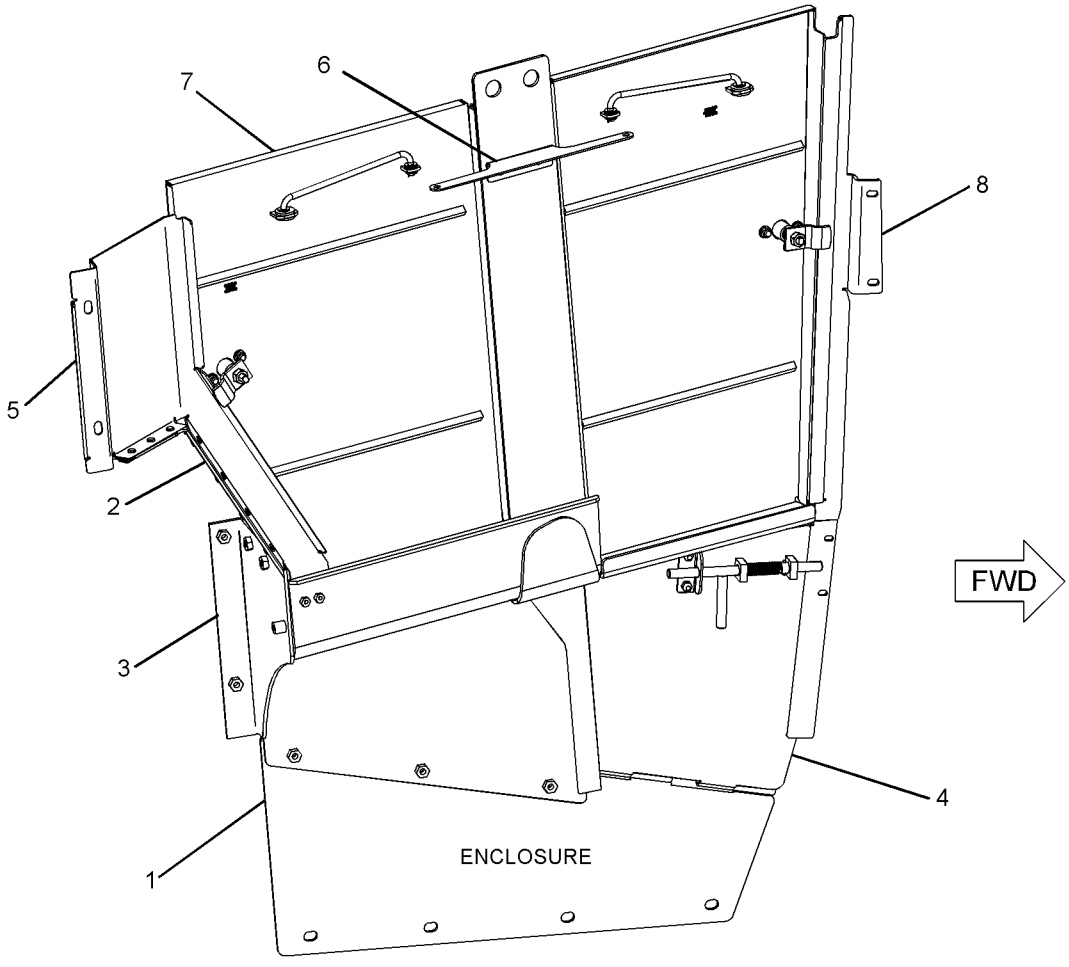

GRAPHIC #1 **<END>** g01137509

FRAME AND BODY

270-0517 ENCLOSURE GP-ENGINE

S/N: RJG529-UP

PART OF 212-2741 CHASSIS AR

SMCS-7263 **i02467669**

NOTE	REF NO	GRAPHIC REF	PART NUMBER	QTY	PART NAME 1 2 3 4 5 6 (PRODUCT LEVEL)	SEE PAGE
	1	1	**246-2641**	5	PADLOCK GP (ENGINE ENCLOSURE)	
					(EACH INCLUDES)	
		1	**5P-8500**	2	KEY	
	2	1	**6T-9927**	2	SLIDE	
	3	1	**6V-9197**	2	LOCK PIN	
	4	1	**7T-1819**	2	MOUNTING AS	
	5	1	**8E-4072**	4	SPACER (13.8X23.75X16-MM THK)	
	6	1	**8V-2671**	4	SPACER (10X13.1X3.7-MM)	
	7	1	**9M-3835**	2	LATCH-RUBBER	
	8	1	**9P-8663**	4	SPACER (13.8X38X13-MM THK)	
	9	1	**233-6310**	1	SUPPORT AS	
Y	10	1	*250-2614*	1	ENCLOSURE GP-ENGINE (RH)	413
Y	11	1	*250-2615*	1	ENCLOSURE GP-ENGINE (LH)	414
	12	1	**270-0519**	1	HOOD AS	
	13	1	**272-9665**	1	COVER AS-ACCESS	
	14	1	**283-6920**	1	PLATE AS (RH)	
	15	1	**283-6921**	1	PLATE AS (LH)	
	16	1	**030-7335**	8	BOLT-LOCKING (5/8-11X1.5-IN)	
	17	1	**2M-5795**	2	PIN-CLEVIS	
	18	1	**3E-4356**	8	WASHER-HARD (17.5X30X6-MM THK)	
	19	1	**5P-1076**	22	WASHER-HARD (13.5X30X4-MM THK)	
	20	1	**5P-4116**	4	WASHER-HARD (8.8X20.5X2-MM THK)	
	21	1	**6T-8714**	2	WASHER-HARD (28X125X12-MM THK)	
	22	1	**7X-0618**	4	WASHER-HARD (13.5X40X5-MM THK)	
	23	1	**7X-7729**	4	WASHER (11X25X3-MM THK)	
I	24	1	**8E-4121**	12	HOSE AS	
M	25	1	**8T-4136**	4	BOLT (M10X1.5X25-MM)	
M	26	1	**8T-4137**	12	BOLT (M10X1.5X20-MM)	
M	27	1	**8T-4140**	8	BOLT (M16X2X60-MM)	
	28	1	**8T-4167**	1	WASHER-HARD (26X44X4-MM THK)	
M	29	1	**8T-4179**	4	BOLT (M12X1.75X20-MM)	
M	30	1	**8T-4183**	4	BOLT (M12X1.75X40-MM)	
M	31	1	**8T-4189**	4	BOLT (M8X1.25X20-MM)	
M	32	1	**8T-4200**	4	BOLT (M8X1.25X16-MM)	
	33	1	**8T-4224**	4	WASHER-HARD (8.8X16X2-MM THK)	
M	34	1	**8T-4956**	22	BOLT (M12X1.75X35-MM)	
M	35	1	**8T-6380**	1	BOLT (M24X3X130-MM)	
	36	1	**9X-8257**	8	WASHER (17.5X30X3.5-MM THK)	

I-REFER TO HYDRAULIC INFORMATION SYSTEM
M-METRIC PART
Y-SEPARATE ILLUSTRATION

270-0517 **ENCLOSURE GP-ENGINE** *(contd.)* **i02467669**

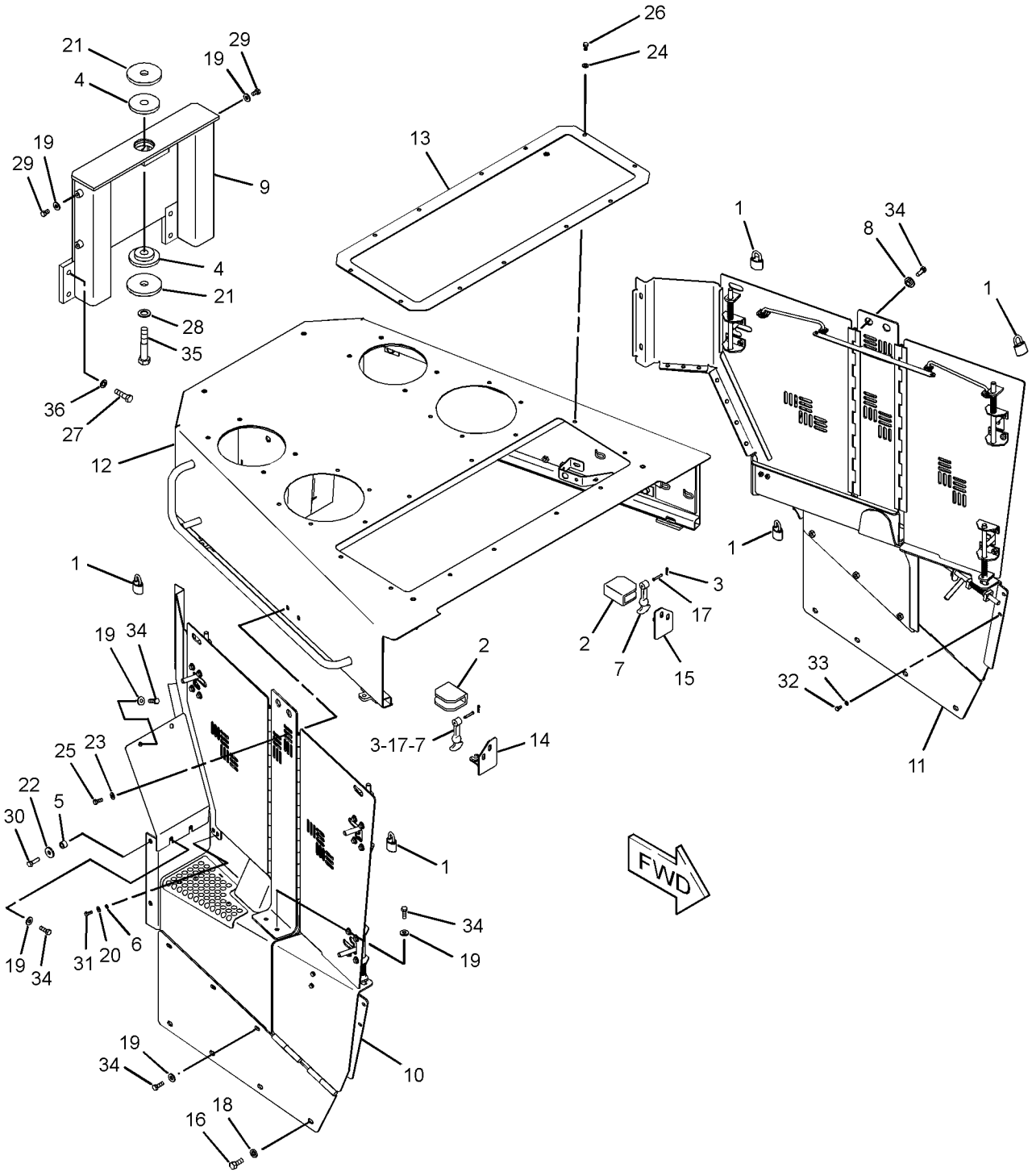

GRAPHIC #1 **<END>** g01232476

270-0525 ENCLOSURE GP-ENGINE

S/N: RJG529-UP

PART OF 238-4498 STOCKPILE AR, 238-4496 WASTE HANDLING AR

AN ATTACHMENT

SMCS-7263 **i02467690**

NOTE	REF NO	GRAPHIC REF	PART NUMBER	QTY	PART NAME 1 2 3 4 5 6 (PRODUCT LEVEL)	SEE PAGE
	1	1	**246-2641**	5	PADLOCK GP (ENGINE ENCLOSURE)	
					(EACH INCLUDES)	
		1	**5P-8500**	2	KEY	
	2	1	**6T-9927**	2	SLIDE	
	3	1	**6V-9197**	2	LOCK PIN	
	4	1	**7T-1819**	2	MOUNTING AS	
	5	1	**8E-4072**	4	SPACER (13.8X23.75X16-MM THK)	
	6	1	**8V-2671**	4	SPACER (10X13.1X3.7-MM)	
	7	1	**9M-3835**	2	LATCH-RUBBER	
	8	1	**9P-8663**	4	SPACER (13.8X38X13-MM THK)	
	9	1	**233-6310**	1	SUPPORT AS	
Y	10	1	*250-8543*	1	ENCLOSURE GP-ENGINE (RH)	415
Y	11	1	*250-8544*	1	ENCLOSURE GP-ENGINE (LH)	416
	12	1	**270-0519**	1	HOOD AS	
	13	1	**272-9665**	1	COVER AS-ACCESS	
	14	1	**283-6920**	1	PLATE AS (RH)	
	15	1	**283-6921**	1	PLATE AS (LH)	
	16	1	**030-7335**	8	BOLT-LOCKING (5/8-11X1.5-IN)	
	17	1	**2M-5795**	2	PIN-CLEVIS	
	18	1	**3E-4356**	8	WASHER-HARD (17.5X30X6-MM THK)	
	19	1	**5P-1076**	22	WASHER-HARD (13.5X30X4-MM THK)	
	20	1	**5P-4116**	4	WASHER-HARD (8.8X20.5X2-MM THK)	
	21	1	**6T-8714**	2	WASHER-HARD (28X125X12-MM THK)	
	22	1	**7X-0618**	4	WASHER-HARD (13.5X40X5-MM THK)	
	23	1	**8T-4121**	16	WASHER-HARD (11X21X2.5-MM THK)	
M	24	1	**8T-4136**	2	BOLT (M10X1.5X25-MM)	
M	25	1	**8T-4137**	14	BOLT (M10X1.5X20-MM)	
M	26	1	**8T-4140**	8	BOLT (M16X2X60-MM)	
	27	1	**8T-4167**	1	WASHER-HARD (26X44X4-MM THK)	
M	28	1	**8T-4179**	4	BOLT (M12X1.75X20-MM)	
M	29	1	**8T-4183**	4	BOLT (M12X1.75X40-MM)	
M	30	1	**8T-4189**	4	BOLT (M8X1.25X20-MM)	
M	31	1	**8T-4192**	4	BOLT (M12X1.75X25-MM)	
M	32	1	**8T-4200**	4	BOLT (M8X1.25X16-MM)	
	33	1	**8T-4223**	4	WASHER-HARD (13.5X25.5X3-MM THK)	
	34	1	**8T-4224**	4	WASHER-HARD (8.8X16X2-MM THK)	
M	35	1	**8T-4956**	22	BOLT (M12X1.75X35-MM)	
M	36	1	**8T-6380**	1	BOLT (M24X3X130-MM)	
	37	1	**9X-8257**	8	WASHER (17.5X30X3.5-MM THK)	
E	38	1	**113-9159**		SEAL (52-CM EACH)	
E	38A	1	**113-9159**		SEAL (42-CM EACH)	
E	38B	1	**113-9159**		SEAL (178-CM EACH)	
E	38C	1	**113-9159**		SEAL (87-CM EACH)	

E-ORDER BY THE CENTIMETER
M-METRIC PART
Y-SEPARATE ILLUSTRATION

270-0525 **ENCLOSURE GP-ENGINE** *(contd.)* **i02467690**

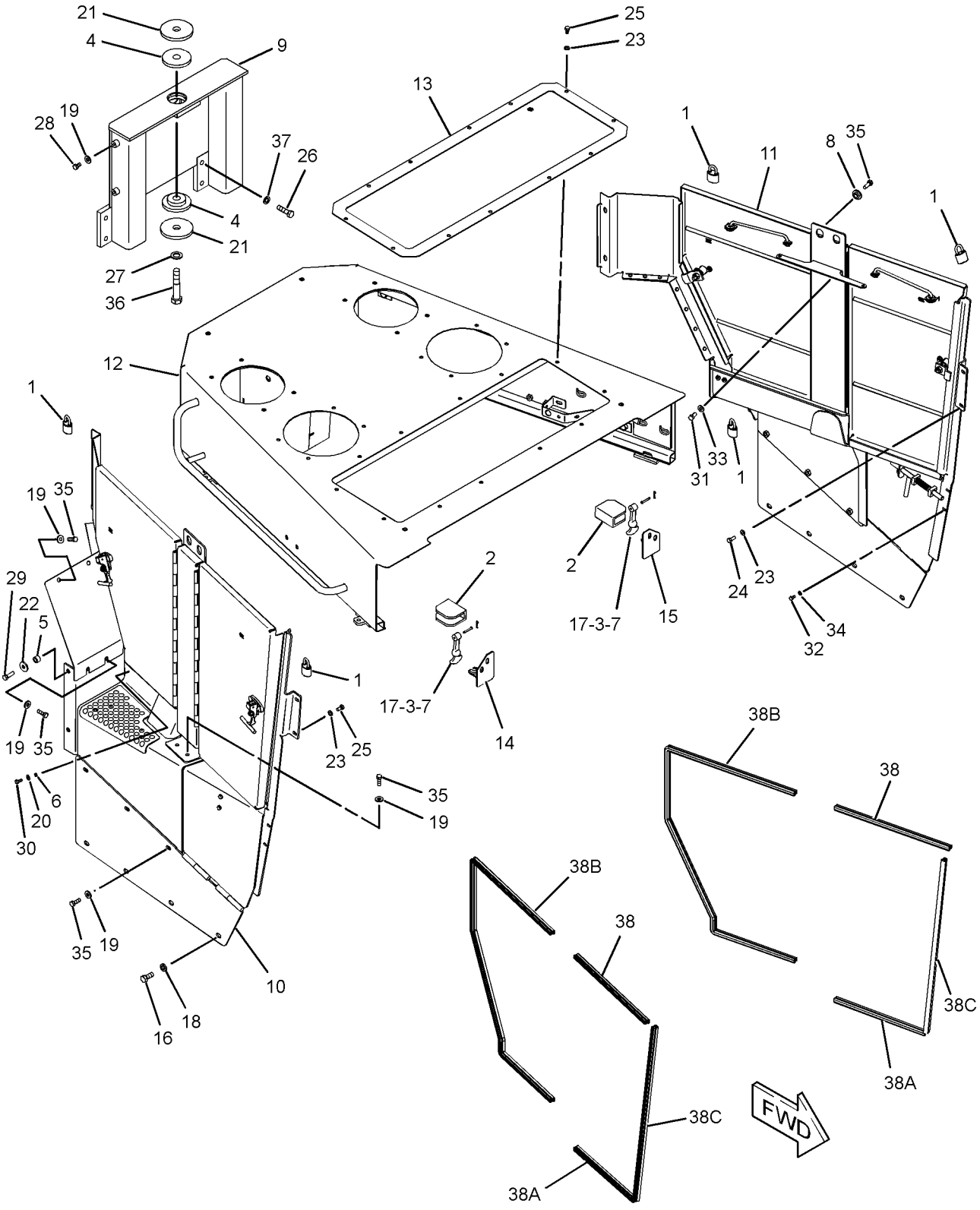

GRAPHIC #1 **<END>** g01234449

FRAME AND BODY

213-1082 FENDER GP

S/N: RJG1-109

PART OF 212-2741 CHASSIS AR

SMCS-7252 **i02251888**

NOTE	REF NO	GRAPHIC REF	PART NUMBER	QTY	PART NAME 1 2 3 4 5 6 (PRODUCT LEVEL)	SEE PAGE
	1	1	**3W-3110**	4	LOCK PIN	
	2	1	**246-2641**	2	PADLOCK GP (POWER TRAIN OIL FILLER)	
					(EACH INCLUDES)	
		1	**5P-8500**	2	KEY	
	3	1	**9M-3835**	2	LATCH-RUBBER	
	4	1	**9W-0352**	2	LINK	
	5	1	**9W-6958**	2	HANDHOLD (GRAB)	
	6	1	**9W-7006**	2	PIN	
	7	1	**068-5893**	6	SPACER (19.05X31.75X30.2-MM THK)	
	8	1	**218-3216**	1	BEAM AS	
		1	**9W-0330**	2	BEARING	
	9	1	**218-3219**	1	PLATE AS	
	10	1	**218-3221**	1	PLATE AS	
	11	1	**218-3229**	1	PLATE	
	12	1	**218-3230**	1	PLATE	
	13	1	**232-3755**	2	PLATE	
	14	1	**233-0901**	2	STEP	
	15	1	**233-0914**	2	STEP	
Y	16	1	*233-6596*	1	FENDER GP (LH)	426
Y	17	1	*233-6597*	1	FENDER GP (RH)	427
	18	1	**234-8778**	1	SHIELD AS	
	19	1	**245-6858**	1	PLATE	
M	20	1	**141-9203**	8	SCREW-BUTTON HEAD (M10X1.5X30-MM)	
	21	1	**2M-5795**	2	PIN-CLEVIS	
	22	1	**5P-1075**	8	WASHER-HARD (10.2X22.5X3-MM THK)	
	23	1	**5P-1076**	4	WASHER-HARD (13.5X30X4-MM THK)	
BD	24	1	**5P-7211**		SEAL	
	25	1	**5V-1496**	2	RETAINER	
	26	1	**7X-0515**	28	WASHER-HARD (17X35X5-MM THK)	
M	27	1	**7X-2555**	11	BOLT (M16X2X80-MM)	
M	28	1	**8C-8585**	16	SCREW-BUTTON HEAD (M10X1.5X20-MM)	
	29	1	**8T-4121**	10	WASHER-HARD (11X21X2.5-MM THK)	
M	30	1	**8T-4132**	22	NUT (M16X2-THD)	
M	31	1	**8T-4139**	10	BOLT (M12X1.75X30-MM)	
M	32	1	**8T-4140**	20	BOLT (M16X2X60-MM)	
M	33	1	**8T-4175**	3	BOLT (M16X2X90-MM)	
M	34	1	**8T-4195**	14	BOLT (M10X1.5X30-MM)	
	35	1	**8T-4223**	10	WASHER-HARD (13.5X25.5X3-MM THK)	
	36	1	**8T-4226**	4	WASHER-PLATED (10.5X45X3-MM THK)	
	37	1	**9X-8257**	28	WASHER (17.5X30X3.5-MM THK)	

B-USE AS REQUIRED
D-ORDER BY THE METER
M-METRIC PART
Y-SEPARATE ILLUSTRATION

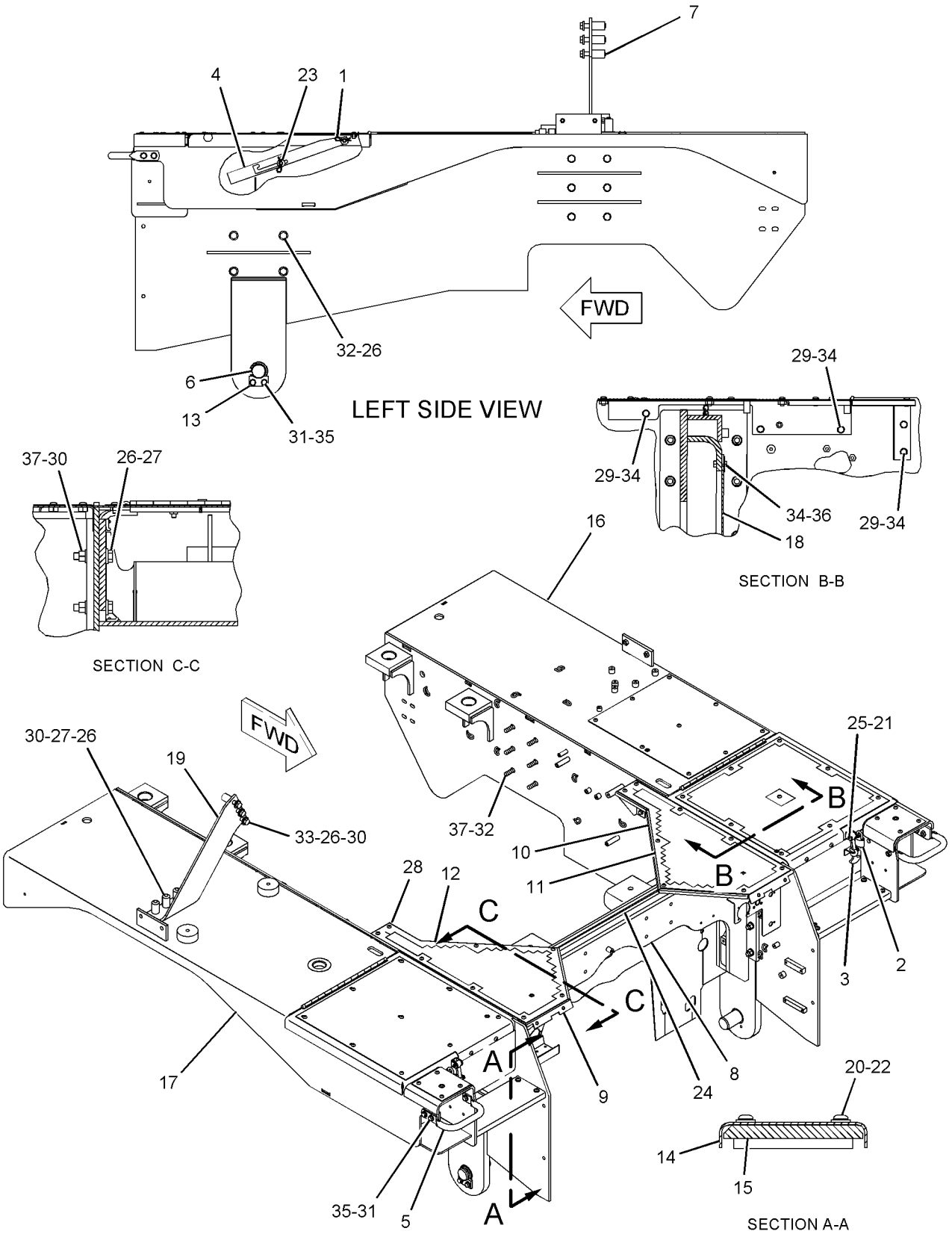

GRAPHIC #1 **<END>** g01134246

FRAME AND BODY

213-1082 FENDER GP

S/N: RJG110-UP

PART OF 212-2741 CHASSIS AR

SMCS-7252 **i02465006**

NOTE	REF NO	GRAPHIC REF	PART NUMBER	QTY	PART NAME 1 2 3 4 5 6 (PRODUCT LEVEL)	SEE PAGE
	1	1	**3W-3110**	4	LOCK PIN	
	2	1	**246-2641**	2	PADLOCK GP (BATTERY BOX)	
					(EACH INCLUDES)	
		1	**5P-8500**	2	KEY	
	3	1	**9M-3835**	2	LATCH-RUBBER	
	4	1	**9W-0352**	2	LINK	
	5	1	**9W-6958**	2	HANDHOLD (GRAB)	
	6	2	**9W-7006**	2	PIN	
	7	1	**068-5893**	6	SPACER (19.05X31.75X30.2-MM THK)	
	8	2	**218-3216**	1	BEAM AS	
		2	**9W-0330**	2	BEARING	
	9	2	**232-3755**	2	PLATE	
Y	10	2	*233-6596*	1	FENDER GP (LH)	426
Y	11	1	*233-6597*	1	FENDER GP (RH)	427
	12	2	**234-8778**	1	SHIELD AS	
	13	1	**245-6858**	1	PLATE	
C	14	2	**262-6146**	1	PLATE AS	
C	15	1,2	**262-6147**	2	PLATE AS	
C	16	1,2	**262-6149**	2	PLATE	
C	17	1	**262-7894**	1	PLATE AS	
C	18	2	**264-4442**	1	PLATE	
C	19	1	**264-4443**	1	PLATE	
C	20	1	**096-3781**	2	PIN-CLEVIS	
	21	1	**2M-5795**	2	PIN-CLEVIS	
M	22	1	**8T-4175**	3	BOLT (M16X2X90-MM)	
C	23	1	**5P-1075**	4	WASHER-HARD (10.2X22.5X3-MM THK)	
D	24	2	**5P-7211**		SEAL (1-M)	
C	25	1	**5V-1496**	2	RETAINER	
	26	1,2	**7X-0515**	28	WASHER-HARD (17X35X5-MM THK)	
CM	27	1,2	**7X-2555**	11	BOLT (M16X2X80-MM)	
M	28	1,2	**8C-8585**	16	SCREW-BUTTON HEAD (M10X1.5X20-MM)	
M	29	1,2	**8T-4132**	22	NUT (M16X2-THD)	
CM	30	1,2	**8T-4139**	12	BOLT (M12X1.75X30-MM)	
M	31	1,2	**8T-4140**	20	BOLT (M16X2X60-MM)	
CM	32	1,2	**8T-4183**	10	BOLT (M12X1.75X40-MM)	
CM	33	2	**8T-4196**	4	BOLT (M10X1.5X35-MM)	
C	34	1,2	**8T-4223**	22	WASHER-HARD (13.5X25.5X3-MM THK)	
	35	2	**8T-4226**	4	WASHER-PLATED (10.5X45X3-MM THK)	
	36	1,2	**9X-8257**	28	WASHER (17.5X30X3.5-MM THK)	

C-CHANGE FROM PREVIOUS TYPE
D-ORDER BY THE METER
M-METRIC PART
Y-SEPARATE ILLUSTRATION

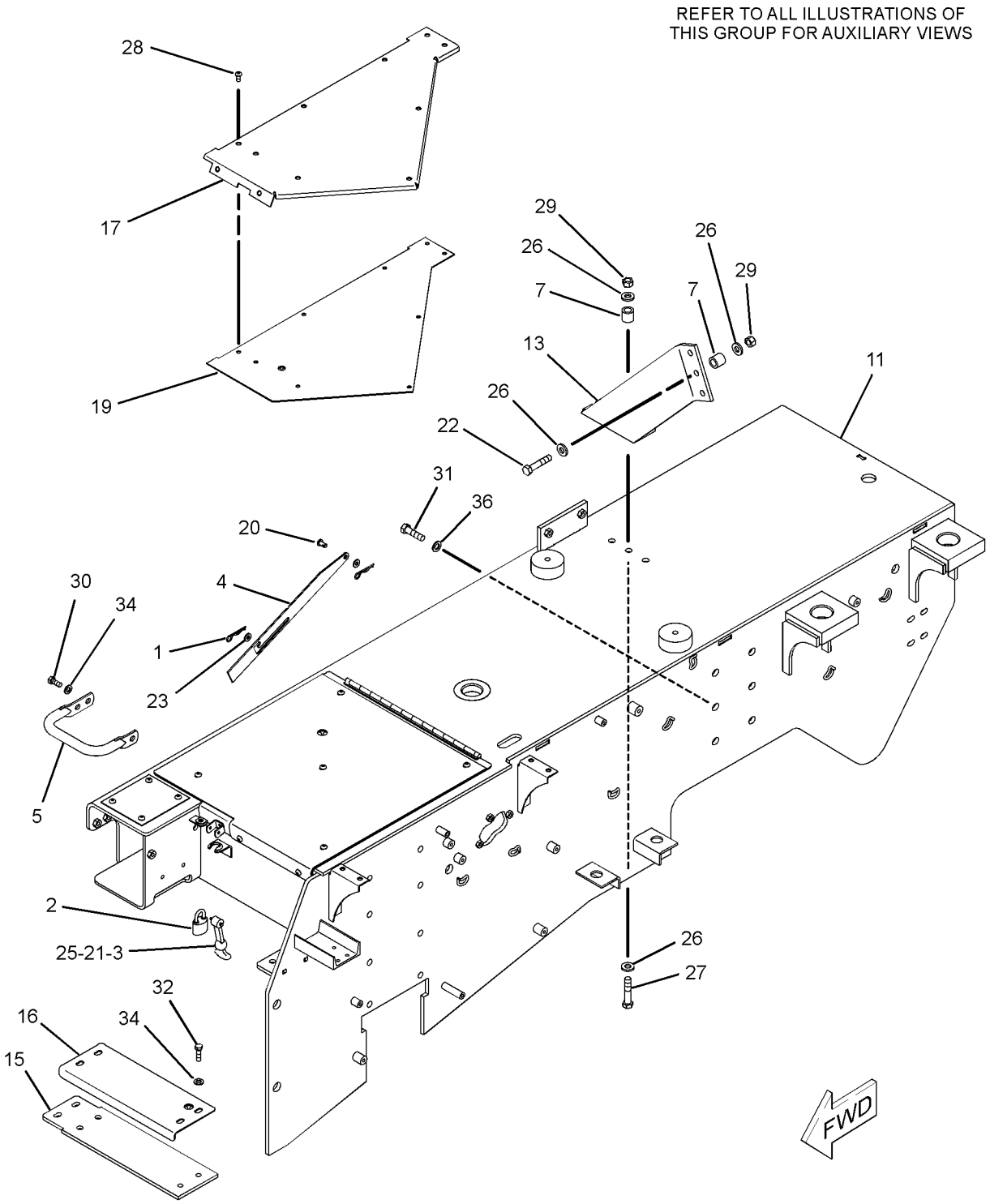

GRAPHIC #1 g01233487

213-1082 **FENDER GP** *(contd.)* **i02465006**

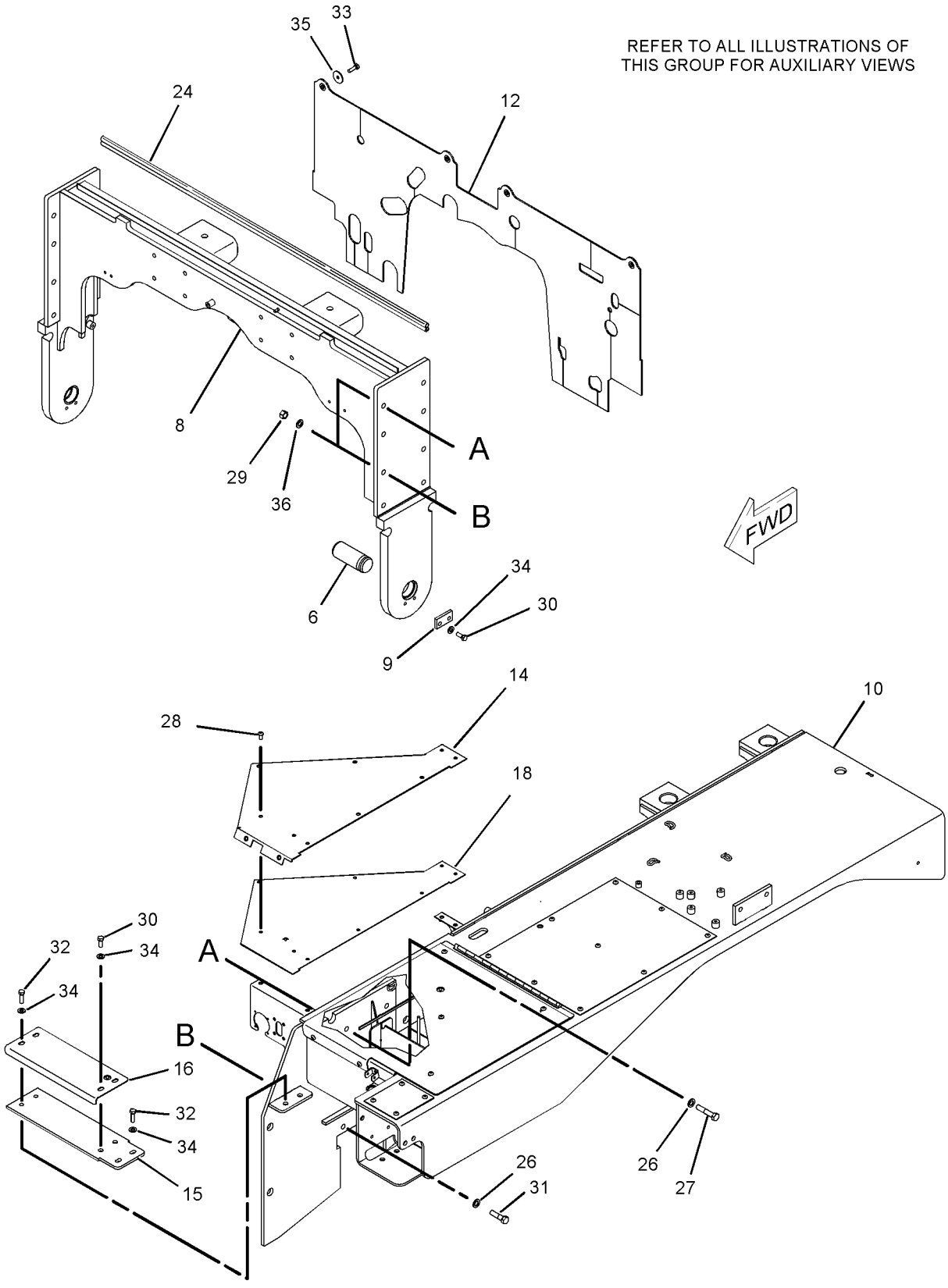

GRAPHIC #2 **<END>** g01140990

233-6596 FENDER GP–LH

S/N: RJG1-UP

PART OF 213-1082 FENDER GP

SMCS-7252 **i02362256**

NOTE	REF NO	GRAPHIC REF	PART NUMBER	QTY	PART NAME 1 2 3 4 5 6 (PRODUCT LEVEL)	SEE PAGE
	1	1	**218-3227**	1	FENDER AS (LH)	
	2	1	**262-6905**	1	COVER (LH)	
	3	1	**264-4444**	1	PLATE	
M	4	1	**141-9203**	9	SCREW-BUTTON HEAD (M10X1.5X30-MM)	
	5	1	**3T-2977**	1	PLATE	
M	6	1	**8C-8585**	10	SCREW-BUTTON HEAD (M10X1.5X20-MM)	

M-METRIC PART

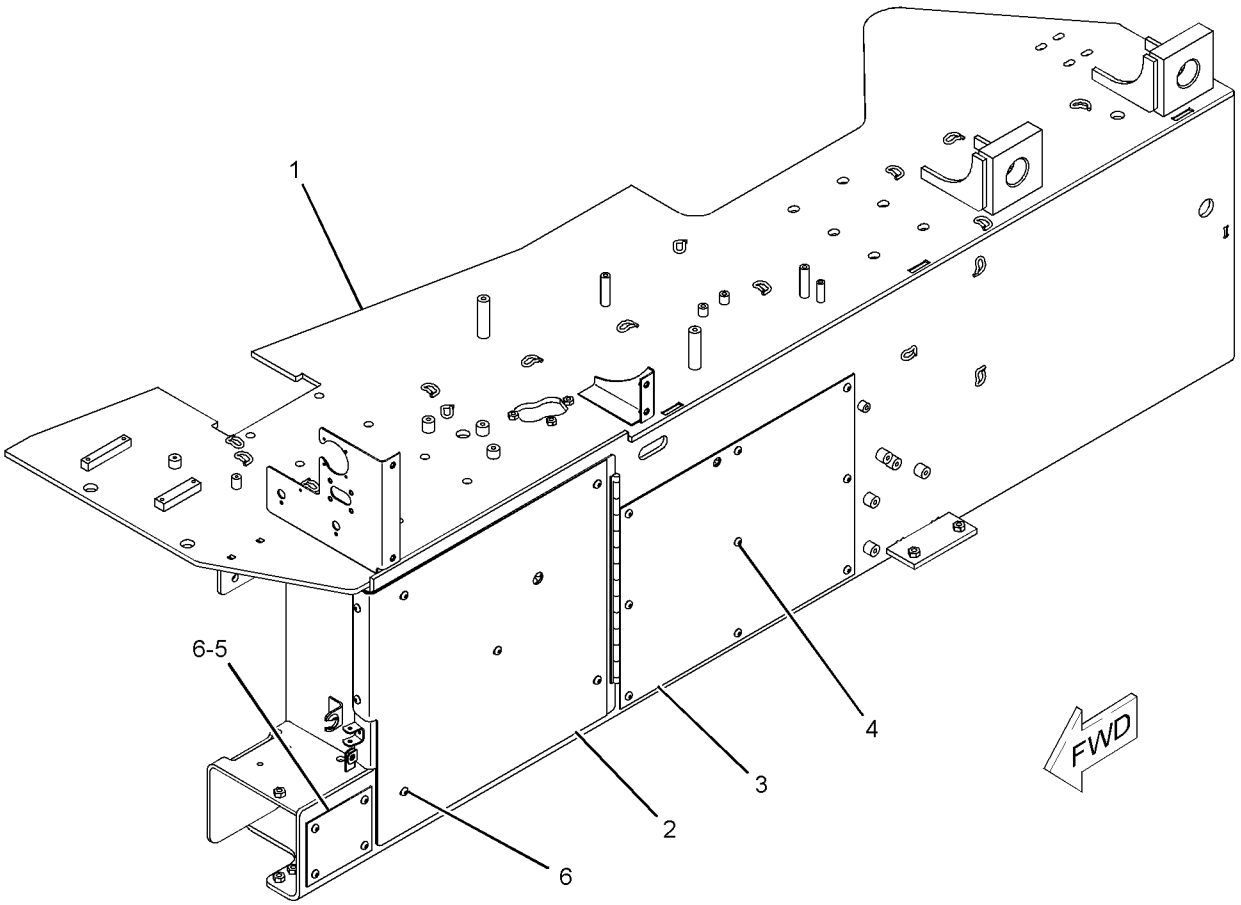

GRAPHIC #1 **<END>** g01135738

FRAME AND BODY

233-6597 FENDER GP–RH

S/N: RJG1-UP

PART OF 213-1082 FENDER GP

SMCS-7252 **i02362770**

NOTE	REF NO	GRAPHIC REF	PART NUMBER	QTY	PART NAME 1 2 3 4 5 6 (PRODUCT LEVEL)	SEE PAGE
	1	1	**218-3223**	1	FENDER AS (RH)	
	2	1	**262-7325**	1	COVER -RH	
	3	1	**3T-2977**	1	PLATE	
M	4	1	**8C-8585**	10	SCREW-BUTTON HEAD (M10X1.5X20-MM)	

M-METRIC PART

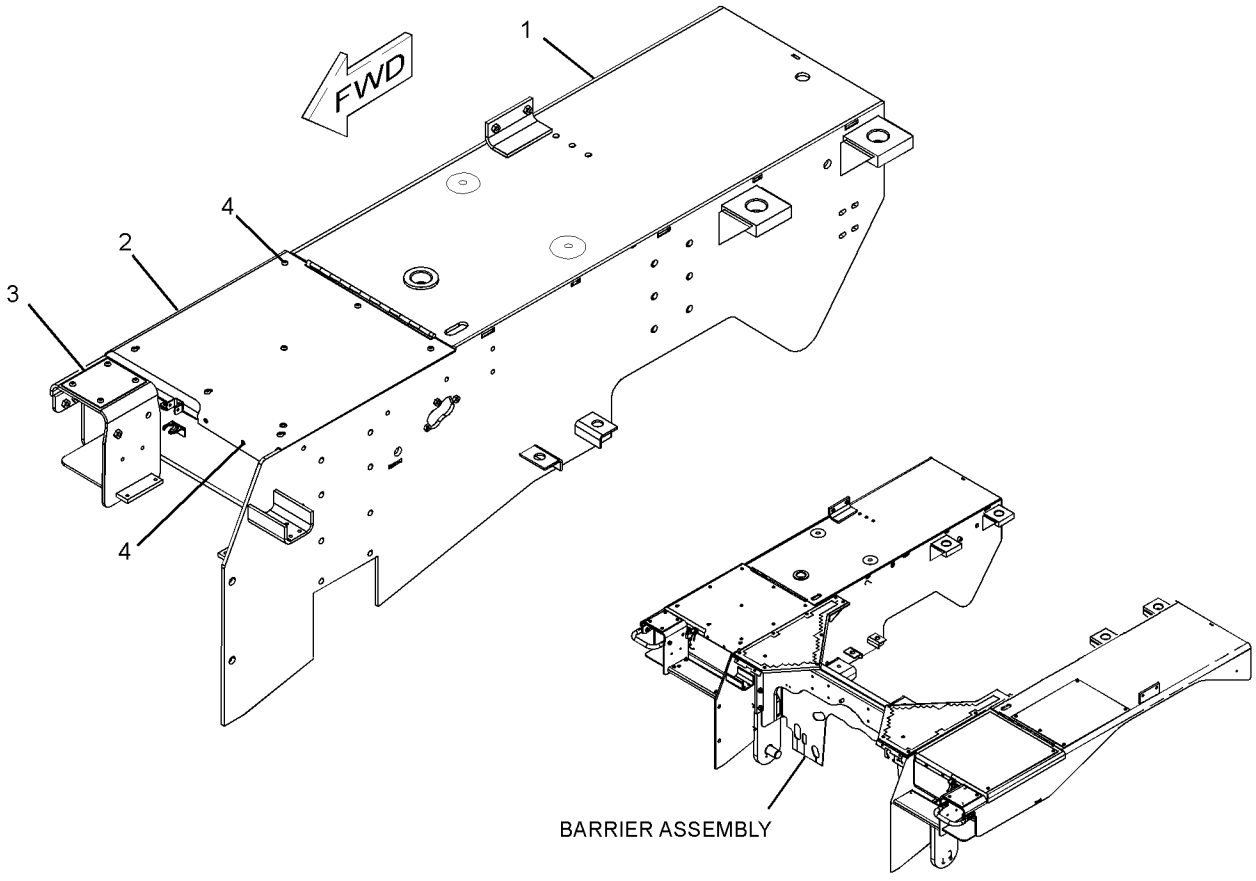

GRAPHIC #1 **<END>** g01181342

143-7543 GUARD AR-FINAL DRIVE—WASTE HANDLING

S/N: RJG1-UP
DUO-CONE PACKING SEAL & GUARD
PART OF 238-4495 WASTE HANDLING AR
AN ATTACHMENT

SMCS-7172 **i01436976**

NOTE	PART NUMBER	QTY	PART NAME 1 2 3 4 5 6 (PRODUCT LEVEL)	SEE PAGE
Y	**192-0722**	2	FINAL DRIVE GP	360
Y-SEPARATE ILLUSTRATION				

<END>

167-1949 GUARD AR-IDLER—WASTE HANDLING

S/N: RJG1-UP
PART OF 238-4495 WASTE HANDLING AR
CANNOT BE USED WITH DISPOSAL AR
AN ATTACHMENT

SMCS-4159 **i01111239**

NOTE	PART NUMBER	QTY	PART NAME 1 2 3 4 5 6 (PRODUCT LEVEL)	SEE PAGE
Y	**167-1946**	4	IDLER GP-TRACK	470
Y-SEPARATE ILLUSTRATION				

<END>

225-3161 GUARD GP-BOTTOM—STOCKPILE

S/N: RJG1-UP
PART OF 238-4498 STOCKPILE AR
AN ATTACHMENT

SMCS-7153 **i02047176**

NOTE	REF NO	GRAPHIC REF	PART NUMBER	QTY	PART NAME 1 2 3 4 5 6 (PRODUCT LEVEL)	SEE PAGE
	1	1	**3W-2647**	3	SPACER (13.5X30X10-MM THK)	
	2	1	**6P-8829**	2	RETAINER	
	3	1	**7G-1815**	1	PLATE	
	4	1	**7G-6503**	1	PLATE AS	
	5	1	**200-7134**	1	GUARD AS	
		1	**8T-5911**	2	NUT-WELD (1/2-13-THD)	
		1	**226-2677**	1	BOSS	
	6	1	**200-7136**	1	COVER	
	7	1	**4L-6454**	1	BOLT (3/8-16X1-IN)	
	8	1	**6V-8190**	2	NUT (1-8-THD)	
	9	1	**7X-0403**	4	BOLT (1-8X2.25-IN)	
	10	1	**7X-0422**	4	BOLT (1-1/8-7-THD)	
	11	1	**7X-0444**	2	BOLT (1-8X6.5-IN)	
	12	1	**7X-0531**	4	WASHER-HARD (31X52.5X6-MM THK)	
	13	1	**7X-0549**	6	WASHER-HARD (28X52.5X8-MM THK)	
	14	1	**7X-0578**	1	WASHER-HARD (10.2X32X2.5-MM THK)	
	15	1	**8T-8919**	3	BOLT (1/2-13X1.75-IN)	

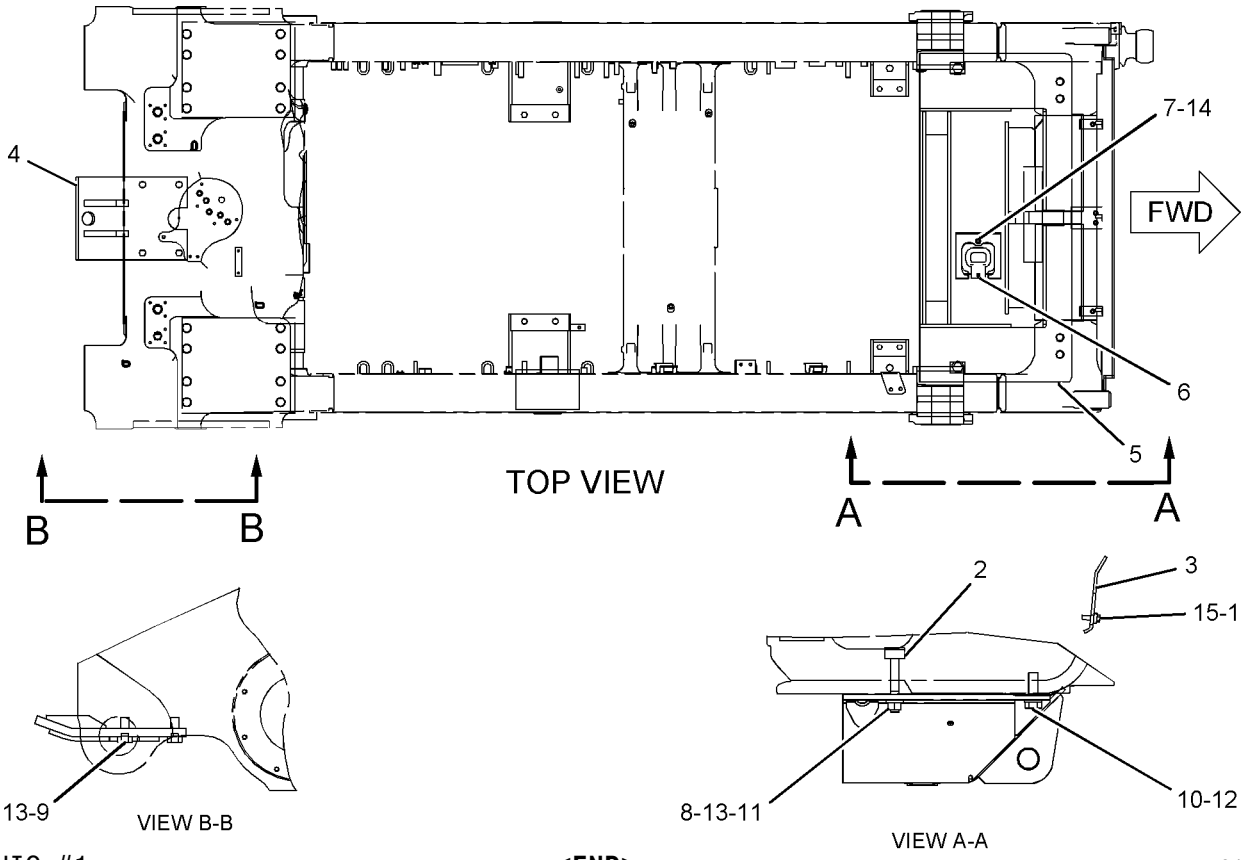

GRAPHIC #1

<END>

g01052529

231-8147 GUARD GP-BOTTOM

S/N: RJG1-UP

PART OF 212-2741 CHASSIS AR

SMCS-7153 **i02253362**

NOTE	REF NO	GRAPHIC REF	PART NUMBER	QTY	PART NAME 1 2 3 4 5 6 (PRODUCT LEVEL)	SEE PAGE
	1	1	**3W-2647**	3	SPACER (13.5X30X10-MM THK)	
	2	1	**6P-8829**	14	RETAINER	
	3	1	**6T-5941**	4	PIN-SECONDARY BAR	
	4	1	**7G-1814**	1	GUARD AS	
	5	1	**7G-1815**	1	PLATE	
	6	1	**7G-6503**	1	PLATE AS	
	7	1	**200-7134**	1	GUARD AS	
	8	1	**200-7136**	2	COVER	
	9	1	**231-8148**	1	GUARD AS	
	10	1	**231-8149**	1	GUARD AS	
	11	1	**3B-5317**	4	PIN-COTTER	
	12	1	**4L-6454**	2	BOLT (3/8-16X1-IN)	
	13	1	**6V-8190**	14	NUT (1-8-THD)	
	14	1	**7X-0403**	4	BOLT (1-8X2.25-IN)	
	15	1	**7X-0405**	4	BOLT (1-8X2.75-IN)	
	16	1	**7X-0422**	4	BOLT (1-1/8-7-THD)	
	17	1	**7X-0444**	14	BOLT (1-8X6.5-IN)	
	18	1	**7X-0531**	4	WASHER-HARD (31X52.5X6-MM THK)	
	19	1	**7X-0549**	22	WASHER-HARD (28X52.5X8-MM THK)	
	20	1	**7X-0578**	2	WASHER-HARD (10.2X32X2.5-MM THK)	
	21	1	**8T-5361**	4	WASHER-HARD (28X49X5-MM THK)	
M	22	1	**8T-4184**	3	BOLT (M12X1.75X45-MM)	

M-METRIC PART

231-8147 **GUARD GP-BOTTOM** *(contd.)* **i02253362**

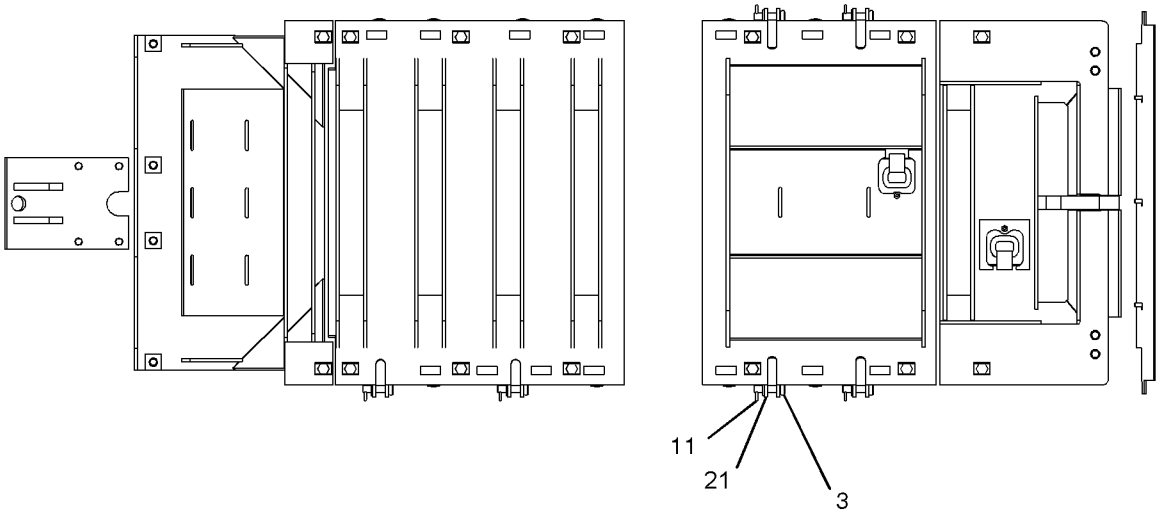

TOP VIEW

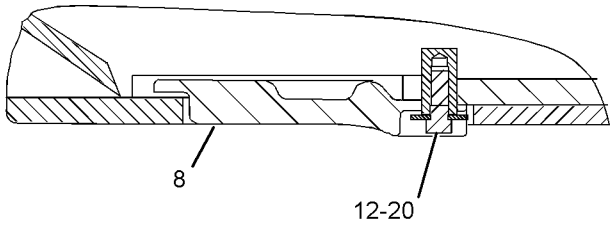

SECTION A-A

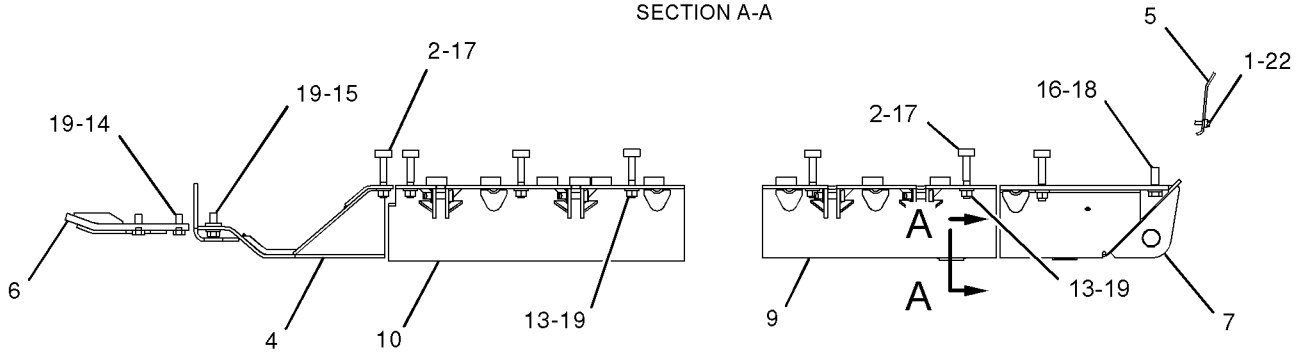

LEFT SIDE VIEW

GRAPHIC #1

<END>

g01053066

243-1653 GUARD GP-BOTTOM—WASTE HANDLER

S/N: RJG1-UP
SEALED
PART OF 238-4496 WASTE HANDLING AR
AN ATTACHMENT

SMCS-7153 **i02264689**

NOTE	REF NO	GRAPHIC REF	PART NUMBER	QTY	PART NAME 1 2 3 4 5 6 (PRODUCT LEVEL)	SEE PAGE
	1	1	**3W-2647**	3	SPACER (13.5X30X10-MM THK)	
	2	1	**6P-8829**	14	RETAINER	
	3	1	**6T-5941**	4	PIN-SECONDARY BAR	
	4	1	**7G-6503**	1	PLATE AS	
	5	1	**110-5435**	1	PLATE AS	
	6	1	**110-5436**	1	GUARD AS	
	7	1	**110-5439**	1	GUARD AS	
	8	1	**200-7136**	2	COVER	
	9	1	**243-1655**	1	GUARD AS	
	10	1	**243-1656**	1	GUARD AS	
	11	1	**3B-5317**	4	PIN-COTTER	
	12	1	**4L-6454**	2	BOLT (3/8-16X1-IN)	
	13	1	**6V-8190**	14	NUT (1-8-THD)	
	14	1	**7X-0365**	6	BOLT (3/4-10X1.5-IN)	
	15	1	**7X-0403**	4	BOLT (1-8X2.25-IN)	
	16	1	**7X-0405**	4	BOLT (1-8X2.75-IN)	
	17	1	**7X-0422**	4	BOLT (1-1/8-7-THD)	
	18	1	**7X-0444**	14	BOLT (1-8X6.5-IN)	
	19	1	**7X-0531**	4	WASHER-HARD (31X52.5X6-MM THK)	
	20	1	**7X-0549**	22	WASHER-HARD (28X52.5X8-MM THK)	
	21	1	**7X-0578**	2	WASHER-HARD (10.2X32X2.5-MM THK)	
M	22	1	**8T-4184**	3	BOLT (M12X1.75X45-MM)	
	23	1	**8T-4994**	6	WASHER-HARD (20X36.5X3.5-MM THK)	
	24	1	**8T-5361**	4	WASHER-HARD (28X49X5-MM THK)	
BD	25	1	**5P-5649**		SEAL	
BD	26	1	**5P-7514**		SEAL	

B-USE AS REQUIRED
D-ORDER BY THE METER
M-METRIC PART

243-1653 **GUARD GP-BOTTOM** *(contd.)* **i02264689**

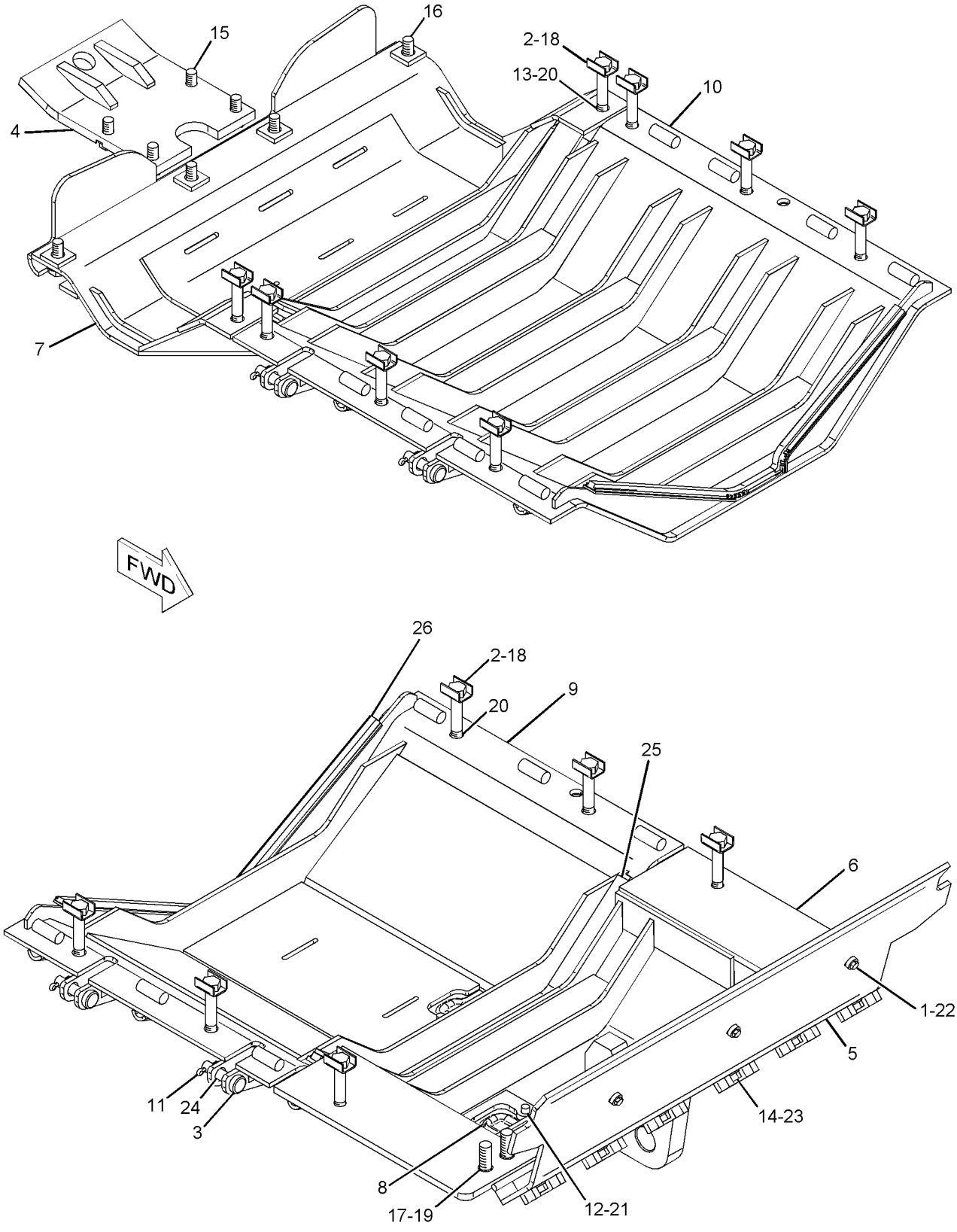

GRAPHIC #1 **<END>** g01137744

255-1302 GUARD GP-BRUSH—REVERSIBLE FAN

S/N: RJG1-UP
PART OF 220-0261 FAN AR-REVERSIBLE
AN ATTACHMENT

SMCS-7158 **i02271426**

NOTE	REF NO	GRAPHIC REF	PART NUMBER	QTY	PART NAME 1 2 3 4 5 6 (PRODUCT LEVEL)	SEE PAGE
	1	1	**224-4214**	2	GUARD AS	
					(EACH INCLUDES)	
		1	**6N-8599**	2	CLIP	
M		1	**8T-3490**	2	NUT-WELD (M10X1.5 THD)	
	2	1	**224-4215**	1	GUARD AS	
		1	**6N-8599**	2	CLIP	
	3	1	**256-5357**	2	GUARD AS	
	4	1	**256-5358**	2	BRACKET	
	5	1	**257-2028**	1	GUARD AS	
		1	**6N-8599**	2	CLIP	
	6	1	**7X-7729**	40	WASHER (11X25X3-MM THK)	
M	7	1	**8T-4195**	40	BOLT (M10X1.5X30-MM)	

M-METRIC PART

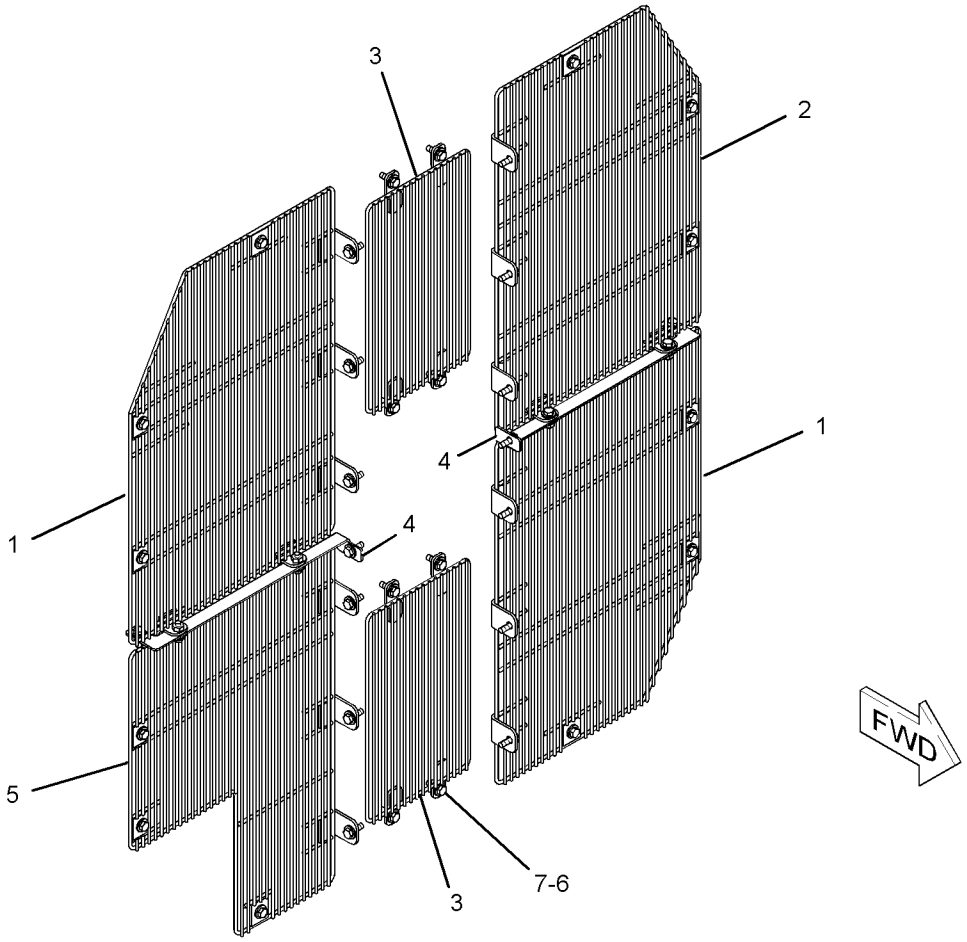

GRAPHIC #1 **<END>** g01138585

257-8332 GUARD GP-BRUSH

S/N: RJG1-UP
CANNOT BE USED WITH REVERSING FAN AR
AN ATTACHMENT

SMCS-7158 **i02264531**

NOTE	REF NO	GRAPHIC REF	PART NUMBER	QTY	PART NAME 1 2 3 4 5 6 (PRODUCT LEVEL)	SEE PAGE
	1	1	**224-4214**	2	GUARD AS	
					(EACH INCLUDES)	
		1	**6N-8599**	2	CLIP	
M		1	**8T-3490**	2	NUT-WELD (M10X1.5 THD)	
	2	1	**224-4215**	2	GUARD AS	
					(EACH INCLUDES)	
		1	**6N-8599**	2	CLIP	
	3	1	**256-5357**	2	GUARD AS	
	4	1	**256-5358**	2	BRACKET	
	5	1	**7X-7729**	40	WASHER (11X25X3-MM THK)	
M	6	1	**8T-4195**	40	BOLT (M10X1.5X30-MM)	

M-METRIC PART

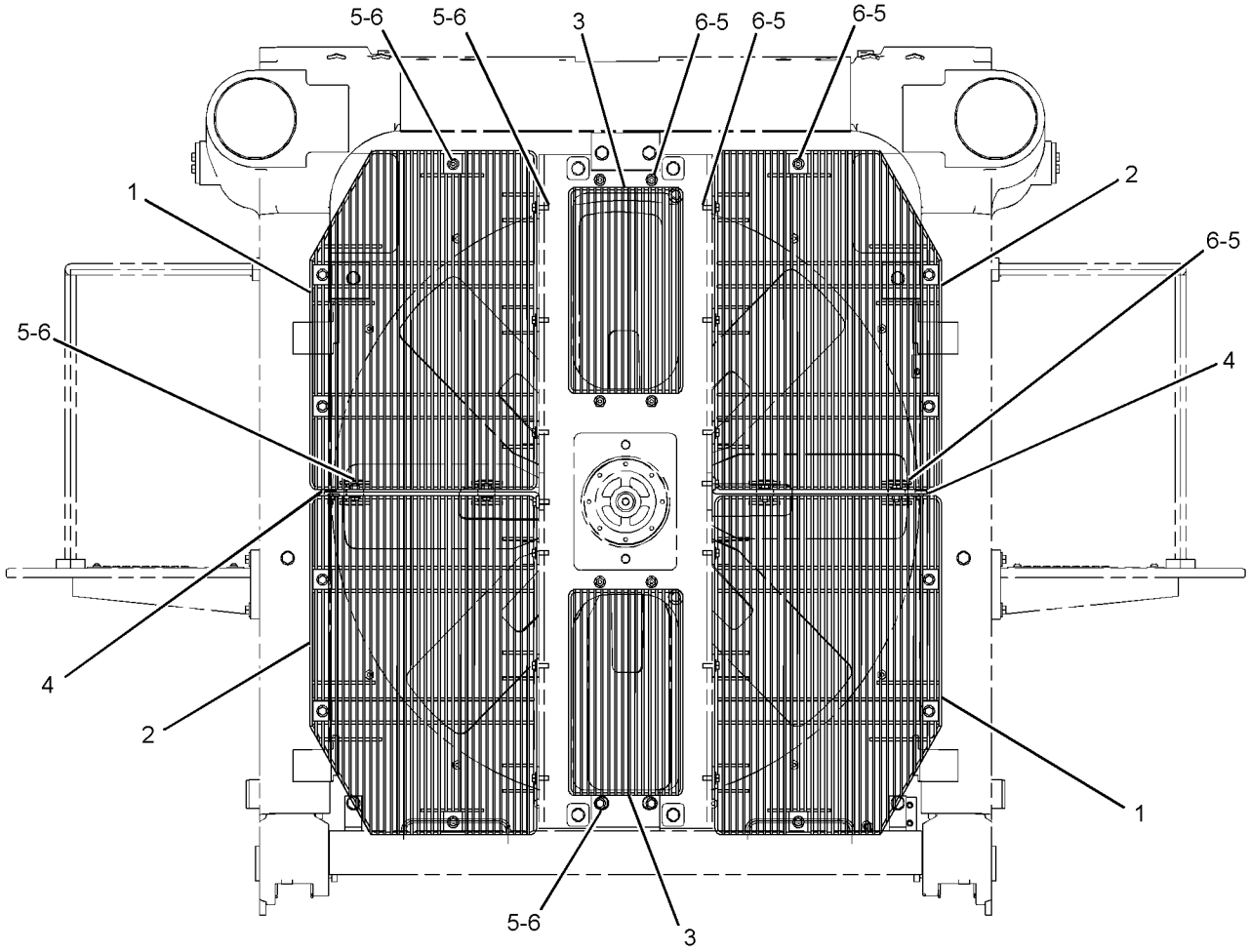

GRAPHIC #1 **<END>** g01137669

FRAME AND BODY

213-1141 GUARD GP-DRIVE SHAFT

S/N: RJG1-UP

PART OF 212-2741 CHASSIS AR

SMCS-7153 **i02254912**

NOTE	REF NO	GRAPHIC REF	PART NUMBER	QTY	PART NAME 1 2 3 4 5 6 (PRODUCT LEVEL)	SEE PAGE
	1	1	**173-7221**	1	GUARD AS	
	2	1	**218-8465**	1	GUARD AS	
	3	1	**218-8466**	1	GUARD AS	
	4	1	**5C-6565**	6	BOLT (1/2-13X1.125-IN)	
	5	1	**5M-3062**	4	BOLT (3/8-16X0.75-IN)	
	6	1	**8T-4223**	6	WASHER-HARD (13.5X25.5X3-MM THK)	
	7	1	**8T-4896**	4	WASHER-HARD (10.2X18.5X2.5-MM THK)	

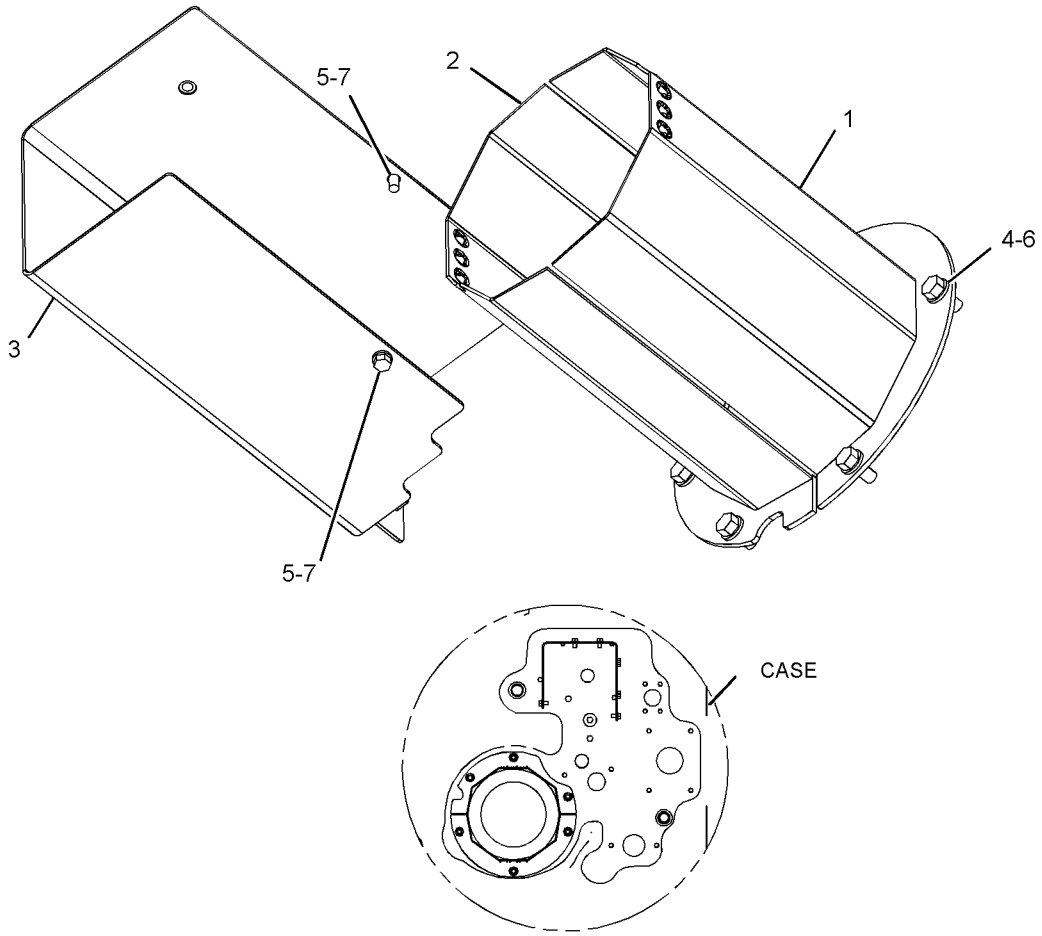

GRAPHIC #1

<END>

g01052068

FRAME AND BODY

190-8429 GUARD GP-FINAL DRIVE

S/N: RJG1-UP
AN ATTACHMENT

SMCS-7172 **i02248216**

NOTE	REF NO	GRAPHIC REF	PART NUMBER	QTY	PART NAME 1 2 3 4 5 6 (PRODUCT LEVEL)	SEE PAGE
	1	1	**186-3641**	4	GUARD	
	2	1	**188-8963**	4	SPACER	
	3	1	**188-9042**	4	COVER	
	4	1	**5B-5473**	16	BOLT (1-8X6.5-IN)	
	5	1	**5D-4661**	16	WASHER-HARD (28X52.5X8-MM THK)	
	6	1	**5M-2894**	16	WASHER-HARD (10.2X18.5X2.5-MM THK)	
	7	1	**9B-7237**	16	BOLT (3/8-16X1.25-IN)	

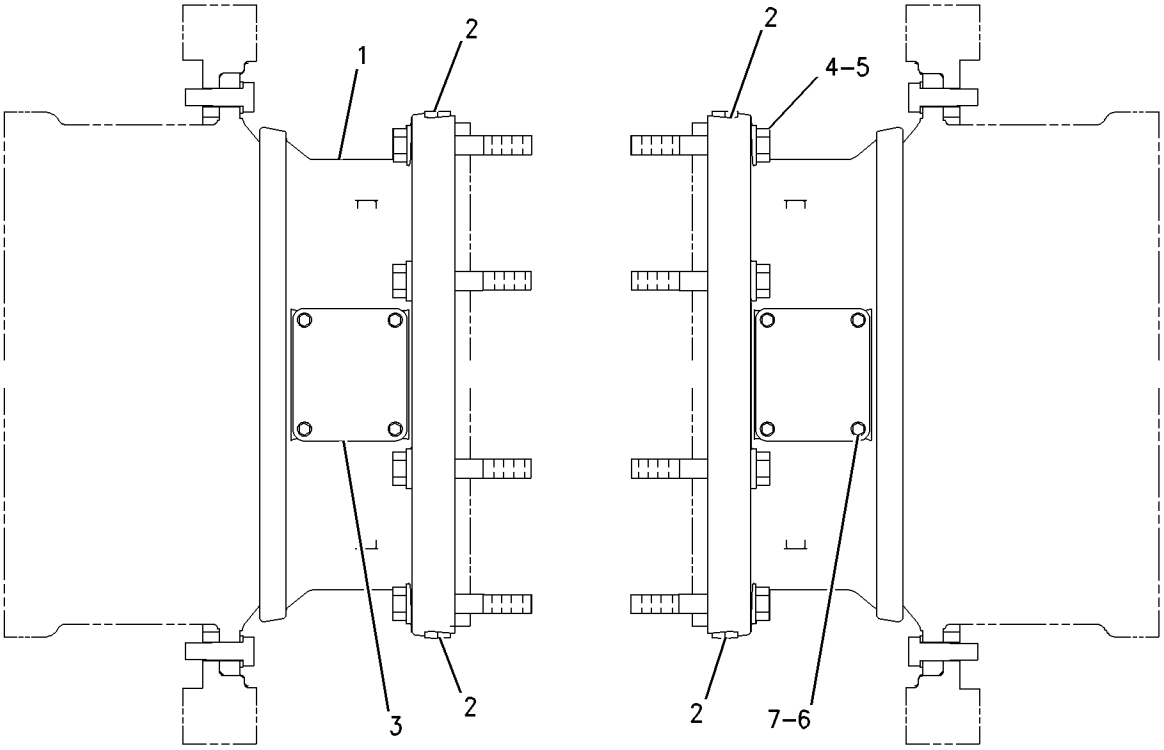

GRAPHIC #1 **<END>** g00826492

196-8565 GUARD GP-IDLER

S/N: RJG1-UP
CANNOT BE USED WITH WASTE DISPOSAL AR
AN ATTACHMENT

SMCS-4159 **i02041088**

NOTE	REF NO	GRAPHIC REF	PART NUMBER	QTY	PART NAME 1 2 3 4 5 6 (PRODUCT LEVEL)	SEE PAGE
	1	1	**147-5330**	4	GUARD AS (LH)	
	2	1	**147-5331**	2	GUARD AS (IDLER)	
	3	1	**147-5332**	2	GUARD AS (RH)	
	4	1	**147-5333**	4	PLATE	
	5	1	**7X-0344**	12	BOLT (5/8-11X1.375-IN)	
M	6	1	**8T-4122**	24	WASHER-HARD (17X32X3.5-MM THK)	
	7	1	**8T-6871**	12	BOLT (5/8-11X2.5-IN)	

QUANTITIES SHOWN ARE THOSE REQUIRED FOR BOTH LH AND RH SIDES
M-METRIC PART

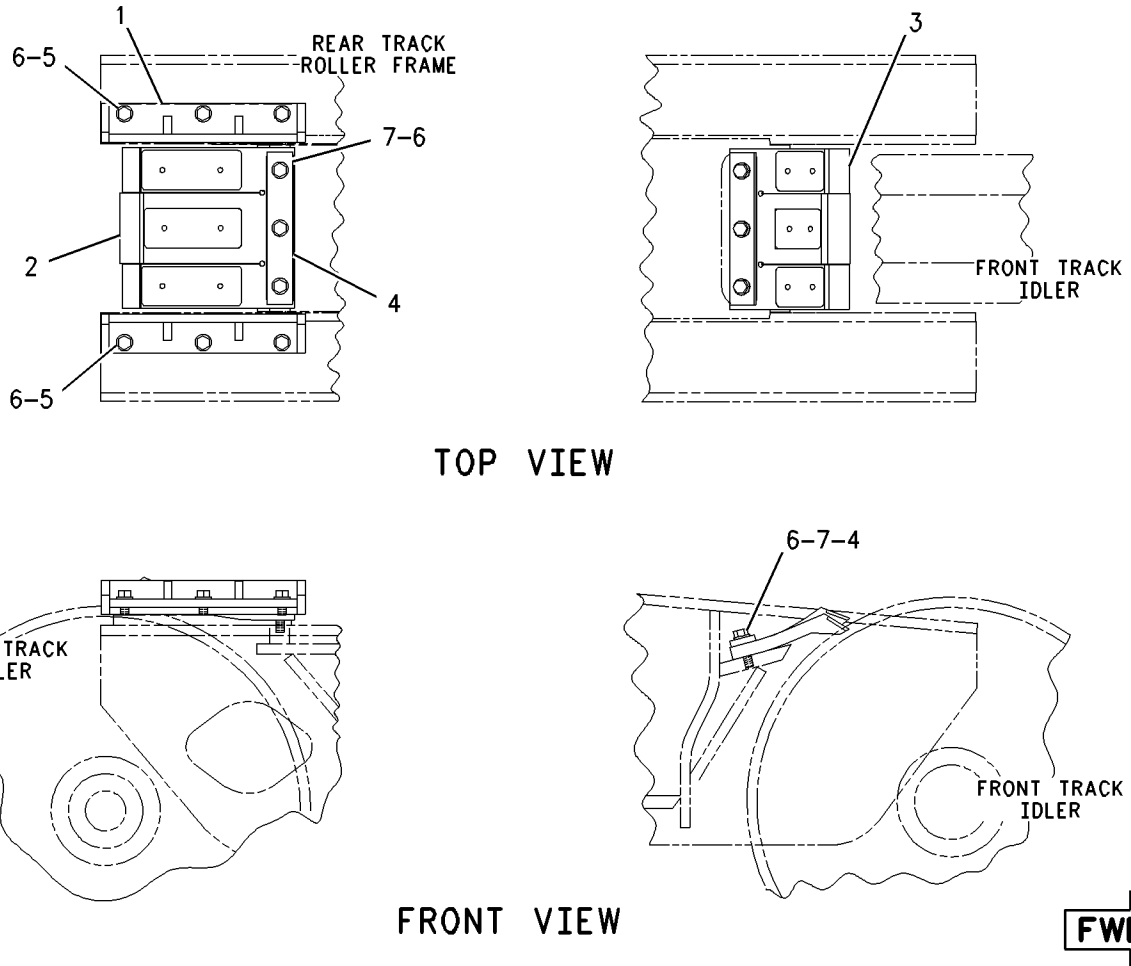

GRAPHIC #1 **<END>** g00816504

1Z-0749 GUARD GP-PIVOT SHAFT

S/N: RJG1-UP
PART OF 238-4496 WASTE HANDLING AR
AN ATTACHMENT

SMCS-7150 **i02019512**

NOTE	REF NO	GRAPHIC REF	PART NUMBER	QTY	PART NAME 1 2 3 4 5 6 (PRODUCT LEVEL)	SEE PAGE
	1	1	**1Q-3626**	2	RETAINER	
	2	1	**1Q-3627**	2	GUARD	

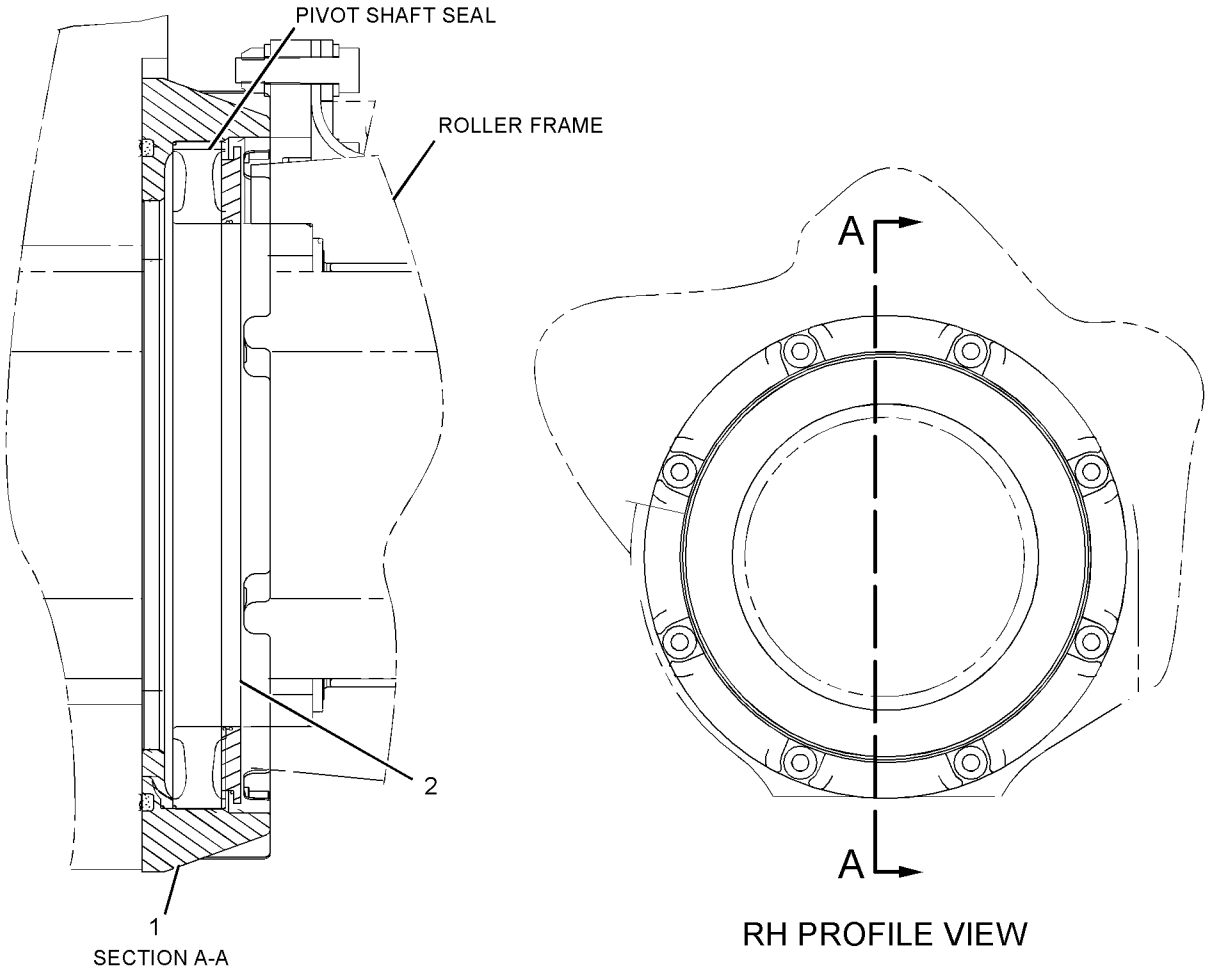

GRAPHIC #1 **<END>** g01050317

FRAME AND BODY

247-1267 GUARD GP-POWER TRAIN

S/N: RJG1-UP

AN ATTACHMENT

SMCS-7150 **i02254874**

NOTE	REF NO	GRAPHIC REF	PART NUMBER	QTY	PART NAME 1 2 3 4 5 6 (PRODUCT LEVEL)	SEE PAGE
	1	1	**2M-6095**	1	HANDLE	
	2	1	**4J-4262**	1	COVER	
	3	1	**4S-8033**	2	PIN-SECONDARY BAR	
	4	1	**5P-8837**	2	LOCK PIN	
	5	1	**6B-0533**	1	SPRING	
	6	1	**6H-3956**	1	PIN	
	7	1	**8E-7561**	1	KNOB AS	
	7A	1	**7S-2042**	1	STUD	
	7B	1	**8E-1205**	1	KNOB	
	7C	1	**8T-7566**	1	PIN-SPRING	
	8	1	**241-4933**	1	PLATE AS	
	9	1	**247-1284**	2	BRACKET AS	
	10	1	**247-1288**	1	PLATE AS	
	11	1	**247-1289**	1	PLATE AS	
	12	1	**247-1290**	1	PLATE AS	
	13	1	**247-1291**	1	GUARD AS	
	14	1	**5C-6565**	4	BOLT (1/2-13X1.125-IN)	
	15	1	**5P-1076**	8	WASHER-HARD (13.5X30X4-MM THK)	
M	16	1	**8T-4122**	17	WASHER-HARD (17X32X3.5-MM THK)	
M	17	1	**8T-4140**	8	BOLT (M16X2X60-MM)	
M	18	1	**8T-4183**	8	BOLT (M12X1.75X40-MM)	
	19	1	**8T-4223**	4	WASHER-HARD (13.5X25.5X3-MM THK)	
	20	1	**8T-5361**	2	WASHER-HARD (28X49X5-MM THK)	
M	21	1	**8T-7338**	8	BOLT (M16X2X45-MM)	

M-METRIC PART

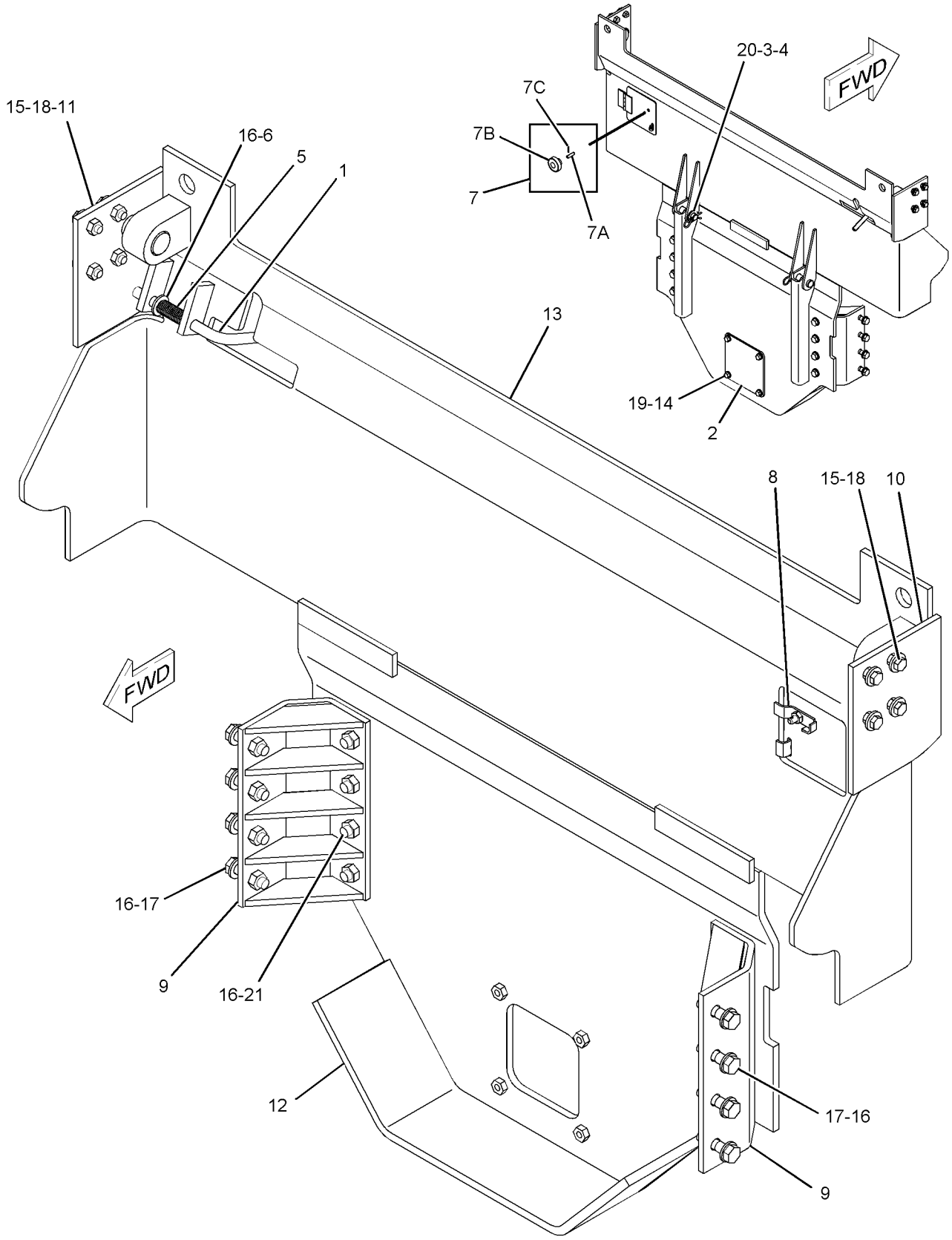

GRAPHIC #1 **<END>** g01135707

FRAME AND BODY

213-6973 GUARD GP-RADIATOR

S/N: RJG1-528

PART OF 212-2741 CHASSIS AR

SMCS-7155 **i02390857**

NOTE	REF NO	GRAPHIC REF	PART NUMBER	QTY	PART NAME 1 2 3 4 5 6 (PRODUCT LEVEL)	SEE PAGE
	1	1	**3B-4617**	4	PIN-COTTER	
	2	1	**4J-7083**	2	GASKET	
	3	1	**6J-0488**	8	SCREW-BUTTON HEAD (3/8-16X0.875-IN)	
	4	1	**7K-6413**	2	FLANGE	
	5	1	**8E-4815**	2	PLUG	
	6	1	**9C-6984**	2	PLATE	
	7	1	**135-3173**	2	ROD	
	8	1	**213-6974**	1	GUARD AS	
	8A	1	**7J-1337**	2	BEARING (6.5-IN OD)	
	8B	1	**7J-1338**	2	BEARING (5-IN OD)	
	8C	1	**7T-9014**	4	BEARING-SLEEVE	
	8D	1	**8P-7598**	2	BEARING-SLEEVE	
	9	1	**219-9792**	1	SCREEN AS (RH)	
	10	1	**219-9793**	1	SCREEN AS (LH)	
	11	1	**233-0888**	2	PIN	
	12	1	**233-0890**	2	PIN	
	13	1	**237-8108**	1	HANDLE AS (LH)	
	14	1	**237-8109**	1	HANDLE AS (RH)	
	15	1	**247-4163**	2	PLATE	
	16	1	**259-5762**	2	WASHER (23X80X12-MM THK)	
	17	1	**5M-6214**	2	PLUG-PIPE	
	18	1	**5P-1076**	10	WASHER-HARD (13.5X30X4-MM THK)	
M	19	1	**7X-2554**	8	BOLT (M16X2X70-MM)	
M	20	1	**7X-2562**	2	BOLT (M20X2.5X45-MM)	
M	21	1	**8T-4139**	8	BOLT (M12X1.75X30-MM)	
M	22	1	**8T-4193**	2	BOLT (M16X2X50-MM)	
	23	1	**8T-4223**	8	WASHER-HARD (13.5X25.5X3-MM THK)	
M	24	1	**8T-4910**	10	BOLT (M12X1.75X60-MM)	
	25	1	**9X-8257**	10	WASHER (17.5X30X3.5-MM THK)	
	26	1	**237-8104**	2	PLATE AS	
	27	1	**8T-4123**	2	WASHER-PLATED (22X35X3.5-MM THK)	
	28	1	**5P-2566**	4	BOLT (1/2-13X1.5-IN)	

M-METRIC PART

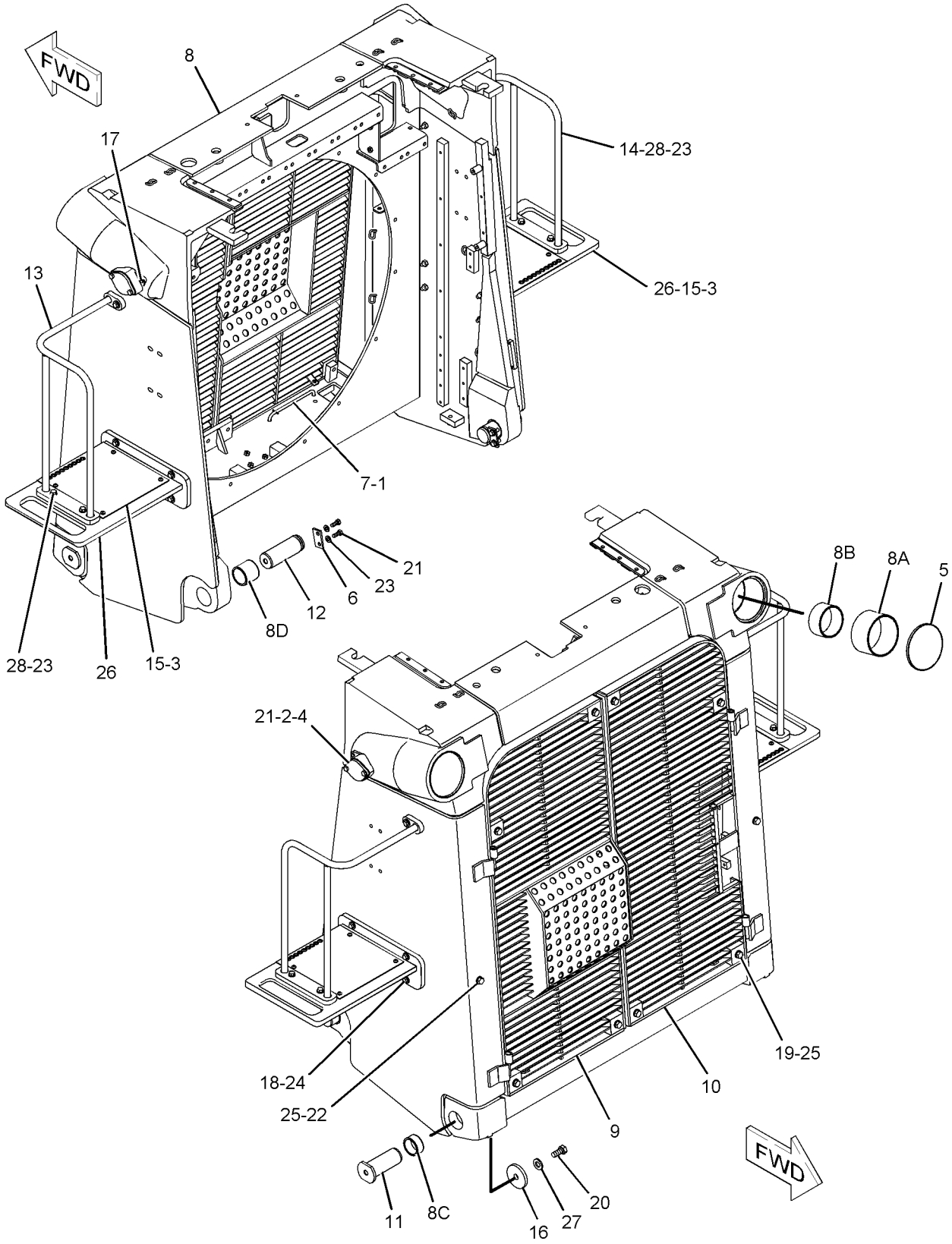

GRAPHIC #1

<END>

g01133619

270-7539 GUARD GP-RADIATOR

S/N: RJG529-UP

PART OF 212-2741 CHASSIS AR

SMCS-7155 **i02467672**

NOTE	REF NO	GRAPHIC REF	PART NUMBER	QTY	PART NAME 1 2 3 4 5 6 (PRODUCT LEVEL)	SEE PAGE
	1	1	**3B-4617**	4	PIN-COTTER	
	2	1	**4J-7083**	2	GASKET	
	3	1	**6J-0488**	8	SCREW-BUTTON HEAD (3/8-16X0.875-IN)	
	4	1	**7K-6413**	2	FLANGE	
	5	1	**8E-4815**	2	PLUG	
	6	1	**9C-6984**	2	PLATE	
	7	1	**135-3173**	2	ROD	
	8	1	**219-9792**	1	SCREEN AS (RH)	
	9	1	**219-9793**	1	SCREEN AS (LH)	
	10	1	**233-0888**	2	PIN	
	11	1	**233-0890**	2	PIN	
	12	1	**237-8104**	2	PLATE AS	
	13	1	**237-8108**	1	HANDLE AS	
	14	1	**237-8109**	1	HANDLE AS	
	15	1	**247-4163**	2	PLATE	
	16	1	**259-5762**	2	WASHER (23X80X12-MM THK)	
	17	1	**270-7540**	1	GUARD AS	
	17A	1	**7J-1337**	2	BEARING (6.5-IN OD)	
	17B	1	**7J-1338**	2	BEARING (5-IN OD)	
	17C	1	**7T-9014**	4	BEARING-SLEEVE	
	17D	1	**8P-7598**	2	BEARING-SLEEVE	
	18	1	**5M-6214**	2	PLUG-PIPE	
	19	1	**5P-1076**	10	WASHER-HARD (13.5X30X4-MM THK)	
	20	1	**5P-2566**	4	BOLT (1/2-13X1.5-IN)	
M	21	1	**7X-2554**	8	BOLT (M16X2X70-MM)	
M	22	1	**7X-2562**	2	BOLT (M20X2.5X45-MM)	
	23	1	**8T-4123**	2	WASHER-PLATED (22X35X3.5-MM THK)	
M	24	1	**8T-4139**	8	BOLT (M12X1.75X30-MM)	
M	25	1	**8T-4193**	2	BOLT (M16X2X50-MM)	
	26	1	**8T-4223**	8	WASHER-HARD (13.5X25.5X3-MM THK)	
M	27	1	**8T-4910**	10	BOLT (M12X1.75X60-MM)	
	28	1	**9X-8257**	10	WASHER (17.5X30X3.5-MM THK)	

M-METRIC PART

270-7539 **GUARD GP-RADIATOR** *(contd.)* **i02467672**

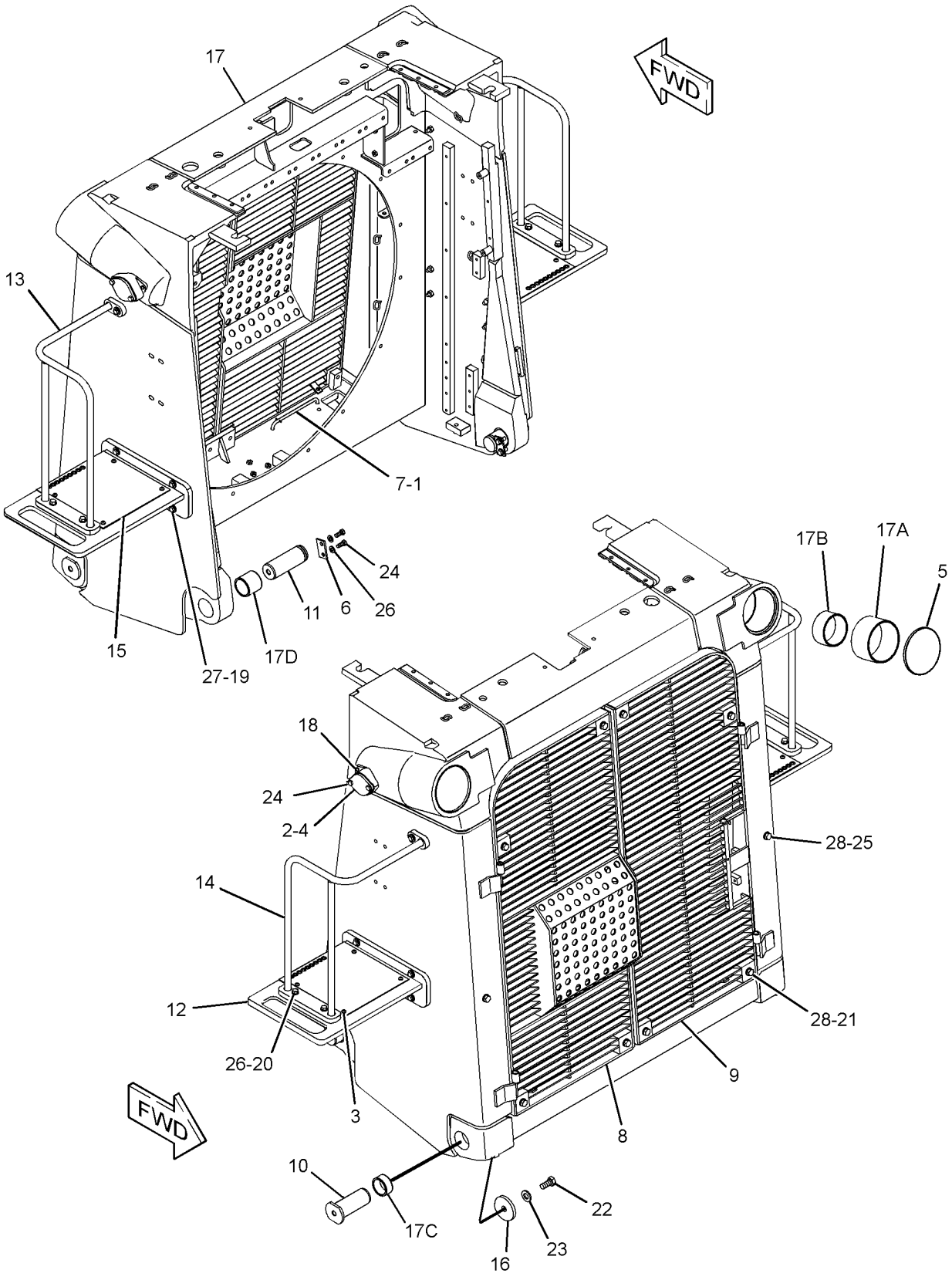

GRAPHIC #1 **<END>** g01231290

FRAME AND BODY

254-7275 GUARD GP-REAR

S/N: RJG1-UP

FOR USE WITH COUNTERWEIGHT AR. CANNOT BE USED WITH DRAWBAR AR AN ATTACHMENT

SMCS-7187 **i02259663**

NOTE	REF NO	GRAPHIC REF	PART NUMBER	QTY	PART NAME 1 2 3 4 5 6 (PRODUCT LEVEL)	SEE PAGE
	1	1	**2M-6095**	1	HANDLE	
	2	1	**4J-4262**	1	COVER	
	3	1	**4S-8033**	2	PIN-SECONDARY BAR	
	4	1	**5P-8837**	2	LOCK PIN	
	5	1	**6B-0533**	1	SPRING	
	6	1	**6H-3956**	1	PIN	
	7	1	**8E-7561**	1	KNOB AS	
		1	**7S-2042**	1	STUD	
		1	**8E-1205**	1	KNOB	
		1	**8T-7566**	1	PIN-SPRING	
	8	1	**247-1288**	1	PLATE AS	
	9	1	**247-1289**	1	PLATE AS	
	10	1	**254-7280**	1	GUARD AS	
	11	1	**254-9024**	1	PLATE AS	
	12	1	**255-0005**	2	PLATE AS	
	13	1	**5C-6565**	4	BOLT (1/2-13X1.125-IN)	
	14	1	**5P-1076**	8	WASHER-HARD (13.5X30X4-MM THK)	
	15	1	**7M-2360**	6	WASHER (19.8X41X9.5-MM THK)	
M	16	1	**8T-4122**	1	WASHER-HARD (17X32X3.5-MM THK)	
M	17	1	**8T-4183**	8	BOLT (M12X1.75X40-MM)	
M	18	1	**8T-4193**	14	BOLT (M16X2X50-MM)	
	19	1	**8T-4223**	4	WASHER-HARD (13.5X25.5X3-MM THK)	
	20	1	**8T-5361**	2	WASHER-HARD (28X49X5-MM THK)	
	21	1	**9X-8257**	8	WASHER (17.5X30X3.5-MM THK)	

M-METRIC PART

254-7275 **GUARD GP-REAR** *(contd.)* **i02259663**

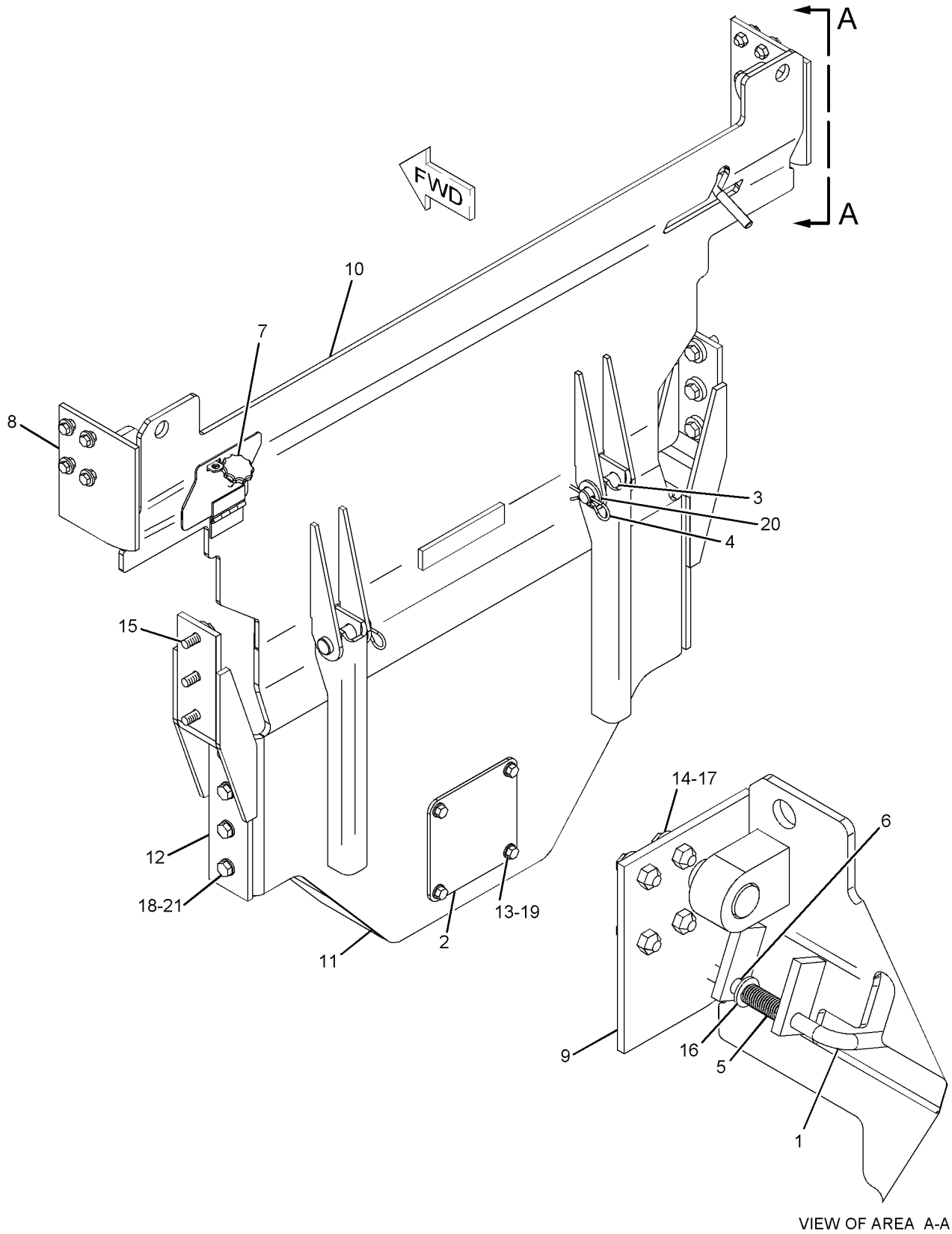

VIEW OF AREA A-A

GRAPHIC #1 **<END>** g01137833

8E-9570 GUARD GP-ROCK–SEMI-UNIVERSAL BLADE

S/N: BHJ1-UP
PART OF 8E-9010 BLADE AS-SEMI-UNIVERSAL
AN ATTACHMENT

SMCS-7182 **i00596183**

NOTE	REF NO	GRAPHIC REF	PART NUMBER	QTY	PART NAME 1 2 3 4 5 6 (PRODUCT LEVEL)	SEE PAGE
	1	1	**8E-9947**	1	GUARD AS	
	2	1	**8E-6866**	1	GUARD AS	
	3	1	**8E-6757**	1	GUARD AS	
	4	1	**8E-9938**	2	PLATE	

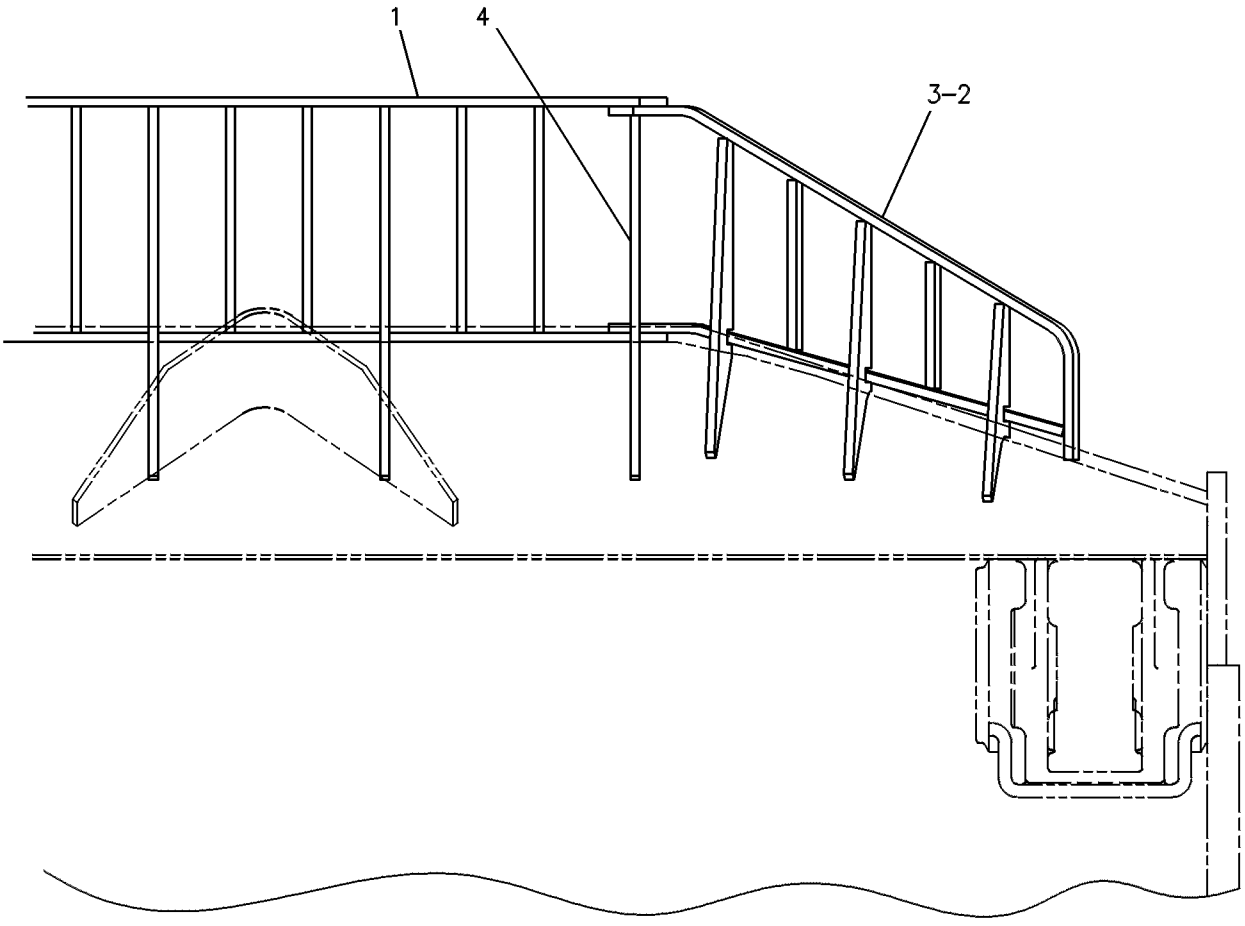

REAR VIEW

GRAPHIC #1 **<END>** g00234840

131-0785 GUARD GP-ROCK–UNIVERSAL BLADE

S/N: RJG1-UP; BHP1-UP
PART OF 266-9947 BLADE & EDGE GP-UNIVERSAL, 130-7749, 130-7751 BLADE AS-UNIVERSAL
AN ATTACHMENT

SMCS-7182 **i00602752**

NOTE	REF NO	GRAPHIC REF	PART NUMBER	QTY	PART NAME 1 2 3 4 5 6 (PRODUCT LEVEL)	SEE PAGE
	1	1	**8E-9947**	1	GUARD AS	
	2	1	**131-0782**	1	GUARD AS	
	3	1	**131-0783**	1	GUARD AS	
	4	1	**131-0786**	2	PLATE	

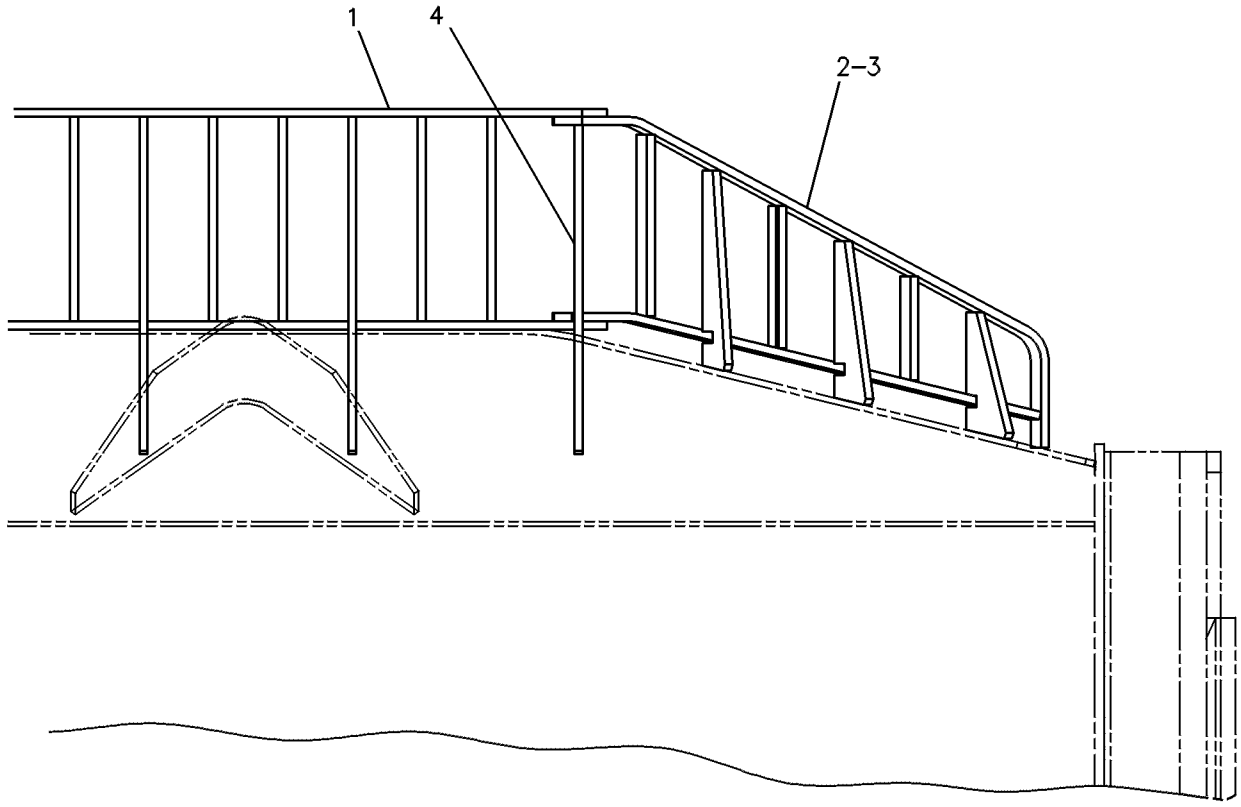

REAR VIEW

GRAPHIC #1 **<END>** g00234819

FRAME AND BODY

213-1117 HOOD & GUARD GP

S/N: RJG1-528

PART OF 212-2741 CHASSIS AR

SMCS-7251 **i02284270**

NOTE	REF NO	GRAPHIC REF	PART NUMBER	QTY	PART NAME 1 2 3 4 5 6 (PRODUCT LEVEL)	SEE PAGE
	1	1	**246-2641**	5	PADLOCK GP (ENGINE ENCLOSURE)	
					(EACH INCLUDES)	
		1	**5P-8500**	2	KEY	
	2	1	**6T-9927**	2	SLIDE	
	3	1	**7T-1819**	2	MOUNTING AS	
	4	1	**8E-4072**	4	SPACER (13.8X23.75X16-MM THK)	
	5	1	**8V-2671**	4	SPACER (10X13.1X3.7-MM)	
	6	1	**9P-8663**	4	SPACER (13.8X38X13-MM THK)	
	7	1	**218-8470**	1	HOOD AS	
		1	**262-0862**	1	HANDHOLD	
		1	**262-0863**	1	HANDHOLD	
	8	1	**233-6310**	1	SUPPORT AS	
Y	9	1	**250-2614**	1	ENCLOSURE GP-ENGINE (RH)	413
Y	10	1	**250-2615**	1	ENCLOSURE GP-ENGINE (LH)	414
	11	1	**030-7335**	8	BOLT-LOCKING (5/8-11X1.5-IN)	
	12	1	**3E-4356**	8	WASHER-HARD (17.5X30X6-MM THK)	
	13	1	**5P-1076**	22	WASHER-HARD (13.5X30X4-MM THK)	
	14	1	**5P-4116**	4	WASHER-HARD (8.8X20.5X2-MM THK)	
	15	1	**6T-8714**	2	WASHER-HARD (28X125X12-MM THK)	
	16	1	**7X-0618**	4	WASHER-HARD (13.5X40X5-MM THK)	
	17	1	**7X-7729**	4	WASHER (11X25X3-MM THK)	
M	18	1	**8T-4136**	4	BOLT (M10X1.5X25-MM)	
M	19	1	**8T-4140**	8	BOLT (M16X2X60-MM)	
	20	1	**8T-4167**	1	WASHER-HARD (26X44X4-MM THK)	
M	21	1	**8T-4179**	4	BOLT (M12X1.75X20-MM)	
M	22	1	**8T-4183**	4	BOLT (M12X1.75X40-MM)	
M	23	1	**8T-4189**	8	BOLT (M8X1.25X20-MM)	
	24	1	**8T-4224**	4	WASHER-HARD (8.8X16X2-MM THK)	
M	25	1	**8T-4956**	22	BOLT (M12X1.75X35-MM)	
M	26	1	**8T-6380**	1	BOLT (M24X3X130-MM)	
	27	1	**9X-8257**	8	WASHER (17.5X30X3.5-MM THK)	

M-METRIC PART
Y-SEPARATE ILLUSTRATION

213-1117 **HOOD & GUARD GP** *(contd.)* **i02284270**

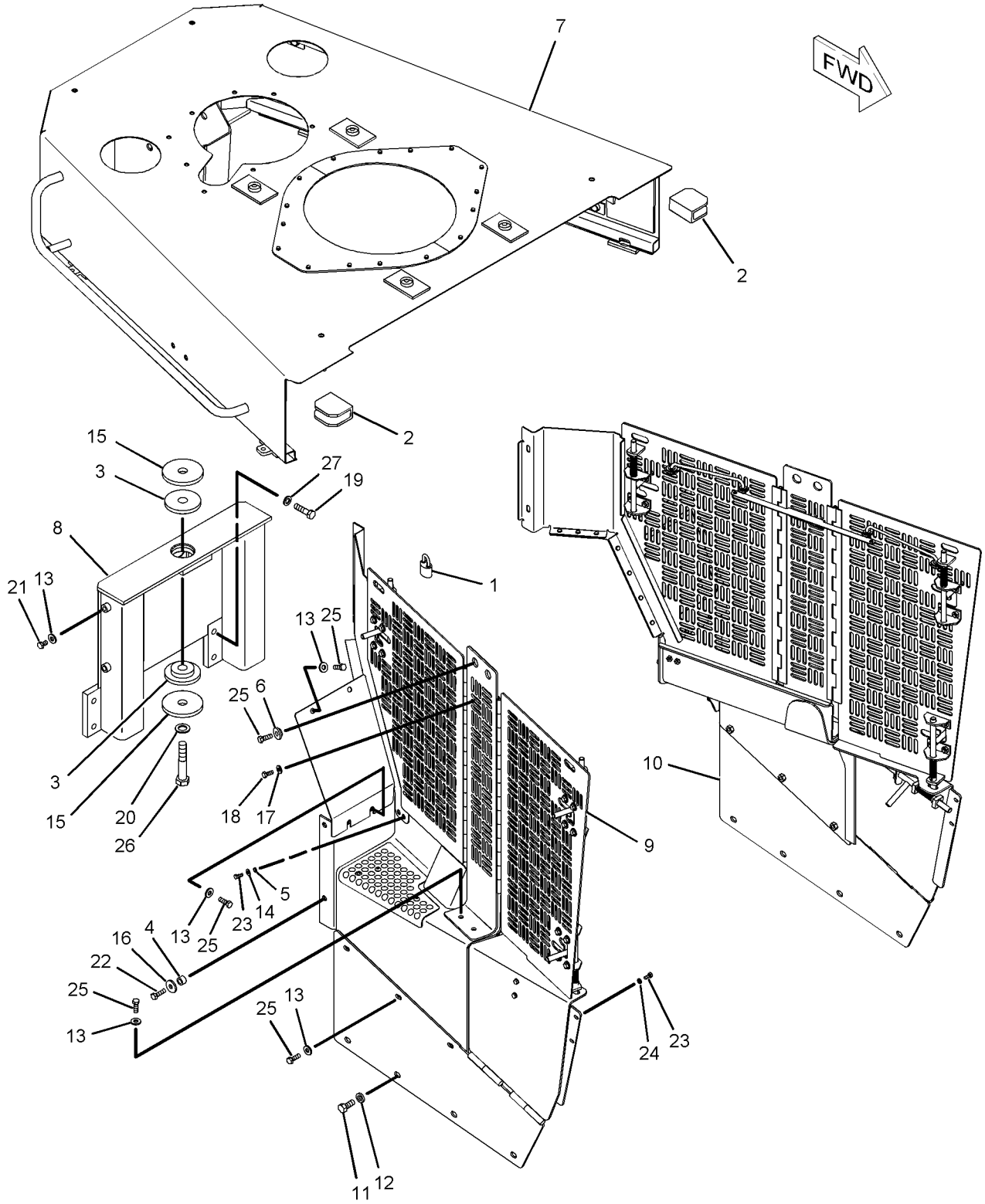

GRAPHIC #1 **<END>** g01134942

8Y-6400 LATCH GP–ENGINE ENCLOSURE

S/N: RJG1-UP

PART OF 250-8539, 250-8540 DOOR GP-ACCESS

AN ATTACHMENT

SMCS-7251 **i01743659**

NOTE	REF NO	GRAPHIC REF	PART NUMBER	QTY	PART NAME 1 2 3 4 5 6 (PRODUCT LEVEL)	SEE PAGE
	1	1	**7X-0766**	1	SPRING-LATCH	
	2	1	**8Y-5747**	1	BRACKET-MOUNTING	
	3	1	**8Y-3998**	1	HANDLE-LATCH	
	4	1	**8Y-3966**	1	WASHER (14.7X35X1.57-MM THK)	
	5	1	**8Y-8306**	1	SHAFT-LATCH	
	6	1	**6H-3956**	1	PIN	

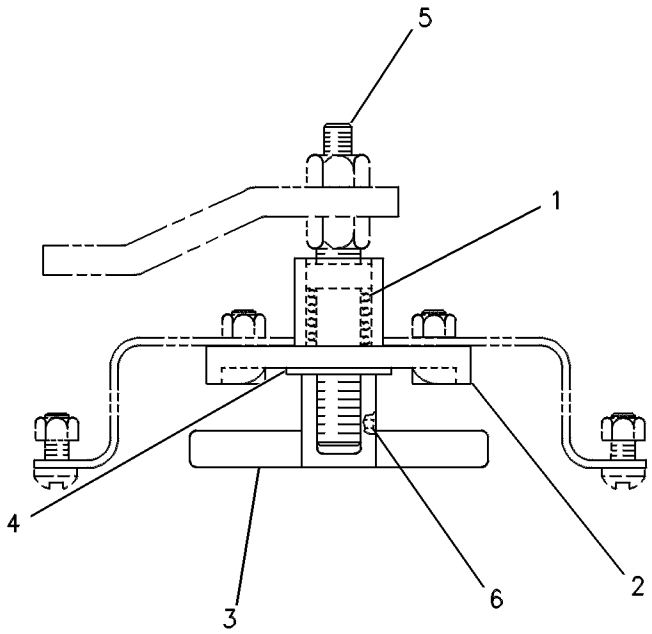

GRAPHIC #1 **<END>** g00236353

250-8443 PLATE GP-REINFORCEMENT–LH–ENGINE ENCLOSURE

S/N: RJG1-UP

PART OF 250-2615, 250-8544 ENCLOSURE GP-ENGINE

ALSO AN ATTACHMENT

SMCS-7000 **i02252408**

NOTE	REF NO	GRAPHIC REF	PART NUMBER	QTY	PART NAME 1 2 3 4 5 6 (PRODUCT LEVEL)	SEE PAGE
	1	1	**218-8472**	1	PLATE AS (LH)	
	2	1	**250-2378**	1	TREAD (LH)	
M	3	1	**8C-8585**	2	SCREW-BUTTON HEAD (M10X1.5X20-MM)	

M-METRIC PART

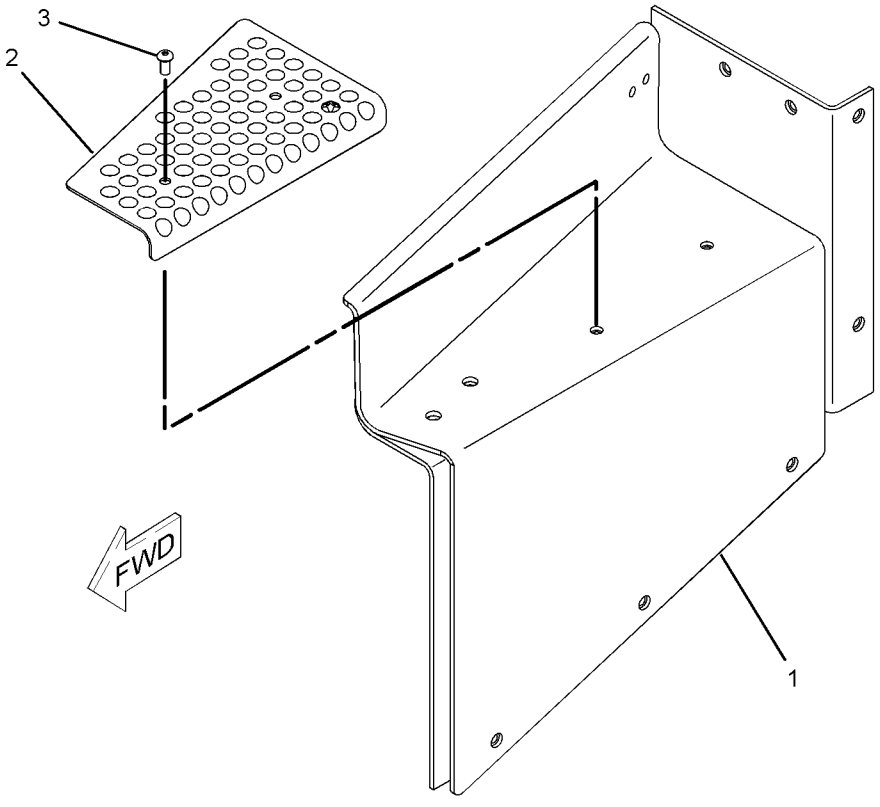

GRAPHIC #1 **<END>** g01134726

163-1101 BAR AR-STRIKER

S/N: RJG1-UP
712-MM (28-IN) MAXIMUM TRACK WIDTH
FOR USE WITH DISPOSAL AR
AN ATTACHMENT

SMCS-7180 **i02358693**

NOTE	REF NO	GRAPHIC REF	PART NUMBER	QTY	PART NAME 1 2 3 4 5 6 (PRODUCT LEVEL)	SEE PAGE
Y	1	1	*1Q-3458*	1	BAR GP-STRIKER	461
Y	2	1	*1Q-3468*	1	BAR GP-STRIKER	462
	3	1	**155-2745**	2	FRAME AS	
					(EACH INCLUDES)	
	4	1	**4B-4158**	4	SCREW-DRIVE (3/16X0.25-IN)	
	5	1	**253-1347**	1	PLATE-WARNING (RECOIL SPRING)	
	6	1	**7G-1958**	1	BEARING-SLEEVE	

Y-SEPARATE ILLUSTRATION

163-1101 **BAR AR-STRIKER** *(contd.)* **i02358693**

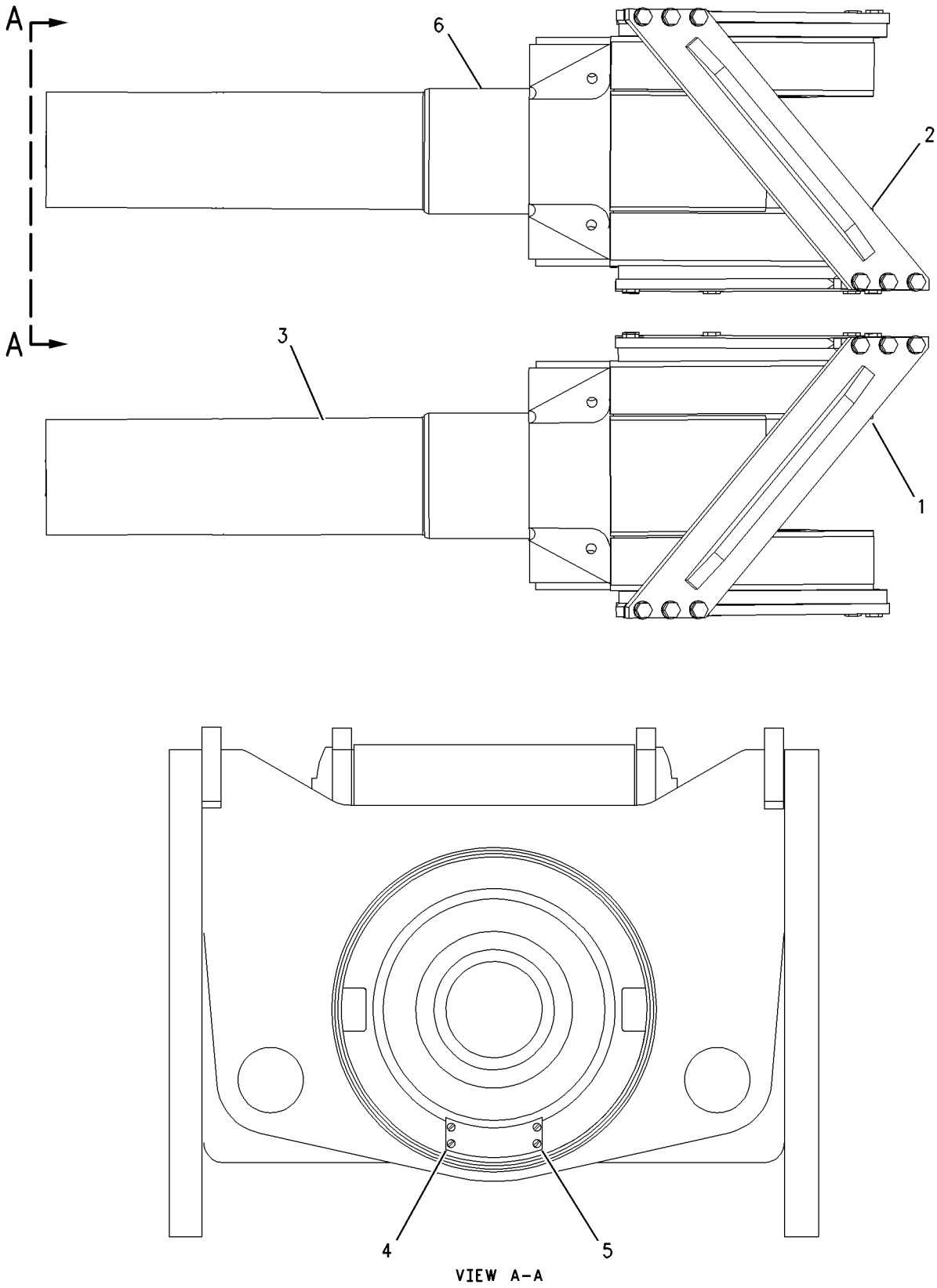

GRAPHIC #1 **<END>** g00806339

222-3676 BAR GP-EQUALIZER–ROLLER FRAME, STRAIGHT

S/N: RJG1-UP
PART OF 256-7216 UNDERCARRIAGE AR
AN ATTACHMENT

SMCS-7206 **i02277810**

NOTE	REF NO	GRAPHIC REF	PART NUMBER	QTY	PART NAME 1 2 3 4 5 6 (PRODUCT LEVEL)	SEE PAGE
	1	1	**3B-8489**	2	FITTING-GREASE	
	2	1	**7J-3296**	4	RING-LOCK	
	3	1	**8P-9142**	1	SEAL	
	4	1	**9G-2398**	1	SEAL	
	5	1	**133-5631**	2	PLUG	
	6	1	**153-1370**	2	BEARING-SELF-ALIGNING	
	7	1	**207-7107**	4	SEAL AS	
	9	1	**251-9905**	1	BEARING-SLEEVE	
	10	1	**2F-5326**	8	SETSCREW (3/8-16X0.37-IN)	
	11	1	**3J-7354**	2	SEAL-O-RING	
	12	1	**5F-1678**	2	SEAL-O-RING	
	13	1	**7X-0323**	4	BOLT (1/2-13-THD)	
	14	1	**8T-4223**	4	WASHER-HARD (13.5X25.5X3-MM THK)	
	15	1	**9S-8002**	2	PLUG	

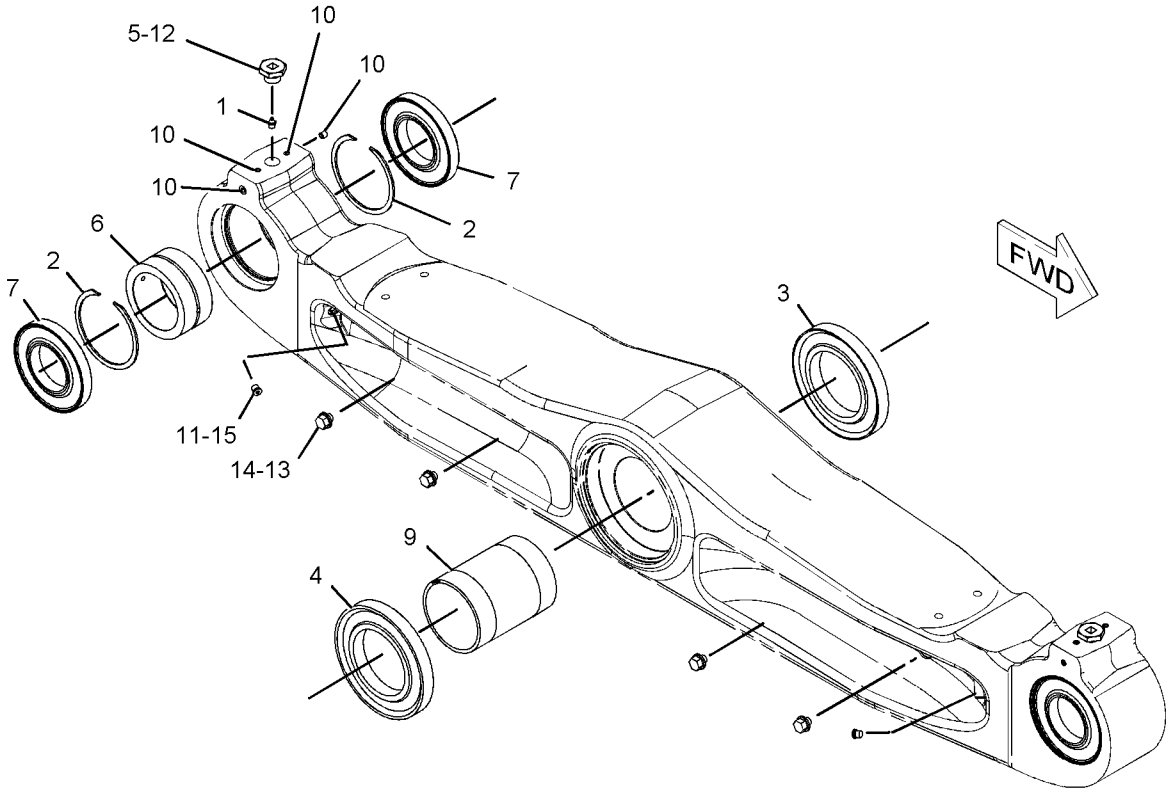

GRAPHIC #1 **<END>** g01140687

222-3680 BAR GP-EQUALIZER

S/N: RJG1-UP

PART OF 212-2747 UNDERCARRIAGE AR

SMCS-7206 **i02451475**

NOTE	REF NO	GRAPHIC REF	PART NUMBER	QTY	PART NAME 1 2 3 4 5 6 (PRODUCT LEVEL)	SEE PAGE
	1	1	**3J-4278**	4	SPACER (13.5X22.2X6.5-MM THK)	
	2	1	**7F-6112**	1	BOLT (1-1/4-12X3-IN)	
	3	1	**7G-2704**	2	PAD AS	
	4	1	**9G-2401**	2	WASHER (117X206X12-MM THK)	
	5	1	**209-3186**	1	MANIFOLD	
	6	1	**213-7322**	2	PAD AS	
Y	7	1	**222-3682**	1	BAR GP-EQUALIZER	459
	8	1	**278-0237**	1	PIN	
	10	1	**2H-3745**	2	BOLT (1-14X2.75-IN)	
	11	1	**2M-3530**	4	BOLT (1-1/8-12-THD)	
	12	1	**3S-1356**	4	NUT-FULL (1-1/8-12-THD)	
	13	1	**3T-4214**	2	PIN	
	14	1	**5C-6565**	12	BOLT (1/2-13X1.125-IN)	
	15	1	**7X-0531**	8	WASHER-HARD (31X52.5X6-MM THK)	
	16	1	**7X-0533**	1	WASHER-HARD (34X55X6-MM THK)	
	17	1	**7X-0590**	4	WASHER-HARD (13.5X44.5X6-MM THK)	
	18	1	**8T-4223**	8	WASHER-HARD (13.5X25.5X3-MM THK)	
	19	1	**8T-5361**	2	WASHER-HARD (28X49X5-MM THK)	

Y-SEPARATE ILLUSTRATION

222-3680 **BAR GP-EQUALIZER** *(contd.)* **i02451475**

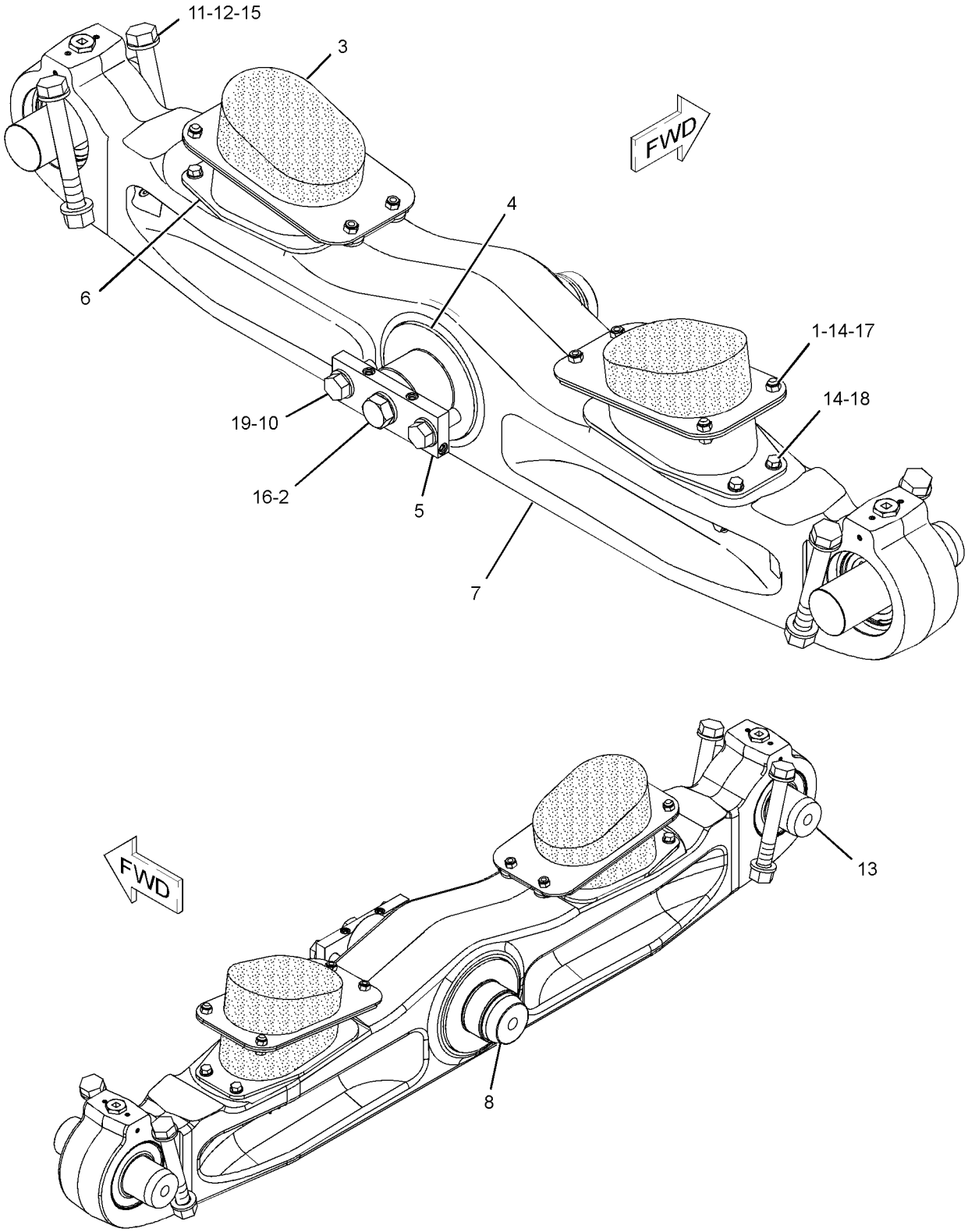

GRAPHIC #1 **<END>** g01224056

UNDERCARRIAGE

222-3682 BAR GP-EQUALIZER

S/N: RJG1-UP

PART OF 222-3680 BAR GP-EQUALIZER

SMCS-7206 **i02322208**

NOTE	REF NO	GRAPHIC REF	PART NUMBER	QTY	PART NAME 1 2 3 4 5 6 (PRODUCT LEVEL)	SEE PAGE
	1	1	**3B-8489**	2	FITTING-GREASE	
	2	1	**7J-3296**	4	RING-LOCK	
	3	1	**8P-9142**	1	SEAL	
	4	1	**9G-2398**	1	SEAL	
	5	1	**133-5631**	2	PLUG	
	6	1	**153-1370**	2	BEARING-SELF-ALIGNING	
	7	1	**207-7107**	4	SEAL AS	
	8	1	**222-3677**	1	BAR	
	9	1	**251-9905**	1	BEARING-SLEEVE	
	10	1	**2F-5326**	8	SETSCREW (3/8-16X0.37-IN)	
	11	1	**3J-7354**	2	SEAL-O-RING	
	12	1	**5F-1678**	2	SEAL-O-RING	
	13	1	**7X-0323**	4	BOLT (1/2-13-THD)	
	14	1	**8T-4223**	4	WASHER-HARD (13.5X25.5X3-MM THK)	
	15	1	**9S-8002**	2	PLUG	

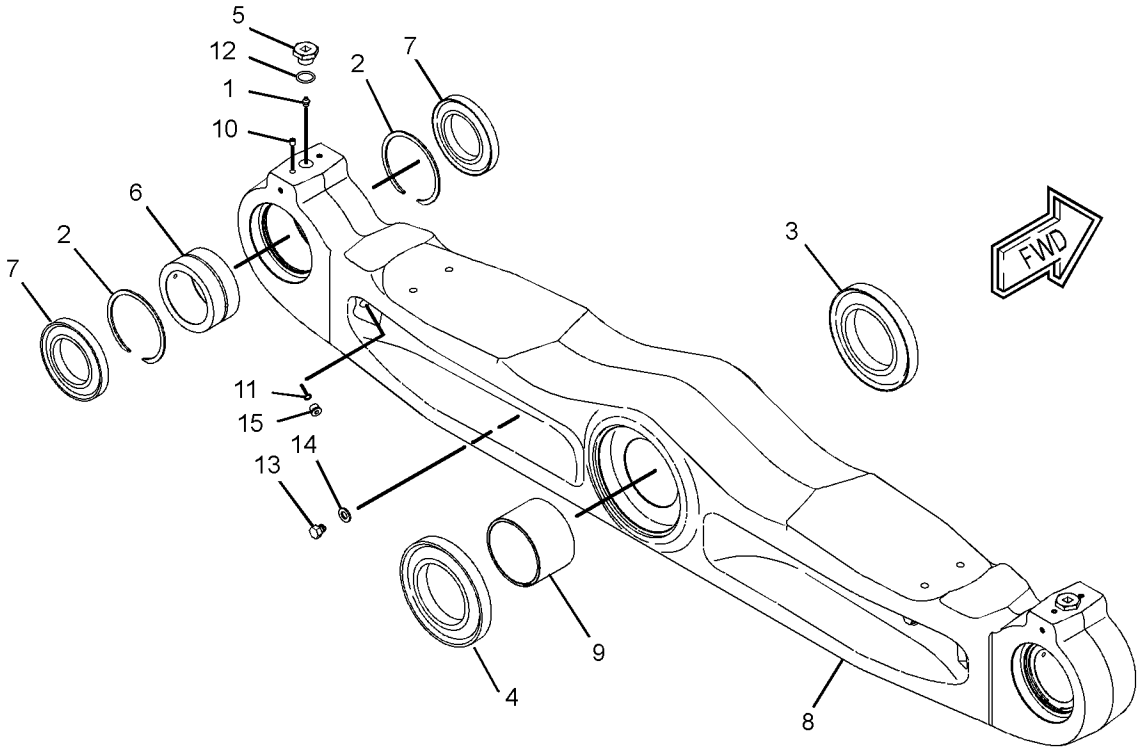

GRAPHIC #1 **<END>** g01180548

226-0463 BAR GP-EQUALIZER–COLD WEATHER

S/N: RJG1-UP
PART OF 238-4491, 238-4492 COLD WEATHER AR
AN ATTACHMENT

SMCS-7206 **i02372650**

NOTE	REF NO	GRAPHIC REF	PART NUMBER	QTY	PART NAME 1 2 3 4 5 6 (PRODUCT LEVEL)	SEE PAGE
	1	1	**3B-8489**	2	FITTING-GREASE	
	2	1	**7J-3296**	4	RING-LOCK	
	3	1	**8P-9142**	1	SEAL	
	4	1	**9G-2398**	1	SEAL	
	5	1	**251-9905**	2	BEARING-SLEEVE	
	6	1	**133-5631**	2	PLUG	
	7	1	**153-1370**	2	BEARING-SELF-ALIGNING	
	9	1	**223-9058**	4	SEAL AS	
	10	1	**2F-5326**	8	SETSCREW (3/8-16X0.37-IN)	
	11	1	**3J-7354**	2	SEAL-O-RING	
	12	1	**5F-1678**	2	SEAL-O-RING	
	13	1	**7X-0323**	4	BOLT (1/2-13-THD)	
	14	1	**8T-4223**	4	WASHER-HARD (13.5X25.5X3-MM THK)	
	15	1	**9S-8002**	2	PLUG	

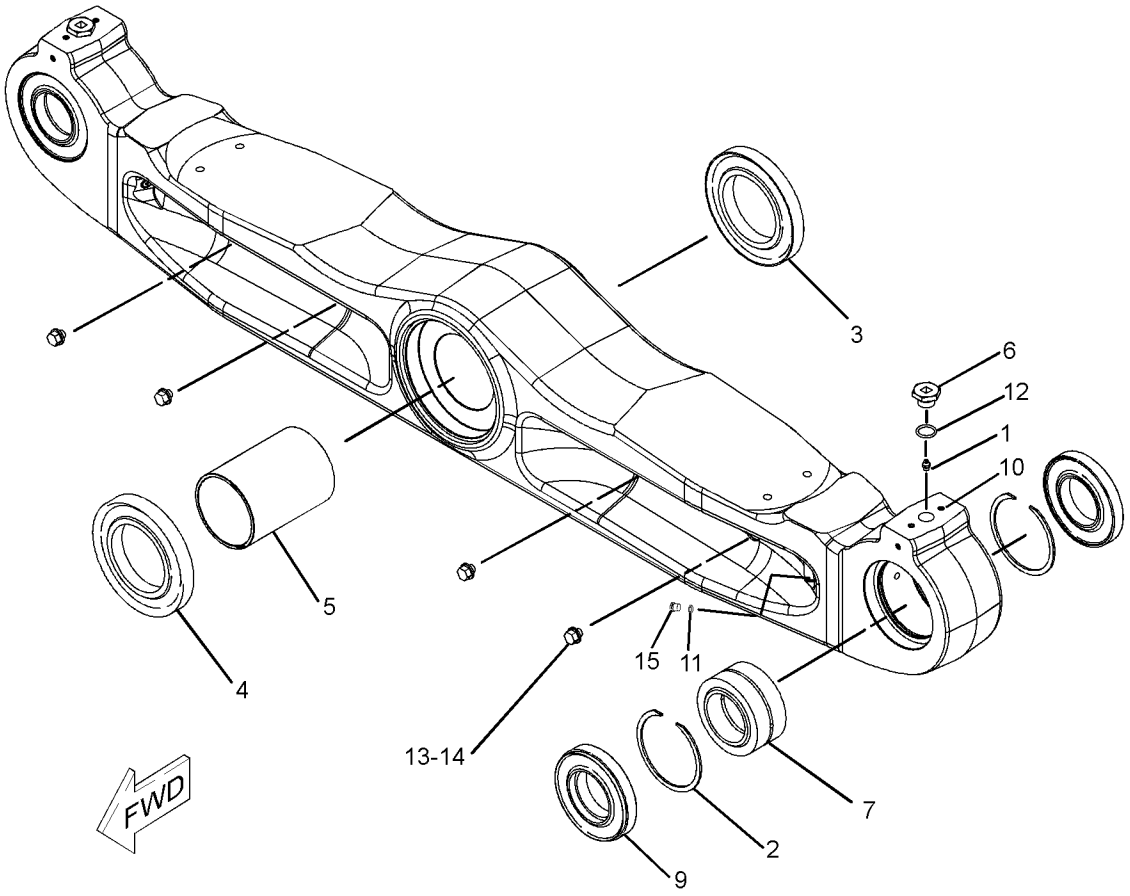

GRAPHIC #1 **<END>** g01184462

UNDERCARRIAGE

1Q-3458 BAR GP-STRIKER—RH

S/N: RJG1-UP

PART OF 163-1101 BAR AR-STRIKER

AN ATTACHMENT

SMCS-7180 **i01743664**

NOTE	REF NO	GRAPHIC REF	PART NUMBER	QTY	PART NAME 1 2 3 4 5 6 (PRODUCT LEVEL)	SEE PAGE
	1	1	**7X-0422**	6	BOLT (1-1/8-7-THD)	
	2	1	**1Q-3463**	1	PLATE AS	
	3	1	**1Q-3467**	1	PLATE AS	
	4	1	**7X-0531**	16	WASHER-HARD (31X52.5X6-MM THK)	
	5	1	**7X-0420**	10	BOLT (1 1/8-7X50.8-MM)	
	6	1	**1Q-3462**	1	PLATE AS	

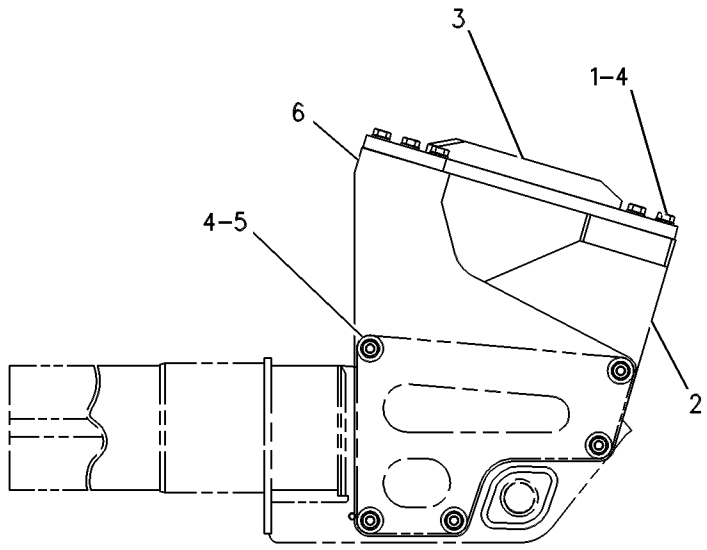

RIGHT SIDE VIEW

GRAPHIC #1 **<END>** g00350324

1Q-3468 BAR GP-STRIKER–LH

S/N: RJG1-UP
PART OF 163-1101 BAR AR-STRIKER
AN ATTACHMENT

SMCS-7180 **i01743668**

NOTE	REF NO	GRAPHIC REF	PART NUMBER	QTY	PART NAME 1 2 3 4 5 6 (PRODUCT LEVEL)	SEE PAGE
	1	1	**1Q-3465**	1	PLATE AS	
	2	1	**1Q-3466**	1	PLATE AS	
	3	1	**1Q-3453**	1	PLATE AS	
	4	1	**7X-0531**	16	WASHER-HARD (31X52.5X6-MM THK)	
	5	1	**7X-0422**	6	BOLT (1-1/8-7-THD)	
	6	1	**7X-0420**	10	BOLT (1 1/8-7X50.8-MM)	

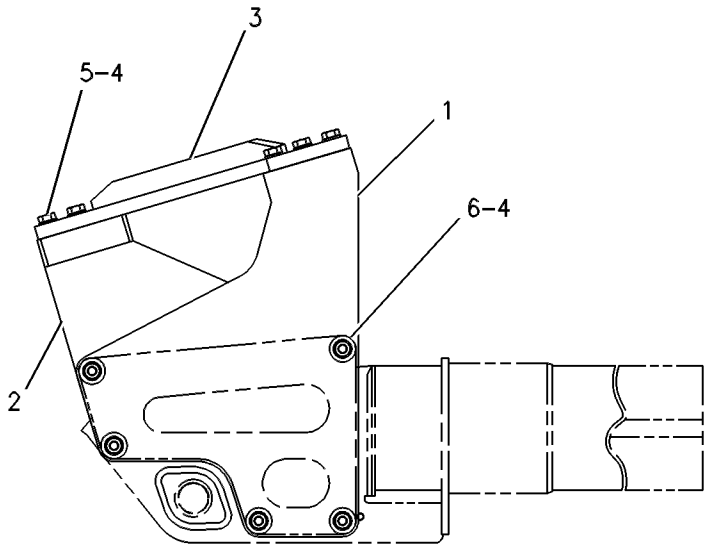

LEFT SIDE VIEW

GRAPHIC #1 **<END>** g00262996

256-7254 BAR GP-STRIKER

S/N: RJG1-UP
AND REAR COUNTERWEIGHT
FOR USE WITH 248-6690—PAGE 398, 248-6727—PAGE 400
AN ATTACHMENT

SMCS-7180 **i02273954**

NOTE	REF NO	GRAPHIC REF	PART NUMBER	QTY	PART NAME 1 2 3 4 5 6 (PRODUCT LEVEL)	SEE PAGE
	1	1	**4Z-8959**	1	STRIKER AS-LH	
	2	1	**4Z-8961**	1	STRIKER AS-RH	

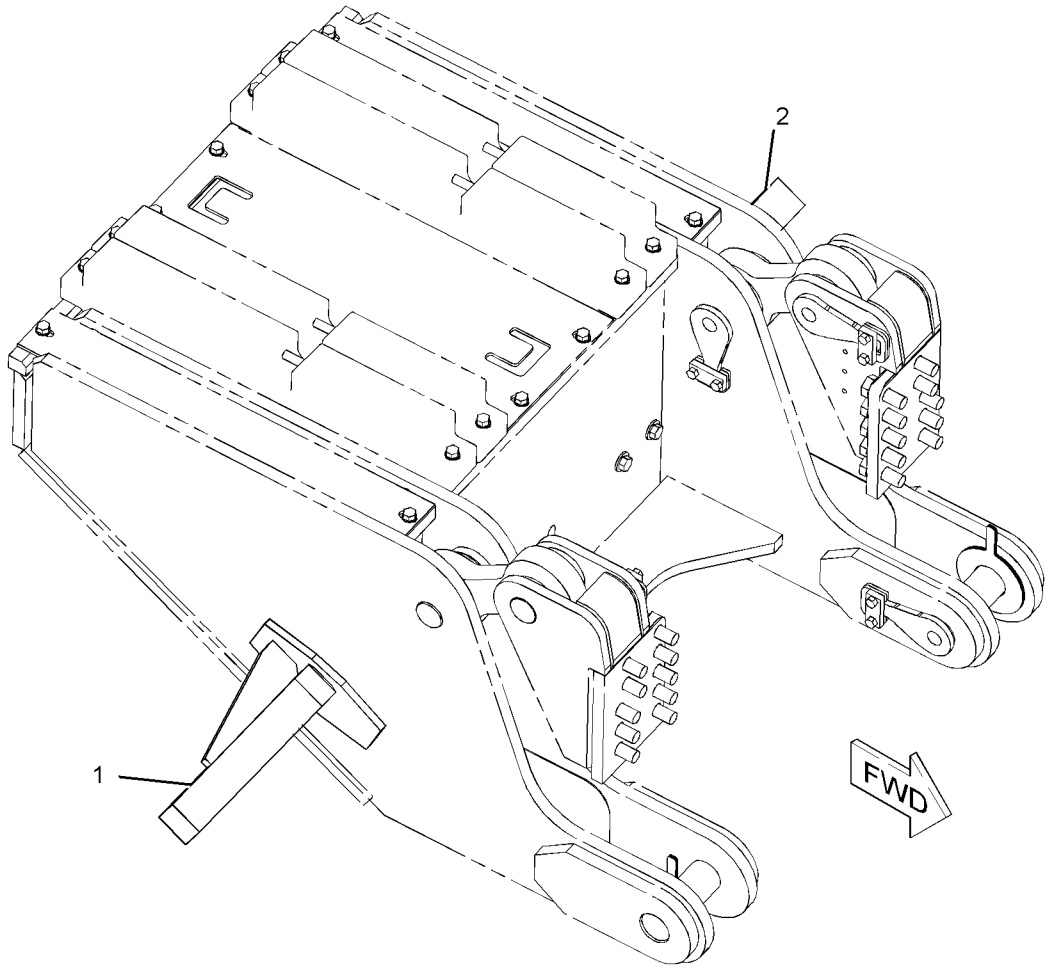

GRAPHIC #1 **<END>** g01140714

UNDERCARRIAGE

127-3446 CAP GP-TRACK IDLER

S/N: RJG1-UP

PART OF 212-2747 UNDERCARRIAGE AR

SMCS-4159 **i01743672**

NOTE	REF NO	GRAPHIC REF	PART NUMBER	QTY	PART NAME 1 2 3 4 5 6 (PRODUCT LEVEL)	SEE PAGE
	1	1	**127-3445**	1	CAP AS-TRACK IDLER	
		1	**1T-0068**	1	PIN-SPRING	
	2	1	**4K-0684**	3	WASHER-HARD (34X55X6MM THK)	
	3	1	**9W-4488**	3	BOLT (1-1/4X7 UNJC THD)	

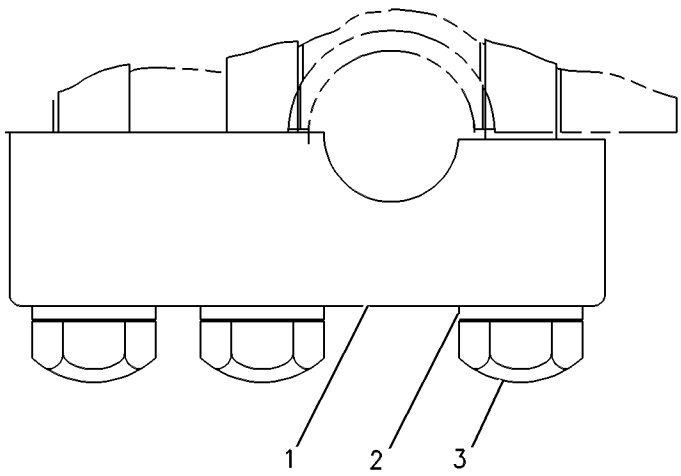

GRAPHIC #1 **<END>** g00252790

128-3504 CAP GP-TRACK IDLER

S/N: RJG1-UP

PART OF 212-2747 UNDERCARRIAGE AR

SMCS-4159 **i01743690**

NOTE	REF NO	GRAPHIC REF	PART NUMBER	QTY	PART NAME 1 2 3 4 5 6 (PRODUCT LEVEL)	SEE PAGE
	1	1	**128-3503**	1	CAP AS-TRACK IDLER	
		1	**1T-0068**	1	PIN-SPRING	
	2	1	**4K-0684**	3	WASHER-HARD (34X55X6MM THK)	
	3	1	**9W-4488**	3	BOLT (1-1/4X7 UNJC THD)	

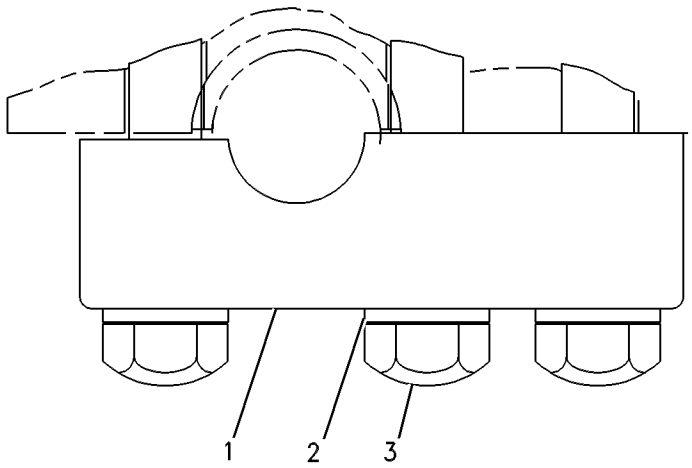

GRAPHIC #1 **<END>** g00252785

6T-1141 CAP GP-TRACK ROLLER

S/N: RJG1-UP

PART OF 213-4312 ROLLER AR-TRACK CARRIER, 212-2747 UNDERCARRIAGE AR

ALSO AN ATTACHMENT

SMCS-4180 **i01743698**

NOTE	REF NO	GRAPHIC REF	PART NUMBER	QTY	PART NAME 1 2 3 4 5 6 (PRODUCT LEVEL)	SEE PAGE
	1	1	**131-1650**	1	CAP AS-TRACK ROLLER	
	2	1	**1T-0068**	1	PIN-SPRING	
	3	1	**6T-1139**	2	BOLT-ROLLER MOUNTING (1-8X3.8 UNJC THD)	
		1	**3K-5234**	2	WASHER-HARD (28X49X6MM THK)	

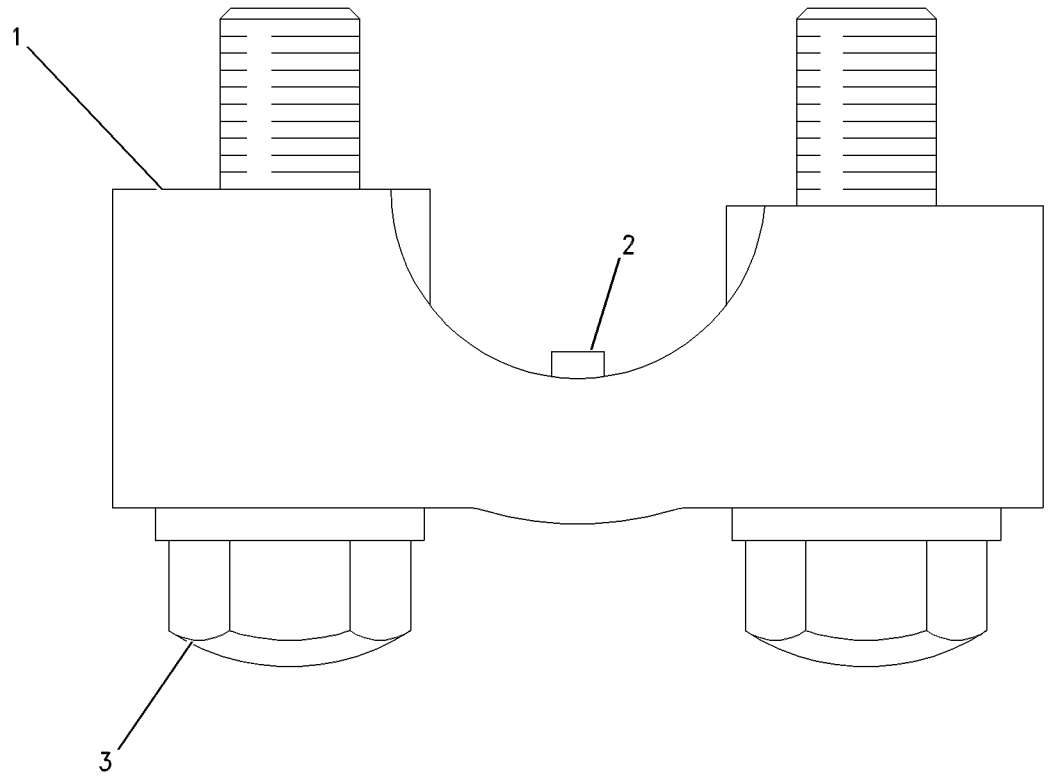

GRAPHIC #1 **<END>** g00546453

UNDERCARRIAGE

212-3500 FRAME GP-TELESCOPING RECOIL

S/N: RJG1-UP

PART OF 212-2747 UNDERCARRIAGE AR

SMCS-4151 **i02358484**

NOTE	REF NO	GRAPHIC REF	PART NUMBER	QTY	PART NAME 1 2 3 4 5 6 (PRODUCT LEVEL)	SEE PAGE
	1	1	**7T-4130**	4	GUIDE	
	2	1	**7T-4131**	4	COVER	
	3	1	**7T-4133**	2	PLATE-THRUST	
	4	1	**7T-4145**	2	SLEEVE	
	5	1	**8E-2900**	1	SHAFT-PIVOT	
	6	1	**8E-2901**	2	PLATE-THRUST	
	7	1	**8E-2902**	2	PLATE-THRUST	
	8	1	**8T-0208**	2	SEAL-PIVOT SHAFT	
	9	1	**9G-7516**	32	PLUG	
	10	1	**9W-2380**	2	RETAINER	
	11	1	**9W-5575**	2	COVER AS	
					(EACH INCLUDES)	
		1	**253-1344**	2	PLATE-WARNING (HIGH PRESSURE CYLINDER)	
		1	**3H-9675**	1	PIN-SPRING	
		1	**9N-1995**	6	RIVET-POP	
	12	1	**9X-4588**	2	SEAL AS	
	13	1	**187-6289**	2	FRAME AS-FRONT	
					(EACH INCLUDES)	
	13A	1	**7G-1958**	1	BEARING-SLEEVE	
		1	**4B-4158**	4	SCREW-DRIVE (3/16X0.25-IN)	
		1	**253-1347**	1	PLATE-WARNING (RECOIL SPRING)	
	14	1	**203-9381**	2	RING	
	15	1	**203-9382**	2	GUARD-SEAL	
	16	1	**203-9383**	2	PLATE	
	17	1	**212-3498**	1	FRAME AS (RH)	
	18	1	**212-3499**	1	FRAME AS (LH)	
	19	1	**252-5158**	4	FILM-WARNING (COMPRESSED SPRING, READ OMM)	
	20	1	**252-6375**	8	WASHER-HARD (31X74X10-MM THK)	
	21	1	**1K-6872**	6	LOCKNUT (1/2-13-THD)	
	22	1	**1P-9254**	2	RING-RETAINING	
	23	1	**2H-3932**	6	SEAL-O-RING	
	24	1	**3K-0360**	2	SEAL-O-RING	
	25	1	**4D-4508**	2	SEAL-O-RING	
	26	1	**4T-2069**	2	PLUG-DRAIN (PIVOT SHAFT OIL FILL)	
	26A	1	**4T-2069**	4	PLUG-DRAIN (PIVOT SHAFT OIL DRAIN)	
	27	1	**5H-6734**	2	SEAL-O-RING	
	28	1	**5P-3092**	4	SEAL-O-RING	
	29	1	**6V-8849**	24	BOLT-12 POINT HEAD (3/4-10X3-IN)	
	30	1	**7G-1952**	2	BEARING	
	31	1	**7G-9709**	2	BEARING-SLEEVE	
	32	1	**7T-4132**	2	RING-THRUST	
	33	1	**7T-4134**	2	BEARING-SLEEVE	
	34	1	**7T-8006**	2	RING-RETAINING	
	35	1	**7X-0328**	8	BOLT (1/2-13X3.5-IN)	
	36	1	**7X-0342**	24	BOLT (5/8-11X0.75-IN)	
	37	1	**7X-0345**	40	BOLT (5/8-11X1.75-IN)	
	38	1	**7X-0420**	8	BOLT (1.125-7X50.8-MM)	
	39	1	**8E-2827**	2	RING-RETAINING	
M	40	1	**8T-4122**	64	WASHER-HARD (17X32X3.5-MM THK)	
	41	1	**8T-4223**	36	WASHER-HARD (13.5X25.5X3-MM THK)	
	42	1	**8T-4835**	6	BOLT (1/2-13X2-IN)	
	43	1	**8T-8917**	8	BOLT (1/2-13X1.25-IN)	
	44	1	**8T-9389**	8	BOLT (1/2-13X2.75-IN)	
	45	1	**9M-5894**	2	SEAL-O-RING	
	46	1	**9S-4185**	2	PLUG	

QUANTITIES SHOWN ARE THOSE REQUIRED FOR BOTH LH AND RH SIDES

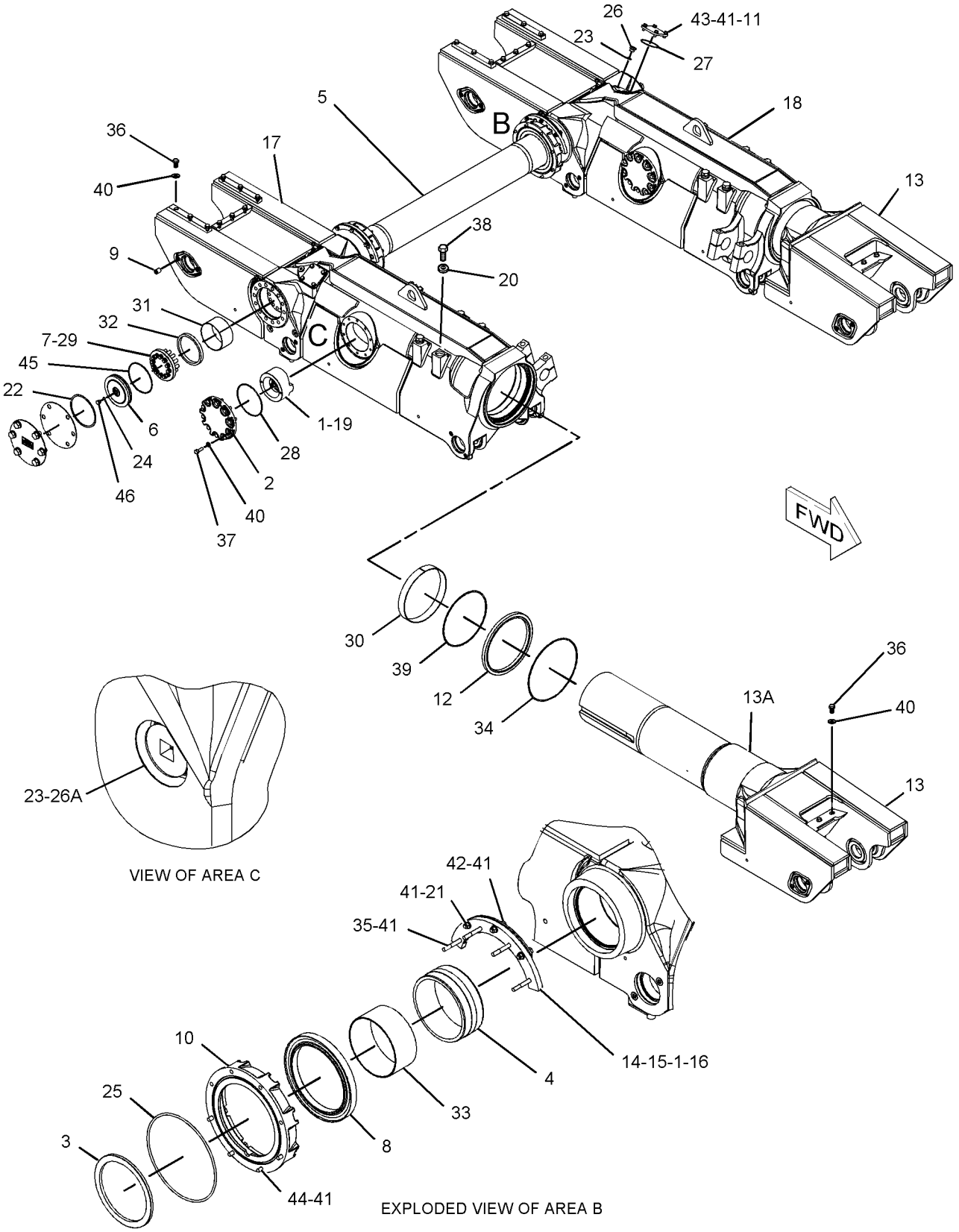

GRAPHIC #1 **<END>** g01139201

UNDERCARRIAGE

125-3537 IDLER GP-TRACK

S/N: RJG1-UP

PART OF 212-2747 UNDERCARRIAGE AR

SMCS-4159 **i01749798**

NOTE	REF NO	GRAPHIC REF	PART NUMBER	QTY	PART NAME 1 2 3 4 5 6 (PRODUCT LEVEL)	SEE PAGE
	1	1	**7T-0961**	1	IDLER & BEARING AS	
		1	**9W-4194**	2	BEARING-SLEEVE	
	2	1	**142-2805**	2	RETAINER AS	
					(EACH INCLUDES)	
		1	**2H-1190**	4	DOWEL	
		1	**8P-4661**	1	WASHER-THRUST	
	3	1	**107-9620**	2	COLLAR-SEAL	
	4	1	**154-3308**	1	SHAFT-TRACK IDLER	
	5	1	**9G-4872**	1	STOPPER-RUBBER	
	6	1	**7R-8872**	2	SEAL-O-RING	
	7	1	**162-7864**	2	SEAL GP-DUO-CONE	
					(EACH INCLUDES)	
		1	**162-2168**	2	RING-TORIC	
	8	1	**3H-7654**	24	WASHER-HARD (13.5X22.5X3MM THK)	
	9	1	**4K-5175**	24	BOLT-12 POINT HEAD (1/2-13X1.5 IN)	
	10	1	**8F-8733**	2	SEAL-O-RING	
	11	1	**6Y-0473**	1	PLUG-CLEAR	

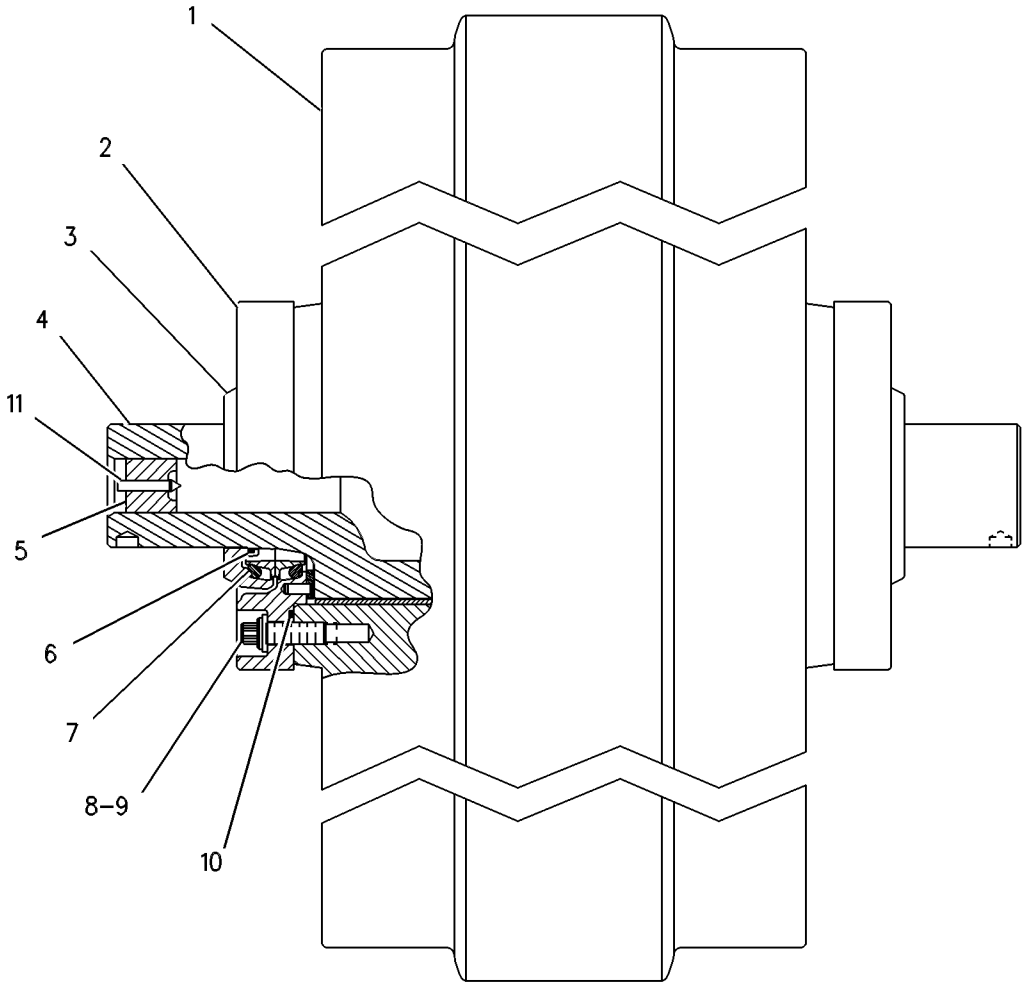

GRAPHIC #1 **<END>** g00276866

UNDERCARRIAGE

167-1946 IDLER GP-TRACK—WASTE HANDLER

S/N: RJG1-UP

PART OF 167-1949 GUARD AR-IDLER

AN ATTACHMENT

SMCS-4159 **i02234084**

NOTE	REF NO	GRAPHIC REF	PART NUMBER	QTY	PART NAME 1 2 3 4 5 6 (PRODUCT LEVEL)	SEE PAGE
	1	1	**6Y-0473**	1	PLUG-CLEAR	
	2	1	**7R-8872**	2	SEAL-O-RING	
	3	1	**7T-0961**	1	IDLER & BEARING AS	
	3A	1	**9W-4194**	2	BEARING-SLEEVE	
	4	1	**8F-8733**	2	SEAL-O-RING	
	5	1	**9G-4872**	1	STOPPER-RUBBER	
	6	1	**154-3308**	1	SHAFT-TRACK IDLER	
	7	1	**162-7864**	2	SEAL GP-DUO-CONE	
					(EACH INCLUDES)	
	7A	1	**162-2168**	2	RING-TORIC	
Z	7B	1		2	SEAL-RING	
	8	1	**166-9445**	2	PLATE	
	9	1	**261-9674**	2	COLLAR	
	10	1	**261-9675**	2	RETAINER AS	
					(EACH INCLUDES)	
		1	**2H-1190**	4	DOWEL	
		1	**8P-4661**	1	WASHER-THRUST	
	11	1	**8T-4223**	24	WASHER-HARD (13.5X25.5X3-MM THK)	
	12	1	**8T-4835**	24	BOLT (1/2-13X2-IN)	

Z-NOT SERVICED SEPARATELY

167-1946 IDLER GP-TRACK *(contd.)* **i02234084**

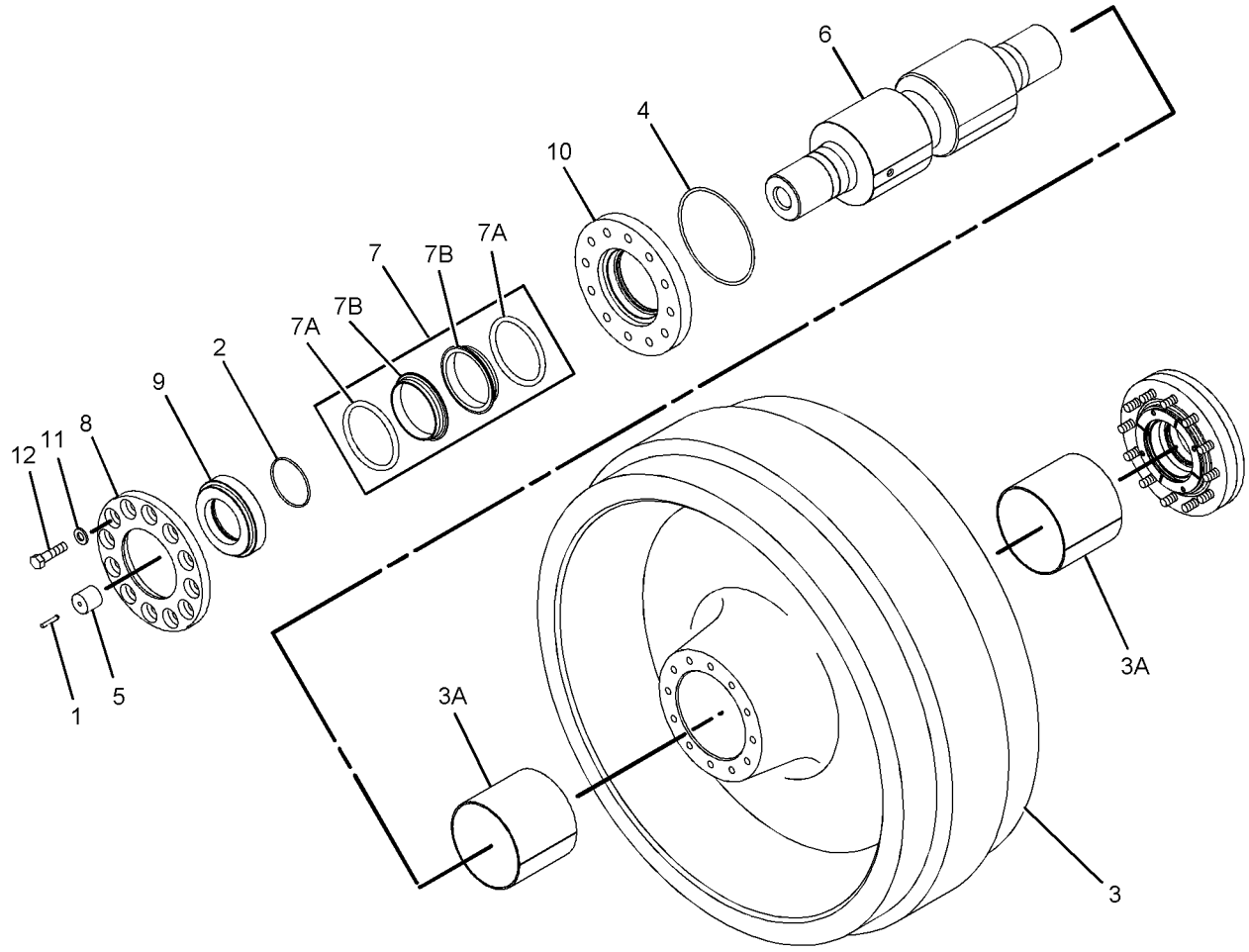

GRAPHIC #1 **<END>** g01129331

245-9947 IDLER GP-TRACK–COLD WEATHER

S/N: RJG1-UP
PART OF 238-4491, 238-4492 COLD WEATHER AR
AN ATTACHMENT

SMCS-4159 **i02119499**

NOTE	REF NO	GRAPHIC REF	PART NUMBER	QTY	PART NAME 1 2 3 4 5 6 (PRODUCT LEVEL)	SEE PAGE
	1	1	**6Y-0473**	1	PLUG-CLEAR	
	2	1	**7R-8872**	2	SEAL-O-RING	
	3	1	**7T-0961**	1	IDLER & BEARING AS	
		1	**9W-4194**	2	BEARING-SLEEVE	
	4	1	**8F-8733**	2	SEAL-O-RING	
	5	1	**9G-4872**	1	STOPPER-RUBBER	
	6	1	**107-9620**	2	COLLAR-SEAL	
	7	1	**142-2805**	2	RETAINER AS	
					(EACH INCLUDES)	
		1	**2H-1190**	4	DOWEL	
		1	**8P-4661**	1	WASHER-THRUST	
	8	1	**154-3308**	1	SHAFT-TRACK IDLER	
	9	1	**162-7864**	2	SEAL GP-DUO-CONE	
					(EACH INCLUDES)	
		1	**162-2168**	2	RING-TORIC	
	10	1	**3H-7654**	24	WASHER-HARD (13.5X22.5X3-MM THK)	
	11	1	**4K-5175**	24	BOLT-12 POINT HEAD (1/2-13X1.5-IN)	

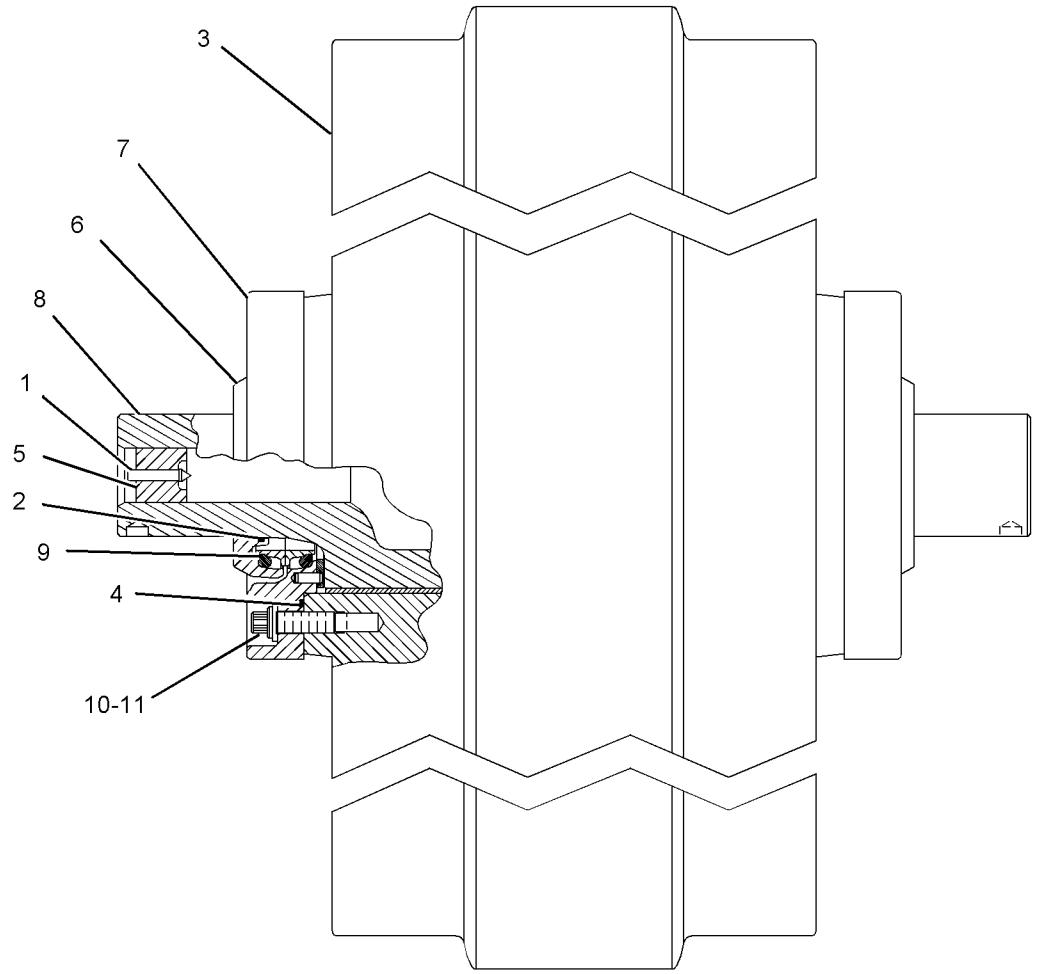

GRAPHIC #1 **<END>** g01116716

236-4105 LINK AS-TRACK

S/N: RJG1-UP
SEALED, LUBRICATED, POSITIVE PIN RETENTION, CHROME NITRIDE
PART OF 263-3826 TRACK GP
AN ATTACHMENT

SMCS-4169, 4171 **i02277836**

NOTE	REF NO	GRAPHIC REF	PART NUMBER	QTY	PART NAME 1 2 3 4 5 6 (PRODUCT LEVEL)	SEE PAGE
	1	1	**6Y-0473**	44	PLUG-CLEAR	
		1	**7G-4332**	44	STOPPER	
	2	1	**6Y-0471**	88	RING-RETAINING	
	3	1	**235-7820**	44	BUSHING-TRACK	
	4	1	**6Y-1579**	44	PIN-TRACK	
	5	1	**7T-0715**	43	LINK-TRACK (RH)	
	6	1	**7T-0716**	43	LINK-TRACK (LH)	
	7	1	**234-6941**	1	LINK-TRACK MASTER (PIN END, RH)	
	8	1	**234-6942**	1	LINK-TRACK MASTER (PIN END, LH)	
	9	1	**234-6943**	1	LINK-TRACK MASTER (BUSHING END, RH)	
	10	1	**234-6944**	1	LINK-TRACK MASTER (BUSHING END, LH)	
	11	1	**222-7001**	88	SEAL AS	
	12	1	**235-2213**	88	RING-THRUST	

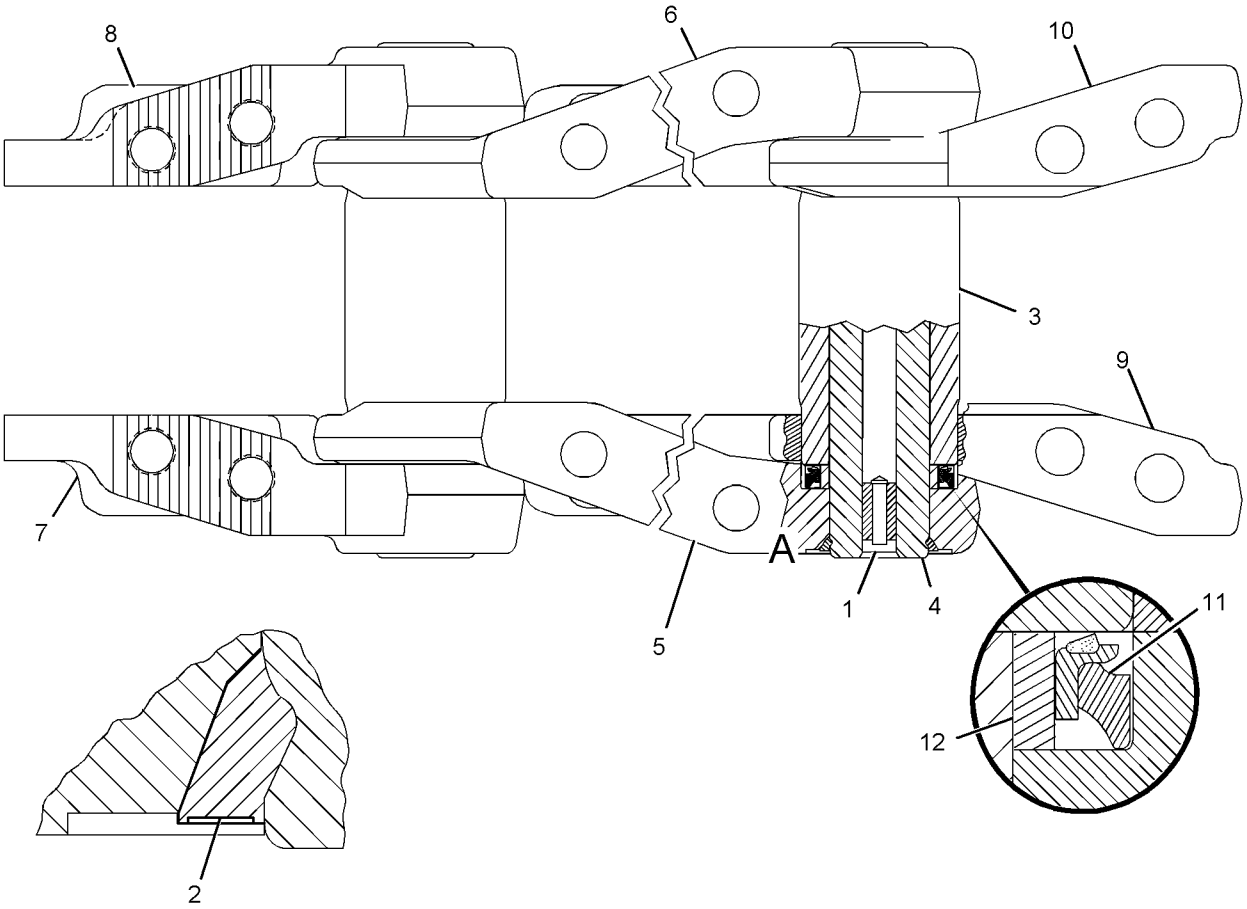

VIEW OF AREA A

GRAPHIC #1 **<END>** g01117097

236-4106 LINK AS-TRACK

S/N: RJG1-UP
SEALED, LUBRICATED,POSITIVE PIN RETENTION, TOUGH STEEL
PART OF 256-4306 TRACK GP
AN ATTACHMENT

SMCS-4169, 4171 **i02277824**

NOTE	REF NO	GRAPHIC REF	PART NUMBER	QTY	PART NAME 1 2 3 4 5 6 (PRODUCT LEVEL)	SEE PAGE
	1	1	**6Y-2057**	44	BUSHING-TRACK	
	2	1	**234-6943**	1	LINK-TRACK MASTER (BUSHING END, RH)	
	3	1	**171-6735**	43	LINK-TRACK (RH)	
	4	1	**222-7001**	88	SEAL AS	
	5	1	**235-2213**	88	RING-THRUST	
	6	1	**234-6944**	1	LINK-TRACK MASTER (BUSHING END, LH)	
	7	1	**6Y-0473**	44	PLUG-CLEAR	
			7G-4332	44	STOPPER	
	8	1	**6Y-0471**	88	RING-RETAINING	
	9	1	**6Y-1579**	44	PIN-TRACK	
	10	1	**234-6942**	1	LINK-TRACK MASTER (PIN END, LH)	
	11	1	**171-6736**	43	LINK-TRACK (LH)	
	12	1	**234-6941**	1	LINK-TRACK MASTER (PIN END, RH)	

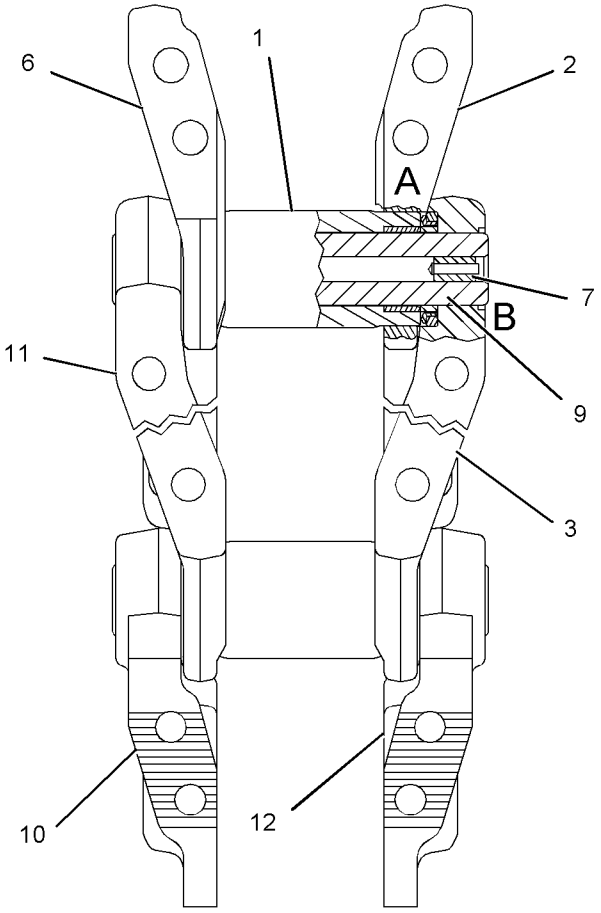

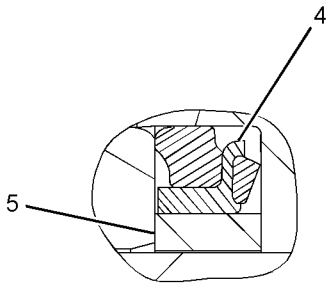

VIEW OF AREA A

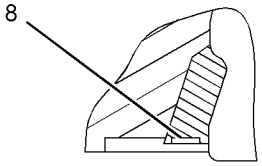

VIEW OF AREA B

GRAPHIC #1 **<END>** g01141306

238-9851 LINK AS-TRACK

S/N: RJG1-UP
SEALED, LUBRICATED, POSITIVE PIN RETENTION
PART OF 130-5641, 158-3303, 172-3916, 183-2131, 195-4579, 1Q-4636, 233-5110, 7T-0723, 7T-4606, 7T-4608 TRACK GP
ALSO AN ATTACHMENT

SMCS-4169, 4171 **i02039548**

NOTE	REF NO	GRAPHIC REF	PART NUMBER	QTY	PART NAME 1 2 3 4 5 6 (PRODUCT LEVEL)	SEE PAGE
	1	1	**6Y-2057**	44	BUSHING-TRACK	
	2	1	**234-6943**	1	LINK-TRACK MASTER (BUSHING END, RH)	
	3	1	**7T-0715**	43	LINK-TRACK (RH)	
	4	1	**222-7001**	88	SEAL AS	
	5	1	**235-2213**	88	RING-THRUST	
	6	1	**234-6944**	1	LINK-TRACK MASTER (BUSHING END, LH)	
	7	1	*6Y-0454*	44	STOP AS	
					(EACH INCLUDES)	
		1	**6Y-0473**	1	PLUG-CLEAR	
		1	**7G-4332**	1	STOPPER	
	8		**6Y-0471**	88	RING-RETAINING	
	9	1	**6Y-1579**	44	PIN-TRACK	
	10	1	**234-6942**	1	LINK-TRACK MASTER (PIN END, LH)	
	11	1	**7T-0716**	43	LINK-TRACK (LH)	
	12	1	**234-6941**	1	LINK-TRACK MASTER (PIN END, RH)	

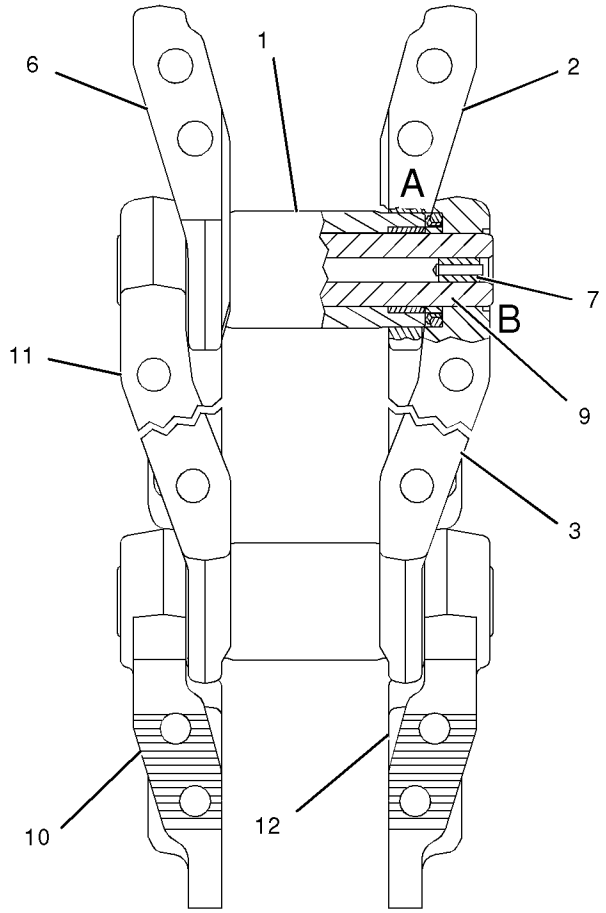

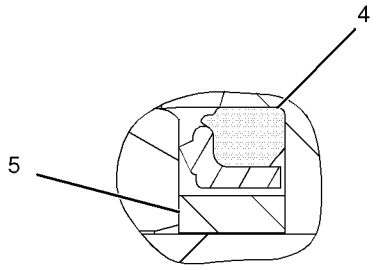

VIEW OF AREA A

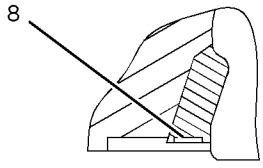

VIEW OF AREA B

GRAPHIC #1 **<END>** g01051050

238-9852 LINK AS-TRACK

S/N: RJG1-UP
SEALED, LUBRICATED
PART OF 247-1927 TRACK GP
AN ATTACHMENT

SMCS-4169, 4171 **i02050017**

NOTE	REF NO	GRAPHIC REF	PART NUMBER	QTY	PART NAME 1 2 3 4 5 6 (PRODUCT LEVEL)	SEE PAGE
	1	1	**6Y-2057**	44	BUSHING-TRACK	
	2	1	**234-6943**	1	LINK-TRACK MASTER (BUSHING END, RH)	
	3	1	**9W-5265**	43	LINK-TRACK (RH)	
	4	1	**222-7001**	88	SEAL AS	
	5	1	**235-2213**	88	RING-THRUST	
	6	1	**234-6944**	1	LINK-TRACK MASTER (BUSHING END, LH)	
	7	1	*6Y-0454*	44	STOP AS	
					(EACH INCLUDES)	
		1	**6Y-0473**	1	PLUG-CLEAR	
		1	**7G-4332**	1	STOPPER	
	8	1	**9W-6854**	2	RING-RETAINING	
	9	1	**6Y-1578**	43	PIN-TRACK	
	10	1	**238-9856**	1	LINK-TRACK MASTER (PIN END, LH)	
	11	1	**9W-5266**	43	LINK-TRACK (LH)	
	12	1	**238-9855**	1	LINK-TRACK MASTER (PIN END, RH)	
	13	1	**6Y-1577**	1	PIN-TRACK MASTER	

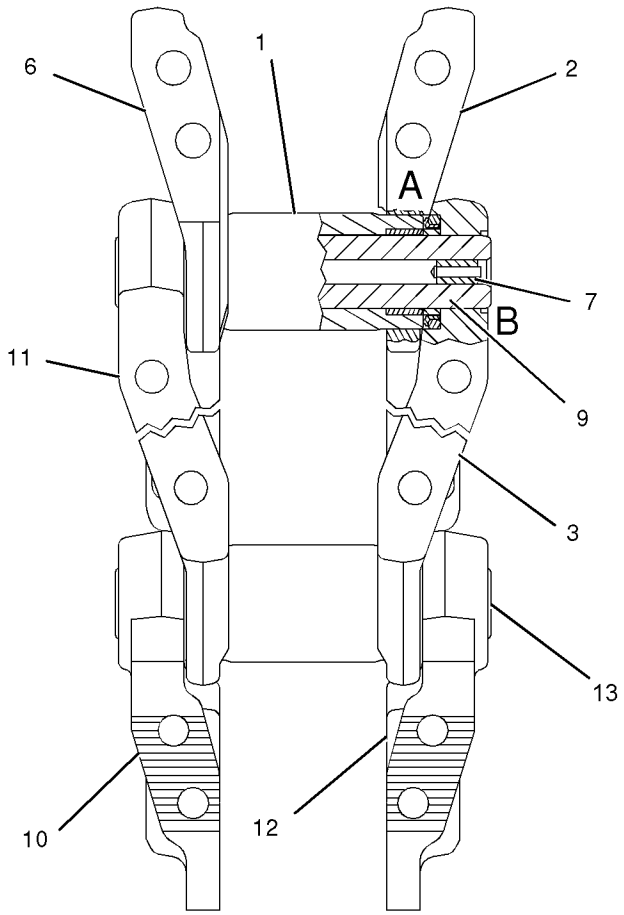

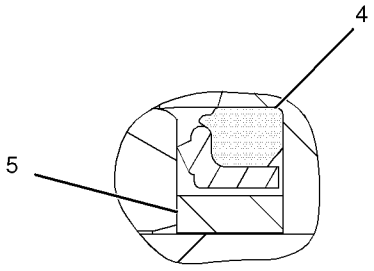

VIEW OF AREA A

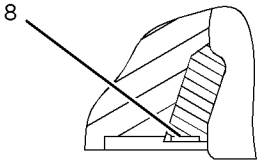

VIEW OF AREA B

GRAPHIC #1 **<END>** g01051790

231-4590 LUBRICATION GP-EQUALIZER BAR

S/N: RJG1-UP

PART OF 212-2741 CHASSIS AR

SMCS-7206 **i02401394**

NOTE	REF NO	GRAPHIC REF	PART NUMBER	QTY	PART NAME 1 2 3 4 5 6 (PRODUCT LEVEL)	SEE PAGE
	1	1	**2V-9923**	4	SPACER (0.5X0.75X1.06-IN THK)	
M	2	1	**5C-9553**	4	BOLT (M6X1X16-MM)	
	3	1	**5L-2952**	1	CAP AS-FILLER (LUBRICATION TANK)	
		1	**6L-2609**	1	SEAL-RUBBER	
	4	1	**210-4720**	1	PLATE	
	5	1	**210-4721**	1	PLATE	
	6	1	**210-4723**	2	HOSE AS	
	7	1	**210-8580**	1	TANK AS-LUBRICATION	
		1	**2T-2305**	2	ELBOW	
		1	**6W-5698**	1	GROMMET	
		1	**198-7711**	1	BREATHER (LUBRICATION TANK)	
	8	1	**211-0243**	1	PLATE	
I	9	1	**234-3569**	1	HOSE AS	
I	10	1	**234-4397**	1	HOSE AS	
	11	1	*148-8326*	2	CONNECTOR AS	
					(EACH INCLUDES)	
		1	**6V-9872**	1	CONNECTOR	
		1	**3J-7354**	1	SEAL-O-RING	
		1	**6V-8397**	1	SEAL-O-RING	
	12	1	**148-8385**	2	ELBOW AS	
					(EACH INCLUDES)	
		1	**6V-9000**	1	ELBOW	
		1	**3J-7354**	1	SEAL-O-RING	
		1	**4J-5477**	1	SEAL-O-RING	
	13	1	**3D-0472**	4	STUD-TAPERLOCK	
	14	1	**3J-7354**	2	SEAL-O-RING	
	15	1	**4D-7733**	5	CLIP	
	16	1	**4I-9521**	1	MARKER (RED, L1)	
	17	1	**4I-9525**	1	MARKER (ORANGE, R1)	
	18	1	**4J-5477**	2	SEAL-O-RING	
	19	1	**6S-5993**	4	CLIP	
	20	1	**6V-8188**	4	NUT (1/2-13-THD)	
	21	1	**6V-8397**	2	SEAL-O-RING	
	22	1	**7I-8663**	2	CONNECTOR	
	23	1	**8T-4121**	3	WASHER-HARD (11X21X2.5-MM THK)	
M	24	1	**8T-4136**	4	BOLT (M10X1.5X25-MM)	
M	25	1	**8T-4137**	4	BOLT (M10X1.5X20-MM)	
	26	1	**8T-4223**	4	WASHER-HARD (13.5X25.5X3-MM THK)	
	27	1	**8T-4896**	5	WASHER-HARD (10.2X18.5X2.5-MM THK)	
	28	1	**9X-8256**	4	WASHER (6.6X12X2-MM THK)	
	29	1	**5P-4961**	3	CLAMP-HOSE	
	30	1	**5M-6213**	1	PLUG-PIPE	
	31	1	**2T-2305**	2	ELBOW	

I-REFER TO HYDRAULIC INFORMATION SYSTEM
M-METRIC PART

231-4590 **LUBRICATION GP-EQUALIZER BAR** *(contd.)* **i02401394**

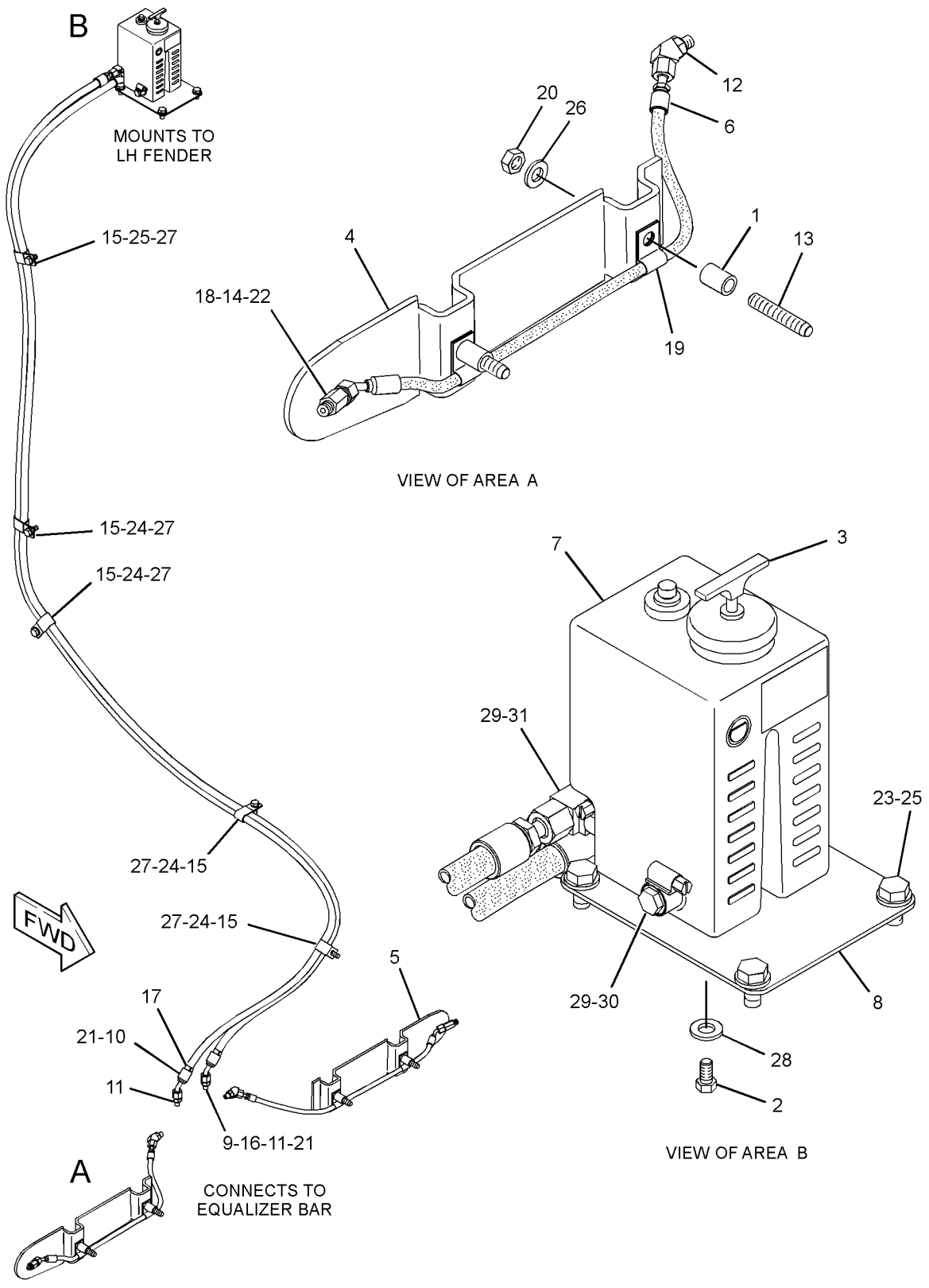

GRAPHIC #1 **<END>** g01224613

231-1381 LUBRICATION GP-PIVOT SHAFT

S/N: RJG1-UP

PART OF 212-2741 CHASSIS AR

SMCS-3286 **i02402573**

NOTE	REF NO	GRAPHIC REF	PART NUMBER	QTY	PART NAME 1 2 3 4 5 6 (PRODUCT LEVEL)	SEE PAGE
	1	1	**9G-5127**	1	BREATHER AS (PIVOT SHAFT OIL TANK)	
	2	1	**9U-9409**	1	TANK (PIVOT SHAFT OIL)	
	3	1	**9W-1693**	1	SUPPORT AS	
B	4	1	**9W-1694**	2	PAD	
	5	1	**221-0812**	1	CAP-OIL FILLER (PIVOT SHAFT OIL TANK)	
I	6	1	**231-1382**	1	HOSE AS	
	7	1	**234-1642**	1	BRACKET	
	8	1	*148-8341*	1	CONNECTOR AS	
		1	**6V-8713**	1	CONNECTOR	
		1	**3D-2824**	1	SEAL-O-RING	
		1	**7J-9108**	1	SEAL-O-RING	
	9	1	*150-3037*	1	ELBOW AS	
		1	**8T-2530**	1	ELBOW	
		1	**3K-0360**	1	SEAL-O-RING	
		1	**7J-9108**	1	SEAL-O-RING	
	10	1	**4L-6454**	2	BOLT (3/8-16X1-IN)	
	11	1	**8T-4121**	4	WASHER-HARD (11X21X2.5-MM THK)	
M	12	1	**8T-4136**	2	BOLT (M10X1.5X25-MM)	
M	13	1	**8T-4137**	2	BOLT (M10X1.5X20-MM)	
	14	1	**8T-4896**	2	WASHER-HARD (10.2X18.5X2.5-MM THK)	
	15	1	**9X-8250**	2	CLIP	

B-USE AS REQUIRED
I-REFER TO HYDRAULIC INFORMATION SYSTEM
M-METRIC PART

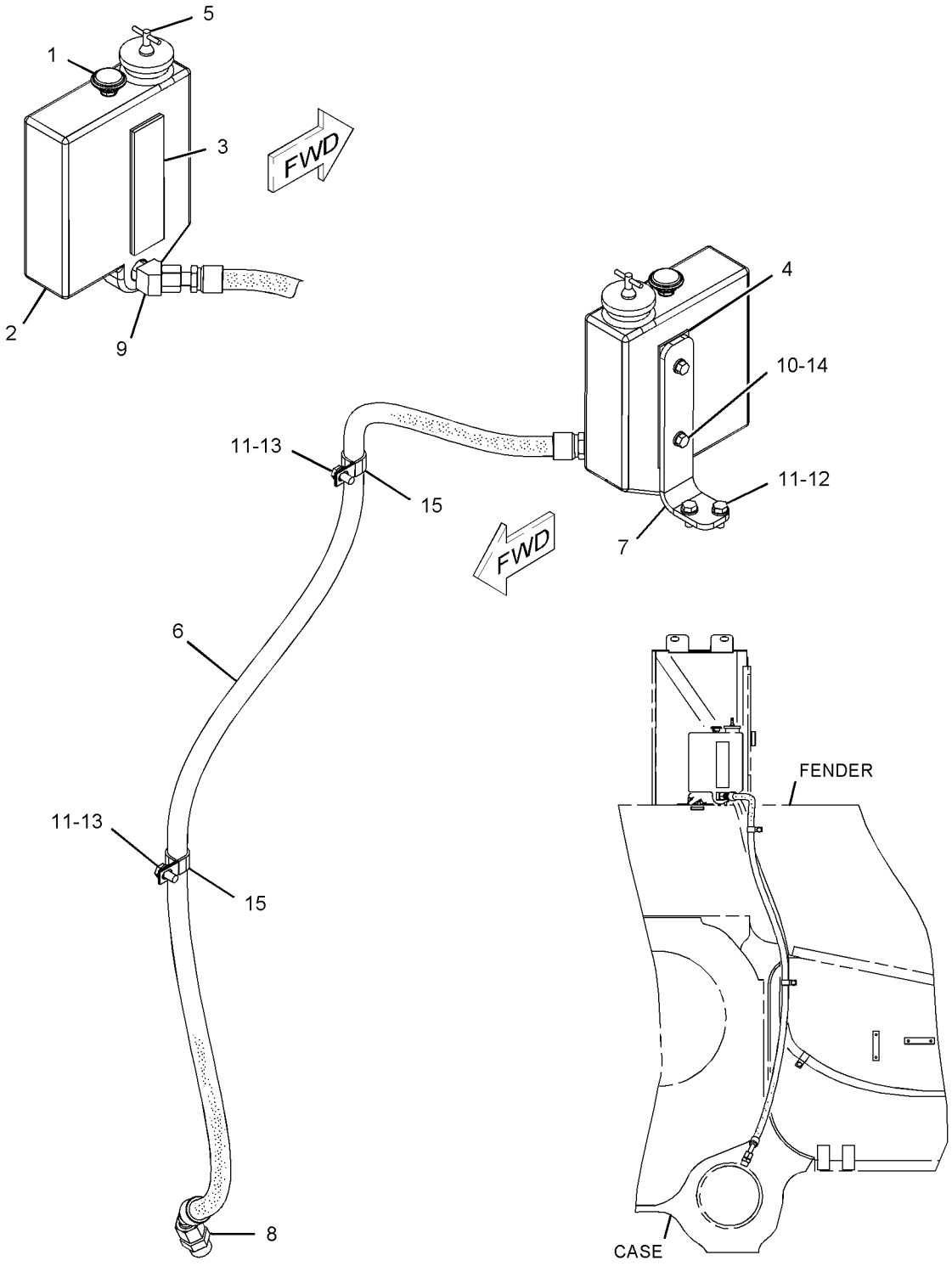

GRAPHIC #1 **<END>** g01053102

199-7735 ROLLER AR-TRACK—SINGLE FLANGE

S/N: RJG1-UP
PART OF 238-4494 MINING AR
CANNOT BE USED WITH 238-4494—PAGE 3
AN ATTACHMENT

SMCS-4180 **i02279735**

NOTE	PART NUMBER	QTY	PART NAME 1 2 3 4 5 6 (PRODUCT LEVEL)	SEE PAGE
YR	**195-5855**	16	ROLLER GP-TRACK-SINGLE FLANGE	485

R-REMFG PART MAY BE AVAILABLE
Y-SEPARATE ILLUSTRATION

<END>

118-6528 ROLLER AR-TRACK CARRIER—COLD WEATHER

S/N: RJG1-UP
AN ATTACHMENT

SMCS-4154 **i02286353**

NOTE	PART NUMBER	QTY	PART NAME 1 2 3 4 5 6 (PRODUCT LEVEL)	SEE PAGE
Y	**245-9948**	2	ROLLER GP-TRACK-SINGLE FLANGE	486

Y-SEPARATE ILLUSTRATION

<END>

213-4312 ROLLER AR-TRACK CARRIER–STOCKPILE

S/N: RJG1-UP
PART OF 238-4498 STOCKPILE AR
AN ATTACHMENT

SMCS-4154 **i02274937**

NOTE	REF NO	GRAPHIC REF	PART NUMBER	QTY	PART NAME 1 2 3 4 5 6 (PRODUCT LEVEL)	SEE PAGE
Y	1	1	*6T-1141*	4	CAP GP-TRACK ROLLER	466
YR	2	1	**195-5855**	2	ROLLER GP-TRACK-SINGLE FLANGE	485
	3	1	**212-8281**	4	SUPPORT	
	4	1	**267-2154**	8	WASHER-HARD	
	5	1	**7X-0423**	8	BOLT (1-1/8-7X4.5-IN)	

R-REMFG PART MAY BE AVAILABLE
Y-SEPARATE ILLUSTRATION

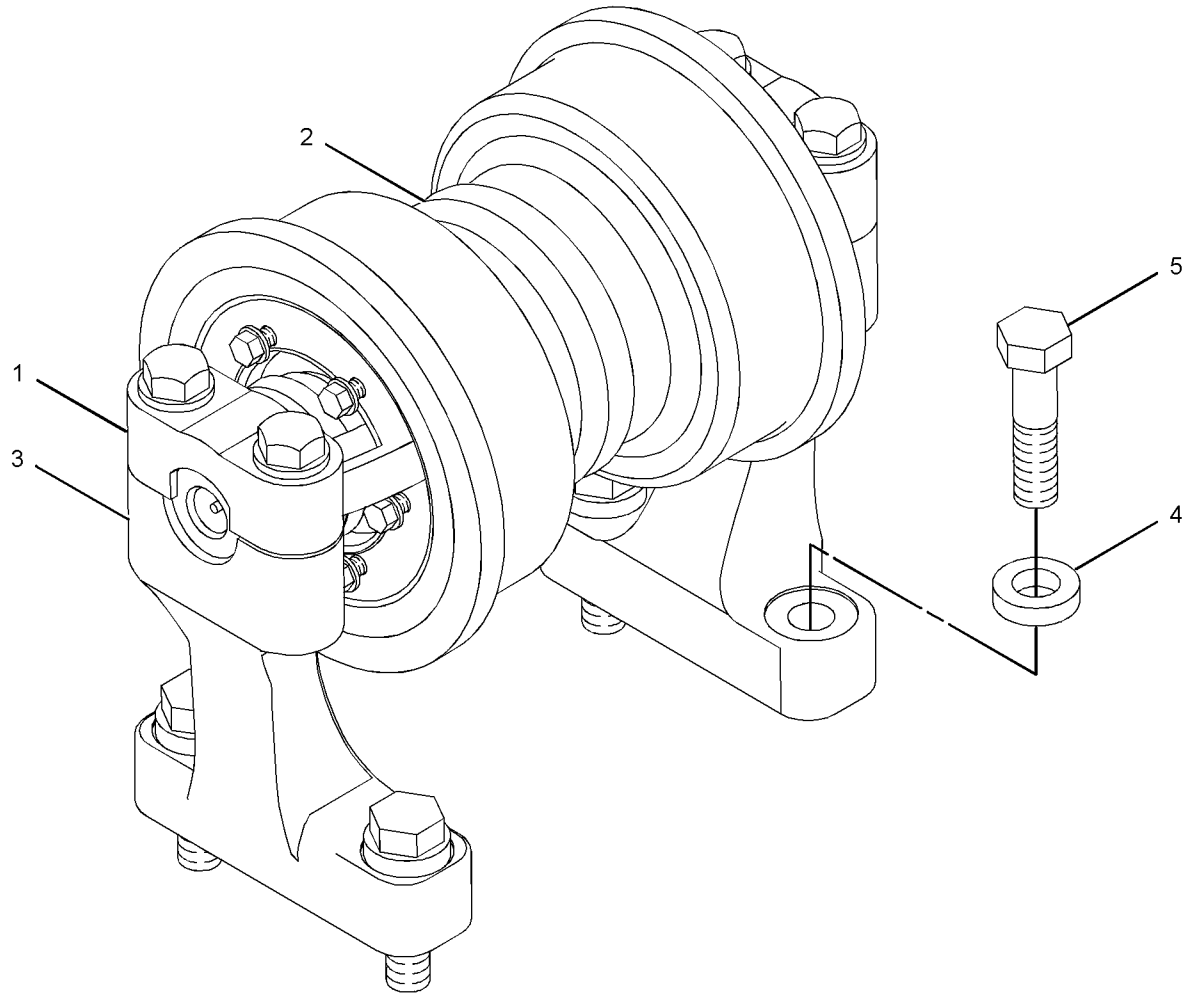

GRAPHIC #1 **<END>** g01140674

195-5856 ROLLER GP-TRACK-DOUBLE FLANGE*R

S/N: RJG1-UP

PART OF 212-2747 UNDERCARRIAGE AR

SMCS-4180 **i02210893**

NOTE	REF NO	GRAPHIC REF	PART NUMBER	QTY	PART NAME 1 2 3 4 5 6 (PRODUCT LEVEL)	SEE PAGE
	1	1	**8E-6619**	2	WASHER-THRUST (12X18.5X3-MM THK)	
	2	1	**6Y-0473**	1	PLUG-CLEAR	
	3	1	**9G-4872**	1	STOPPER-RUBBER	
	4	1	**8F-9516**	2	SEAL-O-RING	
	5	1	**107-3947**	2	COLLAR-SEAL	
	6	1	**107-4057**	2	SEAL-O-RING	
	7	1	**107-9616**	2	RETAINER	
	8	1	**154-3306**	1	SHAFT-TRACK ROLLER	
	9	1	**162-7863**	2	SEAL GP-DUO-CONE	
					(EACH INCLUDES)	
		1	**162-2167**	2	RING-TORIC	
	10	1	**195-5854**	1	ROLLER & BEARING AS	
		1	**9W-9499**	2	BEARING-SLEEVE	
	11	1	**241-1855**	12	BOLT (1/2-13X2-IN)	
	12	1	**5P-8245**	12	WASHER-HARD (13.5X25.5X3-MM THK)	

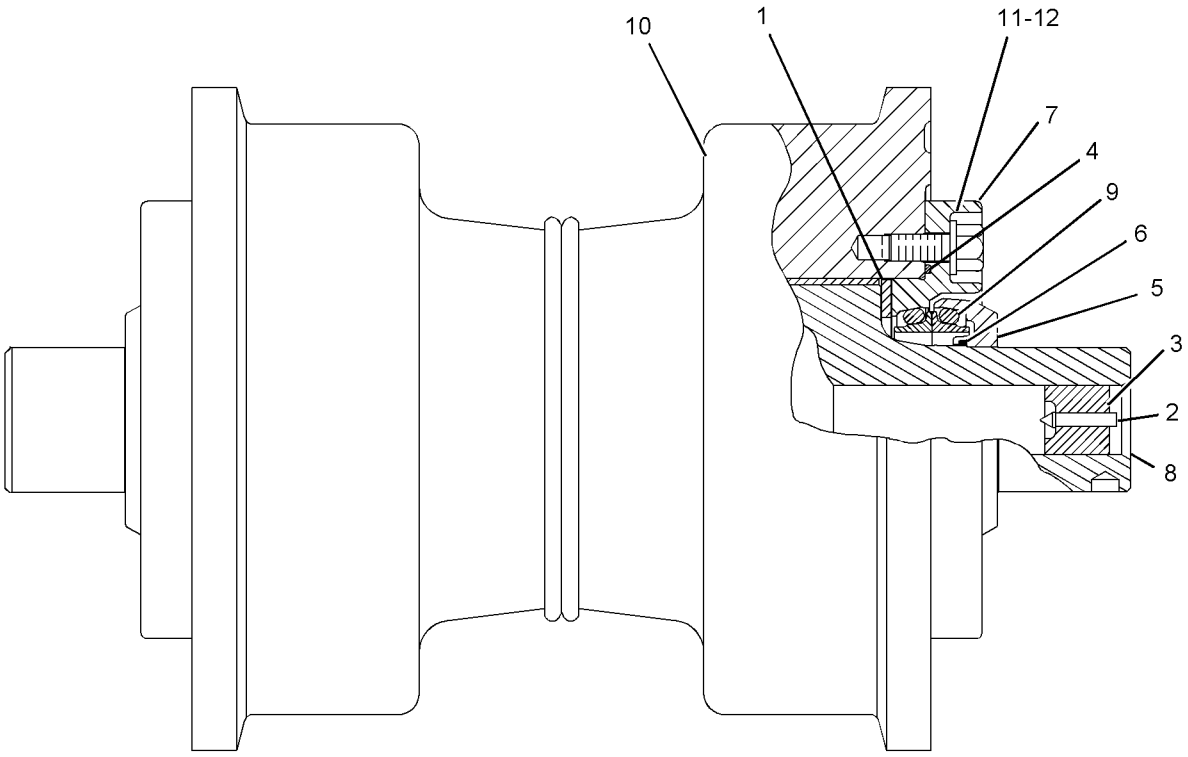

GRAPHIC #1 **<END>** g01116825

245-9949 ROLLER GP-TRACK-DOUBLE FLANGE–COLD WEATHER

S/N: RJG1-UP
PART OF 238-4492 COLD WEATHER AR
AN ATTACHMENT

SMCS-4180 **i02119605**

NOTE	REF NO	GRAPHIC REF	PART NUMBER	QTY	PART NAME 1 2 3 4 5 6 (PRODUCT LEVEL)	SEE PAGE
	1	1	**8E-6619**	2	WASHER-THRUST (12X18.5X3-MM THK)	
	2	1	**6Y-0473**	1	PLUG-CLEAR	
	3	1	**9G-4872**	1	STOPPER-RUBBER	
	4	1	**8F-9516**	2	SEAL-O-RING	
	5	1	**107-3947**	2	COLLAR-SEAL	
	6	1	**107-4057**	2	SEAL-O-RING	
	7	1	**107-9616**	2	RETAINER	
	8	1	**154-3306**	1	SHAFT-TRACK ROLLER	
	9	1	**162-7863**	2	SEAL GP-DUO-CONE	
					(EACH INCLUDES)	
		1	**162-2167**	2	RING-TORIC	
	10	1	**195-5854**	1	ROLLER & BEARING AS	
		1	**9W-9499**	2	BEARING-SLEEVE	
	11	1	**1A-1460**	12	BOLT (1/2-13X2-IN)	
	12	1	**5P-8245**	12	WASHER-HARD (13.5X25.5X3-MM THK)	

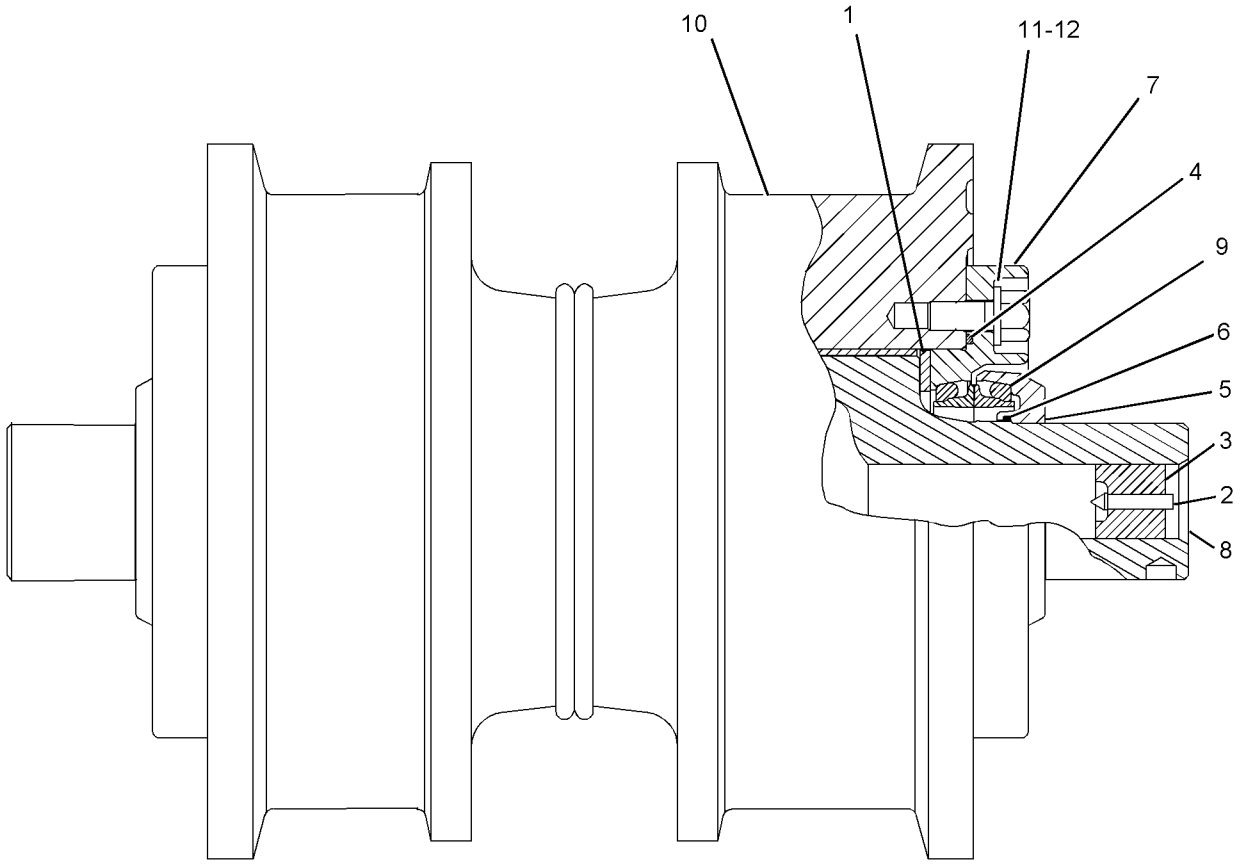

GRAPHIC #1 **<END>** g01116756

195-5855 ROLLER GP-TRACK-SINGLE FLANGE*R

S/N: RJG1-UP

PART OF 199-7735 ROLLER AR-TRACK, 213-4312 ROLLER AR-TRACK CARRIER, 212-2747 UNDERCARRIAGE AR

ALSO AN ATTACHMENT

SMCS-4180 **i02210750**

NOTE	REF NO	GRAPHIC REF	PART NUMBER	QTY	PART NAME 1 2 3 4 5 6 (PRODUCT LEVEL)	SEE PAGE
	1	1	**8E-6619**	2	WASHER-THRUST (12X18.5X3-MM THK)	
	2	1	**6Y-0473**	1	PLUG-CLEAR	
	3	1	**9G-4872**	1	STOPPER-RUBBER	
	4	1	**8F-9516**	2	SEAL-O-RING	
	5	1	**107-3947**	2	COLLAR-SEAL	
	6	1	**107-4057**	2	SEAL-O-RING	
	7	1	**107-9616**	2	RETAINER	
	8	1	**154-3306**	1	SHAFT-TRACK ROLLER	
	9	1	**162-7863**	2	SEAL GP-DUO-CONE	
					(EACH INCLUDES)	
		1	**162-2167**	2	RING-TORIC	
	10	1	**195-5853**	1	ROLLER & BEARING AS	
		1	**9W-9499**	2	BEARING-SLEEVE	
	11	1	**241-1855**	12	BOLT (1/2-13X2-IN)	
	12	1	**5P-8245**	12	WASHER-HARD (13.5X25.5X3-MM THK)	

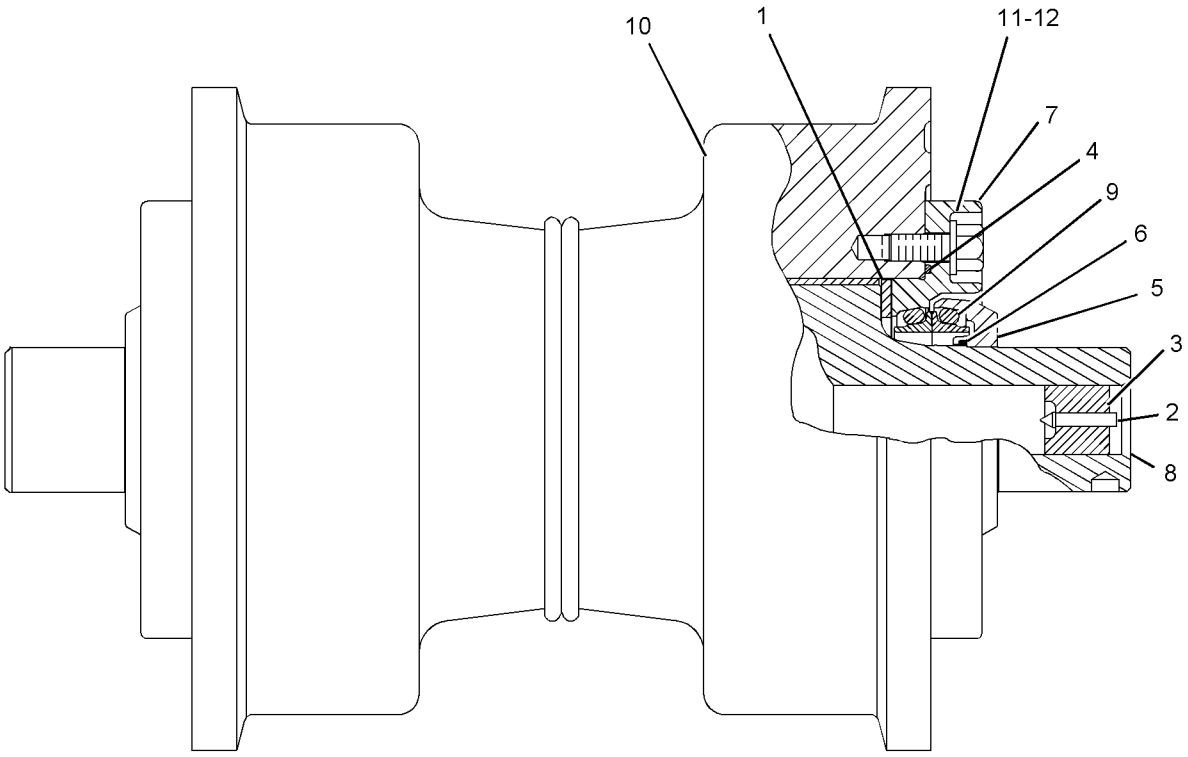

GRAPHIC #1 **<END>** g01116825

245-9948 ROLLER GP-TRACK-SINGLE FLANGE–COLD WEATHER

S/N: RJG1-UP

PART OF 238-4491, 238-4492 COLD WEATHER AR, 118-6528 ROLLER AR-TRACK CARRIER AN ATTACHMENT

SMCS-4180 **i02119570**

NOTE	REF NO	GRAPHIC REF	PART NUMBER	QTY	PART NAME 1 2 3 4 5 6 (PRODUCT LEVEL)	SEE PAGE
	1	1	**8E-6619**	2	WASHER-THRUST (12X18.5X3-MM THK)	
	2	1	**6Y-0473**	1	PLUG-CLEAR	
	3	1	**9G-4872**	1	STOPPER-RUBBER	
	4	1	**8F-9516**	2	SEAL-O-RING	
	5	1	**107-3947**	2	COLLAR-SEAL	
	6	1	**107-4057**	2	SEAL-O-RING	
	7	1	**107-9616**	2	RETAINER	
	8	1	**154-3306**	1	SHAFT-TRACK ROLLER	
	9	1	**162-7863**	2	SEAL GP-DUO-CONE	
					(EACH INCLUDES)	
		1	**162-2167**	2	RING-TORIC	
	10	1	**195-5853**	1	ROLLER & BEARING AS	
		1	**9W-9499**	2	BEARING-SLEEVE	
	11	1	**241-1855**	12	BOLT (1/2-13X2-IN)	
	12	1	**5P-8245**	12	WASHER-HARD (13.5X25.5X3-MM THK)	

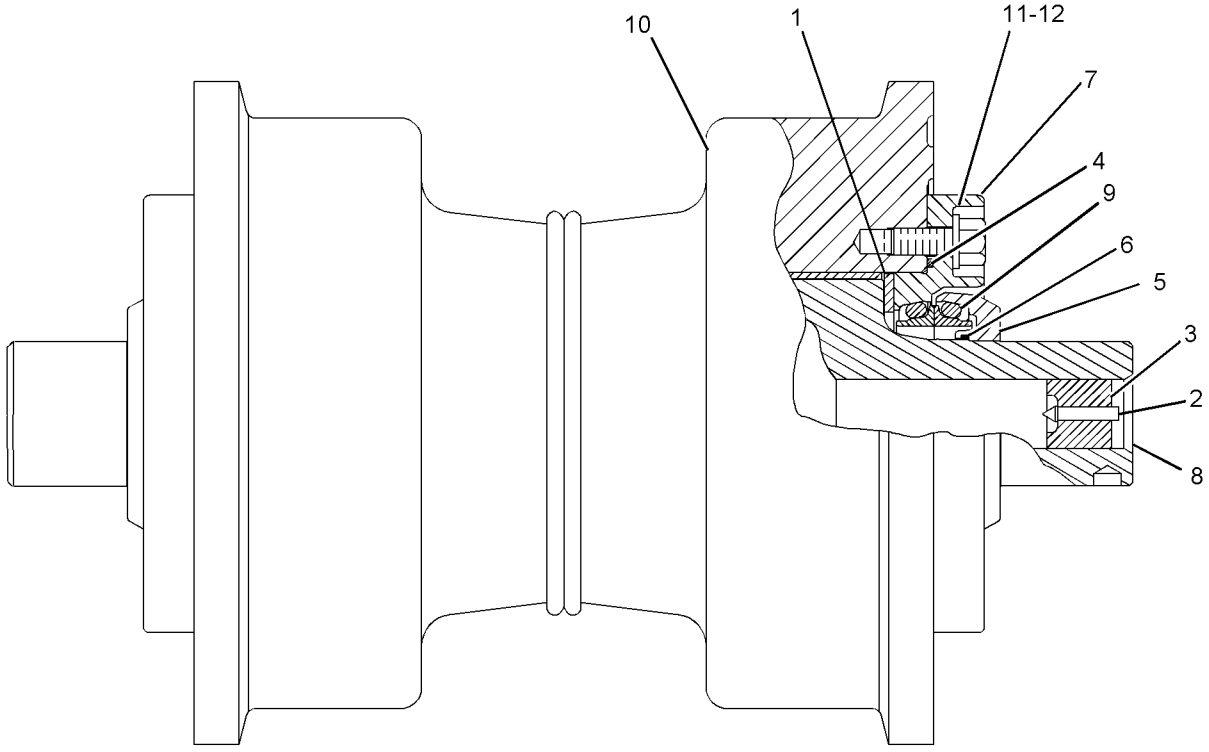

GRAPHIC #1 **<END>** g01116795

252-6329 SEAL SET—TRACK LINK

S/N: RJG1-UP

FOR USE WITH 235-2213 RING-THRUST

FIELD INSTALLATION

SMCS-7555 **i02276060**

NOTE	PART NUMBER	QTY	PART NAME 1 2 3 4 5 6 (PRODUCT LEVEL)	SEE PAGE
	252-6327	92	SEAL AS	

<END>

239-2309 SHOE-TRACK–ABRASIVE RESISTANT MATERIAL

S/N: RJG1-UP

610-MM (24-IN)GROUSER SHOE. EXTREME SERVICE

AN ATTACHMENT

SMCS-4172 **i02048563**

NOTE	REF NO	GRAPHIC REF	PART NUMBER	QTY	PART NAME 1 2 3 4 5 6 (PRODUCT LEVEL)	SEE PAGE
					(NO SERVICED PARTS)	

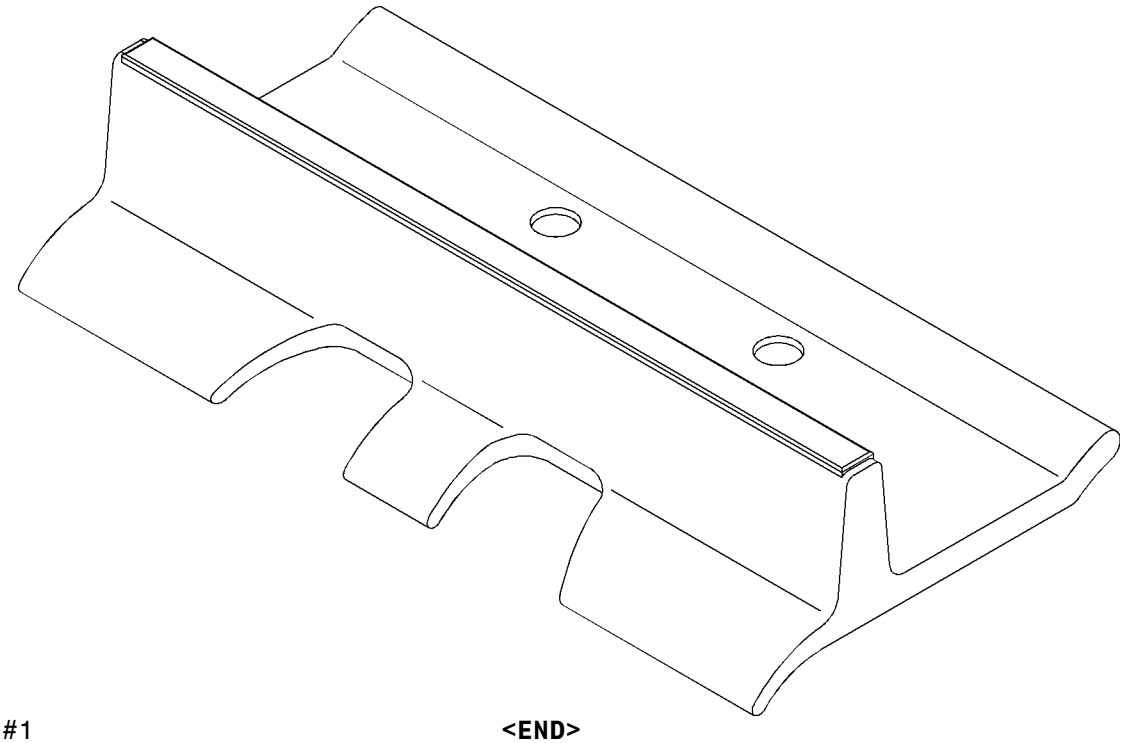

GRAPHIC #1 **<END>** g01037343

243-4372 SHOE-TRACK–ABRASIVE RESISTANT MATERIAL

S/N: RJG1-UP

760-MM (29.9-IN) GROUSER SHOE. EXTREME SERVICE

FIELD INSTALLATION

SMCS-4172 **i02049037**

NOTE	REF NO	GRAPHIC REF	PART NUMBER	QTY	PART NAME 1 2 3 4 5 6 (PRODUCT LEVEL)	SEE PAGE
					(NO SERVICED PARTS)	

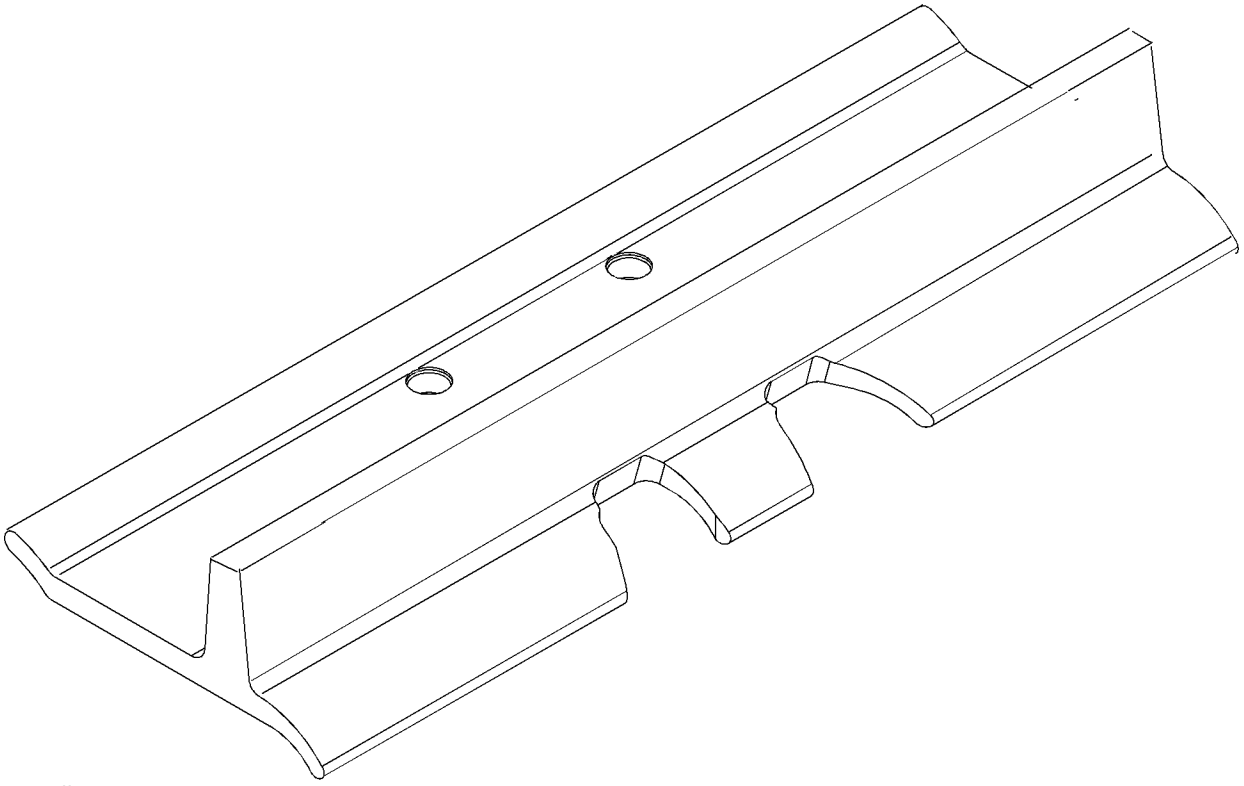

GRAPHIC #1 **<END>** g01052628

243-4374 SHOE-TRACK–ABRASIVE RESISTANT MATERIAL

S/N: RJG1-UP

800-MM (31.49-IN) GROUSER SHOE. EXTREME SERVICE

FIELD INSTALLATION

SMCS-4172 **i02049084**

NOTE	REF NO	GRAPHIC REF	PART NUMBER	QTY	PART NAME 1 2 3 4 5 6 (PRODUCT LEVEL)	SEE PAGE
					(NO SERVICED PARTS)	

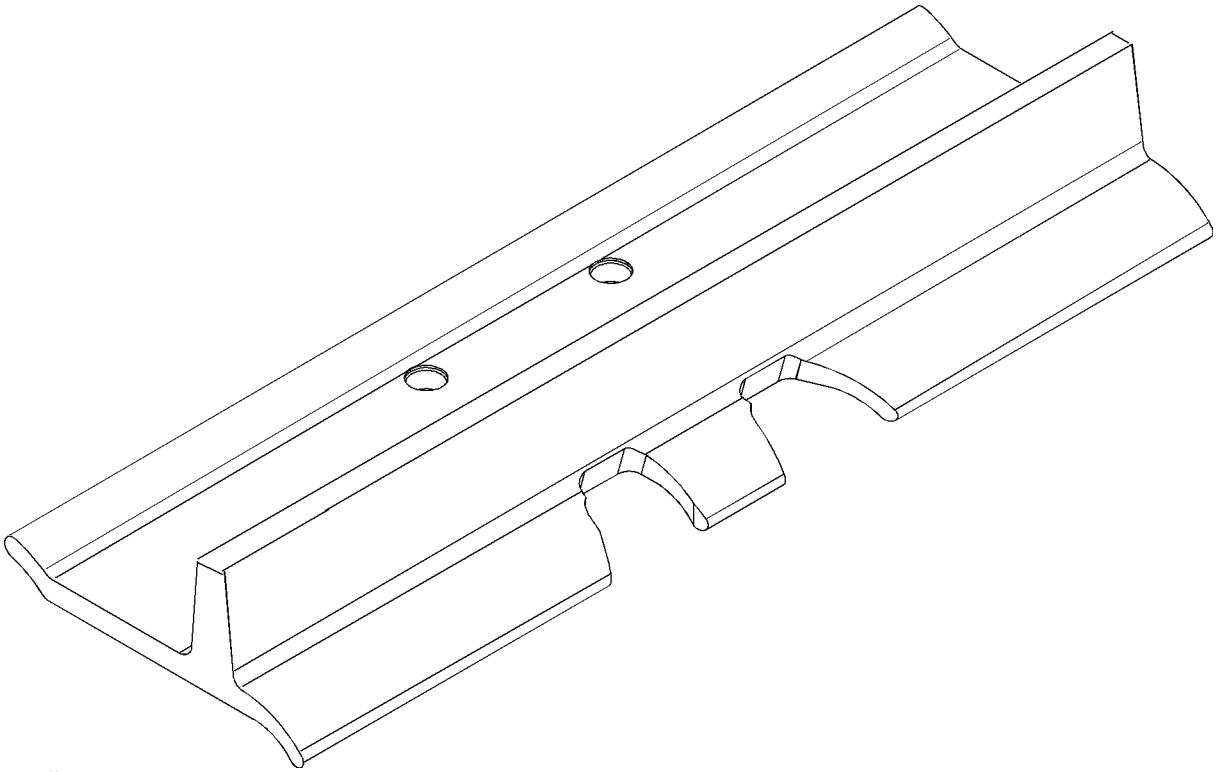

GRAPHIC #1 **<END>** g01052647

239-2310 SHOE-TRACK MASTER–ABRASIVE RESISTANT MATERIAL

S/N: RJG1-UP

610-MM (24-IN) GROUSER SHOE. EXTREME SERVICE

FIELD INSTALLATION

SMCS-4172 **i02048724**

NOTE	REF NO	GRAPHIC REF	PART NUMBER	QTY	PART NAME 1 2 3 4 5 6 (PRODUCT LEVEL)	SEE PAGE
					(NO SERVICED PARTS)	

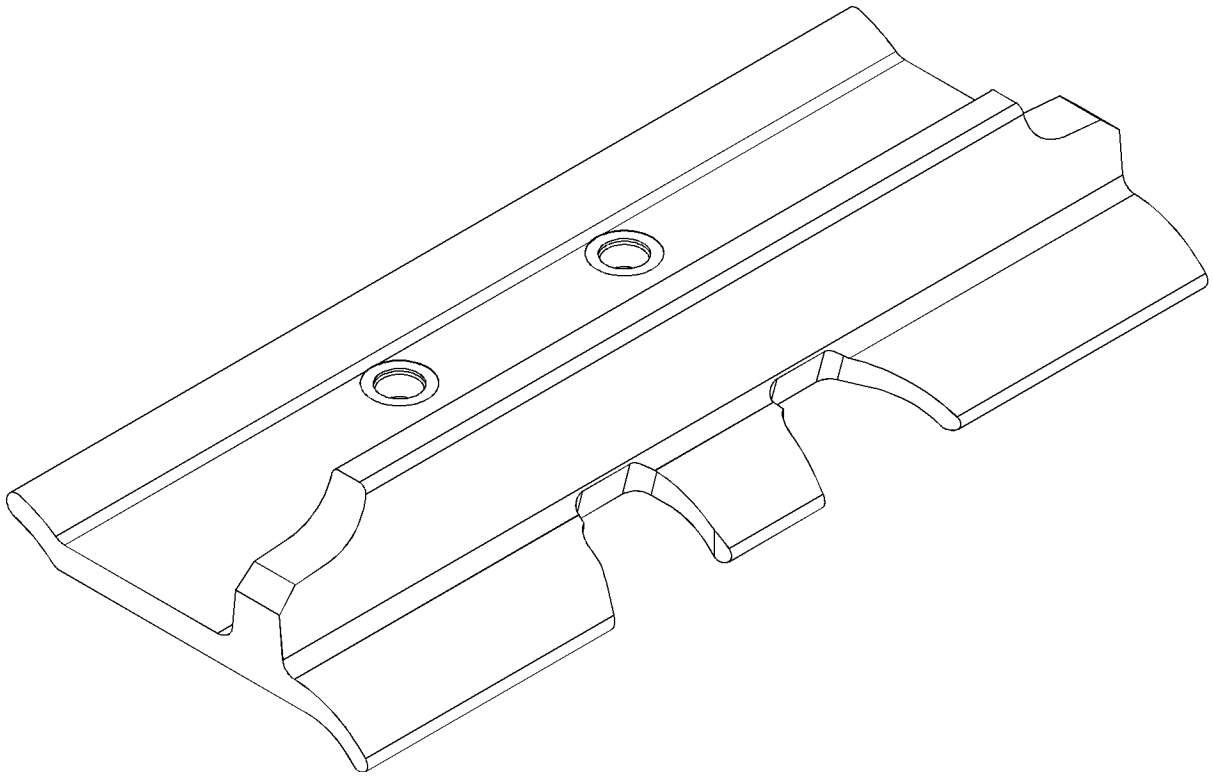

GRAPHIC #1 **<END>** g01052543

243-4373 SHOE-TRACK MASTER–ABRASIVE RESISTANT MATERIAL

S/N: RJG1-UP

760-MM (29.9-IN) GROUSER SHOE. EXTREME SERVICE

FIELD INSTALLATION

SMCS-4172 **i02049076**

NOTE	REF NO	GRAPHIC REF	PART NUMBER	QTY	PART NAME 1 2 3 4 5 6 (PRODUCT LEVEL)	SEE PAGE
					(NO SERVICED PARTS)	

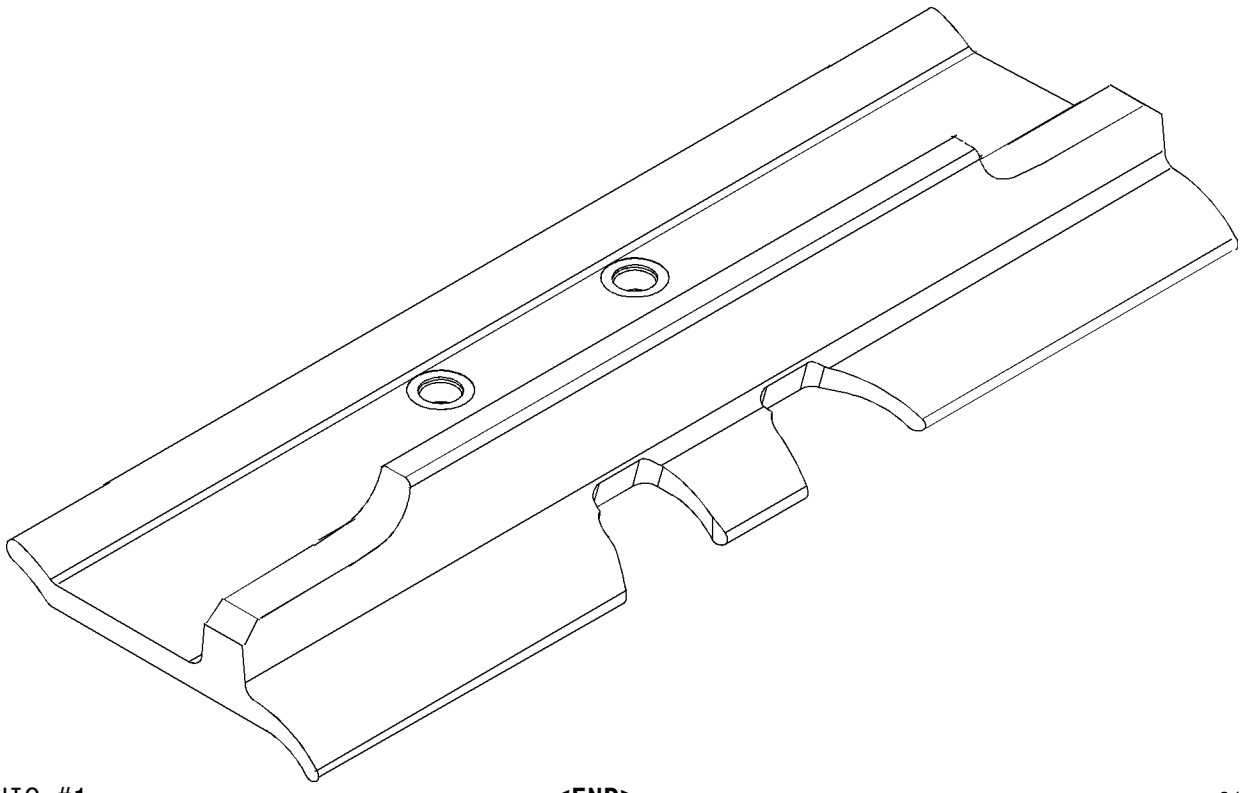

GRAPHIC #1 **<END>** g01052631

243-4375 SHOE-TRACK MASTER—ABRASIVE RESISTANT MATERIAL

S/N: RJG1-UP

800-MM (31.49-IN) GROUSER SHOE. EXTREME SERVICE

AN ATTACHMENT

SMCS-4172 **i02049102**

NOTE	REF NO	GRAPHIC REF	PART NUMBER	QTY	PART NAME 1 2 3 4 5 6 (PRODUCT LEVEL)	SEE PAGE
					(NO SERVICED PARTS)	

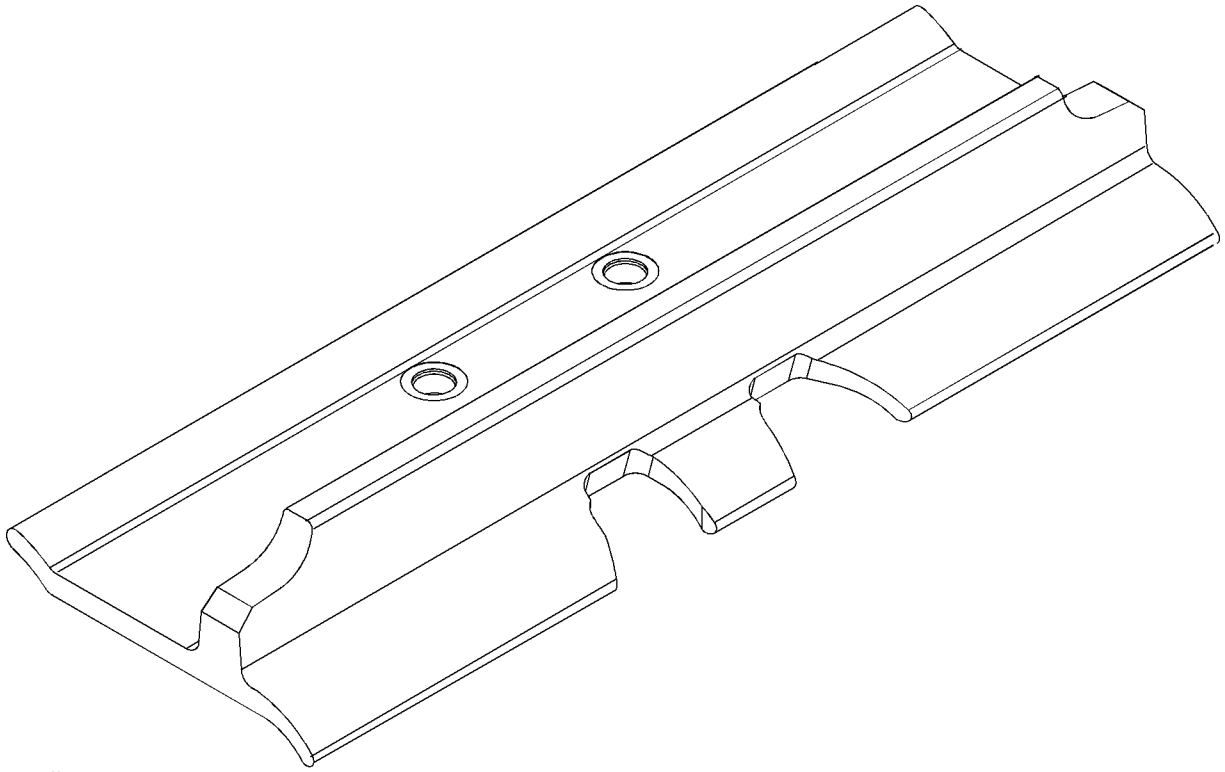

GRAPHIC #1 **<END>** g01052654

UNDERCARRIAGE

1Z-0919 SUSPENSION GP-BOGIE–MINING

S/N: RJG1-UP
DOWNHILL OR SEVERE APPLICATION
PART OF 238-4494 MINING AR
AN ATTACHMENT

SMCS-7217 **i01333086**

NOTE	REF NO	GRAPHIC REF	PART NUMBER	QTY	PART NAME 1 2 3 4 5 6 (PRODUCT LEVEL)	SEE PAGE
	1	1	**9P-2704**	24	PLATE	
	2	1	**5P-2566**	56	BOLT (1/2-13X1.5-IN)	
					(USE EXISTING WASHERS)	

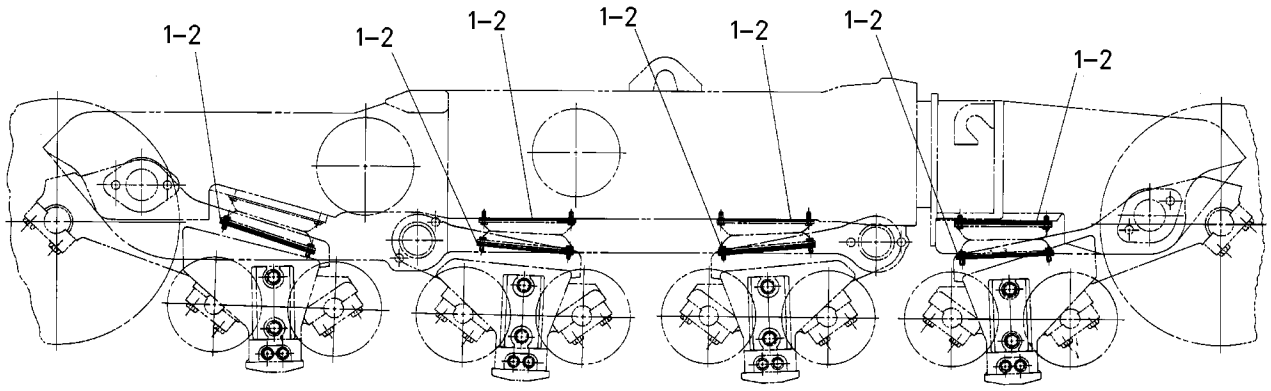

RIGHT SIDE VIEW

GRAPHIC #1 **<END>** g00705140

UNDERCARRIAGE

156-4210 SUSPENSION GP-BOGIE

S/N: RJG1-UP

PART OF 212-2747 UNDERCARRIAGE AR

SMCS-7217 **i01749885**

NOTE	REF NO	GRAPHIC REF	PART NUMBER	QTY	PART NAME 1 2 3 4 5 6 (PRODUCT LEVEL)	SEE PAGE
	1	1	**7G-3907**	16	COVER	
	2	1	**7G-5221**	16	PLATE-RETAINER	
	3	1	**7T-0375**	4	BOGIE AS	
	4	1	**7T-5959**	16	PAD AS-RESILIENT	
					(EACH INCLUDES)	
		1	**9P-2704**	1	PLATE	
	5	1	**7T-9309**	32	PIN AS-CARTRIDGE	
					(EACH INCLUDES)	
		1	**6Y-0473**	2	PLUG-CLEAR	
		1	**9G-4872**	2	STOPPER-RUBBER	
	6	1	**184-4396**	16	GUIDE	
	7	1	**8S-4756**	32	BOLT (1-14X1.75-IN)	
	8	1	**9W-4489**	8	INSERT	
	9	1	**126-8588**	2	BOGIE AS	
	10	1	**128-4414**	2	BOGIE AS	
	11	1	**156-4208**	8	BOGIE-MINOR (RH)	
	12	1	**156-4209**	8	BOGIE-MINOR (LH)	
	13	1	**067-3161**	16	RING-RETAINING	
	14	1	**5P-1076**	64	WASHER-HARD (13.5X30X4-MM THK)	
	15	1	**5P-2228**	64	BOLT (1/2-13X1-IN)	
	16	1	**7X-0386**	32	BOLT (7/8-9X3.50-IN)	
	17	1	**8C-6913**	32	WASHER-HARD (24X41.5X4-MM THK)	

QUANTITIES SHOWN ARE THOSE REQUIRED FOR BOTH LH AND RH SIDES

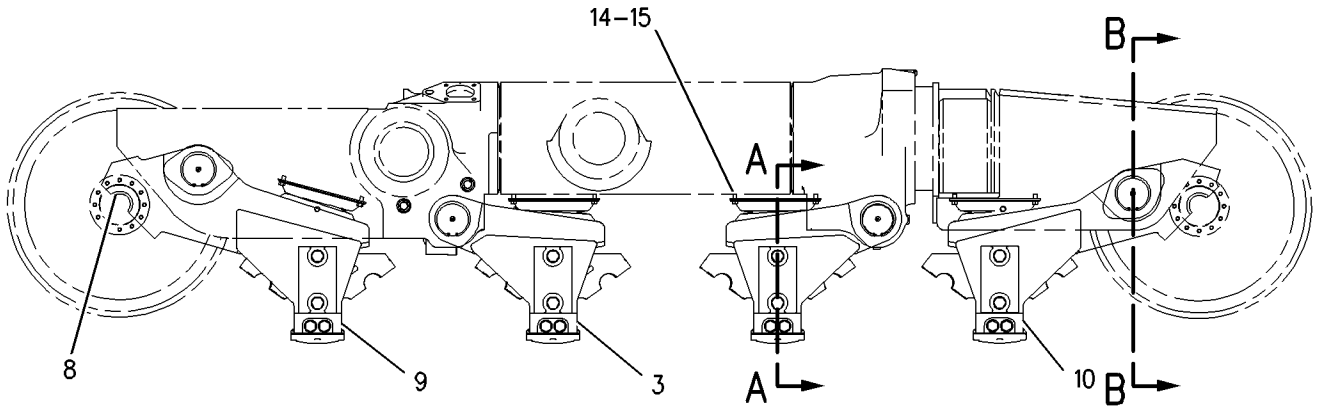

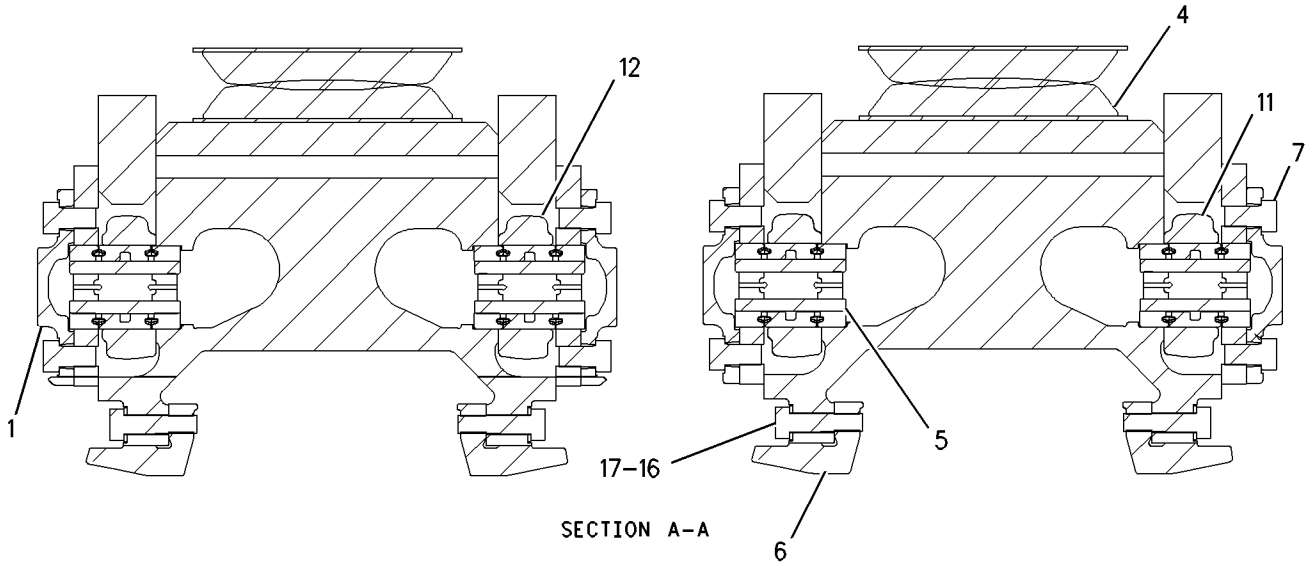

SECTION A-A

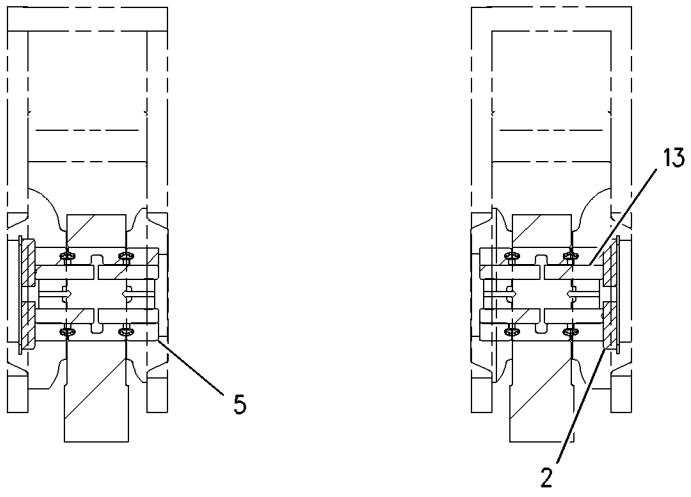

SECTION B-B

GRAPHIC #1 **<END>** g00860606

UNDERCARRIAGE

196-8563 TRACK ADJUSTER & RECOIL GP

S/N: RJG1-UP

PART OF 212-2747 UNDERCARRIAGE AR

SMCS-4157, 4158 **i02362375**

NOTE	REF NO	GRAPHIC REF	PART NUMBER	QTY	PART NAME 1 2 3 4 5 6 (PRODUCT LEVEL)	SEE PAGE
	1	1	**1L-5081**	2	SPACER (0.41X0.75X0.56-IN THK)	
	2	1	**1P-7346**	2	WASHER-HARD (10.2X35X6-MM THK)	
	3	1	**190-8609**	2	VALVE-FILL	
	4	1	**2S-5926**	2	FITTING-GREASE	
	5	1	**7G-2421**	4	STOP	
	6	1	**7G-2425**	2	CYLINDER	
	7	1	**7G-4766**	2	RING	
	8	1	**6V-8801**	2	NUT (3/8-16-THD)	
	9	1	**187-6282**	2	SUPPORT AS	
	10	1	**7T-3926**	2	SPRING	
	11	1	**7T-3927**	2	GUIDE AS	
					(EACH INCLUDES)	
		1	**7G-2419**	1	BEARING-SLEEVE	
	12	1	**7T-3928**	2	PISTON	
	13	1	**7T-6192**	1	CYLINDER AS-RH	
	14	1	**7T-6193**	1	CYLINDER AS-LH	
	15	1	**8P-5264**	4	RING	
	16	1	**8P-5265**	4	RING	
	17	1	**8T-1981**	2	SEAL-U-CUP	
	18	1	**156-4215**	2	RETAINER	
	19	1	**0L-1178**	8	BOLT (3/4-10X2-IN)	
	20	1	**1M-8653**	2	RING-RETAINING	
	21	1	**3B-1915**	2	BOLT (3/8-16X1.375-IN)	
	22	1	**6V-2360**	8	WASHER-HARD (20X32X3-MM THK)	
	23	1	**7G-8282**	2	CABLE AS	
					(EACH INCLUDES)	
	23A	1	**1P-7405**	1	EYEBOLT (3/8-16-THD)	

196-8563 **TRACK ADJUSTER & RECOIL GP** *(contd.)* **i02362375**

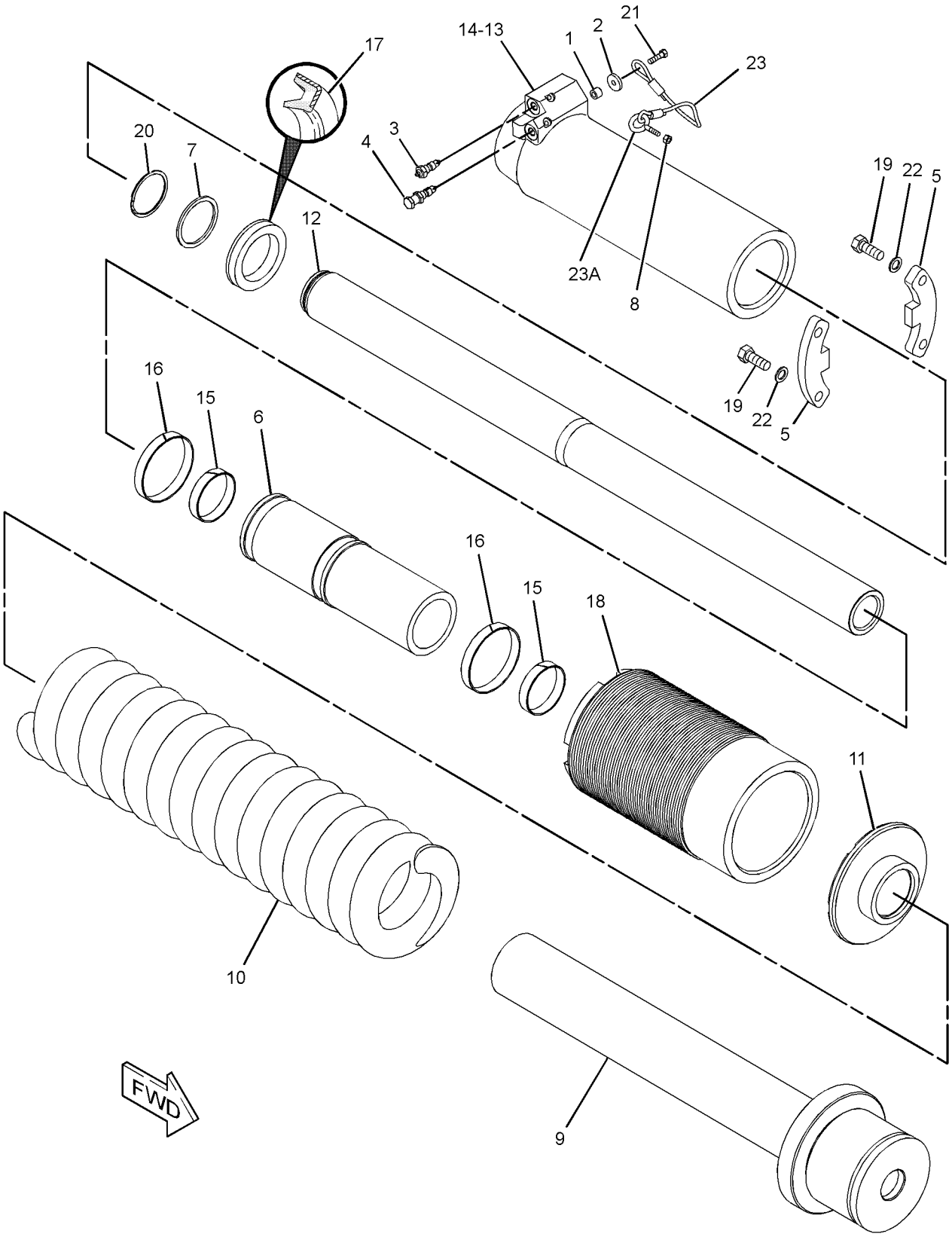

GRAPHIC #1 **<END>** g01195399

1Q-4636 TRACK GP–2-REQUIRED

S/N: RJG1-UP
610-MM (24-IN) GROUSER SHOE. SEALED, LUBRICATED, SUPER EXTREME SERVICE, POSITIVE PIN RETENTION
AN ATTACHMENT

SMCS-4170 **i02400326**

NOTE	PART NUMBER	QTY	PART NAME 1 2 3 4 5 6 (PRODUCT LEVEL)	SEE PAGE
Y	**238-9851**	1	LINK AS-TRACK	475
	7T-0998	2	BOLT-MASTER TRACK (1-1/8-12X6.46-IN)	
	7T-0999	2	BOLT-MASTER TRACK (1-1/8-12X5.28-IN)	
	7T-1000	172	BOLT-TRACK (1-1/8-12X3.8-IN)	
	5P-8221	172	NUT-TRACK (1-1/8-12-THD)	
	276-2414	43	SHOE-TRACK	
	276-2416	1	SHOE-TRACK MASTER	
Y-SEPARATE ILLUSTRATION				

<END>

7T-0723 TRACK GP–2-REQUIRED

S/N: RJG1-UP
610-MM (24-IN) GROUSER SHOE.
SEALED, LUBRICATED, EXTREME SERVICE, POSITIVE PIN RETENTION
PART OF 212-2747 UNDERCARRIAGE AR

SMCS-4170 **i02276690**

NOTE	PART NUMBER	QTY	PART NAME 1 2 3 4 5 6 (PRODUCT LEVEL)	SEE PAGE
Y	**238-9851**	1	LINK AS-TRACK	475
	7T-0998	2	BOLT-MASTER TRACK (1-1/8-12X6.46-IN)	
	7T-0999	2	BOLT-MASTER TRACK (1-1/8-12X5.28-IN)	
	7T-1000	172	BOLT-TRACK (1-1/8-12X3.8-IN)	
	5P-8221	172	NUT-TRACK (1-1/8-12-THD)	
	9W-1867	1	SHOE-MASTER TRACK	
	7T-0724	43	SHOE-TRACK	
Y-SEPARATE ILLUSTRATION				

<END>

7T-4606 TRACK GP—2-REQUIRED

S/N: RJG1-UP
800-MM (31.5-IN.) GROUSER SHOE.
SEALED, LUBRICATED, EXTREME SERVICE,POSITIVE PIN RETENTION
FOR USE WITH 4Z-0660—PAGE 741
AN ATTACHMENT

SMCS-4170 **i02276333**

NOTE	PART NUMBER	QTY	PART NAME 1 2 3 4 5 6 (PRODUCT LEVEL)	SEE PAGE
Y	**238-9851**	1	LINK AS-TRACK	475
	7T-1000	172	BOLT-TRACK (1-1/8-12X3.8-IN)	
	7T-0998	2	BOLT-MASTER TRACK (1-1/8-12X6.46-IN)	
	7T-0999	2	BOLT-MASTER TRACK (1-1/8-12X5.28-IN)	
	5P-8221	172	NUT-TRACK (1-1/8-12-THD)	
	7T-4605	43	SHOE-TRACK	
	9W-1869	1	SHOE-MASTER TRACK	
Y-SEPARATE ILLUSTRATION				

<END>

7T-4608 TRACK GP—2-REQUIRED

S/N: RJG1-UP
710-MM (28-IN.) GROUSER SHOE.
SEALED, LUBRICATED, EXTREME SERVICE, POSITIVE PIN RETENTION
AN ATTACHMENT

SMCS-4170 **i02276521**

NOTE	PART NUMBER	QTY	PART NAME 1 2 3 4 5 6 (PRODUCT LEVEL)	SEE PAGE
Y	**238-9851**	1	LINK AS-TRACK	475
	7T-0998	2	BOLT-MASTER TRACK (1-1/8-12X6.46-IN)	
	7T-0999	2	BOLT-MASTER TRACK (1-1/8-12X5.28-IN)	
	7T-1000	172	BOLT-TRACK (1-1/8-12X3.8-IN)	
	5P-8221	172	NUT-TRACK (1-1/8-12-THD)	
	9W-1870	1	SHOE-MASTER TRACK	
	7T-4607	43	SHOE-TRACK	
Y-SEPARATE ILLUSTRATION				

<END>

UNDERCARRIAGE

130-5641 TRACK GP–2 REQUIRED

S/N: RJG1-UP
710-MM (28-IN) GROUSER SHOE.
SEALED, LUBRICATED, SUPER EXTREME SERVICE, POSITIVE PIN RETENTION
AN ATTACHMENT

SMCS-4170 **i02462551**

NOTE	PART NUMBER	QTY	PART NAME 1 2 3 4 5 6 (PRODUCT LEVEL)	SEE PAGE
Y	**238-9851**	1	LINK AS-TRACK	475
	7T-0998	2	BOLT-MASTER TRACK (1-1/8-12X6.46-IN)	
	7T-0999	2	BOLT-MASTER TRACK (1-1/8-12X5.28-IN)	
	7T-1000	172	BOLT-TRACK (1-1/8-12X3.8-IN)	
	5P-8221	172	NUT-TRACK (1-1/8-12-THD)	
	276-2417	43	SHOE-TRACK	
	276-2418	1	SHOE-TRACK MASTER	
Y-SEPARATE ILLUSTRATION				

<END>

158-3303 TRACK GP–2-REQUIRED

S/N: RJG1-UP
610-MM (24-IN) GROUSER SHOE.
SEALED, LUBRICATED, EXTREME SERVICE, POSITIVE PIN RETENTION, TRAPEZOIDAL
AN ATTACHMENT

SMCS-4170 **i02276622**

NOTE	PART NUMBER	QTY	PART NAME 1 2 3 4 5 6 (PRODUCT LEVEL)	SEE PAGE
Y	**238-9851**	1	LINK AS-TRACK	475
	7T-0998	2	BOLT-MASTER TRACK (1-1/8-12X6.46-IN)	
	7T-0999	2	BOLT-MASTER TRACK (1-1/8-12X5.28-IN)	
	7T-1000	172	BOLT-TRACK (1-1/8-12X3.8-IN)	
	5P-8221	172	NUT-TRACK (1-1/8-12-THD)	
	234-6033	43	SHOE-TRACK	
	234-6029	1	SHOE-TRACK MASTER	
Y-SEPARATE ILLUSTRATION				

<END>

172-3916 TRACK GP—2-REQUIRED

S/N: RJG1-UP
800-MM (31.5-IN) GROUSER SHOE.
SEALED, LUBRICATED, EXTREME SERVICE, POSITIVE PIN RETENTION, TRAPEZOIDAL
FOR USE WITH 4Z-0660—PAGE 741
AN ATTACHMENT

SMCS-4170 **i02276697**

NOTE	PART NUMBER	QTY	PART NAME 1 2 3 4 5 6 (PRODUCT LEVEL)	SEE PAGE
Y	**238-9851**	1	LINK AS-TRACK	475
	7T-0998	2	BOLT-MASTER TRACK (1-1/8-12X6.46-IN)	
	7T-0999	2	BOLT-MASTER TRACK (1-1/8-12X5.28-IN)	
	7T-1000	172	BOLT-TRACK (1-1/8-12X3.8-IN)	
	5P-8221	172	NUT-TRACK (1-1/8-12-THD)	
	234-6032	43	SHOE-TRACK	
	234-6028	1	SHOE-TRACK MASTER	
Y-SEPARATE ILLUSTRATION				

<END>

183-2131 TRACK GP—2-REQUIRED

S/N: RJG1-UP
710-MM (28-IN) GROUSER SHOE .
SEALED, LUBRICATED, EXTREME SERVICE, POSITIVE PIN RETENTION, TRAPEZOIDAL
AN ATTACHMENT

SMCS-4170 **i02273200**

NOTE	PART NUMBER	QTY	PART NAME 1 2 3 4 5 6 (PRODUCT LEVEL)	SEE PAGE
Y	**238-9851**	1	LINK AS-TRACK	475
	234-6030	1	SHOE-TRACK MASTER	
	234-6031	43	SHOE-TRACK	
	5P-8221	172	NUT-TRACK (1-1/8-12-THD)	
	7T-0998	2	BOLT-MASTER TRACK (1-1/8-12X6.46-IN)	
	7T-0999	2	BOLT-MASTER TRACK (1-1/8-12X5.28-IN)	
	7T-1000	172	BOLT-TRACK (1-1/8-12X3.8-IN)	
Y-SEPARATE ILLUSTRATION				

<END>

195-4579 TRACK GP–2-REQUIRED

S/N: RJG1-UP
800-MM (31.5-IN) GROUSER SHOE.
SEALED, LUBRICATED, EXTREME SERVICE, POSITIVE PIN RETENTION, CLIPPED
FOR USE WITH RIPPER, 4Z-0660–PAGE 741
AN ATTACHMENT

SMCS-4170 **i02276684**

NOTE	PART NUMBER	QTY	PART NAME 1 2 3 4 5 6 (PRODUCT LEVEL)	SEE PAGE
Y	**238-9851**	1	LINK AS-TRACK	475
	7T-0998	2	BOLT-MASTER TRACK (1-1/8-12X6.46-IN)	
	7T-0999	2	BOLT-MASTER TRACK (1-1/8-12X5.28-IN)	
	7T-1000	172	BOLT-TRACK (1-1/8-12X3.8-IN)	
	5P-8221	172	NUT-TRACK (1-1/8-12-THD)	
	9W-1869	1	SHOE-MASTER TRACK	
	195-4576	43	SHOE-TRACK	
Y-SEPARATE ILLUSTRATION				

<END>

233-5110 TRACK GP–2-REQUIRED

S/N: RJG1-UP
760-MM (29.92-IN) GROUSER SHOE.
SEALED, LUBRICATED, EXTREME SERVICE, POSITIVE PIN RETENTION, CLIPPED
AN ATTACHMENT

SMCS-4170 **i02276695**

NOTE	PART NUMBER	QTY	PART NAME 1 2 3 4 5 6 (PRODUCT LEVEL)	SEE PAGE
Y	**238-9851**	1	LINK AS-TRACK	475
	7T-0998	2	BOLT-MASTER TRACK (1-1/8-12X6.46-IN)	
	7T-0999	2	BOLT-MASTER TRACK (1-1/8-12X5.28-IN)	
	7T-1000	172	BOLT-TRACK (1-1/8-12X3.8-IN)	
	5P-8221	172	NUT-TRACK (1-1/8-12-THD)	
	6Y-2536	1	SHOE-MASTER TRACK	
	1Q-4651	43	SHOE-TRACK	
Y-SEPARATE ILLUSTRATION				

<END>

UNDERCARRIAGE

247-1927 TRACK GP—2-REQUIRED

S/N: RJG1-UP

760-MM (29.9-IN) GROUSER SHOE. SEALED, LUBRICATED, EXTREME SERVICE

AN ATTACHMENT

SMCS-4170 **i02049975**

NOTE	PART NUMBER	QTY	PART NAME 1 2 3 4 5 6 (PRODUCT LEVEL)	SEE PAGE
Y	**238-9852**	1	LINK AS-TRACK	476
	7T-1000	172	BOLT-TRACK (1 1/8-12X3.8-IN)	
	7T-0998	2	BOLT-TRACK MASTER (1 1/8-12X6.46-IN)	
	7T-0999	2	BOLT-TRACK MASTER (1 1/8-12X5.28-IN)	
	5P-8221	172	NUT-TRACK (1 1/8-12-THD)	
	6Y-2536	1	SHOE-MASTER TRACK	
	6Y-2534	43	SHOE-TRACK	

Y-SEPARATE ILLUSTRATION

<END>

256-4306 TRACK GP—2-REQUIRED

S/N: RJG1-UP

710-MM (27.95-IN) GROUSER SHOE. SEALED, LUBRICATED, POSITIVE PIN RETENTION, EXTENDED SERVICE, TRAPEZOIDAL, EXTREME SERVICE, TOUGH STEEL

AN ATTACHMENT

SMCS-4170 **i02277822**

NOTE	PART NUMBER	QTY	PART NAME 1 2 3 4 5 6 (PRODUCT LEVEL)	SEE PAGE
Y	**236-4106**	1	LINK AS-TRACK	474
	7T-0998	2	BOLT-MASTER TRACK (1-1/8-12X6.46-IN)	
	7T-0999	2	BOLT-MASTER TRACK (1-1/8-12X5.28-IN)	
	7T-1000	172	BOLT-TRACK (1-1/8-12X3.8-IN)	
	5P-8221	172	NUT-TRACK (1-1/8-12-THD)	
	234-6031	43	SHOE-TRACK	
	234-6030	1	SHOE-TRACK MASTER	

Y-SEPARATE ILLUSTRATION

<END>

UNDERCARRIAGE

263-3826 TRACK GP–2-REQUIRED

S/N: RJG1-UP

610-MM (24-IN) GROUSER SHOE. SEALED, LUBRICATED, POSITIVE PIN RETENTION, SUPER EXTREME SERVICE, CHROME NITRIDE

AN ATTACHMENT

SMCS-4170 **i02467636**

NOTE	PART NUMBER	QTY	PART NAME 1 2 3 4 5 6 (PRODUCT LEVEL)	SEE PAGE
Y	**236-4105**	1	LINK AS-TRACK	473
	7T-0998	2	BOLT-MASTER TRACK (1-1/8-12X6.46-IN)	
	7T-0999	2	BOLT-MASTER TRACK (1-1/8-12X5.28-IN)	
	7T-1000	172	BOLT-TRACK (1-1/8-12X3.8-IN)	
	5P-8221	172	NUT-TRACK (1-1/8-12-THD)	
	276-2414	43	SHOE-TRACK	
	276-2416	1	SHOE-TRACK MASTER	
Y-SEPARATE ILLUSTRATION				

<END>

212-2747 UNDERCARRIAGE AR

S/N: RJG1-UP

PART OF 212-2740 GENERAL AR

SMCS-4150 **i02051163**

NOTE	PART NUMBER	QTY	PART NAME 1 2 3 4 5 6 (PRODUCT LEVEL)	SEE PAGE
Y	*222-3680*	1	BAR GP-EQUALIZER	457
Y	*127-3446*	4	CAP GP-TRACK IDLER	464
Y	*128-3504*	4	CAP GP-TRACK IDLER	465
Y	*6T-1141*	32	CAP GP-TRACK ROLLER	466
Y	*212-3500*	1	FRAME GP-TELESCOPING RECOIL	467
Y	**125-3537**	4	IDLER GP-TRACK	469
Y	**195-5856**	8	ROLLER GP-TRACK-DOUBLE FLANGE	483
Y	**195-5855**	8	ROLLER GP-TRACK-SINGLE FLANGE	485
Y	*156-4210*	1	SUSPENSION GP-BOGIE	495
Y	*196-8563*	1	TRACK ADJUSTER & RECOIL GP	497
Y	**7T-0723**	2	TRACK GP	499
Y-SEPARATE ILLUSTRATION				

<END>

UNDERCARRIAGE

256-7216 UNDERCARRIAGE AR—ROLLER FRAME, STRAIGHT

S/N: RJG1-UP

AN ATTACHMENT

SMCS-4150 **i02277801**

NOTE	PART NUMBER	QTY	PART NAME 1 2 3 4 5 6 (PRODUCT LEVEL)	SEE PAGE
Y	**222-3676**	1	BAR GP-EQUALIZER	456
	6T-1382	16	BOGIE-MINOR	
	256-7215	1	FRAME AS (LH)	
	256-7214	1	FRAME AS (RH)	

Y-SEPARATE ILLUSTRATION

<END>

234-2496 ADJUSTER GP-STEER & TMSN CONT

S/N: RJG1-UP

PART OF 212-0704 CONTROL GP-STEERING & TMSN

SMCS-4135 **i02285346**

NOTE	REF NO	GRAPHIC REF	PART NUMBER	QTY	PART NAME 1 2 3 4 5 6 (PRODUCT LEVEL)	SEE PAGE
	1	1	**8F-7702**	4	SEAL-LIP TYPE	
	2	1	**8T-5410**	4	SEAL-LIP TYPE	
M	3	1	**8T-9006**	1	BOLT-SOCKET HEAD (M3X0.5X20-MM)	
	4	1	**122-4271**	1	KNOB (ARMREST ADJUSTMENT)	
	5	1	**124-0799**	1	SPRING	
	6	1	**130-0701**	1	SHAFT	
	7	1	**130-1985**	1	SLEEVE	
	8	1	**130-7975**	4	SLEEVE-BRASS	
	9	1	**130-9989**	4	SLEEVE	
	10	1	**130-9990**	2	SLEEVE	
	11	1	**133-0155**	1	SHAFT	
	12	1	**133-6595**	1	BRACKET AS	
M		1	**8T-3490**	2	NUT-WELD (M10X1.5-THD)	
	13	1	**133-6974**	1	BRACKET AS	
M		1	**8T-3490**	2	NUT-WELD (M10X1.5-THD)	
	14	1	**133-7214**	1	SHAFT	
	15	1	**133-7230**	1	SHAFT	
	16	1	**133-7231**	1	PLATE	
	17	1	**149-4889**	1	ACTUATOR AS	
	18	1	**209-5179**	2	BEARING AS (SELF ALIGNING)	
	19	1	**209-9350**	1	BRACKET AS	
		1	**122-6046**	1	MOUNT	
	20	1	**219-5805**	1	SPACER (8.5X16X12.5-MM THK)	
	21	1	**222-7891**	1	SWITCH AS-ROCKER (CONSOLE RAISE, LOWER)	
	22	1	**225-3188**	1	PLATE AS	
	23	1	**225-3191**	1	BRACKET AS	
	24	1	**225-3193**	1	PLATE AS	
M		1	**6V-9632**	2	NUT-WELD (M6X1-THD)	
M		1	**8T-3490**	1	NUT-WELD (M10X1.5-THD)	
M		1	**8T-3612**	5	NUT-WELD (M8X1.25-THD)	
	25	1	**234-2500**	1	PLATE	
	26	1	**234-2879**	1	BRACKET	
	27	1	**235-4498**	1	PLATE	
	28	1	**2D-6235**	2	LOCKNUT (1/4-20-THD)	
	29	1	**5P-4116**	1	WASHER-HARD (8.8X20.5X2-MM THK)	
M	30	1	**6V-2317**	1	BOLT (M8X1.25X30-MM)	
	31	1	**7X-7729**	4	WASHER (11X25X3-MM THK)	
	32	1	**8T-1172**	4	SEAL-LIP TYPE	
M	33	1	**8T-2658**	1	LOCKNUT (M3X0.5-THD)	
	34	1	**8T-4121**	6	WASHER-HARD (11X21X2.5-MM THK)	
M	35	1	**8T-4133**	8	NUT (M10X1.5 THD)	
M	36	1	**8T-4136**	6	BOLT (M10X1.5X25-MM)	
M	37	1	**8T-4189**	1	BOLT (M8X1.25X20-MM)	
M	38	1	**8T-4195**	4	BOLT (M10X1.5X30-MM)	
M	39	1	**8T-4200**	1	BOLT (M8X1.25X16-MM)	
	40	1	**8T-4205**	2	WASHER-HARD (7.2X14.5X2-MM THK)	
	41	1	**8T-4224**	4	WASHER-HARD (8.8X16X2-MM THK)	
M	42	1	**8T-4908**	1	BOLT (M8X1.25X25-MM)	
	43	1	**8T-7934**	12	WASHER-HARD (11X21X5-MM THK)	
	44	1	**8T-9368**	2	BOLT (1/4-20X2.25-IN)	
	45	1	**9X-6772**	2	STRAP-CABLE	
	46	1	**242-5203**	1	HARNESS AS-MOTOR (CONSOLE RAISE, LOWER)	
		1	**102-8802**	1	KIT-RECEPTACLE (2-PIN)	
					(INCLUDES RECEPTACLE AS & WEDGE)	
		1	**155-2270**	1	KIT-CONNECTING PLUG (2-PIN)	
					(INCLUDES PLUG AS & WEDGE)	

M-METRIC PART

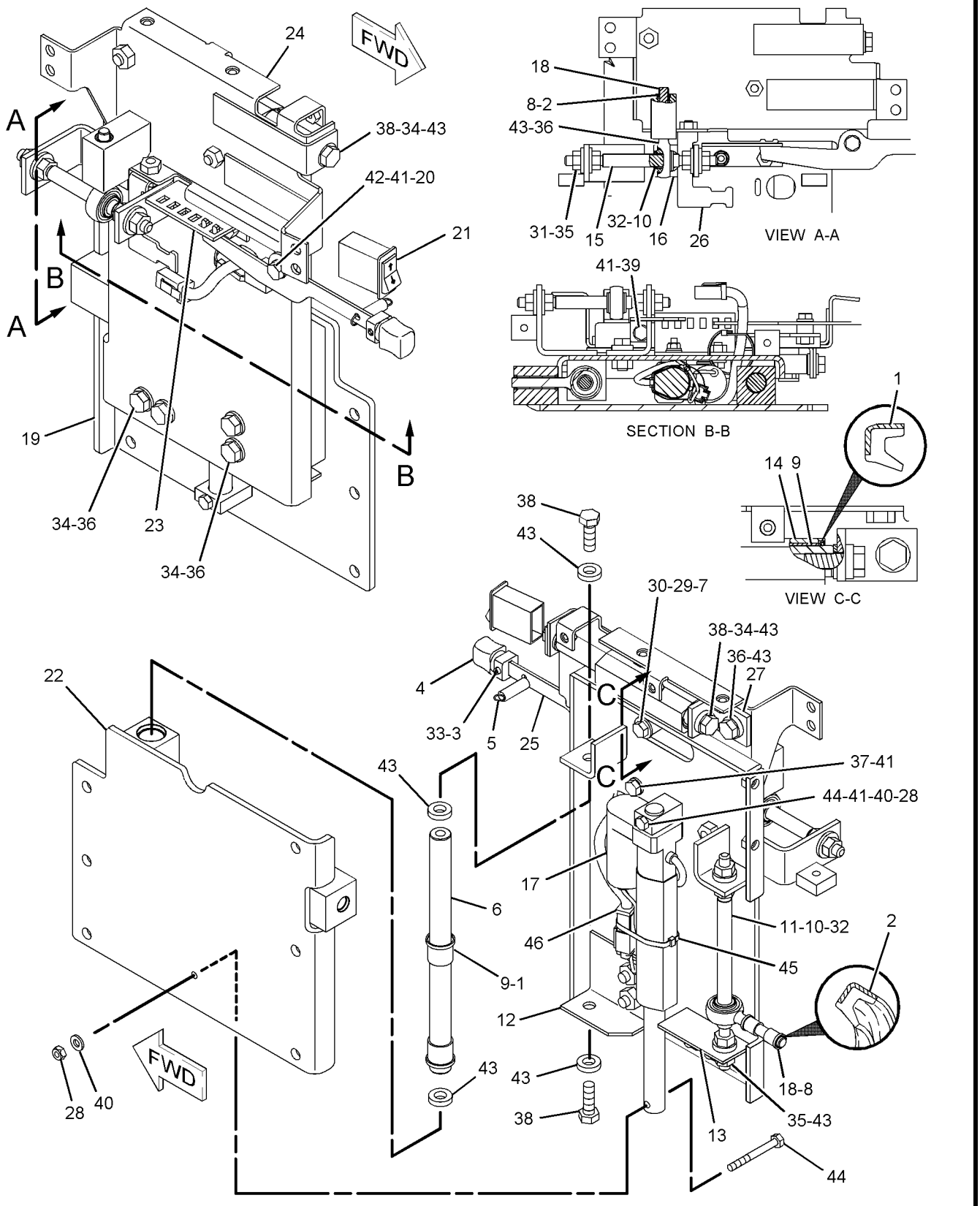

GRAPHIC #1 **<END>** g01138610

STEERING AND BRAKING SYSTEM

106-0466 CLUTCH & BRAKE GP-STEERING*R

S/N: RJG1-109

PART OF 212-2746 POWER TRAIN AR

SMCS-4101, 4109 **i02362278**

NOTE	REF NO	GRAPHIC REF	PART NUMBER	QTY	PART NAME 1 2 3 4 5 6 (PRODUCT LEVEL)	SEE PAGE
	1	1	**3P-3441**	1	RING-RETAINING	
	2	1	**4F-2129**	1	BALL BEARING	
	3	1	**6Y-3484**	1	BALL BEARING	
	4	1	**5L-4398**	17	BOLT (1/2-13X2.25-IN)	
	5	1	**5P-3488**	1	RACE & ROLLER AS-INNER	
	6	1	**5P-3489**	1	RACE-BEARING OUTER	
	7	1	**6P-5317**	1	RING-SEAL	
	8	1	**6T-0840**	1	RING-SEAL	
	9	1	**6T-0841**	1	PLATE	
	10	1	**6T-0842**	1	PLATE	
	11	1	**6T-2037**	1	RING-SEAL	
	12	1	**6V-6572**	1	RING-RETAINING	
	13	1	**6Y-2875**	2	RING	
	14	1	**6Y-2876**	4	SPRING	
	15	1	**6Y-2878**	1	RETAINER	
	16	1	**7T-1885**	1	RING	
	17	1	**7T-6994**	7	PLATE-CLUTCH & BRAKE	
	18	1	**8P-8360**	8	DISC-FRICTION	
	19	1	**9G-2991**	3	RING-SEAL	
	20	1	**9S-8006**	6	PLUG	
C	21	1	**105-3372**	1	SPRING	
	22	1	**106-0468**	1	HUB	
	23	1	**106-0469**	1	PISTON	
	24	1	**106-0470**	1	HOUSING-BRAKE	
	25	1	**106-0471**	1	PISTON	
	26	1	**106-0472**	1	HUB-INPUT	
	27	1	**106-0476**	1	RETAINER	
	28	1	**215-8140**	10	DISC-FRICTION	
C	29	1	**109-0063**	10	PLATE-BRAKE	
	30	1	**116-2591**	1	PLATE-THRUST	
	31	1	**116-2592**	1	RING-SEAL	
	32	1	**121-0691**	1	SHAFT AS	
	33	1	**219-7239**	1	SPOOL	
C	34	1	**129-9247**	1	RETAINER	
	35	1	**0S-1585**	10	BOLT (1/2-13X1.5-IN)	
	36	1	**1A-5822**	4	BOLT (1/2-13X2.75-IN)	
	37	1	**2M-9780**	6	SEAL-O-RING	
	38	1	**4F-7389**	3	SEAL-O-RING	
	39	1	**4K-5175**	4	BOLT-12 POINT HEAD (1/2-13X1.5-IN)	
	40	1	**5P-8245**	34	WASHER-HARD (13.5X25.5X3-MM THK)	
	41	1	**8M-4389**	2	SEAL-O-RING	
	42	1	**9H-3360**	1	SEAL-O-RING	
	43	1	**9S-1366**	3	BOLT (1/2-13X2.5-IN)	

C-CHANGE FROM PREVIOUS TYPE

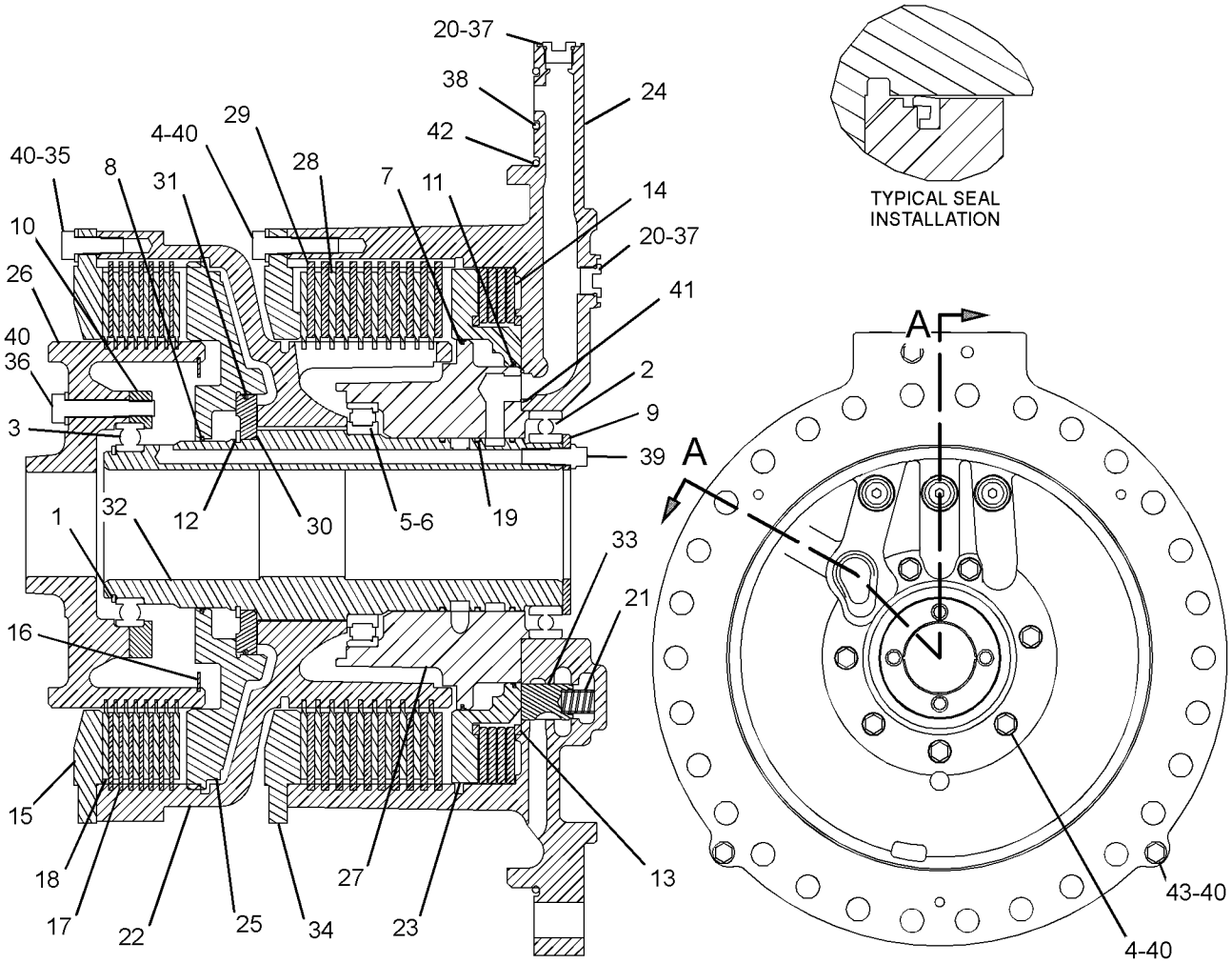

VIEW A-A

GRAPHIC #1 **<END>** g01180996

STEERING AND BRAKING SYSTEM

237-1017 CLUTCH & BRAKE GP-STEERING

S/N: RJG110-UP

PART OF 212-2746 POWER TRAIN AR

SMCS-4101, 4109 **i02273843**

NOTE	REF NO	GRAPHIC REF	PART NUMBER	QTY	PART NAME 1 2 3 4 5 6 (PRODUCT LEVEL)	SEE PAGE
	1	1	**3P-3441**	1	RING-RETAINING	
	2	1	**3T-3601**	1	RING-SPACER	
	3	1	**3T-3602**	1	RING-SPACER	
	4	1	**3T-4717**	2	SPRING-DISC	
	5	1	**4F-2129**	1	BALL BEARING	
	6	1	**5L-4398**	17	BOLT (1/2-13X2.25-IN)	
	7	1	**5P-3488**	1	RACE & ROLLER AS-INNER	
	8	1	**5P-3489**	1	RACE-BEARING OUTER	
	9	1	**6P-5317**	1	RING-SEAL	
	10	1	**6T-0840**	1	RING-SEAL	
	11	1	**6T-0841**	1	PLATE	
	12	1	**6T-0842**	1	PLATE	
	13	1	**6T-2037**	1	RING-SEAL	
	14	1	**6V-6572**	1	RING-RETAINING	
	15	1	**6Y-2878**	1	RETAINER	
	16	1	**6Y-3484**	1	BALL BEARING	
	17	1	**7T-1885**	1	RING	
	18	1	**7T-6994**	7	PLATE-CLUTCH & BRAKE	
	19	1	**8P-8360**	8	DISC-FRICTION	
	20	1	**9G-2991**	3	RING-SEAL	
	21	1	**9S-8006**	6	PLUG	
	22	1	**105-3372**	1	SPRING	
	23	1	**106-0468**	1	HUB	
	24	1	**106-0471**	1	PISTON	
	25	1	**106-0472**	1	HUB-INPUT	
	26	1	**106-0476**	1	RETAINER	
	27	1	**109-0063**	10	PLATE-BRAKE	
	28	1	**116-2591**	1	PLATE-THRUST	
	29	1	**116-2592**	1	RING-SEAL	
	30	1	**121-0691**	1	SHAFT AS	
	31	1	**129-9247**	1	RETAINER	
	32	1	**215-8140**	10	DISC-FRICTION	
	33	1	**219-7239**	1	SPOOL	
	34	1	**237-0930**	1	PISTON	
	35	1	**237-1016**	1	HOUSING-BRAKE	
	36	1	**0S-1585**	10	BOLT (1/2-13X1.5-IN)	
	37	1	**1A-5822**	4	BOLT (1/2-13X2.75-IN)	
	38	1	**2M-9780**	6	SEAL-O-RING	
	39	1	**4F-7389**	3	SEAL-O-RING	
	40	1	**4K-5175**	4	BOLT-12 POINT HEAD (1/2-13X1.5-IN)	
	41	1	**5P-8245**	34	WASHER-HARD (13.5X25.5X3-MM THK)	
	42	1	**8M-4389**	2	SEAL-O-RING	
	43	1	**9H-3360**	1	SEAL-O-RING	
	44	1	**9S-1366**	3	BOLT (1/2-13X2.5-IN)	

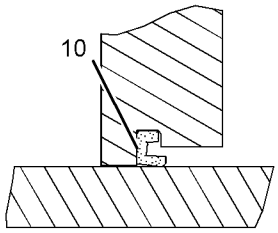

VIEW OF AREA C

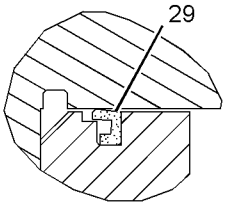

VIEW OF AREA D

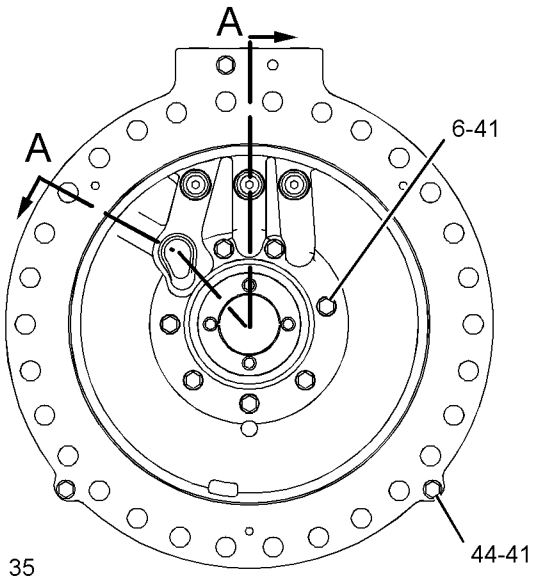

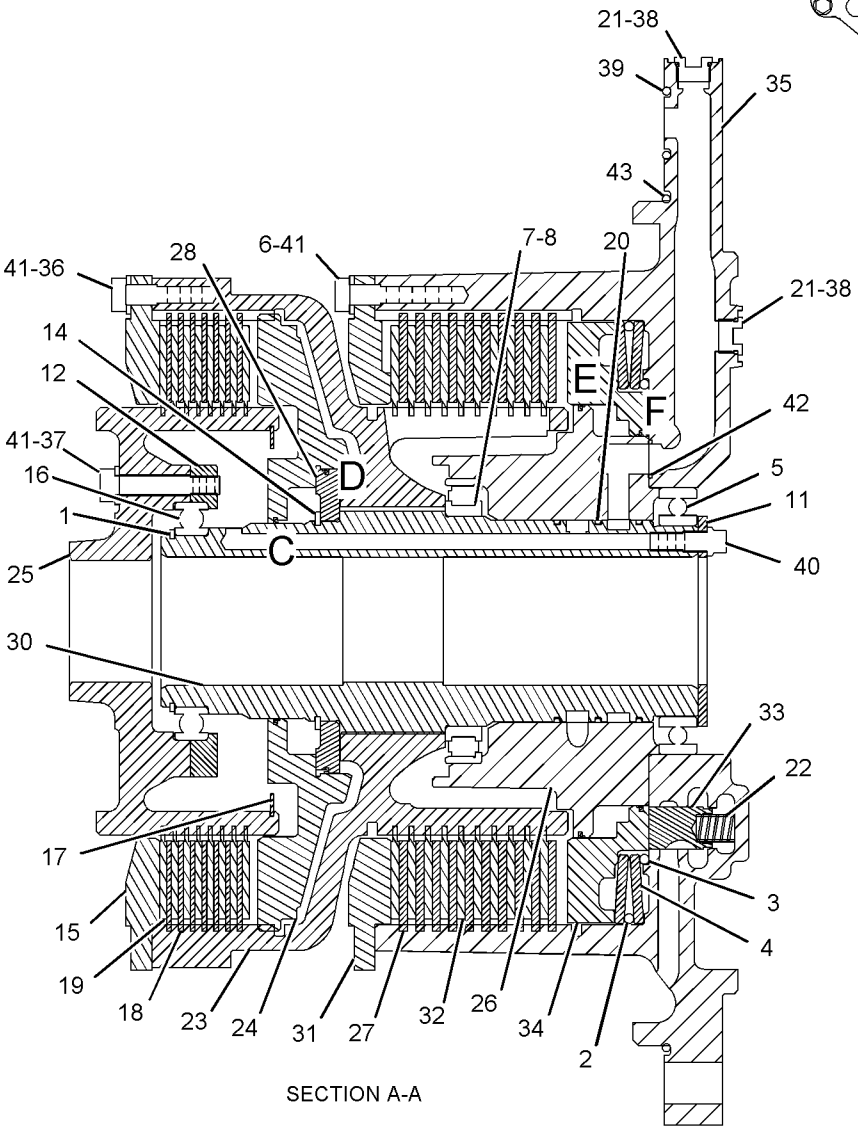

SECTION A-A

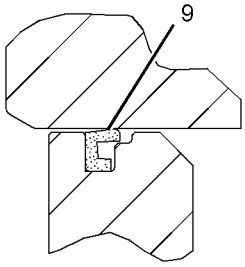

VIEW OF AREA E

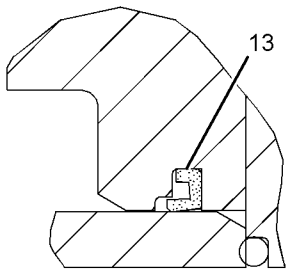

VIEW OF AREA F

GRAPHIC #1 **<END>** g01140655

235-4494 CONTROL GP-STEERING—STEERING, TRANSMISSION

S/N: RJG1-UP

PART OF 212-0694 CONTROL GP-STEERING & TMSN

SMCS-4135 **i02461748**

NOTE	REF NO	GRAPHIC REF	PART NUMBER	QTY	PART NAME 1 2 3 4 5 6 (PRODUCT LEVEL)	SEE PAGE
	1	1	**112-0858**	1	BEARING	
M	2	1	**9X-2328**	1	BOLT-SOCKET HEAD (M6X1X25-MM)	
	3	1	**234-2875**	1	HANDLE AS	
	4	1	**234-2877**	1	GASKET	
Y	5	1	**235-4495**	1	DETENT GP	518
	6	1	**237-0159**	1	SWITCH AS-LIMIT (FORWARD,REVERSE)	
		1	**102-8805**	1	KIT-RECEPTACLE (6-PIN)	
					(INCLUDES RECEPTACLE AS & WEDGE)	
		1	**186-3735**	6	PIN-CONNECTOR (16-GA TO 18-GA)	
	7	1	**103-6262**	4	SCREW-MACHINE (4-40X0.63-IN)	
	8	1	**1W-6448**	2	DOWEL	
	9	1	**8T-5410**	1	SEAL-LIP TYPE	

M-METRIC PART
Y-SEPARATE ILLUSTRATION

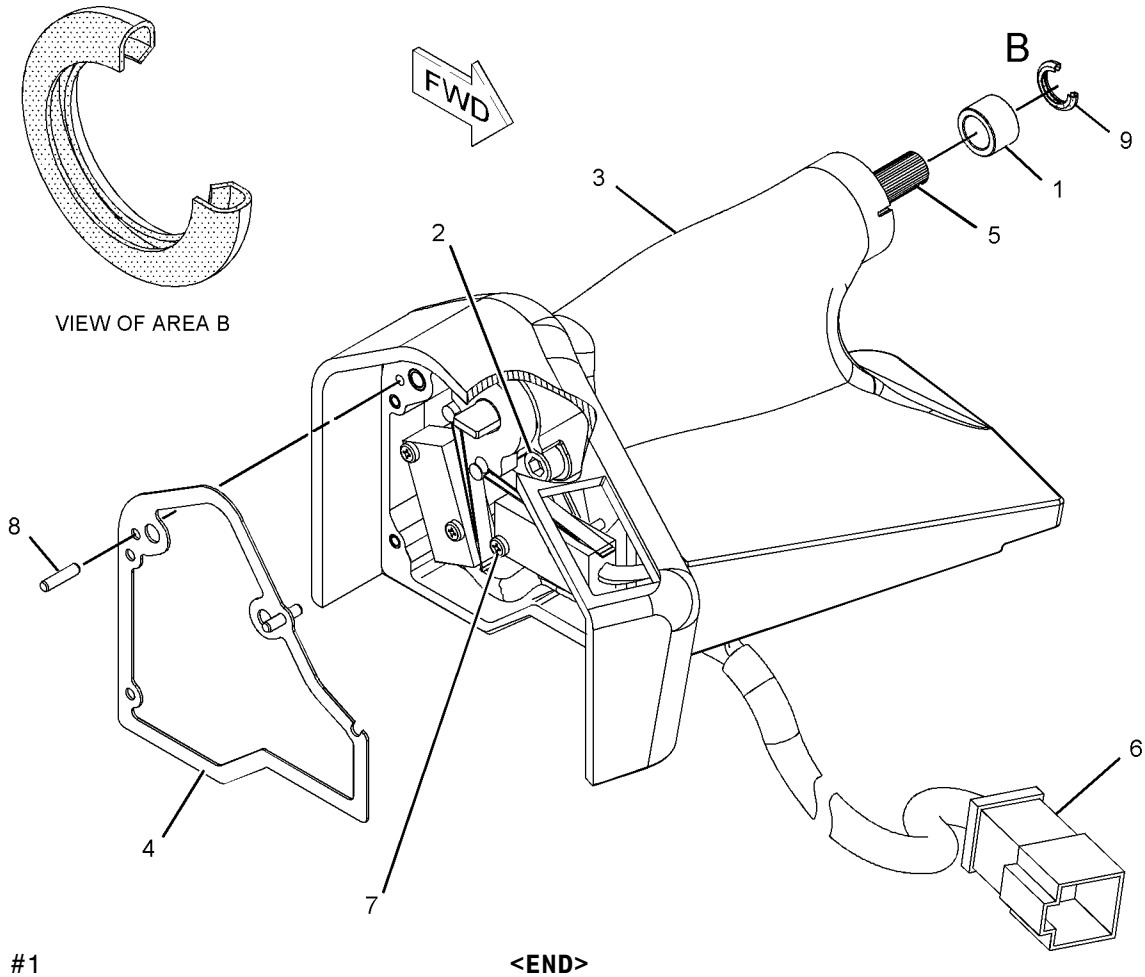

GRAPHIC #1 **<END>** g01052156

STEERING AND BRAKING SYSTEM

212-0694 CONTROL GP-STEERING & TMSN

S/N: RJG1-UP

PART OF 212-0704 CONTROL GP-STEERING & TMSN

SMCS-4122 **i02402538**

NOTE	REF NO	GRAPHIC REF	PART NUMBER	QTY	PART NAME 1 2 3 4 5 6 (PRODUCT LEVEL)	SEE PAGE
M	1	1	**9X-6615**	6	BOLT (M5X0.8X30-MM)	
	2	1	**9X-6772**	7	STRAP-CABLE	
M	3	1	**9X-8902**	3	BOLT-SOCKET HEAD (M3X0.5X8-MM)	
Y	4	1	**122-7372**	1	GEAR GP-STEERING (STEERING CLUTCH, BRAKE, LH)	519
	5	1	**123-9812**	1	HANDLE AS	
Y	6	1	**125-0583**	1	SUPPORT GP-CONTROL (UPSHIFT, DOWNSHIFT)	523
Y	7	1	*125-9664*	1	GEAR GP-STEERING (STEERING CLUTCH, BRAKE, RH)	520
Y	8	1	**160-2443**	2	SENSOR GP-POSITION (ROTARY) (STEERING CLUTCH, BRAKE, RH, LH)	281
	9	1	**213-7012**	1	HARNESS AS-CONSOLE (STEERING, TRANSMISSION)	
		1	**102-8802**	1	KIT-RECEPTACLE (2-PIN)	
		1	**102-8804**	1	KIT-RECEPTACLE (4-PIN)	
		1	**102-8801**	1	KIT-RECEPTACLE (12-PIN)	
					(EACH INCLUDES RECEPTACLE AS & WEDGE)	
		1	**155-2272**	1	PLUG AS-CONNECTOR (4-PIN)	
		1	**155-2255**	1	KIT-CONNECTING PLUG (12-PIN)	
		1	**155-2260**	2	KIT-CONNECTING PLUG (3-PIN)	
		1	**155-2274**	2	KIT-CONNECTING PLUG (6-PIN)	
					(EACH INCLUDES PLUG AS, WEDGE, & INTERFACE SEAL)	
	10	1	**219-2391**	1	SENSOR GP-POSITION (TRANSMISSION CONTROL)	
	11	1	**273-2630**	1	SWITCH AS-ROCKER (PARKING BRAKE)	
	12	1	**233-8442**	1	PLATE AS	
	13	1	**234-2876**	1	PLATE	
	14	1	**234-2878**	1	PLATE	
Y	15	1	*235-4494*	1	CONTROL GP-STEERING	513
	16	1	**246-4311**	1	GUARD (SWITCH)	
	17	1	**4B-1270**	1	SCREW-MACHINE (8-32X0.75-IN)	
	18	1	**6V-0894**	3	SEAL-O-RING	
M	19	1	**7X-7888**	2	BOLT (M6X1X90-MM)	
M	20	1	**8T-0267**	1	BOLT-SOCKET HEAD (M6X1X12-MM)	
M	21	1	**8T-4138**	2	BOLT (M6X1X20-MM)	
	22	1	**9X-8256**	4	WASHER (6.6X12X2-MM THK)	

M-METRIC PART
Y-SEPARATE ILLUSTRATION

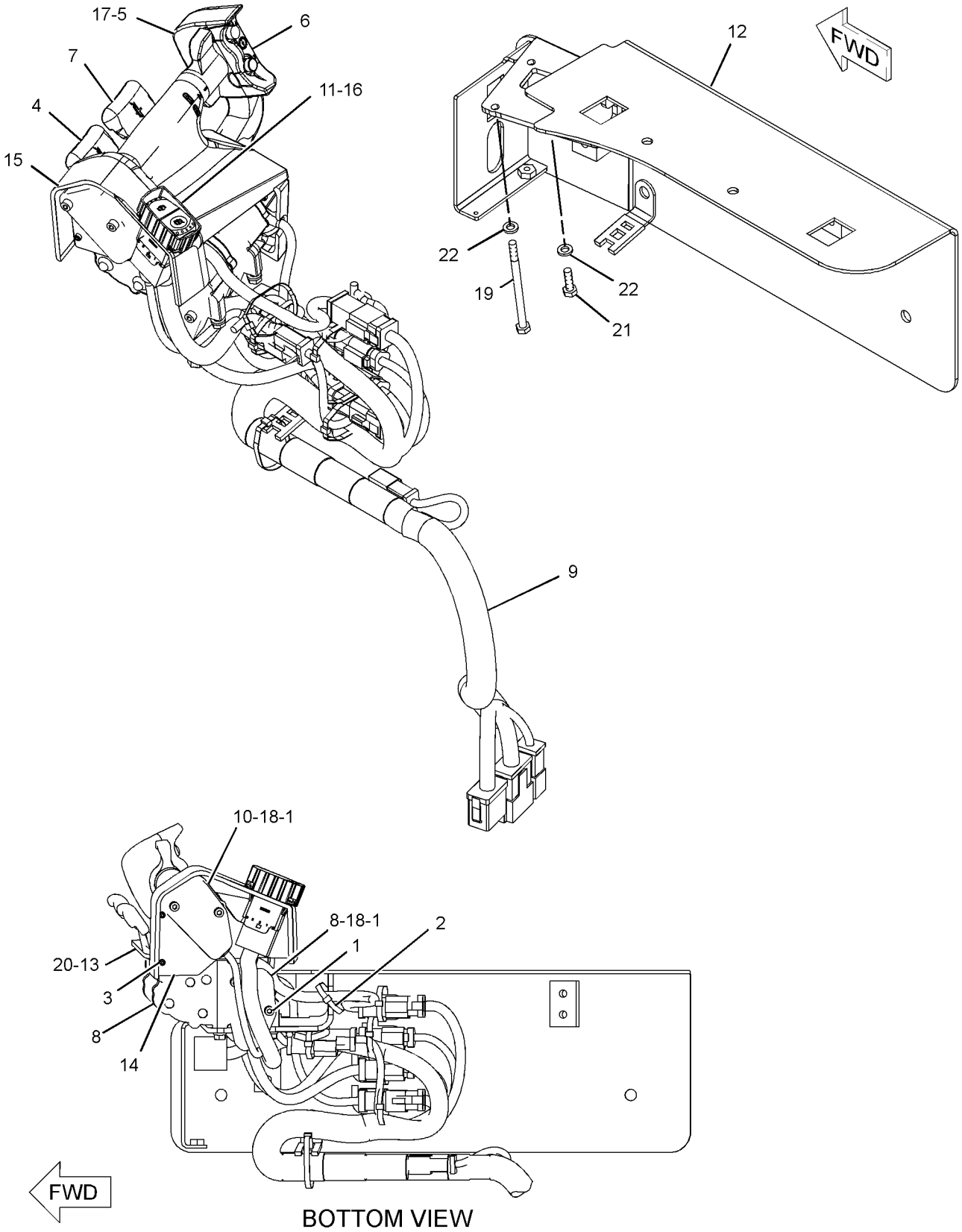

GRAPHIC #1 **<END>** g01224752

STEERING AND BRAKING SYSTEM

212-0704 CONTROL GP-STEERING & TMSN

S/N: RJG1-UP

PART OF 212-0710 CONTROL GP-STEERING & TMSN

SMCS-4122 **i02049625**

NOTE	REF NO	GRAPHIC REF	PART NUMBER	QTY	PART NAME 1 2 3 4 5 6 (PRODUCT LEVEL)	SEE PAGE
	1	1	**159-7351**	2	CLIP	
Y	2	1	*212-0694*	1	CONTROL GP-STEERING & TMSN	514
	3	1	**222-1463**	1	PLATE AS	
M		1	**6V-9632**	2	NUT-WELD (M6X1-THD)	
	4	1	**222-1464**	1	PLATE	
	5	1	**233-8554**	1	CUSHION AS	
M		1	**8T-3490**	4	NUT-WELD (M10X1.5-THD)	
Y	6	1	*234-2496*	1	ADJUSTER GP-STEER & TMSN CONT	507
	7	1	**234-2880**	1	BELLOWS AS	
	8	1	**235-4493**	1	COVER	
M	9	1	**5C-9553**	2	BOLT (M6X1X16-MM)	
	10	1	**5P-4116**	2	WASHER-HARD (8.8X20.5X2-MM THK)	
	11	1	**8T-4121**	2	WASHER-HARD (11X21X2.5-MM THK)	
M	12	1	**8T-4137**	4	BOLT (M10X1.5X20-MM)	
M	13	1	**8T-4200**	8	BOLT (M8X1.25X16-MM)	
	14	1	**8T-4224**	6	WASHER-HARD (8.8X16X2-MM THK)	
M	15	1	**9X-2043**	5	SCREW-TRUSS HEAD (M6X1X14-MM)	
	16	1	**9X-8256**	2	WASHER (6.6X12X2-MM THK)	

M-METRIC PART
Y-SEPARATE ILLUSTRATION

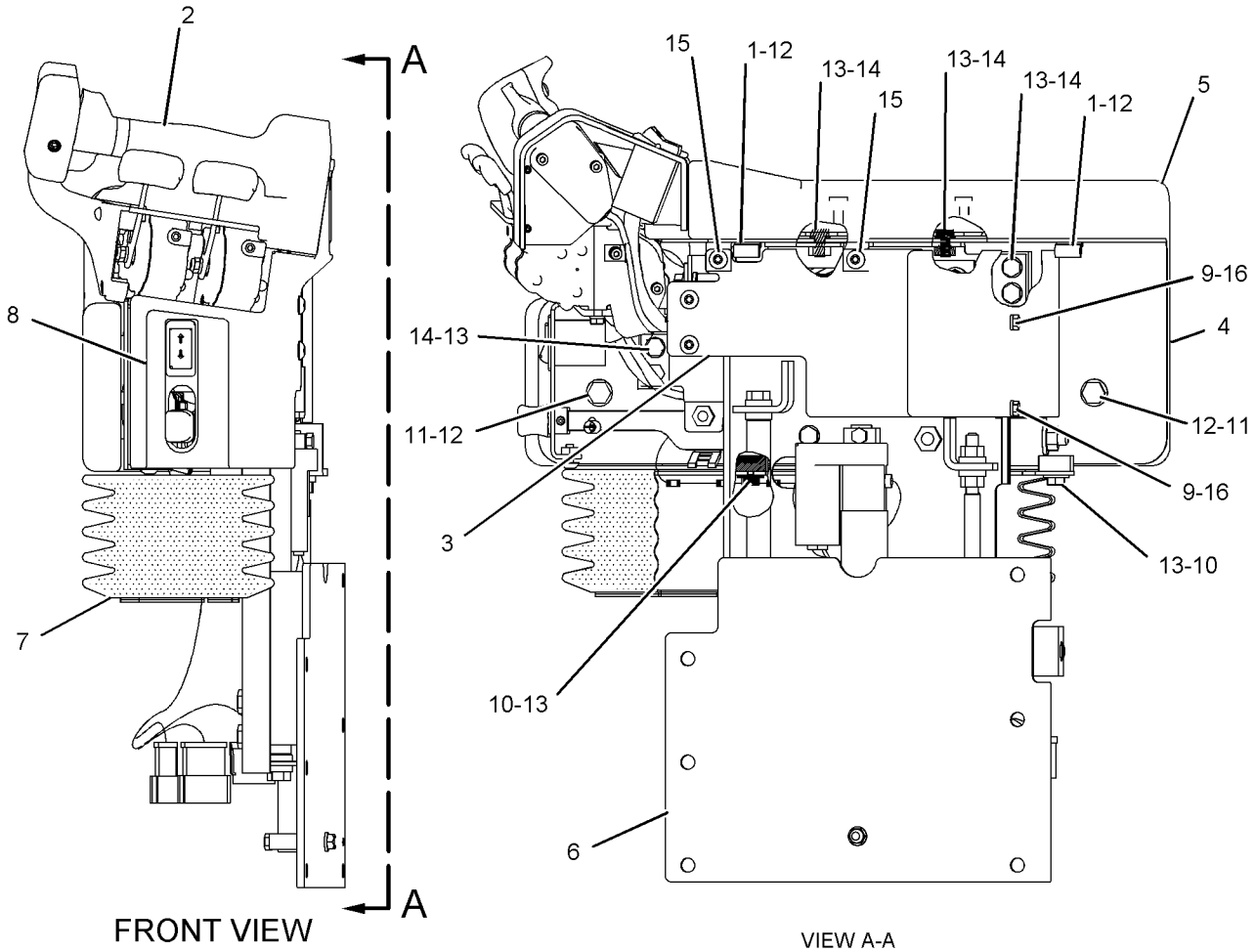

FRONT VIEW

VIEW A-A

GRAPHIC #1 **<END>** g01053197

212-0710 CONTROL GP-STEERING & TMSN

S/N: RJG1-UP

PART OF 212-2746 POWER TRAIN AR

SMCS-4122 **i02263383**

NOTE	REF NO	GRAPHIC REF	PART NUMBER	QTY	PART NAME 1 2 3 4 5 6 (PRODUCT LEVEL)	SEE PAGE
	1	1	**171-7077**	2	ROD-THREADED	
Y	2	1	*212-0704*	1	CONTROL GP-STEERING & TMSN	516
	3	1	**8T-4121**	6	WASHER-HARD (11X21X2.5-MM THK)	
M	4	1	**8T-4133**	2	NUT (M10X1.5 THD)	
M	5	1	**8T-4136**	4	BOLT (M10X1.5X25-MM)	

M-METRIC PART
Y-SEPARATE ILLUSTRATION

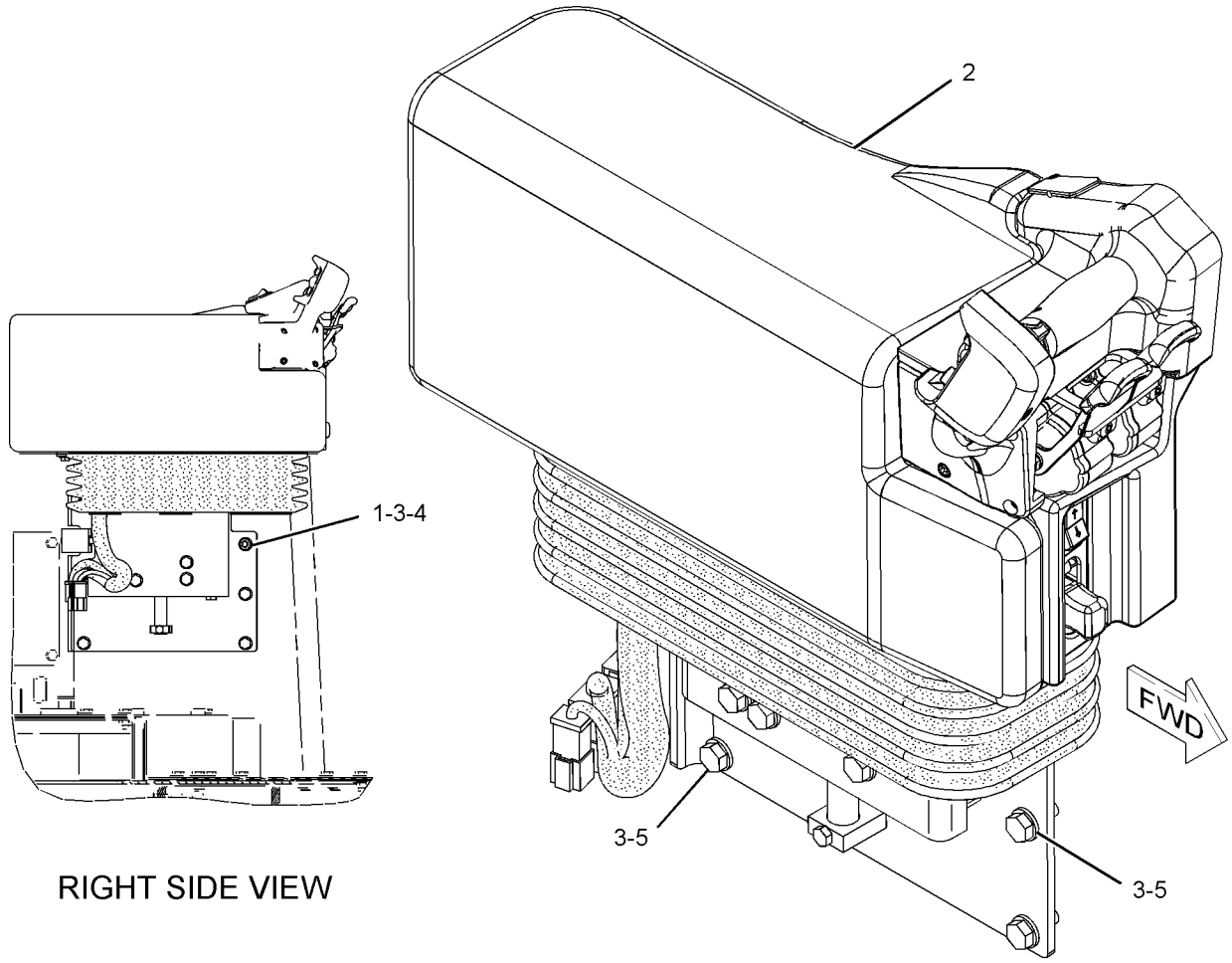

RIGHT SIDE VIEW

GRAPHIC #1 **<END>** g01052209

235-4495 DETENT GP–STEERING

S/N: RJG1-UP

PART OF 235-4494 CONTROL GP-STEERING

SMCS-4005 **i02049810**

NOTE	REF NO	GRAPHIC REF	PART NUMBER	QTY	PART NAME 1 2 3 4 5 6 (PRODUCT LEVEL)	SEE PAGE
Z	1	1		4	BALL	
Z	2	1		1	DOWEL	
Z	3	1		1	PIN-SPRING	
Z	4	1		4	SPRING	
Z	5	1		1	BEARING	
Z	6	1		1	SHAFT	
Z	7	1		1	DETENT	

Z-NOT SERVICED SEPARATELY

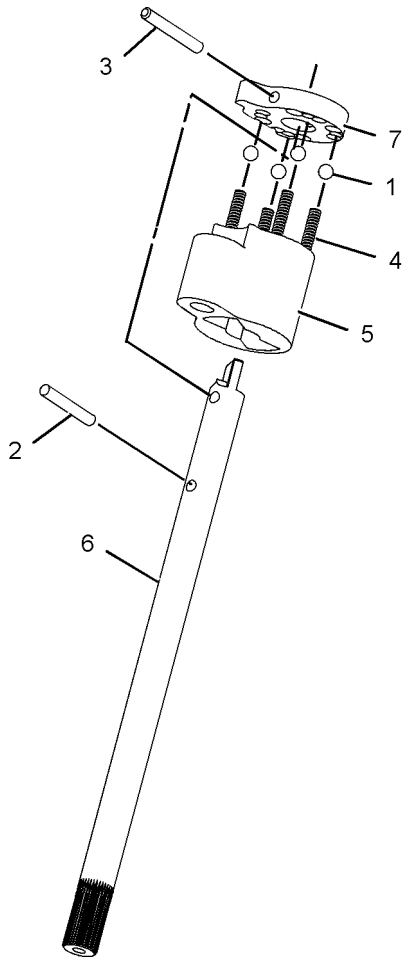

GRAPHIC #1 **<END>** g01052177

122-7372 GEAR GP-STEERING—STEERING CLUTCH, BRAKE, LH

S/N: RJG1-UP

PART OF 212-0694 CONTROL GP-STEERING & TMSN

FIELD REPLACEMENT FOR 125-9664—PAGE 520

SMCS-4301 **i02275106**

NOTE	REF NO	GRAPHIC REF	PART NUMBER	QTY	PART NAME 1 2 3 4 5 6 (PRODUCT LEVEL)	SEE PAGE
M	1	1	**125-3298**	4	BOLT-SOCKET HEAD (M5X0.8X12-MM)	
M	2	1	**129-3178**	1	LOCKNUT (M6X1 THD)	
	3	1	**266-0048**	1	LEVER AS	
		1	**2K-8467**	1	PIN-SPRING	
	4	1	**9X-8256**	1	WASHER (6.6X12X2-MM THK)	

M-METRIC PART

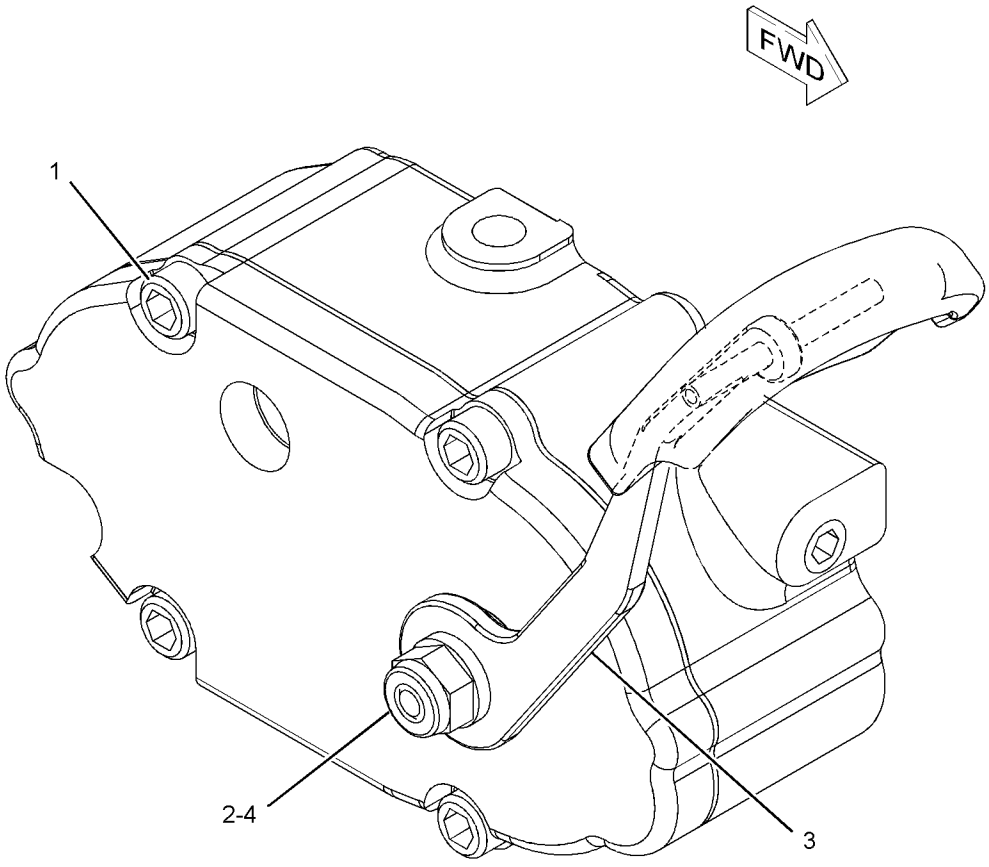

GRAPHIC #1 **<END>** g01140192

125-9664 GEAR GP-STEERING—STEERING CLUTCH, BRAKE, RH

S/N: RJG1-UP

PART OF 212-0694 CONTROL GP-STEERING & TMSN

FIELD REPLACEMENT ORDER 122-7372—PAGE 519, 4-125-3299 BOLT-SOCKET HEAD

SMCS-4301 **i02275132**

NOTE	REF NO	GRAPHIC REF	PART NUMBER	QTY	PART NAME 1 2 3 4 5 6 (PRODUCT LEVEL)	SEE PAGE
M	1	1	**125-3299**	4	BOLT-SOCKET HEAD (M5X0.8X25-MM)	
M	2	1	**129-3178**	1	LOCKNUT (M6X1 THD)	
	3	1	**266-0048**	1	LEVER AS	
		1	**2K-8467**	1	PIN-SPRING	
	4	1	**9X-8256**	1	WASHER (6.6X12X2-MM THK)	

M-METRIC PART

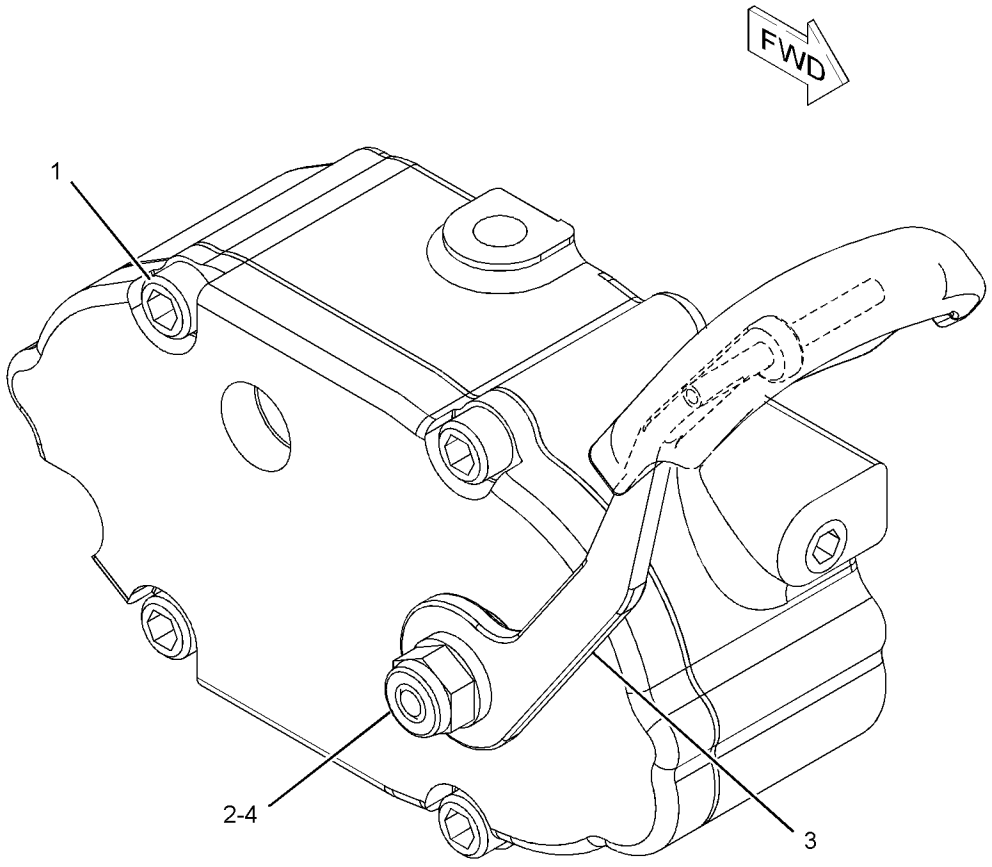

GRAPHIC #1 **<END>** g01140192

164-6093 MANIFOLD & VALVE GP–
STEERING CLUTCH, BRAKE, RH, LH
S/N: RJG1-UP

PART OF 201-7272 VALVE GP-STEERING & BRAKE CONT

SMCS-3206, 5479 **i02285629**

NOTE	REF NO	GRAPHIC REF	PART NUMBER	QTY	PART NAME 1 2 3 4 5 6 (PRODUCT LEVEL)	SEE PAGE
	1	1	**137-8794**	2	SPOOL AS	
					(EACH INCLUDES)	
	2	1	**3D-7943**	1	RING-RETAINING	
	3	1	**5L-4758**	1	SEAL-O-RING	
	4	1	**137-8793**	1	SPRING	
	5	1	**111-3199**	1	MANIFOLD	
Y	6	1	**174-4909**	1	VALVE GP-SOLENOID (RIGHT STEERING CLUTCH)	527
Y	6A	1	**174-4909**	1	VALVE GP-SOLENOID (RIGHT BRAKE)	527
Y	6B	1	**174-4909**	1	VALVE GP-SOLENOID (LEFT BRAKE)	527
Y	6C	1	**174-4909**	1	VALVE GP-SOLENOID (LEFT STEERING CLUTCH)	527
	7	1	**1P-1744**	2	DOWEL	

Y-SEPARATE ILLUSTRATION

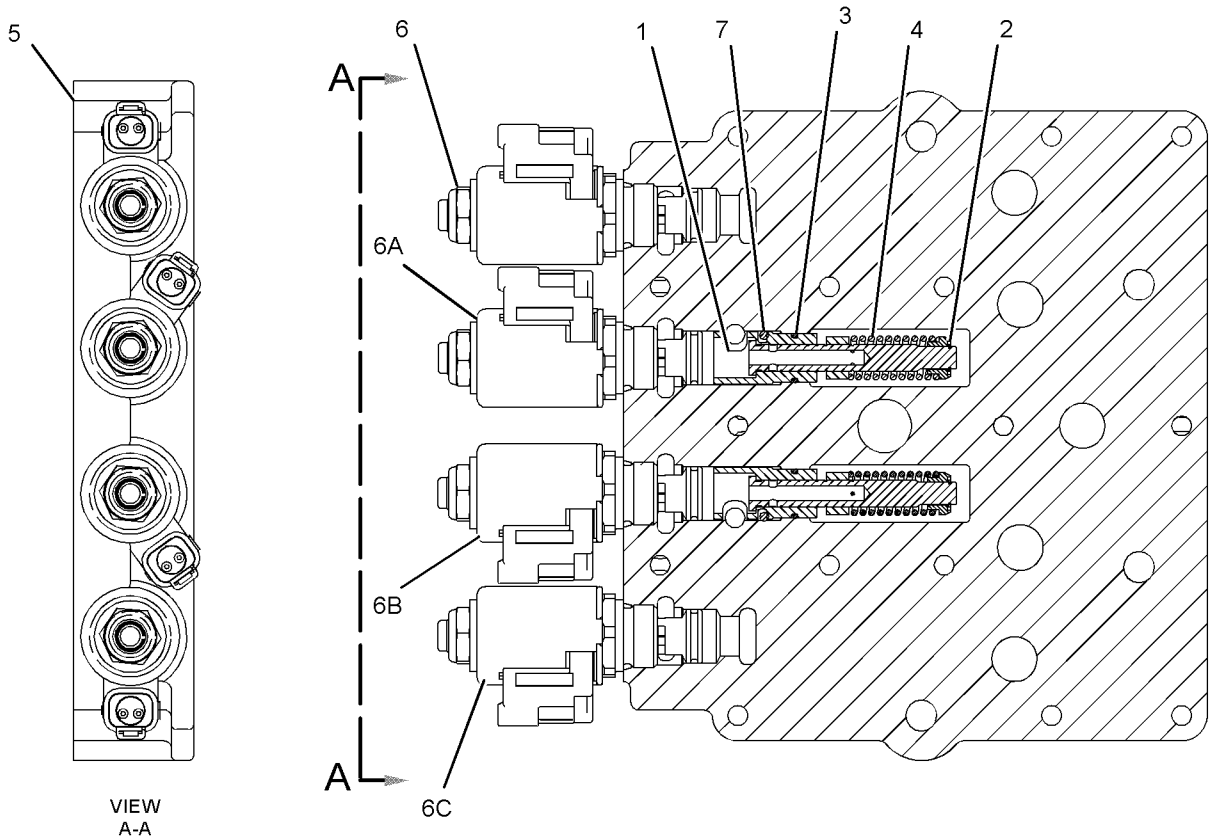

GRAPHIC #1 **<END>** g01144040

175-4972 MANIFOLD & VALVE GP–

PARKING BRAKE, SECONDARY BRAKE

S/N: RJG1-UP

PART OF 201-7272 VALVE GP-STEERING & BRAKE CONT

SMCS-3206, 5479 **i02149658**

NOTE	REF NO	GRAPHIC REF	PART NUMBER	QTY	PART NAME 1 2 3 4 5 6 (PRODUCT LEVEL)	SEE PAGE
	1	1	**132-9455**	1	MANIFOLD	
Y	2	1	*172-2392*	2	VALVE GP-SOLENOID (PARKING, SECONDARY BRAKE)	526

Y-SEPARATE ILLUSTRATION

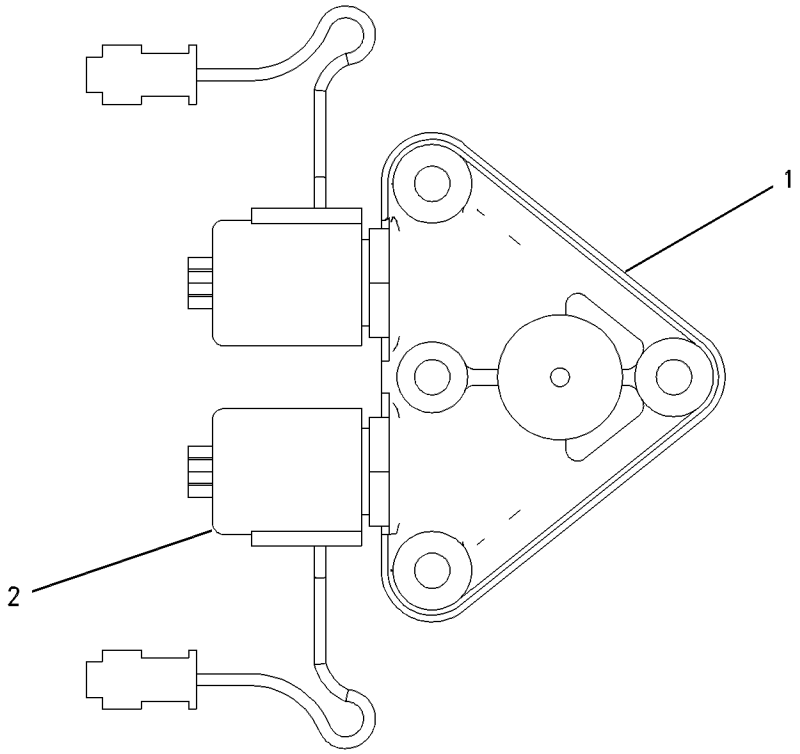

GRAPHIC #1 **<END>** g00653425

125-0583 SUPPORT GP-CONTROL–UPSHIFT, DOWNSHIFT

S/N: RJG1-UP

PART OF 212-0694 CONTROL GP-STEERING & TMSN

SMCS-4122 **i01988855**

NOTE	REF NO	GRAPHIC REF	PART NUMBER	QTY	PART NAME 1 2 3 4 5 6 (PRODUCT LEVEL)	SEE PAGE
M	1	1	**9X-8902**	1	BOLT-SOCKET HEAD (M3X0.5X8-MM)	
	2	1	**5P-8907**	1	SEAL-O-RING	
	3	1	**125-0582**	1	COVER AS	
M	4	1	**125-3298**	1	BOLT-SOCKET HEAD (M5X0.8X12-MM)	
	5	1	**125-8826**	1	COVER	
	6	1	**131-0447**	2	NUT (15/32-32-THD)	
	7	1	**132-7419**	1	SWITCH AS-PUSH BUTTON (DOWNSHIFT)	
		1	**144-0331**	1	CAP-PUSH BUTTON	
	8	1	**132-7450**	1	SWITCH AS-PUSH BUTTON (UPSHIFT)	
		1	**144-0331**	1	CAP-PUSH BUTTON	
	9	1	**151-9275**	1	KIT-RECEPTACLE (6-PIN)	
					(INCLUDES RECEPTACLE AS & WEDGE)	
	10	1	**8T-8729**	6	PIN-CONNECTOR	
	11	1	**3E-3383**	1	WEDGE-RECEPTACLE LOCK (6-PIN)	
BD	12	1	**6V-2689**		TUBE-HEAT SHRINK	

B-USE AS REQUIRED
D-ORDER BY THE METER
M-METRIC PART

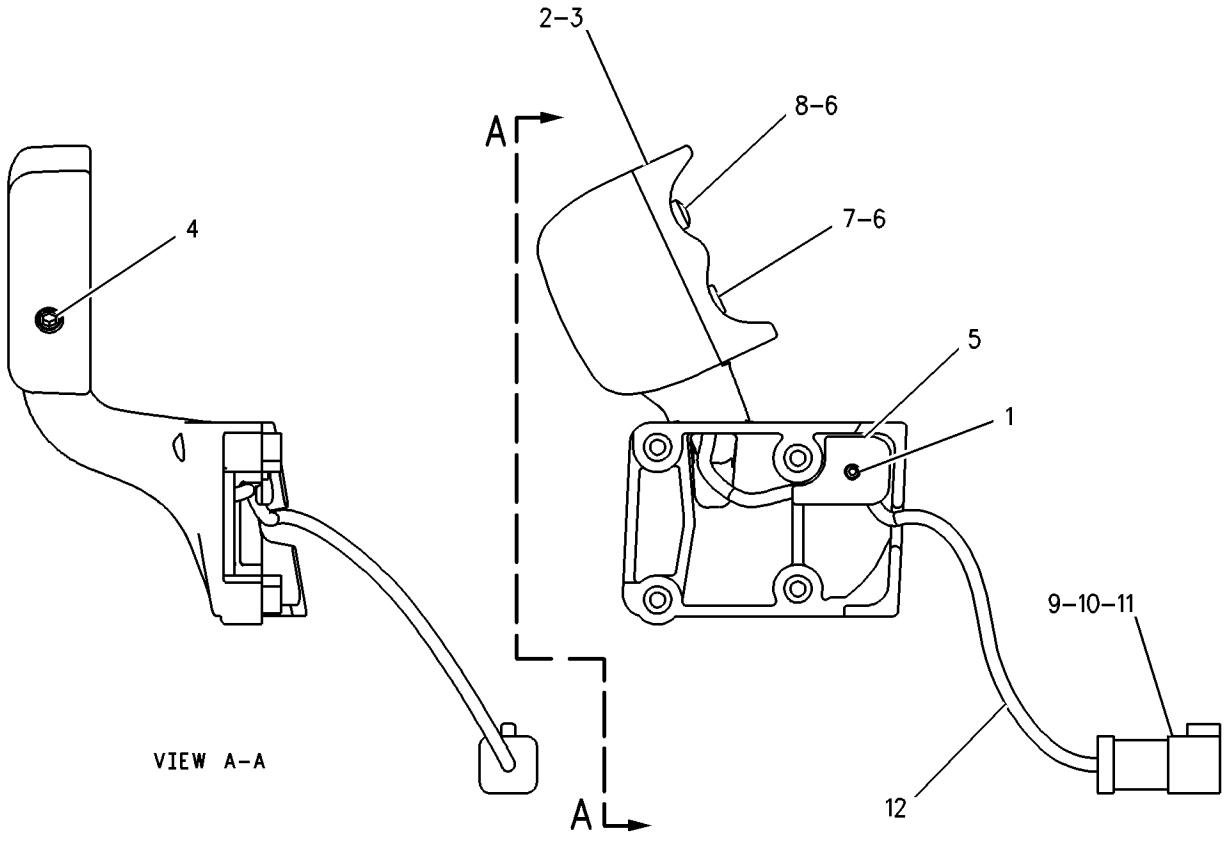

GRAPHIC #1 **<END>** g00629711

STEERING AND BRAKING SYSTEM

221-0867 VALVE & MTG GP-STEER & BRAKE

S/N: RJG1-UP

PART OF 212-2746 POWER TRAIN AR

SMCS-4120 **i02462988**

NOTE	REF NO	GRAPHIC REF	PART NUMBER	QTY	PART NAME 1 2 3 4 5 6 (PRODUCT LEVEL)	SEE PAGE
	1	1	**3S-0004**	4	WASHER (0.406X0.728X0.09-IN THK)	
	2	1	**6V-0852**	4	CAP-DUST	
	3	1	**9S-1018**	8	WASHER (9.73X19.05X0.84-MM THK)	
	4	1	**114-3926**	1	PLATE	
Y	5	1	**201-7272**	1	VALVE GP-STEERING & BRAKE CONT	530
	6	1	**221-1846**	1	MANIFOLD AS	
	6A	1	**8C-3312**	1	RING-RETAINING	
	6B	1	**7X-0588**	1	WASHER-HARD (17X27X3.5-MM THK)	
	6C	1	**9X-4609**	1	SEAL-O-RING	
	6D	1	**197-4652**	1	VALVE-RELIEF	
	6E	1	**221-1845**	1	MANIFOLD	
	7	1	**2M-9780**	2	SEAL-O-RING	
	8	1	**3J-1907**	4	SEAL-O-RING	
	9	1	**4F-0411**	4	BOLT (3/8-16X6.5-IN)	
	10	1	**5P-1404**	2	ADAPTER-O-RING	
	11	1	**6V-3965**	4	FITTING AS (QUICK DISCONNECT)	
	12	1	**8M-4438**	8	SEAL-O-RING	
	13	1	**8M-4992**	1	SEAL-O-RING	
	14	1	**8M-5254**	11	SEAL-O-RING	

Y-SEPARATE ILLUSTRATION

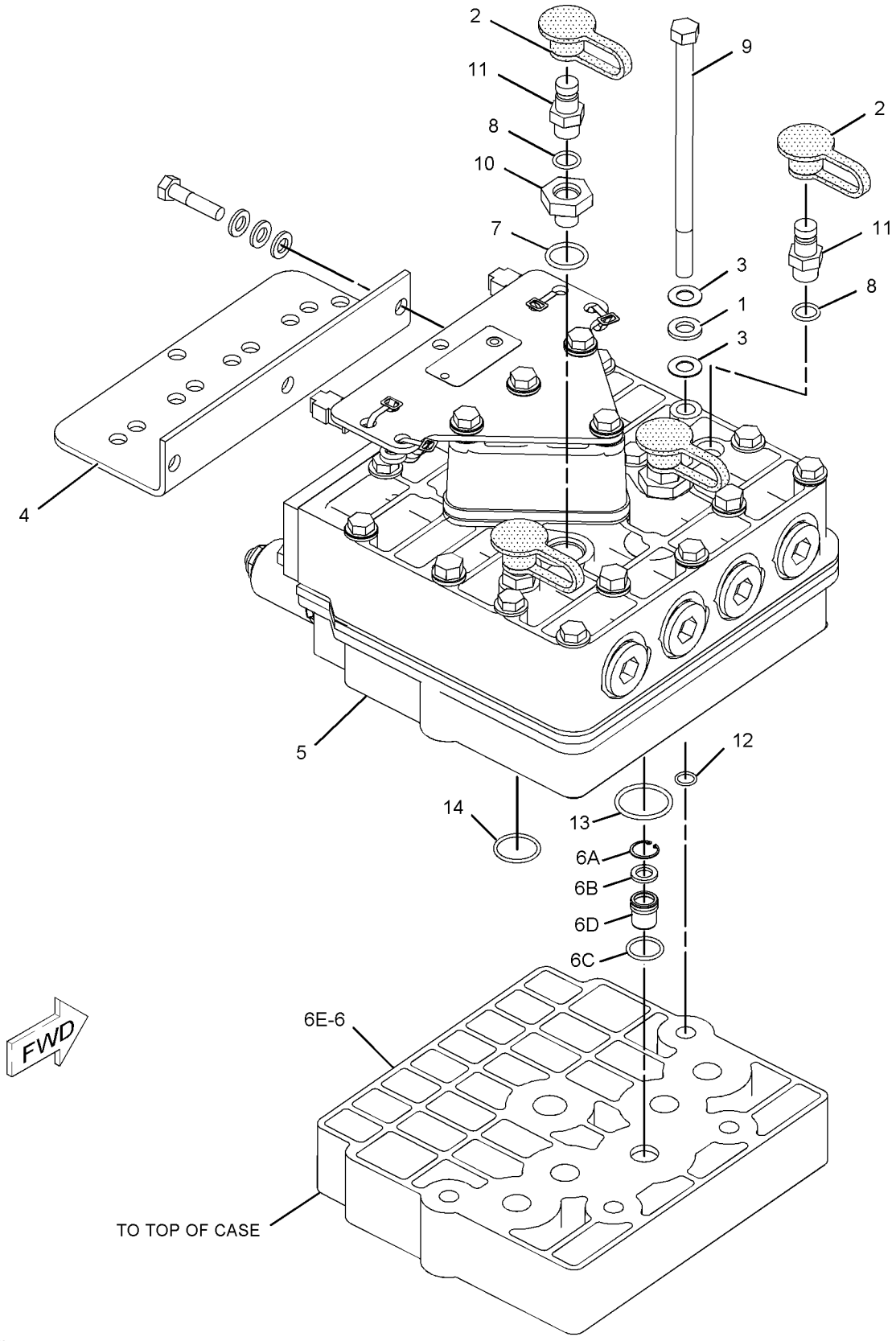

GRAPHIC #1 **<END>** g01054183

172-2392 VALVE GP-SOLENOID—PARKING, SECONDARY BRAKE

S/N: RJG1-UP
24 VOLT
PART OF 175-4972 MANIFOLD & VALVE GP

SMCS-4804 **i02149751**

NOTE	REF NO	GRAPHIC REF	PART NUMBER	QTY	PART NAME 1 2 3 4 5 6 (PRODUCT LEVEL)	SEE PAGE
	1	1	**156-5970**	1	NUT (1/2-20-2B THD)	
	2	1	**133-2249**	1	COIL AS	
		1	**1S-9593**	2	STRAP-CABLE	
		1	**186-3735**	2	PIN-CONNECTOR (16-GA TO 18-GA)	
		1	**8T-8737**	2	PLUG-SEAL	
		1	**102-8804**	1	KIT-RECEPTACLE (4-PIN)	
					(INCLUDES RECEPTACLE AS & WEDGE)	
	3	1	**172-2391**	1	SPOOL AS	
		1	**156-5970**	1	NUT (1/2-20-2B THD)	
					AVAILABLE REPAIR KIT(S):	
			189-1839	1	KIT-SEAL (SOLENOID VALVE)	
					(INCLUDES O-RING SEALS & BACK UP RING)	

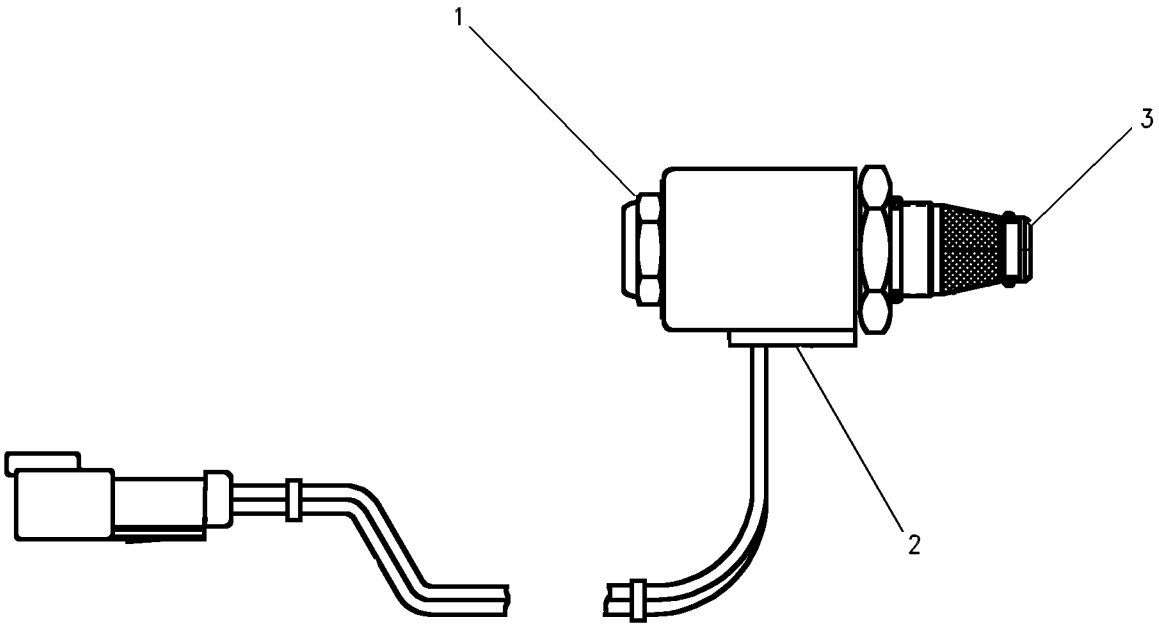

GRAPHIC #1 **<END>** g00653409

174-4909 VALVE GP-SOLENOID—STEERING, BRAKE

S/N: RJG1-UP

PART OF 164-6093 MANIFOLD & VALVE GP

SMCS-4804 **i02275292**

NOTE	REF NO	GRAPHIC REF	PART NUMBER	QTY	PART NAME 1 2 3 4 5 6 (PRODUCT LEVEL)	SEE PAGE
	1	1	**226-9622**	1	COIL AS (24 VOLT)	
	2	1	**164-2108**	1	WASHER (13.03X25.4X2.38-MM THK)	
	3	1	**218-2373**	1	NUT (1/2-28-THD)	

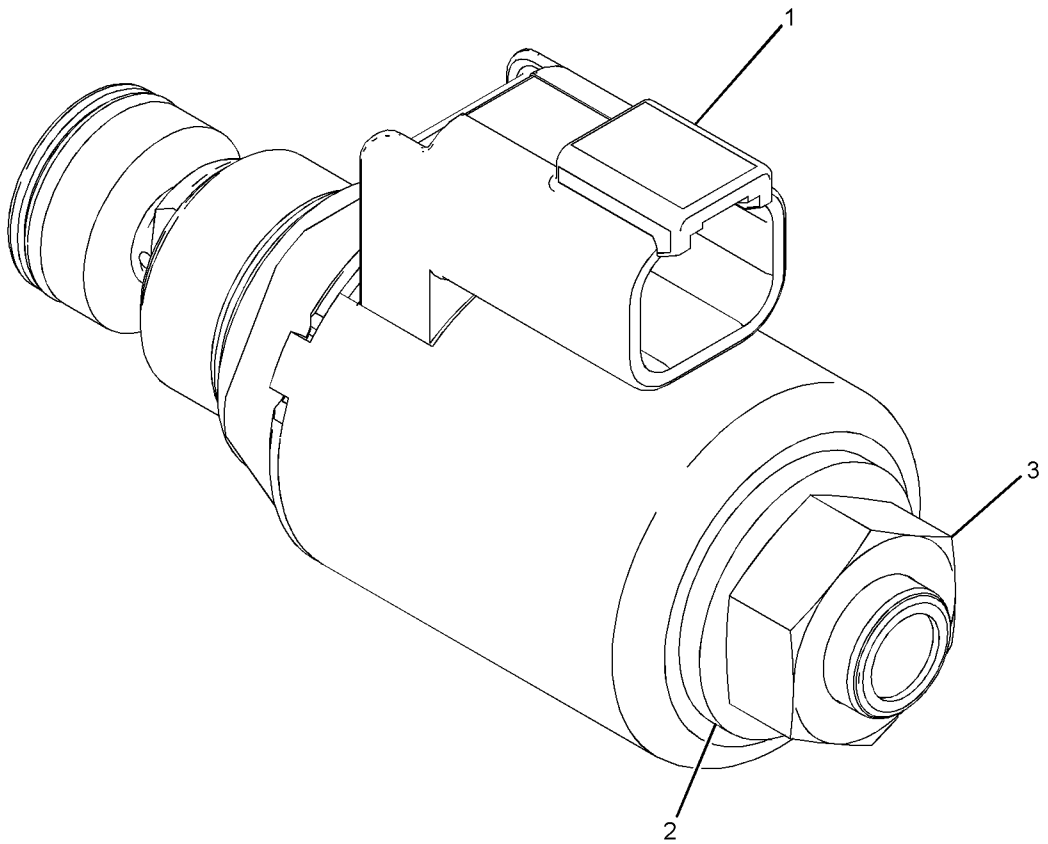

GRAPHIC #1 **<END>** g01139934

STEERING AND BRAKING SYSTEM

201-7270 VALVE GP-STEERING & BRAKE CONT

S/N: RJG1-UP

PART OF 201-7272 VALVE GP-STEERING & BRAKE CONT

SMCS-4120 **i02149356**

NOTE	REF NO	GRAPHIC REF	PART NUMBER	QTY	PART NAME 1 2 3 4 5 6 (PRODUCT LEVEL)	SEE PAGE
	1	1	**188-7067**	4	SPRING	
	2	1	**188-7068**	4	RETAINER	
	3	1	**188-7069**	4	PISTON-LOAD	
	4	1	**108-4430**	4	SPRING	
	5	1	**108-4433**	1	PLATE-END	
	6	1	**148-8409**	4	PLUG AS	
		1	**3D-2824**	1	SEAL-O-RING	
M	7	1	**7X-2537**	3	BOLT (M8X1.25X35-MM)	
M	8	1	**8T-7547**	3	BOLT (M8X1.25X30-MM)	
	9	1	**219-7587**	1	BODY AS	
	10	1	**137-6603**	4	SPOOL	
	12	1	**148-8410**	2	PLUG AS	
		1	**2M-9780**	1	SEAL-O-RING	
	13	1	**6J-2419**	4	SEAL-O-RING	
	14	1	**148-8407**	2	PLUG AS	
		1	**3J-1907**	1	SEAL-O-RING	
	15	1	**8T-4224**	3	WASHER-HARD (8.8X16X2-MM THK)	

M-METRIC PART

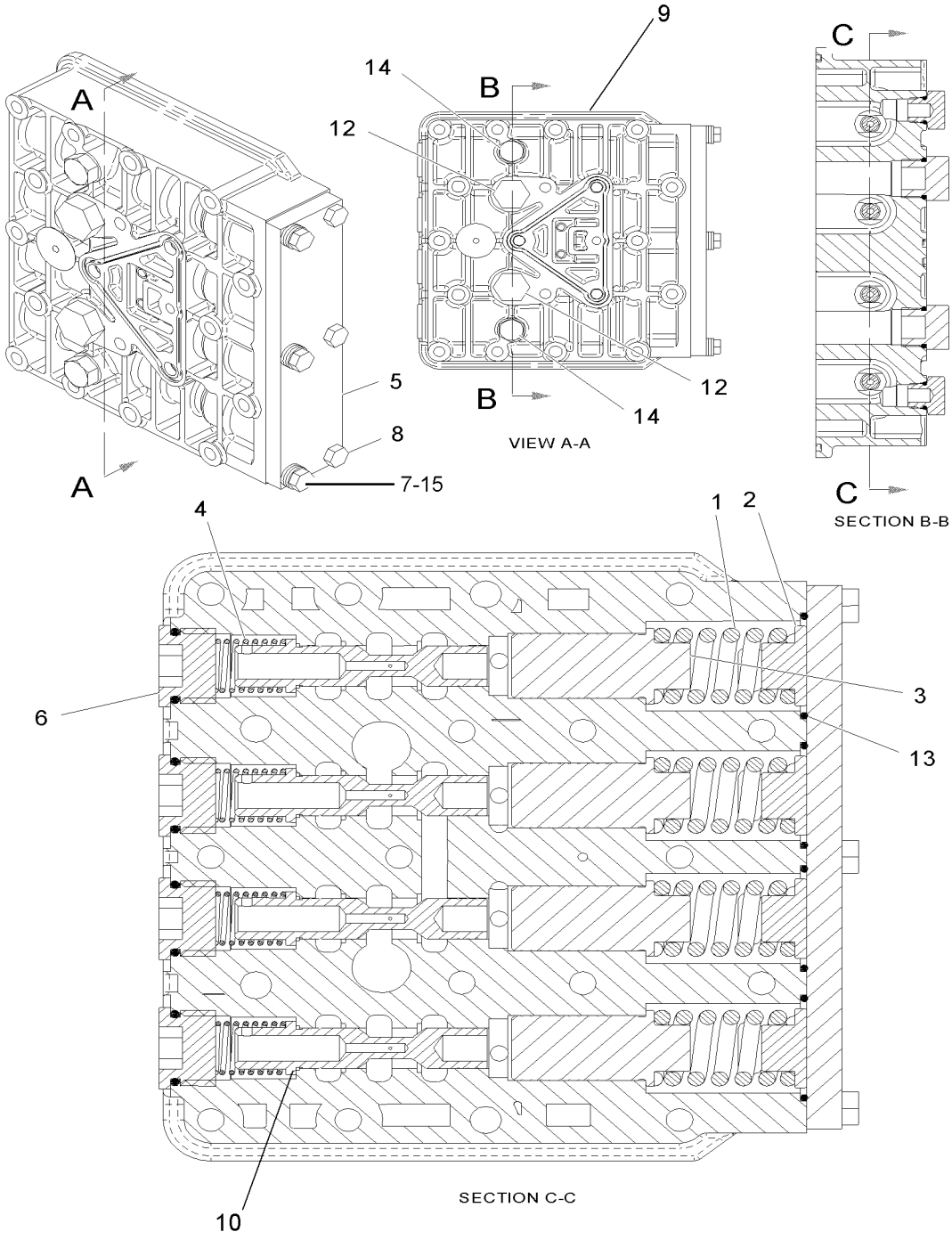

GRAPHIC #1 **<END>** g01073535

STEERING AND BRAKING SYSTEM

201-7272 VALVE GP-STEERING & BRAKE CONT

S/N: RJG1-UP

PART OF 221-0867 VALVE & MTG GP-STEER & BRAKE

SMCS-4120 **i02149357**

NOTE	REF NO	GRAPHIC REF	PART NUMBER	QTY	PART NAME 1 2 3 4 5 6 (PRODUCT LEVEL)	SEE PAGE
	1	1	**9P-9150**	36	WASHER (8.25X18X0.84-MM THK)	
Y	2	1	**164-6093**	1	MANIFOLD & VALVE GP (RH, LH STEERING CLUTCH, BRAKE)	521
	3	1	**176-0258**	2	PLUG AS (ORIFICE SCREEN)	
	4	1	**108-4434**	1	PLATE-SEPARATOR	
	5	1	**132-9899**	1	PLATE	
	6	1	**132-9900**	1	PLATE	
Y	7	1	*175-4972*	1	MANIFOLD & VALVE GP (PARKING BRAKE, SECONDARY BRAKE)	522
Y	8	1	*201-7270*	1	VALVE GP-STEERING & BRAKE CONT	528
	9	1	**1T-0738**	16	WASHER (8.4X19X1.83-MM THK)	
	10	1	**3S-2093**	4	STRAP-CABLE	
	11	1	**185-3503**	2	SEAL-O-RING	
	12	1	**4J-7533**	4	SEAL-O-RING	
	13	1	**185-3502**	2	SEAL-O-RING	
	14	1	**176-0259**	2	PLUG AS (ORIFICE SCREEN)	
M	15	1	**7X-2541**	3	BOLT (M8X1.25X140-MM)	
M	16	1	**8T-3647**	11	BOLT (M8X1.25X80-MM)	
M	17	1	**8T-4177**	2	BOLT (M8X1.25X90-MM)	
	18	1	**9L-9068**	4	DOWEL	

M-METRIC PART
Y-SEPARATE ILLUSTRATION

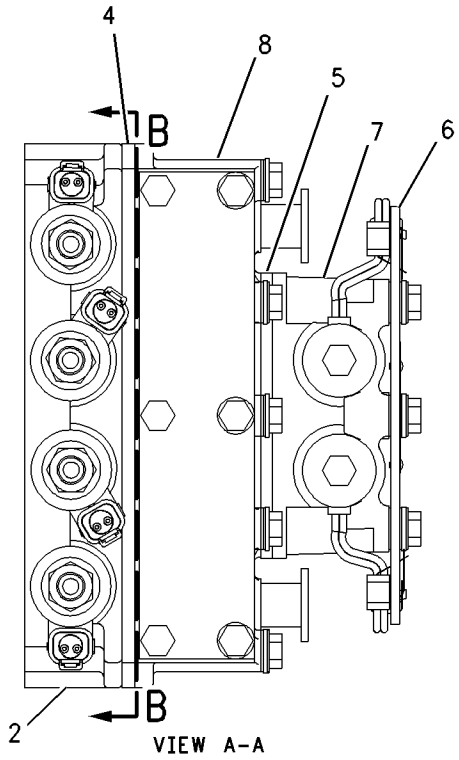

VIEW A-A

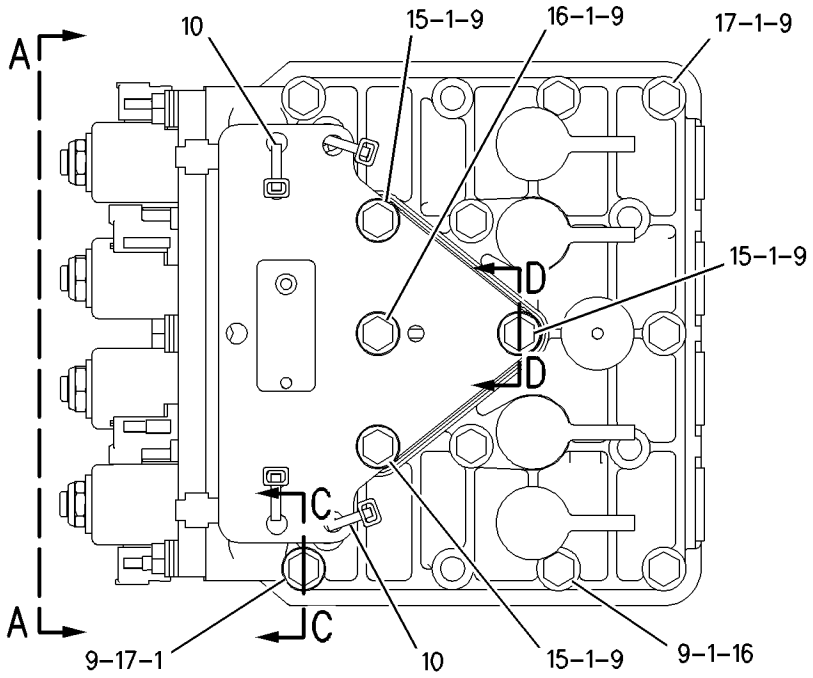

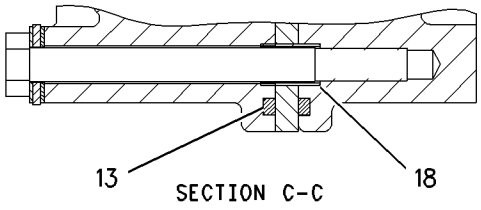

SECTION C-C

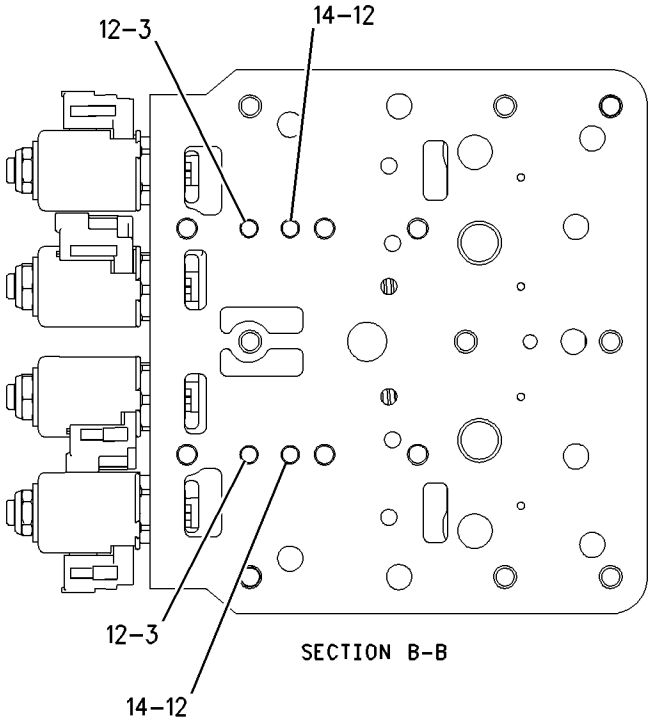

SECTION B-B

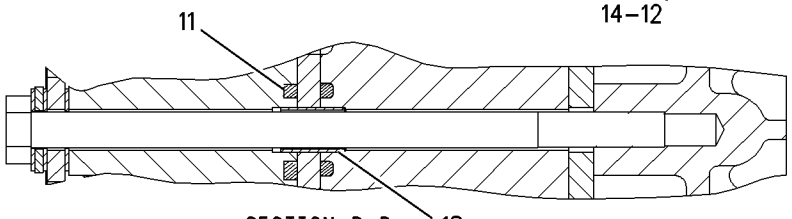

SECTION D-D

GRAPHIC #1 **<END>** g00769056

211-2069 ACCUMULATOR GP-HYDRAULIC–CHARGED

S/N: RJG1-528

PART OF 213-0004 LINES GP-MOTOR

FIELD REPLACEMENT ORDER 179-9387–PAGE 533

SMCS-5077 **i01932345**

NOTE	REF NO	GRAPHIC REF	PART NUMBER	QTY	PART NAME 1 2 3 4 5 6 (PRODUCT LEVEL)	SEE PAGE
	1	1	**214-0720**	2	FILM-WARNING (ACCUMULATOR)	

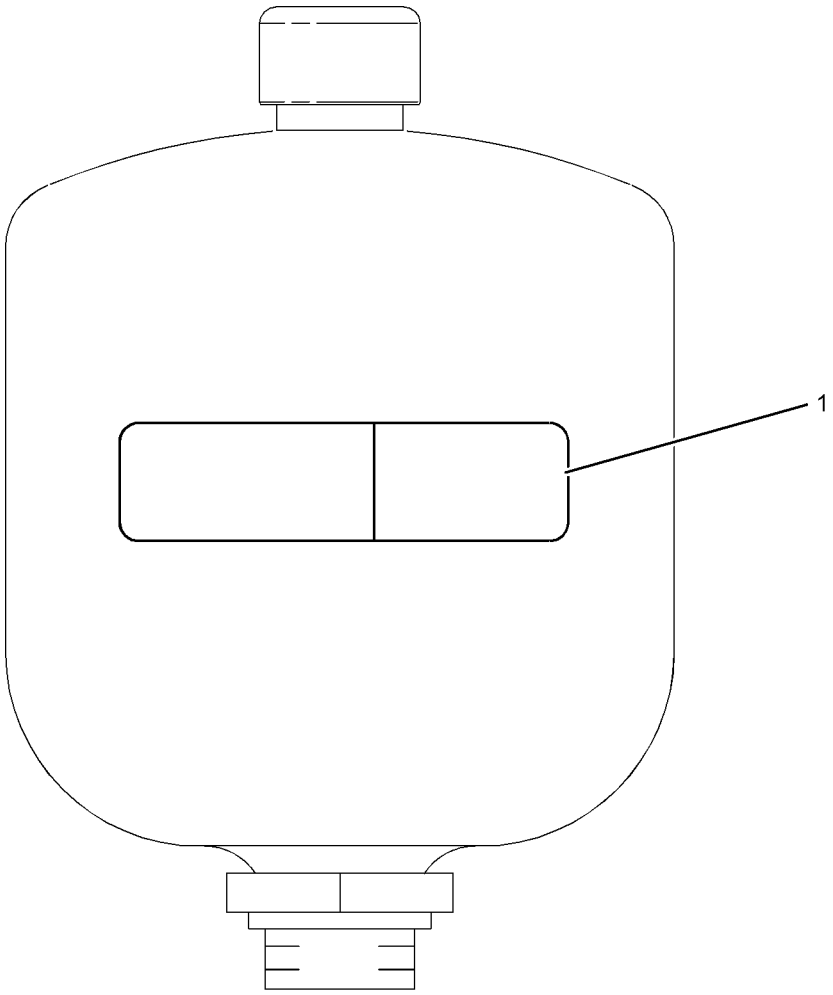

GRAPHIC #1 **<END>** g01057063

179-9387 ACCUMULATOR GP-PILOT OIL–UNCHARGED

S/N: RJG1-UP

FIELD REPLACEMENT FOR 211-2069–PAGE 532

SMCS-5077 **i01929992**

NOTE	REF NO	GRAPHIC REF	PART NUMBER	QTY	PART NAME 1 2 3 4 5 6 (PRODUCT LEVEL)	SEE PAGE
	1	1	**204-8758**	2	FILM-WARNING (ACCUMULATOR)	

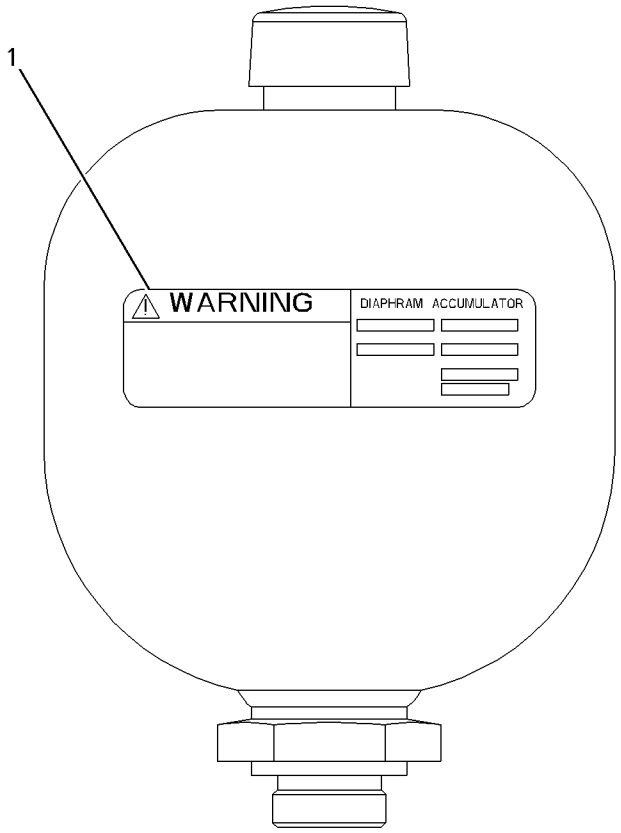

GRAPHIC #1 **<END>** g01004085

HYDRAULIC SYSTEM

216-2547 CONTROL AR-DUAL TILT

S/N: RJG1-UP
FOR USE WITH TRACTORS EQUIPPED WITH DUAL TILT CYLINDERS
AN ATTACHMENT

SMCS-5050 **i02274219**

NOTE	PART NUMBER	QTY	PART NAME 1 2 3 4 5 6 (PRODUCT LEVEL)	SEE PAGE
Y	**208-6072**	1	CONTROL GP-JOYSTICK (BULLDOZER)	541
Y	*216-2548*	1	LINES GP-TILT CYLINDER	614
Y	**225-2321**	1	VALVE GP-TILT CONTROL (DUAL)	690
	233-7894	1	FILM-IDENTIFICATION (DUAL TILT)	
			ON UPPER RH CONSOLE	
	234-3404	1	FILM-IDENTIFICATION (AUTOMATIC BLADE)	
			ON LOWER RH CONSOLE	
	222-7882	1	SWITCH AS-ROCKER (DUAL TILT CYLINDER)	
Y-SEPARATE ILLUSTRATION				

<END>

269-8384 CONTROL AR-DUAL TILT

S/N: RJG1-UP
AN ATTACHMENT

SMCS-5050 **i02465645**

NOTE	PART NUMBER	QTY	PART NAME 1 2 3 4 5 6 (PRODUCT LEVEL)	SEE PAGE
Y	**208-6072**	1	CONTROL GP-JOYSTICK (BULLDOZER)	541
Y	*269-8385*	1	LINES GP-TILT CYLINDER	621
Y	**225-2321**	1	VALVE GP-TILT CONTROL	690
	233-7894	1	FILM-IDENTIFICATION (DUAL TILT)	
			ON UPPER RH CONSOLE	
	234-3404	1	FILM-IDENTIFICATION (AUTOMATIC BLADE)	
			ON LOWER RH CONSOLE	
	222-7882	1	SWITCH AS-ROCKER (AUTOMATIC BLADE)	
Y-SEPARATE ILLUSTRATION				

<END>

HYDRAULIC SYSTEM

258-8717 CONTROL AR-HYD PIN PULLER

S/N: RJG1-UP
FOR USE WITH RIPPER
AN ATTACHMENT

SMCS-5353 **i02264288**

NOTE	REF NO	GRAPHIC REF	PART NUMBER	QTY	PART NAME 1 2 3 4 5 6 (PRODUCT LEVEL)	SEE PAGE
	1	1	**102-3679**	1	TUBE AS	
	2	1	**102-3680**	1	TUBE AS	
	3	1	**120-5820**	1	PLATE	
	4	1	**120-5821**	1	PLATE AS	
Y	5	1	*188-6140*	1	VALVE & MTG GP-CONTROL (HYDRAULIC PIN PULLER)	659
	6	1	**222-7889**	1	SWITCH AS-ROCKER (HYDRAULIC PIN PULLER)	
	7	1	**246-4311**	1	GUARD (SWITCH)	
	8	1	*148-8336*	2	CONNECTOR AS	
					(EACH INCLUDES)	
		1	**6V-8636**	1	CONNECTOR	
		1	**3J-1907**	1	SEAL-O-RING	
		1	**6V-8397**	1	SEAL-O-RING	
	9	1	*148-8378*	2	ELBOW AS	
					(EACH INCLUDES)	
		1	**6V-8724**	1	ELBOW	
		1	**3J-1907**	1	SEAL-O-RING	
		1	**6V-8397**	1	SEAL-O-RING	
	11	1	**4L-6454**	2	BOLT (3/8-16X1-IN)	
	12	1	**4P-8134**	2	CLIP	
	13	1	**5P-9938**	2	BOLT-LOCKING (3/8-16X1.375-IN)	
	14	1	**6V-8801**	2	NUT (3/8-16-THD)	
	15	1	**7K-1181**	3	STRAP-CABLE	
	16	1	**7X-0290**	2	BOLT (3/8-16X3.5-IN)	
	17	1	**7X-0578**	4	WASHER-HARD (10.2X32X2.5-MM THK)	
	18	1	**8T-4896**	4	WASHER-HARD (10.2X18.5X2.5-MM THK)	

Y-SEPARATE ILLUSTRATION

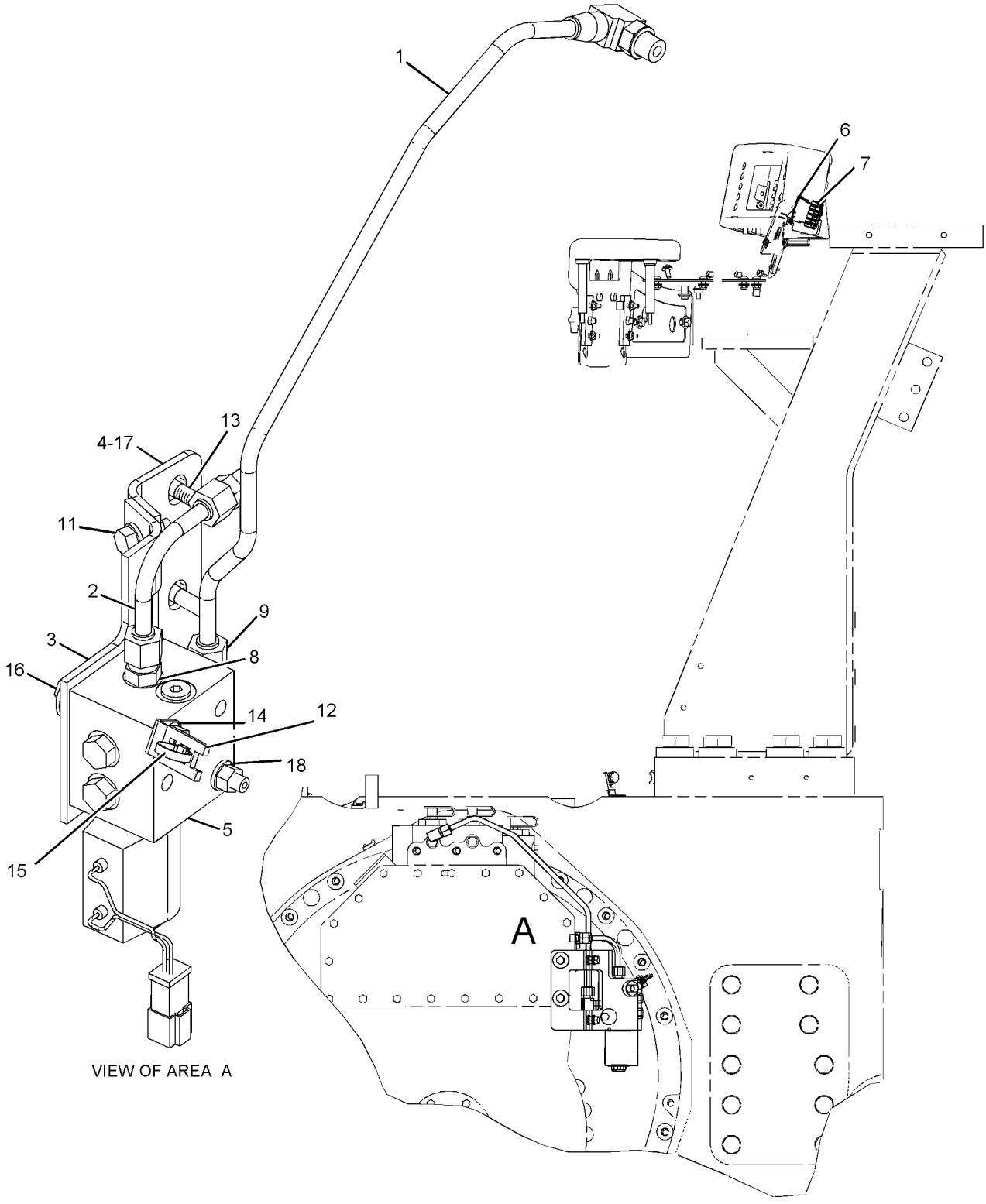

REAR VIEW

GRAPHIC #1 **<END>** g01137726

216-2552 CONTROL AR-HYDRAULIC—RIPPER

S/N: RJG1-UP
MUST BE EQUIPPED WITH RIPPER
AN ATTACHMENT

SMCS-5057, 5170, 5357 **i02451450**

NOTE	PART NUMBER	QTY	PART NAME 1 2 3 4 5 6 (PRODUCT LEVEL)	SEE PAGE
Y	*196-9987*	1	CONTROL & MTG GP-IMPLEMENT (RIPPER)	789
Y	*216-2553*	1	LINES GP-RIPPER	608
Y	**235-3506**	1	VALVE GP-CONTROL (RIPPER)	670
			S/N: RJG1-528	
Y	**237-7654**	1	VALVE GP-CONTROL (RIPPER)	672
			S/N: RJG529-UP	

Y-SEPARATE ILLUSTRATION

<END>

216-2554 CONTROL AR-HYDRAULIC—AUTO CARRY

S/N: RJG1-UP
FOR USE WITH 216-2547—PAGE 534, 221-8236—PAGE 553
AN ATTACHMENT

SMCS-5057, 5170, 5357 **i02286365**

NOTE	PART NUMBER	QTY	PART NAME 1 2 3 4 5 6 (PRODUCT LEVEL)	SEE PAGE
Y	**247-0747**	1	CONTROL GP-JOYSTICK (BULLDOZER)	545
Y	*216-1726*	1	LINES GP-HYDRAULIC	582
Y	*232-1134*	1	SENSOR & MTG GP-GROUND SPEED (RADAR)	276
	261-4373	1	GUARD AS	
	234-2477	1	GUARD AS	
	261-4280	1	SOFTWARE GP-IMPLEMENT (ACCUGRADE)	
			(DLR INSTALL CONFIG: SEE IRM: EES03-01)	

Y-SEPARATE ILLUSTRATION

<END>

208-6070 CONTROL GP-HANDLE—WITH TRIGGER—DUAL TILT

S/N: RJG1-UP
PART OF 208-6072 CONTROL GP-JOYSTICK
AN ATTACHMENT

SMCS-5063, 5705 **i02286164**

NOTE	REF NO	GRAPHIC REF	PART NUMBER	QTY	PART NAME 1 2 3 4 5 6 (PRODUCT LEVEL)	SEE PAGE
Z	1	1		1	HANDHOLD AS	
	2	1	**144-0331**	1	CAP-PUSH BUTTON (MODE SELECT)	
	2A	1	**144-0331**	1	CAP-PUSH BUTTON (MANUAL MODE)	
	2B	1	**144-0331**	1	CAP-PUSH BUTTON (DUAL TILT, SINGLE TILT)	
	3	1	**208-6067**	1	HOUSING AS	
	4	1	**162-8387**	1	LEVER-TRIGGER	
	5	1	**9B-1117**	2	LOCKWASHER	
	6	1	**162-8389**	1	PLATE (SWITCH)	
	7	1	**175-4170**	2	SCREW-PAN HEAD (NO 6X1.625-IN)	
	8	1	**208-6081**	1	SLEEVE	
E	9	1	**218-7136**		SLEEVE (36-CM)	
	10	1	**179-7376**	1	SWITCH AS-PUSH BUTTON (BULLDOZER TILT)	
BD	11	1	**6V-1614**		TUBE-HEAT SHRINK	

B-USE AS REQUIRED
D-ORDER BY THE METER
E-ORDER BY THE CENTIMETER
Z-NOT SERVICED SEPARATELY

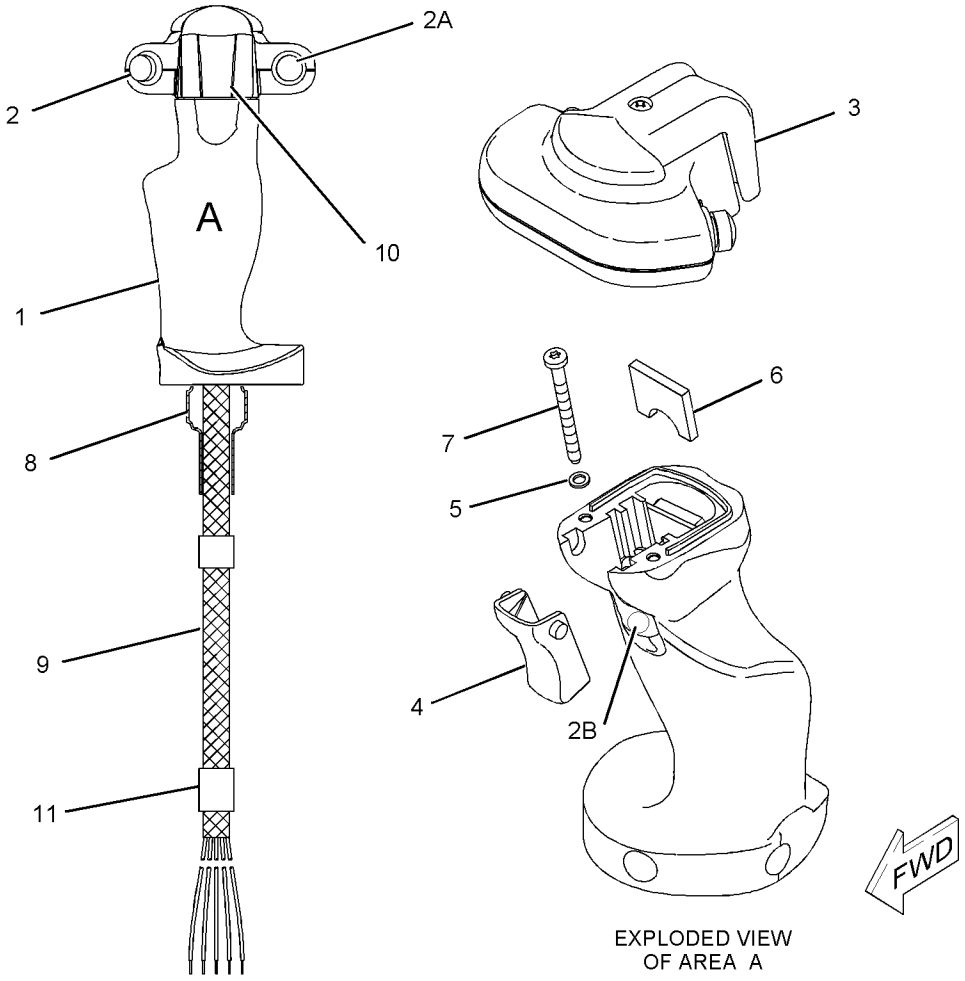

EXPLODED VIEW
OF AREA A

GRAPHIC #1 **<END>** g01144344

240-7837 CONTROL GP-HANDLE–BULLDOZER

S/N: RJG1-UP
PART OF 247-0747 CONTROL GP-JOYSTICK
AN ATTACHMENT

SMCS-5063, 5705 **i02286163**

NOTE	REF NO	GRAPHIC REF	PART NUMBER	QTY	PART NAME 1 2 3 4 5 6 (PRODUCT LEVEL)	SEE PAGE
E	1	1	**218-7136**		SLEEVE (36-CM)	
D	2	1	**6V-1614**		TUBE-HEAT SHRINK (1-M)	
	3	1	**144-0331**	1	CAP-PUSH BUTTON (MODE SELECT)	
	3A	1	**144-0331**	1	CAP-PUSH BUTTON (MANUAL MODE)	
	3B	1	**144-0331**	1	CAP-PUSH BUTTON (DUAL TILT, SINGLE TILT)	

D-ORDER BY THE METER
E-ORDER BY THE CENTIMETER

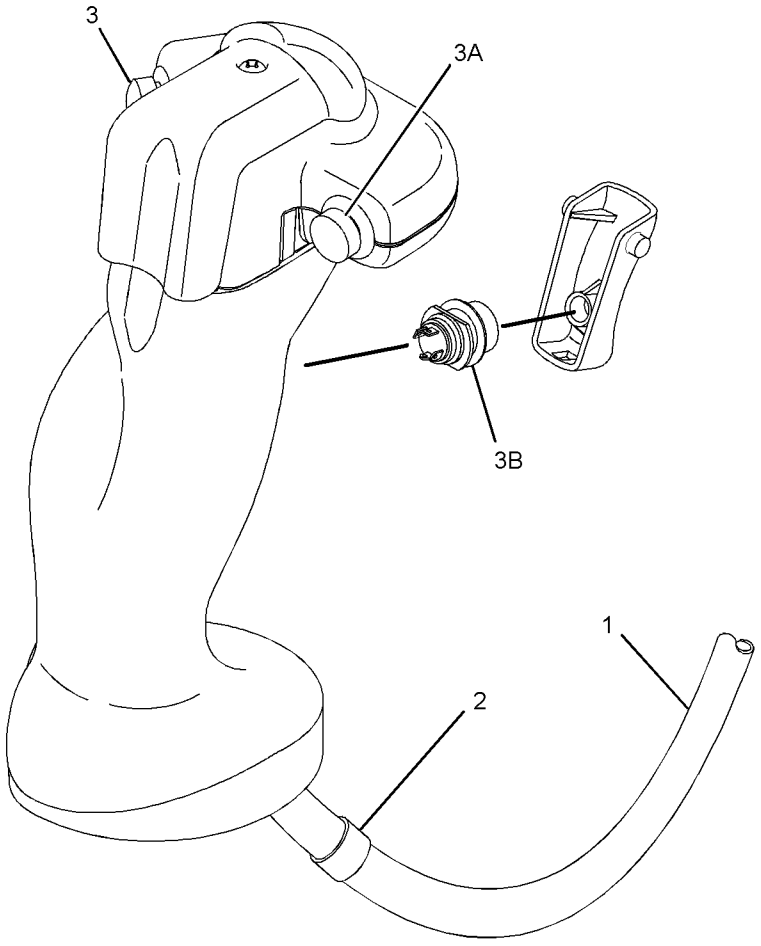

GRAPHIC #1 **<END>** g01144339

208-6072 CONTROL GP-JOYSTICK–DUAL TILT

S/N: RJG1-UP

PART OF 216-2547, 269-8384 CONTROL AR-DUAL TILT

AN ATTACHMENT

SMCS-5063 **i02208073**

NOTE	REF NO	GRAPHIC REF	PART NUMBER	QTY	PART NAME 1 2 3 4 5 6 (PRODUCT LEVEL)	SEE PAGE
M	1	1	**192-4658**	4	SCREW-PAN HEAD (M4X0.7X20-MM)	
M	2	1	**193-4476**	8	SCREW-PAN HEAD (M4X0.7X35-MM)	
	3	1	*206-7421*	1	BASE AS	
		1	**205-2941**	4	SCREW-FLAT HEAD (M5X0.08X2.8-MM)	
		1	**175-1529**	1	BOOT	
Y	4	1	**208-6070**	1	CONTROL GP-HANDLE (BULLDOZER CONTROL)	538
	5	1	**216-3002**	1	DETENT GP-CONTROL (BLADE LIFT, LOWER)	
	6	1	**227-6718**	1	DETENT GP-CONTROL (BLADE TILT)	
	7	1	**151-4977**	12	WASHER (4.445X9.525X1.092-MM THK)	
	8	1	**175-3265**	1	SCREW (8-16X0.63-IN)	
	9	1	**257-2529**	1	SENSOR GP-POSITION (BLADE LIFT, LOWER)	
	10	1	**257-2532**	1	SENSOR GP-POSITION (BLADE TILT)	
	11	1	**2K-4898**	1	CLAMP-TUBE	
	12	1	**4B-9808**	2	SETSCREW (1/4-20X0.5-IN)	
	13	1	**186-3735**	11	PIN-CONNECTOR (16-GA TO 18-GA)	
	14	1	**8T-8737**	1	PLUG-SEAL	
	15	1	**174-3091**	1	KIT-RECEPTACLE (12-PIN)	
					(INCLUDES RECEPTACLE AS & WEDGE)	
	16	1	**208-6081**	1	SLEEVE	

M-METRIC PART
Y-SEPARATE ILLUSTRATION

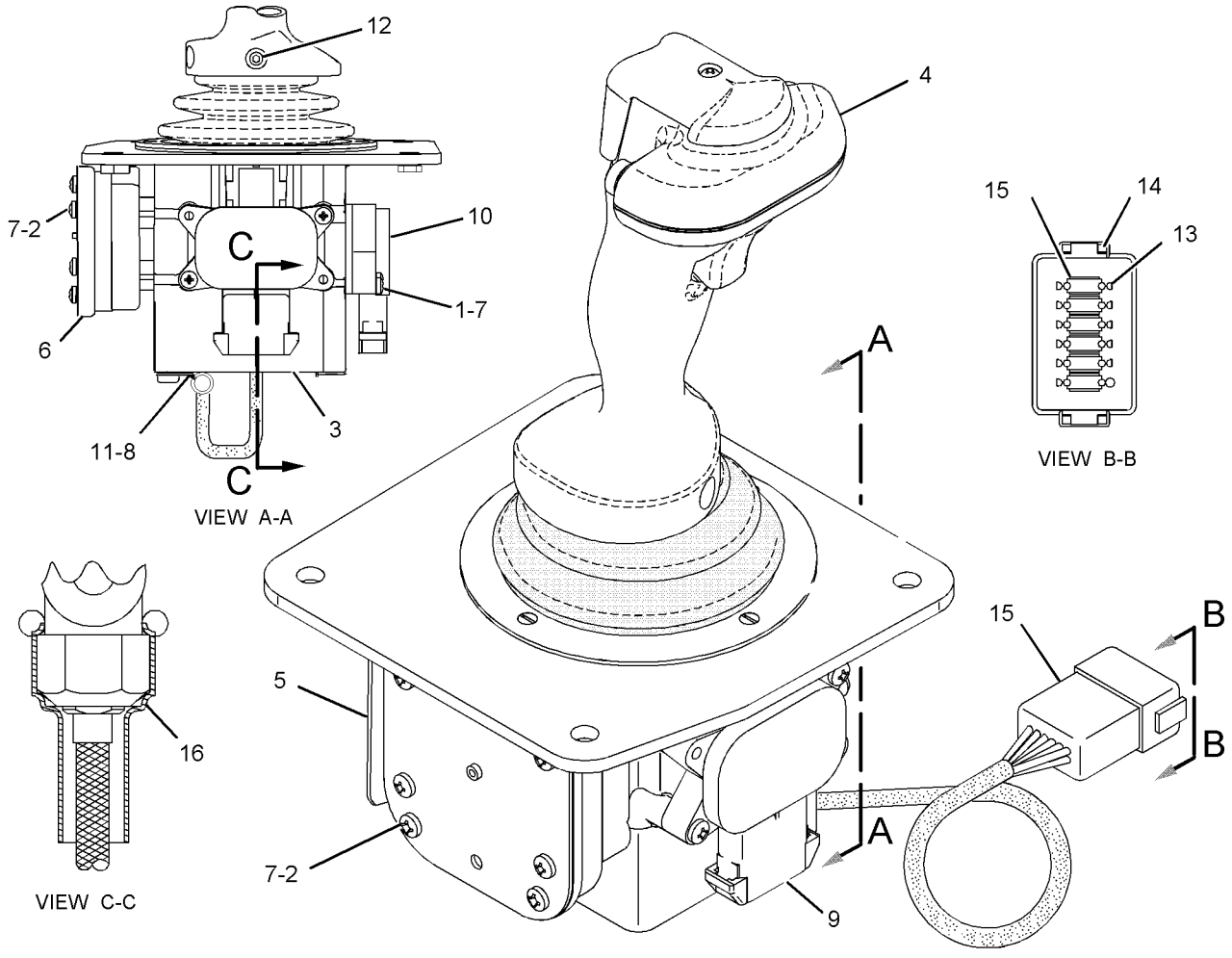

GRAPHIC #1 **<END>** g01110614

208-6074 CONTROL GP-JOYSTICK–BULLDOZER

S/N: RJG1-UP

PART OF 212-2742, 269-8382 HYDRAULIC AR

SMCS-5063 **i02234893**

NOTE	REF NO	GRAPHIC REF	PART NUMBER	QTY	PART NAME 1 2 3 4 5 6 (PRODUCT LEVEL)	SEE PAGE
Y	1	1	**188-1079**	1	HANDLE GP-CONTROL (BULLDOZER CONTROL)	575
M	2	1	**192-4658**	4	SCREW-PAN HEAD (M4X0.7X20-MM)	
M	3	1	**193-4476**	8	SCREW-PAN HEAD (M4X0.7X35-MM)	
	4	1	**175-1529**	1	BOOT	
	4A	1	**205-2941**	4	SCREW-FLAT HEAD (M5X0.08X2.8-MM)	
	5	1	**216-3002**	1	DETENT GP-CONTROL (BLADE LIFT, LOWER)	
	6	1	**227-6718**	1	DETENT GP-CONTROL (BLADE TILT)	
	7	1	**257-2529**	1	SENSOR GP-POSITION (BLADE LIFT, LOWER)	
	8	1	**257-2532**	1	SENSOR GP-POSITION (BLADE TILT)	
	9	1	**151-4977**	12	WASHER (4.445X9.525X1.092-MM THK)	
	10	1	**4B-9808**	2	SETSCREW (1/4-20X0.5-IN)	

M-METRIC PART
Y-SEPARATE ILLUSTRATION

208-6074 CONTROL GP-JOYSTICK *(contd.)* i02234893

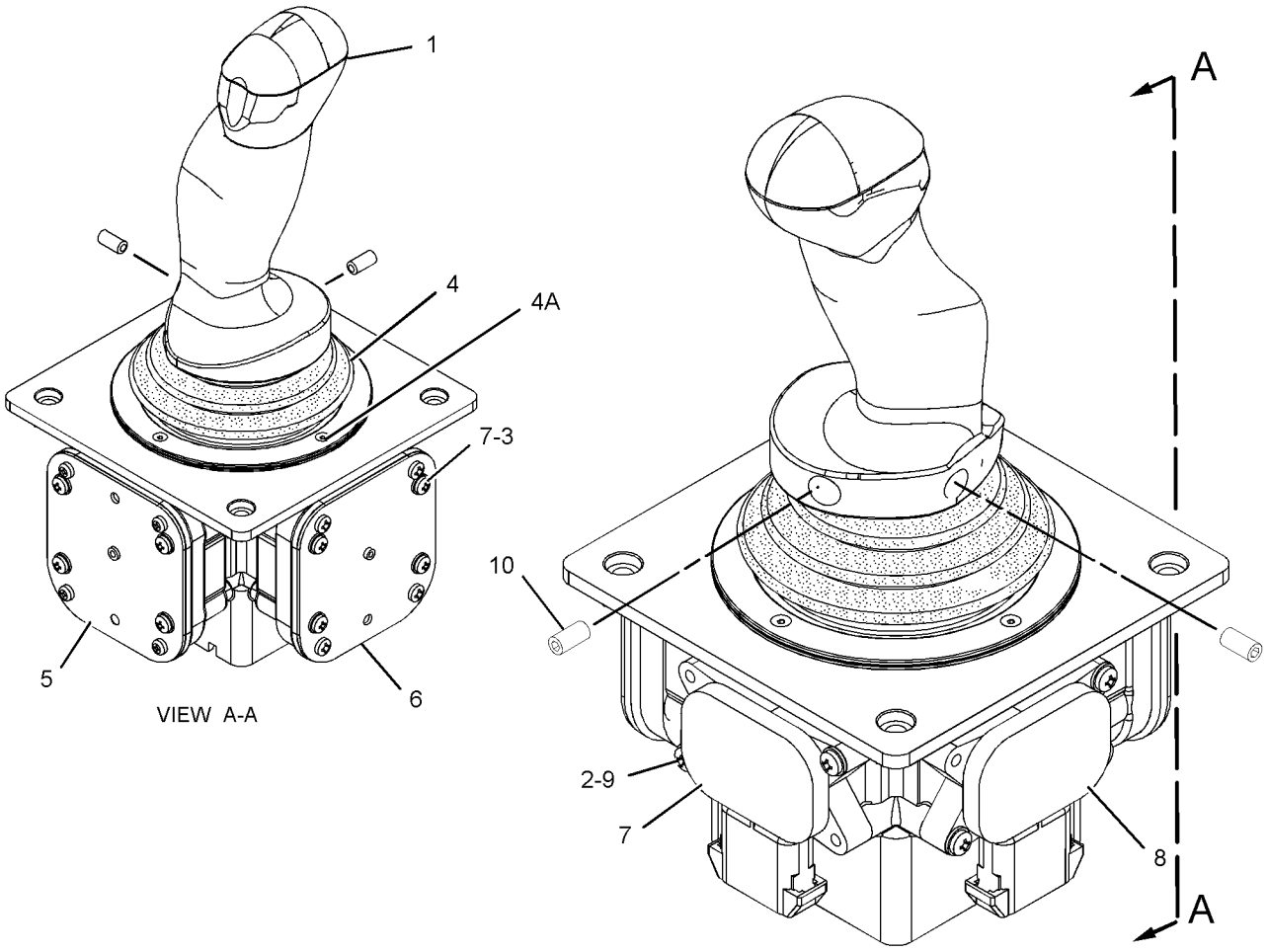

GRAPHIC #1 **<END>** g01106082

HYDRAULIC SYSTEM

247-0747 CONTROL GP-JOYSTICK–BULLDOZER

S/N: RJG1-UP

PART OF 216-2554 CONTROL AR-HYDRAULIC

AN ATTACHMENT

SMCS-5063 **i02248021**

NOTE	REF NO	GRAPHIC REF	PART NUMBER	QTY	PART NAME 1 2 3 4 5 6 (PRODUCT LEVEL)	SEE PAGE
M	1	1	**192-4658**	4	SCREW-PAN HEAD (M4X0.7X20-MM)	
M	2	1	**193-4476**	8	SCREW-PAN HEAD (M4X0.7X35-MM)	
	4	1	**216-3002**	1	DETENT GP-CONTROL (BLADE LIFT, LOWER)	
M		1	**193-4476**	4	SCREW-PAN HEAD (M4X0.7X35-MM)	
		1	**151-4977**	4	WASHER (4.445X9.525X1.092-MM THK)	
	5	1	**227-6718**	1	DETENT GP-CONTROL (BLADE TILT)	
M		1	**193-4476**	4	SCREW-PAN HEAD (M4X0.7X35-MM)	
		1	**151-4977**	4	WASHER (4.445X9.525X1.092-MM THK)	
Y	6	1	**240-7837**	1	CONTROL GP-HANDLE (BULLDOZER CONTROL)	540
	7	1	**257-2529**	1	SENSOR GP-POSITION (BLADE LIFT, LOWER)	
	8	1	**257-2532**	1	SENSOR GP-POSITION (BLADE TILT)	
	9	1	**151-4977**	12	WASHER (4.445X9.525X1.092-MM THK)	
	10	1	**175-3265**	1	SCREW (8-16X0.63-IN)	
	11	1	**2K-4898**	1	CLAMP-TUBE	
	12	1	**4B-9808**	2	SETSCREW (1/4-20X0.5-IN)	
	13	1	**8T-8729**	7	PIN-CONNECTOR	
	14	1	**8T-8737**	5	PLUG-SEAL	
	15	1	**174-3091**	1	KIT-RECEPTACLE (12-PIN)	
					(INCLUDES RECEPTACLE AS & WEDGE)	
	16	1	**208-6081**	1	SLEEVE	

M-METRIC PART
Y-SEPARATE ILLUSTRATION

247-0747 CONTROL GP-JOYSTICK *(contd.)* i02248021

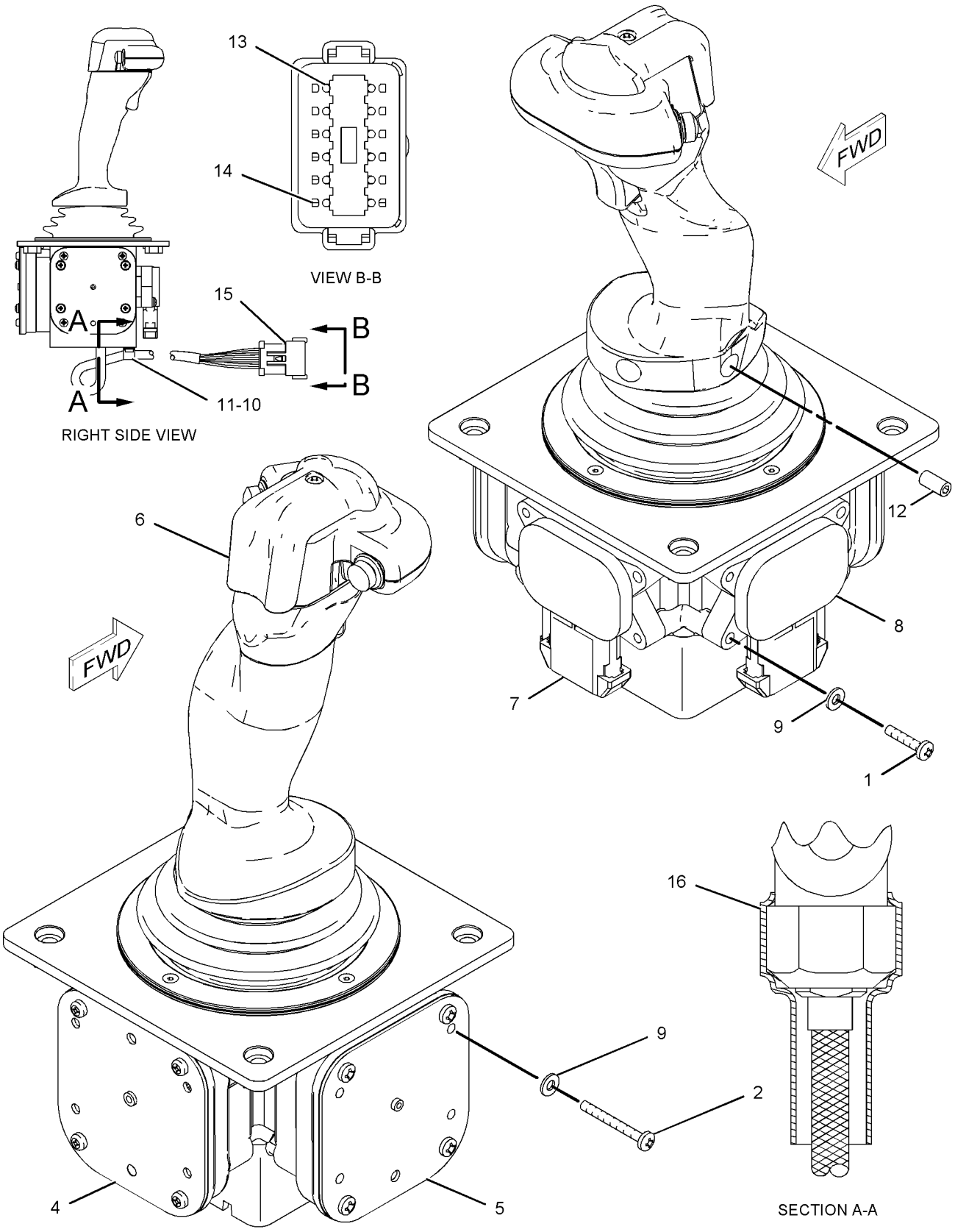

GRAPHIC #1 **<END>** g01112500

HYDRAULIC SYSTEM

226-7420 CONTROL GP-RIPPER

S/N: RJG1-UP

PART OF 196-9987 CONTROL & MTG GP-IMPLEMENT

AN ATTACHMENT

SMCS-5357 **i02242725**

NOTE	REF NO	GRAPHIC REF	PART NUMBER	QTY	PART NAME 1 2 3 4 5 6 (PRODUCT LEVEL)	SEE PAGE
	1	1	**4B-1270**	2	SCREW-MACHINE (8-32X0.75-IN)	
	2	1	**8T-5410**	2	SEAL-LIP TYPE	
M	3	1	**8T-6699**	4	BOLT-SOCKET HEAD (M5X0.8X35-MM)	
	4	1	**112-0858**	4	BEARING	
	5	1	**137-5817**	1	KNOB AS (RIPPER CONTROL) (RAISE, LOWER)	
	6	1		1	SHAFT	
	7	1	**142-2526**	2	PLATE	
	8	1		1	CAM	
	9	1	**144-0326**	1	SWITCH AS-PUSH BUTTON (RIPPER AUTOMATIC STOW)	
		1	**144-0331**	1	CAP-PUSH BUTTON	
	10	1	**155-2260**	1	KIT-CONNECTING PLUG (3-PIN)	
					(INCLUDES PLUG AS & WEDGE)	
B	11	1	**195-7869**	1	SHIM (0.15-MM THK)	
B	12	1	**195-7870**	1	SHIM (0.51-MM THK)	
B	13	1	**195-7871**	1	SHIM (0.25-MM THK)	
B	14	1	**195-7872**	1	SHIM (0.41-MM THK)	
	15	1	**219-2390**	1	SENSOR GP-POSITION (RIPPER SHANK IN, OUT)	
		1	**102-8803**	1	KIT-RECEPTACLE (3-PIN)	
					(INCLUDES RECEPTACLE AS & WEDGE)	
		1	**3E-3371**	1	WEDGE-RECEPTACLE LOCK (3-PIN)	
		1	**186-3735**	3	PIN-CONNECTOR (16-GA TO 18-GA)	
E		1	**9X-1813**		SLEEVE (13-CM)	
	16	1	**219-2391**	1	SENSOR GP-POSITION (RIPPER RAISE, LOWER)	
		1	**102-8804**	1	KIT-RECEPTACLE (4-PIN)	
					(INCLUDES RECEPTACLE AS & WEDGE)	
		1	**3E-3377**	1	WEDGE-RECEPTACLE LOCK (4-PIN)	
		1	**186-3735**	3	PIN-CONNECTOR (16-GA TO 18-GA)	
		1	**9G-3695**	1	PLUG (GROMMET SEALING)	
	17	1	**223-4461**	1	BASE AS	
	18	1	**226-2751**	1	LEVER-FINGER (RIPPER SHANK IN, OUT)	
	19	1	**226-7295**	1	FILM-INFORMATION (AUTOMATIC RIPPER)	
	20	1	**226-7480**	1	SHAFT	
	21	1	**242-5205**	2	GASKET	
	22	1	**245-3856**	2	SPRING	
	23	1	**1W-6448**	4	DOWEL	
	24	1	**2L-5894**	4	PIN-SPRING	
	25	1	**3K-4897**	2	PIN-SPRING	
	26	1	**6V-0894**	2	SEAL-O-RING	
D	27	1	**8T-5677**		SLEEVE (0.5-M)	
	28	1	**8T-0328**	4	WASHER-HARD (5.5X10X1-MM THK)	
	29	1	**186-3736**	3	SOCKET-CONNECTOR (16-GA TO 18-GA)	
BE	30	1	**7X-3159**		TUBE-HEAT SHRINK	

B-USE AS REQUIRED
D-ORDER BY THE METER
E-ORDER BY THE CENTIMETER
M-METRIC PART

226-7420 CONTROL GP-RIPPER *(contd.)* i02242725

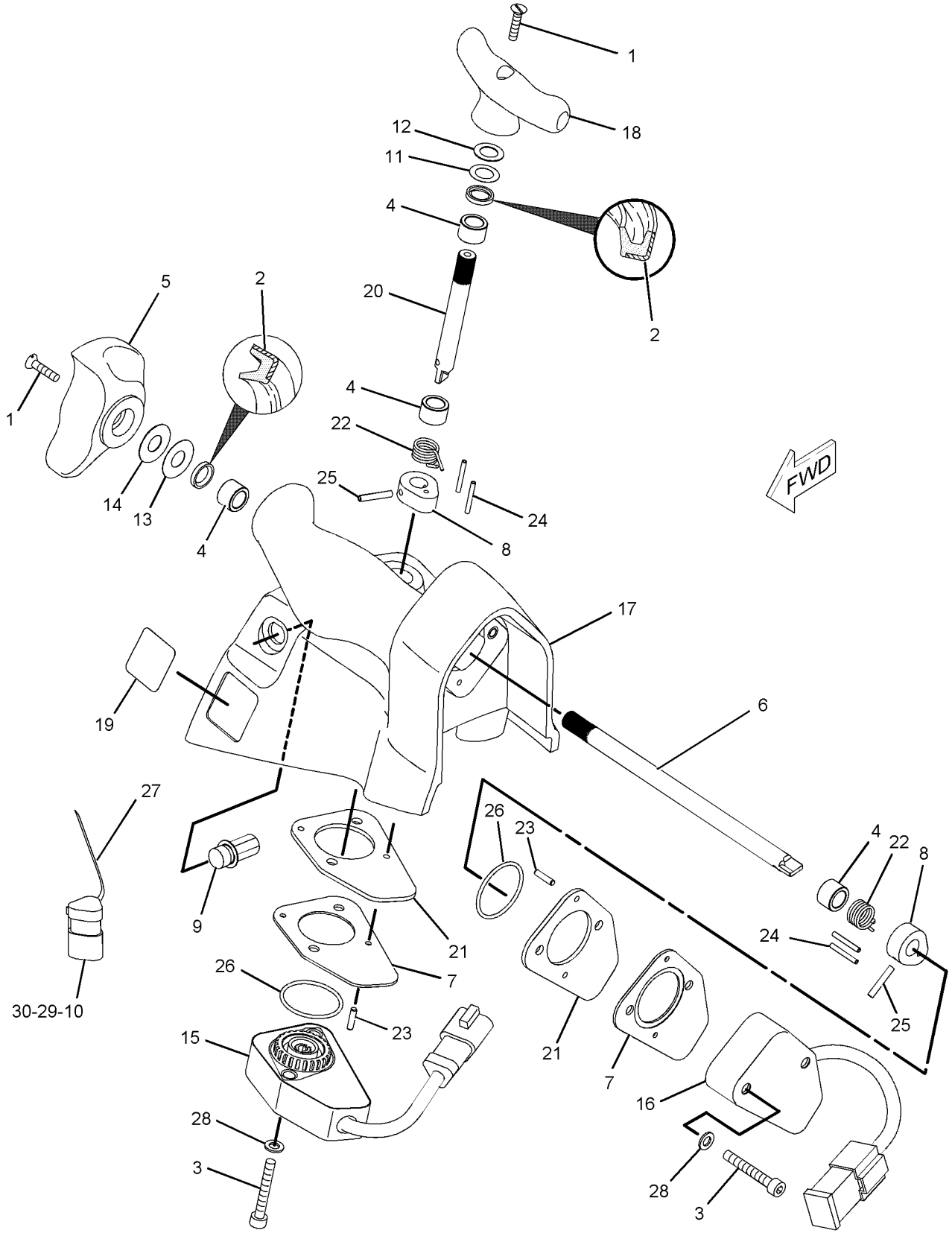

GRAPHIC #1 **<END>** g01130543

214-6665 COOLER GP-HYDRAULIC OIL

S/N: RJG1-UP

PART OF 212-2745, 267-2900 INSTALLATION AR-ENGINE

SMCS-1374, 5071 **i02266710**

NOTE	REF NO	GRAPHIC REF	PART NUMBER	QTY	PART NAME 1 2 3 4 5 6 (PRODUCT LEVEL)	SEE PAGE
R	1	1	**2W-9978**	1	CORE AS-OIL COOLER	
	2	1	**259-8303**	2	GASKET	

R-REMFG PART MAY BE AVAILABLE

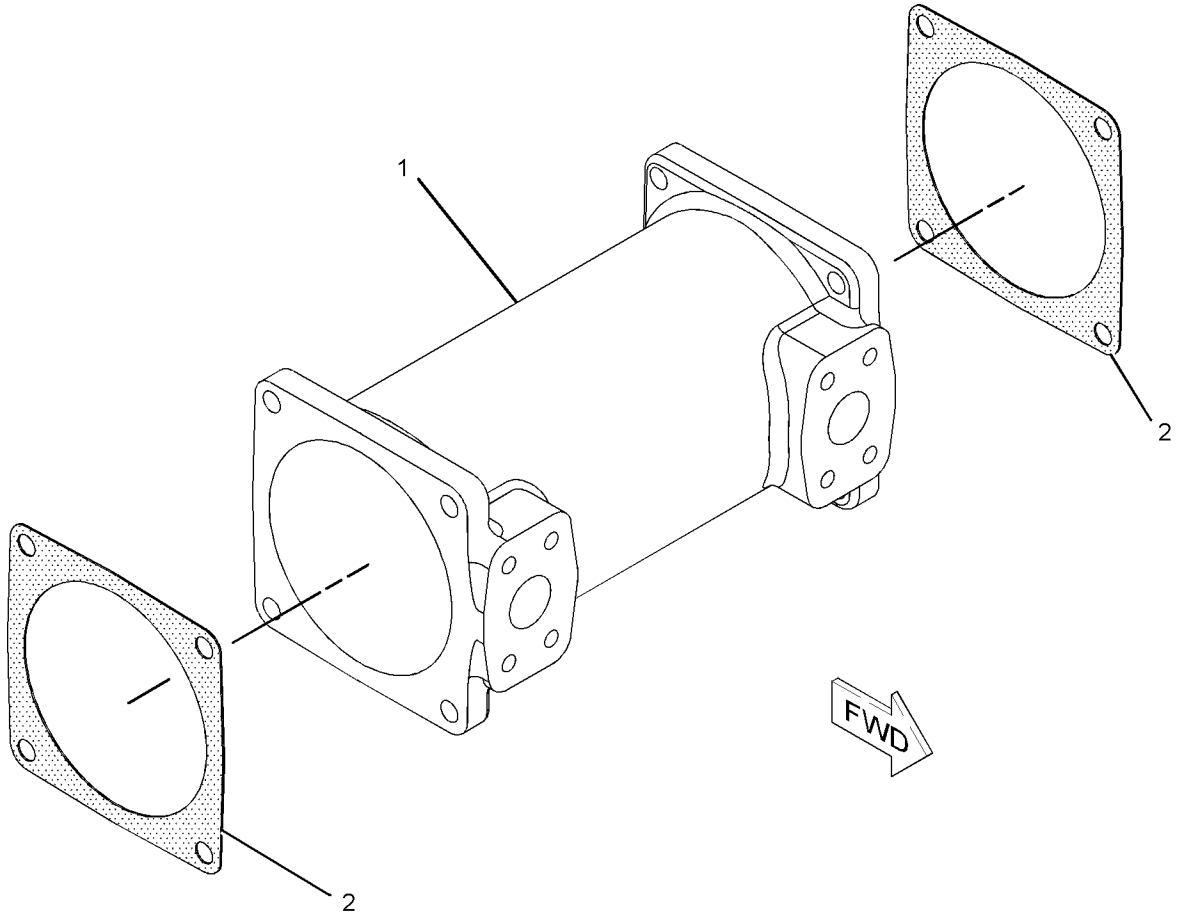

GRAPHIC #1 **<END>** g01055251

HYDRAULIC SYSTEM

9G-9288 COVER GP-HYDRAULIC TANK CAP

S/N: RJG1-UP

PART OF 213-0003 TANK & MTG GP-HYDRAULIC

SMCS-5056, 7315 **i02248629**

NOTE	REF NO	GRAPHIC REF	PART NUMBER	QTY	PART NAME 1 2 3 4 5 6 (PRODUCT LEVEL)	SEE PAGE
	1	1	**1L-5072**	1	DOWEL	
	2	1	**9M-7394**	1	LEVER (COVER) (HYDRAULIC TANK FILL)	
	3	1	**5D-1911**	1	COVER-HYDRAULIC CAP	
	4	1	**2J-7761**	1	RING-RETAINING	
	5	1	**246-2641**	1	PADLOCK GP (HYDRAULIC TANK FILL)	
		1	**5P-8500**	2	KEY	

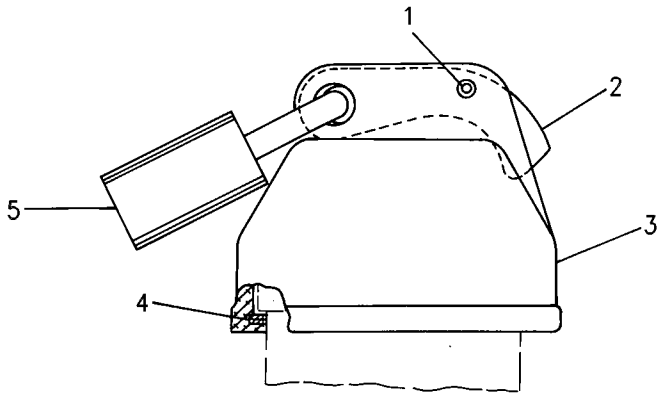

GRAPHIC #1 **<END>** g00600453

216-2481 CYLINDER & LINES GP-LIFT–RH

S/N: BHA1-UP; BHF1-UP; RJG1-UP; BHJ1-UP; BHP1-UP
PART OF 227-9988, 244-2009 BULLDOZER AR-SEMI-UNIVERSAL, 227-9991, 244-1958 BULLDOZER AR-UNIVERSAL
FOR USE WITH 216-2482–PAGE 552 AN ATTACHMENT

SMCS-5102 **i02044654**

NOTE	REF NO	GRAPHIC REF	PART NUMBER	QTY	PART NAME 1 2 3 4 5 6 (PRODUCT LEVEL)	SEE PAGE
Y	1	1	*7T-3829*	1	CYLINDER & VALVE GP-LIFT (RH)	555
I	2	1	**8E-1249**	1	HOSE AS	
I	3	1	**117-6418**	1	HOSE AS	
	4	1	**217-0242**	1	BRACKET AS	
	5	1	**4J-0520**	4	SEAL-O-RING	
	6	1	**5P-2566**	4	BOLT (1/2-13X1.5-IN)	
	7	1	**8T-4223**	4	WASHER-HARD (13.5X25.5X3-MM THK)	

I-REFER TO HYDRAULIC INFORMATION SYSTEM
Y-SEPARATE ILLUSTRATION

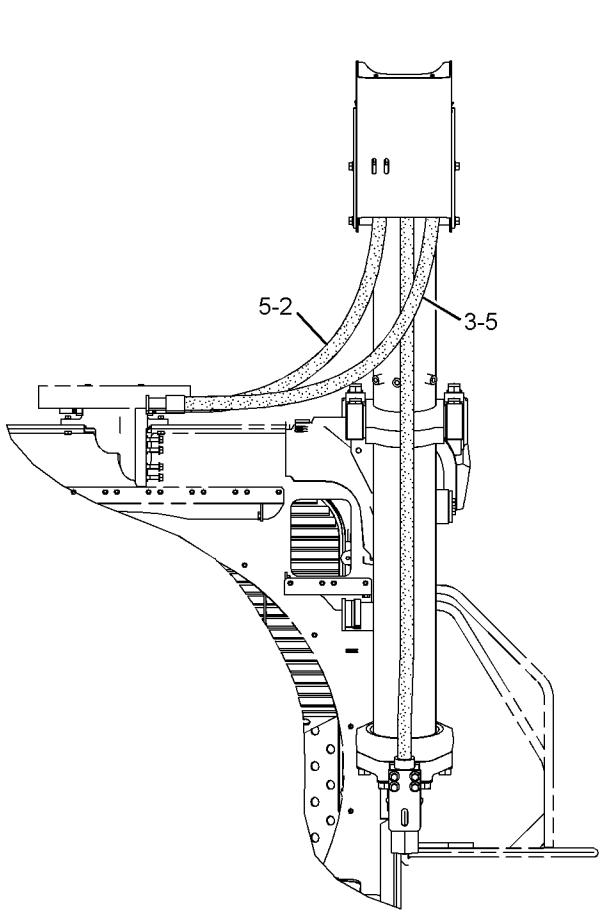

REAR VIEW

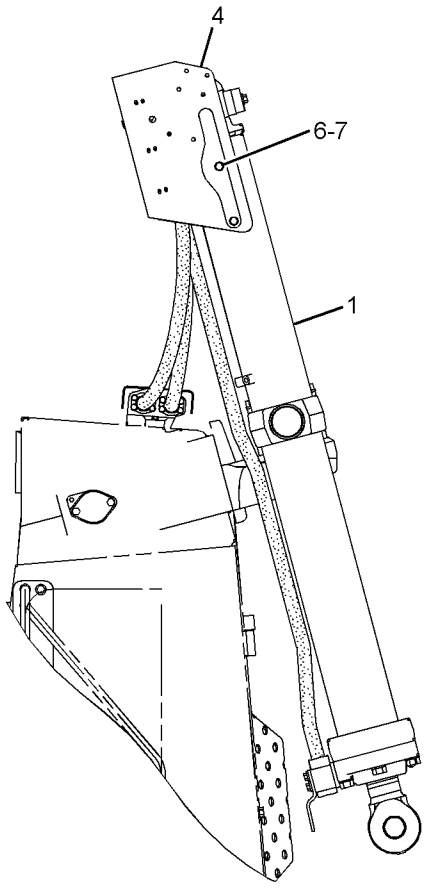

RIGHT SIDE VIEW

GRAPHIC #1 **<END>** g01051414

216-2482 CYLINDER & LINES GP-LIFT–LH

S/N: BHA1-UP; BHF1-UP; RJG1-UP; BHJ1-UP; BHP1-UP
PART OF 227-9988, 244-2009 BULLDOZER AR-SEMI-UNIVERSAL, 227-9991, 244-1958 BULLDOZER AR-UNIVERSAL
FOR USE WITH 216-2481–PAGE 551
AN ATTACHMENT

SMCS-5102 **i02044806**

NOTE	REF NO	GRAPHIC REF	PART NUMBER	QTY	PART NAME 1 2 3 4 5 6 (PRODUCT LEVEL)	SEE PAGE
Y	1	1	*7T-3829*	1	CYLINDER & VALVE GP-LIFT (LH)	555
I	2	1	**8E-1249**	1	HOSE AS	
I	3	1	**117-6418**	1	HOSE AS	
	4	1	**217-0242**	1	BRACKET AS	
	5	1	**4J-0520**	4	SEAL-O-RING	
	6	1	**5P-2566**	4	BOLT (1/2-13X1.5-IN)	
	7	1	**8T-4223**	4	WASHER-HARD (13.5X25.5X3-MM THK)	

I-REFER TO HYDRAULIC INFORMATION SYSTEM
Y-SEPARATE ILLUSTRATION

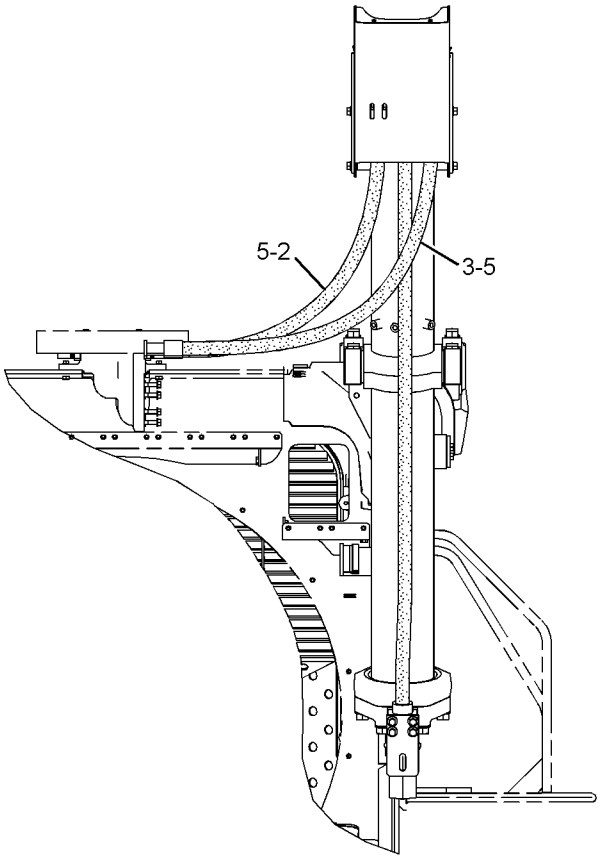

REAR VIEW

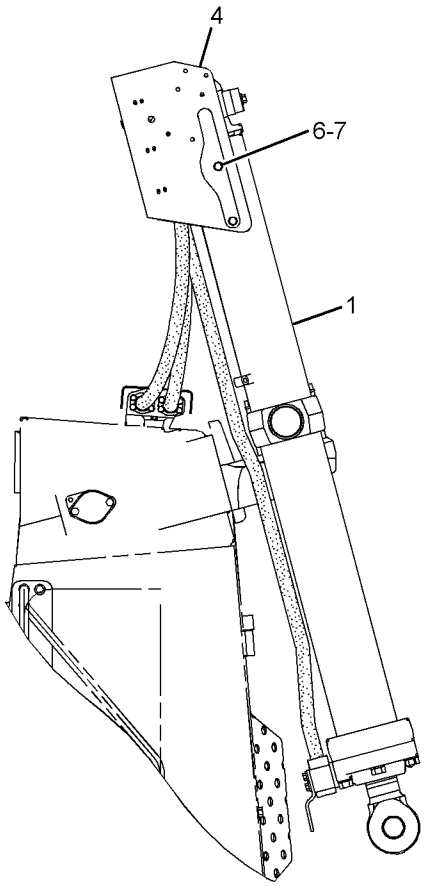

RIGHT SIDE VIEW

GRAPHIC #1 **<END>** g01051415

221-8236 CYLINDER & LINES GP-LIFT–RH, POSITION SENSING

S/N: RJG1-UP

FOR USE WITH 216-2482–PAGE 552

AN ATTACHMENT

SMCS-5102 **i02462996**

NOTE	REF NO	GRAPHIC REF	PART NUMBER	QTY	PART NAME 1 2 3 4 5 6 (PRODUCT LEVEL)	SEE PAGE
	1	1	**8E-6269**	1	BRACKET AS	
		1	**1F-0750**	2	NUT-WELD (3/8-16-THD)	
I	2	1	**8V-6963**	1	HOSE AS	
	3	1	**217-0242**	1	BRACKET AS	
I	4	1	**217-9148**	1	HOSE AS	
Y	5	1	**221-8235**	1	CYLINDER & VALVE GP-LIFT (POSITION SENSING, RH)	556
	6	1	**4J-0520**	4	SEAL-O-RING	
	7	1	**4L-6454**	2	BOLT (3/8-16X1-IN)	
	8	1	**5P-1075**	2	WASHER-HARD (10.2X22.5X3-MM THK)	
	9	1	**5P-2566**	4	BOLT (1/2-13X1.5-IN)	
	10	1	**8T-4223**	4	WASHER-HARD (13.5X25.5X3-MM THK)	

I-REFER TO HYDRAULIC INFORMATION SYSTEM
Y-SEPARATE ILLUSTRATION

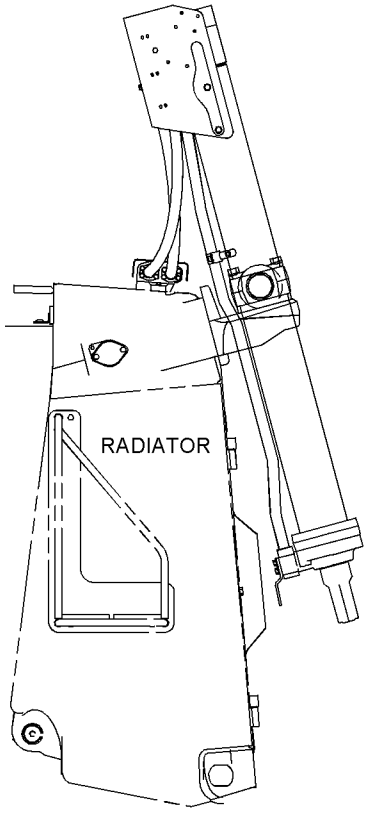

RIGHT SIDE VIEW

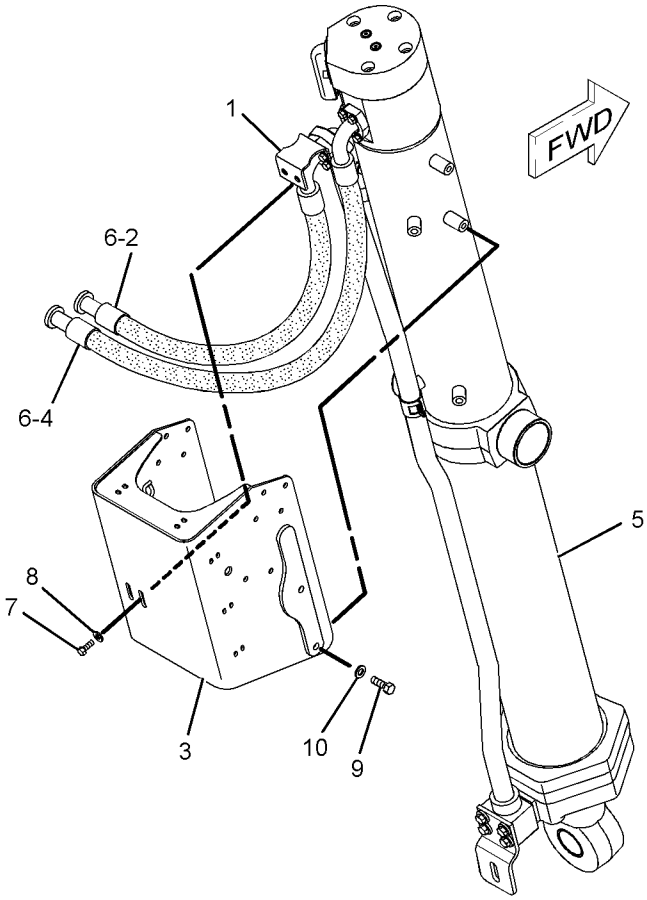

GRAPHIC #1 **<END>** g01051535

234-9182 CYLINDER & SENSOR GP-LIFT–
POSITION SENSING, RH
S/N: RJG1-UP
PART OF 221-8235 CYLINDER & VALVE GP-LIFT
AN ATTACHMENT

SMCS-5102 **i02045851**

NOTE	REF NO	GRAPHIC REF	PART NUMBER	QTY	PART NAME 1 2 3 4 5 6 (PRODUCT LEVEL)	SEE PAGE
Y	1	1	**231-0865**	1	CYLINDER GP-LIFT (RH)	562
Y	2	1	**234-7689**	1	SENSOR GP-POSITION (CYLINDER, RH)	283
M	3	1	**095-9806**	4	BOLT-SOCKET HEAD (M16X2X80-MM)	
	4	1	**3S-4489**	1	SEAL-O-RING	

M-METRIC PART
Y-SEPARATE ILLUSTRATION

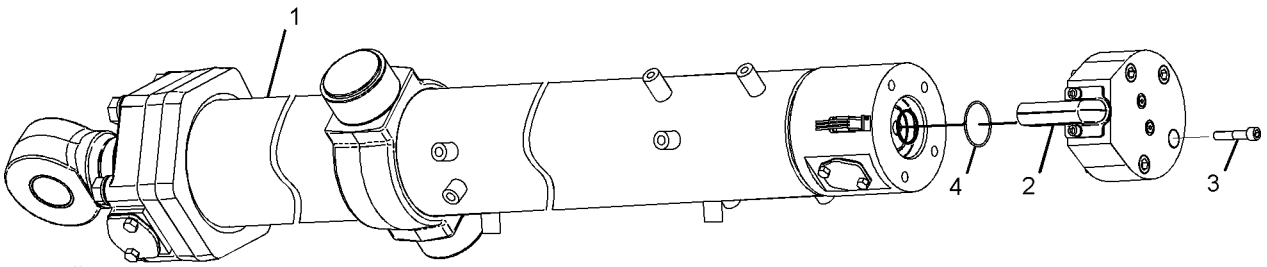

GRAPHIC #1 **<END>** g01051957

7T-3829 CYLINDER & VALVE GP-LIFT

S/N: BHA1-UP; BHF1-UP; RJG1-UP; BHJ1-UP; BHP1-UP
PART OF 216-2481, 216-2482 CYLINDER & LINES GP-LIFT
AN ATTACHMENT

SMCS-5102, 5110 **i01405138**

NOTE	REF NO	GRAPHIC REF	PART NUMBER	QTY	PART NAME 1 2 3 4 5 6 (PRODUCT LEVEL)	SEE PAGE
Y	1	1	**4T-4205**	1	VALVE GP-QUICK-DROP	680
Y	2	1	**9T-2869**	1	CYLINDER GP-LIFT (BULLDOZER)	560
	3	1	**5S-7382**	8	BOLT (3/8-16X1.375-IN)	
		1	**8T-4896**	8	WASHER-HARD (10.2X18.5X2.5-MM THK)	
	4	1	**7T-4890**	1	PLATE	
	5	1	**7X-0315**	4	BOLT (7/16-14X3.25-IN)	
	6	1	**8T-5360**	4	WASHER (12X22.5X2.5-MM THK)	
	7	1	**9W-4888**	1	TUBE AS	
	8	1	**7S-8921**	1	CLIP (TAB)	
		1	**7S-8920**	1	CLIP (SLOT)	
	9	1	**5C-6565**	1	BOLT (1/2-13X1.125-IN)	
		1	**8T-4223**	1	WASHER-HARD (13.5X25.5X3-MM THK)	
	10	1	**7X-0311**	4	BOLT (7/16-14X2.25-IN)	
	11	1	**1P-3705**	2	SEAL-RECTANGULAR	
	12	1	**1P-4577**	4	FLANGE-HALF	
	13	1	**7X-0589**	4	WASHER-HARD (12X28.5X5-MM THK)	

Y-SEPARATE ILLUSTRATION

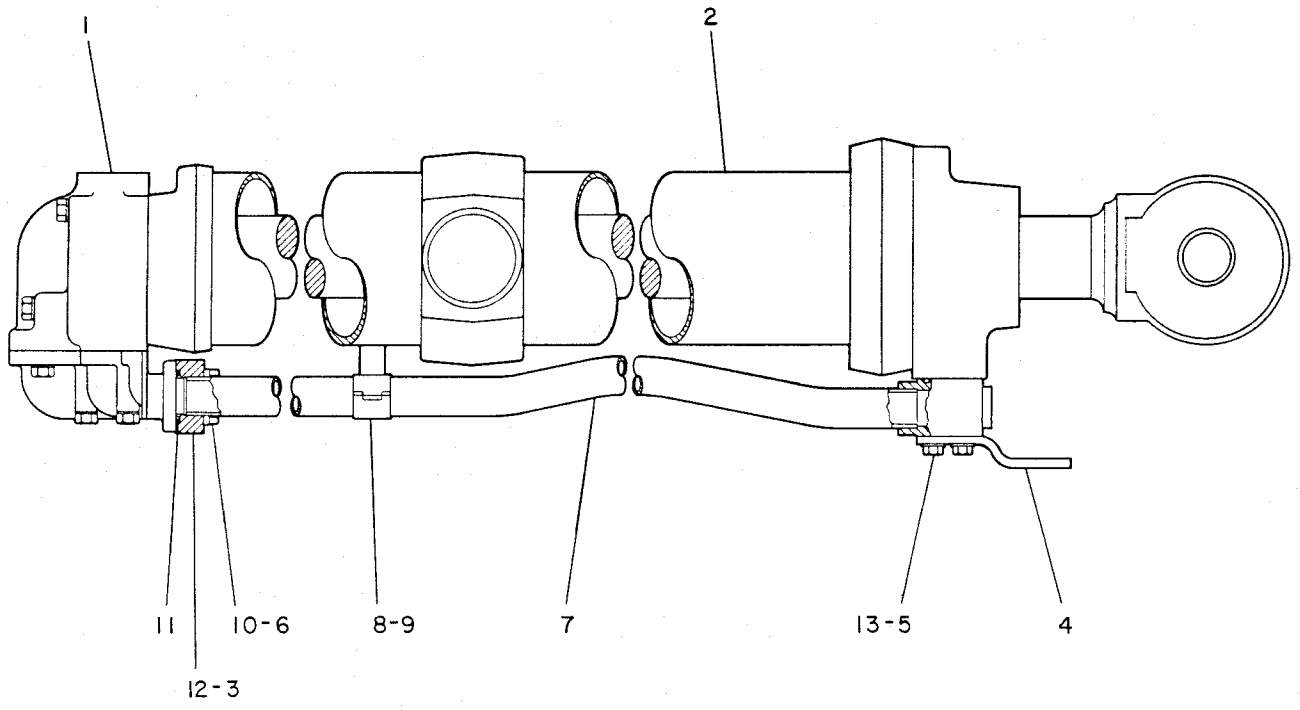

GRAPHIC #1 **<END>** g00187885

221-8235 CYLINDER & VALVE GP-LIFT–
POSITION SENSING, RH
S/N: RJG1-UP
PART OF 221-8236 CYLINDER & LINES GP-LIFT
AN ATTACHMENT

SMCS-5102, 5110 **i02462998**

NOTE	REF NO	GRAPHIC REF	PART NUMBER	QTY	PART NAME 1 2 3 4 5 6 (PRODUCT LEVEL)	SEE PAGE
	1	1	**7T-4890**	1	PLATE	
	2	1	**221-4466**	1	TUBE AS	
Y	3	1	**234-9182**	1	CYLINDER & SENSOR GP-LIFT (POSITION SENSING, RH)	554
	4	1	**1P-3705**	1	SEAL-RECTANGULAR	
	5	1	**1P-4577**	4	FLANGE-HALF	
	6	1	**4L-9337**	4	BOLT (3/8-16X1.5-IN)	
	7	1	**5C-6565**	1	BOLT (1/2-13X1.125-IN)	
	8	1	**5S-7382**	4	BOLT (3/8-16X1.375-IN)	
	9	1	**7S-8920**	1	CLIP (SLOT)	
	10	1	**7S-8921**	1	CLIP (TAB)	
	11	1	**7X-0315**	4	BOLT (7/16-14X3.25-IN)	
	12	1	**7X-0589**	4	WASHER-HARD (12X28.5X5-MM THK)	
	13	1	**8T-4223**	1	WASHER-HARD (13.5X25.5X3-MM THK)	
	14	1	**8T-4896**	8	WASHER-HARD (10.2X18.5X2.5-MM THK)	

Y-SEPARATE ILLUSTRATION

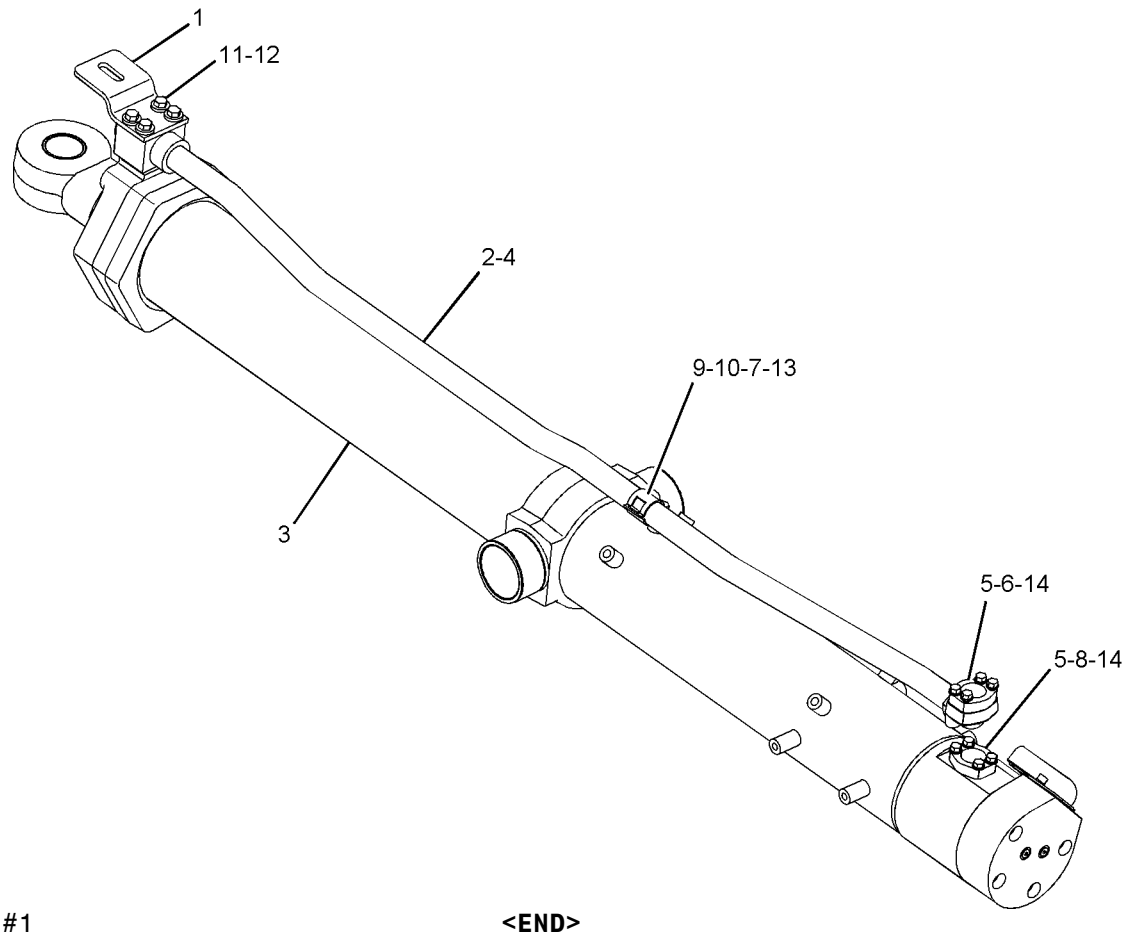

GRAPHIC #1 **<END>** g01051471

HYDRAULIC SYSTEM

231-7575 CYLINDER AR-DUAL TILT

S/N: RJG1-UP

AN ATTACHMENT

SMCS-5104 **i02253491**

NOTE	REF NO	GRAPHIC REF	PART NUMBER	QTY	PART NAME 1 2 3 4 5 6 (PRODUCT LEVEL)	SEE PAGE
Y	1	1	*231-7574*	1	LINES GP-TILT CYLINDER	618
Y	2	1	**232-0652**	1	CYLINDER GP-TILT (BULLDOZER) (LH)	571
Y	3	1	**232-0653**	1	CYLINDER GP-DUAL TILT (RH)	558

Y-SEPARATE ILLUSTRATION

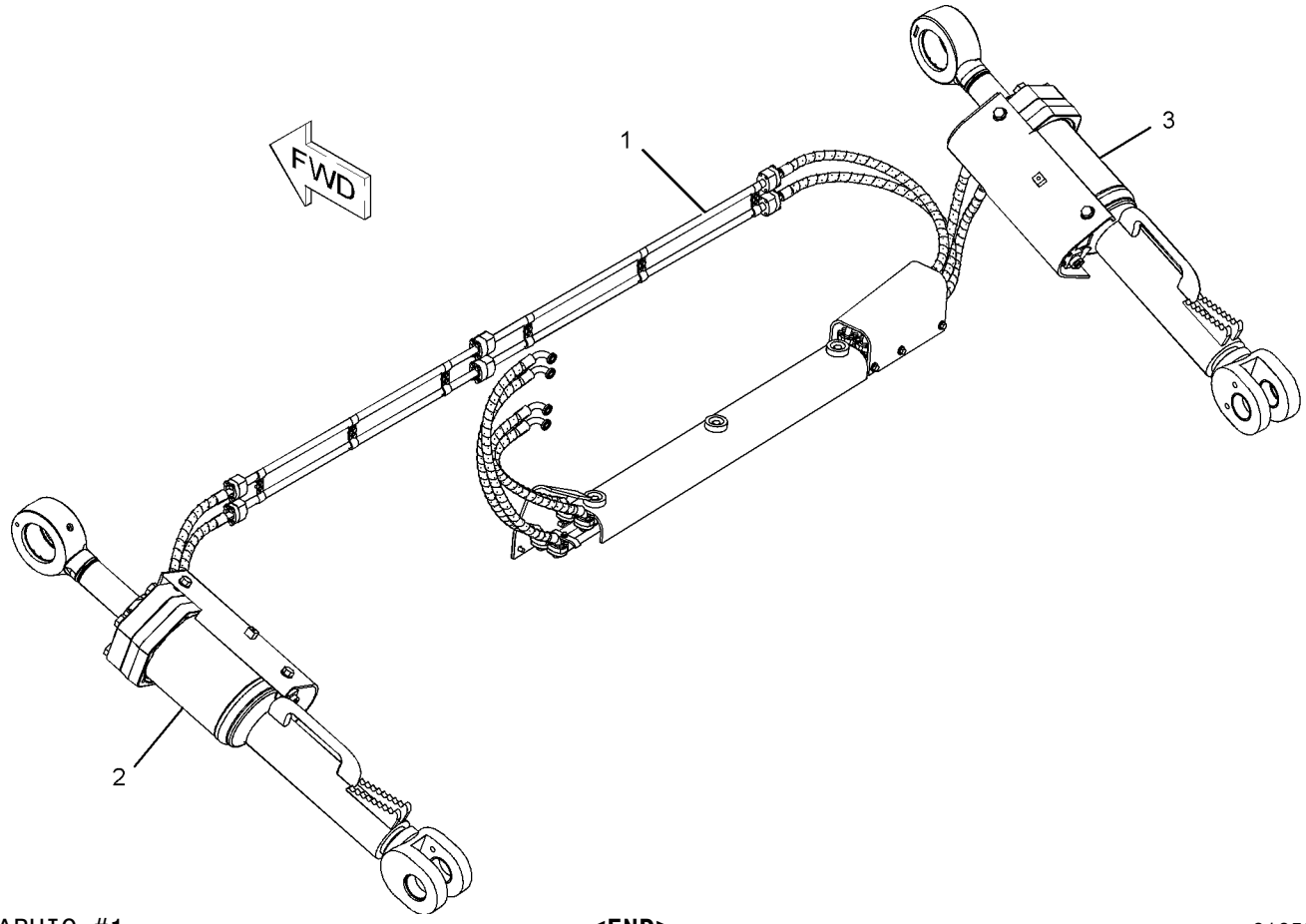

GRAPHIC #1 **<END>** g01055570

HYDRAULIC SYSTEM

232-0653 CYLINDER GP-DUAL TILT

S/N: RJG1-UP
234.95-MM (9.25-IN) BORE X 241-MM (9.48-IN) STROKE
PART OF 231-7575 CYLINDER AR-DUAL TILT
AN ATTACHMENT

SMCS-5104 **i02048500**

NOTE	REF NO	GRAPHIC REF	PART NUMBER	QTY	PART NAME 1 2 3 4 5 6 (PRODUCT LEVEL)	SEE PAGE
	1	1	**3B-8489**	1	FITTING-GREASE	
	2	1	**4J-8734**	1	LOCKNUT (2 3/4-12-THD)	
	3	1	**6E-3667**	1	HEAD	
R	4	1	**9T-9682**	1	ROD AS	
		1	**5L-4756**	2	RING-RETAINING	
		1	**117-3006**	1	BEARING	
	5	1	**107-0576**	2	WASHER (85X120X4.76-MM THK)	
	6	1	**118-0609**	1	PISTON AS	
	6A	1	**118-0611**	4	INSERT	
	6B	1	**118-0612**	2	PLUNGER	
	7	1	**234-0143**	1	CYLINDER AS	
	7A	1	**3G-7961**	1	LUG	
		1	**1U-2532**	2	BAR	
		1	**1U-3658**	1	HANDLE	
	8	1	**158-3032**	1	RING-BACKUP	
	9	1	**167-2216**	1	SEAL AS-BUFFER	
	10	1	**167-2331**	1	SEAL-U-CUP	
	11	1	**1U-3174**	1	SEAL-O-RING	
	12	1	**225-3287**	1	SEAL-WIPER	
	13	1	**3S-1349**	6	WASHER-HARD (31X52.5X6-MM THK)	
	14	1	**4T-4143**	1	SEAL AS	
	15	1	**5M-0544**	6	BOLT (1 1/8-7X4.5-IN)	
	16	1	**7J-2087**	1	RING-WEAR	
	17	1	**8T-6747**	1	RING-WEAR	

R-REMFG PART MAY BE AVAILABLE

232-0653 **CYLINDER GP-DUAL TILT** *(contd.)* **i02048500**

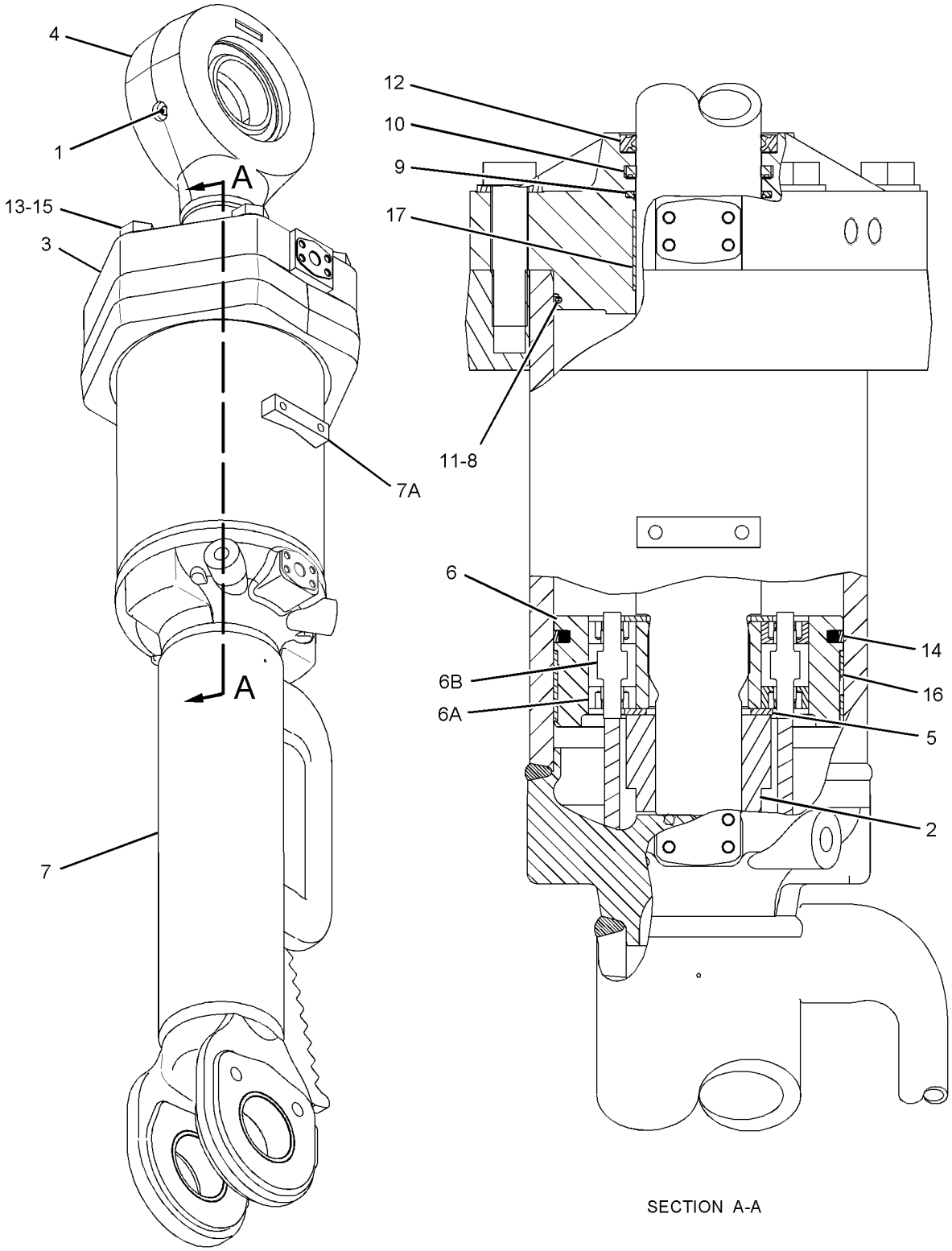

SECTION A-A

GRAPHIC #1 **<END>** g01054222

HYDRAULIC SYSTEM

9T-2869 CYLINDER GP-BULLDOZER LIFT

S/N: BHA1-UP; BHF1-UP; RJG1-UP; BHJ1-UP; BHP1-UP
158.75-MM (6.25-IN) BORE X 1652.9-MM (65.1-IN) STROKE
PART OF 7T-3829 CYLINDER & VALVE GP-LIFT
AN ATTACHMENT

SMCS-5102 **i01872728**

NOTE	REF NO	GRAPHIC REF	PART NUMBER	QTY	PART NAME 1 2 3 4 5 6 (PRODUCT LEVEL)	SEE PAGE
	1	1	**2J-0564**	1	LOCKNUT (2-12-2B THD)	
	2	1	**2J-1740**	1	SPACER (2.033X3.5X.372-IN THK)	
	3	1	**5J-3326**	1	RING-WEAR	
	4	1	**8T-1788**	1	SEAL AS	
	5	1	**142-2725**	1	PISTON AS	
	6	1	**9T-7059**	2	PLUNGER	
		1	**1J-8569**	4	INSERT-PISTON	
J	7	1	**132-4907**	1	RING-WEAR (ROD)	
CJ	8	1	**167-2211**	1	SEAL AS-BUFFER	
R	9	1	**9T-2865**	1	ROD AS	
	10	1	**1J-2192**	1	BUSHING	
CJ	11	1	**9X-7405**	1	SEAL-U-CUP	
C	12	1	**162-7209**	1	RING-BACKUP	
	13	1	**6V-5657**	1	SEAL-O-RING	
	14	1	**2H-3856**	2	BOLT (7/8-9X3.75-IN)	
	15	1	**5P-8249**	6	WASHER-HARD (24X41.5X4-MM THK)	
C	16	1	**162-7487**	1	HEAD	
	17	1	**1D-4628**	4	BOLT (7/8-9X3.25-IN)	
R	18	1	**9T-2868**	1	CYLINDER AS	
	19	1	**5J-1193**	2	BEARING-SLEEVE	
CJ	20	1	**225-3286**	1	SEAL-WIPER	
AFJ			**8C-4935**	1	SEAL AS	
AFJ			**8T-8357**	1	RING-WEAR	
AFJ			**8T-8378**	1	SEAL-HEAD	
AFJ			**9X-7391**	1	SEAL-O-RING	
					AVAILABLE REPAIR KIT(S):	
J			**229-3638**	1	KIT-SEAL (LIFT)	
					(INCLUDES SEALS & RINGS)	

A-NOT PART OF THIS GROUP
C-CHANGE FROM PREVIOUS TYPE
F-NOT SHOWN
J-KIT MARKED J INCLUDES PARTS MARKED J
R-REMFG PART MAY BE AVAILABLE

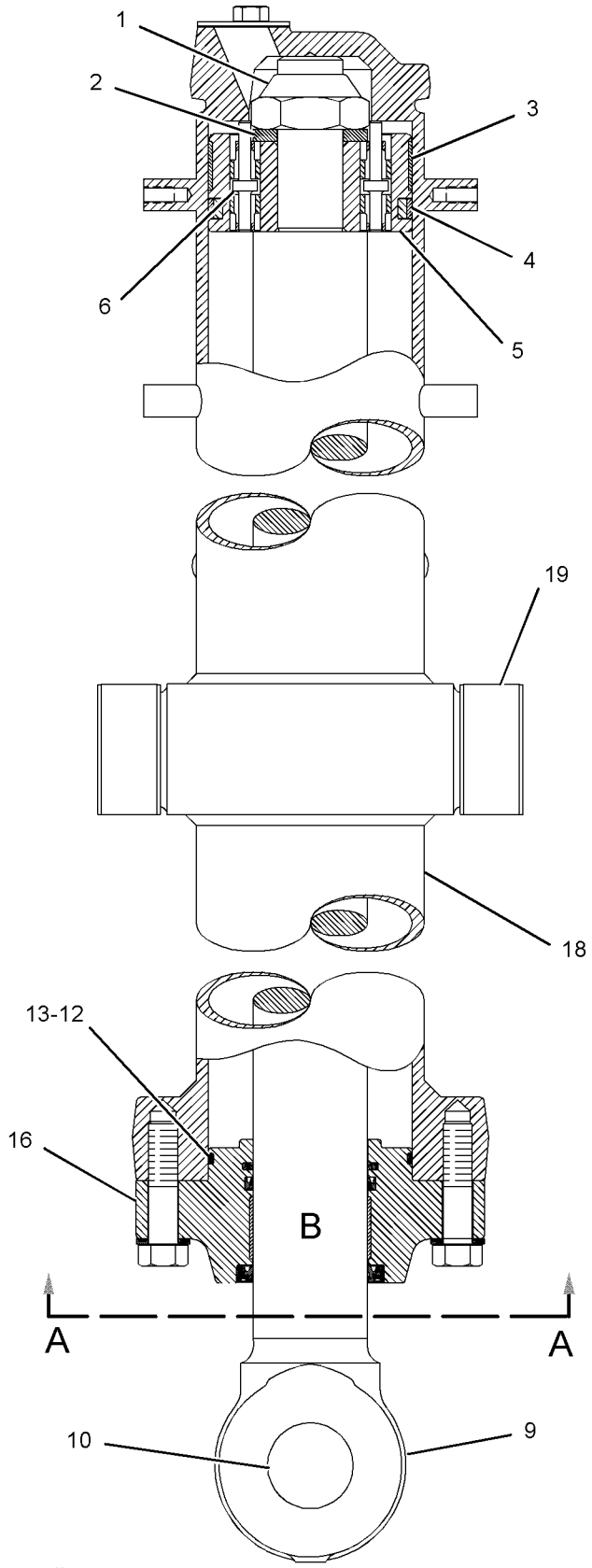

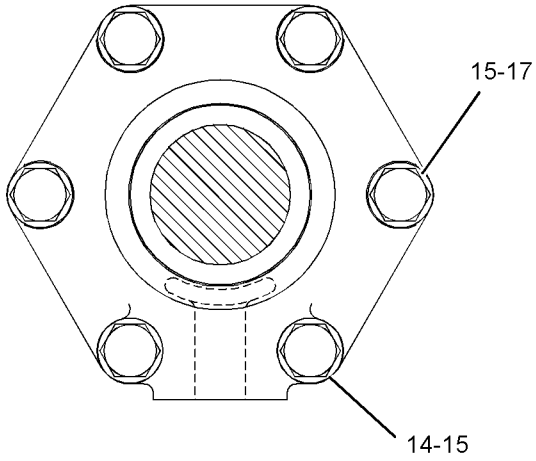

SECTION A-A

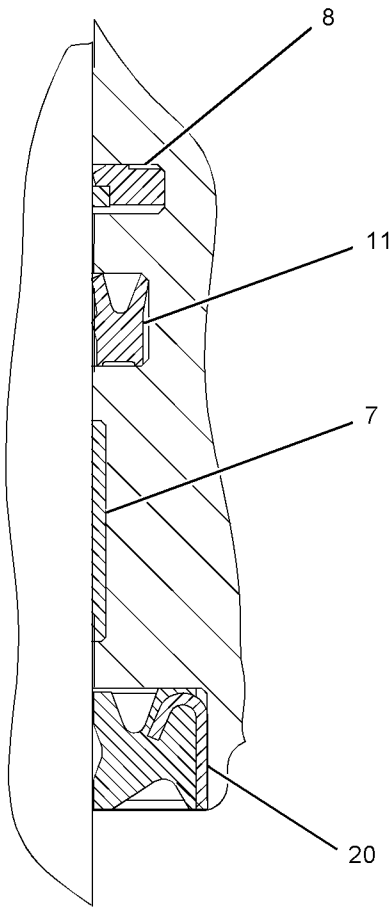

VIEW OF AREA B

GRAPHIC #1 **<END>** g01057897

231-0865 CYLINDER GP-LIFT–BULLDOZER

S/N: RJG1-UP
158.75-MM (6.25-IN) BORE X 1652.9-MM (65.1-IN) STROKE
PART OF 234-9182 CYLINDER & SENSOR GP-LIFT
AN ATTACHMENT

SMCS-5102 **i02267731**

NOTE	REF NO	GRAPHIC REF	PART NUMBER	QTY	PART NAME 1 2 3 4 5 6 (PRODUCT LEVEL)	SEE PAGE
	1	1	**2J-1740**	1	SPACER (2.033X3.5X0.372-IN THK)	
	2	1	**5J-3326**	1	RING-WEAR	
	3	1	**142-2725**	1	PISTON AS	
	3A	1	**1J-8569**	4	INSERT-PISTON	
	3B	1	**9T-7059**	2	PLUNGER	
	4	1	**162-7209**	1	RING-BACKUP	
	5	1	**162-7487**	1	HEAD	
	6	1	**214-1639**	1	MAGNET	
	7	1	**221-6982**	1	ROD AS	
	7A	1	**1J-2192**	1	BUSHING	
	8	1	**231-0866**	1	CYLINDER AS	
	8A	1	**1S-8241**	4	BOSS	
	8B	1	**5H-9394**	1	BOSS (3/8-16X1-IN)	
	8C	1	**5J-1193**	2	BEARING-SLEEVE	
	8D	1	**8K-0273**	4	BOSS (1/2-13-THD)	
	9	1	**243-3177**	1	RETAINER	
	10	1	**132-4907**	1	RING-WEAR (ROD)	
	11	1	**167-2211**	1	SEAL AS-BUFFER	
	12	1	**225-3286**	1	SEAL-WIPER	
	13	1	**2J-0564**	1	LOCKNUT (2-12-THD)	
	14	1	**5P-8249**	6	WASHER-HARD (24X41.5X4-MM THK)	
	15	1	**6V-5657**	1	SEAL-O-RING	
	16	1	**8T-1788**	1	SEAL AS	
	17	1	**9X-7405**	1	SEAL-U-CUP	
	18	1	**9X-8892**	4	BOLT (7/8-9X3.25-IN)	
	19	1	**9X-8894**	2	BOLT (7/8-9X3.75-IN)	

231-0865 CYLINDER GP-LIFT *(contd.)* **i02267731**

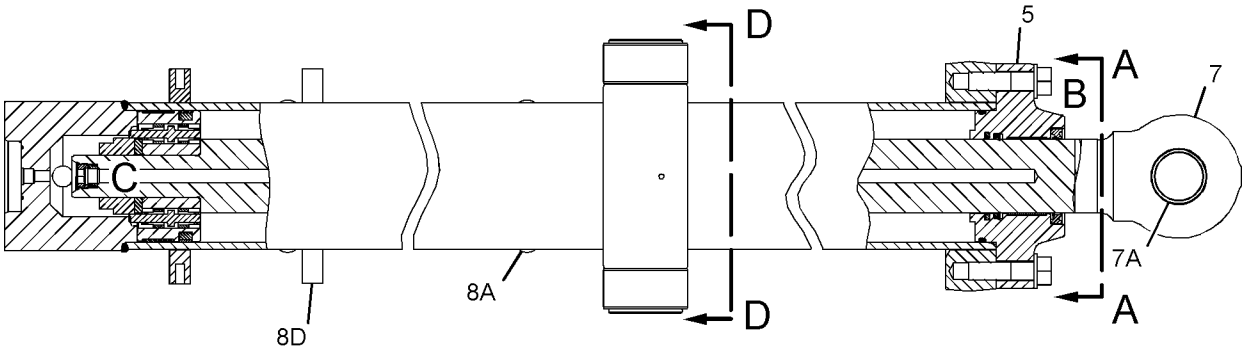

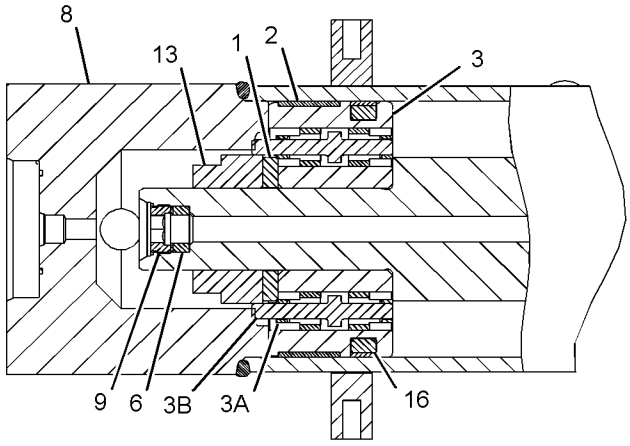

VIEW OF AREA C

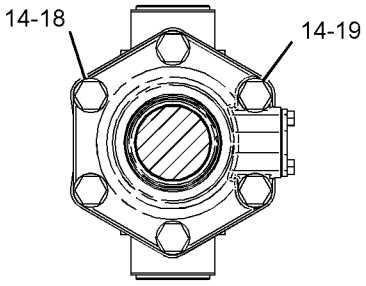

SECTION A-A

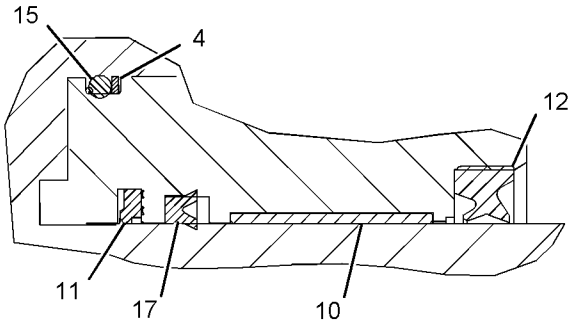

VIEW OF AREA B

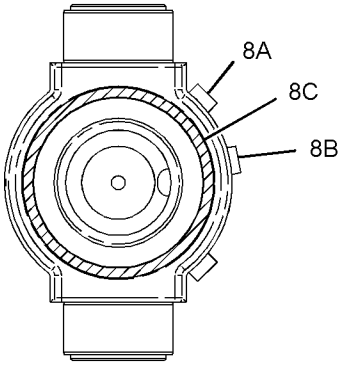

SECTION D-D

GRAPHIC #1 **<END>** g01137303

HYDRAULIC SYSTEM

192-6445 CYLINDER GP-RIPPER LIFT–RH

S/N: 4PP1-UP; BRT1-UP; BEY1-UP
234.95-MM (9.25-IN) BORE X 535-MM (21.06-IN) STROKE
PART OF 216-0120, 216-0121, 216-0122 RIPPER AR
AN ATTACHMENT

SMCS-5352 **i02044249**

NOTE	REF NO	GRAPHIC REF	PART NUMBER	QTY	PART NAME 1 2 3 4 5 6 (PRODUCT LEVEL)	SEE PAGE
R	1	1	**4T-5114**	1	CYLINDER AS	
	1A	1	**7J-2086**	1	FLANGE	
	1B	1	**3G-7624**	1	BEARING-SLEEVE	
	2	1	**4J-6888**	1	LOCKNUT (2 3/4-12-THD)	
	3	1	**173-7756**	2	WASHER (70.1X114X6.4-MM THK)	
	4	1	**7J-2087**	1	RING-WEAR	
	5	1	**4T-4143**	1	SEAL AS	
	6	1	**7J-4083**	1	PISTON	
	7	1	**192-6448**	1	ROD AS	
	7A	1	**9J-6549**	1	BEARING-SLEEVE	
	8	1	**1U-3173**	1	RING-BACKUP	
	9	1	**1U-3174**	1	SEAL-O-RING	
	10	1	**8T-8383**	1	SEAL-HEAD	
	11	1	**192-6447**	1	HEAD	
	12	1	**3B-8489**	2	FITTING-GREASE (CYLINDER BEARING)	
	13	1	**132-4907**	1	RING-WEAR (ROD)	
	14	1	**167-2211**	1	SEAL AS-BUFFER	
	15	1	**167-2324**	1	SEAL-U-CUP	
	16	1	**225-3286**	1	SEAL-WIPER	
	17	1	**5P-8250**	6	WASHER (28X49X5-MM THK)	
	18	1	**1D-4637**	6	BOLT (1-8X3.25-IN)	
	19	1	**1P-4577**	4	FLANGE-HALF	
	20	1	**5S-7382**	8	BOLT (3/8-16X1.375-IN)	
	21	1	**8T-4896**	8	WASHER-HARD (10.2X18.5X2.5-MM THK)	
	22	1	**4J-0520**	2	SEAL-O-RING	
	23	1	**5H-4019**	2	COVER	

R-REMFG PART MAY BE AVAILABLE

192-6445 CYLINDER GP-RIPPER LIFT *(contd.)* i02044249

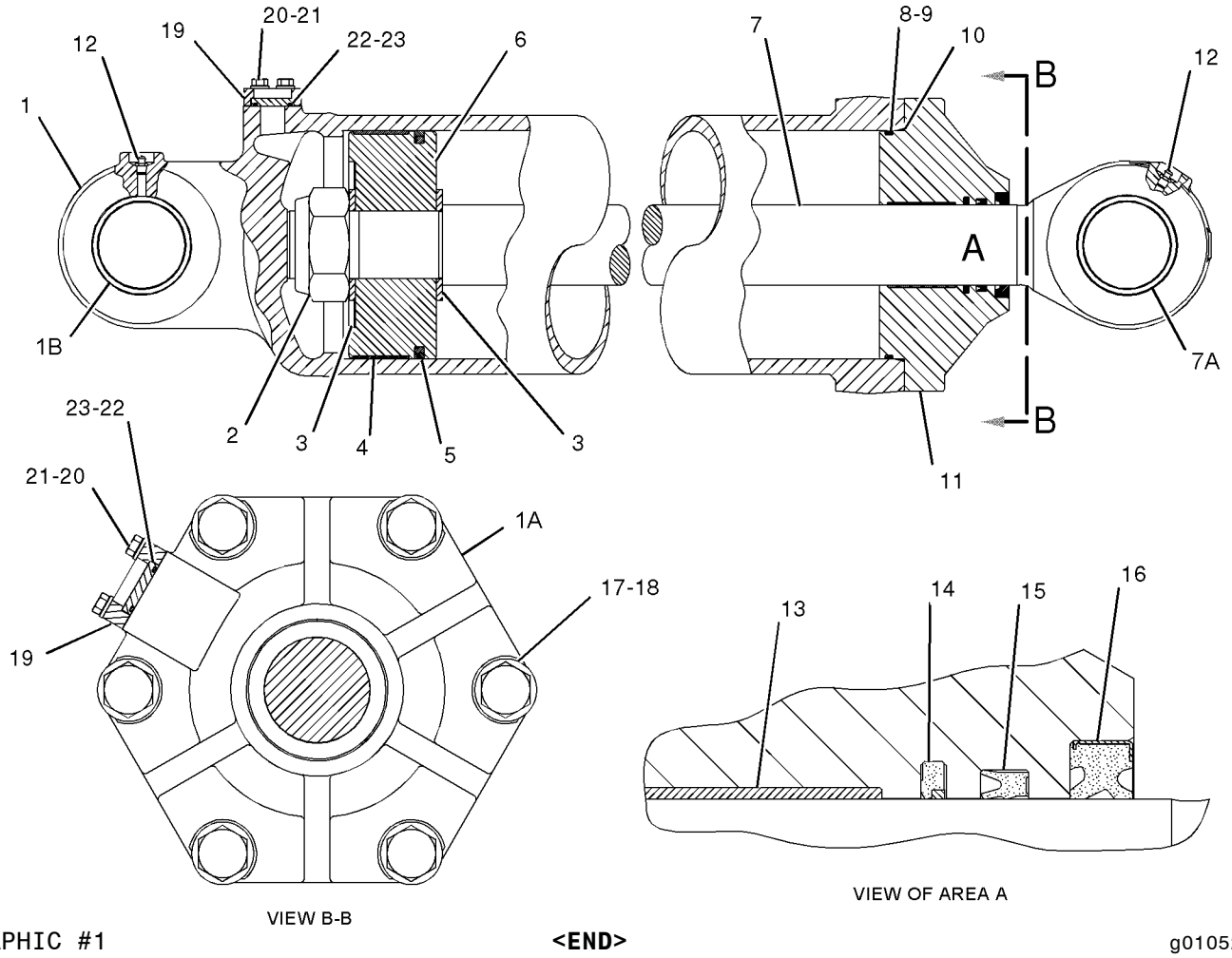

GRAPHIC #1 **<END>** g01052526

HYDRAULIC SYSTEM

192-6446 CYLINDER GP-RIPPER LIFT–LH

S/N: 4PP1-UP; BRT1-UP; BEY1-UP
234.95-MM (9.25-IN) BORE X 535-MM (21.06-IN) STROKE
PART OF 216-0120, 216-0121, 216-0122 RIPPER AR
AN ATTACHMENT

SMCS-5352 **i02274373**

NOTE	REF NO	GRAPHIC REF	PART NUMBER	QTY	PART NAME 1 2 3 4 5 6 (PRODUCT LEVEL)	SEE PAGE
R	1	1	**4T-5114**	1	CYLINDER AS	
		1	**7J-2086**	1	FLANGE	
		1	**3G-7624**	1	BEARING-SLEEVE	
	2	1	**4J-6888**	1	LOCKNUT (2 3/4-12-THD)	
	3	1	**173-7756**	2	WASHER (70.1X114X6.4-MM THK)	
	4	1	**7J-2087**	1	RING-WEAR	
	5	1	**4T-4143**	1	SEAL AS	
	6	1	**7J-4083**	1	PISTON	
	7	1	**192-6448**	1	ROD AS	
		1	**9J-6549**	1	BEARING-SLEEVE	
	8	1	**1U-3173**	1	RING-BACKUP	
	9	1	**1U-3174**	1	SEAL-O-RING	
	10	1	**8T-8383**	1	SEAL-HEAD	
	11	1	**192-6447**	1	HEAD	
	12	1	**3B-8489**	2	FITTING-GREASE	
	13	1	**132-4907**	1	RING-WEAR (ROD)	
	14	1	**167-2211**	1	SEAL AS-BUFFER	
	15	1	**167-2324**	1	SEAL-U-CUP	
	16	1	**225-3286**	1	SEAL-WIPER	
	17	1	**5P-8250**	6	WASHER (28X49X5-MM THK)	
	18	1	**1D-4637**	6	BOLT (1-8X3.25-IN)	
	19	1	**1P-4577**	4	FLANGE-HALF	
	20	1	**5S-7382**	8	BOLT (3/8-16X1.375-IN)	
	21	1	**8T-4896**	8	WASHER-HARD (10.2X18.5X2.5-MM THK)	

R-REMFG PART MAY BE AVAILABLE

192-6446 CYLINDER GP-RIPPER LIFT *(contd.)* i02274373

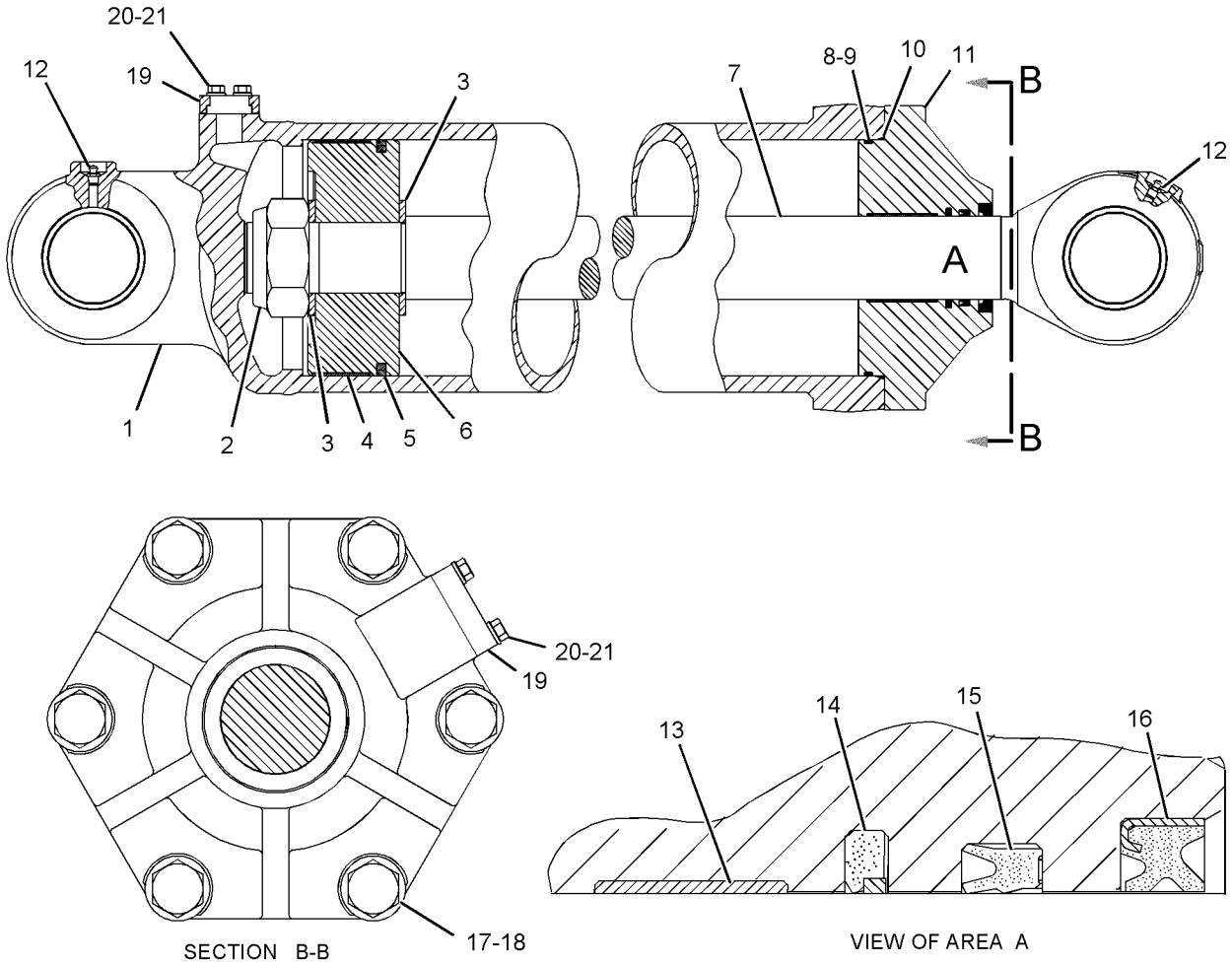

GRAPHIC #1 **<END>** g01139361

6E-3113 CYLINDER GP-RIPPER PIN PULLER

S/N: RJG1-UP
101.6-MM (4-IN) BORE X 138.5-MM (5.5-IN) STROKE
PART OF 178-1784 PULLER AR-PIN, 4Z-8946 PULLER GP-PIN
AN ATTACHMENT

SMCS-5354 **i02024570**

NOTE	REF NO	GRAPHIC REF	PART NUMBER	QTY	PART NAME 1 2 3 4 5 6 (PRODUCT LEVEL)	SEE PAGE
M	1	1	**173-9779**	1	BOLT (M24X3.0X80-MM)	
	2	1	**6J-2797**	1	RING-WEAR	
	3	1	**5J-5402**	1	SEAL AS	
	4	1	**9T-3493**	1	PISTON	
	5	1	**6V-8237**	1	WASHER (26X44X4-MM THK)	
	6	1	**4T-6907**	1	RING-WEAR	
	7	1	**6E-3980**	1	ROD AS	
	8	1	**231-3539**	1	SEAL-WIPER	
	9	1	**167-2300**	1	SEAL-U-CUP	
	10	1	**167-2190**	1	SEAL AS-BUFFER	
	11	1	**2K-6830**	1	RING-BACKUP	
	12	1	**175-7900**	1	SEAL-O-RING	
	13	1	**6E-4976**	1	HEAD	
	14	1	**6E-3976**	1	CYLINDER AS	

M-METRIC PART

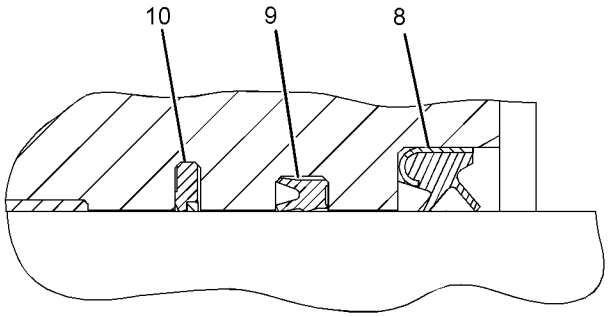

VIEW OF AREA A

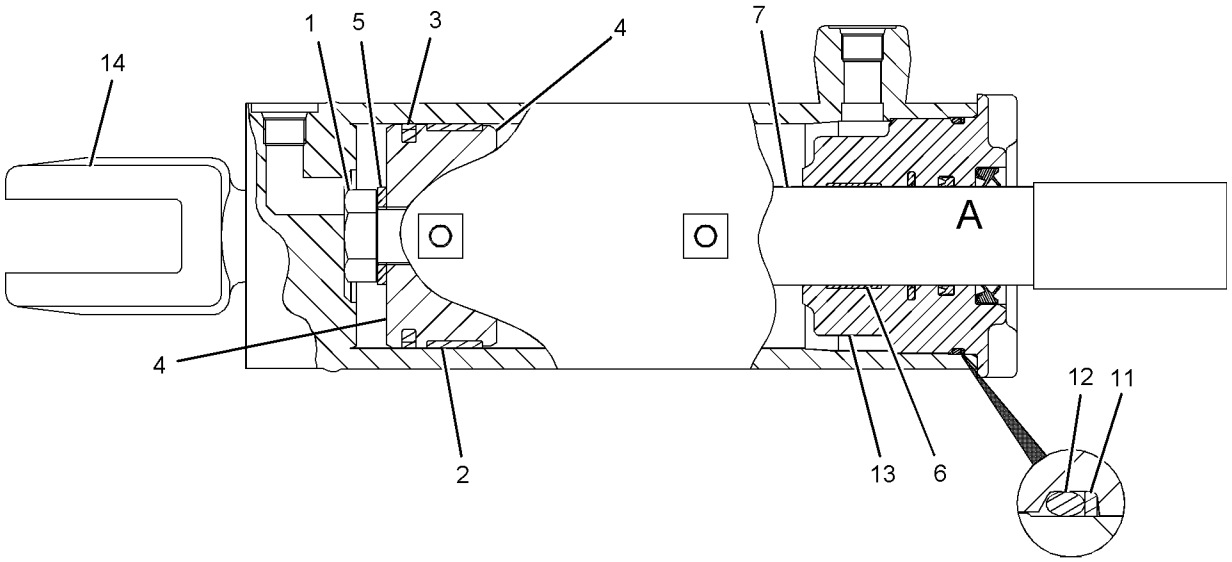

GRAPHIC #1 **<END>** g01016887

4T-9977 CYLINDER GP-RIPPER TILT

S/N: 4PP1-UP; BRT1-UP; BEY1-UP
209.6-MM (8.25-IN) BORE X 660-MM (26-IN) STROKE
PART OF 216-0120, 216-0121, 216-0122 RIPPER AR
AN ATTACHMENT

SMCS-5356 **i02044223**

NOTE	REF NO	GRAPHIC REF	PART NUMBER	QTY	PART NAME 1 2 3 4 5 6 (PRODUCT LEVEL)	SEE PAGE
	1	1	**3B-8489**	2	FITTING-GREASE (CYLINDER BEARING)	
	2	1	**105-4172**	1	PISTON	
	3	1	**5J-3488**	1	LOCKNUT (2-1/4-12-2B-THD)	
	4	1	**8T-6745**	1	RING-WEAR	
	5	1	**4J-7376**	1	RING-WEAR	
	6	1	**5J-5559**	1	SEAL AS	
	7	1	**119-8455**	2	WASHER (57.3X100X6.35-MM THK)	
	8	1	**8J-4386**	1	SEAL-O-RING	
	9	1	**3G-3747**	1	RING-BACKUP	
	10	1	**1D-4631**	2	BOLT (7/8-9X4.25-IN)	
	11	1	**5P-8249**	8	WASHER-HARD (24X41.5X4-MM THK)	
R	12	1	**105-4169**	1	ROD AS	
	12A	1	**3J-6484**	2	BEARING-SLEEVE	
	12B	1	**4J-4955**	1	SPACER (3X100X5-MM THK)	
	13	1	**8T-4896**	8	WASHER-HARD (10.2X18.5X2.5-MM THK)	
	14	1	**167-2209**	1	SEAL AS-BUFFER	
	15	1	**167-2320**	1	SEAL-U-CUP	
	16	1	**225-3285**	1	SEAL-WIPER	
	17	1	**1D-4627**	6	BOLT (7/8-9X3-IN)	
	18	1	**100-9965**	1	HEAD	
R	19	1	**9T-0085**	1	CYLINDER AS	
	19A	1	**3J-6484**	2	BEARING-SLEEVE	
	19B	1	**4J-4955**	1	SPACER (3X100X5-MM THK)	
	20	1	**5S-7382**	8	BOLT (3/8-16X1.375-IN)	
	21	1	**1P-4577**	4	FLANGE-HALF	
	22	1	**8T-8382**	1	SEAL-HEAD	

R-REMFG PART MAY BE AVAILABLE

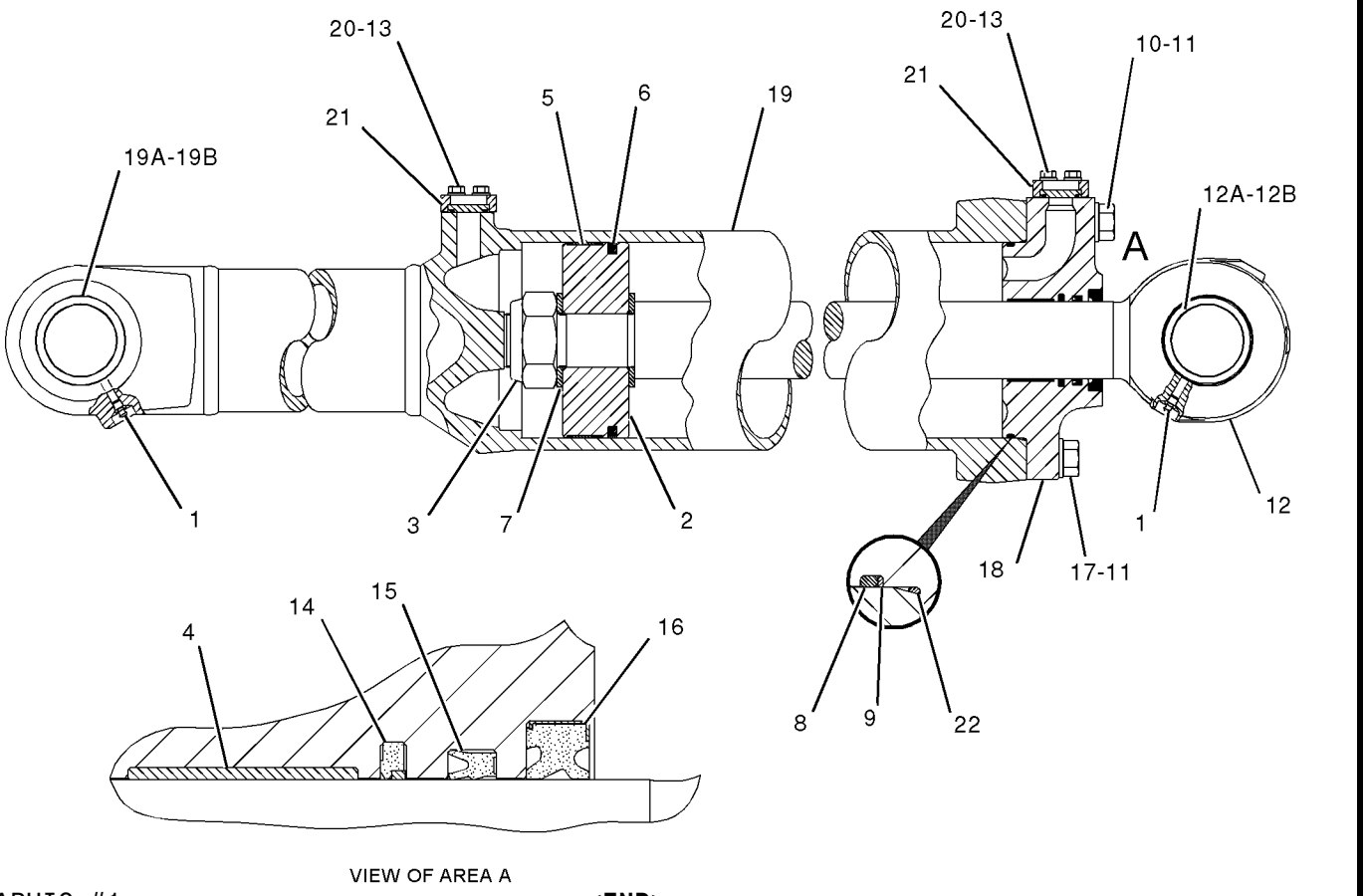

GRAPHIC #1 **<END>** g01052535

HYDRAULIC SYSTEM

232-0652 CYLINDER GP-TILT

S/N: RJG1-UP
234.95-MM (9.25-IN) BORE X 241-MM (9.48-IN) STROKE
PART OF 231-7575 CYLINDER AR-DUAL TILT
AN ATTACHMENT

SMCS-5104 **i02048385**

NOTE	REF NO	GRAPHIC REF	PART NUMBER	QTY	PART NAME 1 2 3 4 5 6 (PRODUCT LEVEL)	SEE PAGE
	1	1	**3B-8489**	1	FITTING-GREASE	
	2	1	**4J-8734**	1	LOCKNUT (2 3/4-12-THD)	
	3	1	**6E-3667**	1	HEAD	
R	4	1	**9T-9682**	1	ROD AS	
		1	**5L-4756**	2	RING-RETAINING	
		1	**117-3006**	1	BEARING	
	5	1	**107-0576**	2	WASHER (85X120X4.76-MM THK)	
	6	1	**118-0609**	1	PISTON AS	
		1	**118-0611**	4	INSERT	
		1	**118-0612**	2	PLUNGER	
	7	1	**234-0144**	1	CYLINDER AS (LH)	
		1	**1U-2532**	2	BAR	
		1	**1U-3658**	1	HANDLE	
		1	**3G-7961**	1	LUG	
	8	1	**158-3032**	1	RING-BACKUP	
	9	1	**167-2216**	1	SEAL AS-BUFFER	
	10	1	**167-2331**	1	SEAL-U-CUP	
	11	1	**1U-3174**	1	SEAL-O-RING	
	12	1	**225-3287**	1	SEAL-WIPER	
	13	1	**3S-1349**	6	WASHER-HARD (31X52.5X6-MM THK)	
	14	1	**4T-4143**	1	SEAL AS	
	15	1	**5M-0544**	6	BOLT (1-1/8-7X4.5-IN)	
	16	1	**7J-2087**	1	RING-WEAR	
	17	1	**8T-6747**	1	RING-WEAR	

R-REMFG PART MAY BE AVAILABLE

232-0652 CYLINDER GP-TILT *(contd.)* i02048385

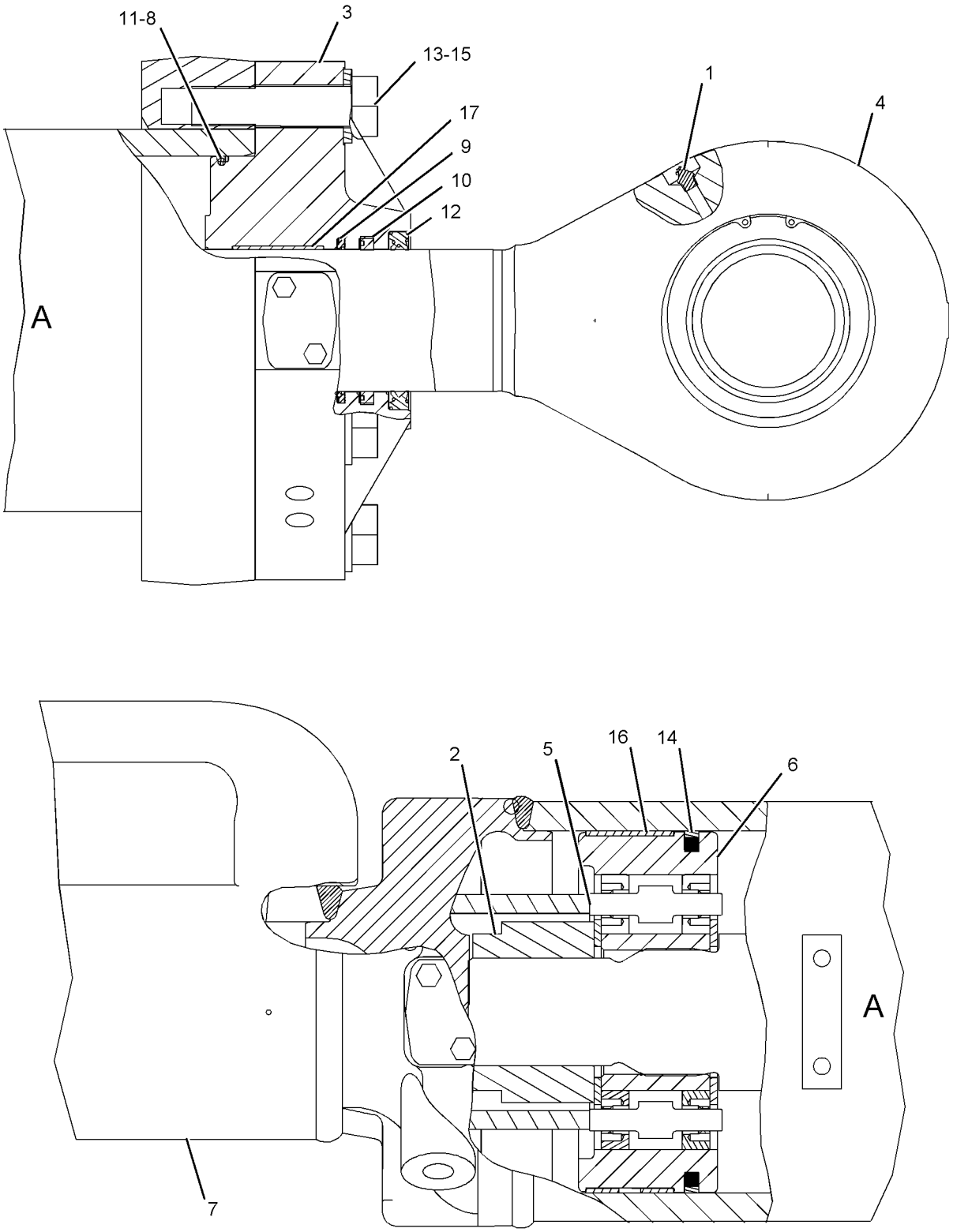

GRAPHIC #1 **<END>** g01053368

HYDRAULIC SYSTEM

232-0654 CYLINDER GP-TILT–RH

S/N: BHA1-UP; BHF1-UP; BHJ1-UP; BHP1-UP
234.95-MM (9.25-IN) BORE X 241-MM (9.48-IN) STROKE
PART OF 235-2812 PUSH ARM GP-STABILIZER
AN ATTACHMENT

SMCS-5104 **i02267761**

NOTE	REF NO	GRAPHIC REF	PART NUMBER	QTY	PART NAME 1 2 3 4 5 6 (PRODUCT LEVEL)	SEE PAGE
	1	1	**3B-8489**	1	FITTING-GREASE (CYLINDER BEARING)	
	2	1	**3G-8633**	1	PISTON	
	3	1	**5J-1572**	6	BOLT (1-1/8-7X4.25-IN)	
R	4	1	**9T-1181**	1	ROD AS	
	4A	1	**5L-4756**	2	RING-RETAINING	
	4B	1	**117-3006**	1	BEARING	
	5	1	**9T-4447**	1	HEAD	
		1	**225-3287**	1	SEAL-WIPER	
	6	1	**234-0142**	1	CYLINDER AS	
	6A	1	**1U-2532**	2	BAR	
	6B	1	**1U-3658**	1	HANDLE	
	6C	1	**3G-7961**	1	LUG	
	6D	1	**4J-2379**	2	BEARING-SLEEVE	
	7	1	**158-3032**	1	RING-BACKUP	
	8	1	**167-2216**	1	SEAL AS-BUFFER	
	9	1	**167-2331**	1	SEAL-U-CUP	
	10	1	**1U-3174**	1	SEAL-O-RING	
	11	1	**225-3287**	1	SEAL-WIPER	
	12	1	**3S-1349**	6	WASHER-HARD (31X52.5X6-MM THK)	
	13	1	**4T-4143**	1	SEAL AS	
	14	1	**7J-2087**	1	RING-WEAR	
	15	1	**7J-9250**	1	LOCKNUT (3-1/4X12-THD)	
	16	1	**8T-6747**	1	RING-WEAR	
	17	1	**8T-8383**	1	SEAL-HEAD	

R-REMFG PART MAY BE AVAILABLE

232-0654 CYLINDER GP-TILT *(contd.)* i02267761

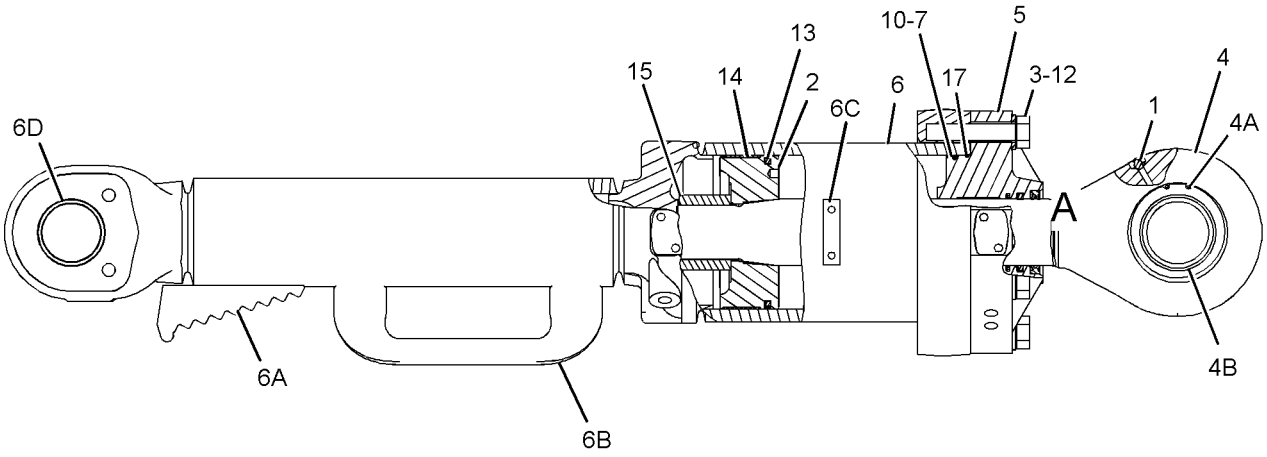

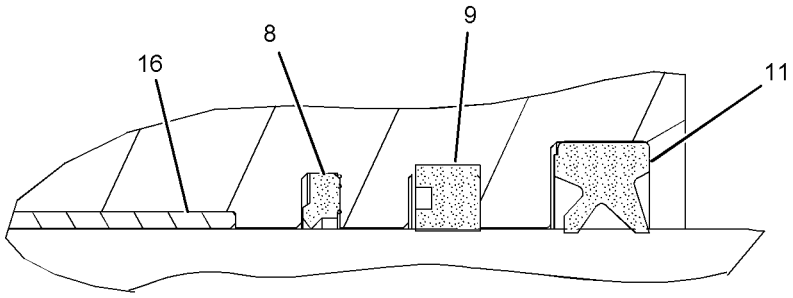

VIEW OF AREA A

GRAPHIC #1 **<END>** g01052664

188-1079 HANDLE GP-CONTROL–BULLDOZER

S/N: RJG1-UP

PART OF 208-6074 CONTROL GP-JOYSTICK

SMCS-3168 **i01499097**

NOTE	REF NO	GRAPHIC REF	PART NUMBER	QTY	PART NAME 1 2 3 4 5 6 (PRODUCT LEVEL)	SEE PAGE
Z	1	1		1	HANDGRIP AS	

Z-NOT SERVICED SEPARATELY

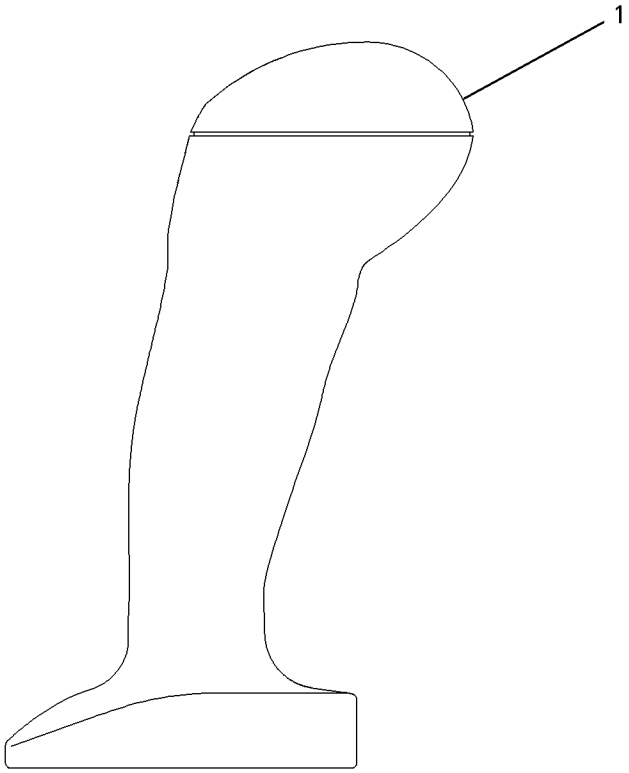

GRAPHIC #1 **<END>** g00721034

HYDRAULIC SYSTEM

212-2742 HYDRAULIC AR

S/N: RJG1-528

PART OF 212-2740 GENERAL AR

SMCS-5050 **i02285622**

NOTE	PART NUMBER	QTY	PART NAME 1 2 3 4 5 6 (PRODUCT LEVEL)	SEE PAGE
Y	**208-6074**	1	CONTROL GP-JOYSTICK	543
Y	*213-0007*	1	LINES GP-HYDRAULIC FAN	584
Y	*213-0001*	1	LINES GP-LIFT CYLINDER	587
Y	*213-0004*	1	LINES GP-MOTOR (HYDRAULIC FAN)	590
Y	*213-0006*	1	LINES GP-PILOT	595
Y	*213-0000*	1	LINES GP-PUMP (IMPLEMENT, HYDRAULIC FAN)	603
Y	*213-0002*	1	LINES GP-TILT CYLINDER	611
Y	**212-0272**	1	MOTOR GP-PISTON (HYDRAULIC FAN)	628
Y	**228-0272**	1	PUMP GP-GEAR (IMPLEMENT)	634
Y	**220-0780**	1	PUMP GP-PISTON (HYDRAULIC FAN)	637
Y	*213-0003*	1	TANK & MTG GP-HYDRAULIC	653
Y	*213-0005*	1	VALVE & MTG GP-BULLDOZER (2-FUNCTION)	657

Y-SEPARATE ILLUSTRATION

<END>

269-8382 HYDRAULIC AR

S/N: RJG529-UP

PART OF 212-2740 GENERAL AR

SMCS-5050 **i02439290**

NOTE	PART NUMBER	QTY	PART NAME 1 2 3 4 5 6 (PRODUCT LEVEL)	SEE PAGE
Y	**208-6074**	1	CONTROL GP-JOYSTICK	543
Y	*213-0007*	1	LINES GP-HYDRAULIC FAN	584
Y	*213-0001*	1	LINES GP-LIFT CYLINDER	587
Y	*269-8383*	1	LINES GP-MOTOR	593
Y	*213-0006*	1	LINES GP-PILOT	595
Y	*213-0000*	1	LINES GP-PUMP	603
Y	*213-0002*	1	LINES GP-TILT CYLINDER	611
Y	**212-0272**	1	MOTOR GP-PISTON	628
Y	**272-9795**	1	PUMP GP-GEAR	636
Y	**220-0780**	1	PUMP GP-PISTON	637
Y	*213-0003*	1	TANK & MTG GP-HYDRAULIC	653
Y	*213-0005*	1	VALVE & MTG GP-BULLDOZER (2-FUNCTION)	657

Y-SEPARATE ILLUSTRATION

<END>

HYDRAULIC SYSTEM

238-9121 LINES GP-BULLDOZER

S/N: RJG1-375

PART OF 238-4490 MODIFICATION AR-BULLDOZER

AN ATTACHMENT

SMCS-5057 **i02274693**

NOTE	REF NO	GRAPHIC REF	PART NUMBER	QTY	PART NAME 1 2 3 4 5 6 (PRODUCT LEVEL)	SEE PAGE
I	1	2	**174-7832**	2	HOSE AS	
	2	1	**174-7835**	1	BRACKET AS	
M		1	**8T-3490**	1	NUT-WELD (M10X1.5-THD)	
I	3	2	**174-8845**	1	HOSE AS	
I	4	1	**216-2599**	1	HOSE AS	
M	5	1	**116-3715**	1	STUD-TAPERLOCK (M10X1.5X85-MM)	
M	6	1	**140-9473**	1	STUD-TAPERLOCK (M10X1.5X100-MM)	
	7	1	**149-7738**	2	CLIP	
M	8	1	**172-2718**	2	STUD-TAPERLOCK (M10X1.5X46-MM)	
M	9	1,2	**180-3998**	3	STUD (M10X1.5X55-MM)	
	10	1	**198-4777**	1	WASHER-HARD (11X25X10-MM THK)	
	11	2	**1S-0994**	1	CLIP	
	12	1,2	**1S-1015**	3	CLIP	
	13	1	**1V-6645**	1	SPACER (0.493X0.675X0.75-IN THK)	
	14	1	**5J-4715**	1	WASHER (10.3X20.6X4.2-MM THK)	
	15	1	**5P-7468**	2	CLIP (SLOT)	
	16	1	**5P-7469**	2	CLIP (TAB)	
	17	1	**5P-8444**	1	GROMMET	
	18	1	**6D-4247**	1	CLIP	
	19	1	**6V-1874**	1	GROMMET	
	20	2	**7G-3413**	1	CLIP (SLOT)	
	21	2	**7G-3414**	1	CLIP (TAB)	
	22	2	**7G-3415**	1	GROMMET	
	23	2	**7G-3832**	1	GROMMET	
	24	2	**7G-3833**	1	CLIP (TAB)	
	25	2	**7G-3834**	1	CLIP (SLOT)	
	26	1	**8S-0948**	1	CLIP	
	27	1,2	**8T-4121**	12	WASHER-HARD (11X21X2.5-MM THK)	
M	28	1,2	**8T-4133**	7	NUT (M10X1.5 THD)	
M	29	1	**8T-4137**	1	BOLT (M10X1.5X20-MM)	
M	30	2	**8T-4139**	4	BOLT (M12X1.75X30-MM)	
M	31	1	**8T-4195**	1	BOLT (M10X1.5X30-MM)	
	32	2	**8T-4223**	4	WASHER-HARD (13.5X25.5X3-MM THK)	
M	33	1	**8T-7044**	1	STUD-TAPERLOCK (M10X1.5X40-MM)	
	34	1	**9M-8406**	1	CLIP	

I-REFER TO HYDRAULIC INFORMATION SYSTEM
M-METRIC PART

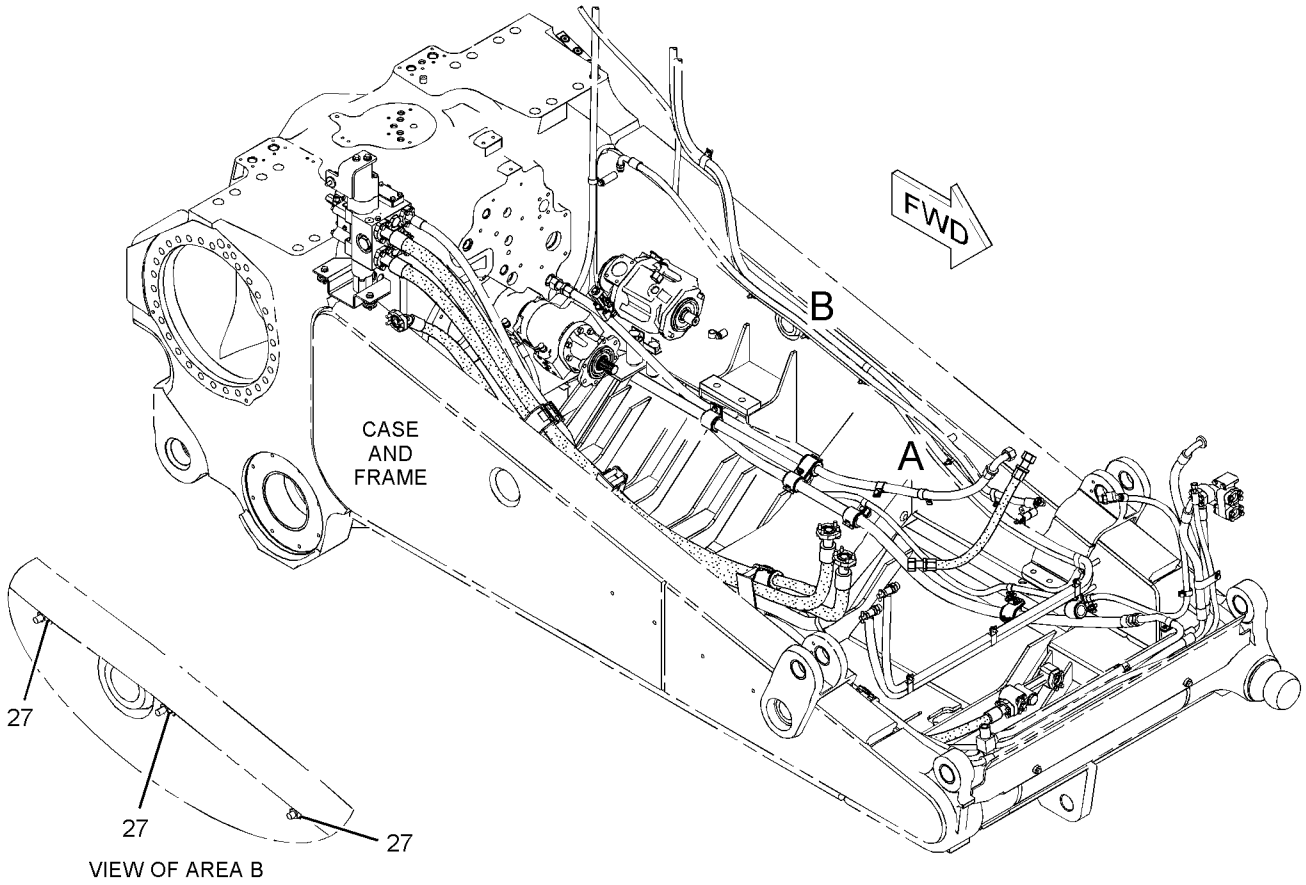

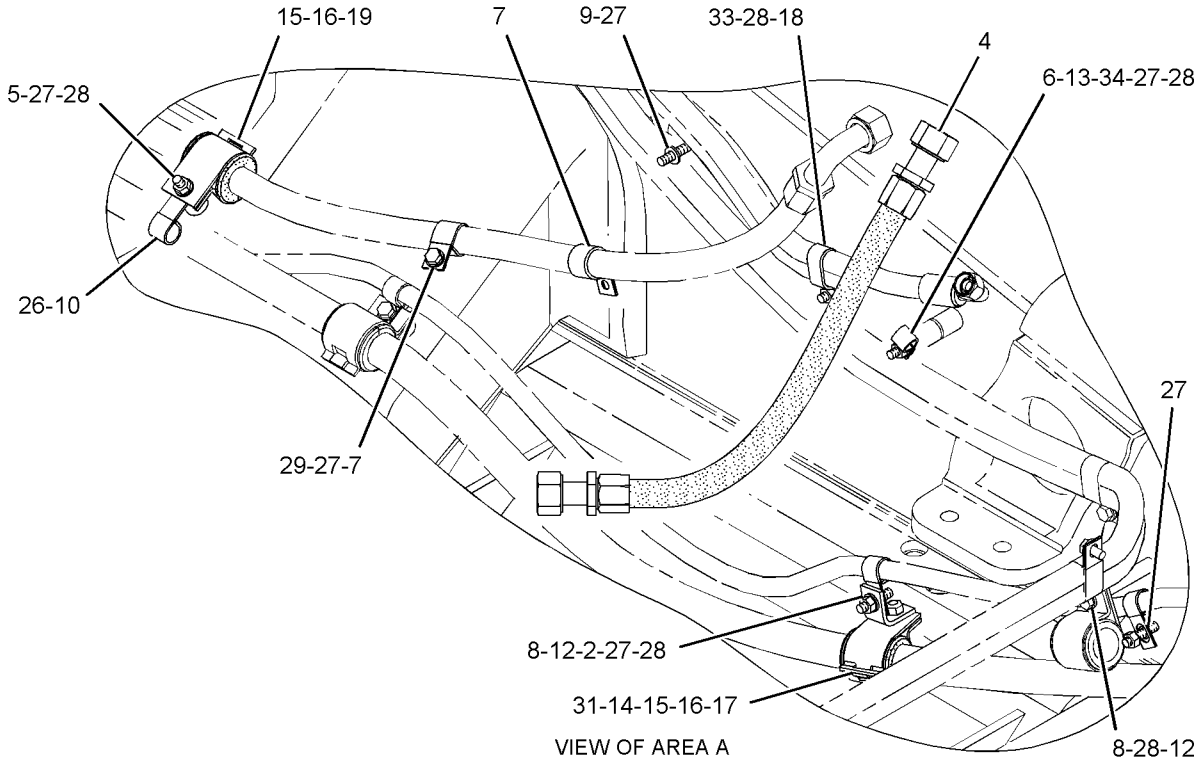

GRAPHIC #1

g01141529

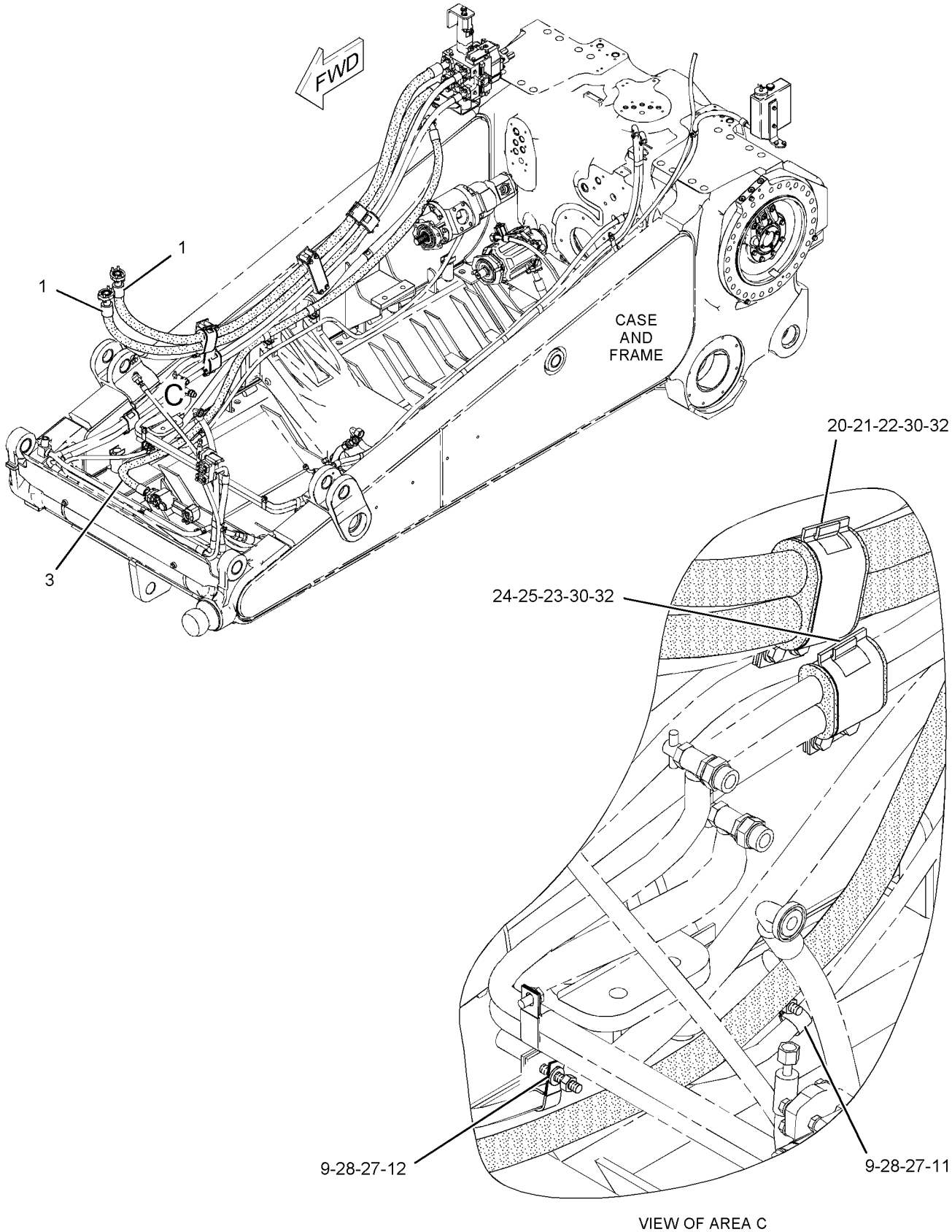

VIEW OF AREA C

GRAPHIC #2 **<END>** g01141532

HYDRAULIC SYSTEM

238-9121 LINES GP-BULLDOZER

S/N: RJG376-UP
PART OF 238-4490 MODIFICATION AR-BULLDOZER
AN ATTACHMENT

SMCS-5057 **i02467835**

NOTE	REF NO	GRAPHIC REF	PART NUMBER	QTY	PART NAME 1 2 3 4 5 6 (PRODUCT LEVEL)	SEE PAGE
I	1	1	**174-7832**	2	HOSE AS	
	2	1	**174-7835**	1	BRACKET AS	
M		1	**8T-3490**	1	NUT-WELD (M10X1.5-THD)	
I	3	1	**174-8845**	1	HOSE AS	
I	4	1	**216-2599**	1	HOSE AS	
M	5	1	**140-9473**	1	STUD-TAPERLOCK (M10X1.5X100-MM)	
C	6	1	*162-0177*	1	PLUG AS	
		1	**3J-1907**	1	SEAL-O-RING	
		1	**9S-8004**	1	PLUG	
M	7	1	**172-2718**	2	STUD-TAPERLOCK (M10X1.5X46-MM)	
M	8	1	**180-3998**	3	STUD (M10X1.5X55-MM)	
	9	1	**1S-0994**	1	CLIP	
C	10	1	**1S-1015**	2	CLIP	
	11	1	**1V-6645**	1	SPACER (0.493X0.675X0.75-IN THK)	
	12	1	**5J-4715**	1	WASHER (10.3X20.6X4.2-MM THK)	
	13	1	**5P-7468**	2	CLIP (SLOT)	
	14	1	**5P-7469**	2	CLIP (TAB)	
C	15	1	**5P-8444**	2	GROMMET	
	16	1	**6D-4247**	1	CLIP	
	17	1	**7G-3413**	1	CLIP (SLOT)	
	18	1	**7G-3414**	1	CLIP (TAB)	
	19	1	**7G-3415**	1	GROMMET	
	20	1	**7G-3832**	1	GROMMET	
	21	1	**7G-3833**	1	CLIP (TAB)	
	22	1	**7G-3834**	1	CLIP (SLOT)	
C	23	1	**8T-4121**	7	WASHER-HARD (11X21X2.5-MM THK)	
CM	24	1	**8T-4133**	6	NUT (M10X1.5 THD)	
M	25	1	**8T-4139**	4	BOLT (M12X1.75X30-MM)	
CM	26	1	**8T-4186**	1	BOLT (M10X1.5X40-MM)	
	27	1	**8T-4223**	4	WASHER-HARD (13.5X25.5X3-MM THK)	
M	28	1	**8T-7044**	1	STUD-TAPERLOCK (M10X1.5X40-MM)	
	29	1	**9M-8406**	1	CLIP	

C-CHANGE FROM PREVIOUS TYPE
I-REFER TO HYDRAULIC INFORMATION SYSTEM
M-METRIC PART

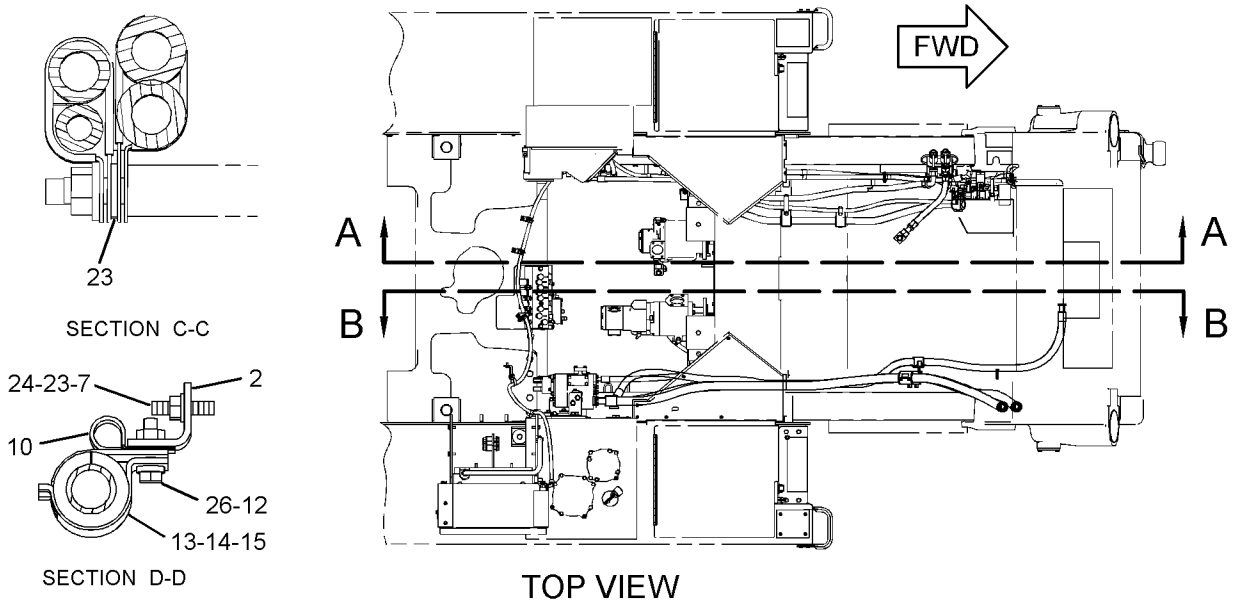

GRAPHIC #1 **<END>** g01232286

HYDRAULIC SYSTEM

216-1726 LINES GP-HYDRAULIC—AUTO CARRY

S/N: RJG1-UP

PART OF 216-2554 CONTROL AR-HYDRAULIC

AN ATTACHMENT

SMCS-5057 **i02274954**

NOTE	REF NO	GRAPHIC REF	PART NUMBER	QTY	PART NAME 1 2 3 4 5 6 (PRODUCT LEVEL)	SEE PAGE
Y	1	1	**164-4536**	1	VALVE GP-DIVERTER (AUTOCARRY HYDRAULIC LINES)	676
I	2	1	**216-1727**	1	HOSE AS	
I	3	1	**216-1729**	1	HOSE AS	
I	4	1	**216-1730**	1	HOSE AS	
I	5	1	**217-3445**	1	HOSE AS	
I	6	1	**217-3446**	1	HOSE AS	
	7	1	**234-1582**	1	TUBE AS	
	8	1	**242-0255**	1	TUBE AS	
	9	1	*148-8336*	1	CONNECTOR AS	
		1	**6V-8636**	1	CONNECTOR	
		1	**3J-1907**	1	SEAL-O-RING	
		1	**6V-8397**	1	SEAL-O-RING	
	10	1	*148-8353*	1	ELBOW AS	
		1	**6V-9001**	1	ELBOW	
		1	**3J-1907**	1	SEAL-O-RING	
		1	**6V-8397**	1	SEAL-O-RING	
	11	1	*148-8367*	1	ELBOW AS	
		1	**6V-9850**	1	ELBOW	
		1	**6V-8397**	1	SEAL-O-RING	
	12	1	*148-8378*	1	ELBOW AS	
		1	**6V-8724**	1	ELBOW	
		1	**3J-1907**	1	SEAL-O-RING	
		1	**6V-8397**	1	SEAL-O-RING	
	13	1	*148-8433*	1	TEE AS	
		1	**6V-9836**	1	TEE-SWIVEL	
		1	**6V-8397**	2	SEAL-O-RING	
	14	1	*148-8439*	1	TEE AS	
		1	**6V-8774**	1	TEE	
		1	**3J-1907**	1	SEAL-O-RING	
		1	**6V-8397**	2	SEAL-O-RING	
	15	1	**1P-3704**	2	SEAL-RECTANGULAR	
	16	1	**1P-3705**	3	SEAL-RECTANGULAR	
	17	1	**1P-4579**	2	FLANGE-HALF	
	18	1	**1P-5767**	4	FLANGE-HALF	
	19	1	**1S-0994**	1	CLIP	
	20	1	**1S-0996**	1	CLIP	
	21	1	**4J-0524**	2	SEAL-O-RING	
	22	1	**5P-8077**	2	FLANGE-HALF	
	23	1	**7X-0325**	4	BOLT (1/2-13X2.5-IN)	
	24	1	**7X-0334**	3	BOLT (1/2-13X5-IN)	
	25	1	**7X-3391**	3	WASHER-HARD (13.5X32X6-MM THK)	
	26	1	**8T-4121**	1	WASHER-HARD (11X21X2.5-MM THK)	
M	27	1	**8T-4122**	4	WASHER-HARD (17X32X3.5-MM THK)	
M	28	1	**8T-4136**	1	BOLT (M10X1.5X25-MM)	
	29	1	**8T-4223**	16	WASHER-HARD (13.5X25.5X3-MM THK)	
	30	1	**8T-4835**	4	BOLT (1/2-13X2-IN)	
	31	1	**8T-6871**	4	BOLT (5/8-11X2.5-IN)	
	32	1	**8T-8919**	4	BOLT (1/2-13X1.75-IN)	
	33	1	**8T-8920**	4	BOLT (1/2-13X3.25-IN)	

I-REFER TO HYDRAULIC INFORMATION SYSTEM
M-METRIC PART
Y-SEPARATE ILLUSTRATION

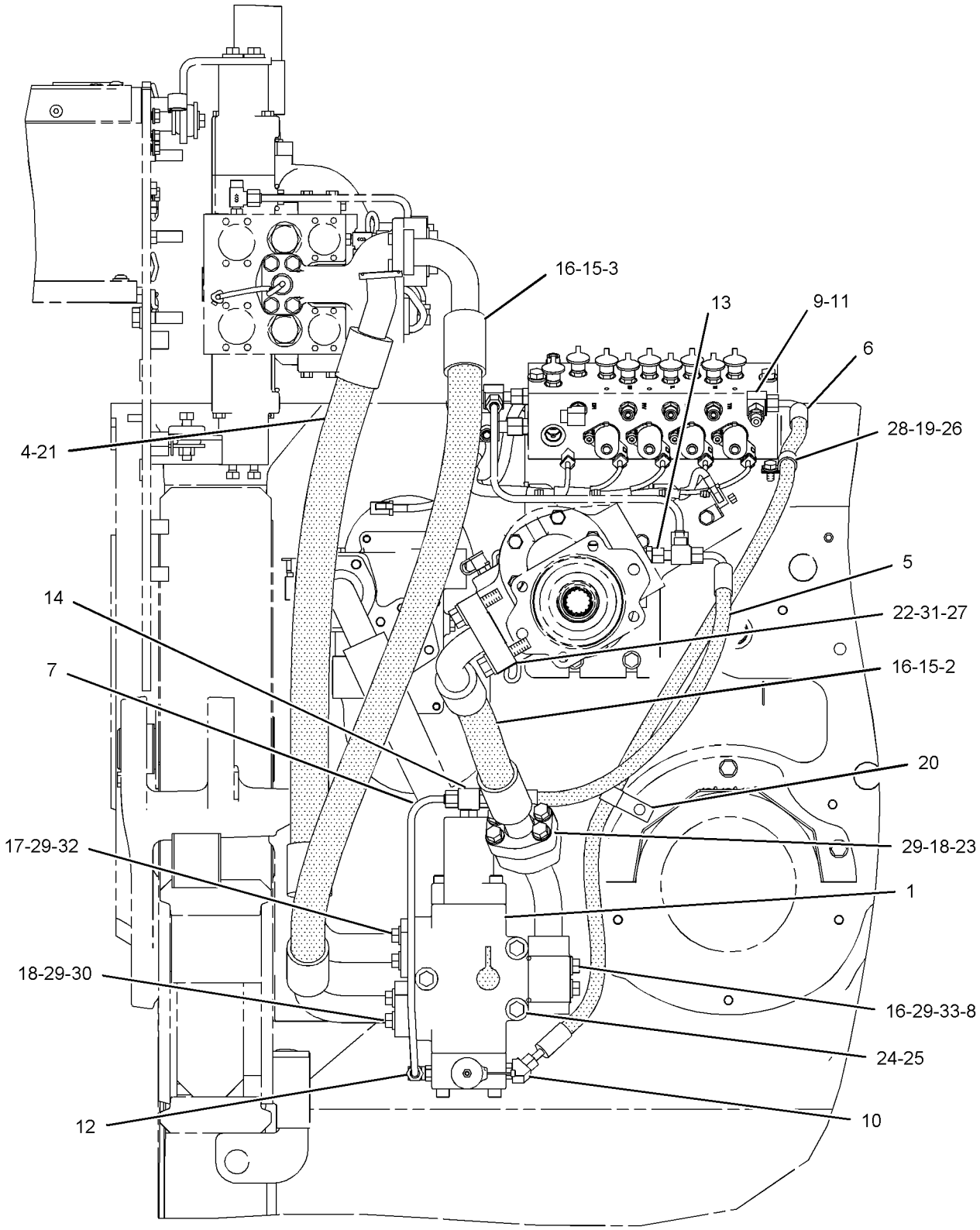

FRONT VIEW

GRAPHIC #1

<END>

g01053172

HYDRAULIC SYSTEM

213-0007 LINES GP-HYDRAULIC FAN

S/N: RJG1-UP

PART OF 212-2742, 269-8382 HYDRAULIC AR

SMCS-1386, 1387, 5057 **i02372585**

NOTE	REF NO	GRAPHIC REF	PART NUMBER	QTY	PART NAME 1 2 3 4 5 6 (PRODUCT LEVEL)	SEE PAGE
	1	1	**6V-0852**	1	CAP-DUST	
	2	1	**163-1829**	1	VALVE GP-CHECK	
		1	**128-2779**	1	KIT-SEAL (CHECK VALVE) (HYDRAULIC FAN, REVERSING)	
					(INCLUDES O-RING SEALS & BACKUP RINGS)	
I	3	1	**213-1084**	1	HOSE AS	
I	4	1	**213-1085**	1	HOSE AS	
I	5	1	**213-1086**	1	HOSE AS	
I	6	1	**213-1087**	1	HOSE AS	
	7	1	**229-5681**	1	TUBE AS	
	8	1	**229-9866**	1	PLATE	
I	9	1	**234-1957**	1	HOSE AS	
	10	1	**234-1977**	1	MANIFOLD	
I	11	1	**235-2326**	1	HOSE AS	
	12	1	*148-8358*	1	ELBOW AS	
		1	**6V-8624**	1	ELBOW	
		1	**2M-9780**	1	SEAL-O-RING	
		1	**6V-8398**	1	SEAL-O-RING	
	13	1	*148-8407*	1	PLUG AS	
		1	**9S-4191**	1	PLUG-O RING	
		1	**3J-1907**	1	SEAL-O-RING	
	14	1	*155-6344*	1	ELBOW AS	
		1	**6V-8991**	1	ELBOW	
		1	**5K-9090**	2	SEAL-O-RING	
	15	1	*164-5567*	1	FITTING AS	
		1	**6V-3965**	1	FITTING AS (QUICK DISCONNECT)	
		1	**3J-1907**	1	SEAL-O-RING	
	16	1	**1P-4577**	8	FLANGE-HALF	
	17	1	**1P-4578**	4	FLANGE-HALF	
	18	1	**1S-0994**	5	CLIP	
	19	1	**4J-0520**	6	SEAL-O-RING	
	20	1,1	**4J-0522**	2	SEAL-O-RING	
	21	1,1	**5F-3106**	1	SEAL-O-RING	
	22	1	**5K-9090**	2	SEAL-O-RING	
	23	1	**5P-7468**	5	CLIP (SLOT)	
	24	1	**5P-7469**	5	CLIP (TAB)	
	25	1	**5P-8444**	5	GROMMET	
	26	1	**5S-7382**	12	BOLT (3/8-16X1.375-IN)	
	27	1	**6V-9172**	2	NUT (1-7/16-12-THD)	
	28	1	**7S-3916**	2	CLIP (TAB)	
	29	1	**7S-3919**	2	CLIP (SLOT)	
	30	1	**7S-8920**	3	CLIP (SLOT)	
	31	1	**7S-8921**	3	CLIP (TAB)	
	32	1	**7X-0290**	4	BOLT (3/8-16X3.5-IN)	
	33	1	**7X-0345**	2	BOLT (5/8-11X1.75-IN)	
	34	1	**8S-0948**	1	CLIP	
	35	1	**8T-4121**	13	WASHER-HARD (11X21X2.5-MM THK)	
M	36	1	**8T-4122**	2	WASHER-HARD (17X32X3.5-MM THK)	
	37	1	**8T-4123**	2	WASHER-PLATED (22X35X3.5-MM THK)	
M	38	1	**8T-4137**	2	BOLT (M10X1.5X20-MM)	
M	39	1	**8T-4139**	2	BOLT (M12X1.75X30-MM)	
M	40	1	**8T-4141**	2	BOLT (M20X2.5X70-MM)	
M	41	1	**8T-4195**	4	BOLT (M10X1.5X30-MM)	
M	42	1	**8T-4196**	3	BOLT (M10X1.5X35-MM)	
	43	1,1	**8T-4223**	2	WASHER-HARD (13.5X25.5X3-MM THK)	
	44	1,1,1	**8T-4896**	20	WASHER-HARD (10.2X18.5X2.5-MM THK)	

213-0007 **LINES GP-HYDRAULIC FAN** *(contd.)* **i02372585**

NOTE	REF NO	GRAPHIC REF	PART NUMBER	QTY	PART NAME 1 2 3 4 5 6 (PRODUCT LEVEL)	SEE PAGE
	45	1	**8T-5360**	8	WASHER (12X22.5X2.5-MM THK)	
	46	1	**8T-8915**	4	BOLT (3/8-16X3.25-IN)	
	47	1	**8T-8916**	8	BOLT (7/16-14X1.5-IN)	
M	48	1	**180-3998**	2	STUD (M10X1.5X55-MM)	
M	49	1	**8T-4186**	2	BOLT (M10X1.5X40-MM)	
M	50	1,1	**8T-4133**	2	NUT (M10X1.5 THD)	

I-REFER TO HYDRAULIC INFORMATION SYSTEM
M-METRIC PART

213-0007 **LINES GP-HYDRAULIC FAN** *(contd.)* **i02372585**

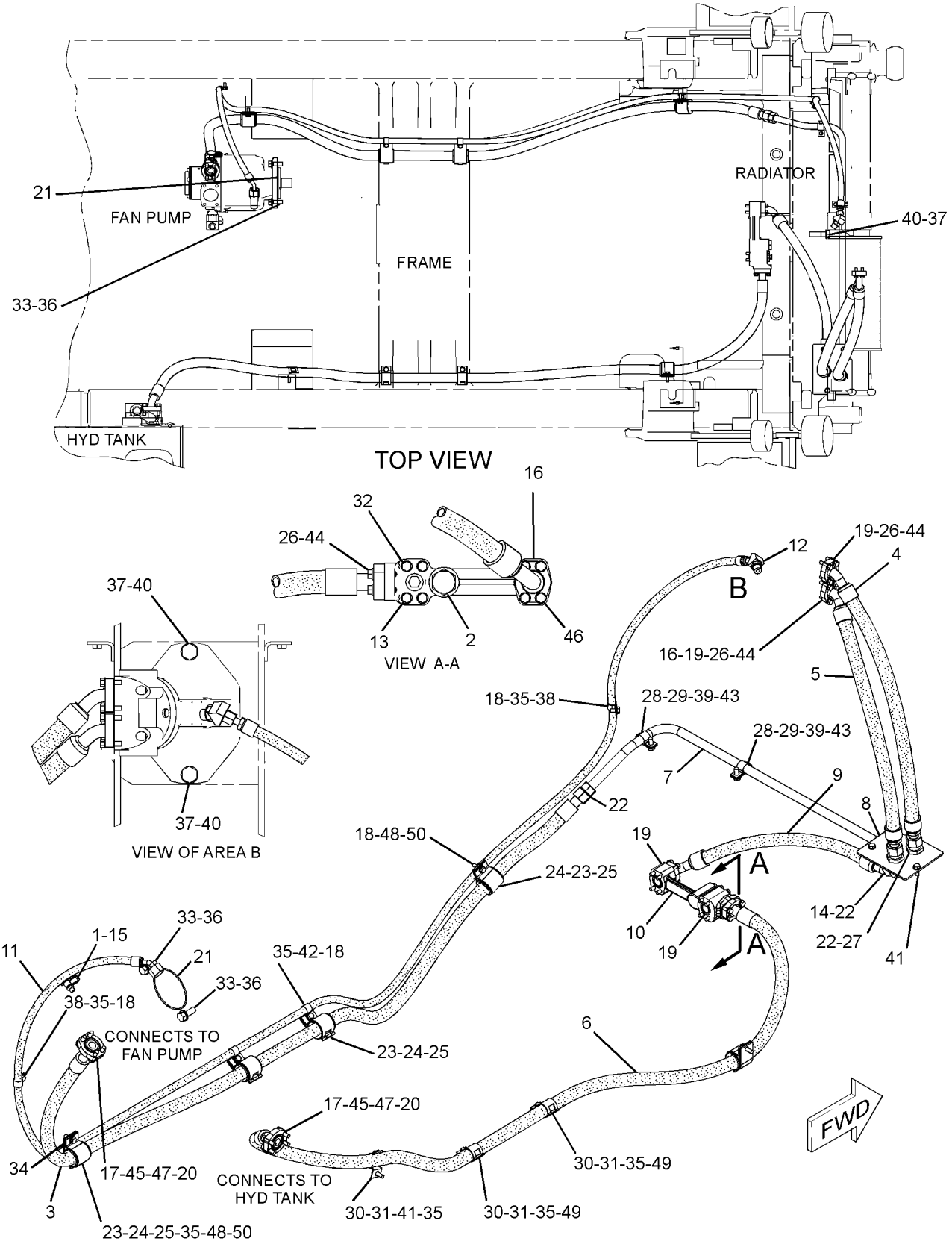

GRAPHIC #1 **<END>** g01183955

HYDRAULIC SYSTEM

213-0001 LINES GP-LIFT CYLINDER

S/N: RJG1-UP

PART OF 212-2742, 269-8382 HYDRAULIC AR

SMCS-5057, 5102 **i02362259**

NOTE	REF NO	GRAPHIC REF	PART NUMBER	QTY	PART NAME 1 2 3 4 5 6 (PRODUCT LEVEL)	SEE PAGE
	1	1	**7G-5606**	2	PLATE	
	2	1	**9W-0512**	4	GROMMET	
I	3	1	**101-1497**	2	HOSE AS	
	4	1	**216-2596**	1	TUBE AS	
	5	1	**216-2597**	1	TUBE AS	
	6	1	**216-2601**	1	MANIFOLD	
	7	1	**216-2602**	1	PLATE	
	8	1	**1P-3705**	2	SEAL-RECTANGULAR	
	9	1	**1P-4577**	8	FLANGE-HALF	
	10	1	**1P-4578**	4	FLANGE-HALF	
	11	1	**4J-0520**	4	SEAL-O-RING	
	12	1	**4J-0522**	4	SEAL-O-RING	
	13	1	**5H-4019**	4	COVER	
	14	1	**5M-3062**	2	BOLT (3/8-16X0.75-IN)	
	15	1	**5R-1238**	4	CLAMP	
	16	1	**5S-7382**	16	BOLT (3/8-16X1.375-IN)	
	17	1	**7G-3413**	1	CLIP (SLOT)	
	18	1	**7G-3414**	1	CLIP (TAB)	
	19	1	**7G-3415**	1	GROMMET	
	20	1	**7X-0311**	8	BOLT (7/16-14X2.25-IN)	
	21	1	**7X-7729**	8	WASHER (11X25X3-MM THK)	
	22	1	**8T-4121**	2	WASHER-HARD (11X21X2.5-MM THK)	
M	23	1	**8T-4136**	8	BOLT (M10X1.5X25-MM)	
M	24	1	**8T-4139**	2	BOLT (M12X1.75X30-MM)	
M	25	1	**8T-4182**	2	BOLT (M10X1.5X45-MM)	
	26	1	**8T-4223**	3	WASHER-HARD (13.5X25.5X3-MM THK)	
	27	1	**8T-4896**	18	WASHER-HARD (10.2X18.5X2.5-MM THK)	
	28	1	**8T-5360**	16	WASHER (12X22.5X2.5-MM THK)	
	29	1	**8T-8916**	8	BOLT (7/16-14X1.5-IN)	
	31	1	**5P-7466**	1	CLIP (SLOT)	
	32	1	**5G-6504**	1	LUG	
M	33	1	**8T-4648**	1	BOLT (M12X1.75X70-MM)	
	34	1	**5P-7467**	1	CLIP (TAB)	

I-REFER TO HYDRAULIC INFORMATION SYSTEM
M-METRIC PART

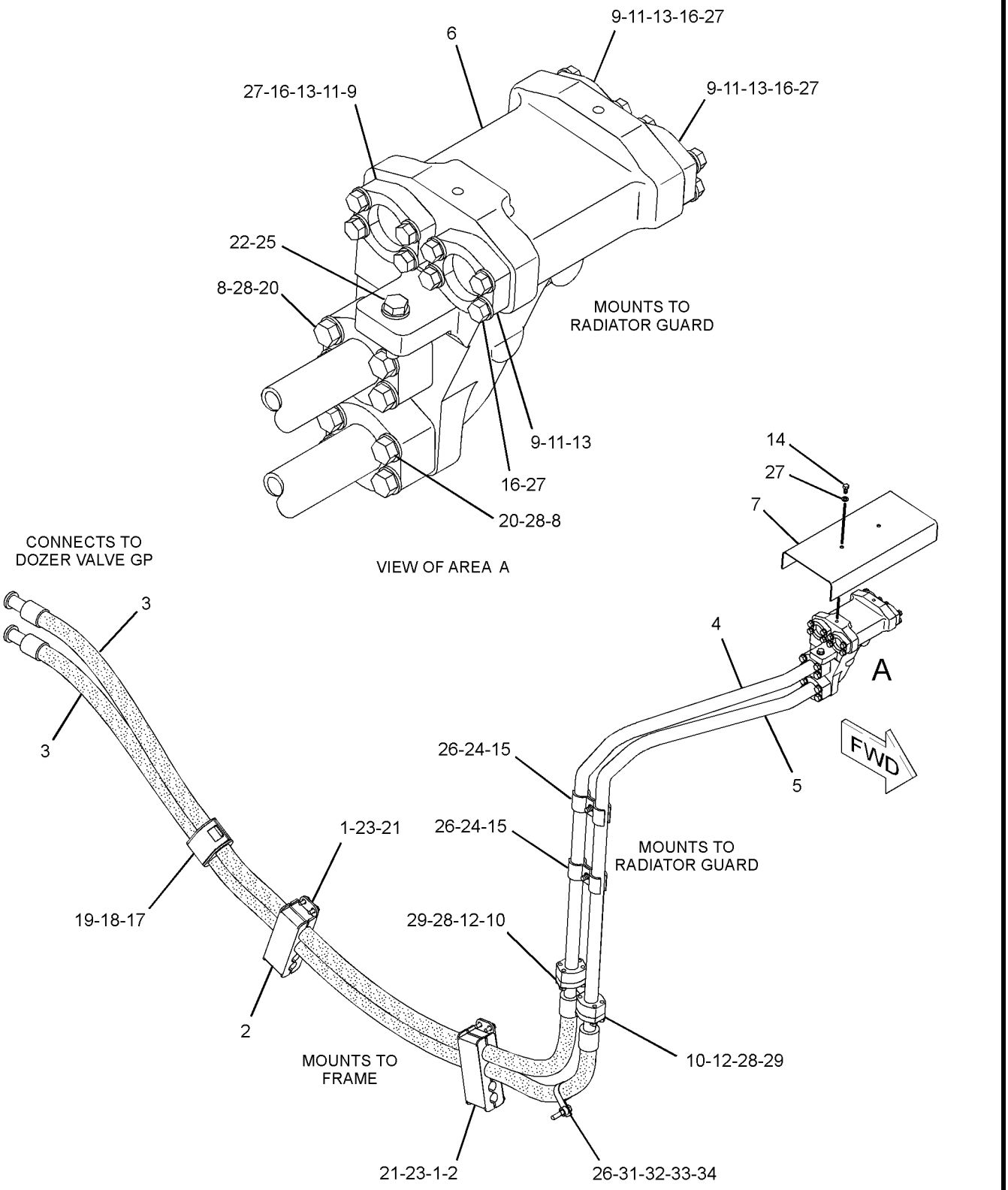

GRAPHIC #1 **<END>** g01180434

HYDRAULIC SYSTEM

238-4497 LINES GP-LIFT CYLINDER—COLD WEATHER

S/N: RJG1-UP

CANNOT BE USED WITH 216-2554—PAGE 537

AN ATTACHMENT

SMCS-5057, 5102 **i02277872**

NOTE	PART NUMBER	QTY	PART NAME 1 2 3 4 5 6 (PRODUCT LEVEL)	SEE PAGE
	236-2621	2	HOSE AS	
	236-8806	2	HOSE AS	

<END>

HYDRAULIC SYSTEM

213-0004 LINES GP-MOTOR—HYDRAULIC FAN

S/N: RJG1-528

PART OF 212-2742 HYDRAULIC AR

SMCS-5057 **i02362263**

NOTE	REF NO	GRAPHIC REF	PART NUMBER	QTY	PART NAME 1 2 3 4 5 6 (PRODUCT LEVEL)	SEE PAGE
	1	1	**4P-6645**	1	BRACKET	
I	2	1	**161-8666**	1	HOSE AS	
	3	1	**200-6345**	1	MOUNT (DUAL SWIVEL)	
	4	1	**204-2281**	2	TIE	
Y	5	1	*211-2069*	1	ACCUMULATOR GP-HYDRAULIC	532
	6	1	**214-5098**	1	HOSE AS	
I	7	1	**219-1435**	1	HOSE AS	
Y	8	1	**231-6285**	1	MANIFOLD GP-CONTROL (HYDRAULIC FAN MOTOR)	625
I	9	1	**232-3305**	1	HOSE AS	
I	10	1	**232-3306**	1	HOSE AS	
I	11	1	**232-3307**	1	HOSE AS	
	12	1	**232-3308**	1	PLATE AS	
	13	1	**232-3309**	1	TUBE AS	
	14	1	**235-2328**	1	PLATE AS	
	15	1	*235-3573*	1	CROSS AS	
		1	**235-3572**	1	FITTING-CROSS	
		1	**3D-2824**	1	SEAL-O-RING	
		1	**6V-9746**	3	SEAL-O-RING	
	16	1	*148-8327*	1	CONNECTOR AS	
		1	**6V-8637**	1	CONNECTOR	
		1	**3D-2824**	1	SEAL-O-RING	
		1	**6V-9746**	1	SEAL-O-RING	
	17	1	*148-8341*	1	CONNECTOR AS	
		1	**6V-8713**	1	CONNECTOR	
		1	**3D-2824**	1	SEAL-O-RING	
		1	**7J-9108**	1	SEAL-O-RING	
	18	1	*148-8347*	1	ELBOW AS	
		1	**6V-9007**	1	ELBOW	
		1	**3D-2824**	1	SEAL-O-RING	
		1	**6V-9746**	1	SEAL-O-RING	
	19	1	*148-8378*	1	ELBOW AS	
		1	**6V-8724**	1	ELBOW	
		1	**3J-1907**	1	SEAL-O-RING	
		1	**6V-8397**	1	SEAL-O-RING	
	20	1	*150-3037*	1	ELBOW AS	
		1	**8T-2530**	1	ELBOW	
		1	**3K-0360**	1	SEAL-O-RING	
		1	**7J-9108**	1	SEAL-O-RING	
	21	1	*150-4048*	1	ELBOW AS	
		1	**6V-8722**	1	ELBOW	
		1	**3K-0360**	1	SEAL-O-RING	
		1	**7J-9108**	1	SEAL-O-RING	
	22	1	*150-4049*	1	ELBOW AS	
		1	**8T-4149**	1	ELBOW	
		1	**6V-9746**	1	SEAL-O-RING	
		1	**7M-8485**	1	SEAL-O-RING	
	23	1	*153-6241*	1	ELBOW AS	
		1	**8C-8989**	1	ELBOW	
		1	**6V-8398**	1	SEAL-O-RING	
	24		*162-0177*	1	PLUG AS	
			9S-8004	1	PLUG	
			3J-1907	1	SEAL-O-RING	
	25	1	*164-6863*	1	ELBOW AS	
		1	**8C-6920**	1	ELBOW	
		1	**3K-0360**	1	SEAL-O-RING	
		1	**6V-9746**	1	SEAL-O-RING	

213-0004 **LINES GP-MOTOR** *(contd.)* **i02362263**

NOTE	REF NO	GRAPHIC REF	PART NUMBER	QTY	PART NAME 1 2 3 4 5 6 (PRODUCT LEVEL)	SEE PAGE
	26	1	**1P-3705**	1	SEAL-RECTANGULAR	
	27	1	**3D-2824**	1	SEAL-O-RING	
	28	1	**3P-2404**	1	CLIP	
	29	1	**5P-7468**	1	CLIP (SLOT)	
	30	1	**5P-7469**	1	CLIP (TAB)	
	31	1	**5P-8444**	1	GROMMET	
	32	1	**6D-4244**	2	CLIP	
	33	1	**6V-8397**	1	SEAL-O-RING	
	34	1	**6V-8398**	1	SEAL-O-RING	
	35	1	**6V-8801**	2	NUT (3/8-16-THD)	
	36	1	**6V-9169**	1	NUT-BULKHEAD (13/16-16-THD)	
	37	1	**7G-3833**	2	CLIP (TAB)	
	38	1	**7G-3834**	2	CLIP (SLOT)	
	39	1	**7X-0292**	4	BOLT (3/8-16X4.5-IN)	
	40	1	**8C-3174**	2	GROMMET	
	41	1	**8T-4121**	10	WASHER-HARD (11X21X2.5-MM THK)	
	42	1	**8T-4123**	2	WASHER-PLATED (22X35X3.5-MM THK)	
M	43	1	**8T-4133**	1	NUT (M10X1.5 THD)	
M	44	1	**8T-4136**	1	BOLT (M10X1.5X25-MM)	
M	45	1	**8T-4182**	1	BOLT (M10X1.5X45-MM)	
M	46	1	**8T-4186**	2	BOLT (M10X1.5X40-MM)	
M	47	1	**8T-4195**	4	BOLT (M10X1.5X30-MM)	
M	48	1	**8T-4196**	1	BOLT (M10X1.5X35-MM)	
	49	1	**8T-4223**	4	WASHER-HARD (13.5X25.5X3-MM THK)	
	50	1	**8T-4896**	8	WASHER-HARD (10.2X18.5X2.5-MM THK)	
	51	1	**8T-5465**	1	ELBOW	
	52	1	**8T-8920**	4	BOLT (1/2-13X3.25-IN)	

I-REFER TO HYDRAULIC INFORMATION SYSTEM
M-METRIC PART
Y-SEPARATE ILLUSTRATION

213-0004 **LINES GP-MOTOR** *(contd.)* **i02362263**

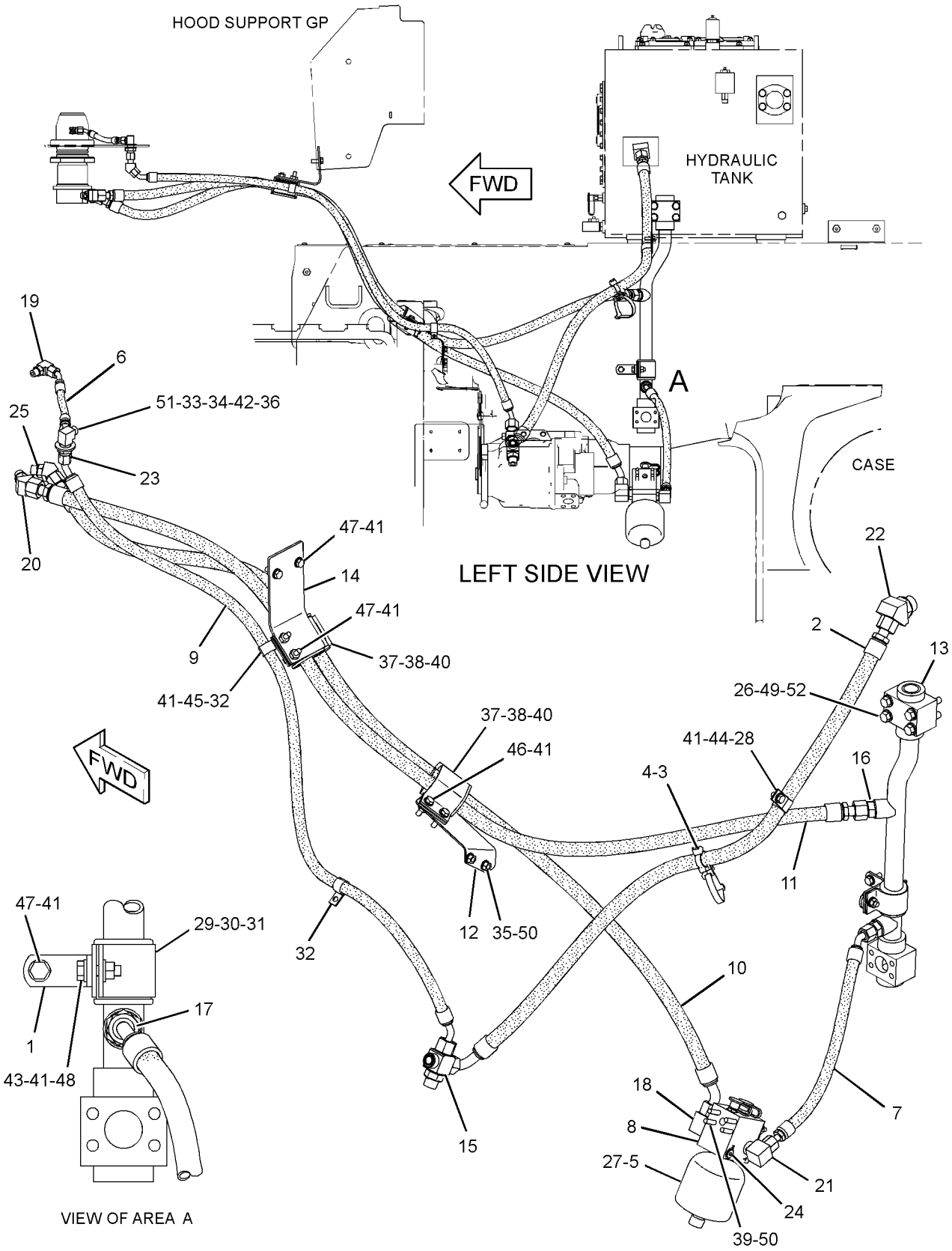

GRAPHIC #1 **<END>** g01194435

HYDRAULIC SYSTEM

269-8383 LINES GP-MOTOR

S/N: RJG529-UP

PART OF 269-8382 HYDRAULIC AR

SMCS-5057 **i02439678**

NOTE	REF NO	GRAPHIC REF	PART NUMBER	QTY	PART NAME 1 2 3 4 5 6 (PRODUCT LEVEL)	SEE PAGE
	1	1	**4P-6645**	1	BRACKET	
I	2	1	**161-8666**	1	HOSE AS	
	3	1	**200-6345**	1	MOUNT (DUAL SWIVEL)	
	4	1	**204-2281**	2	TIE	
	5	1	**232-3309**	1	TUBE AS	
I	6	1	**272-9830**	1	HOSE AS	
	7	1	*148-8341*	1	CONNECTOR AS	
		1	**6V-8713**	1	CONNECTOR	
		1	**3D-2824**	1	SEAL-O-RING	
		1	**7J-9108**	1	SEAL-O-RING	
	8	1	*150-3037*	1	ELBOW AS	
		1	**8T-2530**	1	ELBOW	
		1	**3K-0360**	1	SEAL-O-RING	
		1	**7J-9108**	1	SEAL-O-RING	
	9	1	*150-4049*	1	ELBOW AS	
		1	**8T-4149**	1	ELBOW	
		1	**6V-9746**	1	SEAL-O-RING	
		1	**7M-8485**	1	SEAL-O-RING	
	10	1	*153-6259*	1	TEE GP	
		1	**6V-8777**	1	TEE-FACE SEAL	
		1	**3D-2824**	1	SEAL-O-RING	
		1	**6V-9746**	2	SEAL-O-RING	
	11	1	**1P-3705**	1	SEAL-RECTANGULAR	
	12	1	**3D-2824**	1	SEAL-O-RING	
	13	1	**3P-2404**	1	CLIP	
	14	1	**5P-7468**	1	CLIP (SLOT)	
	15	1	**5P-7469**	1	CLIP (TAB)	
	16	1	**5P-8444**	1	GROMMET	
	17	1	**5P-9436**	1	PLUG-THREADED O-RING	
	18	1	**8T-4121**	4	WASHER-HARD (11X21X2.5-MM THK)	
M	19	1	**8T-4133**	1	NUT (M10X1.5 THD)	
M	20	1	**8T-4136**	1	BOLT (M10X1.5X25-MM)	
M	21	1	**8T-4195**	1	BOLT (M10X1.5X30-MM)	
M	22	1	**8T-4196**	1	BOLT (M10X1.5X35-MM)	
	23	1	**8T-4223**	4	WASHER-HARD (13.5X25.5X3-MM THK)	
	24	1	**8T-8920**	4	BOLT (1/2-13X3.25-IN)	

I-REFER TO HYDRAULIC INFORMATION SYSTEM
M-METRIC PART

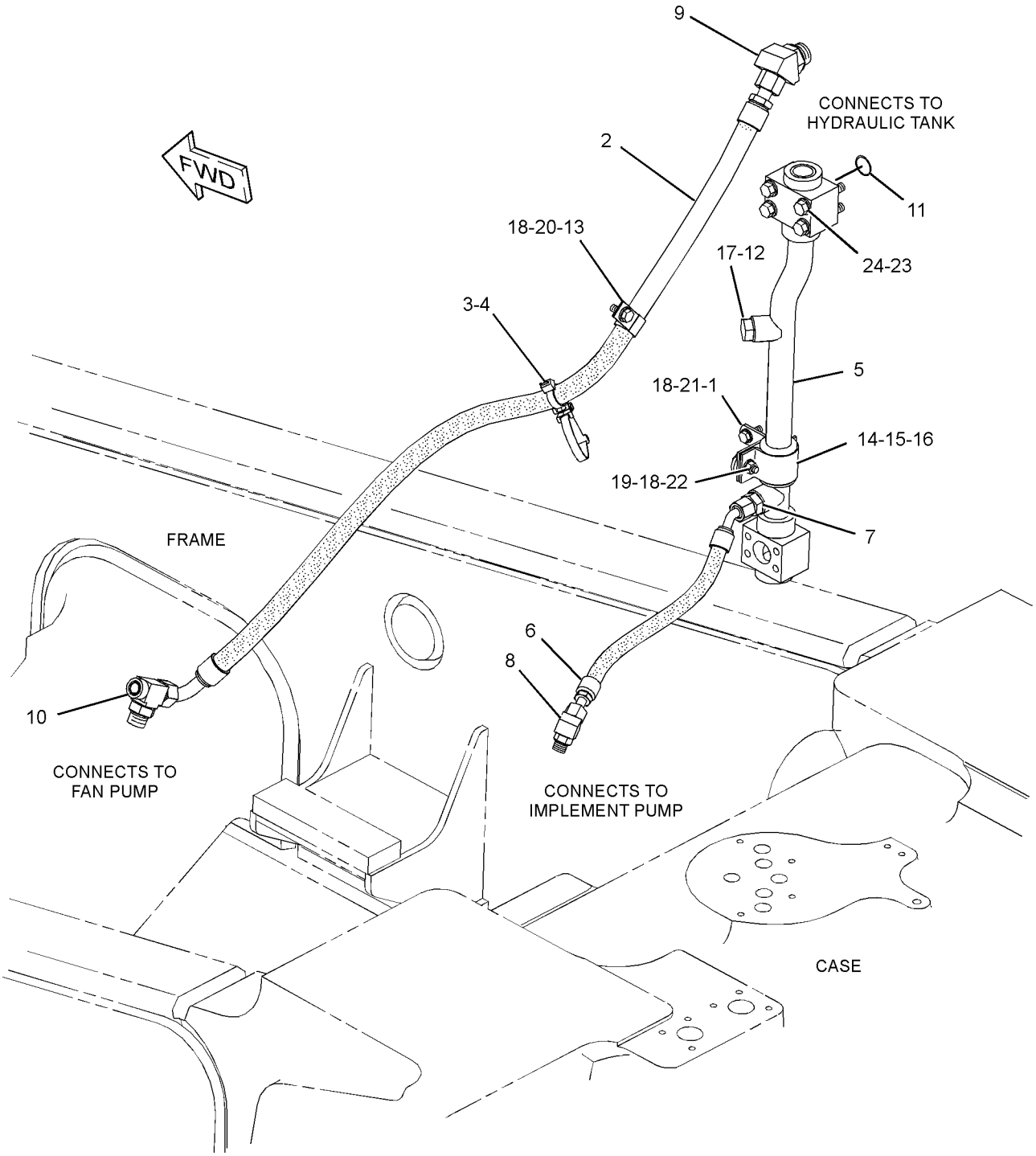

GRAPHIC #1 **<END>** g01222025

HYDRAULIC SYSTEM

213-0006 LINES GP-PILOT

S/N: RJG1-UP

PART OF 212-2742, 269-8382 HYDRAULIC AR

SMCS-5057 **i02285648**

NOTE	REF NO	GRAPHIC REF	PART NUMBER	QTY	PART NAME 1 2 3 4 5 6 (PRODUCT LEVEL)	SEE PAGE
	1	1	**6V-0852**	1	CAP-DUST	
	2	1,2	**7K-1181**	8	STRAP-CABLE	
I	3	1	**122-0669**	1	HOSE AS	
I	4	1	**129-5126**	1	HOSE AS	
I	5	2	**138-8745**	1	HOSE AS	
	6	2	*148-8309*	2	ADAPTER AS	
					(EACH INCLUDES)	
		2	**2P-8421**	1	ADAPTER-O-RING	
		2	**3D-2824**	1	SEAL-O-RING	
I	7	1	**158-3817**	1	HOSE AS	
I	8	2	**159-2154**	1	HOSE AS	
I	9	2	**159-5901**	1	HOSE AS	
I	10	2	**160-4001**	1	HOSE AS	
	11	1	**164-6874**	1	FITTING AS	
	12	2	**200-6345**	1	MOUNT (DUAL SWIVEL)	
	13	2	**204-2281**	2	TIE	
	14	1	**213-7008**	1	HARNESS AS-SOLENOID (BLADE, RIPPER, BLADE TILT)	
		1	**102-8801**	1	KIT-RECEPTACLE (12-PIN)	
					(INCLUDES RECEPTACLE AS & WEDGE)	
		1	**155-2255**	1	KIT-CONNECTING PLUG (12-PIN)	
		1	**155-2270**	10	KIT-CONNECTING PLUG (2-PIN)	
					(EACH INCLUDES PLUG AS & WEDGE)	
	15	1	**232-0211**	1	PLATE AS	
	16	2	**232-3173**	1	HOSE AS	
I	17	2	**232-3178**	1	HOSE AS	
	18	1	**232-3181**	1	TUBE AS	
	19	1	**232-3182**	1	TUBE AS	
	20	1	**232-3184**	1	TUBE AS	
	21	1	**232-3185**	1	TUBE AS	
Y	22	1	**232-3242**	1	MANIFOLD GP-CONTROL (IMPLEMENT PILOT)	626
I	23	2	**233-6680**	1	HOSE AS	
I	24	2	**233-6681**	1	HOSE AS	
Y	25	2	**247-3026**	1	VALVE & MTG GP-MAIN CONTROL (IMPLEMENT PILOT)	662
	26	2	**249-1751**	1	FILTER GP-OIL (IMPLEMENT PILOT OIL)	
		2	**103-8236**	1	SEAL-O-RING	
		2	**130-3212**	1	FILTER AS-OIL	
		2	**2M-9780**	1	SEAL-O-RING	
		2	**9S-8006**	1	PLUG	
	27	1	**263-3912**	3	VALVE	
	28	1	**132-5789**	1	CLIP	
	29	1	*148-8318*	2	CONNECTOR AS	
					(EACH INCLUDES)	
		1	**6V-8634**	1	CONNECTOR	
		1	**3K-0360**	1	SEAL-O-RING	
		1	**6V-8397**	1	SEAL-O-RING	
	30	1,2	*148-8336*	5	CONNECTOR AS	
					(EACH INCLUDES)	
		1,2	**6V-8636**	1	CONNECTOR	
		1,2	**3J-1907**	1	SEAL-O-RING	
		1,2	**6V-8397**	1	SEAL-O-RING	
	31	1	*148-8338*	1	CONNECTOR AS	
		1	**8T-0075**	1	CONNECTOR	
		1	**3J-1907**	1	SEAL-O-RING	
		1	**6V-8397**	1	SEAL-O-RING	
	32	1	*148-8353*	1	ELBOW AS	

213-0006 **LINES GP-PILOT** *(contd.)* **i02285648**

NOTE	REF NO	GRAPHIC REF	PART NUMBER	QTY	PART NAME 1 2 3 4 5 6 (PRODUCT LEVEL)	SEE PAGE
		1	**6V-9001**	1	ELBOW	
		1	**3J-1907**	1	SEAL-O-RING	
		1	**6V-8397**	1	SEAL-O-RING	
	33	1	*148-8367*	2	ELBOW AS	
					(EACH INCLUDES)	
		1	**6V-9850**	1	ELBOW	
		1	**6V-8397**	1	SEAL-O-RING	
	34	1	*148-8371*	1	ELBOW AS	
		1	**8C-8988**	1	ELBOW	
		1	**6V-8397**	1	SEAL-O-RING	
	35	2	*148-8374*	1	ELBOW AS	
		2	**6V-8723**	1	ELBOW	
		2	**6V-8397**	1	SEAL-O-RING	
		2	**3K-0360**	1	SEAL-O-RING	
	36	1,2	*148-8378*	5	ELBOW AS	
					(EACH INCLUDES)	
		1,2	**6V-8724**	1	ELBOW	
		1,2	**6V-8397**	1	SEAL-O-RING	
		1,2	**3J-1907**	1	SEAL-O-RING	
	37	1,2	*148-8433*	1	TEE AS	
		1,2	**6V-9836**	1	TEE-SWIVEL	
		1,2	**6V-8397**	2	SEAL-O-RING	
	38	1	*148-8435*	1	TEE AS	
		1	**6V-8781**	1	TEE-FACE SEAL	
		1	**6V-8397**	2	SEAL-O-RING	
		1	**3J-1907**	1	SEAL-O-RING	
	39	1	**150-4047**	4	ADAPTER AS	
	40	1	*164-5567*	1	FITTING AS	
		1	**6V-3965**	1	FITTING AS (QUICK DISCONNECT)	
		1	**3J-1907**	1	SEAL-O-RING	
	41	1	**3J-1907**	3	SEAL-O-RING	
	42	1	**4D-7733**	1	CLIP	
	43	2	**5K-5338**	3	CLIP	
	44	1	**6V-8397**	6	SEAL-O-RING	
	45	2	**7S-1912**	1	CLIP	
	46	1,2	**8T-4121**	7	WASHER-HARD (11X21X2.5-MM THK)	
M	47	2	**8T-4136**	3	BOLT (M10X1.5X25-MM)	
M	48	1	**8T-4137**	1	BOLT (M10X1.5X20-MM)	
M	49	1,2	**8T-4139**	4	BOLT (M12X1.75X30-MM)	
M	50	2	**8T-4189**	4	BOLT (M8X1.25X20-MM)	
	51	1,2	**8T-4223**	6	WASHER-HARD (13.5X25.5X3-MM THK)	
	52	2	**8T-4224**	4	WASHER-HARD (8.8X16X2-MM THK)	
M	53	1	**8T-5005**	3	BOLT (M10X1.5X70-MM)	
M	54	2	**8T-5041**	2	BOLT (M12X1.75X120-MM)	

I-REFER TO HYDRAULIC INFORMATION SYSTEM
M-METRIC PART
Y-SEPARATE ILLUSTRATION

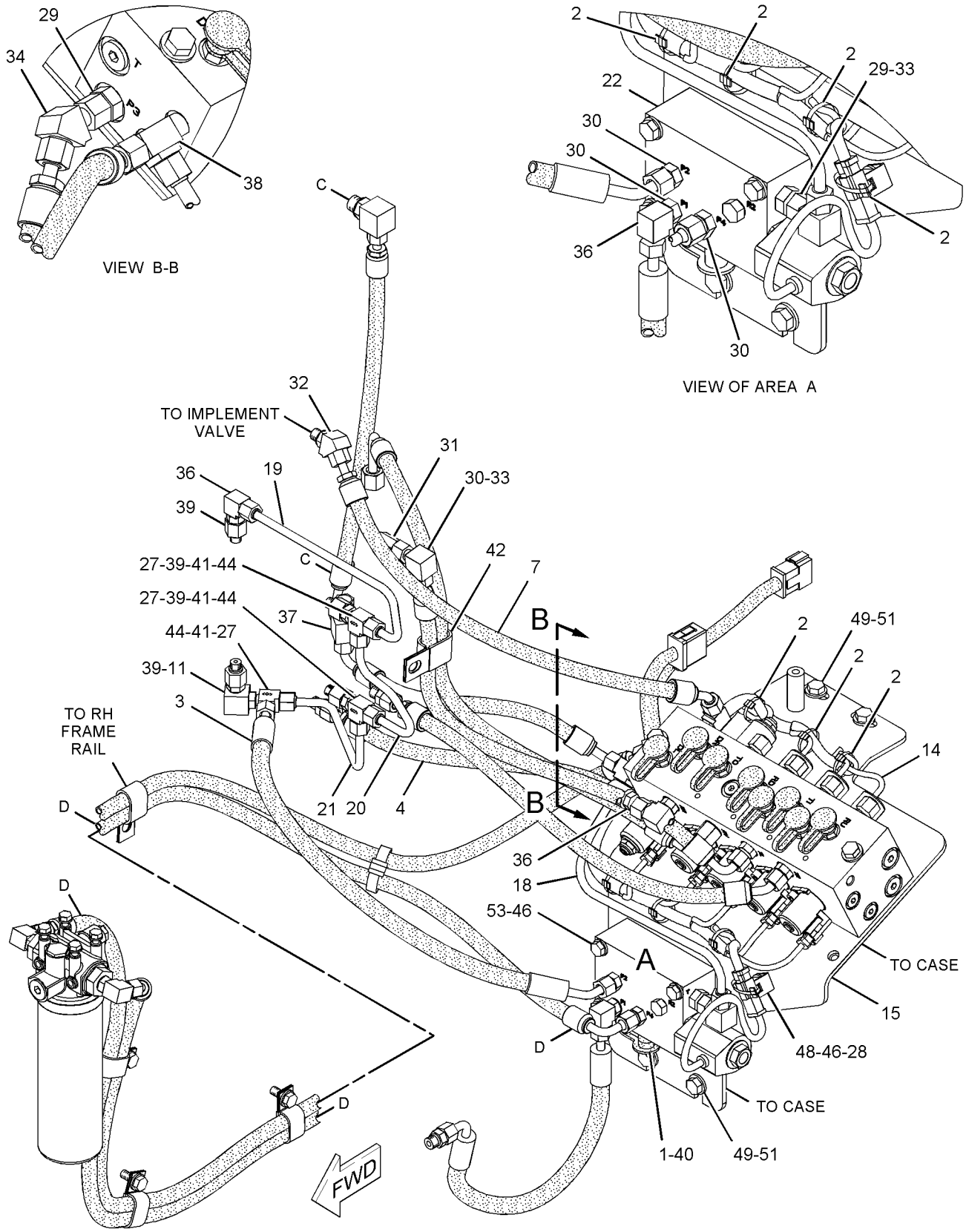

GRAPHIC #1 g01136193

213-0006 **LINES GP-PILOT** *(contd.)* **i02285648**

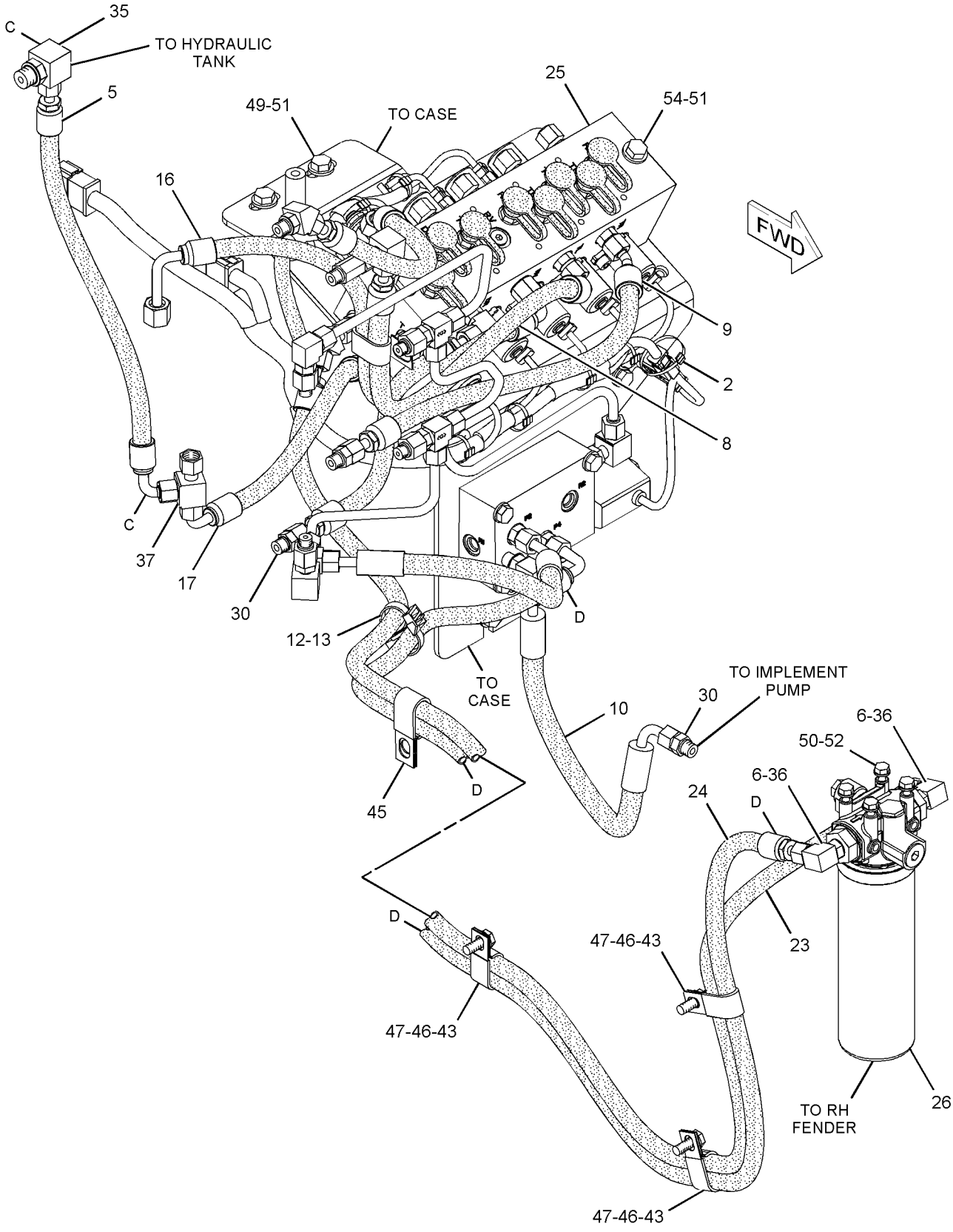

GRAPHIC #2 **<END>** g01136196

193-1662 LINES GP-PIN PULLER CYLINDER—COLD WEATHER

S/N: RJG1-UP
FOR USE WITH PIN PULLER AR
AN ATTACHMENT

SMCS-5057, 5354 **i02273233**

NOTE	PART NUMBER	QTY	PART NAME 1 2 3 4 5 6 (PRODUCT LEVEL)	SEE PAGE
	218-3346	1	HOSE AS	
	218-3347	1	HOSE AS	

<END>

HYDRAULIC SYSTEM

210-6030 LINES GP-PIN PULLER CYLINDER

S/N: RJG1-UP
PART OF 178-1784 PULLER AR-PIN
AN ATTACHMENT

SMCS-5057, 5354 **i01783196**

NOTE	REF NO	GRAPHIC REF	PART NUMBER	QTY	PART NAME 1 2 3 4 5 6 (PRODUCT LEVEL)	SEE PAGE
I	1	1	**218-1837**	1	HOSE AS	
I	2	1	**218-1840**	1	HOSE AS	
	3	1	**3G-8047**	3	GROMMET	
	4	1	**3G-8054**	3	CLIP (TAB)	
	5	1	**3G-8057**	3	CLIP (SLOT)	
	6	1	**3J-1907**	2	SEAL-O-RING	
	7	1	**3K-0360**	2	SEAL-O-RING	
	8	1	**4L-6454**	1	BOLT (3/8-16X1-IN)	
	9	1	**5P-1075**	8	WASHER-HARD (10.2X22.5X3-MM THK)	
	10	1	**6D-4244**	2	CLIP	
	11	1	**6V-8398**	4	SEAL-O-RING	
	12	1	**6V-8625**	1	ELBOW	
	13	1	**6V-9002**	1	ELBOW	
	14	1	**6V-9873**	1	CONNECTOR	
	15	1	**8T-2502**	4	BOLT (3/8-16X1.125-IN)	
	16	1	**8T-5050**	1	CONNECTOR	
	17	1	**8T-7008**	2	BOLT (3/8-16X3-IN)	
	18	1	**9W-1991**	2	SPACER (10.7X17.1X40-MM THK)	

I-REFER TO HYDRAULIC INFORMATION SYSTEM

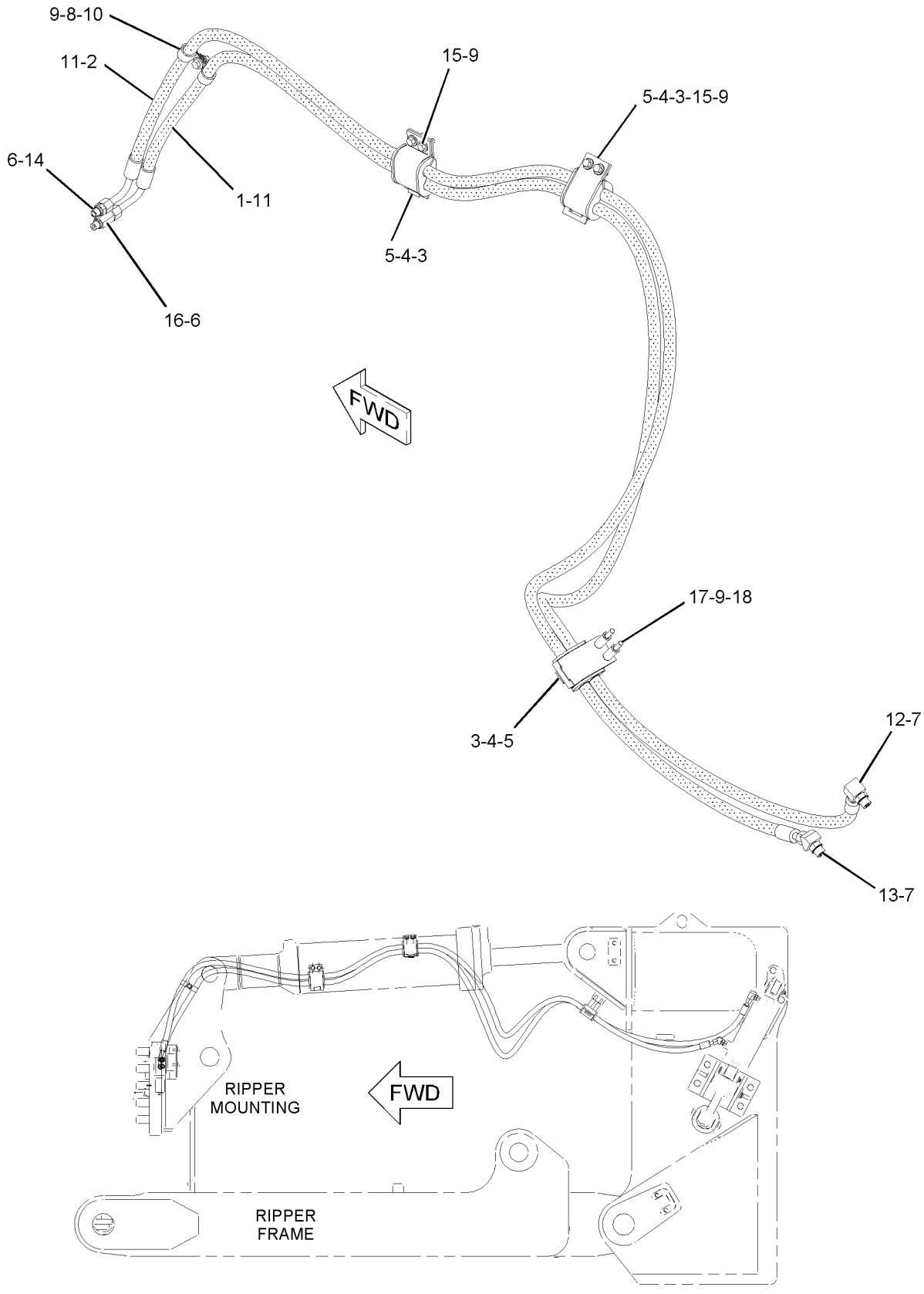

LEFT SIDE VIEW

GRAPHIC #1 **<END>** g01012178

HYDRAULIC SYSTEM

218-3348 LINES GP-PIN PULLER CYLINDER–

MULTI-SHANK RIPPER
S/N: RJG1-UP
DEEP RIP
PART OF 135-2919 MODIFICATION AR-RIPPER
AN ATTACHMENT

SMCS-5057, 5354 **i02272828**

NOTE	REF NO	GRAPHIC REF	PART NUMBER	QTY	PART NAME 1 2 3 4 5 6 (PRODUCT LEVEL)	SEE PAGE
I	1	1	**218-3352**	1	HOSE AS	
I	2	1	**218-3353**	1	HOSE AS	
	3	1	**3G-8047**	2	GROMMET	
	4	1	**3G-8054**	2	CLIP (TAB)	
	5	1	**3G-8057**	2	CLIP (SLOT)	
	6	1	**3J-1907**	2	SEAL-O-RING	
	7	1	**3K-0360**	2	SEAL-O-RING	
	8	1	**4L-9337**	1	BOLT (3/8-16X1.5-IN)	
	9	1	**5P-1075**	6	WASHER-HARD (10.2X22.5X3-MM THK)	
	10	1	**6D-4244**	2	CLIP	
	11	1	**6V-8398**	4	SEAL-O-RING	
	12	1	**6V-9002**	2	ELBOW	
	13	1	**6V-9873**	1	CONNECTOR	
	14	1	**8T-2502**	4	BOLT (3/8-16X1.125-IN)	
	15	1	**8T-5050**	1	CONNECTOR	

I-REFER TO HYDRAULIC INFORMATION SYSTEM

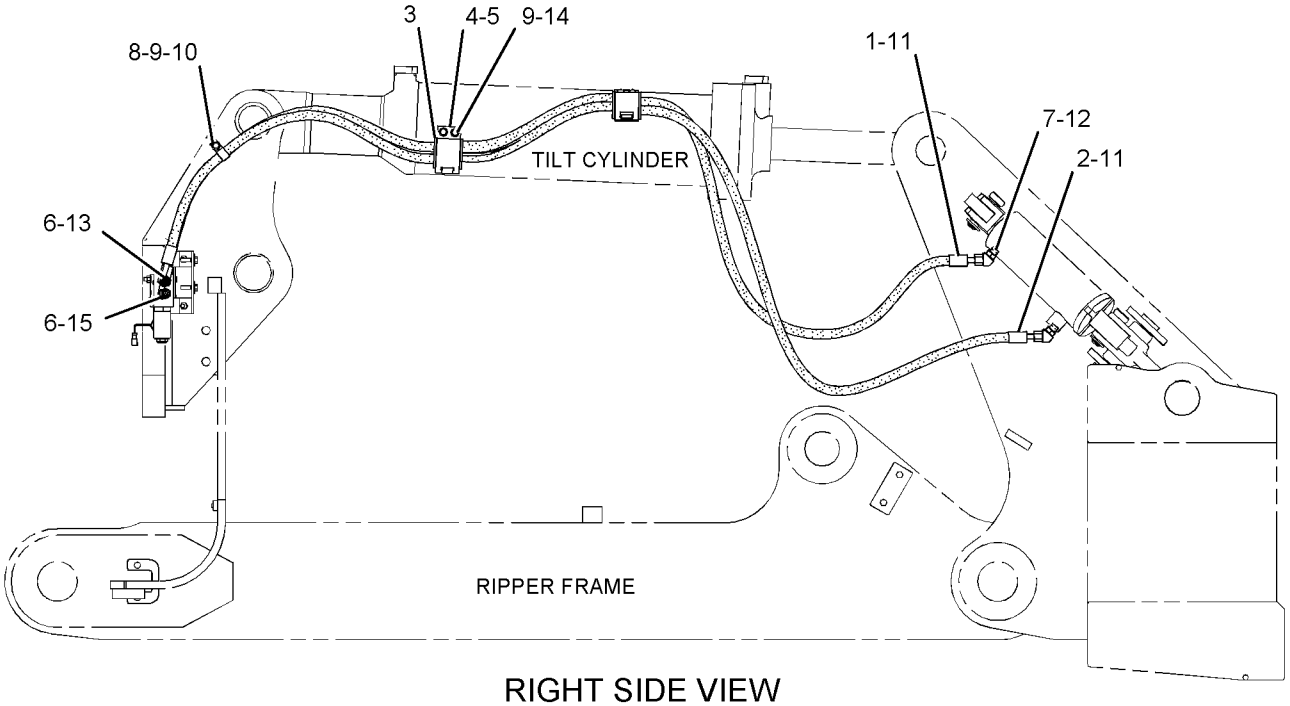

RIGHT SIDE VIEW

GRAPHIC #1 **<END>** g01140538

HYDRAULIC SYSTEM

213-0000 LINES GP-PUMP–IMPLEMENT, HYDRAULIC FAN

S/N: RJG1-UP

PART OF 212-2742, 269-8382 HYDRAULIC AR

SMCS-5057 **i02044639**

NOTE	REF NO	GRAPHIC REF	PART NUMBER	QTY	PART NAME 1 2 3 4 5 6 (PRODUCT LEVEL)	SEE PAGE
	1	2	**9G-6094**	1	MANIFOLD	
	2	1	**9J-3866**	1	ADAPTER	
I	3	2	**216-2418**	1	HOSE AS	
I	4	1	**216-2419**	1	HOSE AS	
I	5	2	**216-2420**	1	HOSE AS	
I	6	2	**216-2421**	1	HOSE AS	
	7	2	**217-5115**	1	ELBOW	
	8	1	**217-5116**	1	MANIFOLD	
	9	1	**217-5117**	1	MANIFOLD	
I	10	1	**219-1902**	1	HOSE AS	
I	11	2	**229-6620**	1	HOSE AS	
	12	2	**1P-3705**	2	SEAL-RECTANGULAR	
	13	1	**1P-4577**	2	FLANGE-HALF	
	14	1,2	**1P-4578**	8	FLANGE-HALF	
	15	1	**1P-4579**	2	FLANGE-HALF	
	16	1	**1P-4582**	4	FLANGE-HALF	
	17	2	**1P-4584**	2	FLANGE-HALF	
	18	1,2	**1P-4585**	4	FLANGE-HALF	
	19	2	**2H-6338**	2	SEAL-O-RING	
	20	1	**2J-2668**	1	COVER	
	21	1	**3E-6703**	1	SEAL-O-RING	
	22	1	**4J-0520**	3	SEAL-O-RING	
	23	1,2	**4J-0522**	5	SEAL-O-RING	
	24	1	**4J-0524**	2	SEAL-O-RING	
	25	1,2	**4J-0527**	3	SEAL-O-RING	
	26	1	**4L-6459**	4	BOLT (3/8-16X2.5-IN)	
	27	2	**5F-3106**	1	SEAL-O-RING	
	28	1	**5H-4020**	2	COVER	
	29	1	**5P-2566**	4	BOLT (1/2-13X1.5-IN)	
	30	1,2	**5P-8077**	4	FLANGE-HALF	
	31	1	**5S-7382**	4	BOLT (3/8-16X1.375-IN)	
	32	2	**6J-2680**	1	SEAL-O-RING	
	33	2	**7X-0315**	4	BOLT (7/16-14X3.25-IN)	
	34	2	**7X-0345**	2	BOLT (5/8-11X1.75-IN)	
	35	1,2	**7X-0346**	8	BOLT (5/8-11X2-IN)	
	36	1,2	**7X-0347**	8	BOLT (5/8-11X2.25-IN)	
	37	2	**7X-0352**	2	BOLT (5/8-11X4-IN)	
	38	2	**7X-0354**	2	BOLT (5/8-11X4.5-IN)	
	39	2	**7X-0356**	2	BOLT (5/8-11X5-IN)	
M	40	1,2	**8T-4122**	26	WASHER-HARD (17X32X3.5-MM THK)	
	41	1,2	**8T-4223**	18	WASHER-HARD (13.5X25.5X3-MM THK)	
	42	1	**8T-4896**	4	WASHER-HARD (10.2X18.5X2.5-MM THK)	
	43	1,2	**8T-5360**	20	WASHER (12X22.5X2.5-MM THK)	
	44	1,2	**8T-8916**	16	BOLT (7/16-14X1.5-IN)	
	45	1,2	**8T-8919**	12	BOLT (1/2-13X1.75-IN)	
	46	1	**8T-9391**	2	BOLT (1/2-13X3.75-IN)	
	47	2	**8T-9396**	2	BOLT (5/8-11X3.25-IN)	

I-REFER TO HYDRAULIC INFORMATION SYSTEM
M-METRIC PART

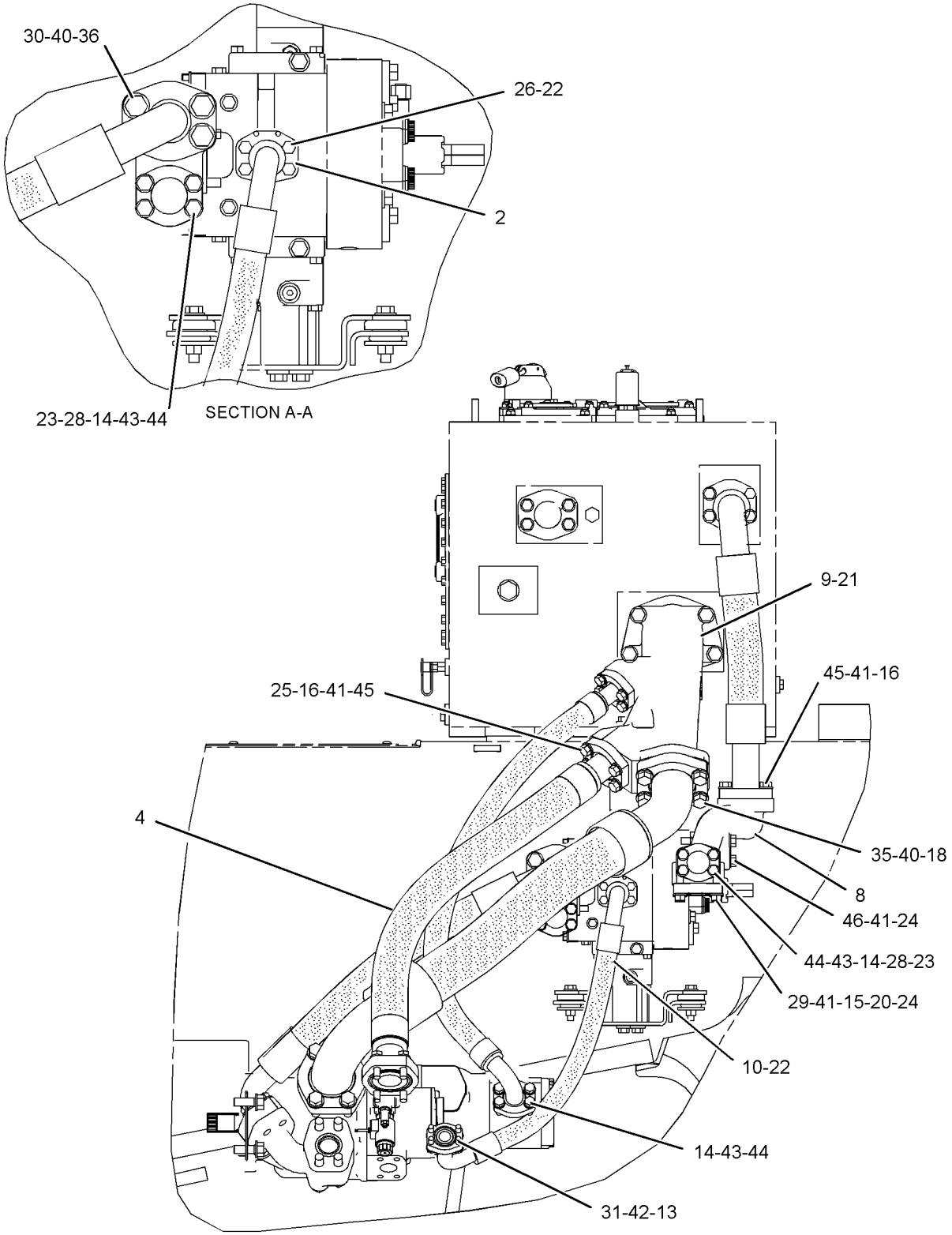

LEFT SIDE VIEW

GRAPHIC #1 g01053179

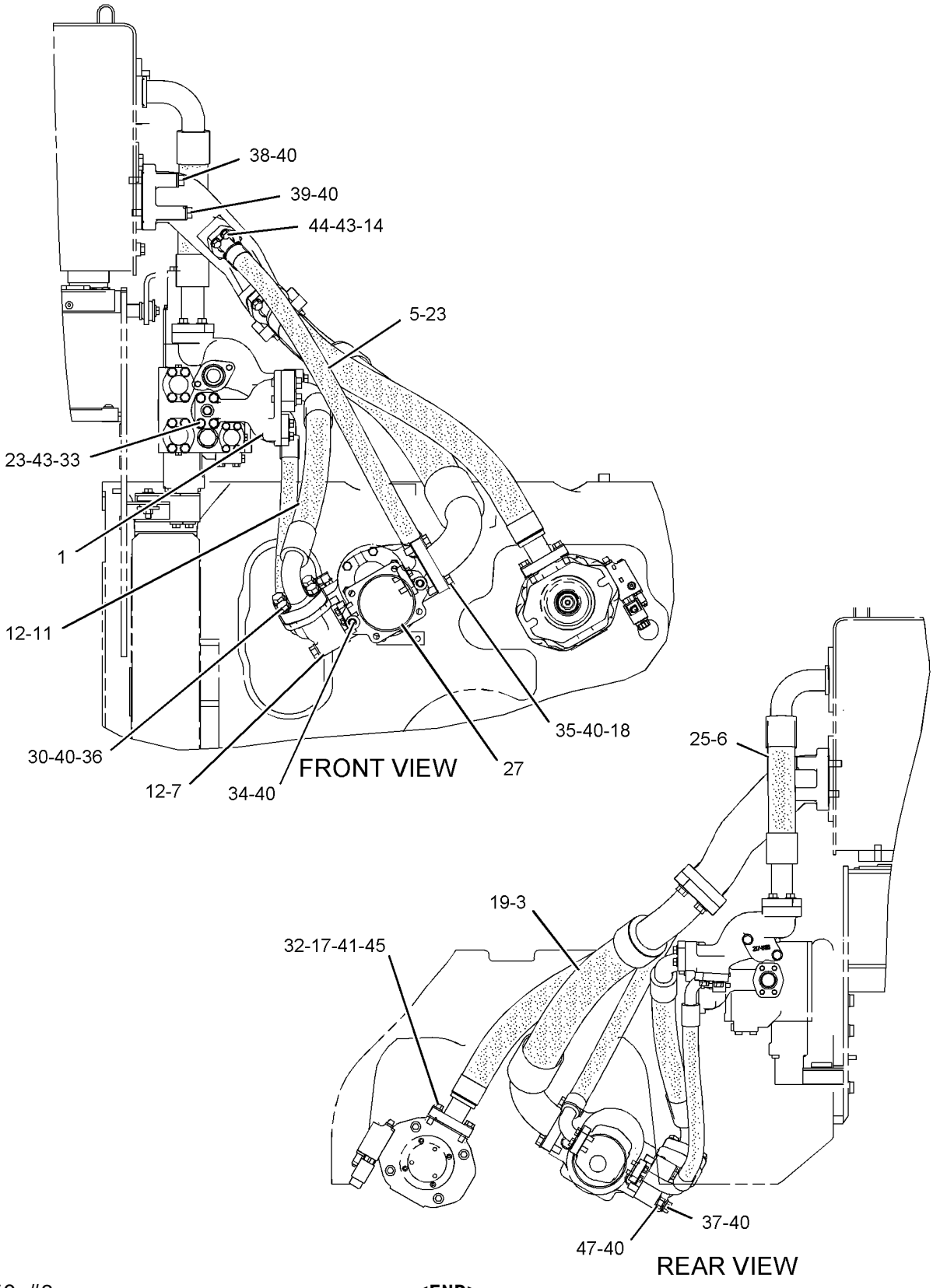

GRAPHIC #2 **<END>** g01053253

HYDRAULIC SYSTEM

215-6418 LINES GP-RIPPER

S/N: 4PP1-UP; BRT1-UP; BEY1-UP
PART OF 216-0120, 216-0121, 216-0122 RIPPER AR
AN ATTACHMENT

SMCS-5057, 5352, 5356 **i02402542**

NOTE	REF NO	GRAPHIC REF	PART NUMBER	QTY	PART NAME 1 2 3 4 5 6 (PRODUCT LEVEL)	SEE PAGE
I	1	1	**7T-3912**	1	HOSE AS	
I	2	1	**4Z-9333**	1	HOSE AS	
I	3	1	**7T-3915**	1	HOSE AS	
I	4	1	**7T-3916**	1	HOSE AS	
I	5	1	**8E-1041**	1	HOSE AS	
	6	1	**9M-2904**	8	CLAMP-HOSE	
I	7	1	**9W-8941**	1	HOSE AS	
	8	1	**130-1977**	8	SHIELD	
	9	1	**130-9191**	4	GROMMET	
	10	1	**139-2455**	2	SHIELD-RH	
	11	1	**139-2456**	2	SHIELD-LH	
I	12	1	**216-0169**	1	HOSE AS	
I	13	1	**216-0170**	1	HOSE AS	
	14	1	**241-7716**	2	PLATE	
	15	1	**4J-0520**	16	SEAL-O-RING	
	16	1	**4L-9337**	8	BOLT (3/8-16X1.5-IN)	
	17	1	**5P-8112**	2	GROMMET	
	18	1	**5S-7383**	4	BOLT (3/8-16X1.75-IN)	
	19	1	**8E-1042**	2	CLIP (SLOT)	
	20	1	**8E-1043**	2	CLIP (TAB)	
	21	1	**8T-2502**	4	BOLT (3/8-16X1.125-IN)	
	22	1	**8T-4896**	4	WASHER-HARD (10.2X18.5X2.5-MM THK)	

I-REFER TO HYDRAULIC INFORMATION SYSTEM

215-6418 **LINES GP-RIPPER** *(contd.)* **i02402542**

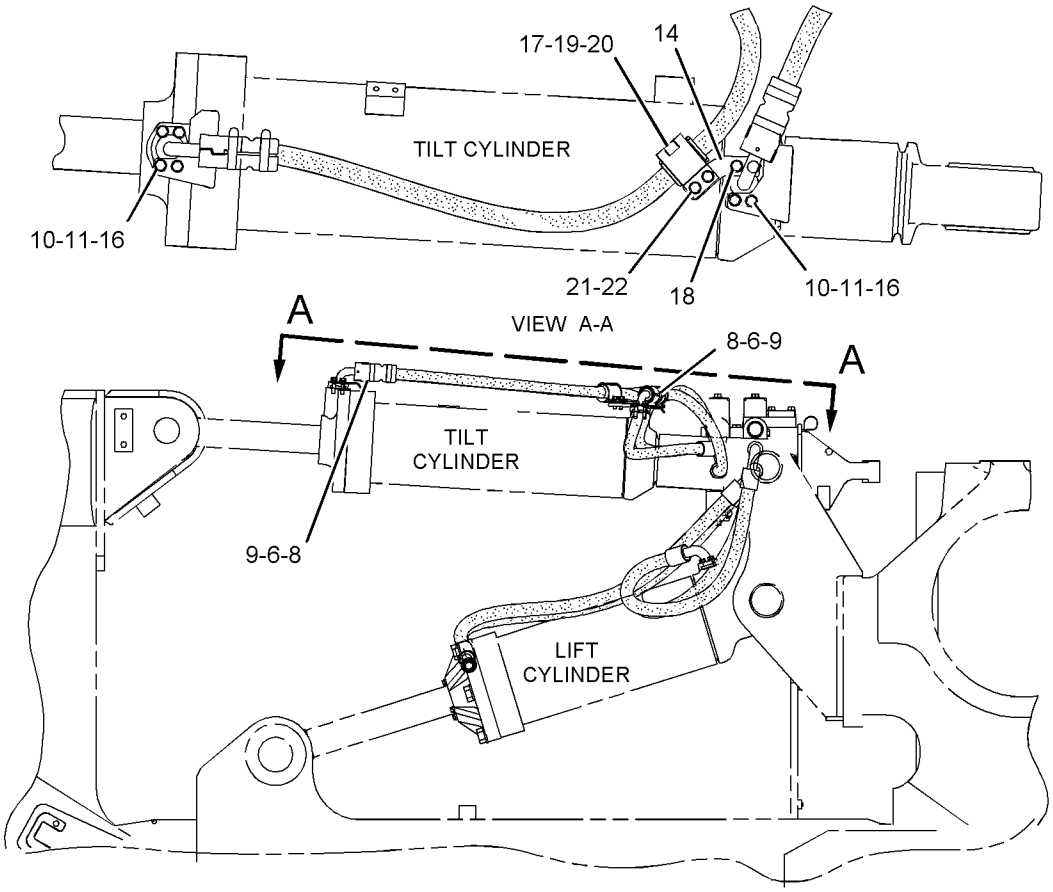

RIGHT SIDE VIEW OF MACHINE

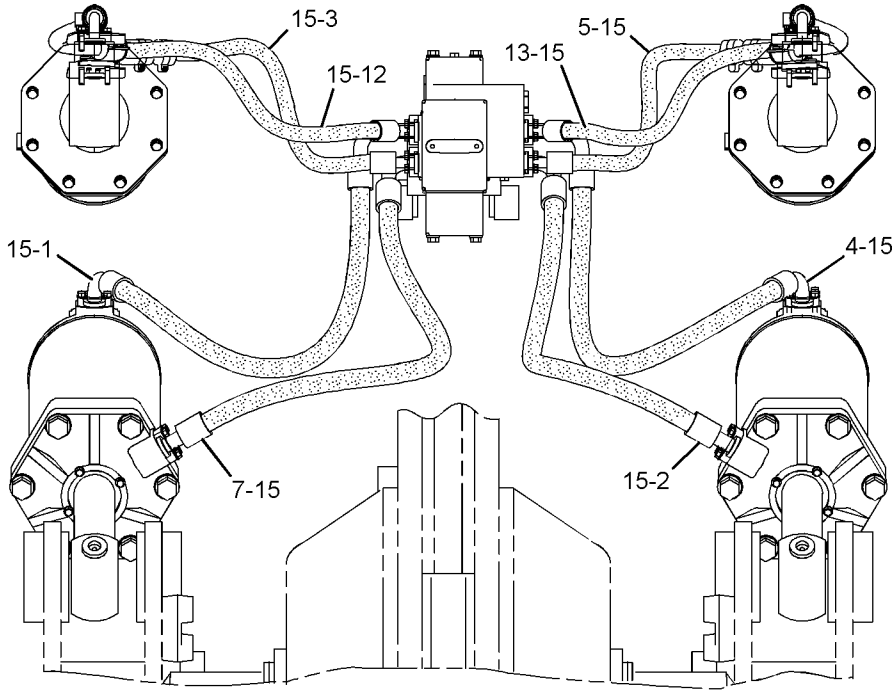

REAR OF MACHINE

GRAPHIC #1

<END>

g01053657

HYDRAULIC SYSTEM

216-2553 LINES GP-RIPPER

S/N: RJG1-UP
PART OF 216-2552 CONTROL AR-HYDRAULIC
AN ATTACHMENT

SMCS-5057, 5352, 5356 **i02362260**

NOTE	REF NO	GRAPHIC REF	PART NUMBER	QTY	PART NAME 1 2 3 4 5 6 (PRODUCT LEVEL)	SEE PAGE
	1	1	**3T-4816**	1	GROMMET	
	2	1	**3T-4817**	1	CLAMP	
	3	1	**3T-4820**	1	PLATE	
	4	1	**112-9252**	3	SPACER (13X25X22.14-MM THK)	
	5	1	**127-5419**	1	BRACKET AS	
I	6	1	**148-7030**	2	HOSE AS	
I	7	1	**185-6517**	2	HOSE AS	
	8	1	**206-5575**	1	BRACKET AS	
I	9	1	**219-7903**	1	HOSE AS	
I	10	1	**233-7670**	1	HOSE AS	
	11	1	**233-7675**	1	TUBE AS	
I	12	1	**233-9687**	1	HOSE AS	
	13	1	**263-3912**	2	VALVE	
	14	1	*148-8336*	2	CONNECTOR AS	
					(EACH INCLUDES)	
		1	**6V-8636**	1	CONNECTOR	
		1	**3J-1907**	1	SEAL-O-RING	
		1	**6V-8397**	1	SEAL-O-RING	
	15	1	*148-8367*	1	ELBOW AS	
		1	**6V-9850**	1	ELBOW	
		1	**6V-8397**	1	SEAL-O-RING	
	16	1	*148-8378*	3	ELBOW AS	
					(EACH INCLUDES)	
		1	**6V-8724**	1	ELBOW	
		1	**3J-1907**	1	SEAL-O-RING	
		1	**6V-8397**	1	SEAL-O-RING	
	17	1	**1J-8668**	3	STUD-TAPERLOCK (3/8-16X1.97-IN)	
	18	1	**3J-1907**	2	SEAL-O-RING	
	19	1	**4D-7733**	1	CLIP	
	20	1	**4I-9521**	2	MARKER (RED, L1)	
	21	1	**4I-9522**	2	MARKER (YELLOW, L2)	
	22	1	**4I-9523**	2	MARKER (BLUE, L3)	
	23	1	**4I-9524**	2	MARKER (BROWN, L4)	
	24	1	**4J-0522**	4	SEAL-O-RING	
	25	1	**6V-8397**	4	SEAL-O-RING	
	26	1	**6V-8801**	3	NUT (3/8-16-THD)	
	27	1	**7X-0310**	3	BOLT (7/16-14X2-IN)	
	28	1	**7X-0371**	4	BOLT (3/4-10X3.75-IN)	
	29	1	**1S-0994**	1	CLIP	
	31	1	**8T-4121**	2	WASHER-HARD (11X21X2.5-MM THK)	
M	32	1	**8T-4137**	2	BOLT (M10X1.5X20-MM)	
	33	1	**8T-4896**	4	WASHER-HARD (10.2X18.5X2.5-MM THK)	
	34	1	**8T-4994**	4	WASHER-HARD (20X36.5X3.5-MM THK)	
	35	1	**8T-5360**	3	WASHER (12X22.5X2.5-MM THK)	
	36	1	**193-3973**	2	TIE (WRAP)	
	37	1	**200-6345**	1	MOUNT (DUAL SWIVEL)	

I-REFER TO HYDRAULIC INFORMATION SYSTEM
M-METRIC PART

216-2553 **LINES GP-RIPPER** *(contd.)* **i02362260**

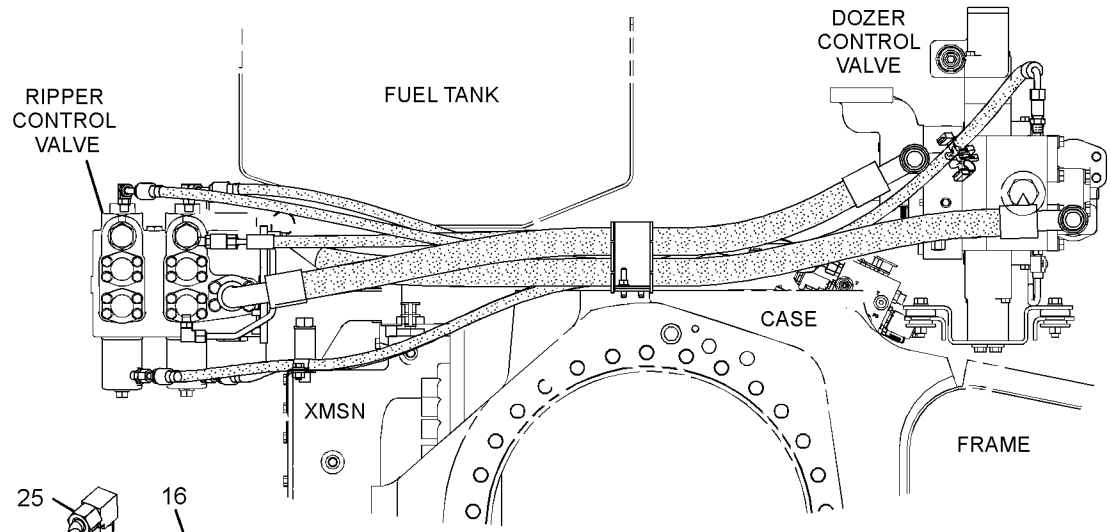

RIGHT SIDE VIEW

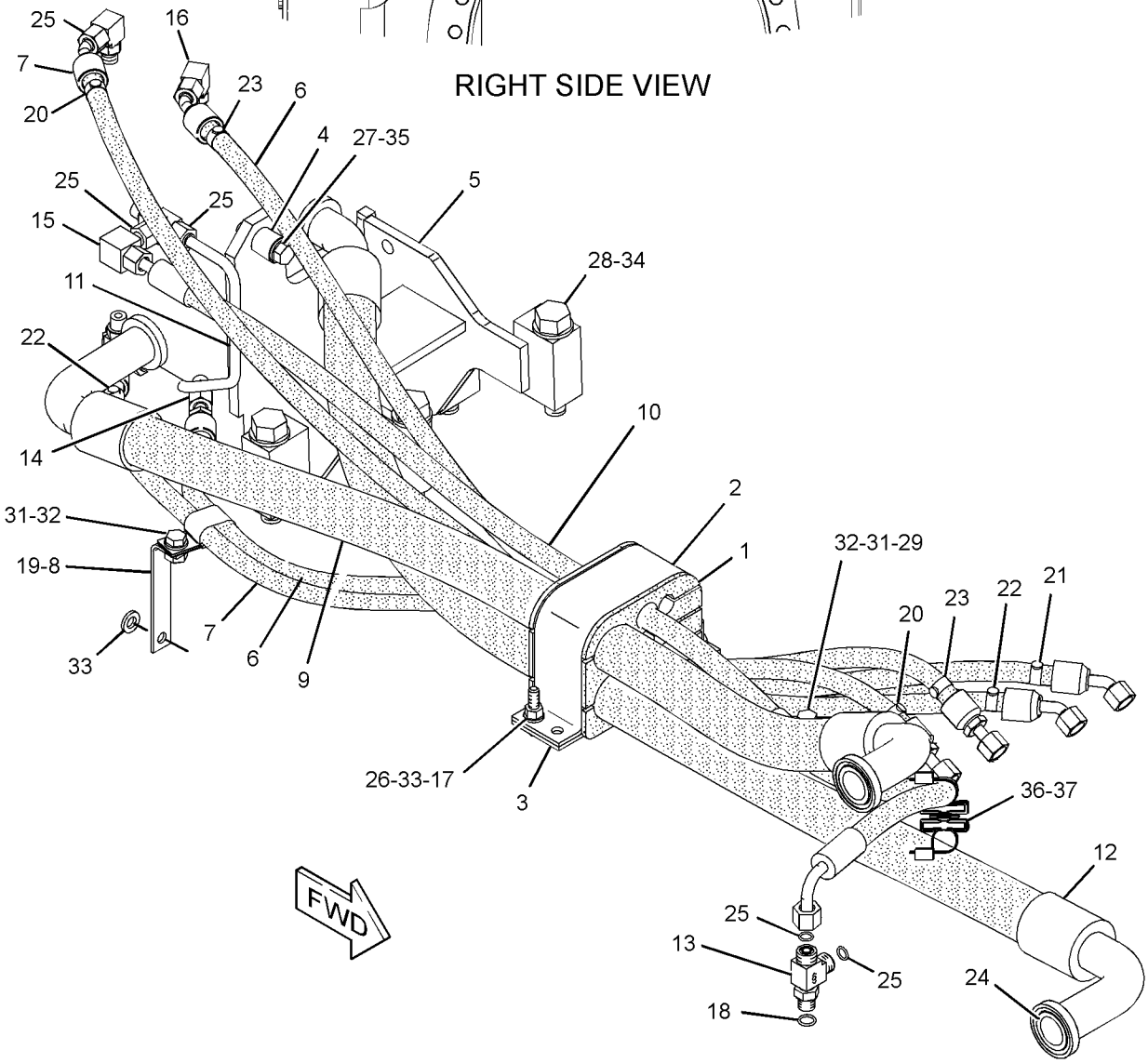

GRAPHIC #1 **<END>** g01226145

HYDRAULIC SYSTEM

247-6389 LINES GP-RIPPER—COLD WEATHER

S/N: RJG1-UP

AN ATTACHMENT

SMCS-5057, 5352, 5356 **i02050049**

NOTE	PART NUMBER	QTY	PART NAME 1 2 3 4 5 6 (PRODUCT LEVEL)	SEE PAGE
I	**1Q-1492**	1	HOSE AS (COLD WEATHER)	
I	**1Q-1494**	1	HOSE AS (COLD WEATHER)	
I	**1Q-1495**	1	HOSE AS (COLD WEATHER)	
I	**1Q-1496**	1	HOSE AS (COLD WEATHER)	
I	**1Q-1497**	1	HOSE AS (COLD WEATHER)	
I	**1Q-3386**	1	HOSE AS (COLD WEATHER)	
	247-6387	1	HOSE AS (COLD WEATHER)	
	247-6388	1	HOSE AS (COLD WEATHER)	

I-REFER TO HYDRAULIC INFORMATION SYSTEM

<END>

213-0002 LINES GP-TILT CYLINDER

S/N: RJG1-UP

PART OF 212-2742, 269-8382 HYDRAULIC AR

SMCS-5057, 5104 **i02250475**

NOTE	REF NO	GRAPHIC REF	PART NUMBER	QTY	PART NAME 1 2 3 4 5 6 (PRODUCT LEVEL)	SEE PAGE
	1	2	**6Y-3567**	1	ELBOW	
	2	2	**6Y-3568**	1	COVER	
I	3	1	**226-0135**	1	HOSE AS	
I	4	1	**226-0136**	1	HOSE AS	
	5	2	**1P-4576**	6	FLANGE-HALF	
	6	2	**1P-4577**	2	FLANGE-HALF	
M	7	1	**7X-3342**	2	STUD-LOCKING	
	8	1	**4J-0520**	3	SEAL-O-RING	
	9	1,2	**4J-5267**	3	SEAL-O-RING	
	10	2	**5H-4018**	2	COVER	
	11	2	**5M-3062**	2	BOLT (3/8-16X0.75-IN)	
	12	2	**5S-7382**	16	BOLT (3/8-16X1.375-IN)	
	13	1,2	**7G-3832**	4	GROMMET	
	14	1,2	**7G-3833**	4	CLIP (TAB)	
	15	1,2	**7G-3834**	4	CLIP (SLOT)	
	16	2	**8T-4121**	1	WASHER-HARD (11X21X2.5-MM THK)	
M	17	2	**8T-4136**	1	BOLT (M10X1.5X25-MM)	
M	18	2	**8T-4139**	2	BOLT (M12X1.75X30-MM)	
M	19	2	**8T-4172**	2	BOLT (M10X1.5X80-MM)	
	20	1,2	**8T-4223**	9	WASHER-HARD (13.5X25.5X3-MM THK)	
M	21	1	**8T-4244**	3	NUT (M12X1.75-THD)	
	22	2	**8T-4896**	20	WASHER-HARD (10.2X18.5X2.5-MM THK)	
M	23	1	**8T-4956**	4	BOLT (M12X1.75X35-MM)	
	24	2	**9D-1829**	1	CLIP	

I-REFER TO HYDRAULIC INFORMATION SYSTEM
M-METRIC PART

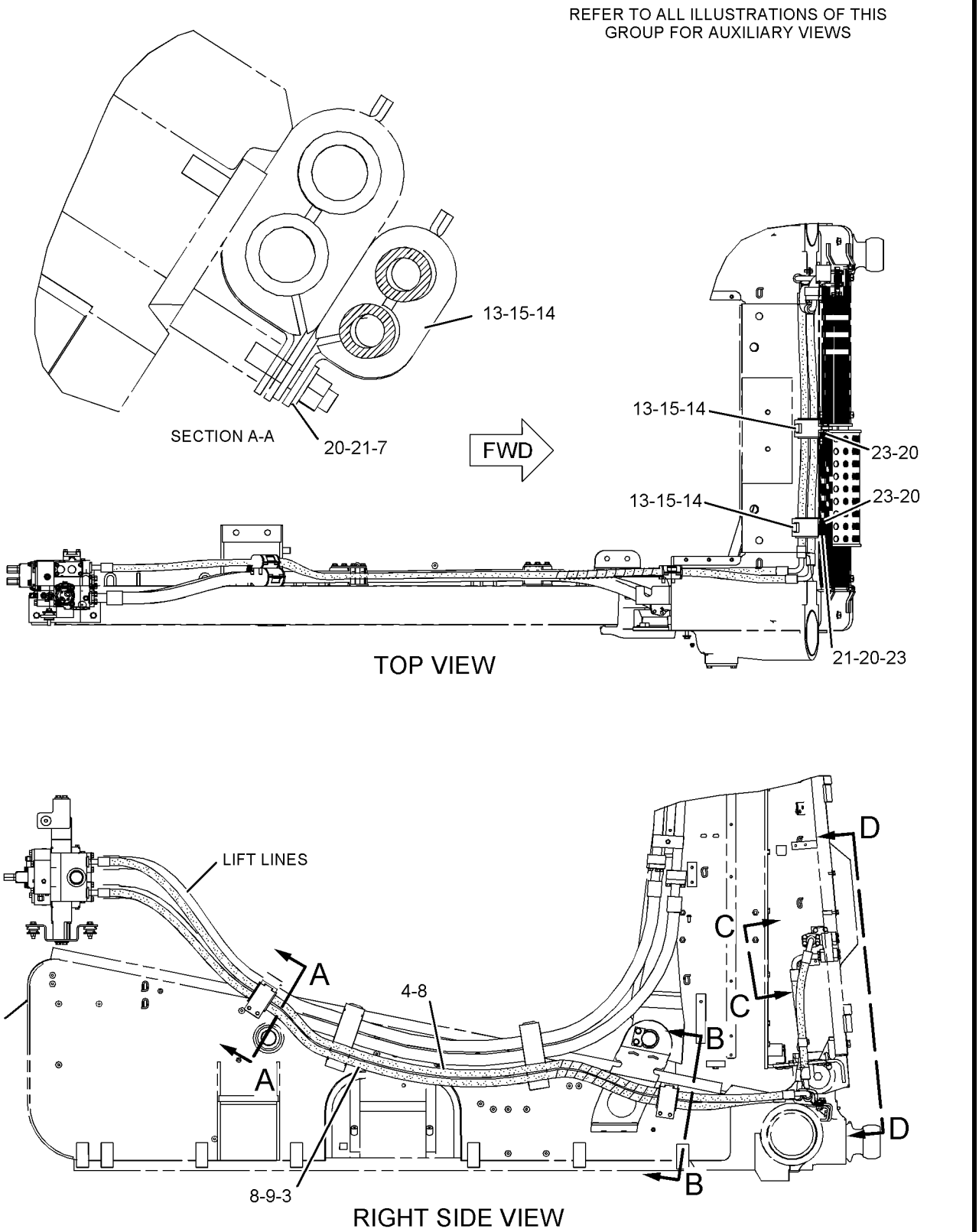

GRAPHIC #1

g01053044

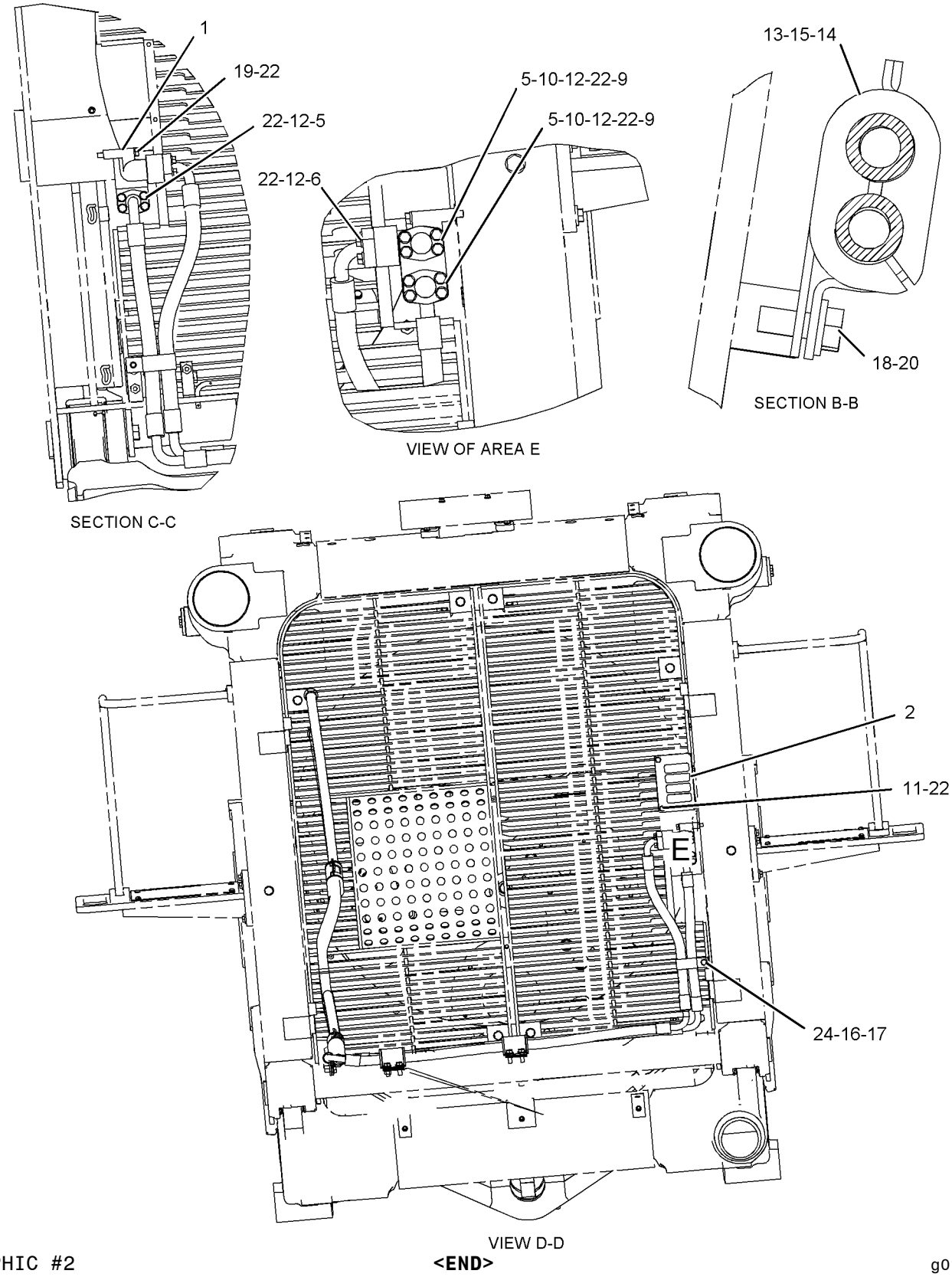

GRAPHIC #2 **<END>** g01053090

HYDRAULIC SYSTEM

216-2548 LINES GP-TILT CYLINDER—DUAL

S/N: RJG1-UP
PART OF 216-2547 CONTROL AR-DUAL TILT
AN ATTACHMENT

SMCS-5057, 5104 **i02467812**

NOTE	REF NO	GRAPHIC REF	PART NUMBER	QTY	PART NAME 1 2 3 4 5 6 (PRODUCT LEVEL)	SEE PAGE
	1	1	**8E-7111**	1	PLATE	
	2	1	**8E-7112**	1	ELBOW	
	3	1	**9V-0999**	2	SPACER (13.8X30X50-MM THK)	
	4	1	**203-2789**	1	BRACKET AS	
I	5	1	**226-2406**	1	HOSE AS	
I	6	1	**230-9556**	1	HOSE AS	
I	7	1	**236-6646**	1	HOSE AS	
	8	1	*148-8321*	1	CONNECTOR AS	
		1	**8C-0564**	1	CONNECTOR	
		1	**3J-1907**	1	SEAL-O-RING	
		1	**6V-8397**	1	SEAL-O-RING	
	9	1	*148-8353*	1	ELBOW AS	
		1	**6V-9001**	1	ELBOW	
		1	**3J-1907**	1	SEAL-O-RING	
		1	**6V-8397**	1	SEAL-O-RING	
	10	1	*150-3065*	1	ADAPTER AS	
		1	**6V-0484**	1	ADAPTER-O-RING	
		1	**3J-1907**	1	SEAL-O-RING	
	11	1	*153-6249*	1	CONNECTOR AS	
		1	**8T-8887**	1	CONNECTOR	
		1	**3J-1907**	1	SEAL-O-RING	
		1	**6V-8397**	1	SEAL-O-RING	
	12	1	*174-3181*	1	ELBOW AS	
		1	**8T-7521**	1	ELBOW	
		1	**3J-1907**	1	SEAL-O-RING	
		1	**6V-8398**	1	SEAL-O-RING	
	13	1	**1S-0994**	1	CLIP	
	14	1	**1S-0996**	1	CLIP	
	15	1	**4J-0520**	2	SEAL-O-RING	
	16	1	**4J-5267**	1	SEAL-O-RING	
	17	1	**5P-7462**	2	CLIP (SLOT)	
	18	1	**5P-7463**	2	CLIP (TAB)	
	19	1	**6V-0683**	2	GROMMET	
	20	1	**7S-1912**	1	CLIP	
	21	1	**8S-0948**	3	CLIP	
	22	1	**8T-4121**	7	WASHER-HARD (11X21X2.5-MM THK)	
M	23	1	**8T-4133**	1	NUT (M10X1.5 THD)	
M	24	1	**8T-4136**	1	BOLT (M10X1.5X25-MM)	
M	25	1	**8T-4137**	4	BOLT (M10X1.5X20-MM)	
M	26	1	**8T-4176**	2	BOLT (M12X1.75X90-MM)	
M	27	1	**8T-4195**	1	BOLT (M10X1.5X30-MM)	
	28	1	**8T-4223**	2	WASHER-HARD (13.5X25.5X3-MM THK)	
	29	1	**8T-4896**	4	WASHER-HARD (10.2X18.5X2.5-MM THK)	
	30	1	**8T-5360**	3	WASHER (12X22.5X2.5-MM THK)	
	31	1	**8T-9379**	4	BOLT (3/8-16X4.25-IN)	
	32	1	**8T-9380**	3	BOLT (7/16-14X1-IN)	
M	33	1	**9X-8281**	1	STUD-TAPERLOCK (M10X1.5X45-MM)	

I-REFER TO HYDRAULIC INFORMATION SYSTEM
M-METRIC PART

216-2548 **LINES GP-TILT CYLINDER** *(contd.)* **i02467812**

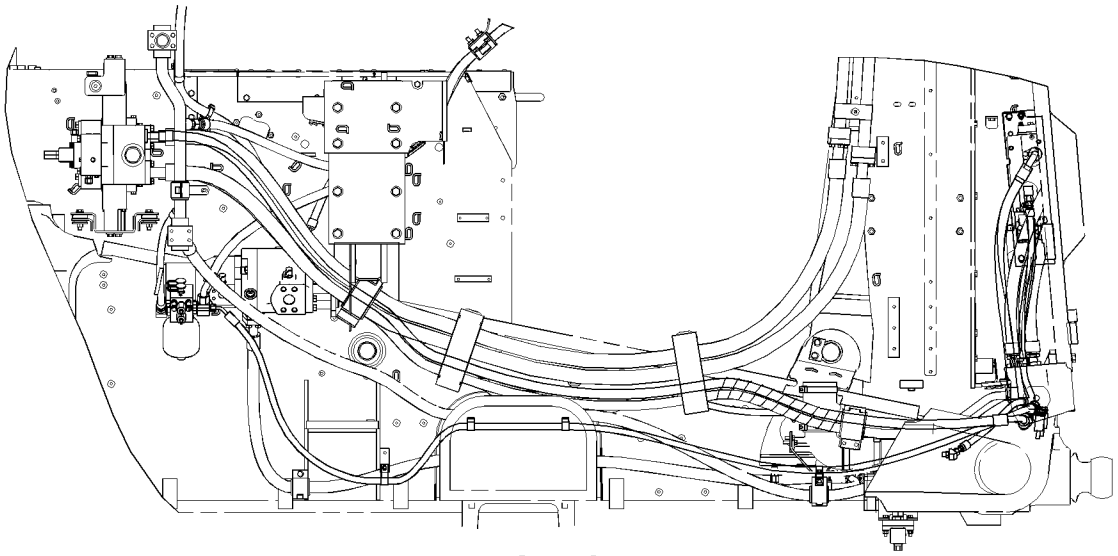

RIGHT SIDE VIEW

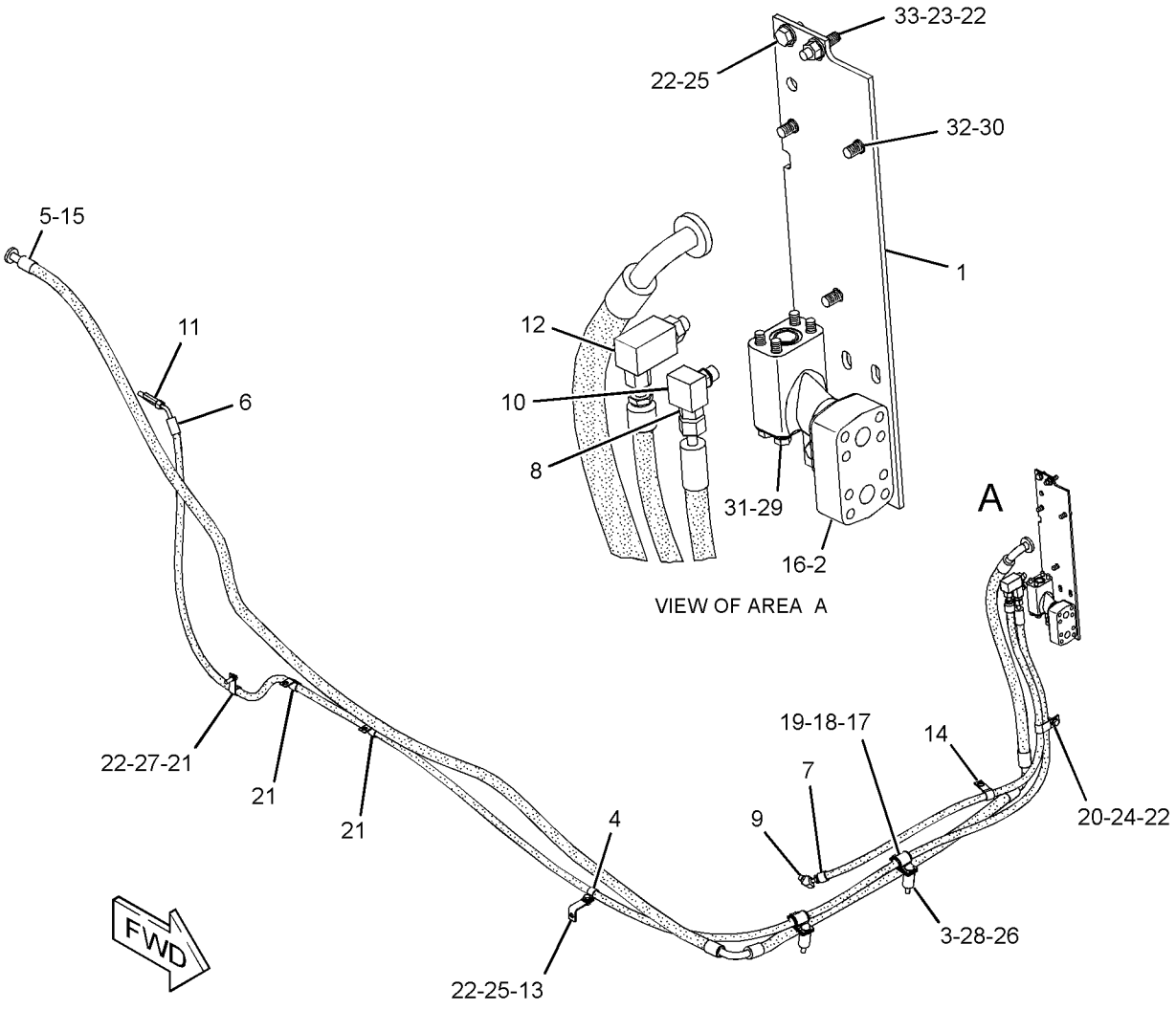

GRAPHIC #1 **<END>** g01231067

HYDRAULIC SYSTEM

231-7573 LINES GP-TILT CYLINDER—SINGLE TILT

S/N: BHA1-UP; BHF1-UP; BHJ1-UP; BHP1-UP
PART OF 227-9988, 244-1952, 244-1953, 244-2009 BULLDOZER AR-SEMI-UNIVERSAL,
216-2238, 227-9991, 244-1958, 244-2101 BULLDOZER AR-UNIVERSAL
AN ATTACHMENT

SMCS-5057, 5104 **i02263649**

NOTE	REF NO	GRAPHIC REF	PART NUMBER	QTY	PART NAME 1 2 3 4 5 6 (PRODUCT LEVEL)	SEE PAGE
	1	1	**8J-3146**	1	CLAMP	
	2	1	**9U-9488**	2	TUBE AS	
	3	1	**9W-2877**	4	CLAMP	
	4	1	**9W-2896**	1	GUARD	
	5	1	**110-4727**	1	GUARD AS	
	5A	1	**8L-5771**	3	SPACER (2X3X0.88-IN THK)	
I	6	1	**134-5418**	1	HOSE AS	
I	7	1	**134-5419**	1	HOSE AS	
	8	1	**146-3672**	1	GUARD	
	9	1	**234-2267**	1	TUBE AS	
I	10	1	**234-2268**	1	HOSE AS	
I	11	1	**234-6712**	1	HOSE AS	
	12	1	**235-2036**	1	GUARD AS (RH)	
	13	1	**1P-3703**	1	SEAL-RECTANGULAR	
	14	1	**1P-4576**	12	FLANGE-HALF	
	15	1	**4J-5267**	8	SEAL-O-RING	
	16	1	**4L-6459**	4	BOLT (3/8-16X2.5-IN)	
	17	1	**4L-9337**	8	BOLT (3/8-16X1.5-IN)	
	18	1	**5P-1075**	4	WASHER-HARD (10.2X22.5X3-MM THK)	
	19	1	**5P-1076**	10	WASHER-HARD (13.5X30X4-MM THK)	
	20	1	**5P-2228**	2	BOLT (1/2-13X1-IN)	
	21	1	**7X-0381**	2	BOLT (7/8-9X2-IN)	
	22	1	**7X-0383**	2	BOLT (7/8-9X2.75-IN)	
	23	1	**7X-0515**	3	WASHER-HARD (17X35X5-MM THK)	
	24	1	**8C-6913**	4	WASHER-HARD (24X41.5X4-MM THK)	
	25	1	**8T-4223**	2	WASHER-HARD (13.5X25.5X3-MM THK)	
	26	1	**8T-4896**	28	WASHER-HARD (10.2X18.5X2.5-MM THK)	
	27	1	**8T-8917**	10	BOLT (1/2-13X1.25-IN)	
	28	1	**8T-9393**	3	BOLT (5/8-11X1.5-IN)	
	29	1	**9B-7237**	20	BOLT (3/8-16X1.25-IN)	

I-REFER TO HYDRAULIC INFORMATION SYSTEM

231-7573 **LINES GP-TILT CYLINDER** *(contd.)* **i02263649**

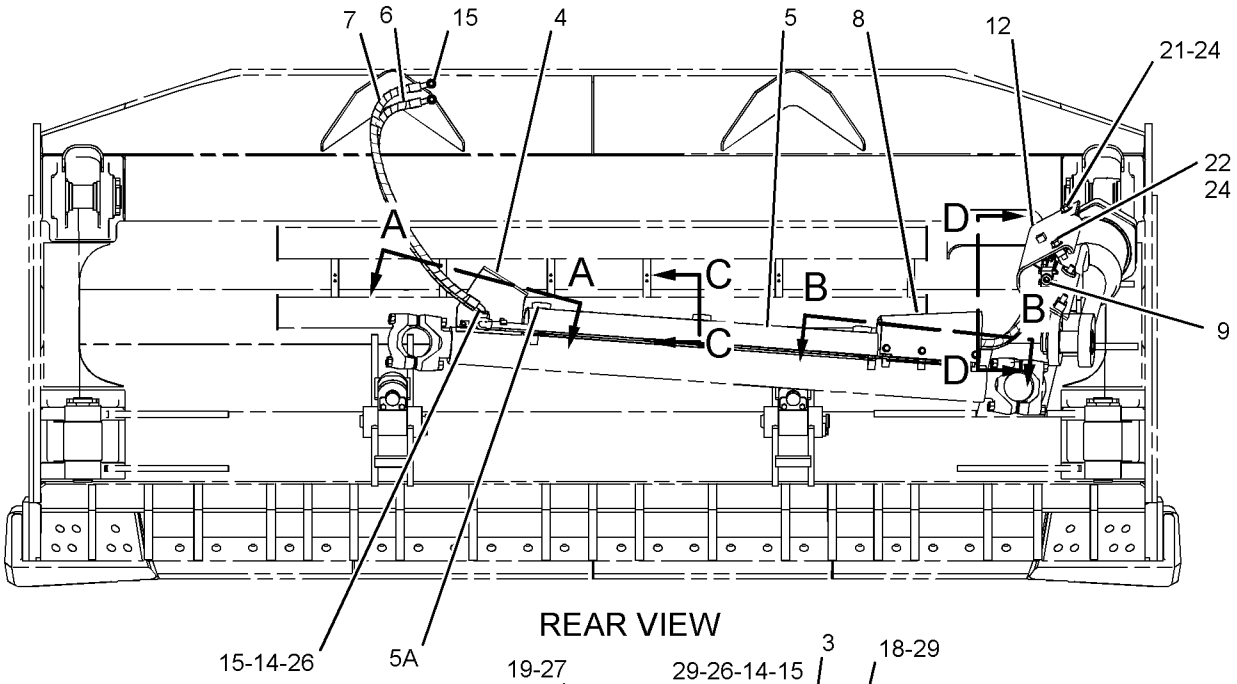

REAR VIEW

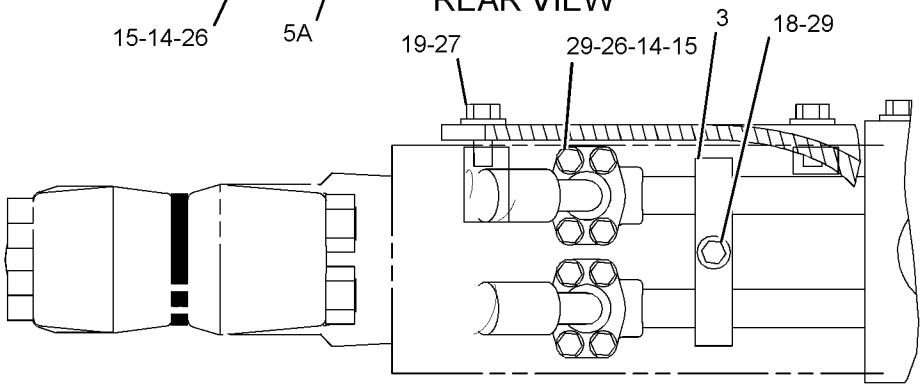

SECTION A-A

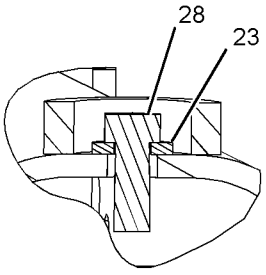

SECTION C-C

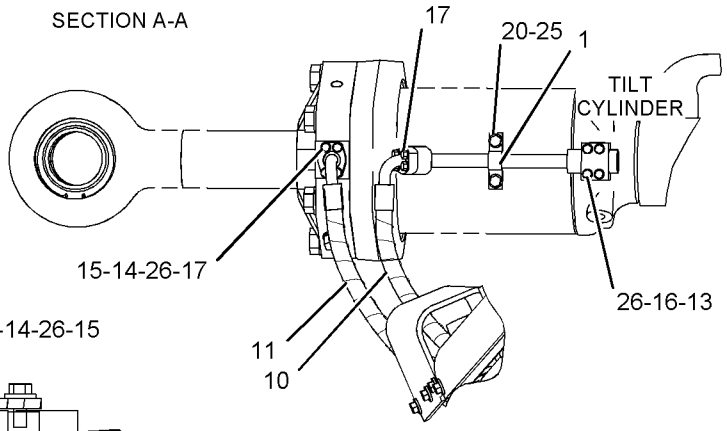

SECTION D-D

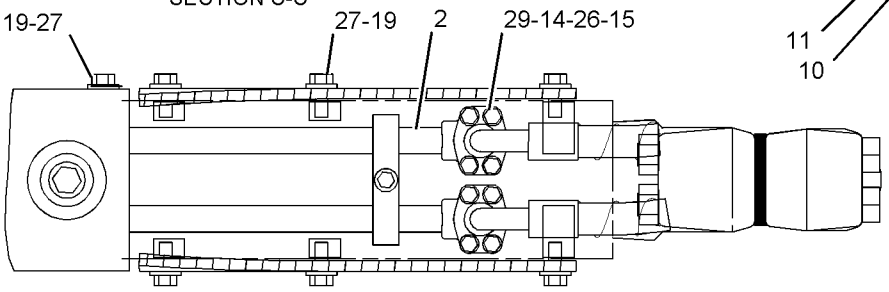

SECTION B-B

GRAPHIC #1 **<END>** g01136482

HYDRAULIC SYSTEM

231-7574 LINES GP-TILT CYLINDER—DUAL TILT

S/N: RJG1-UP

PART OF 231-7575 CYLINDER AR-DUAL TILT

AN ATTACHMENT

SMCS-5057, 5104 **i02360202**

NOTE	REF NO	GRAPHIC REF	PART NUMBER	QTY	PART NAME 1 2 3 4 5 6 (PRODUCT LEVEL)	SEE PAGE
	1	2	**1J-7468**	6	CLAMP	
	2	2	**8J-3146**	2	CLAMP	
	3	1	**9U-9487**	2	TUBE AS	
	4	1,2	**9U-9488**	2	TUBE AS	
	5	1	**9W-2877**	2	CLAMP	
	6	1	**9W-2881**	2	TUBE AS	
	7	1	**9W-2883**	2	TUBE AS	
	8	1	**9W-2896**	1	GUARD	
	9	2	**110-4727**	1	GUARD AS	
		2	**8L-5771**	3	SPACER (2X3X0.88-IN THK)	
I	10	1	**124-3346**	1	HOSE AS	
I	11	1	**124-3347**	1	HOSE AS	
I	12	1	**134-5418**	1	HOSE AS	
I	13	1	**134-5419**	1	HOSE AS	
	14	2	**146-3672**	1	GUARD	
I	15	1	**175-0289**	2	HOSE AS	
	16	2	**234-2267**	2	TUBE AS	
I	17	2	**234-2268**	1	HOSE AS	
	18	1	**234-6173**	1	GUARD AS (RH)	
	19	1	**234-6176**	1	GUARD AS (LH)	
I	20	2	**234-6712**	1	HOSE AS	
I	21	1	**234-6714**	2	HOSE AS	
	22	1,2	**1P-3703**	4	SEAL-RECTANGULAR	
	23	2	**1P-4576**	24	FLANGE-HALF	
	24	1	**1P-4577**	8	FLANGE-HALF	
	25	1	**1P-5760**	4	FLANGE-HALF	
	26	1	**4J-0520**	4	SEAL-O-RING	
	27	2	**4J-5267**	16	SEAL-O-RING	
	28	2	**4L-6459**	8	BOLT (3/8-16X2.5-IN)	
	29	2	**4L-9337**	16	BOLT (3/8-16X1.5-IN)	
	30	2	**4T-3981**	6	CLIP	
	31	1	**5P-1075**	2	WASHER-HARD (10.2X22.5X3-MM THK)	
	32	1,2	**5P-1076**	10	WASHER-HARD (13.5X30X4-MM THK)	
	33	2	**5P-2228**	4	BOLT (1/2-13X1-IN)	
	34	2	**5S-7379**	12	BOLT (3/8-16X0.875-IN)	
	35	2	**5S-7383**	6	BOLT (3/8-16X1.75-IN)	
	36	1	**7X-0288**	8	BOLT (3/8-16X1.625-IN)	
	37	1	**7X-0381**	4	BOLT (7/8-9X2-IN)	
	38	1	**7X-0383**	4	BOLT (7/8-9X2.75-IN)	
	39	2	**7X-0515**	3	WASHER-HARD (17X35X5-MM THK)	
	40	1	**268-8310**	8	WASHER-HARD (24X50.8X4-MM THK)	
	41	2	**8T-2561**	6	WASHER-HARD (10.5X28.5X5-MM THK)	
	42	2	**8T-4223**	4	WASHER-HARD (13.5X25.5X3-MM THK)	
	43	1,2	**8T-4896**	92	WASHER-HARD (10.2X18.5X2.5-MM THK)	
	44	1,2	**8T-8917**	10	BOLT (1/2-13X1.25-IN)	
	45	2	**8T-9393**	3	BOLT (5/8-11X1.5-IN)	
	46	1,2	**9B-7237**	50	BOLT (3/8-16X1.25-IN)	

I-REFER TO HYDRAULIC INFORMATION SYSTEM

REFER TO ALL ILLUSTRATIONS OF
THIS GROUP FOR AUXILIARY VIEWS

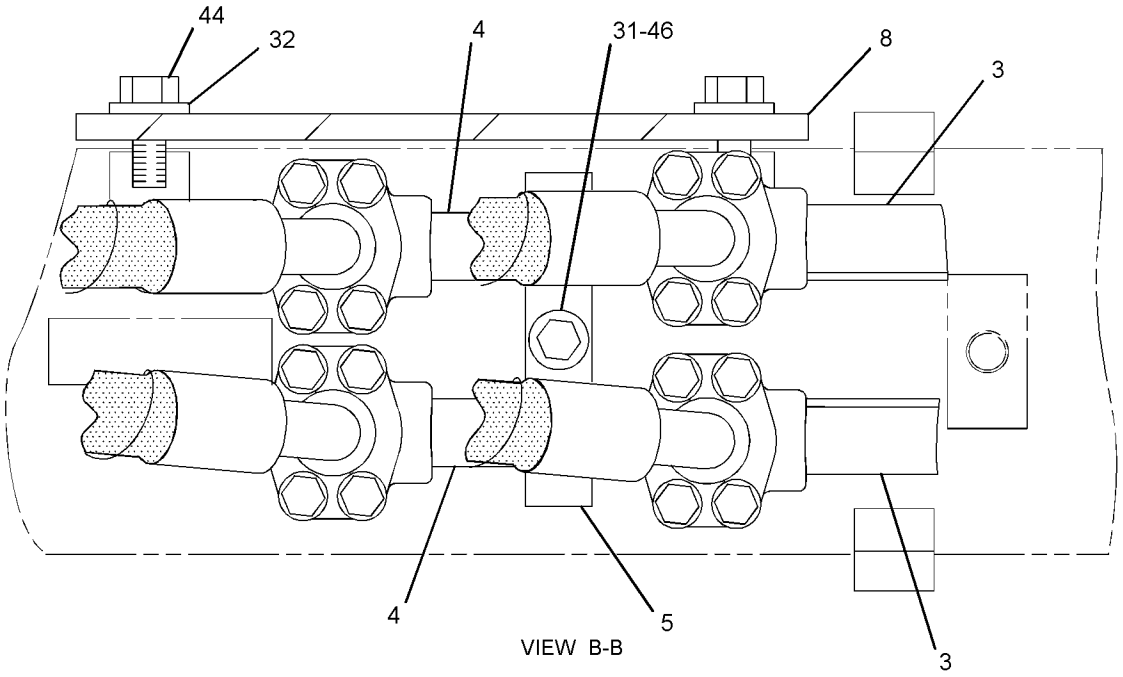

VIEW B-B

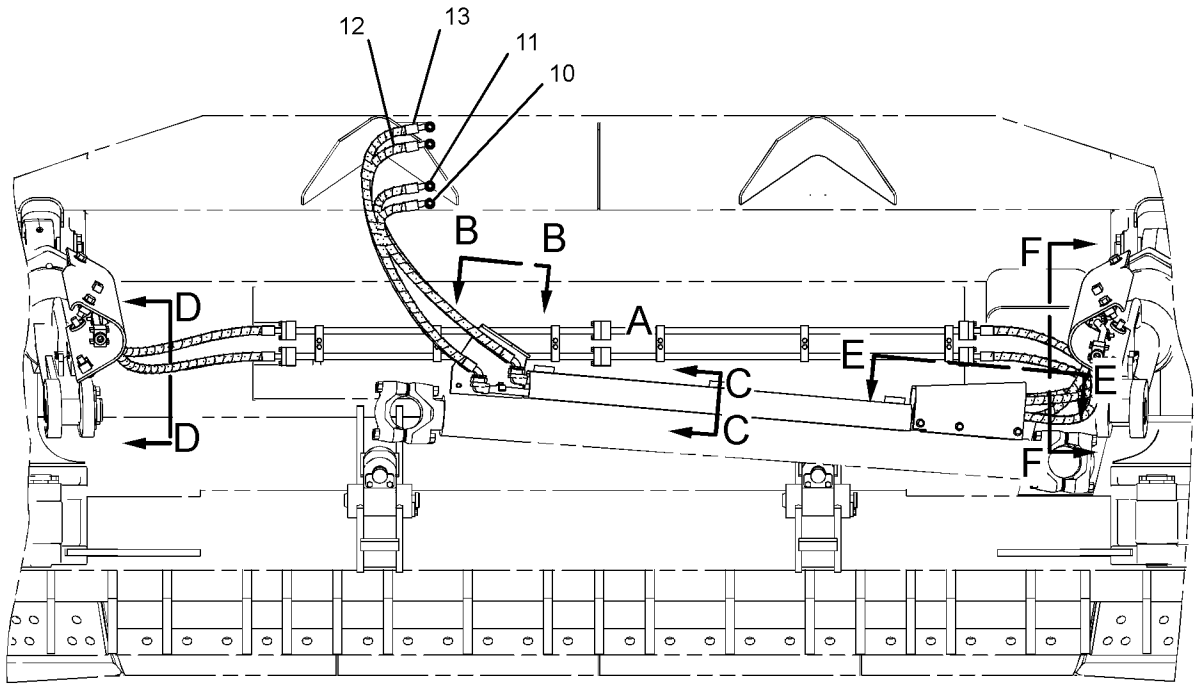

REAR VIEW

GRAPHIC #1 g01180034

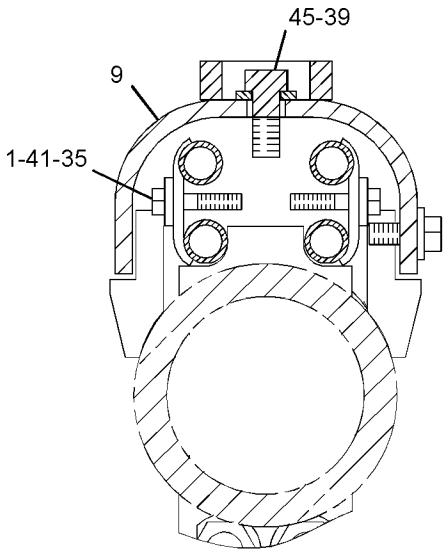

SECTION C-C

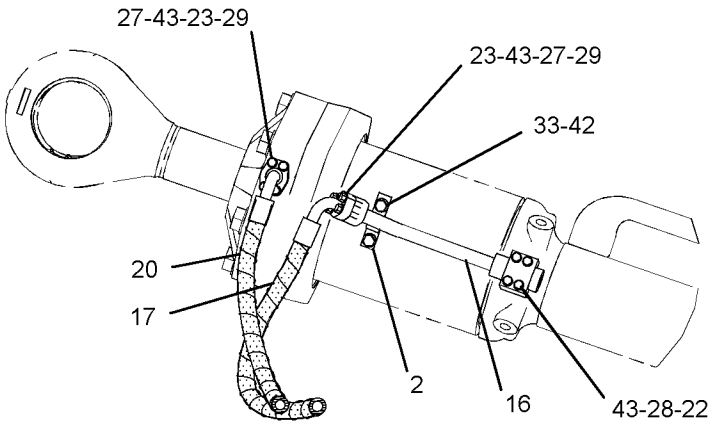

SECTION F-F

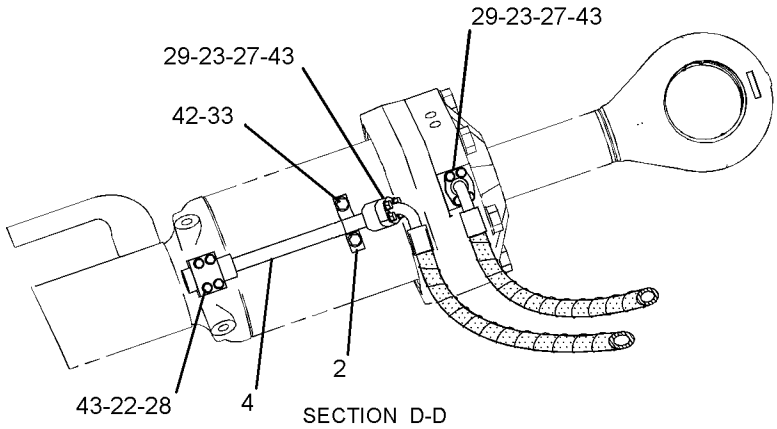

SECTION D-D

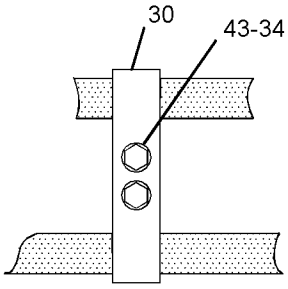

VIEW OF AREA A

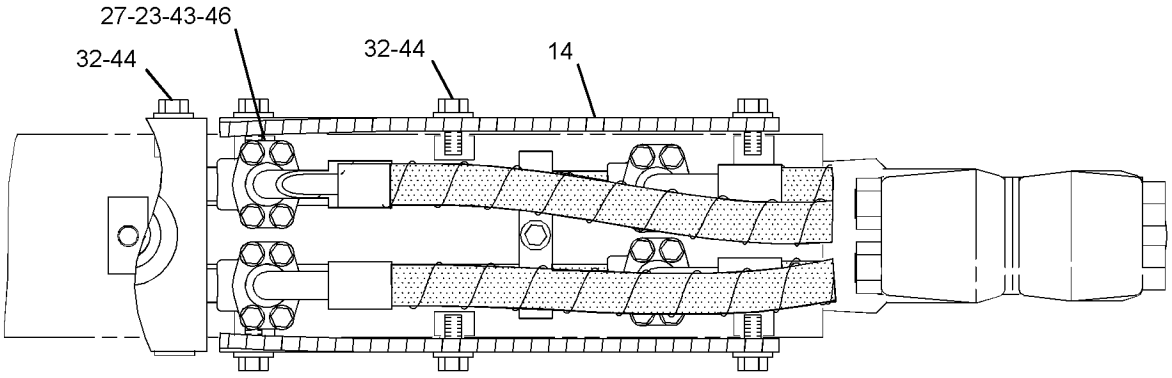

SECTION E-E

GRAPHIC #2 **<END>** g01180036

HYDRAULIC SYSTEM

269-8385 LINES GP-TILT CYLINDER

S/N: RJG1-UP
PART OF 269-8384 CONTROL AR-DUAL TILT
AN ATTACHMENT

SMCS-5057, 5104 **i02465651**

NOTE	REF NO	GRAPHIC REF	PART NUMBER	QTY	PART NAME 1 2 3 4 5 6 (PRODUCT LEVEL)	SEE PAGE
	1	1	**8E-7111**	1	PLATE	
	2	1	**8E-7112**	1	ELBOW	
	3	1	**9V-0999**	2	SPACER (13.8X30X50-MM THK)	
	4	1	**203-2789**	1	BRACKET AS	
I	5	1	**226-2406**	1	HOSE AS	
I	6	1	**236-6646**	1	HOSE AS	
I	7	1	**273-2821**	1	HOSE AS	
	8	1	*148-8321*	1	CONNECTOR AS	
		1	**8C-0564**	1	CONNECTOR	
		1	**3J-1907**	1	SEAL-O-RING	
		1	**6V-8397**	1	SEAL-O-RING	
	9	1	*148-8353*	1	ELBOW AS	
		1	**6V-9001**	1	ELBOW	
		1	**3J-1907**	1	SEAL-O-RING	
		1	**6V-8397**	1	SEAL-O-RING	
	10	1	*148-8363*	1	ELBOW AS	
		1	**6V-9876**	1	ELBOW	
		1	**3K-0360**	1	SEAL-O-RING	
		1	**6V-8397**	1	SEAL-O-RING	
	11	1	*150-3065*	1	ADAPTER AS	
		1	**6V-0484**	1	ADAPTER-O-RING	
		1	**3J-1907**	1	SEAL-O-RING	
	12	1	*174-3181*	1	ELBOW AS	
		1	**8T-7521**	1	ELBOW	
		1	**3J-1907**	1	SEAL-O-RING	
		1	**6V-8398**	1	SEAL-O-RING	
	13	1	**1S-0994**	1	CLIP	
	14	1	**1S-0996**	1	CLIP	
	15	1	**4J-0520**	2	SEAL-O-RING	
	16	1	**4J-5267**	1	SEAL-O-RING	
	17	1	**5P-7462**	2	CLIP (SLOT)	
	18	1	**5P-7463**	2	CLIP (TAB)	
	19	1	**6V-0683**	2	GROMMET	
	20	1	**7S-1912**	1	CLIP	
	21	1	**8S-0948**	3	CLIP	
	22	1	**8T-4121**	7	WASHER-HARD (11X21X2.5-MM THK)	
M	23	1	**8T-4133**	1	NUT (M10X1.5 THD)	
M	24	1	**8T-4136**	1	BOLT (M10X1.5X25-MM)	
M	25	1	**8T-4137**	4	BOLT (M10X1.5X20-MM)	
M	26	1	**8T-4176**	2	BOLT (M12X1.75X90-MM)	
M	27	1	**8T-4195**	1	BOLT (M10X1.5X30-MM)	
	28	1	**8T-4223**	2	WASHER-HARD (13.5X25.5X3-MM THK)	
	29	1	**8T-4896**	4	WASHER-HARD (10.2X18.5X2.5-MM THK)	
	30	1	**8T-5360**	3	WASHER (12X22.5X2.5-MM THK)	
	31	1	**8T-9379**	4	BOLT (3/8-16X4.25-IN)	
	32	1	**8T-9380**	3	BOLT (7/16-14X1-IN)	
M	33	1	**9X-8281**	1	STUD-TAPERLOCK (M10X1.5X45-MM)	

I-REFER TO HYDRAULIC INFORMATION SYSTEM
M-METRIC PART

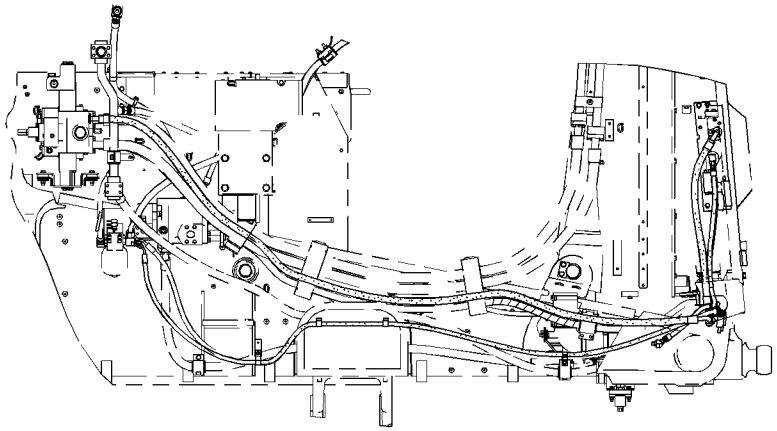

RIGHT SIDE VIEW

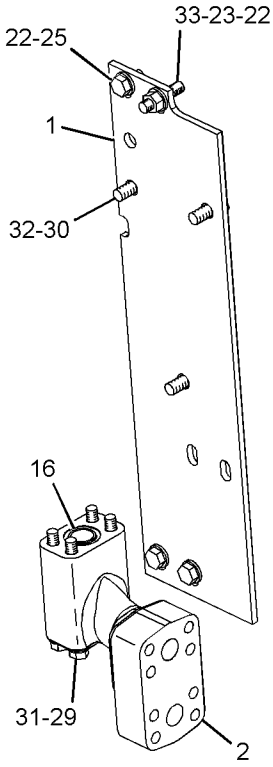

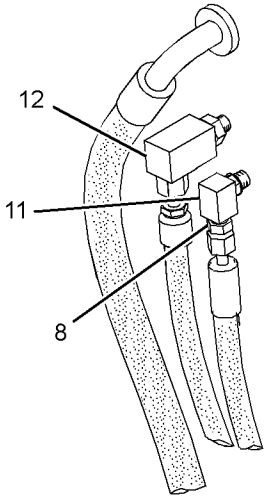

VIEW OF AREA B

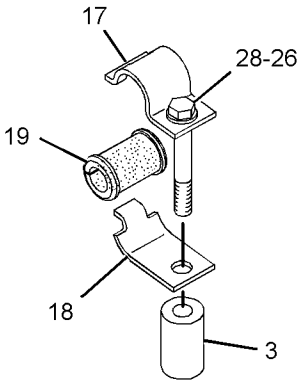

VIEW OF AREA A
(EXPLODED)

GRAPHIC #1 **<END>** g01231620

229-1466 MANIFOLD GP-CONTROL–REVERSING FAN

S/N: RJG1-UP

PART OF 220-0550 VALVE & MTG GP-HYDRAULIC FAN

AN ATTACHMENT

SMCS-5264 **i02267035**

NOTE	REF NO	GRAPHIC REF	PART NUMBER	QTY	PART NAME 1 2 3 4 5 6 (PRODUCT LEVEL)	SEE PAGE
Y	1	1	**152-8340**	1	VALVE GP-SOLENOID (24-VOLT) (HYDRAULIC FAN SPEED CONTROL)	686
Y	2	1	**203-4157**	1	VALVE GP-SOLENOID (24-VOLT) (HYDRAULIC LOCKOUT)	688
	3	1	**9S-8006**	1	PLUG	
	4	1	**9S-8005**	6	PLUG-O RING	
	5	1	**9S-8002**	4	PLUG	
	6	1	**9S-8001**	8	PLUG	
	7	1	**4J-7533**	8	SEAL-O-RING	
	8	1	**3J-7354**	4	SEAL-O-RING	
	9	1	**3K-0360**	6	SEAL-O-RING	
	10	1	**2M-9780**	1	SEAL-O-RING	
Y	11	1	**128-2780**	2	VALVE GP-CHECK (HYDRAULIC FAN, REVERSING)	664
	12	1	**235-4101**	3	VALVE GP-RELIEF (HYDRAULIC FAN, REVERSING)	
					(EACH INCLUDES)	
		1	**133-5545**	1	KIT-SEAL (RELIEF VALVE) (HYDRAULIC FAN, REVERSING)	
					(INCLUDES SEALS & BACKUP RINGS)	
	13	1	**236-6605**	2	VALVE GP-DIVERTER (HYDRAULIC FAN)	
					(EACH INCLUDES)	
		1	**2U-7354**	1	KIT-SEAL (DIVERTER VALVE) (HYDRAULIC FAN, REVERSING)	
					(INCLUDES SEALS & BACKUP RINGS)	

Y-SEPARATE ILLUSTRATION

229-1466 MANIFOLD GP-CONTROL *(contd.)* i02267035

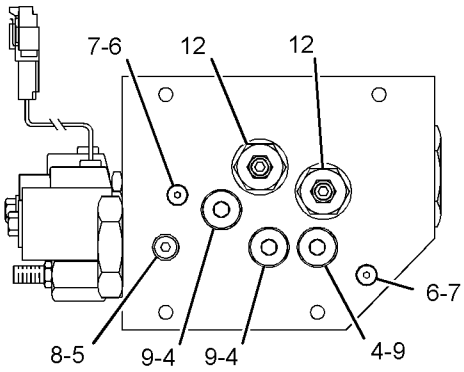

VIEW A-A

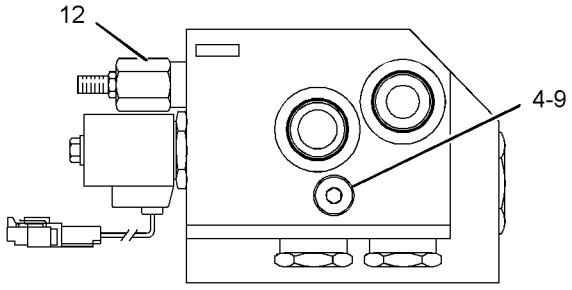

VIEW B-B

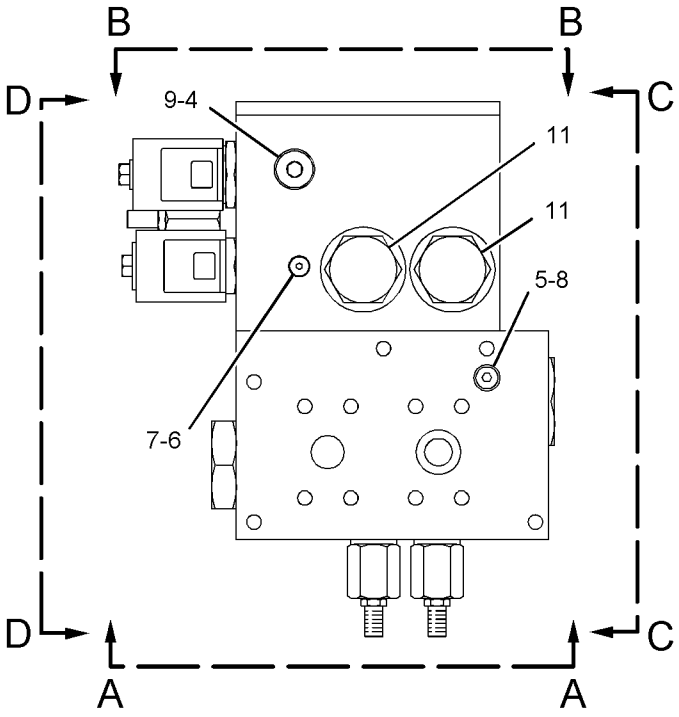

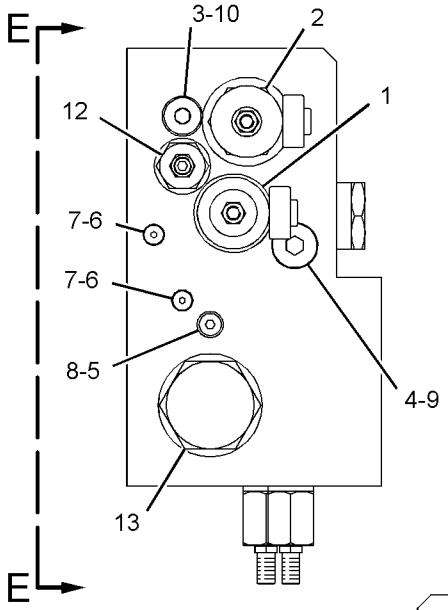

VIEW D-D

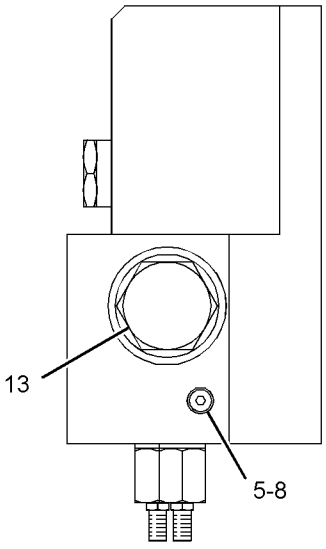

VIEW C-C

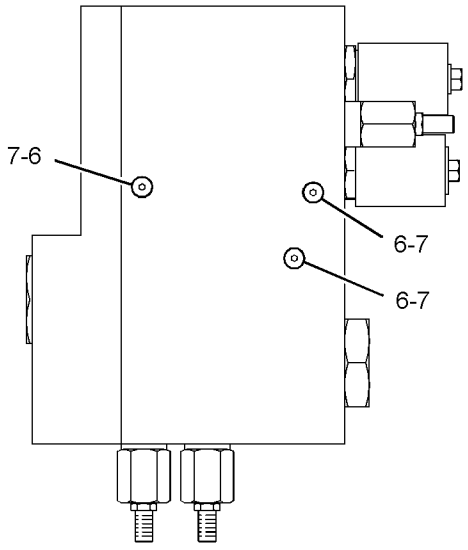

VIEW E-E

GRAPHIC #1 **<END>** g01104705

231-6285 MANIFOLD GP-CONTROL–HYDRAULIC FAN MOTOR

S/N: RJG1-528

PART OF 213-0004 LINES GP-MOTOR

SMCS-5264 **i02255985**

NOTE	REF NO	GRAPHIC REF	PART NUMBER	QTY	PART NAME 1 2 3 4 5 6 (PRODUCT LEVEL)	SEE PAGE
Y	1	1	**220-4551**	1	VALVE GP-SEQUENCE (MANIFOLD TO VALVE)	682
H	2	1	**179-0124**	1	VALVE GP-RELIEF (MANIFOLD PRESSURE)	
J		1	**2M-9780**	1	SEAL-O-RING	
J		1	**161-6149**	1	SEAL-O-RING	
J		1	**161-6161**	2	RING-BACKUP	
	3	1	**6V-3965**	2	FITTING AS (QUICK DISCONNECT)	
	4	1	**6V-0852**	2	CAP-DUST	
	5	1	**3J-1907**	2	SEAL-O-RING	
	6	1	**9S-8001**	1	PLUG	
	7	1	**095-1527**	1	SEAL-O-RING	
	8	1	**4J-7533**	1	SEAL-O-RING	
					AVAILABLE REPAIR KIT(S):	
HJ			**133-5545**	1	KIT-SEAL (RELIEF VALVE)	
					(INCLUDES SEAL-O-RINGS AND RING-BACKUP)	

H-KIT MARKED H SERVICES PART MARKED H
J-PARTS MARKED J INCLUDED IN KIT MARKED J
Y-SEPARATE ILLUSTRATION

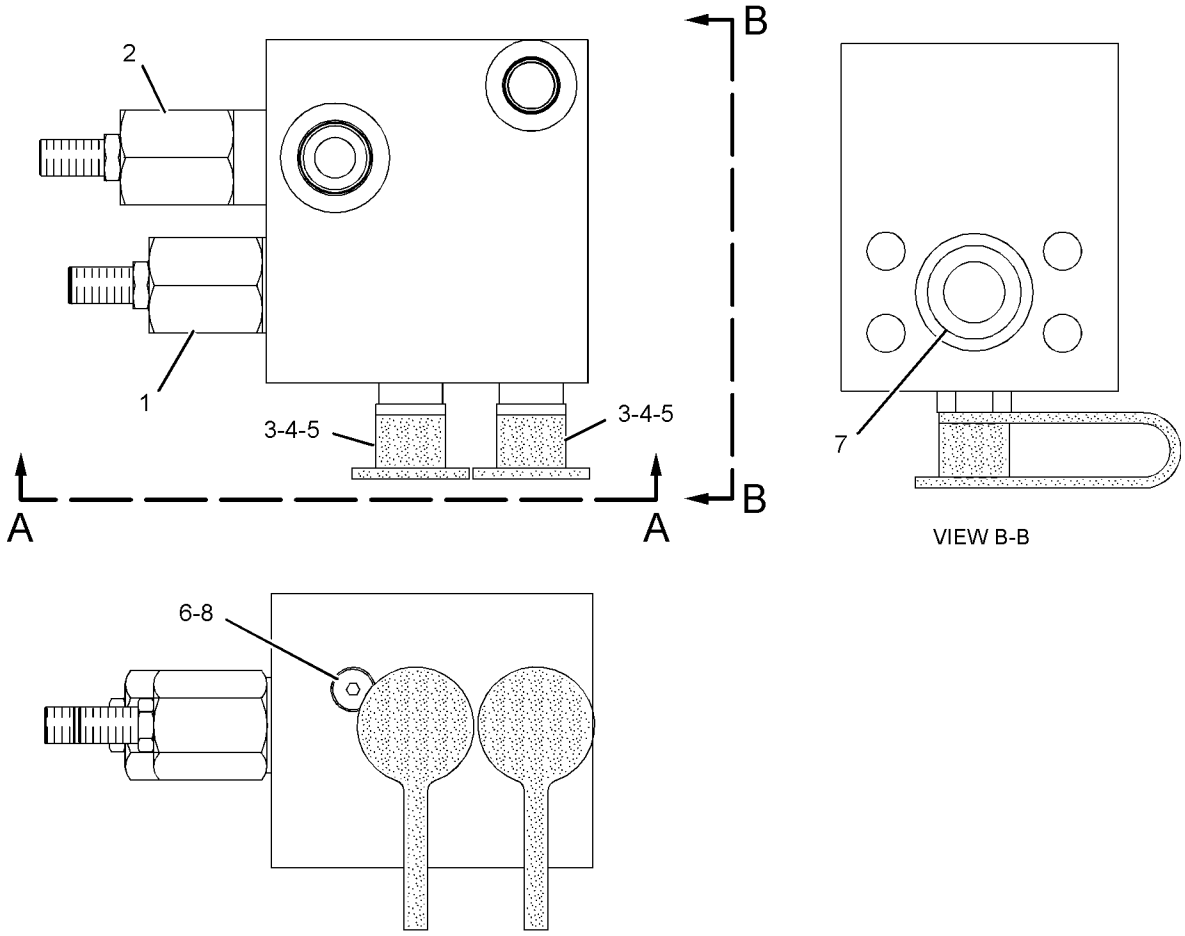

GRAPHIC #1 **<END>** g01052138

232-3242 MANIFOLD GP-CONTROL—IMPLEMENT PILOT

S/N: RJG1-UP

PART OF 213-0006 LINES GP-PILOT

SMCS-5264 **i02285662**

NOTE	REF NO	GRAPHIC REF	PART NUMBER	QTY	PART NAME 1 2 3 4 5 6 (PRODUCT LEVEL)	SEE PAGE
Y	1	1	**235-5299**	1	VALVE GP-DIVERTER (IMPLEMENT PILOT)	677
Y	2	1	**252-8042**	1	VALVE GP-PRESSURE REDUCING (IMPLEMENT PILOT OIL)	678
Y	3	1	**225-8026**	1	VALVE GP-RELIEF (IMPLEMENT PILOT OIL)	681
Y	4	1	**203-4157**	1	VALVE GP-SOLENOID (24-VOLT) (IMPLEMENT PILOT)	688
	5	1	**6E-5066**	1	SCREEN (IMPLEMENT PILOT OIL)	
	6	1	**9S-4182**	3	PLUG	
	7	1	**9S-4191**	3	PLUG-O RING	
	8	1	**3J-1907**	3	SEAL-O-RING	
	9	1	**3J-7354**	3	SEAL-O-RING	
	10	1	**235-8727**	1	BOLT (M10X1.5X55-MM)	
	11	1	**194-2088**	1	NUT-SPECIAL (M10X1.15-THD)	

Y-SEPARATE ILLUSTRATION

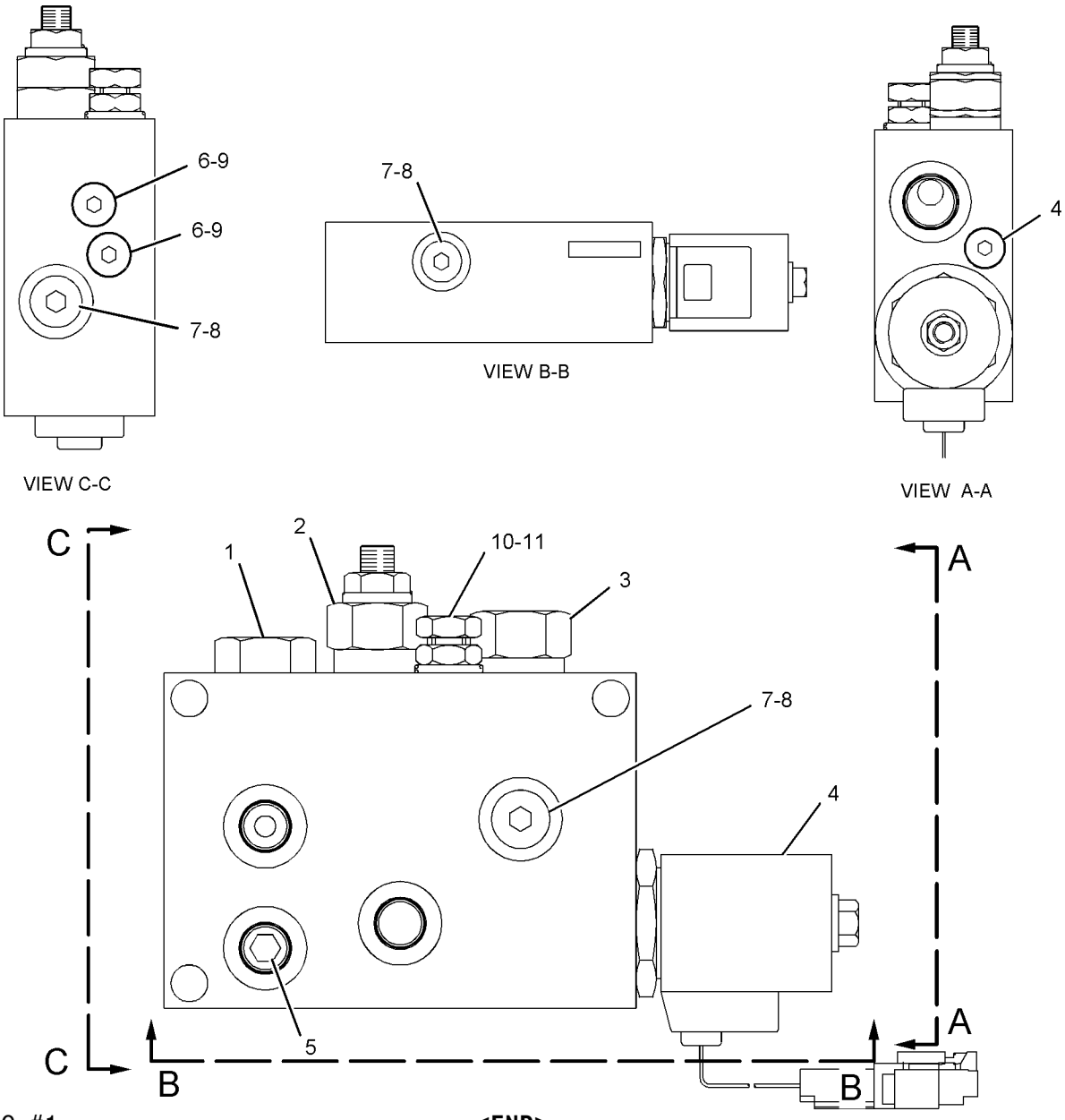

GRAPHIC #1 **<END>** g01051425

HYDRAULIC SYSTEM

212-0272 MOTOR GP-PISTON—HYDRAULIC FAN

S/N: RJG1-UP

PART OF 212-2742, 269-8382 HYDRAULIC AR

SMCS-5058 **i02362383**

NOTE	REF NO	GRAPHIC REF	PART NUMBER	QTY	PART NAME 1 2 3 4 5 6 (PRODUCT LEVEL)	SEE PAGE
Y	1	1	**247-6303**	1	ROTATING GP-PUMP (HYDRAULIC FAN)	641
	2	1	**6E-4092**	1	HOUSING	
	3	1	**247-6304**	1	HEAD AS	
	3A	1	**247-6306**	1	HEAD	
	3B	1	**241-2943**	1	SPRING	
	3C	1	**241-5790**	1	SEAL-O-RING	
	3D	1	**241-2940**	1	VALVE-RELIEF	
	4	1	**8T-4231**	1	DOWEL	
	5	1	**6V-1197**	1	SEAL-O-RING	
M	6	1	**8T-3957**	2	BOLT-SOCKET HEAD (M12X1.75X30-MM)	
	7	1	**9S-8008**	1	PLUG	
	8	1	**3D-2824**	1	SEAL-O-RING	
M	9	1	**095-0670**	4	BOLT (M12X1.75X45-MM)	
	10	1	**9S-8004**	1	PLUG	
	11	1	**3J-1907**	1	SEAL-O-RING	
					AVAILABLE REPAIR KIT(S):	
			241-2924		KIT-SEAL (PISTON MOTOR) (HYDRAULIC FAN)	
					(INCLUDES SHAFT SEAL RING & O-RING SEALS)	

M-METRIC PART
Y-SEPARATE ILLUSTRATION

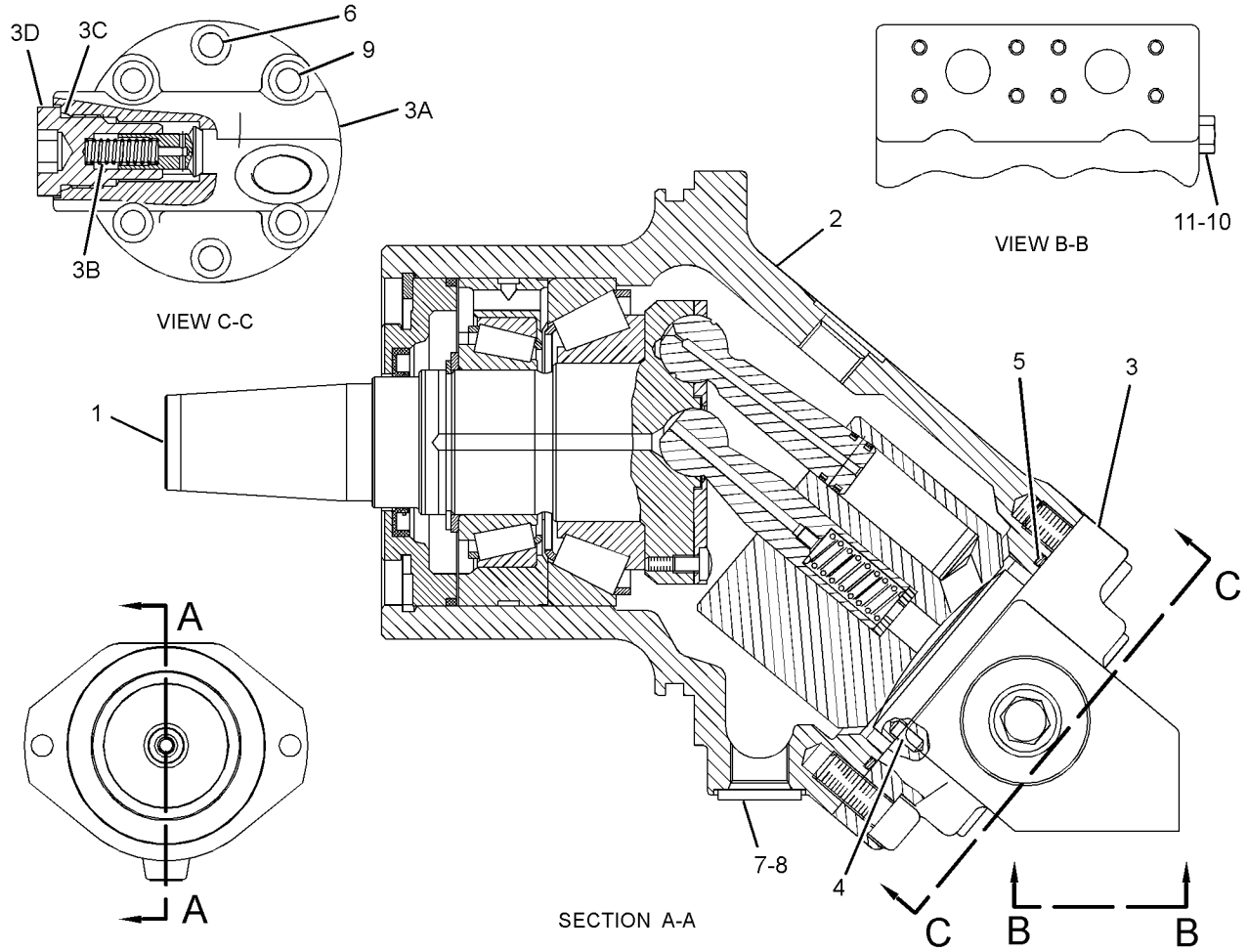

GRAPHIC #1 **<END>** g01227273

212-4977 MOTOR GP-PISTON–REVERSIBLE FAN

S/N: RJG1-UP
PART OF 220-0261 FAN AR-REVERSIBLE
AN ATTACHMENT

SMCS-5058 **i02285670**

NOTE	REF NO	GRAPHIC REF	PART NUMBER	QTY	PART NAME 1 2 3 4 5 6 (PRODUCT LEVEL)	SEE PAGE
Y	1	1	**247-6303**	1	ROTATING GP-PUMP (REVERSING FAN)	641
	2	1	**6E-4092**	1	HOUSING	
	3	1	**247-6402**	1	HEAD-MOTOR	
	4	1	**8T-4231**	1	DOWEL	
	5	1	**6V-1197**	1	SEAL-O-RING	
M	6	1	**8T-3957**	2	BOLT-SOCKET HEAD (M12X1.75X30-MM)	
	7	1	**9S-8008**	1	PLUG	
	8	1	**3D-2824**	1	SEAL-O-RING	
M	9	1	**095-0670**	4	BOLT (M12X1.75X45-MM)	
					AVAILABLE REPAIR KIT(S):	
			241-2924	1	KIT-SEAL (PISTON MOTOR) (REVERSING FAN)	
					(INCLUDES SEAL-O-RINGS & SEAL RING SHAFT)	

M-METRIC PART
Y-SEPARATE ILLUSTRATION

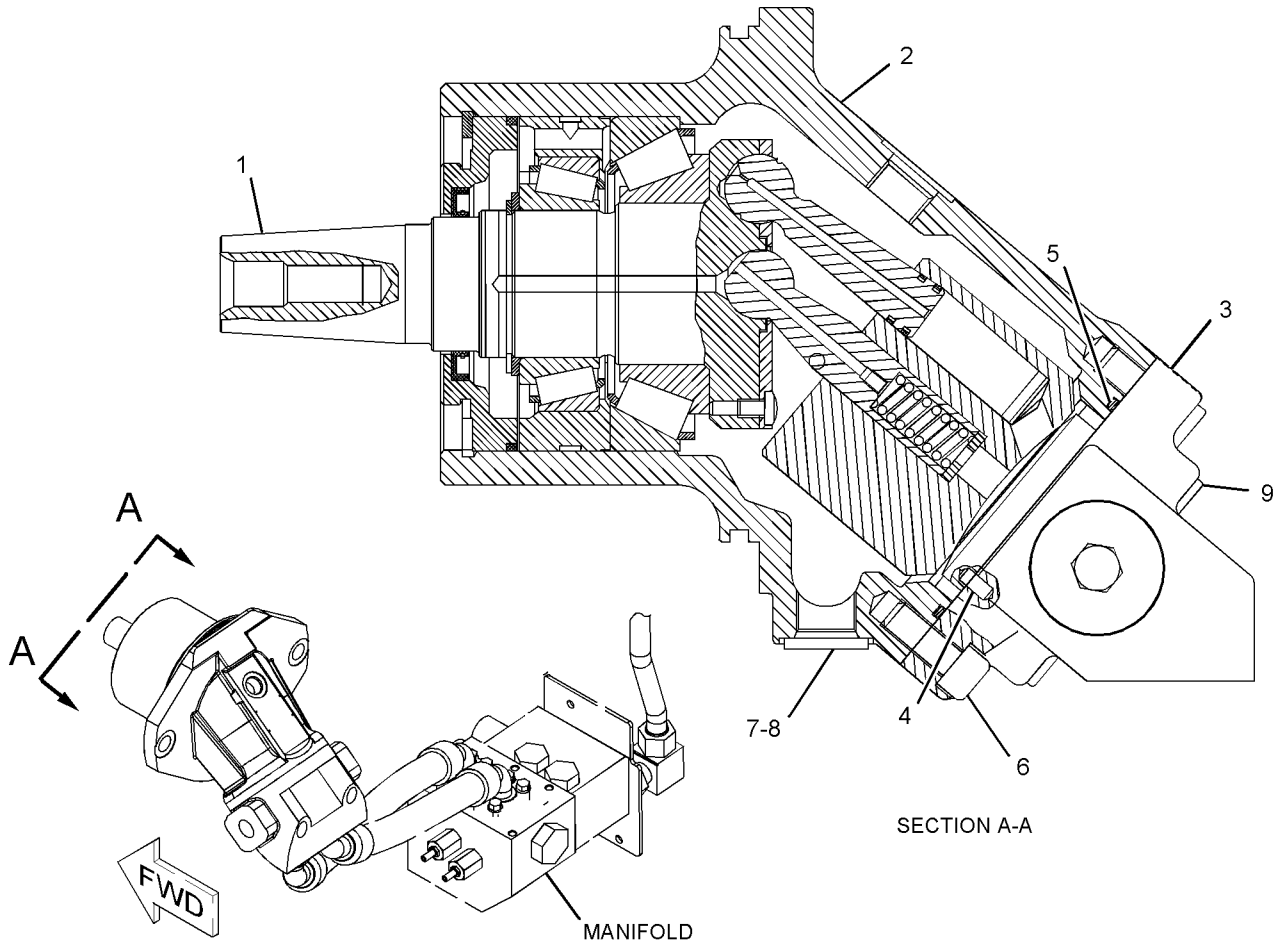

GRAPHIC #1

<END>

g01052955

HYDRAULIC SYSTEM

217-7101 MOTOR GP-PISTON—AFTERCOOLER, AIR

S/N: RJG1-528

PART OF 217-9277 MOTOR GP-PISTON

SMCS-5058 **i01798856**

NOTE	REF NO	GRAPHIC REF	PART NUMBER	QTY	PART NAME 1 2 3 4 5 6 (PRODUCT LEVEL)	SEE PAGE
	1	1	**219-7687**	1	SHAFT	
	2	1	**136-8423**	1	PLUG-BREAK OFF	
	3	1	**119-0959**	1	PLUG-ORIFICE	
	4	1	**197-2474**	1	VALVE AS	
	5	1	**189-4717**	1	BEARING	
		1	**105-3035**	1	CONE-BEARING	
		1	**203-8609**	1	CUP-BEARING	
	6	1	**6V-8760**	1	DOWEL	
	7	1	**201-0239**	1	SWASHPLATE	
Y	8	1	**197-2468**	1	ROTATING GP-MOTOR	639
	9	1	**8T-6628**	1	DOWEL	
M	10	1	**6V-8653**	8	BOLT-SOCKET HEAD (M6X1X40-MM)	
	11	1	**189-4718**	1	BEARING	
	12	1	**201-0880**	1	SEAL-O-RING	
	13	1	**189-4716**	1	SHIM (2.5-MM THK)	
	14	1	**120-5723**	1	PLUG-BREAK OFF	
	15	1	**197-2471**	1	PLUG AS	
	16	1	**197-2473**	1	SLEEVE	
	17	1	**9S-8002**	1	PLUG	
	18	1	**3J-1907**	1	SEAL-O-RING	

M-METRIC PART
Y-SEPARATE ILLUSTRATION

217-7101 MOTOR GP-PISTON *(contd.)* **i01798856**

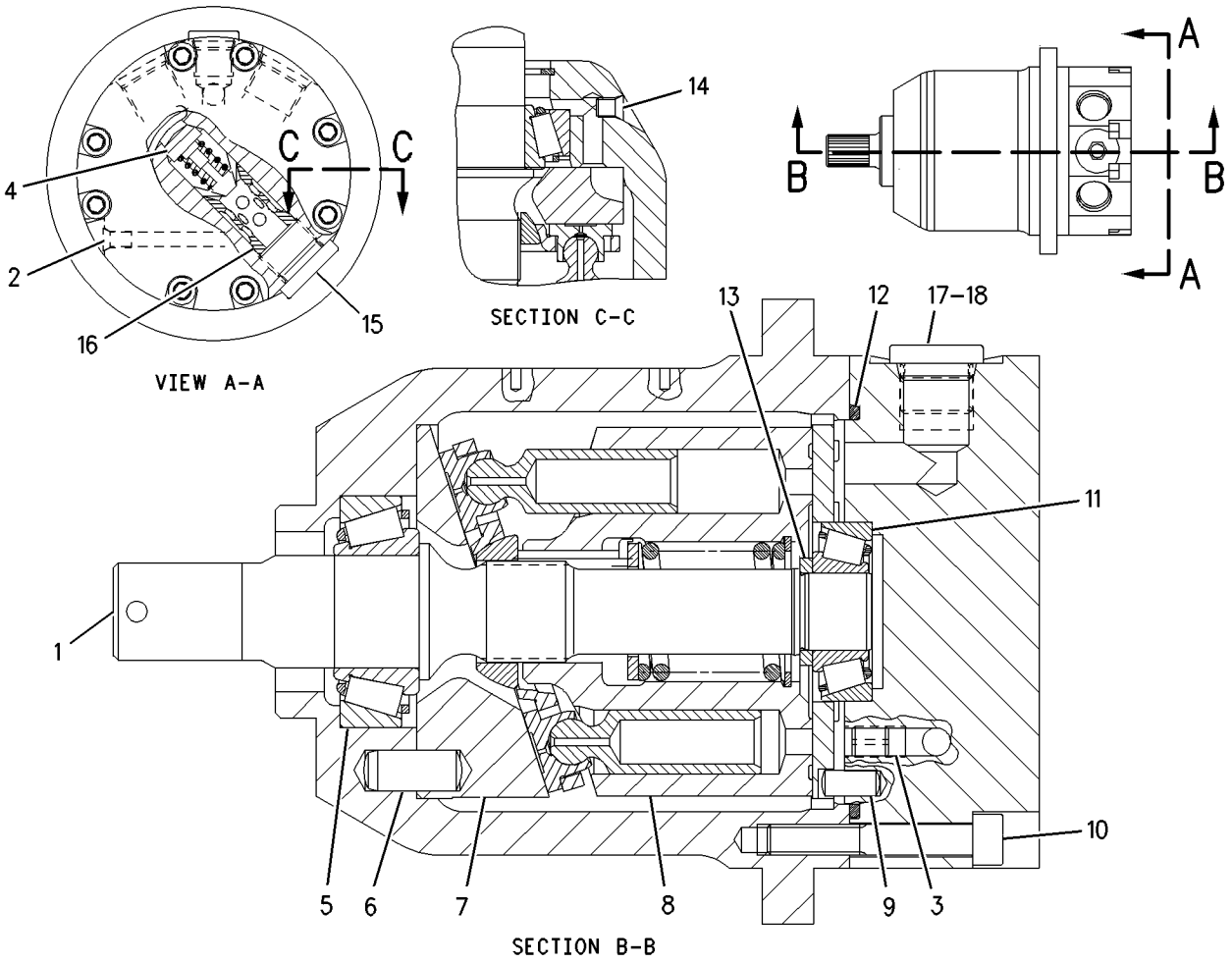

GRAPHIC #1 **<END>** g00979106

HYDRAULIC SYSTEM

217-9277 MOTOR GP-PISTON–AFTERCOOLER, AIR

S/N: RJG1-528

PART OF 212-7532 AFTERCOOLER GP-AIR

SMCS-5058 **i01798857**

NOTE	REF NO	GRAPHIC REF	PART NUMBER	QTY	PART NAME 1 2 3 4 5 6 (PRODUCT LEVEL)	SEE PAGE
	1	1	**214-5976**	1	ADAPTER	
Y	2	1	**217-7101**	1	MOTOR GP-PISTON	630
	3	1	**009-2062**	1	SEAL-O-RING	
M	4	1	**6V-7357**	8	BOLT (M6X1X25-MM)	
	5	1	**9X-8256**	8	WASHER (6.6X12X2-MM THK)	

M-METRIC PART
Y-SEPARATE ILLUSTRATION

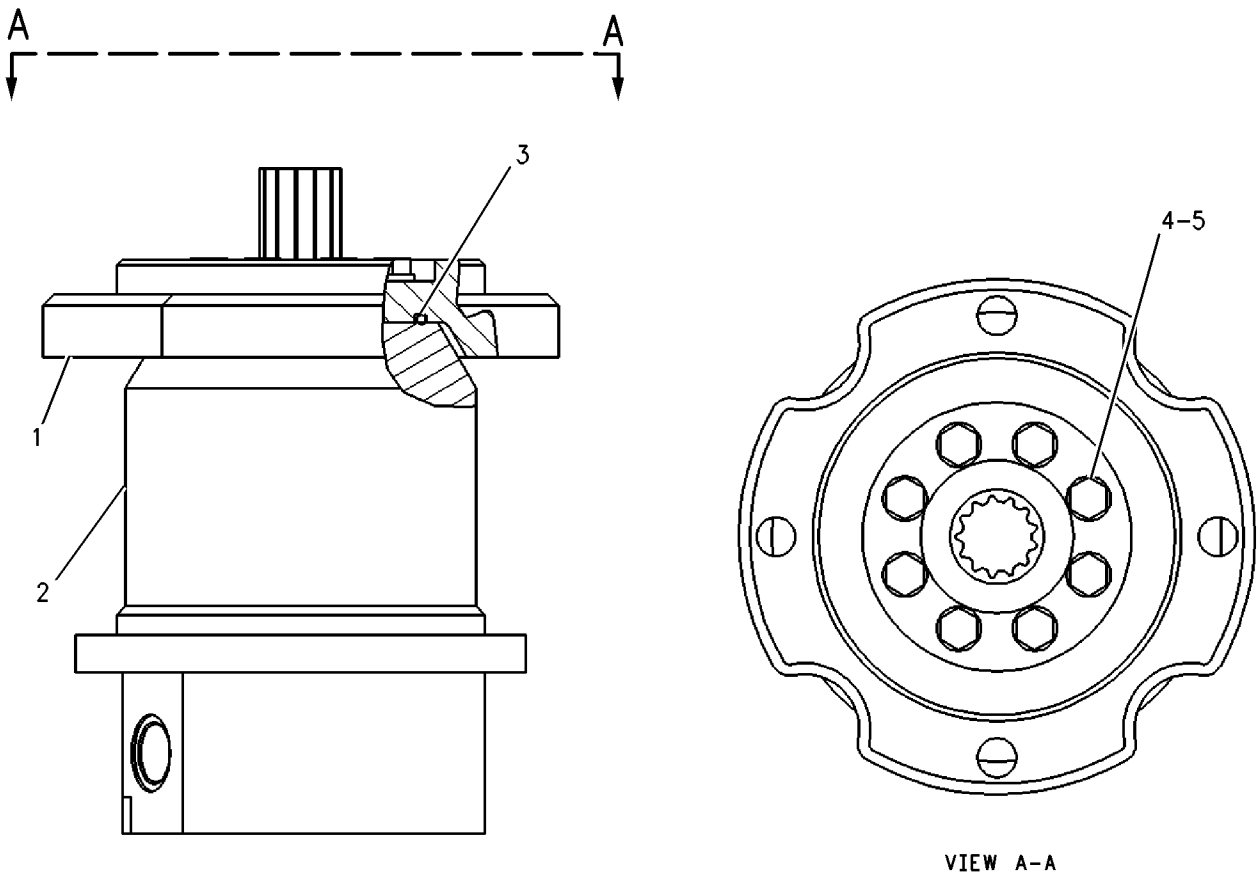

GRAPHIC #1 **<END>** g00871702

9J-6006 MOUNTING GP-CYLINDER

S/N: BHA1-UP; BHF1-UP; RJG1-UP; BHJ1-UP; BHP1-UP
PART OF 227-9988, 244-2009 BULLDOZER AR-SEMI-UNIVERSAL, 227-9991, 244-1958 BULLDOZER AR-UNIVERSAL
AN ATTACHMENT

SMCS-7562 **i02147151**

NOTE	REF NO	GRAPHIC REF	PART NUMBER	QTY	PART NAME 1 2 3 4 5 6 (PRODUCT LEVEL)	SEE PAGE
	1	1	**3B-8489**	2	FITTING-GREASE	
	2	1	**5J-5365**	2	PIN	
C	3	1	**233-4658**	2	YOKE	
	4	1	**240-9493**	4	CAP AS	
					(EACH INCLUDES)	
	4A	1	**9J-5942**	1	BEARING-SLEEVE	
	5	1	**198-4782**	8	WASHER-HARD (26X47X12-MM THK)	
	6	1	**5P-2322**	2	SEAL-LIP TYPE	
CM	7	1	**7X-2465**	8	BOLT (M24X3X180-MM)	

C-CHANGE FROM PREVIOUS TYPE
M-METRIC PART

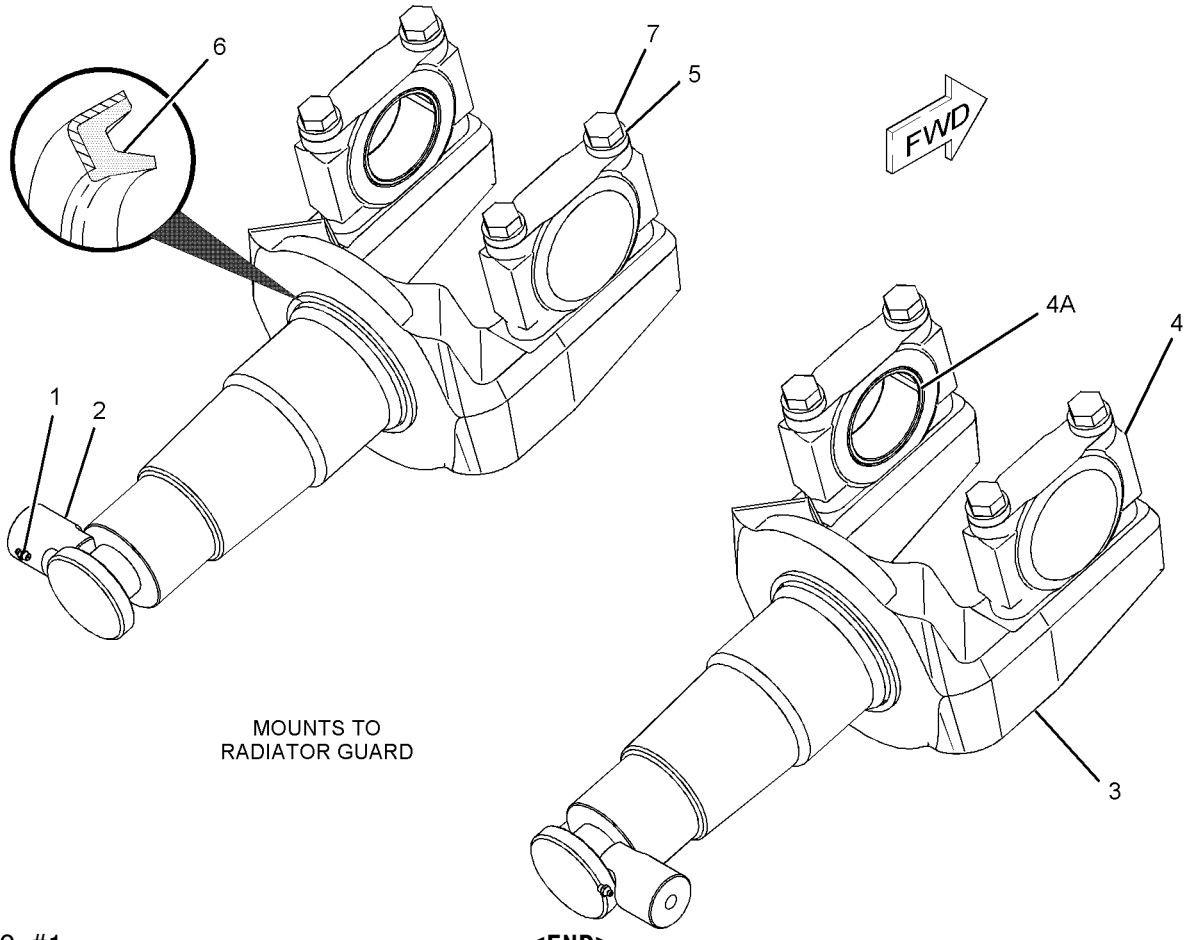

GRAPHIC #1 **<END>** g01052035

HYDRAULIC SYSTEM

228-0272 PUMP GP-GEAR–IMPLEMENT

S/N: RJG1-528

PART OF 212-2742 HYDRAULIC AR

SMCS-5073 **i02253346**

NOTE	REF NO	GRAPHIC REF	PART NUMBER	QTY	PART NAME 1 2 3 4 5 6 (PRODUCT LEVEL)	SEE PAGE
Y	1	1	**263-7765**	1	SECTION GP-GEAR PUMP (FRONT)	645
Y	2	1	**260-3947**	1	SECTION GP-GEAR PUMP (CENTER)	643
Y	3	1	**263-7766**	1	SECTION GP-GEAR PUMP (REAR)	647
	4	1	**1A-1460**	4	BOLT (1/2-13X2-IN)	
	5	1	**5P-7213**	4	WASHER-HARD (13.5X20.5X2-MM THK)	
	6	1	**244-1013**	2	DOWEL	
	7	1	**9T-7163**	1	COUPLING	
J	8	1	**6V-7350**	1	SEAL-O-RING	
J	9	1	**6V-3834**	1	SEAL-O-RING	
	10	1	**260-3960**	1	DOWEL	
	11	1	**260-3959**	1	COUPLING	
M	12	1	**7X-0909**	1	BOLT (M12X1.75X140-MM)	
	13	1	**5P-8245**	4	WASHER-HARD (13.5X25.5X3-MM THK)	
					AVAILABLE REPAIR KIT(S):	
J			**260-6896**	1	KIT-SEAL (GEAR PUMP)	
					KIT INCLUDES DUST CAP, PRESSURE SEALS, O-RING SEALS, SEAL, RETAINING RING, BREATHER PLUG, & SEAL BACKUP	

J-KIT MARKED J INCLUDES PARTS MARKED J
M-METRIC PART
Y-SEPARATE ILLUSTRATION

228-0272 PUMP GP-GEAR *(contd.)* **i02253346**

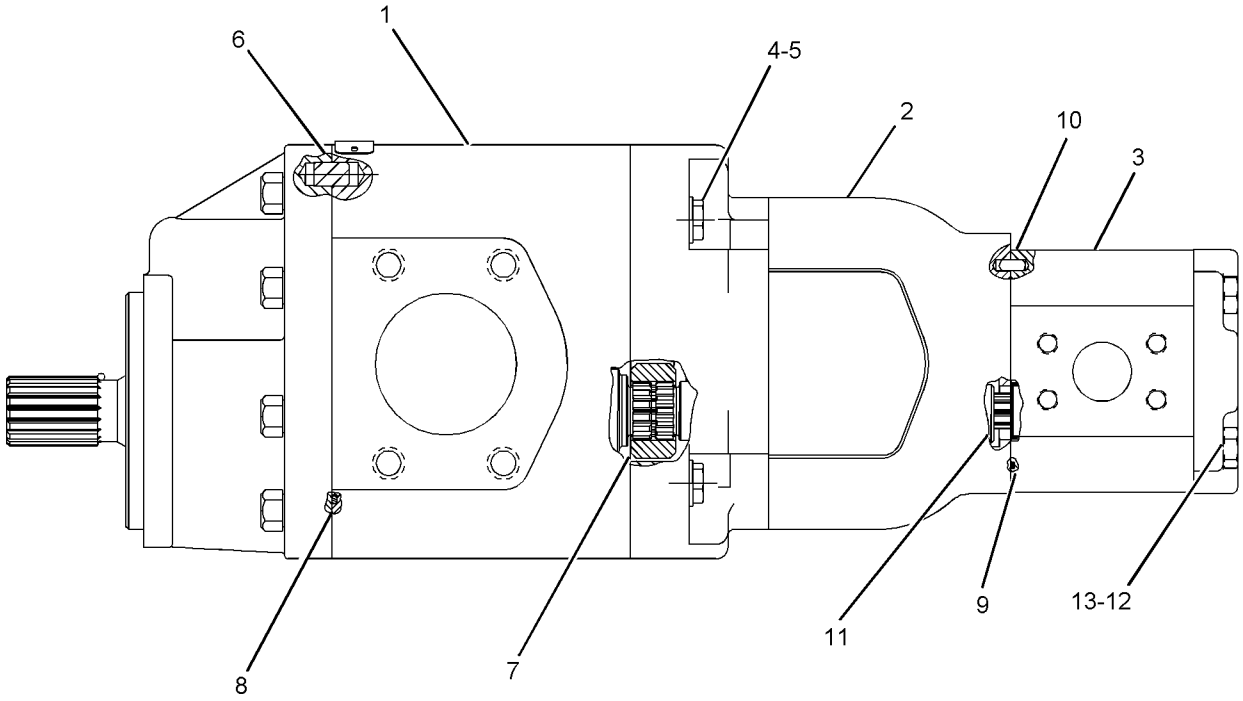

GRAPHIC #1 **<END>** g01137421

HYDRAULIC SYSTEM

272-9795 PUMP GP-GEAR–IMPLEMENT

S/N: RJG529-UP

PART OF 269-8382 HYDRAULIC AR

SMCS-5073 **i02453842**

NOTE	REF NO	GRAPHIC REF	PART NUMBER	QTY	PART NAME 1 2 3 4 5 6 (PRODUCT LEVEL)	SEE PAGE
Y	1	1	**263-7765**	1	SECTION GP-GEAR PUMP (FRONT) (IMPLEMENT PUMP, LIFT)	645
Y	2	1	**260-3947**	1	SECTION GP-GEAR PUMP (CENTER) (IMPLEMENT PUMP, TILT)	643
Y	3	1	**271-3002**	1	SECTION GP-GEAR PUMP (REAR)	648
	4	1	**1A-1460**	4	BOLT (1/2-13X2-IN)	
	5	1	**5P-7213**	4	WASHER-HARD (13.5X20.5X2-MM THK)	
	6	1	**244-1013**	2	DOWEL	
	7	1	**9T-7163**	1	COUPLING	
	8	1	**6V-7350**	1	SEAL-O-RING	
	9	1	**6V-3834**	1	SEAL-O-RING	
	10	1	**260-3960**	2	DOWEL	
	11	1	**260-3959**	1	COUPLING	
M	12	1	**8T-5001**	4	BOLT (M12X1.75X130-MM)	
	13	1	**5P-8245**	4	WASHER-HARD (13.5X25.5X3-MM THK)	
					AVAILABLE REPAIR KIT(S):	
			260-6896	1	KIT-SEAL (GEAR PUMP) (IMPLEMENT)	
					(KIT INCLUDES SEALS, DUST CAPS, RETAINING RING, & BREATHER PLUG)	

M-METRIC PART
Y-SEPARATE ILLUSTRATION

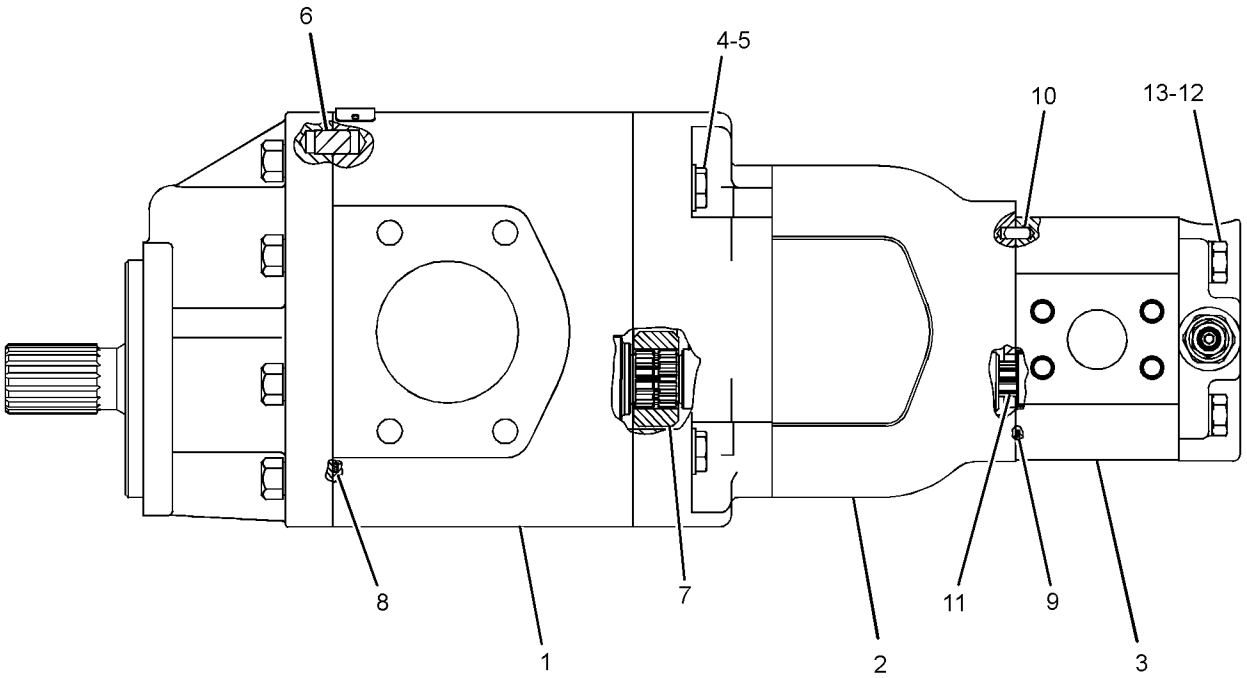

GRAPHIC #1 **<END>** g01222203

220-0780 PUMP GP-PISTON—HYDRAULIC FAN

S/N: RJG1-UP

PART OF 212-2742, 269-8382 HYDRAULIC AR

SMCS-5070 **i02253345**

NOTE	REF NO	GRAPHIC REF	PART NUMBER	QTY	PART NAME 1 2 3 4 5 6 (PRODUCT LEVEL)	SEE PAGE
	1	1	**140-1739**	1	RING-RETAINING	
	2	1	**105-1642**	2	BEARING	
	3	1	**105-1633**	1	HOUSING-PUMP	
Y	4	1	**226-1224**	1	ROTATING GP-PUMP (HYDRAULIC FAN)	640
	5	1	**8U-5951**	4	SEAL-O-RING	
M	6	1	**6V-8201**	4	BOLT-SOCKET HEAD (M16X2X45-MM)	
	7	1	**105-3033**	1	CUP-BEARING	
	8	1	**105-3032**	1	CONE-BEARING	
	9	1	**251-2176**	1	COUPLER	
	10	1	**105-1638**	1	SPACER	
	11	1	**162-9997**	1	SEAL-O-RING	
	12	1	**105-1636**	1	CYLINDER-CONTROL	
	13	1	**105-1635**	1	SPRING	
	14	1	**105-1634**	1	PLUNGER	
	15	1	**9S-8008**	1	PLUG	
	16	1	**3D-2824**	1	SEAL-O-RING	
	17	1	**194-6847**	1	SHAFT	
	18	1	**3B-2263**	1	CUP-BEARING	
	19	1	**105-3031**	1	CONE-BEARING	
	20	1	**7X-1553**	1	SEAL-LIP TYPE	
	21	1	**194-6850**	1	SWASHPLATE	
	22	1	**105-1640**	1	PISTON-CONTROL	
	23	1	**105-1639**	1	GUIDE-CONTROL	
	24	1	**095-0942**	1	RING-RETAINING	
	25	1	**120-4394**	1	PLUG-BREAK OFF	
	26	1	**9X-8979**	1	DOWEL	
	27	1	**143-7052**	1	SLEEVE-STOP	
	28	1	**204-3334**	1	SEAL-O-RING	
	29	1	**251-2460**	1	COVER	
	30	1	**251-2459**	1	SHAFT	
	31	1	**203-1095**	1	SEAL	
	32	1	**9X-7680**	3	SEAL-O-RING	
M	33	1	**8T-8442**	4	BOLT-SOCKET HEAD (M6X1X30-MM)	
	34	1	**6V-5200**	1	RING-RETAINING	
	35	1	**9S-8004**	3	PLUG	
	36	1	**3J-1907**	3	SEAL-O-RING	
M	37	1	**8T-1158**	4	BOLT-SOCKET HEAD (M8X1.25X20-MM)	
	38	1	**6Y-2736**	2	CONE-BEARING	
	39	1	**6Y-2737**	2	CUP-BEARING	
Y	40	1	**229-0890**	1	VALVE GP-PUMP CONTROL (HYDRAULIC FAN)	679

M-METRIC PART
Y-SEPARATE ILLUSTRATION

220-0780 PUMP GP-PISTON *(contd.)* i02253345

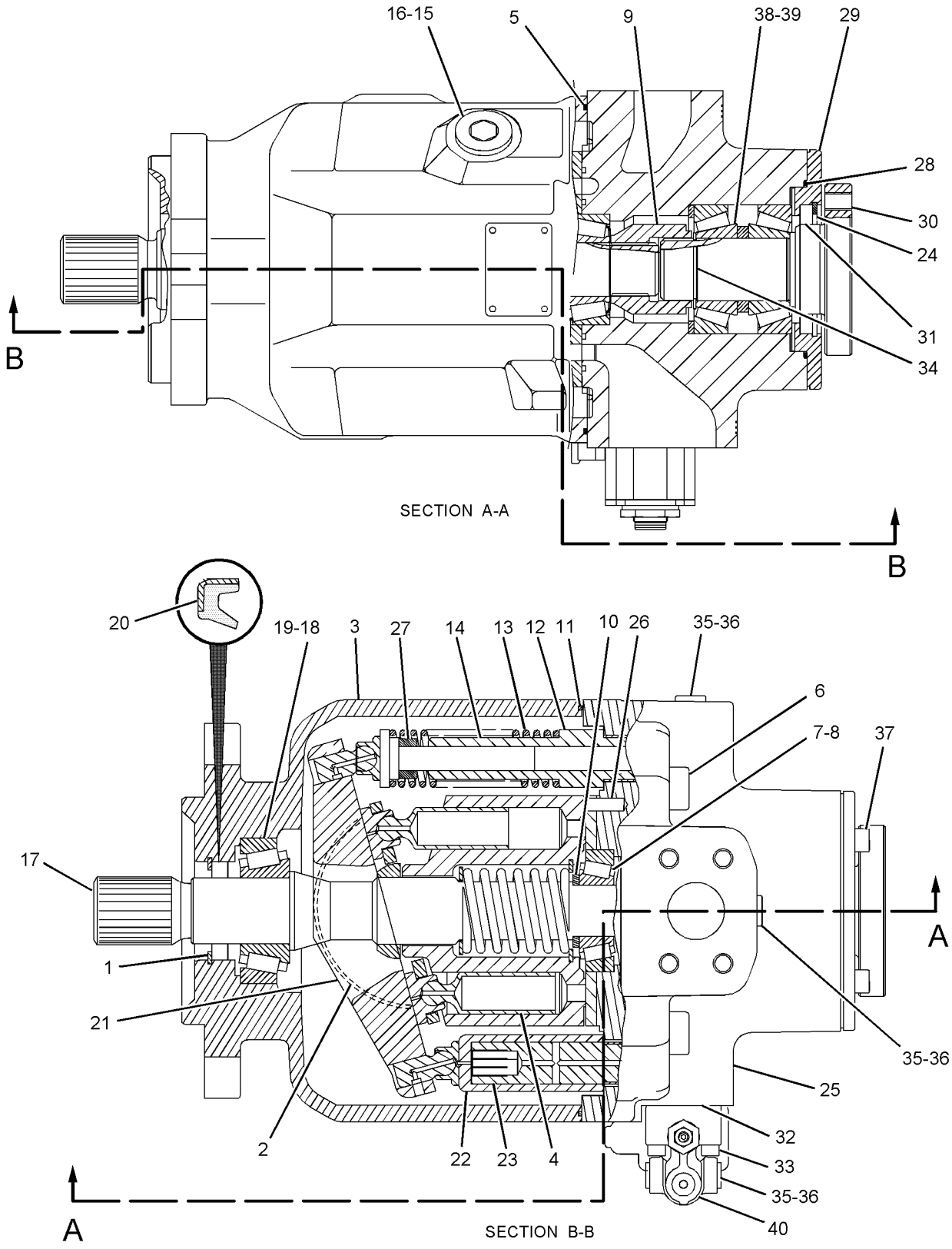

GRAPHIC #1 **<END>** g01136252

197-2468 ROTATING GP-MOTOR–AFTERCOOLER AIR FAN

S/N: RJG1-528

PART OF 217-7101 MOTOR GP-PISTON

SMCS-5058 **i01524542**

NOTE	REF NO	GRAPHIC REF	PART NUMBER	QTY	PART NAME 1 2 3 4 5 6 (PRODUCT LEVEL)	SEE PAGE
	1	1	**189-4724**	9	PISTON AS	
	2	1	**197-2476**	1	BARREL	
	3	1	**197-2475**	1	PLATE	
	4	1	**189-4727**	1	PLATE	
	5	1	**189-4728**	1	BEARING	
	6	1	**189-4729**	1	SPRING	
	7	1	**189-4730**	3	PIN	
	8	1	**6V-5205**	1	RING	
	9	1	**189-4732**	1	SPACER	

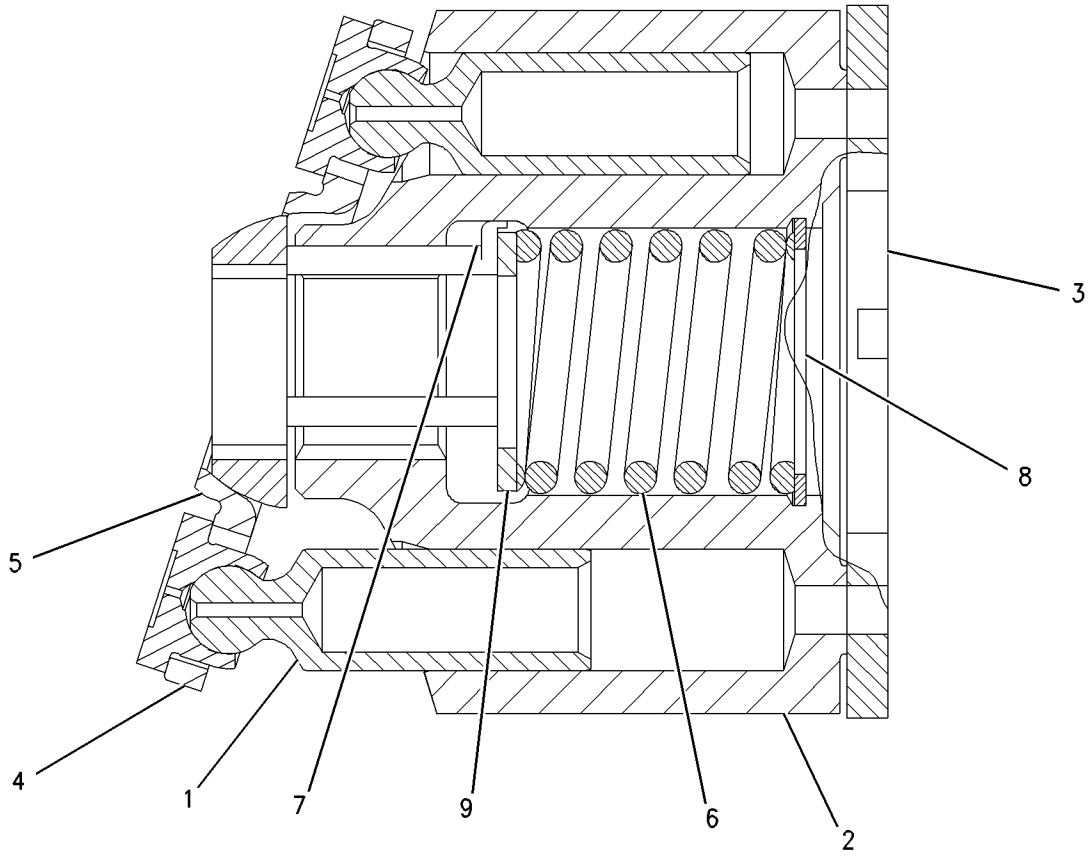

GRAPHIC #1 **<END>** g00796786

226-1224 ROTATING GP-PUMP–HYDRAULIC FAN

S/N: RJG1-UP

PART OF 220-0780 PUMP GP-PISTON

SMCS-5070 **i02069110**

NOTE	REF NO	GRAPHIC REF	PART NUMBER	QTY	PART NAME 1 2 3 4 5 6 (PRODUCT LEVEL)	SEE PAGE
	1	1	**105-1646**	9	PISTON AS-PUMP	
	2	1	**188-9637**	1	PLATE-RETRACTION	
	3	1	**105-1648**	1	BEARING	
	4	1	**105-1653**	3	PIN-RETRACTION	
	5	1	**226-1227**	1	BARREL	
	6	1	**105-1650**	1	SPACER	
	7	1	**105-1651**	1	SPRING	
	8	1	**180-6213**	1	RING-RETAINING	
	9	1	**245-7350**	1	PLATE	

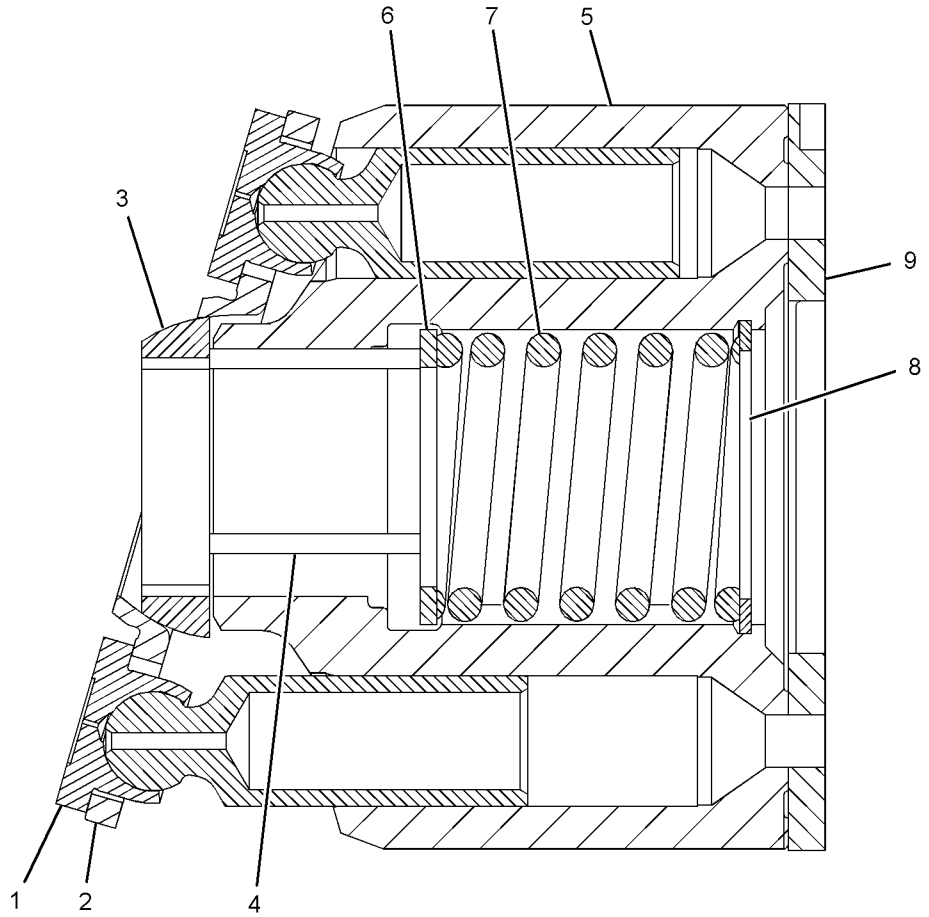

GRAPHIC #1 **<END>** g01136182

247-6303 ROTATING GP-PUMP—HYDRAULIC FAN

S/N: RJG1-UP

PART OF 212-0272, 212-4977 MOTOR GP-PISTON

ALSO AN ATTACHMENT

SMCS-5070 **i02253506**

NOTE	REF NO	GRAPHIC REF	PART NUMBER	QTY	PART NAME 1 2 3 4 5 6 (PRODUCT LEVEL)	SEE PAGE
	1	1	**171-3061**	1	SPRING	
	2	1	**171-5989**	1	KIT-BEARING (MOTOR ROTATING GROUP)	
	3	1	**9T-1642**	1	PLATE-RETAINING	
	4	1	**165-6969**	7	PISTON AS	
					(EACH INCLUDES)	
		1	**9T-1582**	4	RING	
	5	1	**9T-1687**	1	BARREL-CYLINDER	
	6	1	**171-5999**	1	PLATE-PORT	
B	7	1	**171-3060**	1	SHIM (3.6-MM THK)	
B	8	1	**171-3059**	1	SHIM (3.7-MM THK)	
B	9	1	**171-3058**	1	SHIM (3.8-MM THK)	
B	10	1	**171-3057**	1	SHIM (3.9-MM THK)	
B	11	1	**171-3055**	1	SHIM (4-MM THK)	
	12	1	**171-3054**	1	PIN-CENTER	
	13	1	**216-0029**	7	SCREW (M6X20-MM)	
B	14	1	**9T-1576**	2	SHIM (0.1-MM THK)	
	15	1	**5D-5958**	1	SEAL-O-RING	
	16	1	**3E-4334**	1	RING-RETAINING	
	17	1	**9T-1637**	1	COVER-FRONT	
	18	1	**123-5748**	1	SEAL-SHAFT	
	19	1	**247-6305**	1	SHAFT-DRIVE	
B	20	1	**9T-1579**	2	SHIM (0.3-MM THK)	
	21	1	**9T-1643**	1	DISC-RETAINING	
	22	1	**096-5516**	1	RING-RETAINING	

B-USE AS REQUIRED

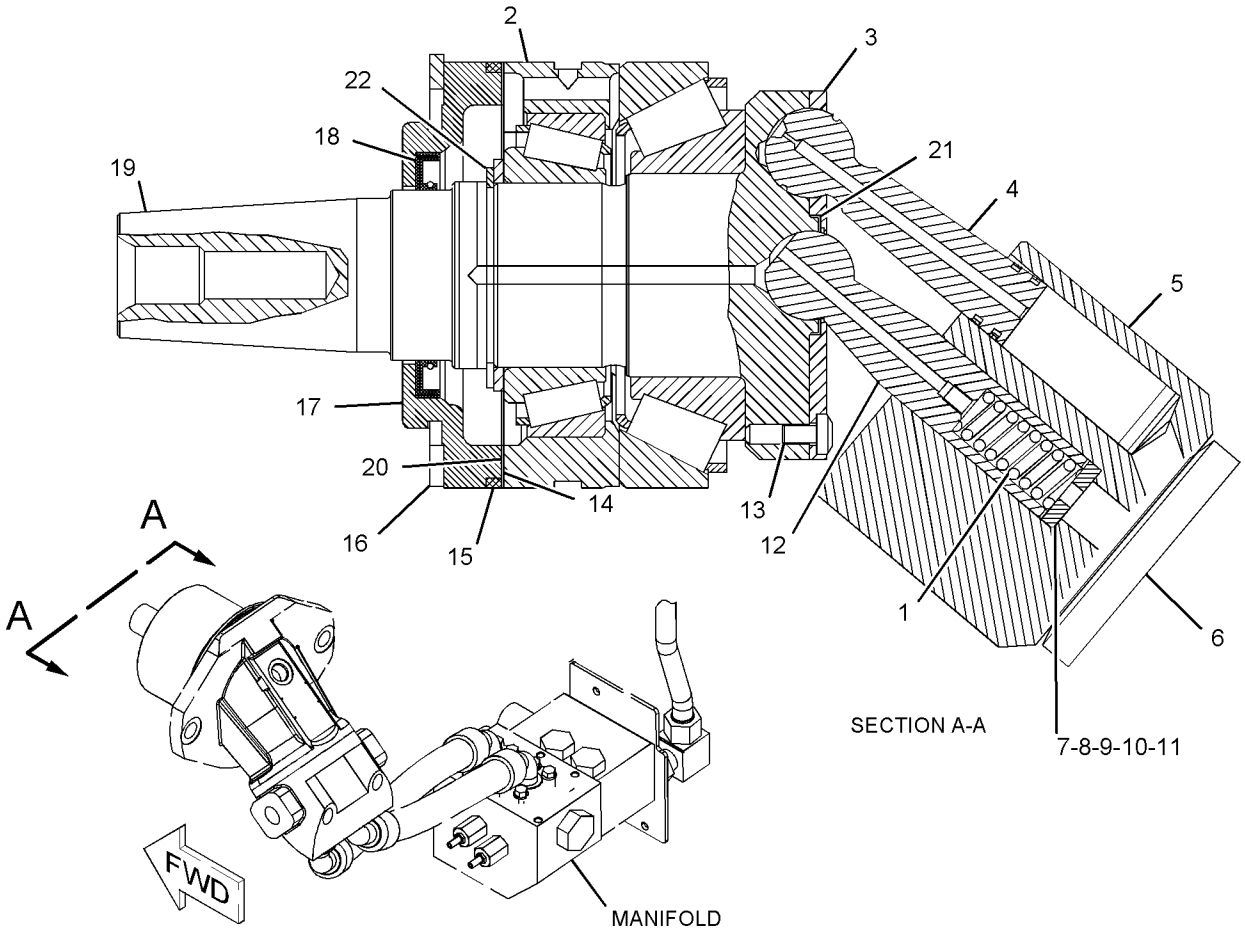

GRAPHIC #1

<END>

g01053279

260-3947 SECTION GP-GEAR PUMP–CENTER–

IMPLEMENT PUMP, TILT

S/N: RJG1-UP

PART OF 228-0272, 272-9795 PUMP GP-GEAR

SMCS-5073 **i02286433**

NOTE	REF NO	GRAPHIC REF	PART NUMBER	QTY	PART NAME 1 2 3 4 5 6 (PRODUCT LEVEL)	SEE PAGE
	1	1	**260-3948**	1	BODY AS	
	2	1	**260-3942**	1	PLATE AS	
J	3	1	**260-3952**	1	SEAL-O-RING	
	4	1	**256-2127**	1	PLATE-PRESSURE	
	5	1	**256-2130**	1	PLATE-ISOLATION	
	6	1	**260-3949**	1	GEAR-DRIVE (10-TEETH)	
	7	1	**260-3950**	1	GEAR-IDLER (10-TEETH)	
	8	1	**244-1013**	2	DOWEL	
J	9	1	**260-3951**	2	SEAL-PRESSURE	
	10	1	**5P-7213**	8	WASHER-HARD (13.5X20.5X2-MM THK)	
	11	1	**4L-8515**	8	BOLT (1/2-13X3-IN)	
	12	1	**6V-3965**	1	FITTING AS (QUICK DISCONNECT)	
	13	1	**6V-0852**	1	CAP-DUST	
J	14	1	**3J-1907**	1	SEAL-O-RING	
					AVAILABLE REPAIR KIT(S):	
J			**260-6896**	1	KIT-SEAL (GEAR PUMP)	
					(INCLUDES DUST CAPS, O-RING SEALS, PRESSURE SEALS, BREATHER PLUG, & RETAINING RING)	

J-PARTS MARKED J INCLUDED IN KIT MARKED J

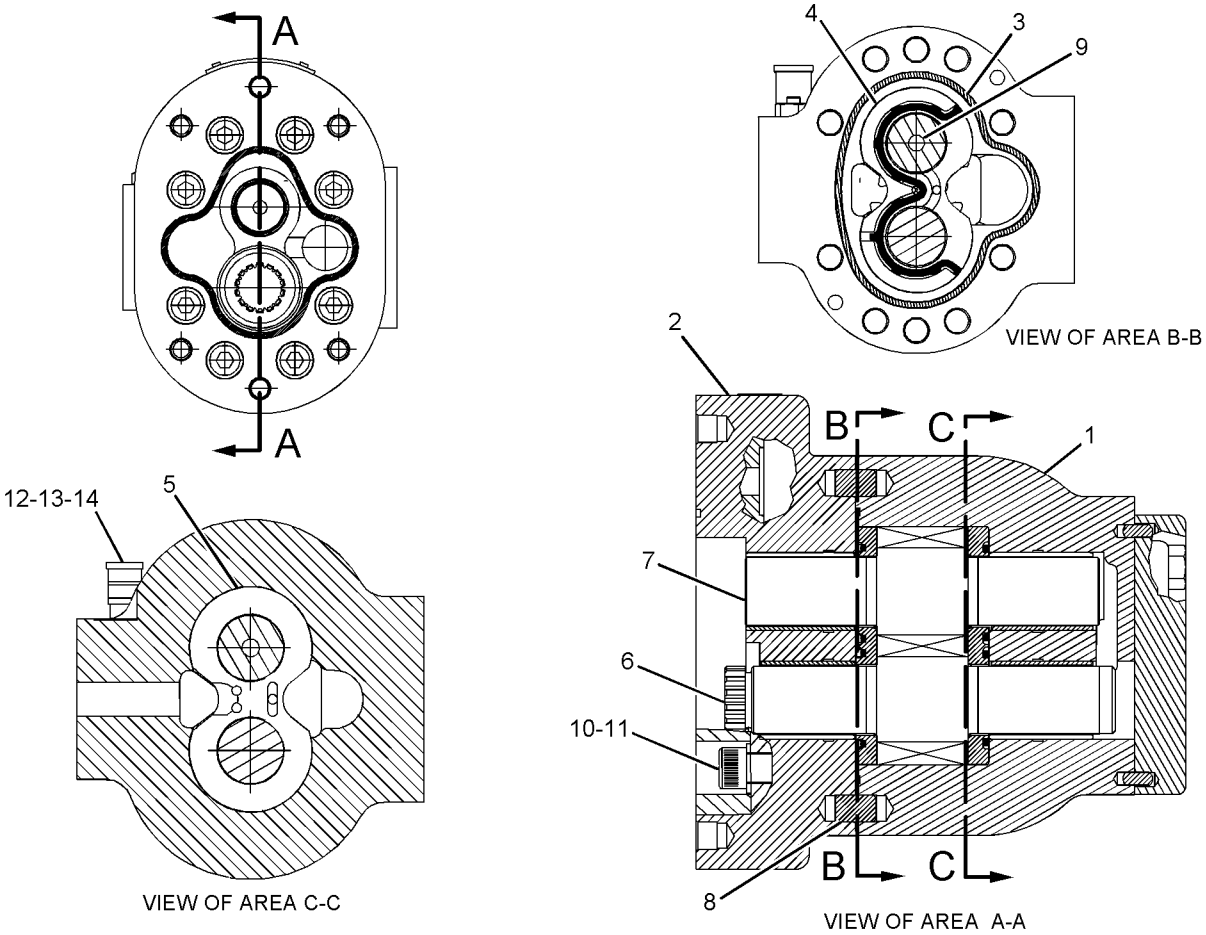

GRAPHIC #1 **<END>** g01137797

263-7765 SECTION GP-GEAR PUMP–FRONT–

IMPLEMENT PUMP, LIFT

S/N: RJG1-UP

PART OF 228-0272, 272-9795 PUMP GP-GEAR

SMCS-5073 **i02286434**

NOTE	REF NO	GRAPHIC REF	PART NUMBER	QTY	PART NAME 1 2 3 4 5 6 (PRODUCT LEVEL)	SEE PAGE
	1	1	**263-7761**	1	BODY AS	
	2	1	**263-7762**	1	FLANGE AS	
	3	1	**263-7763**	1	GEAR-DRIVE	
	4	1	**263-7764**	1	GEAR-IDLER	
	5	1	**244-1013**	2	DOWEL	
	6	1	**224-4508**	1	PLATE-PRESSURE (BOTTOM)	
	7	1	**224-4507**	1	PLATE-PRESSURE (TOP)	
J	8	1	**260-3946**	2	SEAL-PRESSURE	
J	9	1	**6V-7351**	1	SEAL-O-RING	
	10	1	**9X-8880**	8	BOLT (5/8-11X2-IN)	
J	11	1	**155-3167**	2	SEAL-LIP TYPE	
J	12	1	**6E-2943**	1	PLUG	
	13	1	**2D-6648**	1	RING-RETAINING	
	14	1	**6V-3965**	1	FITTING AS (QUICK DISCONNECT)	
	15	1	**6V-0852**	1	CAP-DUST	
	16	1	**3J-1907**	1	SEAL-O-RING	
					AVAILABLE REPAIR KIT(S):	
J			**260-6896**	1	KIT-SEAL (GEAR PUMP)	
					(KIT INCLUDES DUST CAP, SEALS, RETAINING RING, AND BREATHER PLUG)	

J-PARTS MARKED J INCLUDED IN KIT MARKED J

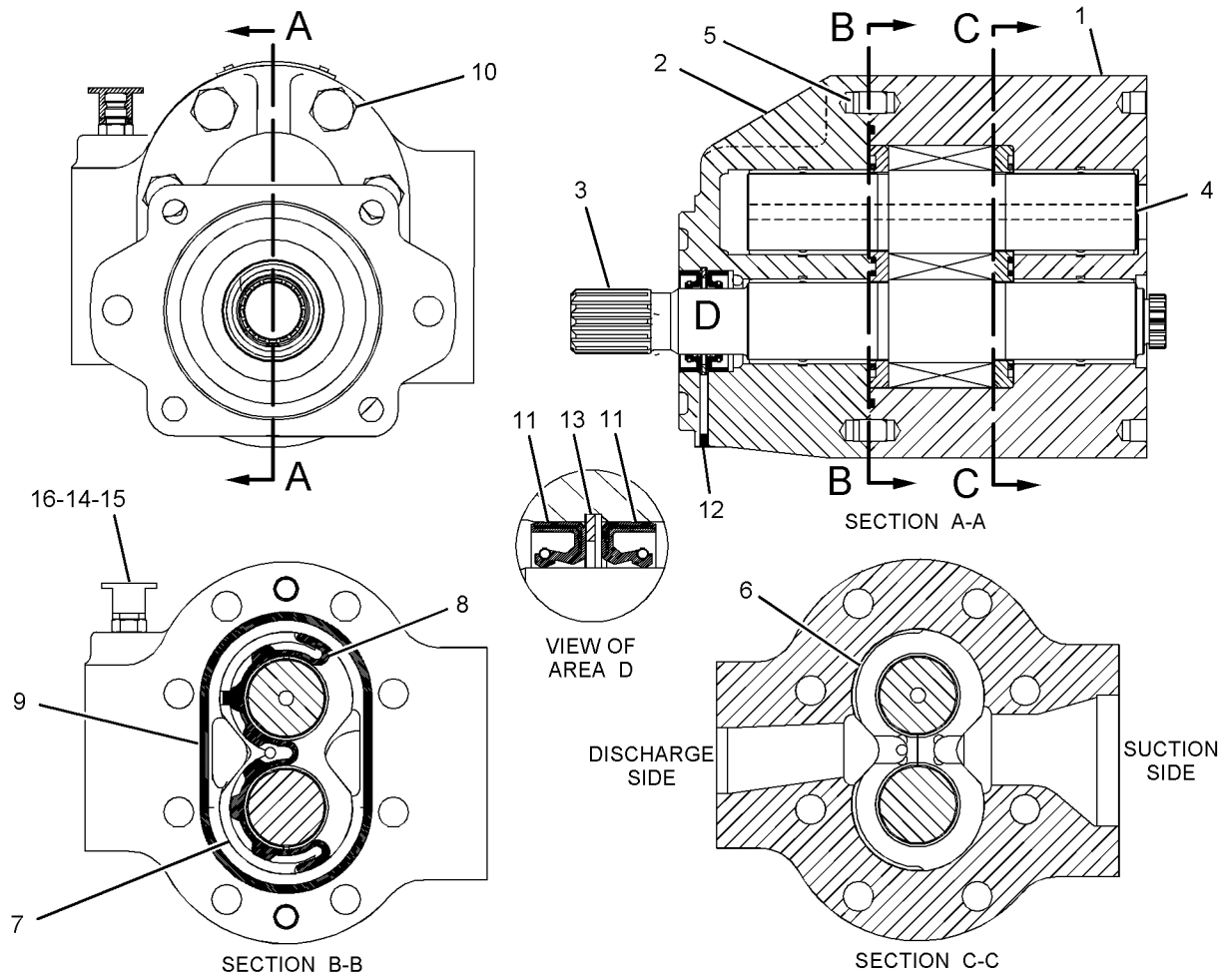

GRAPHIC #1 **<END>** g01136333

263-7766 SECTION GP-GEAR PUMP–REAR–IMPLEMENT

S/N: RJG1-528

PART OF 228-0272 PUMP GP-GEAR

SMCS-5073 **i02286449**

NOTE	REF NO	GRAPHIC REF	PART NUMBER	QTY	PART NAME 1 2 3 4 5 6 (PRODUCT LEVEL)	SEE PAGE
	1	1	**263-7769**	1	BODY AS	
J	2	1	**6V-3834**	2	SEAL-O-RING	
	3	1	**260-3955**	1	COVER	
	4	1	**260-3956**	1	GEAR-DRIVE	
	5	1	**260-3958**	2	BUSHING AS (GEAR)	
J	6	1	**260-3961**	2	SEAL-PRESSURE	
J	7	1	**260-3962**	2	SEAL-BACKUP	
M	8	1	**7X-0909**	4	BOLT (M12X1.75X140-MM)	
	9	1	**5P-8245**	4	WASHER-HARD (13.5X25.5X3-MM THK)	
	10	1	**260-3957**	1	GEAR-IDLER	
					AVAILABLE REPAIR KIT(S):	
J			**260-6896**	1	KIT-SEAL (GEAR PUMP)	
					(INCLUDES CAP, SEALS, RING & PLUG)	

J-PARTS MARKED J INCLUDED IN KIT MARKED J
M-METRIC PART

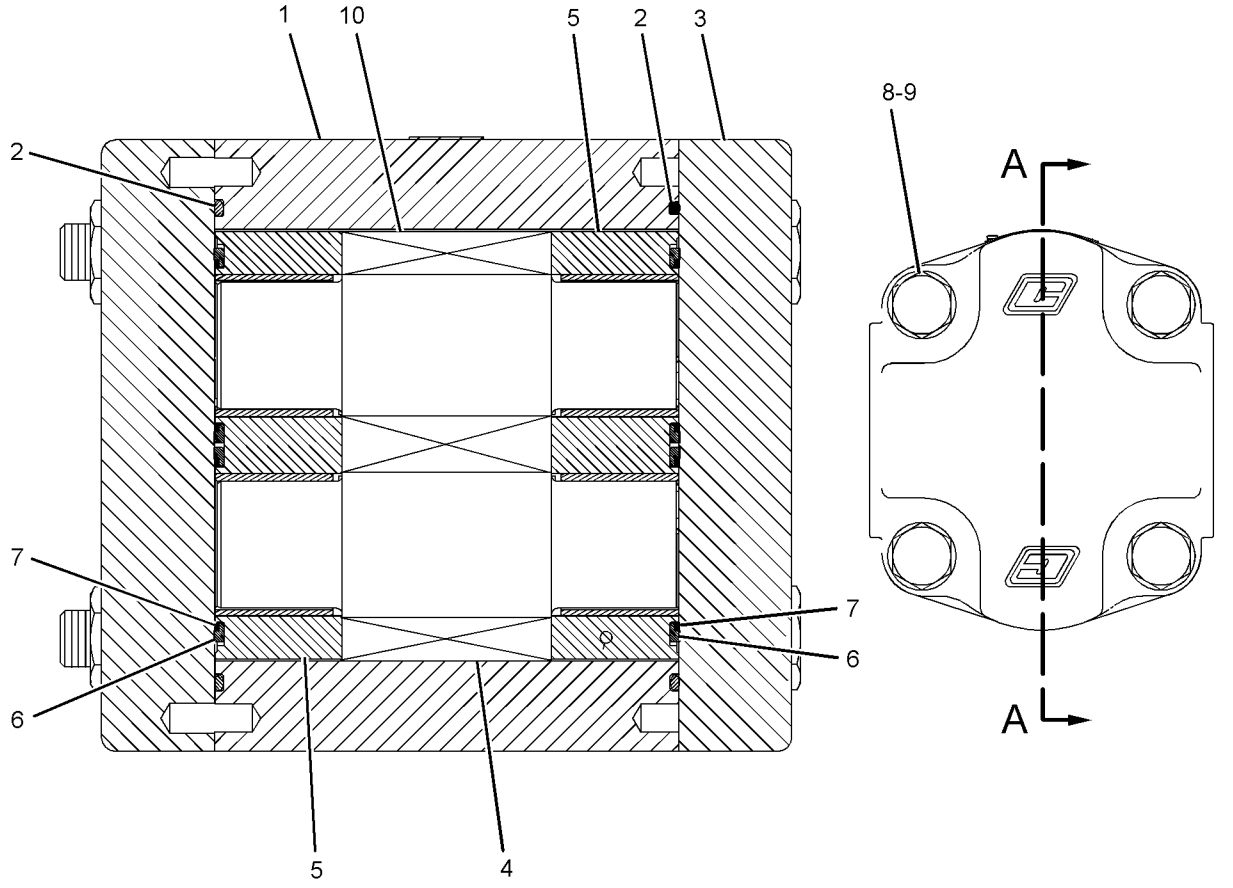

GRAPHIC #1 **<END>** g01136256

HYDRAULIC SYSTEM

271-3002 SECTION GP-GEAR PUMP–REAR–IMPLEMENT

S/N: RJG529-UP

PART OF 272-9795 PUMP GP-GEAR

SMCS-5073 **i02439370**

NOTE	REF NO	GRAPHIC REF	PART NUMBER	QTY	PART NAME 1 2 3 4 5 6 (PRODUCT LEVEL)	SEE PAGE
	1	1	**275-8509**	1	VALVE GP-RELIEF (IMPLEMENT PILOT PRESSURE)	
		1	**033-6033**	1	SEAL-O-RING	
		1	**152-2939**	1	SEAL-O-RING	
		1	**161-6161**	2	RING-BACKUP	
	2	1	**6V-3834**	2	SEAL-O-RING	
	3	1	**275-8512**	1	COVER	
	4	1	**5P-8245**	4	WASHER-HARD (13.5X25.5X3-MM THK)	
	5	1	**260-3958**	2	BUSHING AS (GEAR)	
	6	1	**260-3961**	2	SEAL-PRESSURE	
	7	1	**260-3962**	2	SEAL-BACKUP	
M	8	1	**8T-5001**	4	BOLT (M12X1.75X130-MM)	
					AVAILABLE REPAIR KIT(S):	
			260-6896	1	KIT-SEAL (GEAR PUMP) (IMPLEMENT)	
					(KIT INCLUDES SEALS, DUST CAPS, RETAINING RING, & BREATHER PLUG)	

M-METRIC PART

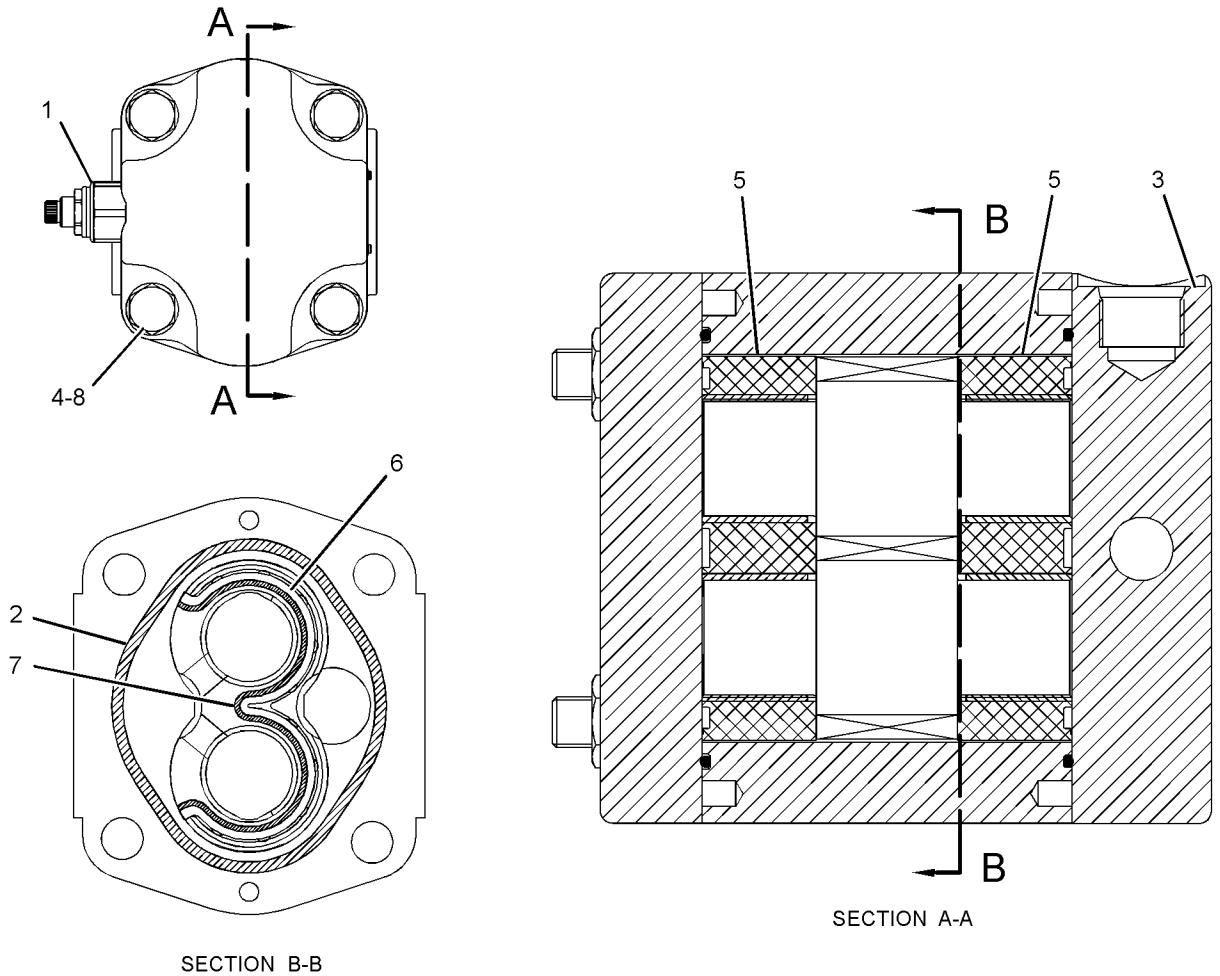

SECTION B-B

SECTION A-A

GRAPHIC #1 **<END>** g01222173

HYDRAULIC SYSTEM

211-4364 TANK & FILTER GP-HYDRAULIC

S/N: RJG1-UP

PART OF 213-0003 TANK & MTG GP-HYDRAULIC

SMCS-5056, 5068 **i02362274**

NOTE	REF NO	GRAPHIC REF	PART NUMBER	QTY	PART NAME 1 2 3 4 5 6 (PRODUCT LEVEL)	SEE PAGE
	1	1	**8C-3451**	1	CAP-DUST	
	2	2	**1P-4579**	2	FLANGE-HALF	
	3	2	**1P-4582**	2	FLANGE-HALF	
	4	1	**3J-1907**	1	SEAL-O-RING	
	5	1	**3J-7354**	1	SEAL-O-RING	
	6	2	**5P-2566**	8	BOLT (1/2-13X1.5-IN)	
	7	1	**5P-9617**	1	ADAPTER	
	8	1	**8C-3446**	1	VALVE-FLUID SAMPLING	
	9	2	**8T-4223**	8	WASHER-HARD (13.5X25.5X3-MM THK)	
	10	1	**5D-7927**	1	STRAINER AS (HYDRAULIC TANK FILL)	
		1	**5F-3488**	1	END-STRAINER	
	11	1	**6E-2060**	1	COVER AS	
	12	1	**7H-1447**	1	CAP-FILLER (HYDRAULIC TANK)	
	13	2	**9J-1979**	1	RETAINER AS	
	14	1,2	**9T-7570**	2	VALVE-BYPASS	
	15	1,2	**9T-7571**	2	SCREEN AS (HYDRAULIC TANK, MAIN RETURN)	
	16	1,2	**9T-7572**	2	FLANGE	
	17	2	**267-7369**	1	SPACER	
	18	1	**118-8693**	1	SCREEN (HYDRAULIC)	
	19	2	**139-1537**	2	FILTER ELEMENT AS-OIL (ULTRA HIGH EFFICIENCY)	
					-OR-	
		2	**1R-0735**	2	FILTER ELEMENT AS-OIL (STANDARD EFFICIENCY)	
					—OR—	
		2	**1R-0777**	2	FILTER ELEMENT AS-OIL (ADVANCED EFFICIENCY)	
					—OR—	
		2	**104-6931**	2	FILTER ELEMENT AS-OIL (FIRE RESISTANT FLUID)	
	20	1	**211-4368**	1	TANK AS-HYDRAULIC	
	21	1	**226-2009**	1	COVER AS	
M		1	**6V-8149**	2	NUT (M12X1.75-THD)	
	22	1	**231-9487**	1	TUBE AS	
	23	1	**231-9488**	1	TUBE AS	
	24	1	**231-9489**	1	TUBE AS	
	25	1	**231-9491**	1	TUBE AS	
	26	1	**231-9493**	1	RETAINER AS	
	27	1	**231-9494**	1	CAP AS	
	28	1	**231-9495**	1	BASE-FILTER	
	29	1	**268-8043**	1	STUD-TAPERLOCK	
	30	2	**268-8042**	1	STUD-TAPERLOCK	
	31	1	**267-7209**	1	SPACER (20X173.4X6-MM THK)	
	32	1	**236-8232**	1	BRACKET	
	33	2	**243-0781**	1	SPRING	
	34	2	**244-4094**	1	BASE-FILTER	
	35	1	**245-9740**	1	GASKET	
	36	2	**246-2166**	1	TUBE AS	
	37	1	**249-2337**	1	ELEMENT AS-FILTER (REVERSE FLOW, DISPOSABLE)	
	38	1	**260-8636**	1	GAUGE-LIQUID LEVEL (SIGHT GLASS) (HYDRAULIC TANK OIL)	
	40	1	**0L-0646**	1	SPRING-VALVE	
	41	1	*155-3624*	1	PLUG AS	
		1	**3J-7354**	1	SEAL-O-RING	
		1	**9S-4182**	1	PLUG	
	42	1	**1H-7339**	1	SEAL-O-RING	
	43	1	**1M-0556**	1	SEAL-O-RING	
	44	1	**2D-1691**	1	SEAL-RING	
	45	1	**2D-4202**	1	PLATE	
	46	1	**2H-2665**	1	SEAL-O-RING	

211-4364 TANK & FILTER GP-HYDRAULIC *(contd.)* i02362274

NOTE	REF NO	GRAPHIC REF	PART NUMBER	QTY	PART NAME 1 2 3 4 5 6 (PRODUCT LEVEL)	SEE PAGE
	47	1	**2H-6124**	1	SEAL-O-RING	
	48	1,2	**2L-1699**	2	PIN-SPRING	
	49	1	**4J-0525**	1	SEAL-O-RING	
	50	1	**5F-6222**	1	SEAL-O-RING	
	51	1,2	**5F-7054**	4	SEAL-O-RING	
	52	1	**5H-6733**	1	SEAL-O-RING	
	53	2	**5K-5959**	1	SEAL-O-RING	
	54	1	**6H-9361**	1	RING-RETAINING	
	55	1,2	**6V-5839**	24	WASHER (11X21X2.5-MM THK)	
M	56	1	**6V-7732**	8	BOLT (M10X1.5X25-MM)	
M	57	1,2	**6V-7744**	16	LOCKNUT (M10X1.15-THD)	
	58	2	**7D-1195**	1	SEAL-O-RING	
	59	2	**7F-8268**	1	SEAL-O-RING	
M	60	1,2	**8T-0722**	8	BOLT-LOCKING (M10X1.5X30-MM)	
	61	1	**8T-2275**	1	BALL	
	62	1	**8T-4121**	36	WASHER-HARD (11X21X2.5-MM THK)	
M	63	1	**8T-4133**	8	NUT (M10X1.5 THD)	
M	64	1	**8T-4136**	36	BOLT (M10X1.5X25-MM)	
M	65	2	**8T-4196**	2	BOLT (M10X1.5X35-MM)	
	66	1	**9H-6454**	1	GASKET (HYDRAULIC TANK)	

M-METRIC PART

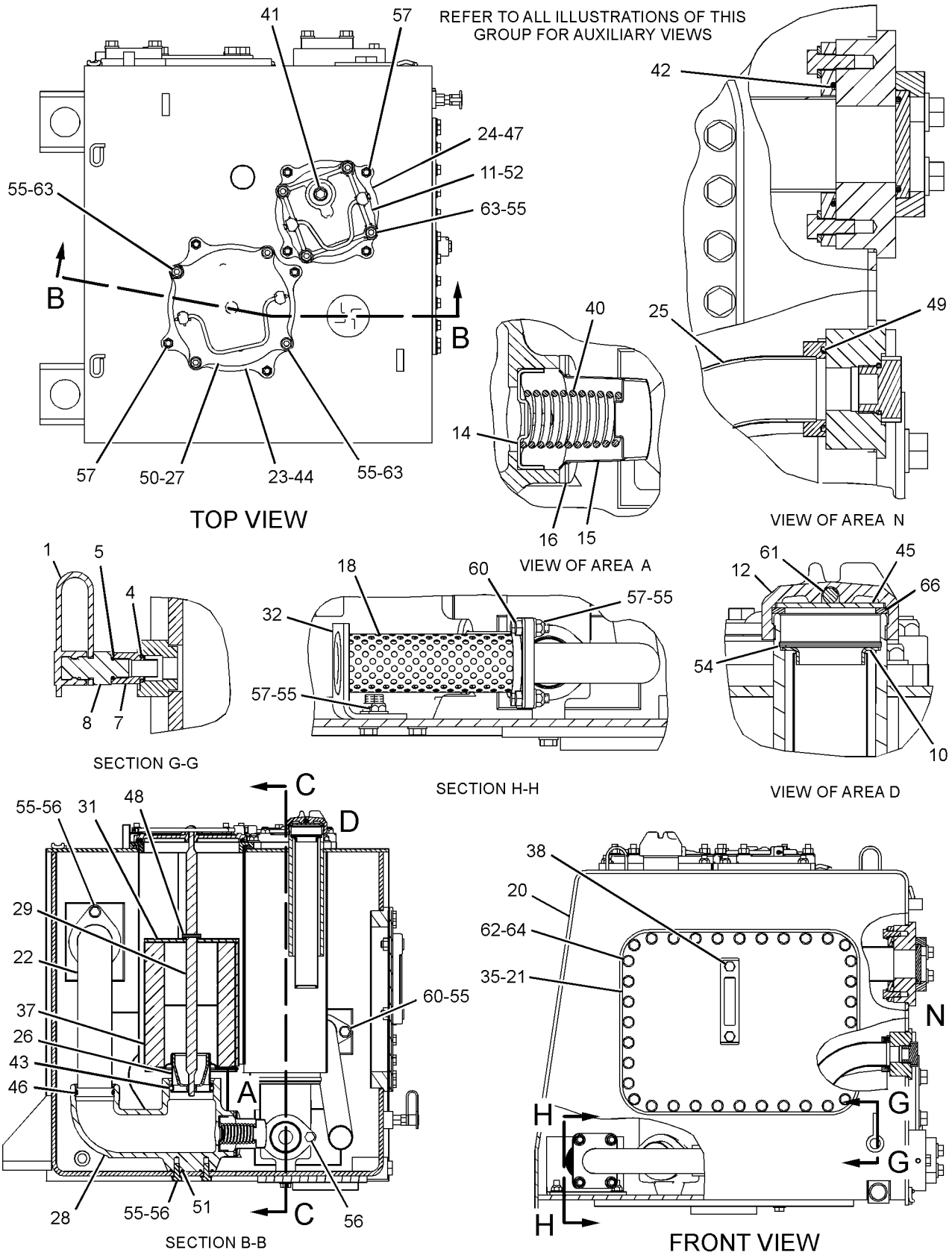

GRAPHIC #1

g01225760

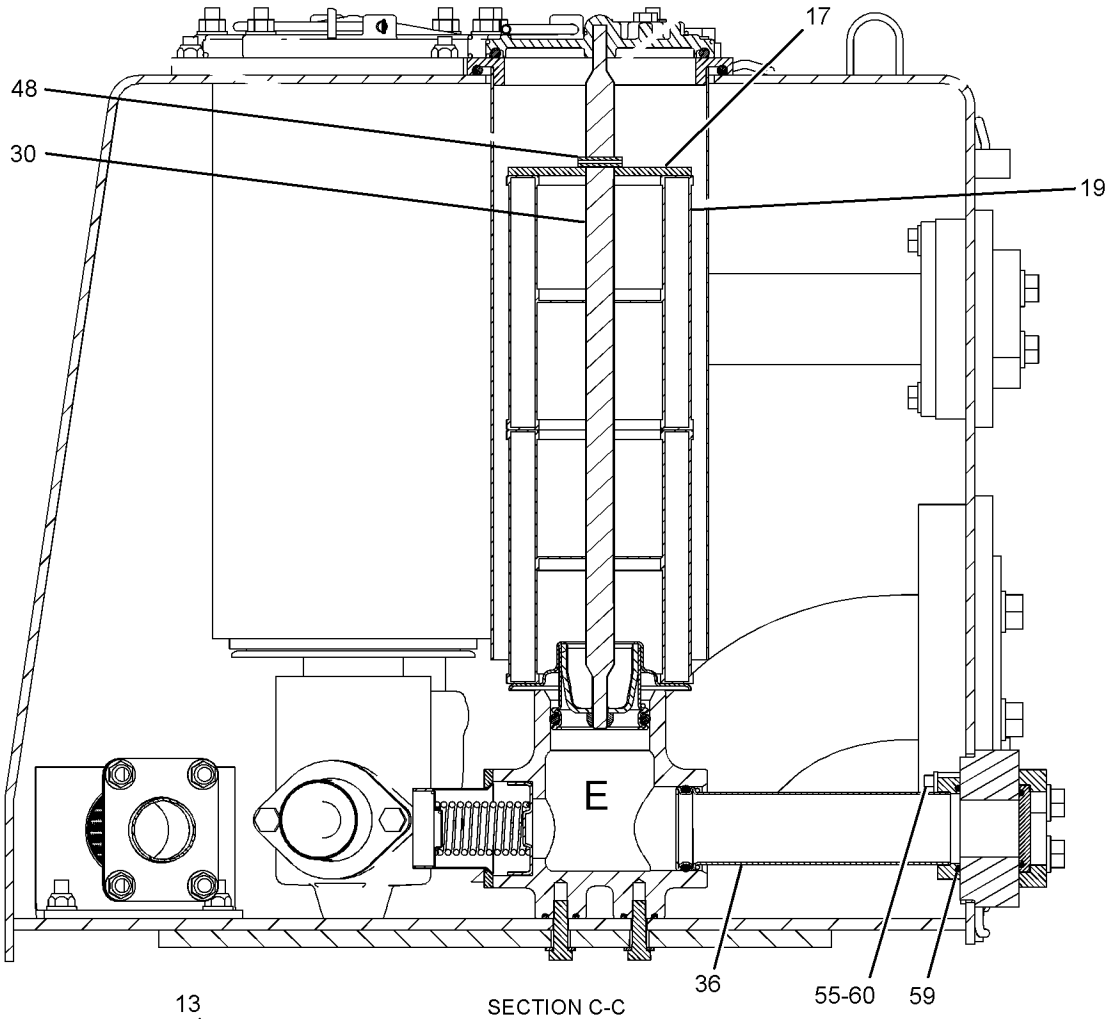

SECTION C-C

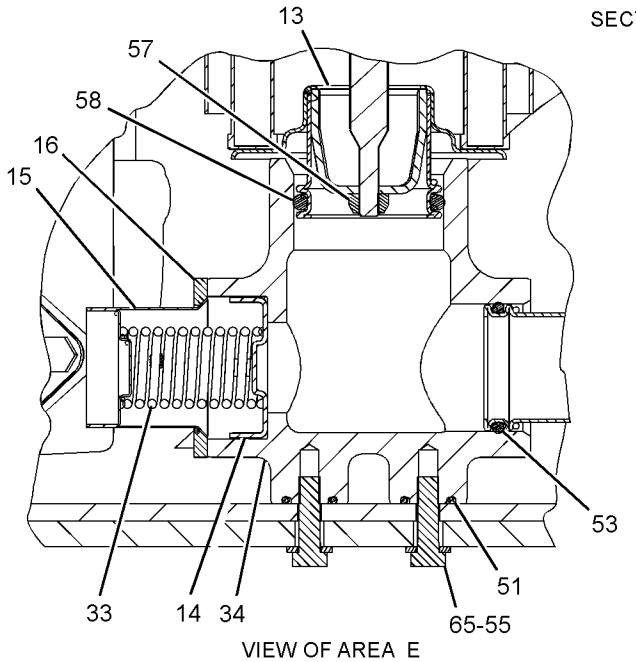

VIEW OF AREA E

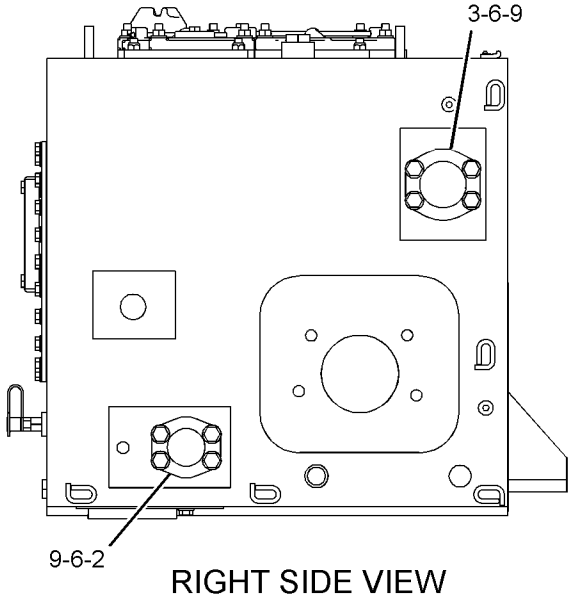

RIGHT SIDE VIEW

GRAPHIC #2 **<END>** g01225762

HYDRAULIC SYSTEM

213-0003 TANK & MTG GP-HYDRAULIC

S/N: RJG1-UP

PART OF 212-2742, 269-8382 HYDRAULIC AR

SMCS-5056 **i02044651**

NOTE	REF NO	GRAPHIC REF	PART NUMBER	QTY	PART NAME 1 2 3 4 5 6 (PRODUCT LEVEL)	SEE PAGE
	1	1	**2G-0493**	3	WASHER-RETAINING (20X82.55X11-MM THK)	
Y	2	1	*9G-9288*	1	COVER GP-HYDRAULIC TANK CAP	550
	3	1	**9P-3066**	6	MOUNTING	
	4	1	**110-5918**	1	VALVE-DRAIN (HYDRAULIC OIL TANK)	
	5	1	**154-6165**	1	VALVE-CHECK (VACUUM BREATHER)	
	6	1	*185-8833*	1	ELBOW AS	
		1	**2M-9780**	1	SEAL-O-RING	
		1	**129-2327**	1	ELBOW	
Y	7	1	**211-4364**	1	TANK & FILTER GP-HYDRAULIC	649
	8	1	**2B-0858**	1	PLUG-PIPE	
	9	1	**2M-9780**	1	SEAL-O-RING	
	10	1	**3D-2824**	1	SEAL-O-RING	
M	11	1	**7X-2555**	1	BOLT (M16X2X80-MM)	
M	12	1	**8T-4175**	2	BOLT (M16X2X90-MM)	
	13	1	**9X-8257**	3	WASHER (17.5X30X3.5-MM THK)	

M-METRIC PART
Y-SEPARATE ILLUSTRATION

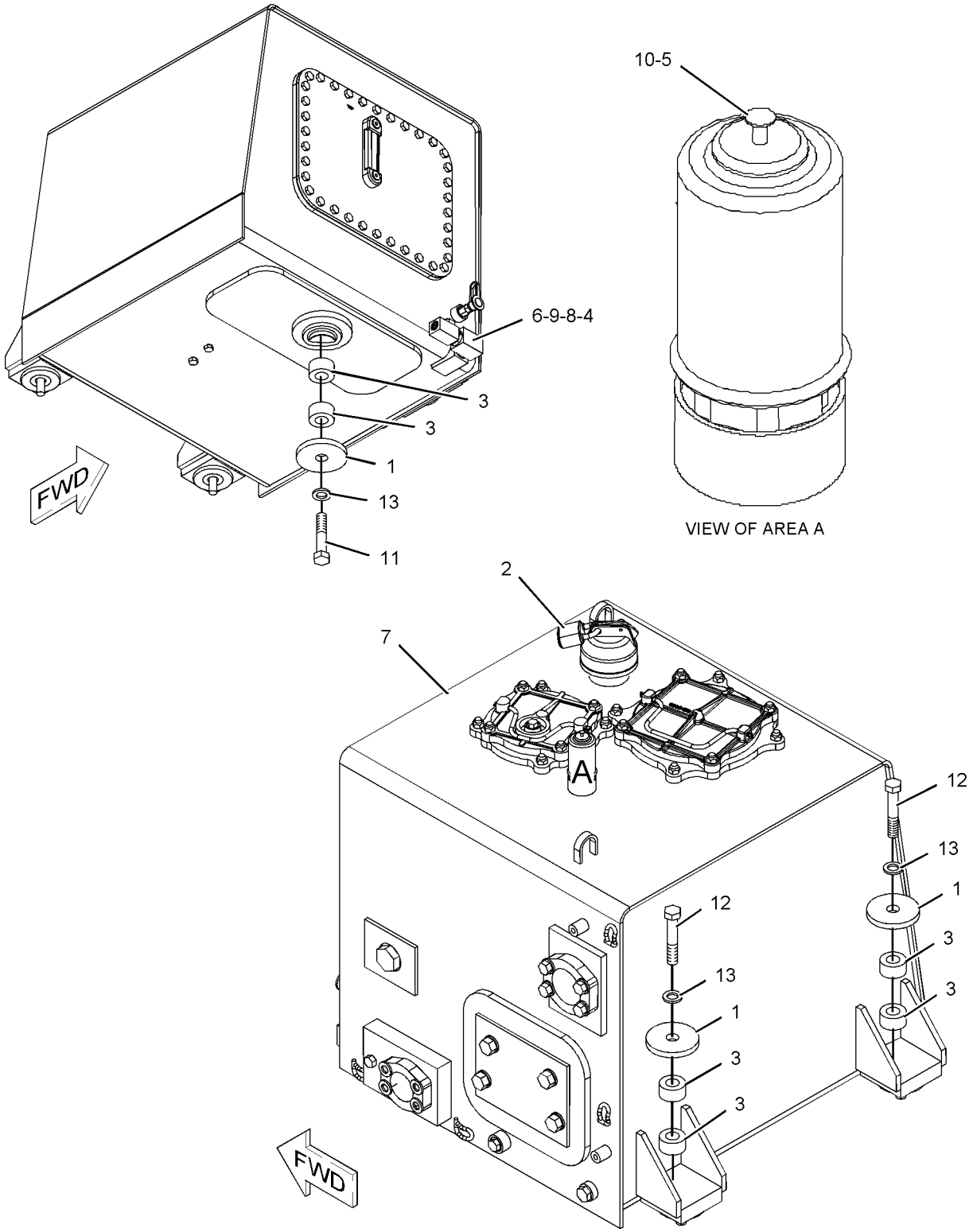

GRAPHIC #1 **<END>** g01050897

HYDRAULIC SYSTEM

239-8293 TANK GP-EXPANSION

S/N: RJG1-UP
FOR USE WITH SOUND SUPPRESSION AR
AN ATTACHMENT
TYPE 1

SMCS-1354 **i02049008**

NOTE	REF NO	GRAPHIC REF	PART NUMBER	QTY	PART NAME 1 2 3 4 5 6 (PRODUCT LEVEL)	SEE PAGE
	1	1	*148-8327*	1	CONNECTOR AS	
		1	**6V-8637**	1	CONNECTOR	
		1	**3D-2824**	1	SEAL-O-RING	
		1	**6V-9746**	1	SEAL-O-RING	
	2	1	*172-5277*	1	TEE AS	
		1	**8T-8901**	1	TEE-O-RING PORT	
		1	**3D-2824**	1	SEAL-O-RING	
		1	**6V-9746**	1	SEAL-O-RING	
	3	1	**220-0199**	1	BRACKET	
	4	1	**220-0813**	1	VALVE AS-RELIEF (HYDRAULIC TANK PRESSURE)	
	5	1	**221-5500**	1	TANK GP-EXPANSION (AIR)	
I	6	1	**241-8427**	1	HOSE AS	
	7	1	**3D-2824**	1	SEAL-O-RING	
	8	1	**4L-6454**	8	BOLT (3/8-16X1-IN)	
	9	1	**8T-4896**	8	WASHER-HARD (10.2X18.5X2.5-MM THK)	

I-REFER TO HYDRAULIC INFORMATION SYSTEM

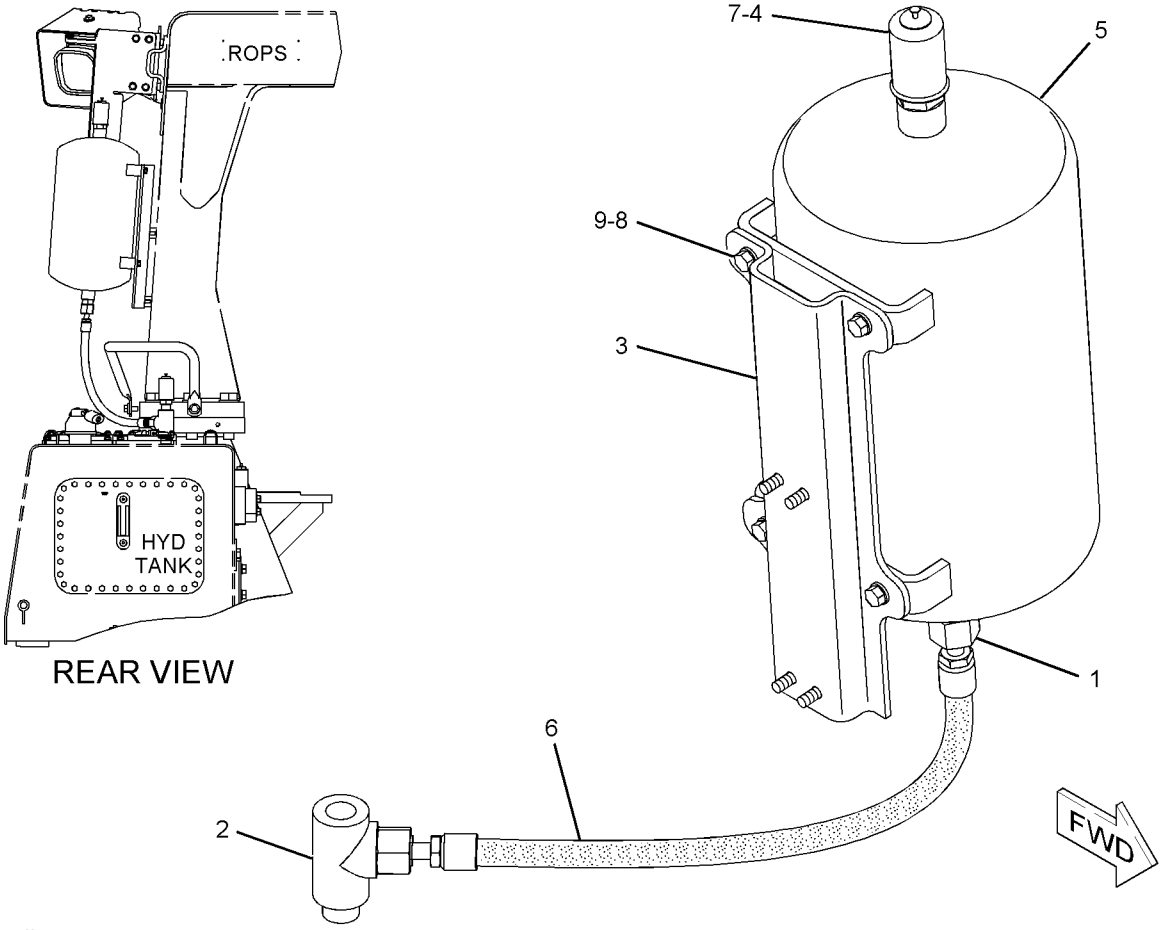

GRAPHIC #1 **<END>** g01052976

HYDRAULIC SYSTEM

239-8293 TANK GP-EXPANSION

S/N: RJG1-UP
FOR USE WITH SOUND SUPPRESSION AR
AN ATTACHMENT
TYPE 2

SMCS-1354 **i02397753**

NOTE	REF NO	GRAPHIC REF	PART NUMBER	QTY	PART NAME 1 2 3 4 5 6 (PRODUCT LEVEL)	SEE PAGE
	1	1	*148-8327*	1	CONNECTOR AS	
		1	**6V-8637**	1	CONNECTOR	
		1	**3D-2824**	1	SEAL-O-RING	
		1	**6V-9746**	1	SEAL-O-RING	
	2	1	*172-5277*	1	TEE AS	
		1	**8T-8901**	1	TEE-O-RING PORT	
		1	**3D-2824**	1	SEAL-O-RING	
		1	**6V-9746**	1	SEAL-O-RING	
	3	1	**220-0199**	1	BRACKET	
	4	1	**220-0813**	1	VALVE AS-RELIEF (HYDRAULIC TANK PRESSURE)	
	5	1	**221-5500**	1	TANK GP-EXPANSION (AIR)	
CI	6	1	**273-9827**	1	HOSE AS	
	7	1	**3D-2824**	1	SEAL-O-RING	
	8	1	**4L-6454**	8	BOLT (3/8-16X1-IN)	
	9	1	**8T-4896**	8	WASHER-HARD (10.2X18.5X2.5-MM THK)	

C-CHANGE FROM PREVIOUS TYPE
I-REFER TO HYDRAULIC INFORMATION SYSTEM

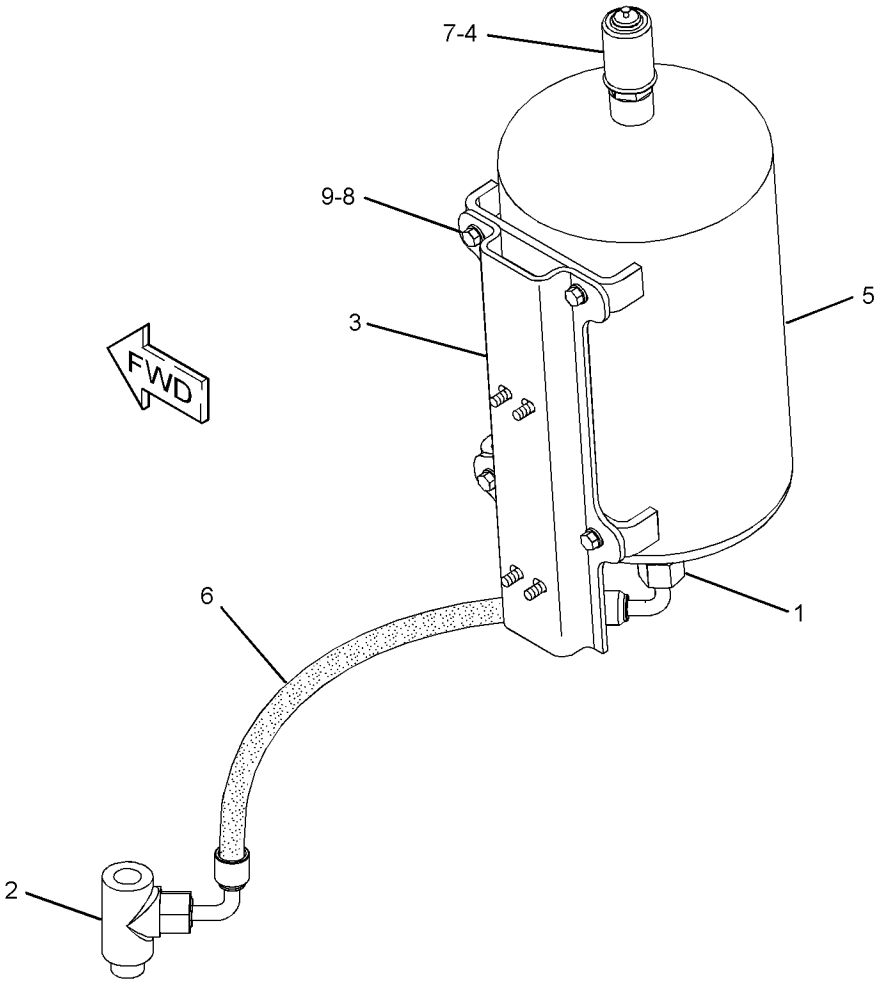

GRAPHIC #1 **<END>** g01225455

213-0005 VALVE & MTG GP-BULLDOZER

S/N: RJG1-UP

PART OF 212-2742, 269-8382 HYDRAULIC AR

SMCS-5051 **i02045769**

NOTE	REF NO	GRAPHIC REF	PART NUMBER	QTY	PART NAME 1 2 3 4 5 6 (PRODUCT LEVEL)	SEE PAGE
	1	1	**6S-6251**	1	MOUNT	
	2	1	**9G-0162**	2	MOUNTING	
	3	1	**174-7839**	1	BRACKET	
	4	1	**232-2572**	1	PLATE	
Y	5	1	**234-3025**	1	VALVE GP-CONTROL (2-FUNCTION) (BLADE RAISE, LOWER, TILT)	666
	6	1	**7X-0308**	2	BOLT (7/16-14X1.375-IN)	
	7	1	**7X-0589**	4	WASHER-HARD (12X28.5X5-MM THK)	
	8	1	**7X-0618**	1	WASHER-HARD (13.5X40X5-MM THK)	
	9	1	**8F-6437**	3	WASHER (13.5X50.8X4.76-MM THK)	
	10	1	**8T-4223**	3	WASHER-HARD (13.5X25.5X3-MM THK)	
M	11	1	**8T-4244**	2	NUT (M12X1.75-THD)	
M	12	1	**8T-4910**	3	BOLT (M12X1.75X60-MM)	
	13	1	**8T-9382**	2	BOLT (7/16-14X1.25-IN)	

M-METRIC PART
Y-SEPARATE ILLUSTRATION

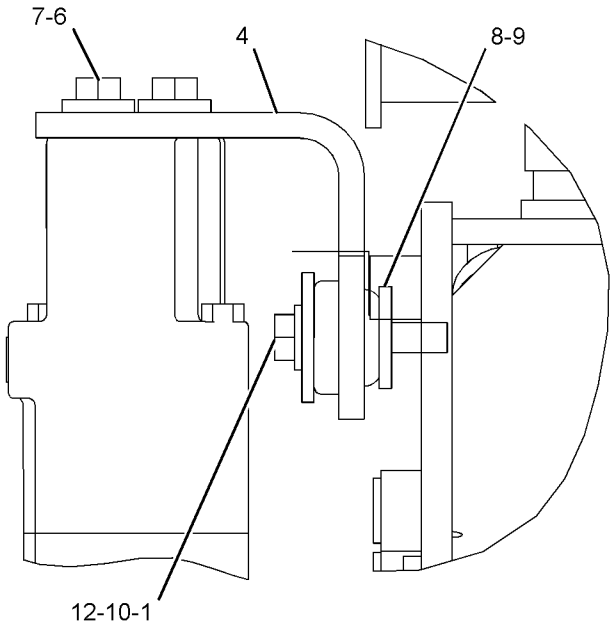

VIEW OF AREA B

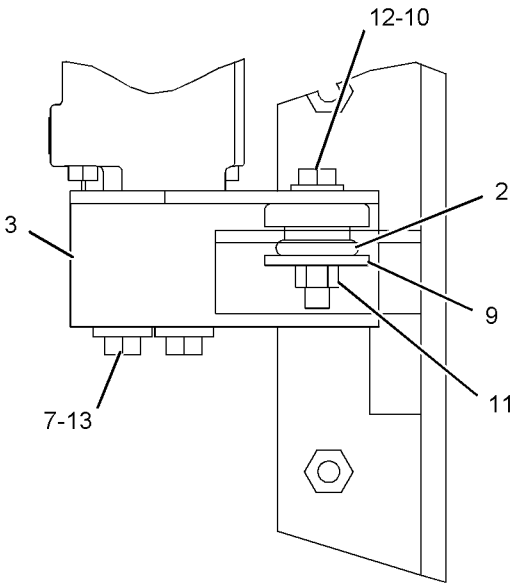

VIEW OF AREA A

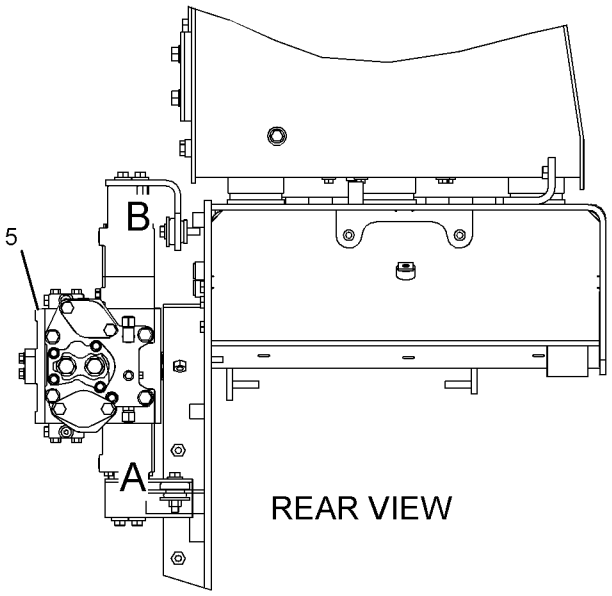

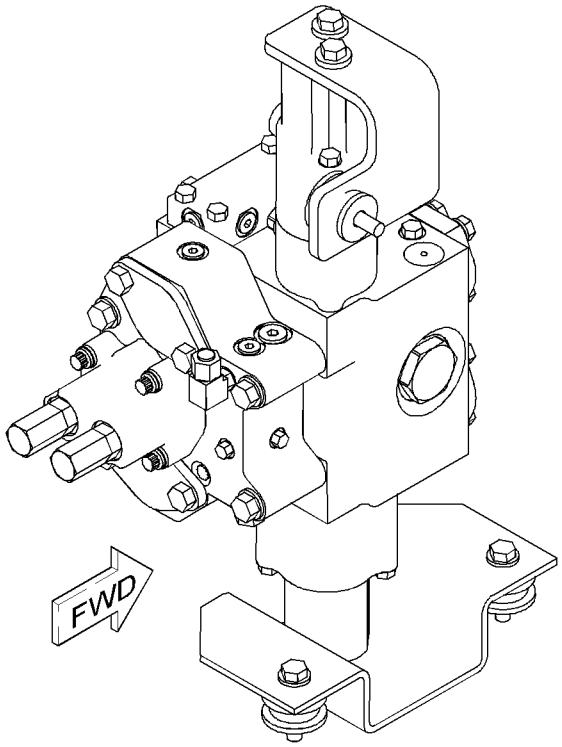

GRAPHIC #1 **<END>** g01050614

188-6140 VALVE & MTG GP-CONTROL–HYDRAULIC PIN PULLER

S/N: RJG1-UP

PART OF 258-8717 CONTROL AR-HYD PIN PULLER

AN ATTACHMENT

SMCS-5051 **i02249319**

NOTE	REF NO	GRAPHIC REF	PART NUMBER	QTY	PART NAME 1 2 3 4 5 6 (PRODUCT LEVEL)	SEE PAGE
Y	1	1	**3E-8575**	1	VALVE GP-SOLENOID (HYDRAULIC PIN PULLER)	684
	2	1	**188-6141**	1	MANIFOLD AS	
	2A	1	**3J-1907**	1	SEAL-O-RING	
	2B	1	**9S-8004**	1	PLUG	
	2C	1	**200-2964**	1	ORIFICE AS	
	2D	1	**4J-7533**	1	SEAL-O-RING	

Y-SEPARATE ILLUSTRATION

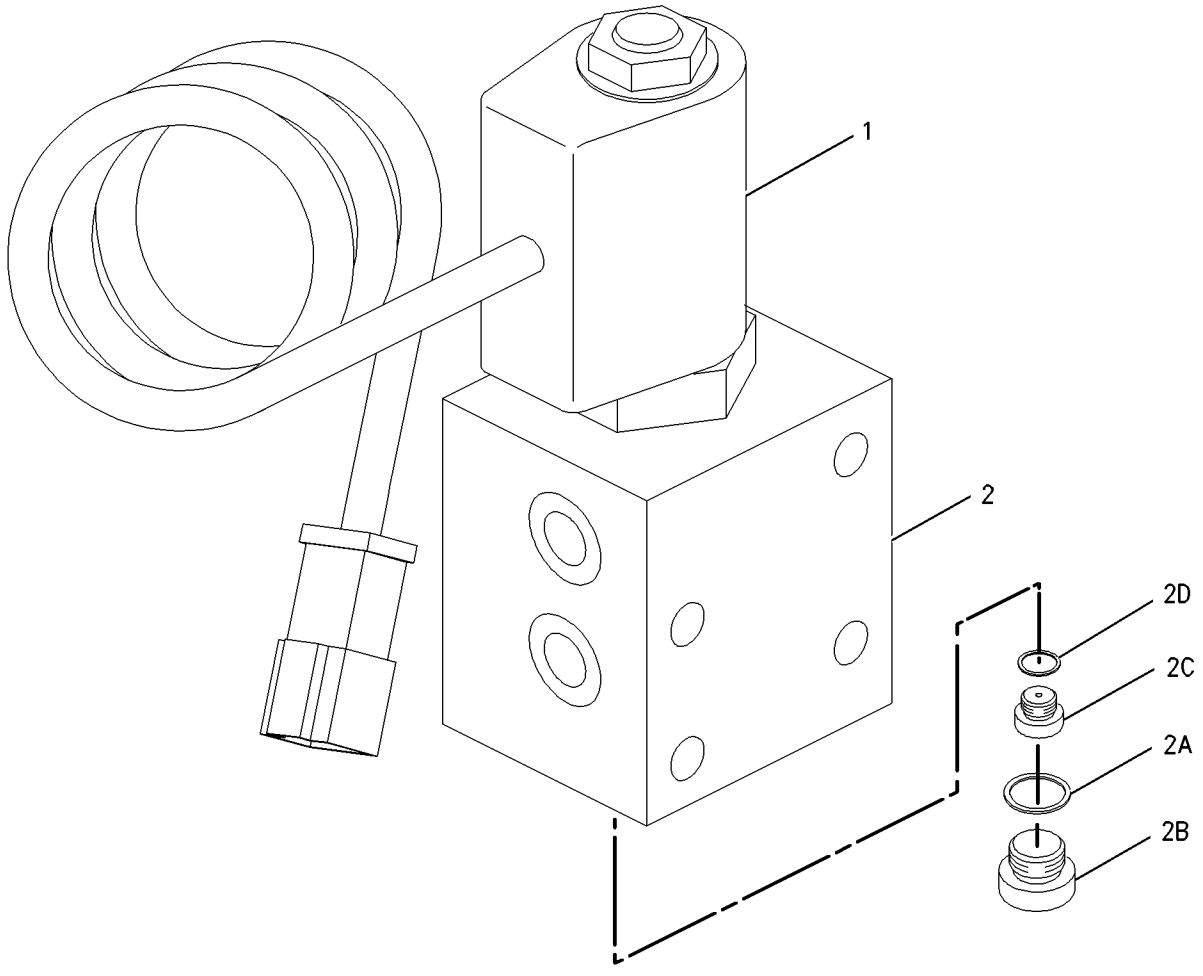

GRAPHIC #1 **<END>** g00764266

HYDRAULIC SYSTEM

220-0550 VALVE & MTG GP-HYDRAULIC FAN

S/N: RJG1-UP
PART OF 220-0261 FAN AR-REVERSIBLE
AN ATTACHMENT

SMCS-1387 **i02266429**

NOTE	REF NO	GRAPHIC REF	PART NUMBER	QTY	PART NAME 1 2 3 4 5 6 (PRODUCT LEVEL)	SEE PAGE
	1	1	**174-3891**	1	TUBE AS	
Y	2	1	**229-1466**	1	MANIFOLD GP-CONTROL (HYDRAULIC FAN, REVERSING)	623
I	3	1	**234-4402**	1	HOSE AS	
I	4	1	**234-4403**	1	HOSE AS	
	5	1	**234-7517**	1	BRACKET	
	6	1	*148-8335*	1	CONNECTOR AS	
		1	**6V-8635**	1	CONNECTOR	
		1	**5K-9090**	1	SEAL-O-RING	
		1	**7M-8485**	1	SEAL-O-RING	
	7	1	*148-8352*	1	ELBOW AS	
		1	**6V-9854**	1	ELBOW (SWIVEL)	
		1	**5K-9090**	1	SEAL-O-RING	
	8	1	*148-8355*	1	ELBOW AS	
		1	**6V-9005**	1	ELBOW	
		1	**5K-9090**	1	SEAL-O-RING	
		1	**7M-8485**	1	SEAL-O-RING	
	9	1	**4J-0520**	2	SEAL-O-RING	
	10	1	**8C-3206**	4	FLANGE-HALF	
	11	1	**8T-4121**	11	WASHER-HARD (11X21X2.5-MM THK)	
M	12	1	**8T-4136**	3	BOLT (M10X1.5X25-MM)	
M	13	1	**8T-4196**	8	BOLT (M10X1.5X35-MM)	

I-REFER TO HYDRAULIC INFORMATION SYSTEM
M-METRIC PART
Y-SEPARATE ILLUSTRATION

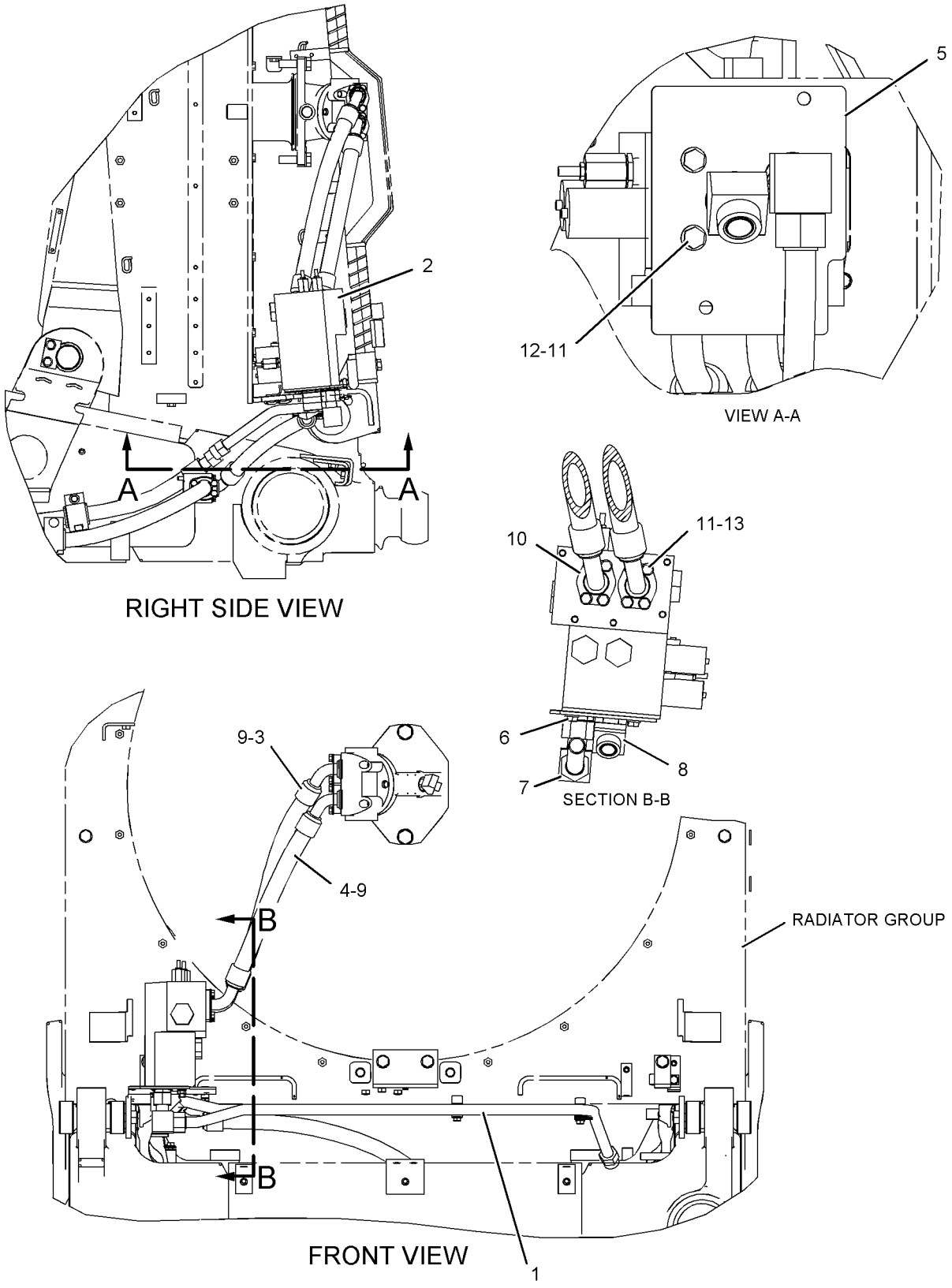

GRAPHIC #1 **<END>** g01136994

HYDRAULIC SYSTEM

247-3026 VALVE & MTG GP-MAIN CONTROL–

IMPLEMENT PILOT PRESSURE

S/N: RJG1-UP

PART OF 213-0006 LINES GP-PILOT

SMCS-5051 **i02280151**

NOTE	REF NO	GRAPHIC REF	PART NUMBER	QTY	PART NAME 1 2 3 4 5 6 (PRODUCT LEVEL)	SEE PAGE
Y	1	1	**222-3137**	1	VALVE GP-SOLENOID (RIPPER RAISE)	689
Y	1A	1	**222-3137**	1	VALVE GP-SOLENOID (RIPPER SHANK IN)	689
Y	1B	1	**222-3137**	1	VALVE GP-SOLENOID (RIPPER LOWER)	689
Y	1C	1	**222-3137**	1	VALVE GP-SOLENOID (RIPPER SHANK OUT)	689
Y	1D	1	**222-3137**	1	VALVE GP-SOLENOID (ENGINE OVERSPEED)	689
	2	1	**247-3025**	1	MANIFOLD AS (IMPLEMENT CONTROL)	
Y	3	1	**174-4916**	1	VALVE GP-SOLENOID (BLADE TILT RIGHT)	687
Y	3A	1	**174-4916**	1	VALVE GP-SOLENOID (BLADE TILT LEFT)	687
Y	3B	1	**174-4916**	1	VALVE GP-SOLENOID (BULLDOZER RAISE)	687
Y	3C	1	**174-4916**	1	VALVE GP-SOLENOID (BULLDOZER LOWER)	687
	4	1	**6V-0852**	8	CAP-DUST	
	5	1	**3J-1907**	23	SEAL-O-RING	
	6	1	**3K-0360**	3	SEAL-O-RING	
	7	1	**6V-3965**	8	FITTING AS (QUICK DISCONNECT)	
	8	1	**6V-8397**	8	SEAL-O-RING	
	9	1	**6V-8636**	7	CONNECTOR	
	10	1	**6V-8724**	1	ELBOW	
	11	1	**6V-9829**	4	CAP AS (PORT)	
M	12	1	**8T-1158**	5	BOLT-SOCKET HEAD (M8X1.25X20-MM)	
	13	1	**9S-8004**	7	PLUG	
	14	1	**9S-8005**	3	PLUG-O RING	

M-METRIC PART
Y-SEPARATE ILLUSTRATION

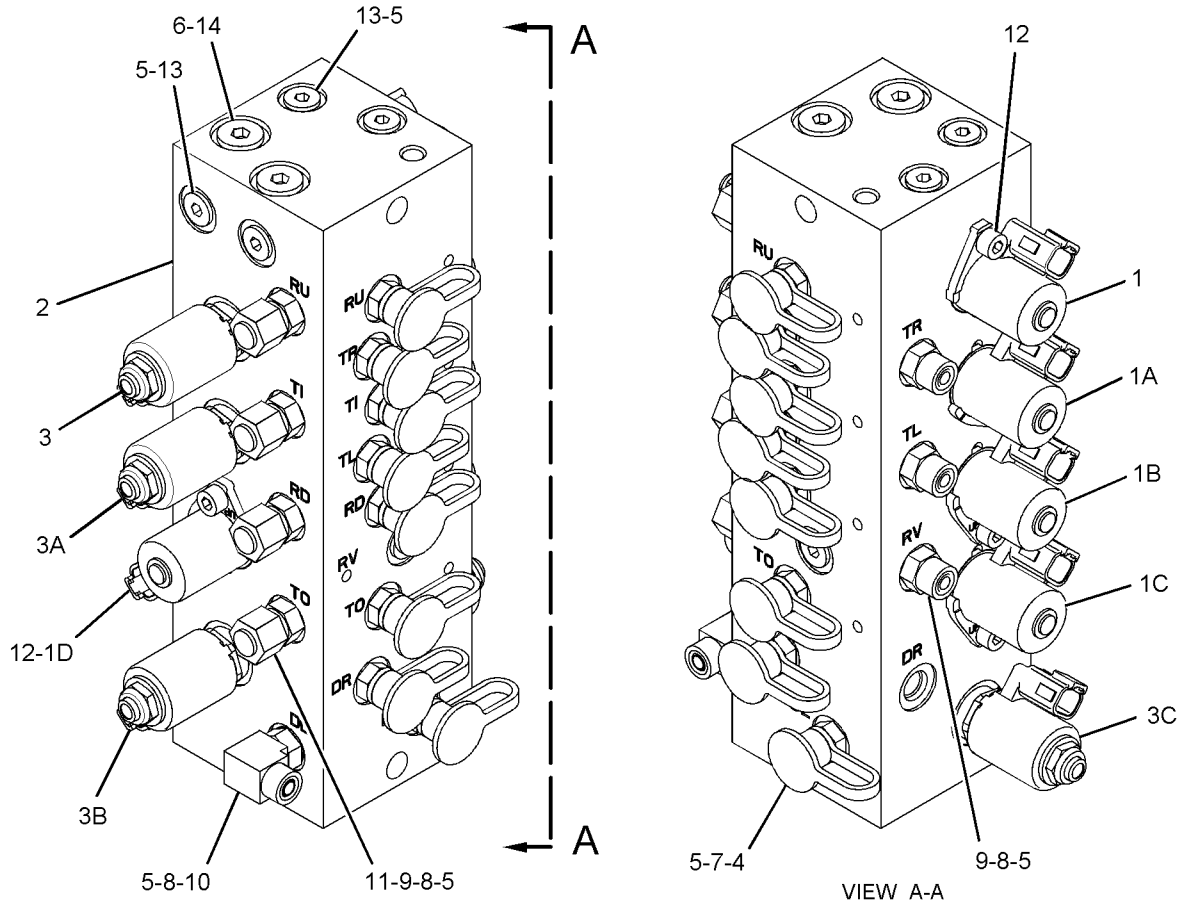

GRAPHIC #1 **<END>** g01139854

HYDRAULIC SYSTEM

128-2780 VALVE GP-CHECK–REVERSING FAN

S/N: RJG1-UP
PART OF 229-1466 MANIFOLD GP-CONTROL
AN ATTACHMENT

SMCS-5067 **i02356716**

NOTE	PART NUMBER	QTY	PART NAME 1 2 3 4 5 6 (PRODUCT LEVEL)	SEE PAGE
	128-2779	2	KIT-SEAL (CHECK VALVE)	
			(INCLUDES SEAL-O-RINGS & BACKUP RINGS)	

<END>

9T-5769 VALVE GP-CONTROL—BLADE RAISE, LOWER, TILT

S/N: RJG1-UP

PART OF 234-3025 VALVE GP-CONTROL

SMCS-5051 **i01691114**

NOTE	REF NO	GRAPHIC REF	PART NUMBER	QTY	PART NAME 1 2 3 4 5 6 (PRODUCT LEVEL)	SEE PAGE
	1	1	**4J-0523**	1	SEAL-O-RING	
	2	1	**9J-5756**	1	SPRING	
	3	1	**9S-8004**	4	PLUG	
	4	1	**9J-6491**	3	SEAL-O-RING	
	5	1	**3J-1907**	4	SEAL-O-RING	
	6	1	**4J-8997**	1	SEAL-O-RING	
	7	1	**3K-0360**	1	SEAL-O-RING	
	8	1	**9S-8005**	1	PLUG-O RING	
Y	9	1	**4T-4073**	1	VALVE GP-SHUTTLE	683
	10	1	**4J-0522**	2	SEAL-O-RING	
	11	1	**6J-1038**	3	SEAL-O-RING	
	12	1	**9S-4180**	3	PLUG	
	13	1	**4J-7533**	3	SEAL-O-RING	

Y-SEPARATE ILLUSTRATION

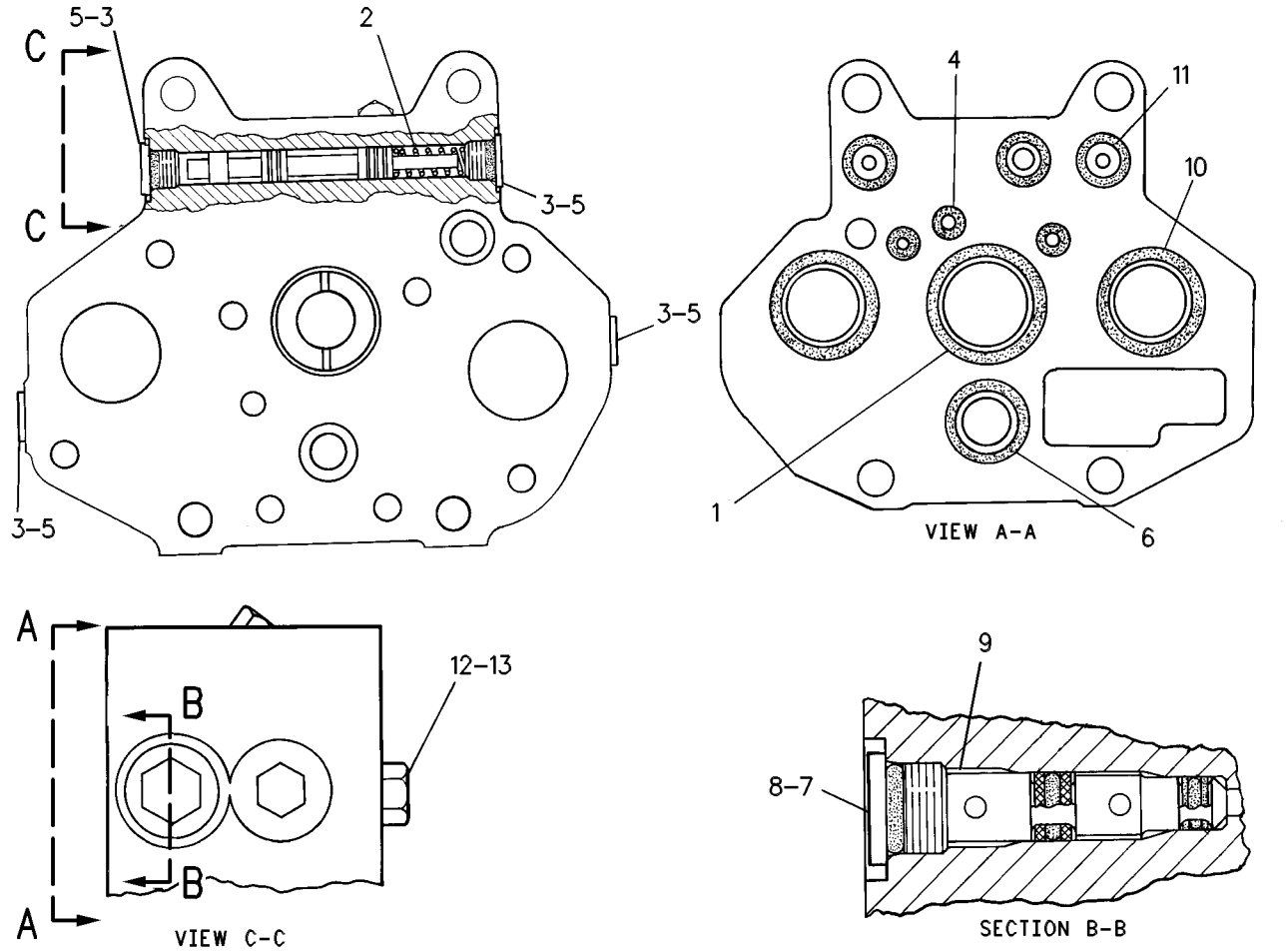

GRAPHIC #1 **<END>** g00248438

HYDRAULIC SYSTEM

234-3025 VALVE GP-CONTROL—BLADE RAISE, LOWER, TILT

S/N: RJG1-UP

PART OF 213-0005 VALVE & MTG GP-BULLDOZER

SMCS-5051 **i02300568**

NOTE	REF NO	GRAPHIC REF	PART NUMBER	QTY	PART NAME 1 2 3 4 5 6 (PRODUCT LEVEL)	SEE PAGE
	1	1	**1U-1799**	2	PLUG (3/8-24-THD)	
	2	1	**2J-6089**	2	SPRING	
	3	2	**2N-7029**	2	SPRING-CONTROL PIN	
	4	1	**3G-8163**	2	SCREW-ADJUSTMENT (3/8-24X1.5-IN)	
	5	1	**3G-8165**	2	NUT (5/8-18-THD)	
	7	1	**6J-2561**	2	VALVE-RELIEF POPPET	
	8	1	**9J-5499**	1	SPRING (INNER)	
	9	2	**177-4334**	1	SPRING (OUTER)	
	10	2	**177-4335**	1	SPRING (OUTER)	
	11	2	**177-4336**	2	SPRING (INNER)	
B	12	2	**177-7130**	6	SHIM (1-MM THK)	
	13	1	**197-5035**	1	PISTON	
	14	1	**205-3140**	2	HOUSING	
	15	2	**205-3171**	1	RETAINER	
	16	2	**205-3176**	1	RETAINER	
	17	2	**205-3179**	1	RETAINER	
	18	2	**205-3180**	1	RETAINER	
	21	1	**241-8832**	1	HOUSING	
	23	1,2	*162-0177*	6	PLUG AS	
					(EACH INCLUDES)	
		1,2	**9S-8004**	1	PLUG	
		1,2	**3J-1907**	1	SEAL-O-RING	
B	24	2	**164-2273**	3	SHIM (0.3-MM THK)	
	25	2	**1H-5728**	1	SEAL-O-RING	
	26	1	**1P-4577**	6	FLANGE-HALF	
	27	1	**1P-4578**	4	FLANGE-HALF	
	29	1	**2A-5885**	1	SPRING	
	30	2	**2M-4453**	1	SEAL-O-RING	
	31	1	**2M-9780**	2	SEAL-O-RING	
	32	1	**2S-4078**	1	SEAL-O-RING	
	33	1	**3F-4479**	2	PIN-SPRING	
	34	2	**3G-1258**	2	RETAINER	
	35	2	**3G-3475**	2	SPRING	
	36	1	**3G-8164**	2	NUT (3/8-24-THD)	
	37	1	**3G-8415**	2	COVER	
	38	2	**3G-8710**	2	PLUG (1-5/16-12-THD)	
	39	1,2	**3J-1907**	2	SEAL-O-RING	
	40	2	**3J-7354**	1	SEAL-O-RING	
B	41	1	**3J-7470**	4	SHIM (1.22-MM THK)	
B	42	1	**3J-7473**	12	SHIM (0.12-MM THK)	
	43	1	**3K-6113**	4	WASHER-HARD (12X18.5X3-MM THK)	
	44	1	**3S-9233**	1	SEAL-O-RING	
	45	1	**4J-0520**	1	SEAL-O-RING	
	46	2	**4J-0522**	2	SEAL-O-RING	
	47	1	**4J-0523**	1	SEAL-O-RING	
	48	2	**4J-8996**	2	SEAL-O-RING	
	49	1	**4J-8997**	1	SEAL-O-RING	
	50	1	**5H-4019**	2	COVER	
	51	1	**5J-4664**	1	SPRING	
	52	1	**5P-2228**	2	BOLT (1/2-13X1-IN)	
	53	1	**5P-7892**	1	BOLT-12 POINT HEAD (7/16-14X2.75-IN)	
	54	1	**5P-7972**	4	BOLT-12 POINT HEAD (7/16-14X1.75-IN)	
	55	1	**5S-7382**	12	BOLT (3/8-16X1.375-IN)	
	56	2	**6E-4343**	2	VALVE	
	57	1	**6J-3134**	2	SEAL-O-RING	
	58	2	**6V-8397**	2	SEAL-O-RING	

234-3025 VALVE GP-CONTROL *(contd.)* i02300568

NOTE	REF NO	GRAPHIC REF	PART NUMBER	QTY	PART NAME 1 2 3 4 5 6 (PRODUCT LEVEL)	SEE PAGE
	59	2	**6V-9200**	1	ELBOW	
	60	2	**6V-9829**	2	CAP AS	
	61	1	**7D-9749**	1	SEAL-O-RING	
	62	1	**7J-1592**	1	COVER	
	63	1	**7M-5717**	1	SPACER (0.062-IN THK)	
	64	2	**7M-8485**	2	SEAL-O-RING	
	65	1	**7X-0288**	8	BOLT (3/8-16X1.625-IN)	
	66	1	**7X-0291**	2	BOLT (3/8-16X3.75-IN)	
	67	1	**7X-0308**	8	BOLT (7/16-14X1.375-IN)	
	68	1	**7X-0328**	4	BOLT (1/2-13X3.5-IN)	
	69	1	**8C-7323**	2	BOLT (3/8-16X6-IN)	
	70	2	**8F-8882**	2	SEAL-O-RING	
	71	1	**8J-7360**	1	PLUG (1-5/8-12-THD)	
	72	2	**8J-7366**	2	PLUG (3/8-16-THD)	
	73	1	**8J-7462**	1	SEAT	
	74	1	**8J-7466**	1	SEAT	
	75	1	**8T-4223**	4	WASHER-HARD (13.5X25.5X3-MM THK)	
	76	1	**8T-4896**	12	WASHER-HARD (10.2X18.5X2.5-MM THK)	
	77	1	**8T-5360**	8	WASHER (12X22.5X2.5-MM THK)	
	78	2	**8T-9041**	1	CONNECTOR	
	79	1	**9J-5498**	1	SPRING (OUTER)	
	80	2	**9J-5753**	2	SPRING (INNER)	
	81	2	**9J-5754**	2	SPRING (OUTER)	
	82	1	**9T-3746**	1	VALVE	
	83	2	**9T-3747**	2	VALVE	
	84	1	**9T-5483**	1	BODY-VALVE	
Y	85	2	**9T-5769**	1	VALVE GP-CONTROL (BLADE RAISE, LOWER, TILT)	665

B-USE AS REQUIRED
Y-SEPARATE ILLUSTRATION

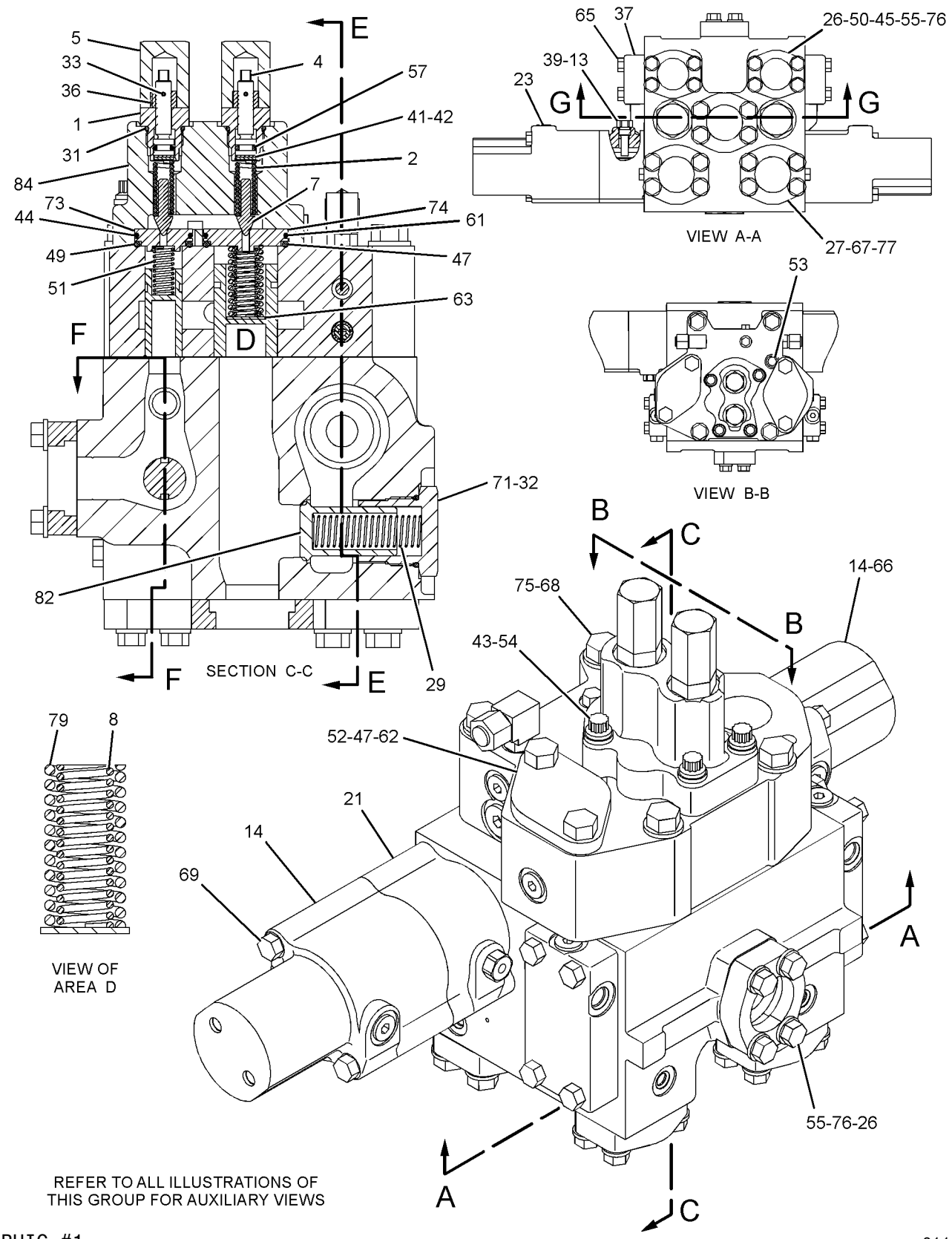

GRAPHIC #1

g01152723

234-3025 VALVE GP-CONTROL *(contd.)* i02300568

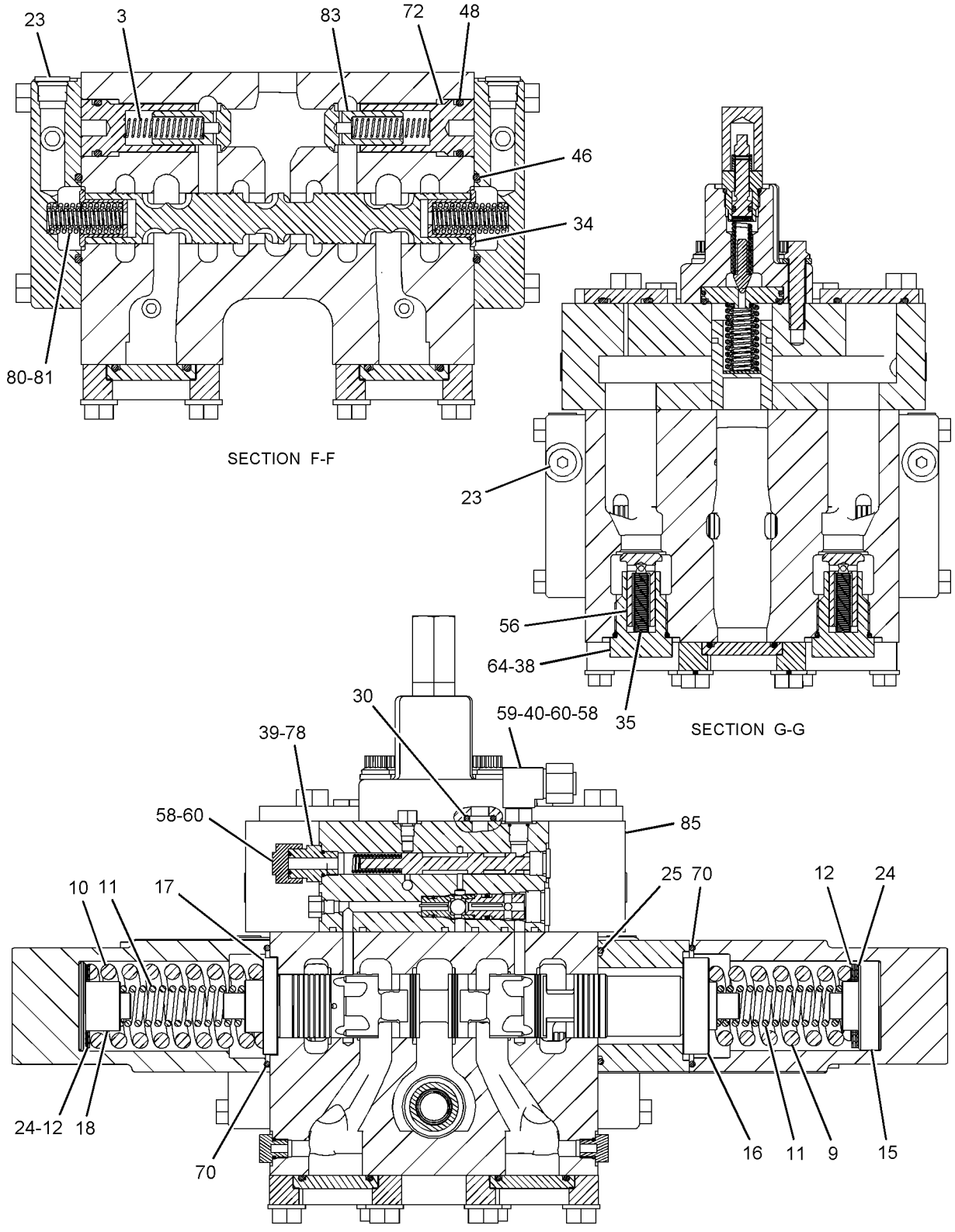

GRAPHIC #2

<END>

g01050929

HYDRAULIC SYSTEM

235-3506 VALVE GP-CONTROL–RIPPER

S/N: RJG1-528
PART OF 216-2552 CONTROL AR-HYDRAULIC
AN ATTACHMENT

SMCS-5051 **i02274332**

NOTE	REF NO	GRAPHIC REF	PART NUMBER	QTY	PART NAME 1 2 3 4 5 6 (PRODUCT LEVEL)	SEE PAGE
	2	1	*184-1192*	1	PLUG AS	
		1	**2M-9780**	1	SEAL-O-RING	
		1	**6V-3505**	1	RING-BACKUP	
		1	**095-1751**	1	SEAL-O-RING	
	6	1	**123-2564**	2	PLUG	
	7	1	**1P-4577**	16	FLANGE-HALF	
	8	1	**1P-4578**	6	FLANGE-HALF	
	9	1	**2S-4078**	1	SEAL-O-RING	
	10	1	**3G-3475**	2	SPRING	
	11	1	**3G-8710**	2	PLUG	
	12	1	**4J-0522**	1	SEAL-O-RING	
	13	1	**4J-0526**	2	SEAL-O-RING	
	14	1	**4T-2620**	2	SPRING	
	15	1	**5H-4020**	1	COVER	
	16	1	**5S-7379**	2	BOLT (3/8-16X0.875-IN)	
	17	1	**5S-7382**	32	BOLT (3/8-16X1.375-IN)	
	18	1	**6E-4343**	2	VALVE	
	19	1	**6E-4432**	4	RETAINER	
	20	1	**6E-4492**	2	HOUSING	
	21	1	**6K-6307**	2	SEAL-O-RING	
	22	1	**6V-4432**	4	BOLT (1/2-13X4-IN)	
	23	1	**7M-8485**	2	SEAL-O-RING	
	24	1	**7X-0308**	12	BOLT (7/16-14X1.375-IN)	
	25	1	**8M-7145**	2	WASHER (10.2X28.5X5-MM THK)	
	26	1	**8T-4223**	4	WASHER-HARD (13.5X25.5X3-MM THK)	
	27	1	**8T-4896**	32	WASHER-HARD (10.2X18.5X2.5-MM THK)	
	28	1	**8T-5360**	12	WASHER (12X22.5X2.5-MM THK)	
	29	1	**9T-8206**	1	VALVE	
	30	1	**9T-8207**	1	PLUG	
	31	1	**9T-8208**	1	SPRING	

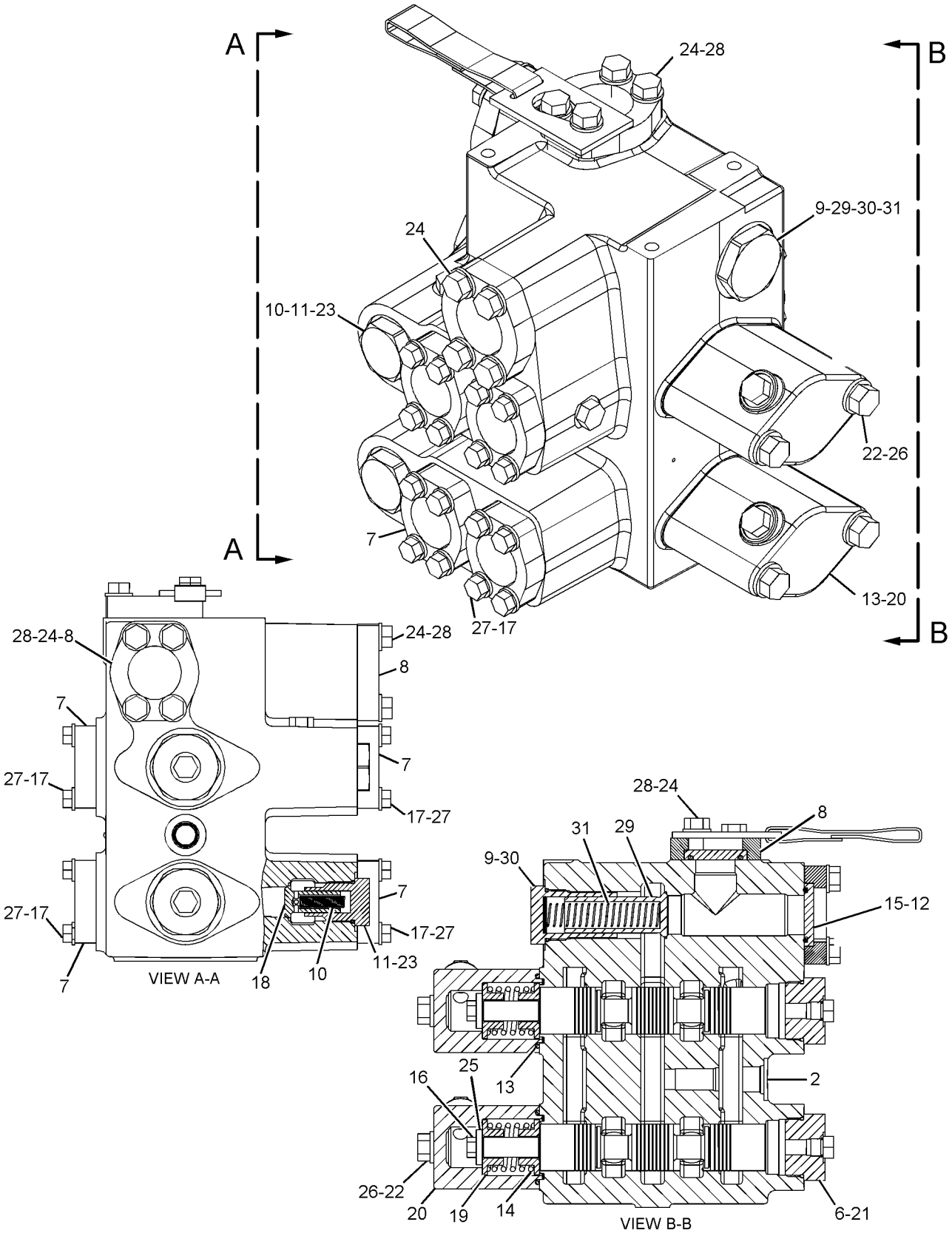

GRAPHIC #1 **<END>** g01141048

HYDRAULIC SYSTEM

237-7654 VALVE GP-CONTROL–RIPPER

S/N: RJG529-UP
PART OF 216-2552 CONTROL AR-HYDRAULIC
AN ATTACHMENT

SMCS-5051 **i02029220**

NOTE	REF NO	GRAPHIC REF	PART NUMBER	QTY	PART NAME 1 2 3 4 5 6 (PRODUCT LEVEL)	SEE PAGE
	3	1	*184-1192*	1	PLUG AS	
	3A	1	**2M-9780**	1	SEAL-O-RING	
	3B	1	**6V-3505**	1	RING-BACKUP	
	3C	1	**095-1751**	1	SEAL-O-RING	
	6	1	**1P-4577**	16	FLANGE-HALF	
	7	1	**1P-4578**	6	FLANGE-HALF	
	8	1	**2S-4078**	1	SEAL-O-RING	
	9	1	**3G-3475**	2	SPRING	
	10	1	**3G-8710**	2	PLUG	
	11	1	**4J-0522**	1	SEAL-O-RING	
	12	1	**4J-0525**	2	SEAL-O-RING	
	13	1	**4J-0526**	2	SEAL-O-RING	
	14	1	**4T-2620**	2	SPRING	
	15	1	**5H-4020**	1	COVER	
	16	1	**5S-7379**	2	BOLT (3/8-16X0.875-IN)	
	17	1	**5S-7382**	32	BOLT (3/8-16X1.375-IN)	
	18	1	**6E-4343**	2	VALVE (TIP CYLINDER)	
	19	1	**6E-4432**	4	RETAINER	
	20	1	**6E-4492**	2	HOUSING	
	21	1	**6V-4432**	4	BOLT (1/2-13X4-IN)	
	22	1	**7M-8485**	2	SEAL-O-RING	
	23	1	**7X-0308**	12	BOLT (7/16-14X1.375-IN)	
	24	1	**7X-0326**	4	BOLT (1/2-13X3-IN)	
	25	1	**8M-7145**	2	WASHER (10.2X28.5X5-MM THK)	
	26	1	**8T-4223**	8	WASHER-HARD (13.5X25.5X3-MM THK)	
	27	1	**8T-4896**	32	WASHER-HARD (10.2X18.5X2.5-MM THK)	
	28	1	**8T-5360**	12	WASHER (12X22.5X2.5-MM THK)	
	29	1	**9T-8206**	1	VALVE	
	30	1	**9T-8207**	1	PLUG	
	31	1	**9T-8208**	1	SPRING	
	32	1	**9T-8210**	2	HOUSING	

237-7654 VALVE GP-CONTROL *(contd.)* **i02029220**

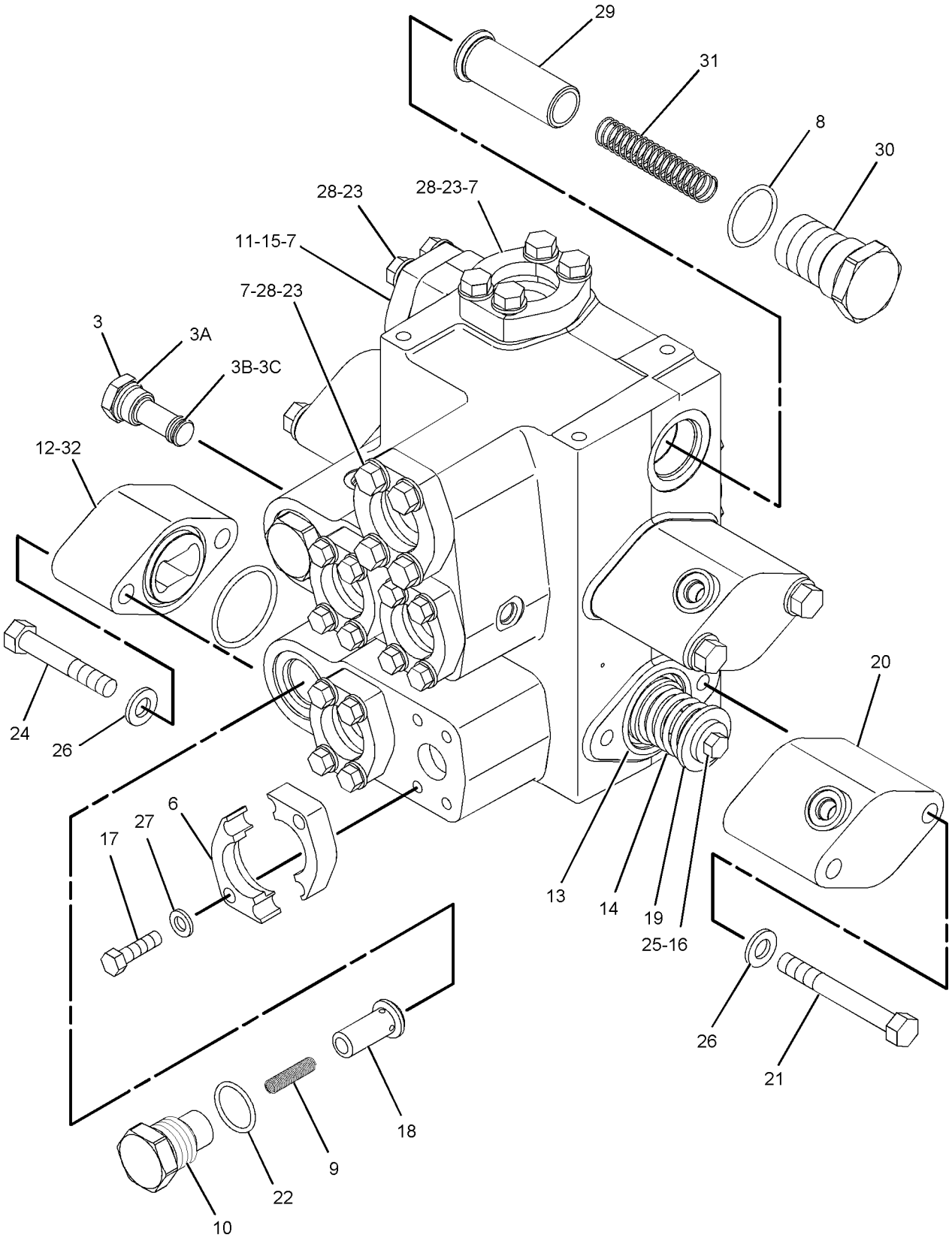

GRAPHIC #1 **<END>** g01027444

HYDRAULIC SYSTEM

244-7000 VALVE GP-CONTROL—TRANSMISSION

S/N: DRL1-UP

PART OF 219-3034 CONTROL GP-TRANSMISSION HYD

SMCS-5051 **i02050471**

NOTE	REF NO	GRAPHIC REF	PART NUMBER	QTY	PART NAME 1 2 3 4 5 6 (PRODUCT LEVEL)	SEE PAGE
	1	1	**133-4772**	1	MANIFOLD	
	2	1	**133-0772**	1	PLATE	
	3	1	**169-0486**	1	MANIFOLD	
	4	1	**6Y-4638**	1	PLUG-HEX SOCKET (1-5/16-12-2A THD)	
	5	1	**7M-8485**	1	SEAL-O-RING	
	6	1	**106-9212**	1	SPRING	
	7	1	**133-6567**	1	SPOOL AS-RELIEF	
	7A	1	**3D-8317**	1	RING-RETAINING	
	7B	1	**4B-9880**	1	BALL	
	7C	1	**4M-2381**	1	SPRING	
	7D	1	**8M-1013**	1	RETAINER	
	8	1	**109-3969**	1	STOP	
	9	1	**5B-3180**	1	NUT (5/16-18-THD)	
	10	1	**9M-1974**	5	WASHER-HARD (8.8X16X2-MM THK)	
	11	1	**4M-5905**	1	SCREW-ADJUSTMENT (5/16-18X1-IN)	
	12	1	**9W-5568**	1	SLUG	
	14	1	**6L-4784**	3	BOLT-12 POINT HEAD (5/16-18X1.75-IN)	
	15	1	**8H-8769**	1	BOLT (5/16-18X4.25-IN)	
	16	1	**1T-0416**	6	BOLT (5/16-18X0.75-IN)	
	17	1	**1P-7404**	1	EYEBOLT (5/16-18X1.15-IN)	
	18	1	**5S-0003**	1	NUT (5/16-18-THD)	

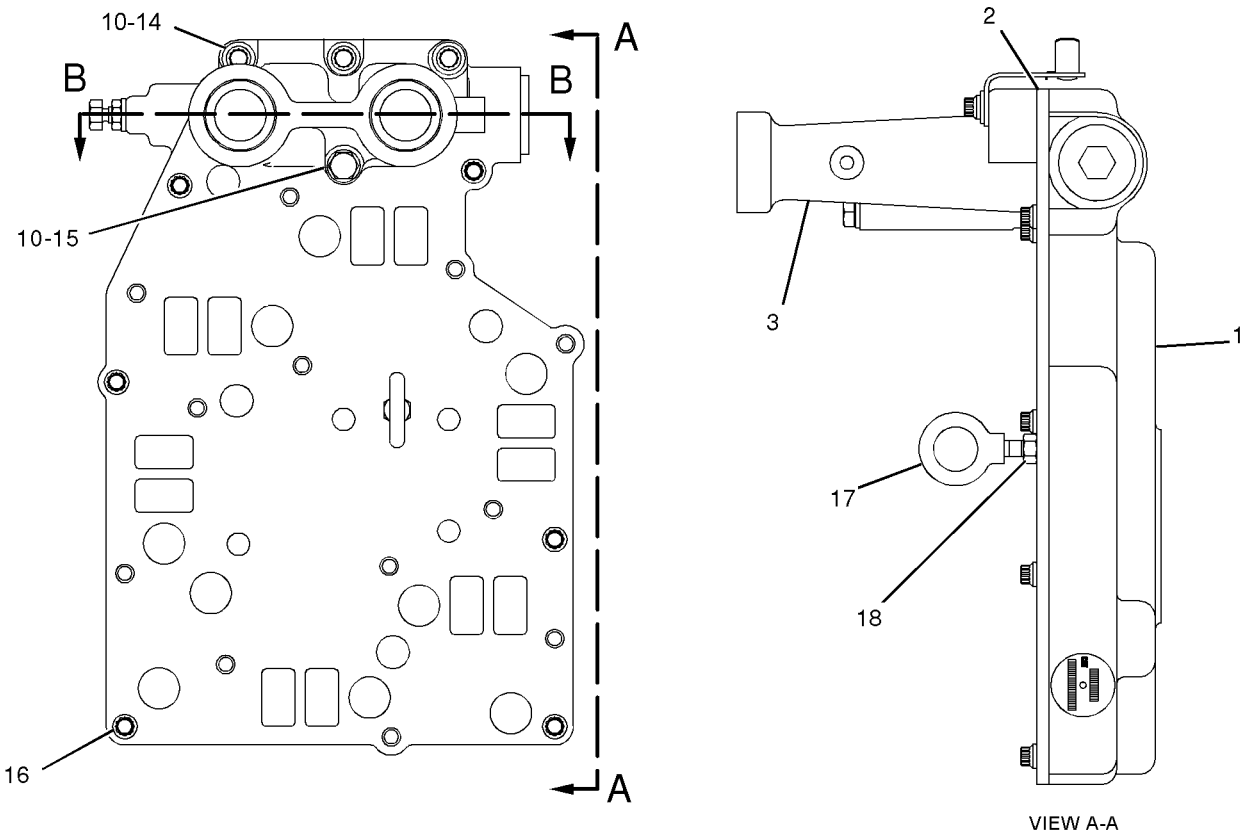

VIEW A-A

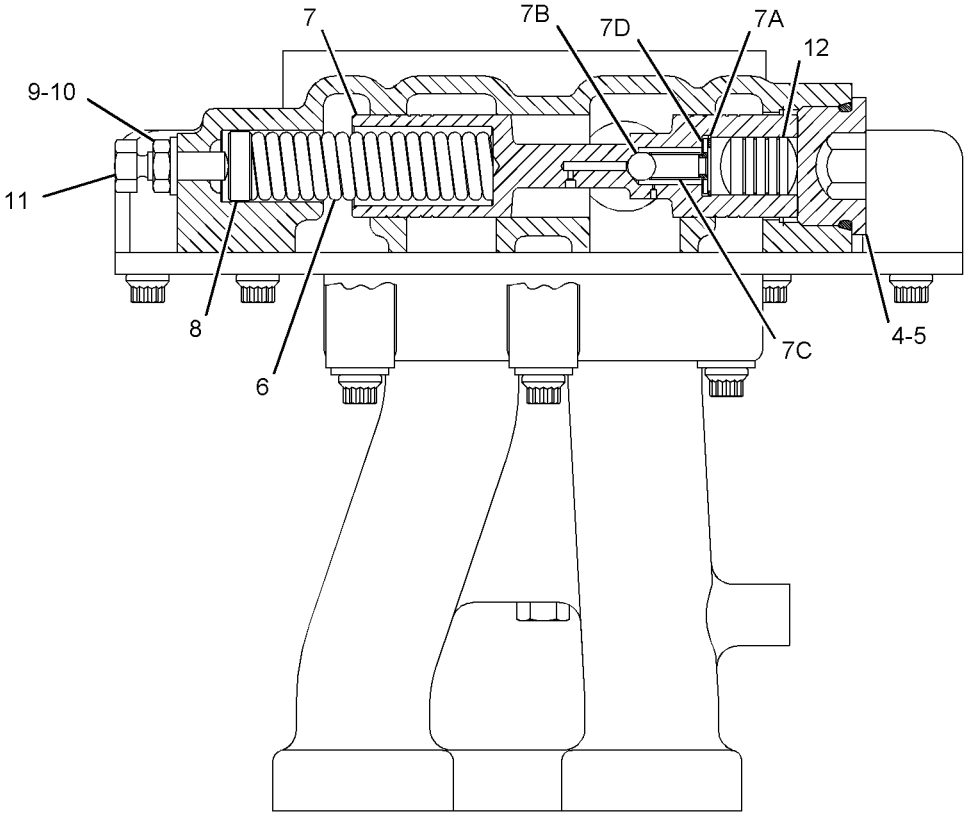

SECTION B-B

GRAPHIC #1

<END>

g01053036

HYDRAULIC SYSTEM

164-4536 VALVE GP-DIVERTER–AUTO CARRY

S/N: RJG1-UP
PART OF 216-1726 LINES GP-HYDRAULIC
AN ATTACHMENT

SMCS-5066 **i01834387**

NOTE	REF NO	GRAPHIC REF	PART NUMBER	QTY	PART NAME 1 2 3 4 5 6 (PRODUCT LEVEL)	SEE PAGE
	1	1	**6V-3965**	1	FITTING AS (QUICK DISCONNECT)	
	2	1	**3J-1907**	4	SEAL-O-RING	
	3	1	**6V-0852**	1	CAP-DUST (DIVERTER VALVE)	
	4	1	**5S-2256**	2	BOLT (1/2-13X1.75-IN)	
	5	1	**215-5627**	1	SPRING	
	6	1	**215-5628**	1	SPRING	
	7	1	**215-5629**	1	SPRING	
Y	8	1	**152-8340**	1	VALVE GP-SOLENOID (24-VOLT)	686
	9	1	**215-5631**	1	BLOCK	
	10	1	**215-5789**	1	SEAL-O-RING	
	11	1	**215-5640**	1	BOLT-SHOULDER	
	12	1	**215-5636**	1	CAP	
	13	1	**215-5639**	1	SEAT-SPRING	
	14	1	**3P-1979**	1	SEAL-O-RING	
	15	1	**3D-7805**	1	SEAL-O-RING	
	16	1	**5S-2389**	2	BOLT-SOCKET HEAD (1/2-13X2.75-IN)	
	17	1	**9S-8004**	3	PLUG	

Y-SEPARATE ILLUSTRATION

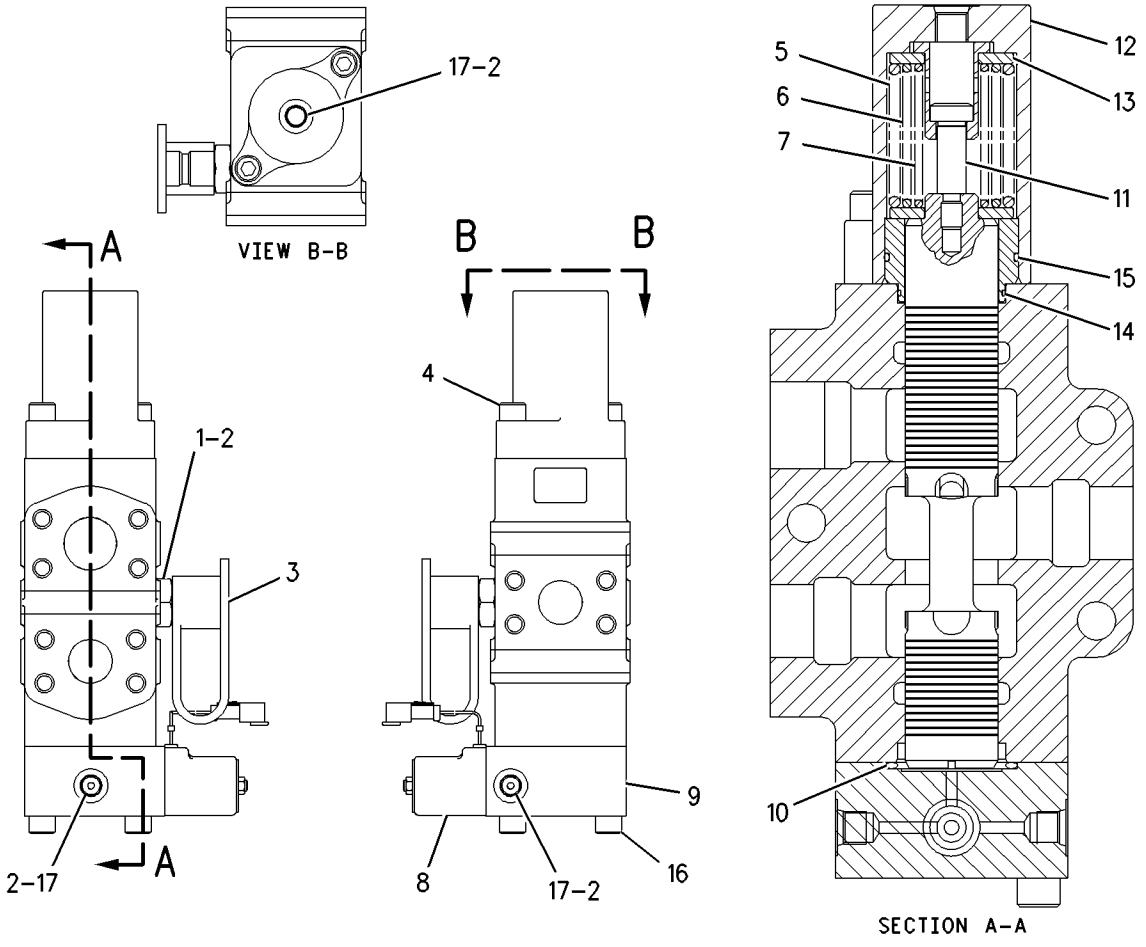

GRAPHIC #1 **<END>** g00927374

235-5299 VALVE GP-DIVERTER—IMPLEMENT PILOT OIL

S/N: RJG1-UP

PART OF 232-3242 MANIFOLD GP-CONTROL

SMCS-5066 **i02285635**

NOTE	REF NO	GRAPHIC REF	PART NUMBER	QTY	PART NAME 1 2 3 4 5 6 (PRODUCT LEVEL)	SEE PAGE
J	1	1	**2M-9780**	1	SEAL-O-RING	
J	2	1	**6V-5142**	1	SEAL-O-RING	
J	3	1	**169-1617**	2	RING-BACKUP	
J	4	1	**095-1751**	1	SEAL-O-RING	
J	5	1	**169-1616**	2	RING-BACKUP	
J	6	1	**161-6149**	1	SEAL-O-RING	
J	7	1	**161-6161**	2	RING-BACKUP	
					AVAILABLE REPAIR KIT(S):	
J			**200-6282**	1	KIT-SEAL (DIVERTER VALVE) (DIVERTER VALVE)	

J-KIT MARKED J SERVICES PARTS MARKED J

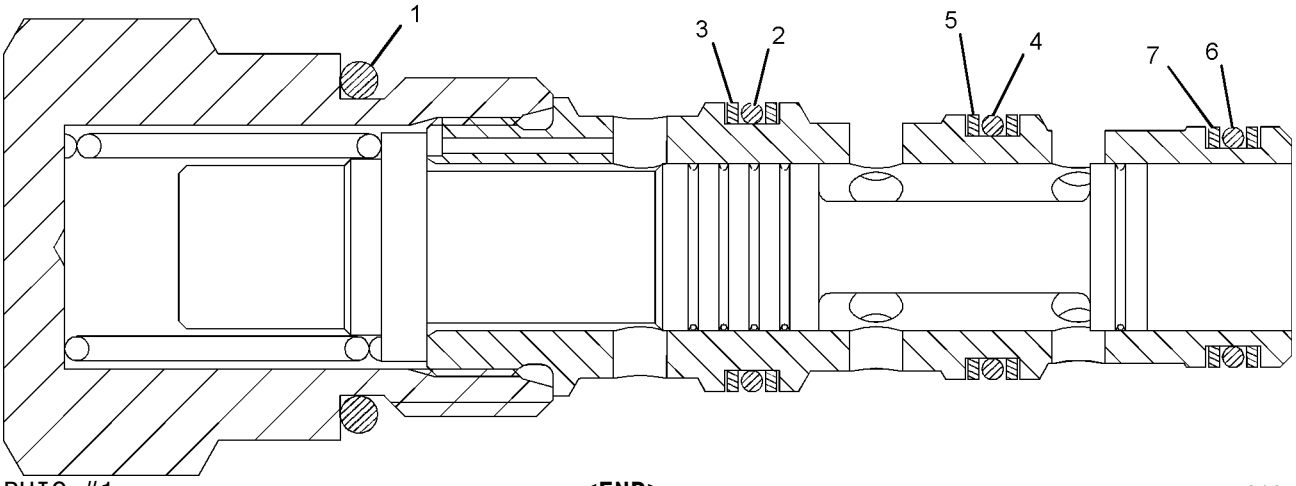

GRAPHIC #1 **<END>** g01051443

252-8042 VALVE GP-PRESSURE REDUCING–
IMPLEMENT PILOT OIL
S/N: RJG1-UP
PART OF 232-3242 MANIFOLD GP-CONTROL

SMCS-5117 **i02273948**

NOTE	REF NO	GRAPHIC REF	PART NUMBER	QTY	PART NAME 1 2 3 4 5 6 (PRODUCT LEVEL)	SEE PAGE
	1	1	**2M-9780**	1	SEAL-O-RING	
	2	1	**6V-3505**	1	RING-BACKUP	
	3	1	**8C-3132**	1	SEAL-O-RING	
	4	1	**6E-0410**	1	SEAL-O-RING	
	5	1	**5P-2199**	1	RING-BACKUP	

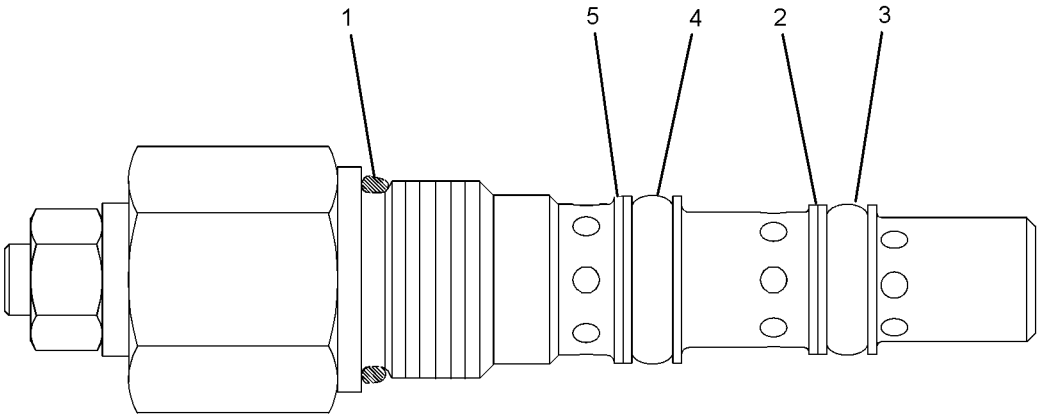

GRAPHIC #1 **<END>** g01139064

229-0890 VALVE GP-PUMP CONTROL–PRESSURE, FLOW COMPENSATOR–HYDRAULIC FAN

S/N: RJG1-UP

PART OF 220-0780 PUMP GP-PISTON

SMCS-5455 **i02185587**

NOTE	REF NO	GRAPHIC REF	PART NUMBER	QTY	PART NAME 1 2 3 4 5 6 (PRODUCT LEVEL)	SEE PAGE
	1	1	**192-4370**	1	SOLENOID GP-PROPORTIONAL (12-VDC) (HYDRAULIC FAN)	
	2	1	**213-9242**	1	SEAL-O-RING	
	3	1	**213-9247**	1	SEAL-O-RING	
	4	1	**033-6043**	1	SEAL-O-RING	
	5	1	**6V-5049**	1	SEAL-O-RING	
	6	1	**033-6033**	1	SEAL-O-RING	

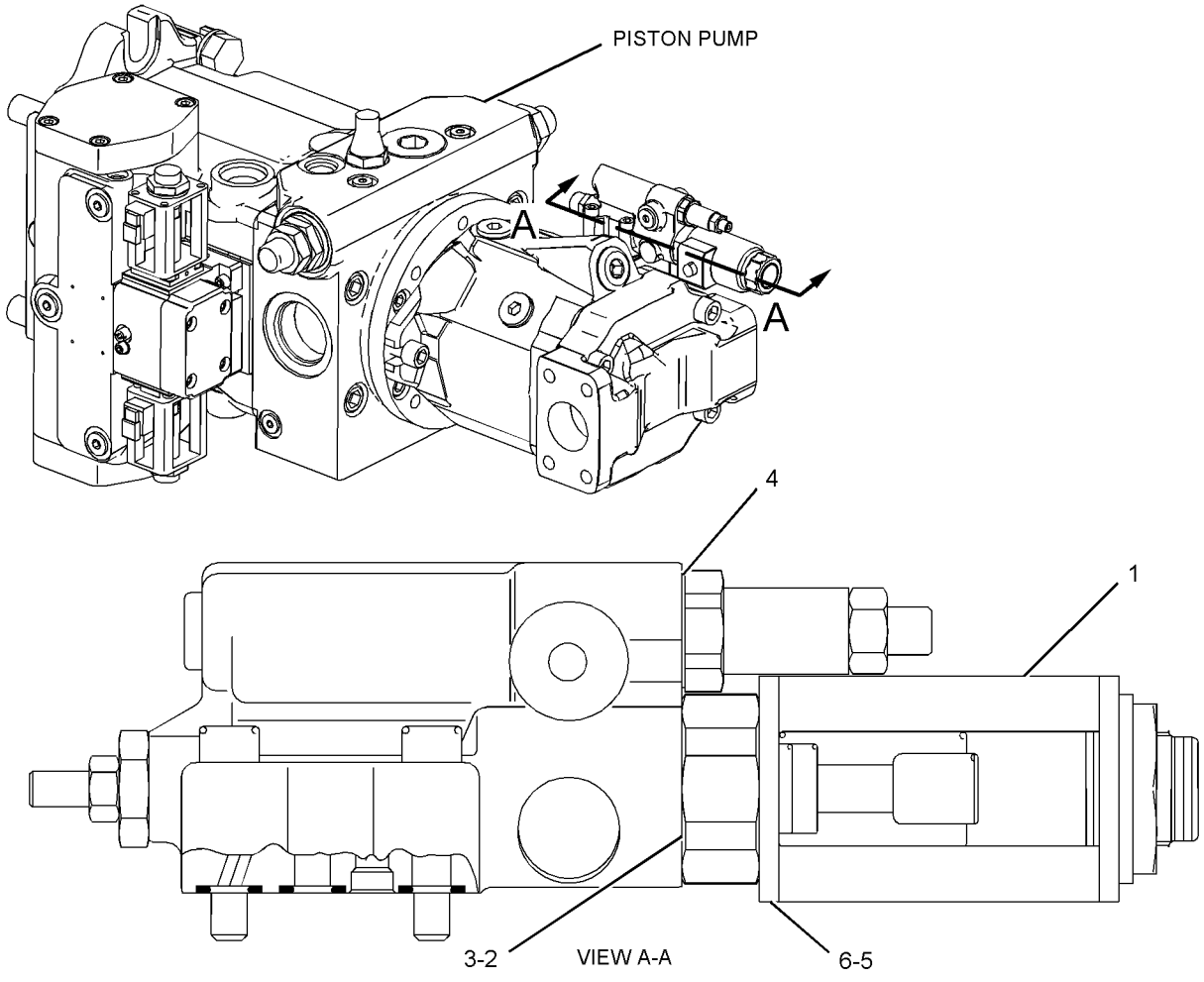

GRAPHIC #1 **<END>** g01106358

HYDRAULIC SYSTEM

4T-4205 VALVE GP-QUICK-DROP

S/N: BHA1-UP; BHF1-UP; RJG1-UP; BHJ1-UP; BHP1-UP
PART OF 7T-3829 CYLINDER & VALVE GP-LIFT
AN ATTACHMENT

SMCS-5110 **i01745979**

NOTE	REF NO	GRAPHIC REF	PART NUMBER	QTY	PART NAME 1 2 3 4 5 6 (PRODUCT LEVEL)	SEE PAGE
C	1	1	**8T-8919**	2	BOLT (1/2-13X1.75-IN)	
C		1	**5P-1076**	2	WASHER-HARD (13.5X30X4-MM THK)	
	2	1	**6V-1849**	1	COVER	
	3	1	**4J-0526**	1	SEAL-O-RING	
C	4	1	**4T-4207**	1	PLUG-ORIFICE	
	5	1	**7M-1297**	1	SPRING	
C	6	1	**9T-4733**	1	MANIFOLD	
	7	1	**8M-2530**	2	BOLT-12 POINT HEAD (1/2-13X1.25-IN)	
	8	1	**4J-5573**	1	SEAL-O-RING	
	9	1	**1D-4566**	5	BOLT (1/2-13X3.5-IN)	
	10	1	**4J-0522**	3	SEAL-O-RING	
	11	1	**4J-0525**	1	SEAL-O-RING	
C	12	1	**7X-0358**	1	BOLT (5/8-11X5.5-IN)	
C	13	1	**7X-0352**	1	BOLT (5/8-11X4-IN)	
C	14	1	**3G-9105**	1	ORIFICE	

C-CHANGE FROM PREVIOUS TYPE

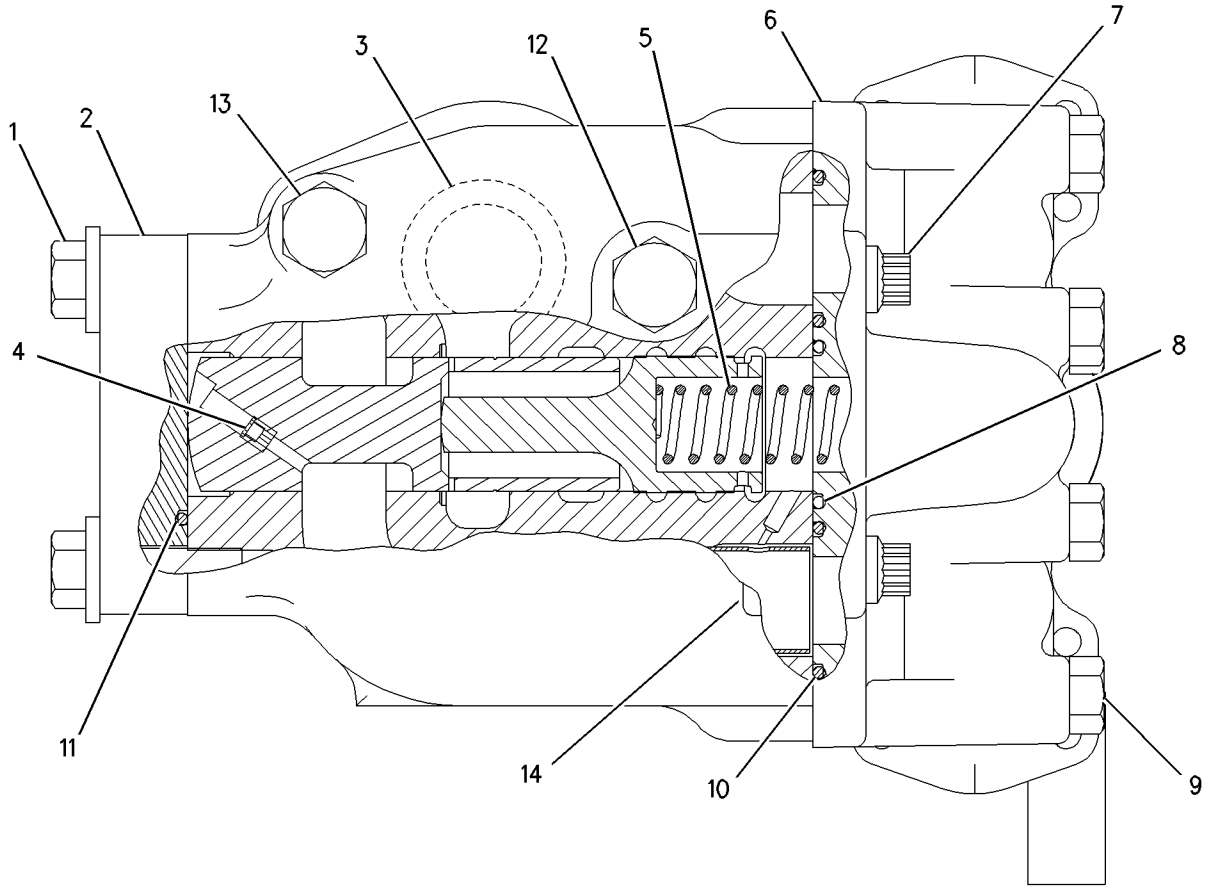

GRAPHIC #1 **<END>** g00876050

225-8026 VALVE GP-RELIEF–IMPLEMENT PILOT

S/N: RJG1-UP

PART OF 232-3242 MANIFOLD GP-CONTROL

SMCS-5069, 5117 **i01951099**

NOTE	REF NO	GRAPHIC REF	PART NUMBER	QTY	PART NAME 1 2 3 4 5 6 (PRODUCT LEVEL)	SEE PAGE
J	1	1	**161-6149**	1	SEAL-O-RING	
J	2	1	**161-6161**	2	RING-BACKUP	
J	3	1	**2M-9780**	1	SEAL-O-RING	
					AVAILABLE REPAIR KIT(S):	
J			**133-5545**	1	KIT-SEAL (RELIEF VALVE)	

J-KIT MARKED J SERVICES PARTS MARKED J

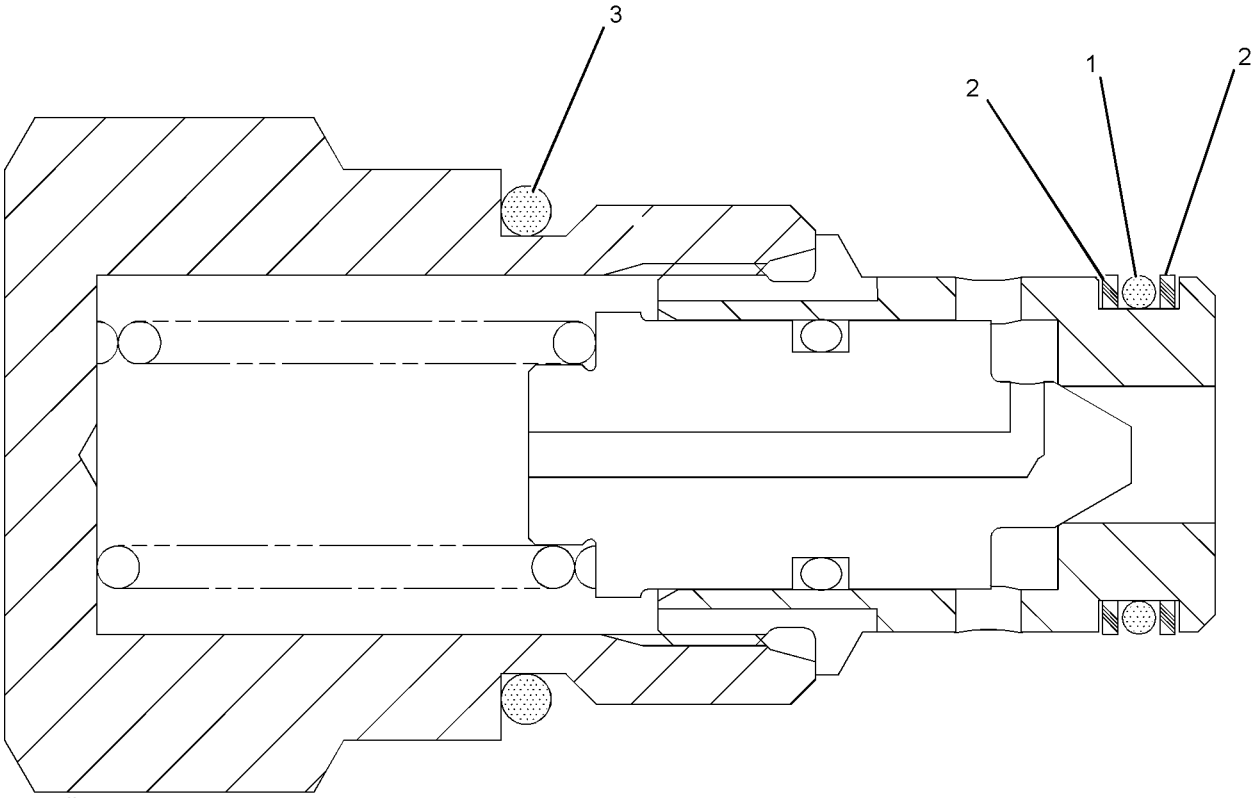

GRAPHIC #1 **<END>** g01019745

220-4551 VALVE GP-SEQUENCE—MANIFOLD TO VALVE

S/N: RJG1-528

PART OF 231-6285 MANIFOLD GP-CONTROL

SMCS-5051 **i01928074**

NOTE	REF NO	GRAPHIC REF	PART NUMBER	QTY	PART NAME 1 2 3 4 5 6 (PRODUCT LEVEL)	SEE PAGE
	1	1	**2M-9780**	1	SEAL-O-RING	
	2	1	**6V-5142**	1	SEAL-O-RING	
	3	1	**095-1751**	1	SEAL-O-RING	
	4	1	**169-1616**	2	RING-BACKUP	
	5	1	**169-1617**	2	RING-BACKUP	
					AVAILABLE REPAIR KIT(S):	
			200-6283	1	KIT-SEAL (SEQUENCE VALVE)	
					(INCLUDES SEAL-O-RINGS & BACKUP RINGS)	

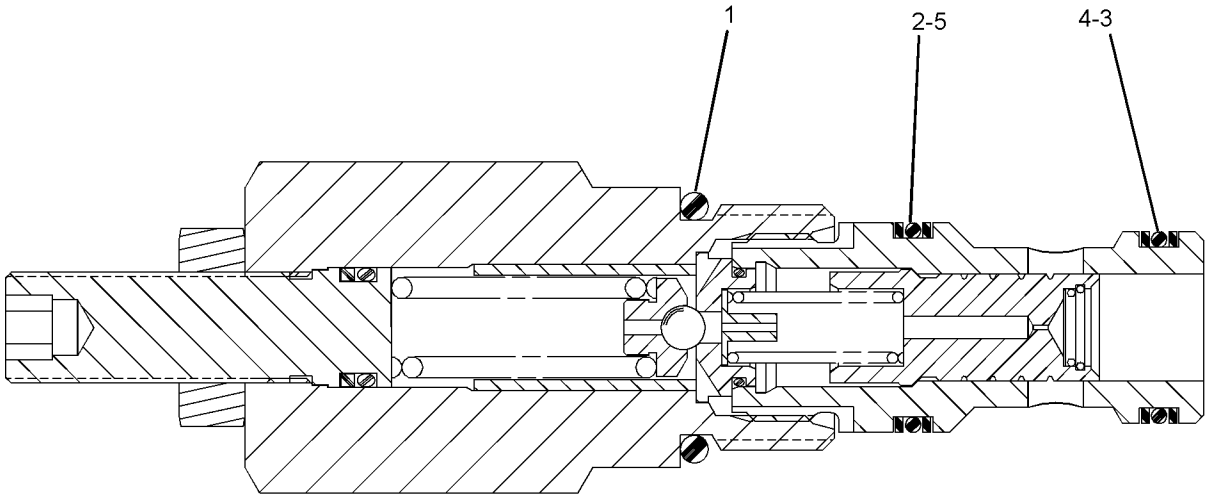

GRAPHIC #1 **<END>** g01044456

HYDRAULIC SYSTEM

4T-4073 VALVE GP-SHUTTLE

S/N: RJG1-UP

PART OF 9T-5769 VALVE GP-CONTROL

SMCS-5079 **i01564592**

NOTE	REF NO	GRAPHIC REF	PART NUMBER	QTY	PART NAME 1 2 3 4 5 6 (PRODUCT LEVEL)	SEE PAGE
	1	1	**033-6039**	1	SEAL-O-RING	
	2	1	**8L-2777**	1	SEAL-O-RING	
	3	1	**6E-0382**	2	RING-BACKUP	
	4	1	**6E-0381**	2	RING-BACKUP	

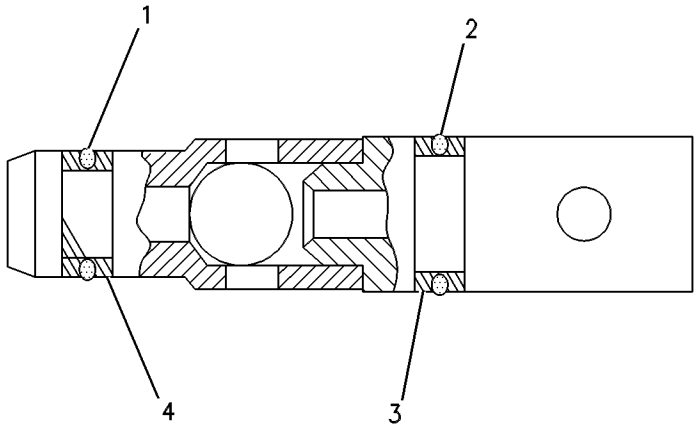

GRAPHIC #1 **<END>** g00279740

3E-8575 VALVE GP-SOLENOID—HYDRAULIC PIN PULLER

S/N: RJG1-UP
PART OF 188-6140 VALVE & MTG GP-CONTROL
AN ATTACHMENT

SMCS-5479 **i01896778**

NOTE	REF NO	GRAPHIC REF	PART NUMBER	QTY	PART NAME 1 2 3 4 5 6 (PRODUCT LEVEL)	SEE PAGE
	1	1	**6T-3382**	1	CARTRIDGE AS	
	2	1	**160-5843**	1	WASHER (16.8X38.1X.5-MM THK)	
	3	1	**157-2284**	1	LOCKNUT-SPECIAL (5/8-18-THD)	
	4	1	**160-5844**	1	WASHER-SPRING (16.3X31.5X1.85-MM THK)	
	5	1	**3E-8581**	1	COIL AS	
	6	1	**102-8804**	1	KIT-RECEPTACLE (4-PIN)	
					(INCLUDES RECEPTACLE AS & WEDGE)	
	7	1	**8T-8729**	4	PIN-CONNECTOR	
	8	1	**1S-9593**	2	STRAP-CABLE	
	9	1	**3E-3377**	1	WEDGE-RECEPTACLE LOCK (4-PIN)	
					AVAILABLE REPAIR KIT(S):	
			126-5948	1	KIT-SEAL (SOLENOID VALVE)	
					(INCLUDES SEAL-O-RINGS & RING-BACKUPS)	

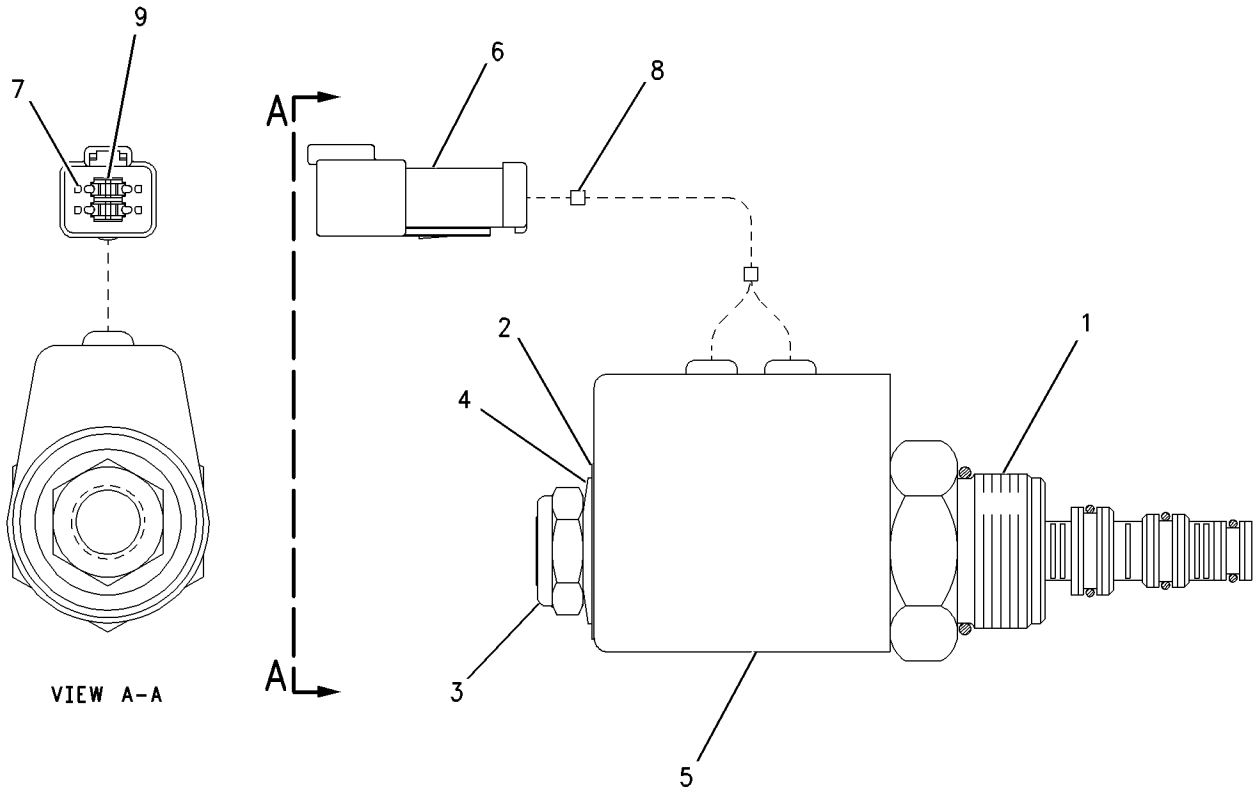

GRAPHIC #1 **<END>** g00623320

3E-9205 VALVE GP-SOLENOID—DUAL TILT CONTROL

S/N: RJG1-UP
24 VOLT
PART OF 225-2321 VALVE GP-TILT CONTROL
AN ATTACHMENT

SMCS-5479 **i02202816**

NOTE	REF NO	GRAPHIC REF	PART NUMBER	QTY	PART NAME 1 2 3 4 5 6 (PRODUCT LEVEL)	SEE PAGE
	1	1	**6T-9244**	1	CARTRIDGE AS	
	2	1	**3E-8581**	1	COIL AS	
	3	1	**102-8804**	1	KIT-RECEPTACLE (4-PIN)	
					(INCLUDES RECEPTACLE AS & WEDGE)	
		1	**3E-3377**	1	WEDGE-RECEPTACLE LOCK (4-PIN)	
		1	**186-3735**	4	PIN-CONNECTOR (16-GA TO 18-GA)	
	4	1	**1S-9593**	2	STRAP-CABLE	
	5	1	**157-2284**	1	LOCKNUT-SPECIAL (5/8-18-THD)	
	6	1	**160-5843**	1	WASHER (16.8X38.1XO.5-MM THK)	
	7	1	**160-5844**	1	WASHER-SPRING (16.3X31.5X1.85-MM THK)	
					AVAILABLE REPAIR KIT(S):	
			126-5948	1	KIT-SEAL (SOLENOID VALVE)	
					(INCLUDES SEAL-O-RINGS & RING-BACKUPS)	

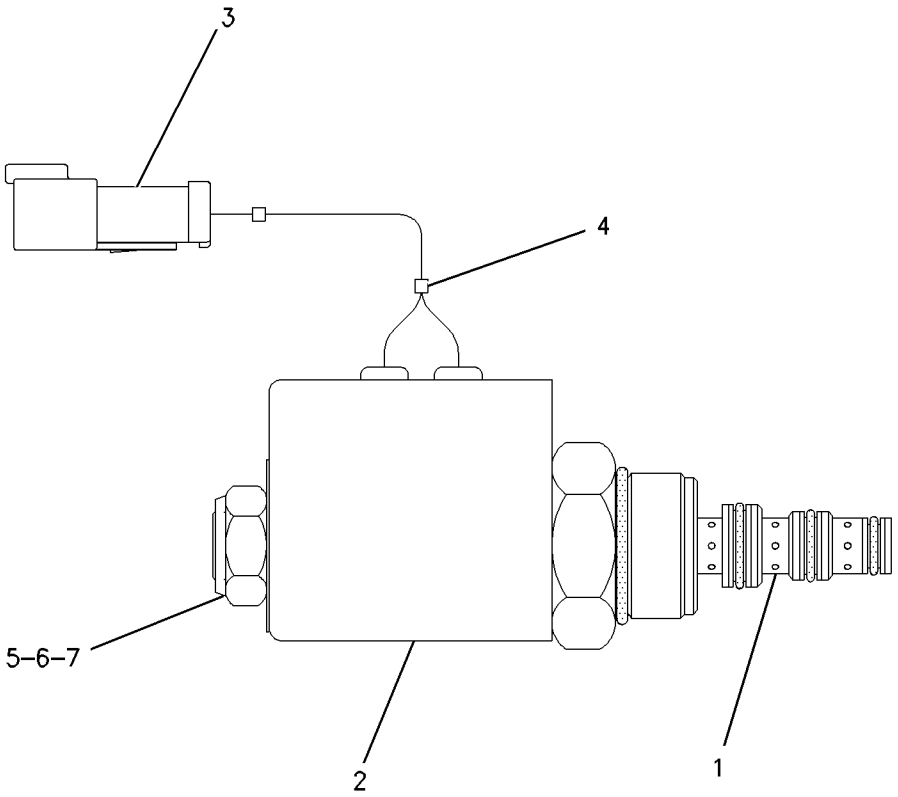

GRAPHIC #1 **<END>** g00657410

152-8340 VALVE GP-SOLENOID—AUTO CARRY—HYDRAULIC FAN

S/N: RJG1-UP
24-VOLT
PART OF 229-1466 MANIFOLD GP-CONTROL, 164-4536 VALVE GP-DIVERTER
AN ATTACHMENT

SMCS-5479 **i02407076**

NOTE	REF NO	GRAPHIC REF	PART NUMBER	QTY	PART NAME 1 2 3 4 5 6 (PRODUCT LEVEL)	SEE PAGE
	1	1	**8C-9987**	1	WASHER (8.3X28X2.5-MM THK)	
	2	1	**111-0343**	1	LOCKNUT (5/16-18-THD)	
	3	1	**152-8338**	1	CARTRIDGE AS	
		1	**8C-9987**	1	WASHER (8.3X28X2.5-MM THK)	
		1	**111-0343**	1	LOCKNUT (5/16-18-THD)	
	4	1	**189-0189**	1	COIL AS	
					—OR—	
	5	1	**227-4398**	1	COIL AS	
					(EACH COIL ASSEMBLY INCLUDES)	
	5A	1	**186-3735**	2	PIN-CONNECTOR (16-GA TO 18-GA)	
	5B	1	**3E-3365**	1	WEDGE-RECEPTACLE LOCK (2-PIN)	
	5C	1	**102-8802**	1	KIT-RECEPTACLE (2-PIN)	
					(INCLUDES RECEPTACLE AS & WEDGE)	
	5D	1	**1S-9593**	2	STRAP-CABLE	
					AVAILABLE REPAIR KIT(S):	
			197-7701	1	KIT-SEAL (SOLENOID VALVE)	
					(INCLUDES SEALS AND RINGS)	

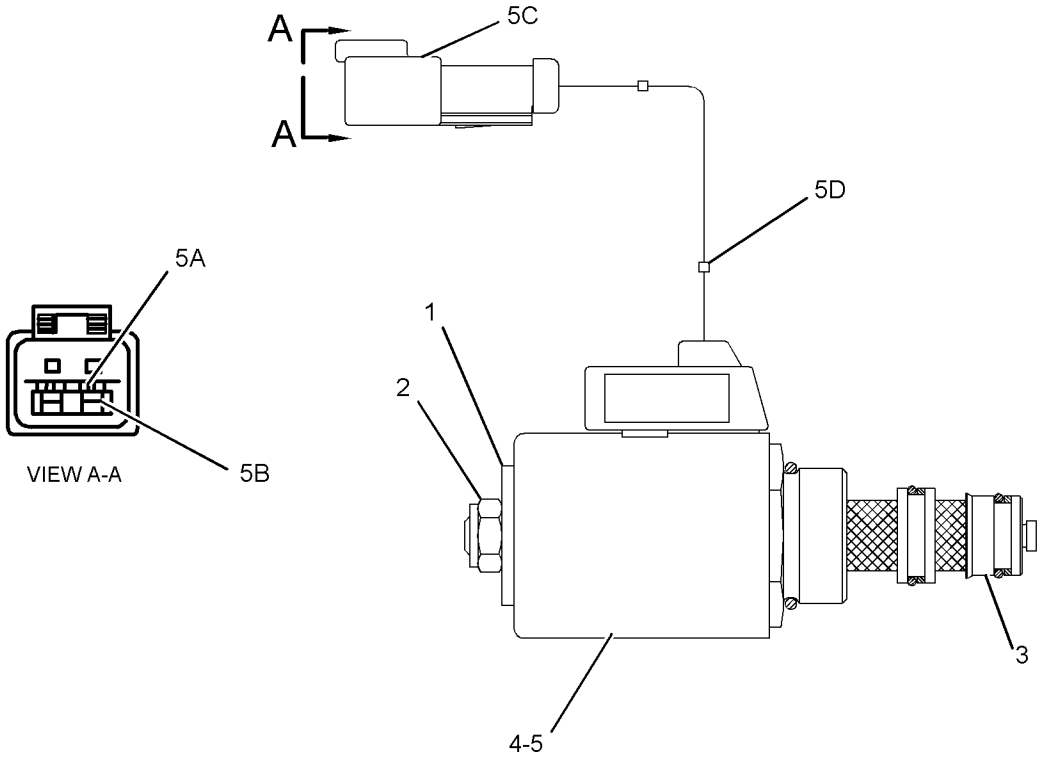

GRAPHIC #1 **<END>** g01202385

174-4916 VALVE GP-SOLENOID–BULLDOZER CONTROL

S/N: RJG1-UP

PART OF 247-3026 VALVE & MTG GP-MAIN CONTROL

SMCS-5479 **i02285677**

NOTE	REF NO	GRAPHIC REF	PART NUMBER	QTY	PART NAME 1 2 3 4 5 6 (PRODUCT LEVEL)	SEE PAGE
	1	1	**226-9622**	1	COIL AS (24 VOLT)	
	2	1	**164-2108**	1	WASHER (13.03X25.4X2.38-MM THK)	
	3	1	**218-2373**	1	NUT (1/2-28-THD)	
Z	4	1		1	SPOOL AS-VALVE	
					AVAILABLE REPAIR KIT(S):	
			108-2148	1	KIT-SEAL (SOLENOID VALVE)	
					(INCLUDES SEAL-O-RINGS)	

Z-NOT SERVICED SEPARATELY

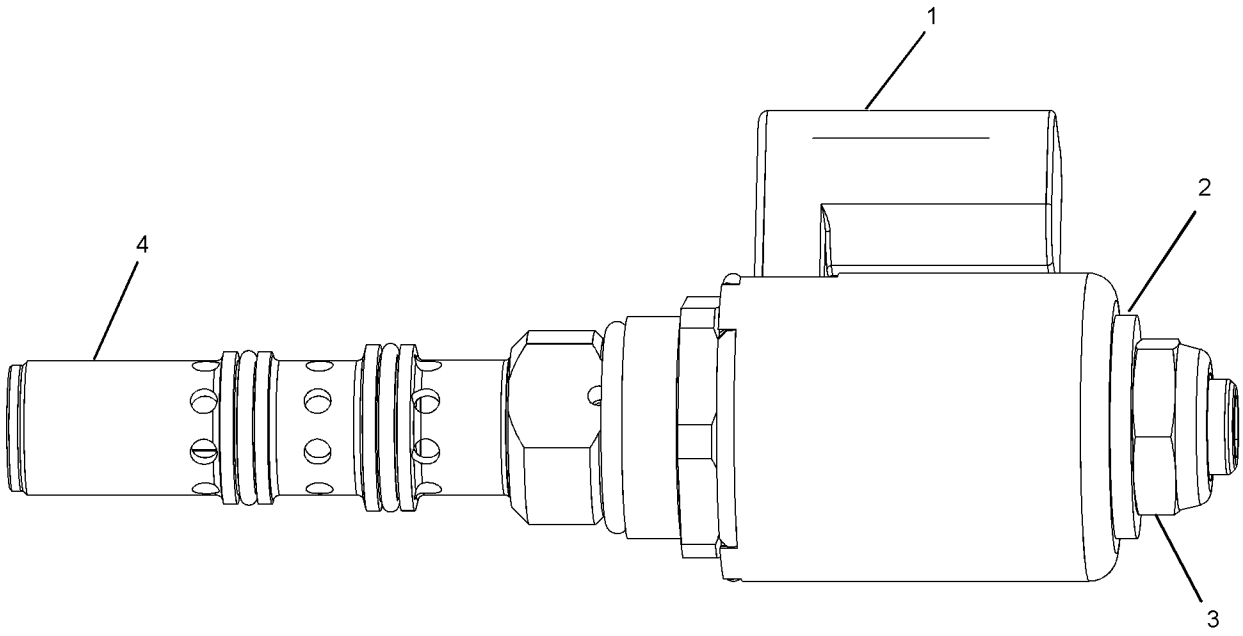

GRAPHIC #1 **<END>** g01140901

203-4157 VALVE GP-SOLENOID–HYDRAULIC FAN–HYDRAULIC LOCKOUT

S/N: RJG1-UP

PART OF 229-1466, 232-3242 MANIFOLD GP-CONTROL

ALSO AN ATTACHMENT

SMCS-5479 **i01989020**

NOTE	REF NO	GRAPHIC REF	PART NUMBER	QTY	PART NAME 1 2 3 4 5 6 (PRODUCT LEVEL)	SEE PAGE
	1	1	**111-0343**	1	LOCKNUT (5/16-18-THD)	
	2	1	**8C-9987**	1	WASHER (8.3X28X2.5-MM THK)	
	3	1	**189-0189**	1	COIL AS	
		1	**1S-9593**	2	STRAP-CABLE	
		1	**102-8802**	1	KIT-RECEPTACLE (2-PIN)	
					(INCLUDES RECEPTACLE AS & WEDGE)	
		1	**3E-3365**	1	WEDGE-RECEPTACLE LOCK (2-PIN)	
		1	**186-3735**	2	PIN-CONNECTOR (16-GA TO 18-GA)	
	4	1	**152-6760**	1	CARTRIDGE AS	
		1	**8C-9987**	1	WASHER (8.3X28X2.5-MM THK)	
		1	**111-0343**	1	LOCKNUT (5/16-18-THD)	
					AVAILABLE REPAIR KIT(S):	
			3G-8175	1	KIT-SEAL (SOLENOID VALVE)	
					(INCLUDES SEAL-O-RINGS AND RING-BACKUP)	

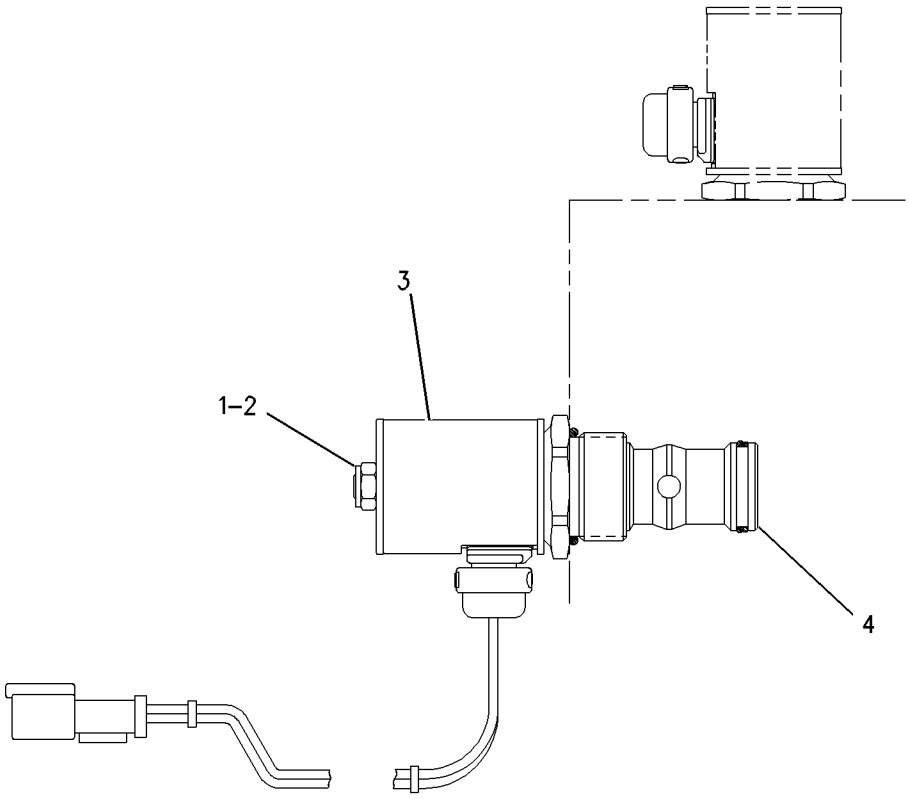

GRAPHIC #1 **<END>** g00805789

HYDRAULIC SYSTEM

222-3137 VALVE GP-SOLENOID–RIPPER CONTROL

S/N: RJG1-UP

PART OF 247-3026 VALVE & MTG GP-MAIN CONTROL

SMCS-5479 **i02046887**

NOTE	REF NO	GRAPHIC REF	PART NUMBER	QTY	PART NAME 1 2 3 4 5 6 (PRODUCT LEVEL)	SEE PAGE
	1	1	**212-0061**	1	FLANGE	
					AVAILABLE REPAIR KIT(S):	
			200-2371	1	KIT-SEAL (SOLENOID VALVE)	
					(INCLUDES SEALS)	

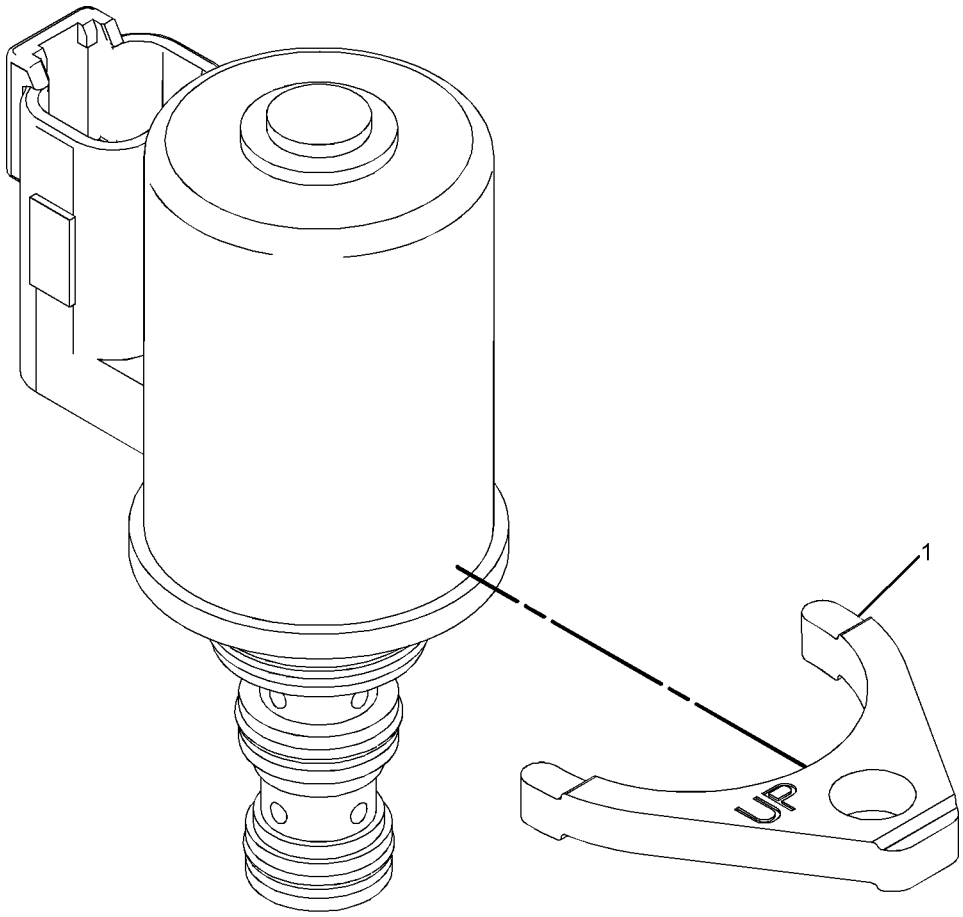

GRAPHIC #1 **<END>** g01051395

HYDRAULIC SYSTEM

225-2321 VALVE GP-TILT CONTROL–DUAL

S/N: RJG1-UP
PART OF 216-2547, 269-8384 CONTROL AR-DUAL TILT
AN ATTACHMENT

SMCS-5051 **i02232534**

NOTE	REF NO	GRAPHIC REF	PART NUMBER	QTY	PART NAME 1 2 3 4 5 6 (PRODUCT LEVEL)	SEE PAGE
Y	1	1	**3E-9205**	1	VALVE GP-SOLENOID (24-VOLT) (DUAL TILT)	685
	4	1	**8J-8621**	2	SPRING	
	5	1	**9J-1722**	1	RETAINER	
	7	1	**223-4443**	2	COVER	
	8	1	**223-4445**	1	RETAINER	
	10	1	**1P-4576**	6	FLANGE-HALF	
	11	1	**1P-4577**	2	FLANGE-HALF	
	12	1	**3V-2431**	4	WASHER (10.2X16X2-MM THK)	
	13	1	**4J-0522**	2	SEAL-O-RING	
	14	1	**5P-0076**	4	BOLT-12 POINT HEAD (3/8-16X1.5-IN)	
	15	1	**5S-7382**	16	BOLT (3/8-16X1.375-IN)	
	16	1	**8T-4896**	16	WASHER-HARD (10.2X18.5X2.5-MM THK)	
	17	1	**173-3993**	4	PLUG AS	
	18	1	**162-0177**	1	PLUG AS	

Y-SEPARATE ILLUSTRATION

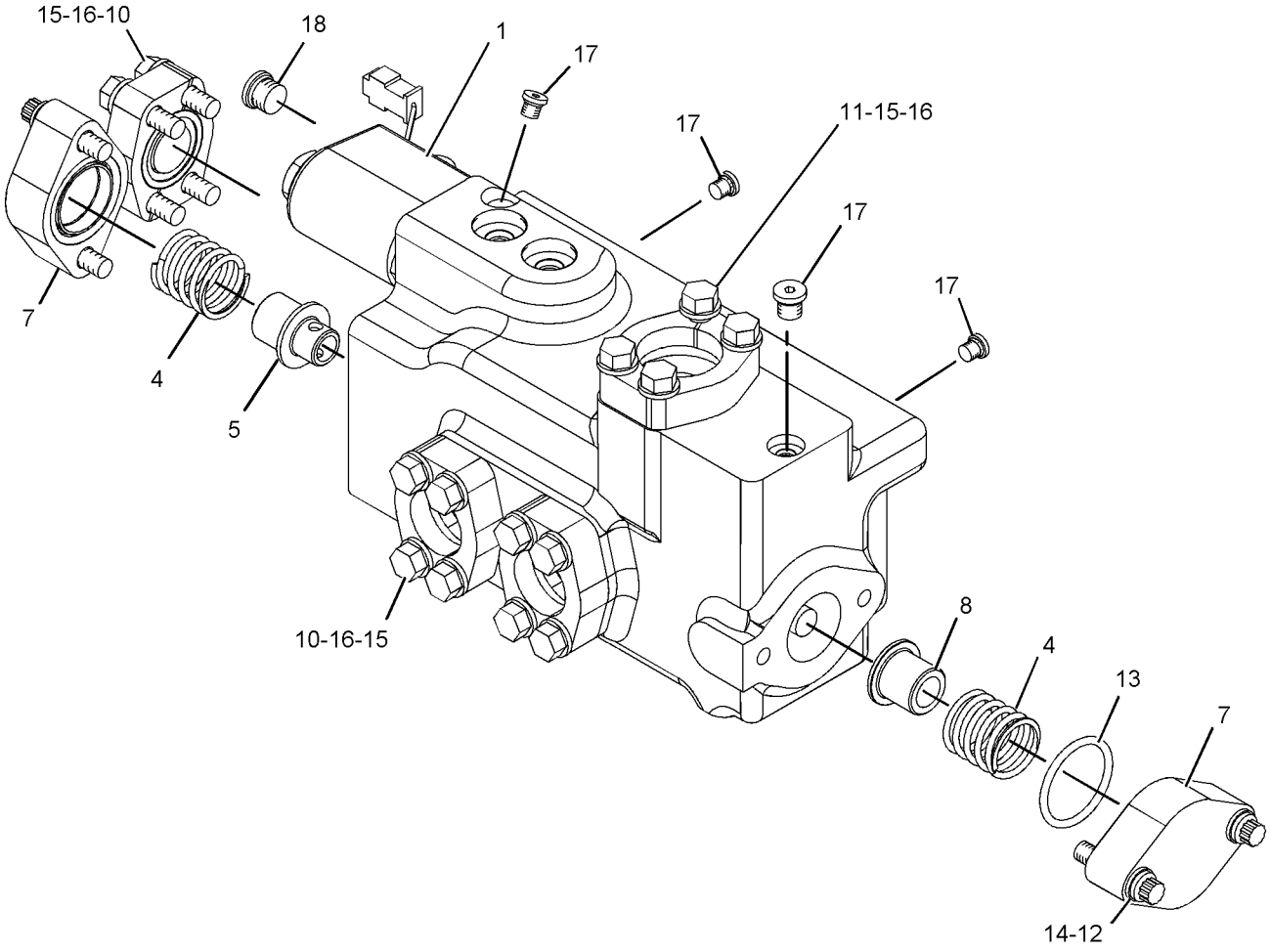

GRAPHIC #1 **<END>** g01126501

180-2398 BLOCK GP-PUSH

S/N: RJG1-UP
FIELD CONVERSION
FOR USE WITH 216-0120—PAGE 751, 216-0121—PAGE 752
AN ATTACHMENT

SMCS-6062 **i01351611**

NOTE	REF NO	GRAPHIC REF	PART NUMBER	QTY	PART NAME 1 2 3 4 5 6 (PRODUCT LEVEL)	SEE PAGE
					(INDIVIDUAL PARTS ARE NOT SERVICED SEPARATELY)	

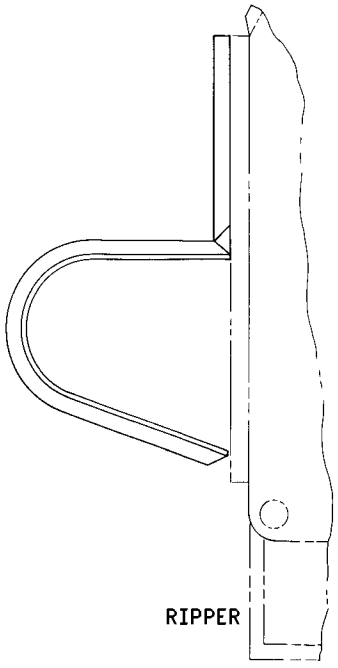

GRAPHIC #1 **<END>** g00234472

185-1713 BLOCK GP-PUSH–RIPPER

S/N: RJG1-UP

FOR USE WITH 180-2401 RIPPER AR, 216-0121–PAGE 752, 216-0122–PAGE 753.
CANNOT BE USED WITH 216-0120–PAGE 751, 216-0122–PAGE 753
AN ATTACHMENT

SMCS-6062 **i02040743**

NOTE	REF NO	GRAPHIC REF	PART NUMBER	QTY	PART NAME 1 2 3 4 5 6 (PRODUCT LEVEL)	SEE PAGE
	1	1	**180-2409**	1	CARRIAGE AS	
	1A	1	**2V-0447**	4	BEARING-SLEEVE	
	1B	1	**2V-1256**	4	BEARING-SLEEVE	
	1C	1	**2J-1227**	2	RETAINER	
	1D	1	**3J-6035**	2	RETAINER	

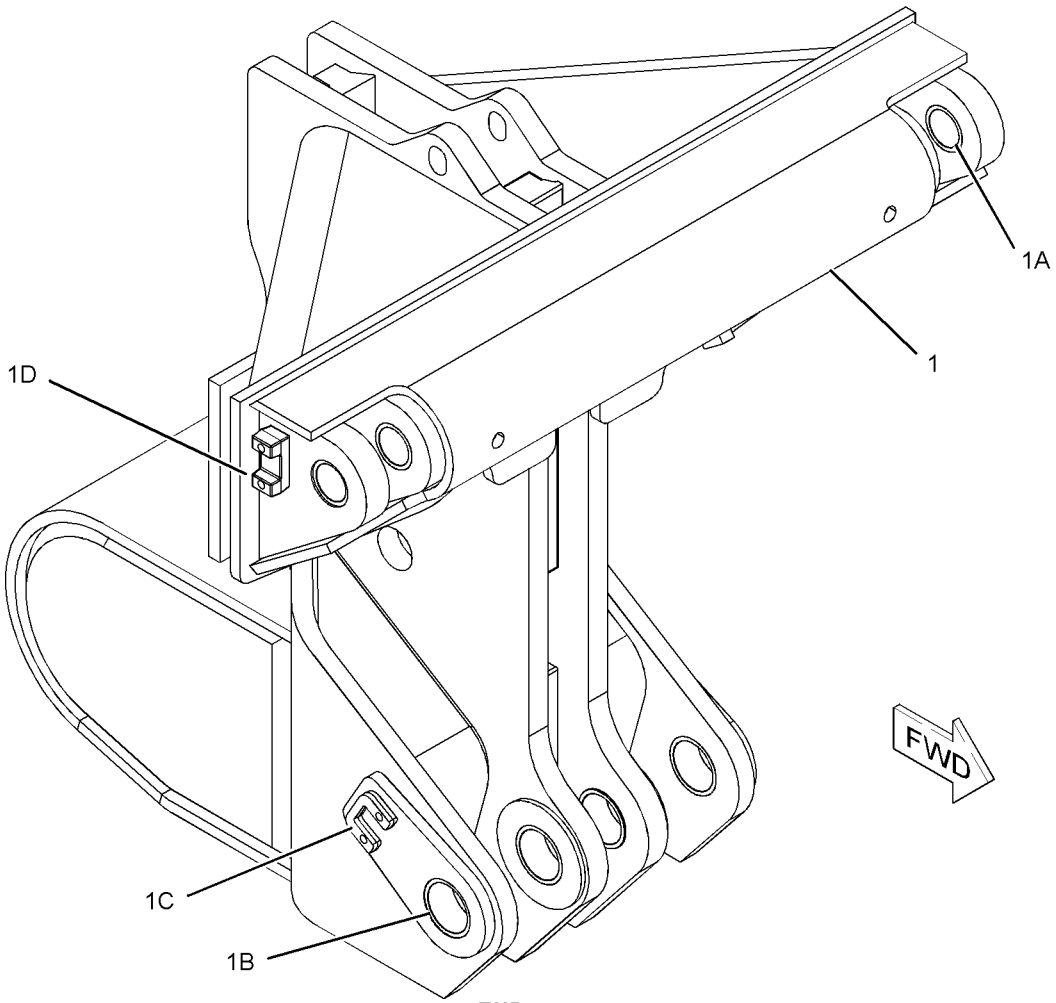

GRAPHIC #1 **<END>** g01051939

186-3302 BLOCK GP-PUSH–RIPPER

S/N: RJG1-UP

FOR USE WITH 216-0121–PAGE 752, 216-0122–PAGE 753, 216-0120–PAGE 751. CANNOT BE USED WITH 216-0121–PAGE 752, 216-0122–PAGE 753 AN ATTACHMENT

SMCS-6062 **i02041057**

NOTE	REF NO	GRAPHIC REF	PART NUMBER	QTY	PART NAME 1 2 3 4 5 6 (PRODUCT LEVEL)	SEE PAGE
	1	1	**186-3301**	1	CARRIAGE AS	
	1A	1	**2J-1227**	2	RETAINER	
	1B	1	**3J-6035**	2	RETAINER	

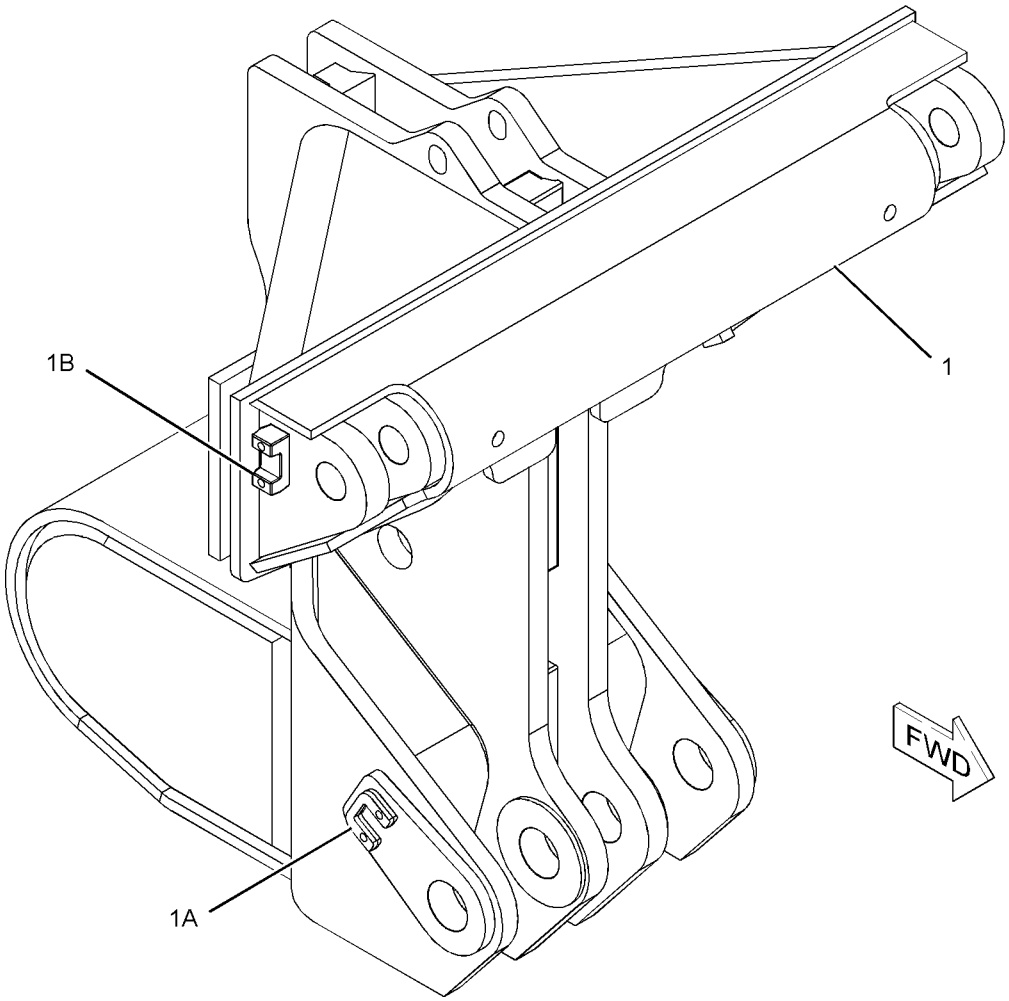

GRAPHIC #1

<END>

g01051940

7T-7577 BRACE GP-BULLDOZER

S/N: BHA1-UP; BHF1-UP; BHJ1-UP; BHP1-UP
PART OF 235-2812 PUSH ARM GP-STABILIZER
AN ATTACHMENT

SMCS-6074 **i00594863**

NOTE	REF NO	GRAPHIC REF	PART NUMBER	QTY	PART NAME 1 2 3 4 5 6 (PRODUCT LEVEL)	SEE PAGE
	1	1	**7T-7578**	1	BRACE AS	
	2	1	**1U-3658**	1	HANDLE	
	3	1	**117-3006**	1	BEARING	
	4	1	**5L-4756**	1	RING-RETAINING	
	5	1	**9B-1948**	1	SPACER (1.03X1.63X1-IN THK)	
	6	1	**7X-0403**	1	BOLT (1-8X2.25-IN)	
	7	1	**9J-6662**	1	PIN	
	8	1	**9J-2365**	1	RETAINER	
	9	1	**7X-0379**	2	BOLT (7/8-9X1.5-IN)	
	10	1	**7T-7586**	1	LINK AS	
	11	1	**3B-8489**	1	FITTING-GREASE	

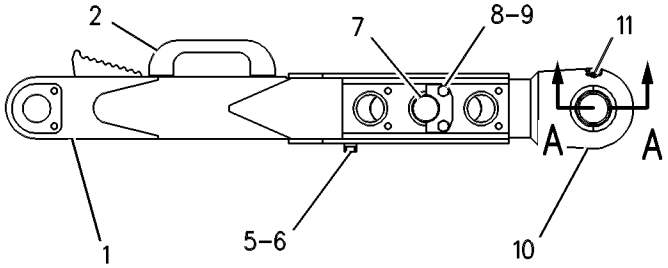

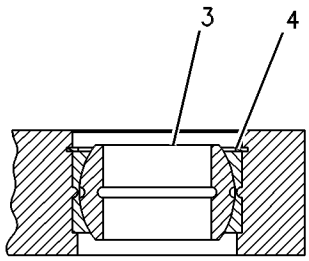

VIEW A-A

GRAPHIC #1 **<END>** g00258570

227-9988 BULLDOZER AR-SEMI-UNIVERSAL

S/N: BHJ1-UP
AN ATTACHMENT

SMCS-6050, 6078 **i02285097**

NOTE	REF NO	GRAPHIC REF	PART NUMBER	QTY	PART NAME 1 2 3 4 5 6 (PRODUCT LEVEL)	SEE PAGE
Y	1	1	*8E-2173*	1	BLADE GP-SEMI-UNIVERSAL	727
Y	2	1	**9J-6006**	1	MOUNTING GP-CYLINDER	633
Y	3	1	*9J-6073*	1	TRUNNION GP-BULLDOZER	711
Y	4	1	*216-2481*	1	CYLINDER & LINES GP-LIFT (RH)	551
Y	5	1	*216-2482*	1	CYLINDER & LINES GP-LIFT (LH)	552
Y	6	1	*231-7573*	1	LINES GP-TILT CYLINDER	616
Y	7	1	*235-2812*	1	PUSH ARM GP-STABILIZER	710
F			**8T-7371**	1	PLATE-SERIAL NUMBER (BULLDOZER)	
					(UNDER RH CYLINDER DEFLECTOR)	
F			**4B-4158**	2	SCREW-DRIVE (3/16-12X.25-IN)	

F-NOT SHOWN
Y-SEPARATE ILLUSTRATION

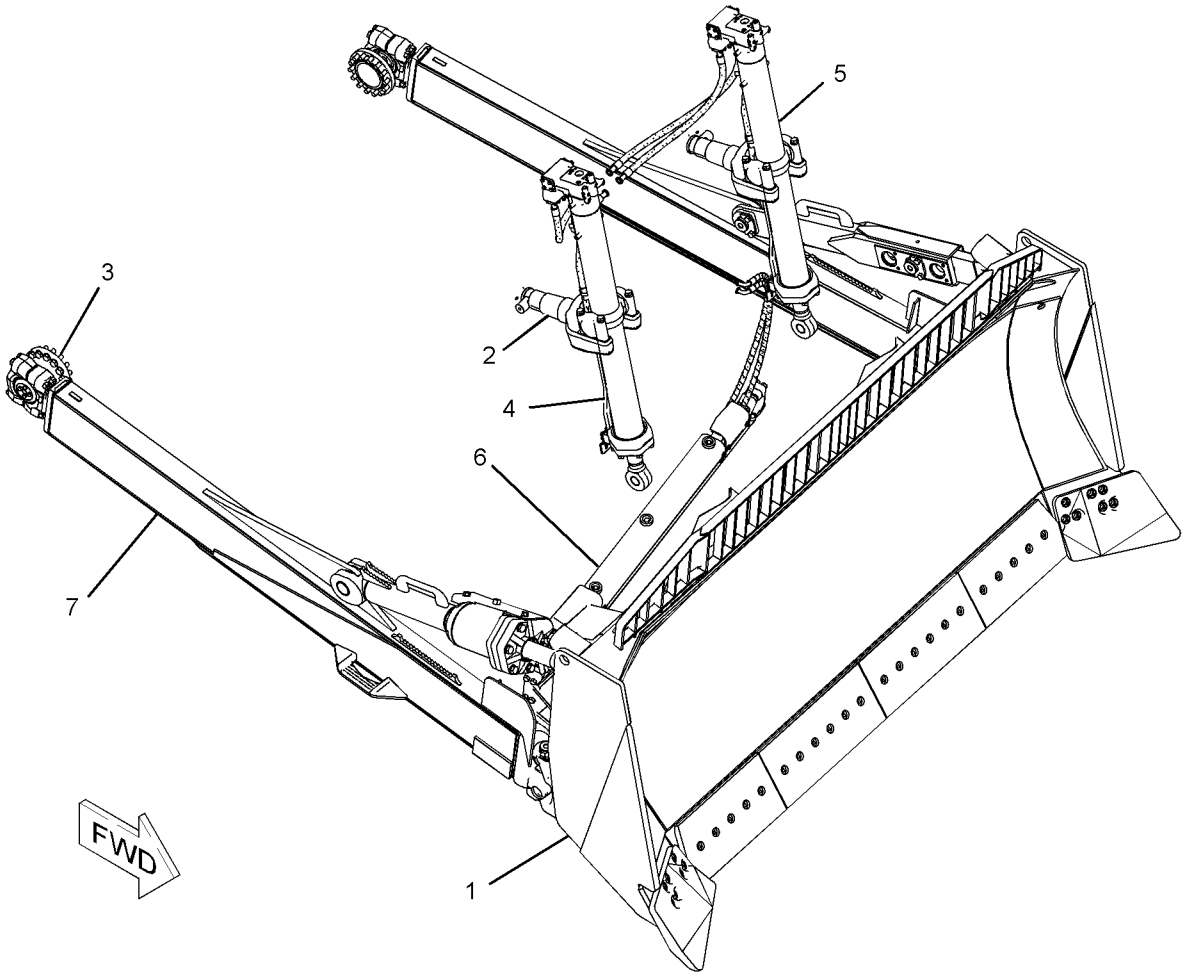

GRAPHIC #1 **<END>** g01139580

244-1952 BULLDOZER AR-SEMI-UNIVERSAL

S/N: BHJ1-UP

AN ATTACHMENT

SMCS-6050, 6078 **i02280230**

NOTE	REF NO	GRAPHIC REF	PART NUMBER	QTY	PART NAME 1 2 3 4 5 6 (PRODUCT LEVEL)	SEE PAGE
Y	1	1	*8E-2173*	1	BLADE GP-SEMI-UNIVERSAL	727
Y	2	1	*9J-6073*	1	TRUNNION GP-BULLDOZER	711
Y	3	1	*231-7573*	1	LINES GP-TILT CYLINDER	616
Y	4	1	*235-2812*	1	PUSH ARM GP-STABILIZER	710
F		1	**8T-7371**	1	PLATE-SERIAL NUMBER (BULLDOZER)	
					UNDER RH CYLINDER DEFLECTOR	
F		1	**4B-4158**	2	SCREW-DRIVE (3/16-12X.25-IN)	

F-NOT SHOWN
Y-SEPARATE ILLUSTRATION

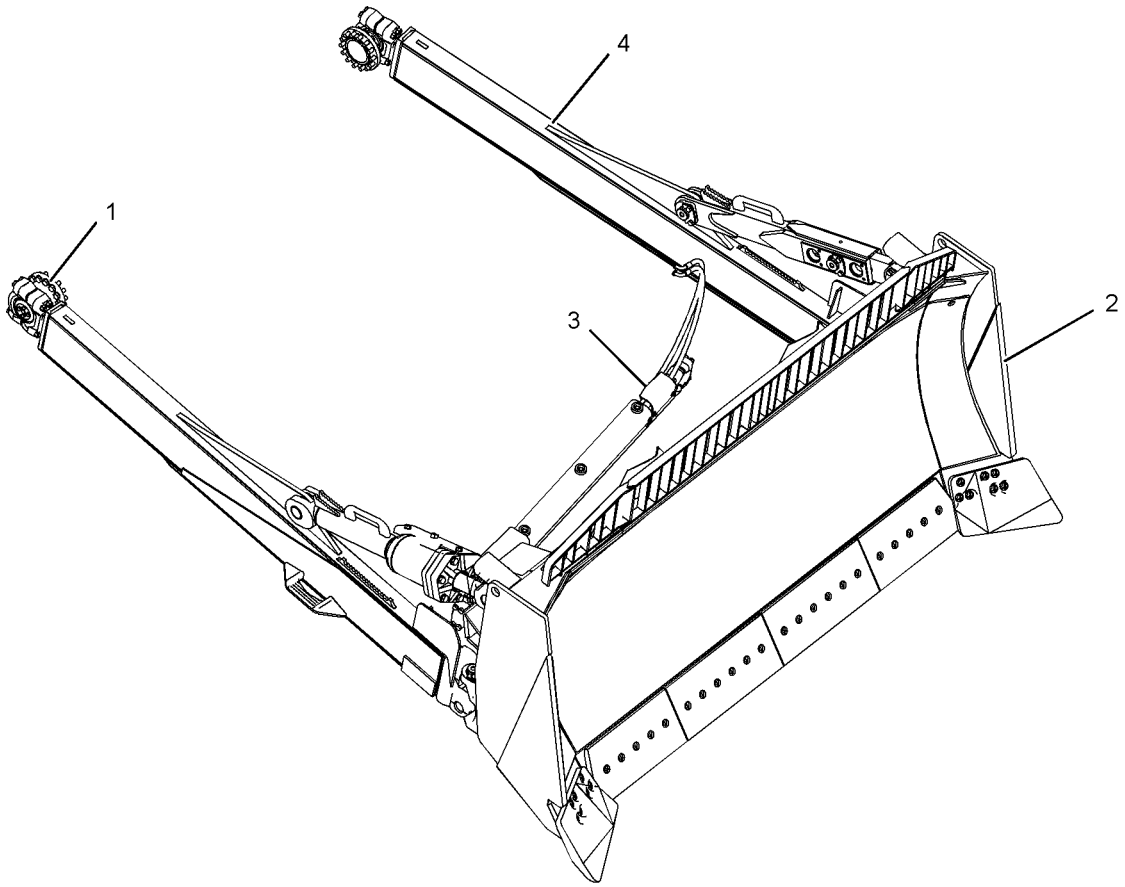

GRAPHIC #1 **<END>** g01052318

IMPLEMENTS

244-1953 BULLDOZER AR-SEMI-UNIVERSAL

S/N: BHA1-UP

AN ATTACHMENT

SMCS-6050, 6078 **i02280234**

NOTE	REF NO	GRAPHIC REF	PART NUMBER	QTY	PART NAME 1 2 3 4 5 6 (PRODUCT LEVEL)	SEE PAGE
Y	1	1	*4T-8183*	1	BLADE GP-SEMI-UNIVERSAL	726
Y	2	1	*9J-6073*	1	TRUNNION GP-BULLDOZER	711
Y	3	1	*231-7573*	1	LINES GP-TILT CYLINDER	616
Y	4	1	*235-2812*	1	PUSH ARM GP-STABILIZER	710
F		1	**8T-7371**	1	PLATE-SERIAL NUMBER (BULLDOZER)	
					UNDER RH CYLINDER DEFLECTOR	
F		1	**4B-4158**	2	SCREW-DRIVE (3/16-12X.25-IN)	

F-NOT SHOWN
Y-SEPARATE ILLUSTRATION

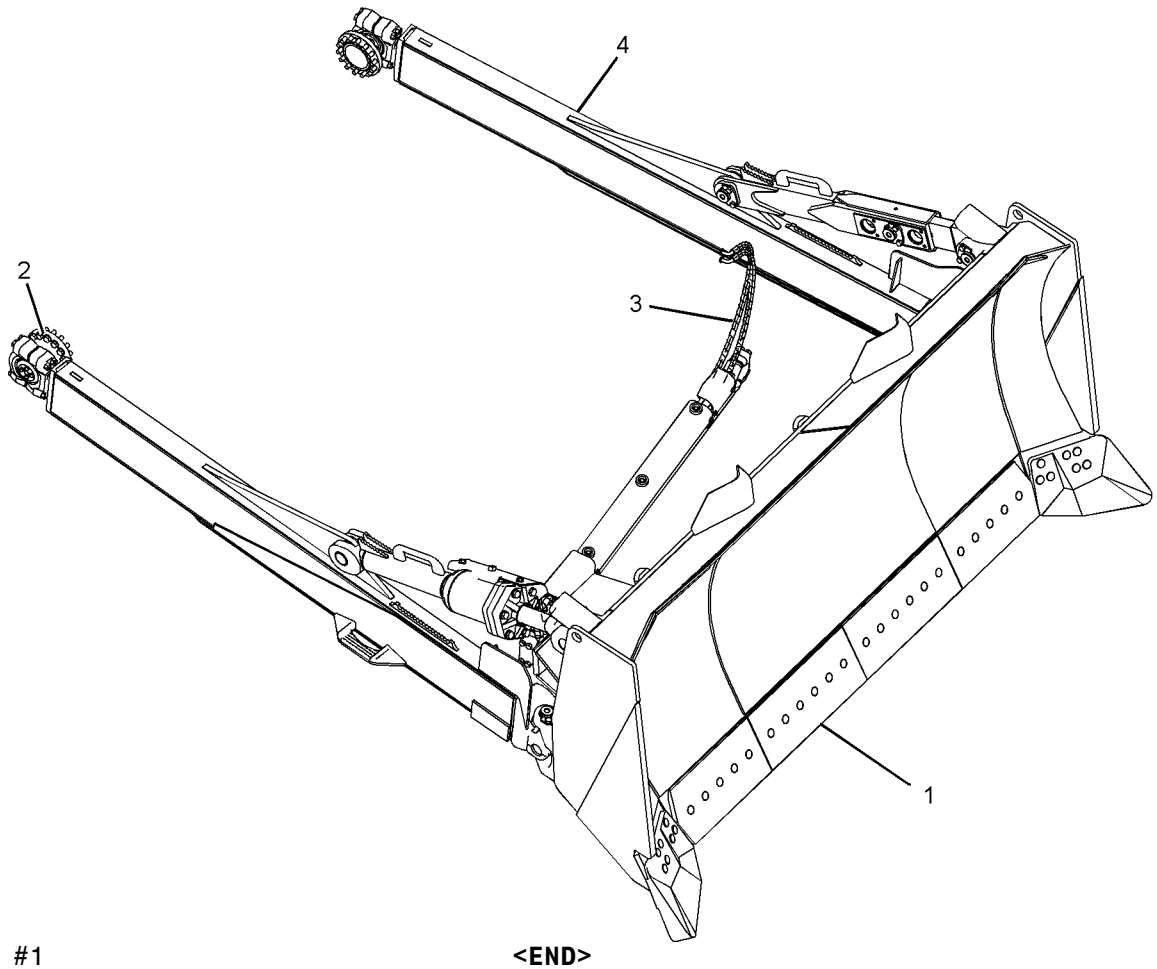

GRAPHIC #1 **<END>** g01052329

244-2009 BULLDOZER AR-SEMI-UNIVERSAL

S/N: BHA1-UP

AN ATTACHMENT

SMCS-6050, 6078 **i02280235**

NOTE	REF NO	GRAPHIC REF	PART NUMBER	QTY	PART NAME 1 2 3 4 5 6 (PRODUCT LEVEL)	SEE PAGE
Y	1	1	*4T-8183*	1	BLADE GP-SEMI-UNIVERSAL	726
Y	2	1	**9J-6006**	1	MOUNTING GP-CYLINDER	633
Y	3	1	*9J-6073*	1	TRUNNION GP-BULLDOZER	711
Y	4	1	*216-2481*	1	CYLINDER & LINES GP-LIFT (RH)	551
Y	5	1	*216-2482*	1	CYLINDER & LINES GP-LIFT (LH)	552
Y	6	1	*231-7573*	1	LINES GP-TILT CYLINDER	616
Y	7	1	*235-2812*	1	PUSH ARM GP-STABILIZER	710
F		1	**8T-7371**	1	PLATE-SERIAL NUMBER (BULLDOZER)	
					UNDER RH CYLINDER DEFLECTOR	
F		1	**4B-4158**	2	SCREW-DRIVE (3/16-12X.25-IN)	

F-NOT SHOWN
Y-SEPARATE ILLUSTRATION

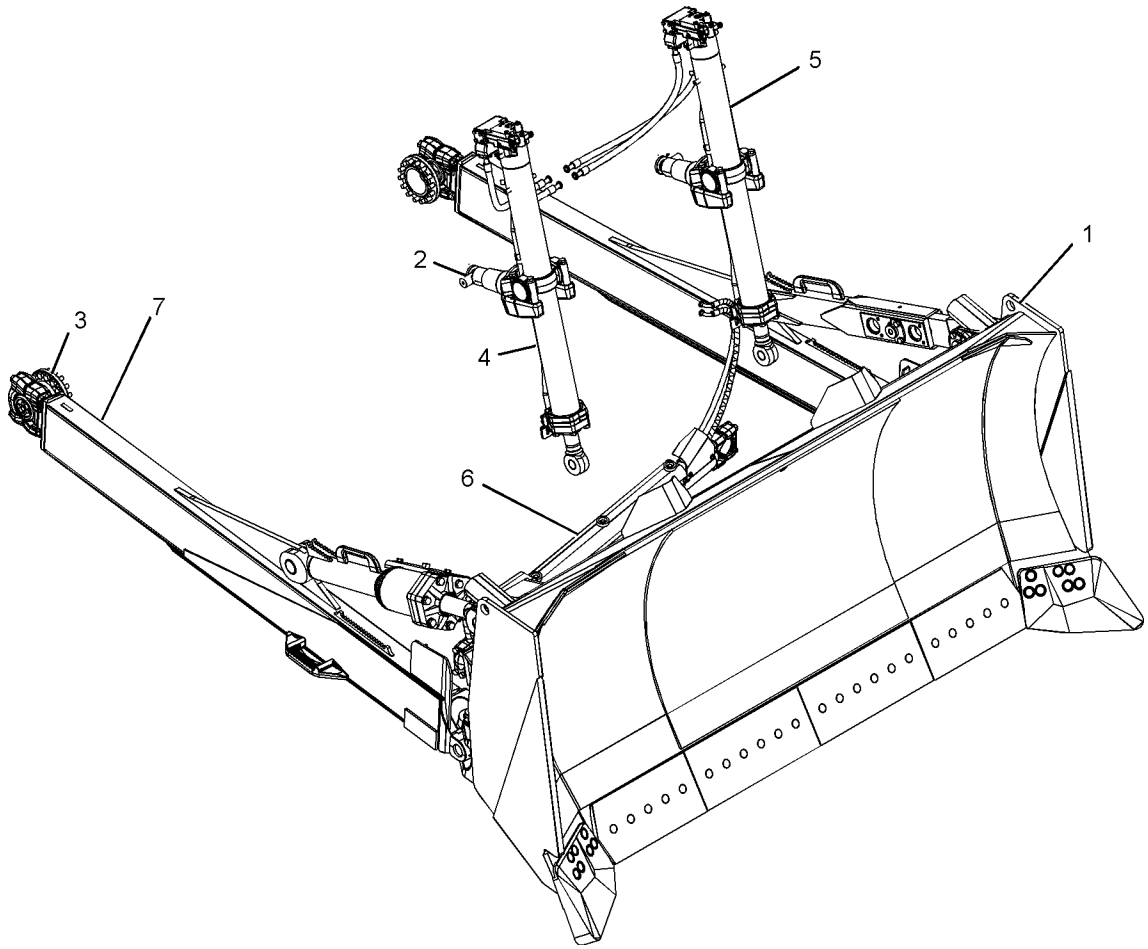

GRAPHIC #1 **<END>** g01052415

IMPLEMENTS

216-2238 BULLDOZER AR-UNIVERSAL

S/N: BHP1-UP

AN ATTACHMENT

SMCS-6050, 6053 **i02280243**

NOTE	REF NO	GRAPHIC REF	PART NUMBER	QTY	PART NAME 1 2 3 4 5 6 (PRODUCT LEVEL)	SEE PAGE
Y	1	1	*9J-6073*	1	TRUNNION GP-BULLDOZER	711
Y	2	1	*130-7658*	1	BLADE GP-UNIVERSAL	728
Y	3	1	*231-7573*	1	LINES GP-TILT CYLINDER	616
Y	4	1	*235-2812*	1	PUSH ARM GP-STABILIZER	710
F		1	**8T-7371**	1	PLATE-SERIAL NUMBER (BULLDOZER)	
					UNDER RH CYLINDER DEFLECTOR	
F		1	**4B-4158**	2	SCREW-DRIVE (3/16-12X.25-IN)	

F-NOT SHOWN
Y-SEPARATE ILLUSTRATION

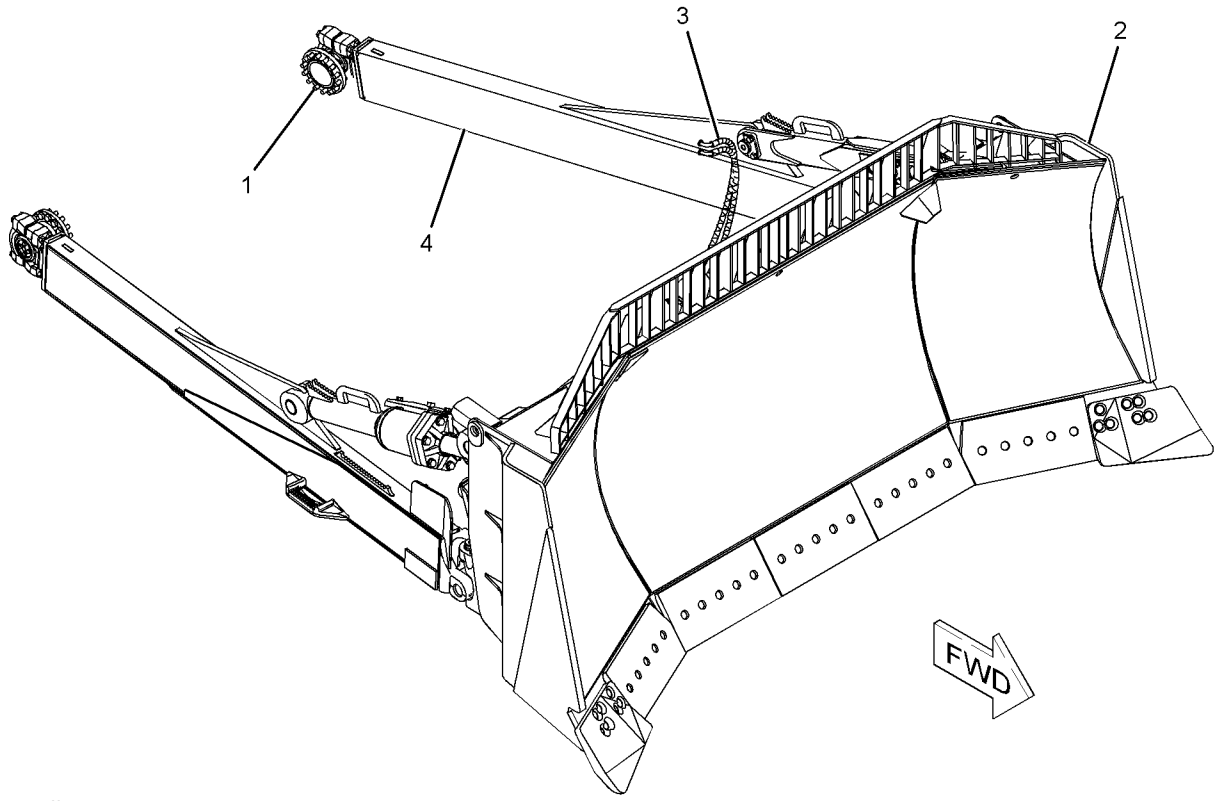

GRAPHIC #1 **<END>** g01052492

IMPLEMENTS

227-9991 BULLDOZER AR-UNIVERSAL

S/N: BHP1-UP

AN ATTACHMENT

SMCS-6050, 6053 **i02274389**

NOTE	REF NO	GRAPHIC REF	PART NUMBER	QTY	PART NAME 1 2 3 4 5 6 (PRODUCT LEVEL)	SEE PAGE
Y	1	1	**9J-6006**	1	MOUNTING GP-CYLINDER	633
Y	2	1	*9J-6073*	1	TRUNNION GP-BULLDOZER	711
Y	3	1	*130-7658*	1	BLADE GP-UNIVERSAL	728
Y	4	1	*216-2481*	1	CYLINDER & LINES GP-LIFT (RH)	551
Y	5	1	*216-2482*	1	CYLINDER & LINES GP-LIFT (LH)	552
Y	6	1	*231-7573*	1	LINES GP-TILT CYLINDER	616
Y	7	1	*235-2812*	1	PUSH ARM GP-STABILIZER	710
F			**8T-7371**	1	PLATE-SERIAL NUMBER (BULLDOZER)	
					UNDER RH CYLINDER DEFLECTOR	
F			**4B-4158**	2	SCREW-DRIVE (3/16-12X.25-IN)	

F-NOT SHOWN
Y-SEPARATE ILLUSTRATION

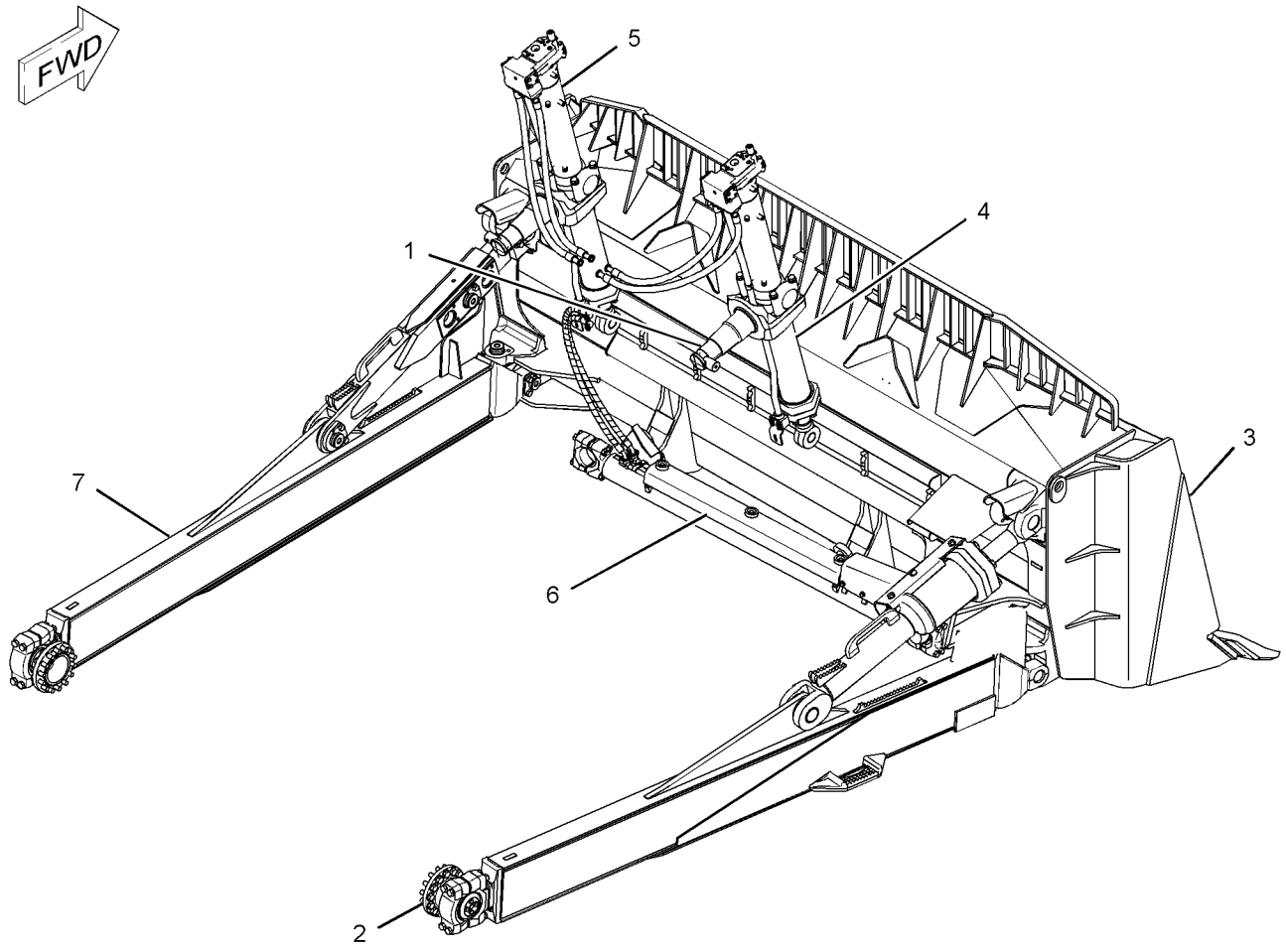

GRAPHIC #1 **<END>** g01140627

IMPLEMENTS

244-1958 BULLDOZER AR-UNIVERSAL

S/N: BHF1-UP

AN ATTACHMENT

SMCS-6050, 6053 **i02280339**

NOTE	REF NO	GRAPHIC REF	PART NUMBER	QTY	PART NAME 1 2 3 4 5 6 (PRODUCT LEVEL)	SEE PAGE
Y	1	1	**9J-6006**	1	MOUNTING GP-CYLINDER	633
Y	2	1	*9J-6073*	1	TRUNNION GP-BULLDOZER	711
Y	3	1	*130-7660*	1	BLADE GP-UNIVERSAL	730
Y	4	1	*216-2481*	1	CYLINDER & LINES GP-LIFT (RH)	551
Y	5	1	*216-2482*	1	CYLINDER & LINES GP-LIFT (LH)	552
Y	6	1	*231-7573*	1	LINES GP-TILT CYLINDER	616
Y	7	1	*235-2812*	1	PUSH ARM GP-STABILIZER	710
F		1	**8T-7371**	1	PLATE-SERIAL NUMBER (BULLDOZER)	
					ON RH CYLINDER DEFLECTOR	
F		1	**4B-4158**	2	SCREW-DRIVE (3/16-12X.25-IN)	

F-NOT SHOWN
Y-SEPARATE ILLUSTRATION

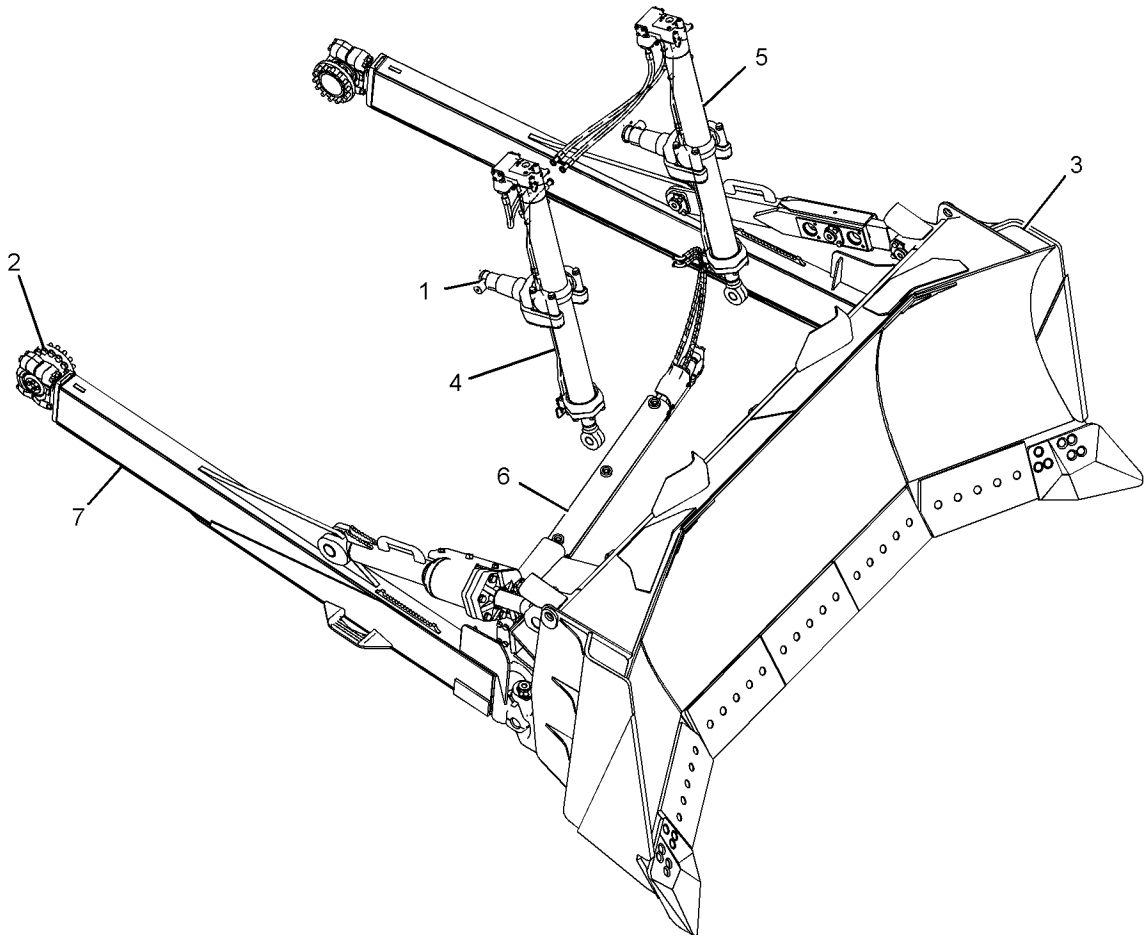

GRAPHIC #1 **<END>** g01052403

IMPLEMENTS

244-2101 BULLDOZER AR-UNIVERSAL

S/N: BHF1-UP

AN ATTACHMENT

SMCS-6050, 6053 **i02280351**

NOTE	REF NO	GRAPHIC REF	PART NUMBER	QTY	PART NAME 1 2 3 4 5 6 (PRODUCT LEVEL)	SEE PAGE
Y	1	1	*9J-6073*	1	TRUNNION GP-BULLDOZER	711
Y	2	1	*130-7660*	1	BLADE GP-UNIVERSAL	730
Y	3	1	*231-7573*	1	LINES GP-TILT CYLINDER	616
Y	4	1	*235-2812*	1	PUSH ARM GP-STABILIZER	710
F		1	**8T-7371**	1	PLATE-SERIAL NUMBER (BULLDOZER)	
					ON RH CYLINDER DEFLECTOR	
F		1	**4B-4158**	2	SCREW-DRIVE (3/16-12X.25-IN)	

F-NOT SHOWN
Y-SEPARATE ILLUSTRATION

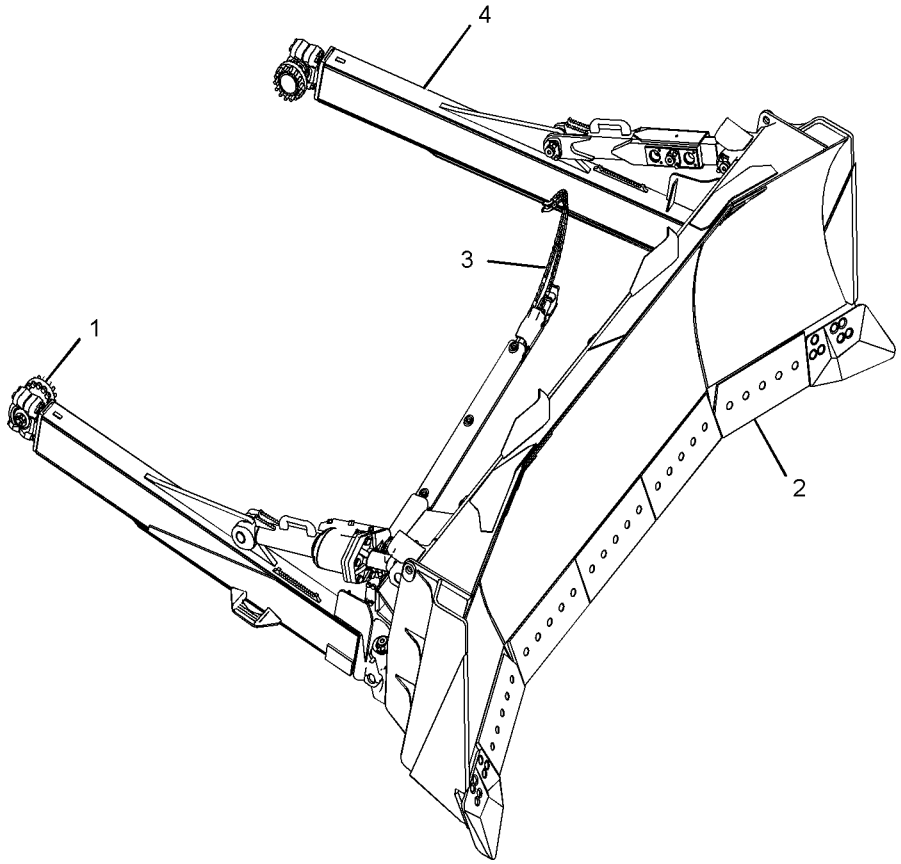

GRAPHIC #1 **<END>** g01052433

7T-6040 COVER GP-TRUNNION

S/N: RJG1-UP

CANNOT BE USED WITH BULLDOZER TRUNNIONS

AN ATTACHMENT

SMCS-4077 **i02039647**

NOTE	REF NO	GRAPHIC REF	PART NUMBER	QTY	PART NAME 1 2 3 4 5 6 (PRODUCT LEVEL)	SEE PAGE
	1	1	**6P-8901**	2	COVER	
	2	1	**7X-0403**	12	BOLT (1-8X2.25-IN)	
	3	1	**8T-5361**	12	WASHER-HARD (28X49X5-MM THK)	

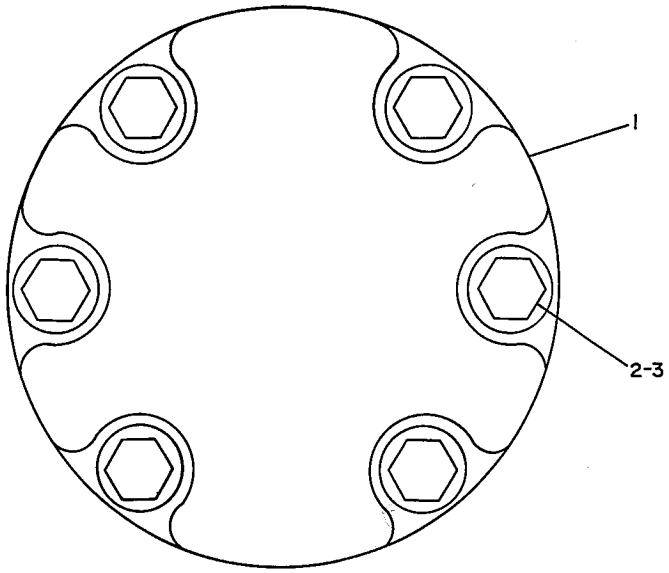

GRAPHIC #1 **<END>** g00172067

110-4724 LINK GP-STABILIZER

S/N: BHA1-UP; BHF1-UP; BHJ1-UP; BHP1-UP
PART OF 235-2812 PUSH ARM GP-STABILIZER
AN ATTACHMENT

SMCS-6071, 7203 **i00764674**

NOTE	REF NO	GRAPHIC REF	PART NUMBER	QTY	PART NAME 1 2 3 4 5 6 (PRODUCT LEVEL)	SEE PAGE
	1	1	**7X-0396**	8	BOLT (7/8-9X8.5-IN)	
	2	1	**9J-6062**	2	CAP-BEARING	
	3	1	**7X-0449**	8	NUT-FULL (7/8-9-THD)	
B	4	1	**8E-1378**	52	SHIM (0.8-MM THK)	
	5	1	**110-4729**	1	LINK AS	
		1	**3G-7891**	2	BEARING	
		1	**8P-9770**	1	PLATE	

B-USE AS REQUIRED

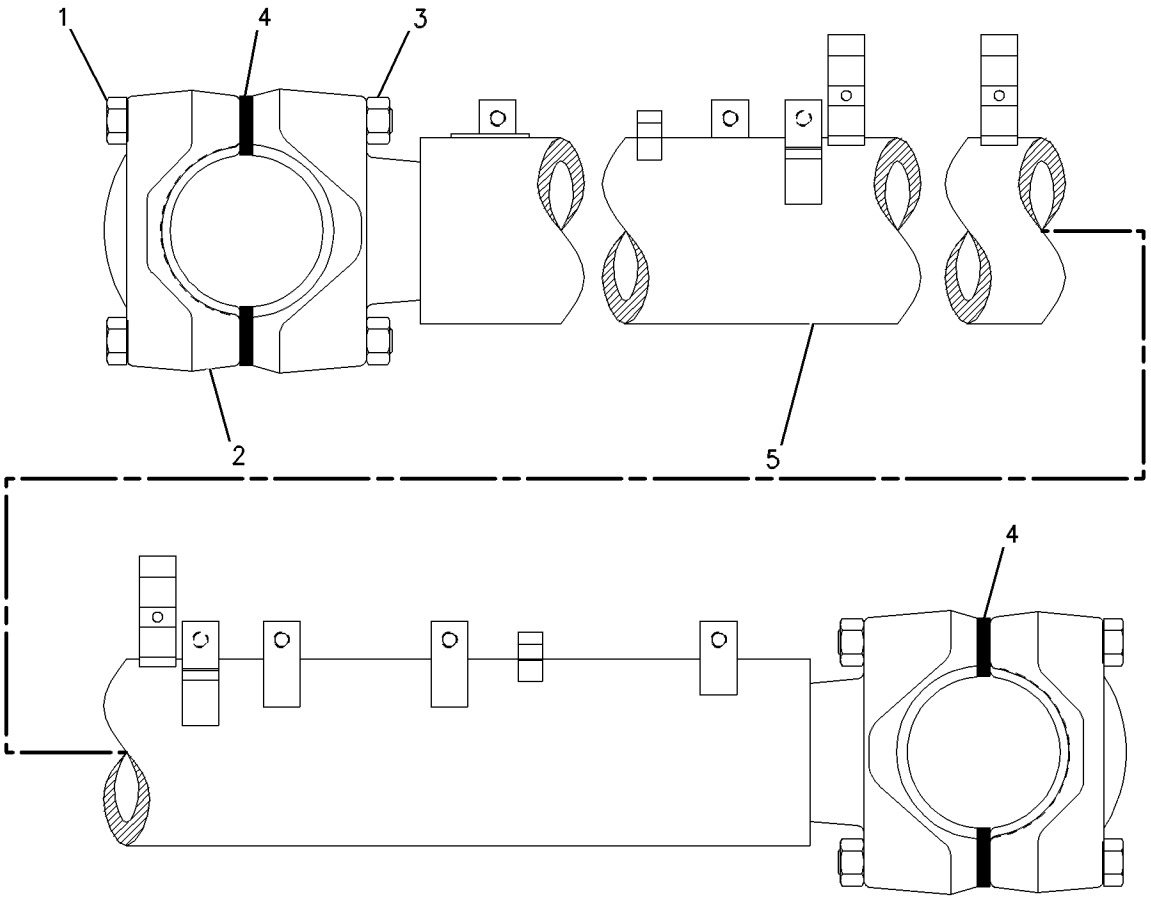

GRAPHIC #1 **<END>** g00347934

238-4490 MODIFICATION AR-BULLDOZER—TRUNNION

S/N: RJG1-UP

FOR USE WITH 213-1112—PAGE 764, 213-1113—PAGE 764, 256-6916—PAGE 765, 221-1813—PAGE 81

AN ATTACHMENT

SMCS-7000 **i02400818**

NOTE	PART NUMBER	QTY	PART NAME 1 2 3 4 5 6 (PRODUCT LEVEL)	SEE PAGE
Y	*239-0601*	1	CASE & FRAME GP	395
Y	*238-9121*	1	LINES GP-BULLDOZER	577
	7X-0419	2	BOLT (1-8X10-IN)	
	241-3751	1	GUARD AS	

Y-SEPARATE ILLUSTRATION

<END>

244-1955 MODIFICATION AR-BULLDOZER—SINGLE TILT

S/N: RJG1-UP
LANDFILL
FOR USE WITH 244-1958—PAGE 701, 244-2101—PAGE 702, 216-2238—PAGE 699, 227-9991—PAGE 700, 244-2009—PAGE 698, 244-1953—PAGE 697, 227-9988—PAGE 695, 244-1952—PAGE 696
AN ATTACHMENT

SMCS-7000 **i02050406**

NOTE	REF NO	GRAPHIC REF	PART NUMBER	QTY	PART NAME 1 2 3 4 5 6 (PRODUCT LEVEL)	SEE PAGE
I	1	1	**135-1828**	1	HOSE AS	
I	2	1	**135-1829**	1	HOSE AS	
I	3	1	**247-1941**	1	HOSE AS	
I	4	1	**247-1942**	1	HOSE AS	

I-REFER TO HYDRAULIC INFORMATION SYSTEM

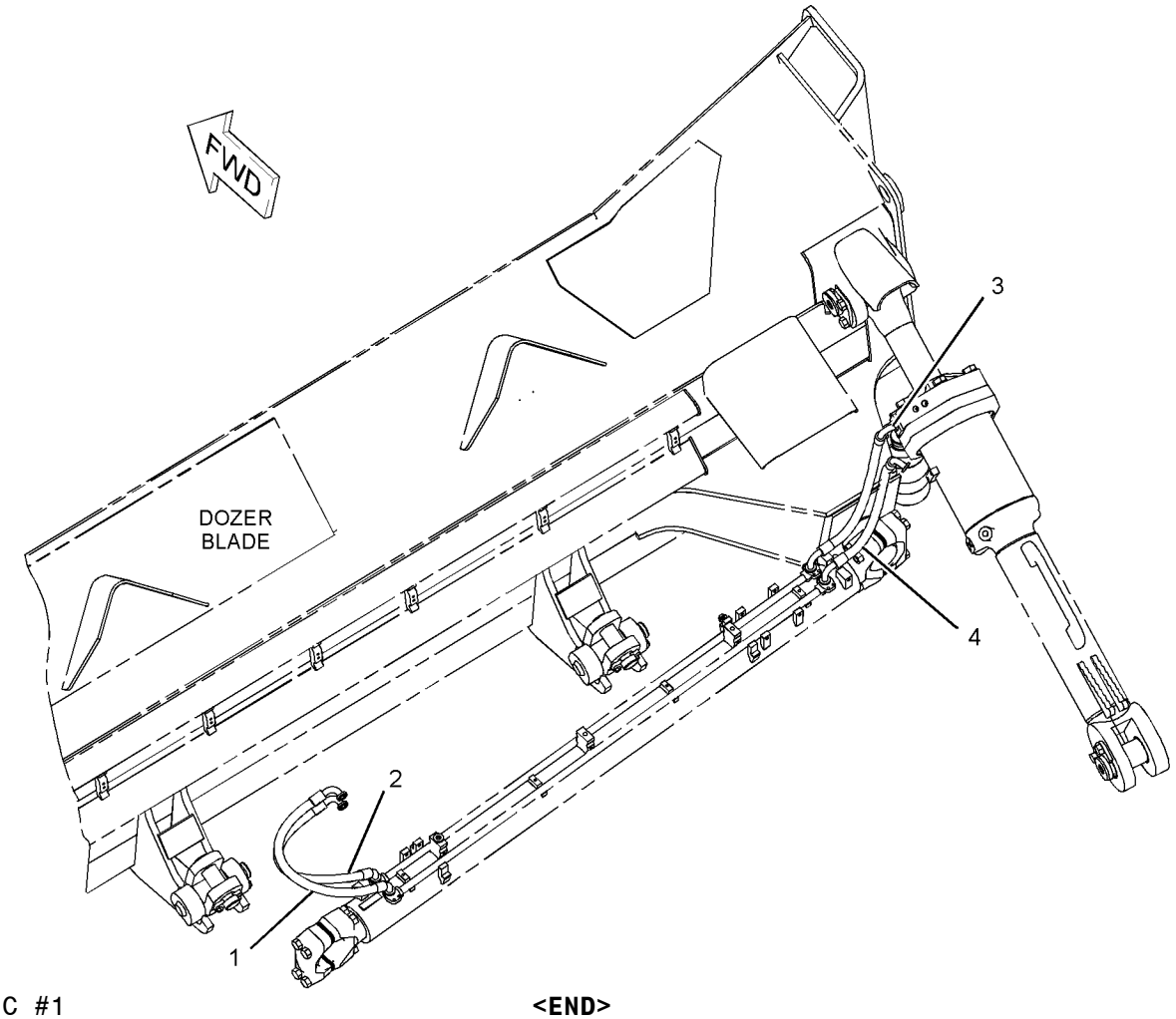

GRAPHIC #1 **<END>** g01054384

244-1956 MODIFICATION AR-BULLDOZER—DUAL TILT

S/N: RJG1-UP
LANDFILL
FOR USE WITH 244-1958—PAGE 701, 244-2101—PAGE 702, 216-2238—PAGE 699, 227-9991—PAGE 700, 244-2009—PAGE 698, 244-1953—PAGE 697, 227-9988—PAGE 695, 244-1952—PAGE 696
AN ATTACHMENT

SMCS-7000 **i02050419**

NOTE	REF NO	GRAPHIC REF	PART NUMBER	QTY	PART NAME 1 2 3 4 5 6 (PRODUCT LEVEL)	SEE PAGE
I	1	1	**135-1828**	1	HOSE AS	
I	2	1	**135-1829**	1	HOSE AS	
I	3	1	**135-1831**	1	HOSE AS	
I	4	1	**135-1832**	1	HOSE AS	
I	5	1	**200-2670**	2	HOSE AS	
I	6	1	**247-1941**	1	HOSE AS	
I	7	1	**247-1942**	1	HOSE AS	
I	8	1	**249-8783**	2	HOSE AS	

I-REFER TO HYDRAULIC INFORMATION SYSTEM

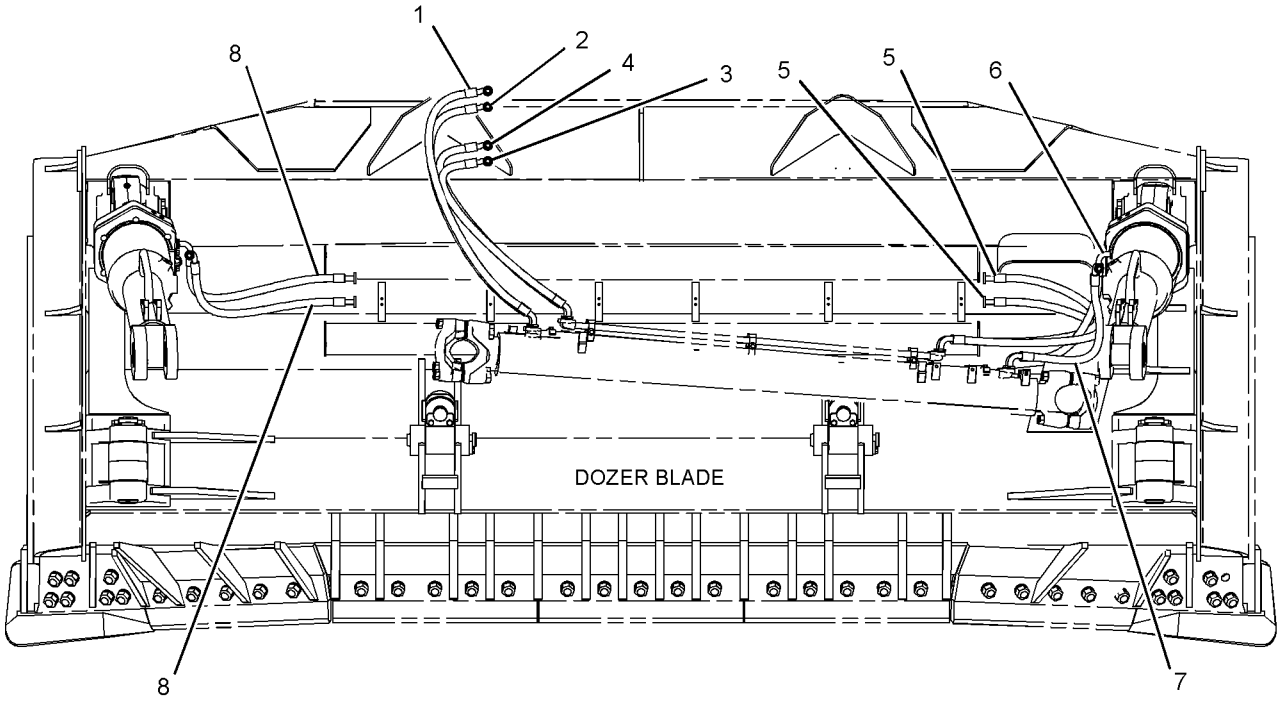

REAR VIEW

GRAPHIC #1

<END>

g01054449

4T-8181 PUSH ARM GP–RH

S/N: BHA1-UP; BHF1-UP; BHJ1-UP; BHP1-UP
PART OF 235-2812 PUSH ARM GP-STABILIZER
AN ATTACHMENT

SMCS-6061 **i01582676**

NOTE	REF NO	GRAPHIC REF	PART NUMBER	QTY	PART NAME 1 2 3 4 5 6 (PRODUCT LEVEL)	SEE PAGE
	1	1	**8K-5130**	4	BOLT (1-8X11-IN)	
		1	**2J-3507**	4	NUT-FULL (1-8-THD)	
	2	1	**7T-4966**	1	CAP-BEARING	
	3	1	**138-2829**	1	PUSH ARM AS-RH	
		1	**8J-5326**	1	PLATE	
	4	1	**138-2834**	1	BRACKET AS	
	5	1	**3G-8051**	1	BEARING-SLEEVE	
	6	1	**3G-8052**	1	BEARING	
	7	1	**9W-9163**	1	BRACKET AS	
	8	1	**1U-1187**	1	BEARING AS	
		1	**4T-9702**	1	CAP-BEARING	
	9	1	**166-4113**	1	STEP	
	10	1	**1U-2533**	1	BAR	
	11	1	**8P-9770**	1	PLATE	
B	12	1	**4T-9707**	26	SHIM (0.8-MM THK)	

B-USE AS REQUIRED

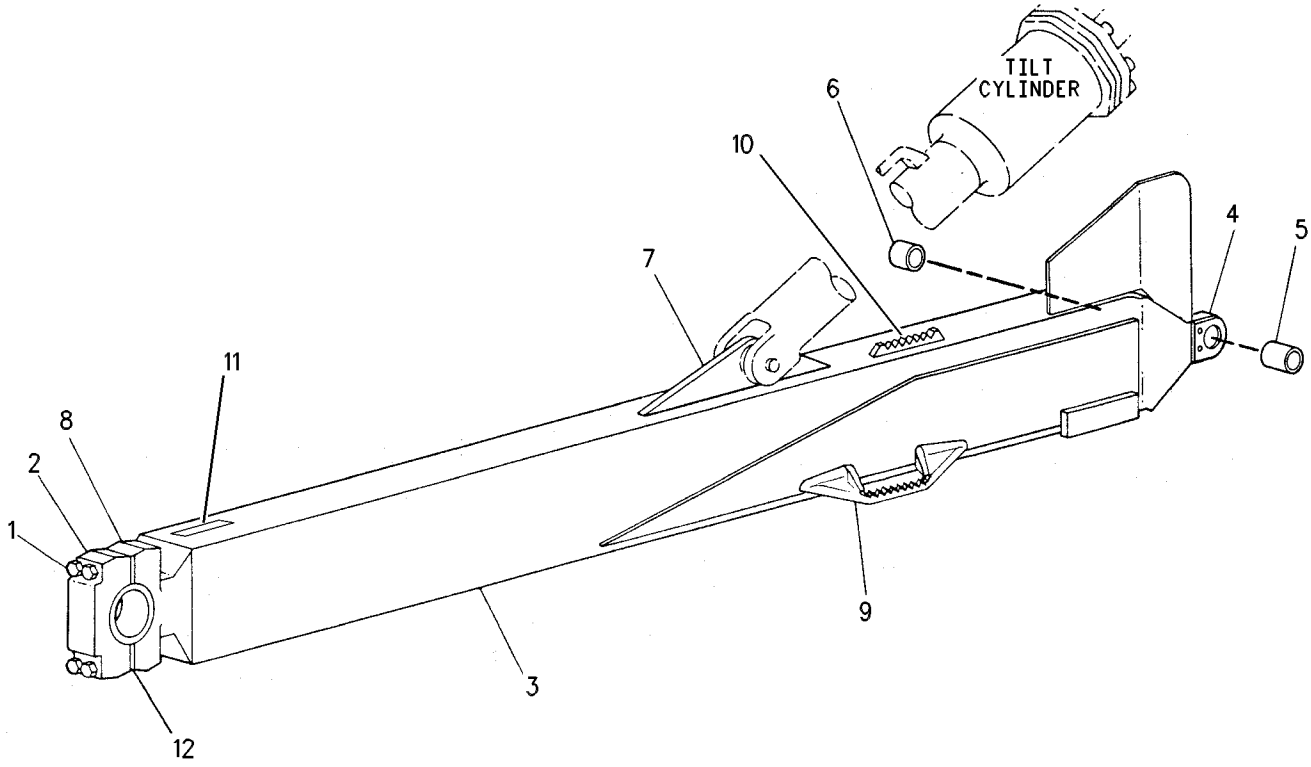

GRAPHIC #1 **<END>** g00347933

4T-8182 PUSH ARM GP–LH

S/N: BHA1-UP; BHF1-UP; BHJ1-UP; BHP1-UP
PART OF 235-2812 PUSH ARM GP-STABILIZER
AN ATTACHMENT

SMCS-6061 **i01582677**

NOTE	REF NO	GRAPHIC REF	PART NUMBER	QTY	PART NAME 1 2 3 4 5 6 (PRODUCT LEVEL)	SEE PAGE
	1	1	**7T-4966**	1	CAP-BEARING	
	2	1	**8K-5130**	4	BOLT (1-8X11-IN)	
	3	1	**2J-3507**	4	NUT-FULL (1-8-THD)	
B	4	1	**4T-9707**	26	SHIM (0.8-MM THK)	
	5	1	**138-2833**	1	PUSH ARM AS-LH	
	6	1	**1U-1187**	1	BEARING AS	
		1	**4T-9702**	1	CAP-BEARING	
	7	1	**9W-9163**	1	BRACKET AS	
	8	1	**1U-2533**	1	BAR	
	9	1	**8P-9770**	1	PLATE	
	10	1	**166-4113**	1	STEP	
	11	1	**138-2835**	1	BRACKET AS	
	12	1	**3G-8052**	1	BEARING	
	13	1	**3G-8051**	1	BEARING-SLEEVE	

B-USE AS REQUIRED

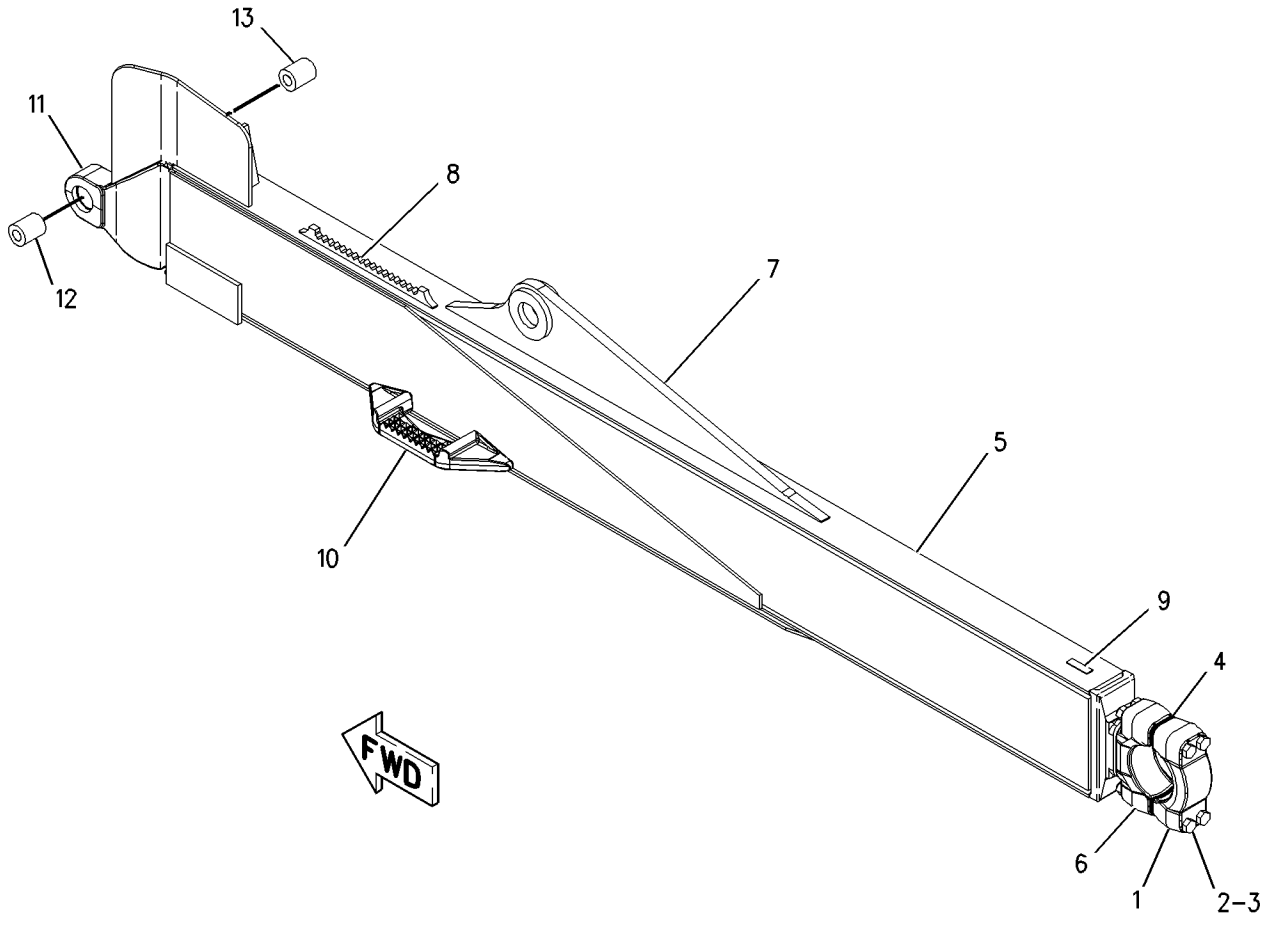

GRAPHIC #1 **<END>** g00848416

235-2812 PUSH ARM GP-STABILIZER

S/N: BHA1-UP; BHF1-UP; BHJ1-UP; BHP1-UP
PART OF 227-9988, 244-1952, 244-1953, 244-2009 BULLDOZER AR-SEMI-UNIVERSAL, 216-2238, 227-9991, 244-1958, 244-2101 BULLDOZER AR-UNIVERSAL
AN ATTACHMENT

SMCS-6061 **i02044644**

NOTE	REF NO	GRAPHIC REF	PART NUMBER	QTY	PART NAME 1 2 3 4 5 6 (PRODUCT LEVEL)	SEE PAGE
	1	1	**3G-8053**	2	PIN	
Y	2	1	*4T-8181*	1	PUSH ARM GP (RH)	708
Y	3	1	*4T-8182*	1	PUSH ARM GP (LH)	709
	4	1	**6J-7500**	2	RETAINER	
Y	5	1	*7T-7577*	1	BRACE GP-BULLDOZER	694
	6	1	**9J-2365**	2	RETAINER	
	7	1	**9J-6662**	2	PIN	
Y	8	1	*110-4724*	1	LINK GP-STABILIZER	704
B	9	1	**137-8479**	6	SPACER (82X145X2-MM THK)	
Y	10	1	**232-0654**	1	CYLINDER GP-TILT (BULLDOZER)	573
	11	1	**7X-0379**	8	BOLT (7/8-9X1.5-IN)	

B-USE AS REQUIRED
Y-SEPARATE ILLUSTRATION

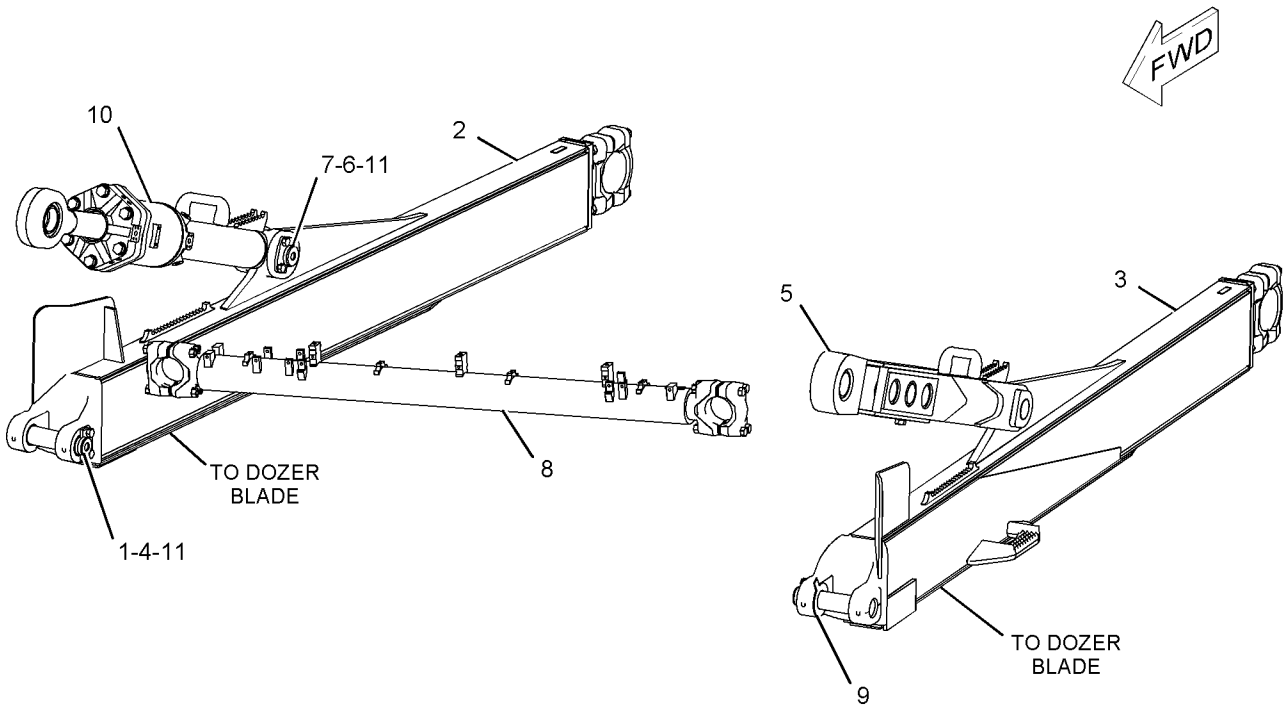

GRAPHIC #1 **<END>** g01053245

9J-6073 TRUNNION GP-BULLDOZER

S/N: BHA1-UP; BHF1-UP; RJG1-UP; BHJ1-UP; BHP1-UP

PUSH ARM

PART OF 227-9988, 244-1952, 244-1953, 244-2009 BULLDOZER AR-SEMI-UNIVERSAL, 216-2238, 227-9991, 244-1958, 244-2101 BULLDOZER AR-UNIVERSAL AN ATTACHMENT

SMCS-6069 **i00763355**

NOTE	REF NO	GRAPHIC REF	PART NUMBER	QTY	PART NAME 1 2 3 4 5 6 (PRODUCT LEVEL)	SEE PAGE
C	1	1	**129-8169**	2	TRUNNION	
C	2	1	**129-8171**	2	BEARING-SPHERICAL SLEEVE	
C	3	1	**7X-0343**	8	BOLT (5/8-11X1.25IN)	
C	4	1	**129-8172**	2	RETAINER	
	5	1	**7X-0405**	28	BOLT (1-8X2.75IN)	

C-CHANGE FROM PREVIOUS TYPE

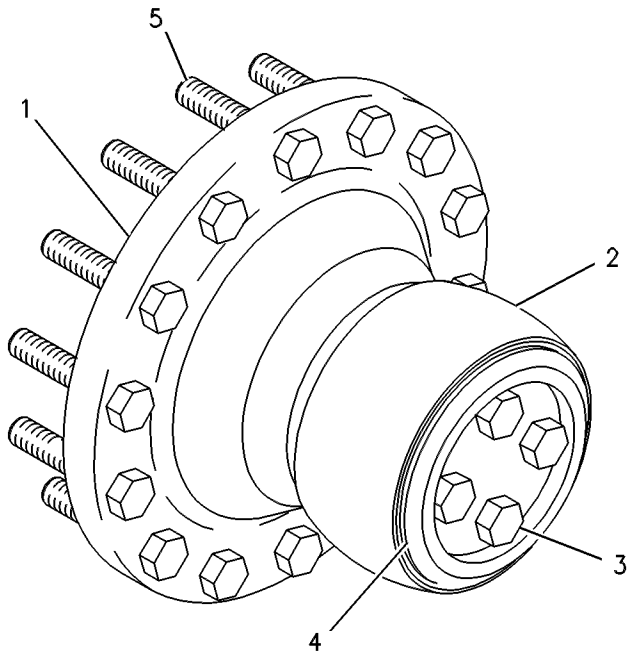

GRAPHIC #1 **<END>** g00346436

9U-8215 BLADE & EDGE GP-SEMI-UNIVERSAL

S/N: BHA1-UP
BLADE WITH PUSH PLATE
PART OF 4T-8183 BLADE GP-SEMI-UNIVERSAL
AN ATTACHMENT

SMCS-6060 **i00598040**

NOTE	PART NUMBER	QTY	PART NAME 1 2 3 4 5 6 (PRODUCT LEVEL)	SEE PAGE
Y	*7T-8712*	1	EDGE GP-BIT & CUTTING	731
Y	**4T-8288**	1	BLADE AS-SEMI-UNIVERSAL	717
Y-SEPARATE ILLUSTRATION				

<END>

9U-8216 BLADE & EDGE GP-SEMI-UNIVERSAL

S/N: BHJ1-UP
BLADE WITH ROCK GUARD & WEAR PLATES
PART OF 8E-2173 BLADE GP-SEMI-UNIVERSAL
AN ATTACHMENT

SMCS-6060 **i00736561**

NOTE	PART NUMBER	QTY	PART NAME 1 2 3 4 5 6 (PRODUCT LEVEL)	SEE PAGE
Y	*9W-5652*	1	EDGE GP-BIT & CUTTING	733
Y	*8E-9010*	1	BLADE AS-SEMI-UNIVERSAL	719
Y-SEPARATE ILLUSTRATION				

<END>

130-7657 BLADE & EDGE GP-UNIVERSAL

S/N: BHP1-UP
BLADE WITH ROCK GUARD & WEAR PLATES
PART OF 130-7658 BLADE GP-UNIVERSAL
AN ATTACHMENT

SMCS-6060 **i00693425**

NOTE	PART NUMBER	QTY	PART NAME 1 2 3 4 5 6 (PRODUCT LEVEL)	SEE PAGE
Y	*9W-5653*	1	EDGE GP-BIT & CUTTING	734
Y	**130-7751**	1	BLADE AS-UNIVERSAL	723
Y-SEPARATE ILLUSTRATION				

<END>

WORK TOOLS

130-7659 BLADE & EDGE GP-UNIVERSAL

S/N: BHF1-UP

PART OF 130-7660 BLADE GP-UNIVERSAL

AN ATTACHMENT

SMCS-6060 **i00693428**

NOTE	PART NUMBER	QTY	PART NAME 1 2 3 4 5 6 (PRODUCT LEVEL)	SEE PAGE
Y	*7T-8713*	1	EDGE GP-BIT & CUTTING	732
Y	**132-8799**	1	BLADE AS-UNIVERSAL	724

Y-SEPARATE ILLUSTRATION

<END>

WORK TOOLS

193-3085 BLADE & EDGE GP-UNIVERSAL—LANDFILL

S/N: RJG1-UP

AN ATTACHMENT

SMCS-6060 **i02402819**

NOTE	REF NO	GRAPHIC REF	PART NUMBER	QTY	PART NAME 1 2 3 4 5 6 (PRODUCT LEVEL)	SEE PAGE
Y	1	1	*7T-8713*	1	EDGE GP-BIT & CUTTING	732
Y	2	1	**134-6736**	1	BLADE AS-UNIVERSAL	725

Y-SEPARATE ILLUSTRATION

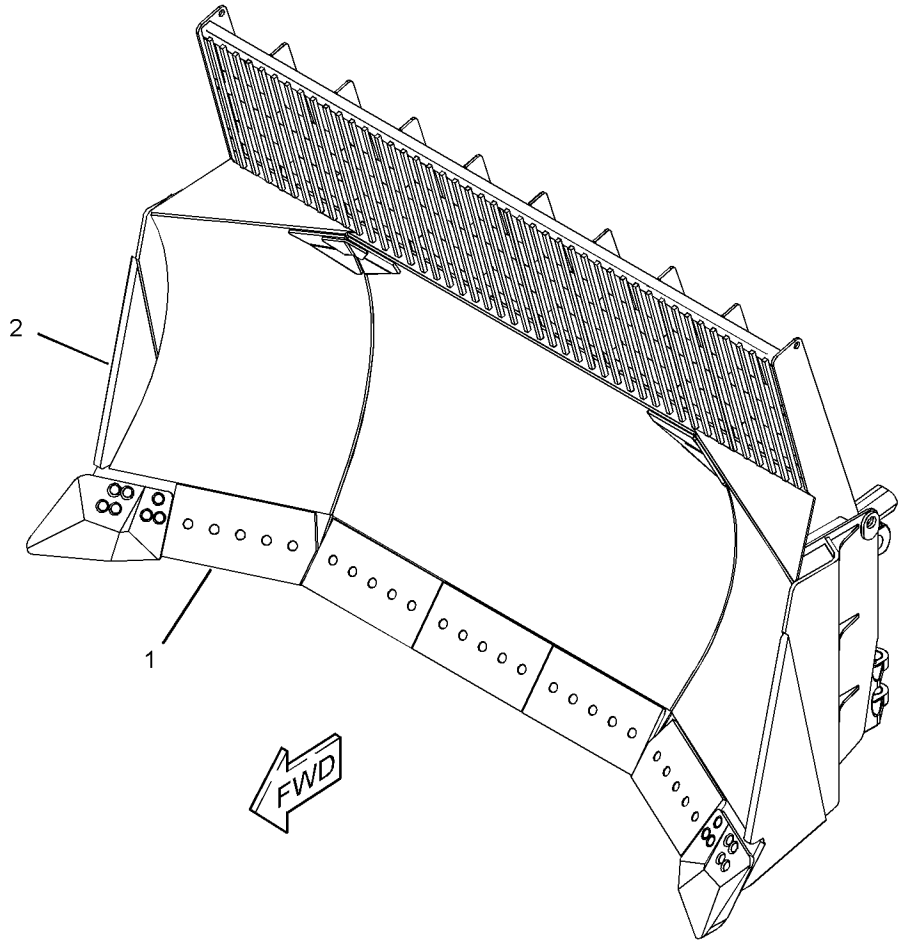

GRAPHIC #1 **<END>** g01225051

WORK TOOLS

196-5856 BLADE & EDGE GP-UNIVERSAL

S/N: RJG1-UP
BLADE WITH ROCK GUARD
AN ATTACHMENT

SMCS-6060 **i01437634**

NOTE	PART NUMBER	QTY	PART NAME 1 2 3 4 5 6 (PRODUCT LEVEL)	SEE PAGE
Y	*7T-8713*	1	EDGE GP-BIT & CUTTING	732
Y	**130-7749**	1	BLADE AS-UNIVERSAL	722

Y-SEPARATE ILLUSTRATION

<END>

266-9946 BLADE & EDGE GP-UNIVERSAL

S/N: RJG1-UP
FOR USE WITH BULLDOZER ABRASION AR
AN ATTACHMENT

SMCS-6060 **i02339565**

NOTE	PART NUMBER	QTY	PART NAME 1 2 3 4 5 6 (PRODUCT LEVEL)	SEE PAGE
Y	*267-6585*	1	BLADE & EDGE GP-UNIVERSAL	716

Y-SEPARATE ILLUSTRATION

<END>

266-9947 BLADE & EDGE GP-UNIVERSAL

S/N: RJG1-UP
PART OF 267-6585 BLADE & EDGE GP-UNIVERSAL
AN ATTACHMENT

SMCS-6060 **i02339686**

NOTE	PART NUMBER	QTY	PART NAME 1 2 3 4 5 6 (PRODUCT LEVEL)	SEE PAGE
Y	**132-8799**	1	BLADE AS-UNIVERSAL	724
Y	*9W-5653*	1	EDGE GP-BIT & CUTTING	734
Y	*131-0785*	1	GUARD GP-ROCK (UNIVERSAL BLADE)	449
			*****ATTACHMENT REMOVAL*****	
H	*130-7657*	1	BLADE & EDGE GP-UNIVERSAL	

H-PART OF ATTACHMENT BLADE GP-UNIVERSAL
Y-SEPARATE ILLUSTRATION

<END>

267-6585 BLADE & EDGE GP-UNIVERSAL

S/N: RJG1-UP

PART OF 266-9946 BLADE & EDGE GP-UNIVERSAL

AN ATTACHMENT

SMCS-6060 **i02339651**

NOTE	PART NUMBER	QTY	PART NAME 1 2 3 4 5 6 (PRODUCT LEVEL)	SEE PAGE
Y	*266-9947*	1	BLADE & EDGE GP-UNIVERSAL	715
	266-9948	1	PLATE GP-WEAR	

Y-SEPARATE ILLUSTRATION

<END>

WORK TOOLS

4T-8288 BLADE AS-SEMI-UNIVERSAL

S/N: BHA1-UP
WITH PUSH PLATE
PART OF 9U-8215 BLADE & EDGE GP-SEMI-UNIVERSAL
AN ATTACHMENT

SMCS-6060 **i00804855**

NOTE	REF NO	GRAPHIC REF	PART NUMBER	QTY	PART NAME 1 2 3 4 5 6 (PRODUCT LEVEL)	SEE PAGE
	1	1	**6Y-8865**	1	BLADE AS-SEMI-UNIVERSAL	
	2	1	**7T-5869**	1	GUARD	
	3	1	**9W-6118**	2	GUARD	
	4	1	**6Y-3233**	2	DEFLECTOR	
	5	1	**6Y-5493**	2	BRACKET AS	
					(EACH INCLUDES)	
		1	**3G-8052**	2	BEARING	
	6	1	**8E-3584**	1	TRUNNION AS	
		1	**9J-6067**	1	TRUNNION	
	7	1	**8E-3581**	2	SUPPORT-OUTER	
	8	1	**8P-9770**	1	PLATE	
	9	1	**4T-3980**	6	BLOCK	
	10	1	**8E-3582**	1	BRACKET	
	11	1	**8E-3583**	1	BRACKET	
	12	1	**8E-3600**	4	PLATE	
	13	1	**8E-3599**	2	ANGLE	
	14	1	**7T-4777**	1	CHANNEL	
	15	1	**9W-2409**	1	PLATE-PUSH	

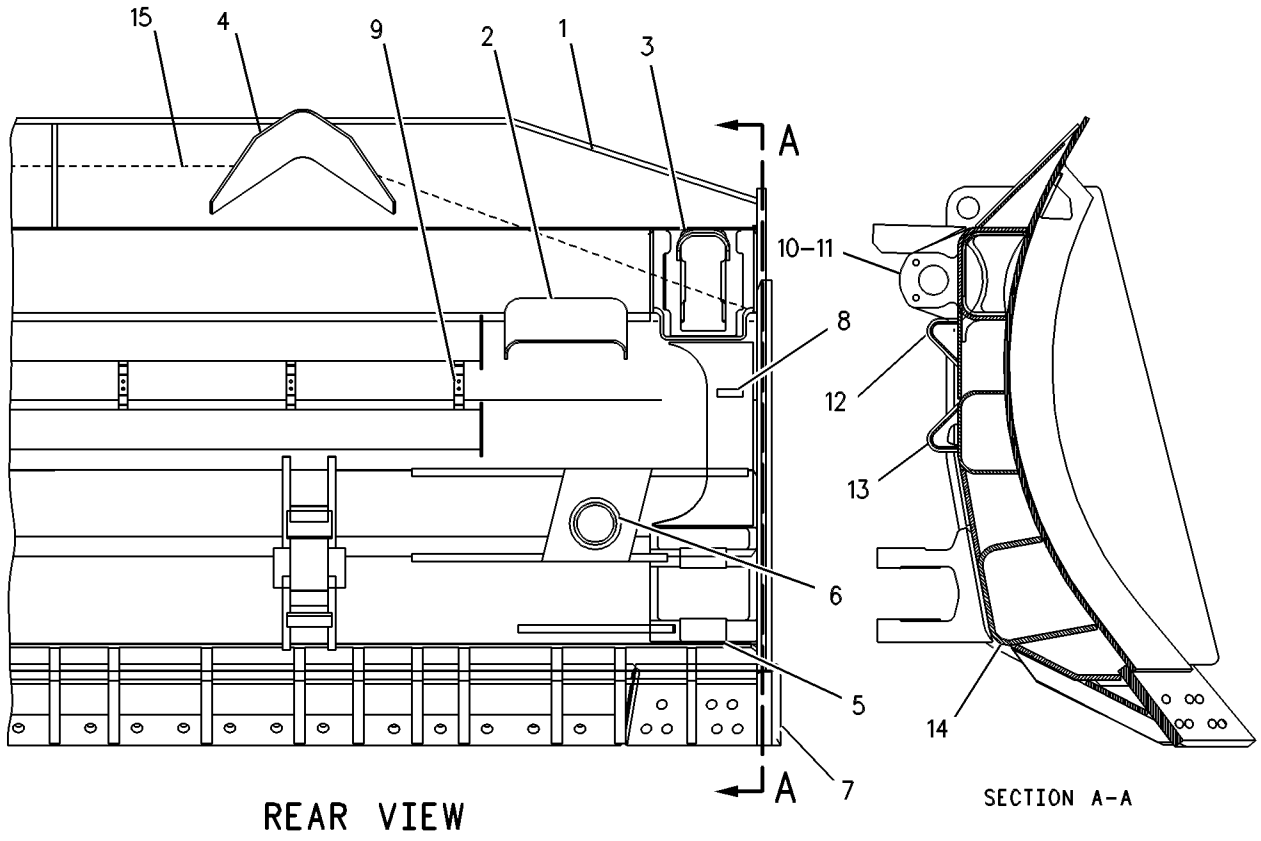

GRAPHIC #1 **<END>** g00380587

8E-9010 BLADE AS-SEMI-UNIVERSAL

S/N: BHJ1-UP
WITH ROCK GUARD & WEAR PLATES
PART OF 9U-8216 BLADE & EDGE GP-SEMI-UNIVERSAL
AN ATTACHMENT

SMCS-6060 **i01904864**

NOTE	REF NO	GRAPHIC REF	PART NUMBER	QTY	PART NAME 1 2 3 4 5 6 (PRODUCT LEVEL)	SEE PAGE
	1	1	**6Y-8865**	1	BLADE AS-SEMI-UNIVERSAL	
	2	1	**7T-5869**	1	GUARD	
	3	1	**9W-6118**	2	GUARD	
	4	1	**6Y-3233**	2	DEFLECTOR	
	5	1	**6Y-5493**	2	BRACKET AS	
					(EACH INCLUDES)	
		1	**3G-8052**	2	BEARING	
	6	1	**8E-3584**	1	TRUNNION AS	
	7	1	**8E-3581**	2	SUPPORT-OUTER	
	8	1	**8P-9770**	1	PLATE	
	9	1	**4T-3980**	6	BLOCK	
	10	1	**8E-3582**	1	BRACKET	
	11	1	**8E-3583**	1	BRACKET	
	12	1	**8E-3600**	4	PLATE	
	13	1	**8E-3599**	2	ANGLE	
	14	1	**7T-4777**	1	CHANNEL	
Y	15	1	*218-3921*	1	PLATE GP-WEAR	745
Y	16	1	*8E-9570*	1	GUARD GP-ROCK (SEMI-UNIVERSAL BLADE)	448

Y-SEPARATE ILLUSTRATION

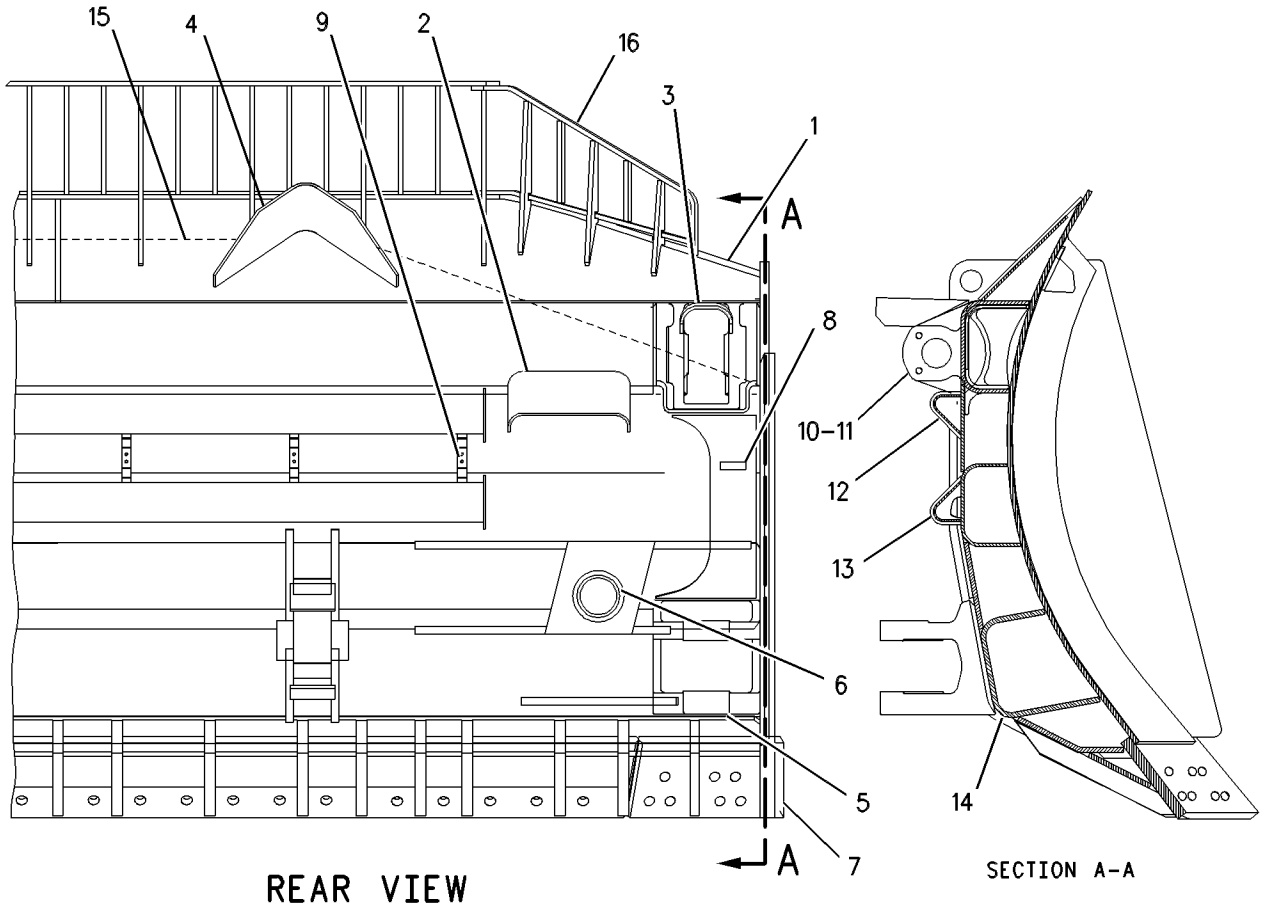

GRAPHIC #1 **<END>** g00380588

130-7656 BLADE AS-UNIVERSAL

S/N: BHF1-UP; RJG1-UP; BHP1-UP
BLADE WITH ROCK GUARD & WEAR PLATES
PART OF 130-7751, 132-8799 BLADE AS-UNIVERSAL
AN ATTACHMENT

SMCS-6053, 6060 **i01526383**

NOTE	REF NO	GRAPHIC REF	PART NUMBER	QTY	PART NAME 1 2 3 4 5 6 (PRODUCT LEVEL)	SEE PAGE
	1	1	**6Y-3233**	2	DEFLECTOR	
	2	1	**9W-6118**	2	GUARD	
	3	1	**8P-9770**	1	PLATE	
	4	1	**113-4536**	1	TRUNNION AS	
	5	1	**6Y-5493**	2	BRACKET AS	
					(EACH INCLUDES)	
		1	**3G-8052**	2	BEARING	
	6	1	**129-5081**	6	BLOCK	
	7	1	**7T-5869**	1	GUARD	

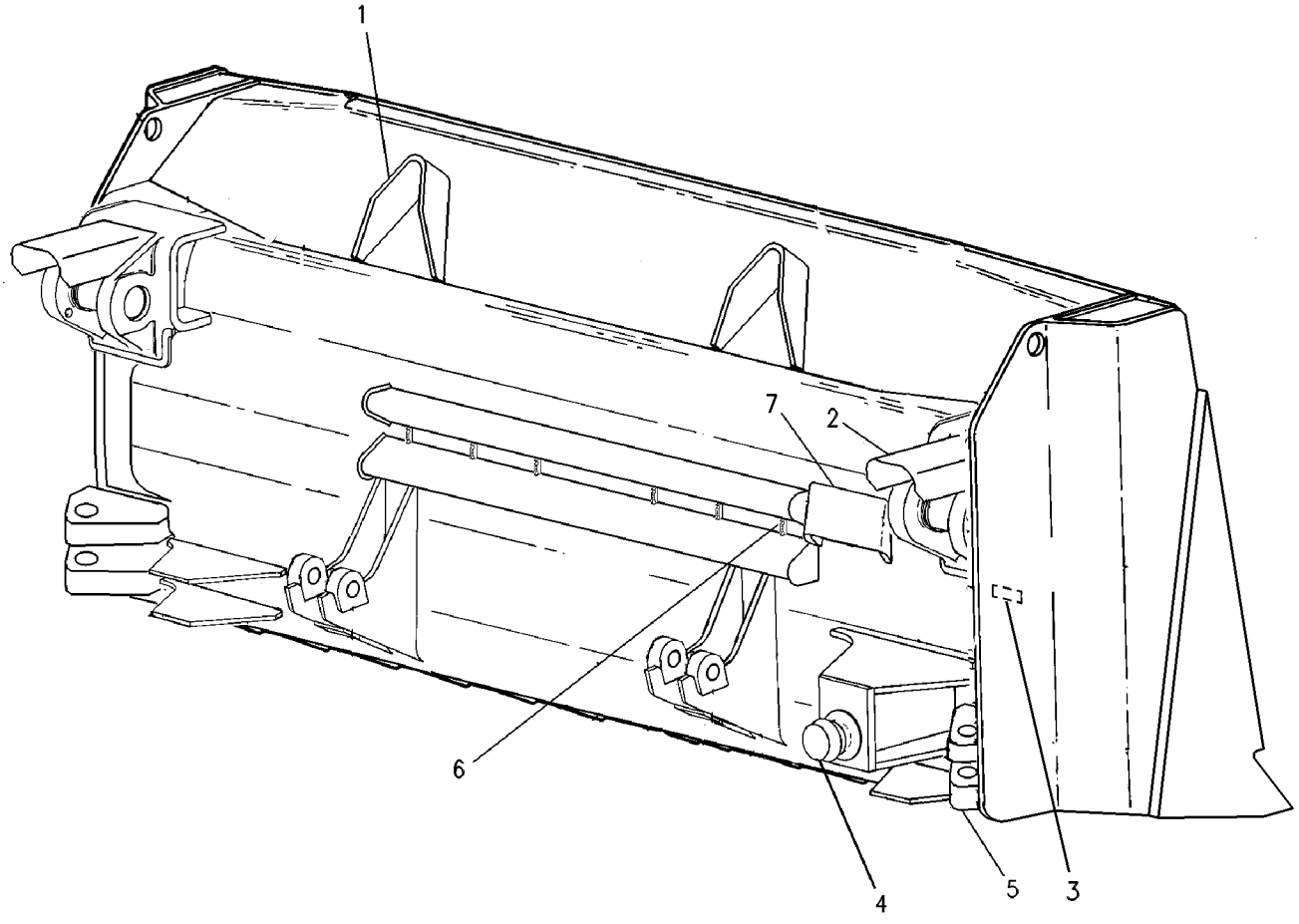

GRAPHIC #1 **<END>** g00234818

130-7749 BLADE AS-UNIVERSAL

S/N: RJG1-UP
WITH ROCK GUARD
PART OF 196-5856 BLADE & EDGE GP-UNIVERSAL
AN ATTACHMENT

SMCS-6053, 6060 **i00695056**

NOTE	PART NUMBER	QTY	PART NAME 1 2 3 4 5 6 (PRODUCT LEVEL)	SEE PAGE
Y	**132-8799**	1	BLADE AS-UNIVERSAL	724
Y	*131-0785*	1	GUARD GP-ROCK (UNIVERSAL BLADE)	449

Y-SEPARATE ILLUSTRATION

<END>

WORK TOOLS

130-7751 BLADE AS-UNIVERSAL

S/N: BHP1-UP
WITH ROCK GUARD & WEAR PLATES
PART OF 130-7657 BLADE & EDGE GP-UNIVERSAL
AN ATTACHMENT

SMCS-6053, 6060 **i01905061**

NOTE	REF NO	GRAPHIC REF	PART NUMBER	QTY	PART NAME 1 2 3 4 5 6 (PRODUCT LEVEL)	SEE PAGE
Y	1	1	**130-7656**	1	BLADE AS-UNIVERSAL	721
Y	2	1	*131-0785*	1	GUARD GP-ROCK (UNIVERSAL BLADE)	449
Y	3	1	*218-3938*	1	PLATE GP-WEAR	746

Y-SEPARATE ILLUSTRATION

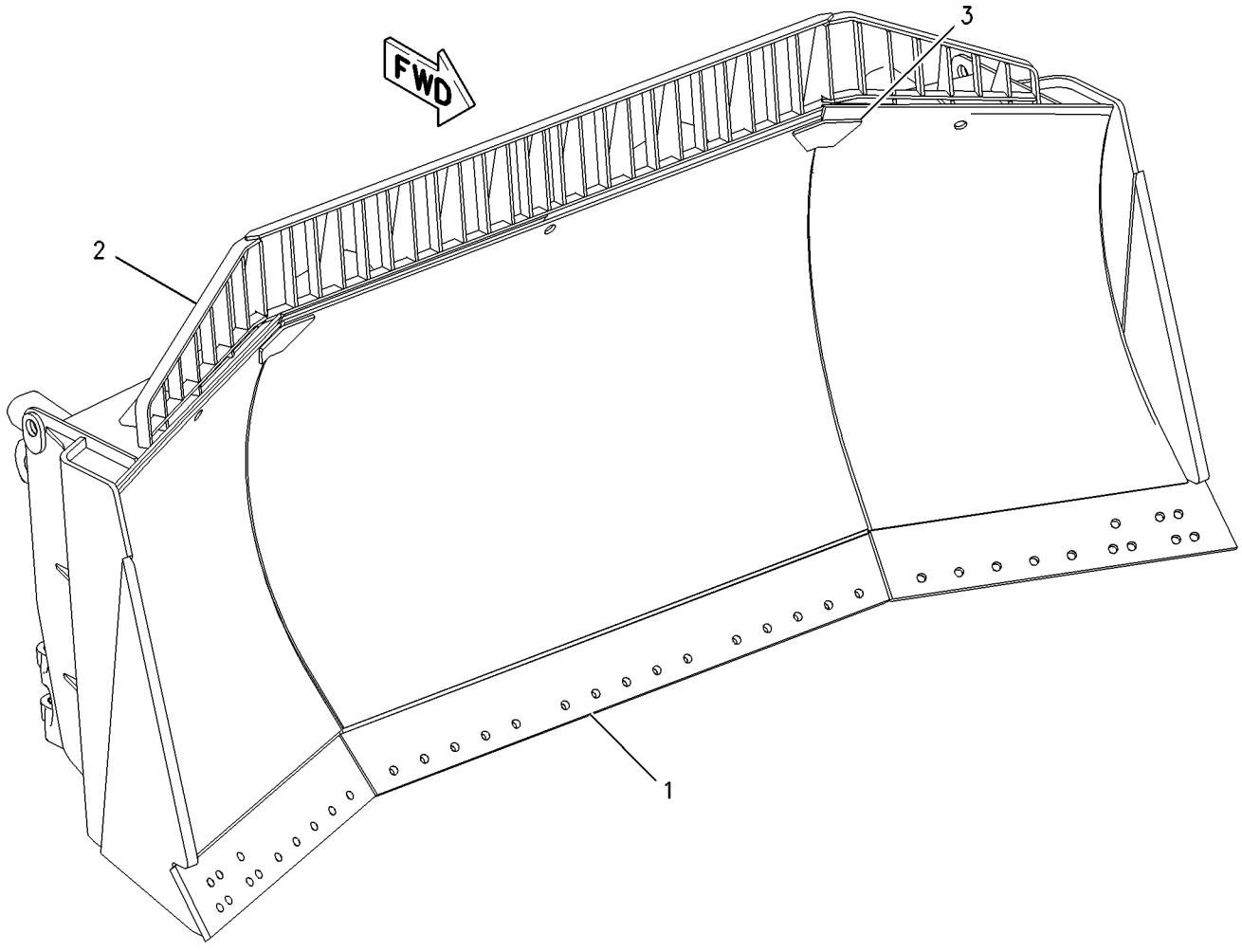

GRAPHIC #1 **<END>** g01007769

WORK TOOLS

132-8799 BLADE AS-UNIVERSAL

S/N: BHF1-UP; RJG1-UP
PART OF 130-7659, 266-9947 BLADE & EDGE GP-UNIVERSAL, 130-7749, 134-6736
BLADE AS-UNIVERSAL
AN ATTACHMENT

SMCS-6053, 6060 **i01205039**

NOTE	REF NO	GRAPHIC REF	PART NUMBER	QTY	PART NAME 1 2 3 4 5 6 (PRODUCT LEVEL)	SEE PAGE
Y	1	1	**130-7656**	1	BLADE AS-UNIVERSAL	721

Y-SEPARATE ILLUSTRATION

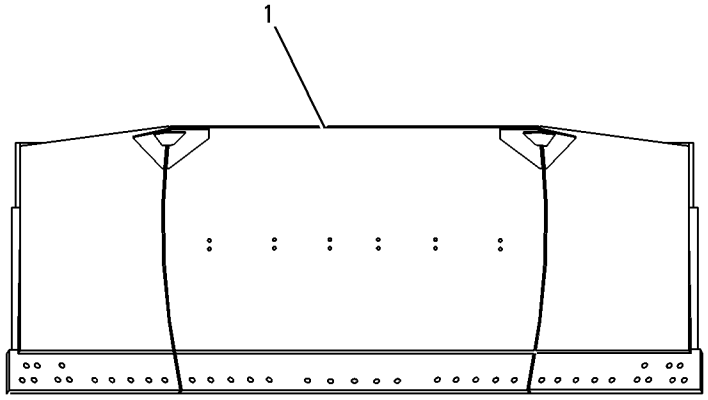

FRONT VIEW

GRAPHIC #1 **<END>** g00258604

WORK TOOLS

134-6736 BLADE AS-UNIVERSAL

S/N: RJG1-UP

PART OF 193-3085 BLADE & EDGE GP-UNIVERSAL

AN ATTACHMENT

SMCS-6053, 6060 **i01321256**

NOTE	REF NO	GRAPHIC REF	PART NUMBER	QTY	PART NAME 1 2 3 4 5 6 (PRODUCT LEVEL)	SEE PAGE
	1	1	**4Z-9401**	2	PLATE	
	2	1	**4Z-9407**	8	STRAP	
Y	3	1	**132-8799**	1	BLADE AS-UNIVERSAL	724
	4	1	**134-6737**	1	SCREEN AS	

Y-SEPARATE ILLUSTRATION

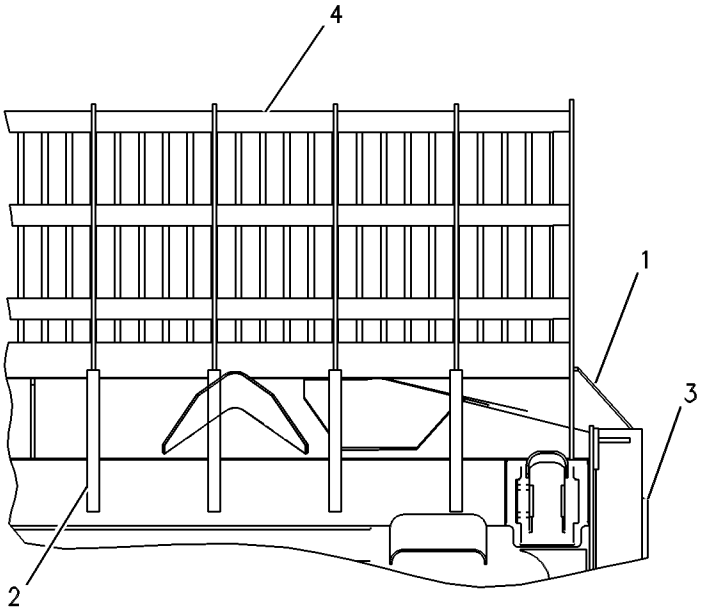

REAR VIEW

GRAPHIC #1 **<END>** g00276935

WORK TOOLS

4T-8183 BLADE GP-SEMI-UNIVERSAL

S/N: BHA1-UP

PART OF 244-1953, 244-2009 BULLDOZER AR-SEMI-UNIVERSAL

AN ATTACHMENT

SMCS-6060, 6078 **i00694889**

NOTE	REF NO	GRAPHIC REF	PART NUMBER	QTY	PART NAME 1 2 3 4 5 6 (PRODUCT LEVEL)	SEE PAGE
Y	1	1	*9U-8215*	1	BLADE & EDGE GP-SEMI-UNIVERSAL	712
	2	1	**4T-3797**	2	CONNECTOR	
		1	**6J-5985**	2	PIN	
	3	1	**6J-5986**	4	RETAINER	
	4	1	**7X-0379**	8	BOLT (7/8-9X1.5-IN)	
	5	1	**9J-2365**	2	RETAINER	
	6	1	**7T-4810**	2	PIN	
		1	**7T-4809**	4	SPACER (96.5X114.3X16.5-MM THK)	
	7	1	**6J-7500**	2	RETAINER	
	8	1	**3G-8053**	2	PIN	
C	9	1	**138-2828**	2	CONNECTOR AS	
					(EACH INCLUDES)	
		1	**3G-8052**	4	BEARING	
	10	1	**9W-2939**	2	PIN	
	11	1	**8T-8917**	8	BOLT (1/2-13X1.25-IN)	
C	12	1	**137-8479**	6	SPACER (82X145X2-MM THK)	

C-CHANGE FROM PREVIOUS TYPE
Y-SEPARATE ILLUSTRATION

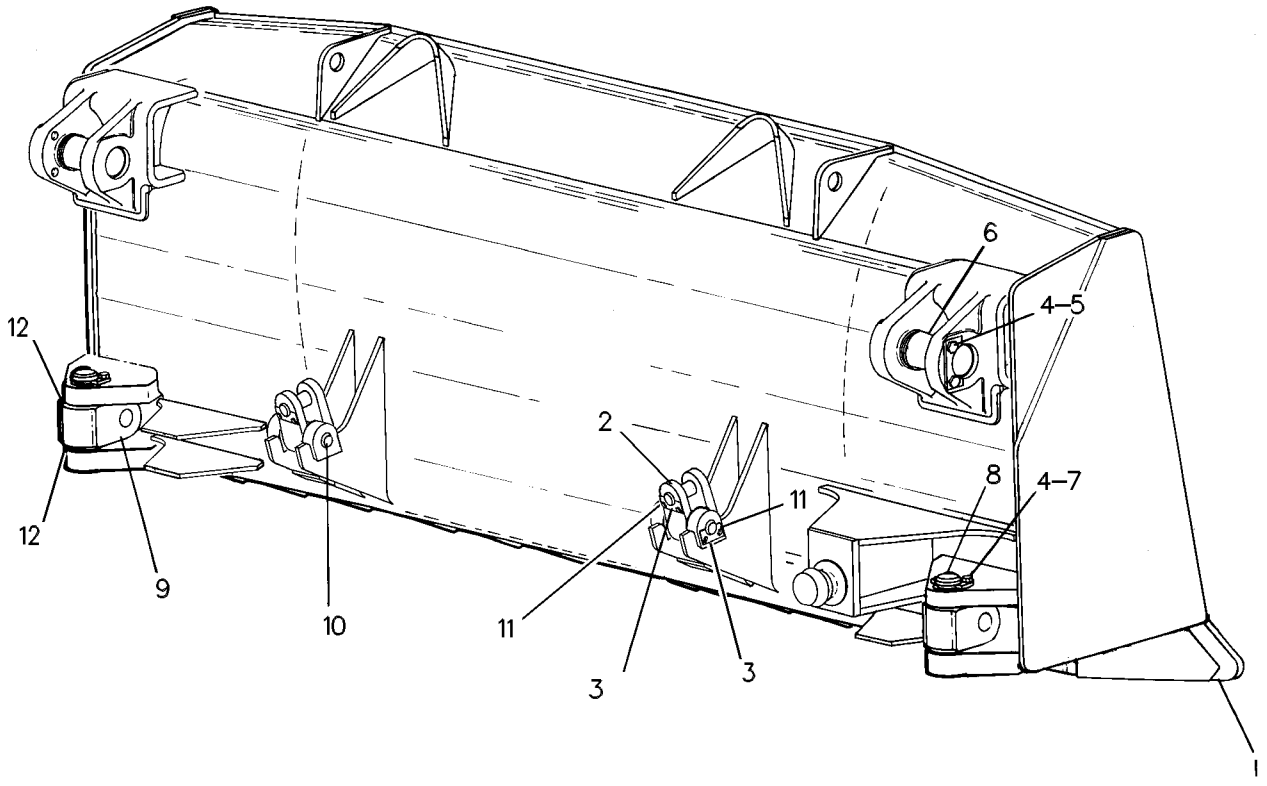

GRAPHIC #1 **<END>** g00297036

WORK TOOLS

8E-2173 BLADE GP-SEMI-UNIVERSAL

S/N: BHJ1-UP

PART OF 227-9988, 244-1952 BULLDOZER AR-SEMI-UNIVERSAL

AN ATTACHMENT

SMCS-6060, 6078 **i00736587**

NOTE	REF NO	GRAPHIC REF	PART NUMBER	QTY	PART NAME 1 2 3 4 5 6 (PRODUCT LEVEL)	SEE PAGE
Y	1	1	*9U-8216*	1	BLADE & EDGE GP-SEMI-UNIVERSAL	712
	2	1	**4T-3797**	2	CONNECTOR	
		1	**6J-5985**	2	PIN	
	3	1	**6J-5986**	4	RETAINER	
	4	1	**7X-0379**	8	BOLT (7/8-9X1.5-IN)	
	5	1	**9J-2365**	2	RETAINER	
	6	1	**7T-4810**	2	PIN	
		1	**7T-4809**	4	SPACER (96.5X114.3X16.5-MM THK)	
	7	1	**6J-7500**	2	RETAINER	
	8	1	**3G-8053**	2	PIN	
C	9	1	**138-2828**	2	CONNECTOR AS	
					(EACH INCLUDES)	
		1	**3G-8052**	4	BEARING	
	10	1	**9W-2939**	2	PIN	
	11	1	**8T-8917**	8	BOLT (1/2-13X1.25-IN)	
C	12	1	**137-8479**	6	SPACER (82X145X2-MM THK)	

C-CHANGE FROM PREVIOUS TYPE
Y-SEPARATE ILLUSTRATION

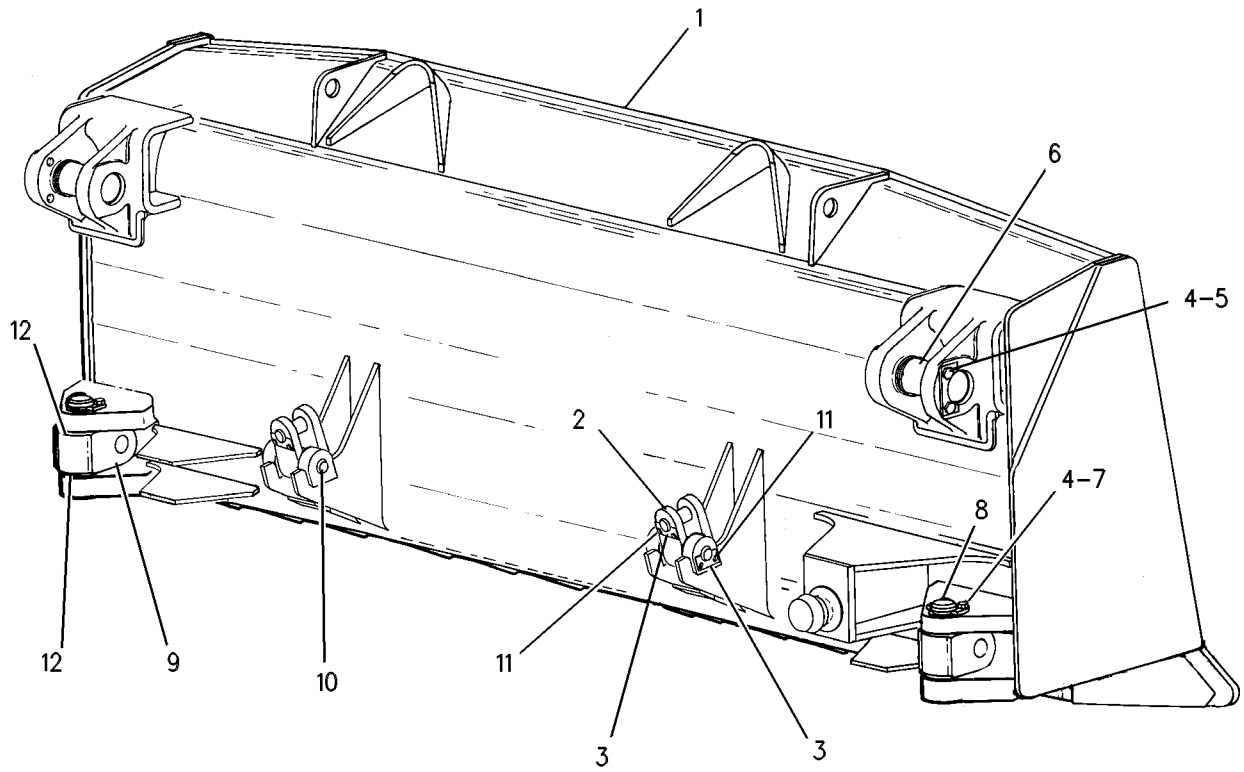

GRAPHIC #1 **<END>** g00297040

WORK TOOLS

130-7658 BLADE GP-UNIVERSAL

S/N: BHP1-UP

PART OF 216-2238, 227-9991 BULLDOZER AR-UNIVERSAL

AN ATTACHMENT

SMCS-6053, 6060 **i01746176**

NOTE	REF NO	GRAPHIC REF	PART NUMBER	QTY	PART NAME 1 2 3 4 5 6 (PRODUCT LEVEL)	SEE PAGE
Y	1	1	*130-7657*	1	BLADE & EDGE GP-UNIVERSAL	712
	2	1	**6J-5985**	2	PIN	
	3	1	**7X-0379**	8	BOLT (7/8-9X1.5-IN)	
	4	1	**9J-2365**	2	RETAINER	
	5	1	**7T-4810**	2	PIN	
	6	1	**7T-4809**	4	SPACER (96.5X114.3X16.5-MM THK)	
	7	1	**6J-7500**	2	RETAINER	
	8	1	**3G-8053**	2	PIN	
C	9	1	**138-2828**	2	CONNECTOR AS	
					(EACH INCLUDES)	
		1	**3G-8052**	1	BEARING	
	10	1	**9W-2939**	2	PIN	
	11	1	**6J-5986**	4	RETAINER	
	12	1	**8T-8917**	8	BOLT (1/2-13X1.25-IN)	
	13	1	**4T-3797**	2	CONNECTOR	
C	14	1	**137-8479**	6	SPACER (82X145X2-MM THK)	
					(USE ONE SPACER PER SIDE OF EACH CONNECTOR AS. MINIMUM AND THREE SPACERS PER PIN JOINT MAXIMUM)	

C-CHANGE FROM PREVIOUS TYPE
Y-SEPARATE ILLUSTRATION

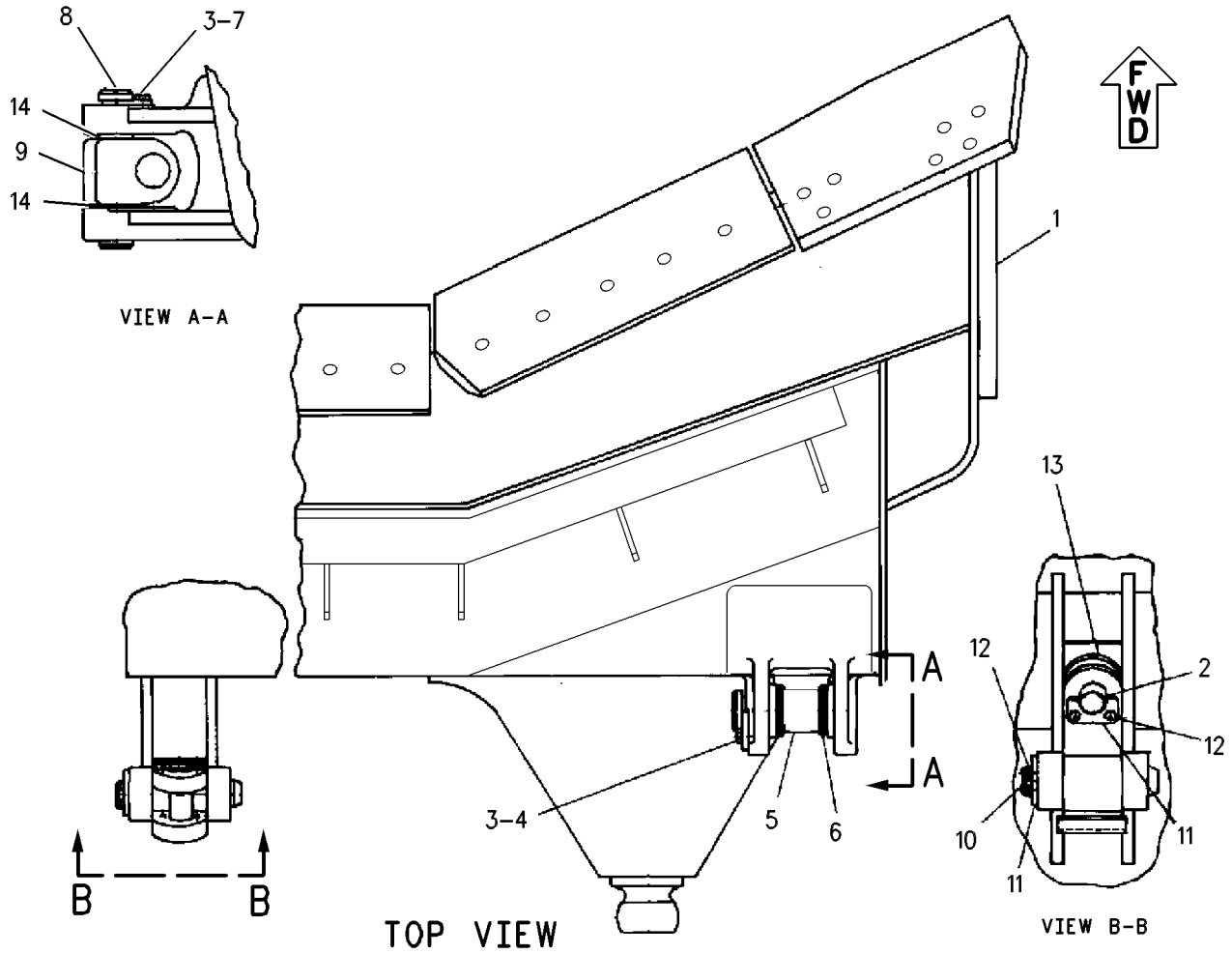

GRAPHIC #1 **<END>** g00335362

WORK TOOLS

130-7660 BLADE GP-UNIVERSAL

S/N: BHF1-UP
PART OF 244-1958, 244-2101 BULLDOZER AR-UNIVERSAL
AN ATTACHMENT

SMCS-6053, 6060 **i00691829**

NOTE	REF NO	GRAPHIC REF	PART NUMBER	QTY	PART NAME 1 2 3 4 5 6 (PRODUCT LEVEL)	SEE PAGE
Y	1	1	*130-7659*	1	BLADE & EDGE GP-UNIVERSAL	713
	2	1	**6J-5985**	2	PIN	
	3	1	**7X-0379**	8	BOLT (7/8-9X1.5-IN)	
	4	1	**9J-2365**	2	RETAINER	
	5	1	**7T-4810**	2	PIN	
	6	1	**7T-4809**	4	SPACER (96.5X114.3X16.5-MM THK)	
	7	1	**6J-7500**	2	RETAINER	
	8	1	**3G-8053**	2	PIN	
C	9	1	**138-2828**	2	CONNECTOR AS	
					(EACH INCLUDES)	
		1	**3G-8052**	1	BEARING	
	10	1	**9W-2939**	2	PIN	
	11	1	**6J-5986**	4	RETAINER	
	12	1	**8T-8917**	8	BOLT (1/2-13X1.25-IN)	
	13	1	**4T-3797**	2	CONNECTOR	
C	14	1	**137-8479**	6	SPACER (82X145X2-MM THK) (2 EACH SIDE)	

C-CHANGE FROM PREVIOUS TYPE
Y-SEPARATE ILLUSTRATION

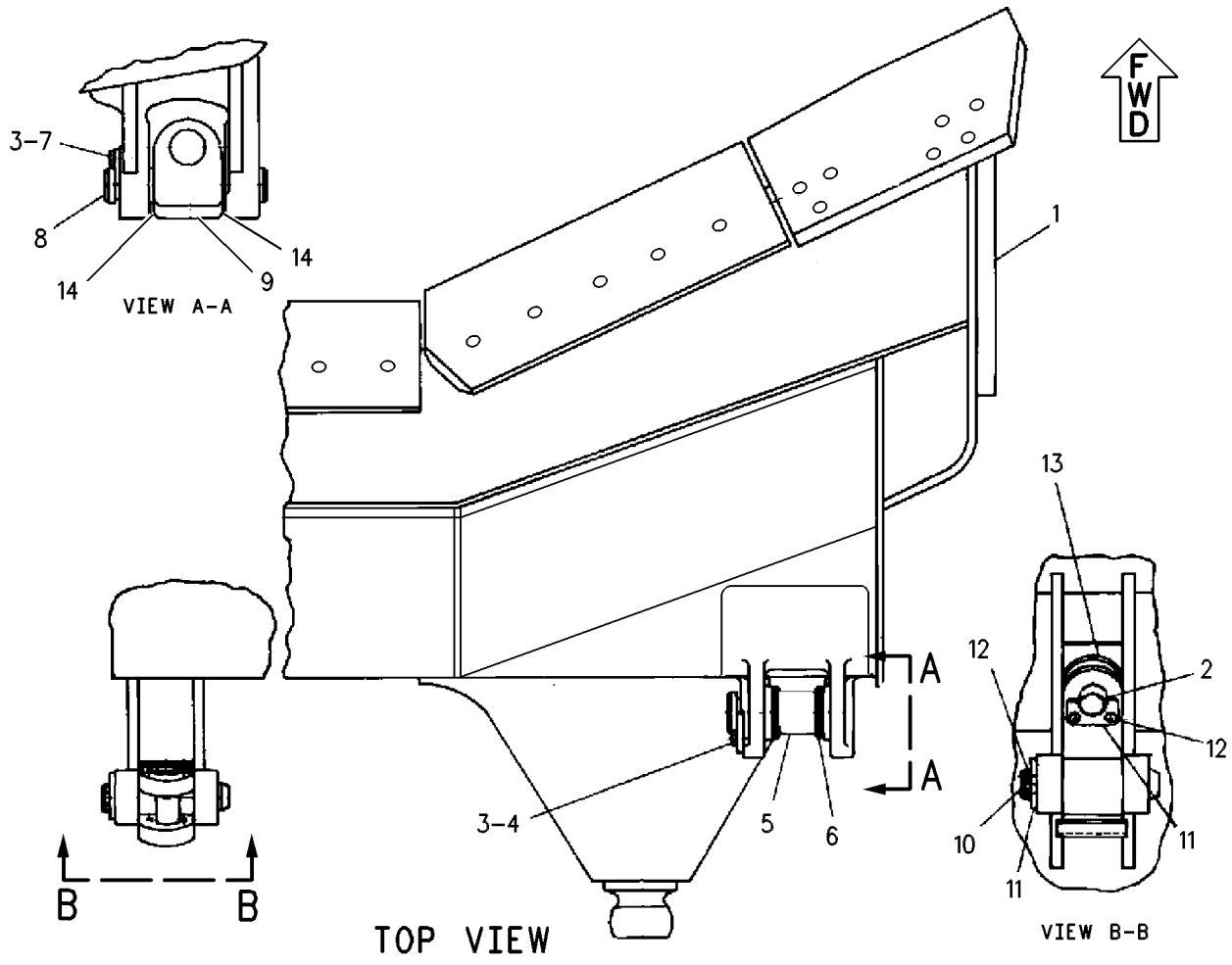

GRAPHIC #1 **<END>** g00280865

7T-8712 EDGE GP-BIT & CUTTING—SEMI-UNIVERSAL

S/N: BHA1-UP

PART OF 9U-8215 BLADE & EDGE GP-SEMI-UNIVERSAL

AN ATTACHMENT

SMCS-6801, 6804 **i01746133**

NOTE	REF NO	GRAPHIC REF	PART NUMBER	QTY	PART NAME 1 2 3 4 5 6 (PRODUCT LEVEL)	SEE PAGE
	1	1	**8E-4199**	1	BIT-END	
	2	1	**8E-4198**	1	BIT-END	
	3	1	**9W-6608**	2	EDGE-CUTTING	
	4	1	**5P-8823**	36	BOLT-PLOW (1 1/4-7X4.13 IN)	
	5	1	**4K-0684**	36	WASHER-HARD (34X55X6MM THK)	
	6	1	**3K-9770**	36	NUT-FULL (1 1/4X7 THD)	
	7	1	**9W-6609**	2	EDGE-CUTTING	

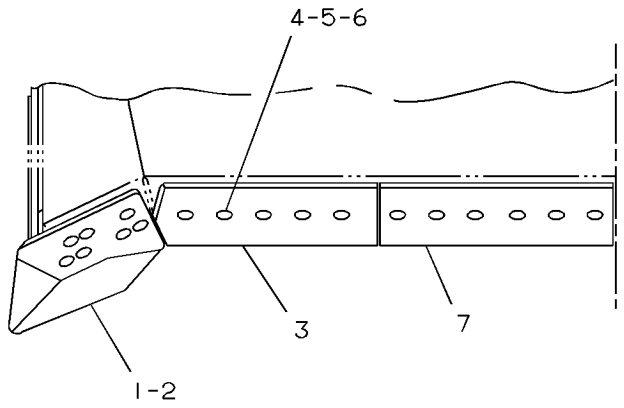

GRAPHIC #1 **<END>** g00182908

7T-8713 EDGE GP-BIT & CUTTING—UNIVERSAL BLADE

S/N: BHF1-UP; RJG1-UP

PART OF 130-7659, 193-3085, 196-5856 BLADE & EDGE GP-UNIVERSAL

AN ATTACHMENT

SMCS-6801, 6804 **i01712683**

NOTE	REF NO	GRAPHIC REF	PART NUMBER	QTY	PART NAME 1 2 3 4 5 6 (PRODUCT LEVEL)	SEE PAGE
	1	1	**8E-4199**	1	BIT-END	
	2	1	**8E-4198**	1	BIT-END	
	3	1	**9W-6608**	2	EDGE-CUTTING	
	4	1	**5P-8823**	39	BOLT-PLOW (1 1/4-7X4.13 IN)	
	5	1	**4K-0684**	39	WASHER-HARD (34X55X6MM THK)	
	6	1	**3K-9770**	39	NUT-FULL (1 1/4X7 THD)	
	7	1	**9W-6615**	3	EDGE-CUTTING	

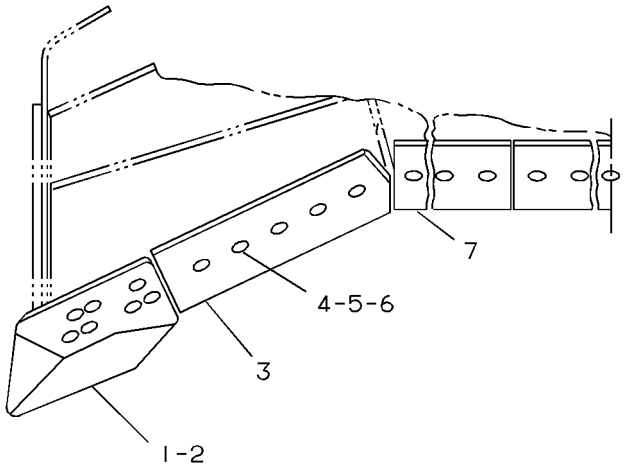

GRAPHIC #1 **<END>** g00182967

9W-5652 EDGE GP-BIT & CUTTING—SEMI-UNIVERSAL BLADE

S/N: BHJ1-UP
ABRASIVE RESISTANT MATERIAL
PART OF 9U-8216 BLADE & EDGE GP-SEMI-UNIVERSAL
AN ATTACHMENT

SMCS-6801, 6804 **i02108712**

NOTE	REF NO	GRAPHIC REF	PART NUMBER	QTY	PART NAME 1 2 3 4 5 6 (PRODUCT LEVEL)	SEE PAGE
	1	1	**8E-4541**	1	BIT-END (RH)	
		1	**8E-4542**	1	BIT-END (LH)	
	2	1	**9W-6657**	2	EDGE-CUTTING	
	3	1	**5P-8823**	36	BOLT-PLOW (1 1/4-7X4.13-IN)	
		1	**4K-0684**	36	WASHER-HARD (34X55X6-MM THK)	
		1	**3K-9770**	36	NUT-FULL (1 1/4X7-THD)	
	4	1	**9W-6656**	2	EDGE-CUTTING	

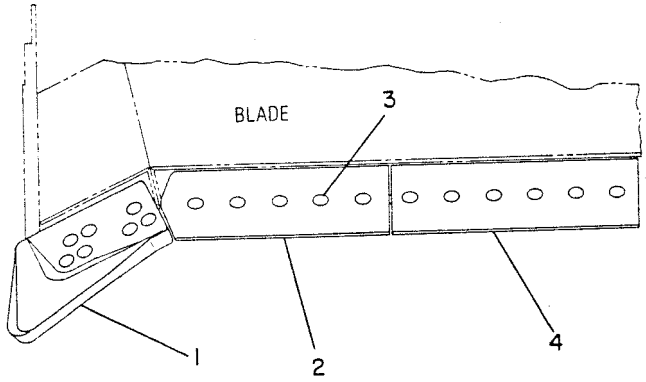

GRAPHIC #1 **<END>** g00183222

9W-5653 EDGE GP-BIT & CUTTING—UNIVERSAL BLADE

S/N: RJG1-UP; BHP1-UP
ABRASIVE RESISTANT MATERIAL
PART OF 130-7657, 266-9947 BLADE & EDGE GP-UNIVERSAL
AN ATTACHMENT

SMCS-6801, 6804 **i02108719**

NOTE	REF NO	GRAPHIC REF	PART NUMBER	QTY	PART NAME 1 2 3 4 5 6 (PRODUCT LEVEL)	SEE PAGE
	1	1	**8E-4541**	1	BIT-END (RH)	
		1	**8E-4542**	1	BIT-END (LH)	
	2	1	**9W-6657**	2	EDGE-CUTTING	
	3	1	**5P-8823**	39	BOLT-PLOW (1 1/4-7X4.13-IN)	
		1	**4K-0684**	39	WASHER-HARD (34X55X6-MM THK)	
		1	**3K-9770**	39	NUT-FULL (1 1/4X7-THD)	
	4	1	**9W-6658**	3	EDGE-CUTTING	

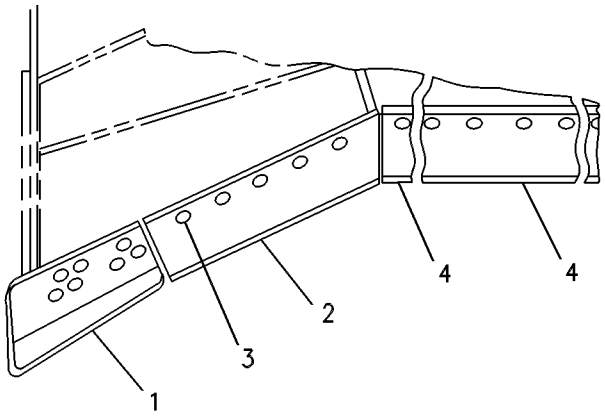

FRONT VIEW

GRAPHIC #1 **<END>** g00257797

WORK TOOLS

119-7830 FRAME GP-RIPPER—MULTI SHANK

S/N: 4PP1-UP
PART OF 216-0122 RIPPER AR
AN ATTACHMENT

SMCS-6314, 7067 **i02310170**

NOTE	REF NO	GRAPHIC REF	PART NUMBER	QTY	PART NAME 1 2 3 4 5 6 (PRODUCT LEVEL)	SEE PAGE
	1	1	**3B-8489**	2	FITTING-GREASE	
	2	1	**3E-6756**	8	SEAL-LIP TYPE	
	3	1	**3E-6758**	8	SEAL-LIP TYPE	
	4	1	**7X-0365**	24	BOLT (3/4-10X1.5-IN)	
	5	1	**6Y-9287**	2	SPACER (76.8X170X40-MM THK)	
	6	1	**7K-9211**	8	SEAL-LIP TYPE	
	7	1	**7T-7222**	2	PIN AS	
	8	1	**7T-7303**	2	PIN AS	
	9	1	**7T-7305**	12	PLATE	
	10	1	**9J-4782**	2	PROTECTOR	
	11	1	**9J-6691**	2	PIN AS	
	12	1	**9J-9055**	2	PIN AS	
I	13	1	**9R-6776**	2	HOSE AS	
	14	1	**9U-8404**	2	SPACER (89.4X180X35-MM THK)	
	15	1	**9W-6343**	2	PIN AS	
B	16	1	**9W-6371**	24	SPACER (108X230X3-MM THK)	
	17	1	**154-4492**	2	PLUG-ADAPTER	
	18	1	**111-2106**	2	PIN AS	
	19	1	**6V-8628**	2	ELBOW	
	20	1	**3J-7354**	4	SEAL-O-RING	
	21	1	**4J-5477**	4	SEAL-O-RING	
	22	1	**126-2372**	1	FRAME & BEARING AS	
	22A	1	**3B-8489**	2	FITTING-GREASE	
	22B	1	**7T-7190**	4	BEARING-SLEEVE	

B-USE AS REQUIRED
I-REFER TO HYDRAULIC INFORMATION SYSTEM

119-7830 **FRAME GP-RIPPER** *(contd.)* **i02310170**

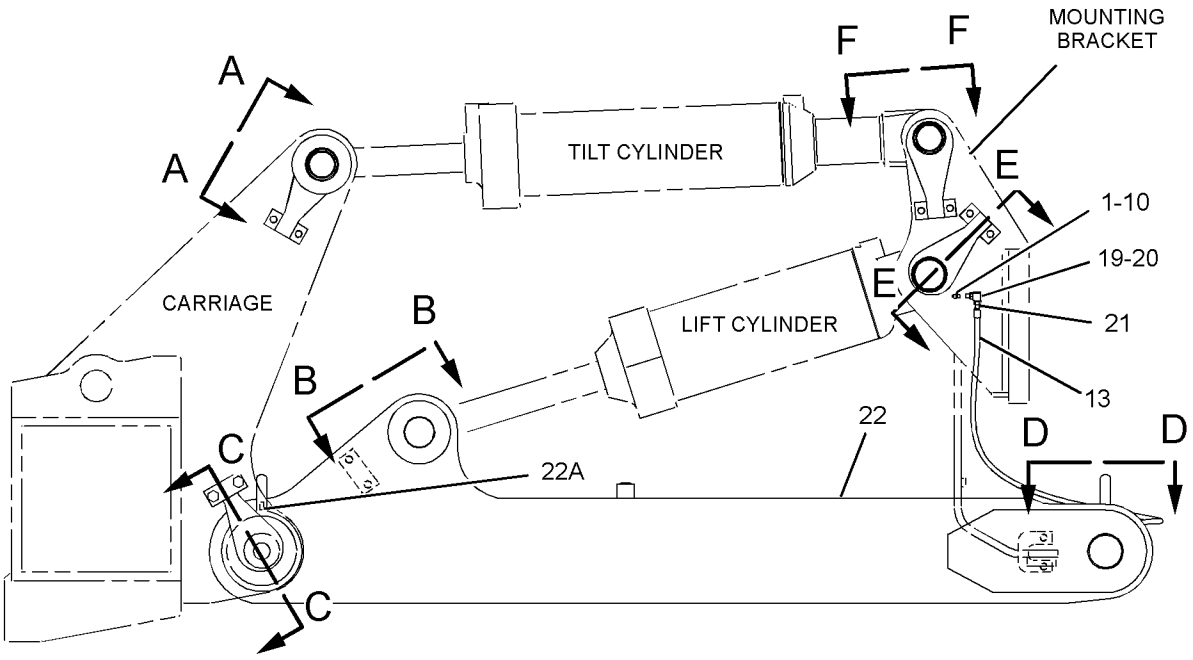

RIGHT SIDE VIEW

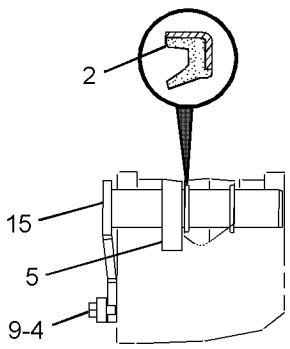

VIEW A-A

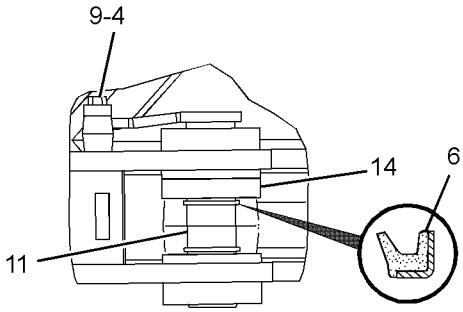

VIEW B-B

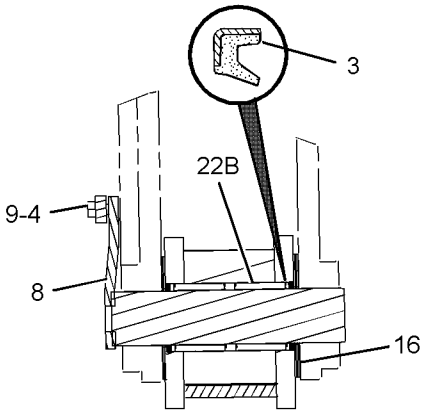

VIEW C-C

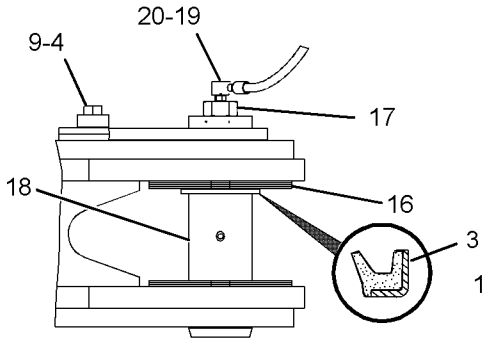

VIEW D-D

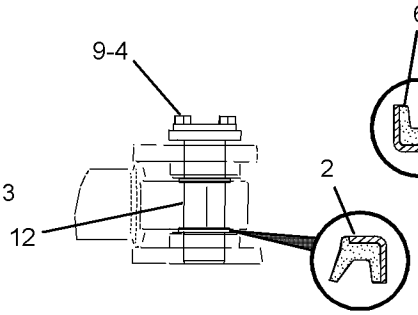

VIEW F-F

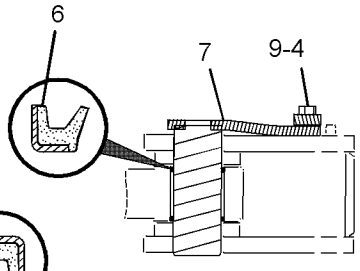

VIEW E-E

GRAPHIC #1 **<END>** g01172357

WORK TOOLS

180-2399 FRAME GP-RIPPER—SINGLE SHANK

S/N: BEY1-UP
PART OF 216-0121 RIPPER AR
AN ATTACHMENT

SMCS-6314, 7067 **i02308795**

NOTE	REF NO	GRAPHIC REF	PART NUMBER	QTY	PART NAME 1 2 3 4 5 6 (PRODUCT LEVEL)	SEE PAGE
	1	1	**3B-8489**	2	FITTING-GREASE	
	2	1	**3E-6756**	8	SEAL-LIP TYPE	
	3	1	**3E-6758**	8	SEAL-LIP TYPE	
	5	1	**7K-9211**	8	SEAL-LIP TYPE	
	6	1	**7T-7222**	2	PIN AS	
	7	1	**7T-7305**	12	PLATE	
	8	1	**9J-4782**	2	PROTECTOR	
	9	1	**9J-6689**	2	PIN AS	
	10	1	**9J-6691**	2	PIN AS	
	11	1	**9J-9055**	2	PIN AS	
I	12	1	**9R-6776**	2	HOSE AS	
	13	1	**9U-8404**	2	SPACER (89.4X180X35-MM THK)	
B	14	1	**9W-6371**	26	SPACER (108X230X3-MM THK)	
	15	1	**111-2106**	2	PIN AS	
	16	1	**132-7994**	2	PIN AS	
					(EACH INCLUDES)	
		1	**5J-1205**	1	PIN	
	17	1	**133-0225**	1	FRAME & BEARING AS	
	17A	1	**2V-0447**	4	BEARING-SLEEVE	
	17B	1	**3B-8489**	2	FITTING-GREASE	
	17C	1	**4T-1422**	4	BEARING-SLEEVE	
	17D	1	**133-2015**	4	BEARING-SLEEVE	
	18	1	**154-4492**	2	PLUG-ADAPTER	
	19	1	**3J-7354**	4	SEAL-O-RING	
	20	1	**4J-5477**	4	SEAL-O-RING	
	21	1	**6V-8628**	4	ELBOW	
	22	1	**7X-0365**	24	BOLT (3/4-10X1.5-IN)	

B-USE AS REQUIRED
I-REFER TO HYDRAULIC INFORMATION SYSTEM

180-2399 **FRAME GP-RIPPER** *(contd.)* **i02308795**

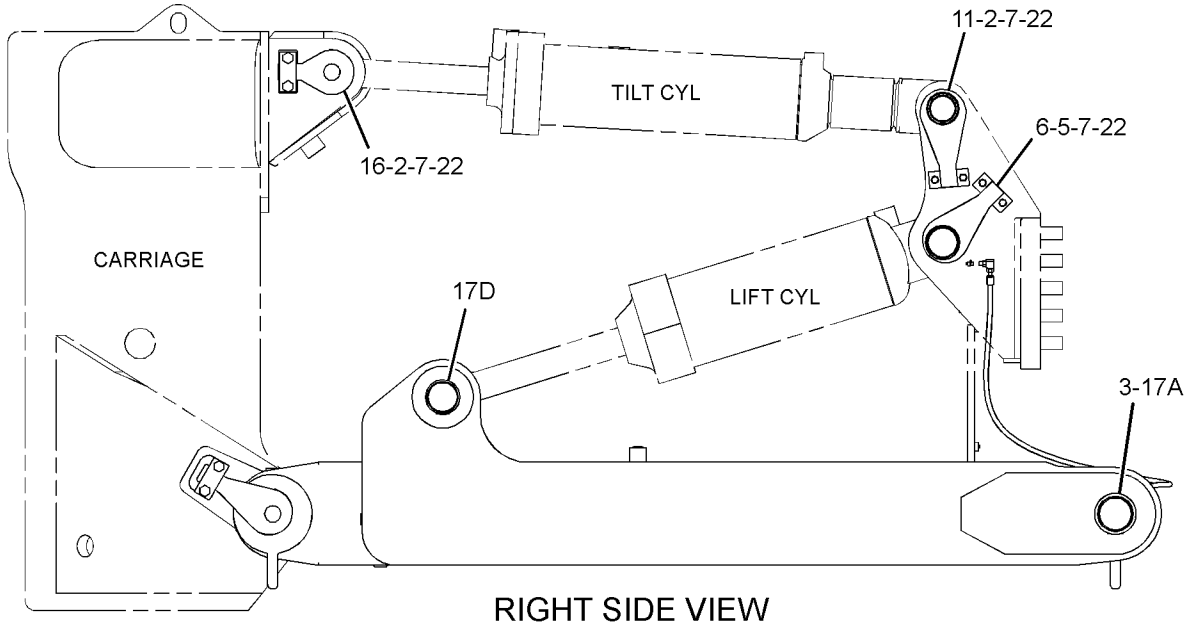

RIGHT SIDE VIEW

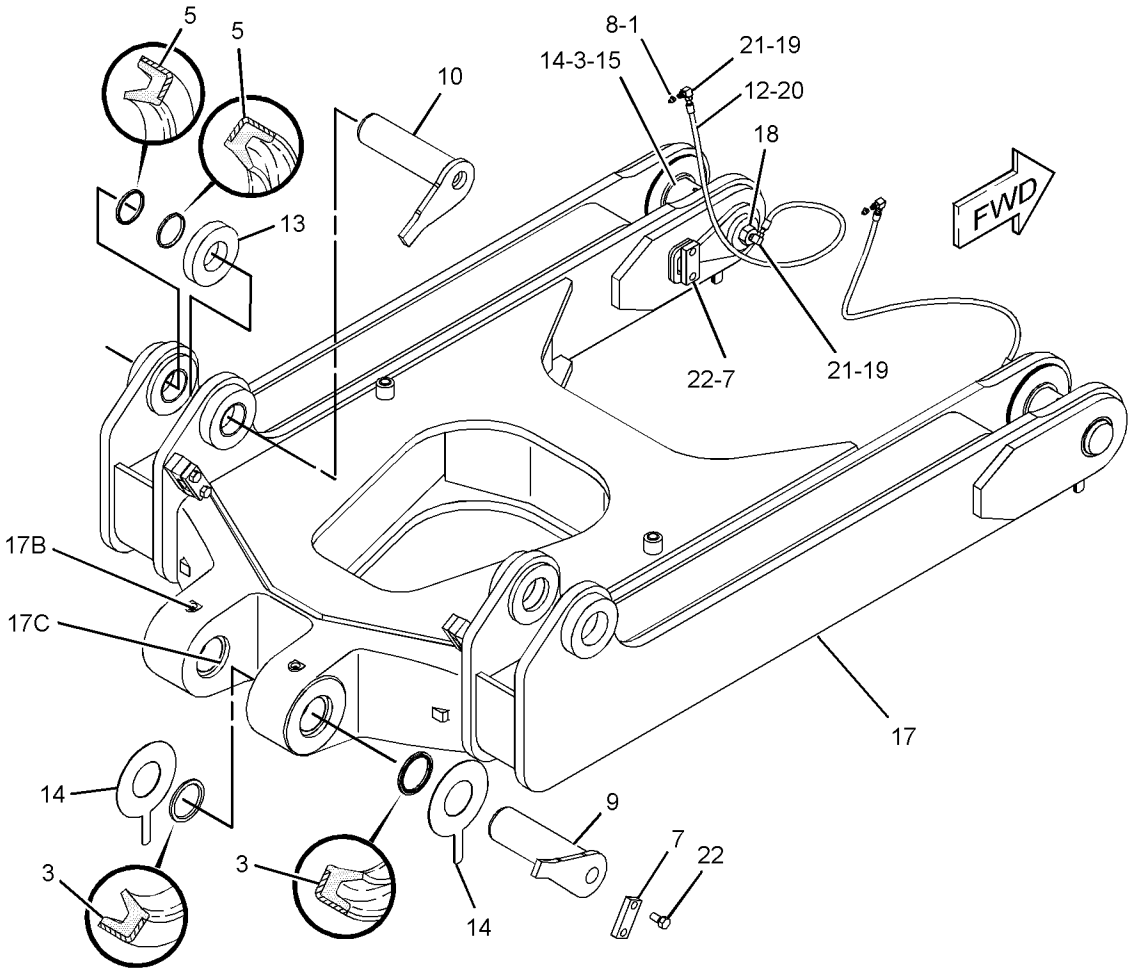

GRAPHIC #1 **<END>** g01224895

WORK TOOLS

185-1715 FRAME GP-RIPPER—SINGLE SHANK

S/N: BRT1-UP
PART OF 216-0120 RIPPER AR
AN ATTACHMENT

SMCS-6314, 7067 **i02034266**

NOTE	REF NO	GRAPHIC REF	PART NUMBER	QTY	PART NAME 1 2 3 4 5 6 (PRODUCT LEVEL)	SEE PAGE
	1	1	**3B-8489**	2	FITTING-GREASE	
	2	1	**3E-6756**	8	SEAL-LIP TYPE	
	3	1	**3E-6758**	8	SEAL-LIP TYPE	
	4	1	**5P-9899**	2	PLUG-PROTECTION	
	5	1	**7K-9211**	8	SEAL-LIP TYPE	
	6	1	**7T-7222**	2	PIN AS	
	7	1	**7T-7305**	12	PLATE	
	8	1	**9J-4782**	2	PROTECTOR	
	9	1	**9J-6689**	2	PIN AS	
	10	1	**9J-6691**	2	PIN AS	
	11	1	**9J-9055**	2	PIN AS	
I	12	1	**9R-6776**	2	HOSE AS	
	13	1	**9U-8404**	2	SPACER (89.4X180X35-MM THK)	
B	14	1	**9W-6371**	26	SPACER (108X230X3-MM THK)	
	15	1	**111-2106**	2	PIN AS	
	16	1	**117-4995**	1	FRAME & BEARING AS	
		1	**3B-8489**	2	FITTING-GREASE	
		1	**4T-1422**	2	BEARING-SLEEVE	
	17	1	**132-7994**	2	PIN AS	
	18	1	**154-4492**	2	PLUG-ADAPTER	
	19	1	**3J-7354**	4	SEAL-O-RING	
	20	1	**4J-5477**	4	SEAL-O-RING	
	21	1	**6V-8628**	4	ELBOW	
	22	1	**7X-0365**	24	BOLT (3/4-10X1.5-IN)	

B-USE AS REQUIRED
I-REFER TO HYDRAULIC INFORMATION SYSTEM

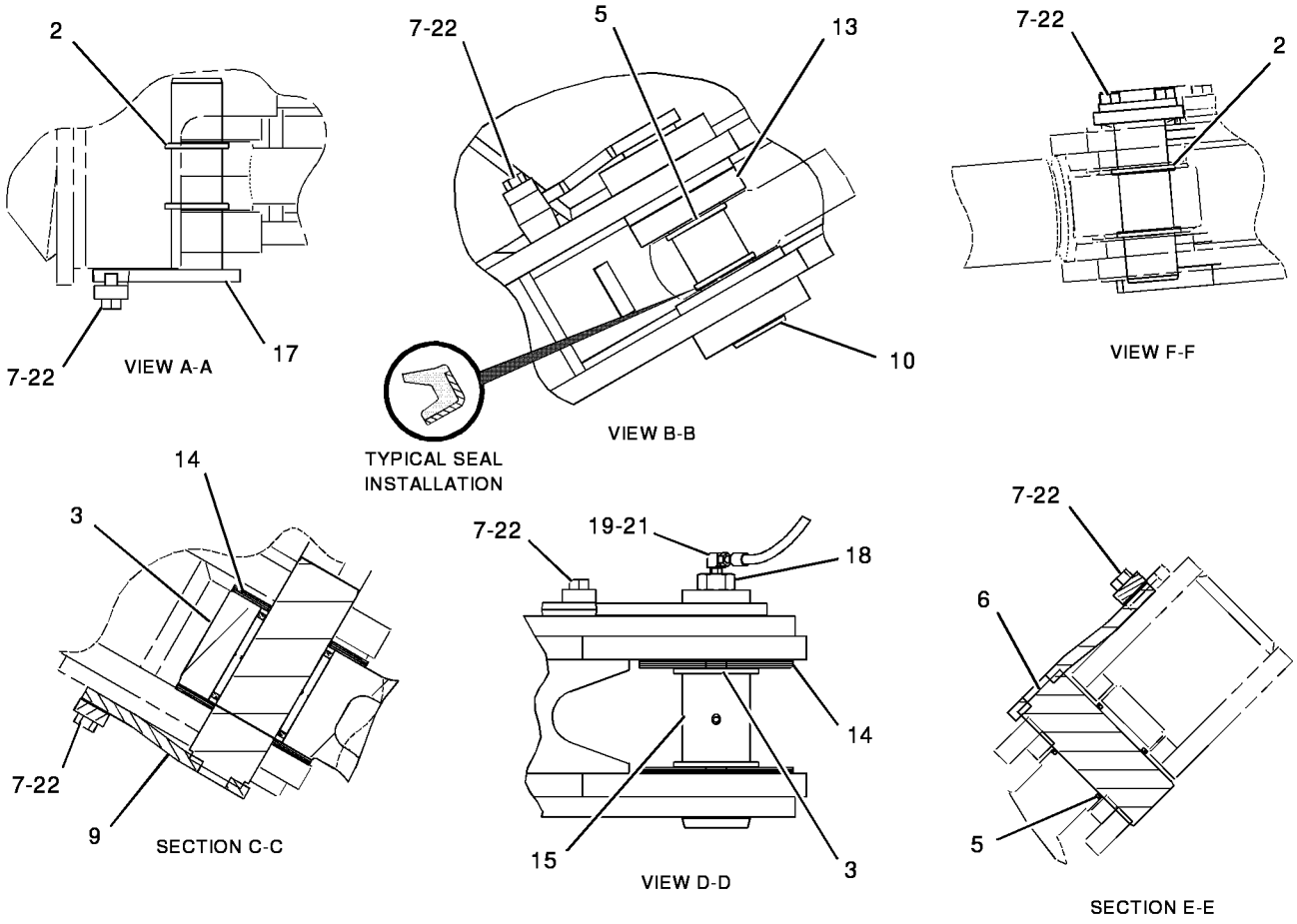

GRAPHIC #1

<END>

g01047476

WORK TOOLS

4Z-0660 MODIFICATION AR-RIPPER

S/N: RJG1-UP

FOR USE WITH 216-0120–PAGE 751, 216-0121–PAGE 752, 216-0122–PAGE 753, 31.5-IN TRACK SHOES

AN ATTACHMENT

SMCS-7000 **i02280811**

NOTE	PART NUMBER	QTY	PART NAME 1 2 3 4 5 6 (PRODUCT LEVEL)	SEE PAGE
	9J-2290	2	PIN AS	
	195-3370	1	PLATE & BEARING AS (LH)	
	2V-1256	2	BEARING-SLEEVE	
	3T-8459	2	BEARING-SLEEVE	
	195-3371	1	PLATE & BEARING AS (RH)	
	2V-1256	2	BEARING-SLEEVE	
	3T-8459	2	BEARING-SLEEVE	

<END>

WORK TOOLS

135-2919 MODIFICATION AR-RIPPER

S/N: RJG1-UP
MULTI-SHANK RIPPER WITH LONG SHANK
FOR USE WITH 216-0122—PAGE 753
AN ATTACHMENT

SMCS-7000 **i02272779**

NOTE	REF NO	GRAPHIC REF	PART NUMBER	QTY	PART NAME 1 2 3 4 5 6 (PRODUCT LEVEL)	SEE PAGE
Y	1	1	*4Z-8946*	1	PULLER GP-PIN	748
Y	2	1	*4Z-8947*	1	RIPPER GP	755
CY	3	1	*218-3348*	1	LINES GP-PIN PULLER CYLINDER	602

C-CHANGE FROM PREVIOUS TYPE
Y-SEPARATE ILLUSTRATION

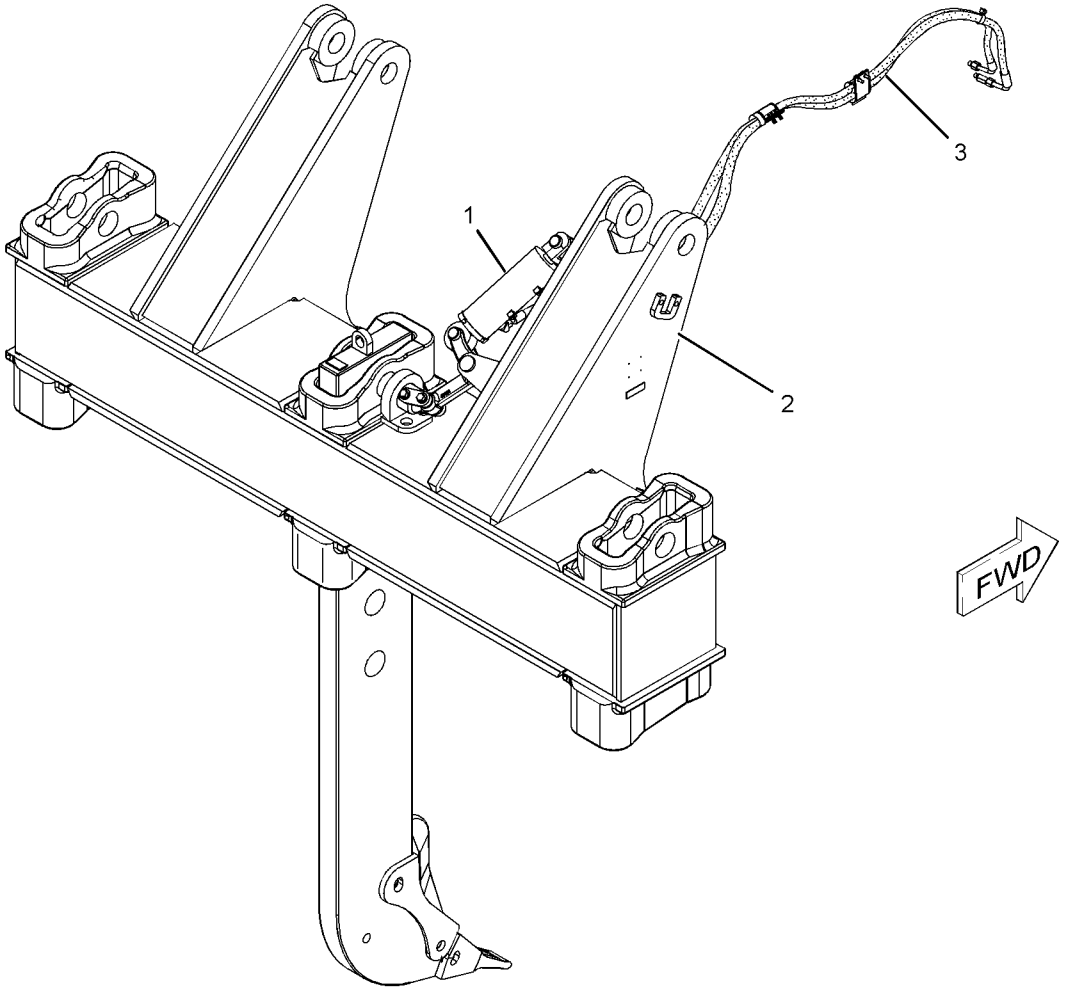

GRAPHIC #1 **<END>** g01139758

WORK TOOLS

133-0229 MOUNTING GP-RIPPER

S/N: 4PP1-UP; BRT1-UP; BEY1-UP
BUSHED JOINTS
PART OF 216-0120, 216-0121, 216-0122 RIPPER AR
AN ATTACHMENT

SMCS-6165, 6310, 6324 **i02351794**

NOTE	REF NO	GRAPHIC REF	PART NUMBER	QTY	PART NAME 1 2 3 4 5 6 (PRODUCT LEVEL)	SEE PAGE
	1	1	**119-7015**	1	GUARD AS	
C	2	1	**160-5458**	2	BAR	
C	3	1	**160-6765**	1	PLATE & BEARING AS (LH)	
C	4	1	**160-6767**	1	PLATE & BEARING AS (RH)	
					(EACH PLATE & BEARING AS INCLUDES)	
	4A	1	**2V-1256**	2	BEARING-SLEEVE (95.4MM OD)	
	4B	1	**3T-8459**	2	BEARING-SLEEVE (101.1MM OD)	
	4C	1	**2J-1227**	2	RETAINER	
	8	1	**7X-0439**	20	BOLT (1-1/2-6X5-IN)	
	9	1	**7X-0537**	20	WASHER-HARD (40.5X67X6-MM THK)	
	10	1	**7X-0616**	16	WASHER-HARD (28X57X6-MM THK)	
C	11	1	**8C-8843**	4	BOLT (1-8X4.5-IN)	
C	12	1	**8T-2502**	2	BOLT (3/8-16X1.125-IN)	
C	13	1	**5P-1075**	2	WASHER-HARD (10.2X22.5X3-MM THK)	
C	14	1	**7X-0405**	12	BOLT (1-8X2.75-IN)	
C	15	1	**165-6064**	1	GUARD AS	
	15A	1	**5P-1075**	2	WASHER-HARD (10.2X22.5X3-MM THK)	
	15B	1	**8T-2502**	2	BOLT (3/8-16X1.125-IN)	
	15C	1	**141-2723**	1	PLATE	
	15E	1	**9W-8558**	2	BLOCK	

C-CHANGE FROM PREVIOUS TYPE

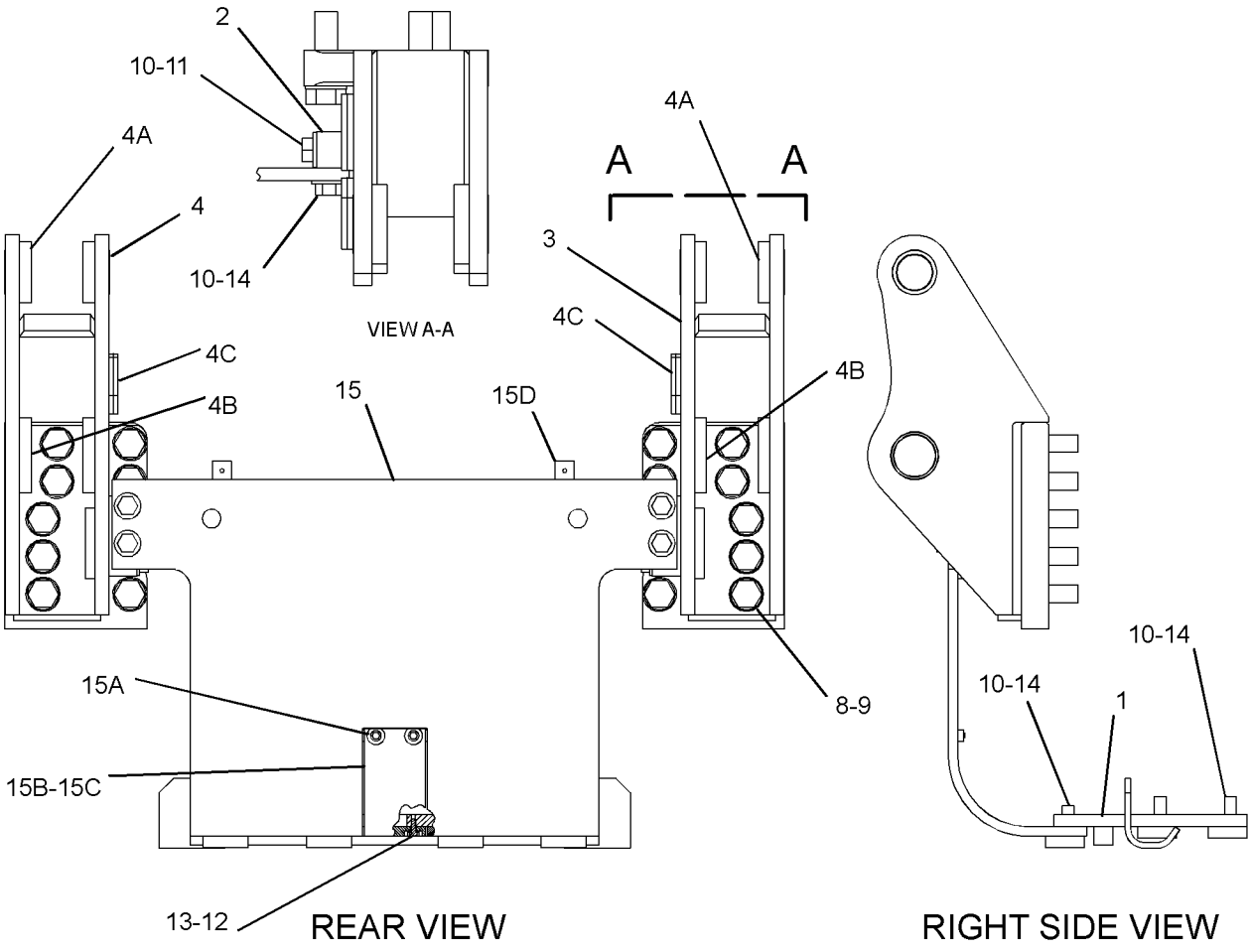

GRAPHIC #1 **<END>** g01175761

WORK TOOLS

218-3921 PLATE GP-WEAR—SEMI-UNIVERSAL BLADE

S/N: BHJ1-UP

PART OF 8E-9010 BLADE AS-SEMI-UNIVERSAL

AN ATTACHMENT

SMCS-6820 **i01904866**

NOTE	REF NO	GRAPHIC REF	PART NUMBER	QTY	PART NAME 1 2 3 4 5 6 (PRODUCT LEVEL)	SEE PAGE
	1	1	**218-3922**	1	PLATE (RH)	
	2	1	**218-3923**	1	PLATE (LH)	
	3	1	**218-3924**	1	PLATE-WEAR	

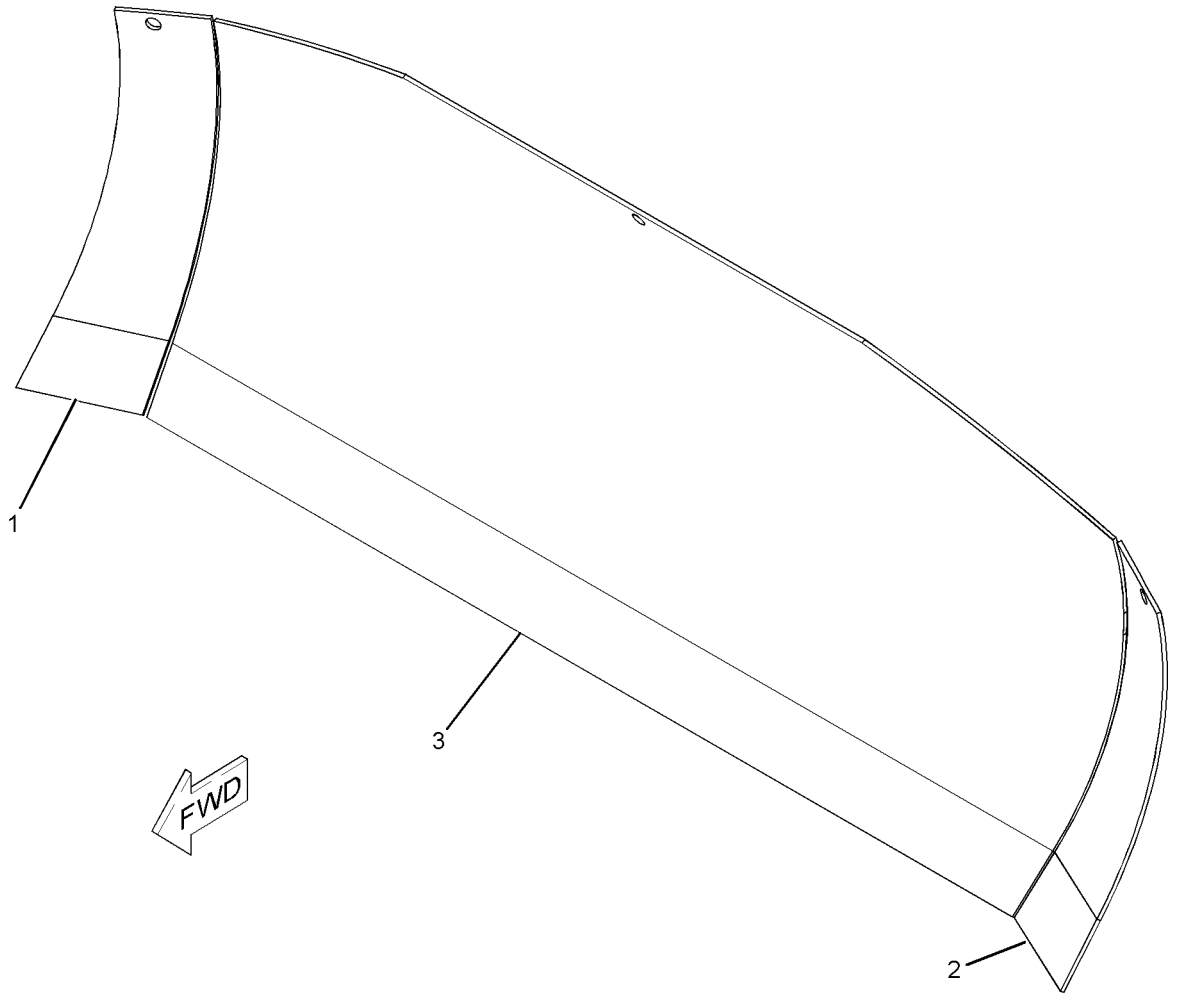

GRAPHIC #1 **<END>** g01056961

218-3938 PLATE GP-WEAR—UNIVERSAL BLADE

S/N: BHP1-UP
PART OF 130-7751 BLADE AS-UNIVERSAL
AN ATTACHMENT

SMCS-6820 **i01905064**

NOTE	REF NO	GRAPHIC REF	PART NUMBER	QTY	PART NAME 1 2 3 4 5 6 (PRODUCT LEVEL)	SEE PAGE
	1	1	**1U-3685**	1	PLATE-RH	
	2	1	**1U-3686**	1	PLATE-LH	
	3	1	**218-3939**	1	PLATE (RH)	
	4	1	**218-3940**	1	PLATE (LH)	
	5	1	**218-3941**	1	PLATE-WEAR	

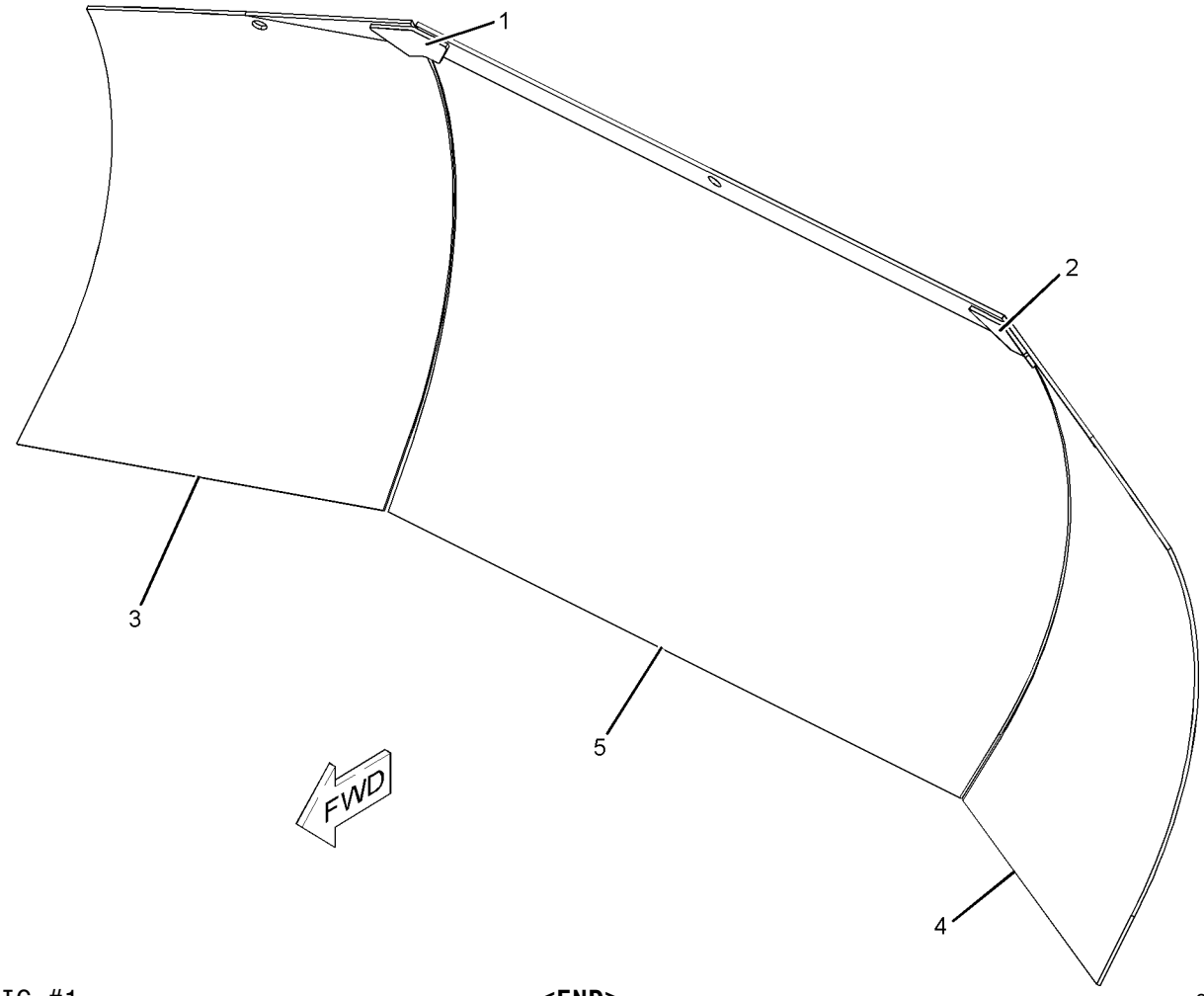

GRAPHIC #1 **<END>** g01056966

WORK TOOLS

178-1784 PULLER AR-PIN

S/N: RJG1-UP

FOR USE WITH 216-0120—PAGE 751, 216-0121—PAGE 752

AN ATTACHMENT

SMCS-5353, 5354 **i01682895**

NOTE	REF NO	GRAPHIC REF	PART NUMBER	QTY	PART NAME 1 2 3 4 5 6 (PRODUCT LEVEL)	SEE PAGE
Y	1	1	**6E-3113**	1	CYLINDER GP-RIPPER PIN PULLER	568
Y	2	1	*178-1783*	1	PULLER GP-PIN	749
Y	3	1	**210-6030**	1	LINES GP-PIN PULLER CYLINDER	600

Y-SEPARATE ILLUSTRATION

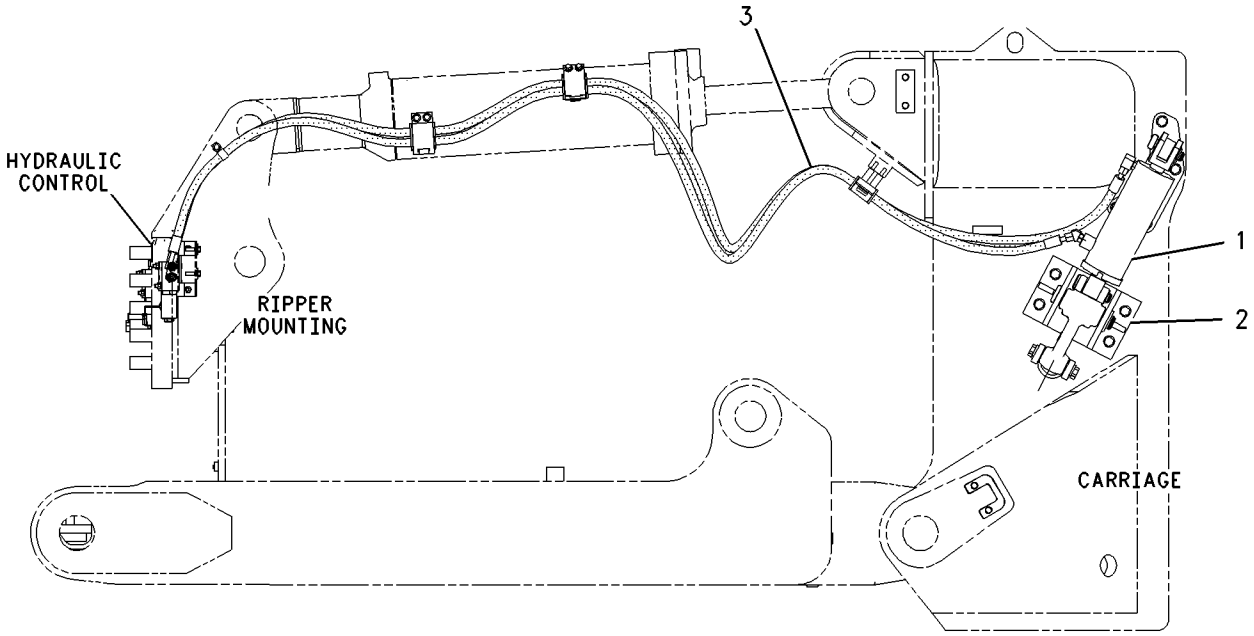

LEFT SIDE VIEW

GRAPHIC #1 **<END>** g00868051

4Z-8946 PULLER GP-PIN—LONG SHANK

S/N: RJG1-UP
PART OF 135-2919 MODIFICATION AR-RIPPER
AN ATTACHMENT

SMCS-5353, 5354 **i02274714**

NOTE	REF NO	GRAPHIC REF	PART NUMBER	QTY	PART NAME 1 2 3 4 5 6 (PRODUCT LEVEL)	SEE PAGE
	1	1	**4Z-8943**	1	PIN	
	2	1	**4Z-9219**	1	LEVER	
Y	3	1	*6E-3113*	1	CYLINDER GP-RIPPER PIN PULLER	568
	4	1	**7T-4501**	2	PIN	
	5	1	**9J-4523**	2	LINK	
	6	1	**6K-0138**	4	BOLT-LOCKING (5/8-11X1.25-IN)	
	7	1	**6K-3630**	1	RING	
	8	1	**7J-4169**	2	RING-SNAP	
	9	1	**7T-4502**	1	PIN	
	10	1	**7X-0515**	4	WASHER-HARD (17X35X5-MM THK)	
	11	1	**7X-0537**	1	WASHER-HARD (40.5X67X6-MM THK)	
	12	1	**8E-8914**	2	PIN	
	13	1	**8T-4167**	2	WASHER-HARD (26X44X4-MM THK)	

Y-SEPARATE ILLUSTRATION

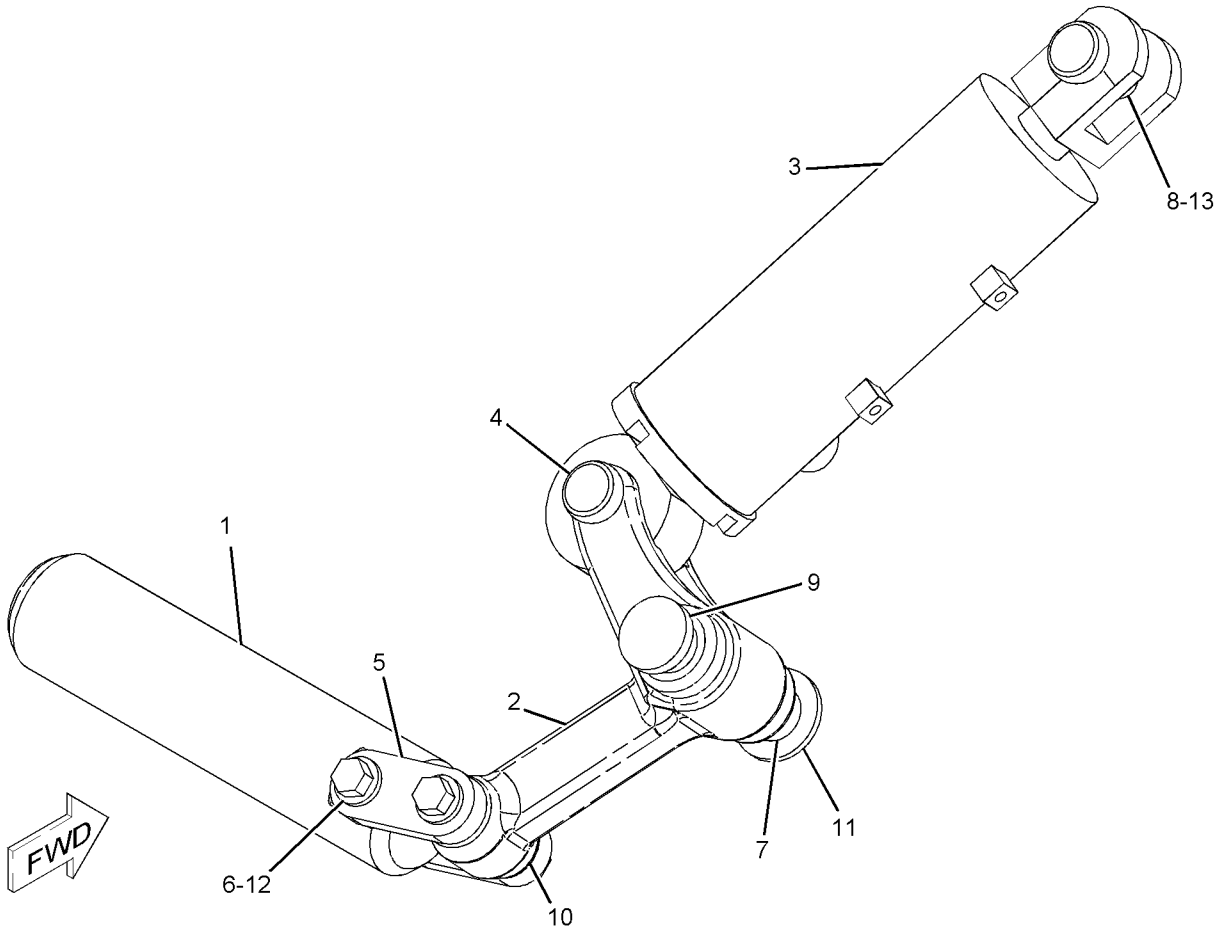

GRAPHIC #1 **<END>** g01140763

WORK TOOLS

178-1783 PULLER GP-PIN

S/N: RJG1-UP

PART OF 178-1784 PULLER AR-PIN

AN ATTACHMENT

SMCS-5353, 5354 **i01405893**

NOTE	REF NO	GRAPHIC REF	PART NUMBER	QTY	PART NAME 1 2 3 4 5 6 (PRODUCT LEVEL)	SEE PAGE
	1	1	**7T-4501**	1	PIN	
	2	1	**7T-4502**	1	PIN	
	3	1	**9U-9622**	1	LEVER	
	4	1	**130-6366**	2	LINK	
	5	1	**135-5105**	1	PLATE AS	
	6	1	**135-5114**	1	PIN	
	7	1	**178-2552**	1	PIN	
	8	1	**178-2553**	1	PLATE AS	
	9	1	**6K-0138**	4	BOLT-LOCKING (5/8-11X1.25-IN)	
	10	1	**6K-3630**	1	RING	
	11	1	**7J-4169**	2	RING-SNAP	
	12	1	**7X-0345**	8	BOLT (5/8-11X1.75-IN)	
	13	1	**7X-0515**	4	WASHER-HARD (17X35X5-MM THK)	
	14	1	**7X-0537**	1	WASHER-HARD (40.5X67X6-MM THK)	
	15	1	**8E-8914**	2	PIN	
M	16	1	**8T-4122**	8	WASHER-HARD (17X32X3.5-MM THK)	
	17	1	**8T-4167**	2	WASHER-HARD (26X44X4-MM THK)	

M-METRIC PART

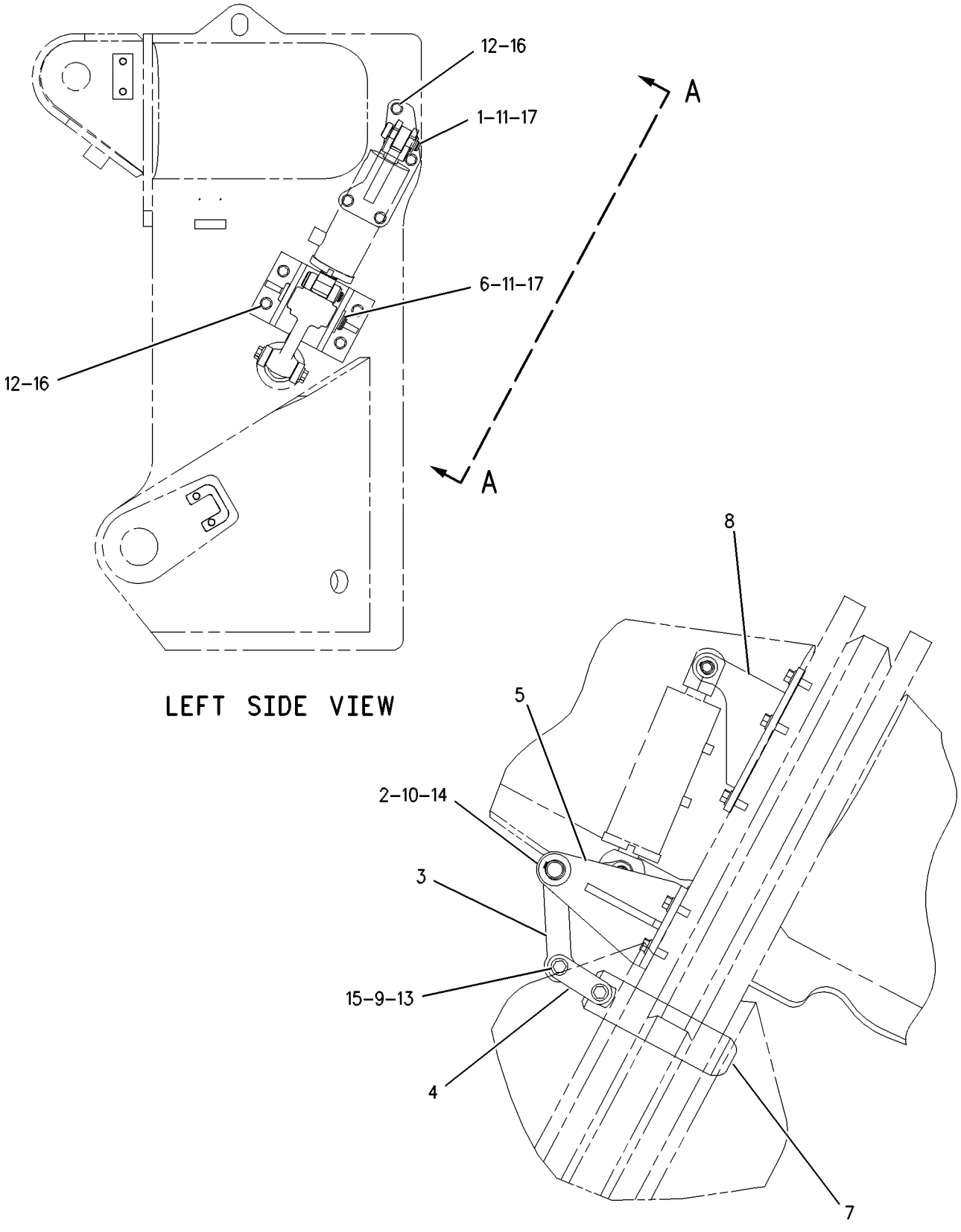

GRAPHIC #1 **<END>** g00659325

216-0120 RIPPER AR—SINGLE SHANK

S/N: BRT1-UP
WITHOUT BUSHINGS
FOR USE WITH 216-2552—PAGE 537
AN ATTACHMENT

SMCS-6310 **i02285879**

NOTE	REF NO	GRAPHIC REF	PART NUMBER	QTY	PART NAME 1 2 3 4 5 6 (PRODUCT LEVEL)	SEE PAGE
Y	1	1	**4T-9977**	2	CYLINDER GP-RIPPER TILT	569
Y	2	1	*133-0229*	1	MOUNTING GP-RIPPER	743
Y	3	1	*185-1714*	1	RIPPER GP	757
Y	4	1	*185-1715*	1	FRAME GP-RIPPER	739
Y	5	1	**192-6445**	1	CYLINDER GP-RIPPER LIFT (RH)	564
Y	6	1	**192-6446**	1	CYLINDER GP-RIPPER LIFT (LH)	566
Y	7	1	*215-6418*	1	LINES GP-RIPPER	606
FY			*217-7739*	1	LIGHTING GP-RIPPER	270
F			**5P-1327**	1	PLATE-SERIAL NUMBER (RIPPER)	
F			**4B-4158**	2	SCREW-DRIVE (3/16-12X.25-IN)	

F-NOT SHOWN
Y-SEPARATE ILLUSTRATION

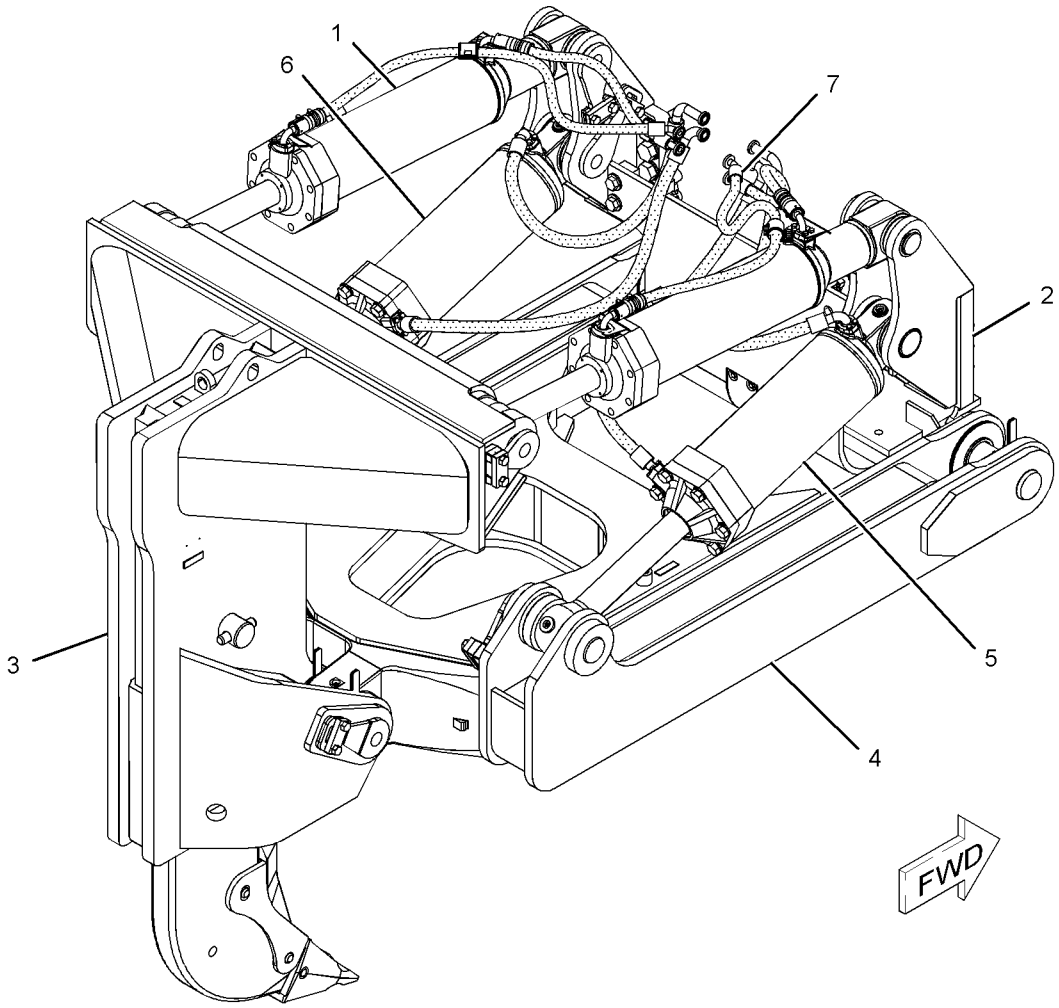

GRAPHIC #1 **<END>** g01051876

216-0121 RIPPER AR—SINGLE SHANK

S/N: BEY1-UP
WITH BEARINGS
FOR USE WITH 216-2552—PAGE 537
AN ATTACHMENT

SMCS-6310 **i02285880**

NOTE	REF NO	GRAPHIC REF	PART NUMBER	QTY	PART NAME 1 2 3 4 5 6 (PRODUCT LEVEL)	SEE PAGE
Y	1	1	**4T-9977**	2	CYLINDER GP-RIPPER TILT	569
Y	2	1	*133-0229*	1	MOUNTING GP-RIPPER	743
Y	3	1	*180-2399*	1	FRAME GP-RIPPER	737
Y	4	1	*180-2400*	1	RIPPER GP	756
Y	5	1	**192-6445**	1	CYLINDER GP-RIPPER LIFT (RH)	564
Y	6	1	**192-6446**	1	CYLINDER GP-RIPPER LIFT (LH)	566
Y	7	1	*215-6418*	1	LINES GP-RIPPER	606
FY			*217-7739*	1	LIGHTING GP-RIPPER	270
F			**5P-1327**	1	PLATE-SERIAL NUMBER (RIPPER)	
F			**4B-4158**	2	SCREW-DRIVE (3/16-12X.25-IN)	

F-NOT SHOWN
Y-SEPARATE ILLUSTRATION

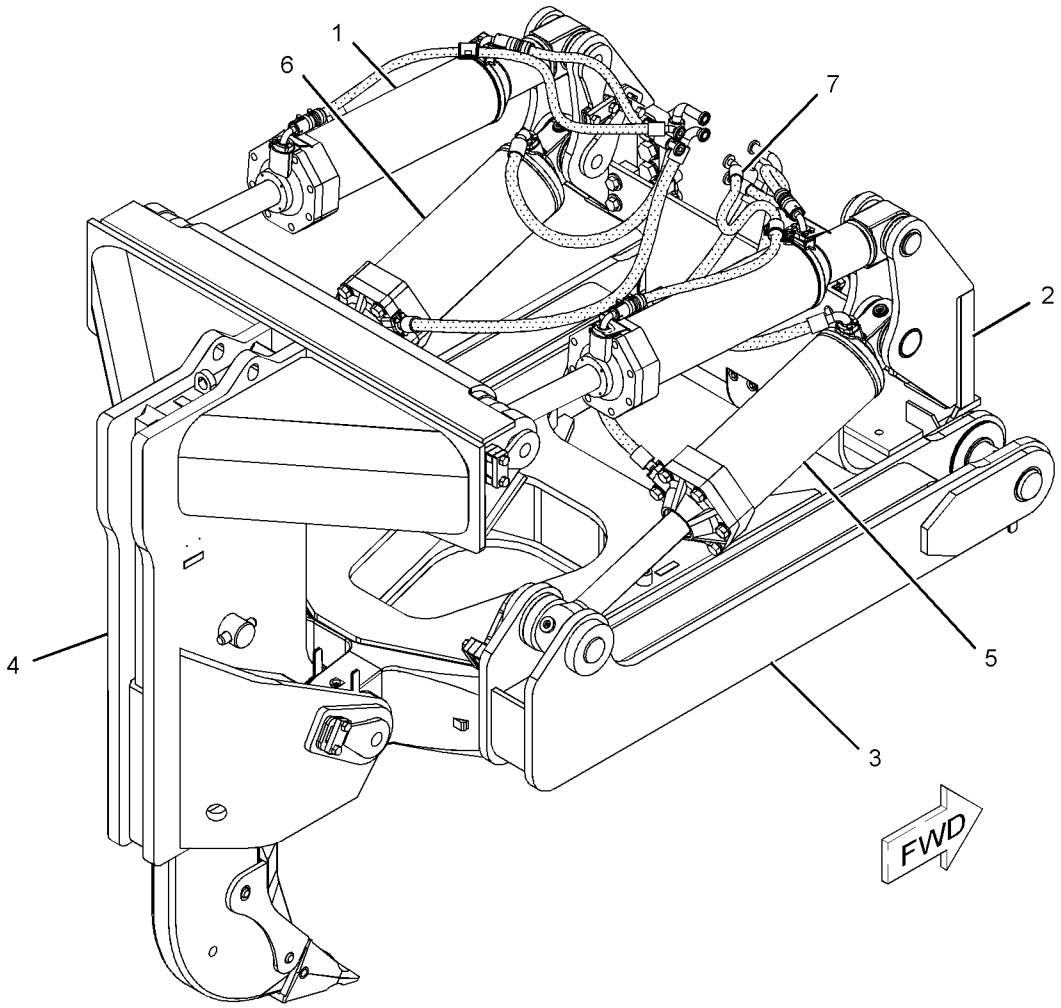

GRAPHIC #1 **<END>** g01051880

WORK TOOLS

216-0122 RIPPER AR—MULTI SHANK

S/N: 4PP1-UP

FOR USE WITH 216-2552—PAGE 537

AN ATTACHMENT

SMCS-6310 **i02285881**

NOTE	REF NO	GRAPHIC REF	PART NUMBER	QTY	PART NAME 1 2 3 4 5 6 (PRODUCT LEVEL)	SEE PAGE
Y	1	1	*4T-8223*	1	RIPPER GP	754
Y	2	1	**4T-9977**	2	CYLINDER GP-RIPPER TILT	569
Y	3	1	*119-7830*	1	FRAME GP-RIPPER	735
Y	4	1	*133-0229*	1	MOUNTING GP-RIPPER	743
Y	5	1	**192-6445**	1	CYLINDER GP-RIPPER LIFT (RH)	564
Y	6	1	**192-6446**	1	CYLINDER GP-RIPPER LIFT (LH)	566
Y	7	1	*215-6418*	1	LINES GP-RIPPER	606
FY			*217-7739*	1	LIGHTING GP-RIPPER	270
F			**5P-1327**	1	PLATE-SERIAL NUMBER (RIPPER)	
F			**4B-4158**	2	SCREW-DRIVE (3/16-12X.25-IN)	

F-NOT SHOWN
Y-SEPARATE ILLUSTRATION

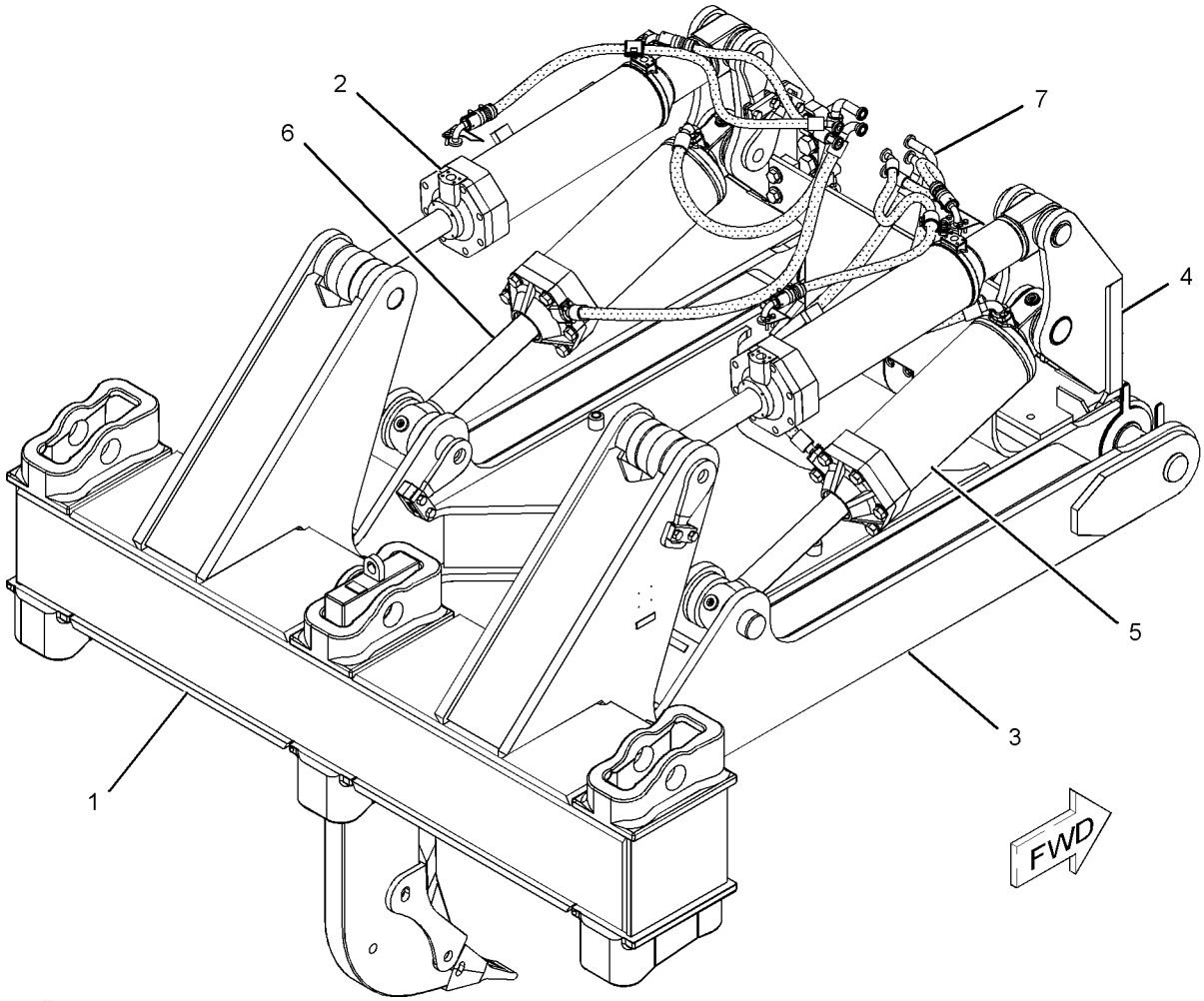

GRAPHIC #1 **<END>** g01051839

WORK TOOLS

4T-8223 RIPPER GP

S/N: 4PP1-UP
PART OF 216-0122 RIPPER AR
AN ATTACHMENT

SMCS-6310, 6325 **i00763540**

NOTE	REF NO	GRAPHIC REF	PART NUMBER	QTY	PART NAME 1 2 3 4 5 6 (PRODUCT LEVEL)	SEE PAGE
Y	1	1	*6Y-6140*	1	TOOTH GP-RIPPER	759
C	2	1	**8E-1597**	1	BEAM AS	
	3	1	**2J-1227**	2	RETAINER	
	4	1	**3G-1877**	2	RETAINER	
	5	1	**8P-9770**	1	PLATE	

C-CHANGE FROM PREVIOUS TYPE
Y-SEPARATE ILLUSTRATION

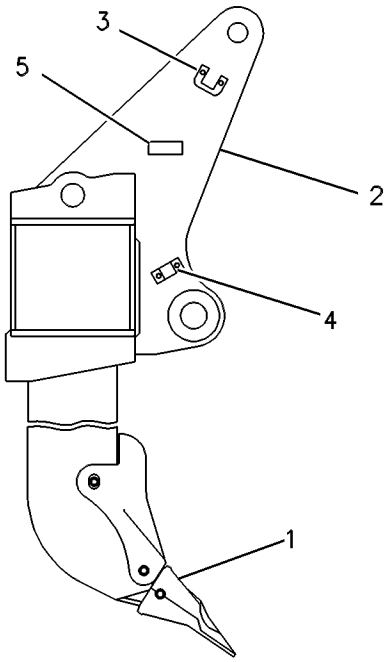

RIGHT SIDE VIEW

GRAPHIC #1 **<END>** g00346437

4Z-8947 RIPPER GP—LONG SHANK

S/N: RJG1-UP
PART OF 135-2919 MODIFICATION AR-RIPPER
AN ATTACHMENT

SMCS-6310, 6325 **i01321257**

NOTE	REF NO	GRAPHIC REF	PART NUMBER	QTY	PART NAME 1 2 3 4 5 6 (PRODUCT LEVEL)	SEE PAGE
	1	1	**4Z-8942**	1	BEAM AS	
	2	1	**4Z-9220**	1	BRACKET	
	3	1	**4Z-8840**	2	BRACKET	
	4	1	**4Z-8846**	1	GUIDE AS	
	5	1	**3G-1877**	2	RETAINER	
	6	1	**2J-1227**	2	RETAINER	
	7	1	**8P-9770**	1	PLATE	
FY		1	*4Z-8944*	1	TOOTH GP-RIPPER	758

F-NOT SHOWN
Y-SEPARATE ILLUSTRATION

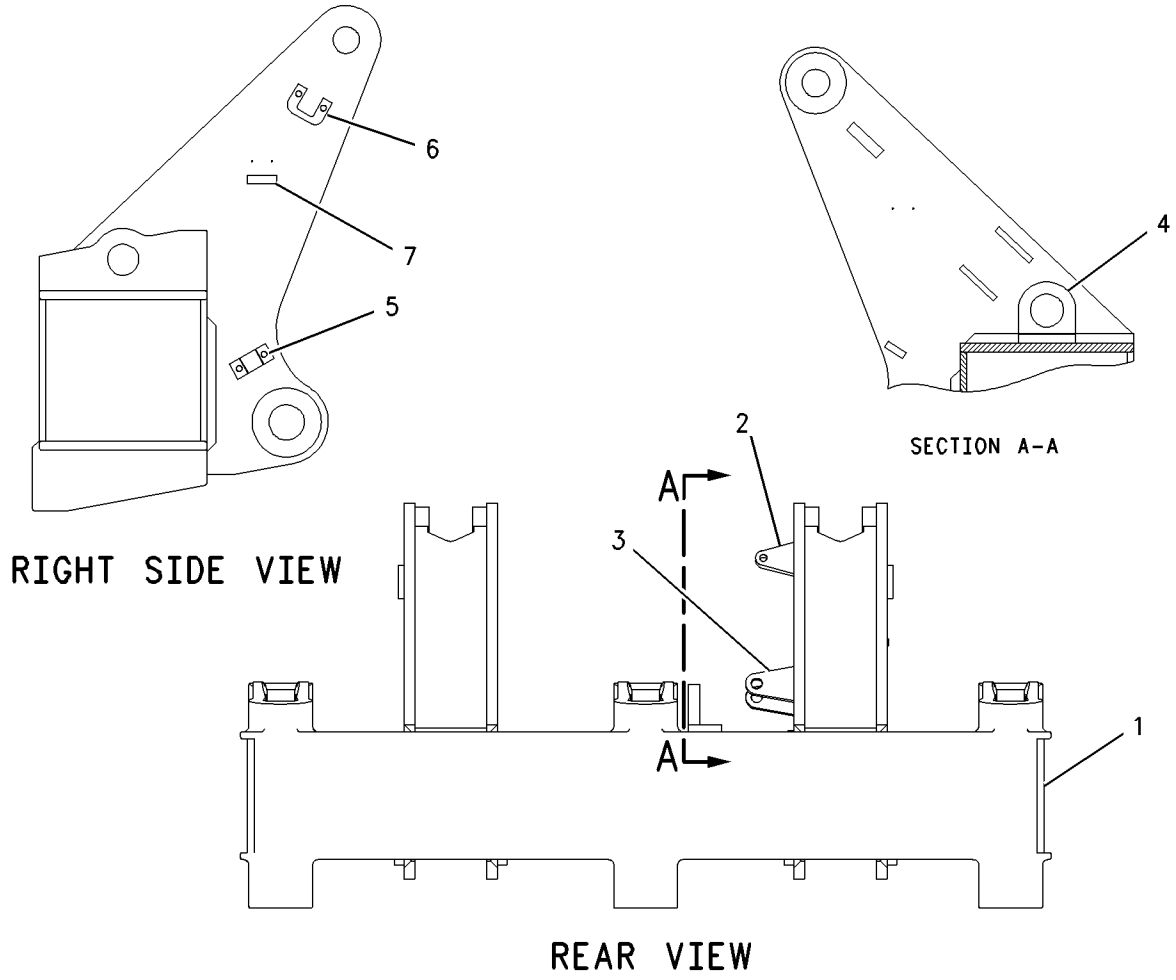

GRAPHIC #1 **<END>** g00699238

WORK TOOLS

180-2400 RIPPER GP

S/N: BEY1-UP
SINGLE SHANK-BUSHED JOINT
PART OF 216-0121 RIPPER AR
AN ATTACHMENT

SMCS-6310, 6325 **i02280818**

NOTE	REF NO	GRAPHIC REF	PART NUMBER	QTY	PART NAME 1 2 3 4 5 6 (PRODUCT LEVEL)	SEE PAGE
	1	1	**102-9062**	2	PIN AS	
		1	**102-9073**	1	SPRING	
	2	1	**178-9603**	1	PIN	
Y	3	1	*118-2141*	1	TOOTH GP-RIPPER	761
	4	1	**178-0589**	1	CARRIAGE AS	
	5	1	**2V-0447**	4	BEARING-SLEEVE	
	6	1	**2V-1256**	4	BEARING-SLEEVE	
	7	1	**2J-1227**	2	RETAINER	
	8	1	**3J-6035**	2	RETAINER	

Y-SEPARATE ILLUSTRATION

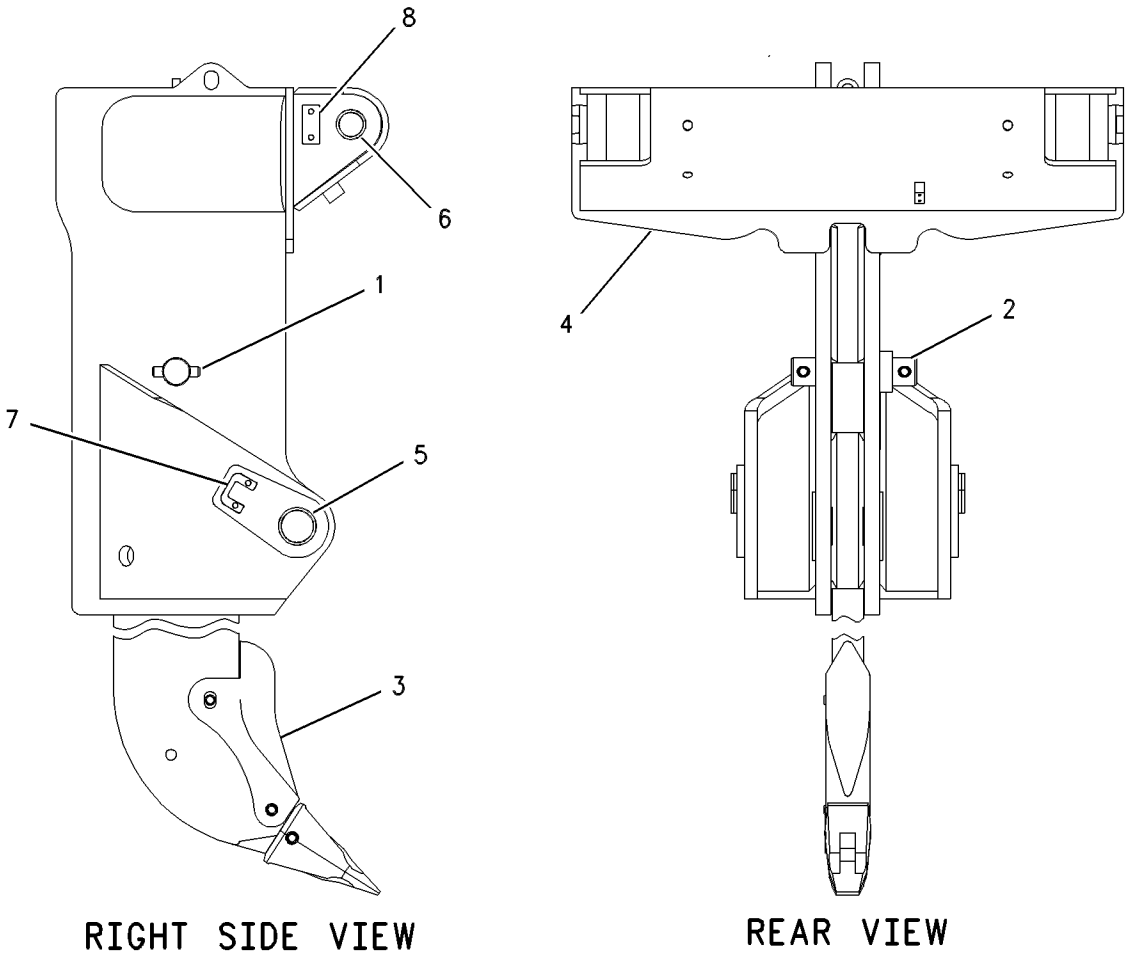

GRAPHIC #1 **<END>** g00659172

WORK TOOLS

185-1714 RIPPER GP

S/N: BRT1-UP
PART OF 216-0120 RIPPER AR
AN ATTACHMENT

SMCS-6310, 6325 **i01405918**

NOTE	REF NO	GRAPHIC REF	PART NUMBER	QTY	PART NAME 1 2 3 4 5 6 (PRODUCT LEVEL)	SEE PAGE
	1	1	**102-9062**	2	PIN AS	
					(EACH INCLUDES)	
	2	1	**102-9073**	1	SPRING	
	3	1	**178-9603**	1	PIN	
Y	4	1	*118-2141*	1	TOOTH GP-RIPPER	761
	5	1	**171-6959**	1	CARRIAGE AS	
	6	1	**2J-1227**	2	RETAINER	
	7	1	**8P-9770**	1	PLATE	
	8	1	**9V-8427**	1	BAR	
	9	1	**3J-6035**	2	RETAINER	

Y-SEPARATE ILLUSTRATION

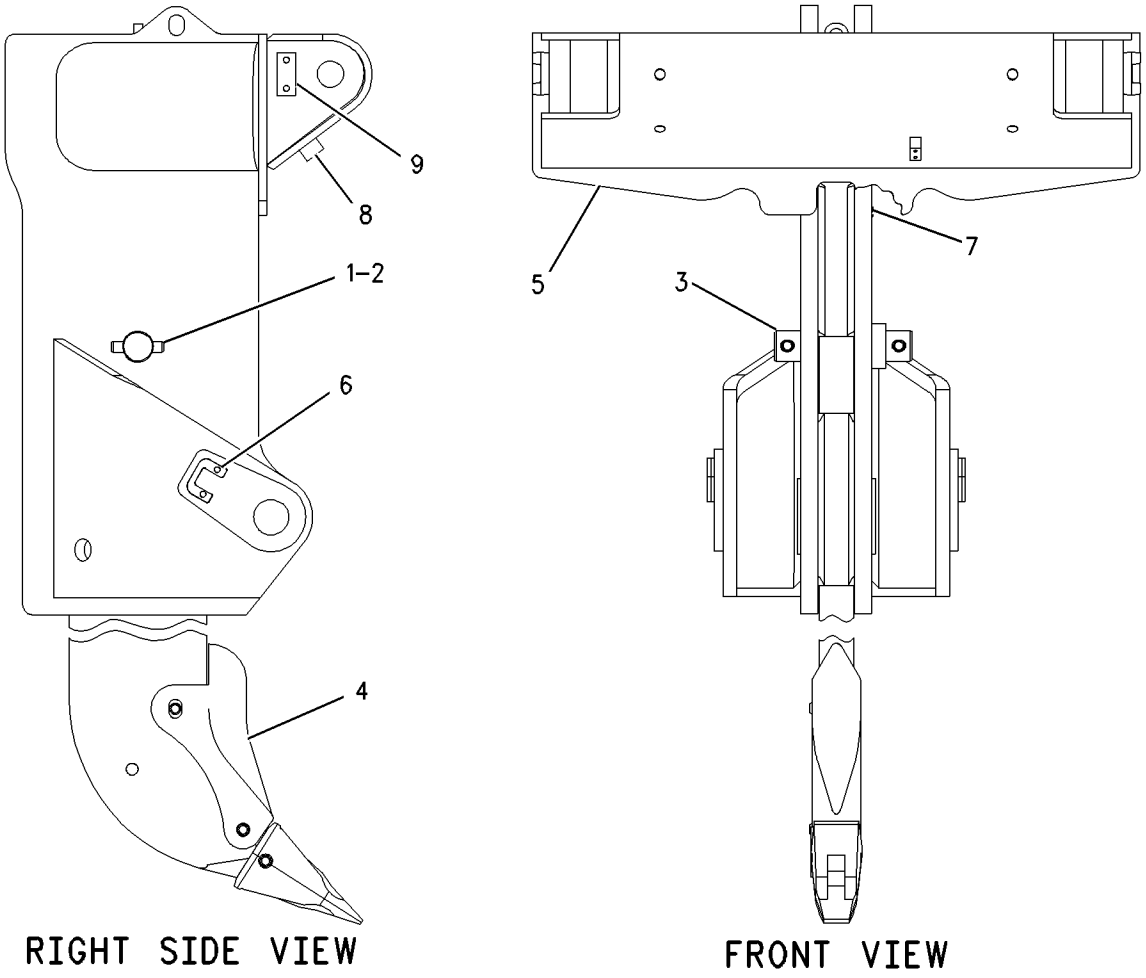

GRAPHIC #1 **<END>** g00740059

WORK TOOLS

4Z-8944 TOOTH GP-RIPPER

S/N: RJG1-UP
PART OF 4Z-8947 RIPPER GP
AN ATTACHMENT

SMCS-6808, 6810 **i01205151**

NOTE	REF NO	GRAPHIC REF	PART NUMBER	QTY	PART NAME 1 2 3 4 5 6 (PRODUCT LEVEL)	SEE PAGE
	1	1	**6Y-1204**		PIN-G.E.T.	
	2	1	**9W-8365**		PROTECTOR	
	3	1	**4T-5502**		TIP-RIPPER	
	4	1	**6Y-1202**		RETAINER AS	
	5	1	**7M-9107**		LOCKRING	
	6	1	**4Z-8937**		SHANK AS-RIPPER	
	7	1	**3G-5596**		LUG	

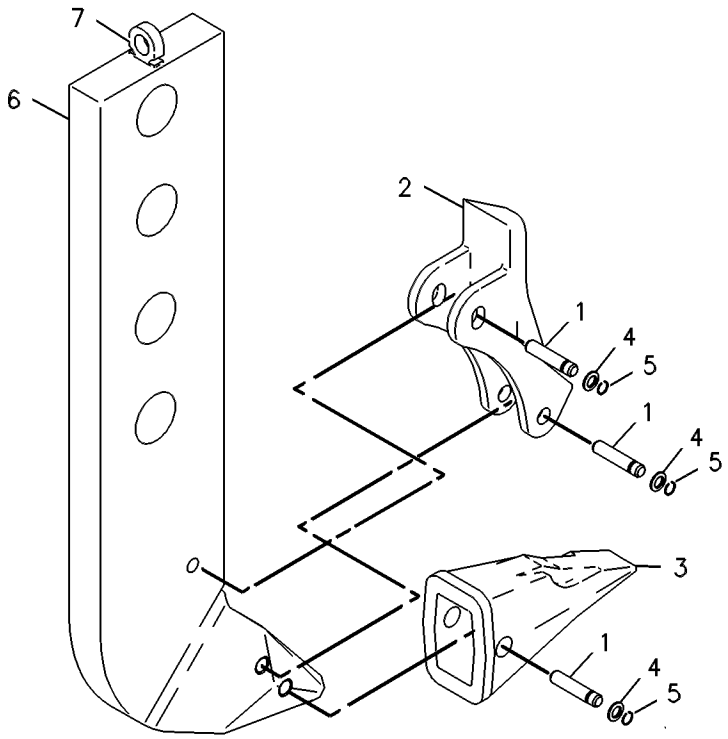

GRAPHIC #1 **<END>** g00276620

6Y-6140 TOOTH GP-RIPPER—LONG SHANK

S/N: RJG1-UP; 4PP1-UP
PART OF 4T-8223 RIPPER GP
FOR USE WITH 216-0122—PAGE 753
AN ATTACHMENT

SMCS-6808, 6810 **i02280826**

NOTE	REF NO	GRAPHIC REF	PART NUMBER	QTY	PART NAME 1 2 3 4 5 6 (PRODUCT LEVEL)	SEE PAGE
	1	1	**3G-6509**	1	PIN	
	2	1	**9W-8365**	1	PROTECTOR	
	3	1	**4T-5502**	1	TIP-RIPPER	
C	4	1	**102-9062**	2	PIN AS	
					(EACH INCLUDES)	
	5	1	**102-9073**	1	SPRING	
C	6	1	**8E-8415**	1	SHANK AS-RIPPER	
	7	1	**3G-5596**	1	LUG	
C	8	1	**6Y-1204**	3	PIN	
C	9	1	**6Y-1202**	3	RETAINER AS	
					(EACH INCLUDES)	
	10	1	**7M-9107**	1	RING-LOCK	

C-CHANGE FROM PREVIOUS TYPE

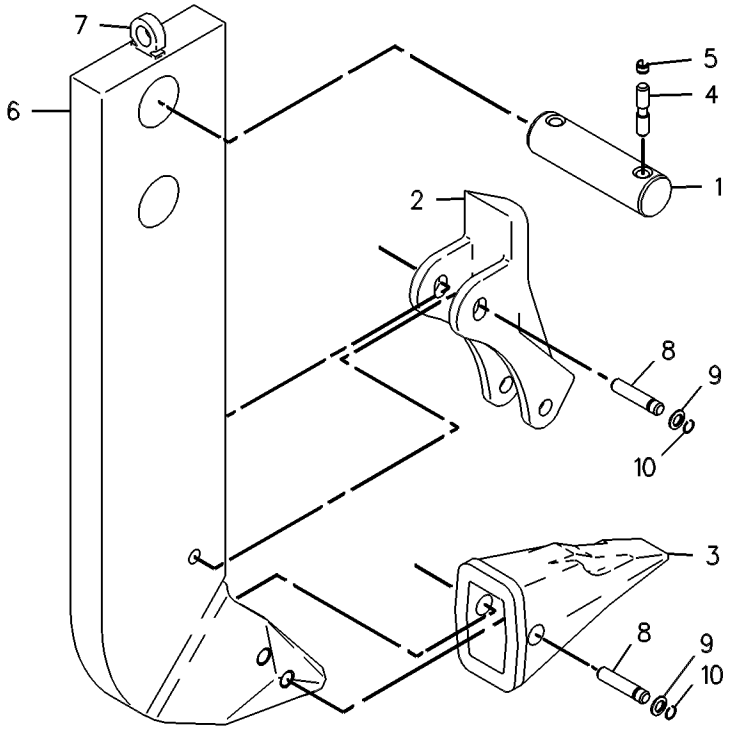

GRAPHIC #1 **<END>** g00253703

109-3134 TOOTH GP-RIPPER—LONG SHANK

S/N: RJG1-UP

FOR USE WITH HYDRAULIC PIN PULLER, 216-0120—PAGE 751, 216-0121—PAGE 752

AN ATTACHMENT

SMCS-6808, 6810 **i02280835**

NOTE	REF NO	GRAPHIC REF	PART NUMBER	QTY	PART NAME 1 2 3 4 5 6 (PRODUCT LEVEL)	SEE PAGE
C	1	1	**8E-8417**	1	SHANK AS-RIPPER	
		1	**3G-5596**	1	LUG	
	2	1	**9W-8365**	1	PROTECTOR	
	3	1	**4T-5502**	1	TIP-RIPPER	
C	4	1	**6Y-1204**	3	PIN	
C		1	**6Y-1202**	3	RETAINER AS	
					(EACH INCLUDES)	
		1	**7M-9107**	1	RING-LOCK	

C-CHANGE FROM PREVIOUS TYPE

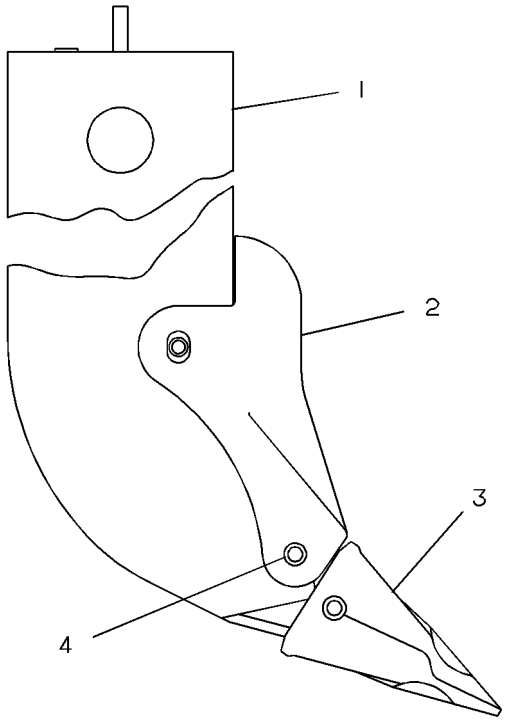

GRAPHIC #1 **<END>** g00202833

WORK TOOLS

118-2141 TOOTH GP-RIPPER

S/N: BRT1-UP; BEY1-UP
PART OF 180-2400, 185-1714 RIPPER GP
AN ATTACHMENT

SMCS-6808, 6810 **i02125120**

NOTE	REF NO	GRAPHIC REF	PART NUMBER	QTY	PART NAME 1 2 3 4 5 6 (PRODUCT LEVEL)	SEE PAGE
	1	1	**118-2140**	1	SHANK AS-RIPPER	
		1	**3G-5596**	1	LUG	
	2	1	**6Y-8960**	1	PROTECTOR	
	3	1	**4T-5501**	1	TIP-RIPPER	
	4	1	**6Y-1204**	3	PIN	
		1	**6Y-1202**	3	RETAINER AS	
					(EACH INCLUDES)	
		1	**7M-9107**	1	RING-LOCK	

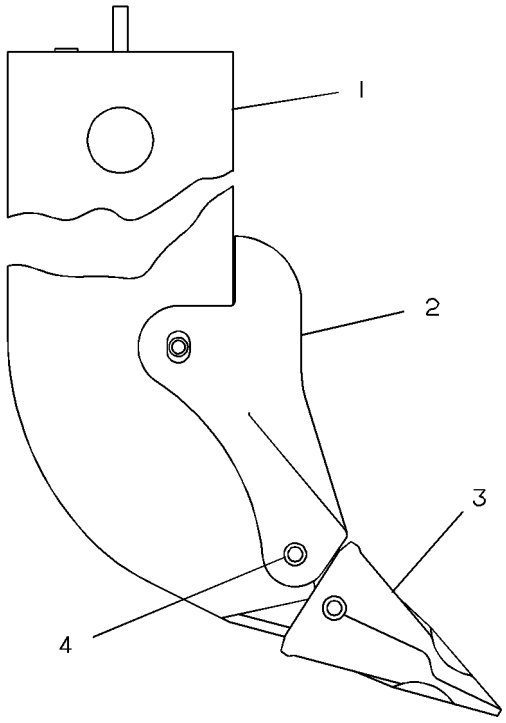

GRAPHIC #1 **<END>** g00202833

OPERATOR STATION

173-1028 ADJUSTER GP-SEAT

S/N: RJG1-UP
PART OF 178-0603, 180-7304 SEAT GP
ALSO AN ATTACHMENT

SMCS-7321 **i02387199**

NOTE	REF NO	GRAPHIC REF	PART NUMBER	QTY	PART NAME 1 2 3 4 5 6 (PRODUCT LEVEL)	SEE PAGE
	1	1	**4V-8256**	4	SPRING	
	2	1	**117-4492**	1	ROD	
	3	1	**136-1544**	1	LATCH AS-LH	
	4	1	**156-5545**	1	LATCH AS-RH	
	5	1	**164-4531**	1	ROD	
	6	1	**170-1112**	1	PLATE AS	
	7	1	**170-1114**	1	HANDLE (SLIDE ADJUSTMENT)	
	8	1	**170-1115**	1	HANDLE (TILT ADJUSTMENT)	
	9	1	**132-0338**	2	WASHER-PLASTIC (13X31.7X0.8-MM THK)	
	10	1	**2K-4973**	2	LOCKNUT (3/8-16 THD)	
	11	1	**7X-0608**	2	WASHER-HARD (10.2X16X2-MM THK)	

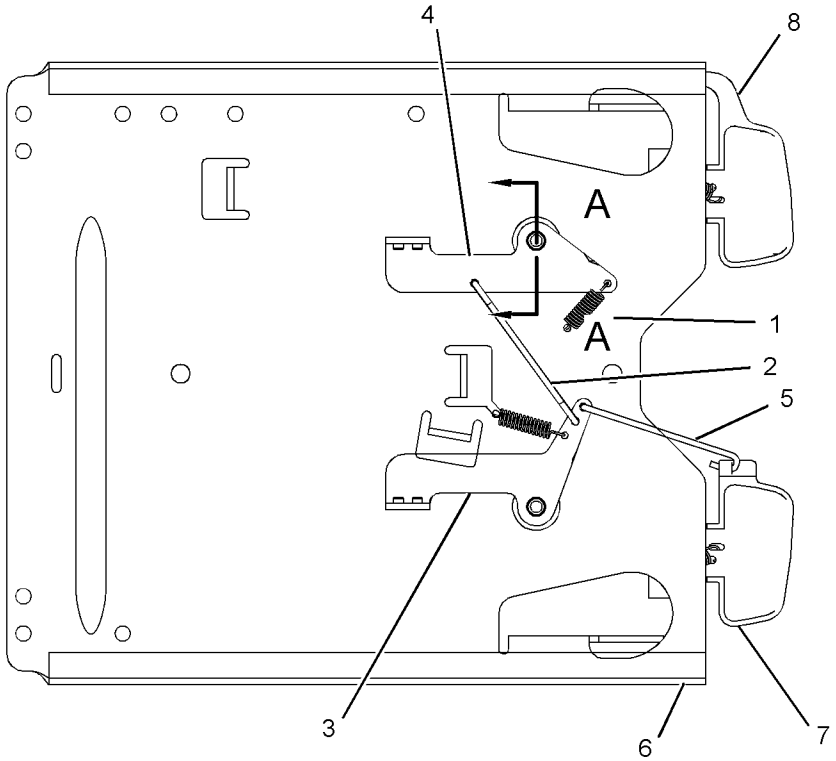

BOTTOM VIEW

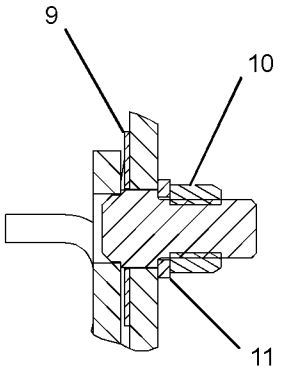

SECTION A-A

GRAPHIC #1 **<END>** g01191495

OPERATOR STATION

237-3970 AIR COMPRESSOR GP-SEAT

S/N: RJG1-UP
PART OF 191-2933 SUSPENSION GP-SEAT
AN ATTACHMENT

SMCS-731S, 7324 **i02012095**

NOTE	REF NO	GRAPHIC REF	PART NUMBER	QTY	PART NAME 1 2 3 4 5 6 (PRODUCT LEVEL)	SEE PAGE
					(NO SERVICED PARTS)	

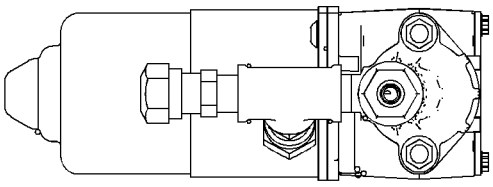

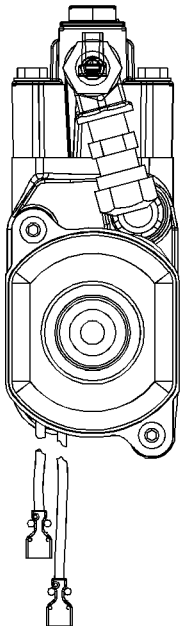

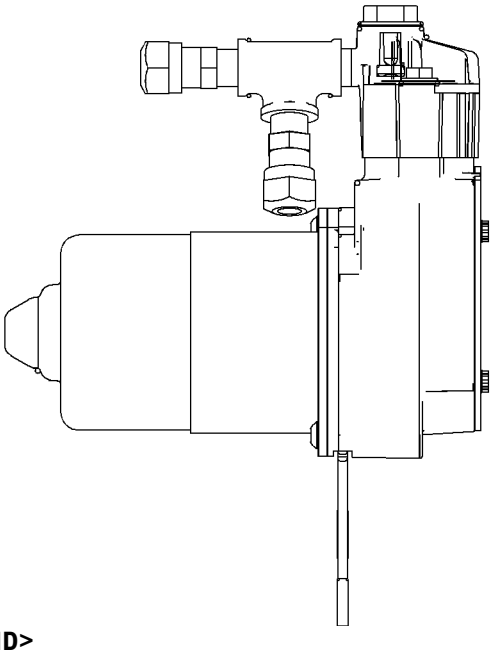

GRAPHIC #1 **<END>** g01040576

OPERATOR STATION

213-1112 AIR CONDITIONER AR—FENDER MOUNTED CONDENSER

S/N: RJG1-UP
R134A
PART OF 238-4494 MINING AR
AN ATTACHMENT

SMCS-7320 **i02273295**

NOTE	PART NUMBER	QTY	PART NAME 1 2 3 4 5 6 (PRODUCT LEVEL)	SEE PAGE
Y	*219-0312*	1	COMPRESSOR GP-REFRIGERANT	777
Y	*248-2941*	1	MOUNTING GP-CONDENSER	834
Y	*213-0049*	1	LINES GP-AIR CONDITIONER	812
Y	*183-2089*	1	MIRROR GP-REAR VIEW	830
Y	**103-9527**	1	CONDENSER GP-REFRIGERANT	784
	226-4455	1	BRACKET AS	
	110-6393	1	PLATE-INSTRUCTION (AIR CONDITIONER)	
			ON LH SIDE OF DASH BELOW FOOTPAD AND ABOVE SERIAL NUMBER PLATE	

Y-SEPARATE ILLUSTRATION

<END>

213-1113 AIR CONDITIONER AR

S/N: RJG1-UP
AN ATTACHMENT

SMCS-7320 **i02041548**

NOTE	PART NUMBER	QTY	PART NAME 1 2 3 4 5 6 (PRODUCT LEVEL)	SEE PAGE
Y	*219-0312*	1	COMPRESSOR GP-REFRIGERANT	777
Y	*241-7655*	1	CONDENSER & MTG GP-REFRIGERANT	779
Y	*240-4734*	1	LINES GP-AIR CONDITIONER	815
	110-6393	1	PLATE-INSTRUCTION (AIR CONDITIONER)	
			ON LH SIDE OF DASH BELOW FOOTPAD AND ABOVE S/N PLATE	

Y-SEPARATE ILLUSTRATION

<END>

OPERATOR STATION

256-6916 AIR CONDITIONER AR—ROPS MOUNTED CONDENSER

S/N: RJG1-UP

AN ATTACHMENT

SMCS-7320 **i02285668**

NOTE	PART NUMBER	QTY	PART NAME 1 2 3 4 5 6 (PRODUCT LEVEL)	SEE PAGE
Y	*219-0312*	1	COMPRESSOR GP-REFRIGERANT	777
Y	*219-3587*	1	MOUNTING GP-CONDENSER	832
Y	**103-9527**	1	CONDENSER GP-REFRIGERANT	784
Y	*256-7212*	1	LINES GP-AIR CONDITIONER	818
	241-7669	1	ROPS AS	
	110-6393	1	PLATE-INSTRUCTION (AIR CONDITIONER)	
			(ON LH SIDE OF DASH, BELOW FOOTPAD AND ABOVE SERIAL NUMBER PLATE)	

Y-SEPARATE ILLUSTRATION

<END>

269-8387 AIR CONDITIONER AR

S/N: RJG1-UP

AN ATTACHMENT

SMCS-7320 **i02465668**

NOTE	PART NUMBER	QTY	PART NAME 1 2 3 4 5 6 (PRODUCT LEVEL)	SEE PAGE
Y	*219-0312*	1	COMPRESSOR GP-REFRIGERANT	777
Y	*267-2871*	1	CONDENSER & MTG GP-REFRIGERANT	783
Y	*269-8388*	1	LINES GP-AIR CONDITIONER	822
	110-6393	1	PLATE-INSTRUCTION (AIR CONDITIONER)	
			ON LH SIDE OF DASH BELOW FOOTPAD & ABOVE SERIAL NUMBER PLATE	

Y-SEPARATE ILLUSTRATION

<END>

OPERATOR STATION

214-4176 BOX GP-STORAGE

S/N: RJG1-UP

PART OF 214-2014 CONSOLE GP-FRONT

SMCS-7268 **i02280843**

NOTE	REF NO	GRAPHIC REF	PART NUMBER	QTY	PART NAME 1 2 3 4 5 6 (PRODUCT LEVEL)	SEE PAGE
	1	1	**9M-5733**	6	RIVET-POP	
	2	1	**178-0266**	1	HINGE AS	
	3	1	**209-5157**	1	DOOR-FRONT	
	4	1	**214-2015**	1	LATCH (STORAGE COMPARTMENT)	
	5	1	**224-4905**	4	BUMPER	
	6	1	**226-7665**	1	BOX AS-STORAGE	
	7	1	**3H-0240**	6	WASHER (5X9.7X0.8-MM THK)	
M	8	1	**8C-7581**	5	SCREW-MACHINE (M4X0.7X8-MM)	

M-METRIC PART

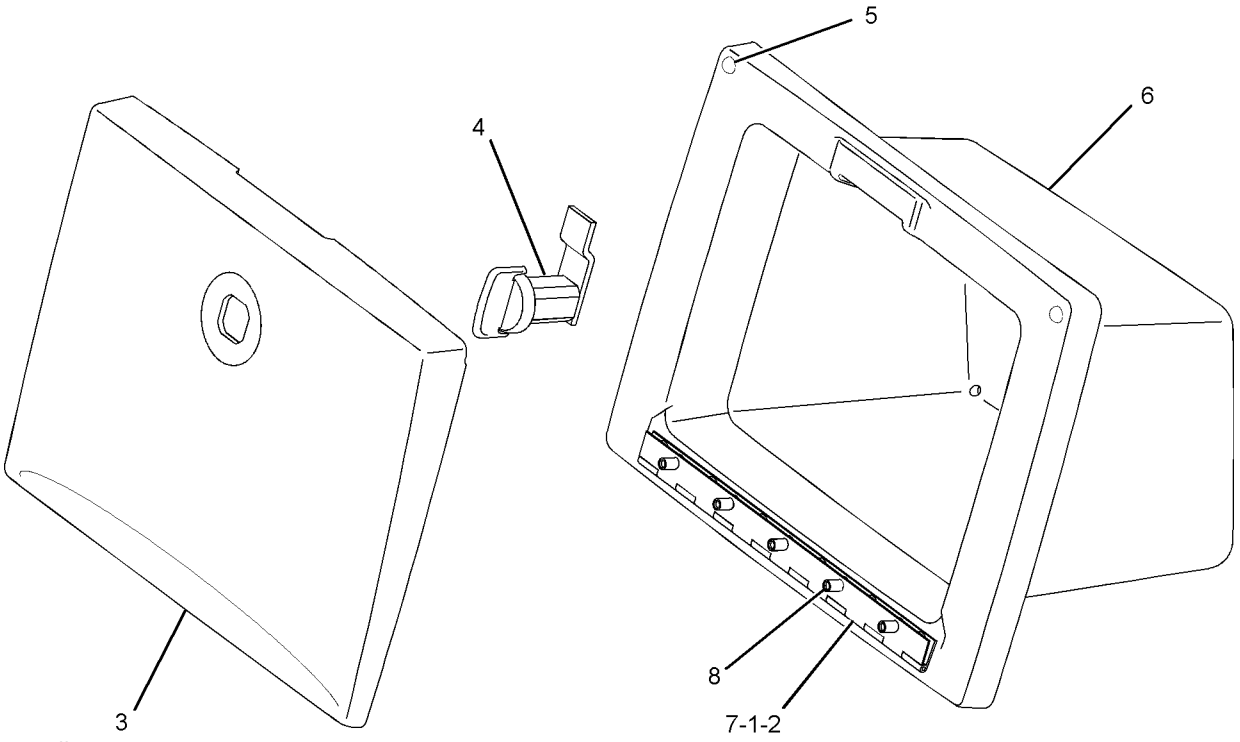

GRAPHIC #1 **<END>** g01019845

OPERATOR STATION

254-9317 BRACKET GP-MOUNTING–DOOR

S/N: RJG1-UP

PART OF 205-8640 CAB AR

SMCS-7301 **i02196530**

NOTE	REF NO	GRAPHIC REF	PART NUMBER	QTY	PART NAME 1 2 3 4 5 6 (PRODUCT LEVEL)	SEE PAGE
	1	1	**254-9012**	1	BRACKET AS (LEFT)	
	2	1	**254-9013**	1	BRACKET AS (RIGHT)	
	3	1	**7X-7729**	6	WASHER (11X25X3-MM THK)	
M	4	1	**8T-4136**	6	BOLT (M10X1.5X25-MM)	

M-METRIC PART

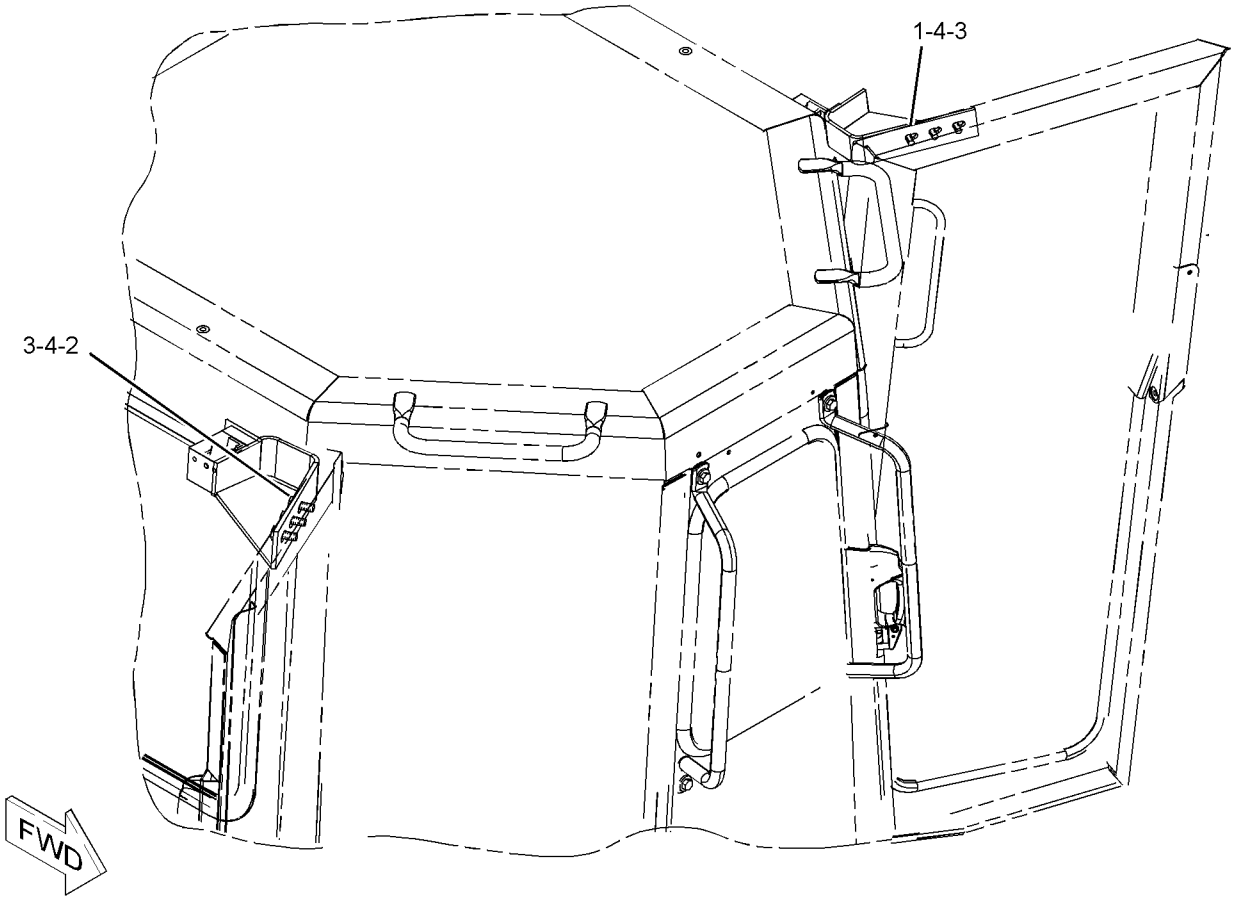

GRAPHIC #1 **<END>** g01117752

OPERATOR STATION

261-3768 BRACKET GP-MOUNTING—FIRST AID KIT

S/N: RJG1-UP

PART OF 214-1800 CAB GP

SMCS-7301 **i02194174**

NOTE	REF NO	GRAPHIC REF	PART NUMBER	QTY	PART NAME 1 2 3 4 5 6 (PRODUCT LEVEL)	SEE PAGE
	1	1	**7G-4824**	1	STRAP	
	2	1	**8E-7791**	1	STRAP	
	3	1	**247-4156**	1	BRACKET	
	4	1	**8T-4121**	2	WASHER-HARD (11X21X2.5-MM THK)	
M	5	1	**8T-4195**	2	BOLT (M10X1.5X30-MM)	

M-METRIC PART

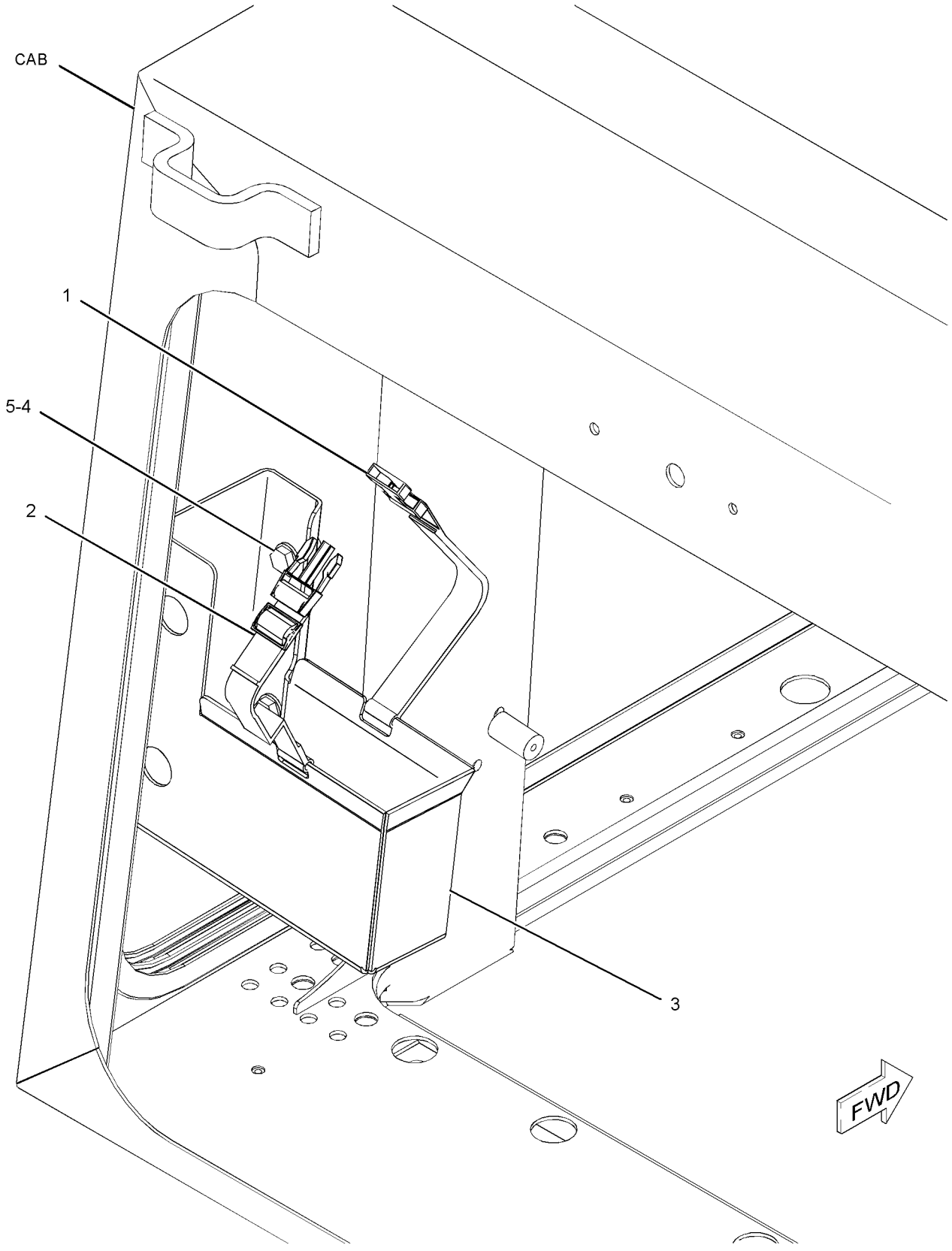

GRAPHIC #1 **<END>** g01110014

OPERATOR STATION

205-8640 CAB AR

S/N: RJG1-UP

PART OF 212-2741 CHASSIS AR

SMCS-7301 **i02250616**

NOTE	PART NUMBER	QTY	PART NAME 1 2 3 4 5 6 (PRODUCT LEVEL)	SEE PAGE
Y	*254-9317*	1	BRACKET GP-MOUNTING (DOOR)	767
Y	*213-1100*	1	CAB AR	770
Y	*209-5192*	1	COVER GP-CAB	792
Y	*214-1740*	1	MOUNTING GP-CAB	831

Y-SEPARATE ILLUSTRATION

<END>

213-1100 CAB AR

S/N: RJG1-UP

PART OF 205-8640 CAB AR

SMCS-7301 **i01946620**

NOTE	PART NUMBER	QTY	PART NAME 1 2 3 4 5 6 (PRODUCT LEVEL)	SEE PAGE
Y	*214-1800*	1	CAB GP	772
Y	*214-1760*	1	INSTALLATION GP-RADIO	808
Y	*212-8725*	1	LINER GP-CAB	810
Y	*105-9659*	1	MIRROR GP-REAR VIEW	829
Y	*214-1780*	1	WASHER GP-WINDOW	875
Y	*214-1770*	1	WIPER GP-WINDOW	881
Y	*214-4763*	1	WIRING GP-CAB	322

Y-SEPARATE ILLUSTRATION

<END>

248-4171 CAB AR

S/N: RJG1-UP

AN ATTACHMENT

SMCS-7301 **i02274114**

NOTE	PART NUMBER	QTY	PART NAME 1 2 3 4 5 6 (PRODUCT LEVEL)	SEE PAGE
Y	*245-8220*	1	FILTER GP-CAB AIR	797
Y	*248-4178*	1	WINDOW GP-CAB (COLD WEATHER)	879

Y-SEPARATE ILLUSTRATION

<END>

OPERATOR STATION

248-4172 CAB AR

S/N: RJG1-UP
40-PSI GLASS
AN ATTACHMENT

SMCS-7301 **i02274145**

NOTE	PART NUMBER	QTY	PART NAME 1 2 3 4 5 6 (PRODUCT LEVEL)	SEE PAGE
Y	*247-8271*	1	WINDOW GP-CAB	878
Y	*245-8220*	1	FILTER GP-CAB AIR	797

Y-SEPARATE ILLUSTRATION

<END>

OPERATOR STATION

214-1800 CAB GP

S/N: RJG1-UP
PART OF 213-1100 CAB AR
TYPE 1

SMCS-7301 **i02464978**

NOTE	REF NO	GRAPHIC REF	PART NUMBER	QTY	PART NAME 1 2 3 4 5 6 (PRODUCT LEVEL)	SEE PAGE
	1	1	**3H-6660**	4	PIN-SPRING	
	2	1	**5M-8500**	2	KNOB (DOOR RELEASE)	
	3	1	**6V-8928**	1	HOOK-COAT	
	4	1	**6Y-3732**	1	BRACKET	
	5	1	**8C-3442**	2	SPRING-COIL	
	6	1	**8E-2685**	1	BRACKET	
	7	1	**8E-5922**	2	LATCH (WINDOW)	
	8	1	**9N-1995**	4	RIVET-POP	
	9	1	**9P-6572**	1	PLUG	
	10	1	**205-7048**	4	INSERT-THREADED (M6X1-6H-THD)	
	11	1	**214-1801**	1	GLASS (TINTED)	
	12	1	**214-1808**	2	HANDHOLD	
Y	13	1	**214-7244**	1	WINDOW GP-SLIDING (RH)	879
Y	14	1	**214-7245**	1	WINDOW GP-SLIDING (LH)	880
Y	15	1	**214-7246**	1	WINDOW AS-REAR	877
	16	1	**225-6169**	1	ROD	
	17	1	**225-6170**	1	ROD	
	18	1	**236-1300**	1	CAB AS	
	19	1	**239-9961**	2	STRIKER AS	
Y	20	1	*255-6899*	1	DOOR GP-CAB (RH)	795
Y	21	1	*255-6900*	1	DOOR GP-CAB (LH)	796
	22	1	**256-0271**	1	COVER AS	
	23	1	**258-8885**	1	GASKET	
Y	24	1	*261-3768*	1	BRACKET GP-MOUNTING (FIRST AID KIT)	768
	25	1	**110-7524**	18	BUTTON	
	26	1	**180-3748**	3	INSERT-THREADED (M8X1.25-THD)	
	27	1	**224-6208**	2	INSERT-THREADED (M10X1.5-THD)	
M	28	1	**3E-8020**	1	SCREW-TRUSS HEAD (M6X1X25-MM)	
	29	1	**3K-6235**	2	SEAL-LIP TYPE	
M	30	1	**5C-9553**	6	BOLT (M6X1X16-MM)	
	31	1	**5P-1076**	8	WASHER-HARD (13.5X30X4-MM THK)	
	32	1	**7X-7729**	8	WASHER (11X25X3-MM THK)	
	33	1	**8E-6856**	1	COVER	
	34	1	**8T-2501**	4	BOLT (3/8-16X2-IN)	
	35	1	**8T-4121**	4	WASHER-HARD (11X21X2.5-MM THK)	
M	36	1	**8T-4139**	4	BOLT (M12X1.75X30-MM)	
M	37	1	**8T-4183**	4	BOLT (M12X1.75X40-MM)	
M	38	1	**8T-4191**	4	BOLT (M10X1.5X16-MM)	
	39	1	**9M-5884**	2	BUMPER	
M	40	1	**9X-2041**	4	SCREW-TRUSS HEAD (M10X1.5X20-MM)	
	41	1	**9X-8256**	6	WASHER (6.6X12X2-MM THK)	
D	42	1	**5P-6605**		SEAL (1.8-M)	

D-ORDER BY THE METER
M-METRIC PART
Y-SEPARATE ILLUSTRATION

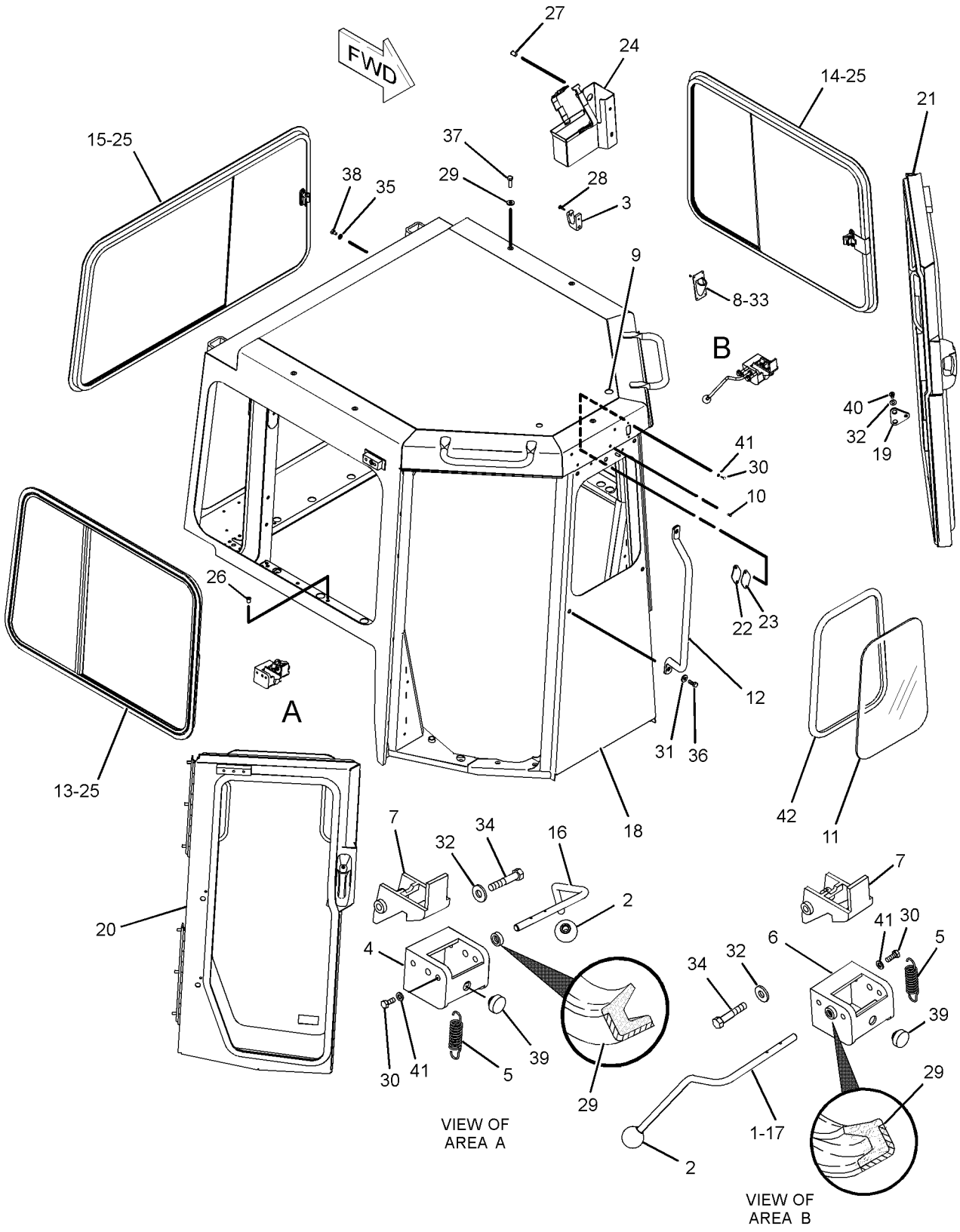

GRAPHIC #1 **<END>** g01165077

OPERATOR STATION

214-1800 CAB GP

S/N: RJG1-UP
PART OF 213-1100 CAB AR
TYPE 2

SMCS-7301 **i02473980**

NOTE	REF NO	GRAPHIC REF	PART NUMBER	QTY	PART NAME 1 2 3 4 5 6 (PRODUCT LEVEL)	SEE PAGE
	1	1	**3H-6660**	4	PIN-SPRING	
	2	1	**5M-8500**	2	KNOB (DOOR RELEASE)	
	3	1	**6V-8928**	1	HOOK-COAT	
	4	1	**6Y-3732**	1	BRACKET	
	5	1	**8C-3442**	2	SPRING-COIL	
	6	1	**8E-2685**	1	BRACKET	
	7	1	**8E-5922**	2	LATCH (WINDOW)	
	8	1	**9N-1995**	4	RIVET-POP	
	9	1	**9P-6572**	1	PLUG	
	10	1	**214-1801**	1	GLASS (TINTED)	
	11	1	**214-1808**	2	HANDHOLD	
Y	12	1	**214-7244**	1	WINDOW GP-SLIDING (RH)	879
Y	13	1	**214-7245**	1	WINDOW GP-SLIDING (LH)	880
Y	14	1	**214-7246**	1	WINDOW AS-REAR	877
	15	1	**225-6169**	1	ROD	
	16	1	**225-6170**	1	ROD	
	17	1	**236-1300**	1	CAB AS	
	18	1	**239-9961**	2	STRIKER AS	
Y	19	1	*255-6899*	1	DOOR GP-CAB (RH)	795
Y	20	1	*255-6900*	1	DOOR GP-CAB (LH)	796
Y	21	1	*261-3768*	1	BRACKET GP-MOUNTING (FIRST AID KIT)	768
C	22	1	**131-5879**	8	WASHER (11X32X3-MM THK)	
	23	1	**180-3748**	3	INSERT-THREADED (M8X1.25-THD)	
	24	1	**224-6208**	2	INSERT-THREADED (M10X1.5-THD)	
M	25	1	**3E-8020**	1	SCREW-TRUSS HEAD (M6X1X25-MM)	
	26	1	**3K-6235**	2	SEAL-LIP TYPE	
CM	27	1	**5C-9553**	4	BOLT (M6X1X16-MM)	
	28	1	**5P-1076**	9	WASHER-HARD (13.5X30X4-MM THK)	
C	29	1	**7X-7729**	4	WASHER (11X25X3-MM THK)	
	30	1	**8E-6856**	1	COVER	
	31	1	**8T-2501**	4	BOLT (3/8-16X2-IN)	
	32	1	**8T-4121**	4	WASHER-HARD (11X21X2.5-MM THK)	
M	33	1	**8T-4139**	4	BOLT (M12X1.75X30-MM)	
M	34	1	**8T-4183**	5	BOLT (M12X1.75X40-MM)	
M	35	1	**8T-4191**	4	BOLT (M10X1.5X16-MM)	
	36	1	**9M-5884**	2	BUMPER	
CM	37	1	**9X-2040**	4	SCREW-TRUSS HEAD (M10X1.5X25-MM)	
C	38	1	**9X-8256**	4	WASHER (6.6X12X2-MM THK)	
D	39	1	**5P-5969**		SEAL (1.3-M)	
D	40	1	**5P-6605**		SEAL (1.8-M)	
E	41	1	**3E-3000**		SEAL (400-CM)	
E	41A	1	**3E-3000**		SEAL (350-CM EACH)	

C-CHANGE FROM PREVIOUS TYPE
D-ORDER BY THE METER
E-ORDER BY THE CENTIMETER
M-METRIC PART
Y-SEPARATE ILLUSTRATION

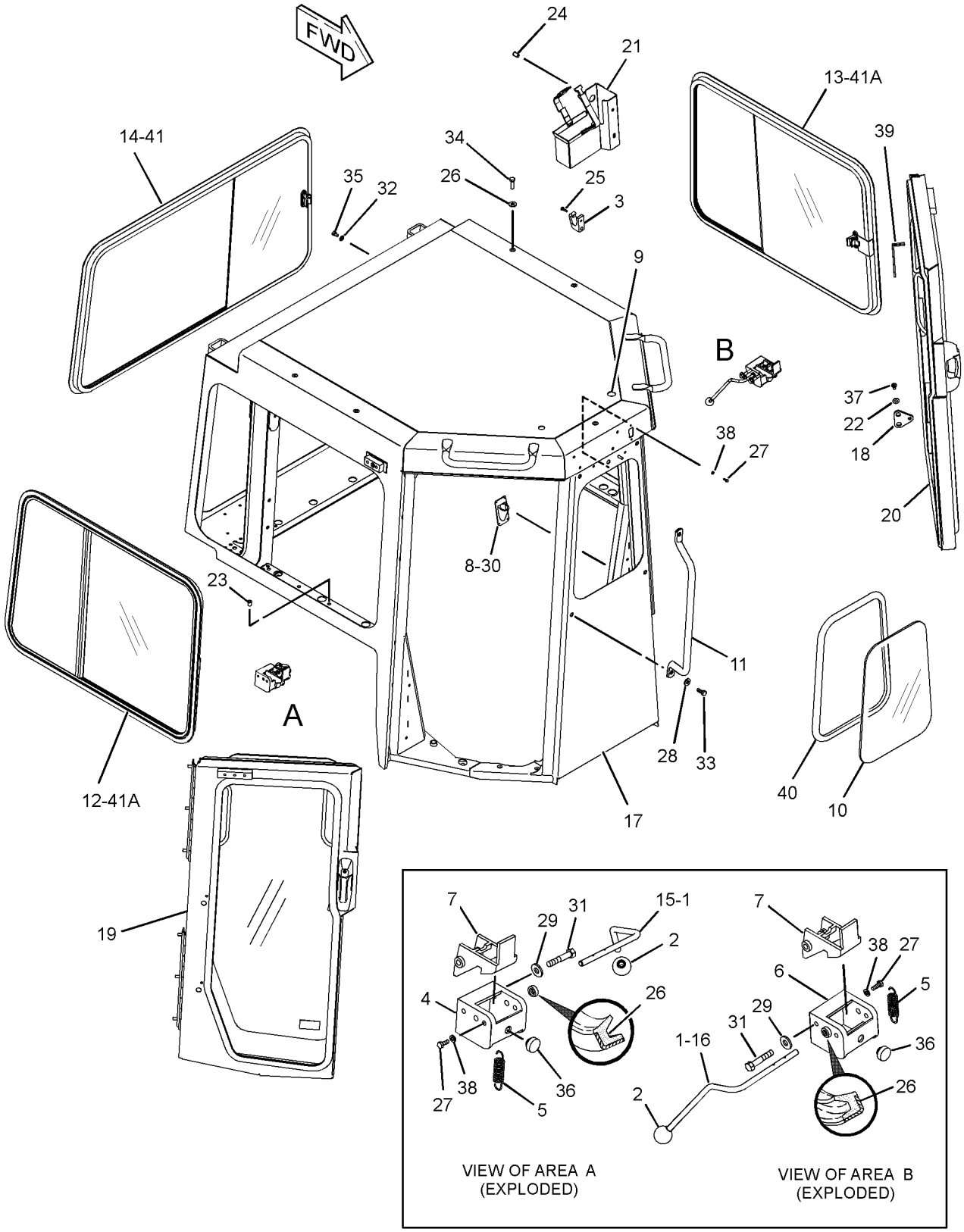

GRAPHIC #1 **<END>** g01232228

OPERATOR STATION

106-5122 COMPRESSOR GP-REFRIGERANT

S/N: RJG1-UP

PART OF 219-0312 COMPRESSOR GP-REFRIGERANT

AN ATTACHMENT

SMCS-1802 **i02280846**

NOTE	REF NO	GRAPHIC REF	PART NUMBER	QTY	PART NAME 1 2 3 4 5 6 (PRODUCT LEVEL)	SEE PAGE
	1	1	**102-8802**	1	KIT-RECEPTACLE (2-PIN)	
					INCLUDES RECEPTACLE & WEDGE	
	2	1	**114-3469**	1	VALVE GP-RELIEF (REFRIGERANT COMPRESSOR)	
		1	**9X-7378**	1	SEAL-O-RING	
	3	1	**7T-4532**	1	PLUG AS	
	4	1	**9X-7385**	2	SEAL-O-RING	

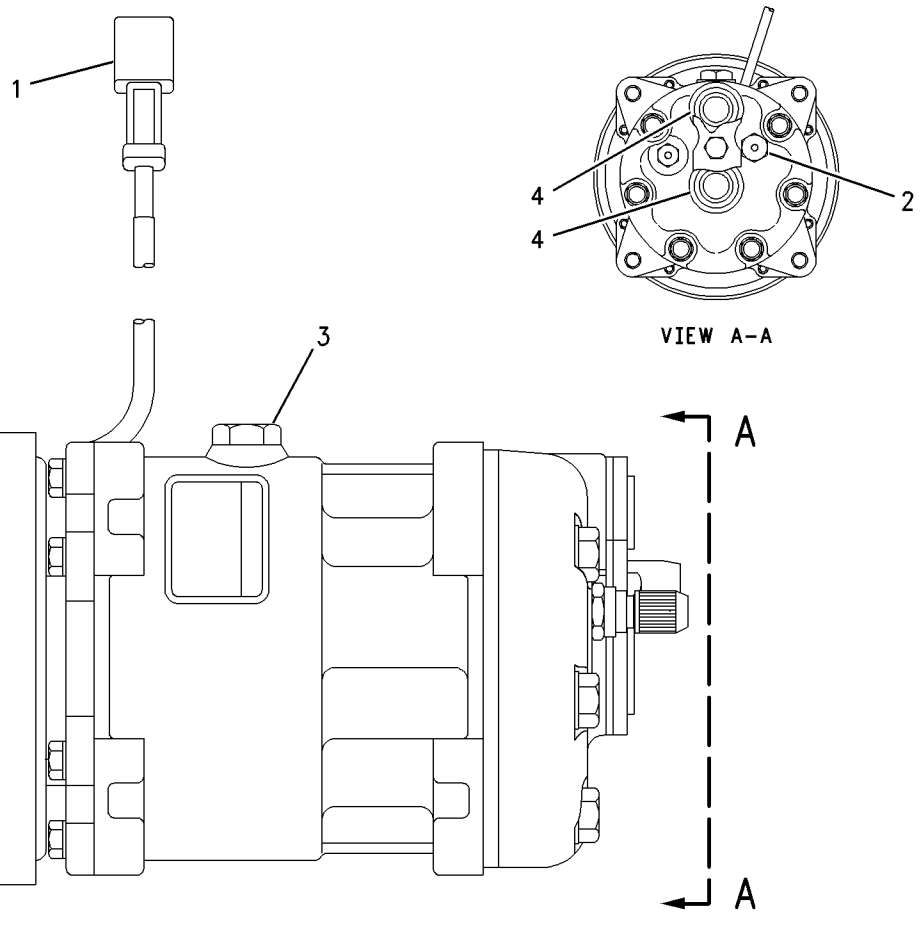

GRAPHIC #1 **<END>** g00985035

OPERATOR STATION

219-0312 COMPRESSOR GP-REFRIGERANT

S/N: RJG1-UP

PART OF 213-1112, 213-1113, 256-6916, 269-8387 AIR CONDITIONER AR

AN ATTACHMENT

SMCS-1802 **i02041676**

NOTE	REF NO	GRAPHIC REF	PART NUMBER	QTY	PART NAME 1 2 3 4 5 6 (PRODUCT LEVEL)	SEE PAGE
	1	1	**2K-5804**	1	ROD END	
	2	1	**4N-2745**	1	V-BELT (COMPRESSOR PULLEY)	
	3	1	**6W-8509**	1	PUSHROD	
	4	1	**9S-1354**	1	NUT (5/8-18-THD)	
	5	1	**126-2277**	1	GUARD AS-COMPRESSOR PULLEY	
M		1	**8T-3490**	2	NUT-WELD (M10X1.5-THD)	
	6	1	**232-1244**	1	BLOCK	
Y	7	1	**106-5122**	1	COMPRESSOR GP-REFRIGERANT	776
	8	1	**6V-8181**	2	NUT-FULL (5/8-18-THD)	
	9	1	**6V-8801**	1	NUT (3/8-16-THD)	
	10	1	**7X-0294**	1	BOLT (3/8-16X5-IN)	
	11	1	**7X-0346**	1	BOLT (5/8-11X2-IN)	
	12	1	**7X-0591**	2	WASHER-HARD (17X29X3-MM THK)	
	13	1	**8T-4121**	2	WASHER-HARD (11X21X2.5-MM THK)	
M	14	1	**8T-4122**	2	WASHER-HARD (17X32X3.5-MM THK)	
M	15	1	**8T-4196**	1	BOLT (M10X1.5X35-MM)	
	16	1	**8T-4896**	2	WASHER-HARD (10.2X18.5X2.5-MM THK)	
M	17	1	**8T-6466**	1	BOLT (M10X1.5X60-MM)	

M-METRIC PART
Y-SEPARATE ILLUSTRATION

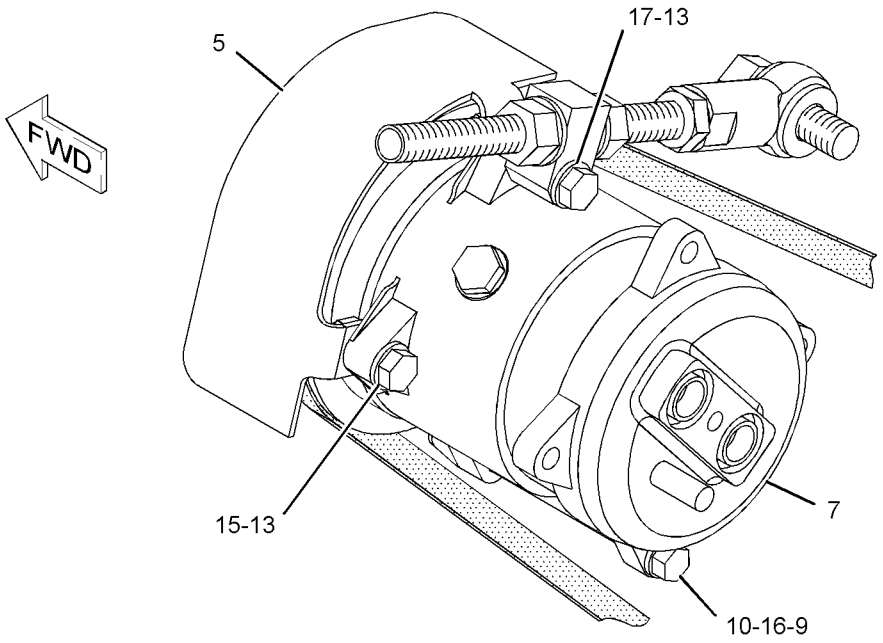

VIEW B-B

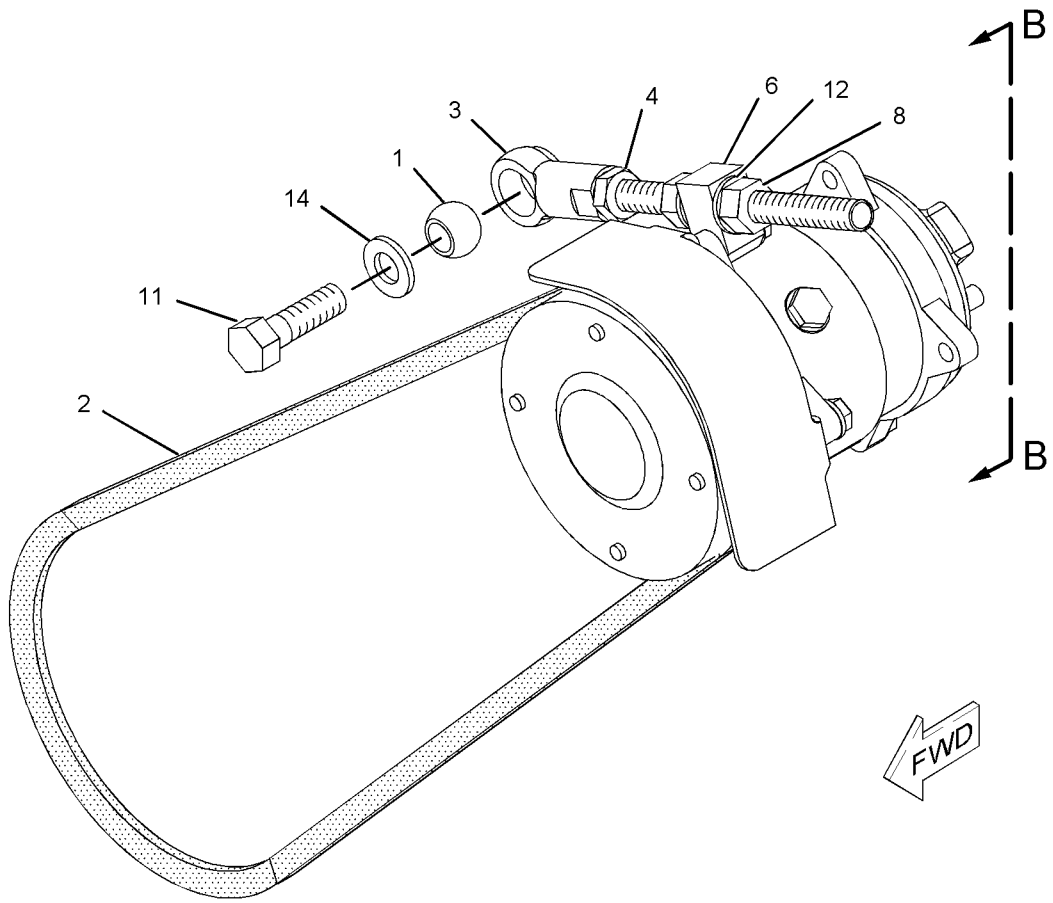

GRAPHIC #1 **<END>** g01051892

OPERATOR STATION

241-7655 CONDENSER & MTG GP-REFRIGERANT

S/N: RJG1-109
PART OF 213-1113 AIR CONDITIONER AR
AN ATTACHMENT

SMCS-1805 **i02263731**

NOTE	REF NO	GRAPHIC REF	PART NUMBER	QTY	PART NAME 1 2 3 4 5 6 (PRODUCT LEVEL)	SEE PAGE
	1	1	**6N-8744**	4	MOUNT	
	2	1	**9L-8781**	8	WASHER (0.406X1.5X0.188-IN THK)	
	3	1	**241-7656**	2	BRACKET AS	
					(EACH INCLUDES)	
M		1	**8T-3490**	6	NUT-WELD (M10X1.5 THD)	
		1	**7T-1099**	1	LINK	
	4	1	**241-7657**	1	PLATE AS (RH)	
	5	1	**241-7658**	1	PLATE AS (LH)	
					(EACH PLATE AS INCLUDES)	
		1	**4K-2542**	2	BOSS	
	6	1	**241-7660**	2	BRACKET	
	7	1	**245-7647**	1	CORE AS (AIR CONDITIONER)	
	8	1	**4L-6454**	8	BOLT (3/8-16X1-IN)	
	9	1	**8T-9375**	4	BOLT (3/8-16X1.75-IN)	
	10	1	**7X-7729**	12	WASHER (11X25X3-MM THK)	
M	11	1	**8T-4186**	8	BOLT (M10X1.5X40-MM)	
M	12	1	**8T-4195**	4	BOLT (M10X1.5X30-MM)	
	13	1	**8T-4896**	8	WASHER-HARD (10.2X18.5X2.5-MM THK)	

M-METRIC PART

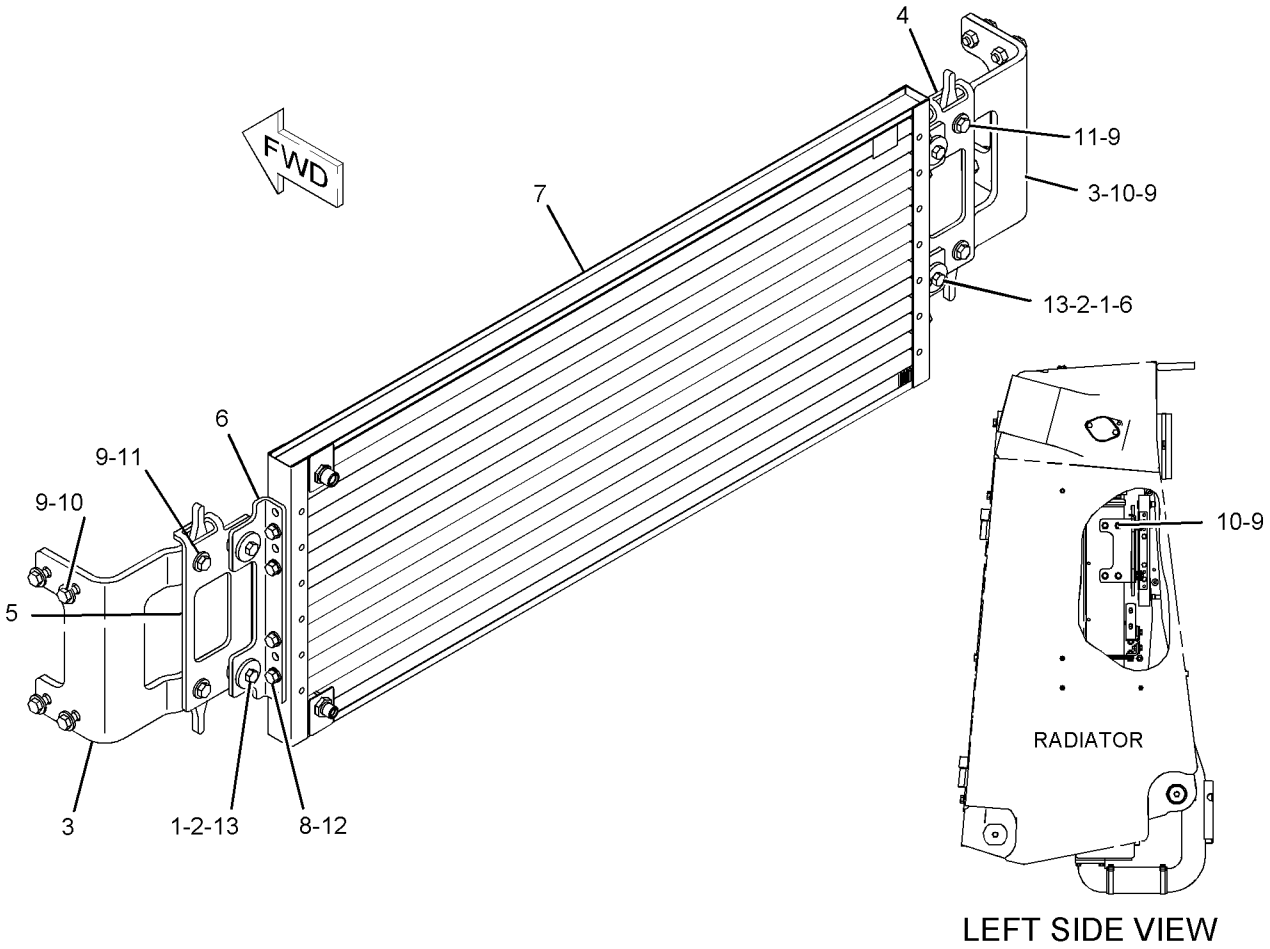

LEFT SIDE VIEW

GRAPHIC #1 **<END>** g01136527

OPERATOR STATION

241-7655 CONDENSER & MTG GP-REFRIGERANT

S/N: RJG110-UP
PART OF 213-1113 AIR CONDITIONER AR
AN ATTACHMENT

SMCS-1805 **i02275022**

NOTE	REF NO	GRAPHIC REF	PART NUMBER	QTY	PART NAME 1 2 3 4 5 6 (PRODUCT LEVEL)	SEE PAGE
	1	1	**6N-8744**	4	MOUNT	
	2	1	**9L-8781**	8	WASHER (0.406X1.5X0.188-IN THK)	
	3	1	**241-7656**	2	BRACKET AS	
					(EACH INCLUDES)	
M		1	**8T-3490**	6	NUT-WELD (M10X1.5 THD)	
		1	**7T-1099**	1	LINK	
	4	1	**241-7657**	1	PLATE AS (RH)	
	5	1	**241-7658**	1	PLATE AS (LH)	
					(EACH PLATE AS INCLUDES)	
		1	**4K-2542**	2	BOSS	
	6	1	**241-7660**	2	BRACKET	
C	7	1	**256-6455**	1	CORE AS (AIR CONDITIONER)	
	8	1	**7X-7729**	12	WASHER (11X25X3-MM THK)	
C	9	1	**8T-4121**	8	WASHER-HARD (11X21X2.5-MM THK)	
CM	10	1	**8T-4136**	8	BOLT (M10X1.5X25-MM)	
M	11	1	**8T-4186**	8	BOLT (M10X1.5X40-MM)	
M	12	1	**8T-4195**	4	BOLT (M10X1.5X30-MM)	
	13	1	**8T-9375**	4	BOLT (3/8-16X1.75-IN)	

C-CHANGE FROM PREVIOUS TYPE
M-METRIC PART

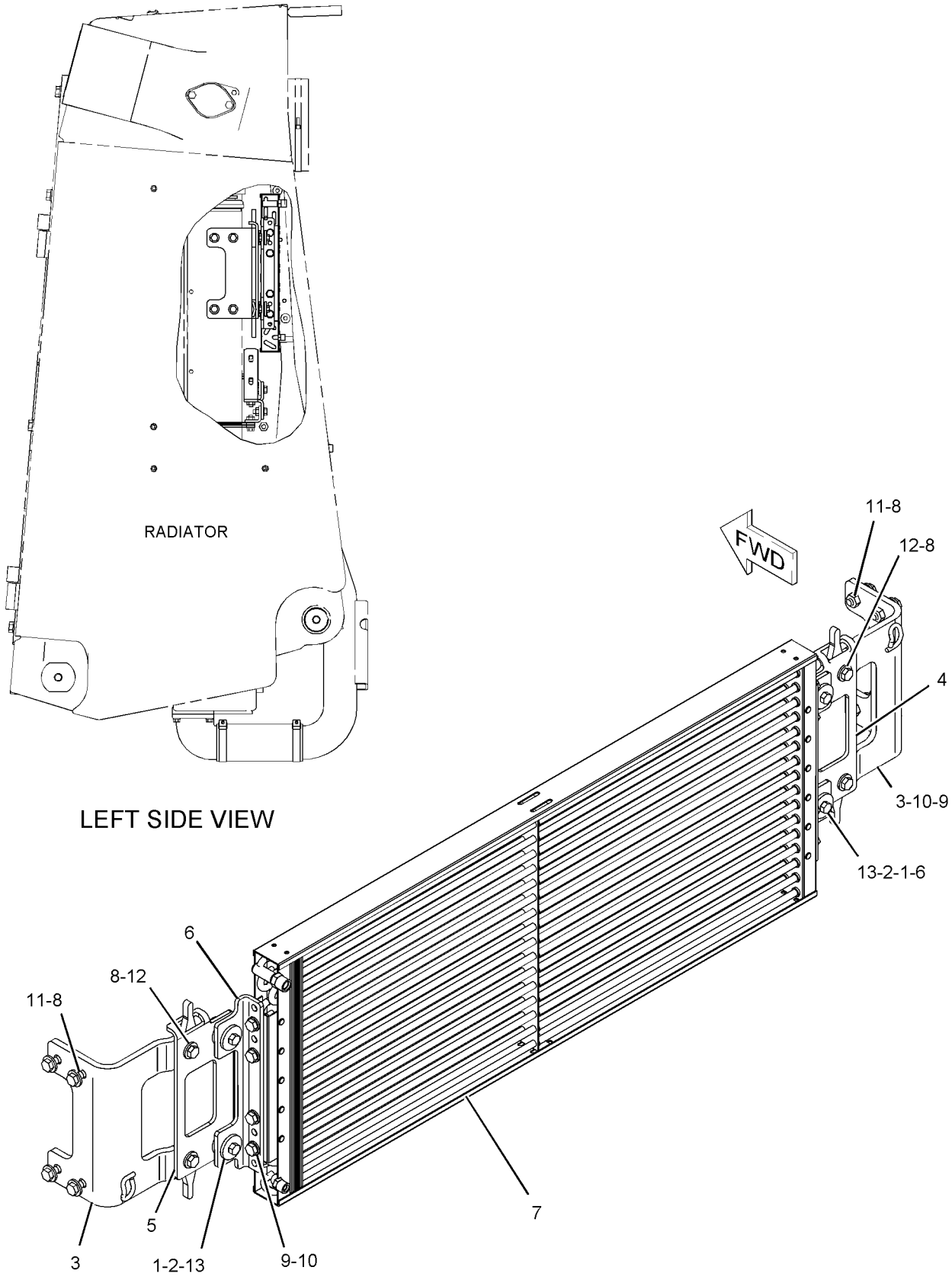

GRAPHIC #1 **<END>** g01139559

OPERATOR STATION

267-2871 CONDENSER & MTG GP-REFRIGERANT

S/N: RJG1-UP
PART OF 269-8387 AIR CONDITIONER AR
AN ATTACHMENT

SMCS-1805 **i02465674**

NOTE	REF NO	GRAPHIC REF	PART NUMBER	QTY	PART NAME 1 2 3 4 5 6 (PRODUCT LEVEL)	SEE PAGE
	1	1	**6N-8744**	4	MOUNT	
	2	1	**267-2872**	2	BRACKET AS	
					(EACH INCLUDES)	
M		1	**8T-3490**	2	NUT-WELD (M10X1.5-THD)	
	3	1	**271-5545**	1	CONDENSER AS-REFRIGERANT (AIR CONDITIONER)	
	4	1	**7X-7729**	4	WASHER (11X25X3-MM THK)	
M	5	1	**8T-4136**	4	BOLT (M10X1.5X25-MM)	
M	6	1	**8T-4196**	4	BOLT (M10X1.5X35-MM)	
	7	1	**8T-4226**	8	WASHER-PLATED (10.5X45X3-MM THK)	

M-METRIC PART

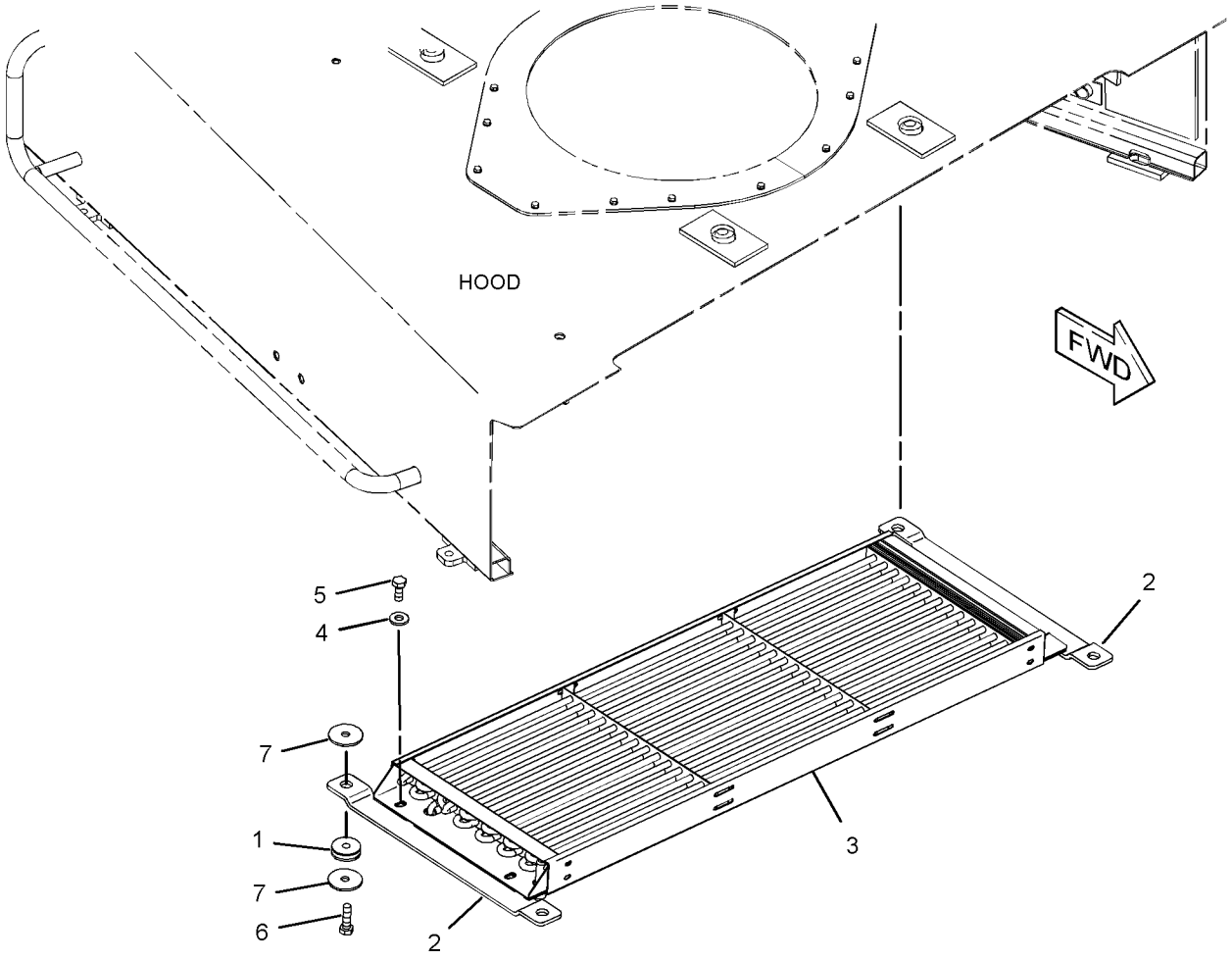

GRAPHIC #1 **<END>** g01231740

OPERATOR STATION

103-9527 CONDENSER GP-REFRIGERANT

S/N: RJG1-UP
PART OF 213-1112, 256-6916 AIR CONDITIONER AR
AN ATTACHMENT

SMCS-1805 **i02212581**

NOTE	REF NO	GRAPHIC REF	PART NUMBER	QTY	PART NAME 1 2 3 4 5 6 (PRODUCT LEVEL)	SEE PAGE
	1	1	**3E-5239**	1	RELAY AS (24-VOLT) (CONDENSER BLOWER MOTOR)	
	2	1	**3S-2093**	7	STRAP-CABLE	
C	3	1	**7K-1181**	2	STRAP-CABLE	
	4	1	**7T-5856**	4	CLAMP	
	5	1	**8C-3756**	1	FILM-IDENTIFICATION (GROUP NUMBER) (REFRIGERANT CONDENSER)	
	6	1	**8P-6363**	1	PLUG	
	7	1	**9X-3452**	2	GUARD AS-FAN	
C	8	1	**124-8490**	1	HARNESS AS-HEATER & AIR COND (CONDENSER BLOWER MOTORS)	
		1	**155-2270**	1	KIT-CONNECTING PLUG (2-PIN)	
					(INCLUDES PLUG AS & WEDGE)	
		1	**102-8803**	1	KIT-RECEPTACLE (3-PIN)	
					(INCLUDES RECEPTACLE AS & WEDGE)	
		1	**9X-1054**	1	PLUG AS-CONNECTOR (4-PIN)	
	9	1	**142-8620**	2	FAN AS-CONDENSER	
	10	1	**174-1495**	2	MOTOR GP-ELECTRIC (CONDENSER BLOWER)	
					(EACH INCLUDES)	
		1	**3E-3365**	1	WEDGE-RECEPTACLE LOCK (2-PIN)	
		1	**9W-0852**	2	PIN-CONNECTOR (14-GA)	
		1	**102-8802**	1	KIT-RECEPTACLE (2-PIN)	
					(INCLUDES RECEPTACLE AS & WEDGE)	
C	11	1	**203-2070**	8	MOUNT	
C	12	1	**204-9530**	4	TUBE	
C	13	1	**204-9531**	1	COIL-CONDENSER	
C	14	1	**204-9532**	1	CASE AS	
C	15	1	**4P-8134**	2	CLIP	
M	16	1	**5C-2890**	1	NUT (M6X1-THD)	
	17	1	**5P-1075**	8	WASHER-HARD (10.2X22.5X3-MM THK)	
	18	1	**5P-8441**	1	GROMMET	
	19	1	**7X-0578**	4	WASHER-HARD (10.2X32X2.5-MM THK)	
C	20	1	**8T-4121**	4	WASHER-HARD (11X21X2.5-MM THK)	
M	21	1	**8T-4133**	4	NUT (M10X1.5 THD)	
M	22	1	**8T-4137**	8	BOLT (M10X1.5X20-MM)	
M	23	1	**8T-4192**	12	BOLT (M12X1.75X25-MM)	
	24	1	**8T-4205**	1	WASHER-HARD (7.2X14.5X2-MM THK)	
	25	1	**8T-4223**	12	WASHER-HARD (13.5X25.5X3-MM THK)	
CM	26	1	**8T-6685**	4	BOLT (M10X1.5X110-MM)	
	27	1	**9X-7373**	1	GROMMET	
BD	28	1	**5P-5924**		SEAL	
BCD	29	1	**5P-5672**		SEAL	
BD	30	1	**5P-5908**		SEAL	

B-USE AS REQUIRED
C-CHANGE FROM PREVIOUS TYPE
D-ORDER BY THE METER
M-METRIC PART

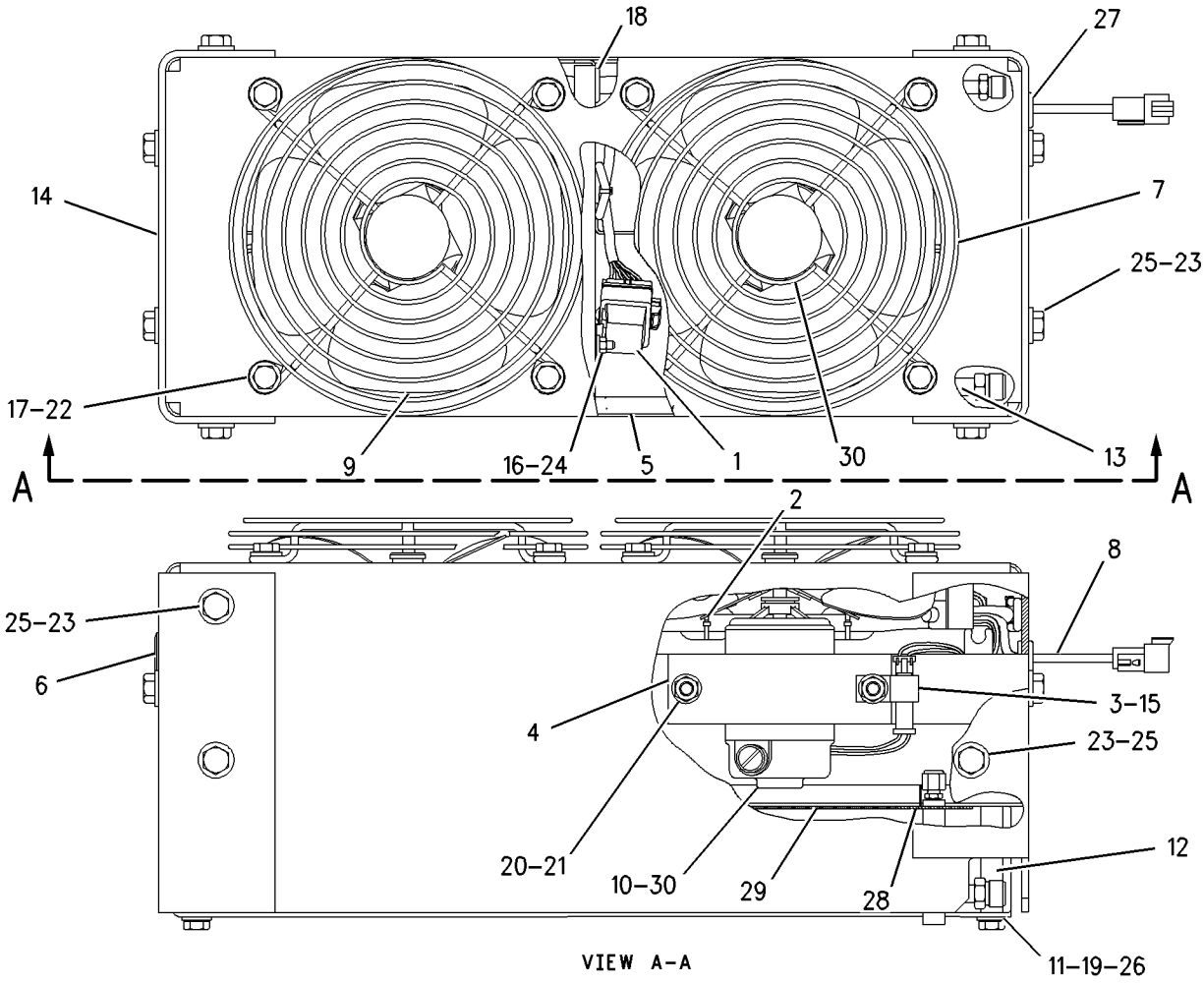

GRAPHIC #1 **<END>** g00937470

OPERATOR STATION

214-2014 CONSOLE GP-FRONT

S/N: RJG1-UP

PART OF 219-4135 PLATFORM AR

SMCS-5258 **i02237758**

NOTE	REF NO	GRAPHIC REF	PART NUMBER	QTY	PART NAME 1 2 3 4 5 6 (PRODUCT LEVEL)	SEE PAGE
	1	1	**6Y-5094**	1	CABLE	
	2	1	**209-5155**	1	CONSOLE-FRONT	
Y	3	1	**214-4176**	1	BOX GP-STORAGE	766
	4	1	**232-6668**	1	PAD AS (FOOT)	
	5	1	**244-6529**	1	FOAM AS	
M	6	1	**127-2170**	10	SCREW-TRUSS HEAD (M8X1.25X20-MM)	
	7	1	**4B-4274**	4	WASHER (5.5X13X1.2-MM THK)	
M	8	1	**7X-2619**	1	BOLT (M6X1X20-MM)	
M	9	1	**8C-6364**	4	BOLT-SOCKET HEAD (M5X0.8X14-MM)	
	10	1	**9X-8256**	1	WASHER (6.6X12X2-MM THK)	

M-METRIC PART
Y-SEPARATE ILLUSTRATION

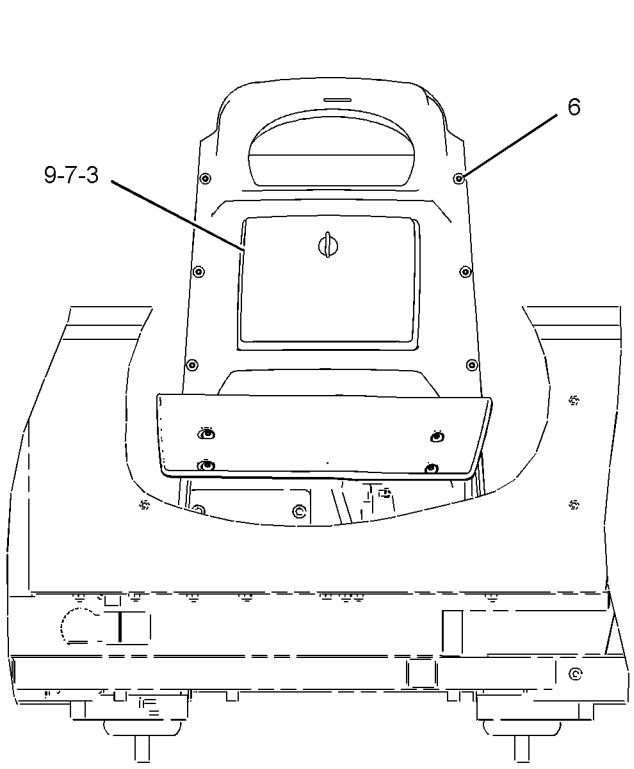

REAR VIEW

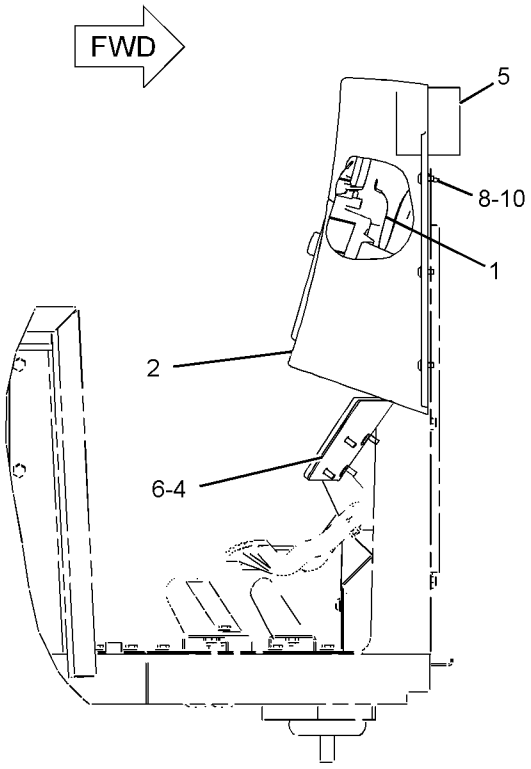

RIGHT SIDE VIEW

GRAPHIC #1 **<END>** g01128755

OPERATOR STATION

209-5154 CONSOLE GP-OPERATOR

S/N: RJG1-UP

PART OF 219-4135 PLATFORM AR

SMCS-5258, 7451 **i02320216**

NOTE	REF NO	GRAPHIC REF	PART NUMBER	QTY	PART NAME 1 2 3 4 5 6 (PRODUCT LEVEL)	SEE PAGE
	1	1	**154-8079**	12	NUT (U-TYPE RETAINER)	
	2	1	**209-9542**	1	PLATE	
	3	1	**216-0382**	1	CUSHION AS	
	4	1	**218-3266**	1	PANEL	
	5	1	**218-3269**	1	PANEL	
	6	1	**220-3439**	1	PLATE	
	7	1	**220-6126**	2	PLATE AS	
	8	1	**221-9403**	1	CONSOLE AS	
	9	1	**221-9409**	2	KNOB (ARMREST ADJUSTMENT)	
	10	1	**230-0093**	1	BRACKET AS	
	11	1	**233-9161**	12	SCREW-TRUSS HEAD (M4X0.7X18-MM)	
	12	1	**235-3560**	1	CASE-REAR	
	13	1	**235-3561**	1	PANEL AS (FRONT)	
	14	1	**263-3280**	1	CUSHION AS	
	15	1	**264-0072**	1	PLATE	
M	16	1	**127-2170**	9	SCREW-TRUSS HEAD (M8X1.25X20-MM)	
M	17	1	**131-3539**	4	SCREW-FLAT HEAD (M8-1.25X30-MM)	
	18	1	**198-9706**	4	SCREW-TRUSS HEAD (M5X0.8X16-MM)	
	19	1	**9D-3767**	3	PLUG-BUTTON	
	20	1	**3E-4352**	7	WASHER-HARD (8.8X20.5X2.5-MM THK)	
M	21	1	**5C-9553**	4	BOLT (M6X1X16-MM)	
	22	1	**5P-4116**	15	WASHER-HARD (8.8X20.5X2-MM THK)	
M	23	1	**5P-7970**	1	NUT (M8X1.25-THD)	
M	24	1	**6V-9189**	8	LOCKNUT (M8X1.25-THD)	
	25	1	**7X-0578**	2	WASHER-HARD (10.2X32X2.5-MM THK)	
M	26	1	**7X-2538**	3	BOLT (M8X1.25X100-MM)	
M	27	1	**7X-2540**	3	BOLT (M8X1.25X120-MM)	
	28	1	**7X-7729**	2	WASHER (11X25X3-MM THK)	
	29	1	**267-8828**	1	GROMMET	
M	30	1	**8T-4136**	4	BOLT (M10X1.5X25-MM)	
M	31	1	**8T-4200**	2	BOLT (M8X1.25X16-MM)	
	32	1	**9X-8267**	4	WASHER (6.6X12X2-MM THK)	
	33	1	**271-9408**	4	SCREW-TRUSS HEAD (M5X0.8X10-MM)	

M-METRIC PART

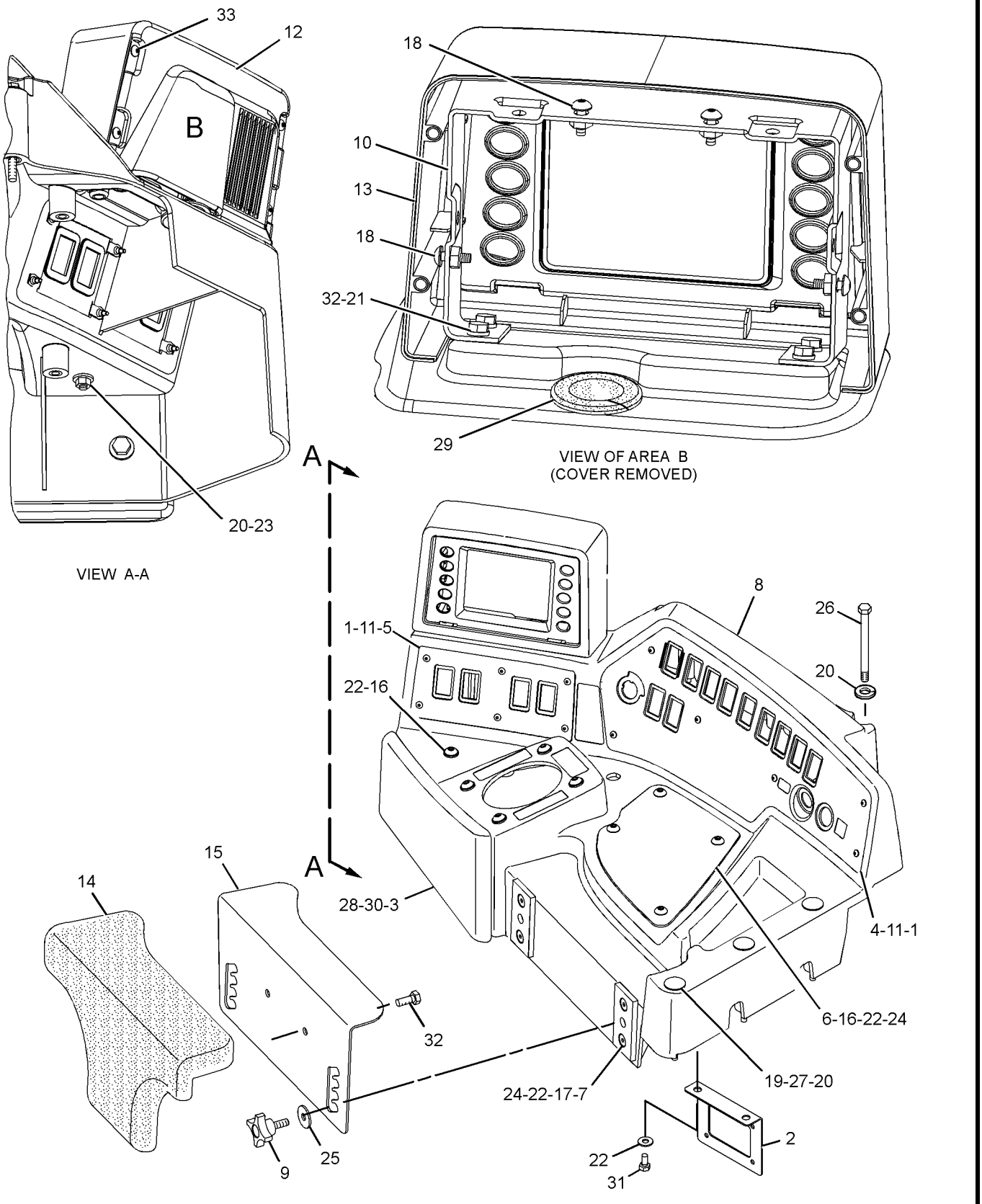

GRAPHIC #1 **<END>** g01161705

OPERATOR STATION

196-9987 CONTROL & MTG GP-IMPLEMENT–RIPPER

S/N: RJG1-UP

PART OF 216-2552 CONTROL AR-HYDRAULIC

AN ATTACHMENT

SMCS-5100 **i02285067**

NOTE	REF NO	GRAPHIC REF	PART NUMBER	QTY	PART NAME 1 2 3 4 5 6 (PRODUCT LEVEL)	SEE PAGE
	1	1	**137-3928**	1	FILM-INSTRUCTION (RIPPER CONTROL)	
	2	1	**224-5871**	1	PLATE	
Y	3	1	**226-7420**	1	CONTROL GP-RIPPER	547
	4	1	**5P-4116**	4	WASHER-HARD (8.8X20.5X2-MM THK)	
M	5	1	**8T-4908**	2	BOLT (M8X1.25X25-MM)	
M	6	1	**8T-7547**	2	BOLT (M8X1.25X30-MM)	

M-METRIC PART
Y-SEPARATE ILLUSTRATION

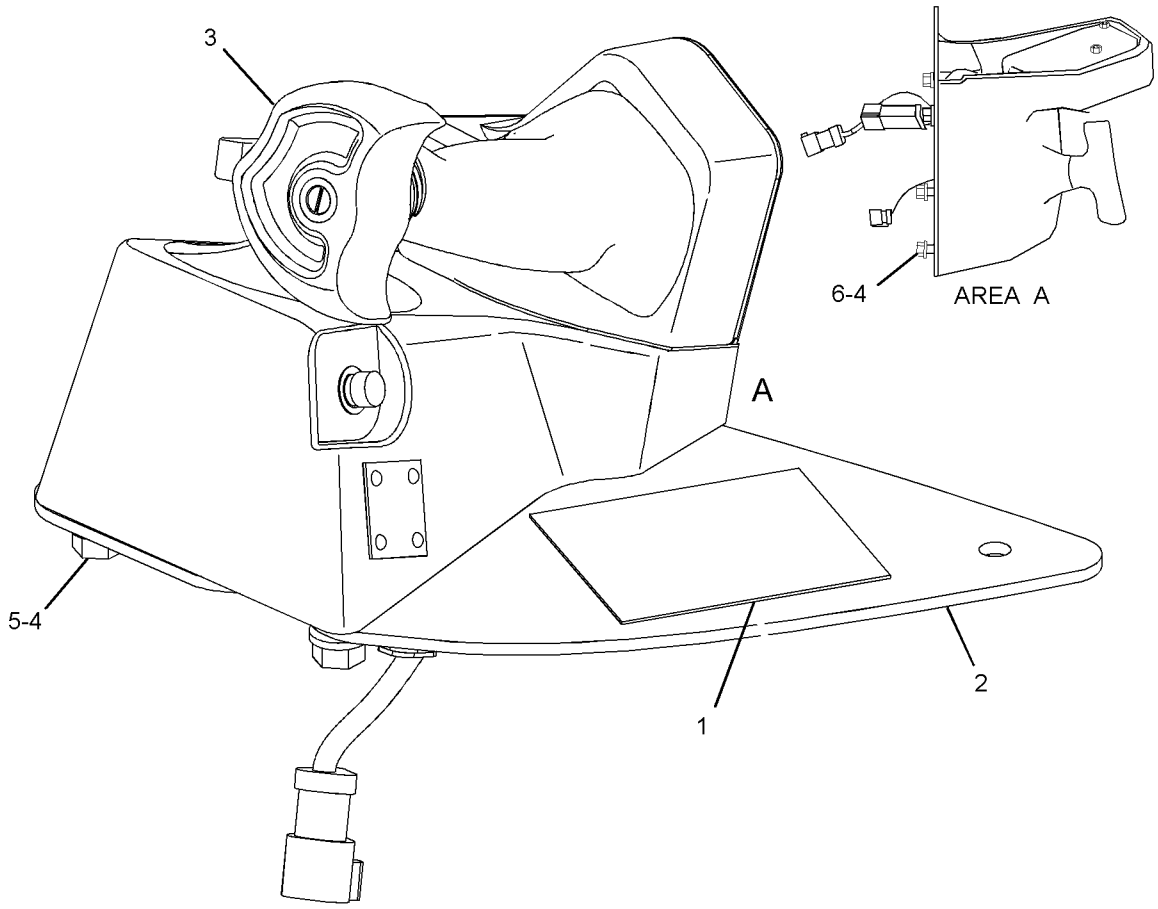

GRAPHIC #1 **<END>** g01110204

232-6622 CONTROL & MTG GP-PEDAL—GOVERNOR, BRAKE

S/N: RJG1-UP

PART OF 212-2746 POWER TRAIN AR

SMCS-5462 **i01961419**

NOTE	REF NO	GRAPHIC REF	PART NUMBER	QTY	PART NAME 1 2 3 4 5 6 (PRODUCT LEVEL)	SEE PAGE
	1	1	**171-7077**	2	ROD-THREADED	
Y	2	1	*231-7314*	1	PEDAL GP-GOVERNOR & BRAKE	846
	3	1	**8T-4121**	4	WASHER-HARD (11X21X2.5-MM THK)	
M	4	1	**8T-4133**	2	NUT (M10X1.5 THD)	
M	5	1	**8T-4195**	2	BOLT (M10X1.5X30-MM)	

M-METRIC PART
Y-SEPARATE ILLUSTRATION

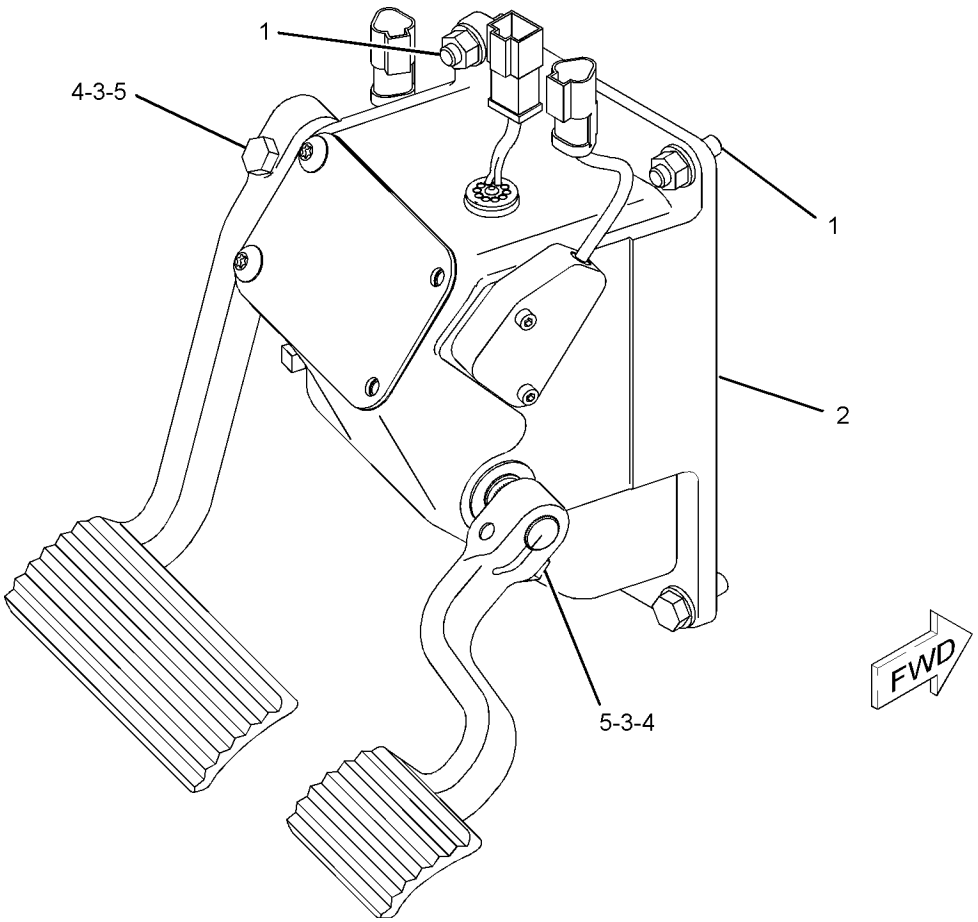

GRAPHIC #1 **<END>** g01021937

OPERATOR STATION

263-3318 CONTROL & MTG GP-PEDAL–GOVERNOR, BRAKE

S/N: RJG1-UP
PART OF 256-0190 OPERATOR AR
AN ATTACHMENT

SMCS-5462 **i02277758**

NOTE	REF NO	GRAPHIC REF	PART NUMBER	QTY	PART NAME 1 2 3 4 5 6 (PRODUCT LEVEL)	SEE PAGE
Y	1	1	*231-7314*	1	PEDAL GP-GOVERNOR & BRAKE	846
	2	1	**258-0978**	1	PEDAL AS (SERVICE BRAKE)	
	3	1	**258-0980**	1	PEDAL AS (DECELERATOR)	
M	4	1	**8T-4195**	2	BOLT (M10X1.5X30-MM)	

M-METRIC PART
Y-SEPARATE ILLUSTRATION

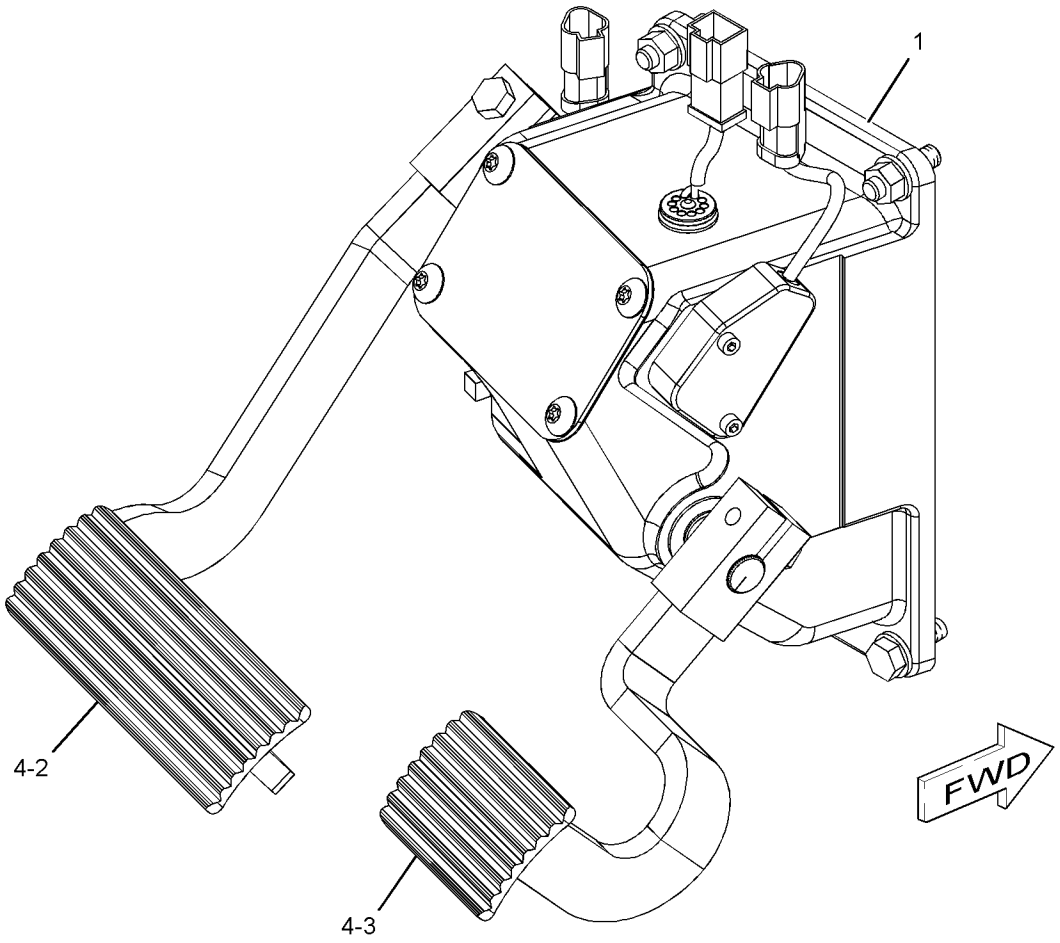

GRAPHIC #1 **<END>** g01140635

OPERATOR STATION

209-5192 COVER GP-CAB

S/N: RJG1-UP

PART OF 205-8640 CAB AR

SMCS-7301 **i02214750**

NOTE	REF NO	GRAPHIC REF	PART NUMBER	QTY	PART NAME 1 2 3 4 5 6 (PRODUCT LEVEL)	SEE PAGE
	1	1	**6Y-0206**	2	RETAINER	
	2	1	**7G-4824**	1	STRAP	
	3	1	**8E-7791**	1	STRAP	
	4	1	**190-8505**	1	ASHTRAY (CAB)	
	5	1	**209-5163**	1	FLOOR MAT-LOWER (CAB)	
	6	1	**209-5164**	1	FLOOR MAT-UPPER (CAB)	
	7	1	**209-5196**	1	PANEL-ACOUSTICAL	
	8	1	**212-4994**	1	PANEL-ACOUSTICAL	
	9	1	**237-0190**	1	GASKET	
M	10	1	**9X-2043**	2	SCREW-TRUSS HEAD (M6X1X14-MM)	
M	11	1	**9X-2045**	5	SCREW-TRUSS HEAD (M6X1X20-MM)	

M-METRIC PART

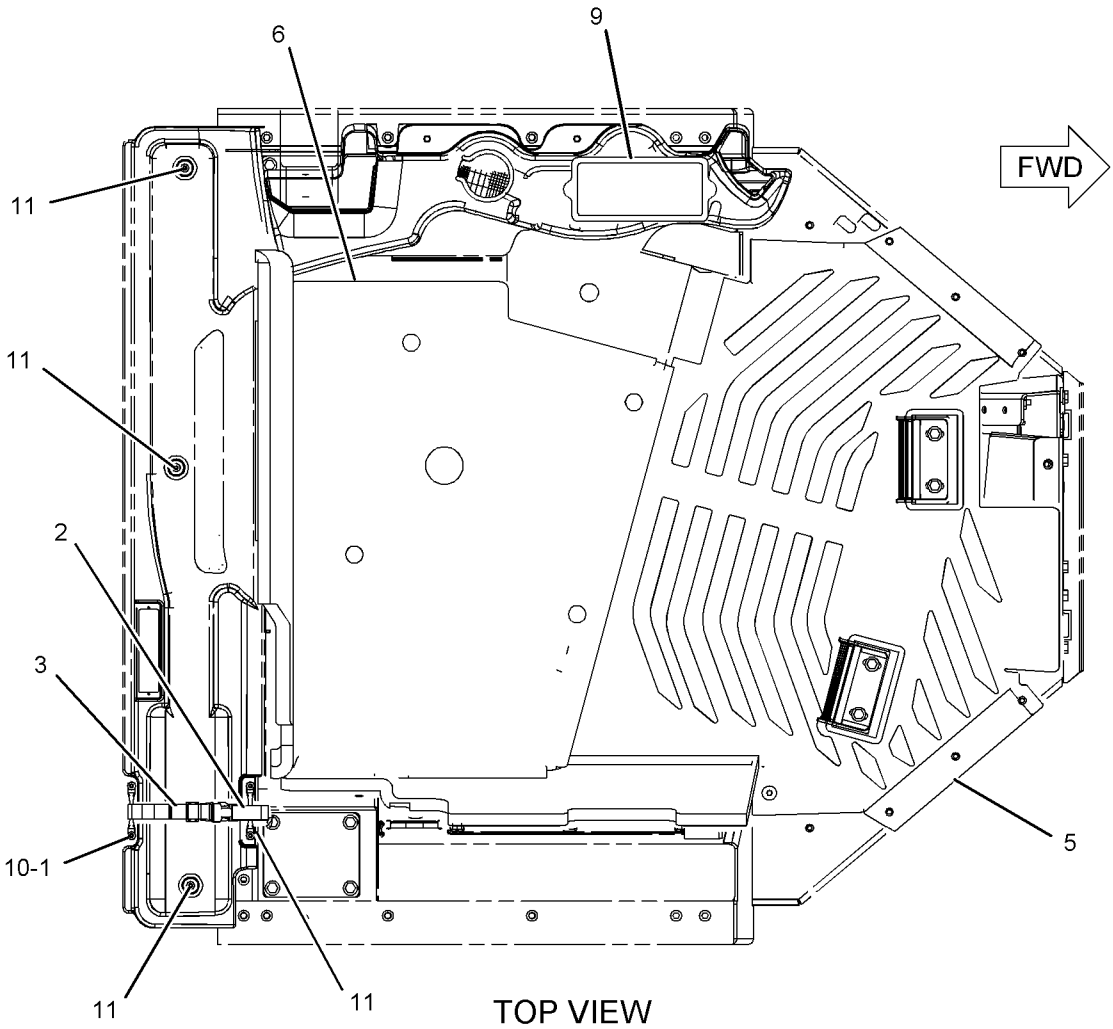

TOP VIEW

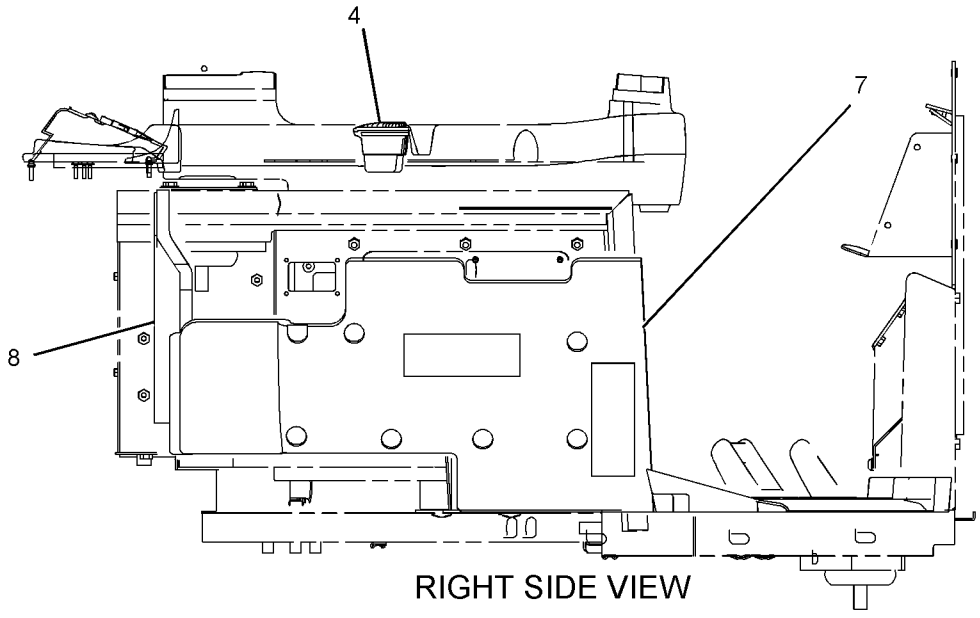

RIGHT SIDE VIEW

GRAPHIC #1 **<END>** g01117892

OPERATOR STATION

277-0493 DISPLAY GP-MONITOR

S/N: RJG1-UP
PART OF 257-5849 INSTALLATION GP-GRADE CONTROL
AN ATTACHMENT

SMCS-7490 **i02447460**

NOTE	REF NO	GRAPHIC REF	PART NUMBER	QTY	PART NAME 1 2 3 4 5 6 (PRODUCT LEVEL)	SEE PAGE
	1	1	**239-9531**	1	DISPLAY GP-MONITOR (NAVIGATOR)	

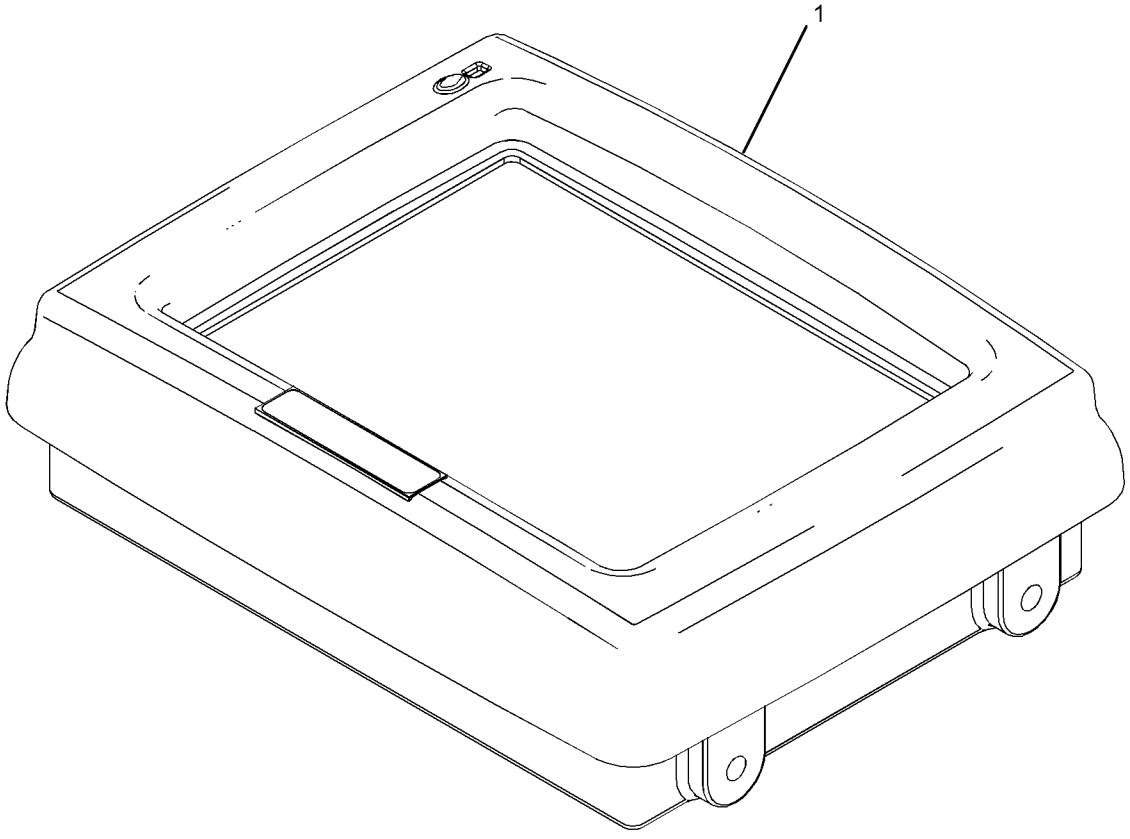

GRAPHIC #1 **<END>** g01223636

OPERATOR STATION

255-6899 DOOR GP-CAB–RH

S/N: RJG1-UP

PART OF 214-1800 CAB GP

SMCS-7308 **i02250480**

NOTE	REF NO	GRAPHIC REF	PART NUMBER	QTY	PART NAME 1 2 3 4 5 6 (PRODUCT LEVEL)	SEE PAGE
	1	1	**200-7836**	1	HANDLE AS (PULL)	
	2	1	**212-7670**	1	PLATE	
	3	1	**214-1802**	1	GLASS	
	4	1	**255-0845**	1	DOOR AS (RH)	
	5	1	**255-0849**	1	COVER (RH)	
	6	1	**256-7745**	1	LATCH AS (RH)	
M	7	1	**127-2170**	4	SCREW-TRUSS HEAD (M8X1.25X20-MM)	
M	8	1	**3E-4304**	7	INSERT-THREADED (M6X1-6H THD)	
	9	1	**7X-7729**	6	WASHER (11X25X3-MM THK)	
	10	1	**8E-6856**	1	COVER	
M	11	1	**8T-4136**	6	BOLT (M10X1.5X25-MM)	
	12	1	**9N-1995**	4	RIVET-POP	
M	13	1	**9X-2042**	4	SCREW-TRUSS HEAD (M6X1X12-MM)	
M	14	1	**9X-2044**	4	SCREW-TRUSS HEAD (M6X1X16-MM)	
BD	15	1	**5P-6605**		SEAL	
BE	16	1	**178-8894**		SEAL	

B-USE AS REQUIRED
D-ORDER BY THE METER
E-ORDER BY THE CENTIMETER
M-METRIC PART

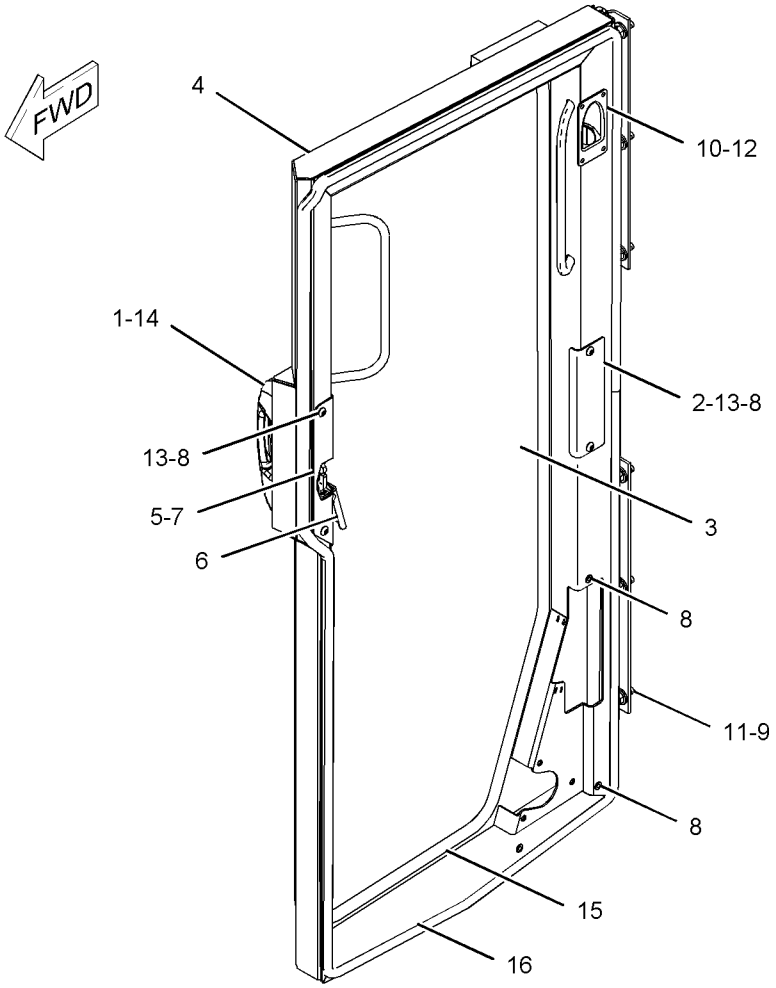

GRAPHIC #1 **<END>** g01109995

OPERATOR STATION

255-6900 DOOR GP-CAB—LH

S/N: RJG1-UP

PART OF 214-1800 CAB GP

SMCS-7308 **i02250481**

NOTE	REF NO	GRAPHIC REF	PART NUMBER	QTY	PART NAME 1 2 3 4 5 6 (PRODUCT LEVEL)	SEE PAGE
	1	1	**200-7836**	1	HANDLE AS (PULL)	
	2	1	**212-7670**	1	PLATE	
	3	1	**214-1802**	1	GLASS	
	4	1	**255-0844**	1	DOOR AS (LH)	
	5	1	**255-0848**	1	COVER (LH)	
	6	1	**256-7744**	1	LATCH AS (LH)	
M	7	1	**127-2170**	4	SCREW-TRUSS HEAD (M8X1.25X20-MM)	
M	8	1	**3E-4304**	7	INSERT-THREADED (M6X1-6H THD)	
	9	1	**7X-7729**	6	WASHER (11X25X3-MM THK)	
	10	1	**8E-6856**	1	COVER	
M	11	1	**8T-4136**	6	BOLT (M10X1.5X25-MM)	
	12	1	**9N-1995**	4	RIVET-POP	
M	13	1	**9X-2042**	4	SCREW-TRUSS HEAD (M6X1X12-MM)	
M	14	1	**9X-2044**	4	SCREW-TRUSS HEAD (M6X1X16-MM)	
BD	15	1	**5P-6605**		SEAL	
BE	16	1	**178-8894**		SEAL	

B-USE AS REQUIRED
D-ORDER BY THE METER
E-ORDER BY THE CENTIMETER
M-METRIC PART

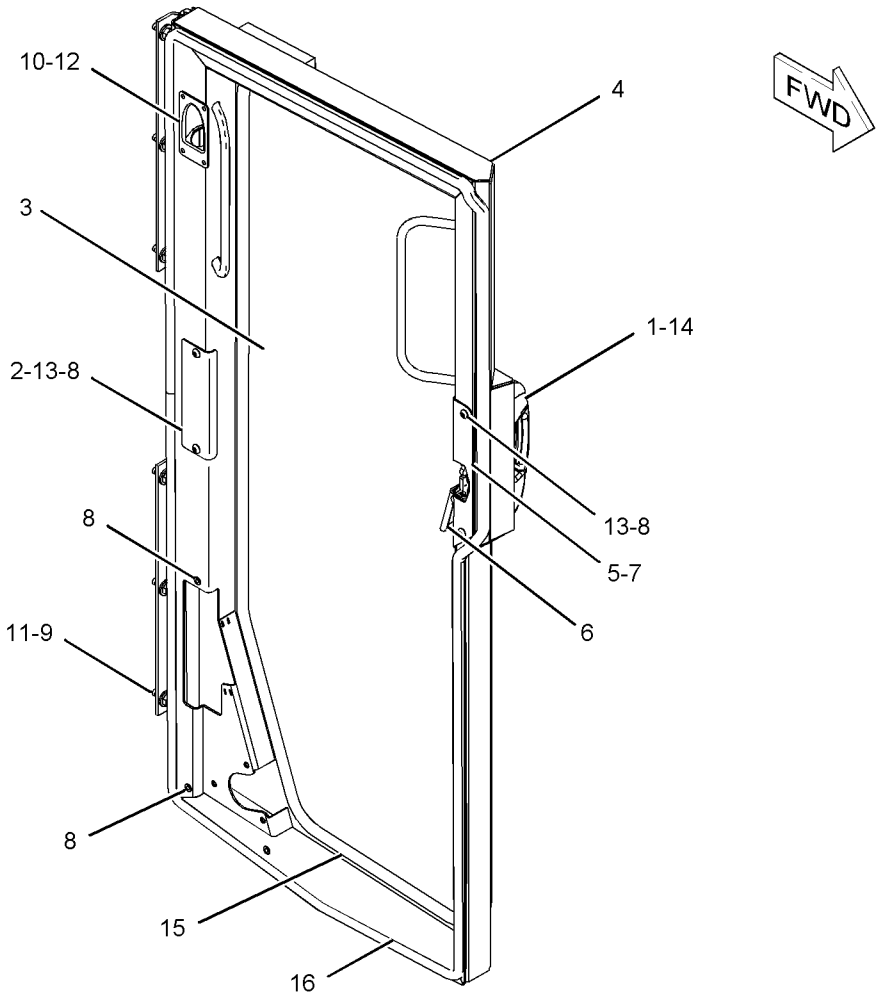

GRAPHIC #1 **<END>** g01109954

OPERATOR STATION

245-8220 FILTER GP-CAB AIR

S/N: RJG1-UP
PART OF 248-4171, 248-4172 CAB AR
AN ATTACHMENT

SMCS-7342 **i02351774**

NOTE	REF NO	GRAPHIC REF	PART NUMBER	QTY	PART NAME 1 2 3 4 5 6 (PRODUCT LEVEL)	SEE PAGE
	1	1	**3E-7404**	1	CLAMP-HOSE	
	2	1	**8L-7905**	4	RIVET-POP	
	3	1	**117-9066**	1	LATCH AS	
	4	1	**232-3583**	1	PRECLEANER GP (CAB AIR)	
		1	**9W-0852**	2	PIN-CONNECTOR (14-GA)	
		1	**197-1932**	1	MOTOR AS (24-VOLT DC)	
		1	**102-8802**	1	KIT-RECEPTACLE (2-PIN)	
					(INCLUDES RECEPTACLE AS & WEDGE)	
	5	1	**235-0320**	1	CAP AS-RAIN	
	6	1	**261-8821**	1	BRACKET AS	
	7	1	**262-5228**	1	COVER AS	
	8	1	**262-5229**	1	PLATE AS	
	9	1	**262-5230**	1	PLATE AS	
	10	1	**265-0959**	1	BRACKET AS	
	11	1	**265-3857**	1	FILTER-AIR (HIGH EFFICIENCY)	
	12	1	**117-8929**	4	WASHER (6.6X22X2-MM THK)	
	13	1	**5P-4116**	4	WASHER-HARD (8.8X20.5X2-MM THK)	
	14	1	**5P-8525**	1	GROMMET	
M	15	1	**8T-4138**	10	BOLT (M6X1X20-MM)	
M	16	1	**8T-4189**	4	BOLT (M8X1.25X20-MM)	
	17	1	**8T-4205**	6	WASHER-HARD (7.2X14.5X2-MM THK)	
D	18	1	**6V-9335**		SEAL (0.4-M)	
E	19	1	**8T-9005**		SEAL (22.5-CM)	
E	19A	1	**8T-9005**		SEAL (41-CM)	
E	20	1	**3E-3892**		SEAL (115-CM)	

D-ORDER BY THE METER
E-ORDER BY THE CENTIMETER
M-METRIC PART

245-8220 **FILTER GP-CAB AIR** *(contd.)* **i02351774**

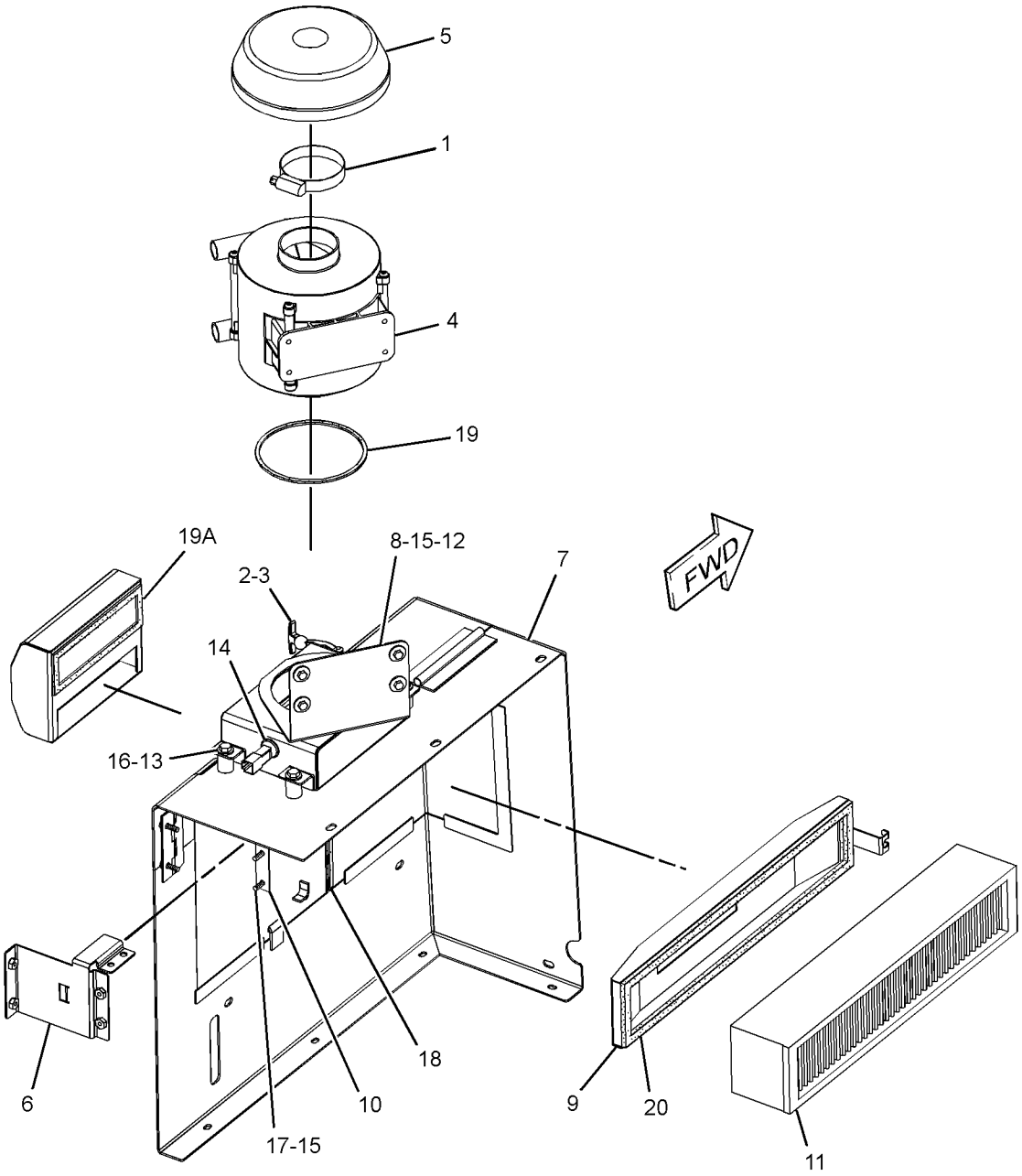

GRAPHIC #1 **<END>** g01226998

OPERATOR STATION

205-3645 HEATER GP-CAB

S/N: RJG1-UP

PART OF 263-3279 HEATER GP-CAB

SMCS-7304 **i02458583**

NOTE	REF NO	GRAPHIC REF	PART NUMBER	QTY	PART NAME 1 2 3 4 5 6 (PRODUCT LEVEL)	SEE PAGE
	1	1	**3E-5239**	1	RELAY AS (24-VOLT) (HEATER, AIR CONDITIONER)	
	2	1	**3E-5464**	1	SWITCH AS-TEMPERATURE (HEATER, AIR CONDITIONER)	
	3	1,2	**5V-1474**	12	SCREW-FORMING (10-16XO.625-IN)	
	4	2	**9X-2185**	3	SCREW (8-15X11.11-MM)	
	5	2	**131-3093**	1	BUSHING	
	6	1	**133-8715**	1	GROMMET	
	7	2	**136-6505**	2	INSULATION	
	8	2	**216-8731**	1	COIL AS-HEATER	
	9	2	**216-8732**	1	COIL AS-EVAPORATOR	
	10	1	**222-8843**	1	COVER	
	11	2	**225-2338**	1	GASKET	
	12	2	**225-2339**	1	SEAL	
	13	2	**245-1596**	1	ACTUATOR	
Y	14	1	**248-2921**	1	RESISTOR GP-CAB HEATER	275
	15	1	**248-2923**	4	FITTING-DRAIN	
	16	1	**248-2931**	1	PLATE	
	17	2	**248-6772**	4	SCREW-MACHINE (8-16X7.75-IN)	
	18	1	**249-9311**	1	HARNESS AS-HEATER & AIR COND	
		1	**239-9368**	1	RESISTOR AS	
		1	**155-2255**	1	KIT-CONNECTING PLUG (12-PIN)	
		1	**155-2270**	3	KIT-CONNECTING PLUG (2-PIN)	
					(EACH INCLUDES PLUG AS, WEDGE, & INTERFACE SEAL)	
		1	**102-8802**	1	KIT-RECEPTACLE (2-PIN)	
					(INCLUDES RECEPTACLE AS & WEDGE)	
		1	**9X-1054**	1	PLUG AS-CONNECTOR (4-PIN)	
		1	**7K-1181**	1	STRAP-CABLE	
	19	1	**264-0461**	1	PLATE	
	20	2	**264-0462**	1	PLATE	
	21	2	**264-0465**	1	PLATE AS	
	22	2	**264-0466**	1	PLATE AS	
	23	1	**264-0467**	1	PLATE	
	24	2	**264-0468**	1	PLATE	
	25	2	**268-8792**	1	MOTOR AS-BLOWER (24-VOLT, A/C, HEATER)	
		2	**9W-0852**	2	PIN-CONNECTOR (14-GA)	
		2	**102-8802**	1	KIT-RECEPTACLE (2-PIN)	
					(INCLUDES RECEPTACLE AS & WEDGE)	
	26	2	**264-1476**	1	VALVE AS-WATER	
	27	1	**266-3447**	1	CASE AS	
		1	**117-9066**	1	LATCH AS	
M	28	1,2	**129-3178**	9	LOCKNUT (M6X1-THD)	
	29	1	**3B-4501**	2	LOCKWASHER	
	30	2	**4M-6582**	1	SEAL-O-RING	
	31	1	**4P-8134**	3	CLIP	
	32	1	**6C-3680**	2	RIVET-POP	
	33	2	**6P-1301**	1	GROMMET	
M	34	1	**6V-7357**	5	BOLT (M6X1X25-MM)	
	35	1	**8T-4205**	8	WASHER-HARD (7.2X14.5X2-MM THK)	
	36	1	**8T-6631**	2	SCREW-MACHINE (8-32XO.5-IN)	
	37	1,2	**9X-8256**	6	WASHER (6.6X12X2-MM THK)	
D	38	1	**5P-5639**		SEAL (26-CM EACH)	
E	39	1	**267-8575**		TUBE (58-CM EACH)	

D-ORDER BY THE METER
E-ORDER BY THE CENTIMETER
M-METRIC PART
Y-SEPARATE ILLUSTRATION

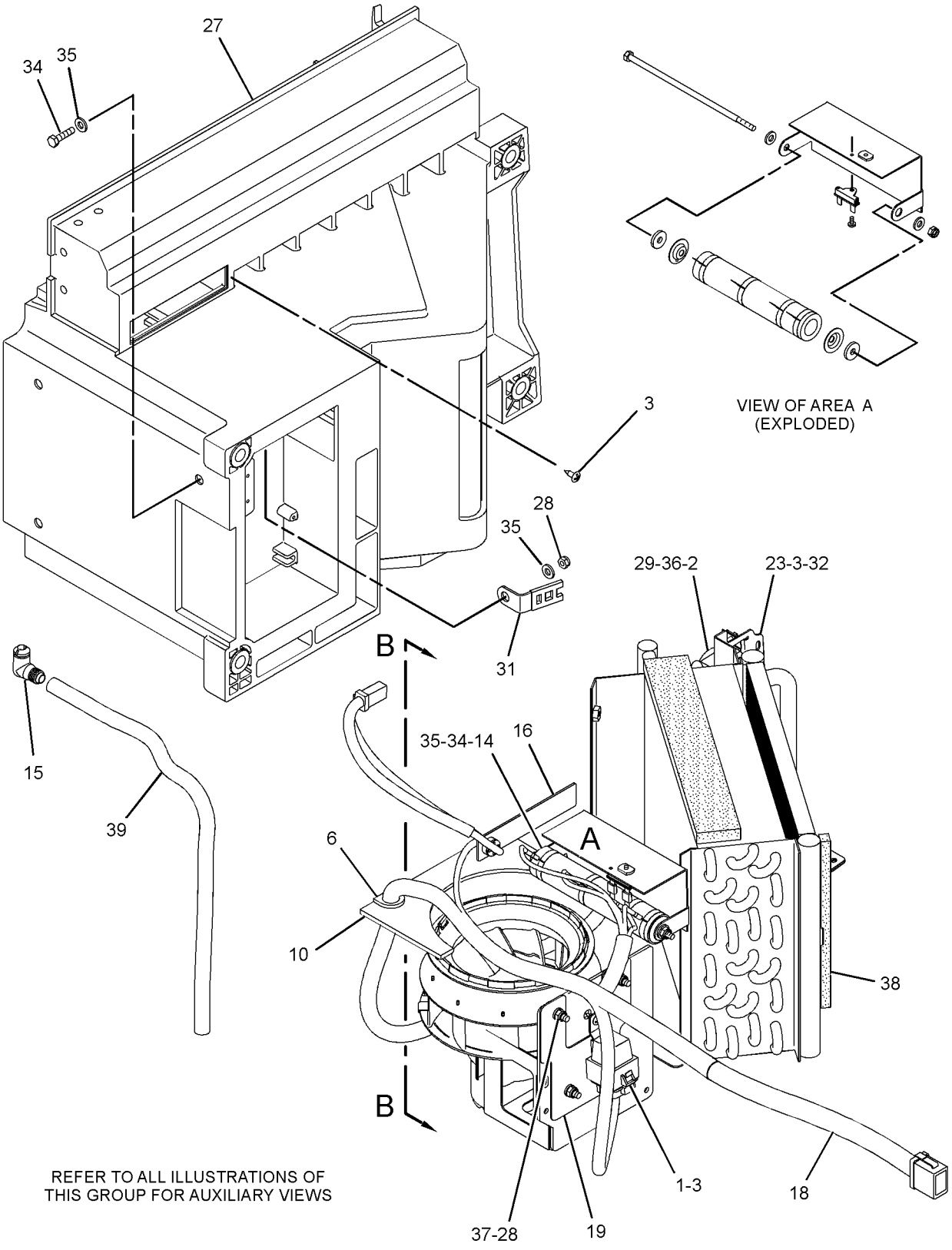

GRAPHIC #1 g01164849

205-3645 HEATER GP-CAB *(contd.)* **i02458583**

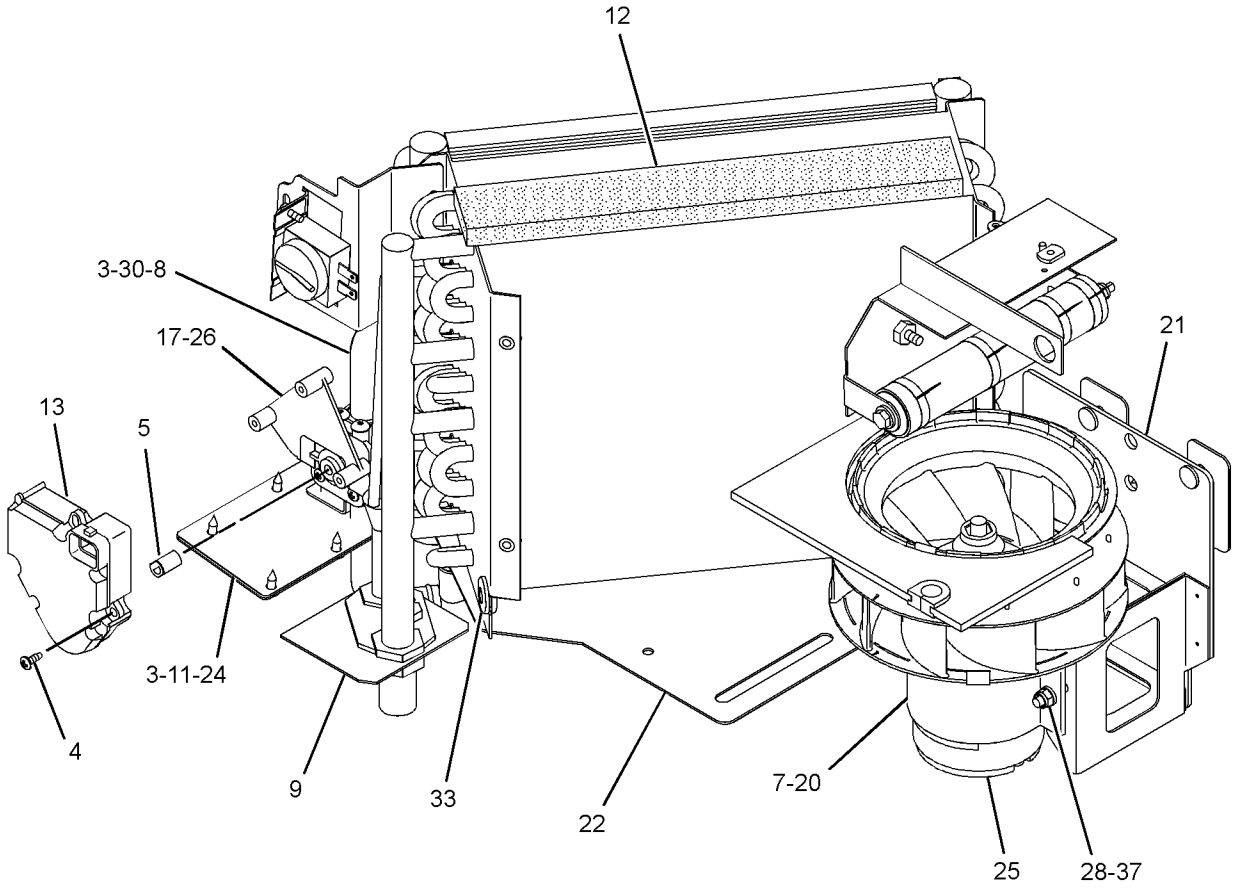

VIEW B-B

GRAPHIC #2 **<END>** g01164852

OPERATOR STATION

231-3767 HEATER GP-CAB

S/N: RJG1-UP

PART OF 219-4135 PLATFORM AR

SMCS-7304 **i02349361**

NOTE	REF NO	GRAPHIC REF	PART NUMBER	QTY	PART NAME 1 2 3 4 5 6 (PRODUCT LEVEL)	SEE PAGE
	1	1	**246-2641**	1	PADLOCK GP (CAB HEATER)	
		1	**5P-8500**	2	KEY	
	2	1	**8E-7561**	1	KNOB AS	
		1	**8E-1205**	1	KNOB	
		1	**7S-2042**	1	STUD	
		1	**8T-7566**	1	PIN-SPRING	
	3	1	**9S-8230**	1	PLATE AS	
		1	**1F-0750**	1	NUT-WELD (3/8-16-THD)	
	4	1	**209-8217**	1	FILTER ELEMENT AS-AIR (CAB)	
	5	1	**216-4998**	1	PLATE AS	
	6	1	**226-7956**	1	PLATE AS	
	7	1	**227-4159**	1	COVER AS	
		1	**5P-7213**	1	WASHER-HARD (13.5X20.5X2-MM THK)	
	8	1	**227-5334**	1	SEAL	
	9	1	**230-7645**	1	BRACKET AS	
	10	1	**231-3768**	1	PLATE AS	
	11	1	**238-0479**	1	FILTER-AIR (STANDARD) (CAB)	
					—OR—	
		1	**265-3857**	1	FILTER-AIR (HIGH EFFICIENCY) (CAB)	
	12	1	**248-2929**	1	GASKET (CAB FILTER)	
	13	1	**248-2930**	1	GASKET (CAB FILTER)	
	14	1	**248-2949**	1	BRACKET AS	
Y	15	1	*263-3279*	1	HEATER GP-CAB	804
	16	1	**4H-1641**	1	PIN-SPRING	
	17	1	**5P-4116**	8	WASHER-HARD (8.8X20.5X2-MM THK)	
	18	1	**7X-0599**	1	WASHER-HARD (13X20X2-MM THK)	
	19	1	**7X-7729**	4	WASHER (11X25X3-MM THK)	
	20	1	**8T-4121**	3	WASHER-HARD (11X21X2.5-MM THK)	
M	21	1	**8T-4136**	3	BOLT (M10X1.5X25-MM)	
M	22	1	**8T-4183**	1	BOLT (M12X1.75X40-MM)	
M	23	1	**8T-4189**	7	BOLT (M8X1.25X20-MM)	
M	24	1	**8T-4970**	4	BOLT (M6X1X14-MM)	
M	25	1	**8T-6466**	4	BOLT (M10X1.5X60-MM)	
M	26	1	**8T-7547**	1	BOLT (M8X1.25X30-MM)	
	27	1	**9M-5884**	1	BUMPER	
	28	1	**9X-8256**	4	WASHER (6.6X12X2-MM THK)	
M	29	1	**5C-9553**	4	BOLT (M6X1X16-MM)	
	30	1	**8T-4205**	4	WASHER-HARD (7.2X14.5X2-MM THK)	
	31	1	**237-1009**	1	BRACKET	
	32	1	**238-4505**	1	BRACKET	

M-METRIC PART
Y-SEPARATE ILLUSTRATION

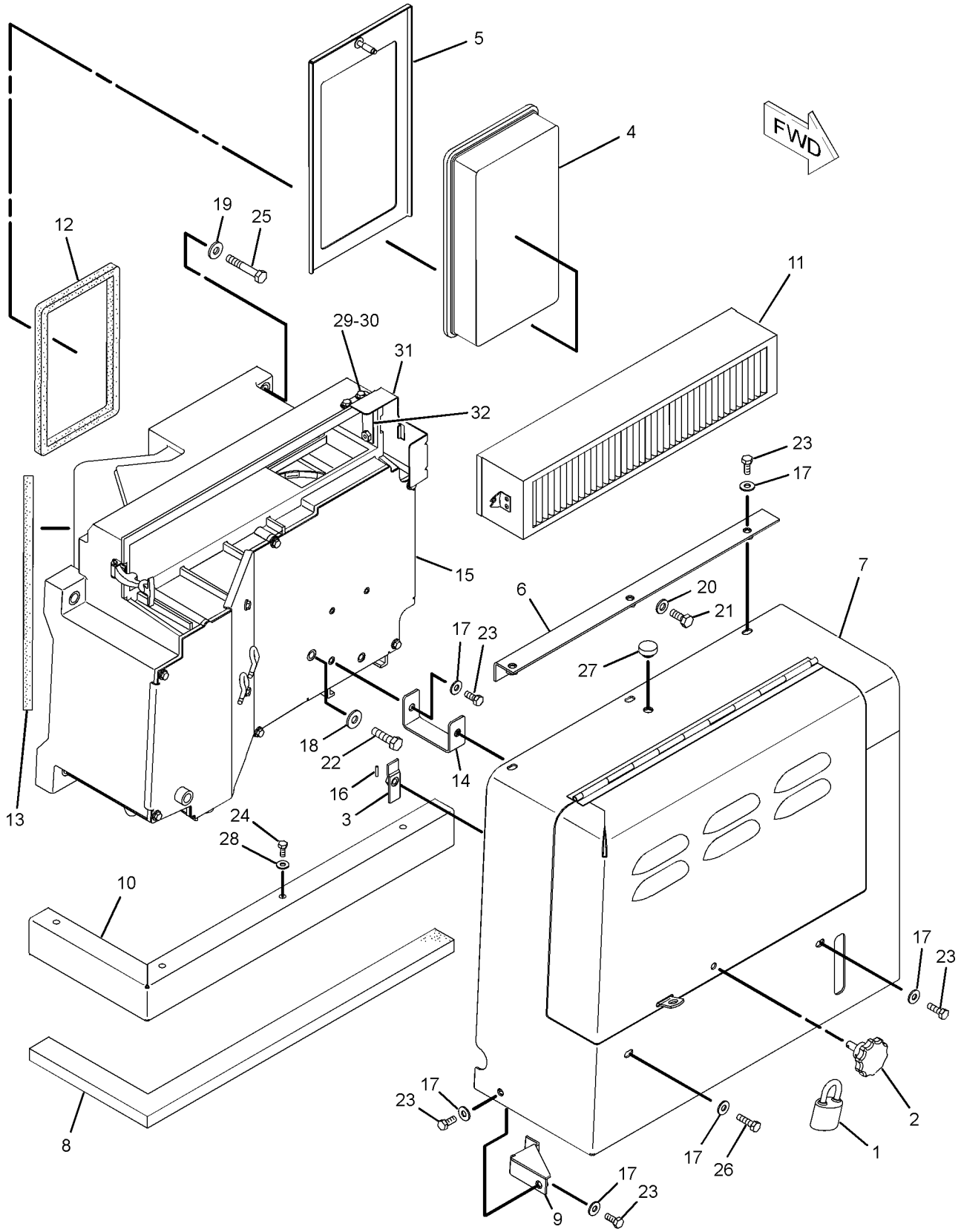

GRAPHIC #1 **<END>** g01225855

OPERATOR STATION

263-3279 HEATER GP-CAB

S/N: RJG1-UP

PART OF 231-3767 HEATER GP-CAB

SMCS-7304 **i02349363**

NOTE	REF NO	GRAPHIC REF	PART NUMBER	QTY	PART NAME 1 2 3 4 5 6 (PRODUCT LEVEL)	SEE PAGE
Y	1	1	**205-3645**	1	HEATER GP-CAB	799
	2	1	**266-3451**	1	PLATE AS	
M	3	1	**5C-9553**	2	BOLT (M6X1X16-MM)	
M	4	1	**8T-4171**	6	BOLT (M6X1X12-MM)	
	5	1	**8T-4205**	8	WASHER-HARD (7.2X14.5X2-MM THK)	

M-METRIC PART
Y-SEPARATE ILLUSTRATION

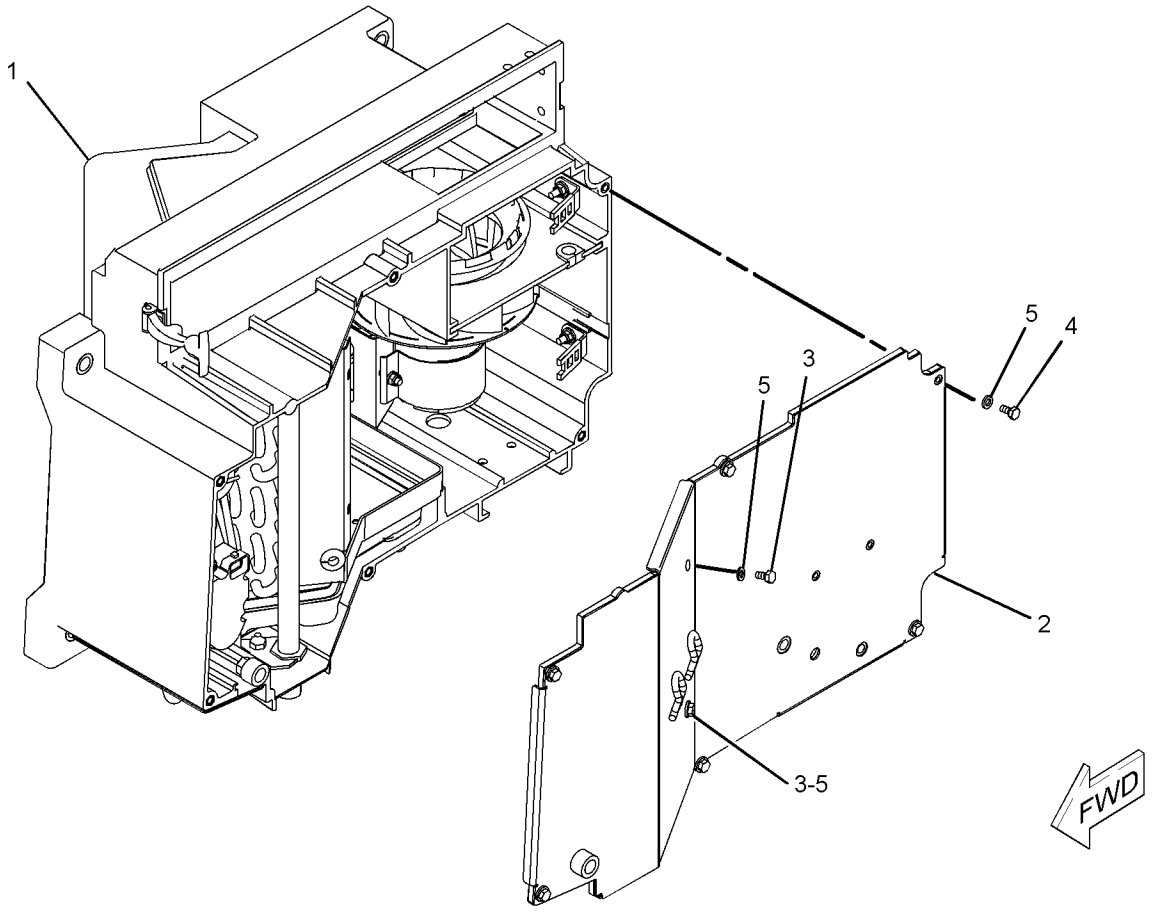

GRAPHIC #1 **<END>** g01197660

OPERATOR STATION

174-2231 HOUSING GP-SEAT SUSPENSION

S/N: RJG1-UP
PART OF 160-7165 SUSPENSION GP-SEAT
ALSO AN ATTACHMENT

SMCS-7321 **i02270624**

NOTE	REF NO	GRAPHIC REF	PART NUMBER	QTY	PART NAME 1 2 3 4 5 6 (PRODUCT LEVEL)	SEE PAGE
	1	1	**1Y-7927**	1	PIN	
	2	1	**2D-6235**	2	LOCKNUT (1/4-20 THD)	
	3	1	**2M-7819**	4	RING-RETAINING	
	4	1	**3D-2975**	2	RING-RETAINING	
	5	1	**4B-5059**	6	WASHER (15X29.5X2.5-MM THK)	
	6	1	**4N-2927**	2	RACE-THRUST BEARING	
	7	1	**5D-4822**	2	RING-RETAINING	
	8	1	**5P-8445**	4	RING-RETAINING	
	9	1	**5V-0770**	2	BOLT-CARRIAGE (1/4-20X0.74-IN)	
	10	1	**7M-7219**	1	BEARING-THRUST	
	11	1	**7V-5191**	2	SPACER (28X10X7.1-MM THK)	
	12	1	**8L-8413**	2	STRAP-CABLE	
	13	1	**8S-7803**	4	RING-RETAINING	
	14	1	**8Y-6041**	1	ARM AS	
	15	1	**8Y-6045**	1	CAM	
	16	1	**8Y-6046**	1	PIN	
	17	1	**8Y-6047**	2	PIN	
	18	1	**8Y-6060**	2	ROLLER	
	19	1	**8Y-6062**	1	LINK-ACTUATOR	
	20	1	**8Y-6063**	1	LINK-ACTUATOR	
	21	1	**8Y-6064**	2	ROLLER-SLIDER	
	22	1	**8Y-6066**	1	SPRING	
	23	1	**8Y-6067**	1	SPACER (10.54-MM THK)	
	24	1	**8Y-6068**	1	NUT (3/8X16-THD)	
	25	1	**8Y-6069**	1	ADJUSTER AS	
	26	1	**9X-8918**	3	SCREW-FLAT HEAD (8-32X0.5-IN)	
	27	1	**095-0878**	1	PIN-SPRING	
	28	1	**131-4242**	1	BOLT (3/8-16X5.18-IN)	
	29	1	**131-5167**	1	KNOB AS-ADJUSTMENT (WEIGHT)	
	30	1	**161-5967**	1	SHAFT	
	31	1	**174-2237**	1	HOUSING AS-UPPER	
JZ	32	1		1	KNOB-HEIGHT (SUSPENSION SEAT)	
JZ	33	1		1	KNOB-HEIGHT (SUSPENSION SEAT)	
LZ	34	1		2	SPRING	
LZ	35	1		2	BUSHING	
VZ	36	1		2	SPRING	
VZ	37	1		2	SPACER	
VZ	38	1		2	BUSHING-GUIDE	
VZ	39	1		2	ROD	
PZ	40	1		1	TAPE-INDICATOR	
PZ	41	1		1	GUIDE	
SZ	42	1		1	PIN	
SZ	43	1		1	FOLLOWER-CAM	
TZ	44	1		1	PIN	
TZ	45	1		1	FOLLOWER-CAM	
UZ	46	1		2	ROLLER AS	
UZ	47	1		1	ROLLER AS	
QZ	48	1		3	BUMPER	
					AVAILABLE REPAIR KIT(S):	
J			**8Y-5945**	1	KIT-SUSPENSION KNOB (HEIGHT ADJUSTMENT) (SUSPENSION SEAT)	
L			**8Y-6859**	1	KIT-SPRING (SUSPENSION SEAT)	
V			**8Y-6860**	1	KIT-SPRING (HEIGHT ADJUSTMENT) (SUSPENSION SEAT)	

174-2231 **HOUSING GP-SEAT SUSPENSION** *(contd.)* **i02270624**

NOTE	REF NO	GRAPHIC REF	PART NUMBER	QTY	PART NAME 1 2 3 4 5 6 (PRODUCT LEVEL)	SEE PAGE
P			**100-3224**	1	KIT-INDICATOR (WEIGHT ADJUSTMENT) (SUSPENSION SEAT)	
Q			**100-5179**	1	KIT-BUMPER (WEIGHT ADJUSTMENT) (SUSPENSION SEAT)	
S			**108-4086**	1	KIT-FOLLOWER (SUSPENSION SEAT)	
T			**108-4087**	1	KIT-FOLLOWER (SUSPENSION SEAT)	
U			**108-4103**	1	KIT-BEARING (SUSPENSION SEAT)	

J-KIT MARKED J INCLUDES PARTS MARKED J
L-KIT MARKED L INCLUDES PARTS MARKED L AND RETAINING RING
P-KIT MARKED P INCLUDES PARTS MARKED P AND CABLE STRAP
Q-KIT MARKED Q INCLUDES PARTS MARKED Q
S-KIT MARKED S INCLUDES PARTS MARKED S
T-KIT MARKED T INCLUDES PARTS MARKED T
U-KIT MARKED U INCLUDES PARTS MARKED U
V-KIT MARKED V INCLUDES PARTS MARKED V
Z-NOT SERVICED SEPARATELY

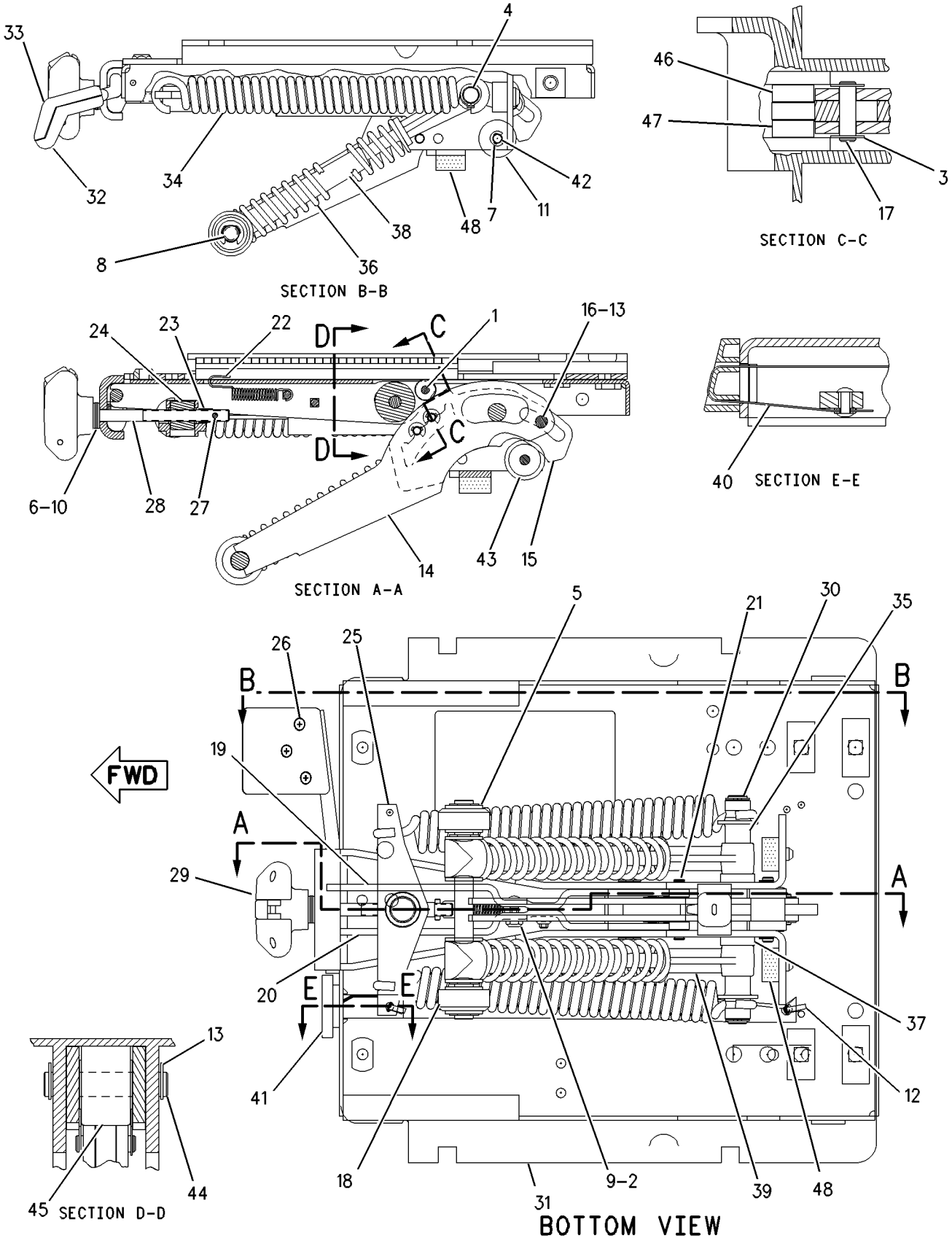

GRAPHIC #1 **<END>** g00608620

OPERATOR STATION

214-1760 INSTALLATION GP-RADIO

S/N: RJG1-UP

PART OF 213-1100 CAB AR

SMCS-7338 **i02194022**

NOTE	REF NO	GRAPHIC REF	PART NUMBER	QTY	PART NAME 1 2 3 4 5 6 (PRODUCT LEVEL)	SEE PAGE
	1	1	**3E-4356**	4	WASHER-HARD (17.5X30X6-MM THK)	
	2	1	**4N-9915**	4	GROMMET AS	
	3	1	**6V-7646**	4	WASHER-HARD (7.2X25X2-MM THK)	
	4	1	**6Y-7385**	1	BRACKET	
	5	1	**8E-1118**	1	ANTENNA AS	
	6	1	**8K-1433**	1	GROMMET	
	7	1	**9U-8263**	1	COVER	
	8	1	**9U-8746**	1	CABLE AS-COAXIAL	
	9	1	**168-8772**	2	SPEAKER AS-RADIO	
	10	1	**108-3138**	1	BRACKET AS	
	11	1	**217-8433**	1	FILM-NOTICE (RADIO)	
M	12	1	**5C-2890**	4	NUT (M6X1-THD)	
M	13	1	**8T-4171**	1	BOLT (M6X1X12-MM)	
M	14	1	**9X-1046**	8	SCREW (M4X0.7X18-MM)	
	15	1	**9X-8256**	1	WASHER (6.6X12X2-MM THK)	

M-METRIC PART

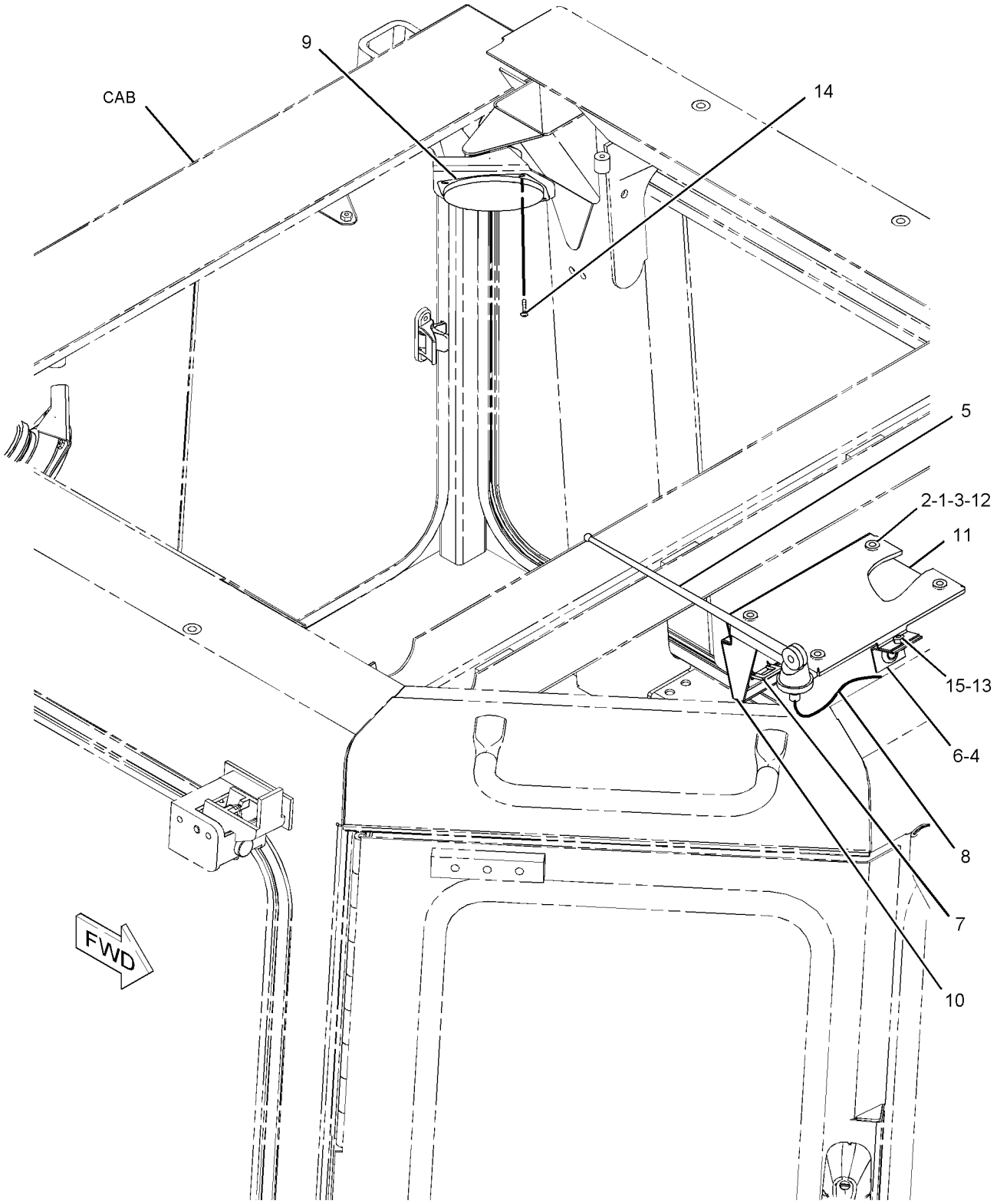

GRAPHIC #1 **<END>** g01110176

OPERATOR STATION

212-8725 LINER GP-CAB

S/N: RJG1-UP

PART OF 213-1100 CAB AR

SMCS-7329 **i02228542**

NOTE	REF NO	GRAPHIC REF	PART NUMBER	QTY	PART NAME 1 2 3 4 5 6 (PRODUCT LEVEL)	SEE PAGE
M	1	1	**3E-6924**	2	SCREW-TRUSS HEAD (M6X1X50-MM)	
	2	1	**8Y-6388**	6	LOUVER AS	
	3	1	**141-5169**	2	WASHER (7.5X40X3-MM THK)	
	4	1	**171-4047**	5	LOUVER AS	
	5	1	**209-5161**	1	CONSOLE-REAR	
	6	1	**209-5162**	1	LINER AS	
	7	1	**209-5193**	1	DUCT-RH	
	8	1	**209-5194**	1	CONSOLE-LH	
	9	1	**212-8948**	1	LINER AS (REAR)	
	10	1	**212-9973**	1	DUCT (LH)	
	11	1	**212-9974**	1	DUCT (LH)	
	12	1	**212-9975**	1	DUCT (UPPER)	
	13	1	**212-9976**	1	DUCT (LH)	
	14	1	**214-1751**	1	BARRIER	
	15	1	**214-3316**	1	LINER AS	
	16	1	**214-7737**	1	DUCT-RH	
	17	1	**216-2813**	1	DUCT-UPPER	
	18	1	**220-3987**	1	COVER	
	19	1	**220-3988**	1	COVER (WIPER MOTOR, LH DOOR)	
	20	1	**220-3989**	1	COVER (WIPER MOTOR, RH DOOR)	
	21	1	**227-4158**	1	PLATE	
	22	1	**238-1265**	1	DUCT (UPPER)	
	23	1	**256-5701**	1	COVER AS (RH)	
		1	**209-5204**	1	COVER (RH)	
	24	1	**101-2867**	12	WASHER-HARD (7.2X25X2-MM THK)	
	25	1	**104-2091**	22	SCREW-FLAT HEAD (6-20X0.5-IN)	
M	26	1	**3E-8020**	22	SCREW-TRUSS HEAD (M6X1X25-MM)	
M	27	1	**9X-2046**	6	SCREW-TRUSS HEAD (M6X1X35-MM)	
BD	28	1	**5P-5969**		SEAL	
BD	29	1	**6V-5163**		SEAL	

B-USE AS REQUIRED
D-ORDER BY THE METER
M-METRIC PART

212-8725 **LINER GP-CAB** *(contd.)* **i02228542**

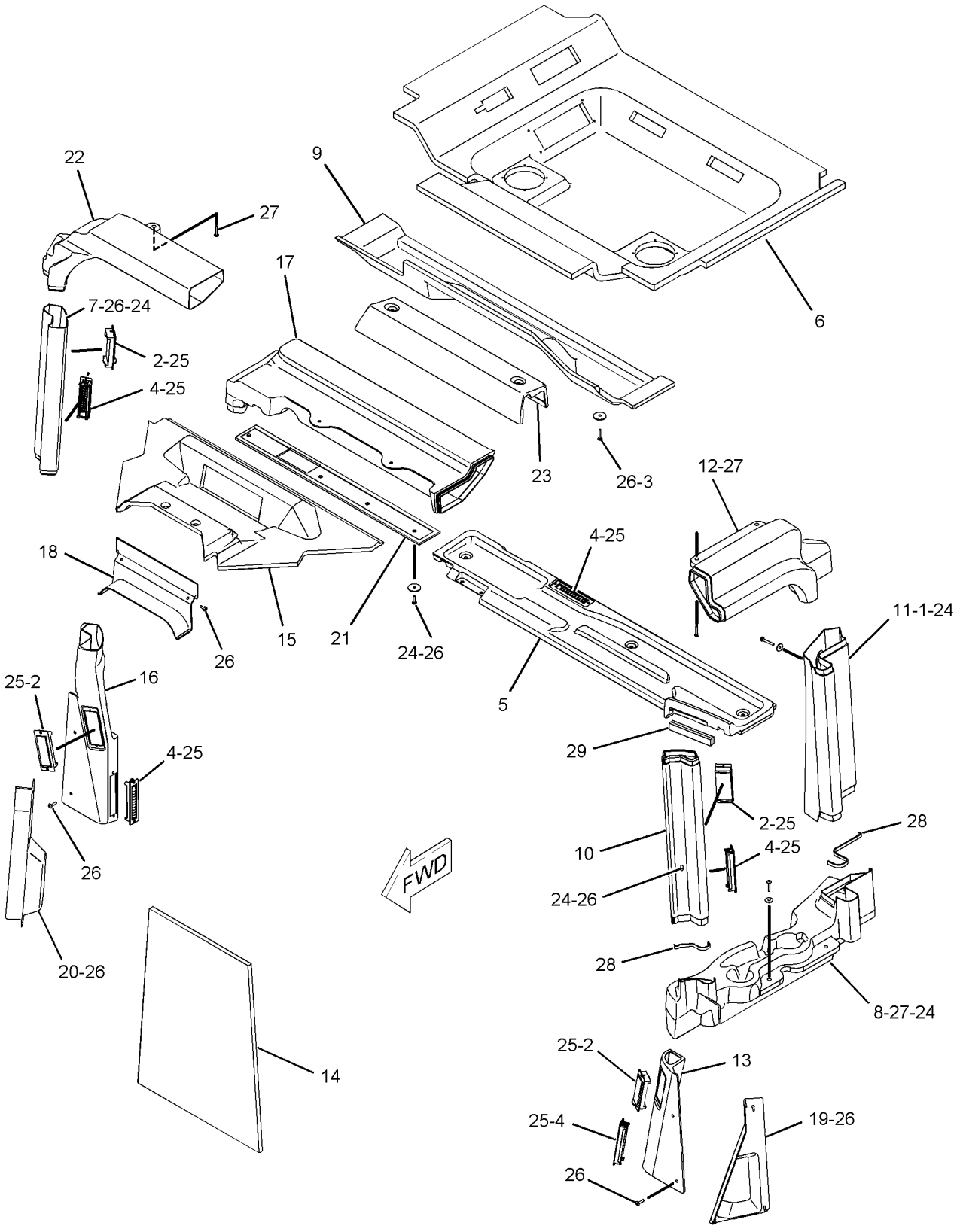

GRAPHIC #1 **<END>** g01126513

OPERATOR STATION

213-0049 LINES GP-AIR CONDITIONER–
FENDER MOUNTED CONDENSER
S/N: RJG1-UP
PART OF 213-1112 AIR CONDITIONER AR
AN ATTACHMENT

SMCS-1808 **i02285774**

NOTE	REF NO	GRAPHIC REF	PART NUMBER	QTY	PART NAME 1 2 3 4 5 6 (PRODUCT LEVEL)	SEE PAGE
	1	1	**1P-6356**	1	PLATE	
	2	1	**175-7162**	1	RECEIVER-DRYER GP (AIR CONDITIONER)	
		1	**7X-2049**	1	TUBE AS-REFRIGERANT ORIFICE	
	3	1	**6T-3643**	1	CIRCUIT BREAKER AS (15-AMPERE)	
		1	**6V-8376**	2	SCREW-MACHINE (8-32X0.25-IN)	
		1	**9B-7233**	2	LOCKWASHER	
	4	1	**9X-6772**	1	STRAP-CABLE	
	5	1	**068-4209**	2	SCREW (8-32X0.75-IN)	
	6	1	**103-6100**	2	FITTING AS-AIR CONDITIONER (QUICK DISCONNECT)	
					(EACH INCLUDES)	
		1	**9X-7382**	2	SEAL-O-RING	
	7	1	**114-5333**	1	SWITCH AS-PRESSURE (COMPRESSOR, HIGH SIDE)	
		1	**3E-3365**	1	WEDGE-RECEPTACLE LOCK (2-PIN)	
E		1	**9X-1386**		SLEEVE (25-CM)	
		1	**186-3735**	2	PIN-CONNECTOR (16-GA TO 18-GA)	
		1	**102-8802**	1	KIT-RECEPTACLE (2-PIN)	
					(INCLUDES RECEPTACLE AS & WEDGE)	
	8	1	**116-6202**	2	BOOT	
	9	1	**149-6371**	1	SWITCH AS-PRESSURE (COMPRESSOR, LOW SIDE)	
		1	**3E-3365**	1	WEDGE-RECEPTACLE LOCK (2-PIN)	
		1	**186-3735**	2	PIN-CONNECTOR (16-GA TO 18-GA)	
		1	**102-8802**	1	KIT-RECEPTACLE (2-PIN)	
					(INCLUDES RECEPTACLE AS & WEDGE)	
	10	1	**153-3946**	1	BRACKET	
	11	1	**169-7443**	1	TIMER AS-ON DELAY (24-VOLT) (REFRIGERANT COMPRESSOR)	
		1	**186-3735**	4	PIN-CONNECTOR (16-GA TO 18-GA)	
		1	**102-8804**	1	KIT-RECEPTACLE (4-PIN)	
					(INCLUDES RECEPTACLE AS & WEDGE)	
	12	1	**170-0235**	1	ACCUMULATOR-REFRIGERANT (AIR CONDITIONER)	
	13	1	**170-5293**	1	HARNESS AS-HEATER & AIR COND (COMPRESSOR)	
		1	**102-8805**	1	KIT-RECEPTACLE (6-PIN)	
					(INCLUDES RECEPTACLE AS & WEDGE)	
		1	**155-2270**	3	KIT-CONNECTING PLUG (2-PIN)	
					(EACH INCLUDES PLUG AS & WEDGE)	
	14	1	**171-5855**	1	BRACKET AS	
		1	**1F-0750**	1	NUT-WELD (3/8-16-THD)	
	15	1	**203-2789**	1	BRACKET AS	
I	16	1	**222-2190**	1	HOSE AS	
I	17	1	**222-2191**	1	HOSE AS	
I	18	1	**222-2193**	1	HOSE AS	
I	19	1	**222-2194**	1	HOSE AS	
I	20	1	**222-2195**	1	HOSE AS	
	21	1	**109-1633**	1	CLIP (SLOT)	
	22	1	**109-1634**	1	CLIP (TAB)	
	23	1	**153-6781**	2	U-BOLT	
	24	1	**172-0986**	1	FITTING AS-AIR CONDITIONER	
		1	**3E-4051**	1	CAP-SEAL (AIR CONDITIONER)	
		1	**3E-4057**	1	VALVE AS	
		1	**172-4880**	1	CAP-SEAL (AIR CONDITIONER)	
		1	**180-7180**	1	CORE-VALVE	
	25	1	**2K-4973**	4	LOCKNUT (3/8-16-THD)	
	26	1	**3E-4067**	1	FITTING AS-COMPRESSOR	
		1	**3E-4052**	1	CAP-SEAL (AIR CONDITIONER)	

213-0049 **LINES GP-AIR CONDITIONER** *(contd.)* **i02285774**

NOTE	REF NO	GRAPHIC REF	PART NUMBER	QTY	PART NAME 1 2 3 4 5 6 (PRODUCT LEVEL)	SEE PAGE
		1	**3E-4058**	1	VALVE AS	
	27	1	**4D-7733**	5	CLIP	
	28	1	**4K-8302**	1	CLIP	
	29	1	**4P-7581**	1	CLIP	
	30	1	**5M-3062**	4	BOLT (3/8-16X0.75-IN)	
	31	1	**5P-1075**	5	WASHER-HARD (10.2X22.5X3-MM THK)	
	32	1	**5S-7382**	2	BOLT (3/8-16X1.375-IN)	
	33	1	**6D-4247**	5	CLIP	
M	34	1	**6V-1820**	1	BOLT (M10X1.5X30-MM)	
	35	1	**6V-8801**	2	NUT (3/8-16-THD)	
	36	1	**7C-4354**	2	CLIP	
	37	1	**8T-4121**	9	WASHER-HARD (11X21X2.5-MM THK)	
M	38	1	**8T-4133**	1	NUT (M10X1.5 THD)	
M	39	1	**8T-4137**	5	BOLT (M10X1.5X20-MM)	
M	40	1	**8T-4195**	2	BOLT (M10X1.5X30-MM)	
	41	1	**8T-4223**	1	WASHER-HARD (13.5X25.5X3-MM THK)	
	42	1	**8T-4896**	8	WASHER-HARD (10.2X18.5X2.5-MM THK)	
M	43	1	**8T-4956**	1	BOLT (M12X1.75X35-MM)	
M	44	1	**8T-6466**	1	BOLT (M10X1.5X60-MM)	
	45	1	**9M-8406**	3	CLIP	
	46	1	**9X-7378**	2	SEAL-O-RING	
	47	1	**9X-7380**	3	SEAL-O-RING	
	48	1	**9X-7381**	3	SEAL-O-RING	
	49	1	**9X-7382**	2	SEAL-O-RING	
	50	1	**9X-7383**	2	SEAL-O-RING	
	51	1	**9X-7385**	2	SEAL-O-RING	
M	52	1	**9X-8281**	1	STUD-TAPERLOCK (M10X1.5X45-MM)	

E-ORDER BY THE CENTIMETER
I-REFER TO HYDRAULIC INFORMATION SYSTEM
M-METRIC PART

213-0049 **LINES GP-AIR CONDITIONER** *(contd.)* **i02285774**

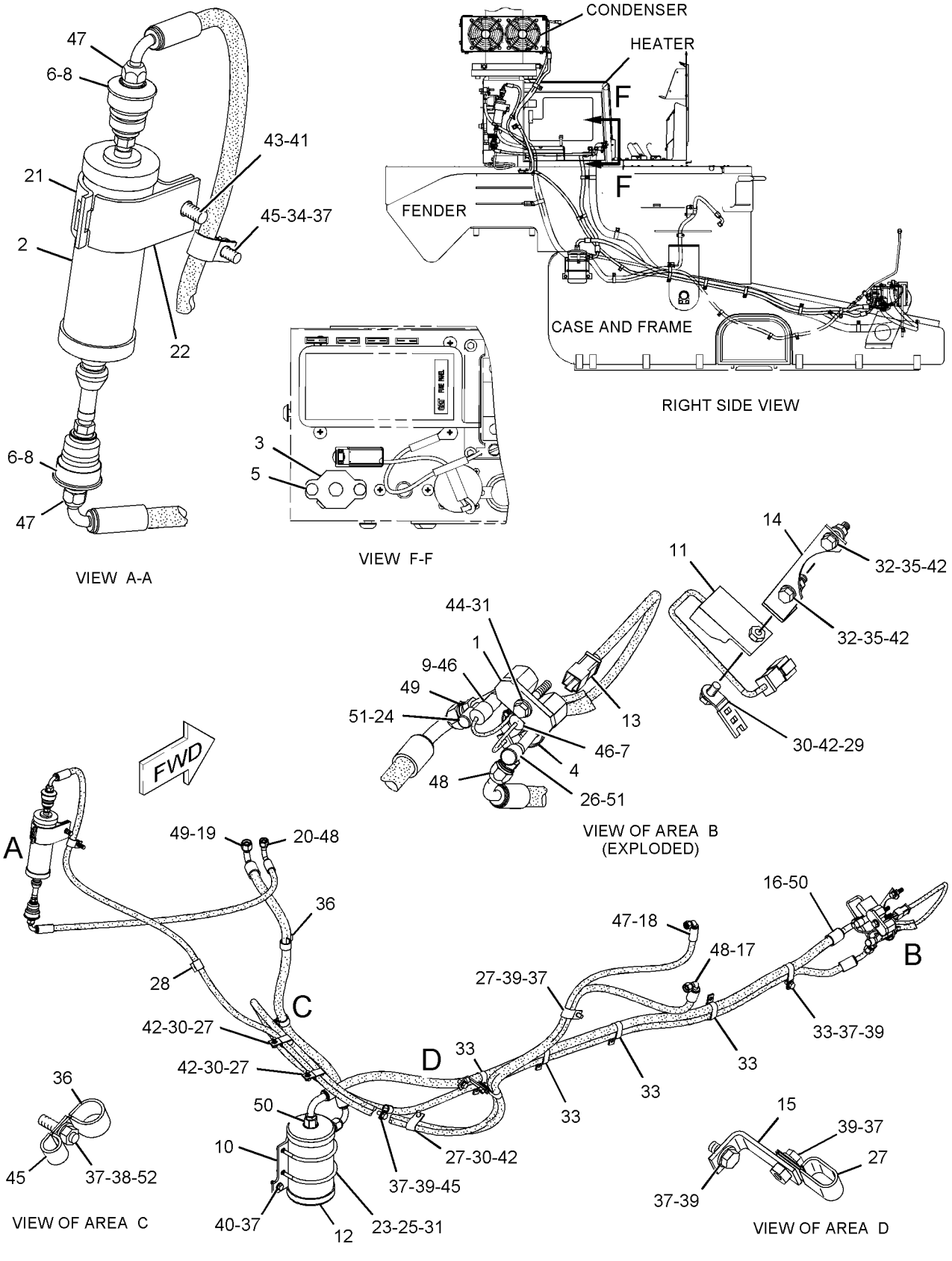

GRAPHIC #1 **<END>** g01139930

OPERATOR STATION

240-4734 LINES GP-AIR CONDITIONER

S/N: RJG1-UP

PART OF 213-1113 AIR CONDITIONER AR

AN ATTACHMENT

SMCS-1808 **i02285761**

NOTE	REF NO	GRAPHIC REF	PART NUMBER	QTY	PART NAME 1 2 3 4 5 6 (PRODUCT LEVEL)	SEE PAGE
	1	1	**1P-6356**	1	PLATE	
	2	1	**175-7162**	1	RECEIVER-DRYER GP (AIR CONDITIONER)	
	3	1	**9X-6772**	1	STRAP-CABLE	
	4	1	**103-6100**	2	FITTING AS-AIR CONDITIONER (QUICK DISCONNECT)	
					(EACH INCLUDES)	
		1	**9X-7382**	2	SEAL-O-RING	
	5	1	**114-5333**	1	SWITCH AS-PRESSURE (COMPRESSOR, HIGH SIDE)	
		1	**102-8802**	1	KIT-RECEPTACLE (2-PIN)	
					(INCLUDES RECEPTACLE AS & WEDGE)	
		1	**3E-3365**	1	WEDGE-RECEPTACLE LOCK (2-PIN)	
		1	**186-3735**	2	PIN-CONNECTOR (16-GA TO 18-GA)	
BE		1	**9X-1386**		SLEEVE	
	6	1	**116-6202**	2	BOOT	
	7	1	**149-6371**	1	SWITCH AS-PRESSURE (COMPRESSOR, LOW SIDE)	
		1	**102-8802**	1	KIT-RECEPTACLE (2-PIN)	
					(INCLUDES RECEPTACLE AS & WEDGE)	
		1	**3E-3365**	1	WEDGE-RECEPTACLE LOCK (2-PIN)	
		1	**186-3735**	2	PIN-CONNECTOR (16-GA TO 18-GA)	
	8	1	**153-3946**	1	BRACKET	
	9	1	**169-7443**	1	TIMER AS-ON DELAY (24-VOLT) (COMPRESSOR CYCLE LIMITER)	
		1	**186-3735**	4	PIN-CONNECTOR (16-GA TO 18-GA)	
		1	**102-8804**	1	KIT-RECEPTACLE (4-PIN)	
					(INCLUDES RECEPTACLE AS & WEDGE)	
	10	1	**170-0235**	1	ACCUMULATOR-REFRIGERANT (AIR CONDITIONER)	
	11	1	**170-5293**	1	HARNESS AS-HEATER & AIR COND (COMPRESSOR)	
		1	**102-8805**	1	KIT-RECEPTACLE (6-PIN)	
					(INCLUDES RECEPTACLE AS & WEDGE)	
		1	**155-2270**	3	KIT-CONNECTING PLUG (2-PIN)	
					(EACH INCLUDES PLUG AS & WEDGE)	
		1	**155-2272**	1	PLUG AS-CONNECTOR (4-PIN)	
	12	1	**171-5855**	1	BRACKET AS	
		1	**1F-0750**	1	NUT-WELD (3/8-16-THD)	
I	13	1	**222-2190**	1	HOSE AS	
I	14	1	**222-2194**	1	HOSE AS	
I	15	1	**222-2195**	1	HOSE AS	
	16	1	**226-3492**	2	BRACKET AS	
I	17	1	**240-4813**	1	HOSE AS	
I	18	1	**240-4814**	1	HOSE AS	
	19	1	**109-1633**	1	CLIP (SLOT)	
	20	1	**109-1634**	1	CLIP (TAB)	
	21	1	**153-6781**	2	U-BOLT	
	22	1	**172-0986**	1	FITTING AS-AIR CONDITIONER	
		1	**3E-4051**	1	CAP-SEAL (AIR CONDITIONER)	
		1	**3E-4057**	1	VALVE AS	
		1	**172-4880**	1	CAP-SEAL (AIR CONDITIONER)	
		1	**180-7180**	1	CORE-VALVE	
		1	**180-7181**	1	BODY-VALVE	
	23	1	**2K-4973**	4	LOCKNUT (3/8-16-THD)	
	24	1	**3E-4067**	1	FITTING AS-COMPRESSOR	
		1	**3E-4052**	1	CAP-SEAL (AIR CONDITIONER)	
		1	**3E-4058**	1	VALVE AS	
	25	1	**4K-8302**	1	CLIP	
	26	1	**4P-7581**	1	CLIP	
	27	1	**4S-1936**	2	CLIP	

240-4734 LINES GP-AIR CONDITIONER *(contd.)* i02285761

NOTE	REF NO	GRAPHIC REF	PART NUMBER	QTY	PART NAME 1 2 3 4 5 6 (PRODUCT LEVEL)	SEE PAGE
	28	1	**5M-3062**	1	BOLT (3/8-16X0.75-IN)	
	29	1	**5P-1075**	5	WASHER-HARD (10.2X22.5X3-MM THK)	
	30	1	**5P-4295**	2	CLIP	
	31	1	**5S-7382**	2	BOLT (3/8-16X1.375-IN)	
	32	1	**6D-4247**	5	CLIP	
	33	1	**6V-8801**	2	NUT (3/8-16-THD)	
	34	1	**7C-4354**	2	CLIP	
	35	1	**8T-4121**	8	WASHER-HARD (11X21X2.5-MM THK)	
M	36	1	**8T-4133**	1	NUT (M10X1.5 THD)	
M	37	1	**8T-4137**	5	BOLT (M10X1.5X20-MM)	
M	38	1	**8T-4186**	1	BOLT (M10X1.5X40-MM)	
M	39	1	**8T-4195**	2	BOLT (M10X1.5X30-MM)	
	40	1	**8T-4223**	1	WASHER-HARD (13.5X25.5X3-MM THK)	
	41	1	**8T-4896**	5	WASHER-HARD (10.2X18.5X2.5-MM THK)	
M	42	1	**8T-4956**	1	BOLT (M12X1.75X35-MM)	
M	43	1	**8T-6466**	1	BOLT (M10X1.5X60-MM)	
	44	1	**9M-8406**	3	CLIP	
	45	1	**9X-7378**	2	SEAL-O-RING	
	46	1	**9X-7380**	3	SEAL-O-RING	
	47	1	**9X-7381**	3	SEAL-O-RING	
	48	1	**9X-7382**	2	SEAL-O-RING	
	49	1	**9X-7383**	2	SEAL-O-RING	
	50	1	**9X-7385**	2	SEAL-O-RING	
M	51	1	**9X-8281**	1	STUD-TAPERLOCK (M10X1.5X45-MM)	

B-USE AS REQUIRED
E-ORDER BY THE CENTIMETER
I-REFER TO HYDRAULIC INFORMATION SYSTEM
M-METRIC PART

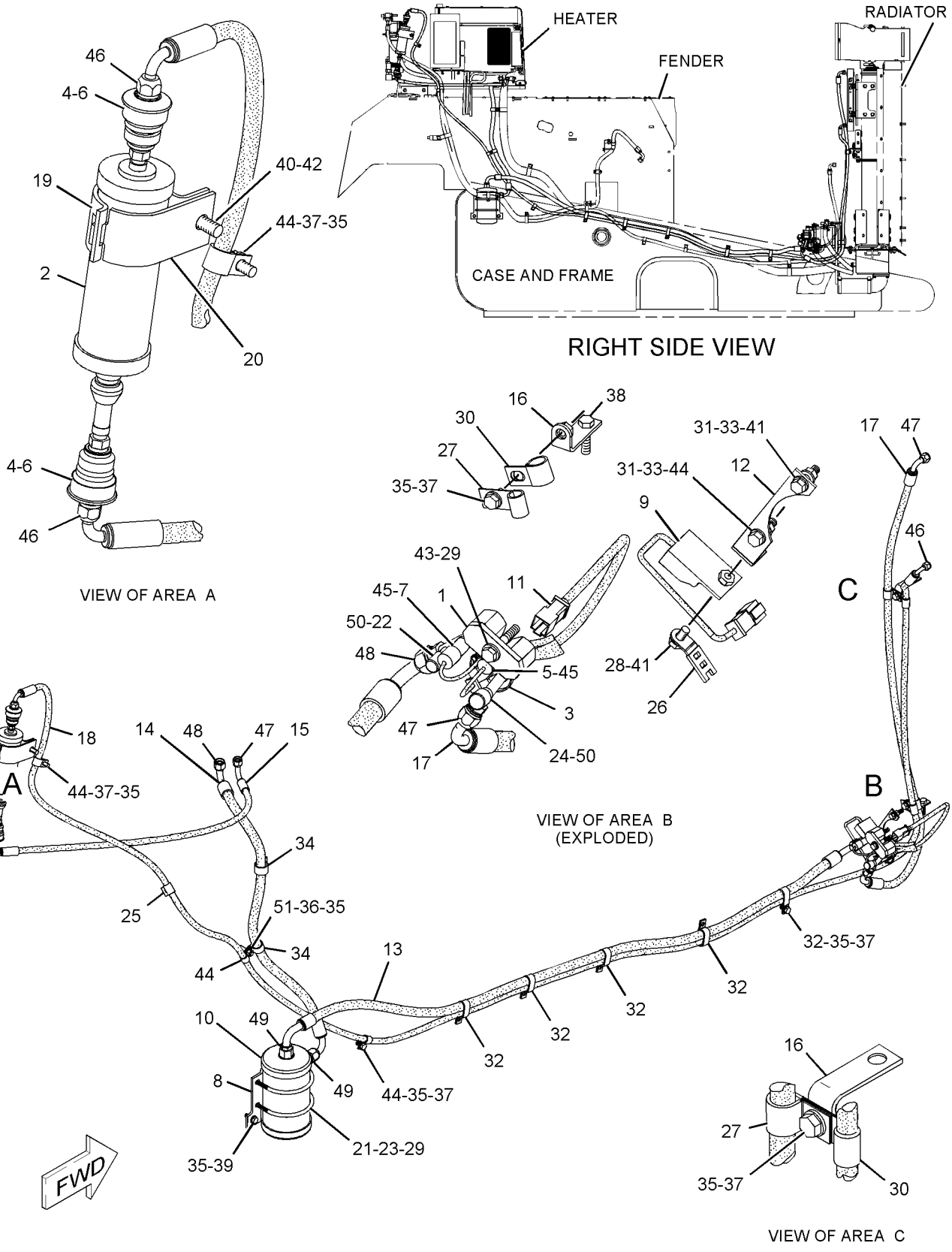

GRAPHIC #1 **<END>** g01138651

OPERATOR STATION

256-7212 LINES GP-AIR CONDITIONER–

ROPS MOUNTED CONDENSER

S/N: RJG1-UP

PART OF 256-6916 AIR CONDITIONER AR

AN ATTACHMENT

SMCS-1808 **i02285713**

NOTE	REF NO	GRAPHIC REF	PART NUMBER	QTY	PART NAME 1 2 3 4 5 6 (PRODUCT LEVEL)	SEE PAGE
	1	2	**1P-6356**	1	PLATE	
	2	2	**3E-3535**	1	RECEIVER-DRYER (REFRIGERANT)	
		2	**7X-2049**	1	TUBE AS-REFRIGERANT ORIFICE	
	3	1	**5P-3948**	1	COUPLING AS-REFRIGERANT	
		1	**7F-8607**	1	SEAL-O-RING	
		1	**107-4399**	1	VALVE AS	
	4	2	**6T-3643**	1	CIRCUIT BREAKER AS (15-AMPERE)	
		2	**6V-8376**	2	SCREW-MACHINE (8-32X0.25-IN)	
		2	**9B-7233**	2	LOCKWASHER	
	5	1	**7K-3176**	1	COUPLING AS-REFRIGERANT	
		1	**107-4393**	1	VALVE AS	
		1	**107-4394**	1	GASKET	
	6	1	**9X-0358**	1	FITTING AS	
	7	2	**9X-6772**	1	STRAP-CABLE	
	8	2	**068-4209**	2	SCREW (8-32X0.75-IN)	
	9	1,2	**103-6100**	3	FITTING AS-AIR CONDITIONER (QUICK DISCONNECT)	
		1,2	**9X-7382**	2	SEAL-O-RING	
	10	1	**109-3875**	2	HARNESS AS-HEATER & AIR COND	
					(EACH INCLUDES)	
		1	**102-8803**	1	KIT-RECEPTACLE (3-PIN)	
					(INCLUDES RECEPTACLE AS & WEDGE)	
		1	**155-2260**	1	KIT-CONNECTING PLUG (3-PIN)	
					(INCLUDES PLUG AS & WEDGE)	
	11	2	**114-5333**	1	SWITCH AS-PRESSURE	
	12	2	**116-6202**	2	BOOT	
	13	2	**149-6371**	1	SWITCH AS-PRESSURE (A/C COMPRESSOR)	
	14	2	**153-3946**	1	BRACKET	
	15	2	**169-7443**	1	TIMER AS-ON DELAY (24-VOLT) (A/C COMPRESSOR)	
	16	2	**170-0235**	1	ACCUMULATOR-REFRIGERANT	
	17	2	**170-5293**	1	HARNESS AS-HEATER & AIR COND (COMPRESSOR)	
		2	**102-8805**	1	KIT-RECEPTACLE (6-PIN)	
					(INCLUDES RECEPTACLE AS & WEDGE)	
		2	**155-2272**	1	PLUG AS-CONNECTOR (4-PIN)	
					(INCLUDES PLUG AS & WEDGE)	
		2	**155-2270**	3	KIT-CONNECTING PLUG (2-PIN)	
					(EACH INCLUDES PLUG AS & WEDGE)	
	18	2	**171-5855**	1	BRACKET AS	
		2	**1F-0750**	1	NUT-WELD (3/8-16-THD)	
	19	1	**174-4445**	1	HARNESS AS-HEATER & AIR COND (CONDENSER)	
		1	**155-2260**	2	KIT-CONNECTING PLUG (3-PIN)	
					(EACH INCLUDES PLUG AS & WEDGE)	
I	20	1	**219-5179**	1	HOSE AS	
I	21	1	**222-2190**	1	HOSE AS	
I	22	1	**222-2194**	1	HOSE AS	
I	23	1	**222-2195**	1	HOSE AS	
I	24	1	**259-6357**	1	HOSE AS	
I	25	1	**259-6358**	1	HOSE AS	
I	26	1	**259-6359**	1	HOSE AS	
	27	2	**109-1633**	1	CLIP (SLOT)	
	28	2	**109-1634**	1	CLIP (TAB)	
	29	2	**153-6781**	2	U-BOLT	
	30	2	**172-0986**	1	FITTING AS-AIR CONDITIONER	
		2	**3E-4051**	1	CAP-SEAL (AIR CONDITIONER)	
		2	**3E-4057**	1	VALVE AS	

256-7212 **LINES GP-AIR CONDITIONER** *(contd.)* **i02285713**

NOTE	REF NO	GRAPHIC REF	PART NUMBER	QTY	PART NAME 1 2 3 4 5 6 (PRODUCT LEVEL)	SEE PAGE
		2	**172-4880**	1	CAP-SEAL (AIR CONDITIONER)	
		2	**180-7180**	1	CORE-VALVE	
		2	**180-7181**	1	BODY-VALVE	
	31	1	**1S-0496**	1	CLIP	
	32	2	**2K-4973**	4	LOCKNUT (3/8-16-THD)	
	33	2	**3E-4067**	1	FITTING AS-COMPRESSOR	
		2	**3E-4052**	1	CAP-SEAL (AIR CONDITIONER)	
		2	**3E-4058**	1	VALVE AS	
	34	1	**4K-8302**	4	CLIP	
	35	1	**4P-7428**	7	CLIP	
	36	1,2	**4P-7581**	1	CLIP	
	37	2	**5M-3062**	4	BOLT (3/8-16X0.75-IN)	
	38	1,2	**5P-1075**	5	WASHER-HARD (10.2X22.5X3-MM THK)	
	39	1,2	**5P-4295**	6	CLIP	
	40	2	**5S-7382**	2	BOLT (3/8-16X1.375-IN)	
	41	1	**6D-4247**	5	CLIP	
	42	2	**6V-8801**	2	NUT (3/8-16-THD)	
	43	1,2	**7C-4354**	2	CLIP	
	44	1	**7K-1181**	9	STRAP-CABLE	
	45	1,2	**8T-4121**	5	WASHER-HARD (11X21X2.5-MM THK)	
M	46	2	**8T-4133**	1	NUT (M10X1.5 THD)	
M	47	1	**8T-4137**	2	BOLT (M10X1.5X20-MM)	
M	48	2	**8T-4195**	2	BOLT (M10X1.5X30-MM)	
	49	1,2	**8T-4223**	5	WASHER-HARD (13.5X25.5X3-MM THK)	
	50	2	**8T-4896**	8	WASHER-HARD (10.2X18.5X2.5-MM THK)	
M	51	1,2	**8T-4956**	1	BOLT (M12X1.75X35-MM)	
M	52	2	**8T-6466**	1	BOLT (M10X1.5X60-MM)	
	53	1	**8T-8917**	4	BOLT (1/2-13X1.25-IN)	
	54	2	**9X-7378**	2	SEAL-O-RING	
	55	1,2	**9X-7380**	3	SEAL-O-RING	
	56	1,2	**9X-7381**	3	SEAL-O-RING	
	57	1,2	**9X-7382**	2	SEAL-O-RING	
	58	1	**9X-7383**	4	SEAL-O-RING	
	59	2	**9X-7385**	2	SEAL-O-RING	
M	60	2	**9X-8281**	1	STUD-TAPERLOCK (M10X1.5X45-MM)	

I-REFER TO HYDRAULIC INFORMATION SYSTEM
M-METRIC PART

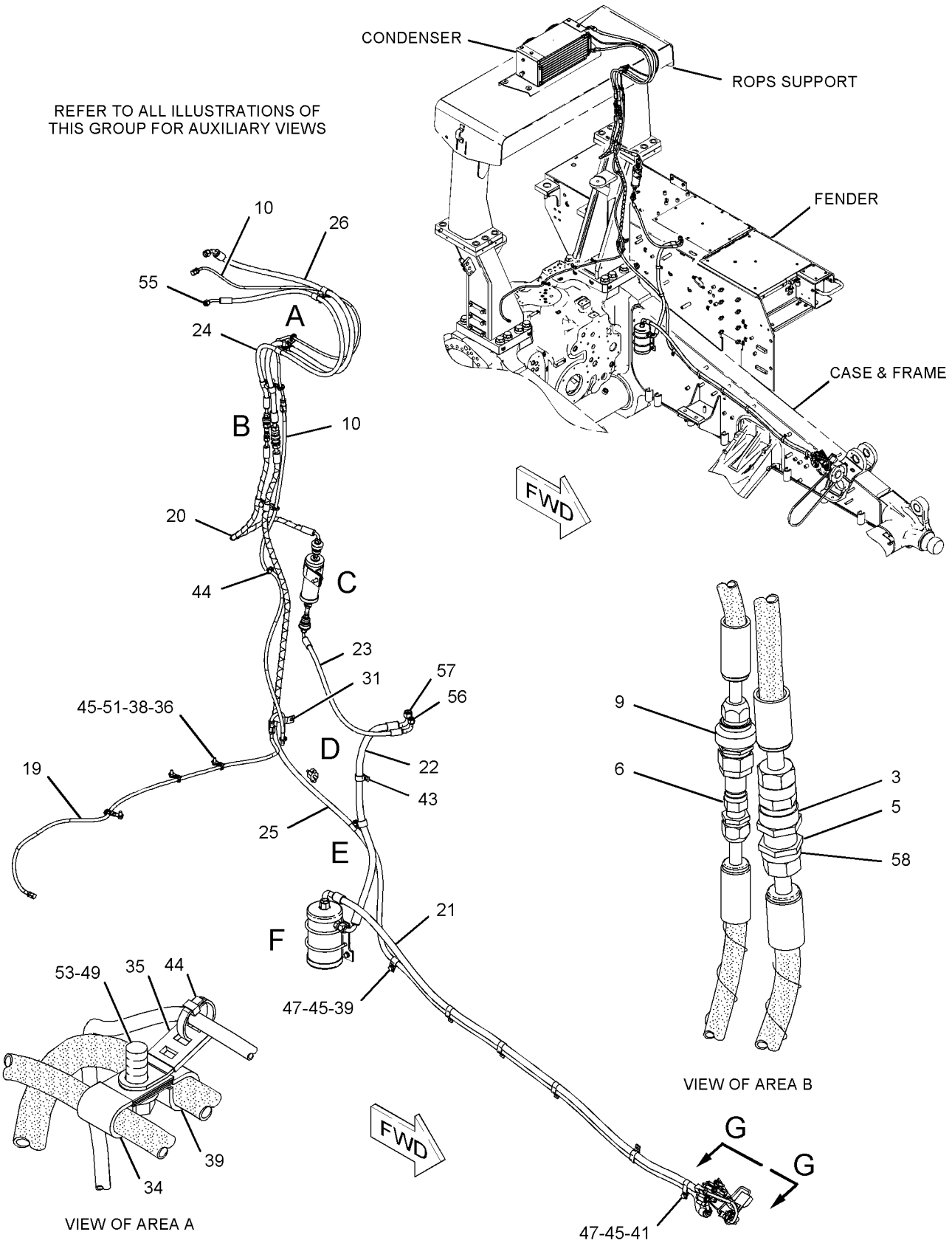

GRAPHIC #1

g01141174

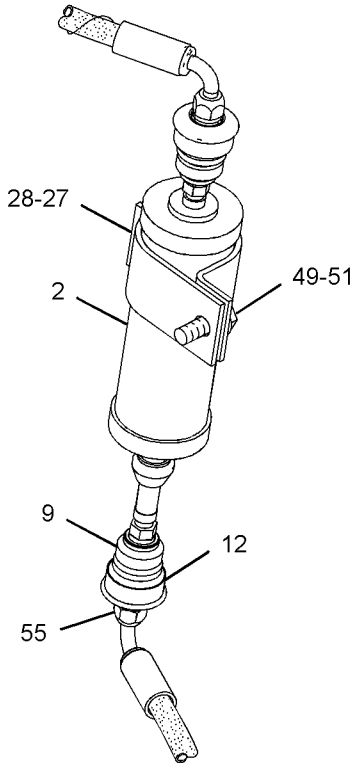

VIEW OF AREA C

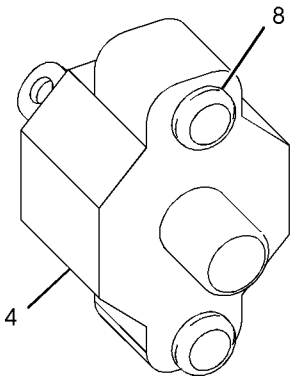

VIEW OF AREA D

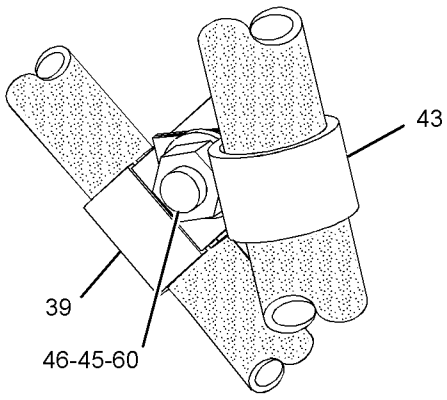

VIEW OF AREA E

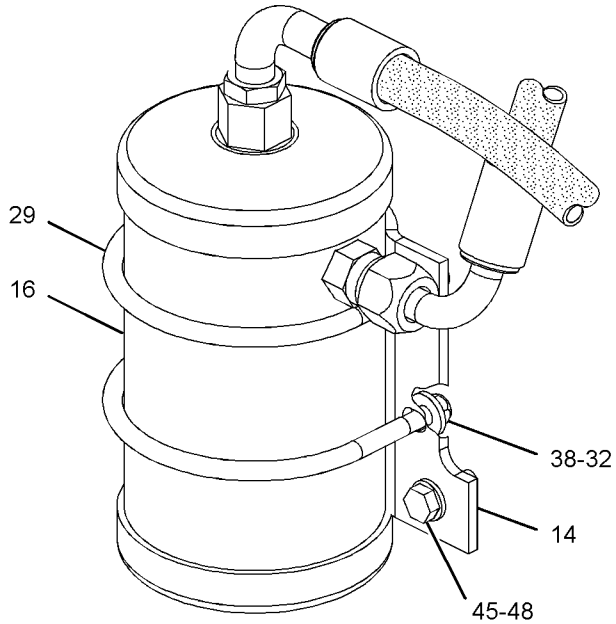

VIEW OF AREA F

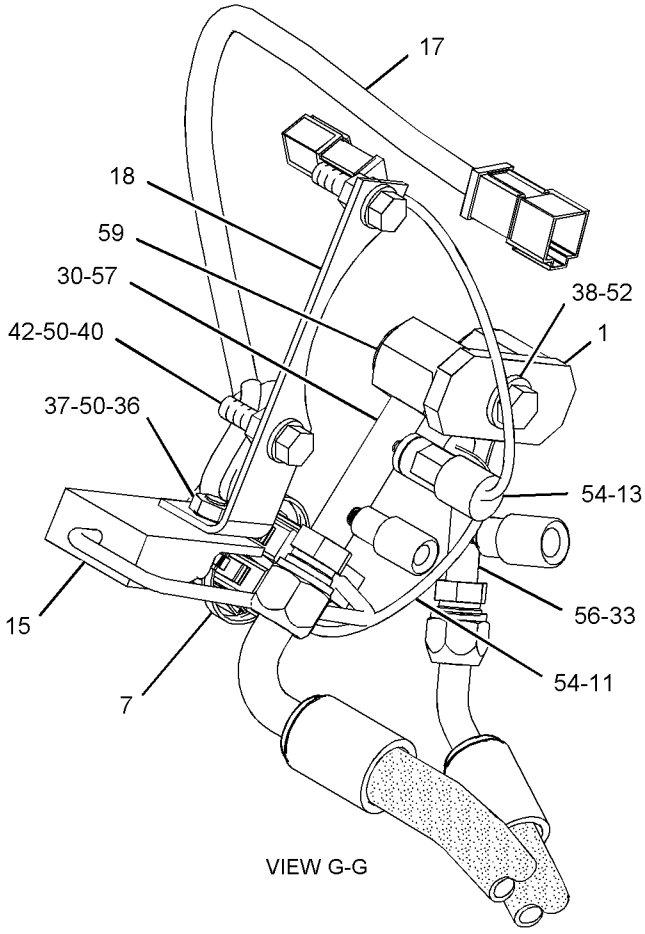

VIEW G-G

GRAPHIC #2 **<END>** g01141176

OPERATOR STATION

269-8388 LINES GP-AIR CONDITIONER

S/N: RJG1-UP
HOOD MOUNTED
PART OF 269-8387 AIR CONDITIONER AR
AN ATTACHMENT

SMCS-1808 **i02465670**

NOTE	REF NO	GRAPHIC REF	PART NUMBER	QTY	PART NAME 1 2 3 4 5 6 (PRODUCT LEVEL)	SEE PAGE
	1	1	**1P-6356**	1	PLATE	
	2	1	**175-7162**	1	RECEIVER-DRYER GP (AIR CONDITIONER)	
		1	**7X-2049**	1	TUBE AS-REFRIGERANT ORIFICE	
	3	1	**9X-6772**	1	STRAP-CABLE	
	4	1	**103-6100**	2	FITTING AS-AIR CONDITIONER (QUICK DISCONNECT)	
		1	**9X-7382**	2	SEAL-O-RING	
	5	1	**114-5333**	1	SWITCH AS-PRESSURE (HIGH SIDE)	
E		1	**9X-1386**		SLEEVE (25-CM)	
		1	**186-3735**	2	PIN-CONNECTOR (16-GA TO 18-GA)	
		1	**102-8802**	1	KIT-RECEPTACLE (2-PIN)	
					(INCLUDES RECEPTACLE AS & WEDGE)	
	6	1	**116-6202**	2	BOOT	
	7	1	**149-6371**	1	SWITCH AS-PRESSURE (REFRIGERANT COMPR, LOW SIDE)	
		1	**186-3735**	2	PIN-CONNECTOR (16-GA TO 18-GA)	
		1	**102-8802**	1	KIT-RECEPTACLE (2-PIN)	
					(INCLUDES RECEPTACLE AS & WEDGE)	
	8	1	**153-3946**	1	BRACKET	
	9	1	**169-7443**	1	TIMER AS-ON DELAY (24-VOLT)	
		1	**186-3735**	4	PIN-CONNECTOR (16-GA TO 18-GA)	
		1	**102-8804**	1	KIT-RECEPTACLE (4-PIN)	
					(INCLUDES RECEPTACLE AS & WEDGE)	
		1	**3E-3377**	1	WEDGE-RECEPTACLE LOCK (4-PIN)	
	10	1	**170-0235**	1	ACCUMULATOR-REFRIGERANT	
	11	1	**170-5293**	1	HARNESS AS-HEATER & AIR COND (COMPRESSOR)	
		1	**102-8805**	1	KIT-RECEPTACLE (6-PIN)	
					(INCLUDES RECEPTACLE AS & WEDGE)	
		1	**155-2270**	3	KIT-CONNECTING PLUG (2-PIN)	
					(EACH INCLUDES PLUG AS, WEDGE, & INTERFACE SEAL)	
		1	**155-2272**	1	PLUG AS-CONNECTOR (4-PIN)	
	12	1	**171-5855**	1	BRACKET AS	
		1	**1F-0750**	1	NUT-WELD (3/8-16-THD)	
	13	1	**203-2789**	1	BRACKET AS	
I	14	1	**222-2190**	1	HOSE AS	
I	15	1	**222-2194**	1	HOSE AS	
I	16	1	**222-2195**	1	HOSE AS	
	17	1	**226-3492**	2	BRACKET AS	
I	18	1	**271-6554**	1	HOSE AS	
I	19	1	**271-6555**	1	HOSE AS	
	20	1	**109-1633**	1	CLIP (SLOT)	
	21	1	**109-1634**	1	CLIP (TAB)	
	22	1	**153-6781**	2	U-BOLT	
	23	1	**172-0986**	1	FITTING AS-AIR CONDITIONER	
		1	**3E-4051**	1	CAP-SEAL (AIR CONDITIONER)	
		1	**3E-4057**	1	VALVE AS	
		1	**172-4880**	1	CAP-SEAL (AIR CONDITIONER)	
		1	**180-7180**	1	CORE-VALVE	
	24	1	**2K-4973**	4	LOCKNUT (3/8-16-THD)	
	25	1	**3E-4067**	1	FITTING AS-COMPRESSOR	
		1	**3E-4052**	1	CAP-SEAL (AIR CONDITIONER)	
		1	**3E-4058**	1	VALVE AS	
	26	1	**4K-8302**	1	CLIP	
	27	1	**4P-7581**	1	CLIP	

269-8388 **LINES GP-AIR CONDITIONER** *(contd.)* **i02465670**

NOTE	REF NO	GRAPHIC REF	PART NUMBER	QTY	PART NAME 1 2 3 4 5 6 (PRODUCT LEVEL)	SEE PAGE
	28	1	**4S-1936**	3	CLIP	
	29	1	**5K-4778**	1	CLIP	
	30	1	**5M-3062**	1	BOLT (3/8-16X0.75-IN)	
	31	1	**5P-1075**	5	WASHER-HARD (10.2X22.5X3-MM THK)	
	32	1	**5P-4295**	4	CLIP	
	33	1	**5S-7382**	2	BOLT (3/8-16X1.375-IN)	
	34	1	**6D-4247**	5	CLIP	
	35	1	**6V-8801**	2	NUT (3/8-16-THD)	
	36	1	**7C-4354**	2	CLIP	
	37	1	**8T-4121**	11	WASHER-HARD (11X21X2.5-MM THK)	
M	38	1	**8T-4133**	1	NUT (M10X1.5 THD)	
M	39	1	**8T-4136**	3	BOLT (M10X1.5X25-MM)	
M	40	1	**8T-4137**	5	BOLT (M10X1.5X20-MM)	
M	41	1	**8T-4186**	1	BOLT (M10X1.5X40-MM)	
M	42	1	**8T-4195**	2	BOLT (M10X1.5X30-MM)	
	43	1	**8T-4223**	1	WASHER-HARD (13.5X25.5X3-MM THK)	
	44	1	**8T-4896**	5	WASHER-HARD (10.2X18.5X2.5-MM THK)	
M	45	1	**8T-4956**	1	BOLT (M12X1.75X35-MM)	
M	46	1	**8T-6466**	1	BOLT (M10X1.5X60-MM)	
	47	1	**9M-8406**	3	CLIP	
	48	1	**9X-7378**	2	SEAL-O-RING	
	49	1	**9X-7380**	3	SEAL-O-RING	
	50	1	**9X-7381**	3	SEAL-O-RING	
	51	1	**9X-7382**	2	SEAL-O-RING	
	52	1	**9X-7383**	2	SEAL-O-RING	
	53	1	**9X-7385**	2	SEAL-O-RING	
M	54	1	**9X-8281**	1	STUD-TAPERLOCK (M10X1.5X45-MM)	

E-ORDER BY THE CENTIMETER
I-REFER TO HYDRAULIC INFORMATION SYSTEM
M-METRIC PART

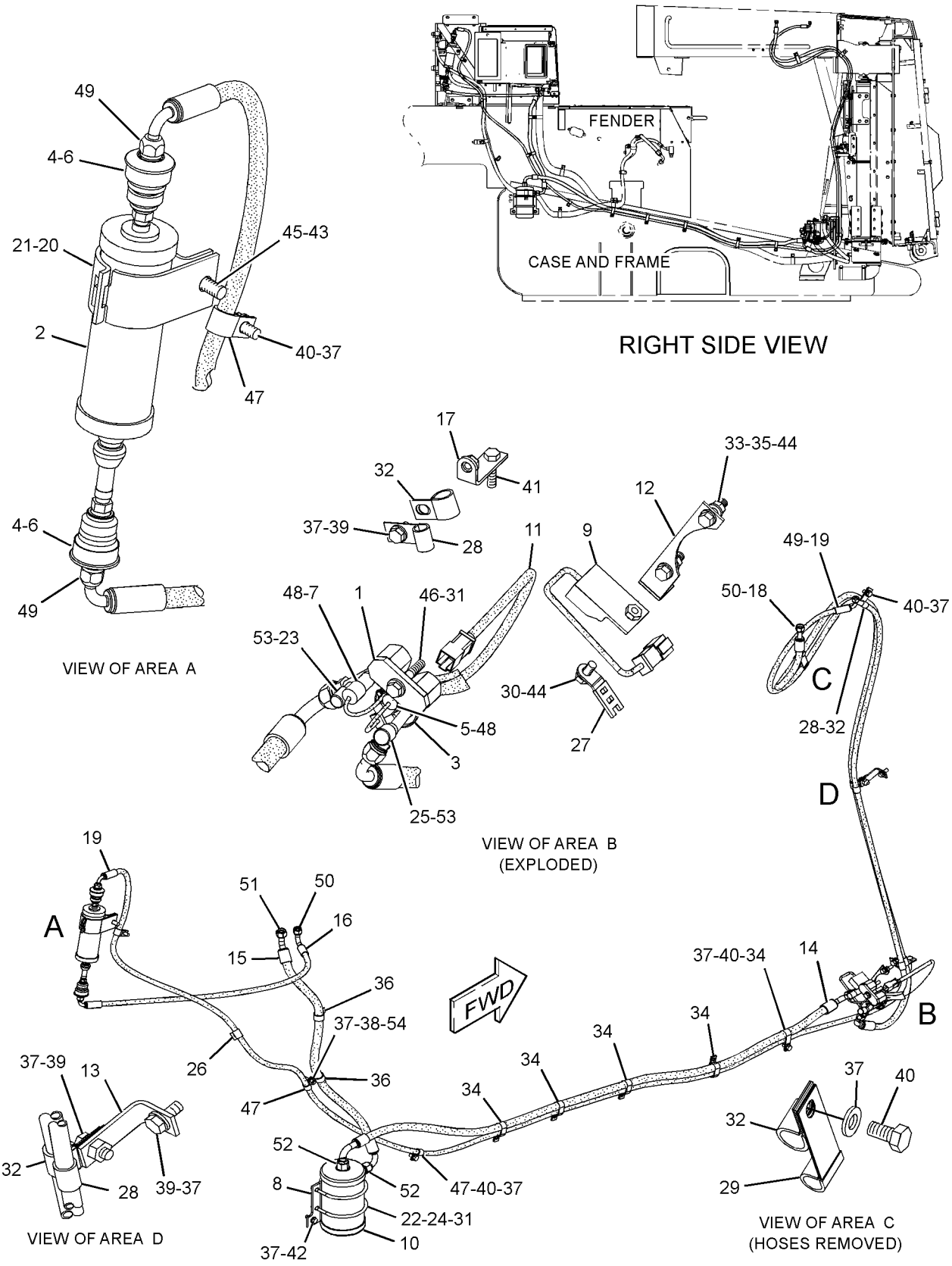

GRAPHIC #1 **<END>** g01231380

OPERATOR STATION

213-0048 LINES GP-HEATER

S/N: RJG1-109

PART OF 212-2741 CHASSIS AR

SMCS-7304 **i02040749**

NOTE	REF NO	GRAPHIC REF	PART NUMBER	QTY	PART NAME 1 2 3 4 5 6 (PRODUCT LEVEL)	SEE PAGE
	1	1	**9X-2488**	4	CLAMP-HOSE	
	2	1	**005-7889**	1	VALVE AS-DRAIN	
	3	1	*165-2273*	1	VALVE GP-SHUTOFF (CAB HEATER)	
		1	**6V-7238**	1	VALVE-SHUTOFF	
		1	**3K-0360**	1	SEAL-O-RING	
M	4	1	**116-3715**	1	STUD-TAPERLOCK (M10X1.5X85-MM)	
	5	1	*155-7321*	1	ADAPTER GP	
		1	**3D-2824**	1	SEAL-O-RING	
		1	**6V-1722**	1	ADAPTER-O-RING	
M	6	1	**180-3998**	3	STUD (M10X1.5X55-MM)	
	7	1	**3B-7255**	1	BUSHING-REDUCING	
	8	1	**5K-6875**	1	ADAPTER	
	9	1	**5P-1075**	9	WASHER-HARD (10.2X22.5X3-MM THK)	
	10	1	**6D-1641**	11	CLIP	
	11	1	**6U-3791**	1	TUBE	
	12	1	**6V-5839**	2	WASHER (11X21X2.5-MM THK)	
M	13	1	**6V-6317**	1	BOLT (M10X1.5X20-MM)	
M	14	1	**8T-4133**	6	NUT (M10X1.5 THD)	
M	15	1	**8T-4137**	4	BOLT (M10X1.5X20-MM)	
M	16	1	**9X-8281**	2	STUD-TAPERLOCK (M10X1.5X45-MM)	
E	17	1	**5P-0767**		HOSE (454-CM EACH)	

E-ORDER BY THE CENTIMETER
M-METRIC PART

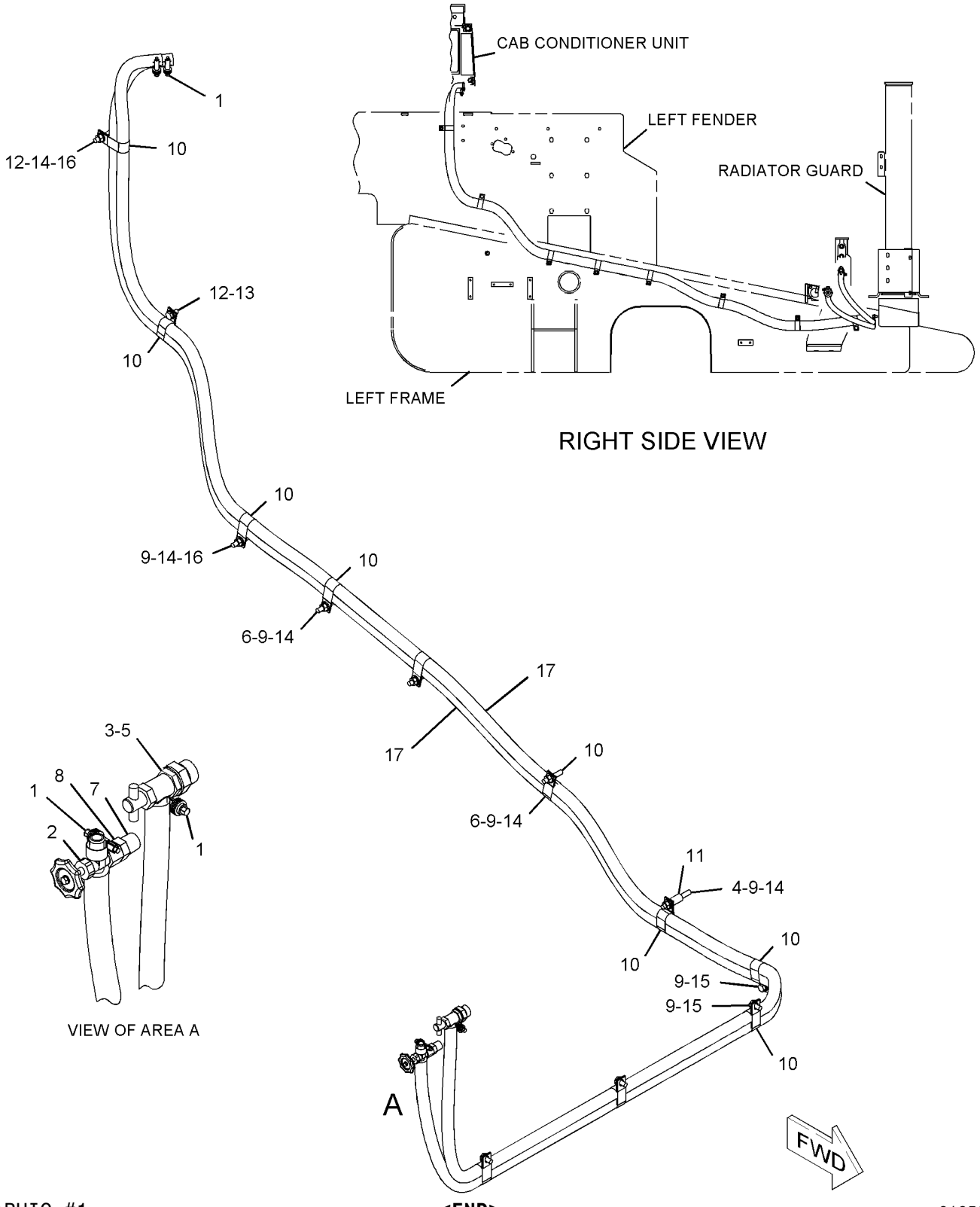

GRAPHIC #1

<END>

g01052109

OPERATOR STATION

213-0048 LINES GP-HEATER

S/N: RJG110-UP

PART OF 212-2741 CHASSIS AR

SMCS-7304 **i02251890**

NOTE	REF NO	GRAPHIC REF	PART NUMBER	QTY	PART NAME 1 2 3 4 5 6 (PRODUCT LEVEL)	SEE PAGE
C	1	1	**9R-2216**	1	BOSS	
	2	1	**9X-2488**	4	CLAMP-HOSE	
C	3	1	*165-2273*	2	VALVE GP-SHUTOFF (CAB HEATER)	
		1	**6V-7238**	1	VALVE-SHUTOFF	
		1	**3K-0360**	1	SEAL-O-RING	
C	4	1	*155-7321*	2	ADAPTER GP	
		1	**3D-2824**	1	SEAL-O-RING	
		1	**6V-1722**	1	ADAPTER-O-RING	
M	5	1	**180-3998**	3	STUD (M10X1.5X55-MM)	
	6	1	**5P-1075**	9	WASHER-HARD (10.2X22.5X3-MM THK)	
	7	1	**6D-1641**	11	CLIP	
	8	1	**6V-5839**	2	WASHER (11X21X2.5-MM THK)	
M	9	1	**6V-6317**	1	BOLT (M10X1.5X20-MM)	
CM	10	1	**8T-4133**	5	NUT (M10X1.5 THD)	
M	11	1	**8T-4137**	4	BOLT (M10X1.5X20-MM)	
CM	12	1	**8T-6466**	1	BOLT (M10X1.5X60-MM)	
M	13	1	**9X-8281**	2	STUD-TAPERLOCK (M10X1.5X45-MM)	
CE	14	1	**5P-0767**		HOSE (464-CM EACH)	

C-CHANGE FROM PREVIOUS TYPE
E-ORDER BY THE CENTIMETER
M-METRIC PART

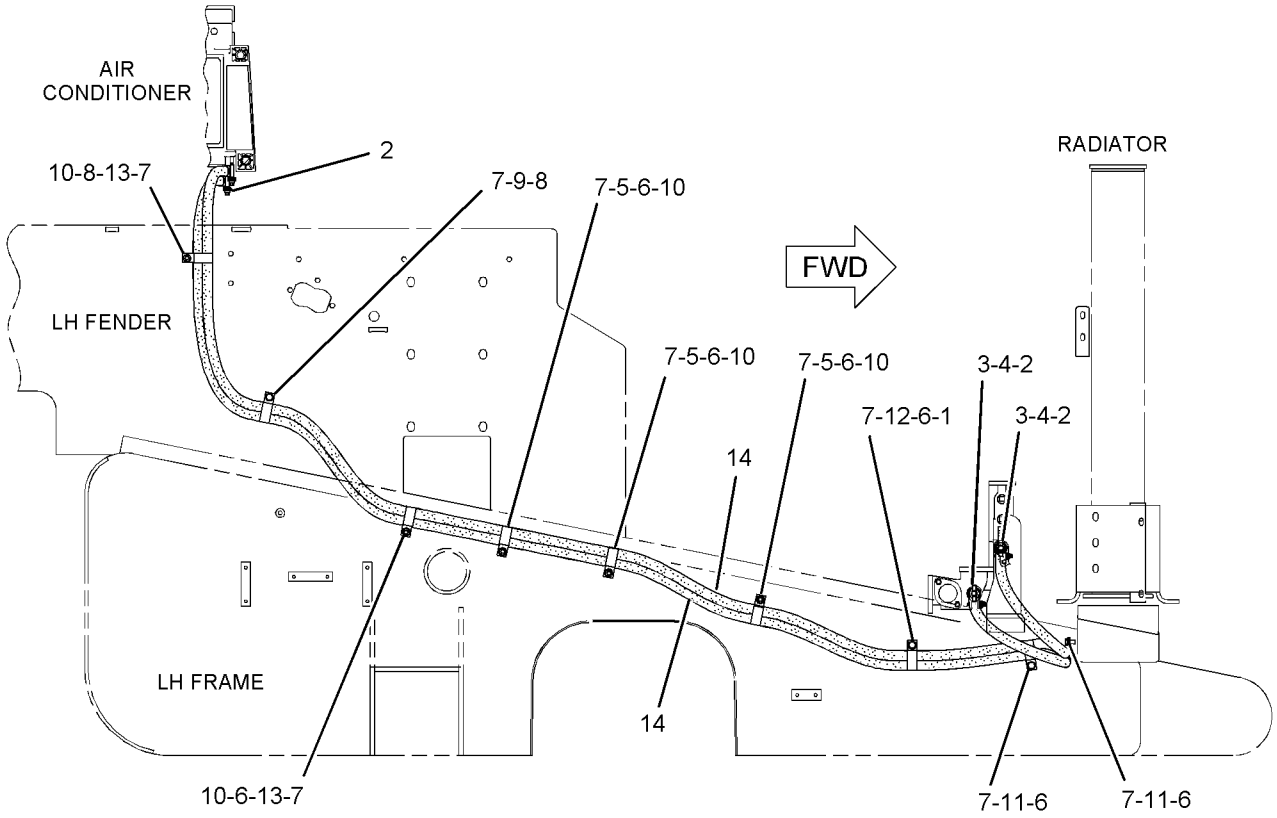

RIGHT SIDE VIEW

GRAPHIC #1 **<END>** g01134316

OPERATOR STATION

105-9659 MIRROR GP-REAR VIEW

S/N: RJG1-UP

PART OF 213-1100 CAB AR

SMCS-7319 **i01901909**

NOTE	REF NO	GRAPHIC REF	PART NUMBER	QTY	PART NAME 1 2 3 4 5 6 (PRODUCT LEVEL)	SEE PAGE
	1	1	**9P-9388**	1	KNOB (MIRROR ADJUSTMENT)	
	2	1	**5P-6874**	1	MIRROR (REAR VIEW)	
	3	1	**5K-9179**	1	BOLT-ROUND HEAD (3/8-16X11-IN)	
	4	1	**6Y-5113**	1	BRACKET	
	5	1	**8T-4121**	2	WASHER-HARD (11X21X2.5-MM THK)	
M	6	1	**8T-4195**	2	BOLT (M10X1.5X30-MM)	

M-METRIC PART

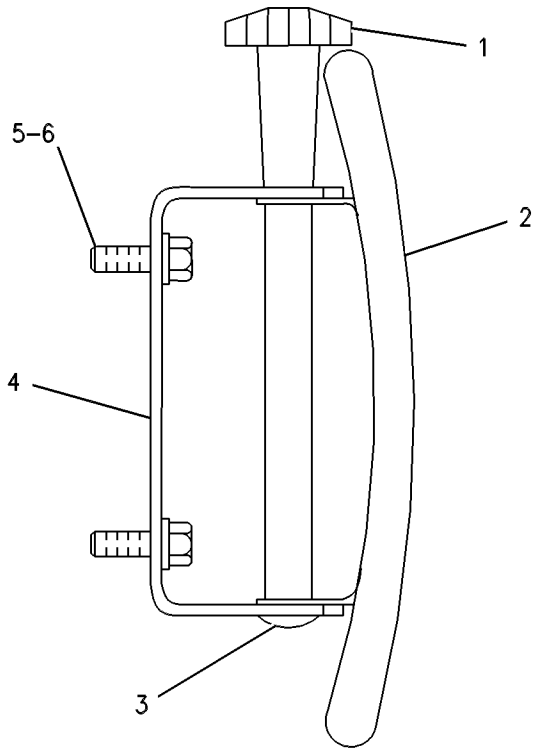

GRAPHIC #1 **<END>** g00254288

OPERATOR STATION

183-2089 MIRROR GP-REAR VIEW

S/N: RJG1-UP
PART OF 213-1112 AIR CONDITIONER AR
AN ATTACHMENT

SMCS-7319 **i02273777**

NOTE	REF NO	GRAPHIC REF	PART NUMBER	QTY	PART NAME 1 2 3 4 5 6 (PRODUCT LEVEL)	SEE PAGE
	1	1	**6V-9156**	1	MIRROR (RH)	
	2	1	**4L-6454**	2	BOLT (3/8-16X1-IN)	
	3	1	**7X-0592**	2	WASHER-HARD (10.2X32X5-MM THK)	

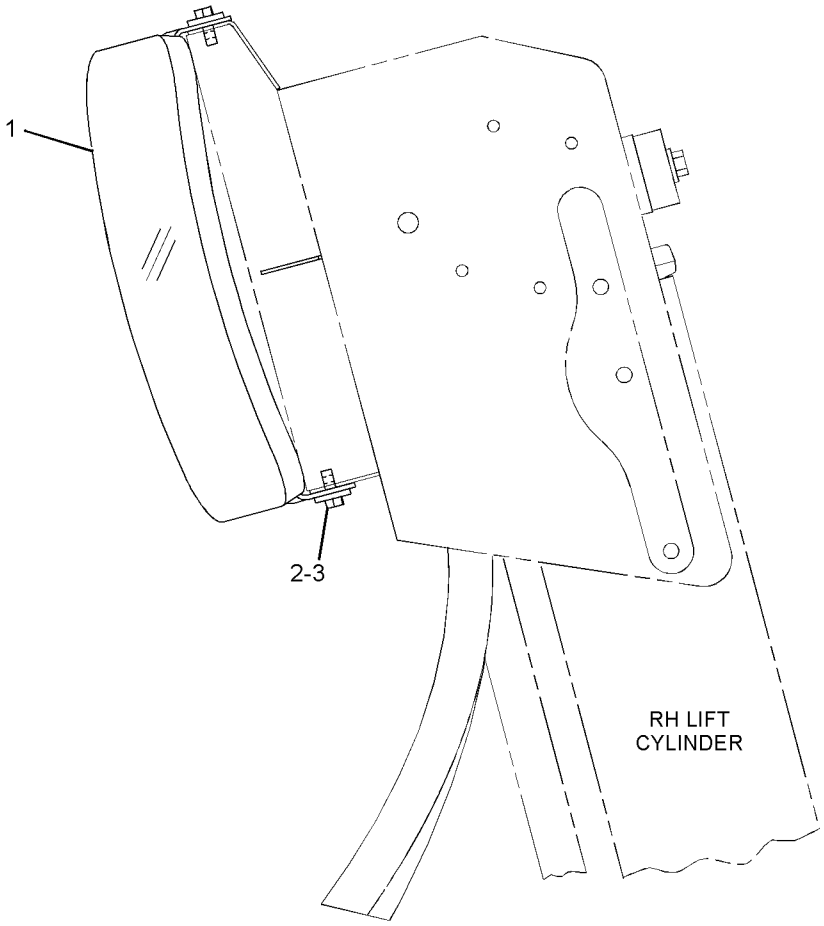

RIGHT SIDE VIEW

GRAPHIC #1 **<END>** g01140535

OPERATOR STATION

214-1740 MOUNTING GP-CAB

S/N: RJG1-UP

PART OF 205-8640 CAB AR

SMCS-7266, 7301 **i02229502**

NOTE	REF NO	GRAPHIC REF	PART NUMBER	QTY	PART NAME 1 2 3 4 5 6 (PRODUCT LEVEL)	SEE PAGE
	1	1	**230-4691**	1	PLATE	
	2	1	**7X-0618**	6	WASHER-HARD (13.5X40X5-MM THK)	
	3	1	**7X-3392**	42	WASHER-HARD (13.5X22.5X3-MM THK)	
	4	1	**7X-7729**	8	WASHER (11X25X3-MM THK)	
	5	1	**8T-4121**	1	WASHER-HARD (11X21X2.5-MM THK)	
M	6	1	**8T-4137**	1	BOLT (M10X1.5X20-MM)	
M	7	1	**8T-4139**	6	BOLT (M12X1.75X30-MM)	
M	8	1	**8T-4178**	2	BOLT (M10X1.5X90-MM)	
M	9	1	**8T-4195**	6	BOLT (M10X1.5X30-MM)	
M	10	1	**8T-4648**	4	BOLT (M12X1.75X70-MM)	
M	11	1	**8T-4910**	11	BOLT (M12X1.75X60-MM)	
M	12	1	**8T-6868**	6	BOLT (M12X1.75X80-MM)	
	13	1	**247-4144**	1	SEAL	
BD	14	1	**5P-7513**		SEAL	

B-USE AS REQUIRED
D-ORDER BY THE METER
M-METRIC PART

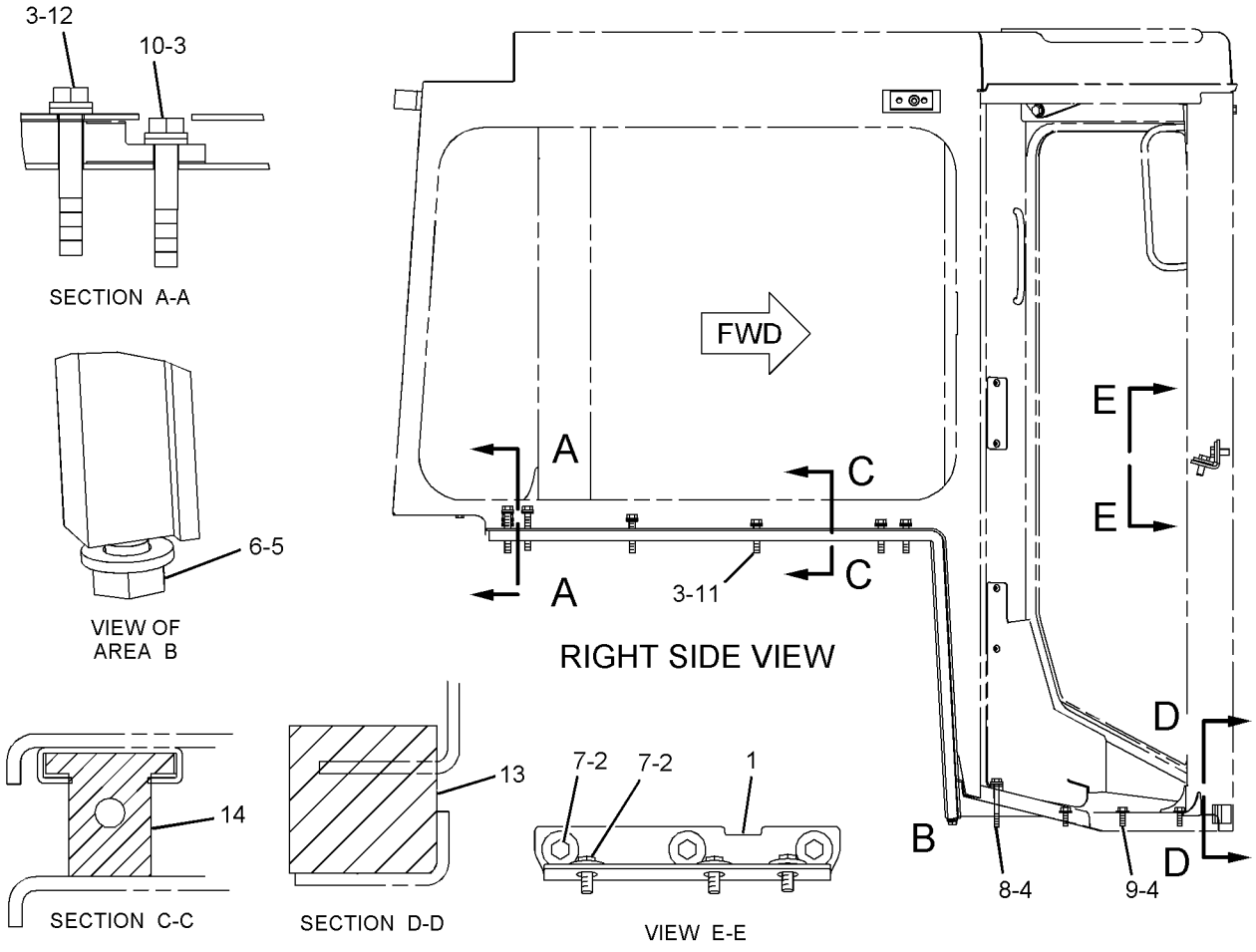

GRAPHIC #1 **<END>** g01124962

OPERATOR STATION

219-3587 MOUNTING GP-CONDENSER—ROPS MOUNTED

S/N: RJG1-UP

PART OF 256-6916 AIR CONDITIONER AR

AN ATTACHMENT

SMCS-1805 **i02202730**

NOTE	REF NO	GRAPHIC REF	PART NUMBER	QTY	PART NAME 1 2 3 4 5 6 (PRODUCT LEVEL)	SEE PAGE
	1	1	**8D-3932**	4	MOUNTING	
	2	1	**110-4506**	1	PLATE	
	3	1	**134-0165**	4	WASHER (13.8X45X3-MM THK)	
M	4	1	**8T-4139**	4	BOLT (M12X1.75X30-MM)	
M	5	1	**8T-4194**	4	BOLT (M12X1.75X50-MM)	
	6	1	**8T-4223**	4	WASHER-HARD (13.5X25.5X3-MM THK)	

M-METRIC PART

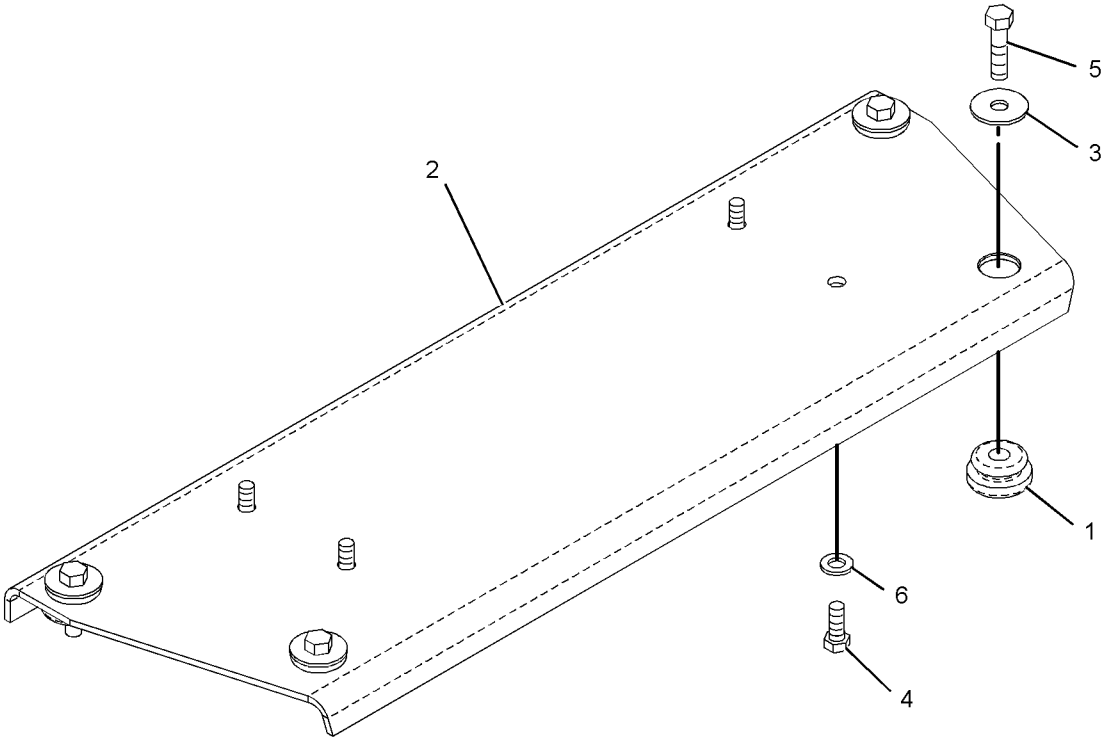

GRAPHIC #1 **<END>** g01112228

OPERATOR STATION

248-2941 MOUNTING GP-CONDENSER–FENDER

S/N: RJG1-UP

PART OF 213-1112 AIR CONDITIONER AR

AN ATTACHMENT

SMCS-1805 **i02403204**

NOTE	REF NO	GRAPHIC REF	PART NUMBER	QTY	PART NAME 1 2 3 4 5 6 (PRODUCT LEVEL)	SEE PAGE
	1	1	**8D-3786**	4	MOUNTING	
M	2	1	**8T-4648**	2	BOLT (M12X1.75X70-MM)	
	3	1	**179-1532**	1	BRACKET	
	4	1	**179-8008**	1	HANDHOLD	
	5	1	**179-8230**	1	BRACKET AS	
		1	**1F-0750**	2	NUT-WELD (3/8-16-THD)	
	6	1	**179-8231**	1	BRACKET AS	
		1	**7T-1099**	1	LINK	
		1	**8D-3508**	1	BOSS (3/8-16X1-IN)	
	7	1	**4L-9337**	2	BOLT (3/8-16X1.5-IN)	
	8	1	**5C-6565**	2	BOLT (1/2-13X1.125-IN)	
	9	1	**5P-1075**	2	WASHER-HARD (10.2X22.5X3-MM THK)	
	10	1	**5P-1076**	6	WASHER-HARD (13.5X30X4-MM THK)	
M	11	1	**8T-4244**	4	NUT (M12X1.75-THD)	
M	12	1	**8T-4183**	2	BOLT (M12X1.75X40-MM)	
	13	1	**8T-4223**	10	WASHER-HARD (13.5X25.5X3-MM THK)	
	14	1	**8T-4821**	4	WASHER (13.5X40X3-MM THK)	
M	15	1	**8T-4910**	2	BOLT (M12X1.75X60-MM)	
M	16	1	**8T-4956**	8	BOLT (M12X1.75X35-MM)	

M-METRIC PART

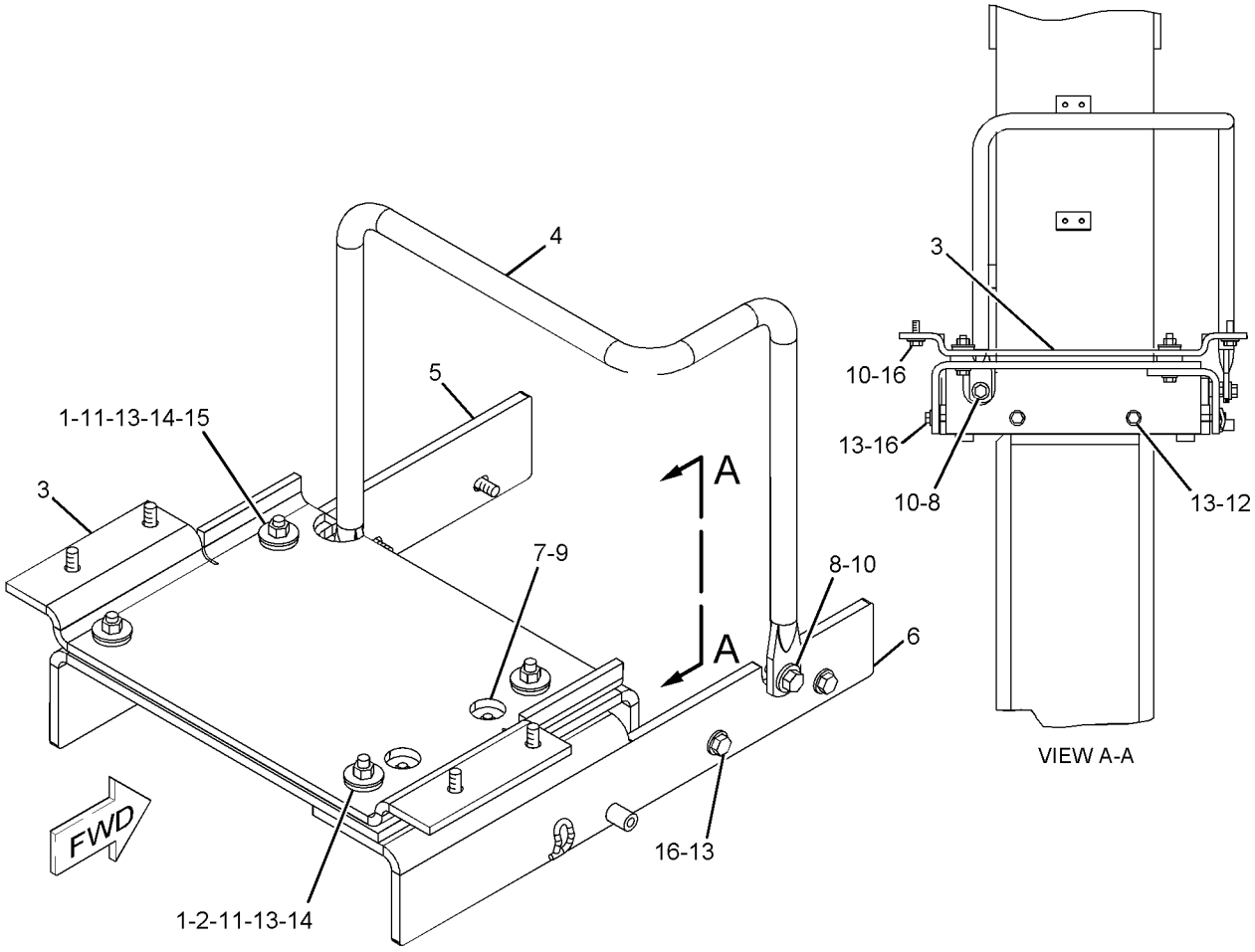

GRAPHIC #1 **<END>** g01140704

OPERATOR STATION

243-5158 MOUNTING GP-RADIO—GRADE CONTROL

S/N: RJG1-UP
PART OF 255-9372 KIT-INSTALLATION
AN ATTACHMENT

SMCS-7338 **i02351804**

NOTE	REF NO	GRAPHIC REF	PART NUMBER	QTY	PART NAME 1 2 3 4 5 6 (PRODUCT LEVEL)	SEE PAGE
	1	1	**8C-5607**	6	MOUNT-ISOLATION	
	2	1	**8C-5608**	3	SPACER (6.5X9.5X25.4-MM THK)	
	3	1	**140-7480**	1	BRACKET-MOUNTING	
	4	1	**167-8610**	1	BRACKET AS	
	5	1	**243-5156**	1	PLATE AS	
	6	1	**4L-6454**	4	BOLT (3/8-16X1-IN)	
	7	1	**5P-1075**	4	WASHER-HARD (10.2X22.5X3-MM THK)	
	8	1	**5S-7349**	2	BOLT (1/4-20X0.5-IN)	
M	9	1	**7X-2533**	3	BOLT (M6X1X35-MM)	
	10	1	**9X-6165**	3	WASHER (6.5X22X2.5-MM THK)	
	11	1	**9X-8256**	2	WASHER (6.6X12X2-MM THK)	

M-METRIC PART

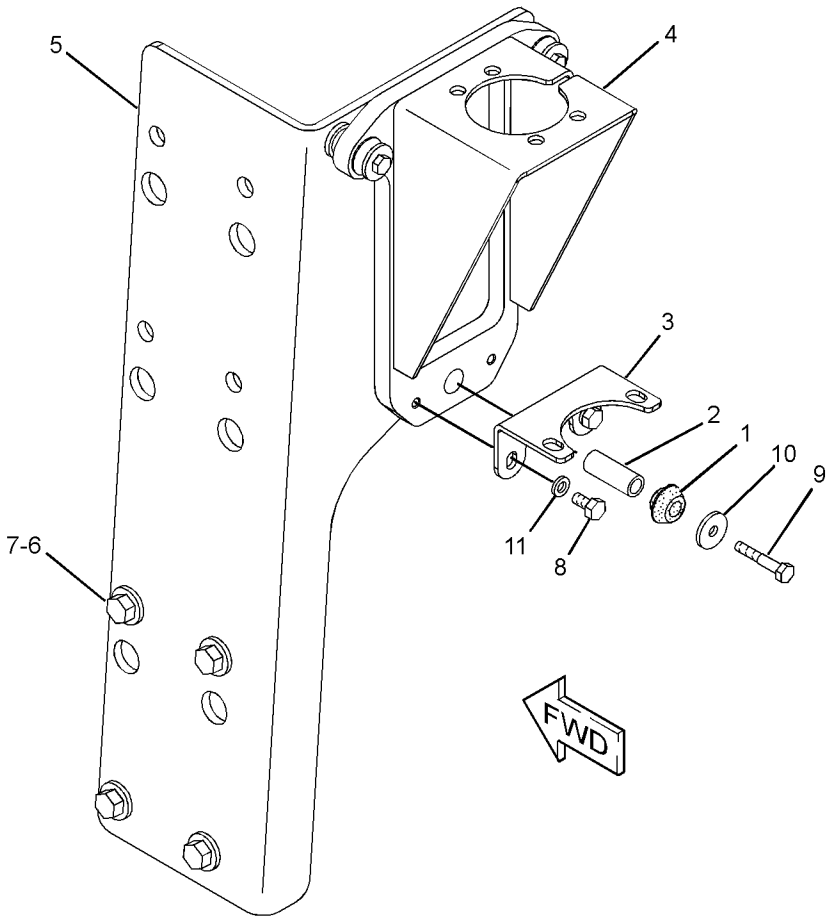

GRAPHIC #1 **<END>** g01225332

OPERATOR STATION

273-2696 MOUNTING GP-RADIO

S/N: RJG1-UP

AN ATTACHMENT

SMCS-7338 **i02346034**

NOTE	REF NO	GRAPHIC REF	PART NUMBER	QTY	PART NAME 1 2 3 4 5 6 (PRODUCT LEVEL)	SEE PAGE
	1	1	**273-2695**	1	BRACKET	
	2	1	**130-7914**	2	BUSHING	
M	3	1	**7X-2535**	2	BOLT (M6X1X60-MM)	
	4	1	**9X-8256**	2	WASHER (6.6X12X2-MM THK)	

M-METRIC PART

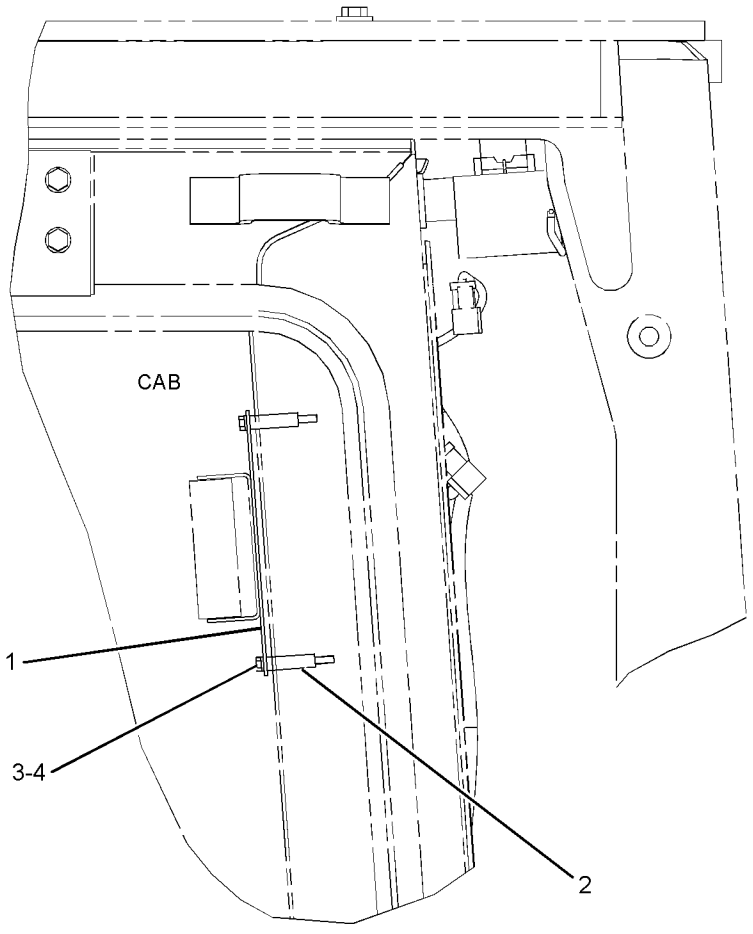

REAR VIEW

GRAPHIC #1 **<END>** g01174617

OPERATOR STATION

213-7065 MOUNTING GP-ROPS

S/N: RJG1-UP

PART OF 212-2741 CHASSIS AR

SMCS-7266 **i02043815**

NOTE	REF NO	GRAPHIC REF	PART NUMBER	QTY	PART NAME 1 2 3 4 5 6 (PRODUCT LEVEL)	SEE PAGE
	1	1	**6V-8953**	16	BOLT (1-1/2-6X2.06-IN)	
	2	1	**7G-6176**	16	SPACER (40X75X20-MM THK)	
	3	1	**213-7063**	1	SUPPORT AS (RH)	
	4	1	**233-6684**	1	SUPPORT AS (LH)	

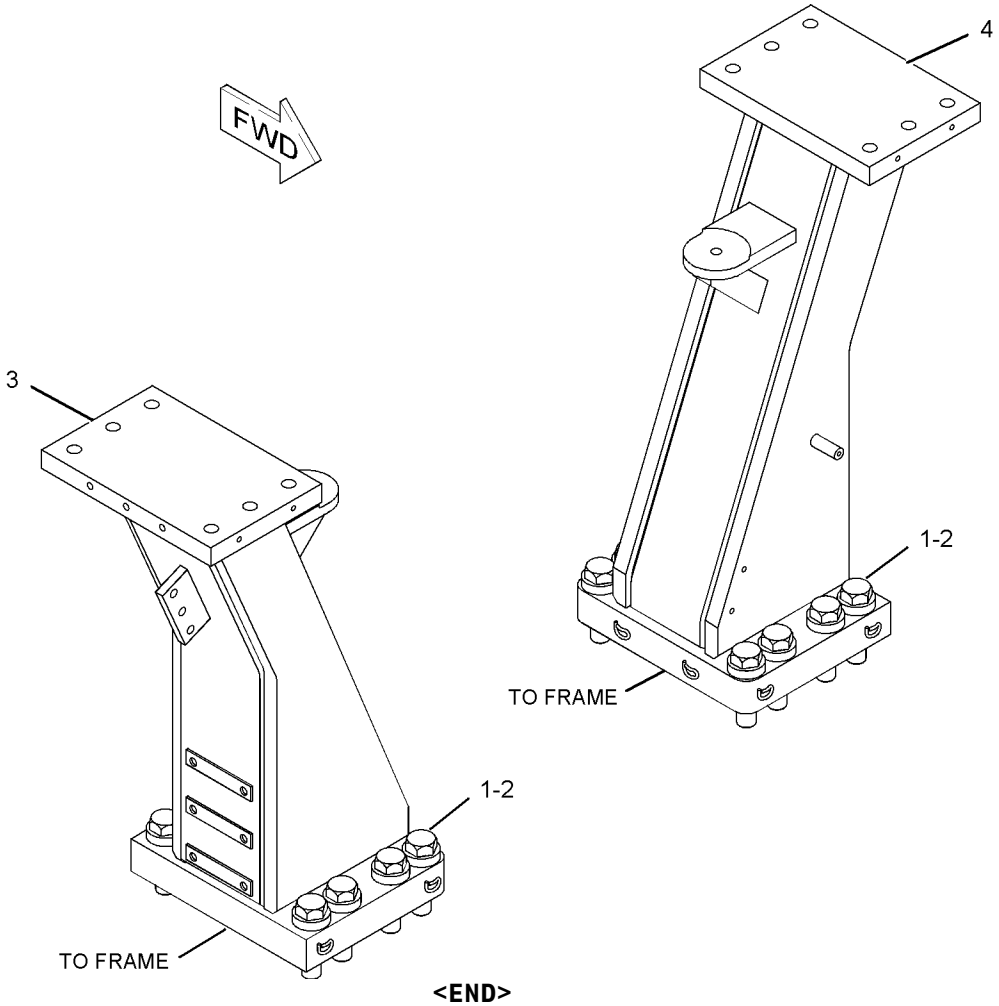

GRAPHIC #1 **<END>** g01053286

OPERATOR STATION

256-0190 OPERATOR AR

S/N: RJG1-UP

AN ATTACHMENT

SMCS-7301 **i02400806**

NOTE	REF NO	GRAPHIC REF	PART NUMBER	QTY	PART NAME 1 2 3 4 5 6 (PRODUCT LEVEL)	SEE PAGE
	1	1	**1Q-3783**	2	PLATE AS	
	2	1	**1Q-3785**	2	PLATE AS	
					(EACH INCLUDES)	
	2A	1	**1F-0750**	6	NUT-WELD (3/8-16-THD)	
	3	1	**171-7077**	2	ROD-THREADED	
	5	1	**258-0977**	1	BOX AS	
	6	1	**258-0985**	1	FLOOR MAT-LOWER	
	7	1	**258-0986**	1	FLOOR MAT-UPPER	
Y	8	1	*263-3318*	1	CONTROL & MTG GP-PEDAL (GOVERNOR, BRAKE)	791
	9	1	**263-5043**	1	FLOORPLATE AS	
	10	1	**5S-7379**	8	BOLT (3/8-16X0.875-IN)	
	11	1	**7X-7729**	19	WASHER (11X25X3-MM THK)	
	12	1	**8T-4121**	4	WASHER-HARD (11X21X2.5-MM THK)	
M	13	1	**8T-4133**	2	NUT (M10X1.5 THD)	
M	14	1	**8T-4136**	12	BOLT (M10X1.5X25-MM)	
M	15	1	**8T-4195**	9	BOLT (M10X1.5X30-MM)	
	16	1	**8T-4896**	8	WASHER-HARD (10.2X18.5X2.5-MM THK)	

M-METRIC PART
Y-SEPARATE ILLUSTRATION

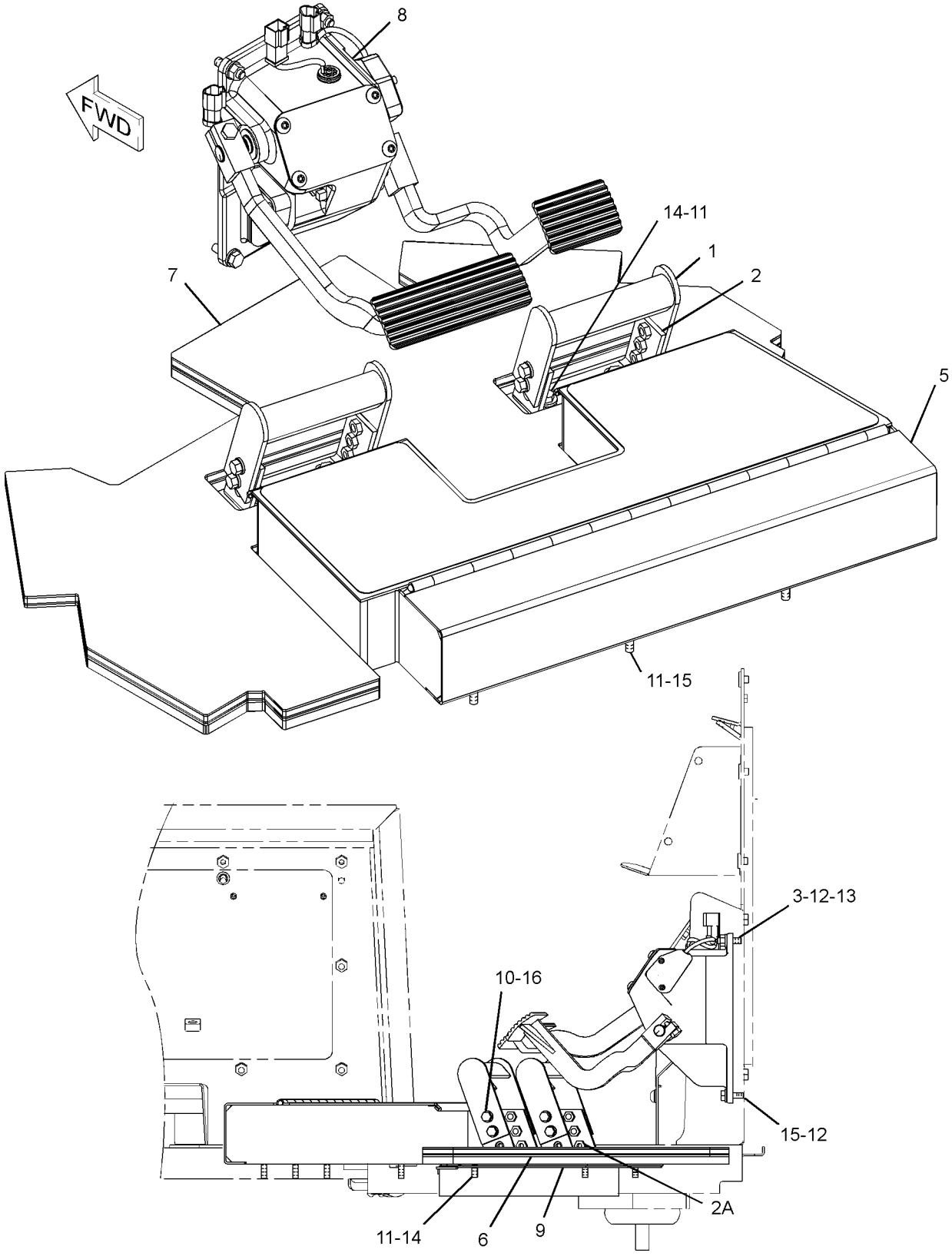

RIGHT SIDE VIEW

GRAPHIC #1

<END>

g01199832

OPERATOR STATION

178-0604 PAN GP-BACKREST–CLOTH

S/N: RJG1-UP
PART OF 178-0603 SEAT GP
ALSO AN ATTACHMENT

SMCS-7312 **i02267748**

NOTE	REF NO	GRAPHIC REF	PART NUMBER	QTY	PART NAME 1 2 3 4 5 6 (PRODUCT LEVEL)	SEE PAGE
	1	1	**164-4883**	1	KNOB-LUMBAR	
Y	2	1	*178-0605*	1	PAN GP-BACKREST (CLOTH)	842
	3	1	**233-6745**	1	CUSHION AS (CLOTH)	
	4	1	**250-4628**	3	PLUG	
	5	1	**8T-7566**	1	PIN-SPRING	

Y-SEPARATE ILLUSTRATION

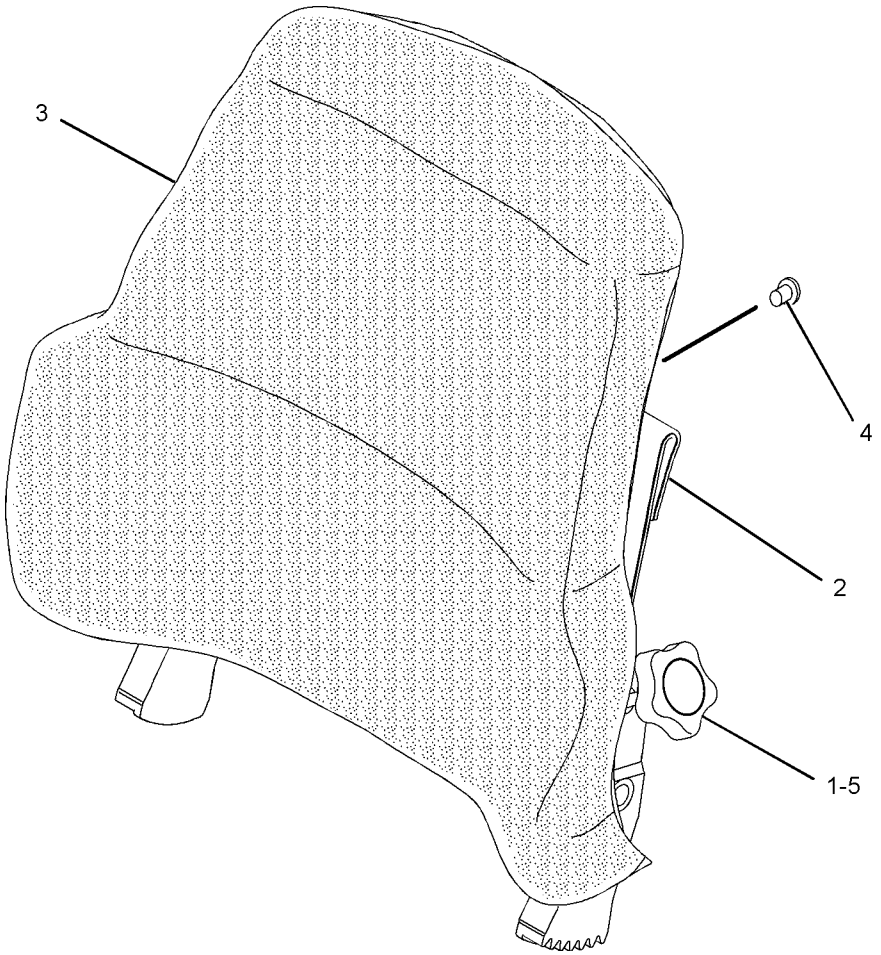

GRAPHIC #1 **<END>** g01092296

OPERATOR STATION

178-0605 PAN GP-BACKREST

S/N: RJG1-UP
PART OF 178-0604, 180-7305 PAN GP-BACKREST
ALSO AN ATTACHMENT

SMCS-7312 **i01508995**

NOTE	REF NO	GRAPHIC REF	PART NUMBER	QTY	PART NAME 1 2 3 4 5 6 (PRODUCT LEVEL)	SEE PAGE
	1	1	**4K-9429**	8	RIVET-POP	
	2	1	**5P-7957**	1	LANYARD	
	3	1	**136-1543**	1	PLATE AS-LUMBAR	
	4	1	**173-2052**	1	RETAINER	
	5	1	**178-7907**	1	HOLDER	
	6	1	**177-4930**	1	PAN AS-BACK	

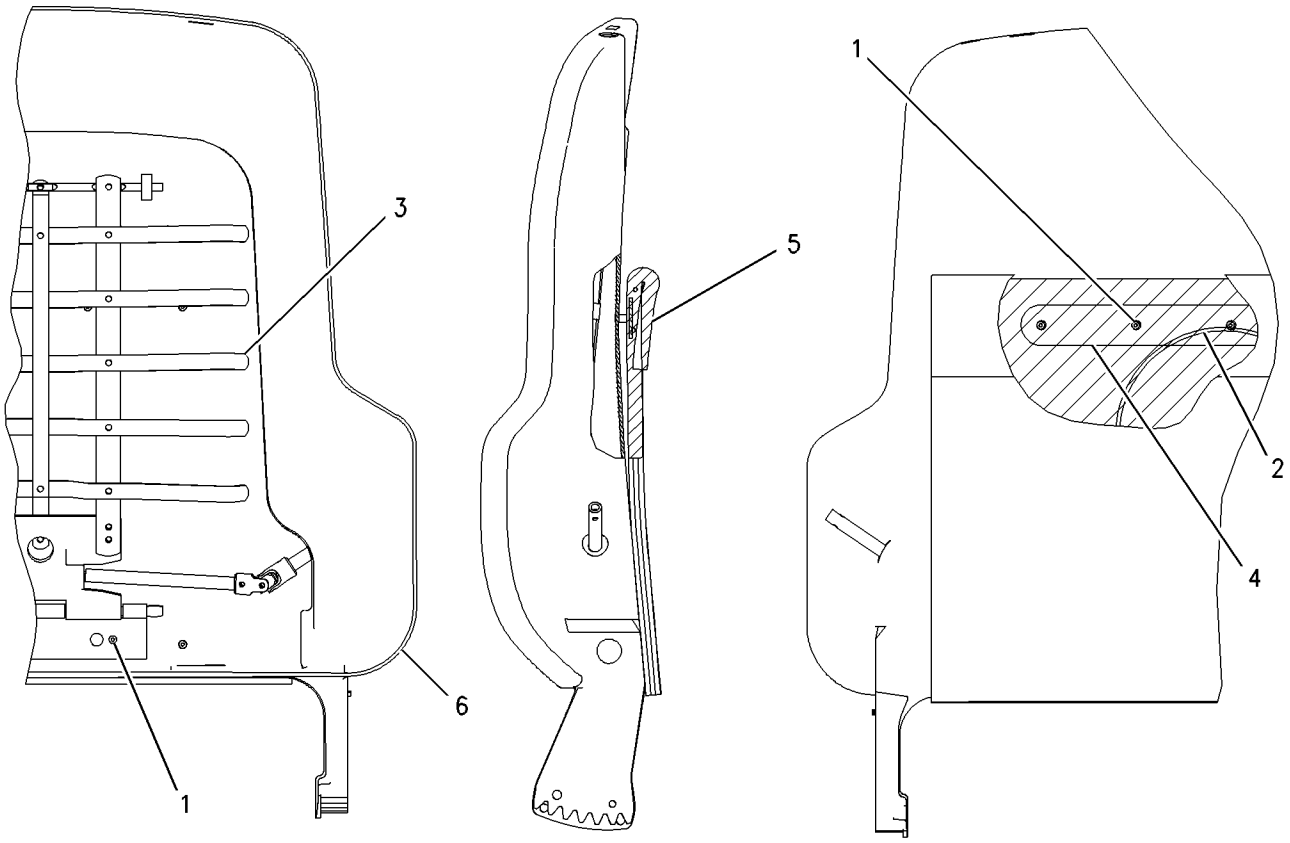

GRAPHIC #1 **<END>** g00716497

OPERATOR STATION

180-7305 PAN GP-BACKREST–VINYL

S/N: RJG1-UP
PART OF 180-7304 SEAT GP
AN ATTACHMENT

SMCS-7312 **i02122312**

NOTE	REF NO	GRAPHIC REF	PART NUMBER	QTY	PART NAME 1 2 3 4 5 6 (PRODUCT LEVEL)	SEE PAGE
	1	1	**164-4883**	1	KNOB-LUMBAR	
	2	1	**169-0697**	1	CUSHION AS	
Y	3	1	*178-0605*	1	PAN GP-BACKREST	842
	4	1	**250-4628**	3	PLUG	
	5	1	**8T-7566**	1	PIN-SPRING	

Y-SEPARATE ILLUSTRATION

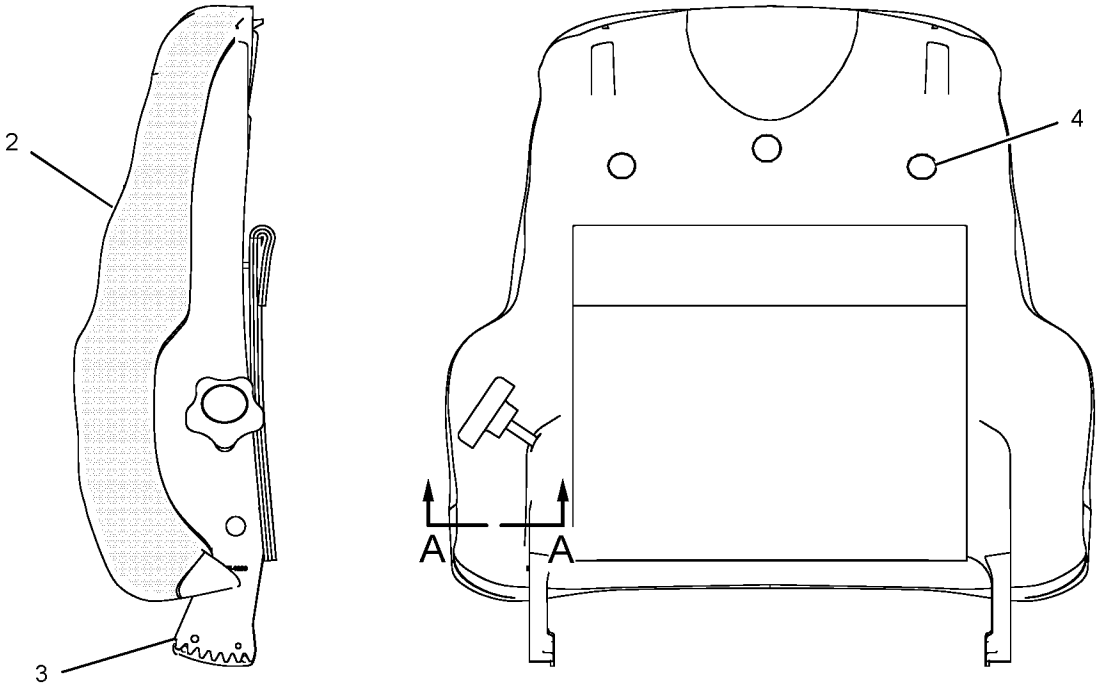

LEFT SIDE VIEW

REAR VIEW

SECTION A-A

<END>

GRAPHIC #1

g01082619

OPERATOR STATION

231-9290 PANEL GP-CONTROL

S/N: RJG1-UP

OVERHEAD WIPER, HEATER, A/C SWITCHES

PART OF 214-4763 WIRING GP-CAB

SMCS-4490, 7332, 7451 **i02402576**

NOTE	REF NO	GRAPHIC REF	PART NUMBER	QTY	PART NAME 1 2 3 4 5 6 (PRODUCT LEVEL)	SEE PAGE
	1	1	**2P-4339**	1	NUT-JAM (7/16-28-THD)	
	2	1	**7F-6998**	1	LOCKWASHER	
	3	1	**9X-1138**	1	CONTROL AS-ELECTRONIC (DASH LIGHT)	
M	4	1	**096-3773**	8	SCREW-MACHINE (M4X0.7X25-MM)	
	5	1	**110-6109**	1	KNOB-CONTROL (WIPER, WASHER REAR)	
	5A	1	**110-6109**	1	KNOB-CONTROL (WIPER, WASHER, RH DOOR)	
	5B	1	**110-6109**	1	KNOB-CONTROL (WIPER, WASHER, LH DOOR)	
	5C	1	**110-6109**	1	KNOB-CONTROL (WIPER, WASHER FRONT)	
	5D	1	**110-6109**	1	KNOB-CONTROL (CAB HEATER, AIR CONDITIONER)	
	5E	1	**110-6109**	1	KNOB-CONTROL (BLOWER FAN SPEED)	
	6	1	**110-7886**	1	SWITCH AS-WIPER (24-VOLT) (FRONT INTERMITTENT)	
	6A	1	**110-7886**	1	SWITCH AS-WIPER (24-VOLT) (LH DOOR)	
	6B	1	**110-7886**	1	SWITCH AS-WIPER (24-VOLT) (RH DOOR)	
	6C	1	**110-7886**	1	SWITCH AS-WIPER (24-VOLT) (REAR INTERMITTENT)	
					(EACH INCLUDES)	
		1	**2H-3920**	1	LOCKWASHER	
		1	**3E-3389**	1	WEDGE-RECEPTACLE LOCK	
		1	**6V-8369**	1	NUT (7/16-28-THD)	
		1	**8T-8737**	1	PLUG-SEAL	
		1	**9W-0852**	4	PIN-CONNECTOR (14-GA)	
		1	**186-3735**	3	PIN-CONNECTOR (16-GA TO 18-GA)	
		1	**102-8806**	1	KIT-RECEPTACLE (8-PIN)	
					(INCLUDES RECEPTACLE AS & WEDGE)	
	7	1	**157-1361**	1	SWITCH AS-ROTARY (A/C CONTROL)	
		1	**9W-0852**	6	PIN-CONNECTOR (14-GA)	
		1	**102-8805**	1	KIT-RECEPTACLE (6-PIN)	
					(INCLUDES RECEPTACLE AS & WEDGE)	
	8	1	**229-2578**	1	SWITCH AS-ROCKER (AIR CONDITIONER ON, OFF)	
	9	1	**230-3023**	1	PLATE	
	10	1	**236-8721**	1	POTENTIOMETER AS	
		1	**236-8722**	1	WASHER	
		1	**102-8803**	1	KIT-RECEPTACLE (3-PIN)	
					(INCLUDES RECEPTACLE AS & WEDGE)	
		1	**186-3735**	3	PIN-CONNECTOR (16-GA TO 18-GA)	
	11	1	**245-2760**	8	SPACER (6.5X12.7X9.5-MM THK)	
	12	1	**246-4296**	1	CONTROL GP-HEAT & AIR COND	
		1	**102-8802**	1	KIT-RECEPTACLE (2-PIN)	
					(INCLUDES RECEPTACLE AS & WEDGE)	
		1	**3E-3365**	1	WEDGE-RECEPTACLE LOCK (2-PIN)	
		1	**186-3735**	2	PIN-CONNECTOR (16-GA TO 18-GA)	
	13	1	**246-5785**	1	FILM-PANEL (WIPER CONTROL)	
M	14	1	**5C-8312**	19	NUT (M4X0.7-THD)	

M-METRIC PART

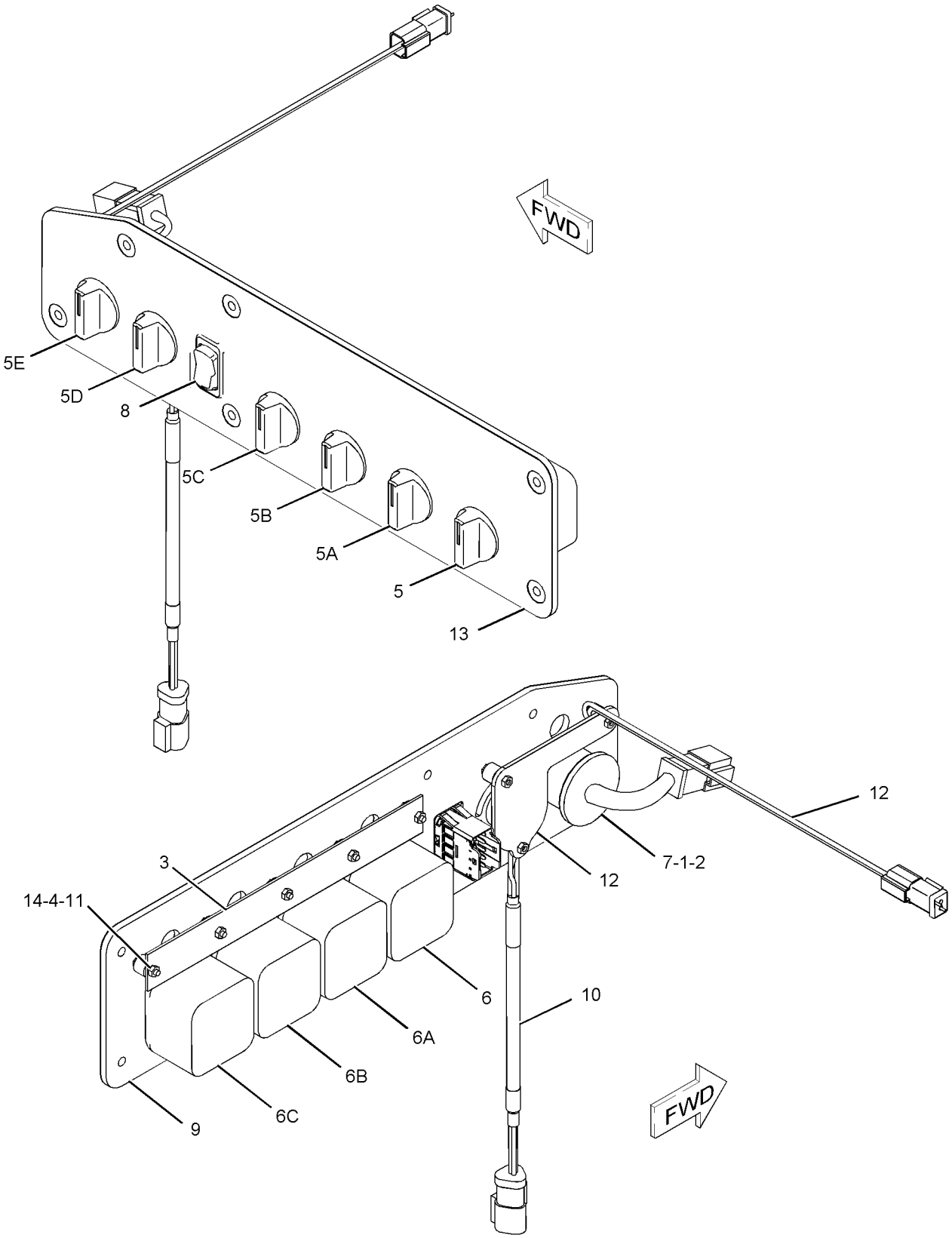

GRAPHIC #1 **<END>** g01110053

OPERATOR STATION

231-7314 PEDAL GP-GOVERNOR & BRAKE

S/N: RJG1-UP

PART OF 232-6622, 263-3318 CONTROL & MTG GP-PEDAL

ALSO AN ATTACHMENT

SMCS-4122 **i02469357**

NOTE	REF NO	GRAPHIC REF	PART NUMBER	QTY	PART NAME 1 2 3 4 5 6 (PRODUCT LEVEL)	SEE PAGE
	1	2	**1B-8706**	1	KEY-WOODRUFF	
	2	2	**1B-8714**	1	KEY-WOODRUFF	
	3	2	**2J-6356**	4	RING-RETAINING	
	4	2	**7P-4190**	4	BEARING-ROLLER	
	5	1	**9M-5731**	2	RIVET-POP	
M	6	1	**9X-6615**	4	BOLT (M5X0.8X30-MM)	
	7	1	**110-8379**	1	PEDAL (BRAKE) (SERVICE)	
	8	2	**111-3780**	1	SPRING	
	9	1	**111-3781**	2	BOLT-ANCHOR (M10X1.5X23-MM)	
	10	1	**132-7077**	1	SWITCH AS-LIMIT (SERVICE BRAKE PEDAL)	
		1	**6V-8376**	3	SCREW-MACHINE (8-32X0.25-IN)	
		1	**9B-7233**	3	LOCKWASHER	
	11	1	**145-3405**	2	SPACER (10.3X16.7X8-MM THK)	
	12	1	**160-1433**	1	LEVER	
	13	2	**160-1434**	1	LEVER	
Y	14	1	**160-2443**	1	SENSOR GP-POSITION (ROTARY) (DECELERATION PEDAL)	281
	15	1	**164-9541**	1	HARNESS AS-SWITCH (SERVICE BRAKE)	
		1	**102-8804**	1	KIT-RECEPTACLE (4-PIN)	
					(INCLUDES RECEPTACLE AS & WEDGE)	
	16	1	**165-9100**	1	LINK	
	17	1	**165-9103**	1	SPRING	
	18	1	**165-9104**	1	SPACER (6.5X9.5X10-MM THK)	
	19	1	**244-1419**	1	SPRING	
	20	1	**205-7331**	1	SPACER (20.32X28.01X0.41-MM THK)	
Y	21	1	**224-5530**	1	SENSOR GP-POSITION (SERVICE BRAKE PEDAL)	282
	22	1	**231-7306**	1	PEDAL (DECELERATOR)	
	23	1	**231-7307**	1	PLATE	
	24	1	**231-7308**	1	GASKET	
	25	2	**231-7309**	1	PLATE	
	26	1	**231-7310**	1	BRACKET AS	
	27	2	**231-7311**	1	SHAFT	
	28	2	**231-7312**	1	SHAFT	
	29	1	**231-7313**	1	HOUSING	
	30	1	**096-5962**	2	WASHER-HARD (3.4X7X0.8-MM THK)	
M	31	2	**106-5472**	1	SETSCREW-HEX SOCKET (M5X0.8X20-MM)	
	32	2	**111-9251**	4	WASHER-HARD (20X35X1.6-MM THK)	
M	33	1	**127-2170**	2	SCREW-TRUSS HEAD (M8X1.25X20-MM)	
	34	1	**4B-3609**	1	SETSCREW-SQUARE HEAD (3/8-16X1.5-IN)	
	35	2	**6V-0894**	2	SEAL-O-RING	
M	36	1	**6V-7357**	1	BOLT (M6X1X25-MM)	
M	37	1	**6V-7744**	2	LOCKNUT (M10X1.15-THD)	
	38	1	**6V-8801**	1	NUT (3/8-16-THD)	
	39	1	**7X-7729**	2	WASHER (11X25X3-MM THK)	
	40	2	**8F-7702**	2	SEAL-LIP TYPE	
	41	1	**8T-4121**	4	WASHER-HARD (11X21X2.5-MM THK)	
M	42	1	**8T-4136**	2	BOLT (M10X1.5X25-MM)	
M	43	1	**8T-4186**	2	BOLT (M10X1.5X40-MM)	
M	44	1	**8T-4195**	2	BOLT (M10X1.5X30-MM)	
	45	1	**8T-4205**	2	WASHER-HARD (7.2X14.5X2-MM THK)	
M	46	2	**8T-4970**	2	BOLT (M6X1X14-MM)	
	47	1	**9X-6281**	2	SCREW-MACHINE (4-40X1-IN)	
	48	2	**9X-8256**	2	WASHER (6.6X12X2-MM THK)	

M-METRIC PART
Y-SEPARATE ILLUSTRATION

231-7314 **PEDAL GP-GOVERNOR & BRAKE** *(contd.)* **i02469357**

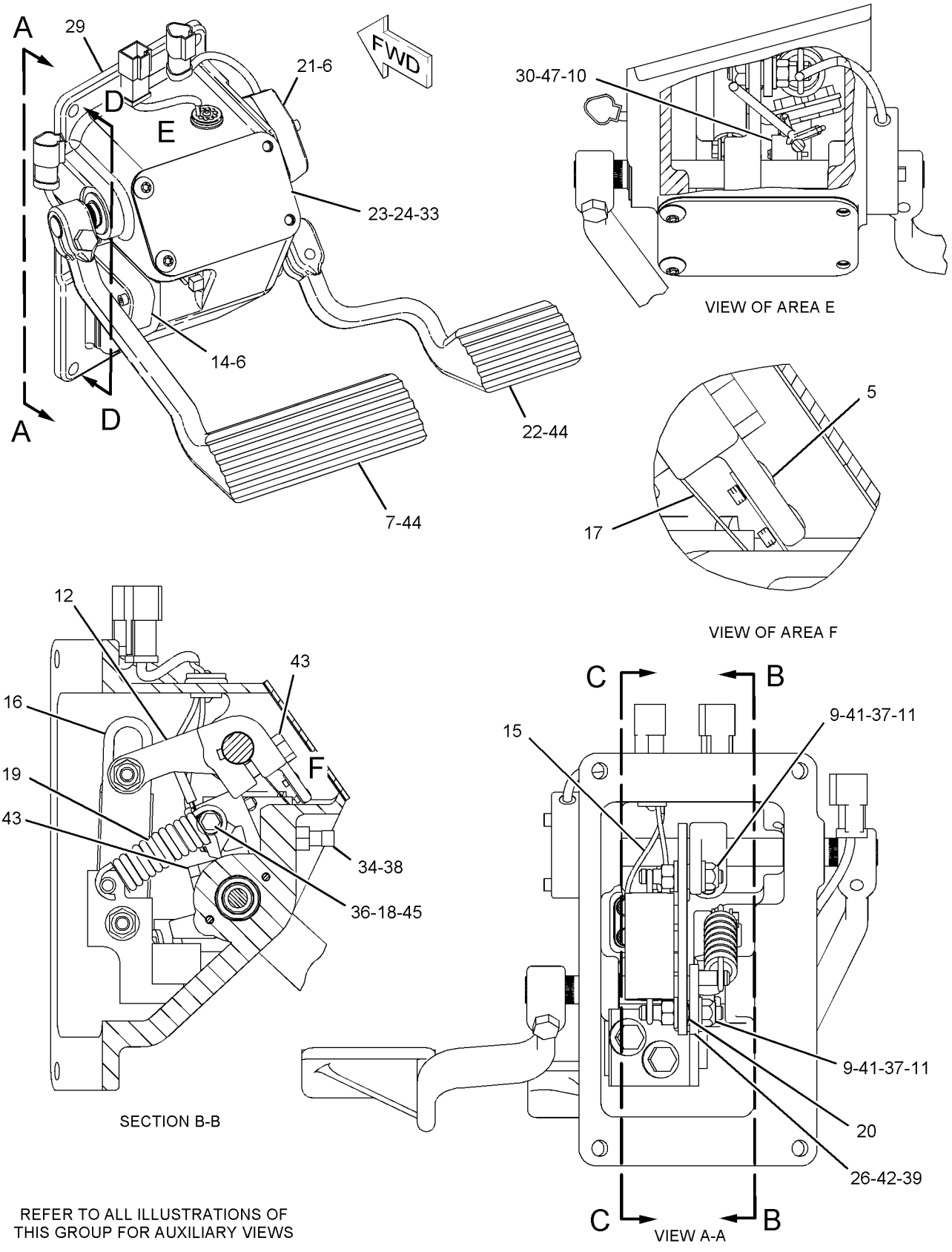

REFER TO ALL ILLUSTRATIONS OF THIS GROUP FOR AUXILIARY VIEWS

GRAPHIC #1 g01110949

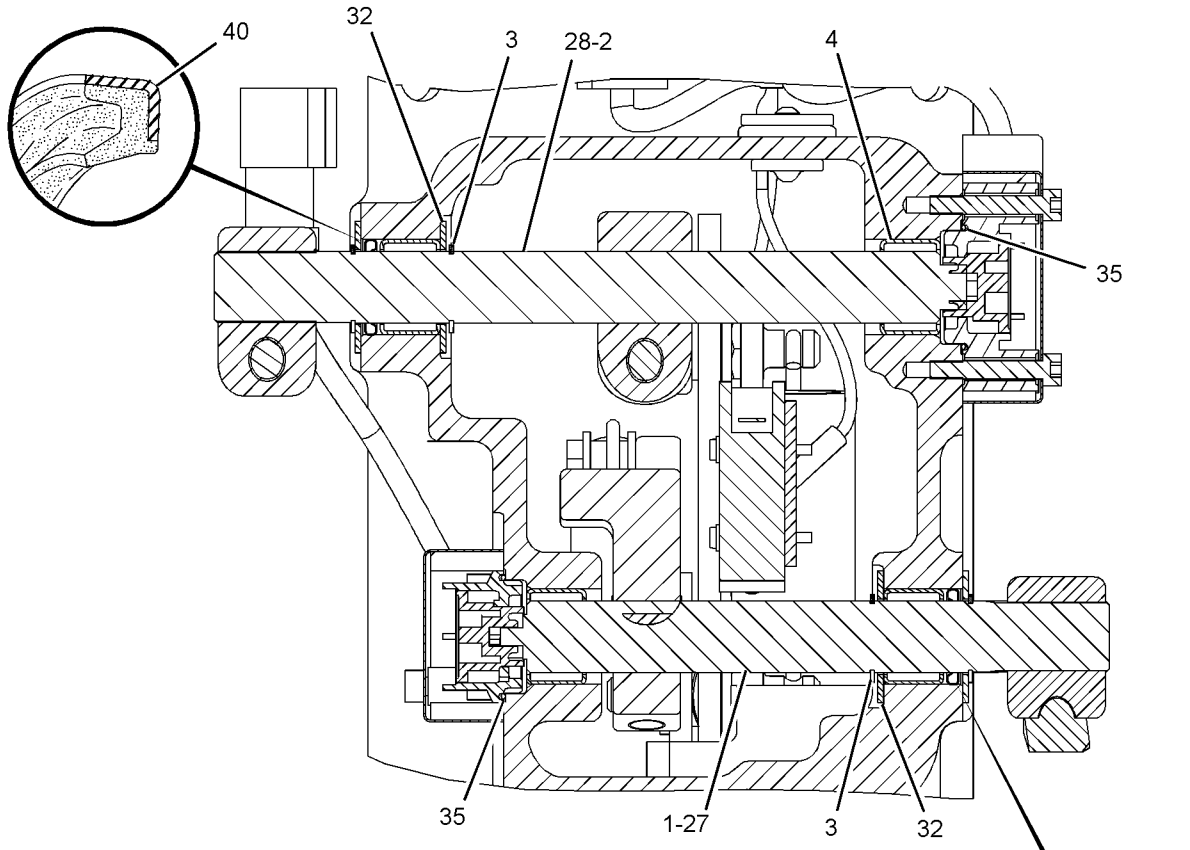

SECTION D-D

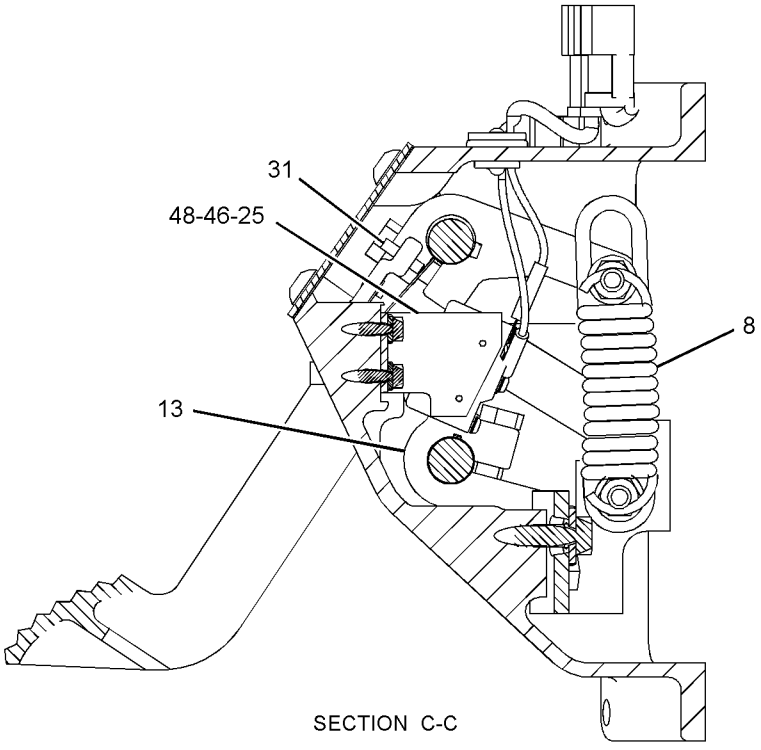

SECTION C-C

REFER TO ALL ILLUSTRATIONS OF THIS GROUP FOR AUXILIARY VIEWS

GRAPHIC #2 **<END>** g01111651

OPERATOR STATION

219-4135 PLATFORM AR

S/N: RJG1-UP

PART OF 212-2741 CHASSIS AR

SMCS-7253 **i02044230**

NOTE	PART NUMBER	QTY	PART NAME 1 2 3 4 5 6 (PRODUCT LEVEL)	SEE PAGE
Y	*214-2014*	1	CONSOLE GP-FRONT	786
Y	*209-5154*	1	CONSOLE GP-OPERATOR	787
Y	*231-3767*	1	HEATER GP-CAB	802
Y	*205-8576*	1	PLATFORM GP	850
Y	*226-9249*	1	TANK GP-WINDOW WASHER	874
Y	*218-7063*	1	WIRING GP-PLATFORM	336

Y-SEPARATE ILLUSTRATION

<END>

OPERATOR STATION

205-8576 PLATFORM GP

S/N: RJG1-UP

PART OF 219-4135 PLATFORM AR

SMCS-7253, 7254 **i02349256**

NOTE	REF NO	GRAPHIC REF	PART NUMBER	QTY	PART NAME 1 2 3 4 5 6 (PRODUCT LEVEL)	SEE PAGE
	1	2	**117-8131**	8	MOUNT AS (CAB)	
	2	2	**185-3666**	4	SLEEVE	
	3	1	**209-9331**	1	PLATFORM AS	
	3A	1	**209-9336**	1	PANEL AS-DASH	
	3B	1	**209-9342**	1	CONSOLE AS-RH	
	3C	1	**209-9343**	1	CONSOLE AS-LH	
M	3D	2	**5C-7261**	8	NUT (M8X1.25-THD)	
	3E	2	**7T-1099**	15	LINK	
	4	1	**209-9537**	1	PLATE AS	
		1	**215-2815**	1	GASKET	
	5	1	**209-9706**	2	STRIP	
	6	2	**215-2802**	1	PLATE	
	7	1	**215-2809**	2	PLATE AS	
	8	1	**215-2812**	2	GASKET	
	9	1	**226-7874**	1	PLATE	
	10	1	**226-7875**	1	PLATE	
	11	2	**233-6313**	2	SUPPORT (FOOT)	
	12	1	**235-8110**	1	PLATE AS	
	13	1	**252-6953**	1	PLATE AS	
	14	1	**252-6954**	1	GASKET	
	15	1	**256-4313**	1	FLOORPLATE AS	
	15A	2	**215-2807**	1	PLATE AS	
	15B	2	**215-2814**	1	GASKET	
	15C	2	**226-9189**	1	PANEL	
	16	1	**256-4314**	1	FLOORPLATE AS	
	16A	2	**215-2808**	1	PLATE AS	
	16B	2	**215-2813**	1	GASKET	
	16C	2	**226-9193**	1	PANEL	
M	17	1	**5C-9553**	2	BOLT (M6X1X16-MM)	
	18	2	**6T-8714**	4	WASHER-HARD (28X125X12-MM THK)	
	19	1,2	**7X-7729**	47	WASHER (11X25X3-MM THK)	
M	20	2	**8C-3290**	4	BOLT (M24X3X150-MM)	
	21	1,2	**8T-4121**	9	WASHER-HARD (11X21X2.5-MM THK)	
M	22	1,2	**8T-4136**	47	BOLT (M10X1.5X25-MM)	
M	23	1	**8T-4137**	5	BOLT (M10X1.5X20-MM)	
	24	2	**8T-4167**	4	WASHER-HARD (26X44X4-MM THK)	
M	25	2	**9X-2040**	4	SCREW-TRUSS HEAD (M10X1.5X25-MM)	
	26	1	**9X-8256**	2	WASHER (6.6X12X2-MM THK)	

M-METRIC PART

REFER TO ALL ILLUSTRATIONS OF
THIS GROUP FOR AUXILIARY VIEWS

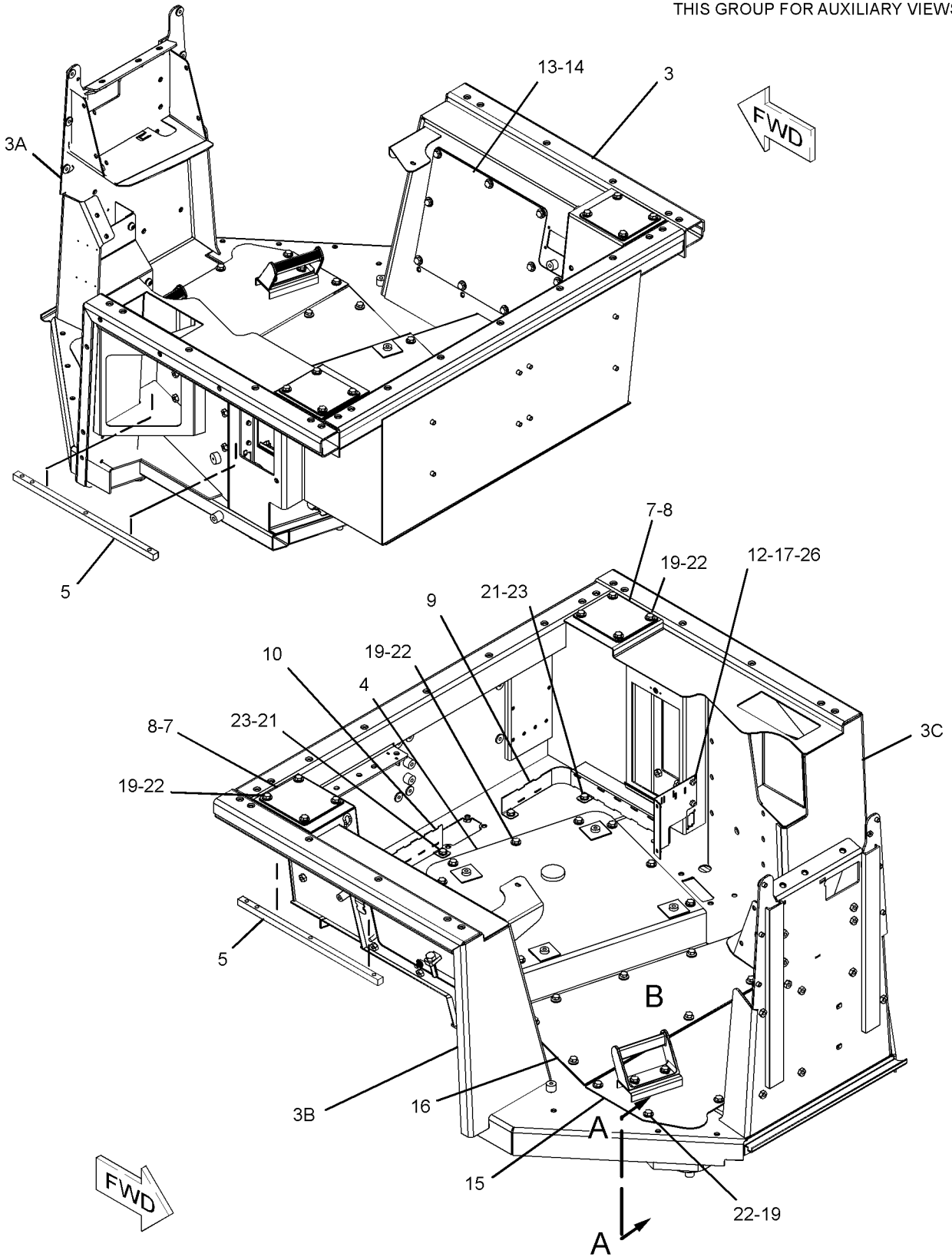

GRAPHIC #1

g01196279

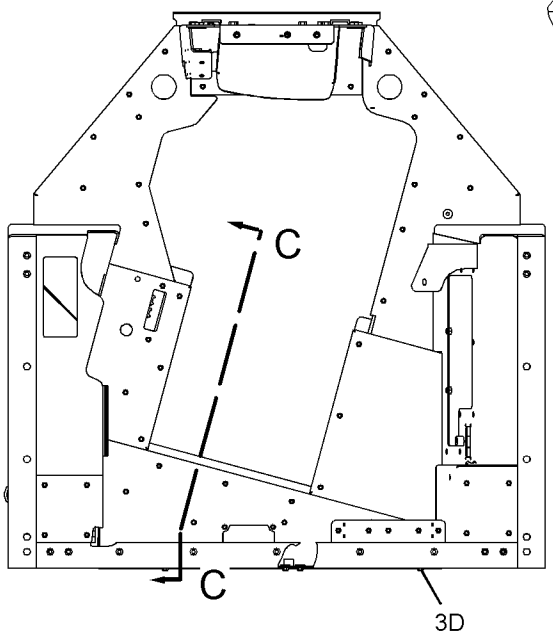

TOP VIEW

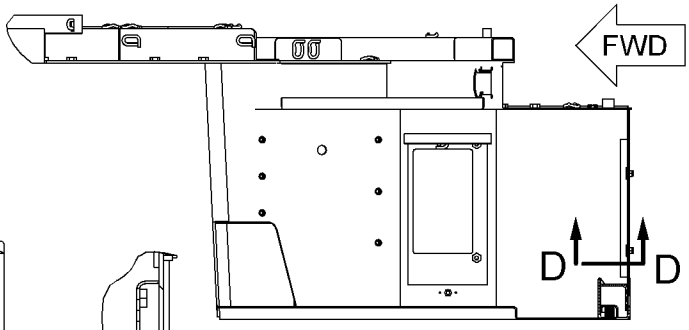

SECTION C-C

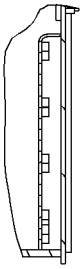

SECTION D-D

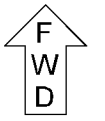

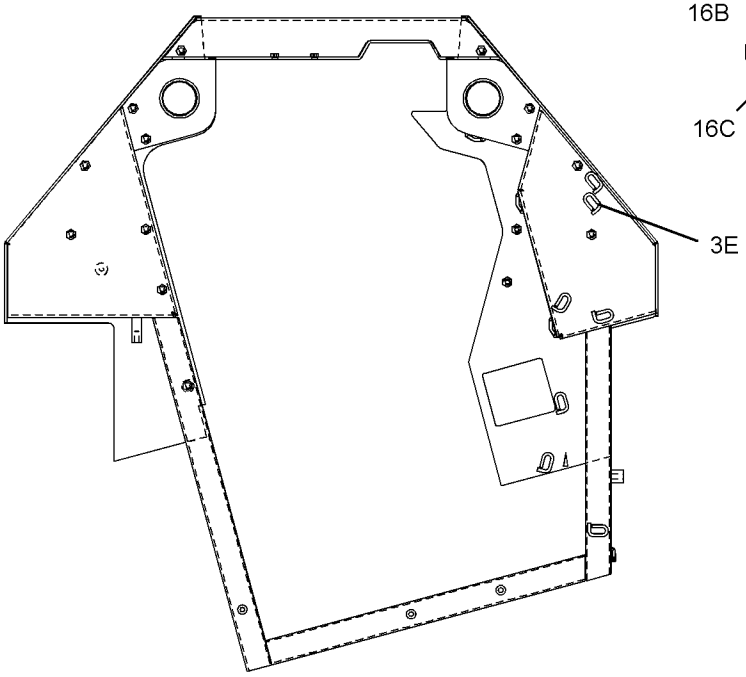

BOTTOM VIEW

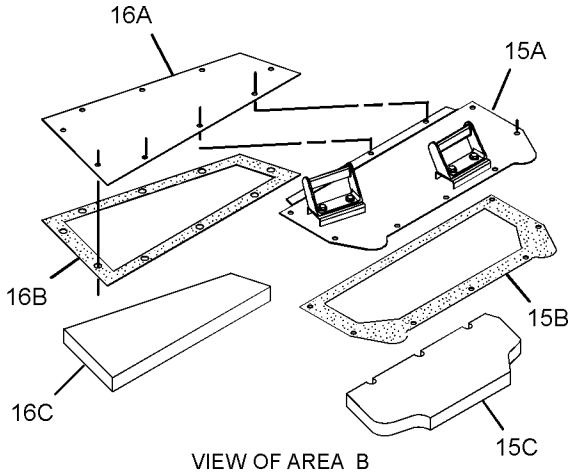

VIEW OF AREA B
(EXPLODED)

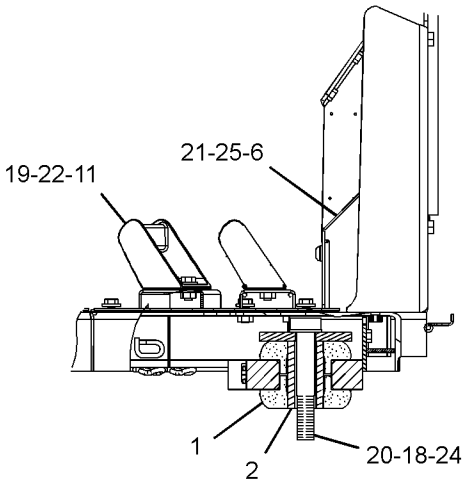

VIEW A-A

REFER TO ALL ILLUSTRATIONS OF
THIS GROUP FOR AUXILIARY VIEWS

GRAPHIC #2 **<END>** g01196291

OPERATOR STATION

210-2270 RECLINER GP-SEAT

S/N: RJG1-UP
PART OF 178-0603, 180-7304 SEAT GP
ALSO AN ATTACHMENT

SMCS-7312 **i02348953**

NOTE	REF NO	GRAPHIC REF	PART NUMBER	QTY	PART NAME 1 2 3 4 5 6 (PRODUCT LEVEL)	SEE PAGE
	1	1	**177-1862**	1	BRACKET (SEAT BELT)	
	2	1	**210-2262**	1	BRACKET AS	
	3	1	**210-2263**	1	BRACKET AS	
	4	1	**210-2266**	1	GEAR (14-TEETH)	
	5	1	**210-2268**	1	SHAFT AS	
	6	1	**217-7933**	1	LATCH	
	7	1	**236-5197**	1	SPRING	
	8	1	**031-0214**	1	BOLT-LOCKING (1/4-20X0.5-IN)	
	9	1	**101-2867**	1	WASHER-HARD (7.2X25X2-MM THK)	
	10	1	**4M-6425**	1	BOLT (5/16-18X1-IN)	
	11	1	**5M-2894**	1	WASHER-HARD (10.2X18.5X2.5-MM THK)	
	12	1	**5S-7383**	1	BOLT (3/8-16X1.75-IN)	
	13	1	**8T-4224**	1	WASHER-HARD (8.8X16X2-MM THK)	

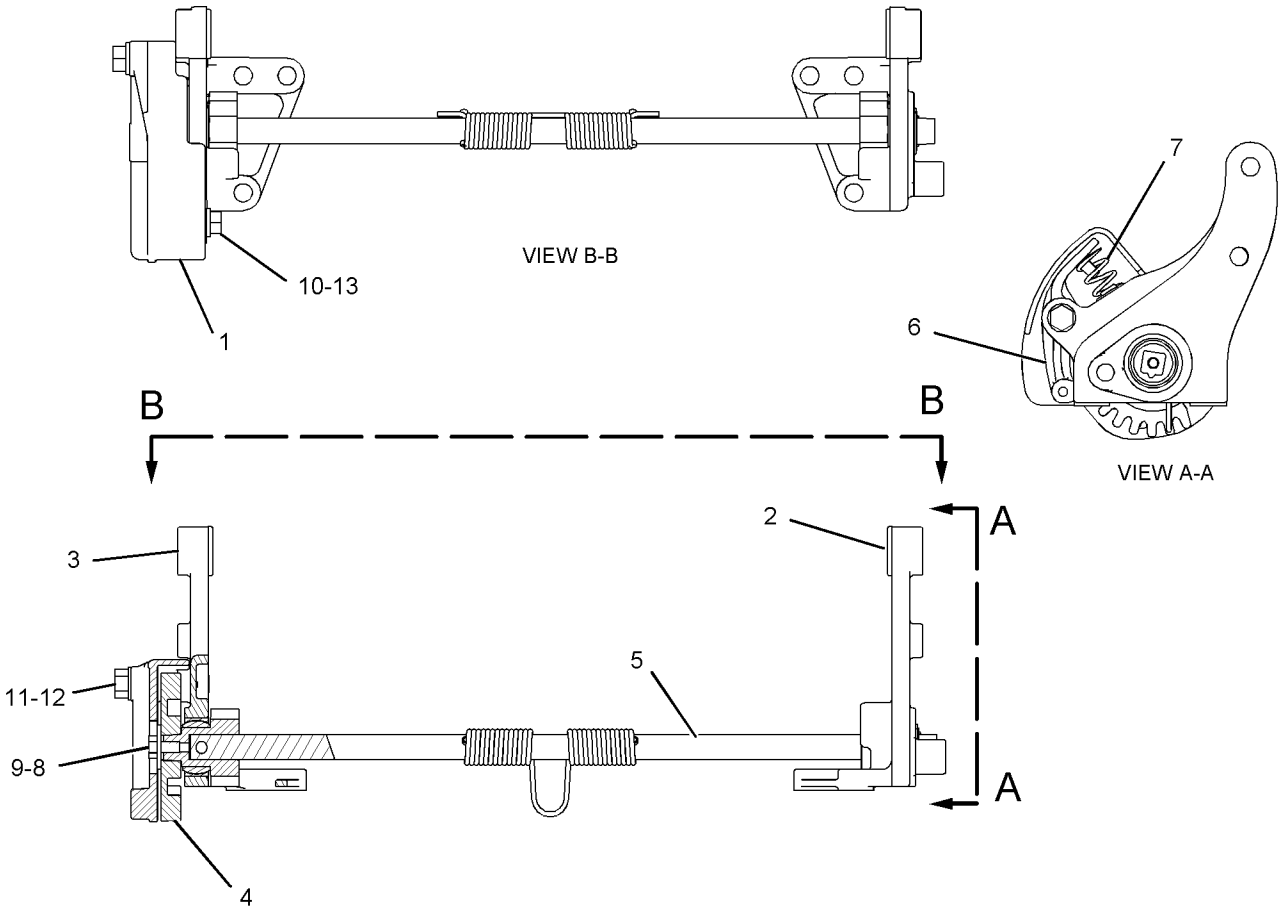

GRAPHIC #1 **<END>** g01040293

OPERATOR STATION

213-7067 ROPS GP

S/N: RJG1-UP

PART OF 212-2741 CHASSIS AR

SMCS-7177, 7301 **i02285796**

NOTE	REF NO	GRAPHIC REF	PART NUMBER	QTY	PART NAME 1 2 3 4 5 6 (PRODUCT LEVEL)	SEE PAGE
	1	1	**9U-9956**	1	HANDHOLD-RH	
	2	1	**213-7066**	1	ROPS AS	
	3	1	**233-9314**	1	HANDHOLD-LH	
	4	1	**5C-6565**	4	BOLT (1/2-13X1.125-IN)	
	5	1	**5P-1076**	4	WASHER-HARD (13.5X30X4-MM THK)	
	6	1	**7X-0429**	12	BOLT (1-1/4-7X4.5-IN)	
	7	1	**7X-0533**	12	WASHER-HARD (34X55X6-MM THK)	

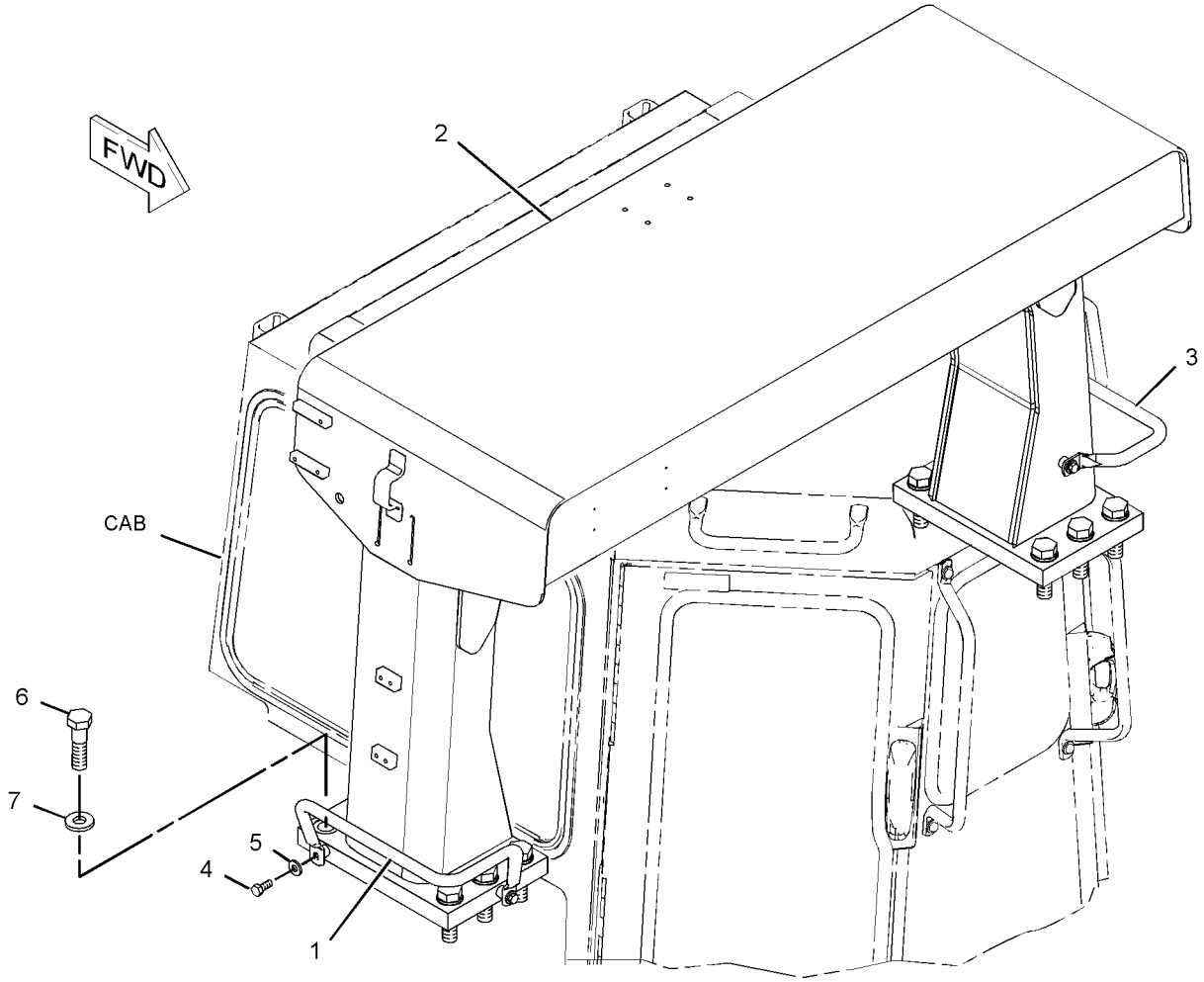

GRAPHIC #1 **<END>** g01138978

OPERATOR STATION

213-6382 SCREEN GP-PROTECTION–REAR

S/N: RJG1-UP

AN ATTACHMENT

SMCS-7165 **i02353222**

NOTE	REF NO	GRAPHIC REF	PART NUMBER	QTY	PART NAME 1 2 3 4 5 6 (PRODUCT LEVEL)	SEE PAGE
	1	1	**216-8198**	1	SCREEN AS	
	2	1	**258-7318**	1	PLATE AS	
		1	**7T-1099**	4	LINK	
		1	**8J-7236**	3	NUT-WELD (3/4-10-THD)	
	3	1	**258-7319**	1	PLATE AS	
		1	**7T-1099**	4	LINK	
		1	**8J-7236**	3	NUT-WELD (3/4-10-THD)	
	4	1	**7X-0365**	8	BOLT (3/4-10X1.5-IN)	
	5	1	**7X-0582**	4	WASHER-HARD (20X44.5X6-MM THK)	
	6	1	**8T-4994**	6	WASHER-HARD (20X36.5X3.5-MM THK)	
	7	1	**7X-0366**	2	BOLT (3/4-10X2-IN)	
	8	1	**1K-5760**	2	SPACER (0.781X1.375X0.81-IN THK)	

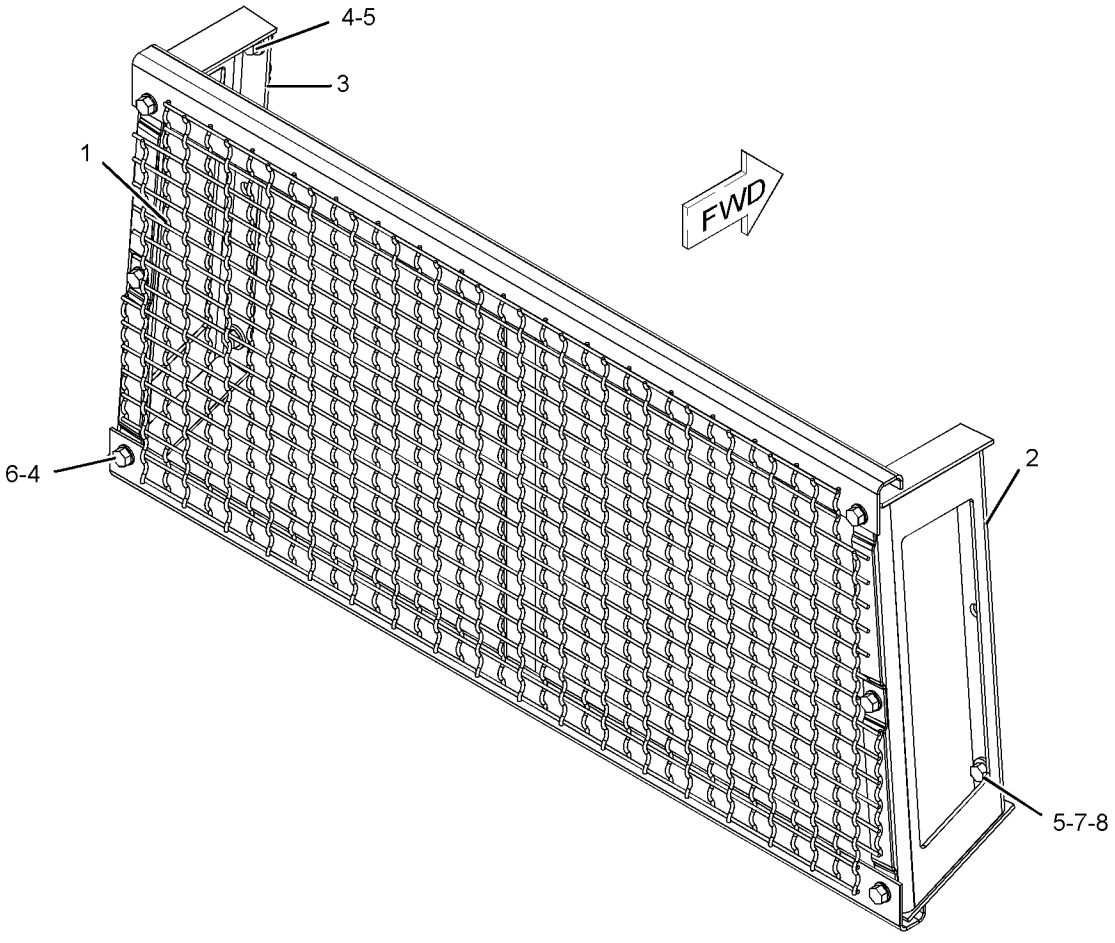

GRAPHIC #1 **<END>** g01190890

OPERATOR STATION

214-1096 SEAT & MOUNTING GP—CLOTH

S/N: RJG1-UP

PART OF 212-2741 CHASSIS AR

SMCS-7312 **i02250647**

NOTE	REF NO	GRAPHIC REF	PART NUMBER	QTY	PART NAME 1 2 3 4 5 6 (PRODUCT LEVEL)	SEE PAGE
Y	1	1	**160-7186**	1	SEAT GP-SUSPENSION (CLOTH)	866
	2	1	**7X-7729**	4	WASHER (11X25X3-MM THK)	
M	3	1	**9X-2125**	4	BOLT-LOCKING (M10X1.5X25-MM)	

M-METRIC PART
Y-SEPARATE ILLUSTRATION

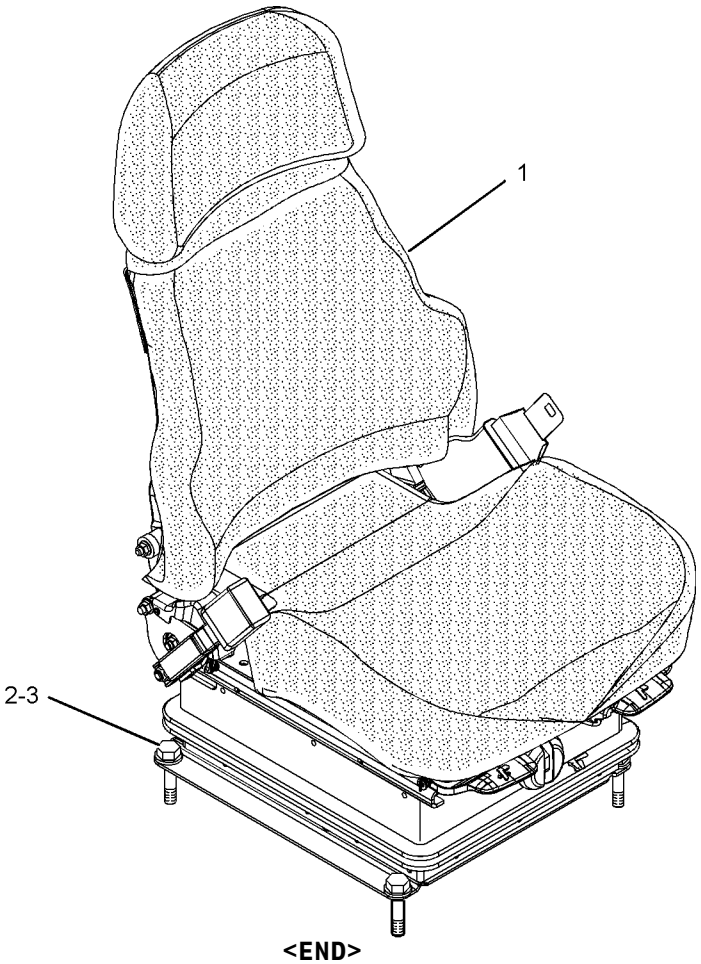

GRAPHIC #1 **<END>** g01017306

OPERATOR STATION

178-0603 SEAT GP–CLOTH

S/N: RJG1-UP
PART OF 178-0606 SEAT GP
ALSO AN ATTACHMENT

SMCS-7312 **i02360439**

NOTE	REF NO	GRAPHIC REF	PART NUMBER	QTY	PART NAME 1 2 3 4 5 6 (PRODUCT LEVEL)	SEE PAGE
	1	1	**218-0861**	1	PAN AS	
		1	**8T-9082**	5	RIVET-POP	
		1	**217-9049**	1	CUSHION AS	
	2	1	**143-1288**	8	LOCKNUT-FLANGE (3/8-16-THD)	
	3	1	**171-1230**	6	SCREW-BUTTON HEAD (3/8-16X1-IN)	
	4	1	**171-6682**	1	BAR	
	5	1	**172-2416**	2	PIN	
Y	6	1	*173-1028*	1	ADJUSTER GP-SEAT	762
	7	1	**177-1863**	2	BOLT-PIVOT (3/8-16X2.89-IN)	
Y	8	1	*210-2270*	1	RECLINER GP-SEAT	853
Y	9	1	*178-0604*	1	PAN GP-BACKREST	841
	10	1	**184-2298**	1	ROD	
	11	1	**184-2299**	4	WASHER (7X25.4X2.54-MM THK)	
	12	1	**095-0843**	2	PIN-COTTER	
	13	1	**5V-1496**	2	RETAINER	
	14	1	**6V-7646**	2	WASHER-HARD (7.2X25X2-MM THK)	
	15	1	**8T-0328**	1	WASHER-HARD (5.5X10X1-MM THK)	
	16	1	**8T-4205**	1	WASHER-HARD (7.2X14.5X2-MM THK)	
	17	1	**8Y-6277**	2	SPACER (10.5X28.6X10-MM THK)	

Y-SEPARATE ILLUSTRATION

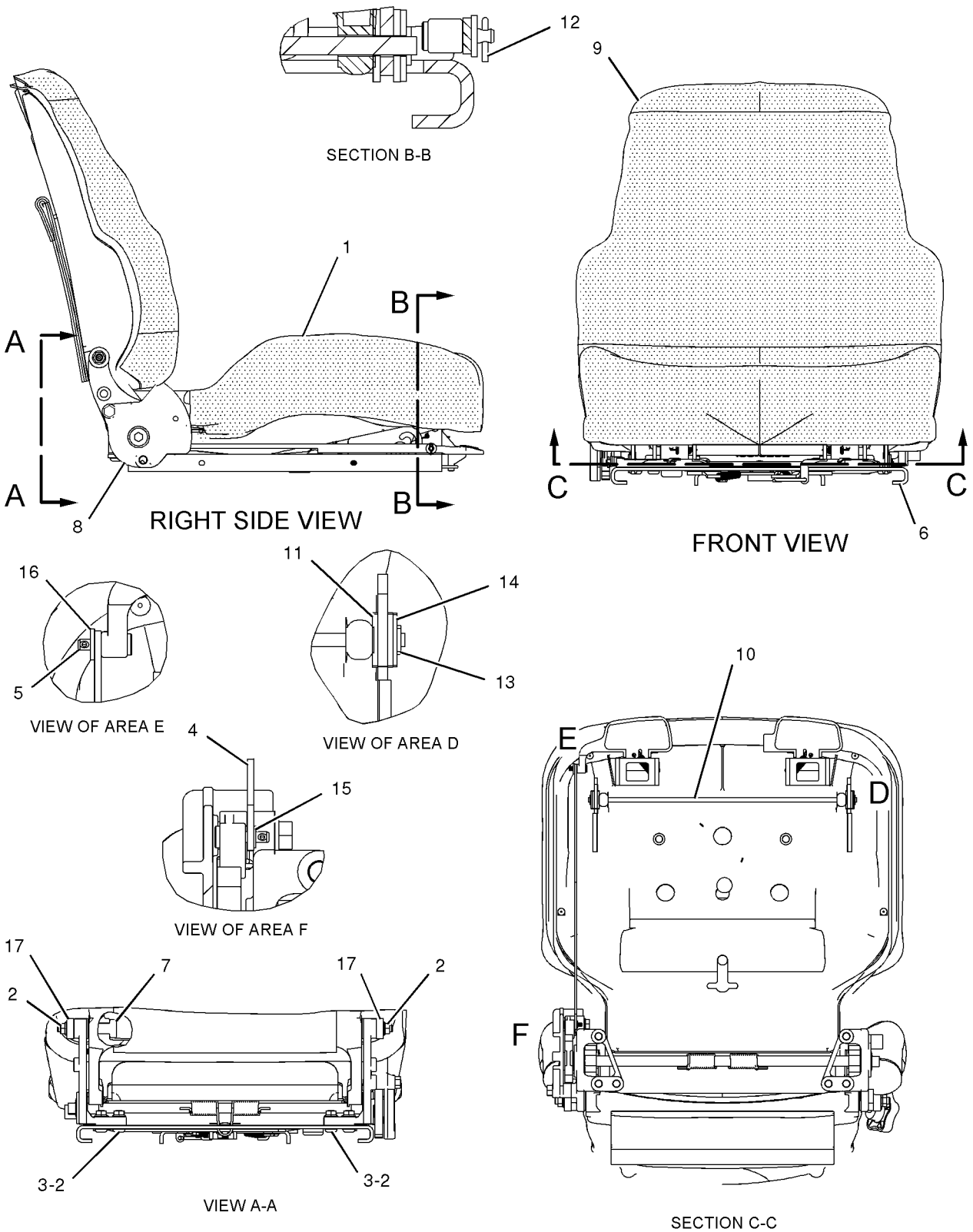

GRAPHIC #1 **<END>** g01023456

OPERATOR STATION

178-0606 SEAT GP–CLOTH

S/N: RJG1-UP
PART OF 160-7186, 200-3174 SEAT GP-SUSPENSION
ALSO AN ATTACHMENT

SMCS-7312 **i02360459**

NOTE	REF NO	GRAPHIC REF	PART NUMBER	QTY	PART NAME 1 2 3 4 5 6 (PRODUCT LEVEL)	SEE PAGE
	1	1	**177-4937**	1	SPACER (11.7X19.8X20.3-MM THK)	
Y	2	1	**178-0603**	1	SEAT GP (CLOTH)	857
	3	1	**222-0345**	1	SEAT BELT GP (RETRACTABLE)	
C	4	1	**229-1494**	1	EXTENSION GP-BACKREST (CLOTH)	
	5	1	**0T-0244**	1	BOLT (7/16-20X1.25-IN)	
	6	1	**205-6388**	1	BOLT (7/16-20X1.75-IN)	

C-CHANGE FROM PREVIOUS TYPE
Y-SEPARATE ILLUSTRATION

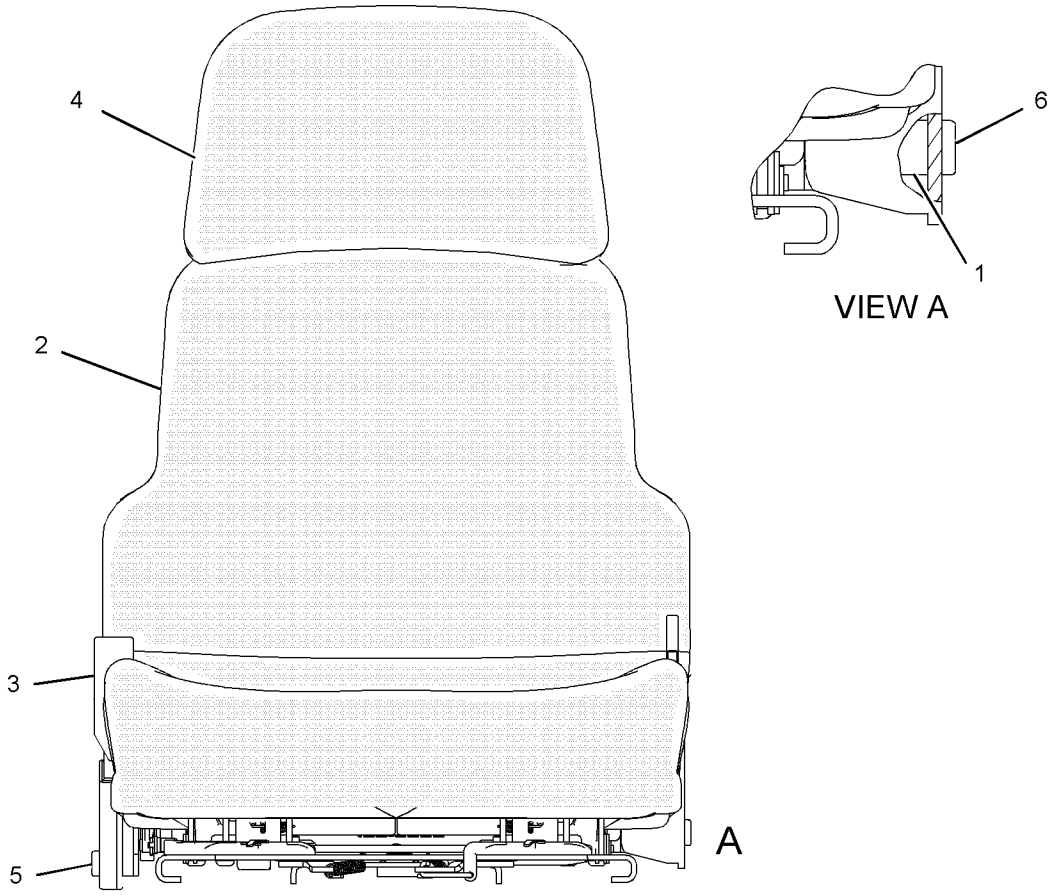

FRONT VIEW

GRAPHIC #1

<END>

g01084230

OPERATOR STATION

180-7304 SEAT GP—VINYL

S/N: RJG1-UP
PART OF 184-6011 SEAT GP
AN ATTACHMENT

SMCS-7312 **i02360761**

NOTE	REF NO	GRAPHIC REF	PART NUMBER	QTY	PART NAME 1 2 3 4 5 6 (PRODUCT LEVEL)	SEE PAGE
	1	1	**143-1288**	8	LOCKNUT-FLANGE (3/8-16-THD)	
	2	1	**171-1230**	6	SCREW-BUTTON HEAD (3/8-16X1-IN)	
	3	1	**171-6682**	1	BAR	
	4	1	**172-2416**	2	PIN	
Y	5	1	*173-1028*	1	ADJUSTER GP-SEAT	762
	6	1	**173-3283**	1	PAN AS (VINYL)	
		1	**169-1026**	1	CUSHION AS	
		1	**6K-3273**	5	RIVET-POP	
	7	1	**177-1863**	2	BOLT-PIVOT (3/8-16X2.89-IN)	
Y	8	1	*180-7305*	1	PAN GP-BACKREST	843
	9	1	**184-2298**	1	ROD	
	10	1	**184-2299**	4	WASHER (7X25.4X2.54-MM THK)	
Y	11	1	*210-2270*	1	RECLINER GP-SEAT	853
	12	1	**095-0843**	2	PIN-COTTER	
	13	1	**5V-1496**	2	RETAINER	
	14	1	**6V-7646**	2	WASHER-HARD (7.2X25X2-MM THK)	
	15	1	**8T-0328**	1	WASHER-HARD (5.5X10X1-MM THK)	
	16	1	**8T-4205**	1	WASHER-HARD (7.2X14.5X2-MM THK)	
	17	1	**8Y-6277**	2	SPACER (10.5X28.6X10-MM THK)	

Y-SEPARATE ILLUSTRATION

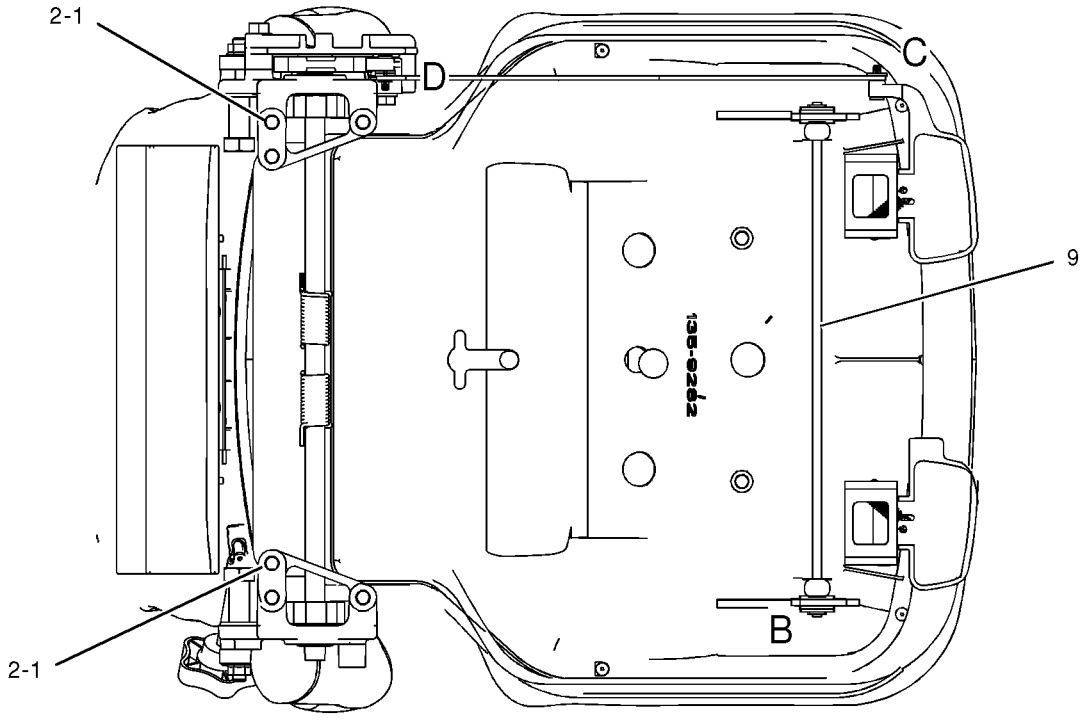

SECTION A-A

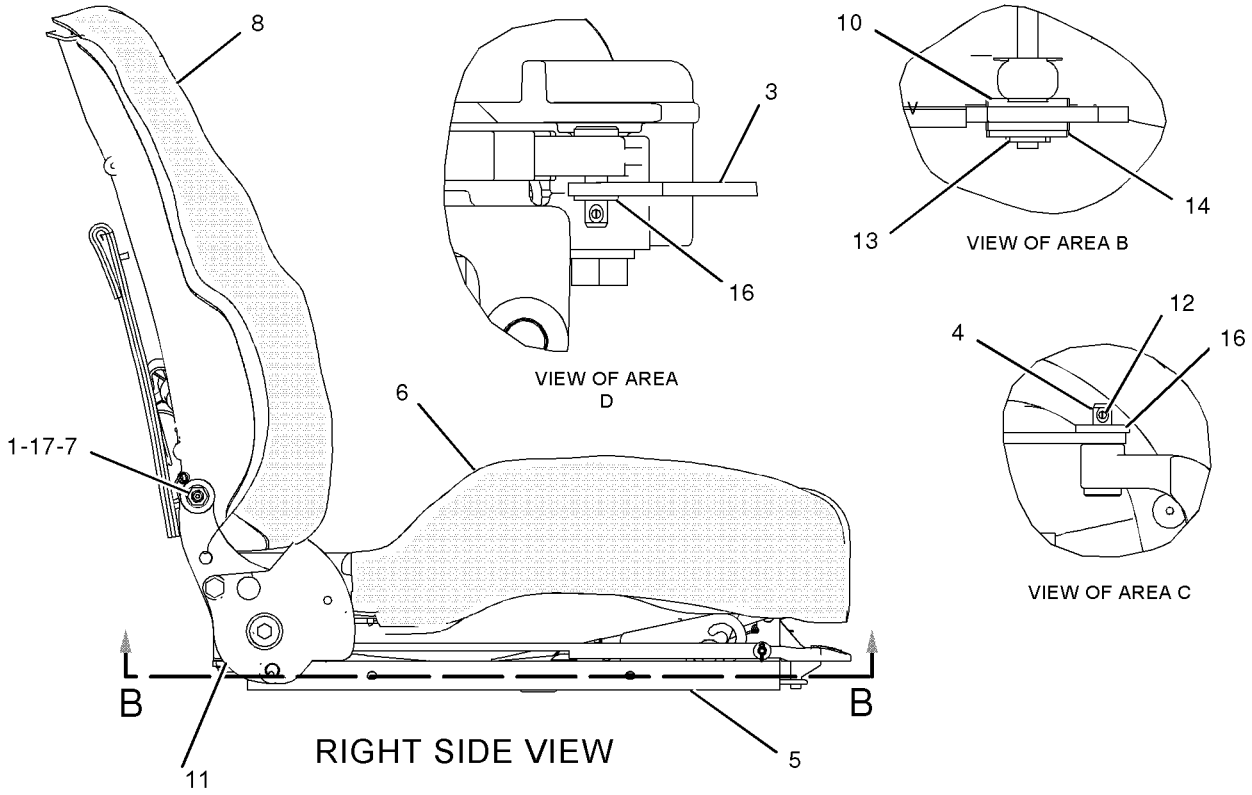

VIEW OF AREA D

VIEW OF AREA B

VIEW OF AREA C

RIGHT SIDE VIEW

GRAPHIC #1 **<END>** g01037175

OPERATOR STATION

184-6011 SEAT GP–VINYL

S/N: RJG1-UP
PART OF 159-2950 SEAT GP-SUSPENSION
AN ATTACHMENT

SMCS-7312 **i02360772**

NOTE	REF NO	GRAPHIC REF	PART NUMBER	QTY	PART NAME 1 2 3 4 5 6 (PRODUCT LEVEL)	SEE PAGE
	1	1	**173-3083**	1	EXTENSION GP-BACKREST (VINYL)	
		1	**117-4491**	1	ROD	
	2	1	**177-4937**	1	SPACER (11.7X19.8X20.3-MM THK)	
	3	1	**205-6388**	1	BOLT (7/16-20X1.75-IN)	
	4	1	**0T-0244**	1	BOLT (7/16-20X1.25-IN)	
Y	5	1	**180-7304**	1	SEAT GP (VINYL)	860
	6	1	**222-0345**	1	SEAT BELT GP (RETRACTABLE)	

Y-SEPARATE ILLUSTRATION

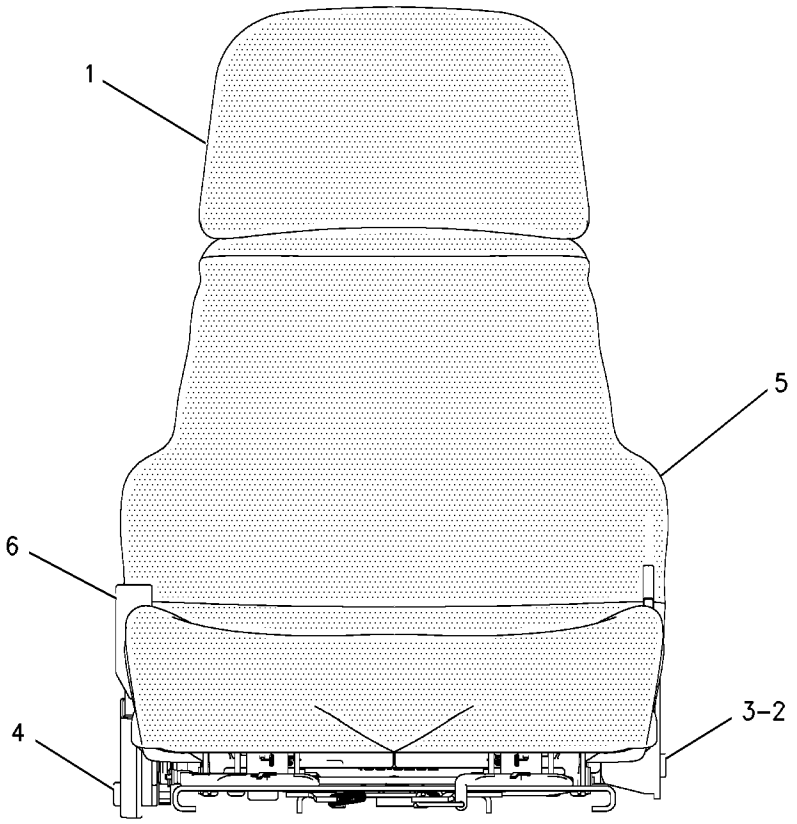

FRONT VIEW

GRAPHIC #1 **<END>** g00683843

OPERATOR STATION

214-1196 SEAT GP—AIR SUSPENSION, CLOTH

S/N: RJG1-UP

AN ATTACHMENT

SMCS-7312 **i02250648**

NOTE	REF NO	GRAPHIC REF	PART NUMBER	QTY	PART NAME 1 2 3 4 5 6 (PRODUCT LEVEL)	SEE PAGE
Y	1	1	**200-3174**	1	SEAT GP-SUSPENSION (AIR) (CLOTH)	867
	2	1	**9V-2818**	1	GROMMET	

Y-SEPARATE ILLUSTRATION

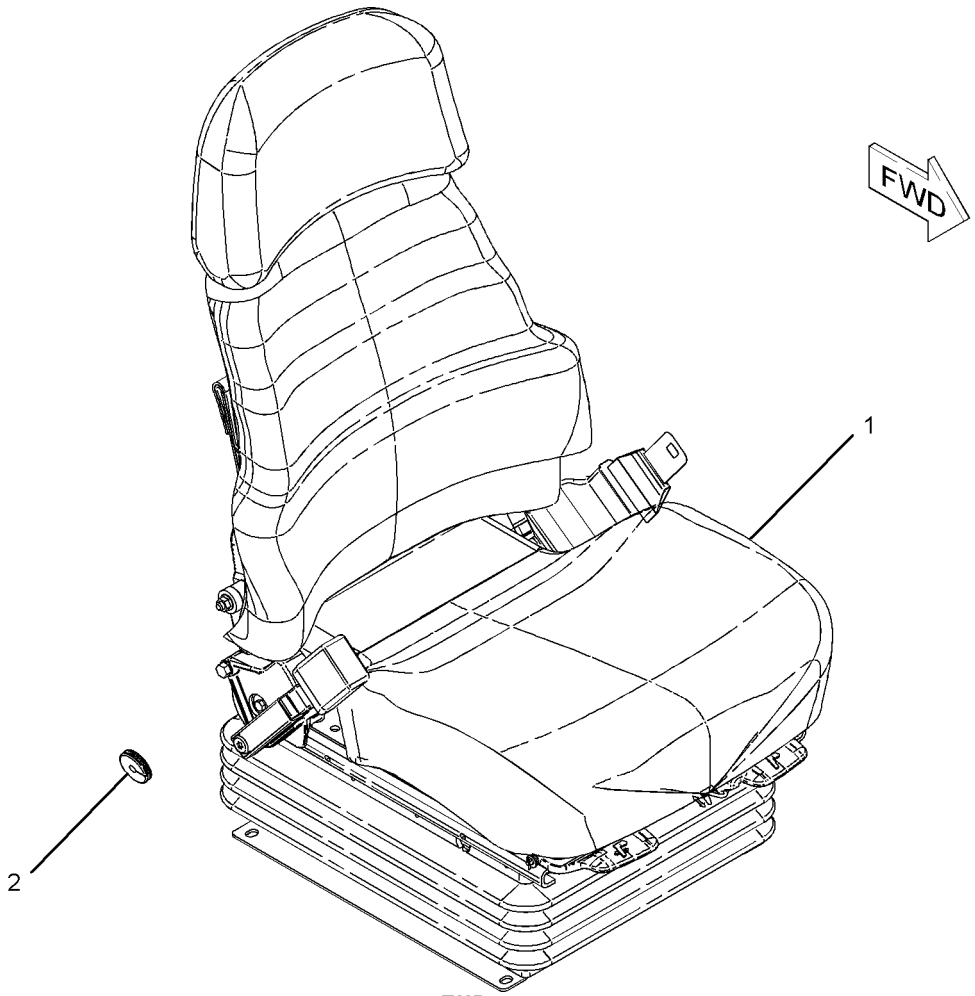

GRAPHIC #1 **<END>** g01021550

OPERATOR STATION

214-1197 SEAT GP—AIR SUSPENSION, VINYL

S/N: RJG1-UP

AN ATTACHMENT

SMCS-7312 **i02360770**

NOTE	REF NO	GRAPHIC REF	PART NUMBER	QTY	PART NAME 1 2 3 4 5 6 (PRODUCT LEVEL)	SEE PAGE
Y	1	1	**159-2950**	1	SEAT GP-SUSPENSION (AIR) (VINYL)	865

Y-SEPARATE ILLUSTRATION

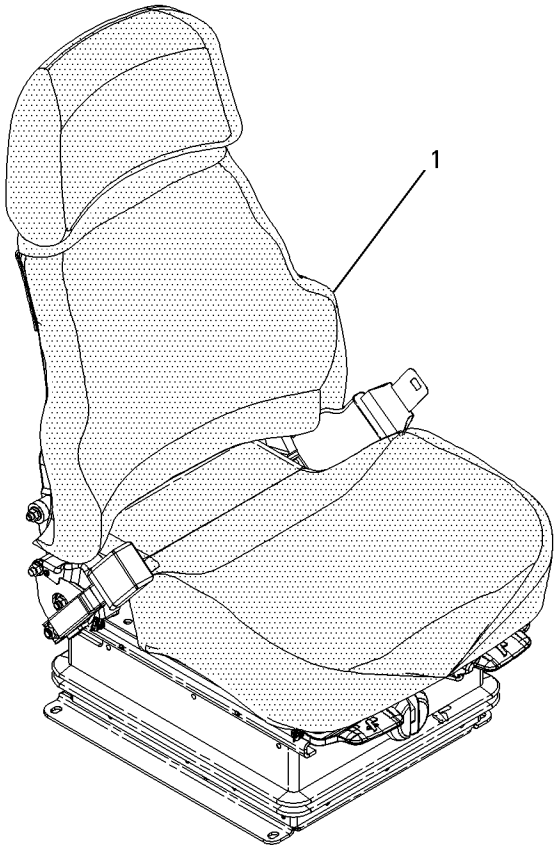

GRAPHIC #1 **<END>** g00695004

OPERATOR STATION

159-2950 SEAT GP-SUSPENSION–VINYL

S/N: RJG1-UP
PART OF 214-1197 SEAT GP
AN ATTACHMENT

SMCS-7321, 7324, 7336 **i02360776**

NOTE	REF NO	GRAPHIC REF	PART NUMBER	QTY	PART NAME 1 2 3 4 5 6 (PRODUCT LEVEL)	SEE PAGE
Y	1	1	**160-7165**	1	SUSPENSION GP-SEAT	868
Y	2	1	**184-6011**	1	SEAT GP	862
J	3	1	**161-9289**	4	BLOCK-SLIDER	
J	4	1	**4F-4879**	1	BOLT (3/8-16X0.5-IN)	
J	5	1	**203-7703**	2	WASHER-HARD (10.2X22.22X2.38-MM THK)	
J	6	1	**173-5787**	4	SETSCREW (1/4-20-THD)	
					AVAILABLE REPAIR KIT(S):	
J			**173-7035**	1	KIT-SLIDER BLOCK (SUSPENSION SEAT)	

J-KIT MARKED J SERVICES PART(S) MARKED J
Y-SEPARATE ILLUSTRATION

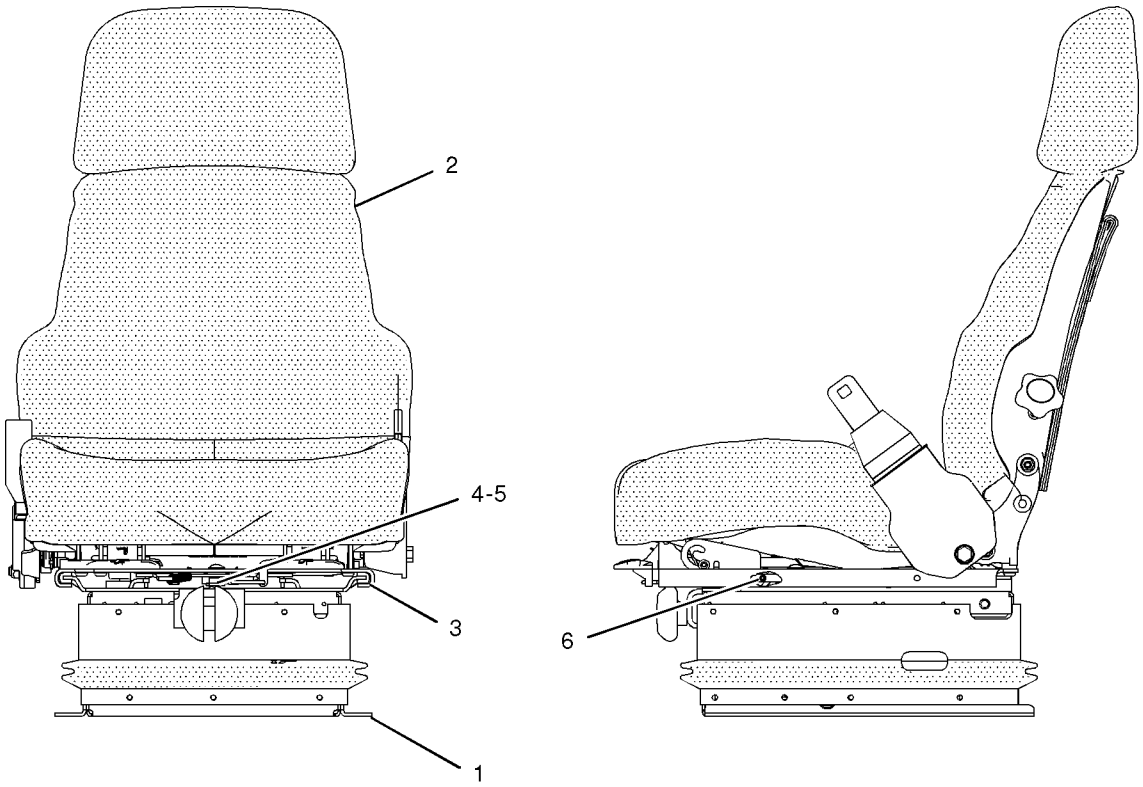

FRONT VIEW LEFT SIDE VIEW

GRAPHIC #1 **<END>** g01023474

160-7186 SEAT GP-SUSPENSION—CLOTH

S/N: RJG1-UP

PART OF 214-1096 SEAT & MOUNTING GP

SMCS-7321, 7324, 7336 **i02360780**

NOTE	REF NO	GRAPHIC REF	PART NUMBER	QTY	PART NAME 1 2 3 4 5 6 (PRODUCT LEVEL)	SEE PAGE
Y	1	1	**160-7165**	1	SUSPENSION GP-SEAT	868
Y	2	1	**178-0606**	1	SEAT GP	859
J	3	1	**161-9289**	4	BLOCK-SLIDER	
J	4	1	**4F-4879**	1	BOLT (3/8-16X0.5-IN)	
J	5	1	**203-7703**	2	WASHER-HARD (10.2X22.22X2.38-MM THK)	
J	6	1	**173-5787**	4	SETSCREW (1/4-20-THD)	
					AVAILABLE REPAIR KIT(S):	
J			**173-7035**	1	KIT-SLIDER BLOCK (SUSPENSION SEAT)	

J-KIT MARKED J SERVICES PART(S) MARKED J
Y-SEPARATE ILLUSTRATION

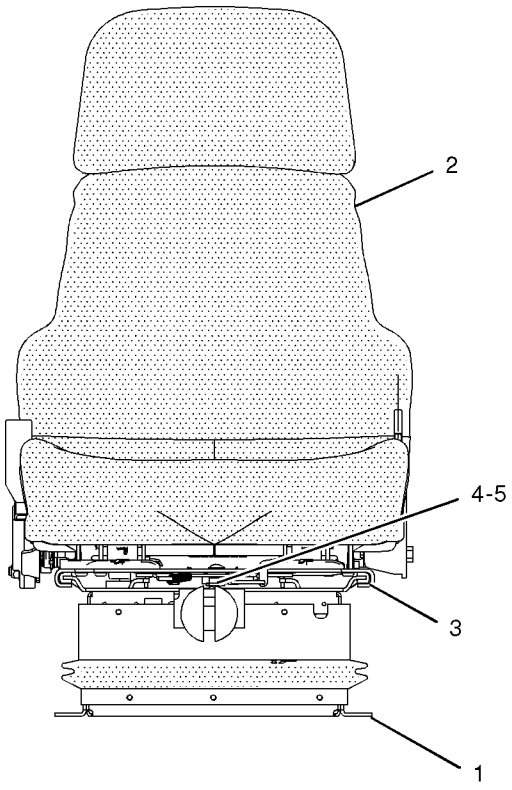

FRONT VIEW

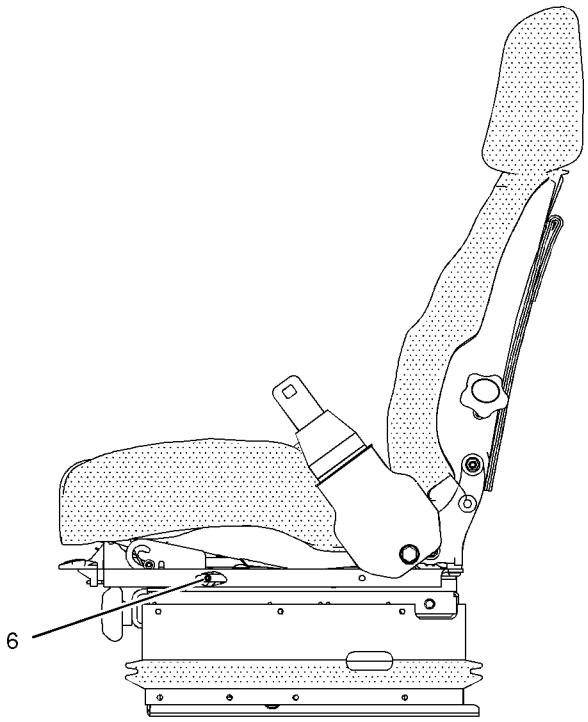

LEFT SIDE VIEW

GRAPHIC #1 **<END>** g01023474

200-3174 SEAT GP-SUSPENSION–AIR–CLOTH

S/N: RJG1-UP
PART OF 214-1196 SEAT GP
AN ATTACHMENT

SMCS-7321, 7324, 7336 **i02360781**

NOTE	REF NO	GRAPHIC REF	PART NUMBER	QTY	PART NAME 1 2 3 4 5 6 (PRODUCT LEVEL)	SEE PAGE
J	1	1	**161-9289**	4	BLOCK-SLIDER	
J	2	1	**173-5787**	4	SETSCREW (1/4-20-THD)	
Y	3	1	**178-0606**	1	SEAT GP	859
Y	4	1	**191-2933**	1	SUSPENSION GP-SEAT (AIR)	870
J	5	1	**203-7703**	2	WASHER-HARD (10.2X22.22X2.38-MM THK)	
J	6	1	**4F-4879**	1	BOLT (3/8-16X0.5-IN)	
					AVAILABLE REPAIR KIT(S):	
J			**173-7035**	1	KIT-SLIDER BLOCK (SUSPENSION SEAT)	

J-KIT MARKED J INCLUDES PARTS MARKED J
Y-SEPARATE ILLUSTRATION

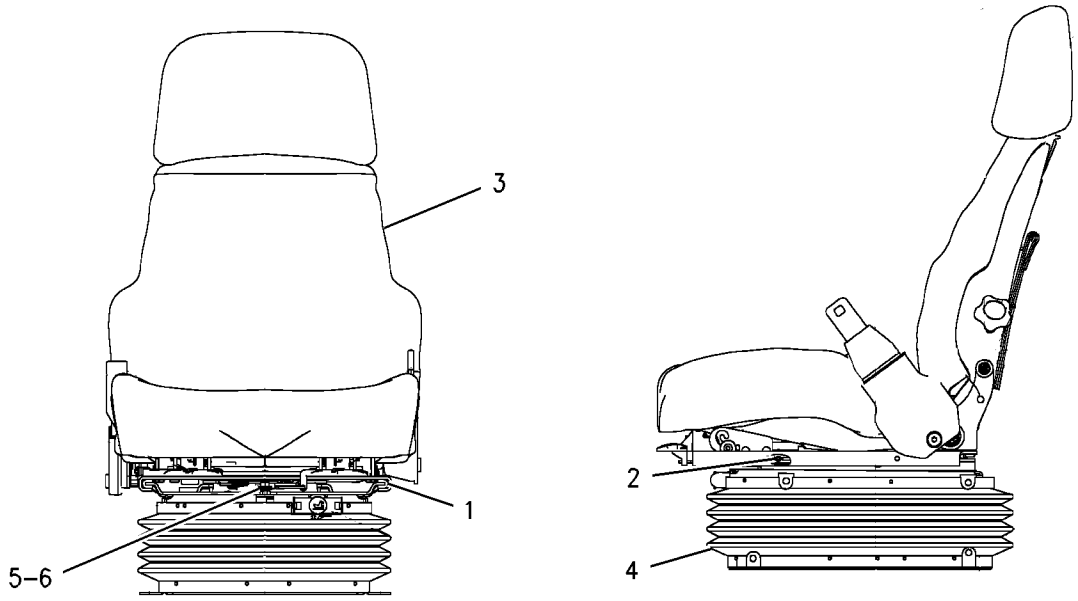

GRAPHIC #1 **<END>** g00909437

OPERATOR STATION

160-7165 SUSPENSION GP-SEAT

S/N: RJG1-UP

PART OF 159-2950, 160-7186 SEAT GP-SUSPENSION

ALSO AN ATTACHMENT

SMCS-7324 **i02238322**

NOTE	REF NO	GRAPHIC REF	PART NUMBER	QTY	PART NAME 1 2 3 4 5 6 (PRODUCT LEVEL)	SEE PAGE
	1	1	**2K-4973**	2	LOCKNUT (3/8-16-THD)	
	2	1	**4V-7884**	2	BEARING	
	3	1	**4V-8577**	4	BEARING	
	4	1	**5V-1497**	1	RETAINER	
	5	1	**8Y-5965**	1	ABSORBER AS-SHOCK	
	6	1	**8Y-6012**	1	ARM AS-SUSPENSION	
	7	1	**8Y-6014**	1	HOUSING AS-LOWER	
	8	1	**8Y-6024**	2	SHAFT AS	
J	9	1	**101-0003**	20	FASTENER	
J	10	1	**166-6781**	6	FASTENER	
J	11	1	**163-1146**	3	FASTENER	
	12	1	**145-0326**	1	FILM-INSTRUCTION (SEAT ADJUSTMENT)	
	13	1	**169-7380**	1	BOLT-SOCKET HEAD (3/8-16X0.375-IN)	
Y	14	1	**174-2231**	1	HOUSING GP-SEAT SUSPENSION	805
J	15	1	**197-7689**	3	FASTENER	
					AVAILABLE REPAIR KIT(S):	
J				1	KIT-SUSPENSION BOOT	
					(INCLUDES BOOT, RETAINER & FASTENERS)	
				1	KIT-BELT TETHER	
					(INCLUDES BELTS)	
				1	KIT-SUSPENSION ROLLER	
					(INCLUDES ROLLERS)	

J-KIT MARKED J INCLUDES PARTS MARKED J
Y-SEPARATE ILLUSTRATION

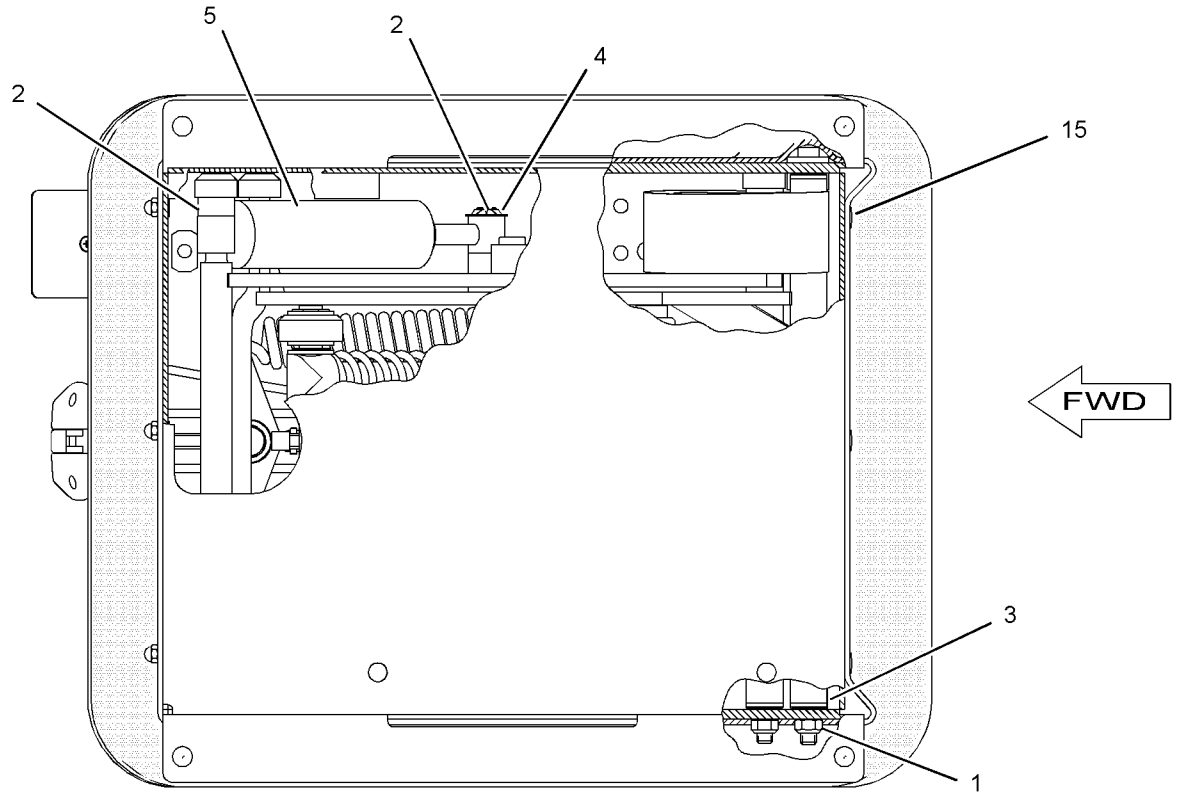

BOTTOM VIEW

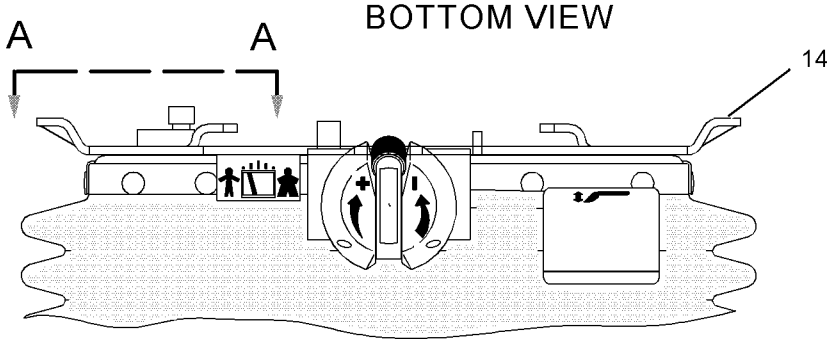

FRONT VIEW

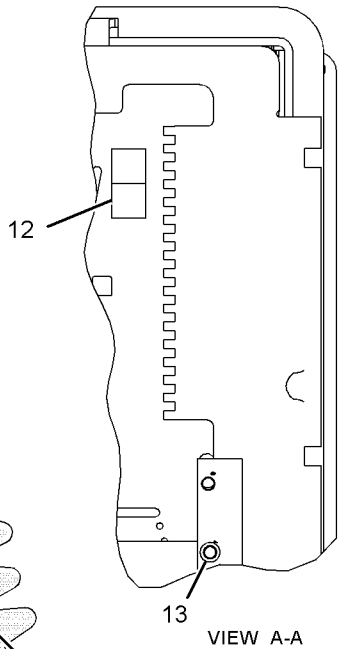

VIEW A-A

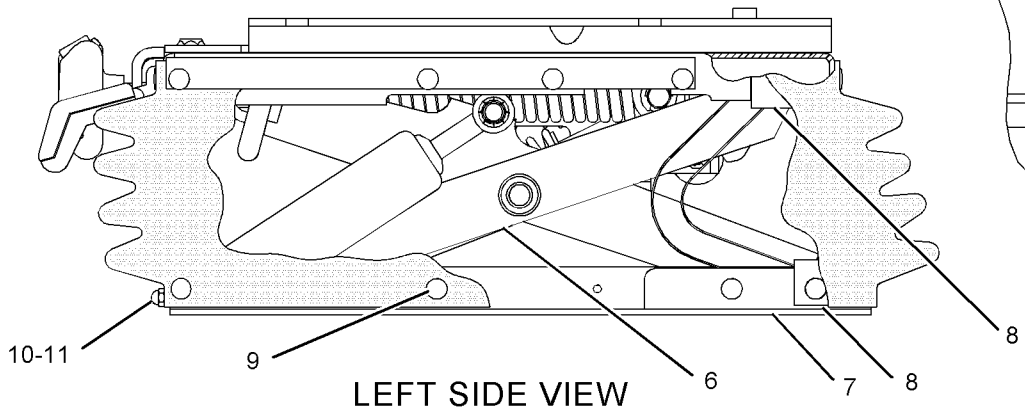

LEFT SIDE VIEW

GRAPHIC #1 **<END>** g01129757

OPERATOR STATION

191-2933 SUSPENSION GP-SEAT—AIR

S/N: RJG1-UP
PART OF 200-3174 SEAT GP-SUSPENSION
AN ATTACHMENT

SMCS-7324 **i02396615**

NOTE	REF NO	GRAPHIC REF	PART NUMBER	QTY	PART NAME 1 2 3 4 5 6 (PRODUCT LEVEL)	SEE PAGE
	1	1	**3P-9900**	5	WASHER (10.5X30X3-MM THK)	
	2	1	**4B-4278**	2	WASHER (10.2X20.5X1.6-MM THK)	
	3	1	**4V-8577**	12	BEARING	
	4	1	**8L-8413**	1	STRAP-CABLE	
	5	1	**145-0326**	1	FILM-INSTRUCTION (SEAT ADJUSTMENT)	
	6	1	**164-1234**	1	PLATE	
	7	1	**101-0003**	33	FASTENER	
	8	1	**169-7380**	1	BOLT-SOCKET HEAD (3/8-16X0.375-IN)	
	9	1	**186-5107**	2	SCREW (NO 8X1.25-IN)	
	10	1	**192-7752**	4	SHAFT AS	
	11	1	**192-7755**	1	HOUSING AS	
	12	1	**192-7760**	1	SHAFT	
	13	1	**192-7767**	1	SCISSORS AS	
	14	1	**192-7783**	1	TOGGLE AS	
	15	1	**192-7787**	1	TOGGLE AS	
	16	1	**192-7790**	1	HOUSING AS	
	17	1	**192-7795**	1	BOOT	
	18	1	**192-7805**	1	HARNESS AS-VALVE (SEAT AIR COMPRESSOR)	
		1	**102-8802**	1	KIT-RECEPTACLE (2-PIN)	
					(INCLUDES RECEPTACLE AS & WEDGE)	
	19	1	**192-7810**	1	SPRING AS-AIR	
		1	**5P-4423**	1	ELBOW	
		1	**163-1135**	1	SPRING	
	20	1	**192-7812**	1	BOLT-SHOULDER	
	21	1	**192-7820**	3	BUMPER	
	22	1	**192-7822**	1	SHAFT	
	23	1	**237-3943**	1	BRACKET	
Y	24	1	**237-3970**	1	AIR COMPRESSOR GP-SEAT	763
	25	1	**1H-8296**	1	SCREW-MACHINE (3/8-16X0.52-IN)	
	26	1	**2K-4973**	8	LOCKNUT (3/8-16-THD)	
	27	1	**3J-4818**	1	LOCKWASHER	
M	28	1	**5C-2890**	3	NUT (M6X1-THD)	
	29	1	**8T-9371**	1	BOLT (3/8-16X0.5-IN)	
E	30	1	**211-5358**		CONDUIT (26.7-CM)	
E	30A	1	**211-5358**		CONDUIT (35.6-CM)	
D	31	1	**5P-6010**		TUBE (0.267-M)	
D	31A	1	**5P-6010**		TUBE (0.356-M)	
					AVAILABLE REPAIR KIT(S):	
			192-7799	1	KIT-AIR VALVE (SUSPENSION SEAT)	
					(INCLUDES KNOB AS, NUT, VALVE, LOCKWASHER & FITTING)	
			192-7848	1	KIT-SHOCK ABSORBER (SUSPENSION SEAT)	
					(INCLUDES LOCKNUT, LOCKWASHER, SHOCK ABSORBER, BEARING, WASHER, & BOLTS)	
			211-9294	1	KIT-TETHER (SUSPENSION SEAT)	

D-ORDER BY THE METER
E-ORDER BY THE CENTIMETER
M-METRIC PART
Y-SEPARATE ILLUSTRATION

191-2933 SUSPENSION GP-SEAT *(contd.)* i02396615

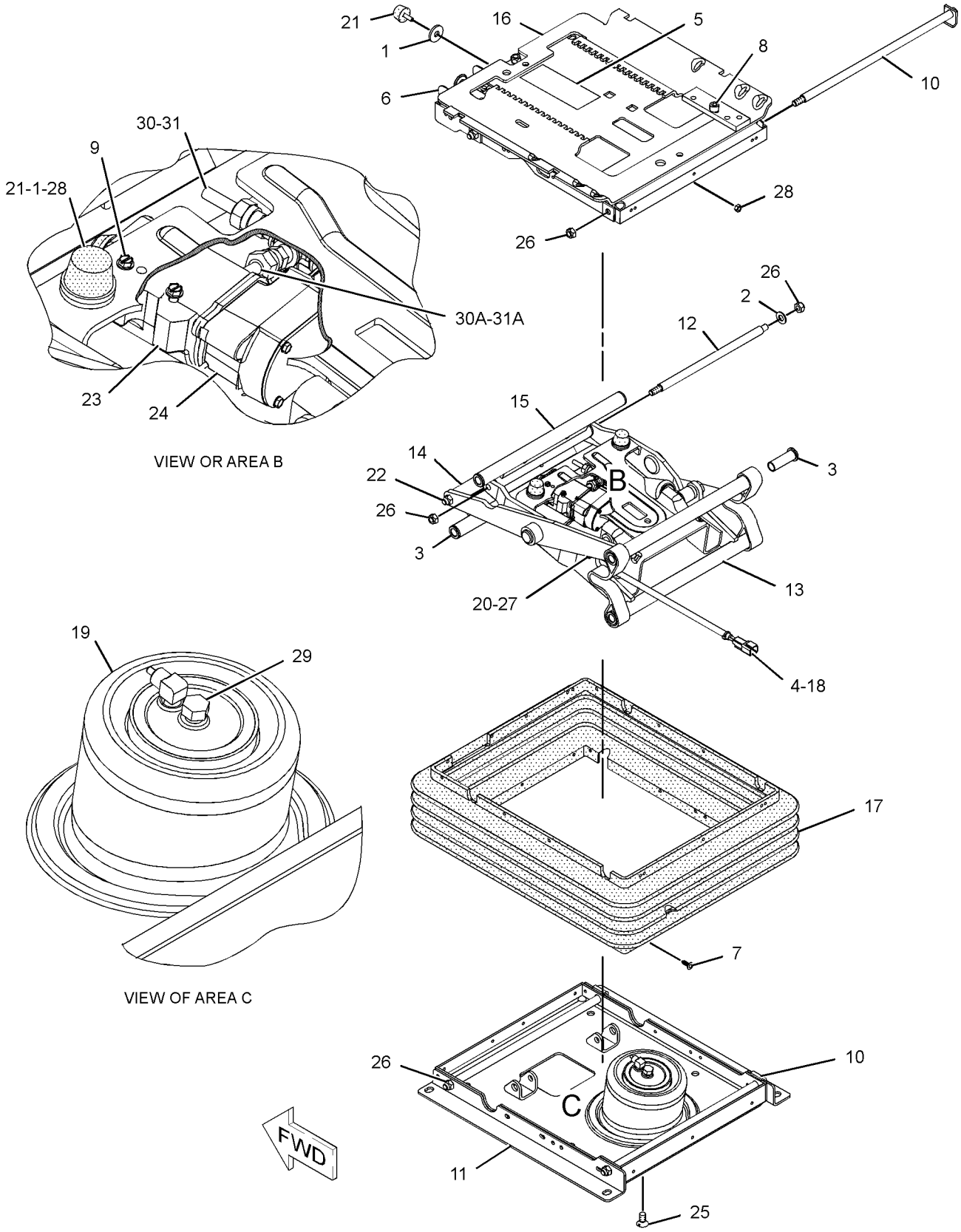

GRAPHIC #1 **<END>** g01197079

OPERATOR STATION

214-1790 TANK GP-WINDOW WASHER

S/N: RJG1-UP

PART OF 226-9249 TANK GP-WINDOW WASHER

SMCS-7306 **i02393293**

NOTE	REF NO	GRAPHIC REF	PART NUMBER	QTY	PART NAME 1 2 3 4 5 6 (PRODUCT LEVEL)	SEE PAGE
	1	1	**3S-2093**	2	STRAP-CABLE	
	2	1	**5D-1026**	2	CLAMP-HOSE	
	3	1	**6W-5698**	1	GROMMET	
	4	1	**7T-8891**	4	PUMP AS-WASHER	
	5	1	**8E-8293**	4	GROMMET	
	6	1	**110-8760**	2	STRAP	
	7	1	**153-0136**	1	SPOUT AS	
	8	1	**226-9248**	1	TANK (WINDOW WASHER)	
	9	1	**231-7585**	1	CLAMP	
	10	1	**261-3345**	1	CONNECTOR	
	11	1	**186-4857**	1	HARNESS AS-WIRING (WINDOW WASHER)	
		1	**102-8805**	1	KIT-RECEPTACLE (6-PIN)	
					(INCLUDES RECEPTACLE AS, WEDGE, & INTERFACE SEAL)	
		1	**9X-0194**	4	TERMINAL AS	
D	12	1	**6V-5817**		CONDUIT-FLEXIBLE (0.3-M)	
E	13	1	**144-0195**		HOSE (45-CM)	
E	13A	1	**144-0195**		HOSE (68-CM EACH)	
E	14	1	**153-2817**		HOSE (58-CM)	
B	15	1	**7X-7927**		TAPE (A)	
B	16	1	**7X-7928**		TAPE (B)	
B	17	1	**7X-7929**		TAPE (C)	
B	18	1	**7X-7930**		TAPE (D)	

B-USE AS REQUIRED
D-ORDER BY THE METER
E-ORDER BY THE CENTIMETER

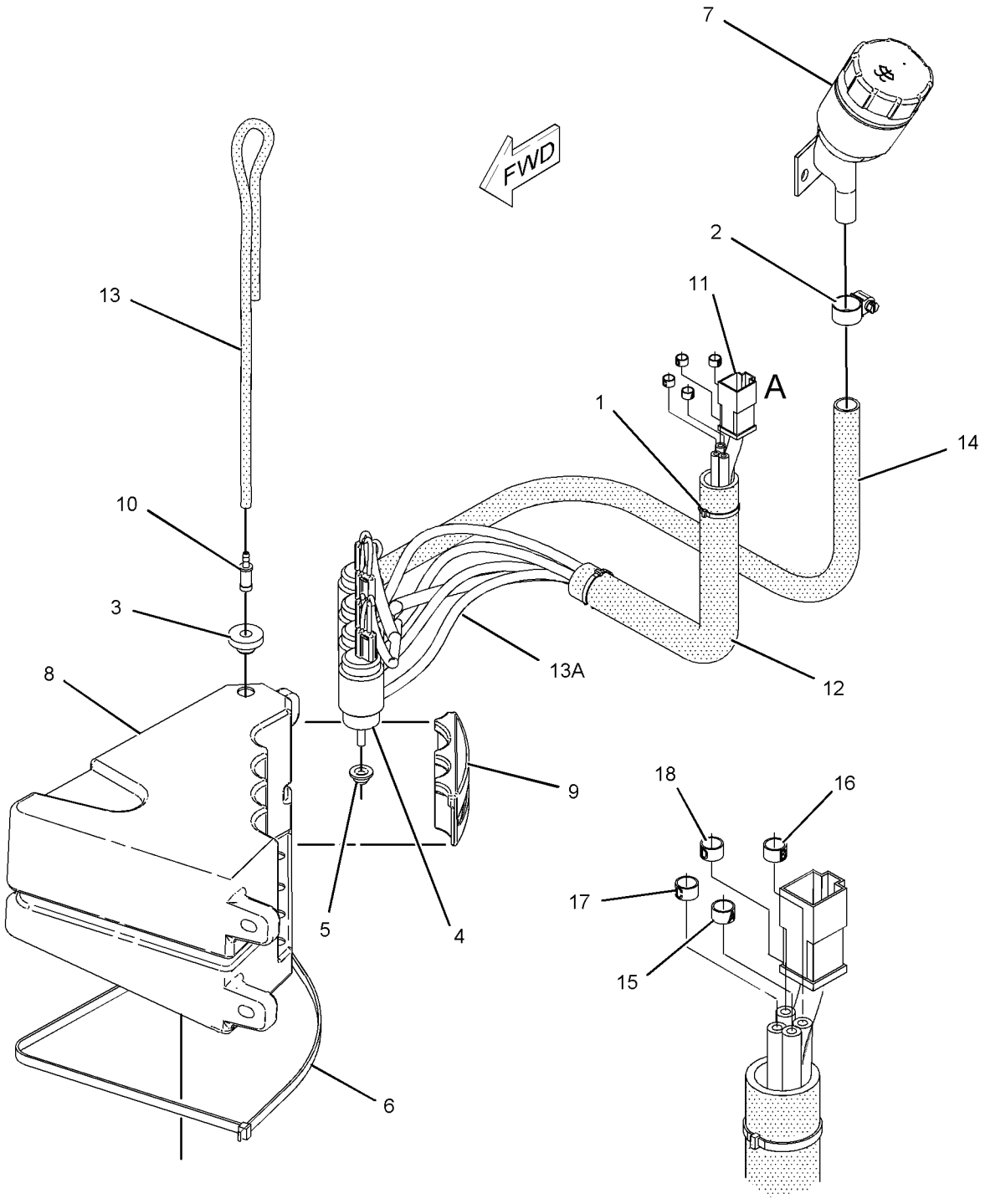

VIEW OF AREA A

GRAPHIC #1 **<END>** g01138284

OPERATOR STATION

226-9249 TANK GP-WINDOW WASHER

S/N: RJG1-UP

PART OF 219-4135 PLATFORM AR

SMCS-7306 **i02253355**

NOTE	REF NO	GRAPHIC REF	PART NUMBER	QTY	PART NAME 1 2 3 4 5 6 (PRODUCT LEVEL)	SEE PAGE
	1	1	**3S-2093**	2	STRAP-CABLE	
Y	2	1	*214-1790*	1	TANK GP-WINDOW WASHER	872
	3	1	**6D-4246**	1	CLIP	
	4	1	**7X-0732**	1	WASHER-HARD (10X22.5X8-MM THK)	
	5	1	**8T-4121**	1	WASHER-HARD (11X21X2.5-MM THK)	
M	6	1	**8T-4136**	1	BOLT (M10X1.5X25-MM)	
M	7	1	**8T-4138**	2	BOLT (M6X1X20-MM)	
M	8	1	**8T-4971**	3	BOLT (M6X1X30-MM)	
	9	1	**9X-6165**	5	WASHER (6.5X22X2.5-MM THK)	

M-METRIC PART
Y-SEPARATE ILLUSTRATION

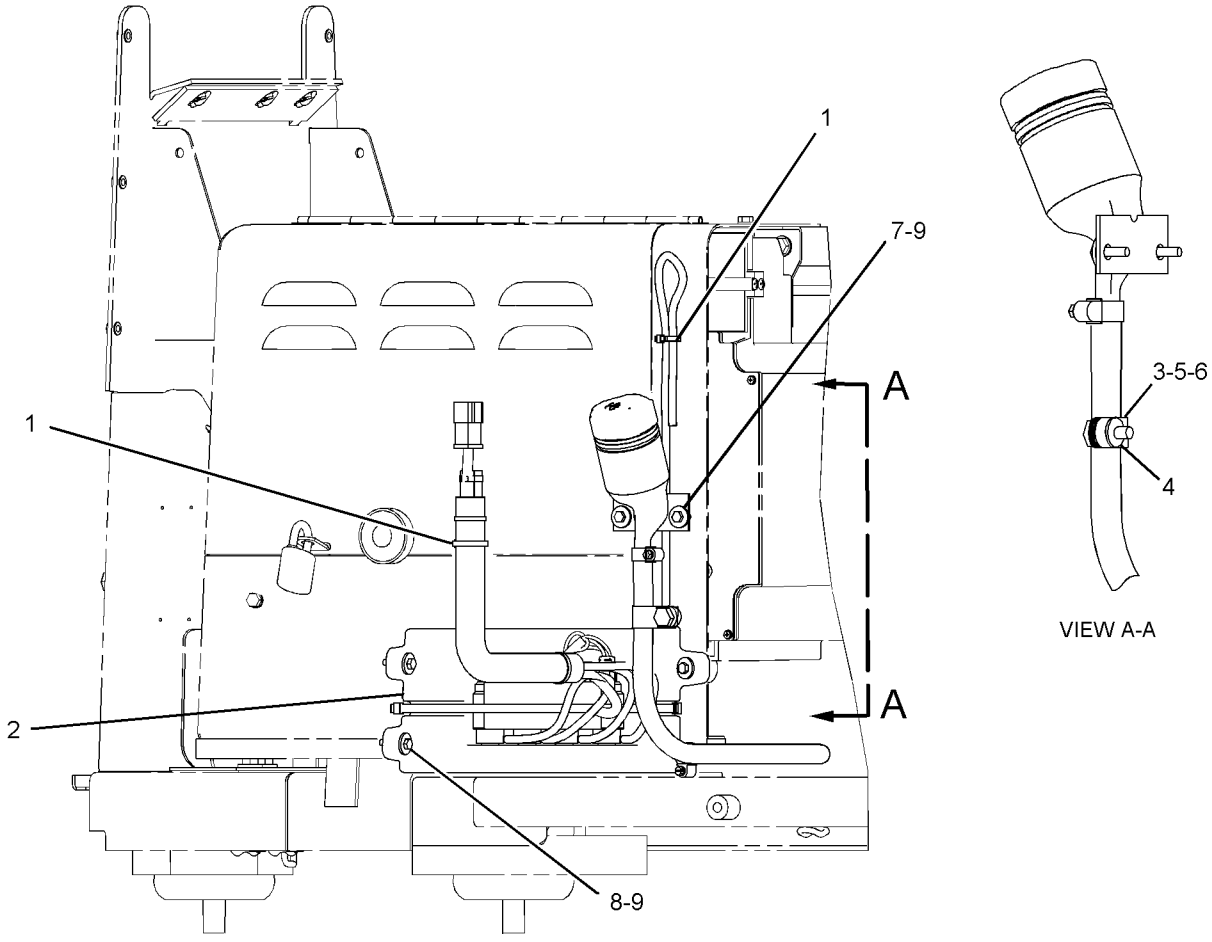

LEFT SIDE VIEW

GRAPHIC #1 **<END>** g01135789

OPERATOR STATION

214-1780 WASHER GP-WINDOW

S/N: RJG1-UP

PART OF 213-1100 CAB AR

SMCS-7306 **i02327111**

NOTE	REF NO	GRAPHIC REF	PART NUMBER	QTY	PART NAME 1 2 3 4 5 6 (PRODUCT LEVEL)	SEE PAGE
B	1		**3S-2093**	19	STRAP-CABLE	
	2		**8T-5400**	6	CONNECTOR	
	3		**145-7328**	2	ELBOW-HOSE (WINDSHIELD WASHER)	
	4		**204-2581**	4	VALVE AS-CHECK	
	5		**6K-9632**	2	TEE	
D	6		**6V-5818**		CONDUIT-FLEXIBLE (0.8-M)	
E	7		**7X-7702**		CONDUIT-FLEXIBLE (83-CM)	
BE	8		**144-0195**		HOSE (490-CM)	
BE	8A		**144-0195**		HOSE (390-CM)	
BE	8B		**144-0195**		HOSE (3-CM EACH)	
BE	8C		**144-0195**		HOSE (5-CM EACH)	
BE	8D		**144-0195**		HOSE (40-CM EACH)	
BE	8E		**144-0195**		HOSE (35-CM)	
BE	8F		**144-0195**		HOSE (310-CM)	
B	9		**7X-7927**		TAPE (A)	
B	10		**7X-7928**		TAPE (B)	
B	11		**7X-7929**		TAPE (C)	
B	12		**7X-7930**		TAPE (D)	

B-USE AS REQUIRED
D-ORDER BY THE METER
E-ORDER BY THE CENTIMETER

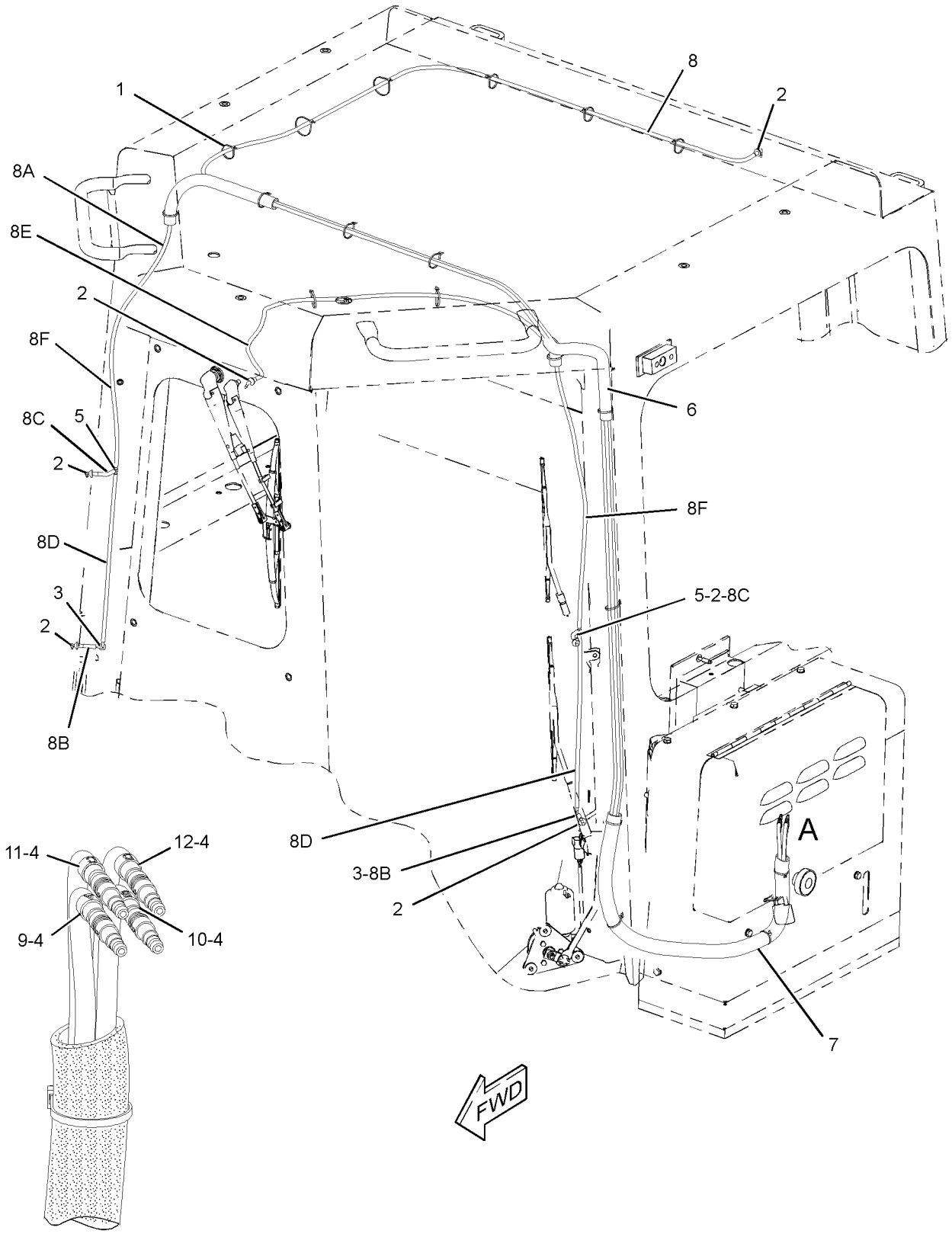

VIEW OF AREA A

GRAPHIC #1 **<END>** g01165355

OPERATOR STATION

214-7246 WINDOW AS-REAR

S/N: RJG1-UP
PART OF 214-1800 CAB GP

SMCS-7310 **i02464991**

NOTE	PART NUMBER	QTY	PART NAME 1 2 3 4 5 6 (PRODUCT LEVEL)	SEE PAGE
	271-5039	1	CATCH	
	271-5054	1	GLASS	
	271-5056	1	GLASS	
	271-5041	1	LOCK AS	
	271-5045	1	LOCK AS	
	4V-8046	1	PLATE	
	271-5043	1	PLATE	
	2F-7306	4	SCREW-MACHINE (6-32X0.25-IN)	
	4B-1230	1	SCREW-MACHINE (10-24X0.625-IN)	
	4B-1234	2	SCREW-MACHINE (10-24X1.25-IN)	
	4B-1274	6	SCREW-MACHINE (10-24X0.625-IN)	
	8C-8514	2	SCREW-MACHINE (8-32X0.375-IN)	
	271-5040	1	STOP	
			AVAILABLE REPAIR KIT(S):	
	271-5057	1	KIT-SEAL (REAR WINDOW)	
			(INCLUDES WEATHERSTRIPS, TRIM, VINYLS, & FLOCKED RUBBER)	

<END>

244-1735 WINDOW GP-CAB

S/N: RJG1-UP
40 PSI GLASS
FIELD INSTALLATION

SMCS-7310 **i02052475**

NOTE	PART NUMBER	QTY	PART NAME 1 2 3 4 5 6 (PRODUCT LEVEL)	SEE PAGE
	247-4837	1	FRAME-LH	
	247-4836	1	FRAME-RH	
	222-2825	2	GLASS-DOOR	
	222-2824	1	GLASS-FRONT	
	222-2828	1	GLASS-REAR	
	222-2827	2	GLASS-SIDE	

<END>

OPERATOR STATION

247-8271 WINDOW GP-CAB

S/N: RJG1-UP
40-PSI GLASS
PART OF 248-4172 CAB AR
AN ATTACHMENT

SMCS-7310 **i02403167**

NOTE	REF NO	GRAPHIC REF	PART NUMBER	QTY	PART NAME 1 2 3 4 5 6 (PRODUCT LEVEL)	SEE PAGE
B	1	1	**214-9186**	15	BUTTON	
	2	1	**222-2824**	1	GLASS-FRONT	
	3	1	**222-2825**	2	GLASS-CAB (DOOR)	
	4	1	**222-2827**	2	GLASS-SIDE	
	5	1	**222-2828**	1	GLASS-REAR	
Y	6	1	*254-9371*	1	WIPER GP-WINDOW (CAB, REAR)	884
	7	1	**270-5001**	3	ANGLE	
	8	1	**270-5002**	3	ANGLE	
	9	1	**275-2324**	1	FRAME-RH	
	10	1	**275-2325**	1	FRAME-LH	
B	11	1	**110-7524**	34	BUTTON	

B-USE AS REQUIRED
Y-SEPARATE ILLUSTRATION

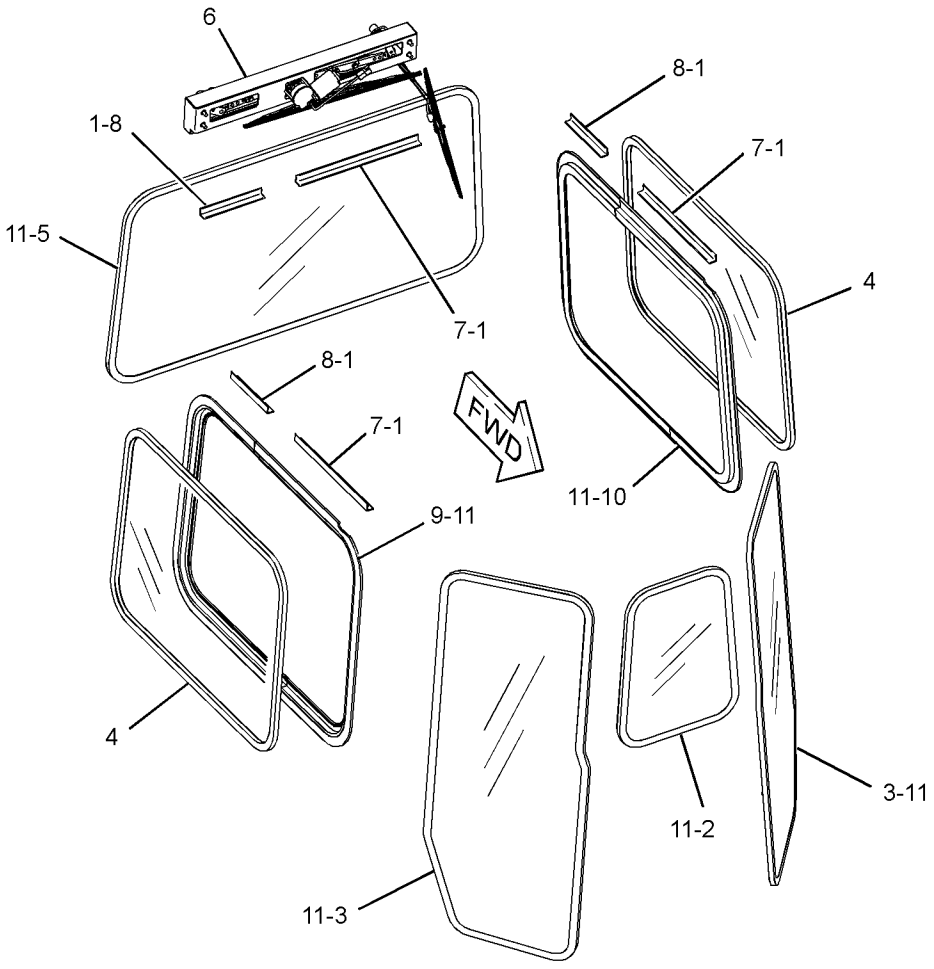

GRAPHIC #1 **<END>** g01224750

OPERATOR STATION

248-4178 WINDOW GP-CAB—COLD WEATHER

S/N: RJG1-UP
PART OF 248-4171 CAB AR
AN ATTACHMENT

SMCS-7310 **i02274091**

NOTE	PART NUMBER	QTY	PART NAME 1 2 3 4 5 6 (PRODUCT LEVEL)	SEE PAGE
Y	*254-9371*	1	WIPER GP-WINDOW	884
	262-2046	1	WINDOW AS (FRONT)	
	262-2047	1	WINDOW AS (DOOR, LH)	
	262-2048	1	WINDOW AS (DOOR, RH)	
	262-2049	1	WINDOW AS (SIDE, LH)	
	262-2050	1	WINDOW AS (SIDE, RH)	
	262-2051	1	WINDOW AS (REAR)	
Y-SEPARATE ILLUSTRATION				

<END>

214-7244 WINDOW GP-SLIDING

S/N: RJG1-UP
PART OF 214-1800 CAB GP

SMCS-7310 **i02464981**

NOTE	PART NUMBER	QTY	PART NAME 1 2 3 4 5 6 (PRODUCT LEVEL)	SEE PAGE
	271-5039	1	CATCH	
	271-5053	1	GLASS	
	271-5055	1	GLASS	
	271-5041	1	LOCK AS	
	271-5045	1	LOCK AS	
	4V-8046	1	PLATE	
	271-5043	1	PLATE	
	2F-7306	4	SCREW-MACHINE (6-32X0.25-IN)	
	4B-1234	2	SCREW-MACHINE (10-24X1.25-IN)	
	4B-1274	6	SCREW-MACHINE (10-24X0.625-IN)	
	8C-8514	2	SCREW-MACHINE (8-32X0.375-IN)	
			AVAILABLE REPAIR KIT(S):	
	271-5057	1	KIT-SEAL (WINDOW)	
			(INCLUDES WEATHERSTRIPS, TRIM, VINYLS, & FLOCKED RUBBER)	

<END>

OPERATOR STATION

214-7245 WINDOW GP-SLIDING–LH

S/N: RJG1-UP

PART OF 214-1800 CAB GP

SMCS-7310 **i02464987**

NOTE	REF NO	GRAPHIC REF	PART NUMBER	QTY	PART NAME 1 2 3 4 5 6 (PRODUCT LEVEL)	SEE PAGE
	1	1	**271-5039**	1	CATCH	
	2	1	**271-5041**	1	LOCK AS	
	3	1	**271-5043**	1	PLATE	
	4	1	**271-5045**	1	LOCK AS	
	5	1	**271-5053**	1	GLASS	
	6	1	**271-5055**	1	GLASS	
	7	1	**271-5057**	1	KIT-SEAL	
					(INCLUDES WEATHERSTRIP, TRIM, VINYL, & RUBBER)	
	8	1	**4V-8046**	1	PLATE	
	9	1	**2F-7306**	4	SCREW-MACHINE (6-32X0.25-IN)	
	10	1	**4B-1234**	2	SCREW-MACHINE (10-24X1.25-IN)	
	11	1	**4B-1274**	6	SCREW-MACHINE (10-24X0.625-IN)	
	12	1	**8C-8514**	2	SCREW-MACHINE (8-32X0.375-IN)	

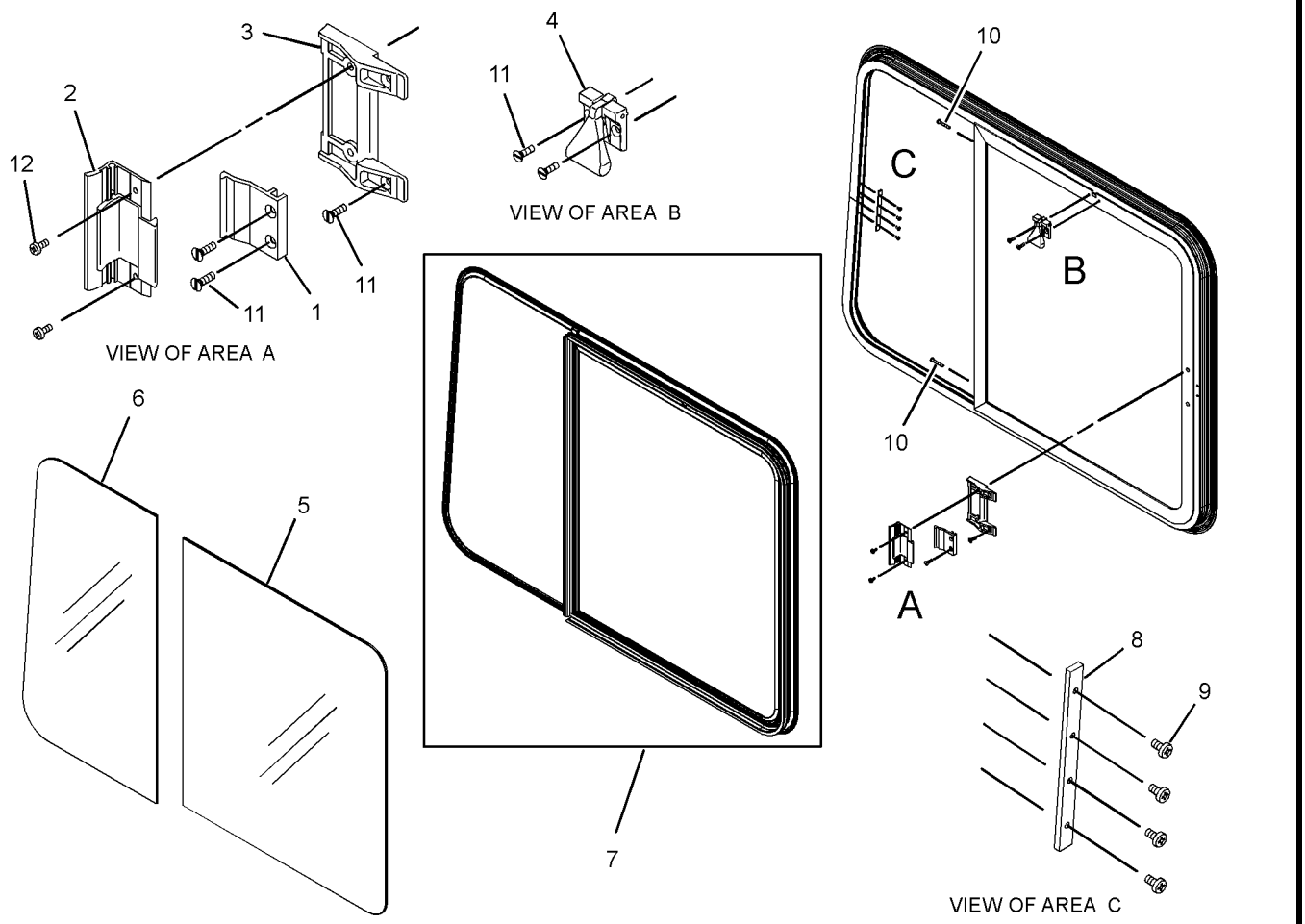

GRAPHIC #1 **<END>** g01234073

OPERATOR STATION

214-1770 WIPER GP-WINDOW

S/N: RJG1-UP

PART OF 213-1100 CAB AR

SMCS-7305 **i02358494**

NOTE	REF NO	GRAPHIC REF	PART NUMBER	QTY	PART NAME 1 2 3 4 5 6 (PRODUCT LEVEL)	SEE PAGE
	1	1	**4N-9915**	6	GROMMET AS	
	2	1	**5C-8811**	1	BLADE AS-WIPER (REAR)	
	3	1	**6V-5851**	1	BLADE AS-WIPER (FRONT)	
	4	1	**6V-6888**	2	WASHER-SPRING (8.31X15.54X1.07-MM THK)	
	5	1	**128-5040**	4	BLADE AS-WIPER (SIDE)	
	6	1	**222-5374**	2	ARM GP-WINDOW WIPER (RH, FRONT)	
					(EACH INCLUDES)	
		1	**136-3192**	1	NOZZLE AS-WASHER	
E		1	**194-5171**		HOSE (33-CM)	
	7	1	**8Y-6343**	1	ARM GP-WINDOW WIPER (REAR)	
		1	**136-3193**	1	NOZZLE AS-WASHER	
	8	1	**146-6346**	1	CLIP	
	9	1	**175-3761**	1	ARM GP-WINDOW WIPER (FRONT, CENTER)	
		1	**136-3189**	3	CLIP	
		1	**136-3191**	1	NOZZLE AS-WASHER	
E		1	**194-5171**		HOSE (50-CM)	
	10	1	**214-1838**	2	PLATE	
	11	1	**222-5369**	2	CRANK AS (WIPER)	
	12	1	**222-5370**	1	LINKAGE AS (BOTTOM, RH)	
	12A	1	**222-5370**	1	LINKAGE AS (BOTTOM, LH)	
	13	1	**222-5371**	1	SHAFT AS (BOTTOM, RH)	
	14	1	**222-5372**	1	SHAFT AS (TOP, RH)	
	14A	1	**222-5372**	1	SHAFT AS (TOP, LH)	
	15	1	**222-5373**	1	LINKAGE AS (TOP, RH)	
	15A	1	**222-5373**	1	LINKAGE AS (TOP, LH)	
	16	1	**135-0611**	1	MOTOR GP-WINDOW WIPER (24-VOLT, 2-SPEED) (RH, FRONT)	
	17	1	**222-5376**	1	MOTOR GP-WINDOW WIPER (24-VOLT, 2-SPEED) (LH, FRONT)	
					(EACH MOTOR GP INCLUDES)	
		1	**186-3735**	5	PIN-CONNECTOR (16-GA TO 18-GA)	
		1	**8T-8737**	1	PLUG-SEAL	
		1	**102-8805**	1	KIT-RECEPTACLE (6-PIN)	
					(INCLUDES RECEPTACLE AS & WEDGE)	
	18	1	**222-5377**	1	SHAFT AS (BOTTOM, LH)	
		1	**3F-9556**	1	LOCKWASHER	
M		1	**5C-7261**	1	NUT (M8X1.25-THD)	
M		1	**6V-6213**	2	NUT (M20X1-THD)	
		1	**206-5823**	1	CAP (WIPER)	
	19	1	**222-5378**	2	ARM GP-WINDOW WIPER (LH, FRONT)	
					(EACH INCLUDES)	
		1	**136-3193**	1	NOZZLE AS-WASHER	
E		1	**194-5171**		HOSE (33-CM)	
	20	1	**222-5379**	1	MOTOR GP-WINDOW WIPER (24-VOLT, 2-SPEED) (CENTER, FRONT)	
	21	1	**222-5382**	1	MOTOR GP-WINDOW WIPER (24-VOLT, 2-SPEED) (REAR)	
					(EACH MOTOR GP INCLUDES)	
		1	**186-3735**	5	PIN-CONNECTOR (16-GA TO 18-GA)	
		1	**8T-8737**	1	PLUG-SEAL	
		1	**3F-9556**	1	LOCKWASHER	
		1	**102-8805**	1	KIT-RECEPTACLE (6-PIN)	
					(INCLUDES RECEPTACLE AS & WEDGE)	
M		1	**5C-7261**	1	NUT (M8X1.25-THD)	
	22	1	**2M-6102**	1	PIPE	
	23	1	**3E-4356**	6	WASHER-HARD (17.5X30X6-MM THK)	
M	24	1	**5C-7261**	2	NUT (M8X1.25-THD)	

214-1770 **WIPER GP-WINDOW** *(contd.)* **i02358494**

NOTE	REF NO	GRAPHIC REF	PART NUMBER	QTY	PART NAME 1 2 3 4 5 6 (PRODUCT LEVEL)	SEE PAGE
M	25	1	**6V-7357**	6	BOLT (M6X1X25-MM)	
	26	1	**6V-7646**	6	WASHER-HARD (7.2X25X2-MM THK)	
M	27	1	**8T-4171**	6	BOLT (M6X1X12-MM)	
	28	1	**9X-2038**	1	WASHER (7X19X2-MM THK)	
M	29	1	**121-9870**	1	SCREW-MACHINE (M6X1X40-MM)	

E-ORDER BY THE CENTIMETER
M-METRIC PART

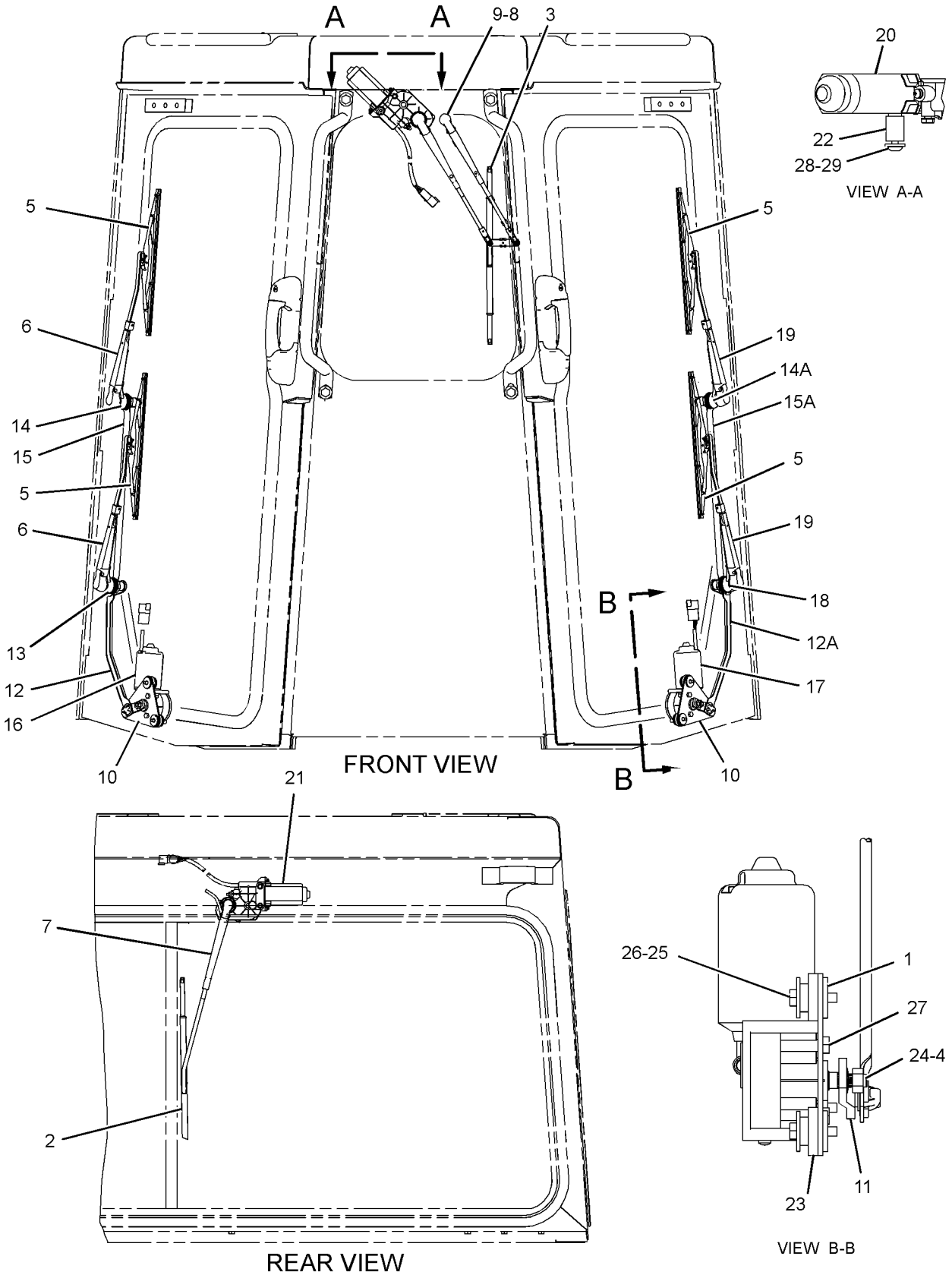

GRAPHIC #1 **<END>** g01178662

OPERATOR STATION

254-9371 WIPER GP-WINDOW—REAR—REAR CAB

S/N: RJG1-UP

PART OF 247-8271, 248-4178 WINDOW GP-CAB

AN ATTACHMENT

SMCS-7305 **i02470108**

NOTE	REF NO	GRAPHIC REF	PART NUMBER	QTY	PART NAME 1 2 3 4 5 6 (PRODUCT LEVEL)	SEE PAGE
	1	1	**6V-6864**	2	BLADE AS-WIPER (RH, LH, REAR)	
	2	1	**3S-2093**	3	STRAP-CABLE	
	3	1	**8T-5400**	2	CONNECTOR	
	5	1	**135-0611**	1	MOTOR GP-WINDOW WIPER (24-VOLT, 2-SPEED) (REAR)	
	5A	1	**102-8805**	1	KIT-RECEPTACLE (6-PIN)	
					(INCLUDES RECEPTACLE AS & WEDGE)	
	5B	1	**8T-8737**	1	PLUG-SEAL	
	5C	1	**186-3735**	5	PIN-CONNECTOR (16-GA TO 18-GA)	
Y	6	1	**254-8961**	1	WIPER PIVOT GP (REAR, LH)	886
Y	7	1	**254-8962**	1	WIPER PIVOT GP (REAR, RH)	887
	8	1	**254-8974**	1	ARM GP-WINDOW WIPER (REAR, RH)	
	8A	1	**136-3188**	2	CLIP	
	8B	1	**136-3196**	1	NOZZLE AS-WASHER	
E	8C	1	**194-5171**		HOSE (57-CM)	
	9	1	**254-8982**	1	ARM GP-WINDOW WIPER (REAR, LH)	
	9A	1	**136-3188**	2	CLIP	
	9B	1	**136-3196**	1	NOZZLE AS-WASHER	
E	9C	1	**194-5171**		HOSE (58-CM)	
	10	1	**254-8986**	1	HOUSING AS	
	11	1	**6K-9632**	1	TEE	
	12	1	**6V-5839**	4	WASHER (11X21X2.5-MM THK)	
M	14	1	**8T-0644**	4	BOLT (M10X1.5X90-MM)	
	15	1	**9X-8267**	3	WASHER (6.6X12X2-MM THK)	
E	16	1	**144-0195**		HOSE (40.5-CM)	
E	16A	1	**144-0195**		HOSE (30-CM)	
E	16B	1	**144-0195**		HOSE (13-CM)	
	17	1	**3F-9556**	1	LOCKWASHER	
M	18	1	**5C-7261**	1	NUT (M8X1.25-THD)	
M	19	1	**6V-8836**	3	BOLT (M6X1X14-MM)	
	20	1	**144-4107**	1	FASTENER	
	21	1	**9R-4398**	1	BUMPER	

E-ORDER BY THE CENTIMETER
M-METRIC PART
Y-SEPARATE ILLUSTRATION

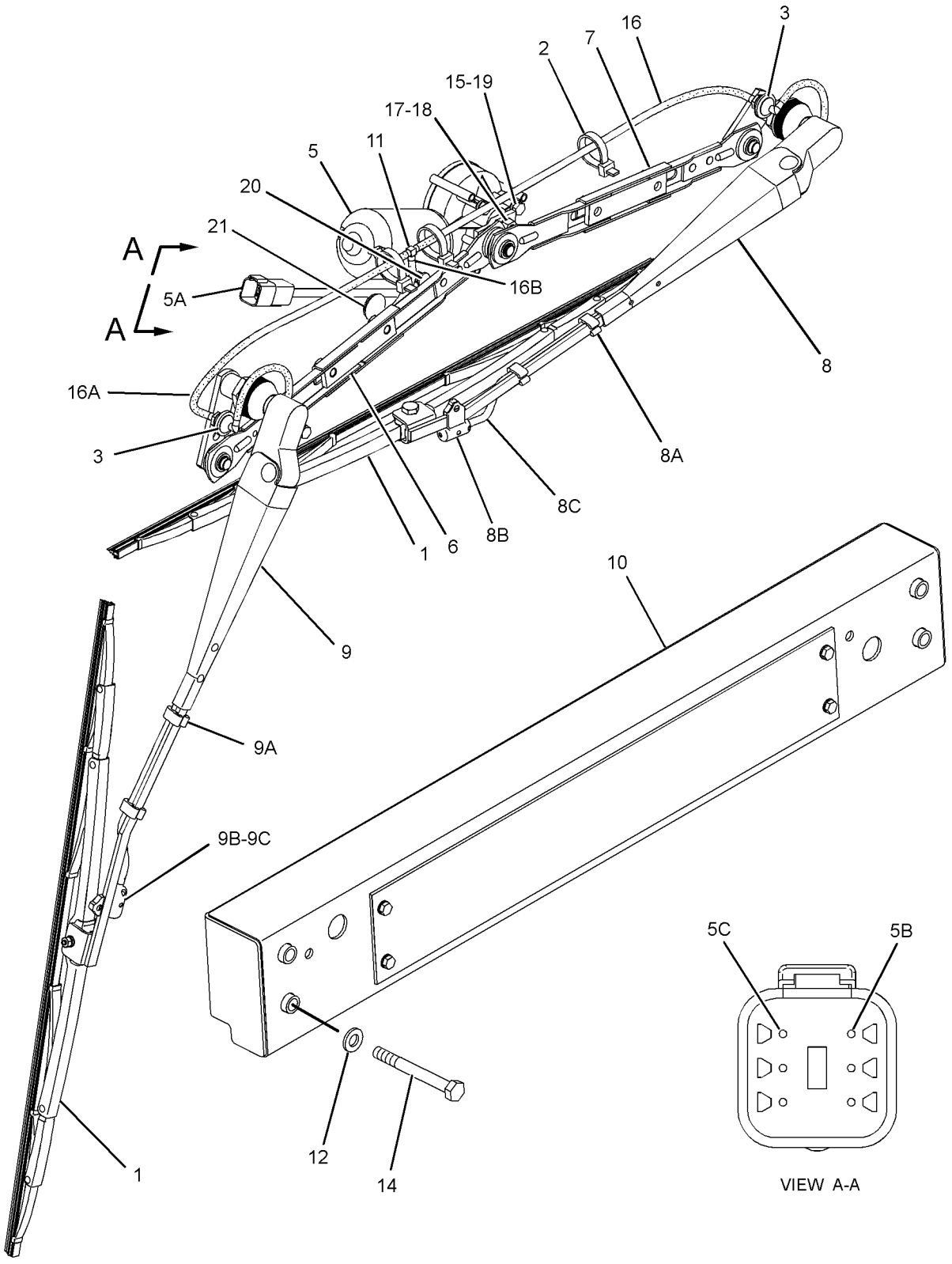

GRAPHIC #1 **<END>** g01232554

OPERATOR STATION

254-8961 WIPER PIVOT GP–REAR, LH

S/N: RJG1-UP
PART OF 254-9371 WIPER GP-WINDOW
AN ATTACHMENT

SMCS-7305 **i02226225**

NOTE	REF NO	GRAPHIC REF	PART NUMBER	QTY	PART NAME 1 2 3 4 5 6 (PRODUCT LEVEL)	SEE PAGE
	1	1	**206-5823**	1	CAP (WIPER)	
	2	1	**261-1173**	1	SHAFT AS-PIVOT	
	3	1	**261-1175**	1	LINK AS-WIPER	
	4	1	**261-1177**	1	DRIVE AS (WIPER)	
	5	1	**3F-9556**	1	LOCKWASHER	
M	6	1	**5C-7261**	1	NUT (M8X1.25-THD)	

M-METRIC PART

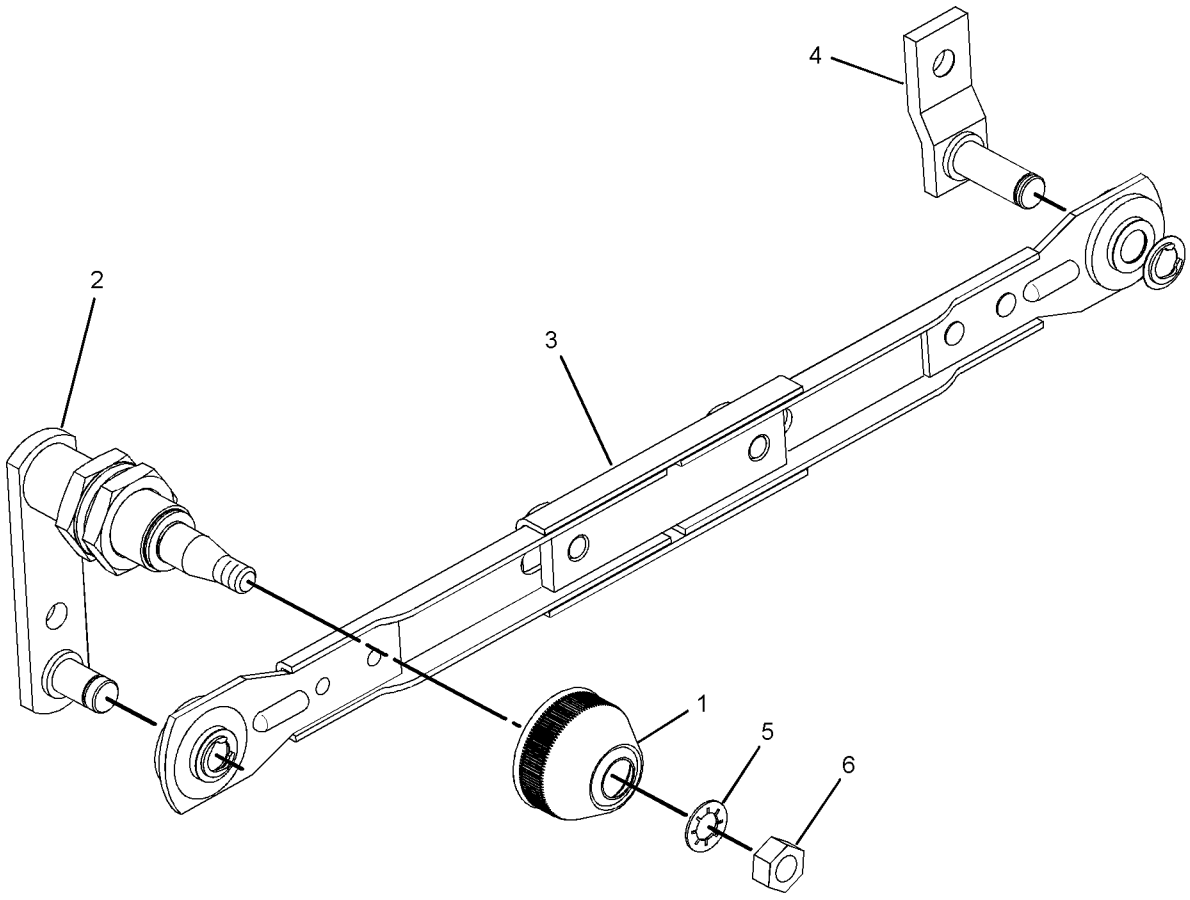

GRAPHIC #1 **<END>** g01125780

254-8962 WIPER PIVOT GP–REAR, RH

S/N: RJG1-UP

PART OF 254-9371 WIPER GP-WINDOW

AN ATTACHMENT

SMCS-7305 **i02226226**

NOTE	REF NO	GRAPHIC REF	PART NUMBER	QTY	PART NAME 1 2 3 4 5 6 (PRODUCT LEVEL)	SEE PAGE
	1	1	**206-5823**	1	CAP (WIPER)	
	2	1	**261-1174**	1	SHAFT AS-PIVOT	
	3	1	**261-1176**	1	LINK AS	
	4	1	**3F-9556**	1	LOCKWASHER	
M	5	1	**5C-7261**	1	NUT (M8X1.25-THD)	

M-METRIC PART

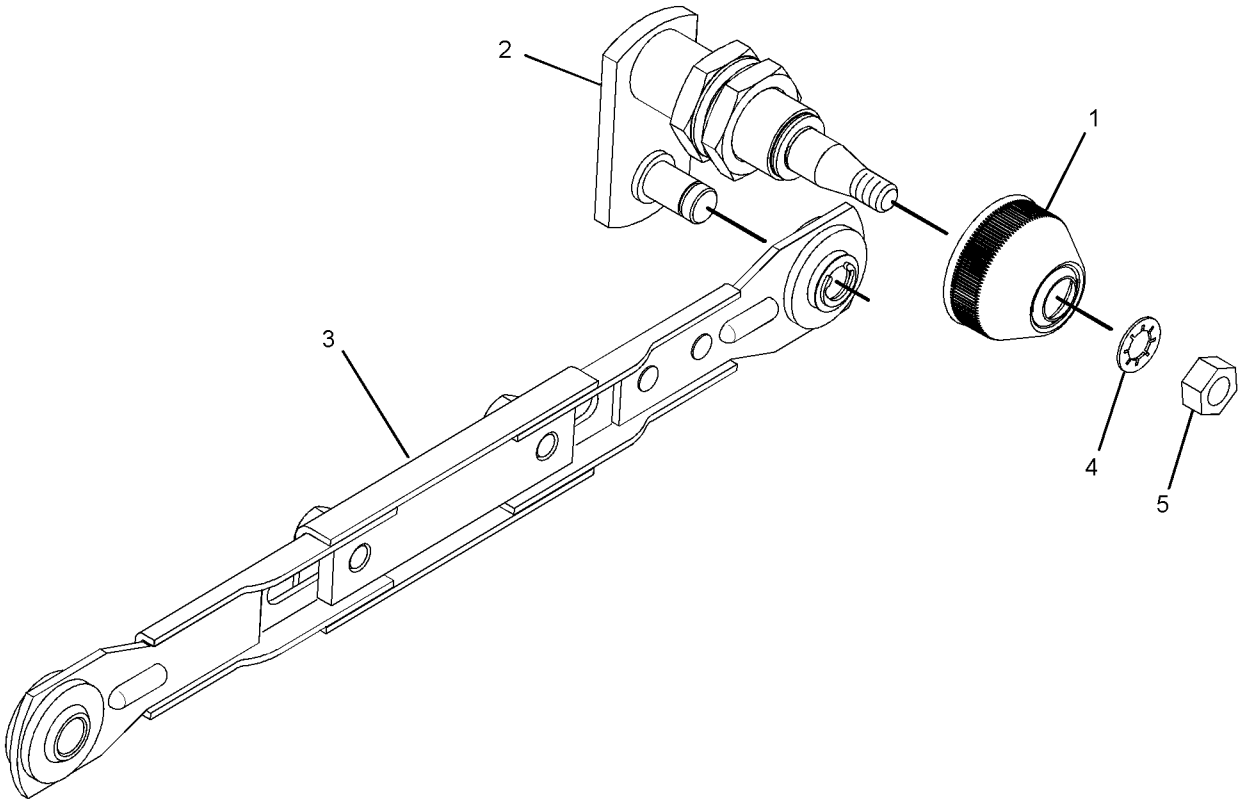

GRAPHIC #1 **<END>** g01125803

SERVICE EQUIPMENT AND SUPPLIES

214-0067 PLATE & FILM GP

S/N: RJG1-UP

PART OF 212-2741 CHASSIS AR

SMCS-7557, 7563 **i02364020**

NOTE	PART NUMBER	QTY	PART NAME 1 2 3 4 5 6 (PRODUCT LEVEL)	SEE PAGE
Y	*214-0070*	1	PLATE & FILM GP	891
	239-6987	1	PLATE GP-IDENTIFICATION (SERIAL NUMBER)	
			ON UPPER LH REAR OF CASE BELOW FENDER & ROPS	
	8T-9905	1	PLATE-IDENTIFICATION (TRANSMISSION OIL FILL TUBE)	
			ON TRANSMISSION OIL FILL CAP TAG CHAIN	
	174-4590	1	PLATE-INFORMATION (SERVICE INFORMATION NUMBERS)	
			LH SIDE OF DASH	
A	**3N-3790**		PLATE-SERIAL NUMBER (ENGINE)	
			ON LH SIDE OF BLOCK NEAR FRONT FACE AT BOTTOM OF WATER JACKET	
	9F-6656	1	RING-RETAINING	
			ON TOP LINK OF PTO FILLER CAP CHAIN	
	235-7046	1	FILM (STARTER, DISCONNECT)	
			UNDER UPPER STARTER DISCONNECT SWITCH	
	248-8741	1	FILM (STARTER DISCONNECT)	
			UNDER BOTTOM STARTER DISCONNECT SWITCH	
	211-1808	1	FILM-IDENTIFICATION (EQUALIZER BAR LUBRICATION)	
			ON FRONT OF EQUALIZER BAR LUBRICATION RESERVOIR BOTTLE	
	245-1750	1	FILM-IDENTIFICATION (FUSE PANEL)	
			ON INSIDE OF FUSE PANEL DOOR	
	1P-2807	4	FILM-INFORMATION (LIFT EYE LOCATION)	
			WITHOUT RIPPER (4 REQUIRED)	
			1 ON RH TRACK ROLLER FRAME BETWEEN FRONT IDLER & FRONT ROLLER	
			1 ON RH TRACK ROLLER FRAME BETWEEN REAR IDLER & REAR ROLLER	
			1 ON LH TRACK ROLLER FRAME BETWEEN FRONT IDLER & FRONT ROLLER	
			1 ON LH TRACK ROLLER FRAME BETWEEN REAR IDLER & REAR ROLLER	
			WITH RIPPER (4 REQUIRED)	
			1 ON RH TRACK ROLLER FRAME BETWEEN FRONT IDLER & FRONT ROLLER	
			1 ON RH RIPPER FRAME JUST AHEAD OF CARRIAGE OR BEAM MOUNTING PINS	
			1 ON LH TRACK ROLLER FRAME BETWEEN FRONT IDLER & FRONT ROLLER	
			1 ON LH RIPPER FRAME JUST AHEAD OF CARRIAGE OR BEAM MOUNTING PINS	
	215-3192	1	FILM-IDENTIFICATION (FUSE)	
			ON FACE OF FUSE PANEL	
	8C-5346	1	FILM-IDENTIFICATION (HYDRAULIC OIL FILTER)	
			ON ANGLED PLATE BETWEEN RH FENDER & LOWER ENCLOSURE DOOR ON RH SIDE OF TRACTOR	
	134-7258	1	FILM-INFORMATION (EXTENDED LIFE COOLANT-READ OMM)	
			ON INSIDE OF DOOR TO RADIATOR FILL	
	169-2876	1	FILM-IDENTIFICATION (12-VOLT)	
			ON UPPER RH CONSOLE	
	137-3937	1	FILM-IDENTIFICATION (ACTION LIGHT)	
			ON RH CONSOLE NEXT TO RED ACTION LAMP	

214-0067 **PLATE & FILM GP** *(contd.)* **i02364020**

NOTE	PART NUMBER	QTY	PART NAME 1 2 3 4 5 6 (PRODUCT LEVEL)	SEE PAGE
	233-7895	1	FILM-IDENTIFICATION (IGNITION)	
			ON UPPER RH CONSOLE	
	190-5386	2	FILM-IDENTIFICATION (ROUND RED REFLECTIVE)	
			1-ON REAR RH SIDE OF MACHINE ON FILM STRIPE	
			1-ON REAR LH SIDE OF MACHINE ON FILM STRIPE	
	248-6862	2	FILM-IDENTIFICATION (WORK LIGHT)	
			1-ON RH ENGINE SERVICE LIGHT BRACKET BELOW SWITCH	
			1-ON LH ENGINE SERVICE LIGHT BRACKET BELOW SWITCH	
	146-6747	2	FILM-INFORMATION (24-VOLT)	
			1-ON PLATE ABOVE JUMP START RECEPTACLE IN TRACTOR DISCONNECT KEY COMPARTMENT ON LEFT SIDE OF TRACTOR	
			1-ON UNDERSIDE OF BATTERY COMPARTMENT COVER	
	233-7893	1	FILM-INFORMATION (BLADE, LOWER, RAISE)	
			ON LOWER RH CONSOLE TO THE RIGHT OF THE BULLDOZER HANDLE	
	235-7128	1	FILM-INFORMATION (ENGINE OIL)	
			OVER ENGINE OIL FILLER CAP	
	233-7892	1	FILM-INFORMATION (BLADE, SINGLE TILT)	
			ON LOWER RH CONSOLE BELOW BULLDOZER HANDLE	
	229-0887	2	FILM-INFORMATION (AIR CLEANER)	
			ON TOP OF EACH AIR CLEANER	
	235-8026	1	FILM-INFORMATION (TRANSMISSION OIL LEVEL)	
			ON INSIDE OF POWERTRAIN OIL FILL COVER	
	244-2620	1	FILM-INFORMATION (ROPS, FOPS, READ OMM)	
			ON OUTSIDE OF UPPER RH CAB	
	247-4962	1	FILM-INFORMATION (ROPS)	
			ON TOP RIGHT CORNER OF ROPS ROLLOVER ASSEMBLY	
	257-7446	1	FILM-INSTRUCTION (FUEL PUMP, PRIMER)	
			ON PLATE WITH SWITCH ABOVE THE PRIMARY FUEL FILTER	
	3E-2378	1	FILM-INSTRUCTION (PIVOT SHAFT LUBRICATION)	
			ON FRONT OF PIVOT SHAFT LUBRICATION RESERVOIR BOTTLE	
	7X-7644	9	FILM-INFORMATION (TIE-DOWN)	
			WITHOUT RIPPER (7 REQUIRED)	
			1 - ON FRONT TOWING EYE	
			1 - ON RH TRACK ROLLER FRAME AT FRONT MAJOR BOGIE CARTRIDGE PIN	
			1 - ON LH TRACK ROLLER FRAME AT FRONT MAJOR BOGIE CARTRIDGE PIN	
			1 - ON RH TRACK ROLLER FRAME AT REAR MAJOR BOGIE CARTRIDGE PIN	
			1 - ON LH TRACK ROLLER FRAME AT REAR MAJOR BOGIE CARTRIDGE PIN	
			1-ON RH TRACK ROLLER FRAME CENTERED BETWEEN FRONT & REAR IDLERS	
			1-ON LH TRACK ROLLER FRAME CENTERED BETWEEN FRONT & REAR IDLERS	
			WITH RIPPER (9 REQUIRED)	
			1 - ON FRONT TOWING EYE OR BEAM	
			1 - ON RH TRACK ROLLER FRAME AT FRONT MAJOR BOGIE CARTRIDGE PIN	
			1 - ON LH TRACK ROLLER FRAME AT FRONT MAJOR BOGIE CARTRIDGE PIN	
			1 - ON RH TRACK ROLLER FRAME AT REAR MAJOR BOGIE CARTRIDGE PIN	
			1 - ON LH TRACK ROLLER FRAME AT REAR MAJOR BOGIE CARTRIDGE PIN	

214-0067 **PLATE & FILM GP** *(contd.)* **i02364020**

NOTE	PART NUMBER	QTY	PART NAME 1 2 3 4 5 6 (PRODUCT LEVEL)	SEE PAGE
			1-ON RH TRACK ROLLER FRAME CENTERED BETWEEN FRONT & REAR IDLERS	
			1-ON LH TRACK ROLLER FRAME CENTERED BETWEEN FRONT & REAR IDLERS	
			1-ON RH SIDE OF RIPPER FRAME AHEAD OF CARRIAGE OR BEAM MOUNTING PINS	
			1-ON LH SIDE OF RIPPER FRAME AHEAD OF CARRIAGE OR BEAM MOUNTING PINS	
			WITH DRAWBAR OR COUNTERWEIGHT (8 REQUIRED)	
			1 - ON FRONT TOWING EYE	
			1 - ON RH TRACK ROLLER FRAMES AT FRONT MAJOR BOGIE CARTRIDGE PINS	
			1 - ON LH TRACK ROLLER FRAMES AT FRONT MAJOR BOGIE CARTRIDGE PINS	
			1 - ON RH TRACK ROLLER FRAMES AT REAR MAJOR BOGIE CARTRIDGE PINS	
			1 - ON LH TRACK ROLLER FRAMES AT REAR MAJOR BOGIE CARTRIDGE PINS	
			1-ON RH TRACK ROLLER FRAME CENTERED BETWEEN FRONT & REAR IDLERS	
			1-ON LH TRACK ROLLER FRAME CENTERED BETWEEN FRONT & REAR IDLERS	
			1-ON REAR OF DRAWBAR OR COUNTERWEIGHT	
	109-0362	1	FILM-INSTRUCTION (WASHER FLUID)	
			ON COVER OF HEATER BOX NEXT TO SIGHT GLASS SLOT ON LEFT FENDER	
	158-7864	1	FILM-INSTRUCTION (HYDRAULIC OIL)	
			ON TOP OF HYDRAULIC TANK ADJACENT TO FILLER SPOUT	
	9X-6340	1	FILM-INSTRUCTION (ENGINE OIL)	
			ON ENGINE OIL FILL SPOUT ON LEFT SIDE OF ENGINE	
	219-0305	2	FILM-WARNING (NO WELD, NO DRILL, READ OMM)	
			1-OUTSIDE OF UPPER RH CAB	
			1-ON TOP RIGHT CORNER OF ROPS ROLLOVER ASSEMBLY	
	224-7830	1	FILM-WARNING (HIGH PRESSURE, READ OMM, ANSI)	
			TOP SIDE OF FRONT FLOOR PLATE IN CAB	
	225-0313	1	FILM-WARNING (JUMP START, READ OMM)	
			ON UNDERSIDE OF BATTERY COMPARTMENT COVER	
	225-4256	1	FILM-WARNING (HOT FLUID UNDER PRESSURE)	
			ON INSIDE OF DOOR TO RADIATOR FILL	
	232-2960	1	FILM-WARNING (SHOCK HAZARD)	
			ON FUSE CAP AT BOTTOM OF FUSE PANEL	
	247-6875	1	FILM-WARNING (READ OMM)	
			ON LH VERTICAL B POST COVER ABOVE STEERING CONTROL	
	247-6877	1	FILM-WARNING (SEAT BELT)	
			ON LH VERTICAL B POST COVER ABOVE STEERING CONTROL	

A-NOT PART OF THIS GROUP
Y-SEPARATE ILLUSTRATION

<END>

214-0070 PLATE & FILM GP

S/N: RJG1-UP

PART OF 214-0067 PLATE & FILM GP

SMCS-7557, 7563 **i02364017**

NOTE	REF NO	GRAPHIC REF	PART NUMBER	QTY	PART NAME 1 2 3 4 5 6 (PRODUCT LEVEL)	SEE PAGE
	1	1	**263-6309**	1	FILM-STRIPE (CAT, LH)	
	2	1	**263-6310**	1	FILM-STRIPE (REAR, LH)	
	3	1	**263-6311**	1	FILM-STRIPE (D10T, REAR, LH)	
	4	1	**263-6312**	1	FILM-STRIPE (CAT, RH)	
	5		**263-6313**	1	FILM-STRIPE (REAR, RH)	
	6	1	**263-6314**	1	FILM-STRIPE (REAR, RH)	
	7	1	**263-6315**	1	FILM-STRIPE (D10T, REAR, RH)	
	8	1	**263-6316**	1	FILM-STRIPE (REAR, LH)	
	9	1	**263-6317**	1	FILM-IDENTIFICATION (CAT, REAR)	
	10	1	**263-6318**	1	FILM-STRIPE (REAR, RH)	
	11	1	**3E-8273**	1	FILM-STRIPE (CATERPILLAR, FRONT)	
	12	1	**253-0861**	2	FILM-INFORMATION (CAT POWER, ACERT TECHNOLOGY)	

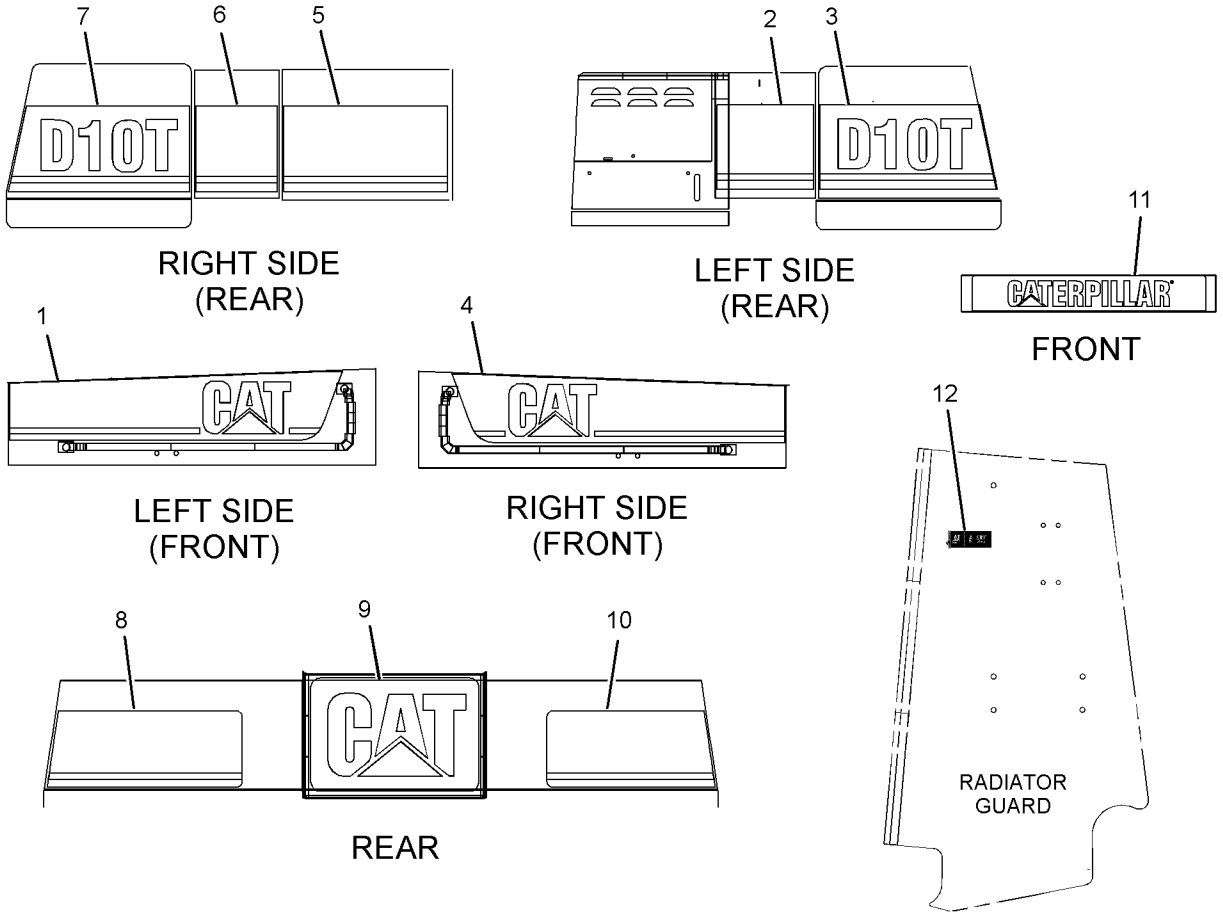

GRAPHIC #1 **<END>** g01226140

SERVICE EQUIPMENT AND SUPPLIES

257-5848 PLATE & FILM GP

S/N: RJG1-UP

AN ATTACHMENT

SMCS-7557, 7563 **i02274185**

NOTE	PART NUMBER	QTY	PART NAME 1 2 3 4 5 6 (PRODUCT LEVEL)	SEE PAGE
	224-0672	1	FILM-WARNING (HIGH PRESSURE, READ OMM, ISO)	
			ON TOP SIDE OF FRONT FLOOR PLATE IN CAB	
	225-0312	2	FILM-WARNING (JUMP START, READ OMM)	
			ON UNDERSIDE OF EACH BATTERY COMPARTMENT COVER	
	225-4257	1	FILM-WARNING (HOT FLUID UNDER PRESSURE)	
			ON INSIDE OF RADIATOR FILL DOOR	
	232-3402	1	FILM-WARNING (ELECTRICAL SHOCK)	
			ON FUSE CAP AT BOTTOM OF FUSE PANEL	
	247-6876	1	FILM-WARNING (DO NOT OPERATE, READ OMM)	
			ON LH VERTICAL B POST COVER ABOVE STEERING CONTROL	
	247-6878	1	FILM-WARNING (SEAT BELT)	
			ON LH VERTICAL B POST COVER ABOVE STEERING CONTROL	
	260-7653	1	FILM-WARNING (PRODUCT LINK 300, ISO)	
			SHIPPED LOOSE IN PACKAGE NOT ATTACHED TO MODULE	

<END>

SERVICE EQUIPMENT AND SUPPLIES

256-9738 PLATE GP-ENGINE IDENTIFICATION

S/N: EHX1-UP

PART OF 212-2737, 212-2744, 271-2219 ENGINE AR-COMPLETE

ALSO AN ATTACHMENT

SMCS-7557 **i02270797**

NOTE	REF NO	GRAPHIC REF	PART NUMBER	QTY	PART NAME 1 2 3 4 5 6 (PRODUCT LEVEL)	SEE PAGE
	1	1	**234-1402**	2	PLATE-IDENTIFICATION (C27 ACERT)	
	2	1	**234-1404**	1	PLATE-STRIPE	
	3	1	**234-1405**	2	PLATE-IDENTIFICATION (CAT)	

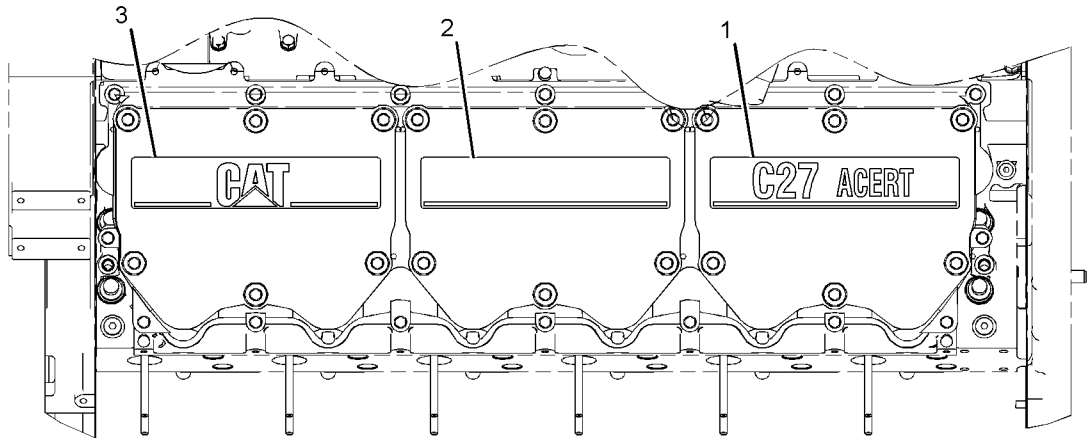

LEFT SIDE VIEW

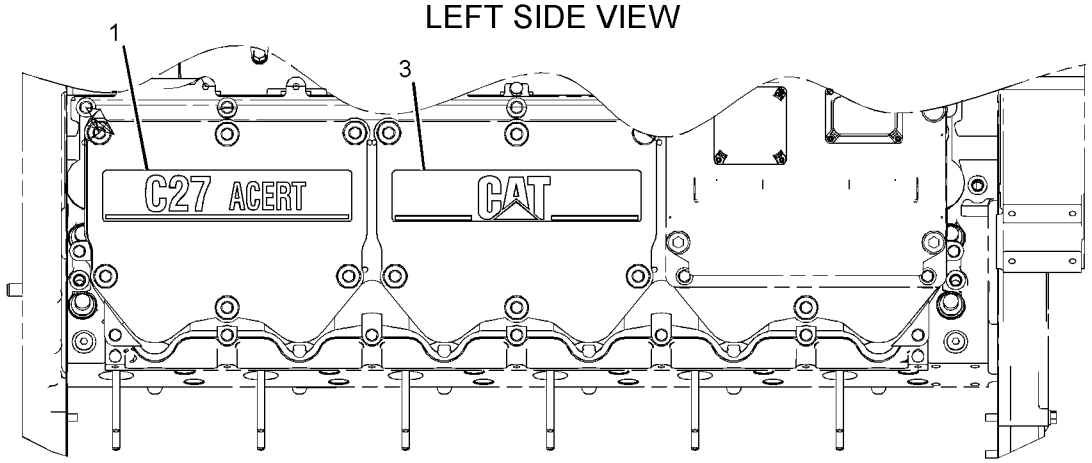

RIGHT SIDE VIEW

GRAPHIC #1 **<END>** g01139623

MEMORANDA

PART NUMBER INDEX

Part	Page
0	
0L-0646	649
0L-1143	70
	94
	96
	101
	104
	326
	330
	333
0L-1178	497
0L-1351	53
	73
	77
	90
	187
0L-1352	47
0L-2070	77
	184
0R-5513	101
	104
0R-8521	360
0S-0509	24
	40
	76
	151
	184
	187
	278
	324
0S-0699	38
0S-1566	24
0S-1571	40
	54
	79
0S-1573	67
0S-1585	36
	53
	387
	509
	511
0S-1587	54
	101
	104
	387
0S-1588	71
	72
	76
	79
	96
	101
	104
	187
0S-1590	21
	70
	77
	92
	94
	135
	136
	137
	184
	187
	326
	330
	333
0S-1591	77
	101
	104
	107
	133
	370
	376
0S-1594	21
	23
	73
	77
	92
	94
	96
	99
	101
	104
	108
	184
	187
	371
	392
0S-1595	77
0S-1604	381
	390
0S-1608	77
	99
0S-1616	48
0S-1619	24
	46
	73
	94
	96
	101
	104
	345
	372
0T-0055	54
	99
0T-0065	77
	327
	330
0T-0244	859
	862
0T-0319	77
0T-0573	21
	40
	53
	99
	376
0T-0768	77
1	
1A-1135	64
	65
	107
1A-1460	484
	634
	636
1A-2029	24
	42
	44
	71
	73
	79
	101
	104
	107
	133
	180
	345
	376
	383
	385
1A-5183	92
	94
	96
	146
1A-5822	509
	511
1A-9579	18
1B-2578	184
	187
1B-2886	101
	104
	370
1B-3057	92
	94
	96
1B-3623	39
1B-3978	351
	354
	357
	360
1B-4367	387
1B-5675	376
1B-7182	107
	345
1B-8705	40
	42
	44
	378
1B-8706	846
1B-8714	376
	378
	846
1C-2251	99
	101
	104
	178
	180
1D-4540	345
1D-4556	77
1D-4566	680
1D-4569	67
1D-4627	63
	569
1D-4628	560
1D-4631	63
	569
1D-4637	564
	566
1D-4640	351
	357
	360
1F-0748	201
	203
	205
1F-0750	71
	73
	122
	127
	142
	252
	253
	255
	257
	259
	263
	267
	268
	326
	330
	333
	402
	553
	802
	812
	815
	818
	822
	834
	839
1F-2417	127
1F-7854	81
1H-1023	305
	310
1H-2415	201
	203
	205
1H-2629	305
1H-3244	199
	271
1H-3338	85
	316
1H-4106	409
1H-5728	666
1H-7339	649
1H-8128	169
	171
	173
	195
1H-8296	870
1J-2192	560
	562
1J-7468	618
1J-8569	560
	562
1J-8668	366
	608
1J-9671	169
	171
	173
	209
	217
	224
1K-5760	855
1K-6870	173
1K-6872	173
	467
1K-6985	127
1L-3162	393
1L-5072	550

► **PRIMARY REFERENCE**

PART NUMBER INDEX

Part	Page
1L-5081	497
1L-7203	351
	354
	357
	360
1L-7319	351
	354
	357
	360
1M-0556	649
1M-0644	86
1M-6119	207
	215
	222
	302
1M-6120	207
	215
	222
	302
1M-6573	363
1M-8653	497
1M-8657	371
1M-9968	305
1M-9971	306
1P-1744	521
1P-2807	888
1P-3703	616
	618
1P-3704	582
1P-3705	555
	556
	582
	587
	591
	593
	603
1P-3708	366
1P-3709	366
1P-4278	112
	117
	120
	123
	175
1P-4576	366
	611
	616
	618
	690
1P-4577	366
	555
	556
	564
	566
	569
	584
	587
	603
	611
	618
	666
	670
	672
	690
1P-4578	366
	584
	587
	603
	666
	670
	672
1P-4579	366
	582
	603
	649
1P-4582	169
	171
	173
	366
	603
	649
1P-4584	603
1P-4585	603
1P-5760	618
1P-5763	366
1P-5767	582
1P-6356	812
	815
	818
	822
1P-7346	40
	497
1P-7404	674
1P-7405	497
1P-9254	467
1P-9261	371
1P-9390	131
	133
1Q-1492	610
1Q-1494	610
1Q-1495	610
1Q-1496	610
1Q-1497	610
1Q-1591	140
	268
1Q-1592	140
	253
	257
	259
	263
	268
1Q-3386	610
1Q-3453	462
1Q-3458	454
	▶461
1Q-3462	461
1Q-3463	461
1Q-3465	462
1Q-3466	462
1Q-3467	461
1Q-3468	454
	▶462
1Q-3626	439
1Q-3627	439
1Q-3783	839
1Q-3785	839
1Q-4636	▶499
1Q-4651	503
1R-0716	73
1R-0735	649
1R-0755	178
	180
1R-0771	183
1R-0777	649
1R-1809	349
	365
1S-0004	81
	83
1S-0496	819
1S-0994	123
	303
	326
	330
	333
	577
	580
	582
	584
	608
	614
	621
1S-0996	175
	366
	582
	614
	621
1S-1015	123
	577
	580
1S-2342	322
1S-4295	165
	166
1S-4915	207
	208
	209
	215
	216
	217
	222
	223
	224
	302
	303
	326
	330
	333
1S-7251	207
	208
	209
	215
	216
	217
	222
	223
	302
	303
	326
	330
	333
1S-7252	207
	209
	215
	217
	223
	224
	302
1S-7446	305
	310
1S-8241	562
1S-8385	363
1S-9110	385
1S-9593	526
	684
	685
	686
	688
1T-0068	464
	465
	466
1T-0141	385
1T-0229	383
1T-0241	383
1T-0242	383
1T-0278	383
1T-0416	674
1T-0610	383
1T-0720	42
	44
1T-0738	530
1T-1402	127
1U-1187	708
	709
1U-1799	666
1U-2532	558
	571
	573
1U-2533	708
	709
1U-3173	564
	566
1U-3174	558
	564
	566
	571
	573
1U-3658	558
	571
	573
	694
1U-3685	746
1U-3686	746
1U-8846	376
1V-6645	577
	580
1V-8284	120
	123
1W-1116	77
1W-2860	123
1W-3014	67
1W-3136	46
1W-4724	203
	205
1W-6448	513
	547
1W-8620	137
	155
1W-8793	175
1W-8795	77
1W-9860	392
1Y-7927	805

▶ **PRIMARY REFERENCE**

PART NUMBER INDEX

Part	Page
1Z-0749	5
	7
	9
	▶439
1Z-0886	3
1Z-0919	3
	▶494
2	
2A-1531	370
2A-1538	63
2A-3223	127
2A-3746	385
2A-4429	35
2A-4639	73
2A-5885	666
2B-0858	653
2B-2695	40
	314
2B-9373	378
2D-1691	649
2D-4202	649
2D-5658	372
2D-6235	507
	805
2D-6374	36
2D-6392	305
	310
2D-6648	127
	645
2F-5326	456
	459
	460
2F-6678	305
2F-7306	877
	879
	880
2G-0493	653
2H-1190	469
	470
	472
2H-1537	409
2H-2665	649
2H-3429	306
	310
2H-3745	457
2H-3755	278
	345
	373
2H-3855	372
2H-3856	560
2H-3920	844
2H-3922	313
	319
2H-3932	467
2H-5549	376
2H-6124	650
2H-6338	603
2J-0564	560
	562
2J-1227	692
	693
	743
2J-1740	560
	562
2J-2668	603
2J-3507	397
	708
	709
2J-6089	666
2J-6356	846
2J-7761	550
2J-8163	305
	310
2J-8333	382
2J-8348	397
2K-0337	376
	378
2K-4821	199
2K-4898	541
	545
2K-4973	47
	762
	812
	815
	819
	822
	868
	870
2K-5254	387
2K-5804	201
	203
	205
	777
2K-6830	568
2K-7471	363
2K-8467	519
	520
2L-1699	650
2L-2685	77
2L-3650	383
2L-5894	547
2L-6679	305
	310
2M-0849	387
2M-1538	21
2M-3530	457
2M-3974	376
2M-4453	666
2M-5656	380
2M-5795	155
	417
	419
	421
	423
2M-6095	440
	446
2M-6102	881
2M-7819	805
2M-9780	83
	175
	209
	239
	509
	511
	524
	528
	584
	595
	623
	625
	653
	666
	670
	672
	677
	678
	681
	682
2N-2765	165
	166
2N-2766	135
	136
	137
	151
	165
	166
2N-7029	666
2P-1286	81
2P-1974	21
2P-2508	131
2P-2772	24
2P-2975	210
	218
	225
2P-3203	54
2P-3204	54
2P-3209	54
2P-3213	146
2P-4339	844
2P-4538	393
2P-7213	184
	187
2P-7418	135
	136
	137
2P-7557	146
2P-8421	595
2S-0613	351
	354
	357
	360
2S-2053	77
2S-4078	209
	218
	224
	343
	349
	351
	354
	357
	360
	392
	393
	666
	670
	672
2S-5926	497
2S-8939	371
2T-2305	477
2T-2396	120
2U-7354	623
2V-0447	692
	737
	756
2V-1256	692
	741
	743
	756
2V-2043	81
2V-4868	120
	123
2V-9923	477
2W-3875	40
2W-4087	40
2W-4474	151
2W-7622	90
2W-8225	73
2W-9978	549
2Y-6508	94
	96
3	
3A-4703	194
3B-0551	90
3B-0622	99
3B-0623	32
3B-0645	30
	32
	58
3B-1915	40
	54
	79
	101
	104
	163
	164
	178
	180
	190
	229
	497
3B-2263	637
3B-2968	63
3B-4501	319
	799
3B-4605	404
	405
	407
	408
3B-4617	442
	444
3B-5317	430
	432
3B-7255	825
3B-8489	456
	459
	460
	558
	564
	566
	569

▶ **PRIMARY REFERENCE**

PART NUMBER INDEX

Part	Page	Part	Page	Part	Page	Part	Page
	571	3E-3371	207	3E-6772	33		726
	573		281	3E-6924	810		727
	633		282	3E-7404	797		728
	694		320	3E-7424	155		730
	735		322	3E-7433	366	3G-8054	600
	737		547	3E-7447	131		602
	739	3E-3377	280		155	3G-8057	600
3D-0472	477		547	3E-7753	207		602
3D-2824	81		684		215	3G-8163	666
	90		685		222	3G-8164	666
	175		822	3E-7768	306	3G-8165	666
	209	3E-3383	523	3E-7771	305	3G-8175	688
	218	3E-3389	844	3E-8020	322	3G-8415	666
	224	3E-3535	818		772	3G-8633	573
	312	3E-3892	797		774	3G-8710	666
	349	3E-4041	120		810		670
	366		123	3E-8273	891		672
	479	3E-4051	812	3E-8575	659	3G-9105	680
	528		815		▶684	3H-0240	766
	590		818	3E-8581	684	3H-6660	772
	591		822		685		774
	593	3E-4052	812	3E-9205	▶685	3H-7654	469
	595		815		690		472
	628		819	3F-0379	305	3H-9675	467
	629		822	3F-4479	666	3J-1907	90
	637	3E-4057	812	3F-6156	72		146
	653		815	3F-9556	199		209
	655		818		881		218
	656		822		884		224
	825	3E-4058	813		886		300
	827		815		887		326
3D-2975	805		819	3G-1258	666		331
3D-7805	676		822	3G-1877	754		334
3D-7943	521	3E-4067	812		755		343
3D-8012	409		815	3G-2292	40		349
3D-8241	387		819	3G-3475	666		365
3D-8317	674		822		670		366
3D-9133	351	3E-4304	795		672		378
	354		796	3G-3747	569		387
	357	3E-4334	641	3G-5596	758		391
	360	3E-4352	373		759		392
3D-9799	241		787		760		393
	242	3E-4353	326		761		524
3E-2378	889		330	3G-6509	759		528
3E-3000	774		333	3G-7624	564		535
3E-3365	198	3E-4356	411		566		580
	208		417	3G-7698	395		582
	209		419	3G-7891	704		584
	292		450	3G-7961	558		590
	297		808		571		595
	312		881		573		596
	318	3E-5239	336	3G-8047	600		600
	319		784		602		602
	321		799	3G-8051	708		608
	336	3E-5464	799		709		614
	686	3E-5519	336	3G-8052	708		621
	688	3E-6328	▶198		709		625
	784		336		717		626
	812	3E-6703	603		719		628
	815	3E-6756	735		721		630
	844		737		726		637
3E-3368	284		739		727		643
	285	3E-6758	735		728		645
	286		737		730		649
	287		739	3G-8053	710		659

▶ PRIMARY REFERENCE

PART NUMBER INDEX

Part	Page	Part	Page	Part	Page	Part	Page
	662	3K-5234	466		784		690
	665	3K-6060	209		872	3V-9399	404
	666		218		874		405
	676		224		875		407
3J-4278	457		303		884		408
3J-4818	870	3K-6113	666	3S-2708	372	3W-2647	429
3J-6035	692	3K-6235	772		385		430
	693		774	3S-4489	554		432
	756	3K-9770	409	3S-6162	409	3W-3110	421
	757		731	3S-8665	90		423
3J-6484	569		732	3S-9233	666	3Y-2888	300
3J-7354	120		733	3S-9557	271		
	123		734	3S-9643	99		
	283	3L-3380	305	3T-0304	336	**4**	
	326		310	3T-2977	426		
	331	3N-3763	306		427	4B-0418	76
	334	3N-3790	888	3T-3294	351		92
	366	3P-0246	393		354		94
	456	3P-0653	387		357		96
	459	3P-1323	27		360	4B-1230	877
	460	3P-1849	357	3T-3418	305	4B-1234	877
	477	3P-1932	96		310		879
	623	3P-1979	676	3T-3422	305		880
	626	3P-2404	591		310	4B-1270	514
	649		593	3T-3423	305		547
	666	3P-2792	371		310	4B-1274	877
	735	3P-2793	371	3T-3424	305		879
	737	3P-2794	371		310		880
	739	3P-3103	371	3T-3434	306	4B-2049	306
3J-7470	666	3P-3321	372		310	4B-3609	846
3J-7473	666	3P-3441	509	3T-3601	511	4B-4158	454
3K-0360	83		511	3T-3602	511		467
	90	3P-7447	372	3T-3663	378		695
	96	3P-7489	371	3T-4014	365		696
	104	3P-7570	372	3T-4214	457		697
	123	3P-8820	351	3T-4391	363		698
	175		354	3T-4403	345		699
	209		357	3T-4709	305		700
	218		360		310		701
	224	3P-8822	351	3T-4710	305		702
	239		354		310		751
	351		357	3T-4711	305		752
	354		360	3T-4717	511		753
	357	3P-8827	351	3T-4816	608	4B-4161	73
	360		354	3T-4817	608	4B-4274	366
	366		357	3T-4820	608		786
	467		360	3T-5830	370	4B-4278	404
	479	3P-9900	870	3T-6457	345		405
	590	3R-8801	305	3T-7567	409		407
	593	3S-0004	378	3T-8459	741		408
	595		524		743		870
	596	3S-0127	48	3T-8791	409	4B-5059	805
	600	3S-1349	397	3T-8792	409	4B-9782	60
	602		409	3T-9494	305		61
	621		558		306	4B-9785	343
	623		571		310		363
	662		573	3T-9524	305	4B-9808	541
	665	3S-1356	457	3T-9525	305		543
	825	3S-2093	178		310		545
	827		180	3T-9549	207	4B-9880	674
3K-2889	409		324		215	4C-9612	48
3K-3256	21		337		222	4D-1248	208
	47		345	3T-9658	394		209
	151		373		395		216
3K-4897	547		530	3V-2431	283		217

► **PRIMARY REFERENCE**

PART NUMBER INDEX

Part	Page
	223
	303
4D-3704	39
	201
	203
	205
4D-4508	467
4D-7733	477
	596
	608
	813
4D-8123	324
4D-8148	343
4D-9517	120
	123
4F-0411	524
4F-2129	509
	511
4F-2294	317
4F-4879	865
	866
	867
4F-7389	509
	511
4F-7957	19
4F-8503	381
4F-8711	271
4F-8965	77
4H-1641	40
	402
	802
4H-2558	404
	405
	407
	408
4H-3539	123
4I-9521	477
	608
4I-9522	608
4I-9523	608
4I-9524	608
4I-9525	477
4J-0520	366
	551
	552
	553
	564
	584
	587
	603
	606
	611
	614
	618
	621
	660
	666
4J-0522	366
	584
	587
	603
	608
	665
	666
	670
	672
	680
	690
4J-0523	665
	666
4J-0524	582
	603
4J-0525	650
	672
	680
4J-0526	670
	672
	680
4J-0527	169
	171
	173
	366
	603
4J-2379	573
4J-4262	440
	446
4J-4955	569
4J-5267	366
	611
	614
	616
	618
	621
4J-5477	366
	477
	735
	737
	739
4J-5573	680
4J-5977	409
4J-6888	564
	566
4J-7083	442
	444
4J-7376	569
4J-7533	530
	623
	625
	659
	665
4J-8734	558
	571
4J-8820	169
4J-8996	666
4J-8997	665
	666
4K-0684	409
	464
	465
	731
	732
	733
	734
4K-2542	779
	781
4K-5175	343
	469
	472
	509
	511
4K-6297	42
	44
4K-8302	813
	815
	819
	822
4K-8864	324
4K-9429	842
4L-2729	305
4L-6454	75
	90
	127
	142
	155
	158
	209
	218
	224
	239
	241
	242
	253
	257
	259
	263
	268
	270
	326
	331
	429
	430
	432
	479
	535
	553
	600
	655
	656
	779
	830
	836
4L-6459	90
	110
	115
	253
	255
	257
	263
	267
	268
	327
	331
	334
	603
	616
	618
4L-8515	643
4L-9337	90
	127
	366
	556
	602
	606
	616
	618
	834
4M-0189	127
4M-1336	107
4M-1827	306
	310
4M-1828	305
	310
4M-1829	305
	310
4M-1831	305
	310
4M-1853	306
	310
4M-1854	305
	310
4M-1896	306
4M-2381	674
4M-5905	674
4M-6425	230
	853
4M-6582	799
4M-7470	404
	405
	407
	408
4M-8239	392
4M-8910	387
4N-0342	40
4N-0683	30
	48
	67
4N-0684	26
	40
	42
	44
4N-0685	27
4N-0848	42
	44
4N-0861	77
4N-0864	23
	101
	104
	241
	242
4N-0865	77
4N-0913	77
4N-0914	77
4N-1059	309
4N-1114	24
4N-1151	54
4N-1650	30
4N-1682	23
4N-1683	23
4N-1946	101
	104
4N-1948	107
4N-2198	101
	104
4N-2199	101
	104
4N-2380	101
	104
4N-2481	13
	14
	15

► **PRIMARY REFERENCE**

PART NUMBER INDEX

Part	Page
	▶70
4N-2514	39
4N-2745	777
4N-2927	805
4N-3329	278
4N-3808	348
4N-3841	314
4N-5339	86
4N-6658	27
4N-7183	42
	44
4N-8411	77
4N-8452	101
	104
4N-8770	77
4N-9915	808
	881
4P-0519	54
4P-5544	16
	17
	▶63
4P-5546	63
4P-6645	590
	593
4P-7428	209
	218
	224
	253
	255
	257
	259
	263
	268
	327
	331
	334
	819
4P-7429	210
	218
	224
	241
	242
	276
	324
	327
	331
	334
	373
4P-7581	83
	137
	180
	210
	218
	224
	241
	242
	270
	300
	303
	324
	327
	331
	334
	338
	345
	813
	815
	819
	822
4P-7582	327
	331
	334
4P-7820	21
4P-8134	137
	210
	218
	224
	276
	324
	327
	331
	334
	338
	535
	784
	799
4S-1936	815
	823
4S-5565	283
4S-8033	440
	446
4S-8537	371
	372
4S-9134	378
4T-1389	398
	400
4T-1422	737
	739
4T-2069	467
4T-2620	670
	672
4T-3797	726
	727
	728
	730
4T-3980	717
	719
4T-3981	618
4T-4073	665
	▶683
4T-4143	558
	564
	566
	571
	573
4T-4205	555
	▶680
4T-4207	680
4T-5114	564
	566
4T-5501	761
4T-5502	758
	759
	760
4T-6907	568
4T-8050	327
	330
4T-8181	▶708
	710
4T-8182	▶709
	710
4T-8183	697
	698
	▶726
4T-8223	753
	▶754
4T-8288	712
	▶717
4T-9702	708
	709
4T-9707	708
	709
4T-9977	▶569
	751
	752
	753
4V-7884	868
4V-8046	877
	879
	880
4V-8256	762
4V-8577	868
	870
4W-5412	101
	104
4W-5698	26
4W-5699	26
4W-5700	26
4W-5701	26
4W-7627	94
	96
4Z-0660	▶741
4Z-8840	755
4Z-8846	755
4Z-8937	758
4Z-8942	755
4Z-8943	748
4Z-8944	755
	▶758
4Z-8946	742
	▶748
4Z-8947	742
	▶755
4Z-8959	463
4Z-8961	463
4Z-9219	748
4Z-9220	755
4Z-9333	606
4Z-9401	725
4Z-9407	725
5	
5B-0213	42
	44
5B-2638	46
5B-3180	674
5B-5473	437
5B-7890	151
5B-9603	53
5C-2890	271
	303
	316
	784
	808
	870
5C-6266	327
	331
	334
5C-6565	436
	440
	446
	457
	555
	556
	834
	854
5C-7261	248
	276
	850
	881
	884
	886
	887
5C-8312	844
5C-8811	881
5C-9553	243
	276
	338
	477
	516
	772
	774
	787
	802
	804
	850
5D-0353	351
	354
	357
	360
5D-1026	872
5D-1911	550
5D-4661	437
5D-4822	805
5D-5957	366
5D-5958	641
5D-6657	381
5D-6659	363
5D-7449	383
5D-7523	351
	354
	357
5D-7635	253
	257
	259
	263
	268
5D-7927	649
5E-8771	40
	42
	44
5F-1248	383
5F-1678	456
	459
	460
5F-3106	584
	603

▶ **PRIMARY REFERENCE**

PART NUMBER INDEX

Part	Page
5F-3488	649
5F-4899	21
	86
5F-6222	650
5F-7054	351
	354
	357
	360
	650
5F-7403	42
	44
5F-7404	42
	44
5G-6504	587
5H-0135	77
5H-1504	33
5H-2068	77
5H-4018	611
5H-4019	564
	587
	666
5H-4020	603
	670
	672
5H-4279	376
	382
5H-6733	650
5H-6734	169
	171
	173
	195
	467
5H-7153	366
5H-8985	385
5H-9394	562
5I-3272	122
	126
5I-8748	110
5J-1193	560
	562
5J-1205	737
5J-1572	573
5J-3326	560
	562
5J-3488	569
5J-4664	666
5J-4715	577
	580
5J-5314	306
	310
5J-5365	633
5J-5402	568
5J-5559	569
5J-5793	370
5J-5794	51
	52
5K-1770	366
5K-3931	363
5K-3932	363
5K-4778	823
5K-5120	343
5K-5338	596
5K-5959	650
5K-6875	825
5K-7143	351
	354
	357
	361
5K-9090	81
	83
	584
	660
5K-9107	343
	363
5K-9179	829
5K-9235	343
5K-9238	365
5K-9592	77
5K-9989	343
5L-2952	477
5L-4041	85
5L-4398	509
	511
5L-4756	558
	571
	573
	694
5L-4758	521
5L-7200	319
5L-8854	142
5M-0544	409
	558
	571
5M-2894	21
	23
	24
	40
	46
	47
	53
	54
	70
	71
	72
	73
	76
	77
	79
	86
	92
	94
	96
	99
	135
	136
	137
	146
	151
	178
	180
	184
	187
	190
	229
	278
	324
	343
	345
	370
	371
	383
	385
	437
	853
5M-3034	306
	310
5M-3062	75
	133
	252
	253
	255
	257
	259
	263
	267
	268
	270
	303
	436
	587
	611
	813
	816
	819
	823
5M-4480	372
5M-6126	371
5M-6187	372
5M-6213	477
5M-6214	442
	444
5M-8500	772
	774
5M-9548	393
5M-9622	392
	393
5M-9623	392
	393
5M-9624	392
	393
5P-0076	690
5P-0537	19
	40
	48
5P-0597	75
	135
	136
	137
	139
	155
	158
	205
5P-0695	207
	208
	209
	215
	216
	217
	223
	224
	253
	255
	257
	259
	263
	267
	268
	270
	303
	436
	587
	611
	813
	816
	819
	823
5P-0747	207
	208
	209
	215
	216
	217
	222
	223
	224
	302
	303
5P-0760	326
	330
	333
5P-0761	207
	208
	209
	215
	216
	217
	222
	223
	302
	303
5P-0764	110
	115
5P-0767	825
	827
5P-0840	366
5P-1075	83
	127
	142
	144
	150
	155
	162
	175
	252
	253
	255
	257
	259
	263
	267
	268
	303
	366
	421
	423
	553
	600
	602
	616
	618
	743
	784
	813
	816
	819
	823
	825
	827
	834
	836
5P-1076	127

PART NUMBER INDEX

Part	Page	Part	Page	Part	Page	Part	Page
	129		666		376		787
	139	5P-2322	633	5P-4961	477	5P-7972	666
	152	5P-2566	169	5P-5405	385	5P-8068	77
	153		171	5P-5422	380	5P-8077	582
	155		173	5P-5528	120		603
	175		366		123	5P-8112	606
	263		387	5P-5623	208	5P-8134	38
	268		397		216		151
	397		442		223	5P-8167	120
	402		444		336	5P-8211	71
	409		494	5P-5639	799		72
	411		551	5P-5649	432	5P-8221	499
	417		552	5P-5672	784		500
	419		553	5P-5908	784		501
	421		603	5P-5924	784		502
	440		649	5P-5969	774		503
	442	5P-2618	169		810		504
	444		171	5P-5991	176		505
	446		173	5P-6010	870	5P-8244	77
	450	5P-2955	252	5P-6254	372	5P-8245	46
	495		253	5P-6298	310		49
	616		255	5P-6312	300		53
	618		257	5P-6313	300		75
	680		259	5P-6314	300		77
	772		263	5P-6393	383		101
	774		267	5P-6605	772		104
	834		268		774		351
	854	5P-3092	467		795		354
5P-1230	79	5P-3414	371		796		357
5P-1251	120	5P-3488	509	5P-6718	378		361
	123		511	5P-6874	829		363
5P-1268	90	5P-3489	509	5P-6944	366		370
5P-1327	751		511	5P-6994	239		371
	752	5P-3948	818	5P-7211	155		376
	753	5P-4115	245		421		383
5P-1370	42	5P-4116	68		423		387
	44		127	5P-7213	634		483
5P-1404	210		411		636		484
	524		417		643		485
5P-1465	120		419		802		486
	123		450	5P-7462	614		509
5P-1471	135		507		621		511
	137		516	5P-7463	614		634
	139		787		621		636
	155		789	5P-7466	587		647
	158		797	5P-7467	587		648
	203		802	5P-7468	366	5P-8247	24
	205	5P-4143	363		577		199
5P-1505	176	5P-4268	378		580		343
5P-1981	363	5P-4295	816		584		363
5P-2199	678		819		591	5P-8248	63
5P-2228	176		823		593	5P-8249	63
	241	5P-4318	42	5P-7469	366		560
	242		44		577		562
	253	5P-4325	139		580		569
	255		158		584	5P-8250	351
	257		203		591		357
	259		205		593		361
	263	5P-4423	870	5P-7513	831		380
	327	5P-4674	210	5P-7514	432		397
	331		218	5P-7701	54		564
	334		224	5P-7814	46		566
	495	5P-4868	75	5P-7892	666	5P-8286	349
	616	5P-4869	133	5P-7957	842	5P-8356	30
	618	5P-4889	366	5P-7970	338	5P-8429	42

► **PRIMARY REFERENCE**

PART NUMBER INDEX

Part	Page
	44
5P-8441	784
5P-8444	577
	580
	584
	591
	593
5P-8445	805
5P-8500	1
	16
	17
	175
	194
	302
	402
	411
	417
	419
	421
	423
	450
	550
	802
5P-8522	255
	257
	263
5P-8525	797
5P-8823	731
	732
	733
	734
5P-8837	440
	446
5P-8874	90
5P-8907	523
5P-8944	351
	354
	357
	360
5P-8998	343
5P-9085	324
5P-9299	123
5P-9436	593
5P-9439	376
5P-9519	343
	370
5P-9597	127
5P-9617	365
	649
5P-9658	348
5P-9890	77
5P-9899	739
5P-9938	535
5R-1238	587
5R-5927	152
	153
5R-7755	308
5S-0003	674
5S-0581	107
5S-2256	676
5S-2389	383
	676
5S-7348	228
5S-7349	199
	836
5S-7379	210
	218
	224
	387
	618
	670
	672
	839
5S-7382	175
	263
	268
	366
	555
	556
	564
	566
	569
	584
	587
	603
	611
	666
	670
	672
	690
	813
	816
	819
	823
5S-7383	90
	606
	618
	853
5T-4896	409
5V-0770	805
5V-1474	799
5V-1496	155
	421
	423
	857
	860
5V-1497	868
5V-6103	276

6

Part	Page
6B-0533	404
	405
	440
	446
6B-1557	334
6B-2882	151
6B-4594	110
	115
6B-6205	333
6C-3680	799
6D-1641	825
	827
6D-3479	324
6D-4244	120
	184
	187
	591
	600
	602
6D-4246	874
6D-4247	303
	577
	580
	813
	816
	819
	823
6D-4636	175
6D-5801	192
	271
6E-0381	683
6E-0382	683
6E-0410	678
6E-2060	649
6E-2943	645
6E-3113	▶568
	747
	748
6E-3667	558
	571
6E-3976	568
6E-3980	568
6E-4092	628
	629
6E-4343	666
	670
	672
6E-4432	670
	672
6E-4492	670
	672
6E-4976	568
6E-5066	626
6E-5102	180
6F-0156	372
6F-0295	75
6F-0711	394
	395
6F-7045	313
6F-8146	352
	354
	358
	361
	366
6H-1717	383
6H-3956	404
	405
	440
	446
	452
6H-3957	127
6H-9361	650
6I-0213	191
6I-0928	35
6I-1418	230
	336
6I-1458	51
	52
6I-2431	112
	117
6I-2435	112
	117
6I-2436	112
6I-2505	132
6I-2506	132
6I-4025	33
6I-4465	132
6I-9255	371
6I-9471	89
6J-0488	442
	444
6J-1038	665
6J-2419	345
	528
6J-2561	666
6J-2680	603
6J-2797	568
6J-3134	666
6J-3913	42
	44
6J-5985	726
	727
	728
	730
6J-5986	726
	727
	728
	730
6J-7500	710
	726
	727
	728
	730
6K-0138	748
	749
6K-3273	860
6K-3630	748
	749
6K-5535	123
6K-5536	123
6K-6307	365
	366
	670
6K-8714	376
6K-9632	875
	884
6L-1651	366
6L-2609	477
6L-3005	146
6L-4428	30
6L-4784	376
	674
6L-6560	385
6L-9284	343
	370
6L-9965	343
6N-0008	101
	104
6N-0977	40
6N-1025	40
6N-1026	40
6N-1027	40
6N-1127	178
	180
6N-1378	12
	▶64
6N-2229	10

▶ **PRIMARY REFERENCE**

PART NUMBER INDEX

Part	Page
	11
	12
	▶36
6N-2343	86
6N-2469	54
6N-2656	81
	83
6N-2985	365
6N-3279	306
	310
6N-3356	155
6N-3826	305
	310
6N-3896	63
6N-3897	63
6N-6037	36
6N-7654	36
6N-8599	434
	435
6N-8744	779
	781
	783
6P-1301	799
6P-3458	372
6P-3901	385
6P-3902	385
6P-3904	383
6P-5317	509
	511
6P-6739	371
6P-7564	371
6P-8339	387
6P-8340	387
6P-8829	397
	429
	430
	432
6P-8901	703
6P-9163	383
6S-5993	477
6S-6251	657
6T-0363	305
	310
6T-0371	305
	310
6T-0372	305
	310
6T-0410	409
6T-0609	351
	354
	357
	361
6T-0840	509
	511
6T-0841	509
	511
6T-0842	509
	511
6T-1139	466
6T-1141	▶466
	482
	505
6T-1382	506
6T-2037	509
	511
6T-3382	684
6T-3631	207
	215
	222
	320
6T-3632	207
	215
	222
	320
6T-3633	207
	215
	222
	320
6T-3643	271
	812
	818
6T-5941	430
	432
6T-6080	194
6T-6566	351
	354
	357
	360
6T-6708	275
6T-8115	322
6T-8714	411
	417
	419
	450
	850
6T-9244	685
6T-9927	411
	417
	419
	450
6U-3791	825
6V-0128	19
6V-0457	363
6V-0458	363
6V-0484	73
	614
	621
6V-0683	614
	621
6V-0836	371
6V-0852	73
	178
	180
	343
	365
	392
	393
	524
	584
	595
	625
	643
	645
	662
	676
6V-0894	514
	547
	846
6V-0928	▶305
	308
6V-1195	144
	150
6V-1196	376
	387
6V-1197	628
	629
6V-1322	85
	305
	310
6V-1614	538
	540
6V-1653	351
	354
	357
	360
6V-1668	275
6V-1720	372
6V-1722	825
	827
6V-1820	813
6V-1849	680
6V-1874	577
6V-1904	366
6V-1971	1
6V-2235	75
6V-2317	507
6V-2360	497
6V-2491	271
6V-2495	203
	205
6V-2686	169
	171
	300
6V-2689	336
	523
6V-3265	278
	324
6V-3298	351
	354
	357
	360
6V-3319	42
	44
6V-3505	670
	672
	678
6V-3668	152
	153
6V-3821	175
6V-3830	54
	73
	77
6V-3834	634
	636
	647
	648
6V-3965	343
	366
	391
	392
	393
	524
	584
	596
	625
	643
	645
	662
	676
6V-4248	131
	133
	239
6V-4432	59
	670
	672
6V-4433	73
6V-4589	42
	44
	57
	73
	79
	197
	318
6V-5048	48
	73
	145
	146
	148
	278
	290
	291
6V-5049	33
	42
	44
	73
	101
	104
	178
	180
	184
	187
	278
	289
	679
6V-5050	30
	79
6V-5051	210
	218
	224
6V-5063	101
	104
	120
	123
6V-5064	101
	104
6V-5134	366
6V-5142	677
	682
6V-5163	810
6V-5200	637
6V-5205	639
6V-5219	276
6V-5553	24
	385
6V-5645	271
6V-5656	366
6V-5657	560
	562
6V-5683	272
6V-5782	127

▶ **PRIMARY REFERENCE**

PART NUMBER INDEX

Part	Page
6V-5817	872
6V-5818	875
6V-5839	131
	133
	169
	171
	173
	239
	327
	331
	334
	650
	825
	827
	884
6V-5851	881
6V-6213	881
6V-6317	327
	331
	334
	825
	827
6V-6353	146
6V-6572	509
	511
6V-6609	33
	99
	299
6V-6782	148
6V-6783	148
6V-6864	884
6V-6888	881
6V-6923	197
6V-7238	825
	827
6V-7350	634
	636
6V-7351	645
6V-7357	327
	331
	334
	632
	799
	846
	882
6V-7646	808
	857
	860
	882
6V-7732	650
6V-7743	411
6V-7744	131
	133
	407
	408
	650
	846
6V-8001	365
6V-8149	649
6V-8181	201
	203
	205
	777
6V-8185	271
6V-8188	127
	201
	203
	205
	252
	253
	255
	257
	259
	263
	267
	268
6V-8189	199
6V-8190	429
	430
	432
6V-8201	637
6V-8237	568
6V-8245	120
	123
6V-8281	351
	354
	357
	360
6V-8358	175
6V-8369	844
6V-8370	319
6V-8376	271
	812
	818
	846
6V-8397	477
	535
	582
	590
	591
	595
	596
	608
	614
	621
	662
	666
6V-8398	90
	120
	123
	175
	584
	590
	591
	600
	602
	614
	621
6V-8400	365
	366
6V-8554	178
	180
6V-8624	584
6V-8625	175
	600
6V-8626	79
	175
6V-8628	735
	737
	739
6V-8632	83
6V-8633	90
6V-8634	595
6V-8635	81
	83
	660
6V-8636	535
	582
	595
	608
	662
6V-8637	90
	366
	590
	655
	656
6V-8639	96
	123
6V-8641	366
6V-8653	630
6V-8713	479
	590
	593
6V-8722	239
	590
6V-8723	596
6V-8724	535
	582
	590
	596
	608
	662
6V-8760	630
6V-8774	582
6V-8775	90
6V-8777	593
6V-8781	596
6V-8801	90
	133
	162
	176
	187
	252
	253
	259
	263
	268
	303
	327
	331
	334
	366
	497
	535
	591
	608
	777
	813
	816
	819
	823
	846
6V-8836	884
6V-8849	467
6V-8928	772
	774
6V-8953	838
6V-8970	409
6V-8991	584
6V-9000	477
6V-9001	582
	596
	614
	621
6V-9002	600
	602
6V-9003	79
	184
	187
6V-9005	660
6V-9007	590
6V-9023	272
6V-9027	96
	99
	101
	104
6V-9028	327
	331
	334
6V-9156	830
6V-9169	92
	94
	96
	591
6V-9172	584
6V-9176	385
6V-9189	787
6V-9197	417
	419
6V-9200	667
6V-9335	797
6V-9632	507
	516
6V-9746	90
	365
	366
	590
	593
	655
	656
6V-9829	662
	667
6V-9830	176
6V-9833	81
	83
6V-9836	582
	596
6V-9840	81
	83
6V-9850	582
	596
	608
6V-9854	83
	660
6V-9872	477
6V-9873	600
	602
6V-9876	621

► **PRIMARY REFERENCE**

PART NUMBER INDEX

Part	Page
6W-5698	477
	872
6W-6672	300
6W-8509	201
	203
	205
	777
6Y-0091	169
	171
6Y-0206	792
6Y-0454	475
	476
6Y-0471	473
	474
	475
6Y-0473	2
	3
	469
	470
	472
	473
	474
	475
	476
	483
	484
	485
	486
	495
6Y-1202	758
	759
	760
	761
6Y-1204	758
	759
	760
	761
6Y-1577	476
6Y-1578	476
6Y-1579	473
	474
	475
6Y-2057	474
	475
	476
6Y-2090	63
6Y-2130	347
6Y-2534	504
6Y-2536	503
	504
6Y-2546	363
6Y-2547	363
6Y-2736	637
6Y-2737	637
6Y-2875	509
6Y-2876	509
6Y-2878	509
	511
6Y-3233	717
	719
	721
6Y-3484	371
	509
	511
6Y-3567	611
6Y-3568	611
6Y-3732	772
	774
6Y-4638	674
6Y-5094	786
6Y-5113	829
6Y-5493	717
	719
	721
6Y-5636	383
6Y-5793	383
6Y-5888	385
6Y-6140	754
	▶759
6Y-6584	207
	215
	222
6Y-7385	808
6Y-8865	717
	719
6Y-8960	761
6Y-9287	735
7B-1251	210
	218
	224
7B-3235	42
	44
	49
	101
	104
7C-0145	101
	104
7C-0307	101
	104
7C-0754	239
7C-1511	86
7C-1512	86
7C-1772	13
	14
	15
	▶86
7C-3910	148
7C-4354	813
	816
	819
	823
7C-4938	77
7C-8246	365
7C-9614	30
7D-1195	650
7D-1649	49
	363
7D-4069	366
7D-7233	120
7D-9749	667
7E-4039	92
	94
7E-6508	18
7E-8630	148
7E-9262	26
7F-2050	184
	187
7F-3488	305
7F-3491	305
	310
7F-3525	305
	310
7F-5711	409
7F-6112	457
7F-6998	844
7F-8268	650
7F-8607	818
7F-9090	178
	180
7G-0897	372
7G-1060	83
	207
	215
	222
7G-1814	430
7G-1815	429
	430
7G-1952	467
7G-1958	454
	467
7G-2176	86
7G-2248	376
7G-2325	363
7G-2419	497
7G-2421	497
7G-2425	497
7G-2476	371
7G-2704	457
7G-3413	577
	580
	587
7G-3414	577
	580
	587
7G-3415	577
	580
	587
7G-3832	577
	580
	611
7G-3833	577
	580
	591
	611
7G-3834	577
	580
	591
	611
7G-3907	495
7G-4332	473
	474
	475
	476
7G-4766	497
7G-4817	371
7G-4824	768
	792
7G-4998	349
7G-5221	495
7G-5606	587
7G-5622	385
7G-5671	383
7G-6176	838
7G-6503	429
	430
	432
7G-6623	409
7G-8282	497
7G-8839	127
7G-9709	467
7G-9724	46
7G-9922	383
7H-1447	649
7I-8663	477
7J-0204	210
	218
	225
	327
	331
	334
7J-1337	442
	444
7J-1338	442
	444
7J-1592	667
7J-2086	564
	566
7J-2087	558
	564
	566
	571
	573
7J-3296	456
	459
	460
7J-4083	564
	566
7J-4169	748
	749
7J-6525	371
7J-9108	83
	175
	176
	239
	479
	590
	593
7J-9250	573
7K-1181	83
	137
	141
	207
	215
	222
	241
	242
	243
	253
	255
	257
	259
	263
	268
	270
	272
	276

7

▶ PRIMARY REFERENCE

PART NUMBER INDEX

Part	Page	Part	Page	Part	Page	Part	Page
	303	7N-0296	300		556	7T-3974	310
	322	7N-0719	207		584	7T-4130	467
	327		215	7S-8921	555	7T-4131	467
	331		222		556	7T-4132	467
	334		▶313		584	7T-4133	467
	338	7N-1210	67	7T-0375	495	7T-4134	467
	535	7N-1277	326	7T-0715	473	7T-4135	394
	595		330		475		395
	784		333	7T-0716	473	7T-4145	467
	799	7N-1346	10		475	7T-4501	748
	819		11	7T-0723	▶499		749
7K-3116	40		12		505	7T-4502	748
7K-3176	818		▶67	7T-0724	499		749
7K-6413	442	7N-1447	90	7T-0961	469	7T-4532	776
	444	7N-1637	163		470	7T-4605	500
7K-6956	397		164		472	7T-4606	▶500
7K-9211	735	7N-1996	336	7T-0998	499	7T-4607	500
	737	7N-2059	300		500	7T-4608	▶500
	739	7N-2155	86		501	7T-4777	717
7L-2894	305	7N-2156	86		502		719
	310	7N-2213	86		503	7T-4809	726
7L-7262	92	7N-2443	40		504		727
	94	7N-6252	77		505		728
7L-7524	376	7N-6494	308	7T-0999	499		730
	378	7N-7559	79		500	7T-4810	726
7L-9061	318	7N-7628	92		501		727
	385		94		502		728
7M-0324	305		96		503		730
7M-0325	305	7N-7878	92		504	7T-4890	555
7M-0326	305		94		505		556
	310		96	7T-1000	499	7T-4966	708
7M-0327	305	7N-8875	79		500		709
	310	7N-9212	77		501	7T-5856	784
7M-0475	370	7N-9801	321		502	7T-5869	717
7M-1199	371	7N-9802	54		503		719
7M-1297	349	7P-4190	846		504		721
	680	7R-0042	90		505	7T-5959	495
7M-2360	446	7R-8872	469	7T-1099	112	7T-6040	▶703
7M-5717	667		470		117	7T-6192	497
7M-7219	805		472		208	7T-6193	497
7M-8480	343	7S-1912	176		209	7T-6799	337
	371		596		257	7T-6993	383
	372		614		259	7T-6994	509
	394		621		263		511
	395	7S-2042	402		303	7T-7190	735
7M-8485	81		440		779	7T-7222	398
	83		446		781		400
	120		802		834		735
	123	7S-3916	584		850		737
	242	7S-3919	584		855		739
	349	7S-4326	352	7T-1819	411	7T-7303	735
	365		354		417	7T-7305	398
	366		358		419		400
	590		361		450		735
	593	7S-4411	135	7T-1885	509		737
	660		136		511		739
	667		137	7T-3829	551	7T-7577	▶694
	670	7S-5003	139		552		710
	672	7S-5005	26		▶555	7T-7578	694
	674		40	7T-3912	606	7T-7586	694
7M-8651	305	7S-8767	101	7T-3915	606	7T-7942	▶409
7M-9107	758		104	7T-3916	606	7T-8006	467
	759	7S-8780	90	7T-3926	497	7T-8331	127
	760	7S-8817	133	7T-3927	497		129
	761	7S-8920	555	7T-3928	497	7T-8712	712

▶ **PRIMARY REFERENCE**

PART NUMBER INDEX

Part	Page
	▶731
7T-8713	713
	714
	715
	▶732
7T-8891	872
7T-9014	394
	395
	442
	444
7T-9123	306
7T-9309	495
7T-9515	319
7U-4892	272
7V-5191	805
7W-2033	203
	205
7W-2034	203
	205
7W-2297	167
	168
7W-6492	27
7W-6528	86
7W-6534	57
7W-7141	86
7W-8106	229
7W-9094	96
	187
7X-0288	618
	667
7X-0290	90
	367
	392
	535
	584
7X-0291	667
7X-0292	591
7X-0294	777
7X-0308	367
	657
	667
	670
	672
7X-0310	608
7X-0311	555
	587
7X-0315	555
	556
	603
7X-0323	456
	459
	460
7X-0325	582
7X-0326	367
	376
	672
7X-0328	467
	667
7X-0334	582
7X-0335	376
7X-0339	201
	203
	205
7X-0340	169
	171
7X-0341	173
7X-0342	467
7X-0343	711
7X-0344	438
7X-0345	467
	584
	603
	749
7X-0346	201
	203
	205
7X-0347	603
7X-0349	409
7X-0352	603
	680
7X-0354	603
7X-0356	603
7X-0358	680
7X-0365	398
	400
	432
	735
	737
	739
	855
7X-0366	855
7X-0371	608
7X-0379	398
	400
	694
	710
	726
	727
	728
	730
7X-0381	616
	618
7X-0383	616
	618
7X-0386	495
7X-0389	398
	400
7X-0396	704
7X-0403	429
	430
	432
	694
	703
7X-0405	398
	400
	430
	432
	711
	743
7X-0419	705
7X-0420	461
	462
	467
7X-0422	429
	430
	432
	461
	462
7X-0423	482
7X-0429	854
7X-0439	743
7X-0440	68
	127
	230
7X-0444	429
	430
	432
7X-0449	704
7X-0482	127
7X-0515	421
	423
	616
	618
	748
	749
7X-0531	429
	430
	432
	457
	461
	462
7X-0533	457
	854
7X-0537	398
	400
	743
	748
	749
7X-0546	151
7X-0549	429
	430
	432
7X-0562	305
7X-0578	429
	430
	432
	535
	784
	787
7X-0582	141
	253
	257
	259
	263
	268
	855
7X-0588	524
7X-0589	555
	556
	657
7X-0590	129
	457
7X-0591	201
	203
	205
	777
7X-0592	830
7X-0599	802
7X-0605	276
7X-0608	762
7X-0616	743
7X-0618	411
	417
	419
	450
	657
	831
7X-0732	874
7X-0766	452
7X-0818	338
7X-0857	398
	400
7X-0909	634
	647
7X-1553	637
7X-2049	812
	818
	822
7X-2465	633
7X-2501	90
7X-2533	249
	250
	836
7X-2535	837
7X-2537	528
7X-2538	787
7X-2540	787
7X-2541	530
7X-2548	272
7X-2554	89
	442
	444
7X-2555	421
	423
	653
7X-2562	442
	444
7X-2566	194
7X-2619	786
7X-2623	387
7X-3159	547
7X-3342	611
7X-3373	306
	310
7X-3391	582
7X-3392	831
7X-4736	155
7X-6085	228
7X-6222	337
7X-6315	234
	237
7X-7644	889
7X-7700	195
7X-7702	875
7X-7715	92
	94
	96
7X-7729	110
	112
	117
	131
	144
	150
	155
	176
	210
	218
	225

▶ **PRIMARY REFERENCE**

PART NUMBER INDEX

Part	Page
7X-7888	514
7X-7927	872
	875
7X-7928	872
	875
7X-7929	872
	875
7X-7930	872
	875
7X-7958	120
	123
7Y-3948	207
	222
7Y-8763	148
8	
8B-1312	371
8B-6561	90
	120
8C-0564	614
	621
8C-0624	77
8C-3089	145
	148
	190
	306
	310
8C-3132	678
8C-3174	591
8C-3206	660
8C-3290	850
8C-3312	524
8C-3442	772
	774
8C-3445	73
8C-3446	73
	366
	649
8C-3447	365
	402
	404
	405
	417
	434
	435
	450
	507
	587
	767
	772
	774
	779
	781
	783
	787
	795
	796
	802
	831
	839
	846
	850
	856
8C-3451	649
8C-3756	784
8C-4935	560
8C-5230	73
	367
8C-5238	127
8C-5346	888
8C-5607	836
8C-5608	243
	249
	250
	836
8C-5917	207
	215
	222
	302
8C-5918	302
8C-6364	786
8C-6416	178
	180
8C-6561	361
8C-6761	372
8C-6872	90
8C-6913	351
	354
	357
	360
	398
	400
	495
	616
8C-6920	590
8C-7323	300
	667
8C-7514	175
8C-7581	275
	766
8C-8451	243
8C-8514	877
	879
	880
8C-8584	407
	408
8C-8585	406
	421
	423
	426
	427
	453
8C-8843	743
8C-8844	169
8C-8988	596
8C-8989	590
8C-9006	300
8C-9660	306
	310
8C-9987	686
	688
8D-3508	834
8D-3786	834
8D-3932	832
8D-4771	351
	354
	357
	360
8E-0618	342
8E-1041	606
8E-1042	606
8E-1043	606
8E-1118	808
8E-1205	402
	440
	446
	802
8E-1249	551
	552
8E-1378	704
8E-1597	754
8E-2173	695
	696
	▶727
8E-2685	772
	774
8E-2729	373
8E-2827	467
8E-2900	467
8E-2901	467
8E-2902	467
8E-3124	352
	354
	358
	361
8E-3241	253
	255
	257
	259
	263
	267
	268
8E-3581	717
	719
8E-3582	717
	719
8E-3583	717
	719
8E-3584	717
	719
8E-3599	717
	719
8E-3600	717
	719
8E-4072	411
	417
	419
	450
8E-4121	417
8E-4198	731
	732
8E-4199	731
	732
8E-4541	733
	734
8E-4542	733
	734
8E-4815	442
	444
8E-5922	772
	774
8E-6269	553
8E-6619	483
	484
	485
	486
8E-6757	448
8E-6856	772
	774
	795
	796
8E-6866	448
8E-6927	392
8E-7111	614
	621
8E-7112	614
	621
8E-7561	402
	440
	446
8E-7791	768
	792
8E-7838	387
8E-8293	872
8E-8304	371
8E-8316	385
8E-8415	759
8E-8417	760
8E-8914	748
	749
8E-8994	387
8E-9010	712
	▶719
8E-9289	409
8E-9570	▶448
	719
8E-9938	448
8E-9947	448
	449
8F-1434	306
8F-6437	657
8F-7702	507
	846
8F-8544	372
8F-8733	469
	470
	472
8F-8882	667
8F-9516	483
	484
	485
	486
8F-9836	65
	127
	155
8H-3127	19
8H-5303	313
8H-5306	313
8H-5727	397
8H-8769	674
8J-3146	616
	618
8J-4351	77
8J-4386	569
8J-5326	708
8J-5914	343
8J-7236	855

▶ **PRIMARY REFERENCE**

PART NUMBER INDEX

Part	Page	Part	Page	Part	Page	Part	Page
8J-7360	667		208		621		217
8J-7366	667		209	8S-2332	308		223
8J-7462	667		215		309		224
8J-7466	667		216	8S-2634	210		302
8J-8197	176		217		218		303
8J-8322	385		223		225		326
8J-8621	690		302	8S-4211	207		330
8K-0273	562		303		215		333
8K-1433	210		326		222	8T-2275	650
	808		330	8S-4756	495	8T-2501	155
8K-2692	372		333	8S-5383	201		343
8K-4739	278	8N-2104	77		203		367
8K-5130	708	8N-4617	132		205		387
	709	8N-6739	73	8S-7803	805		772
8L-2746	79		77	8S-8820	184		774
8L-2777	60	8N-6740	77		187	8T-2502	110
	61	8N-8753	302	8S-9130	343		115
	683		▶308		387		187
8L-2786	146	8N-8846	122	8S-9191	46		253
	178		126		77		255
	180	8P-0058	343		184		257
	184	8P-0420	394		187		259
	187		395		191		263
	298	8P-4047	372		371		267
8L-5771	616	8P-4617	372	8T-0075	595		268
	618	8P-4661	469	8T-0100	176		352
8L-7905	797		470	8T-0119	180		354
8L-8413	207		472	8T-0122	142		358
	805	8P-5056	385		145		361
	870	8P-5264	497		146		394
8M-0505	180	8P-5265	497	8T-0208	467		395
8M-0547	180	8P-5411	205	8T-0267	272		600
	184	8P-5698	351		514		602
	187		354	8T-0326	338		606
8M-1013	674		357	8T-0328	141		743
8M-2530	680		360		306	8T-2530	479
8M-2537	393	8P-6363	784		338		590
8M-2773	184	8P-6817	383		547		593
	187	8P-7598	394		857	8T-2561	618
8M-4389	509		395		860	8T-2602	81
	511		442	8T-0404	175	8T-2603	81
8M-4390	367		444	8T-0644	884	8T-2658	507
8M-4395	372	8P-8360	509	8T-0722	650	8T-3490	75
8M-4432	345		511	8T-1141	371		112
8M-4438	524	8P-9142	456	8T-1158	637		117
8M-4443	367		459		662		123
8M-4986	392		460	8T-1159	169		129
8M-4992	392	8P-9266	383		171		144
	524	8P-9770	704		173		175
8M-5254	524		708	8T-1172	507		207
8M-5266	343		709	8T-1444	372		215
8M-5661	367		717	8T-1686	175		300
	372		719	8T-1703	99		404
8M-7145	670		721	8T-1715	178		405
	672		754		180		434
8M-8157	367		755	8T-1788	560		435
8M-8489	86		757		562		507
	372	8S-0948	184	8T-1897	81		516
8N-0396	77		187	8T-1898	81		577
8N-0397	77		210	8T-1981	497		580
8N-0422	54		218	8T-2225	207		777
8N-0423	54		225		208		779
8N-0610	77		577		209		781
8N-0612	77		584		215		783
8N-0869	207		614		216	8T-3491	175

▶ **PRIMARY REFERENCE**

PART NUMBER INDEX

Part	Page
8T-3597	123
	129
8T-3612	140
	507
8T-3647	530
8T-3957	628
	629
8T-4121	81
	89
	110
	112
	115
	117
	120
	123
	131
	133
	136
	137
	139
	141
	148
	158
	169
	171
	173
	176
	195
	203
	205
	210
	218
	225
	245
	272
	300
	303
	322
	327
	331
	334
	338
	347
	367
	407
	408
	411
	419
	421
	477
	479
	507
	516
	517
	577
	580
	582
	584
	587
	591
	593
	596
	608
	611
	614
	621
	650
	660
	768
	772
	774
	777
	781
	784
	790
	802
	813
	816
	819
	823
	829
	831
	839
	846
	850
	874
8T-4122	201
	203
	205
	327
	331
	334
	438
	440
	446
	467
	582
	584
	603
	749
	777
8T-4123	442
	444
	584
	591
8T-4132	127
	421
	423
8T-4133	83
	123
	137
	140
	155
	169
	171
	176
	203
	205
	327
	331
	334
	367
	507
	517
	577
	580
	585
	591
	593
	614
	621
	650
	784
	790
	813
	816
	819
	823
	825
	827
	839
8T-4136	83
	110
	115
	117
	123
	169
	171
	173
	176
	195
	218
	225
	245
	272
	327
	331
	334
	338
	402
	404
	405
	407
	408
	411
	417
	419
	450
	477
	479
	507
	517
	582
	587
	591
	593
	596
	611
	614
	621
	650
	660
	767
	781
	783
	787
	795
	796
	802
	823
	839
	846
	850
	874
8T-4137	120
	139
	144
	150
	158
	176
	205
	210
	218
	225
	300
	303
	322
	327
	331
	334
	338
	402
	411
	417
	419
	477
	479
	516
	577
	584
	596
	608
	614
	621
	784
	813
	816
	819
	823
	825
	827
	831
	850
8T-4138	243
	338
	411
	514
	797
	874
8T-4139	140
	155
	210
	218
	225
	239
	264
	268
	402
	421
	423
	442
	444
	577
	580
	584
	587
	596
	611
	772
	774

► **PRIMARY REFERENCE**

PART NUMBER INDEX

Part	Page
	831
	832
8T-4140	89
	411
	417
	419
	421
	423
	440
	450
8T-4141	584
8T-4149	590
	593
8T-4167	411
	417
	419
	450
	748
	749
	850
8T-4171	804
	808
	882
8T-4172	611
8T-4175	421
	423
	653
8T-4176	276
	614
	621
8T-4177	530
8T-4178	831
8T-4179	210
	218
	225
	257
	259
	264
	268
	411
	417
	419
	450
8T-4182	117
	225
	347
	587
	591
8T-4183	139
	411
	417
	419
	423
	440
	446
	450
	772
	774
	802
	834
8T-4184	129
	176
	430
	432
8T-4185	144
	150
	210
	218
	225
	327
	347
8T-4186	89
	144
	148
	150
	155
	203
	205
	331
	334
	580
	585
	591
	779
	781
	816
	823
	846
8T-4189	300
	411
	417
	419
	450
	507
	596
	797
	802
8T-4191	83
	123
	272
	322
	338
	772
	774
8T-4192	303
	411
	419
	784
8T-4193	442
	444
	446
8T-4194	832
8T-4195	81
	110
	112
	115
	117
	123
	131
	136
	137
	210
	218
	225
	327
	331
	334
	338
	367
	421
	434
	435
	507
	577
	584
	591
	593
	614
	621
	768
	779
	781
	790
	791
	813
	816
	819
	823
	829
	831
	839
	846
8T-4196	112
	117
	120
	123
	140
	155
	423
	584
	591
	593
	650
	660
	777
	783
8T-4199	272
8T-4200	140
	272
	338
	417
	419
	507
	516
	787
8T-4205	85
	127
	199
	271
	275
	305
	310
	507
	784
	797
	799
	802
	804
	846
	857
	860
8T-4222	402
8T-4223	127
	141
	169
	171
	173
	176
	201
	203
	205
	210
	218
	225
	239
	241
	242
	253
	255
	257
	259
	264
	268
	272
	303
	327
	331
	334
	352
	354
	358
	361
	367
	387
	402
	411
	419
	421
	423
	436
	440
	442
	444
	446
	456
	457
	459
	460
	467
	470
	477
	551
	552
	553
	555
	556
	577
	580
	582
	584
	587
	591
	593
	596
	603
	611
	614
	616
	618
	621

► **PRIMARY REFERENCE**

PART NUMBER INDEX

Part	Page
	649
	657
	667
	670
	672
	784
	813
	816
	819
	823
	832
	834
8T-4224	68
	141
	199
	230
	248
	252
	253
	255
	257
	259
	264
	267
	268
	272
	276
	300
	338
	361
	411
	417
	419
	450
	507
	516
	528
	596
	853
8T-4226	421
	423
	783
8T-4231	628
	629
8T-4244	239
	611
	657
	834
8T-4648	129
	587
	831
	834
8T-4821	834
8T-4835	367
	409
	467
	470
	582
8T-4896	75
	83
	90
	110
	115
	120
	123
	127
	133
	135
	137
	155
	158
	210
	218
	225
	239
	270
	300
	349
	352
	354
	358
	361
	367
	387
	392
	394
	395
	436
	477
	479
	535
	555
	556
	564
	566
	569
	584
	587
	591
	603
	606
	608
	611
	614
	616
	618
	621
	655
	656
	667
	670
	672
	690
	777
	779
	813
	816
	819
	823
	839
8T-4908	276
	338
	507
	789
8T-4910	129
	442
	444
	657
	831
	834
8T-4956	129
	411
	417
	419
	450
	611
	813
	816
	819
	823
	834
8T-4970	802
	846
8T-4971	874
8T-4990	110
8T-4994	173
	432
	608
	855
8T-5001	636
	648
8T-5005	81
	596
8T-5041	596
8T-5050	600
	602
8T-5070	283
8T-5360	367
	555
	585
	587
	603
	608
	614
	621
	667
	670
	672
8T-5361	169
	430
	432
	440
	446
	457
	703
8T-5400	875
	884
8T-5410	507
	513
	547
8T-5439	194
8T-5465	591
8T-5677	547
8T-5911	429
8T-6338	178
	180
8T-6380	411
	417
	419
	450
8T-6383	127
8T-6385	127
8T-6466	112
	117
	327
	331
	334
	367
	777
	802
	813
	816
	819
	823
	827
8T-6628	630
8T-6631	799
8T-6639	175
8T-6685	784
8T-6699	547
8T-6745	569
8T-6747	558
	571
	573
8T-6757	30
	32
	57
8T-6761	54
8T-6762	343
	387
	392
8T-6763	127
8T-6764	107
8T-6767	101
8T-6776	367
8T-6868	249
	250
	831
8T-6871	438
	582
8T-6936	205
8T-7008	144
	150
	241
	242
	600
8T-7044	131
	133
	577
	580
8T-7338	440
8T-7371	695
	696
	697
	698
	699
	700
	701
	702
8T-7521	614
	621
8T-7547	528
	789
	802
8T-7566	402
	440
	446
	802
	841
	843

► **PRIMARY REFERENCE**

PART NUMBER INDEX

Part	Page	Part	Page	Part	Page	Part	Page
8T-7852	140		593	8Y-5747	452	9F-6656	888
8T-7934	120	8T-8924	173	8Y-5945	805	9G-0002	207
	123	8T-9005	797	8Y-5965	868		215
	144	8T-9006	507	8Y-6012	868	9G-0003	207
	150	8T-9041	667	8Y-6014	868		215
	402	8T-9082	857	8Y-6024	868		222
	507	8T-9364	245	8Y-6041	805		302
8T-7970	81	8T-9368	507	8Y-6045	805	9G-0004	207
8T-8357	560	8T-9371	870	8Y-6046	805		215
8T-8378	560	8T-9375	779	8Y-6047	805		222
8T-8382	569		781	8Y-6060	805		302
8T-8383	564	8T-9377	127	8Y-6062	805	9G-0005	302
	566		367	8Y-6063	805	9G-0162	657
	573	8T-9379	614	8Y-6064	805	9G-0371	173
8T-8442	637		621	8Y-6066	805	9G-1919	372
8T-8729	281	8T-9380	614	8Y-6067	805	9G-2398	456
	282		621	8Y-6068	805		459
	297	8T-9382	657	8Y-6069	805		460
	523	8T-9386	83	8Y-6277	857	9G-2401	457
	545	8T-9389	467		860	9G-2991	509
	684	8T-9391	367	8Y-6343	881		511
8T-8737	19		603	8Y-6388	810	9G-3464	363
	283	8T-9392	376	8Y-6400	407	9G-3695	547
	337	8T-9393	616		408	9G-4101	305
	526		618		▶452		310
	541	8T-9396	603	8Y-6859	805	9G-4872	2
	545	8T-9397	140	8Y-6860	805		3
	844		253	8Y-8306	452		469
	881		257				470
	884		259				472
8T-8887	614		264	**9**			483
8T-8901	655		268				484
	656	8T-9400	351	9B-1117	538		485
8T-8908	127		354	9B-1948	694		486
8T-8912	68		357	9B-7233	271		495
8T-8915	349		360		812	9G-5127	365
	367	8T-9407	303		818		479
	585	8T-9412	351		846	9G-6094	603
8T-8916	585		357	9B-7237	75	9G-7101	92
	587		360		90		94
	603	8T-9496	407		127		184
8T-8917	352		408		135		326
	354	8T-9655	175		137		330
	358		230		142		333
	361		336		155	9G-7516	467
	367	8T-9756	215		259	9G-8615	343
	467	8T-9757	207		327	9G-8909	207
	616		215		331		209
	618		222		334		215
	726		302		367		217
	727	8T-9905	888		437		224
	728	8U-5951	637		616		302
	730	8V-0622	207		618	9G-9288	▶550
	819		215	9C-6984	442		653
8T-8919	169		222		444	9H-1031	27
	171		302	9D-0630	169	9H-3360	509
	173	8V-2671	411		171		511
	367		417		173	9H-3757	305
	387		419	9D-1829	611		310
	429		450	9D-3767	787	9H-6454	650
	582	8V-6963	553	9F-2773	120	9J-1722	690
	603	8W-2644	365	9F-5599	305	9J-1979	649
	680	8W-9912	390		310	9J-2290	741
8T-8920	582	8Y-3966	452	9F-5644	313	9J-2365	694
	591	8Y-3998	452	9F-6304	77		710

▶ **PRIMARY REFERENCE**

PART NUMBER INDEX

Part	Page	Part	Page	Part	Page	Part	Page
	726	9M-2744	363	9P-3657	351		104
	727	9M-2904	606		354		146
	728	9M-3116	90		357		343
	730	9M-3835	155		360		349
9J-3866	603		417	9P-3801	351		378
9J-4523	748		419		354		383
9J-4782	735		421		357		387
	737		423		360		584
	739	9M-4007	383	9P-4057	385		626
9J-5498	667	9M-4136	123	9P-6572	772	9S-4372	387
9J-5499	666		326		774	9S-7710	343
9J-5753	667		330	9P-7121	195	9S-8001	623
9J-5754	667		333	9P-8078	378		625
9J-5756	665	9M-4313	393	9P-8663	411	9S-8002	48
9J-5942	633	9M-4355	372		417		145
9J-6006	▶633	9M-5731	846		419		146
	695	9M-5732	365		450		148
	698	9M-5733	766	9P-9150	530		192
	700	9M-5884	772	9P-9388	829		283
	701		774	9P-9555	365		456
9J-6062	704		802	9R-2216	827		459
9J-6067	394	9M-5894	351	9R-2613	112		460
	717		354		117		623
9J-6073	695		357		142		630
	696		360	9R-4398	884	9S-8003	46
	697		467	9R-6776	735	9S-8004	33
	698	9M-6527	107		737		580
	699	9M-7394	550		739		590
	700	9M-7539	367	9S-1018	378		628
	701	9M-7609	305		524		637
	702		310	9S-1240	201		659
	▶711	9M-8406	366		203		662
9J-6491	665		577		205		665
9J-6549	564		580	9S-1343	372		666
	566		813	9S-1350	343		676
9J-6662	694		816	9S-1354	201	9S-8005	33
	710		823		203		99
9J-6689	398	9M-8546	101		205		146
	400		104		777		178
	737	9M-9647	343	9S-1366	101		180
	739		370		104		623
9J-6691	735	9N-0575	42		509		662
	737		44		511		665
	739	9N-0869	176	9S-1367	363	9S-8006	57
9J-9055	735		230	9S-2075	404		146
	737		338		405		176
	739	9N-1940	142	9S-2437	192		509
9L-5854	29	9N-1941	142	9S-2544	305		511
9L-6770	199	9N-1995	467		310		595
9L-7712	60		772	9S-4180	665		623
9L-8781	779		774	9S-4181	54	9S-8008	30
	781		795		366		101
9L-9068	530		796	9S-4182	101		104
9L-9132	77	9N-2038	167		104		349
9M-0853	77		168		626		628
9M-1503	372	9N-6379	146		649		629
9M-1974	18	9N-9545	144	9S-4185	104		637
	278		150		351	9S-8010	349
	314	9P-2704	494		354		392
	345		495		357		393
	376	9P-3066	653		360	9S-8230	402
	674	9P-3555	351		467		802
9M-2074	385		354	9S-4190	73	9S-8752	21
9M-2076	385		357		176		54
9M-2564	79		360	9S-4191	101		71

▶ PRIMARY REFERENCE

PART NUMBER INDEX

Part	Page	Part	Page	Part	Page	Part	Page
	72		423		737		808
	76	9W-0352	421		739	9X-1054	336
	77		423	9W-6608	731		784
	79	9W-0512	587		732		799
	108	9W-0852	784	9W-6609	731	9X-1138	844
	178		797	9W-6615	732	9X-1386	283
9S-9334	349		799	9W-6656	733		292
9T-0085	569		844	9W-6657	733		812
9T-1181	573	9W-1441	271		734		815
9T-1576	641	9W-1442	271	9W-6658	734		822
9T-1579	641	9W-1446	271	9W-6854	476	9X-1813	208
9T-1582	641	9W-1599	175	9W-6958	421		209
9T-1637	641	9W-1693	479		423		216
9T-1642	641	9W-1694	479	9W-6991	371		217
9T-1643	641	9W-1867	499	9W-7006	421		223
9T-1687	641	9W-1869	500		423		224
9T-2865	560		503	9W-8100	173		280
9T-2868	560	9W-1870	500	9W-8365	758		282
9T-2869	555	9W-1951	271		759		284
	▶560	9W-1991	600		760		285
9T-3493	568	9W-2380	467	9W-8394	239		286
9T-3746	667	9W-2409	717	9W-8558	743		287
9T-3747	667	9W-2877	616	9W-8941	606		288
9T-4447	573		618	9W-9132	351		312
9T-4733	680	9W-2881	618		354		316
9T-5483	667	9W-2883	618		357		318
9T-5769	▶665	9W-2896	616		360		336
	667		618	9W-9133	351		547
9T-7059	560	9W-2939	726		354	9X-2038	882
	562		727		357	9X-2040	774
9T-7163	634		728		360		850
	636		730	9W-9134	351	9X-2041	772
9T-7570	649	9W-3273	378		354	9X-2042	235
9T-7571	649	9W-4162	363		357		272
9T-7572	649	9W-4163	363		360		338
9T-8206	670	9W-4194	469	9W-9135	351		795
	672		470		354		796
9T-8207	670		472		357	9X-2043	516
	672	9W-4361	252		360		792
9T-8208	670		253	9W-9136	351	9X-2044	795
	672		259		354		796
9T-8210	672		263		357	9X-2045	792
9T-9682	558		268		360	9X-2046	810
	571	9W-4488	464	9W-9163	708	9X-2125	856
9U-8215	▶712		465		709	9X-2185	799
	726	9W-4489	495	9W-9499	483	9X-2201	145
9U-8216	▶712	9W-4888	555		484		148
	727	9W-4904	409		485	9X-2205	195
9U-8263	808	9W-5265	476		486	9X-2328	513
9U-8404	735	9W-5266	476	9W-9856	372	9X-2488	239
	737	9W-5568	674	9W-9978	173		825
	739	9W-5575	467	9X-0194	872		827
9U-8746	808	9W-5652	712	9X-0195	224	9X-2493	90
9U-9409	479		▶733	9X-0196	271	9X-2503	76
9U-9487	618	9W-5653	712		336	9X-3401	283
9U-9488	616		715	9X-0199	319		319
	618		▶734	9X-0261	178		337
9U-9622	749	9W-5768	372		180	9X-3452	784
9U-9956	854	9W-6118	717		278	9X-3463	246
9V-0999	614		719	9X-0262	278		247
	621		721	9X-0263	326		248
9V-2818	863	9W-6343	735		330		251
9V-3418	90	9W-6371	398		333	9X-4008	155
9V-8427	757		400	9X-0358	818	9X-4244	248
9W-0330	421		735	9X-1046	338	9X-4385	276

▶ **PRIMARY REFERENCE**

PART NUMBER INDEX

Part	Page
9X-4493	322
9X-4588	467
9X-4609	524
9X-5699	224
9X-6032	210
	218
	303
9X-6165	243
	249
	250
	836
	874
9X-6281	846
9X-6340	890
9X-6458	21
	53
	71
	72
	73
	76
	99
	101
	104
	120
	163
	164
	184
	187
	334
9X-6615	514
	846
9X-6772	216
	222
	243
	507
	514
	812
	815
	818
	822
9X-7317	191
9X-7371	108
9X-7373	784
9X-7378	776
	813
	816
	819
	823
9X-7380	813
	816
	819
	823
9X-7381	813
	816
	819
	823
9X-7382	812
	813
	815
	816
	818
	819
	822
	823
9X-7383	813
	816
	819
	823
9X-7385	776
	813
	816
	819
	823
9X-7391	560
9X-7405	560
	562
9X-7430	32
9X-7487	2
9X-7680	637
9X-8250	479
9X-8256	243
	272
	276
	303
	327
	331
	334
	338
	411
	477
	514
	516
	519
	520
	632
	772
	774
	786
	799
	802
	808
	836
	837
	846
	850
9X-8257	411
	417
	419
	421
	423
	442
	444
	446
	450
	653
9X-8267	787
	884
9X-8281	614
	621
	813
	816
	819
	823
	825
	827
9X-8600	195
9X-8872	37
9X-8874	101
	104
	363
9X-8875	49
9X-8880	343
	645
9X-8881	363
9X-8883	363
9X-8892	562
9X-8894	562
9X-8902	514
	523
9X-8918	805
9X-8979	637
9X-9896	243
	249
	250
9Y-1800	86
9Y-4056	201
	203
	205
9Y-6089	24
9Y-9236	120
	123
0	
005-7889	825
009-2062	632
012-0380	316
030-7335	411
	417
	419
	450
030-7937	184
	187
030-7942	184
	187
030-7946	48
030-7947	184
	187
030-8538	351
	354
	357
	360
030-9612	69
031-0214	853
031-1119	122
	126
031-5085	40
	42
	44
032-0676	363
033-6033	178
	180
	197
	648
	679
033-6039	683
033-6042	383
033-6043	679
034-1432	146
034-3557	343
034-3679	175
036-9821	305
	310
036-9823	305
045-4065	306
053-2294	48
061-7540	73
	77
061-7661	215
	302
061-8561	365
061-8639	48
	60
	61
061-9455	365
	376
067-2551	92
	94
	96
	324
067-3161	495
068-4209	271
	812
	818
068-5893	421
	423
085-7356	393
092-9012	64
	65
095-0670	628
	629
095-0843	857
	860
095-0878	805
095-0879	283
095-0942	637
095-1527	625
095-1751	670
	672
	677
	682
095-7950	372
095-9806	554
096-3773	844
096-3781	423
096-5516	641
096-5962	846
1	
10R-1365	61
100-3224	806
100-4417	10
	11
	12
	▶314
100-5072	191
100-5179	806
100-5218	19
100-5219	19
100-7401	151
100-9965	569
101-0003	868
	870
101-1497	587
101-2867	810
	853
101-3374	40

▶ **PRIMARY REFERENCE**

PART NUMBER INDEX

Part	Page	Part	Page	Part	Page	Part	Page
101-8240	239		207		178		▶509
102-3679	535		208		180	106-0468	509
102-3680	535		215		243		511
102-5861	42		216		324	106-0469	509
	44		222		336	106-0470	509
102-8801	140		228		844	106-0471	509
	208		281	102-9062	756		511
	216		282		757	106-0472	509
	217		320		759		511
	222		322	102-9073	756	106-0476	509
	223		324		757		511
	224		326		759	106-1792	33
	276		330	103-0010	175	106-1793	151
	322		333		207	106-4150	343
	336		336		215		▶348
	337		547	103-0126	37		387
	514		784	103-6100	812	106-4572	112
	595		818		815		117
102-8802	83		844		818	106-5122	▶776
	140	102-8804	208		822		777
	198		216	103-6262	513	106-5472	846
	208		222	103-8134	19	106-5673	33
	209		223	103-8236	595	106-5823	239
	216		253	103-9527	764	106-7098	383
	217		255		765	106-7099	385
	222		257		▶784	106-8186	394
	223		259	104-2091	810		395
	224		263	104-5771	402	106-8187	394
	253		276	104-5773	402		395
	255		280	104-6202	326	106-8704	216
	257		283		330		222
	259		336		333	106-9212	674
	263		337	104-6729	345	107-0576	558
	268		345	104-6730	345		571
	271		514	104-6931	649	107-3786	337
	276		526	104-9270	60	107-3947	483
	292		547	105-1633	637		484
	293		684	105-1634	637		485
	297		685	105-1635	637		486
	312		812	105-1636	637	107-4057	483
	316		815	105-1638	637		484
	318		822	105-1639	637		485
	319		846	105-1640	637		486
	321	102-8805	140	105-1642	637	107-4393	818
	324		208	105-1646	640	107-4394	818
	326		216	105-1648	640	107-4399	818
	330		224	105-1650	640	107-5769	99
	333		253	105-1651	640	107-7495	161
	336		255	105-1653	640	107-9616	483
	507		257	105-3031	637		484
	514		259	105-3032	637		485
	686		263	105-3033	637		486
	688		268	105-3035	630	107-9620	469
	776		336	105-3372	509		472
	784		337		511	108-2148	687
	797		513	105-4169	569	108-2735	372
	799		812	105-4172	569	108-2736	372
	812		815	105-4728	309	108-3138	808
	815		818	105-4729	16	108-3612	151
	822		822		17	108-4086	806
	844		844		▶309	108-4087	806
	870		872	105-8034	322	108-4103	806
102-8803	140		881	105-9659	770	108-4430	528
	178		884		▶829	108-4433	528
	180	102-8806	140	106-0466	375	108-4434	530

▶ **PRIMARY REFERENCE**

PART NUMBER INDEX

Part	Page
108-6259	217
	223
108-7930	107
109-0063	509
	511
109-0074	101
	104
109-0075	101
	104
109-0076	99
	365
109-0077	101
	104
109-0362	890
109-1633	812
	815
	818
	822
109-1634	812
	815
	818
	822
109-3134	▶760
109-3657	365
109-3875	818
109-3969	674
109-5839	54
109-6511	365
110-0203	322
110-2220	29
110-2637	▶342
	375
110-2655	▶351
	375
110-2656	▶354
110-2662	351
	354
	357
	360
110-2663	351
	354
	357
	360
110-2664	351
	354
	357
110-2665	351
	354
	357
	360
110-2670	351
	355
	357
	360
110-2671	351
	354
	357
	360
110-2674	351
	355
	357
	360
110-2780	2
	▶357
110-4506	832
110-4724	▶704
	710
110-4727	616
	618
110-4729	704
110-5435	432
110-5436	432
110-5439	432
110-5918	653
110-6109	844
110-6393	764
	765
110-7524	772
	878
110-7886	844
110-7887	337
110-7935	5
	7
	9
110-8318	81
110-8319	81
110-8379	846
110-8760	872
110-8769	326
	330
	333
110-8826	81
110-8827	81
110-9243	372
110-9246	372
110-9248	372
110-9251	372
110-9255	372
110-9258	371
110-9262	371
110-9264	371
110-9269	371
110-9272	371
110-9273	371
110-9274	371
110-9278	371
110-9282	371
110-9283	371
110-9284	371
110-9285	371
110-9286	371
110-9287	372
110-9288	372
110-9289	372
110-9291	343
110-9299	343
110-9300	343
110-9301	363
110-9302	363
110-9303	363
110-9304	363
110-9305	363
110-9306	363
110-9307	363
110-9309	363
110-9311	381
111-0343	686
	688
111-2106	735
	737
	739
111-2721	107
111-3199	521
111-3780	846
111-3781	846
111-4374	99
111-4402	207
	215
	222
111-4919	376
111-7421	112
	117
111-8314	252
	253
	255
	257
	259
	263
	267
	268
111-8919	371
111-8920	372
111-9251	846
111-9289	239
111-9827	239
112-0858	513
	547
112-1289	363
112-1574	365
112-3102	76
112-4509	371
112-4511	372
112-4512	343
112-7317	363
112-9217	40
112-9252	608
113-4323	54
113-4536	721
113-5304	77
113-9159	411
	419
114-0325	363
114-3469	776
114-3824	73
114-3926	524
114-4652	372
114-4655	343
114-5333	812
	815
	818
	822
114-8843	207
	208
	209
	215
	216
	217
	223
	224
	302
	303
	326
	330
	333
114-9223	73
	151
	165
	166
114-9363	253
	259
114-9365	253
	257
	259
115-0617	267
115-1032	259
115-8384	73
116-2591	509
	511
116-2592	509
	511
116-3715	577
	825
116-6202	812
	815
	818
	822
117-1385	373
117-2311	271
	336
117-3006	558
	571
	573
	694
117-4491	862
117-4492	762
117-4995	739
117-5792	385
117-6418	551
	552
117-7127	387
117-7773	209
117-8131	850
117-8301	73
117-8547	394
	395
117-8801	40
	42
	44
117-8929	797
117-9066	797
	799
117-9712	40
118-0609	558
	571
118-0611	558
	571
118-0612	558
	571
118-0911	96
118-2140	761
118-2141	756
	757
	▶761
118-2900	357
118-4728	178
	184
	187
118-6528	▶481
118-8693	649
119-0959	630

▶ **PRIMARY REFERENCE**

PART NUMBER INDEX

Part	Page	Part	Page	Part	Page	Part	Page
119-3662	324	125-2000	270		664	130-9191	606
119-7015	743	125-2001	▶252	128-2780	623	130-9811	178
119-7830	▶735		253		▶664		180
	753		255	128-3503	465		▶296
119-8455	569		257	128-3504	▶465		298
119-8582	10		263		505		299
	11		270	128-4414	495	130-9989	507
	12	125-3298	519	128-5040	881	130-9990	507
	▶54		523	128-6157	271	131-0136	365
120-4394	637	125-3299	520	129-1609	378	131-0447	523
120-5281	155	125-3537	▶469	129-2327	653	131-0782	449
	156		505	129-3178	275	131-0783	449
120-5723	630	125-5835	278		519	131-0785	▶449
120-5820	535	125-6535	306		520		715
120-5821	535	125-6536	306		799		722
120-9027	249	125-6537	306	129-3180	249		723
	250	125-7874	178		250	131-0786	449
120-9127	178	125-7875	324	129-5081	721	131-1650	466
121-0691	509	125-7876	324	129-5126	595	131-3093	799
	511	125-8826	523	129-6400	145	131-3539	787
121-2844	326	125-9664	514		148	131-3718	127
	330		▶520	129-8169	711	131-4242	805
	333	125-9740	275	129-8171	711	131-5167	805
121-9870	882	125-9794	21	129-8172	711	131-5879	774
121-9871	363	126-0186	398	129-9208	380	131-7123	40
122-0333	363		400	129-9247	509	132-0338	762
122-0669	595	126-0587	351		511	132-4907	560
122-4271	507		354	129-9452	151		562
122-4575	363		357	130-0229	365		564
122-6046	507		360	130-0701	507		566
122-7372	514	126-0588	351	130-1977	606	132-5538	372
	▶519		354	130-1985	507	132-5546	372
122-7375	32		357	130-3212	595	132-5789	178
122-8682	▶370		360	130-3281	155		180
	375	126-1774	216		158		184
123-2564	670		222		161		187
123-3202	19		243	130-3374	135		209
123-5150	83		326		136		217
123-5748	641		330	130-5300	278		224
123-6857	133		333		337		324
123-6858	133		336	130-5641	▶501		326
123-9812	514	126-2277	777	130-6366	749		330
124-0799	507	126-2372	735	130-6889	351		333
124-1855	33	126-5948	684		354		345
124-2375	351		685		360		595
	354	126-7574	234	130-7656	▶721	132-7077	846
	357		237		723	132-7419	523
	360	126-8588	495		724	132-7450	523
124-2463	169	127-0116	351	130-7657	▶712	132-7994	737
	171		354		715		739
	173		360		728	132-8799	713
124-3019	175	127-0929	145	130-7658	699		715
124-3346	618		148		700		722
124-3347	618	127-2170	786		▶728		▶724
124-8490	784		787	130-7659	▶713		725
124-9325	207		795		730	132-9455	522
	215		796	130-7660	701	132-9899	530
	222		846		702	132-9900	530
	▶280	127-3445	464		▶730	133-0155	507
125-0582	523	127-3446	▶464	130-7749	715	133-0225	737
125-0583	514		505		▶722	133-0229	▶743
	▶523	127-4978	169	130-7751	712		751
125-1302	271	127-5419	608		▶723		752
	302	128-0317	107	130-7914	837		753
	▶316	128-2779	584	130-7975	507	133-0260	293

▶ **PRIMARY REFERENCE**

PART NUMBER INDEX

Part	Page	Part	Page	Part	Page	Part	Page
133-0772	674		184		538		595
133-2015	737		187		540		608
133-2198	349		278		547	148-8338	595
133-2249	526	136-8423	630	144-0344	398	148-8340	123
133-4772	674	136-9699	175		400	148-8341	479
133-5545	623	137-3928	789	144-1636	322		590
	625	137-3937	888	144-4107	884		593
	681	137-5532	371	145-0326	868	148-8342	83
133-5631	456	137-5817	547		870	148-8346	175
	459	137-6603	528	145-3405	846	148-8347	590
	460	137-8479	710	145-5664	156	148-8352	83
133-6567	674		726	145-6669	155		660
133-6595	507		727		158	148-8353	582
133-6974	507		728		161		595
133-7214	507		730	145-7028	209		614
133-7230	507	137-8793	521		217		621
133-7231	507	137-8794	521		224	148-8355	660
133-7810	175	138-2828	726		▶297	148-8358	584
133-8715	799		727		326	148-8363	621
133-9012	275		728		330	148-8364	175
134-0165	832		730		333	148-8367	582
134-1375	283	138-2829	708	145-7328	875		596
134-2540	140	138-2833	709	145-8503	86		608
	216	138-2834	708	145-9987	155	148-8371	596
	224	138-2835	709		158	148-8374	596
	276	138-8745	595	146-3672	616	148-8378	535
	326	139-1537	649		618		582
	330	139-2116	207	146-6346	881		590
	333		215	146-6747	302		596
	336		222		889		608
134-4126	234	139-2455	606	147-0071	351	148-8382	175
	237	139-2456	606		354	148-8385	477
134-5418	616	140-1739	637		357	148-8390	175
	618	140-7480	836		361	148-8407	146
134-5419	616	140-9473	577	147-0319	▶246		528
	618		580		252		584
134-6736	714	141-2723	743		259	148-8409	528
	▶725	141-5169	810	147-1226	342	148-8410	528
134-6737	725	141-7143	75	147-1444	337	148-8429	81
134-7258	888	141-9203	421	147-1445	336		83
135-0611	881		426	147-1446	336	148-8433	582
	884	141-9784	275	147-5330	438		596
135-1828	706	142-0406	169	147-5331	438	148-8435	596
	707	142-2526	547	147-5332	438	148-8439	582
135-1829	706	142-2725	560	147-5333	438	149-4889	507
	707		562	148-7030	608	149-6371	812
135-1831	707	142-2805	469	148-8305	365		815
135-1832	707		472	148-8309	595		818
135-2919	▶742	142-5867	26	148-8313	366		822
135-3173	442	142-5868	46	148-8318	595	149-7738	577
	444	142-6217	29	148-8321	614	150-1156	56
135-4928	107	142-7072	29		621	150-1302	342
135-5105	749	142-8620	784	148-8325	366	150-3037	479
135-5114	749	143-1288	857	148-8326	477		590
136-1107	107		860	148-8327	366		593
136-1543	842	143-2466	263		590	150-3065	614
136-1544	762		268		655		621
136-3188	884	143-7052	637		656	150-4047	596
136-3189	881	143-7543	4	148-8328	90	150-4048	239
136-3191	881		▶428	148-8331	300		590
136-3192	881	144-0195	872	148-8335	81	150-4049	590
136-3193	881		875		83		593
136-3196	884		884		660	150-5931	209
136-6505	799	144-0326	547	148-8336	535		217
136-7227	146	144-0331	523		582		224

▶ **PRIMARY REFERENCE**

PART NUMBER INDEX

Part	Page	Part	Page	Part	Page	Part	Page
151-1398	271		739		270		354
151-2946	40	154-6165	653		271		357
151-4977	541	154-8079	787		276		360
	543	154-9023	96		293	156-5545	762
	545		99		317	156-5782	89
151-5145	73	155-2255	140		324	156-5970	526
151-9275	523		208		326	156-6175	337
152-2939	648		209		330	157-0305	▶251
152-6760	688		216		333		253
152-8338	686		217		336	157-0670	96
152-8340	623		222		337		99
	676		223		345	157-1361	844
	▶686		243		372	157-2284	684
153-0136	872		276		507		685
153-1256	107		324		595	158-0248	246
153-1278	156		326		784		247
	158		330		799	158-0249	251
	161		333		812	158-0250	246
153-1370	456		336		815		247
	459		337		818		251
	460		514		822	158-0252	246
153-2073	▶247		595	155-2271	140		247
	253		799		208		251
	255	155-2256	336		253	158-3032	558
	257	155-2257	326		255		571
	259		330		257		573
	263		333		259	158-3303	▶501
	267		337		263	158-3528	135
	268	155-2260	140		276		136
153-2817	872		178		336		137
153-3946	812		208		337	158-3817	595
	815		216	155-2272	216	158-6632	▶319
	818		222		222		336
	822		223		223	158-7864	890
153-5043	297		224		224	159-2154	595
153-5482	371		228		337	159-2950	864
153-5710	207		284		372		▶865
	215		285		514	159-5901	595
	222		286		815	159-7351	516
	302		287		818	159-8050	207
153-6230	83		288		822		215
153-6235	366		326	155-2274	140	160-1433	846
153-6240	175		330		208	160-1434	846
153-6241	590		333		216	160-2443	▶281
153-6249	614		336		217		514
153-6259	593		337		223		846
153-6281	207		514		224	160-4001	595
	215		547		326	160-4928	351
	222		818		330		357
	302	155-2265	140		333		360
153-6781	812		336		336		▶380
	815	155-2270	140		337	160-5458	743
	818		178		514	160-5843	684
	822		180	155-2745	454		685
153-7023	35		208	155-3167	645	160-5844	684
153-7024	35		216	155-3624	649		685
154-3306	483		222	155-6344	584	160-6765	743
	484		223	155-7321	825	160-6767	743
	485		224		827	160-7165	865
	486		253	156-4208	495		866
154-3308	469		255	156-4209	495		▶868
	470		257	156-4210	▶495	160-7186	856
	472		259		505		▶866
154-4492	735		263	156-4215	497	160-7689	140
	737		268	156-4593	351		216

▶ **PRIMARY REFERENCE**

PART NUMBER INDEX

Part	Page
	222
	223
	326
	330
	333
	336
160-7690	243
161-0832	404
	405
161-5967	805
161-6149	625
	677
	681
161-6161	625
	648
	677
	681
161-7293	48
161-8666	590
	593
161-9289	865
	866
	867
161-9926	▶284
	326
	330
	333
162-0177	580
	590
	666
	690
162-2167	483
	484
	485
	486
162-2168	469
	470
	472
162-5709	365
162-7209	560
	562
162-7487	560
	562
162-7863	483
	484
	485
	486
162-7864	469
	470
	472
162-8387	538
162-8389	538
162-9997	637
163-1101	▶454
163-1135	870
163-1146	868
163-1201	209
	217
	224
163-1829	584
163-2478	35
163-3103	151
163-4057	109
163-5455	169
	171
	173
163-5748	161
164-1234	870
164-2108	391
	527
	687
164-2273	666
164-3417	195
164-3651	207
	215
	222
164-4180	366
164-4187	56
164-4531	762
164-4536	582
	▶676
164-4883	841
	843
164-5567	366
	584
	596
164-5590	366
164-5798	205
164-6093	▶521
	530
164-6863	590
164-6874	595
164-7556	248
164-7577	207
	215
	222
	▶312
164-9541	846
165-2273	825
	827
165-4852	387
165-4854	387
165-5970	175
	▶320
165-6064	743
165-6170	76
165-6969	641
165-8718	140
165-9100	846
165-9103	846
165-9104	846
166-2903	32
166-2904	32
166-4113	708
	709
166-5229	336
166-6781	868
166-7432	127
166-9445	470
167-1795	175
167-1884	252
167-1946	428
	▶470
167-1949	4
	▶428
167-2190	568
167-2209	569
167-2211	560
	562
	564
	566
167-2216	558
	571
	573
167-2300	568
167-2320	569
167-2324	564
	566
167-2331	558
	571
	573
167-8130	36
167-8610	836
167-8712	140
167-8713	140
167-8984	140
	▶228
167-9524	391
168-8502	127
168-8772	808
169-0486	674
169-0697	843
169-0902	160
169-0903	160
169-1026	860
169-1616	677
	682
169-1617	677
	682
169-2876	888
169-4279	90
169-6443	127
169-7055	371
169-7380	868
	870
169-7443	812
	815
	818
	822
170-0235	812
	815
	818
	822
170-0610	73
	90
170-0612	46
	73
170-1112	762
170-1114	762
170-1115	762
170-3461	336
170-3794	326
	330
	333
170-5293	812
	815
	818
	822
171-1230	857
	860
171-3054	641
171-3055	641
171-3057	641
171-3058	641
171-3059	641
171-3060	641
171-3061	641
171-4047	810
171-5349	292
171-5855	812
	815
	818
	822
171-5989	641
171-5999	641
171-6682	857
	860
171-6735	474
171-6736	474
171-6959	757
171-7077	517
	790
	839
171-8708	314
	▶315
172-0197	187
172-0986	812
	815
	818
	822
172-2263	▶343
	389
172-2391	526
172-2392	522
	▶526
172-2416	857
	860
172-2718	577
	580
172-3262	371
172-3263	372
172-3467	363
172-3473	343
172-3916	▶502
172-4275	343
172-4863	271
172-4880	812
	815
	819
	822
172-5277	655
	656
173-0245	375
	▶381
173-0246	381
	▶390
173-0247	390
173-1028	▶762
	857
	860
173-2052	842
173-3083	862
173-3283	860
173-3993	690
173-5787	865
	866
	867
173-7035	865
	866
	867

▶ PRIMARY REFERENCE

PART NUMBER INDEX

Part	Page	Part	Page	Part	Page	Part	Page
173-7221	436	175-7900	568	180-5571	137	186-2002	148
173-7756	564	176-0258	530	180-6213	640	186-3161	343
	566	176-0259	530	180-7180	812	186-3301	693
173-9779	568	176-0781	110		815	186-3302	▶693
174-0050	169	176-9966	365		819	186-3641	437
	171	177-0038	127		822	186-3735	198
	173	177-1862	853	180-7181	815		207
174-0503	140	177-1863	857		819		208
	208		860	180-7304	▶860		209
	216	177-4334	666		862		215
	224	177-4335	666	180-7305	▶843		216
	276	177-4336	666		860		217
	326	177-4930	842	180-7350	56		222
	330	177-4937	859	180-8424	92		223
	333		862		94		224
	336	177-7130	666		96		276
174-1495	784	177-9653	336	180-9340	284		280
174-2231	▶805	177-9656	336		285		292
	868	178-0266	766	183-1961	259		312
174-2237	805	178-0589	756	183-2089	764		316
174-3091	541	178-0603	▶857		▶830		318
	545		859	183-2131	▶502		320
174-3181	614	178-0604	▶841	183-2264	371		321
	621		857	183-6967	85		336
174-3777	387	178-0605	841	183-6970	85		337
174-3891	660		▶842	183-6971	85		513
174-4445	818		843	183-7121	112		526
174-4590	888	178-0606	▶859		117		541
174-4895	158		866	184-1192	670		547
	161		867		672		685
174-4909	521	178-1783	747	184-2298	857		686
	▶527		▶749		860		688
174-4916	662	178-1784	▶747	184-2299	857		812
	▶687	178-2552	749		860		815
174-7832	577	178-2553	749	184-4396	495		822
	580	178-7907	842	184-5498	203		844
174-7835	577	178-8894	795	184-6011	▶862		881
	580		796		865		884
174-7839	657	178-9603	756	185-1497	42	186-3736	317
174-7875	207		757		44		547
	215	179-0124	625	185-1713	▶692	186-4857	872
	222	179-1532	834	185-1714	751	186-5107	870
174-8845	577	179-7376	538		▶757	187-1679	195
	580	179-7400	192	185-1715	▶739	187-6282	497
174-9169	300	179-8008	834		751	187-6289	467
175-0289	618	179-8230	834	185-2638	199	188-1079	543
175-1529	541	179-8231	834	185-2639	199		▶575
	543	179-9387	▶533	185-2644	199	188-2008	81
175-2582	142	180-0050	337	185-2645	199	188-2199	283
175-2583	142	180-2398	▶691	185-2647	199	188-3989	119
175-2592	142	180-2399	▶737	185-2648	199	188-5095	169
175-3265	541		752	185-2650	199		171
	545	180-2400	752	185-2651	199		173
175-3761	881		▶756	185-2653	199	188-6140	535
175-4170	538	180-2409	692	185-2654	199		▶659
175-4291	248	180-2449	137	185-2655	199	188-6141	659
175-4292	248		155	185-2658	199	188-7067	528
175-4464	131	180-3748	772	185-3502	530	188-7068	528
175-4972	▶522		774	185-3503	530	188-7069	528
	530	180-3998	577	185-3666	850	188-8849	246
175-7162	812		580	185-6517	608		247
	815		585	185-7979	127		251
	822		825	185-8833	653	188-8963	437
175-7542	16		827	185-9464	271	188-9042	437
	▶160	180-4323	81	186-2001	35	188-9429	293

▶ **PRIMARY REFERENCE**

PART NUMBER INDEX

Part	Page
188-9637	640
189-0189	686
	688
189-0981	73
189-1839	526
189-3063	361
189-3064	360
189-3065	360
189-3158	271
189-4716	630
189-4717	630
189-4718	630
189-4724	639
189-4727	639
189-4728	639
189-4729	639
189-4730	639
189-4732	639
189-5746	278
	▶292
	326
	330
	333
189-6244	361
189-8869	360
189-8874	360
190-3832	101
	104
190-5386	889
190-7613	140
	216
	224
	337
190-7615	208
190-8429	▶437
190-8505	792
190-8609	497
191-1782	175
191-1783	175
191-2933	867
	▶870
191-8304	372
191-8305	373
191-8726	207
	215
191-8727	207
	215
191-8728	302
191-8729	302
192-0722	▶360
	428
192-4151	60
	61
192-4309	101
	104
192-4370	679
192-4658	541
	543
	545
192-5425	120
	123
192-6445	▶564
	751
	752
	753
192-6446	▶566
	751
	752
	753
192-6447	564
	566
192-6448	564
	566
192-7752	870
192-7755	870
192-7760	870
192-7767	870
192-7783	870
192-7787	870
192-7790	870
192-7795	870
192-7799	870
192-7805	870
192-7810	870
192-7812	870
192-7820	870
192-7822	870
192-7848	870
192-9464	302
193-0711	345
193-1662	▶599
193-3085	▶714
193-3973	209
	217
	224
	326
	330
	333
	367
	608
193-4476	541
	543
	545
193-5463	392
194-0620	42
	44
194-2088	626
194-5171	881
	884
194-5226	286
	287
194-6722	▶285
	289
194-6724	▶286
	291
194-6725	▶287
	290
194-6847	637
194-6850	637
195-3370	741
195-3371	741
195-4576	503
195-4579	▶503
195-5853	485
	486
195-5854	483
	484
195-5855	481
	482
	▶485
	505
195-5856	▶483
	505
195-7869	547
195-7870	547
195-7871	547
195-7872	547
196-5069	60
	61
196-5070	60
	61
196-5856	▶715
196-8563	▶497
	505
196-8565	▶438
196-9987	537
	▶789
197-1932	797
197-2468	630
	▶639
197-2471	630
197-2473	630
197-2474	630
197-2475	639
197-2476	639
197-4652	524
197-5035	666
197-7689	868
197-7701	686
197-8391	278
	▶298
197-8392	278
	▶299
197-8820	▶199
	201
	203
	205
197-9322	29
198-4776	68
198-4777	112
	117
	577
198-4782	633
198-7711	477
198-9706	787
199-4272	127
199-7735	3
	▶481
199-7891	199
199-8436	199
199-9800	207
	216
	302
200-2371	689
200-2670	707
200-2964	659
200-3174	863
	▶867
200-6282	677
200-6283	682
200-6345	302
	367
	590
	593
	595
	608
200-6410	101
	104
200-7134	429
	430
200-7136	429
	430
	432
200-7836	795
	796
201-0239	630
201-0880	630
201-4340	178
201-6615	▶293
	294
201-6616	295
201-7270	▶528
	530
201-7272	524
	▶530
201-8117	371
201-8389	365
	▶376
201-8390	376
	▶378
201-8391	378
201-8394	376
201-8395	378
201-8396	378
201-8398	378
201-8401	378
201-8425	378
202-3572	86
202-4327	271
202-6614	248
203-1095	637
203-2070	784
203-2789	614
	621
	812
	822
203-4157	623
	626
	▶688
203-6066	120
	123
203-6549	154
	▶161
203-7703	865
	866
	867
203-8609	630
203-8824	61
203-9381	467
203-9382	467
203-9383	467
204-1611	178
204-2281	302
	336
	590
	593

2

▶ PRIMARY REFERENCE

PART NUMBER INDEX

Part	Page	Part	Page	Part	Page	Part	Page
	595	208-7524	376	211-3123	35	212-7682	16
204-2581	875	208-8899	378	211-3686	271		17
204-3334	637	209-0381	336	211-3703	271		▶90
204-7184	117	209-2667	378	211-4232	337	212-7683	16
204-8000	207	209-3186	457	211-4364	▶649		▶131
	216	209-3424	382		653	212-7684	16
	222	209-4588	110	211-4368	649		▶137
	271		115	211-5337	127	212-7688	16
	326	209-4590	90	211-5358	870		17
	330	209-5154	▶787	211-6807	324		▶162
	333		849	211-9085	347	212-7728	68
	336	209-5155	786	211-9087	347	212-8281	482
204-8758	533	209-5157	766	211-9294	870	212-8725	770
204-9530	784	209-5161	810	212-0061	689		▶810
204-9531	784	209-5162	810	212-0272	576	212-8948	810
204-9532	784	209-5163	792		▶628	212-9580	▶183
205-0626	199	209-5164	792	212-0694	▶514		192
205-2941	541	209-5179	507		516	212-9645	16
	543	209-5192	770	212-0704	▶516		17
205-3079	208		▶792		517		▶142
	216	209-5193	810	212-0710	375	212-9646	16
	222	209-5194	810		▶517		▶144
	326	209-5196	792	212-0907	283	212-9647	16
	330	209-5204	810	212-2737	▶10		▶145
	333	209-6630	326		66	212-9648	16
205-3140	666		330	212-2740	▶3		17
205-3171	666		333	212-2741	▶1		▶59
205-3176	666	209-6934	1		3	212-9973	810
205-3179	666		▶194	212-2742	▶576	212-9974	810
205-3180	666	209-6935	194	212-2743	3	212-9975	810
205-3257	372		▶195		▶236	212-9976	810
205-3645	▶799	209-8217	802	212-2744	▶11	213-0000	576
	804	209-8622	42	212-2745	▶16		▶603
205-6388	859		44	212-2746	3	213-0001	576
	862	209-9331	850		▶375		▶587
205-7048	772	209-9336	850	212-2747	3	213-0002	576
205-7331	846	209-9342	850		▶505		▶611
205-8576	849	209-9343	850	212-3498	467	213-0003	576
	▶850	209-9350	507	212-3499	467		▶653
205-8640	1	209-9537	850	212-3500	▶467	213-0004	576
	▶770	209-9542	787		505		▶590
206-4473	378	209-9706	850	212-4977	88	213-0005	576
206-4475	376	210-2262	853		▶629		▶657
206-5575	608	210-2263	853	212-4994	792	213-0006	576
206-5823	881	210-2266	853	212-6157	271		▶595
	886	210-2268	853	212-6167	271	213-0007	576
	887	210-2270	▶853	212-6168	271		▶584
206-7044	76		857	212-6169	271	213-0047	1
206-7421	541		860	212-6933	72		▶175
207-3673	372	210-3301	336	212-7532	16	213-0048	1
207-7107	456	210-4720	477		▶127		▶825
	459	210-4721	477	212-7587	16		▶827
208-4622	326	210-4723	477		▶110	213-0049	764
	330	210-6030	▶600	212-7670	795		▶812
	333		747		796	213-0050	▶239
208-6067	538	210-8580	477	212-7678	16	213-0495	394
208-6070	▶538	210-9123	136		17	213-0496	1
	541	210-9126	137		▶75		▶394
208-6072	534	210-9246	79	212-7679	16	213-1046	302
	▶541	211-0243	477		▶135	213-1082	1
208-6074	▶543	211-0592	26		▶136		▶421
	576	211-1808	888	212-7680	16		▶423
208-6081	538	211-2069	▶532		▶152	213-1084	584
	541		590	212-7681	16	213-1085	584
	545	211-3122	35		▶120	213-1086	584

▶ **PRIMARY REFERENCE**

PART NUMBER INDEX

Part	Page	Part	Page	Part	Page	Part	Page
213-1087	584	213-7005	208	214-1740	770	215-3712	271
213-1100	770		216		▶831	215-4013	101
213-1112	3		222	214-1751	810		104
	▶764	213-7006	326	214-1760	770	215-5627	676
213-1113	▶764		330		▶808	215-5628	676
213-1117	1	213-7007	208	214-1770	770	215-5629	676
	▶450		216		▶881	215-5631	676
213-1121	1	213-7008	595	214-1780	770	215-5636	676
	▶402	213-7009	326		▶875	215-5639	676
213-1141	1		330	214-1790	▶872	215-5640	676
	▶436		333		874	215-5789	676
213-1280	322	213-7012	514	214-1800	770	215-6418	▶606
213-2304	271	213-7016	302		▶772		751
213-3064	271	213-7018	303		▶774		752
213-3212	39	213-7020	303	214-1801	772		753
213-3217	56	213-7021	208		774	215-8140	509
213-4312	4		216	214-1802	795		511
	▶482		222		796	216-0029	641
213-4836	13	213-7063	838	214-1808	772	216-0120	▶751
	14	213-7065	1		774	216-0121	▶752
	15		▶838	214-1838	881	216-0122	▶753
	▶56	213-7066	854	214-2014	▶786	216-0169	606
213-4998	249	213-7067	1		849	216-0170	606
	250		▶854	214-2015	766	216-0273	363
213-5171	375	213-7322	457	214-2296	127	216-0382	787
	▶389	213-8358	16	214-2297	127	216-0657	▶107
213-5172	▶365		17	214-2540	▶235		108
	375		▶89	214-3316	810	216-0810	10
213-5173	▶363	213-8359	89	214-4176	▶766		11
	389	213-8517	127		786		12
213-5174	363	213-9100	208	214-4208	271		▶77
213-5175	363		216		333	216-0811	10
213-6382	▶855		223		336		11
213-6383	145	213-9242	679		337		12
213-6386	145	213-9247	679	214-4763	▶322		▶39
213-6732	152	213-9906	112		770	216-0812	10
213-6733	152		117	214-5098	590		11
213-6738	110	213-9907	112	214-5976	632		12
	▶112	214-0067	1	214-6665	16		▶42
213-6739	112		▶888		17		▶44
	117	214-0070	888		▶549	216-0819	10
213-6795	90		▶891	214-7244	772		11
213-6796	90	214-0720	532		774		12
213-6831	120	214-1000	236		▶879		▶73
	▶122		▶238	214-7245	772	216-0820	10
213-6864	162	214-1001	236		774		11
213-6865	162		▶238		▶880		▶71
213-6866	162	214-1002	236	214-7246	772	216-0821	10
213-6907	144		▶238		774		11
	150	214-1048	127		▶877		12
213-6908	144	214-1067	208	214-7737	810		▶76
213-6909	144		216	214-9186	878	216-0823	10
213-6922	59		223	214-9367	142		11
213-6973	1	214-1068	▶241	215-1933	249		12
	▶442	214-1069	▶242		250		▶92
213-6974	442	214-1070	▶83	215-1942	283		▶94
213-7003	1	214-1072	▶302	215-2802	850		▶96
	▶207	214-1096	1	215-2807	850	216-0824	10
	▶215		▶856	215-2808	850		11
	▶222	214-1196	▶863	215-2809	850		12
213-7004	16	214-1197	▶864	215-2812	850		▶99
	17	214-1639	562	215-2813	850	216-0825	10
	▶326	214-1703	271	215-2814	850		11
	▶330	214-1727	47	215-2815	850		12
	▶333	214-1728	30	215-3192	888		▶101

▶ PRIMARY REFERENCE

PART NUMBER INDEX

Part	Page	Part	Page	Part	Page	Part	Page
	▶104	217-5117	603	218-3921	719	219-4458	56
216-0826	10	217-5393	365		▶745	219-4474	90
	11		▶392	218-3922	745		110
	12	217-5684	146	218-3923	745		115
	▶146	217-6459	151	218-3924	745	219-5179	818
216-0828	10	217-6460	151	218-3938	723	219-5805	507
	11	217-6570	13		▶746	219-6012	79
	12		14	218-3939	746	219-6014	79
	▶79		15	218-3940	746	219-6027	92
216-0829	10		▶165	218-3941	746		94
	11		▶166	218-4962	16		96
	▶184	217-6574	73		17	219-6028	92
216-1319	337	217-6643	101		▶201		94
216-1726	537		104	218-5002	73		96
	▶582	217-6645	101	218-7063	▶336	219-6029	92
216-1727	582		104		849		94
216-1729	582	217-6649	101	218-7136	538		96
216-1730	582		104		540	219-6030	92
216-2238	▶699	217-6652	101	218-8456	405		94
216-2418	603	217-6663	71	218-8457	404		96
216-2419	603	217-6686	10	218-8461	402	219-6033	76
216-2420	603		11	218-8462	402	219-6330	73
216-2421	603		12	218-8465	436	219-6335	73
216-2481	▶551		▶151	218-8466	436	219-6485	209
	695	217-7101	▶630	218-8470	411		217
	698		632		450		223
	700	217-7219	42	218-8471	406		▶248
	701		44	218-8472	453	219-6922	53
216-2482	▶552	217-7739	▶270	218-8474	413	219-6923	163
	695		751		415		164
	698		752	218-8475	414	219-7239	509
	700		753		416		511
	701	217-7933	853	218-8476	414	219-7587	528
216-2547	▶534	217-8339	192		416	219-7677	10
216-2548	534	217-8342	175	218-8480	413		11
	▶614		▶192		415		12
216-2552	▶537	217-8433	808	219-0305	890		▶53
216-2553	537	217-8763	283	219-0312	764	219-7678	53
	▶608	217-8947	145		765	219-7687	630
216-2554	▶537		148		▶777	219-7903	608
216-2596	587	217-9049	857	219-0313	131	219-9654	365
216-2597	587	217-9148	553	219-1435	590	219-9792	442
216-2599	577	217-9277	127	219-1902	603		444
	580		▶632	219-2390	547	219-9793	442
216-2600	365	218-0861	857	219-2391	514		444
216-2601	587	218-1837	600		547	219-9914	135
216-2602	587	218-1840	600	219-2630	122		136
216-2603	365	218-2373	527	219-3033	▶371		137
216-2813	810		687		389	220-0199	655
216-3002	541	218-3216	421	219-3034	▶345		656
	543		423		389	220-0261	4
	545	218-3219	421	219-3035	345		▶88
216-4349	365	218-3221	421	219-3036	371	220-0550	88
216-4998	802	218-3223	427	219-3037	372		▶660
216-5582	32	218-3227	426	219-3587	765	220-0780	576
216-8198	855	218-3229	421		▶832		▶637
216-8731	799	218-3230	421	219-4135	1	220-0813	655
216-8732	799	218-3266	787		▶849		656
217-0242	551	218-3269	787	219-4263	201	220-3439	787
	552	218-3346	599		203	220-3987	810
	553	218-3347	599		205	220-3988	810
217-3445	582	218-3348	▶602	219-4284	110	220-3989	810
217-3446	582		742		115	220-4551	625
217-5115	603	218-3352	602	219-4455	107		▶682
217-5116	603	218-3353	602	219-4456	107	220-5548	▶347

▶ **PRIMARY REFERENCE**

PART NUMBER INDEX

Part	Page	Part	Page	Part	Page	Part	Page
	375		822	223-3265	13	224-5871	789
220-5549	347	222-2195	812	223-4296	243	224-6208	772
	▶382		815	223-4443	690		774
220-5550	382		818	223-4445	690	224-6316	208
220-6126	787		822	223-4461	547		217
220-8397	217	222-2196	239	223-5567	▶397		223
	223	222-2197	239	223-5568	397	224-6687	112
220-8678	183	222-2824	877	223-6397	13	224-7506	68
221-0812	479		878		14	224-7830	890
221-0851	322	222-2825	877		15	224-9222	337
221-0867	375		878		▶33	224-9657	42
	▶524	222-2827	877	223-6407	10		44
221-1444	371		878		11	224-9664	42
221-1813	▶81	222-2828	877		12		44
221-1814	16		878		▶58	224-9907	68
	17	222-3137	662	223-6408	13	225-0312	892
	▶300		▶689		14	225-0313	303
221-1829	81	222-3676	▶456		15		890
221-1831	365		506		▶18	225-1242	46
221-1832	365	222-3677	459	223-6421	10	225-2321	534
221-1833	365	222-3680	▶457		11		▶690
221-1834	365		505		12	225-2338	799
221-1835	365	222-3682	457		▶190	225-2339	799
221-1836	365		▶459	223-6431	33	225-3099	33
221-1839	365	222-3920	42		▶35	225-3100	30
221-1840	365		44	223-6432	▶32	225-3101	30
221-1841	365	222-5369	881		35	225-3161	4
221-1842	365	222-5370	881	223-6433	32		▶429
221-1843	365	222-5371	881	223-7485	144	225-3188	507
221-1845	524	222-5372	881		150	225-3191	507
221-1846	524	222-5373	881	223-8173	271	225-3193	507
221-2616	230	222-5374	881	223-8175	271	225-3285	569
221-4038	110	222-5376	881	223-8176	▶271	225-3286	560
	115	222-5377	881		336		562
221-4466	556	222-5378	881	223-8177	336		564
221-5500	655	222-5379	881	223-9058	460		566
	656	222-5382	881	223-9135	26	225-3287	558
221-6826	112	222-5455	120	223-9137	40		571
221-6982	562	222-6456	19	223-9672	397		573
221-7070	112	222-6953	19	224-0672	892	225-3797	271
221-8235	553	222-7001	473	224-1219	42	225-4256	890
	▶556		474		44	225-4257	892
221-8236	▶553		475	224-1220	42	225-5928	271
221-9403	787		476		44	225-5965	27
221-9409	787	222-7877	337	224-1221	42	225-5966	27
222-0345	859	222-7879	337		44	225-6052	13
	862	222-7880	337	224-1223	42		14
222-1428	90	222-7881	276	224-3158	163		15
222-1430	90	222-7882	534		164		▶26
222-1433	90	222-7883	337	224-3242	193	225-6053	26
222-1449	▶169	222-7884	337	224-3983	32	225-6169	772
222-1463	516	222-7887	88	224-4214	434		774
222-1464	516	222-7889	535		435	225-6170	772
222-2185	175	222-7891	507	224-4215	434		774
222-2186	175	222-8843	799		435	225-6309	230
222-2187	175	223-1127	60	224-4507	645	225-8026	626
222-2190	812		61	224-4508	645		▶681
	815	223-1998	146	224-4905	766	225-8553	271
	818	223-2642	110	224-5140	▶253	226-0135	611
	822	223-2643	110	224-5322	48	226-0136	611
222-2191	812		115	224-5332	40	226-0297	10
222-2193	812	223-2644	110		42		11
222-2194	812	223-2645	110		44		12
	815	223-2646	110	224-5530	▶282		▶46
	818	223-2647	110		846	226-0301	46

▶ PRIMARY REFERENCE

PART NUMBER INDEX

Part	Page
226-0463	2
	▶460
226-0916	27
226-1224	637
	▶640
226-1227	640
226-2009	649
226-2406	614
	621
226-2677	429
226-2751	547
226-2811	322
226-3492	175
	815
	822
226-3768	▶171
226-4455	764
226-4909	205
226-4927	18
	▶19
226-5561	32
226-5613	146
226-6036	42
	44
226-6052	42
	44
226-7295	547
226-7420	▶547
	789
226-7480	547
226-7610	387
226-7612	▶383
	385
226-7613	▶385
	387
226-7614	375
	▶387
226-7615	383
226-7617	383
226-7618	383
226-7619	385
226-7620	383
226-7665	766
226-7874	850
226-7875	850
226-7956	802
226-9189	850
226-9193	850
226-9248	872
226-9249	849
	▶874
226-9622	391
	527
	687
227-0159	42
	44
227-0912	271
227-3127	337
227-4002	324
227-4158	810
227-4159	802
227-4239	32
227-4398	686
227-5334	802
227-6718	541
	543
	545
227-9516	10
	11
	12
	▶57
227-9988	▶695
227-9991	▶700
228-0272	576
	▶634
228-2767	131
228-4078	110
	115
228-4947	294
	295
228-5813	42
	44
228-6089	337
228-7381	184
	187
	▶197
228-8553	83
	▶85
229-0774	337
229-0887	889
229-0890	637
	▶679
229-1466	▶623
	660
229-1494	859
229-1663	42
	44
229-2578	844
229-2689	142
229-2690	142
229-2767	14
229-3638	560
229-5122	92
	94
	96
229-5681	584
229-5682	365
229-5683	365
229-6259	56
229-6620	603
229-8779	263
	268
229-9866	584
230-0079	90
230-0093	787
230-1294	99
230-1296	99
230-1302	99
230-1437	300
230-1550	49
230-2521	90
230-2569	56
230-3023	844
230-3525	241
230-3728	191
230-3775	191
230-4089	83
230-4156	10
	11
	12
	▶24
230-4157	24
230-4172	10
	11
	12
	▶108
230-4691	831
230-5440	142
230-6202	42
	44
230-7149	278
	▶294
230-7181	▶27
	29
230-7182	▶29
	30
230-7515	175
230-7645	802
230-9556	614
231-0865	554
	▶562
231-0866	562
231-1166	413
231-1167	414
231-1168	413
	414
231-1381	1
	▶479
231-1382	479
231-1946	263
	268
231-1947	263
	268
231-2082	404
	405
231-2188	365
231-3069	▶255
231-3070	▶257
231-3071	▶259
231-3072	▶263
231-3472	208
	217
231-3539	568
231-3767	▶802
	849
231-3768	802
231-4470	46
231-4471	46
231-4590	1
	▶477
231-4627	283
231-4708	99
231-6270	271
231-6285	590
	▶625
231-6565	378
231-7306	846
231-7307	846
231-7308	846
231-7309	846
231-7310	846
231-7311	846
231-7312	846
231-7313	846
231-7314	790
	791
	▶846
231-7573	▶616
	695
	696
	697
	698
	699
	700
	701
	702
231-7574	557
	▶618
231-7575	▶557
231-7585	872
231-8147	1
	▶430
231-8148	430
231-8149	430
231-8825	131
	133
231-8842	131
	133
231-9290	322
	▶844
231-9306	263
	268
231-9330	24
	▶69
231-9487	649
231-9488	649
231-9489	649
231-9491	649
231-9493	649
231-9494	649
231-9495	649
232-0211	595
232-0253	60
	61
232-0652	557
	▶571
232-0653	557
	▶558
232-0654	▶573
	710
232-1134	▶276
	537
232-1244	777
232-1318	205
232-2572	657
232-2960	890
232-3173	595
232-3178	595
232-3181	595
232-3182	595
232-3184	595
232-3185	595
232-3226	56
232-3232	56
232-3242	595
	▶626
232-3305	590
232-3306	590
232-3307	590

▶ **PRIMARY REFERENCE**

PART NUMBER INDEX

Part	Page
232-3308	590
232-3309	590
	593
232-3374	365
	▶393
232-3402	892
232-3583	797
232-3643	48
232-3755	421
	423
232-4517	19
232-6622	375
	▶790
232-6668	786
232-7572	372
232-7575	372
232-7607	27
233-0888	442
	444
233-0890	442
	444
233-0891	230
233-0901	421
233-0914	421
233-2462	13
	14
	15
	▶48
233-2804	208
	217
	223
233-3729	81
233-4658	633
233-4877	101
	104
233-5070	83
233-5110	▶503
233-6020	263
	268
233-6310	411
	417
	419
	450
233-6313	850
233-6596	421
	423
	▶426
233-6597	421
	423
	▶427
233-6680	595
233-6681	595
233-6684	838
233-6745	841
233-7670	608
233-7675	608
233-7892	889
233-7893	889
233-7894	534
233-7895	889
233-8442	514
233-8554	516
233-9161	787
233-9314	854
233-9687	608
233-9843	209
	217
234-0142	573
234-0143	558
234-0144	571
234-0825	253
	255
	257
	259
	263
234-1374	300
234-1402	893
234-1404	893
234-1405	893
234-1524	165
	166
	▶167
234-1579	▶37
	40
234-1582	582
234-1622	10
	11
	12
	▶68
234-1642	479
234-1957	584
234-1977	584
234-2267	616
	618
234-2268	616
	618
234-2477	537
234-2496	▶507
	516
234-2500	507
234-2515	110
234-2519	56
234-2875	513
234-2876	514
234-2877	513
234-2878	514
234-2879	507
234-2880	516
234-3025	657
	▶666
234-3404	534
234-3438	99
234-3441	21
234-3569	477
234-4279	48
234-4300	241
234-4397	477
234-4402	660
234-4403	660
234-4405	83
234-4406	83
234-4407	83
234-5880	271
234-5913	10
	11
	12
	▶163
	▶164
234-6028	502
234-6029	501
234-6030	502
	504
234-6031	502
	504
234-6032	502
234-6033	501
234-6173	618
234-6176	618
234-6712	616
	618
234-6714	618
234-6845	271
234-6902	27
234-6928	376
234-6941	473
	474
	475
234-6942	473
	474
	475
234-6943	473
	474
	475
	476
234-6944	473
	474
	475
	476
234-7517	660
234-7689	▶283
	554
234-8778	421
	423
234-8937	24
234-8999	283
234-9182	▶554
	556
235-0320	797
235-0543	300
235-0560	178
	180
235-1046	402
235-1587	86
235-1594	209
	217
	223
	303
235-1861	49
235-2014	10
	11
	12
	▶49
235-2036	616
235-2213	473
	474
	475
	476
235-2326	584
235-2328	590
235-2812	695
	696
	697
	698
	699
	700
	701
	702
	▶710
235-3172	144
235-3506	537
	▶670
235-3560	787
235-3561	787
235-3572	590
235-3573	590
235-4101	623
235-4102	10
	11
	12
	▶21
235-4177	131
	▶132
	133
235-4493	516
235-4494	▶513
	514
235-4495	513
	▶518
235-4498	507
235-4753	101
	104
235-4754	184
	187
235-5299	626
	▶677
235-5915	131
235-6504	10
	11
	▶178
235-7046	888
235-7128	889
235-7134	13
	14
	15
	▶40
235-7135	10
	11
	12
	▶23
235-7820	473
235-8022	75
235-8026	889
235-8110	850
235-8210	10
	11
	12
	▶278
235-8727	626
235-8751	75
235-9762	209
	217
	223
236-0846	209
	217
	223
236-0847	209
	217
236-0848	209
	217
	223

▶ PRIMARY REFERENCE

PART NUMBER INDEX

Part	Page	Part	Page	Part	Page	Part	Page
236-0849	209		180		▶321	241-2924	628
	217	237-9601	372	239-1139	21		629
	223	238-0283	101	239-1358	75	241-2940	628
236-1300	772		104	239-1464	162	241-2943	628
	774	238-0292	101	239-1466	▶229	241-3352	349
236-2502	99		104		278	241-3751	705
236-2621	589	238-0293	241	239-2240	326	241-4933	440
236-4096	40		242		330	241-5790	628
236-4105	▶473	238-0294	56		333	241-7655	764
	505	238-0479	802	239-2309	▶488		▶779
236-4106	▶474	238-0489	13	239-2310	▶491		▶781
	504		14	239-2395	278	241-7656	779
236-4136	40		15		▶289		781
236-4185	184		▶191	239-2396	178	241-7657	779
	187	238-0994	101		180		781
236-5197	853		104		278	241-7658	779
236-5418	92	238-1265	810		▶290		781
	94	238-1851	305	239-2397	278	241-7660	779
236-5423	101	238-2800	47		▶295		781
	104	238-4490	▶705	239-3902	235	241-7669	765
236-6605	623	238-4491	▶2	239-5225	99	241-7716	606
236-6646	614	238-4492	▶2	239-5363	371	241-8368	271
	621	238-4494	▶3	239-5571	23		▶317
236-6733	86	238-4495	▶4	239-5609	144	241-8427	655
236-8232	649	238-4496	4		150	241-8832	666
236-8721	844		▶5	239-6987	888	242-0255	582
236-8722	844		▶7	239-7902	230	242-5174	190
236-8806	589		▶9		▶232		▶193
237-0159	513	238-4497	▶589		▶233	242-5203	507
237-0190	792	238-4498	▶4	239-8035	4	242-5205	547
237-0842	13	238-4505	802		▶203	242-6106	193
	14	238-4664	178	239-8051	242	242-8030	383
	15		180	239-8107	271	242-8031	383
	▶30	238-6646	24	239-8293	▶655	242-8033	383
237-0843	270	238-9121	▶577		▶656	242-9228	263
237-0930	511		▶580	239-9368	799		268
237-0957	209		705	239-9531	794	242-9362	178
	217	238-9204	69	239-9954	▶234	242-9536	135
	224	238-9205	69		243		136
	▶288	238-9206	69	239-9961	772		137
	326	238-9850	68		774	242-9964	243
	330	238-9851	▶475	240-0228	4	243-0781	649
	333		499		5	243-1554	10
237-1009	802		500		7		11
237-1016	511		501		▶411		12
237-1017	375		502	240-2035	278		▶230
	▶511		503		▶291	243-1653	5
237-1962	309	238-9852	▶476	240-2037	▶3		7
	▶310		504	240-4734	764		9
237-3943	870	238-9855	476		▶815		▶432
237-3970	▶763	238-9856	476	240-4813	815	243-1655	432
	870	238-9857	21	240-4814	815	243-1656	432
237-4895	184	238-9860	46	240-5283	140	243-2466	60
	187		47	240-6904	▶154	243-2468	51
237-7654	537	238-9861	47	240-6905	▶155		▶60
	▶672	238-9862	13	240-7837	▶540	243-3177	562
237-8104	442		14		545	243-4372	▶489
	444		15	240-8586	371	243-4373	▶492
237-8108	442		▶47	240-8587	372	243-4374	▶490
	444	238-9864	21	240-9493	633	243-4375	▶493
237-8109	442	239-0283	140	240-9543	30	243-5156	836
	444	239-0600	395	241-1781	276	243-5158	140
237-9307	178	239-0601	▶395	241-1855	483		▶836
	180		705		485	243-5780	114
237-9323	178	239-1134	300		486	244-1013	634

▶ **PRIMARY REFERENCE**

PART NUMBER INDEX

Part	Page
	636
	643
	645
244-1419	846
244-1717	245
244-1735	▶877
244-1952	▶696
244-1953	▶697
244-1955	▶706
244-1956	▶707
244-1958	▶701
244-2009	▶698
244-2101	▶702
244-2620	889
244-3114	345
	▶391
244-3462	158
244-4094	649
244-5578	112
	117
244-5579	112
	117
244-6529	786
244-7000	345
	▶674
244-8822	155
245-0767	167
	168
245-1596	799
245-1750	888
245-2760	844
245-3804	42
	44
245-3856	547
245-6520	349
245-6555	▶349
	365
245-6858	421
	423
245-7350	640
245-7481	201
	203
	205
245-7647	779
245-8220	770
	771
	▶797
245-9740	649
245-9947	2
	▶472
245-9948	2
	481
	▶486
245-9949	2
	▶484
246-2166	649
246-2641	1
	16
	17
	175
	194
	302
	402
	411
	417
	419
	421
	423
	450
	550
	802
246-2925	205
246-4258	242
246-4296	844
246-4311	337
	514
	535
246-5625	253
	259
246-5626	253
	257
	259
	263
	268
246-5771	120
	123
246-5772	120
	123
246-5785	844
246-6720	249
	250
246-8809	184
247-0293	▶249
	263
	268
247-0294	▶250
	263
	268
247-0495	253
	257
	259
	263
	268
247-0747	537
	▶545
247-1267	▶440
247-1284	440
247-1288	440
	446
247-1289	440
	446
247-1290	440
247-1291	440
247-1781	114
247-1828	4
	▶114
247-1927	▶504
247-1941	706
	707
247-1942	706
	707
247-3025	662
247-3026	595
	▶662
247-4144	831
247-4156	768
247-4163	442
	444
247-4285	248
247-4836	877
247-4837	877
247-4918	203
247-4927	1
	▶267
247-4962	889
247-6130	56
247-6303	628
	629
	▶641
247-6304	628
247-6305	641
247-6306	628
247-6387	610
247-6388	610
247-6389	▶610
247-6402	629
247-6875	890
247-6876	892
247-6877	890
247-6878	892
247-7792	56
247-8271	771
	▶878
248-0036	33
248-2921	▶275
	799
248-2922	275
248-2923	799
248-2929	802
248-2930	802
248-2931	799
248-2941	764
	▶834
248-2949	802
248-4171	▶770
248-4172	▶771
248-4178	770
	▶879
248-4820	64
	65
248-4821	10
	11
	▶65
248-5513	99
248-6258	89
248-6259	89
248-6690	▶398
248-6691	398
	400
248-6713	398
248-6715	398
	400
248-6716	398
	400
248-6720	398
	400
248-6722	398
	400
248-6724	400
248-6727	▶400
248-6772	799
248-6862	889
248-6886	10
	11
	12
	▶324
248-6931	155
	158
248-6934	155
248-6935	155
248-6936	155
248-6937	155
248-6938	155
248-6939	155
248-6940	155
248-6941	155
248-6942	155
248-6951	155
248-8741	888
249-0409	156
249-0951	271
249-1751	595
249-2337	649
249-3832	90
249-3833	90
249-5544	101
	104
249-5648	276
249-8533	10
	11
	12
	▶38
249-8550	278
249-8783	707
249-9311	799
250-2378	453
250-2379	406
250-2610	▶404
	414
250-2611	▶405
	413
250-2614	▶413
	417
	450
250-2615	▶414
	417
	450
250-4628	841
	843
250-5798	127
250-5902	127
250-5903	127
250-8441	▶406
	413
	415
250-8443	414
	416
	▶453
250-8450	415
250-8452	416
250-8464	413
	415
250-8465	414
	416
250-8536	415
	416
250-8537	407
250-8538	408
250-8539	▶407
	415

▶ PRIMARY REFERENCE

PART NUMBER INDEX

Part	Page
250-8540	▶408
	416
250-8541	415
250-8542	416
250-8543	411
	▶415
	419
250-8544	411
	▶416
	419
250-9540	127
251-1253	89
251-2176	637
251-2459	637
251-2460	637
251-3273	2
	3
251-6775	79
251-7591	216
	222
251-9905	456
	459
	460
252-5158	467
252-5880	337
252-6327	487
252-6329	▶487
252-6375	467
252-6949	140
252-6953	850
252-6954	850
252-8042	626
	▶678
253-0617	191
253-0861	891
253-1344	467
253-1347	454
	467
253-2673	217
	224
253-7138	303
253-8285	155
253-8286	155
254-5678	140
254-5679	140
254-5680	140
254-5681	140
	276
254-5682	140
254-7275	▶446
254-7280	446
254-8195	337
254-8961	884
	▶886
254-8962	884
	▶887
254-8974	884
254-8982	884
254-8986	884
254-9012	767
254-9013	767
254-9024	446
254-9317	▶767
	770
254-9371	878
255-0005	446
255-0844	796
255-0845	795
255-0848	796
255-0849	795
255-1302	88
	▶434
255-3544	142
255-3545	142
255-3546	142
255-3547	20
255-3680	145
255-3681	145
255-4206	▶243
255-4517	243
255-5282	▶231
	232
255-6899	772
	774
	▶795
255-6900	772
	774
	▶796
255-9372	▶140
256-0190	▶839
256-0271	772
256-2090	109
	119
256-2127	643
256-2130	643
256-3087	▶173
256-3366	184
	187
256-4306	▶504
256-4313	850
256-4314	850
256-5357	434
	435
256-5358	434
	435
256-5701	810
256-6455	781
256-6916	▶765
256-7212	765
	▶818
256-7214	506
256-7215	506
256-7216	▶506
256-7254	▶463
256-7744	796
256-7745	795
256-9738	10
	11
	12
	▶893
257-0540	77
257-0541	77
257-0542	77
257-2028	434
257-2529	541
	543
	545
257-2532	541
257-3469	171
257-3710	140
257-4183	▶341
257-5846	▶66
257-5848	▶892
257-5849	▶245
257-7446	889
257-8332	▶435
258-0883	178
	180
	▶318
258-0977	839
258-0978	791
258-0980	791
258-0985	839
258-0986	839
258-5035	203
	205
258-7318	855
258-7319	855
258-8717	▶535
258-8721	61
258-8885	772
259-0022	140
259-2093	337
259-2988	276
259-5762	442
	444
259-6122	60
259-6123	155
259-6357	818
259-6358	818
259-6359	818
259-8303	549
260-0716	79
260-0717	79
260-0718	79
260-2998	303
260-3125	127
260-3201	20
260-3942	643
260-3946	645
260-3947	634
	636
	▶643
260-3948	643
260-3949	643
260-3950	643
260-3951	643
260-3952	643
260-3955	647
260-3956	647
260-3957	647
260-3958	647
	648
260-3959	634
	636
260-3960	634
	636
260-3961	647
	648
260-3962	647
	648
260-6616	71
260-6896	634
	636
	643
	645
	647
	648
260-7652	243
260-7653	892
260-8636	649
260-9306	13
	14
	15
	▶20
260-9421	162
260-9423	162
260-9424	162
260-9527	11
	▶13
260-9631	13
	14
	15
	▶51
	▶52
260-9648	184
	187
260-9649	184
261-0011	72
261-1173	886
261-1174	887
261-1175	886
261-1176	887
261-1177	886
261-1507	10
	▶14
261-3345	872
261-3768	▶768
	772
	774
261-4280	537
261-4373	537
261-5735	83
261-7991	140
261-8821	797
261-9674	470
261-9675	470
262-0862	411
	450
262-0863	411
	450
262-1408	337
262-2043	▶237
	243
262-2046	879
262-2047	879
262-2048	879
262-2049	879
262-2050	879
262-2051	879
262-2876	233
262-5228	797
262-5229	797
262-5230	797
262-6125	243
262-6146	423

▶ **PRIMARY REFERENCE**

PART NUMBER INDEX

Part	Page	Part	Page	Part	Page	Part	Page
262-6147	423	266-9946	▶715	268-3295	166	271-5045	877
262-6149	423	266-9947	▶715		▶168		879
262-6905	426		716	268-4121	127		880
262-7325	427	266-9948	716	268-6368	17	271-5053	879
262-7757	127	267-2154	482		▶133		880
262-7894	423	267-2860	17	268-6651	▶158	271-5054	877
263-3279	802		▶115	268-6682	133	271-5055	879
	▶804	267-2861	115	268-7801	4		880
263-3280	787		▶117		▶205	271-5056	877
263-3318	▶791	267-2862	117	268-8042	649	271-5057	877
	839	267-2863	117	268-8043	649		879
263-3805	276	267-2864	117	268-8310	618		880
263-3826	▶505	267-2865	117	268-8792	799	271-5545	783
263-3912	595	267-2867	115	268-9447	158	271-6554	822
	608	267-2868	115	268-9448	158	271-6555	822
263-4924	413	267-2871	765	269-0889	17	271-9408	787
	414		▶783		▶139	272-0365	150
263-5043	839	267-2872	783	269-0892	139	272-5508	▶119
263-6309	891	267-2873	115	269-1882	148	272-9665	417
263-6310	891	267-2874	115	269-5324	327		419
263-6311	891	267-2875	17		330	272-9795	576
263-6312	891		▶123		333		▶636
263-6313	891	267-2876	123	269-7113	17	272-9830	593
263-6314	891	267-2880	17		▶153	273-1761	85
263-6315	891		▶129	269-7114	153	273-2536	85
263-6316	891	267-2881	129	269-7115	153	273-2630	514
263-6317	891	267-2882	129	269-8382	3	273-2695	837
263-6318	891	267-2883	129		▶576	273-2696	▶837
263-7761	645	267-2884	129	269-8383	576	273-2821	621
263-7762	645	267-2885	129		▶593	273-5662	245
263-7763	645	267-2886	129	269-8384	▶534	273-9827	656
263-7764	645	267-2888	123	269-8385	534	274-9565	180
263-7765	634	267-2889	123		▶621	274-9566	187
	636	267-2890	17	269-8387	▶765	274-9569	187
	▶645		▶148	269-8388	765	275-2324	878
263-7766	634	267-2891	148		▶822	275-2325	878
	▶647	267-2892	148	269-8788	79	275-2393	224
263-7769	647	267-2894	148	270-0517	1	275-6230	333
263-8623	155	267-2895	148		▶417	275-6274	180
263-9088	243	267-2896	148	270-0519	417	275-8509	648
264-0072	787	267-2897	148		419	275-8512	648
264-0461	799	267-2898	123	270-0523	205	276-1365	▶268
264-0462	799	267-2899	123	270-0525	4	276-2414	499
264-0465	799	267-2900	3		9		505
264-0466	799		▶17		▶419	276-2416	499
264-0467	799	267-2901	4	270-5001	878		505
264-0468	799		▶109	270-5002	878	276-2417	501
264-0544	44	267-2902	123	270-5320	183	276-2418	501
264-1476	799		▶126	270-7539	1	276-3507	224
264-4442	423	267-2904	126		▶444	276-4132	61
264-4443	423	267-2905	17	270-7540	444	276-5317	61
264-4444	426		▶150	271-2219	3	276-5458	15
265-0959	797	267-2906	150		▶12	276-9586	12
265-3857	797	267-2907	150	271-3002	636		▶15
	802	267-4524	324		▶648	277-0493	245
265-6639	127	267-4603	243	271-5039	877		▶794
265-7924	276	267-6585	715		879	277-0642	224
265-9370	162		▶716		880	277-6370	243
265-9642	237	267-7209	649	271-5040	877	277-6717	104
265-9643	237	267-7369	649	271-5041	877	277-6718	96
266-0048	519	267-8575	799		879	278-0237	457
	520	267-8821	127		880	278-1363	61
266-2861	243	267-8828	787	271-5043	877	278-8794	184
266-3447	799	267-9441	129		879		187
266-3451	804	267-9442	129		880	278-8795	184

▶ PRIMARY REFERENCE

PART NUMBER INDEX

Part	Page	Part	Page	Part	Page	Part	Page
	187						
278-9029	184						
	187						
279-5729	72						
279-5730	10						
	12						
	▶180						
280-2688	72						
280-7095	224						
280-7128	224						
280-8043	52						
	▶61						
281-0193	72						
281-0202	10						
	12						
	▶72						
282-5926	10						
	12						
	▶187						
282-8985	411						
283-2239	238						
283-2240	238						
283-2247	238						
283-2248	238						
283-6333	238						
283-6334	238						
283-6920	417						
	419						
283-6921	417						
	419						
285-0986	201						
	205						

▶ **PRIMARY REFERENCE**

MEMORANDA



© 2005 Caterpillar
All Rights Reserved

Printed in U.S.A.