SEBP5809-12 (en-us)
February 2016

VOLUME I
Pages 1-732

RUTHZIL TRATOR COMERCIAL DE PEÇAS LTDA 11 97083-6812 ROLANDO CITRANGULO

Parts Manual

D10T2 TRACK-TYPE TRACTOR

RAB1-UP (Machine)
JZM1-UP (Engine)
NDM1-UP (Transmission)
TFD1-UP (Ripper)
TFP1-UP (Ripper)
TFR1-UP (Ripper)
TFY1-UP (Ripper)
AJ21-UP (Torque Converter)
7GW1-UP (Blade)
EPA1-UP (Blade)
EPB1-UP (Blade)

Powered By C27 Engine

SAFETY.CAT.COM

Product and Dealer Information

Note: For product identification plate locations, see the section “Product Identification Information” in the Operation and Maintenance Manual.

Delivery Date: _____

Product Information

Model: _____

Product Identification Number: _____

Engine Serial Number: _____

Transmission Serial Number: _____

Generator Serial Number: _____

Attachment Serial Numbers: _____

Attachment Information: _____

Customer Equipment Number: _____

Dealer Equipment Number: _____

Dealer Information

Name: _____ Branch: _____

Address: _____

_____

_____

	Dealer Contact	Phone Number	Hours
Sales:	_____	_____	_____
Parts:	_____	_____	_____
Service:	_____	_____	_____

MEMORANDA

TABLE OF CONTENTS

NAME	PAGE
GENERAL INFORMATION	A6
REPAIR ALTERNATIVES	A9
SUPPLEMENTAL COOLANT ADDITIVES	A10
MAINTENANCE PARTS	A11
INDEX	A15
MACHINE ARRANGEMENT	1
CHASSIS AR	1
COMMON AR	1
DISTRIBUTION AR	2
INSTALLATION AR	3
STOCKPILE AR	4
ENGINE ARRANGEMENT	6
ENGINE AR	6
ENGINE AR-COMPLETE	7
ENGINE AR-CORE	10
INSTALLATION AR-ENGINE	11
BASIC ENGINE	12
BASE GP-VALVE COVER & INJ HARN	12
CAMSHAFT GP	14
COVER GP-ENGINE	15
COVER GP-FRONT HOUSING	16
COVER GP-REAR HOUSING	17
COVER GP-SOUND SUPPRESSION	19
COVER GP-VALVE MECHANISM	23
CRANKSHAFT GP	26
CYLINDER BLOCK AS	27
CYLINDER BLOCK GP	30
CYLINDER HEAD AS	33
CYLINDER HEAD GP	35
DAMPER GP	39
DRIVE GP-ACCESSORY	41
DRIVE GP-FAN	42
FLYWHEEL GP	44
GEAR GP-FRONT	45
GEAR GP-REAR	47
HOUSING GP-FLYWHEEL	50
HOUSING GP-FRONT	52
HOUSING GP-REAR	54
LIFTING GP-ENGINE	55
MECHANISM GP-FUEL PUMP & VALVE	57
MOUNTING GP-ALTERNATOR	58
PAN GP-OIL	59
PANEL GP-SOUND SUPPRESSION	61
PISTON & ROD GP	62
PLUG GP-CYLINDER BLOCK	64
PLUG GP-CYLINDER HEAD	65
ROCKER ARM GP	66
SEAL GP-CRANKSHAFT	69
SUPPORT GP-ENGINE	71
TRUNNION GP-ENGINE	73
LUBRICATION SYSTEM	74
BASE AS-OIL FILTER	74
FASTENER GP-OIL PUMP MOUNTING	75
FILLER GP-ENGINE OIL	76
FILTER GP-ENGINE OIL	77
FUMES DISPOSAL GP	79
GAUGE GP-OIL LEVEL (DIPSTICK)	81
LINES GP-ENGINE OIL	82
LINES GP-ENGINE OIL FILTER	84
LINES GP-TURBOCHARGER OIL	86
OIL CHANGE GP-HIGH SPEED	88
PRELUBRICATION AR-ENGINE	94
PUMP & MOTOR GP-PRELUBRICATION	97
PUMP GP-ENGINE OIL	98
COOLING SYSTEM	100
CORE GP-OIL COOLER	100
FAN GP-REVERSIBLE	101
FAN GP-SUCTION	102
LINES GP-TURBOCHARGER WATER	104
LINES GP-WATER	106
PLUG GP-WATER LINES	115
PUMP GP-WATER	116
RADIATOR AR	118
RADIATOR GP	122
TANK GP-COOLANT	125
AIR INLET AND EXHAUST SYSTEM	131
AFTERCOOLER GP-AIR	131
AIR CLEANER GP	133
DUST EJECTOR GP	136
ELBOW GP-AIR INLET	137
FRAME GP-MOUNTING	138
LINES GP-AIR	139
LINES GP-EXHAUST	142
MANIFOLD GP-EXHAUST	143
MANIFOLD GP-INLET	145
MOUNTING GP-MUFFLER	146
MUFFLER & MOUNTING GP	147
PRECLEANER AS	148
PRECLEANER GP	149
SHIELD GP-HEAT	153
SHIELD GP-MANIFOLD	154
TURBOCHARGER GP	155
FUEL SYSTEM	158
ADAPTER GP-FAST FILL FUEL	158
BASE GP-FUEL FILTER	163

TABLE OF CONTENTS

NAME PAGE

COVER GP-FUEL FILTER BASE 165
FILTER GP-FUEL 166
FILTER GP-WATER SEP & FUEL 167
INJECTOR GP-FUEL 168
LINES GP-FUEL 169
LINES GP-FUEL FILTER 178
PUMP GP-FUEL INJECTION 181
PUMP GP-FUEL PRIMING 182
PUMP GP-FUEL TRANSFER 184
TANK GP-FUEL 187
VALVE GP-CHECK 192

ELECTRICAL AND STARTING SYSTEM 194
ADAPTER GP-SENSOR 194
ALARM GP 195
ALTERNATOR GP-CHARGING 196
APPLICATION GP-MONITOR 198
BATTERY & WIRING GP 199
BATTERY GP 228
BLOCK GP-JUNCTION 229
CAMERA & MOUNTING GP 230
CONTROL & MTG GP-ELECTRONIC 234
CONTROL & MTG GP-ENGINE ELEK 235
CONTROL & MTG GP-POWER TRAIN 238
CONTROL GP-ENGINE ELECTRONIC 239
CONTROL GP-REMOTE 240
CONTROL GP-UNPROGRAMMED 241
ELECTRICAL AR 243
ELECTRONICS AR-MACHINE 243
ELECTRONICS GP-COMMUNICATION 244
ELECTRONICS GP-IMPLEMENT 245
ELECTRONICS GP-MACHINE 245
ELECTRONICS GP-MONITOR 245
ELECTRONICS GP-POWER TRAIN 247
ENCLOSURE GP-ELECTRICAL 248
HARNESS AS-CAB 249
HARNESS AS-CHASSIS 250
HARNESS AS-CONSOLE 254
HARNESS AS-CONTROL 256
HARNESS AS-ENGINE 259
HARNESS AS-LIGHTING 262
HARNESS AS-MONITOR 263
HARNESS AS-PLATFORM 264
HARNESS AS-POWER 268
HARNESS AS-PUMP 268
HARNESS AS-RADIO 269
HARNESS AS-SWITCH 269
HARNESS AS-TRANSMISSION 270
HARNESS AS-WIRING 271
HEATER GP-FUEL 272
HEATER GP-JACKET WATER 274

NAME PAGE

INSTALLATION AR-CAES 276
INSTALLATION GP-CAES 278
INSTALLATION GP-COMMUNICATION 280
KIT-REMOTE CONTROL 284
LAMP & MTG GP-COMMAND SIGNAL 286
LAMP GP-FLOOD 290
LAMP GP-WARNING BEACON 298
LIGHTING GP-FLOOD 299
LIGHTING GP-RIPPER 332
LIGHTING GP-WARNING BEACON 334
LINES GP-ALTERNATOR AIR 336
MOUNTING GP-GRADE CONTROL 337
MOUNTING GP-RECEIVER 346
MOUNTING GP-SENSOR 355
PANEL GP-FUSE 357
PLATE AS-BRUSH 359
RADIO GP-COMMUNICATION 360
SENSOR & MOUNTING GP 362
SENSOR GP-ENGINE 363
SENSOR GP-LIQUID LEVEL 367
SENSOR GP-POSITION 372
SENSOR GP-PRESSURE 375
SENSOR GP-SPEED 379
SENSOR GP-TEMPERATURE 382
STARTING AID GP-ETHER 387
STARTING AR-COLD WEATHER 389
STARTING MOTOR GP-ELECTRIC 392
SWITCH AS-TOGGLE 399
SWITCH GP-FLOW 400
SWITCH GP-MAGNETIC 401
SWITCH GP-POSITION 403
SWITCH GP-PRESSURE 404
SWITCH GP-PUSH BUTTON 406
SWITCH GP-ROTARY 407
SWITCH GP-START 408
SWITCH GP-WIPER 409
VALVE GP-ETHER STARTING 410
WIRING GP-CAB 411
WIRING GP-CAMERA 414
WIRING GP-CHASSIS 417
WIRING GP-COMMUNICATION 419
WIRING GP-ELECTRONIC CONTROL 431
WIRING GP-ENGINE 435
WIRING GP-LADDER 447
WIRING GP-LIGHTING 452
WIRING GP-PLATFORM 454
WIRING GP-RECEIVER 479
WIRING GP-REMOTE CONTROL 484
WIRING GP-SERVICE CENTER 495
WIRING GP-SHUTDOWN 499
WIRING GP-VALVE 501

POWER TRAIN 505

TABLE OF CONTENTS

NAME	PAGE
AXLE GP	505
CASE & PARTS GP-PLANETARY	506
CONTROL GP-TRANSMISSION HYD	508
COOLER GP-TRANSMISSION OIL	511
COUPLING GP-PUMP	512
DRAIN GP-ECOLOGY	513
DRIVE AR-FINAL	514
DRIVE GP-FINAL	518
FILLER GP-POWER TRAIN OIL	530
FILTER GP-OIL	532
GEAR GP-BEVEL & TRANSFER	536
LINES GP-POWER TRAIN OIL	538
LINES GP-TRANSMISSION OIL	542
MANIFOLD GP-CONTROL	545
MOUNTING GP-FINAL DRIVE	547
MOUNTING GP-TRANSMISSION	549
PLANETARY GP-TRANSMISSION	550
POWER TRAIN AR	556
PUMP & MTG GP-POWER TRAIN	557
PUMP GP-GEAR	559
SEGMENT GP-SPROCKET	564
SHAFT GP-DRIVE	566
SLIP JOINT GP	567
TORQUE CONVERTER & HOUSING GP	568
TORQUE CONVERTER GP	570
TRANSMISSION AR	584
UNIVERSAL JOINT GP	585
VALVE GP-FLOW CONTROL	586
VALVE GP-RELIEF	587
VALVE GP-SOLENOID	589
FRAME AND BODY	591
BAR GP-STRIKER	591
CASE & FRAME GP	594
COUNTERWEIGHT AR	596
COUNTERWEIGHT GP	597
COVER GP-HOOD	601
COVER GP-PROTECTION	603
DOOR GP-ACCESS	605
DOOR GP-HOOD	607
DRAWBAR GP	621
ENCLOSURE GP-ENGINE	624
FENDER GP	625
FLOORPLATE GP	631
GRILL GP-RADIATOR	633
GUARD GP-BOTTOM	634
GUARD GP-BRUSH	647
GUARD GP-DRIVE SHAFT	648
GUARD GP-ENGINE	649
GUARD GP-LINES	661
GUARD GP-POWER TRAIN	663
GUARD GP-RADIATOR	664
GUARD GP-ROCK	667
GUARDRAIL GP	669
HANDRAIL GP	678
HOOD & GUARD GP	679
INSULATION GP-HEAT	683
KIT-RETROFIT	684
LADDER AR	687
LADDER GP	689
LATCH GP	692
LATCH GP-SWINGOUT LADDER	693
LINES GP-AUTOMATIC LUBRICATION	695
LUBRICATION AR-AUTOMATIC	707
PUMP GP-LUBRICATION	709
SCREEN GP-PROTECTION	712
SEAL GP-ENCLOSURE	713
STEP GP	717
VALVE GP-DRAIN	721
VALVE GP-LUBE DISTRIBUTION	722
UNDERCARRIAGE	733
BAR GP-EQUALIZER	733
CAP GP-TRACK IDLER	734
CAP GP-TRACK ROLLER	736
FRAME GP-TELESCOPING RECOIL	737
GUARD GP-IDLER	749
IDLER GP	750
IDLER GP-TRACK	753
LINK AS-TRACK	759
LUBRICATION GP-EQUALIZER BAR	765
LUBRICATION GP-PIVOT SHAFT	768
MOUNTING GP-ROLLER FRAME	770
ROLLER GP-TRACK CARRIER	774
ROLLER GP-TRACK-DOUBLE FLANGE	776
ROLLER GP-TRACK-SINGLE FLANGE	778
SHOE-TRACK	781
SHOE-TRACK MASTER	784
SUSPENSION GP-BOGIE	787
TRACK ADJUSTER & RECOIL GP	797
TRACK AR	801
TRACK GP	822
UNDERCARRIAGE AR	845
STEERING AND BRAKING SYSTEM	853
CLUTCH & BRAKE GP-STEERING	853
CONTROL GP-STEERING	855
CONTROL GP-STEERING & XMSN	856
GEAR GP-STEERING	863
PUMP GP-PISTON	865
VALVE & MTG GP-STEER & BRAKE	867
VALVE GP-SOLENOID	868
HYDRAULIC SYSTEM	869
ACCUMULATOR GP-HYDRAULIC	869
ACCUMULATOR GP-PILOT OIL	873

TABLE OF CONTENTS

NAME PAGE

ACTUATOR GP-PUMP 874
CONTROL AR-HYDRAULIC 875
COOLER GP-HYDRAULIC OIL 877
CYLINDER & LINES GP-LIFT 878
CYLINDER GP-BULLDOZER LIFT 889
CYLINDER GP-DUAL TILT 893
CYLINDER GP-RIPPER 897
CYLINDER GP-RIPPER PIN PULLER 903
FILTER GP-OIL 905
HEAD GP-PUMP 906
HYDRAULIC AR 908
LINES GP-HYDRAULIC 911
LINES GP-HYDRAULIC FAN 915
LINES GP-LIFT CYLINDER 920
LINES GP-PILOT 927
LINES GP-PIN PULLER CYLINDER 930
LINES GP-PUMP 934
LINES GP-RIPPER 938
LINES GP-TILT CYLINDER 942
MANIFOLD GP-CONTROL 959
MANIFOLD GP-VALVE 960
MOTOR & MTG GP-HYDRAULIC FAN 962
MOTOR GP-PISTON 963
MOUNTING GP-CYLINDER 965
PUMP & MOUNTING GP 966
PUMP GP-CHARGE 968
PUMP GP-ELECTRIC DRIVE 969
PUMP GP-GEAR 970
PUMP GP-PISTON 971
ROTATING GP-MOTOR 977
ROTATING GP-PUMP 978
TANK & FILTER GP-HYDRAULIC 979
TANK & MTG GP-HYDRAULIC 982
TANK GP-EXPANSION 983
VALVE & LINES GP-HYD CONTROL 985
VALVE & MTG GP-CONTROL 991
VALVE GP-BANK 5 992
VALVE GP-BANK 6 994
VALVE GP-BREAKER RELIEF 996
VALVE GP-BYPASS 997
VALVE GP-CONTROL 998
VALVE GP-PUMP CONTROL 1007
VALVE GP-RELIEF 1009
VALVE GP-SHUTTLE 1012
VALVE GP-SOLENOID 1013

IMPLEMENTS 1015
BRACE GP-BULLDOZER 1015
COVER GP-TRUNNION 1016
INSTALLATION AR-BULLDOZER 1017
LINES GP-GREASE 1025
LINK GP-STABILIZER 1031
PUSH ARM GP 1032
PUSH ARM GP-STABILIZER 1038
TRUNNION GP-BULLDOZER 1040

OPERATOR STATION 1041
ADJUSTER GP-CONTROL 1041
AIR CONDITIONER & MOUNTING GP 1044
AIR CONDITIONER AR 1046
ARMREST GP 1047
BOX GP-STORAGE 1048
BRACKET GP-MOUNTING 1050
CAB AR 1051
CAB GP-ENCLOSED ROPS 1052
CAMERA & MIRROR AR 1055
COMPRESSOR GP-REFRIGERANT 1056
CONDENSER & MTG GP-REFRIGERANT 1057
CONDENSER GP-REFRIGERANT 1058
CONSOLE GP-OPERATOR 1060
CONTROL & MTG GP-JOYSTICK 1066
CONTROL & MTG GP-PEDAL 1074
CONTROL GP-HANDLE 1075
CONTROL GP-JOYSTICK 1079
CONTROL GP-OPERATOR 1083
CONTROL GP-PEDAL 1084
CONTROL GP-RIPPER 1085
COVER GP-CAB 1087
DETENT GP 1089
DOOR GP-CAB 1090
FILTER GP-CAB AIR 1094
HEATER & AIR CONDITIONER GP 1097
INSTALLATION GP-RADIO 1100
KIT-CUSHION 1102
KIT-HANDLE 1103
KIT-RADIO 1104
KIT-RETROFIT 1106
KIT-SEAT AIR COMPRESSOR 1107
KIT-SEAT CUSHION 1109
KIT-SHOCK ABSORBER 1112
LINER GP-CAB 1114
LINES GP-AIR CONDITIONER 1116
LINES GP-HEATER 1123
MIRROR AR-REAR VIEW 1125
MIRROR GP-REAR VIEW 1126
MODULE GP-DISPLAY 1129
MOTOR GP-BLOWER 1131
MOTOR GP-WINDOW WIPER 1132
MOUNTING GP-CAB 1134
MOUNTING GP-CONDENSER 1136
MOUNTING GP-PLATFORM 1139
MOUNTING GP-ROPS 1146
PAN GP-BACKREST 1147
PANEL GP-CONTROL 1148
PEDAL GP-GOVERNOR & BRAKE 1149
PLATFORM AR 1151

TABLE OF CONTENTS

NAME	PAGE
PLATFORM GP-OPERATOR	1158
ROPS GP	1161
SCREEN GP-PROTECTION	1162
SCREEN GP-SUN	1163
SEAT & MOUNTING GP	1164
SEAT BELT GP	1172
SEAT GP	1173
SEAT GP-SUSPENSION	1193
SUPPORT GP-CONTROL	1208
SUPPORT GP-HYDRAULIC CONTROL	1214
SUPPORT GP-STEERING CONTROL	1216
SUSPENSION GP-SEAT	1218
TANK GP-WINDOW WASHER	1227
VALVE GP-WATER	1230
WASHER GP-WINDOW	1231
WINDOW GP-CAB	1233
WIPER GP-WINDOW	1238
WORK TOOLS	1241
BIT GP-END	1241
BLADE & EDGE GP-SEMI-UNIVERSAL	1243
BLADE & EDGE GP-UNIVERSAL	1249
BLADE AS-SEMI-UNIVERSAL	1257
BLADE AS-UNIVERSAL	1260
BLADE GP-UNIVERSAL	1265
EDGE GP-BIT & CUTTING	1269
EDGE GP-CUTTING	1271
EDGE-CUTTING	1276
FRAME GP-RIPPER	1279
MOUNTING GP-RIPPER	1283
PLATE GP-WEAR	1287
PROTECTOR GP-SHANK	1288
PULLER AR-PIN	1289
PULLER GP-PIN	1290
RIPPER AR-MULTISHANK	1293
RIPPER AR-SINGLE SHANK	1296
SHANK AS-RIPPER	1299
TIP GP-RIPPER	1303
TIP-RIPPER	1304
TOOTH GP-RIPPER	1305
SERVICE EQUIPMENT AND SUPPLIES	1314
FILM GP	1314
FILM GP-INTERNATIONAL	1320
PLATE & FILM GP	1321
PLATE GP-CERTIFICATION	1325
PROTECTION GP-VANDALISM	1326
TOOL GP-ADJUSTER	1327
PART NUMBER INDEX	B1

1. MACHINE IDENTIFICATION

Cat machines are identified by Product Identification Numbers (PIN). Some components included in a machine may be identified by Serial Numbers (S/N). Typical components that will be serialized include engines, transmissions, bulldozers, and rippers. The machine and engine are further identified by arrangement numbers and in some cases modification numbers. These numbers are shown on the product identification plate(s) and on the master plate in the operator's compartment.

Cat dealers need all of these numbers to determine accurate parts identification.

Effective First Quarter 2001 the Cat Product Identification Number (PIN) changed from 8 to 17 characters. In an effort to provide uniform equipment identification, Caterpillar and other construction equipment manufacturers are moving to comply with the latest version of the product identification numbering standard. Non-road machine PINs are defined by ISO 10261. The new PIN format will apply to all Cat machines and generator sets. The PIN plates and frame marking will display the 17 character PIN. The new format will look like the following:

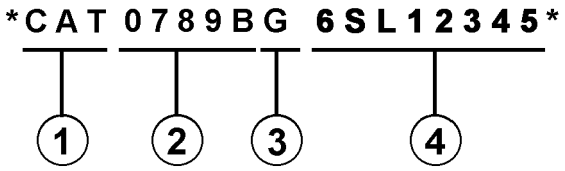

Where:

1. Caterpillar's World Manufacturing Code (characters 1-3)

2. Machine Descriptor (characters 4-8)

3. Check Character (character 9)

4. Machine Indicator Section (MIS) or Product Sequence Number (characters 10-17). These were previously referred to as the Serial Number.

Machines and generator sets produced before First Quarter 2001 will maintain their 8 character PIN format.

Components such as engines, transmissions, axles, etc. and work tools will continue to use an 8 character Serial Number (S/N).

2. ORDERING PARTS

⚠ WARNING

When replacement parts are required for this product Caterpillar recommends using Caterpillar replacement parts or parts with equivalent specifications including, but not limited to, physical dimensions, type, strength and material.

Failure to heed this warning can lead to premature failures, product damage, personal injury or death.

Quality Cat replacement parts are available from Cat dealers throughout the world. Their parts inventories are up to date and include all parts normally required to protect your investment in Cat machines. Dealers may offer repair kits or remanufactured parts to allow selection of the most effective repair alternative for a particular situation. When ordering parts, your order should specify the quantity, part number, part name, and the serial number/product identification number of the machine for which the parts are needed.

3. PARTS MANUAL ORGANIZATION

Product information in this manual is presented as "information elements" that represent all of the components for the specific model. Engine Arrangement and Seat Group are examples of information elements. The information elements are organized alphabetically by part name and secondarily by part number within each major section of the manual.

4. TABLE OF CONTENTS

A table of contents (TOC) is found at the beginning of the manual. The TOC lists each section of the manual with a complete list of all information elements organized as they appear in the manual. Page numbers are provided for quick reference to detailed parts identification illustrations and serviceable consist lists.

5. MAINTENANCE PARTS INDEX

The Maintenance Parts Index, located near the beginning of the manual, references most frequently used maintenance part numbers, providing description, quantity, usage and page number. This information is organized alphabetically by part description.

6. INDEX

The index located near the front of the manual is an alphabetical listing of all information elements included in the manual. Page numbers are provided for quick reference to detailed parts identification illustrations and serviceable consist lists.

7. PART NUMBER INDEX

A numerical index listing all part numbers and the corresponding page number(s) appears at the back of the manual.

8. CAPTIONS

Captions located at the beginning of each information element identify the part number and part name along with additional descriptive information. PIN and S/N information found in each caption should be used to select correct information for a specific machine. Field replacement options, identification of optional attachment components, and where used ("part of") information is also provided.

The first line of a caption is shown in larger type font to indicate the beginning of an information element. Captions for additional pages that may be required to illustrate an information element will be shown in standard type font and will include the term (contd.).

9. NON-SERVICED PARTS

In some instances it is necessary to display non-serviced parts that are a link to a lower level serviceable consist lists. These non-serviced part numbers are shown in italic type indicating that they are not available.

10. PARTS LIST REFERENCE NUMBERS

Numbers shown in the Ref No column correspond to numbers used in the associated graphic(s). An alphabetic suffix may be added to a reference number to identify lower level consist items. Numbers shown in the Graphic Ref column refer to the graphic number identifier displayed in the lower left corner of each illustration. The Graphic Ref number may be used in combination with the item Ref No to determine the correct part number. There may be intentional omission of a Ref No in a consist list as information is updated to reflect the latest serviceable part numbers.

11. INDENTED PART NAMES

When a part name is indented in a parts list, it is part of (included in) the group or assembly under which it is indented.

12. ILLUSTRATION REFERENCE LETTERS

When necessary, illustrations contain reference letters (A, B, C etc.) that are intended to track lines and harnesses from one point to another. They are also used to show where to reconnect illustrations that have been separated.

13. ABBREVIATIONS AND SYMBOLS

O.D. – Outside Diameter
I.D. – Inside Diameter
A – Not Part Of This Group
B – Use As Required
C – Change From Previous Type
D – Order By The Meter
E – Order By The Centimeter
F – Not Shown
G – Order By The Inch
I – Refer To Hydraulic Information System
M – Metric Part
R – Remfg Part May Be Available
Y – Separate Illustration
Z – Not Serviced Separately

14. DESCRIPTION OF TYPE CHANGES

Type - A type is defined as any configuration change that requires an additional Information Element for an Arrangement, Group, or Assembly. If serial number breaks for types are not available, a type # (Type 1, Type 2, etc.) will be displayed in the caption. These "type" changes are identified with a "C" note (change from previous type) in the Parts List. Only the "types" that apply to this Parts Manual will be included. Additional types may exist causing "C" notes to appear on an Information Element when no other types are shown.

15.<END>

This symbol indicates the end of an information element.

NOTE:

Continuing improvement and advancement of product design may cause changes to your machine which may not be included in this publication. Whenever a question arises regarding your Cat product or this publication, please consult your Cat dealer for the latest available information.

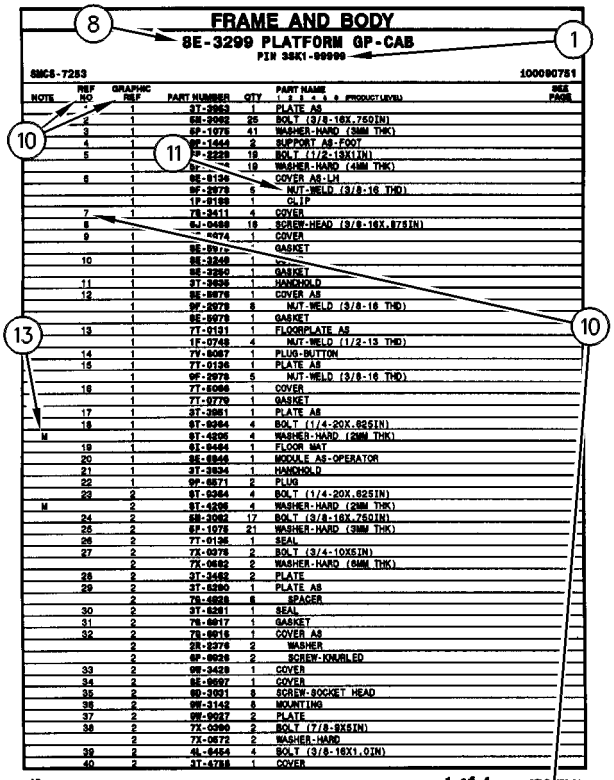

FRAME AND BODY

8E-3299 PLATFORM GP-CAB

PIN 3SK1-99999

SMCS-7283 100090751

NOTE	REF NO	GRAPHIC REF	PART NUMBER	QTY	PART NAME 1 2 3 4 5 6 (PRODUCT LEVEL)	SEE PAGE
	1	1	3T-3963	1	PLATE AS	
	2	1	6M-3982	25	BOLT (3/8-16X.75DIN)	
	3	1	5P-1078	41	WASHER-HARD (3MM THK)	
	4	1	9F-1444	2	SUPPORT AS-FOOT	
	5	1	7P-2229	19	BOLT (1/2-13X1IN)	
		1	5P-[illegible]	19	WASHER-HARD (4MM THK)	
	6	1	8E-8136	1	COVER AS-LH	
		1	9F-2979	6	NUT-WELD (3/8-16 THD)	
		1	1F-8188	1	CLIP	
	7	1	7S-3411	4	COVER	
	8		5J-0488	19	SCREW-HEAD (3/8-16X.875IN)	
	9	1	[illegible]-4974	1	COVER	
		1	8E-8976	1	GASKET	
	10	1	8E-3249	1	[illegible]	
		1	8E-3250	1	GASKET	
	11	1	3T-3935	1	HANDHOLD	
	12	1	8E-8978	1	COVER AS	
		1	9F-2979	8	NUT-WELD (3/8-16 THD)	
		1	8E-8979	1	GASKET	
	13	1	7T-0131	1	FLOORPLATE AS	
		1	1F-0748	4	NUT-WELD (1/2-13 THD)	
	14	1	7V-8067	1	PLUG-BUTTON	
	15	1	7T-0136	1	PLATE AS	
		1	9F-2979	5	NUT-WELD (3/8-16 THD)	
	16	1	7T-8066	1	COVER	
		1	7T-0779	1	GASKET	
	17	1	3T-3961	1	PLATE AS	
	18	1	6T-9364	4	BOLT (1/4-20X.625IN)	
M		1	6T-4236	4	WASHER-HARD (2MM THK)	
	19	1	6I-9494	1	FLOOR MAT	
	20	1	8E-8946	1	MODULE AS-OPERATOR	
	21	1	3T-3934	1	HANDHOLD	
	22	1	9F-8571	2	PLUG	
	23	2	6T-9364	4	BOLT (1/4-20X.625IN)	
M		2	6T-4236	4	WASHER-HARD (2MM THK)	
	24	2	6M-3982	17	BOLT (3/8-16X.75DIN)	
	25	2	5P-1078	21	WASHER-HARD (3MM THK)	
	26	2	7T-0136	1	SEAL	
	27	2	7X-0378	2	BOLT (3/4-10X5IN)	
		2	7X-0682	2	WASHER-HARD (6MM THK)	
	28	2	3T-3462	2	PLATE	
	29	2	3T-8280	1	PLATE AS	
		2	7S-4828	6	SPACER	
	30	2	3T-8281	1	SEAL	
	31	2	7S-8817	1	GASKET	
	32	2	7S-8816	1	COVER AS	
		2	2S-2376	2	WASHER	
		2	9F-8628	2	SCREW-KNURLED	
	33	2	9W-3429	1	COVER	
	34	2	8E-8697	1	COVER	
	35	2	9D-3931	8	SCREW-SOCKET HEAD	
	36	2	9W-3142	8	MOUNTING	
	37	2	9W-9927	2	PLATE	
	38	2	7X-0290	2	BOLT (7/8-9X5IN)	
		2	7X-0572	2	WASHER-HARD	
	39	2	4L-6454	4	BOLT (3/8-16X1.0IN)	
	40	2	3T-4788	1	COVER	

12 FRAME AND BODY 1 of 4 SELP[illegible]70-01

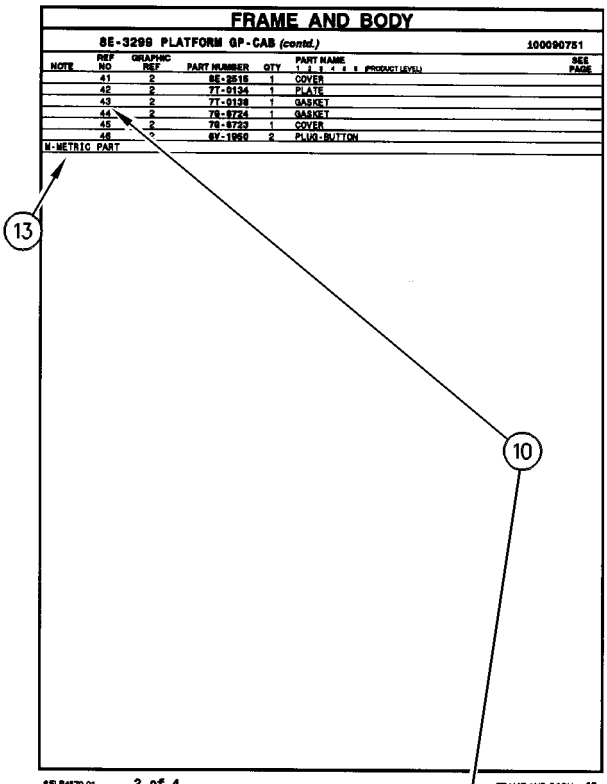

FRAME AND BODY

8E-3299 PLATFORM GP-CAB (contd.) 100090751

NOTE	REF NO	GRAPHIC REF	PART NUMBER	QTY	PART NAME 1 2 3 4 5 6 (PRODUCT LEVEL)	SEE PAGE
	41	2	8E-2516	1	COVER	
	42	2	7T-0134	1	PLATE	
	43	2	7T-0138	1	GASKET	
	44	2	7S-8724	1	GASKET	
	45	2	7S-8723	1	COVER	
	46	2	6V-1960	2	PLUG-BUTTON	

M-METRIC PART

SELP4570-01 2 of 4 FRAME AND BODY 13

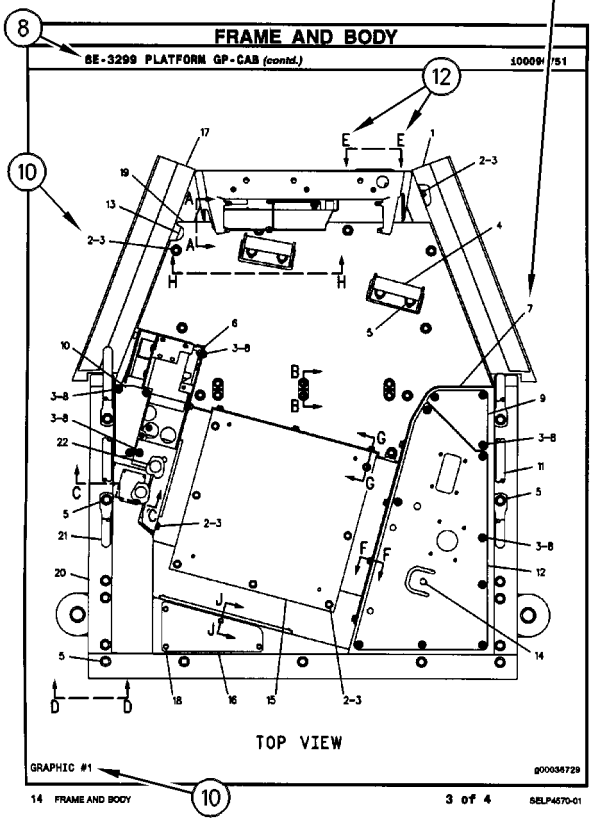

FRAME AND BODY

8E-3299 PLATFORM GP-CAB (contd.) 100090751

TOP VIEW

GRAPHIC #1 g00036729

14 FRAME AND BODY 3 of 4 SELP4570-01

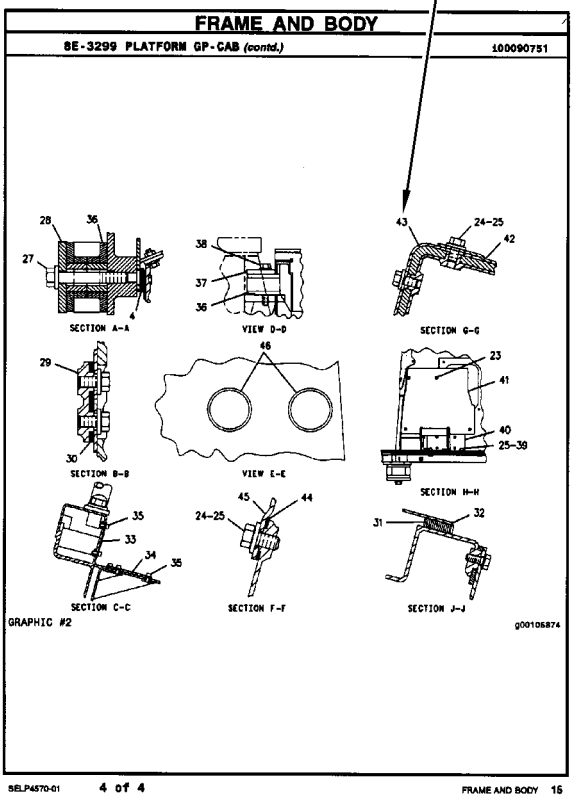

FRAME AND BODY

8E-3299 PLATFORM GP-CAB (contd.) 100090751

SECTION A-A

VIEW D-D

SECTION G-G

SECTION B-B

VIEW E-E

SECTION H-H

SECTION C-C

SECTION F-F

SECTION J-J

GRAPHIC #2 g00105874

SELP4570-01 4 of 4 FRAME AND BODY 15

REMANUFACTURED COMPONENTS

As an option when making repairs consider Cat Remanufactured Components. Components that are available through the Cat Remanufactured Program are identified three ways in the parts book:

- with the letter R in the note field of the parts list
- with an R* at the beginning of the first line of the caption
- with an *R at the end of the first line of the caption

Typical components included in the Remanufacturing Program include:

ALTERNATORS
CONNECTING RODS
CRANKSHAFTS - UNDERSIZE
CRANKSHAFTS - UPGRADE TO NEW
CYLINDER HEADS
ELECTRONIC CONTROL MODULES (ECM)
ELECTRONIC SENSORS
FUEL INJECTORS
FUEL NOZZLES
FUEL PUMPS
GOVERNORS
OIL PUMPS
PISTONS
SHORT BLOCKS
STARTERS
TURBOCHARGERS - COMPLETE
TURBOCHARGER CARTRIDGES
WATER PUMPS

Cat Remanufactured engines for many engine arrangements are also available.

SUPPLEMENTAL COOLANT ADDITIVES

CUSTOMER BENEFITS:

Protects against cavitation, foam, erosion, corrosion, and scale buildup in cooling systems.

- Provides measured coolant conditioner.

DESCRIPTION:

Additives deplete from the coolant with normal operation. For this reason, Supplemental Coolant Additives (SCA) must be added to all heavy duty coolants at regular intervals. In addition, when not using a fully formulated, pre-charged antifreeze, like Cat DEAC, an initial charge of SCA must be added to the cooling system. The amount of SCA added to the system is dependent on the capacity of the system.

The SCA for initial fill is provided as a liquid. SCA's for maintenance intervals are available in liquid form and as a spin-on element. (No Spin-on available for 3600 Family of Engines)

NOTE:

The amount of SCA added at initial fill is not the same as the amount added at maintenance intervals.

The coolant additive elements can be used with any ethylene or propylene glycol type antifreeze which meets ASTM D4985 or ASTM D5345 Specifications.

NOTE:

For use with standard heavy duty coolant only, not for use with Extended Life Coolant.

PARTS NEEDED:

Cooling System Capacity		Liquid SCA at Initial Fill	Liquid SCA at Maintenance*	Spin-on SCA Maintenance Element*
Liters	Gallons			
22-30	(6-8)	3P-2044 (1)	6V-3542 (1)	111-2370 (1)
30-38	(8-10)	3P-2044 (1) 6V-3542 (1)	111-2372 (1)	111-2369 (1)
38-49	(10-13)	3P-2044 (1) 8T-1589 (1)	111-2372 (1)	111-2369 (1)
49-64	(13-17)	3P-2044 (2)	8T-1589 (1)	9N-3368 (1)
64-83	(17-22)	3P-2044 (2) 8T-1589 (1)	111-2372 (1) 6V-3542 (1)	111-2371 (1)
83-114	(22-30)	3P-2044 (3) 8T-1589 (1)	3P-2044 (1)	9N-3718 (1)
114-163	(30-43)	3P-2044 (5)	3P-2044 (1) 6V-3542 (1)	111-2371 (2)
163-242	(43-64)	3P-2044 (8)	3P-2044 (2)	9N-3718 (2)

* Normal maintenance period is 250 hrs. See your Operation and Maintenance Manual for complete coolant maintenance instructions.

( ) Indicates quantity required.

MAINTENANCE PARTS

DESCRIPTION	PART NUMBER	QTY	WHERE USED	PAGE
AIR INLET AND EXHAUST SYSTEM				
FILTER ELEMENT AS-AIR (PRIMARY)	122-1675	1	AIR CLEANER GP	134
	6I-2505	1	AIR CLEANER GP	134
		1	AIR CLEANER GP	135
FILTER ELEMENT AS-AIR (SECONDARY)	6I-2506	1	AIR CLEANER GP	134
		1	AIR CLEANER GP	135
SCREEN (AIR CLEANER)	350-5811	2	PRECLEANER AS	148
BASIC ENGINE				
BELT-SERPENTINE	357-2890	1	DRIVE GP-ACCESSORY	41
BREATHER AS (CRANKCASE)	4W-3027	2	COVER GP-VALVE MECHANISM	23
		2	COVER GP-VALVE MECHANISM	24
		2	COVER GP-VALVE MECHANISM	25
PLUG-DRAIN	109-5839	1	PAN GP-OIL	59
SEAL (VALVE COVER BASE)	222-6456	1	BASE GP-VALVE COVER & INJ HARN	13
SEAL-INTEGRAL	239-5571	1	COVER GP-ENGINE	15
	239-5572	1	COVER GP-ENGINE	15
COOLING SYSTEM				
CAP AS-RADIATOR	294-3342	1	TANK GP-COOLANT	129
		1	TANK GP-COOLANT	130
REGULATOR-WATER TEMPERATURE (92-DEG C)	367-7900	2	LINES GP-WATER	112
SEAL-LIP TYPE	3S-9643	2	LINES GP-WATER	112
ELECTRICAL AND STARTING SYSTEM				
BATTERY (RECHARGEABLE)	430-9016	2	KIT-REMOTE CONTROL	284
		2	KIT-REMOTE CONTROL	285
BATTERY GP (RECHARGEABLE, 24-VOLT)	167-8984	1	INSTALLATION GP-CAES	278
CAP AS	180-9900	1	WIRING GP-REMOTE CONTROL	484
	330-2152	1	MOUNTING GP-GRADE CONTROL	337
		2	WIRING GP-PLATFORM	454
		2	WIRING GP-PLATFORM	463
	440-0535	3	WIRING GP-REMOTE CONTROL	487
CAP AS-CONNECTOR	363-9053	1	HARNESS AS-RADIO	269
		1	MOUNTING GP-GRADE CONTROL	343
CAP AS-FILLER (7/8-9-THD)	123-1373	6	STARTING AR-COLD WEATHER	389
CAP AS-FILLER (7/8-9-THD) (NEGATIVE)	123-1373	6	BATTERY & WIRING GP	199
		6	BATTERY & WIRING GP	209
		6	BATTERY & WIRING GP	219
CAP AS-FILLER (M18X2-MM) (POSITIVE)	461-5232	6	BATTERY & WIRING GP	199
		6	BATTERY & WIRING GP	209
		6	BATTERY & WIRING GP	219
CIRCUIT BREAKER AS (15-AMPERE, MANUAL RESET)	280-2709	6	PANEL GP-FUSE	357
CIRCUIT BREAKER AS (20-AMPERE, MANUAL RESET)	280-2710	2	PANEL GP-FUSE	357

MAINTENANCE PARTS

DESCRIPTION	PART NUMBER	QTY	WHERE USED	PAGE
FILTER (ETHER START)	358-4889	1	VALVE GP-ETHER STARTING	410
FUSE (10-AMPERE)	113-8490	10	PANEL GP-FUSE	357
	3K-8782	1	WIRING GP-REMOTE CONTROL	486
FUSE (15-AMPERE)	113-8491	23	PANEL GP-FUSE	357
		1	PANEL GP-FUSE	358
	9W-1441	1	WIRING GP-REMOTE CONTROL	484
FUSE (20-AMPERE)	113-8492	3	PANEL GP-FUSE	357
KEY	430-9022	3	KIT-REMOTE CONTROL	284
KEY (ACCESS)	430-9022	3	KIT-REMOTE CONTROL	285
LAMP (24-VOLT, 21-WATT)	9X-4493	1	WIRING GP-CAB	411
LAMP (24-VOLT, HID)	290-8160	1	LAMP GP-FLOOD	294
		1	LAMP GP-FLOOD	295
LAMP AS (24-VOLT)	250-8335	2	WIRING GP-CAB	411
LAMP AS (24-VOLT) (REAR)	454-6614	1	WIRING GP-PLATFORM	457
		1	WIRING GP-PLATFORM	464
		1	WIRING GP-PLATFORM	473
LAMP AS-DOME	226-2811	1	WIRING GP-CAB	411
LAMP-HALOGEN (24-VOLT, 70-WATT)	351-9918	1	LAMP GP-FLOOD	290
		1	LAMP GP-FLOOD	291
		1	LAMP GP-FLOOD	292
		1	LAMP GP-FLOOD	293
SCREEN (ALTERNATOR COOLING)	226-4909	1	LINES GP-ALTERNATOR AIR	336
FRAME AND BODY				
PLUG-DRAIN	6N-9590	1	VALVE GP-DRAIN	721
PLUG-DRAIN (DRAIN) (CASE, FRAME)	106-8187	1	CASE & FRAME GP	594
		1	CASE & FRAME GP	595
FUEL SYSTEM				
CAP AS-FUEL (LOCKABLE, VENTED)	349-7059	1	TANK GP-FUEL	190
		1	TANK GP-FUEL	191
FILTER AS-WATER SEP & FUEL (ADVANCED EFFICIENCY)	438-5385	1	FILTER GP-WATER SEP & FUEL	167
FILTER-FUEL (ADVANCED EFFICIENCY)	1R-0755	2	BASE GP-FUEL FILTER	164
SCREEN-SUMP (FUEL TANK)	5G-4109	1	LINES GP-FUEL	171
STRAINER-FUEL (FUEL TANK)	9P-7121	1	TANK GP-FUEL	190
		1	TANK GP-FUEL	191
HYDRAULIC SYSTEM				
CAP-FILLER (HYDRAULIC TANK)	7H-1447	1	TANK & FILTER GP-HYDRAULIC	980
FILTER ELEMENT AS-OIL (ULTRA HIGH EFFICIENCY)	139-1537	1	TANK & FILTER GP-HYDRAULIC	979
FILTER-OIL (ULTRA HIGH EFFICIENCY)	126-1818	1	FILTER GP-OIL	905
SCREEN	118-8693	1	TANK & FILTER GP-HYDRAULIC	979
SCREEN AS (HYDRAULIC TANK)	380-8484	1	TANK & FILTER GP-HYDRAULIC	979
	9T-7571	1	TANK & FILTER GP-HYDRAULIC	979
STRAINER AS-OIL (HYDRAULIC)	5D-7927	1	TANK & FILTER GP-HYDRAULIC	979

MAINTENANCE PARTS

DESCRIPTION	PART NUMBER	QTY	WHERE USED	PAGE
LUBRICATION SYSTEM				
CAP-OIL FILLER (ENGINE)	324-9751	1	FILLER GP-ENGINE OIL	76
FILTER-ENGINE OIL (ADVANCED EFFICIENCY)	1R-1808	2	FILTER GP-ENGINE OIL	77
SCREEN-STRAINER	4N-0913	1	LINES GP-ENGINE OIL	82
OPERATOR STATION				
BLADE AS-WIPER (330-MM) (DOOR, RH, LH)	128-5040	4	WIPER GP-WINDOW	1238
BLADE AS-WIPER (350-MM) (FRONT WINDOW)	6V-5849	1	WIPER GP-WINDOW	1238
BLADE AS-WIPER (558-MM) (REAR)	6W-3924	1	WIPER GP-WINDOW	1238
CAP-VENTED (WINDOW WASHER TANK)	322-4964	1	TANK GP-WINDOW WASHER	1227
DRYER AS-REFRIGERANT (IN-LINE)	320-0562	1	LINES GP-AIR CONDITIONER	1116
FILTER ELEMENT AS-AIR (PRIMARY)	231-0167	1	FILTER GP-CAB AIR	1094
FILTER ELEMENT-CAB AIR (PLATFORM)	346-8243	1	FILTER GP-CAB AIR	1095
FILTER ELEMENT-CAB AIR (ULTRA HIGH EFFICIENCY, CARBON)	326-7963	1	FILTER GP-CAB AIR	1094
FUSE (15-AMPERE) (THERMAL)	133-9012	1	HEATER & AIR CONDITIONER GP	1097
LAMP AS-LED (BACKLIGHT)	360-7923	1	PANEL GP-CONTROL	1148
SCREEN AS	216-8198	1	SCREEN GP-PROTECTION	1162
SEAL-INTEGRAL (1/2-IN)	327-0282	2	LINES GP-AIR CONDITIONER	1116
		4	LINES GP-AIR CONDITIONER	1118
		4	LINES GP-AIR CONDITIONER	1119
		4	LINES GP-AIR CONDITIONER	1121
SEAL-INTEGRAL (3/4-IN)	327-0283	4	LINES GP-AIR CONDITIONER	1116
POWER TRAIN				
BREATHER AS (TRANSMISSION)	9G-5127	2	FILLER GP-POWER TRAIN OIL	530
CAP AS-FILLER (POWER TRAIN OIL)	6N-2985	1	FILLER GP-POWER TRAIN OIL	530
FILTER ELEMENT-OIL	344-0004	1	FILTER GP-OIL	534
FILTER ELEMENT-OIL (POWER TRAIN)	344-0004	1	FILTER GP-OIL	532
FILTER-OIL (ULTRA HIGH EFFICIENCY)	126-1815	1	LINES GP-TRANSMISSION OIL	542
GASKET-COVER	8P-0058	1	CASE & PARTS GP-PLANETARY	506
PLUG-MAGNETIC (FINAL DRIVE, OIL FILL)	6V-3298	1	DRIVE GP-FINAL	518
		1	DRIVE GP-FINAL	521
		1	DRIVE GP-FINAL	524
		1	DRIVE GP-FINAL	527
SCREEN AS-SUCTION	9P-9555	1	PUMP & MTG GP-POWER TRAIN	557
SCREEN-SUCTION	8S-9130	1	CASE & PARTS GP-PLANETARY	506
SCREEN-SUCTION (TORQUE CONVERTER SCAVENGE)	8S-9130	1	TORQUE CONVERTER & HOUSING GP	568
UNDERCARRIAGE				
BREATHER AS (PIVOT SHAFT OIL)	9G-5127	1	LUBRICATION GP-PIVOT SHAFT	768
CAP-OIL FILLER (PIVOT SHAFT)	221-0812	1	LUBRICATION GP-PIVOT SHAFT	768

MAINTENANCE PARTS

DESCRIPTION	PART NUMBER	QTY	WHERE USED	PAGE
PLUG	4T-2069	3	FRAME GP-TELESCOPING RECOIL	737
		3	FRAME GP-TELESCOPING RECOIL	739
PLUG (PIVOT SHAFT OIL DRAIN/FILL)	4T-2069	3	FRAME GP-TELESCOPING RECOIL	741
		3	FRAME GP-TELESCOPING RECOIL	743
		3	FRAME GP-TELESCOPING RECOIL	745
		3	FRAME GP-TELESCOPING RECOIL	747

INDEX

NAME PAGE

A

ACCUMULATOR GP 545
ACCUMULATOR GP-HYDRAULIC–CHARGED . . . 871
ACCUMULATOR GP-HYDRAULIC–UNCHARGED 869, 870, 872
ACCUMULATOR GP-PILOT OIL–CHARGED 873
ACCUMULATOR GP-REFRIGERANT 1116
ACTUATOR GP 689, 693
ACTUATOR GP-PUMP–HYDRAULIC FAN 874
ADAPTER GP-FAST FILL FUEL 158, 160, 161, 162
ADAPTER GP-SENSOR 194
ADJUSTER GP-CONTROL 1041
AFTERCOOLER GP-AIR 131
AIR CLEANER GP 133, 134, 135
AIR CONDITIONER & MOUNTING GP 1044
AIR CONDITIONER AR–FENDER MOUNTED CONDENSER 1046
AIR CONDITIONER AR–ROPS MOUNTED CONDENSER 1046
AIR CONDITIONER AR–UNDERHOOD 1046
ALARM GP 195
ALARM GP (BACKUP) 200, 210, 220
ALTERNATOR GP-CHARGING 196
APPLICATION GP-MONITOR–VIMS 198
ARM GP-WINDOW WIPER (FRONT) 1238
ARM GP-WINDOW WIPER (REAR) 1238
ARMREST GP–RH 1047
AXLE GP 505

B

BAR GP-EQUALIZER 733
BAR GP-STRIKER 593
BAR GP-STRIKER–LH 592
BAR GP-STRIKER–RH 591
BASE AS-OIL FILTER 74
BASE GP-FUEL FILTER 163, 164
BASE GP-VALVE COVER & INJ HARN 12, 13
BATTERY (RECHARGEABLE) 284, 285
BATTERY & WIRING GP 199, 209, 219
BATTERY GP (12-VOLT, MAINTENANCE FREE, WET) 199, 209, 219, 389
BATTERY GP (RECHARGEABLE, 24-VOLT) 278
BATTERY GP–RECHARGEABLE 228
BELT-SERPENTINE 41
BIT GP-END 1241, 1242
BLADE & EDGE GP-SEMI-UNIVERSAL 1243, 1244, 1246, 1247, 1248
BLADE & EDGE GP-SEMI-UNIVERSAL–BLACK 1245
BLADE & EDGE GP-UNIVERSAL 1249, 1250, 1253, 1254, 1255, 1256
BLADE & EDGE GP-UNIVERSAL–BLACK 1252
BLADE & EDGE GP-UNIVERSAL–WASTE HANDLING 1251
BLADE AS-SEMI-UNIVERSAL 1257, 1258, 1259
BLADE AS-UNIVERSAL 1260, 1263, 1264
BLADE AS-UNIVERSAL–WASTE HANDLING . . 1262
BLADE AS-WIPER (330-MM) (DOOR, RH, LH) 1238
BLADE AS-WIPER (350-MM) (FRONT WINDOW) 1238
BLADE AS-WIPER (558-MM) (REAR) 1238
BLADE GP-UNIVERSAL 1265, 1266, 1267, 1268
BLOCK GP-JUNCTION 229
BOX GP-STORAGE 1048, 1049
BRACE GP-BULLDOZER 1015
BRACKET GP-MOUNTING–CAB DOOR 1050
BREATHER AS (CRANKCASE) 23, 24, 25
BREATHER AS (PIVOT SHAFT OIL) 768
BREATHER AS (TRANSMISSION) 530

C

CAB AR 1051
CAB GP-ENCLOSED ROPS 1052
CAMERA & MIRROR AR 1055
CAMERA & MOUNTING GP 230, 232

INDEX

NAME PAGE

CAMERA GP. 230
CAMERA GP (115-DEG, COLOR) 232
CAMSHAFT GP 14
CAP AS 337
454
463
484
487
CAP AS-CONNECTOR. 269
343
CAP AS-FILLER (7/8-9-THD) 389
CAP AS-FILLER (7/8-9-THD) (NEGATIVE). 199
209
219
CAP AS-FILLER (M18X2-MM) (POSITIVE). 199
209
219
CAP AS-FILLER (POWER TRAIN OIL). 530
CAP AS-FUEL (LOCKABLE, VENTED) 190
191
CAP AS-RADIATOR 129
130
CAP GP-TRACK IDLER. 734
735
CAP GP-TRACK ROLLER. 736
CAP-FILLER (HYDRAULIC TANK) 980
CAP-OIL FILLER (ENGINE) 76
CAP-OIL FILLER (PIVOT SHAFT) 768
CAP-VENTED (WINDOW WASHER TANK) 1227
CASE & FRAME GP 594
595
CASE & PARTS GP-PLANETARY 506
CHASSIS AR. 1
CIRCUIT BREAKER AS (15-AMPERE, MANUAL RESET). 357
CIRCUIT BREAKER AS (20-AMPERE, MANUAL RESET). 357
CLUTCH & BRAKE GP-STEERING 853
COIL GP-SOLENOID (ACTUATOR) 874
COMMON AR 1
COMPRESSOR GP-REFRIGERANT. 1056
CONDENSER & MTG GP-REFRIGERANT. 1057
CONDENSER GP-REFRIGERANT–WITH FANS. 1058
CONFIGURATION-PREMIUM 95
CONNECTOR GP 768
CONSOLE GP-OPERATOR. 1060
CONSOLE GP-OPERATOR–LH 1062
1063
CONSOLE GP-OPERATOR–RH. 1061
1064
CONTROL & MTG GP-ELECTRONIC 234
CONTROL & MTG GP-ENGINE ELEK 235
237
CONTROL & MTG GP-JOYSTICK 1066
1067
CONTROL & MTG GP-JOYSTICK–BULLDOZER, RH 1070
1072

NAME PAGE

CONTROL & MTG GP-JOYSTICK–DUAL TILT 1068
1069
CONTROL & MTG GP-PEDAL–GOVERNOR, BRAKE 1074
CONTROL & MTG GP-POWER TRAIN 238
CONTROL AR-HYDRAULIC–PIN PULLER 875
CONTROL GP-ELECTRONIC (MONITOR) 473
CONTROL GP-ENGINE ELECTRONIC 239
CONTROL GP-HANDLE. 1077
1082
CONTROL GP-HANDLE (BULLDOZER) 1080
CONTROL GP-HANDLE–BULLDOZER. 1075
CONTROL GP-JOYSTICK 1081
CONTROL GP-JOYSTICK–BULLDOZER 1079
1080
1082
CONTROL GP-OPERATOR. 1083
CONTROL GP-PEDAL–GOVERNOR, BRAKE 1084
CONTROL GP-REMOTE 240
285
CONTROL GP-RIPPER 1085
CONTROL GP-STEERING. 855
CONTROL GP-STEERING & XMSN 856
858
861
CONTROL GP-TRANSMISSION HYD 508
CONTROL GP-UNPROGRAMMED 239
CONTROL GP-UNPROGRAMMED (ELECTRONIC) (DRIVE TRAIN). 454
463
470
CONTROL GP-UNPROGRAMMED (ELECTRONIC) (IMPLEMENT) 454
463
470
CONTROL GP-UNPROGRAMMED (IMPLEMENT) 417
484
CONTROL GP-UNPROGRAMMED (NETWORK MANAGER) 423
426
484
CONTROL GP-UNPROGRAMMED (VIMS) 198
CONTROL GP-UNPROGRAMMED–PRODUCT LINK 523. 241
242
COOLER GP-HYDRAULIC OIL 877
COOLER GP-TRANSMISSION OIL. 511
CORE AS. 100
CORE AS-AFTERCOOLER 131
CORE AS-CONDENSER 1057
CORE AS-OIL COOLER 877
CORE AS-OIL COOLER (ENGINE) (ENGINE) . . 106
CORE AS-RADIATOR. 122
CORE GP-OIL COOLER–TRANSMISSION 100
COUNTERWEIGHT AR 596
COUNTERWEIGHT GP 597
599
COUPLING GP-PUMP 512

INDEX

NAME PAGE

COVER GP-CAB 1087
COVER GP-ENGINE 15
COVER GP-FRONT HOUSING 16
COVER GP-FUEL FILTER BASE 165
COVER GP-HOOD 601
602
COVER GP-PROTECTION 603
COVER GP-REAR HOUSING. 17
COVER GP-SOUND SUPPRESSION 19
21
COVER GP-TRUNNION 1016
COVER GP-VALVE MECHANISM 23
24
25
CRANKSHAFT GP. 26
CYLINDER & LINES GP-LIFT 878
CYLINDER & LINES GP-LIFT–AUTO CARRY. . . 880
CYLINDER & LINES GP-LIFT–BLADE CONTROL 879
CYLINDER & LINES GP-LIFT–LH. 881
885
CYLINDER & LINES GP-LIFT–RH 883
887
CYLINDER BLOCK AS. 27
28
CYLINDER BLOCK GP 30
CYLINDER GP-BULLDOZER LIFT 889
891
CYLINDER GP-DUAL TILT–LH 893
CYLINDER GP-DUAL TILT–RH 895
CYLINDER GP-RIPPER PIN PULLER 903
CYLINDER GP-RIPPER–LIFT, LH. 897
CYLINDER GP-RIPPER–LIFT, RH 899
CYLINDER GP-RIPPER–TILT 901
CYLINDER HEAD AS. 33
CYLINDER HEAD GP. 35
37

D

DAMPER GP. 39
40
DETENT GP–STEERING 1089
DISTRIBUTION AR 2
DOOR GP-ACCESS 605
DOOR GP-CAB–LH 1092
DOOR GP-CAB–RH. 1090
DOOR GP-HOOD. 607
612
DOOR GP-HOOD–LH 608
610
613
617
618
619
DOOR GP-HOOD–RH. 609
611
614
615
616
620
DRAIN GP-ECOLOGY 513
DRAWBAR GP 621
622
DRIVE AR-FINAL 514
DRIVE AR-FINAL–COLD WEATHER 515
DRIVE AR-FINAL–MUD ENVIRONMENT. 516
DRIVE AR-FINAL–WASTE HANDLING 517
DRIVE GP-ACCESSORY 41
DRIVE GP-FAN 42
43
DRIVE GP-FINAL 518
DRIVE GP-FINAL–COLD WEATHER 521
DRIVE GP-FINAL–MUD ENVIRONMENT 527
DRIVE GP-FINAL–WASTE HANDLING 524
DRYER AS-REFRIGERANT (IN-LINE) 1116
DUST EJECTOR GP 136

E

EDGE GP-BIT & CUTTING–SEMI-UNIVERSAL BLADE. 1269
EDGE GP-BIT & CUTTING–UNIVERSAL BLADE. 1270
EDGE GP-CUTTING 1271
1272
1273
1274
1275
EDGE-CUTTING 1276
1277
1278
ELBOW GP-AIR INLET 137
ELECTRICAL AR 243
ELECTRONICS AR-MACHINE 243
ELECTRONICS GP-COMMUNICATION–PLE601 NETWORK MANAGER. 244
ELECTRONICS GP-IMPLEMENT. 245
ELECTRONICS GP-MACHINE 245
ELECTRONICS GP-MACHINE–REMOTE CONTROL 245
ELECTRONICS GP-MONITOR 246
247
ELECTRONICS GP-MONITOR–ADVISOR 245
ELECTRONICS GP-MONITOR–INDICATOR PANEL. 245
ELECTRONICS GP-MONITOR–PL321VSR 246
ELECTRONICS GP-MONITOR–PRODUCT LINK 523. 246
ELECTRONICS GP-MONITOR–VIMS 3G, PRODUCT LINK. 246
ELECTRONICS GP-POWER TRAIN. 247
ENCLOSURE GP-ELECTRICAL. 248
ENCLOSURE GP-ENGINE 624
ENCLOSURE GP-ENGINE–HIGH DEBRIS 624

NAME PAGE

ENCLOSURE GP-ENGINE–SOUND SUPPRESSION. 624
ENGINE AR. 6
ENGINE AR-COMPLETE 7
9
ENGINE AR-CORE 10
EXTENSION GP-BACKREST 1173
1198
EXTENSION GP-BACKREST (CLOTH) 1175
1178
1184
1189
1191
1201
EXTENSION GP-BACKREST (VINYL) 1181
1203

F

FAN GP-REVERSIBLE 101
FAN GP-SUCTION. 102
103
FASTENER GP-CYLINDER HEAD 35
FASTENER GP-OIL PUMP MOUNTING–ENGINE 75
FENDER GP 625
FENDER GP–LH 629
FENDER GP–RH 628
FILLER GP-ENGINE OIL 76
FILLER GP-POWER TRAIN OIL 530
FILM GP. 1314
FILM GP-INTERNATIONAL 1320
FILM GP–AUTONOMOUS CONTROL 1316
FILM GP–GROUND LEVEL SERVICE. 1317
1318
FILM GP–JAPAN 1319
FILM-CONTROL 1148
FILM-IDENTIFICATION (CAT, LH). 187
188
FILM-IDENTIFICATION (CAT, REAR). 1314
FILM-IDENTIFICATION (CAT). 284
285
FILM-IDENTIFICATION (FIRE EXTINGUISHER) 1064
FILM-IDENTIFICATION (HYDRAULIC ACCUMULATOR) 873
FILM-IDENTIFICATION (JOYSTICK) (AUTOMATIC BLADE) 908
909
FILM-IDENTIFICATION (JOYSTICK) (DUAL TILT) 908
909
FILM-IDENTIFICATION (PRELUBRICATION PUMP). 94
FILM-IDENTIFICATION (REMOTE CONTROL PANEL) 499
FILM-IDENTIFICATION (REMOTE CONTROL PANEL) 1317
FILM-IDENTIFICATION (WORK LIGHT). 1321
FILM-INFORMATION (24-VOLT HEATER) 1097
FILM-INFORMATION (AIR CLEANER). 1321
FILM-INFORMATION (ARMREST ADJUSTMENT) 1214
1216
FILM-INFORMATION (DRAWBAR, READ OMM). 622
FILM-INFORMATION (ETHERNET). 487
FILM-INFORMATION (LADDER) 450
684
FILM-INFORMATION (PL641 CELLULAR) 361
FILM-INFORMATION (PRODUCT LINK, READ OMM). 1322
FILM-INFORMATION (SLOPE CONTROL) 277
FILM-INFORMATION (TRANSMISSION OIL LEVEL) 1322
FILM-INSTRUCTION (ADJUSTMENT CONTROL). 856
FILM-INSTRUCTION (BULLDOZER LIFT, TILT) 1322
FILM-INSTRUCTION (ELECTRICAL POWER) . . . 403
FILM-INSTRUCTION (RIPPER) 234
FILM-INSTRUCTION (SEAT ADJUSTMENT) . . . 1218
1221
1224
FILM-NOTICE (RADIO). 1100
FILM-REMOTE 1318
FILM-WARNING (COMPRESSED SPRING, READ OMM). 737
739
741
743
745
747
FILM-WARNING (DO NOT OPERATE, READ OMM). 1323
FILM-WARNING (FALL HAZARD, LANYARD, READ OMM). 1320
FILM-WARNING (HIGH PRESSURE CYLINDER) 869
FILM-WARNING (HIGH PRESSURE, READ OMM, INTL) 1320
FILM-WARNING (HIGH PRESSURE, READ OMM). 870
871
872
FILM-WARNING (NO WELD, NO DRILL, READ OMM). 1322
FILM-WARNING (PRODUCT LINK RADIO, INTL) 1320
FILTER (ETHER START). 410
FILTER AS-WATER SEP & FUEL (ADVANCED EFFICIENCY). 167
FILTER ELEMENT AS-AIR (PRIMARY). 134
135
1094
FILTER ELEMENT AS-AIR (SECONDARY) 134
135
FILTER ELEMENT AS-OIL (ULTRA HIGH EFFICIENCY). 979
FILTER ELEMENT-CAB AIR (PLATFORM) 1095

INDEX

NAME PAGE

FILTER ELEMENT-CAB AIR (ULTRA HIGH EFFICIENCY, CARBON) 1094
FILTER ELEMENT-OIL 534
FILTER ELEMENT-OIL (POWER TRAIN) 532
FILTER GP-CAB AIR 1095
FILTER GP-CAB AIR–HIGH EFFICIENCY 1094
FILTER GP-ENGINE OIL 77
78
FILTER GP-FUEL 166
FILTER GP-OIL 905
FILTER GP-OIL (HYDRAULIC) 542
FILTER GP-OIL–POWER TRAIN 534
FILTER GP-OIL–PRIMARY 532
FILTER GP-WATER SEP & FUEL 167
FILTER-ENGINE OIL (ADVANCED EFFICIENCY) 77
FILTER-FUEL (ADVANCED EFFICIENCY) 164
FILTER-OIL (ULTRA HIGH EFFICIENCY) 542
905
FLOOR MAT AS 1139
1141
1143
FLOOR MAT-CAB 1087
FLOORPLATE GP 631
632
FLYWHEEL GP 44
FRAME GP-MOUNTING 138
FRAME GP-RIPPER–MULTISHANK 1279
FRAME GP-RIPPER–SINGLE SHANK 1281
FRAME GP-TELESCOPING RECOIL–LH 739
743
FRAME GP-TELESCOPING RECOIL–RH 737
741
FRAME GP-TELESCOPING RECOIL–WASTE HANDLER, LH 747
FRAME GP-TELESCOPING RECOIL–WASTE HANDLER, RH 745
FUMES DISPOSAL GP 79
80
FUSE (10-AMPERE) 357
486
FUSE (15-AMPERE) 357
358
484
FUSE (15-AMPERE) (THERMAL) 1097
FUSE (20-AMPERE) 357

G

GASKET-COVER 506
GAUGE AS-OIL LEVEL (DIPSTICK) (ENGINE) . . . 81
GAUGE GP-OIL LEVEL (DIPSTICK) 81
GAUGE-LIQUID LEVEL (SIGHT GLASS) 979
GAUGE-SIGHT (COOLANT LEVEL) 130
GAUGE-SIGHT (COOLANT) 129
GEAR GP-BEVEL & TRANSFER 536
GEAR GP-FRONT 45
GEAR GP-REAR 47
GEAR GP-STEERING 863
864
GRILL GP-RADIATOR 633
GUARD GP-BOTTOM 634
636
639
GUARD GP-BOTTOM–FRONT 638
GUARD GP-BOTTOM–REAR 643
644
645
646
GUARD GP-BOTTOM–TRUNNION 641
GUARD GP-BRUSH 647
GUARD GP-DRIVE SHAFT 648
GUARD GP-ENGINE 649
GUARD GP-ENGINE–LH 651
653
658
659
660
GUARD GP-ENGINE–RH 652
654
655
656
657
GUARD GP-IDLER 749
GUARD GP-LINES 661
GUARD GP-POWER TRAIN–WASTE HANDLING 663
GUARD GP-RADIATOR 664
666
GUARD GP-ROCK–SEMI-UNIVERSAL BLADE 668
GUARD GP-ROCK–UNIVERSAL BLADE 667
GUARDRAIL GP 671
GUARDRAIL GP–LH 670
672
673
676
GUARDRAIL GP–RH 669
674

H

HANDRAIL GP–LH 678
HARNESS AS (LADDER ACCESS) 447
684
HARNESS AS-CAB 249
411
HARNESS AS-CAB (ROOF, LH) 411
HARNESS AS-CAB (ROOF, RH) 411
HARNESS AS-CHASSIS 252
253
1058
HARNESS AS-CHASSIS (CHASSIS) 343
HARNESS AS-CHASSIS (FRONT) 337
HARNESS AS-CHASSIS (REAR) 337
HARNESS AS-CHASSIS–FENDER, LH 251
HARNESS AS-CHASSIS–FENDER, RH 250
HARNESS AS-CONSOLE 254
255
HARNESS AS-CONSOLE (LH) 485

INDEX

NAME PAGE

HARNESS AS-CONSOLE (MAIN) 486
HARNESS AS-CONSOLE (RH) 485
HARNESS AS-CONSOLE (STEERING, TRANSMISSION) 858
HARNESS AS-CONTROL 256 257 258 484
HARNESS AS-ENGINE 259 261 262 435 436 441 442
HARNESS AS-HEATER 1206
HARNESS AS-HEATER (SEAT) 1205
HARNESS AS-HEATER & AIR COND 1097 1121
HARNESS AS-LIGHTING 263
HARNESS AS-LIGHTING (CYLINDER FLOODLIGHTS) 300 303 306 310 314 317 320 323 326 329
HARNESS AS-LIGHTING (RIPPER) 332
HARNESS AS-LIGHTING (ROPS) 300 306 314 320 326
HARNESS AS-LIGHTING–BEACON 262
HARNESS AS-MONITOR 263
HARNESS AS-MOTOR 1042
HARNESS AS-PLATFORM 264 265 454 470
HARNESS AS-POWER 268
HARNESS AS-PUMP 268
HARNESS AS-RADIO 269
HARNESS AS-RADIO (AUXILIARY) 411
HARNESS AS-SENSOR 276 431
HARNESS AS-SENSOR (INCLINATION) 3
HARNESS AS-SOLENOID (PRELUBRICATION PUMP) 94
HARNESS AS-SWITCH 269 270 389
HARNESS AS-SWITCH (ACCESS) 448 685
HARNESS AS-SWITCH (CONVERTER) 454 463 470
HARNESS AS-SWITCH (RAISE, LOWER) 450 685
HARNESS AS-SWITCH (SEAT HEATER) 1173 1184
HARNESS AS-SWITCH (STARTING MOTOR, START RELAY) 435 441
HARNESS AS-SWITCH (WITH SWITCH) 1198
HARNESS AS-SWITCH (WITH SWITCH) (SEAT HEATER) 1191
HARNESS AS-TRANSMISSION 270 508
HARNESS AS-VALVE 501 503
HARNESS AS-VALVE (SEAT AIR COMPRESSOR) 1218
HARNESS AS-WINDOW WIPER 1227
HARNESS AS-WIRING 350 355 495 497
HARNESS AS-WIRING (CAMERA) 415
HARNESS AS-WIRING (GROUND LEVEL SERVICE) 355 495 497
HARNESS AS-WIRING (PEDAL) 486
HARNESS AS-WIRING (RECEIVER) 353
HARNESS AS-WIRING (REMOTE CONTROL) 346 348
HARNESS AS-WIRING–RECEIVER 271
HARNESS AS-WIRING–SEAT SUSPENSION . . . 271
HEAD GP-PUMP–HYDRAULIC FAN 906
HEATER & AIR CONDITIONER GP 1097
HEATER GP-FUEL 272
HEATER GP-JACKET WATER 274 275
HOOD & GUARD GP 679
HOUSING GP-FLYWHEEL 50
HOUSING GP-FRONT 52 53
HOUSING GP-LEVER (JOYSTICK) 1077
HOUSING GP-REAR 54
HYDRAULIC AR 910
HYDRAULIC AR–DUAL TILT 908 909
HYDRAULIC AR–SINGLE TILT 908 909

I

IDLER GP-TRACK 753 755
IDLER GP-TRACK–COLD WEATHER 757
IDLER GP–SOUND SUPPRESSION 750 752
INJECTOR GP-FUEL 168

INDEX

NAME PAGE

INSTALLATION AR-BULLDOZER–SEMI-UNIVERSAL, UNIVERSAL 1017
1019
1021
1023
INSTALLATION AR-CAES 276
INSTALLATION AR-CAES–AUTO CARRY, AUTOMATIC RIPPER 276
INSTALLATION AR-CAES–TERRAIN 277
INSTALLATION AR-ENGINE 11
INSTALLATION AR–GRADE CONTROL 3
INSTALLATION GP-CAES 278
INSTALLATION GP-COMMUNICATION 283
INSTALLATION GP-COMMUNICATION–PL321VSR 280
INSTALLATION GP-COMMUNICATION–PRODUCT LINK 281
INSTALLATION GP-COMMUNICATION–PRODUCT LINK 523 280
INSTALLATION GP-COMMUNICATION–VIMS 3G, PRODUCT LINK 280
INSTALLATION GP-RADIO 1100
1101
INSULATION GP-HEAT–FOAM 683

K

KEY 284
KEY (ACCESS) 285
KIT-CUSHION–VINYL 1102
KIT-HANDLE 1103
KIT-RADIO–FIELD INSTALLED 1104
1105
KIT-REMOTE CONTROL 284
285
KIT-RETROFIT–LADDER 684
KIT-RETROFIT–PLATFORM 1106
KIT-SEAT AIR COMPRESSOR 1107
1108
KIT-SEAT CUSHION–CLOTH 1109
1110
KIT-SEAT CUSHION–CLOTH, HEATED 1111
KIT-SHOCK ABSORBER 1112

L

LADDER AR 687
LADDER GP 689
690
LAMP (24-VOLT, 21-WATT) 411
LAMP (24-VOLT, HID) 294
295
LAMP & MTG GP-COMMAND SIGNAL–LH 288
LAMP & MTG GP-COMMAND SIGNAL–RH 286
LAMP AS (24-VOLT) 411
LAMP AS (24-VOLT) (REAR) 457
464
473
LAMP AS-DOME 411
LAMP AS-LED (BACKLIGHT) 1148
LAMP GP-FLOOD 290
291
292
293
297
LAMP GP-FLOOD (24-VOLT) (ROPS, FENDER, CYLINDER) 320
323
326
329
LAMP GP-FLOOD–HID 294
295
LAMP GP-FLOOD–LED 296
LAMP GP-SIGNAL (12-VOLT, 24-VOLT, GREEN) 286
288
LAMP GP-SIGNAL (AMBER) 286
288
LAMP GP-SIGNAL (BLUE) 286
288
LAMP GP-SIGNAL (RED) 286
288
LAMP GP-WARNING BEACON–STROBE 298
LAMP-HALOGEN (24-VOLT, 70-WATT) 290
291
292
293
LATCH GP 692
LATCH GP-SWINGOUT LADDER 693
LIFTING GP-ENGINE 55
LIGHTING GP-FLOOD 299
313
LIGHTING GP-FLOOD–CYLINDER, FENDER, ROPS, UNDER HOOD 300
303
306
310
314
317
320
323
326
329
LIGHTING GP-RIPPER 332
LIGHTING GP-WARNING BEACON 334
LINER GP-CAB–SOUND SUPPRESSION 1114
LINES GP-AIR 139
140
141
LINES GP-AIR CONDITIONER 1116
LINES GP-AIR CONDITIONER–FENDER MOUNTED CONDENSER 1119
LINES GP-AIR CONDITIONER–ROPS MOUNTED CONDENSER 1121
LINES GP-AIR CONDITIONER–UNDERHOOD 1118
LINES GP-ALTERNATOR AIR 336
LINES GP-AUTOMATIC LUBRICATION 695
703
705

INDEX

NAME PAGE

LINES GP-AUTOMATIC LUBRICATION–FRONT 700
LINES GP-AUTOMATIC LUBRICATION–REAR. 698
LINES GP-ENGINE OIL 82
LINES GP-ENGINE OIL FILTER 84
LINES GP-EXHAUST 142
LINES GP-FUEL. 169
171
174
176
LINES GP-FUEL FILTER. 178
LINES GP-GREASE–MULTISHANK RIPPER . . . 1025
LINES GP-GREASE–SINGLE SHANK RIPPER. 1028
LINES GP-HEATER. 1123
LINES GP-HYDRAULIC FAN 915
916
917
LINES GP-HYDRAULIC–LADDER 911
913
LINES GP-LIFT CYLINDER. 920
921
923
925
LINES GP-PILOT–IMPLEMENT CONTROL. 927
LINES GP-PIN PULLER CYLINDER. 930
LINES GP-PIN PULLER CYLINDER–MULTISHANK 932
LINES GP-POWER TRAIN OIL 538
539
LINES GP-PUMP–IMPLEMENT, HYDRAULIC FAN 934
LINES GP-RIPPER 938
940
LINES GP-TILT CYLINDER. 951
LINES GP-TILT CYLINDER–DUAL 942
944
949
953
LINES GP-TILT CYLINDER–SINGLE 946
947
955
957
LINES GP-TRANSMISSION OIL 542
LINES GP-TURBOCHARGER OIL. 86
LINES GP-TURBOCHARGER WATER. 104
LINES GP-WATER. 106
108
112
LINK AS-TRACK. 759
760
762
764
LINK GP-STABILIZER. 1031
LUBRICATION AR-AUTOMATIC–MULTISHANK RIPPER. 708
LUBRICATION AR-AUTOMATIC–SINGLE SHANK RIPPER. 707
LUBRICATION GP-EQUALIZER BAR. 765
LUBRICATION GP-PIVOT SHAFT. 768

NAME PAGE

M

MANIFOLD GP-CONTROL–IMPLEMENT, STEERING, BRAKE. 545
MANIFOLD GP-CONTROL–PILOT SHUTOFF . . . 959
MANIFOLD GP-EXHAUST. 143
MANIFOLD GP-INLET. 145
MANIFOLD GP-VALVE. 934
960
MECHANISM GP-FUEL PUMP & VALVE. 57
MIRROR AR-REAR VIEW. 1125
MIRROR GP-REAR VIEW. 1126
1128
MIRROR GP-REAR VIEW–INTERIOR 1127
MODULE GP-DISPLAY. 1130
MODULE GP-DISPLAY (WORK AREA VISUAL SYSTEM) 414
415
MODULE GP-DISPLAY–G610. 1129
MODULE GP-KEYPAD. 908
909
MOTOR & MTG GP-HYDRAULIC FAN. 962
MOTOR GP-BLOWER 1131
MOTOR GP-ELEC HYD PUMP. 97
MOTOR GP-PISTON–HYDRAULIC FAN 963
MOTOR GP-WINDOW WIPER (24-VOLT, 2-SPEED) (DOOR, LH). 1238
MOTOR GP-WINDOW WIPER (24-VOLT, 2-SPEED) (DOOR, RH) 1238
MOTOR GP-WINDOW WIPER–FRONT. 1133
MOTOR GP-WINDOW WIPER–REAR 1132
MOUNTING GP-ALTERNATOR 58
MOUNTING GP-CAB. 1134
MOUNTING GP-CONDENSER–FENDER. 1136
MOUNTING GP-CONDENSER–ROPS MOUNTED 1138
MOUNTING GP-CYLINDER. 965
MOUNTING GP-FINAL DRIVE. 547
MOUNTING GP-FINAL DRIVE–WASTE HANDLING. 548
MOUNTING GP-GRADE CONTROL. 345
MOUNTING GP-GRADE CONTROL–AUTO CARRY, AUTOMATIC RIPPER. 340
341
MOUNTING GP-GRADE CONTROL–CHASSIS 342
343
344
MOUNTING GP-GRADE CONTROL–TERRAIN 337
MOUNTING GP-MUFFLER 146
MOUNTING GP-PLATFORM. 1139
1141
1143
MOUNTING GP-RECEIVER 346
348
350
352
353

INDEX

NAME PAGE

MOUNTING GP-RIPPER 1283
1284
1285
1286
MOUNTING GP-ROLLER FRAME 770
MOUNTING GP-ROLLER FRAME–WASTE HANDLING 772
MOUNTING GP-ROPS 1146
MOUNTING GP-SENSOR–DRAWBAR 355
MOUNTING GP-TRANSMISSION 549
MUFFLER & MOUNTING GP 147

O

OIL CHANGE GP-HIGH SPEED 90
92
OIL CHANGE GP-HIGH SPEED–UNDER HOOD 88
ORIFICE AS-AIR CONDITIONER 1116

P

PADLOCK GP 1
171
187
188
605
625
1095
1322
PAN GP-BACKREST–LUMBAR 1147
PAN GP-OIL 59
PAN GP-SEAT 1175
1178
1181
PANEL GP-CONTROL–WIPER SWITCH 1148
PANEL GP-FUSE 357
358
PANEL GP-SOUND SUPPRESSION 61
PEDAL GP-GOVERNOR (THROTTLE) 1150
PEDAL GP-GOVERNOR & BRAKE 1149
1150
PISTON & ROD GP 62
PLANETARY GP-TRANSMISSION 550
PLATE & FILM GP 6
1046
1321
1323
1325
PLATE AS-BRUSH 359
PLATE GP-CERTIFICATION 1325
PLATE GP-CERTIFICATION (MACHINE) 2
PLATE GP-WEAR–SEMI-UNIVERSAL BLADE 1287
PLATE-CERTIFICATION (MACHINE) 1325
PLATE-SERIAL NUMBER 1019
1021
1023
PLATE-SERIAL NUMBER (BULLDOZER) 1017

NAME PAGE

PLATE-SERIAL NUMBER (MACHINE) 664
PLATE-SERIAL NUMBER (RIPPER) 1293
1296
PLATE-SERIAL NUMBER (TRANSMISSION) 550
PLATE-WARNING (HIGH PRESSURE CYLINDER) 737
739
741
743
PLATE-WARNING (RECOIL SPRING) 737
739
1327
PLATFORM AR 1151
1153
1155
1156
PLATFORM AR–REMOTE 1157
PLATFORM GP-OPERATOR 1158
PLATFORM GP-OPERATOR–REMOTE 1160
PLUG 737
739
PLUG (PIVOT SHAFT OIL DRAIN/FILL) 741
743
745
747
PLUG GP-CYLINDER BLOCK 64
PLUG GP-CYLINDER HEAD 65
PLUG GP-WATER LINES 115
PLUG-DRAIN 59
721
PLUG-DRAIN (DRAIN) (CASE, FRAME) 594
595
PLUG-MAGNETIC (FINAL DRIVE, OIL FILL) 518
521
524
527
POWER TRAIN AR 556
PRECLEANER AS 148
PRECLEANER GP 150
151
PRECLEANER GP-CAB AIR 152
PRECLEANER GP–CAB AIR 152
PRECLEANER GP–TURBINE 149
PRELUBRICATION AR-ENGINE 94
PROTECTION GP-VANDALISM 982
PROTECTION GP-VANDALISM–HYDRAULIC TANK 1326
PROTECTOR GP-SHANK 1288
PULLER AR-PIN 1289
PULLER GP-PIN 1292
PULLER GP-PIN–SINGLE SHANK 1290
PUMP & MOTOR GP-PRELUBRICATION 97
PUMP & MOUNTING GP–IMPLEMENT 966
PUMP & MOUNTING GP–IMPLEMENT, HYDRAULIC FAN 967
PUMP & MTG GP-POWER TRAIN 557
PUMP GP-CHARGE–HYDRAULIC FAN 968
PUMP GP-ELECTRIC DRIVE–LADDER 969
PUMP GP-ENGINE OIL 98
PUMP GP-FUEL INJECTION 181

INDEX

NAME PAGE

PUMP GP-FUEL PRIMING 182 183
PUMP GP-FUEL TRANSFER 184 185 186
PUMP GP-GEAR–LADDER 970
PUMP GP-GEAR–POWER TRAIN OIL 559 561
PUMP GP-LUBRICATION–RIPPER 709 711
PUMP GP-PISTON–CHARGE 865
PUMP GP-PISTON–HYDRAULIC FAN 975
PUMP GP-PISTON–IMPLEMENT PUMP 1 971
PUMP GP-PISTON–IMPLEMENT PUMP 2 973
PUMP GP-WATER 116 117
PUSH ARM GP-STABILIZER–SEMI-UNIVERSAL, UNIVERSAL 1038
PUSH ARM GP–LH 1032 1034
PUSH ARM GP–RH 1033 1035
PUSH ARM GP–SEMI-UNIVERSAL, UNIVERSAL 1036

R

RADIATOR AR 118 120
RADIATOR GP 122 124
RADIO GP-COMMUNICATION–PL641E CELLULAR 361
RADIO GP-COMMUNICATION–PRODUCT LINK 121SR 360
RECEIVER GP-SATELLITE 348 479
REGULATOR AS-VOLTAGE (24-VOLT) 196
REGULATOR-WATER TEMPERATURE (92-DEG C) 112
RELAY AS (24-VOLT) 357
RELAY AS (24-VOLT) (CONDENSER FAN MOTOR) 1058
RELAY AS (24-VOLT) (FUSE PANEL) 358
RELAY AS (24-VOLT) (LADDER ACCESS) 447 685
RELAY AS-TIMER 457
RELAY AS-TIMER (24-VDC) 464 473
RIPPER AR-MULTISHANK 1293 1294
RIPPER AR-MULTISHANK–MULTISHANK 1295
RIPPER AR-SINGLE SHANK 1296 1297 1298
ROCKER ARM GP 66
ROCKER ARM GP–EXHAUST 67
ROCKER ARM GP–UNIT INJECTOR 68
ROLLER GP-TRACK CARRIER 774
ROLLER GP-TRACK CARRIER–COLD WEATHER 775
ROLLER GP-TRACK-DOUBLE FLANGE 776
ROLLER GP-TRACK-DOUBLE FLANGE–COLD WEATHER 777
ROLLER GP-TRACK-SINGLE FLANGE 778
ROLLER GP-TRACK-SINGLE FLANGE–COLD WEATHER 780
ROPS GP 1161
ROTATING GP-MOTOR–HYDRAULIC FAN 977
ROTATING GP-PUMP 865
ROTATING GP-PUMP–IMPLEMENT 978

S

SCREEN 979
SCREEN (AIR CLEANER) 148
SCREEN (ALTERNATOR COOLING) 336
SCREEN AS 1162
SCREEN AS (HYDRAULIC TANK) 979
SCREEN AS-SUCTION 557
SCREEN GP-PROTECTION–RADIATOR 712
SCREEN GP-PROTECTION–ROPS 1162
SCREEN GP-SUN 1163
SCREEN-STRAINER 82
SCREEN-SUCTION 506
SCREEN-SUCTION (TORQUE CONVERTER SCAVENGE) 568
SCREEN-SUMP (FUEL TANK) 171
SEAL (VALVE COVER BASE) 13
SEAL GP-CRANKSHAFT–FRONT 70
SEAL GP-CRANKSHAFT–REAR 69
SEAL GP-DUO-CONE 776 777 778 780
SEAL GP-ENCLOSURE–HIGH DEBRIS 714
SEAL GP-ENCLOSURE–SOUND SUPPRESSION 713
SEAL-INTEGRAL 15
SEAL-INTEGRAL (1/2-IN) 1116 1118 1119 1121
SEAL-INTEGRAL (3/4-IN) 1116
SEAL-LIP TYPE 112
SEAT & MOUNTING GP–CLOTH, AIR 1164 1165
SEAT & MOUNTING GP–CLOTH, HEATED . . . 1170 1171
SEAT & MOUNTING GP–CLOTH, HEATED, AIR 1166 1167
SEAT & MOUNTING GP–VINYL 1168 1169
SEAT BELT GP 1172
SEAT GP-SUSPENSION 1198
SEAT GP-SUSPENSION–CLOTH 1201
SEAT GP-SUSPENSION–CLOTH, AIR 1195 1207

INDEX

NAME PAGE

SEAT GP-SUSPENSION–CLOTH, HEATED.... 1196
1205
SEAT GP-SUSPENSION–CLOTH, HEATED, AIR..... 1197
1206
SEAT GP-SUSPENSION–VINYL 1193
1200
1203
SEAT GP–CLOTH 1173
1175
1184
1187
1188
SEAT GP–CLOTH, HEATED..... 1178
1189
1191
SEAT GP–VINYL 1181
SEGMENT GP-SPROCKET..... 564
SEGMENT GP-SPROCKET–SOUND SUPPRESSION..... 565
SENSOR & MOUNTING GP–AUTO CARRY.... 362
SENSOR AS-ANGLE (GRADE CONTROL) 276
SENSOR AS-ANGLE (INCLINATION)..... 3
SENSOR AS-ANGLE (INCLINATION)..... 362
SENSOR AS-LIQUID LEVEL (FUEL)..... 187
188
SENSOR AS-POSITION (JOYSTICK) (BULLDOZER CONTROL HANDLE)..... 1080
SENSOR AS-POSITION (JOYSTICK) (BULLDOZER)..... 1079
SENSOR GP-ENGINE 363
365
SENSOR GP-LIQUID LEVEL 200
367
368
369
370
371
SENSOR GP-LIQUID LEVEL (COOLANT) (RADIATOR TOP TANK)..... 220
SENSOR GP-LIQUID LEVEL (ENGINE OIL).... 365
SENSOR GP-POSITION..... 372
373
SENSOR GP-POSITION (DECELERATOR) 1149
SENSOR GP-POSITION (LIFT CYLINDER)..... 374
SENSOR GP-POSITION (RIPPER LIFT, LOWER)..... 1085
SENSOR GP-POSITION (RIPPER SHANK IN, OUT)..... 1085
SENSOR GP-POSITION (ROTARY) (DECELERATOR, SERVICE BRAKE)..... 1084
SENSOR GP-POSITION (ROTARY) (SERVICE BRAKE)..... 1149
SENSOR GP-POSITION (ROTARY) (STEERING CLUTCH, BRAKE, RH, LH) 858
861
SENSOR GP-POSITION (THROTTLE)..... 1150
SENSOR GP-POSITION (TRANSMISSION CONTROL)..... 858
861
SENSOR GP-POSITION–BULLDOZER LIFT 374

NAME PAGE

SENSOR GP-PRESSURE 375
376
377
378
SENSOR GP-PRESSURE (ATMOSPHERIC).... 363
SENSOR GP-PRESSURE (ENGINE OIL)..... 363
SENSOR GP-PRESSURE (FAN)..... 503
SENSOR GP-PRESSURE (FUEL)..... 164
376
SENSOR GP-PRESSURE (INLET AIR)..... 435
441
SENSOR GP-PRESSURE (INLET MANIFOLD) 501
SENSOR GP-PRESSURE (INTAKE MANIFOLD, LH)..... 363
SENSOR GP-PRESSURE (INTAKE MANIFOLD, RH)..... 363
SENSOR GP-SPEED 380
381
SENSOR GP-SPEED (PRIMARY, TIMING) 363
SENSOR GP-SPEED (SECONDARY, TIMING) 363
SENSOR GP-SPEED (TRANSMISSION OUTPUT 1) 551
SENSOR GP-SPEED (TRANSMISSION OUTPUT 2) 551
SENSOR GP-SPEED–ENGINE..... 379
SENSOR GP-TEMPERATURE 384
385
SENSOR GP-TEMPERATURE (COOLANT)..... 435
441
SENSOR GP-TEMPERATURE (EVAPORATOR)..... 1097
SENSOR GP-TEMPERATURE (EXHAUST, LH)..... 365
SENSOR GP-TEMPERATURE (EXHAUST, RH)..... 365
SENSOR GP-TEMPERATURE (FUEL)..... 164
SENSOR GP-TEMPERATURE (INTAKE MANIFOLD, LH)..... 363
SENSOR GP-TEMPERATURE (INTAKE MANIFOLD, RH)..... 363
SENSOR GP-TEMPERATURE (TURBOCHARGER INLET)..... 385
SENSOR GP-TEMPERATURE (WATER, COOLANT TEMPERATURE) 363
SENSOR GP-TEMPERATURE–COOLANT 383
SENSOR GP-TEMPERATURE–HYDRAULIC OIL..... 382
SENSOR-TEMPERATURE..... 383
384
SENSOR-TEMPERATURE (ENGINE OIL TEMPERATURE) 435
441
SENSOR-TEMPERATURE (JACKET WATER HEATER) (AIR CONDITIONER)..... 1044
SENSOR-TEMPERATURE (TRANSMISSION OIL) 199
209
219
SHAFT GP-DRIVE..... 566

INDEX

NAME PAGE

SHANK AS-RIPPER 1299
1300
1301
1302
SHIELD GP-HEAT 153
SHIELD GP-MANIFOLD 154
SHOE-TRACK 781
782
783
SHOE-TRACK MASTER 784
785
786
SLIP JOINT GP 567
SOFTWARE GP-COMMUNICATION (PRODUCT LINK 121SR) 360
SOFTWARE GP-IMPLEMENT 245
SOFTWARE GP-MACHINE 245
SOFTWARE GP-MACHINE (REMOTE CONTROL OP STATION) 245
SOFTWARE GP-MONITOR 245
481
SOFTWARE GP-MONITOR (CELLULAR) 247
361
SOFTWARE GP-MONITOR (ETHERNET ROUTER) 245
SOFTWARE GP-MONITOR (INSTRUMENT PANEL) 245
SOFTWARE GP-MONITOR (PRODUCT LINK 523) 246
SOFTWARE GP-MONITOR (TELEMATICS CONFIGURATION) 246
SOFTWARE GP-MONITOR (TELEMATICS) 246
SOFTWARE GP-MONITOR (VIMS MAIN, CONFIGURE) 246
SOFTWARE GP-MONITOR (VIMS MAIN, PROGRAM) 246
SOFTWARE GP-POWER TRAIN 247
SOLENOID AS-STARTING MOTOR (24-VOLT) 393
396
STARTING AID GP-ETHER 387
STARTING AR-COLD WEATHER 389
STARTING MOTOR GP-ELECTRIC 392
395
398
STEP GP 717
719
STOCKPILE AR 4
5
STRAINER AS-OIL (HYDRAULIC) 979
STRAINER-FUEL (FUEL TANK) 190
191
SUPPORT GP-CONTROL 1208
SUPPORT GP-CONTROL–LH 1210
SUPPORT GP-CONTROL–RH 1212
SUPPORT GP-ENGINE 71
72
SUPPORT GP-HYDRAULIC CONTROL–RH 1214
SUPPORT GP-STEERING CONTROL 1216
SUSPENSION GP-BOGIE 787
789

NAME PAGE

SUSPENSION GP-BOGIE–ABRASION 793
SUSPENSION GP-BOGIE–COLD WEATHER 791
795
SUSPENSION GP-SEAT–AIR 1218
1221
1224
SWITCH AS (CAMERA) 232
SWITCH AS (PARKING BRAKE) 499
SWITCH AS (PARKING BRAKE) (PARKING BRAKE) 484
SWITCH AS-DISCONNECT (MASTER) (AUXILIARY) 200
210
220
484
SWITCH AS-LIMIT (DOME LIGHT) 411
SWITCH AS-LIMIT (DOOR) 411
SWITCH AS-LIMIT (FORWARD, REVERSE) 855
SWITCH AS-LIMIT (SERVICE BRAKE PEDAL) 1084
1149
SWITCH AS-PRESSURE (HIGH, LOW) (AIR CONDITIONER) 200
210
220
SWITCH AS-PRESSURE (REFRIGERANT, LOW SIDE) 199
209
219
SWITCH AS-PUSH BUTTON (AUTO STOW) 1085
SWITCH AS-PUSH BUTTON (AUTOMATIC RIPPER) 1085
SWITCH AS-PUSH BUTTON (DOWNSHIFT) . . . 1208
SWITCH AS-PUSH BUTTON (DUAL TILT, SINGLE TILT) 1077
SWITCH AS-PUSH BUTTON (IMPLEMENT) . . . 1075
SWITCH AS-PUSH BUTTON (SECONDARY STOP) 454
463
470
SWITCH AS-PUSH BUTTON (UPSHIFT) 1208
SWITCH AS-ROCKER (24-VOLT) (AIR CONDITIONER CONTROL) 411
SWITCH AS-ROCKER (24-VOLT) (HORN) 861
SWITCH AS-ROCKER (24-VOLT) (IMPLEMENT LOCKOUT) 454
463
470
SWITCH AS-ROCKER (24-VOLT) (LIGHTS) 456
463
473
SWITCH AS-ROCKER (24-VOLT) (MANUAL, REMOTE CONTROL) 417
SWITCH AS-ROCKER (24-VOLT) (THROTTLE) 454
463
470
SWITCH AS-ROCKER (CONSOLE RAISE, LOWER) 1041

NAME PAGE

SWITCH AS-ROCKER (PARKING BRAKE) 858
SWITCH AS-TOGGLE. 399
SWITCH AS-TOGGLE (ACCESS LADDER) 499
SWITCH AS-TOGGLE (ACCESS LIGHTS) 499
603
SWITCH AS-TOGGLE (COMMUNICATION ON/ OFF) 484
SWITCH AS-TOGGLE (DOOR RELEASE, REMOTE) 399
SWITCH AS-TOGGLE (ENGINE COMPARTMENT LIGHTS) 200
210
220
SWITCH AS-TOGGLE (OPERATOR LADDER UP, DOWN) 447
450
686
SWITCH GP-BRAKE & POWER STOP (COMMAND) (ENGINE SHUTDOWN) 499
SWITCH GP-BRAKE & POWER STOP (COMMAND) (PUSH BUTTON) 484
SWITCH GP-FLOW–COOLANT 400
SWITCH GP-MAGNETIC 401
402
SWITCH GP-POSITION 403
SWITCH GP-PRESSURE. 404
405
SWITCH GP-PRESSURE (STEERING CHARGE) 905
SWITCH GP-PUSH BUTTON 406
SWITCH GP-ROTARY 407
SWITCH GP-START 408
SWITCH GP-TOGGLE (GROUND LEVEL SHUTDOWN). 603
SWITCH GP-WIPER–CAB 409
SWITCH-ROCKER (24-VOLT) (HEATED SEAT) 1178
1189
SWITCH-ROCKER (HYDRAULIC PIN PULLER). 875
SWITCH-START (HOOD TILT). 969

T

TANK & FILTER GP-HYDRAULIC 979
TANK & MTG GP-HYDRAULIC 982
TANK GP-COOLANT. 125
127
129
130
TANK GP-EXPANSION. 983
TANK GP-EXPANSION (AIR) 983
TANK GP-FUEL 187
188
190
191
TANK GP-WINDOW WASHER. 1227
1229
TIP GP-RIPPER 1303
TIP-RIPPER 1304
TOOL GP-ADJUSTER–TRACK. 1327
TOOTH GP-RIPPER 1306
1307
1308
1309
1311
1312
1313
TOOTH GP-RIPPER–DEEP RIP 1310
TOOTH GP-RIPPER–LONG SHANK. 1305
TORQUE CONVERTER & HOUSING GP 568
TORQUE CONVERTER GP 570
572
574
TORQUE CONVERTER GP–WITH DIVIDER 576
578
580
582
TRACK ADJUSTER & RECOIL GP 797
799
TRACK AR. 801
802
804
805
806
807
808
809
810
811
812
813
814
815
816
817
818
819
820
821
TRACK GP–2-REQUIRED 822-844
TRANSMISSION AR 584
TRUNNION GP-BULLDOZER 1040
TRUNNION GP-ENGINE 73
TURBOCHARGER GP 155
156
157

U

UNDERCARRIAGE AR. 851
852
UNDERCARRIAGE AR–COLD WEATHER 849
UNDERCARRIAGE AR–LH 846
848
UNDERCARRIAGE AR–RH 845
847
UNDERCARRIAGE AR–SOUND SUPRESSION 850
UNDERCARRIAGE AR–WASTE HANDLING 851

NAME PAGE

UNDERCARRIAGE AR–WITH GUARD 850
UNIVERSAL JOINT GP 585
UNIVERSAL JOINT GP-ROTOR DRIVE 585

V

VALVE & LINES GP-HYD CONTROL–DUAL TILT 985
VALVE & LINES GP-HYD CONTROL–SINGLE TILT 988
VALVE & MTG GP-CONTROL. 991
VALVE & MTG GP-STEER & BRAKE. 867
VALVE AS-CHECK 150 151
VALVE AS-FLUID SAMPLING 106 927
VALVE AS-PRESSURE RELIEF (REFRIGERANT COMPRESSOR) 1056
VALVE GP-BANK 5–IMPLEMENT 992
VALVE GP-BANK 6–IMPLEMENT 994
VALVE GP-BREAKER RELIEF–HYDRAULIC TANK. 996
VALVE GP-BYPASS 934
VALVE GP-BYPASS–IMPLEMENT, HYDRAULIC FAN OIL 997
VALVE GP-CHECK 178 193 545 959
VALVE GP-CHECK (HYDRAULIC FAN) 934
VALVE GP-CHECK–FUEL 192
VALVE GP-CONTROL (IMPLEMENT, STEERING, BRAKE). 545
VALVE GP-CONTROL–BULLDOZER LIFT–BULLDOZER LIFT, LOWER 998
VALVE GP-CONTROL–BULLDOZER TILT 1001
VALVE GP-CONTROL–RIPPER LIFT, LOWER. 1003
VALVE GP-CONTROL–RIPPER SHANK IN, OUT 1005
VALVE GP-DRAIN 721
VALVE GP-ETHER STARTING 410
VALVE GP-FLOW CONTROL. 586
VALVE GP-FLUID SAMPLING 543 979
VALVE GP-LUBE DISTRIBUTION–2-INJECTOR 722
VALVE GP-LUBE DISTRIBUTION–3-INJECTOR 723
VALVE GP-LUBE DISTRIBUTION–4-INJECTOR 724
VALVE GP-LUBE DISTRIBUTION–RIPPER 725 727
VALVE GP-LUBE DISTRIBUTION–RIPPER, LH. 731 732
VALVE GP-LUBE DISTRIBUTION–RIPPER, RH 729 730
VALVE GP-PRESSURE REDUCING (ACTUATOR). 874
VALVE GP-PRESSURE REDUCING (IMPLEMENT, STEERING, BRAKE) 545
VALVE GP-PUMP CONTROL (PRESSURE COMPENSATOR) (PUMP HEAD) 906
VALVE GP-PUMP CONTROL (PRESSURE, FLOW COMPENSATOR). 865
VALVE GP-PUMP CONTROL–FLOW COMPENSATOR 1007 1008
VALVE GP-RELIEF 1009 1010
VALVE GP-RELIEF (DIRECT OPERATED) (INLET AIR) 960
VALVE GP-RELIEF (HYDRAULIC FAN PUMP PRESSURE) 906
VALVE GP-RELIEF–BULLDOZER TILT 1011
VALVE GP-RELIEF–TORQUE CONVERTER OUTLET 587
VALVE GP-SHUTOFF (CAB HEATER) 1123
VALVE GP-SHUTTLE 1012
VALVE GP-SOLENOID. 589 590 868 1013 1014
VALVE GP-SOLENOID (24-VOLT) (BLADE TILT RIGHT, LEFT). 1001
VALVE GP-SOLENOID (24-VOLT) (BULLDOZER LIFT) 998
VALVE GP-SOLENOID (24-VOLT) (HYDRAULIC LOCKOUT). 545 959
VALVE GP-SOLENOID (24-VOLT) (IMPLEMENT) 1003
VALVE GP-SOLENOID (24-VOLT) (RIPPER TILT) 1005
VALVE GP-SOLENOID (HYDRAULIC PIN PULLER). 991
VALVE GP-SOLENOID (SHIFT). 508
VALVE GP-SOLENOID (STEERING CLUTCH, BRAKE, RH, LH) 545
VALVE GP-WATER 1230
VALVE-RELIEF (POWER TRAIN OIL) 539

W

WASHER GP-WINDOW 1231
WINDOW GP-CAB. 1233 1234
WINDOW GP-CAB–DUAL PANE 1235
WINDOW GP-CAB–LH 1237
WINDOW GP-CAB–RH. 1236
WIPER GP-WINDOW 1238
WIRING GP-CAB 411
WIRING GP-CAMERA. 414 415
WIRING GP-CHASSIS 417

INDEX

NAME	PAGE	NAME	PAGE
WIRING GP-COMMUNICATION	423		
	426		
WIRING GP-COMMUNICATION–PL321VSR	419		
WIRING GP-COMMUNICATION–PRODUCT LINK 523	421		
WIRING GP-COMMUNICATION–VIMS 3G, PRODUCT LINK	429		
WIRING GP-ELECTRONIC CONTROL	431		
	433		
WIRING GP-ENGINE	435		
	441		
WIRING GP-LADDER	447		
	450		
WIRING GP-LIGHTING	452		
WIRING GP-LIGHTING–BEACON	453		
WIRING GP-PLATFORM	454		
	463		
	470		
WIRING GP-RECEIVER	479		
	483		
WIRING GP-RECEIVER–GPS	481		
WIRING GP-REMOTE CONTROL	484		
	490		
	491		
	493		
WIRING GP-SERVICE CENTER–COUNTERWEIGHT	497		
WIRING GP-SERVICE CENTER–RIPPER	495		
WIRING GP-SHUTDOWN	499		
WIRING GP-VALVE–IMPLEMENT	501		
	503		

MEMORANDA

MACHINE ARRANGEMENT

359-6401 CHASSIS AR

S/N: RAB1-UP
PART OF 440-9398 COMMON AR
AN ATTACHMENT

SMCS-7000 **i06269061**

NOTE	PART NUMBER	QTY	PART NAME 1 2 3 4 5 6 (PRODUCT LEVEL)	SEE PAGE
Y	*359-6421*	1	BATTERY & WIRING GP	199
Y	*359-6411*	1	CAB AR	1051
Y	*376-3675*	1	DOOR GP-ACCESS	605
Y	*373-3193*	1	FENDER GP	625
Y	*359-6413*	1	GUARD GP-DRIVE SHAFT	648
Y	*372-6746*	1	GUARD GP-RADIATOR	664
Y	*373-3194*	1	GUARD GP-RADIATOR	666
Y	*359-6422*	1	HOOD & GUARD GP	679
Y	*359-6511*	1	LINES GP-AIR CONDITIONER	1116
Y	*359-6415*	1	LINES GP-HEATER	1123
Y	*359-6412*	1	LUBRICATION GP-EQUALIZER BAR	765
Y	*359-6416*	1	LUBRICATION GP-PIVOT SHAFT	768
Y	*420-6205*	1	MOUNTING GP-ROPS	1146
Y	*359-6418*	1	PLATE & FILM GP	1321
Y	*359-6419*	1	PLATFORM AR	1151
Y	*371-6859*	1	ROPS GP	1161
Y	*379-5590*	1	STEP GP (RADIATOR GUARD)	719
Y	*287-7507*	1	TANK GP-WINDOW WASHER	1229
	6V-1971	1	LITERATURE GP	
	246-2641	1	PADLOCK GP	
	5P-8500	1	KEY	
	5P-7958	1	SLEEVE-CABLE SPLICE	
	381-0221	1	ROPS AS	

Y - SEPARATE ILLUSTRATION

<END>

440-9398 COMMON AR

S/N: RAB1-UP
PART OF 444-5740, 444-5741, 444-5742 DISTRIBUTION AR
AN ATTACHMENT

SMCS-7000 **i05423561**

NOTE	PART NUMBER	QTY	PART NAME 1 2 3 4 5 6 (PRODUCT LEVEL)	SEE PAGE
Y	*359-6401*	1	CHASSIS AR	1
Y	*359-6406*	1	ELECTRONICS AR-MACHINE	243
Y	*359-6403*	1	HYDRAULIC AR	910
Y	*359-6404*	1	INSTALLATION AR-ENGINE	11
Y	*359-6405*	1	POWER TRAIN AR	556

Y - SEPARATE ILLUSTRATION

<END>

444-5740 DISTRIBUTION AR

S/N: RAB1-UP
EUROPEAN MARKET
AN ATTACHMENT

SMCS-7000 **i06574673**

NOTE	PART NUMBER	QTY	PART NAME 1 2 3 4 5 6 (PRODUCT LEVEL)	SEE PAGE
Y	*440-9398*	1	COMMON AR	1
Y	**359-6502**	1	ENGINE AR-COMPLETE	7
Y	*416-9803*	1	FILM GP-INTERNATIONAL	1320
Y	*359-6500*	1	INSTALLATION AR-ENGINE	11
Y	*397-9341*	1	TANK GP-EXPANSION	983
	132-3391	1	PLATE GP-CERTIFICATION (MACHINE)	

Y - SEPARATE ILLUSTRATION

<END>

444-5741 DISTRIBUTION AR

S/N: RAB1-UP
AN ATTACHMENT

SMCS-7000 **i06574682**

NOTE	PART NUMBER	QTY	PART NAME 1 2 3 4 5 6 (PRODUCT LEVEL)	SEE PAGE
Y	*440-9398*	1	COMMON AR	1
Y	**359-6502**	1	ENGINE AR-COMPLETE	7
Y	*416-9803*	1	FILM GP-INTERNATIONAL	1320
Y	*359-6500*	1	INSTALLATION AR-ENGINE	11
Y	*397-9340*	1	VALVE GP-BREAKER RELIEF	996

Y - SEPARATE ILLUSTRATION

<END>

444-5742 DISTRIBUTION AR

S/N: RAB1-UP
AN ATTACHMENT

SMCS-7000 **i06574687**

NOTE	PART NUMBER	QTY	PART NAME 1 2 3 4 5 6 (PRODUCT LEVEL)	SEE PAGE
Y	*440-9398*	1	COMMON AR	1
Y	**443-0004**	1	ENGINE AR-COMPLETE	9
Y	*416-9803*	1	FILM GP-INTERNATIONAL	1320
Y	*359-6500*	1	INSTALLATION AR-ENGINE	11
Y	*397-9340*	1	VALVE GP-BREAKER RELIEF	996

Y - SEPARATE ILLUSTRATION

<END>

359-6358 INSTALLATION AR—GRADE CONTROL

S/N: RAB1-UP

AN ATTACHMENT

SMCS-7000 **i05438864**

NOTE	PART NUMBER	QTY	PART NAME 1 2 3 4 5 6 (PRODUCT LEVEL)	SEE PAGE
Y	**304-4030**	1	BOX GP-STORAGE	1048
M	**8T-4136**	4	BOLT (M10X1.5X25-MM)	
	268-8749	1	CAP-CONNECTOR	
	310-0674	1	LOCKWASHER	
	211-0052	1	NUT (1-11/16-18-THD)	
	372-0438	1	PLATE	
M	**9X-2616**	4	SCREW-SOCKET (M8X1.25X16-MM)	
	334-1658	1	SENSOR AS-ANGLE (INCLINATION)	
	386-0444	1	HARNESS AS-SENSOR (INCLINATION)	
	3E-3383	1	WEDGE-RECEPTACLE LOCK (6-PIN)	
E	**112-4550**		SLEEVE (20-CM)	
	151-9275	1	KIT-RECEPTACLE (6-PIN)	
			(INCLUDES RECEPTACLE AS & WEDGE)	
	9X-3401	6	PIN-CONNECTOR (16-GA TO 18-GA)	
	3E-4352	4	WASHER-HARD (8.8X20.5X2.5-MM THK)	
	8T-4121	4	WASHER-HARD (11X21X2.5-MM THK)	

E - ORDER BY THE CENTIMETER
M - METRIC PART
Y - SEPARATE ILLUSTRATION

<END>

MACHINE ARRANGEMENT

359-6430 STOCKPILE AR

S/N: RAB1-283

AN ATTACHMENT

SMCS-7000 **i05909072**

NOTE	REF NO	GRAPHIC REF	PART NUMBER	QTY	PART NAME 1 2 3 4 5 6 (PRODUCT LEVEL)	SEE PAGE
Y	1	1	*359-6361*	1	LINES GP-ALTERNATOR AIR	336
Y	2	1	*359-6480*	1	PRECLEANER GP	151
Y	3	1	*375-7592*	1	DOOR GP-HOOD	607
Y	4	1	*384-8844*	1	SCREEN GP-PROTECTION	712
Y	5	1	*422-5438*	1	SEAL GP-ENCLOSURE	714
FJ			*261-1580*	1	CONFIGURATION-PREMIUM (REVERSIBLE FAN)	

F - NOT SHOWN
J - DLR INSTALL CONFIG: SEE IRM: EES03-01
Y - SEPARATE ILLUSTRATION

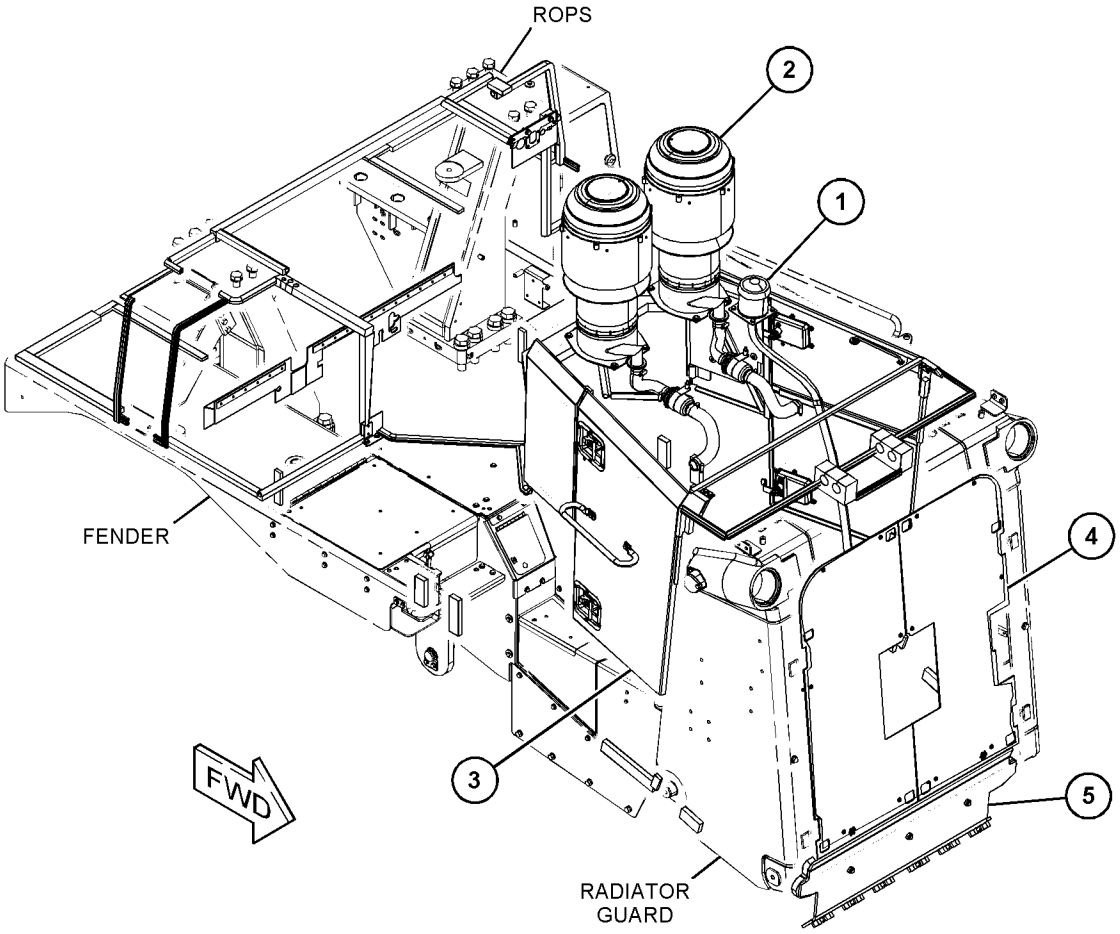

GRAPHIC #1 <END> g03453848

359-6430 STOCKPILE AR

S/N: RAB284-UP

AN ATTACHMENT

SMCS-7000 **i06580885**

NOTE	REF NO	GRAPHIC REF	PART NUMBER	QTY	PART NAME 1 2 3 4 5 6 (PRODUCT LEVEL)	SEE PAGE
Y	1	1	*359-6361*	1	LINES GP-ALTERNATOR AIR	336
Y	2	1	*359-6480*	1	PRECLEANER GP	151
Y	3	1	*375-7592*	1	DOOR GP-HOOD	607
Y	4	1	*422-5438*	1	SEAL GP-ENCLOSURE	714

Y - SEPARATE ILLUSTRATION

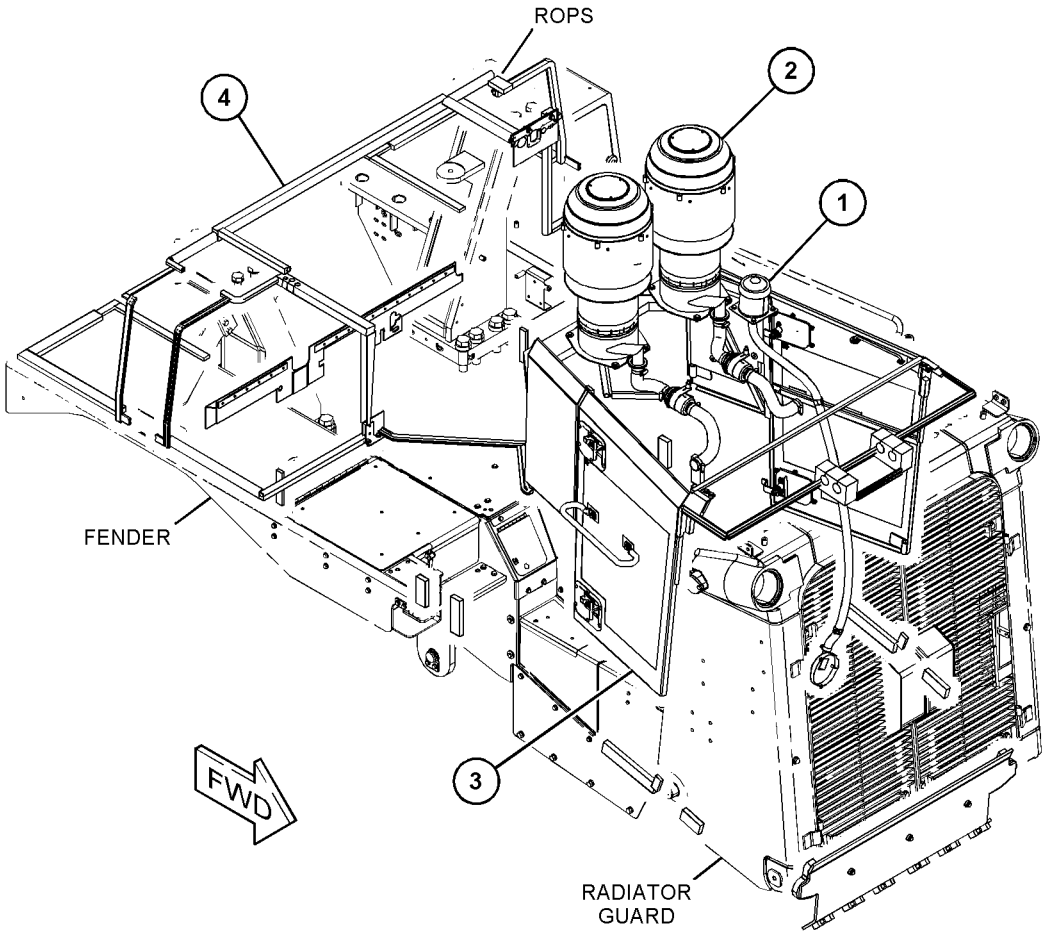

GRAPHIC #1 <END> g06034079

371-2275 ENGINE AR

S/N: JZM1-UP

PART OF 359-6502, 443-0004 ENGINE AR-COMPLETE

AN ATTACHMENT

SMCS-1000 **i05501311**

NOTE	PART NUMBER	QTY	PART NAME 1 2 3 4 5 6 (PRODUCT LEVEL)	SEE PAGE
Y	*371-2276*	1	ENGINE AR-CORE	10
Y	**447-9719**	1	PLATE & FILM GP	1323
	380-5972	1	ELECTRONICS GP-ENGINE RATINGS	

Y - SEPARATE ILLUSTRATION

<END>

359-6502 ENGINE AR-COMPLETE

S/N: JZM1-UP
568 BRAKE KW (763 BHP) AT 1800 RPM
PART OF 444-5740, 444-5741 DISTRIBUTION AR
AN ATTACHMENT

SMCS-1000 **i06213892**

NOTE	PART NUMBER	QTY	PART NAME 1 2 3 4 5 6 (PRODUCT LEVEL)	SEE PAGE
Y	*348-4046*	1	CONTROL & MTG GP-ENGINE ELEK	235
			—OR—	
Y	*460-1194*	1	CONTROL & MTG GP-ENGINE ELEK	237
Y	*343-4347*	1	COVER GP-ENGINE	15
Y	*348-2533*	1	COVER GP-FRONT HOUSING	16
Y	*417-8579*	1	COVER GP-REAR HOUSING	17
Y	*356-4833*	1	COVER GP-SOUND SUPPRESSION	19
Y	*444-1950*	1	COVER GP-VALVE MECHANISM	23
Y	*335-9269*	1	DAMPER GP	39
Y	*347-9461*	1	ELBOW GP-AIR INLET	137
Y	*371-2275*	1	ENGINE AR	6
Y	*353-0196*	1	FILLER GP-ENGINE OIL	76
Y	*357-0336*	1	FILTER GP-ENGINE OIL	78
Y	*350-1328*	1	FILTER GP-FUEL	166
Y	*216-0811*	1	FLYWHEEL GP	44
Y	*349-8849*	1	FRAME GP-MOUNTING (EXHAUST)	138
Y	*431-8800*	1	FUMES DISPOSAL GP	80
Y	*444-6976*	1	GUARD GP-LINES	661
Y	*376-4179*	1	GAUGE GP-OIL LEVEL (DIPSTICK) (ENGINE)	81
Y	*399-5083*	1	GEAR GP-REAR	47
Y	*226-0297*	1	HOUSING GP-FLYWHEEL	50
Y	*235-2014*	1	LIFTING GP-ENGINE	55
Y	*348-7879*	1	LINES GP-AIR	139
Y	*376-6447*	1	LINES GP-ENGINE OIL	82
Y	*352-6152*	1	LINES GP-ENGINE OIL FILTER	84
Y	*357-1292*	1	LINES GP-FUEL	169
			—OR—	
Y	*440-5222*	1	LINES GP-FUEL	176
Y	*352-5699*	1	LINES GP-FUEL FILTER	178
Y	*379-3290*	1	LINES GP-TURBOCHARGER OIL	86
Y	*379-3291*	1	LINES GP-TURBOCHARGER WATER	104
Y	*354-3515*	1	LINES GP-WATER	106
Y	*375-9542*	1	LINES GP-WATER	112
Y	*445-7979*	1	MANIFOLD GP-EXHAUST	143
Y	*347-9437*	1	MANIFOLD GP-INLET	145
Y	*376-0626*	1	MOUNTING GP-ALTERNATOR	58
Y	*375-7122*	1	PAN GP-OIL	59
Y	*415-7216*	1	PANEL GP-SOUND SUPPRESSION	61
Y	*357-1093*	1	PLUG GP-CYLINDER BLOCK	64
Y	*223-6407*	1	PLUG GP-CYLINDER HEAD	65
Y	*331-7465*	1	PUMP GP-FUEL TRANSFER	185
Y	*348-4037*	1	PUMP GP-WATER	116
Y	*359-7757*	1	SENSOR GP-ENGINE	365
			—OR—	
Y	*463-5557*	1	SENSOR GP-TEMPERATURE	385
Y	*430-3375*	1	SHIELD GP-HEAT	153
Y	*419-7664*	1	SHIELD GP-MANIFOLD	154

359-6502 **ENGINE AR-COMPLETE (**contd.**)** **i06213892**

NOTE	PART NUMBER	QTY	PART NAME 1 2 3 4 5 6 (PRODUCT LEVEL)	SEE PAGE
Y	*376-6601*	1	SUPPORT GP-ENGINE	72
Y	*179-7086*	1	TRUNNION GP-ENGINE	73
Y	*375-5493*	1	TURBOCHARGER GP	157
Y	*346-9696*	1	WIRING GP-ELECTRONIC CONTROL	431
Y	*382-1477*	1	WIRING GP-ELECTRONIC CONTROL	433
			PLEASE USE THE GASKET KIT LINK IN SIS OR CONTACT YOUR LOCAL DEALER FOR THE LATEST GASKET KIT INFORMATION	

Y - SEPARATE ILLUSTRATION

<END>

443-0004 ENGINE AR-COMPLETE

S/N: JZM1-UP

PART OF 444-5742 DISTRIBUTION AR

AN ATTACHMENT

SMCS-1000 **i05856333**

NOTE	PART NUMBER	QTY	PART NAME 1 2 3 4 5 6 (PRODUCT LEVEL)	SEE PAGE
Y	*348-4046*	1	CONTROL & MTG GP-ENGINE ELEK	235
			—OR—	
Y	*460-1194*	1	CONTROL & MTG GP-ENGINE ELEK	237
Y	*343-4347*	1	COVER GP-ENGINE	15
Y	*417-8579*	1	COVER GP-REAR HOUSING	17
Y	*356-4833*	1	COVER GP-SOUND SUPPRESSION	19
Y	*384-0742*	1	COVER GP-SOUND SUPPRESSION	21
Y	*444-1950*	1	COVER GP-VALVE MECHANISM	23
Y	*335-9269*	1	DAMPER GP	39
Y	*347-9461*	1	ELBOW GP-AIR INLET	137
Y	*371-2275*	1	ENGINE AR	6
Y	*353-0196*	1	FILLER GP-ENGINE OIL	76
Y	*357-0336*	1	FILTER GP-ENGINE OIL	78
Y	*350-1328*	1	FILTER GP-FUEL	166
Y	*216-0811*	1	FLYWHEEL GP	44
Y	*349-8849*	1	FRAME GP-MOUNTING (EXHAUST)	138
Y	*431-8800*	1	FUMES DISPOSAL GP	80
Y	*444-6976*	1	GUARD GP-LINES	661
Y	*376-4179*	1	GAUGE GP-OIL LEVEL (DIPSTICK) (ENGINE)	81
Y	*399-5083*	1	GEAR GP-REAR	47
Y	*226-0297*	1	HOUSING GP-FLYWHEEL	50
Y	*235-2014*	1	LIFTING GP-ENGINE	55
Y	*348-7879*	1	LINES GP-AIR	139
Y	*376-6447*	1	LINES GP-ENGINE OIL	82
Y	*352-6152*	1	LINES GP-ENGINE OIL FILTER	84
Y	*357-1292*	1	LINES GP-FUEL	169
			—OR—	
Y	*440-5222*	1	LINES GP-FUEL	176
Y	*352-5699*	1	LINES GP-FUEL FILTER	178
Y	*379-3290*	1	LINES GP-TURBOCHARGER OIL	86
Y	*379-3291*	1	LINES GP-TURBOCHARGER WATER	104
Y	*354-3515*	1	LINES GP-WATER	106
Y	*375-9542*	1	LINES GP-WATER	112
Y	*445-7979*	1	MANIFOLD GP-EXHAUST	143
Y	*347-9437*	1	MANIFOLD GP-INLET	145
Y	*376-0626*	1	MOUNTING GP-ALTERNATOR	58
Y	*375-7122*	1	PAN GP-OIL	59
Y	*415-7216*	1	PANEL GP-SOUND SUPPRESSION	61
Y	*357-1093*	1	PLUG GP-CYLINDER BLOCK	64
Y	*223-6407*	1	PLUG GP-CYLINDER HEAD	65
Y	*331-7465*	1	PUMP GP-FUEL TRANSFER	185
Y	*348-4037*	1	PUMP GP-WATER	116
Y	*359-7757*	1	SENSOR GP-ENGINE	365
Y	*430-3375*	1	SHIELD GP-HEAT	153
Y	*419-7664*	1	SHIELD GP-MANIFOLD	154
Y	*376-6601*	1	SUPPORT GP-ENGINE	72
Y	*179-7086*	1	TRUNNION GP-ENGINE	73
Y	*375-5493*	1	TURBOCHARGER GP	157

443-0004 **ENGINE AR-COMPLETE (**contd.**)** **i05856333**

NOTE	PART NUMBER	QTY	PART NAME 1 2 3 4 5 6 (PRODUCT LEVEL)	SEE PAGE
Y	*346-9696*	1	WIRING GP-ELECTRONIC CONTROL	431
Y	*382-1477*	1	WIRING GP-ELECTRONIC CONTROL	433
			PLEASE USE THE GASKET KIT LINK IN SIS OR CONTACT YOUR LOCAL DEALER FOR THE LATEST GASKET KIT INFORMATION	

Y - SEPARATE ILLUSTRATION

<END>

371-2276 ENGINE AR-CORE

S/N: JZM1-UP

PART OF 371-2275 ENGINE AR

AN ATTACHMENT

SMCS-1000 **i05501459**

NOTE	PART NUMBER	QTY	PART NAME 1 2 3 4 5 6 (PRODUCT LEVEL)	SEE PAGE
Y	*223-6408*	1	BASE GP-VALVE COVER & INJ HARN	12
Y	*260-9306*	1	CAMSHAFT GP	14
Y	*225-6052*	1	CRANKSHAFT GP	26
Y	*349-2528*	1	CYLINDER BLOCK GP	30
Y	*339-3585*	1	CYLINDER HEAD GP	35
Y	*4N-2481*	1	FASTENER GP-OIL PUMP MOUNTING (ENGINE)	75
Y	*355-2287*	1	GEAR GP-FRONT	45
Y	*238-9862*	1	HOUSING GP-FRONT	52
			—OR—	
Y	*350-1639*	1	HOUSING GP-FRONT	53
Y	*350-8861*	1	HOUSING GP-REAR	54
Y	*260-9631*	1	MECHANISM GP-FUEL PUMP & VALVE	57
Y	*213-4836*	12	PISTON & ROD GP	62
YR	**174-7916**	1	PUMP GP-ENGINE OIL	98
Y	*238-0489*	12	PUMP GP-FUEL INJECTION	181
Y	*347-7065*	1	SENSOR GP-ENGINE	363

R - REMANUFACTURED PART MAY BE AVAILABLE
Y - SEPARATE ILLUSTRATION

<END>

359-6404 INSTALLATION AR-ENGINE

S/N: RAB1-UP
PART OF 440-9398 COMMON AR
AN ATTACHMENT

SMCS-1000 **i05667529**

NOTE	PART NUMBER	QTY	PART NAME 1 2 3 4 5 6 (PRODUCT LEVEL)	SEE PAGE
Y	*359-6461*	1	AFTERCOOLER GP-AIR	131
Y	*359-6463*	1	AIR CLEANER GP	133
Y	*359-6465*	1	COOLER GP-HYDRAULIC OIL	877
Y	*359-6466*	1	COOLER GP-TRANSMISSION OIL	511
Y	*359-6468*	1	DRIVE GP-ACCESSORY	41
Y	*359-6469*	1	DUST EJECTOR GP	136
Y	*359-6470*	1	FAN GP-SUCTION	102
Y	*359-6467*	1	FUMES DISPOSAL GP	79
Y	*359-6462*	1	STARTING AID GP-ETHER	387
Y	*359-6475*	1	STARTING MOTOR GP-ELECTRIC	398
Y	*359-6476*	1	SUPPORT GP-ENGINE	71
Y	*359-6477*	1	TANK GP-COOLANT	125

Y - SEPARATE ILLUSTRATION

<END>

359-6500 INSTALLATION AR-ENGINE

S/N: RAB1-UP
PART OF 444-5740, 444-5741, 444-5742 DISTRIBUTION AR
ALSO AN ATTACHMENT

SMCS-1000 **i05421544**

NOTE	PART NUMBER	QTY	PART NAME 1 2 3 4 5 6 (PRODUCT LEVEL)	SEE PAGE
Y	*381-3648*	1	COVER GP-HOOD	602
Y	*359-6369*	1	LINES GP-AIR	140
Y	*361-2156*	1	LINES GP-AIR	141
Y	*348-3626*	1	LINES GP-EXHAUST	142
Y	*359-6364*	1	LINES GP-FUEL	171
Y	*361-2157*	1	LINES GP-WATER	108
Y	*390-6783*	1	MUFFLER & MOUNTING GP	147
Y	*416-4697*	1	WIRING GP-ENGINE	435

Y - SEPARATE ILLUSTRATION

<END>

223-6408 BASE GP-VALVE COVER & INJ HARN

S/N: JZM1-UP
PART OF 371-2276 ENGINE AR-CORE
AN ATTACHMENT

SMCS-1120, 1408 **i02230983**

NOTE	REF NO	GRAPHIC REF	PART NUMBER	QTY	PART NAME 1 2 3 4 5 6 (PRODUCT LEVEL)	SEE PAGE
	1	1	**7E-6508**	12	CAP AS (UNIT INJECTOR)	
Y	2	1	*226-4927*	2	BASE GP-VALVE COVER & INJ HARN	13
	3	1	**1A-9579**	32	BOLT (5/16-18X1.5-IN)	
	4	1	**9M-1974**	32	WASHER-HARD (8.8X16X2-MM THK)	

Y - SEPARATE ILLUSTRATION

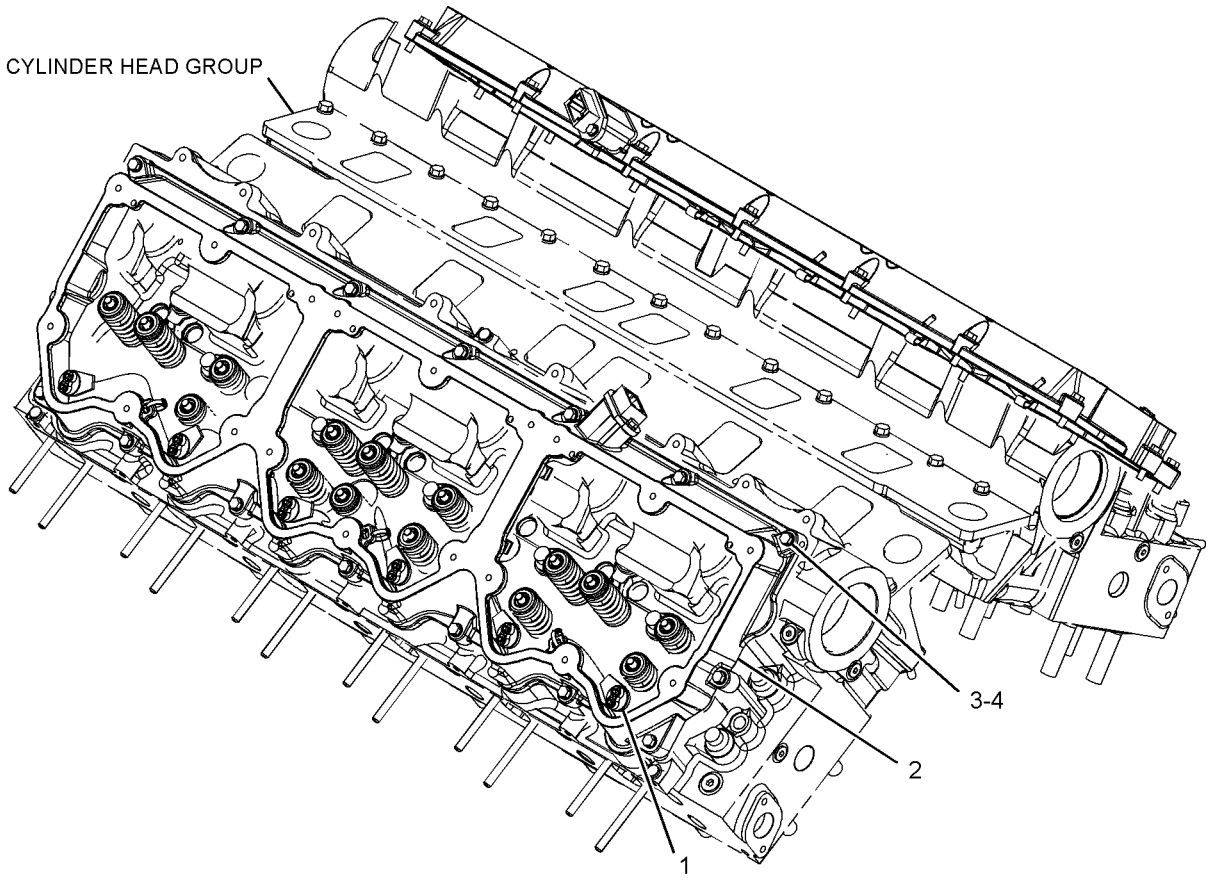

GRAPHIC #1 <END> g01051256

226-4927 BASE GP-VALVE COVER & INJ HARN

S/N: JZM1-UP

PART OF 223-6408 BASE GP-VALVE COVER & INJ HARN

AN ATTACHMENT

SMCS-1120, 1408 **i05509234**

NOTE	REF NO	GRAPHIC REF	PART NUMBER	QTY	PART NAME 1 2 3 4 5 6 (PRODUCT LEVEL)	SEE PAGE
	1	1	**6V-0128**	1	SEAL-CONNECTOR	
	2	1	**326-4512**	6	MOUNTING-CABLE TIE	
CY	3	1	**435-8538**	1	HARNESS AS-ENGINE (UNIT INJECTOR)	262
	4	1	**442-5727**	1	BASE-VALVE COVER	
	5	1	**123-3202**	6	STRAP-CABLE	
	6	1	**1H-3337**	2	BOLT (1/4-20X0.875-IN)	
	7	1	**222-6456**	1	SEAL (VALVE COVER BASE)	
	8	1	**8T-4205**	2	WASHER-HARD (7.2X14.5X2-MM THK)	

C - CHANGE FROM PREVIOUS TYPE
Y - SEPARATE ILLUSTRATION

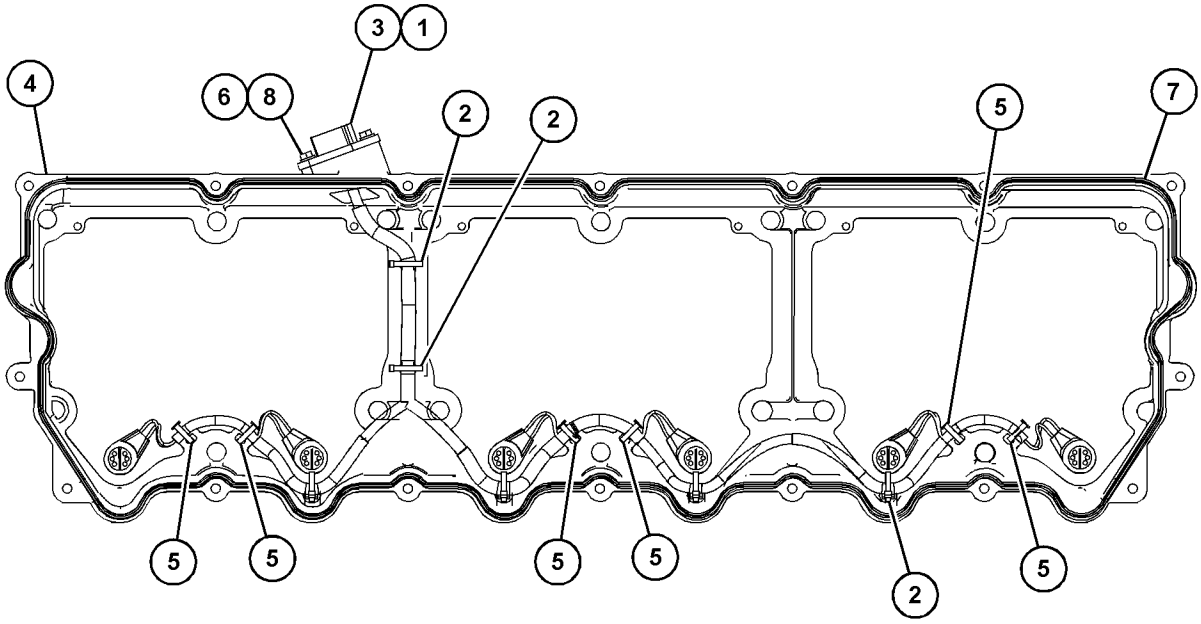

BOTTOM VIEW OF ENGINE

GRAPHIC #1 <END> g03486436

260-9306 CAMSHAFT GP

S/N: JZM1-UP
PART OF 371-2276 ENGINE AR-CORE
AN ATTACHMENT

SMCS-1210 **i05090116**

NOTE	REF NO	GRAPHIC REF	PART NUMBER	QTY	PART NAME 1 2 3 4 5 6 (PRODUCT LEVEL)	SEE PAGE
CR	1	1	**421-0087**	1	CAMSHAFT (RIGHT BANK)	
CJR	2	1	**421-0097**	1	CAMSHAFT (LEFT BANK)	

C - CHANGE FROM PREVIOUS TYPE
J - END MARKED "F" ON FRONT END OF ENGINE
R - REMANUFACTURED PART MAY BE AVAILABLE

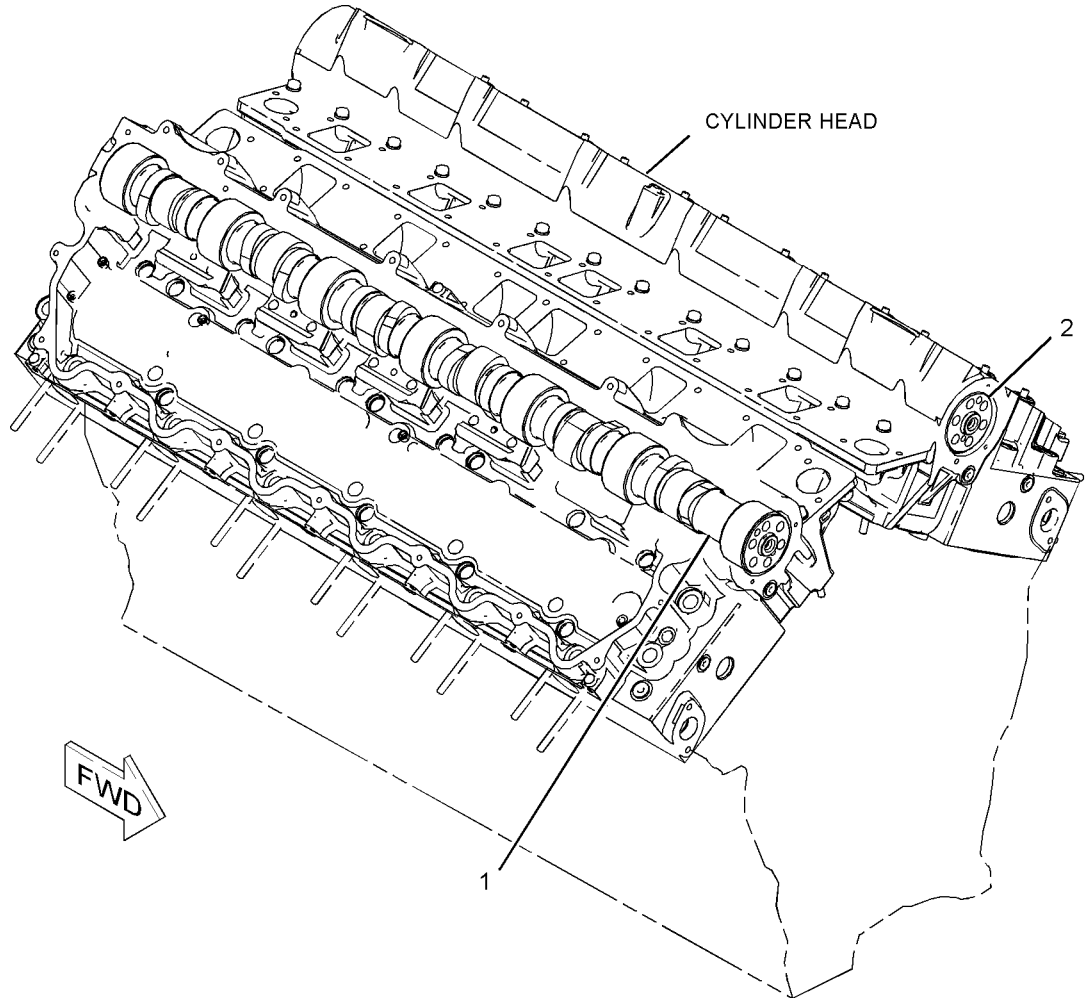

GRAPHIC #1 <END> g01051265

343-4347 COVER GP-ENGINE

S/N: JZM1-UP
PART OF 359-6502, 443-0004 ENGINE AR-COMPLETE
AN ATTACHMENT

SMCS-1000 **i04384049**

NOTE	REF NO	GRAPHIC REF	PART NUMBER	QTY	PART NAME 1 2 3 4 5 6 (PRODUCT LEVEL)	SEE PAGE
	1	1	**4N-1683**	1	COVER	
	2	1	**239-5571**	1	SEAL-INTEGRAL	
	3	1	**0S-1588**	2	BOLT (3/8-16X1.25-IN)	
	4	1	**0S-1594**	5	BOLT (3/8-16X1-IN)	
	5	1	**234-8937**	1	SEAL-INTEGRAL	
	6	1	**239-5572**	1	SEAL-INTEGRAL	
	7	1	**2P-2772**	1	COVER	
	8	1	**4N-0794**	1	COVER	
	9	1	**5M-2894**	7	WASHER-HARD (10.2X18.5X2.5-MM THK)	

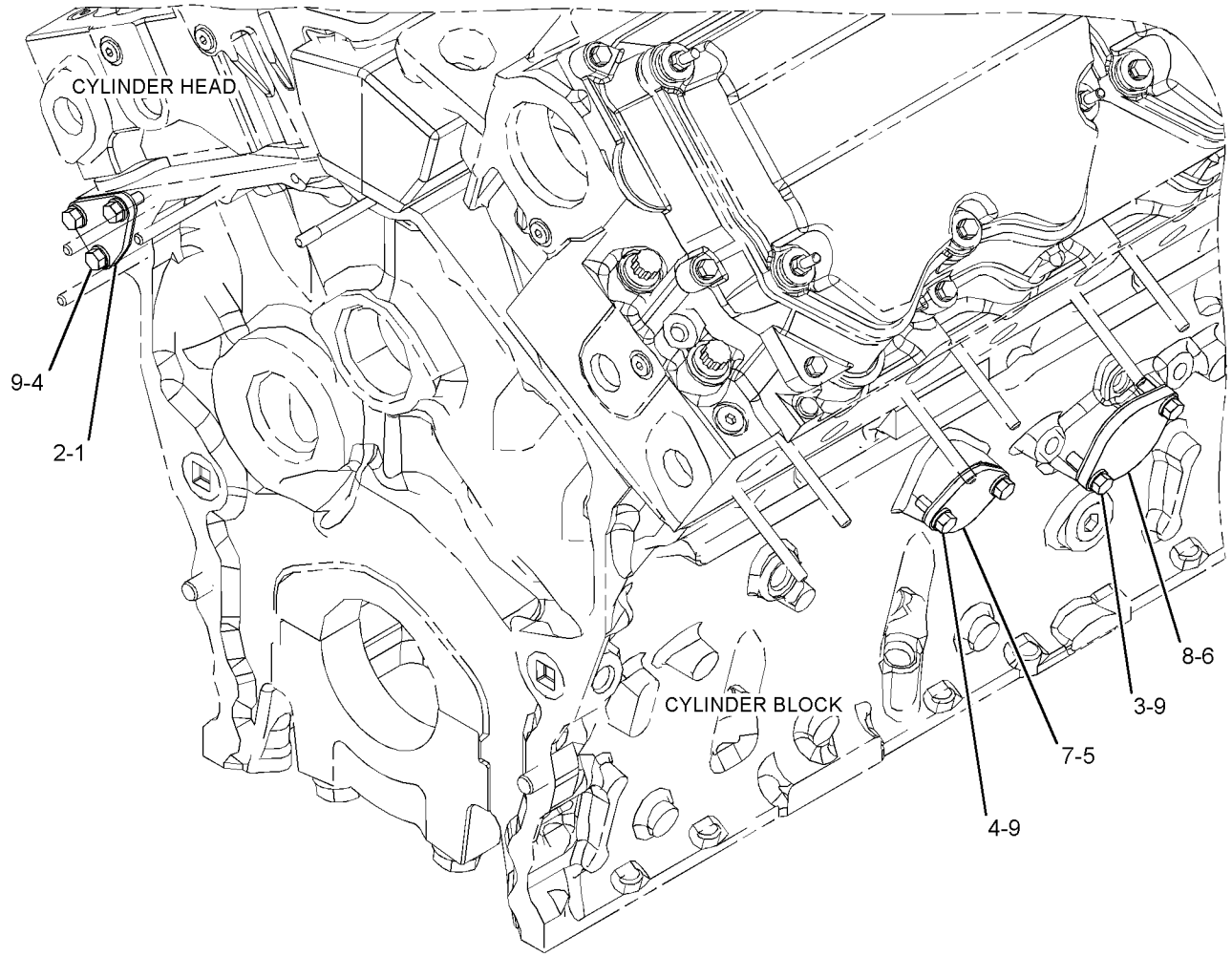

GRAPHIC #1 <END> g02576478

348-2533 COVER GP-FRONT HOUSING

S/N: JZM1-UP
FOR COVERS WITHOUT SOUND PANELS
PART OF 359-6502 ENGINE AR-COMPLETE
AN ATTACHMENT

SMCS-1151, 1166 **i05318351**

NOTE	REF NO	GRAPHIC REF	PART NUMBER	QTY	PART NAME 1 2 3 4 5 6 (PRODUCT LEVEL)	SEE PAGE
	1	1	**4P-7820**	1	COVER-ACCESSORY DRIVE	
	2	1	**239-1139**	2	SEAL	
	3	1	**274-4051**	1	COVER-CAMSHAFT	
	4	1	**274-4052**	1	COVER-CAMSHAFT	
	5	1	**0S-1590**	2	BOLT (3/8-16X2-IN)	
	6	1	**0S-1594**	3	BOLT (3/8-16X1-IN)	
	7	1	**125-9794**	1	SEAL-O-RING	
	8	1	**238-4664**	2	STUD (3/8-16-THD)	
	9	1	**2M-1538**	1	STUD-TAPERLOCK (3/8-16X1.6-IN)	
	10	1	**2P-1974**	3	STUD-TAPERLOCK (3/8-16X4.2-IN)	
	11	1	**3K-3256**	1	STUD-TAPERLOCK (3/8-16X1.7-IN)	
	12	1	**5F-4899**	2	BOLT (3/8-16X5.5-IN)	
	13	1	**5M-2894**	5	WASHER-HARD (10.2X18.5X2.5-MM THK)	
	14	1	**9S-8752**	6	NUT-FULL (3/8-16-THD)	
	15	1	**9X-6458**	10	WASHER-HARD (10.2X22.5X3-MM THK)	

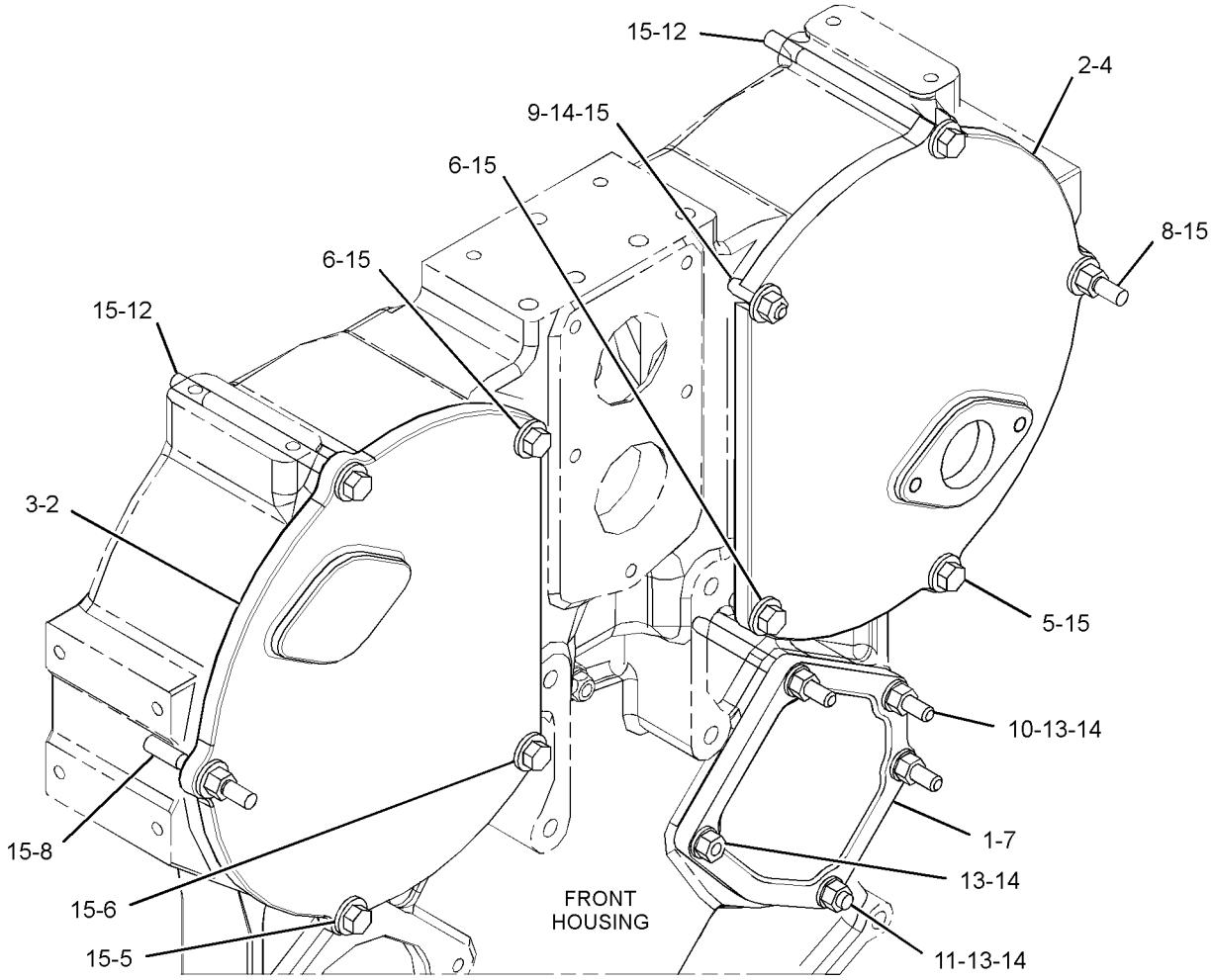

GRAPHIC #1 <END> g02403857

417-8579 COVER GP-REAR HOUSING

S/N: JZM1-UP

PART OF 359-6502, 443-0004 ENGINE AR-COMPLETE

AN ATTACHMENT

SMCS-1157 **i05193298**

NOTE	REF NO	GRAPHIC REF	PART NUMBER	QTY	PART NAME 1 2 3 4 5 6 (PRODUCT LEVEL)	SEE PAGE
	1	1	**4N-1114**	1	COVER	
	2	1	**6V-5553**	2	SEAL-O-RING	
	3	1	**9Y-6089**	1	GASKET	
	4	1	**227-5538**	1	SEAL-O-RING	
	5	1	**230-4157**	2	COVER	
	6	1	**234-8937**	2	SEAL-INTEGRAL	
	7	1	**273-8703**	1	COVER	
	8	1	**0L-1351**	1	BOLT (3/8-16X0.875-IN)	
	9	1	**0S-0509**	7	BOLT (3/8-16X0.75-IN)	
	10	1	**0S-1566**	3	BOLT (5/8-11X1.5-IN)	
	11	1	**0S-1619**	2	BOLT (3/8-16X3-IN)	
	12	1	**129-3172**	2	STUD-MOUNTING (3/8-16X1.564-IN)	
	13	1	**1A-2029**	4	BOLT (3/8-16X1.125-IN)	
	14	1	**2P-2772**	2	COVER	
	15	1	**4P-7429**	1	CLIP	
	16	1	**5M-2894**	16	WASHER-HARD (10.2X18.5X2.5-MM THK)	
	17	1	**5P-8247**	3	WASHER-HARD (17X32X3.5-MM THK)	

417-8579 **COVER GP-REAR HOUSING (**contd.**)** **i05193298**

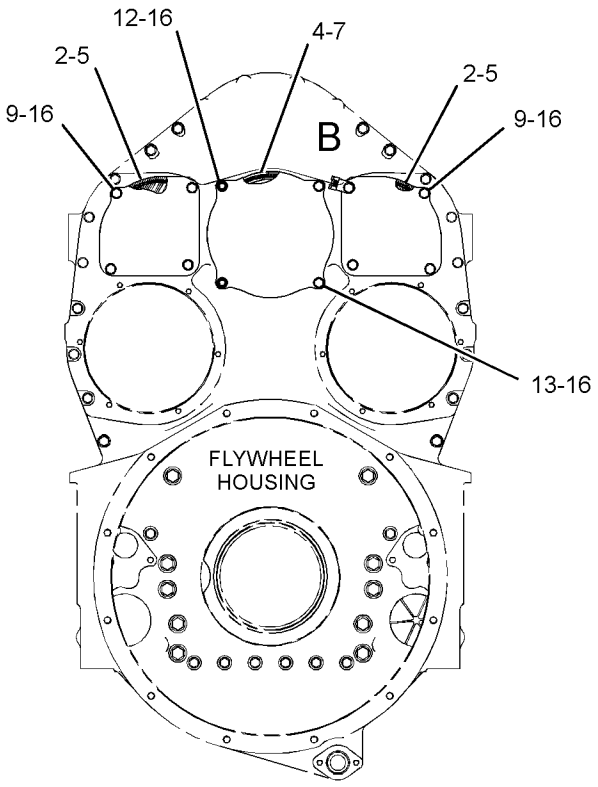

REAR VIEW OF ENGINE

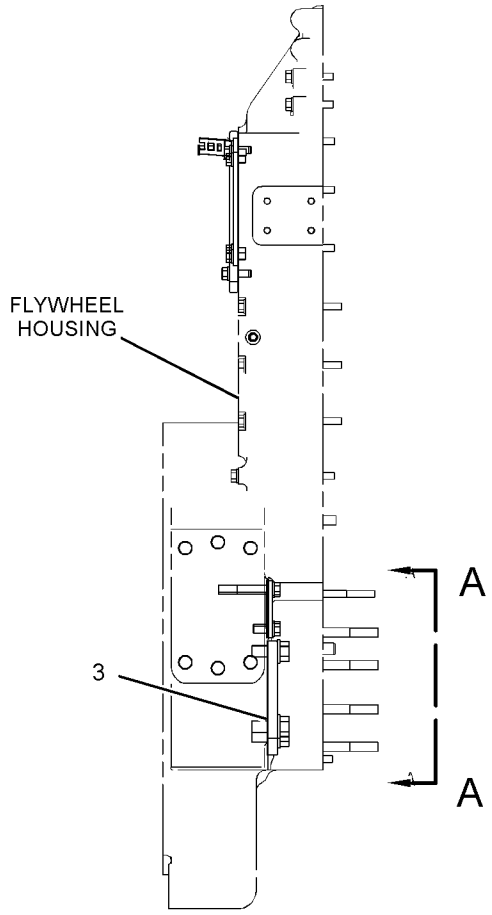

RIGHT SIDE VIEW OF ENGINE

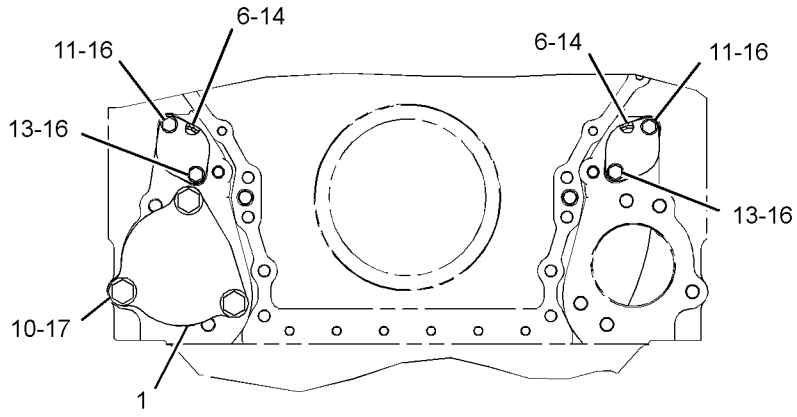

VIEW A-A

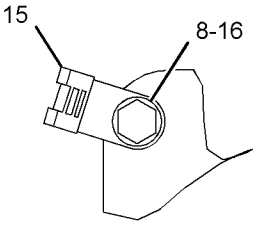

VIEW OF AREA B

GRAPHIC #1 <END> g03453889

356-4833 COVER GP-SOUND SUPPRESSION

S/N: JZM1-UP

PART OF 359-6502, 443-0004 ENGINE AR-COMPLETE

AN ATTACHMENT

SMCS-1801 **i06598866**

NOTE	REF NO	GRAPHIC REF	PART NUMBER	QTY	PART NAME 1 2 3 4 5 6 (PRODUCT LEVEL)	SEE PAGE
	1	1	**453-5531**	1	PANEL AS-SOUND SUPPRESSION (LH)	
		1	**6C-9237**	6	RIVET	
		1	**455-1944**	2	BRACKET-SUPPORT	
	2	1	**453-5532**	1	PANEL AS-SOUND SUPPRESSION (RH)	
		1	**6C-9237**	3	RIVET	
		1	**455-1944**	1	BRACKET-SUPPORT	
	3	1	**9X-6458**	3	WASHER-HARD (10.2X22.5X3-MM THK)	
	4	1	**0L-1351**	3	BOLT (3/8-16X0.875-IN)	
	5	1	**0S-1588**	7	BOLT (3/8-16X1.25-IN)	
	6	1	**5M-2894**	7	WASHER-HARD (10.2X18.5X2.5-MM THK)	

356-4833 **COVER GP-SOUND SUPPRESSION (**contd.**)** **i06598866**

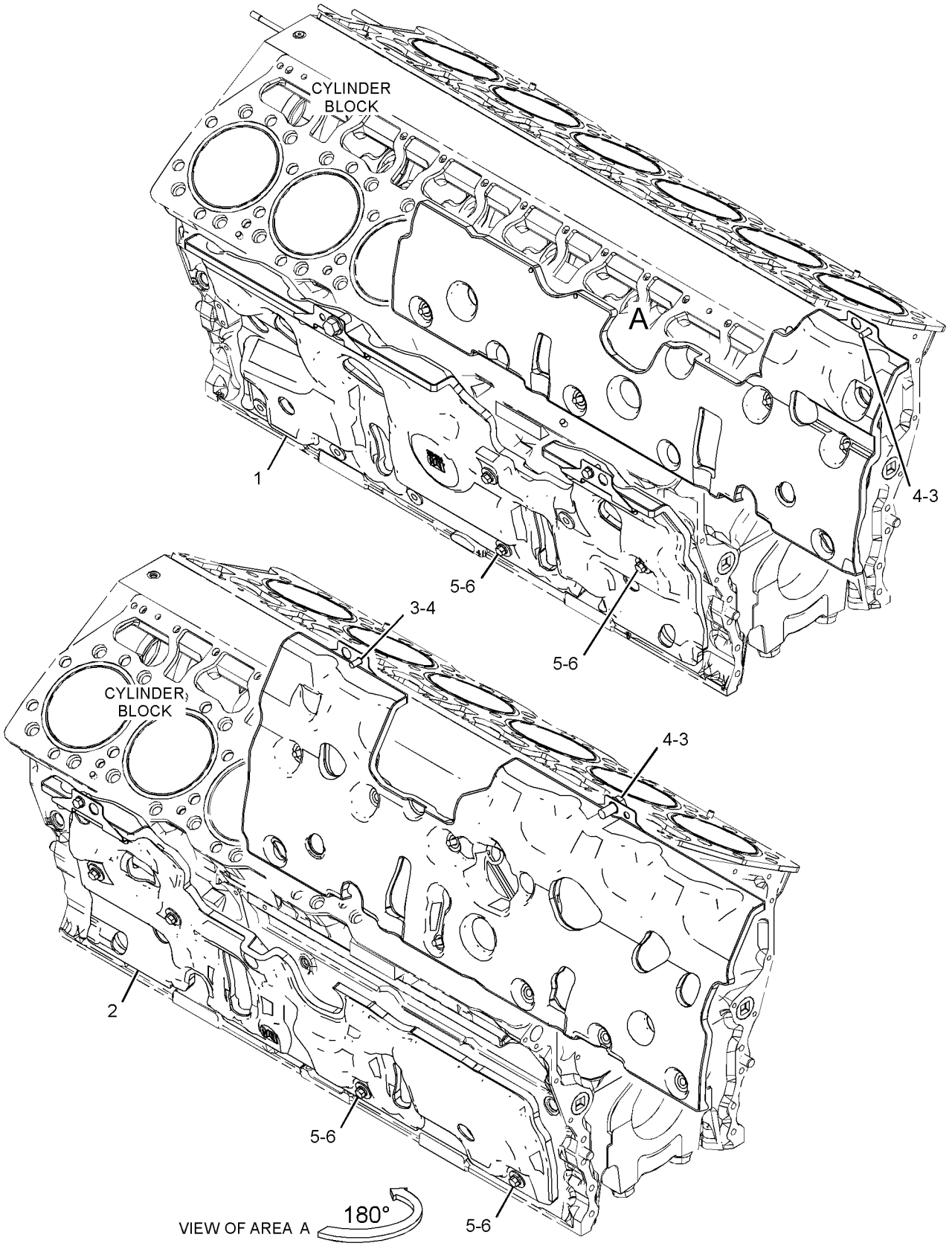

GRAPHIC #1 <END> g06041531

384-0742 COVER GP-SOUND SUPPRESSION

S/N: JZM1-UP

PART OF 443-0004 ENGINE AR-COMPLETE

AN ATTACHMENT

SMCS-1801 **i05195734**

NOTE	REF NO	GRAPHIC REF	PART NUMBER	QTY	PART NAME 1 2 3 4 5 6 (PRODUCT LEVEL)	SEE PAGE
	1	1	**4P-7820**	1	COVER-ACCESSORY DRIVE	
	2	1	**239-1139**	2	SEAL	
	3	1	**274-4051**	1	COVER-CAMSHAFT	
	4	1	**274-4052**	1	COVER-CAMSHAFT	
	5	1	**381-6883**	1	COVER AS-SOUND SUPPRESSION	
	6	1	**0L-1143**	1	BOLT (3/8-16X2.5-IN)	
	7	1	**0S-1588**	1	BOLT (3/8-16X1.25-IN)	
	8	1	**0S-1590**	1	BOLT (3/8-16X2-IN)	
	9	1	**125-9794**	1	SEAL-O-RING	
	10	1	**143-9393**	1	STUD (3/8-16-THD)	
	11	1	**1D-4706**	2	BOLT (3/8-16X6-IN)	
	12	1	**238-4664**	2	STUD (3/8-16-THD)	
	13	1	**2A-4639**	2	BOLT (3/8-16X1.625-IN)	
	14	1	**2M-1538**	1	STUD-TAPERLOCK (3/8-16X1.6-IN)	
	15	1	**2P-1974**	2	STUD-TAPERLOCK (3/8-16X4.2-IN)	
	16	1	**3K-3256**	1	STUD-TAPERLOCK (3/8-16X1.7-IN)	
	17	1	**5M-2894**	5	WASHER-HARD (10.2X18.5X2.5-MM THK)	
	18	1	**9S-8752**	5	NUT-FULL (3/8-16-THD)	
	19	1	**9X-6458**	10	WASHER-HARD (10.2X22.5X3-MM THK)	

384-0742 **COVER GP-SOUND SUPPRESSION** (contd.) **i05195734**

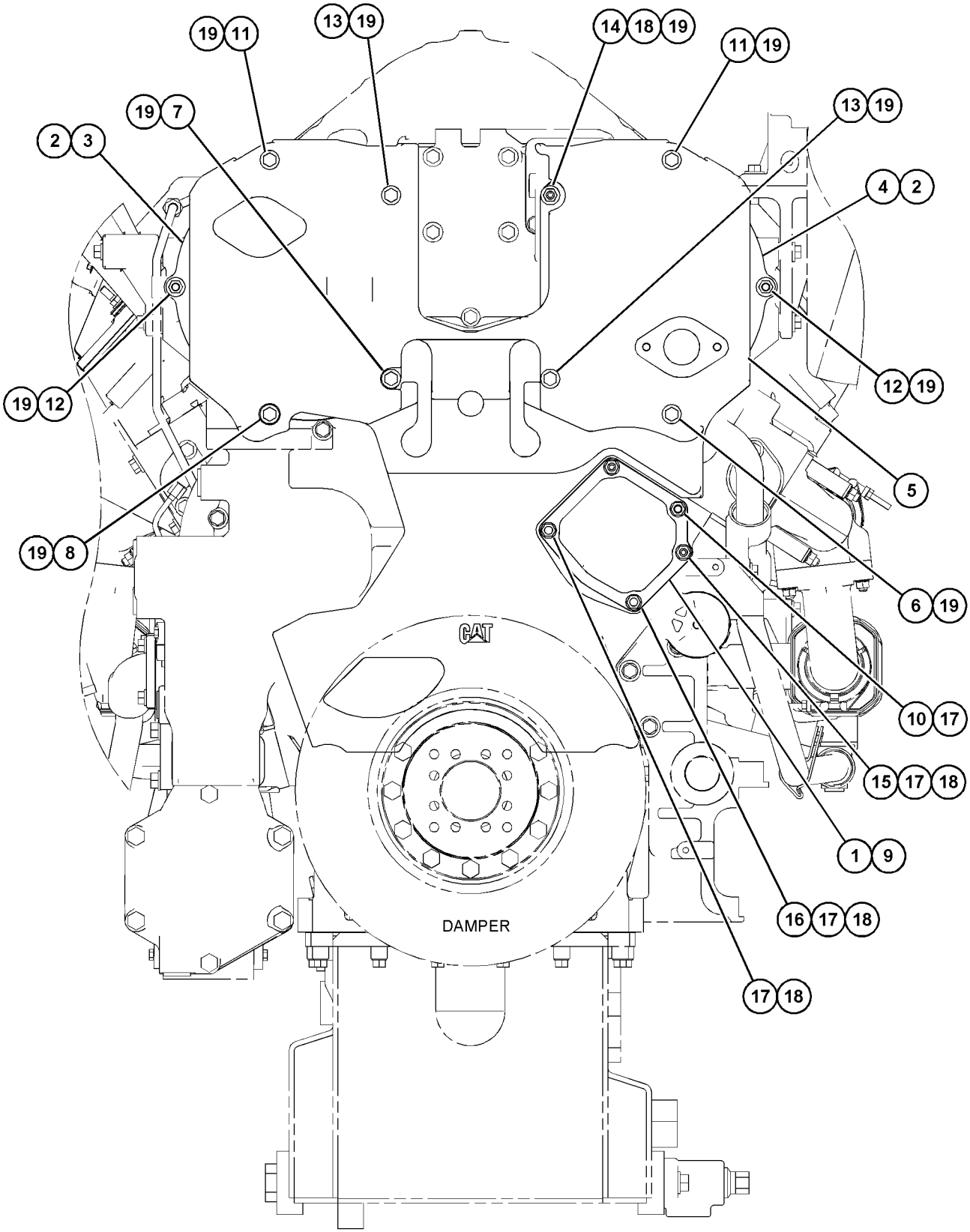

FRONT VIEW OF ENGINE

GRAPHIC #1 <END> g03529276

444-1950 COVER GP-VALVE MECHANISM

S/N: JZM1-UP
PART OF 359-6502, 443-0004 ENGINE AR-COMPLETE
AN ATTACHMENT
TYPE 1

SMCS-1107 **i05501510**

NOTE	REF NO	GRAPHIC REF	PART NUMBER	QTY	PART NAME 1 2 3 4 5 6 (PRODUCT LEVEL)	SEE PAGE
	1	1	**4W-3027**	2	BREATHER AS (CRANKCASE)	
	2	1	**4W-3034**	2	CLAMP-HOSE	
	3	1	**126-0559**	4	BOLT (5/16-18X1.25-IN)	
	4	1	**224-9907**	14	STUD (5/16-18-THD)	
	5	1	**345-2011**	2	ELBOW	
	6	1	**387-9526**	6	SEAL	
	7	1	**437-0127**	3	COVER	
	8	1	**437-0128**	2	COVER AS	
	9	1	**447-8811**	1	COVER	
	10	1	**033-6031**	2	SEAL-O-RING	
	11	1	**4P-8525**	36	SPACER (9X16X30-MM THK)	
	12	1	**5P-8211**	2	SEAL-O-RING	
	13	1	**7X-0440**	22	BOLT (5/16-18X1.75-IN)	

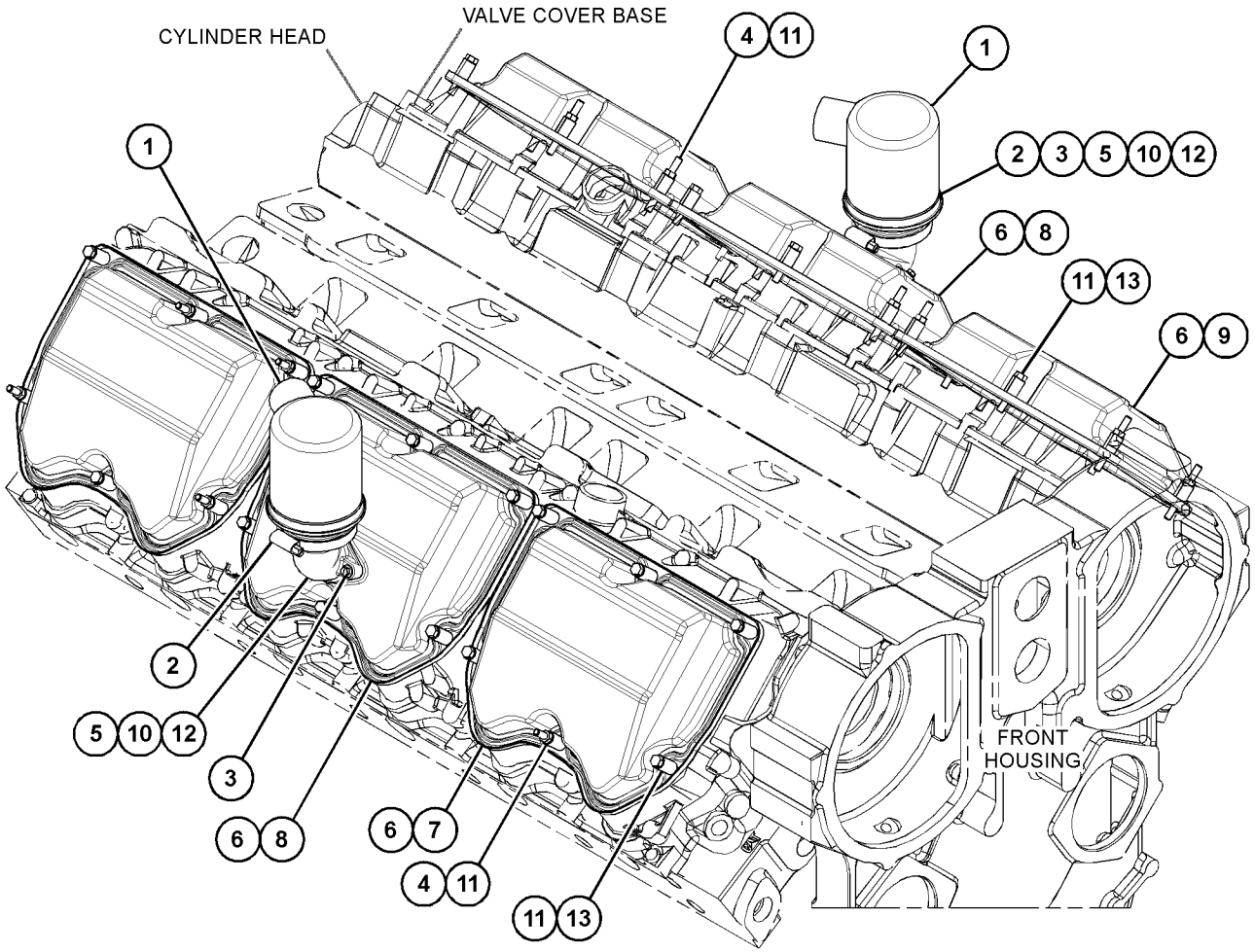

GRAPHIC #1 <END> g03512396

444-1950 COVER GP-VALVE MECHANISM

S/N: JZM1-UP
PART OF 359-6502, 443-0004 ENGINE AR-COMPLETE
AN ATTACHMENT
TYPE 2

SMCS-1107 **i05635013**

NOTE	REF NO	GRAPHIC REF	PART NUMBER	QTY	PART NAME 1 2 3 4 5 6 (PRODUCT LEVEL)	SEE PAGE
	1	1	**4W-3027**	2	BREATHER AS (CRANKCASE)	
	2	1	**4W-3034**	2	CLAMP-HOSE	
	3	1	**126-0559**	4	BOLT (5/16-18X1.25-IN)	
	4	1	**224-9907**	14	STUD (5/16-18-THD)	
	5	1	**345-2011**	2	ELBOW	
C	6	1	**449-9059**	6	SEAL	
C	7	1	**448-3693**	3	COVER-VALVE MECHANISM	
C	8	1	**448-3694**	2	COVER AS-VALVE MECHANISM	
C	9	1	**448-3695**	1	COVER AS-VALVE MECHANISM	
	10	1	**033-6031**	2	SEAL-O-RING	
	11	1	**4P-8525**	36	SPACER (9X16X30-MM THK)	
	12	1	**5P-8211**	2	SEAL-O-RING	
	13	1	**7X-0440**	22	BOLT (5/16-18X1.75-IN)	

C - CHANGE FROM PREVIOUS TYPE

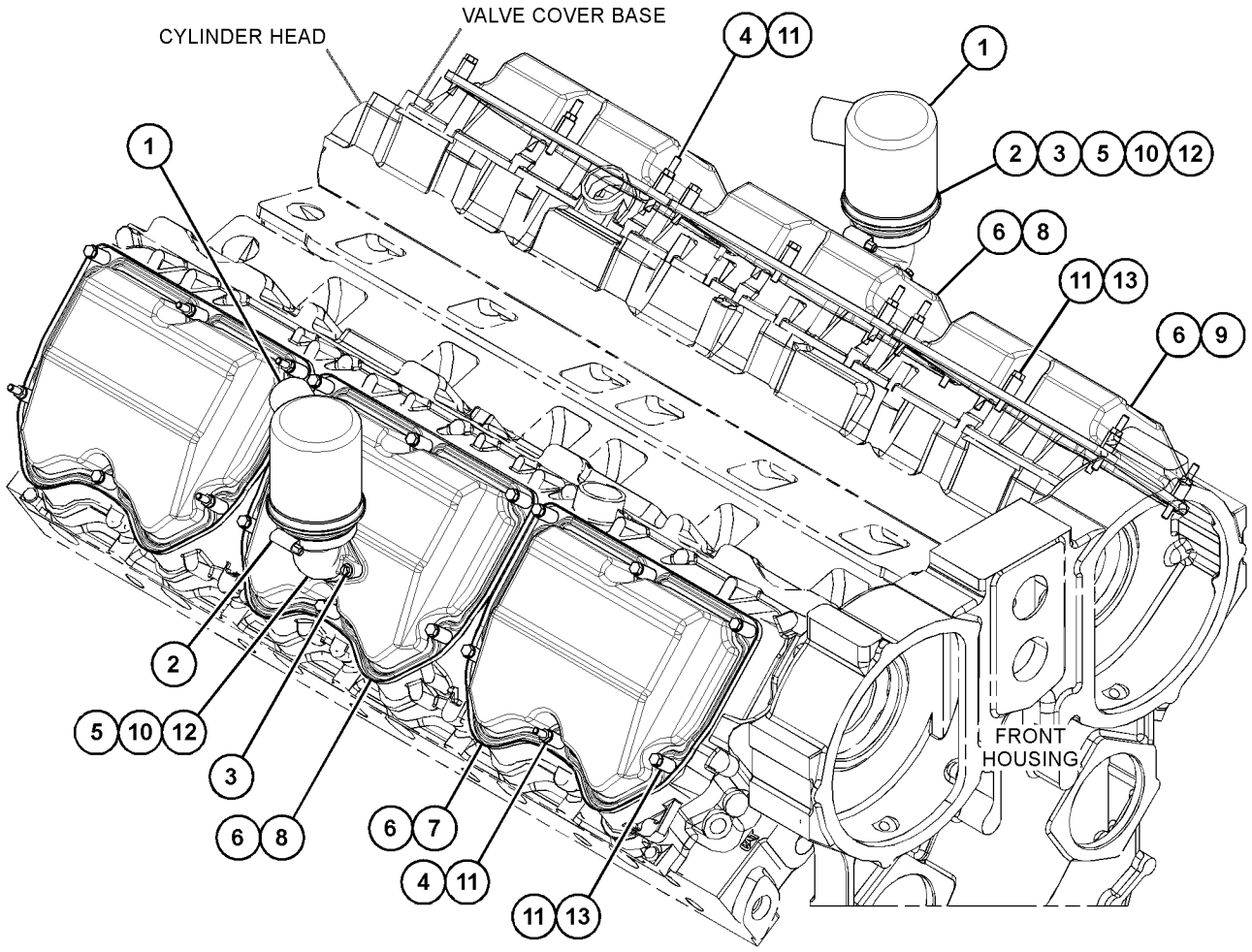

GRAPHIC #1 <END> g03512396

444-1950 COVER GP-VALVE MECHANISM

S/N: JZM1-UP
PART OF 359-6502, 443-0004 ENGINE AR-COMPLETE
AN ATTACHMENT
TYPE 3

SMCS-1107 **i06595807**

NOTE	REF NO	GRAPHIC REF	PART NUMBER	QTY	PART NAME 1 2 3 4 5 6 (PRODUCT LEVEL)	SEE PAGE
	1	1	**4W-3027**	2	BREATHER AS (CRANKCASE)	
	2	1	**4W-3034**	2	CLAMP-HOSE	
C	3	1	**126-0559**	8	BOLT (5/16-18X1.25-IN)	
	4	1	**224-9907**	14	STUD (5/16-18-THD)	
C	5	1	**481-3211**	2	ELBOW	
	6	1	**449-9059**	6	SEAL	
	7	1	**448-3693**	3	COVER-VALVE MECHANISM	
C	8	1	**481-2514**	2	COVER-VALVE MECHANISM	
	9	1	**448-3695**	1	COVER AS-VALVE MECHANISM	
	10	1	**033-6031**	2	SEAL-O-RING	
C	11	1	**4P-8525**	34	SPACER (9X16X30-MM THK)	
C	12	1	**061-9457**	2	SEAL-O-RING	
C	13	1	**7X-0440**	20	BOLT (5/16-18X1.75-IN)	
C	14	1	**237-3759**	2	STUD (5/16-18X2.36-IN)	
C	15	1	**267-4211**	2	SPACER (8.8X16X15-MM THK)	

C - CHANGE FROM PREVIOUS TYPE

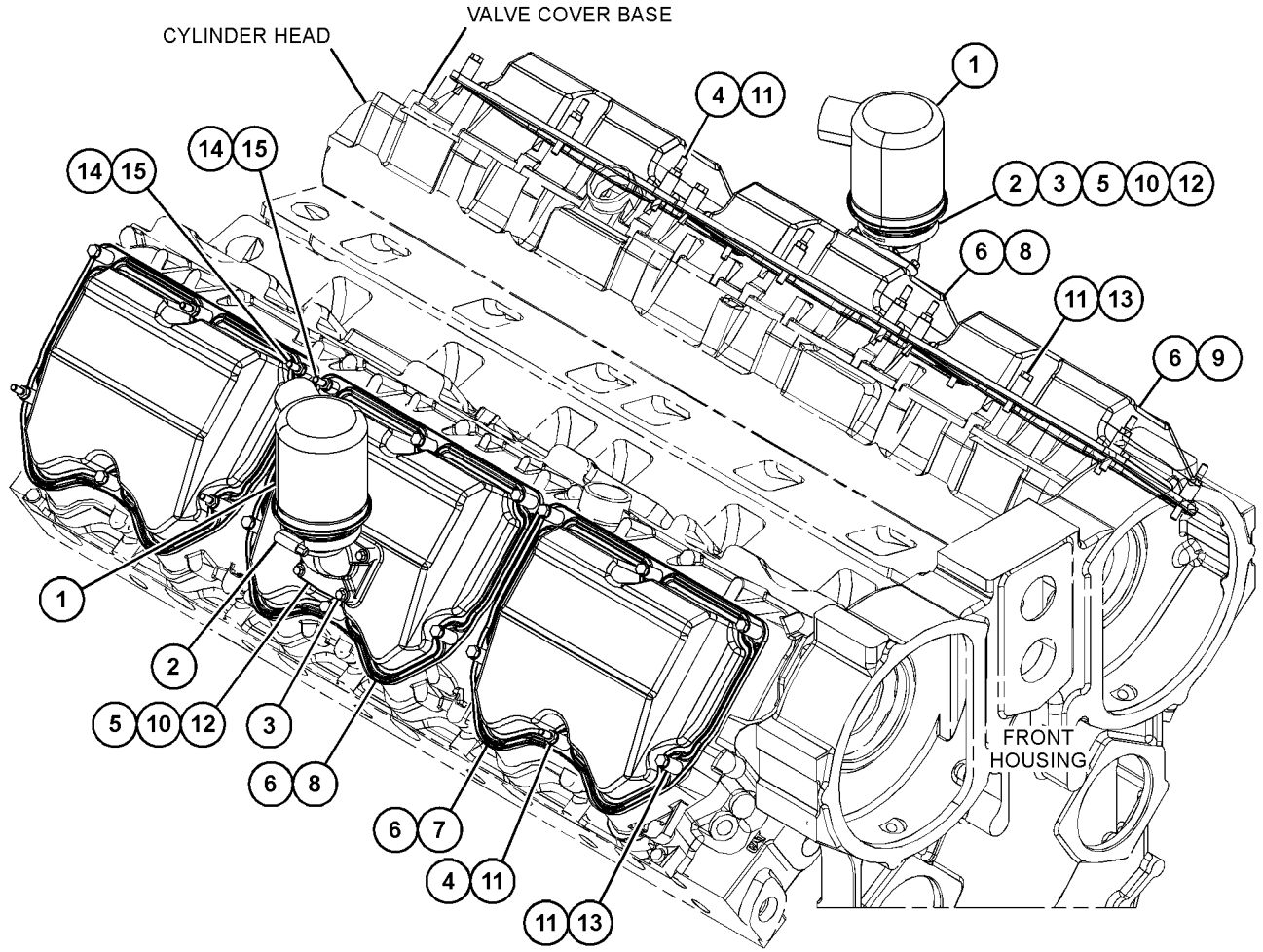

GRAPHIC #1 <END> g06044986

225-6052 CRANKSHAFT GP

S/N: JZM1-UP
PART OF 371-2276 ENGINE AR-CORE
AN ATTACHMENT

SMCS-1202 **i05235616**

NOTE	REF NO	GRAPHIC REF	PART NUMBER	QTY	PART NAME 1 2 3 4 5 6 (PRODUCT LEVEL)	SEE PAGE
J	1	1	**253-1752**	2	PLATE-THRUST	
Y	2	1	*319-7401*	1	SEAL GP-CRANKSHAFT (FRONT)	70
J	3	1	**317-8766**	7	BEARING-MAIN (STANDARD)	
AB		1	**4W-5698**		BEARING-MAIN (0.63-MM US)	
AB		1	**4W-5699**		BEARING-MAIN (1.27-MM US)	
AB		1	**4W-5700**		BEARING-MAIN (0.63-MM OS)	
AB		1	**4W-5701**		BEARING-MAIN (0.63-MM OS, 0.63-MM US)	
R	4	1	**384-9907**	1	CRANKSHAFT AS	
	4A	1	**4N-0684**	1	DOWEL	
	4B	1	**7S-5005**	1	DOWEL	
	4C	1	**223-9135**	1	GEAR-CRANKSHAFT (99-TEETH)	
					AVAILABLE REPAIR KIT(S):	
AJ			**243-6718**		KIT-CRANKSHAFT BEARING (STANDARD)	
					(KIT INCLUDES A COMPLETE SET OF MAIN BEARINGS & THRUST PLATES)	

A - NOT PART OF THIS GROUP
B - USE AS REQUIRED
J - KIT MARKED J INCLUDES PART(S) MARKED J
R - REMANUFACTURED PART MAY BE AVAILABLE
Y - SEPARATE ILLUSTRATION

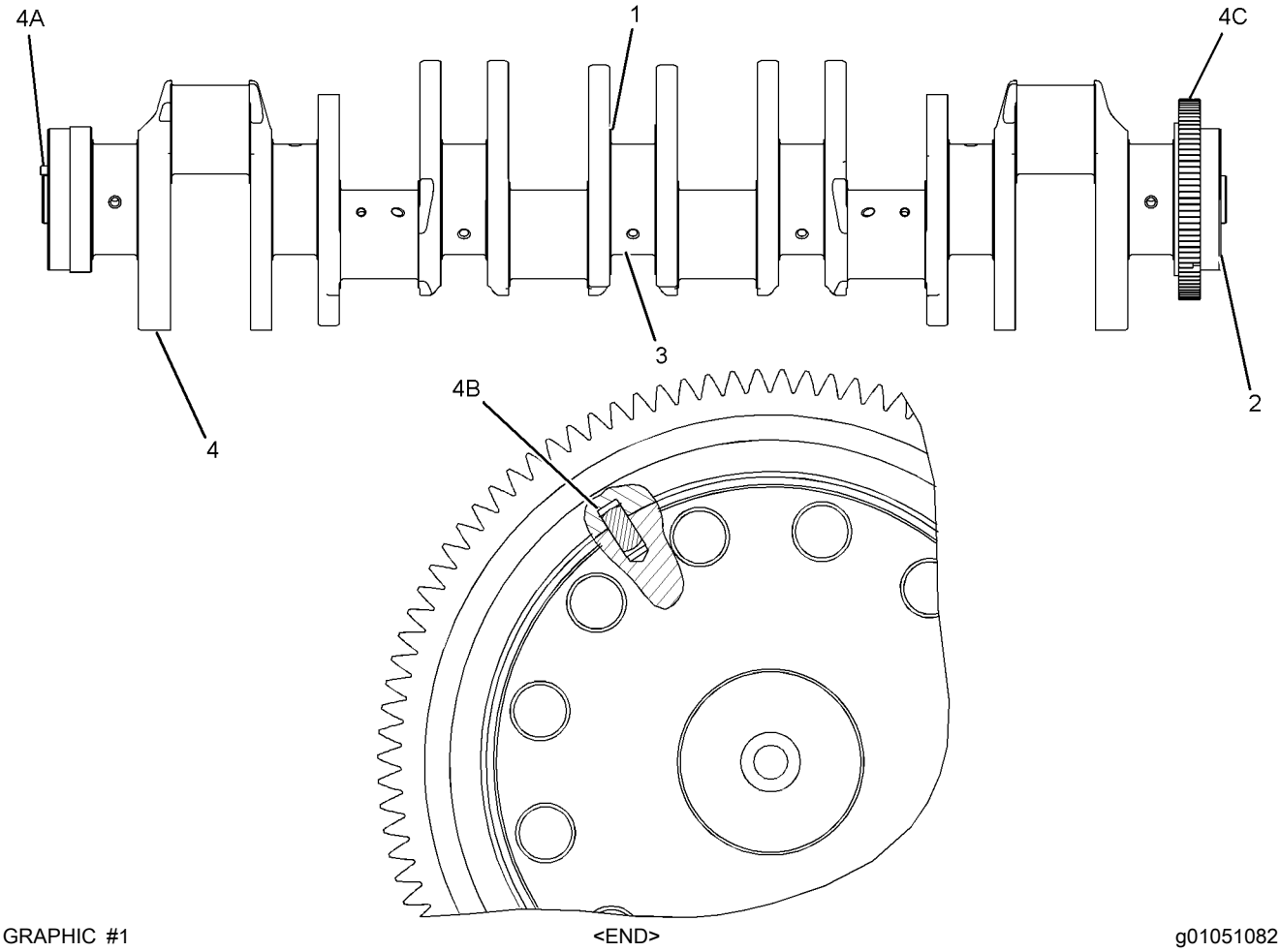

GRAPHIC #1 <END> g01051082

348-9904 CYLINDER BLOCK AS

S/N: JZM1-UP
PART OF 348-9905 CYLINDER BLOCK AS
AN ATTACHMENT

SMCS-1201 **i05426051**

NOTE	REF NO	GRAPHIC REF	PART NUMBER	QTY	PART NAME 1 2 3 4 5 6 (PRODUCT LEVEL)	SEE PAGE
	1	1	**3P-1323**	14	BOLT-BEARING CAP (7/8-14X7.75-IN)	
	2	1	**225-5966**	1	SLEEVE	
	3	1	**232-7607**	7	CAP-CRANKSHAFT	
	4	1	**365-4307**	14	BOLT-12 POINT HEAD (M11X1.25X50-MM)	
	5	1	*341-0087*	2	PLUG AS	
					(EACH INCLUDES)	
		1	**6V-6609**	1	SEAL-O-RING	
		1	**9S-4185**	1	PLUG	
	6	1	**4N-0685**	1	BUSHING (1-IN WIDE)	
	7	1	**4N-6658**	1	BUSHING (1.3-IN WIDE)	
	9	1	**9H-1031**	14	WASHER-HARD (24X41.5X6-MM THK)	

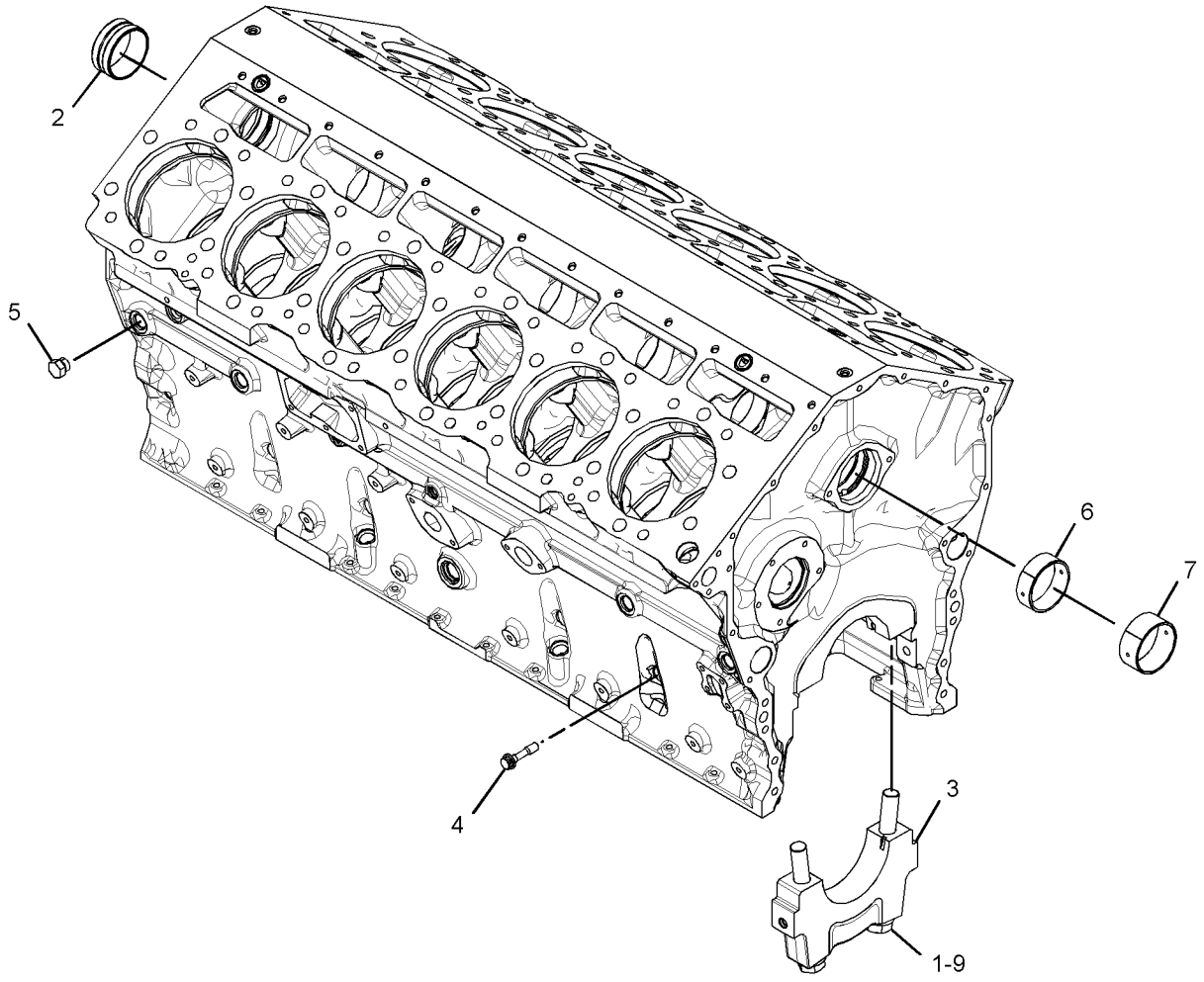

GRAPHIC #1 <END> g03461936

348-9905 CYLINDER BLOCK AS

S/N: JZM1-UP

PART OF 349-2528 CYLINDER BLOCK GP

AN ATTACHMENT

SMCS-1201 **i04541552**

NOTE	REF NO	GRAPHIC REF	PART NUMBER	QTY	PART NAME 1 2 3 4 5 6 (PRODUCT LEVEL)	SEE PAGE
	1	1	**9L-5854**	12	BAND-FILLER (130.2-MM ID)	
	2	1	**110-2220**	12	SEAL-LINER	
	3	1	**142-6217**	12	SEAL-O-RING	
	4	1	**142-7072**	12	SEAL-LINER	
	5	1	**197-9322**	12	LINER-CYLINDER BLOCK	
Y	6	1	*348-9904*	1	CYLINDER BLOCK AS	27
ABFN		1	**6I-4361**		INSERT-LINER SEAT (0.772-MM THK)	
ABFN		1	**9Y-3368**		INSERT-LINER SEAT (0.822-MM THK)	
ABFN		1	**6I-4362**		INSERT-LINER SEAT (0.872-MM THK)	
ABFN		1	**6I-4364**		INSERT-LINER SEAT (1.655-MM THK)	
ABFN		1	**6I-4363**		INSERT-LINER SEAT (1.555-MM THK)	
ABFN		1	**2W-3815**		INSERT-LINER SEAT (1.605-MM THK)	
ABFN		1	**101-0523**		INSERT-LINER SEAT (5.21-MM THK)	
ABFN		1	**6I-4365**		INSERT-LINER SEAT (2.66-MM THK)	
ABFN		1	**5N-0093**		INSERT-LINER SEAT (2.71-MM THK)	
ABFN		1	**6I-4366**		INSERT-LINER SEAT (2.76-MM THK)	
ABFN		1	**101-0524**		INSERT-LINER SEAT (5.16-MM THK)	
ABFN		1	**101-0525**		INSERT-LINER SEAT (5.26-MM THK)	

A - NOT PART OF THIS GROUP
B - USE AS REQUIRED
F - NOT SHOWN
N - FOR SALVAGE OF DAMAGED LIFTER BORES IN CYLINDER BLOCK REFER TO SEBF8076 IN SISWEB
Y - SEPARATE ILLUSTRATION

348-9905 **CYLINDER BLOCK AS (**contd.**)** **i04541552**

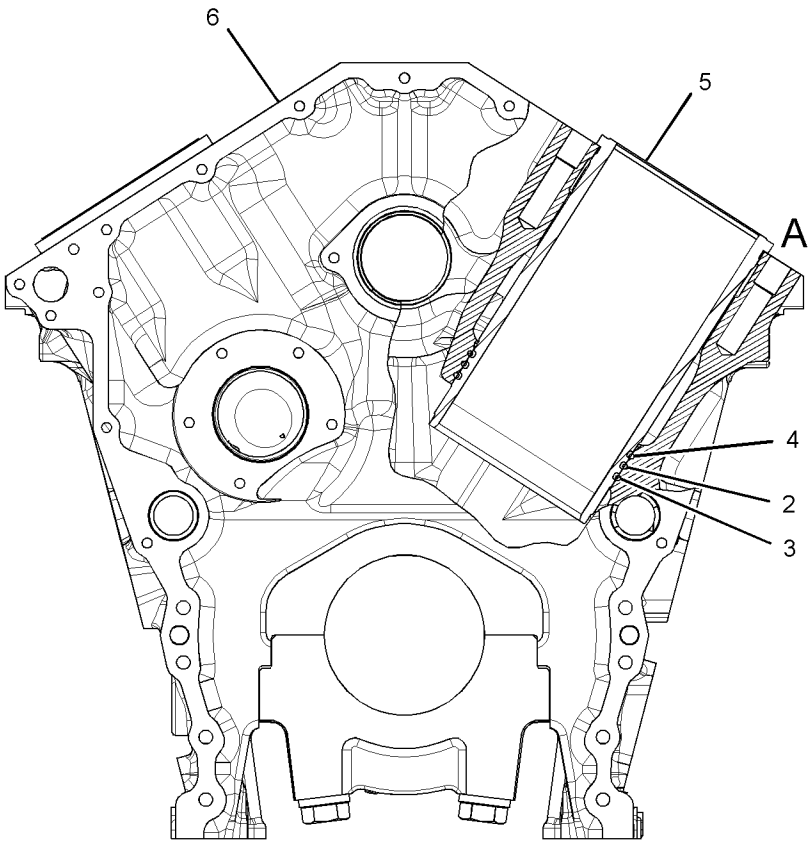

FRONT VIEW OF ENGINE

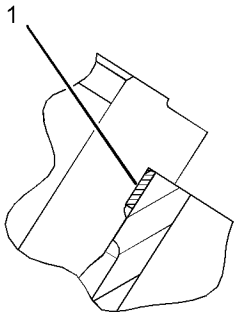

VIEW OF AREA A

GRAPHIC #1 <END> g02026936

349-2528 CYLINDER BLOCK GP

S/N: JZM1-UP
PART OF 371-2276 ENGINE AR-CORE
AN ATTACHMENT

SMCS-1201 **i04541557**

NOTE	REF NO	GRAPHIC REF	PART NUMBER	QTY	PART NAME 1 2 3 4 5 6 (PRODUCT LEVEL)	SEE PAGE
	1	2	**354-8484**	2	GASKET-PLATE	
	2	1	**240-9543**	14	WASHER (12.45X22.35X1.82-MM THK)	
	3	2	**5P-8356**	4	SEAL-O-RING	
	4	1	**4N-1650**	4	DOWEL	
	5	2	*315-9859*	2	PLUG AS	
					(EACH INCLUDES)	
		2	**9S-8008**	1	PLUG (1-1/16-12-THD)	
		2	**238-5082**	1	SEAL-O-RING	
	6	2	**225-3100**	2	PLATE-SPACER	
	7	1,2	**7C-9614**	4	PLUG-TAPERLOCK (1-5/8-12-THD)	
	8	1	**4N-0683**	4	DOWEL	
	9	1	**214-1728**	1	STUD (3/8-16, 1/8-27X3.5-IN)	
	10	1	**6L-4428**	3	STUD-TAPERLOCK (3/8-16X4.01-IN)	
	11	2	**8T-6757**	1	PLUG-PIPE	
Y	12	1	*348-9905*	1	CYLINDER BLOCK AS	28
	13	2	*307-2671*	1	PLUG AS	
		2	**9S-8002**	1	PLUG (7/16-20-THD)	
		2	**214-7566**	1	SEAL-O-RING	
	14	2	**3B-0645**	1	PLUG-CUP	
ABFN		1	**6I-4361**		INSERT-LINER SEAT (0.772-MM THK)	
ABFN		1	**9Y-3368**		INSERT-LINER SEAT (0.822-MM THK)	
ABFN		1	**6I-4362**		INSERT-LINER SEAT (0.872-MM THK)	
ABFN		1	**6I-4363**		INSERT-LINER SEAT (1.555-MM THK)	
ABFN		1	**2W-3815**		INSERT-LINER SEAT (1.605-MM THK)	
ABFN		1	**6I-4364**		INSERT-LINER SEAT (1.655-MM THK)	
ABFN		1	**6I-4365**		INSERT-LINER SEAT (2.66-MM THK)	
ABFN		1	**5N-0093**		INSERT-LINER SEAT (2.71-MM THK)	
ABFN		1	**6I-4366**		INSERT-LINER SEAT (2.76-MM THK)	
ABFN		1	**101-0524**		INSERT-LINER SEAT (5.16-MM THK)	
ABFN		1	**101-0523**		INSERT-LINER SEAT (5.21-MM THK)	
ABFN		1	**101-0525**		INSERT-LINER SEAT (5.26-MM THK)	

A - NOT PART OF THIS GROUP
B - USE AS REQUIRED
F - NOT SHOWN
N - FOR SALVAGE OF DAMAGED LIFTER BORES IN CYLINDER BLOCK REFER TO SEBF8076 IN SISWEB
Y - SEPARATE ILLUSTRATION

349-2528 **CYLINDER BLOCK GP (**contd.**)** **i04541557**

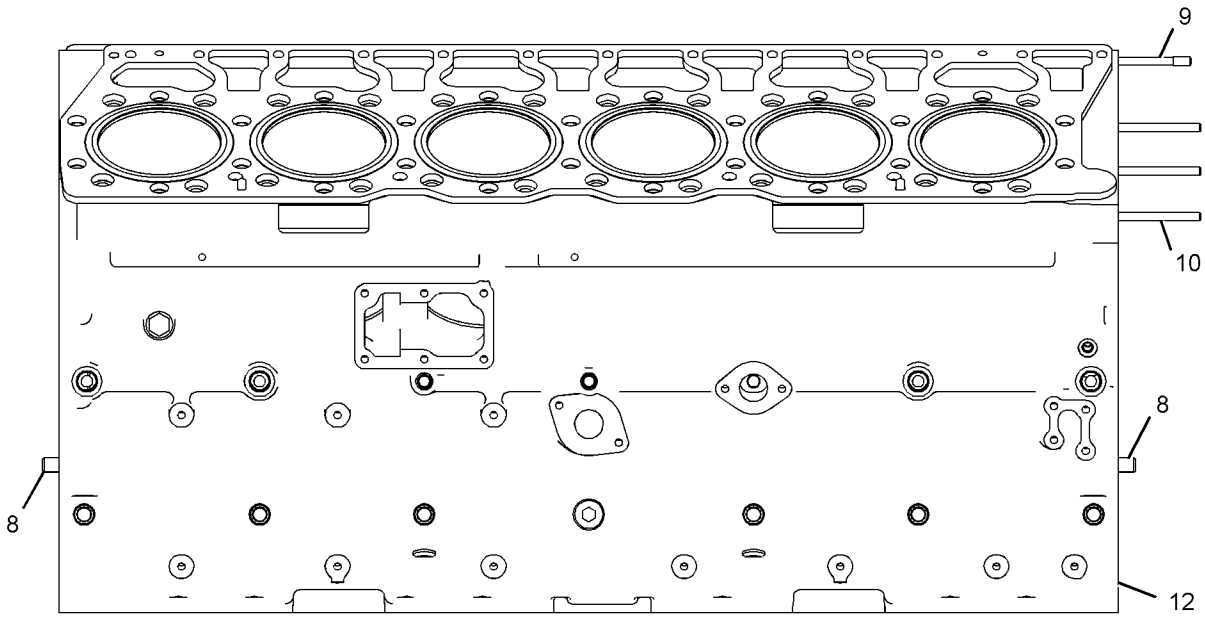

RIGHT SIDE VIEW OF ENGINE

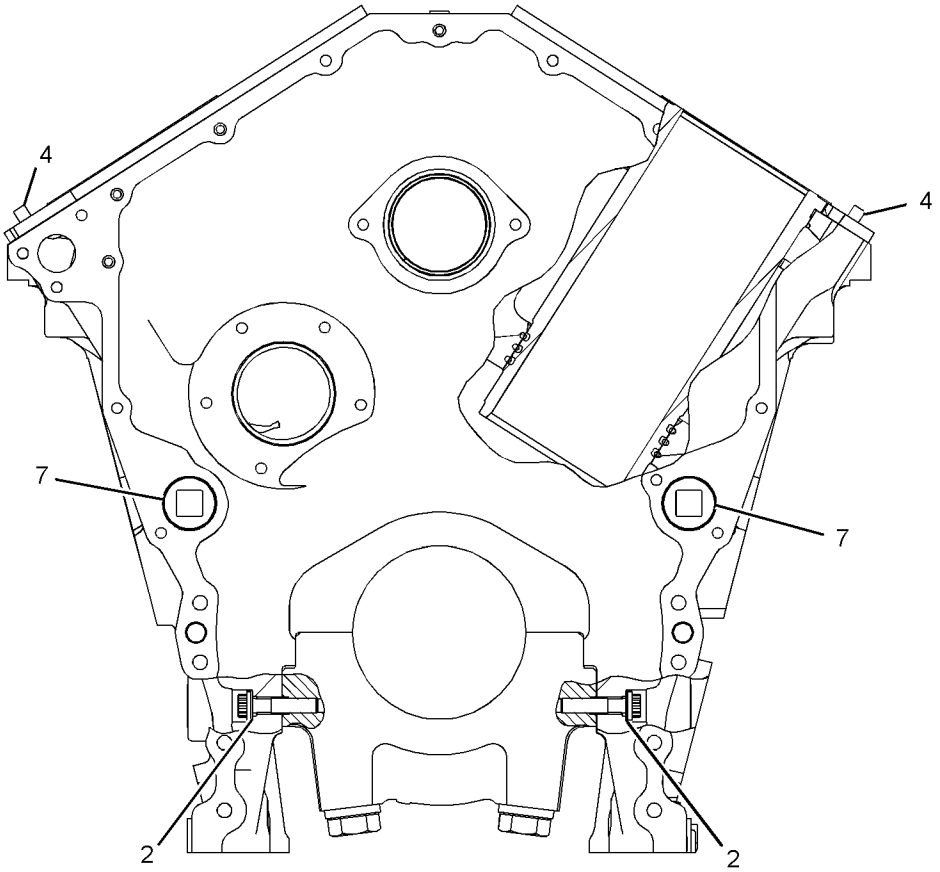

FRONT VIEW OF ENGINE

GRAPHIC #1 g02140829

349-2528 **CYLINDER BLOCK GP (**contd.**)** **i04541557**

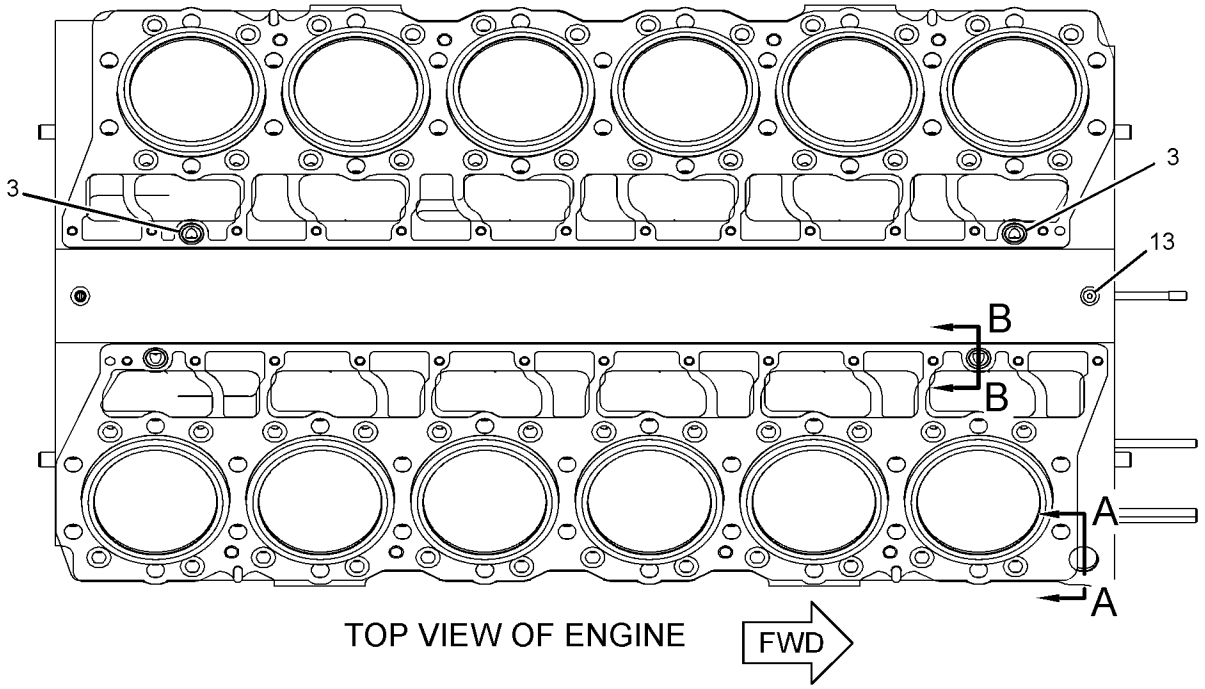

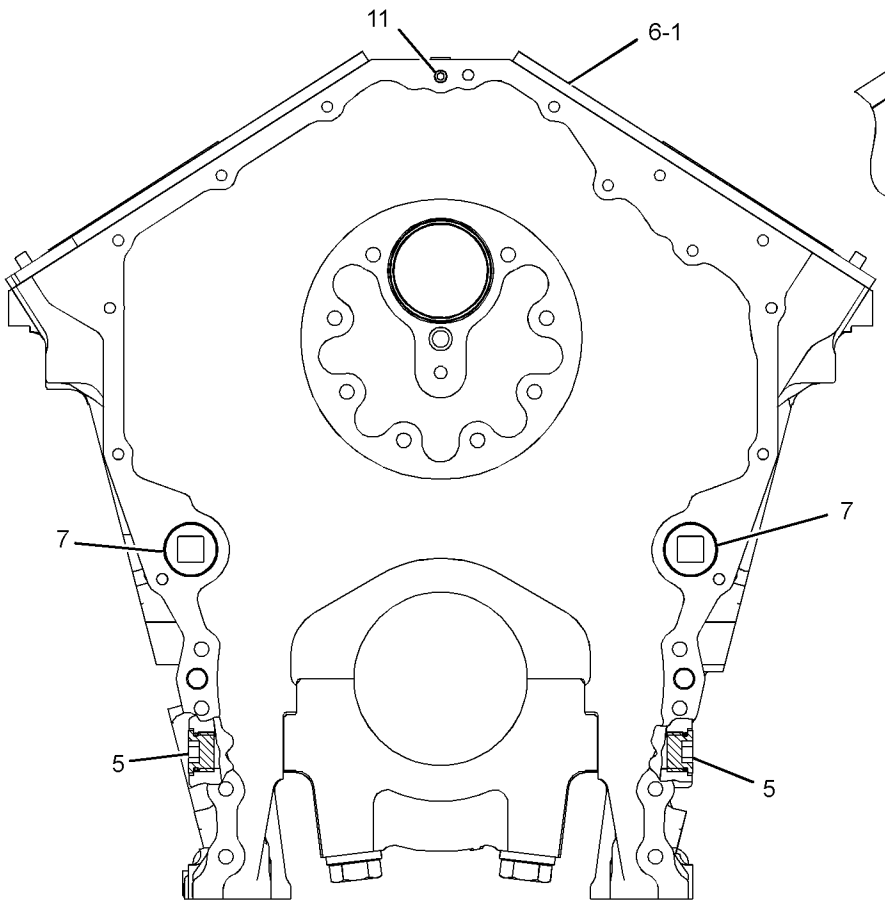

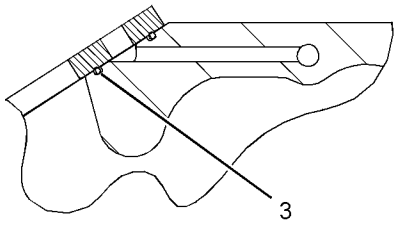

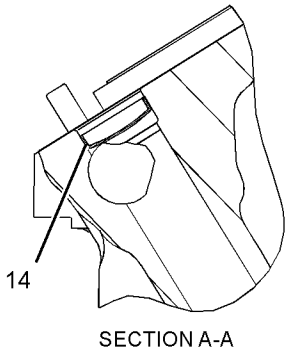

GRAPHIC #2 <END> g02140830

396-8374 CYLINDER HEAD AS

S/N: JZM1-UP
PART OF 396-8375 CYLINDER HEAD GP
AN ATTACHMENT

SMCS-1100, 1101 **i04941680**

NOTE	REF NO	GRAPHIC REF	PART NUMBER	QTY	PART NAME 1 2 3 4 5 6 (PRODUCT LEVEL)	SEE PAGE
	1	1	**122-7375**	24	GUIDE-VALVE (STANDARD)	
AB		1	**122-0447**		GUIDE-VALVE (0.51-MM OS)	
AB		1	**122-8612**		GUIDE-VALVE (0.13-MM OS)	
	2	1	**216-5582**	7	BUSHING (STANDARD)	
AB		1	**217-0751**		BUSHING (0.25-MM OS)	
AB		1	**217-0752**		BUSHING (0.762-MM OS)	
AB		1	**261-3429**		BUSHING (1.778-MM OS)	
AB		1	**261-3430**		BUSHING (1.27-MM OS)	
	3	1	**226-5561**	12	INSERT-VALVE SEAT (EXHAUST) (STANDARD)	
AB		1	**288-4883**		INSERT-VALVE SEAT (0.51-MM OS, EXHAUST)	
AB		1	**288-4884**		INSERT-VALVE SEAT (0.76-MM OS, EXHAUST)	
	4	1	**263-4920**	6	SLEEVE-INJECTOR (INLET)	
	5	1	**280-3979**	12	INSERT-VALVE SEAT (INLET) (STANDARD)	
AB		1	**288-4881**		INSERT-VALVE SEAT (INLET) (0.51-MM OS)	
AB		1	**288-4882**		INSERT-VALVE SEAT (0.76-MM OS, INLET)	
	6	1	**9X-7430**	6	SEAL-O-RING	
	7	1	**166-2904**	12	SEAL-O-RING	
	8	1	**3B-0623**	36	PLUG-CUP	
	9	1	**3B-0645**	2	PLUG-CUP	
	10	1	**8T-6757**	3	PLUG-PIPE	

A - NOT PART OF THIS GROUP
B - USE AS REQUIRED

396-8374 **CYLINDER HEAD AS (**contd.**)** **i04941680**

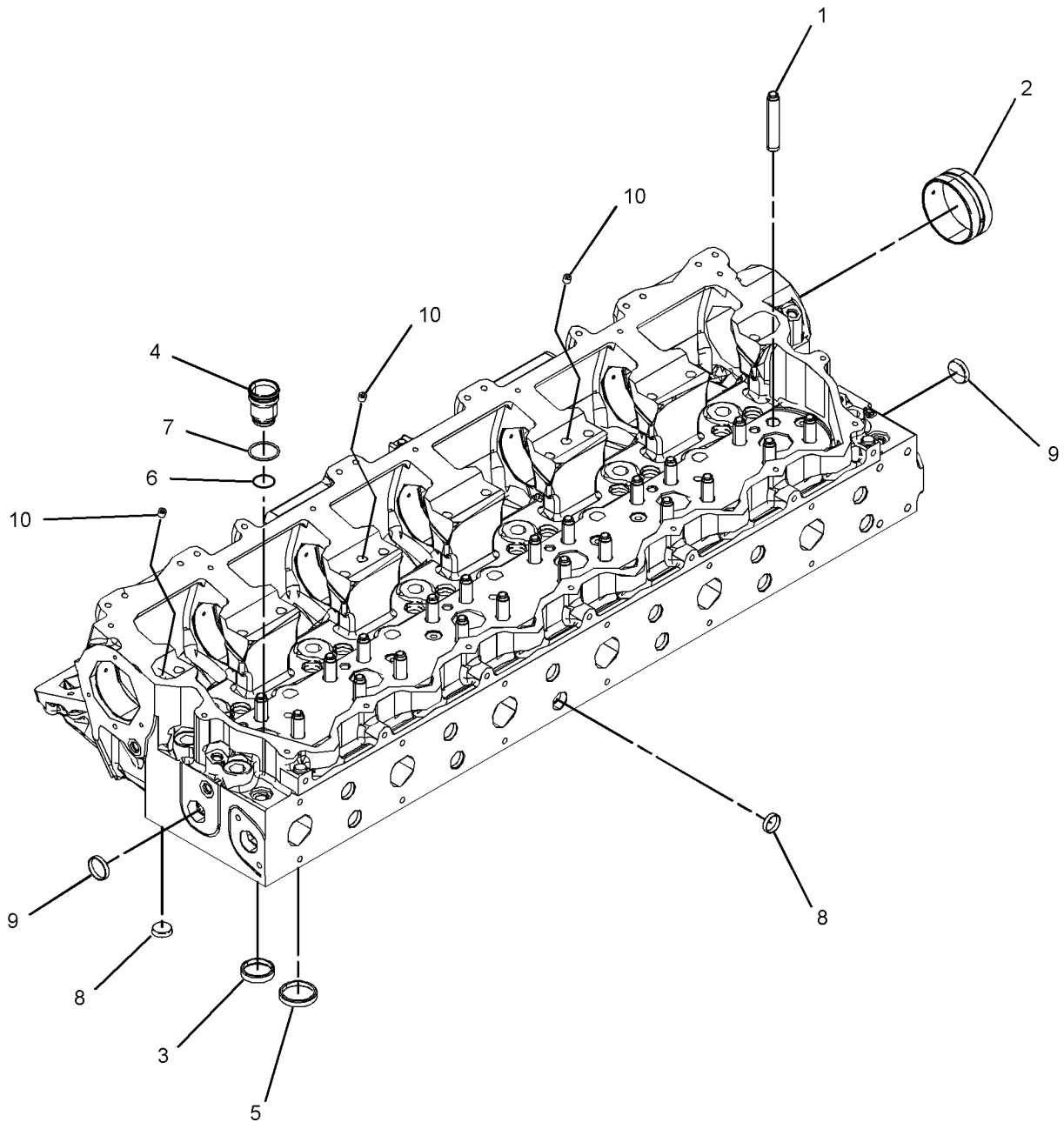

GRAPHIC #1 <END> g03149436

339-3585 CYLINDER HEAD GP

S/N: JZM1-UP
PART OF 371-2276 ENGINE AR-CORE
AN ATTACHMENT

SMCS-1100 **i05700035**

NOTE	REF NO	GRAPHIC REF	PART NUMBER	QTY	PART NAME 1 2 3 4 5 6 (PRODUCT LEVEL)	SEE PAGE
	1	1	**359-1439**	48	SEAL AS-WATER	
	2	1	*6I-4025*	32	FASTENER GP-CYLINDER HEAD	
					(EACH INCLUDES)	
		1	**5H-1504**	1	WASHER-HARD (20X33.5X5-MM THK)	
		1	**124-1855**	1	BOLT-12 POINT HEAD (3/4-16X7.638-IN)	
	3	1	**106-1792**	24	STUD-TAPERLOCK (3/8-16X4-IN)	
	4	1	*106-5673*	20	FASTENER GP-CYLINDER HEAD	
					(EACH INCLUDES)	
		1	**5H-1504**	1	WASHER-HARD (20X33.5X5-MM THK)	
		1	**124-1854**	1	BOLT-12 POINT HEAD (3/4-16X8.5-IN)	
	5	1	**225-3099**	2	GASKET-CYLINDER HEAD	
	6	1	**248-0036**	26	BOLT-WASHER HEAD (3/8-16X6-IN)	
	7	1	**445-8643**	1	PANEL	
CYR	8	1	**396-8375**	2	CYLINDER HEAD GP	37
	9	1	*183-3407*	10	PLUG AS	
					(EACH INCLUDES)	
		1	**214-7568**	1	SEAL-O-RING	
		1	**9S-8004**	1	PLUG	
	10	1	*353-5126*	4	PLUG AS	
					(EACH INCLUDES)	
		1	**6V-6609**	1	SEAL-O-RING	
		1	**9S-8005**	1	PLUG	

C - CHANGE FROM PREVIOUS TYPE
R - REMANUFACTURED PART MAY BE AVAILABLE
Y - SEPARATE ILLUSTRATION

339-3585 **CYLINDER HEAD GP (**contd.**)** **i05700035**

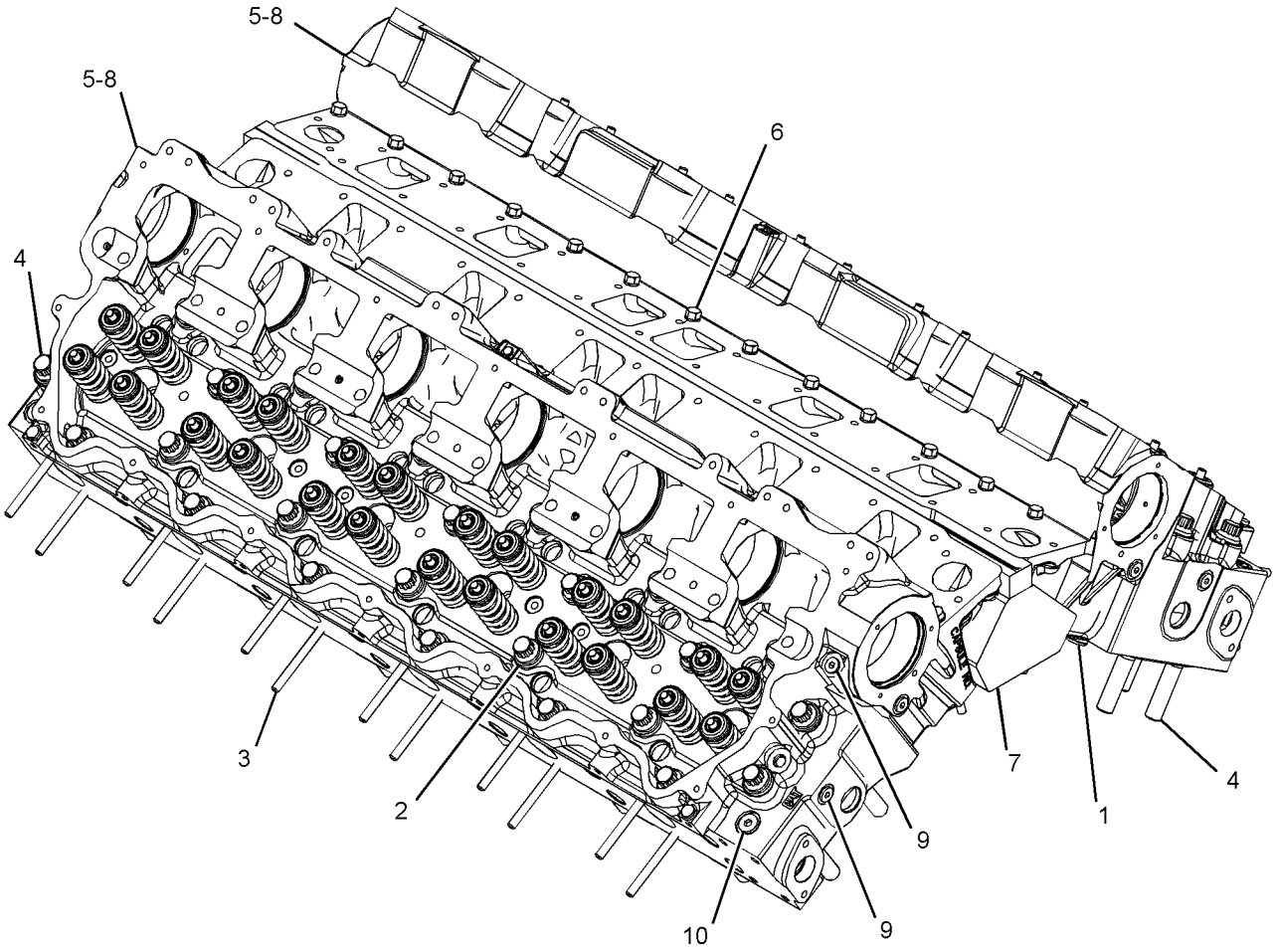

GRAPHIC #1 <END> g03623076

396-8375 CYLINDER HEAD GP*R

S/N: JZM1-UP

PART OF 339-3585 CYLINDER HEAD GP

AN ATTACHMENT

SMCS-1100 **i04941608**

NOTE	REF NO	GRAPHIC REF	PART NUMBER	QTY	PART NAME 1 2 3 4 5 6 (PRODUCT LEVEL)	SEE PAGE
	1	1	**2A-4429**	48	LOCK-RETAINER	
	2	1	**6I-0928**	24	WASHER-SPECIAL	
	3	1	**153-7024**	12	VALVE-EXHAUST	
	4	1	**211-3122**	24	SPRING-VALVE	
	5	1	**236-5605**	12	VALVE-INLET	
	6	1	**247-9908**	24	SPRING-VALVE	
Y	7	1	**396-8374**	1	CYLINDER HEAD AS	33
	8	1	**163-2478**	24	SEAL-VALVE STEM	
	9	1	**186-2001**	24	ROTOCOIL AS	

Y - SEPARATE ILLUSTRATION

396-8375 **CYLINDER HEAD GP** (contd.) **i04941608**

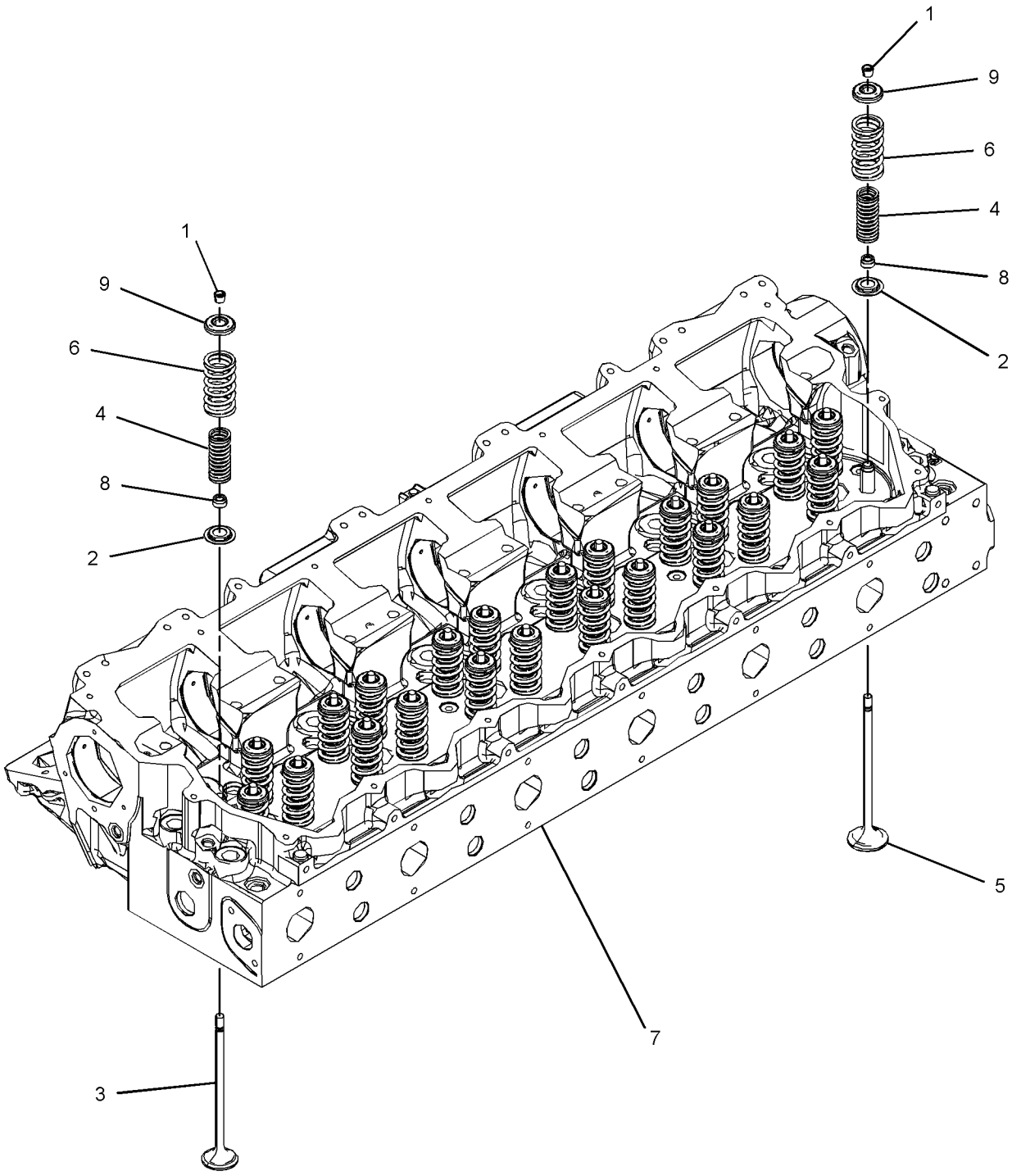

GRAPHIC #1 <END> g03148496

335-9269 DAMPER GP

S/N: JZM1-UP
PART OF 359-6502, 443-0004 ENGINE AR-COMPLETE
AN ATTACHMENT

SMCS-1205 **i05501089**

NOTE	REF NO	GRAPHIC REF	PART NUMBER	QTY	PART NAME 1 2 3 4 5 6 (PRODUCT LEVEL)	SEE PAGE
	1	1	**6N-6037**	1	ADAPTER-DAMPER	
	2	1	**6N-7654**	1	SPACER (6.312X8.18X0.312-IN THK)	
	3	1	**343-4609**	1	PULLEY-CRANKSHAFT (8-GROOVE)	
	4	1	**348-2366**	1	DAMPER AS	
	5	1	**253-2180**	8	BOLT-SOCKET HEAD	
	6	1	**9X-8875**	12	BOLT (1/2-13X3.5-IN)	

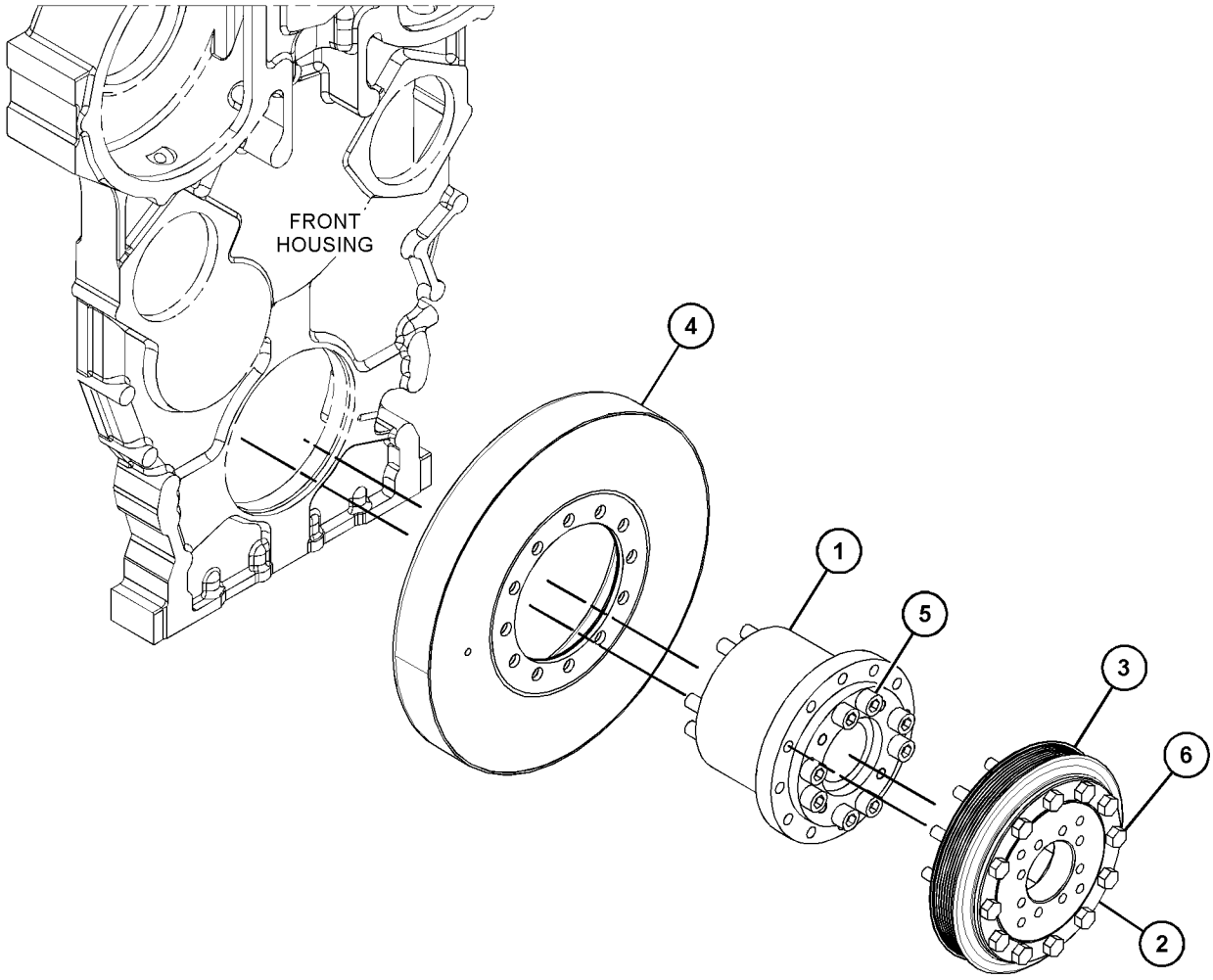

GRAPHIC #1 <END> g03512517

352-7936 DAMPER GP

S/N: JZM1-UP
PART OF 355-2287 GEAR GP-FRONT
AN ATTACHMENT

SMCS-1205 **i03875056**

NOTE	REF NO	GRAPHIC REF	PART NUMBER	QTY	PART NAME 1 2 3 4 5 6 (PRODUCT LEVEL)	SEE PAGE
	1	1	**103-0126**	1	DOWEL	
	2	1	**0S-1571**	8	BOLT (3/8-16X1.75-IN)	

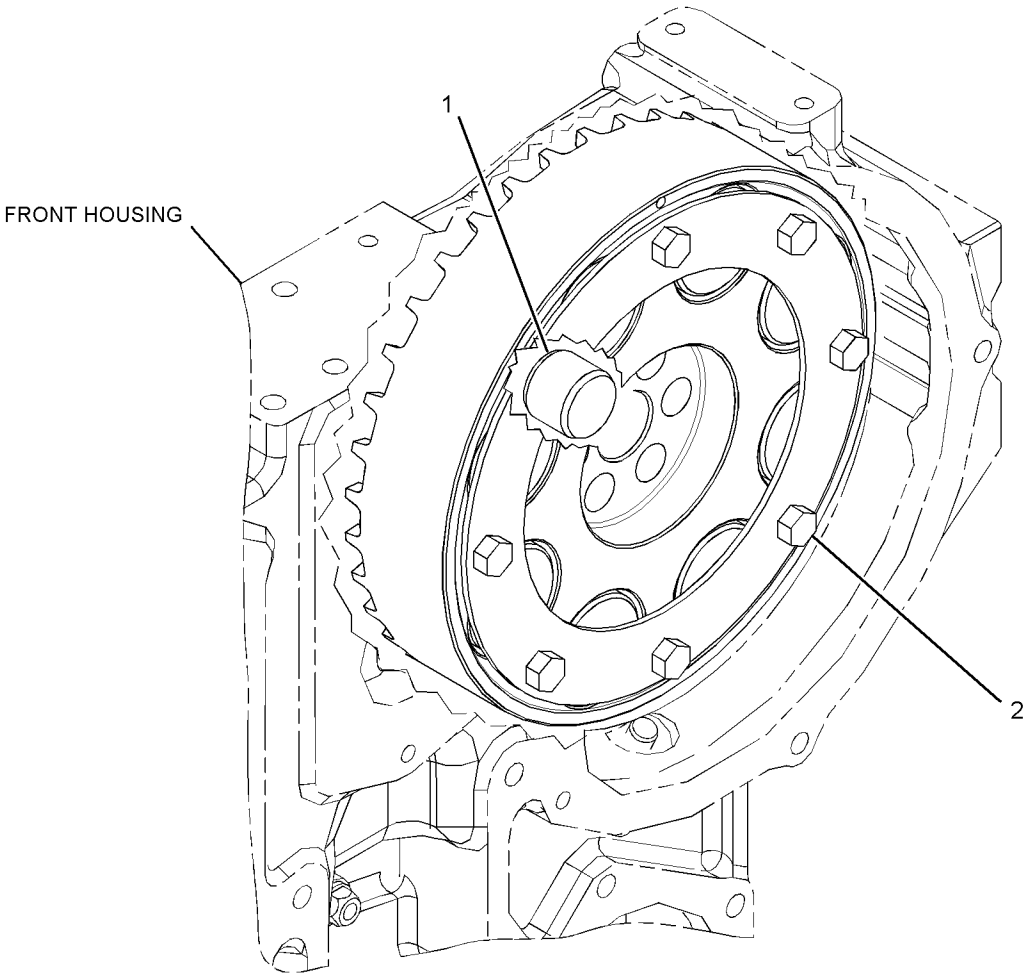

GRAPHIC #1 <END> g02124473

359-6468 DRIVE GP-ACCESSORY

S/N: RAB1-UP
PART OF 359-6404 INSTALLATION AR-ENGINE
AN ATTACHMENT

SMCS-1207 **i05811481**

NOTE	REF NO	GRAPHIC REF	PART NUMBER	QTY	PART NAME 1 2 3 4 5 6 (PRODUCT LEVEL)	SEE PAGE
	1	1	**190-3635**	1	PULLEY (8-GROOVE) (8-GROOVE)	
M	2	1	**255-1281**	2	BOLT-FLANGE HEAD (M8X1.25X100-MM)	
Y	3	1	**324-9711**	1	COMPRESSOR GP-REFRIGERANT	1056
	4	1	**337-5127**	1	SHIELD	
	5	1	**380-0789**	1	BRACKET AS	
YR	6	1	**272-1889**	1	ALTERNATOR GP-CHARGING (24-VOLT, 150-AMPERE)	196
	7	1	**357-2890**	1	BELT-SERPENTINE	
	8	1	**4L-6454**	2	BOLT (3/8-16X1-IN)	
M	9	1	**7X-2538**	2	BOLT (M8X1.25X100-MM)	
	10	1	**8T-7934**	4	WASHER-HARD (11X21X5-MM THK)	
	11	1	**8T-4224**	2	WASHER-HARD (8.8X16X2-MM THK)	
	12	1	**8T-4896**	2	WASHER-HARD (10.2X18.5X2.5-MM THK)	
M	13	1	**8T-6685**	4	BOLT (M10X1.5X110-MM)	

M - METRIC PART
R - REMANUFACTURED PART MAY BE AVAILABLE
Y - SEPARATE ILLUSTRATION

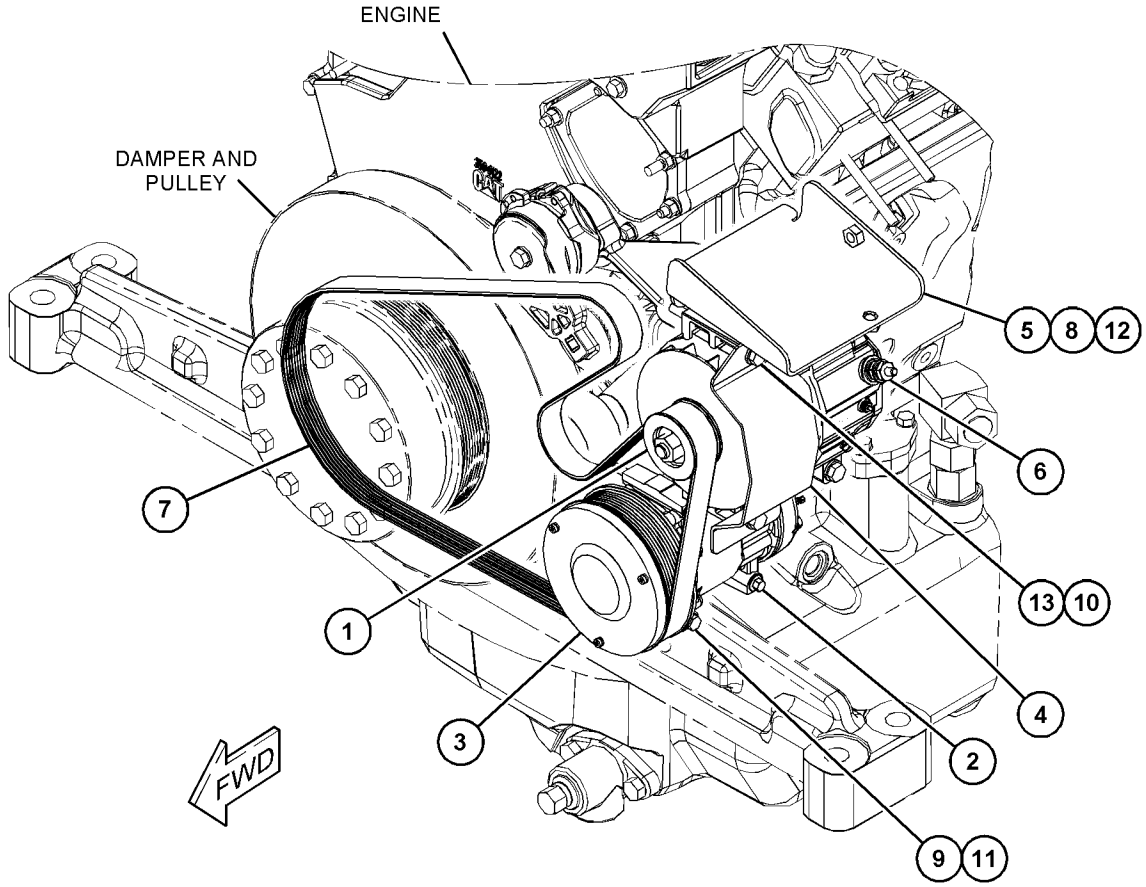

GRAPHIC #1 <END> g03480897

375-0772 DRIVE GP-FAN

S/N: RAB1-UP
PART OF 359-6470 FAN GP-SUCTION
AN ATTACHMENT

SMCS-1359 **i05426123**

NOTE	REF NO	GRAPHIC REF	PART NUMBER	QTY	PART NAME 1 2 3 4 5 6 (PRODUCT LEVEL)	SEE PAGE
	1	1	**4B-3665**	2	BALL BEARING	
	2	1	**095-7424**	1	RING-RETAINING	
	3	1	**137-3749**	2	SPACER (45X53X10-MM THK)	
	4	1	**200-3311**	1	HOUSING	
	5	1	**341-2862**	1	SEAL-LIP TYPE	
	6	1	**375-0773**	1	SHAFT	
	7	1	**6V-5590**	1	RING-RETAINING	

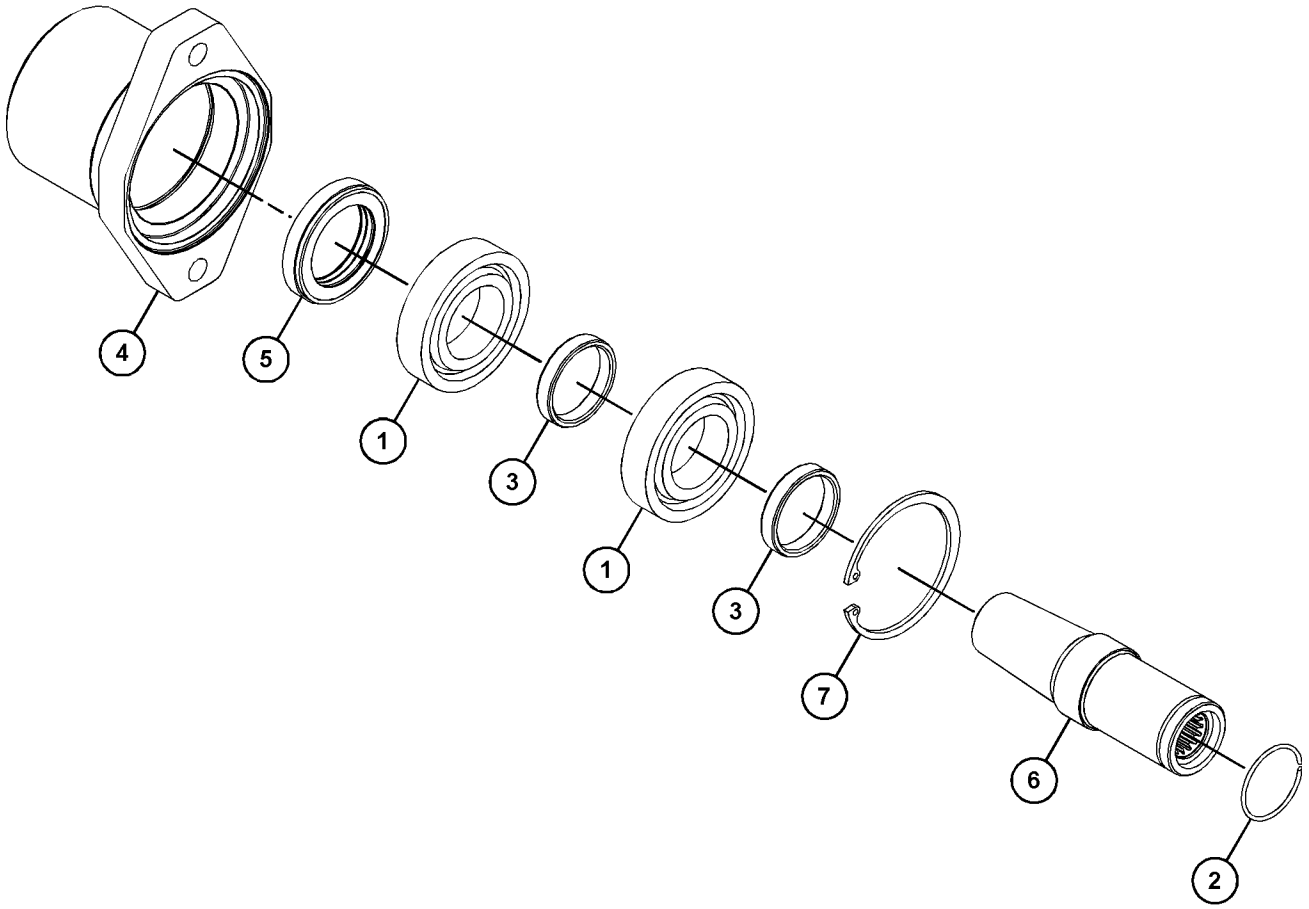

GRAPHIC #1 <END> g03480781

486-9830 DRIVE GP-FAN

S/N: RAB1-UP
PART OF 359-6470 FAN GP-SUCTION
AN ATTACHMENT

SMCS-1359 **i06575471**

NOTE	REF NO	GRAPHIC REF	PART NUMBER	QTY	PART NAME 1 2 3 4 5 6 (PRODUCT LEVEL)	SEE PAGE
	1	1	**4B-3665**	2	BALL BEARING	
	2	1	**7X-4771**	1	SEAL-V-RING	
	3	1	**341-2862**	1	SEAL-LIP TYPE	
	4	1	**486-9787**	1	SHAFT	
	5	1	**486-9790**	1	HOUSING	
	6	1	**486-9827**	2	SPACER	
	7	1	**486-9829**	1	SPACER	
	8	1	**6V-5590**	1	RING-RETAINING	
	9	1	**9J-2968**	1	RING-RETAINING	

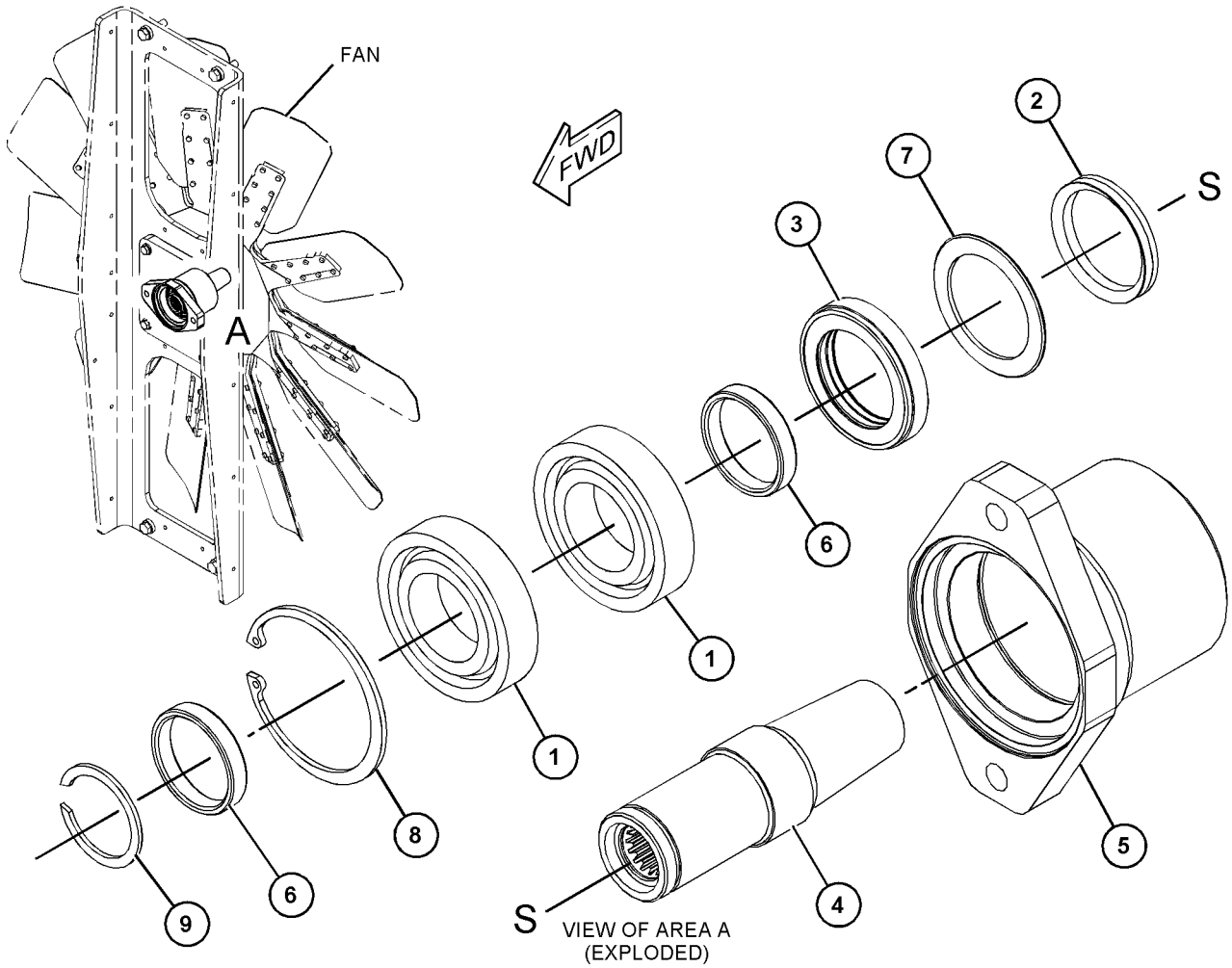

GRAPHIC #1 <END> g06030294

216-0811 FLYWHEEL GP

S/N: JZM1-UP

PART OF 359-6502, 443-0004 ENGINE AR-COMPLETE

AN ATTACHMENT

SMCS-1156 **i02044736**

NOTE	REF NO	GRAPHIC REF	PART NUMBER	QTY	PART NAME 1 2 3 4 5 6 (PRODUCT LEVEL)	SEE PAGE
	1	1	**213-3212**	1	FLYWHEEL AS	
	1A	1	**4N-2514**	1	GEAR (113-TEETH)	
	2	1	**1B-3623**	12	BOLT (5/8-18X7-IN)	
	3	1	**4D-3704**	12	WASHER-HARD (17X30X5-MM THK)	

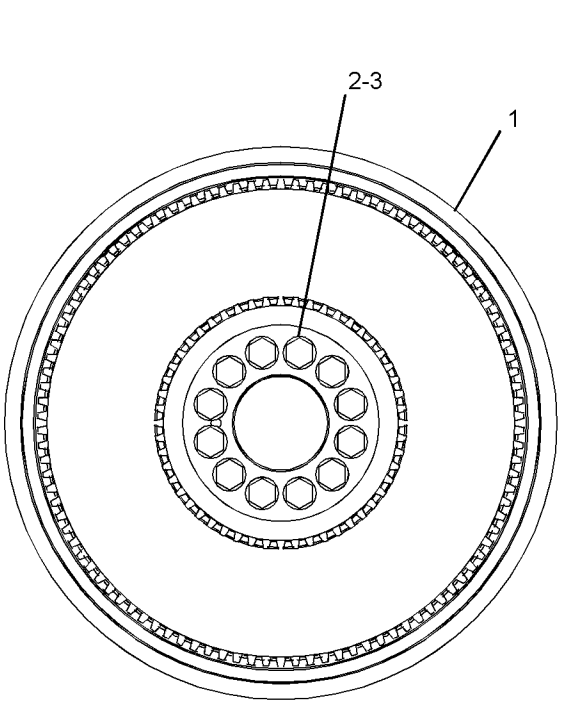

FRONT VIEW

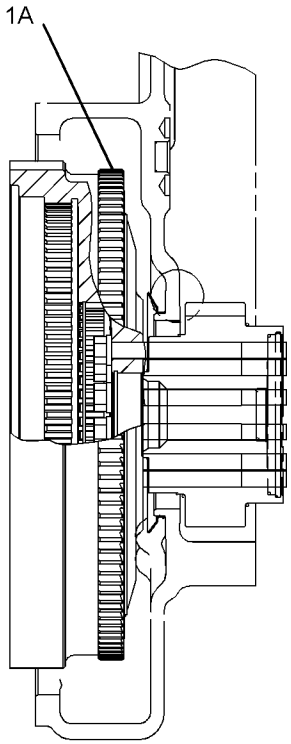

LEFT SIDE VIEW

GRAPHIC #1 <END> g01052142

355-2287 GEAR GP-FRONT

S/N: JZM1-UP
PART OF 371-2276 ENGINE AR-CORE
AN ATTACHMENT

SMCS-1151, 1162, 1206 **i04381711**

NOTE	REF NO	GRAPHIC REF	PART NUMBER	QTY	PART NAME 1 2 3 4 5 6 (PRODUCT LEVEL)	SEE PAGE
	1	1	**2W-3875**	1	GEAR-OIL PUMP DRIVE (56-TEETH)	
	2	1	**2W-4087**	1	GEAR AS-IDLER (35-TEETH)	
		1	**6N-0977**	1	BUSHING	
	3	1	**3G-2292**	5	BOLT-LOCKING (3/8-16X0.87-IN)	
	4	1	**4N-0342**	1	PLATE	
	5	1	**6N-1026**	1	SHAFT AS-IDLER	
		1	**4H-1641**	1	PIN-SPRING	
		1	**6N-1025**	1	SHAFT-PUMP IDLER	
		1	**7S-5005**	2	DOWEL	
	6	1	**6N-1027**	1	PLATE-THRUST	
	7	1	**7N-2443**	1	WASHER-THRUST (2.508X3.5X0.188-IN THK)	
	8	1	**112-9217**	1	PLATE-THRUST	
	9	1	**117-9712**	1	SHAFT-DRIVE IDLER	
	10	1	**223-9137**	1	GEAR AS	
		1	**101-3374**	1	GEAR (86-TEETH)	
	11	1	**224-5332**	2	PLATE-SEALING	
	12	1	**236-4136**	2	ADAPTER AS	
					(EACH INCLUDES)	
		1	**4N-0684**	2	DOWEL	
	13	1	**300-5575**	1	GEAR AS-IDLER (99/43-TEETH)	
		1	**1B-8705**	1	KEY-WOODRUFF	
		1	**131-7123**	1	BUSHING	
Y	14	1	**352-7936**	2	DAMPER GP	40
	15	1	**031-5085**	6	BOLT-LOCKING (1/4-20X1-IN)	
	16	1	**0S-0509**	2	BOLT (3/8-16X0.75-IN)	
	17	1	**0S-1571**	1	BOLT (3/8-16X1.75-IN)	
	18	1	**0T-0573**	1	BOLT (3/8-16X2.75-IN)	
	19	1	**117-8801**	2	SEAL-O-RING	
	20	1	**1B-8705**	1	KEY-WOODRUFF	
	21	1	**1P-7346**	1	WASHER-HARD (10.2X35X6-MM THK)	
	22	1	**2B-2695**	4	BOLT (5/16-18X0.875-IN)	
	23	1	**3B-1915**	2	BOLT (3/8-16X1.375-IN)	
	24	1	**5E-8771**	2	SEAL-O-RING	
	25	1	**5M-2894**	3	WASHER-HARD (10.2X18.5X2.5-MM THK)	
	26	1	**5P-0537**	6	WASHER-HARD (7.2X14.5X2-MM THK)	
	27	1	**7K-3116**	12	BOLT-12 POINT HEAD (5/8-11X3.5-IN)	

Y - SEPARATE ILLUSTRATION

355-2287 **GEAR GP-FRONT (**contd.**)** **i04381711**

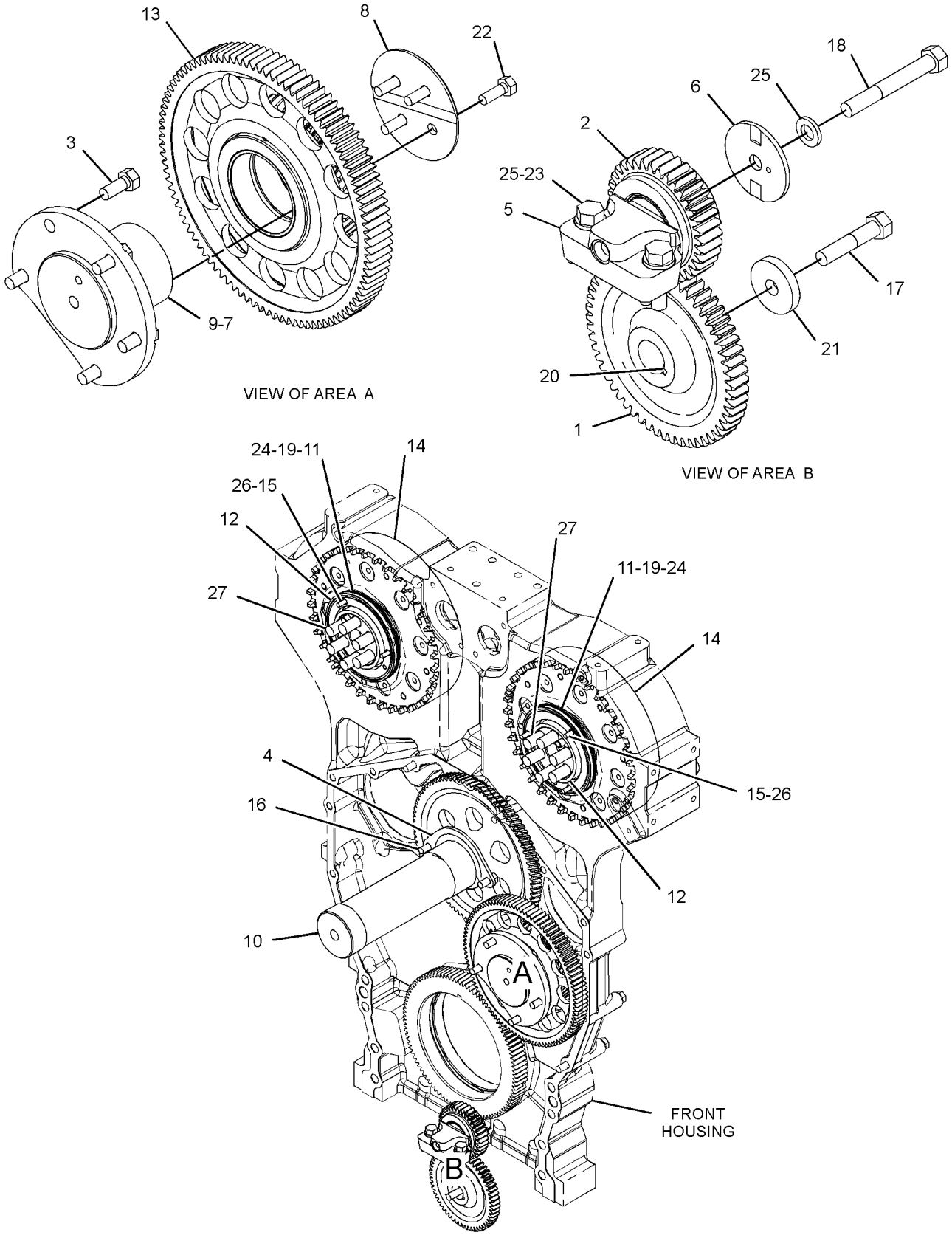

GRAPHIC #1 <END> g02554796

399-5083 GEAR GP-REAR

S/N: JZM1-UP
PART OF 359-6502, 443-0004 ENGINE AR-COMPLETE
AN ATTACHMENT

SMCS-1204 **i05612789**

NOTE	REF NO	GRAPHIC REF	PART NUMBER	QTY	PART NAME 1 2 3 4 5 6 (PRODUCT LEVEL)	SEE PAGE
	1	1	**4N-0848**	1	SLEEVE-WEAR	
	2	1	**4N-7183**	2	RING-RETAINING	
	4	1	**5F-7403**	2	LOCKWASHER	
	5	1	**5F-7404**	2	LOCKNUT-BEARING	
	6	1	**5P-1370**	2	BEARING AS-ROLLER	
	7	1	**102-5861**	2	PLATE-THRUST	
	8	1	**185-1497**	1	GEAR AS-IDLER (79-TEETH)	
	8A	2	**224-9664**	1	BUSHING	
	9	1	**194-0620**	2	HOSE AS	
	10	2	**217-7219**	2	ADAPTER-HYDRAULIC PUMP	
	11	1	**222-3920**	2	GEAR (49-TEETH)	
	12	2	**224-1219**	1	SHAFT-STUB	
	13	2	**224-1220**	1	PLATE	
	14	2	**224-1221**	1	SHAFT-STUB	
	15	1	**224-5332**	2	PLATE-SEALING	
	16	1	**224-9657**	2	ADAPTER AS	
					(EACH INCLUDES)	
		1	**4N-0684**	1	DOWEL	
	17	2	**226-6036**	1	GEAR AS-IDLER (40/70-TEETH)	
		2	**1B-8705**	1	KEY-WOODRUFF	
	17A	2	**226-6052**	1	BUSHING	
	18	1	**227-0159**	1	SHAFT-STUB	
	19	2	**228-5813**	1	GEAR AS-CRANKSHAFT (49-TEETH)	
		2	**4N-0684**	1	DOWEL	
	20	2	**229-1663**	1	PLATE-THRUST	
	21	2	**230-6202**	1	GEAR AS-IDLER (70/83-TEETH)	
	21A	2	**224-9664**	1	BUSHING	
	22	2	**331-6188**	2	GEAR AS-CAMSHAFT (56-TEETH)	
	23	1	**031-5085**	6	BOLT-LOCKING (1/4-20X1-IN)	
	24	2	**0S-1588**	3	BOLT (3/8-16X1.25-IN)	
	26	1	**117-8801**	2	SEAL-O-RING	
	27	2	**132-5789**	1	CLIP	
	28	2	**1A-2029**	13	BOLT (3/8-16X1.125-IN)	
	29	1	**1T-0720**	12	BOLT-12 POINT HEAD (3/8-16X1.25-IN)	
	30	1	**214-7568**	2	SEAL-O-RING	
	31	2	**245-3804**	1	BOLT (3/8-16X3.5-IN)	
	32	1	**297-7956**	2	ELBOW (INCLUDES SCREEN FILTER)	
	33	2	**4P-7428**	2	CLIP	
	35	2	**5B-0213**	6	BOLT (3/8-16X2.375-IN)	
	36	1	**5E-8771**	2	SEAL-O-RING	
	37	1	**5P-4318**	2	ELBOW	
	39	1	**5P-8429**	2	SEAL-O-RING	
	40	2	**6J-3913**	12	BOLT-12 POINT HEAD (5/8-11X3.25-IN)	
	41	1	**6V-3319**	1	SEAL-O-RING	
	42	1	**6V-4589**	2	SEAL-O-RING	
	43	2	**6V-5839**	3	WASHER (11X21X2.5-MM THK)	
	44	1	**7B-3235**	8	BOLT (1/2-13X1.375-IN)	

399-5083 **GEAR GP-REAR (**contd.**)** **i05612789**

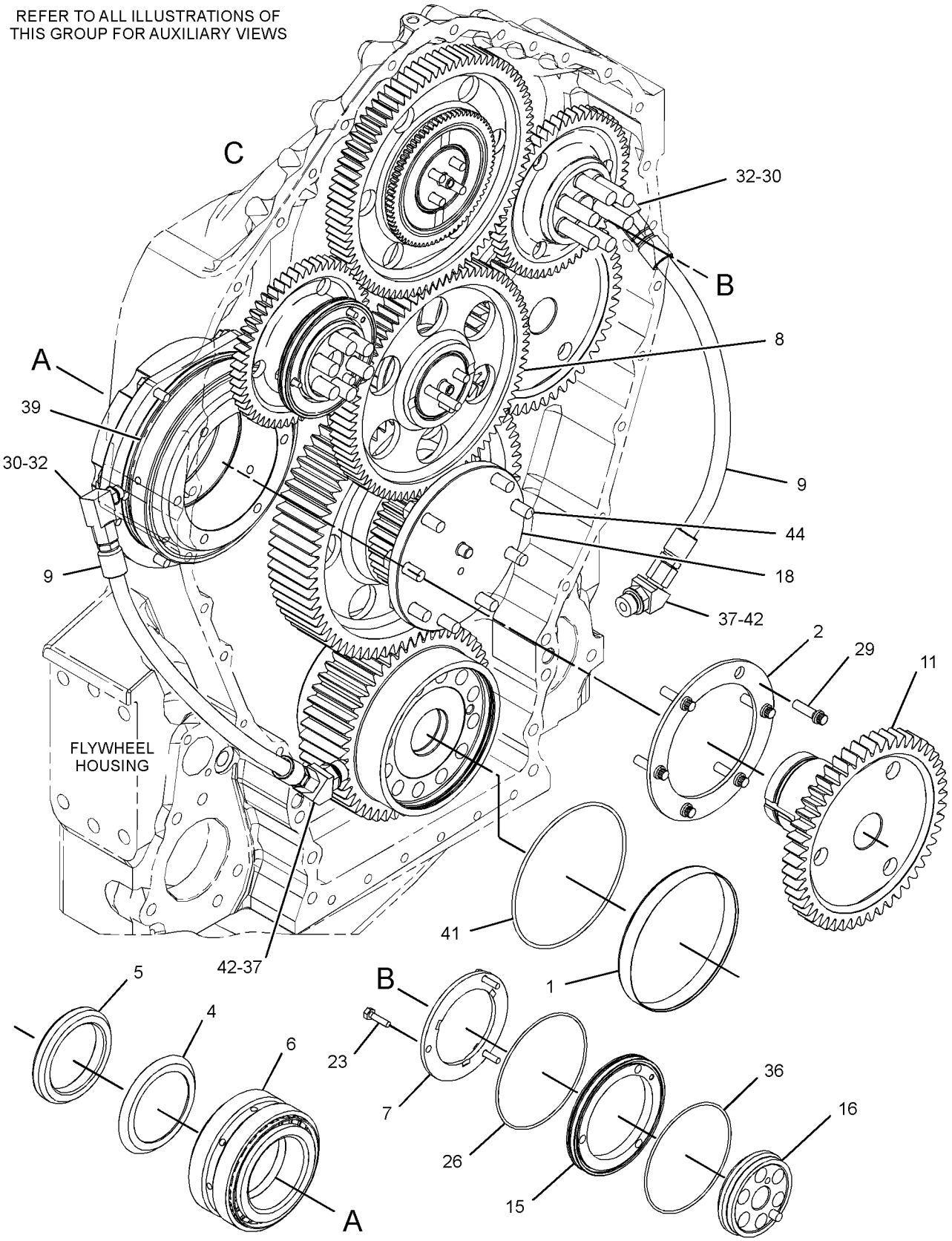

GRAPHIC #1 g03346052

399-5083 **GEAR GP-REAR (**contd.**)** **i05612789**

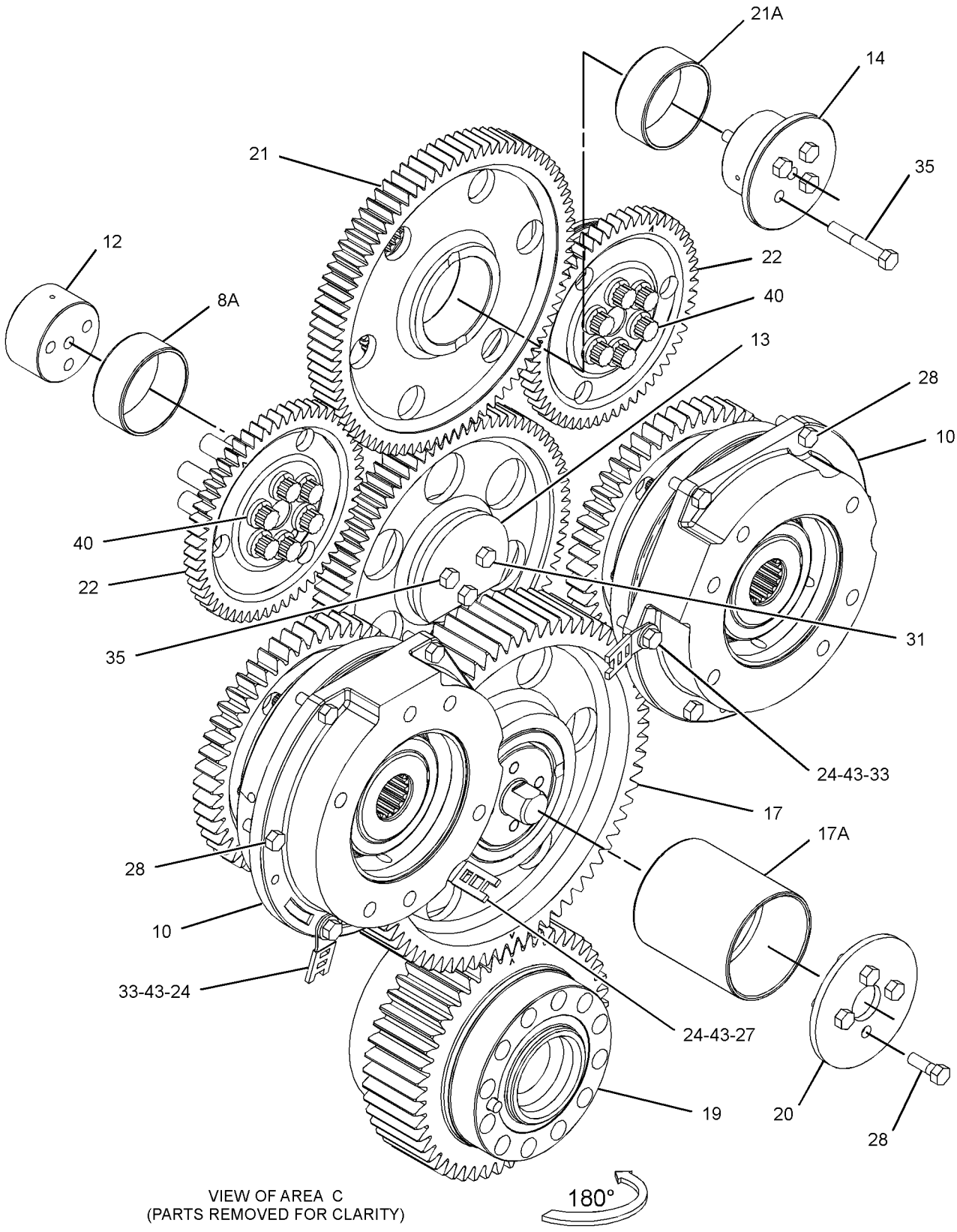

VIEW OF AREA C
(PARTS REMOVED FOR CLARITY)

GRAPHIC #2 <END> g03346053

226-0297 HOUSING GP-FLYWHEEL

S/N: JZM1-UP

PART OF 359-6502, 443-0004 ENGINE AR-COMPLETE

AN ATTACHMENT

SMCS-1157 **i05395477**

NOTE	REF NO	GRAPHIC REF	PART NUMBER	QTY	PART NAME 1 2 3 4 5 6 (PRODUCT LEVEL)	SEE PAGE
	1	1	**7G-9724**	4	SPACER (10.5X18X19-MM THK)	
Y	2	1	*319-0785*	1	SEAL GP-CRANKSHAFT (REAR) (FLYWHEEL HOUSING)	69
	3	1	**225-1242**	1	GASKET	
	4	1	**302-4289**	1	HOUSING AS-FLYWHEEL	
		1	**1W-3136**	1	BAFFLE	
		1	**238-9860**	2	DOWEL	
	5	1	**0S-1619**	2	BOLT (3/8-16X3-IN)	
	6	1	**170-0612**	4	STUD (3/8-16X4-IN)	
	7	1	**231-4470**	2	BOLT (3/8-16X6.25-IN)	
	8	1	**231-4471**	8	BOLT (1/2-13X6.25-IN)	
	9	1	**5B-2638**	14	BOLT (3/8-16X5.25-IN)	
	10	1	**5M-2894**	28	WASHER-HARD (10.2X18.5X2.5-MM THK)	
	11	1	**5P-7814**	1	SEAL-O-RING	
	12	1	**5P-8245**	8	WASHER-HARD (13.5X25.5X3-MM THK)	
	13	1	**8S-9191**	6	BOLT (3/8-16X4-IN)	
	14	1	**3K-8460**	1	PLUG (STRAIGHT THREAD O-RING)	
	15	1	**4P-8134**	1	CLIP (LADDER)	

Y - SEPARATE ILLUSTRATION

226-0297 **HOUSING GP-FLYWHEEL (**contd.**)** **i05395477**

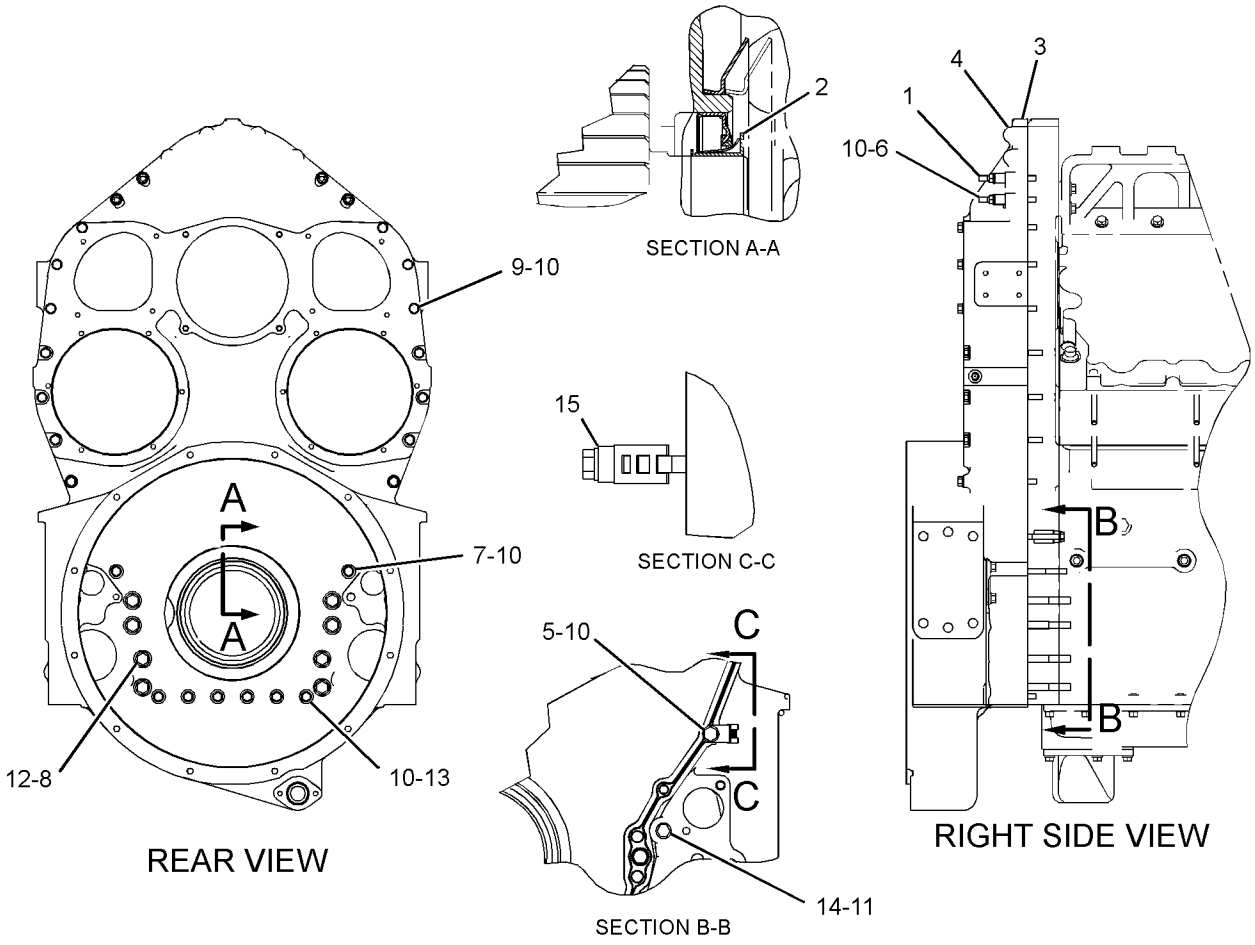

GRAPHIC #1 <END> g03517699

238-9862 HOUSING GP-FRONT

S/N: JZM1-100
PART OF 371-2276 ENGINE AR-CORE
AN ATTACHMENT

SMCS-1151, 1162, 1206 **i03883900**

NOTE	REF NO	GRAPHIC REF	PART NUMBER	QTY	PART NAME 1 2 3 4 5 6 (PRODUCT LEVEL)	SEE PAGE
	1	1	**214-1727**	1	GASKET (CYLINDER BLOCK)	
	2	1	**350-1638**	1	HOUSING AS-FRONT	
	2A	1	**238-9860**	2	DOWEL	
	3	1	**0L-1352**	4	BOLT (3/8-16X3.25-IN)	
	4	1	**2K-4973**	1	LOCKNUT (3/8-16-THD)	
	5	1	**3K-3256**	2	STUD-TAPERLOCK (3/8-16X1.7-IN)	
	6	1	**5M-2894**	5	WASHER-HARD (10.2X18.5X2.5-MM THK)	

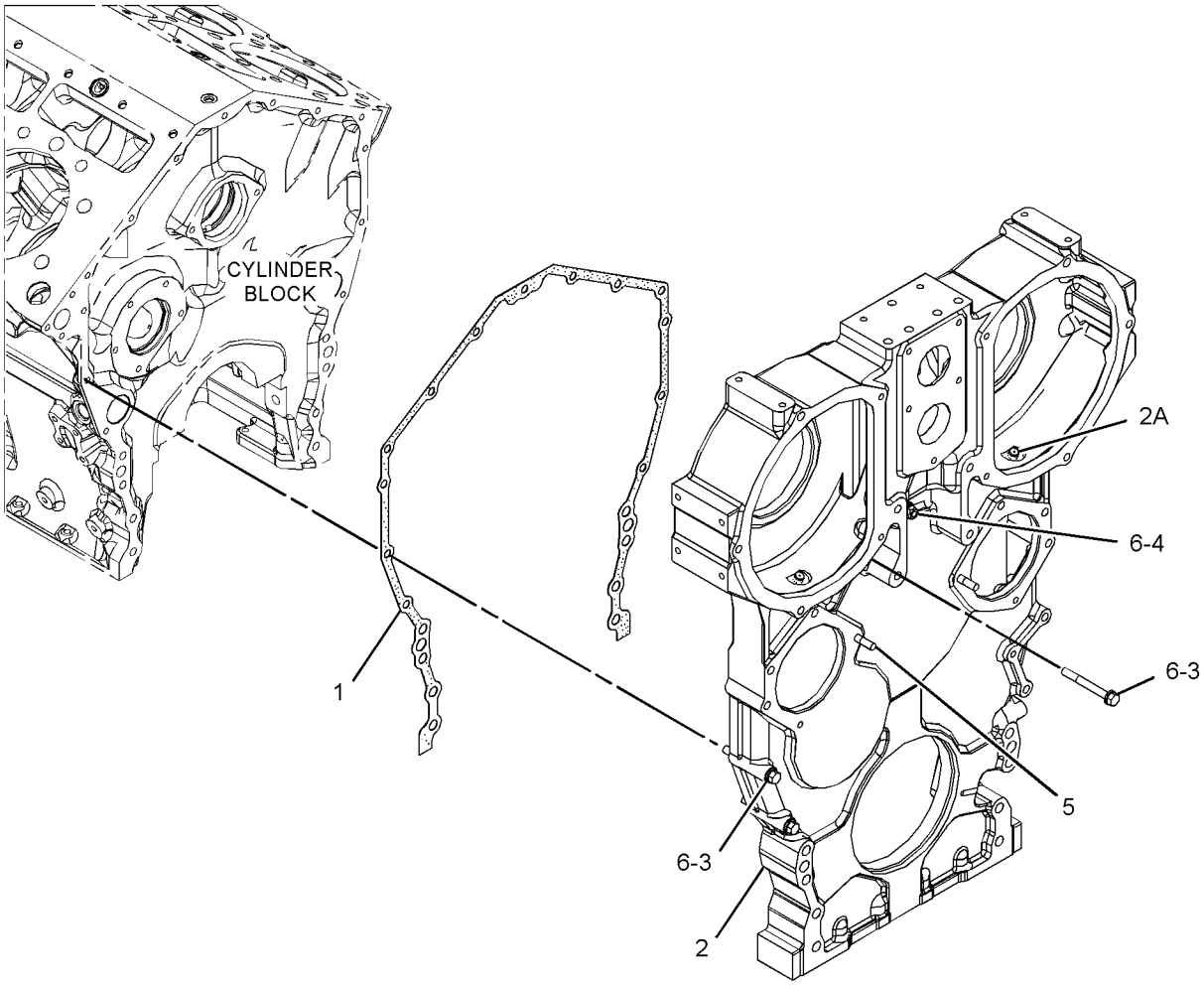

GRAPHIC #1 <END> g02138011

350-1639 HOUSING GP-FRONT

S/N: JZM101-UP
PART OF 371-2276 ENGINE AR-CORE
AN ATTACHMENT

SMCS-1151, 1162, 1206

i05840117

NOTE	REF NO	GRAPHIC REF	PART NUMBER	QTY	PART NAME 1 2 3 4 5 6 (PRODUCT LEVEL)	SEE PAGE
	1	1	**214-1727**	1	GASKET	
	2	1	**350-1638**	1	HOUSING AS-FRONT	
	2A	1	**238-9860**	2	DOWEL	
	3	1	**0L-1352**	4	BOLT (3/8-16X3.25-IN)	
	4	1	**2K-4973**	1	LOCKNUT (3/8-16-THD)	
	5	1	**3K-3256**	2	STUD-TAPERLOCK (3/8-16X1.7-IN)	
	6	1	**5M-2894**	5	WASHER-HARD (10.2X18.5X2.5-MM THK)	

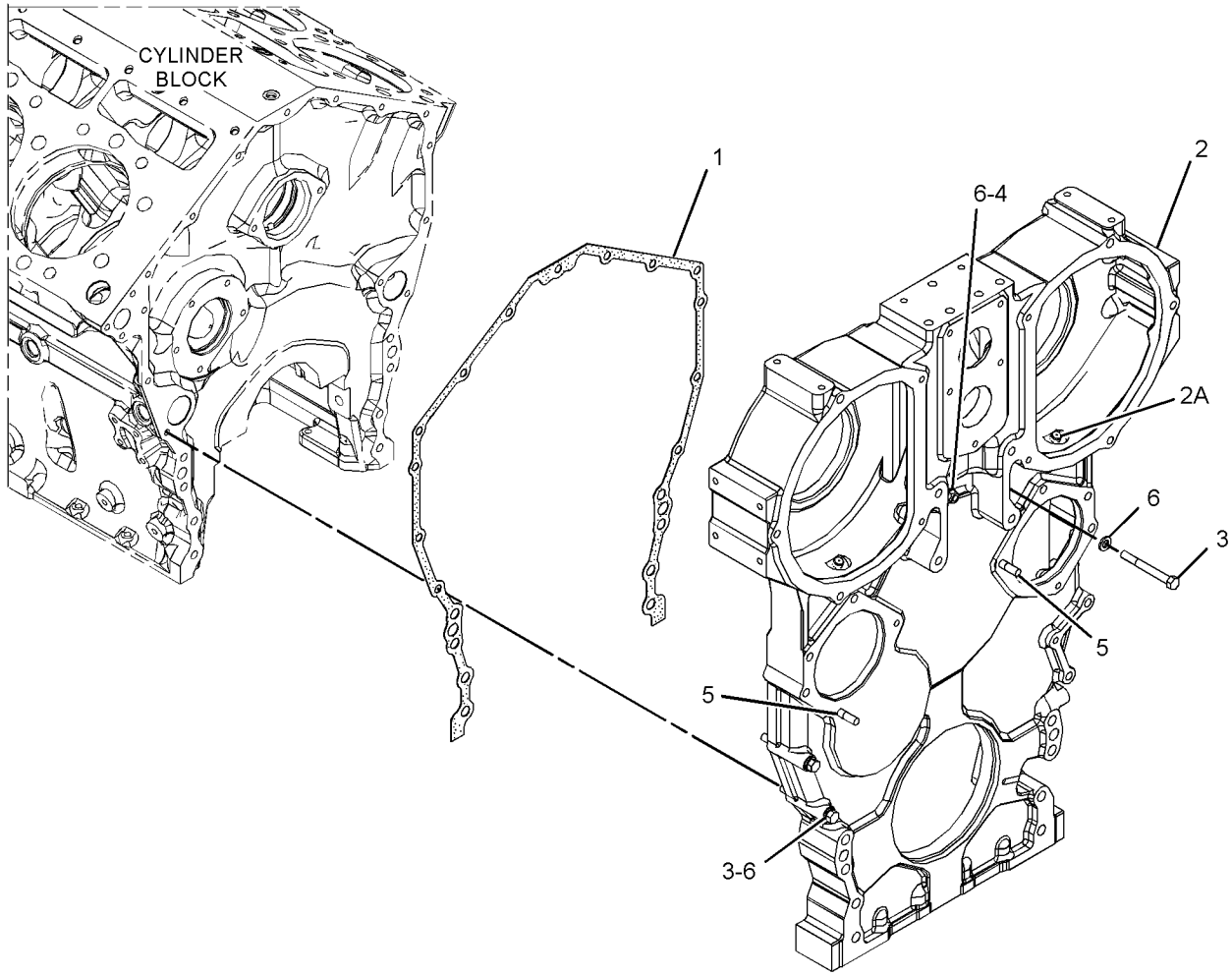

GRAPHIC #1 <END> g02125173

350-8861 HOUSING GP-REAR

S/N: JZM1-UP
PART OF 371-2276 ENGINE AR-CORE
AN ATTACHMENT

SMCS-1166 **i06029007**

NOTE	REF NO	GRAPHIC REF	PART NUMBER	QTY	PART NAME 1 2 3 4 5 6 (PRODUCT LEVEL)	SEE PAGE
	1	1	**161-7293**	1	GASKET-CYLINDER	
	2	1	**316-9154**	1	HOSE AS	
	3	1	**232-3643**	1	HOUSING AS-REAR	
		1	**4N-0683**	2	DOWEL	
	4	1	**234-4279**	1	FLANGE	
	5	1	**030-7946**	1	ELBOW	
	6	1	**053-2294**	2	BOLT-12 POINT HEAD (3/8-16X1.75-IN)	
	7	1	**061-8639**	1	SEAL-O-RING	
	8	1	**0S-1616**	2	BOLT (1/4-20X1-IN)	
	9	1	**3S-0127**	8	BOLT-12 POINT HEAD (3/8-16X2.25-IN)	
	10	1	**5P-0537**	2	WASHER-HARD (7.2X14.5X2-MM THK)	
	11	1	**6V-5048**	3	SEAL-O-RING	
	12	1	**9S-8002**	1	PLUG (7/16-20-THD)	
B	13	1	**4C-9612**		SEALANT-SILICONE	

B - USE AS REQUIRED

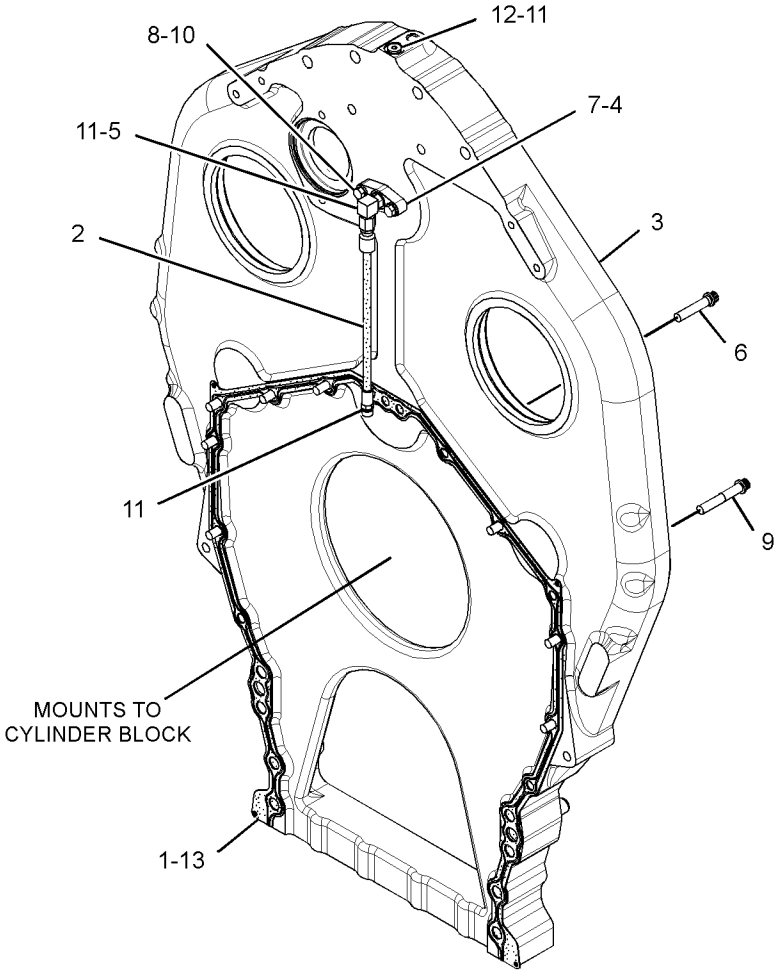

GRAPHIC #1 <END> g02058694

235-2014 LIFTING GP-ENGINE

S/N: JZM1-UP

PART OF 359-6502, 443-0004 ENGINE AR-COMPLETE

AN ATTACHMENT

SMCS-1122 **i05794543**

NOTE	REF NO	GRAPHIC REF	PART NUMBER	QTY	PART NAME 1 2 3 4 5 6 (PRODUCT LEVEL)	SEE PAGE
	1	1	**230-1550**	1	EYE AS-LIFTING	
	2	1	**235-1861**	1	EYE-LIFTING	
	3	1	**5P-8245**	5	WASHER-HARD (13.5X25.5X3-MM THK)	
	4	1	**7B-3235**	7	BOLT (1/2-13X1.375-IN)	
	5	1	**7D-1649**	6	WASHER-HARD (13.5X32X5-MM THK)	
	6	1	**9X-8875**	4	BOLT (1/2-13X3.5-IN)	

235-2014 **LIFTING GP-ENGINE (**contd.**)** **i05794543**

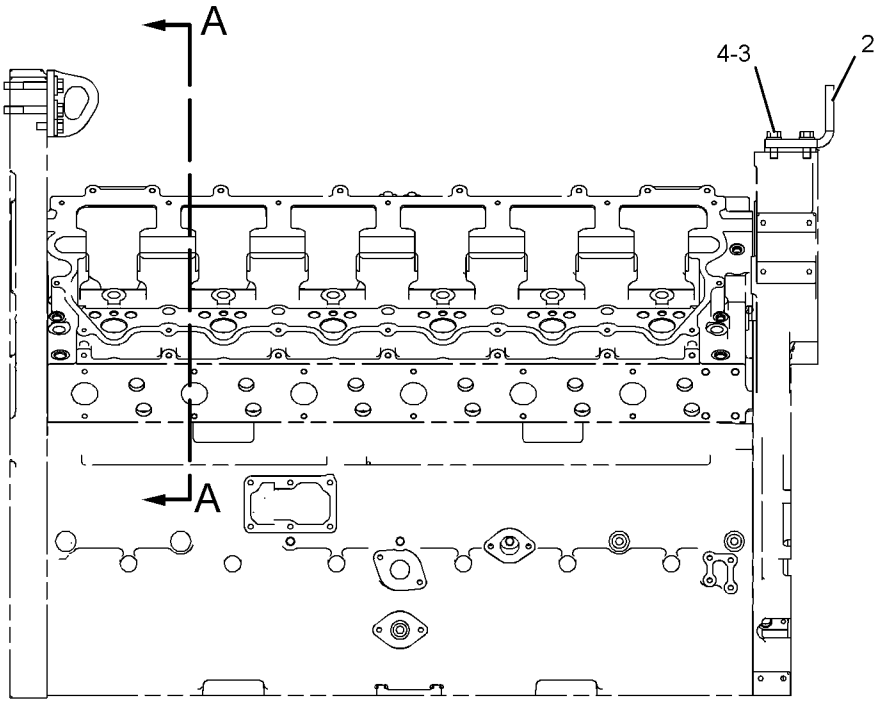

RIGHT SIDE VIEW

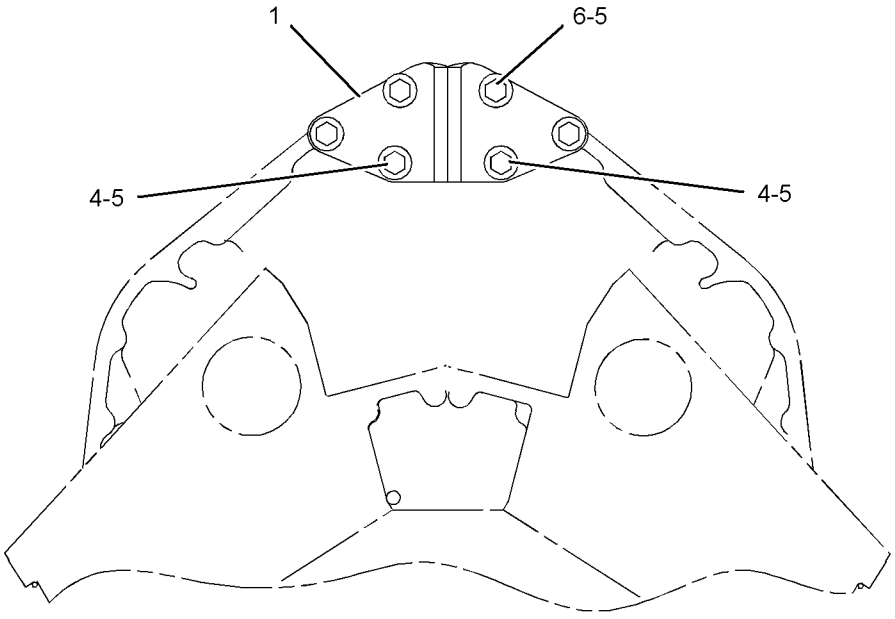

SECTION A-A

GRAPHIC #1 <END> g01051242

260-9631 MECHANISM GP-FUEL PUMP & VALVE

S/N: JZM1-UP
PART OF 371-2276 ENGINE AR-CORE
AN ATTACHMENT

SMCS-1102, 1123

i05808650

NOTE	REF NO	GRAPHIC REF	PART NUMBER	QTY	PART NAME 1 2 3 4 5 6 (PRODUCT LEVEL)	SEE PAGE
	1	1	**348-7743**	24	BRIDGE-VALVE	
CY	2	1	*437-3876*	6	ROCKER ARM GP	66
	3	1	**356-5212**	24	BOLT-12 POINT HEAD (1/2-13X3.5 IN)	

C - CHANGE FROM PREVIOUS TYPE
Y - SEPARATE ILLUSTRATION

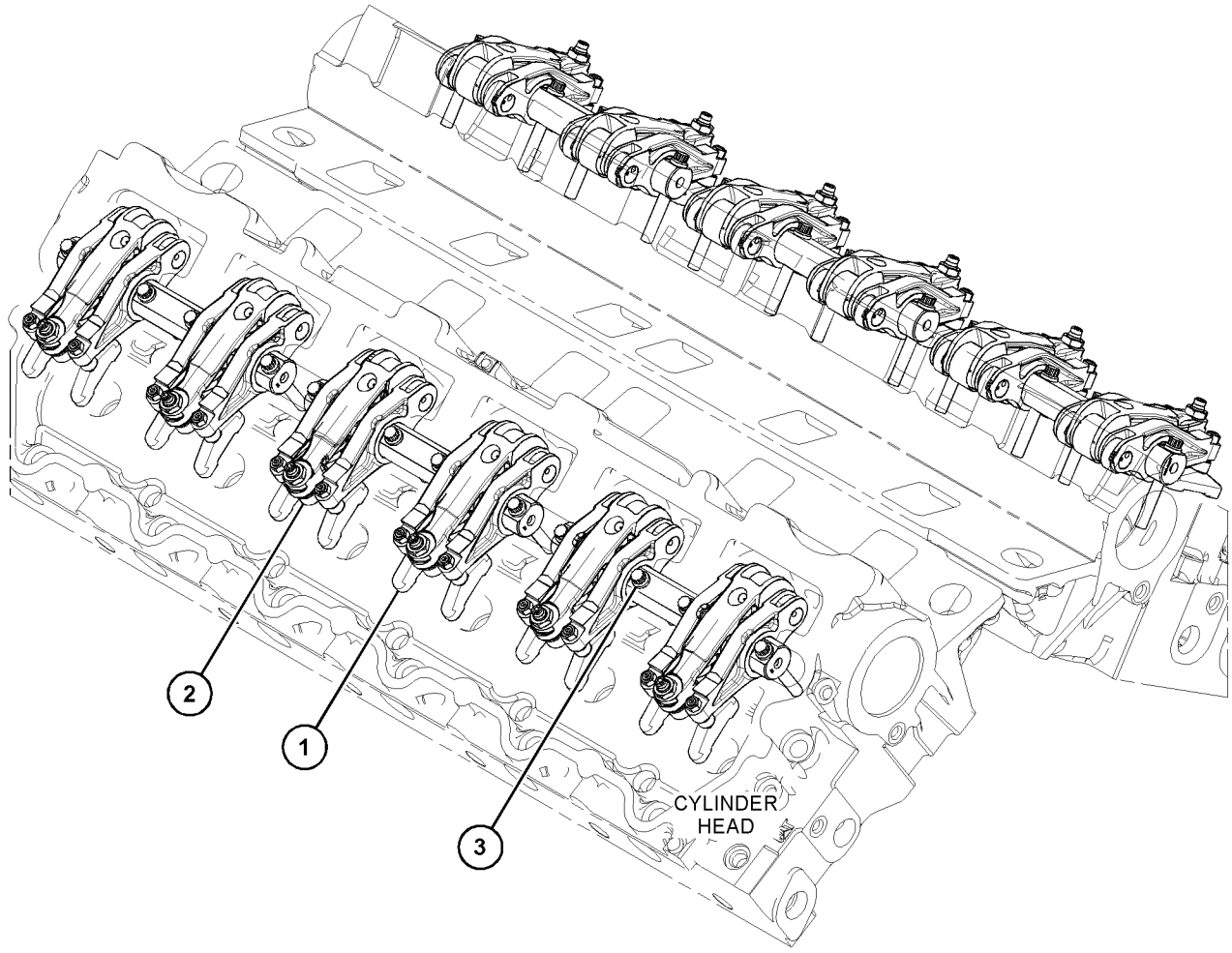

GRAPHIC #1

<END>

g03678646

376-0626 MOUNTING GP-ALTERNATOR

S/N: JZM1-UP

PART OF 359-6502, 443-0004 ENGINE AR-COMPLETE

AN ATTACHMENT

SMCS-1405 **i05501352**

NOTE	REF NO	GRAPHIC REF	PART NUMBER	QTY	PART NAME 1 2 3 4 5 6 (PRODUCT LEVEL)	SEE PAGE
	1	1	**243-2310**	1	COVER	
	2	1	**333-1207**	1	IDLER AS	
	3	1	**347-7092**	1	TENSIONER-BELT	
	4	1	**417-0112**	1	SUPPORT AS	
	4A	1	**332-9270**	3	BUSHING	
	5	1	**0L-1352**	1	BOLT (3/8-16X3.25-IN)	
	6	1	**0S-1571**	3	BOLT (3/8-16X1.75-IN)	
	7	1	**5M-2894**	3	WASHER-HARD (10.2X18.5X2.5-MM THK)	
	8	1	**165-3925**	2	BOLT (3/8-16X5.75-IN)	
	9	1	**8T-4121**	1	WASHER-HARD (11X21X2.5-MM THK)	
M	10	1	**8T-4172**	1	BOLT (M10X1.5X80-MM)	
	11	1	**9X-6458**	3	WASHER-HARD (10.2X22.5X3-MM THK)	

M - METRIC PART

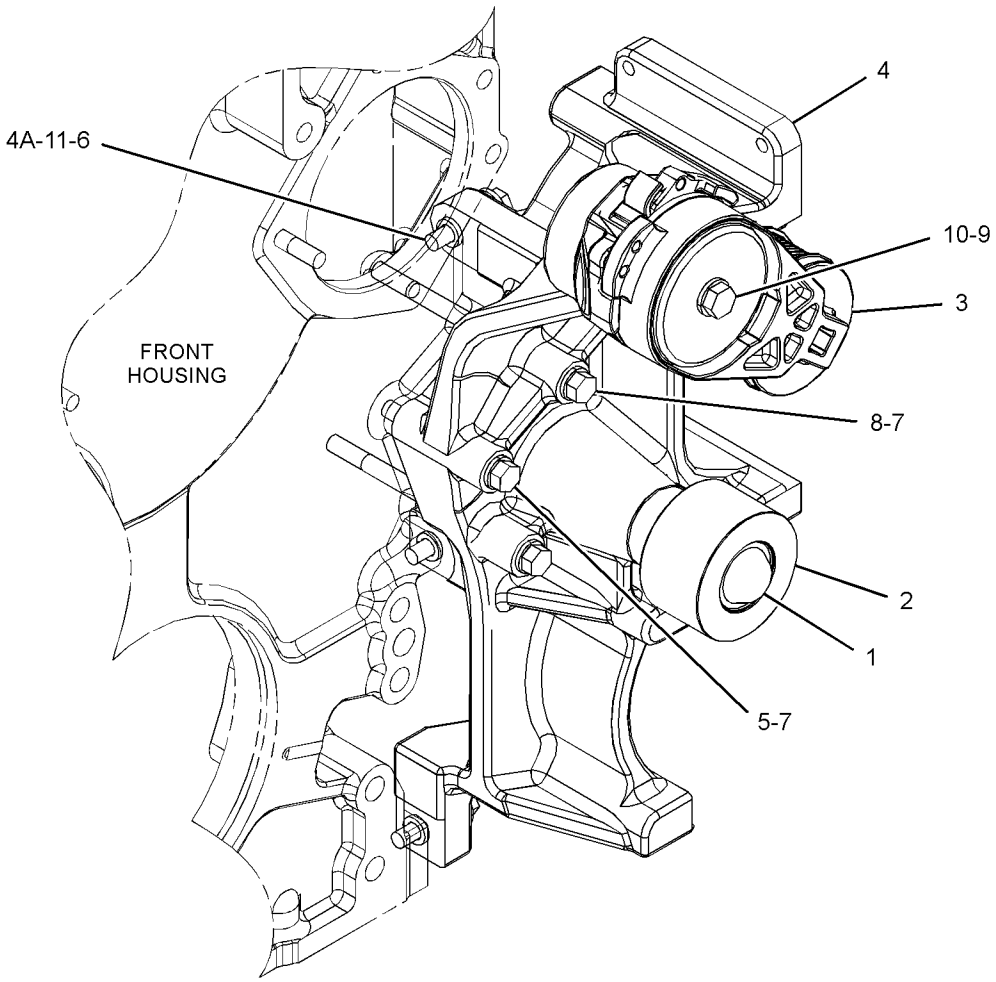

GRAPHIC #1 <END> g03504776

375-7122 PAN GP-OIL

S/N: JZM1-UP
PART OF 359-6502, 443-0004 ENGINE AR-COMPLETE
AN ATTACHMENT

SMCS-1302 **i05826184**

NOTE	REF NO	GRAPHIC REF	PART NUMBER	QTY	PART NAME 1 2 3 4 5 6 (PRODUCT LEVEL)	SEE PAGE
	1	1	*4P-0519*	1	ADAPTER AS-DRAIN	
		1	**109-5839**	1	PLUG-DRAIN	
		1	**109-5840**	1	ADAPTER-PLUG	
	2	1	**6N-2656**	1	TUBE AS	
	3	1	**8N-0422**	1	GASKET	
	4	1	**8N-0423**	1	PAN-OIL	
	5	1	**119-0273**	1	COVER	
	6	1	**124-3019**	5	BRACKET AS	
					(EACH INCLUDES)	
M		1	**8T-3490**	1	NUT-WELD (M10X1.5-THD)	
	7	1	**278-2325**	1	PAN-OIL	
	8	1	**353-1648**	1	GASKET-OIL PAN	
	9	1	**355-3257**	1	GASKET-OIL PAN	
	10	1	**375-7121**	1	PAN-OIL	
	11	1	**379-5053**	1	SEAL-O-RING	
	12	1	**165-3931**	6	BOLT (3/8-16X1.75-IN)	
	13	1	**0S-1587**	2	BOLT (1/2-13X1.75-IN)	
	14	1	**0T-0055**	4	BOLT (3/8-16X4.25-IN)	
	15	1	*148-8352*	1	ELBOW AS	
		1	**5K-9090**	1	SEAL-O-RING	
		1	**6V-9854**	1	ELBOW (SWIVEL)	
	16	1	*164-5594*	1	CONNECTOR AS	
		1	**5K-9090**	1	SEAL-O-RING	
		1	**7M-8485**	1	SEAL-O-RING	
		1	**8C-5723**	1	CONNECTOR	
	17	1	**1A-2029**	2	BOLT (3/8-16X1.125-IN)	
	18	1	**1S-0004**	1	SEAL-O-RING	
	19	1	**2P-3203**	30	BOLT-WASHER HEAD (3/8-16X1.25-IN)	
	20	1	**2P-3204**	2	BOLT-WASHER HEAD	
	21	1	**2P-3209**	4	BOLT-WASHER HEAD	
	22	1	**3B-1915**	6	BOLT (3/8-16X1.375-IN)	
	23	1	**4J-0528**	1	SEAL-O-RING	
	24	1	**4N-0699**	1	GASKET	
	25	1	**4W-9890**	1	COVER	
	26	1	**5M-2894**	26	WASHER-HARD (10.2X18.5X2.5-MM THK)	
	27	1	**6V-9833**	1	CAP AS	
	28	1	**8T-6761**	1	PLUG-PIPE (1-11-1/2 NPT THD)	
	29	1	**9S-8752**	6	NUT-FULL (3/8-16-THD)	
	30	1	**165-3929**	2	BOLT (3/8-16X1.5-IN)	

M - METRIC PART

375-7122 **PAN GP-OIL (**contd.**)** **i05826184**

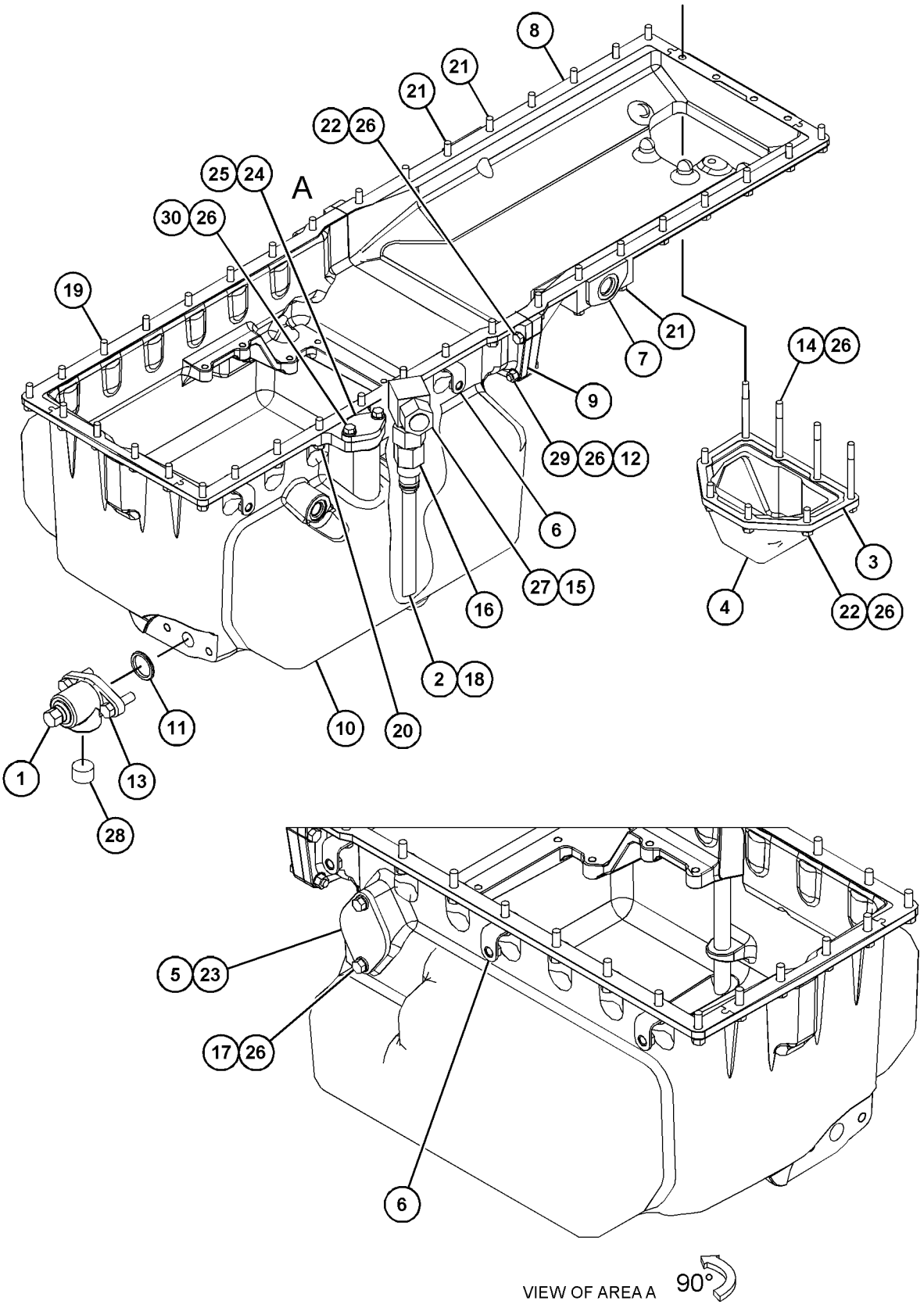

GRAPHIC #1 <END> g03726321

415-7216 PANEL GP-SOUND SUPPRESSION

S/N: JZM1-UP
OIL PAN
PART OF 359-6502, 443-0004 ENGINE AR-COMPLETE
AN ATTACHMENT

SMCS-1801 **i05174329**

NOTE	REF NO	GRAPHIC REF	PART NUMBER	QTY	PART NAME 1 2 3 4 5 6 (PRODUCT LEVEL)	SEE PAGE
	1	1	**415-7215**	1	PANEL AS-SOUND SUPPRESSION	
		1	**4P-8134**	5	CLIP	
		1	**6C-9237**	5	RIVET	
		1	**098-8968**	10	WASHER (5X16X1.2-MM THK)	
	2	1	**6V-5839**	5	WASHER (11X21X2.5-MM THK)	
M	3	1	**6V-8455**	5	BOLT (M10X1.5X16-MM)	

M - METRIC PART

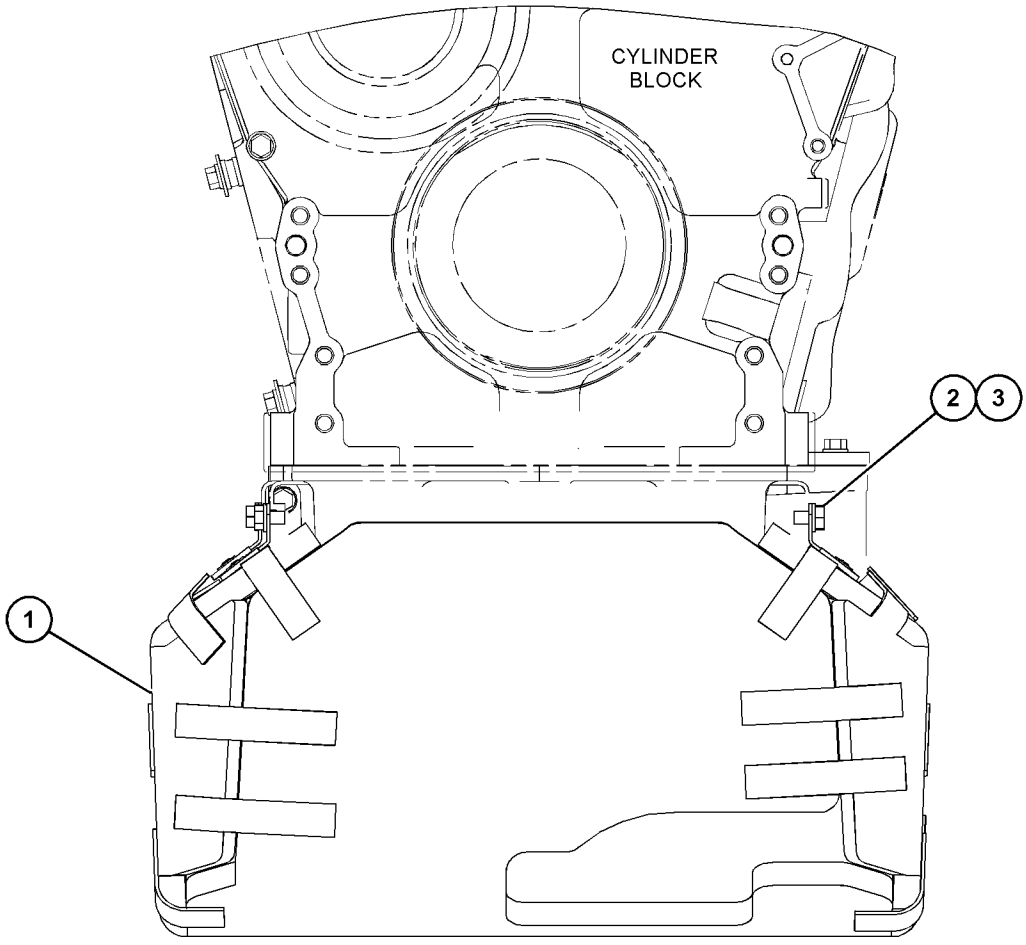

FRONT VIEW OF ENGINE

GRAPHIC #1 <END> g03527981

213-4836 PISTON & ROD GP

S/N: JZM1-UP
27 LITER, 18:1 COMPRESSION RATIO
PART OF 371-2276 ENGINE AR-CORE
AN ATTACHMENT

SMCS-1225 **i04868969**

NOTE	REF NO	GRAPHIC REF	PART NUMBER	QTY	PART NAME 1 2 3 4 5 6 (PRODUCT LEVEL)	SEE PAGE
	1	1	**150-1156**	1	BOLT-SPECIAL (OIL JET)	
	2	1	**164-4187**	1	RING-PISTON (INTERMEDIATE)	
	3	1	**180-7350**	1	PIN-PISTON	
C	4	1	**250-2940**	2	RETAINER-PIN	
	5	1	**232-3226**	1	BEARING-CONNECTING ROD (STANDARD)	
AB		1	**341-0060**		BEARING-CONNECTING ROD (0.63-MM US)	
R	6	1	**232-3232**	1	ROD AS	
	6A	1	**213-3217**	4	BOLT (M11X1.25X84-MM)	
	6B	1	**219-4458**	2	PIN-DOWEL	
	6C	1	**229-6259**	1	BEARING	
	7	1	**357-7163**	1	TUBE AS-OIL JET	
CR	8	1	**376-7362**	1	BODY AS-PISTON	
	9	1	**247-6130**	1	RING-PISTON-TOP	
	10	1	**238-0294**	1	RING-PISTON (OIL)	

A - NOT PART OF THIS GROUP
B - USE AS REQUIRED
C - CHANGE FROM PREVIOUS TYPE
R - REMANUFACTURED PART MAY BE AVAILABLE

213-4836 **PISTON & ROD GP (**contd.**)** **i04868969**

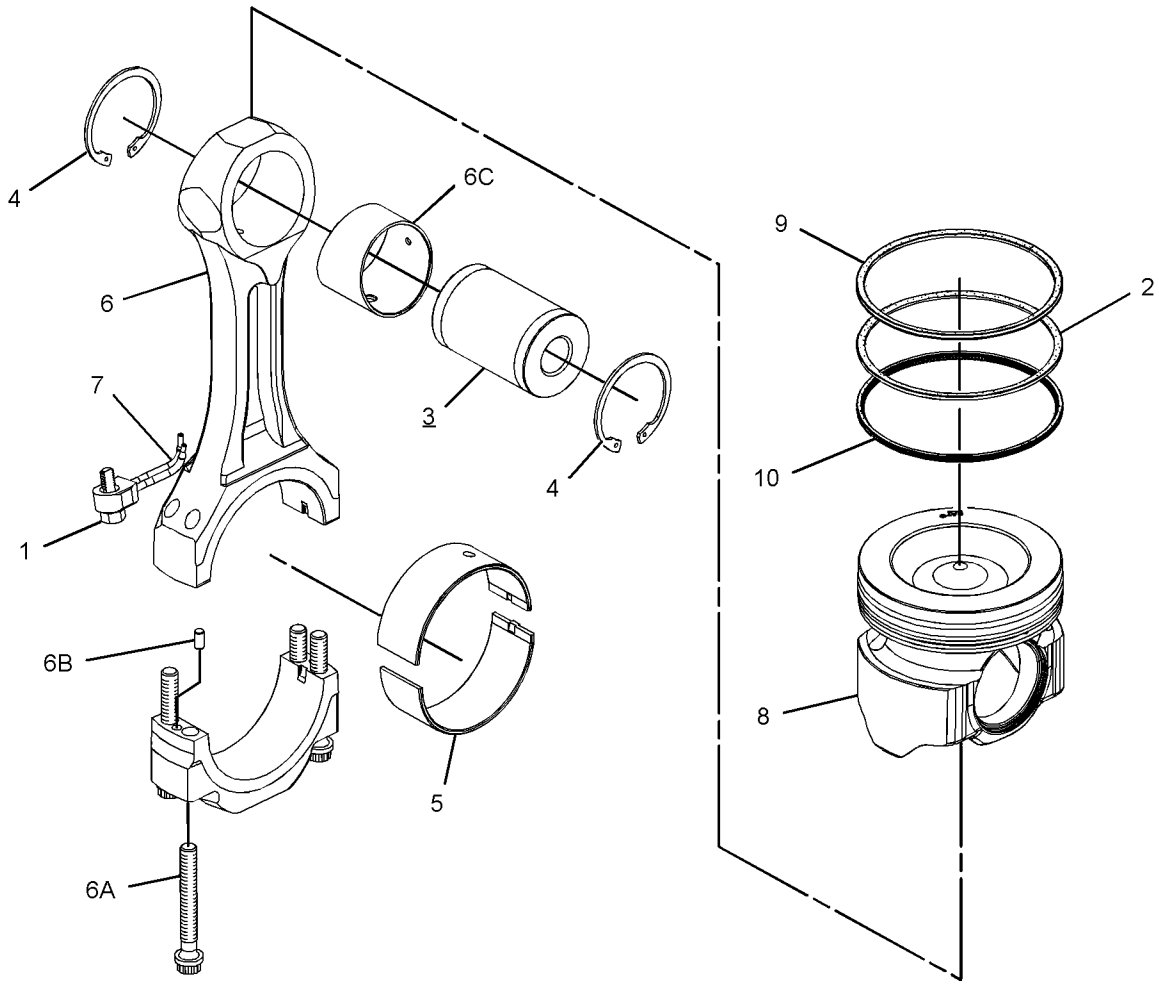

GRAPHIC #1 <END> g02557599

357-1093 PLUG GP-CYLINDER BLOCK

S/N: JZM1-UP

PART OF 359-6502, 443-0004 ENGINE AR-COMPLETE

AN ATTACHMENT

SMCS-1201 **i04384120**

NOTE	REF NO	GRAPHIC REF	PART NUMBER	QTY	PART NAME 1 2 3 4 5 6 (PRODUCT LEVEL)	SEE PAGE
	1	1	**165-6170**	2	PLUG	
	2	1	*183-3407*	4	PLUG AS	
					(EACH INCLUDES)	
		1	**9S-8004**	1	PLUG	
		1	**214-7568**	1	SEAL-O-RING	
	3	1	*307-2671*	1	PLUG AS	
		1	**9S-8002**	1	PLUG (7/16-20-THD)	
		1	**214-7566**	1	SEAL-O-RING	
	4	1	*309-5131*	3	PLUG AS	
					(EACH INCLUDES)	
		1	**9S-8006**	1	PLUG	
		1	**238-5081**	1	SEAL-O-RING	

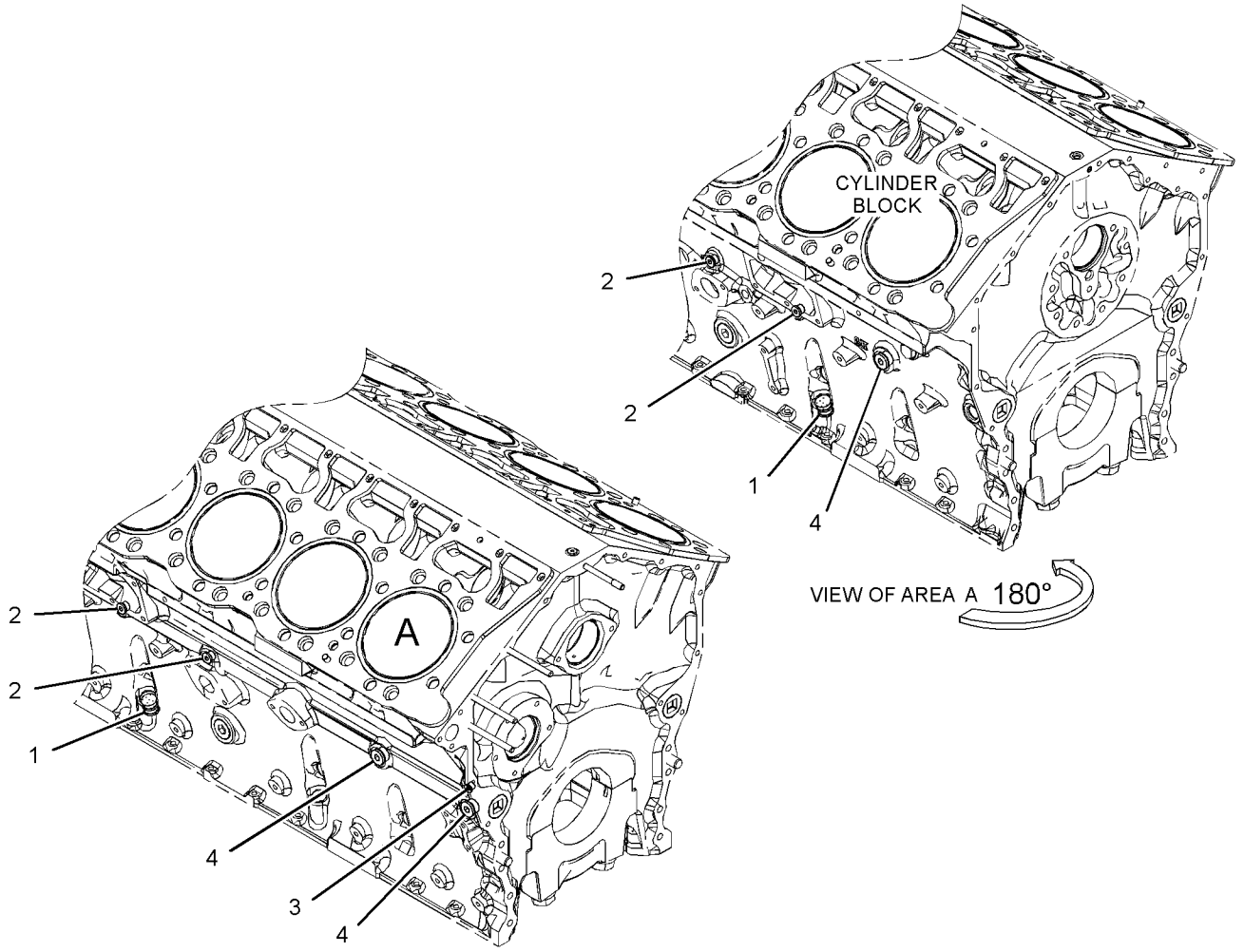

GRAPHIC #1 <END> g02575018

223-6407 PLUG GP-CYLINDER HEAD

S/N: JZM1-UP

PART OF 359-6502, 443-0004 ENGINE AR-COMPLETE

AN ATTACHMENT

SMCS-1100, 1101 **i02040812**

NOTE	REF NO	GRAPHIC REF	PART NUMBER	QTY	PART NAME 1 2 3 4 5 6 (PRODUCT LEVEL)	SEE PAGE
	1	1	**3B-0645**	4	PLUG-CUP	

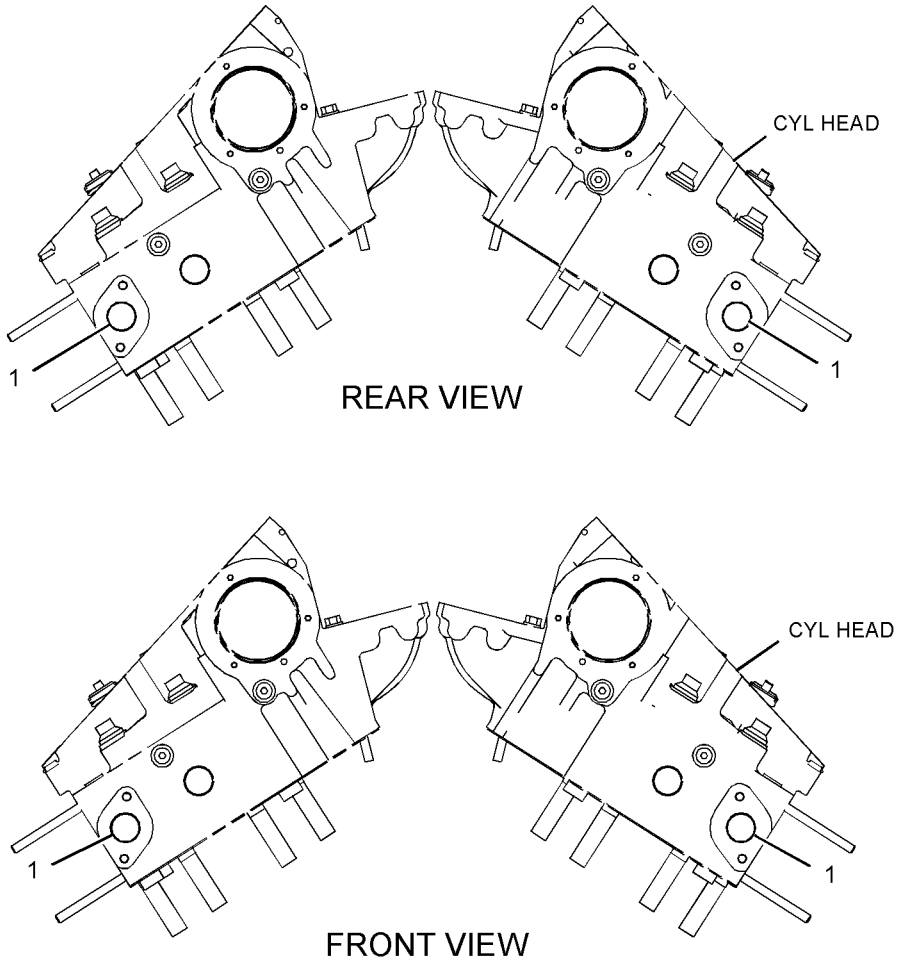

GRAPHIC #1 <END> g01051070

437-3876 ROCKER ARM GP

S/N: JZM1-UP

PART OF 260-9631 MECHANISM GP-FUEL PUMP & VALVE

AN ATTACHMENT

SMCS-1123 **i05645673**

NOTE	REF NO	GRAPHIC REF	PART NUMBER	QTY	PART NAME 1 2 3 4 5 6 (PRODUCT LEVEL)	SEE PAGE
Y	1	1	*437-3881*	2	ROCKER ARM GP (UNIT INJECTOR)	68
	2	1	**313-4085**	1	SHAFT AS-ROCKER ARM	
		1	**4B-9782**	2	BALL	
Y	3	1	*437-3877*	4	ROCKER ARM GP (EXHAUST)	67

Y - SEPARATE ILLUSTRATION

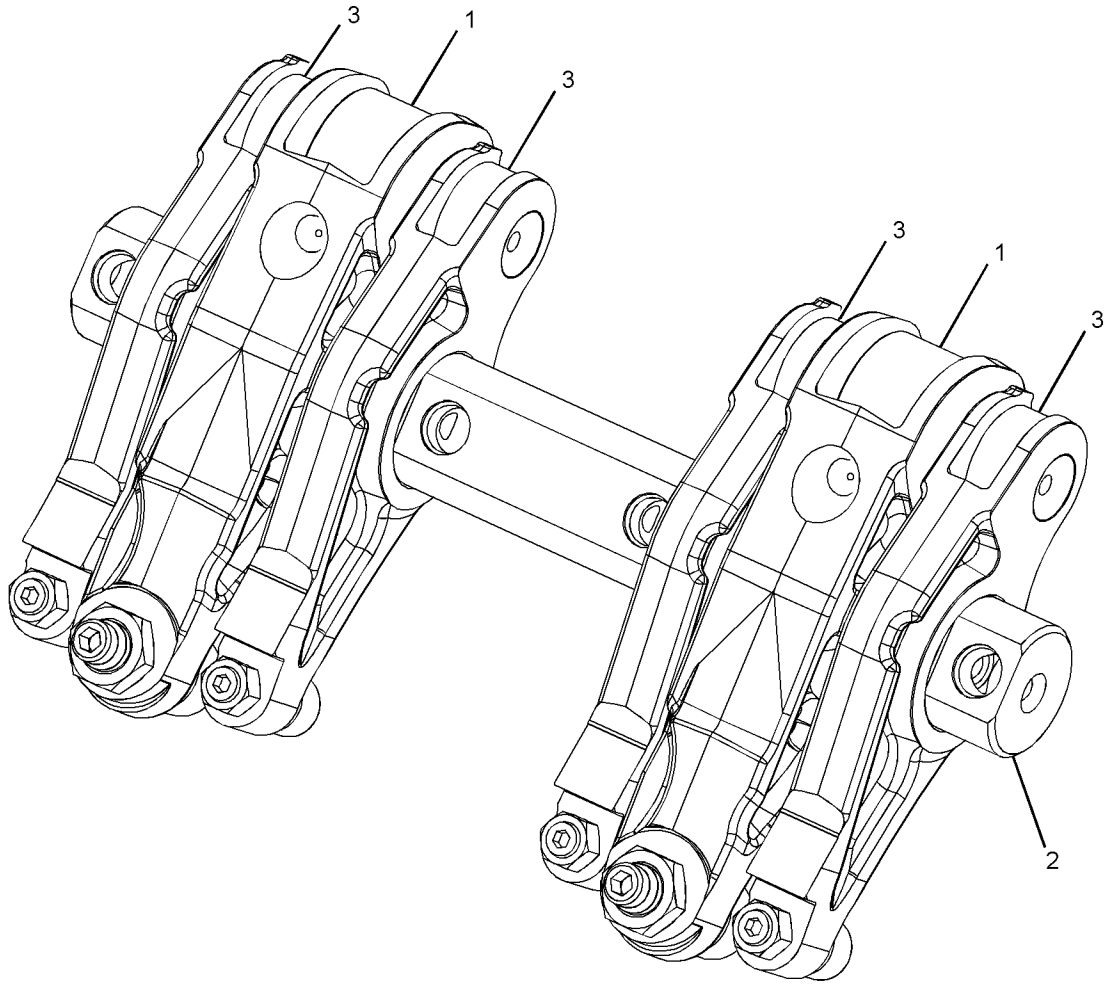

GRAPHIC #1 <END> g03365160

437-3877 ROCKER ARM GP–EXHAUST

S/N: JZM1-UP

PART OF 437-3876 ROCKER ARM GP

AN ATTACHMENT

SMCS-1123 **i05645687**

NOTE	REF NO	GRAPHIC REF	PART NUMBER	QTY	PART NAME 1 2 3 4 5 6 (PRODUCT LEVEL)	SEE PAGE
	1	1	**258-8721**	1	BUTTON	
	2	1	**274-4491**	1	SCREW-ARM ADJUSTMENT (3/8-24X1.20-IN)	
	3	1	**3S-2713**	1	NUT-FULL (3/8-24-THD)	
R	4	1	**437-3870**	1	ROCKER ARM AS	
	5	1	**8L-2777**	1	SEAL-O-RING	

R - REMANUFACTURED PART MAY BE AVAILABLE

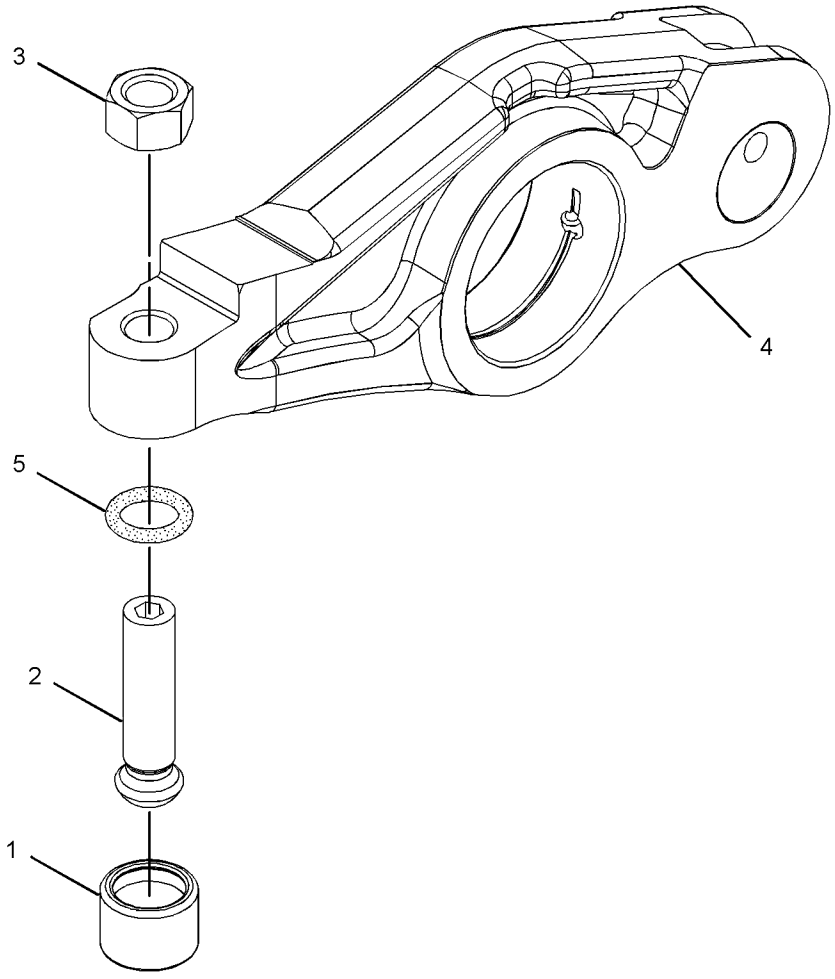

GRAPHIC #1 <END> g03379862

437-3881 ROCKER ARM GP—UNIT INJECTOR

S/N: JZM1-UP
PART OF 437-3876 ROCKER ARM GP
AN ATTACHMENT

SMCS-1123 **i05544384**

NOTE	REF NO	GRAPHIC REF	PART NUMBER	QTY	PART NAME 1 2 3 4 5 6 (PRODUCT LEVEL)	SEE PAGE
	1	1	**192-4151**	1	BUTTON	
	2	1	**196-5069**	1	SCREW-ARM ADJUSTMENT (9/16-18X2-IN)	
	3	1	**196-5070**	1	NUT-JAM (9/16-18-THD)	
R	4	1	**437-3880**	1	ROCKER ARM AS	
	5	1	**061-8639**	1	SEAL-O-RING	

R - REMANUFACTURED PART MAY BE AVAILABLE

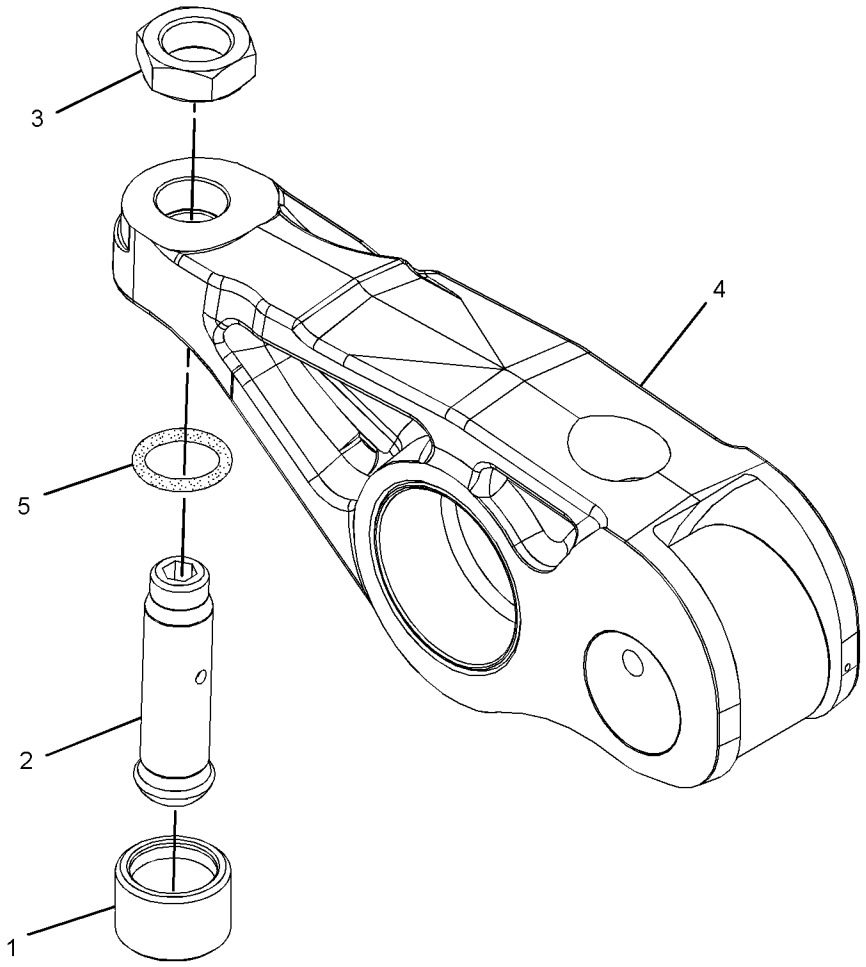

GRAPHIC #1 <END> g03379863

319-0785 SEAL GP-CRANKSHAFT–REAR

S/N: JZM1-UP
FOR USE WITH CCW ROTATION
PART OF 226-0297 HOUSING GP-FLYWHEEL
AN ATTACHMENT

SMCS-1160, 1161

i05830408

NOTE	REF NO	GRAPHIC REF	PART NUMBER	QTY	PART NAME 1 2 3 4 5 6 (PRODUCT LEVEL)	SEE PAGE
J	1	1	**142-5868**	1	SEAL-CRANKSHAFT (REAR)	
					CRANKSHAFT SEAL 366-6004 IS AVAILABLE FOR WET APPLICATIONS	

J - FOR USE WITH DRY CLUTCH APPLICATIONS

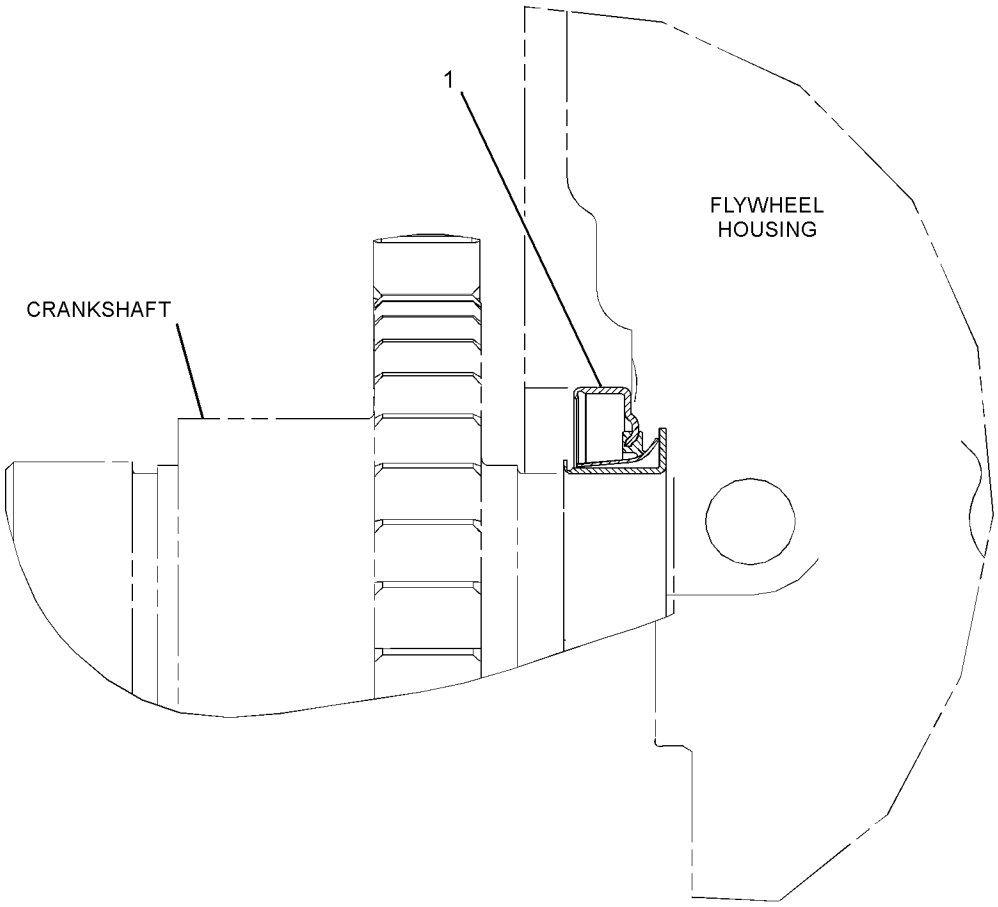

RIGHT SIDE VIEW OF ENGINE

GRAPHIC #1 <END> g01496733

319-7401 SEAL GP-CRANKSHAFT—FRONT

S/N: JZM1-UP
FOR USE WITH CW ROTATION
PART OF 225-6052 CRANKSHAFT GP
AN ATTACHMENT

SMCS-1160, 1161 **i06508342**

NOTE	REF NO	GRAPHIC REF	PART NUMBER	QTY	PART NAME 1 2 3 4 5 6 (PRODUCT LEVEL)	SEE PAGE
	1	1	**142-5867**	1	SEAL-CRANKSHAFT (FRONT)	

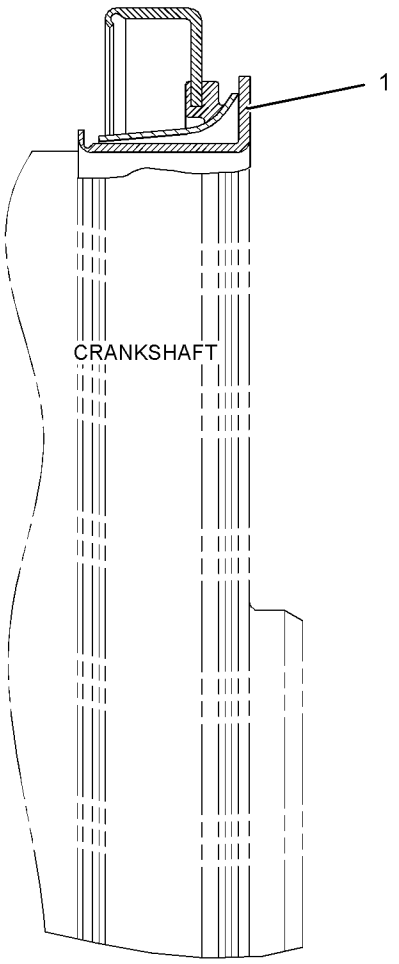

SECTION A-A

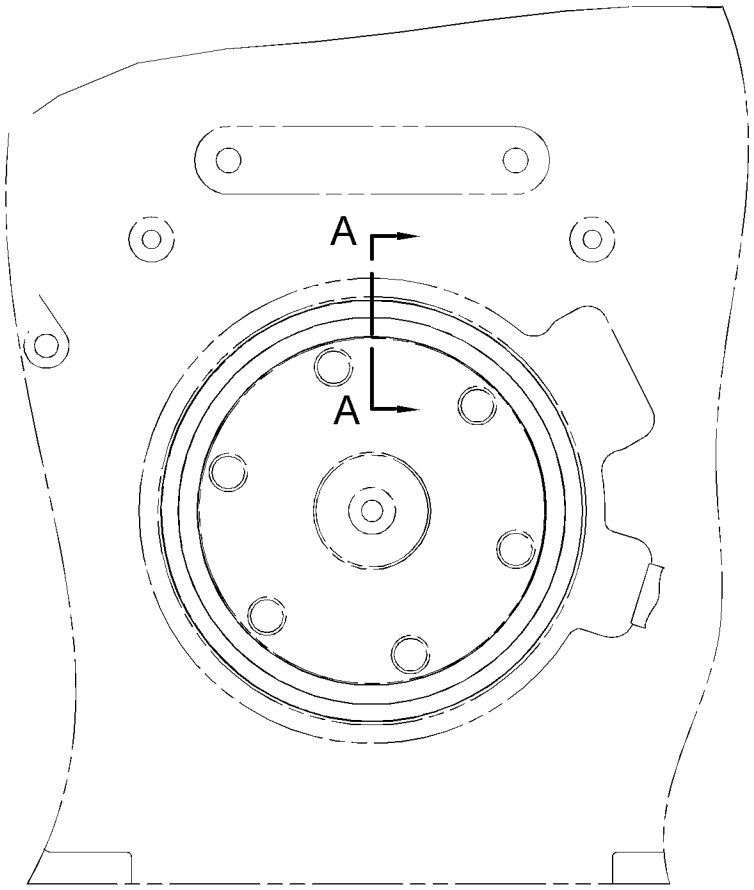

FRONT VIEW OF ENGINE

GRAPHIC #1 <END> g01516169

359-6476 SUPPORT GP-ENGINE

S/N: RAB1-UP
PART OF 359-6404 INSTALLATION AR-ENGINE
AN ATTACHMENT

SMCS-1152, 1153, 1154

i05426049

NOTE	REF NO	GRAPHIC REF	PART NUMBER	QTY	PART NAME 1 2 3 4 5 6 (PRODUCT LEVEL)	SEE PAGE
	1	1	**4P-5546**	2	SUPPORT	
	2	1	**6N-3896**	2	CAP	
	3	1	**6N-3897**	2	SUPPORT-ENGINE	
	4	1	**6Y-2090**	2	MOUNT AS	
	5	1	**6C-3210**	4	BOLT (7/8-9X3-IN)	
	6	1	**7X-0455**	4	BOLT (7/8-9X4.25-IN)	
	7	1	**5P-8248**	16	WASHER-HARD (20X36.5X3.5-MM THK)	
	8	1	**5P-8249**	8	WASHER-HARD (24X41.5X4-MM THK)	
	9	1	**2A-1538**	12	BOLT (3/4-10X2.25-IN)	
	10	1	**9X-8889**	4	BOLT (3/4-10X3.5-IN)	

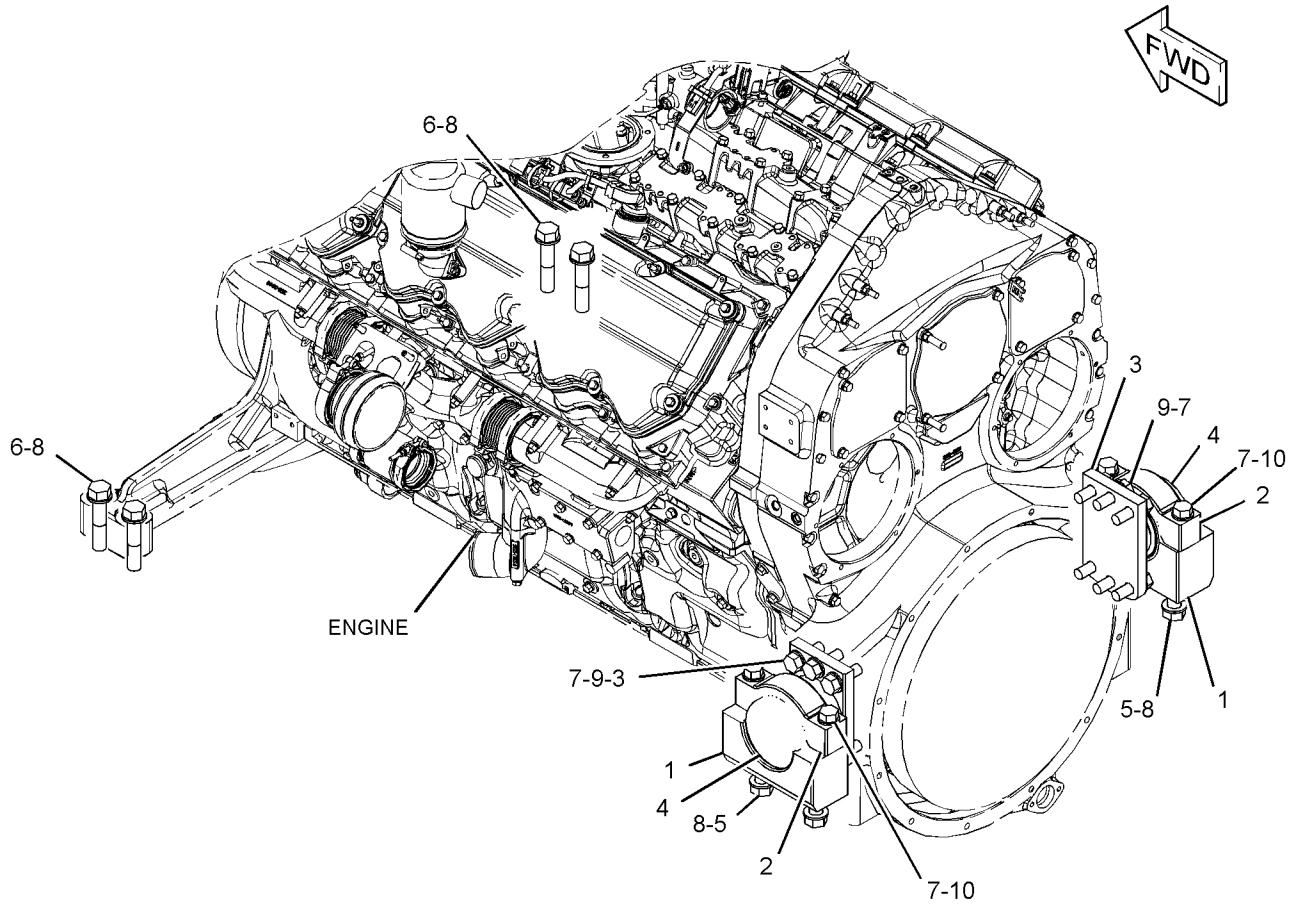

GRAPHIC #1 <END> g03489764

376-6601 SUPPORT GP-ENGINE

S/N: JZM1-UP
FRONT
PART OF 359-6502, 443-0004 ENGINE AR-COMPLETE
AN ATTACHMENT

SMCS-1152, 1153, 1154 **i05173546**

NOTE	REF NO	GRAPHIC REF	PART NUMBER	QTY	PART NAME 1 2 3 4 5 6 (PRODUCT LEVEL)	SEE PAGE
	1	1	**373-9811**	1	SUPPORT (FRONT)	
	2	1	**7X-0346**	4	BOLT (5/8-11X2-IN)	
	3	1	**8T-4122**	4	WASHER-HARD (17X32X3.5-MM THK)	

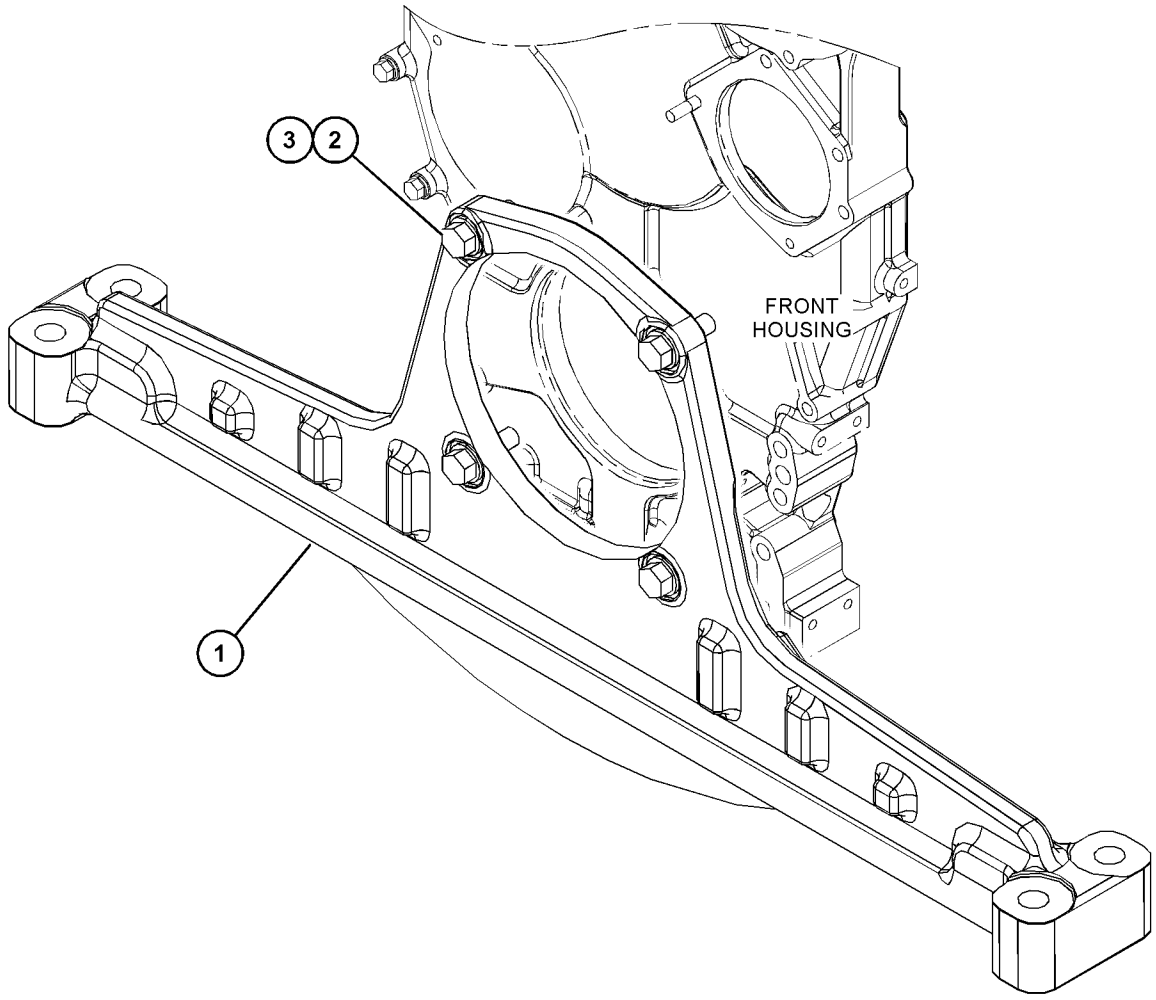

GRAPHIC #1 <END> g03525856

179-7086 TRUNNION GP-ENGINE

S/N: JZM1-UP

PART OF 359-6502, 443-0004 ENGINE AR-COMPLETE

AN ATTACHMENT

SMCS-1153 **i03905674**

NOTE	REF NO	GRAPHIC REF	PART NUMBER	QTY	PART NAME 1 2 3 4 5 6 (PRODUCT LEVEL)	SEE PAGE
	1	1	**1W-3014**	1	ADAPTER AS	
	1A	1	**4N-0683**	2	DOWEL	
	2	1	**343-4835**	1	MOUNT AS	
	3	1	**0S-1573**	8	BOLT (1/2-13X4-IN)	

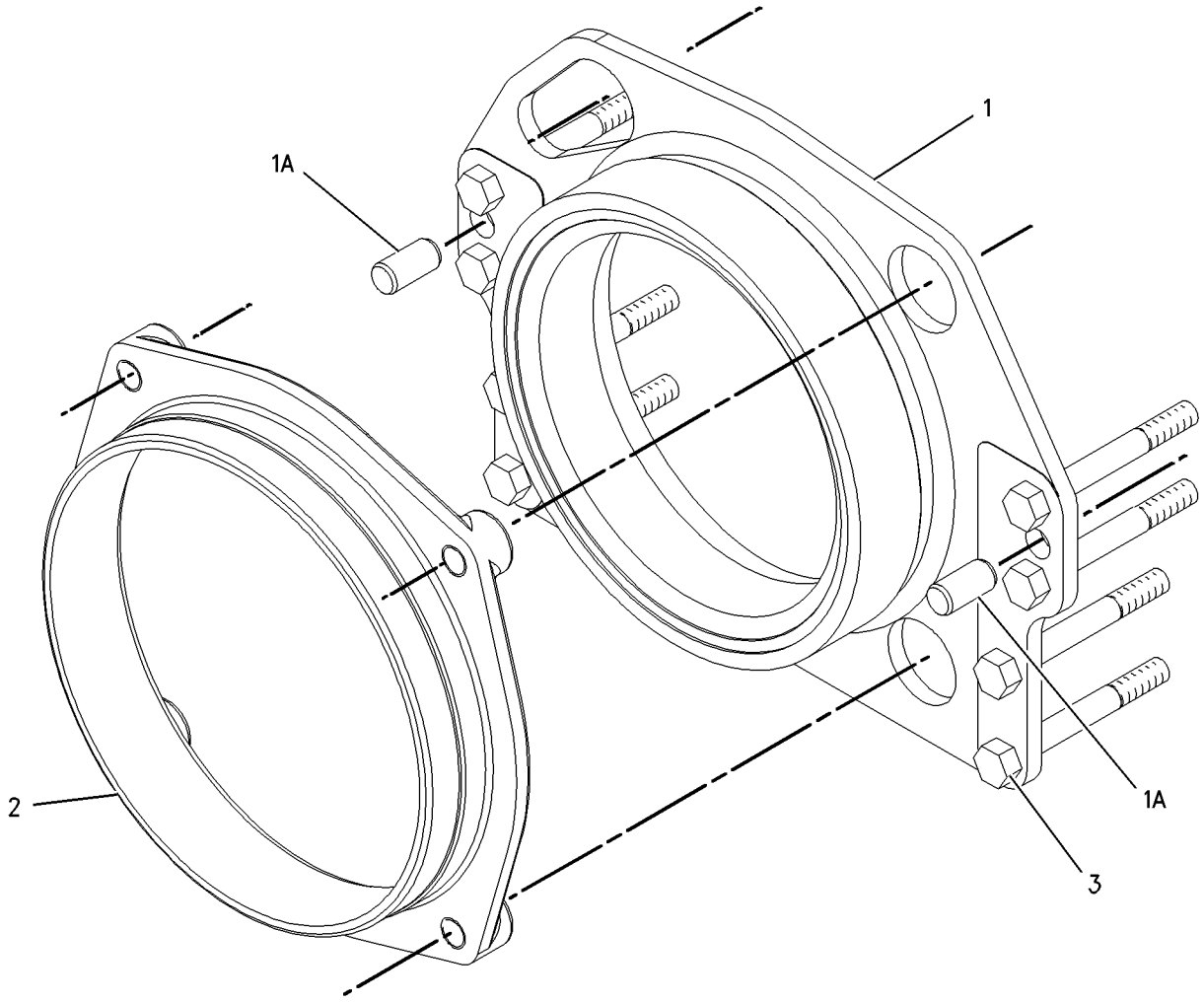

GRAPHIC #1 <END> g00725950

397-1179 BASE AS-OIL FILTER

S/N: JZM1-UP

PART OF 349-9380 FILTER GP-ENGINE OIL

AN ATTACHMENT

SMCS-1306 **i04971682**

NOTE	REF NO	GRAPHIC REF	PART NUMBER	QTY	PART NAME 1 2 3 4 5 6 (PRODUCT LEVEL)	SEE PAGE
	1	1	**2P-4304**	2	STUD-HOLLOW	

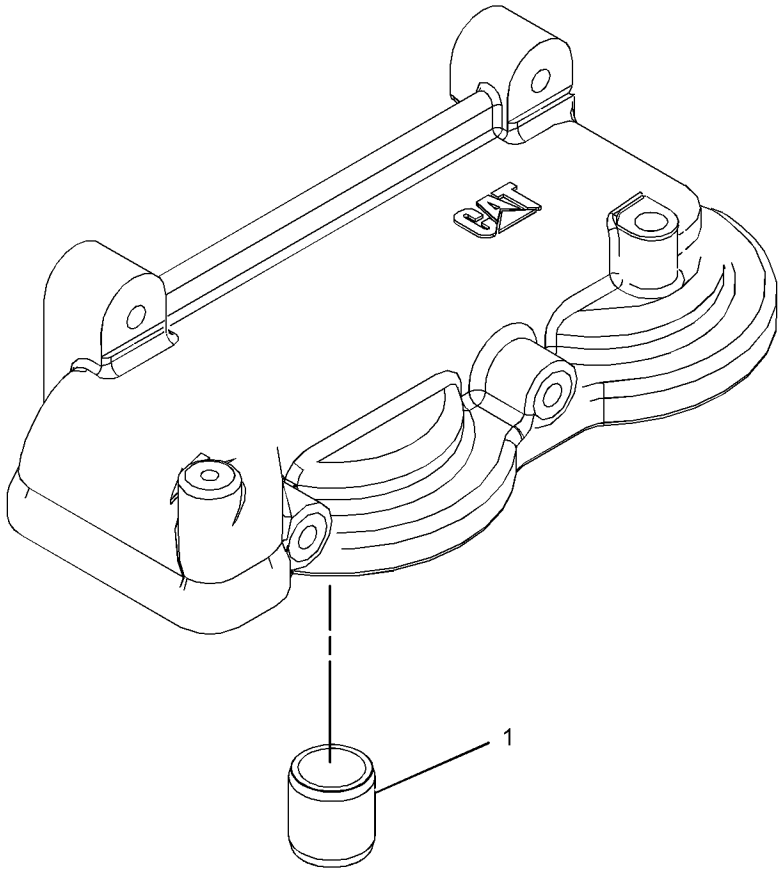

GRAPHIC #1 <END> g03202219

4N-2481 FASTENER GP-OIL PUMP MOUNTING—ENGINE

S/N: JZM1-UP
PART OF 371-2276 ENGINE AR-CORE
AN ATTACHMENT

SMCS-1304 **i05896883**

NOTE	REF NO	GRAPHIC REF	PART NUMBER	QTY	PART NAME 1 2 3 4 5 6 (PRODUCT LEVEL)	SEE PAGE
	1	1	**0L-1143**	2	BOLT (3/8-16X2.5-IN)	
	2	1	**0S-1590**	1	BOLT (3/8-16X2-IN)	
	3	1	**5M-2894**	3	WASHER-HARD (10.2X18.5X2.5-MM THK)	

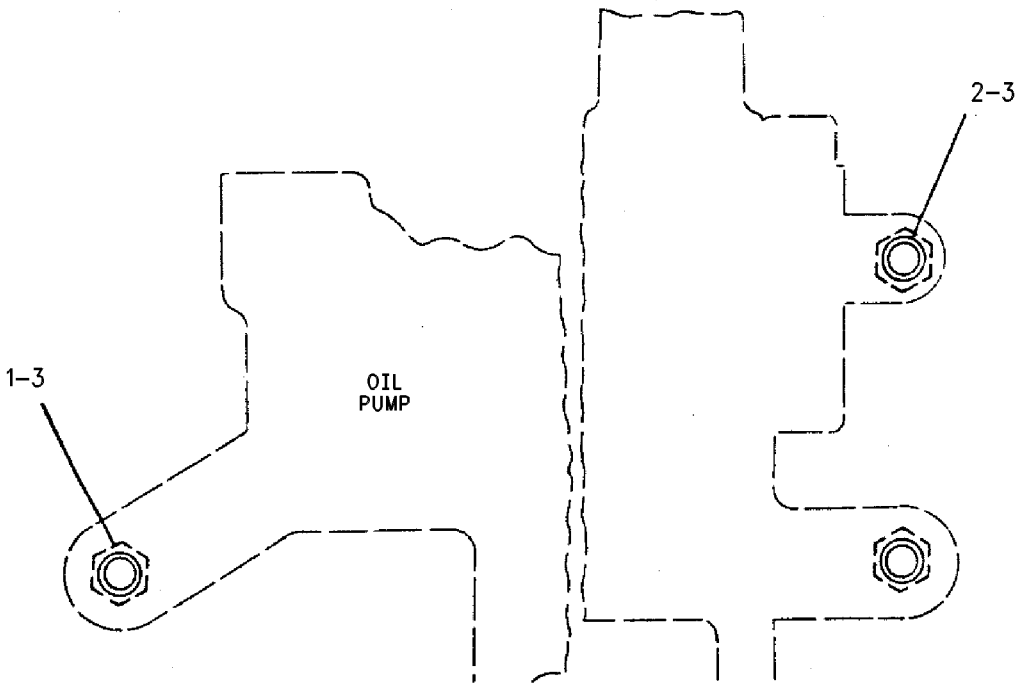

GRAPHIC #1 <END> g00604525

353-0196 FILLER GP-ENGINE OIL

S/N: JZM1-UP

PART OF 359-6502, 443-0004 ENGINE AR-COMPLETE

AN ATTACHMENT

SMCS-1316 **i05820045**

NOTE	REF NO	GRAPHIC REF	PART NUMBER	QTY	PART NAME 1 2 3 4 5 6 (PRODUCT LEVEL)	SEE PAGE
	1	1	**3F-6156**	1	HOOK	
	2	1	**280-2688**	1	ELBOW	
	3	1	**281-0193**	1	HOSE	
	4	1	**324-9751**	1	CAP-OIL FILLER (ENGINE)	
	5	1	**376-8056**	1	TUBE AS	
	6	1	**4L-9337**	2	BOLT (3/8-16X1.5-IN)	
	7	1	**5P-0597**	2	CLAMP-HOSE	
	8	1	**5P-8211**	1	SEAL-O-RING	
	9	1	**7D-1649**	1	WASHER-HARD (13.5X32X5-MM THK)	
	10	1	**7B-3235**	1	BOLT (1/2-13X1.375-IN)	
	11	1	**8T-4896**	2	WASHER-HARD (10.2X18.5X2.5-MM THK)	
	12	1	**9D-6196**	1	CLIP (SLOT)	
	13	1	**9D-6197**	1	CLIP (TAB)	

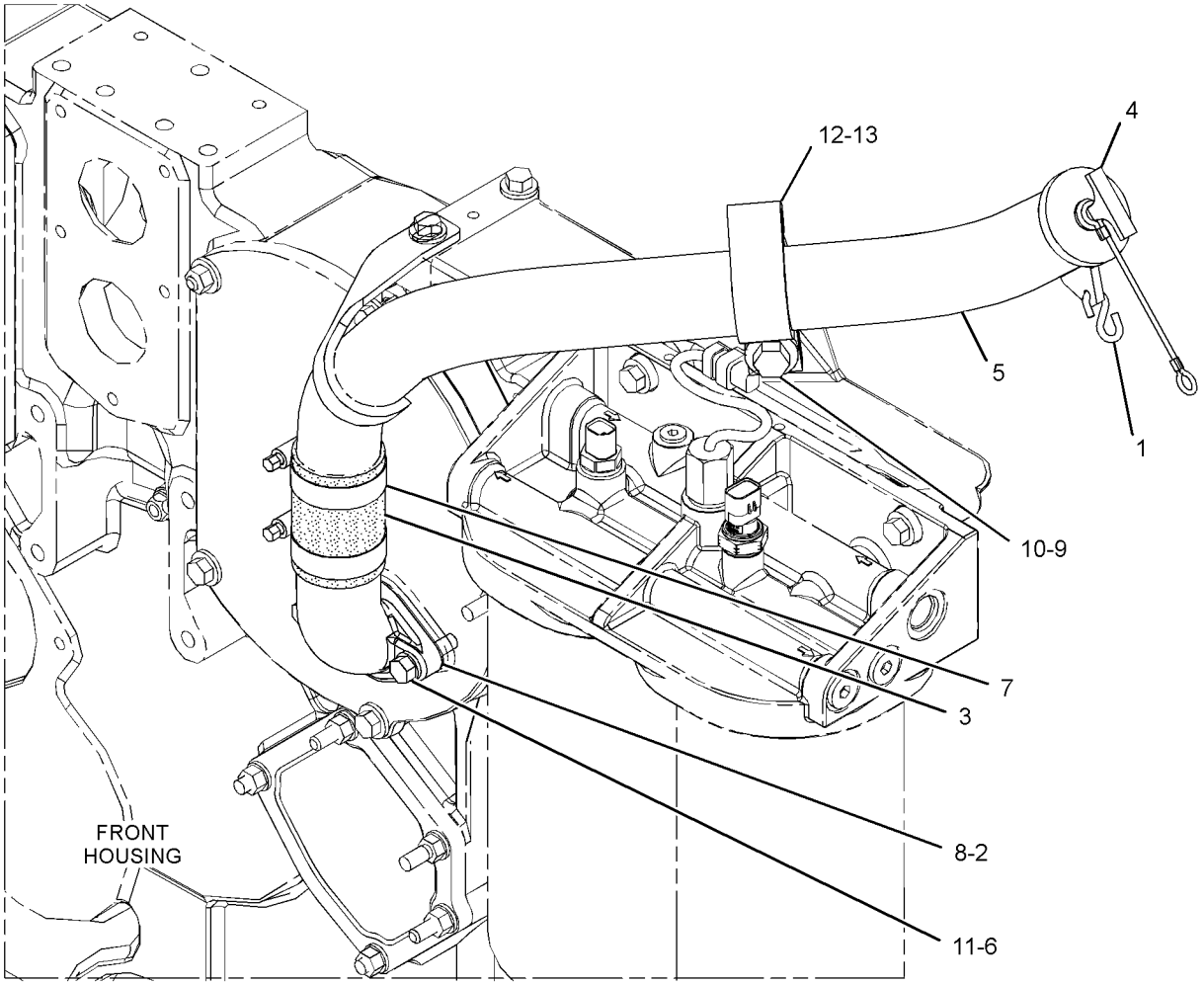

GRAPHIC #1 <END> g02518756

349-9380 FILTER GP-ENGINE OIL

S/N: JZM1-UP
PART OF 357-0336 FILTER GP-ENGINE OIL
AN ATTACHMENT

SMCS-1306, 1308

i06191935

NOTE	REF NO	GRAPHIC REF	PART NUMBER	QTY	PART NAME 1 2 3 4 5 6 (PRODUCT LEVEL)	SEE PAGE
	1	1	**1R-1808**	2	FILTER-ENGINE OIL (ADVANCED EFFICIENCY)	
Y	2	1	**397-1179**	1	BASE AS-OIL FILTER (ENGINE)	74
	3	1	**151-5145**	1	ELBOW	
	4	1	**6V-5048**	2	SEAL-O-RING	
	5	1	**8C-3445**	1	CAP-DUST	
	6	1	**8C-3446**	1	VALVE-SAMPLING (ENGINE OIL)	

Y - SEPARATE ILLUSTRATION

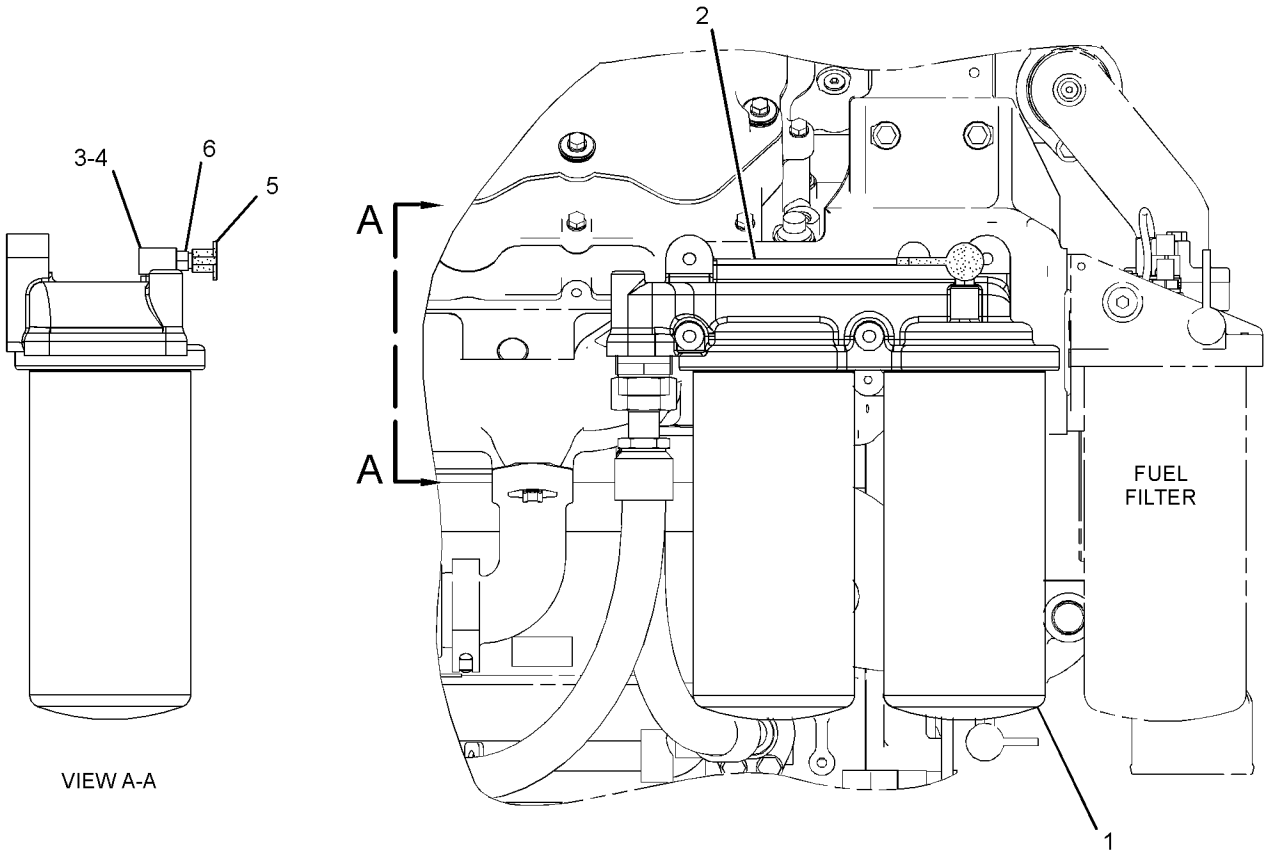

VIEW A-A

RIGHT SIDE VIEW OF ENGINE

GRAPHIC #1

<END>

g02236293

357-0336 FILTER GP-ENGINE OIL

S/N: JZM1-UP

PART OF 359-6502, 443-0004 ENGINE AR-COMPLETE

AN ATTACHMENT

SMCS-1306, 1308

i05820080

NOTE	REF NO	GRAPHIC REF	PART NUMBER	QTY	PART NAME 1 2 3 4 5 6 (PRODUCT LEVEL)	SEE PAGE
Y	1	1	*349-9380*	1	FILTER GP-ENGINE OIL	77
	2	1	**448-7068**	1	BRACKET AS	
		1	**1F-0750**	1	NUT-WELD (3/8-16-THD)	
	3	1	**8M-9124**	10	WASHER (10X22.5X8-MM THK)	
	4	1	**9F-8999**	2	BOLT (3/8-16X7-IN)	
	5	1	**0L-1143**	2	BOLT (3/8-16X2.5-IN)	
	6	1	**0S-1588**	5	BOLT (3/8-16X1.25-IN)	
	7	1	**249-2943**	1	STUD (3/8-16-THD)	

Y - SEPARATE ILLUSTRATION

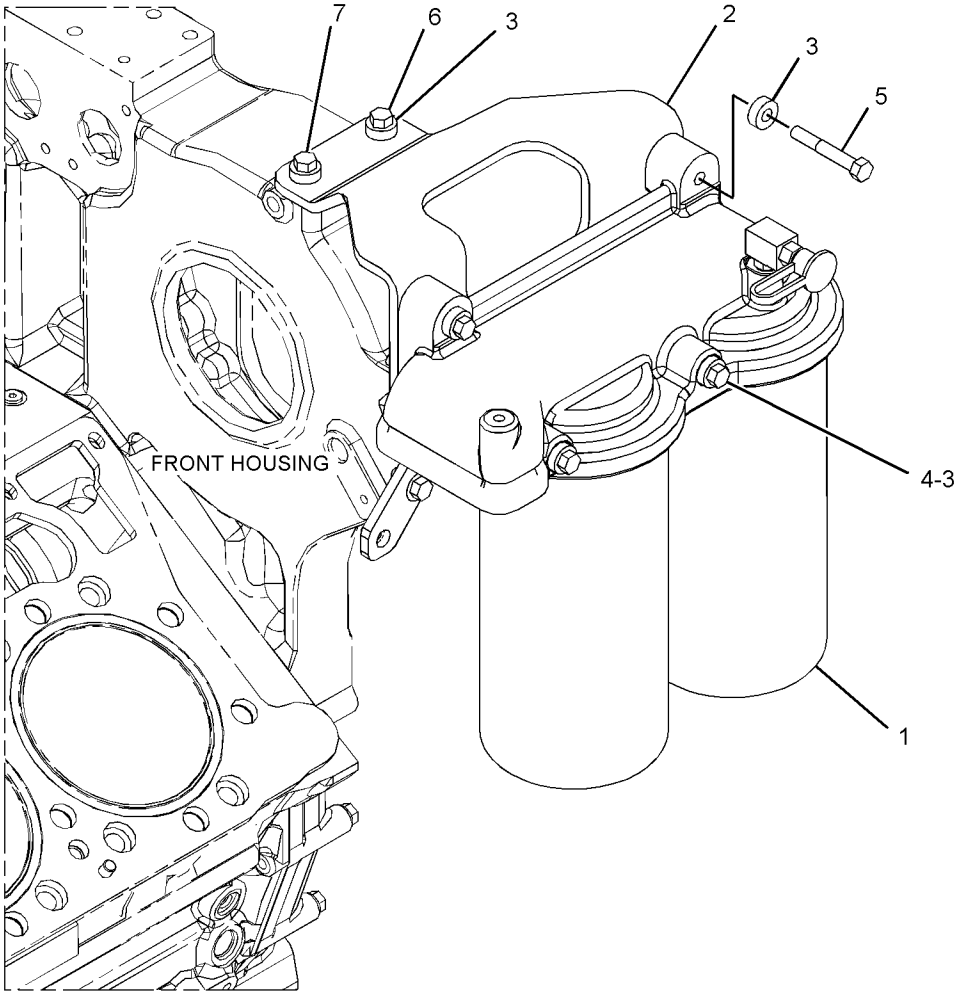

GRAPHIC #1 <END> g03521362

359-6467 FUMES DISPOSAL GP

S/N: RAB1-UP
PART OF 359-6404 INSTALLATION AR-ENGINE
AN ATTACHMENT

SMCS-1317 **i05425918**

NOTE	REF NO	GRAPHIC REF	PART NUMBER	QTY	PART NAME 1 2 3 4 5 6 (PRODUCT LEVEL)	SEE PAGE
	1	1	**160-0564**	2	BRACKET AS	
	2	1	**5P-0597**	2	CLAMP-HOSE	
	3	1	**7D-1553**	2	CLIP	
	4	1	**8T-4121**	2	WASHER-HARD (11X21X2.5-MM THK)	
M	5	1	**8T-4136**	2	BOLT (M10X1.5X25-MM)	
	6	1	**8T-4223**	4	WASHER-HARD (13.5X25.5X3-MM THK)	
	7	1	**8T-8919**	2	BOLT (1/2-13X1.75-IN)	
E	8	1	**5P-2817**		HOSE (88-CM)	
E	8A	1	**5P-2817**		HOSE (77-CM)	

E - ORDER BY THE CENTIMETER
M - METRIC PART

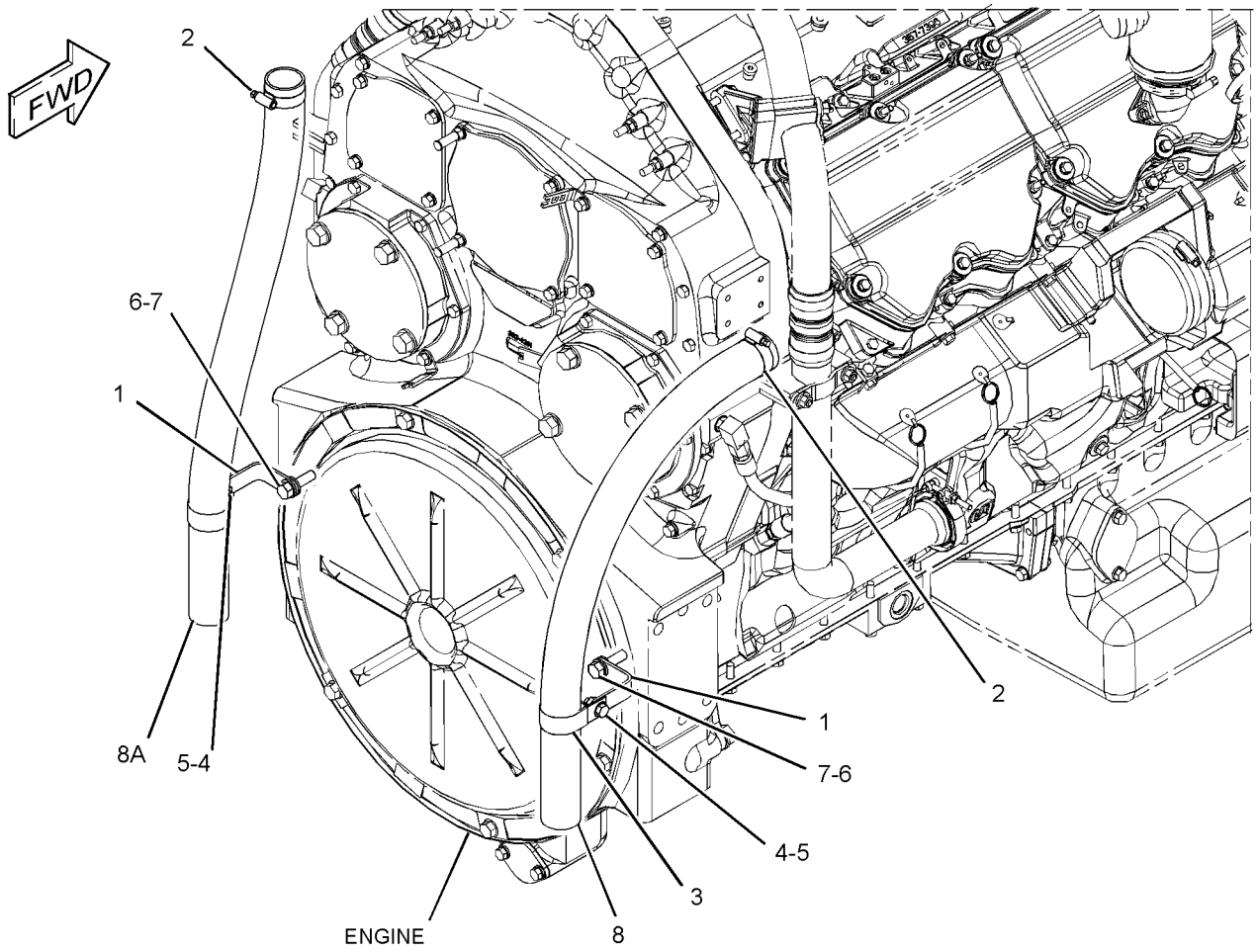

GRAPHIC #1 <END> g03487077

431-8800 FUMES DISPOSAL GP

S/N: JZM1-UP
FOR USE WITH 444-1950–PAGE: 23, 226-0297–PAGE: 50
PART OF 359-6502, 443-0004 ENGINE AR-COMPLETE
AN ATTACHMENT

SMCS-1317 **i05633589**

NOTE	REF NO	GRAPHIC REF	PART NUMBER	QTY	PART NAME 1 2 3 4 5 6 (PRODUCT LEVEL)	SEE PAGE
	1	1	**8T-8917**	2	BOLT (1/2-13X1.25-IN)	
	2	1	**202-2605**	2	HOSE	
	3	1	**444-5607**	1	TUBE	
	4	1	**444-5608**	1	TUBE	
	5	1	**446-1026**	2	BRACKET AS	
					(EACH INCLUDES)	
		1	**1F-0748**	1	NUT-WELD (1/2-13-THD)	
	6	1	**4L-6454**	4	BOLT (3/8-16X1-IN)	
	7	1	**5P-0597**	4	CLAMP-HOSE	
	8	1	**5P-7468**	2	CLIP (SLOT)	
	9	1	**5P-7469**	2	CLIP (TAB)	
	10	1	**6V-0545**	2	GROMMET	
	11	1	**8T-4223**	2	WASHER-HARD (13.5X25.5X3-MM THK)	
	12	1	**8T-4896**	4	WASHER-HARD (10.2X18.5X2.5-MM THK)	

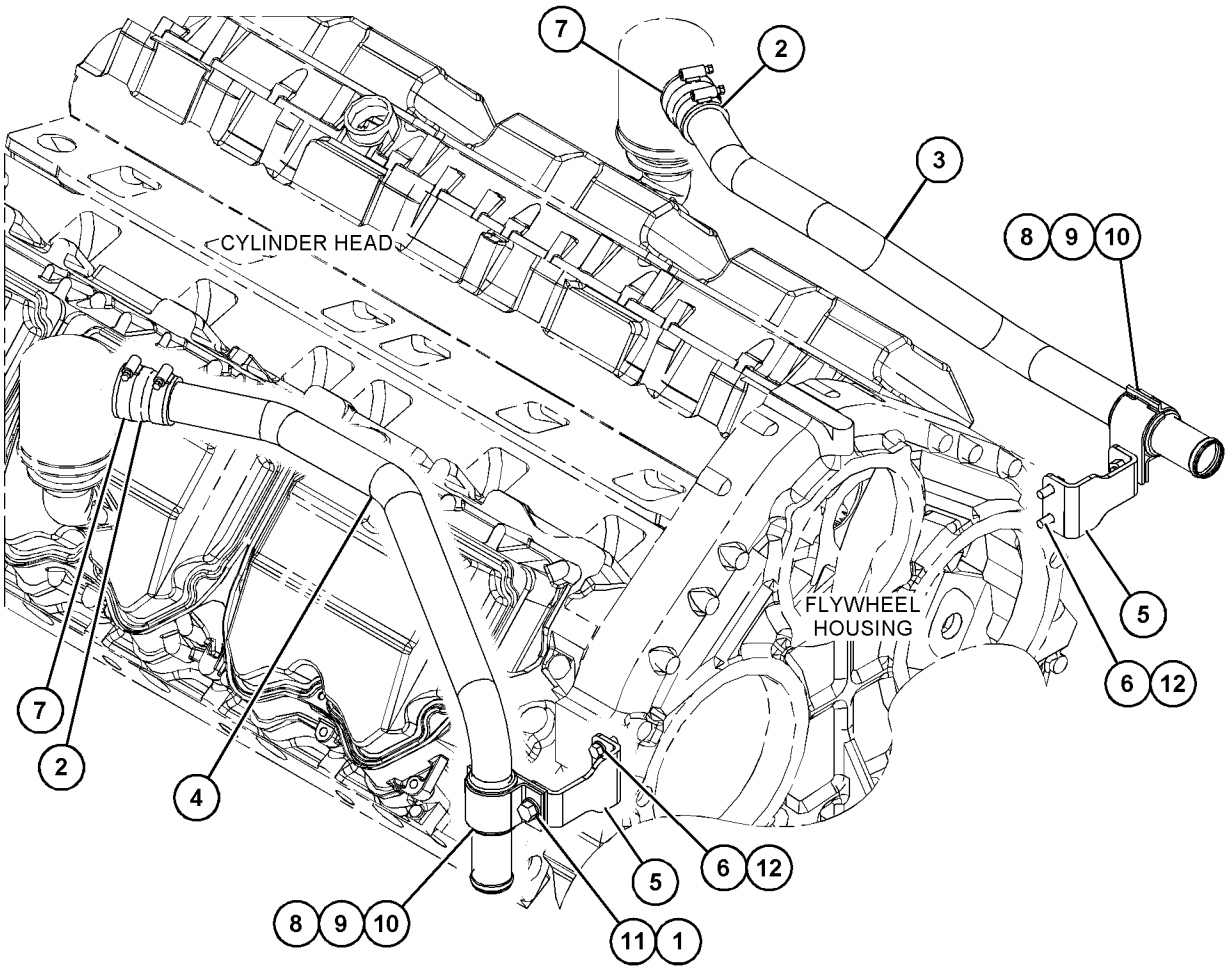

GRAPHIC #1 <END> g03599441

376-4179 GAUGE GP-OIL LEVEL (DIPSTICK)

S/N: JZM1-UP
PART OF 359-6502, 443-0004 ENGINE AR-COMPLETE
AN ATTACHMENT

SMCS-1326 **i05664833**

NOTE	REF NO	GRAPHIC REF	PART NUMBER	QTY	PART NAME 1 2 3 4 5 6 (PRODUCT LEVEL)	SEE PAGE
	1	1	**165-6170**	1	PLUG	
	3	1	**360-8016**	1	TUBE AS	
	4	1	**376-4178**	1	GAUGE AS-OIL LEVEL (DIPSTICK) (ENGINE)	
	6	1	**446-6813**	1	TUBE AS	
	8	1	**0S-1619**	1	BOLT (3/8-16X3-IN)	
	9	1	**108-3612**	1	SPACER (11.13X19.05X53-MM THK)	
	10	1	**110-8330**	1	SPACER (11.3X19.05X90-MM THK)	
	11	1	**118-5068**	1	SEAL-O-RING	
	12	1	**161-6149**	1	SEAL-O-RING	
	13	1	**1A-5964**	1	BOLT (3/8-16X4.5-IN)	
	15	1	**8M-9024**	1	WASHER-HARD (10.2X22.5X5-MM THK)	
	16	1	**9X-6458**	1	WASHER-HARD (10.2X22.5X3-MM THK)	

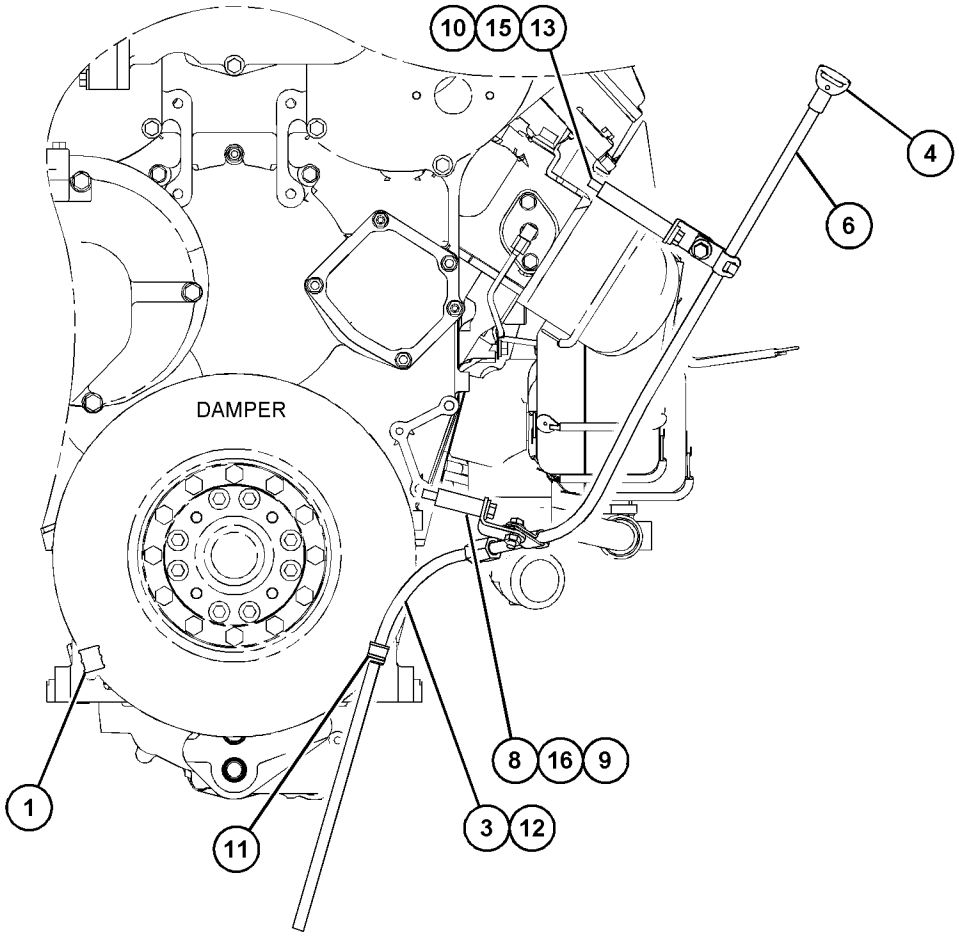

FRONT VIEW OF ENGINE

GRAPHIC #1 <END> g03599396

376-6447 LINES GP-ENGINE OIL

S/N: JZM1-UP

PART OF 359-6502, 443-0004 ENGINE AR-COMPLETE

AN ATTACHMENT

SMCS-1307 **i05582610**

NOTE	REF NO	GRAPHIC REF	PART NUMBER	QTY	PART NAME 1 2 3 4 5 6 (PRODUCT LEVEL)	SEE PAGE
	1	1	**1W-8795**	1	BRACKET	
	2	1	**4N-0913**	1	SCREEN-STRAINER	
	3	1	**4N-0914**	1	CLIP	
	4	1	**4N-2378**	1	TUBE AS	
	5	1	**5G-1713**	2	PLATE	
	6	1	**435-3888**	1	PLATE-FRONT PAN	
	7	1	**7N-9212**	1	TUBE AS	
	8	1	**8N-0397**	1	PIPE AS	
	9	1	**8N-0612**	1	TUBE AS	
	10	1	**8N-2104**	1	BELL AS-SUCTION	
	11	1	**343-6953**	1	BRACKET	
	12	1	**0S-1591**	2	BOLT (3/8-16X1.5-IN)	
	13	1	**0S-1594**	11	BOLT (3/8-16X1-IN)	
	14	1	**0S-1595**	1	BOLT (1/2-13X1.25-IN)	
	15	1	**0S-1608**	1	BOLT (3/8-16X3.75-IN)	
	16	1	**1A-2029**	2	BOLT (3/8-16X1.125-IN)	
	17	1	**2L-2685**	2	CLIP (SLOT)	
	18	1	**2S-2053**	1	CLIP	
	19	1	**5M-2894**	13	WASHER-HARD (10.2X18.5X2.5-MM THK)	
	20	1	**5P-8068**	3	SEAL-O-RING	
	21	1	**5P-8245**	1	WASHER-HARD (13.5X25.5X3-MM THK)	
	22	1	**8J-4351**	1	SEAL-O-RING	
	23	1	**8S-9191**	2	BOLT (3/8-16X4-IN)	
	24	1	**9L-9132**	2	WASHER (10.2X25.5X2.5-MM THK)	
	25	1	**9S-8752**	4	NUT-FULL (3/8-16-THD)	
	26	1	**9X-6458**	4	WASHER-HARD (10.2X22.5X3-MM THK)	

376-6447 **LINES GP-ENGINE OIL (**contd.**)** **i05582610**

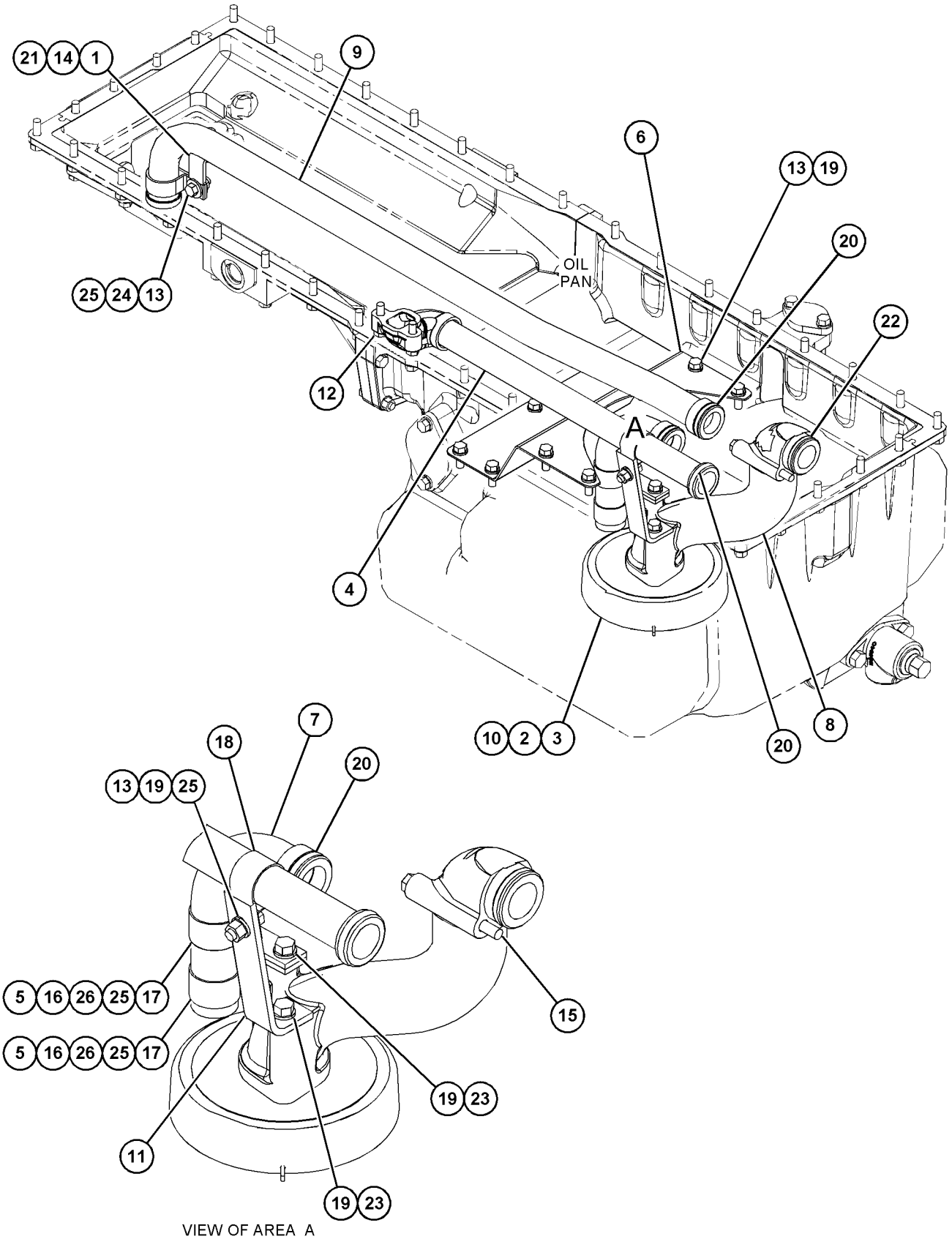

VIEW OF AREA A

GRAPHIC #1 <END> g03525416

352-6152 LINES GP-ENGINE OIL FILTER

S/N: JZM1-UP

PART OF 359-6502, 443-0004 ENGINE AR-COMPLETE

AN ATTACHMENT

SMCS-1307, 1308

i04896492

NOTE	REF NO	GRAPHIC REF	PART NUMBER	QTY	PART NAME 1 2 3 4 5 6 (PRODUCT LEVEL)	SEE PAGE
	1	1	**1W-1116**	1	BODY-BYPASS	
	2	1	**4N-0861**	1	COVER	
	3	1	**4N-0865**	1	GASKET	
	4	1	**4N-8411**	1	TUBE-COOLER BYPASS	
	5	1	**4N-8770**	1	ELBOW-COOLER OUTLET	
	6	1	**9F-6304**	2	SPRING	
	7	1	**1P-1367**	2	PLUNGER (RELIEF VALVE)	
	8	1	**9W-1686**	1	SPACER	
I	9	1	**378-0576**	1	HOSE AS	
I	10	1	**378-0575**	1	HOSE AS	
	11	1	**362-7842**	1	BRACKET AS	
	12	1	**0L-2070**	1	BOLT (3/8-16X2.25-IN)	
	13	1	**0S-1585**	2	BOLT (1/2-13X1.5-IN)	
	14	1	**0S-1594**	10	BOLT (3/8-16X1-IN)	
	15	1	**0S-1595**	2	BOLT (1/2-13X1.25-IN)	
	16	1	**0S-1608**	1	BOLT (3/8-16X3.75-IN)	
	17	1	**0T-0065**	1	BOLT (3/8-16X3.5-IN)	
	18	1	*357-4572*	2	ADAPTER AS	
					(EACH INCLUDES)	
		1	**031-8759**	1	CONNECTOR	
		1	**228-7096**	1	SEAL-O-RING	
	19	1	**061-7540**	3	SEAL-O-RING	
	20	1	**112-3540**	2	SEAL-O-RING	
	21	1	**1F-7958**	2	NUT-FULL (1/2-13-THD)	
	22	1	**1P-4578**	4	FLANGE-HALF	
	23	1	**113-5304**	3	SEAL-O-RING	
	24	1	*183-3407*	1	PLUG AS	
		1	**9S-8004**	1	PLUG	
		1	**214-7568**	1	SEAL-O-RING	
	25	1	*307-2673*	1	PLUG AS	
		1	**9S-8005**	1	PLUG	
		1	**238-5080**	1	SEAL-O-RING	
	26	1	**5M-2894**	3	WASHER-HARD (10.2X18.5X2.5-MM THK)	
	27	1	**5P-7892**	4	BOLT-12 POINT HEAD (7/16-14X2.75-IN)	
	28	1	**5P-8068**	1	SEAL-O-RING	
	29	1	**5P-8244**	8	WASHER-HARD (12X22.5X2.5-MM THK)	
	30	1	**5P-8245**	6	WASHER-HARD (13.5X25.5X3-MM THK)	
	31	1	**6K-3771**	4	BOLT-12 POINT HEAD (7/16-14X1.5-IN)	
	32	1	**7G-3413**	1	CLIP (SLOT)	
	33	1	**346-6393**	1	GROMMET	
	34	1	**7G-3414**	1	CLIP (TAB)	

I - REFER TO HYDRAULIC INFORMATION SYSTEM

352-6152 **LINES GP-ENGINE OIL FILTER (**contd.**)** **i04896492**

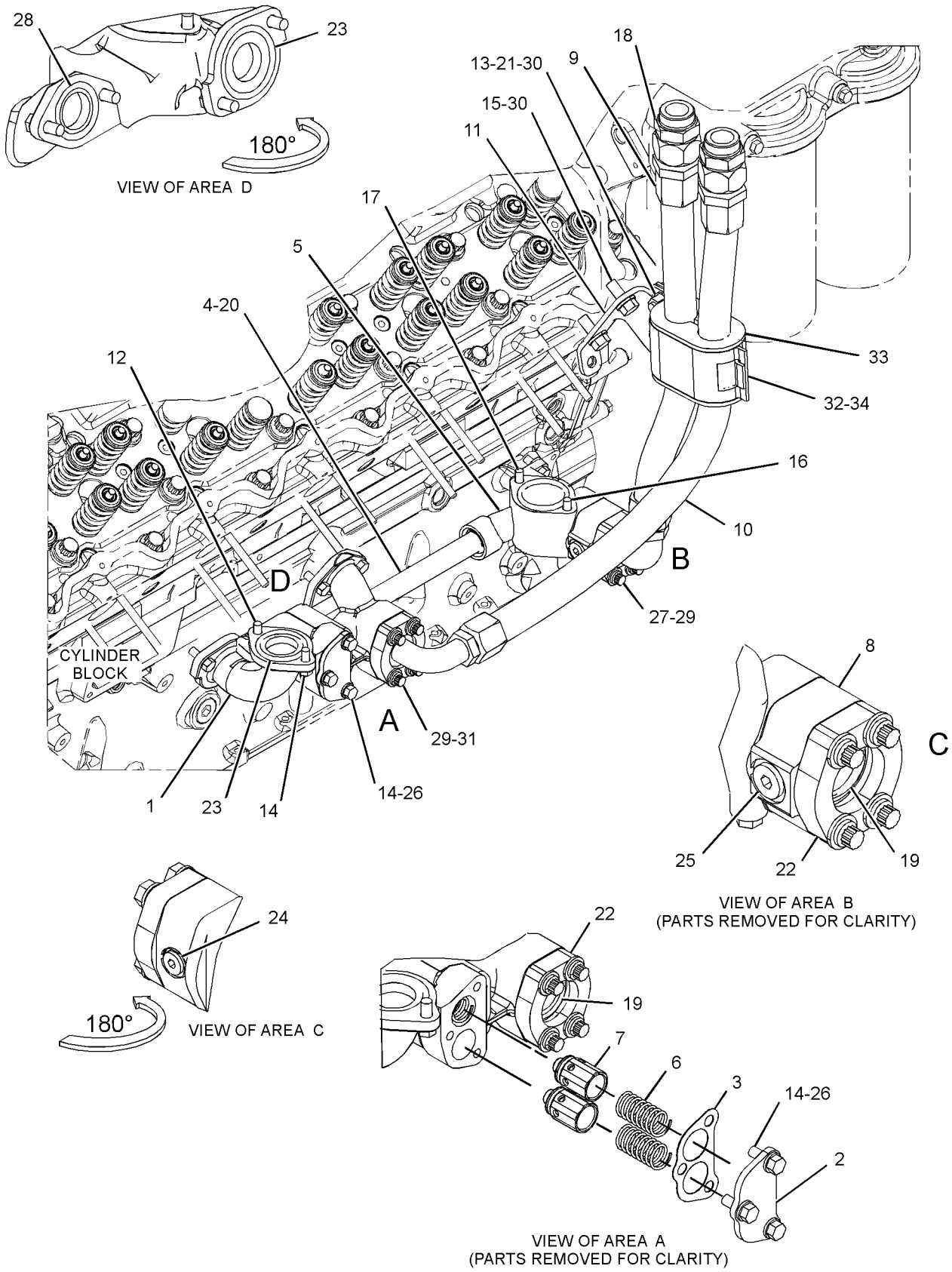

GRAPHIC #1 <END> g03535697

379-3290 LINES GP-TURBOCHARGER OIL

S/N: JZM1-UP
C27 ACERT LRC RATED ENGINE TO BE USED ON TT522 D 10T LRC MACHINE
PART OF 359-6502, 443-0004 ENGINE AR-COMPLETE
AN ATTACHMENT

SMCS-1052, 1307 **i05819368**

NOTE	REF NO	GRAPHIC REF	PART NUMBER	QTY	PART NAME 1 2 3 4 5 6 (PRODUCT LEVEL)	SEE PAGE
	1	1	**5P-1230**	2	CONNECTOR	
	2	1	**7N-7559**	2	GASKET	
	3	1	**9M-2564**	8	CLAMP-TUBE	
	4	1	**246-6036**	2	HOSE	
	5	1	**444-1247**	1	HOSE & TUBE AS	
	6	1	**379-3294**	1	TUBE AS	
	7	1	**379-3295**	1	TUBE AS	
	8	1	**132-7551**	4	SPACER (11X19X6-MM THK)	
	9	1	**448-1355**	1	HOSE & TUBE AS	
	10	1	**7N-8875**	2	GASKET	
	11	1	**0S-1594**	4	BOLT (3/8-16X1-IN)	
	12	1	*349-8519*	2	ELBOW AS	
					(EACH INCLUDES)	
		1	**6V-9003**	1	ELBOW	
		1	**228-7091**	1	SEAL-O-RING	
		1	**238-5081**	1	SEAL-O-RING	
	13	1	**7X-7958**	4	CLAMP-HOSE	
	14	1	**1A-2029**	4	BOLT (3/8-16X1.125-IN)	
	15	1	**1C-2251**	4	BOLT (3/8-16X1.87-IN)	
	16	1	**9S-8752**	4	NUT-FULL (3/8-16-THD)	
	17	1	**5M-2894**	16	WASHER-HARD (10.2X18.5X2.5-MM THK)	
	18	1	**238-5082**	2	SEAL-O-RING	

379-3290 **LINES GP-TURBOCHARGER OIL (**contd.**)** **i05819368**

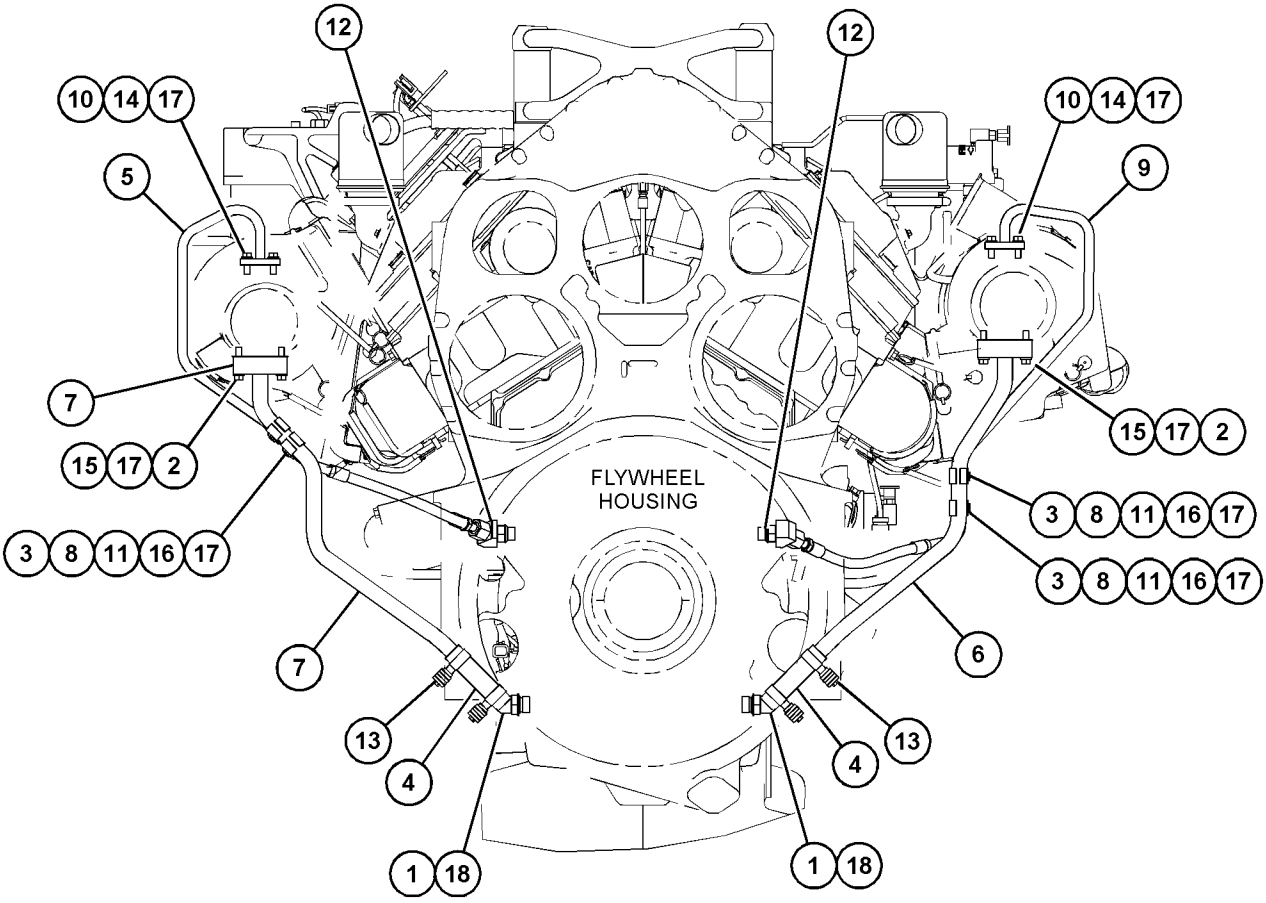

REAR VIEW OF ENGINE

GRAPHIC #1 <END> g03610521

359-6492 OIL CHANGE GP-HIGH SPEED—UNDER HOOD

S/N: RAB1-UP
CANNOT BE USED WITH RIPPER, COUNTERWEIGHT AN ATTACHMENT

SMCS-1325 **i06155435**

NOTE	REF NO	GRAPHIC REF	PART NUMBER	QTY	PART NAME 1 2 3 4 5 6 (PRODUCT LEVEL)	SEE PAGE
	1	1	**276-6807**	1	BRACKET AS	
I	2	1	**399-8382**	1	HOSE AS	
I	3	1	**399-8412**	1	HOSE AS	
	4	1	**419-8226**	1	BRACKET AS	
	5	1	**444-1284**	1	PLATE	
	6	1	**110-8319**	1	FITTING AS (QUICK DISCONNECT, FEMALE)	
	7	1	**110-8827**	1	FITTING (QUICK DISCONNECT, MALE)	
	8	1	*148-8317*	1	CONNECTOR AS	
		1	**6V-8714**	1	CONNECTOR	
		1	**3D-2824**	1	SEAL-O-RING	
		1	**5K-9090**	1	SEAL-O-RING	
	9	1	*148-8357*	1	ELBOW AS	
		1	**6V-9008**	1	ELBOW	
		1	**5K-9090**	1	SEAL-O-RING	
		1	**7M-8485**	1	SEAL-O-RING	
	10	1	*148-8431*	1	TEE AS	
		1	**6V-8785**	1	TEE	
		1	**5K-9090**	2	SEAL-O-RING	
		1	**7M-8485**	1	SEAL-O-RING	
	11	1	**2P-1286**	1	LOCKNUT-BULKHEAD (1-5/16-12-THD)	
	12	1	**2V-2043**	1	NUT-BULKHEAD (1-5/8-12-THD)	
	13	1	**5N-2840**	2	CLIP	
	14	1	**7X-7729**	2	WASHER (11X25X3-MM THK)	
	15	1	**8T-1897**	3	CLIP (SLOT)	
	16	1	**8T-1898**	3	CLIP (TAB)	
	17	1	**8T-4121**	6	WASHER-HARD (11X21X2.5-MM THK)	
M	18	1	**8T-4133**	1	NUT (M10X1.5-THD)	
M	19	1	**8T-4136**	1	BOLT (M10X1.5X25-MM)	
M	20	1	**8T-4186**	2	BOLT (M10X1.5X40-MM)	
M	21	1	**8T-4196**	2	BOLT (M10X1.5X35-MM)	
M	22	1	**8T-4195**	1	BOLT (M10X1.5X30-MM)	

I - REFER TO HYDRAULIC INFORMATION SYSTEM
M - METRIC PART

359-6492 **OIL CHANGE GP-HIGH SPEED (**contd.**)** **i06155435**

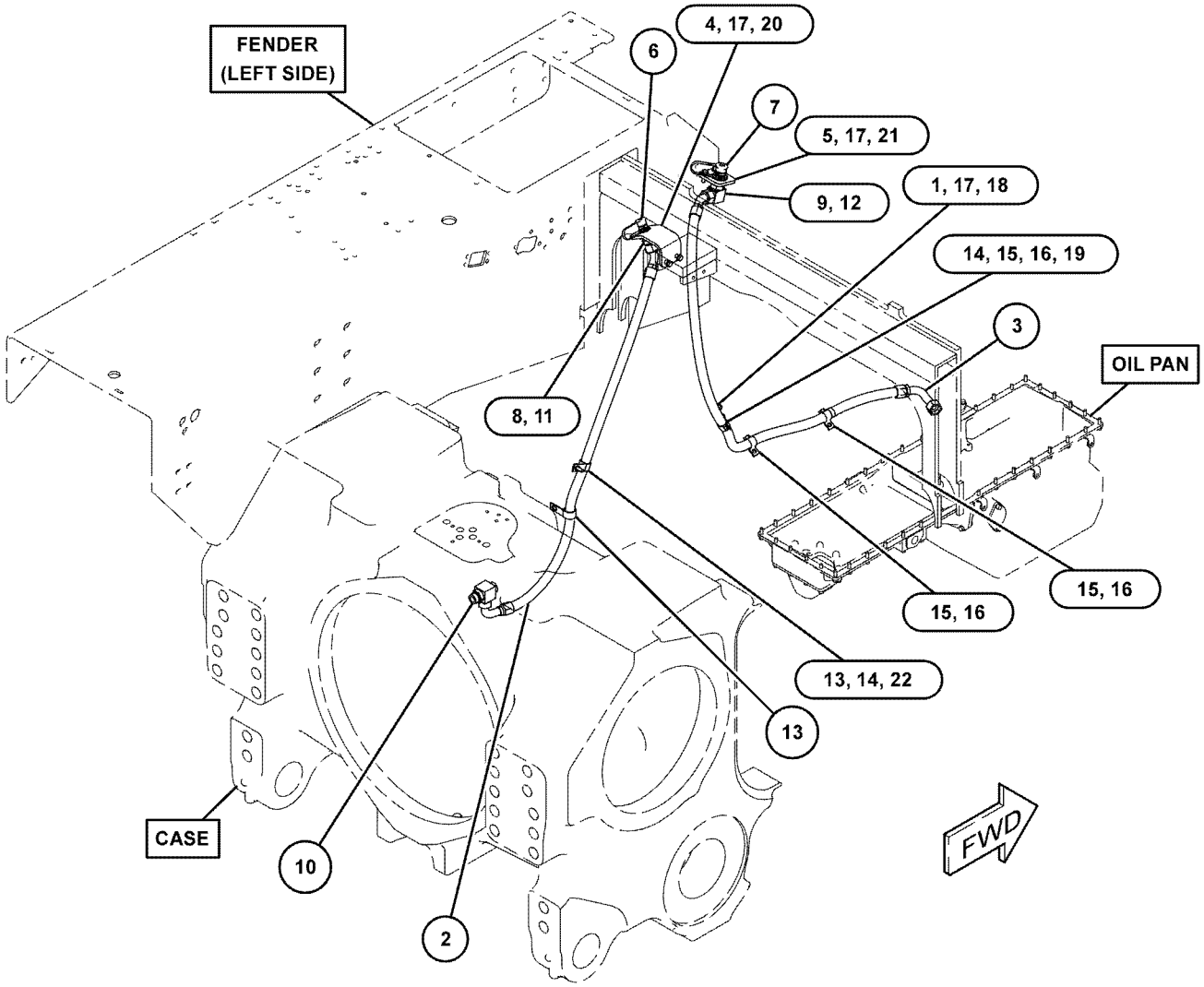

GRAPHIC #1 <END> g03812363

359-6493 OIL CHANGE GP-HIGH SPEED

S/N: RAB1-UP
FOR USE WITH RIPPER
AN ATTACHMENT

SMCS-1325 **i06155448**

NOTE	REF NO	GRAPHIC REF	PART NUMBER	QTY	PART NAME 1 2 3 4 5 6 (PRODUCT LEVEL)	SEE PAGE
	1	1	**7K-1181**	4	STRAP-CABLE	
	2	1	**292-8741**	1	BRACKET AS	
M		1	**8T-3490**	1	NUT-WELD (M10X1.5-THD)	
I	3	1	**380-1245**	1	HOSE AS	
I	4	1	**380-1246**	1	HOSE AS	
	5	1	**110-8319**	1	FITTING AS (QUICK DISCONNECT, FEMALE)	
	6	1	**110-8827**	1	FITTING (QUICK DISCONNECT, MALE)	
	7	1	*148-8317*	1	CONNECTOR AS	
		1	**6V-8714**	1	CONNECTOR	
		1	**3D-2824**	1	SEAL-O-RING	
		1	**5K-9090**	1	SEAL-O-RING	
	8	1	*148-8431*	1	TEE AS	
		1	**6V-8785**	1	TEE	
		1	**5K-9090**	2	SEAL-O-RING	
		1	**7M-8485**	1	SEAL-O-RING	
M	9	1	**227-6715**	2	STUD (M10X1.5X30-MM)	
	10	1	**2P-1286**	1	LOCKNUT-BULKHEAD (1-5/16-12-THD)	
	11	1	**2V-2043**	1	NUT-BULKHEAD (1-5/8-12-THD)	
	12	1	**3P-0440**	1	CONNECTOR-PORT	
	13	1	**5N-2840**	1	CLIP	
	14	1	**6V-1867**	2	CLIP (SLOT)	
	15	1	**6V-1868**	2	CLIP (TAB)	
	16	1	**6V-1869**	2	GROMMET (65-MM ID)	
	17	1	**7M-8485**	1	SEAL-O-RING	
	18	1	**7X-7729**	15	WASHER (11X25X3-MM THK)	
	19	1	**8T-1897**	5	CLIP (SLOT)	
	20	1	**8T-1898**	5	CLIP (TAB)	
	21	1	**8T-4121**	2	WASHER-HARD (11X21X2.5-MM THK)	
M	22	1	**8T-4133**	7	NUT (M10X1.5-THD)	
M	23	1	**8T-4136**	3	BOLT (M10X1.5X25-MM)	
	24	1	**9D-1829**	5	CLIP	
G	25	1	**160-2252**		SLEEVE-ABRASION (42.2-IN)	

G - ORDER BY THE INCH
I - REFER TO HYDRAULIC INFORMATION SYSTEM
M - METRIC PART

359-6493 **OIL CHANGE GP-HIGH SPEED (**contd.**)** **i06155448**

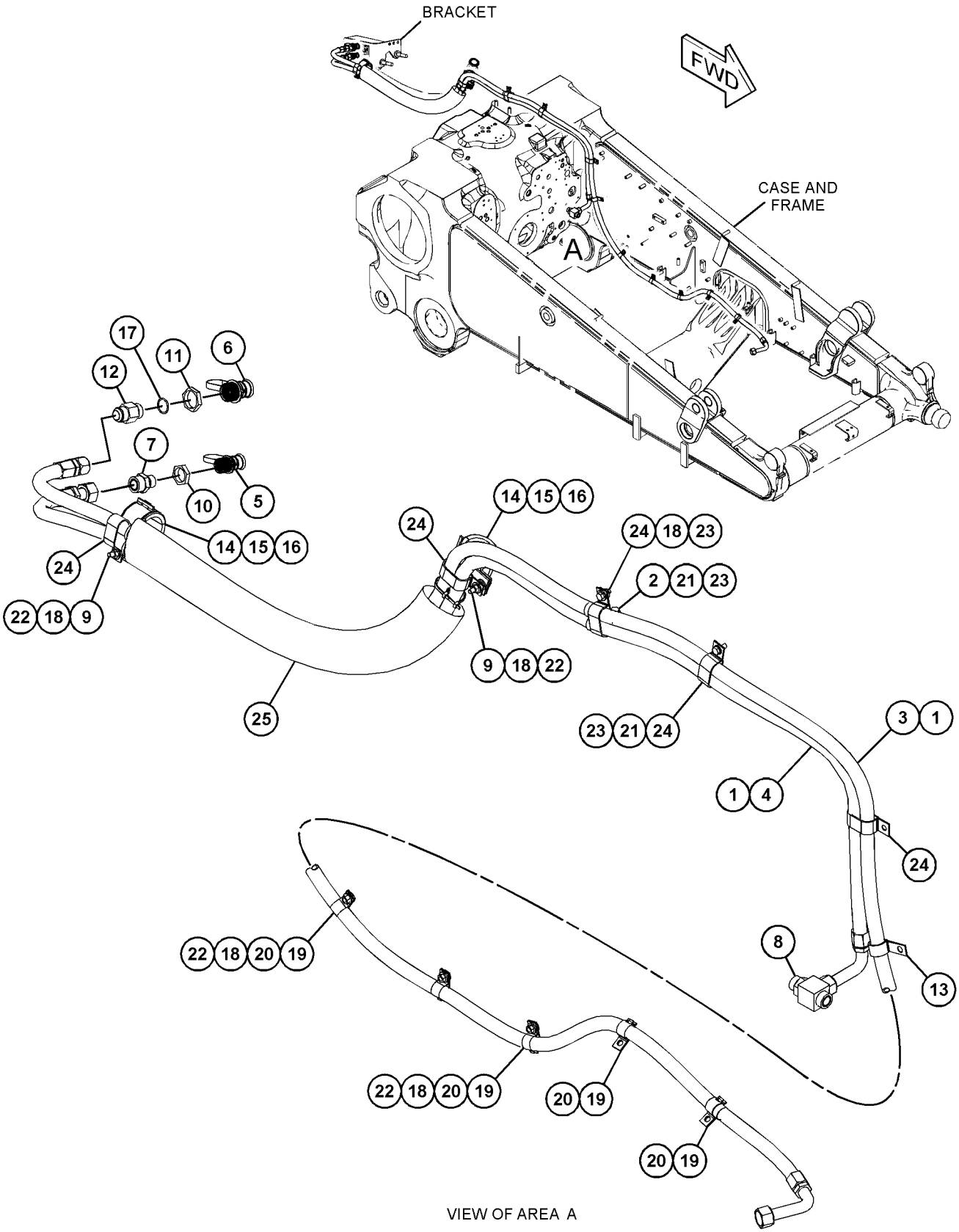

VIEW OF AREA A

GRAPHIC #1 <END> g03485762

359-6494 OIL CHANGE GP-HIGH SPEED

S/N: RAB1-UP
FOR USE WITH COUNTERWEIGHT
AN ATTACHMENT

SMCS-1325 **i06155433**

NOTE	REF NO	GRAPHIC REF	PART NUMBER	QTY	PART NAME 1 2 3 4 5 6 (PRODUCT LEVEL)	SEE PAGE
	1	1	**292-8741**	1	BRACKET AS	
M		1	**8T-3490**	1	NUT-WELD (M10X1.5-THD)	
I	2	1	**399-8997**	1	HOSE AS	
I	3	1	**399-8998**	1	HOSE AS	
	4	1	**110-8319**	1	FITTING AS (QUICK DISCONNECT, FEMALE)	
	5	1	**110-8827**	1	FITTING (QUICK DISCONNECT, MALE)	
	6	1	*148-8317*	1	CONNECTOR AS	
		1	**6V-8714**	1	CONNECTOR	
		1	**3D-2824**	1	SEAL-O-RING	
		1	**5K-9090**	1	SEAL-O-RING	
	7	1	*148-8431*	1	TEE AS	
		1	**6V-8785**	1	TEE	
		1	**5K-9090**	2	SEAL-O-RING	
		1	**7M-8485**	1	SEAL-O-RING	
M	8	1	**227-6715**	1	STUD (M10X1.5X30-MM)	
	9	1	**2P-1286**	1	LOCKNUT-BULKHEAD (1-5/16-12-THD)	
	10	1	**2V-2043**	1	NUT-BULKHEAD (1-5/8-12-THD)	
	11	1	**3P-0440**	1	CONNECTOR-PORT	
	12	1	**5N-2840**	1	CLIP	
	13	1	**6V-1867**	1	CLIP (SLOT)	
	14	1	**6V-1868**	1	CLIP (TAB)	
	15	1	**6V-1869**	1	GROMMET (65-MM ID)	
	16	1	**7M-8485**	1	SEAL-O-RING	
	17	1	**7X-7729**	10	WASHER (11X25X3-MM THK)	
	18	1	**8T-1897**	5	CLIP (SLOT)	
	19	1	**8T-1898**	5	CLIP (TAB)	
	20	1	**8T-4121**	3	WASHER-HARD (11X21X2.5-MM THK)	
M	21	1	**8T-4133**	5	NUT (M10X1.5-THD)	
M	22	1	**8T-4136**	3	BOLT (M10X1.5X25-MM)	
	23	1	**9D-1829**	4	CLIP	

I - REFER TO HYDRAULIC INFORMATION SYSTEM
M - METRIC PART

359-6494 **OIL CHANGE GP-HIGH SPEED (**contd.**)** **i06155433**

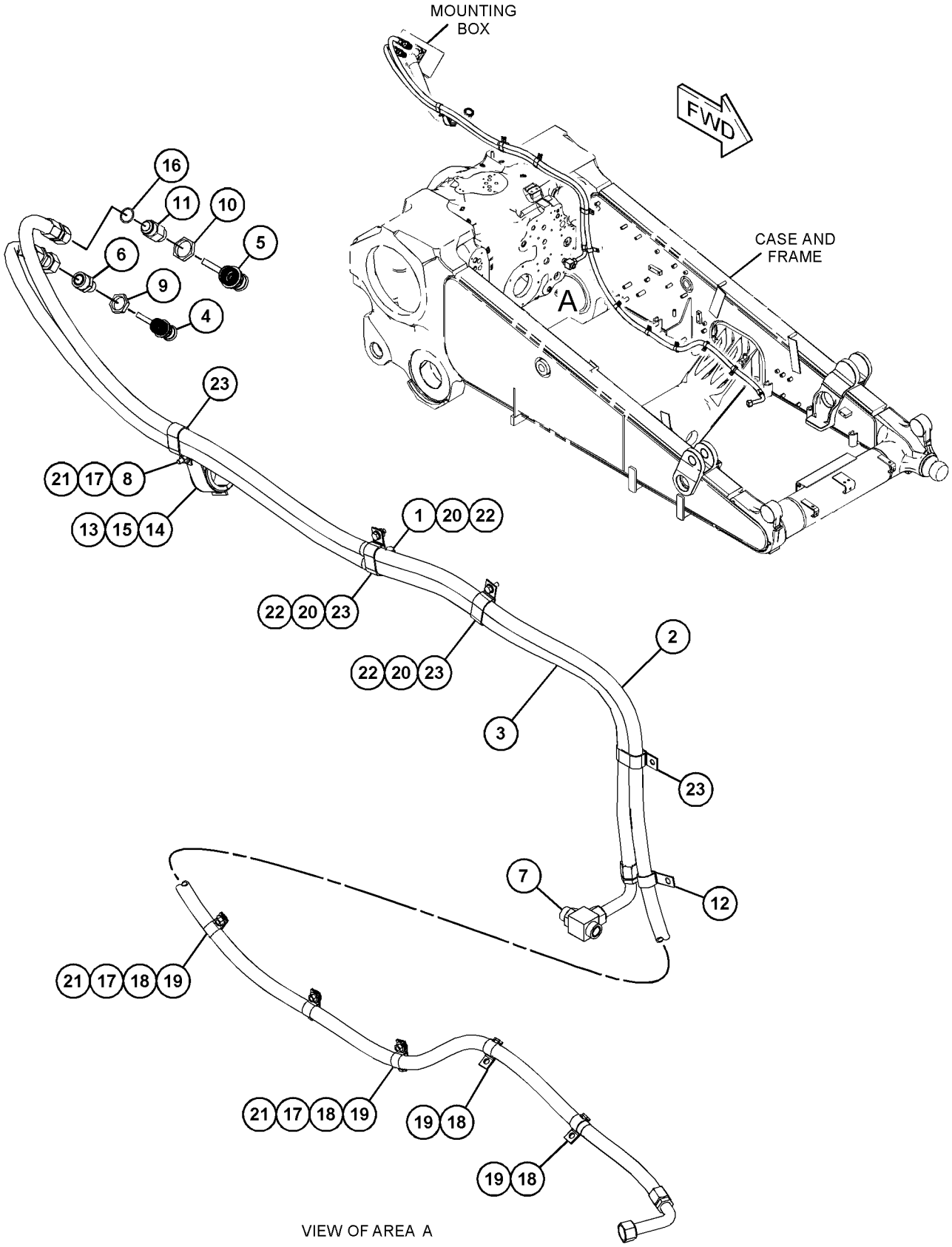

VIEW OF AREA A

GRAPHIC #1 <END> g03485696

380-8106 PRELUBRICATION AR-ENGINE

S/N: RAB1-UP

AN ATTACHMENT

SMCS-1319, 1469 **i05984001**

NOTE	REF NO	GRAPHIC REF	PART NUMBER	QTY	PART NAME 1 2 3 4 5 6 (PRODUCT LEVEL)	SEE PAGE
	1	1	**7G-1060**	1	STRAP AS-GROUND	
	2	1	**9T-8844**	1	VALVE-CHECK	
	3	1	**124-3019**	1	BRACKET AS	
M		1	**8T-3490**	1	NUT-WELD (M10X1.5-THD)	
	4	1	**197-2112**	1	TEE	
	5	1	**226-3492**	2	BRACKET AS	
	6	1	**233-5070**	1	FILM-IDENTIFICATION (PRELUBRICATION PUMP)	
Y	8	1	**337-9078**	1	SWITCH GP-MAGNETIC (24-VOLT TO 32-VOLT) (PRELUBRICATION PUMP RELAY)	402
	9	1	**370-9019**	1	ADAPTER-SCREEN	
I	10	1	**380-8041**	1	HOSE AS	
I	11	1	**380-8042**	1	HOSE AS	
	12	1	**381-3726**	1	WIRE AS	
Y	13	1	*397-6189*	1	PUMP & MOTOR GP-PRELUBRICATION	97
	14	1	**418-2342**	1	PLATE AS	
	15	1	**418-4034**	1	WIRE AS	
	16	1	**418-4035**	1	HARNESS AS-SOLENOID (PRELUBRICATION PUMP)	
		1	**102-8802**	1	KIT-RECEPTACLE (2-PIN)	
					(INCLUDES RECEPTACLE AS & WEDGE)	
		1	**2L-8077**	2	TERMINAL-RING (14-GA TO 16-GA, 1/4-IN SCREW)	
		1	**9X-3401**	2	PIN-CONNECTOR (16-GA TO 18-GA)	
					—OR—	
		1	**126-1767**	2	PIN-CONNECTOR (14-GA TO 16-GA)	
		1	**360-3747**	2	BOOT	
M	17	1	**101-3129**	2	STUD (M10X1.5-THD)	
	18	1	*150-4048*	1	ELBOW AS	
		1	**6V-8722**	1	ELBOW	
		1	**3K-0360**	1	SEAL-O-RING	
		1	**7J-9108**	1	SEAL-O-RING	
	19	1	**156-6175**	1	CLIP	
	20	1	**2M-9780**	1	SEAL-O-RING	
	21	1	**2V-1771**	2	GROMMET	
M	22	1	**344-5675**	2	NUT (M10X1.5-THD)	
	23	1	**352-3968**	2	CLIP	
	24	1	**3K-0360**	2	SEAL-O-RING	
M	25	1	**5C-7261**	4	NUT (M8X1.25-THD)	
M	26	1	**5C-9553**	4	BOLT (M6X1X16-MM)	
	27	1	**5K-9090**	3	SEAL-O-RING	
	28	1	**5P-1075**	5	WASHER-HARD (10.2X22.5X3-MM THK)	
	29	1	**5P-4116**	8	WASHER-HARD (8.8X20.5X2-MM THK)	
	30	1	**7J-9108**	1	SEAL-O-RING	
	31	1	**7K-1181**	4	STRAP-CABLE	
	32	1	**7X-7729**	2	WASHER (11X25X3-MM THK)	
	33	1	**8J-8197**	2	CLIP	
	35	1	**8T-1887**	2	CLIP (SLOT)	
	36	1	**8T-1888**	2	CLIP (TAB)	
	37	1	**8T-4121**	5	WASHER-HARD (11X21X2.5-MM THK)	
M	38	1	**8T-4137**	3	BOLT (M10X1.5X20-MM)	
M	39	1	**8T-4139**	1	BOLT (M12X1.75X30-MM)	

380-8106 **PRELUBRICATION AR-ENGINE (**contd.**)** **i05984001**

NOTE	REF NO	GRAPHIC REF	PART NUMBER	QTY	PART NAME 1 2 3 4 5 6 (PRODUCT LEVEL)	SEE PAGE
M	40	1	**8T-4195**	4	BOLT (M10X1.5X30-MM)	
	41	1	**8T-4223**	1	WASHER-HARD (13.5X25.5X3-MM THK)	
	42	1	**353-7957**	2	GROMMET	
	43	1	**9X-8256**	4	WASHER (6.6X12X2-MM THK)	
	44	1	**204-8000**	1	MOUNTING-CABLE TIE	
M	45	1	**8T-4136**	1	BOLT (M10X1.5X25-MM)	
F			*261-5735*	1	CONFIGURATION-PREMIUM	
					(DLR INSTALL CONFIG: SEE IRM: EES03-01)	

F - NOT SHOWN
I - REFER TO HYDRAULIC INFORMATION SYSTEM
M - METRIC PART
Y - SEPARATE ILLUSTRATION

380-8106 **PRELUBRICATION AR-ENGINE (**contd.**)** **i05984001**

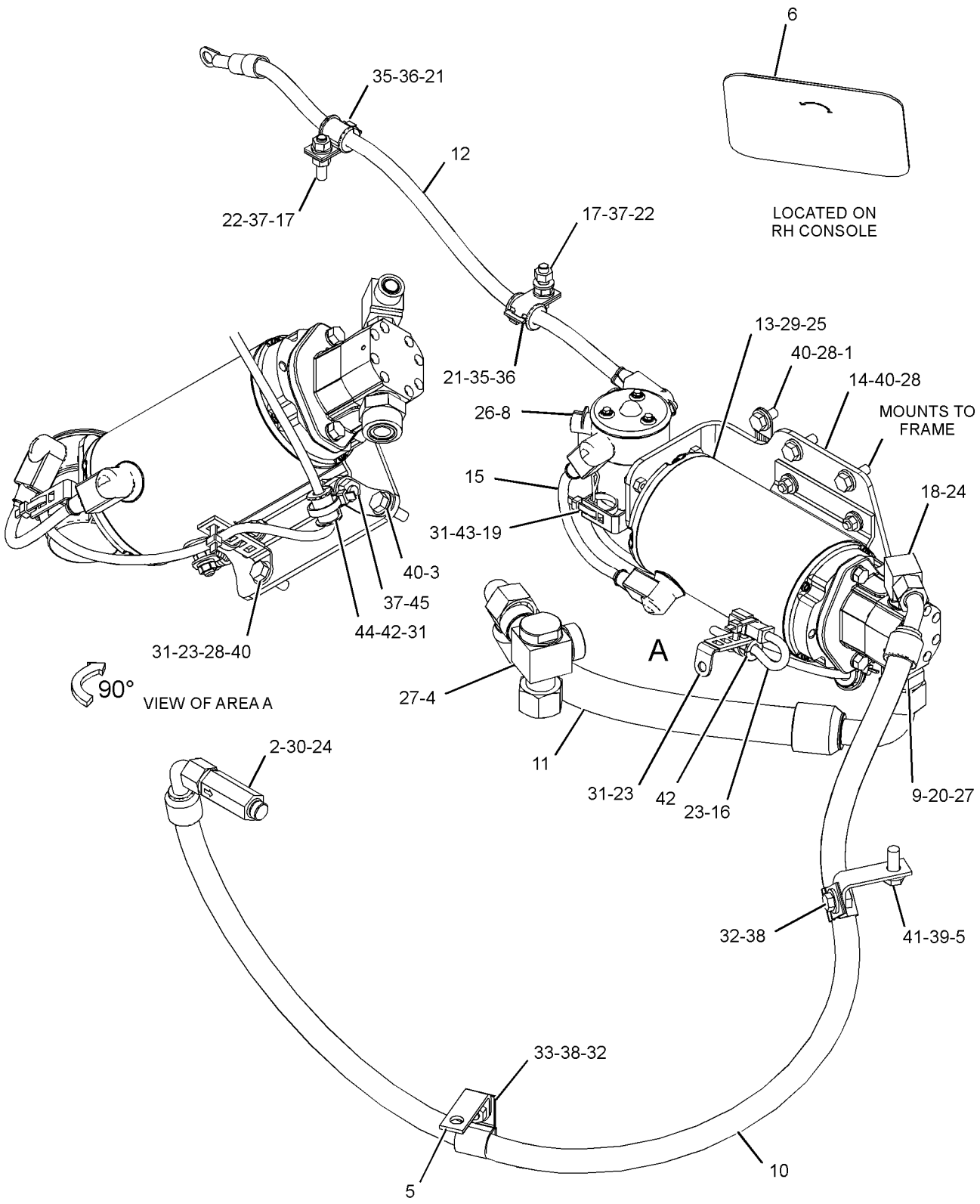

GRAPHIC #1 <END> g03897100

397-6189 PUMP & MOTOR GP-PRELUBRICATION

S/N: RAB1-UP
PART OF 380-8106 PRELUBRICATION AR-ENGINE
AN ATTACHMENT

SMCS-1319, 5927

i05456150

NOTE	REF NO	GRAPHIC REF	PART NUMBER	QTY	PART NAME 1 2 3 4 5 6 (PRODUCT LEVEL)	SEE PAGE
	1	1	**389-8169**	1	MOTOR GP-ELEC HYD PUMP	
	2	1	**273-1761**	1	KIT-PUMP (PRELUBRICATION)	
	3	1	**5L-4041**	8	BOLT-12 POINT HEAD (1/4-20X1.5-IN)	
	4	1	**7X-0796**	2	LOCKWASHER	
	5	1	**9B-7237**	2	BOLT (3/8-16X1.25-IN)	

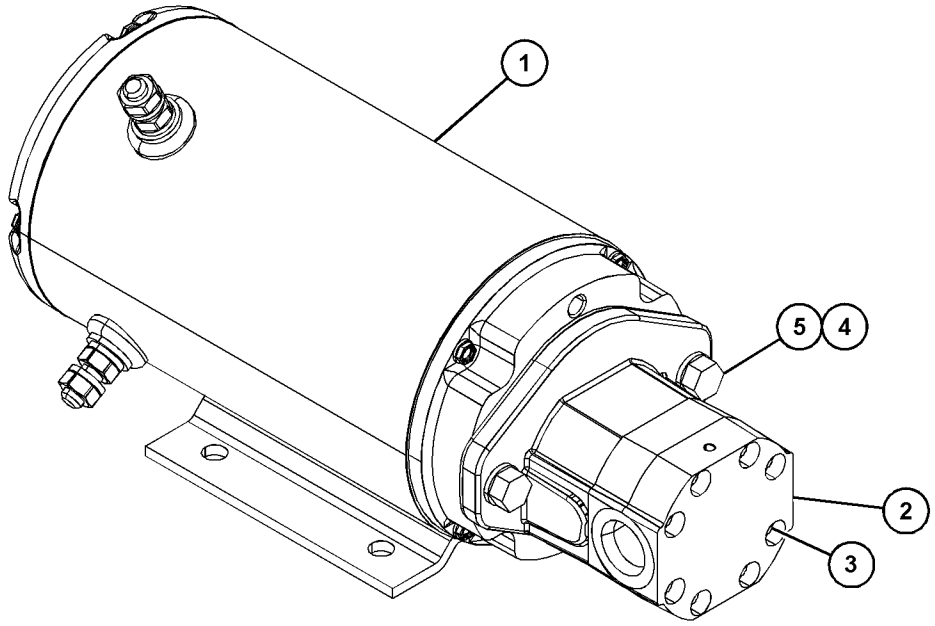

GRAPHIC #1 <END> g03453233

174-7916 PUMP GP-ENGINE OIL*R

S/N: JZM1-UP
PART OF 371-2276 ENGINE AR-CORE
AN ATTACHMENT

SMCS-1304, 1315

i04503209

NOTE	REF NO	GRAPHIC REF	PART NUMBER	QTY	PART NAME 1 2 3 4 5 6 (PRODUCT LEVEL)	SEE PAGE
	1	1	**4N-5339**	1	SPACER AS-OIL PUMP	
	1A	1	**7N-2155**	2	BUSHING	
	2	1	**6N-2343**	1	BODY AS-PUMP	
	2A	1	**7N-2213**	2	BUSHING	
	3	1	**7C-1511**	1	RING-PLUNGER	
	4	1	**7C-1512**	1	PLUNGER	
	5	1	**7G-2176**	4	DAMPER-BOLT	
	6	1	**7W-6528**	1	GEAR-PUMP (8-TEETH)	
	7	1	**7W-7141**	1	GEAR-PUMP (8-TEETH)	
	8	1	**9Y-1792**	1	RETAINER	
	9	1	**145-8503**	1	SHAFT AS-IDLER	
	10	1	**202-3572**	1	SHAFT AS-DRIVE	
	11	1	**235-1587**	1	BODY AS	
	11A	1	**7N-2156**	2	BUSHING	
	11B	1	**8M-8489**	2	DOWEL	
	12	1	**236-6733**	1	SPRING	
	13	1	**1M-0644**	2	BOLT (3/8-16X2.25-IN)	
	14	1	**5F-4899**	4	BOLT (3/8-16X5.5-IN)	
	15	1	**5M-2894**	2	WASHER-HARD (10.2X18.5X2.5-MM THK)	

174-7916 **PUMP GP-ENGINE OIL (**contd.**)** **i04503209**

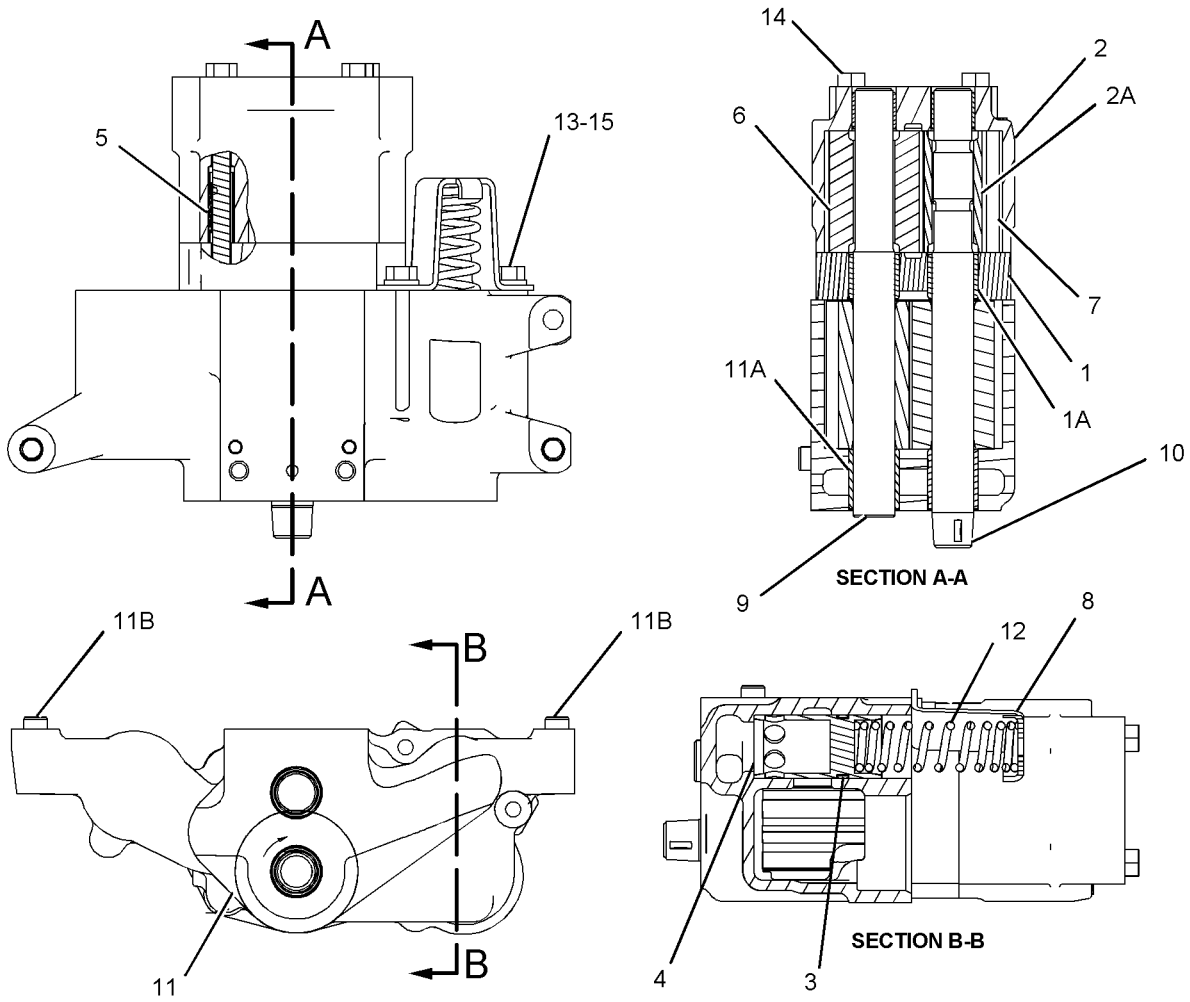

GRAPHIC #1 <END> g01084627

375-0765 CORE GP-OIL COOLER–TRANSMISSION

S/N: RAB1-UP

PART OF 359-6466 COOLER GP-TRANSMISSION OIL

AN ATTACHMENT

SMCS-1375, 1378 **i05425905**

NOTE	REF NO	GRAPHIC REF	PART NUMBER	QTY	PART NAME 1 2 3 4 5 6 (PRODUCT LEVEL)	SEE PAGE
	1	1	**105-8901**	2	GASKET	
	2	1	**292-5060**	1	CORE AS	
	3	1	**361-2154**	2	BONNET	
	4	1	**6V-4432**	4	BOLT (1/2-13X4-IN)	
	5	1	**7X-0328**	8	BOLT (1/2-13X3.5-IN)	
	6	1	**8T-4223**	12	WASHER-HARD (13.5X25.5X3-MM THK)	

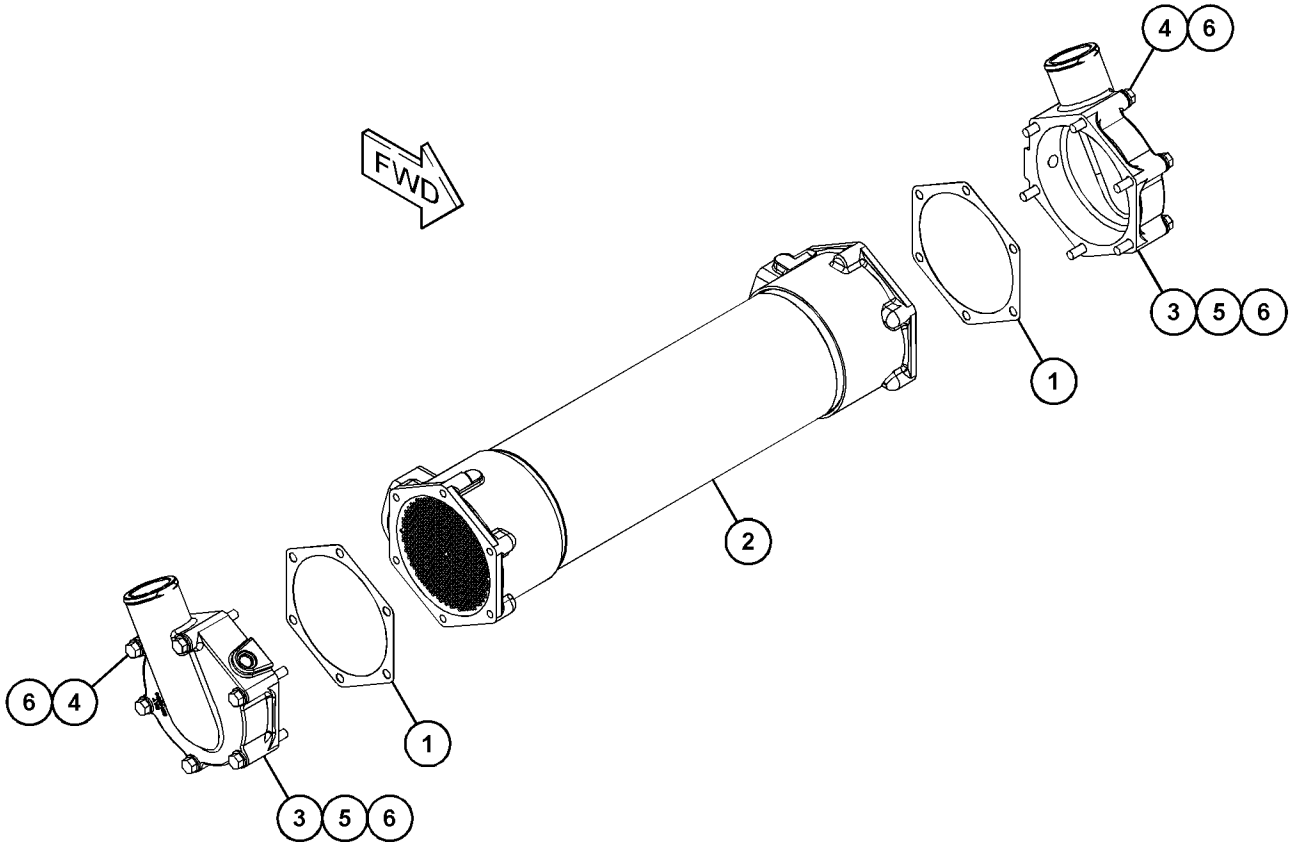

GRAPHIC #1 <END> g03480717

462-1768 FAN GP-REVERSIBLE

S/N: RAB1-UP

AN ATTACHMENT

SMCS-1356, 1360

i06584502

NOTE	PART NUMBER	QTY	PART NAME 1 2 3 4 5 6 (PRODUCT LEVEL)	SEE PAGE
J	*261-1580*	1	CONFIGURATION-PREMIUM (REVERSIBLE FAN)	

J - DLR INSTALL CONFIG: SEE IRM: EES03-01

<END>

359-6470 FAN GP-SUCTION

S/N: RAB1-UP
PART OF 359-6404 INSTALLATION AR-ENGINE
AN ATTACHMENT
TYPE 1

SMCS-1356 **i05426111**

NOTE	REF NO	GRAPHIC REF	PART NUMBER	QTY	PART NAME 1 2 3 4 5 6 (PRODUCT LEVEL)	SEE PAGE
	1	1	**322-5048**	1	ADAPTER-FAN	
Y	2	1	*375-0772*	1	DRIVE GP-FAN	42
	3	1	**375-0774**	1	BLOCK	
	4	1	**375-0775**	1	SUPPORT AS	
	5	1	**396-9709**	1	SPIDER AS-FAN (11-BLADE)	
	6	1	**198-4777**	8	WASHER-HARD (11X25X10-MM THK)	
	7	1	**198-4780**	4	WASHER-HARD (17.5X32X8-MM THK)	
	8	1	**6I-9471**	1	RETAINER	
M	9	1	**7X-2554**	1	BOLT (M16X2X70-MM)	
M	10	1	**8T-4140**	4	BOLT (M16X2X60-MM)	
M	11	1	**8T-4185**	8	BOLT (M10X1.5X50-MM)	
M	12	1	**8T-4194**	4	BOLT (M12X1.75X50-MM)	
	13	1	**8T-4223**	4	WASHER-HARD (13.5X25.5X3-MM THK)	
	14	1	**9X-8257**	1	WASHER (17.5X30X3.5-MM THK)	

M - METRIC PART
Y - SEPARATE ILLUSTRATION

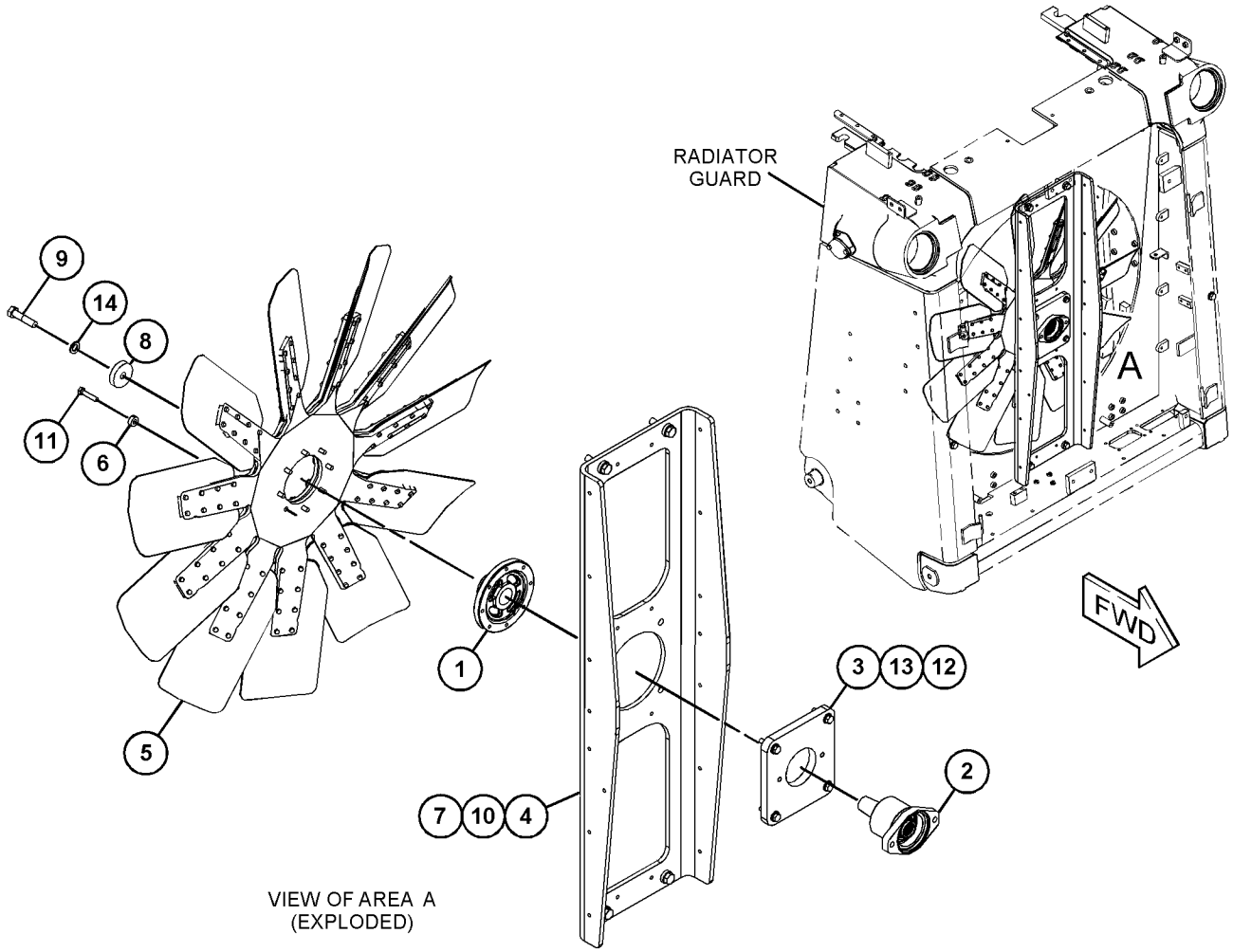

GRAPHIC #1 <END> g03483654

359-6470 FAN GP-SUCTION

S/N: RAB1-UP
PART OF 359-6404 INSTALLATION AR-ENGINE
AN ATTACHMENT
TYPE 2

SMCS-1356 **i06575468**

NOTE	REF NO	GRAPHIC REF	PART NUMBER	QTY	PART NAME 1 2 3 4 5 6 (PRODUCT LEVEL)	SEE PAGE
	1	1	**322-5048**	1	ADAPTER-FAN	
CY	2	1	**486-9830**	1	DRIVE GP-FAN	43
C	3	1	**489-4466**	1	BLOCK	
	4	1	**375-0775**	1	SUPPORT AS	
	5	1	**396-9709**	1	SPIDER AS-FAN (11-BLADE)	
	6	1	**198-4777**	8	WASHER-HARD (11X25X10-MM THK)	
	7	1	**198-4780**	4	WASHER-HARD (17.5X32X8-MM THK)	
	8	1	**6I-9471**	1	RETAINER	
M	9	1	**7X-2554**	1	BOLT (M16X2X70-MM)	
M	10	1	**8T-4140**	4	BOLT (M16X2X60-MM)	
M	11	1	**8T-4185**	8	BOLT (M10X1.5X50-MM)	
M	12	1	**8T-4194**	4	BOLT (M12X1.75X50-MM)	
	13	1	**8T-4223**	4	WASHER-HARD (13.5X25.5X3-MM THK)	
	14	1	**9X-8257**	1	WASHER (17.5X30X3.5-MM THK)	

C - CHANGE FROM PREVIOUS TYPE
M - METRIC PART
Y - SEPARATE ILLUSTRATION

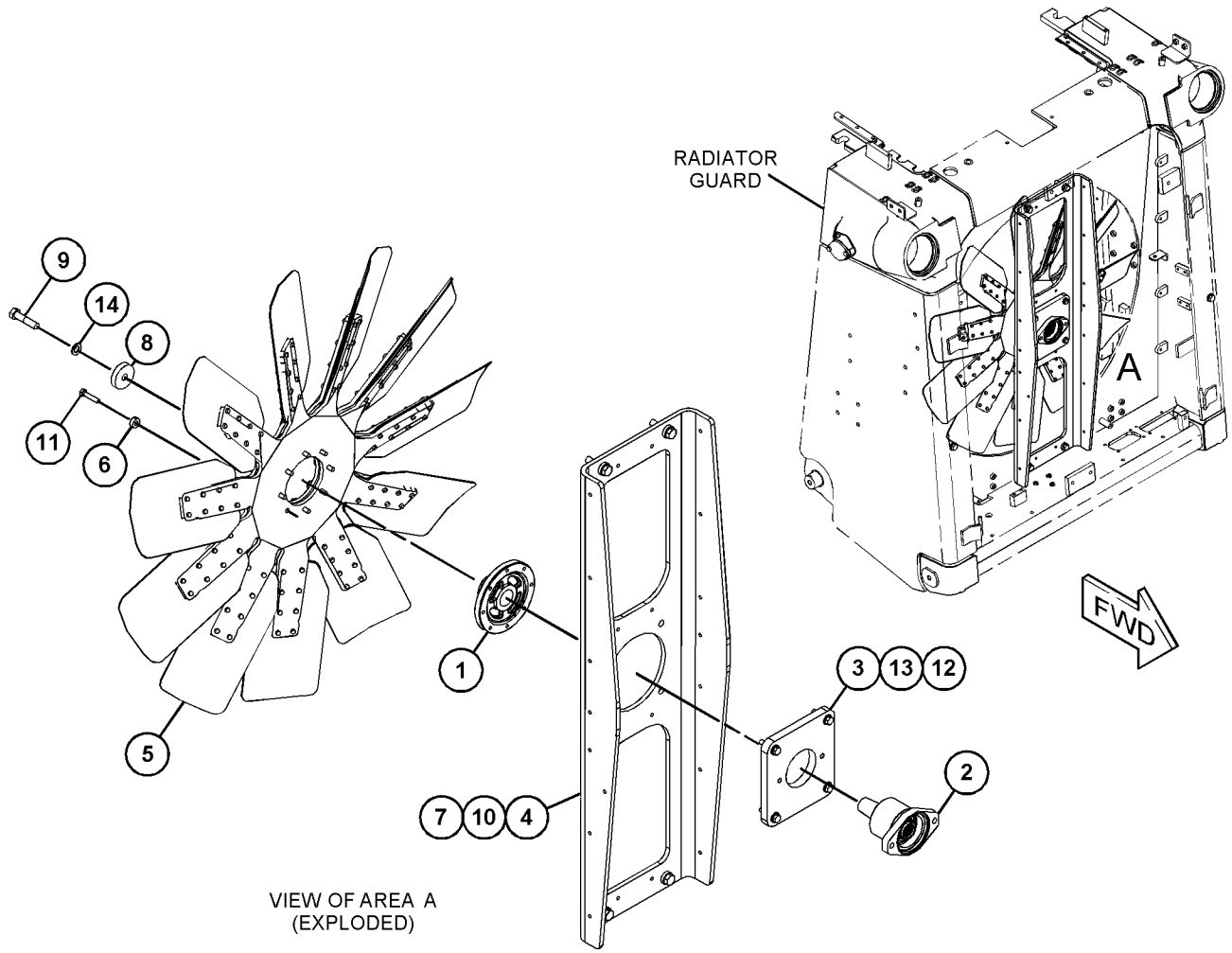

VIEW OF AREA A
(EXPLODED)

GRAPHIC #1 <END> g03483654

379-3291 LINES GP-TURBOCHARGER WATER

S/N: JZM1-UP

PART OF 359-6502, 443-0004 ENGINE AR-COMPLETE

AN ATTACHMENT

SMCS-1052, 1380

i05677121

NOTE	REF NO	GRAPHIC REF	PART NUMBER	QTY	PART NAME 1 2 3 4 5 6 (PRODUCT LEVEL)	SEE PAGE
	1	1	**4P-7233**	3	GROMMET	
	2	1	**7N-7878**	4	PLATE-COVER	
	3	1	**8N-0590**	4	CLIP	
	4	1	**9M-6871**	4	CLAMP	
	5	1	**341-9211**	8	GASKET	
	6	1	**437-5152**	1	BRACKET AS	
		1	**1F-0750**	1	NUT-WELD (3/8-16-THD)	
	7	1	**392-3593**	1	BRACKET AS	
		1	**1F-0750**	1	NUT-WELD (3/8-16-THD)	
	8	1	**446-4127**	1	HOSE & TUBE AS	
	9	1	**379-3480**	1	HOSE AS-WATER	
	10	1	**379-5834**	1	BRACKET AS	
		1	**1F-0750**	1	NUT-WELD (3/8-16-THD)	
	11	1	**379-6026**	1	TUBE AS	
	12	1	**379-6027**	1	TUBE AS	
	13	1	**005-4173**	1	ELBOW	
	14	1	**0S-0509**	4	BOLT (3/8-16X0.75-IN)	
	15	1	**0S-1616**	2	BOLT (1/4-20X1-IN)	
	16	1	**0S-1618**	2	BOLT (5/16-18X1-IN)	
	17	1	**030-7959**	1	TEE-FLARED	
	18	1	**1A-2029**	16	BOLT (3/8-16X1.125-IN)	
	19	1	**5M-2894**	20	WASHER-HARD (10.2X18.5X2.5-MM THK)	
	20	1	**5P-0537**	4	WASHER-HARD (7.2X14.5X2-MM THK)	
	21	1	**5P-5777**	1	ADAPTER-O-RING	
	22	1	**5S-0003**	4	NUT (5/16-18-THD)	
	23	1	**132-7551**	2	SPACER (11X19X6-MM THK)	
	24	1	**8T-1887**	3	CLIP (SLOT)	
	25	1	**8T-1888**	3	CLIP (TAB)	
	26	1	**6V-6609**	1	SEAL-O-RING	
	27	1	**9M-1974**	5	WASHER-HARD (8.8X16X2-MM THK)	
	28	1	**9S-8750**	2	NUT-FULL (1/4-20-THD)	
	29	1	**6V-3251**	1	SEAL-O-RING	
	30	1	**6V-5064**	1	SEAL-O-RING	
	31	1	**3E-4352**	1	WASHER-HARD (8.8X20.5X2.5-MM THK)	
	32	1	**8M-9124**	2	WASHER (10X22.5X8-MM THK)	

379-3291 **LINES GP-TURBOCHARGER WATER (**contd.**)** **i05677121**

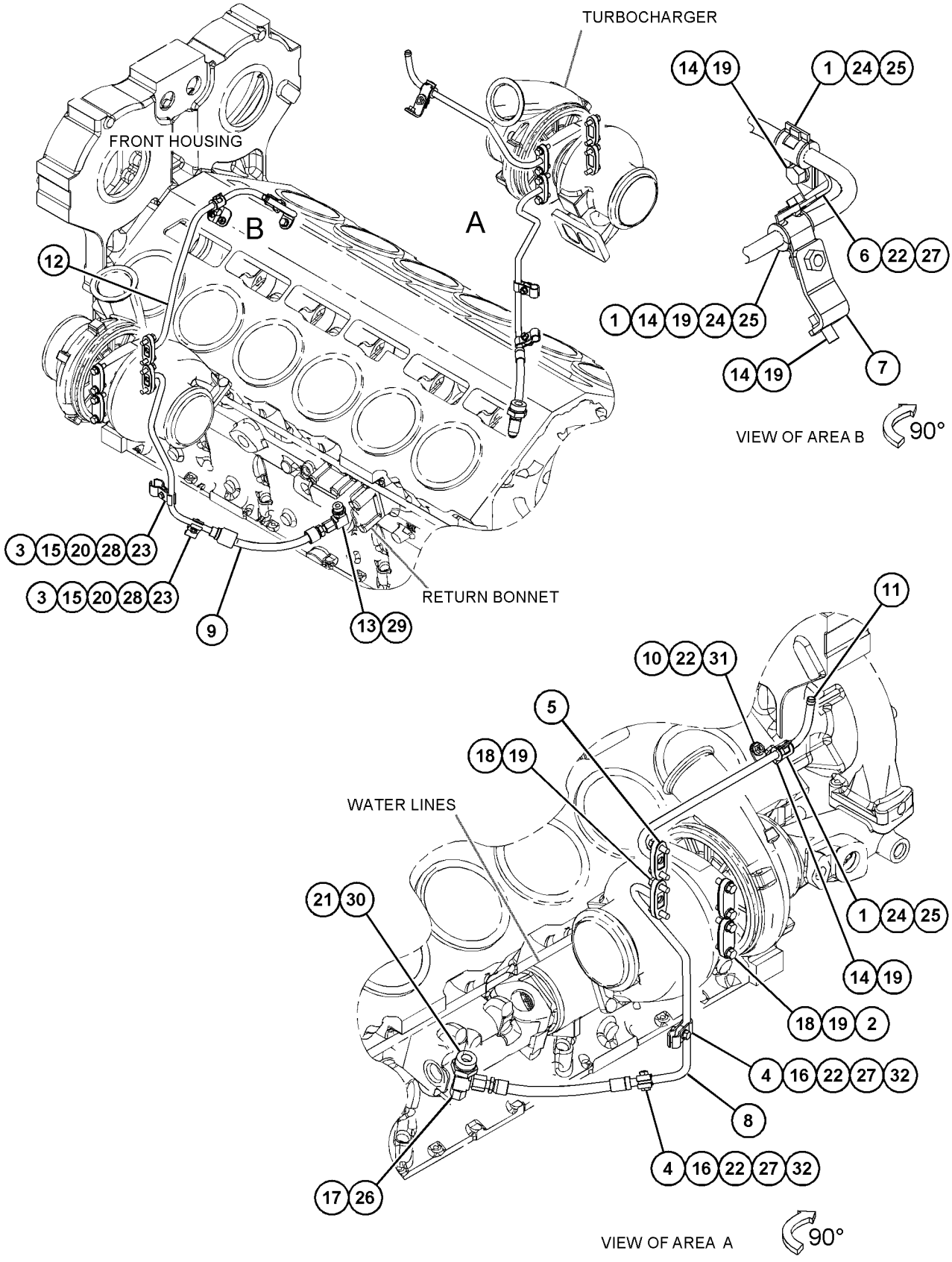

GRAPHIC #1 <END> g03609676

354-3515 LINES GP-WATER

S/N: JZM1-UP

PART OF 359-6502, 443-0004 ENGINE AR-COMPLETE

AN ATTACHMENT

SMCS-1380 **i05193669**

NOTE	REF NO	GRAPHIC REF	PART NUMBER	QTY	PART NAME 1 2 3 4 5 6 (PRODUCT LEVEL)	SEE PAGE
	1	1	**4N-0794**	1	COVER	
	2	1	**4N-1946**	1	GASKET	
	3	1	**4N-2199**	1	GASKET	
	4	1	**6N-0008**	1	ADAPTER	
R	5	1	**7C-0145**	1	CORE AS-OIL COOLER (ENGINE) (ENGINE)	
	6	1	*386-6211*	1	ELBOW AS	
		1	**151-5145**	1	ELBOW	
		1	**6V-9027**	1	SEAL-O-RING	
	7	1	**157-0670**	1	CAP-DUST	
	8	1	**176-5647**	1	PLATE	
	9	1	*377-9603*	1	VALVE AS-FLUID SAMPLING	
		1	**154-9023**	1	VALVE-SAMPLING	
		1	**6V-9027**	1	SEAL-O-RING	
	10	1	**342-8519**	1	BONNET	
	11	1	**343-8888**	2	GASKET	
	12	1	*353-5140*	1	PLUG AS	
		1	**9S-8008**	1	PLUG (1-1/16-12-THD)	
		1	**6V-5063**	1	SEAL-O-RING	
	13	1	*353-5144*	2	PLUG AS	
					(EACH INCLUDES)	
		1	**9S-9334**	1	PLUG-O-RING	
		1	**6V-5064**	1	SEAL-O-RING	
	14	1	**355-0554**	1	ELBOW	
	15	1	**397-2937**	1	ELBOW	
	16	1	**355-3389**	1	BONNET	
	17	1	**358-9131**	1	BONNET-RETURN	
	18	1	**0S-1588**	4	BOLT (3/8-16X1.25-IN)	
	19	1	**0S-1594**	2	BOLT (3/8-16X1-IN)	
	20	1	**0S-1619**	6	BOLT (3/8-16X3-IN)	
	21	1	**0T-0065**	6	BOLT (3/8-16X3.5-IN)	
	22	1	**109-0074**	1	SEAL-O-RING	
	23	1	**109-0077**	2	SEAL-O-RING	
	24	1	**1A-2029**	3	BOLT (3/8-16X1.125-IN)	
	25	1	**0S-1591**	2	BOLT (3/8-16X1.5-IN)	
	26	1	*392-0792*	1	ADAPTER AS	
		1	**5P-4499**	1	ADAPTER	
		1	**6V-5063**	1	SEAL-O-RING	
	27	1	*341-0087*	1	PLUG AS	
		1	**9S-4185**	1	PLUG	
		1	**6V-6609**	1	SEAL-O-RING	
	28	1	**5B-9603**	2	BOLT (3/8-16X5-IN)	
	29	1	**5M-2894**	7	WASHER-HARD (10.2X18.5X2.5-MM THK)	
	32	1	**7C-0307**	3	GASKET	

R - REMANUFACTURED PART MAY BE AVAILABLE

354-3515 **LINES GP-WATER (**contd.**)** **i05193669**

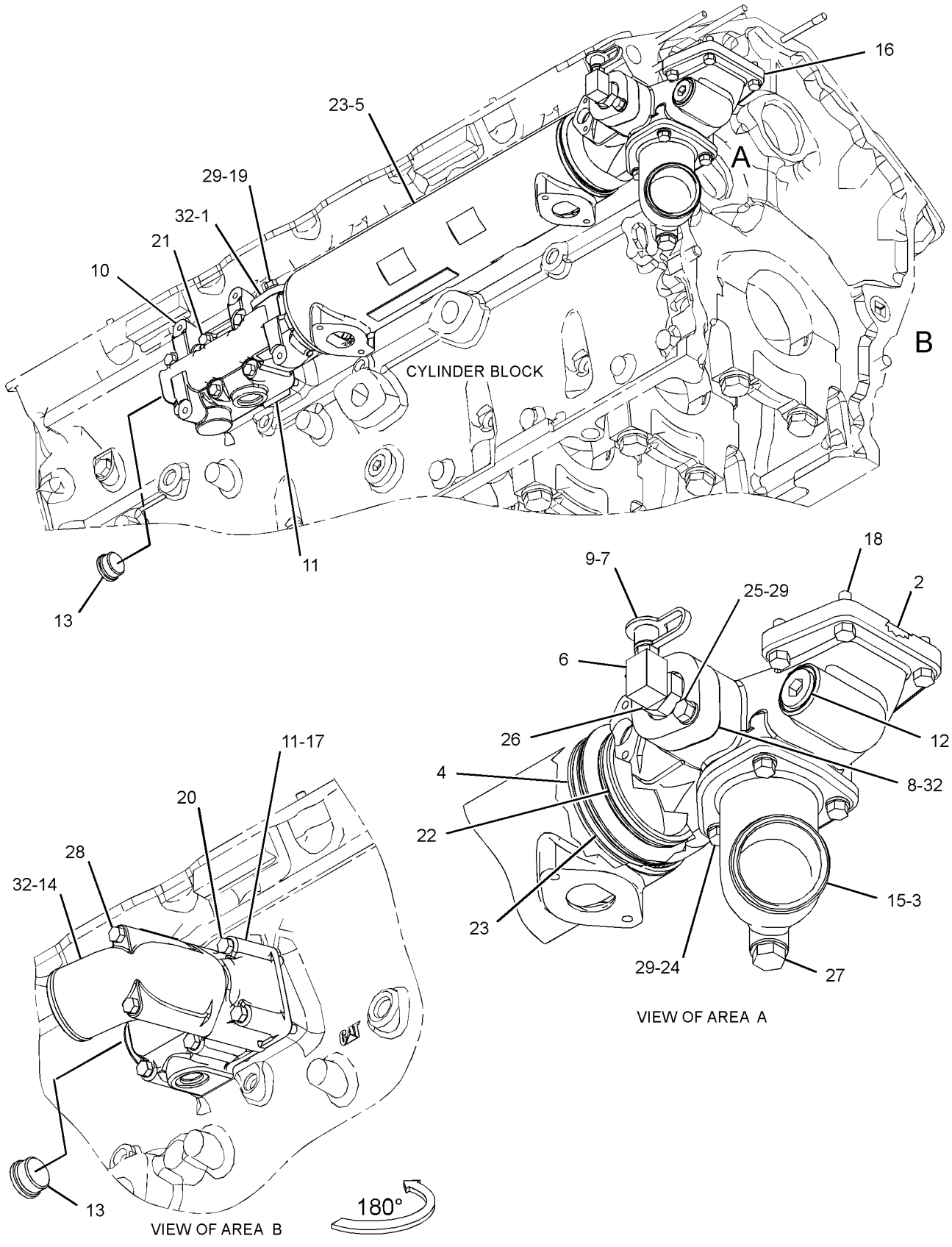

GRAPHIC #1 <END> g03502474

361-2157 LINES GP-WATER

S/N: RAB1-UP
PART OF 359-6500 INSTALLATION AR-ENGINE
ALSO AN ATTACHMENT

SMCS-1380 **i05421637**

NOTE	REF NO	GRAPHIC REF	PART NUMBER	QTY	PART NAME 1 2 3 4 5 6 (PRODUCT LEVEL)	SEE PAGE
	1	2	**124-6257**	4	CLAMP-HOSE	
	2	2	*148-8364*	1	ELBOW AS	
		2	**3K-0360**	1	SEAL-O-RING	
		2	**6V-8398**	1	SEAL-O-RING	
		2	**6V-8625**	1	ELBOW	
	3	2	*148-8378*	2	ELBOW AS	
					(EACH INCLUDES)	
		2	**3J-1907**	1	SEAL-O-RING	
		2	**6V-8397**	1	SEAL-O-RING	
		2	**6V-8724**	1	ELBOW	
	4	2	*148-8435*	2	TEE AS	
					(EACH INCLUDES)	
		2	**3J-1907**	1	SEAL-O-RING	
		2	**6V-8397**	2	SEAL-O-RING	
		2	**6V-8781**	1	TEE	
	5	2	*195-2037*	1	FITTING AS	
		2	**3K-0360**	1	SEAL-O-RING	
		2	**034-3679**	1	ADAPTER	
	6	2	**219-4474**	2	GASKET	
	7	2	**361-2119**	1	ELBOW	
I	8	2	**375-0764**	1	HOSE AS	
	9	2	**375-0794**	1	HOSE-MOLDED	
I	10	2	**375-0799**	1	HOSE AS	
I	11	2	**375-0801**	1	HOSE AS	
	12	2	**375-0802**	1	BRACKET AS	
M		2	**8T-3597**	1	NUT-WELD (M12X1.75-THD)	
	13	2	**375-0809**	1	ELBOW	
	14	2	**375-0810**	1	ELBOW	
	15	2	**375-0811**	1	TUBE	
	16	2	**375-0815**	1	TUBE	
I	17	2	**375-0816**	1	HOSE AS	
	18	2	*389-3703*	1	TEE AS	
		2	**118-0911**	1	TEE-O-RING PORT	
		2	**238-5080**	1	SEAL-O-RING	
Y	19	2	*421-4184*	1	VALVE GP-DRAIN (WATER)	721
	20	2	**443-4954**	1	VALVE AS	
		2	**7N-7688**	1	FERRULE	
		2	**9M-5590**	1	BALL	
	21	2	**450-2490**	1	BRACKET AS	
	22	2	**1S-1015**	1	CLIP	
	23	2	**3E-4041**	1	ELBOW	
	24	2	**3K-0360**	1	SEAL-O-RING	
	25	2	**5P-2228**	2	BOLT (1/2-13X1-IN)	
	26	2	**5P-4295**	1	CLIP	
	27	2	**6D-4246**	2	CLIP	
	28	2	**6V-4356**	1	CLIP (SLOT)	
	29	2	**6V-4357**	1	CLIP (TAB)	

361-2157 **LINES GP-WATER (**contd.**)** **i05421637**

NOTE	REF NO	GRAPHIC REF	PART NUMBER	QTY	PART NAME 1 2 3 4 5 6 (PRODUCT LEVEL)	SEE PAGE
	30	2	**6V-5063**	1	SEAL-O-RING	
	31	2	**7D-7233**	1	CLIP	
	32	2	**7X-7729**	1	WASHER (11X25X3-MM THK)	
	33	2	**7X-7958**	2	CLAMP-HOSE	
	34	2	**8T-4121**	13	WASHER-HARD (11X21X2.5-MM THK)	
M	35	2	**8T-4136**	2	BOLT (M10X1.5X25-MM)	
M	36	2	**8T-4137**	4	BOLT (M10X1.5X20-MM)	
M	37	2	**8T-4139**	1	BOLT (M12X1.75X30-MM)	
M	38	2	**8T-4183**	1	BOLT (M12X1.75X40-MM)	
M	39	2	**8T-4195**	8	BOLT (M10X1.5X30-MM)	
	40	2	**8T-4223**	4	WASHER-HARD (13.5X25.5X3-MM THK)	
	41	2	**8T-4985**	11	CLAMP-HOSE	
	42	2	**9X-2201**	1	CLAMP-HOSE	
E	43	2	**371-8094**		HOSE (133-CM)	
E	44	2	**328-2917**		HOSE (12.5-CM EACH)	
E	45	2	**328-2918**		HOSE (15-CM)	
E	45A	2	**328-2918**		HOSE (12-CM)	
E	46	2	**332-7786**		HOSE (127-CM)	
E	46A	2	**332-7786**		HOSE (71-CM)	

E - ORDER BY THE CENTIMETER
I - REFER TO HYDRAULIC INFORMATION SYSTEM
M - METRIC PART
Y - SEPARATE ILLUSTRATION

361-2157 **LINES GP-WATER (**contd.**)** **i05421637**

REFER TO ALL ILLUSTRATIONS OF
THIS GROUP FOR AUXILIARY VIEWS

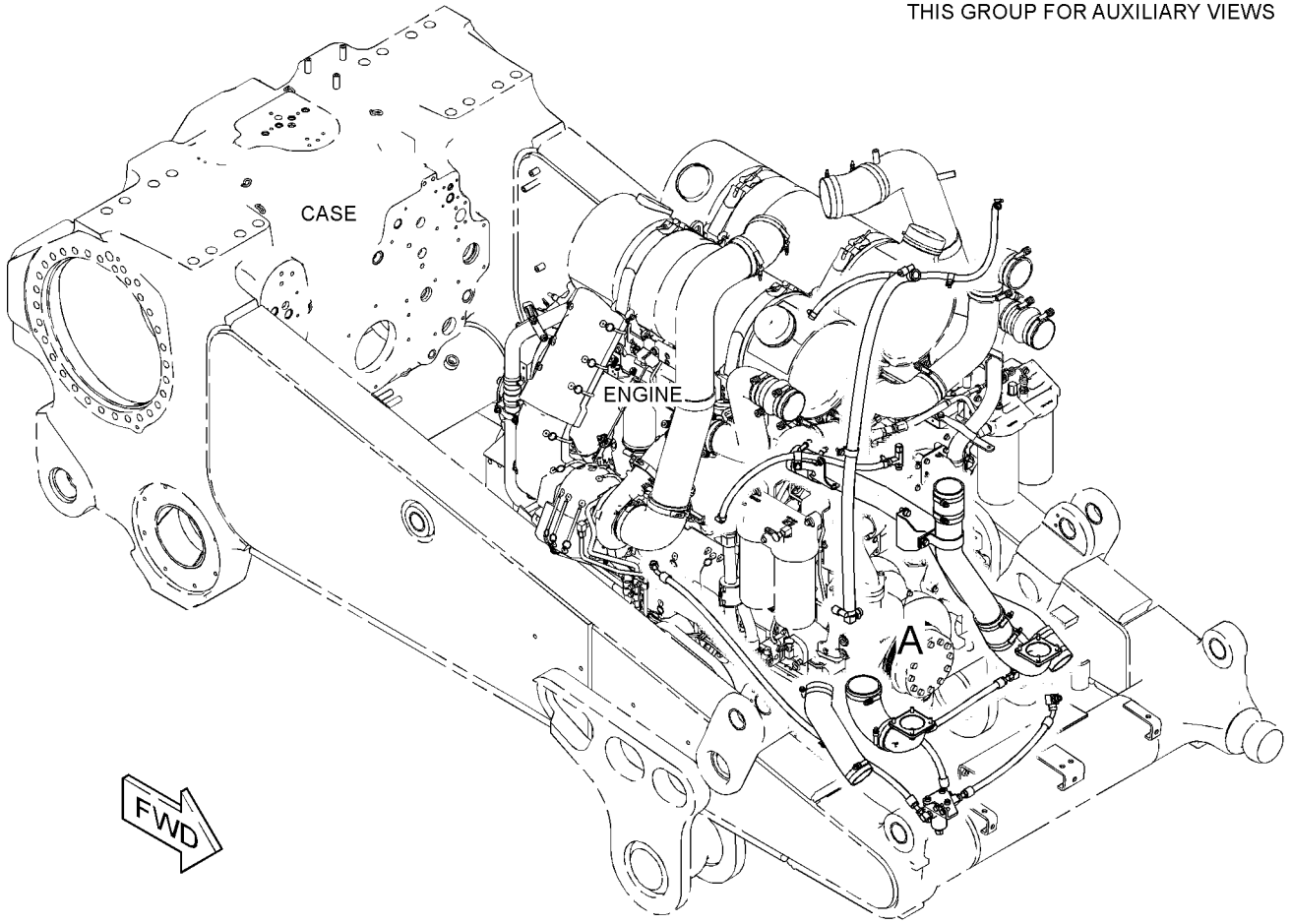

GRAPHIC #1 g03488616

361-2157 **LINES GP-WATER (**contd.**)** **i05421637**

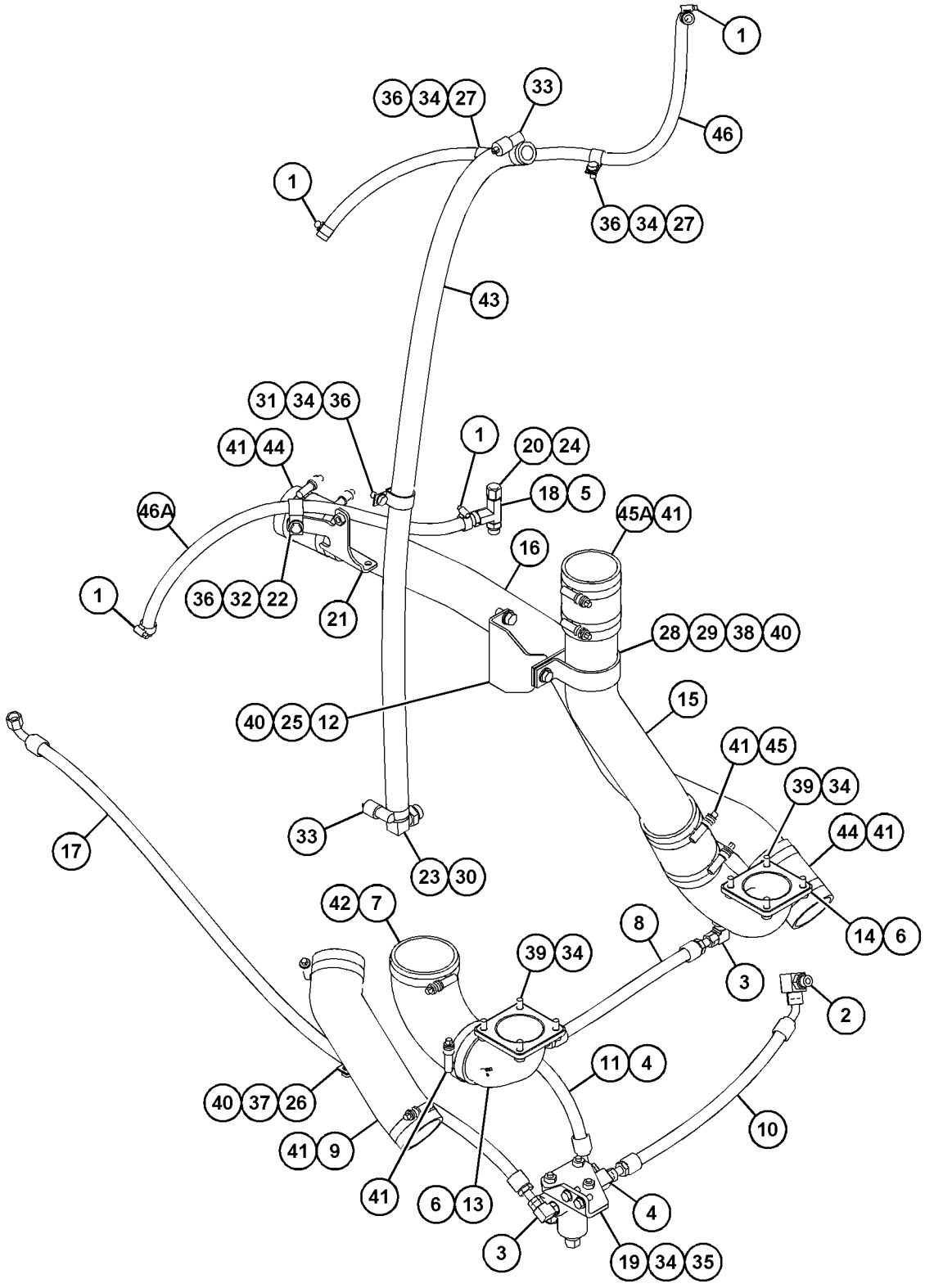

VIEW OF AREA A

GRAPHIC #2 <END> g03488617

375-9542 LINES GP-WATER

S/N: JZM1-UP

PART OF 359-6502, 443-0004 ENGINE AR-COMPLETE

AN ATTACHMENT

SMCS-1380 **i05501354**

NOTE	REF NO	GRAPHIC REF	PART NUMBER	QTY	PART NAME 1 2 3 4 5 6 (PRODUCT LEVEL)	SEE PAGE
	1	1	**9X-6458**	10	WASHER-HARD (10.2X22.5X3-MM THK)	
	2	1	**230-1294**	1	ELBOW	
	3	1	**230-1296**	1	ELBOW	
	4	1	**230-1302**	3	FLANGE	
	5	2	**235-4753**	1	ELBOW	
	6	1	**236-2502**	2	COVER	
	7	2	**239-5225**	1	HOUSING AS	
		2	**3B-0622**	1	PLUG-CUP	
		2	**3S-9643**	2	SEAL-LIP TYPE	
		2	**111-4374**	1	VALVE AS	
	8	1	**279-3397**	1	SEAL-O-RING	
	9	1,2	*304-8008*	3	PLUG AS	
					(EACH INCLUDES)	
		1,2	**6V-9027**	1	SEAL-O-RING	
		1,2	**9S-8002**	1	PLUG (7/16-20-THD)	
	10	1	*318-2946*	1	PLUG AS	
		1	**6V-9027**	1	SEAL-O-RING	
		1	**9S-4182**	1	PLUG (7/16-20-THD)	
	11	2	**346-5786**	1	COVER-WATER PUMP	
	12	2	**348-7066**	1	ELBOW	
Y	13	1	*351-8496*	1	PLUG GP-WATER LINES	115
	14	1	*353-5140*	3	PLUG AS	
					(EACH INCLUDES)	
		1	**6V-5063**	1	SEAL-O-RING	
		1	**9S-8008**	1	PLUG (1-1/16-12-THD)	
	15	2	**367-7900**	2	REGULATOR-WATER TEMPERATURE (92-DEG C)	
	16	2	**0S-1590**	2	BOLT (3/8-16X2-IN)	
	17	2	**0S-1591**	4	BOLT (3/8-16X1.5-IN)	
	18	1,2	**0S-1594**	8	BOLT (3/8-16X1-IN)	
	19	2	**0S-1608**	3	BOLT (3/8-16X3.75-IN)	
	20	1	**0T-0055**	2	BOLT (3/8-16X4.25-IN)	
	21	2	**107-5769**	2	SEAL-O-RING	
	22	2	**109-0075**	1	SEAL-O-RING	
	23	1,2	**109-0076**	3	SEAL-O-RING	
	24	1	**1C-2251**	6	BOLT (3/8-16X1.87-IN)	
	25	2	**200-6410**	1	SEAL-O-RING	
	26	1	**231-4708**	4	SEAL-O-RING	
	27	1,2	**334-5375**	4	STUD (3/8-16X5.26-IN)	
	28	1,2	**5M-2894**	12	WASHER-HARD (10.2X18.5X2.5-MM THK)	
	29	2	**7W-9094**	2	SPACER (10.5X20X9-MM THK)	
	30	1,2	**8T-1703**	3	SEAL-O-RING	

Y - SEPARATE ILLUSTRATION

375-9542 **LINES GP-WATER (**contd.**)** **i05501354**

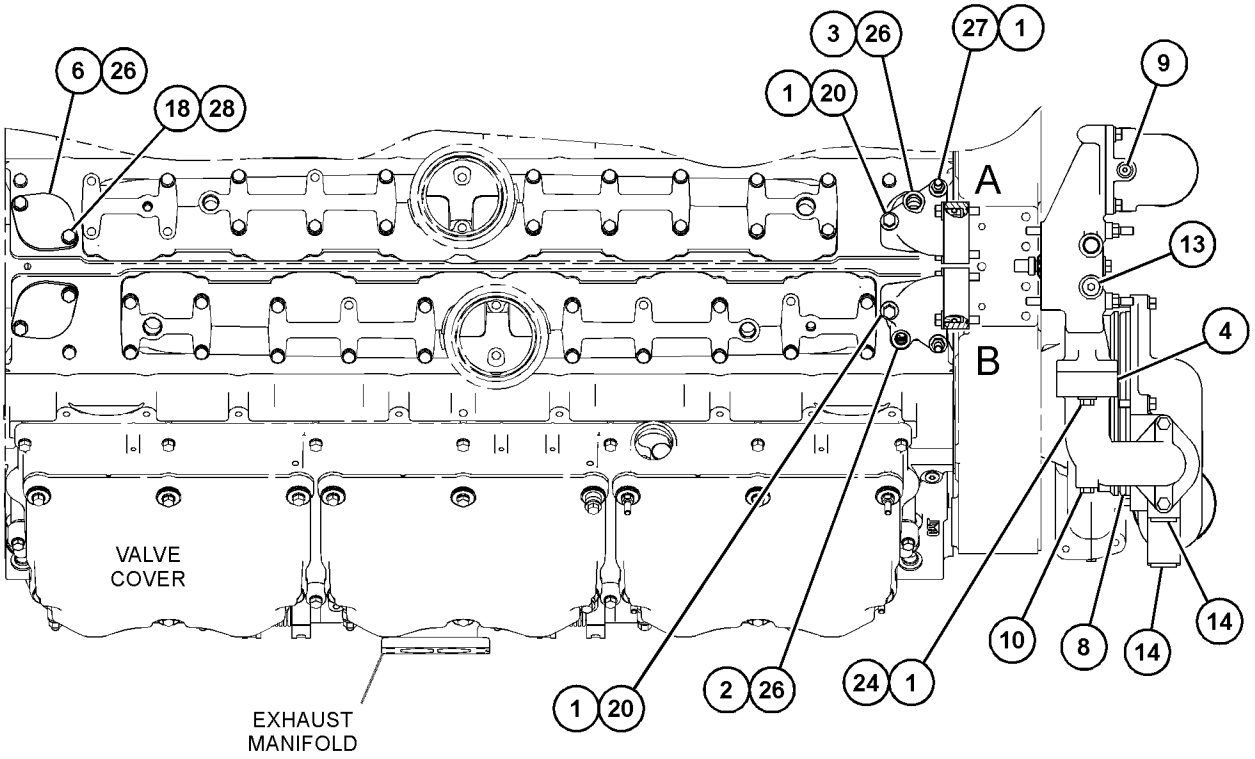

TOP VIEW OF ENGINE

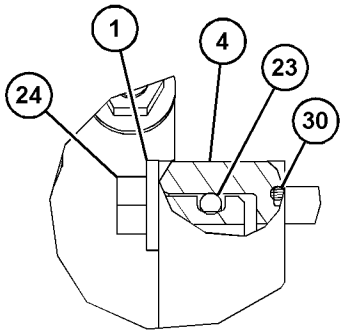

VIEW OF AREA A

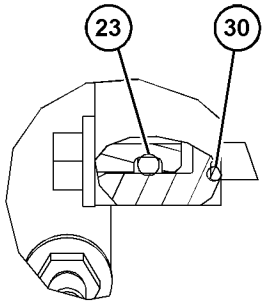

VIEW OF AREA B

GRAPHIC #1 g03504784

375-9542 **LINES GP-WATER (**contd.**)** **i05501354**

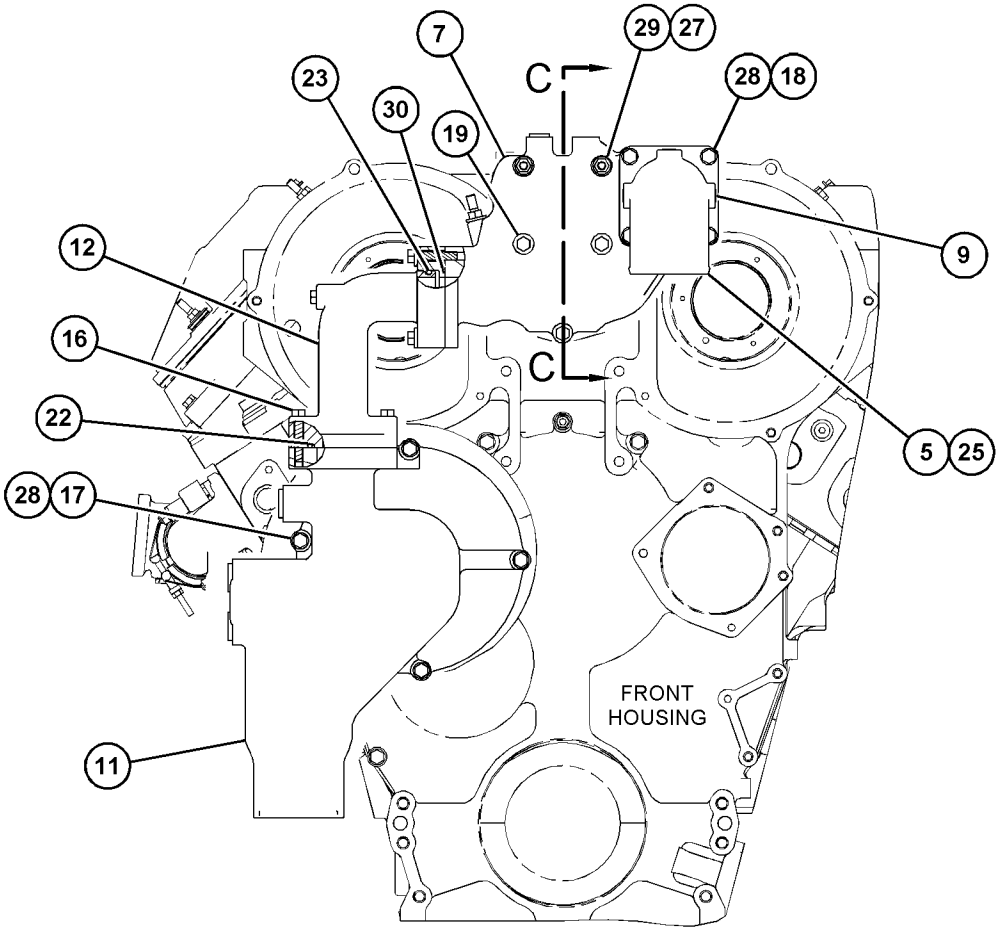

FRONT VIEW OF ENGINE

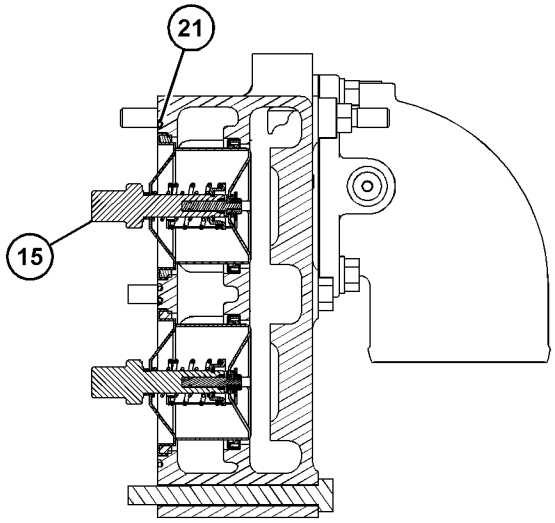

SECTION C-C

GRAPHIC #2 <END> g03504785

351-8496 PLUG GP-WATER LINES

S/N: JZM1-UP
CANNOT BE USED WITH PRECOOLER GP
PART OF 375-9542 LINES GP-WATER
AN ATTACHMENT

SMCS-1380 **i05904319**

NOTE	REF NO	GRAPHIC REF	PART NUMBER	QTY	PART NAME 1 2 3 4 5 6 (PRODUCT LEVEL)	SEE PAGE
	1	1	*353-5126*	1	PLUG AS	
		1	**9S-8005**	1	PLUG	
		1	**6V-6609**	1	SEAL-O-RING	

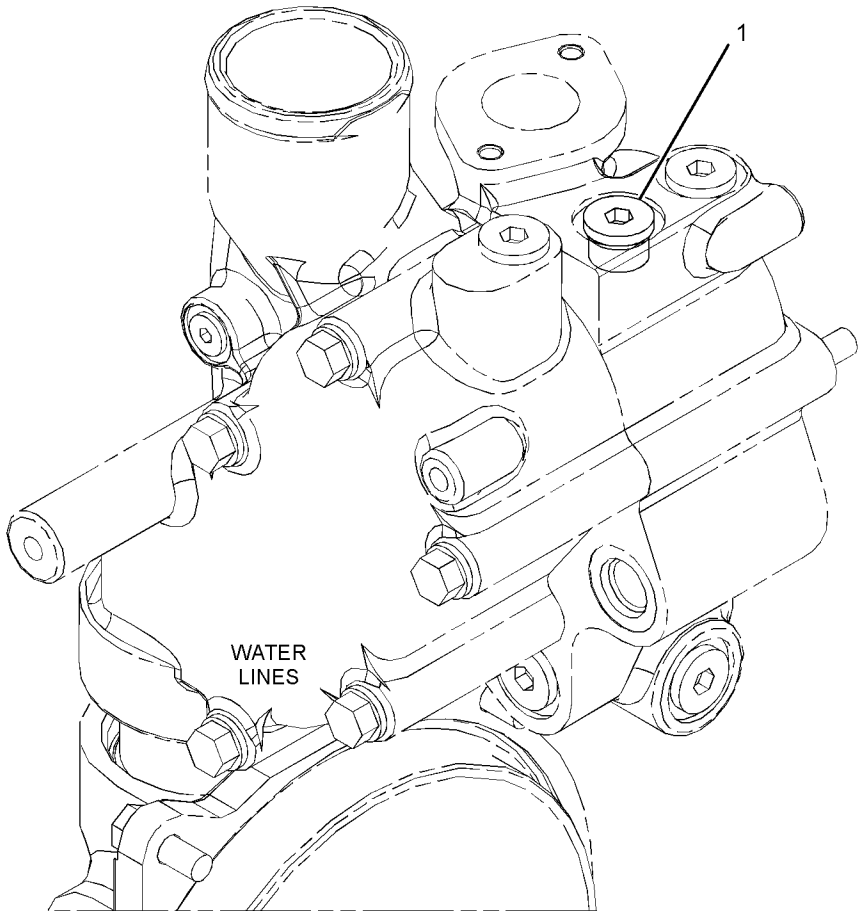

GRAPHIC #1 <END> g02909836

348-4037 PUMP GP-WATER

S/N: JZM1-UP
PART OF 359-6502, 443-0004 ENGINE AR-COMPLETE
AN ATTACHMENT

SMCS-1361 **i05821425**

NOTE	REF NO	GRAPHIC REF	PART NUMBER	QTY	PART NAME 1 2 3 4 5 6 (PRODUCT LEVEL)	SEE PAGE
YR	1	1	**355-7389**	1	PUMP GP-WATER	117
	2	1	**0S-1594**	1	BOLT (3/8-16X1-IN)	
	3	1	**9S-8752**	4	NUT-FULL (3/8-16-THD)	
	4	1	**9X-7371**	1	SEAL-O-RING	

R - REMANUFACTURED PART MAY BE AVAILABLE
Y - SEPARATE ILLUSTRATION

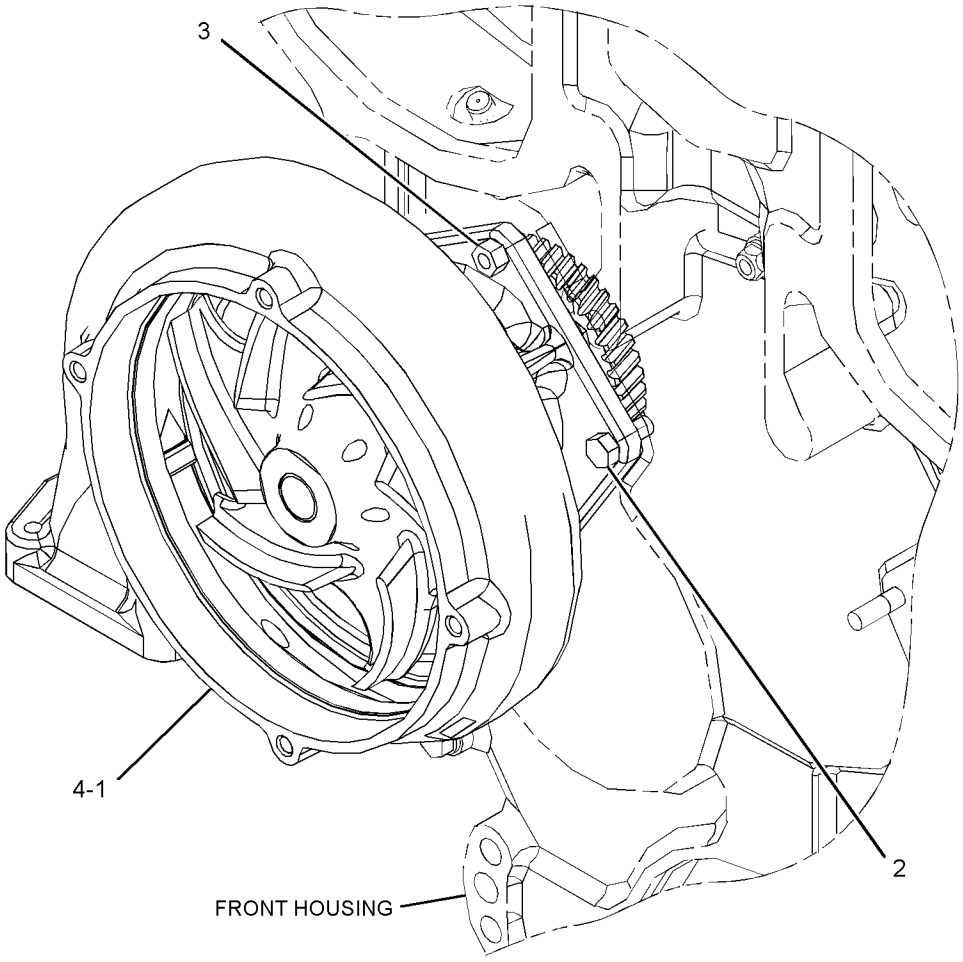

GRAPHIC #1 <END> g02144060

355-7389 PUMP GP-WATER*R

S/N: JZM1-UP
PART OF 348-4037 PUMP GP-WATER
AN ATTACHMENT

SMCS-1361 **i06107374**

NOTE	REF NO	GRAPHIC REF	PART NUMBER	QTY	PART NAME 1 2 3 4 5 6 (PRODUCT LEVEL)	SEE PAGE
	1	1	**4N-1948**	1	GEAR (43-TEETH)	
	2	1	**108-7930**	1	BEARING AS-ROLLER	
	3	1	**111-2721**	1	PLUG-FELT	
	4	1	**136-1107**	1	RETAINER	
	5	1	**153-1256**	1	SEAL-LIP TYPE	
	6	1	**203-3831**	1	PLUG-CUP	
	7	1	**336-2212**	1	SEAL AS-WATER PUMP	
	8	1	*348-4039*	1	HOUSING AS-PUMP	
		1	**4M-1336**	1	FERRULE	
		1	**8T-6764**	1	PLUG-PIPE (1/8-27-THD)	
	9	1	**1B-7182**	4	BOLT (5/16-18X1.25-IN)	
	10	1	**331-5206**	1	IMPELLER-PUMP	
	11	1	**331-5207**	1	SHAFT-WATER PUMP	

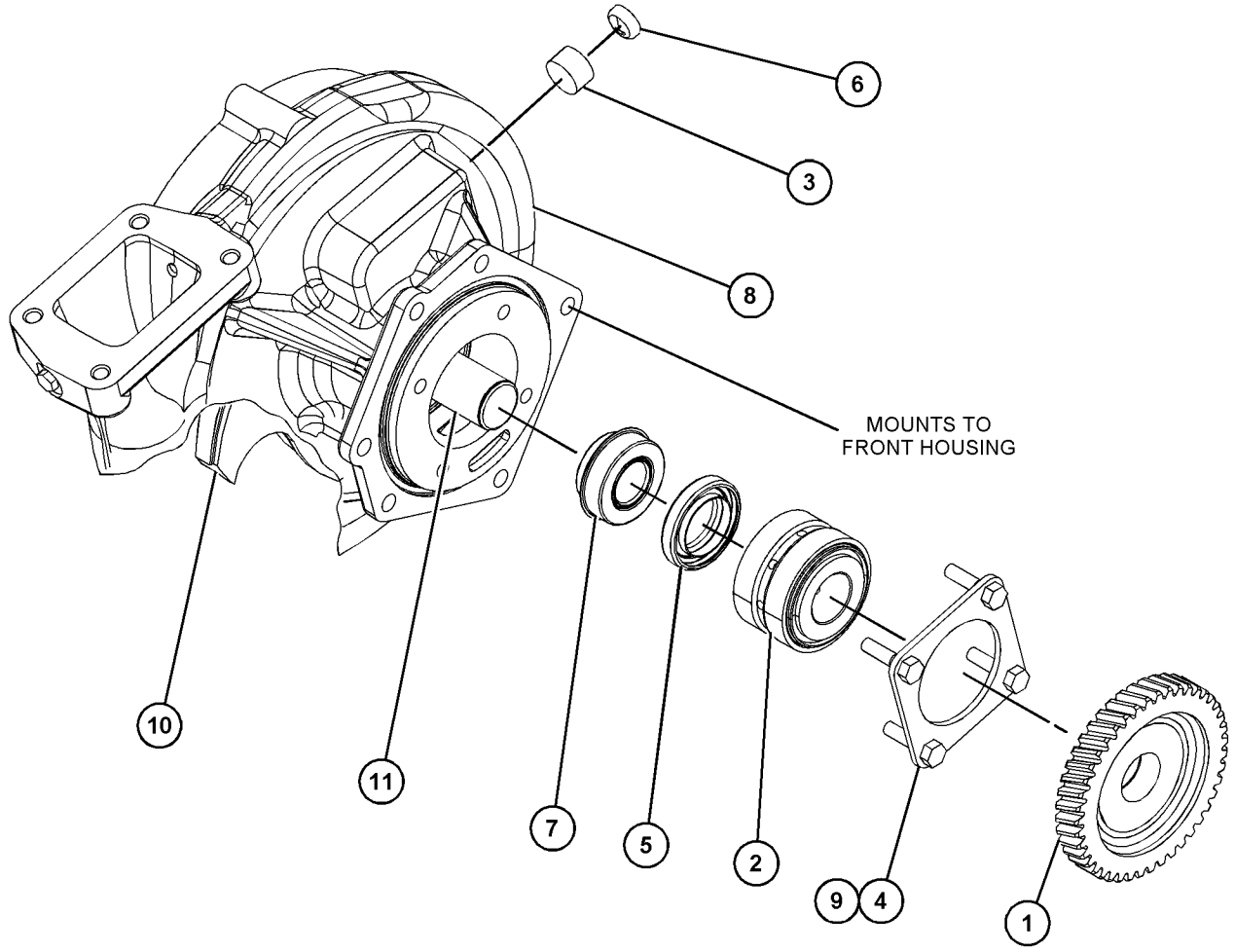

GRAPHIC #1 <END> g03812361

375-0788 RADIATOR AR

S/N: RAB1-244
AN ATTACHMENT

SMCS-1353 **i05453529**

NOTE	REF NO	GRAPHIC REF	PART NUMBER	QTY	PART NAME 1 2 3 4 5 6 (PRODUCT LEVEL)	SEE PAGE
	1	1	**375-0807**	1	BAFFLE AS	
	2	1	**375-0808**	1	BAFFLE AS	
	3	1	**376-4000**	1	BRACKET AS	
Y	4	1	**387-8408**	1	RADIATOR GP	124
	5	1	**399-5733**	1	BAFFLE AS	
	6	1	**399-5736**	1	BAFFLE AS	
	7	1	**399-5737**	1	BAFFLE AS	
	8	1	**443-3910**	1	BAFFLE AS	
		1	**8T-7971**	2	WASHER-HARD (13.5X25.5X5-MM THK)	
	9	1	**443-3911**	1	BAFFLE AS	
		1	**8T-7971**	2	WASHER-HARD (13.5X25.5X5-MM THK)	
M	10	1	**099-0169**	4	BOLT (M16X2X55-MM)	
	11	1	**124-0174**	2	CLIP	
M	12	1	**183-7121**	12	BOLT (M10X1.5X35-MM)	
	13	1	**198-4777**	12	WASHER-HARD (11X25X10-MM THK)	
	14	1	**1P-4278**	5	CLAMP-HOSE	
	15	1	*351-0271*	2	CONNECTOR AS	
					(EACH INCLUDES)	
		1	**310-5893**	1	CONNECTOR	
		1	**6V-9027**	1	SEAL-O-RING	
	16	1	**5P-1076**	4	WASHER-HARD (13.5X30X4-MM THK)	
	17	1	**7X-7729**	37	WASHER (11X25X3-MM THK)	
	18	1	**8T-4121**	11	WASHER-HARD (11X21X2.5-MM THK)	
	19	1	**8T-4122**	4	WASHER-HARD (17X32X3.5-MM THK)	
M	20	1	**8T-4136**	10	BOLT (M10X1.5X25-MM)	
M	21	1	**8T-4137**	5	BOLT (M10X1.5X20-MM)	
M	22	1	**8T-4139**	4	BOLT (M12X1.75X30-MM)	
M	23	1	**8T-4191**	1	BOLT (M10X1.5X16-MM)	
M	24	1	**8T-4195**	30	BOLT (M10X1.5X30-MM)	
M	25	1	**8T-6466**	2	BOLT (M10X1.5X60-MM)	
E	26	1	**5P-1465**		HOSE (20-CM EACH)	
E	27	1	**8C-3681**		HOSE (190-CM)	
E	28	1	**238-9166**		SEAL (15-CM EACH)	

E - ORDER BY THE CENTIMETER
M - METRIC PART
Y - SEPARATE ILLUSTRATION

375-0788 **RADIATOR AR (**contd.**)** **i05453529**

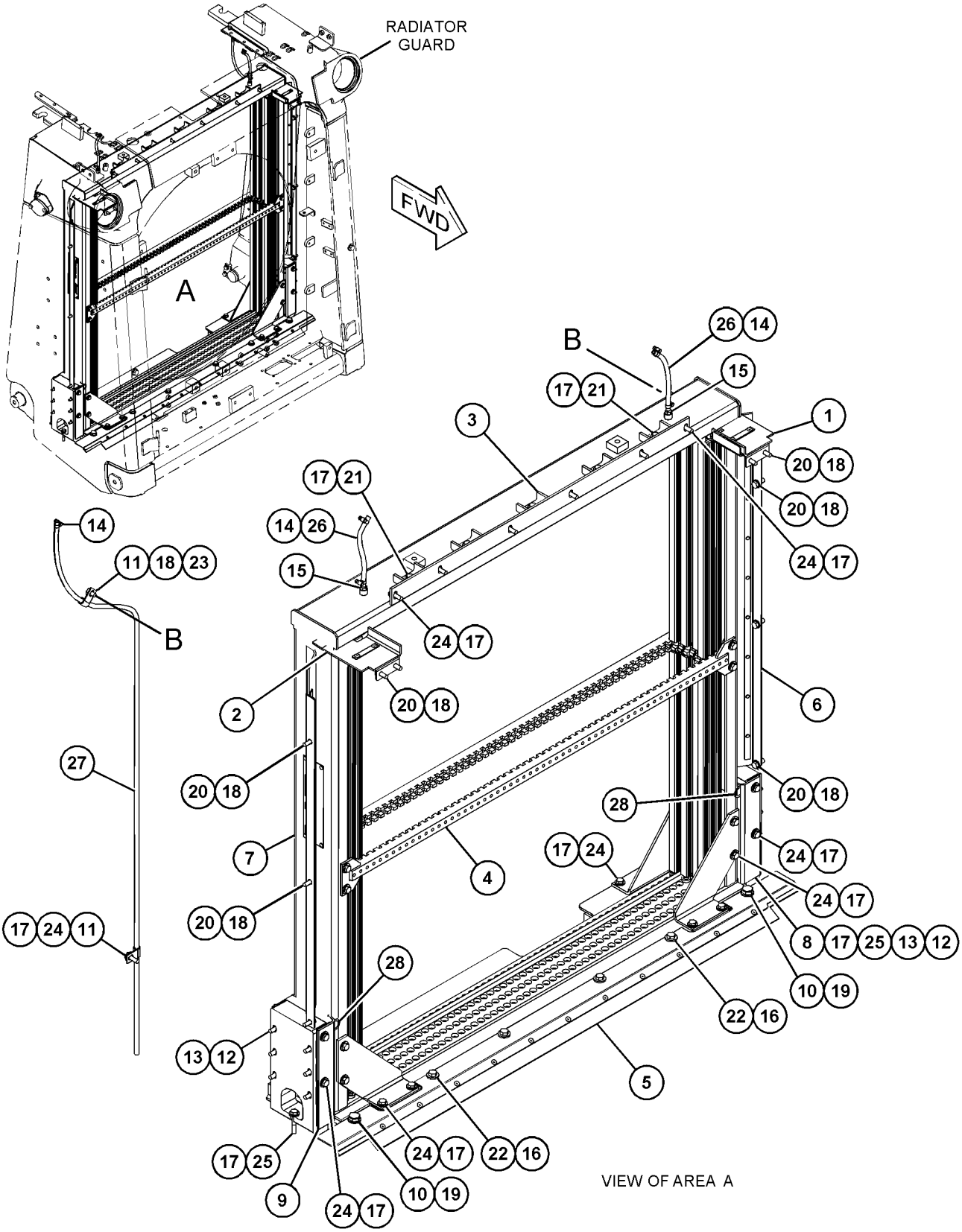

GRAPHIC #1 <END> g03495637

375-0788 RADIATOR AR

S/N: RAB245-UP

AN ATTACHMENT

SMCS-1353 **i05975126**

NOTE	REF NO	GRAPHIC REF	PART NUMBER	QTY	PART NAME 1 2 3 4 5 6 (PRODUCT LEVEL)	SEE PAGE
	1	1	**375-0807**	1	BAFFLE AS	
	2	1	**375-0808**	1	BAFFLE AS	
	3	1	**376-4000**	1	BRACKET AS	
Y	4	1	**387-8408**	1	RADIATOR GP	124
C	5	1	**462-9406**	1	BAFFLE AS	
	6	1	**399-5736**	1	BAFFLE AS	
	7	1	**399-5737**	1	BAFFLE AS	
C	8	1	**462-9404**	1	BAFFLE AS	
C	9	1	**462-9405**	1	BAFFLE AS	
M	10	1	**099-0169**	4	BOLT (M16X2X55-MM)	
	11	1	**124-0174**	2	CLIP	
M	12	1	**183-7121**	12	BOLT (M10X1.5X35-MM)	
	13	1	**198-4777**	12	WASHER-HARD (11X25X10-MM THK)	
	14	1	**1P-4278**	5	CLAMP-HOSE	
	15	1	*351-0271*	2	CONNECTOR AS	
					(EACH INCLUDES)	
		1	**310-5893**	1	CONNECTOR	
		1	**6V-9027**	1	SEAL-O-RING	
	16	1	**5P-1076**	4	WASHER-HARD (13.5X30X4-MM THK)	
	17	1	**7X-7729**	37	WASHER (11X25X3-MM THK)	
	18	1	**8T-4121**	11	WASHER-HARD (11X21X2.5-MM THK)	
	19	1	**120-5737**	4	WASHER (17.5X40X4-MM THK)	
M	20	1	**8T-4136**	10	BOLT (M10X1.5X25-MM)	
M	21	1	**8T-4137**	5	BOLT (M10X1.5X20-MM)	
M	22	1	**8T-4139**	4	BOLT (M12X1.75X30-MM)	
M	23	1	**8T-4191**	1	BOLT (M10X1.5X16-MM)	
M	24	1	**8T-4195**	30	BOLT (M10X1.5X30-MM)	
M	25	1	**8T-6466**	2	BOLT (M10X1.5X60-MM)	
E	26	1	**5P-1465**		HOSE (20-CM EACH)	
E	27	1	**8C-3681**		HOSE (190-CM)	

C - CHANGE FROM PREVIOUS TYPE
E - ORDER BY THE CENTIMETER
M - METRIC PART
Y - SEPARATE ILLUSTRATION

375-0788 **RADIATOR AR (**contd.**)** **i05975126**

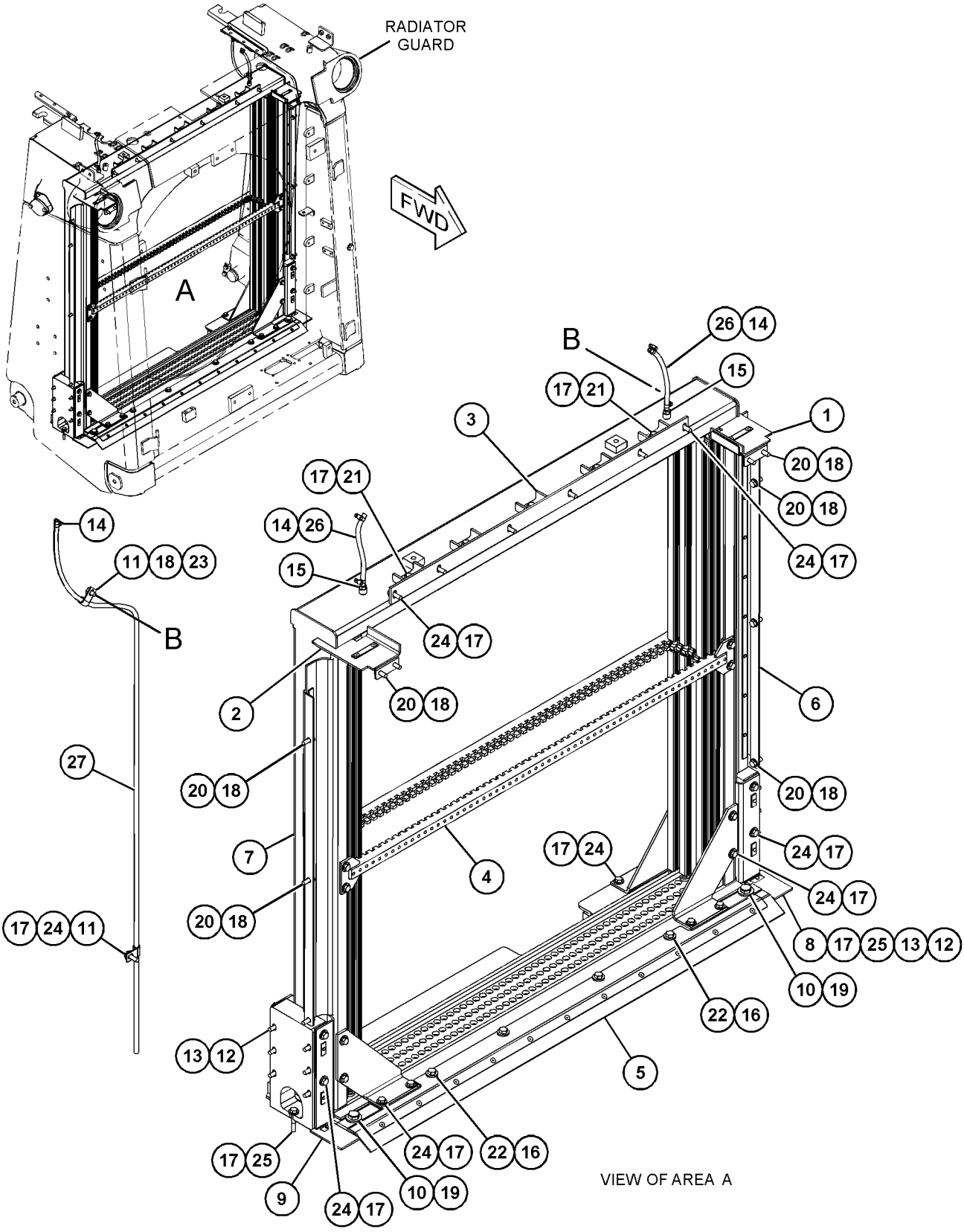

GRAPHIC #1 <END> g03812896

375-0762 RADIATOR GP

S/N: RAB1-UP

AN ATTACHMENT

SMCS-1353 **i05883155**

NOTE	REF NO	GRAPHIC REF	PART NUMBER	QTY	PART NAME 1 2 3 4 5 6 (PRODUCT LEVEL)	SEE PAGE
D	1	1	**5P-5933**		SEAL (1.3-M)	
	2	1	**5V-0500**	8	WASHER (16.5X75X6-MM THK)	
	3	1	**118-2990**	8	MOUNT AS	
	4	1	*188-3034*	2	ELBOW AS	
					(EACH INCLUDES)	
		1	**6V-1355**	1	ELBOW	
		1	**3J-7354**	1	SEAL-O-RING	
	5	1	**375-0786**	1	BRACKET AS	
	6	1	**375-0787**	1	BRACKET AS	
	7	1	**375-0804**	1	BAFFLE AS	
	8	1	**375-0805**	1	BAFFLE AS	
	9	1	**375-0806**	1	BAFFLE AS	
	10	1	**375-0807**	1	BAFFLE AS	
	11	1	**375-0808**	1	BAFFLE AS	
	12	1	**393-5050**	2	CORE AS-RADIATOR	
	13	1	**147-0385**	2	CLIP	
	14	1	**198-4778**	12	WASHER-HARD (13.5X30X12-MM THK)	
	15	1	**1P-4278**	5	CLAMP-HOSE	
	16	1	**209-4588**	2	CLAMP	
	17	1	**286-0693**	8	SPACER (11X25X18-MM THK)	
	18	1	**124-0174**	2	CLIP	
M	22	1	**7X-2556**	8	BOLT (M16X2X100-MM)	
	23	1	**7X-7729**	4	WASHER (11X25X3-MM THK)	
	24	1	**8T-4121**	16	WASHER-HARD (11X21X2.5-MM THK)	
M	25	1	**8T-4136**	12	BOLT (M10X1.5X25-MM)	
M	26	1	**8T-4185**	8	BOLT (M10X1.5X50-MM)	
M	27	1	**8T-4191**	3	BOLT (M10X1.5X16-MM)	
M	28	1	**8T-4194**	12	BOLT (M12X1.75X50-MM)	
M	29	1	**8T-4196**	4	BOLT (M10X1.5X35-MM)	
	30	1	*155-3624*	3	PLUG AS	
					(EACH INCLUDES)	
		1	**3J-7354**	1	SEAL-O-RING	
		1	**9S-4182**	1	PLUG (7/16-20-THD)	
E	31	1	**328-2918**		HOSE (14-CM)	
E	32	1	**5P-1465**		HOSE (59-CM)	
E	32A	1	**5P-1465**		HOSE (42-CM)	
E	33	1	**8C-3681**		HOSE (190-CM)	

D - ORDER BY THE METER
E - ORDER BY THE CENTIMETER
M - METRIC PART

375-0762 **RADIATOR GP (**contd.**)** **i05883155**

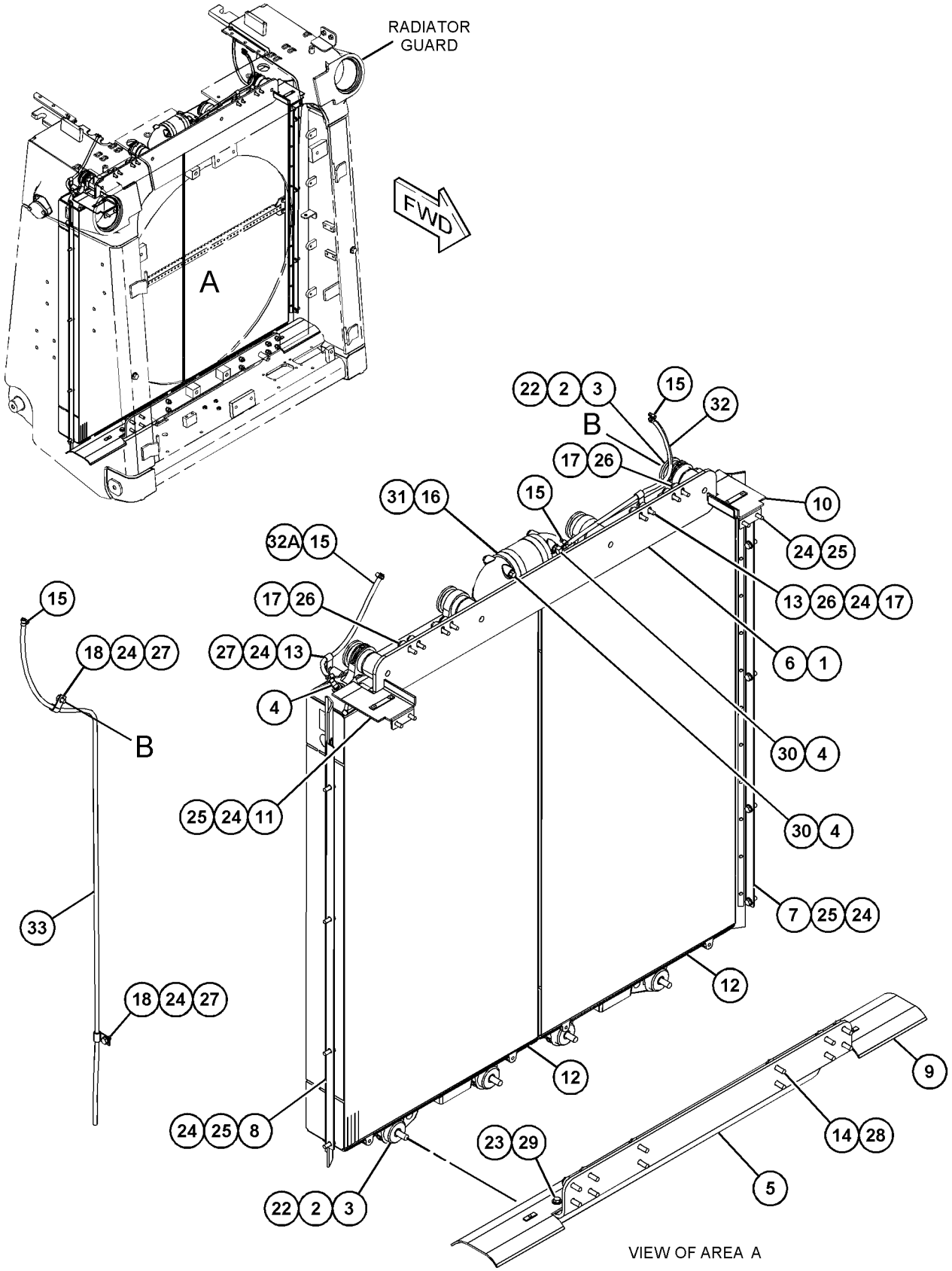

GRAPHIC #1 <END> g03709839

387-8408 RADIATOR GP

S/N: RAB1-UP
PART OF 375-0788 RADIATOR AR
AN ATTACHMENT

SMCS-1353 **i06214403**

NOTE	REF NO	GRAPHIC REF	PART NUMBER	QTY	PART NAME 1 2 3 4 5 6 (PRODUCT LEVEL)	SEE PAGE
	1	1	**7X-7729**	28	WASHER (11X25X3-MM THK)	
	2	1	**8T-4122**	4	WASHER-HARD (17X32X3.5-MM THK)	
M	3	1	**8T-4195**	28	BOLT (M10X1.5X30-MM)	
M	4	1	**099-0169**	4	BOLT (M16X2X55-MM)	
E	5	1	**337-3945**		BAFFLE (135-CM)	
E	6	1	**337-3946**		BAFFLE (135-CM)	
	7	1	**4Q-5140**	234	SEAL (BOTTOM)	
	8	1	**4Q-5139**	234	SEAL (TOP)	
	9	1	**365-0947**	234	TUBE AS	
	10	1	**464-3707**	2	BAR AS	

E - ORDER BY THE CENTIMETER
M - METRIC PART

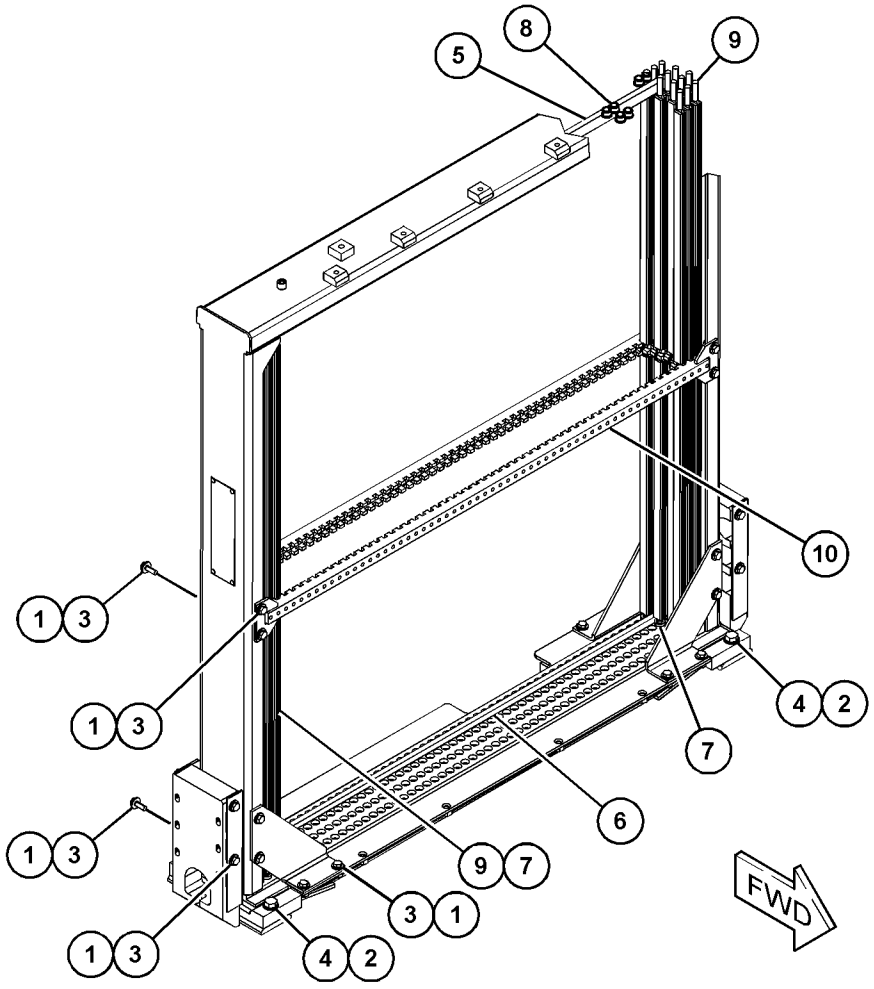

GRAPHIC #1 <END> g06022156

359-6477 TANK GP-COOLANT

S/N: RAB1-281
PART OF 359-6404 INSTALLATION AR-ENGINE
AN ATTACHMENT

SMCS-1377 **i05425987**

NOTE	REF NO	GRAPHIC REF	PART NUMBER	QTY	PART NAME 1 2 3 4 5 6 (PRODUCT LEVEL)	SEE PAGE
	1	1	*260-9149*	1	ADAPTER AS	
		1	**8C-7325**	1	ADAPTER	
		1	**6V-9027**	1	SEAL-O-RING	
	2	1	*353-5128*	1	ADAPTER AS	
		1	**6V-1230**	1	ELBOW	
		1	**6V-6609**	1	SEAL-O-RING	
	3	1	*366-4698*	1	PLUG AS	
		1	**360-3690**	1	PLUG	
		1	**3J-7354**	1	SEAL-O-RING	
Y	4	1	*375-0770*	1	TANK GP-COOLANT	129
I	5	1	**449-5859**	1	HOSE AS	
	6	1	*148-8336*	2	CONNECTOR AS	
					(EACH INCLUDES)	
		1	**6V-8636**	1	CONNECTOR	
		1	**3J-1907**	1	SEAL-O-RING	
		1	**6V-8397**	1	SEAL-O-RING	
	7	1	**198-4777**	6	WASHER-HARD (11X25X10-MM THK)	
	8	1	*351-0273*	2	ELBOW AS	
					(EACH INCLUDES)	
		1	**6V-8245**	1	ELBOW	
		1	**6V-9027**	1	SEAL-O-RING	
M	9	1	**8T-4186**	6	BOLT (M10X1.5X40-MM)	

I - REFER TO HYDRAULIC INFORMATION SYSTEM
M - METRIC PART
Y - SEPARATE ILLUSTRATION

359-6477 **TANK GP-COOLANT (**contd.**)** **i05425987**

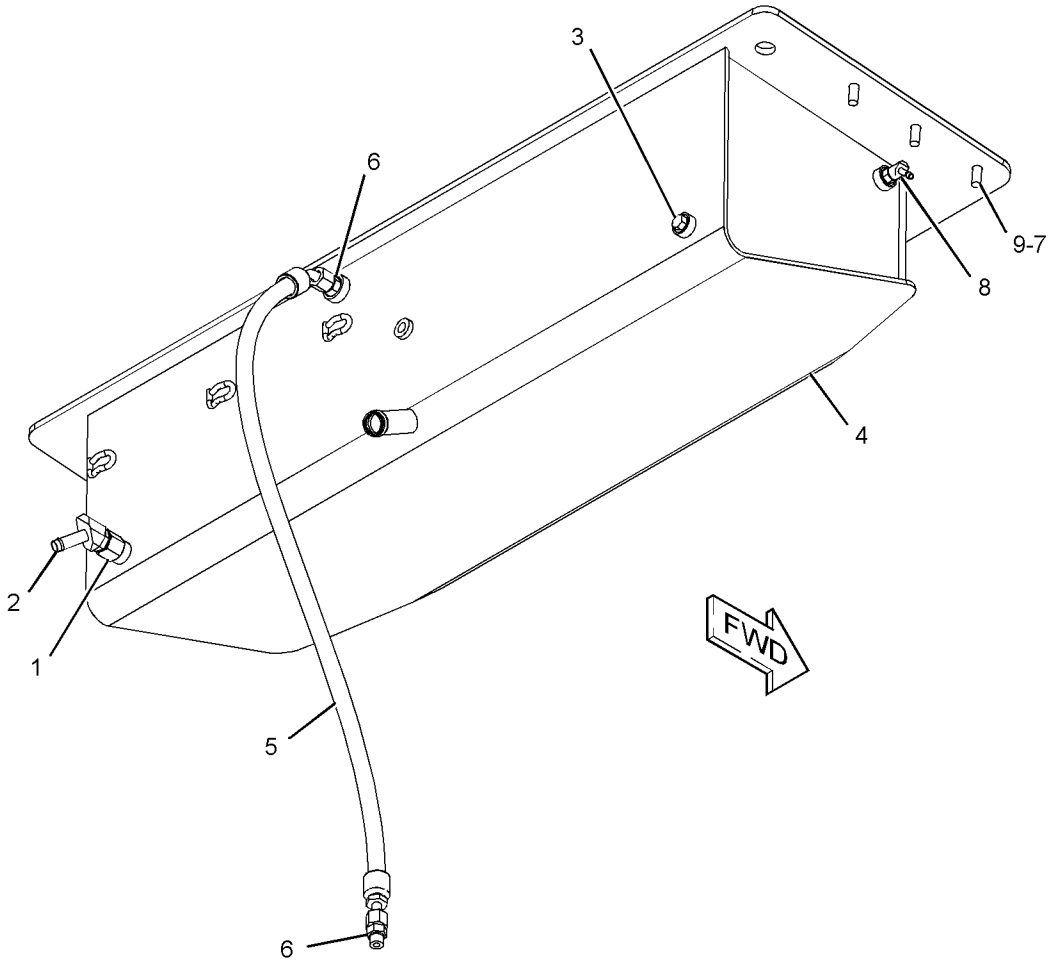

GRAPHIC #1 <END> g03489500

359-6477 TANK GP-COOLANT

S/N: RAB282-UP
PART OF 359-6404 INSTALLATION AR-ENGINE
AN ATTACHMENT

SMCS-1377 **i06546735**

NOTE	REF NO	GRAPHIC REF	PART NUMBER	QTY	PART NAME 1 2 3 4 5 6 (PRODUCT LEVEL)	SEE PAGE
	1	1	*260-9149*	1	ADAPTER AS	
		1	**8C-7325**	1	ADAPTER	
		1	**6V-9027**	1	SEAL-O-RING	
	2	1	*353-5128*	1	ADAPTER AS	
		1	**6V-1230**	1	ELBOW	
		1	**6V-6609**	1	SEAL-O-RING	
	3	1	*366-4698*	1	PLUG AS	
		1	**360-3690**	1	PLUG	
		1	**3J-7354**	1	SEAL-O-RING	
CY	4	1	*484-1120*	1	TANK GP-COOLANT	130
I	5	1	**449-5859**	1	HOSE AS	
	6	1	*148-8336*	2	CONNECTOR AS	
					(EACH INCLUDES)	
		1	**6V-8636**	1	CONNECTOR	
		1	**3J-1907**	1	SEAL-O-RING	
		1	**6V-8397**	1	SEAL-O-RING	
	7	1	**198-4777**	6	WASHER-HARD (11X25X10-MM THK)	
	8	1	*351-0273*	2	ELBOW AS	
					(EACH INCLUDES)	
		1	**6V-8245**	1	ELBOW	
		1	**6V-9027**	1	SEAL-O-RING	
M	9	1	**8T-4186**	6	BOLT (M10X1.5X40-MM)	

C - CHANGE FROM PREVIOUS TYPE
I - REFER TO HYDRAULIC INFORMATION SYSTEM
M - METRIC PART
Y - SEPARATE ILLUSTRATION

359-6477 **TANK GP-COOLANT (**contd.**)** **i06546735**

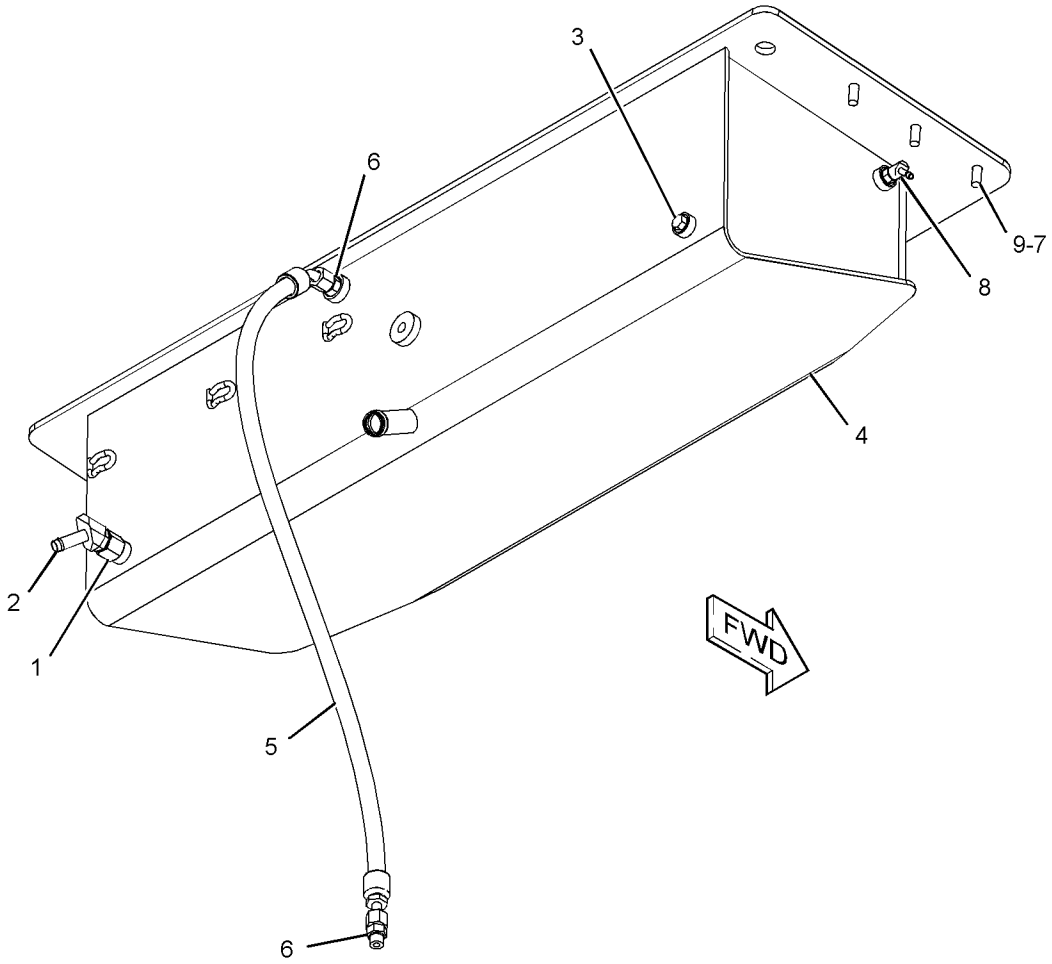

GRAPHIC #1 <END> g06033681

375-0770 TANK GP-COOLANT

S/N: RAB1-281
PART OF 359-6477 TANK GP-COOLANT
AN ATTACHMENT

SMCS-1377 **i05842031**

NOTE	REF NO	GRAPHIC REF	PART NUMBER	QTY	PART NAME 1 2 3 4 5 6 (PRODUCT LEVEL)	SEE PAGE
	1	1	**9Y-9236**	1	GAUGE-SIGHT (COOLANT)	
	2	1	**294-3342**	1	CAP AS-RADIATOR	
	3	1	**375-0771**	1	TANK AS-COOLANT	
	4	1	**7M-8485**	1	SEAL-O-RING	

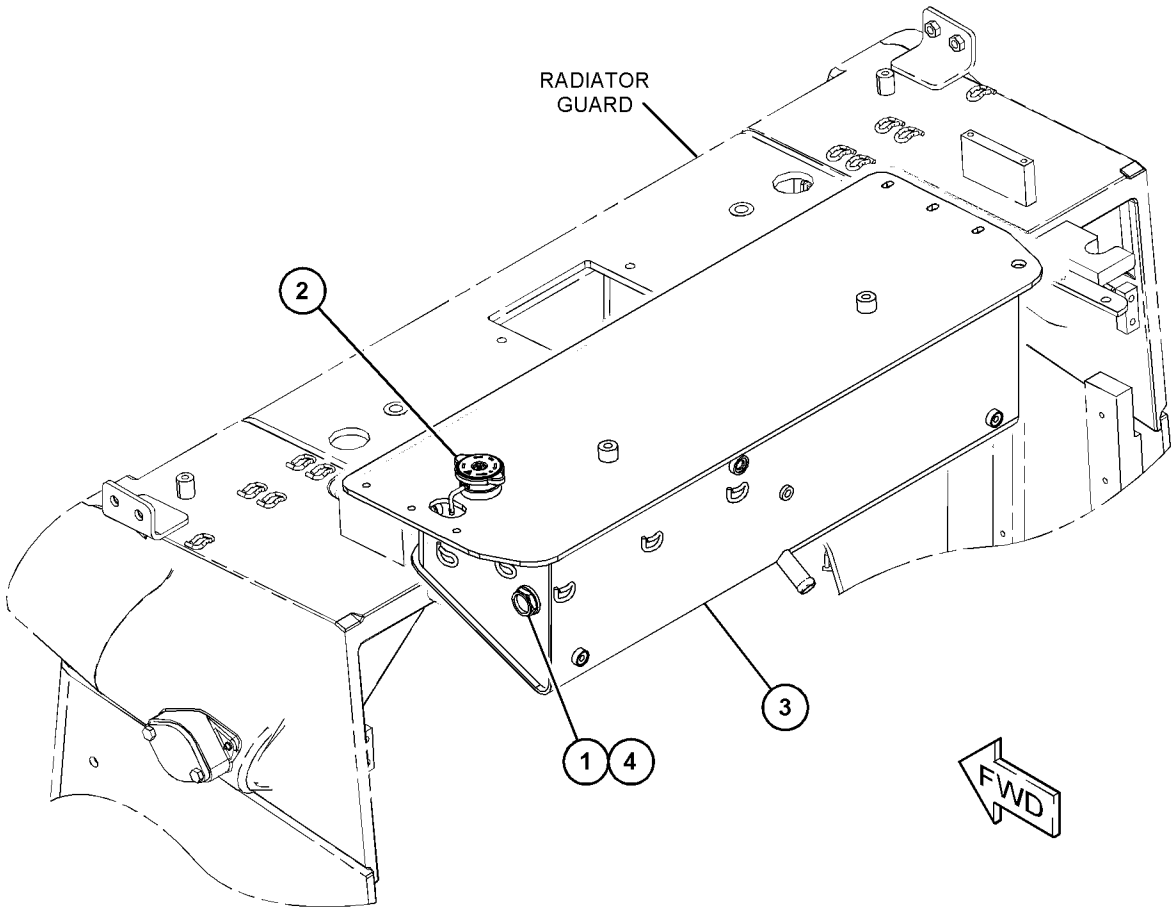

GRAPHIC #1 <END> g03696299

484-1120 TANK GP-COOLANT

S/N: RAB282-UP
PART OF 359-6477 TANK GP-COOLANT
AN ATTACHMENT

SMCS-1377 **i06546738**

NOTE	REF NO	GRAPHIC REF	PART NUMBER	QTY	PART NAME 1 2 3 4 5 6 (PRODUCT LEVEL)	SEE PAGE
	1	1	**9Y-9236**	1	GAUGE-SIGHT (COOLANT LEVEL)	
	2	1	**294-3342**	1	CAP AS-RADIATOR	
	3	1	**484-1119**	1	TANK AS-COOLANT	
	4	1	**7M-8485**	1	SEAL-O-RING	

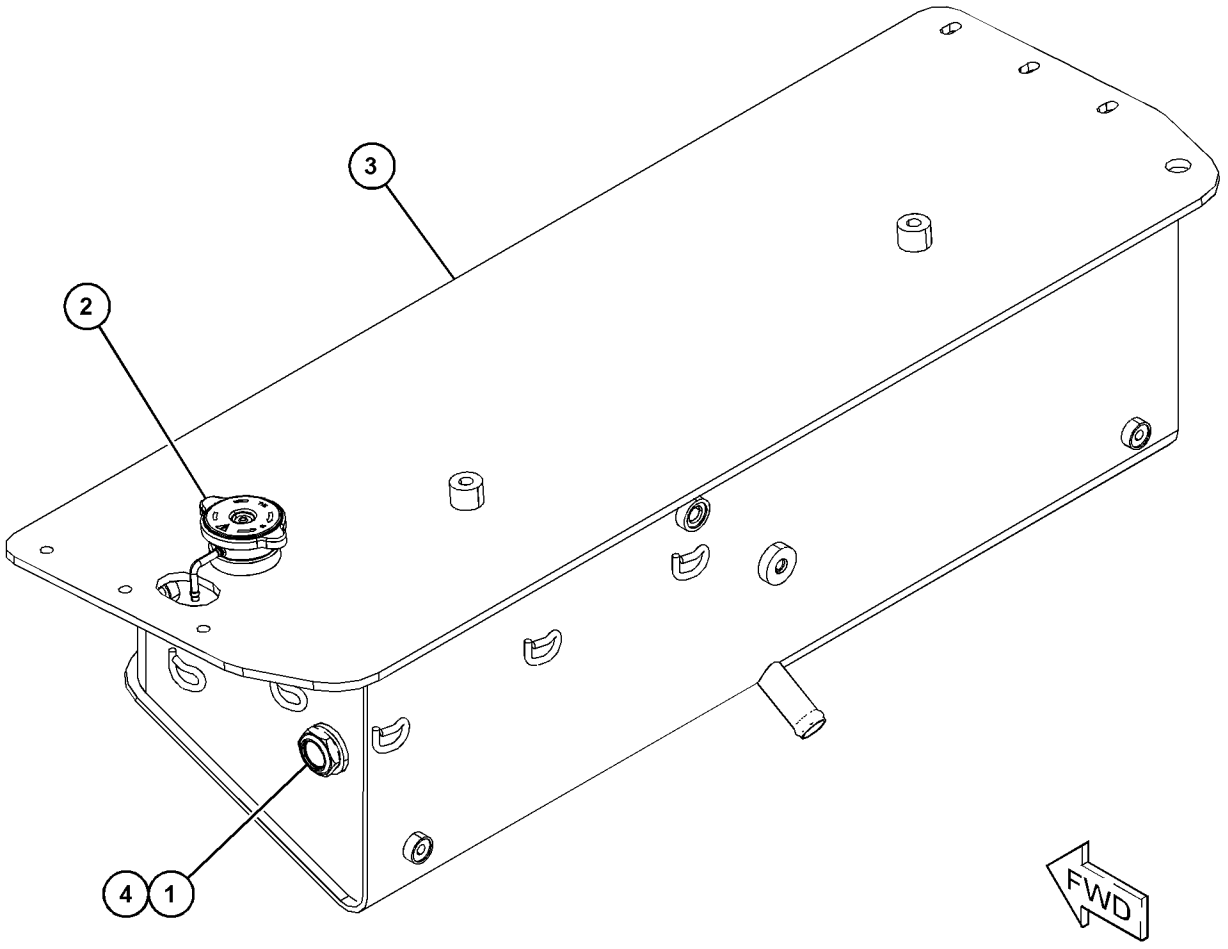

GRAPHIC #1 <END> g06042158

359-6461 AFTERCOOLER GP-AIR

S/N: RAB1-UP

PART OF 359-6404 INSTALLATION AR-ENGINE

AN ATTACHMENT

SMCS-1063 **i05425843**

NOTE	REF NO	GRAPHIC REF	PART NUMBER	QTY	PART NAME 1 2 3 4 5 6 (PRODUCT LEVEL)	SEE PAGE
	1	1	**7T-8331**	8	MOUNT AS	
	2	1	**375-0763**	2	BRACKET AS	
	3	1	**375-0780**	1	BRACKET AS	
	4	1	**375-0781**	1	BRACKET AS	
	5	1	**198-4777**	8	WASHER-HARD (11X25X10-MM THK)	
	6	1	**341-3119**	8	WASHER-HARD (13X48X3.5-MM THK)	
	7	1	**421-4021**	2	CORE AS-AFTERCOOLER	
	8	1	**8F-6437**	8	WASHER (13.5X50.8X4.76-MM THK)	
	9	1	**8T-4121**	8	WASHER-HARD (11X21X2.5-MM THK)	
M	10	1	**8T-4195**	8	BOLT (M10X1.5X30-MM)	
M	11	1	**8T-4196**	8	BOLT (M10X1.5X35-MM)	
M	12	1	**8T-4910**	8	BOLT (M12X1.75X60-MM)	

M - METRIC PART

359-6461 **AFTERCOOLER GP-AIR (**contd.**)** **i05425843**

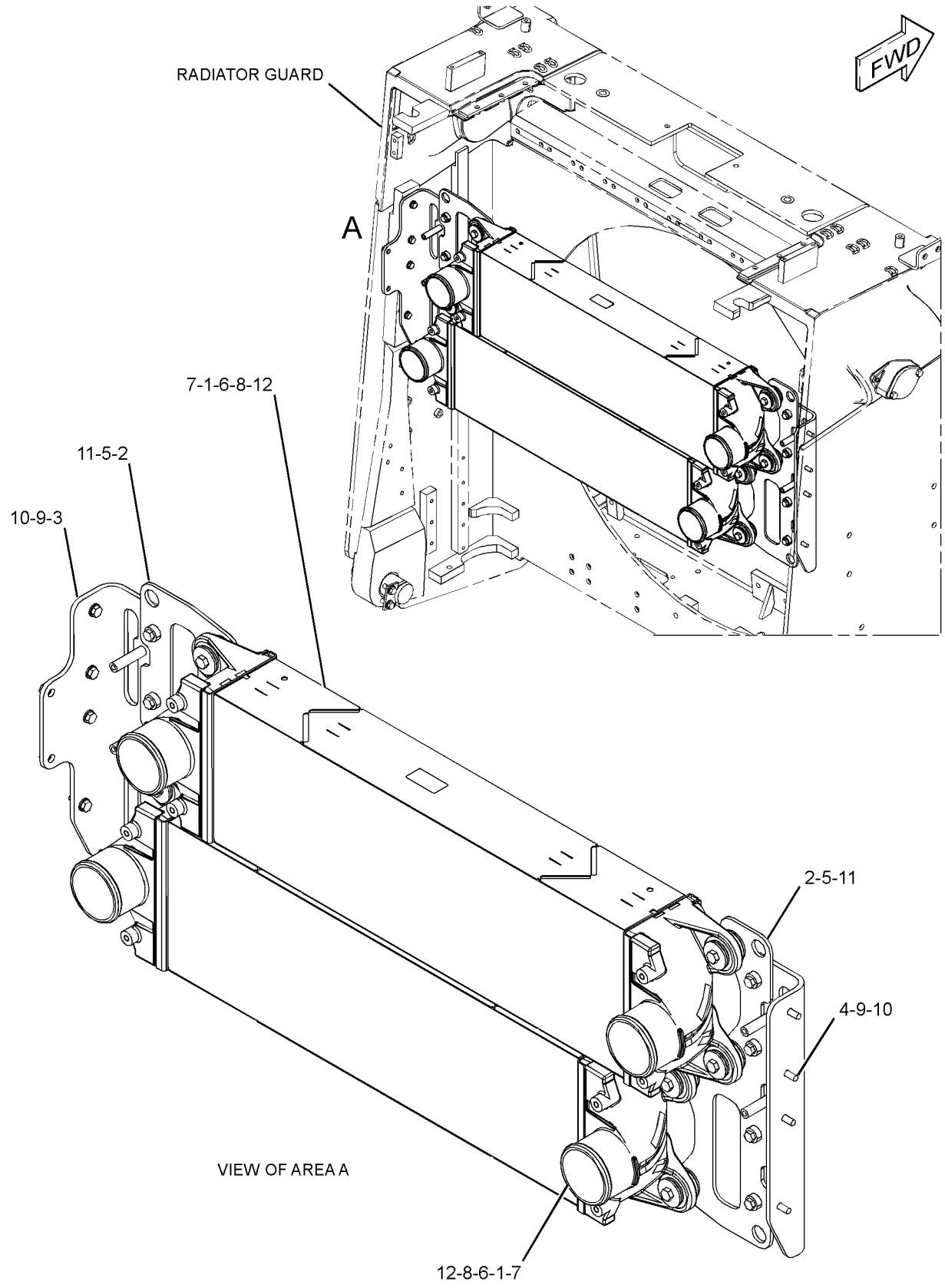

VIEW OF AREA A

GRAPHIC #1 <END> g03488097

359-6463 AIR CLEANER GP

S/N: RAB1-UP
PART OF 359-6404 INSTALLATION AR-ENGINE
AN ATTACHMENT

SMCS-1051, 1054

i05811514

NOTE	REF NO	GRAPHIC REF	PART NUMBER	QTY	PART NAME 1 2 3 4 5 6 (PRODUCT LEVEL)	SEE PAGE
	1	1	**8N-7669**	2	HOSE	
	2	1	**377-1381**	1	SUPPORT-COVER	
Y	3	1	**418-3586**	1	AIR CLEANER GP	134
Y	4	1	**418-3590**	1	AIR CLEANER GP	135
	5	1	**1P-9390**	2	GASKET-OUTLET	
	6	1	**4P-7581**	2	CLIP	
	7	1	**5P-4869**	4	CLAMP-HOSE	
	8	1	**8T-4121**	24	WASHER-HARD (11X21X2.5-MM THK)	
M	9	1	**8T-4182**	4	BOLT (M10X1.5X45-MM)	
M	10	1	**8T-4195**	20	BOLT (M10X1.5X30-MM)	

M - METRIC PART
Y - SEPARATE ILLUSTRATION

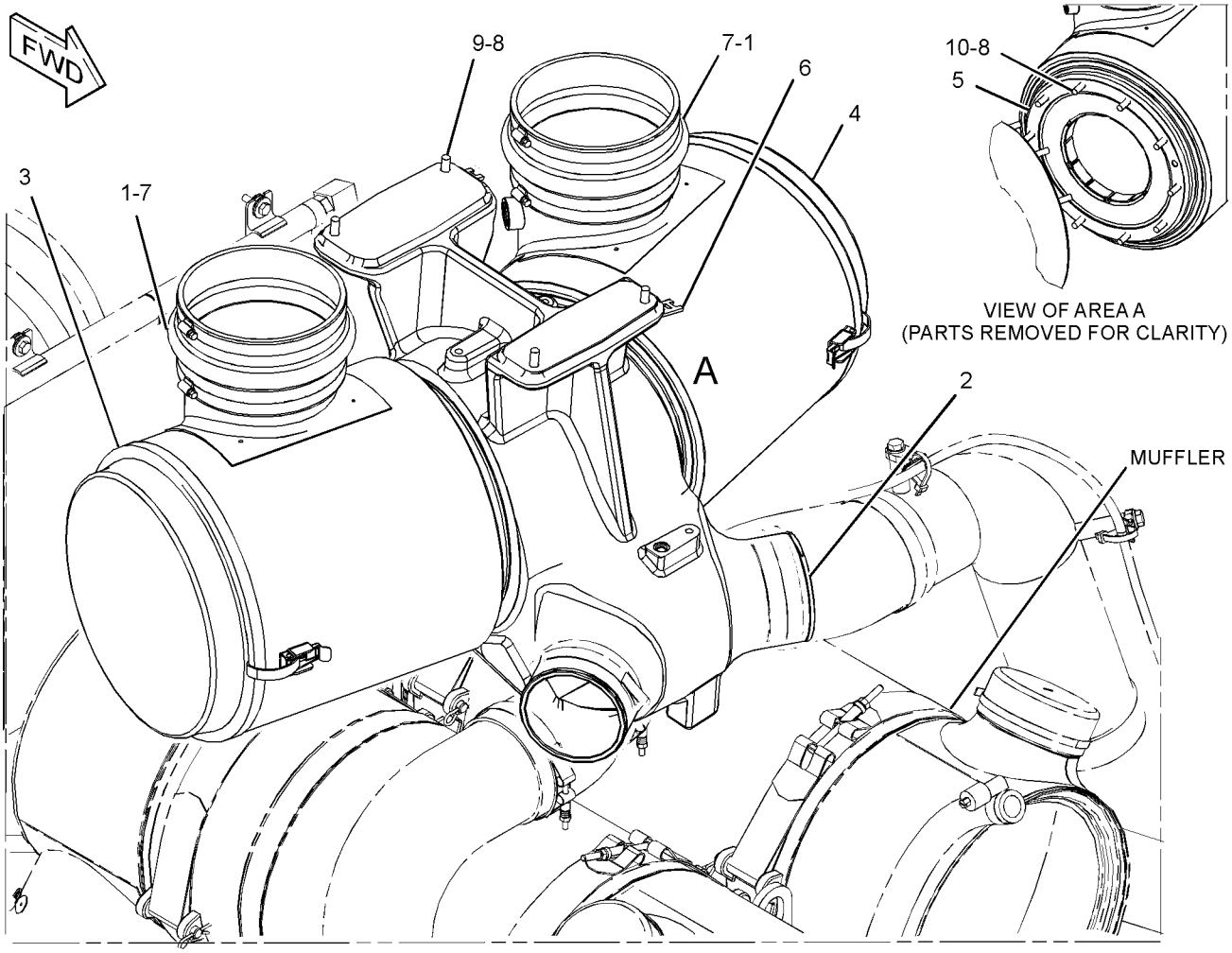

GRAPHIC #1 <END> g03487656

418-3586 AIR CLEANER GP

S/N: RAB1-UP
PART OF 359-6463 AIR CLEANER GP
AN ATTACHMENT

SMCS-1051, 1054

i05195497

NOTE	REF NO	GRAPHIC REF	PART NUMBER	QTY	PART NAME 1 2 3 4 5 6 (PRODUCT LEVEL)	SEE PAGE
	1	1	**6I-2505**	1	FILTER ELEMENT AS-AIR (PRIMARY)	
					—OR—	
		1	**122-1675**	1	FILTER ELEMENT AS-AIR (PRIMARY)	
	2	1	**6I-2506**	1	FILTER ELEMENT AS-AIR (SECONDARY)	
	3	1	**6I-4465**	1	COVER AS-AIR CLEANER	
		1	**6N-7692**	1	GASKET	
	4	1	**8N-4617**	2	KIT-AIR CLEANER CLAMP	

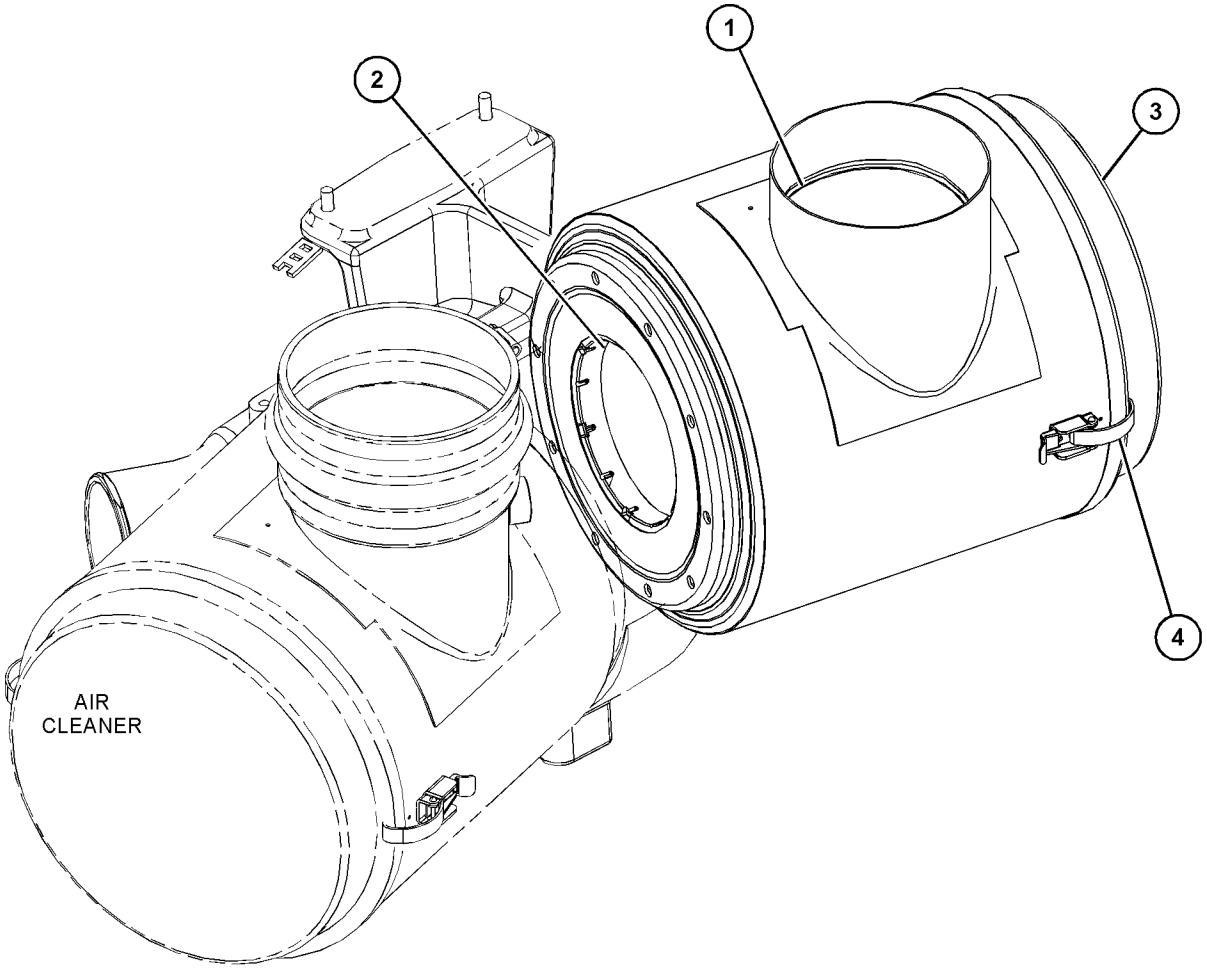

GRAPHIC #1 <END> g03529304

418-3590 AIR CLEANER GP

S/N: RAB1-UP
PART OF 359-6463 AIR CLEANER GP
AN ATTACHMENT

SMCS-1051, 1054

i05203141

NOTE	REF NO	GRAPHIC REF	PART NUMBER	QTY	PART NAME 1 2 3 4 5 6 (PRODUCT LEVEL)	SEE PAGE
	1	1	**6I-2505**	1	FILTER ELEMENT AS-AIR (PRIMARY)	
	2	1	**6I-2506**	1	FILTER ELEMENT AS-AIR (SECONDARY)	
	3	1	**6I-4465**	1	COVER AS-AIR CLEANER	
		1	**6N-7692**	1	GASKET	
	4	1	**8N-4617**	2	KIT-AIR CLEANER CLAMP	
					(EACH INCLUDES CLIP AS & RIVET)	

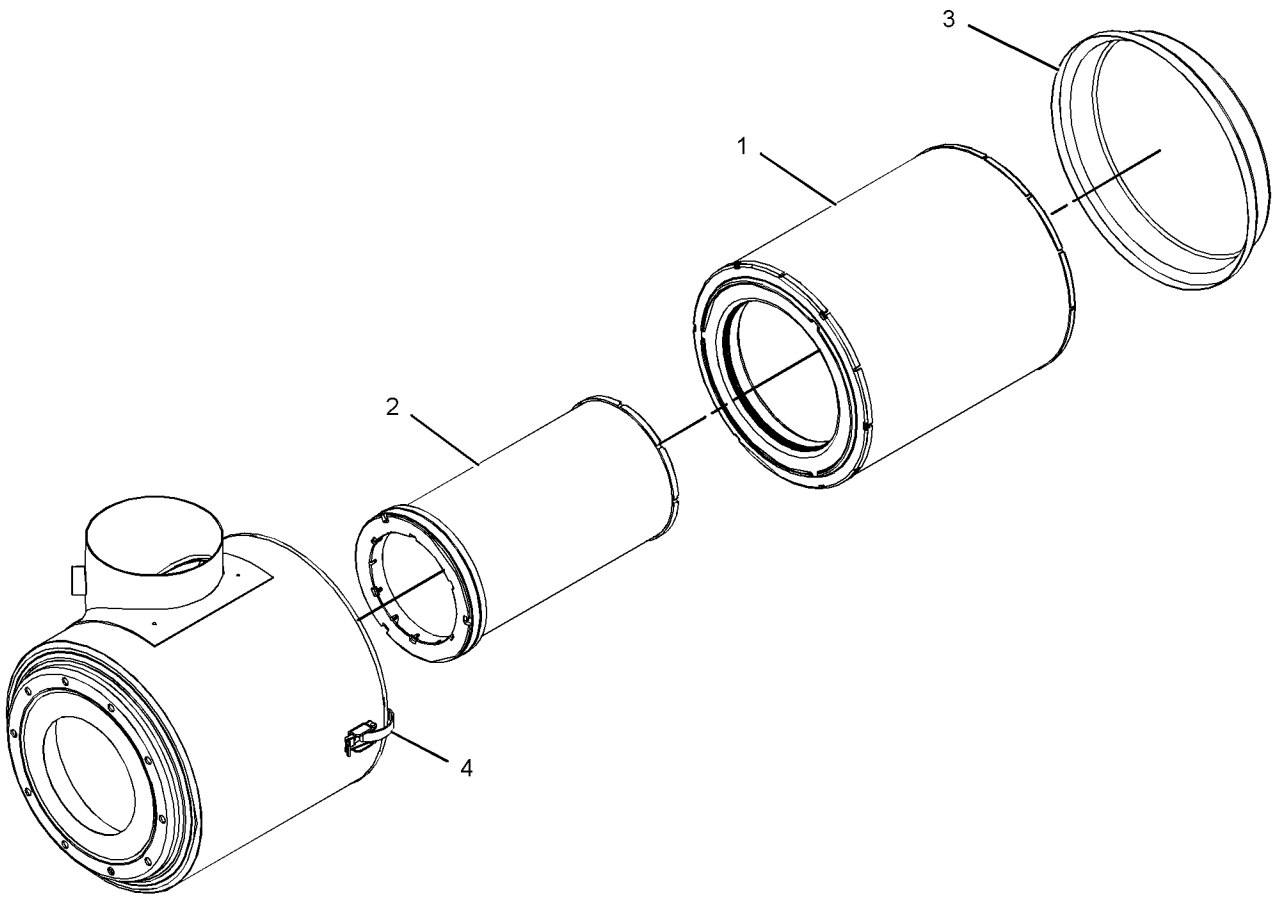

GRAPHIC #1 <END> g03511596

359-6469 DUST EJECTOR GP

S/N: RAB1-UP
PART OF 359-6404 INSTALLATION AR-ENGINE
AN ATTACHMENT

SMCS-1068 **i06523324**

NOTE	REF NO	GRAPHIC REF	PART NUMBER	QTY	PART NAME 1 2 3 4 5 6 (PRODUCT LEVEL)	SEE PAGE
	1	1	**176-8234**	2	CLAMP	
	2	1	**8T-4223**	8	WASHER-HARD (13.5X25.5X3-MM THK)	
	3	1	**335-7292**	2	EJECTOR AS	
	4	1	**417-9681**	2	COVER AS	
	5	1	**419-0513**	2	TUBE AS	
M	6	1	**8T-4183**	8	BOLT (M12X1.75X40-MM)	

M - METRIC PART

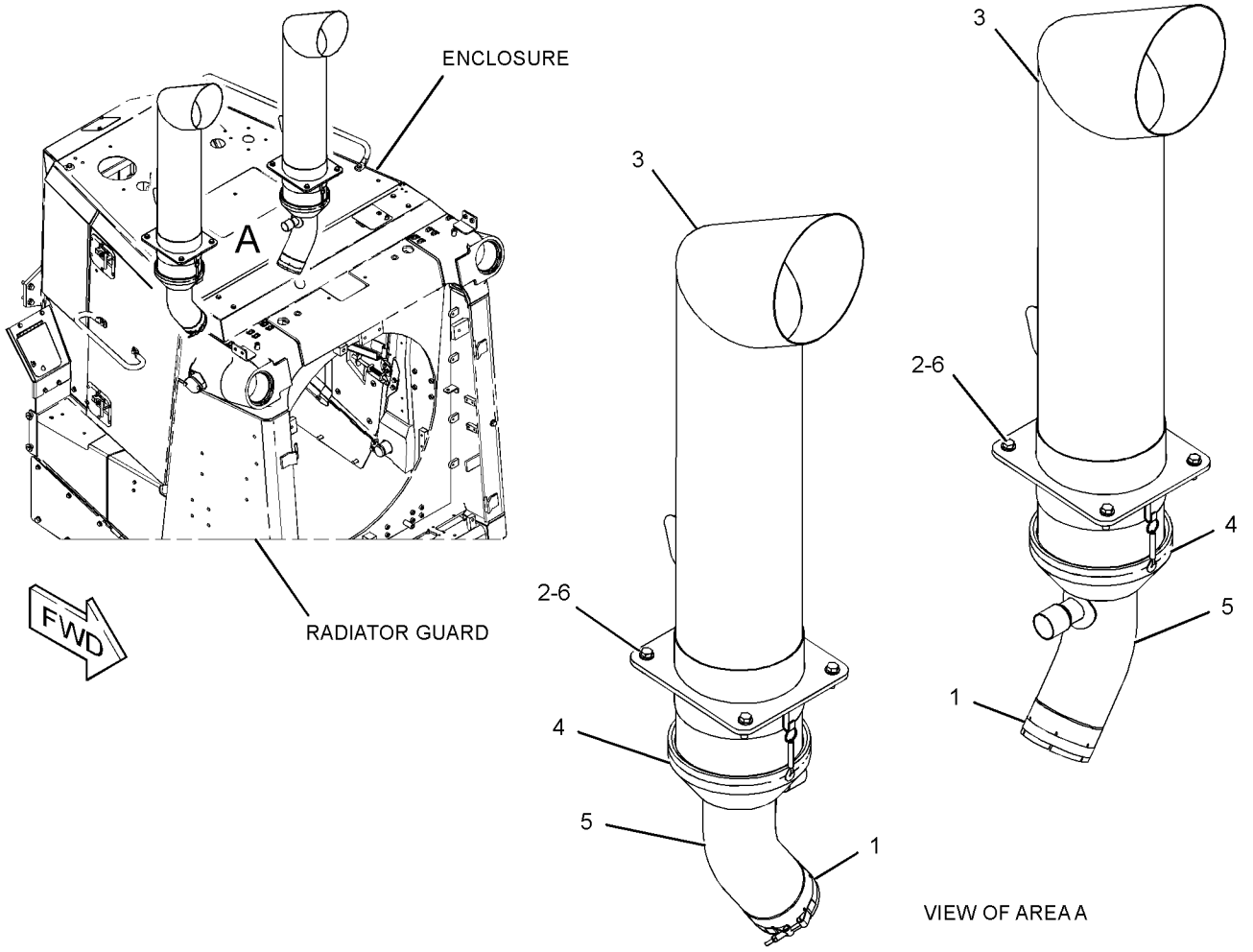

GRAPHIC #1 <END> g03488019

347-9461 ELBOW GP-AIR INLET

S/N: JZM1-UP

PART OF 359-6502, 443-0004 ENGINE AR-COMPLETE

AN ATTACHMENT

SMCS-1087 **i04384070**

NOTE	REF NO	GRAPHIC REF	PART NUMBER	QTY	PART NAME 1 2 3 4 5 6 (PRODUCT LEVEL)	SEE PAGE
	1	1	**347-2233**	2	ELBOW	
	2	1	**0S-1588**	8	BOLT (3/8-16X1.25-IN)	
	3	1	**5M-2894**	8	WASHER-HARD (10.2X18.5X2.5-MM THK)	

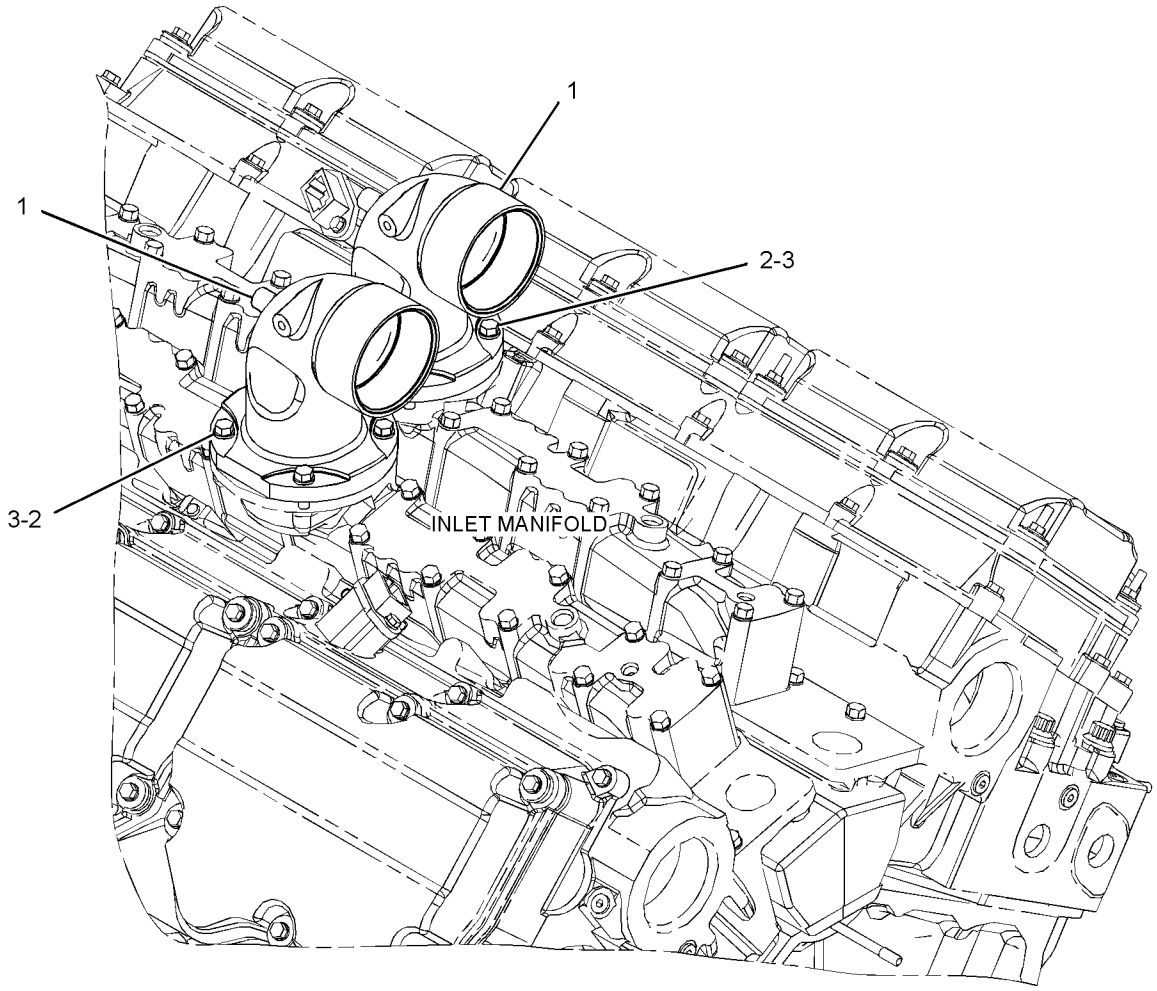

GRAPHIC #1 <END> g02576316

349-8849 FRAME GP-MOUNTING

S/N: JZM1-UP

PART OF 359-6502, 443-0004 ENGINE AR-COMPLETE

AN ATTACHMENT

SMCS-7050 **i05820109**

NOTE	REF NO	GRAPHIC REF	PART NUMBER	QTY	PART NAME 1 2 3 4 5 6 (PRODUCT LEVEL)	SEE PAGE
	1	1	**339-8572**	1	BRACE	
	2	1	**347-9429**	1	PLATE-SUPPORT	
	3	1	**349-8845**	1	BRACE	
	4	1	**349-8846**	1	BRACE	
	5	1	**349-8847**	1	BRACE	
	6	1	**349-8848**	1	BRACE	
	7	1	**0S-1585**	4	BOLT (1/2-13X1.5-IN)	
	8	1	**0S-1595**	4	BOLT (1/2-13X1.25-IN)	
	9	1	**5P-0076**	24	BOLT-12 POINT HEAD (3/8-16X1.5-IN)	
	10	1	**5P-8245**	8	WASHER-HARD (13.5X25.5X3-MM THK)	
	11	1	**5J-4715**	24	WASHER (10.3X20.6X4.2-MM THK)	

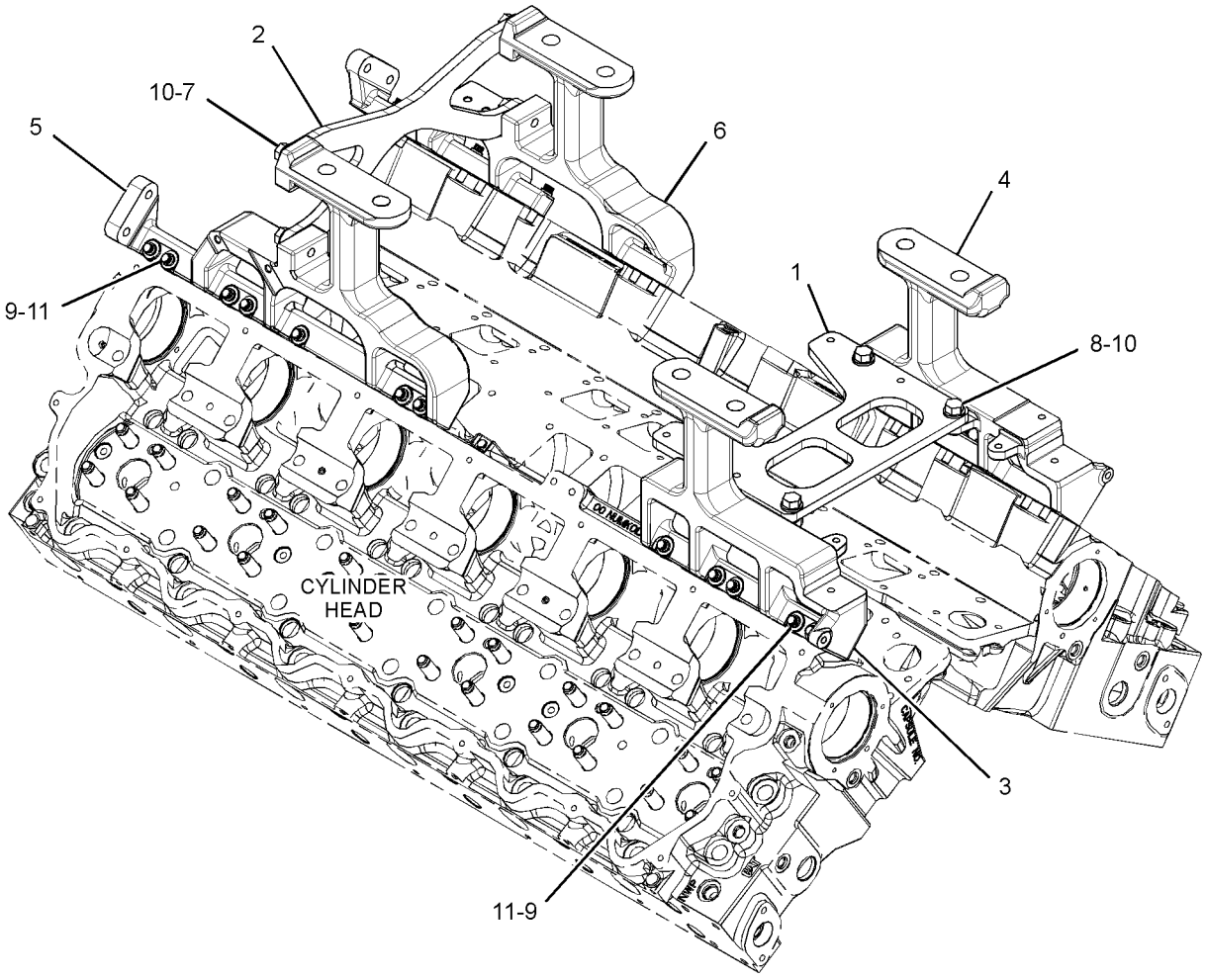

GRAPHIC #1 <END> g02228473

348-7879 LINES GP-AIR

S/N: JZM1-UP
FOR USE WITH MACHINE ENGINES REQUIRING DUAL AIR INLET
PART OF 359-6502, 443-0004 ENGINE AR-COMPLETE
AN ATTACHMENT

SMCS-1071 **i04384097**

NOTE	REF NO	GRAPHIC REF	PART NUMBER	QTY	PART NAME 1 2 3 4 5 6 (PRODUCT LEVEL)	SEE PAGE
	1	1	**4N-1849**	2	TUBE-AIR	
	2	1	**348-7878**	1	ELBOW-AIR INLET	
	3	1	**5M-2894**	4	WASHER-HARD (10.2X18.5X2.5-MM THK)	
	4	1	**5P-5700**	8	SEAL-O-RING	
	5	1	**7F-3425**	4	BOLT (3/8-16X5.75-IN)	

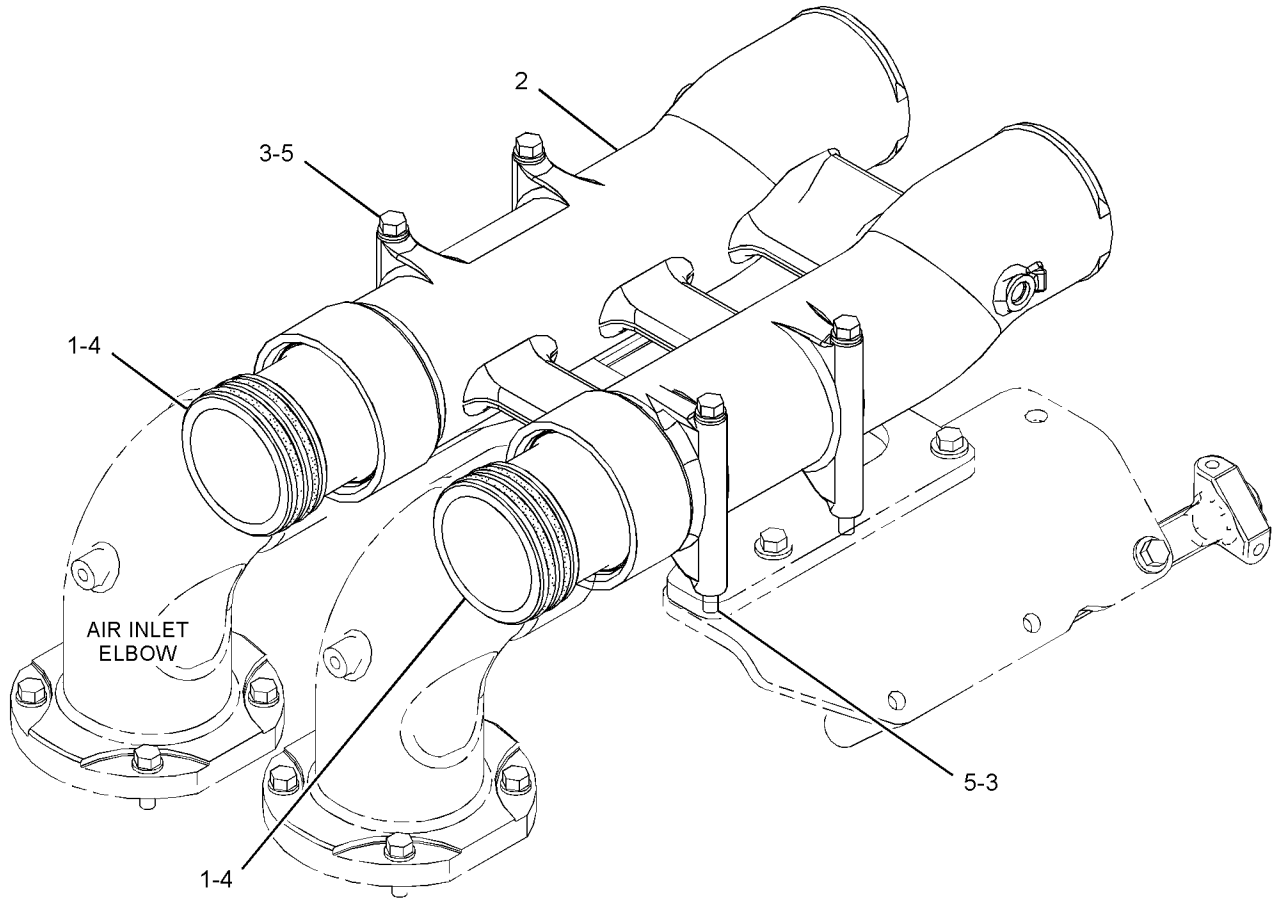

GRAPHIC #1 <END> g02576341

359-6369 LINES GP-AIR

S/N: RAB1-UP
PART OF 359-6500 INSTALLATION AR-ENGINE
ALSO AN ATTACHMENT

SMCS-1071 **i05948010**

NOTE	REF NO	GRAPHIC REF	PART NUMBER	QTY	PART NAME 1 2 3 4 5 6 (PRODUCT LEVEL)	SEE PAGE
	1	1	**9N-9545**	2	ELBOW	
	2	1	**376-1525**	2	HOSE	
	3	1	**381-1006**	1	TUBE	
	4	1	**381-1007**	1	TUBE AS	
	5	1	**387-8079**	1	BRACKET AS	
	6	1	**387-8080**	1	BRACKET AS	
	7	1	**457-9164**	2	CLAMP-T BOLT	
	8	1	**457-9162**	2	CLAMP-T BOLT	
	9	1	**457-9163**	4	CLAMP-T BOLT	
	10	1	**5P-1076**	2	WASHER-HARD (13.5X30X4-MM THK)	
	11	1	**7W-2033**	2	CLIP (TAB)	
	12	1	**7W-2034**	2	CLIP (SLOT)	
	13	1	**8T-4121**	4	WASHER-HARD (11X21X2.5-MM THK)	
M	14	1	**8T-4183**	2	BOLT (M12X1.75X40-MM)	
M	15	1	**8T-4195**	4	BOLT (M10X1.5X30-MM)	

M - METRIC PART

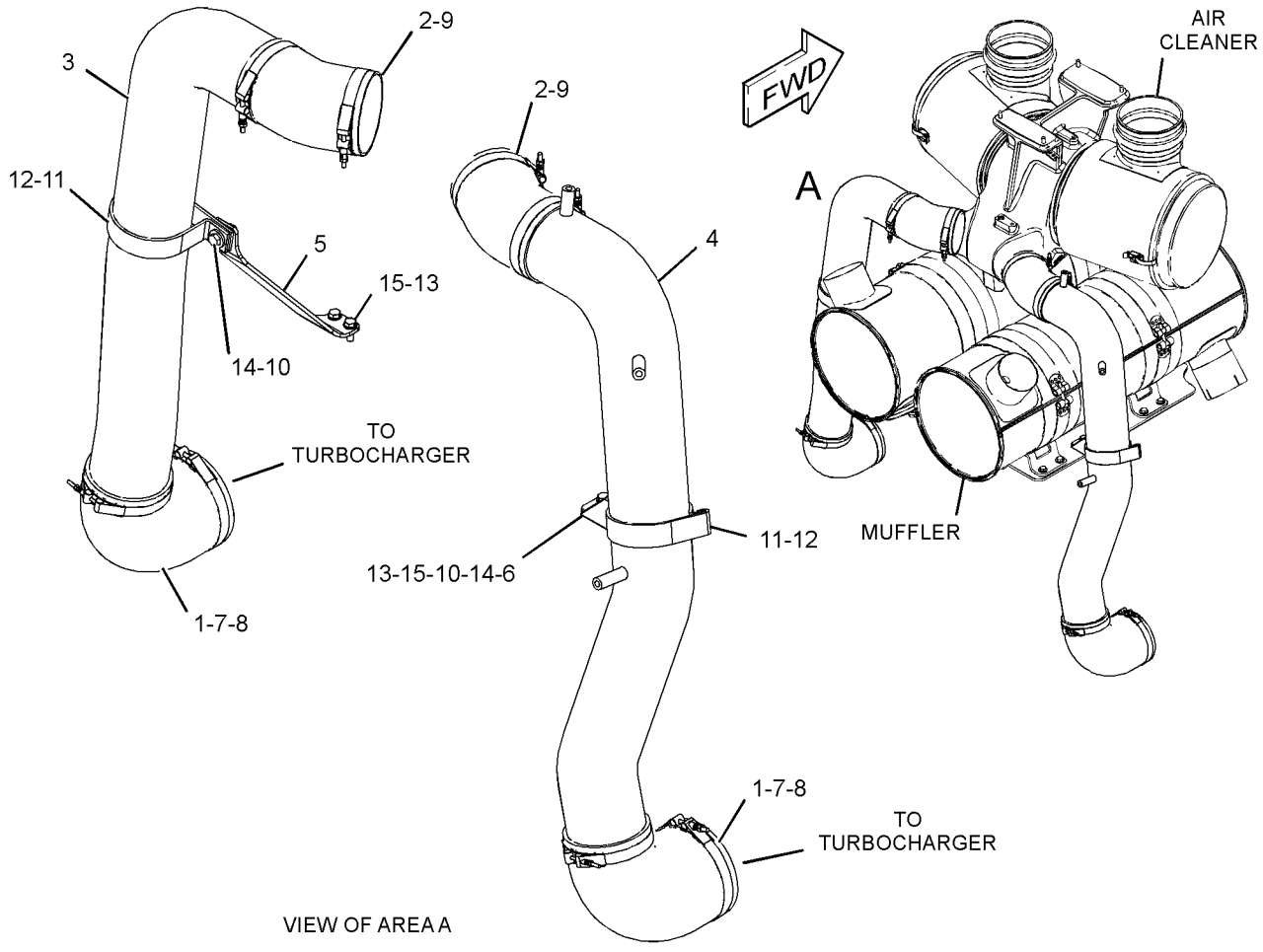

GRAPHIC #1 <END> g03428034

361-2156 LINES GP-AIR

S/N: RAB1-UP
PART OF 359-6500 INSTALLATION AR-ENGINE
ALSO AN ATTACHMENT

SMCS-1071 **i05842056**

NOTE	REF NO	GRAPHIC REF	PART NUMBER	QTY	PART NAME 1 2 3 4 5 6 (PRODUCT LEVEL)	SEE PAGE
	1	1	**7C-3910**	1	HOSE	
	2	1	**7E-8630**	2	HOSE-AIR INLET	
	3	1	**127-0929**	2	CLAMP-V BAND	
	4	1	**217-8947**	2	ELBOW (AFTERCOOLER, OUTLET)	
	5	1	**258-0817**	4	HOSE	
	6	1	**269-1882**	1	ELBOW	
	7	1	**375-0785**	1	TUBE	
	8	1	**375-0791**	1	TUBE	
	9	1	**375-0803**	1	TUBE AS	
	10	1	**439-2334**	1	TUBE AS	
	11	1	**6V-5048**	2	SEAL-O-RING	
	12	1	**8C-3089**	1	SEAL-O-RING	
	13	1	**9S-8002**	2	PLUG (7/16-20-THD)	
	14	1	**9X-2201**	32	CLAMP-HOSE	

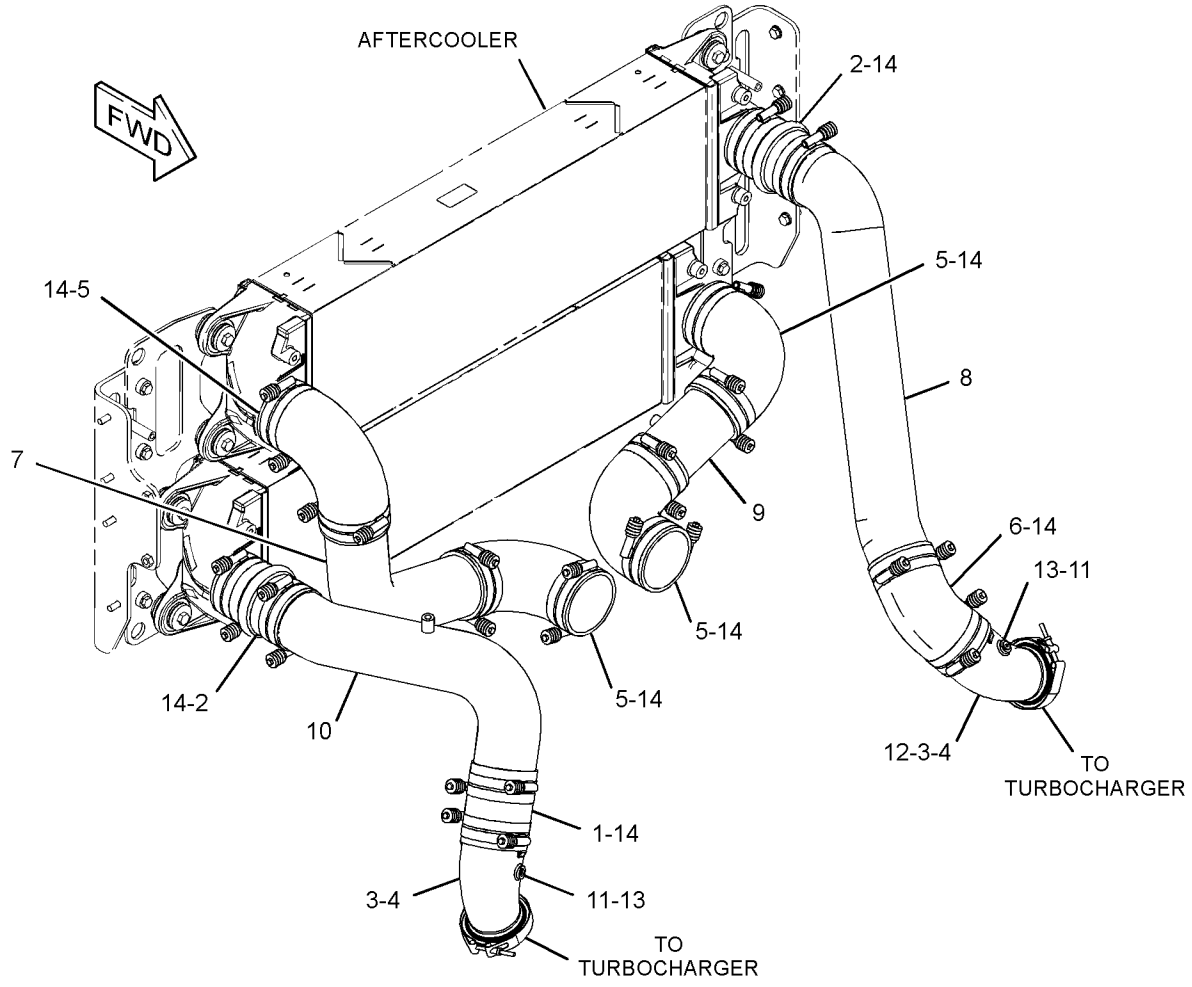

GRAPHIC #1 <END> g03694497

348-3626 LINES GP-EXHAUST

S/N: RAB1-UP
PART OF 359-6500 INSTALLATION AR-ENGINE
ALSO AN ATTACHMENT

SMCS-1061 **i04410795**

NOTE	REF NO	GRAPHIC REF	PART NUMBER	QTY	PART NAME 1 2 3 4 5 6 (PRODUCT LEVEL)	SEE PAGE
	1	1	**9N-1941**	2	CLAMP-V BAND	
	2	1	**241-9265**	2	CLAMP-MUFFLER	
	3	1	**354-5666**	1	TUBE AS-EXHAUST	
	4	1	**354-5668**	1	TUBE AS-EXHAUST	

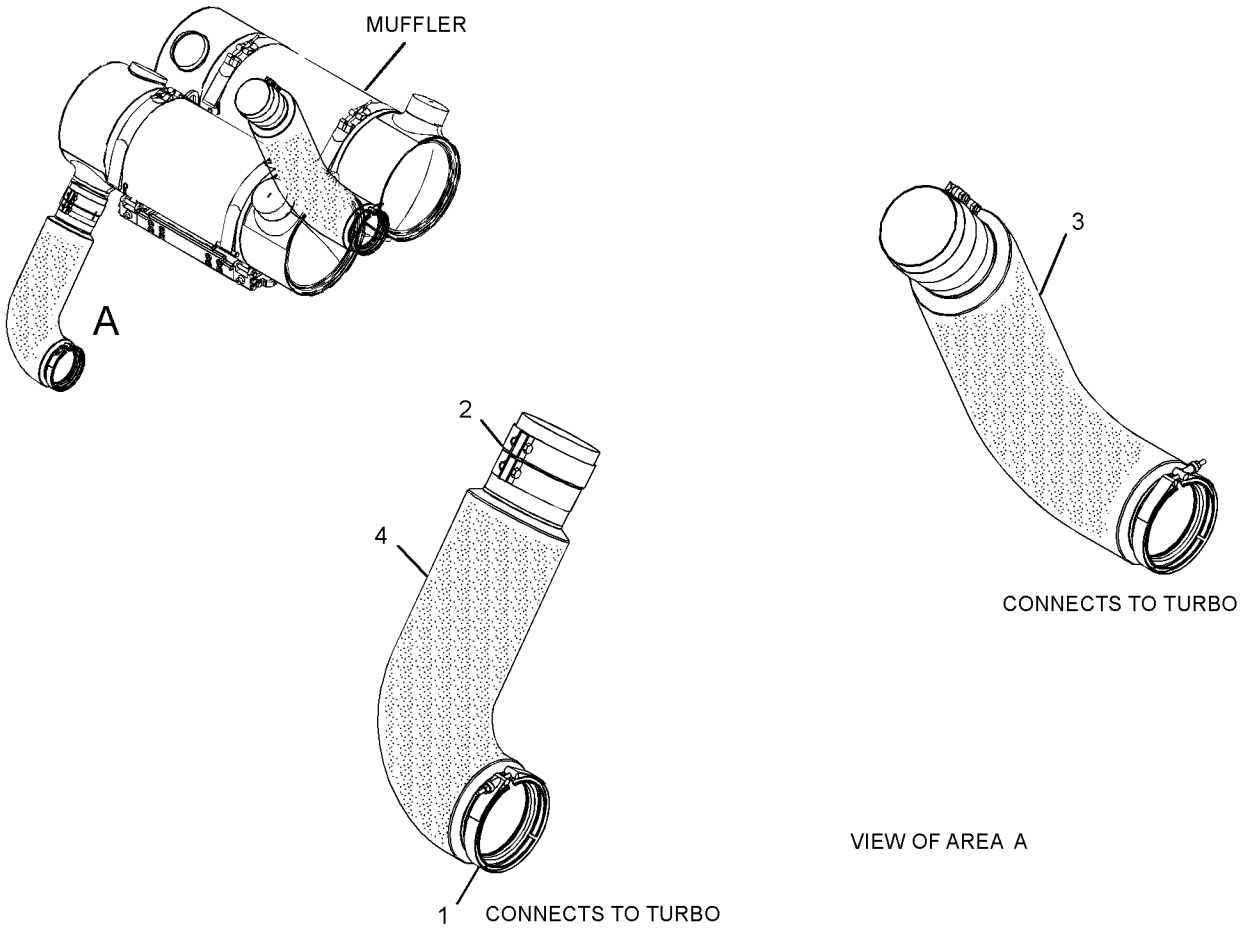

GRAPHIC #1 <END> g02633078

445-7979 MANIFOLD GP-EXHAUST

S/N: JZM1-UP
PART OF 359-6502, 443-0004 ENGINE AR-COMPLETE
AN ATTACHMENT

SMCS-1059 **i05501511**

NOTE	REF NO	GRAPHIC REF	PART NUMBER	QTY	PART NAME 1 2 3 4 5 6 (PRODUCT LEVEL)	SEE PAGE
	1	1	**2W-4474**	2	BRACKET	
	2	1	**8N-0879**	8	CLAMP	
	3	1	**108-3612**	16	SPACER (11.13X19.05X53-MM THK)	
	4	1	**352-4940**	1	MANIFOLD-EXHAUST	
	5	1	**239-1388**	12	GASKET	
	6	1	**243-3565**	8	SEAL-O-RING	
	7	1	**243-3566**	4	BELLOWS AS	
	8	1	**250-6239**	4	MANIFOLD-EXHAUST	
	9	1	**393-5115**	4	STUD-TAPERLOCK	
	10	1	**349-2933**	1	MANIFOLD-EXHAUST	
	11	1	**114-9223**	8	SPACER (11.13X19.05X19-MM THK)	
	12	1	**356-0349**	2	BRACKET	
	13	1	**356-0350**	2	BRACKET	
	14	1	**2N-2766**	24	LOCKNUT (3/8-16-THD)	
	15	1	**3K-3256**	4	STUD-TAPERLOCK (3/8-16X1.7-IN)	
	16	1	**5M-2894**	24	WASHER-HARD (10.2X18.5X2.5-MM THK)	
	17	1	**6B-2882**	4	SPACER (0.406X0.75X0.312-IN THK)	
	18	1	**9G-7101**	4	SPACER (10.5X20X30-MM THK)	

445-7979 **MANIFOLD GP-EXHAUST (**contd.**)** **i05501511**

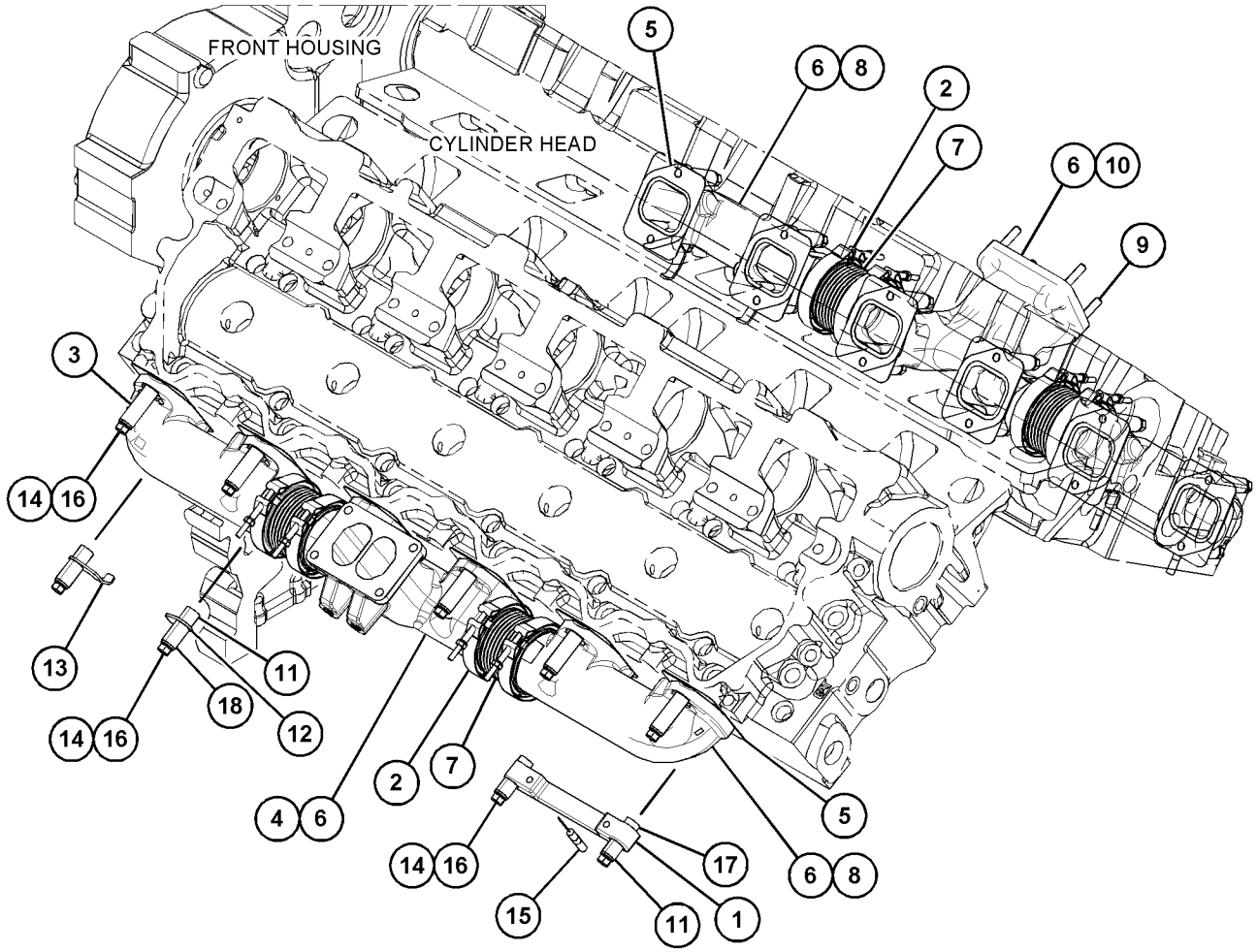

GRAPHIC #1 <END> g03513960

347-9437 MANIFOLD GP-INLET

S/N: JZM1-UP

PART OF 359-6502, 443-0004 ENGINE AR-COMPLETE

AN ATTACHMENT

SMCS-1058, 1090

i05794702

NOTE	REF NO	GRAPHIC REF	PART NUMBER	QTY	PART NAME 1 2 3 4 5 6 (PRODUCT LEVEL)	SEE PAGE
	1	1	**226-5613**	2	GASKET	
	2	1	**374-0650**	2	MANIFOLD-INLET	
	3	1	**2P-3213**	28	BOLT-WASHER HEAD (3/8-16X4.50-IN)	
	4	1	**2P-7557**	16	BOLT (3/8-16X3.75-IN)	
	5	1	**5D-5958**	2	SEAL-O-RING	

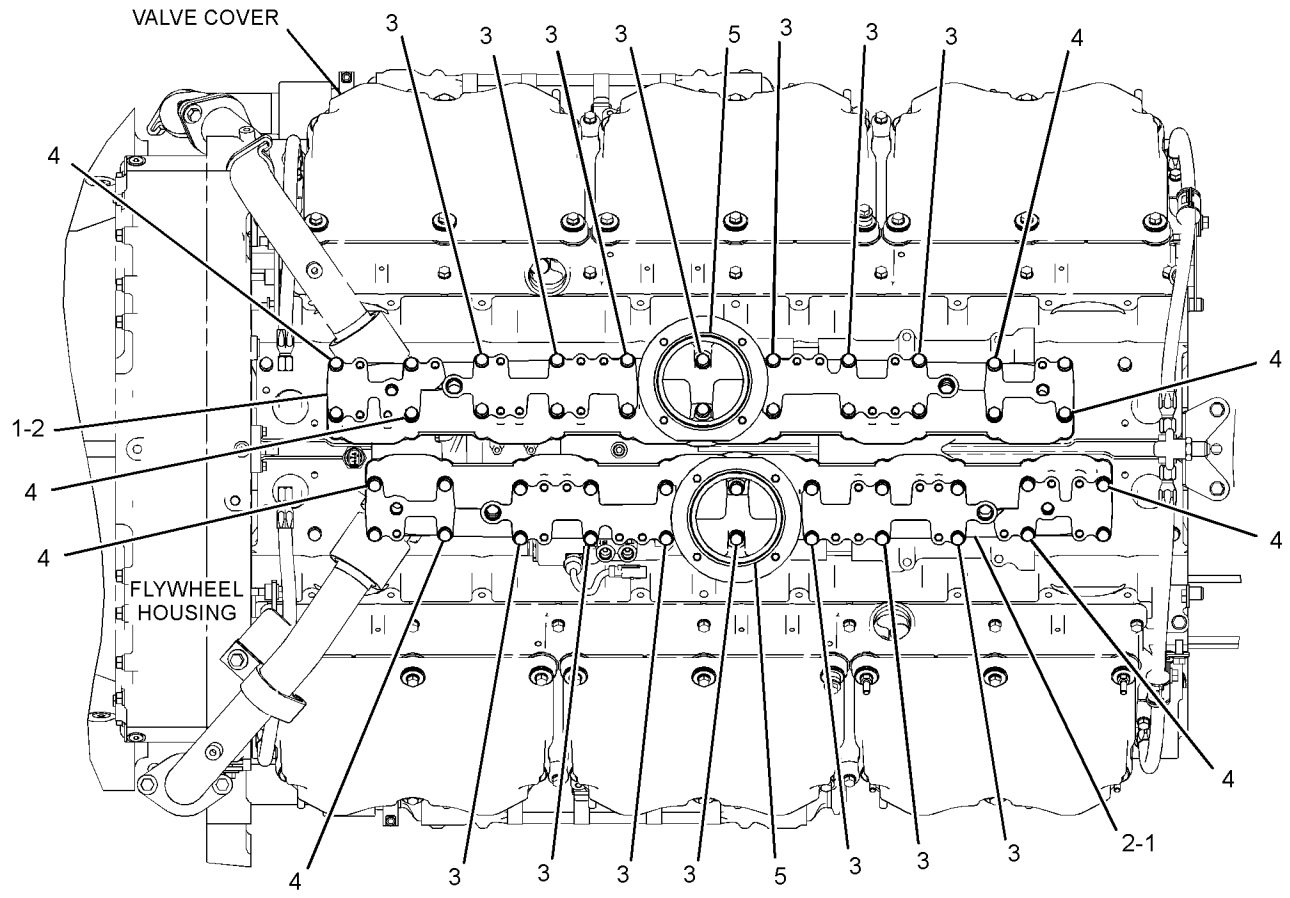

TOP VIEW OF ENGINE

GRAPHIC #1

<END>

g02143973

431-7858 MOUNTING GP-MUFFLER

S/N: RAB1-UP

PART OF 390-6783 MUFFLER & MOUNTING GP

ALSO AN ATTACHMENT

SMCS-1062 **i05575341**

NOTE	REF NO	GRAPHIC REF	PART NUMBER	QTY	PART NAME 1 2 3 4 5 6 (PRODUCT LEVEL)	SEE PAGE
	1	1	**387-2583**	1	BRACKET AS	
M		1	**8T-3490**	20	NUT-WELD (M10X1.5-THD)	
M		1	**355-8941**	8	NUT-WELD (M16X2-THD)	
	2	1	**387-2584**	4	BRACKET	
	3	1	**7X-7729**	16	WASHER (11X25X3-MM THK)	
M	4	1	**8T-4195**	16	BOLT (M10X1.5X30-MM)	

M - METRIC PART

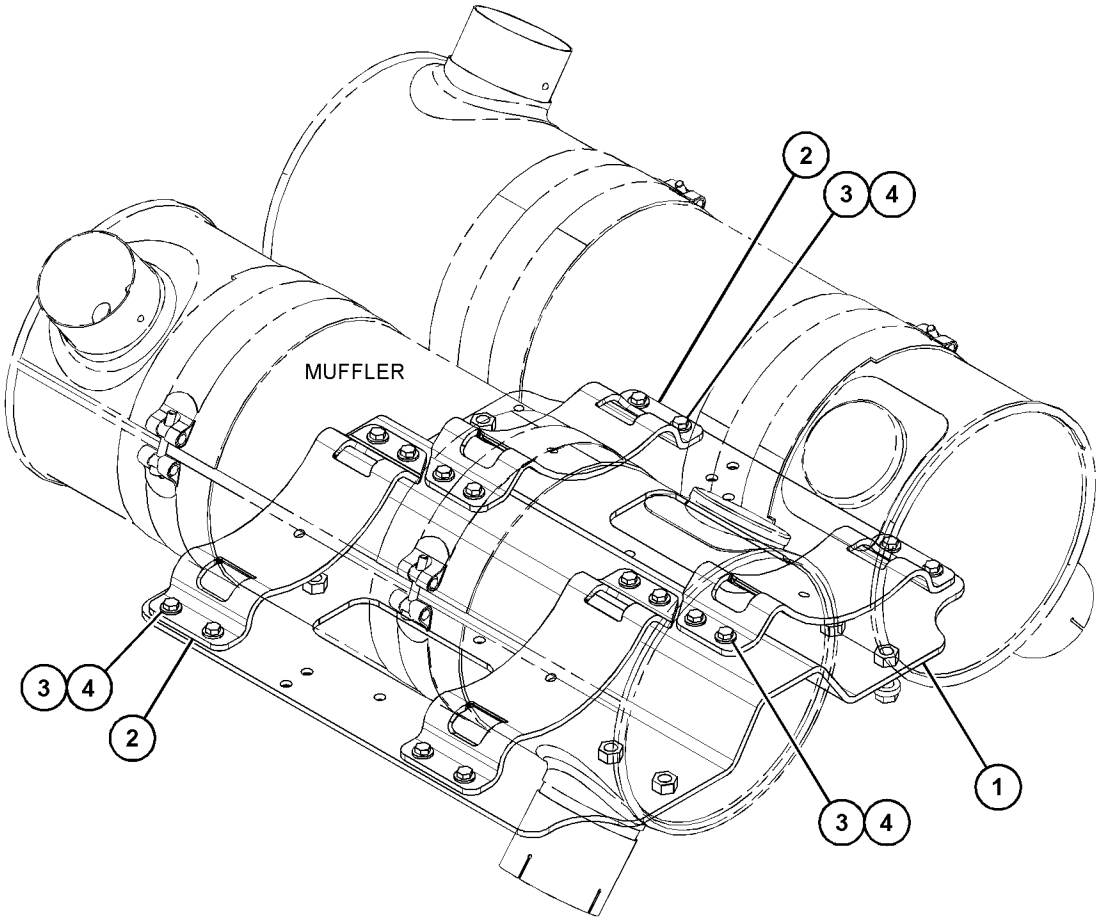

GRAPHIC #1 <END> g03539942

390-6783 MUFFLER & MOUNTING GP

S/N: RAB1-UP
PART OF 359-6500 INSTALLATION AR-ENGINE
ALSO AN ATTACHMENT

SMCS-1062 **i05575337**

NOTE	REF NO	GRAPHIC REF	PART NUMBER	QTY	PART NAME 1 2 3 4 5 6 (PRODUCT LEVEL)	SEE PAGE
Y	1	1	*431-7858*	1	MOUNTING GP-MUFFLER	146
M	2	1	**8T-4140**	8	BOLT (M16X2X60-MM)	
	3	1	**390-0274**	1	MUFFLER AS	
	4	1	**390-0303**	1	MUFFLER AS	
	5	1	**418-3781**	4	CLAMP-MUFFLER	
	6	1	**198-4768**	8	WASHER-HARD (17.5X32X8-MM THK)	

M - METRIC PART
Y - SEPARATE ILLUSTRATION

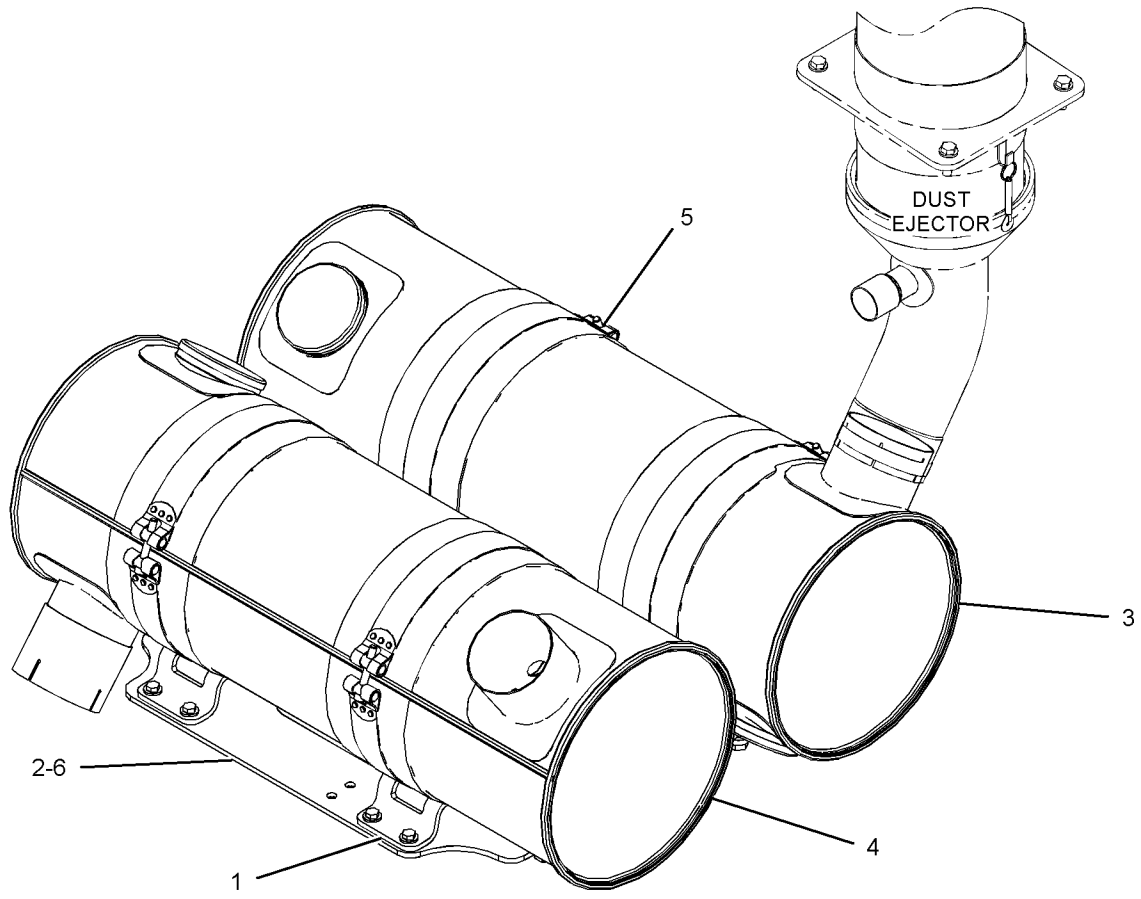

GRAPHIC #1 <END> g03535958

333-1195 PRECLEANER AS

S/N: RAB1-UP
RAIN CAP
PART OF 359-6473 PRECLEANER GP
AN ATTACHMENT

SMCS-1055 **i05933161**

NOTE	REF NO	GRAPHIC REF	PART NUMBER	QTY	PART NAME 1 2 3 4 5 6 (PRODUCT LEVEL)	SEE PAGE
	1	1	**5P-0600**	1	CLAMP-HOSE (HEAVY-DUTY)	
	2	1	**350-5811**	2	SCREEN (AIR CLEANER)	
	3	1	**368-9883**	1	GASKET (AIR CLEANER)	
	4	1	**435-9302**	1	BAFFLE (LOWER)	
	5	1	**435-9303**	1	BAFFLE (UPPER)	
	6	1	**435-9304**	1	COVER (PRECLEANER)	
	7	1	**436-6594**	6	SCREW-TRUSS HEAD	

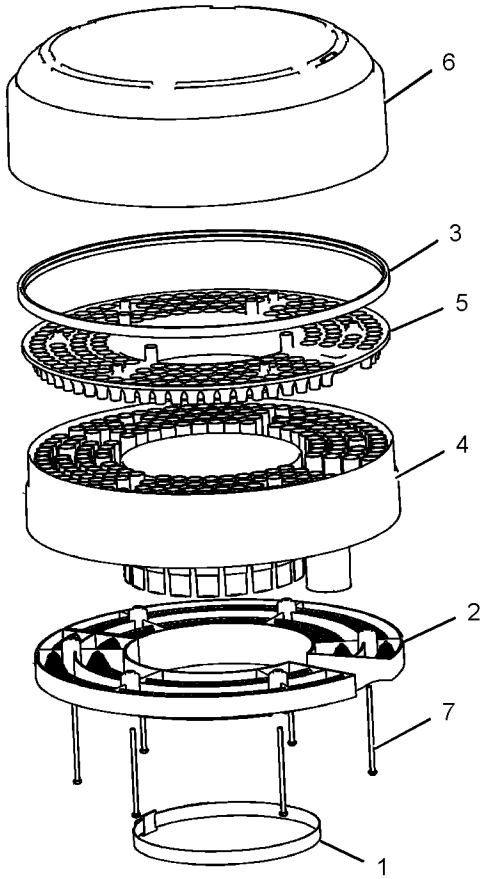

GRAPHIC #1 <END> g03500278

244-3457 PRECLEANER GP–TURBINE

S/N: RAB1-UP
WITH SCREEN
PART OF 359-6480 PRECLEANER GP
AN ATTACHMENT

SMCS-1055 **i02204146**

NOTE	REF NO	GRAPHIC REF	PART NUMBER	QTY	PART NAME 1 2 3 4 5 6 (PRODUCT LEVEL)	SEE PAGE
	1	1	**130-3281**	1	PRECLEANER AS (AIR TURBINE)	
		1	**174-4895**	2	CLAMP	
	2	1	**145-6669**	6	SCREW-SELF-TAPPING (10X0.75-IN)	
	3	1	**145-9987**	1	ADAPTER AS	
	4	1	**208-5837**	1	SCREEN	
	5	1	**244-3462**	1	TUBE AS	

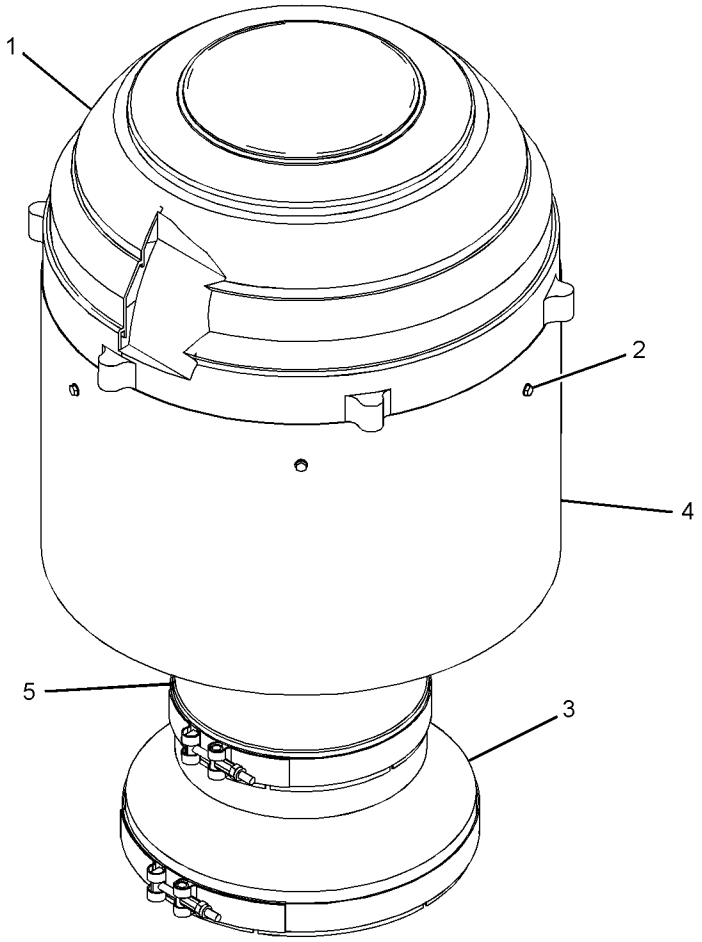

GRAPHIC #1 <END> g01112147

359-6473 PRECLEANER GP

S/N: RAB1-UP

PART OF 359-6428, 359-6454 ENCLOSURE GP-ENGINE

AN ATTACHMENT

SMCS-1055 **i05510665**

NOTE	REF NO	GRAPHIC REF	PART NUMBER	QTY	PART NAME 1 2 3 4 5 6 (PRODUCT LEVEL)	SEE PAGE
	1	1	**1W-8620**	2	VALVE AS-CHECK	
	2	1	**5P-0597**	8	CLAMP-HOSE	
Y	3	1	**333-1195**	2	PRECLEANER AS	148
	4	1	**450-7886**	1	BASE AS	
	5	1	**133-6934**	2	SPACER (11X20X25-MM THK)	
	6	1	**7X-4736**	2	GROMMET	
	7	1	**8T-4121**	2	WASHER-HARD (11X21X2.5-MM THK)	
M	8	1	**8T-4136**	8	BOLT (M10X1.5X25-MM)	
M	9	1	**8T-4182**	2	BOLT (M10X1.5X45-MM)	
	10	1	**8T-4222**	8	WASHER-PLATED (11X32X2.5-MM THK)	
E	11	1	**5P-1471**		HOSE (58-CM EACH)	
E	11A	1	**5P-1471**		HOSE (39-CM EACH)	
	12	1	**450-7885**	1	BASE AS	

E - ORDER BY THE CENTIMETER
M - METRIC PART
Y - SEPARATE ILLUSTRATION

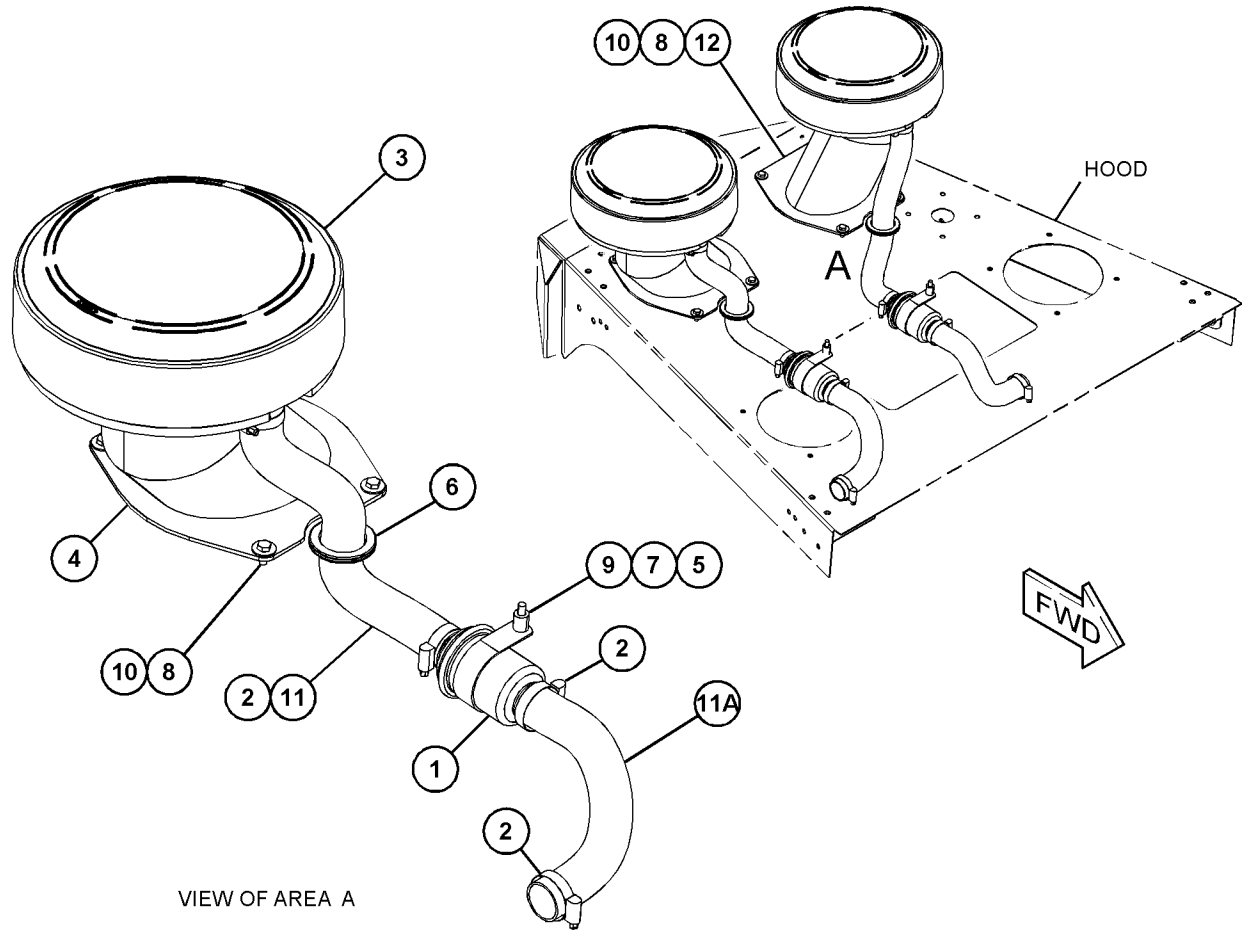

GRAPHIC #1 <END> g03496857

359-6480 PRECLEANER GP

S/N: RAB1-UP

PART OF 359-6429 ENCLOSURE GP-ENGINE, 359-6430 STOCKPILE AR AN ATTACHMENT

SMCS-1055 **i05460710**

NOTE	REF NO	GRAPHIC REF	PART NUMBER	QTY	PART NAME 1 2 3 4 5 6 (PRODUCT LEVEL)	SEE PAGE
	1	1	**1W-8620**	2	VALVE AS-CHECK	
	2	1	**5P-0597**	8	CLAMP-HOSE	
E	3	1	**5P-1471**		HOSE (39-CM EACH)	
E	3A	1	**5P-1471**		HOSE (29-CM EACH)	
Y	4	1	**244-3457**	2	PRECLEANER GP (TURBINE)	149
	5	1	**419-6455**	2	BASE AS	
	6	1	**133-6934**	2	SPACER (11X20X25-MM THK)	
	7	1	**7X-4736**	2	GROMMET	
	8	1	**8T-4121**	2	WASHER-HARD (11X21X2.5-MM THK)	
M	9	1	**8T-4136**	8	BOLT (M10X1.5X25-MM)	
M	10	1	**8T-4182**	2	BOLT (M10X1.5X45-MM)	
	11	1	**8T-4222**	8	WASHER-PLATED (11X32X2.5-MM THK)	

E - ORDER BY THE CENTIMETER
M - METRIC PART
Y - SEPARATE ILLUSTRATION

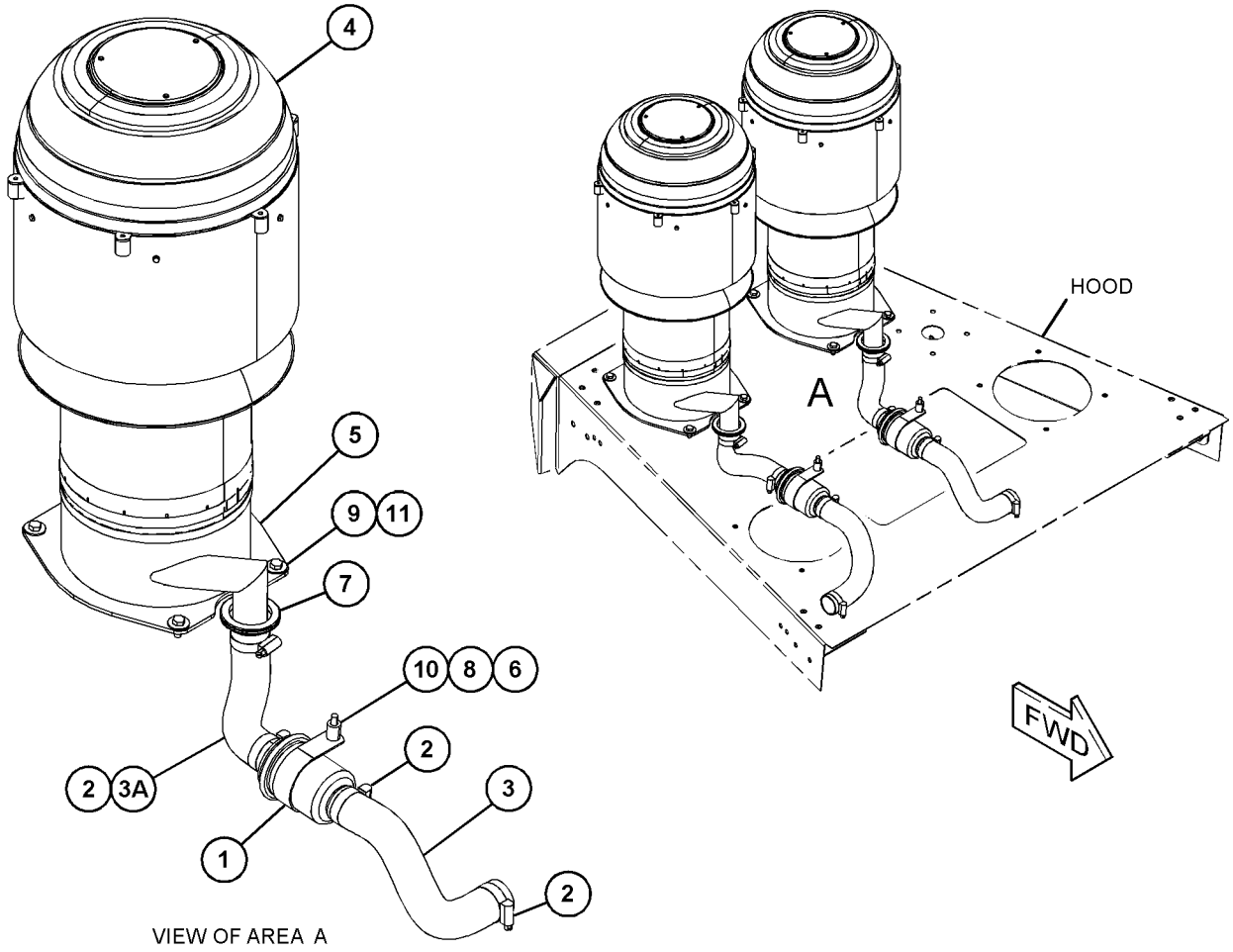

GRAPHIC #1 <END> g03453917

374-9585 PRECLEANER GP–CAB AIR

S/N: RAB1-UP

AN ATTACHMENT

SMCS-1055 **i05259480**

NOTE	REF NO	GRAPHIC REF	PART NUMBER	QTY	PART NAME 1 2 3 4 5 6 (PRODUCT LEVEL)	SEE PAGE
	1	1	**3E-7404**	1	CLAMP-HOSE	
	2	1	**7K-1181**	2	STRAP-CABLE	
	3	1	**283-0775**	1	HOSE	
	4	1	**289-6215**	1	PRECLEANER GP-CAB AIR	
		1	**385-7511**	1	MOTOR AS-BLOWER (24-VOLT, CAB AIR)	
		1	**9W-0852**	2	PIN-CONNECTOR (14-GA TO 16-GA)	
		1	**102-8802**	1	KIT-RECEPTACLE (2-PIN)	
					(INCLUDES RECEPTACLE AS & WEDGE)	
	5	1	**309-6517**	1	BRACKET AS	
	6	1	**9G-1307**	1	GROMMET	
	7	1	**5P-0599**	1	CLAMP-BAND	
	8	1	**8T-4121**	4	WASHER-HARD (11X21X2.5-MM THK)	
M	9	1	**8T-4138**	4	BOLT (M6X1X20-MM)	
M	10	1	**8T-4182**	4	BOLT (M10X1.5X45-MM)	
	11	1	**8T-4205**	4	WASHER-HARD (7.2X14.5X2-MM THK)	

M - METRIC PART

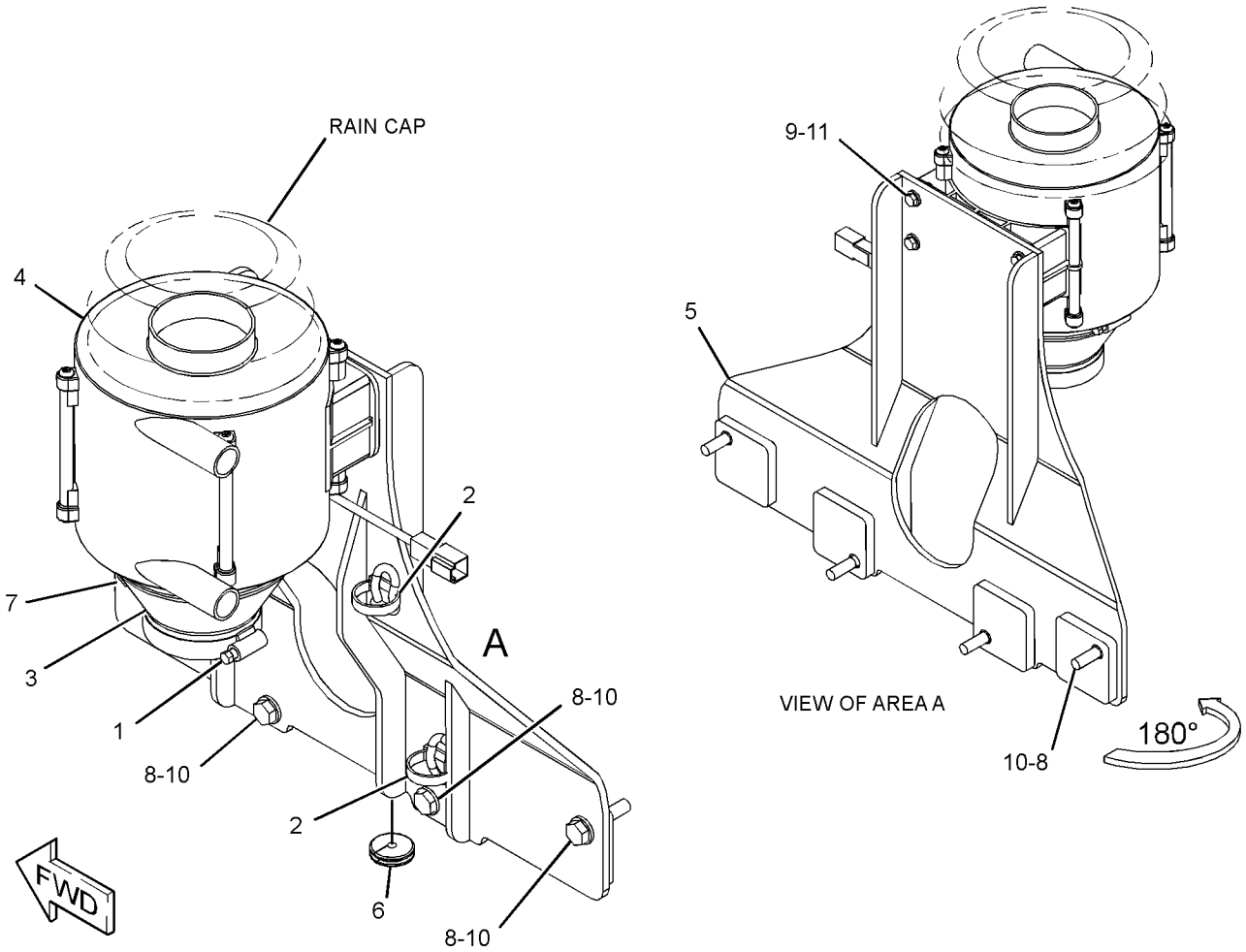

GRAPHIC #1 <END> g03470707

430-3375 SHIELD GP-HEAT

S/N: JZM1-UP
PART OF 359-6502, 443-0004 ENGINE AR-COMPLETE
AN ATTACHMENT

SMCS-1067 **i05501250**

NOTE	REF NO	GRAPHIC REF	PART NUMBER	QTY	PART NAME 1 2 3 4 5 6 (PRODUCT LEVEL)	SEE PAGE
	1	1	**430-3376**	1	SHIELD AS-HEAT	
	2	1	**430-3377**	1	SHIELD AS-HEAT	
	3	1	**430-3378**	1	SHIELD AS-HEAT	
	4	1	**430-3379**	1	SHIELD AS-HEAT	

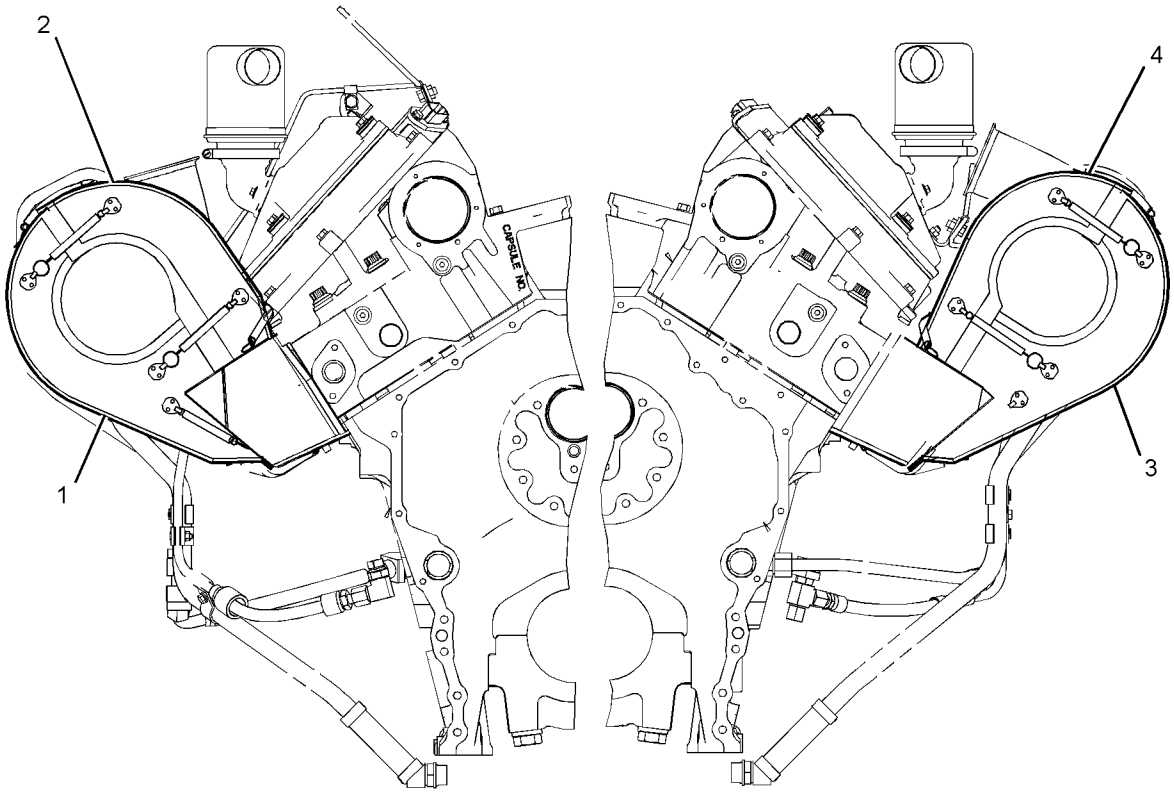

REAR VIEW OF ENGINE

GRAPHIC #1 <END> g03500257

419-7664 SHIELD GP-MANIFOLD

S/N: JZM1-UP

PART OF 359-6502, 443-0004 ENGINE AR-COMPLETE

AN ATTACHMENT

SMCS-1067 **i05623454**

NOTE	REF NO	GRAPHIC REF	PART NUMBER	QTY	PART NAME 1 2 3 4 5 6 (PRODUCT LEVEL)	SEE PAGE
	1	1	**422-4896**	1	SHIELD AS-HEAT	
	2	1	**422-4897**	1	SHIELD AS-HEAT	
	3	1	**445-7998**	1	SHIELD AS-HEAT	
	4	1	**445-8002**	1	SHIELD AS-HEAT	
	5	1	**0S-0509**	9	BOLT (3/8-16X0.75-IN)	
	6	1	**8T-4896**	9	WASHER-HARD (10.2X18.5X2.5-MM THK)	

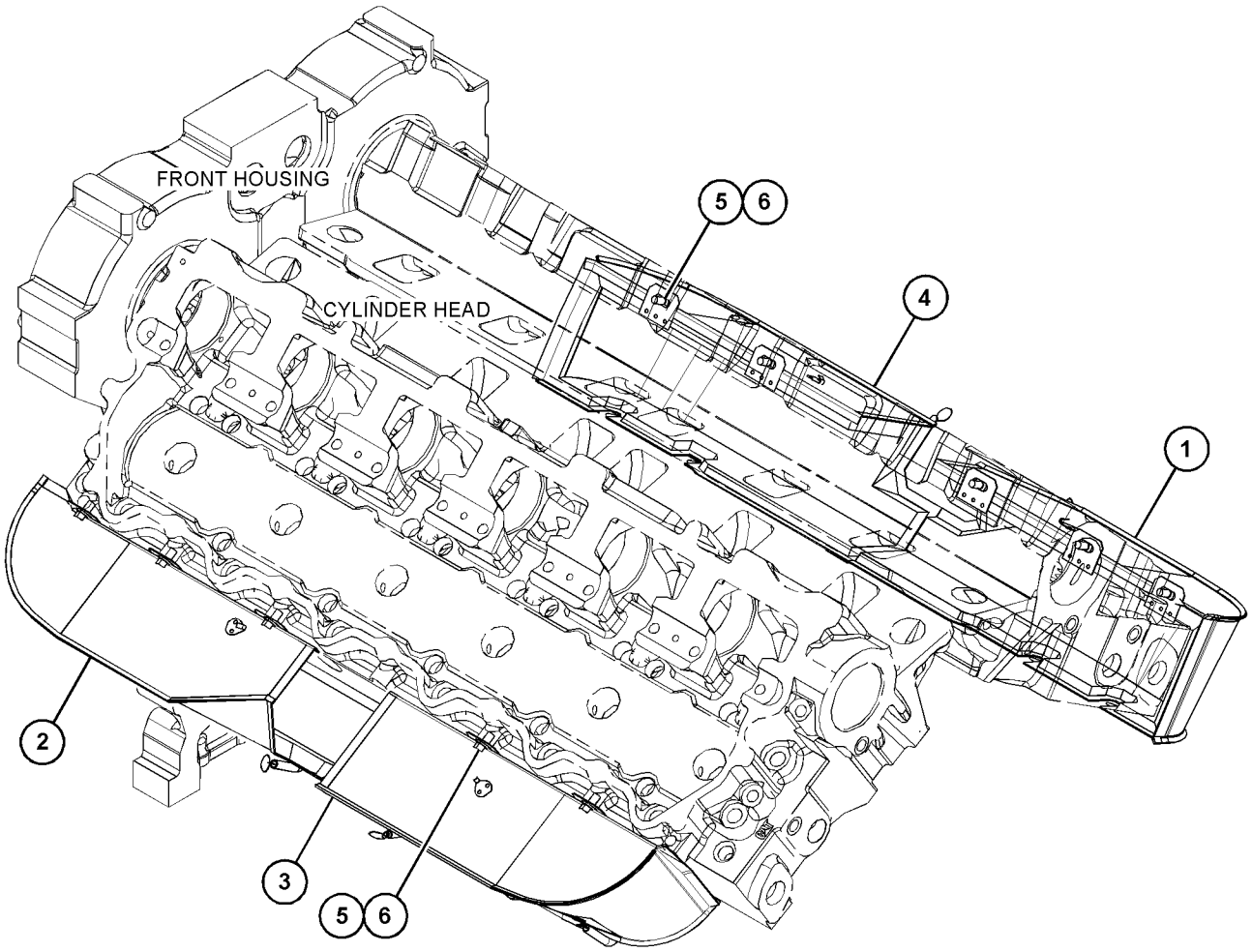

GRAPHIC #1 <END> g03513560

375-5491 TURBOCHARGER GP

S/N: JZM1-UP
PART OF 375-5493 TURBOCHARGER GP
AN ATTACHMENT

SMCS-1052, 1053

i05573649

NOTE	REF NO	GRAPHIC REF	PART NUMBER	QTY	PART NAME 1 2 3 4 5 6 (PRODUCT LEVEL)	SEE PAGE
R	1	1	**268-0183**	1	CARTRIDGE GP-TURBOCHARGER	
	2	1	**7W-2297**	1	CLAMP AS (COMPRESSOR)	
	3	1	**9N-2038**	1	CLAMP AS-TURBINE	

R - REMANUFACTURED PART MAY BE AVAILABLE

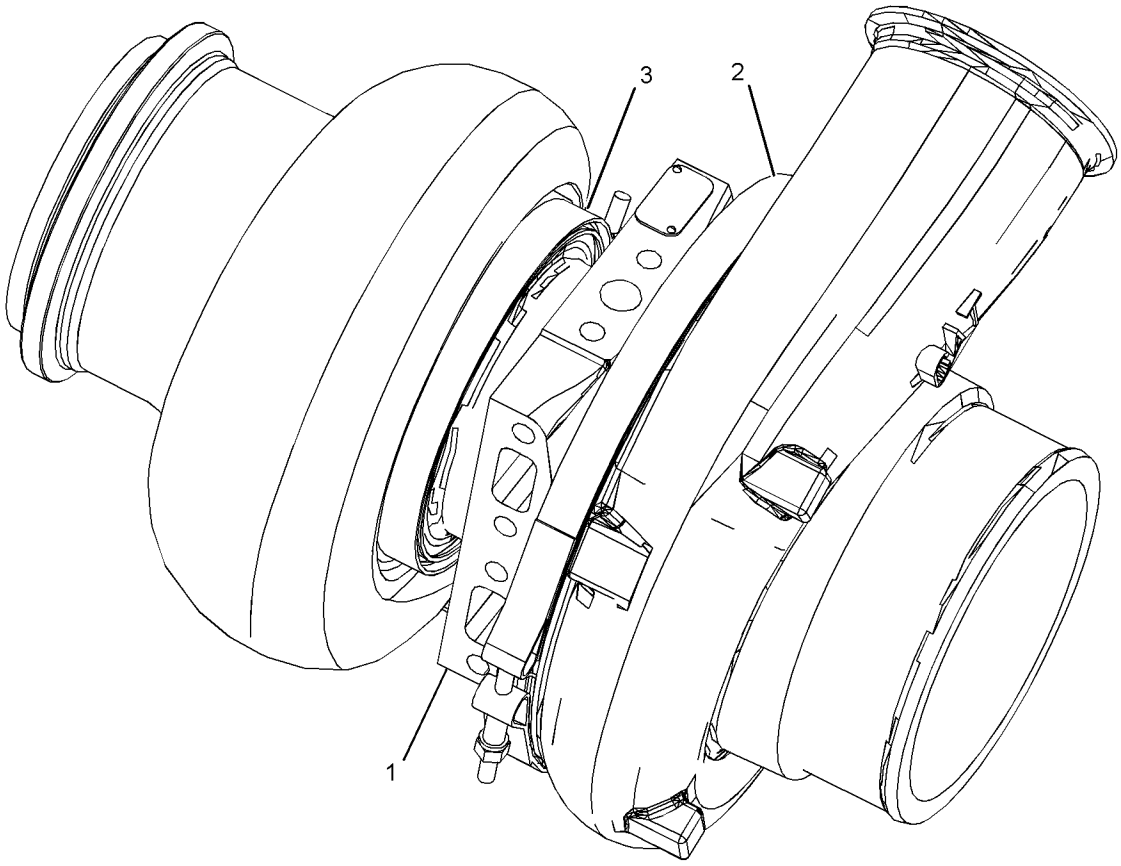

GRAPHIC #1 <END> g03533597

375-5492 TURBOCHARGER GP

S/N: JZM1-UP
PART OF 375-5493 TURBOCHARGER GP
AN ATTACHMENT

SMCS-1052, 1053

i05573650

NOTE	REF NO	GRAPHIC REF	PART NUMBER	QTY	PART NAME 1 2 3 4 5 6 (PRODUCT LEVEL)	SEE PAGE
R	1	1	**268-0183**	1	CARTRIDGE GP-TURBOCHARGER	
	2	1	**7W-2297**	1	CLAMP AS (COMPRESSOR)	
	3	1	**9N-2038**	1	CLAMP AS-TURBINE	

R - REMANUFACTURED PART MAY BE AVAILABLE

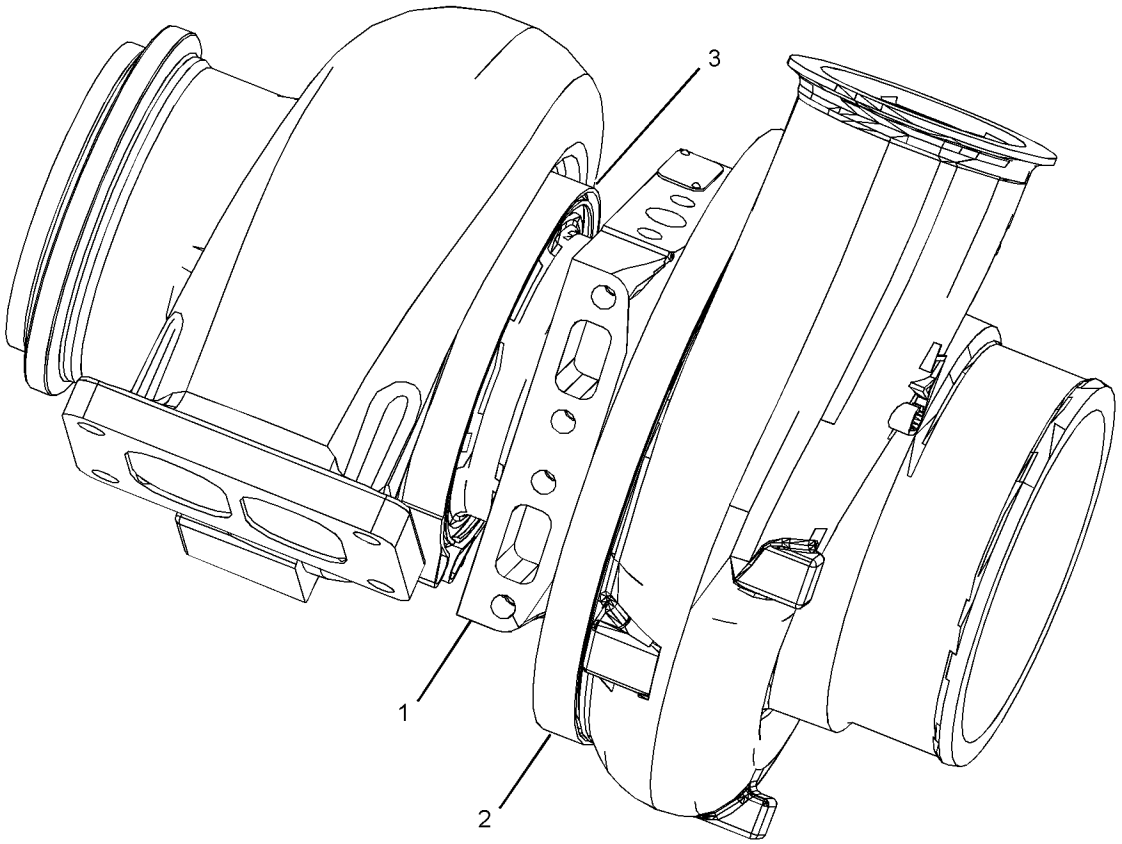

GRAPHIC #1 <END> g03533576

375-5493 TURBOCHARGER GP

S/N: JZM1-UP
PART OF 359-6502, 443-0004 ENGINE AR-COMPLETE
AN ATTACHMENT

SMCS-1052, 1053

i05488335

NOTE	REF NO	GRAPHIC REF	PART NUMBER	QTY	PART NAME 1 2 3 4 5 6 (PRODUCT LEVEL)	SEE PAGE
	1	1	**357-1752**	2	GASKET (TURBOCHARGER)	
Y	2	1	**375-5491**	1	TURBOCHARGER GP	155
Y	3	1	**375-5492**	1	TURBOCHARGER GP	156
	4	1	**391-2167**	8	LOCKNUT-FLANGE (3/8X16-THD)	

Y - SEPARATE ILLUSTRATION

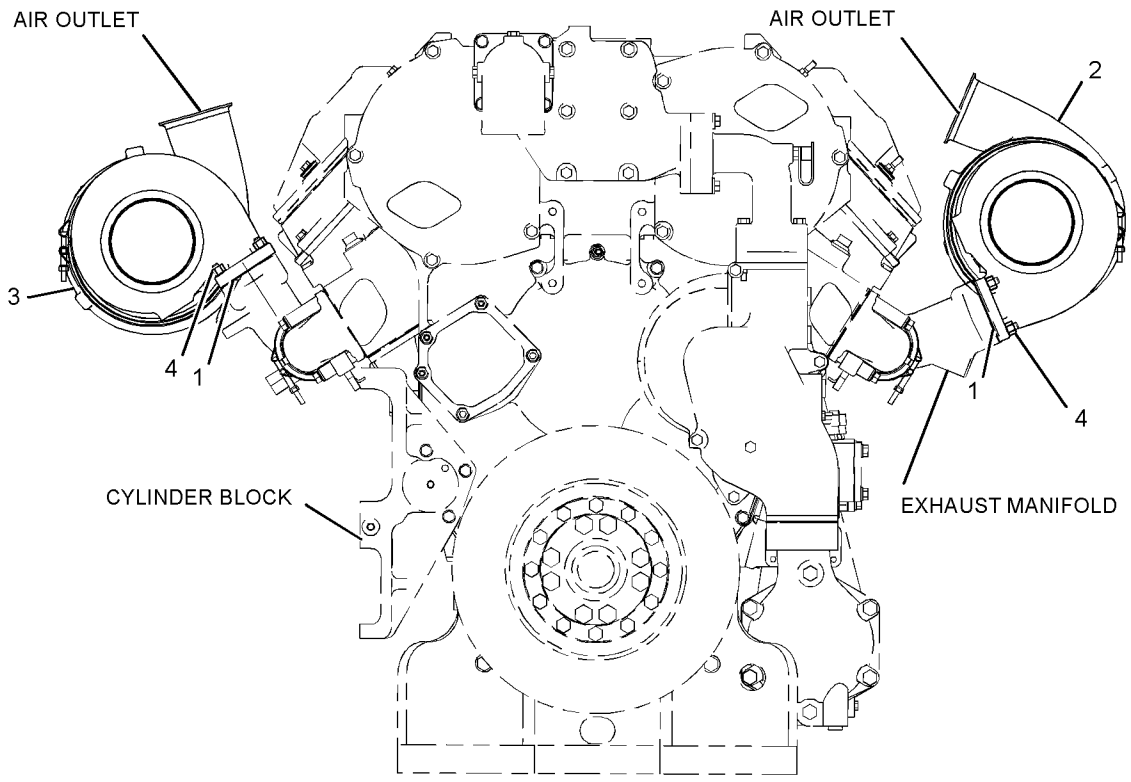

REAR VIEW OF ENGINE

GRAPHIC #1

<END>

g03533177

359-6367 ADAPTER GP-FAST FILL FUEL

S/N: RAB1-UP
FOR USE WITH RIPPER
PART OF 399-7227 MOUNTING GP-RIPPER, 359-6373, 359-6374 RIPPER AR-MULTISHANK, 359-6370, 359-6371, 359-6372 RIPPER AR-SINGLE SHANK
AN ATTACHMENT

SMCS-1273, 1710 **i05443093**

NOTE	REF NO	GRAPHIC REF	PART NUMBER	QTY	PART NAME 1 2 3 4 5 6 (PRODUCT LEVEL)	SEE PAGE
	1	1	**376-1308**	1	RECEIVER AS (FAST FILL FUEL)	
	2	1	**381-9163**	1	BRACKET AS	
I	3	1	**381-9383**	1	HOSE AS	
	4	1	**388-4327**	1	CAP-DUST	
M	5	1	**112-3931**	2	BOLT (M24X3X120-MM)	
	6	1	**1P-4582**	4	FLANGE-HALF	
	7	1	**267-3507**	1	WASHER-HARD (26X47X12-MM THK)	
	8	1	**4J-0527**	3	SEAL-O-RING	
	9	1	**6V-2383**	1	CLIP	
	10	1	**8T-4167**	4	WASHER-HARD (26X44X4-MM THK)	
M	11	1	**8T-4184**	8	BOLT (M12X1.75X45-MM)	
	12	1	**8T-4223**	8	WASHER-HARD (13.5X25.5X3-MM THK)	

I - REFER TO HYDRAULIC INFORMATION SYSTEM
M - METRIC PART

359-6367 **ADAPTER GP-FAST FILL FUEL (**contd.**)** **i05443093**

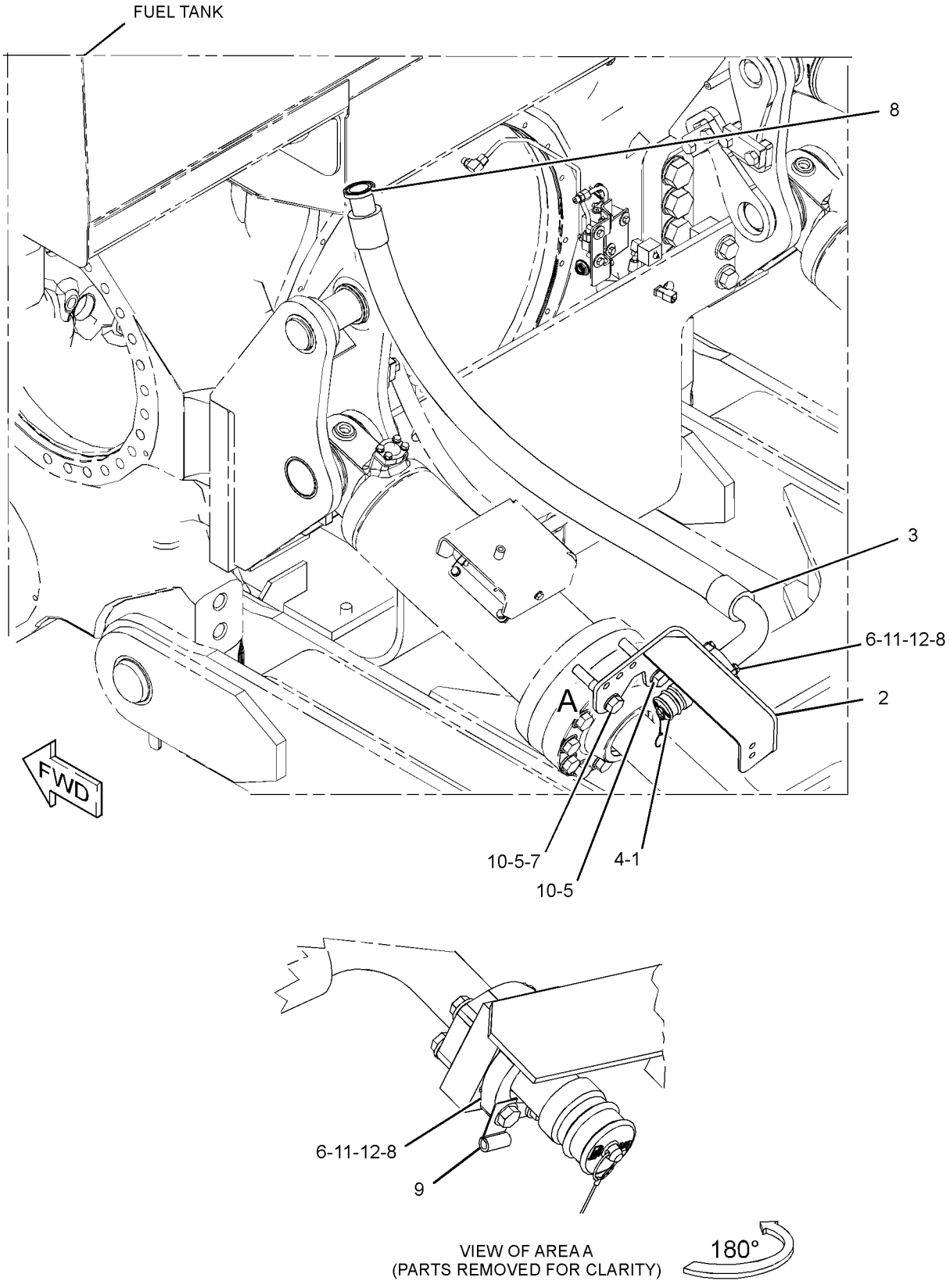

GRAPHIC #1 <END> g03453840

371-6973 ADAPTER GP-FAST FILL FUEL

S/N: RAB1-UP
FOR USE WITH DRAWBAR GP
PART OF 399-7226 DRAWBAR GP
AN ATTACHMENT

SMCS-1273, 1710 **i05209303**

NOTE	REF NO	GRAPHIC REF	PART NUMBER	QTY	PART NAME 1 2 3 4 5 6 (PRODUCT LEVEL)	SEE PAGE
	1	1	**388-4327**	1	CAP-DUST	
	2	1	**9G-0371**	1	BLOCK AS	
	3	1	**9W-8100**	1	PLATE	
	4	1	**376-0929**	1	ADAPTER-FAST FILL FUEL	
I	5	1	**9W-9978**	1	HOSE AS	
	6	1	**8T-8924**	2	BOLT (3/4-10X2.5-IN)	
	7	1	**8T-4994**	4	WASHER-HARD (20X36.5X3.5-MM THK)	
	8	1	**8T-4223**	8	WASHER-HARD (13.5X25.5X3-MM THK)	
	9	1	**7X-0341**	2	BOLT (1/2-13X7-IN)	
	10	1	**1K-6870**	2	LOCKNUT (3/4-10-THD)	
	11	1	**1K-6872**	2	LOCKNUT (1/2-13-THD)	
	12	1	**1P-4582**	2	FLANGE-HALF	
	13	1	**4J-0527**	2	SEAL-O-RING	
	14	1	**5P-2566**	4	BOLT (1/2-13X1.5-IN)	

I - REFER TO HYDRAULIC INFORMATION SYSTEM

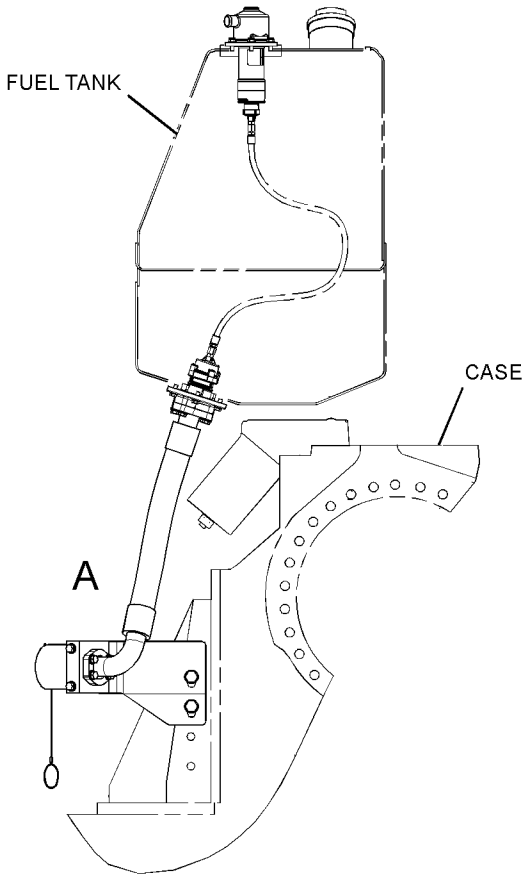

RIGHT SIDE VIEW

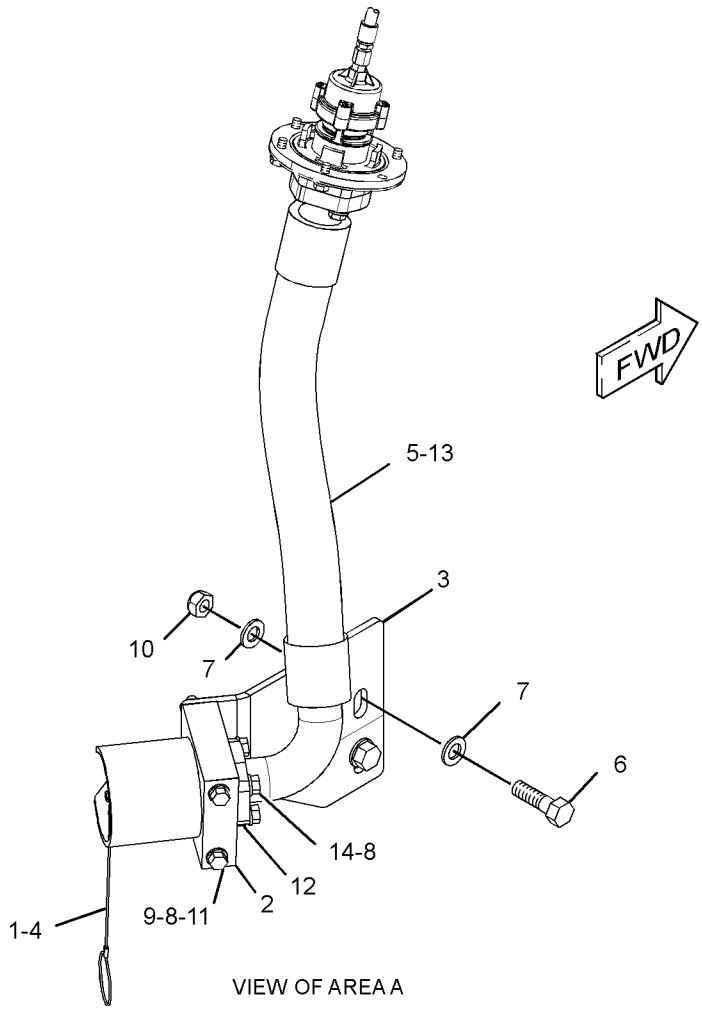

VIEW OF AREA A

GRAPHIC #1

<END>

g03336877

381-6252 ADAPTER GP-FAST FILL FUEL

S/N: RAB1-UP
PART OF 373-3188, 373-3189 TANK GP-FUEL
AN ATTACHMENT

SMCS-1273, 1710

i04933197

NOTE	REF NO	GRAPHIC REF	PART NUMBER	QTY	PART NAME 1 2 3 4 5 6 (PRODUCT LEVEL)	SEE PAGE
	1	1	**174-0050**	1	HOSE AS	
	2	1	**252-5805**	1	VENT AS	
	3	1	**252-5806**	1	VALVE AS-SHUTOFF (FAST FILL FUEL)	
M	4	1	**105-3484**	6	BOLT-SOCKET HEAD (M10X1.5X25-MM)	
	5	1	**1J-9671**	2	SEAL-O-RING	
	6	1	**1P-4582**	2	FLANGE-HALF	
	7	1	**3E-6773**	1	SEAL-O-RING	
	8	1	**5P-2618**	2	CONNECTOR	
	9	1	**8T-4121**	12	WASHER-HARD (11X21X2.5-MM THK)	
M	10	1	**8T-4136**	6	BOLT (M10X1.5X25-MM)	
M	11	1	**8T-4184**	4	BOLT (M12X1.75X45-MM)	
	12	1	**8T-4223**	4	WASHER-HARD (13.5X25.5X3-MM THK)	
	13	1	**9X-7287**	1	SEAL-O-RING	

M - METRIC PART

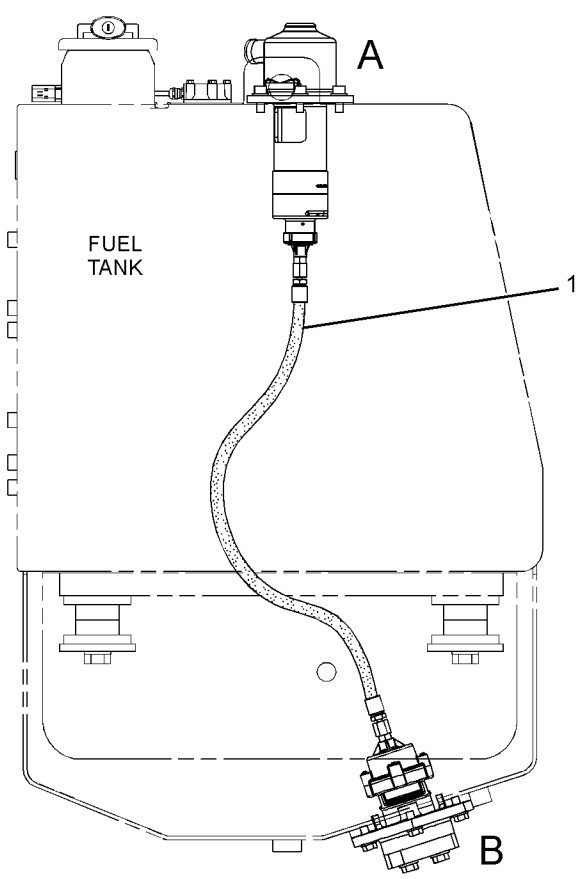

RIGHT SIDE VIEW

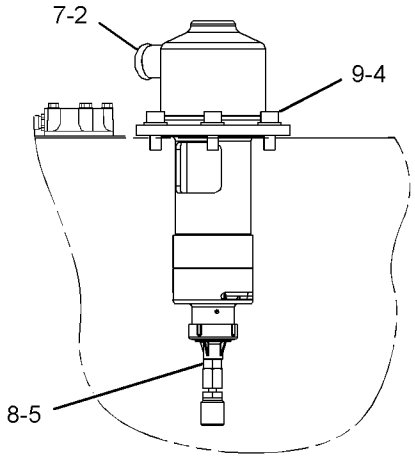

VIEW OF AREA A

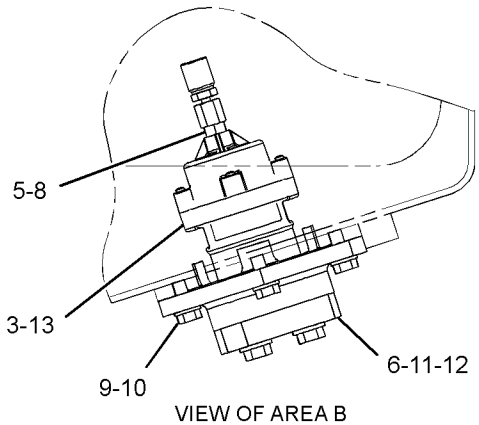

VIEW OF AREA B

GRAPHIC #1

<END>

g03127200

399-8673 ADAPTER GP-FAST FILL FUEL

S/N: RAB1-UP
FOR USE WITH COUNTERWEIGHT GP
PART OF 399-7223, 399-7224, 399-7225 COUNTERWEIGHT AR
AN ATTACHMENT

SMCS-1273, 1710 **i05447631**

NOTE	REF NO	GRAPHIC REF	PART NUMBER	QTY	PART NAME 1 2 3 4 5 6 (PRODUCT LEVEL)	SEE PAGE
	1	1	**359-7328**	1	BOX AS-MOUNTING	
	2	1	**376-1308**	1	RECEIVER AS (FAST FILL FUEL)	
	3	1	**388-4327**	1	CAP-DUST	
I	4	1	**399-8947**	1	HOSE AS	
	5	1	**1P-4582**	4	FLANGE-HALF	
	6	1	**4J-0527**	3	SEAL-O-RING	
	7	1	**6V-2383**	1	CLIP	
M	8	1	**8T-4139**	2	BOLT (M12X1.75X30-MM)	
M	9	1	**8T-4184**	8	BOLT (M12X1.75X45-MM)	
	10	1	**8T-4223**	10	WASHER-HARD (13.5X25.5X3-MM THK)	

I - REFER TO HYDRAULIC INFORMATION SYSTEM
M - METRIC PART

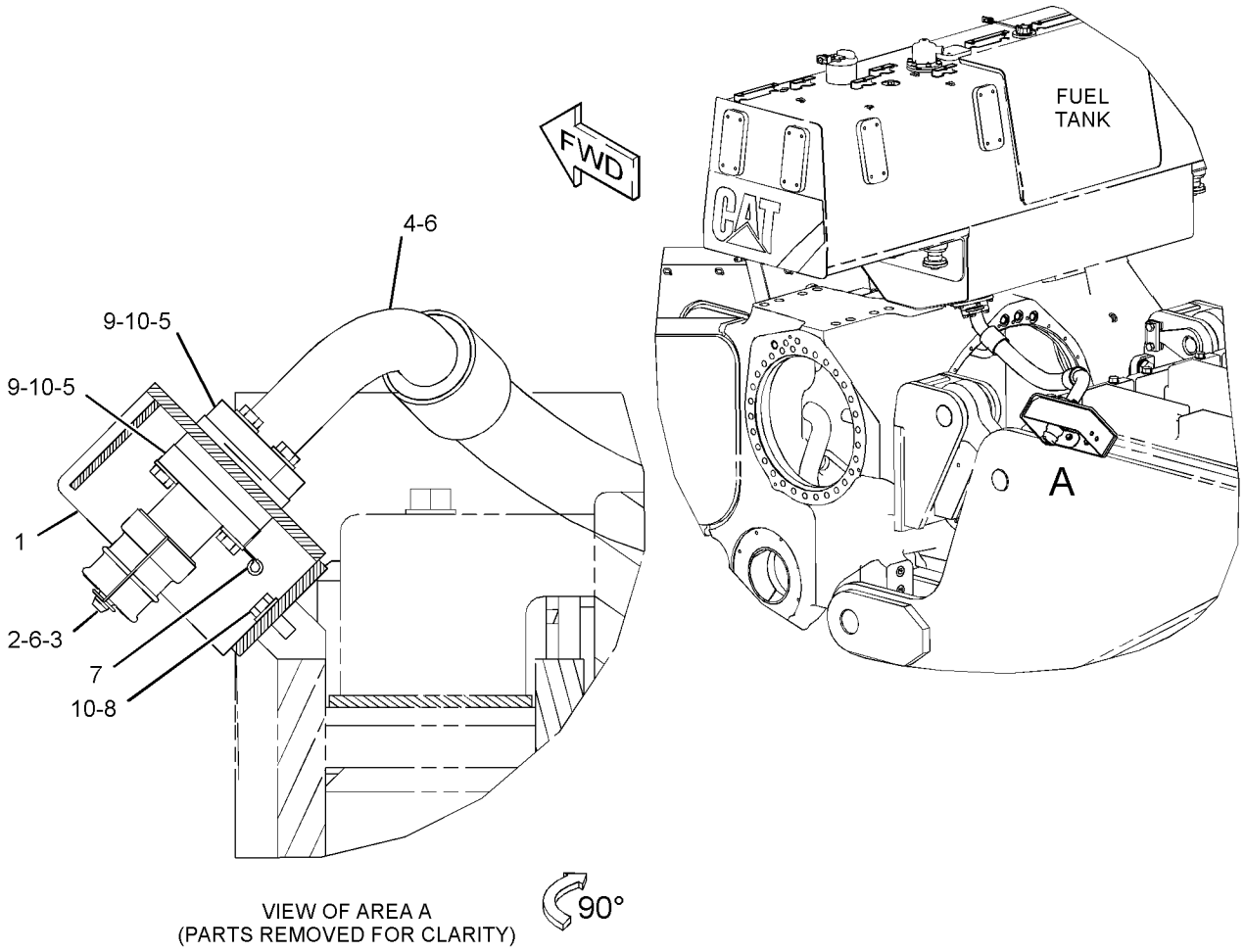

VIEW OF AREA A
(PARTS REMOVED FOR CLARITY)

GRAPHIC #1 <END> g03499057

217-7455 BASE GP-FUEL FILTER

S/N: RAB1-UP
PART OF 358-7692 PUMP GP-FUEL PRIMING
ALSO AN ATTACHMENT

SMCS-1262 **i05762878**

NOTE	REF NO	GRAPHIC REF	PART NUMBER	QTY	PART NAME 1 2 3 4 5 6 (PRODUCT LEVEL)	SEE PAGE
	1	1	**436-8983**	2	VALVE-CHECK (FUEL PRIMING)	
	2	1	**162-2222**	2	SPRING	
	3	1	**9X-8267**	3	WASHER (6.6X12X2-MM THK)	
	4	1	**9S-8002**	1	PLUG (7/16-20-THD)	
M	5	1	**8T-4138**	3	BOLT (M6X1X20-MM)	
	6	1	**447-7206**	1	SEAL-O-RING	
	7	1	**6D-5801**	2	LOCKNUT (8-32-THD)	
	8	1	**236-6717**	2	SEAL-O-RING	
	9	1	**188-7541**	1	SEAL	
	10	1	**188-7536**	1	SEAL	
	11	1	**173-1016**	2	RING-BACKUP	
	12	1	**179-7400**	2	SEAL	
					PARTS SHOWN IN GRAPHIC(S) WITHOUT A REFERENCE NUMBER ARE NOT SERVICED SEPARATELY	

M - METRIC PART

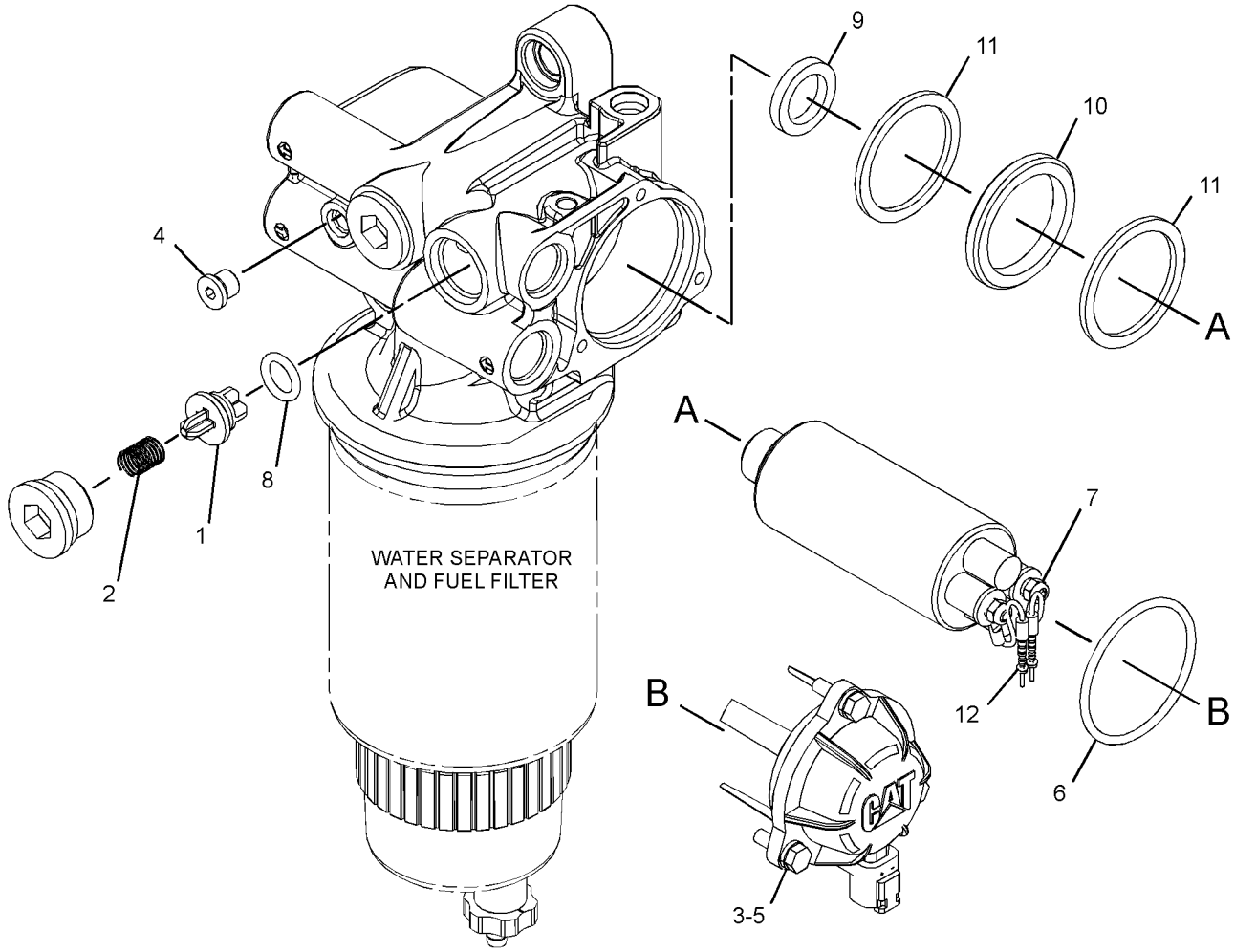

GRAPHIC #1 <END> g03336954

344-5583 BASE GP-FUEL FILTER

S/N: JZM1-UP

PART OF 350-1328 FILTER GP-FUEL

AN ATTACHMENT

SMCS-1262 **i05612892**

NOTE	REF NO	GRAPHIC REF	PART NUMBER	QTY	PART NAME 1 2 3 4 5 6 (PRODUCT LEVEL)	SEE PAGE
	1	1	**1R-0755**	2	FILTER-FUEL (ADVANCED EFFICIENCY)	
Y	2	1	*234-5013*	1	SENSOR GP-TEMPERATURE (FUEL)	384
Y	3	1	**275-1253**	1	SWITCH GP-PRESSURE (FUEL FILTER)	404
Y	4	1	*325-8634*	1	SENSOR GP-PRESSURE (FUEL)	376
	5	1	**344-9562**	1	BASE AS-FUEL FILTER	
		1	**8N-3653**	2	STUD-TAPERLOCK	
	6	1	*307-2671*	1	PLUG AS	
		1	**9S-8002**	1	PLUG (7/16-20-THD)	
		1	**214-7566**	1	SEAL-O-RING	
	7	1	*307-2673*	1	PLUG AS	
		1	**9S-8005**	1	PLUG	
		1	**238-5080**	1	SEAL-O-RING	
	8	1	*321-8642*	1	PLUG AS	
		1	**9S-8003**	1	PLUG	
		1	**214-7567**	1	SEAL-O-RING	

Y - SEPARATE ILLUSTRATION

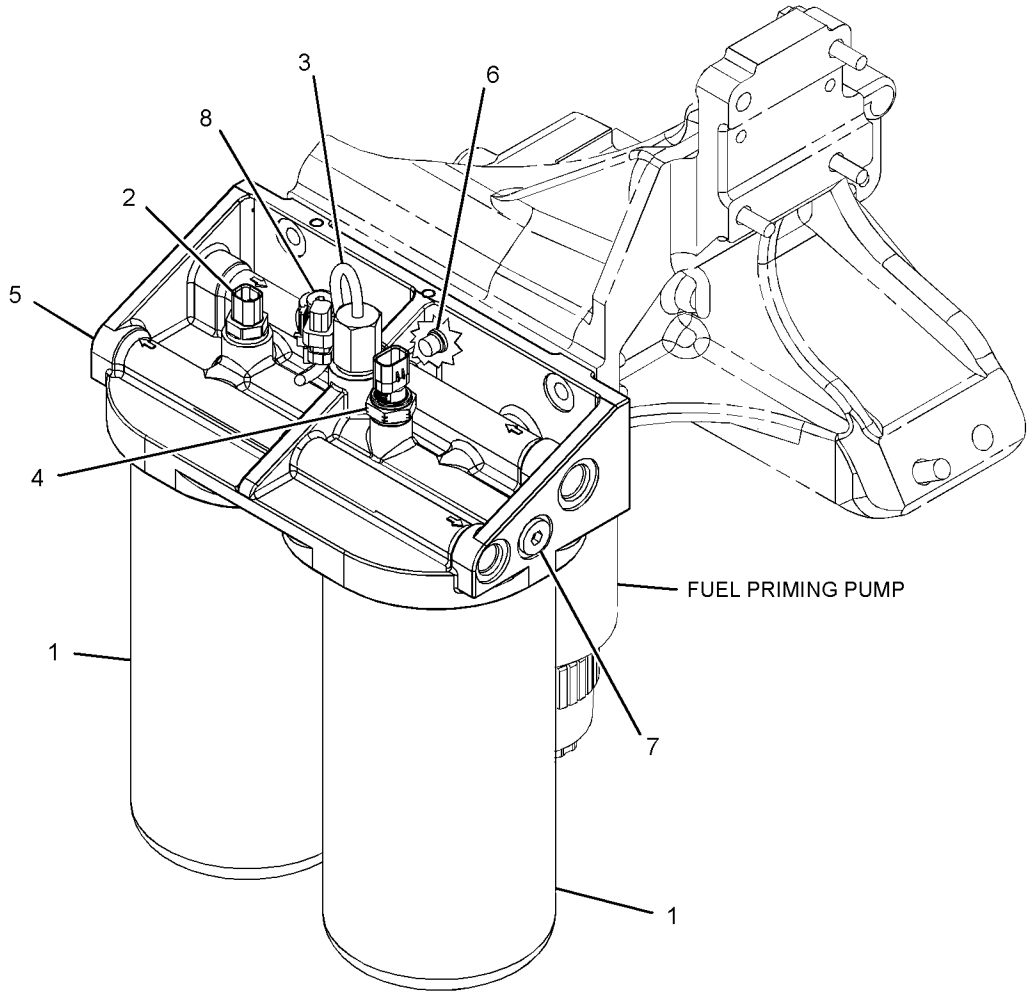

GRAPHIC #1 <END> g02123474

118-4490 COVER GP-FUEL FILTER BASE

S/N: RAB1-UP
PART OF 358-7692 PUMP GP-FUEL PRIMING
ALSO AN ATTACHMENT

SMCS-1262 **i00830399**

NOTE	REF NO	GRAPHIC REF	PART NUMBER	QTY	PART NAME 1 2 3 4 5 6 (PRODUCT LEVEL)	SEE PAGE
	1	1	**8T-6757**	1	PLUG-PIPE	
	2	1	**3P-0657**	1	SEAL-O-RING	

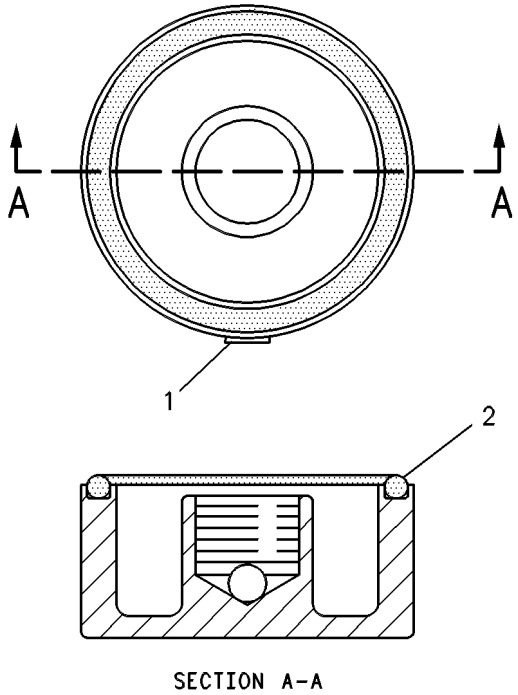

SECTION A-A

GRAPHIC #1 <END> g00247596

350-1328 FILTER GP-FUEL

S/N: JZM1-UP
PROVIDE A FUEL FILTER ON LH SIDE
PART OF 359-6502, 443-0004 ENGINE AR-COMPLETE
AN ATTACHMENT

SMCS-1261 **i05582621**

NOTE	REF NO	GRAPHIC REF	PART NUMBER	QTY	PART NAME 1 2 3 4 5 6 (PRODUCT LEVEL)	SEE PAGE
Y	1	1	*344-5583*	1	BASE GP-FUEL FILTER	164
	2	1	**376-3854**	1	BRACKET	
	3	1	**170-0610**	1	STUD (3/8-16-THD)	
	4	1	**0S-1591**	3	BOLT (3/8-16X1.5-IN)	
	5	1	**2A-4639**	2	BOLT (3/8-16X1.625-IN)	
	6	1	**307-2673**	2	PLUG AS	
					(EACH INCLUDES)	
		1	**9S-8005**	1	PLUG	
		1	**238-5080**	1	SEAL-O-RING	
	7	1	*309-5131*	1	PLUG AS	
		1	**9S-8006**	1	PLUG	
		1	**238-5081**	1	SEAL-O-RING	
	8	1	**8M-9124**	3	WASHER (10X22.5X8-MM THK)	
	9	1	**9X-6458**	5	WASHER-HARD (10.2X22.5X3-MM THK)	
	10	1	**0S-1590**	2	BOLT (3/8-16X2-IN)	

Y - SEPARATE ILLUSTRATION

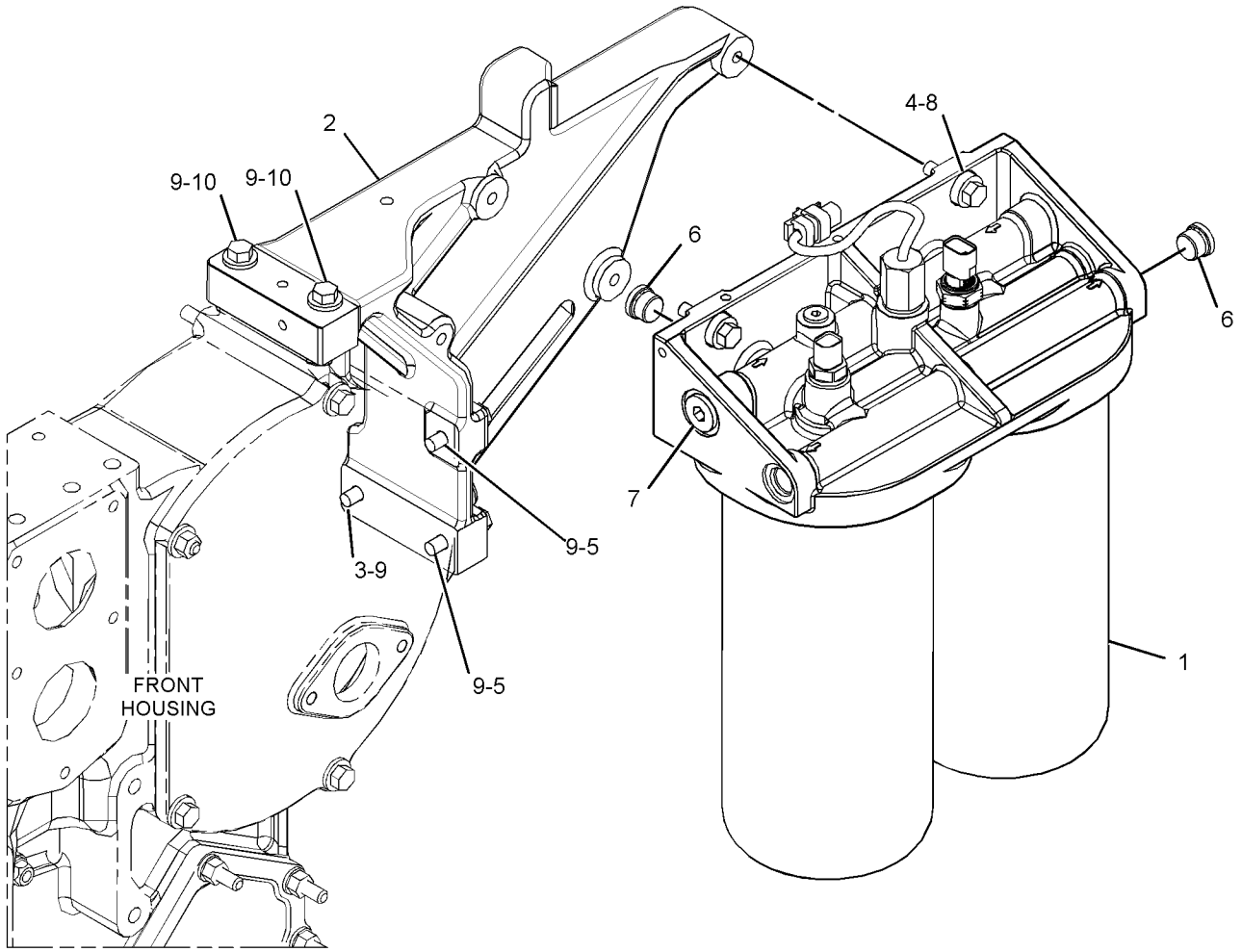

GRAPHIC #1 <END> g03561836

322-1221 FILTER GP-WATER SEP & FUEL

S/N: RAB1-UP
PART OF 359-6364 LINES GP-FUEL
ALSO AN ATTACHMENT

SMCS-1261, 1263

i05366165

NOTE	REF NO	GRAPHIC REF	PART NUMBER	QTY	PART NAME 1 2 3 4 5 6 (PRODUCT LEVEL)	SEE PAGE
	1	1	**438-5385**	1	FILTER AS-WATER SEP & FUEL (ADVANCED EFFICIENCY)	
	2	1	**321-1326**	1	BASE AS-FILTER	
		1	**323-2268**	1	STUD-HOLLOW	

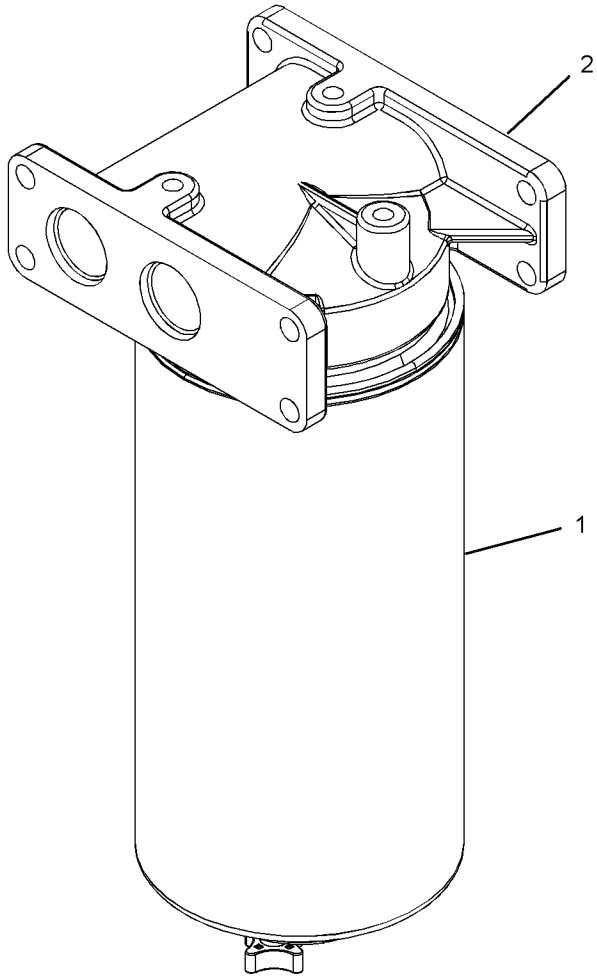

GRAPHIC #1 <END> g03407054

374-0751 INJECTOR GP-FUEL*R

S/N: JZM1-UP

PART OF 238-0489 PUMP GP-FUEL INJECTION

AN ATTACHMENT

SMCS-1251, 1254, 1290

i04998567

NOTE	REF NO	GRAPHIC REF	PART NUMBER	QTY	PART NAME 1 2 3 4 5 6 (PRODUCT LEVEL)	SEE PAGE
	1	1	**230-3728**	1	SEAL-O-RING	
	2	1	**230-3775**	1	SEAL-O-RING	
	3	1	**9X-7317**	1	SEAL-O-RING	

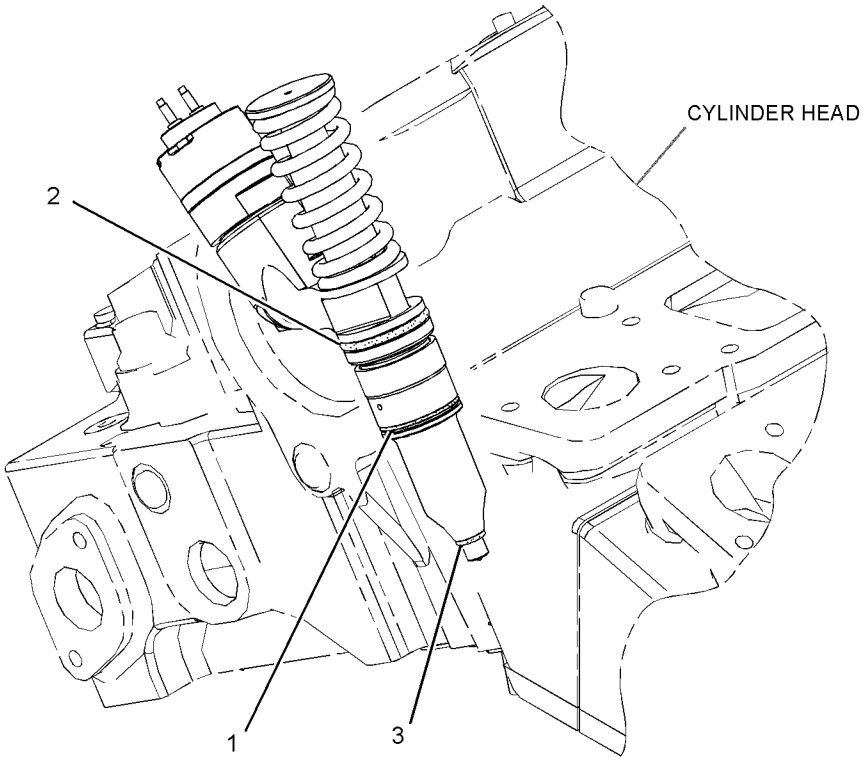

GRAPHIC #1

<END>

g03177588

357-1292 LINES GP-FUEL

S/N: JZM1-UP
PART OF 359-6502, 443-0004 ENGINE AR-COMPLETE
AN ATTACHMENT

SMCS-1274 **i04888080**

NOTE	REF NO	GRAPHIC REF	PART NUMBER	QTY	PART NAME 1 2 3 4 5 6 (PRODUCT LEVEL)	SEE PAGE
	1	1	*313-9614*	1	ADAPTER AS	
		1	**2R-6806**	1	ADAPTER	
		1	**214-7568**	1	SEAL-O-RING	
I	2	1	**322-7615**	1	HOSE AS	
I	3	1	**375-6148**	2	HOSE AS	
Y	4	1	**327-4448**	2	VALVE GP-CHECK (FUEL PRESSURE REGULATING)	193
	5	1	**334-3801**	1	LINE-FUEL	
	6	1	**375-6122**	1	MANIFOLD-FUEL	
	7	1	**375-6118**	1	BRACKET AS	
	8	1	**375-6116**	1	BRACKET AS	
	9	1	**351-6883**	1	MANIFOLD-FUEL	
	10	1	**376-6753**	1	BRACKET AS	
	11	1	**376-6754**	1	BRACKET AS	
	12	1	**030-7937**	1	CONNECTOR-PORT	
	13	1	**0L-1351**	2	BOLT (3/8-16X0.875-IN)	
	14	1	**0L-2070**	2	BOLT (3/8-16X2.25-IN)	
	15	1	*309-5131*	1	PLUG AS	
		1	**9S-8006**	1	PLUG	
		1	**238-5081**	1	SEAL-O-RING	
	16	1	**0S-1571**	5	BOLT (3/8-16X1.75-IN)	
	17	1	**0S-1594**	5	BOLT (3/8-16X1-IN)	
	18	1	**171-4364**	2	SPACER (11X19X11.5-MM THK)	
	19	1	**9X-6458**	4	WASHER-HARD (10.2X22.5X3-MM THK)	
	20	1	**1P-1376**	6	CONNECTOR-PORT	
	21	1	**214-7568**	7	SEAL-O-RING	
	22	1	**8T-1890**	4	CLIP (TAB)	
	23	1	**307-2673**	1	PLUG AS	
		1	**9S-8005**	1	PLUG	
		1	**238-5080**	1	SEAL-O-RING	
	24	1	**5M-2894**	12	WASHER-HARD (10.2X18.5X2.5-MM THK)	
	25	1	**8T-1889**	4	CLIP (SLOT)	
	26	1	**353-7954**	4	GROMMET	
	27	1	**1A-2029**	1	BOLT (3/8-16X1.125-IN)	
	28	1	**4P-7581**	1	CLIP	

I - REFER TO HYDRAULIC INFORMATION SYSTEM
Y - SEPARATE ILLUSTRATION

357-1292 **LINES GP-FUEL (**contd.**)** **i04888080**

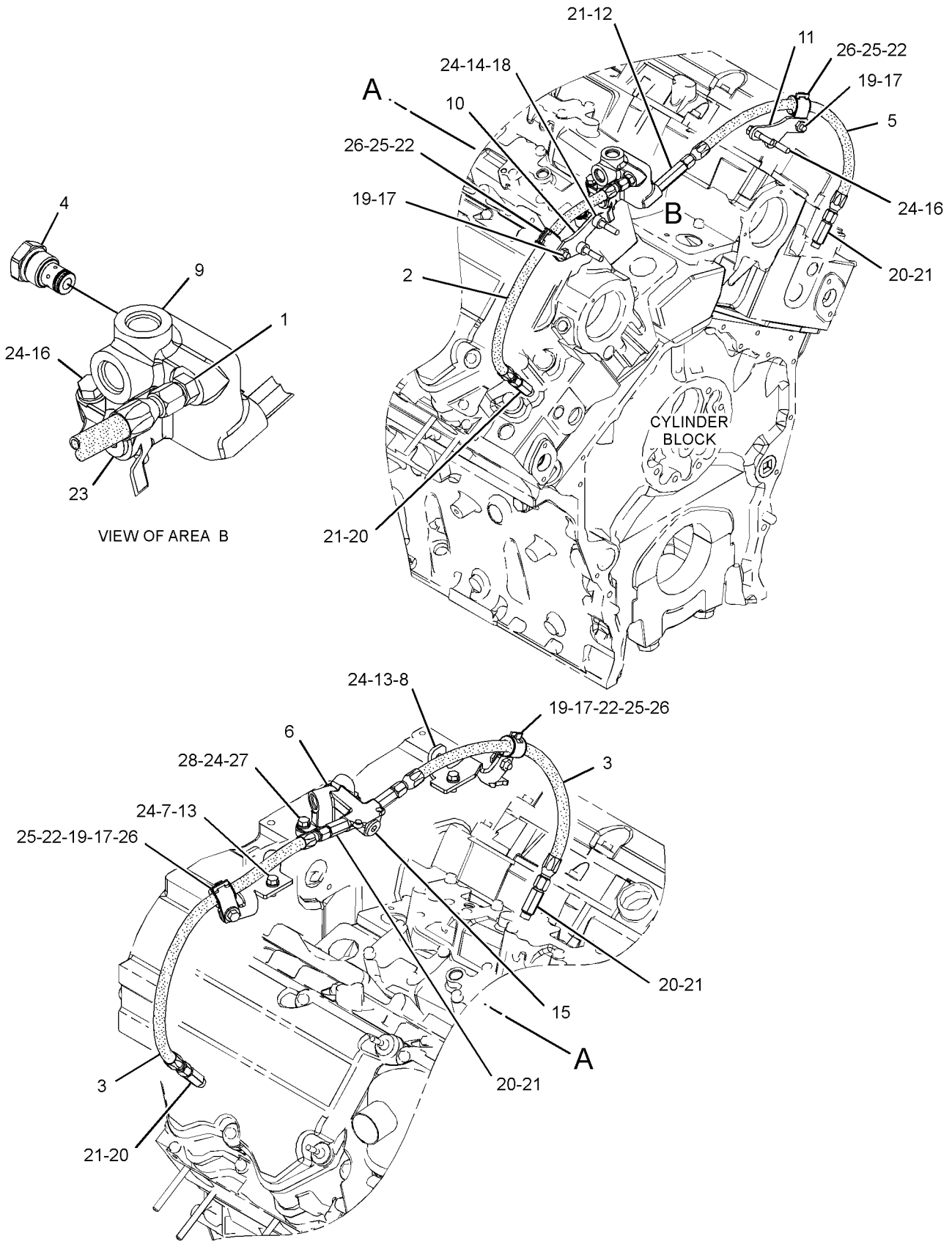

GRAPHIC #1 <END> g03111957

359-6364 LINES GP-FUEL

S/N: RAB1-UP
PART OF 359-6500 INSTALLATION AR-ENGINE
ALSO AN ATTACHMENT

SMCS-1274 **i06071135**

NOTE	REF NO	GRAPHIC REF	PART NUMBER	QTY	PART NAME 1 2 3 4 5 6 (PRODUCT LEVEL)	SEE PAGE
	1	1	**5G-4109**	1	SCREEN-SUMP (FUEL TANK)	
	2	1	**246-2641**	1	PADLOCK GP	
		1	**5P-8500**	1	KEY	
	3	1	**034-3679**	1	ADAPTER	
	4	1	**124-3019**	1	BRACKET AS	
M		1	**8T-3490**	1	NUT-WELD (M10X1.5-THD)	
	5	1	**425-5635**	1	CONNECTOR	
Y	6	1	**322-1221**	1	FILTER GP-WATER SEP & FUEL	167
	7	1	**351-0264**	1	VALVE-BALL	
	8	1	**351-0266**	1	VALVE-BALL	
Y	9	1	*358-7691*	1	PUMP GP-FUEL PRIMING	182
	10	1	**358-7693**	1	BRACKET AS	
I	11	1	**377-8742**	1	HOSE AS	
I	12	1	**377-8743**	1	HOSE AS	
I	13	1	**377-8744**	1	HOSE AS	
	14	1	**379-5198**	1	BRACKET AS	
	15	1	**439-2875**	1	BRACKET AS	
	16	1	**439-3467**	1	BRACKET AS	
	17	1	**067-2551**	1	CLIP	
	18	1	*194-2903*	2	ELBOW AS	
					(EACH INCLUDES)	
		1	**3K-0360**	1	SEAL-O-RING	
		1	**8T-0119**	1	ELBOW	
	19	1	**198-4777**	7	WASHER-HARD (11X25X10-MM THK)	
	20	1	**1P-4278**	1	CLAMP-HOSE	
	21	1	**1S-6420**	1	CLIP	
	22	1	**228-7092**	2	SEAL-O-RING	
	23	1	**238-5081**	1	SEAL-O-RING	
	24	1	**238-5082**	2	SEAL-O-RING	
	25	1	*319-6228*	1	ELBOW AS	
		1	**6V-8721**	1	ELBOW	
		1	**228-7090**	1	SEAL-O-RING	
		1	**238-5081**	1	SEAL-O-RING	
	26	1	*319-6234*	2	PLUG AS	
					(EACH INCLUDES)	
		1	**9S-9334**	1	PLUG-O-RING	
		1	**238-5084**	1	SEAL-O-RING	
	27	1	*330-9758*	1	ELBOW AS	
		1	**8T-4149**	1	ELBOW	
		1	**228-7092**	1	SEAL-O-RING	
		1	**238-5084**	1	SEAL-O-RING	
	28	1	**341-0107**	1	ELBOW	
	29	1	**3K-0360**	2	SEAL-O-RING	
	31	1	**130-9984**	2	CLIP	
	32	1	**5P-7462**	1	CLIP (SLOT)	
	33	1	**5P-7463**	1	CLIP (TAB)	
	34	1	**6V-0683**	1	GROMMET (19-MM ID)	

359-6364 **LINES GP-FUEL (**contd.**)** **i06071135**

NOTE	REF NO	GRAPHIC REF	PART NUMBER	QTY	PART NAME 1 2 3 4 5 6 (PRODUCT LEVEL)	SEE PAGE
	36	1	**7G-3833**	1	CLIP (TAB)	
	37	1	**7G-3834**	1	CLIP (SLOT)	
	38	1	**7X-7729**	3	WASHER (11X25X3-MM THK)	
	39	1	**8C-3174**	1	GROMMET	
	40	1	**8J-8197**	2	CLIP	
	41	1	**8T-4121**	13	WASHER-HARD (11X21X2.5-MM THK)	
M	42	1	**8T-4133**	1	NUT (M10X1.5-THD)	
M	43	1	**8T-4136**	2	BOLT (M10X1.5X25-MM)	
M	45	1	**8T-4195**	6	BOLT (M10X1.5X30-MM)	
M	46	1	**8T-4196**	11	BOLT (M10X1.5X35-MM)	
	48	1	**8T-8984**	1	TEE-O-RING PORT	
G	49	1	**423-1982**		HOSE (2.5-IN)	
G	50	1	**423-1983**		HOSE (2.5-IN)	
M	51	1	**8T-6466**	1	BOLT (M10X1.5X60-MM)	
M	52	1	**142-3953**	2	STUD (M10X1.5-THD)	
	53	1	**1H-7855**	1	SPACER (0.531X1X1.38-IN THK)	

G - ORDER BY THE INCH
I - REFER TO HYDRAULIC INFORMATION SYSTEM
M - METRIC PART
Y - SEPARATE ILLUSTRATION

359-6364 **LINES GP-FUEL (**contd.**)** **i06071135**

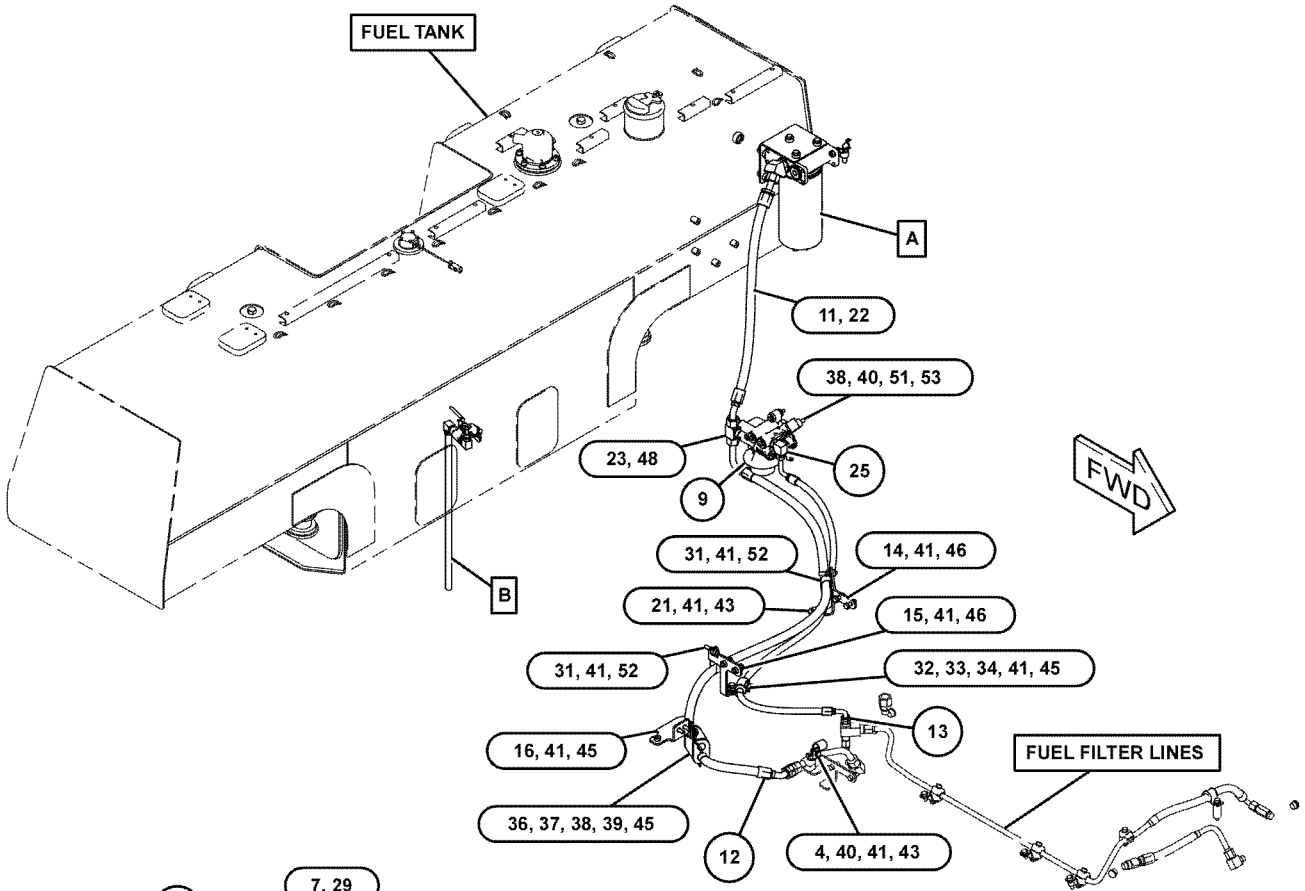

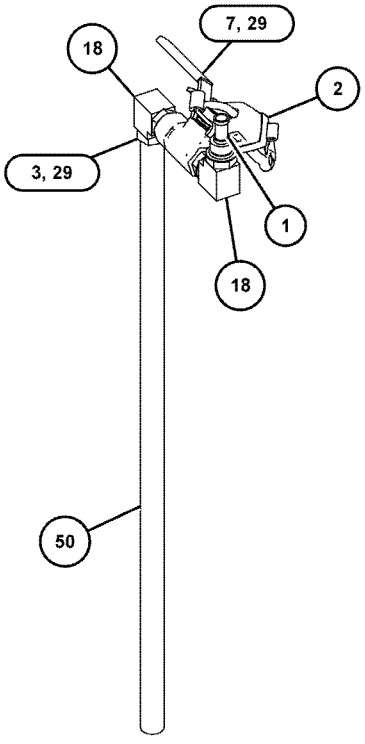

VIEW OF AREA B

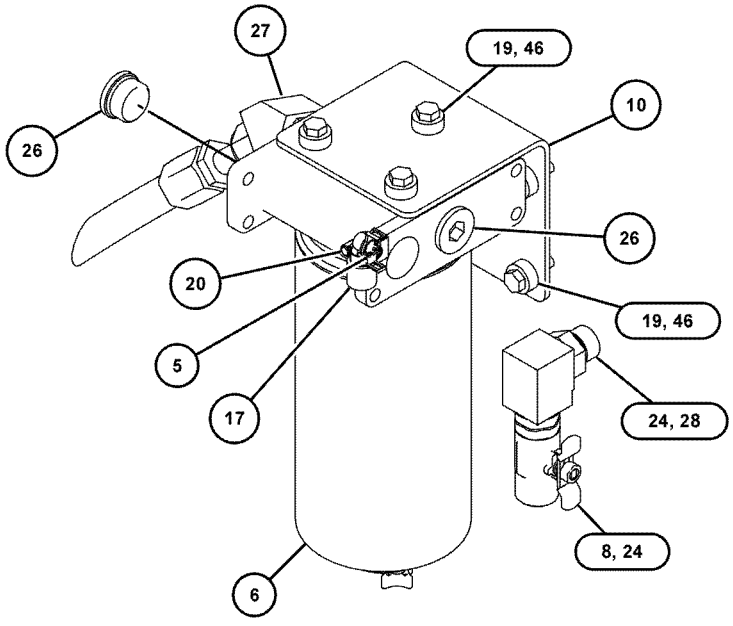

VIEW OF AREA A

GRAPHIC #1 <END> g03812364

359-6365 LINES GP-FUEL

S/N: RAB1-UP
CANNOT BE USED WITH HEATER GP-FUEL
AN ATTACHMENT

SMCS-1274 **i05422542**

NOTE	REF NO	GRAPHIC REF	PART NUMBER	QTY	PART NAME 1 2 3 4 5 6 (PRODUCT LEVEL)	SEE PAGE
	1	1	**197-6453**	1	BRACKET AS	
I	2	1	**377-8745**	1	HOSE AS	
I	3	1	**383-8039**	1	HOSE AS	
	4	1	*281-5934*	1	ELBOW AS	
		1	**6V-9877**	1	ELBOW	
		1	**228-7092**	1	SEAL-O-RING	
		1	**238-5080**	1	SEAL-O-RING	
	5	1	*281-5979*	1	ELBOW AS	
		1	**6V-9007**	1	ELBOW	
		1	**228-7092**	1	SEAL-O-RING	
		1	**238-5082**	1	SEAL-O-RING	
	6	1	*319-6221*	1	ELBOW AS	
		1	**6V-9182**	1	ELBOW	
		1	**228-7092**	1	SEAL-O-RING	
		1	**238-5084**	1	SEAL-O-RING	
	7	1	**7X-7729**	1	WASHER (11X25X3-MM THK)	
	8	1	**8J-8197**	1	CLIP	
M	9	1	**8T-4136**	1	BOLT (M10X1.5X25-MM)	

I - REFER TO HYDRAULIC INFORMATION SYSTEM
M - METRIC PART

359-6365 **LINES GP-FUEL (**contd.**)** **i05422542**

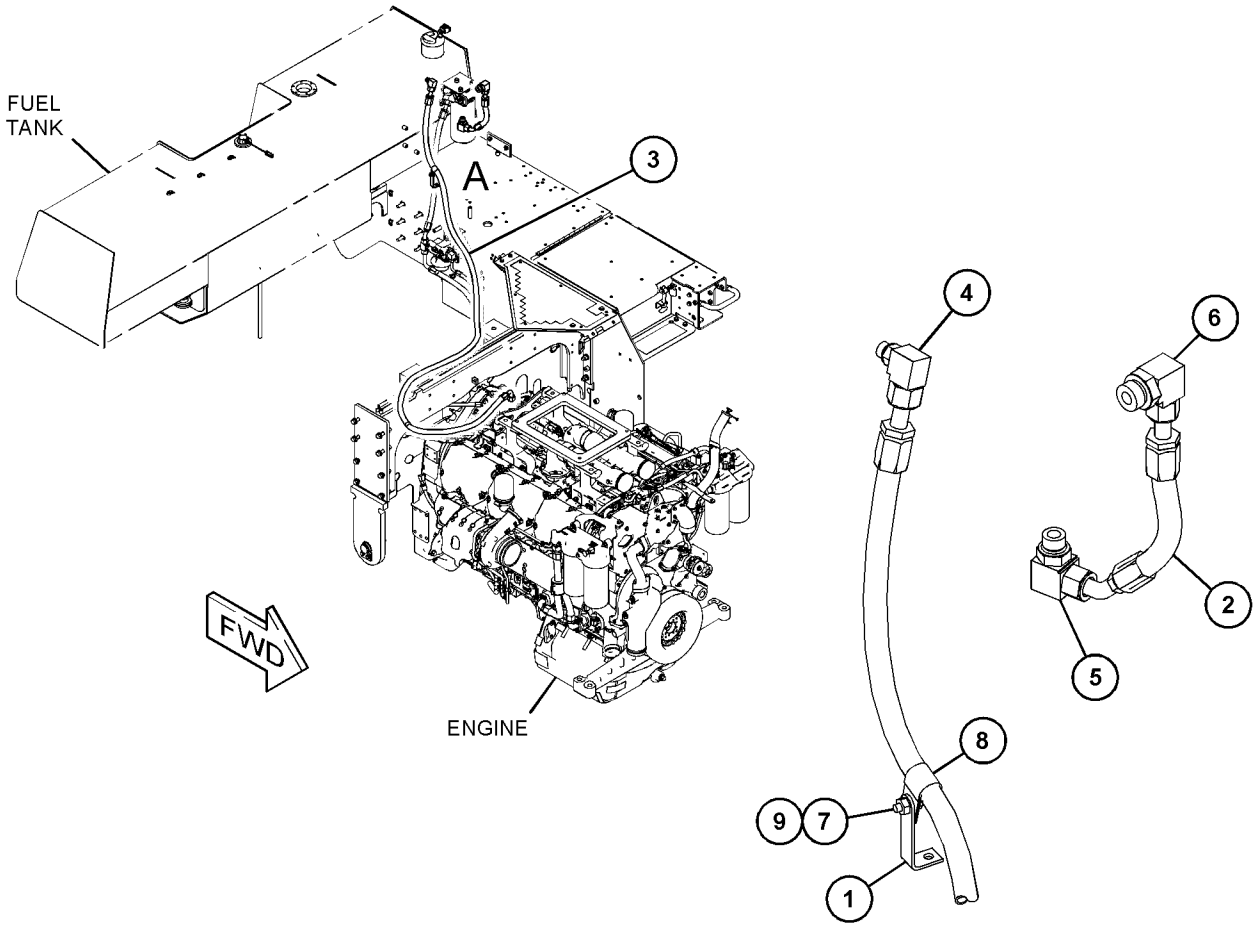

GRAPHIC #1 <END> g03429812

440-5222 LINES GP-FUEL

S/N: JZM1-UP

PART OF 359-6502, 443-0004 ENGINE AR-COMPLETE

AN ATTACHMENT

SMCS-1274 **i05768831**

NOTE	REF NO	GRAPHIC REF	PART NUMBER	QTY	PART NAME 1 2 3 4 5 6 (PRODUCT LEVEL)	SEE PAGE
Y	1	1	**327-4448**	2	VALVE GP-CHECK	193
	2	1	**351-6883**	1	MANIFOLD-FUEL	
	3	1	**375-6122**	1	MANIFOLD-FUEL	
	4	1	*377-9611*	1	CONNECTOR AS	
		1	**030-7937**	1	CONNECTOR-PORT	
		1	**214-7568**	1	SEAL-O-RING	
	5	1	**433-7014**	8	SADDLE AS	
	6	1	**456-9151**	1	HOSE & TUBE AS	
	7	1	**456-9173**	1	HOSE & TUBE AS	
	8	1	**456-9178**	1	HOSE & TUBE AS	
	9	1	**440-3497**	1	BRACKET AS	
	10	1	**440-5229**	1	BRACKET AS	
	11	1	**440-5231**	1	BRACKET AS	
	12	1	**456-9179**	1	HOSE & TUBE AS	
	13	1	**449-4217**	1	BRACKET AS	
	14	1	**090-8635**	2	SPACER (11X22X5-MM THK)	
	15	1	**0L-1351**	1	BOLT (3/8-16X0.875-IN)	
	16	1	**0L-2070**	2	BOLT (3/8-16X2.25-IN)	
	17	1	**0S-1571**	5	BOLT (3/8-16X1.75-IN)	
	18	1	**0S-1590**	2	BOLT (3/8-16X2-IN)	
	19	1	**0S-1594**	2	BOLT (3/8-16X1-IN)	
	20	1	*307-2673*	1	PLUG AS	
		1	**9S-8005**	1	PLUG	
		1	**238-5080**	1	SEAL-O-RING	
	21	1	*309-5131*	1	PLUG AS	
		1	**9S-8006**	1	PLUG	
		1	**238-5081**	1	SEAL-O-RING	
	22	1	*313-9614*	3	ADAPTER AS	
					(EACH INCLUDES)	
		1	**2R-6806**	1	ADAPTER	
		1	**214-7568**	1	SEAL-O-RING	
	23	1	*384-9218*	4	CONNECTOR AS	
					(EACH INCLUDES)	
		1	**1P-1376**	1	CONNECTOR-PORT	
		1	**214-7568**	1	SEAL-O-RING	
	24	1	**4P-0983**	2	STUD (3/8-16-THD)	
	25	1	**5M-2894**	10	WASHER-HARD (10.2X18.5X2.5-MM THK)	
	26	1	**9X-6458**	4	WASHER-HARD (10.2X22.5X3-MM THK)	

Y - SEPARATE ILLUSTRATION

440-5222 **LINES GP-FUEL (**contd.**)** **i05768831**

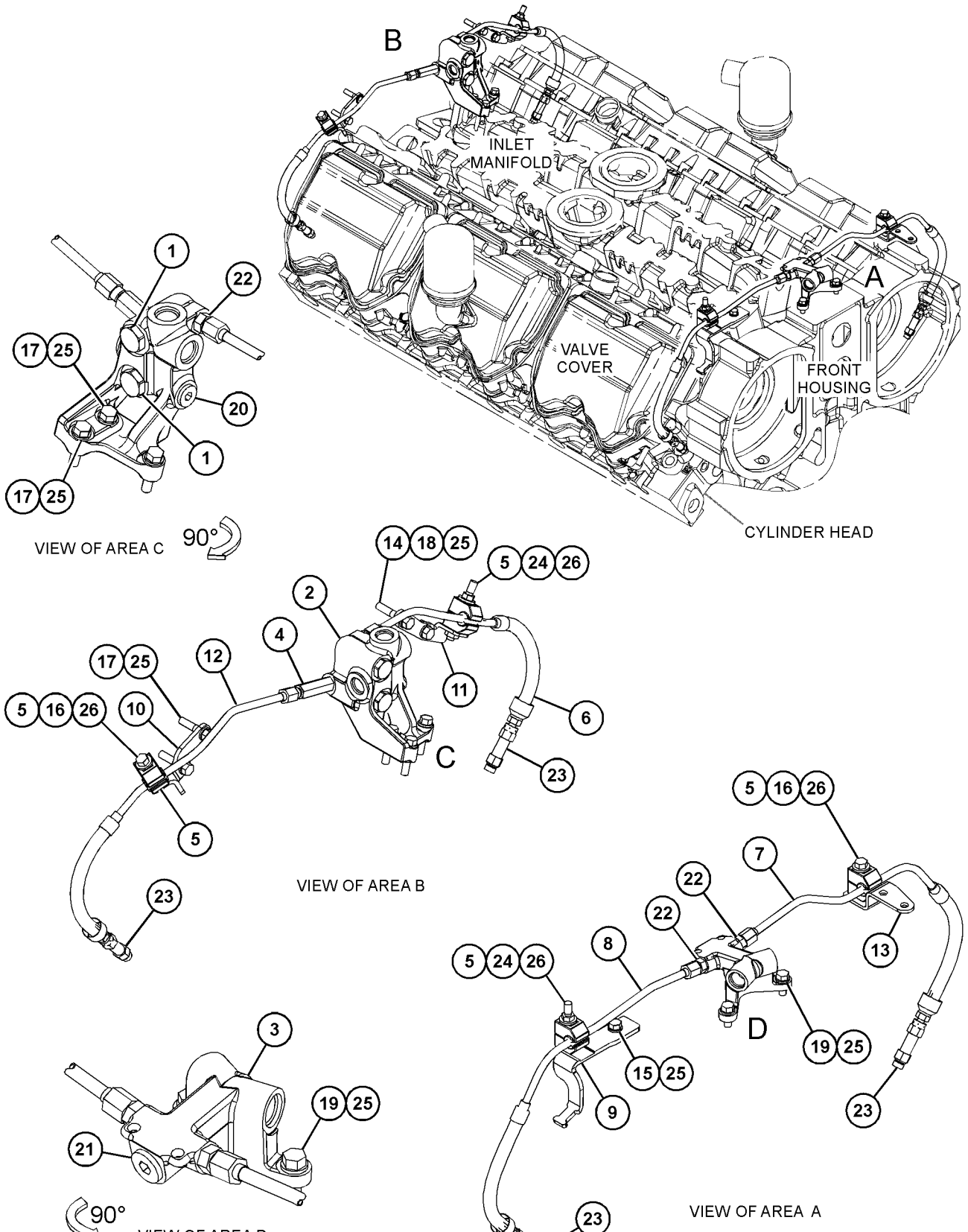

GRAPHIC #1 <END> g03661804

352-5699 LINES GP-FUEL FILTER

S/N: JZM1-UP

PROVIDES CONNECTION BETWEEN FUEL TRANSFER PUMP AND SECONDARY-TERTIARY FUEL FILTERS, ALSO PROVIDES CUSTOMER CONNECTIONS

PART OF 359-6502, 443-0004 ENGINE AR-COMPLETE

AN ATTACHMENT

SMCS-1261, 1274 **i05677122**

NOTE	REF NO	GRAPHIC REF	PART NUMBER	QTY	PART NAME 1 2 3 4 5 6 (PRODUCT LEVEL)	SEE PAGE
	1	1	**4P-0692**	8	CLAMP AS	
					(EACH INCLUDES)	
		1	**108-1434**	1	GROMMET	
	2	1	**4P-3563**	2	CLAMP AS	
					(EACH INCLUDES)	
		1	**108-1434**	1	GROMMET	
	3	1	**185-4026**	1	VALVE GP-CHECK	
		1	**3K-0360**	1	SEAL-O-RING	
		1	**6V-8398**	1	SEAL-O-RING	
	4	1	**346-6981**	3	BRACKET AS	
	5	1	**349-6193**	1	TUBE AS-FUEL	
	6	1	**351-0198**	1	BRACKET AS	
	7	1	**441-7415**	1	HOSE & TUBE AS	
	8	1	**441-7416**	1	HOSE & TUBE AS	
	9	1	**4P-0983**	1	STUD (3/8-16-THD)	
	11	1	**0L-2070**	4	BOLT (3/8-16X2.25-IN)	
	12	1	**0S-1571**	1	BOLT (3/8-16X1.75-IN)	
	13	1	**0S-1594**	2	BOLT (3/8-16X1-IN)	
	14	1	**110-2218**	1	TEE-SWIVEL	
	15	1	**353-7952**	1	GROMMET	
	16	1	**1A-2029**	2	BOLT (3/8-16X1.125-IN)	
	18	1	**228-7090**	1	SEAL-O-RING	
	20	1	**238-5081**	1	SEAL-O-RING	
	21	1	**2B-0941**	1	SPACER (10.5X19X19-MM THK)	
	22	1	*421-6201*	1	CONNECTOR AS	
		1	**2P-1292**	1	CONNECTOR-PORT	
		1	**238-5081**	1	SEAL-O-RING	
	24	1	*309-5131*	4	PLUG AS	
					(EACH INCLUDES)	
		1	**9S-8006**	1	PLUG	
		1	**238-5081**	1	SEAL-O-RING	
	25	1	**5M-2894**	10	WASHER-HARD (10.2X18.5X2.5-MM THK)	
	26	1	**6V-5839**	1	WASHER (11X21X2.5-MM THK)	
	27	1	**138-7500**	1	SPACER (11X25X50-MM THK)	
	28	1	**6V-8640**	1	CONNECTOR	
	29	1	**0T-0573**	1	BOLT (3/8-16X2.75-IN)	
	30	1	**8T-1897**	1	CLIP (SLOT)	
	31	1	**8T-1898**	1	CLIP (TAB)	
	32	1	**9R-5008**	2	SPACER (11X20X6-MM THK)	
	33	1	*351-0258*	1	ELBOW AS	
		1	**1P-7625**	1	ELBOW	
		1	**238-5080**	1	SEAL-O-RING	
	34	1	*365-0576*	1	CONNECTOR AS	
		1	**9M-4584**	1	CONNECTOR	
		1	**238-5081**	1	SEAL-O-RING	

352-5699 **LINES GP-FUEL FILTER (**contd.**)** **i05677122**

NOTE	REF NO	GRAPHIC REF	PART NUMBER	QTY	PART NAME 1 2 3 4 5 6 (PRODUCT LEVEL)	SEE PAGE
	35	1	*365-0578*	1	CONNECTOR AS	
		1	**2P-7636**	1	CONNECTOR (3/4-16 STR-THD)	
		1	**238-5080**	1	SEAL-O-RING	
	36	1	*377-9609*	1	ELBOW AS	
		1	**068-4174**	1	ELBOW	
		1	**238-5081**	1	SEAL-O-RING	

352-5699 **LINES GP-FUEL FILTER (**contd.**)** **i05677122**

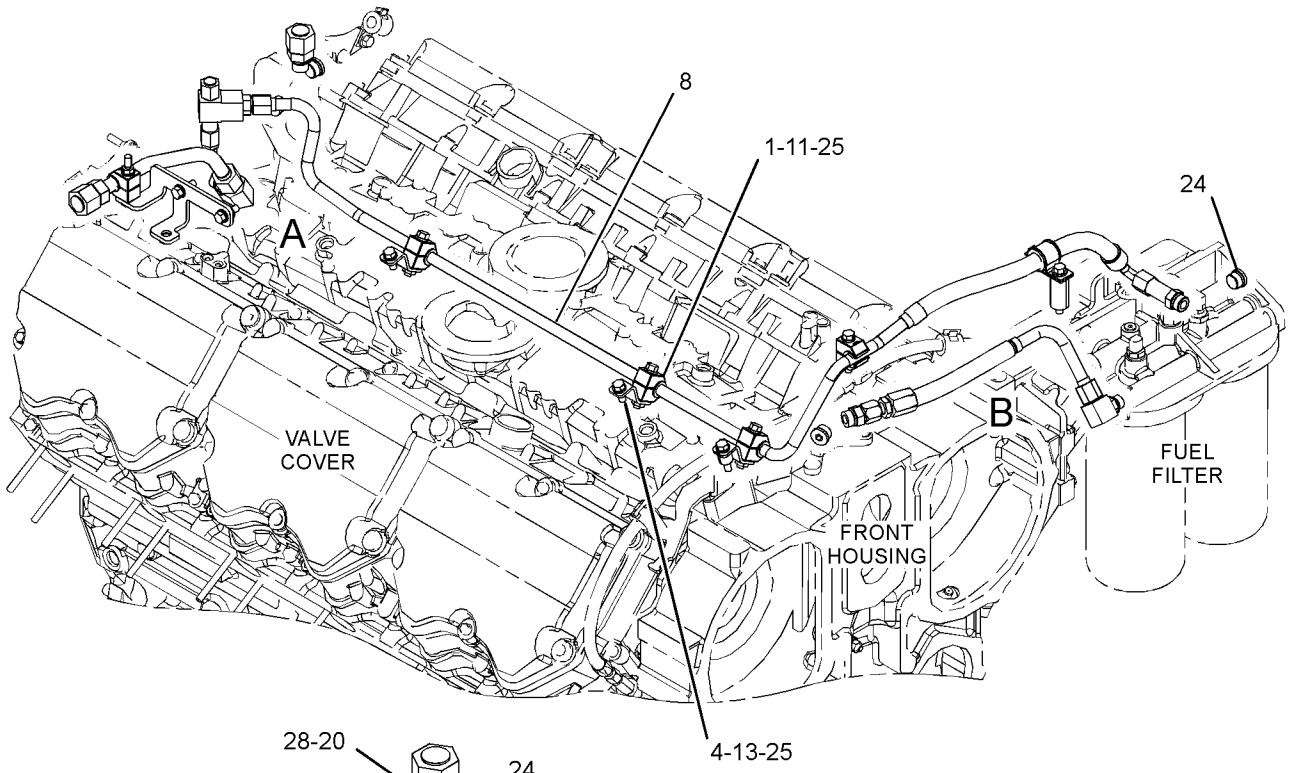

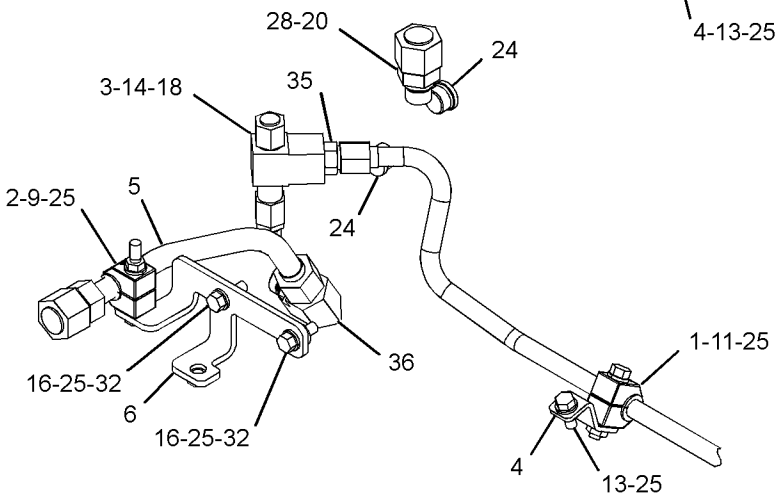

VIEW OF AREA A

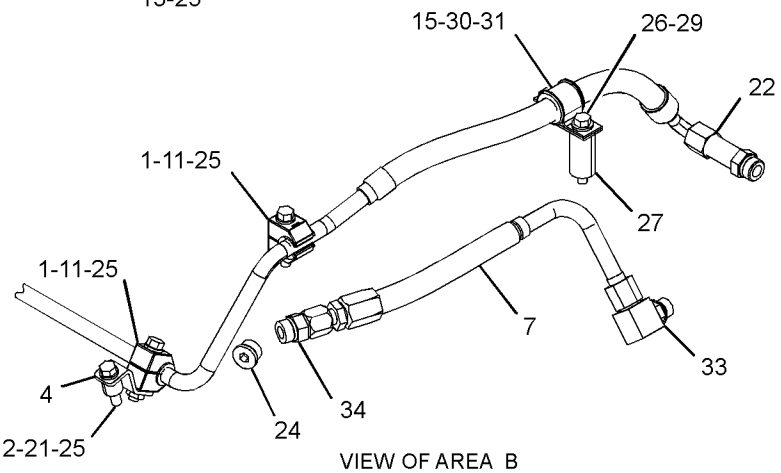

VIEW OF AREA B

GRAPHIC #1 <END> g03608457

238-0489 PUMP GP-FUEL INJECTION

S/N: JZM1-UP
PART OF 371-2276 ENGINE AR-CORE
AN ATTACHMENT

SMCS-1251, 1290

i06145132

NOTE	REF NO	GRAPHIC REF	PART NUMBER	QTY	PART NAME 1 2 3 4 5 6 (PRODUCT LEVEL)	SEE PAGE
	1	1	**6I-0213**	1	CLAMP	
	2	1	**100-5072**	1	SPACER (9.8X15.85X37.6-MM THK)	
CYR	3	1	**374-0751**	1	INJECTOR GP-FUEL	168
	4	1	**8S-9191**	1	BOLT (3/8-16X4-IN)	

C - CHANGE FROM PREVIOUS TYPE
R - REMANUFACTURED PART MAY BE AVAILABLE
Y - SEPARATE ILLUSTRATION

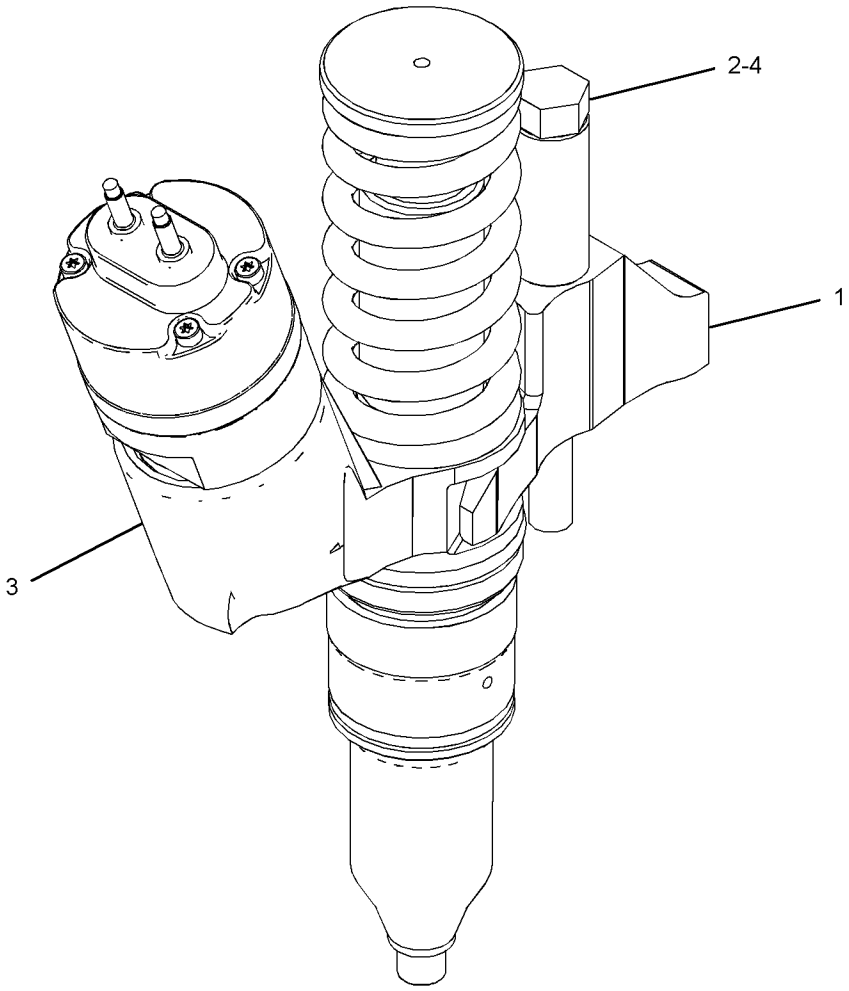

GRAPHIC #1 <END> g03826568

358-7691 PUMP GP-FUEL PRIMING

S/N: RAB1-UP
PART OF 359-6364 LINES GP-FUEL
ALSO AN ATTACHMENT

SMCS-1258 **i04408490**

NOTE	REF NO	GRAPHIC REF	PART NUMBER	QTY	PART NAME 1 2 3 4 5 6 (PRODUCT LEVEL)	SEE PAGE
	1	1	**8T-9655**	6	MOUNT-ISOLATION (ISOLATION)	
	2	1	**191-1782**	1	SPACER (8.5X12.7X38.2-MM THK)	
	3	1	**191-1783**	2	SPACER (8.5X12.7X87.3-MM THK)	
Y	4	1	**358-7692**	1	PUMP GP-FUEL PRIMING	183
	5	1	*164-5619*	2	PLUG AS	
					(EACH INCLUDES)	
		1	**9S-8006**	1	PLUG	
		1	**2M-9780**	1	SEAL-O-RING	
M	6	1	**6V-3821**	2	BOLT (M8X1.25X110-MM)	
	7	1	**7X-0579**	6	WASHER-HARD (8.8X25.5X2-MM THK)	
M	8	1	**8T-6869**	1	BOLT (M8X1.25X60-MM)	

M - METRIC PART
Y - SEPARATE ILLUSTRATION

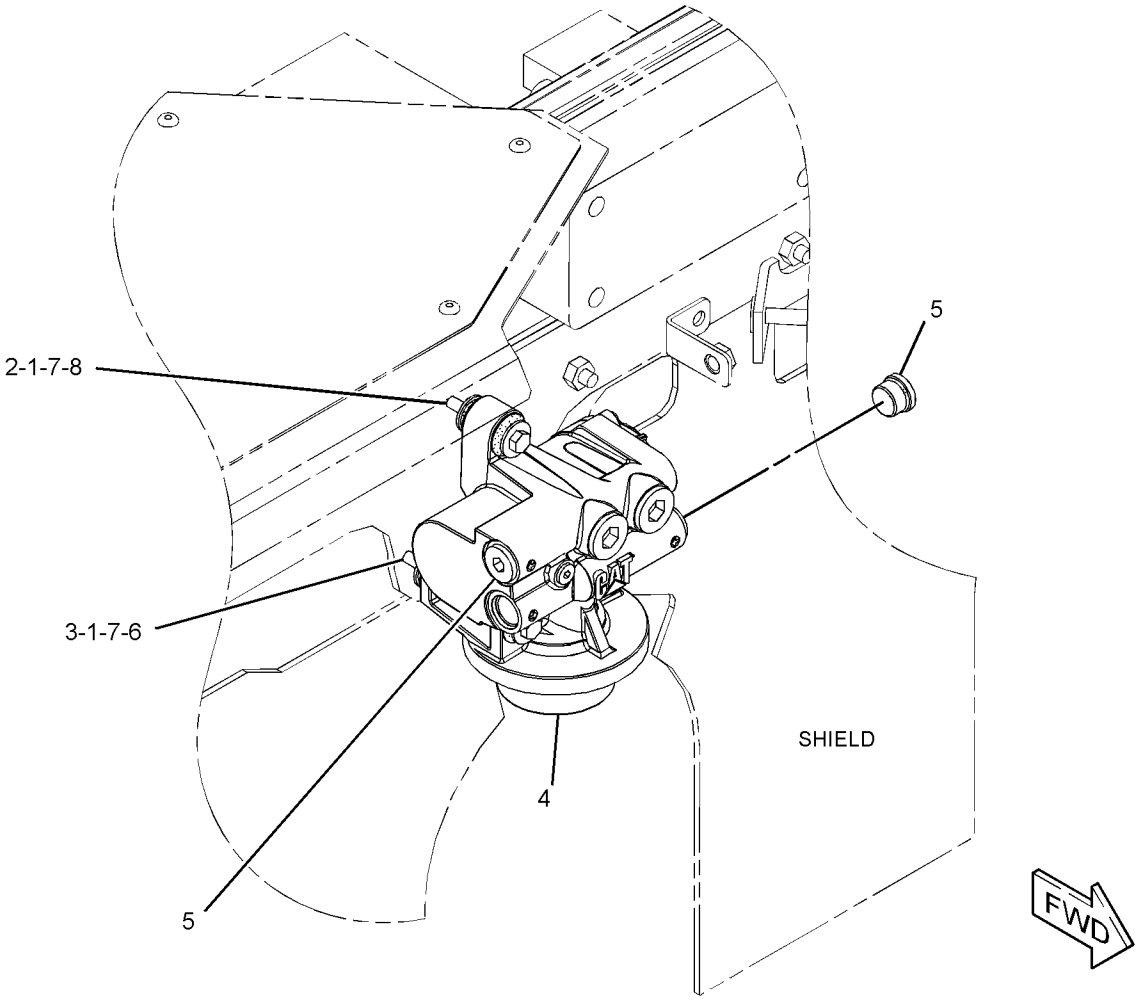

GRAPHIC #1 <END> g02635776

358-7692 PUMP GP-FUEL PRIMING

S/N: RAB1-UP

PART OF 358-7691 PUMP GP-FUEL PRIMING

ALSO AN ATTACHMENT

SMCS-1258 **i04624029**

NOTE	REF NO	GRAPHIC REF	PART NUMBER	QTY	PART NAME 1 2 3 4 5 6 (PRODUCT LEVEL)	SEE PAGE
Y	1	1	**118-4490**	1	COVER GP-FUEL FILTER BASE	165
Y	2	1	**217-7455**	1	BASE GP-FUEL FILTER	163

Y - SEPARATE ILLUSTRATION

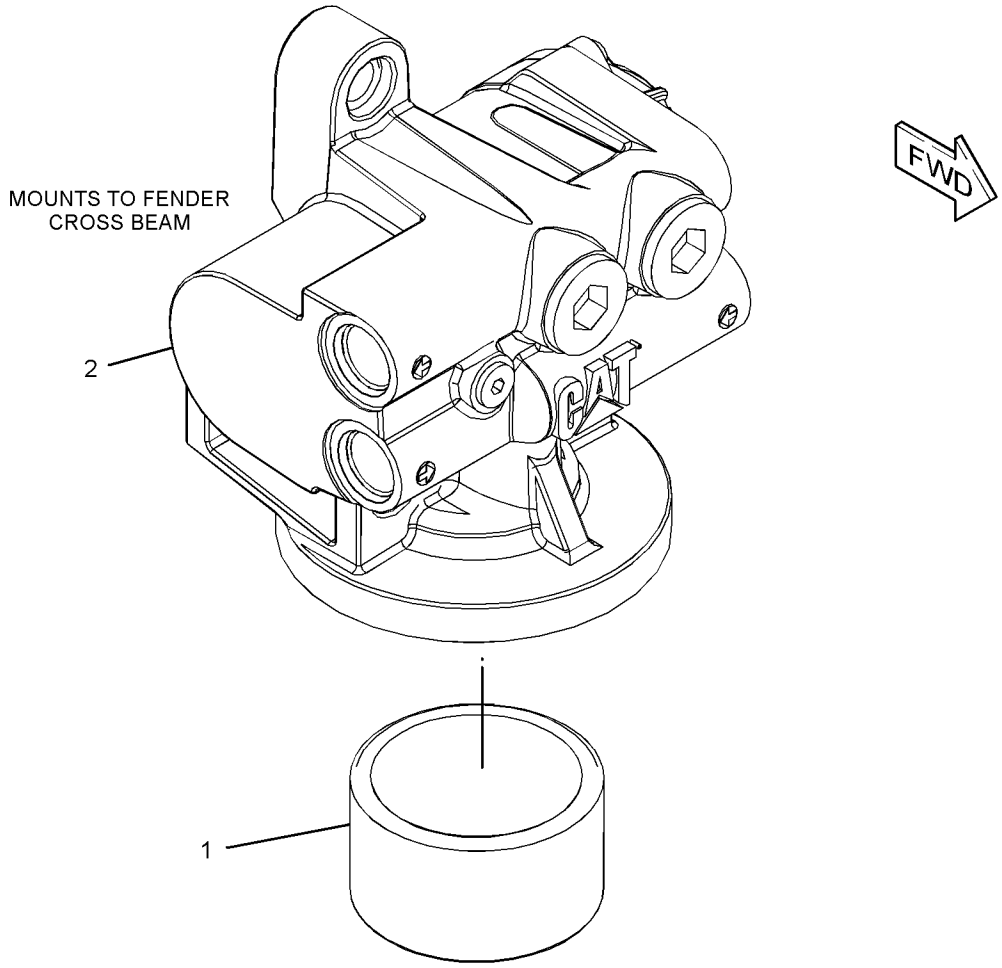

GRAPHIC #1 <END> g02620236

331-3635 PUMP GP-FUEL TRANSFER*R

S/N: JZM1-UP

PART OF 331-7465 PUMP GP-FUEL TRANSFER

AN ATTACHMENT

SMCS-1256 **i06064303**

NOTE	REF NO	GRAPHIC REF	PART NUMBER	QTY	PART NAME 1 2 3 4 5 6 (PRODUCT LEVEL)	SEE PAGE
	1	1	**224-3242**	1	GEAR-FUEL PUMP (16-TEETH)	

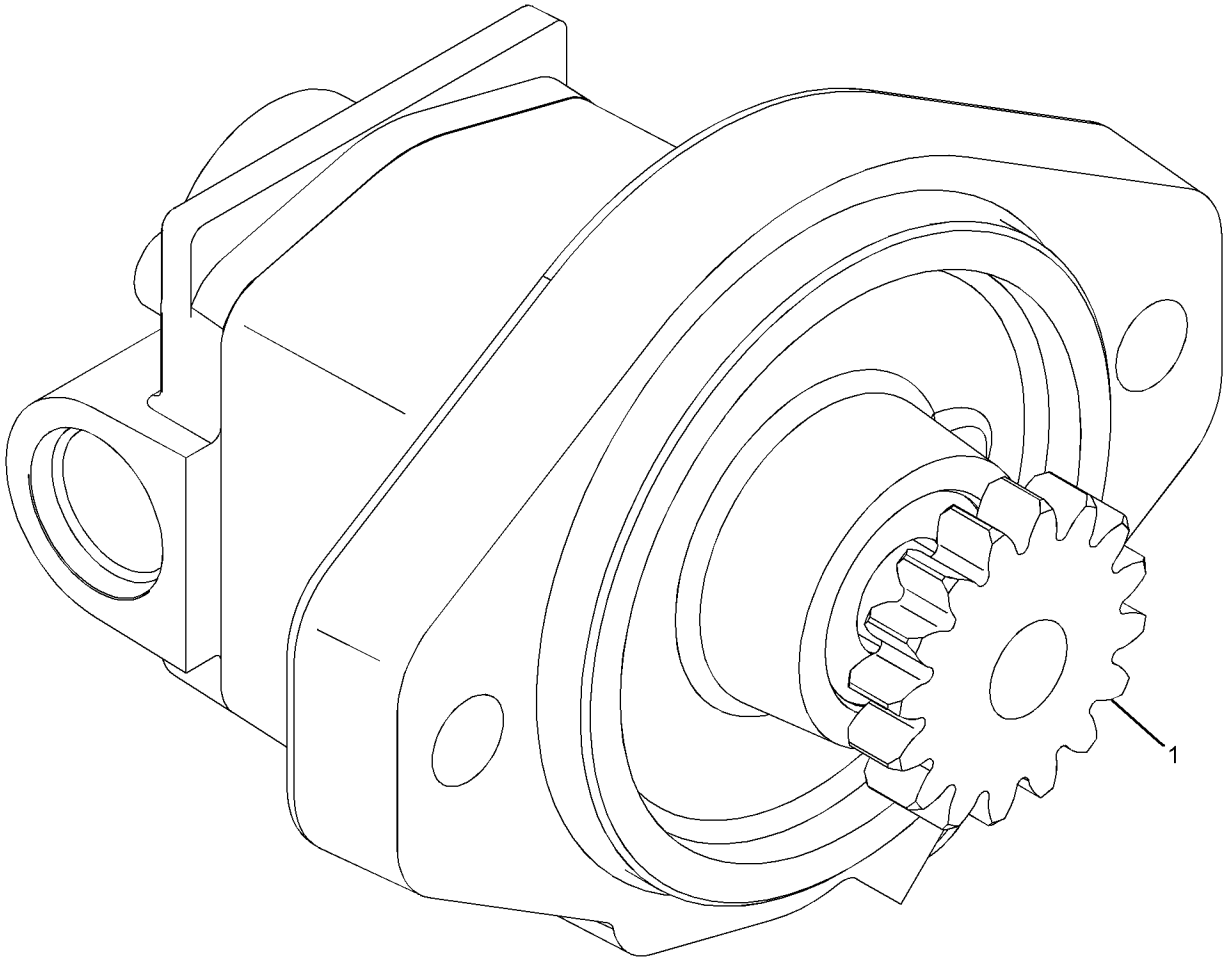

GRAPHIC #1 <END> g01258987

331-7465 PUMP GP-FUEL TRANSFER

S/N: JZM1-UP
PART OF 359-6502, 443-0004 ENGINE AR-COMPLETE
AN ATTACHMENT
TYPE 1

SMCS-1256 **i05318318**

NOTE	REF NO	GRAPHIC REF	PART NUMBER	QTY	PART NAME 1 2 3 4 5 6 (PRODUCT LEVEL)	SEE PAGE
YR	1	1	**331-3635**	1	PUMP GP-FUEL TRANSFER	184
	2	1	**3B-1915**	2	BOLT (3/8-16X1.375-IN)	
	3	1	**5M-2894**	2	WASHER-HARD (10.2X18.5X2.5-MM THK)	
	4	1	**8C-3089**	1	SEAL-O-RING	

R - REMANUFACTURED PART MAY BE AVAILABLE
Y - SEPARATE ILLUSTRATION

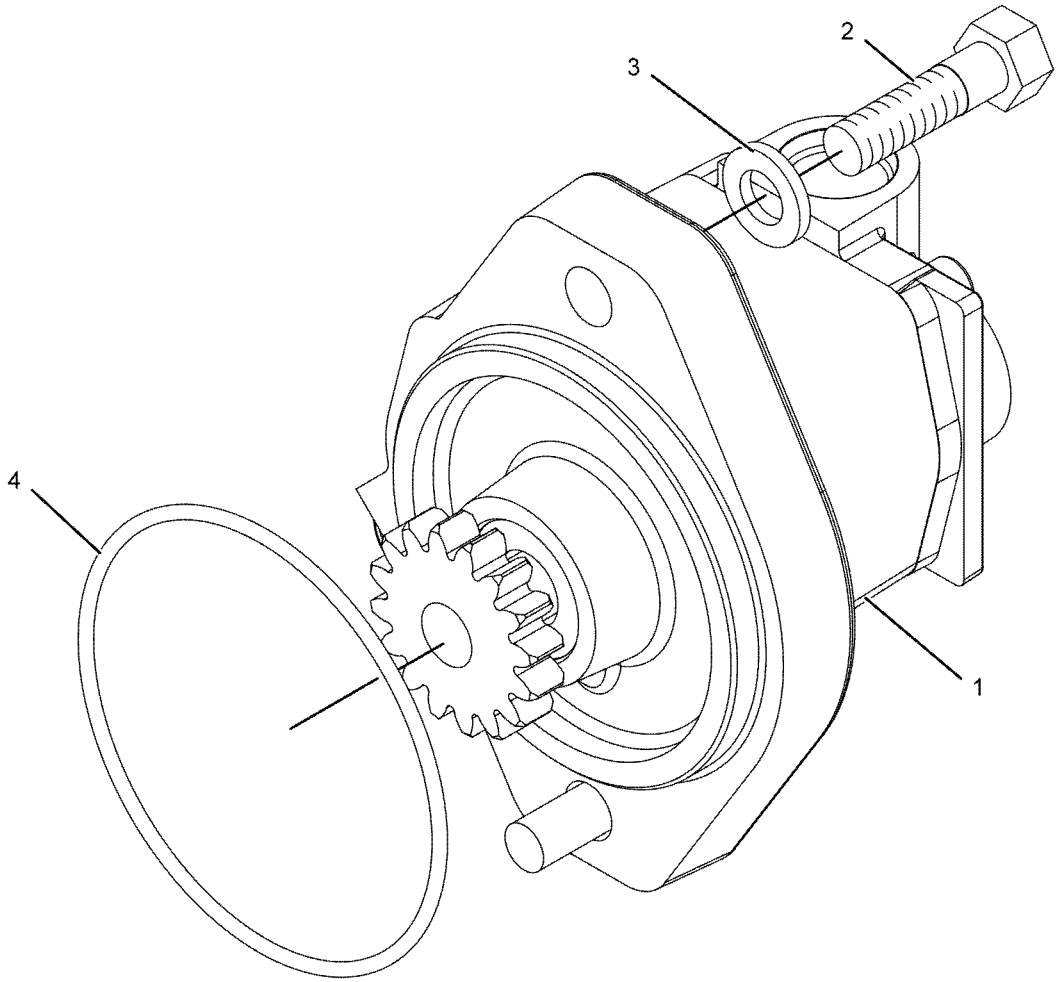

GRAPHIC #1 <END> g01051199

331-7465 PUMP GP-FUEL TRANSFER

S/N: JZM1-UP
PART OF 359-6502, 443-0004 ENGINE AR-COMPLETE
AN ATTACHMENT
TYPE 2

SMCS-1256 **i06064313**

NOTE	REF NO	GRAPHIC REF	PART NUMBER	QTY	PART NAME 1 2 3 4 5 6 (PRODUCT LEVEL)	SEE PAGE
CR	1	1	**394-1398**	1	PUMP GP-FUEL TRANSFER	
	2	1	**3B-1915**	2	BOLT (3/8-16X1.375-IN)	
	3	1	**5M-2894**	2	WASHER-HARD (10.2X18.5X2.5-MM THK)	
	4	1	**8C-3089**	1	SEAL-O-RING	

C - CHANGE FROM PREVIOUS TYPE
R - REMANUFACTURED PART MAY BE AVAILABLE

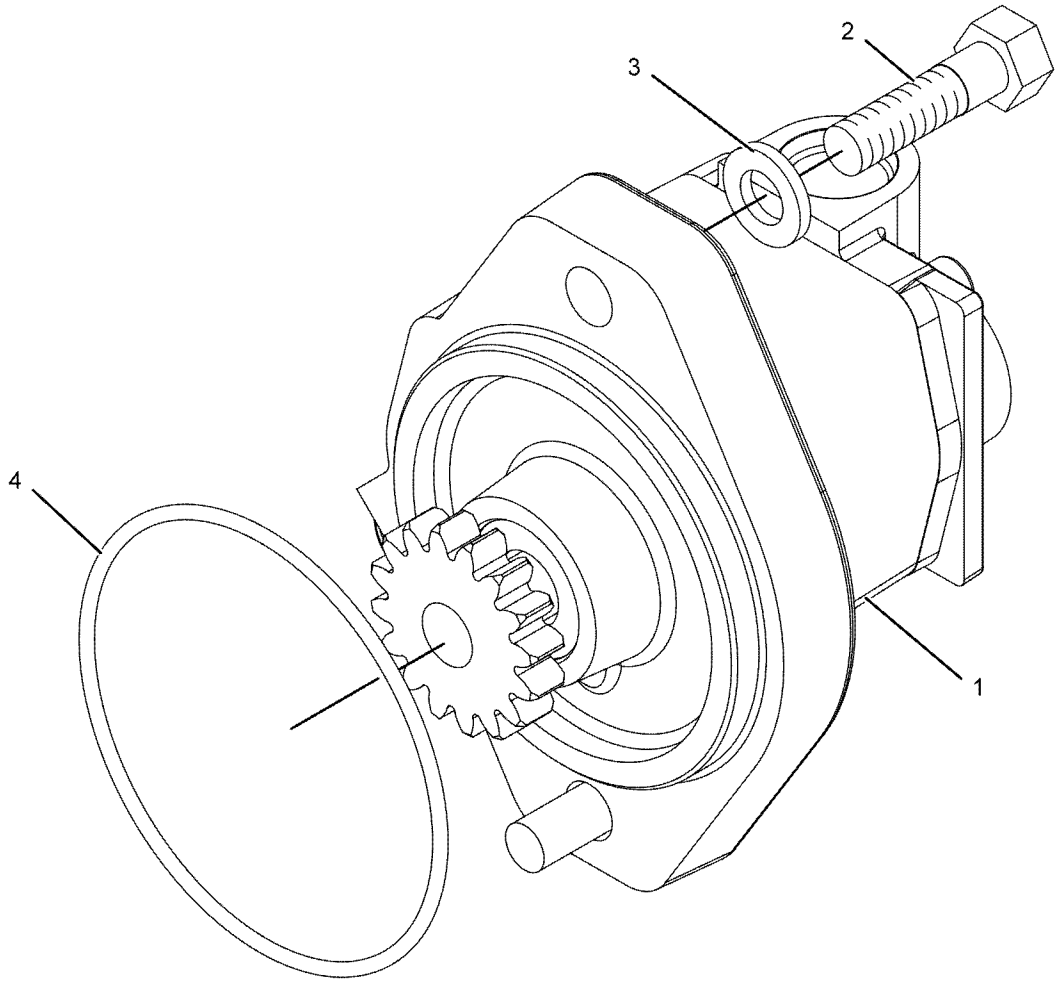

GRAPHIC #1 <END> g01051199

373-3188 TANK GP-FUEL

S/N: RAB1-UP
1207-L (319-US GAL)
AN ATTACHMENT

SMCS-1273 **i05453453**

NOTE	REF NO	GRAPHIC REF	PART NUMBER	QTY	PART NAME 1 2 3 4 5 6 (PRODUCT LEVEL)	SEE PAGE
	1	1	**246-2641**	1	PADLOCK GP	
		1	**5P-8500**	1	KEY	
	2	1	**6T-6080**	8	MOUNT-RUBBER	
	3	1	**306-7490**	1	FILM-IDENTIFICATION (CAT, LH)	
	4	1	**328-9050**	1	SENSOR AS-LIQUID LEVEL (FUEL)	
		1	**9X-3401**	4	PIN-CONNECTOR (16-GA TO 18-GA)	
		1	**230-4014**	2	RECEPTACLE AS-CONNECTOR (3-PIN)	
		1	**363-4123**	2	GASKET	
Y	5	1	**379-8601**	1	TANK GP-FUEL	191
Y	6	1	*381-6252*	1	ADAPTER GP-FAST FILL FUEL	161
M	7	1	**6V-2314**	5	BOLT (M5X0.8X35-MM)	
M	8	1	**7X-2565**	4	BOLT (M20X2.5X100-MM)	
	9	1	**8T-0328**	5	WASHER-HARD (5.5X10X1-MM THK)	
	10	1	**8T-4123**	4	WASHER (3.62X5.75X0.375-MM THK)	
	11	1	**8X-0674**	4	WASHER (22X100X10-MM THK)	

M - METRIC PART
Y - SEPARATE ILLUSTRATION

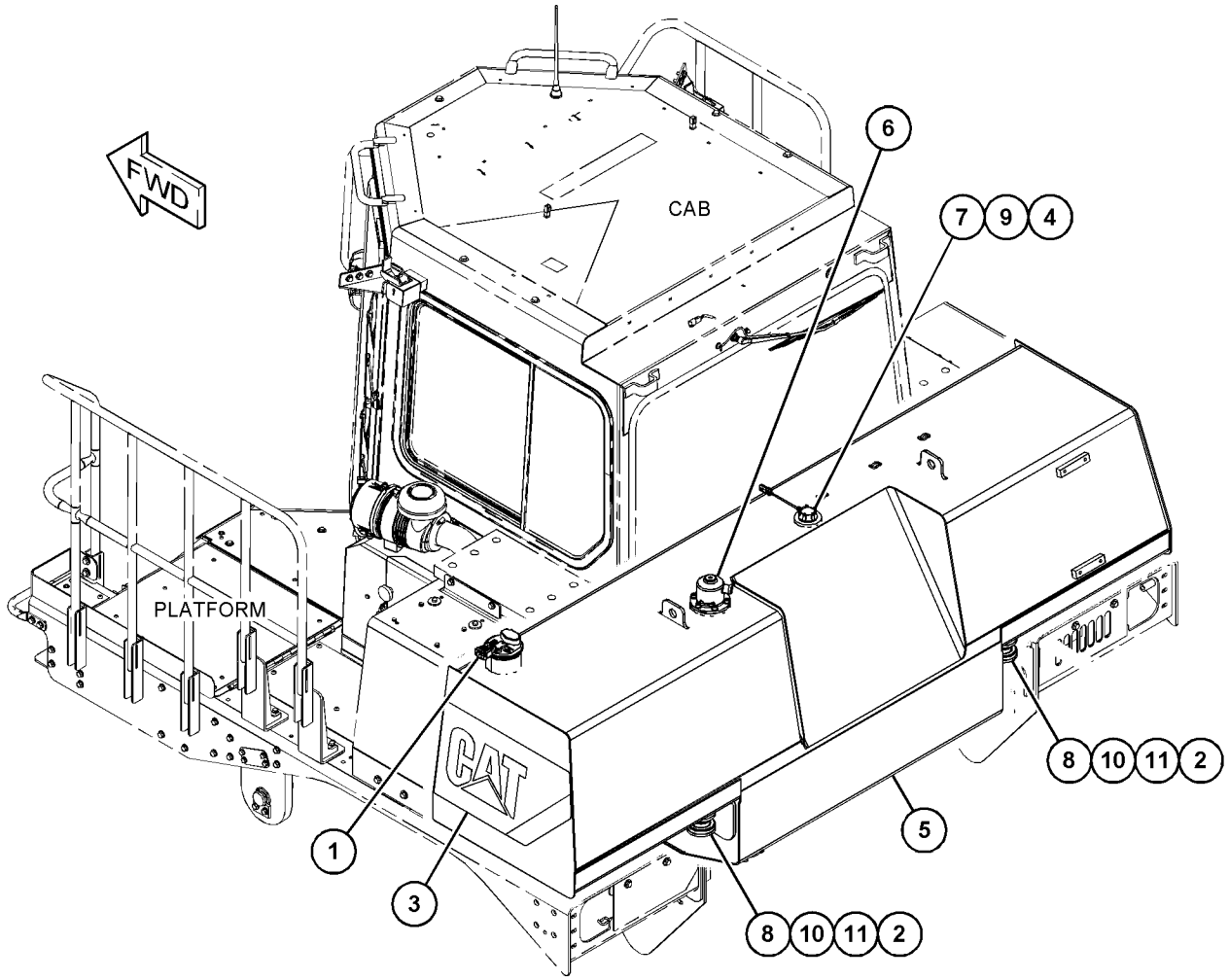

GRAPHIC #1 <END> g03492259

373-3189 TANK GP-FUEL

S/N: RAB1-UP
1207-L (319-US GAL)
AN ATTACHMENT

SMCS-1273 **i05453455**

NOTE	REF NO	GRAPHIC REF	PART NUMBER	QTY	PART NAME 1 2 3 4 5 6 (PRODUCT LEVEL)	SEE PAGE
	1	1	**246-2641**	1	PADLOCK GP	
		1	**5P-8500**	1	KEY	
	2	1	**6T-6080**	12	MOUNT-RUBBER	
	3	1	**328-9050**	1	SENSOR AS-LIQUID LEVEL (FUEL)	
		1	**9X-3401**	3	PIN-CONNECTOR (16-GA TO 18-GA)	
		1	**230-4014**	1	RECEPTACLE AS-CONNECTOR (3-PIN)	
		1	**363-4123**	1	GASKET	
	4	1	**366-2126**	1	FILM-IDENTIFICATION (CAT, LH)	
Y	5	1	**378-5564**	1	TANK GP-FUEL	190
Y	6	1	*381-6252*	1	ADAPTER GP-FAST FILL FUEL	161
M	7	1	**6V-2314**	5	BOLT (M5X0.8X35-MM)	
	8	1	**7X-0342**	2	BOLT (5/8-11X0.75-IN)	
M	9	1	**7X-2565**	6	BOLT (M20X2.5X100-MM)	
	10	1	**8T-0328**	5	WASHER-HARD (5.5X10X1-MM THK)	
	11	1	**8T-4123**	6	WASHER (3.62X5.75X0.375-MM THK)	
	12	1	**8X-0674**	6	WASHER (22X100X10-MM THK)	

M - METRIC PART
Y - SEPARATE ILLUSTRATION

373-3189 **TANK GP-FUEL (**contd.**)** **i05453455**

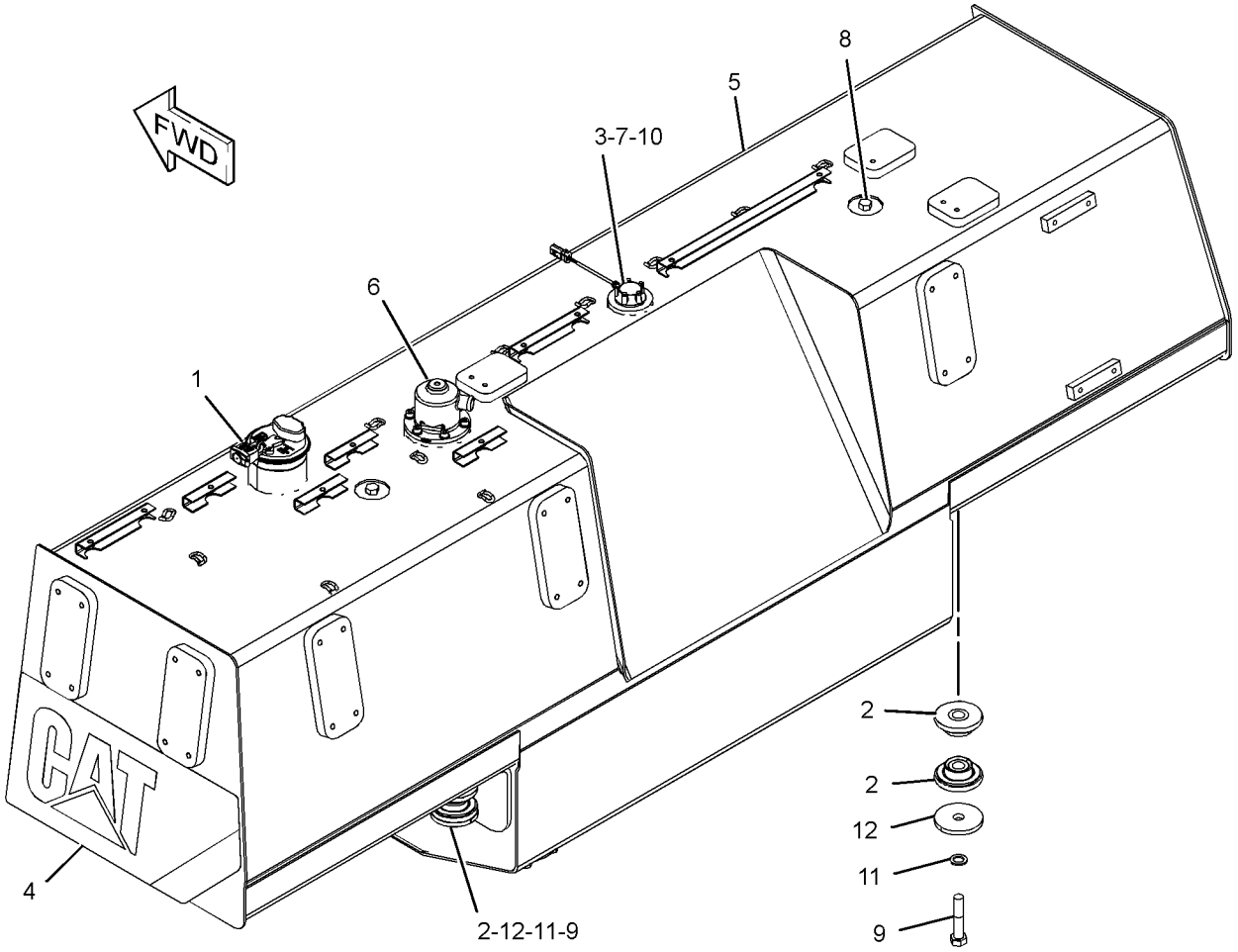

GRAPHIC #1 <END> g03489916

378-5564 TANK GP-FUEL

S/N: RAB1-UP
1207-L (319-US GAL)
PART OF 373-3189 TANK GP-FUEL
AN ATTACHMENT

SMCS-1273 **i06274722**

NOTE	REF NO	GRAPHIC REF	PART NUMBER	QTY	PART NAME 1 2 3 4 5 6 (PRODUCT LEVEL)	SEE PAGE
	1	1	**9P-7121**	1	STRAINER-FUEL (FUEL TANK)	
	2	1	**349-7059**	1	CAP AS-FUEL (LOCKABLE, VENTED)	
		1	**7D-7111**	1	SEAL-O-RING	
		1	**350-7735**	1	KIT-CAP FILTER (FUEL TANK)	
					(INCLUDES BODY BREATHER, GASKET, SCREWS, & WASHERS)	
					PARTS SHOWN IN GRAPHIC(S) WITHOUT A REFERENCE NUMBER ARE NOT SERVICED SEPARATELY	

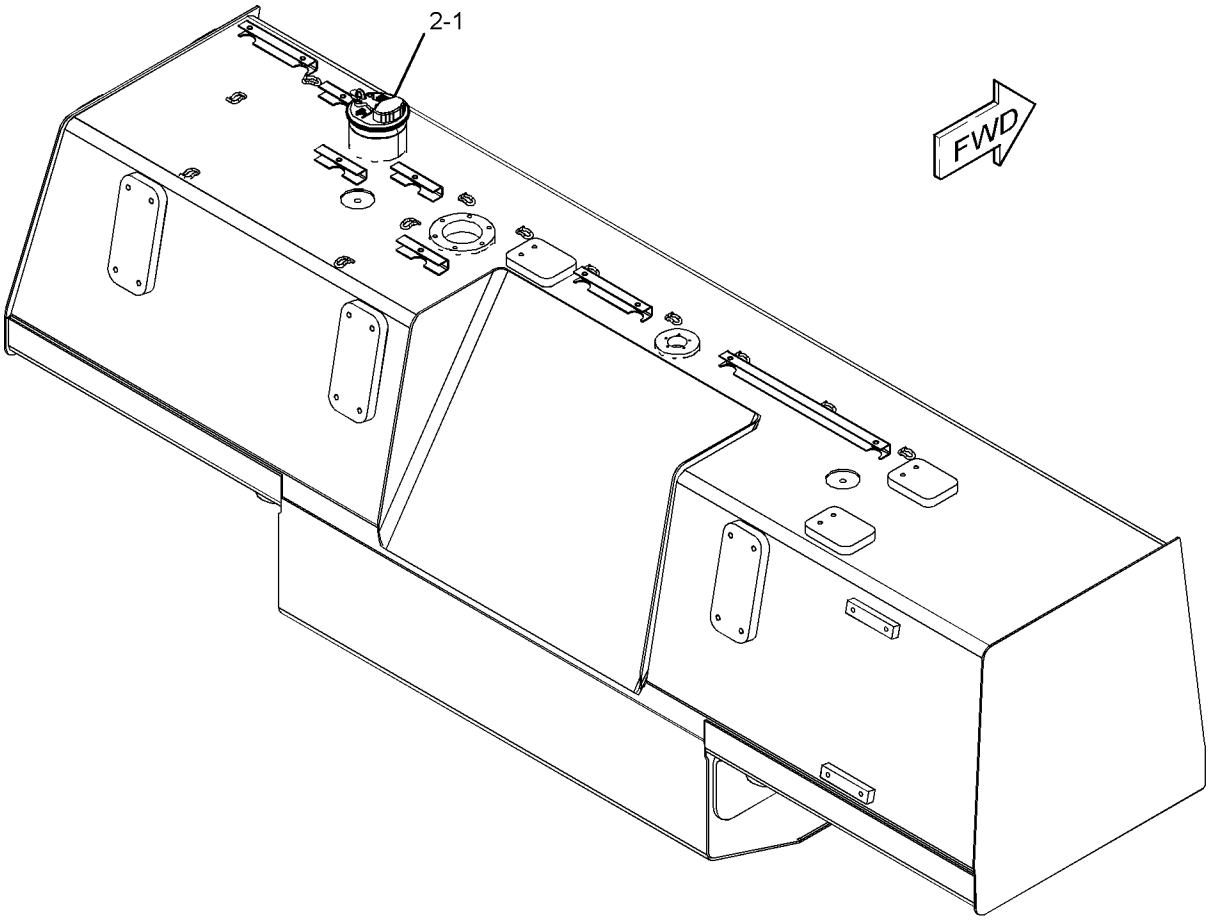

GRAPHIC #1 <END> g03489256

379-8601 TANK GP-FUEL

S/N: RAB1-UP
1207-L (319-US GAL)
PART OF 373-3188 TANK GP-FUEL
AN ATTACHMENT

SMCS-1273 **i06274715**

NOTE	REF NO	GRAPHIC REF	PART NUMBER	QTY	PART NAME 1 2 3 4 5 6 (PRODUCT LEVEL)	SEE PAGE
	1	1	**9P-7121**	1	STRAINER-FUEL (FUEL TANK)	
	2	1	**349-7059**	1	CAP AS-FUEL (LOCKABLE, VENTED)	
		1	**7D-7111**	1	SEAL-O-RING	
		1	**350-7735**	1	KIT-CAP FILTER (FUEL TANK)	
					(INCLUDES BODY, SCREWS, GASKET, & WASHERS)	
					PARTS SHOWN IN GRAPHIC(S) WITHOUT A REFERENCE NUMBER ARE NOT SERVICED SEPARATELY	

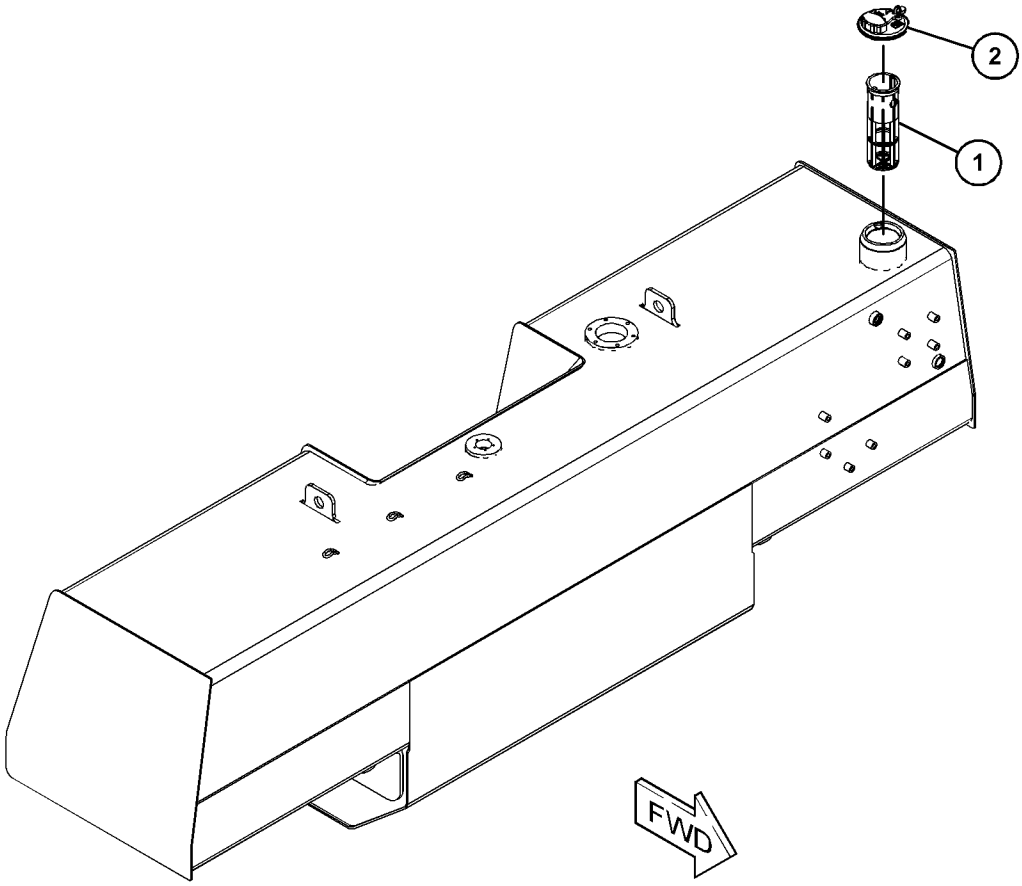

GRAPHIC #1 <END> g03501138

327-0376 VALVE GP-CHECK–FUEL

S/N: JZM1-UP

PART OF 327-4448 VALVE GP-CHECK

AN ATTACHMENT

SMCS-1262 **i03597860**

NOTE	REF NO	GRAPHIC REF	PART NUMBER	QTY	PART NAME 1 2 3 4 5 6 (PRODUCT LEVEL)	SEE PAGE
	1	1	**033-6033**	1	SEAL-O-RING	
	2	1	**6V-6923**	1	RING-BACKUP	

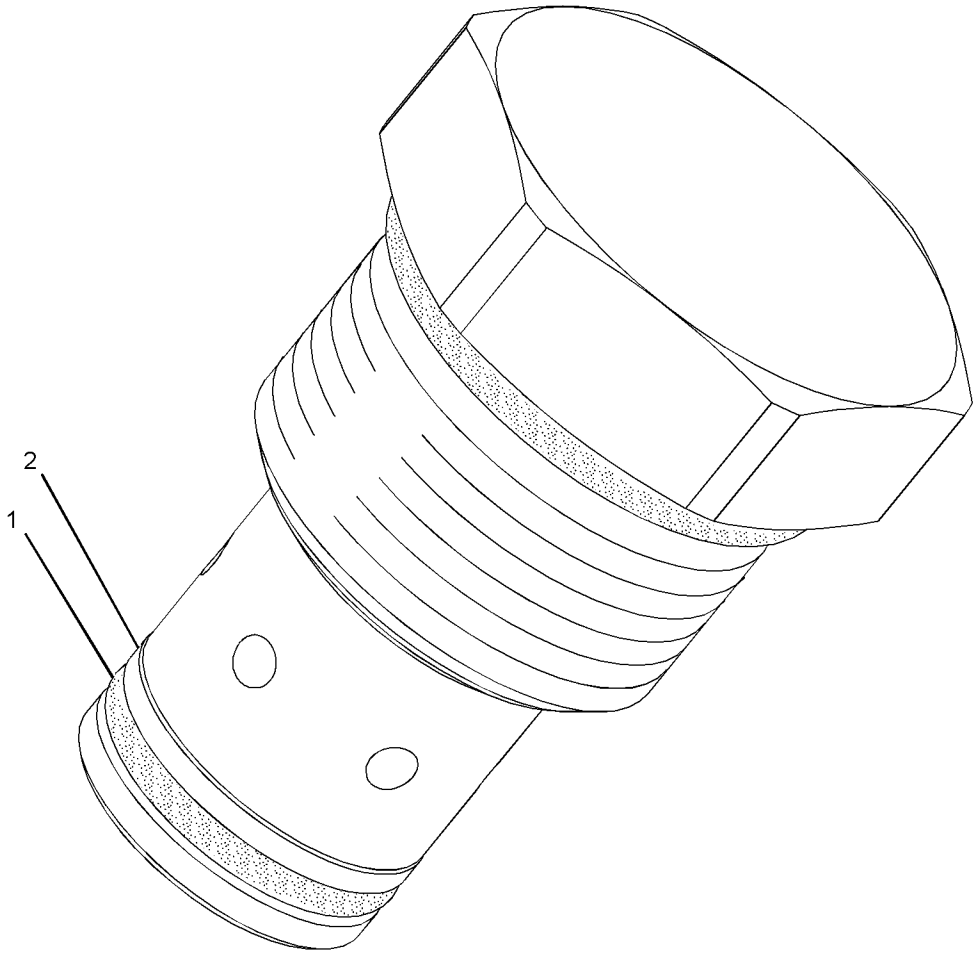

GRAPHIC #1 <END> g01294010

327-4448 VALVE GP-CHECK

S/N: JZM1-UP
FUEL PRESSURE REGULATING
PART OF 357-1292, 440-5222 LINES GP-FUEL
AN ATTACHMENT

SMCS-1262 **i04484869**

NOTE	REF NO	GRAPHIC REF	PART NUMBER	QTY	PART NAME 1 2 3 4 5 6 (PRODUCT LEVEL)	SEE PAGE
Y	1	1	**327-0376**	1	VALVE GP-CHECK (FUEL)	192
	2	1	**033-6027**	1	SEAL-O-RING	

Y - SEPARATE ILLUSTRATION

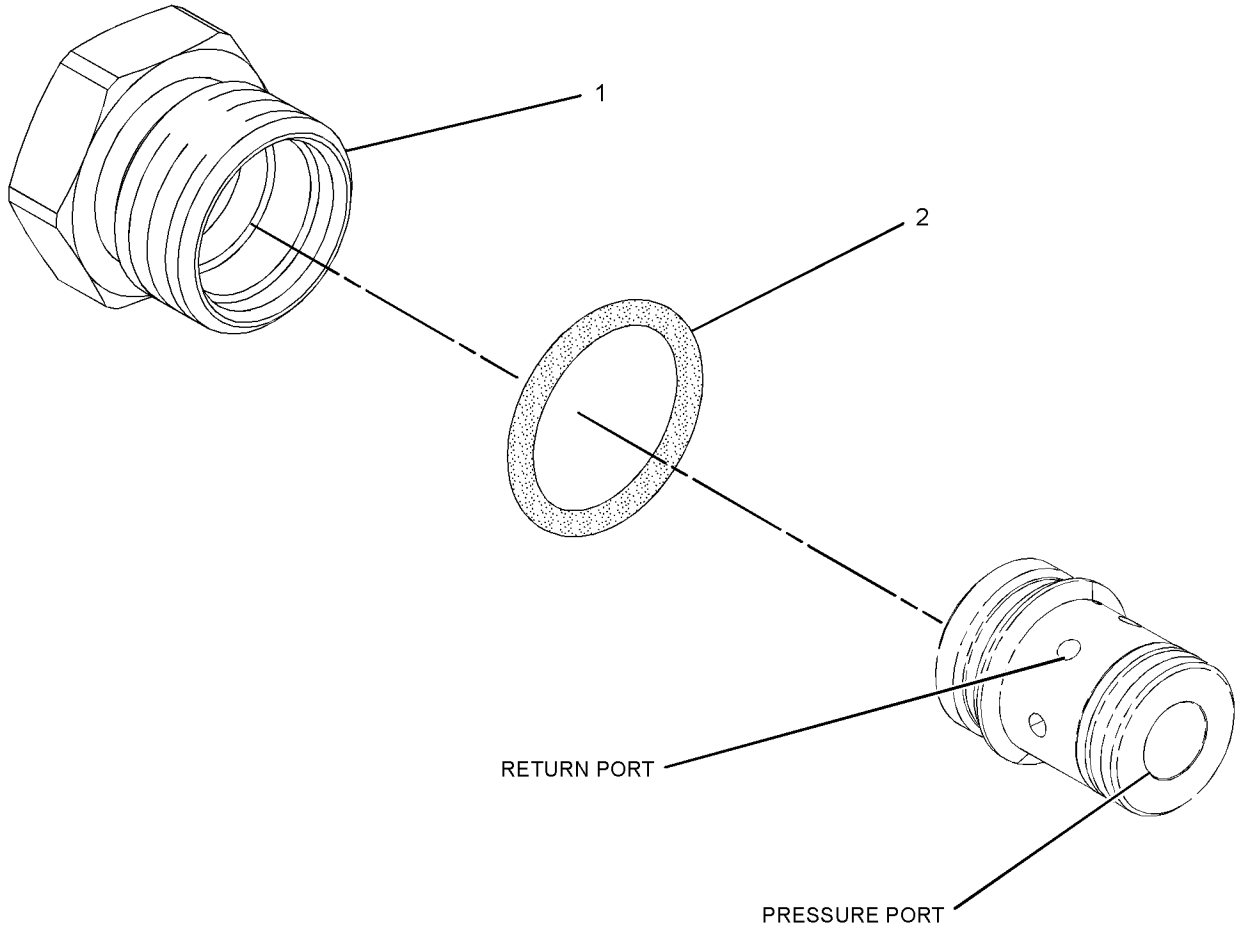

GRAPHIC #1 <END> g01295058

301-4108 ADAPTER GP-SENSOR

S/N: JZM1-UP
FOR USE WITH TIER II, 301-4107 SENSOR GP-ENGINE
CANNOT BE USED WITH DRIVE GP-PUMP HYDRAULIC
PART OF 347-7065 SENSOR GP-ENGINE
AN ATTACHMENT

SMCS-1900 **i05538074**

NOTE	REF NO	GRAPHIC REF	PART NUMBER	QTY	PART NAME 1 2 3 4 5 6 (PRODUCT LEVEL)	SEE PAGE
	1	1	**3E-5276**	1	ADAPTER	
	2	1	**6V-4589**	1	SEAL-O-RING	

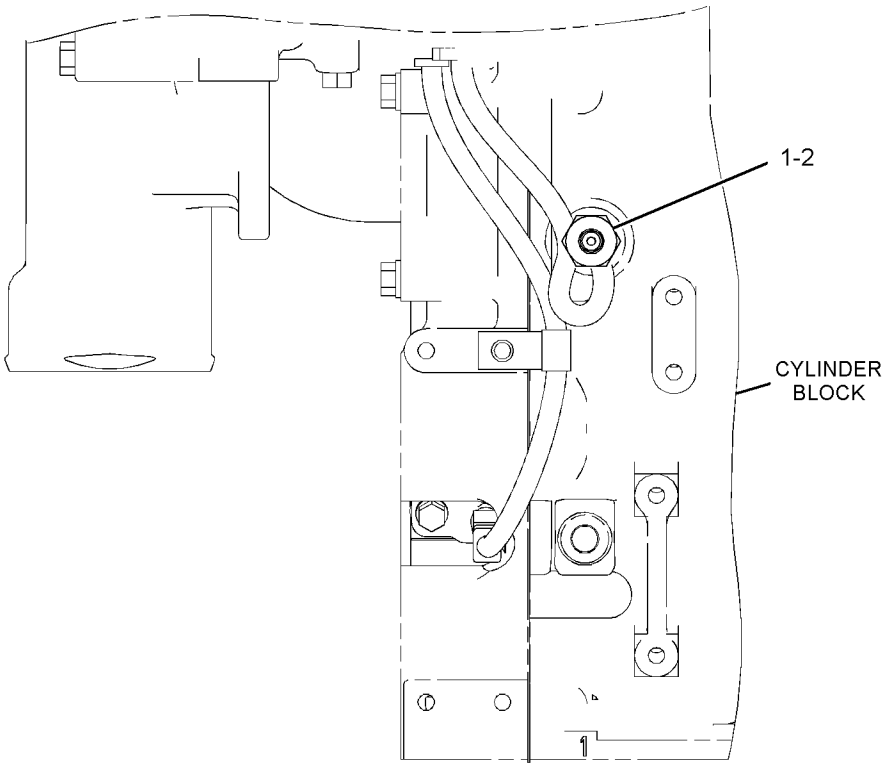

LEFT SIDE VIEW OF ENGINE

GRAPHIC #1 <END> g02188473

3E-6328 ALARM GP

S/N: RAB1-UP
24-VOLT
PART OF 377-6104 WIRING GP-PLATFORM
AN ATTACHMENT

SMCS-7400, 7402, 7407 **i06056671**

NOTE	REF NO	GRAPHIC REF	PART NUMBER	QTY	PART NAME 1 2 3 4 5 6 (PRODUCT LEVEL)	SEE PAGE
	1	1	**102-8802**	1	KIT-RECEPTACLE (2-PIN)	
					(INCLUDES RECEPTACLE AS & WEDGE)	
	2	1	**8T-8729**	2	PIN-CONNECTOR (16-GA TO 18-GA)	

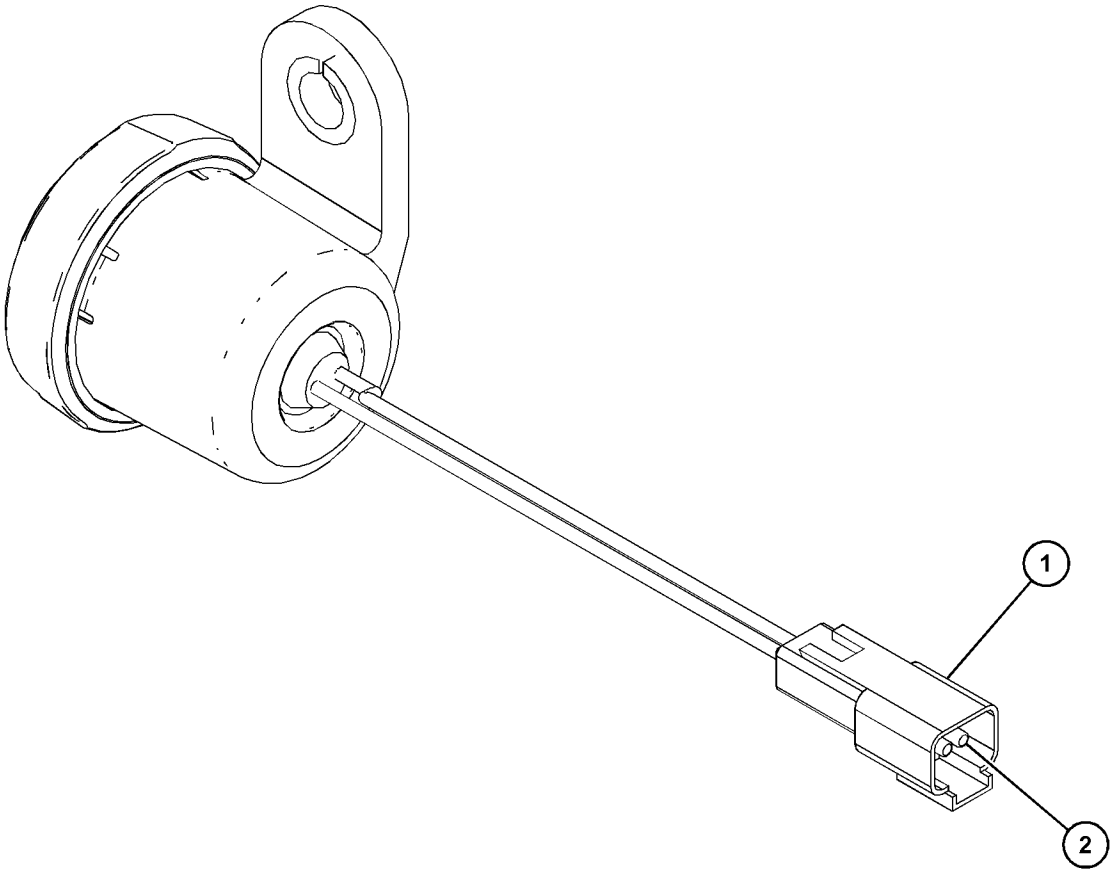

GRAPHIC #1 <END> g03798741

272-1889 ALTERNATOR GP-CHARGING*R

S/N: RAB1-UP
24-VOLT, 150-AMPERE
PART OF 359-6468 DRIVE GP-ACCESSORY
AN ATTACHMENT

SMCS-1405 **i06534721**

NOTE	REF NO	GRAPHIC REF	PART NUMBER	QTY	PART NAME 1 2 3 4 5 6 (PRODUCT LEVEL)	SEE PAGE
	1	1	**478-4968**	1	FRAME-DRIVE END	
	2	1	**478-4950**	1	FAN AS	
	3	1	**478-4970**	1	FRAME-REAR	
	4	1	**478-4971**	1	COVER AS-ALTERNATOR	
	5	1	**185-2647**	1	GROMMET	
	6	1	**478-4955**	1	STATOR AS	
	7	1	**185-2654**	1	PLATE	
	8	1	**478-4958**	1	ROTOR AS	
	9	1	**478-4959**	1	COIL AS	
	10	1	**185-2648**	1	REGULATOR AS-VOLTAGE (24-VOLT)	
					AVAILABLE REPAIR KIT(S):	
			478-4961	1	KIT-COLLAR (ALTERNATOR)	
					(INCLUDES COLLARS)	
			478-4962	1	KIT-BEARING (ALTERNATOR)	
					(INCLUDES BEARINGS)	
			478-4963	1	KIT-HARDWARE (ALTERNATOR)	
					(INCLUDES BOLTS & PLATE)	
			478-4964	1	KIT-TERMINAL (ALTERNATOR)	
					(INCLUDES HOLDER AS,PLATE,INSULATION,PIN, GROMMET & NUT)	
			478-4967	1	KIT-TERMINAL (ALTERNATOR)	
					(INCLUDES INSULATIONS,WASHERS & NUTS)	

272-1889 **ALTERNATOR GP-CHARGING (**contd.**)** **i06534721**

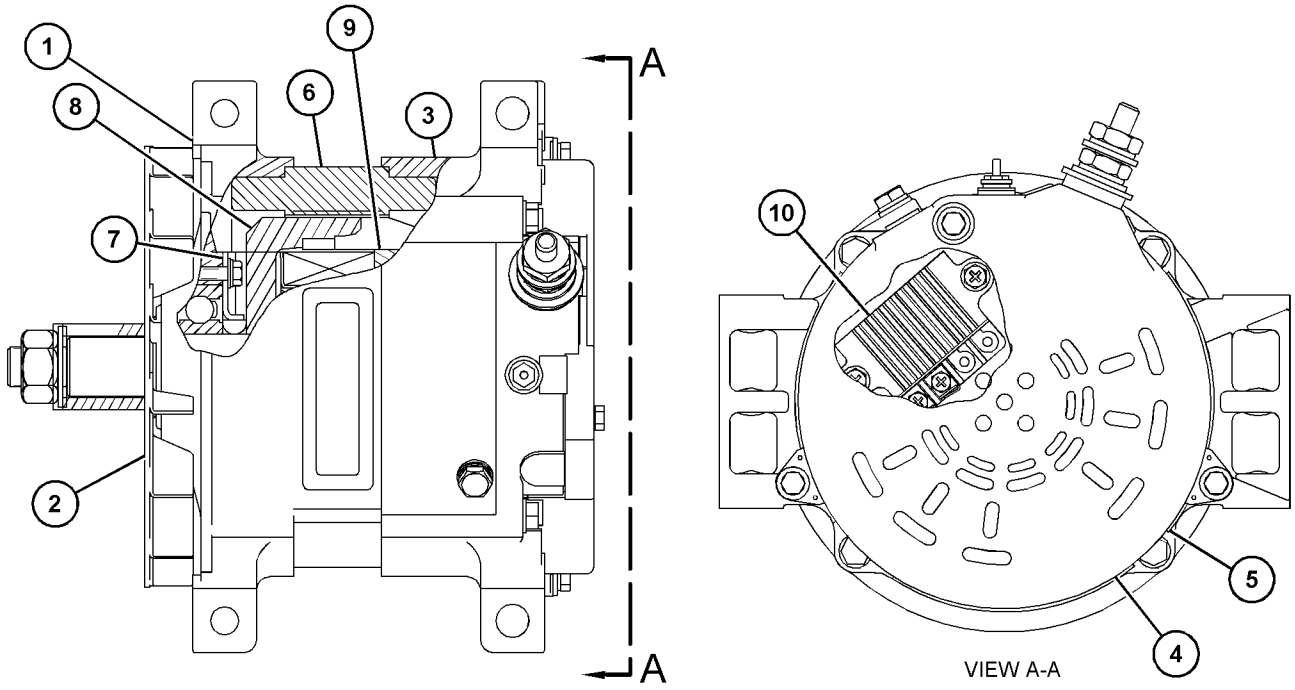

GRAPHIC #1 <END> g03881339

285-1141 APPLICATION GP-MONITOR–VIMS

S/N: RAB1-UP

PART OF 420-9322, 448-9332 WIRING GP-COMMUNICATION

AN ATTACHMENT

SMCS-7610 **i04900945**

NOTE	PART NUMBER	QTY	PART NAME 1 2 3 4 5 6 (PRODUCT LEVEL)	SEE PAGE
R	**285-1142**	1	CONTROL GP-UNPROGRAMMED (VIMS)	
	101-0852	1	SCREW-PAN HEAD (8-32X0.375-IN)	
	7X-6315	1	STRAP AS-GROUND	
	134-4126	1	WASHER (4.52X8.28X0.76-MM THK)	

R - REMANUFACTURED PART MAY BE AVAILABLE

<END>

359-6421 BATTERY & WIRING GP

S/N: RAB1-248
PART OF 359-6401 CHASSIS AR
AN ATTACHMENT

SMCS-1401, 1402, 1408 **i05865068**

NOTE	REF NO	GRAPHIC REF	PART NUMBER	QTY	PART NAME 1 2 3 4 5 6 (PRODUCT LEVEL)	SEE PAGE
D	1	4	**5P-6025**		LOCKWIRE (0.1-M)	
	2	4	**1Q-1592**	2	PLATE AS	
					(EACH INCLUDES)	
		4	**7T-1099**	4	LINK	
M		4	**8T-3490**	1	NUT-WELD (M10X1.5-THD)	
	3	1	**1S-2342**	1	STRAP AS-GROUND	
	4	2	**6Y-6584**	1	STRAP AS-GROUND	
	5	2,3	**7G-1060**	3	STRAP AS-GROUND	
	6	2	**8S-2634**	1	COVER AS	
	7	2	**8S-4211**	2	PLATE	
	8	2	**8V-0622**	1	CABLE AS-BATTERY	
		2	**8C-5917**	1	TERMINAL AS-BATTERY (POSITIVE)	
		2	**8T-9757**	1	TERMINAL AS-BATTERY (NEGATIVE)	
					(EACH TERMINAL AS INCLUDES)	
		2	**1M-6119**	1	BOLT (5/16-18X1.375-IN)	
		2	**1M-6120**	1	NUT (5/16-18-THD)	
		2	**9G-0003**	1	COVER AS-TERMINAL (BLACK)	
		2	**9G-0004**	1	COVER AS-TERMINAL (RED)	
					(EACH COVER AS INCLUDES)	
		2	**8L-8413**	1	STRAP-CABLE (WHITE)	
Y	9	3	**145-7028**	1	SENSOR GP-TEMPERATURE (HYDRAULIC OIL)	382
	10	2	**149-6371**	1	SWITCH AS-PRESSURE (REFRIGERANT, LOW SIDE)	
		2	**102-8802**	2	KIT-RECEPTACLE (2-PIN)	
					(EACH INCLUDES RECEPTACLE AS & WEDGE)	
		2	**8T-8729**	2	PIN-CONNECTOR (16-GA TO 18-GA)	
	11	1	**153-5710**	2	BATTERY GP (12-VOLT, MAINTENANCE FREE, WET)	
					(EACH INCLUDES)	
		1	**123-1373**	6	CAP AS-FILLER (7/8-9-THD) (NEGATIVE)	
		1	**461-5232**	6	CAP AS-FILLER (M18X2-MM) (POSITIVE)	
	12	1	**153-6281**	1	HOLD-DOWN-BATTERY	
	13	5	**163-1201**	1	HORN AS (24-VOLT, LOW TONE)	
	14	3	**164-3651**	1	ADAPTER	
	15	5	**174-7875**	1	HORN AS (24-VOLT, HIGH TONE)	
	16	1	**231-3472**	1	PLATE AS	
		1	**7T-1099**	3	LINK	
	17	1	**235-9762**	1	PLATE AS	
		1	**7T-1099**	3	LINK	
	18	3	**253-2673**	1	SWITCH GP-PRESSURE (DIFFERENTIAL) (DIFFERENTIAL)	
		3	**8T-8729**	2	PIN-CONNECTOR (16-GA TO 18-GA)	
		3	**5F-9144**	1	SEAL-O-RING	
		3	**3J-1907**	1	SEAL-O-RING	
E		3	**9X-1813**		SLEEVE (14-CM)	
		3	**102-8802**	1	KIT-RECEPTACLE (2-PIN)	
					(EACH INCLUDES RECEPTACLE AS & WEDGE)	
	19	2	**256-6453**	1	SENSOR-TEMPERATURE (TRANSMISSION OIL)	
Y	20	2	**292-0358**	1	SWITCH GP-ROTARY (2-POSITION) (STARTER LOCKOUT)	407

359-6421 **BATTERY & WIRING GP (**contd.**)** **i05865068**

NOTE	REF NO	GRAPHIC REF	PART NUMBER	QTY	PART NAME 1 2 3 4 5 6 (PRODUCT LEVEL)	SEE PAGE
	21	4	**296-6539**	1	BRACKET AS	
M		4	**8T-3490**	1	NUT-WELD (M10X1.5-THD)	
Y	22	1	**319-3487**	1	SENSOR GP-LIQUID LEVEL	367
	23	2	**320-6171**	1	JUNCTION BLOCK AS	
	24	2	**324-7659**	1	BLOCK AS-JUNCTION (BATTERY)	
Y	25	4	**330-9321**	1	SENSOR GP-LIQUID LEVEL (POWER TRAIN OIL)	368
	26	1	**331-0158**	1	JUMPER AS	
	27	3,5	**353-4515**	2	SWITCH AS-TOGGLE (ENGINE COMPARTMENT LIGHTS)	
					(EACH INCLUDES)	
		3,5	**102-8803**	1	KIT-RECEPTACLE (3-PIN)	
					(INCLUDES RECEPTACLE AS & WEDGE)	
		3,5	**8T-8729**	3	PIN-CONNECTOR (16-GA TO 18-GA)	
	28	1,2	**355-3148**	1	SWITCH AS-PRESSURE (HIGH, LOW) (AIR CONDITIONER)	
		1,2	**8T-8729**	2	PIN-CONNECTOR (16-GA TO 18-GA)	
		1,2	**102-8802**	2	KIT-RECEPTACLE (2-PIN)	
					(EACH INCLUDES RECEPTACLE AS & WEDGE)	
	29	2	**356-7507**	1	PLATE AS	
M		2	**8T-3490**	1	NUT-WELD (M10X1.5-THD)	
Y	30	2	**363-2210**	1	BLOCK GP-JUNCTION	229
	31	2	**369-4098**	1	SWITCH AS-DISCONNECT (MASTER) (AUXILIARY)	
		2	**449-8192**	1	KIT-KNOB	
					(INCLUDES BEZEL, KNOB, NUTS & LOCKWASHER)	
		2	**2H-3922**	1	LOCKWASHER	
		2	**6F-7045**	2	NUT-FULL (3/8-24-THD)	
		2	**8H-5303**	2	NUT (3/4-16-THD)	
	32	5	**370-1485**	1	ALARM GP (BACKUP)	
		5	**102-8802**	1	KIT-RECEPTACLE (2-PIN)	
					(INCLUDES RECEPTACLE AS & WEDGE)	
		5	**5P-5623**		WIRE-ELECTRICAL (16-GA, BLACK) (0.8-M)	
		5	**8T-8729**	2	PIN-CONNECTOR (16-GA TO 18-GA)	
E		5	**9X-1813**		SLEEVE (21-CM)	
	33	2	**377-2997**	1	CABLE AS	
		2	**1S-4915**	2	LINER (CONDUIT)	
E		2	**5P-0695**		CONDUIT (43-CM)	
		2	**8N-0869**	1	COVER-TERMINAL (RED)	
E		2	**8T-2225**		TUBE-HEAT SHRINK (25.4-MM DIA) (8-CM)	
		2	**276-1786**	1	COVER-TERMINAL (RED)	
		2	**315-0180**	1	TERMINAL-RING (00-GA, 3/8-IN SCREW)	
E		2	**159-8049**		CABLE (00-GA, RED) (77-CM)	
		2	**274-9183**	1	TERMINAL-RING (00-GA, 1/2-IN SCREW)	
		2	**356-0298**	1	ELBOW	
	34	2	**377-2998**	1	CABLE AS	
		2	**1S-4915**	2	LINER (CONDUIT)	
		2	**1S-7251**	2	TERMINAL-CABLE (00-GA, 1/2-IN SCREW)	
E		2	**5P-0695**		CONDUIT (132-CM)	
		2	**8N-0869**	2	COVER-TERMINAL (RED)	
E		2	**8T-2225**		TUBE-HEAT SHRINK (25.4-MM DIA) (8-CM)	
E		2	**159-8049**		CABLE (00-GA, RED) (152-CM)	
	35	2	**377-2999**	1	RECEPTACLE AS	
		2	**9X-9825**	1	TERMINAL-CABLE (00-GA, 1/2-IN SCREW)	
		2	**1S-4915**	2	LINER (CONDUIT)	

359-6421 **BATTERY & WIRING GP (**contd.**)** **i05865068**

NOTE	REF NO	GRAPHIC REF	PART NUMBER	QTY	PART NAME 1 2 3 4 5 6 (PRODUCT LEVEL)	SEE PAGE
		2	**1S-7251**	2	TERMINAL-CABLE (00-GA, 1/2-IN SCREW)	
E		2	**5P-0695**		CONDUIT (79-CM)	
E		2	**8T-2225**		TUBE-HEAT SHRINK (25.4-MM DIA) (12-CM)	
E		2	**159-8049**		CABLE (00-GA, RED) (96-CM)	
E		2	**159-8050**		CABLE (00-GA, BLACK) (27-CM)	
	36	2	**377-3000**	1	CABLE AS	
		2	**1S-4915**	2	LINER (CONDUIT)	
		2	**1S-7251**	1	TERMINAL-CABLE (00-GA, 1/2-IN SCREW)	
		2	**1S-7252**	1	TERMINAL-CABLE (00-GA, 3/8-IN SCREW)	
E		2	**5P-0695**		CONDUIT (26-CM)	
E		2	**159-8050**		CABLE (00-GA, BLACK) (55-CM)	
E		2	**8T-2225**		TUBE-HEAT SHRINK (25.4-MM DIA) (8-CM)	
		2	**9G-8909**	2	COVER-TERMINAL (BLACK)	
	37	2	**377-3004**	1	CABLE AS	
		2	**5P-2600**	1	RING-TERMINAL (000-GA, 1/2-IN SCREW)	
		2	**6T-0465**	2	COVER-TERMINAL (BLACK)	
		2	**035-0425**	1	RING-TERMINAL (000-GA, 3/8-IN SCREW)	
E		2	**159-8052**		CABLE-ELECTRICAL (00-GA) (94-CM)	
	38	2	**377-3005**	1	CABLE AS	
		2	**6T-0465**	1	COVER-TERMINAL (BLACK)	
		2	**035-0425**	2	RING-TERMINAL (000-GA, 3/8-IN SCREW)	
E		2	**159-8052**		CABLE-ELECTRICAL (00-GA) (157-CM)	
	39	2	**377-9496**	1	BRACKET AS	
Y	40	1,3	**378-4518**	1	HARNESS AS-POWER	268
Y	41	3	**378-4520**	1	HARNESS AS-CHASSIS (FENDER, RH)	250
Y	42	4	**378-4521**	1	HARNESS AS-CHASSIS (FENDER, LH)	251
Y	43	4	**380-7133**	1	HARNESS AS-TRANSMISSION	270
	44	4	**381-4119**	1	BRACKET AS	
M		4	**8T-3490**	3	NUT-WELD (M10X1.5-THD)	
	45	3,5	**382-0346**	2	PLATE	
	46	4	**421-1121**	1	BRACKET	
	47	4	**446-9419**	1	BRACKET	
	48	1	**448-9142**	2	BRACKET	
	49	1	**091-9035**	1	SPACER (11X25X20-MM THK)	
M	50	2	**096-4833**	4	BOLT-SOCKET HEAD (M5X0.8X20-MM)	
	51	1,2,4	**130-5300**	9	CLIP	
M	52	3	**133-7810**	2	STUD-TAPERLOCK (M10X1.5X45-MM)	
	53	4	**136-1122**	1	BUSHING	
M	54	2	**142-3953**	3	STUD (M10X1.5-THD)	
	55	3,5	**150-5931**	4	GROMMET	
	56	2	**1K-4649**	1	SPACER (0.516X1X1-IN THK)	
	57	2	**1S-0994**	4	CLIP	
	58	1	**200-6345**	1	MOUNT (DUAL SWIVEL)	
	59	2,3	**204-8000**	2	MOUNTING-CABLE TIE	
M	60	2	**227-6715**	2	STUD (M10X1.5X30-MM)	
	61	2,3	**230-7732**	3	MOUNTING-CABLE TIE	
	62	3	**294-3313**	2	CLIP	
	63	2,3	**2V-1771**	5	GROMMET	
	64	5	**303-4649**	1	CLIP	
	65	4	**315-5491**	2	SPACER (20.5X38X20-MM THK)	
	66	4	**352-3970**	1	CLIP	

359-6421 **BATTERY & WIRING GP (**contd.**)** **i05865068**

NOTE	REF NO	GRAPHIC REF	PART NUMBER	QTY	PART NAME 1 2 3 4 5 6 (PRODUCT LEVEL)	SEE PAGE
	67	3	**3J-1907**	2	SEAL-O-RING	
	68	2,4	**3K-0360**	1	SEAL-O-RING	
	69	2	**4L-6454**	4	BOLT (3/8-16X1-IN)	
	70	1,2,4	**4P-7428**	3	CLIP	
	71	2,3,4	**4P-7429**	4	CLIP	
	72	2,3,4,5	**4P-7581**	8	CLIP	
	73	1,2,3	**4P-8134**	5	CLIP	
	74	2	**5C-6565**	1	BOLT (1/2-13X1.125-IN)	
	75	1,2	**5G-3676**	14	GROMMET	
	76	2	**5P-1076**	1	WASHER-HARD (13.5X30X4-MM THK)	
	77	1,2,3	**5P-7464**	5	CLIP (SLOT)	
	78	1,2,3	**5P-7465**	5	CLIP (TAB)	
	79	1	**5P-8245**	1	WASHER-HARD (13.5X25.5X3-MM THK)	
	80	3	**6V-1249**	3	GROMMET (22-MM ID)	
	81	4	**6V-4589**	1	SEAL-O-RING	
	82	1,2	**6V-7359**	2	GROMMET (25-MM ID, 37-MM OD)	
	83	2	**6V-8188**	2	NUT (1/2-13-THD)	
	84	1,2	**7B-1251**	4	GROMMET	
	85	3	**7J-0204**	1	SEAL-O-RING	
	86	1,2,3,4,5	**7K-1181**	270	STRAP-CABLE	
	87	2	**7V-6571**	1	GROMMET	
	88	4	**7X-0582**	4	WASHER-HARD (20X44.5X6-MM THK)	
	89	4	**7X-7729**	1	WASHER (11X25X3-MM THK)	
	90	2	**8S-0948**	1	CLIP	
	91	1	**8S-9089**	1	BOLT (1/2-13X4.5-IN)	
	92	1	**8T-0328**	4	WASHER-HARD (5.5X10X1-MM THK)	
	93	2,3	**8T-1887**	2	CLIP (SLOT)	
	94	3	**8T-1888**	2	CLIP (TAB)	
	95	1,2	**8T-1889**	2	CLIP (SLOT)	
	96	1,2	**8T-1890**	2	CLIP (TAB)	
	97	2	**8T-1895**	13	CLIP (SLOT)	
	98	2	**8T-1896**	13	CLIP (TAB)	
M	99	2	**8T-2223**	3	BOLT-SOCKET HEAD (M10X1.5X45-MM)	
	100	1,2,3,4,5	**8T-4121**	74	WASHER-HARD (11X21X2.5-MM THK)	
M	101	2,3	**8T-4133**	5	NUT (M10X1.5-THD)	
M	102	1,2,3,4,5	**8T-4136**	21	BOLT (M10X1.5X25-MM)	
M	103	1,2,3,4,5	**8T-4137**	24	BOLT (M10X1.5X20-MM)	
M	104	4	**8T-4139**	4	BOLT (M12X1.75X30-MM)	
M	105	1	**8T-4178**	2	BOLT (M10X1.5X90-MM)	
M	106	2	**8T-4185**	1	BOLT (M10X1.5X50-MM)	
M	107	4	**8T-4186**	1	BOLT (M10X1.5X40-MM)	
M	108	2,3	**8T-4192**	6	BOLT (M12X1.75X25-MM)	
M	109	2,4	**8T-4195**	6	BOLT (M10X1.5X30-MM)	
M	110	1,2	**8T-4196**	3	BOLT (M10X1.5X35-MM)	
M	111	5	**8T-4198**	2	BOLT (M10X1.5X100-MM)	
	112	2,3,4	**8T-4223**	12	WASHER-HARD (13.5X25.5X3-MM THK)	
	113	2	**8T-4896**	4	WASHER-HARD (10.2X18.5X2.5-MM THK)	
	114	5	**8T-5387**	1	GROMMET	
M	115	4	**8T-5460**	2	BOLT (M20X2.5X40-MM)	
M	116	4	**8T-6430**	2	BOLT (M20X2.5X50-MM)	
M	117	2	**8T-6466**	1	BOLT (M10X1.5X60-MM)	

359-6421 **BATTERY & WIRING GP (**contd.**)** **i05865068**

NOTE	REF NO	GRAPHIC REF	PART NUMBER	QTY	PART NAME 1 2 3 4 5 6 (PRODUCT LEVEL)	SEE PAGE
	118	1	**8W-8909**	1	SLEEVE	
	119	5	**9K-0700**	1	GROMMET	
	120	2	**9X-7378**	2	SEAL-O-RING	
	121	4	**9Y-7595**	1	SPACER (13X30X14-MM THK)	

D - ORDER BY THE METER
E - ORDER BY THE CENTIMETER
M - METRIC PART
Y - SEPARATE ILLUSTRATION

359-6421 **BATTERY & WIRING GP (**contd.**)** **i05865068**

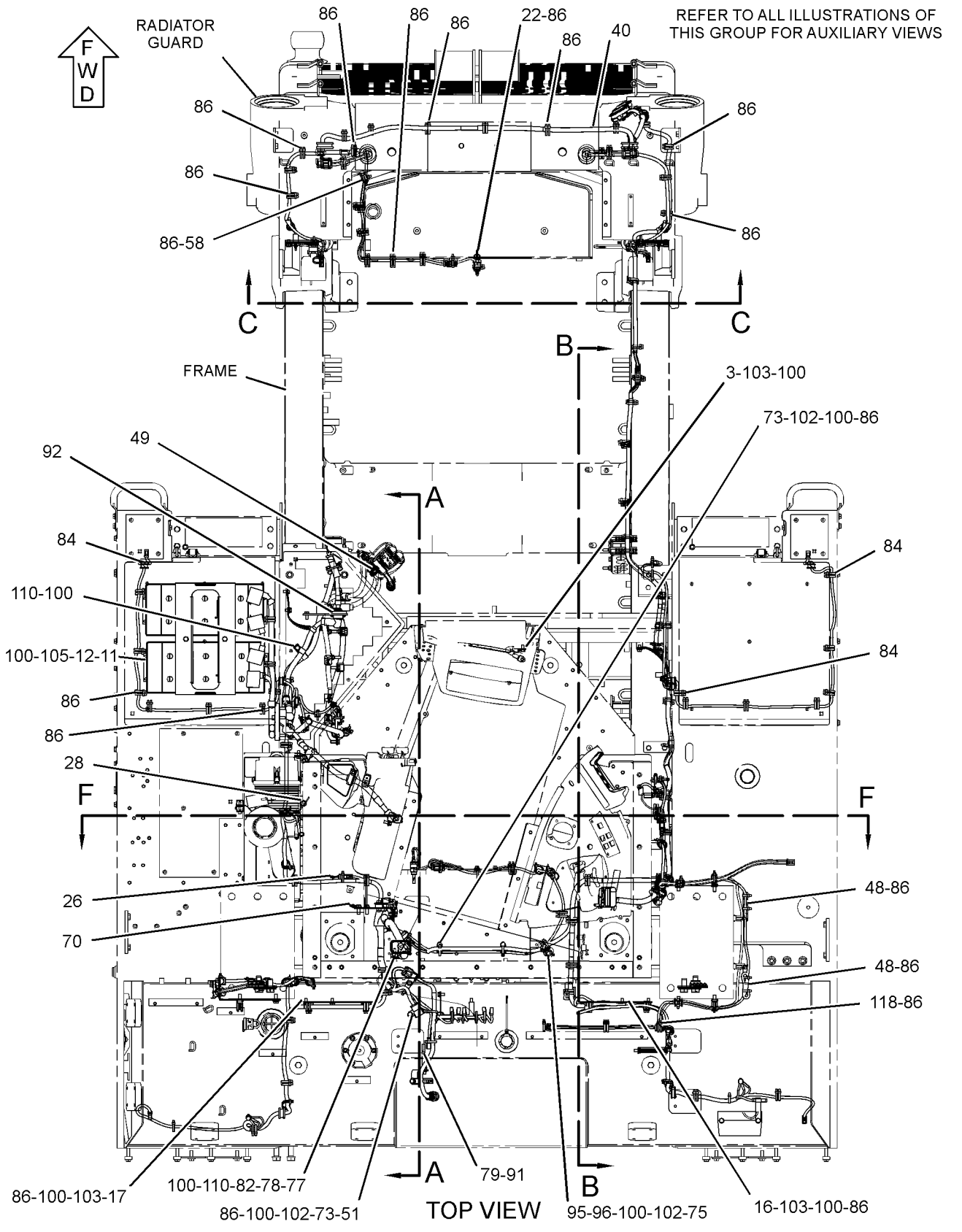

GRAPHIC #1 g03795479

359-6421 **BATTERY & WIRING GP (**contd.**)** **i05865068**

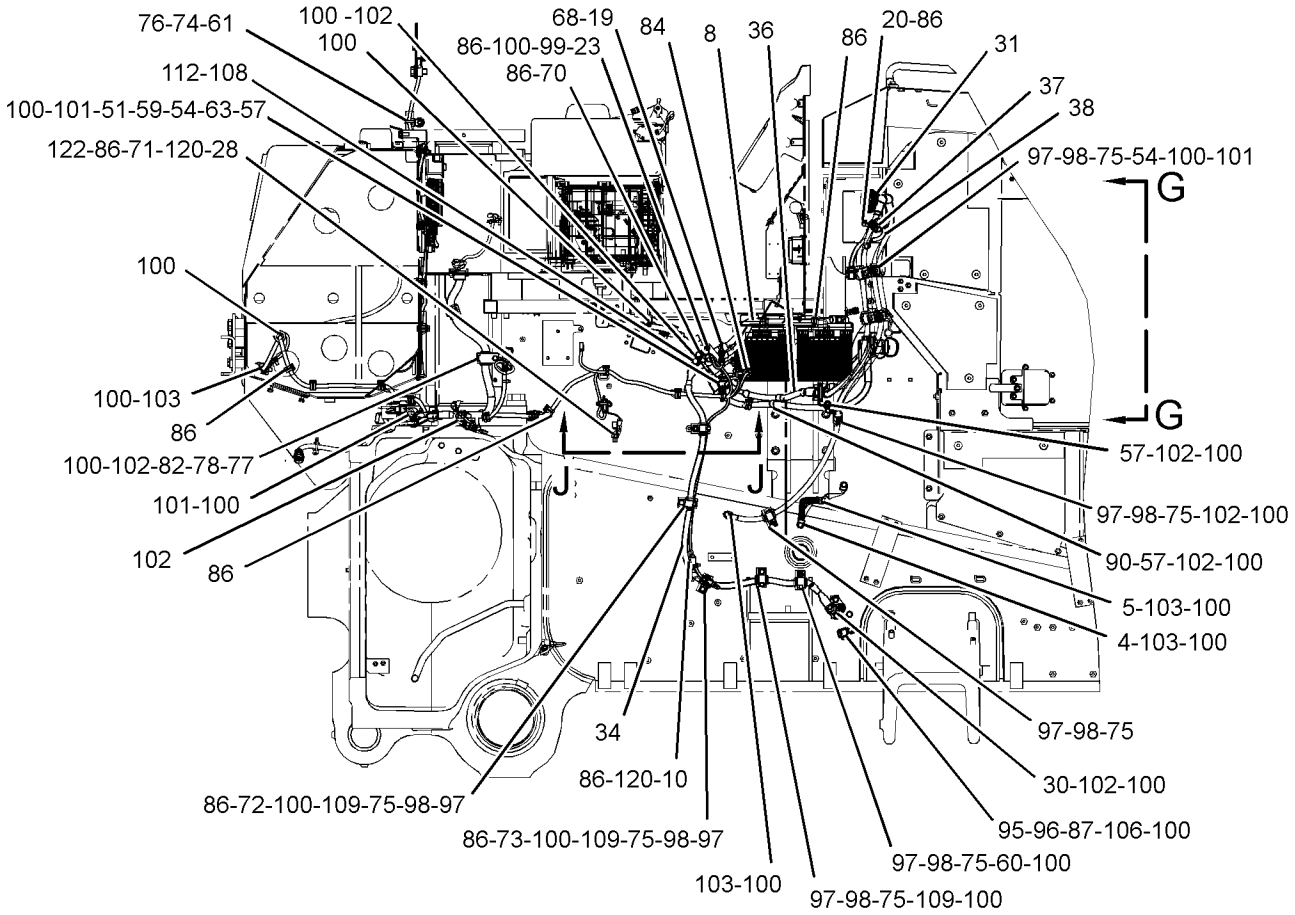

SECTION A-A

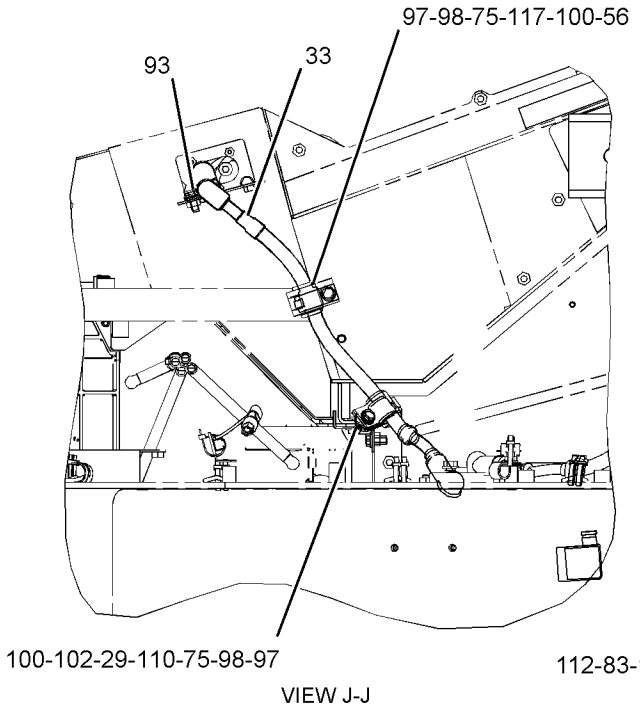

VIEW J-J

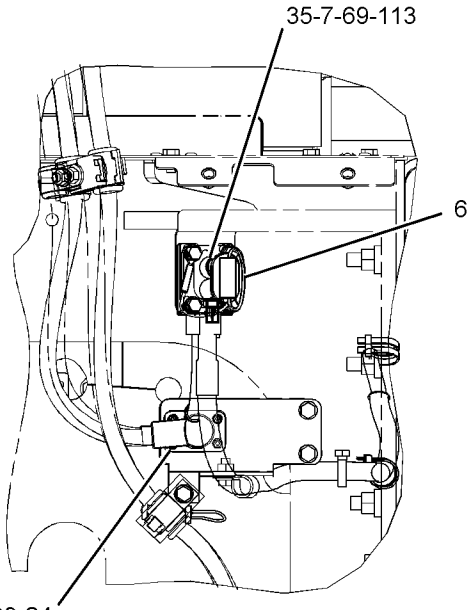

VIEW G-G

GRAPHIC #2 g03795480

359-6421 **BATTERY & WIRING GP (**contd.**)** **i05865068**

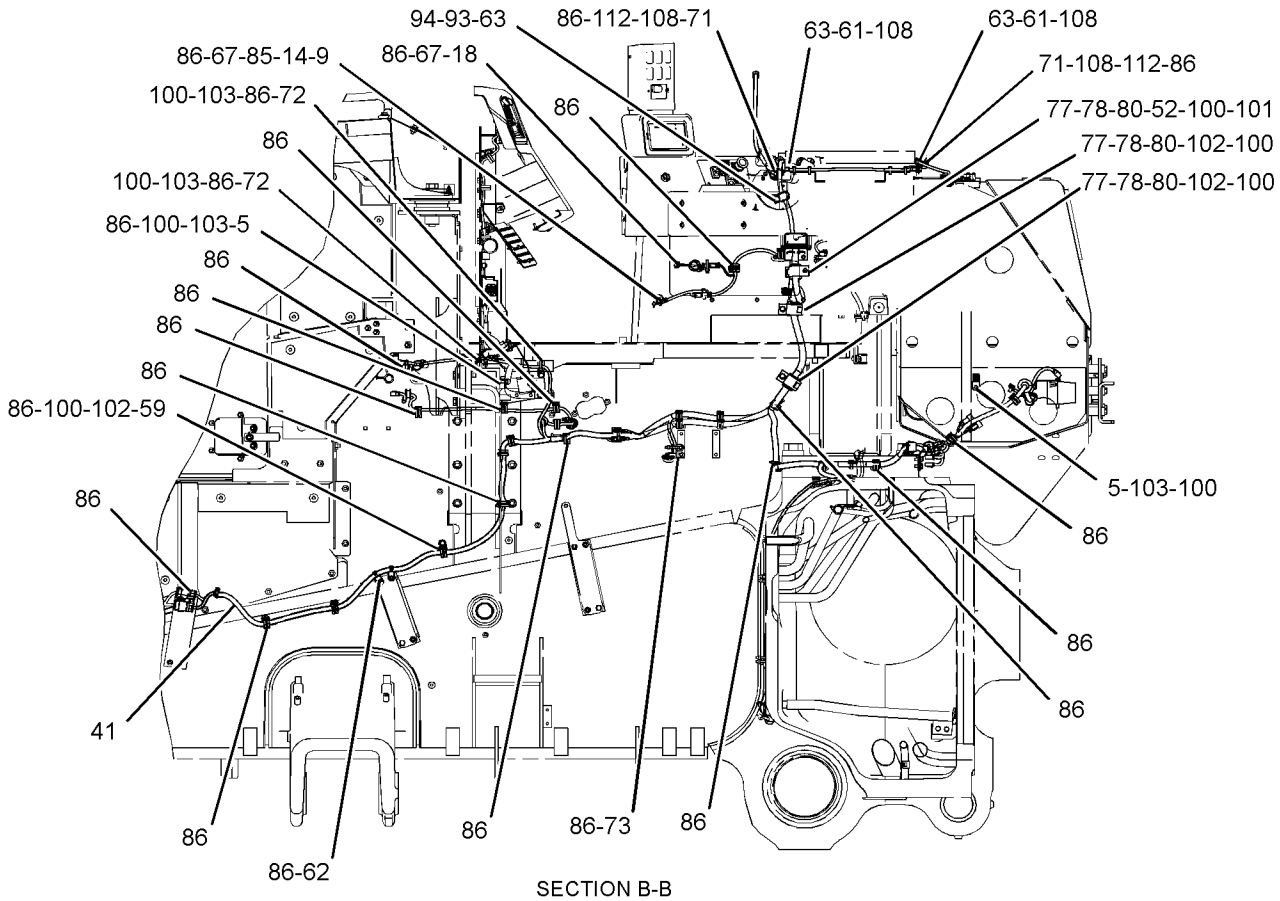

SECTION B-B

REFER TO ALL ILLUSTRATIONS OF THIS GROUP FOR AUXILIARY VIEWS

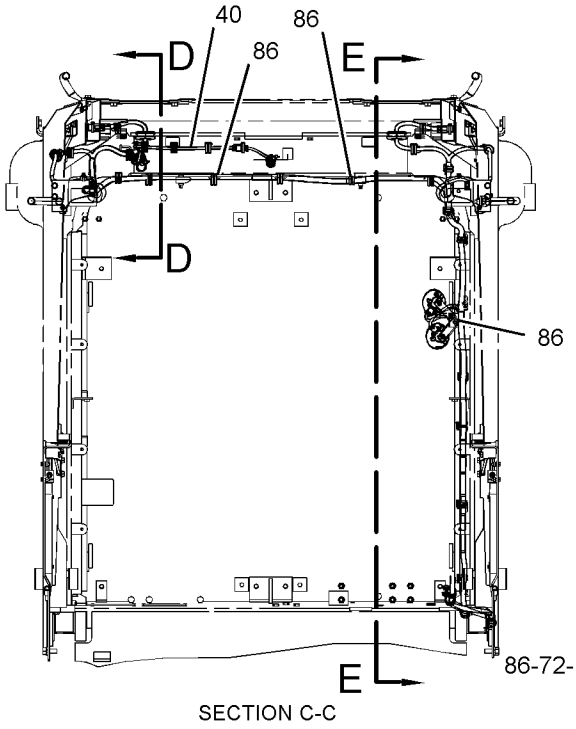

SECTION C-C

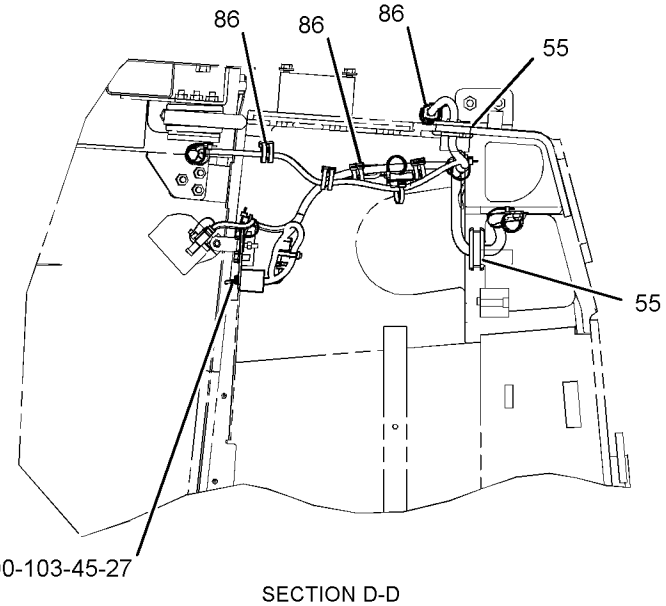

SECTION D-D

GRAPHIC #3 g03795481

359-6421 **BATTERY & WIRING GP (**contd.**)** **i05865068**

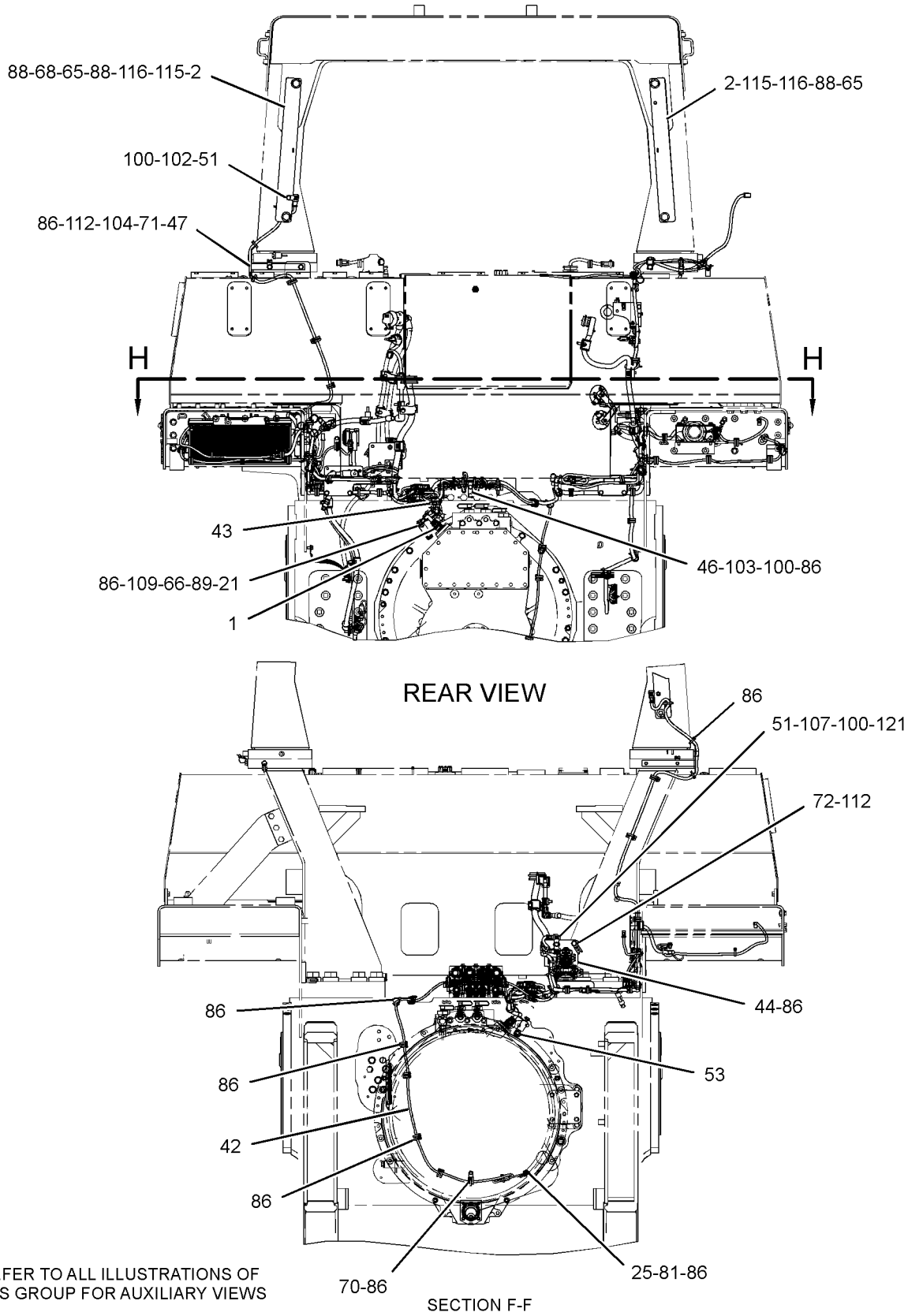

REFER TO ALL ILLUSTRATIONS OF THIS GROUP FOR AUXILIARY VIEWS

GRAPHIC #4

g03795482

359-6421 **BATTERY & WIRING GP (**contd.**)** **i05865068**

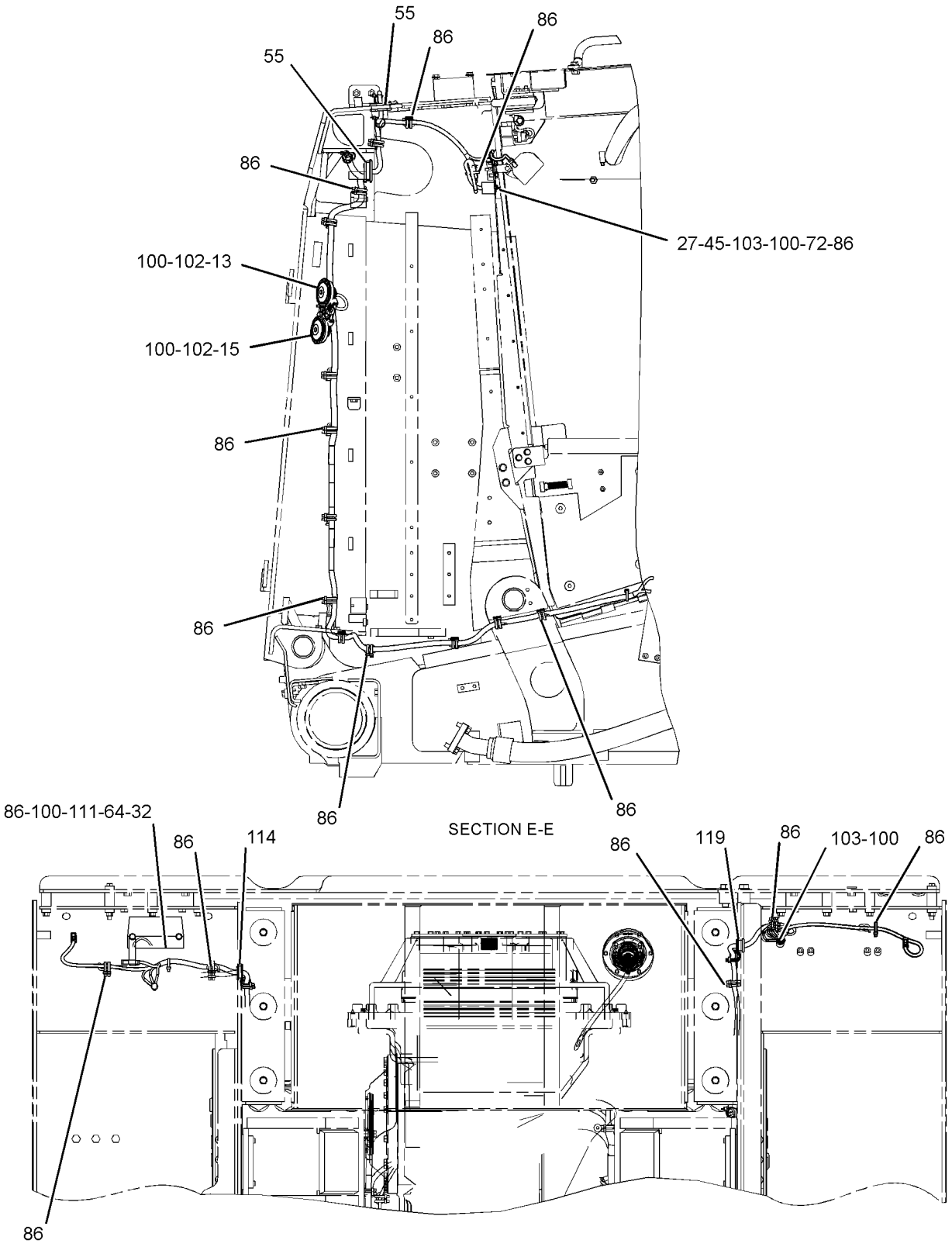

GRAPHIC #5 <END> g03795483

359-6421 BATTERY & WIRING GP

S/N: RAB249-281
PART OF 359-6401 CHASSIS AR
AN ATTACHMENT

SMCS-1401, 1402, 1408 **i06101175**

NOTE	REF NO	GRAPHIC REF	PART NUMBER	QTY	PART NAME 1 2 3 4 5 6 (PRODUCT LEVEL)	SEE PAGE
D	1	4	**5P-6025**		LOCKWIRE (0.1-M)	
	2	4	**1Q-1592**	2	PLATE AS	
					(EACH INCLUDES)	
		4	**7T-1099**	4	LINK	
M		4	**8T-3490**	1	NUT-WELD (M10X1.5-THD)	
	3	1	**1S-2342**	1	STRAP AS-GROUND	
	4	2	**6Y-6584**	1	STRAP AS-GROUND	
	5	2,3	**7G-1060**	3	STRAP AS-GROUND	
	6	2	**8S-2634**	1	COVER AS	
	7	2	**8S-4211**	2	PLATE	
	8	2	**8V-0622**	1	CABLE AS-BATTERY	
		2	**8C-5917**	1	TERMINAL AS-BATTERY (POSITIVE)	
		2	**8T-9757**	1	TERMINAL AS-BATTERY (NEGATIVE)	
					(EACH TERMINAL AS INCLUDES)	
		2	**1M-6119**	1	BOLT (5/16-18X1.375-IN)	
		2	**1M-6120**	1	NUT (5/16-18-THD)	
		2	**9G-0003**	1	COVER AS-TERMINAL (BLACK)	
		2	**9G-0004**	1	COVER AS-TERMINAL (RED)	
					(EACH COVER AS INCLUDES)	
		2	**8L-8413**	1	STRAP-CABLE (WHITE)	
Y	9	3	**145-7028**	1	SENSOR GP-TEMPERATURE (HYDRAULIC OIL)	382
	10	2	**149-6371**	1	SWITCH AS-PRESSURE (REFRIGERANT, LOW SIDE)	
		2	**102-8802**	2	KIT-RECEPTACLE (2-PIN)	
					(EACH INCLUDES RECEPTACLE AS & WEDGE)	
		2	**8T-8729**	2	PIN-CONNECTOR (16-GA TO 18-GA)	
	11	1	**153-5710**	2	BATTERY GP (12-VOLT, MAINTENANCE FREE, WET)	
					(EACH INCLUDES)	
		1	**123-1373**	6	CAP AS-FILLER (7/8-9-THD) (NEGATIVE)	
		1	**461-5232**	6	CAP AS-FILLER (M18X2-MM) (POSITIVE)	
	12	1	**153-6281**	1	HOLD-DOWN-BATTERY	
	13	5	**163-1201**	1	HORN AS (24-VOLT, LOW TONE)	
	14	3	**164-3651**	1	ADAPTER	
	15	5	**174-7875**	1	HORN AS (24-VOLT, HIGH TONE)	
	16	1	**231-3472**	1	PLATE AS	
		1	**7T-1099**	3	LINK	
	17	1	**235-9762**	1	PLATE AS	
		1	**7T-1099**	3	LINK	
	18	3	**253-2673**	1	SWITCH GP-PRESSURE (DIFFERENTIAL) (DIFFERENTIAL)	
		3	**8T-8729**	2	PIN-CONNECTOR (16-GA TO 18-GA)	
		3	**5F-9144**	1	SEAL-O-RING	
		3	**3J-1907**	1	SEAL-O-RING	
E		3	**9X-1813**		SLEEVE (14-CM)	
		3	**102-8802**	1	KIT-RECEPTACLE (2-PIN)	
					(EACH INCLUDES RECEPTACLE AS & WEDGE)	
	19	2	**256-6453**	1	SENSOR-TEMPERATURE (TRANSMISSION OIL)	
Y	20	2	**292-0358**	1	SWITCH GP-ROTARY (2-POSITION) (STARTER LOCKOUT)	407

359-6421 **BATTERY & WIRING GP (**contd.**)** **i06101175**

NOTE	REF NO	GRAPHIC REF	PART NUMBER	QTY	PART NAME 1 2 3 4 5 6 (PRODUCT LEVEL)	SEE PAGE
	21	4	**296-6539**	1	BRACKET AS	
M		4	**8T-3490**	1	NUT-WELD (M10X1.5-THD)	
CY	22	1	**430-9454**	1	SENSOR GP-LIQUID LEVEL (COOLANT) (RADIATOR TOP TANK)	370
	23	2	**320-6171**	1	JUNCTION BLOCK AS	
	24	2	**324-7659**	1	BLOCK AS-JUNCTION (BATTERY)	
Y	25	4	**330-9321**	1	SENSOR GP-LIQUID LEVEL (POWER TRAIN OIL)	368
	26	1	**331-0158**	1	JUMPER AS	
	27	3,5	**353-4515**	2	SWITCH AS-TOGGLE (ENGINE COMPARTMENT LIGHTS)	
					(EACH INCLUDES)	
		3,5	**102-8803**	1	KIT-RECEPTACLE (3-PIN)	
					(INCLUDES RECEPTACLE AS & WEDGE)	
		3,5	**8T-8729**	3	PIN-CONNECTOR (16-GA TO 18-GA)	
	28	1,2	**355-3148**	1	SWITCH AS-PRESSURE (HIGH, LOW) (AIR CONDITIONER)	
		1,2	**8T-8729**	2	PIN-CONNECTOR (16-GA TO 18-GA)	
		1,2	**102-8802**	2	KIT-RECEPTACLE (2-PIN)	
					(EACH INCLUDES RECEPTACLE AS & WEDGE)	
	29	2	**356-7507**	1	PLATE AS	
M		2	**8T-3490**	1	NUT-WELD (M10X1.5-THD)	
Y	30	2	**363-2210**	1	BLOCK GP-JUNCTION	229
	31	2	**369-4098**	1	SWITCH AS-DISCONNECT (MASTER) (AUXILIARY)	
		2	**449-8192**	1	KIT-KNOB	
					(INCLUDES BEZEL, KNOB, NUTS & LOCKWASHER)	
		2	**2H-3922**	1	LOCKWASHER	
		2	**6F-7045**	2	NUT-FULL (3/8-24-THD)	
		2	**8H-5303**	2	NUT (3/4-16-THD)	
	32	5	**370-1485**	1	ALARM GP (BACKUP)	
		5	**102-8802**	1	KIT-RECEPTACLE (2-PIN)	
					(INCLUDES RECEPTACLE AS & WEDGE)	
		5	**5P-5623**		WIRE-ELECTRICAL (16-GA, BLACK) (0.8-M)	
		5	**8T-8729**	2	PIN-CONNECTOR (16-GA TO 18-GA)	
E		5	**9X-1813**		SLEEVE (21-CM)	
	33	2	**377-2997**	1	CABLE AS	
		2	**1S-4915**	2	LINER (CONDUIT)	
E		2	**5P-0695**		CONDUIT (43-CM)	
		2	**8N-0869**	1	COVER-TERMINAL (RED)	
E		2	**8T-2225**		TUBE-HEAT SHRINK (25.4-MM DIA) (8-CM)	
		2	**276-1786**	1	COVER-TERMINAL (RED)	
		2	**315-0180**	1	TERMINAL-RING (00-GA, 3/8-IN SCREW)	
E		2	**159-8049**		CABLE (00-GA, RED) (77-CM)	
		2	**274-9183**	1	TERMINAL-RING (00-GA, 1/2-IN SCREW)	
		2	**356-0298**	1	ELBOW	
	34	2	**377-2998**	1	CABLE AS	
		2	**1S-4915**	2	LINER (CONDUIT)	
		2	**1S-7251**	2	TERMINAL-CABLE (00-GA, 1/2-IN SCREW)	
E		2	**5P-0695**		CONDUIT (132-CM)	
		2	**8N-0869**	2	COVER-TERMINAL (RED)	
E		2	**8T-2225**		TUBE-HEAT SHRINK (25.4-MM DIA) (8-CM)	
E		2	**159-8049**		CABLE (00-GA, RED) (152-CM)	
	35	2	**377-2999**	1	RECEPTACLE AS	
		2	**9X-9825**	1	TERMINAL-CABLE (00-GA, 1/2-IN SCREW)	

359-6421 **BATTERY & WIRING GP (**contd.**)** **i06101175**

NOTE	REF NO	GRAPHIC REF	PART NUMBER	QTY	PART NAME 1 2 3 4 5 6 (PRODUCT LEVEL)	SEE PAGE
		2	**1S-4915**	2	LINER (CONDUIT)	
		2	**1S-7251**	2	TERMINAL-CABLE (00-GA, 1/2-IN SCREW)	
E		2	**5P-0695**		CONDUIT (79-CM)	
E		2	**8T-2225**		TUBE-HEAT SHRINK (25.4-MM DIA) (12-CM)	
E		2	**159-8049**		CABLE (00-GA, RED) (96-CM)	
E		2	**159-8050**		CABLE (00-GA, BLACK) (27-CM)	
	36	2	**377-3000**	1	CABLE AS	
		2	**1S-4915**	2	LINER (CONDUIT)	
		2	**1S-7251**	1	TERMINAL-CABLE (00-GA, 1/2-IN SCREW)	
		2	**1S-7252**	1	TERMINAL-CABLE (00-GA, 3/8-IN SCREW)	
E		2	**5P-0695**		CONDUIT (26-CM)	
E		2	**159-8050**		CABLE (00-GA, BLACK) (55-CM)	
E		2	**8T-2225**		TUBE-HEAT SHRINK (25.4-MM DIA) (8-CM)	
		2	**9G-8909**	2	COVER-TERMINAL (BLACK)	
	37	2	**377-3004**	1	CABLE AS	
		2	**5P-2600**	1	RING-TERMINAL (000-GA, 1/2-IN SCREW)	
		2	**6T-0465**	2	COVER-TERMINAL (BLACK)	
		2	**035-0425**	1	RING-TERMINAL (000-GA, 3/8-IN SCREW)	
E		2	**159-8052**		CABLE-ELECTRICAL (00-GA) (94-CM)	
	38	2	**377-3005**	1	CABLE AS	
		2	**6T-0465**	1	COVER-TERMINAL (BLACK)	
		2	**035-0425**	2	RING-TERMINAL (000-GA, 3/8-IN SCREW)	
E		2	**159-8052**		CABLE-ELECTRICAL (00-GA) (157-CM)	
	39	2	**377-9496**	1	BRACKET AS	
Y	40	1,3	**378-4518**	1	HARNESS AS-POWER	268
Y	41	3	**378-4520**	1	HARNESS AS-CHASSIS (FENDER, RH)	250
Y	42	4	**378-4521**	1	HARNESS AS-CHASSIS (FENDER, LH)	251
Y	43	4	**380-7133**	1	HARNESS AS-TRANSMISSION	270
	44	4	**381-4119**	1	BRACKET AS	
M		4	**8T-3490**	3	NUT-WELD (M10X1.5-THD)	
	45	3,5	**382-0346**	2	PLATE	
	46	4	**421-1121**	1	BRACKET	
	47	4	**446-9419**	1	BRACKET	
	48	1	**448-9142**	2	BRACKET	
	49	1	**091-9035**	1	SPACER (11X25X20-MM THK)	
M	50	2	**096-4833**	4	BOLT-SOCKET HEAD (M5X0.8X20-MM)	
	51	1,2,4	**130-5300**	9	CLIP	
M	52	3	**133-7810**	2	STUD-TAPERLOCK (M10X1.5X45-MM)	
	53	4	**136-1122**	1	BUSHING	
M	54	2	**142-3953**	3	STUD (M10X1.5-THD)	
	55	3,5	**150-5931**	4	GROMMET	
	56	2	**1K-4649**	1	SPACER (0.516X1X1-IN THK)	
	57	2	**1S-0994**	4	CLIP	
	58	1	**200-6345**	1	MOUNT (DUAL SWIVEL)	
	59	2,3	**204-8000**	2	MOUNTING-CABLE TIE	
M	60	2	**227-6715**	2	STUD (M10X1.5X30-MM)	
	61	2,3	**230-7732**	3	MOUNTING-CABLE TIE	
	62	3	**294-3313**	2	CLIP	
	63	2,3	**2V-1771**	5	GROMMET	
	64	5	**303-4649**	1	CLIP	
	65	4	**315-5491**	2	SPACER (20.5X38X20-MM THK)	

359-6421 **BATTERY & WIRING GP** (contd.) **i06101175**

NOTE	REF NO	GRAPHIC REF	PART NUMBER	QTY	PART NAME 1 2 3 4 5 6 (PRODUCT LEVEL)	SEE PAGE
	66	4	**352-3970**	1	CLIP	
	67	3	**3J-1907**	2	SEAL-O-RING	
	68	2,4	**3K-0360**	1	SEAL-O-RING	
	69	2	**4L-6454**	4	BOLT (3/8-16X1-IN)	
	70	1,2,4	**4P-7428**	3	CLIP	
	71	2,3,4	**4P-7429**	4	CLIP	
	72	2,3,4,5	**4P-7581**	8	CLIP	
	73	1,2,3	**4P-8134**	5	CLIP	
	74	2	**5C-6565**	1	BOLT (1/2-13X1.125-IN)	
	75	1,2	**5G-3676**	14	GROMMET	
	76	2	**5P-1076**	1	WASHER-HARD (13.5X30X4-MM THK)	
	77	1,2,3	**5P-7464**	5	CLIP (SLOT)	
	78	1,2,3	**5P-7465**	5	CLIP (TAB)	
	79	1	**5P-8245**	1	WASHER-HARD (13.5X25.5X3-MM THK)	
	80	3	**6V-1249**	3	GROMMET (22-MM ID)	
	81	4	**6V-4589**	1	SEAL-O-RING	
	82	1,2	**6V-7359**	2	GROMMET (25-MM ID, 37-MM OD)	
	83	2	**6V-8188**	2	NUT (1/2-13-THD)	
	84	1,2	**7B-1251**	4	GROMMET	
	85	3	**7J-0204**	1	SEAL-O-RING	
	86	1,2,3,4,5	**7K-1181**	270	STRAP-CABLE	
	87	2	**7V-6571**	1	GROMMET	
	88	4	**7X-0582**	4	WASHER-HARD (20X44.5X6-MM THK)	
	89	4	**7X-7729**	1	WASHER (11X25X3-MM THK)	
	90	2	**8S-0948**	1	CLIP	
	91	1	**8S-9089**	1	BOLT (1/2-13X4.5-IN)	
	92	1	**8T-0328**	4	WASHER-HARD (5.5X10X1-MM THK)	
	93	2,3	**8T-1887**	2	CLIP (SLOT)	
	94	3	**8T-1888**	2	CLIP (TAB)	
	95	1,2	**8T-1889**	2	CLIP (SLOT)	
	96	1,2	**8T-1890**	2	CLIP (TAB)	
	97	2	**8T-1895**	13	CLIP (SLOT)	
	98	2	**8T-1896**	13	CLIP (TAB)	
M	99	2	**8T-2223**	3	BOLT-SOCKET HEAD (M10X1.5X45-MM)	
	100	1,2,3,4,5	**8T-4121**	74	WASHER-HARD (11X21X2.5-MM THK)	
M	101	2,3	**8T-4133**	5	NUT (M10X1.5-THD)	
M	102	1,2,3,4,5	**8T-4136**	21	BOLT (M10X1.5X25-MM)	
M	103	1,2,3,4,5	**8T-4137**	24	BOLT (M10X1.5X20-MM)	
M	104	4	**8T-4139**	4	BOLT (M12X1.75X30-MM)	
M	105	1	**8T-4178**	2	BOLT (M10X1.5X90-MM)	
M	106	2	**8T-4185**	1	BOLT (M10X1.5X50-MM)	
M	107	4	**8T-4186**	1	BOLT (M10X1.5X40-MM)	
M	108	2,3	**8T-4192**	6	BOLT (M12X1.75X25-MM)	
M	109	2,4	**8T-4195**	6	BOLT (M10X1.5X30-MM)	
M	110	1,2	**8T-4196**	3	BOLT (M10X1.5X35-MM)	
M	111	5	**8T-4198**	2	BOLT (M10X1.5X100-MM)	
	112	2,3,4	**8T-4223**	12	WASHER-HARD (13.5X25.5X3-MM THK)	
	113	2	**8T-4896**	4	WASHER-HARD (10.2X18.5X2.5-MM THK)	
	114	5	**8T-5387**	1	GROMMET	
M	115	4	**8T-5460**	2	BOLT (M20X2.5X40-MM)	
M	116	4	**8T-6430**	2	BOLT (M20X2.5X50-MM)	

359-6421 **BATTERY & WIRING GP (**contd.**)** **i06101175**

NOTE	REF NO	GRAPHIC REF	PART NUMBER	QTY	PART NAME 1 2 3 4 5 6 (PRODUCT LEVEL)	SEE PAGE
M	117	2	**8T-6466**	1	BOLT (M10X1.5X60-MM)	
	118	1	**8W-8909**	1	SLEEVE	
	119	5	**9K-0700**	1	GROMMET	
	120	2	**9X-7378**	2	SEAL-O-RING	
	121	4	**9Y-7595**	1	SPACER (13X30X14-MM THK)	

C - CHANGE FROM PREVIOUS TYPE
D - ORDER BY THE METER
E - ORDER BY THE CENTIMETER
M - METRIC PART
Y - SEPARATE ILLUSTRATION

359-6421 **BATTERY & WIRING GP** (contd.) **i06101175**

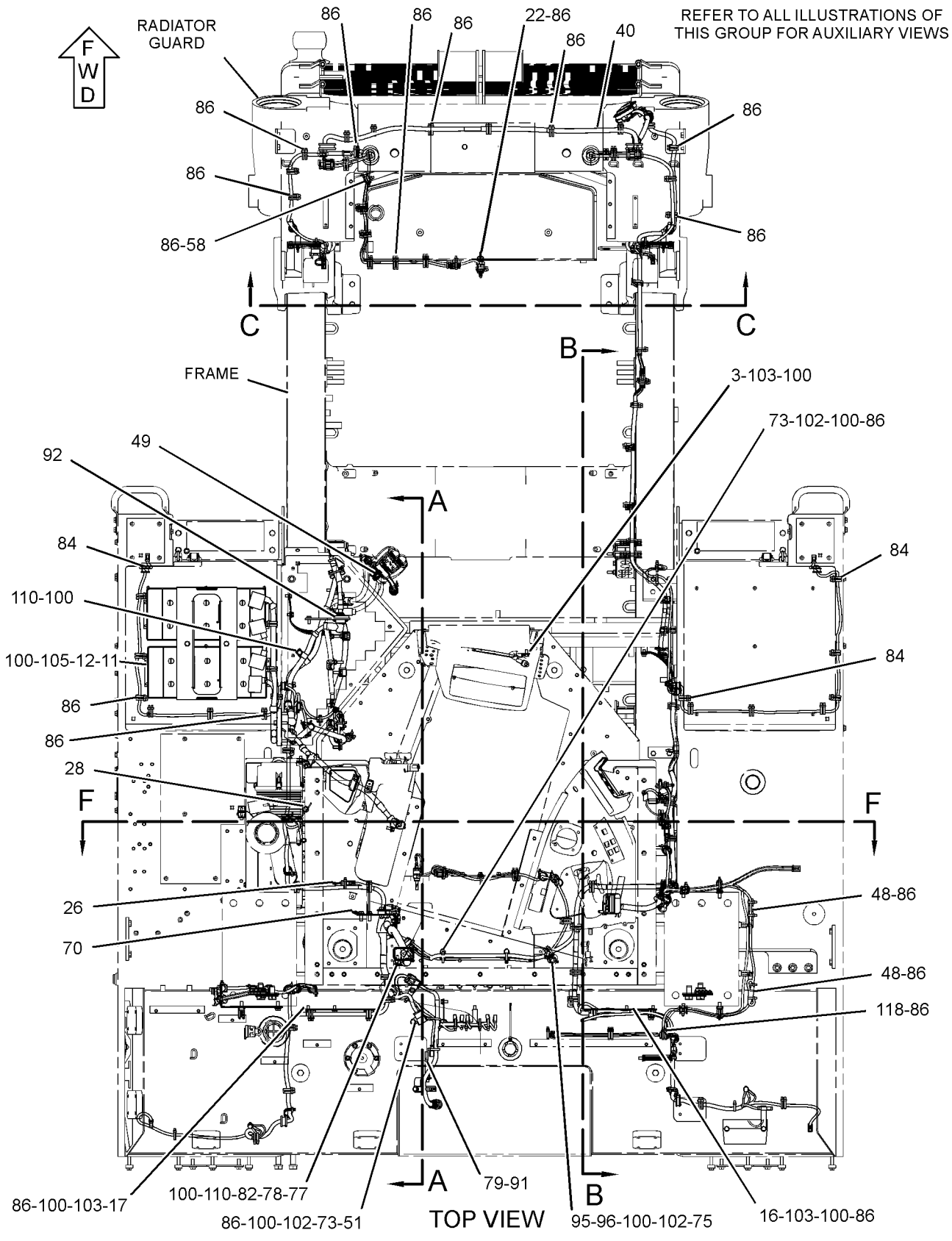

GRAPHIC #1 g03795479

359-6421 **BATTERY & WIRING GP (**contd.**)** **i06101175**

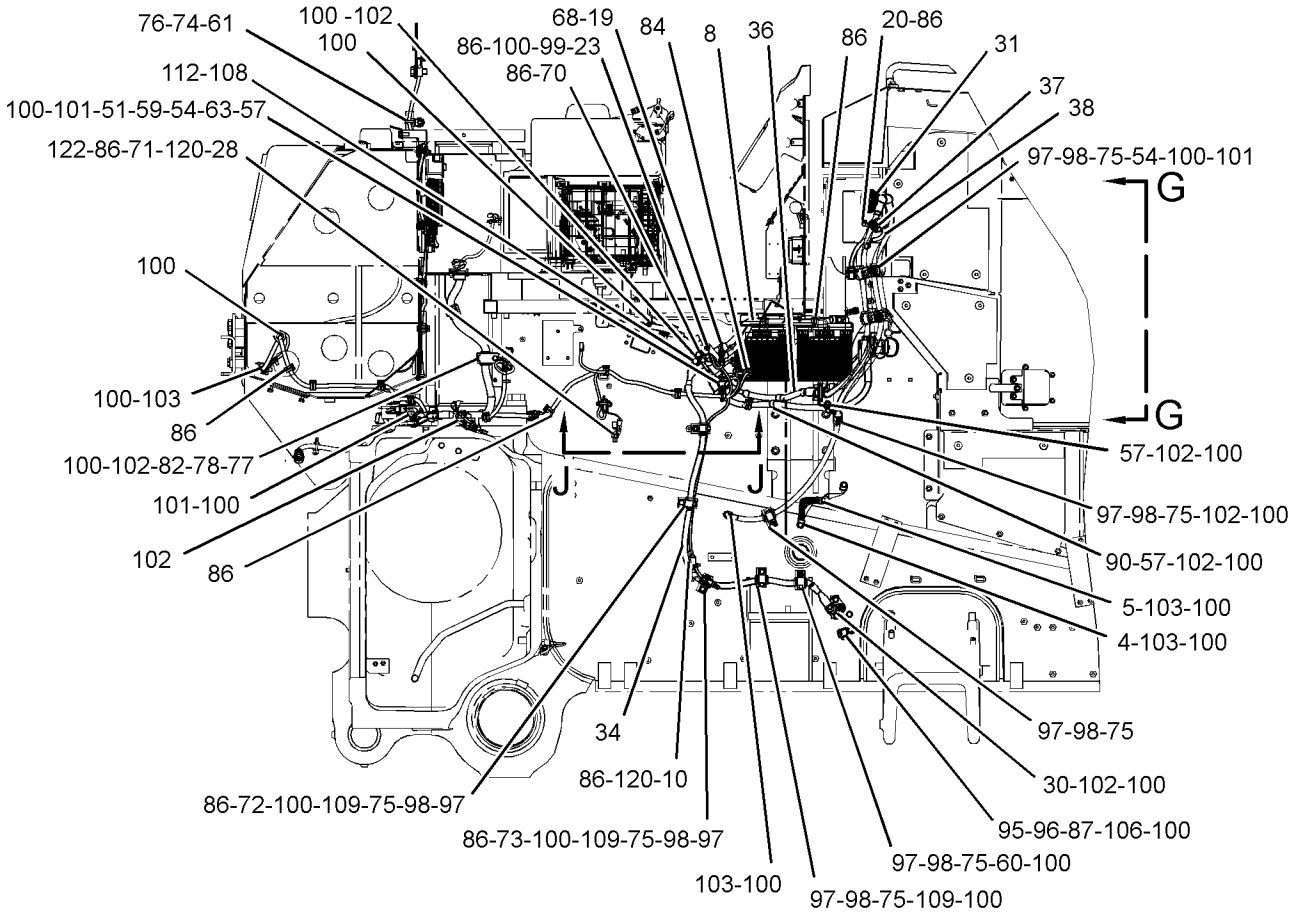

SECTION A-A

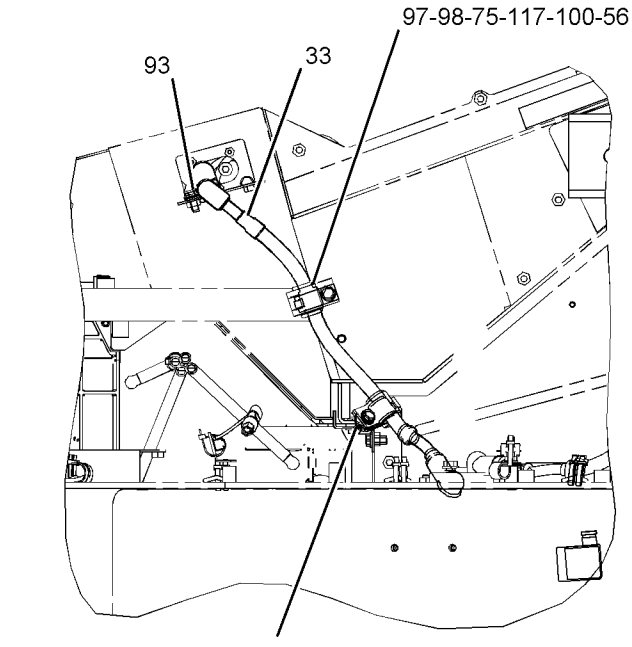

VIEW J-J

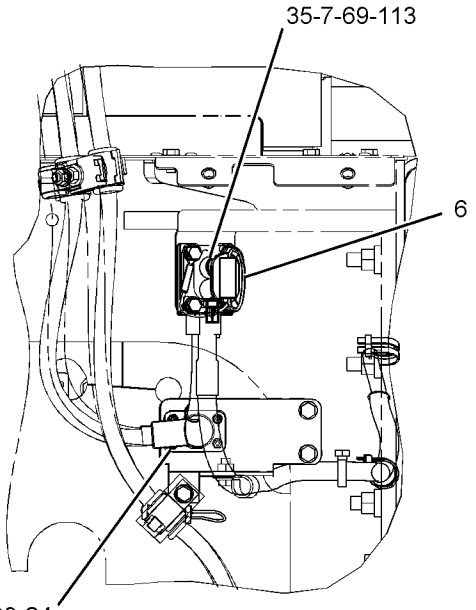

VIEW G-G

GRAPHIC #2 g03795480

359-6421 **BATTERY & WIRING GP (**contd.**)** **i06101175**

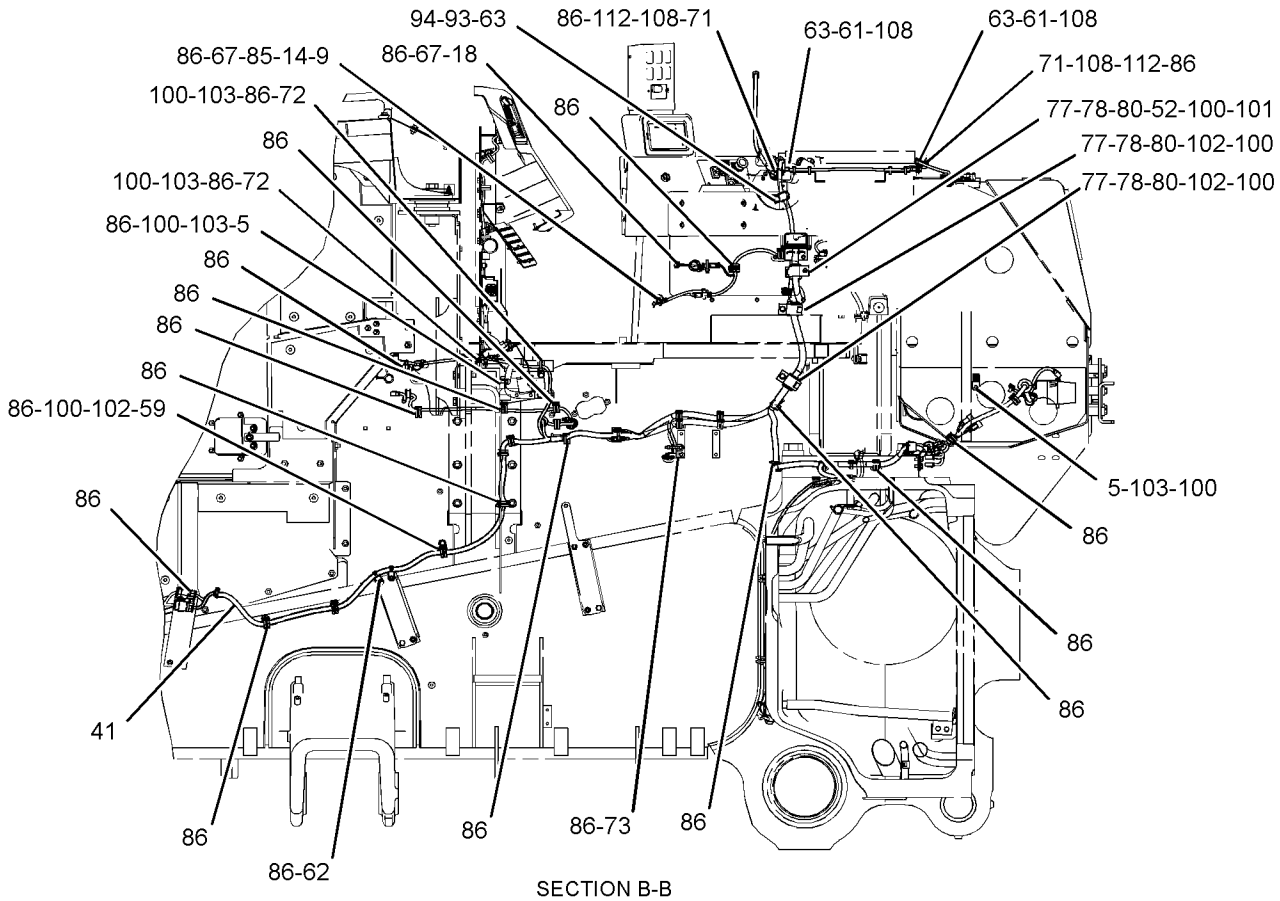

SECTION B-B

REFER TO ALL ILLUSTRATIONS OF THIS GROUP FOR AUXILIARY VIEWS

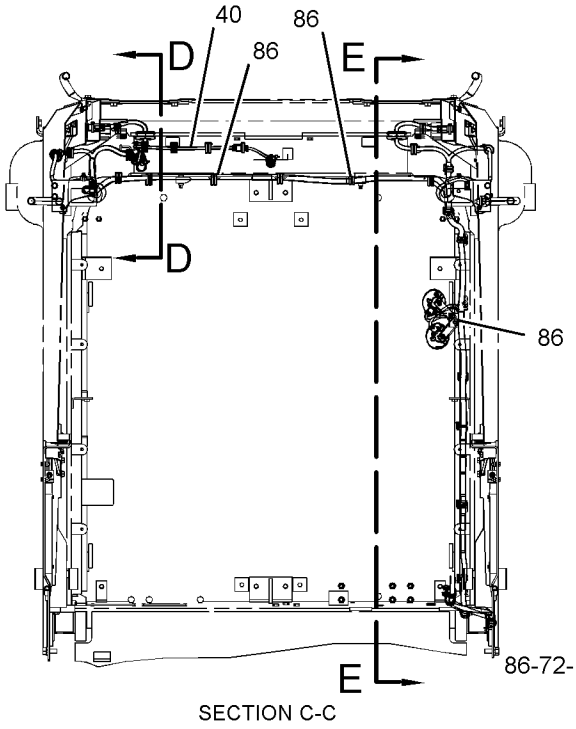

SECTION C-C

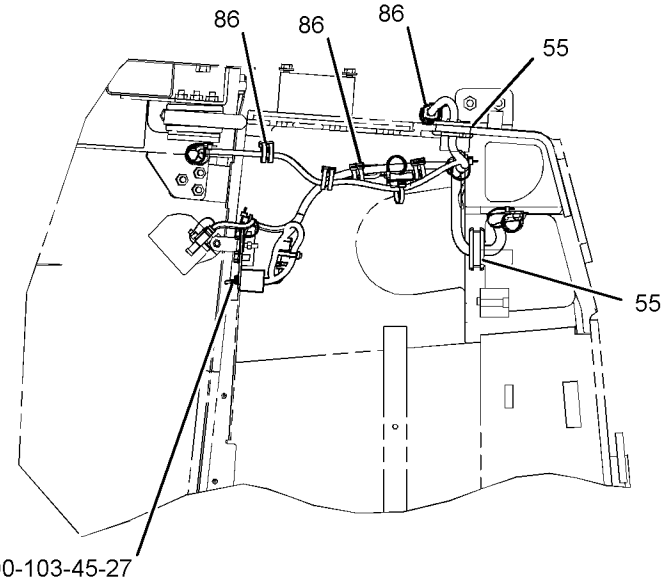

SECTION D-D

GRAPHIC #3 g03795481

359-6421 **BATTERY & WIRING GP (**contd.**)** **i06101175**

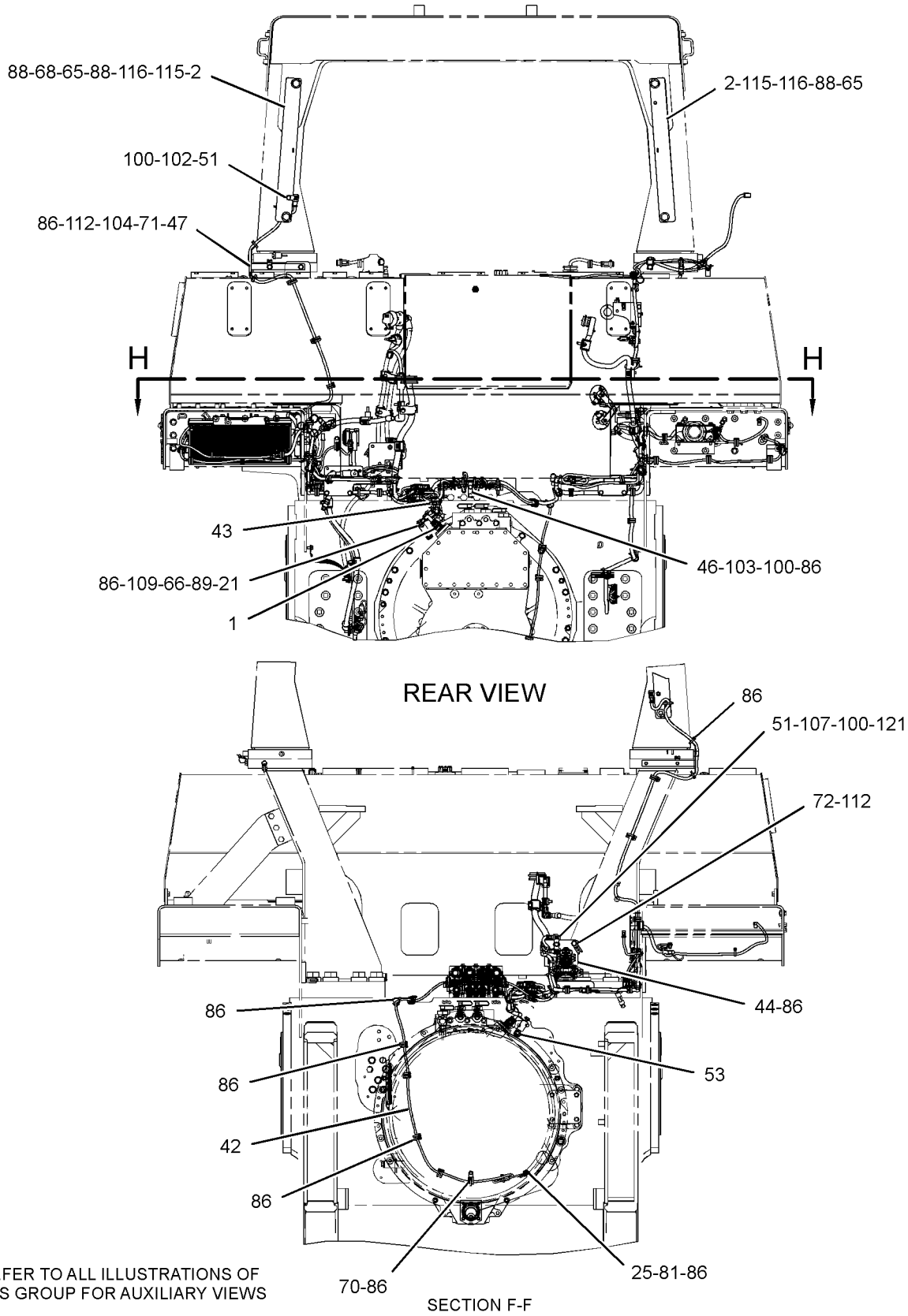

REFER TO ALL ILLUSTRATIONS OF THIS GROUP FOR AUXILIARY VIEWS

GRAPHIC #4

g03795482

359-6421 **BATTERY & WIRING GP (**contd.**)** **i06101175**

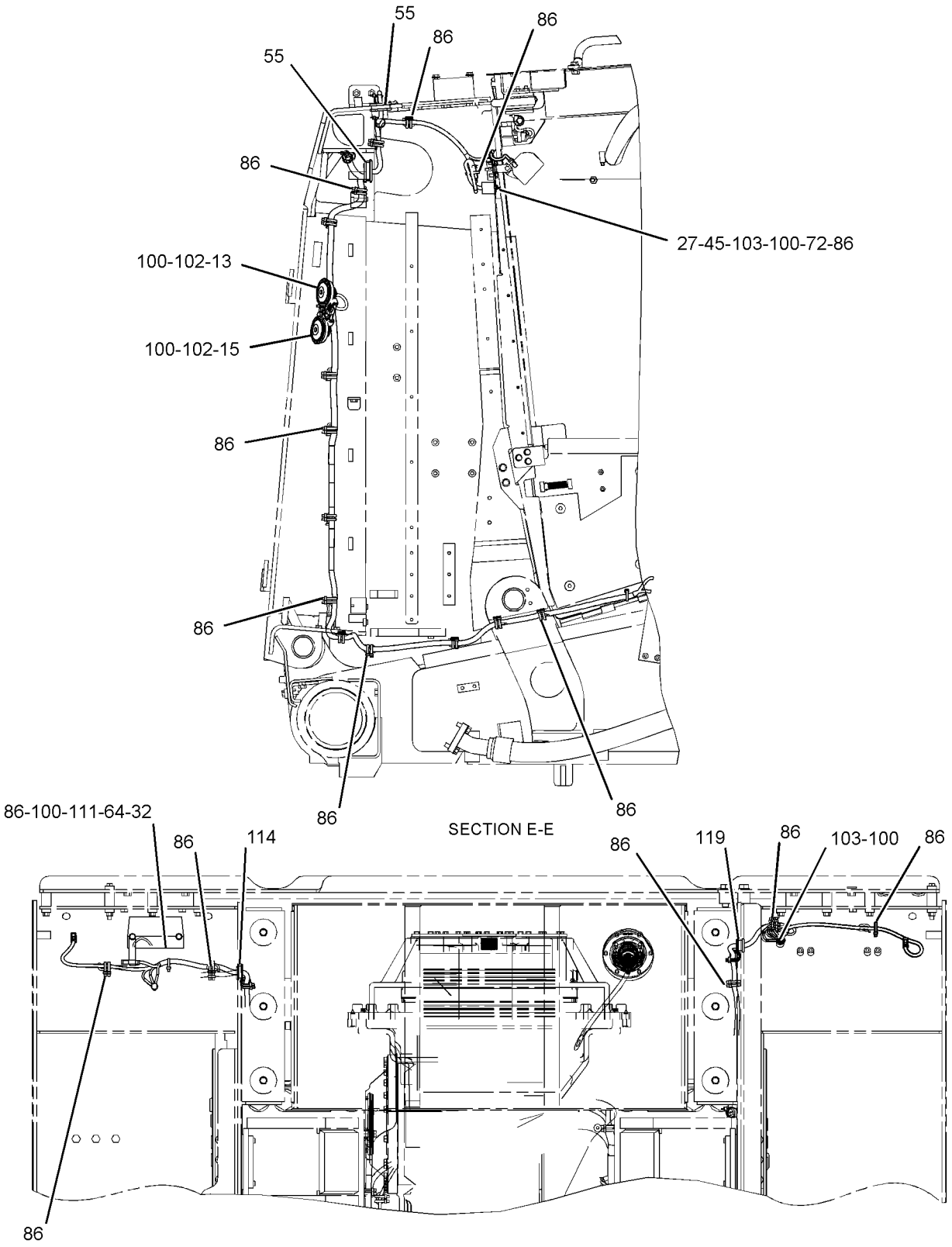

GRAPHIC #5

<END>

g03795483

359-6421 BATTERY & WIRING GP

S/N: RAB282-UP
PART OF 359-6401 CHASSIS AR
AN ATTACHMENT

SMCS-1401, 1402, 1408 **i06582930**

NOTE	REF NO	GRAPHIC REF	PART NUMBER	QTY	PART NAME 1 2 3 4 5 6 (PRODUCT LEVEL)	SEE PAGE
D	1	3	**5P-6025**		LOCKWIRE (0.1-M)	
	2	1	**1Q-1592**	2	PLATE AS	
					(EACH INCLUDES)	
		1	**7T-1099**	4	LINK	
M		1	**8T-3490**	1	NUT-WELD (M10X1.5-THD)	
	3	2	**1S-2342**	1	STRAP AS-GROUND	
	4	2	**6Y-6584**	1	STRAP AS-GROUND	
	5	2,3,4	**7G-1060**	3	STRAP AS-GROUND	
	6	2	**8S-2634**	1	COVER AS	
	7	2	**8S-4211**	2	PLATE	
	8	2	**8V-0622**	1	CABLE AS-BATTERY	
		2	**8C-5917**	1	TERMINAL AS-BATTERY (POSITIVE)	
		2	**8T-9757**	1	TERMINAL AS-BATTERY (NEGATIVE)	
					(EACH TERMINAL AS INCLUDES)	
		2	**1M-6119**	1	BOLT (5/16-18X1.375-IN)	
		2	**1M-6120**	1	NUT (5/16-18-THD)	
		2	**9G-0003**	1	COVER AS-TERMINAL (BLACK)	
		2	**9G-0004**	1	COVER AS-TERMINAL (RED)	
					(EACH COVER AS INCLUDES)	
		2	**8L-8413**	1	STRAP-CABLE (WHITE)	
Y	9	3	**145-7028**	1	SENSOR GP-TEMPERATURE (HYDRAULIC OIL)	382
	10	2	**149-6371**	1	SWITCH AS-PRESSURE (REFRIGERANT, LOW SIDE)	
		2	**102-8802**	1	KIT-RECEPTACLE (2-PIN)	
					(INCLUDES RECEPTACLE AS & WEDGE)	
		2	**8T-8729**	2	PIN-CONNECTOR (16-GA TO 18-GA)	
	11	2	**153-5710**	2	BATTERY GP (12-VOLT, MAINTENANCE FREE, WET)	
					(EACH INCLUDES)	
		2	**123-1373**	6	CAP AS-FILLER (7/8-9-THD) (NEGATIVE)	
		2	**461-5232**	6	CAP AS-FILLER (M18X2-MM) (POSITIVE)	
	12	2	**153-6281**	1	HOLD-DOWN-BATTERY	
	13	1	**163-1201**	1	HORN AS (24-VOLT, LOW TONE)	
	14	3	**164-3651**	1	ADAPTER	
	15	1	**174-7875**	1	HORN AS (24-VOLT, HIGH TONE)	
	16	3	**231-3472**	1	PLATE AS	
		3	**7T-1099**	3	LINK	
	17	3	**235-9762**	1	PLATE AS	
		3	**7T-1099**	3	LINK	
	18	3	**253-2673**	1	SWITCH GP-PRESSURE (DIFFERENTIAL)	
		3	**8T-8729**	2	PIN-CONNECTOR (16-GA TO 18-GA)	
		3	**5F-9144**	1	SEAL-O-RING	
		3	**3J-1907**	1	SEAL-O-RING	
E		3	**9X-1813**		SLEEVE (14-CM)	
		3	**102-8802**	1	KIT-RECEPTACLE (2-PIN)	
					(EACH INCLUDES RECEPTACLE AS & WEDGE)	
	19	2	**256-6453**	1	SENSOR-TEMPERATURE (TRANSMISSION OIL)	
Y	20	2	**292-0358**	1	SWITCH GP-ROTARY (2-POSITION) (STARTER LOCKOUT)	407
	21	3	**296-6539**	1	BRACKET AS	

359-6421 **BATTERY & WIRING GP (**contd.**)** **i06582930**

NOTE	REF NO	GRAPHIC REF	PART NUMBER	QTY	PART NAME 1 2 3 4 5 6 (PRODUCT LEVEL)	SEE PAGE
M		3	**8T-3490**	1	NUT-WELD (M10X1.5-THD)	
CY	22	1	**430-9453**	1	SENSOR GP-LIQUID LEVEL (COOLANT) (RADIATOR TOP TANK)	369
	23	2	**320-6171**	1	JUNCTION BLOCK AS	
	24	2	**324-7659**	1	BLOCK AS-JUNCTION (BATTERY)	
CY	25	3	**430-9455**	1	SENSOR GP-LIQUID LEVEL (POWER TRAIN OIL)	371
	26	2	**331-0158**	1	JUMPER AS	
	27	1	**353-4515**	2	SWITCH AS-TOGGLE (ENGINE COMPARTMENT LIGHTS)	
					(EACH INCLUDES)	
		1	**102-8803**	1	KIT-RECEPTACLE (3-PIN)	
					(INCLUDES RECEPTACLE AS & WEDGE)	
		1	**8T-8729**	3	PIN-CONNECTOR (16-GA TO 18-GA)	
	28	2	**355-3148**	1	SWITCH AS-PRESSURE (HIGH, LOW) (AIR CONDITIONER)	
		2	**8T-8729**	2	PIN-CONNECTOR (16-GA TO 18-GA)	
		2	**102-8802**	1	KIT-RECEPTACLE (2-PIN)	
					(INCLUDES RECEPTACLE AS & WEDGE)	
	29	2	**356-7507**	1	PLATE AS	
M		2	**8T-3490**	1	NUT-WELD (M10X1.5-THD)	
Y	30	2	**363-2210**	1	BLOCK GP-JUNCTION	229
	31	2	**369-4098**	1	SWITCH AS-DISCONNECT (MASTER) (AUXILIARY)	
		2	**449-8192**	1	KIT-KNOB	
					(INCLUDES BEZEL, KNOB, NUTS & LOCKWASHER)	
		2	**2H-3922**	1	LOCKWASHER	
		2	**6F-7045**	2	NUT-FULL (3/8-24-THD)	
		2	**8H-5303**	2	NUT (3/4-16-THD)	
	32	3	**370-1485**	1	ALARM GP (BACKUP)	
		3	**102-8802**	1	KIT-RECEPTACLE (2-PIN)	
					(INCLUDES RECEPTACLE AS & WEDGE)	
		3	**5P-5623**		WIRE-ELECTRICAL (16-GA, BLACK) (0.8-M)	
		3	**8T-8729**	2	PIN-CONNECTOR (16-GA TO 18-GA)	
E		3	**9X-1813**		SLEEVE (21-CM)	
	33	2	**377-2997**	1	CABLE AS	
		2	**1S-4915**	2	LINER (CONDUIT)	
E		2	**5P-0695**		CONDUIT (43-CM)	
		2	**8N-0869**	1	COVER-TERMINAL (RED)	
E		2	**8T-2225**		TUBE-HEAT SHRINK (25.4-MM DIA) (8-CM)	
		2	**276-1786**	1	COVER-TERMINAL (RED)	
		2	**315-0180**	1	TERMINAL-RING (00-GA, 3/8-IN SCREW)	
E		2	**159-8049**		CABLE (00-GA, RED) (77-CM)	
		2	**274-9183**	1	TERMINAL-RING (00-GA, 1/2-IN SCREW)	
		2	**356-0298**	1	ELBOW	
	34	2	**377-2998**	1	CABLE AS	
		2	**1S-4915**	2	LINER (CONDUIT)	
		2	**1S-7251**	2	TERMINAL-CABLE (00-GA, 1/2-IN SCREW)	
E		2	**5P-0695**		CONDUIT (132-CM)	
		2	**8N-0869**	2	COVER-TERMINAL (RED)	
E		2	**8T-2225**		TUBE-HEAT SHRINK (25.4-MM DIA) (8-CM)	
E		2	**159-8049**		CABLE (00-GA, RED) (152-CM)	
	35	2	**377-2999**	1	RECEPTACLE AS	
		2	**9X-9825**	1	TERMINAL-CABLE (00-GA, 1/2-IN SCREW)	
		2	**1S-4915**	2	LINER (CONDUIT)	

359-6421 **BATTERY & WIRING GP (**contd.**)** **i06582930**

NOTE	REF NO	GRAPHIC REF	PART NUMBER	QTY	PART NAME 1 2 3 4 5 6 (PRODUCT LEVEL)	SEE PAGE
		2	**1S-7251**	2	TERMINAL-CABLE (00-GA, 1/2-IN SCREW)	
E		2	**5P-0695**		CONDUIT (79-CM)	
E		2	**8T-2225**		TUBE-HEAT SHRINK (25.4-MM DIA) (12-CM)	
E		2	**159-8049**		CABLE (00-GA, RED) (96-CM)	
E		2	**159-8050**		CABLE (00-GA, BLACK) (27-CM)	
	36	2	**377-3000**	1	CABLE AS	
		2	**1S-4915**	2	LINER (CONDUIT)	
		2	**1S-7251**	1	TERMINAL-CABLE (00-GA, 1/2-IN SCREW)	
		2	**1S-7252**	1	TERMINAL-CABLE (00-GA, 3/8-IN SCREW)	
E		2	**5P-0695**		CONDUIT (26-CM)	
E		2	**159-8050**		CABLE (00-GA, BLACK) (55-CM)	
E		2	**8T-2225**		TUBE-HEAT SHRINK (25.4-MM DIA) (8-CM)	
		2	**9G-8909**	2	COVER-TERMINAL (BLACK)	
	37	2	**377-3004**	1	CABLE AS	
		2	**5P-2600**	1	RING-TERMINAL (000-GA, 1/2-IN SCREW)	
		2	**6T-0465**	2	COVER-TERMINAL (BLACK)	
		2	**035-0425**	1	RING-TERMINAL (000-GA, 3/8-IN SCREW)	
E		2	**159-8052**		CABLE-ELECTRICAL (00-GA) (94-CM)	
	38	2	**377-3005**	1	CABLE AS	
		2	**6T-0465**	1	COVER-TERMINAL (BLACK)	
		2	**035-0425**	2	RING-TERMINAL (000-GA, 3/8-IN SCREW)	
E		2	**159-8052**		CABLE-ELECTRICAL (00-GA) (157-CM)	
	39	2	**377-9496**	1	BRACKET AS	
Y	40	1	**378-4518**	1	HARNESS AS-POWER	268
Y	41	1	**378-4520**	1	HARNESS AS-CHASSIS (FENDER, RH)	250
CY	42	1	**484-4852**	1	HARNESS AS-CHASSIS (FENDER, LH)	253
Y	43	3	**380-7133**	1	HARNESS AS-TRANSMISSION	270
	44	1	**381-4119**	1	BRACKET AS	
M		1	**8T-3490**	3	NUT-WELD (M10X1.5-THD)	
	45	1	**382-0346**	2	PLATE	
	46	3	**421-1121**	1	BRACKET	
	47	3	**446-9419**	1	BRACKET	
	48	3	**448-9142**	2	BRACKET	
	49	2	**091-9035**	1	SPACER (11X25X20-MM THK)	
M	50	2	**096-4833**	4	BOLT-SOCKET HEAD (M5X0.8X20-MM)	
	51	1,2,3	**130-5300**	9	CLIP	
M	52	3	**133-7810**	1	STUD-TAPERLOCK (M10X1.5X45-MM)	
	53	3	**136-1122**	1	BUSHING	
M	54	2	**142-3953**	3	STUD (M10X1.5-THD)	
	55	1	**150-5931**	4	GROMMET	
	56	2	**1K-4649**	1	SPACER (0.516X1X1-IN THK)	
	57	2	**1S-0994**	4	CLIP	
	58	1	**200-6345**	1	MOUNT (DUAL SWIVEL)	
	59	2,4	**204-8000**	2	MOUNTING-CABLE TIE	
M	60	2	**227-6715**	2	STUD (M10X1.5X30-MM)	
	61	3	**230-7732**	3	MOUNTING-CABLE TIE	
	62	1	**294-3313**	2	CLIP	
	63	2,3	**2V-1771**	5	GROMMET	
	64	3	**303-4649**	1	CLIP	
	65	1	**315-5491**	2	SPACER (20.5X38X20-MM THK)	
	66	3	**352-3970**	1	CLIP	

359-6421 **BATTERY & WIRING GP (**contd.**)** **i06582930**

NOTE	REF NO	GRAPHIC REF	PART NUMBER	QTY	PART NAME 1 2 3 4 5 6 (PRODUCT LEVEL)	SEE PAGE
	67	3	**3J-1907**	2	SEAL-O-RING	
	68	2	**3K-0360**	1	SEAL-O-RING	
	69	2	**4L-6454**	4	BOLT (3/8-16X1-IN)	
	70	1,2,3	**4P-7428**	3	CLIP	
	71	2,3	**4P-7429**	4	CLIP	
	72	1,2,4	**4P-7581**	8	CLIP	
	73	2,3,4	**4P-8134**	5	CLIP	
	74	3,4	**5C-6565**	1	BOLT (1/2-13X1.125-IN)	
	75	2,3	**5G-3676**	14	GROMMET	
	76	3	**5P-1076**	1	WASHER-HARD (13.5X30X4-MM THK)	
	77	1,3	**5P-7464**	5	CLIP (SLOT)	
	78	1,3	**5P-7465**	5	CLIP (TAB)	
	79	3	**5P-8245**	1	WASHER-HARD (13.5X25.5X3-MM THK)	
	80	3	**6V-1249**	3	GROMMET (22-MM ID)	
	81	3	**6V-4589**	1	SEAL-O-RING	
	82	1	**6V-7359**	2	GROMMET (25-MM ID, 37-MM OD)	
	83	2	**6V-8188**	2	NUT (1/2-13-THD)	
	84	2,4	**7B-1251**	4	GROMMET	
	85	3	**7J-0204**	1	SEAL-O-RING	
	86	1,2,3,4	**7K-1181**	270	STRAP-CABLE	
	87	2	**7V-6571**	1	GROMMET	
	88	1	**7X-0582**	4	WASHER-HARD (20X44.5X6-MM THK)	
	89	3	**7X-7729**	1	WASHER (11X25X3-MM THK)	
	90	2	**8S-0948**	1	CLIP	
	91	3	**8S-9089**	1	BOLT (1/2-13X4.5-IN)	
	92	2	**8T-0328**	4	WASHER-HARD (5.5X10X1-MM THK)	
	93	2,3	**8T-1887**	2	CLIP (SLOT)	
	94	2,3	**8T-1888**	2	CLIP (TAB)	
	95	2,3	**8T-1889**	2	CLIP (SLOT)	
	96	2,3	**8T-1890**	2	CLIP (TAB)	
	97	2	**8T-1895**	13	CLIP (SLOT)	
	98	2	**8T-1896**	13	CLIP (TAB)	
M	99	2	**8T-2223**	3	BOLT-SOCKET HEAD (M10X1.5X45-MM)	
C	100	1,2,3,4	**8T-4121**	75	WASHER-HARD (11X21X2.5-MM THK)	
M	101	2,3	**8T-4133**	5	NUT (M10X1.5-THD)	
M	102	1,2,3,4	**8T-4136**	21	BOLT (M10X1.5X25-MM)	
CM	103	1,2,3,4	**8T-4137**	25	BOLT (M10X1.5X20-MM)	
M	104	1,3	**8T-4139**	4	BOLT (M12X1.75X30-MM)	
M	105	2	**8T-4178**	2	BOLT (M10X1.5X90-MM)	
M	106	2	**8T-4185**	1	BOLT (M10X1.5X50-MM)	
M	107	1	**8T-4186**	1	BOLT (M10X1.5X40-MM)	
M	108	2,3	**8T-4192**	6	BOLT (M12X1.75X25-MM)	
M	109	1,2,3	**8T-4195**	6	BOLT (M10X1.5X30-MM)	
M	110	1,2	**8T-4196**	3	BOLT (M10X1.5X35-MM)	
M	111	3	**8T-4198**	2	BOLT (M10X1.5X100-MM)	
	112	1,2,3	**8T-4223**	12	WASHER-HARD (13.5X25.5X3-MM THK)	
	113	2	**8T-4896**	4	WASHER-HARD (10.2X18.5X2.5-MM THK)	
	114	3	**8T-5387**	1	GROMMET	
M	115	1	**8T-5460**	2	BOLT (M20X2.5X40-MM)	
M	116	1	**8T-6430**	2	BOLT (M20X2.5X50-MM)	
M	117	2	**8T-6466**	1	BOLT (M10X1.5X60-MM)	

359-6421 **BATTERY & WIRING GP (**contd.**)** **i06582930**

NOTE	REF NO	GRAPHIC REF	PART NUMBER	QTY	PART NAME 1 2 3 4 5 6 (PRODUCT LEVEL)	SEE PAGE
	118	3	**8W-8909**	1	SLEEVE	
	119	3	**9K-0700**	1	GROMMET	
	120	2	**9X-7378**	2	SEAL-O-RING	
	121	1	**9Y-7595**	1	SPACER (13X30X14-MM THK)	
C	122	1	**6V-9028**	1	SEAL-O-RING	

C - CHANGE FROM PREVIOUS TYPE
D - ORDER BY THE METER
E - ORDER BY THE CENTIMETER
M - METRIC PART
Y - SEPARATE ILLUSTRATION

359-6421 **BATTERY & WIRING GP (**contd.**)** **i06582930**

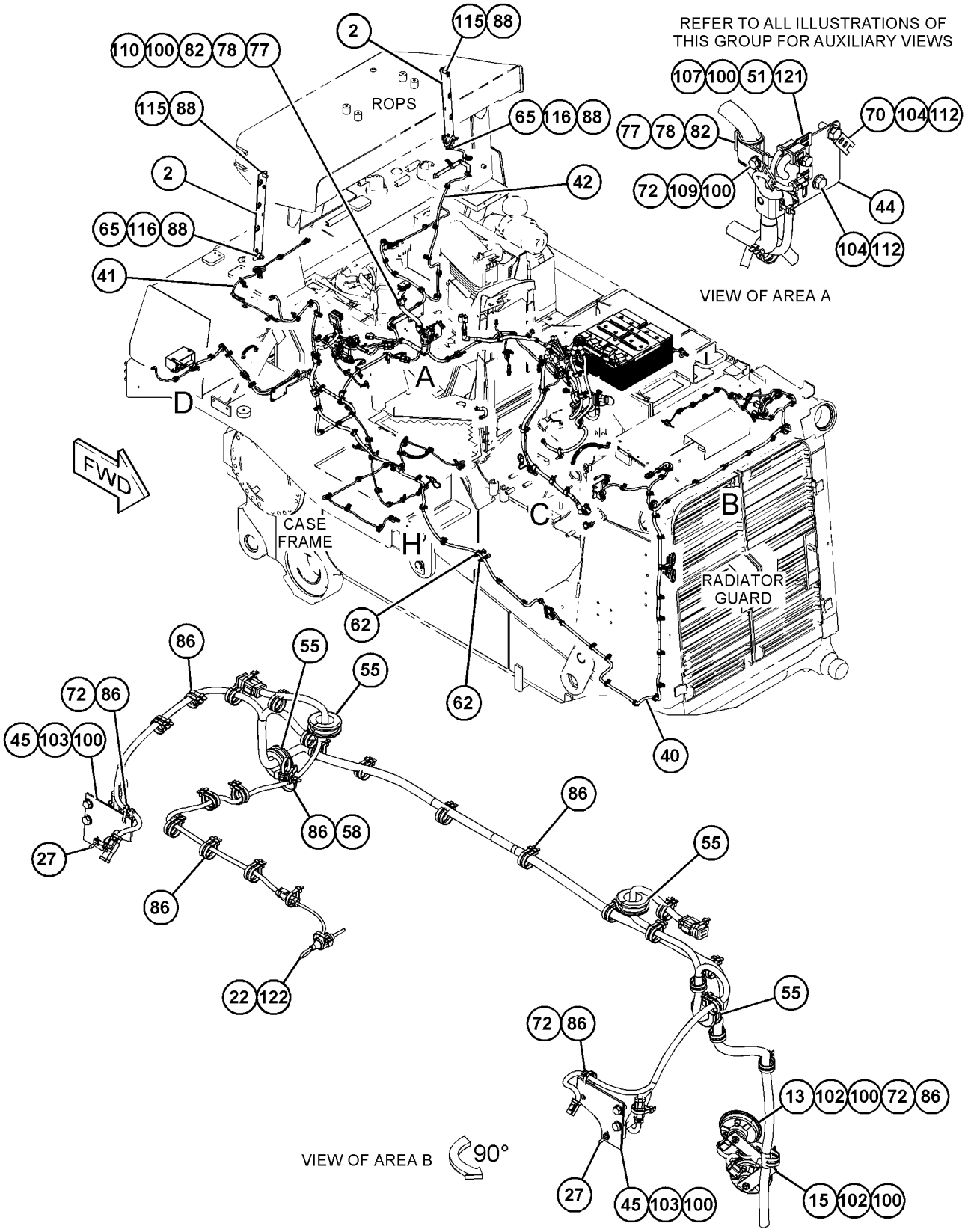

GRAPHIC #1 g06036204

359-6421 **BATTERY & WIRING GP (**contd.**)** **i06582930**

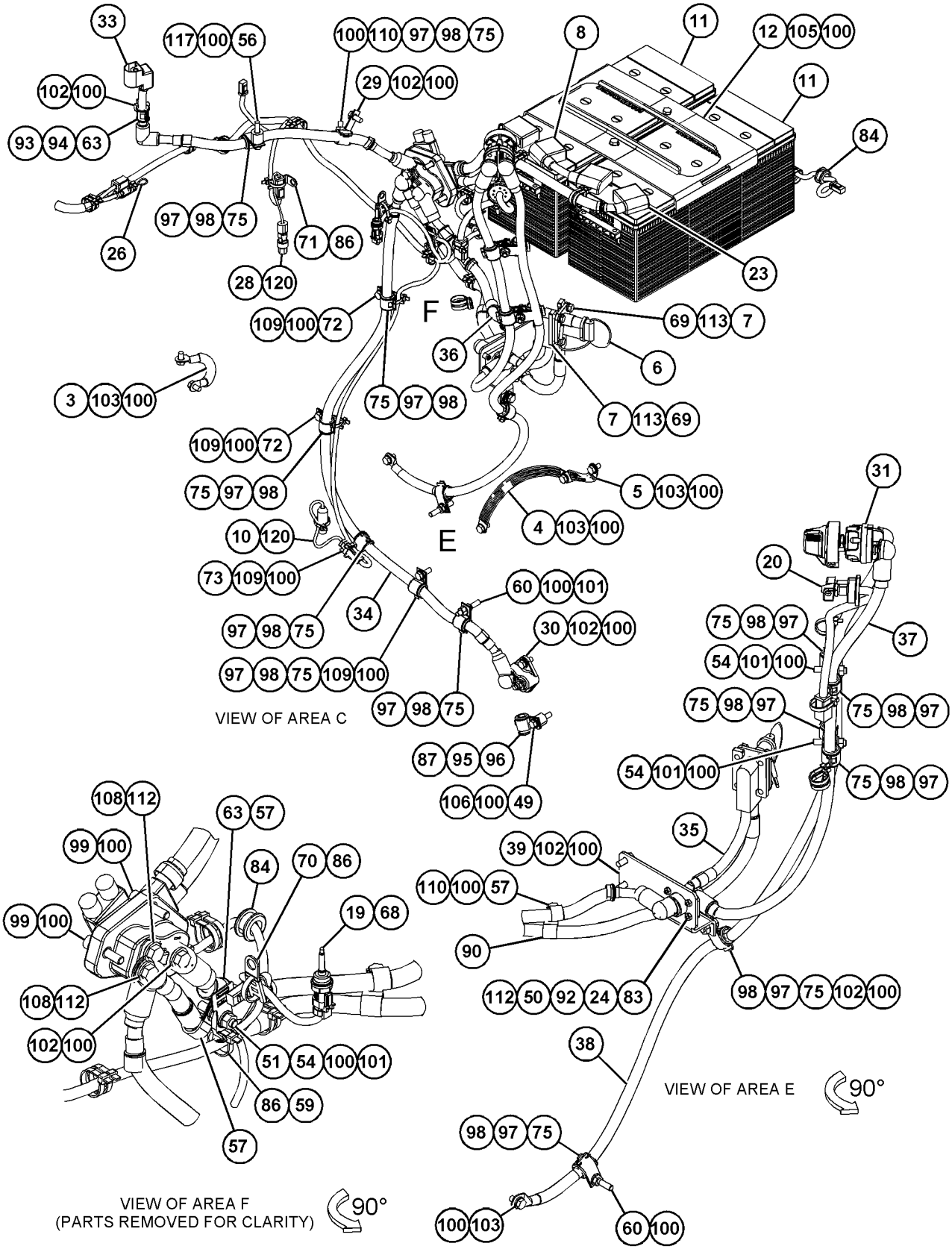

GRAPHIC #2 g06036206

359-6421 **BATTERY & WIRING GP (**contd.**)** **i06582930**

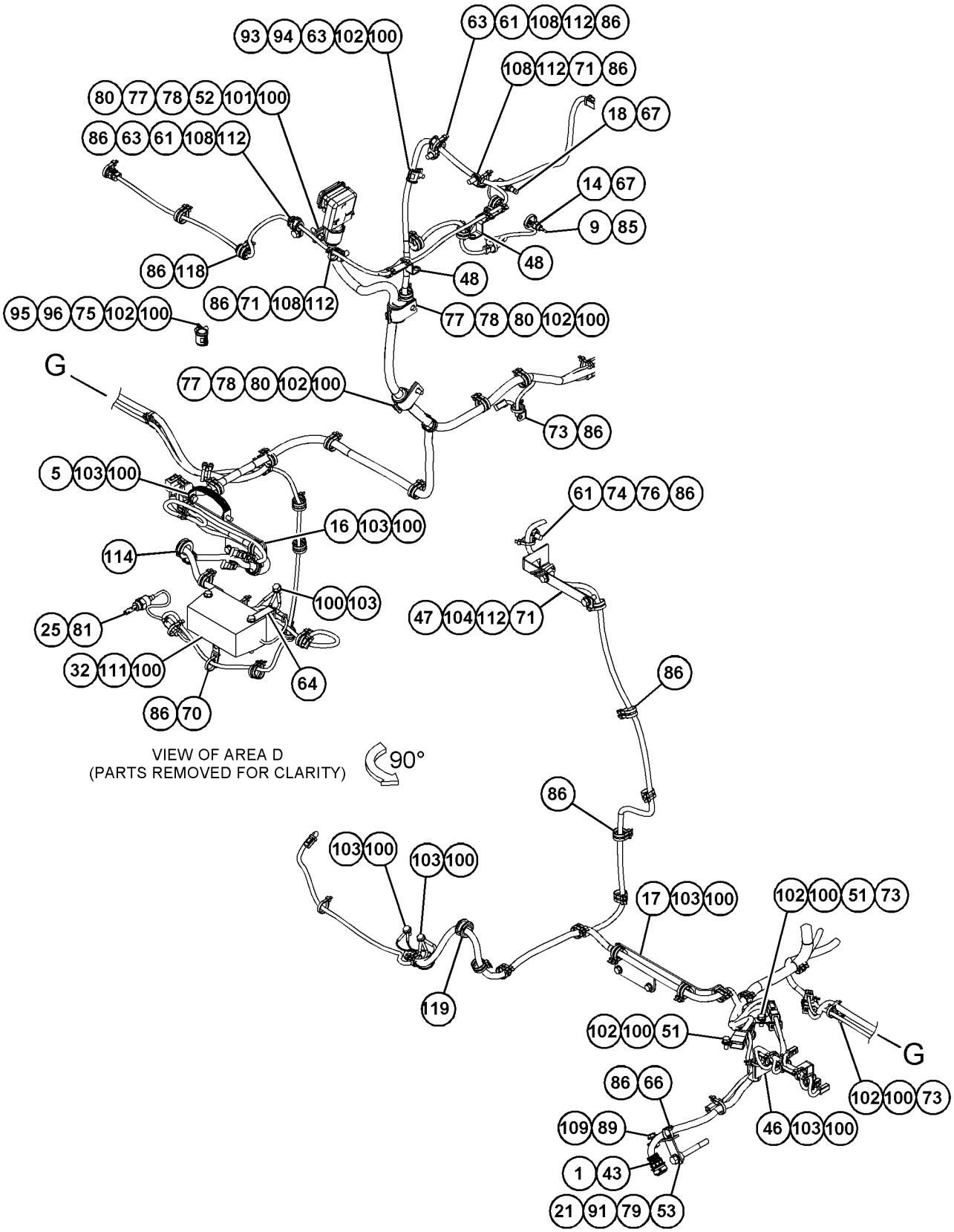

GRAPHIC #3 g06036210

359-6421 **BATTERY & WIRING GP (**contd.**)** **i06582930**

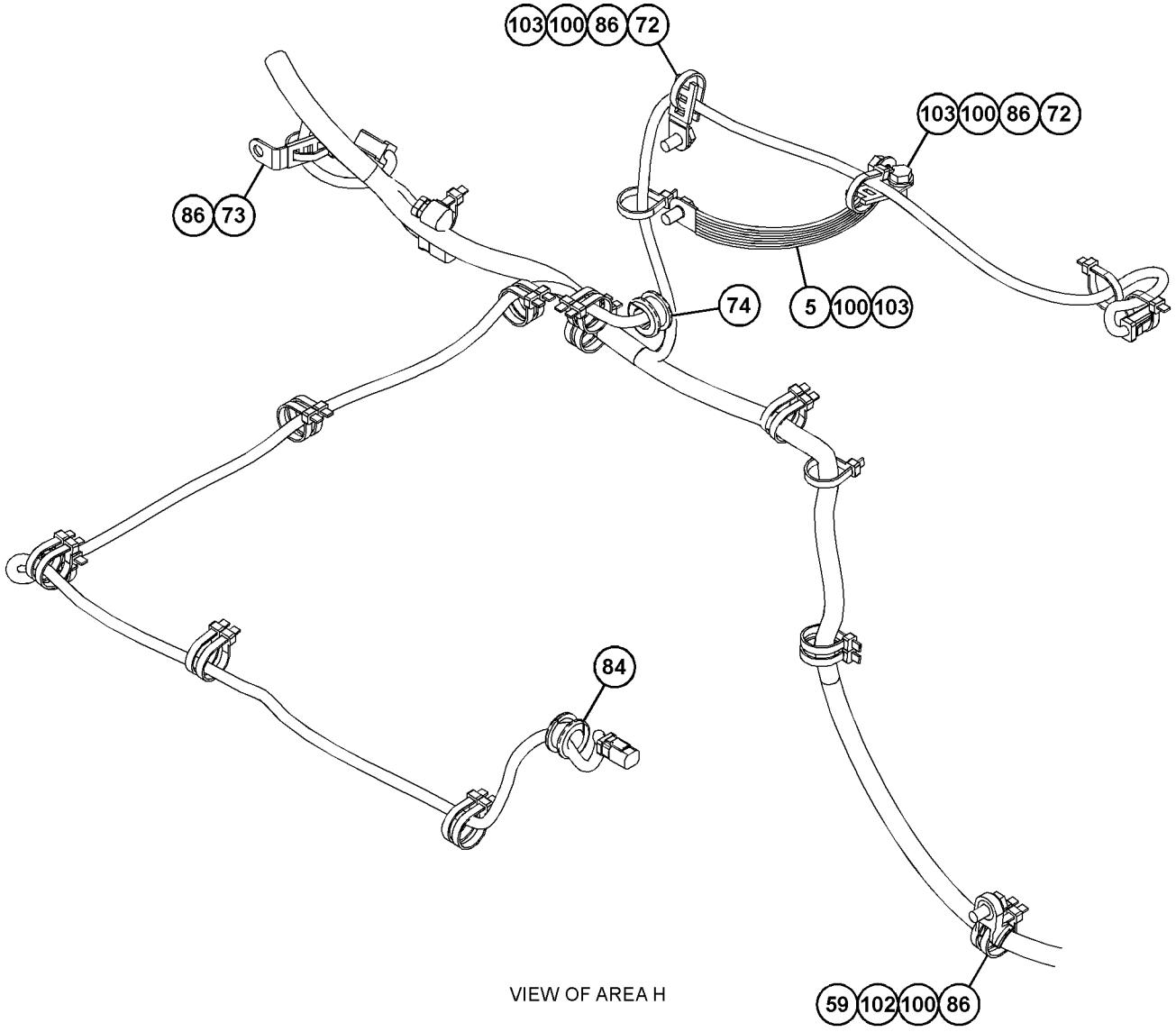

VIEW OF AREA H

GRAPHIC #4 <END> g06038242

167-8984 BATTERY GP–RECHARGEABLE

S/N: RAB1-UP
24-VOLT, 2.5-AMPERE HOUR, LEAD ACID
PART OF 415-2348 INSTALLATION GP-CAES
AN ATTACHMENT

SMCS-1401 **i05111332**

NOTE	REF NO	GRAPHIC REF	PART NUMBER	QTY	PART NAME 1 2 3 4 5 6 (PRODUCT LEVEL)	SEE PAGE
	1	1	**102-8803**	1	KIT-RECEPTACLE (3-PIN)	
					(INCLUDES RECEPTACLE AS & WEDGE)	
	2	1	**155-2260**	1	KIT-CONNECTING PLUG (3-PIN)	
					(INCLUDES PLUG AS & WEDGE)	
	3	1	**7X-6085**	1	GROMMET AS-SEAL	
		1	**5S-7348**	1	SCREW-MACHINE (6-32X0.375-IN)	

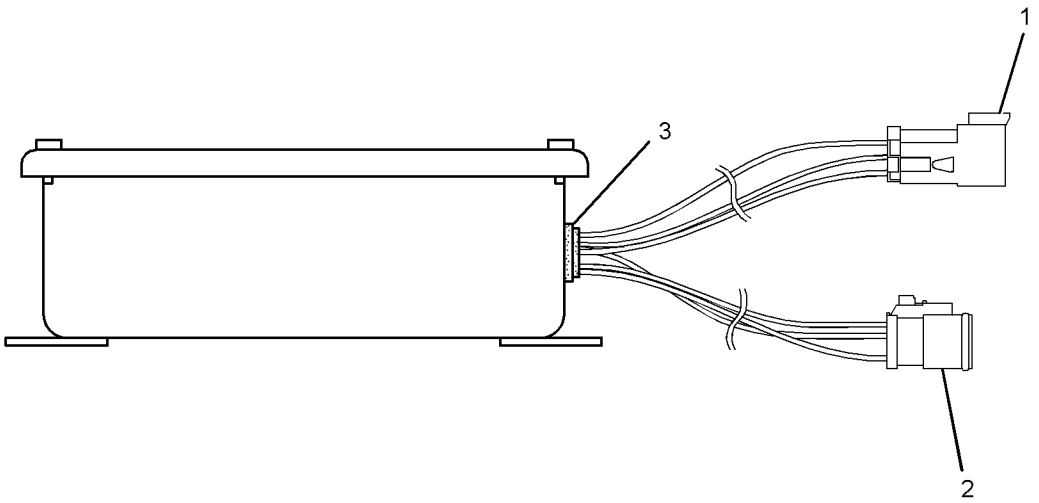

GRAPHIC #1 <END> g03274277

363-2210 BLOCK GP-JUNCTION

S/N: RAB1-UP
PART OF 359-6421 BATTERY & WIRING GP
AN ATTACHMENT

SMCS-1408, 7426

i04229311

NOTE	REF NO	GRAPHIC REF	PART NUMBER	QTY	PART NAME 1 2 3 4 5 6 (PRODUCT LEVEL)	SEE PAGE
	1	1	**5P-1076**	1	WASHER-HARD (13.5X30X4-MM THK)	
	2	1	**7X-7729**	1	WASHER (11X25X3-MM THK)	
M	3	1	**8T-0389**	1	LOCKNUT (M10X1.5-THD)	
M	4	1	**8T-4183**	1	BOLT (M12X1.75X40-MM)	
M	5	1	**8T-4186**	1	BOLT (M10X1.5X40-MM)	
M	6	1	**8T-8549**	1	LOCKNUT (M12X1.75-THD)	

M - METRIC PART

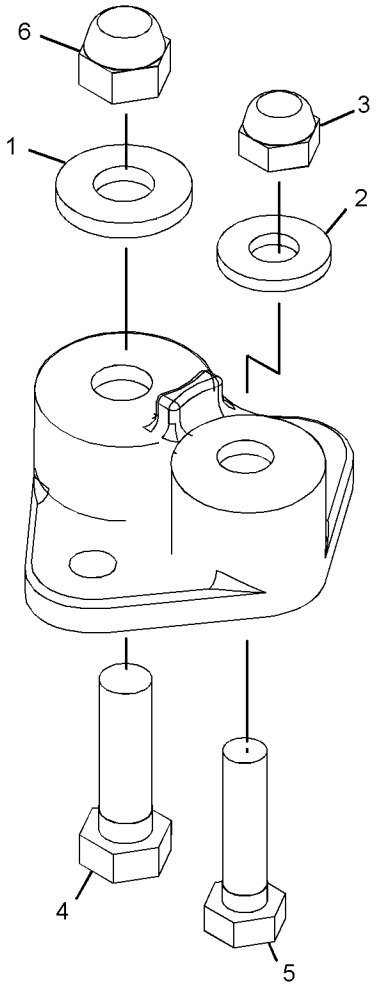

GRAPHIC #1 <END> g02434038

352-3293 CAMERA & MOUNTING GP

S/N: RAB1-UP

PART OF 359-6495 CAMERA & MIRROR AR

AN ATTACHMENT

SMCS-7348 **i06575406**

NOTE	REF NO	GRAPHIC REF	PART NUMBER	QTY	PART NAME 1 2 3 4 5 6 (PRODUCT LEVEL)	SEE PAGE
	1	1	**118-3508**	4	GROMMET	
	2	1	**248-6979**	1	BRACKET AS	
	3	1	**344-1132**	1	PLATE AS	
J	4	1	**459-1800**	1	CAMERA GP	
	5	1	**304-7877**	1	CABLE AS (VIDEO, 1.5-M)	
	6	1	**4L-6459**	4	BOLT (3/8-16X2.5-IN)	
	7	1	**4P-7581**	2	CLIP	
	8	1	**5P-1075**	8	WASHER-HARD (10.2X22.5X3-MM THK)	
	9	1	**6V-8801**	4	NUT (3/8-16-THD)	
	10	1	**7K-1181**	6	STRAP-CABLE	
	11	1	**8T-4121**	2	WASHER-HARD (11X21X2.5-MM THK)	
M	12	1	**8T-4136**	2	BOLT (M10X1.5X25-MM)	
					AVAILABLE REPAIR KIT(S):	
J			**251-4162**	1	KIT-BRACKET (CAMERA)	
					(INCLUDES BRACKET, BOLTS, LOCKNUTS, SOCKET BOLTS, GASKET & ALLEN KEY)	

J - KIT MARKED J SERVICES PART(S) MARKED J
M - METRIC PART

352-3293 **CAMERA & MOUNTING GP (**contd.**)** **i06575406**

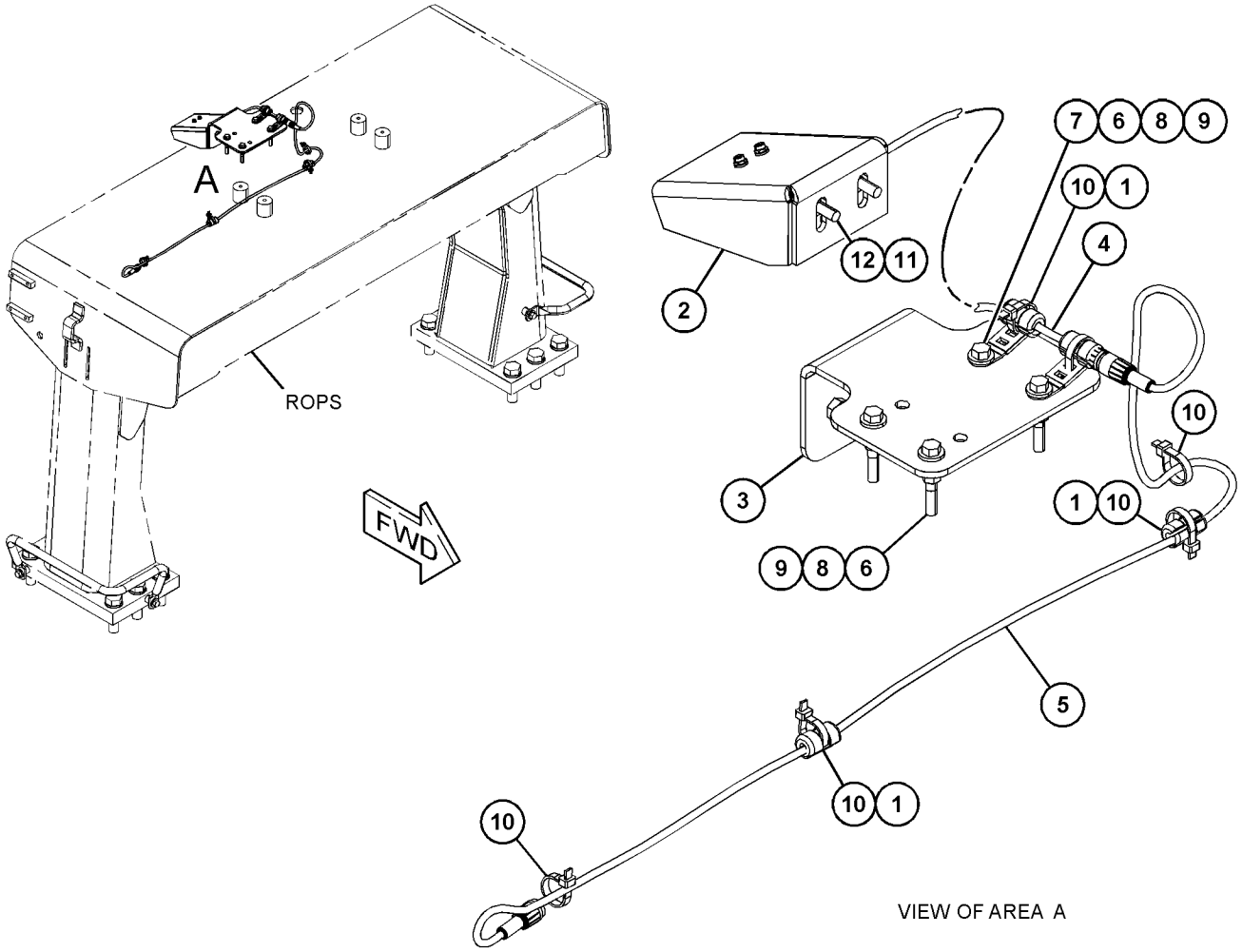

GRAPHIC #1 <END> g03449219

352-3295 CAMERA & MOUNTING GP

S/N: RAB1-UP

PART OF 359-6496 CAMERA & MIRROR AR

AN ATTACHMENT

SMCS-7348 **i06274673**

NOTE	REF NO	GRAPHIC REF	PART NUMBER	QTY	PART NAME 1 2 3 4 5 6 (PRODUCT LEVEL)	SEE PAGE
	1	1	**1K-4649**	1	SPACER (0.516X1X1-IN THK)	
	2	1	**118-3508**	21	GROMMET	
	3	1	**251-4168**	1	SWITCH AS (CAMERA)	
	4	1	**261-3223**	1	CABLE AS-COMMUNICATION	
	5	1	**321-0123**	1	PLATE	
J	6	1	**459-1800**	2	CAMERA GP (115-DEG, COLOR)	
	7	1	**364-8168**	1	BRACKET	
	8	1	**364-8169**	1	BRACKET	
	9	1	**304-7877**	1	CABLE AS (VIDEO, 1.5-M)	
	10	1	**4P-7429**	2	CLIP	
	11	1	**4P-8134**	1	CLIP	
M	12	1	**5C-2874**	2	NUT (M5X0.8-THD)	
	13	1	**7K-1181**	25	STRAP-CABLE	
M	14	1	**8T-0325**	2	BOLT (M5X0.8X14-MM)	
	15	1	**8T-0328**	2	WASHER-HARD (5.5X10X1-MM THK)	
	16	1	**8T-4121**	10	WASHER-HARD (11X21X2.5-MM THK)	
M	17	1	**8T-4136**	8	BOLT (M10X1.5X25-MM)	
M	18	1	**8T-4185**	1	BOLT (M10X1.5X50-MM)	
M	19	1	**8T-4195**	1	BOLT (M10X1.5X30-MM)	
	20	1	**320-9715**	1	CABLE AS (CAMERA)	
					AVAILABLE REPAIR KIT(S):	
J			**251-4162**	1	KIT-BRACKET (CAMERA)	
					(INCLUDES BRACKET, BOLTS, LOCKNUTS, GASKET & ALLEN KEY)	

J - KIT MARKED J SERVICES PART(S) MARKED J
M - METRIC PART

352-3295 **CAMERA & MOUNTING GP (**contd.**)** **i06274673**

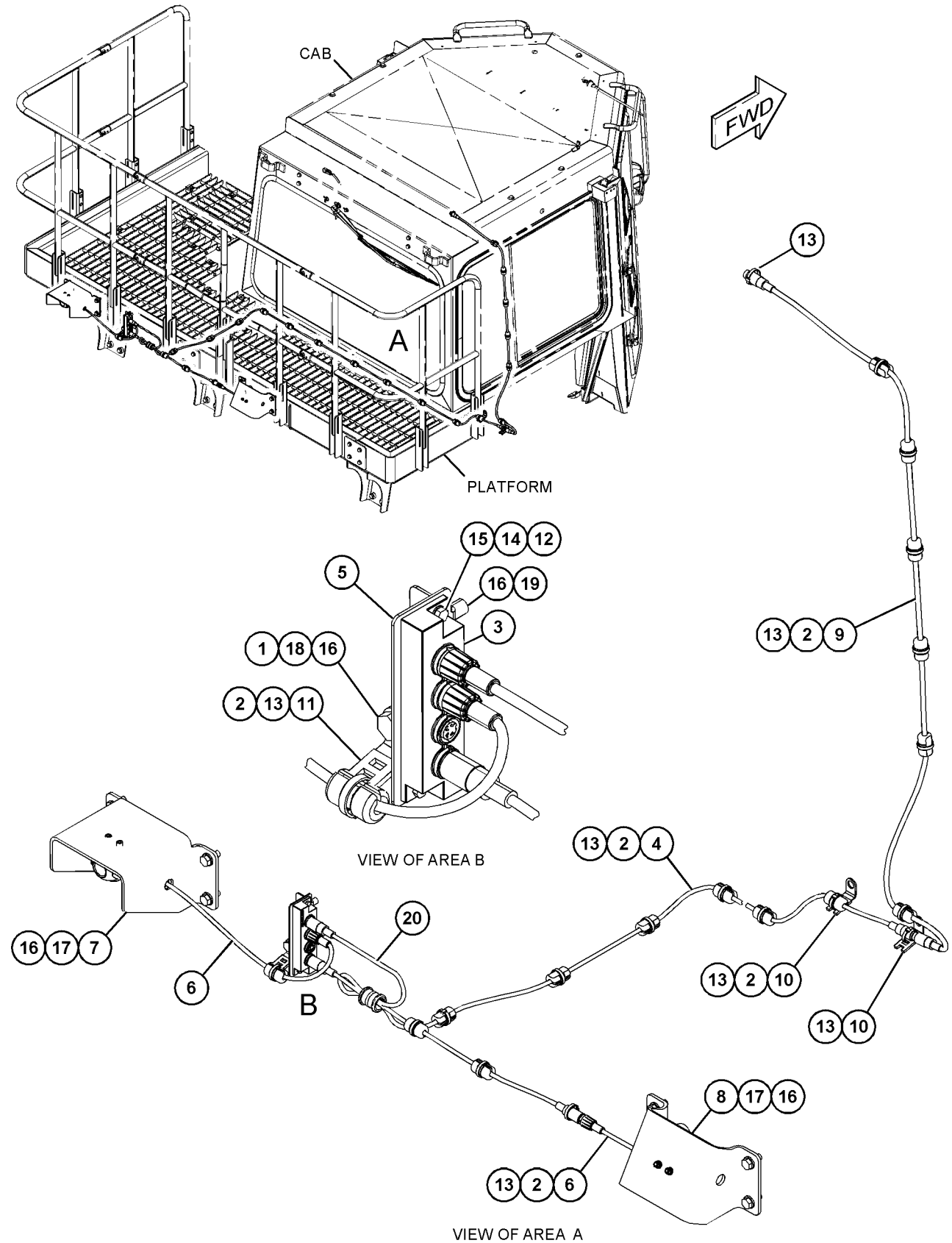

GRAPHIC #1

<END>

g03711288

341-3241 CONTROL & MTG GP-ELECTRONIC

S/N: RAB1-UP
PART OF 359-6419 PLATFORM AR
AN ATTACHMENT

SMCS-1901, 3168 **i05640287**

NOTE	REF NO	GRAPHIC REF	PART NUMBER	QTY	PART NAME 1 2 3 4 5 6 (PRODUCT LEVEL)	SEE PAGE
	1	1	**345-9141**	1	PLATE	
Y	2	1	**352-5146**	1	CONTROL GP-RIPPER	1085
	3	1	**358-8118**	1	FILM-INSTRUCTION (RIPPER)	
	4	1	**5P-4116**	4	WASHER-HARD (8.8X20.5X2-MM THK)	
M	5	1	**5W-8591**	4	BOLT (M8X1.25X18-MM)	

M - METRIC PART
Y - SEPARATE ILLUSTRATION

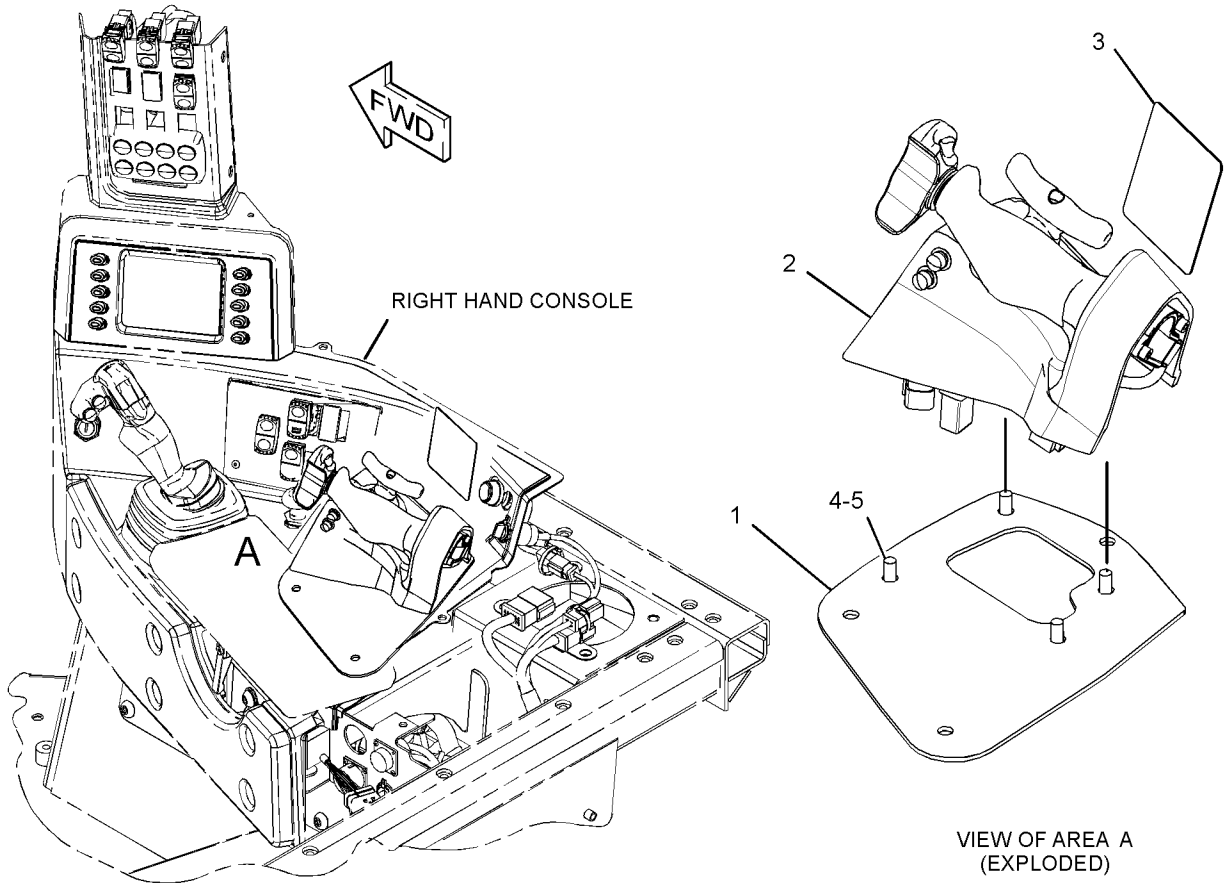

GRAPHIC #1 <END> g02407145

348-4046 CONTROL & MTG GP-ENGINE ELEK

S/N: JZM1-UP
FOR USE WITH AIR COOLED ECM
CANNOT BE USED WITH FUEL COOLED ECM
PART OF 359-6502, 443-0004 ENGINE AR-COMPLETE
AN ATTACHMENT

SMCS-1901, 7620

i04542454

NOTE	REF NO	GRAPHIC REF	PART NUMBER	QTY	PART NAME 1 2 3 4 5 6 (PRODUCT LEVEL)	SEE PAGE
	1	1	**6I-1418**	4	SPACER (8.2X12.7X28.7-MM THK)	
	2	1	**8T-9655**	8	MOUNT-ISOLATION (ISOLATION)	
	3	1	**221-2616**	6	SPACER (5/16-18X1.75-IN)	
Y	4	1	*289-1525*	1	CONTROL GP-ENGINE ELECTRONIC	239
	5	1	**347-3437**	1	BRACKET	
	6	1	**349-9447**	1	PLATE AS	
M		1	**8Y-3795**	1	BOSS (M10X1.5X39-MM)	
	7	1	**224-9907**	4	STUD (5/16-18-THD)	
	8	1	**233-0891**	1	BRACKET AS	
M		1	**232-1693**	1	BOLT-FLANGE HEAD (M6X1X35-MM)	
	9	1	**4M-6425**	6	BOLT (5/16-18X1-IN)	
	10	1	**7X-0579**	3	WASHER-HARD (8.8X25.5X2-MM THK)	
	11	1	**7X-0732**	1	WASHER-HARD (10X22.5X8-MM THK)	
	12	1	**8T-4224**	7	WASHER-HARD (8.8X16X2-MM THK)	

M - METRIC PART
Y - SEPARATE ILLUSTRATION

348-4046 **CONTROL & MTG GP-ENGINE ELEK (**contd.**)** **i04542454**

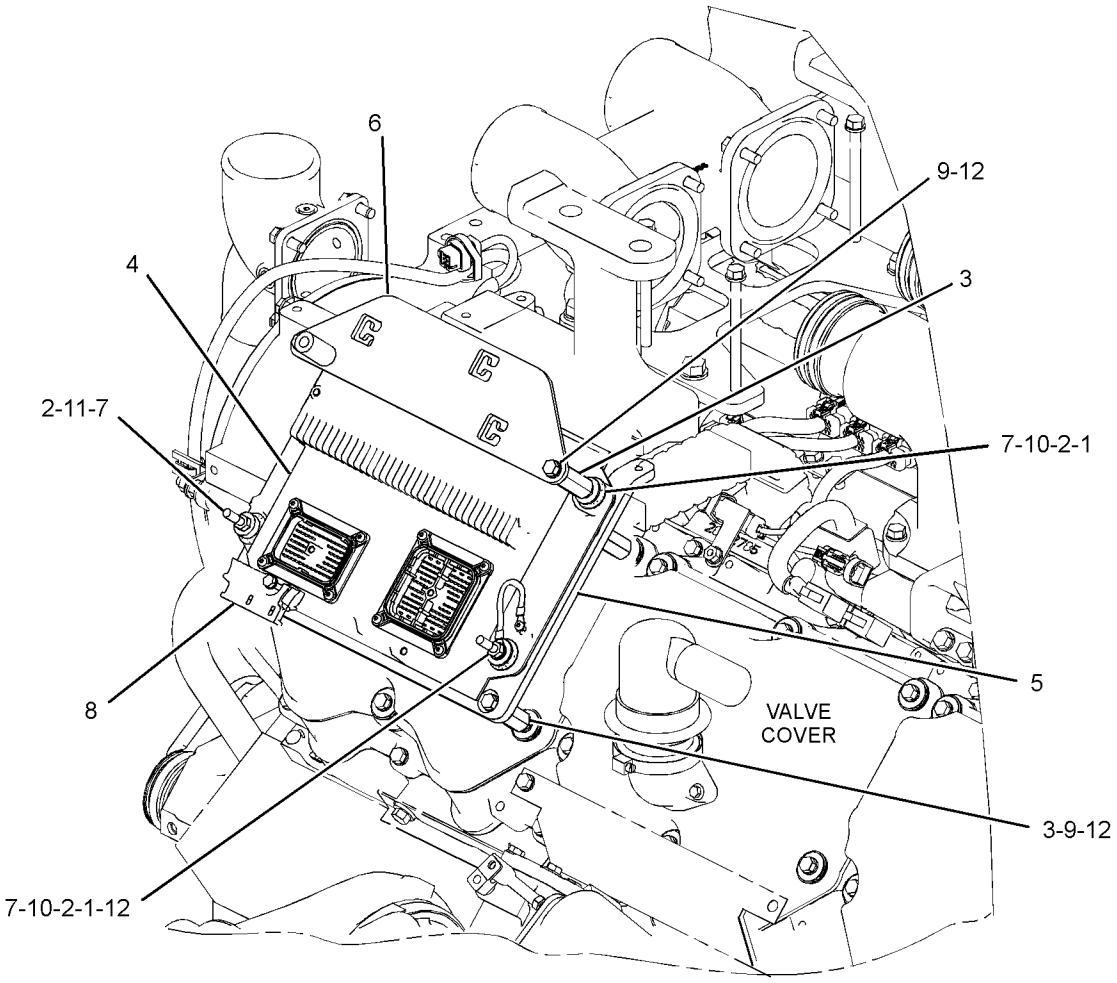

GRAPHIC #1 <END> g02574176

460-1194 CONTROL & MTG GP-ENGINE ELEK

S/N: JZM1-UP
PART OF 359-6502, 443-0004 ENGINE AR-COMPLETE
AN ATTACHMENT

SMCS-1901, 7620 **i05849386**

NOTE	REF NO	GRAPHIC REF	PART NUMBER	QTY	PART NAME 1 2 3 4 5 6 (PRODUCT LEVEL)	SEE PAGE
	1	1	**6I-1418**	4	SPACER (8.2X12.7X28.7-MM THK)	
	2	1	**8T-9655**	8	MOUNT-ISOLATION (ISOLATION)	
	3	1	**221-2616**	6	SPACER (5/16-18X1.75-IN)	
Y	4	1	*289-1525*	1	CONTROL GP-ENGINE ELECTRONIC	239
	5	1	**347-3437**	1	BRACKET	
	6	1	**349-9447**	1	PLATE AS	
M		1	**8Y-3795**	1	BOSS (M10X1.5X39-MM)	
	7	1	**224-9907**	4	STUD (5/16-18-THD)	
	8	1	**8T-4224**	7	WASHER-HARD (8.8X16X2-MM THK)	
	9	1	**4M-6425**	6	BOLT (5/16-18X1-IN)	
	10	1	**7X-0579**	3	WASHER-HARD (8.8X25.5X2-MM THK)	
	11	1	**7X-0732**	1	WASHER-HARD (10X22.5X8-MM THK)	

M - METRIC PART
Y - SEPARATE ILLUSTRATION

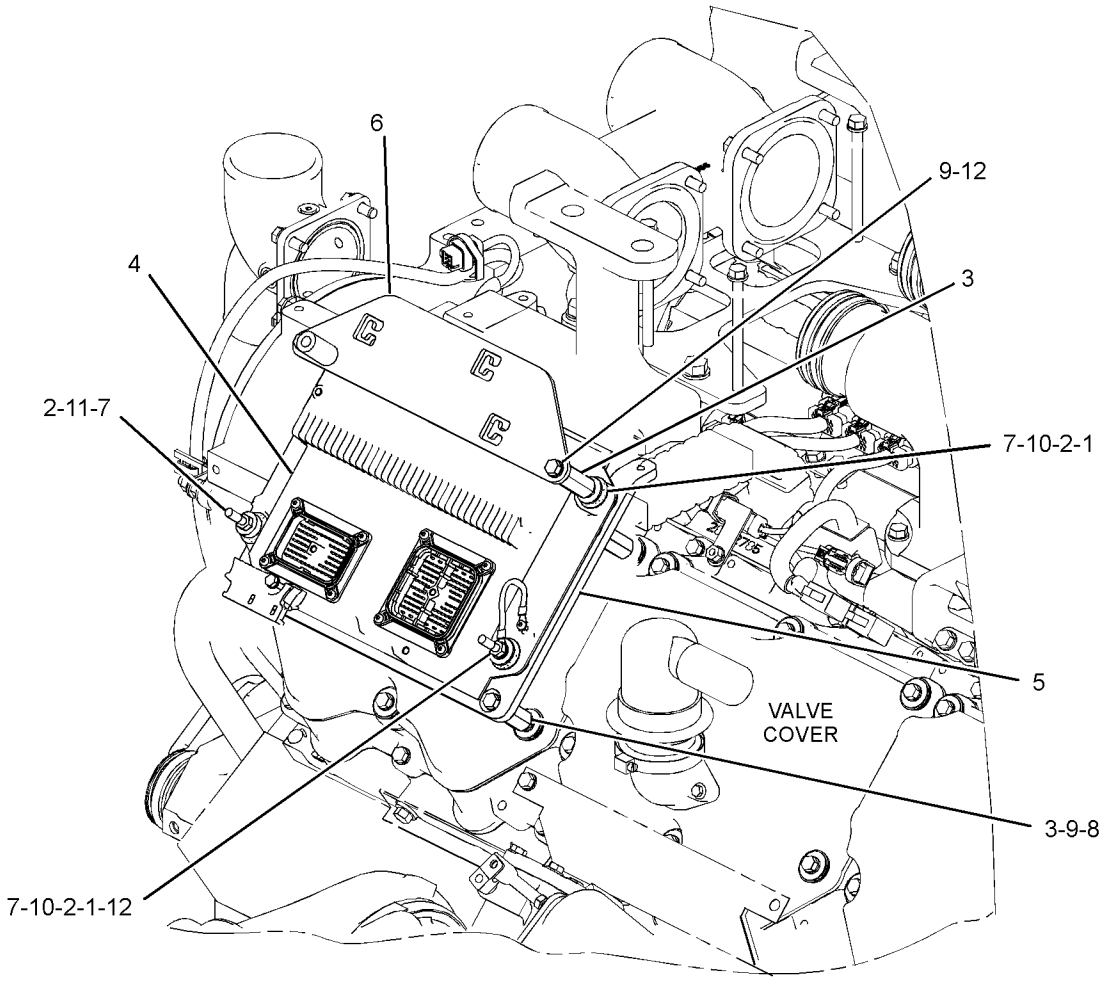

GRAPHIC #1 <END> g03696958

378-7785 CONTROL & MTG GP-POWER TRAIN

S/N: RAB1-UP
PART OF 359-6419 PLATFORM AR
AN ATTACHMENT

SMCS-4800 **i05424626**

NOTE	REF NO	GRAPHIC REF	PART NUMBER	QTY	PART NAME 1 2 3 4 5 6 (PRODUCT LEVEL)	SEE PAGE
	1	1	**171-7077**	2	ROD-THREADED	
Y	2	1	*379-0333*	1	CONTROL GP-STEERING & XMSN	856
	3	1	**8T-4121**	6	WASHER-HARD (11X21X2.5-MM THK)	
M	4	1	**8T-4133**	2	NUT (M10X1.5-THD)	
M	5	1	**8T-4136**	4	BOLT (M10X1.5X25-MM)	

M - METRIC PART
Y - SEPARATE ILLUSTRATION

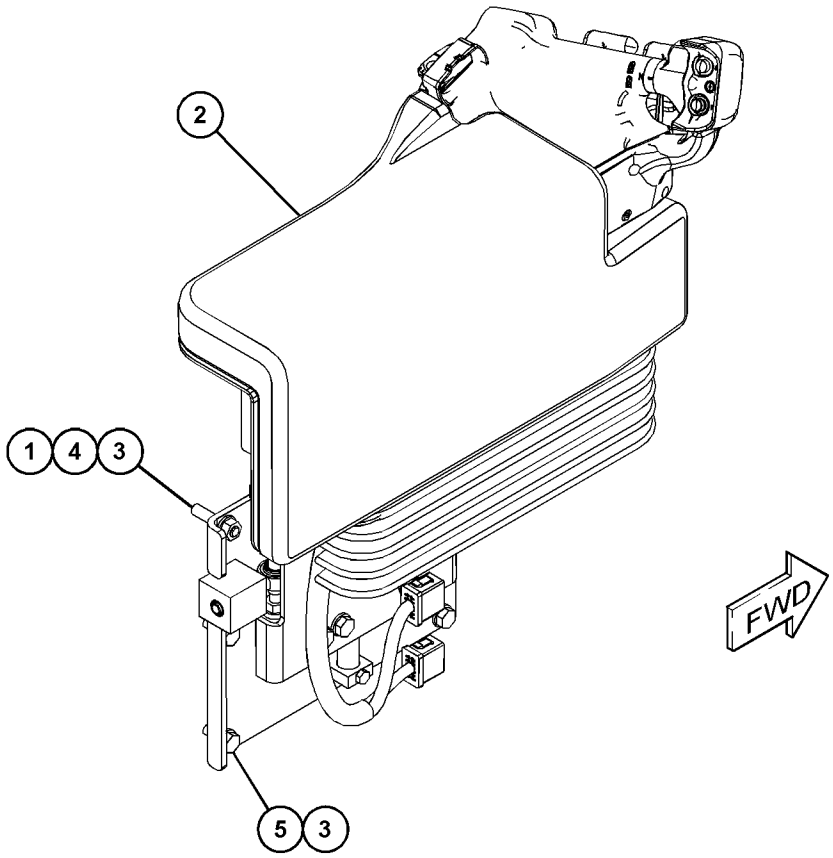

GRAPHIC #1 <END> g03484018

289-1525 CONTROL GP-ENGINE ELECTRONIC

S/N: JZM1-UP

PART OF 348-4046, 460-1194 CONTROL & MTG GP-ENGINE ELEK

AN ATTACHMENT

SMCS-1901 **i05343900**

NOTE	REF NO	GRAPHIC REF	PART NUMBER	QTY	PART NAME 1 2 3 4 5 6 (PRODUCT LEVEL)	SEE PAGE
R	1	1	**417-6011**	1	CONTROL GP-UNPROGRAMMED	

R - REMANUFACTURED PART MAY BE AVAILABLE

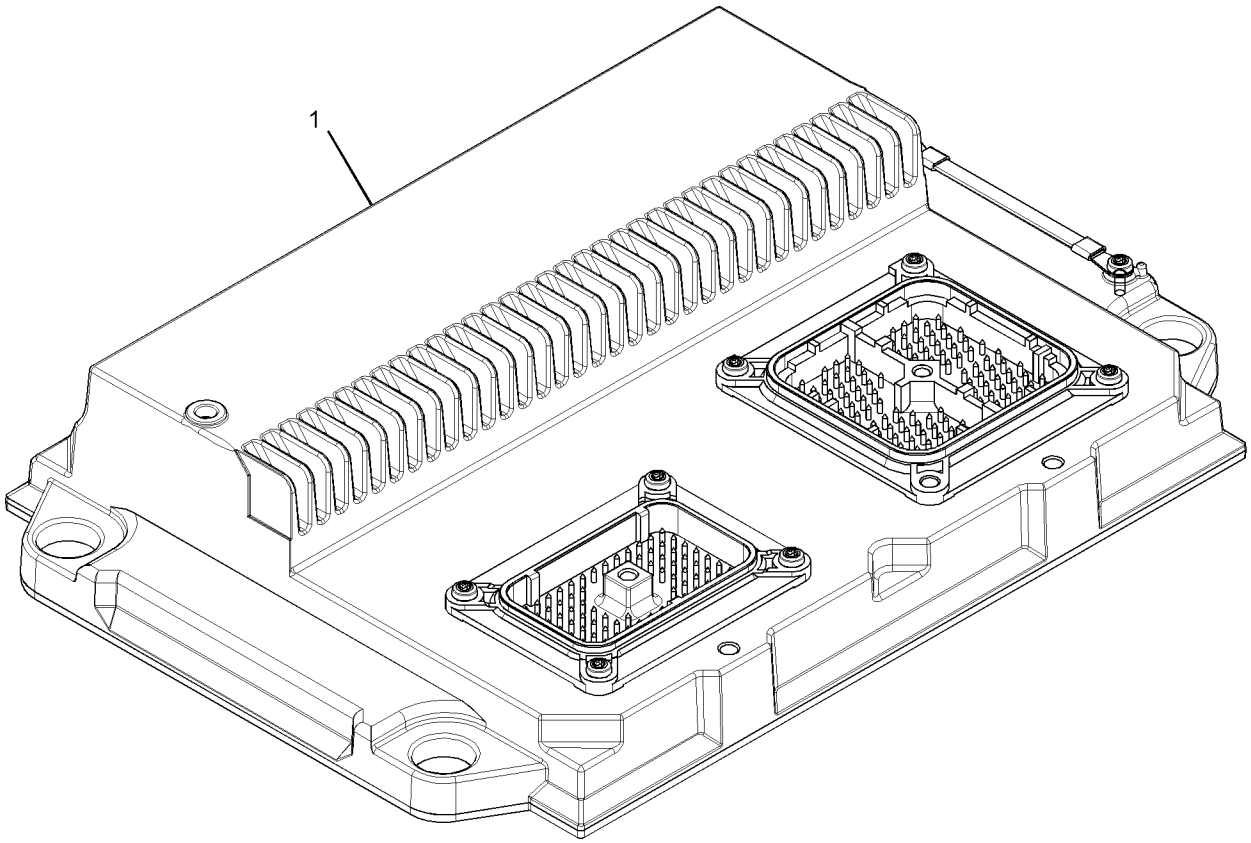

GRAPHIC #1 <END> g01783657

441-3258 CONTROL GP-REMOTE

S/N: RAB1-UP

AN ATTACHMENT

SMCS-7008 **i06589708**

NOTE	PART NUMBER	QTY	PART NAME 1 2 3 4 5 6 (PRODUCT LEVEL)	SEE PAGE
Y	*451-1490*	1	ELECTRONICS GP-MACHINE	245
Y	*446-0204*	1	FILM GP	1316
Y	**436-8094**	1	WIRING GP-LIGHTING (SIGNAL)	452
Y	*446-0214*	1	WIRING GP-REMOTE CONTROL (CAB)	490
Y	*452-6871*	1	WIRING GP-SHUTDOWN	499

Y - SEPARATE ILLUSTRATION

<END>

340-2414 CONTROL GP-UNPROGRAMMED–PRODUCT LINK 523

S/N: RAB1-UP
G4
FIELD REPLACEMENT FOR 351-8492–PAGE: 242
PART OF 351-8492 CONTROL GP-UNPROGRAMMED
AN ATTACHMENT

SMCS-7610 **i05518341**

NOTE	REF NO	GRAPHIC REF	PART NUMBER	QTY	PART NAME 1 2 3 4 5 6 (PRODUCT LEVEL)	SEE PAGE
	1	1	**7X-6315**	1	STRAP AS-GROUND	
M	2	1	**342-9022**	4	SCREW-PAN HEAD (M2.5X0.45X8-MM)	
M	3	1	**342-9290**	1	SCREW-PAN HEAD (M4X0.7X10-MM)	
	4	1	**134-4126**	1	WASHER (4.52X8.28X0.76-MM THK)	
	5	1	**346-7763**	1	COVER AS	

M - METRIC PART

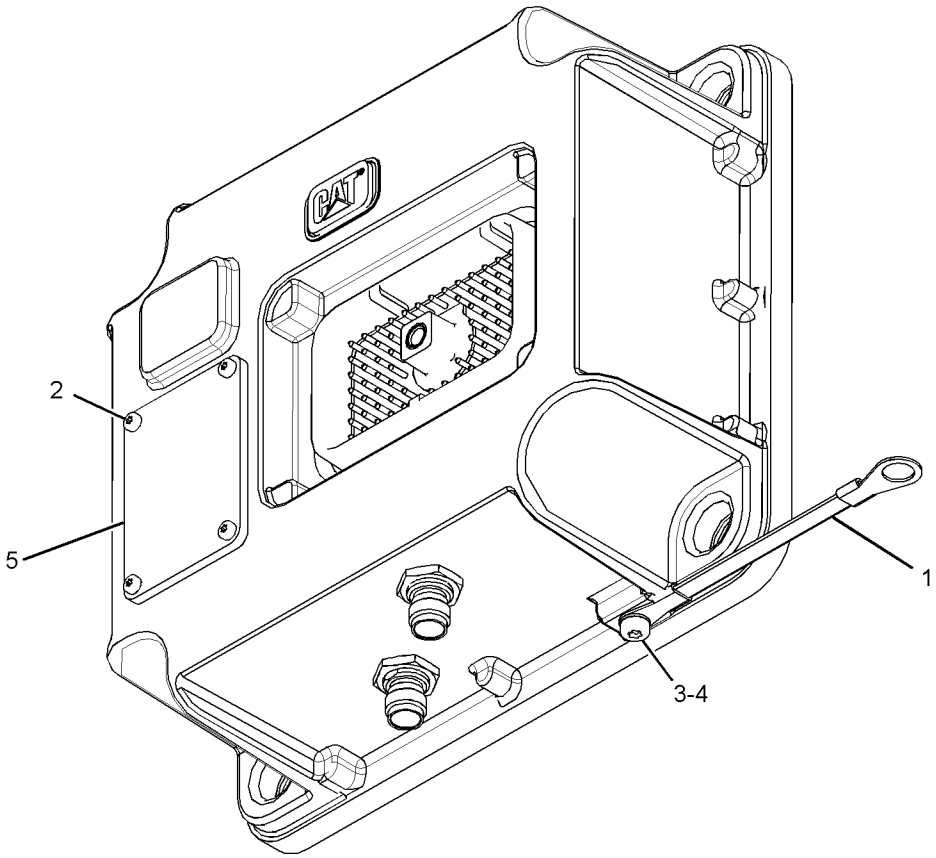

GRAPHIC #1 <END> g03219917

351-8492 CONTROL GP-UNPROGRAMMED–PRODUCT LINK 523

S/N: RAB1-UP
G4
FIELD REPLACEMENT FOR 340-2414–PAGE: 241
PART OF 420-9324 WIRING GP-COMMUNICATION
AN ATTACHMENT

SMCS-7610 **i06141761**

NOTE	REF NO	GRAPHIC REF	PART NUMBER	QTY	PART NAME 1 2 3 4 5 6 (PRODUCT LEVEL)	SEE PAGE
	1	1	**346-7763**	1	COVER AS	
	2	1	**351-8488**	1	CARD-MEMORY (SUBSCRIBER IDENTITY MODULE)	
	3	1	**7X-6315**	1	STRAP AS-GROUND	
M	4	1	**342-9022**	4	SCREW-PAN HEAD (M2.5X0.45X8-MM)	
M	5	1	**342-9290**	1	SCREW-PAN HEAD (M4X0.7X10-MM)	
	6	1	**134-4126**	1	WASHER (4.52X8.28X0.76-MM THK)	
Y	7	1	*340-2414*	1	CONTROL GP-UNPROGRAMMED (PRODUCT LINK 523)	241

M - METRIC PART
Y - SEPARATE ILLUSTRATION

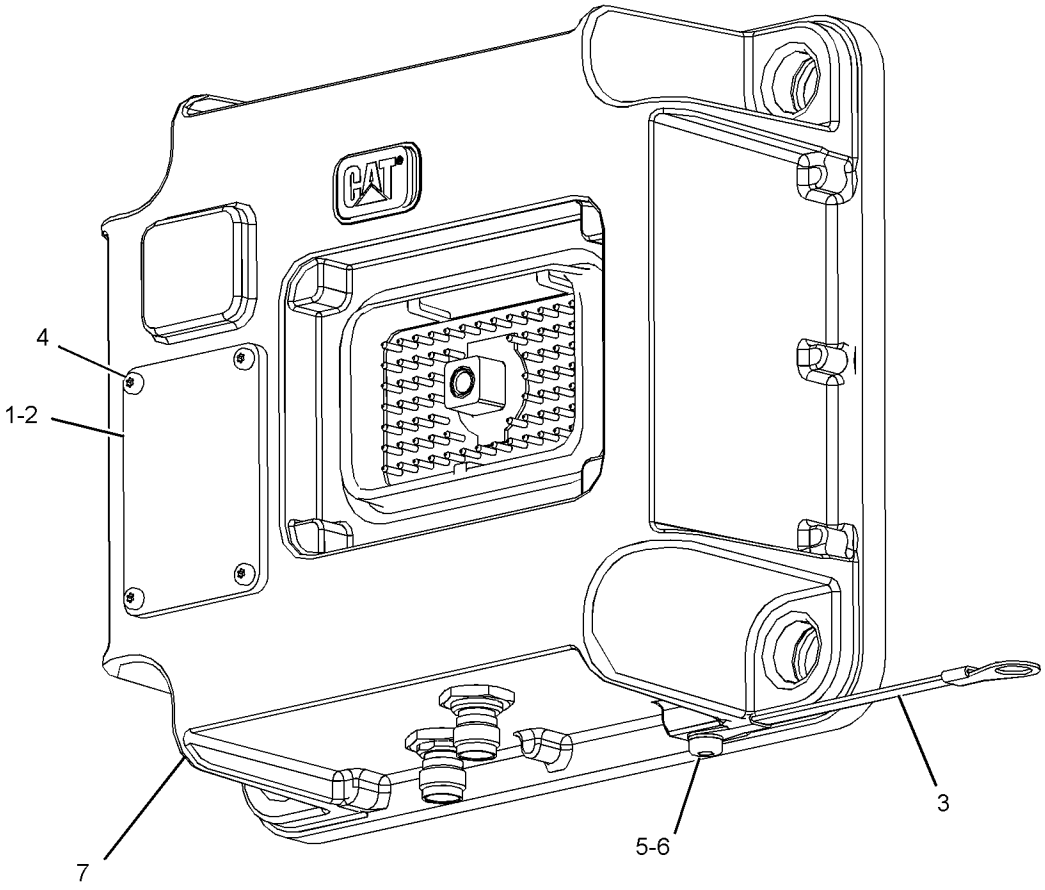

GRAPHIC #1 <END> g02625276

474-5717 ELECTRICAL AR

S/N: RAB1-UP
AN ATTACHMENT

SMCS-1400 **i06538380**

NOTE	PART NUMBER	QTY	PART NAME 1 2 3 4 5 6 (PRODUCT LEVEL)	SEE PAGE
Y	*415-2348*	1	INSTALLATION GP-CAES	278
Y	*399-8989*	1	MOUNTING GP-GRADE CONTROL (TERRAIN)	337
Y	*492-5064*	1	MOUNTING GP-GRADE CONTROL	345
Y	*380-8453*	1	SENSOR & MOUNTING GP	362
Y	*479-1474*	1	WIRING GP-RECEIVER	483
	8T-9364	4	BOLT (1/4-20X0.625-IN)	
M	**9X-2616**	4	SCREW-SOCKET (M8X1.25X16-MM)	
	3E-4352	4	WASHER-HARD (8.8X20.5X2.5-MM THK)	
	5P-4115	4	WASHER-HARD (7.2X19X2-MM THK)	

M - METRIC PART
Y - SEPARATE ILLUSTRATION

<END>

359-6406 ELECTRONICS AR-MACHINE

S/N: RAB1-UP
PART OF 440-9398 COMMON AR
AN ATTACHMENT

SMCS-7610, 7620 **i05410468**

NOTE	PART NUMBER	QTY	PART NAME 1 2 3 4 5 6 (PRODUCT LEVEL)	SEE PAGE
Y	*420-0899*	1	ELECTRONICS GP-IMPLEMENT	245
Y	*420-0914*	1	ELECTRONICS GP-MONITOR (ADVISOR)	245
Y	*420-0901*	1	ELECTRONICS GP-MONITOR (INDICATOR PANEL)	245
Y	*420-0900*	1	ELECTRONICS GP-POWER TRAIN	247

Y - SEPARATE ILLUSTRATION

<END>

417-4722 ELECTRONICS GP-COMMUNICATION–PLE601 NETWORK MANAGER

S/N: RAB1-UP
YELLOW KEY
PART OF 472-8277 INSTALLATION GP-COMMUNICATION
AN ATTACHMENT

SMCS-7606, 7610, 7620

i06193445

NOTE	REF NO	GRAPHIC REF	PART NUMBER	QTY	PART NAME 1 2 3 4 5 6 (PRODUCT LEVEL)	SEE PAGE
R	1	1	**459-0786**	1	ELECTRONICS GP-COMMUNICATION (NETWORK MANAGER)	
		1	**7X-6315**	1	STRAP AS-GROUND	
		1	**5P-6006**	1	TUBE-HEAT SHRINK (9.52-MM DIA)	
		1	**2L-8078**	1	TERMINAL-RING (14-GA TO 16-GA, 5/16-IN SCREW)	
		1	**2L-8075**	1	TERMINAL-RING (14-GA TO 16-GA, NO. 8 SCREW)	
		1	**8C-8514**	1	SCREW-MACHINE (8-32X0.375-IN)	
		1	**134-4126**	1	WASHER (4.52X8.28X0.76-MM THK)	
		1	**175-4168**	12	SCREW-PAN HEAD (6-32X0.37-IN)	
		1	**272-2379**	1	FILM-WARNING (EXPLOSION HAZARD, READ OMM)	

R - REMANUFACTURED PART MAY BE AVAILABLE

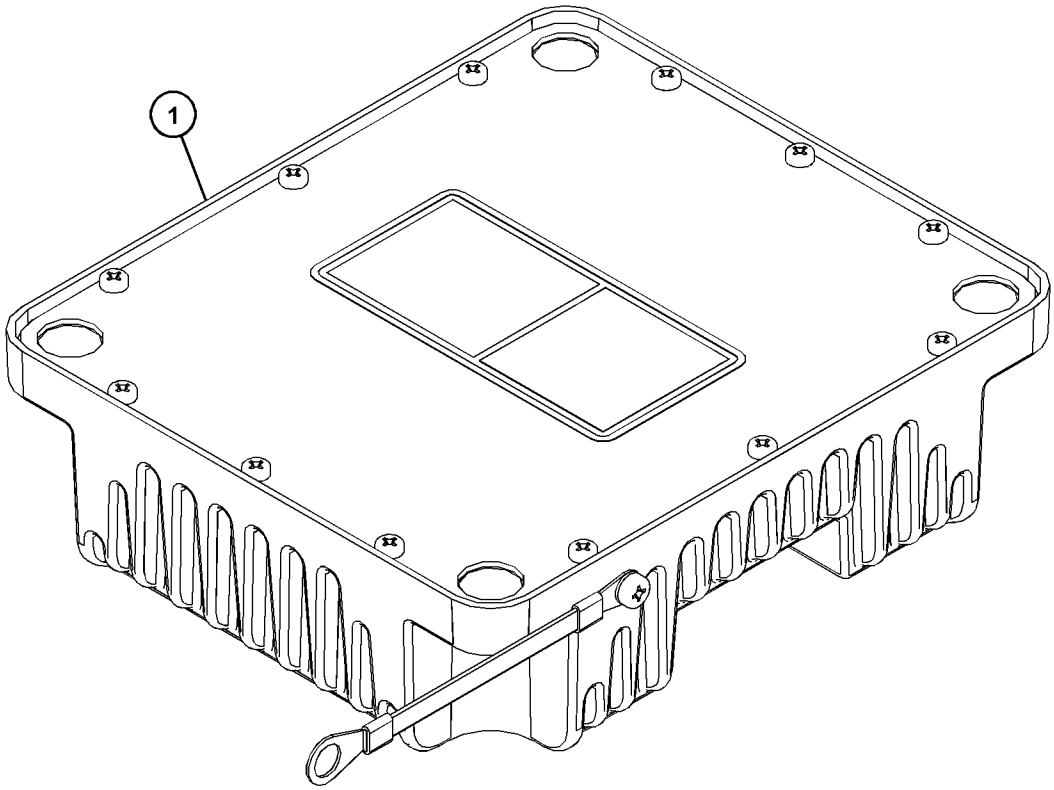

GRAPHIC #1 <END> g03786631

420-0899 ELECTRONICS GP-IMPLEMENT

S/N: RAB1-UP
PART OF 359-6406 ELECTRONICS AR-MACHINE
AN ATTACHMENT

SMCS-5701, 7610, 7620 **i06143146**

NOTE	PART NUMBER	QTY	PART NAME 1 2 3 4 5 6 (PRODUCT LEVEL)	SEE PAGE
	472-8314	1	SOFTWARE GP-IMPLEMENT	

<END>

451-1490 ELECTRONICS GP-MACHINE—REMOTE CONTROL

S/N: RAB1-UP
PART OF 441-3258 CONTROL GP-REMOTE
AN ATTACHMENT

SMCS-7610, 7620 **i05952963**

NOTE	PART NUMBER	QTY	PART NAME 1 2 3 4 5 6 (PRODUCT LEVEL)	SEE PAGE
	455-8009	1	SOFTWARE GP-MACHINE	

<END>

456-6531 ELECTRONICS GP-MACHINE

S/N: RAB1-UP
PART OF 436-6514 PLATFORM AR

SMCS-7610, 7620 **i06502009**

NOTE	PART NUMBER	QTY	PART NAME 1 2 3 4 5 6 (PRODUCT LEVEL)	SEE PAGE
	491-5613	1	SOFTWARE GP-MACHINE (REMOTE CONTROL OP STATION)	
	474-1053	1	SOFTWARE GP-MONITOR (ETHERNET ROUTER)	

<END>

420-0901 ELECTRONICS GP-MONITOR—INDICATOR PANEL

S/N: RAB1-UP
PART OF 359-6406 ELECTRONICS AR-MACHINE
AN ATTACHMENT

SMCS-7490, 7601, 7603, 7610, 7620 **i06104321**

NOTE	PART NUMBER	QTY	PART NAME 1 2 3 4 5 6 (PRODUCT LEVEL)	SEE PAGE
	470-1001	1	SOFTWARE GP-MONITOR (INSTRUMENT PANEL)	

<END>

420-0914 ELECTRONICS GP-MONITOR—ADVISOR

S/N: RAB1-UP
PART OF 359-6406 ELECTRONICS AR-MACHINE
AN ATTACHMENT

SMCS-7490, 7601, 7603, 7610, 7620 **i06062387**

NOTE	PART NUMBER	QTY	PART NAME 1 2 3 4 5 6 (PRODUCT LEVEL)	SEE PAGE
	476-6360	1	SOFTWARE GP-MONITOR	

<END>

420-6044 ELECTRONICS GP-MONITOR—PRODUCT LINK 523

S/N: RAB1-UP
PART OF 419-5040 INSTALLATION GP-COMMUNICATION
AN ATTACHMENT

SMCS-7490, 7601, 7603, 7610, 7620 **i06204546**

NOTE	PART NUMBER	QTY	PART NAME 1 2 3 4 5 6 (PRODUCT LEVEL)	SEE PAGE
	476-1912	1	SOFTWARE GP-MONITOR (PRODUCT LINK 523)	
	481-2489	1	SOFTWARE GP-MONITOR (VIMS MAIN, CONFIGURE)	

<END>

420-6045 ELECTRONICS GP-MONITOR—PL321VSR

S/N: RAB1-UP
PART OF 419-9385 INSTALLATION GP-COMMUNICATION
AN ATTACHMENT

SMCS-7490, 7601, 7603, 7610, 7620 **i06290241**

NOTE	PART NUMBER	QTY	PART NAME 1 2 3 4 5 6 (PRODUCT LEVEL)	SEE PAGE
	476-1899	1	SOFTWARE GP-MONITOR (VIMS MAIN, PROGRAM)	
	481-2489	1	SOFTWARE GP-MONITOR (VIMS MAIN, CONFIGURE)	

<END>

450-5183 ELECTRONICS GP-MONITOR—VIMS 3G, PRODUCT LINK

S/N: RAB1-UP
PART OF 448-4446 INSTALLATION GP-COMMUNICATION
AN ATTACHMENT

SMCS-7490, 7601, 7603, 7610, 7620 **i06237392**

NOTE	PART NUMBER	QTY	PART NAME 1 2 3 4 5 6 (PRODUCT LEVEL)	SEE PAGE
	463-6779	1	SOFTWARE GP-MONITOR (VIMS MAIN, CONFIGURE)	
	458-8202	1	SOFTWARE GP-MONITOR (VIMS MAIN, PROGRAM)	

<END>

481-4736 ELECTRONICS GP-MONITOR

S/N: RAB1-UP
PART OF 482-9657 INSTALLATION GP-COMMUNICATION
AN ATTACHMENT

SMCS-7490, 7601, 7603, 7610, 7620 **i06602524**

NOTE	PART NUMBER	QTY	PART NAME 1 2 3 4 5 6 (PRODUCT LEVEL)	SEE PAGE
	482-7522	1	SOFTWARE GP-MONITOR (TELEMATICS)	
	481-4705	1	SOFTWARE GP-MONITOR (TELEMATICS CONFIGURATION)	

<END>

481-4737 ELECTRONICS GP-MONITOR

S/N: RAB1-UP
PART OF 482-9657 INSTALLATION GP-COMMUNICATION
AN ATTACHMENT

SMCS-7490, 7601, 7603, 7610, 7620 **i06505994**

NOTE	PART NUMBER	QTY	PART NAME 1 2 3 4 5 6 (PRODUCT LEVEL)	SEE PAGE
	482-8138	1	SOFTWARE GP-MONITOR (CELLULAR)	

<END>

420-0900 ELECTRONICS GP-POWER TRAIN

S/N: RAB1-UP
PART OF 359-6406 ELECTRONICS AR-MACHINE
AN ATTACHMENT

SMCS-4800, 4808, 7610, 7620 **i06066511**

NOTE	PART NUMBER	QTY	PART NAME 1 2 3 4 5 6 (PRODUCT LEVEL)	SEE PAGE
	477-1244	1	SOFTWARE GP-POWER TRAIN	

<END>

439-7290 ENCLOSURE GP-ELECTRICAL

S/N: RAB1-UP

PART OF 436-6515 PLATFORM GP-OPERATOR

SMCS-1400 **i05978050**

NOTE	REF NO	GRAPHIC REF	PART NUMBER	QTY	PART NAME 1 2 3 4 5 6 (PRODUCT LEVEL)	SEE PAGE
M	1	1	**288-3657**	11	SCREW-THUMB (M6X1X10-MM)	
	2	1	**9C-9785**	4	BUMPER	
M	3	1	**195-0936**	1	INSERT-THREADED (M6X1-THD)	
	4	1	**439-7256**	2	PLATE	
	5	1	**439-7259**	1	PLATE	
	6	1	**439-7289**	1	ENCLOSURE AS	
	7	1	**362-8685**	3	FILM-IDENTIFICATION (CAT)	
	8	1	**1P-6522**	1	GROMMET	

M - METRIC PART

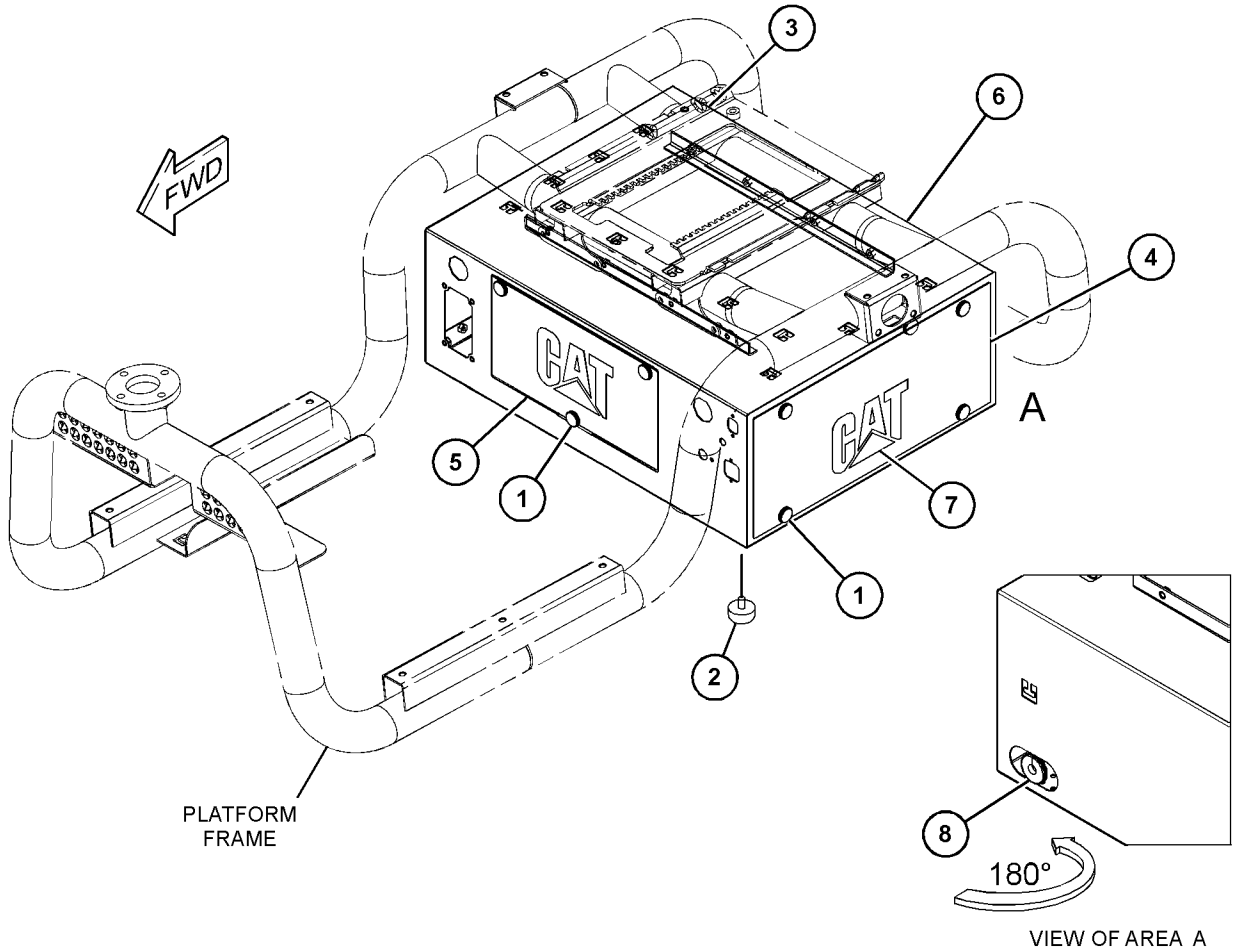

GRAPHIC #1 <END> g03745939

421-6804 HARNESS AS-CAB

S/N: RAB1-UP
PART OF 415-2348 INSTALLATION GP-CAES
AN ATTACHMENT

SMCS-1408 **i05944132**

NOTE	PART NUMBER	QTY	PART NAME 1 2 3 4 5 6 (PRODUCT LEVEL)	SEE PAGE
	310-0674	2	LOCKWASHER	
	211-0052	2	NUT (1-11/16-18-THD)	
	8T-8737	24	PLUG-SEAL	
	225-3861	2	RECEPTACLE AS-CONNECTOR (31-PIN)	
	9W-0844	4	SOCKET-CONNECTOR (14-GA TO 16-GA)	
	9X-3402	34	SOCKET-CONNECTOR (16-GA TO 18-GA)	

<END>

447-6491 HARNESS AS-CAB

S/N: RAB1-UP
PART OF 479-1474 WIRING GP-RECEIVER
AN ATTACHMENT

SMCS-1408 **i06279712**

NOTE	PART NUMBER	QTY	PART NAME 1 2 3 4 5 6 (PRODUCT LEVEL)	SEE PAGE
	432-8962	2	CAP-SEAL	
	155-2255	2	KIT-CONNECTING PLUG (12-PIN)	
	155-2260	2	KIT-CONNECTING PLUG (3-PIN)	
			(EACH KIT INCLUDES PLUG AS, WEDGE(S) & INTERFACE SEAL)	
	102-8805	1	KIT-RECEPTACLE (6-PIN)	
			(INCLUDES RECEPTACLE AS & WEDGE)	
	9W-0852	1	PIN-CONNECTOR (14-GA TO 16-GA)	
	9X-3401	5	PIN-CONNECTOR (16-GA TO 18-GA)	
	8T-8737	13	PLUG-SEAL	
	134-2540	2	RESISTOR AS-CONNECTION (3-PIN)	
	9W-0844	2	SOCKET-CONNECTOR (14-GA TO 16-GA)	
	9X-3402	15	SOCKET-CONNECTOR (16-GA TO 18-GA)	
E	**125-7874**		TUBE-HEAT SHRINK (5.72-MM DIA) (30-CM)	

E - ORDER BY THE CENTIMETER

<END>

378-4520 HARNESS AS-CHASSIS–FENDER, RH

S/N: RAB1-UP
PART OF 359-6421 BATTERY & WIRING GP
AN ATTACHMENT

SMCS-1408 **i06059598**

NOTE	PART NUMBER	QTY	PART NAME 1 2 3 4 5 6 (PRODUCT LEVEL)	SEE PAGE
	102-8802	1	KIT-RECEPTACLE (2-PIN)	
	102-8804	1	KIT-RECEPTACLE (4-PIN)	
	102-8801	2	KIT-RECEPTACLE (12-PIN)	
	190-7615	1	KIT-RECEPTACLE (12-PIN)	
			(EACH RECEPTACLE KIT INCLUDES RECEPTACLE AS & WEDGE)	
	8T-8730	1	SOCKET-CONNECTOR (16-GA TO 18-GA)	
	8T-8737	69	PLUG-SEAL	
	9W-0844	21	SOCKET-CONNECTOR (14-GA TO 16-GA)	
	9W-0852	6	PIN-CONNECTOR (14-GA TO 16-GA)	
	9X-3401	14	PIN-CONNECTOR (16-GA TO 18-GA)	
	9X-3402	53	SOCKET-CONNECTOR (16-GA TO 18-GA)	
	9X-6772	2	STRAP-CABLE	
E	**119-3662**		TUBE-HEAT SHRINK (10.85-MM DIA) (33-CM)	
E	**125-7874**		TUBE-HEAT SHRINK (5.72-MM DIA) (15-CM)	
E	**125-7875**		TUBE-HEAT SHRINK (7.44-MM DIA) (15-CM)	
	126-1774	1	COVER-CONNECTOR	
	2L-8069	3	TERMINAL-RING (2-GA TO 10-GA, 3/8-IN SCREW)	
	155-2255	1	KIT-CONNECTING PLUG (12-PIN)	
	155-2270	10	KIT-CONNECTING PLUG (2-PIN)	
	155-2271	2	KIT-CONNECTING PLUG (4-PIN)	
	155-2274	1	KIT-CONNECTING PLUG (6-PIN)	
			(EACH PLUG KIT INCLUDES PLUG AS, WEDGE & INTERFACE SEAL)	
	155-2258	1	WEDGE-PLUG LOCK (12-PIN)	
	160-7689	1	PLUG AS-CONNECTOR (70-PIN)	
	159-9322	1	SEAL-O-RING	
B	**163-4519**		TAPE	
	189-3158	2	SUPPRESSOR-ARC	
	230-4013	1	PLUG AS-CONNECTOR (3-PIN)	
	455-0705	1	SEAL-CONNECTOR	
	274-3774	3	CAP-CONNECTOR	
	274-3775	1	CAP-CONNECTOR	
	274-3776	1	CAP-SEAL	
	274-3777	1	CAP-CONNECTOR	
	432-8962	1	CAP-SEAL	

B - USE AS REQUIRED
E - ORDER BY THE CENTIMETER

<END>

378-4521 HARNESS AS-CHASSIS–FENDER, LH

S/N: RAB1-281
PART OF 359-6421 BATTERY & WIRING GP
AN ATTACHMENT

SMCS-1408 **i06295177**

NOTE	PART NUMBER	QTY	PART NAME 1 2 3 4 5 6 (PRODUCT LEVEL)	SEE PAGE
	102-8802	4	KIT-RECEPTACLE (2-PIN)	
	102-8805	2	KIT-RECEPTACLE (6-PIN)	
	102-8801	1	KIT-RECEPTACLE (12-PIN)	
			(EACH RECEPTACLE KIT INCLUDES RECEPTACLE AS & WEDGE)	
	8T-8729	3	PIN-CONNECTOR (16-GA TO 18-GA)	
	8T-8730	9	SOCKET-CONNECTOR (16-GA TO 18-GA)	
	8T-8737	66	PLUG-SEAL	
	9W-0844	23	SOCKET-CONNECTOR (14-GA TO 16-GA)	
	9W-0852	2	PIN-CONNECTOR (14-GA TO 16-GA)	
	9X-3401	7	PIN-CONNECTOR (16-GA TO 18-GA)	
	9X-3402	85	SOCKET-CONNECTOR (16-GA TO 18-GA)	
E	**114-8843**		SLEEVE-PLASTIC (20-CM)	
E	**119-3662**		TUBE-HEAT SHRINK (10.85-MM DIA) (13-CM)	
E	**125-7874**		TUBE-HEAT SHRINK (5.72-MM DIA) (20-CM)	
	2L-8069	3	TERMINAL-RING (2-GA TO 10-GA, 3/8-IN SCREW)	
	134-2540	1	RESISTOR AS-CONNECTION (3-PIN)	
	155-2255	3	KIT-CONNECTING PLUG (12-PIN)	
	155-2260	3	KIT-CONNECTING PLUG (3-PIN)	
	155-2270	13	KIT-CONNECTING PLUG (2-PIN)	
	155-2274	3	KIT-CONNECTING PLUG (6-PIN)	
			(EACH PLUG KIT INCLUDES PLUG AS, WEDGE(S) & INTERFACE SEAL)	
	155-2258	2	WEDGE-PLUG LOCK (12-PIN)	
	160-7689	1	PLUG AS-CONNECTOR (70-PIN)	
	159-9322	1	SEAL-O-RING	
	230-4011	1	PLUG AS-CONNECTOR (2-PIN)	
	455-0704	1	SEAL-CONNECTOR	

E - ORDER BY THE CENTIMETER

<END>

482-9109 HARNESS AS-CHASSIS

S/N: RAB1-UP

PART OF 464-7601 WIRING GP-CHASSIS

AN ATTACHMENT

SMCS-1408 **i06589670**

NOTE	PART NUMBER	QTY	PART NAME 1 2 3 4 5 6 (PRODUCT LEVEL)	SEE PAGE
	102-8803	1	KIT-RECEPTACLE (3-PIN)	
	102-8804	1	KIT-RECEPTACLE (4-PIN)	
			(EACH RECEPTACLE KIT INCLUDES RECEPTACLE AS & WEDGE)	
	8T-8729	1	PIN-CONNECTOR (16-GA TO 18-GA)	
	8T-8730	5	SOCKET-CONNECTOR (16-GA TO 18-GA)	
	8T-8737	17	PLUG-SEAL	
	9W-0844	6	SOCKET-CONNECTOR (14-GA TO 16-GA)	
	9W-0852	2	PIN-CONNECTOR (14-GA TO 16-GA)	
	9X-3401	6	PIN-CONNECTOR (16-GA TO 18-GA)	
	9X-3402	22	SOCKET-CONNECTOR (16-GA TO 18-GA)	
E	**119-3662**		TUBE-HEAT SHRINK (10.85-MM DIA) (7-CM)	
E	**125-7874**		TUBE-HEAT SHRINK (5.72-MM DIA) (10-CM)	
	155-2255	2	KIT-CONNECTING PLUG (12-PIN)	
	155-2257	1	KIT-CONNECTING PLUG (12-PIN)	
	155-2271	1	KIT-CONNECTING PLUG (4-PIN)	
			(EACH PLUG KIT INCLUDES PLUG AS, WEDGE, & INTERFACE SEAL)	
	190-7615	1	KIT-RECEPTACLE (12-PIN)	
			(INCLUDES RECEPTACLE AS & WEDGE)	
N	**467-2859**		CABLE (21-DM)	

E - ORDER BY THE CENTIMETER
N - ORDER BY THE DECIMETER

<END>

484-4852 HARNESS AS-CHASSIS

S/N: RAB282-UP
PART OF 359-6421 BATTERY & WIRING GP
AN ATTACHMENT

SMCS-1408 **i06530732**

NOTE	PART NUMBER	QTY	PART NAME 1 2 3 4 5 6 (PRODUCT LEVEL)	SEE PAGE
	102-8802	4	KIT-RECEPTACLE (2-PIN)	
	102-8805	2	KIT-RECEPTACLE (6-PIN)	
	102-8801	1	KIT-RECEPTACLE (12-PIN)	
			(EACH RECEPTACLE KIT INCLUDES RECEPTACLE AS & WEDGE)	
	8T-8729	3	PIN-CONNECTOR (16-GA TO 18-GA)	
	8T-8730	9	SOCKET-CONNECTOR (16-GA TO 18-GA)	
	8T-8737	55	PLUG-SEAL	
	9W-0844	29	SOCKET-CONNECTOR (14-GA TO 16-GA)	
	9W-0852	2	PIN-CONNECTOR (14-GA TO 16-GA)	
	9X-3401	7	PIN-CONNECTOR (16-GA TO 18-GA)	
	9X-3402	96	SOCKET-CONNECTOR (16-GA TO 18-GA)	
E	**119-3662**		TUBE-HEAT SHRINK (10.85-MM DIA) (13-CM)	
E	**125-7874**		TUBE-HEAT SHRINK (5.72-MM DIA) (25-CM)	
	2L-8069	3	TERMINAL-RING (2-GA TO 10-GA, 3/8-IN SCREW)	
	2L-8079	2	TERMINAL-RING (14-GA TO 16-GA, 3/8-IN SCREW)	
	134-2540	1	RESISTOR AS-CONNECTION (3-PIN)	
	155-2255	3	KIT-CONNECTING PLUG (12-PIN)	
	155-2260	3	KIT-CONNECTING PLUG (3-PIN)	
	155-2270	13	KIT-CONNECTING PLUG (2-PIN)	
	155-2274	4	KIT-CONNECTING PLUG (6-PIN)	
			(EACH PLUG KIT INCLUDES PLUG AS, WEDGE, & INTERFACE SEAL)	
	160-7689	1	PLUG AS-CONNECTOR (70-PIN)	
	159-9322	1	SEAL-O-RING	
	230-4011	1	PLUG AS-CONNECTOR (2-PIN)	
	455-0704	1	SEAL-CONNECTOR	

E - ORDER BY THE CENTIMETER

<END>

456-5024 HARNESS AS-CONSOLE

S/N: RAB1-UP

PART OF 438-4319 WIRING GP-COMMUNICATION

SMCS-1408, 7451

i06011989

NOTE	PART NUMBER	QTY	PART NAME 1 2 3 4 5 6 (PRODUCT LEVEL)	SEE PAGE
	155-2271	1	KIT-CONNECTING PLUG (4-PIN)	
			(INCLUDES PLUG AS, WEDGE & INTERFACE SEAL)	
	102-8804	1	KIT-RECEPTACLE (4-PIN)	
	102-8801	1	KIT-RECEPTACLE (12-PIN)	
			(EACH RECEPTACLE KIT INCLUDES RECEPTACLE AS & WEDGE)	
	9X-3401	12	PIN-CONNECTOR (16-GA TO 18-GA)	
	133-0967	2	PIN-CONNECTOR (16-GA TO 18-GA)	
	8T-8737	2	PLUG-SEAL	
	9X-3402	4	SOCKET-CONNECTOR (16-GA TO 18-GA)	
	3E-3377	1	WEDGE-RECEPTACLE LOCK (4-PIN)	

<END>

482-9116 HARNESS AS-CONSOLE

S/N: RAB1-UP

PART OF 457-5010 WIRING GP-REMOTE CONTROL

AN ATTACHMENT

SMCS-1408, 7451

i06589672

NOTE	PART NUMBER	QTY	PART NAME 1 2 3 4 5 6 (PRODUCT LEVEL)	SEE PAGE
	8C-6354	1	CAP-RECEPTACLE (ET CONNECTOR)	
	126-1774	2	COVER-CONNECTOR	
	155-2255	3	KIT-CONNECTING PLUG (12-PIN)	
	155-2256	2	KIT-CONNECTING PLUG (12-PIN)	
	155-2265	1	KIT-CONNECTING PLUG (8-PIN)	
	155-2260	2	KIT-CONNECTING PLUG (3-PIN)	
	155-2270	1	KIT-CONNECTING PLUG (2-PIN)	
	155-2271	1	KIT-CONNECTING PLUG (4-PIN)	
	155-2274	1	KIT-CONNECTING PLUG (6-PIN)	
			(EACH PLUG KIT INCLUDES PLUG AS, WEDGE(S) & INTERFACE SEAL)	
	242-6114	1	KIT-CONNECTING PLUG (8-PIN)	
	242-6116	1	KIT-CONNECTING PLUG (8-PIN)	
	242-6118	1	KIT-CONNECTING PLUG (8-PIN)	
	242-6120	1	KIT-CONNECTING PLUG (8-PIN)	
	196-2383	1	KIT-CONNECTING PLUG (8-PIN)	
	196-2385	1	KIT-CONNECTING PLUG (8-PIN)	
	196-2386	1	KIT-CONNECTING PLUG (8-PIN)	
	196-2384	1	KIT-CONNECTING PLUG (8-PIN)	
	196-2382	1	KIT-CONNECTING PLUG (2-PIN)	
	196-2381	2	KIT-CONNECTING PLUG (2-PIN)	
			(EACH PLUG KIT INCLUDES PLUG AS, LOCK CONNECTOR, TERMINAL ASSEMBLIES & INTERFACE SEAL)	
	102-8803	1	KIT-RECEPTACLE (3-PIN)	
	102-8801	1	KIT-RECEPTACLE (12-PIN)	
	190-7614	1	KIT-RECEPTACLE (12-PIN)	
			(EACH RECEPTACLE KIT INCLUDES RECEPTACLE AS & WEDGE)	
	8T-8729	1	PIN-CONNECTOR (16-GA TO 18-GA)	
	9W-0852	4	PIN-CONNECTOR (14-GA TO 16-GA)	
	9X-3401	15	PIN-CONNECTOR (16-GA TO 18-GA)	
	160-7689	2	PLUG AS-CONNECTOR (70-PIN)	
			(EACH INCLUDES)	
	159-9322	1	SEAL-O-RING	
	7R-2751	23	PLUG-CONNECTOR (1-PIN)	
	8T-8737	98	PLUG-SEAL	
	8T-8736	1	RECEPTACLE-CONNECTOR (9-PIN)	
	8T-8730	13	SOCKET-CONNECTOR (16-GA TO 18-GA)	
	9W-0844	11	SOCKET-CONNECTOR (14-GA TO 16-GA)	
	9X-3402	120	SOCKET-CONNECTOR (16-GA TO 18-GA)	
	9X-6772	4	STRAP-CABLE	
B	**329-3734**		TAPE-ELECTRICAL	
	196-2412	40	TERMINAL AS (16-GA)	
			(EACH INCLUDES)	
	7R-2750	1	SEAL-CONNECTOR	
	196-2413	4	TERMINAL AS (12-GA)	
			(EACH INCLUDES)	
	128-4123	1	SEAL	

482-9116 **HARNESS AS-CONSOLE (**contd.**)** **i06589672**

NOTE	PART NUMBER	QTY	PART NAME 1 2 3 4 5 6 (PRODUCT LEVEL)	SEE PAGE
	196-2414	3	TERMINAL AS (10-GA)	
			(EACH INCLUDES)	
	173-8919	1	SEAL-CONNECTOR	
E	**119-3662**		TUBE-HEAT SHRINK (10.85-MM DIA) (65-CM)	
E	**125-7874**		TUBE-HEAT SHRINK (5.72-MM DIA) (50-CM)	
E	**125-7875**		TUBE-HEAT SHRINK (7.44-MM DIA) (35-CM)	

B - USE AS REQUIRED
E - ORDER BY THE CENTIMETER

<END>

472-8281 HARNESS AS-CONTROL

S/N: RAB1-UP

PART OF 472-8277 INSTALLATION GP-COMMUNICATION

AN ATTACHMENT

SMCS-1408 **i06507941**

NOTE	PART NUMBER	QTY	PART NAME 1 2 3 4 5 6 (PRODUCT LEVEL)	SEE PAGE
	102-8805	1	KIT-RECEPTACLE (6-PIN)	
	102-8801	1	KIT-RECEPTACLE (12-PIN)	
			(EACH RECEPTACLE KIT INCLUDES RECEPTACLE AS & WEDGE)	
	8T-8729	4	PIN-CONNECTOR (16-GA TO 18-GA)	
	8T-8730	8	SOCKET-CONNECTOR (16-GA TO 18-GA)	
	8T-8737	91	PLUG-SEAL	
	9X-3401	10	PIN-CONNECTOR (16-GA TO 18-GA)	
	9X-3402	43	SOCKET-CONNECTOR (16-GA TO 18-GA)	
	9X-6772	2	STRAP-CABLE	
E	**125-7874**		TUBE-HEAT SHRINK (5.72-MM DIA) (10-CM)	
E	**125-7875**		TUBE-HEAT SHRINK (7.44-MM DIA) (10-CM)	
	126-1774	1	COVER-CONNECTOR	
	147-1445	1	PLUG AS-CONNECTOR (70-PIN)	
	159-9322	1	SEAL-O-RING	
	155-2255	2	KIT-CONNECTING PLUG (12-PIN)	
	155-2256	2	KIT-CONNECTING PLUG (12-PIN)	
			(EACH PLUG KIT INCLUDES PLUG AS, WEDGE, & INTERFACE SEAL)	
	155-2258	3	WEDGE-PLUG LOCK (12-PIN)	
	155-2259	1	WEDGE-PLUG LOCK (8-PIN)	
	155-2265	1	KIT-CONNECTING PLUG (8-PIN)	
			(INCLUDES PLUG AS, WEDGE, & INTERFACE SEAL)	
	190-7614	1	KIT-RECEPTACLE (12-PIN)	
			(INCLUDES RECEPTACLE AS & WEDGE)	
E	**329-3734**		TAPE-ELECTRICAL (150-CM)	
	374-7467	1	CAP-SEAL	
	432-8962	3	CAP-SEAL	

E - ORDER BY THE CENTIMETER

<END>

482-9117 HARNESS AS-CONTROL

S/N: RAB1-UP

PART OF 464-5878 WIRING GP-REMOTE CONTROL

AN ATTACHMENT

SMCS-1408 **i06589671**

NOTE	PART NUMBER	QTY	PART NAME 1 2 3 4 5 6 (PRODUCT LEVEL)	SEE PAGE
	102-8801	1	KIT-RECEPTACLE (12-PIN)	
			(INCLUDES RECEPTACLE AS & WEDGE)	
	8T-8729	4	PIN-CONNECTOR (16-GA TO 18-GA)	
	8T-8730	6	SOCKET-CONNECTOR (16-GA TO 18-GA)	
	8T-8737	91	PLUG-SEAL	
	9W-0844	6	SOCKET-CONNECTOR (14-GA TO 16-GA)	
	9W-0852	10	PIN-CONNECTOR (14-GA TO 16-GA)	
	9X-3401	62	PIN-CONNECTOR (16-GA TO 18-GA)	
	9X-3402	64	SOCKET-CONNECTOR (16-GA TO 18-GA)	
	9X-6772	6	STRAP-CABLE	
E	**119-3662**		TUBE-HEAT SHRINK (10.85-MM DIA) (13-CM)	
E	**125-7874**		TUBE-HEAT SHRINK (5.72-MM DIA) (10-CM)	
E	**125-7875**		TUBE-HEAT SHRINK (7.44-MM DIA) (15-CM)	
	126-1774	3	COVER-CONNECTOR	
	147-1445	1	PLUG AS-CONNECTOR (70-PIN)	
	159-9322	1	SEAL-O-RING	
	155-2260	1	KIT-CONNECTING PLUG (3-PIN)	
	155-2274	1	KIT-CONNECTING PLUG (6-PIN)	
			(EACH PLUG KIT INCLUDES PLUG AS, WEDGE, & INTERFACE SEAL)	
	160-7689	1	PLUG AS-CONNECTOR (70-PIN)	
	159-9322	1	SEAL-O-RING	
	190-7615	1	KIT-RECEPTACLE (12-PIN)	
			(INCLUDES RECEPTACLE AS & WEDGE)	
	214-4208	1	RECEPTACLE AS-CONNECTOR (70-PIN)	
B	**329-3734**		TAPE-ELECTRICAL	
	374-7464	1	CAP-SEAL	
	374-7466	1	CAP-SEAL	
N	**467-2859**		CABLE (51-DM)	

B - USE AS REQUIRED
E - ORDER BY THE CENTIMETER
N - ORDER BY THE DECIMETER

<END>

482-9118 HARNESS AS-CONTROL

S/N: RAB1-UP

PART OF 464-7601 WIRING GP-CHASSIS

AN ATTACHMENT

SMCS-1408 **i06589667**

NOTE	PART NUMBER	QTY	PART NAME 1 2 3 4 5 6 (PRODUCT LEVEL)	SEE PAGE
	126-1774	3	COVER-CONNECTOR	
	8T-8729	5	PIN-CONNECTOR (16-GA TO 18-GA)	
	9W-0852	4	PIN-CONNECTOR (14-GA TO 16-GA)	
	9X-3401	42	PIN-CONNECTOR (16-GA TO 18-GA)	
	147-1445	1	PLUG AS-CONNECTOR (70-PIN)	
	147-1446	1	PLUG AS-CONNECTOR (70-PIN)	
			(EACH PLUG AS INCLUDES)	
	159-9322	1	SEAL-O-RING	
	8T-8737	108	PLUG-SEAL	
	214-4208	1	RECEPTACLE AS-CONNECTOR (70-PIN)	
	8T-8730	5	SOCKET-CONNECTOR (16-GA TO 18-GA)	
	9W-0844	4	SOCKET-CONNECTOR (14-GA TO 16-GA)	
	9X-3402	42	SOCKET-CONNECTOR (16-GA TO 18-GA)	
	9X-6772	6	STRAP-CABLE	
B	**329-3734**		TAPE-ELECTRICAL	

B - USE AS REQUIRED

<END>

419-6282 HARNESS AS-ENGINE

S/N: JZM1-UP
PART OF 419-6286 HARNESS AS-ENGINE
AN ATTACHMENT

SMCS-1408 **i05208309**

NOTE	PART NUMBER	QTY	PART NAME 1 2 3 4 5 6 (PRODUCT LEVEL)	SEE PAGE
	367-5037	1	COVER	
	344-2466	1	COVER AS	
	9X-3401	7	PIN-CONNECTOR (16-GA TO 18-GA)	
			—OR—	
	126-1767	7	PIN-CONNECTOR (14-GA TO 16-GA)	
	318-3823	1	PLUG AS	
	230-5010	1	PLUG AS-CONNECTOR (6-PIN)	
	264-7032	1	SEAL-CONNECTOR	
	8T-8737	6	PLUG-SEAL	
	264-7032	1	SEAL-CONNECTOR	
	155-2255	2	KIT-CONNECTING PLUG (12-PIN)	
	155-2260	3	KIT-CONNECTING PLUG (3-PIN)	
			(EACH PLUG KIT INCLUDES PLUG AS, WEDGE & INTERFACE)	
	230-4011	5	PLUG AS-CONNECTOR (2-PIN)	
			(EACH INCLUDES)	
	264-7029	1	SEAL-CONNECTOR	
	230-5008	2	PLUG AS-CONNECTOR (4-PIN)	
			(EACH INCLUDES)	
	264-7031	1	SEAL-CONNECTOR	
	230-5010	2	PLUG AS-CONNECTOR (6-PIN)	
			(EACH INCLUDES)	
	264-7032	1	SEAL-CONNECTOR	
	281-8804	2	PLUG AS-CONNECTOR (3-PIN)	
	281-8803	1	PLUG AS-CONNECTOR (3-PIN)	
	237-0227	1	PLUG AS-CONNECTOR (3-PIN)	
			(EACH PLUG AS INCLUDES)	
	264-7030	1	SEAL-CONNECTOR	
	264-5732	1	PLUG AS-CONNECTOR (120-PIN)	
	288-7324	1	SEAL-CONNECTOR	
	278-8844	1	PLUG AS-CONNECTOR	
	230-4011	1	PLUG AS-CONNECTOR (2-PIN)	
	264-7029	1	SEAL-CONNECTOR	
	8T-8737	2	PLUG-SEAL	
	8T-8737	72	PLUG-SEAL	
	360-1328	2	RECEPTACLE AS-CONNECTOR (6-PIN)	
			(EACH INCLUDES)	
	8T-8737	6	PLUG-SEAL	
	230-5011	1	RECEPTACLE AS-CONNECTOR (6-PIN)	
	230-4012	1	RECEPTACLE AS-CONNECTOR (2-PIN)	
	230-5011	1	RECEPTACLE AS-CONNECTOR (6-PIN)	
E	**317-1204**		SLEEVE (53-CM)	
E	**289-5150**		SLEEVE (122-CM)	
E	**289-5151**		SLEEVE (45-CM)	
	9X-3402	124	SOCKET-CONNECTOR (16-GA TO 18-GA)	
			—OR—	
	126-1768	124	SOCKET-CONNECTOR (14-GA TO 16-GA)	
	3S-2093	4	STRAP-CABLE	
	6K-0806	1	STRAP-CABLE	

419-6282 **HARNESS AS-ENGINE (**contd.**)** **i05208309**

NOTE	PART NUMBER	QTY	PART NAME 1 2 3 4 5 6 (PRODUCT LEVEL)	SEE PAGE
B	**329-3734**		TAPE-ELECTRICAL	
E	**125-7874**		TUBE-HEAT SHRINK (5.72-MM DIA) (35-CM)	
E	**125-7875**		TUBE-HEAT SHRINK (7.44-MM DIA) (25-CM)	

B - USE AS REQUIRED
E - ORDER BY THE CENTIMETER

<END>

419-6286 HARNESS AS-ENGINE

S/N: JZM1-UP

PART OF 382-1477 WIRING GP-ELECTRONIC CONTROL

AN ATTACHMENT

SMCS-1408 **i05750001**

NOTE	REF NO	GRAPHIC REF	PART NUMBER	QTY	PART NAME 1 2 3 4 5 6 (PRODUCT LEVEL)	SEE PAGE
	1	1	**3S-2093**	8	STRAP-CABLE	
Y	2	1	*419-6282*	1	HARNESS AS-ENGINE	259

Y - SEPARATE ILLUSTRATION

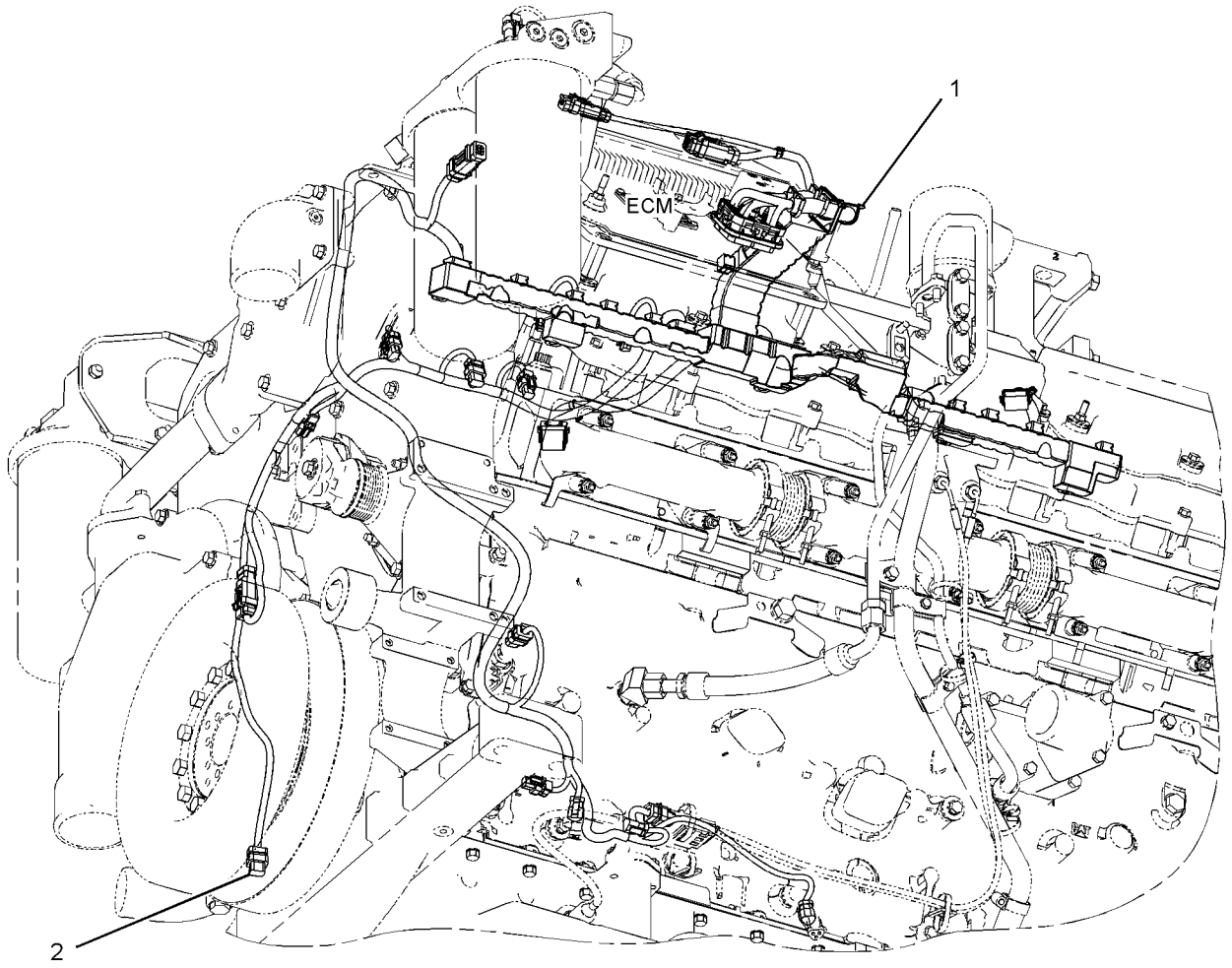

GRAPHIC #1 <END> g03533637

435-8538 HARNESS AS-ENGINE

S/N: JZM1-UP
PART OF 226-4927 BASE GP-VALVE COVER & INJ HARN
AN ATTACHMENT

SMCS-1408 **i05823310**

NOTE	PART NUMBER	QTY	PART NAME 1 2 3 4 5 6 (PRODUCT LEVEL)	SEE PAGE
	102-8801	1	KIT-RECEPTACLE (12-PIN)	
			(INCLUDES RECEPTACLE AS & WEDGE)	
	103-8134	1	KIT-RECEPTACLE (12-PIN)	
			(INCLUDES RECEPTACLE AS & WEDGE)	
	8T-8737	3	PLUG-SEAL	
	9X-3401	9	PIN-CONNECTOR (16-GA TO 18-GA)	
			—OR—	
	126-1767	9	PIN-CONNECTOR (14-GA TO 16-GA)	

<END>

436-8070 HARNESS AS-LIGHTING—BEACON

S/N: RAB1-UP
PART OF 452-9063 WIRING GP-LIGHTING
AN ATTACHMENT

SMCS-1408 **i05966906**

NOTE	PART NUMBER	QTY	PART NAME 1 2 3 4 5 6 (PRODUCT LEVEL)	SEE PAGE
	102-8803	2	KIT-RECEPTACLE (3-PIN)	
	102-8804	3	KIT-RECEPTACLE (4-PIN)	
	102-8805	1	KIT-RECEPTACLE (6-PIN)	
	102-8801	1	KIT-RECEPTACLE (12-PIN)	
			(EACH RECEPTACLE KIT INCLUDES RECEPTACLE AS & WEDGE)	
	3E-3371	2	WEDGE-RECEPTACLE LOCK (3-PIN)	
	3E-3377	2	WEDGE-RECEPTACLE LOCK (4-PIN)	
	8T-8729	1	PIN-CONNECTOR (16-GA TO 18-GA)	
	8T-8737	5	PLUG-SEAL	
	9G-3695	2	PLUG-SEAL	
	9W-0844	5	SOCKET-CONNECTOR (14-GA TO 16-GA)	
	9W-0852	2	PIN-CONNECTOR (14-GA TO 16-GA)	
	9X-3401	19	PIN-CONNECTOR (16-GA TO 18-GA)	
	9X-3402	19	SOCKET-CONNECTOR (16-GA TO 18-GA)	
E	**125-7874**		TUBE-HEAT SHRINK (5.72-MM DIA) (65-CM)	
E	**125-7875**		TUBE-HEAT SHRINK (7.44-MM DIA) (15-CM)	
	134-2540	1	RESISTOR AS-CONNECTION (3-PIN)	
	155-2260	3	KIT-CONNECTING PLUG (3-PIN)	
	155-2271	3	KIT-CONNECTING PLUG (4-PIN)	
	155-2274	1	KIT-CONNECTING PLUG (6-PIN)	
			(EACH PLUG KIT INCLUDES PLUG AS, WEDGE(S) & INTERFACE SEAL)	

E - ORDER BY THE CENTIMETER

<END>

481-7219 HARNESS AS-LIGHTING

S/N: RAB282-UP

PART OF 359-6354, 359-6356, 376-1378, 376-1379, 444-5644 LIGHTING GP-FLOOD

AN ATTACHMENT

SMCS-1408 **i06545346**

NOTE	PART NUMBER	QTY	PART NAME 1 2 3 4 5 6 (PRODUCT LEVEL)	SEE PAGE
	102-8805	1	KIT-RECEPTACLE (6-PIN)	
			(INCLUDES RECEPTACLE AS & WEDGE)	
	9W-0844	12	SOCKET-CONNECTOR (14-GA TO 16-GA)	
	9W-0852	6	PIN-CONNECTOR (14-GA TO 16-GA)	
E	**119-3662**		TUBE-HEAT SHRINK (10.85-MM DIA) (26-CM)	
	155-2270	6	KIT-CONNECTING PLUG (2-PIN)	
			(INCLUDES PLUG AS, WEDGE, & INTERFACE SEAL)	
	274-3774	6	CAP-CONNECTOR	

E - ORDER BY THE CENTIMETER

<END>

421-6805 HARNESS AS-MONITOR

S/N: RAB1-UP

PART OF 415-2348 INSTALLATION GP-CAES

AN ATTACHMENT

SMCS-1408 **i06148175**

NOTE	PART NUMBER	QTY	PART NAME 1 2 3 4 5 6 (PRODUCT LEVEL)	SEE PAGE
	131-9288	2	BEAD-FERRITE	
	274-3777	1	CAP-CONNECTOR	
	155-2255	1	KIT-CONNECTING PLUG (12-PIN)	
	155-2274	1	KIT-CONNECTING PLUG (6-PIN)	
	155-2260	3	KIT-CONNECTING PLUG (3-PIN)	
	237-0166	1	KIT-CONNECTING PLUG (12-PIN)	
	331-4222	1	KIT-CONNECTING PLUG (12-PIN)	
			(EACH PLUG KIT INCLUDES PLUG AS, WEDGE & INTERFACE SEAL)	
	102-8803	2	KIT-RECEPTACLE (3-PIN)	
	176-9299	1	KIT-RECEPTACLE (3-PIN)	
			(EACH RECEPTACLE KIT INCLUDES RECEPTACLE AS & WEDGE)	
	9X-3401	21	PIN-CONNECTOR (16-GA TO 18-GA)	
	160-7689	1	PLUG AS-CONNECTOR (70-PIN)	
	159-9322	1	SEAL-O-RING	
	331-3594	1	PLUG AS-CONNECTOR (31-PIN)	
	8T-8737	84	PLUG-SEAL	
	134-2540	1	RESISTOR AS-CONNECTION (3-PIN)	
	9X-3402	53	SOCKET-CONNECTOR (16-GA TO 18-GA)	
E	**125-7874**		TUBE-HEAT SHRINK (5.72-MM DIA) (20-CM)	
E	**125-7876**		TUBE-HEAT SHRINK (17.78-MM DIA) (20-CM)	
	155-2258	3	WEDGE-PLUG LOCK (12-PIN)	
	3E-3371	1	WEDGE-RECEPTACLE LOCK (3-PIN)	

E - ORDER BY THE CENTIMETER

<END>

466-1712 HARNESS AS-PLATFORM

S/N: RAB248-282

PART OF 377-6104 WIRING GP-PLATFORM

AN ATTACHMENT

SMCS-1408 **i05980452**

NOTE	PART NUMBER	QTY	PART NAME 1 2 3 4 5 6 (PRODUCT LEVEL)	SEE PAGE
Y	*466-1713*	1	HARNESS AS-PLATFORM	265

Y - SEPARATE ILLUSTRATION

<END>

466-1713 HARNESS AS-PLATFORM

S/N: RAB248-UP

PART OF 466-1712 HARNESS AS-PLATFORM

AN ATTACHMENT

SMCS-1408 **i06292449**

NOTE	PART NUMBER	QTY	PART NAME 1 2 3 4 5 6 (PRODUCT LEVEL)	SEE PAGE
	102-8802	1	KIT-RECEPTACLE (2-PIN)	
	102-8803	1	KIT-RECEPTACLE (3-PIN)	
	102-8804	1	KIT-RECEPTACLE (4-PIN)	
	102-8805	1	KIT-RECEPTACLE (6-PIN)	
	102-8801	3	KIT-RECEPTACLE (12-PIN)	
			(EACH RECEPTACLE KIT INCLUDES RECEPTACLE AS & WEDGE)	
	3E-3371	1	WEDGE-RECEPTACLE LOCK (3-PIN)	
	3E-3377	1	WEDGE-RECEPTACLE LOCK (4-PIN)	
	3E-3383	1	WEDGE-RECEPTACLE LOCK (6-PIN)	
	3E-5226	7	SOCKET-CONNECTOR (12-GA TO 14-GA)	
	5P-4571	4	TERMINAL-BLADE (14-GA TO 16-GA)	
	7R-2750	53	SEAL-CONNECTOR	
	7R-2751	16	PLUG-CONNECTOR (1-PIN)	
	9X-0196	2	TERMINAL AS	
			(EACH INCLUDES)	
D	**5P-5623**		WIRE-ELECTRICAL (16-GA, BLACK) (0.4-M)	
	8T-8729	15	PIN-CONNECTOR (16-GA TO 18-GA)	
	8T-8730	12	SOCKET-CONNECTOR (16-GA TO 18-GA)	
	8T-8737	308	PLUG-SEAL	
	9W-0844	26	SOCKET-CONNECTOR (14-GA TO 16-GA)	
	9W-0852	38	PIN-CONNECTOR (14-GA TO 16-GA)	
	9W-1951	1	RECEPTACLE-CONNECTOR (9-PIN)	
	9X-3401	179	PIN-CONNECTOR (16-GA TO 18-GA)	
	9X-3402	236	SOCKET-CONNECTOR (16-GA TO 18-GA)	
	7K-1181	8	STRAP-CABLE	
	196-2412	22	TERMINAL AS (16-GA)	
			(EACH INCLUDES)	
D	**5P-5623**		WIRE-ELECTRICAL (16-GA, BLACK) (0.2-M)	
	7R-2750	1	SEAL-CONNECTOR	
	122-4393	3	TERMINAL	
	122-4424	1	CONNECTOR-RECEPTACLE (3-PIN)	
E	**125-7874**		TUBE-HEAT SHRINK (5.72-MM DIA) (330-CM)	
E	**125-7875**		TUBE-HEAT SHRINK (7.44-MM DIA) (45-CM)	
	126-1774	4	COVER-CONNECTOR	
	128-4123	1	SEAL	
	2L-8052	1	TERMINAL-RING (6-GA, 3/8-IN SCREW)	
			—OR—	
	2L-8060	1	TERMINAL-RING (8-GA, 3/8-IN SCREW)	
	2L-8069	7	TERMINAL-RING (2-GA TO 10-GA, 3/8-IN SCREW)	
	2L-8079	4	TERMINAL-RING (14-GA TO 16-GA, 3/8-IN SCREW)	
	134-2540	3	RESISTOR AS-CONNECTION (3-PIN)	
	147-1445	2	PLUG AS-CONNECTOR (70-PIN)	
	147-1446	2	PLUG AS-CONNECTOR (70-PIN)	
			(EACH PLUG AS INCLUDES)	
	159-9322	1	SEAL-O-RING	
	155-2255	2	KIT-CONNECTING PLUG (12-PIN)	
	155-2256	1	KIT-CONNECTING PLUG (12-PIN)	

466-1713 **HARNESS AS-PLATFORM (**contd.**)** **i06292449**

NOTE	PART NUMBER	QTY	PART NAME 1 2 3 4 5 6 (PRODUCT LEVEL)	SEE PAGE
	155-2260	6	KIT-CONNECTING PLUG (3-PIN)	
	155-2270	6	KIT-CONNECTING PLUG (2-PIN)	
	155-2271	4	KIT-CONNECTING PLUG (4-PIN)	
	155-2274	4	KIT-CONNECTING PLUG (6-PIN)	
			(EACH PLUG KIT INCLUDES PLUG AS, WEDGE(S) & INTERFACE SEAL)	
	166-5229	1	KIT-RECEPTACLE (12-PIN)	
			(INCLUDES RECEPTACLE AS & WEDGE)	
	167-3692	1	RECEPTACLE AS-CONNECTOR (31-PIN)	
	196-2383	1	KIT-CONNECTING PLUG (8-PIN)	
	196-2384	1	KIT-CONNECTING PLUG (8-PIN)	
			(EACH PLUG KIT INCLUDES PLUG AS, LOCK & TERMINAL ASSEMBLIES)	
	196-2413	28	TERMINAL AS (12-GA)	
			(EACH INCLUDES)	
D	**5P-5621**		WIRE (12-GA) (0.2-M)	
	128-4123	1	SEAL	
	177-9653	1	KIT-RECEPTACLE (4-PIN)	
			(INCLUDES RECEPTACLE AS & WEDGE)	
	177-9656	2	KIT-CONNECTING PLUG (4-PIN)	
			(EACH KIT INCLUDES PLUG AS & WEDGE)	
	196-2385	1	KIT-CONNECTING PLUG (8-PIN)	
	196-2386	1	KIT-CONNECTING PLUG (8-PIN)	
			(EACH PLUG KIT INCLUDES PLUG AS, LOCK & TERMINAL ASSEMBLIES)	
	185-1860	31	SEAL-WIRE	
	190-7614	3	KIT-RECEPTACLE (12-PIN)	
			(EACH KIT INCLUDES RECEPTACLE AS & WEDGE)	
	202-0313	1	TERMINAL AS (18-GA)	
D	**5P-5677**		WIRE (18-GA, BLACK) (0.2-M)	
	128-5016	1	SEAL-CABLE	
	202-0314	3	TERMINAL AS (14-GA)	
			(EACH INCLUDES)	
D	**5P-5624**		WIRE (14-GA, BLACK) (0.2-M)	
	128-4123	1	SEAL	
	202-5397	11	PLUG	
	204-1297	28	TERMINAL AS-BLADE (18-GA TO 20-GA)	
			(EACH INCLUDES)	
	235-4123	1	TERMINAL (18-GA TO 20-GA)	
	214-4208	3	RECEPTACLE AS-CONNECTOR (70-PIN)	
	245-7434	4	KIT-CONNECTING PLUG (10-PIN)	
			(EACH KIT INCLUDES PLUGS & WIRE ASSEMBLIES)	
	228-4982	1	RESISTOR AS	
	102-8802	1	KIT-RECEPTACLE (2-PIN)	
			(INCLUDES RECEPTACLE AS & WEDGE)	
	8T-8729	2	PIN-CONNECTOR (16-GA TO 18-GA)	
	230-4009	2	PLUG AS-CONNECTOR (12-PIN)	
			(EACH INCLUDES)	
	455-0709	1	SEAL-CONNECTOR	
	230-4011	1	PLUG AS-CONNECTOR (2-PIN)	
	455-0704	1	SEAL-CONNECTOR	
	230-4013	1	PLUG AS-CONNECTOR (3-PIN)	
	455-0705	1	SEAL-CONNECTOR	
	230-5010	2	PLUG AS-CONNECTOR (6-PIN)	

466-1713 **HARNESS AS-PLATFORM (**contd.**)** **i06292449**

NOTE	PART NUMBER	QTY	PART NAME 1 2 3 4 5 6 (PRODUCT LEVEL)	SEE PAGE
			(EACH INCLUDES)	
	455-0707	1	SEAL-CONNECTOR	
	239-7352	1	PLUG AS-CONNECTOR (6-PIN)	
	455-0707	1	SEAL-CONNECTOR	
	242-6114	1	KIT-CONNECTING PLUG (8-PIN)	
	242-6116	1	KIT-CONNECTING PLUG (8-PIN)	
	242-6118	1	KIT-CONNECTING PLUG (8-PIN)	
	242-6120	1	KIT-CONNECTING PLUG (8-PIN)	
			(EACH PLUG KIT INCLUDES PLUG AS, LOCK & TERMINAL ASSEMBLIES)	
	274-3775	1	CAP-CONNECTOR	
	274-3776	1	CAP-SEAL	
	274-3777	1	CAP-CONNECTOR	
	281-8811	1	PLUG AS-CONNECTOR (6-PIN)	
	455-0707	1	SEAL-CONNECTOR	
B	**329-3734**		TAPE-ELECTRICAL	
	274-3783	1	SEAL-CAP	
	361-6052	1	RESISTOR AS	
	102-8802	1	KIT-RECEPTACLE (2-PIN)	
			(INCLUDES RECEPTACLE AS & WEDGE)	
	8T-8729	2	PIN-CONNECTOR (16-GA TO 18-GA)	
	370-4059	1	KIT-RECEPTACLE (12-PIN)	
			(INCLUDES RECEPTACLE AS & WEDGE)	

B - USE AS REQUIRED
D - ORDER BY THE METER
E - ORDER BY THE CENTIMETER

<END>

378-4518 HARNESS AS-POWER

S/N: RAB1-UP
PART OF 359-6421 BATTERY & WIRING GP
AN ATTACHMENT

SMCS-1408 **i06059603**

NOTE	PART NUMBER	QTY	PART NAME 1 2 3 4 5 6 (PRODUCT LEVEL)	SEE PAGE
	102-8802	1	KIT-RECEPTACLE (2-PIN)	
	102-8806	2	KIT-RECEPTACLE (8-PIN)	
			(EACH RECEPTACLE KIT INCLUDES RECEPTACLE AS & WEDGE)	
	8T-8737	13	PLUG-SEAL	
	9W-0844	23	SOCKET-CONNECTOR (14-GA TO 16-GA)	
	9X-3402	21	SOCKET-CONNECTOR (16-GA TO 18-GA)	
E	**114-8843**		SLEEVE-PLASTIC (80-CM)	
E	**125-7874**		TUBE-HEAT SHRINK (5.72-MM DIA) (40-CM)	
E	**125-7875**		TUBE-HEAT SHRINK (7.44-MM DIA) (10-CM)	
	155-2255	1	KIT-CONNECTING PLUG (12-PIN)	
	155-2257	1	KIT-CONNECTING PLUG (12-PIN)	
	155-2265	2	KIT-CONNECTING PLUG (8-PIN)	
	155-2260	3	KIT-CONNECTING PLUG (3-PIN)	
	155-2270	4	KIT-CONNECTING PLUG (2-PIN)	
			(EACH PLUG KIT INCLUDES PLUG AS, WEDGE(S) & INTERFACE SEAL)	
	155-2258	2	WEDGE-PLUG LOCK (12-PIN)	
	155-2259	2	WEDGE-PLUG LOCK (8-PIN)	
	274-3778	2	CAP-SEAL	

E - ORDER BY THE CENTIMETER

<END>

422-3616 HARNESS AS-PUMP

S/N: RAB1-UP
PART OF 394-4315 PUMP GP-LUBRICATION
AN ATTACHMENT

SMCS-1408 **i05873372**

NOTE	PART NUMBER	QTY	PART NAME 1 2 3 4 5 6 (PRODUCT LEVEL)	SEE PAGE
	155-2255	1	KIT-CONNECTING PLUG (12-PIN)	
			(INCLUDES PLUG AS, WEDGE & INTERFACE SEAL)	
	102-8801	1	KIT-RECEPTACLE (12-PIN)	
			(INCLUDES RECEPTACLE AS & WEDGE)	
	9X-3401	6	PIN-CONNECTOR (16-GA TO 18-GA)	
	8T-8737	6	PLUG-SEAL	

<END>

480-7702 HARNESS AS-RADIO

S/N: RAB282-UP
PART OF 422-3791 MOUNTING GP-GRADE CONTROL
AN ATTACHMENT

SMCS-1408 **i06538565**

NOTE	PART NUMBER	QTY	PART NAME 1 2 3 4 5 6 (PRODUCT LEVEL)	SEE PAGE
	363-9053	1	CAP AS-CONNECTOR	
	102-8801	1	KIT-RECEPTACLE (12-PIN)	
	190-7614	1	KIT-RECEPTACLE (12-PIN)	
			(EACH RECEPTACLE KIT INCLUDES RECEPTACLE AS & WEDGE)	
	8T-8729	2	PIN-CONNECTOR (16-GA TO 18-GA)	
	9X-3401	2	PIN-CONNECTOR (16-GA TO 18-GA)	
	8T-8737	8	PLUG-SEAL	
E	**125-7875**		TUBE-HEAT SHRINK (7.44-MM DIA) (5-CM)	
E - ORDER BY THE CENTIMETER				

<END>

349-6089 HARNESS AS-SWITCH

S/N: RAB1-UP
PART OF 377-6104 WIRING GP-PLATFORM
AN ATTACHMENT

SMCS-1408 **i06544962**

NOTE	PART NUMBER	QTY	PART NAME 1 2 3 4 5 6 (PRODUCT LEVEL)	SEE PAGE
	8T-8737	1	PLUG-SEAL	
	9X-3401	2	PIN-CONNECTOR (16-GA TO 18-GA)	
	9X-3402	8	SOCKET-CONNECTOR (16-GA TO 18-GA)	
	155-2260	1	KIT-CONNECTING PLUG (3-PIN)	
			(INCLUDES PLUG AS, WEDGES & INTERFACE SEAL)	
	155-2274	1	KIT-CONNECTING PLUG (6-PIN)	
			(INCLUDES PLUS AS, WEDGE & INTERFACE SEAL)	
	230-4012	1	RECEPTACLE AS-CONNECTOR (2-PIN)	

<END>

362-3609 HARNESS AS-SWITCH

S/N: RAB1-UP
PART OF 464-7601 WIRING GP-CHASSIS
AN ATTACHMENT

SMCS-1408 **i05966922**

NOTE	PART NUMBER	QTY	PART NAME 1 2 3 4 5 6 (PRODUCT LEVEL)	SEE PAGE
	102-8806	1	KIT-RECEPTACLE (8-PIN)	
			(INCLUDES RECEPTACLE AS & WEDGE)	
	3E-3389	1	WEDGE-RECEPTACLE LOCK (8-PIN)	
	8T-8729	2	PIN-CONNECTOR (16-GA TO 18-GA)	
	8T-8737	1	PLUG-SEAL	
	9X-3401	5	PIN-CONNECTOR (16-GA TO 18-GA)	
	185-1861	7	SEAL-WIRE	
	202-5397	3	PLUG	
	204-1297	5	TERMINAL AS-BLADE (18-GA TO 20-GA)	
			(EACH INCLUDES)	
	235-4123	1	TERMINAL (18-GA TO 20-GA)	
	245-7434	1	KIT-CONNECTING PLUG (10-PIN)	
			(INCLUDES PLUGS & WIRE AS)	
B	**329-3734**		TAPE-ELECTRICAL	

B - USE AS REQUIRED

<END>

451-5453 HARNESS AS-SWITCH

S/N: RAB257-UP
PART OF 443-8222 SEAT GP
AN ATTACHMENT

SMCS-1408 **i06237959**

NOTE	PART NUMBER	QTY	PART NAME 1 2 3 4 5 6 (PRODUCT LEVEL)	SEE PAGE
			(NO SERVICED PARTS)	

<END>

380-7133 HARNESS AS-TRANSMISSION

S/N: RAB1-UP
PART OF 359-6421 BATTERY & WIRING GP
AN ATTACHMENT

SMCS-1408, 3030 **i06288419**

NOTE	PART NUMBER	QTY	PART NAME 1 2 3 4 5 6 (PRODUCT LEVEL)	SEE PAGE
	102-8805	1	KIT-RECEPTACLE (6-PIN)	
	102-8801	1	KIT-RECEPTACLE (12-PIN)	
			(EACH RECEPTACLE KIT INCLUDES RECEPTACLE AS & WEDGE)	
	9X-3401	17	PIN-CONNECTOR (16-GA TO 18-GA)	
	108-6259	1	PLUG AS-CONNECTOR (17-PIN)	
	8T-8737	1	PLUG-SEAL	
	3E-3383	1	WEDGE-RECEPTACLE LOCK (6-PIN)	

<END>

433-5754 HARNESS AS-WIRING—SEAT SUSPENSION

S/N: RAB1-UP
PART OF 191-2933 SUSPENSION GP-SEAT
AN ATTACHMENT

SMCS-1408 **i05858237**

NOTE	PART NUMBER	QTY	PART NAME 1 2 3 4 5 6 (PRODUCT LEVEL)	SEE PAGE
	9X-3401	2	PIN-CONNECTOR (16-GA TO 18-GA)	
			—OR—	
	126-1767	2	PIN-CONNECTOR (14-GA TO 16-GA)	
	102-8802	1	KIT-RECEPTACLE (2-PIN)	
			(INCLUDES RECEPTACLE AS & WEDGE)	
B	**1P-0810**		TAPE-ELECTRICAL	
B	**329-3734**		TAPE-ELECTRICAL	
	5P-4571	2	TERMINAL-BLADE (14-GA TO 16-GA)	
	097-7234	2	TERMINAL-BLADE (18-GA TO 22-GA)	

B - USE AS REQUIRED

<END>

458-3628 HARNESS AS-WIRING—RECEIVER

S/N: RAB1-UP
PART OF 446-0271 MOUNTING GP-RECEIVER

SMCS-1408 **i05977630**

NOTE	PART NUMBER	QTY	PART NAME 1 2 3 4 5 6 (PRODUCT LEVEL)	SEE PAGE
	102-8805	1	KIT-RECEPTACLE (6-PIN)	
			(INCLUDES RECEPTACLE AS & WEDGE)	
	3E-3383	1	WEDGE-RECEPTACLE LOCK (6-PIN)	
	8T-8729	3	PIN-CONNECTOR (16-GA TO 18-GA)	
	9X-3401	3	PIN-CONNECTOR (16-GA TO 18-GA)	
	253-8110	1	PLUG	
	253-8113	1	WEDGE	
	283-8106	6	SOCKET-CONNECTOR (20-GA)	
			—OR—	
	374-8372	6	SOCKET-CONNECTOR (16-GA TO 18-GA)	

<END>

359-6366 HEATER GP-FUEL

S/N: RAB1-UP

CANNOT BE USED WITH 359-6365—PAGE: 174

AN ATTACHMENT

SMCS-1296 **i05422530**

NOTE	REF NO	GRAPHIC REF	PART NUMBER	QTY	PART NAME 1 2 3 4 5 6 (PRODUCT LEVEL)	SEE PAGE
	1	1	**357-7434**	1	HEATER-FUEL	
I	2	1	**377-8747**	1	HOSE AS	
I	3	1	**377-8748**	1	HOSE AS	
	4	1	**377-8749**	1	TUBE AS	
I	5	1	**419-8883**	1	HOSE AS	
	6	1	*281-5972*	1	CONNECTOR AS	
		1	**6V-8637**	1	CONNECTOR	
		1	**228-7092**	1	SEAL-O-RING	
		1	**238-5082**	1	SEAL-O-RING	
	7	1	*281-5982*	1	CONNECTOR AS	
		1	**6V-9874**	1	CONNECTOR (STRAIGHT)	
		1	**228-7092**	1	SEAL-O-RING	
		1	**238-5080**	1	SEAL-O-RING	
	8	1	*319-6216*	2	CONNECTOR AS	
					(EACH INCLUDES)	
		1	**6V-8716**	1	CONNECTOR (STRAIGHT)	
		1	**228-7092**	1	SEAL-O-RING	
		1	**238-5084**	1	SEAL-O-RING	
	9	1	*319-6221*	3	ELBOW AS	
					(EACH INCLUDES)	
		1	**6V-9182**	1	ELBOW	
		1	**228-7092**	1	SEAL-O-RING	
		1	**238-5084**	1	SEAL-O-RING	
	10	1	**8T-4121**	4	WASHER-HARD (11X21X2.5-MM THK)	
M	11	1	**8T-4182**	4	BOLT (M10X1.5X45-MM)	

I - REFER TO HYDRAULIC INFORMATION SYSTEM
M - METRIC PART

359-6366 **HEATER GP-FUEL (**contd.**)** **i05422530**

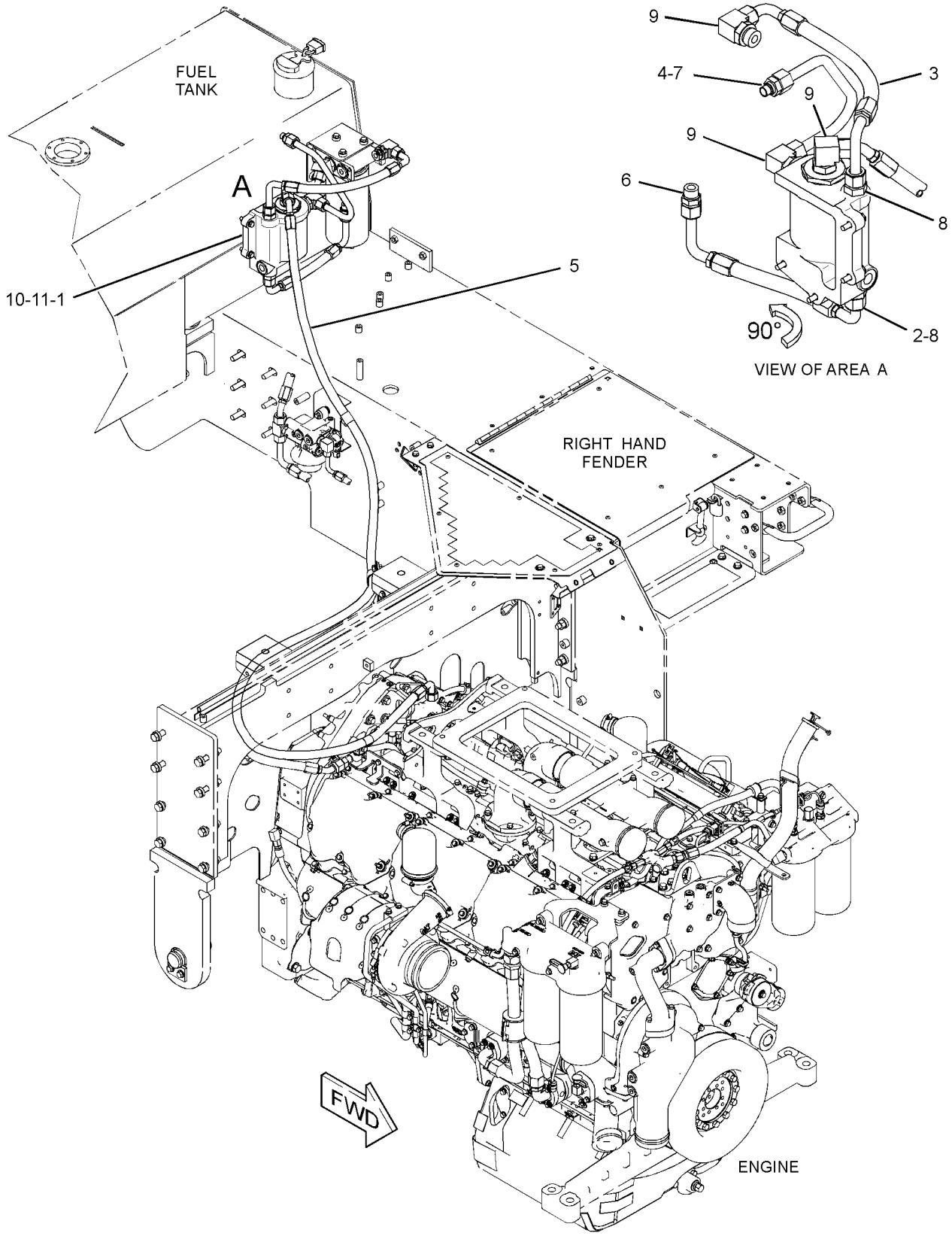

GRAPHIC #1 <END> g03442641

382-8008 HEATER GP-JACKET WATER

S/N: RAB1-UP
120-VOLT, 30-AMPERE
AN ATTACHMENT

SMCS-1383 **i05943553**

NOTE	REF NO	GRAPHIC REF	PART NUMBER	QTY	PART NAME 1 2 3 4 5 6 (PRODUCT LEVEL)	SEE PAGE
	1	1	**392-0895**	2	ELEMENT AS-JACKET WATER HEATER (120-VOLT, 1500-WATT)	
		1	**6V-5064**	1	SEAL-O-RING	
	2	1	**398-5223**	1	PLATE AS	
	3	1	**420-9424**	1	CORD AS	
	4	1	**132-5789**	1	CLIP	
	5	1	**3B-1915**	2	BOLT (3/8-16X1.375-IN)	
	6	1	**126-7573**	4	SCREW-PAN HEAD	
	7	1	**4P-7581**	1	CLIP	
	8	1	**4P-8134**	2	CLIP	
	9	1	**5M-3062**	1	BOLT (3/8-16X0.75-IN)	
	10	1	**7K-1181**	17	STRAP-CABLE	
	11	1	**8T-4896**	3	WASHER-HARD (10.2X18.5X2.5-MM THK)	

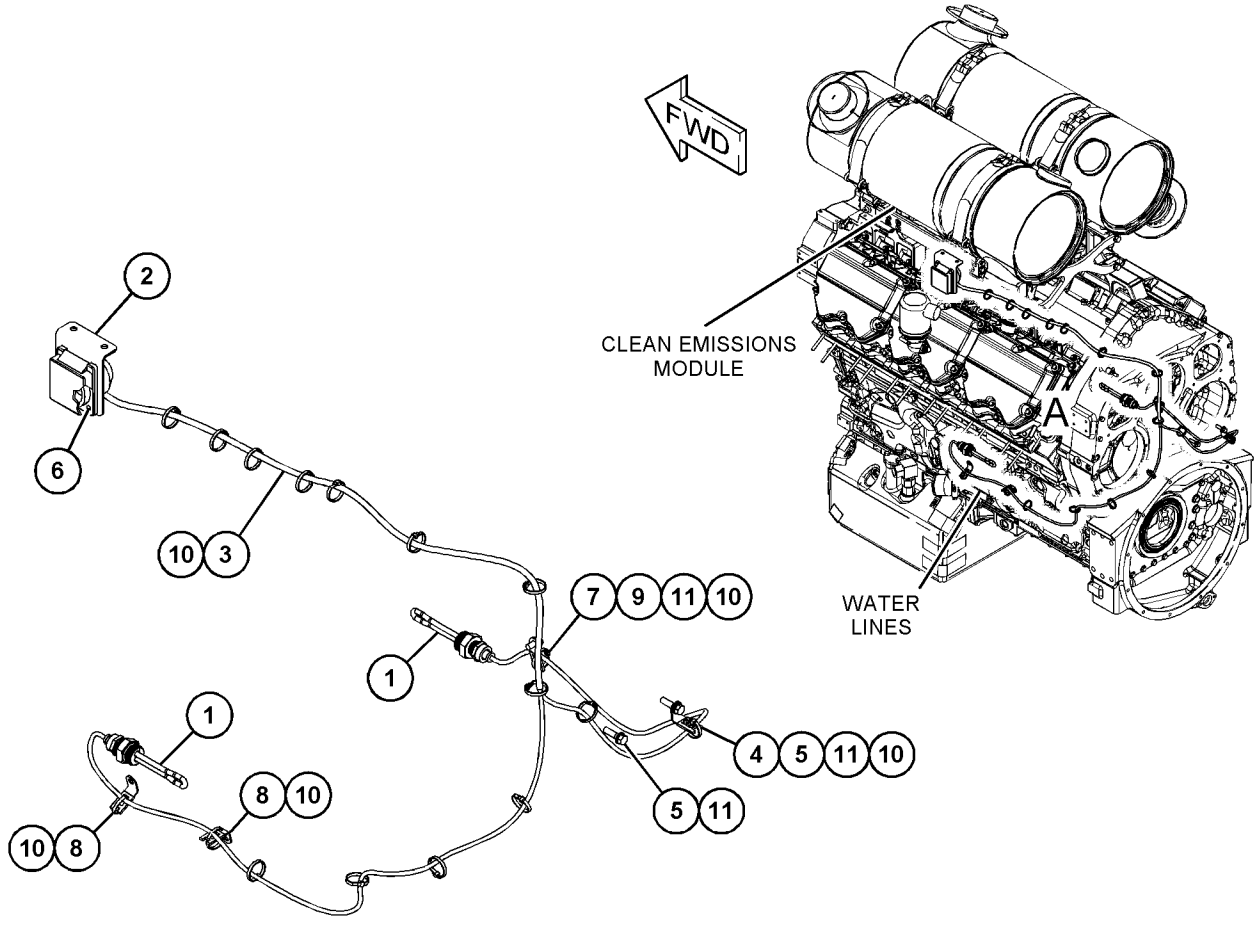

VIEW OF AREA A

GRAPHIC #1 <END> g03500576

399-9002 HEATER GP-JACKET WATER

S/N: RAB1-UP
240-VOLT, 30-AMPERE
AN ATTACHMENT

SMCS-1383 **i05943541**

NOTE	REF NO	GRAPHIC REF	PART NUMBER	QTY	PART NAME 1 2 3 4 5 6 (PRODUCT LEVEL)	SEE PAGE
	1	1	**396-4988**	2	ELEMENT AS-JACKET WATER HEATER (240-VOLT, 1500-WATT)	
					(EACH INCLUDES)	
		1	**6V-5064**	1	SEAL-O-RING	
	2	1	**398-5223**	1	PLATE AS	
	3	1	**420-9425**	1	CORD AS	
	4	1	**132-5789**	1	CLIP	
	5	1	**3B-1915**	2	BOLT (3/8-16X1.375-IN)	
	6	1	**126-7573**	4	SCREW-PAN HEAD	
	7	1	**4P-7581**	1	CLIP	
	8	1	**4P-8134**	2	CLIP	
	9	1	**5M-3062**	1	BOLT (3/8-16X0.75-IN)	
	10	1	**7K-1181**	17	STRAP-CABLE	
	11	1	**8T-4896**	3	WASHER-HARD (10.2X18.5X2.5-MM THK)	

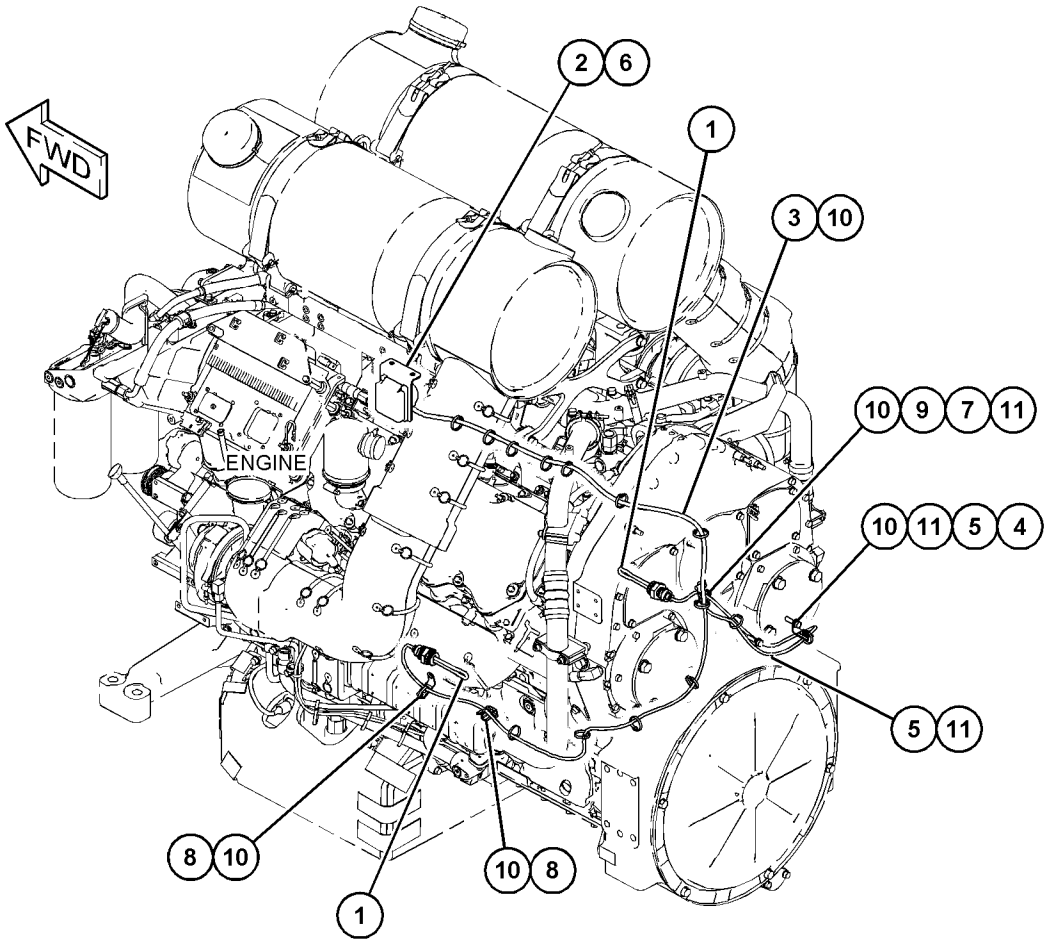

GRAPHIC #1 <END> g03500159

359-6353 INSTALLATION AR-CAES

S/N: RAB1-UP

AN ATTACHMENT

SMCS-7604 **i05443197**

NOTE	PART NUMBER	QTY	PART NAME 1 2 3 4 5 6 (PRODUCT LEVEL)	SEE PAGE
Y	**304-4030**	1	BOX GP-STORAGE	1048
Y	*415-2348*	1	INSTALLATION GP-CAES	278
Y	*399-8989*	1	MOUNTING GP-GRADE CONTROL (TERRAIN)	337
Y	*422-3791*	1	MOUNTING GP-GRADE CONTROL (CHASSIS)	343
	372-0438	1	PLATE	
M	**9X-2616**	4	SCREW-SOCKET (M8X1.25X16-MM)	
	334-1658	1	SENSOR AS-ANGLE (GRADE CONTROL)	
	386-0444	1	HARNESS AS-SENSOR	
E	**112-4550**		SLEEVE (20-CM)	
	151-9275	1	KIT-RECEPTACLE (6-PIN)	
			(INCLUDES RECEPTACLE AS & WEDGE)	
	9X-3401	6	PIN-CONNECTOR (16-GA TO 18-GA)	
	3E-4352	4	WASHER-HARD (8.8X20.5X2.5-MM THK)	

E - ORDER BY THE CENTIMETER
M - METRIC PART
Y - SEPARATE ILLUSTRATION

<END>

359-6359 INSTALLATION AR-CAES—AUTO CARRY, AUTOMATIC RIPPER

S/N: RAB1-UP

AN ATTACHMENT

SMCS-7604 **i05443451**

NOTE	PART NUMBER	QTY	PART NAME 1 2 3 4 5 6 (PRODUCT LEVEL)	SEE PAGE
Y	**304-4030**	1	BOX GP-STORAGE	1048
Y	*415-2348*	1	INSTALLATION GP-CAES	278
Y	*399-8989*	1	MOUNTING GP-GRADE CONTROL (TERRAIN)	337
Y	*399-8993*	1	MOUNTING GP-GRADE CONTROL (AUTO CARRY, AUTOMATIC RIPPER)	340
Y	*422-3791*	1	MOUNTING GP-GRADE CONTROL (CHASSIS)	343
Y	*380-8453*	1	SENSOR & MOUNTING GP	362
Y	*399-8983*	1	WIRING GP-RECEIVER	479
J	*261-4281*	1	CONFIGURATION-PREMIUM	
J	*364-8946*	1	CONFIGURATION-PREMIUM	
	372-0438	1	PLATE	
M	**9X-2616**	4	SCREW-SOCKET (M8X1.25X16-MM)	
	3E-4352	4	WASHER-HARD (8.8X20.5X2.5-MM THK)	

J - (DLR INSTALLED CONFIG:SEE IRM:EES03-01)
M - METRIC PART
Y - SEPARATE ILLUSTRATION

<END>

359-6360 INSTALLATION AR-CAES—TERRAIN

S/N: RAB1-UP

AN ATTACHMENT

SMCS-7604 **i05699811**

NOTE	PART NUMBER	QTY	PART NAME 1 2 3 4 5 6 (PRODUCT LEVEL)	SEE PAGE
Y	*415-2348*	1	INSTALLATION GP-CAES	278
Y	*439-4341*	1	MODULE GP-DISPLAY (G610)	1129
Y	*399-8989*	1	MOUNTING GP-GRADE CONTROL (TERRAIN)	337
Y	*399-8996*	1	MOUNTING GP-GRADE CONTROL (CHASSIS)	342
Y	*380-8453*	1	SENSOR & MOUNTING GP	362
Y	*399-8986*	1	WIRING GP-RECEIVER	481
	8T-9364	4	BOLT (1/4-20X0.625-IN)	
J	*261-4281*	1	CONFIGURATION-PREMIUM	
J	*363-4243*	1	CONFIGURATION-PREMIUM	
J	*364-8946*	1	CONFIGURATION-PREMIUM	
	450-9512	1	FILM-INFORMATION (SLOPE CONTROL)	
			(ON SIDE OF DISPLAY)	
M	**9X-2616**	4	SCREW-SOCKET (M8X1.25X16-MM)	
	5P-4115	4	WASHER-HARD (7.2X19X2-MM THK)	
	3E-4352	4	WASHER-HARD (8.8X20.5X2.5-MM THK)	

J - (DLR INSTALL CONFIG:SEE IRM:EES03-01)
M - METRIC PART
Y - SEPARATE ILLUSTRATION

<END>

415-2348 INSTALLATION GP-CAES

S/N: RAB1-UP

PART OF 474-5717 ELECTRICAL AR, 359-6353, 359-6359, 359-6360 INSTALLATION AR-CAES

AN ATTACHMENT

SMCS-7604 **i06057350**

NOTE	REF NO	GRAPHIC REF	PART NUMBER	QTY	PART NAME 1 2 3 4 5 6 (PRODUCT LEVEL)	SEE PAGE
Y	1	1	**167-8984**	1	BATTERY GP (RECHARGEABLE, 24-VOLT)	228
	2	1	**393-7361**	1	BRACKET	
Y	3	1	**421-6804**	1	HARNESS AS-CAB (BATTERY)	249
Y	4	1	**421-6805**	1	HARNESS AS-MONITOR	263
M	5	1	**107-3786**	4	BOLT (M4X0.7X12-MM)	
	6	1	**211-0052**	2	NUT (1-11/16-18-THD)	
	7	1	**310-0674**	2	LOCKWASHER	
	8	1	**7X-7729**	4	WASHER (11X25X3-MM THK)	
	9	1	**8T-0328**	4	WASHER-HARD (5.5X10X1-MM THK)	
M	10	1	**8T-4136**	4	BOLT (M10X1.5X25-MM)	
	11	1	*461-1343*	1	PLUG AS	
		1	**8T-8737**	12	PLUG-SEAL	
		1	**155-2257**	1	KIT-CONNECTING PLUG (12-PIN)	
					(INCLUDES PLUG AS, WEDGE & INTERFACE SEAL)	
	12	1	**7K-1181**	4	STRAP-CABLE	
	13	1	**9X-8256**	1	WASHER (6.6X12X2-MM THK)	
M	14	1	**8T-4138**	1	BOLT (M6X1X20-MM)	

M - METRIC PART
Y - SEPARATE ILLUSTRATION

415-2348 **INSTALLATION GP-CAES (**contd.**)** **i06057350**

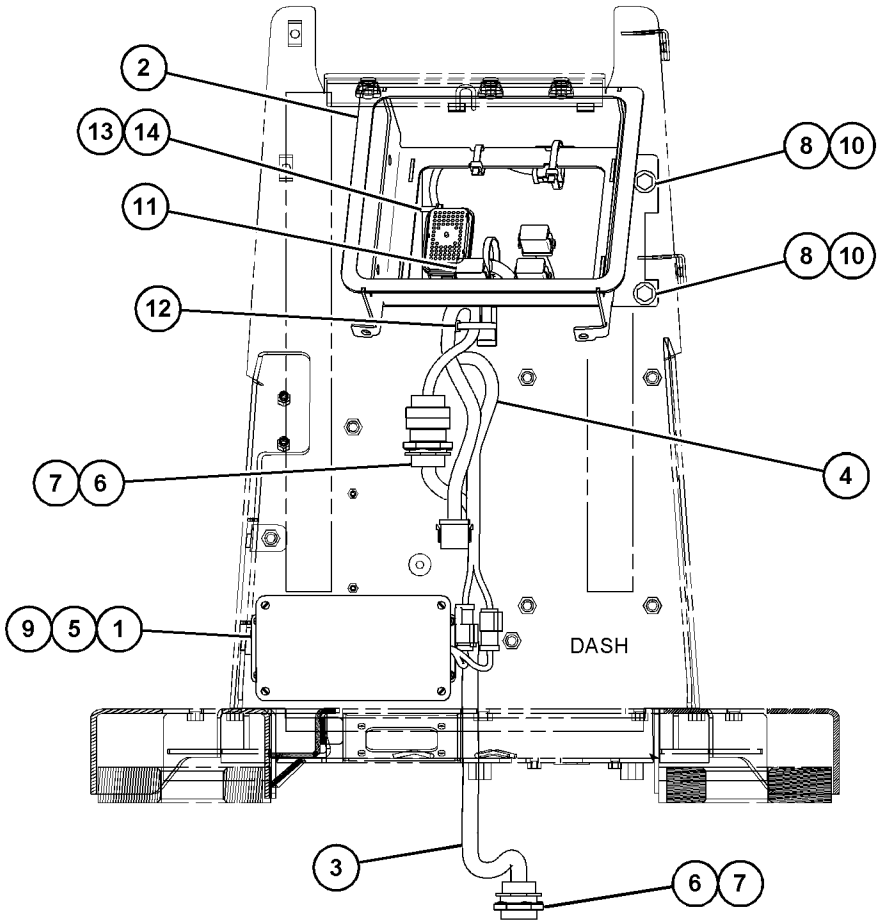

REAR VIEW

GRAPHIC #1 <END> g03794249

419-5040 INSTALLATION GP-COMMUNICATION–PRODUCT LINK 523

S/N: RAB1-UP

DANISH, DUTCH, ENGLISH, FINNISH, NORWEGIAN, SWEDISH

AN ATTACHMENT

SMCS-7606 **i05440755**

NOTE	PART NUMBER	QTY	PART NAME 1 2 3 4 5 6 (PRODUCT LEVEL)	SEE PAGE
Y	*420-6044*	1	ELECTRONICS GP-MONITOR (PRODUCT LINK 523)	246
Y	*420-9324*	1	WIRING GP-COMMUNICATION (PRODUCT LINK 523)	421

Y - SEPARATE ILLUSTRATION

<END>

419-9385 INSTALLATION GP-COMMUNICATION–PL321VSR

S/N: RAB1-UP

DANISH, DUTCH, ENGLISH, FINNISH, NORWEGIAN, SWEDISH

AN ATTACHMENT

SMCS-7606 **i05440757**

NOTE	PART NUMBER	QTY	PART NAME 1 2 3 4 5 6 (PRODUCT LEVEL)	SEE PAGE
Y	*420-6045*	1	ELECTRONICS GP-MONITOR (PL321VSR)	246
Y	*420-9322*	1	WIRING GP-COMMUNICATION (PL321VSR)	419

Y - SEPARATE ILLUSTRATION

<END>

448-4446 INSTALLATION GP-COMMUNICATION–VIMS 3G, PRODUCT LINK

S/N: RAB1-UP

DANISH, DUTCH, ENGLISH, FINNISH, NORWEGIAN, SWEDISH

AN ATTACHMENT

SMCS-7606 **i05717293**

NOTE	PART NUMBER	QTY	PART NAME 1 2 3 4 5 6 (PRODUCT LEVEL)	SEE PAGE
Y	*450-5183*	1	ELECTRONICS GP-MONITOR (VIMS 3G, PRODUCT LINK)	246
Y	*448-9332*	1	WIRING GP-COMMUNICATION (VIMS 3G, PRODUCT LINK)	429

Y - SEPARATE ILLUSTRATION

<END>

472-8277 INSTALLATION GP-COMMUNICATION–PRODUCT LINK

S/N: RAB1-UP

PART OF 482-9657 INSTALLATION GP-COMMUNICATION

AN ATTACHMENT

SMCS-7606 **i06507935**

NOTE	REF NO	GRAPHIC REF	PART NUMBER	QTY	PART NAME 1 2 3 4 5 6 (PRODUCT LEVEL)	SEE PAGE
Y	1	1	**472-8281**	1	HARNESS AS-CONTROL	256
	2	1	**9X-9896**	8	MOUNT (ISOLATION)	
	3	1	**359-4778**	1	CABLE AS	
Y	4	1	**417-4722**	1	ELECTRONICS GP-COMMUNICATION (PLE601 NETWORK MANAGER)	244
Y	5	1	**440-2105**	1	RADIO GP-COMMUNICATION (PL641E CELLULAR)	361
	6	1	**443-8462**	1	ANTENNA AS (CELLULAR)	
		1	**361-1045**	1	NUT-SPECIAL (5/8-18-THD)	
		1	**385-8201**	1	CAP AS-CONNECTOR	
	7	1	**448-5038**	1	PLATE AS	
M		1	**6V-9632**	4	NUT-WELD (M6X1-THD)	
	8	1	**156-6175**	1	CLIP	
	9	1	**4P-7581**	1	CLIP	
M	10	1	**5C-9553**	4	BOLT (M6X1X16-MM)	
	11	1	**7K-1181**	14	STRAP-CABLE	
M	12	1	**7X-2534**	1	BOLT (M6X1X50-MM)	
	13	1	**8C-5608**	4	SPACER (6.5X9.5X25.4-MM THK)	
M	14	1	**8T-4138**	4	BOLT (M6X1X20-MM)	
M	15	1	**9X-2480**	3	BOLT (M6X1X45-MM)	
	16	1	**9X-6165**	9	WASHER (6.5X22X2.5-MM THK)	
	17	1	**9X-8256**	8	WASHER (6.6X12X2-MM THK)	

M - METRIC PART
Y - SEPARATE ILLUSTRATION

472-8277 **INSTALLATION GP-COMMUNICATION (**contd.**)** **i06507935**

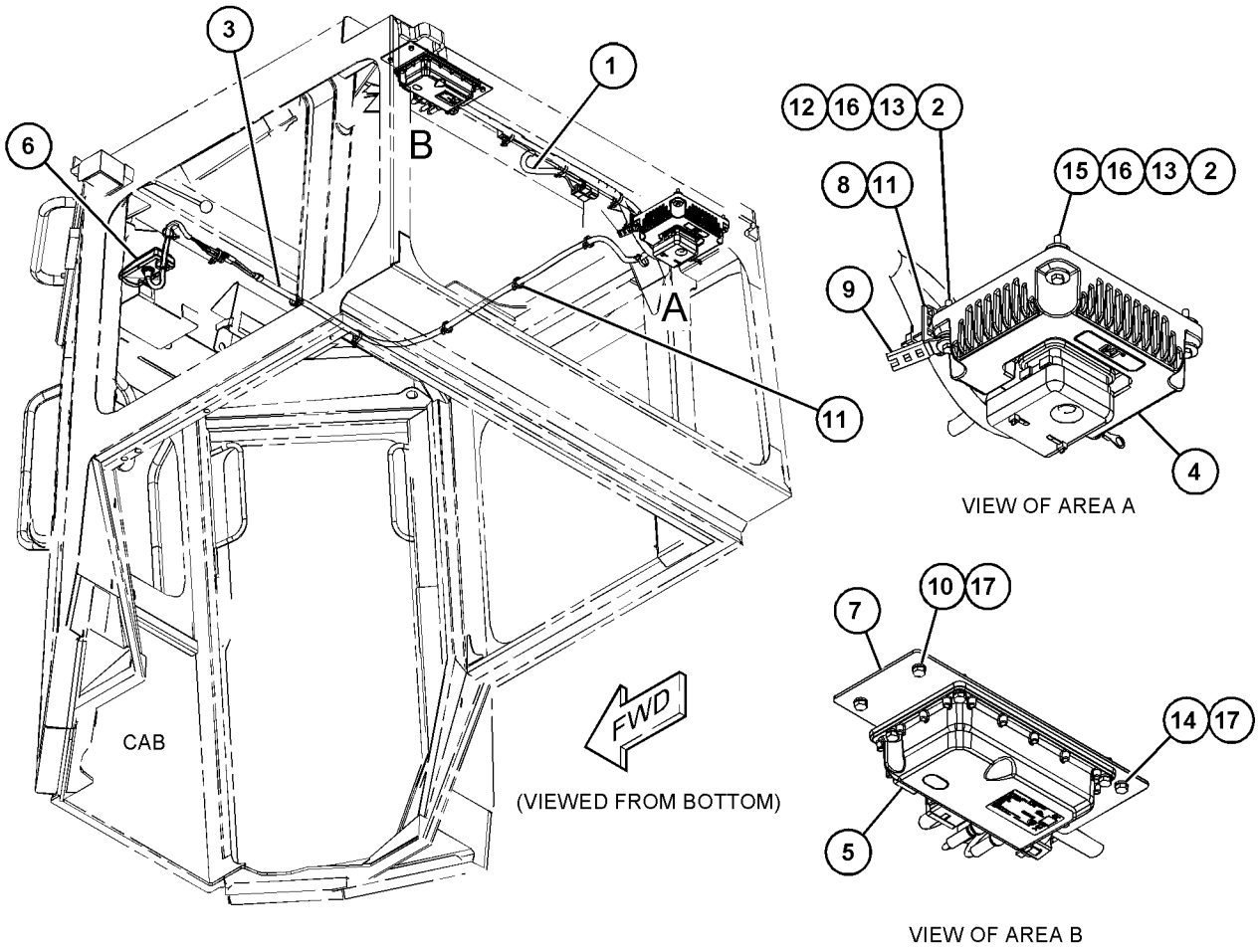

GRAPHIC #1 <END> g06034248

482-9657 INSTALLATION GP-COMMUNICATION

S/N: RAB1-UP

AN ATTACHMENT

SMCS-7606 **i06507871**

NOTE	PART NUMBER	QTY	PART NAME 1 2 3 4 5 6 (PRODUCT LEVEL)	SEE PAGE
Y	*481-4736*	1	ELECTRONICS GP-MONITOR (CELLULAR)	246
Y	*481-4737*	1	ELECTRONICS GP-MONITOR (RADIO)	247
Y	*472-8277*	1	INSTALLATION GP-COMMUNICATION (PRODUCT LINK)	281

Y - SEPARATE ILLUSTRATION

<END>

451-9041 KIT-REMOTE CONTROL

S/N: RAB1-UP

PROVIDE NEW LARGE TRACK TYPE TRACTORS REMOTE CONTROL KIT. CONTAINS ALL THE OFF-MACHINE COMPONENTS REQUIRED FOR PORTABLE LOS REMOTE CONTROL OPERATION FIELD INSTALLATION

SMCS-7008 **i06517099**

NOTE	REF NO	GRAPHIC REF	PART NUMBER	QTY	PART NAME 1 2 3 4 5 6 (PRODUCT LEVEL)	SEE PAGE
	1	1	**290-2770**	1	ANTENNA	
	2	1	**430-9010**	1	CONTROL GP-REMOTE	
	3	1	**430-9016**	2	BATTERY (RECHARGEABLE)	
	4	1	**430-9017**	1	BATTERY CHARGER	
	5	1	**430-9018**	1	BATTERY CHARGER	
	6	1	**430-9022**	3	KEY	
	7	1	**430-9023**	1	BATTERY CHARGER	
	8	1	**452-6790**	1	KIT-REMOTE CONTROL	
	9	1	**475-8076**	1	CASE AS	
		1	**303-3451**	1	FILM-IDENTIFICATION (CAT)	
		1	**475-8077**	1	BLOCK-FOAM	
		1	**475-8078**	1	BLOCK-FOAM	
F		1	**430-9019**	1	HARNESS-SHOULDER	

F - NOT SHOWN

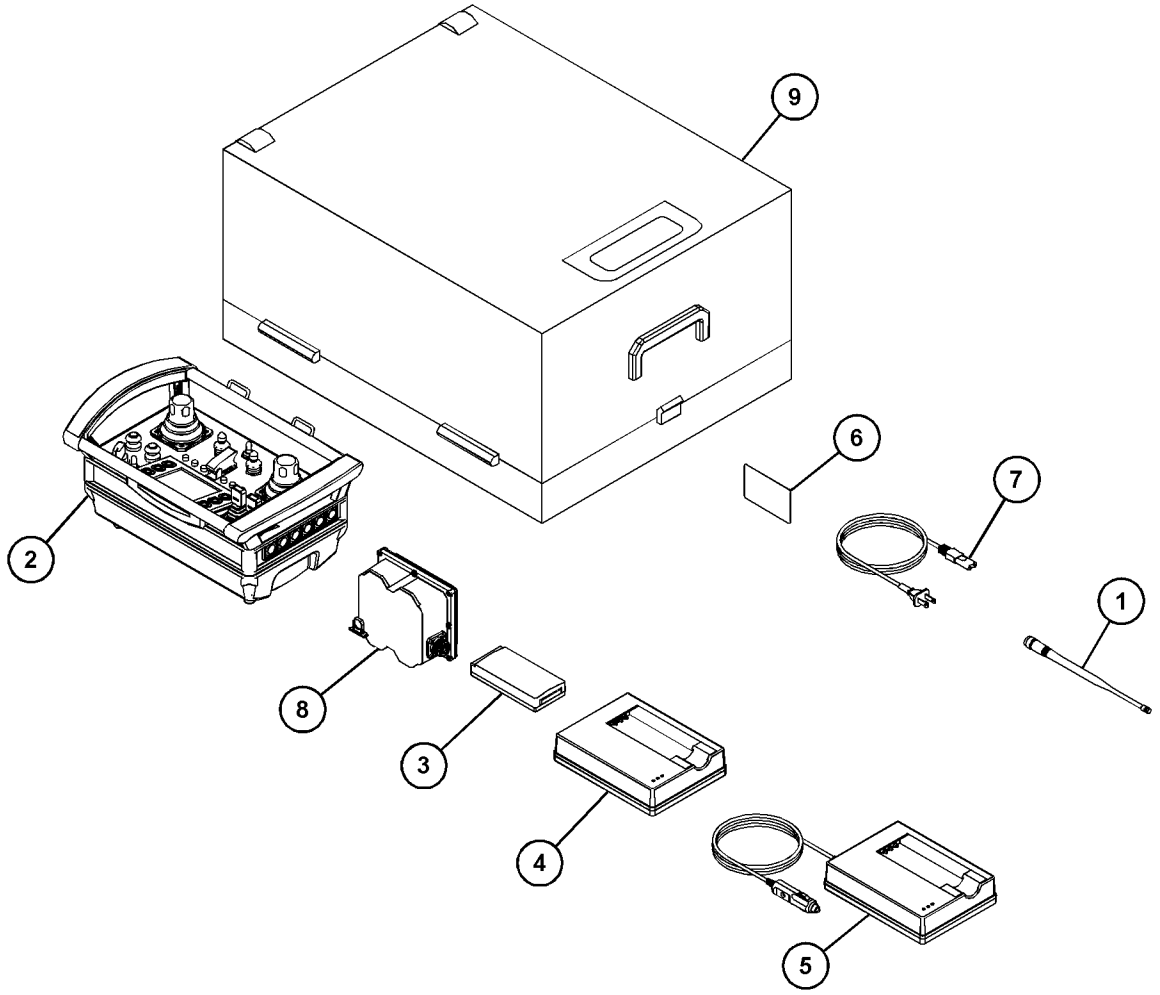

GRAPHIC #1 <END> g06038664

451-9042 KIT-REMOTE CONTROL

S/N: RAB1-UP

PROVIDE NEW LARGE TRACK TYPE TRACTORS REMOTE CONTROL KIT. ~KIT CONTAINS ALL THE OFF-MACHINE COMPONENTS REQUIRED FOR PORTABLE LOS REMOTE CONTROL OPERATION
FOR USE WITH REHS8806, REHS9105, SEBU8835, UENR4737
FIELD INSTALLATION

SMCS-7008 **i06527829**

NOTE	REF NO	GRAPHIC REF	PART NUMBER	QTY	PART NAME 1 2 3 4 5 6 (PRODUCT LEVEL)	SEE PAGE
	1	1	**363-9099**	1	ANTENNA (RADIO)	
	2	1	**430-9008**	1	CONTROL GP-REMOTE	
	3	1	**430-9016**	2	BATTERY (RECHARGEABLE)	
	4	1	**430-9017**	1	BATTERY CHARGER	
	5	1	**430-9018**	1	BATTERY CHARGER	
	6	1	**430-9022**	3	KEY (ACCESS)	
	7	1	**430-9023**	1	BATTERY CHARGER	
	8	1	**452-6789**	1	KIT-REMOTE CONTROL	
	9	1	**475-8076**	1	CASE AS	
		1	**303-3451**	1	FILM-IDENTIFICATION (CAT)	
		1	**475-8077**	1	BLOCK-FOAM	
		1	**475-8078**	1	BLOCK-FOAM	
F		1	**430-9019**	1	HARNESS-SHOULDER	

F - NOT SHOWN

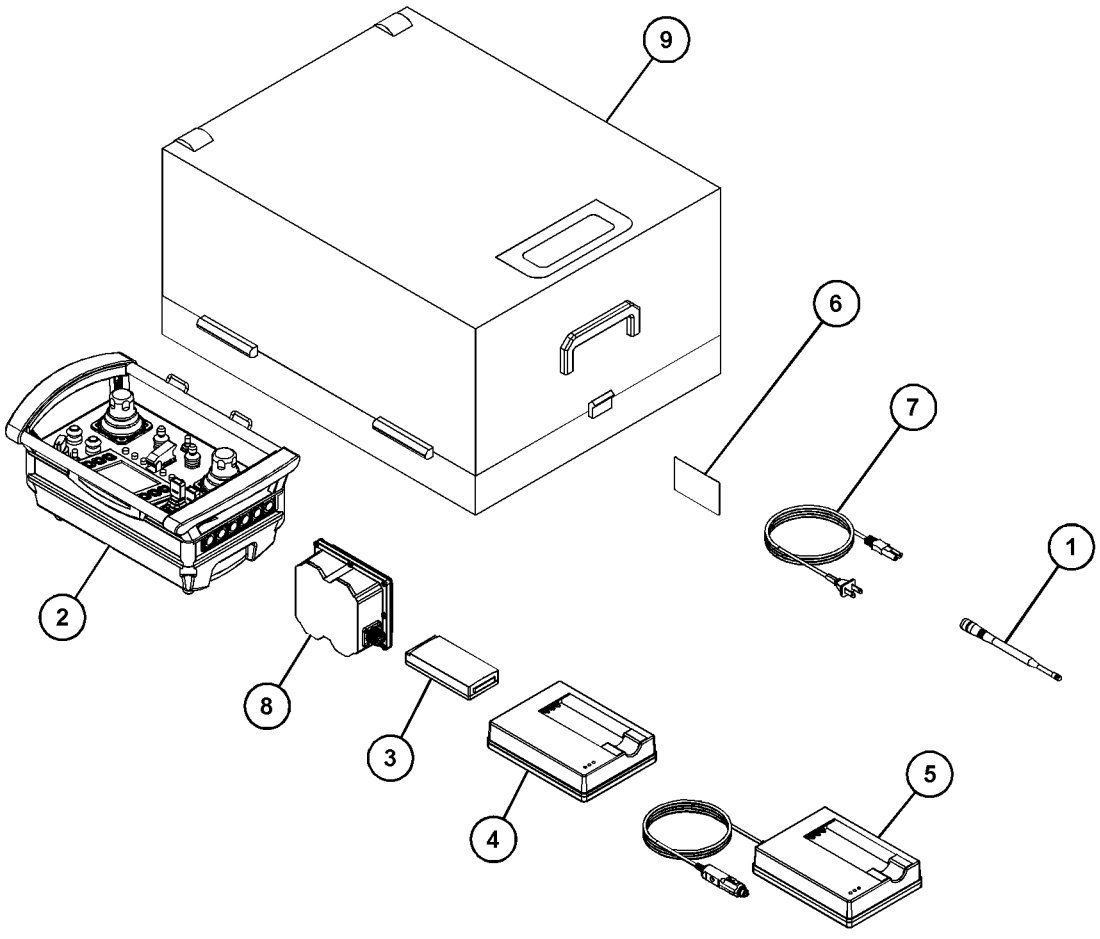

GRAPHIC #1 <END> g06026521

452-9062 LAMP & MTG GP-COMMAND SIGNAL—RH

S/N: RAB1-UP
PART OF 436-8094 WIRING GP-LIGHTING
AN ATTACHMENT

SMCS-1429, 733B

i06011761

NOTE	REF NO	GRAPHIC REF	PART NUMBER	QTY	PART NAME 1 2 3 4 5 6 (PRODUCT LEVEL)	SEE PAGE
	1	1	**330-5646**	6	MOUNT	
	2	1	**355-7153**	1	LAMP GP-SIGNAL (RED)	
		1	**8T-8730**	3	SOCKET-CONNECTOR (16-GA TO 18-GA)	
		1	**155-2260**	1	KIT-CONNECTING PLUG (3-PIN)	
					(INCLUDES PLUG AS, WEDGES & INTERFACE SEAL)	
	3	1	**355-7154**	1	LAMP GP-SIGNAL (BLUE)	
		1	**8T-8729**	3	PIN-CONNECTOR (16-GA TO 18-GA)	
		1	**8T-8737**	1	PLUG-SEAL	
		1	**102-8804**	1	KIT-RECEPTACLE (4-PIN)	
					(INCLUDES RECEPTACLE AS & WEDGE)	
	4	1	**355-7155**	1	LAMP GP-SIGNAL (12-VOLT, 24-VOLT, GREEN)	
		1	**8T-8729**	3	PIN-CONNECTOR (16-GA TO 18-GA)	
		1	**102-8803**	1	KIT-RECEPTACLE (3-PIN)	
					(INCLUDES RECEPTACLE AS & WEDGE)	
	5	1	**355-7156**	1	LAMP GP-SIGNAL (AMBER)	
		1	**8T-8730**	3	SOCKET-CONNECTOR (16-GA TO 18-GA)	
		1	**8T-8737**	1	PLUG-SEAL	
		1	**155-2271**	1	KIT-CONNECTING PLUG (4-PIN)	
					(INCLUDES PLUG AS, WEDGE & INTERFACE SEAL)	
	6	1	**436-8073**	1	BRACKET AS	
	7	1	**461-2450**	1	BRACKET AS	
	8	1	**096-6166**	24	WASHER-HARD (4.5X9X1-MM THK)	
M	9	1	**197-7499**	12	BOLT (M4X0.7X25-MM)	
M	10	1	**5C-8312**	12	NUT (M4X0.7-THD)	
	11	1	**6H-4005**	4	GROMMET	
	12	1	**7K-1181**	4	STRAP-CABLE	
	13	1	**8T-4121**	12	WASHER-HARD (11X21X2.5-MM THK)	
M	14	1	**8T-4133**	12	NUT (M10X1.5-THD)	

M - METRIC PART

452-9062 **LAMP & MTG GP-COMMAND SIGNAL (**contd.**)** **i06011761**

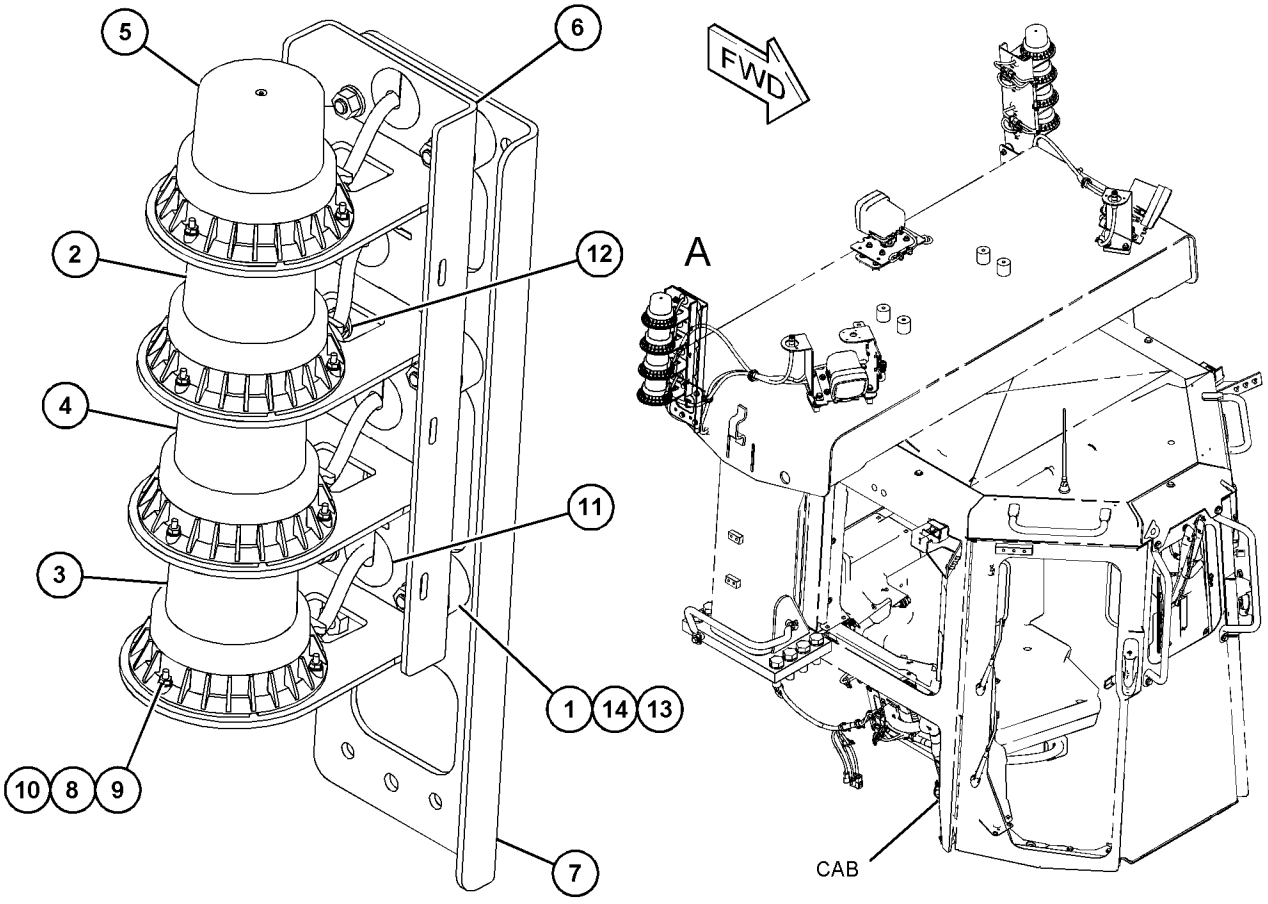

VIEW OF AREA A

GRAPHIC #1 <END> g03787135

457-5028 LAMP & MTG GP-COMMAND SIGNAL—LH

S/N: RAB1-UP
PART OF 436-8094 WIRING GP-LIGHTING
AN ATTACHMENT

SMCS-1429, 733B

i06011763

NOTE	REF NO	GRAPHIC REF	PART NUMBER	QTY	PART NAME 1 2 3 4 5 6 (PRODUCT LEVEL)	SEE PAGE
	1	1	**330-5646**	6	MOUNT	
	2	1	**355-7153**	1	LAMP GP-SIGNAL (RED)	
		1	**8T-8730**	3	SOCKET-CONNECTOR (16-GA TO 18-GA)	
		1	**155-2260**	1	KIT-CONNECTING PLUG (3-PIN)	
					(INCLUDES PLUG AS, WEDGE & INTERFACE SEAL)	
	3	1	**355-7154**	1	LAMP GP-SIGNAL (BLUE)	
		1	**8T-8729**	3	PIN-CONNECTOR (16-GA TO 18-GA)	
		1	**8T-8737**	1	PLUG-SEAL	
		1	**102-8804**	1	KIT-RECEPTACLE (4-PIN)	
					(INCLUDES RECEPTACLE AS & WEDGE)	
	4	1	**355-7155**	1	LAMP GP-SIGNAL (12-VOLT, 24-VOLT, GREEN)	
		1	**8T-8729**	3	PIN-CONNECTOR (16-GA TO 18-GA)	
		1	**102-8803**	1	KIT-RECEPTACLE (3-PIN)	
					(INCLUDES RECEPTACLE AS & WEDGE)	
	5	1	**355-7156**	1	LAMP GP-SIGNAL (AMBER)	
		1	**8T-8730**	3	SOCKET-CONNECTOR (16-GA TO 18-GA)	
		1	**8T-8737**	1	PLUG-SEAL	
		1	**155-2271**	1	KIT-CONNECTING PLUG (4-PIN)	
					(INCLUDES PLUG AS, WEDGE & INTERFACE SEAL)	
	6	1	**436-8073**	1	BRACKET AS	
	7	1	**461-2450**	1	BRACKET AS	
	8	1	**096-6166**	24	WASHER-HARD (4.5X9X1-MM THK)	
M	9	1	**197-7499**	12	BOLT (M4X0.7X25-MM)	
M	10	1	**5C-8312**	12	NUT (M4X0.7-THD)	
	11	1	**6H-4005**	4	GROMMET	
	12	1	**7K-1181**	4	STRAP-CABLE	
	13	1	**8T-4121**	12	WASHER-HARD (11X21X2.5-MM THK)	
M	14	1	**8T-4133**	12	NUT (M10X1.5-THD)	

M - METRIC PART

457-5028 **LAMP & MTG GP-COMMAND SIGNAL (**contd.**)** **i06011763**

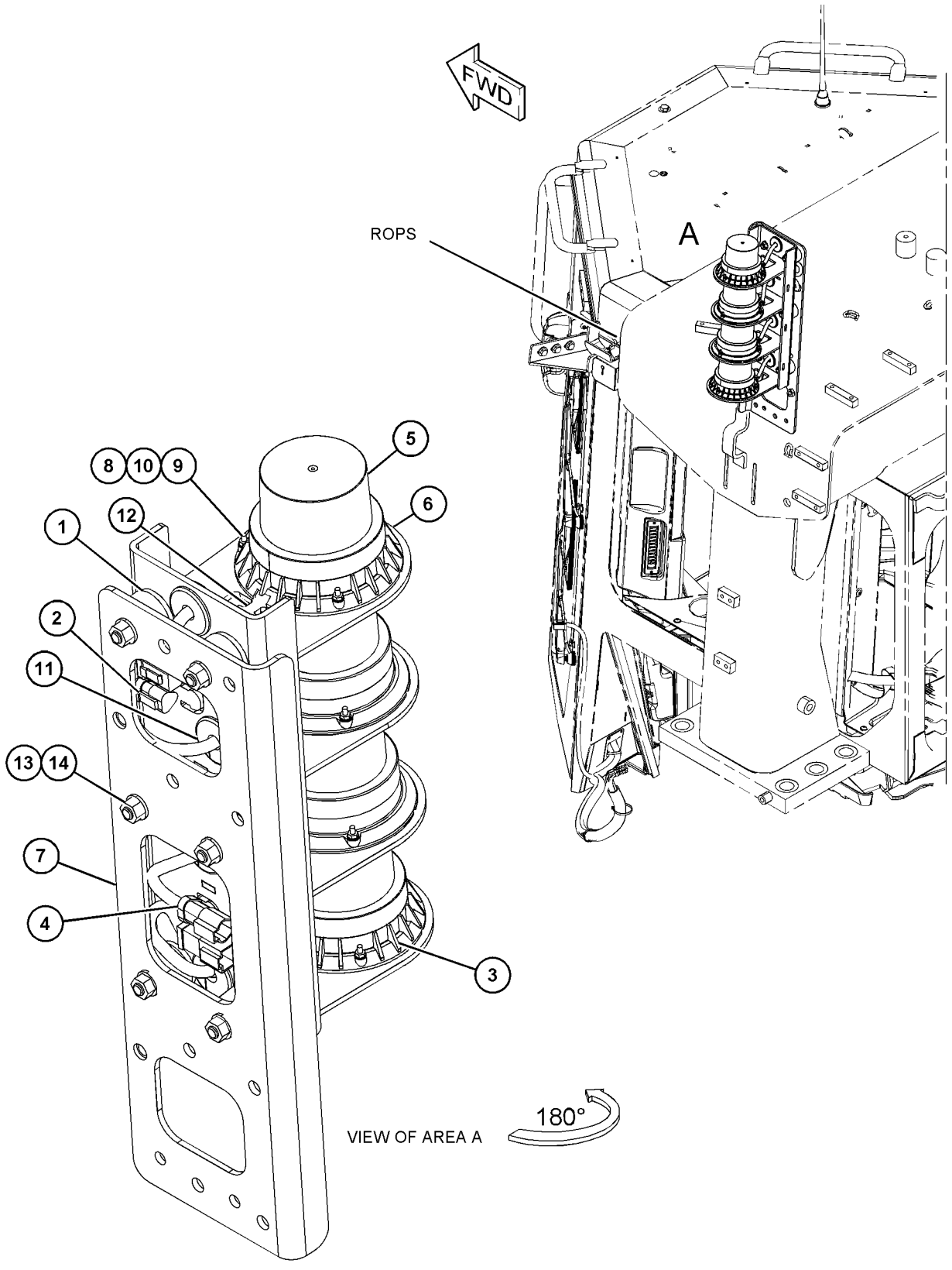

GRAPHIC #1 <END> g03785685

147-0319 LAMP GP-FLOOD

S/N: RAB1-UP
24-VOLT, 70-WATT
FIELD REPLACEMENT ORDER 227-5978—PAGE: 293
PART OF 367-9605 LIGHTING GP-FLOOD, 380-5286 LIGHTING GP-RIPPER
AN ATTACHMENT

SMCS-1434 **i06041366**

NOTE	REF NO	GRAPHIC REF	PART NUMBER	QTY	PART NAME 1 2 3 4 5 6 (PRODUCT LEVEL)	SEE PAGE
	1	1	**351-9918**	1	LAMP-HALOGEN (24-VOLT, 70-WATT)	
	2	1	**188-8849**	2	CLAMP	
	3	1	**375-0352**	1	LENS AS (FLOODLIGHT)	
	4	1	**158-0252**	1	BEZEL	
					PARTS SHOWN IN GRAPHIC(S) WITHOUT A REFERENCE NUMBER ARE NOT SERVICED SEPARATELY	

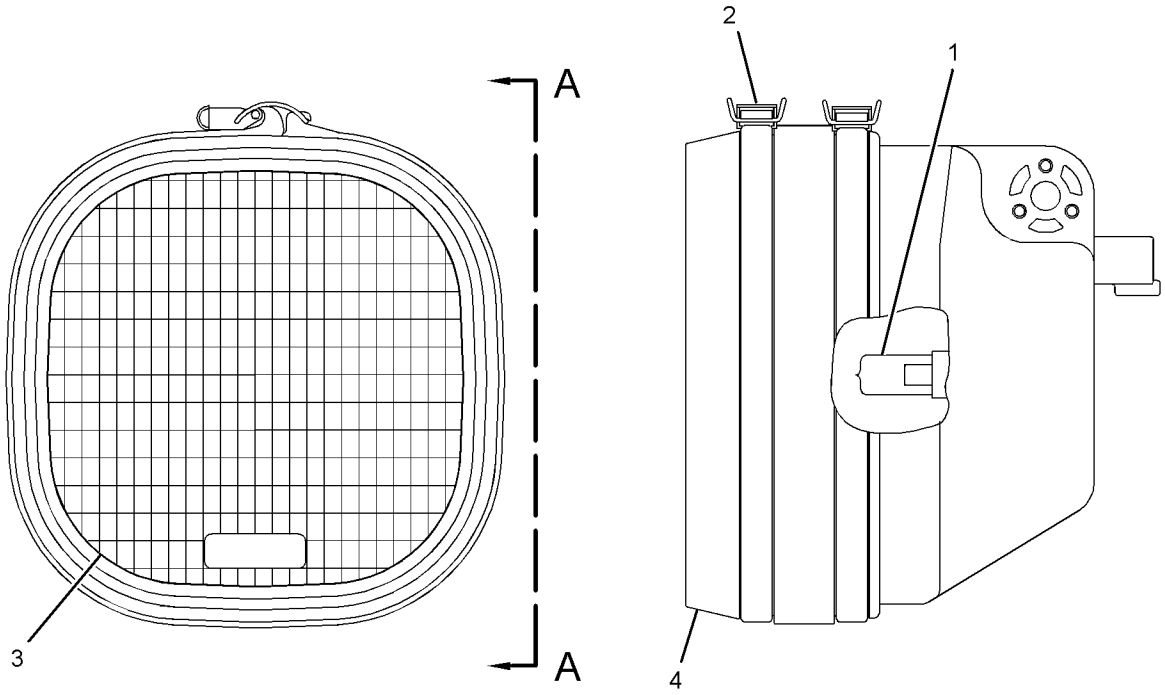

VIEW A-A

GRAPHIC #1 <END> g03786158

153-2073 LAMP GP-FLOOD

S/N: RAB1-UP
24-VOLT, 70-WATT
PART OF 359-6071, 359-6356 LIGHTING GP-FLOOD
AN ATTACHMENT

SMCS-1434 **i05955210**

NOTE	REF NO	GRAPHIC REF	PART NUMBER	QTY	PART NAME 1 2 3 4 5 6 (PRODUCT LEVEL)	SEE PAGE
	1	1	**351-9918**	1	LAMP-HALOGEN (24-VOLT, 70-WATT)	
	2	1	**188-8849**	2	CLAMP	
	3	1	**375-0352**	1	LENS AS (FLOODLIGHT)	
	4	1	**158-0252**	1	BEZEL	
					PARTS SHOWN IN GRAPHIC(S) WITHOUT A REFERENCE NUMBER ARE NOT SERVICED SEPARATELY	

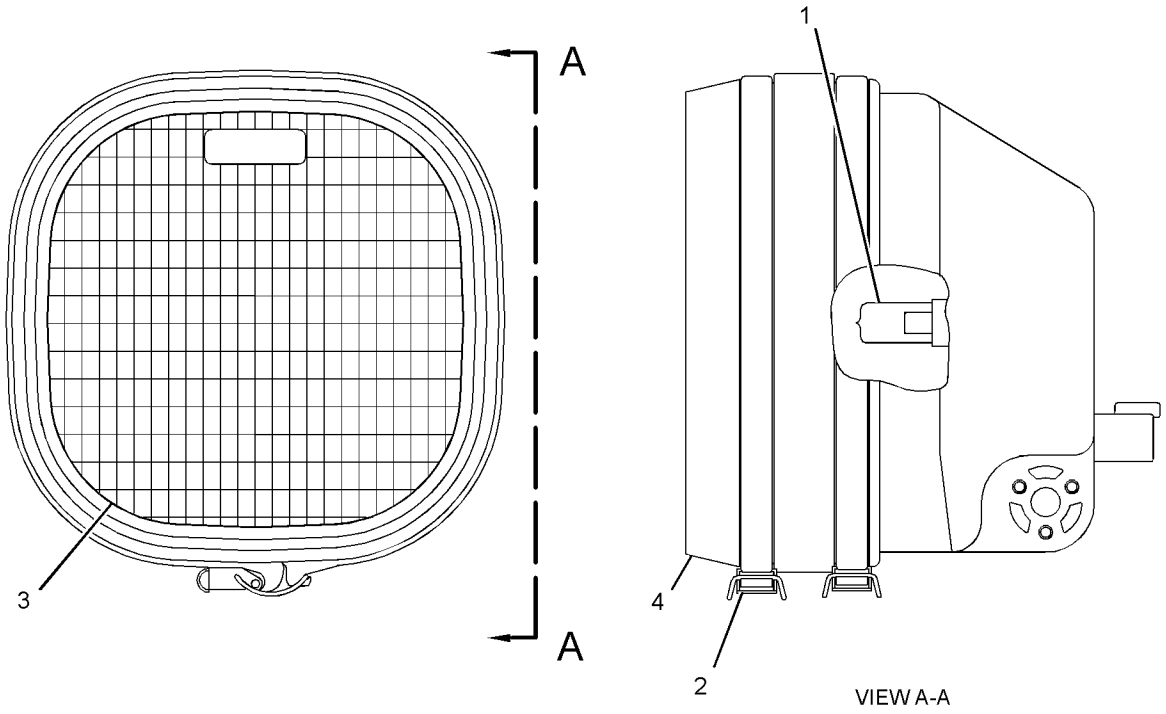

VIEW A-A

GRAPHIC #1 <END> g03737412

219-6485 LAMP GP-FLOOD

S/N: RAB1-UP
24-VOLT, 70-WATT
PART OF 359-6354, 359-6356, 376-1378 LIGHTING GP-FLOOD
AN ATTACHMENT

SMCS-1434 **i05834085**

NOTE	REF NO	GRAPHIC REF	PART NUMBER	QTY	PART NAME 1 2 3 4 5 6 (PRODUCT LEVEL)	SEE PAGE
	1	1	**351-9918**	1	LAMP-HALOGEN (24-VOLT, 70-WATT)	
M	2	1	**9X-4244**	2	SCREW-SPECIAL (M4X1.79X25-MM)	
	3	1	**175-4291**	1	BRACKET AS	
	4	1	**202-6614**	1	LENS AS (FLOODLIGHT)	
	5	1	**175-4292**	1	BODY AS	
	6	1	**164-7556**	1	BRACKET (LAMP RETAINING)	
	7	1	**247-4285**	1	BOLT (M8X1.25X50-MM)	
M	8	1	**6V-9189**	1	LOCKNUT (M8X1.25-THD)	
	9	1	**8T-4224**	2	WASHER-HARD (8.8X16X2-MM THK)	

M - METRIC PART

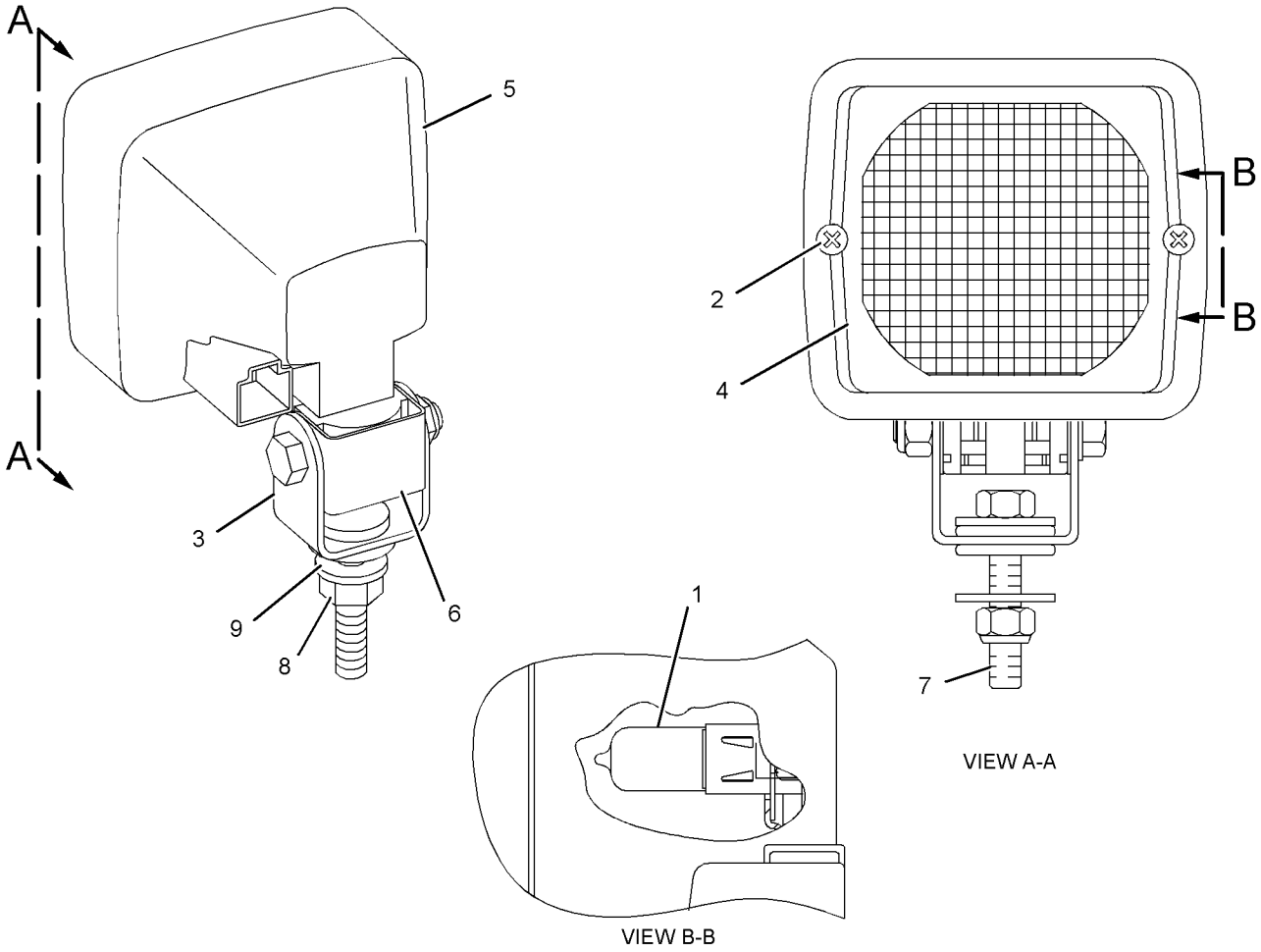

GRAPHIC #1 <END> g02075738

227-5978 LAMP GP-FLOOD

S/N: RAB1-UP
24-VOLT, 70-WATT
FIELD REPLACEMENT FOR 147-0319—PAGE: 290

SMCS-1434 **i06602283**

NOTE	REF NO	GRAPHIC REF	PART NUMBER	QTY	PART NAME 1 2 3 4 5 6 (PRODUCT LEVEL)	SEE PAGE
	1	1	**351-9918**	1	LAMP-HALOGEN (24-VOLT, 70-WATT)	
	2	1	**158-0250**	1	BODY AS-LAMP	
	3	1	**375-0352**	1	LENS AS	
	4	1	**158-0252**	1	BEZEL	
	5	1	**188-8849**	2	CLAMP	
	6	1	**165-0699**	1	KIT-MOUNTING BRACKET (LAMP)	
					(INCLUDES BRACKET, BOLTS & LOCKNUT)	

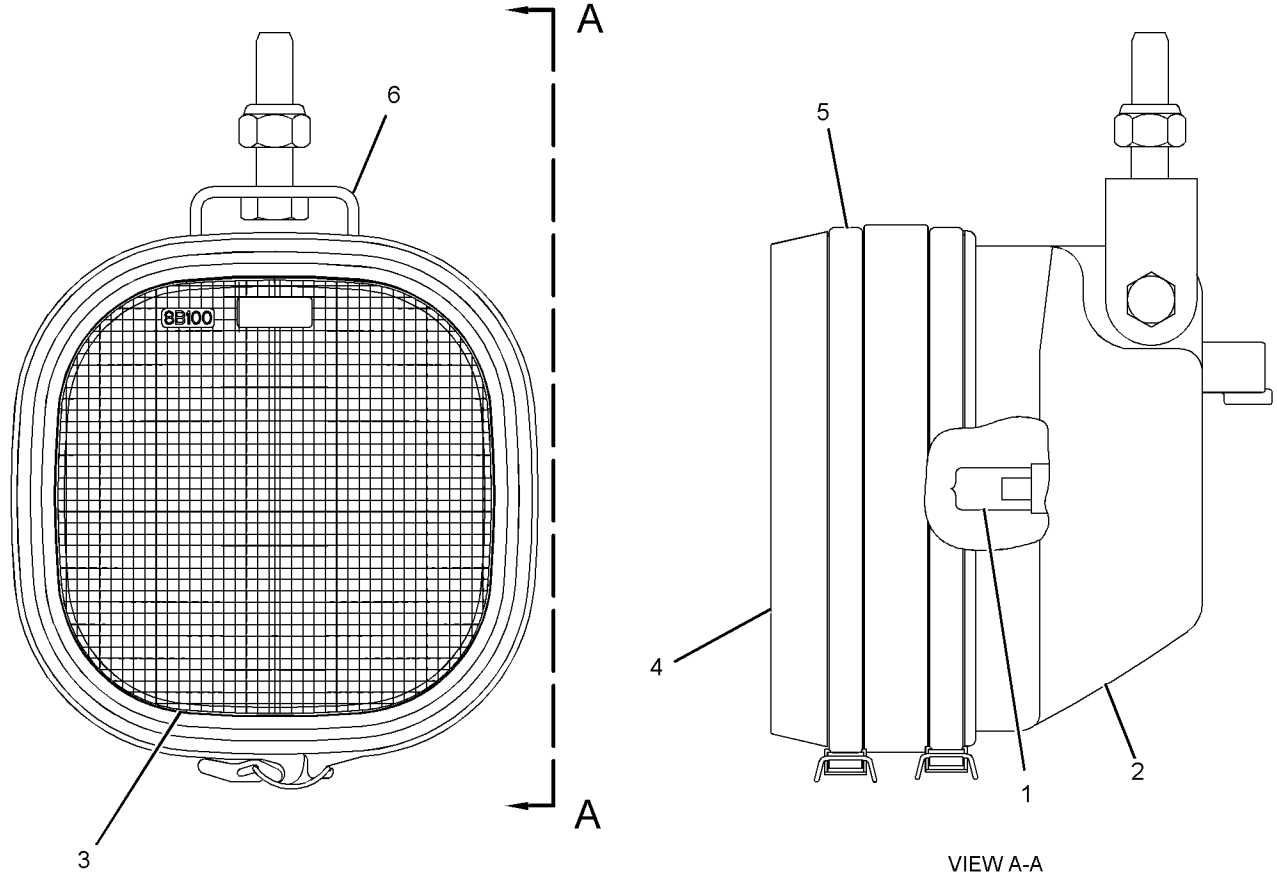

VIEW A-A

GRAPHIC #1 <END> g02753639

332-9402 LAMP GP-FLOOD–HID

S/N: RAB1-UP
24-VOLT, 35-WATT
PART OF 359-6356 LIGHTING GP-FLOOD
AN ATTACHMENT

SMCS-1434 **i05843944**

NOTE	REF NO	GRAPHIC REF	PART NUMBER	QTY	PART NAME 1 2 3 4 5 6 (PRODUCT LEVEL)	SEE PAGE
C	1	1	**360-0187**	1	LENS AS	
	2	1	**290-8160**	1	LAMP (24-VOLT, HID)	
CM	3	1	**8T-4195**	1	BOLT (M10X1.5X30-MM)	
	4	1	**8T-4121**	1	WASHER-HARD (11X21X2.5-MM THK)	
	5	1	**228-6056**	4	SCREW (4-32X1.26-IN)	
CM	6	1	**6V-9804**	1	BOLT (M8X1.25X75-MM)	
CM	7	1	**6V-9189**	1	LOCKNUT (M8X1.25-THD)	
C	8	1	**364-2657**	1	BRACKET-HOUSING	
	9	1	**229-9974**	1	BEZEL	
	10	1	**319-7384**	1	BALLAST AS (24-VOLT, 35-WATT, HID)	
M	11	1	**8T-0389**	1	LOCKNUT (M10X1.5-THD)	

C - CHANGE FROM PREVIOUS TYPE
M - METRIC PART

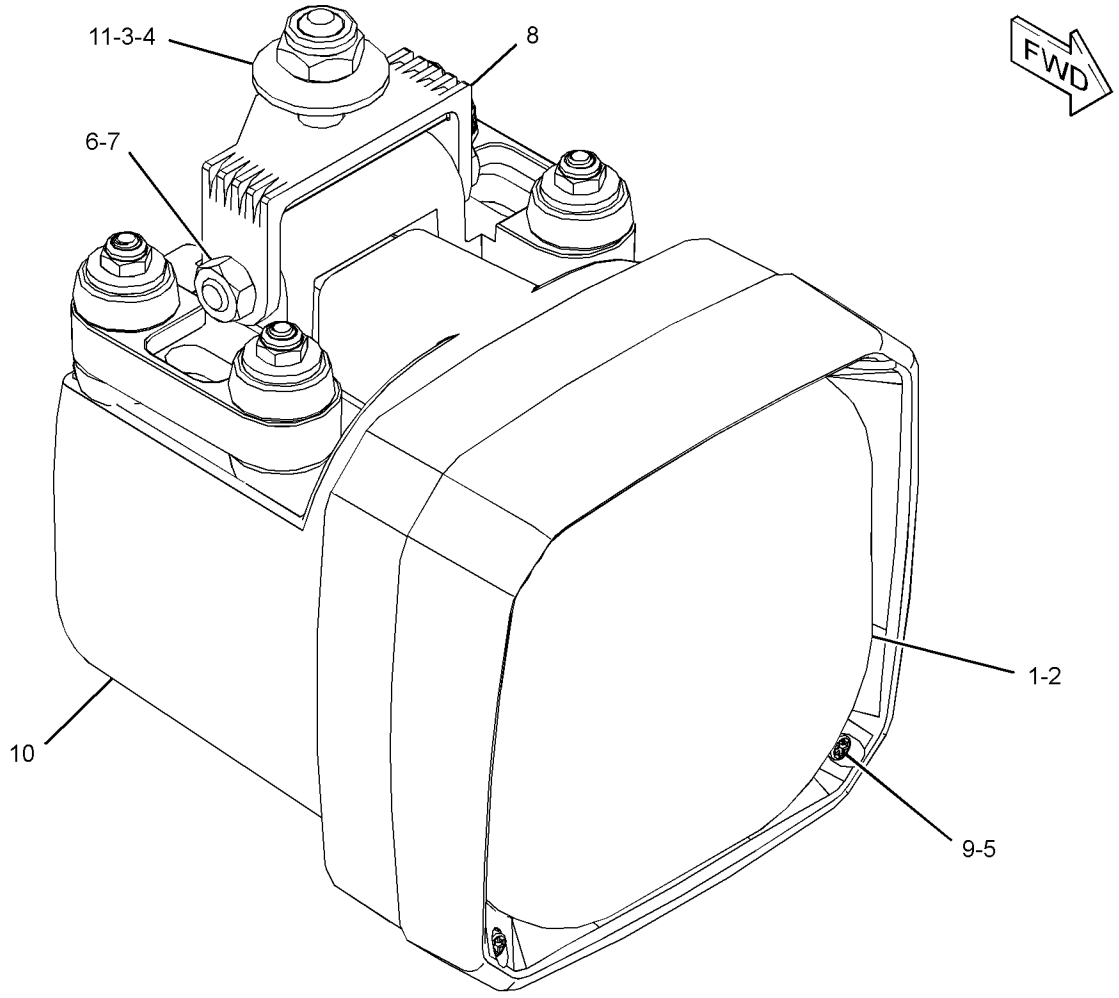

GRAPHIC #1 <END> g03102537

347-9427 LAMP GP-FLOOD–HID

S/N: RAB1-UP
24-VOLT, 35-WATT
PART OF 359-6356 LIGHTING GP-FLOOD
AN ATTACHMENT

SMCS-1434 **i04930155**

NOTE	REF NO	GRAPHIC REF	PART NUMBER	QTY	PART NAME 1 2 3 4 5 6 (PRODUCT LEVEL)	SEE PAGE
C	1	1	**360-0187**	1	LENS AS	
	2	1	**290-8160**	1	LAMP (24-VOLT, HID)	
CM	3	1	**8T-4195**	1	BOLT (M10X1.5X30-MM)	
	4	1	**8T-4121**	1	WASHER-HARD (11X21X2.5-MM THK)	
C	5	1	**228-6056**	4	SCREW (4-32X1.26-IN)	
CM	6	1	**6V-9804**	1	BOLT (M8X1.25X75-MM)	
CM	7	1	**6V-9189**	1	LOCKNUT (M8X1.25-THD)	
C	8	1	**364-2657**	1	BRACKET-HOUSING	
	9	1	**229-9974**	1	BEZEL	
	10	1	**319-7384**	1	BALLAST AS (24-VOLT, 35-WATT, HID)	
M	11	1	**8T-0389**	1	LOCKNUT (M10X1.5-THD)	

C - CHANGE FROM PREVIOUS TYPE
M - METRIC PART

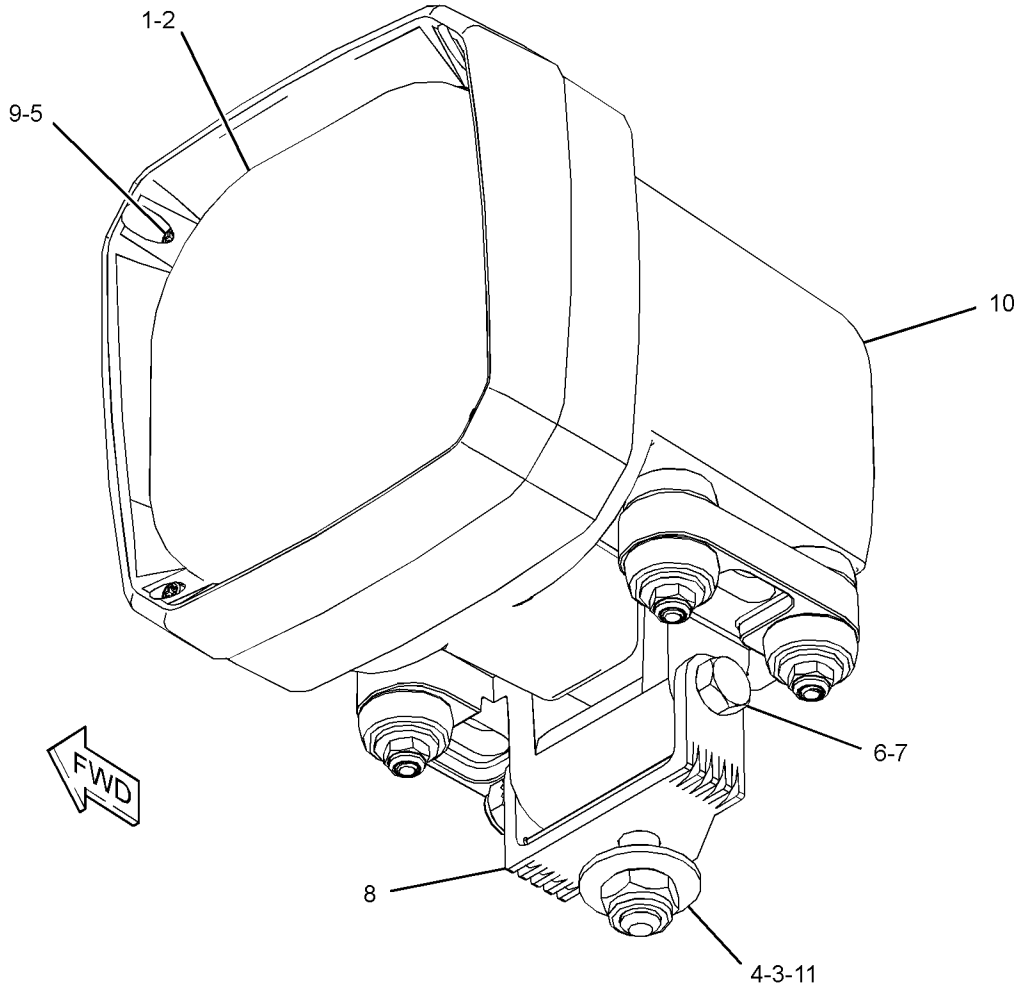

GRAPHIC #1 <END> g03102496

386-1722 LAMP GP-FLOOD–LED

S/N: RAB1-UP
9-VOLT TO 32-VOLT
PART OF 376-1379 LIGHTING GP-FLOOD
AN ATTACHMENT

SMCS-1434 **i06582351**

NOTE	REF NO	GRAPHIC REF	PART NUMBER	QTY	PART NAME 1 2 3 4 5 6 (PRODUCT LEVEL)	SEE PAGE
	1	1	**389-0447**	1	BRACKET AS	

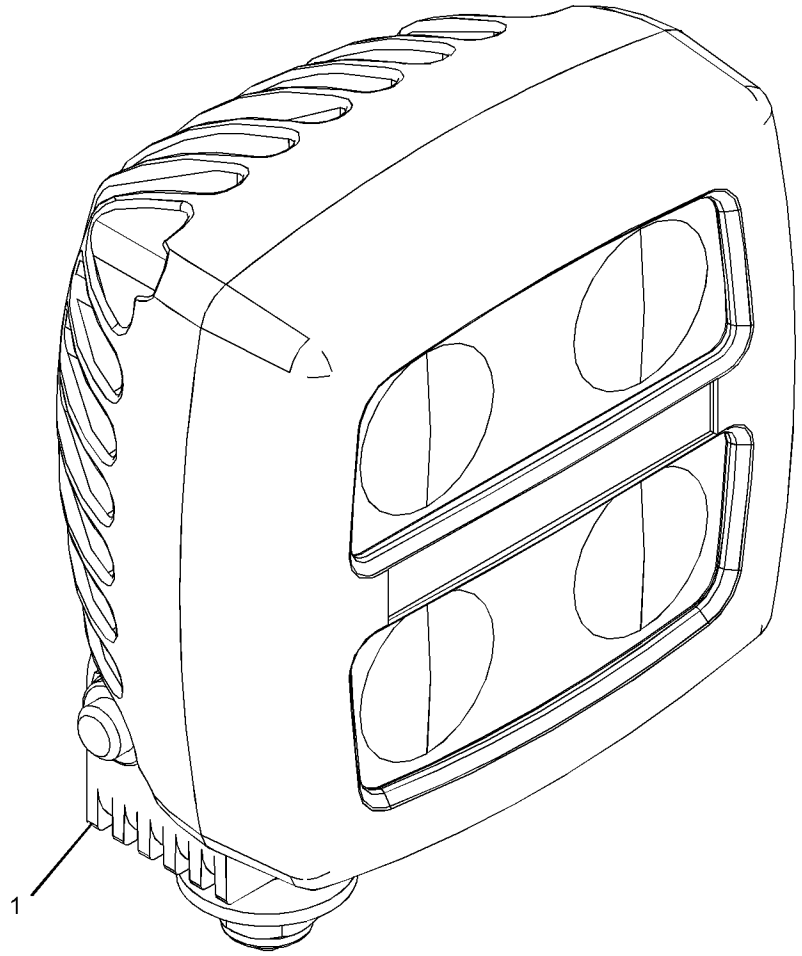

GRAPHIC #1 <END> g03355689

424-5598 LAMP GP-FLOOD

S/N: RAB1-UP
12-VOLT TO 48-VOLT
PART OF 376-1379, 444-5644 LIGHTING GP-FLOOD
AN ATTACHMENT

SMCS-1434 **i05640619**

NOTE	REF NO	GRAPHIC REF	PART NUMBER	QTY	PART NAME 1 2 3 4 5 6 (PRODUCT LEVEL)	SEE PAGE
			(NO SERVICED PARTS)			

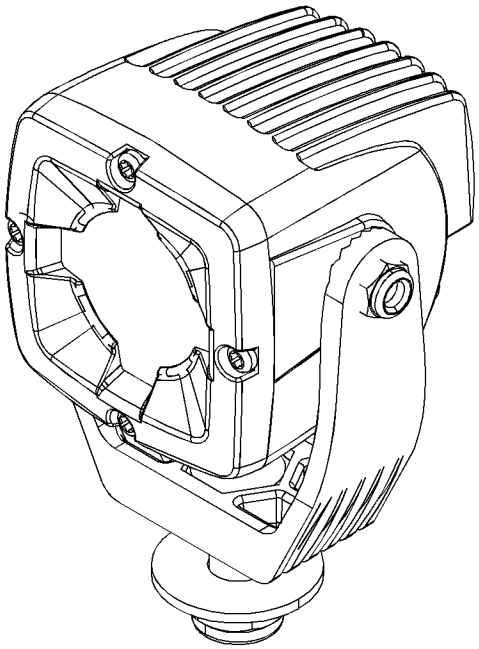

GRAPHIC #1 <END> g03581807

338-1132 LAMP GP-WARNING BEACON–STROBE

S/N: RAB1-UP
12-VOLT, 24-VOLT, LED. AMBER
PART OF 476-7086 LIGHTING GP-WARNING BEACON
AN ATTACHMENT

SMCS-1431 **i05819730**

NOTE	REF NO	GRAPHIC REF	PART NUMBER	QTY	PART NAME 1 2 3 4 5 6 (PRODUCT LEVEL)	SEE PAGE
	1	1	**102-8802**	1	KIT-RECEPTACLE (2-PIN)	
					(INCLUDES RECEPTACLE AS & WEDGE)	
	2	1	**8T-8729**	2	PIN-CONNECTOR (16-GA TO 18-GA)	
	3	1	**356-7515**	1	LENS (AMBER)	
					–OR–	
		1	**421-5583**	1	LENS (RED)	
					–OR–	
		1	**421-5584**	1	LENS (CLEAR)	
					–OR–	
		1	**421-5585**	1	LENS (GREEN)	
E	4	1	**9X-1386**		SLEEVE (44-CM)	

E - ORDER BY THE CENTIMETER

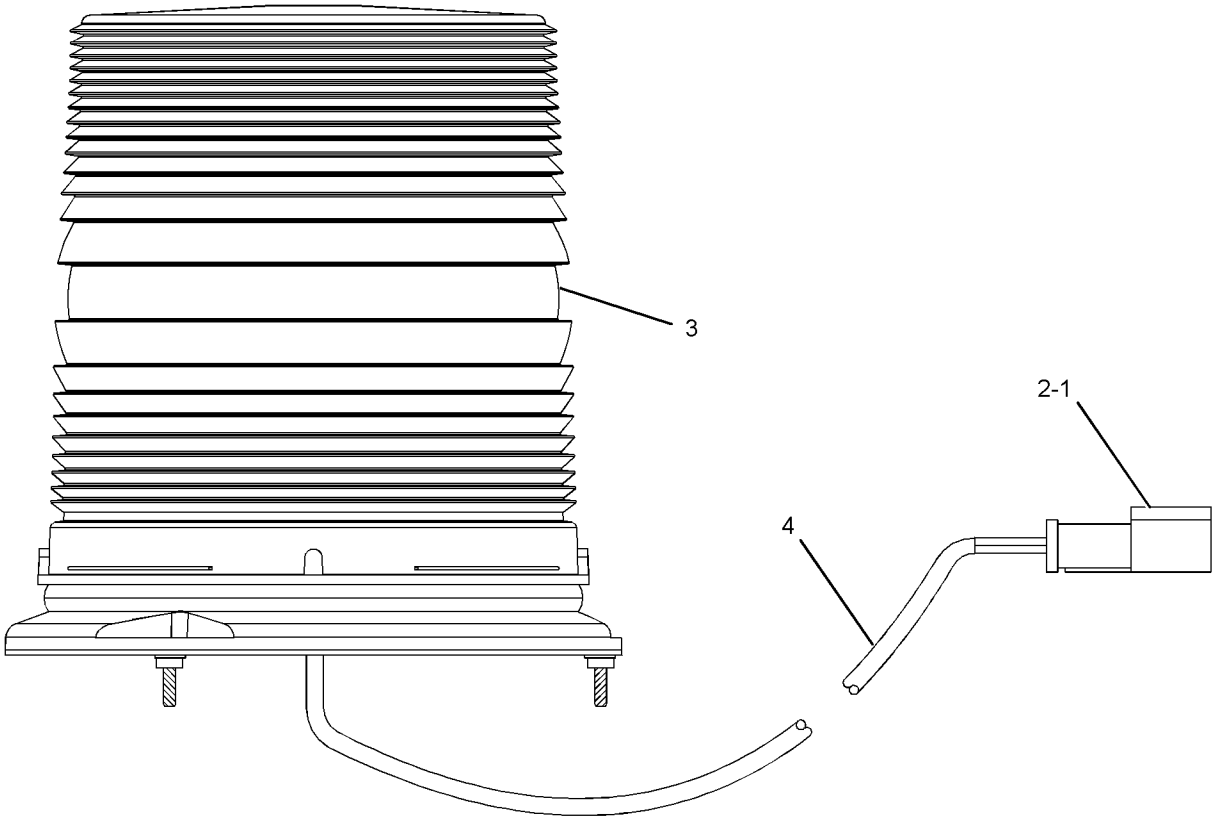

GRAPHIC #1 <END> g02193876

359-6071 LIGHTING GP-FLOOD

S/N: RAB1-UP
24-VOLT
PART OF 359-6354, 376-1378 LIGHTING GP-FLOOD
AN ATTACHMENT

SMCS-1434 **i05450329**

NOTE	REF NO	GRAPHIC REF	PART NUMBER	QTY	PART NAME 1 2 3 4 5 6 (PRODUCT LEVEL)	SEE PAGE
	1	1	**111-8314**	1	BRACKET AS	
Y	2	1	**153-2073**	1	LAMP GP-FLOOD (24-VOLT)	291
	3	1	**5P-2955**	1	BOLT (5/16-18X2.5-IN)	
	4	1	**6V-8189**	1	NUT (5/16-18-THD)	
	5	1	**8T-4224**	2	WASHER-HARD (8.8X16X2-MM THK)	

Y - SEPARATE ILLUSTRATION

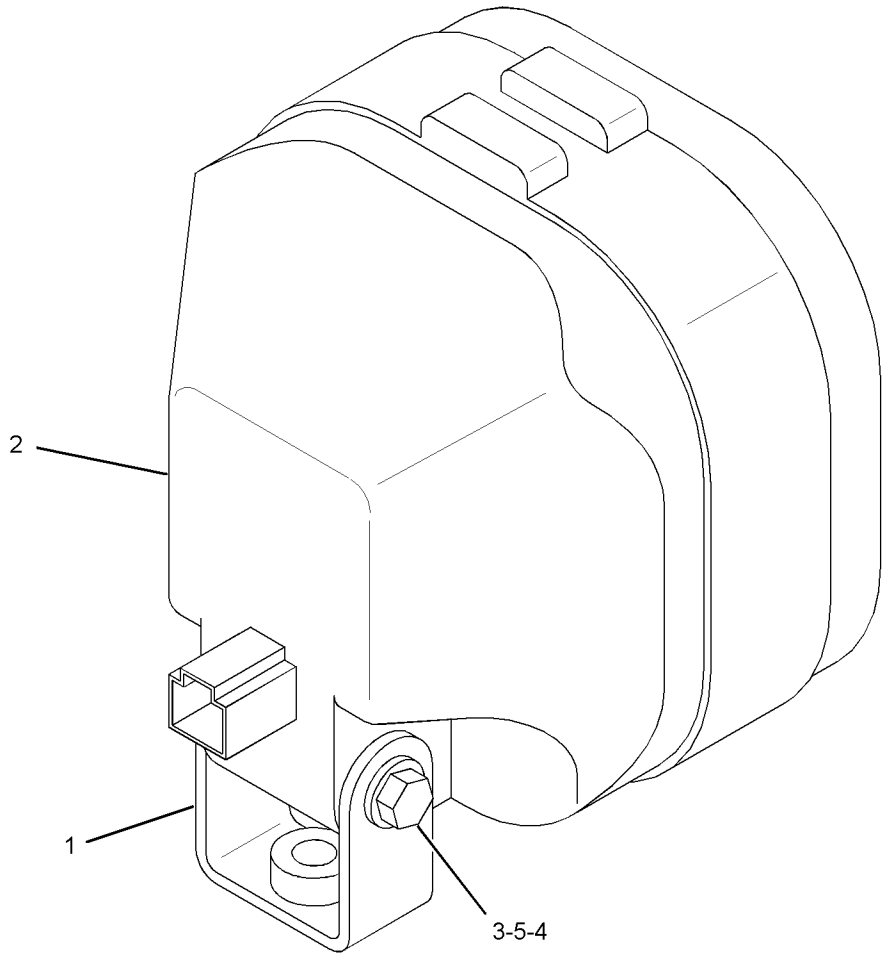

GRAPHIC #1 <END> g02925960

359-6354 LIGHTING GP-FLOOD—CYLINDER, FENDER, ROPS, UNDER HOOD

S/N: RAB1-281
WASTE HANDLING
AN ATTACHMENT

SMCS-1434 **i05907977**

NOTE	REF NO	GRAPHIC REF	PART NUMBER	QTY	PART NAME 1 2 3 4 5 6 (PRODUCT LEVEL)	SEE PAGE
	1	2	**8E-3241**	4	BRACKET AS	
					(EACH INCLUDES)	
		2	**1F-0750**	1	NUT-WELD (3/8-16-THD)	
	2	2	**9W-4361**	8	MOUNT-FLEXIBLE	
Y	3	2	**219-6485**	2	LAMP GP-FLOOD (24-VOLT) (ENGINE COMPARTMENT)	292
	4	2	**345-2955**	2	BRACKET	
	5	2	**347-0890**	2	PLATE	
Y	6	2	*359-6071*	2	LIGHTING GP-FLOOD (ROPS)	299
Y	6A	2	*359-6071*	4	LIGHTING GP-FLOOD (FENDER LIGHTS)	299
	7	2	**376-9911**	2	HARNESS AS-LIGHTING (CYLINDER FLOODLIGHTS)	
					(EACH INCLUDES)	
		2	**102-8806**	1	KIT-RECEPTACLE (8-PIN)	
					(INCLUDES RECEPTACLE AS & WEDGE)	
		2	**3E-3389**	1	WEDGE-RECEPTACLE LOCK (8-PIN)	
E		2	**5P-0742**		HOSE (80-CM)	
		2	**8T-8737**	1	PLUG-SEAL	
		2	**9W-0844**	4	SOCKET-CONNECTOR (14-GA TO 16-GA)	
		2	**9W-0852**	4	PIN-CONNECTOR (14-GA TO 16-GA)	
		2	**9X-3401**	3	PIN-CONNECTOR (16-GA TO 18-GA)	
		2	**9X-3402**	3	SOCKET-CONNECTOR (16-GA TO 18-GA)	
E		2	**108-1304**		TUBE-HEAT SHRINK (33-MM DIA) (16-CM)	
		2	**155-2270**	2	KIT-CONNECTING PLUG (2-PIN)	
					(EACH PLUG KIT INCLUDES PLUG AS, WEDGE & INTERFACE SEAL)	
B		2	**1P-0810**		TAPE-ELECTRICAL	
		2	**230-4013**	1	PLUG AS-CONNECTOR (3-PIN)	
		2	**264-7030**	1	SEAL-CONNECTOR	
		2	**274-3774**	2	CAP-CONNECTOR	
		2	**274-3781**	1	CAP-SEAL	
	8	1	**377-0858**	1	HARNESS AS-LIGHTING (ROPS)	
		1	**102-8805**	1	KIT-RECEPTACLE (6-PIN)	
					(INCLUDES RECEPTACLE AS & WEDGE)	
		1	**3E-3383**		WEDGE-RECEPTACLE LOCK (6-PIN)	
		1	**8T-8737**	2	PLUG-SEAL	
		1	**9W-0844**	10	SOCKET-CONNECTOR (14-GA TO 16-GA)	
		1	**9W-0852**	4	PIN-CONNECTOR (14-GA TO 16-GA)	
E		1	**125-7874**		TUBE-HEAT SHRINK (5.72-MM DIA) (15-CM)	
E		1	**125-7875**		TUBE-HEAT SHRINK (7.44-MM DIA) (5-CM)	
		1	**155-2270**	5	KIT-CONNECTING PLUG (2-PIN)	
					(EACH PLUG KIT INCLUDES PLUG AS, WEDGE & INTERFACE SEAL)	
		1	**274-3774**	5	CAP-CONNECTOR	
	9	1	**130-5300**	2	CLIP	
	10	2	**230-7732**	2	MOUNTING-CABLE TIE	
Y	11	2	*367-9605*	2	LIGHTING GP-FLOOD (24-VOLT) (CYLINDERS)	313
	12	2	**4L-6454**	8	BOLT (3/8-16X1-IN)	
	13	2	**5M-3062**	6	BOLT (3/8-16X0.75-IN)	

359-6354 **LIGHTING GP-FLOOD (**contd.**)** **i05907977**

NOTE	REF NO	GRAPHIC REF	PART NUMBER	QTY	PART NAME 1 2 3 4 5 6 (PRODUCT LEVEL)	SEE PAGE
	14	2	**5P-1075**	42	WASHER-HARD (10.2X22.5X3-MM THK)	
	15	2	**5P-2228**	2	BOLT (1/2-13X1-IN)	
	16	2	**5P-8522**	2	GROMMET	
	17	2	**6V-8801**	16	NUT (3/8-16-THD)	
	18	1,2	**7K-1181**	36	STRAP-CABLE	
	19	2	**7X-0290**	2	BOLT (3/8-16X3.5-IN)	
	20	2	**8T-1897**	4	CLIP (SLOT)	
	21	2	**8T-1898**	4	CLIP (TAB)	
	22	2	**8T-2502**	2	BOLT (3/8-16X1.125-IN)	
	23	1,2	**8T-4121**	3	WASHER-HARD (11X21X2.5-MM THK)	
M	24	1,2	**8T-4136**	3	BOLT (M10X1.5X25-MM)	
	25	2	**8T-4223**	2	WASHER-HARD (13.5X25.5X3-MM THK)	
	26	1	**8T-5387**	1	GROMMET	

B - USE AS REQUIRED
E - ORDER BY THE CENTIMETER
M - METRIC PART
Y - SEPARATE ILLUSTRATION

REFER TO ALL ILLUSTRATIONS OF THIS GROUP FOR AUXILIARY VIEWS

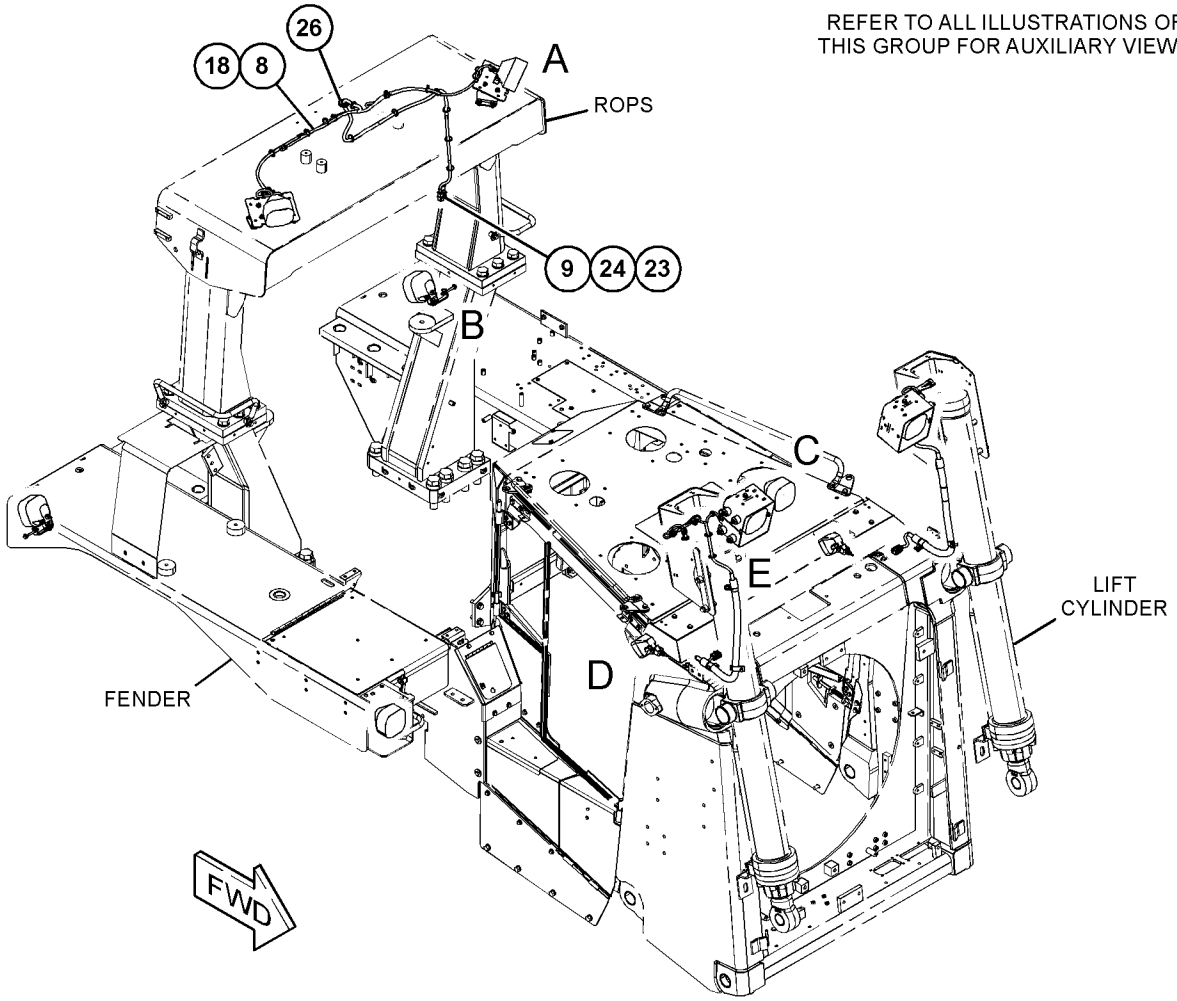

GRAPHIC #1 g03817413

359-6354 **LIGHTING GP-FLOOD (**contd.**)** **i05907977**

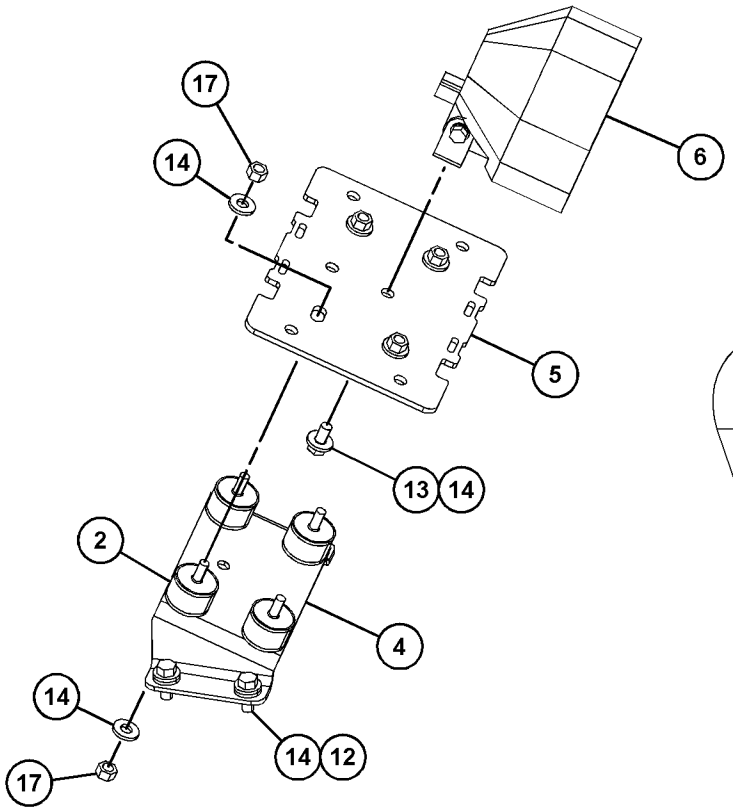

VIEW OF AREA A
(EXPLODED)

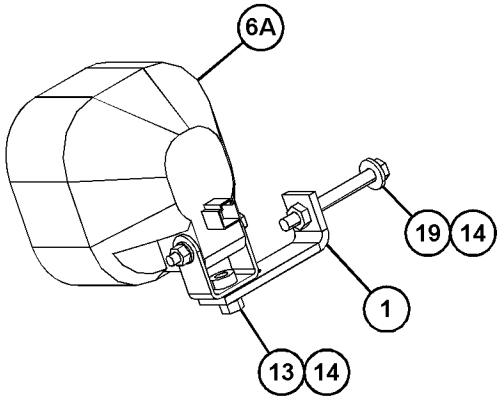

VIEW OF AREA B

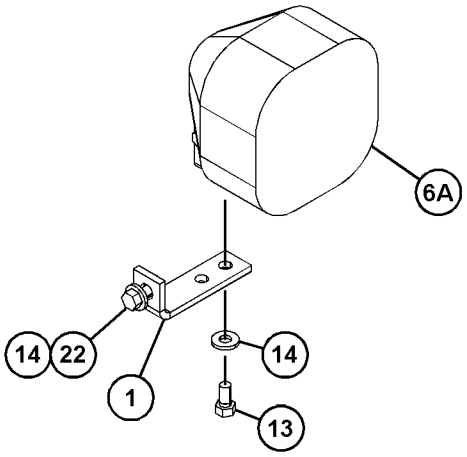

VIEW OF AREA C
(EXPLODED)

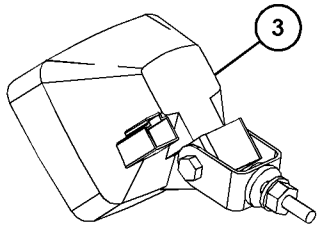

VIEW OF AREA D

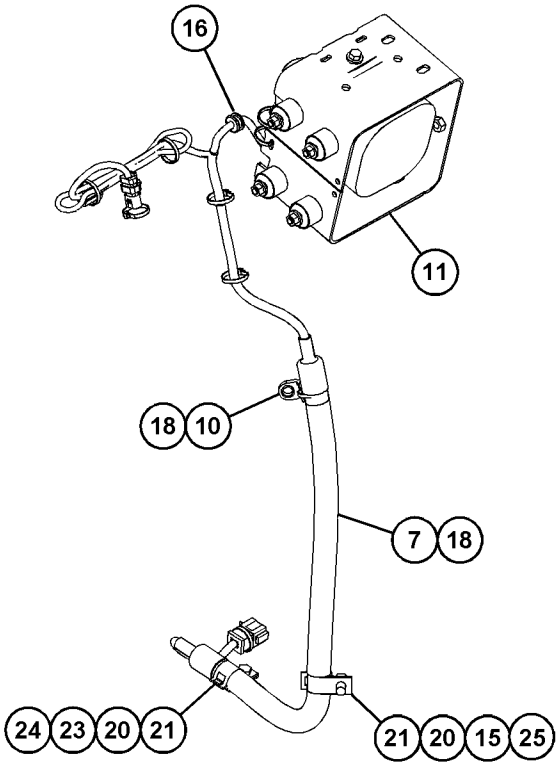

VIEW OF AREA E

GRAPHIC #2 <END> g03817414

359-6354 LIGHTING GP-FLOOD—CYLINDER, FENDER, ROPS, UNDER HOOD

S/N: RAB282-UP
WASTE HANDLING
AN ATTACHMENT

SMCS-1434 **i06546010**

NOTE	REF NO	GRAPHIC REF	PART NUMBER	QTY	PART NAME 1 2 3 4 5 6 (PRODUCT LEVEL)	SEE PAGE
	1	2	**8E-3241**	4	BRACKET AS	
					(EACH INCLUDES)	
		2	**1F-0750**	1	NUT-WELD (3/8-16-THD)	
	2	2	**9W-4361**	8	MOUNT-FLEXIBLE	
Y	3	2	**219-6485**	2	LAMP GP-FLOOD (24-VOLT) (ENGINE COMPARTMENT)	292
	4	2	**345-2955**	2	BRACKET	
	5	2	**347-0890**	2	PLATE	
Y	6	2	*359-6071*	2	LIGHTING GP-FLOOD (ROPS)	299
Y	6A	2	*359-6071*	4	LIGHTING GP-FLOOD (FENDER LIGHTS)	299
	7	2	**376-9911**	2	HARNESS AS-LIGHTING (CYLINDER FLOODLIGHTS)	
					(EACH INCLUDES)	
		2	**102-8806**	1	KIT-RECEPTACLE (8-PIN)	
					(INCLUDES RECEPTACLE AS & WEDGE)	
		2	**3E-3389**	1	WEDGE-RECEPTACLE LOCK (8-PIN)	
E		2	**5P-0742**		HOSE (80-CM)	
		2	**8T-8737**	1	PLUG-SEAL	
		2	**9W-0844**	4	SOCKET-CONNECTOR (14-GA TO 16-GA)	
		2	**9W-0852**	4	PIN-CONNECTOR (14-GA TO 16-GA)	
		2	**9X-3401**	3	PIN-CONNECTOR (16-GA TO 18-GA)	
		2	**9X-3402**	3	SOCKET-CONNECTOR (16-GA TO 18-GA)	
E		2	**108-1304**		TUBE-HEAT SHRINK (33-MM DIA) (16-CM)	
		2	**155-2270**	2	KIT-CONNECTING PLUG (2-PIN)	
					(EACH PLUG KIT INCLUDES PLUG AS, WEDGE & INTERFACE SEAL)	
B		2	**1P-0810**		TAPE-ELECTRICAL	
		2	**230-4013**	1	PLUG AS-CONNECTOR (3-PIN)	
		2	**264-7030**	1	SEAL-CONNECTOR	
		2	**274-3774**	2	CAP-CONNECTOR	
		2	**274-3781**	1	CAP-SEAL	
CY	8	1	**481-7219**	1	HARNESS AS-LIGHTING (ROPS)	263
	9	1	**130-5300**	2	CLIP	
	10	2	**230-7732**	2	MOUNTING-CABLE TIE	
Y	11	2	*367-9605*	2	LIGHTING GP-FLOOD (24-VOLT) (CYLINDERS)	313
	12	2	**4L-6454**	8	BOLT (3/8-16X1-IN)	
	13	2	**5M-3062**	6	BOLT (3/8-16X0.75-IN)	
	14	2	**5P-1075**	42	WASHER-HARD (10.2X22.5X3-MM THK)	
	15	2	**5P-2228**	2	BOLT (1/2-13X1-IN)	
	16	2	**5P-8522**	2	GROMMET	
	17	2	**6V-8801**	16	NUT (3/8-16-THD)	
	18	1,2	**7K-1181**	36	STRAP-CABLE	
	19	2	**7X-0290**	2	BOLT (3/8-16X3.5-IN)	
	20	2	**8T-1897**	4	CLIP (SLOT)	
	21	2	**8T-1898**	4	CLIP (TAB)	
	22	2	**8T-2502**	2	BOLT (3/8-16X1.125-IN)	
	23	1,2	**8T-4121**	3	WASHER-HARD (11X21X2.5-MM THK)	
M	24	1,2	**8T-4136**	3	BOLT (M10X1.5X25-MM)	

359-6354 **LIGHTING GP-FLOOD** (contd.) **i06546010**

NOTE	REF NO	GRAPHIC REF	PART NUMBER	QTY	PART NAME 1 2 3 4 5 6 (PRODUCT LEVEL)	SEE PAGE
	25	2	**8T-4223**	2	WASHER-HARD (13.5X25.5X3-MM THK)	
	26	1	**8T-5387**	1	GROMMET	

B - USE AS REQUIRED
C - CHANGE FROM PREVIOUS TYPE
E - ORDER BY THE CENTIMETER
M - METRIC PART
Y - SEPARATE ILLUSTRATION

REFER TO ALL ILLUSTRATIONS OF THIS GROUP FOR AUXILIARY VIEWS

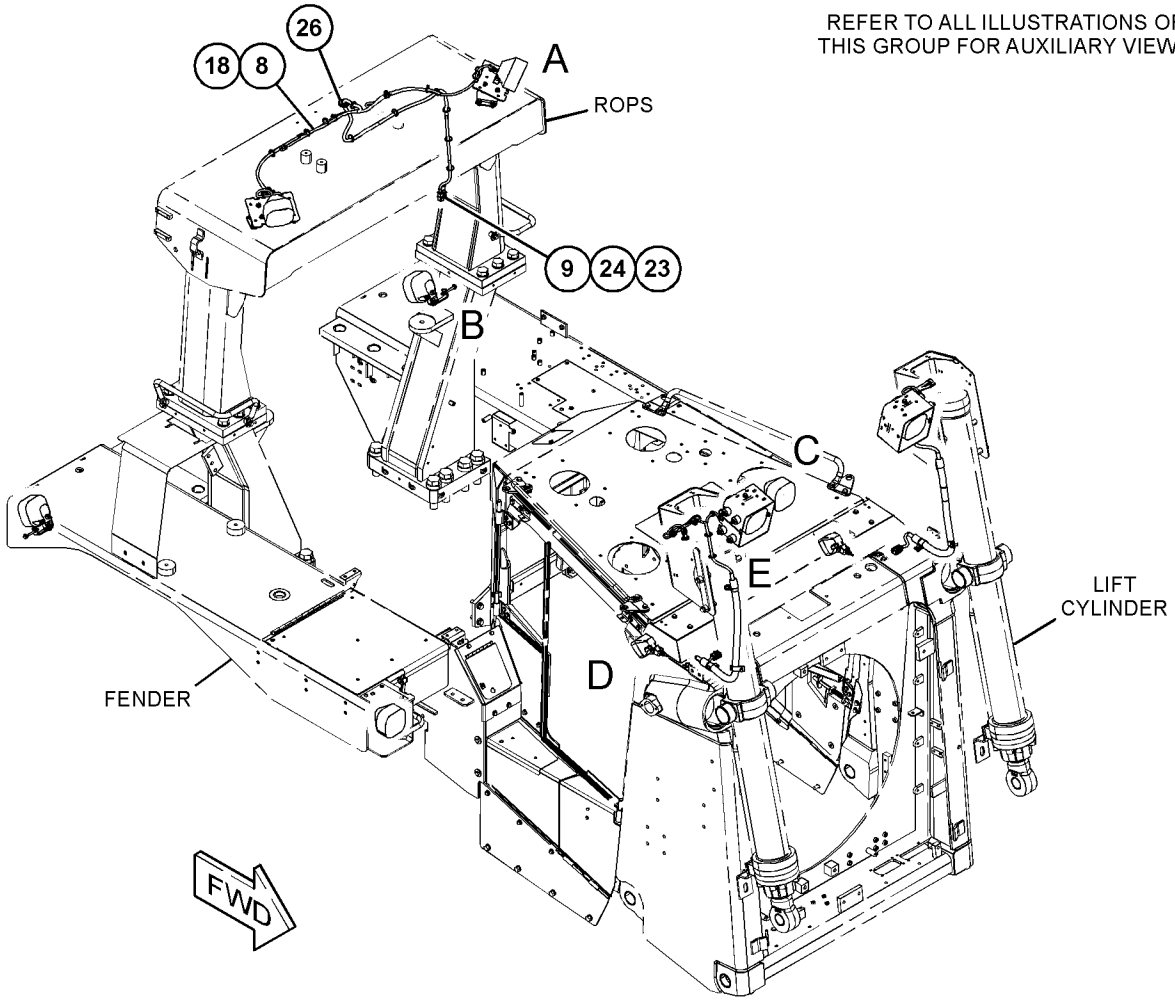

GRAPHIC #1 g03817413

359-6354 **LIGHTING GP-FLOOD (**contd.**)** **i06546010**

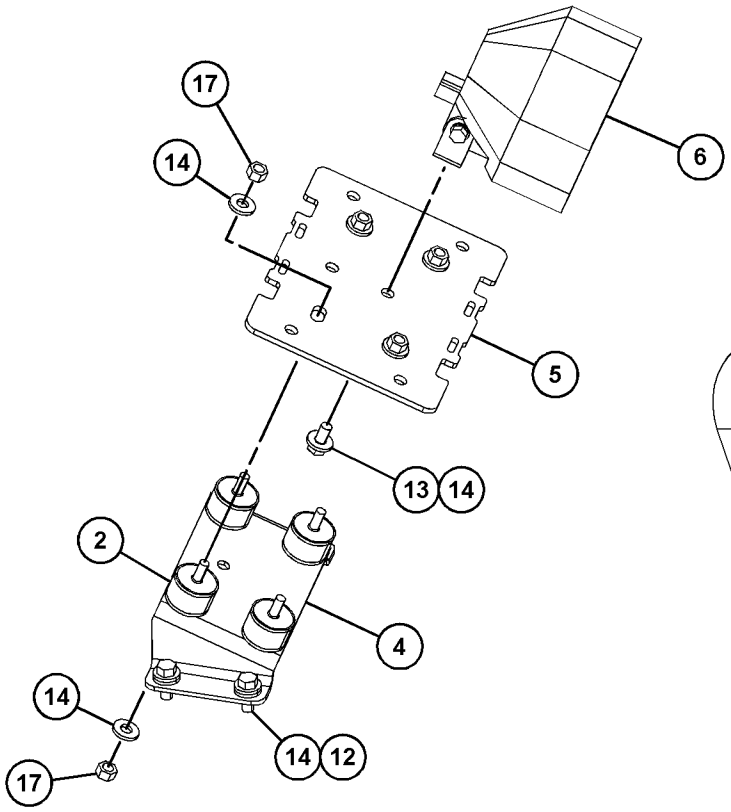

VIEW OF AREA A
(EXPLODED)

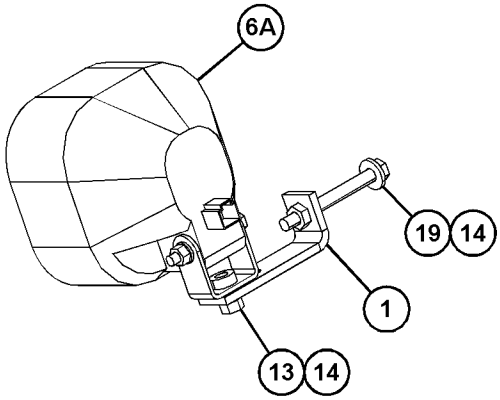

VIEW OF AREA B

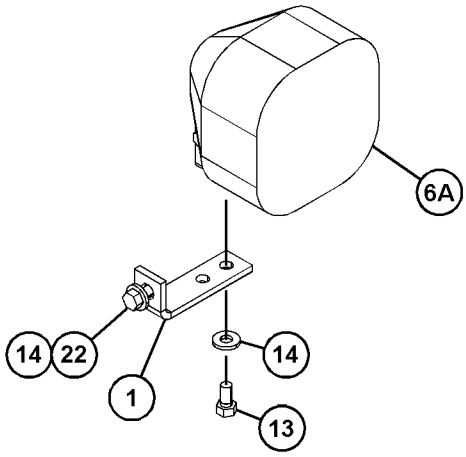

VIEW OF AREA C
(EXPLODED)

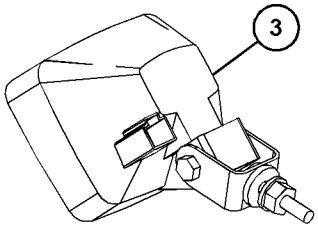

VIEW OF AREA D

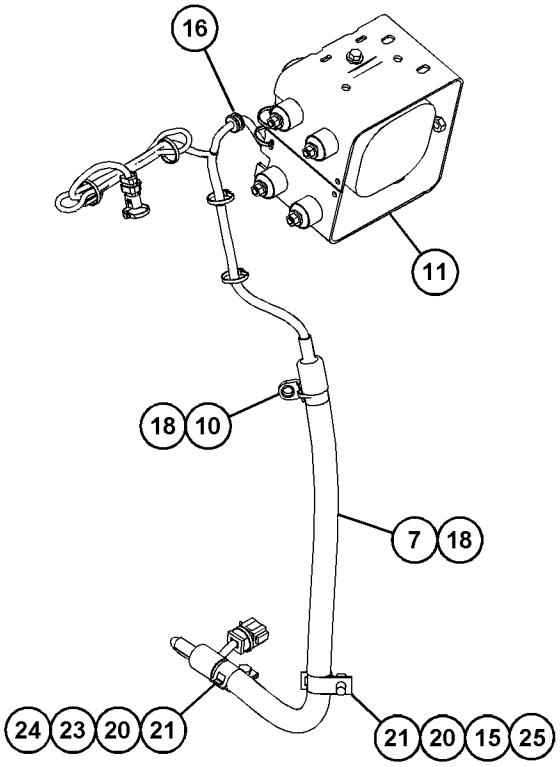

VIEW OF AREA E

GRAPHIC #2 <END> g03817414

359-6356 LIGHTING GP-FLOOD—CYLINDER, FENDER, ROPS, UNDER HOOD

S/N: RAB1-281

HID

CANNOT BE USED WITH 359-6354—PAGE: 300, 376-1378—PAGE: 314, 376-1379—PAGE: 320

AN ATTACHMENT

SMCS-1434 **i05807176**

NOTE	REF NO	GRAPHIC REF	PART NUMBER	QTY	PART NAME 1 2 3 4 5 6 (PRODUCT LEVEL)	SEE PAGE
	1	2	**8E-3241**	4	BRACKET AS	
					(EACH INCLUDES)	
		2	**1F-0750**	1	NUT-WELD (3/8-16-THD)	
	2	2	**9W-4361**	20	MOUNT-FLEXIBLE	
	3	2	**111-8314**	4	BRACKET AS	
	4	2	**114-9365**	1	PLATE	
Y	5	2	**219-6485**	2	LAMP GP-FLOOD (24-VOLT)	292
	6	2	**345-2955**	2	BRACKET	
	7	2	**347-0890**	3	PLATE	
Y	8	2	**347-9427**	3	LAMP GP-FLOOD (24-VOLT, 35-WATT, HID)	295
	9	2	**367-9022**	2	GUARD AS	
					(EACH INCLUDES)	
M		2	**8T-3490**	1	NUT-WELD (M10X1.5-THD)	
	10	2	**376-9911**	2	HARNESS AS-LIGHTING (CYLINDER FLOODLIGHTS)	
					(EACH INCLUDES)	
		2	**102-8806**	1	KIT-RECEPTACLE (8-PIN)	
					(INCLUDES RECEPTACLE AS & WEDGE)	
E		2	**5P-0742**		HOSE (80-CM)	
		2	**8T-8737**	1	PLUG-SEAL	
		2	**9W-0844**	4	SOCKET-CONNECTOR (14-GA TO 16-GA)	
		2	**9W-0852**	4	PIN-CONNECTOR (14-GA TO 16-GA)	
		2	**9X-3401**	3	PIN-CONNECTOR (16-GA TO 18-GA)	
		2	**9X-3402**	3	SOCKET-CONNECTOR (16-GA TO 18-GA)	
E		2	**108-1304**		TUBE-HEAT SHRINK (33-MM DIA) (16-CM)	
		2	**155-2270**	2	KIT-CONNECTING PLUG (2-PIN)	
					(EACH INCLUDES PLUG AS, WEDGE, & INTERFACE SEAL)	
B		2	**1P-0810**		TAPE-ELECTRICAL	
		2	**230-4013**	1	PLUG AS-CONNECTOR (3-PIN)	
		2	**455-0705**	1	SEAL-CONNECTOR	
		2	**274-3774**	2	CAP-CONNECTOR	
		2	**274-3781**	1	CAP-SEAL	
	11	1	**377-0858**	1	HARNESS AS-LIGHTING (ROPS)	
		1	**102-8805**	1	KIT-RECEPTACLE (6-PIN)	
					(INCLUDES RECEPTACLE AS & WEDGE)	
		1	**8T-8737**	2	PLUG-SEAL	
		1	**9W-0844**	10	SOCKET-CONNECTOR (14-GA TO 16-GA)	
		1	**9W-0852**	4	PIN-CONNECTOR (14-GA TO 16-GA)	
E		1	**125-7874**		TUBE-HEAT SHRINK (5.72-MM DIA) (15-CM)	
E		1	**125-7875**		TUBE-HEAT SHRINK (7.44-MM DIA) (5-CM)	
		1	**155-2270**	5	KIT-CONNECTING PLUG (2-PIN)	
					(EACH INCLUDES PLUG AS, WEDGE, & INTERFACE SEAL)	
		1	**274-3774**	5	CAP-CONNECTOR	
Y	12	2	**153-2073**	4	LAMP GP-FLOOD (24-VOLT)	291
	13	2	**1K-4649**	4	SPACER (0.516X1X1-IN THK)	

359-6356 **LIGHTING GP-FLOOD (**contd.**)** **i05807176**

NOTE	REF NO	GRAPHIC REF	PART NUMBER	QTY	PART NAME 1 2 3 4 5 6 (PRODUCT LEVEL)	SEE PAGE
	14	2	**230-7732**	2	MOUNTING-CABLE TIE	
Y	15	2	*367-9605*	2	LIGHTING GP-FLOOD (24-VOLT) (CYLINDER)	313
	16	2	**3E-9860**	4	LOCKNUT (5/16-18-THD)	
	17	2	**4L-6454**	8	BOLT (3/8-16X1-IN)	
	18	2	**5M-3062**	4	BOLT (3/8-16X0.75-IN)	
	19	2	**5P-1075**	72	WASHER-HARD (10.2X22.5X3-MM THK)	
	20	2	**5P-2228**	2	BOLT (1/2-13X1-IN)	
	21	2	**5P-2955**	4	BOLT (5/16-18X2.5-IN)	
	22	2	**5P-8522**	4	GROMMET	
	23	2	**6V-8801**	44	NUT (3/8-16-THD)	
	24	1,2	**7K-1181**	44	STRAP-CABLE	
	25	2	**7X-0290**	2	BOLT (3/8-16X3.5-IN)	
	26	2	**8T-1897**	4	CLIP (SLOT)	
	27	2	**8T-1898**	4	CLIP (TAB)	
	28	2	**8T-2502**	2	BOLT (3/8-16X1.125-IN)	
	29	2	**8T-4121**	2	WASHER-HARD (11X21X2.5-MM THK)	
M	30	2	**8T-4136**	2	BOLT (M10X1.5X25-MM)	
	31	2	**8T-4223**	2	WASHER-HARD (13.5X25.5X3-MM THK)	
	32	2	**8T-4224**	8	WASHER-HARD (8.8X16X2-MM THK)	
	33	1	**8T-5387**	1	GROMMET	
	34	2	**8T-9377**	4	BOLT (3/8-16X2.25-IN)	
Y	35	2	**332-9402**	2	LAMP GP-FLOOD (24-VOLT, 35-WATT, HID)	294

B - USE AS REQUIRED
E - ORDER BY THE CENTIMETER
M - METRIC PART
Y - SEPARATE ILLUSTRATION

359-6356 **LIGHTING GP-FLOOD (**contd.**)** **i05807176**

REFER TO ALL ILLUSTRATIONS OF
THIS GROUP FOR AUXILIARY VIEWS

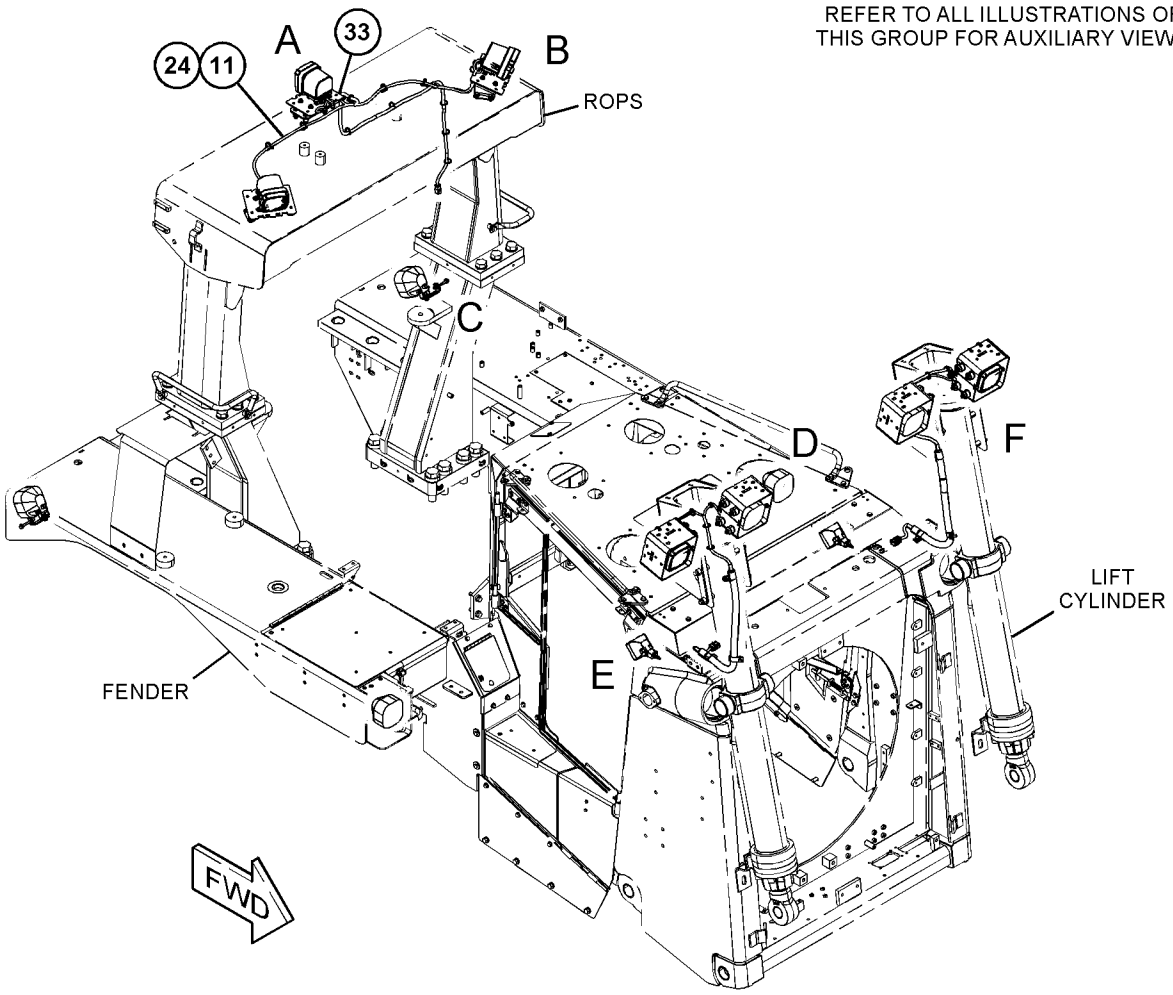

GRAPHIC #1 g03452866

359-6356 **LIGHTING GP-FLOOD (**contd.**)** **i05807176**

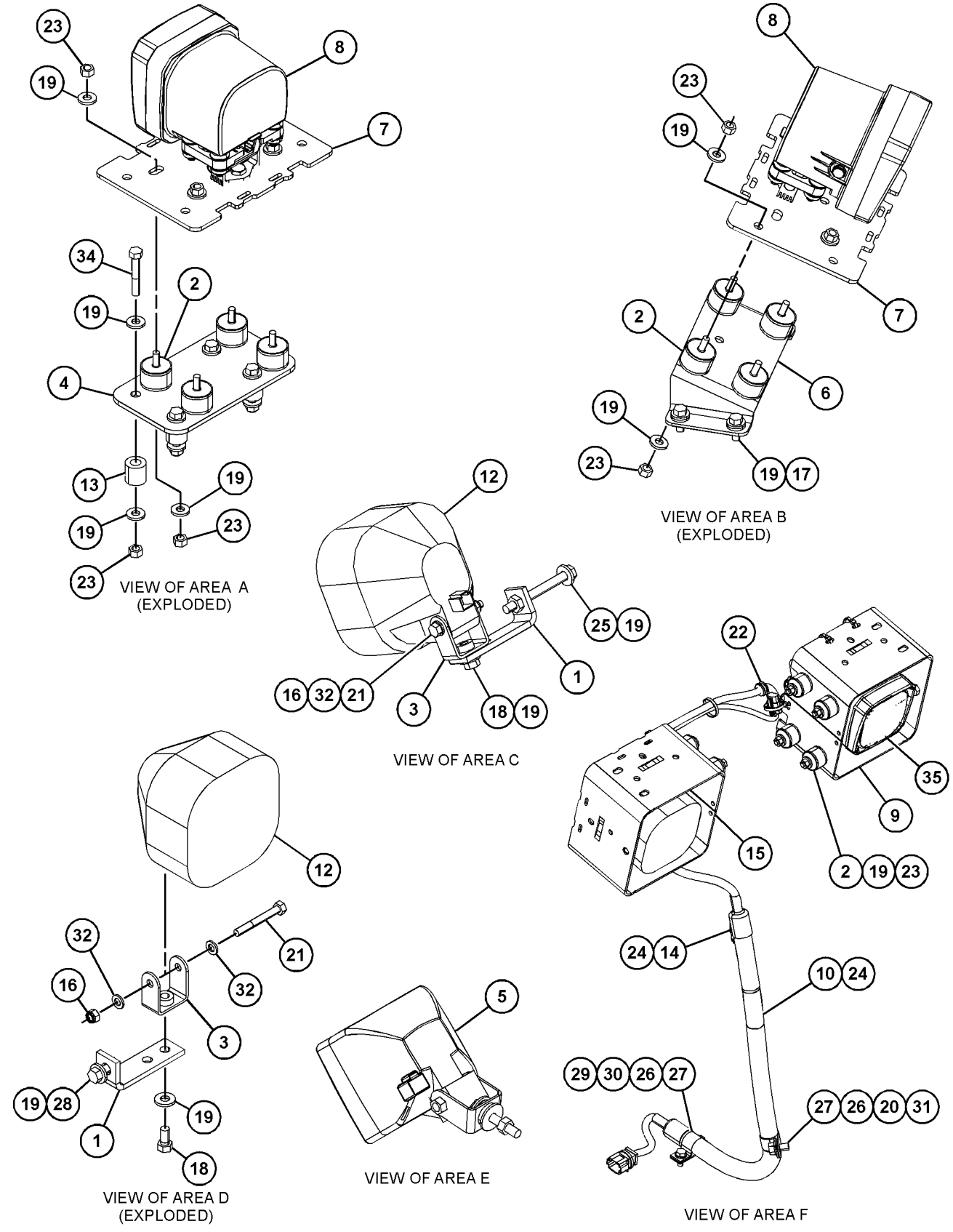

GRAPHIC #2 <END> g03680777

359-6356 LIGHTING GP-FLOOD—CYLINDER, FENDER, ROPS, UNDER HOOD

S/N: RAB282-UP
HID
CANNOT BE USED WITH 359-6354—PAGE: 300, 376-1378—PAGE: 314, 376-1379—PAGE: 320
AN ATTACHMENT

SMCS-1434 **i06546007**

NOTE	REF NO	GRAPHIC REF	PART NUMBER	QTY	PART NAME 1 2 3 4 5 6 (PRODUCT LEVEL)	SEE PAGE
	1	2	**8E-3241**	4	BRACKET AS	
					(EACH INCLUDES)	
		2	**1F-0750**	1	NUT-WELD (3/8-16-THD)	
	2	2	**9W-4361**	20	MOUNT-FLEXIBLE	
	3	2	**111-8314**	4	BRACKET AS	
	4	2	**114-9365**	1	PLATE	
Y	5	2	**219-6485**	2	LAMP GP-FLOOD (24-VOLT)	292
	6	2	**345-2955**	2	BRACKET	
	7	2	**347-0890**	3	PLATE	
Y	8	2	**347-9427**	3	LAMP GP-FLOOD (24-VOLT, 35-WATT, HID)	295
	9	2	**367-9021**	2	GUARD AS	
					(EACH INCLUDES)	
M		2	**8T-3490**	1	NUT-WELD (M10X1.5-THD)	
	10	2	**376-9911**	2	HARNESS AS-LIGHTING (CYLINDER FLOODLIGHTS)	
					(EACH INCLUDES)	
		2	**102-8806**	1	KIT-RECEPTACLE (8-PIN)	
					(INCLUDES RECEPTACLE AS & WEDGE)	
E		2	**5P-0742**		HOSE (80-CM)	
		2	**8T-8737**	1	PLUG-SEAL	
		2	**9W-0844**	4	SOCKET-CONNECTOR (14-GA TO 16-GA)	
		2	**9W-0852**	4	PIN-CONNECTOR (14-GA TO 16-GA)	
		2	**9X-3401**	3	PIN-CONNECTOR (16-GA TO 18-GA)	
		2	**9X-3402**	3	SOCKET-CONNECTOR (16-GA TO 18-GA)	
E		2	**108-1304**		TUBE-HEAT SHRINK (33-MM DIA) (16-CM)	
		2	**155-2270**	2	KIT-CONNECTING PLUG (2-PIN)	
					(EACH INCLUDES PLUG AS, WEDGE, & INTERFACE SEAL)	
B		2	**1P-0810**		TAPE-ELECTRICAL	
		2	**230-4013**	1	PLUG AS-CONNECTOR (3-PIN)	
		2	**455-0705**	1	SEAL-CONNECTOR	
		2	**274-3774**	2	CAP-CONNECTOR	
		2	**274-3781**	1	CAP-SEAL	
CY	11	1	**481-7219**	1	HARNESS AS-LIGHTING (ROPS)	263
Y	12	2	**153-2073**	4	LAMP GP-FLOOD (24-VOLT)	291
	13	2	**1K-4649**	4	SPACER (0.516X1X1-IN THK)	
	14	2	**230-7732**	2	MOUNTING-CABLE TIE	
Y	15	2	*367-9605*	2	LIGHTING GP-FLOOD (24-VOLT) (CYLINDER)	313
	16	2	**3E-9860**	4	LOCKNUT (5/16-18-THD)	
	17	2	**4L-6454**	8	BOLT (3/8-16X1-IN)	
	18	2	**5M-3062**	4	BOLT (3/8-16X0.75-IN)	
	19	2	**5P-1075**	72	WASHER-HARD (10.2X22.5X3-MM THK)	
	20	2	**5P-2228**	2	BOLT (1/2-13X1-IN)	
	21	2	**5P-2955**	4	BOLT (5/16-18X2.5-IN)	
	22	2	**5P-8522**	4	GROMMET	
	23	2	**6V-8801**	44	NUT (3/8-16-THD)	

359-6356 **LIGHTING GP-FLOOD (**contd.**)** **i06546007**

NOTE	REF NO	GRAPHIC REF	PART NUMBER	QTY	PART NAME 1 2 3 4 5 6 (PRODUCT LEVEL)	SEE PAGE
	24	1,2	**7K-1181**	44	STRAP-CABLE	
	25	2	**7X-0290**	2	BOLT (3/8-16X3.5-IN)	
	26	2	**8T-1897**	4	CLIP (SLOT)	
	27	2	**8T-1898**	4	CLIP (TAB)	
	28	2	**8T-2502**	2	BOLT (3/8-16X1.125-IN)	
	29	2	**8T-4121**	2	WASHER-HARD (11X21X2.5-MM THK)	
M	30	2	**8T-4136**	2	BOLT (M10X1.5X25-MM)	
	31	2	**8T-4223**	2	WASHER-HARD (13.5X25.5X3-MM THK)	
	32	2	**8T-4224**	8	WASHER-HARD (8.8X16X2-MM THK)	
	33	1	**8T-5387**	1	GROMMET	
	34	2	**8T-9377**	4	BOLT (3/8-16X2.25-IN)	
Y	35	2	**332-9402**	2	LAMP GP-FLOOD (24-VOLT, 35-WATT, HID)	294

B - USE AS REQUIRED
C - CHANGE FROM PREVIOUS TYPE
E - ORDER BY THE CENTIMETER
M - METRIC PART
Y - SEPARATE ILLUSTRATION

REFER TO ALL ILLUSTRATIONS OF THIS GROUP FOR AUXILIARY VIEWS

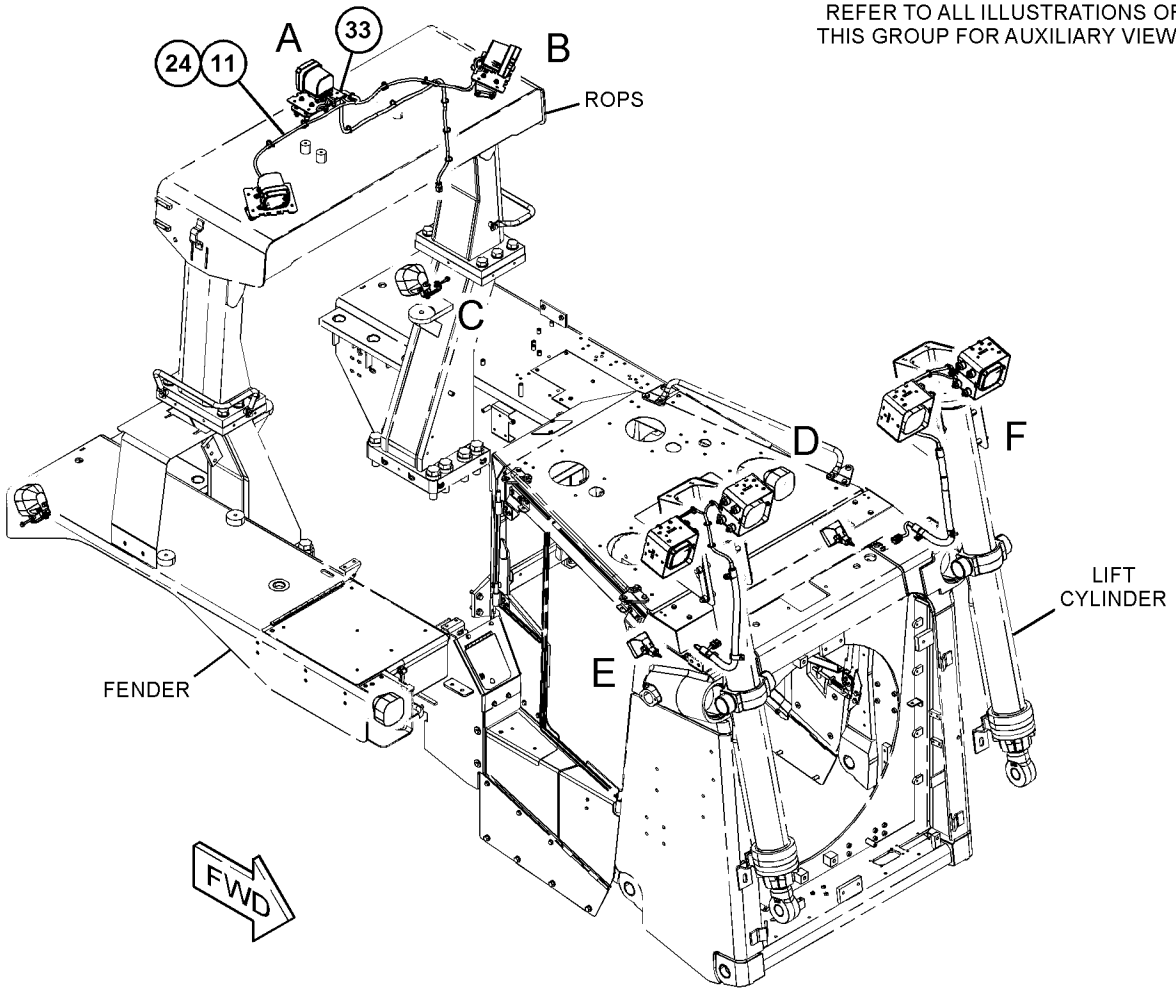

GRAPHIC #1 g03452866

359-6356 **LIGHTING GP-FLOOD (**contd.**)** **i06546007**

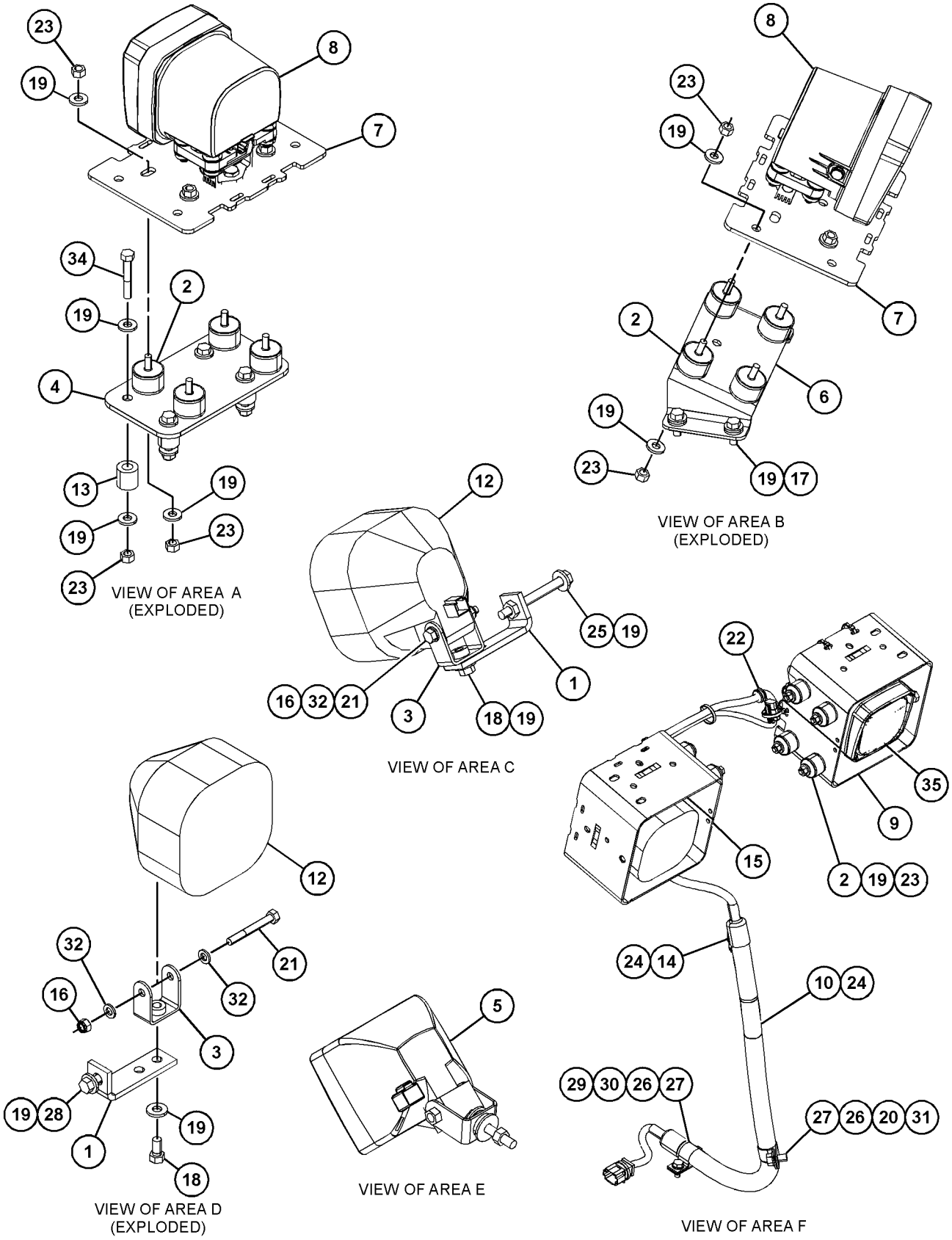

GRAPHIC #2 <END> g03680777

367-9605 LIGHTING GP-FLOOD

S/N: RAB1-UP

PART OF 359-6354, 359-6356, 376-1378 LIGHTING GP-FLOOD AN ATTACHMENT

SMCS-1434 **i04516029**

NOTE	REF NO	GRAPHIC REF	PART NUMBER	QTY	PART NAME 1 2 3 4 5 6 (PRODUCT LEVEL)	SEE PAGE
	1	1	**9W-4361**	4	MOUNT-FLEXIBLE	
	2	1	**111-8314**	1	BRACKET AS	
Y	3	1	**147-0319**	1	LAMP GP-FLOOD (24-VOLT, 70-WATT)	290
	4	1	**367-9022**	1	GUARD AS	
M		1	**8T-3490**	1	NUT-WELD (M10X1.5-THD)	
	5	1	**3E-9860**	1	LOCKNUT (5/16-18-THD)	
	6	1	**5M-3062**	1	BOLT (3/8-16X0.75-IN)	
	7	1	**5P-1075**	9	WASHER-HARD (10.2X22.5X3-MM THK)	
	8	1	**5P-2955**	1	BOLT (5/16-18X2.5-IN)	
	9	1	**6V-8801**	8	NUT (3/8-16-THD)	
	10	1	**8T-4224**	2	WASHER-HARD (8.8X16X2-MM THK)	

M - METRIC PART
Y - SEPARATE ILLUSTRATION

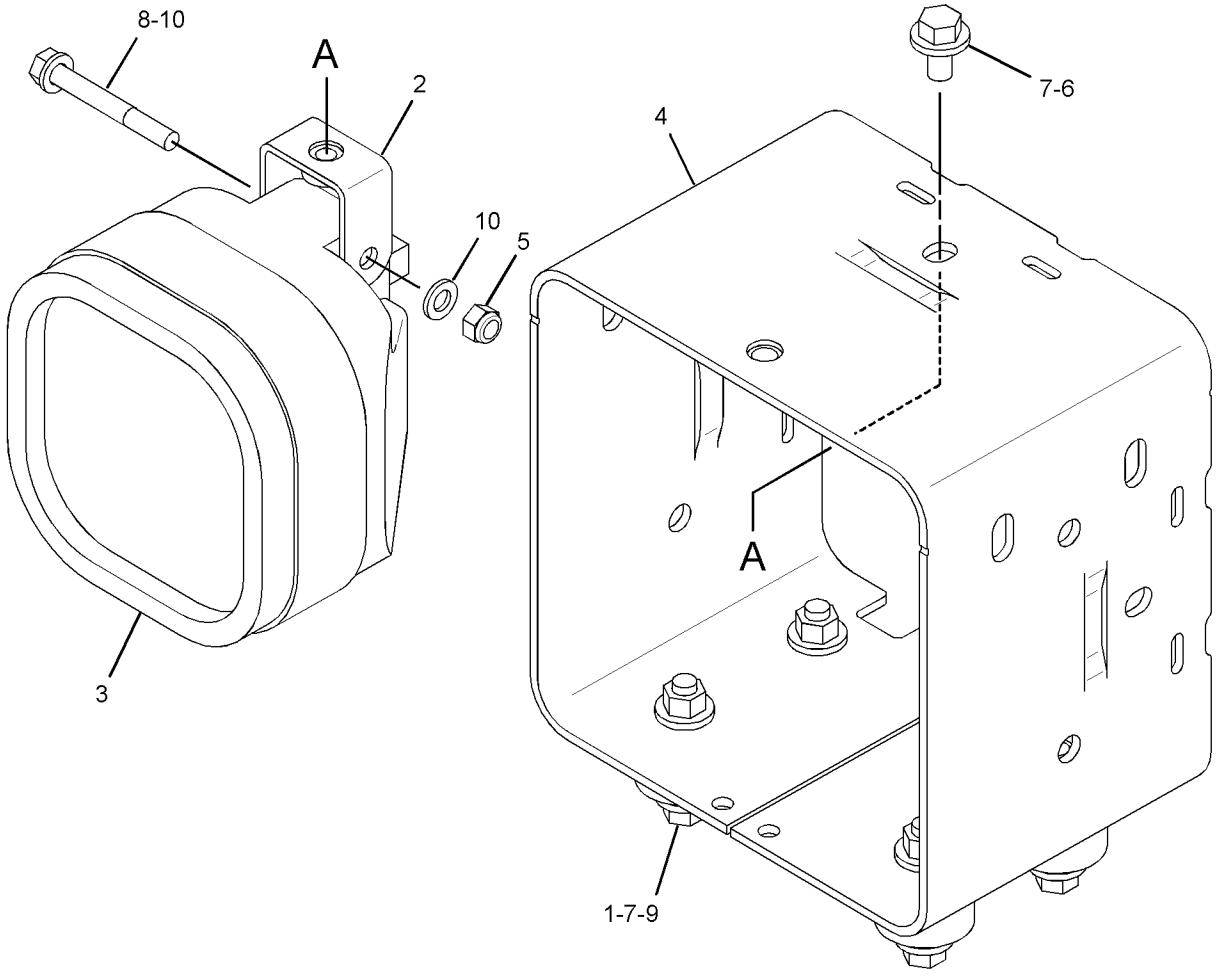

GRAPHIC #1 <END> g02445980

376-1378 LIGHTING GP-FLOOD—CYLINDER, FENDER, ROPS, UNDER HOOD

S/N: RAB1-281
WASTE HANDLING
CANNOT BE USED WITH 359-6354—PAGE: 300, 359-6356—PAGE: 306, 376-1379—PAGE: 320 AN ATTACHMENT

SMCS-1434 **i05907976**

NOTE	REF NO	GRAPHIC REF	PART NUMBER	QTY	PART NAME 1 2 3 4 5 6 (PRODUCT LEVEL)	SEE PAGE
	1	2	**8E-3241**	4	BRACKET AS	
					(EACH INCLUDES)	
		2	**1F-0750**	1	NUT-WELD (3/8-16-THD)	
	2	2	**9W-4361**	16	MOUNT-FLEXIBLE	
Y	3	2	**219-6485**	2	LAMP GP-FLOOD (24-VOLT) (ENGINE COMPARTMENT)	292
	4	2	**345-2955**	4	BRACKET	
	5	2	**347-0890**	4	PLATE	
Y	6	2	*359-6071*	8	LIGHTING GP-FLOOD (ROPS)	299
	7	2	**376-9911**	2	HARNESS AS-LIGHTING (CYLINDER FLOODLIGHTS)	
					(EACH INCLUDES)	
		2	**102-8806**	1	KIT-RECEPTACLE (8-PIN)	
					(INCLUDES RECEPTACLE AS & WEDGE)	
E		2	**5P-0742**		HOSE (80-CM)	
		2	**8T-8737**	1	PLUG-SEAL	
		2	**9W-0844**	4	SOCKET-CONNECTOR (14-GA TO 16-GA)	
		2	**9W-0852**	4	PIN-CONNECTOR (14-GA TO 16-GA)	
		2	**9X-3401**	3	PIN-CONNECTOR (16-GA TO 18-GA)	
		2	**9X-3402**	3	SOCKET-CONNECTOR (16-GA TO 18-GA)	
E		2	**108-1304**		TUBE-HEAT SHRINK (33-MM DIA) (16-CM)	
		2	**155-2270**	2	KIT-CONNECTING PLUG (2-PIN)	
					(EACH INCLUDES PLUG AS, WEDGE, & INTERFACE SEAL)	
B		2	**1P-0810**		TAPE-ELECTRICAL	
		2	**230-4013**	1	PLUG AS-CONNECTOR (3-PIN)	
		2	**264-7030**	1	SEAL-CONNECTOR	
		2	**274-3774**	2	CAP-CONNECTOR	
		2	**274-3781**	1	CAP-SEAL	
	8	2	**230-7732**	2	MOUNTING-CABLE TIE	
	9	2	**271-5584**	1	CLIP	
Y	10	2	*367-9605*	4	LIGHTING GP-FLOOD (24-VOLT) (CYLINDERS)	313
	11	1	**377-0858**	1	HARNESS AS-LIGHTING (ROPS)	
		1	**102-8805**	1	KIT-RECEPTACLE (6-PIN)	
					(INCLUDES RECEPTACLE AS & WEDGE)	
		1	**8T-8737**	2	PLUG-SEAL	
		1	**9W-0844**	10	SOCKET-CONNECTOR (14-GA TO 16-GA)	
		1	**9W-0852**	4	PIN-CONNECTOR (14-GA TO 16-GA)	
E		1	**125-7874**		TUBE-HEAT SHRINK (5.72-MM DIA) (15-CM)	
E		1	**125-7875**		TUBE-HEAT SHRINK (7.44-MM DIA) (5-CM)	
		1	**155-2270**	5	KIT-CONNECTING PLUG (2-PIN)	
					(EACH INCLUDES PLUG AS, WEDGE, & INTERFACE SEAL)	
		1	**274-3774**	5	CAP-CONNECTOR	
	12	2	**4L-6454**	16	BOLT (3/8-16X1-IN)	
	13	2	**5M-3062**	8	BOLT (3/8-16X0.75-IN)	
	14	2	**5P-1075**	76	WASHER-HARD (10.2X22.5X3-MM THK)	
	15	2	**5P-2228**	2	BOLT (1/2-13X1-IN)	

376-1378 **LIGHTING GP-FLOOD (**contd.**)** **i05907976**

NOTE	REF NO	GRAPHIC REF	PART NUMBER	QTY	PART NAME 1 2 3 4 5 6 (PRODUCT LEVEL)	SEE PAGE
	16	2	**5P-8522**	4	GROMMET	
	17	2	**5S-7379**	1	BOLT (3/8-16X0.875-IN)	
	18	2	**6V-8801**	32	NUT (3/8-16-THD)	
	19	1,2	**7K-1181**	49	STRAP-CABLE	
	20	2	**7X-0290**	2	BOLT (3/8-16X3.5-IN)	
	21	2	**8T-1897**	4	CLIP (SLOT)	
	22	2	**8T-1898**	4	CLIP (TAB)	
	23	2	**8T-2502**	2	BOLT (3/8-16X1.125-IN)	
	24	2	**8T-4121**	2	WASHER-HARD (11X21X2.5-MM THK)	
M	25	2	**8T-4136**	2	BOLT (M10X1.5X25-MM)	
	26	2	**8T-4223**	2	WASHER-HARD (13.5X25.5X3-MM THK)	
	27	1	**8T-5387**	1	GROMMET	

B - USE AS REQUIRED
E - ORDER BY THE CENTIMETER
M - METRIC PART
Y - SEPARATE ILLUSTRATION

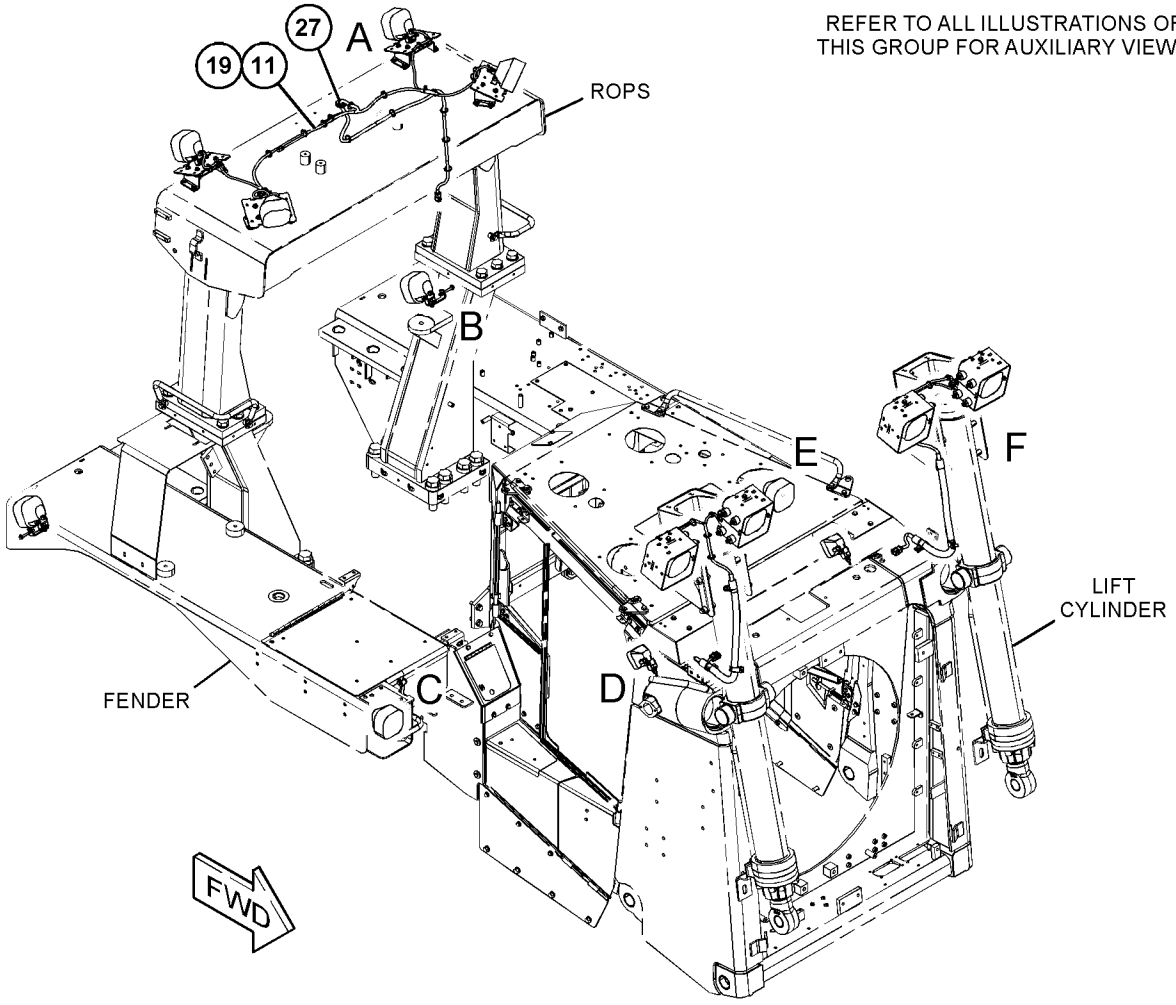

GRAPHIC #1 g03811425

376-1378 **LIGHTING GP-FLOOD (**contd.**)** **i05907976**

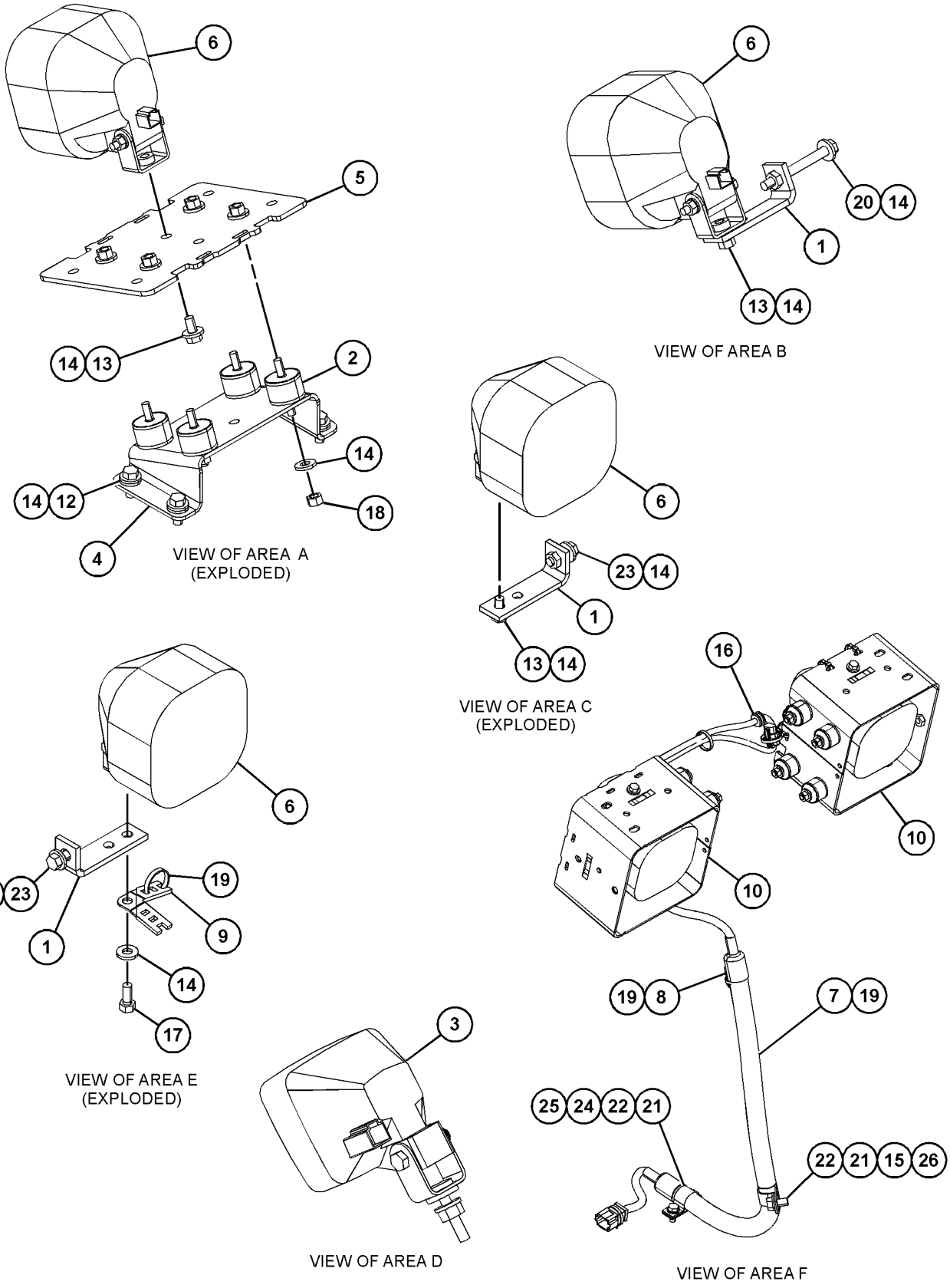

GRAPHIC #2 <END> g03811426

376-1378 LIGHTING GP-FLOOD—CYLINDER, FENDER, ROPS, UNDER HOOD

S/N: RAB282-UP
WASTE HANDLING
CANNOT BE USED WITH 359-6354—PAGE: 300, 359-6356—PAGE: 306, 376-1379—PAGE: 320 AN ATTACHMENT

SMCS-1434 **i06546008**

NOTE	REF NO	GRAPHIC REF	PART NUMBER	QTY	PART NAME 1 2 3 4 5 6 (PRODUCT LEVEL)	SEE PAGE
	1	2	**8E-3241**	4	BRACKET AS	
					(EACH INCLUDES)	
		2	**1F-0750**	1	NUT-WELD (3/8-16-THD)	
	2	2	**9W-4361**	16	MOUNT-FLEXIBLE	
Y	3	2	**219-6485**	2	LAMP GP-FLOOD (24-VOLT) (ENGINE COMPARTMENT)	292
	4	2	**345-2955**	4	BRACKET	
	5	2	**347-0890**	4	PLATE	
Y	6	2	*359-6071*	8	LIGHTING GP-FLOOD (ROPS)	299
	7	2	**376-9911**	2	HARNESS AS-LIGHTING (CYLINDER FLOODLIGHTS)	
					(EACH INCLUDES)	
		2	**102-8806**	1	KIT-RECEPTACLE (8-PIN)	
					(INCLUDES RECEPTACLE AS & WEDGE)	
E		2	**5P-0742**		HOSE (80-CM)	
		2	**8T-8737**	1	PLUG-SEAL	
		2	**9W-0844**	4	SOCKET-CONNECTOR (14-GA TO 16-GA)	
		2	**9W-0852**	4	PIN-CONNECTOR (14-GA TO 16-GA)	
		2	**9X-3401**	3	PIN-CONNECTOR (16-GA TO 18-GA)	
		2	**9X-3402**	3	SOCKET-CONNECTOR (16-GA TO 18-GA)	
E		2	**108-1304**		TUBE-HEAT SHRINK (33-MM DIA) (16-CM)	
		2	**155-2270**	2	KIT-CONNECTING PLUG (2-PIN)	
					(EACH INCLUDES PLUG AS, WEDGE, & INTERFACE SEAL)	
B		2	**1P-0810**		TAPE-ELECTRICAL	
		2	**230-4013**	1	PLUG AS-CONNECTOR (3-PIN)	
		2	**264-7030**	1	SEAL-CONNECTOR	
		2	**274-3774**	2	CAP-CONNECTOR	
		2	**274-3781**	1	CAP-SEAL	
	8	2	**230-7732**	2	MOUNTING-CABLE TIE	
	9	2	**271-5584**	1	CLIP	
Y	10	2	*367-9605*	4	LIGHTING GP-FLOOD (24-VOLT) (CYLINDERS)	313
CY	11	1	**481-7219**	1	HARNESS AS-LIGHTING (ROPS)	263
	12	2	**4L-6454**	16	BOLT (3/8-16X1-IN)	
	13	2	**5M-3062**	8	BOLT (3/8-16X0.75-IN)	
	14	2	**5P-1075**	76	WASHER-HARD (10.2X22.5X3-MM THK)	
	15	2	**5P-2228**	2	BOLT (1/2-13X1-IN)	
	16	2	**5P-8522**	4	GROMMET	
	17	2	**5S-7379**	1	BOLT (3/8-16X0.875-IN)	
	18	2	**6V-8801**	32	NUT (3/8-16-THD)	
	19	1,2	**7K-1181**	49	STRAP-CABLE	
	20	2	**7X-0290**	2	BOLT (3/8-16X3.5-IN)	
	21	2	**8T-1897**	4	CLIP (SLOT)	
	22	2	**8T-1898**	4	CLIP (TAB)	
	23	2	**8T-2502**	2	BOLT (3/8-16X1.125-IN)	
	24	2	**8T-4121**	2	WASHER-HARD (11X21X2.5-MM THK)	
M	25	2	**8T-4136**	2	BOLT (M10X1.5X25-MM)	

376-1378 **LIGHTING GP-FLOOD (**contd.**)** **i06546008**

NOTE	REF NO	GRAPHIC REF	PART NUMBER	QTY	PART NAME 1 2 3 4 5 6 (PRODUCT LEVEL)	SEE PAGE
	26	2	**8T-4223**	2	WASHER-HARD (13.5X25.5X3-MM THK)	
	27	1	**8T-5387**	1	GROMMET	

B - USE AS REQUIRED
C - CHANGE FROM PREVIOUS TYPE
E - ORDER BY THE CENTIMETER
M - METRIC PART
Y - SEPARATE ILLUSTRATION

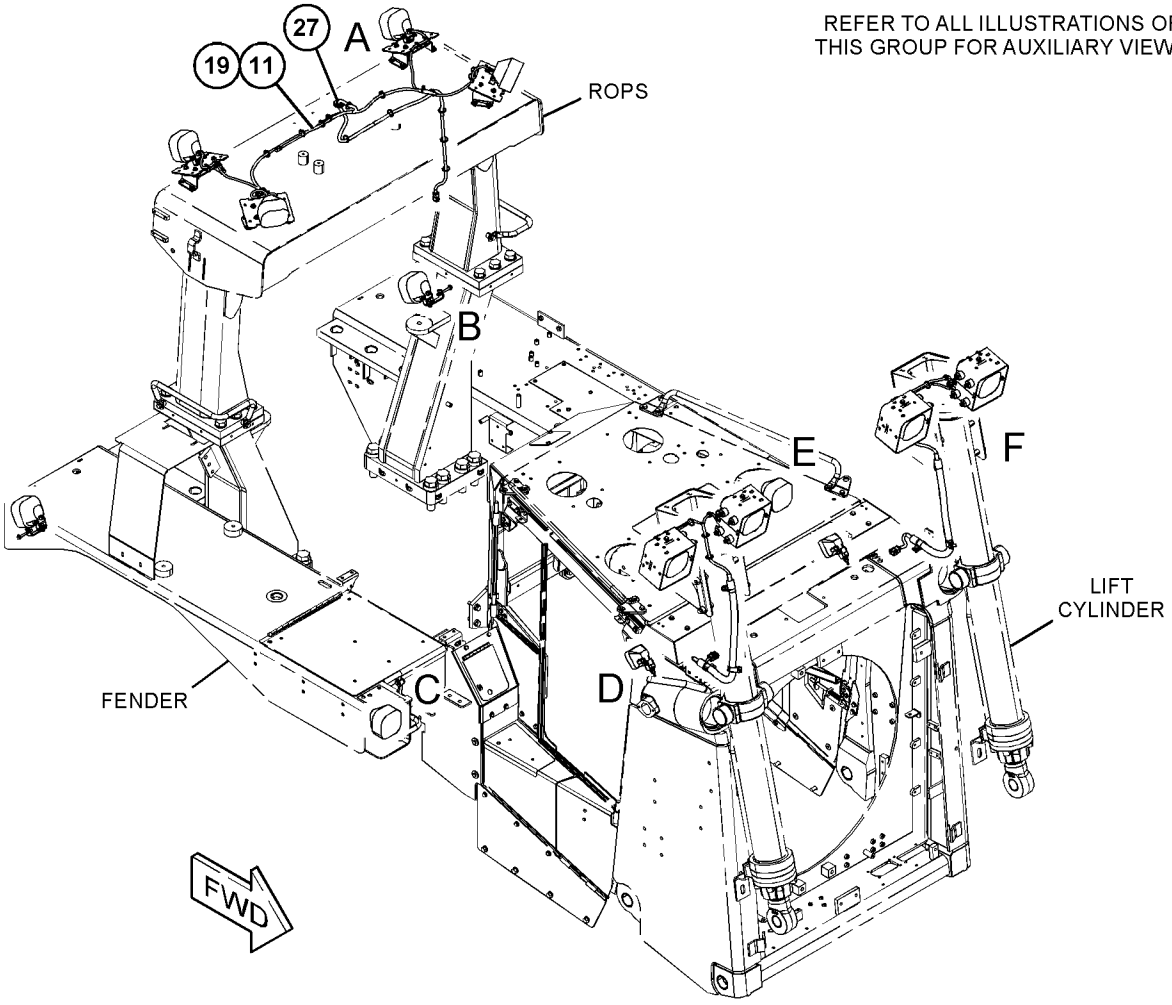

GRAPHIC #1 g06035134

376-1378 **LIGHTING GP-FLOOD (**contd.**)** **i06546008**

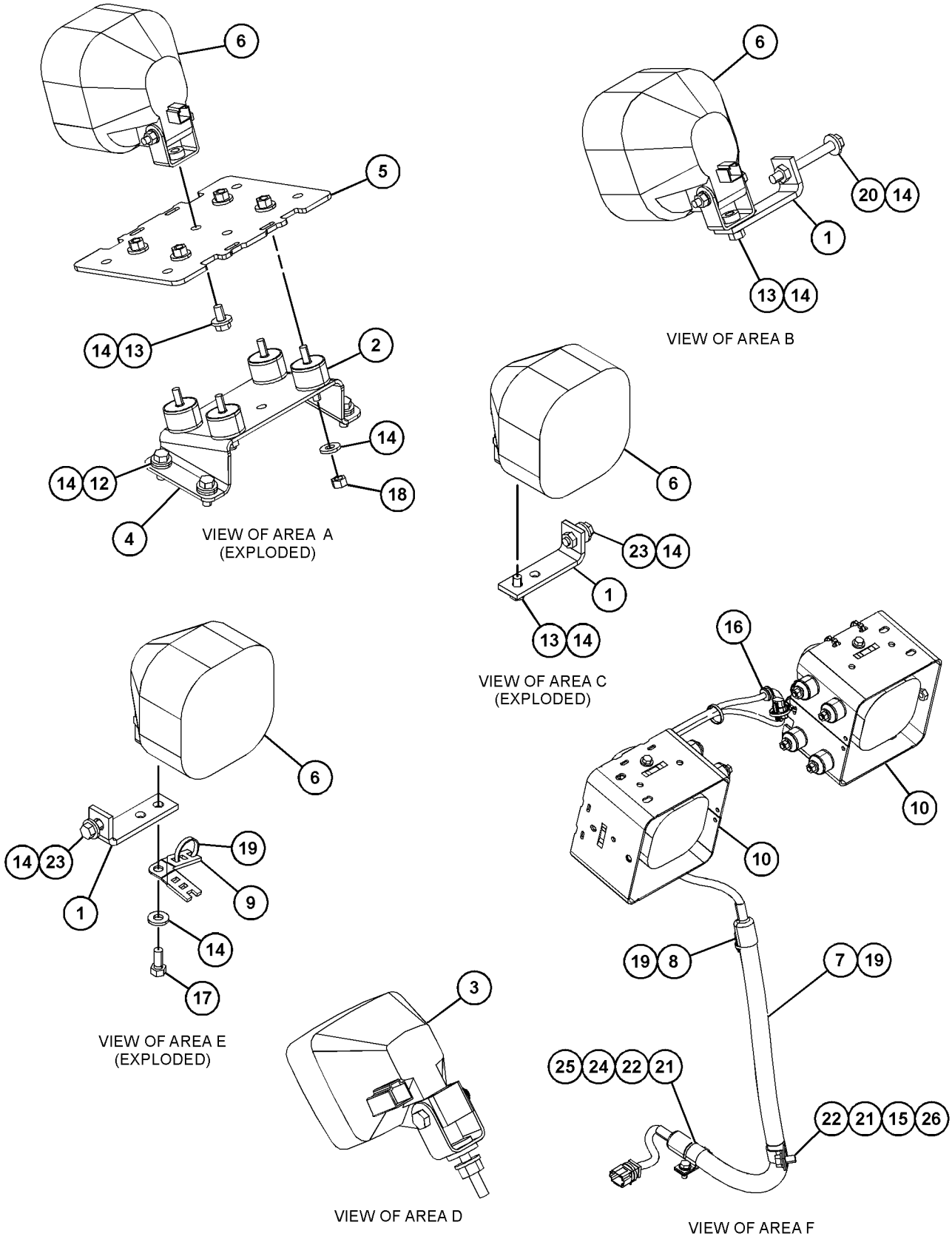

GRAPHIC #2 <END> g03811426

376-1379 LIGHTING GP-FLOOD—CYLINDER, FENDER, ROPS, UNDER HOOD

S/N: RAB1-281

LED

CANNOT BE USED WITH 359-6354—PAGE: 300, 359-6356—PAGE: 306, 376-1378—PAGE: 314 AN ATTACHMENT

SMCS-1434 **i05455700**

NOTE	REF NO	GRAPHIC REF	PART NUMBER	QTY	PART NAME 1 2 3 4 5 6 (PRODUCT LEVEL)	SEE PAGE
	1	2	**9W-4361**	28	MOUNT-FLEXIBLE	
	2	2	**114-9365**	1	PLATE	
	3	2	**345-2955**	2	BRACKET	
	4	2	**347-0890**	3	PLATE	
	5	2	**376-9911**	2	HARNESS AS-LIGHTING (CYLINDER FLOODLIGHTS)	
					(EACH INCLUDES)	
		2	**102-8806**	1	KIT-RECEPTACLE (8-PIN)	
					(INCLUDES RECEPTACLE AS & WEDGE)	
E		2	**5P-0742**		HOSE (80-CM)	
		2	**8T-8737**	1	PLUG-SEAL	
		2	**9W-0844**	4	SOCKET-CONNECTOR (14-GA TO 16-GA)	
		2	**9W-0852**	4	PIN-CONNECTOR (14-GA TO 16-GA)	
		2	**9X-3401**	3	PIN-CONNECTOR (16-GA TO 18-GA)	
		2	**9X-3402**	3	SOCKET-CONNECTOR (16-GA TO 18-GA)	
E		2	**108-1304**		TUBE-HEAT SHRINK (33-MM DIA) (16-CM)	
		2	**155-2270**	2	KIT-CONNECTING PLUG (2-PIN)	
					(EACH INCLUDES PLUG AS, WEDGE, & INTERFACE SEAL)	
B		2	**1P-0810**		TAPE-ELECTRICAL	
		2	**230-4013**	1	PLUG AS-CONNECTOR (3-PIN)	
		2	**264-7030**	1	SEAL-CONNECTOR	
		2	**274-3774**	2	CAP-CONNECTOR	
		2	**274-3781**	1	CAP-SEAL	
	6	2	**377-0858**	1	HARNESS AS-LIGHTING (ROPS)	
		2	**102-8805**	1	KIT-RECEPTACLE (6-PIN)	
					(INCLUDES RECEPTACLE AS & WEDGE)	
		2	**8T-8737**	2	PLUG-SEAL	
		2	**9W-0844**	10	SOCKET-CONNECTOR (14-GA TO 16-GA)	
		2	**9W-0852**	4	PIN-CONNECTOR (14-GA TO 16-GA)	
E		2	**125-7874**		TUBE-HEAT SHRINK (5.72-MM DIA) (15-CM)	
E		2	**125-7875**		TUBE-HEAT SHRINK (7.44-MM DIA) (5-CM)	
		2	**155-2270**	5	KIT-CONNECTING PLUG (2-PIN)	
					(EACH INCLUDES PLUG AS, WEDGE, & INTERFACE SEAL	
		2	**274-3774**	5	CAP-CONNECTOR	
	7	2	**397-3614**	4	BRACKET AS	
	8	2	**399-8955**	4	GUARD	
Y	9	2	**424-5598**	2	LAMP GP-FLOOD (12 TO 48-VOLT) (CYLINDER)	297
	10	2	**441-0314**	5	LAMP GP-FLOOD (24-VOLT) (ROPS, FENDER, CYLINDER)	
	11	2	**1K-4649**	4	SPACER (0.516X1X1-IN THK)	
	12	2	**230-7732**	2	MOUNTING-CABLE TIE	
	13	2	**271-5584**	1	CLIP	
	14	2	**4L-6454**	8	BOLT (3/8-16X1-IN)	
	15	2	**5P-1075**	84	WASHER-HARD (10.2X22.5X3-MM THK)	
	16	2	**5P-2228**	2	BOLT (1/2-13X1-IN)	

376-1379 **LIGHTING GP-FLOOD (**contd.**)** **i05455700**

NOTE	REF NO	GRAPHIC REF	PART NUMBER	QTY	PART NAME 1 2 3 4 5 6 (PRODUCT LEVEL)	SEE PAGE
	17	2	**5P-8522**	4	GROMMET	
	18	2	**6V-8801**	60	NUT (3/8-16-THD)	
	19	2	**7K-1181**	46	STRAP-CABLE	
	20	2	**7X-0290**	2	BOLT (3/8-16X3.5-IN)	
	21	2	**8T-1897**	4	CLIP (SLOT)	
	22	2	**8T-1898**	4	CLIP (TAB)	
	23	2	**8T-2502**	2	BOLT (3/8-16X1.125-IN)	
	24	2	**8T-4121**	2	WASHER-HARD (11X21X2.5-MM THK)	
M	25	2	**8T-4136**	2	BOLT (M10X1.5X25-MM)	
	26	2	**8T-4223**	2	WASHER-HARD (13.5X25.5X3-MM THK)	
	27	2	**8T-5387**	1	GROMMET	
	28	2	**8T-9377**	4	BOLT (3/8-16X2.25-IN)	
Y	29	2	**386-1722**	6	LAMP GP-FLOOD (9 TO 32-VOLT) (FENDER, LIFT CYLINDER)	296

B - USE AS REQUIRED
E - ORDER BY THE CENTIMETER
M - METRIC PART
Y - SEPARATE ILLUSTRATION

REFER TO ALL ILLUSTRATIONS OF THIS GROUP FOR AUXILIARY VIEWS

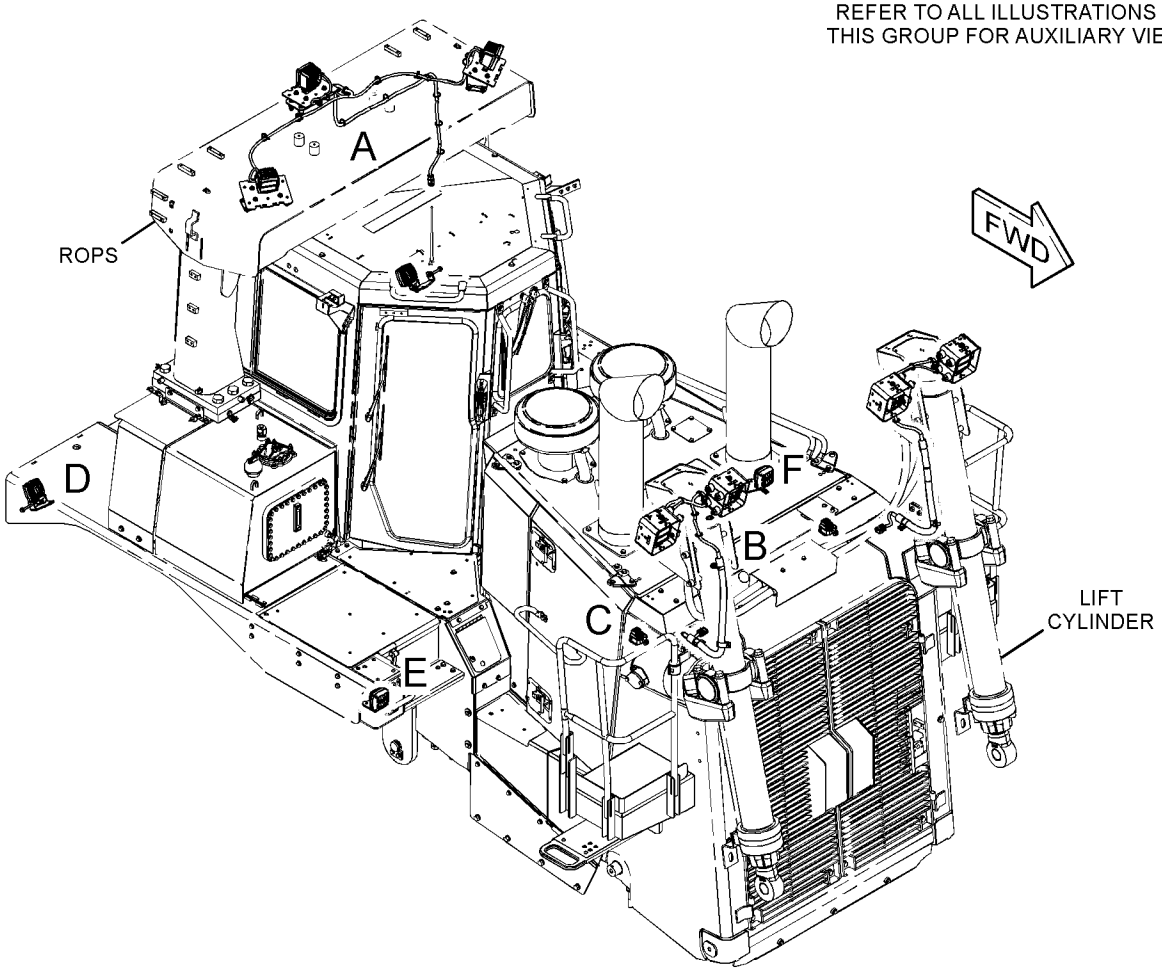

GRAPHIC #1 g03499407

376-1379 **LIGHTING GP-FLOOD (**contd.**)** **i05455700**

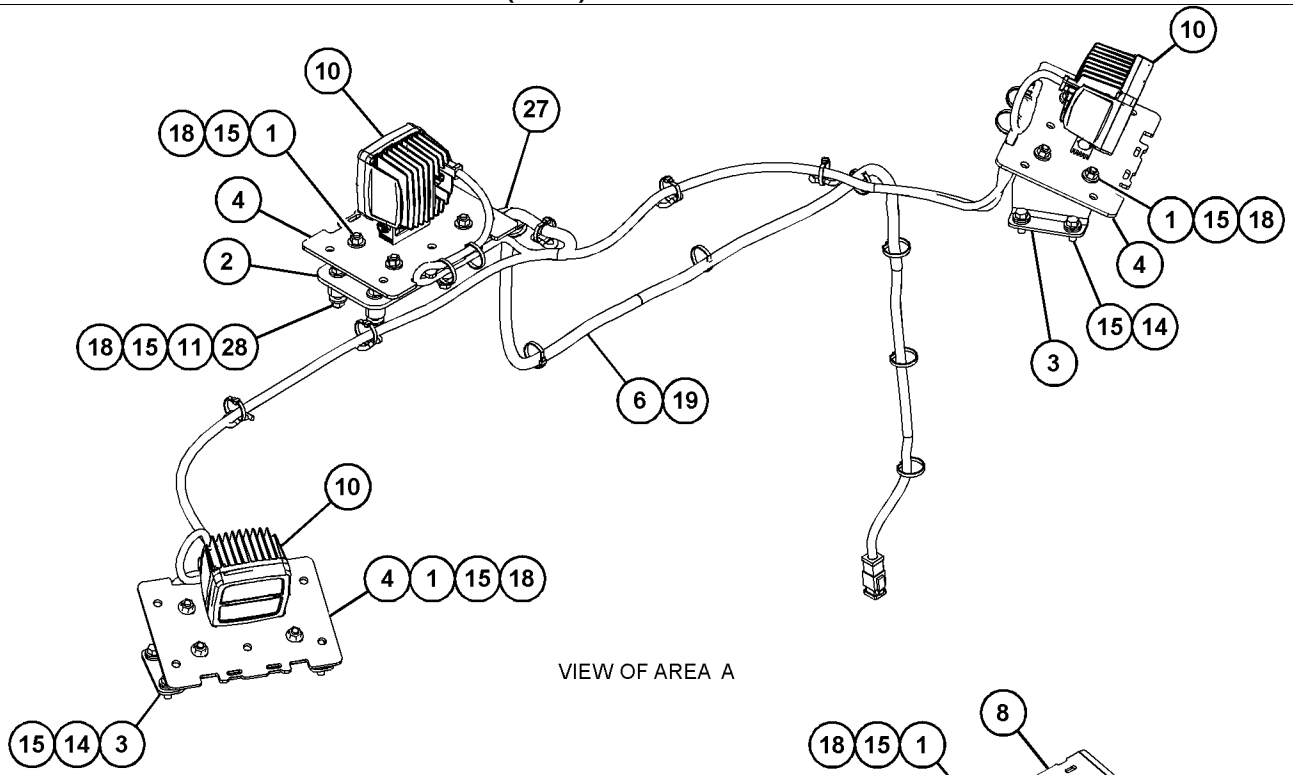

VIEW OF AREA A

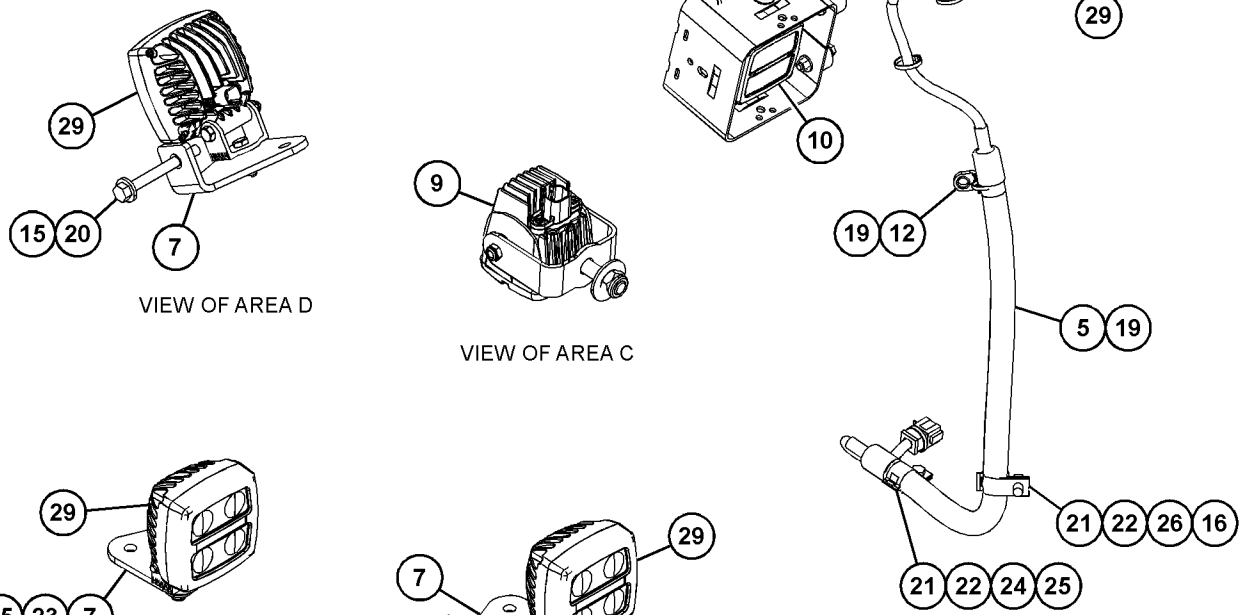

VIEW OF AREA D

VIEW OF AREA C

VIEW OF AREA E

VIEW OF AREA F

VIEW OF AREA B

GRAPHIC #2 <END> g03499408

376-1379 LIGHTING GP-FLOOD—CYLINDER, FENDER, ROPS, UNDER HOOD

S/N: RAB282-UP
LED
CANNOT BE USED WITH 359-6354—PAGE: 300, 359-6356—PAGE: 306, 376-1378—PAGE: 314 AN ATTACHMENT

SMCS-1434 **i06545999**

NOTE	REF NO	GRAPHIC REF	PART NUMBER	QTY	PART NAME 1 2 3 4 5 6 (PRODUCT LEVEL)	SEE PAGE
	1	2	**9W-4361**	28	MOUNT-FLEXIBLE	
	2	2	**114-9365**	1	PLATE	
	3	2	**345-2955**	2	BRACKET	
	4	2	**347-0890**	3	PLATE	
	5	2	**376-9911**	2	HARNESS AS-LIGHTING (CYLINDER FLOODLIGHTS)	
					(EACH INCLUDES)	
		2	**102-8806**	1	KIT-RECEPTACLE (8-PIN)	
					(INCLUDES RECEPTACLE AS & WEDGE)	
E		2	**5P-0742**		HOSE (80-CM)	
		2	**8T-8737**	1	PLUG-SEAL	
		2	**9W-0844**	4	SOCKET-CONNECTOR (14-GA TO 16-GA)	
		2	**9W-0852**	4	PIN-CONNECTOR (14-GA TO 16-GA)	
		2	**9X-3401**	3	PIN-CONNECTOR (16-GA TO 18-GA)	
		2	**9X-3402**	3	SOCKET-CONNECTOR (16-GA TO 18-GA)	
E		2	**108-1304**		TUBE-HEAT SHRINK (33-MM DIA) (16-CM)	
		2	**155-2270**	2	KIT-CONNECTING PLUG (2-PIN)	
					(EACH INCLUDES PLUG AS, WEDGE, & INTERFACE SEAL)	
B		2	**1P-0810**		TAPE-ELECTRICAL	
		2	**230-4013**	1	PLUG AS-CONNECTOR (3-PIN)	
		2	**264-7030**	1	SEAL-CONNECTOR	
		2	**274-3774**	2	CAP-CONNECTOR	
		2	**274-3781**	1	CAP-SEAL	
CY	6	2	**481-7219**	1	HARNESS AS-LIGHTING (ROPS)	263
	7	2	**397-3614**	4	BRACKET AS	
	8	2	**399-8955**	4	GUARD	
Y	9	2	**424-5598**	2	LAMP GP-FLOOD (12 TO 48-VOLT) (CYLINDER)	297
	10	2	**441-0314**	5	LAMP GP-FLOOD (24-VOLT) (ROPS, FENDER, CYLINDER)	
	11	2	**1K-4649**	4	SPACER (0.516X1X1-IN THK)	
	12	2	**230-7732**	2	MOUNTING-CABLE TIE	
	13	2	**271-5584**	1	CLIP	
	14	2	**4L-6454**	8	BOLT (3/8-16X1-IN)	
	15	2	**5P-1075**	84	WASHER-HARD (10.2X22.5X3-MM THK)	
	16	2	**5P-2228**	2	BOLT (1/2-13X1-IN)	
	17	2	**5P-8522**	4	GROMMET	
	18	2	**6V-8801**	60	NUT (3/8-16-THD)	
	19	2	**7K-1181**	46	STRAP-CABLE	
	20	2	**7X-0290**	2	BOLT (3/8-16X3.5-IN)	
	21	2	**8T-1897**	4	CLIP (SLOT)	
	22	2	**8T-1898**	4	CLIP (TAB)	
	23	2	**8T-2502**	2	BOLT (3/8-16X1.125-IN)	
	24	2	**8T-4121**	2	WASHER-HARD (11X21X2.5-MM THK)	
M	25	2	**8T-4136**	2	BOLT (M10X1.5X25-MM)	
	26	2	**8T-4223**	2	WASHER-HARD (13.5X25.5X3-MM THK)	
	27	2	**8T-5387**	1	GROMMET	

376-1379 **LIGHTING GP-FLOOD (**contd.**)** **i06545999**

NOTE	REF NO	GRAPHIC REF	PART NUMBER	QTY	PART NAME 1 2 3 4 5 6 (PRODUCT LEVEL)	SEE PAGE
	28	2	**8T-9377**	4	BOLT (3/8-16X2.25-IN)	
Y	29	2	**386-1722**	6	LAMP GP-FLOOD (9 TO 32-VOLT) (FENDER, LIFT CYLINDER)	296

B - USE AS REQUIRED
C - CHANGE FROM PREVIOUS TYPE
E - ORDER BY THE CENTIMETER
M - METRIC PART
Y - SEPARATE ILLUSTRATION

REFER TO ALL ILLUSTRATIONS OF THIS GROUP FOR AUXILIARY VIEWS

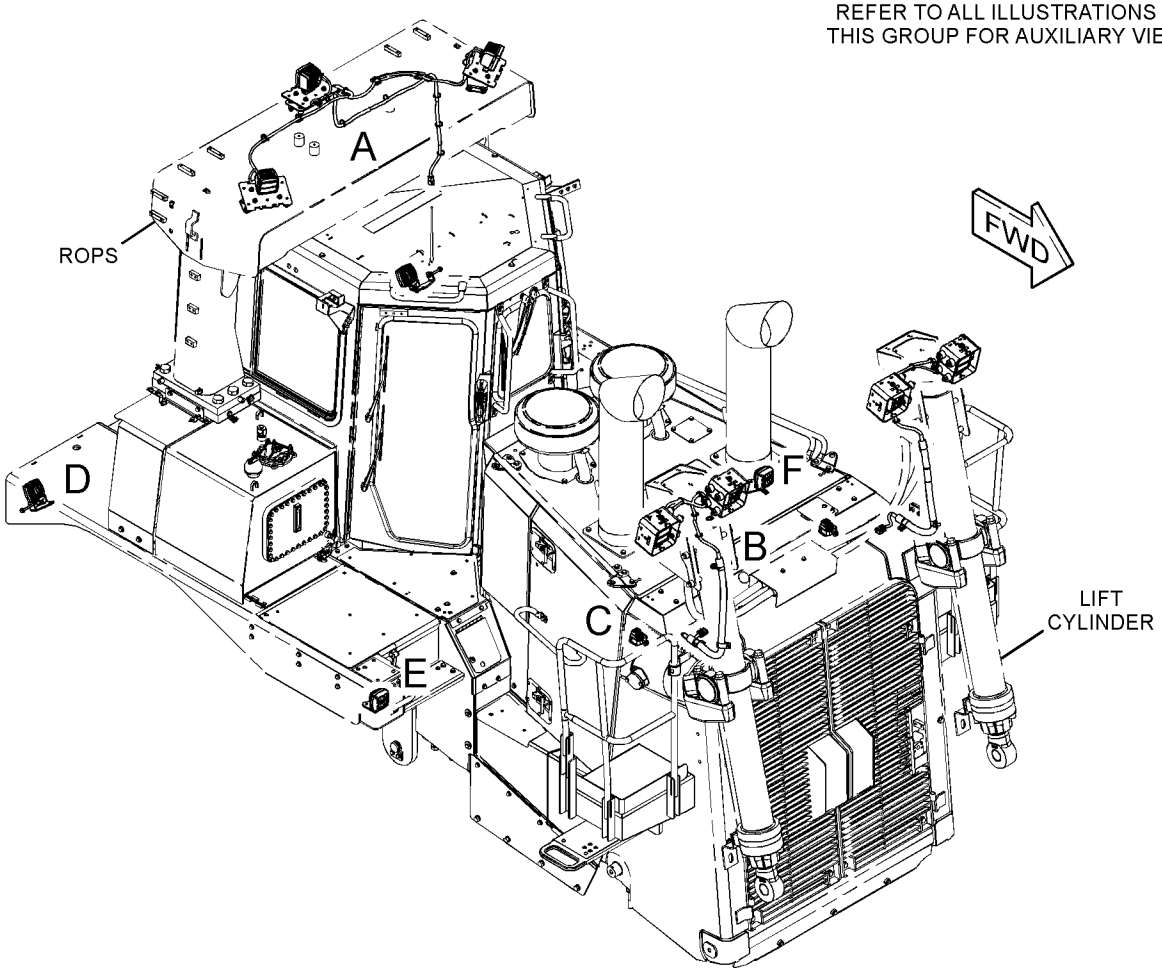

GRAPHIC #1 g06035119

376-1379 **LIGHTING GP-FLOOD (**contd.**)** **i06545999**

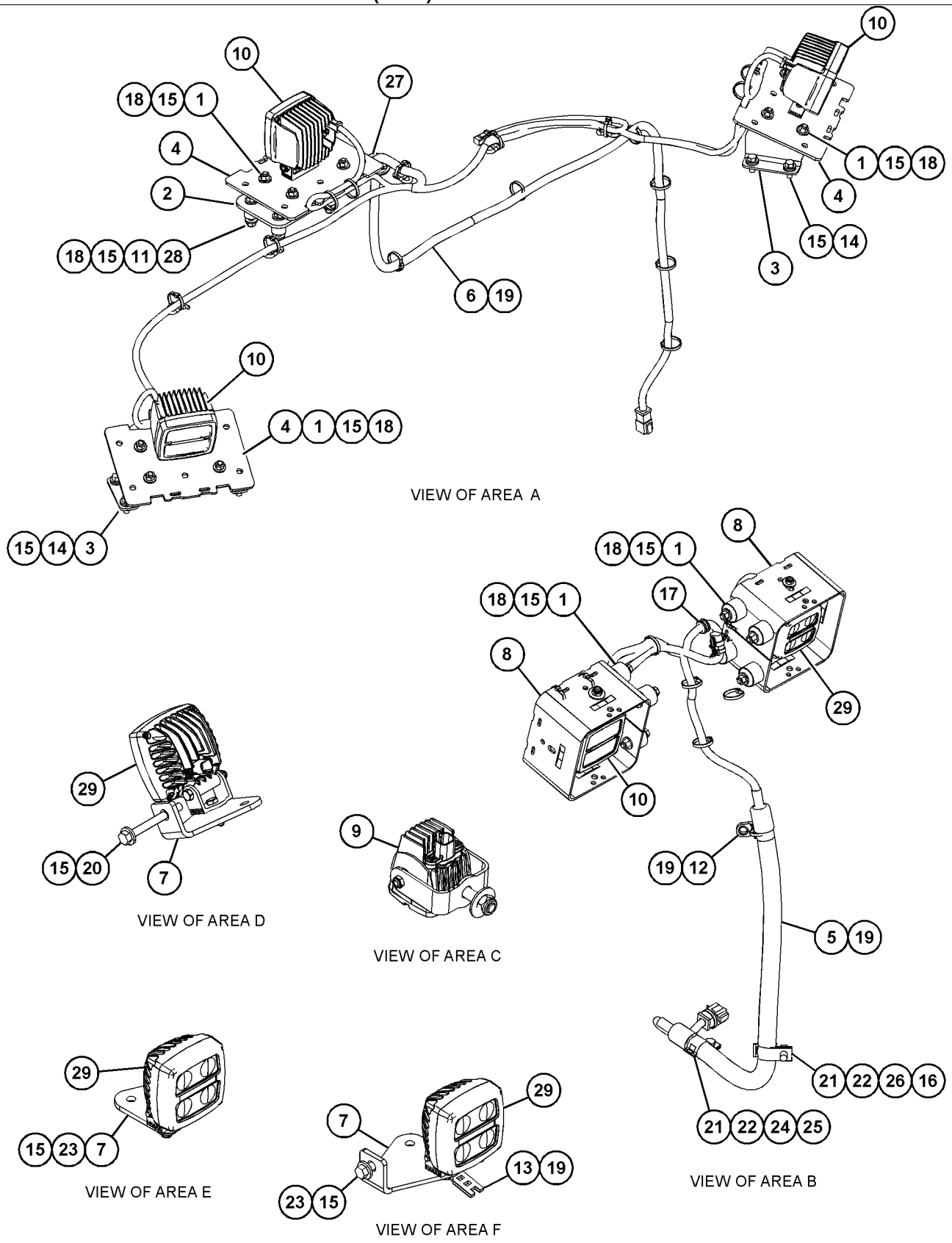

GRAPHIC #2 <END> g06035120

444-5644 LIGHTING GP-FLOOD—CYLINDER, FENDER, ROPS, UNDER HOOD

S/N: RAB1-281
AN ATTACHMENT

SMCS-1434 **i05455549**

NOTE	REF NO	GRAPHIC REF	PART NUMBER	QTY	PART NAME 1 2 3 4 5 6 (PRODUCT LEVEL)	SEE PAGE
	1	2	**9W-4361**	28	MOUNT-FLEXIBLE	
	2	2	**114-9365**	1	PLATE	
	3	2	**345-2955**	2	BRACKET	
	4	2	**347-0890**	3	PLATE	
	5	2	**376-9911**	2	HARNESS AS-LIGHTING (CYLINDER FLOODLIGHTS)	
					(EACH INCLUDES)	
		2	**102-8806**	1	KIT-RECEPTACLE (8-PIN)	
					(INCLUDES RECEPTACLE AS & WEDGE)	
E		2	**5P-0742**		HOSE (80-CM)	
		2	**8T-8737**	1	PLUG-SEAL	
		2	**9W-0844**	4	SOCKET-CONNECTOR (14-GA TO 16-GA)	
		2	**9W-0852**	4	PIN-CONNECTOR (14-GA TO 16-GA)	
		2	**9X-3401**	3	PIN-CONNECTOR (16-GA TO 18-GA)	
		2	**9X-3402**	3	SOCKET-CONNECTOR (16-GA TO 18-GA)	
E		2	**108-1304**		TUBE-HEAT SHRINK (33-MM DIA) (16-CM)	
		2	**155-2270**	2	KIT-CONNECTING PLUG (2-PIN)	
					(EACH INCLUDES PLUG AS, WEDGE, & INTERFACE SEAL)	
B		2	**1P-0810**		TAPE-ELECTRICAL	
		2	**230-4013**	1	PLUG AS-CONNECTOR (3-PIN)	
		2	**264-7030**	1	SEAL-CONNECTOR	
		2	**274-3774**	2	CAP-CONNECTOR	
		2	**274-3781**	1	CAP-SEAL	
	6	2	**377-0858**	1	HARNESS AS-LIGHTING (ROPS)	
		2	**102-8805**	1	KIT-RECEPTACLE (6-PIN)	
					(INCLUDES RECEPTACLE AS & WEDGE)	
		2	**8T-8737**	2	PLUG-SEAL	
		2	**9W-0844**	10	SOCKET-CONNECTOR (14-GA TO 16-GA)	
		2	**9W-0852**	4	PIN-CONNECTOR (14-GA TO 16-GA)	
E		2	**125-7874**		TUBE-HEAT SHRINK (5.72-MM DIA) (15-CM)	
E		2	**125-7875**		TUBE-HEAT SHRINK (7.44-MM DIA) (5-CM)	
		2	**155-2270**	5	KIT-CONNECTING PLUG (2-PIN)	
					(EACH INCLUDES PLUG AS, WEDGE, & INTERFACE SEAL	
		2	**274-3774**	5	CAP-CONNECTOR	
	7	2	**397-3614**	4	BRACKET AS	
	8	2	**399-8955**	4	GUARD	
Y	9	2	**424-5598**	2	LAMP GP-FLOOD (12 TO 48-VOLT) (CYLINDER)	297
	10	2	**441-0314**	11	LAMP GP-FLOOD (24-VOLT) (ROPS, FENDER, CYLINDER)	
	11	2	**1K-4649**	4	SPACER (0.516X1X1-IN THK)	
	12	2	**230-7732**	2	MOUNTING-CABLE TIE	
	13	2	**271-5584**	1	CLIP	
	14	2	**4L-6454**	8	BOLT (3/8-16X1-IN)	
	15	2	**5P-1075**	84	WASHER-HARD (10.2X22.5X3-MM THK)	
	16	2	**5P-2228**	2	BOLT (1/2-13X1-IN)	
	17	2	**5P-8522**	4	GROMMET	
	18	2	**6V-8801**	60	NUT (3/8-16-THD)	

444-5644 **LIGHTING GP-FLOOD (**contd.**)** **i05455549**

NOTE	REF NO	GRAPHIC REF	PART NUMBER	QTY	PART NAME 1 2 3 4 5 6 (PRODUCT LEVEL)	SEE PAGE
	19	2	**7K-1181**	46	STRAP-CABLE	
	20	2	**7X-0290**	2	BOLT (3/8-16X3.5-IN)	
	21	2	**8T-1897**	4	CLIP (SLOT)	
	22	2	**8T-1898**	4	CLIP (TAB)	
	23	2	**8T-2502**	2	BOLT (3/8-16X1.125-IN)	
	24	2	**8T-4121**	2	WASHER-HARD (11X21X2.5-MM THK)	
M	25	2	**8T-4136**	2	BOLT (M10X1.5X25-MM)	
	26	2	**8T-4223**	2	WASHER-HARD (13.5X25.5X3-MM THK)	
	27	2	**8T-5387**	1	GROMMET	
	28	2	**8T-9377**	4	BOLT (3/8-16X2.25-IN)	

B - USE AS REQUIRED
E - ORDER BY THE CENTIMETER
M - METRIC PART
Y - SEPARATE ILLUSTRATION

REFER TO ALL ILLUSTRATIONS OF THIS GROUP FOR AUXILIARY VIEWS

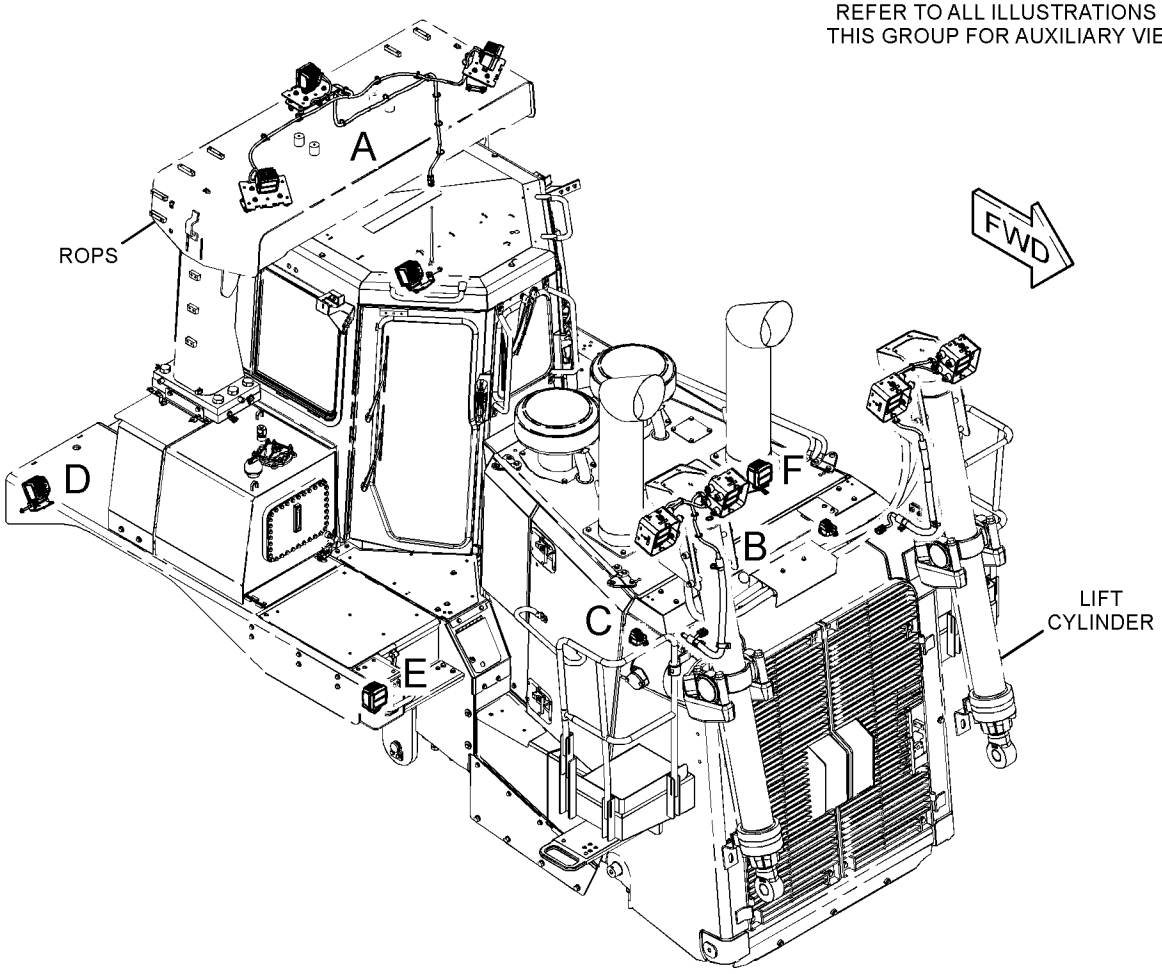

GRAPHIC #1 g03499258

444-5644 **LIGHTING GP-FLOOD (**contd.**)** **i05455549**

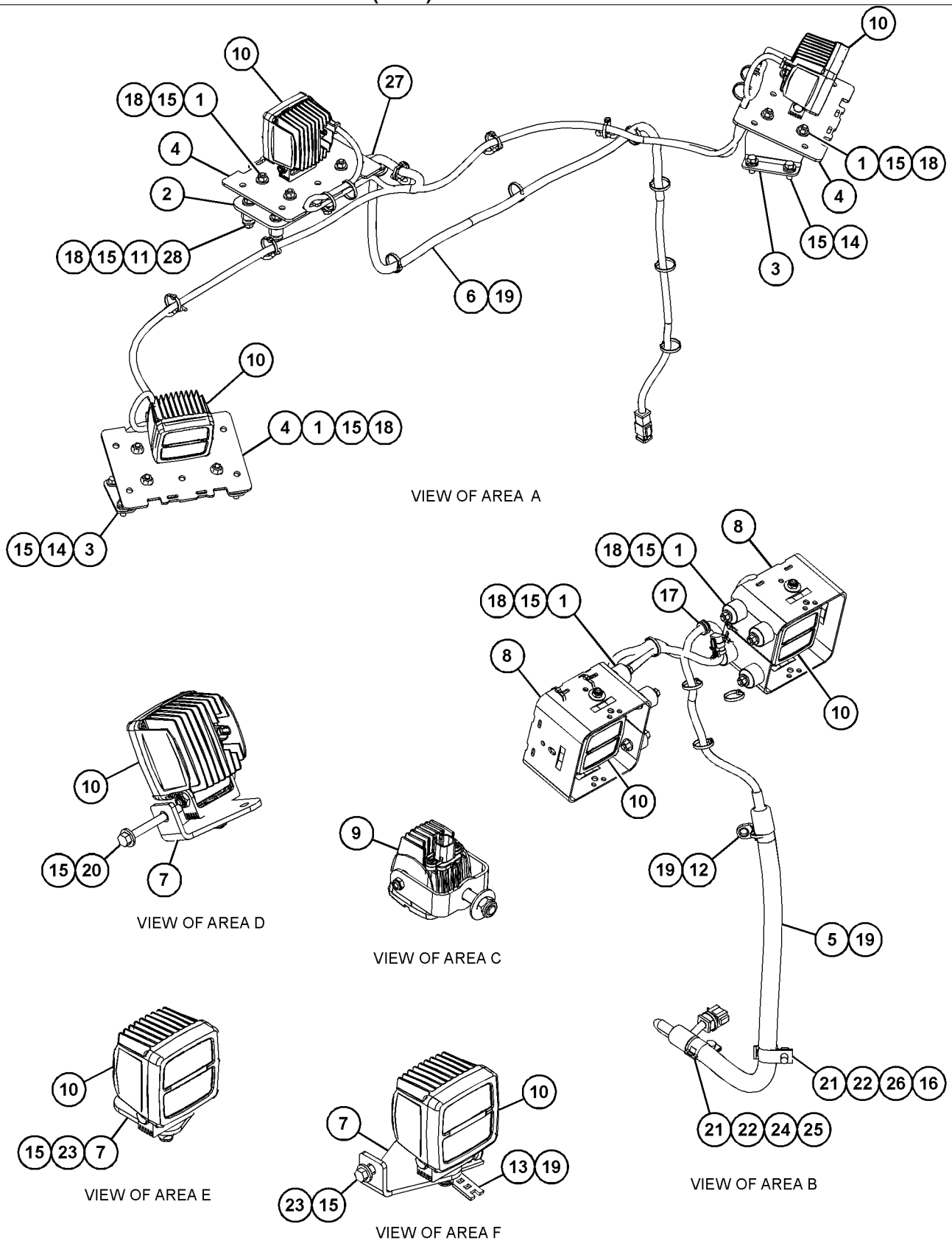

GRAPHIC #2 <END> g03499259

444-5644 LIGHTING GP-FLOOD—CYLINDER, FENDER, ROPS, UNDER HOOD

S/N: RAB282-UP

AN ATTACHMENT

SMCS-1434 **i06545352**

NOTE	REF NO	GRAPHIC REF	PART NUMBER	QTY	PART NAME 1 2 3 4 5 6 (PRODUCT LEVEL)	SEE PAGE
	1	2	**9W-4361**	28	MOUNT-FLEXIBLE	
	2	2	**114-9365**	1	PLATE	
	3	2	**345-2955**	2	BRACKET	
	4	2	**347-0890**	3	PLATE	
	5	2	**376-9911**	2	HARNESS AS-LIGHTING (CYLINDER FLOODLIGHTS)	
					(EACH INCLUDES)	
		2	**102-8806**	1	KIT-RECEPTACLE (8-PIN)	
					(INCLUDES RECEPTACLE AS & WEDGE)	
E		2	**5P-0742**		HOSE (80-CM)	
		2	**8T-8737**	1	PLUG-SEAL	
		2	**9W-0844**	4	SOCKET-CONNECTOR (14-GA TO 16-GA)	
		2	**9W-0852**	4	PIN-CONNECTOR (14-GA TO 16-GA)	
		2	**9X-3401**	3	PIN-CONNECTOR (16-GA TO 18-GA)	
		2	**9X-3402**	3	SOCKET-CONNECTOR (16-GA TO 18-GA)	
E		2	**108-1304**		TUBE-HEAT SHRINK (33-MM DIA) (16-CM)	
		2	**155-2270**	2	KIT-CONNECTING PLUG (2-PIN)	
					(EACH INCLUDES PLUG AS, WEDGE, & INTERFACE SEAL)	
B		2	**1P-0810**		TAPE-ELECTRICAL	
		2	**230-4013**	1	PLUG AS-CONNECTOR (3-PIN)	
		2	**264-7030**	1	SEAL-CONNECTOR	
		2	**274-3774**	2	CAP-CONNECTOR	
		2	**274-3781**	1	CAP-SEAL	
CY	6	2	**481-7219**	1	HARNESS AS-LIGHTING (ROPS)	263
	7	2	**397-3614**	4	BRACKET AS	
	8	2	**399-8955**	4	GUARD	
Y	9	2	**424-5598**	2	LAMP GP-FLOOD (12 TO 48-VOLT) (CYLINDER)	297
	10	2	**441-0314**	11	LAMP GP-FLOOD (24-VOLT) (ROPS, FENDER, CYLINDER)	
	11	2	**1K-4649**	4	SPACER (0.516X1X1-IN THK)	
	12	2	**230-7732**	2	MOUNTING-CABLE TIE	
	13	2	**271-5584**	1	CLIP	
	14	2	**4L-6454**	8	BOLT (3/8-16X1-IN)	
	15	2	**5P-1075**	84	WASHER-HARD (10.2X22.5X3-MM THK)	
	16	2	**5P-2228**	2	BOLT (1/2-13X1-IN)	
	17	2	**5P-8522**	4	GROMMET	
	18	2	**6V-8801**	60	NUT (3/8-16-THD)	
	19	2	**7K-1181**	46	STRAP-CABLE	
	20	2	**7X-0290**	2	BOLT (3/8-16X3.5-IN)	
	21	2	**8T-1897**	4	CLIP (SLOT)	
	22	2	**8T-1898**	4	CLIP (TAB)	
	23	2	**8T-2502**	2	BOLT (3/8-16X1.125-IN)	
	24	2	**8T-4121**	2	WASHER-HARD (11X21X2.5-MM THK)	
M	25	2	**8T-4136**	2	BOLT (M10X1.5X25-MM)	
	26	2	**8T-4223**	2	WASHER-HARD (13.5X25.5X3-MM THK)	
	27	2	**8T-5387**	1	GROMMET	
	28	2	**8T-9377**	4	BOLT (3/8-16X2.25-IN)	

444-5644 **LIGHTING GP-FLOOD (**contd.**)** **i06545352**

NOTE	REF NO	GRAPHIC REF	PART NUMBER	QTY	PART NAME 1 2 3 4 5 6 (PRODUCT LEVEL)	SEE PAGE

B - USE AS REQUIRED
C - CHANGE FROM PREVIOUS TYPE
E - ORDER BY THE CENTIMETER
M - METRIC PART
Y - SEPARATE ILLUSTRATION

REFER TO ALL ILLUSTRATIONS OF THIS GROUP FOR AUXILIARY VIEWS

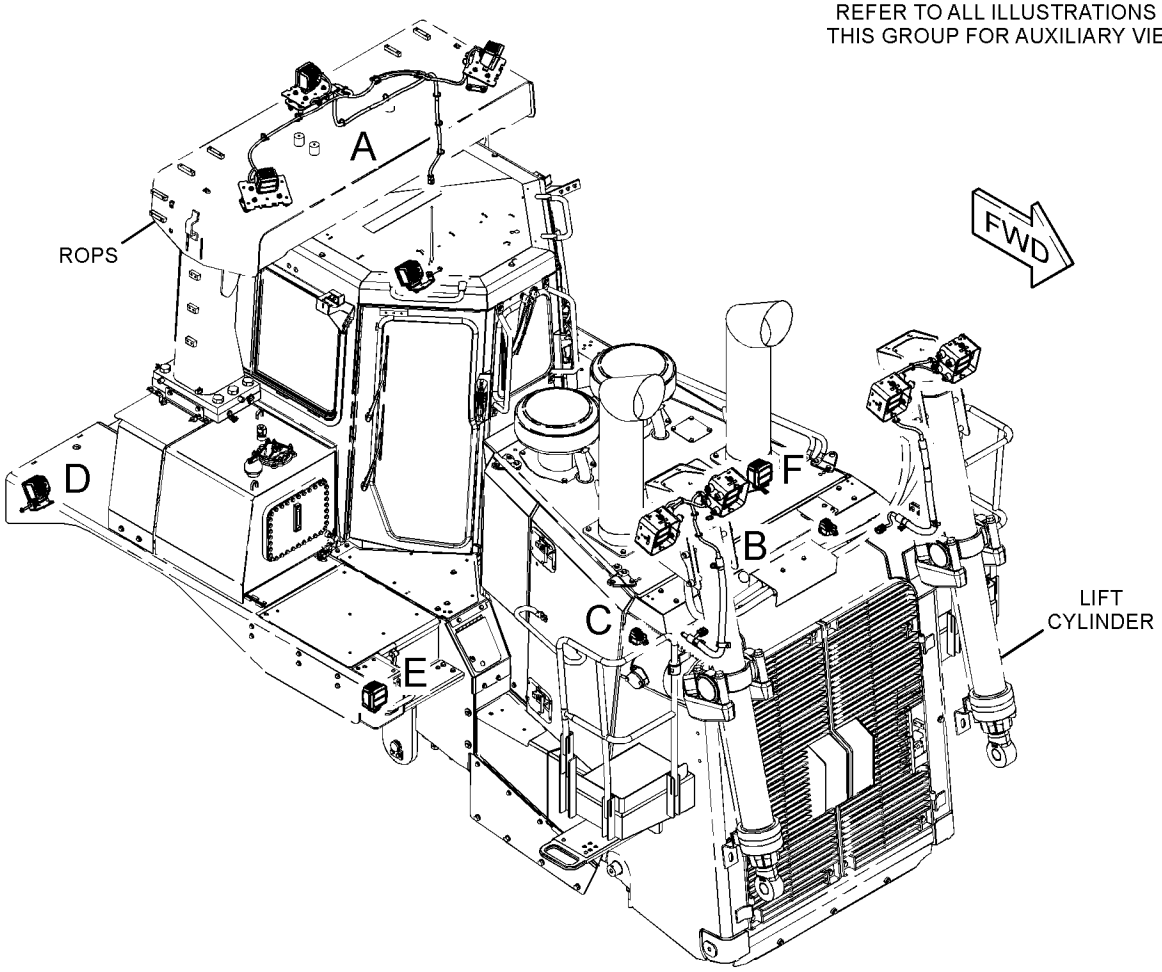

GRAPHIC #1 g06035127

444-5644 **LIGHTING GP-FLOOD (**contd.**)** **i06545352**

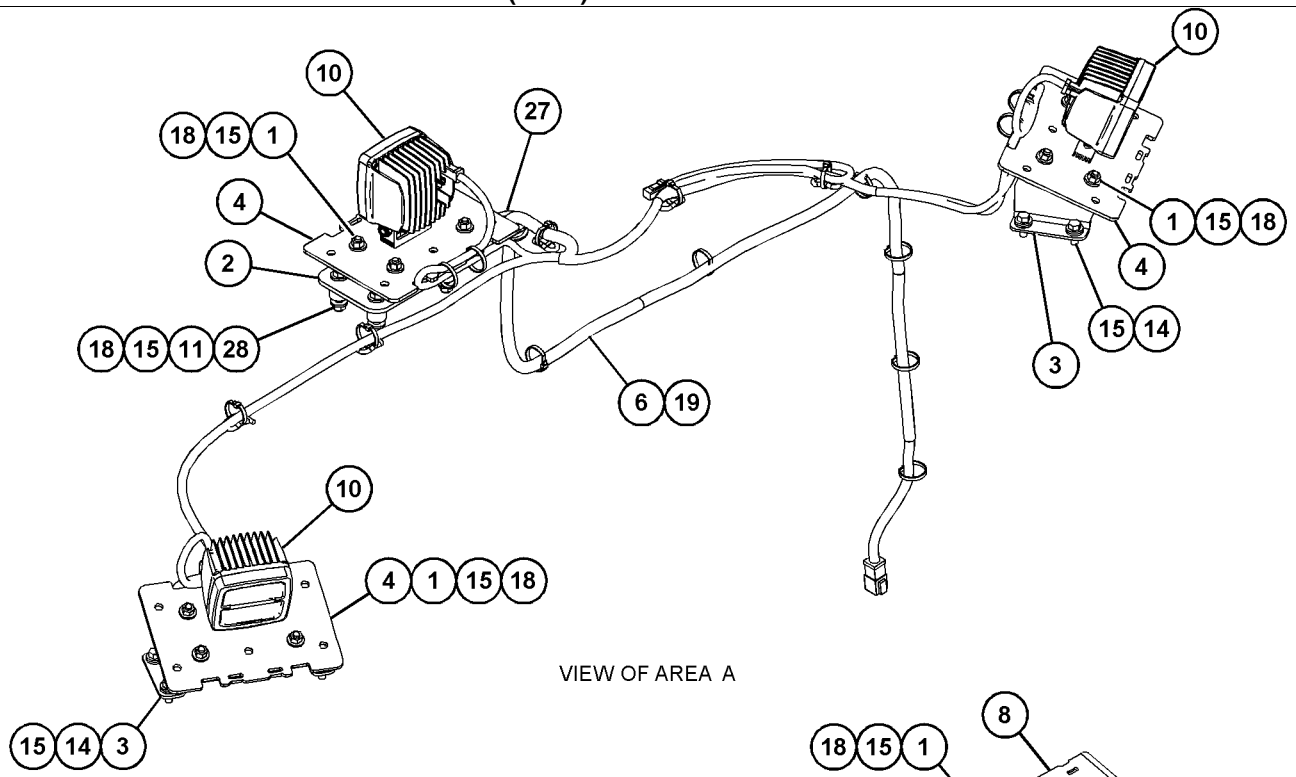

VIEW OF AREA A

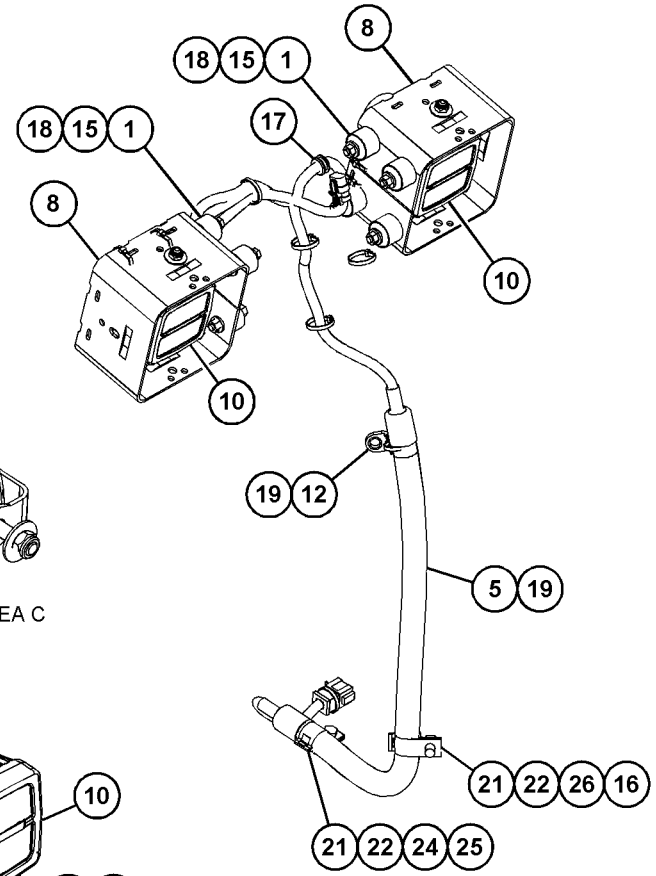

VIEW OF AREA B

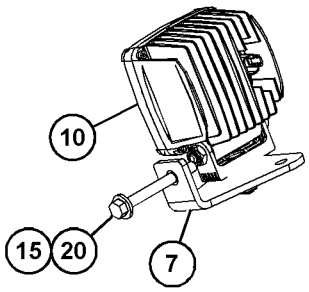

VIEW OF AREA D

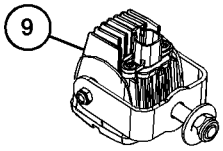

VIEW OF AREA C

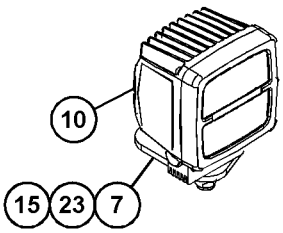

VIEW OF AREA E

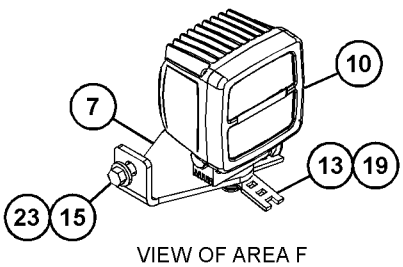

VIEW OF AREA F

GRAPHIC #2 <END> g06035128

380-5286 LIGHTING GP-RIPPER

S/N: RAB1-UP

PART OF 399-7227 MOUNTING GP-RIPPER, 359-6373, 359-6374 RIPPER AR-MULTISHANK, 359-6370, 359-6371, 359-6372 RIPPER AR-SINGLE SHANK

AN ATTACHMENT

SMCS-1429 **i05444243**

NOTE	REF NO	GRAPHIC REF	PART NUMBER	QTY	PART NAME 1 2 3 4 5 6 (PRODUCT LEVEL)	SEE PAGE
	1	1	**7K-1181**	5	STRAP-CABLE	
	2	1	**164-8101**	1	BRACKET	
	3	1	**230-4086**	1	HARNESS AS-LIGHTING (RIPPER)	
		1	**9X-3402**	4	SOCKET-CONNECTOR (16-GA TO 18-GA)	
					—OR—	
		1	**126-1768**	4	SOCKET-CONNECTOR (14-GA TO 16-GA)	
		1	**155-2270**	2	KIT-CONNECTING PLUG (2-PIN)	
					(EACH INCLUDES PLUG AS, WEDGE, & INTERFACE SEAL)	
Y	4	1	**147-0319**	1	LAMP GP-FLOOD (24-VOLT, 70-WATT) (RIPPER)	290
	5	1	**4P-8134**	3	CLIP	
M	6	1	**5C-7261**	1	NUT (M8X1.25-THD)	
	7	1	**8T-4121**	1	WASHER-HARD (11X21X2.5-MM THK)	
M	8	1	**8T-4137**	1	BOLT (M10X1.5X20-MM)	
	9	1	**8T-4224**	2	WASHER-HARD (8.8X16X2-MM THK)	
M	10	1	**8T-6869**	1	BOLT (M8X1.25X60-MM)	
					PARTS SHOWN IN GRAPHIC(S) WITHOUT A REFERENCE NUMBER ARE NOT SERVICED SEPARATELY	

M - METRIC PART
Y - SEPARATE ILLUSTRATION

380-5286 **LIGHTING GP-RIPPER (**contd.**)** **i05444243**

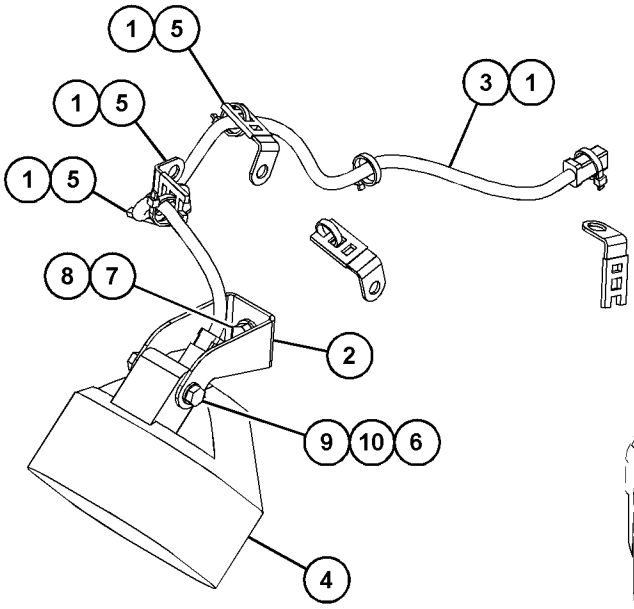

VIEW OF AREA A

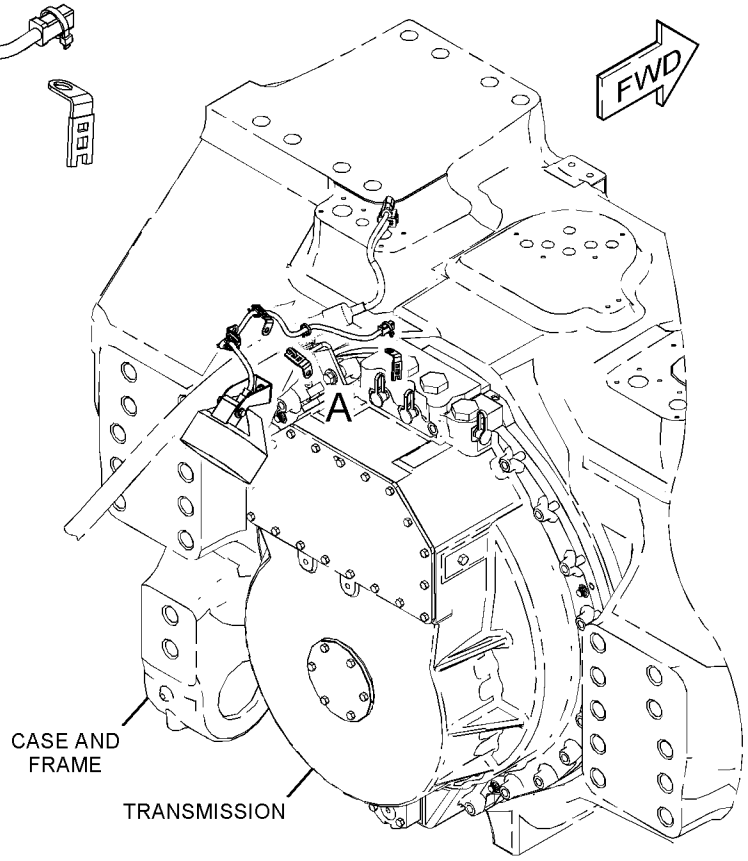

GRAPHIC #1

<END>

g03458121

476-7086 LIGHTING GP-WARNING BEACON

S/N: RAB1-UP

AN ATTACHMENT

SMCS-1431 **i06280444**

NOTE	REF NO	GRAPHIC REF	PART NUMBER	QTY	PART NAME 1 2 3 4 5 6 (PRODUCT LEVEL)	SEE PAGE
M	1	1	**179-4324**	3	LOCKNUT (M5X0.8-THD)	
	2	1	**261-4983**	1	PLATE AS	
Y	3	1	**338-1132**	1	LAMP GP-WARNING BEACON (STROBE)	298
	4	1	**476-2031**	1	CHANNEL AS	
	5	1	**477-2923**	1	PLATE	
	6	1	**4P-7428**	2	CLIP	
M	7	1	**7I-2273**	3	BOLT (M5X0.8X16-MM)	
	8	1	**7K-1181**	5	STRAP-CABLE	
	9	1	**8T-0328**	6	WASHER-HARD (5.5X10X1-MM THK)	
M	10	1	**8T-4138**	2	BOLT (M6X1X20-MM)	
	11	1	**8T-4205**	2	WASHER-HARD (7.2X14.5X2-MM THK)	
	12	1	**8T-4223**	4	WASHER-HARD (13.5X25.5X3-MM THK)	
M	13	1	**8T-4910**	4	BOLT (M12X1.75X60-MM)	

M - METRIC PART
Y - SEPARATE ILLUSTRATION

476-7086 **LIGHTING GP-WARNING BEACON (**contd.**)** **i06280444**

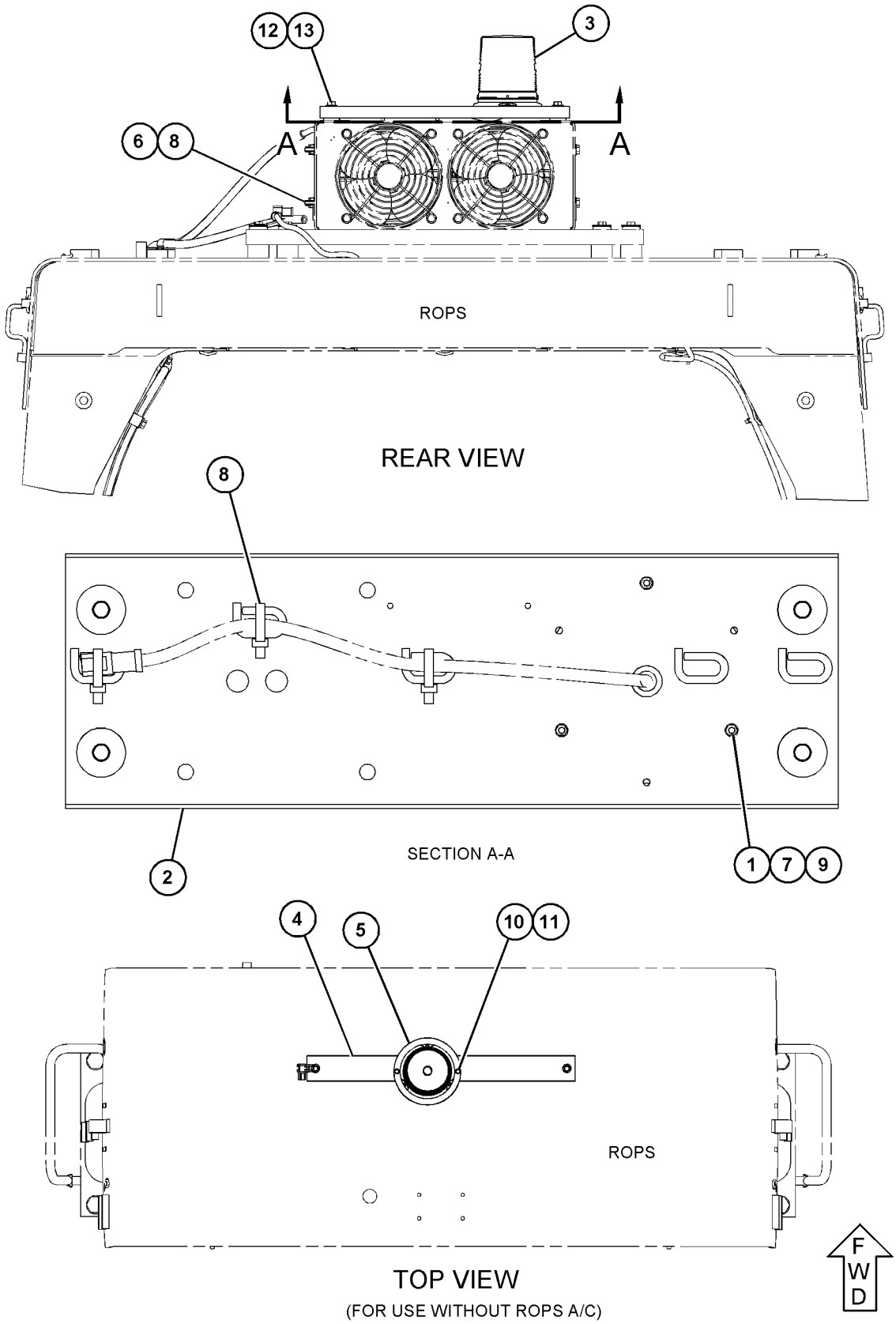

GRAPHIC #1 <END> g06033852

359-6361 LINES GP-ALTERNATOR AIR

S/N: RAB1-UP

PART OF 359-6429 ENCLOSURE GP-ENGINE, 359-6430 STOCKPILE AR AN ATTACHMENT

SMCS-1405 **i05460782**

NOTE	REF NO	GRAPHIC REF	PART NUMBER	QTY	PART NAME 1 2 3 4 5 6 (PRODUCT LEVEL)	SEE PAGE
	1	1	**5P-0597**	1	CLAMP-HOSE	
	2	1	**7X-7958**	2	CLAMP-HOSE	
	3	1	**8P-5411**	1	BUTTON-PLUG	
	4	1	**164-5798**	1	CAP AS-RAIN	
		1	**5P-0597**	1	CLAMP-HOSE	
	5	1	**226-4909**	1	SCREEN (ALTERNATOR COOLING)	
	6	1	**366-5863**	1	PLATE AS	
	7	1	**380-6977**	1	COVER AS	
M	8	1	**6V-2313**	1	BOLT (M5X0.8X30-MM)	
	9	1	**7D-7233**	3	CLIP	
	10	1	**8T-4121**	5	WASHER-HARD (11X21X2.5-MM THK)	
M	11	1	**8T-4137**	5	BOLT (M10X1.5X20-MM)	
	12	1	**9X-8256**	1	WASHER (6.6X12X2-MM THK)	
E	13	1	**371-8094**		HOSE (190-CM)	
E	14	1	**231-0858**		SEAL (44-CM EACH)	

E - ORDER BY THE CENTIMETER
M - METRIC PART

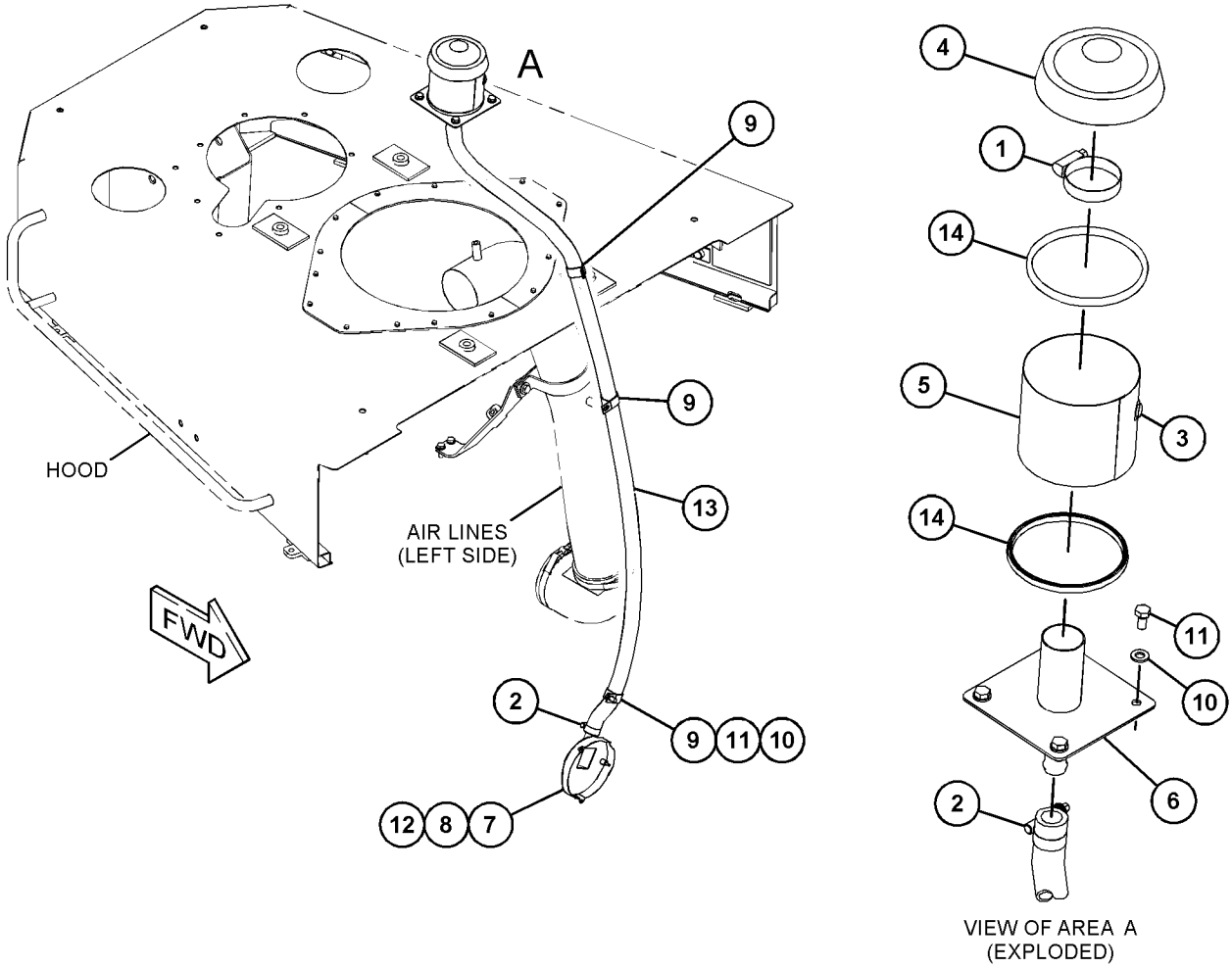

VIEW OF AREA A
(EXPLODED)

GRAPHIC #1 <END> g03454045

399-8989 MOUNTING GP-GRADE CONTROL–TERRAIN

S/N: RAB1-UP

PART OF 474-5717 ELECTRICAL AR, 359-6353, 359-6359, 359-6360 INSTALLATION AR-CAES AN ATTACHMENT

SMCS-7220 **i05805223**

NOTE	REF NO	GRAPHIC REF	PART NUMBER	QTY	PART NAME 1 2 3 4 5 6 (PRODUCT LEVEL)	SEE PAGE
	1	1	**226-3492**	1	BRACKET AS	
	2	1	**419-6122**	1	HARNESS AS-CHASSIS (REAR)	
		1	**102-8802**	2	KIT-RECEPTACLE (2-PIN)	
		1	**102-8803**	1	KIT-RECEPTACLE (3-PIN)	
		1	**176-9299**	1	KIT-RECEPTACLE (3-PIN)	
		1	**102-8805**	2	KIT-RECEPTACLE (6-PIN)	
					(EACH RECEPTACLE KIT INCLUDES RECEPTACLE AS & WEDGE)	
		1	**155-2255**	2	KIT-CONNECTING PLUG (12-PIN)	
		1	**155-2256**	1	KIT-CONNECTING PLUG (12-PIN)	
		1	**174-0503**	1	KIT-CONNECTING PLUG (3-PIN)	
		1	**155-2274**	2	KIT-CONNECTING PLUG (6-PIN)	
		1	**237-0166**	1	KIT-CONNECTING PLUG (12-PIN)	
					(EACH PLUG KIT INCLUDES PLUG AS, WEDGE & INTERFACE SEAL)	
		1	**155-2260**	1	KIT-CONNECTING PLUG (3-PIN)	
					(INCLUDES PLUG AS, WEDGE & INTERFACE SEAL)	
		1	**330-2152**	1	CAP AS	
		1	**8T-8729**	3	PIN-CONNECTOR (16-GA TO 18-GA)	
		1	**155-2258**	4	WEDGE-PLUG LOCK (12-PIN)	
		1	**3E-3383**	2	WEDGE-RECEPTACLE LOCK (6-PIN)	
		1	**8T-8730**	2	SOCKET-CONNECTOR (16-GA TO 18-GA)	
		1	**8T-8736**	1	RECEPTACLE-CONNECTOR (9-PIN)	
		1	**8T-8737**	51	PLUG-SEAL	
		1	**9W-0844**	10	SOCKET-CONNECTOR (14-GA TO 16-GA)	
		1	**9W-0852**	13	PIN-CONNECTOR (14-GA TO 16-GA)	
		1	**9X-3401**	37	PIN-CONNECTOR (16-GA TO 18-GA)	
		1	**9X-3402**	22	SOCKET-CONNECTOR (16-GA TO 18-GA)	
E		1	**119-3662**		TUBE-HEAT SHRINK (10.85-MM DIA) (7-CM)	
E		1	**125-7874**		TUBE-HEAT SHRINK (5.72-MM DIA) (85-CM)	
E		1	**125-7875**		TUBE-HEAT SHRINK (7.44-MM DIA) (10-CM)	
		1	**128-4249**	1	LOCKWASHER	
		1	**134-2540**	1	RESISTOR AS-CONNECTION (3-PIN)	
		1	**211-0052**	1	NUT (1-11/16-18-THD)	
		1	**225-3854**	1	PLUG AS-CONNECTOR (31-PIN)	
		1	**230-4009**	1	PLUG AS-CONNECTOR (12-PIN)	
		1	**264-7034**	1	SEAL-CONNECTOR	
		1	**230-4010**	1	RECEPTACLE AS-CONNECTOR (12-PIN)	
		1	**274-3779**	4	CAP-SEAL	
	3	1	**441-3262**	1	PLATE AS	
M		1	**6V-9632**	4	NUT-WELD (M6X1-THD)	
	4	1	**449-2331**	1	HARNESS AS-CHASSIS (FRONT)	
		1	**9X-3401**	4	PIN-CONNECTOR (16-GA TO 18-GA)	
		1	**8T-8737**	10	PLUG-SEAL	
		1	**134-2540**	2	RESISTOR AS-CONNECTION (3-PIN)	
		1	**9X-3402**	4	SOCKET-CONNECTOR (16-GA TO 18-GA)	
		1	**155-2260**	2	KIT-CONNECTING PLUG (3-PIN)	

399-8989 **MOUNTING GP-GRADE CONTROL (**contd.**)** **i05805223**

NOTE	REF NO	GRAPHIC REF	PART NUMBER	QTY	PART NAME 1 2 3 4 5 6 (PRODUCT LEVEL)	SEE PAGE
					(EACH INCLUDES PLUG AS, WEDGES & INTERFACE SEAL)	
		1	**102-8801**	2	KIT-RECEPTACLE (12-PIN)	
					(EACH INCLUDES RECEPTACLE AS & WEDGE)	
		1	**174-0503**	2	KIT-CONNECTING PLUG (3-PIN)	
					(EACH INCLUDES PLUG AS, WEDGE & INTERFACE SEAL)	
	5	1	**130-5300**	3	CLIP	
	6	1	**352-3964**	1	CLIP	
	7	1	**381-2621**	2	MOUNTING-CABLE TIE	
	8	1	**4P-7428**	3	CLIP	
	9	1	**4P-7581**	6	CLIP	
	10	1	**4P-8134**	1	CLIP	
	11	1	**8T-1890**	2	CLIP (TAB)	
	12	1	**5P-1075**	4	WASHER-HARD (10.2X22.5X3-MM THK)	
	13	1	**5P-8939**	2	GROMMET	
	14	1	**7K-1181**	37	STRAP-CABLE	
	15	1	**8T-2502**	4	BOLT (3/8-16X1.125-IN)	
	16	1	**8T-4121**	9	WASHER-HARD (11X21X2.5-MM THK)	
M	17	1	**8T-4133**	1	NUT (M10X1.5-THD)	
M	18	1	**8T-4137**	6	BOLT (M10X1.5X20-MM)	
M	19	1	**8T-4179**	1	BOLT (M12X1.75X20-MM)	
M	20	1	**8T-4182**	2	BOLT (M10X1.5X45-MM)	
	21	1	**8T-4223**	1	WASHER-HARD (13.5X25.5X3-MM THK)	
	22	1	**8T-1889**	2	CLIP (SLOT)	

E - ORDER BY THE CENTIMETER
M - METRIC PART

399-8989 **MOUNTING GP-GRADE CONTROL (**contd.**)** **i05805223**

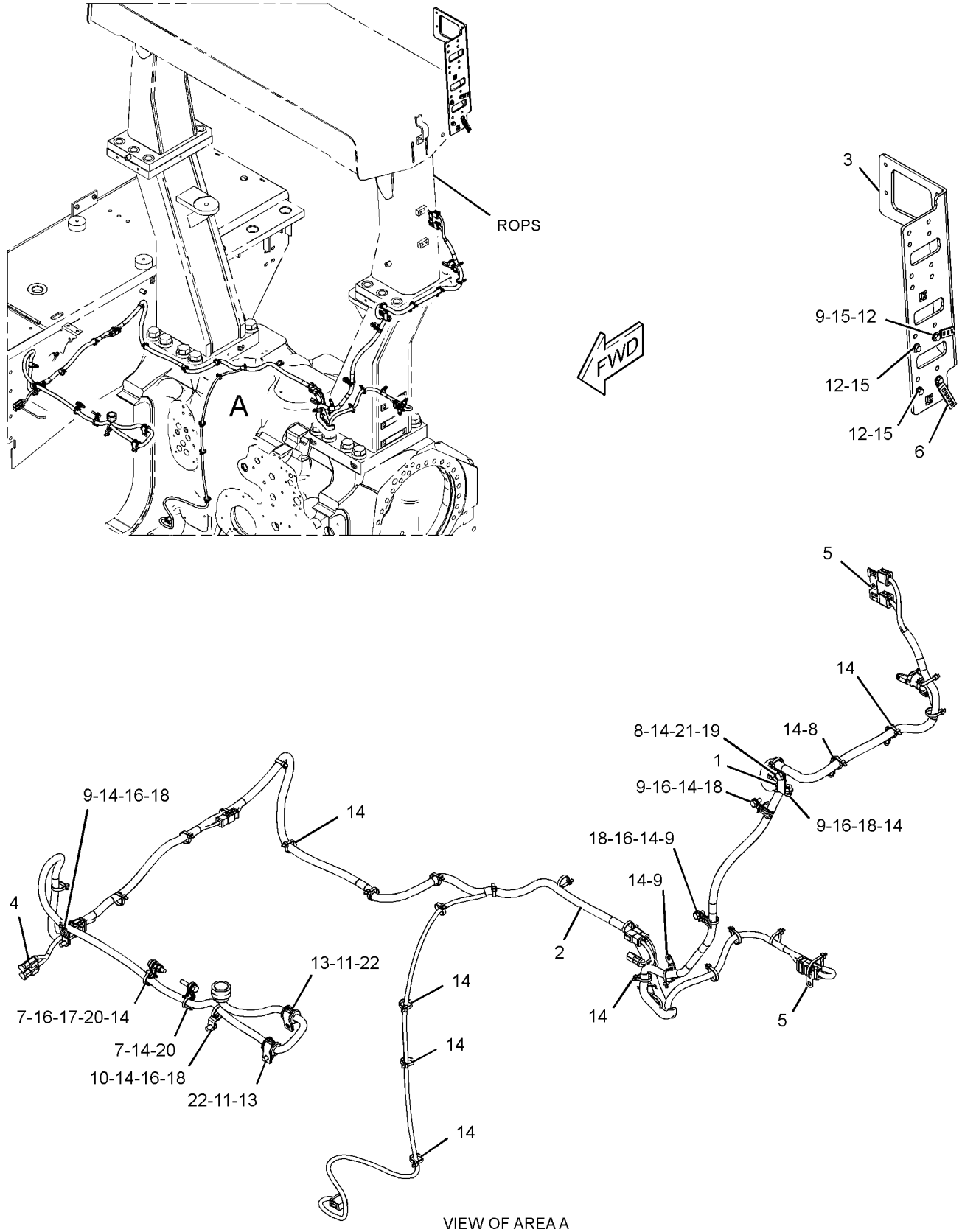

VIEW OF AREA A

GRAPHIC #1 <END> g03686935

399-8993 MOUNTING GP-GRADE CONTROL–AUTO CARRY, AUTOMATIC RIPPER

S/N: RAB1-167
PART OF 359-6359 INSTALLATION AR-CAES
AN ATTACHMENT

SMCS-7220 **i05443669**

NOTE	REF NO	GRAPHIC REF	PART NUMBER	QTY	PART NAME 1 2 3 4 5 6 (PRODUCT LEVEL)	SEE PAGE
	1	1	**372-4806**	1	ANTENNA (GPS)	
	2	1	**416-5446**	1	BRACKET	
	3	1	**5D-7635**	1	GROMMET	
	4	1	**7K-1181**	6	STRAP-CABLE	

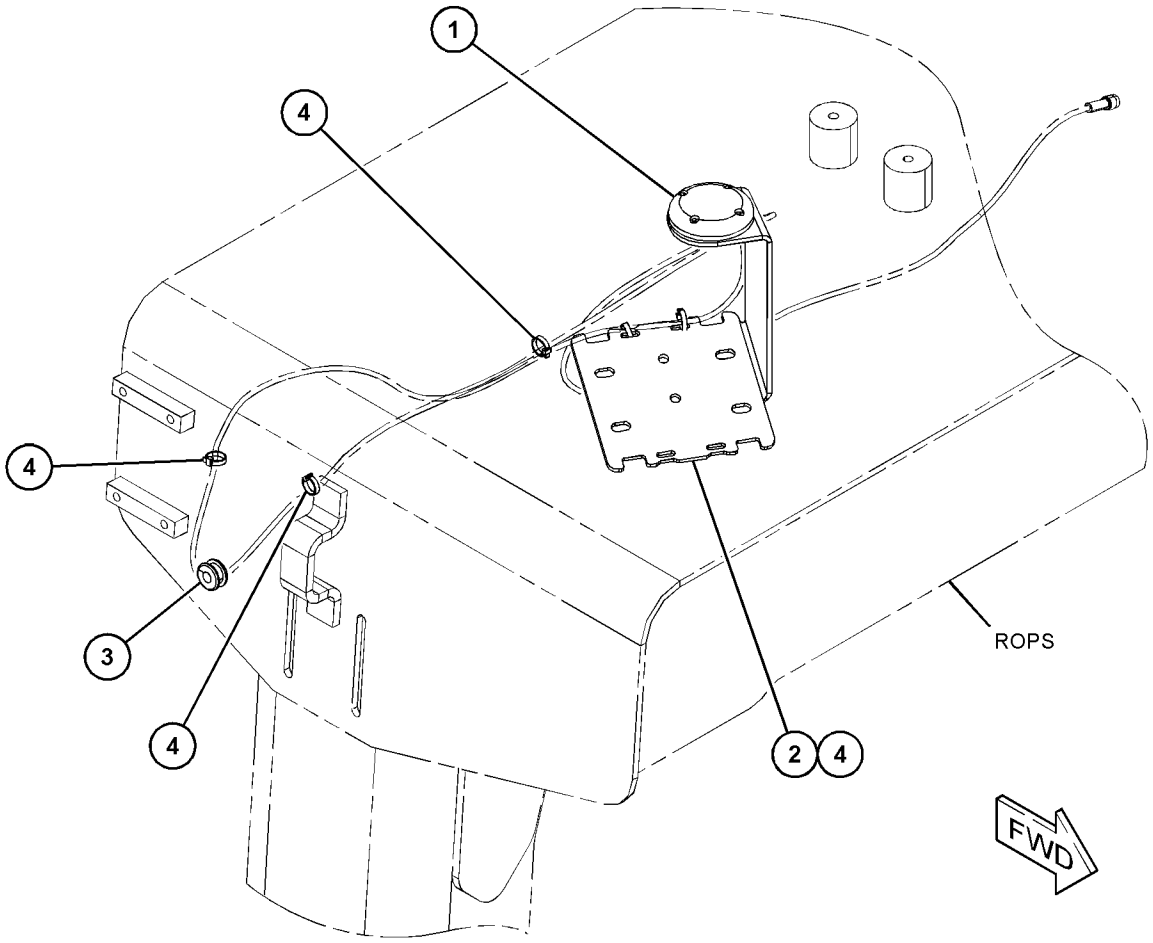

GRAPHIC #1 <END> g03440539

399-8993 MOUNTING GP-GRADE CONTROL—AUTO CARRY, AUTOMATIC RIPPER

S/N: RAB168-UP
PART OF 359-6359 INSTALLATION AR-CAES
AN ATTACHMENT

SMCS-7220 **i06113205**

NOTE	REF NO	GRAPHIC REF	PART NUMBER	QTY	PART NAME 1 2 3 4 5 6 (PRODUCT LEVEL)	SEE PAGE
	1	1	**372-4806**	1	ANTENNA (GPS)	
C	2	1	**472-6229**	1	BRACKET	
C	3	1	**5P-1075**	4	WASHER-HARD (10.2X22.5X3-MM THK)	
C	4	1	**7K-1181**	7	STRAP-CABLE	
C	5	1	**6V-8801**	2	NUT (3/8-16-THD)	
C	6	1	**8T-2502**	2	BOLT (3/8-16X1.125-IN)	

C - CHANGE FROM PREVIOUS TYPE

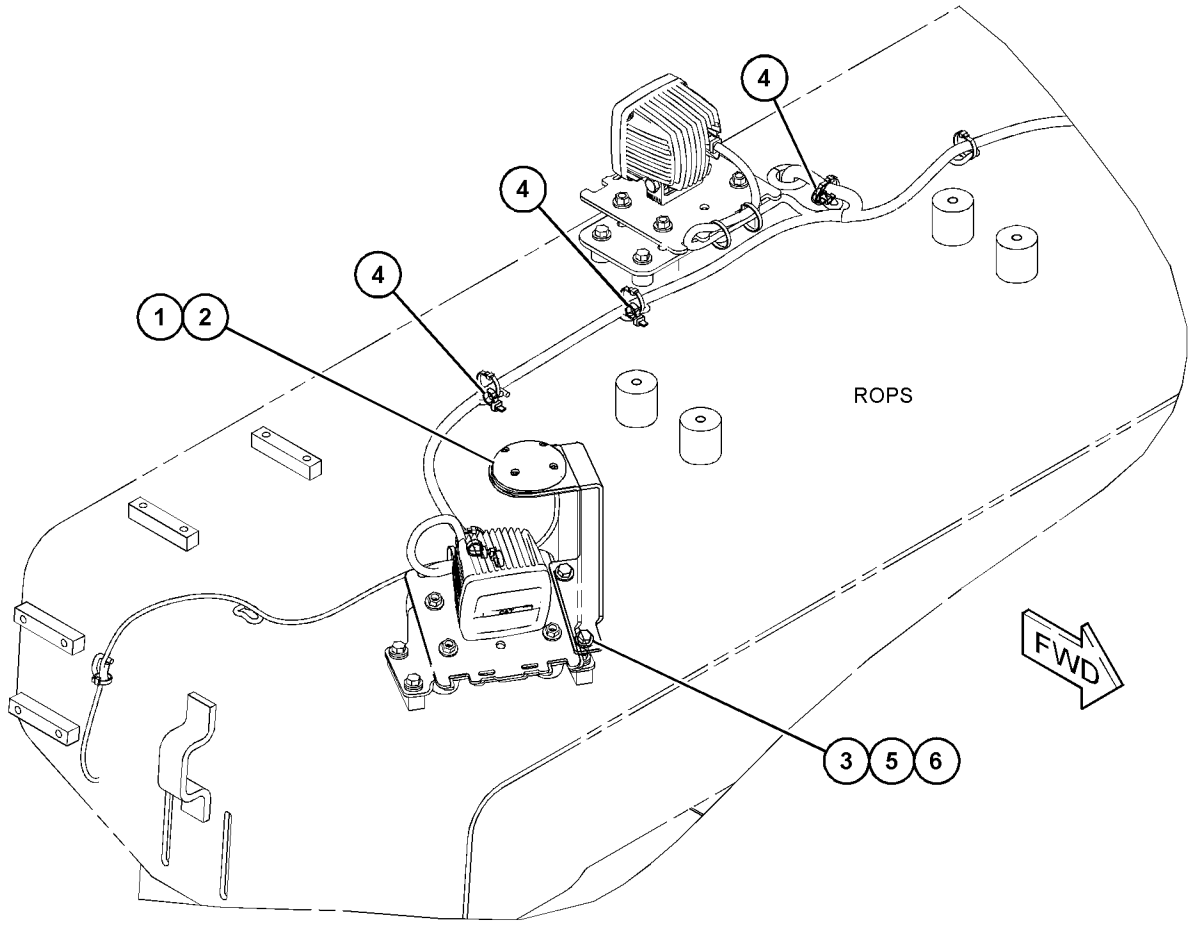

GRAPHIC #1 <END> g03845389

399-8996 MOUNTING GP-GRADE CONTROL–CHASSIS

S/N: RAB1-UP
PART OF 359-6360 INSTALLATION AR-CAES
AN ATTACHMENT

SMCS-7220 **i05488821**

NOTE	REF NO	GRAPHIC REF	PART NUMBER	QTY	PART NAME 1 2 3 4 5 6 (PRODUCT LEVEL)	SEE PAGE
	1	1	**338-5535**	2	ANTENNA (GPS)	
	2	1	**439-1013**	2	PLATE AS	
	3	1	**4L-9337**	8	BOLT (3/8-16X1.5-IN)	
	4	1	**5P-1075**	16	WASHER-HARD (10.2X22.5X3-MM THK)	
M	5	1	**8T-4137**	8	BOLT (M10X1.5X20-MM)	

M - METRIC PART

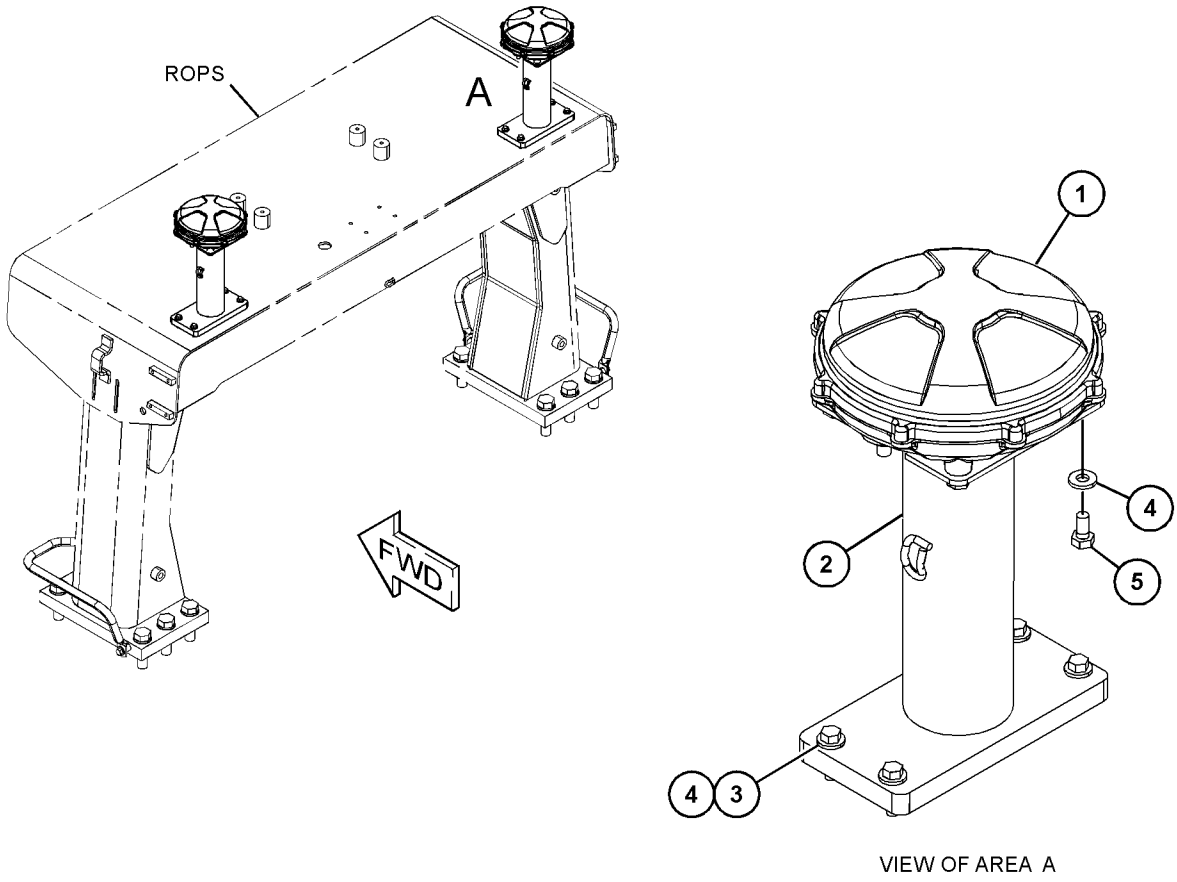

VIEW OF AREA A

GRAPHIC #1 <END> g03480776

422-3791 MOUNTING GP-GRADE CONTROL–CHASSIS

S/N: RAB1-281
PART OF 359-6353, 359-6359 INSTALLATION AR-CAES
AN ATTACHMENT

SMCS-7220 **i05443131**

NOTE	REF NO	GRAPHIC REF	PART NUMBER	QTY	PART NAME 1 2 3 4 5 6 (PRODUCT LEVEL)	SEE PAGE
	1	1	**390-6990**	1	PLATE AS	
	2	1	**422-3792**	1	HARNESS AS-CHASSIS (CHASSIS)	
		1	**370-4059**	1	KIT-RECEPTACLE (12-PIN)	
					(INCLUDES RECEPTACLE KIT & WEDGE)	
		1	**363-9053**	1	CAP AS-CONNECTOR	
		1	**9W-0852**	2	PIN-CONNECTOR (14-GA TO 16-GA)	
		1	**9W-3401**	2	PLATE	
		1	**8T-8737**	8	PLUG-SEAL	
		1	**1S-9593**	1	STRAP-CABLE	
E		1	**119-3662**		TUBE-HEAT SHRINK (10.85-MM DIA) (7-CM)	
E		1	**125-7874**		TUBE-HEAT SHRINK (5.72-MM DIA) (5-CM)	
	3	1	**4P-7428**	1	CLIP	
	4	1	**7K-1181**	11	STRAP-CABLE	
M	5	1	**8T-4194**	4	BOLT (M12X1.75X50-MM)	
	6	1	**8T-4223**	4	WASHER-HARD (13.5X25.5X3-MM THK)	

E - ORDER BY THE CENTIMETER
M - METRIC PART

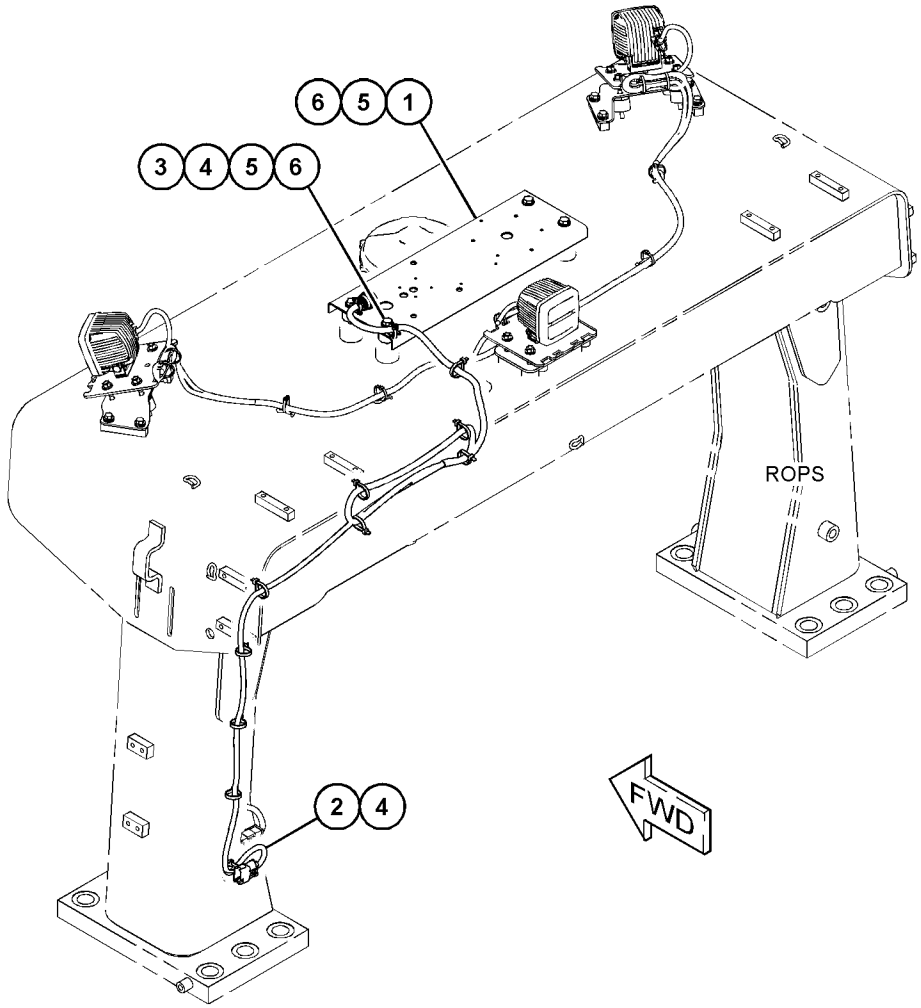

GRAPHIC #1 <END> g03439656

422-3791 MOUNTING GP-GRADE CONTROL–CHASSIS

S/N: RAB282-UP

PART OF 359-6353, 359-6359 INSTALLATION AR-CAES

AN ATTACHMENT

SMCS-7220 **i06541442**

NOTE	REF NO	GRAPHIC REF	PART NUMBER	QTY	PART NAME 1 2 3 4 5 6 (PRODUCT LEVEL)	SEE PAGE
C	1	1	**439-1013**	1	PLATE AS	
CY	2	1	**480-7702**	1	HARNESS AS-RADIO	269
C	3	1	**4L-9337**	4	BOLT (3/8-16X1.5-IN)	
C	4	1	**5P-1075**	4	WASHER-HARD (10.2X22.5X3-MM THK)	
C	5	1	**7K-1181**	13	STRAP-CABLE	

C - CHANGE FROM PREVIOUS TYPE
Y - SEPARATE ILLUSTRATION

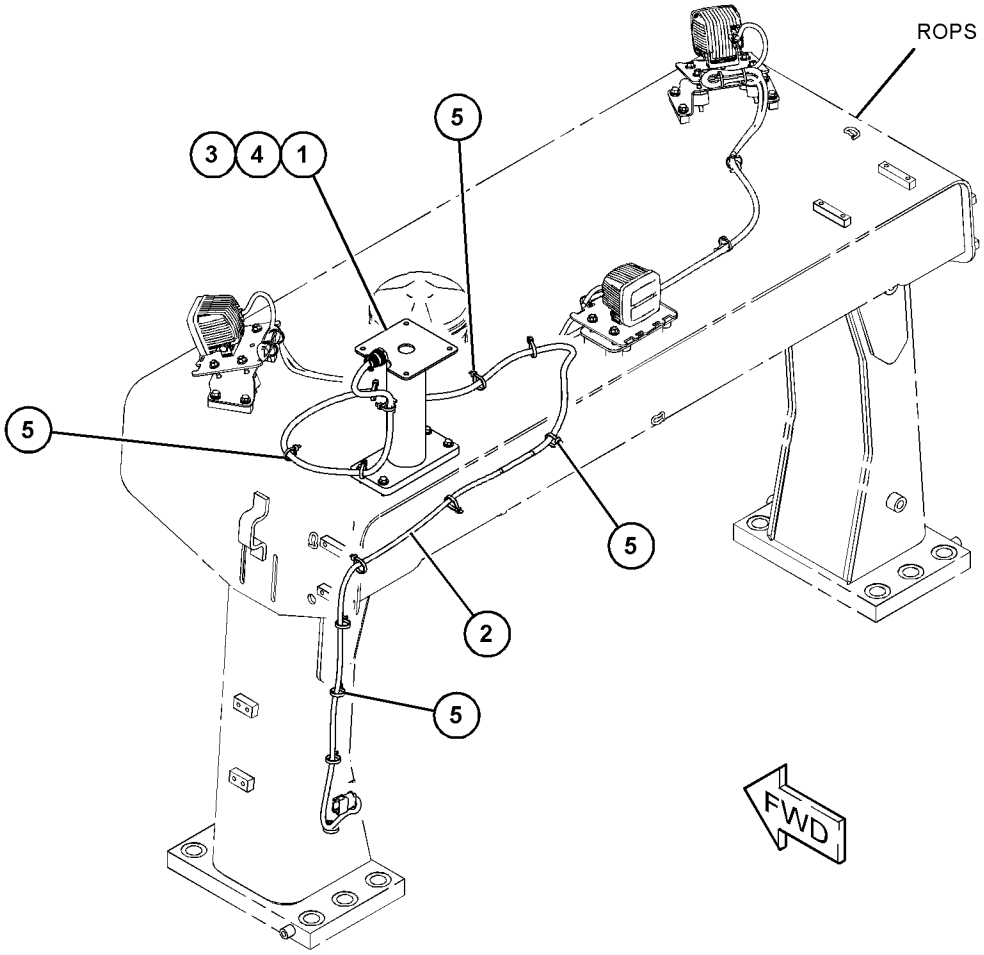

GRAPHIC #1 <END> g06034558

492-5064 MOUNTING GP-GRADE CONTROL

S/N: RAB1-UP
PART OF 474-5717 ELECTRICAL AR
AN ATTACHMENT

SMCS-7220 **i06538376**

NOTE	REF NO	GRAPHIC REF	PART NUMBER	QTY	PART NAME 1 2 3 4 5 6 (PRODUCT LEVEL)	SEE PAGE
	1	1	**439-1013**	2	PLATE AS	
	2	1	**4L-9337**	8	BOLT (3/8-16X1.5-IN)	
	3	1	**5P-1075**	16	WASHER-HARD (10.2X22.5X3-MM THK)	
M	4	1	**8T-4137**	8	BOLT (M10X1.5X20-MM)	

M - METRIC PART

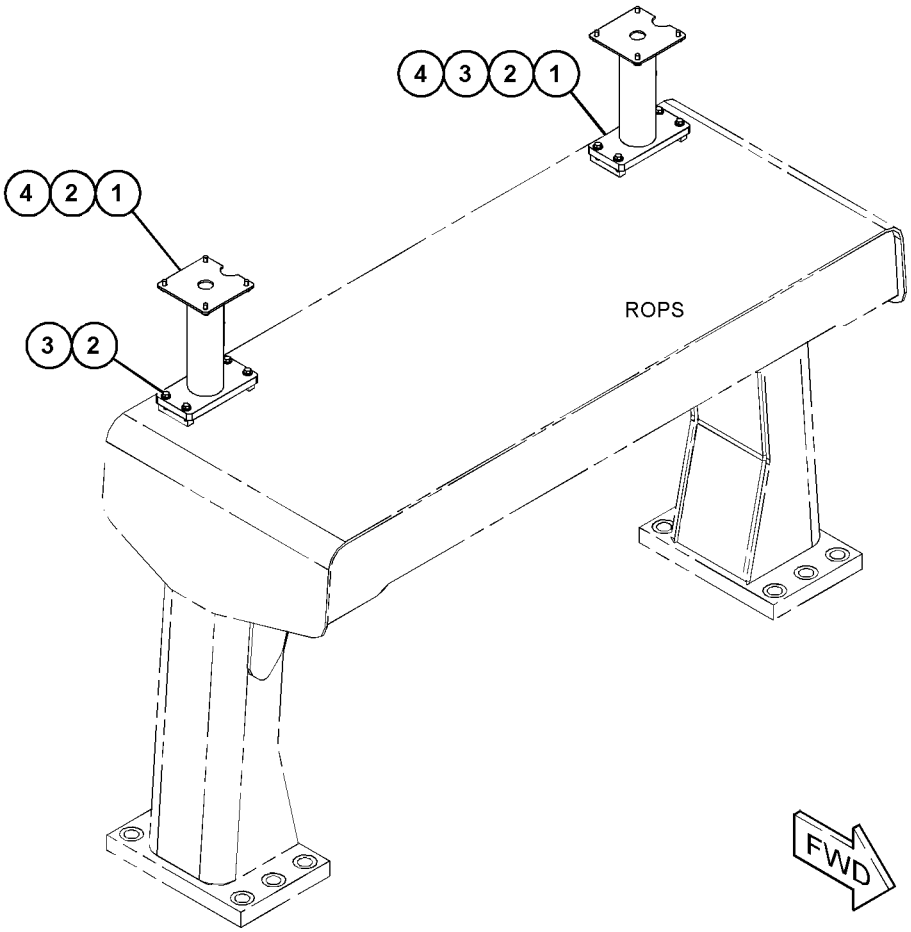

GRAPHIC #1 <END> g06033546

436-8095 MOUNTING GP-RECEIVER

S/N: RAB1-UP
LH
FIELD INSTALLATION
TYPE 1

SMCS-7009, 7010 **i06602289**

NOTE	REF NO	GRAPHIC REF	PART NUMBER	QTY	PART NAME 1 2 3 4 5 6 (PRODUCT LEVEL)	SEE PAGE
	1	1	**456-5037**	1	BRACKET AS	
M	2	1	**344-5673**	2	NUT (M6X1-THD)	
	3	1	**451-5918**	1	HARNESS AS-WIRING (REMOTE CONTROL)	
		1	**155-2258**	1	WEDGE-PLUG LOCK (12-PIN)	
		1	**155-2255**	1	KIT-CONNECTING PLUG (12-PIN)	
					(INCLUDES PLUG AS, WEDGE & INTERFACE SEAL)	
		1	**102-8804**	1	KIT-RECEPTACLE (4-PIN)	
					(INCLUDES RECEPTACLE AS & WEDGE)	
		1	**8T-8737**	8	PLUG-SEAL	
		1	**9W-0844**	2	SOCKET-CONNECTOR (14-GA TO 16-GA)	
		1	**9W-0852**	2	PIN-CONNECTOR (14-GA TO 16-GA)	
		1	**9X-3401**	2	PIN-CONNECTOR (16-GA TO 18-GA)	
		1	**9X-3402**	2	SOCKET-CONNECTOR (16-GA TO 18-GA)	
E		1	**114-8843**		SLEEVE-PLASTIC (20-CM)	
	4	1	**5P-1075**	4	WASHER-HARD (10.2X22.5X3-MM THK)	
M	5	1	**6V-7357**	2	BOLT (M6X1X25-MM)	
	6	1	**6V-8801**	2	NUT (3/8-16-THD)	
	7	1	**7K-1181**	6	STRAP-CABLE	
	8	1	**8T-2502**	2	BOLT (3/8-16X1.125-IN)	
	9	1	**9X-8256**	4	WASHER (6.6X12X2-MM THK)	

E - ORDER BY THE CENTIMETER
M - METRIC PART

436-8095 **MOUNTING GP-RECEIVER (**contd.**)** **i06602289**

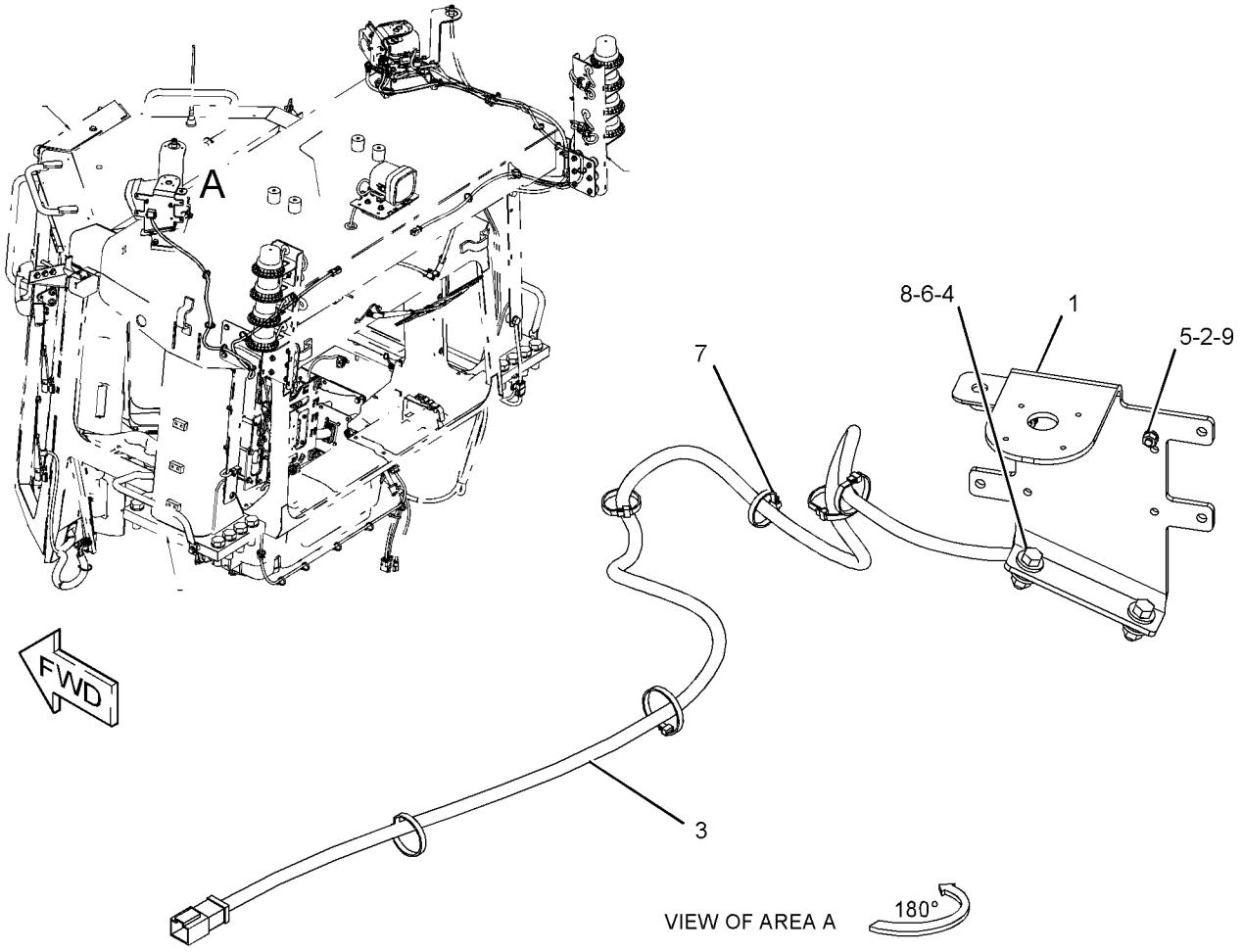

GRAPHIC #1 <END> g03789562

436-8095 MOUNTING GP-RECEIVER

S/N: RAB1-UP
LH
FIELD INSTALLATION
TYPE 2

SMCS-7009, 7010 **i06559771**

NOTE	REF NO	GRAPHIC REF	PART NUMBER	QTY	PART NAME 1 2 3 4 5 6 (PRODUCT LEVEL)	SEE PAGE
C	1	1	**290-2770**	1	ANTENNA	
C	2	1	**365-2131**	1	CABLE AS	
C	3	1	**373-8620**	1	RECEIVER GP-SATELLITE	
	4	1	**451-5918**	1	HARNESS AS-WIRING (REMOTE CONTROL)	
		1	**155-2258**	1	WEDGE-PLUG LOCK (12-PIN)	
		1	**155-2255**	1	KIT-CONNECTING PLUG (12-PIN)	
					(INCLUDES PLUG AS, WEDGE & INTERFACE SEAL)	
		1	**102-8804**	1	KIT-RECEPTACLE (4-PIN)	
					(INCLUDES RECEPTACLE AS & WEDGE)	
		1	**8T-8737**	8	PLUG-SEAL	
		1	**9W-0844**	2	SOCKET-CONNECTOR (14-GA TO 16-GA)	
		1	**9W-0852**	2	PIN-CONNECTOR (14-GA TO 16-GA)	
		1	**9X-3401**	2	PIN-CONNECTOR (16-GA TO 18-GA)	
		1	**9X-3402**	2	SOCKET-CONNECTOR (16-GA TO 18-GA)	
E		1	**114-8843**		SLEEVE-PLASTIC (20-CM)	
C	5	1	**475-8763**	1	BRACKET AS	
CM	6	1	**344-5673**	4	NUT (M6X1-THD)	
C	7	1	**4P-7581**	2	CLIP	
	8	1	**5P-1075**	4	WASHER-HARD (10.2X22.5X3-MM THK)	
CM	9	1	**6V-7357**	4	BOLT (M6X1X25-MM)	
	10	1	**6V-8801**	2	NUT (3/8-16-THD)	
C	11	1	**7K-1181**	8	STRAP-CABLE	
	12	1	**8T-2502**	2	BOLT (3/8-16X1.125-IN)	
C	13	1	**9X-8256**	8	WASHER (6.6X12X2-MM THK)	

C - CHANGE FROM PREVIOUS TYPE
E - ORDER BY THE CENTIMETER
M - METRIC PART

436-8095 **MOUNTING GP-RECEIVER (**contd.**)** **i06559771**

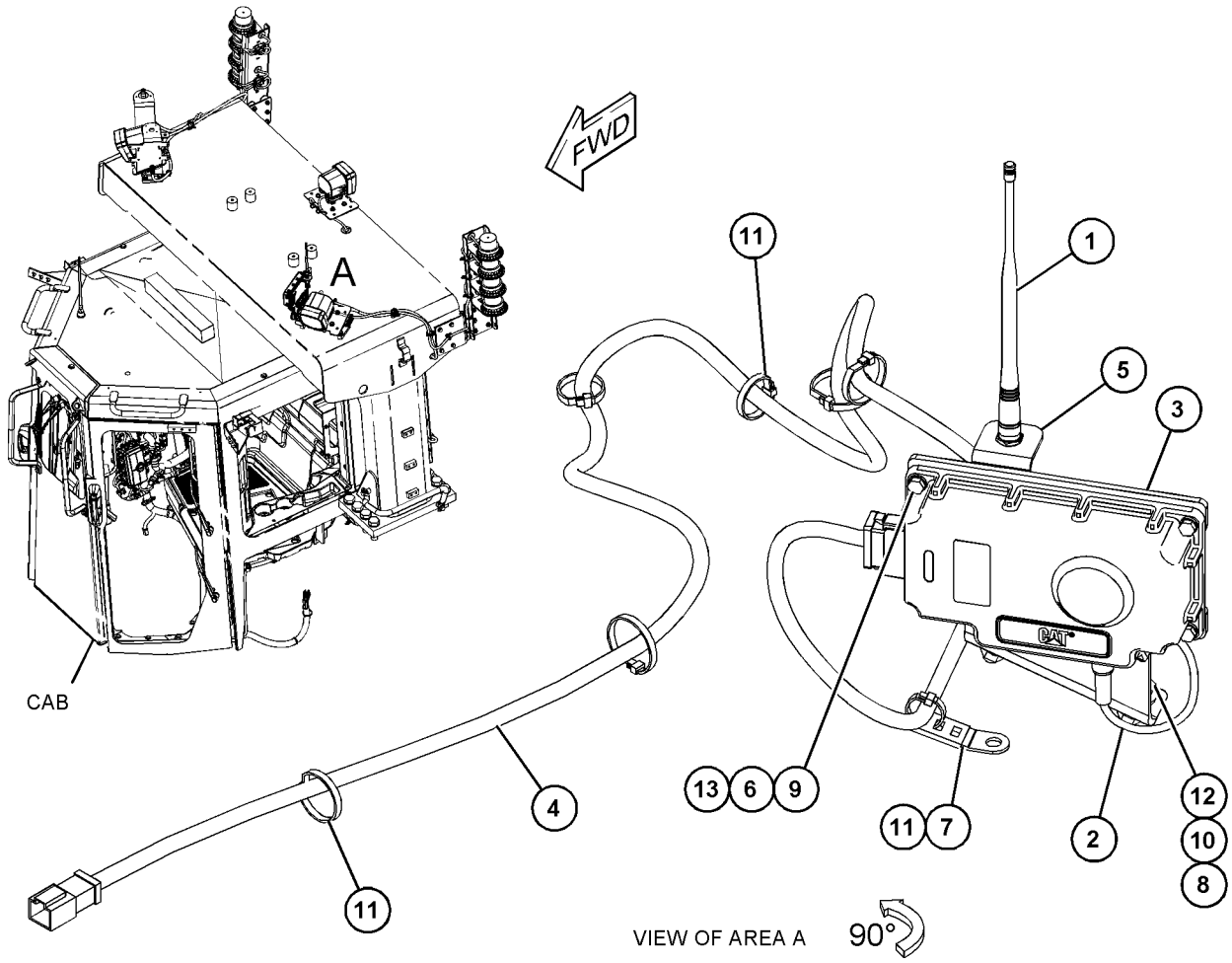

GRAPHIC #1 <END> g06035330

436-8097 MOUNTING GP-RECEIVER

S/N: RAB1-UP

FIELD INSTALLATION

SMCS-7009, 7010

i06292412

NOTE	REF NO	GRAPHIC REF	PART NUMBER	QTY	PART NAME 1 2 3 4 5 6 (PRODUCT LEVEL)	SEE PAGE
	1	1	**456-5037**	1	BRACKET AS	
	2	1	**457-2315**	1	HARNESS AS-WIRING	
		1	**102-8805**	1	KIT-RECEPTACLE (6-PIN)	
					(INCLUDES RECEPTACLE AS & WEDGE)	
		1	**9W-0852**	3	PIN-CONNECTOR (14-GA TO 16-GA)	
		1	**9X-3401**	3	PIN-CONNECTOR (16-GA TO 18-GA)	
		1	**9X-4385**	1	PLUG AS-CONNECTOR (6-PIN)	
E		1	**114-8843**		SLEEVE-PLASTIC (20-CM)	
M	3	1	**5C-2874**	4	NUT (M5X0.8-THD)	
	4	1	**4P-7581**	2	CLIP	
	5	1	**5P-1075**	4	WASHER-HARD (10.2X22.5X3-MM THK)	
	6	1	**6V-8801**	2	NUT (3/8-16-THD)	
	7	1	**7K-1181**	8	STRAP-CABLE	
	8	1	**8T-2502**	2	BOLT (3/8-16X1.125-IN)	
	9	1	**9X-8256**	8	WASHER (6.6X12X2-MM THK)	
	10	1	**8U-5467**	4	WASHER	
M	11	1	**6V-2313**	4	BOLT (M5X0.8X30-MM)	

E - ORDER BY THE CENTIMETER
M - METRIC PART

436-8097 **MOUNTING GP-RECEIVER (**contd.**)** **i06292412**

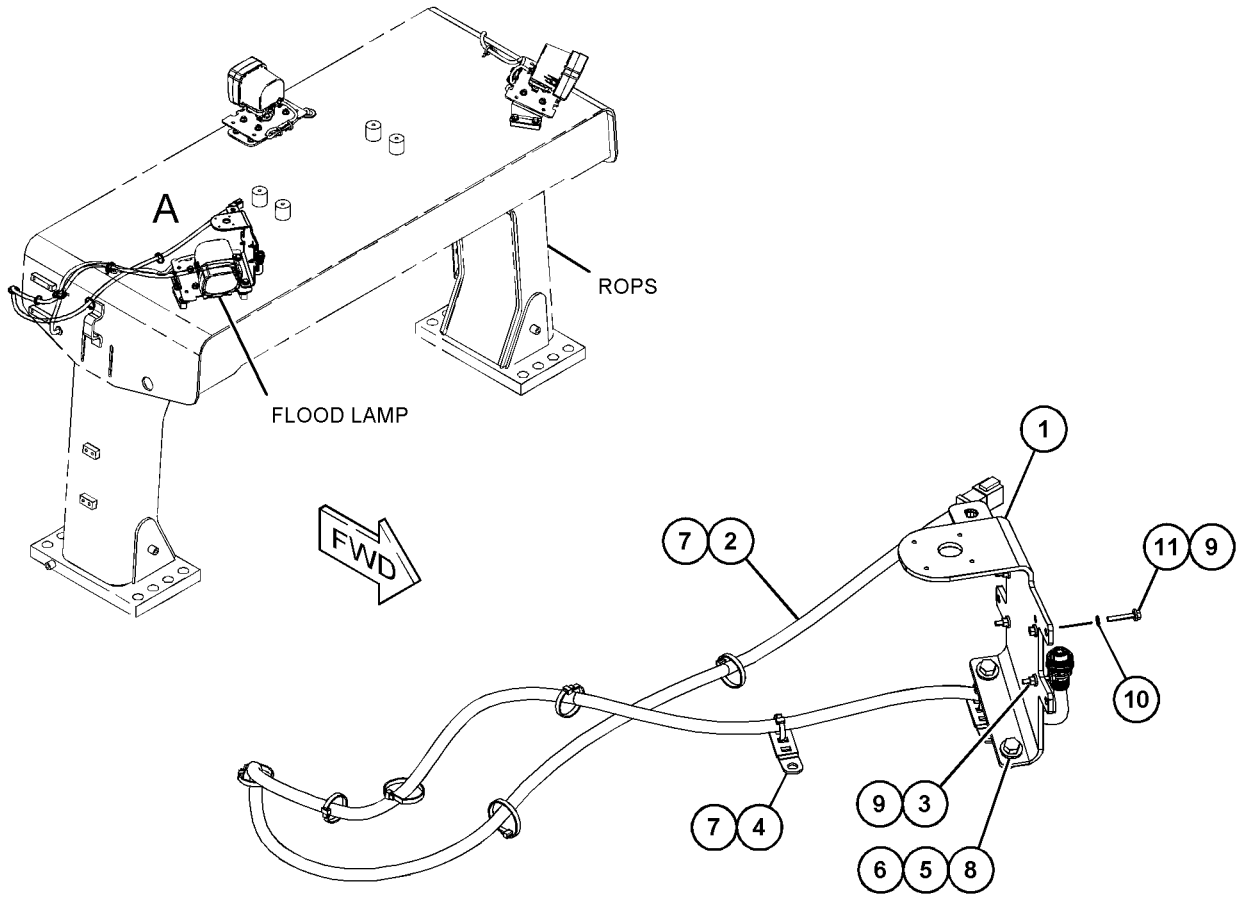

VIEW OF AREA A

GRAPHIC #1 <END> g06033763

446-0271 MOUNTING GP-RECEIVER

S/N: RAB1-UP
RH
FIELD INSTALLATION

SMCS-7009, 7010

i06602327

NOTE	REF NO	GRAPHIC REF	PART NUMBER	QTY	PART NAME 1 2 3 4 5 6 (PRODUCT LEVEL)	SEE PAGE
	1	1	**456-5037**	1	BRACKET AS	
Y	2	1	**458-3628**	1	HARNESS AS-WIRING (RECEIVER)	271
M	3	1	**344-5673**	4	NUT (M6X1-THD)	
	4	1	**4P-7581**	2	CLIP	
	5	1	**5P-1075**	4	WASHER-HARD (10.2X22.5X3-MM THK)	
M	6	1	**6V-7357**	4	BOLT (M6X1X25-MM)	
	7	1	**6V-8801**	2	NUT (3/8-16-THD)	
	8	1	**7K-1181**	8	STRAP-CABLE	
	9	1	**8T-2502**	2	BOLT (3/8-16X1.125-IN)	
	10	1	**9X-8256**	8	WASHER (6.6X12X2-MM THK)	

M - METRIC PART
Y - SEPARATE ILLUSTRATION

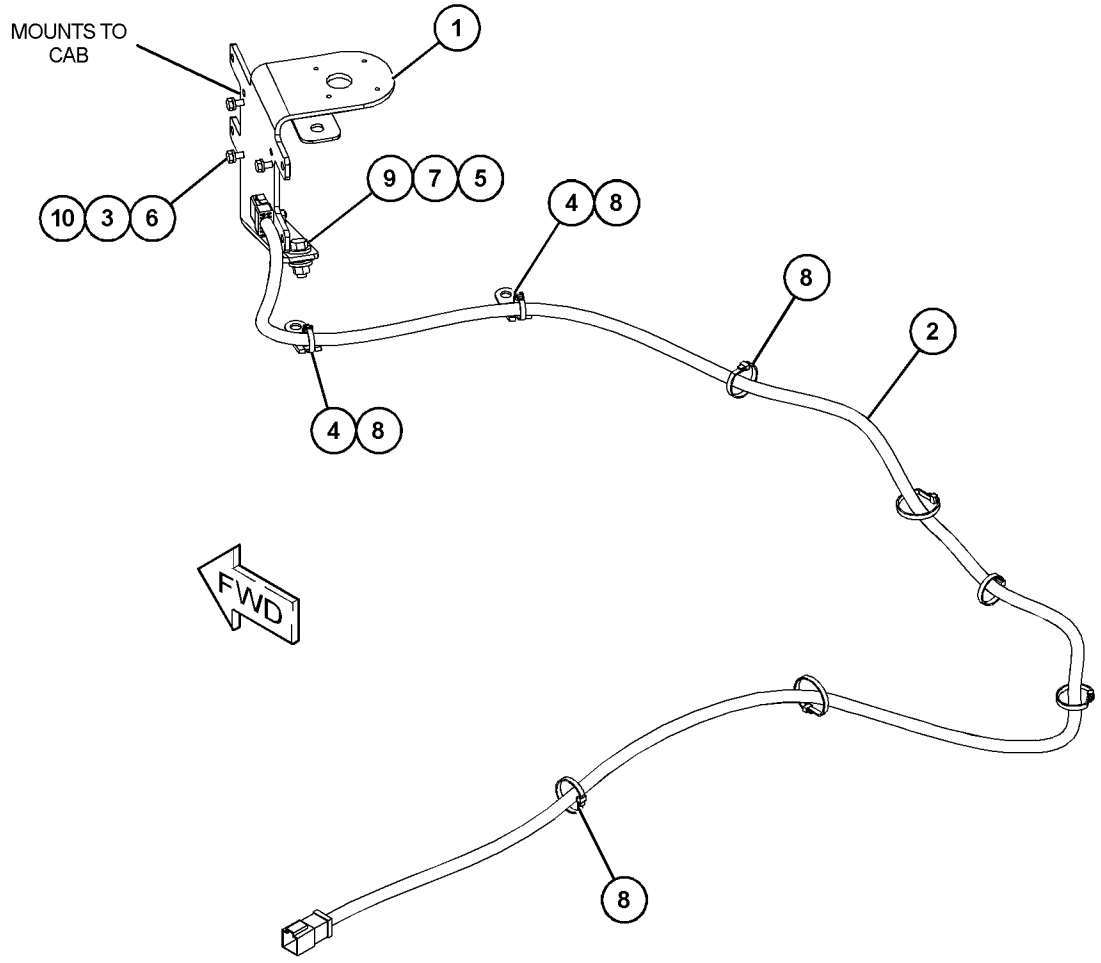

GRAPHIC #1 <END> g03746264

446-0273 MOUNTING GP-RECEIVER

S/N: RAB1-UP

FIELD INSTALLATION

SMCS-7009, 7010

i06096436

NOTE	REF NO	GRAPHIC REF	PART NUMBER	QTY	PART NAME 1 2 3 4 5 6 (PRODUCT LEVEL)	SEE PAGE
	1	1	**7K-1181**	5	STRAP-CABLE	
	2	1	**8C-5607**	6	MOUNT-ISOLATION	
	3	1	**451-5919**	1	HARNESS AS-WIRING (RECEIVER)	
		1	**102-8805**	1	KIT-RECEPTACLE (6-PIN)	
					(INCLUDES RECEPTACLE AS & WEDGE)	
		1	**9W-0852**	3	PIN-CONNECTOR (14-GA TO 16-GA)	
		1	**9X-3401**	3	PIN-CONNECTOR (16-GA TO 18-GA)	
		1	**9X-4385**	1	PLUG AS-CONNECTOR (6-PIN)	
E		1	**114-8843**		SLEEVE-PLASTIC (20-CM)	
	4	1	**458-6619**	1	BRACKET AS	
M	5	1	**5C-2874**	4	NUT (M5X0.8-THD)	
	6	1	**4P-7581**	2	CLIP	
M	7	1	**6V-2313**	4	BOLT (M5X0.8X30-MM)	
	8	1	**8C-5608**	3	SPACER (6.5X9.5X25.4-MM THK)	
M	9	1	**8C-8451**	3	BOLT (M6X1X40-MM)	
	10	1	**9X-6165**	3	WASHER (6.5X22X2.5-MM THK)	
	11	1	**9X-8256**	8	WASHER (6.6X12X2-MM THK)	
	12	1	**8U-5467**	4	WASHER	

E - ORDER BY THE CENTIMETER
M - METRIC PART

446-0273 **MOUNTING GP-RECEIVER (**contd.**)** **i06096436**

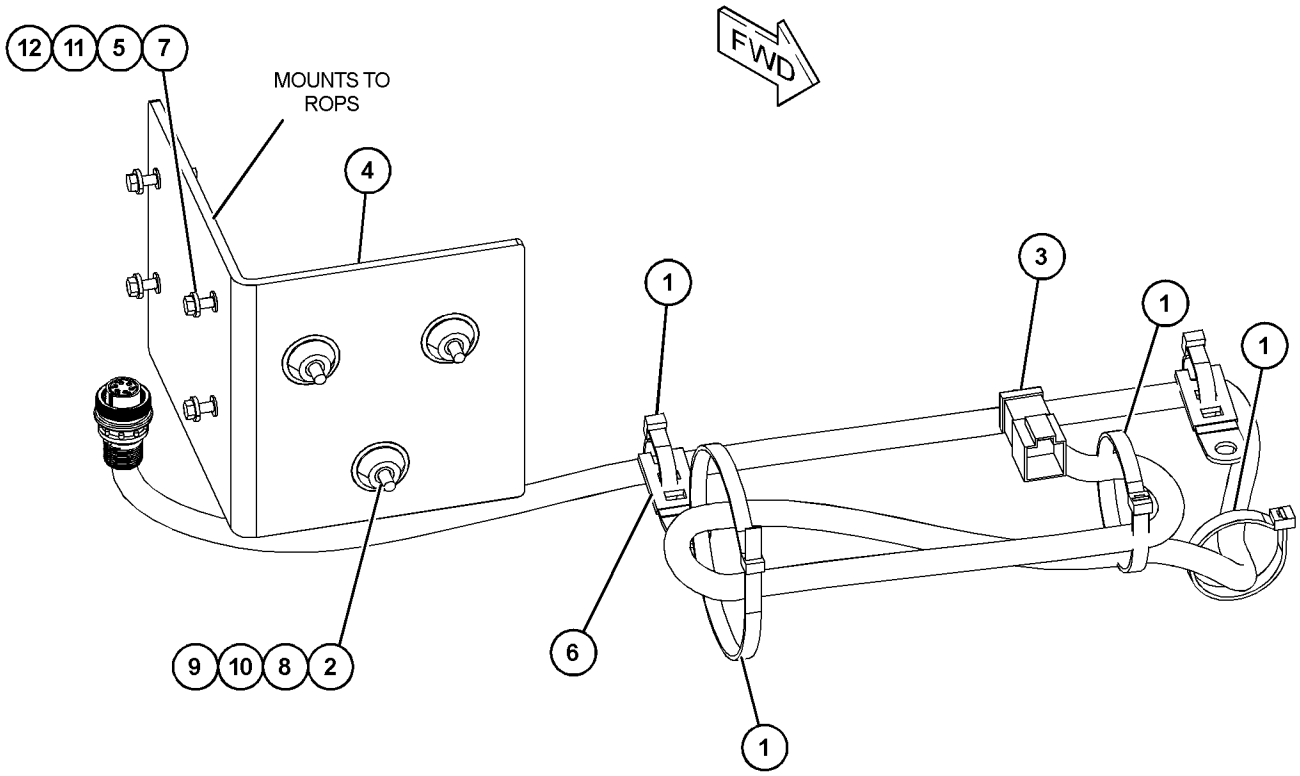

GRAPHIC #1 <END> g03810642

380-9599 MOUNTING GP-SENSOR—DRAWBAR

S/N: RAB1-UP
PART OF 399-7226 DRAWBAR GP
AN ATTACHMENT

SMCS-5953 **i05843953**

NOTE	REF NO	GRAPHIC REF	PART NUMBER	QTY	PART NAME 1 2 3 4 5 6 (PRODUCT LEVEL)	SEE PAGE
	1	1	**124-7000**	1	PLATE AS	
	2	1	**335-3370**	1	HARNESS AS-WIRING (GROUND LEVEL SERVICE)	
		1	**102-8803**	2	KIT-RECEPTACLE (3-PIN)	
					(INCLUDES RECPETACLE AS & WEDGE)	
G		1	**165-0021**		HOSE (36.3-IN)	
		1	**8T-8730**	2	SOCKET-CONNECTOR (16-GA TO 18-GA)	
		1	**8T-8737**	10	PLUG-SEAL	
		1	**9W-0844**	4	SOCKET-CONNECTOR (14-GA TO 16-GA)	
		1	**9X-3401**	3	PIN-CONNECTOR (16-GA TO 18-GA)	
		1	**9X-3402**	17	SOCKET-CONNECTOR (16-GA TO 18-GA)	
		1	**9X-7670**	1	COUPLING AS	
		1	**155-2255**	1	KIT-CONNECTING PLUG (12-PIN)	
		1	**155-2260**	2	KIT-CONNECTING PLUG (3-PIN)	
		1	**155-2270**	1	KIT-CONNECTING PLUG (2-PIN)	
		1	**155-2271**	1	KIT-CONNECTING PLUG (4-PIN)	
		1	**155-2274**	1	KIT-CONNECTING PLUG (6-PIN)	
					(EACH PLUG KIT INCLUDES PLUG AS, WEDGE, & INTERFACE SEAL)	
		1	**274-3774**	1	CAP-CONNECTOR	
		1	**274-3777**	1	CAP-CONNECTOR	
E		1	**311-4859**		TUBE-HEAT SHRINK (48-MM DIA) (8-CM)	
		1	*387-5366*	1	HARNESS AS-WIRING	
		1	**102-8804**	1	KIT-RECEPTACLE (4-PIN)	
					(INCLUDES RECEPTACLE AS & WEDGE)	
		1	**8T-8729**	2	PIN-CONNECTOR (16-GA TO 18-GA)	
	3	1	**5P-1075**	1	WASHER-HARD (10.2X22.5X3-MM THK)	
	4	1	**5P-7464**	1	CLIP (SLOT)	
	5	1	**5P-7465**	1	CLIP (TAB)	
	6	1	**5S-7379**	1	BOLT (3/8-16X0.875-IN)	
	7	1	**7K-1181**	1	STRAP-CABLE	
	8	1	**8T-4121**	4	WASHER-HARD (11X21X2.5-MM THK)	
M	9	1	**8T-4136**	4	BOLT (M10X1.5X25-MM)	

E - ORDER BY THE CENTIMETER
G - ORDER BY THE INCH
M - METRIC PART

380-9599 **MOUNTING GP-SENSOR (**contd.**)** **i05843953**

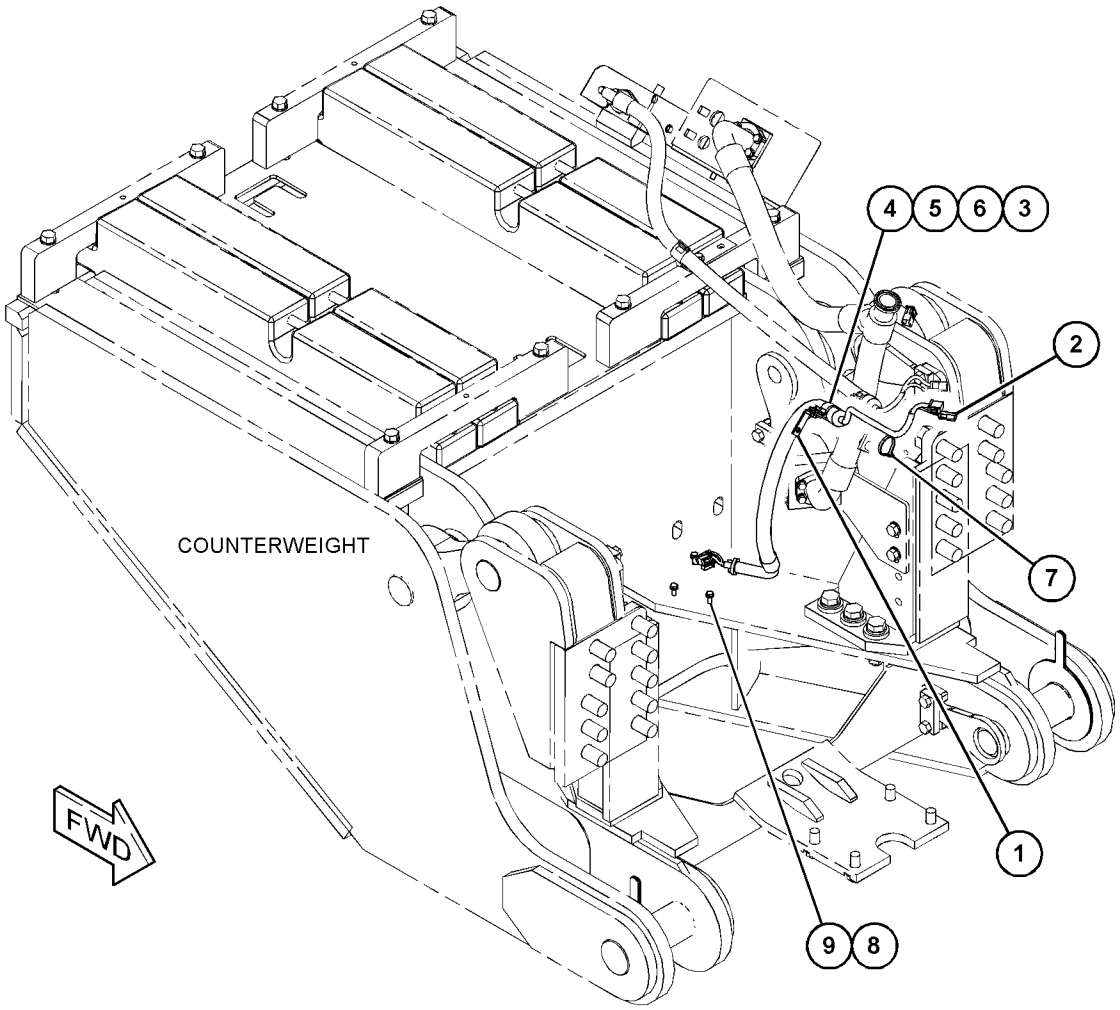

GRAPHIC #1 <END> g03497337

419-8890 PANEL GP-FUSE

S/N: RAB1-UP
PART OF 377-6104 WIRING GP-PLATFORM
AN ATTACHMENT

SMCS-1417 **i05831742**

NOTE	REF NO	GRAPHIC REF	PART NUMBER	QTY	PART NAME 1 2 3 4 5 6 (PRODUCT LEVEL)	SEE PAGE
	1	1	**113-8490**	10	FUSE (10-AMPERE)	
	2	1	**113-8491**	23	FUSE (15-AMPERE)	
	3	1	**113-8492**	3	FUSE (20-AMPERE)	
	4	1	**248-2841**	9	RELAY AS (24-VOLT)	
	5	1	**280-2709**	6	CIRCUIT BREAKER AS (15-AMPERE, MANUAL RESET)	
	6	1	**280-2710**	2	CIRCUIT BREAKER AS (20-AMPERE, MANUAL RESET)	
	7	1	**393-1602**	1	COVER-FUSE	
M	8	1	**5C-7261**	2	NUT (M8X1.25-THD)	
	9	1	**264-3617**	2	LOCKWASHER	
	10	1	**7X-0608**	2	WASHER-HARD (10.2X16X2-MM THK)	
					PARTS SHOWN IN GRAPHIC(S) WITHOUT A REFERENCE NUMBER ARE NOT SERVICED SEPARATELY	

M - METRIC PART

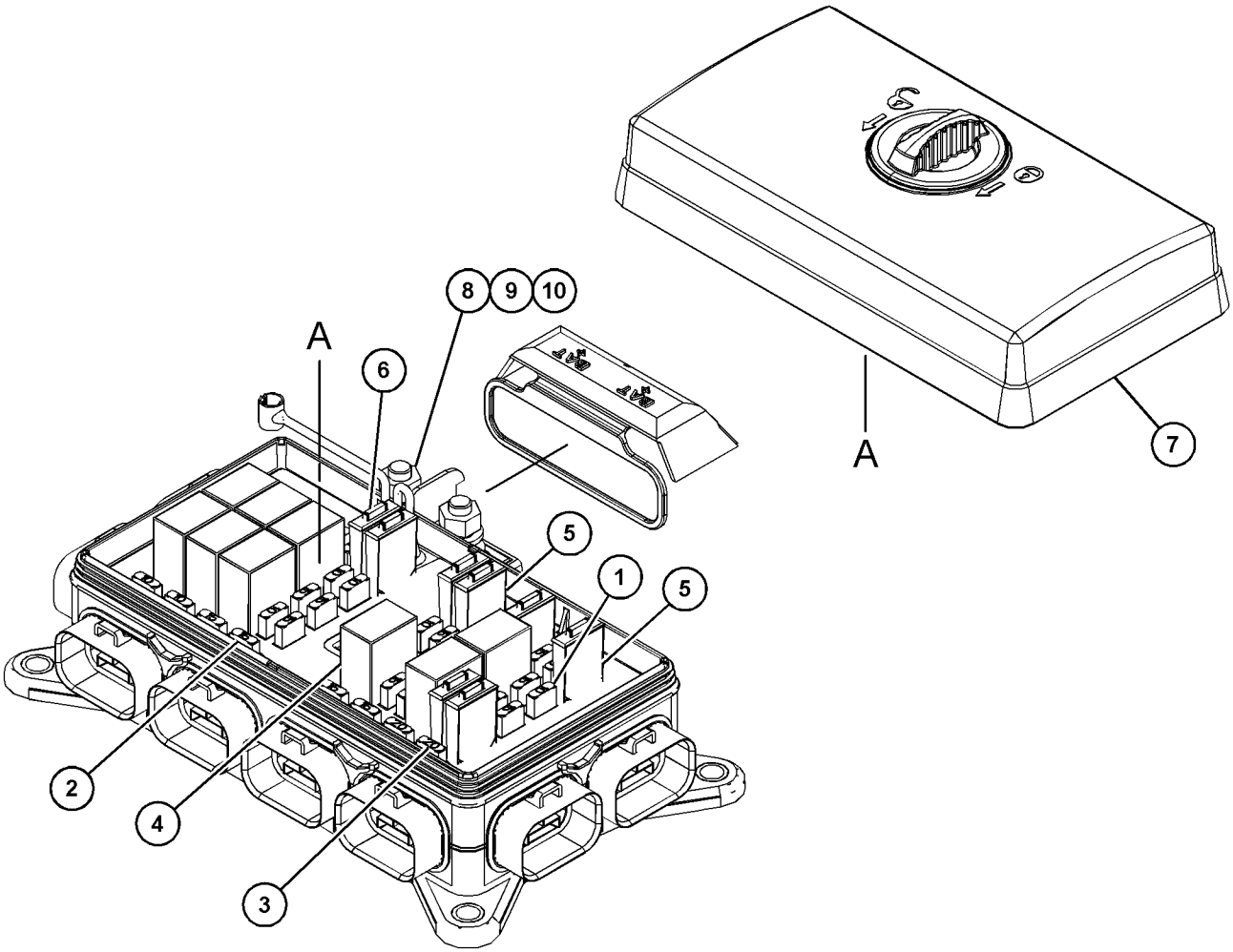

GRAPHIC #1 <END> g03691705

443-1880 PANEL GP-FUSE

S/N: RAB1-UP

PART OF 457-5010 WIRING GP-REMOTE CONTROL

AN ATTACHMENT

SMCS-1417 **i05558810**

NOTE	REF NO	GRAPHIC REF	PART NUMBER	QTY	PART NAME 1 2 3 4 5 6 (PRODUCT LEVEL)	SEE PAGE
	1	1	**248-2841**	16	RELAY AS (24-VOLT) (FUSE PANEL)	
	2	1	**113-8491**	1	FUSE (15-AMPERE)	
	3	1	**265-8182**	1	COVER-FUSE BLOCK	

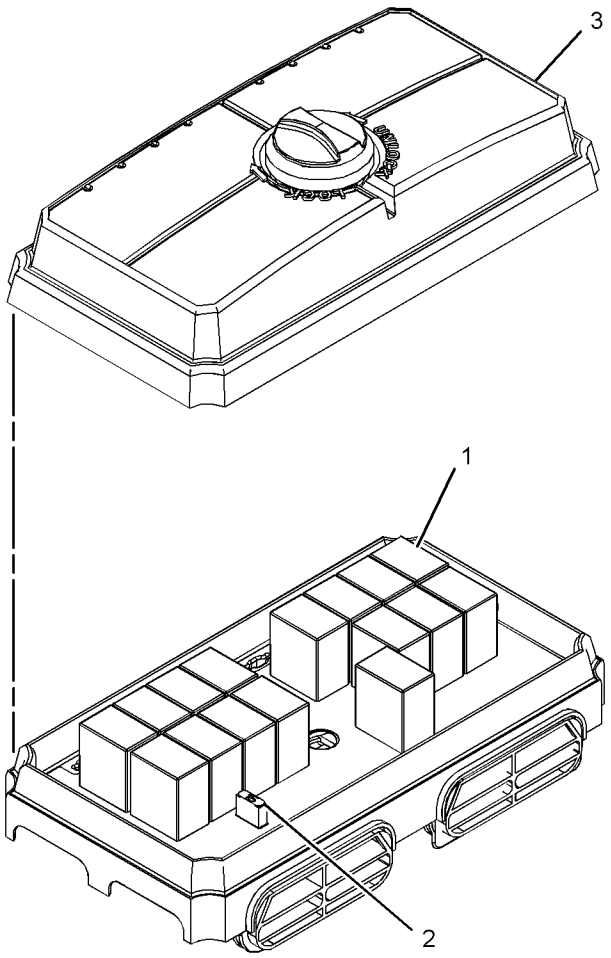

GRAPHIC #1 <END> g03531464

3T-9525 PLATE AS-BRUSH

S/N: RAB1-UP

PART OF 349-6530, 349-6571 STARTING MOTOR GP-ELECTRIC

AN ATTACHMENT

SMCS-1453, 4463 **i04083269**

NOTE	REF NO	GRAPHIC REF	PART NUMBER	QTY	PART NAME 1 2 3 4 5 6 (PRODUCT LEVEL)	SEE PAGE
	1	1	**6T-0372**	1	PLATE	
	2	1	**6T-0371**	1	INSULATOR	
	3	1	**9F-5599**	12	LOCKWASHER	
	4	1	**6T-0363**	6	HOLDER AS-BRUSH	
					(EACH INCLUDES)	
		1	**3T-9494**	1	SPRING	
	5	1	**3T-4709**	3	PLATE	
	6	1	**3T-4710**	3	PLATE	
	7	1	**2L-6679**	3	PLATE-INSULATOR	
	8	1	**7F-3525**	6	WASHER-SPECIAL (0.207X0.39X0.09-IN THK)	
	9	1	**5P-6298**	12	SCREW-MACHINE (10-32X0.5-IN)	

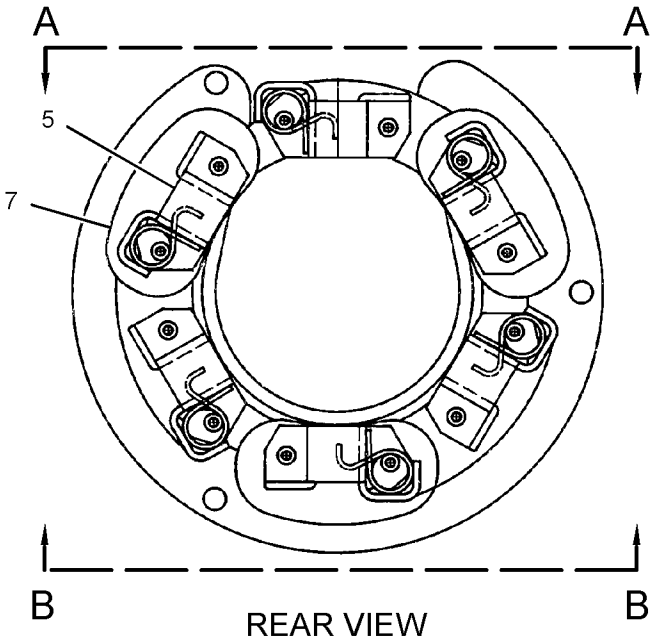

REAR VIEW

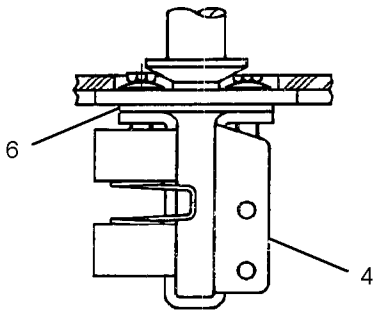

VIEW A-A

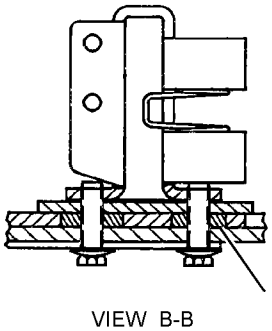

VIEW B-B

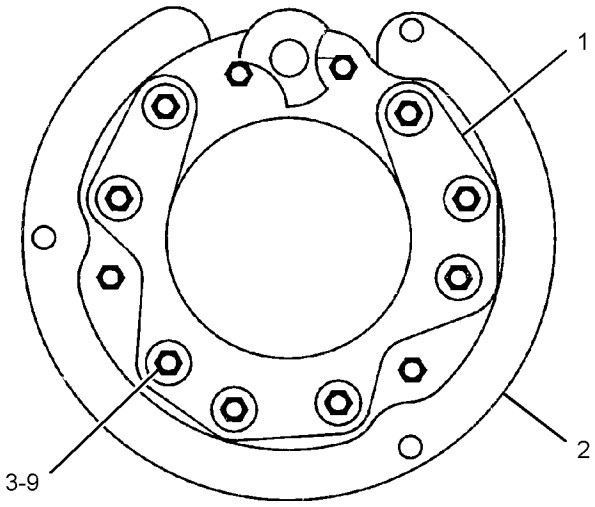

FRONT VIEW

GRAPHIC #1 <END> g02294074

336-3545 RADIO GP-COMMUNICATION–PRODUCT LINK 121SR

S/N: RAB1-UP

PART OF 420-9322 WIRING GP-COMMUNICATION

AN ATTACHMENT

SMCS-733T **i05317633**

NOTE	PART NUMBER	QTY	PART NAME 1 2 3 4 5 6 (PRODUCT LEVEL)	SEE PAGE
	434-1356	1	SOFTWARE GP-COMMUNICATION (PRODUCT LINK 121SR)	

<END>

440-2105 RADIO GP-COMMUNICATION–PL641E CELLULAR

S/N: RAB1-UP

PART OF 472-8277 INSTALLATION GP-COMMUNICATION

AN ATTACHMENT

SMCS-733T **i06587336**

NOTE	REF NO	GRAPHIC REF	PART NUMBER	QTY	PART NAME 1 2 3 4 5 6 (PRODUCT LEVEL)	SEE PAGE
	1	1	**449-7301**	1	FILM-INFORMATION (PL641 CELLULAR)	
F			**482-8138**	1	SOFTWARE GP-MONITOR (CELLULAR)	

F - NOT SHOWN

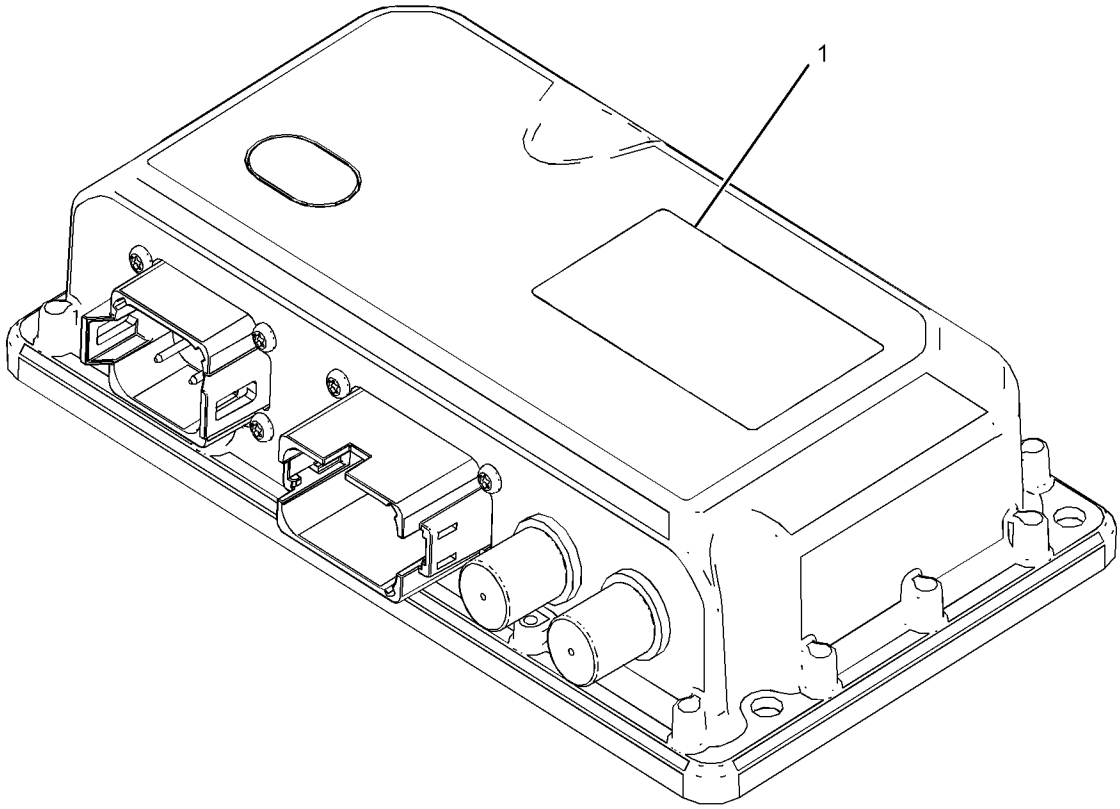

GRAPHIC #1 <END> g03853143

380-8453 SENSOR & MOUNTING GP–AUTO CARRY

S/N: RAB1-UP

PART OF 474-5717 ELECTRICAL AR, 359-6359, 359-6360 INSTALLATION AR-CAES

AN ATTACHMENT

SMCS-7400 **i05480756**

NOTE	REF NO	GRAPHIC REF	PART NUMBER	QTY	PART NAME 1 2 3 4 5 6 (PRODUCT LEVEL)	SEE PAGE
	1	1	**8C-5607**	8	MOUNT-ISOLATION	
	2	1	**352-3964**	1	CLIP	
	3	1	**356-8327**	1	PLATE	
	4	1	**380-6884**	1	BRACKET AS	
	5	1	**9X-8256**	3	WASHER (6.6X12X2-MM THK)	
	6	1	**356-8432**	4	SPACER (6.5X9.5X38.2-MM THK)	
	7	1	**373-6538**	1	SENSOR AS-ANGLE (INCLINATION)	
M	8	1	**6V-7357**	3	BOLT (M6X1X25-MM)	
	9	1	**7K-1181**	1	STRAP-CABLE	
M	10	1	**7X-2534**	4	BOLT (M6X1X50-MM)	
	11	1	**8T-4121**	5	WASHER-HARD (11X21X2.5-MM THK)	
M	12	1	**8T-4136**	5	BOLT (M10X1.5X25-MM)	
	13	1	**9X-6165**	4	WASHER (6.5X22X2.5-MM THK)	

M - METRIC PART

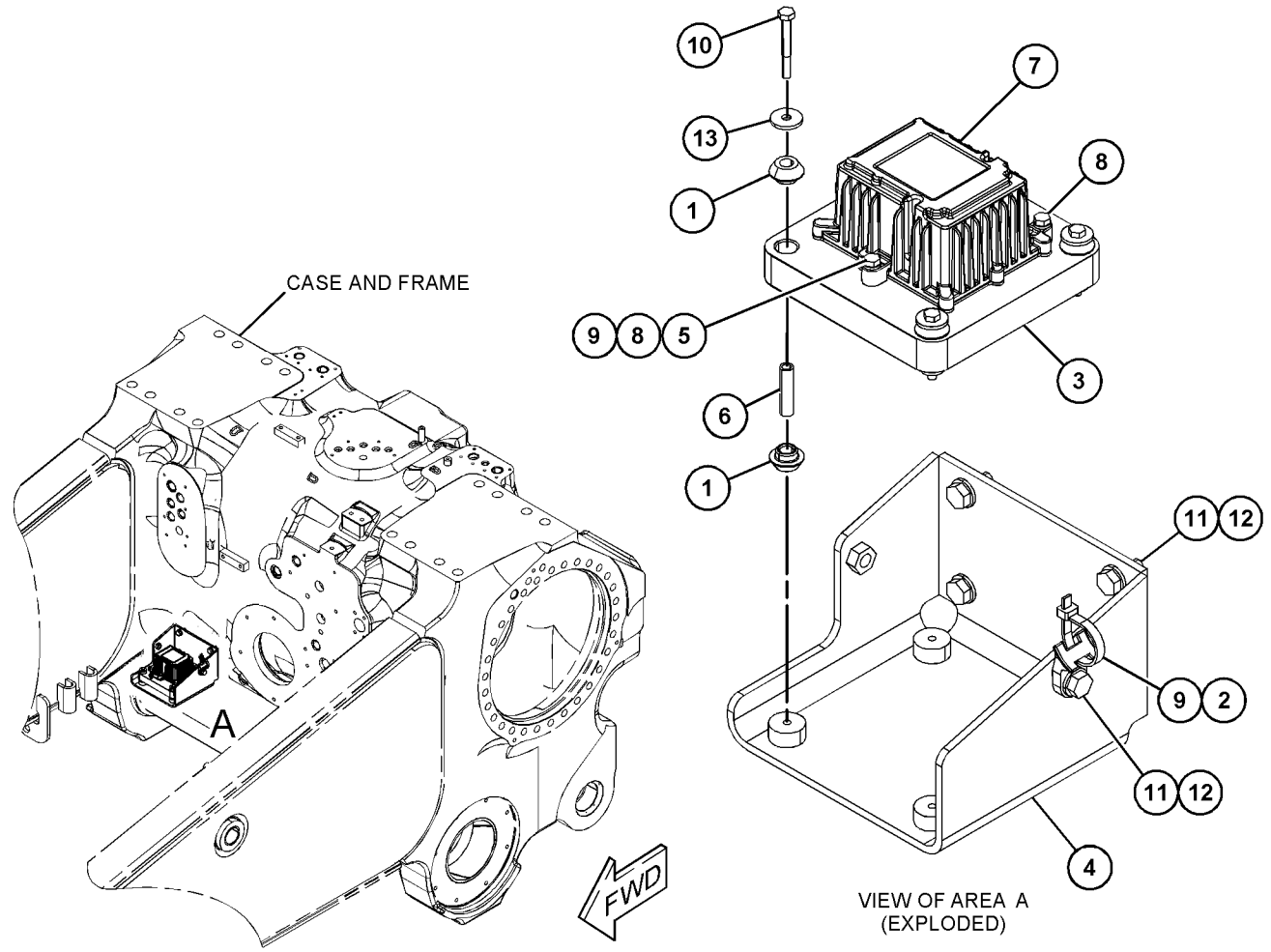

GRAPHIC #1 <END> g03472544

347-7065 SENSOR GP-ENGINE

S/N: JZM1-UP

PART OF 371-2276 ENGINE AR-CORE

AN ATTACHMENT

SMCS-1000, 1718, 1906, 1907, 1912, 1917, 1923, 1924, 1925, 1928, 1929, 7400, 7422

i04896724

NOTE	REF NO	GRAPHIC REF	PART NUMBER	QTY	PART NAME 1 2 3 4 5 6 (PRODUCT LEVEL)	SEE PAGE
Y	1	1	*301-4108*	1	ADAPTER GP-SENSOR	194
	2	1	**3S-2093**	1	STRAP-CABLE	
	3	1	**125-5835**	1	PLUG-FELT	
	4	1	**214-7568**	1	SEAL-O-RING	
Y	5	1	*234-5012*	1	SENSOR GP-TEMPERATURE (WATER, COOLANT TEMPERATURE)	383
Y	6	1	*234-5013*	1	SENSOR GP-TEMPERATURE (INTAKE MANIFOLD, LH)	384
Y	6A	1	*234-5013*	1	SENSOR GP-TEMPERATURE (INTAKE MANIFOLD, RH)	384
Y	7	1	*276-9067*	1	SENSOR GP-PRESSURE (ENGINE OIL)	375
Y	8	1	*300-9805*	1	SENSOR GP-SPEED (PRIMARY, TIMING)	380
Y	9	1	*300-9806*	1	SENSOR GP-SPEED (SECONDARY, TIMING)	381
Y	10	1	*331-1134*	1	SENSOR GP-PRESSURE (ATMOSPHERIC)	377
Y	11	1	*332-0296*	1	SENSOR GP-PRESSURE (INTAKE MANIFOLD, LH)	378
Y	11A	1	*332-0296*	1	SENSOR GP-PRESSURE (INTAKE MANIFOLD, RH)	378
	12	1	**335-3999**	1	CONNECTOR	
	13	1	**228-7101**	2	SEAL-O-RING	
	14	1	**241-6170**	2	PLUG	
	15	1	**2H-3755**	2	BOLT (5/16-18X0.43-IN)	
	17	1	**8L-2786**	2	SEAL-O-RING	
	18	1	**9M-1974**	2	WASHER-HARD (8.8X16X2-MM THK)	
	19	1	**9S-8005**	2	PLUG	

Y - SEPARATE ILLUSTRATION

347-7065 **SENSOR GP-ENGINE (**contd.**)** **i04896724**

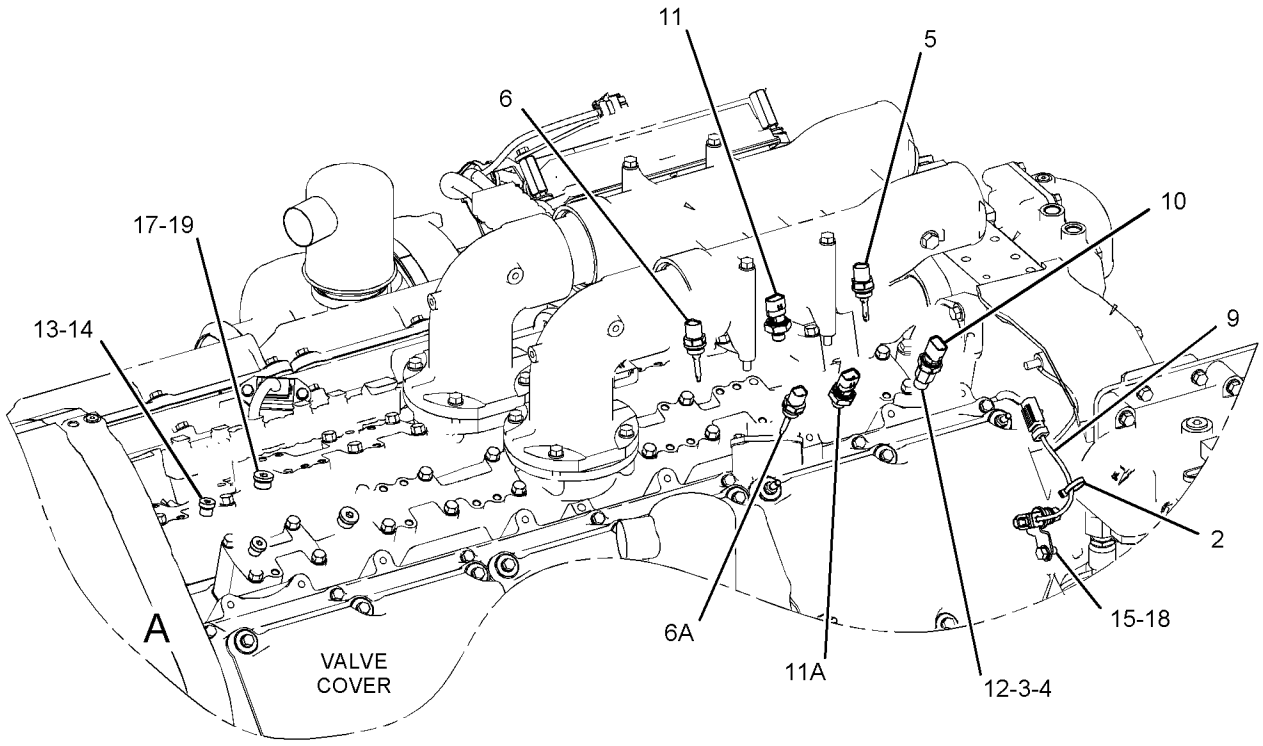

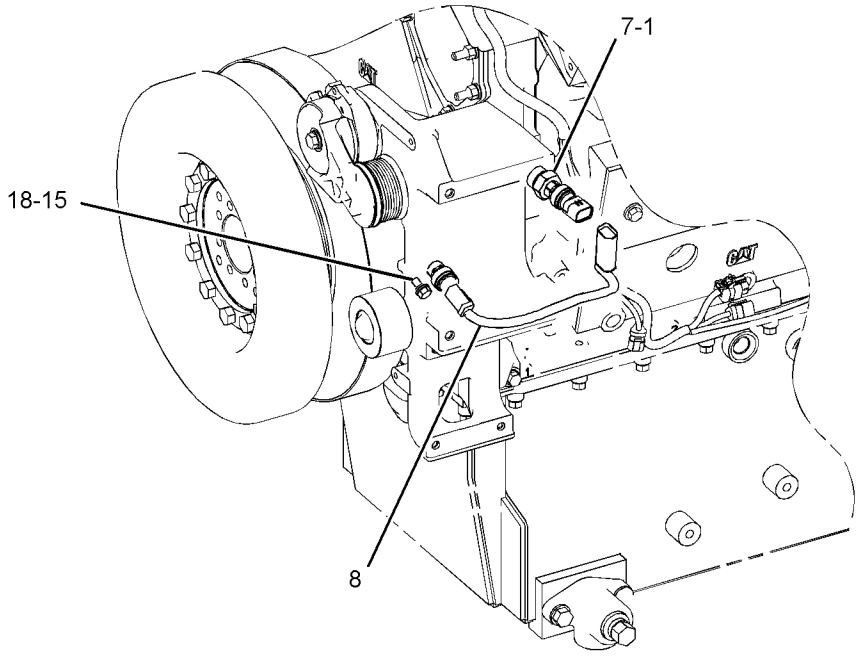

GRAPHIC #1 <END> g03134317

359-7757 SENSOR GP-ENGINE

S/N: JZM1-UP

PART OF 359-6502, 443-0004 ENGINE AR-COMPLETE

AN ATTACHMENT

SMCS-1000, 1718, 1906, 1907, 1912, 1917, 1923, 1924, 1925, 1928, 1929, 7400, 7422

i05799008

NOTE	REF NO	GRAPHIC REF	PART NUMBER	QTY	PART NAME 1 2 3 4 5 6 (PRODUCT LEVEL)	SEE PAGE
	1	1	**4N-3841**	1	GASKET	
	2	1	**7K-1181**	9	STRAP-CABLE	
	3	1	**130-0793**	2	PLUG AS	
					(EACH INCLUDES)	
		1	**8T-8737**	3	PLUG-SEAL	
		1	**102-8803**	1	KIT-RECEPTACLE (3-PIN)	
					(INCLUDES RECEPTACLE AS & WEDGE)	
Y	4	1	**171-8708**	1	SWITCH GP-FLOW (ENGINE COOLANT)	400
C	5	1	**178-1781**	1	CLIP	
	6	1	**188-2128**	1	PLUG AS	
		1	**8T-8737**	2	PLUG-SEAL	
		1	**155-2270**	1	KIT-CONNECTING PLUG (2-PIN)	
					(INCLUDES PLUG AS, WEDGE & INTERFACE SEAL)	
C	7	1	**285-5105**	1	SENSOR GP-LIQUID LEVEL (ENGINE OIL)	
	8	1	**343-6890**	1	SENSOR GP-TEMPERATURE (EXHAUST, LH)	
	8A	1	**343-6890**	1	SENSOR GP-TEMPERATURE (EXHAUST, RH)	
	9	1	**132-5789**	2	CLIP	
C	10	1	**277-1873**	1	CLIP	
C	11	1	**283-8650**	1	WASHER-HARD (10.2X18.5X5-MM THK)	
C	12	1	**0S-1588**	1	BOLT (3/8-16X1.25-IN)	
	13	1	**2B-2695**	2	BOLT (5/16-18X0.875-IN)	
C	14	1	**4P-7428**	1	CLIP	
	15	1	**4P-7429**	2	CLIP	
C	16	1	**5M-2894**	1	WASHER-HARD (10.2X18.5X2.5-MM THK)	
	17	1	**6V-4589**	1	SEAL-O-RING	
	18	1	**9M-1974**	2	WASHER-HARD (8.8X16X2-MM THK)	

C - CHANGE FROM PREVIOUS TYPE
Y - SEPARATE ILLUSTRATION

359-7757 **SENSOR GP-ENGINE (**contd.**)** **i05799008**

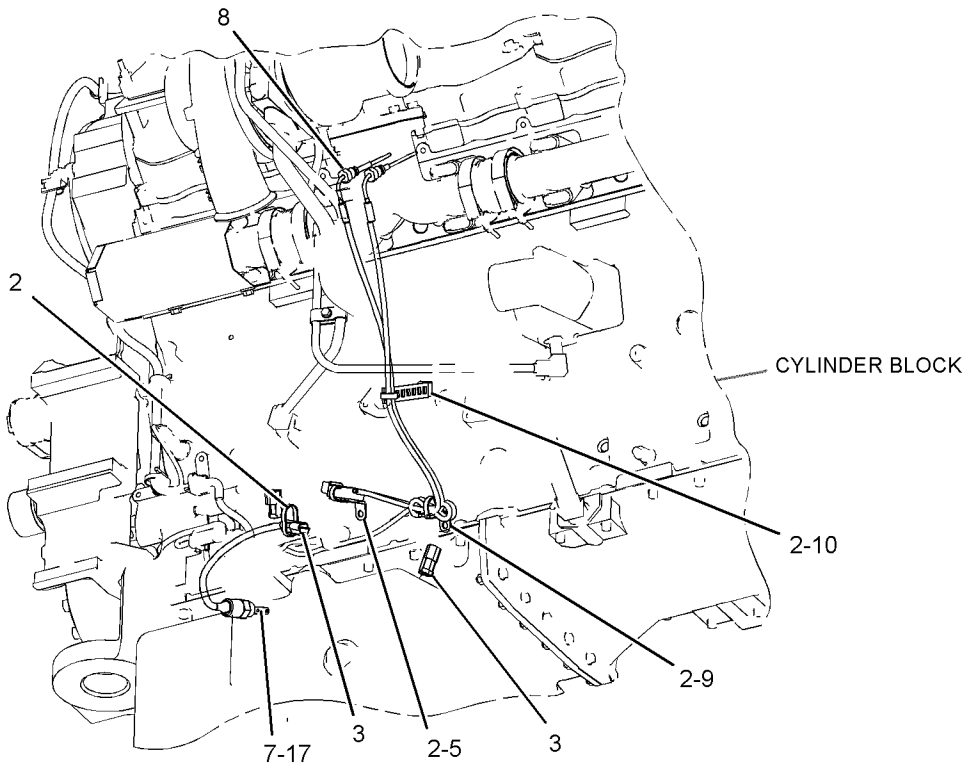

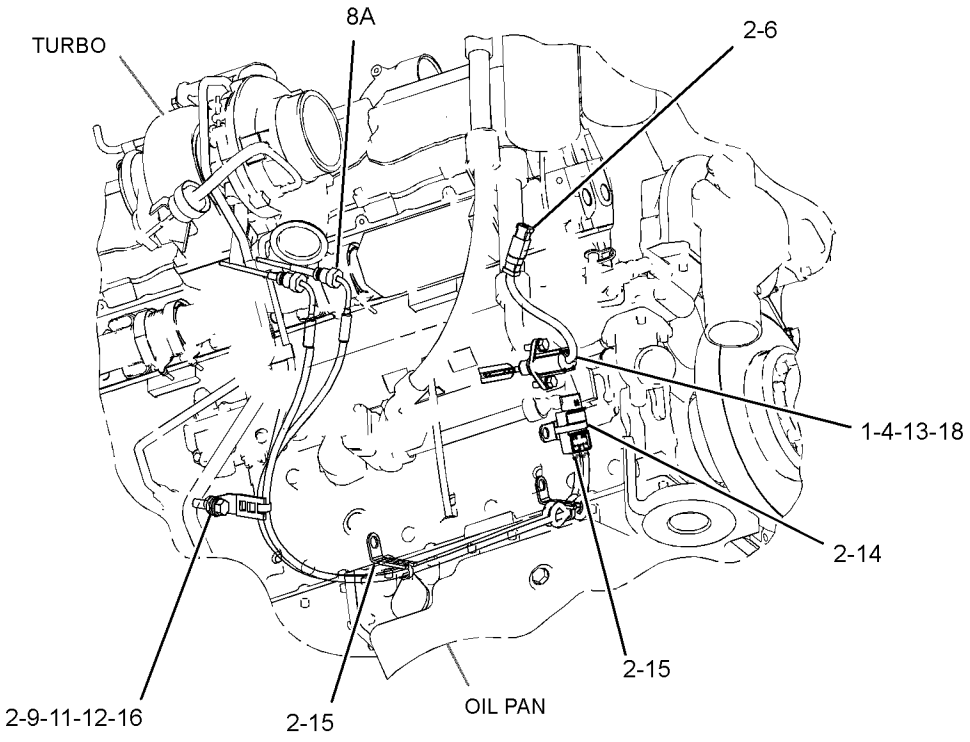

GRAPHIC #1 <END> g03506534

319-3487 SENSOR GP-LIQUID LEVEL

S/N: RAB1-248
COOLANT
FIELD REPLACEMENT ORDER 430-9454—PAGE: 370
PART OF 359-6421 BATTERY & WIRING GP
AN ATTACHMENT

SMCS-7422 **i05942362**

NOTE	REF NO	GRAPHIC REF	PART NUMBER	QTY	PART NAME 1 2 3 4 5 6 (PRODUCT LEVEL)	SEE PAGE
Y	1	1	**430-9454**	1	SENSOR GP-LIQUID LEVEL (COOLANT)	370

Y - SEPARATE ILLUSTRATION

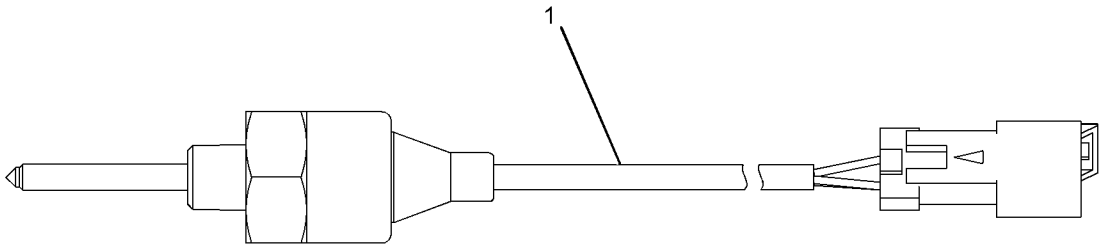

GRAPHIC #1 <END> g03737596

330-9321 SENSOR GP-LIQUID LEVEL

S/N: RAB1-281
HYDROCARBON
PART OF 359-6421 BATTERY & WIRING GP
AN ATTACHMENT

SMCS-7422 **i05964058**

NOTE	REF NO	GRAPHIC REF	PART NUMBER	QTY	PART NAME 1 2 3 4 5 6 (PRODUCT LEVEL)	SEE PAGE
Y	1	1	**430-9455**	1	SENSOR GP-LIQUID LEVEL	371

Y - SEPARATE ILLUSTRATION

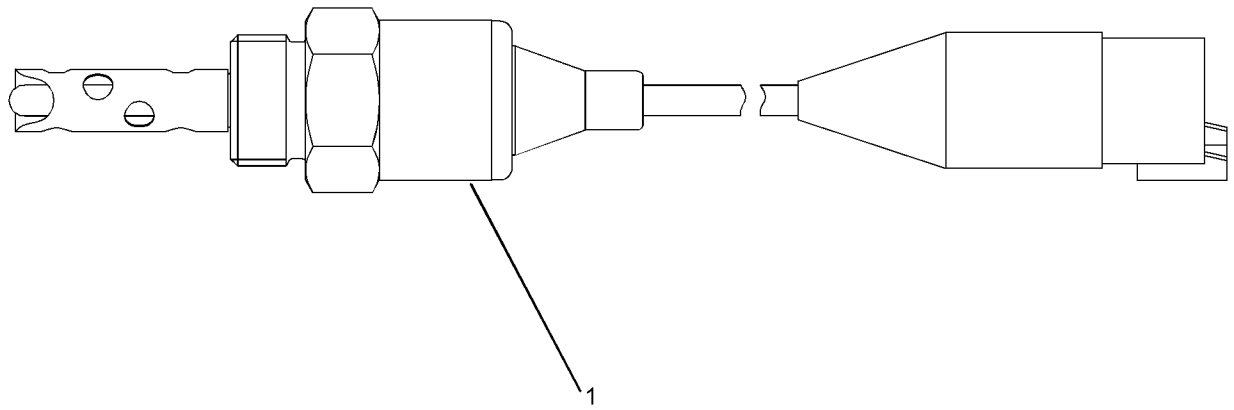

GRAPHIC #1 <END> g03740588

430-9453 SENSOR GP-LIQUID LEVEL

S/N: RAB282-UP
COOLANT
PART OF 359-6421 BATTERY & WIRING GP
AN ATTACHMENT

SMCS-7422 **i05899426**

NOTE	REF NO	GRAPHIC REF	PART NUMBER	QTY	PART NAME 1 2 3 4 5 6 (PRODUCT LEVEL)	SEE PAGE
	1	1	**171-0596**	1	RECEPTACLE AS-CONNECTOR	
	2	1	**8T-8729**	3	PIN-CONNECTOR (16-GA TO 18-GA)	

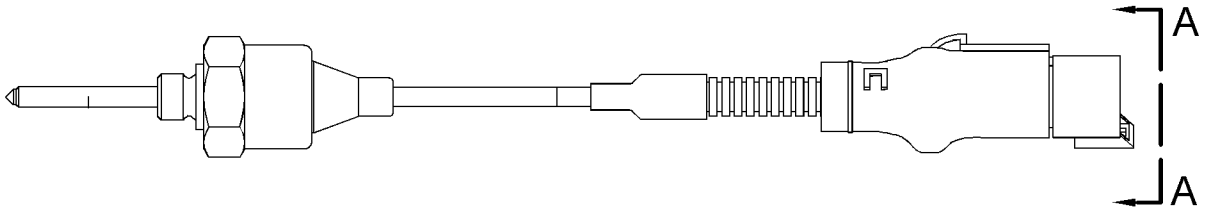

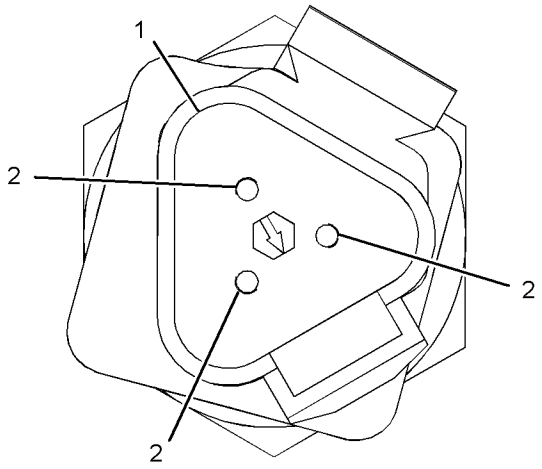

VIEW A-A

GRAPHIC #1 <END> g03654668

430-9454 SENSOR GP-LIQUID LEVEL

S/N: RAB1-281

FIELD REPLACEMENT FOR 319-3487—PAGE: 367

PART OF 359-6421 BATTERY & WIRING GP, 319-3487 SENSOR GP-LIQUID LEVEL

AN ATTACHMENT

SMCS-7422 **i05884676**

NOTE	REF NO	GRAPHIC REF	PART NUMBER	QTY	PART NAME 1 2 3 4 5 6 (PRODUCT LEVEL)	SEE PAGE
	1	1	**171-0596**	1	RECEPTACLE AS-CONNECTOR	
	2	1	**8T-8729**	3	PIN-CONNECTOR (16-GA TO 18-GA)	
	3	1	**3E-3371**	1	WEDGE-RECEPTACLE LOCK (3-PIN)	

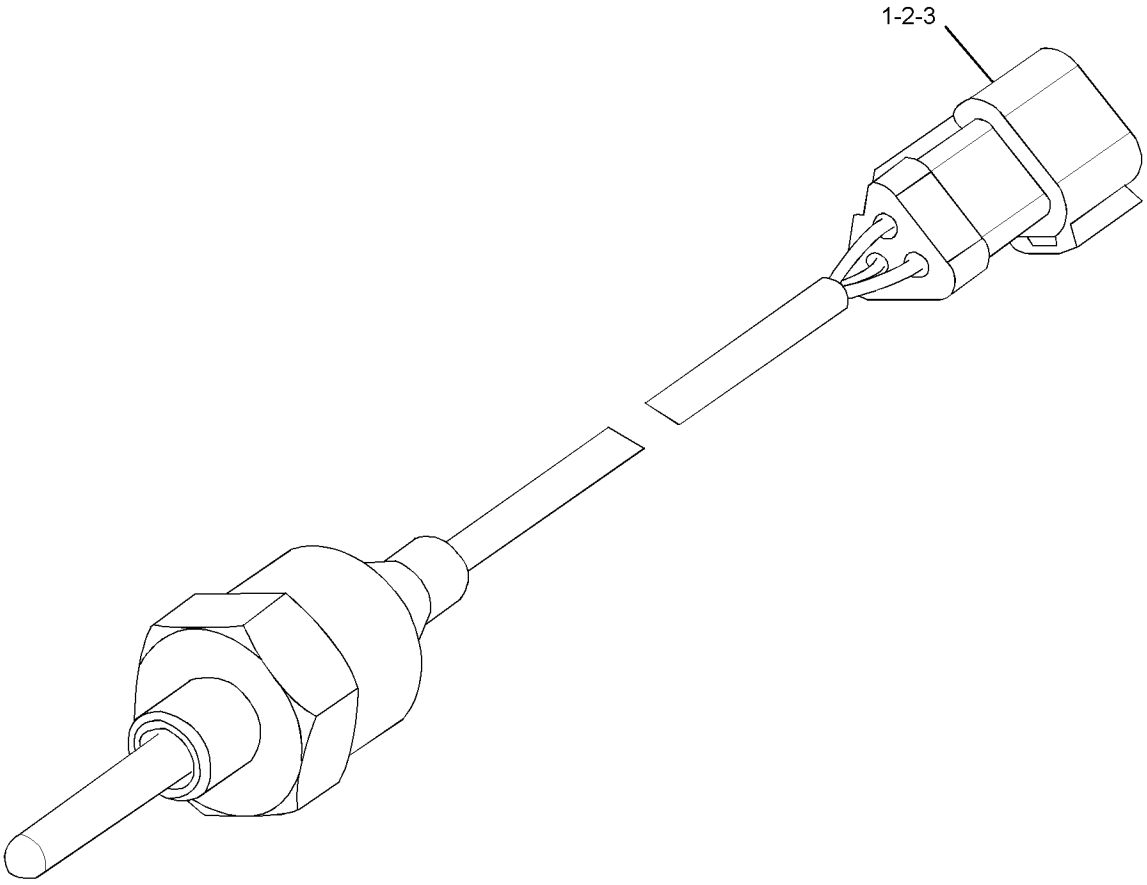

GRAPHIC #1 <END> g02625176

430-9455 SENSOR GP-LIQUID LEVEL

S/N: RAB1-UP; JZM1-UP
HYDROCARBON
PART OF 359-6421 BATTERY & WIRING GP, 330-9321 SENSOR GP-LIQUID LEVEL, 463-5557 SENSOR GP-TEMPERATURE
AN ATTACHMENT

SMCS-7422 **i06218955**

NOTE	REF NO	GRAPHIC REF	PART NUMBER	QTY	PART NAME 1 2 3 4 5 6 (PRODUCT LEVEL)	SEE PAGE
	1	1	**171-0596**	1	RECEPTACLE AS-CONNECTOR	
	2	1	**8T-8729**	3	PIN-CONNECTOR (16-GA TO 18-GA)	
	3	1	**3E-3371**	1	WEDGE-RECEPTACLE LOCK (3-PIN)	

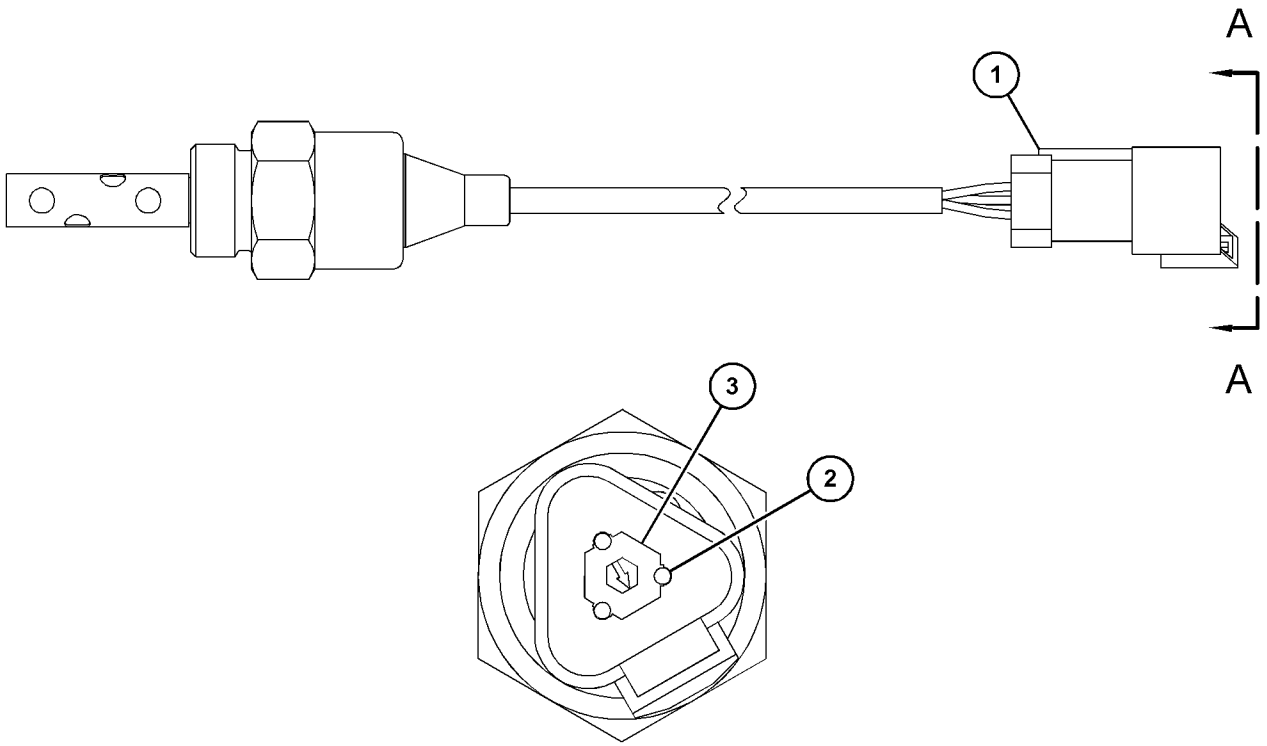

VIEW A-A

GRAPHIC #1 <END> g03504007

266-1467 SENSOR GP-POSITION

S/N: RAB1-UP
ROTARY
PART OF 355-5527 CONTROL GP-PEDAL, 379-0334, 439-0390 CONTROL GP-STEERING & XMSN, 329-5766 PEDAL GP-GOVERNOR & BRAKE
AN ATTACHMENT

SMCS-1408, 1439, 1905, 1911 **i05580556**

NOTE	REF NO	GRAPHIC REF	PART NUMBER	QTY	PART NAME 1 2 3 4 5 6 (PRODUCT LEVEL)	SEE PAGE
	1	1	**9X-3401**	3	PIN-CONNECTOR (16-GA TO 18-GA)	
					–OR–	
		1	**126-1767**	3	PIN-CONNECTOR (14-GA TO 16-GA)	
	2	1	**102-8803**	1	KIT-RECEPTACLE (3-PIN)	
					(INCLUDES RECEPTACLE AS & WEDGE)	
E	3	1	**3E-9375**		CONDUIT (13-CM)	

E - ORDER BY THE CENTIMETER

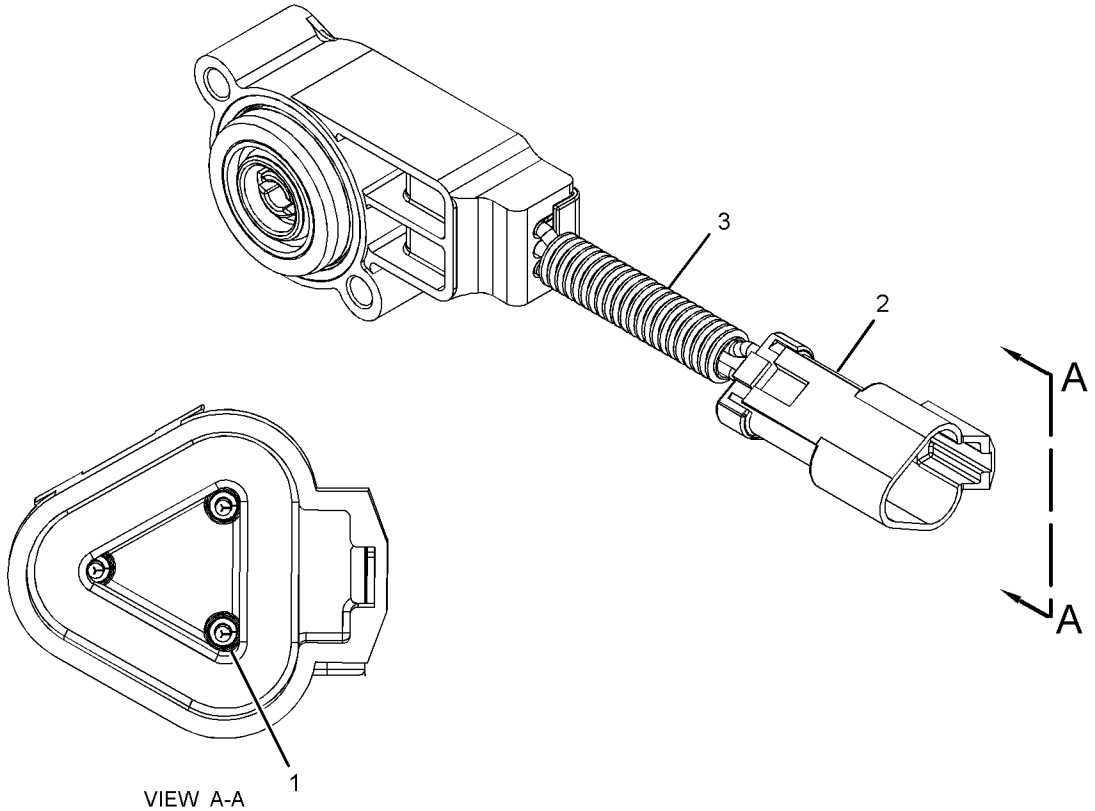

VIEW A-A

GRAPHIC #1 <END> g03547699

269-1981 SENSOR GP-POSITION

S/N: RAB1-UP
ROTARY
PART OF 329-5766 PEDAL GP-GOVERNOR & BRAKE
AN ATTACHMENT

SMCS-1408, 1439, 1905, 1911 **i02765204**

NOTE	REF NO	GRAPHIC REF	PART NUMBER	QTY	PART NAME 1 2 3 4 5 6 (PRODUCT LEVEL)	SEE PAGE
	1	1	**230-4014**	2	RECEPTACLE AS-CONNECTOR (3-PIN)	
	2	1	**9X-3401**	6	PIN-CONNECTOR (16-GA TO 18-GA)	
					–OR–	
			126-1767	6	PIN-CONNECTOR (14-GA TO 16-GA)	

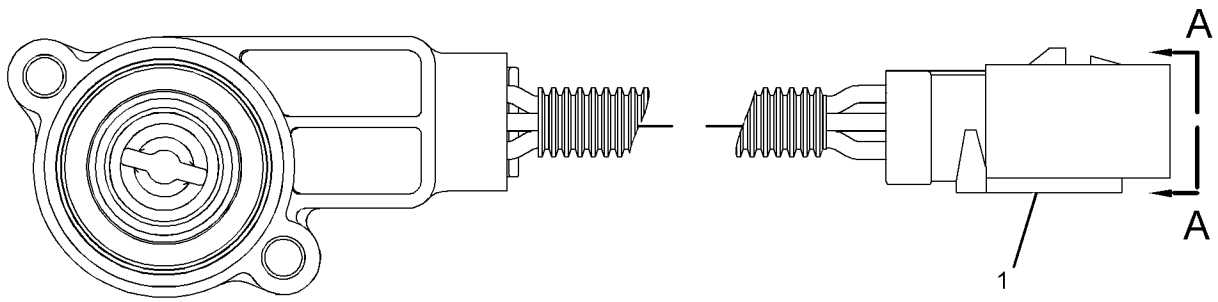

GRAPHIC #1 <END> g01391032

376-2258 SENSOR GP-POSITION—BULLDOZER LIFT

S/N: RAB1-UP

PART OF 374-6601 CYLINDER GP-BULLDOZER LIFT

AN ATTACHMENT

SMCS-1408, 1439, 1905, 1911 **i05622870**

NOTE	REF NO	GRAPHIC REF	PART NUMBER	QTY	PART NAME 1 2 3 4 5 6 (PRODUCT LEVEL)	SEE PAGE
	1	1	**376-2257**	1	HOUSING-SENSOR	
	2	1	**376-7511**	1	SENSOR GP-POSITION (LIFT CYLINDER)	
		1	**118-8586**	1	SEAL-O-RING	
		1	**420-5767**	1	RING-BACKUP	
	3	1	**435-3388**	1	RECEPTACLE AS	
M	4	1	**095-0641**	3	BOLT-SOCKET HEAD (M4X0.7X10-MM)	
	5	1	*183-7263*	3	PLUG AS	
					(EACH INCLUDES)	
		1	**9S-8002**	1	PLUG (7/16-20-THD)	
		1	**3J-7354**	1	SEAL-O-RING	
M	6	1	**8C-6364**	3	BOLT-SOCKET HEAD (M5X0.8X14-MM)	
M	7	1	**8T-9102**	3	SETSCREW-SOCKET (M5X0.8X10-MM)	

M - METRIC PART

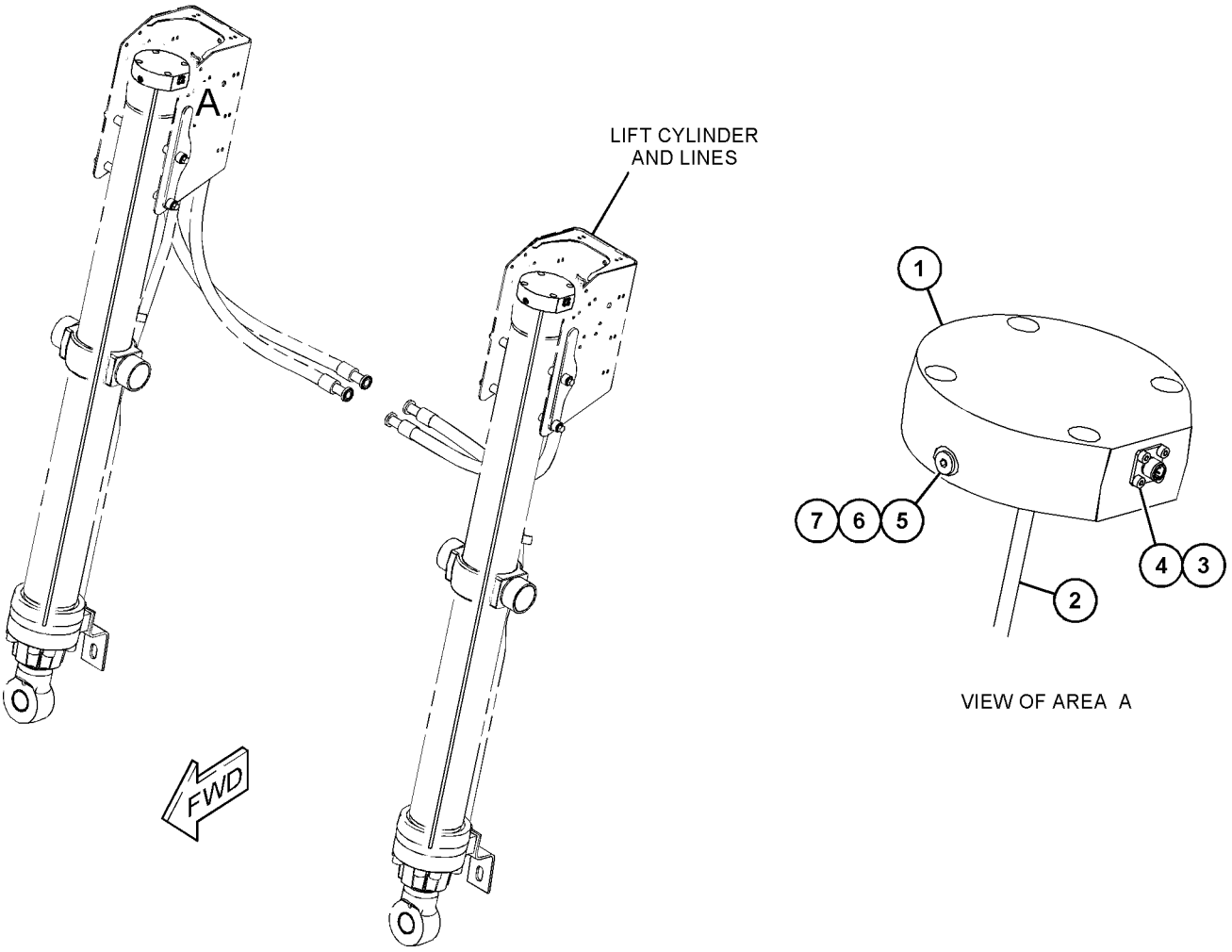

GRAPHIC #1 <END> g03492442

276-9067 SENSOR GP-PRESSURE

S/N: JZM1-UP
AMPSEAL CONNECTOR
PART OF 347-7065 SENSOR GP-ENGINE
AN ATTACHMENT

SMCS-1718, 1916, 1917, 1923, 1924, 1925 **i05506316**

NOTE	REF NO	GRAPHIC REF	PART NUMBER	QTY	PART NAME 1 2 3 4 5 6 (PRODUCT LEVEL)	SEE PAGE
	1	1	**274-6719**	1	SENSOR GP-PRESSURE	
		1	**3J-7354**	1	SEAL-O-RING	
		1	**237-0227**	1	PLUG AS-CONNECTOR (3-PIN)	
	2	1	**214-7566**	1	SEAL-O-RING	

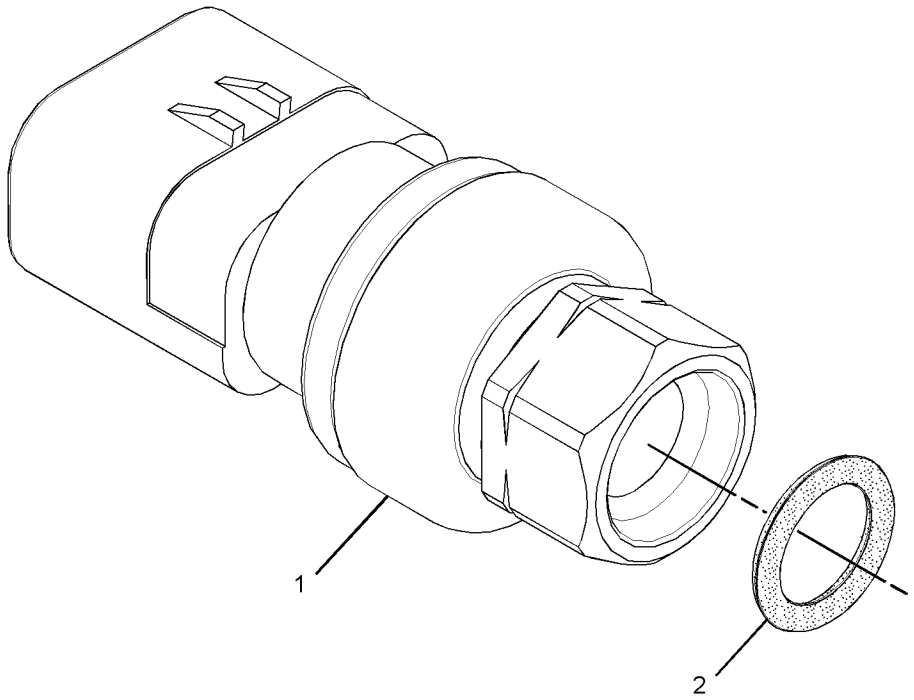

GRAPHIC #1 <END> g01994176

325-8634 SENSOR GP-PRESSURE

S/N: JZM1-UP

PART OF 344-5583 BASE GP-FUEL FILTER

AN ATTACHMENT

SMCS-1718, 1916, 1917, 1923, 1924, 1925 **i04407514**

NOTE	REF NO	GRAPHIC REF	PART NUMBER	QTY	PART NAME 1 2 3 4 5 6 (PRODUCT LEVEL)	SEE PAGE
	1	1	**320-3060**	1	SENSOR GP-PRESSURE (FUEL)	
	2	1	**228-7100**	1	SEAL-O-RING	

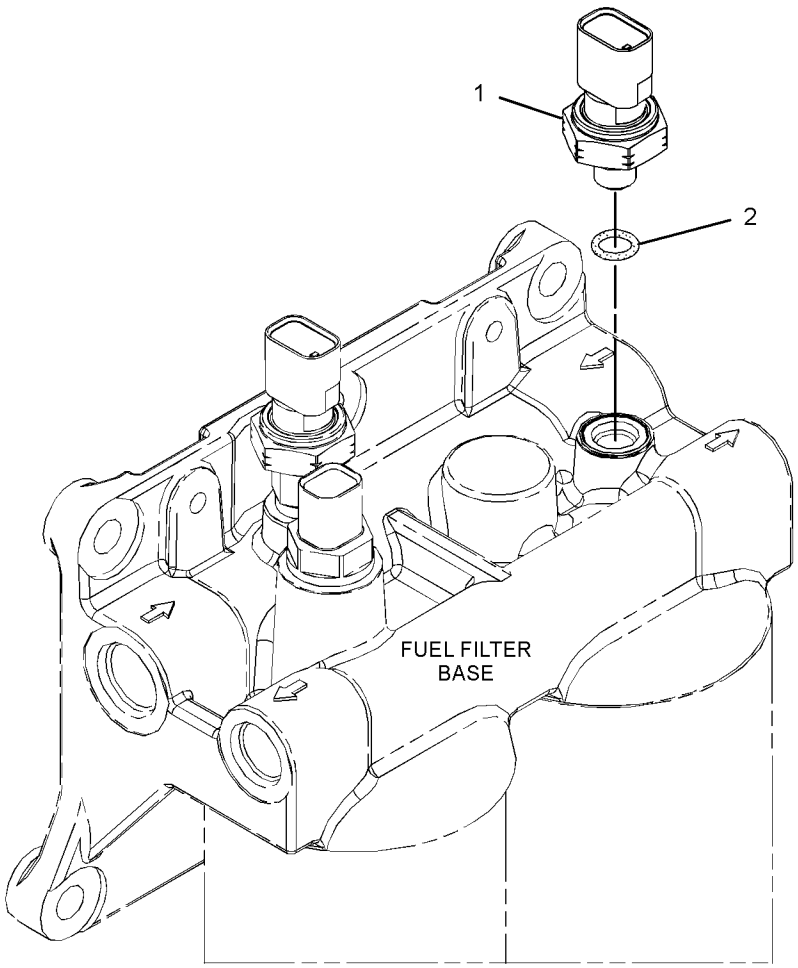

GRAPHIC #1 <END> g02080674

331-1134 SENSOR GP-PRESSURE

S/N: RAB1-UP; JZM1-UP
ATMOSPHERIC
PART OF 347-7065 SENSOR GP-ENGINE, 416-4697 WIRING GP-ENGINE
ALSO AN ATTACHMENT

SMCS-1718, 1916, 1917, 1923, 1924, 1925 **i05529091**

NOTE	REF NO	GRAPHIC REF	PART NUMBER	QTY	PART NAME 1 2 3 4 5 6 (PRODUCT LEVEL)	SEE PAGE
	1	1	**320-3063**	1	SENSOR GP-PRESSURE	
	2	1	**228-7100**	1	SEAL-O-RING	

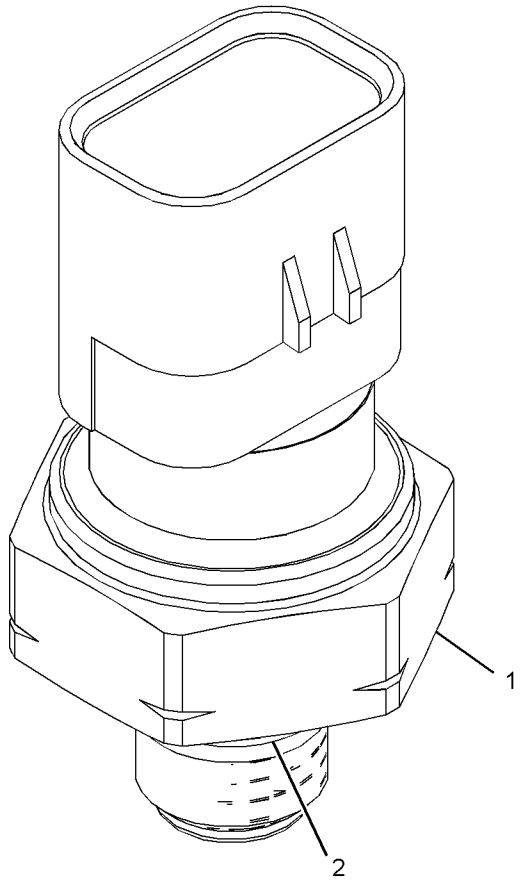

GRAPHIC #1 <END> g03346854

332-0296 SENSOR GP-PRESSURE

S/N: JZM1-UP

PART OF 347-7065 SENSOR GP-ENGINE

AN ATTACHMENT

SMCS-1718, 1916, 1917, 1923, 1924, 1925

i06034928

NOTE	REF NO	GRAPHIC REF	PART NUMBER	QTY	PART NAME 1 2 3 4 5 6 (PRODUCT LEVEL)	SEE PAGE
	1	1	**320-3061**	1	SENSOR GP-PRESSURE	
	2	1	**228-7101**	1	SEAL-O-RING	

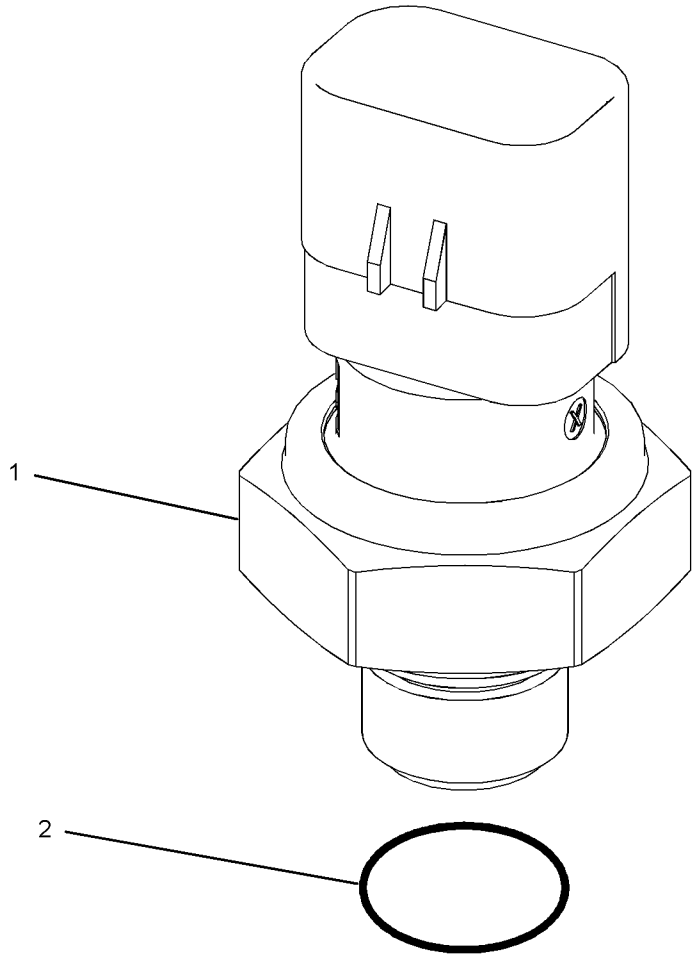

GRAPHIC #1

<END>

g03783456

290-5792 SENSOR GP-SPEED–ENGINE

S/N: RAB1-UP
PART OF 416-4697 WIRING GP-ENGINE
ALSO AN ATTACHMENT

SMCS-1907 **i02979171**

NOTE	REF NO	GRAPHIC REF	PART NUMBER	QTY	PART NAME 1 2 3 4 5 6 (PRODUCT LEVEL)	SEE PAGE
	1	1	**171-5349**	1	STRAP-MARKER	
	2	1	**102-8802**	1	KIT-RECEPTACLE (2-PIN)	
					(INCLUDES RECEPTACLE AS & WEDGE)	
	3	1	**9X-3401**	2	PIN-CONNECTOR (16-GA TO 18-GA)	
					–OR–	
		1	**126-1767**	2	PIN-CONNECTOR (14-GA TO 16-GA)	
E	4	1	**9X-1813**		SLEEVE (14-CM)	

E - ORDER BY THE CENTIMETER

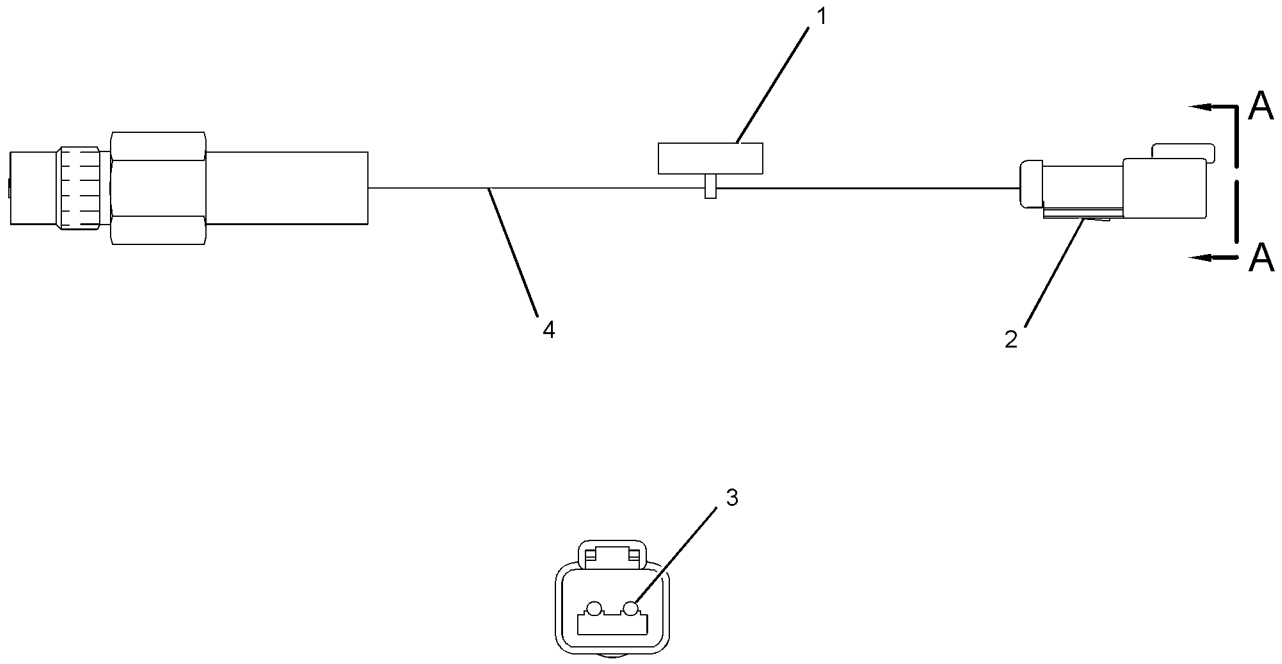

VIEW A-A

GRAPHIC #1 <END> g01409880

300-9805 SENSOR GP-SPEED

S/N: JZM1-UP
PART OF 347-7065 SENSOR GP-ENGINE
AN ATTACHMENT

SMCS-1907 **i05529110**

NOTE	REF NO	GRAPHIC REF	PART NUMBER	QTY	PART NAME 1 2 3 4 5 6 (PRODUCT LEVEL)	SEE PAGE
	1	1	**228-4947**	1	SEAL-O-RING	
	2	1	**279-9828**	1	SENSOR GP-SPEED	

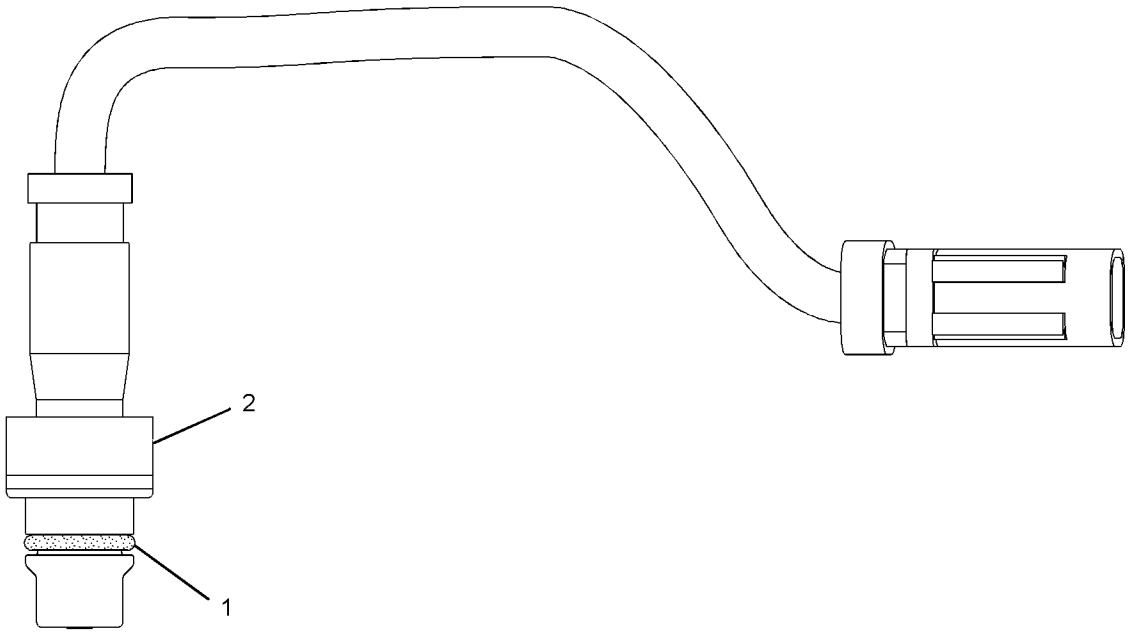

GRAPHIC #1 <END> g02168513

300-9806 SENSOR GP-SPEED

S/N: JZM1-UP
PART OF 347-7065 SENSOR GP-ENGINE
AN ATTACHMENT

SMCS-1907 **i05529129**

NOTE	REF NO	GRAPHIC REF	PART NUMBER	QTY	PART NAME 1 2 3 4 5 6 (PRODUCT LEVEL)	SEE PAGE
	1	1	**228-4947**	1	SEAL-O-RING	
	2	1	**279-9829**	1	SENSOR GP-SPEED	

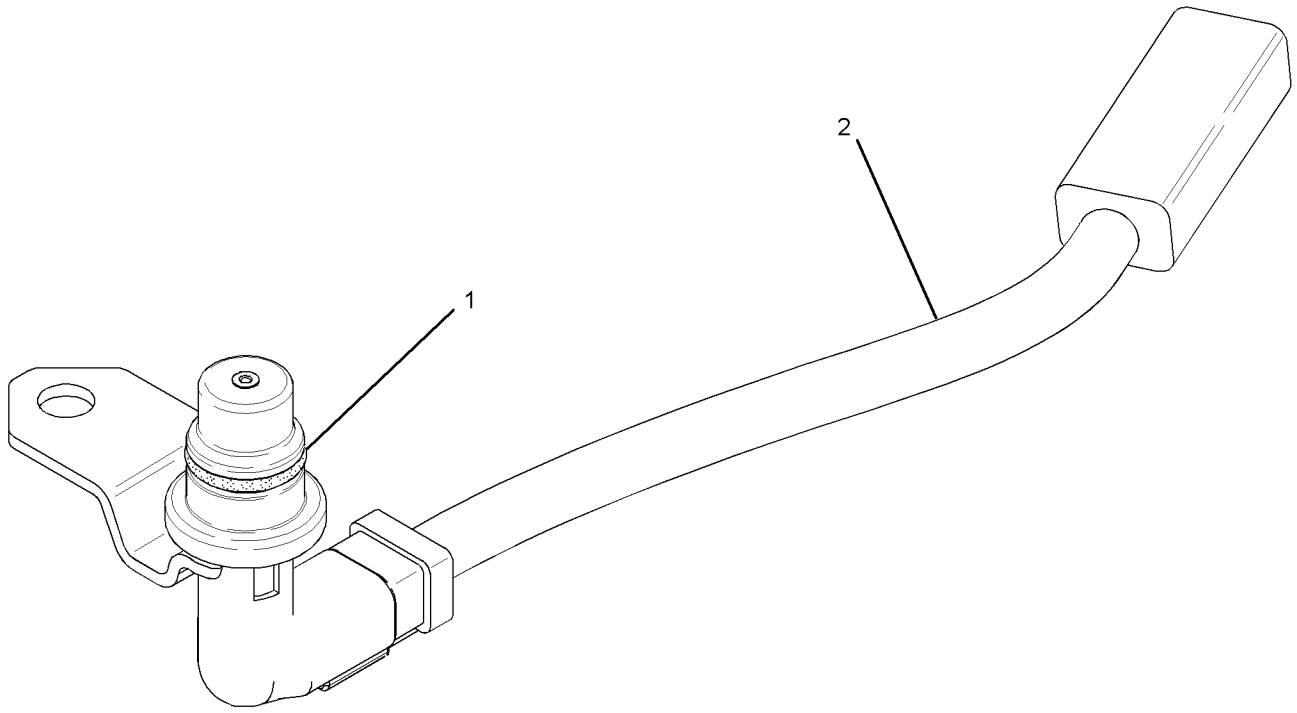

GRAPHIC #1 <END> g01333640

145-7028 SENSOR GP-TEMPERATURE–HYDRAULIC OIL

S/N: RAB1-UP
2 PIN PASSIVE
PART OF 359-6421 BATTERY & WIRING GP
AN ATTACHMENT

SMCS-1906, 1919, 1921, 1922, 1928, 1929 **i04182789**

NOTE	REF NO	GRAPHIC REF	PART NUMBER	QTY	PART NAME 1 2 3 4 5 6 (PRODUCT LEVEL)	SEE PAGE
	1	1	**102-8802**	1	KIT-RECEPTACLE (2-PIN)	
					(INCLUDES RECEPTACLE AS & WEDGE)	
J	2	1	**153-5043**		SLEEVE (2.8-DM)	
	3	1	**8T-8729**	2	PIN-CONNECTOR (16-GA TO 18-GA)	
J - ORDER BY THE DECIMETER						

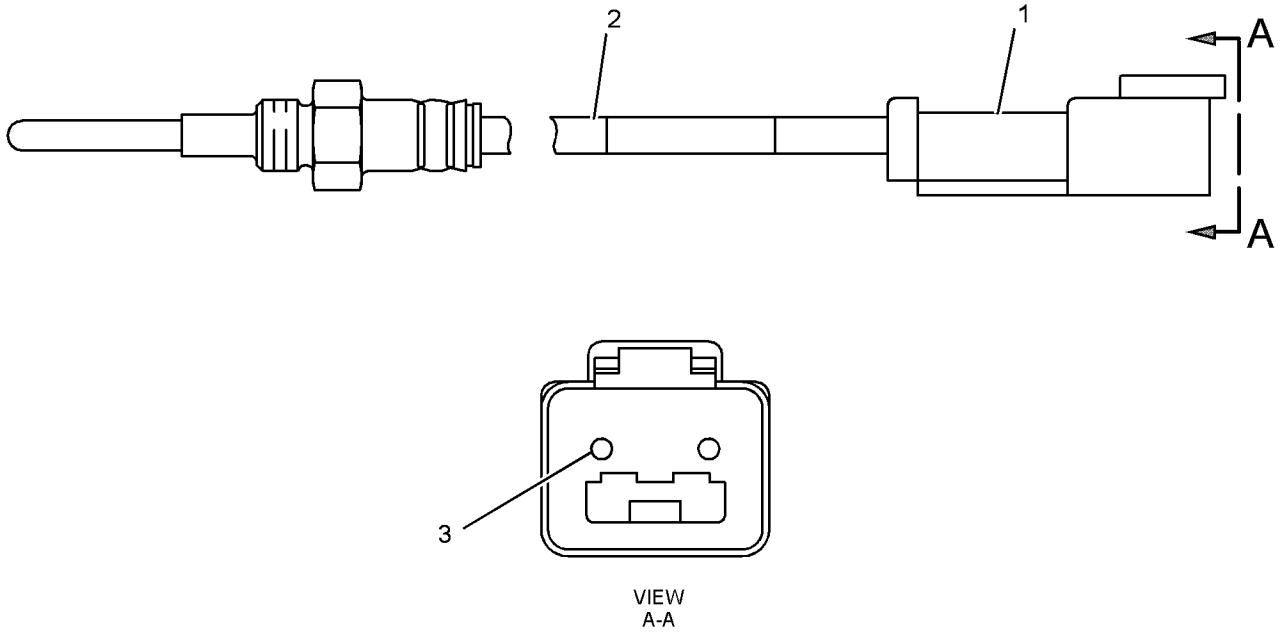

GRAPHIC #1 <END> g01740798

234-5012 SENSOR GP-TEMPERATURE–COOLANT

S/N: RAB1-UP; JZM1-UP

PART OF 347-7065 SENSOR GP-ENGINE, 416-4697 WIRING GP-ENGINE

ALSO AN ATTACHMENT

SMCS-1906, 1919, 1921, 1922, 1928, 1929 **i05506314**

NOTE	REF NO	GRAPHIC REF	PART NUMBER	QTY	PART NAME 1 2 3 4 5 6 (PRODUCT LEVEL)	SEE PAGE
	1	1	**256-6453**	1	SENSOR-TEMPERATURE	
	2	1	**6V-6609**	1	SEAL-O-RING	

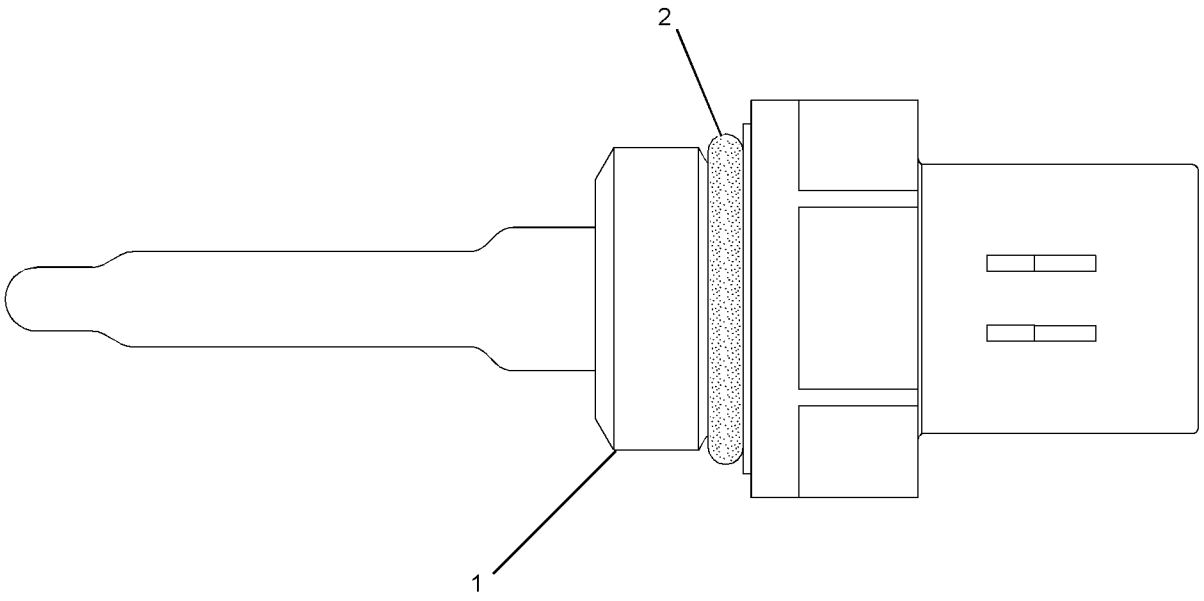

GRAPHIC #1 <END> g01164284

234-5013 SENSOR GP-TEMPERATURE

S/N: JZM1-UP

PART OF 344-5583 BASE GP-FUEL FILTER, 347-7065 SENSOR GP-ENGINE

AN ATTACHMENT

SMCS-1906, 1919, 1921, 1922, 1928, 1929

i05506315

NOTE	REF NO	GRAPHIC REF	PART NUMBER	QTY	PART NAME 1 2 3 4 5 6 (PRODUCT LEVEL)	SEE PAGE
	1	1	**256-6453**	1	SENSOR-TEMPERATURE	
	2	1	**238-5080**	1	SEAL-O-RING	

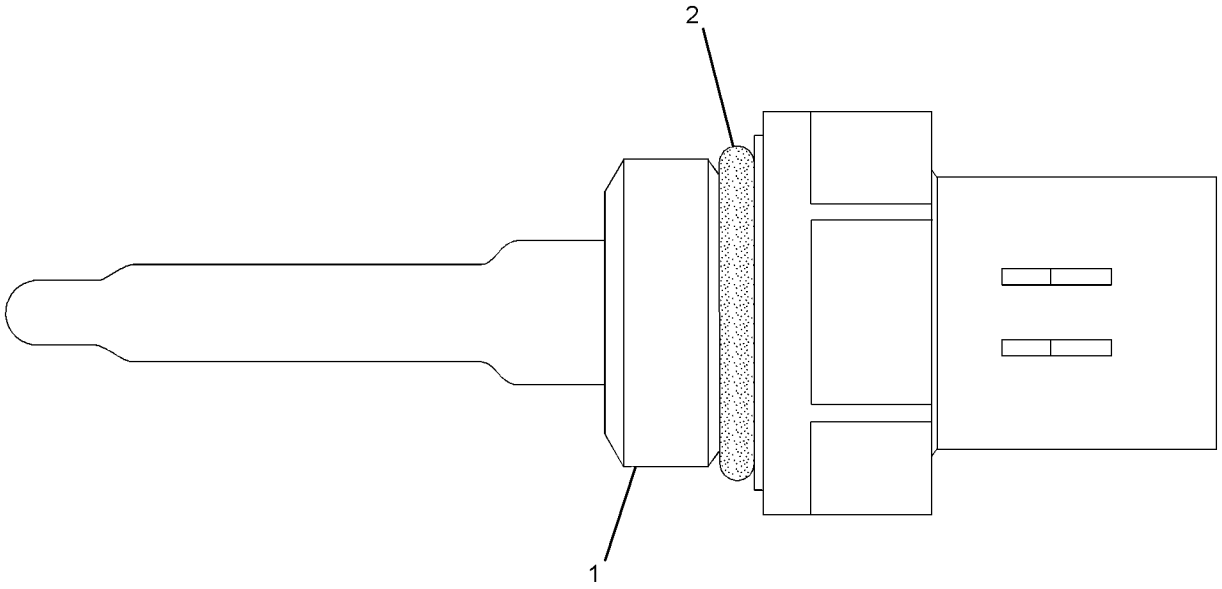

GRAPHIC #1 <END> g01164268

463-5557 SENSOR GP-TEMPERATURE

S/N: JZM1-UP

PART OF 359-6502 ENGINE AR-COMPLETE

AN ATTACHMENT

SMCS-1906, 1919, 1921, 1922, 1928, 1929 **i05979583**

NOTE	REF NO	GRAPHIC REF	PART NUMBER	QTY	PART NAME 1 2 3 4 5 6 (PRODUCT LEVEL)	SEE PAGE
	1	1	**4N-3841**	1	GASKET	
	2	1	**7K-1181**	10	STRAP-CABLE	
	3	1	**130-0793**	2	PLUG AS	
					(EACH INCLUDES)	
		1	**102-8803**	1	KIT-RECEPTACLE (3-PIN)	
					(KIT INCLUDES RECEPTACLE AS, & WEDGE)	
		1	**8T-8737**	3	PLUG-SEAL	
Y	4	1	**171-8708**	1	SWITCH GP-FLOW	400
	5	1	**178-1781**	1	CLIP	
	6	1	**188-2128**	1	PLUG AS	
		1	**155-2270**	1	KIT-CONNECTING PLUG (2-PIN)	
		1	**8T-8737**	2	PLUG-SEAL	
	7	1	**343-6890**	2	SENSOR GP-TEMPERATURE (TURBOCHARGER INLET)	
	8	1	**463-5254**	1	BRACKET AS	
M		1	**8T-3490**	2	NUT-WELD (M10X1.5-THD)	
	9	1	**0S-1588**	1	BOLT (3/8-16X1.25-IN)	
	10	1	**165-3929**	2	BOLT (3/8-16X1.5-IN)	
	11	1	**132-5789**	1	CLIP	
	12	1	**277-1873**	1	CLIP	
	13	1	**283-8650**	1	WASHER-HARD (10.2X18.5X5-MM THK)	
	14	1	**2B-2695**	2	BOLT (5/16-18X0.875-IN)	
Y	15	1	**430-9455**	1	SENSOR GP-LIQUID LEVEL (ENGINE OIL)	371
	16	1	**4P-7428**	1	CLIP	
	17	1	**4P-7429**	2	CLIP	
	18	1	**5M-2894**	3	WASHER-HARD (10.2X18.5X2.5-MM THK)	
	19	1	**6V-4589**	1	SEAL-O-RING	
	20	1	**9M-1974**	2	WASHER-HARD (8.8X16X2-MM THK)	

M - METRIC PART
Y - SEPARATE ILLUSTRATION

463-5557 **SENSOR GP-TEMPERATURE (**contd.**)** **i05979583**

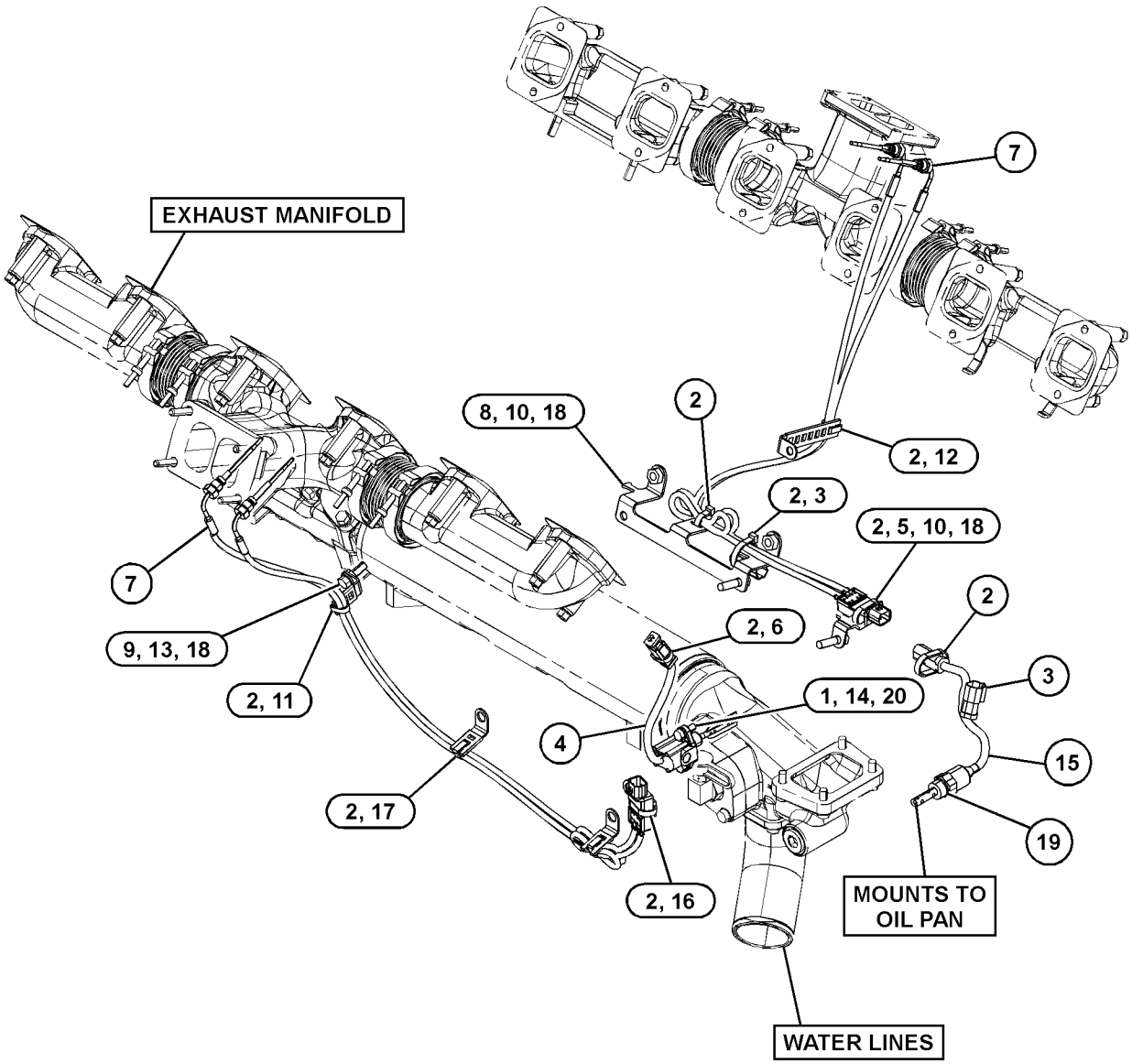

GRAPHIC #1 <END> g03809597

359-6462 STARTING AID GP-ETHER

S/N: RAB1-UP
PART OF 359-6404 INSTALLATION AR-ENGINE
AN ATTACHMENT

SMCS-1456 **i05811515**

NOTE	REF NO	GRAPHIC REF	PART NUMBER	QTY	PART NAME 1 2 3 4 5 6 (PRODUCT LEVEL)	SEE PAGE
	1	1	**7N-2059**	1	CLAMP AS	
M	2	1	**101-3129**	1	STUD (M10X1.5-THD)	
	3	1	**127-9323**	2	BRACKET AS	
					(EACH INCLUDES)	
M		1	**8T-3490**	1	NUT-WELD (M10X1.5-THD)	
	4	1	**133-9660**	1	UNION-FLARED	
	5	1	*148-8331*	2	CONNECTOR AS	
					(EACH INCLUDES)	
		1	**3Y-2888**	1	CONNECTOR	
		1	**3J-1907**	1	SEAL-O-RING	
Y	6	1	**239-1134**	1	VALVE GP-ETHER STARTING (24-VOLT)	410
	7	1	**268-1565**	2	ELBOW	
	8	1	**273-8708**	1	FITTING	
	9	1	**379-3645**	1	BRACKET AS	
	10	1	**379-3646**	1	HOSE AS	
	11	1	**418-4380**	2	HOSE AS	
	12	1	**427-6302**	2	ATOMIZER AS	
	13	1	**332-5240**	2	CLIP	
	14	1	**4D-8123**	1	CLIP	
	15	1	**4M-6425**	1	BOLT (5/16-18X1-IN)	
	17	1	**5P-4116**	1	WASHER-HARD (8.8X20.5X2-MM THK)	
	18	1	**5P-9085**	3	CLIP	
	19	1	**6V-8801**	2	NUT (3/8-16-THD)	
	20	1	**7X-0578**	4	WASHER-HARD (10.2X32X2.5-MM THK)	
	21	1	**8T-4121**	7	WASHER-HARD (11X21X2.5-MM THK)	
M	22	1	**8T-4133**	1	NUT (M10X1.5-THD)	
M	23	1	**8T-4136**	1	BOLT (M10X1.5X25-MM)	
M	24	1	**8T-4137**	3	BOLT (M10X1.5X20-MM)	
M	25	1	**8T-4189**	4	BOLT (M8X1.25X20-MM)	
M	26	1	**8T-4195**	2	BOLT (M10X1.5X30-MM)	
	27	1	**8T-4224**	4	WASHER-HARD (8.8X16X2-MM THK)	

M - METRIC PART
Y - SEPARATE ILLUSTRATION

359-6462 **STARTING AID GP-ETHER (**contd.**)** **i05811515**

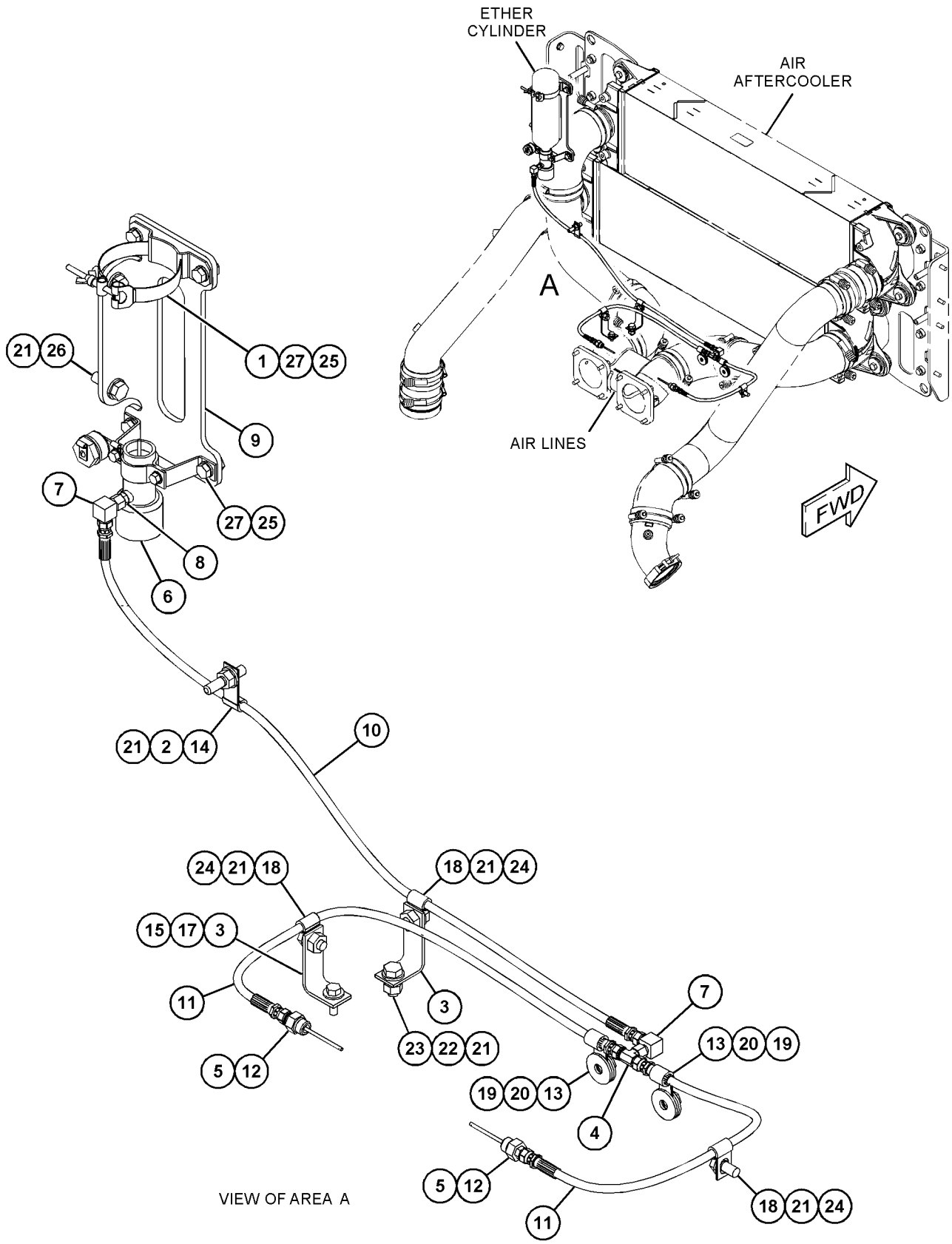

GRAPHIC #1 <END> g03682225

359-6459 STARTING AR-COLD WEATHER

S/N: RAB1-UP

AN ATTACHMENT

SMCS-1450 **i05920095**

NOTE	REF NO	GRAPHIC REF	PART NUMBER	QTY	PART NAME 1 2 3 4 5 6 (PRODUCT LEVEL)	SEE PAGE
	1	1	**313-3516**	1	HARNESS AS-SWITCH	
		1	**8T-8729**	2	PIN-CONNECTOR (16-GA TO 18-GA)	
		1	**2L-8076**	2	TERMINAL-RING (14-GA TO 16-GA, NO. 10 SCREW)	
		1	**230-4012**	1	RECEPTACLE AS-CONNECTOR (2-PIN)	
	2	1	**8V-0622**	1	CABLE AS-BATTERY	
		1	**8C-5917**	1	TERMINAL AS-BATTERY (POSITIVE)	
		1	**1M-6119**	1	BOLT (5/16-18X1.375-IN)	
		1	**1M-6120**	1	NUT (5/16-18-THD)	
E		1	**159-8049**		CABLE (00-GA, RED) (16-CM)	
		1	**8T-9757**	1	TERMINAL AS-BATTERY (NEGATIVE)	
		1	**1M-6119**	1	BOLT (5/16-18X1.375-IN)	
		1	**1M-6120**	1	NUT (5/16-18-THD)	
		1	**9G-0003**	1	COVER AS-TERMINAL (BLACK)	
		1	**8L-8413**	1	STRAP-CABLE (WHITE)	
		1	**9G-0004**	1	COVER AS-TERMINAL (RED)	
		1	**8L-8413**	1	STRAP-CABLE (WHITE)	
	3	1	**9Y-6089**	1	GASKET	
	4	1	**140-0860**	1	STRAP AS-GROUND	
	5	1	**146-6747**	1	FILM-INFORMATION (24-VOLT)	
	6	1	**153-5710**	2	BATTERY GP (12-VOLT, MAINTENANCE FREE, WET)	
					(EACH INCLUDES)	
		1	**123-1373**	6	CAP AS-FILLER (7/8-9-THD)	
	7	1	**153-6281**	1	HOLD-DOWN-BATTERY	
	8	1	**164-2924**	1	PLATE AS	
		1	**1F-0750**	1	NUT-WELD (3/8-16-THD)	
	9	1	**183-1025**	1	STRAP AS	
	10	1	**192-9464**	1	PLATE	
	12	1	**225-0313**	1	FILM-WARNING (JUMP START, READ OMM, U.S.)	
	13	1	**324-3336**	1	JUNCTION BLOCK AS	
		1	**8T-4121**	1	WASHER-HARD (11X21X2.5-MM THK)	
M		1	**8T-4137**	1	BOLT (M10X1.5X20-MM)	
M		1	**8T-4179**	1	BOLT (M12X1.75X20-MM)	
		1	**8T-4223**	1	WASHER-HARD (13.5X25.5X3-MM THK)	
E		1	**159-8049**		CABLE (00-GA, RED) (33-CM)	
		1	**1S-7251**	1	TERMINAL-CABLE (00-GA, 1/2-IN SCREW)	
		1	**9G-0004**	1	COVER AS-TERMINAL (RED)	
		1	**8C-5917**	1	TERMINAL AS-BATTERY (POSITIVE)	
		1	**1M-6119**	1	BOLT (5/16-18X1.375-IN)	
		1	**1M-6120**	1	NUT (5/16-18-THD)	
		1	**1S-7252**	1	TERMINAL-CABLE (00-GA, 3/8-IN SCREW)	
		1	**9G-0005**	1	COVER AS-TERMINAL (BLACK)	
		1	**8L-8413**	1	STRAP-CABLE (WHITE)	
		1	**8T-9757**	1	TERMINAL AS-BATTERY (NEGATIVE)	
		1	**1M-6119**	1	BOLT (5/16-18X1.375-IN)	
		1	**1M-6120**	1	NUT (5/16-18-THD)	
E		1	**159-8050**		CABLE (00-GA, BLACK) (69-CM)	
YR	14	1	*349-6571*	1	STARTING MOTOR GP-ELECTRIC (24-VOLT)	395
	15	1	**377-3001**	1	CABLE AS	

359-6459 **STARTING AR-COLD WEATHER (**contd.**)** **i05920095**

NOTE	REF NO	GRAPHIC REF	PART NUMBER	QTY	PART NAME 1 2 3 4 5 6 (PRODUCT LEVEL)	SEE PAGE
		1	**1S-4915**	2	LINER (CONDUIT)	
		1	**1S-7251**	1	TERMINAL-CABLE (00-GA, 1/2-IN SCREW)	
		1	**4D-1248**	1	TERMINAL (00-GA, 3/8-IN SCREW)	
E		1	**5P-0695**		CONDUIT (140-CM)	
E		1	**8T-2225**		TUBE-HEAT SHRINK (25.4-MM DIA) (12-CM)	
E		1	**159-8050**		CABLE (00-GA, BLACK) (174-CM)	
		1	**260-2998**	1	COVER-TERMINAL (00-GA, BLACK)	
	16	1	**377-3002**	1	CABLE AS	
		1	**1S-4915**	2	LINER (CONDUIT)	
		1	**1S-7251**	1	TERMINAL-CABLE (00-GA, 1/2-IN SCREW)	
E		1	**5P-0695**		CONDUIT (191-CM)	
		1	**8N-0869**	2	COVER-TERMINAL (RED)	
E		1	**8T-2225**		TUBE-HEAT SHRINK (25.4-MM DIA) (8-CM)	
E		1	**159-8049**		CABLE (00-GA, RED) (212-CM)	
		1	**190-3848**	1	TERMINAL-RING (00-GA, 1/2-IN SCREW)	
	17	1	**377-3003**	1	CABLE AS	
		1	**1S-4915**	2	LINER (CONDUIT)	
		1	**1S-7251**	2	TERMINAL-CABLE (00-GA, 1/2-IN SCREW)	
E		1	**5P-0695**		CONDUIT (129-CM)	
		1	**8N-0869**	2	COVER-TERMINAL (RED)	
E		1	**8T-2225**		TUBE-HEAT SHRINK (25.4-MM DIA) (8-CM)	
E		1	**159-8049**		CABLE (00-GA, RED) (153-CM)	
M	18	1	**109-3001**	2	STUD-TAPERLOCK (M10X1.5X65-MM)	
M	19	1	**116-3715**	5	STUD-TAPERLOCK (M10X1.5X85-MM)	
	20	1	**198-4777**	1	WASHER-HARD (11X25X10-MM THK)	
	21	1	**1S-0994**	2	CLIP	
	22	1	**204-2281**	2	STRAP-CABLE	
	23	1	**2V-1771**	2	GROMMET	
	24	1	**5M-3062**	1	BOLT (3/8-16X0.75-IN)	
	25	1	**5P-1075**	3	WASHER-HARD (10.2X22.5X3-MM THK)	
	26	1	**8T-1895**	14	CLIP (SLOT)	
	27	1	**8T-1896**	14	CLIP (TAB)	
	28	1	**6D-4247**	1	CLIP	
	29	1	**5G-3676**	14	GROMMET	
	30	1	**6V-8801**	3	NUT (3/8-16-THD)	
	31	1	**7K-1181**	3	STRAP-CABLE	
	32	1	**8S-2332**	3	BOLT-12 POINT HEAD (5/8-11X1.75-IN)	
M	33	1	**8T-0271**	3	BOLT-SOCKET HEAD (M10X1.5X35-MM)	
	34	1	**8T-4121**	19	WASHER-HARD (11X21X2.5-MM THK)	
M	35	1	**8T-4133**	7	NUT (M10X1.5-THD)	
M	36	1	**8T-4136**	2	BOLT (M10X1.5X25-MM)	
M	37	1	**8T-4137**	1	BOLT (M10X1.5X20-MM)	
M	38	1	**8T-4178**	2	BOLT (M10X1.5X90-MM)	
M	39	1	**8T-4179**	2	BOLT (M12X1.75X20-MM)	
M	40	1	**8T-4195**	2	BOLT (M10X1.5X30-MM)	
	41	1	**8T-4223**	2	WASHER-HARD (13.5X25.5X3-MM THK)	
	42	1	**8T-9407**	3	BOLT-CARRIAGE (3/8-16X1.25-IN)	
	43	1	**9B-7237**	1	BOLT (3/8-16X1.25-IN)	

E - ORDER BY THE CENTIMETER
M - METRIC PART
R - REMANUFACTURED PART MAY BE AVAILABLE
Y - SEPARATE ILLUSTRATION

359-6459 **STARTING AR-COLD WEATHER (**contd.**)** **i05920095**

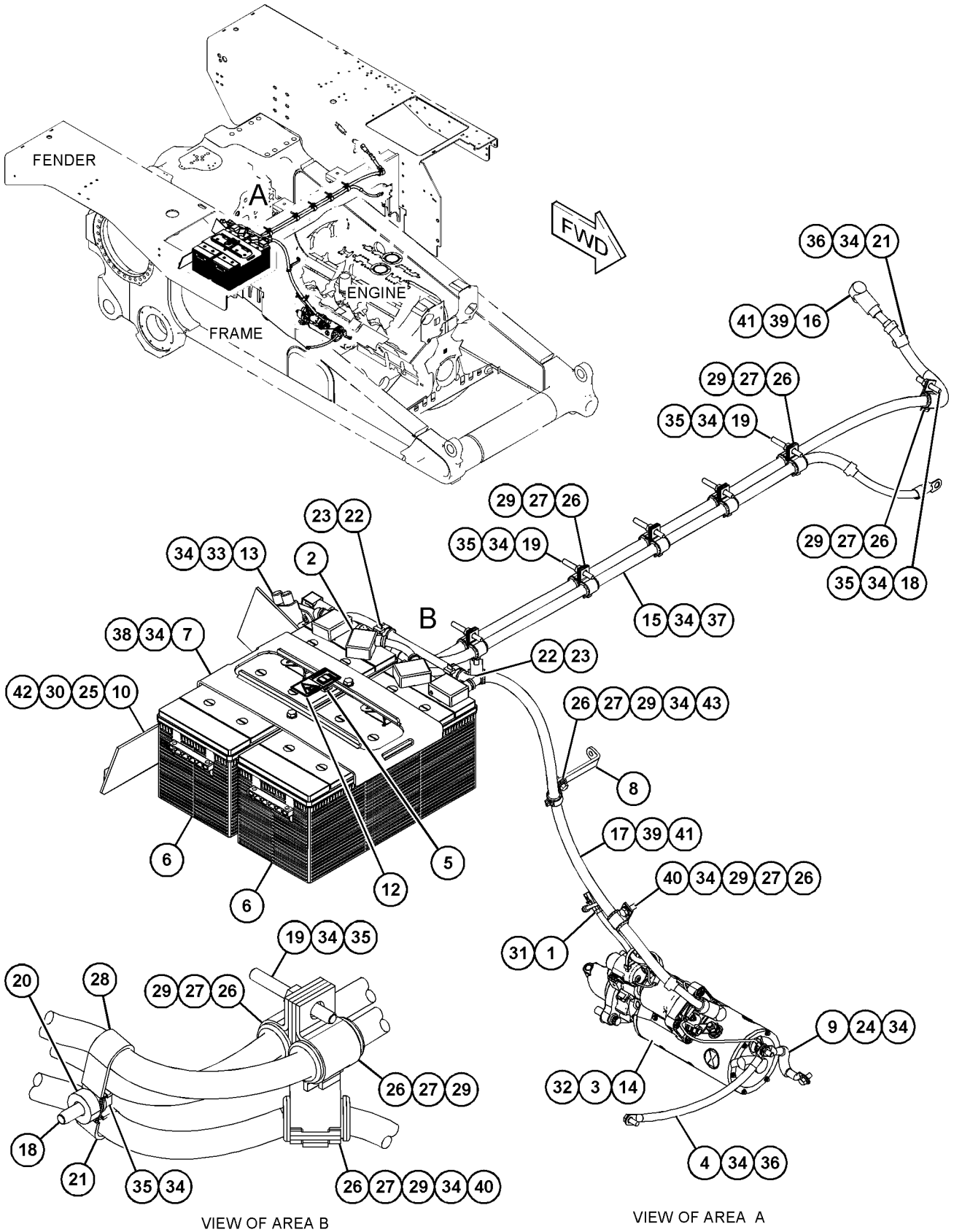

VIEW OF AREA B

VIEW OF AREA A

GRAPHIC #1 <END> g03691558

349-6530 STARTING MOTOR GP-ELECTRIC*R

S/N: RAB1-UP
24-VOLT
PART OF 359-6475 STARTING MOTOR GP-ELECTRIC
AN ATTACHMENT

SMCS-1453 **i04929470**

NOTE	REF NO	GRAPHIC REF	PART NUMBER	QTY	PART NAME 1 2 3 4 5 6 (PRODUCT LEVEL)	SEE PAGE
	1	1	**7M-0326**	1	CONNECTOR	
	2	1	**9H-3757**	2	WASHER (0.516X1X0.094-IN THK)	
	3	1	**1S-7446**	3	SCREW-MACHINE (8-32X0.437-IN)	
	4	1	**8C-9660**	3	WASHER (4.6X7.9X0.8-MM THK)	
	5	1	**9S-2544**	9	SCREW-HEX HEAD (8-32X11.13-MM)	
	6	1	**7M-0327**	1	WASHER-THRUST (17.4X25.4X1.6-MM THK)	
	7	1	**3T-3418**	1	FRAME AS-END	
		1	**3T-3423**	1	CUP	
		1	**3T-3424**	1	PLUG-FELT	
		1	**9G-4101**	1	BUSHING-END	
Y	8	1	**3T-9525**	1	PLATE AS-BRUSH (STARTING MOTOR)	359
	9	1	**1T-0808**	2	WASHER (0.516X0.812X0.09-IN THK)	
	10	1	**3T-3422**	1	WIRE AS	
	11	1	**2J-8163**	2	SEAL-O-RING	
	12	1	**7X-3373**	1	BOLT (5/16-18X0.88-IN)	
	13	1	**5J-5314**	5	BOLT (5/16-18X1.5-IN)	
	14	1	**3L-3380**	1	BUSHING-TERMINAL	
	15	1	**8C-3089**	1	SEAL-O-RING	
	16	1	**4M-1853**	1	LEVER AS-SHIFT	
	17	1	**5M-3034**	1	LOCKNUT (5/16-24-THD)	
	18	1	**7L-2894**	4	GASKET	
	19	1	**4M-1831**	4	PLUG-LEVER HOUSING	
	20	1	**4M-1854**	1	SHAFT-LEVER	
	21	1	**1H-1023**	1	SEAL-O-RING	
	22	1	**2D-6392**	1	SEAL-O-RING	
	23	1	**7T-3974**	1	HOUSING AS-DRIVE	
	24	1	**6N-3826**	1	DRIVE AS-MOTOR	
	25	1	**2H-3429**	1	RING-RETAINING	
	26	1	**6V-1322**	4	BOLT (1/4-20X0.375-IN)	
	27	1	**8T-4205**	1	WASHER-HARD (7.2X14.5X2-MM THK)	
	28	1	**6N-3279**	1	INSULATOR	
	29	1	**0S-1597**	13	BOLT (1/4-28X1-IN)	
	30	1	**1M-9971**	1	SPACER (0.835X1.72X0.188-IN THK)	
	31	1	**1H-2629**	3	STRIP-INSULATION	
	32	1	**7M-0324**	1	COIL AS-FIELD	
	33	1	**3R-8797**	12	SCREW & WASHER AS (3/8-24X0.72-IN)	
	34	1	**7F-3488**	6	SHOE-POLE	
	35	1	**7M-8651**	1	ARMATURE AS	
	36	1	**7M-0325**	1	INSULATOR	
	37	1	**3T-9524**	6	BRUSH AS	
	38	1	**3N-3763**	1	KIT-TERMINAL (STARTING MOTOR)	
					(KIT INCLUDES BUSHINGS & WASHERS)	
	40	1	**3R-8801**	1	CLAMP	
	41	1	**8F-1434**	2	LOCKWASHER	
	42	1	**6V-8188**	6	NUT (1/2-13-THD)	
	43	1	**7X-0562**	6	WASHER-HARD (13.5X19X0.8-MM THK)	

349-6530 **STARTING MOTOR GP-ELECTRIC** (contd.) **i04929470**

NOTE	REF NO	GRAPHIC REF	PART NUMBER	QTY	PART NAME 1 2 3 4 5 6 (PRODUCT LEVEL)	SEE PAGE
	44	1	**4B-2049**	6	NUT (10-32-THD)	
	45	1	**8T-0328**	10	WASHER-HARD (5.5X10X1-MM THK)	
	46	1	**3T-9494**	6	SPRING	
	47	1	**349-6255**	1	HOUSING AS	
	48	1	**9G-4101**	1	BUSHING-END	
	49	1	**3T-3424**	3	PLUG-FELT	
	50	1	**3T-3423**	3	CUP	
	51	1	**1M-9968**	1	BUSHING	
	52	1	**2F-6678**	1	SEAL-LIP TYPE	
	53	1	**4L-2729**	1	WASHER (0.844X1.9X0.188-IN THK)	
	54	1	**4M-1896**	1	BUSHING-TERMINAL	
	55	1	**045-4065**	4	SCREW-MACHINE (10-32X0.75-IN)	
	56	1	**125-6535**	1	COVER-STARTING MOTOR	
	57	1	**338-3453**	1	SOLENOID AS-STARTING MOTOR (24-VOLT)	
		1	**3R-8801**	1	CLAMP	
	58	1	**352-7994**	1	KIT-SWITCH (RELAY, STARTER)	
					(KIT INCLUDES STARTER RELAY SWITCH AS, JUMP START PROTECTION COVER, BOLTS, ANCHOR & CLAMP)	
	59	1	**3T-3434**	6	PLUG	

Y - SEPARATE ILLUSTRATION

349-6530 **STARTING MOTOR GP-ELECTRIC (**contd.**)** **i04929470**

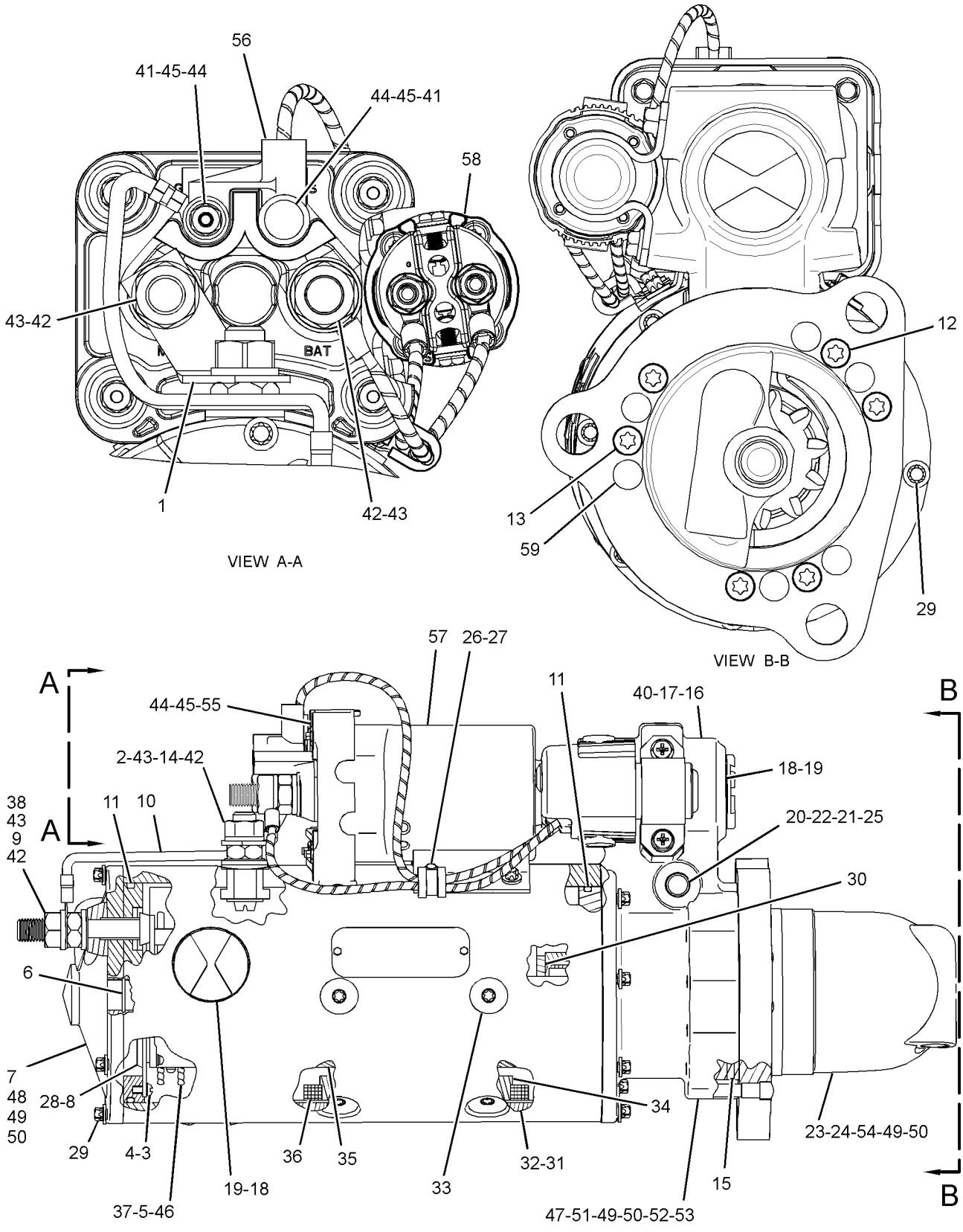

GRAPHIC #1 <END> g03100476

349-6571 STARTING MOTOR GP-ELECTRIC*R

S/N: RAB1-UP
24-VOLT
PART OF 359-6459 STARTING AR-COLD WEATHER
AN ATTACHMENT

SMCS-1453 **i05160874**

NOTE	REF NO	GRAPHIC REF	PART NUMBER	QTY	PART NAME 1 2 3 4 5 6 (PRODUCT LEVEL)	SEE PAGE
	1	1	**7M-0326**	1	CONNECTOR	
	2	1	**9H-3757**	2	WASHER (0.516X1X0.094-IN THK)	
	3	1	**1S-7446**	3	SCREW-MACHINE (8-32X0.437-IN)	
	4	1	**8C-9660**	3	WASHER (4.6X7.9X0.8-MM THK)	
	5	1	**9S-2544**	9	SCREW-HEX HEAD (8-32X11.13-MM)	
	6	1	**7M-0327**	1	WASHER-THRUST (17.4X25.4X1.6-MM THK)	
	7	1	**3T-3418**	1	FRAME AS-END	
		1	**3T-3423**	1	CUP	
		1	**3T-3424**	1	PLUG-FELT	
		1	**9G-4101**	1	BUSHING-END	
Y	8	1	**3T-9525**	1	PLATE AS-BRUSH (STARTING MOTOR)	359
	9	1	**1T-0808**	2	WASHER (0.516X0.812X0.09-IN THK)	
	10	1	**3T-3422**	1	WIRE AS	
	11	1	**2J-8163**	2	SEAL-O-RING	
	12	1	**7X-3373**	1	BOLT (5/16-18X0.88-IN)	
	13	1	**5J-5314**	5	BOLT (5/16-18X1.5-IN)	
	14	1	**3L-3380**	1	BUSHING-TERMINAL	
	15	1	**8C-3089**	1	SEAL-O-RING	
	16	1	**4M-1853**	1	LEVER AS-SHIFT	
	17	1	**5M-3034**	1	LOCKNUT (5/16-24-THD)	
	18	1	**7L-2894**	4	GASKET	
	19	1	**4M-1831**	4	PLUG-LEVER HOUSING	
	20	1	**4M-1854**	1	SHAFT-LEVER	
	21	1	**1H-1023**	1	SEAL-O-RING	
	22	1	**2D-6392**	1	SEAL-O-RING	
	23	1	**7T-3974**	1	HOUSING AS-DRIVE	
	24	1	**6N-3826**	1	DRIVE AS-MOTOR	
	25	1	**2H-3429**	1	RING-RETAINING	
	26	1	**6V-1322**	4	BOLT (1/4-20X0.375-IN)	
	27	1	**8T-4205**	1	WASHER-HARD (7.2X14.5X2-MM THK)	
	28	1	**6N-3279**	1	INSULATOR	
	29	1	**0S-1597**	13	BOLT (1/4-28X1-IN)	
	30	1	**1M-9971**	1	SPACER (0.835X1.72X0.188-IN THK)	
	31	1	**1H-2629**	3	STRIP-INSULATION	
	32	1	**7M-0324**	1	COIL AS-FIELD	
	33	1	**3R-8797**	12	SCREW & WASHER AS (3/8-24X0.72-IN)	
	34	1	**7F-3488**	6	SHOE-POLE	
	35	1	**7M-8651**	1	ARMATURE AS	
	36	1	**7M-0325**	1	INSULATOR	
	37	1	**3T-9524**	6	BRUSH AS	
	38	1	**3N-3763**	1	KIT-TERMINAL (STARTING MOTOR)	
					(KIT INCLUDES BUSHINGS & WASHER)	
	40	1	**3R-8801**	1	CLAMP	
	41	1	**8F-1434**	2	LOCKWASHER	
	42	1	**6V-8188**	6	NUT (1/2-13-THD)	
	43	1	**7X-0562**	6	WASHER-HARD (13.5X19X0.8-MM THK)	

349-6571 **STARTING MOTOR GP-ELECTRIC** (contd.) **i05160874**

NOTE	REF NO	GRAPHIC REF	PART NUMBER	QTY	PART NAME 1 2 3 4 5 6 (PRODUCT LEVEL)	SEE PAGE
	44	1	**4B-2049**	6	NUT (10-32-THD)	
	45	1	**8T-0328**	10	WASHER-HARD (5.5X10X1-MM THK)	
	46	1	**3T-9494**	6	SPRING	
	47	1	**349-6255**	1	HOUSING AS	
	48	1	**9G-4101**	1	BUSHING-END	
	49	1	**3T-3424**	3	PLUG-FELT	
	50	1	**3T-3423**	3	CUP	
	51	1	**1M-9968**	1	BUSHING	
	52	1	**2F-6678**	1	SEAL-LIP TYPE	
	53	1	**4L-2729**	1	WASHER (0.844X1.9X0.188-IN THK)	
	54	1	**4M-1896**	1	BUSHING-TERMINAL	
	55	1	**045-4065**	4	SCREW-MACHINE (10-32X0.75-IN)	
	56	1	**125-6535**	1	COVER-STARTING MOTOR	
	57	1	**338-3453**	1	SOLENOID AS-STARTING MOTOR (24-VOLT)	
		1	**3R-8801**	1	CLAMP	
	58	1	**352-7993**	1	KIT-SWITCH	
					(KIT INCLUDES SWITCH AS, JUMP START PROTECTION COVER, BOLTS, ANCHOR, & CLAMP)	

Y - SEPARATE ILLUSTRATION

349-6571 **STARTING MOTOR GP-ELECTRIC** (contd.) **i05160874**

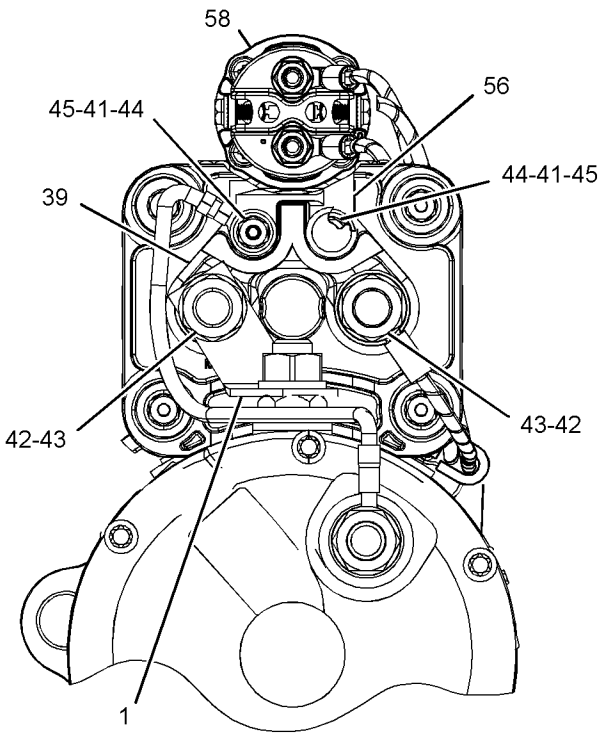

VIEW A-A

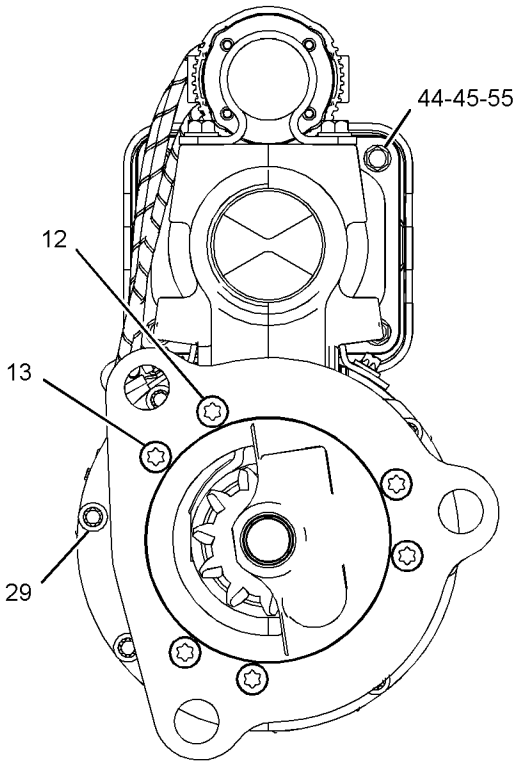

VIEW B-B

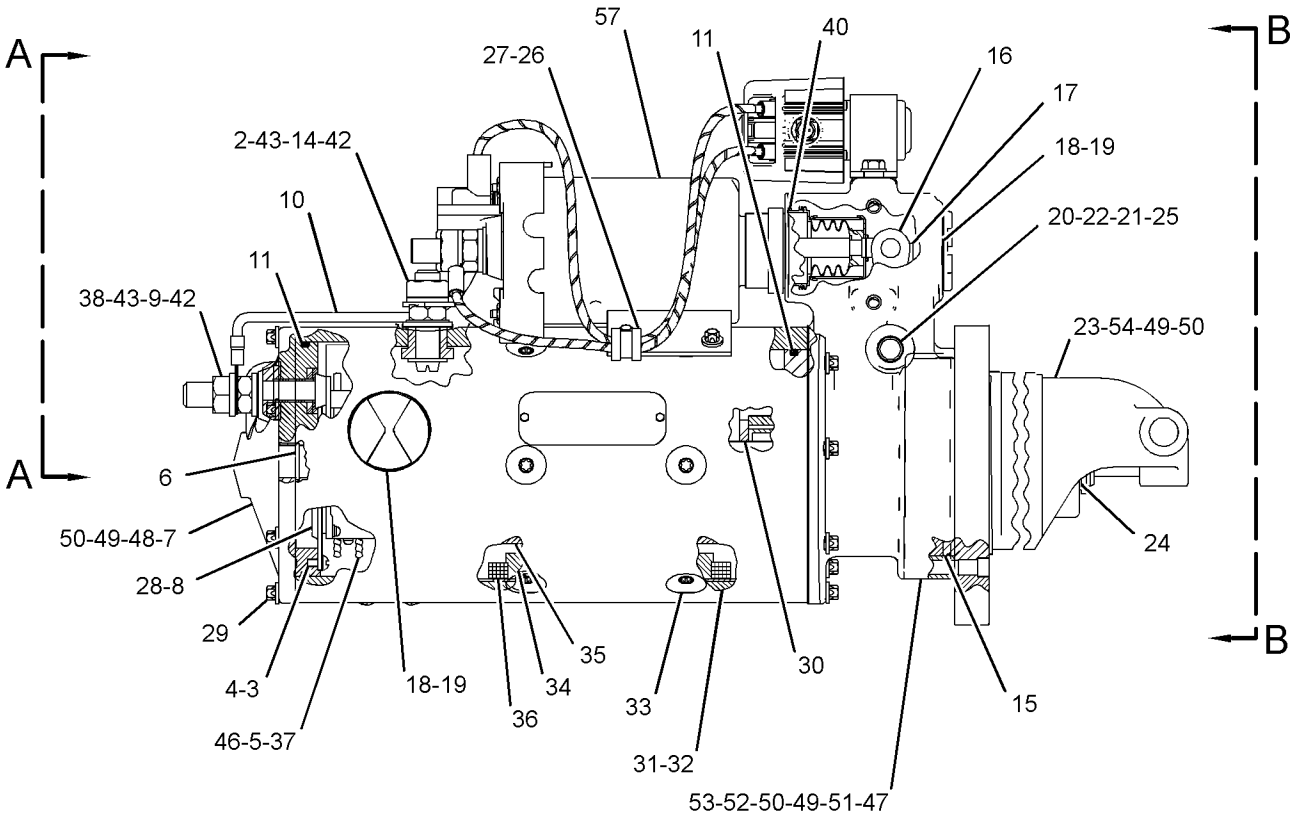

LEFT SIDE VIEW OF ENGINE

GRAPHIC #1 <END> g02625616

359-6475 STARTING MOTOR GP-ELECTRIC

S/N: RAB1-UP
24-VOLT
PART OF 359-6404 INSTALLATION AR-ENGINE
AN ATTACHMENT

SMCS-1453 **i05806491**

NOTE	REF NO	GRAPHIC REF	PART NUMBER	QTY	PART NAME 1 2 3 4 5 6 (PRODUCT LEVEL)	SEE PAGE
	1	1	**9Y-6089**	1	GASKET	
YR	2	1	**349-6530**	1	STARTING MOTOR GP-ELECTRIC (24-VOLT)	392
	3	1	**8S-2332**	3	BOLT-12 POINT HEAD (5/8-11X1.75-IN)	

R - REMANUFACTURED PART MAY BE AVAILABLE
Y - SEPARATE ILLUSTRATION

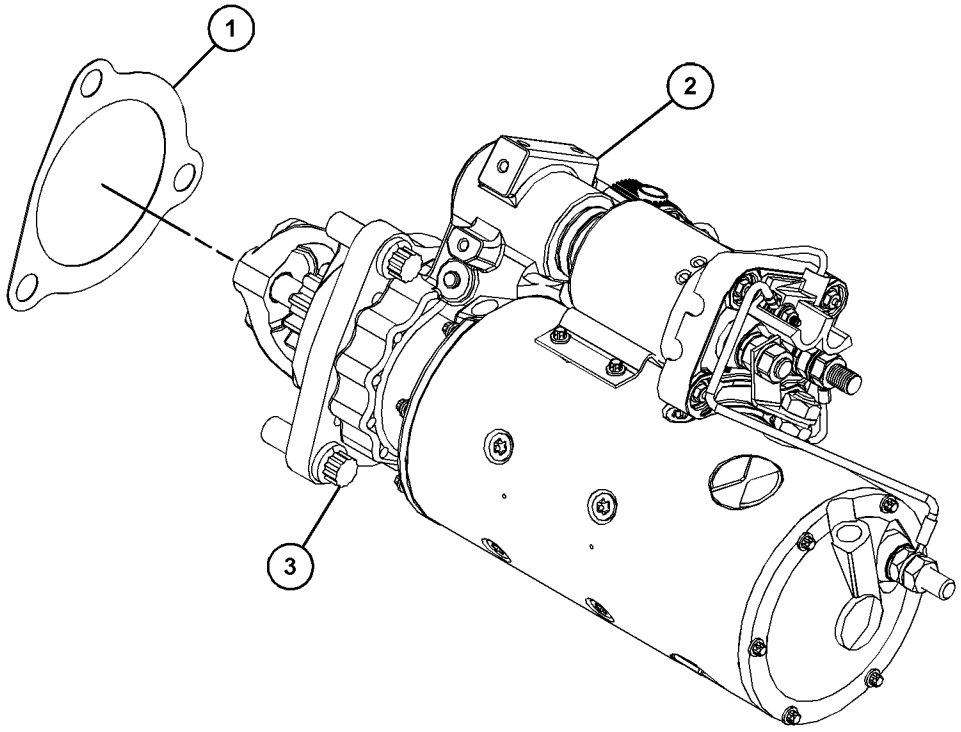

GRAPHIC #1 <END> g03480920

284-8381 SWITCH AS-TOGGLE

S/N: RAB1-UP

PART OF 445-4705 COVER GP-PROTECTION, 452-6871 WIRING GP-SHUTDOWN

AN ATTACHMENT

SMCS-1435, 7332

i05537045

NOTE	REF NO	GRAPHIC REF	PART NUMBER	QTY	PART NAME 1 2 3 4 5 6 (PRODUCT LEVEL)	SEE PAGE
	1	1	**102-8802**	1	KIT-RECEPTACLE (2-PIN)	
					(INCLUDES RECEPTACLE AS & WEDGE)	
	2	1	**8T-8729**	2	PIN-CONNECTOR (16-GA TO 18-GA)	
	3	1	**271-2180**	1	SWITCH AS-TOGGLE (DOOR RELEASE, REMOTE)	
		1	**6T-3631**	2	NUT-HEX (15/32-32-THD)	
		1	**6T-3632**	1	LOCKWASHER	
		1	**6T-3633**	1	RING-LOCKING	
J	4	1	**153-5043**		SLEEVE (3-DM)	

J - ORDER BY THE DECIMETER

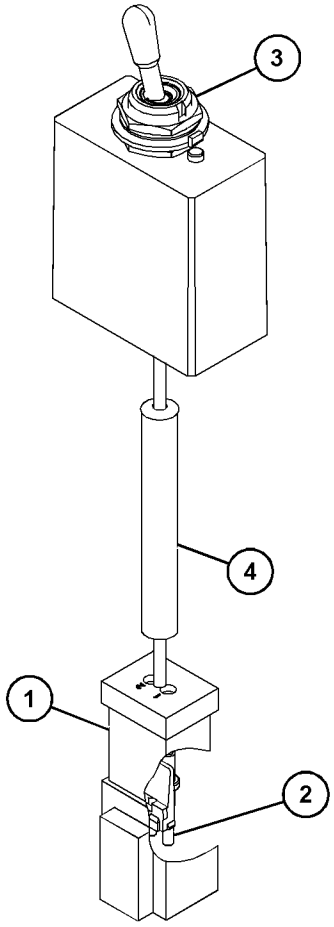

GRAPHIC #1

<END>

g03494022

171-8708 SWITCH GP-FLOW–COOLANT

S/N: JZM1-UP
5 TO 28-VOLT
PART OF 359-7757 SENSOR GP-ENGINE, 463-5557 SENSOR GP-TEMPERATURE
AN ATTACHMENT

SMCS-1438 **i03516522**

NOTE	REF NO	GRAPHIC REF	PART NUMBER	QTY	PART NAME 1 2 3 4 5 6 (PRODUCT LEVEL)	SEE PAGE
	1	1	**102-8802**	1	KIT-RECEPTACLE (2-PIN)	
					(INCLUDES RECEPTACLE AS & WEDGE)	
	2	1	**186-3735**	2	PIN-CONNECTOR (16-GA TO 18-GA)	
BE	3	1	**9X-1813**		SLEEVE	

B - USE AS REQUIRED
E - ORDER BY THE CENTIMETER

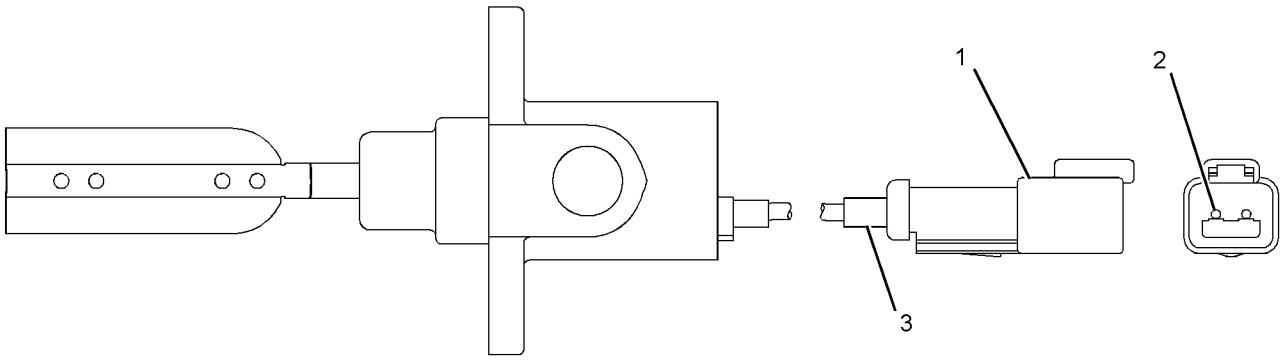

GRAPHIC #1 <END> g01873373

241-8368 SWITCH GP-MAGNETIC

S/N: RAB1-UP
24-VOLT
PART OF 377-6104 WIRING GP-PLATFORM
AN ATTACHMENT

SMCS-7499 **i06575846**

NOTE	REF NO	GRAPHIC REF	PART NUMBER	QTY	PART NAME 1 2 3 4 5 6 (PRODUCT LEVEL)	SEE PAGE
	1	1	**155-2270**	1	KIT-CONNECTING PLUG (2-PIN)	
					(INCLUDES PLUG AS, WEDGE & INTERFACE SEAL)	
	2	1	**4F-2294**	2	NUT-JAM (5/16-24-THD)	
	3	1	**8T-8730**	2	SOCKET-CONNECTOR (16-GA TO 18-GA)	

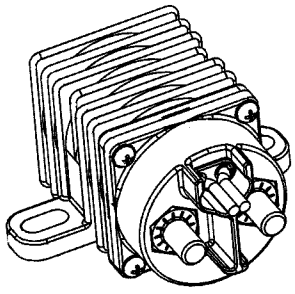

ISOMETRIC VIEW

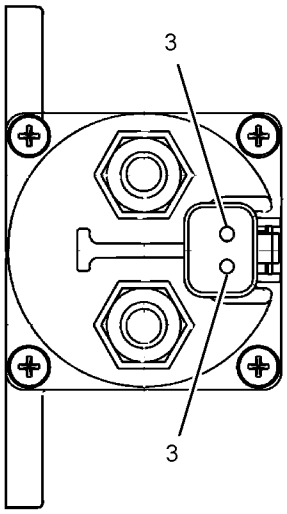

VIEW A-A

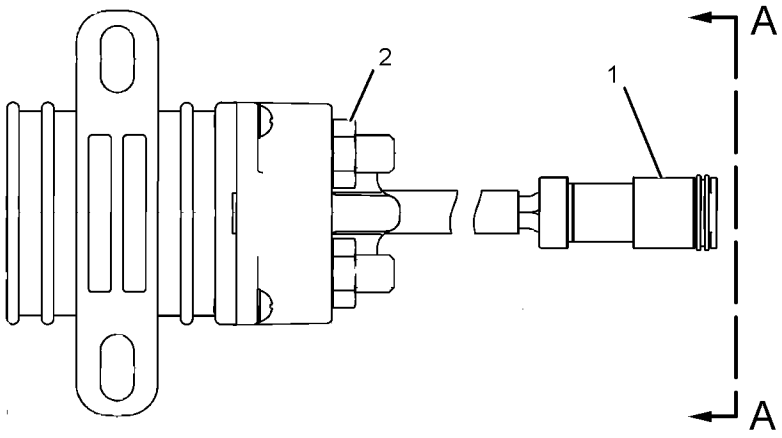

GRAPHIC #1 <END> g01077362

337-9078 SWITCH GP-MAGNETIC

S/N: RAB1-UP
24-VOLT, 32-VOLT, SECONDARY STEERING CONTROL
PART OF 380-8106 PRELUBRICATION AR-ENGINE
AN ATTACHMENT

SMCS-7499 **i05867457**

NOTE	REF NO	GRAPHIC REF	PART NUMBER	QTY	PART NAME 1 2 3 4 5 6 (PRODUCT LEVEL)	SEE PAGE
	1	1	**7X-0620**	2	WASHER-HARD (5.5X13X1.6-MM THK)	
	2	1	**8F-1434**	2	LOCKWASHER	
	3	1	**6V-8378**	2	NUT (10-32-THD)	
	4	1	**4L-6499**	2	WASHER (0.38X0.88X0.06-IN THK)	
	5	1	**4D-1326**	2	LOCKWASHER (EXTERNAL TOOTH)	
	6	1	**1B-2578**	2	NUT (3/8-16-THD)	

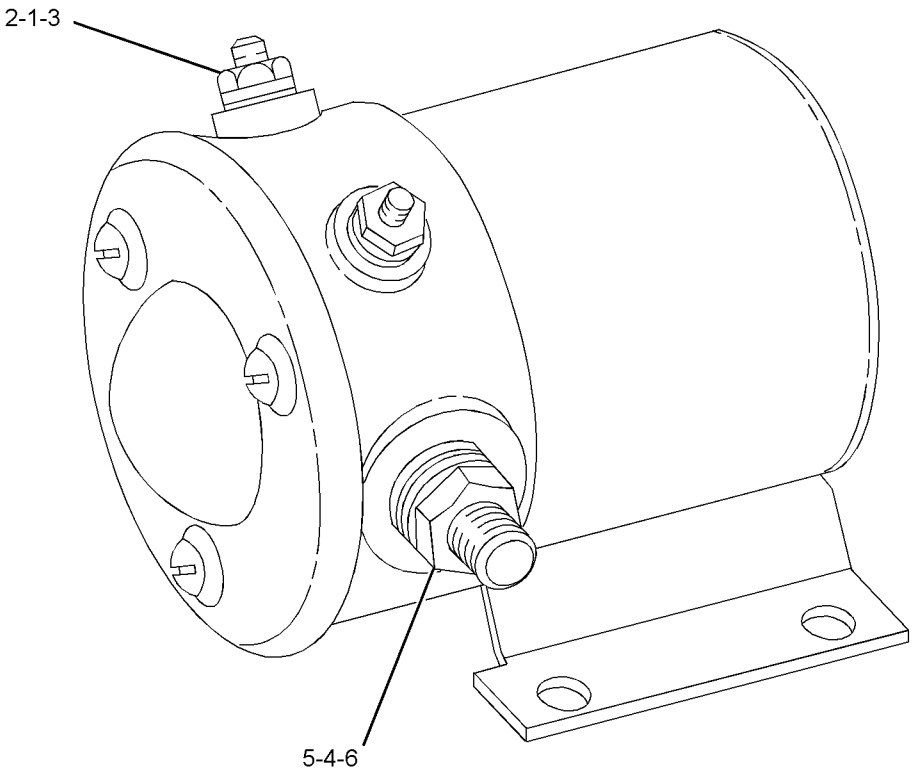

GRAPHIC #1 <END> g01132022

174-7165 SWITCH GP-POSITION

S/N: RAB1-UP
8 TO 32-VOLT
PART OF 419-8645 WIRING GP-LADDER
AN ATTACHMENT

SMCS-1435 **i03853829**

NOTE	REF NO	GRAPHIC REF	PART NUMBER	QTY	PART NAME 1 2 3 4 5 6 (PRODUCT LEVEL)	SEE PAGE
	1	1	**121-0153**	1	FILM-INSTRUCTION (ELECTRICAL POWER)	
	2	1	**102-8803**	1	KIT-RECEPTACLE (3-PIN)	
					(INCLUDES RECEPTACLE AS & WEDGE)	

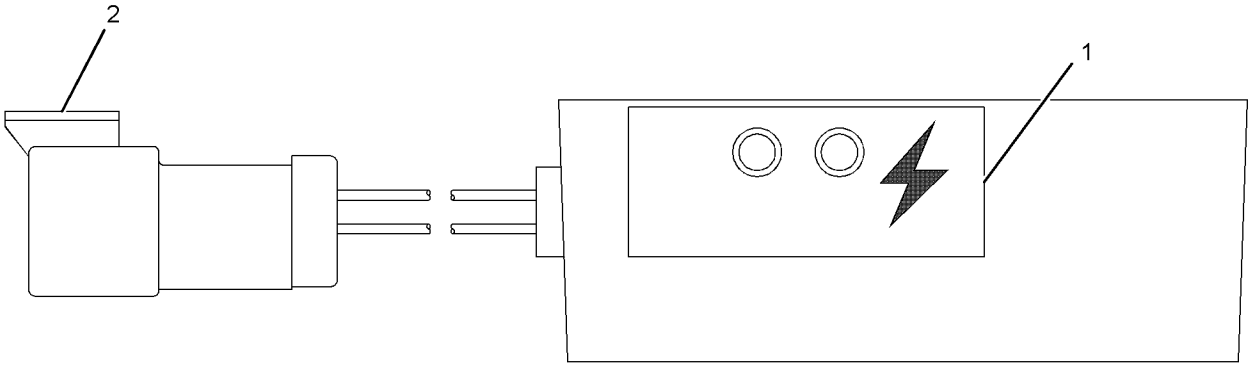

GRAPHIC #1 <END> g02105655

275-1253 SWITCH GP-PRESSURE

S/N: JZM1-UP
5 TO 28-VOLT. AMPSEAL CONNECTOR
PART OF 344-5583 BASE GP-FUEL FILTER
AN ATTACHMENT

SMCS-7400, 7421 **i03524880**

NOTE	REF NO	GRAPHIC REF	PART NUMBER	QTY	PART NAME 1 2 3 4 5 6 (PRODUCT LEVEL)	SEE PAGE
	1	1	**230-4011**	1	PLUG AS-CONNECTOR (2-PIN)	
			264-7029	1	SEAL-CONNECTOR	
E	2	1	**9X-1813**		SLEEVE (14-CM)	
	3	1	**6V-4589**	1	SEAL-O-RING	
	4	1	**9X-7737**	1	SEAL-O-RING	
	5	1	**144-1636**	2	PIN-CONNECTOR (14-GA TO 18-GA)	

E - ORDER BY THE CENTIMETER

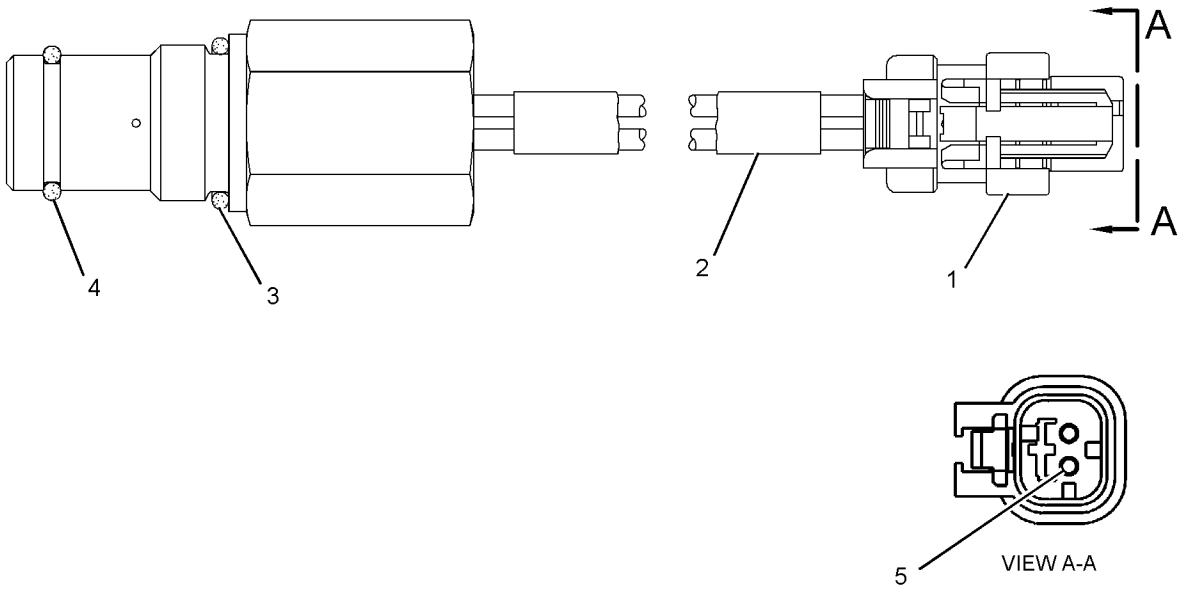

GRAPHIC #1 <END> g01238534

440-0257 SWITCH GP-PRESSURE

S/N: RAB1-UP
DIFFERENTIAL
PART OF 346-5574, 348-1088 FILTER GP-OIL
AN ATTACHMENT

SMCS-7400, 7421

i05979709

NOTE	REF NO	GRAPHIC REF	PART NUMBER	QTY	PART NAME 1 2 3 4 5 6 (PRODUCT LEVEL)	SEE PAGE
	1	1	**102-8802**	1	KIT-RECEPTACLE (2-PIN)	
					(INCLUDES RECEPTACLE AS & WEDGE)	
	2	1	**033-6033**	1	SEAL-O-RING	
	3	1	**8T-8729**	2	PIN-CONNECTOR (16-GA TO 18-GA)	
E	4	1	**9X-1813**		SLEEVE (28-CM)	
	5	1	**206-9295**	1	SEAL-O-RING	

E - ORDER BY THE CENTIMETER

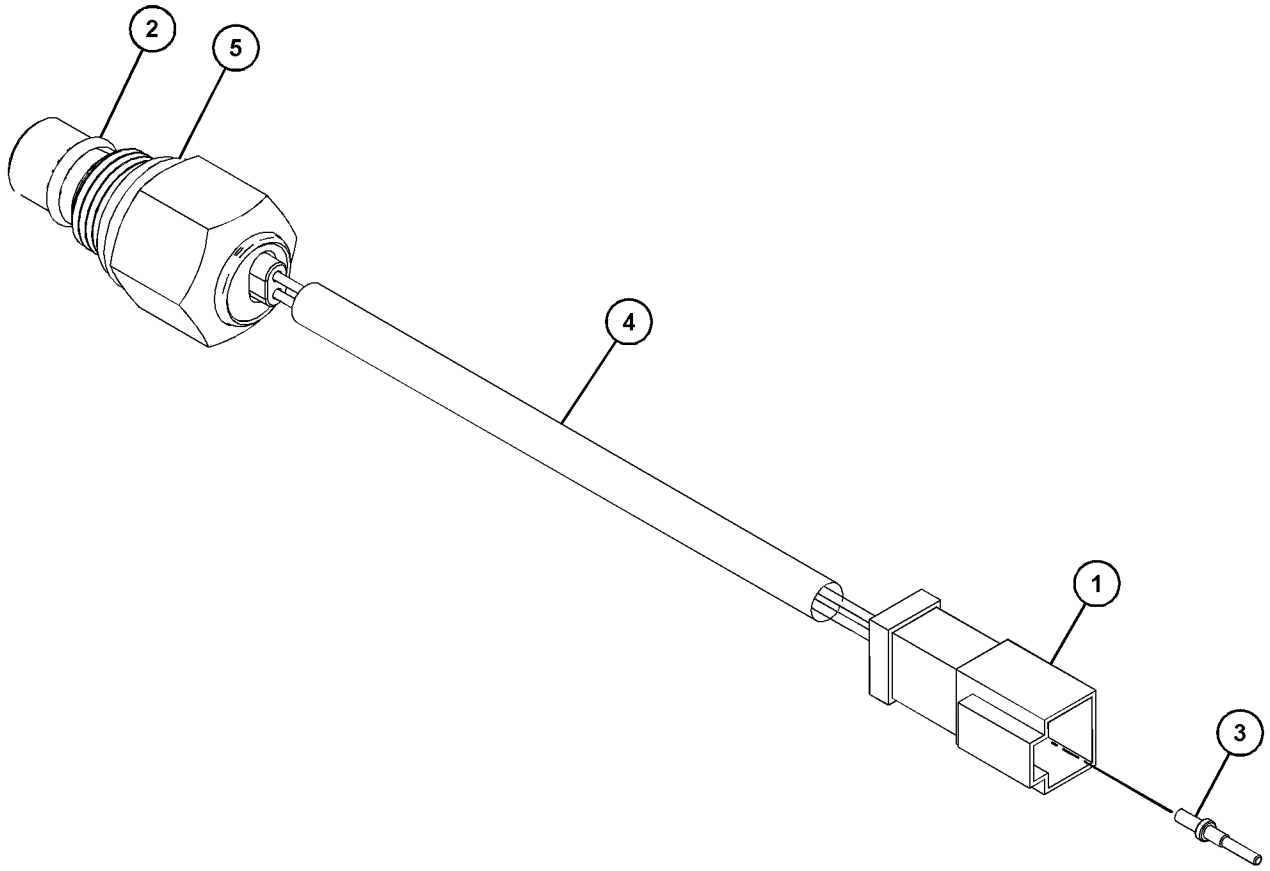

GRAPHIC #1 <END> g03688962

158-6632 SWITCH GP-PUSH BUTTON

S/N: RAB1-UP
24-VOLT
PART OF 377-6104 WIRING GP-PLATFORM
AN ATTACHMENT

SMCS-1435, 7332 **i03297836**

NOTE	REF NO	GRAPHIC REF	PART NUMBER	QTY	PART NAME 1 2 3 4 5 6 (PRODUCT LEVEL)	SEE PAGE
	1	1	**9X-0199**	1	BOOT-SWITCH	
	2	1	**7T-9515**	1	KNOB-HORN	
	3	1	**5L-7200**	1	SCREW (8-32X0.375-IN)	
	4	1	**3B-4501**	1	LOCKWASHER	
	5	1	**6V-8370**	1	NUT-HEX (3/4-32-THD)	
	6	1	**2H-3922**	1	LOCKWASHER	
	7	1	**102-8802**	1	KIT-RECEPTACLE (2-PIN)	
					(INCLUDES RECEPTACLE AS & WEDGE)	
	8	1	**9X-3401**	2	PIN-CONNECTOR (16-GA TO 18-GA)	
	9	1	**3E-3365**	1	WEDGE-RECEPTACLE LOCK (2-PIN)	

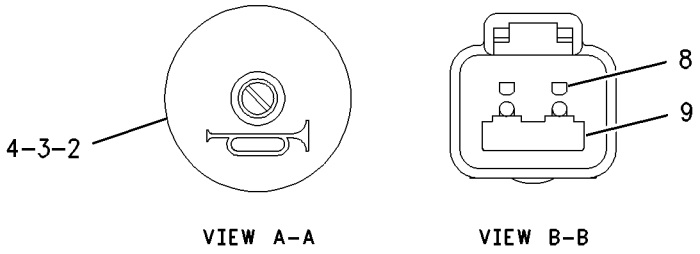

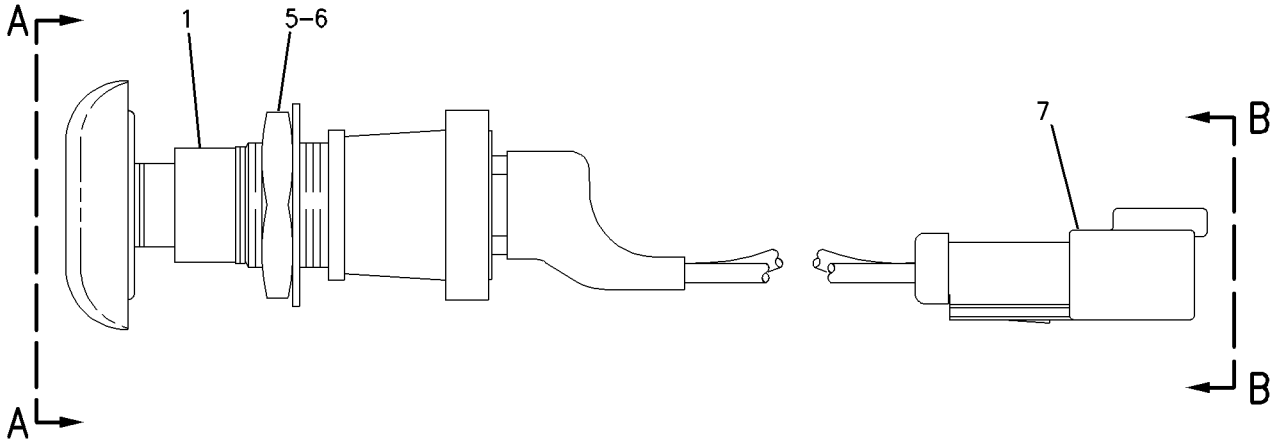

GRAPHIC #1 <END> g00942674

292-0358 SWITCH GP-ROTARY

S/N: RAB1-UP
2-POSITION
PART OF 359-6421 BATTERY & WIRING GP, 452-6871 WIRING GP-SHUTDOWN
AN ATTACHMENT

SMCS-7332 **i03908137**

NOTE	REF NO	GRAPHIC REF	PART NUMBER	QTY	PART NAME 1 2 3 4 5 6 (PRODUCT LEVEL)	SEE PAGE
	1	1	**6V-8832**	1	NUT (5/8-32-THD)	
	2	1	**6F-0253**	1	LOCKWASHER	
	3	1	**9B-7233**	1	LOCKWASHER	
	4	1	**305-3807**	1	LEVER-SWITCH	
	5	1	**186-3735**	6	PIN-CONNECTOR (16-GA TO 18-GA)	
	6	1	**102-8805**	1	KIT-RECEPTACLE (6-PIN)	
					(INCLUDES RECEPTACLE AS & WEDGE)	
	7	1	**5L-7200**	1	SCREW (8-32X0.375-IN)	

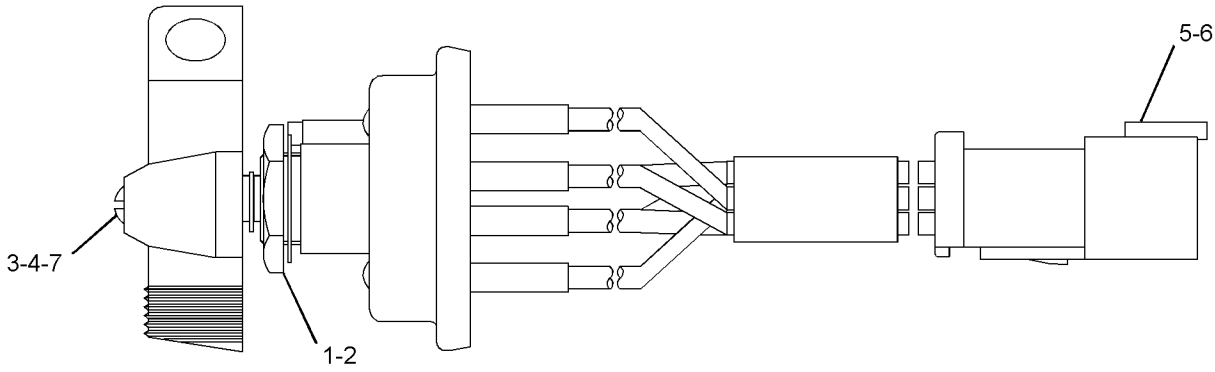

GRAPHIC #1 <END> g02151210

255-2752 SWITCH GP-START

S/N: RAB1-UP
PART OF 377-6104 WIRING GP-PLATFORM
AN ATTACHMENT

SMCS-1416 **i04901785**

NOTE	REF NO	GRAPHIC REF	PART NUMBER	QTY	PART NAME 1 2 3 4 5 6 (PRODUCT LEVEL)	SEE PAGE
	1	1	**7T-6799**	1	NUT-MOUNTING (1-32-THD)	
	2	1	**102-8805**	1	KIT-RECEPTACLE (6-PIN)	
					(INCLUDES RECEPTACLE AS & WEDGE)	
	3	1	**8T-8729**	5	PIN-CONNECTOR (16-GA TO 18-GA)	
	4	1	**8T-8737**	1	PLUG-SEAL	

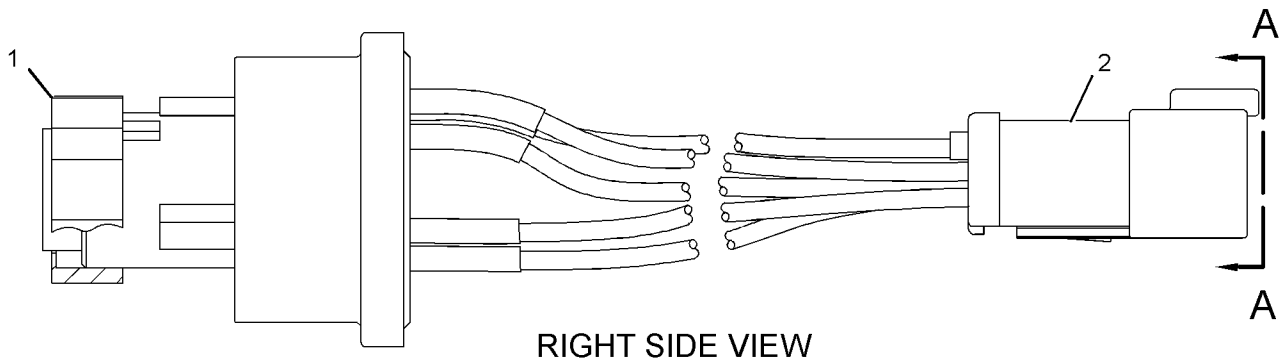

RIGHT SIDE VIEW

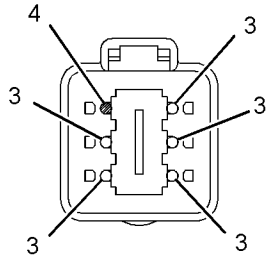

VIEW A-A

GRAPHIC #1 <END> g02255874

275-7741 SWITCH GP-WIPER–CAB

S/N: RAB1-UP
24-VOLT, INTERMITTENT
PART OF 340-4989 PANEL GP-CONTROL
AN ATTACHMENT

SMCS-7305, 7332

i05772888

NOTE	REF NO	GRAPHIC REF	PART NUMBER	QTY	PART NAME 1 2 3 4 5 6 (PRODUCT LEVEL)	SEE PAGE
	1	1	**6V-8369**	1	NUT (7/16-28-THD)	
	2	1	**2H-3920**	1	LOCKWASHER	
	3	1	**8T-8737**	2	PLUG-SEAL	
	4	1	**8T-8729**	6	PIN-CONNECTOR (16-GA TO 18-GA)	
	5	1	**102-8806**	1	KIT-RECEPTACLE (8-PIN)	
					(INCLUDES RECEPTACLE AS & WEDGE)	

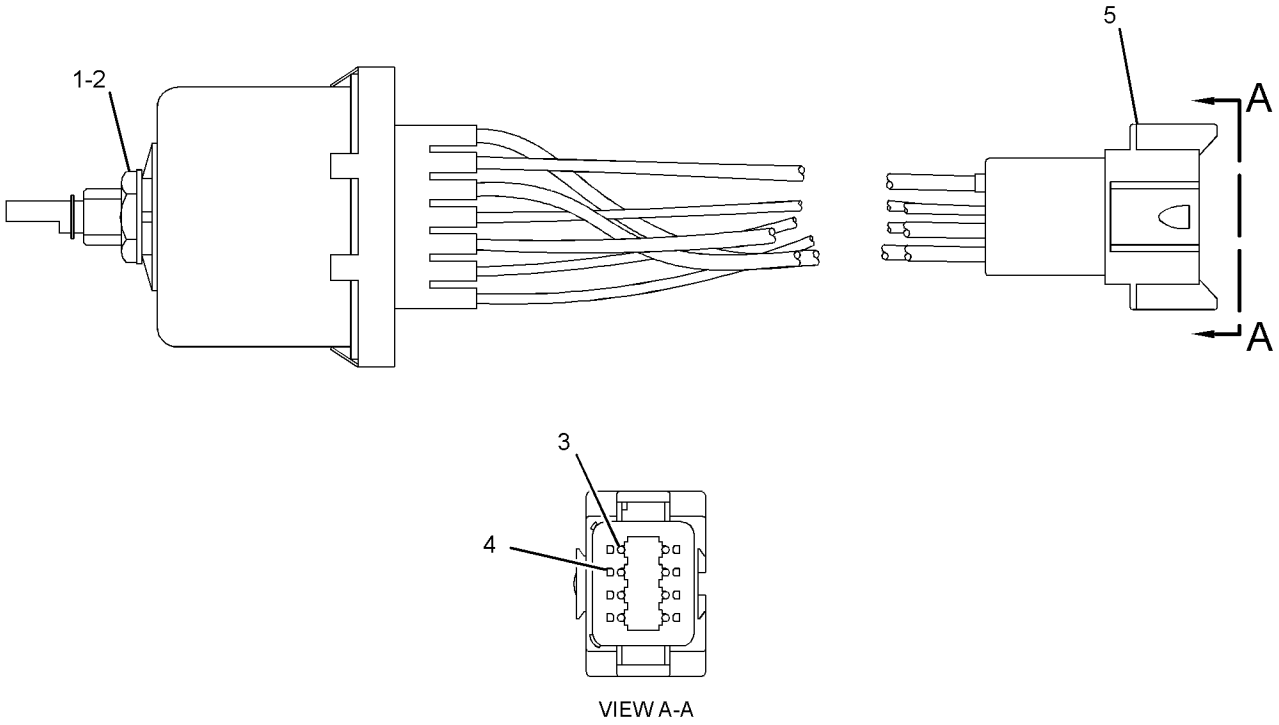

VIEW A-A

GRAPHIC #1

<END>

g01445891

239-1134 VALVE GP-ETHER STARTING

S/N: RAB1-UP
24-VOLT, CONTINUOUS
PART OF 359-6462 STARTING AID GP-ETHER
AN ATTACHMENT

SMCS-1456 **i03894416**

NOTE	REF NO	GRAPHIC REF	PART NUMBER	QTY	PART NAME 1 2 3 4 5 6 (PRODUCT LEVEL)	SEE PAGE
	1	1	**7N-9801**	1	GASKET	
	2	1	**102-8802**	1	KIT-RECEPTACLE (2-PIN)	
					(INCLUDES RECEPTACLE AS & WEDGE)	
	3	1	**8T-8729**	2	PIN-CONNECTOR (16-GA TO 18-GA)	
	4	1	**358-4889**	1	FILTER (ETHER START)	

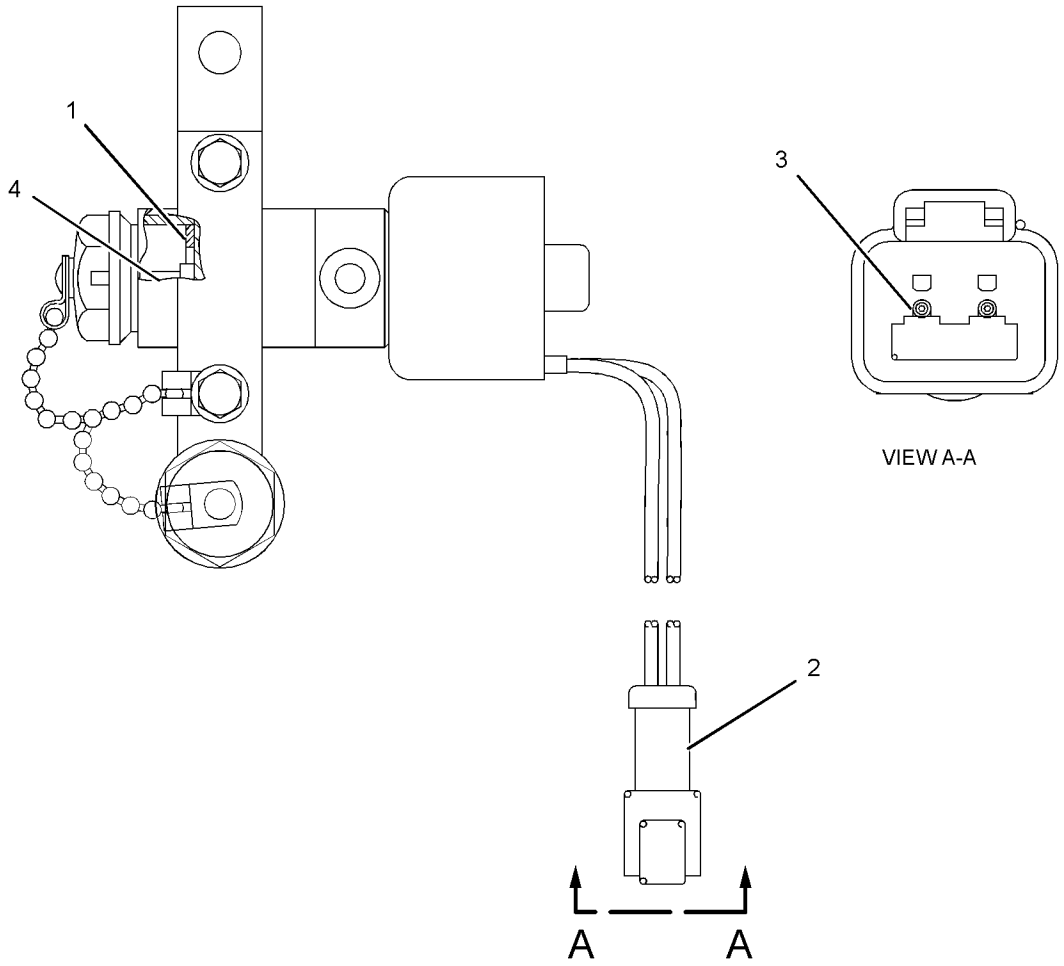

GRAPHIC #1 <END> g02138138

380-2971 WIRING GP-CAB

S/N: RAB1-UP
PART OF 379-6561 CAB AR
AN ATTACHMENT

SMCS-1408, 7301 **i05458491**

NOTE	REF NO	GRAPHIC REF	PART NUMBER	QTY	PART NAME 1 2 3 4 5 6 (PRODUCT LEVEL)	SEE PAGE
	1	1	**1S-2342**	1	STRAP AS-GROUND	
	2	1	**221-0851**	2	SWITCH AS-LIMIT (DOME LIGHT)	
					(EACH INCLUDES)	
		1	**105-8034**	1	SWITCH AS-LIMIT (DOOR)	
		1	**9X-3401**	3	PIN-CONNECTOR (16-GA TO 18-GA)	
					—OR—	
		1	**126-1767**	3	PIN-CONNECTOR (14-GA TO 16-GA)	
		1	**102-8803**	1	KIT-RECEPTACLE (3-PIN)	
					(INCLUDES RECEPTACLE AS & WEDGE)	
		1	**110-0203**	1	CONNECTOR AS (18-GA, BLACK)	
D		1	**5P-5677**		WIRE (18-GA, BLACK) (0.7-M)	
	3	1	**226-2811**	1	LAMP AS-DOME	
		1	**9X-4493**	1	LAMP (24-VOLT, 21-WATT)	
	4	1	**250-8335**	2	LAMP AS (24-VOLT)	
					(EACH INCLUDES)	
		1	**102-8802**	1	KIT-RECEPTACLE (2-PIN)	
					(INCLUDES RECEPTACLE AS & WEDGE)	
		1	**186-3735**	2	PIN-CONNECTOR (16-GA TO 18-GA)	
	5	1	**265-7981**	1	SWITCH AS-ROCKER (24-VOLT) (AIR CONDITIONER CONTROL)	
	6	1	**267-5243**	1	PANEL AS	
		1	**271-7312**	1	KNOB	
		1	**285-7415**	1	KNOB	
	7	1	**340-4196**	1	HARNESS AS-CAB (ROOF, LH)	
	7A	1	**340-4196**	1	HARNESS AS-CAB (ROOF, RH)	
					(EACH HARNESS ASSEMBLY INCLUDES)	
		1	**155-2260**	1	KIT-CONNECTING PLUG (3-PIN)	
					(NCLUDES PLUG AS, WEDGES, & INTERFACE SEAL)	
		1	**155-2274**	2	KIT-CONNECTING PLUG (6-PIN)	
					(EACH INCLUDES PLUG AS, WEDGE, & INTERFACE SEAL)	
		1	**8T-8737**	2	PLUG-SEAL	
		1	**9X-3402**	13	SOCKET-CONNECTOR (16-GA TO 18-GA)	
E		1	**125-7874**		TUBE-HEAT SHRINK (5.72-MM DIA) (5-CM)	
Y	8	1	*340-4989*	1	PANEL GP-CONTROL (OVERHEAD)	1148
	9	1	**344-5594**	1	HARNESS AS-RADIO (AUXILIARY)	
	10	1	**446-8393**	1	HARNESS AS-CAB	
		1	**097-7234**	2	TERMINAL-BLADE (18-GA TO 22-GA)	
		1	**5P-2321**	2	TERMINAL-FORK (14-GA TO 16-GA, NO. 6 SCREW)	
		1	**2L-8069**	1	TERMINAL-RING (2-GA TO 10-GA, 3/8-IN SCREW)	
		1	**2L-8079**	1	TERMINAL-RING (14-GA TO 16-GA, 3/8-IN SCREW)	
		1	**374-7466**	1	CAP-SEAL	
		1	**155-2260**	1	KIT-CONNECTING PLUG (3-PIN)	
					(INCLUDES PLUG AS, WEDGES & INTERFACE SEAL)	
		1	**155-2255**	2	KIT-CONNECTING PLUG (12-PIN)	
		1	**155-2256**	2	KIT-CONNECTING PLUG (12-PIN)	
		1	**155-2265**	5	KIT-CONNECTING PLUG (8-PIN)	
		1	**155-2270**	2	KIT-CONNECTING PLUG (2-PIN)	

380-2971 **WIRING GP-CAB (**contd.**)** **i05458491**

NOTE	REF NO	GRAPHIC REF	PART NUMBER	QTY	PART NAME 1 2 3 4 5 6 (PRODUCT LEVEL)	SEE PAGE
		1	**155-2271**	1	KIT-CONNECTING PLUG (4-PIN)	
		1	**155-2274**	6	KIT-CONNECTING PLUG (6-PIN)	
		1	**245-7434**	1	KIT-CONNECTING PLUG (10-PIN)	
		1	**237-0166**	1	KIT-CONNECTING PLUG (12-PIN)	
					(EACH PLUG KIT INCLUDES PLUG AS, WEDGE, & INTERFACE SEAL)	
		1	**102-8805**	2	KIT-RECEPTACLE (6-PIN)	
					(EACH INCLUDES RECEPTACLE AS & WEDGE)	
D		1	**6V-2689**		TUBE-HEAT SHRINK (6.35-MM DIA) (0.1-M)	
		1	**7N-7221**	1	TERMINAL-BLADE (18-GA TO 22-GA)	
		1	**5P-4571**	5	TERMINAL-BLADE (14-GA TO 16-GA)	
		1	**9X-3402**	81	SOCKET-CONNECTOR (16-GA TO 18-GA)	
		1	**204-1297**	4	TERMINAL AS-BLADE (18-GA TO 20-GA)	
					(EACH INCLUDES)	
		1	**235-4123**	1	TERMINAL (18-GA TO 20-GA)	
E		1	**125-7874**		TUBE-HEAT SHRINK (5.72-MM DIA) (65-CM)	
E		1	**125-7875**		TUBE-HEAT SHRINK (7.44-MM DIA) (15-CM)	
E		1	**119-3662**		TUBE-HEAT SHRINK (10.85-MM DIA) (7-CM)	
		1	**274-3777**	2	CAP-CONNECTOR	
		1	**9W-0852**	1	PIN-CONNECTOR (14-GA TO 16-GA)	
		1	**9X-3401**	22	PIN-CONNECTOR (16-GA TO 18-GA)	
		1	**8T-8737**	23	PLUG-SEAL	
		1	**134-2540**	1	RESISTOR AS-CONNECTION (3-PIN)	
		1	**274-3779**	1	CAP-SEAL	
		1	**274-3778**	1	CAP-SEAL	
		1	**185-1860**	7	SEAL-WIRE	
		1	**8T-8730**	12	SOCKET-CONNECTOR (16-GA TO 18-GA)	
		1	**9W-0844**	16	SOCKET-CONNECTOR (14-GA TO 16-GA)	
	12	1	**118-5619**	4	SCREW-FLAT HEAD (6-20X1-IN)	
	13	1	**174-5763**	4	CLIP	
M	14	1	**195-0936**	2	INSERT-THREADED (M6X1-THD)	
	15	1	**1B-4430**	2	NUT-JAM (1/2-20-THD)	
M	16	1	**3E-8020**	4	SCREW-TRUSS HEAD (M6X1X25-MM)	
	17	1	**3S-2093**	7	STRAP-CABLE	
	18	1	**4P-7581**	1	CLIP	
	19	1	**7K-1181**	27	STRAP-CABLE	
	20	1	**8T-4121**	2	WASHER-HARD (11X21X2.5-MM THK)	
M	21	1	**8T-4137**	2	BOLT (M10X1.5X20-MM)	
M	22	1	**9X-2045**	2	SCREW-TRUSS HEAD (M6X1X20-MM)	
D	23	1	**5P-7086**		TRIM (0.3-M)	

D - ORDER BY THE METER
E - ORDER BY THE CENTIMETER
M - METRIC PART
Y - SEPARATE ILLUSTRATION

380-2971 **WIRING GP-CAB (**contd.**)** **i05458491**

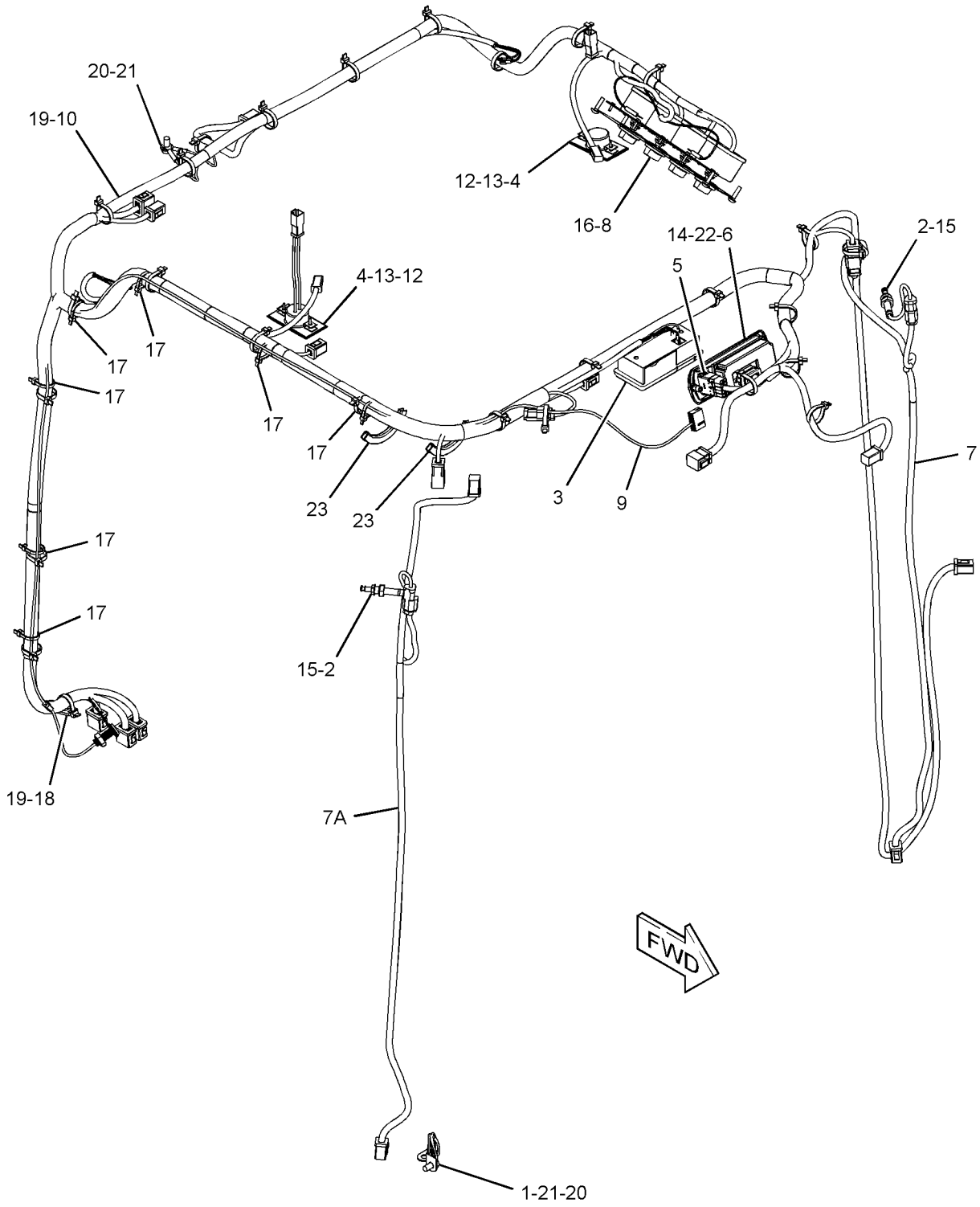

GRAPHIC #1 <END> g03486481

352-3294 WIRING GP-CAMERA

S/N: RAB1-UP
PART OF 359-6496 CAMERA & MIRROR AR
AN ATTACHMENT

SMCS-1408, 7348 **i05453311**

NOTE	REF NO	GRAPHIC REF	PART NUMBER	QTY	PART NAME 1 2 3 4 5 6 (PRODUCT LEVEL)	SEE PAGE
	1	1	**304-7877**	1	CABLE AS (VIDEO, 1.5-M)	
	2	1	**344-2733**	1	MODULE GP-DISPLAY (WORK AREA VISUAL SYSTEM)	
		1	**8T-8729**	5	PIN-CONNECTOR (16-GA TO 18-GA)	
		1	**8T-8737**	1	PLUG-SEAL	
		1	**102-8805**	1	KIT-RECEPTACLE (6-PIN)	
					(INCLUDES RECEPTACLE AS & WEDGE)	
		1	**344-3847**	1	CABLE AS (DISPLAY)	
	3	1	**344-7141**	1	PLATE AS	
		1	**344-7140**	1	PLATE AS	
	4	1	**367-0026**	1	MIRROR	
M	5	1	**127-2170**	2	SCREW-TRUSS HEAD (M8X1.25X20-MM)	
	6	1	**4B-4274**	4	WASHER (5.5X13X1.2-MM THK)	
	7	1	**7K-1181**	11	STRAP-CABLE	
M	8	1	**7I-2272**	4	BOLT (M5X0.8X12-MM)	

M - METRIC PART

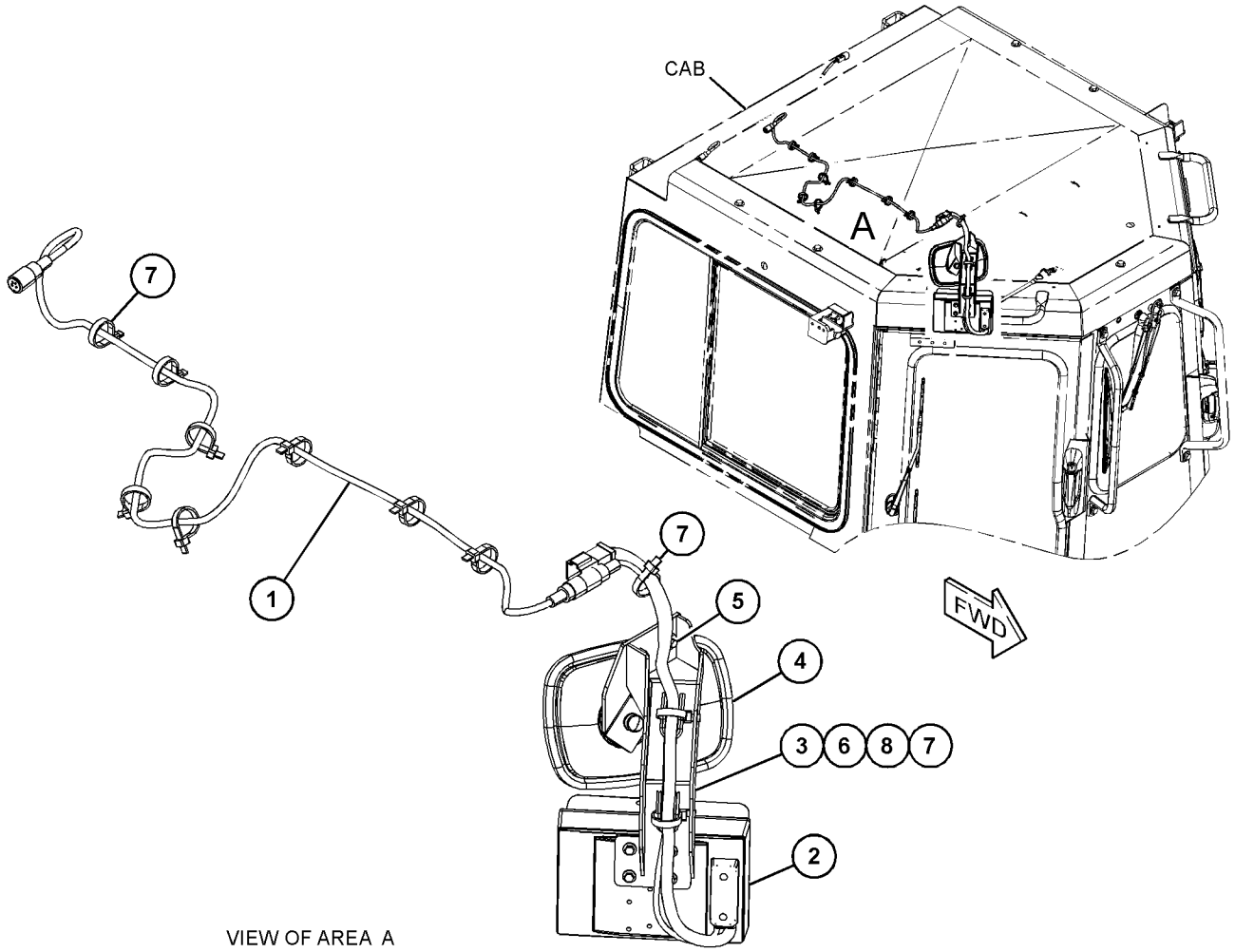

VIEW OF AREA A

GRAPHIC #1 <END> g03449078

390-0705 WIRING GP-CAMERA

S/N: RAB1-UP
PART OF 359-6495 CAMERA & MIRROR AR
AN ATTACHMENT

SMCS-1408, 7348

i06535132

NOTE	REF NO	GRAPHIC REF	PART NUMBER	QTY	PART NAME 1 2 3 4 5 6 (PRODUCT LEVEL)	SEE PAGE
	1	1	**118-3508**	11	GROMMET	
	2	1	**304-7877**	1	CABLE AS (VIDEO, 1.5-M)	
	3	1	**464-6047**	1	MODULE GP-DISPLAY (WORK AREA VISUAL SYSTEM)	
		1	**8T-8729**	5	PIN-CONNECTOR (16-GA TO 18-GA)	
		1	**8T-8737**	1	PLUG-SEAL	
		1	**102-8805**	1	KIT-RECEPTACLE (6-PIN)	
					(INCLUDES RECEPTACLE AS & WEDGE)	
		1	**344-3847**	1	CABLE AS (DISPLAY)	
	4	1	**344-7141**	1	PLATE AS	
		1	**344-7140**	1	PLATE AS	
	5	1	**367-0026**	1	MIRROR	
	6	1	**442-7773**	1	HARNESS AS-WIRING (CAMERA)	
		1	**102-8805**	1	KIT-RECEPTACLE (6-PIN)	
					(INCLUDES RECEPTACLE AS & WEDGE)	
		1	**8T-8737**	3	PLUG-SEAL	
		1	**9G-3695**	3	PLUG-SEAL	
		1	**9X-3401**	3	PIN-CONNECTOR (16-GA TO 18-GA)	
		1	**9X-3402**	3	SOCKET-CONNECTOR (16-GA TO 18-GA)	
E		1	**114-8843**		SLEEVE-PLASTIC (20-CM)	
		1	**155-2274**	1	KIT-CONNECTING PLUG (6-PIN)	
					(INCLUDES PLUG AS, WEDGE, & INTERFACE SEAL)	
M	7	1	**127-2170**	2	SCREW-TRUSS HEAD (M8X1.25X20-MM)	
	8	1	**4B-4274**	4	WASHER (5.5X13X1.2-MM THK)	
	9	1	**7K-1181**	11	STRAP-CABLE	
M	10	1	**7I-2272**	4	BOLT (M5X0.8X12-MM)	

E - ORDER BY THE CENTIMETER
M - METRIC PART

390-0705 **WIRING GP-CAMERA (**contd.**)** **i06535132**

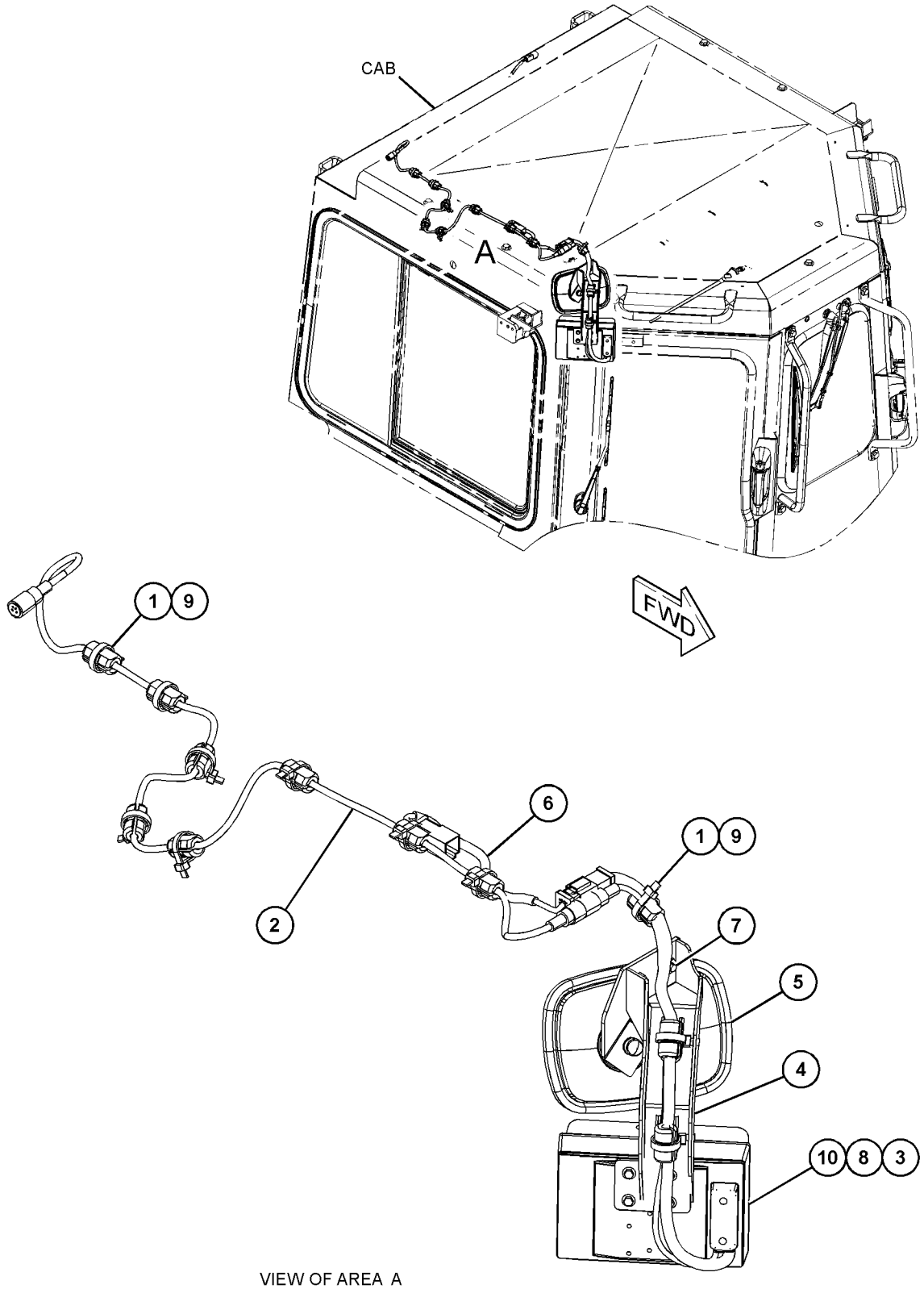

VIEW OF AREA A

GRAPHIC #1 <END> g03449079

464-7601 WIRING GP-CHASSIS

S/N: RAB1-UP

PART OF 446-0214 WIRING GP-REMOTE CONTROL

AN ATTACHMENT

SMCS-1408 **i06589680**

NOTE	REF NO	GRAPHIC REF	PART NUMBER	QTY	PART NAME 1 2 3 4 5 6 (PRODUCT LEVEL)	SEE PAGE
	1	1	**8T-9655**	8	MOUNT-ISOLATION (ISOLATION)	
Y	2	1	**362-3609**	1	HARNESS AS-SWITCH	270
R	3	1	**365-6787**	1	CONTROL GP-UNPROGRAMMED (IMPLEMENT)	
	4	1	**424-4915**	1	SWITCH AS-ROCKER (24-VOLT) (MANUAL, REMOTE CONTROL)	
	5	1	**456-4539**	1	PANEL-SWITCH	
Y	6	1	**482-9109**	1	HARNESS AS-CHASSIS	252
Y	7	1	**482-9118**	1	HARNESS AS-CONTROL	258
	8	1	**485-9470**	1	PLATE AS	
	9	1	**130-5300**	2	CLIP	
	10	1	**133-6934**	1	SPACER (11X20X25-MM THK)	
	11	1	**204-8000**	1	MOUNTING-CABLE TIE	
	12	1	**430-5329**	4	BOSS (M10X1.5X75-MM)	
	13	1	**4P-7581**	2	CLIP	
	14	1	**4P-8134**	3	CLIP	
	15	1	**6I-1418**	4	SPACER (8.2X12.7X28.7-MM THK)	
	16	1	**7K-1181**	26	STRAP-CABLE	
	17	1	**7T-1099**	3	LINK	
	18	1	**7X-7729**	9	WASHER (11X25X3-MM THK)	
	19	1	**8T-4121**	1	WASHER-HARD (11X21X2.5-MM THK)	
M	20	1	**8T-4137**	1	BOLT (M10X1.5X20-MM)	
M	21	1	**8T-4138**	5	BOLT (M6X1X20-MM)	
M	22	1	**8T-4171**	1	BOLT (M6X1X12-MM)	
M	23	1	**8T-4182**	1	BOLT (M10X1.5X45-MM)	
M	24	1	**8T-4185**	3	BOLT (M10X1.5X50-MM)	
M	25	1	**8T-4191**	3	BOLT (M10X1.5X16-MM)	
	26	1	**8T-5387**	1	GROMMET	
M	27	1	**8T-6466**	1	BOLT (M10X1.5X60-MM)	
M	28	1	**8T-6912**	4	BOLT (M8X1.25X50-MM)	
	29	1	**9N-0869**	4	WASHER-HARD (8.8X25.5X2-MM THK)	
	30	1	**9X-8256**	6	WASHER (6.6X12X2-MM THK)	

M - METRIC PART
R - REMANUFACTURED PART MAY BE AVAILABLE
Y - SEPARATE ILLUSTRATION

464-7601 **WIRING GP-CHASSIS (**contd.**)** **i06589680**

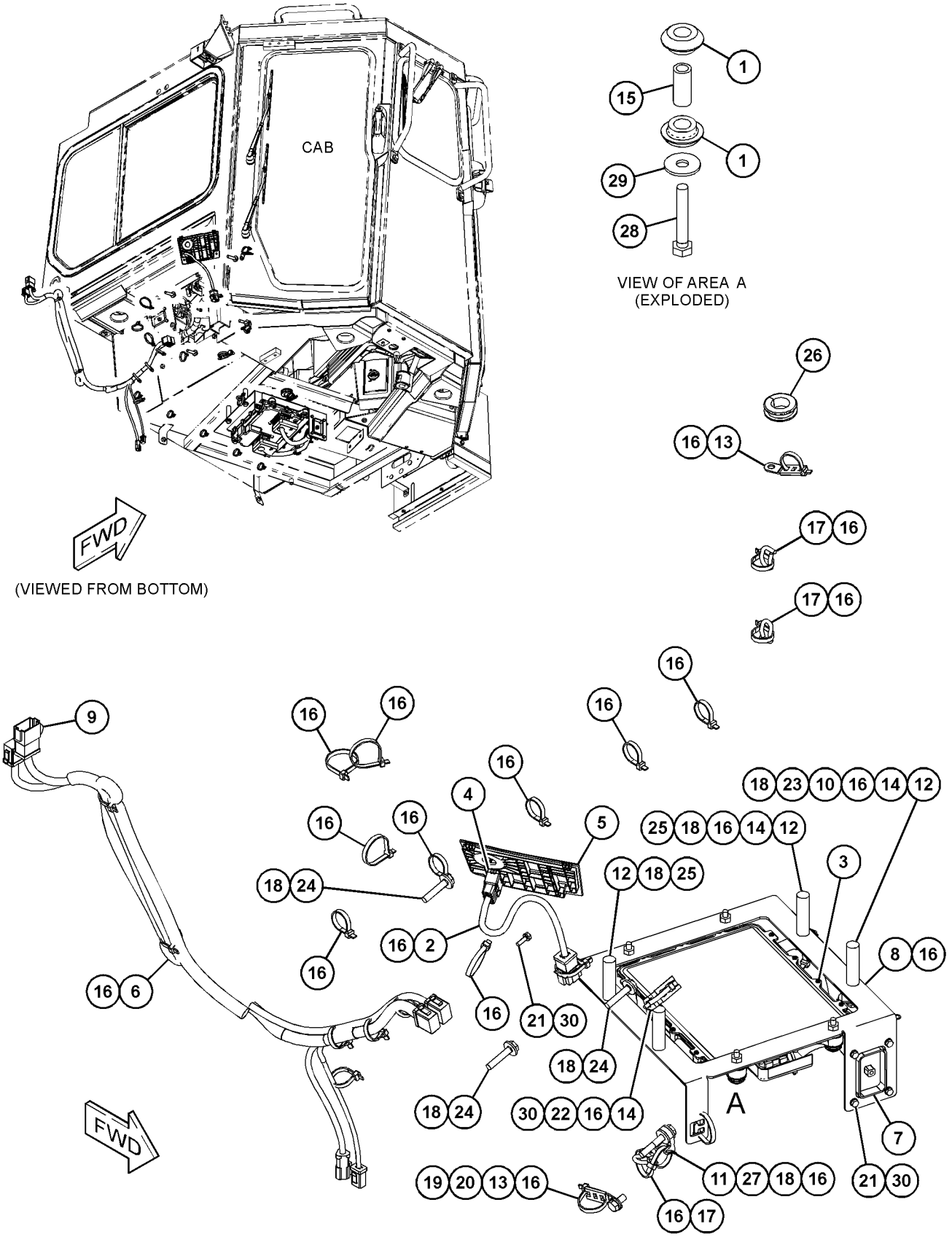

GRAPHIC #1 <END> g06045080

420-9322 WIRING GP-COMMUNICATION–PL321VSR

S/N: RAB1-UP

PART OF 419-9385 INSTALLATION GP-COMMUNICATION

AN ATTACHMENT

SMCS-1408, 7606

i05440949

NOTE	REF NO	GRAPHIC REF	PART NUMBER	QTY	PART NAME 1 2 3 4 5 6 (PRODUCT LEVEL)	SEE PAGE
	1	1	**9X-9896**	8	MOUNT (ISOLATION)	
	2	1	**284-8532**	1	ANTENNA AS	
		1	**301-0589**	1	ANTENNA (FLEXIBLE)	
		1	**355-0598**	1	NUT-SPECIAL	
Y	3	1	*285-1141*	1	APPLICATION GP-MONITOR (VIMS)	198
	4	1	**314-6917**	1	SPACER	
Y	5	1	**336-3545**	1	RADIO GP-COMMUNICATION (PRODUCT LINK 121SR)	360
	6	1	**447-1571**	1	HARNESS AS-CONTROL	
		1	**102-8805**	1	KIT-RECEPTACLE (6-PIN)	
		1	**190-7614**	1	KIT-RECEPTACLE (12-PIN)	
					(EACH RECEPTACLE KIT INCLUDES RECEPTACLE AS & WEDGE)	
		1	**8T-8729**	4	PIN-CONNECTOR (16-GA TO 18-GA)	
		1	**8T-8730**	6	SOCKET-CONNECTOR (16-GA TO 18-GA)	
		1	**8T-8737**	59	PLUG-SEAL	
		1	**9X-3401**	10	PIN-CONNECTOR (16-GA TO 18-GA)	
		1	**9X-3402**	29	SOCKET-CONNECTOR (16-GA TO 18-GA)	
		1	**7K-1181**	2	STRAP-CABLE	
E		1	**125-7874**		TUBE-HEAT SHRINK (5.72-MM DIA) (15-CM)	
E		1	**125-7875**		TUBE-HEAT SHRINK (7.44-MM DIA) (5-CM)	
		1	**126-1774**	1	COVER-CONNECTOR	
		1	**155-2255**	1	KIT-CONNECTING PLUG (12-PIN)	
		1	**155-2265**	1	KIT-CONNECTING PLUG (8-PIN)	
					(EACH PLUG KIT INCLUDES PLUG AS, WEDGE, & INTERFACE SEAL)	
		1	*160-7690*	1	PLUG AS-CONNECTOR (70-PIN)	
		1	**159-9322**	1	SEAL-O-RING	
		1	**374-7467**	1	CAP-SEAL	
		1	**374-7468**	1	CAP-SEAL	
	7	1	**448-5038**	1	PLATE AS	
	8	1	**156-6175**	2	CLIP	
	9	1	**4P-7581**	1	CLIP	
M	10	1	**5C-9553**	4	BOLT (M6X1X16-MM)	
	11	1	**7K-1181**	17	STRAP-CABLE	
M	12	1	**7X-2534**	1	BOLT (M6X1X50-MM)	
	13	1	**8C-5608**	4	SPACER (6.5X9.5X25.4-MM THK)	
M	14	1	**8T-4138**	4	BOLT (M6X1X20-MM)	
M	15	1	**9X-2480**	3	BOLT (M6X1X45-MM)	
	16	1	**9X-6165**	9	WASHER (6.5X22X2.5-MM THK)	
	17	1	**9X-8256**	8	WASHER (6.6X12X2-MM THK)	

E - ORDER BY THE CENTIMETER
M - METRIC PART
Y - SEPARATE ILLUSTRATION

420-9322 **WIRING GP-COMMUNICATION (**contd.**)** **i05440949**

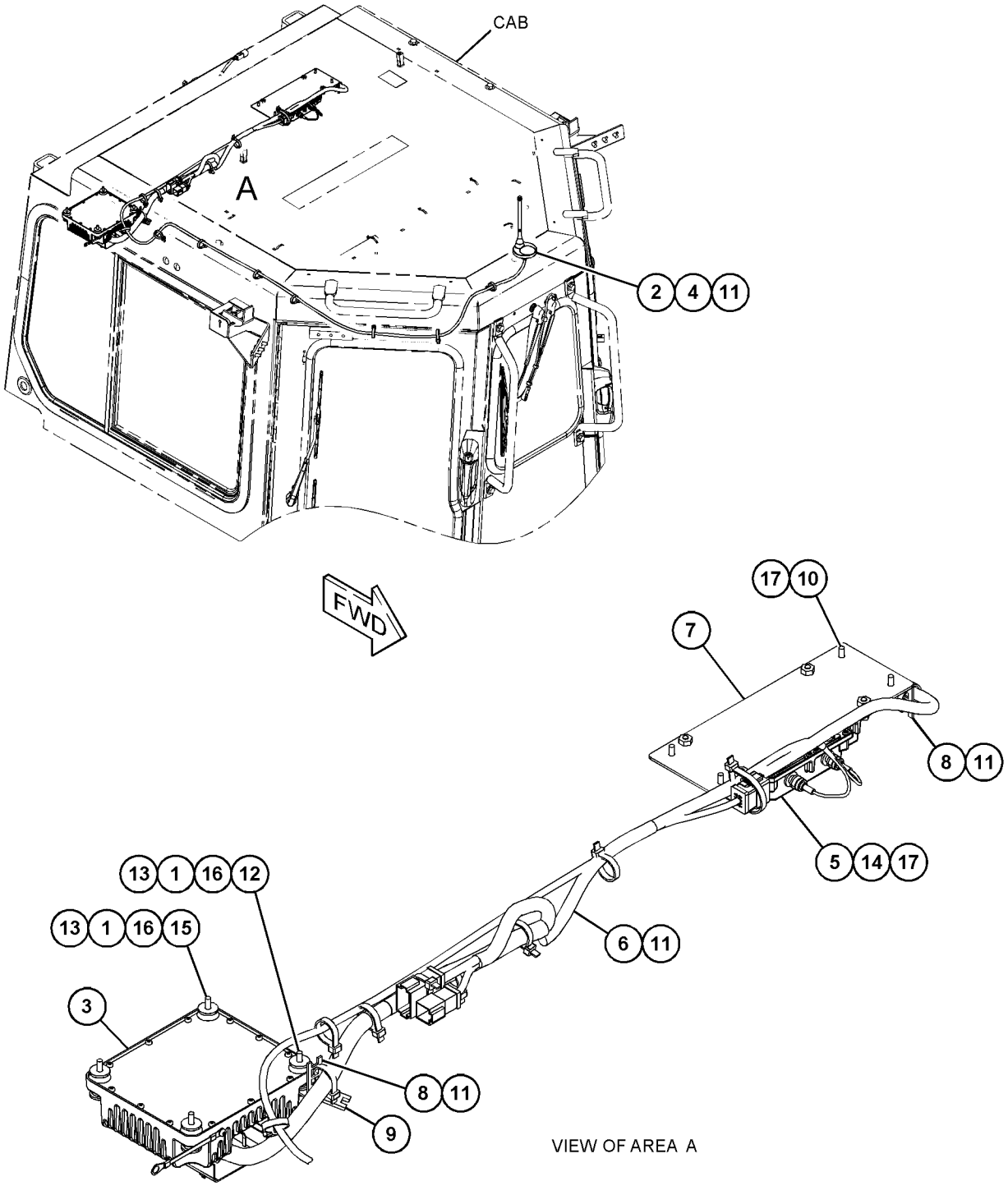

GRAPHIC #1 <END> g03499656

420-9324 WIRING GP-COMMUNICATION—PRODUCT LINK 523

S/N: RAB1-UP

PART OF 419-5040 INSTALLATION GP-COMMUNICATION AN ATTACHMENT

SMCS-1408, 7606 **i05440815**

NOTE	REF NO	GRAPHIC REF	PART NUMBER	QTY	PART NAME 1 2 3 4 5 6 (PRODUCT LEVEL)	SEE PAGE
	1	1	**9X-9896**	8	MOUNT (ISOLATION)	
	2	1	**346-9376**	1	ANTENNA AS	
		1	**355-1213**	1	PLUG	
		1	**361-1045**	1	NUT-SPECIAL (5/8-18-THD)	
	3	1	**351-2352**	1	CABLE AS	
Y	4	1	**351-8492**	1	CONTROL GP-UNPROGRAMMED (PRODUCT LINK 523)	242
	5	1	**156-6175**	1	CLIP	
	6	1	**447-1571**	1	HARNESS AS-CONTROL (PRODUCT LINK)	
		1	**102-8805**	1	KIT-RECEPTACLE (6-PIN)	
		1	**190-7614**	1	KIT-RECEPTACLE (12-PIN)	
					(EACH RECEPTACLE KIT INCLUDES RECEPTACLE AS & WEDGE)	
		1	**8T-8729**	4	PIN-CONNECTOR (16-GA TO 18-GA)	
		1	**8T-8730**	6	SOCKET-CONNECTOR (16-GA TO 18-GA)	
		1	**8T-8737**	59	PLUG-SEAL	
		1	**9X-3401**	10	PIN-CONNECTOR (16-GA TO 18-GA)	
		1	**9X-3402**	29	SOCKET-CONNECTOR (16-GA TO 18-GA)	
		1	**7K-1181**	2	STRAP-CABLE	
E		1	**125-7874**		TUBE-HEAT SHRINK (5.72-MM DIA) (15-CM)	
E		1	**125-7875**		TUBE-HEAT SHRINK (7.44-MM DIA) (5-CM)	
		1	**126-1774**	1	COVER-CONNECTOR	
		1	**155-2255**	1	KIT-CONNECTING PLUG (12-PIN)	
		1	**155-2265**	1	KIT-CONNECTING PLUG (8-PIN)	
					(EACH PLUG KIT INCLUDES PLUG AS, WEDGE, & INTERFACE SEAL)	
		1	*160-7690*	1	PLUG AS-CONNECTOR (70-PIN)	
		1	**159-9322**	1	SEAL-O-RING	
		1	**374-7467**	1	CAP-SEAL	
		1	**374-7468**	1	CAP-SEAL	
	7	1	**4P-7581**	1	CLIP	
	8	1	**7K-1181**	16	STRAP-CABLE	
M	9	1	**7X-2534**	1	BOLT (M6X1X50-MM)	
	10	1	**8C-5608**	4	SPACER (6.5X9.5X25.4-MM THK)	
M	11	1	**9X-2480**	3	BOLT (M6X1X45-MM)	
	12	1	**9X-6165**	9	WASHER (6.5X22X2.5-MM THK)	

E - ORDER BY THE CENTIMETER
M - METRIC PART
Y - SEPARATE ILLUSTRATION

420-9324 **WIRING GP-COMMUNICATION (**contd.**)** **i05440815**

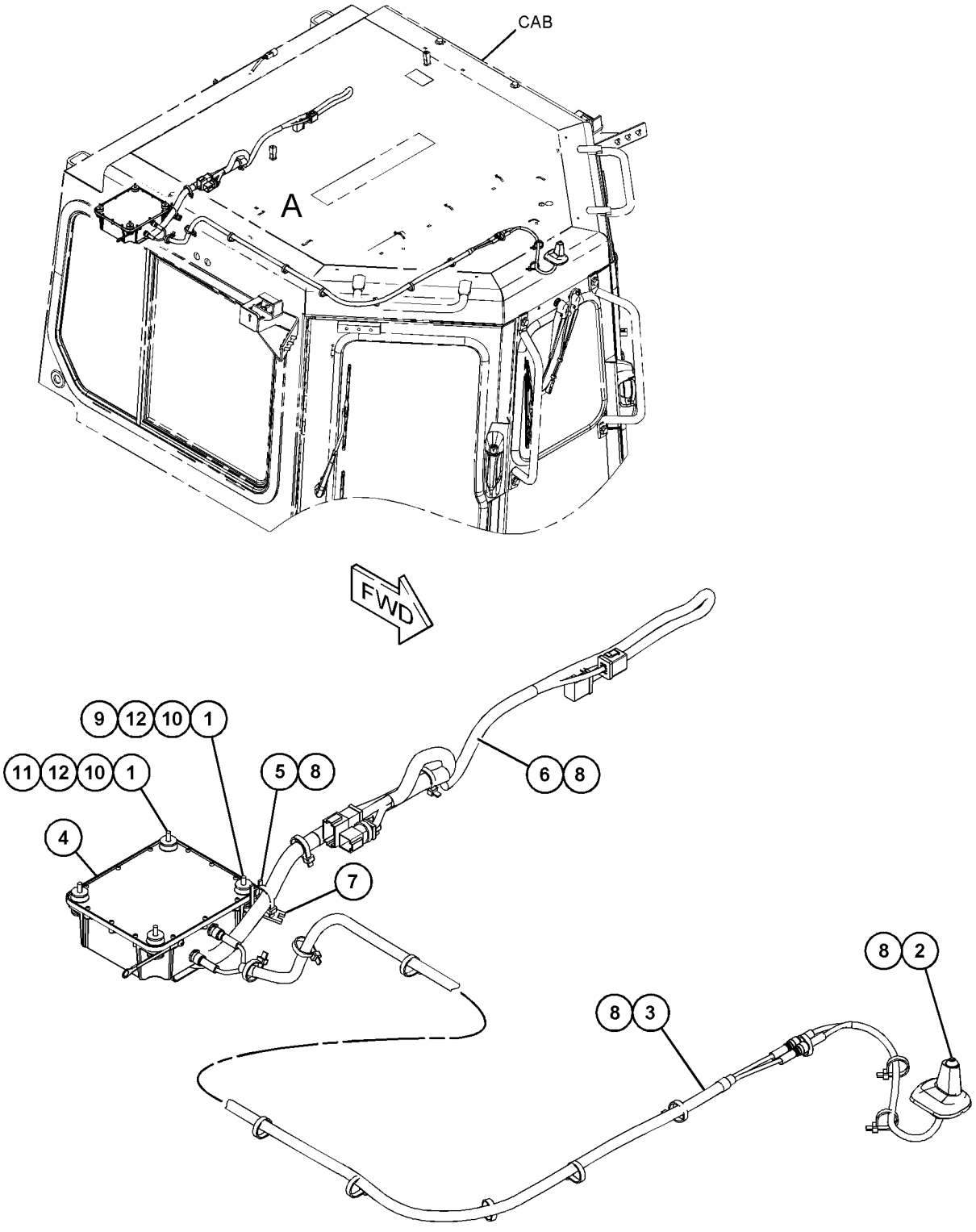

VIEW OF AREA A

GRAPHIC #1 <END> g03499698

438-4319 WIRING GP-COMMUNICATION

S/N: RAB1-UP
NETWORK MANAGER
FIELD INSTALLATION
TYPE 1

SMCS-1408, 7606 **i06268415**

NOTE	REF NO	GRAPHIC REF	PART NUMBER	QTY	PART NAME 1 2 3 4 5 6 (PRODUCT LEVEL)	SEE PAGE
	1	1	**7K-1181**	14	STRAP-CABLE	
	2	1	**8C-5607**	8	MOUNT-ISOLATION	
	3	1	**8T-9655**	8	MOUNT-ISOLATION (ISOLATION)	
	4	1	**459-0787**	1	CONTROL GP-UNPROGRAMMED (NETWORK MANAGER)	
	5	1	**441-3249**	1	BRACKET AS	
	6	1	**441-3250**	1	PLATE AS	
	7	1	**450-6696**	1	CABLE AS	
	8	1	**450-6697**	1	CABLE AS	
	9	1	**452-1339**	1	CABLE AS	
	10	1	**452-1340**	1	CABLE AS	
	11	1	**452-4705**	1	BRACKET AS	
	12	1	**456-3452**	1	CABLE AS	
	13	1	**456-3453**	1	CABLE AS	
Y	14	1	**456-5024**	1	HARNESS AS-CONSOLE	254
	15	1	**456-5035**	2	BRACKET	
	16	1	**114-6658**	8	WASHER (6.5X17X1-MM THK)	
	17	1	**136-4992**	1	SPACER (11X19.05X40-MM THK)	
M	18	1	**344-5675**	2	NUT (M10X1.5-THD)	
	19	1	**353-7956**	12	GROMMET	
	20	1	**353-7957**	10	GROMMET	
	21	1	**3H-3244**	4	SPACER (12.52X17.14X57-MM THK)	
	22	1	**4P-7581**	4	CLIP	
M	23	1	**5C-9553**	4	BOLT (M6X1X16-MM)	
	24	1	**5P-1075**	8	WASHER-HARD (10.2X22.5X3-MM THK)	
	25	1	**5P-4116**	4	WASHER-HARD (8.8X20.5X2-MM THK)	
	26	1	**6V-8801**	4	NUT (3/8-16-THD)	
M	27	1	**7X-0465**	1	BOLT (M6X1X100-MM)	
	28	1	**7X-7729**	9	WASHER (11X25X3-MM THK)	
	29	1	**8C-5608**	4	SPACER (6.5X9.5X25.4-MM THK)	
M	30	1	**8C-8451**	4	BOLT (M6X1X40-MM)	
	31	1	**8T-1887**	2	CLIP (SLOT)	
	32	1	**8T-1888**	2	CLIP (TAB)	
	33	1	**8T-1893**	2	CLIP (SLOT)	
	34	1	**8T-1894**	2	CLIP (TAB)	
	35	1	**8T-2502**	4	BOLT (3/8-16X1.125-IN)	
	36	1	**8T-4121**	4	WASHER-HARD (11X21X2.5-MM THK)	
M	37	1	**8T-4137**	4	BOLT (M10X1.5X20-MM)	
M	38	1	**8T-4138**	4	BOLT (M6X1X20-MM)	
M	39	1	**8T-4178**	2	BOLT (M10X1.5X90-MM)	
M	40	1	**8T-4197**	4	BOLT (M8X1.25X40-MM)	
	41	1	**8T-4224**	8	WASHER-HARD (8.8X16X2-MM THK)	
M	42	1	**8T-6974**	4	BOLT (M6X1X80-MM)	
M	43	1	**8T-7547**	8	BOLT (M8X1.25X30-MM)	
	44	1	**8T-9658**	4	SPACER (8.2X12.7X25.4-MM THK)	
	45	1	**9X-8256**	13	WASHER (6.6X12X2-MM THK)	

438-4319 **WIRING GP-COMMUNICATION (**contd.**)** **i06268415**

NOTE	REF NO	GRAPHIC REF	PART NUMBER	QTY	PART NAME 1 2 3 4 5 6 (PRODUCT LEVEL)	SEE PAGE
	46	1	**473-2339**	1	PLATE	
	47	1	**473-2338**	1	PLATE AS	
M	48	1	**127-1960**	2	SCREW-FLAT HEAD (M6X1X16-MM)	
M	49	1	**8T-4195**	5	BOLT (M10X1.5X30-MM)	

M - METRIC PART
Y - SEPARATE ILLUSTRATION

438-4319 **WIRING GP-COMMUNICATION (**contd.**)** **i06268415**

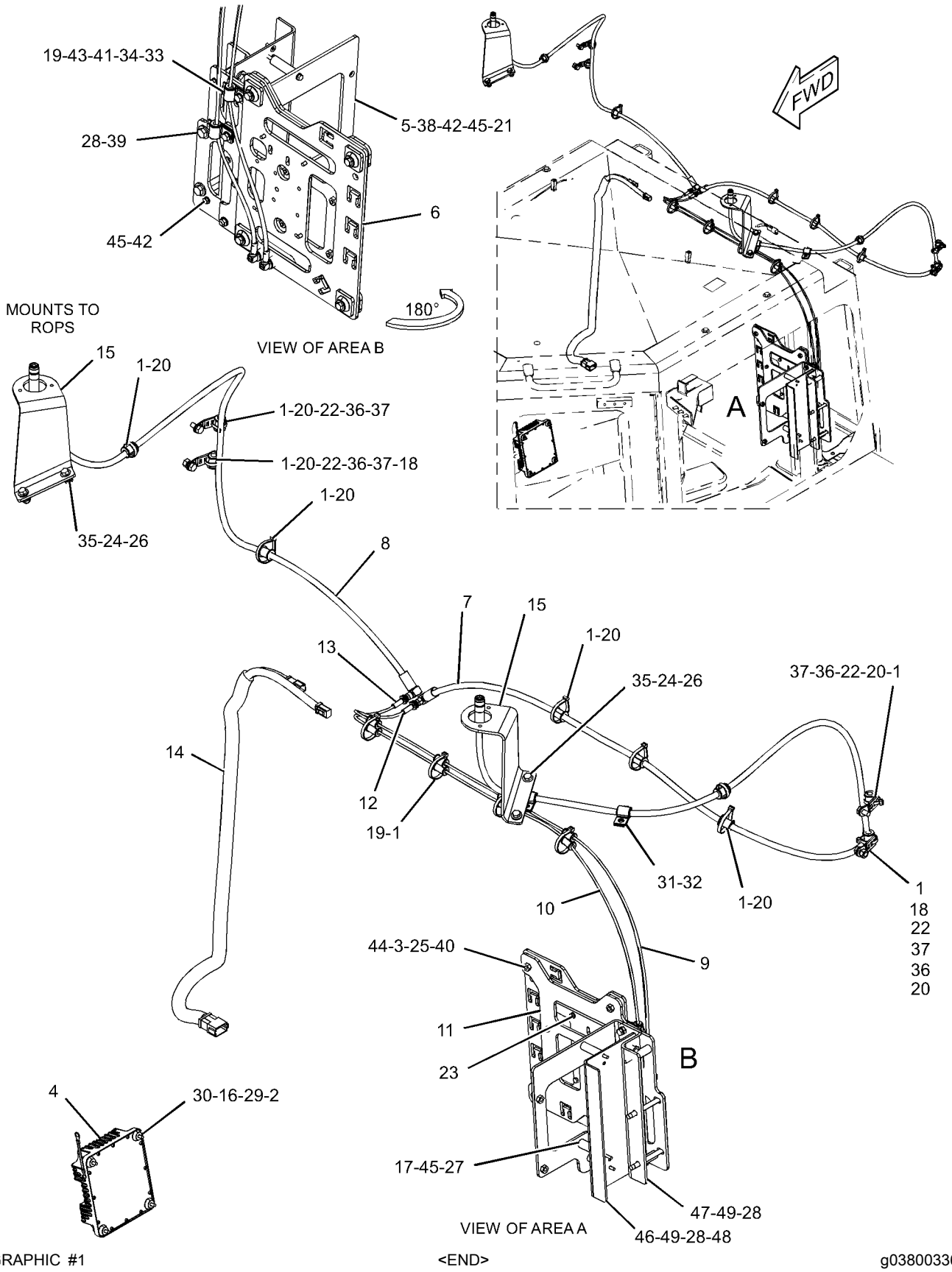

GRAPHIC #1

<END>

g03800336

438-4319 WIRING GP-COMMUNICATION

S/N: RAB1-UP
NETWORK MANAGER
FIELD INSTALLATION
TYPE 2

SMCS-1408, 7606 **i06602344**

NOTE	REF NO	GRAPHIC REF	PART NUMBER	QTY	PART NAME 1 2 3 4 5 6 (PRODUCT LEVEL)	SEE PAGE
	1	1	**7K-1181**	14	STRAP-CABLE	
	2	1	**8C-5607**	8	MOUNT-ISOLATION	
	3	1	**8T-9655**	8	MOUNT-ISOLATION (ISOLATION)	
	4	1	**459-0787**	1	CONTROL GP-UNPROGRAMMED (NETWORK MANAGER)	
	5	1	**441-3249**	1	BRACKET AS	
	6	1	**441-3250**	1	PLATE AS	
	7	1	**450-6696**	1	CABLE AS	
	8	1	**450-6697**	1	CABLE AS	
	9	1	**452-1339**	1	CABLE AS	
	10	1	**452-1340**	1	CABLE AS	
	11	1	**452-4705**	1	BRACKET AS	
	12	1	**456-3452**	1	CABLE AS	
	13	1	**456-3453**	1	CABLE AS	
Y	14	1	**456-5024**	1	HARNESS AS-CONSOLE	254
	16	1	**114-6658**	8	WASHER (6.5X17X1-MM THK)	
	17	1	**136-4992**	1	SPACER (11X19.05X40-MM THK)	
M	18	1	**344-5675**	2	NUT (M10X1.5-THD)	
C	19	1	**353-7956**	10	GROMMET	
C	20	1	**353-7957**	12	GROMMET	
	21	1	**3H-3244**	4	SPACER (12.52X17.14X57-MM THK)	
	22	1	**4P-7581**	4	CLIP	
M	23	1	**5C-9553**	4	BOLT (M6X1X16-MM)	
	25	1	**5P-4116**	4	WASHER-HARD (8.8X20.5X2-MM THK)	
M	27	1	**7X-0465**	1	BOLT (M6X1X100-MM)	
	28	1	**7X-7729**	9	WASHER (11X25X3-MM THK)	
	29	1	**8C-5608**	4	SPACER (6.5X9.5X25.4-MM THK)	
M	30	1	**8C-8451**	4	BOLT (M6X1X40-MM)	
C	33	1	**8T-1893**	4	CLIP (SLOT)	
C	34	1	**8T-1894**	4	CLIP (TAB)	
	36	1	**8T-4121**	4	WASHER-HARD (11X21X2.5-MM THK)	
M	37	1	**8T-4137**	4	BOLT (M10X1.5X20-MM)	
M	38	1	**8T-4138**	4	BOLT (M6X1X20-MM)	
M	39	1	**8T-4178**	2	BOLT (M10X1.5X90-MM)	
M	40	1	**8T-4197**	4	BOLT (M8X1.25X40-MM)	
C	41	1	**8T-4224**	10	WASHER-HARD (8.8X16X2-MM THK)	
M	42	1	**8T-6974**	4	BOLT (M6X1X80-MM)	
M	43	1	**8T-7547**	8	BOLT (M8X1.25X30-MM)	
	44	1	**8T-9658**	4	SPACER (8.2X12.7X25.4-MM THK)	
	45	1	**9X-8256**	13	WASHER (6.6X12X2-MM THK)	
	46	1	**473-2339**	1	PLATE	
	47	1	**473-2338**	1	PLATE AS	
M	48	1	**127-1960**	2	SCREW-FLAT HEAD (M6X1X16-MM)	
M	49	1	**8T-4195**	5	BOLT (M10X1.5X30-MM)	
C	50	1	**475-4997**	1	BRACKET AS	
C	51	1	**474-9468**	1	BRACKET AS	

438-4319 **WIRING GP-COMMUNICATION (**contd.**)** **i06602344**

NOTE	REF NO	GRAPHIC REF	PART NUMBER	QTY	PART NAME 1 2 3 4 5 6 (PRODUCT LEVEL)	SEE PAGE
CM	52	1	**344-5674**	2	NUT (M8X1.25-THD)	
CM	53	1	**8T-4908**	2	BOLT (M8X1.25X25-MM)	

C - CHANGE FROM PREVIOUS TYPE
M - METRIC PART
Y - SEPARATE ILLUSTRATION

438-4319 **WIRING GP-COMMUNICATION (**contd.**)** **i06602344**

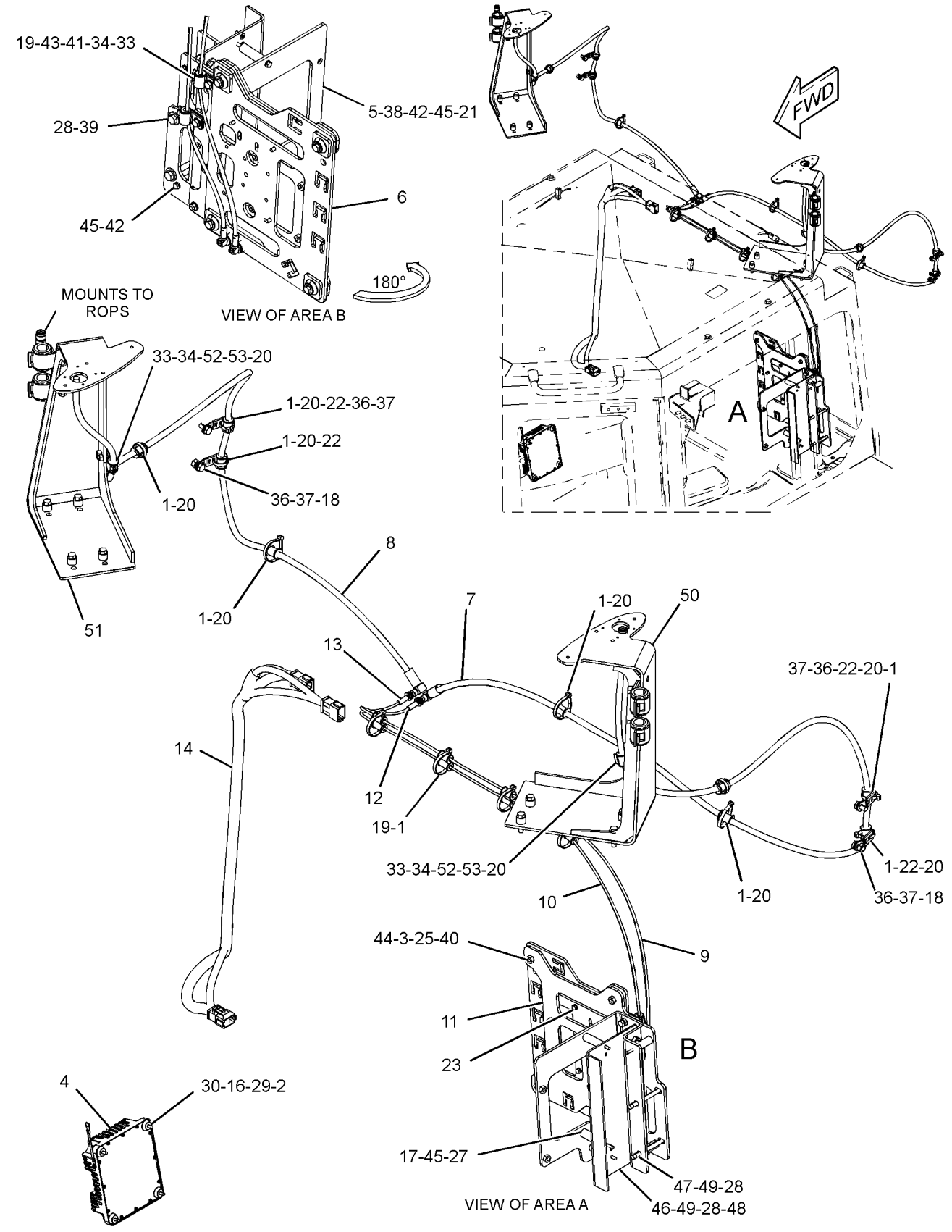

GRAPHIC #1

<END>

g06035401

448-9332 WIRING GP-COMMUNICATION–VIMS 3G, PRODUCT LINK

S/N: RAB1-UP

PART OF 448-4446 INSTALLATION GP-COMMUNICATION

AN ATTACHMENT

SMCS-1408, 7606 **i05471908**

NOTE	REF NO	GRAPHIC REF	PART NUMBER	QTY	PART NAME 1 2 3 4 5 6 (PRODUCT LEVEL)	SEE PAGE
	1	1	**9X-9896**	8	MOUNT (ISOLATION)	
Y	2	1	*285-1141*	1	APPLICATION GP-MONITOR (VIMS)	198
	3	1	**156-6175**	1	CLIP	
	4	1	**447-1571**	1	HARNESS AS-CONTROL	
		1	**8T-8729**	4	PIN-CONNECTOR (16-GA TO 18-GA)	
		1	**8T-8730**	6	SOCKET-CONNECTOR (16-GA TO 18-GA)	
		1	**8T-8737**	59	PLUG-SEAL	
		1	**9X-3401**	10	PIN-CONNECTOR (16-GA TO 18-GA)	
		1	**9X-3402**	29	SOCKET-CONNECTOR (16-GA TO 18-GA)	
		1	**7K-1181**	2	STRAP-CABLE	
E		1	**125-7874**		TUBE-HEAT SHRINK (5.72-MM DIA) (15-CM)	
E		1	**125-7875**		TUBE-HEAT SHRINK (7.44-MM DIA) (5-CM)	
		1	**126-1774**	1	COVER-CONNECTOR	
		1	**155-2255**	1	KIT-CONNECTING PLUG (12-PIN)	
		1	**155-2265**	1	KIT-CONNECTING PLUG (8-PIN)	
					(EACH PLUG KIT INCLUDES PLUG AS, WEDGE, & INERFACE SEAL)	
		1	*160-7690*	1	PLUG AS-CONNECTOR (70-PIN)	
		1	**159-9322**	1	SEAL-O-RING	
		1	**102-8805**	1	KIT-RECEPTACLE (6-PIN)	
		1	**190-7614**	1	KIT-RECEPTACLE (12-PIN)	
					(EACH RECEPTACLE KIT INCLUDES RECEPTACLE AS & WEDGE)	
		1	**374-7467**	1	CAP-SEAL	
		1	**374-7468**	1	CAP-SEAL	
	5	1	**4P-7581**	1	CLIP	
	6	1	**7K-1181**	7	STRAP-CABLE	
M	7	1	**7X-2534**	1	BOLT (M6X1X50-MM)	
	8	1	**8C-5608**	4	SPACER (6.5X9.5X25.4-MM THK)	
M	9	1	**9X-2480**	3	BOLT (M6X1X45-MM)	
	10	1	**9X-6165**	9	WASHER (6.5X22X2.5-MM THK)	

E - ORDER BY THE CENTIMETER
M - METRIC PART
Y - SEPARATE ILLUSTRATION

448-9332 **WIRING GP-COMMUNICATION (**contd.**)** **i05471908**

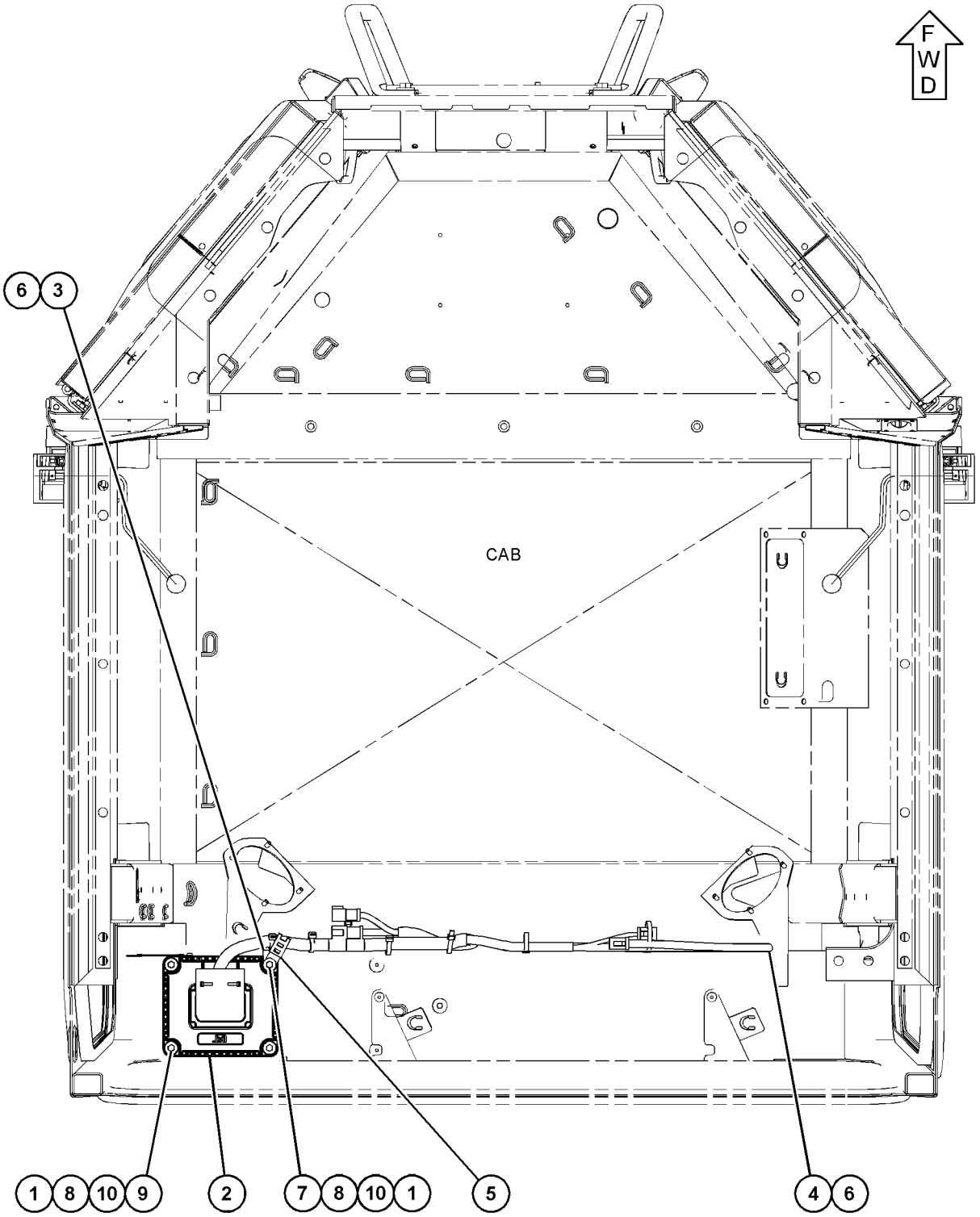

BOTTOM VIEW

GRAPHIC #1 <END> g03466976

346-9696 WIRING GP-ELECTRONIC CONTROL

S/N: JZM1-UP
FOR USE WITH EXTERNAL WIRING GP, FUEL FILTER GP
PART OF 359-6502, 443-0004 ENGINE AR-COMPLETE
AN ATTACHMENT

SMCS-1408, 1900 **i05820129**

NOTE	REF NO	GRAPHIC REF	PART NUMBER	QTY	PART NAME 1 2 3 4 5 6 (PRODUCT LEVEL)	SEE PAGE
	1	1	**7K-1181**	2	STRAP-CABLE	
	2	1	**206-1345**	1	RETAINER AS	
	3	1	**352-8325**	1	BRACKET	
	4	1	**373-0424**	1	HARNESS AS-SENSOR	
E		1	**125-7874**		TUBE-HEAT SHRINK (5.72-MM DIA) (5-CM)	
		1	**9X-3402**	5	SOCKET-CONNECTOR (16-GA TO 18-GA)	
					—OR—	
		1	**126-1768**	5	SOCKET-CONNECTOR (14-GA TO 16-GA)	
		1	**9X-3401**	8	PIN-CONNECTOR (16-GA TO 18-GA)	
					—OR—	
		1	**126-1767**	8	PIN-CONNECTOR (14-GA TO 16-GA)	
		1	**230-4011**	1	PLUG AS-CONNECTOR (2-PIN)	
		1	**264-7029**	1	SEAL-CONNECTOR	
		1	**230-4012**	1	RECEPTACLE AS-CONNECTOR (2-PIN)	
		1	**230-5011**	1	RECEPTACLE AS-CONNECTOR (6-PIN)	
		1	*278-8844*	1	PLUG AS-CONNECTOR	
		1	**8T-8737**	2	PLUG-SEAL	
		1	**230-4011**	1	PLUG AS-CONNECTOR (2-PIN)	
		1	**264-7029**	1	SEAL-CONNECTOR	
		1	**281-8804**	1	PLUG AS-CONNECTOR (3-PIN)	
		1	**264-7030**	1	SEAL-CONNECTOR	
E		1	**289-5150**		SLEEVE (52-CM)	
	5	1	**0S-1594**	2	BOLT (3/8-16X1-IN)	
	6	1	**132-5789**	1	CLIP	
	7	1	**2H-3755**	1	BOLT (5/16-18X0.43-IN)	
	8	1	**4P-7581**	1	CLIP	
	9	1	**5M-2894**	2	WASHER-HARD (10.2X18.5X2.5-MM THK)	
	10	1	**9M-1974**	1	WASHER-HARD (8.8X16X2-MM THK)	

E - ORDER BY THE CENTIMETER

346-9696 **WIRING GP-ELECTRONIC CONTROL (**contd.**)** **i05820129**

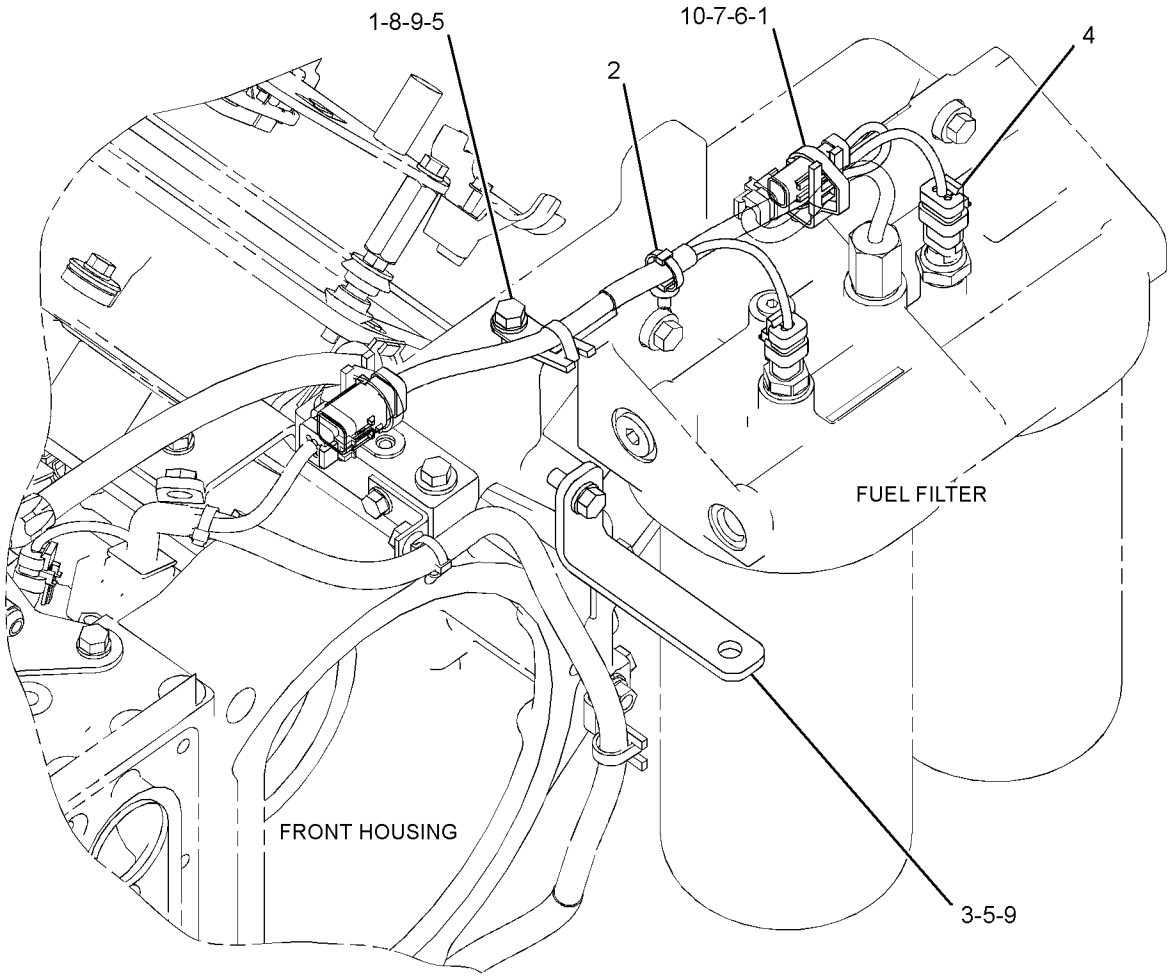

GRAPHIC #1 <END> g02572076

382-1477 WIRING GP-ELECTRONIC CONTROL

S/N: JZM1-UP
PART OF 359-6502, 443-0004 ENGINE AR-COMPLETE
AN ATTACHMENT

SMCS-1408, 1900 **i05910447**

NOTE	REF NO	GRAPHIC REF	PART NUMBER	QTY	PART NAME 1 2 3 4 5 6 (PRODUCT LEVEL)	SEE PAGE
	1	1	**7K-1181**	23	STRAP-CABLE	
	2	1	**206-1345**	1	RETAINER AS	
	3	1	**352-3970**	1	CLIP	
	5	1	**347-9417**	1	BRACKET	
	6	1	**375-5131**	1	BRACKET	
Y	7	1	**419-6286**	1	HARNESS AS-ENGINE	261
	8	1	**0L-1351**	9	BOLT (3/8-16X0.875-IN)	
	9	1	**0S-0509**	3	BOLT (3/8-16X0.75-IN)	
	10	1	**0S-1588**	1	BOLT (3/8-16X1.25-IN)	
	12	1	**0S-1594**	1	BOLT (3/8-16X1-IN)	
	13	1	**0S-1617**	1	BOLT (5/16-18X0.75-IN)	
	14	1	**0S-1621**	2	BOLT (1/2-13X1-IN)	
	15	1	**132-5789**	10	CLIP	
	16	1	**283-8650**	1	WASHER-HARD (10.2X18.5X5-MM THK)	
	17	1	**0S-1618**	1	BOLT (5/16-18X1-IN)	
	18	1	**352-3968**	1	CLIP	
	19	1	**352-3969**	2	CLIP	
	20	1	**4P-7429**	1	CLIP	
	21	1	**4P-7581**	2	CLIP	
	22	1	**5M-2894**	16	WASHER-HARD (10.2X18.5X2.5-MM THK)	
	23	1	**5P-8245**	2	WASHER-HARD (13.5X25.5X3-MM THK)	
	24	1	**5S-0003**	1	NUT (5/16-18-THD)	
	25	1	**7X-0579**	1	WASHER-HARD (8.8X25.5X2-MM THK)	
	26	1	**9M-1974**	3	WASHER-HARD (8.8X16X2-MM THK)	
	27	1	**9S-8752**	3	NUT-FULL (3/8-16-THD)	

Y - SEPARATE ILLUSTRATION

382-1477 **WIRING GP-ELECTRONIC CONTROL (**contd.**)** **i05910447**

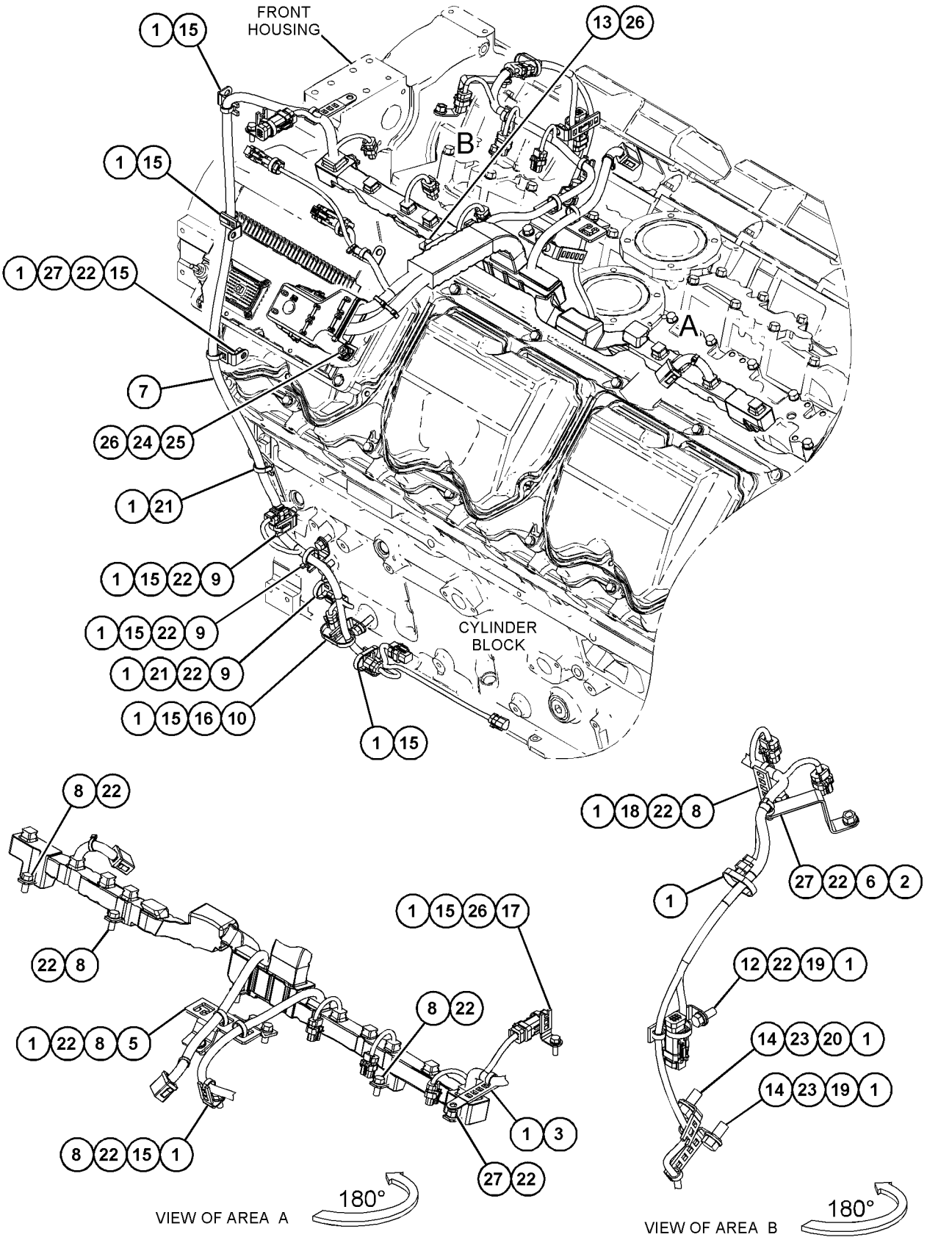

GRAPHIC #1 <END> g06042090

416-4697 WIRING GP-ENGINE

S/N: RAB1-248

PART OF 359-6500 INSTALLATION AR-ENGINE

SMCS-1000, 1408 **i05817067**

NOTE	REF NO	GRAPHIC REF	PART NUMBER	QTY	PART NAME 1 2 3 4 5 6 (PRODUCT LEVEL)	SEE PAGE
	1	2	**313-3516**	1	HARNESS AS-SWITCH (STARTING MOTOR, START RELAY)	
		2	**2L-8076**	1	TERMINAL-RING (14-GA TO 16-GA, NO. 10 SCREW)	
		2	**8T-8729**	2	PIN-CONNECTOR (16-GA TO 18-GA)	
	2	2	**8E-3430**	1	STRIP AS	
		2	**1F-0750**	1	NUT-WELD (3/8-16-THD)	
		2	**8E-3431**	1	PLATE	
	3	2	**140-0860**	2	STRAP AS-GROUND	
	4	1,2	**206-5575**	3	BRACKET AS	
	5	2,3	**226-3492**	3	BRACKET AS	
Y	6	1	*234-5012*	1	SENSOR GP-TEMPERATURE (COOLANT)	383
	7	3	**256-6453**	1	SENSOR-TEMPERATURE (ENGINE OIL TEMPERATURE)	
Y	8	3	**290-5792**	1	SENSOR GP-SPEED (TORQUE CONVERTER OUTPUT)	379
Y	9	1	*331-1134*	1	SENSOR GP-PRESSURE (INLET AIR)	377
	10	2	**377-9493**	1	BRACKET AS	
	11	1	**377-9494**	1	BRACKET AS	
	12	2	**377-9495**	1	CABLE AS	
		2	**1S-4915**	2	LINER (CONDUIT)	
E		2	**5P-0695**		CONDUIT (119-CM)	
E		2	**8T-2225**		TUBE-HEAT SHRINK (25.4-MM DIA) (24-CM)	
		2	**8T-8827**	1	BOOT (RED)	
		2	**9X-9825**	1	TERMINAL-CABLE (00-GA, 1/2-IN SCREW)	
		2	**030-1705**	1	TERMINAL-CABLE (00-GA, 5/16-IN SCREW)	
E		2	**159-8049**		CABLE (00-GA, RED) (131-CM)	
	13	1	**378-4519**		HARNESS AS-ENGINE	
		1	**155-2260**	2	KIT-CONNECTING PLUG (3-PIN)	
					(EACH INCLUDES PLUG AS, WEGDES & INTERFACE SEAL)	
		1	**155-2270**	7	KIT-CONNECTING PLUG (2-PIN)	
		1	**155-2274**	2	KIT-CONNECTING PLUG (6-PIN)	
					(EACH PLUG KIT INCLUDES PLUG AS, WEDGE & INTERFACE SEAL)	
		1	**102-8802**	1	KIT-RECEPTACLE (2-PIN)	
					(INCLUDES RECEPTACLE AS & WEDGE)	
		1	**9X-3402**	98	SOCKET-CONNECTOR (16-GA TO 18-GA)	
		1	**126-1768**	98	SOCKET-CONNECTOR (14-GA TO 16-GA)	
		1	**2L-8069**	3	TERMINAL-RING (2-GA TO 10-GA, 3/8-IN SCREW)	
		1	**160-7689**	2	PLUG AS-CONNECTOR (70-PIN)	
					(EACH INCLUDES)	
		1	**159-9322**	1	SEAL-O-RING	
		1	**8T-8737**	90	PLUG-SEAL	
E		1	**119-3662**		TUBE-HEAT SHRINK (10.85-MM DIA) (7-CM)	
E		1	**125-7874**		TUBE-HEAT SHRINK (5.72-MM DIA) (40-CM)	
		1	**134-2540**	2	RESISTOR AS-CONNECTION (3-PIN)	
		1	**230-4011**	4	PLUG AS-CONNECTOR (2-PIN)	
		1	**264-7029**	1	SEAL-CONNECTOR	
		1	**230-5010**	1	PLUG AS-CONNECTOR (6-PIN)	
		1	**264-7032**	1	SEAL-CONNECTOR	
		1	**237-0336**	1	COVER (CONNECTOR)	

416-4697 **WIRING GP-ENGINE (**contd.**)** **i05817067**

NOTE	REF NO	GRAPHIC REF	PART NUMBER	QTY	PART NAME 1 2 3 4 5 6 (PRODUCT LEVEL)	SEE PAGE
		1	**274-3780**	1	CAP-SEAL	
	14	1	**378-4522**	1	HARNESS AS-ENGINE	
		1	**102-8805**	1	KIT-RECEPTACLE (6-PIN)	
					(INCLUDES RECEPTACLE AS & WEDGE)	
		1	**3E-3383**	1	WEDGE-RECEPTACLE LOCK (6-PIN)	
		1	**8T-8737**	2	PLUG-SEAL	
		1	**9X-3401**	4	PIN-CONNECTOR (16-GA TO 18-GA)	
		1	**9X-3402**	5	SOCKET-CONNECTOR (16-GA TO 18-GA)	
		1	**125-7874**	5	TUBE-HEAT SHRINK (5.72-MM DIA)	
		1	**230-4011**	1	PLUG AS-CONNECTOR (2-PIN)	
		1	**264-7029**	1	SEAL-CONNECTOR	
		1	**281-8803**	1	PLUG AS-CONNECTOR (3-PIN)	
		1	**264-7030**	1	SEAL-CONNECTOR	
	15	2	**380-9101**	1	CABLE AS	
		2	**030-1707**	1	TERMINAL-RING (0-GA, 3/8-IN SCREW)	
		2	**030-1709**	1	TERMINAL-RING (0-GA, 1/4-IN SCREW)	
E		2	**159-8050**		CABLE (00-GA, BLACK) (116-CM)	
	16	2	**381-2304**	1	CABLE AS	
		2	**1S-7251**	1	TERMINAL-CABLE (00-GA, 1/2-IN SCREW)	
		2	**1S-7252**	1	TERMINAL-CABLE (00-GA, 3/8-IN SCREW)	
		2	**8N-0869**	1	COVER-TERMINAL (RED)	
E		2	**8T-2225**		TUBE-HEAT SHRINK (25.4-MM DIA) (4-CM)	
E		2	**159-8049**		CABLE (00-GA, RED) (66-CM)	
	17	2	**448-0423**	2	BRACKET AS	
	18	2	**091-0081**	1	SPACER (10.5X20X10-MM THK)	
	19	2	**091-9035**	1	SPACER (11X25X20-MM THK)	
	20	3	**104-6202**	1	CLIP	
	21	2	**122-0450**	6	GROMMET	
	22	3	**132-5789**	1	CLIP	
	23	2	**164-4226**	1	CLIP	
	24	2	**1F-7854**	1	SPACER (11.01X19.05X49.21-MM THK)	
	25	2	**203-2789**	1	BRACKET AS	
	26	1,2,3	**204-8000**	7	MOUNTING-CABLE TIE	
	27	2	**2V-1771**	1	GROMMET	
	28	1,3	**338-8439**	4	CLIP	
	29	2	**352-3964**	1	CLIP	
	30	1	**352-3967**	1	CLIP	
	31	3	**3K-0360**	1	SEAL-O-RING	
	32	2	**4L-6454**	2	BOLT (3/8-16X1-IN)	
	33	2	**4L-6459**	1	BOLT (3/8-16X2.5-IN)	
	34	3	**4P-7428**	1	CLIP	
	35	3	**4P-7429**	1	CLIP	
	36	1,2,3	**4P-7581**	4	CLIP	
	37	1,2,3	**4P-8134**	8	CLIP	
	38	2	**4S-4455**	2	CLIP	
	39	2	**5G-3676**	2	GROMMET	
	40	2	**5M-3062**	1	BOLT (3/8-16X0.75-IN)	
	41	2	**5P-7462**	3	CLIP (SLOT)	
	42	2	**5P-7463**	3	CLIP (TAB)	
	43	2	**6V-0683**	3	GROMMET (19-MM ID)	
	44	2	**6V-8189**	1	NUT (5/16-18-THD)	

416-4697 **WIRING GP-ENGINE (**contd.**)** **i05817067**

NOTE	REF NO	GRAPHIC REF	PART NUMBER	QTY	PART NAME 1 2 3 4 5 6 (PRODUCT LEVEL)	SEE PAGE
	45	2,3	**6V-8801**	4	NUT (3/8-16-THD)	
	46	1,2,3	**7K-1181**	50	STRAP-CABLE	
	47	2	**7X-0277**	1	BOLT (5/16-18X3.75-IN)	
	48	2	**8C-6561**	1	BOLT (5/16-18X1.375-IN)	
	49	3	**8L-2786**	1	SEAL-O-RING	
	50	2	**8T-1887**	1	CLIP (SLOT)	
	51	2	**8T-1888**	1	CLIP (TAB)	
	52	2	**8T-1895**	2	CLIP (SLOT)	
	53	2	**8T-1896**	2	CLIP (TAB)	
	54	2	**8T-1897**	4	CLIP (SLOT)	
	55	2	**8T-1898**	4	CLIP (TAB)	
	56	2	**8T-2501**	1	BOLT (3/8-16X2-IN)	
	57	1,2,3	**8T-4121**	26	WASHER-HARD (11X21X2.5-MM THK)	
M	58	2	**8T-4133**	1	NUT (M10X1.5-THD)	
M	59	1,2,3	**8T-4136**	6	BOLT (M10X1.5X25-MM)	
M	60	1,2	**8T-4137**	3	BOLT (M10X1.5X20-MM)	
M	61	2	**8T-4185**	1	BOLT (M10X1.5X50-MM)	
M	62	1,3	**8T-4195**	3	BOLT (M10X1.5X30-MM)	
M	63	2	**8T-4196**	2	BOLT (M10X1.5X35-MM)	
	64	2	**8T-4224**	2	WASHER-HARD (8.8X16X2-MM THK)	
	65	2	**8T-4896**	2	WASHER-HARD (10.2X18.5X2.5-MM THK)	
	66	2	**8T-8912**	1	BOLT (5/16-18X2.25-IN)	
	67	2	**9G-7101**	1	SPACER (10.5X20X30-MM THK)	
	68	2	**9M-8406**	3	CLIP	
	69	2	**9R-2216**	1	BOSS	

E - ORDER BY THE CENTIMETER
M - METRIC PART
Y - SEPARATE ILLUSTRATION

416-4697 **WIRING GP-ENGINE (**contd.**)** **i05817067**

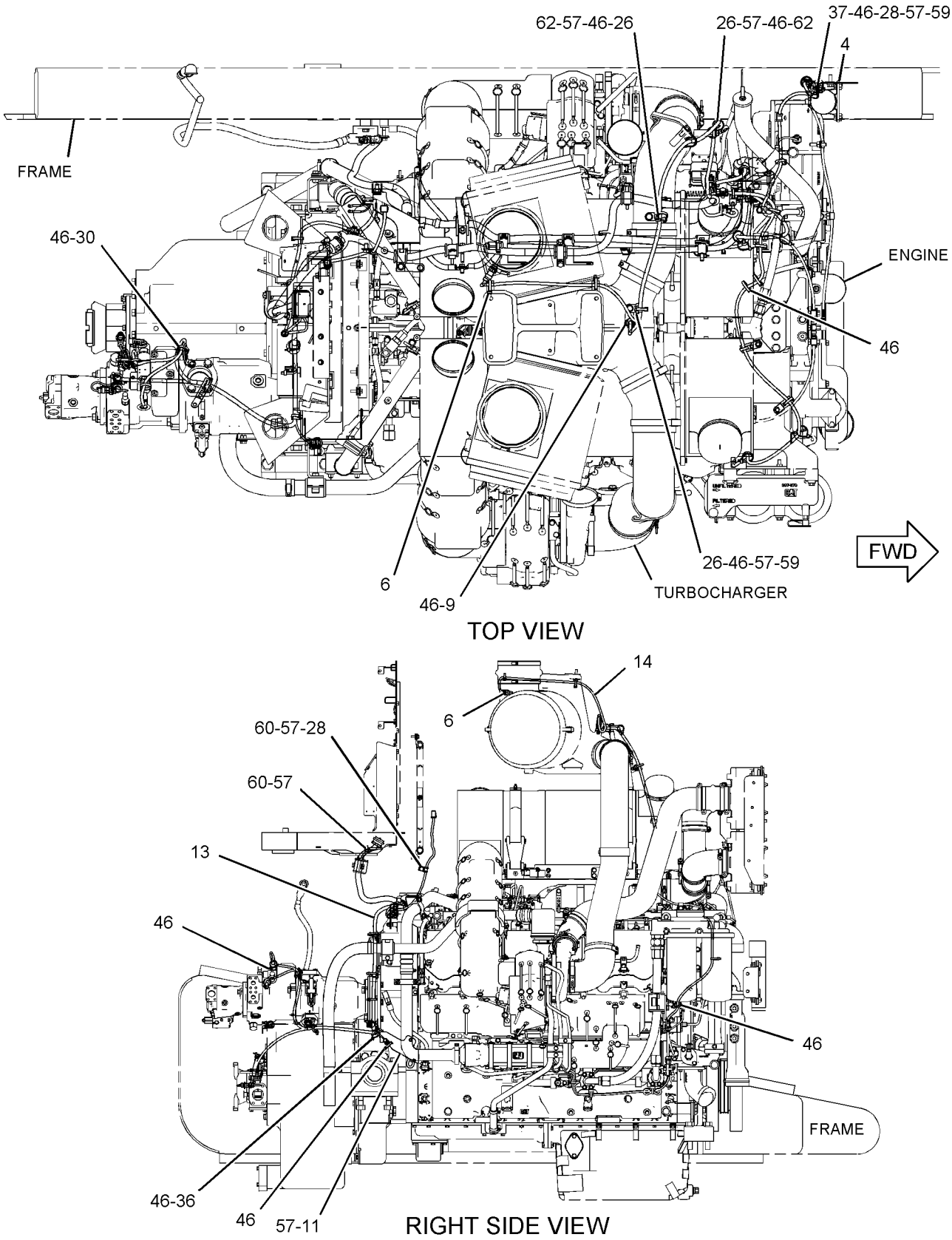

GRAPHIC #1 g03494126

416-4697 **WIRING GP-ENGINE (**contd.**)** **i05817067**

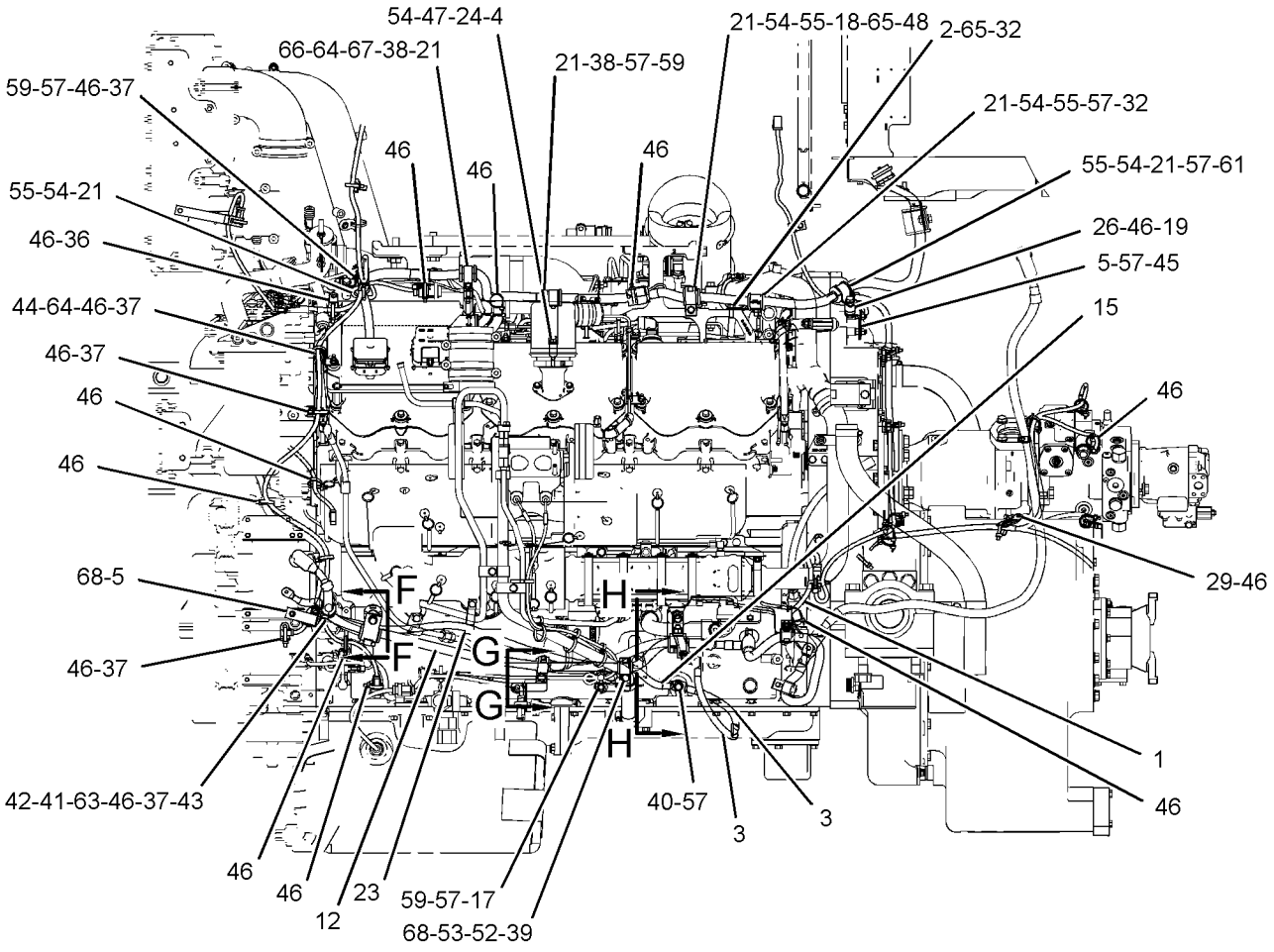

LEFT SIDE VIEW

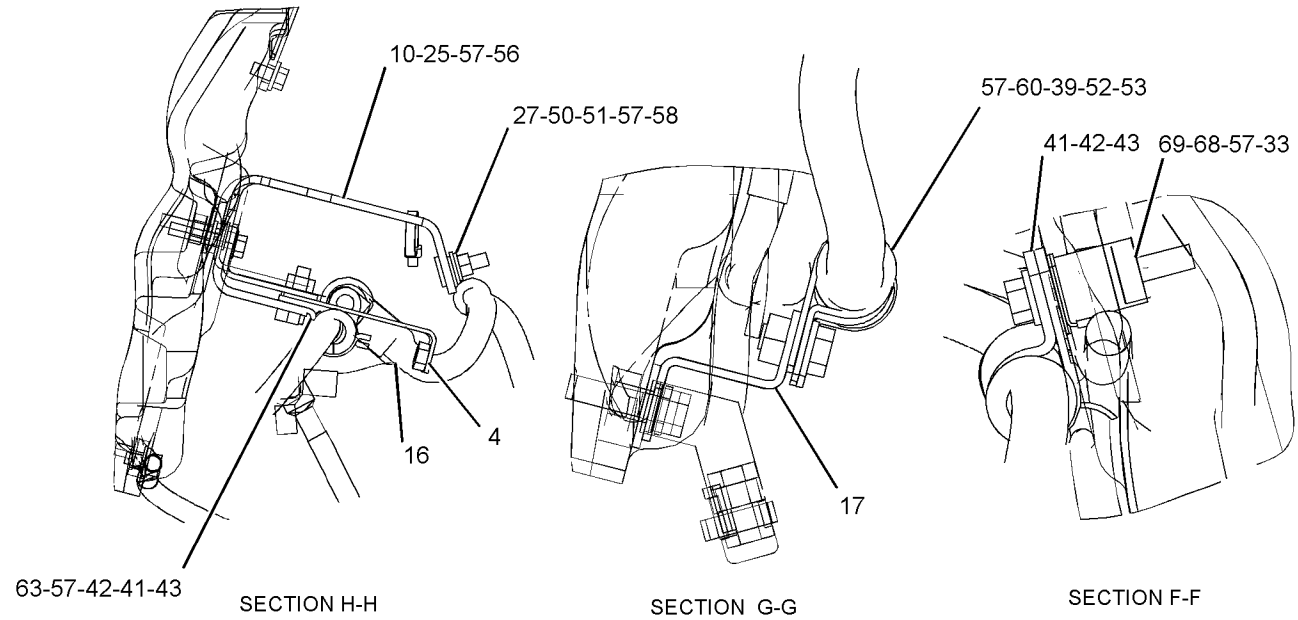

GRAPHIC #2 g03494127

416-4697 **WIRING GP-ENGINE (**contd.**)** **i05817067**

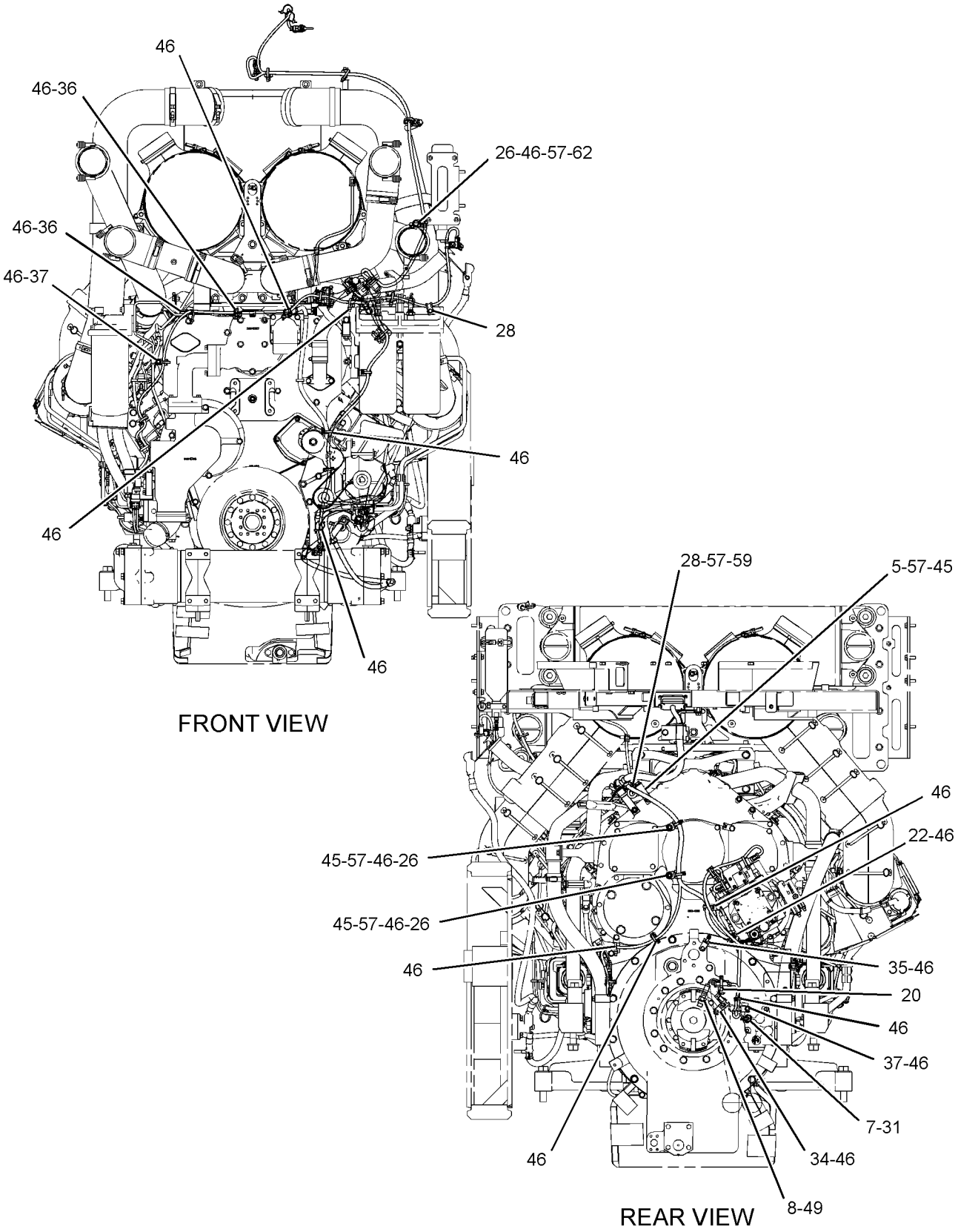

GRAPHIC #3 <END> g03494128

416-4697 WIRING GP-ENGINE

S/N: RAB249-UP
PART OF 359-6500 INSTALLATION AR-ENGINE
ALSO AN ATTACHMENT

SMCS-1000, 1408 **i06080550**

NOTE	REF NO	GRAPHIC REF	PART NUMBER	QTY	PART NAME 1 2 3 4 5 6 (PRODUCT LEVEL)	SEE PAGE
	1	2	**313-3516**	1	HARNESS AS-SWITCH (STARTING MOTOR, START RELAY)	
		2	**2L-8076**	1	TERMINAL-RING (14-GA TO 16-GA, NO. 10 SCREW)	
		2	**8T-8729**	2	PIN-CONNECTOR (16-GA TO 18-GA)	
	2	2	**8E-3430**	1	STRIP AS	
		2	**1F-0750**	1	NUT-WELD (3/8-16-THD)	
		2	**8E-3431**	1	PLATE	
	3	2	**140-0860**	2	STRAP AS-GROUND	
C	4	1,2	**206-5575**	2	BRACKET AS	
	5	2,3	**226-3492**	3	BRACKET AS	
Y	6	1	*234-5012*	1	SENSOR GP-TEMPERATURE (COOLANT)	383
	7	3	**256-6453**	1	SENSOR-TEMPERATURE (ENGINE OIL TEMPERATURE)	
Y	8	3	**290-5792**	1	SENSOR GP-SPEED (TORQUE CONVERTER OUTPUT)	379
Y	9	1	*331-1134*	1	SENSOR GP-PRESSURE (INLET AIR)	377
	10	2	**377-9493**	1	BRACKET AS	
	11	1	**377-9494**	1	BRACKET AS	
	12	2	**377-9495**	1	CABLE AS	
		2	**1S-4915**	2	LINER (CONDUIT)	
E		2	**5P-0695**		CONDUIT (119-CM)	
E		2	**8T-2225**		TUBE-HEAT SHRINK (25.4-MM DIA) (24-CM)	
		2	**8T-8827**	1	BOOT (RED)	
		2	**9X-9825**	1	TERMINAL-CABLE (00-GA, 1/2-IN SCREW)	
		2	**030-1705**	1	TERMINAL-CABLE (00-GA, 5/16-IN SCREW)	
E		2	**159-8049**		CABLE (00-GA, RED) (131-CM)	
	13	1	**378-4519**		HARNESS AS-ENGINE	
		1	**155-2260**	2	KIT-CONNECTING PLUG (3-PIN)	
					(EACH INCLUDES PLUG AS, WEGDES & INTERFACE SEAL)	
		1	**155-2270**	7	KIT-CONNECTING PLUG (2-PIN)	
		1	**155-2274**	2	KIT-CONNECTING PLUG (6-PIN)	
					(EACH PLUG KIT INCLUDES PLUG AS, WEDGE & INTERFACE SEAL)	
		1	**102-8802**	1	KIT-RECEPTACLE (2-PIN)	
					(INCLUDES RECEPTACLE AS & WEDGE)	
		1	**9X-3402**	98	SOCKET-CONNECTOR (16-GA TO 18-GA)	
		1	**126-1768**	98	SOCKET-CONNECTOR (14-GA TO 16-GA)	
		1	**2L-8069**	3	TERMINAL-RING (2-GA TO 10-GA, 3/8-IN SCREW)	
		1	**160-7689**	2	PLUG AS-CONNECTOR (70-PIN)	
					(EACH INCLUDES)	
		1	**159-9322**	1	SEAL-O-RING	
		1	**8T-8737**	90	PLUG-SEAL	
E		1	**119-3662**		TUBE-HEAT SHRINK (10.85-MM DIA) (7-CM)	
E		1	**125-7874**		TUBE-HEAT SHRINK (5.72-MM DIA) (40-CM)	
		1	**134-2540**	2	RESISTOR AS-CONNECTION (3-PIN)	
		1	**230-4011**	4	PLUG AS-CONNECTOR (2-PIN)	
		1	**264-7029**	1	SEAL-CONNECTOR	
		1	**230-5010**	1	PLUG AS-CONNECTOR (6-PIN)	
		1	**264-7032**	1	SEAL-CONNECTOR	

416-4697 **WIRING GP-ENGINE (**contd.**)** **i06080550**

NOTE	REF NO	GRAPHIC REF	PART NUMBER	QTY	PART NAME 1 2 3 4 5 6 (PRODUCT LEVEL)	SEE PAGE
		1	**237-0336**	1	COVER (CONNECTOR)	
		1	**274-3780**	1	CAP-SEAL	
	14	1	**378-4522**	1	HARNESS AS-ENGINE	
		1	**102-8805**	1	KIT-RECEPTACLE (6-PIN)	
					(INCLUDES RECEPTACLE AS & WEDGE)	
		1	**3E-3383**	1	WEDGE-RECEPTACLE LOCK (6-PIN)	
		1	**8T-8737**	2	PLUG-SEAL	
		1	**9X-3401**	4	PIN-CONNECTOR (16-GA TO 18-GA)	
		1	**9X-3402**	5	SOCKET-CONNECTOR (16-GA TO 18-GA)	
		1	**125-7874**	5	TUBE-HEAT SHRINK (5.72-MM DIA)	
		1	**230-4011**	1	PLUG AS-CONNECTOR (2-PIN)	
		1	**264-7029**	1	SEAL-CONNECTOR	
		1	**281-8803**	1	PLUG AS-CONNECTOR (3-PIN)	
		1	**264-7030**	1	SEAL-CONNECTOR	
	15	2	**380-9101**	1	CABLE AS	
		2	**030-1707**	1	TERMINAL-RING (0-GA, 3/8-IN SCREW)	
		2	**030-1709**	1	TERMINAL-RING (0-GA, 1/4-IN SCREW)	
E		2	**159-8050**		CABLE (00-GA, BLACK) (116-CM)	
	16	2	**381-2304**	1	CABLE AS	
		2	**1S-7251**	1	TERMINAL-CABLE (00-GA, 1/2-IN SCREW)	
		2	**1S-7252**	1	TERMINAL-CABLE (00-GA, 3/8-IN SCREW)	
		2	**8N-0869**	1	COVER-TERMINAL (RED)	
E		2	**8T-2225**		TUBE-HEAT SHRINK (25.4-MM DIA) (4-CM)	
E		2	**159-8049**		CABLE (00-GA, RED) (66-CM)	
	18	2	**091-0081**	1	SPACER (10.5X20X10-MM THK)	
	19	2	**091-9035**	1	SPACER (11X25X20-MM THK)	
	20	3	**104-6202**	1	CLIP	
	21	2	**122-0450**	6	GROMMET	
	22	3	**132-5789**	1	CLIP	
	23	2	**164-4226**	1	CLIP	
	24	2	**1F-7854**	1	SPACER (11.01X19.05X49.21-MM THK)	
	26	1,2,3	**204-8000**	7	MOUNTING-CABLE TIE	
	27	2	**2V-1771**	1	GROMMET	
	28	1,3	**338-8439**	4	CLIP	
	29	2	**352-3964**	1	CLIP	
	30	1	**352-3967**	1	CLIP	
	31	3	**3K-0360**	1	SEAL-O-RING	
	32	2	**4L-6454**	2	BOLT (3/8-16X1-IN)	
	34	3	**4P-7428**	1	CLIP	
	35	3	**4P-7429**	1	CLIP	
	36	1,2,3	**4P-7581**	4	CLIP	
C	37	1,2,3	**4P-8134**	9	CLIP	
	38	2	**4S-4455**	2	CLIP	
C	39	2	**5G-3676**	5	GROMMET	
	40	2	**5M-3062**	1	BOLT (3/8-16X0.75-IN)	
	44	2	**6V-8189**	1	NUT (5/16-18-THD)	
	45	2,3	**6V-8801**	4	NUT (3/8-16-THD)	
C	46	1,2,3	**7K-1181**	51	STRAP-CABLE	
	47	2	**7X-0277**	1	BOLT (5/16-18X3.75-IN)	
	48	2	**8C-6561**	1	BOLT (5/16-18X1.375-IN)	
	49	3	**8L-2786**	1	SEAL-O-RING	

416-4697 **WIRING GP-ENGINE (**contd.**)** **i06080550**

NOTE	REF NO	GRAPHIC REF	PART NUMBER	QTY	PART NAME 1 2 3 4 5 6 (PRODUCT LEVEL)	SEE PAGE
	50	2	**8T-1887**	1	CLIP (SLOT)	
	51	2	**8T-1888**	1	CLIP (TAB)	
C	52	2	**8T-1895**	5	CLIP (SLOT)	
C	53	2	**8T-1896**	5	CLIP (TAB)	
	54	2	**8T-1897**	4	CLIP (SLOT)	
	55	2	**8T-1898**	4	CLIP (TAB)	
C	56	2	**8T-2501**	2	BOLT (3/8-16X2-IN)	
C	57	1,2,3	**8T-4121**	27	WASHER-HARD (11X21X2.5-MM THK)	
M	58	2	**8T-4133**	1	NUT (M10X1.5-THD)	
CM	59	1,2,3	**8T-4136**	8	BOLT (M10X1.5X25-MM)	
CM	60	1	**8T-4137**	2	BOLT (M10X1.5X20-MM)	
M	61	2	**8T-4185**	1	BOLT (M10X1.5X50-MM)	
M	62	1,3	**8T-4195**	3	BOLT (M10X1.5X30-MM)	
M	63	2	**8T-4196**	2	BOLT (M10X1.5X35-MM)	
	64	2	**8T-4224**	2	WASHER-HARD (8.8X16X2-MM THK)	
	65	2	**8T-4896**	2	WASHER-HARD (10.2X18.5X2.5-MM THK)	
	66	2	**8T-8912**	1	BOLT (5/16-18X2.25-IN)	
	67	2	**9G-7101**	1	SPACER (10.5X20X30-MM THK)	
C	68	2	**9M-8406**	2	CLIP	
C	69	2	**133-6934**	1	SPACER (11X20X25-MM THK)	
C	70	2	**6K-8178**	1	CLIP	

C - CHANGE FROM PREVIOUS TYPE
E - ORDER BY THE CENTIMETER
M - METRIC PART
Y - SEPARATE ILLUSTRATION

416-4697 **WIRING GP-ENGINE (**contd.**)** **i06080550**

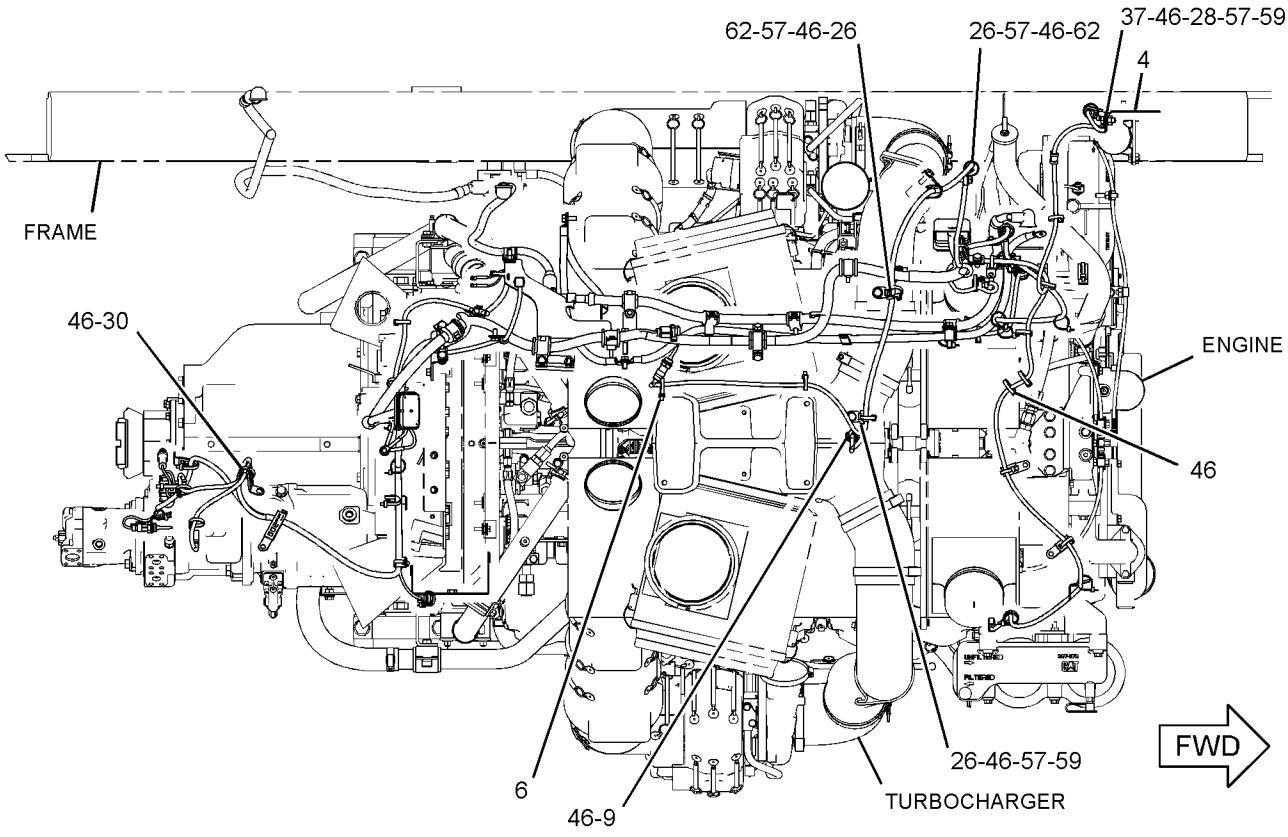

TOP VIEW

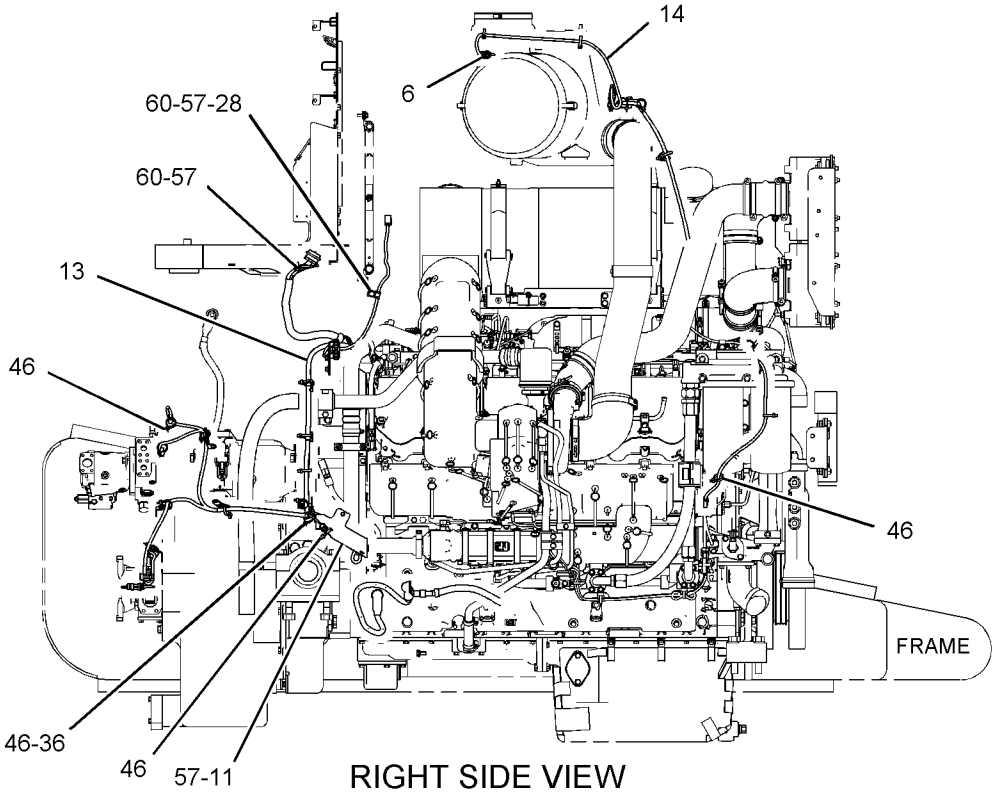

RIGHT SIDE VIEW

GRAPHIC #1 g06035266

416-4697 **WIRING GP-ENGINE (**contd.**)** **i06080550**

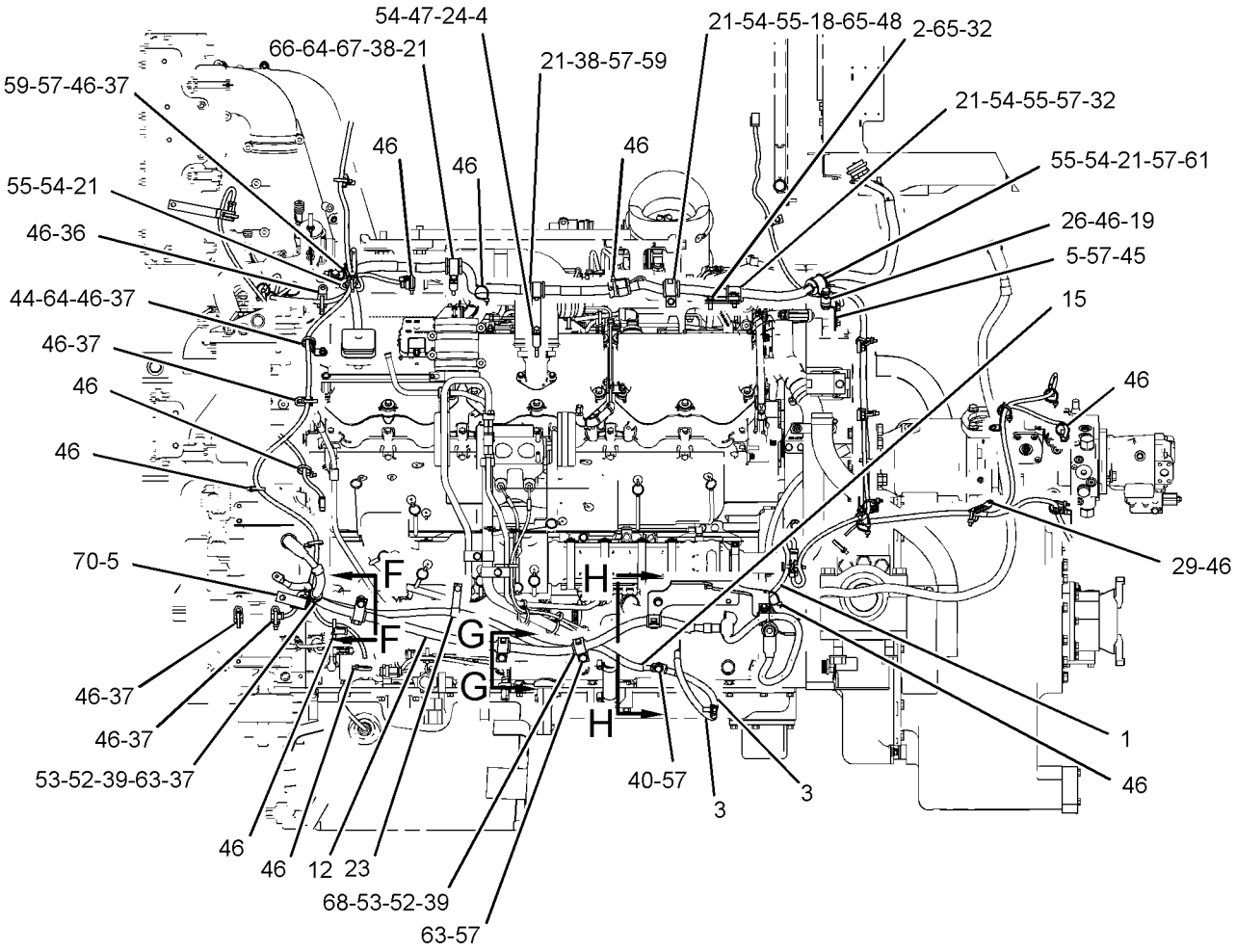

LEFT SIDE VIEW

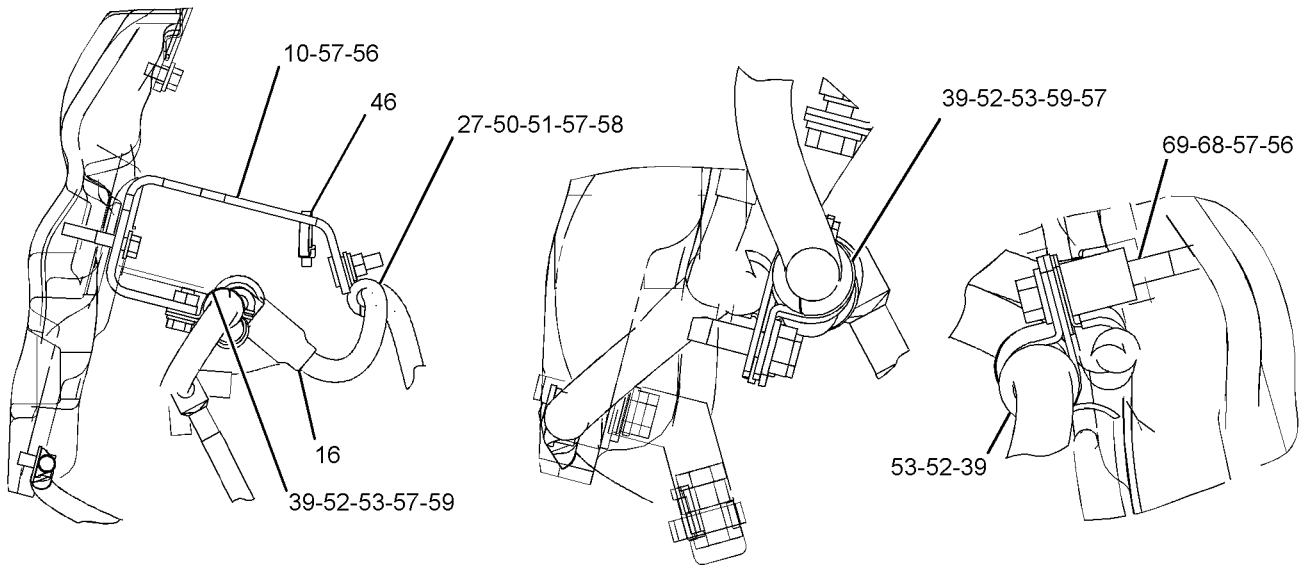

SECTION H-H

SECTION G-G

SECTION F-F

GRAPHIC #2

g06035268

416-4697 **WIRING GP-ENGINE (**contd.**)** **i06080550**

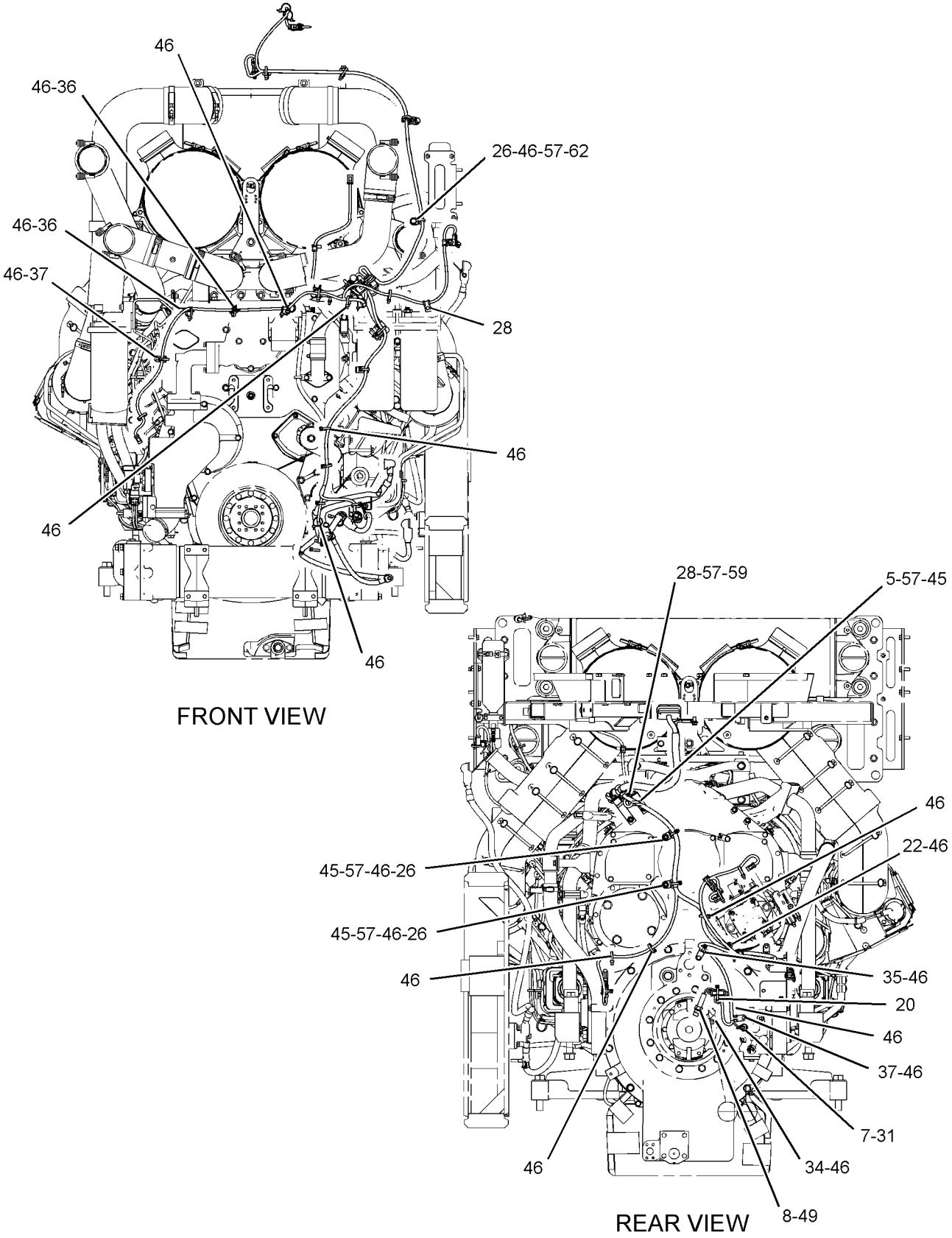

GRAPHIC #3 <END> g06035269

381-4080 WIRING GP-LADDER

S/N: RAB1-UP

PART OF 359-6486 LADDER AR, 359-6488 PLATFORM AR

AN ATTACHMENT

SMCS-1408, 7254

i05805245

NOTE	REF NO	GRAPHIC REF	PART NUMBER	QTY	PART NAME 1 2 3 4 5 6 (PRODUCT LEVEL)	SEE PAGE
	1	2	**3E-5239**	5	RELAY AS (24-VOLT) (LADDER ACCESS)	
	2	2	**7G-1060**	1	STRAP AS-GROUND	
	3	2	**200-1898**	1	SUPPRESSOR-ARC	
	4	1	**301-2980**	1	SWITCH AS-TOGGLE (OPERATOR LADDER UP, DOWN)	
		1	**102-8803**	1	KIT-RECEPTACLE (3-PIN)	
					(INCLUDES RECEPTACLE AS & WEDGE)	
		1	**3E-3371**	1	WEDGE-RECEPTACLE LOCK (3-PIN)	
		1	**8T-8729**	3	PIN-CONNECTOR (16-GA TO 18-GA)	
E		1	**112-4550**		SLEEVE (21-CM)	
	5	2	**441-9193**	1	HARNESS AS (LADDER ACCESS)	
		2	**102-8802**	1	KIT-RECEPTACLE (2-PIN)	
		2	**102-8803**	1	KIT-RECEPTACLE (3-PIN)	
					(EACH RECEPTACLE KIT INCLUDES RECEPTACLE AS & WEDGE)	
		2	**3E-3371**	1	WEDGE-RECEPTACLE LOCK (3-PIN)	
		2	**8T-8729**	2	PIN-CONNECTOR (16-GA TO 18-GA)	
		2	**8T-8730**	12	SOCKET-CONNECTOR (16-GA TO 18-GA)	
		2	**8T-8737**	3	PLUG-SEAL	
		2	**9X-3401**	3	PIN-CONNECTOR (16-GA TO 18-GA)	
		2	**9X-3402**	10	SOCKET-CONNECTOR (16-GA TO 18-GA)	
E		2	**125-7874**		TUBE-HEAT SHRINK (5.72-MM DIA) (15-CM)	
E		2	**125-7875**		TUBE-HEAT SHRINK (7.44-MM DIA) (5-CM)	
		2	**155-2255**	1	KIT-CONNECTING PLUG (12-PIN)	
		2	**155-2260**	3	KIT-CONNECTING PLUG (3-PIN)	
		2	**155-2270**	2	KIT-CONNECTING PLUG (2-PIN)	
					(EACH PLUG KIT INCLUDES PLUG AS, WEDGE & INTERFACE SEAL)	
		2	**274-3774**	1	CAP-CONNECTOR	
		2	**331-0158**	1	JUMPER AS	
		2	**102-8803**	1	KIT-RECEPTACLE (3-PIN)	
		2	**3E-3371**	1	WEDGE-RECEPTACLE LOCK (3-PIN)	
		2	**8T-8737**	1	PLUG-SEAL	
		2	**9X-3401**	2	PIN-CONNECTOR (16-GA TO 18-GA)	
	6	2	**382-5435**	1	WIRE AS	
	8	2	**441-9942**	1	CABLE AS	
D		2	**6V-2369**		CABLE (4-GA, BLACK) (0.3-M)	
		2	**8T-8827**	2	BOOT (RED)	
		2	**5P-3454**	2	TERMINAL-RING (4-GA, 5/16-IN SCREW)	
	9	2	**2V-1771**	2	GROMMET	
	10	2	**4P-7581**	3	CLIP	
	11	2	**9X-6165**	2	WASHER (6.5X22X2.5-MM THK)	
	12	2	**7B-1251**	1	GROMMET	
	13	2	**7K-1181**	31	STRAP-CABLE	
	14	2	**8T-1887**	2	CLIP (SLOT)	
	15	2	**8T-1888**	2	CLIP (TAB)	
	16	2	**8T-4121**	2	WASHER-HARD (11X21X2.5-MM THK)	
M	17	2	**9X-2045**	5	SCREW-TRUSS HEAD (M6X1X20-MM)	
M	18	2	**8T-4133**	1	NUT (M10X1.5-THD)	

381-4080 **WIRING GP-LADDER (**contd.**)** **i05805245**

NOTE	REF NO	GRAPHIC REF	PART NUMBER	QTY	PART NAME 1 2 3 4 5 6 (PRODUCT LEVEL)	SEE PAGE
M	19	2	**8T-4191**	1	BOLT (M10X1.5X16-MM)	
	20	2	**441-9192**	1	HARNESS AS-SWITCH (ACCESS)	
		2	**102-8801**	1	KIT-RECEPTACLE (12-PIN)	
					(INCLUDES RECEPTACLE AS & WEDGE)	
		2	**3E-5519**	5	PLUG AS-CONNECTOR (5-PIN)	
		2	**8T-8729**	6	PIN-CONNECTOR (16-GA TO 18-GA)	
		2	**8T-8730**	8	SOCKET-CONNECTOR (16-GA TO 18-GA)	
		2	**8T-8737**	4	PLUG-SEAL	
		2	**9X-1056**	12	TERMINAL-RECEPTACLE (14-GA TO 16-GA)	
		2	**9X-3401**	5	PIN-CONNECTOR (16-GA TO 18-GA)	
		2	**100-5041**	10	TERMINAL-RECEPTACLE (18-GA TO 20-GA)	
E		2	**125-7874**		TUBE-HEAT SHRINK (5.72-MM DIA) (20-CM)	
E		2	**125-7875**		TUBE-HEAT SHRINK (7.44-MM DIA) (15-CM)	
		2	**2L-8076**	2	TERMINAL-RING (14-GA TO 16-GA, NO. 10 SCREW)	
		2	**155-2270**	2	KIT-CONNECTING PLUG (2-PIN)	
		2	**155-2271**	1	KIT-CONNECTING PLUG (4-PIN)	
					(EACH PLUG KIT INCLUDES PLUG AS, WEDGE & INTERFACE SEAL)	
		2	**274-3774**	1	CAP-CONNECTOR	

D - ORDER BY THE METER
E - ORDER BY THE CENTIMETER
M - METRIC PART

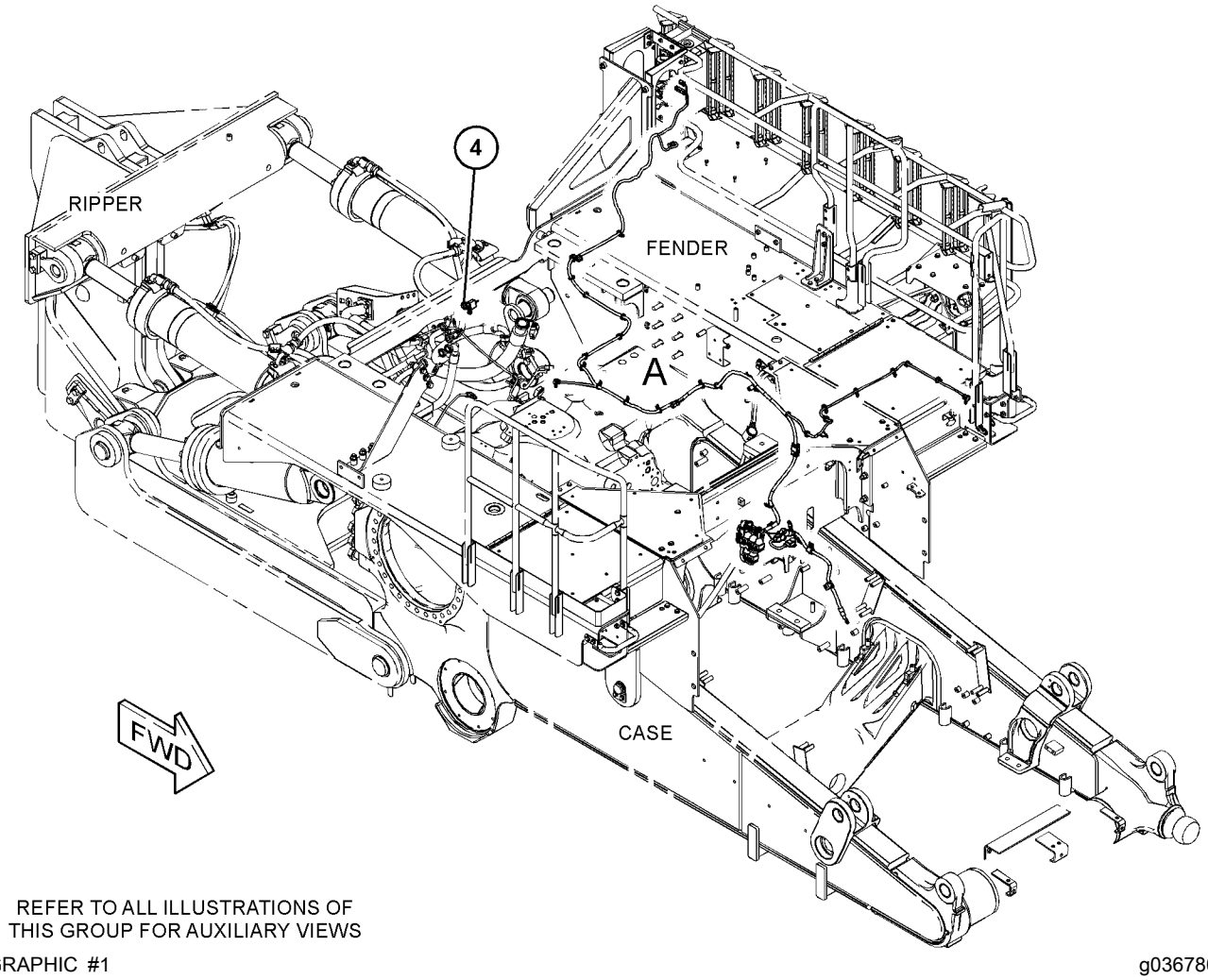

REFER TO ALL ILLUSTRATIONS OF THIS GROUP FOR AUXILIARY VIEWS

GRAPHIC #1 g03678004

381-4080 **WIRING GP-LADDER (**contd.**)** **i05805245**

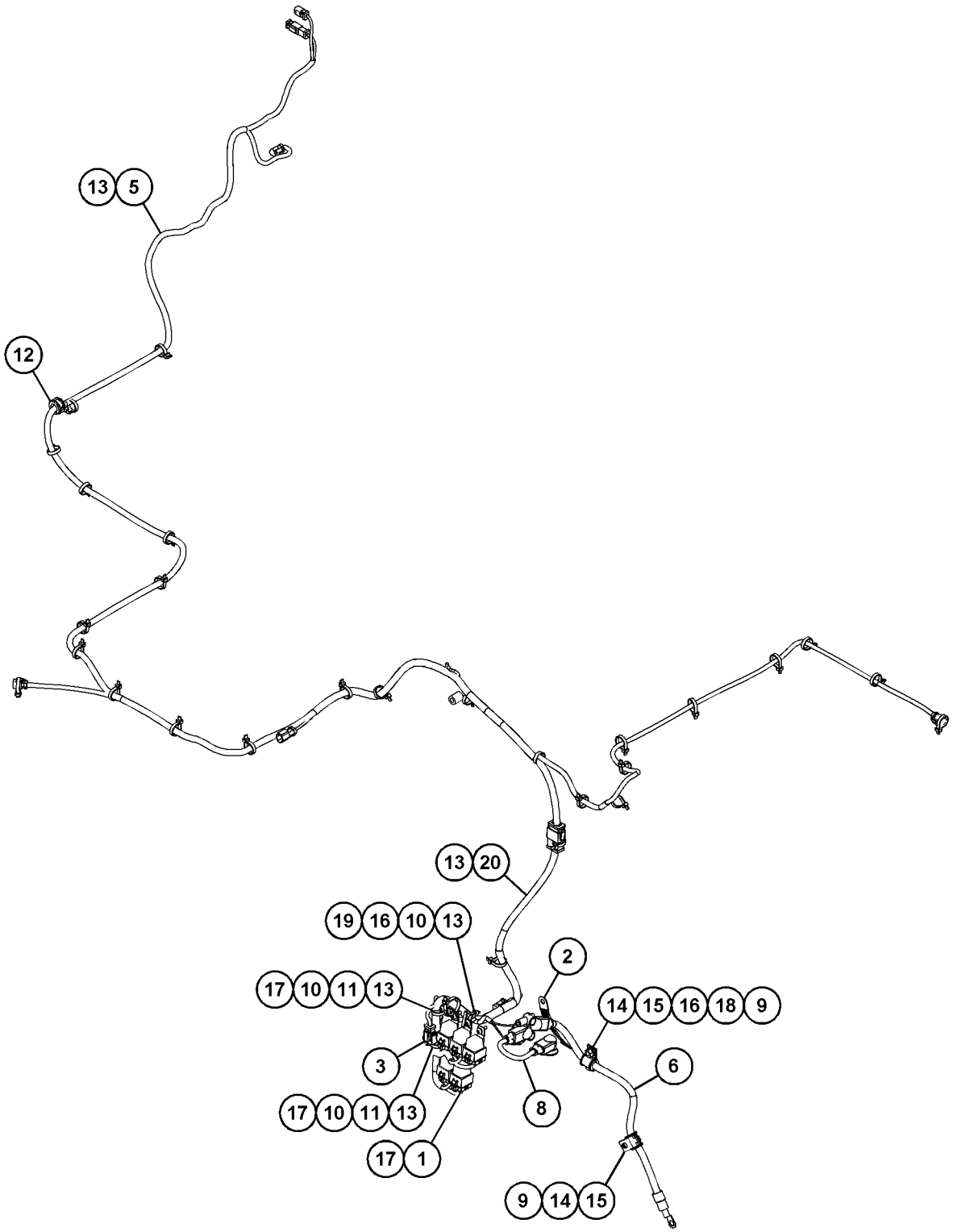

VIEW OF AREA A

GRAPHIC #2 <END> g03678006

419-8645 WIRING GP-LADDER

S/N: RAB1-UP

PART OF 359-6486 LADDER AR, 359-6488 PLATFORM AR

AN ATTACHMENT

SMCS-1408, 7254

i05805162

NOTE	REF NO	GRAPHIC REF	PART NUMBER	QTY	PART NAME 1 2 3 4 5 6 (PRODUCT LEVEL)	SEE PAGE
	1	1	**5G-7820**	1	MAGNET AS	
Y	2	1	**174-7165**	1	SWITCH GP-POSITION (LADDER)	403
	3	1	**241-6942**	1	FILM-INFORMATION (LADDER)	
	4	1	**301-2980**	1	SWITCH AS-TOGGLE (OPERATOR LADDER UP, DOWN)	
		1	**102-8803**	1	KIT-RECEPTACLE (3-PIN)	
					(INCLUDES RECEPTACLE AS & WEDGE)	
		1	**3E-3371**	1	WEDGE-RECEPTACLE LOCK (3-PIN)	
		1	**8T-8729**	3	PIN-CONNECTOR (16-GA TO 18-GA)	
	5	1	**372-3819**	1	HARNESS AS-SWITCH (RAISE, LOWER)	
		1	**102-8803**	1	KIT-RECEPTACLE (3-PIN)	
					(INCLUDES RECEPTACLE AS & WEDGE)	
		1	**3E-3371**	1	WEDGE-RECEPTACLE LOCK (3-PIN)	
		1	**9X-3401**	3	PIN-CONNECTOR (16-GA TO 18-GA)	
		1	**9X-3402**	3	SOCKET-CONNECTOR (16-GA TO 18-GA)	
		1	**155-2260**	1	KIT-CONNECTING PLUG (3-PIN)	
					(INCLUDES PLUG AS, WEDGE & INTERFACE SEAL)	
	6	1	**4M-6425**	2	BOLT (5/16-18X1-IN)	
	7	1	**4P-8134**	1	CLIP	
M	8	1	**6V-9189**	2	LOCKNUT (M8X1.25-THD)	
	9	1	**7B-1251**	1	GROMMET	
	10	1	**7K-1181**	11	STRAP-CABLE	
	11	1	**8T-4121**	2	WASHER-HARD (11X21X2.5-MM THK)	
M	12	1	**8T-4133**	1	NUT (M10X1.5-THD)	
M	13	1	**8T-4195**	1	BOLT (M10X1.5X30-MM)	
	14	1	**8T-4224**	6	WASHER-HARD (8.8X16X2-MM THK)	
M	15	1	**8T-4908**	2	BOLT (M8X1.25X25-MM)	
	16	1	**9D-3768**	2	GROMMET	
	17	1	**9K-0700**	1	GROMMET	
	18	1	**4P-7581**	1	CLIP	

M - METRIC PART
Y - SEPARATE ILLUSTRATION

419-8645 **WIRING GP-LADDER (**contd.**)** **i05805162**

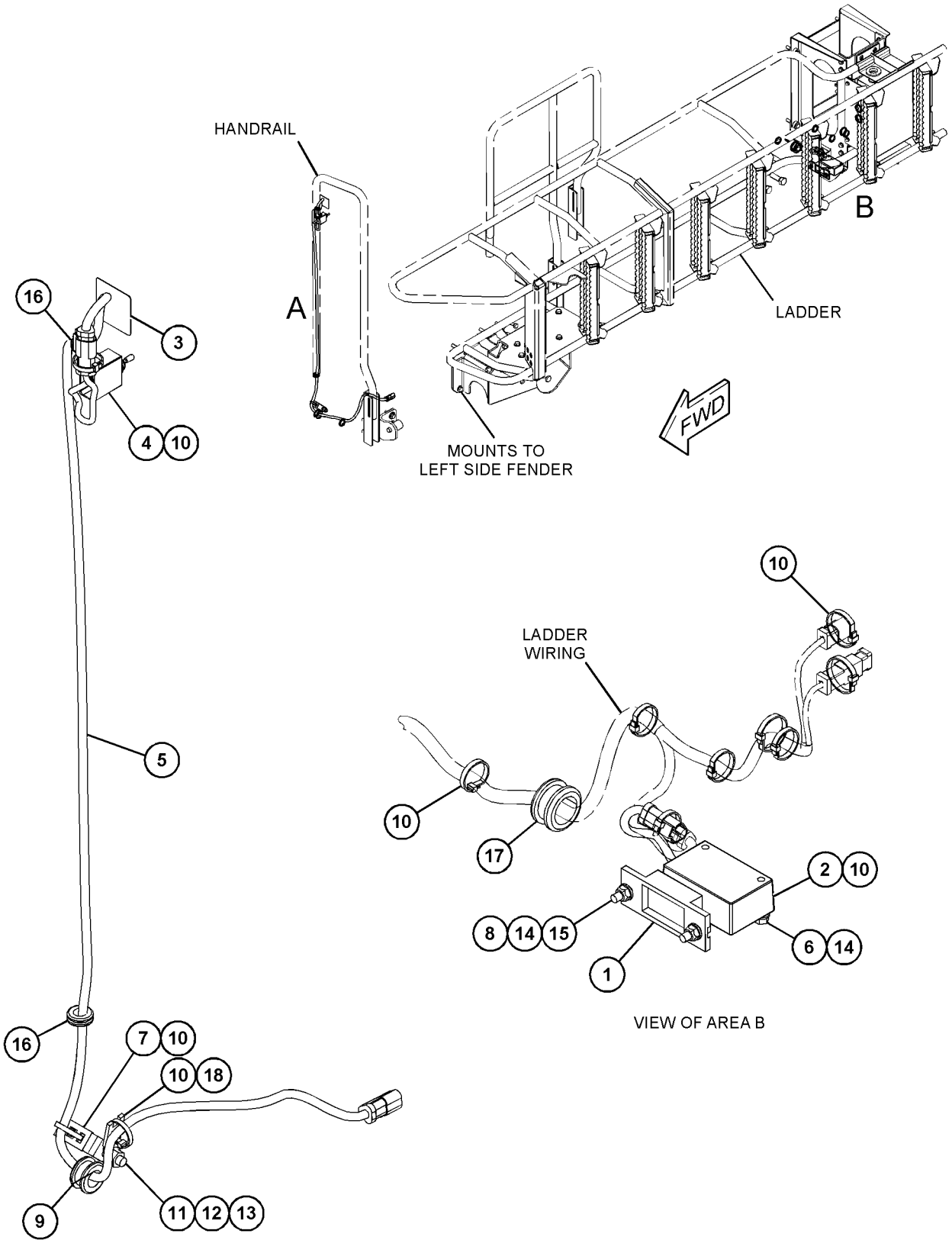

GRAPHIC #1 <END> g03682888

436-8094 WIRING GP-LIGHTING

S/N: RAB1-UP
PART OF 441-3258 CONTROL GP-REMOTE
AN ATTACHMENT

SMCS-1408, 1429 **i06011770**

NOTE	REF NO	GRAPHIC REF	PART NUMBER	QTY	PART NAME 1 2 3 4 5 6 (PRODUCT LEVEL)	SEE PAGE
Y	1	1	*452-9062*	1	LAMP & MTG GP-COMMAND SIGNAL (RH)	286
Y	2	1	*452-9063*	1	WIRING GP-LIGHTING (WARNING BEACON)	453
Y	3	1	*457-5028*	1	LAMP & MTG GP-COMMAND SIGNAL (LH)	288

Y - SEPARATE ILLUSTRATION

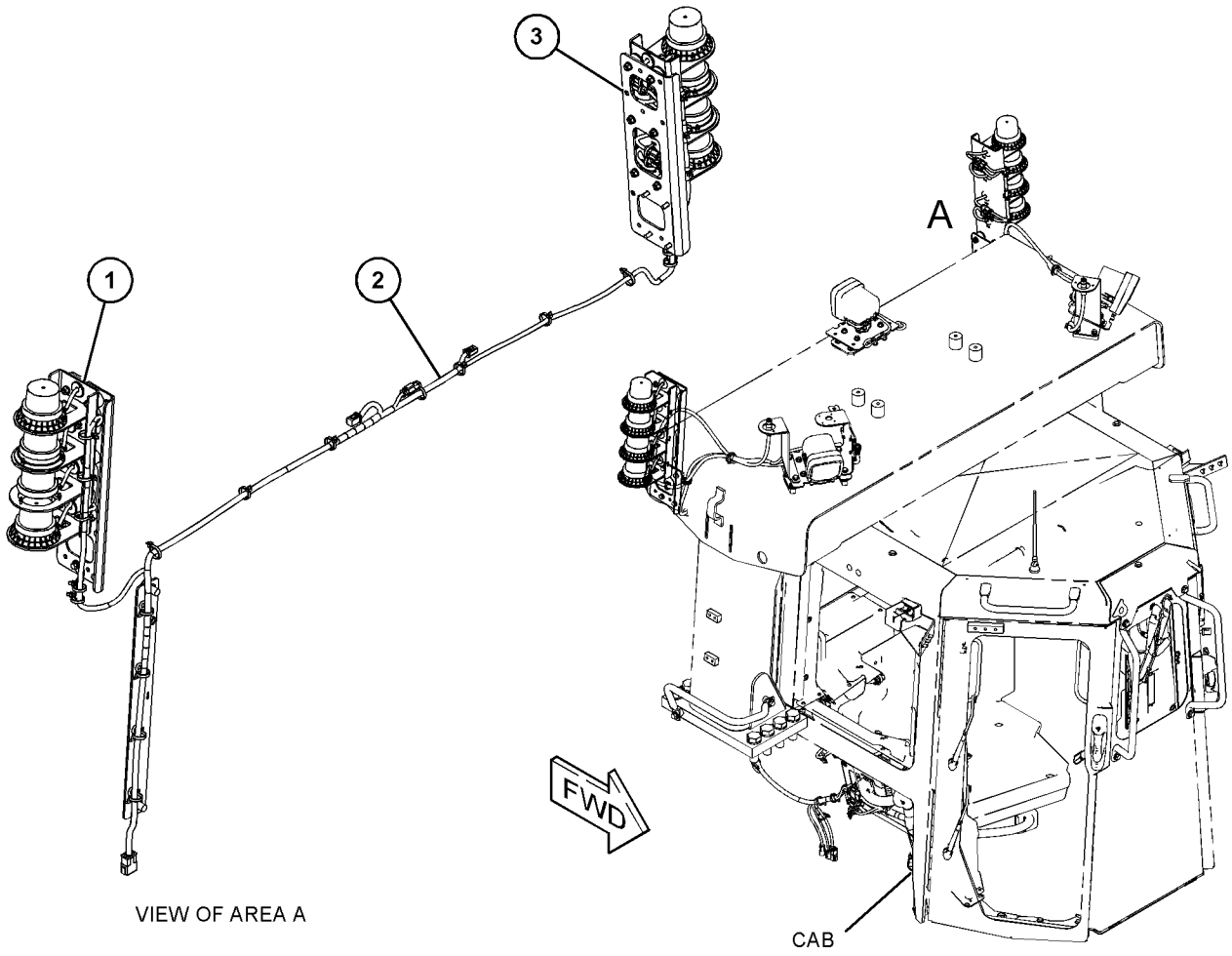

VIEW OF AREA A

GRAPHIC #1 <END> g03789484

452-9063 WIRING GP-LIGHTING–BEACON

S/N: RAB1-UP
PART OF 436-8094 WIRING GP-LIGHTING
AN ATTACHMENT

SMCS-1408, 1429 **i05966891**

NOTE	REF NO	GRAPHIC REF	PART NUMBER	QTY	PART NAME 1 2 3 4 5 6 (PRODUCT LEVEL)	SEE PAGE
	1	1	**1Q-1592**	1	PLATE AS	
	2	1	**418-9798**	2	BRACKET	
Y	3	1	**436-8070**	1	HARNESS AS-LIGHTING (BEACON) (ROPS)	262
	4	1	**4L-6454**	8	BOLT (3/8-16X1-IN)	
	5	1	**7K-1181**	29	STRAP-CABLE	
	6	1	**7X-0582**	2	WASHER-HARD (20X44.5X6-MM THK)	
	7	1	**8T-4896**	8	WASHER-HARD (10.2X18.5X2.5-MM THK)	
	8	1	**8T-9397**	2	BOLT (3/4-10X1.25-IN)	

Y - SEPARATE ILLUSTRATION

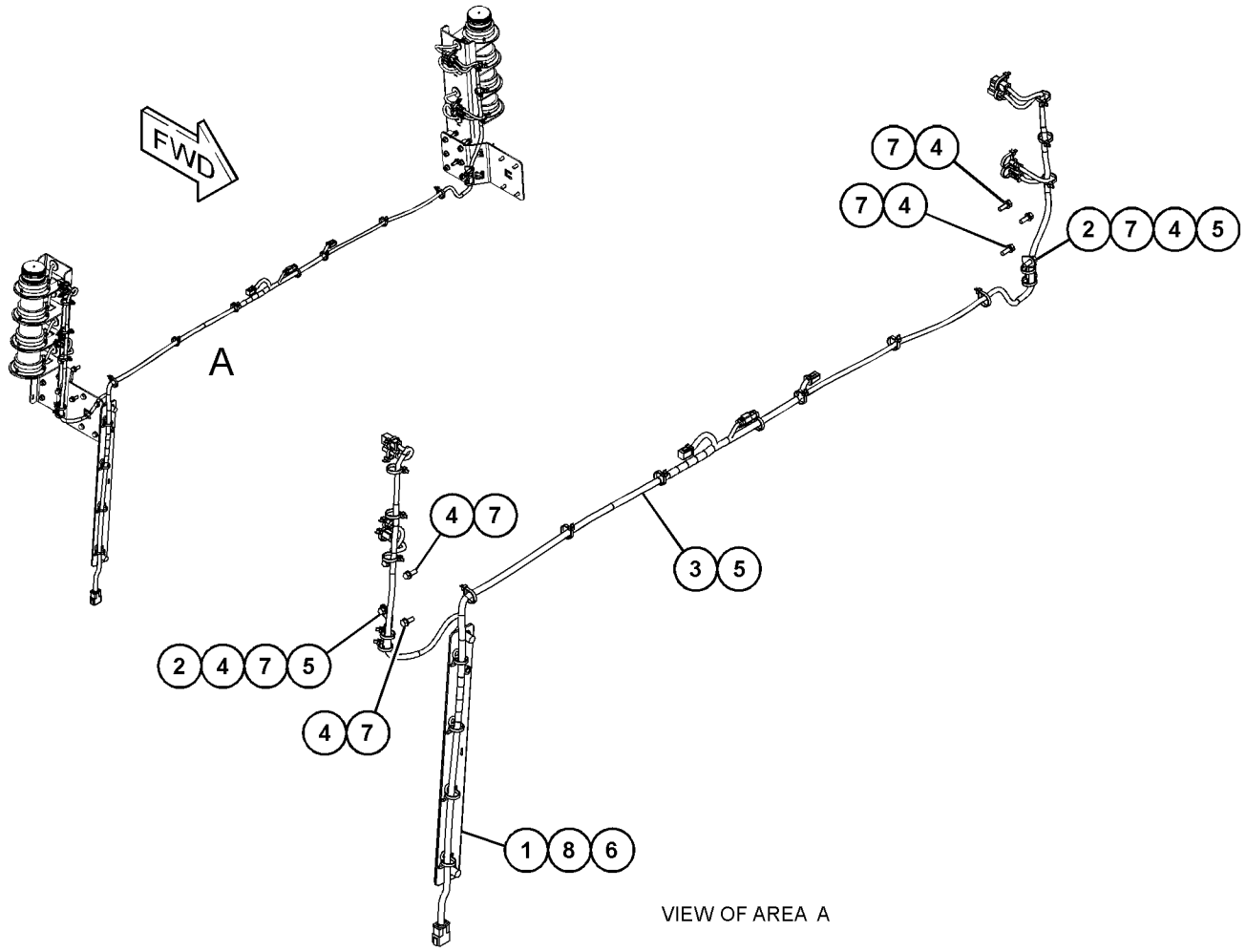

VIEW OF AREA A

GRAPHIC #1 <END> g03786536

377-6104 WIRING GP-PLATFORM

S/N: RAB1-247
PART OF 359-6419 PLATFORM AR
AN ATTACHMENT

SMCS-1408 **i06588590**

NOTE	REF NO	GRAPHIC REF	PART NUMBER	QTY	PART NAME 1 2 3 4 5 6 (PRODUCT LEVEL)	SEE PAGE
Y	1	2	**3E-6328**	1	ALARM GP (24-VOLT) (FAULT INDICATOR)	195
	2	1	**117-2311**	2	SOCKET-AUXILIARY POWER (12-VOLT)	
	3	1	**128-6157**	2	PLATE	
Y	4	2	**158-6632**	1	SWITCH GP-PUSH BUTTON (HORN)	406
	5	1,3	**234-5925**	3	GASKET	
Y	6	3	**241-8368**	1	SWITCH GP-MAGNETIC (24-VOLT) (GLOW PLUG)	401
	7	3	**248-7959**	1	STUD-TERMINAL	
	8	2	**249-5481**	1	SWITCH AS-ROCKER (24-VOLT) (THROTTLE)	
Y	9	4	**255-2752**	1	SWITCH GP-START (IGNITION)	408
	10	4	**256-4617**	1	PLATE	
	11	2	**270-2679**	1	LOCKWASHER	
	12	2	**284-3623**	1	SWITCH AS-ROCKER (24-VOLT) (IMPLEMENT LOCKOUT)	
	13	3	**286-0323**	1	GASKET	
	14	1,2	**311-2813**	2	SEAL	
	15	2	**330-2152**	2	CAP AS	
					(EACH INCLUDES)	
		2	**5P-5677**	1	WIRE (18-GA, BLACK)	
		2	**8C-6354**	1	CAP-RECEPTACLE (ET CONNECTOR)	
		2	**125-7875**	3	TUBE-HEAT SHRINK (7.44-MM DIA)	
		2	**5P-2766**	1	TERMINAL-RING (18-GA TO 22-GA, NO. 6 SCREW)	
	16	2	*331-9697*		PLUG AS	
		2	**8T-8737**	12	PLUG-SEAL	
		2	**155-2256**	1	KIT-CONNECTING PLUG (12-PIN)	
					(INCLUDES PLUG AS, WEDGE & INTERFACE SEAL)	
	17	2	**340-7161**	1	CONVERTER-POWER (24-VOLT TO 12-VOLT)	
	18	2	**344-9694**	2	BRACKET AS	
					(EACH INCLUDES)	
M		2	**8T-3490**	1	NUT-WELD (M10X1.5-THD)	
Y	19	2	**349-6089**	1	HARNESS AS-SWITCH (CONVERTER)	269
	20	2	*351-8647*	1	PLUG AS-CONNECTOR (12-PIN)	
		2	**8T-8737**	12	PLUG-SEAL	
		2	**241-8834**	1	PLUG AS-CONNECTOR (12-PIN)	
		2	**264-7034**	1	SEAL-CONNECTOR	
R	21	4	**365-6773**	1	CONTROL GP-UNPROGRAMMED (ELECTRONIC) (IMPLEMENT)	
R	21A	4	**365-6773**	1	CONTROL GP-UNPROGRAMMED (ELECTRONIC) (DRIVE TRAIN)	
	22	2	**367-9470**	1	SWITCH AS-PUSH BUTTON (SECONDARY STOP)	
		2	**102-8804**	1	KIT-RECEPTACLE (4-PIN)	
					(INCLUDES RECEPTACLE AS & WEDGE)	
		2	**9X-3401**	4	PIN-CONNECTOR (16-GA TO 18-GA)	
	23	3	**375-9258**	1	WIRE AS	
	24	2	**380-3970**	1	HARNESS AS-PLATFORM	
		2	**202-0314**	33	TERMINAL AS (14-GA)	
					(EACH INCLUDES)	
		2	**128-4123**	1	SEAL	
		2	**7K-1181**	8	STRAP-CABLE	
		2	**9X-0196**	2	TERMINAL AS	

377-6104 **WIRING GP-PLATFORM (**contd.**)** **i06588590**

NOTE	REF NO	GRAPHIC REF	PART NUMBER	QTY	PART NAME 1 2 3 4 5 6 (PRODUCT LEVEL)	SEE PAGE
		2	**2L-8052**	1	TERMINAL-RING (6-GA, 3/8-IN SCREW)	
					—OR—	
		2	**2L-8060**	1	TERMINAL-RING (8-GA, 3/8-IN SCREW)	
		2	**2L-8069**	7	TERMINAL-RING (2-GA TO 10-GA, 3/8-IN SCREW)	
		2	**2L-8079**	4	TERMINAL-RING (14-GA TO 16-GA, 3/8-IN SCREW)	
		2	**5P-4571**	4	TERMINAL-BLADE (14-GA TO 16-GA)	
		2	**102-8803**	1	KIT-RECEPTACLE (3-PIN)	
		2	**102-8804**	1	KIT-RECEPTACLE (4-PIN)	
		2	**102-8806**	1	KIT-RECEPTACLE (8-PIN)	
		2	**102-8801**	9	KIT-RECEPTACLE (12-PIN)	
		2	**166-5229**	1	KIT-RECEPTACLE (12-PIN)	
		2	**177-9653**	1	KIT-RECEPTACLE (4-PIN)	
		2	**190-7614**	3	KIT-RECEPTACLE (12-PIN)	
		2	**102-8802**	2	KIT-RECEPTACLE (2-PIN)	
					(INCLUDES RECEPTACLE AS & WEDGE)	
		2	**196-2412**	22	TERMINAL AS (16-GA)	
					(EACH INCLUDES)	
		2	**7R-2750**	1	SEAL-CONNECTOR	
		2	**196-2413**	28	TERMINAL AS (12-GA)	
					(EACH INCLUDES)	
		2	**128-4123**	1	SEAL	
		2	**202-0313**	1	TERMINAL AS (18-GA)	
		2	**128-5016**	1	SEAL-CABLE	
		2	**177-9656**	2	KIT-CONNECTING PLUG (4-PIN)	
		2	**196-2385**	1	KIT-CONNECTING PLUG (8-PIN)	
		2	**196-2386**	1	KIT-CONNECTING PLUG (8-PIN)	
		2	**242-6114**	1	KIT-CONNECTING PLUG (8-PIN)	
		2	**242-6116**	1	KIT-CONNECTING PLUG (8-PIN)	
		2	**242-6118**	1	KIT-CONNECTING PLUG (8-PIN)	
		2	**242-6120**	1	KIT-CONNECTING PLUG (8-PIN)	
		2	**245-7434**	1	KIT-CONNECTING PLUG (10-PIN)	
		2	**155-2255**	2	KIT-CONNECTING PLUG (12-PIN)	
		2	**155-2256**	1	KIT-CONNECTING PLUG (12-PIN)	
		2	**155-2270**	12	KIT-CONNECTING PLUG (2-PIN)	
		2	**155-2271**	7	KIT-CONNECTING PLUG (4-PIN)	
		2	**155-2274**	8	KIT-CONNECTING PLUG (6-PIN)	
		2	**196-2383**	1	KIT-CONNECTING PLUG (8-PIN)	
		2	**174-0503**	2	KIT-CONNECTING PLUG (3-PIN)	
		2	**196-2384**	1	KIT-CONNECTING PLUG (8-PIN)	
					(EACH PLUG KIT INCLUDES PLUG AS, WEDGE & INTERFACE SEAL)	
		2	**155-2260**	9	KIT-CONNECTING PLUG (3-PIN)	
					(EACH INCLUDES PLUG AS, WEDGES & INTERFACE SEAL)	
		2	**9X-3402**	234	SOCKET-CONNECTOR (16-GA TO 18-GA)	
B		2	**329-3734**		TAPE-ELECTRICAL	
		2	**204-1297**	28	TERMINAL AS-BLADE (18-GA TO 20-GA)	
					(EACH INCLUDES)	
		2	**235-4123**	1	TERMINAL (18-GA TO 20-GA)	
		2	**122-4393**	3	TERMINAL	
E		2	**125-7874**		TUBE-HEAT SHRINK (5.72-MM DIA) (335-CM)	
E		2	**125-7875**		TUBE-HEAT SHRINK (7.44-MM DIA) (45-CM)	

377-6104 **WIRING GP-PLATFORM (**contd.**)** **i06588590**

NOTE	REF NO	GRAPHIC REF	PART NUMBER	QTY	PART NAME 1 2 3 4 5 6 (PRODUCT LEVEL)	SEE PAGE
		2	**155-2258**	3	WEDGE-PLUG LOCK (12-PIN)	
		2	**3E-3371**	1	WEDGE-RECEPTACLE LOCK (3-PIN)	
		2	**3E-3383**	1	WEDGE-RECEPTACLE LOCK (6-PIN)	
		2	**214-4208**	3	RECEPTACLE AS-CONNECTOR (7O-PIN)	
		2	**9W-1951**	1	RECEPTACLE-CONNECTOR (9-PIN)	
		2	**228-4982**	1	RESISTOR AS	
		2	**6T-3610**	1	RESISTOR	
		2	**8T-8729**	2	PIN-CONNECTOR (16-GA TO 18-GA)	
		2	**274-3776**	1	CAP-SEAL	
		2	**128-4123**	1	SEAL	
		2	**7R-2750**	53	SEAL-CONNECTOR	
		2	**185-1860**	31	SEAL-WIRE	
		2	**3E-5226**	7	SOCKET-CONNECTOR (12-GA TO 14-GA)	
		2	**8T-8730**	12	SOCKET-CONNECTOR (16-GA TO 18-GA)	
		2	**9W-0844**	26	SOCKET-CONNECTOR (14-GA TO 16-GA)	
		2	**230-4009**	2	PLUG AS-CONNECTOR (12-PIN)	
					(EACH INCLUDES)	
		2	**264-7034**	1	SEAL-CONNECTOR	
		2	**230-4011**	1	PLUG AS-CONNECTOR (2-PIN)	
		2	**264-7029**	1	SEAL-CONNECTOR	
		2	**230-4013**	1	PLUG AS-CONNECTOR (3-PIN)	
		2	**264-7030**	1	SEAL-CONNECTOR	
		2	**230-5010**	2	PLUG AS-CONNECTOR (6-PIN)	
					(EACH INCLUDES)	
		2	**264-7032**	1	SEAL-CONNECTOR	
		2	**239-7352**	1	PLUG AS-CONNECTOR (6-PIN)	
		2	**281-8811**	1	PLUG AS-CONNECTOR (6-PIN)	
					(EACH PLUG AS INCLUDES)	
		2	**264-7032**	1	SEAL-CONNECTOR	
		2	**7R-2751**	16	PLUG-CONNECTOR (1-PIN)	
		2	**8T-8737**	312	PLUG-SEAL	
		2	**134-2540**	3	RESISTOR AS-CONNECTION (3-PIN)	
		2	**167-3692**	1	RECEPTACLE AS-CONNECTOR (31-PIN)	
		2	**274-3775**	1	CAP-CONNECTOR	
		2	**274-3777**	2	CAP-CONNECTOR	
		2	**126-8295**	1	CONNECTOR-PLUG	
		2	**122-4424**	1	CONNECTOR-RECEPTACLE (3-PIN)	
		2	**126-1774**	4	COVER-CONNECTOR	
		2	**8T-8729**	15	PIN-CONNECTOR (16-GA TO 18-GA)	
		2	**9W-0852**	38	PIN-CONNECTOR (14-GA TO 16-GA)	
		2	**9X-3401**	177	PIN-CONNECTOR (16-GA TO 18-GA)	
		2	**147-1445**	2	PLUG AS-CONNECTOR (7O-PIN)	
		2	**147-1446**	2	PLUG AS-CONNECTOR (7O-PIN)	
					(EACH PLUG AS INCLUDES)	
		2	**159-9322**	1	SEAL-O-RING	
	25	2	**380-5288**	1	MODULE GP-DISPLAY (INSTRUMENT CLUSTER)	
	26	1	**392-9245**	1	COVER AS	
	27	3	**393-1088**	1	WIRE AS	
	28	3	**393-7807**	1	WIRE AS	
	29	2	**396-1708**	1	SWITCH AS-ROCKER (24-VOLT) (LIGHTS)	
	30	2	**415-8267**	1	PANEL AS	

377-6104 **WIRING GP-PLATFORM (**contd.**)** **i06588590**

NOTE	REF NO	GRAPHIC REF	PART NUMBER	QTY	PART NAME 1 2 3 4 5 6 (PRODUCT LEVEL)	SEE PAGE
	31	3	**416-0641**	1	BRACKET AS	
	32	1	**419-0108**	1	PLATE AS	
Y	33	2	**419-8890**	1	PANEL GP-FUSE	357
	34	3	**441-3637**	1	RELAY AS-TIMER	
Y	35	4	**441-5131**	1	MODULE GP-DISPLAY (MONITOR)	1130
	36	2	**443-6362**	1	CONVERTER-POWER (24-VOLT TO 12-VOLT)	
	37	2	*448-1882*	1	PLUG AS-CONNECTOR	
		2	**8T-8737**	12	PLUG-SEAL	
		2	**239-7356**	1	PLUG AS-CONNECTOR (12-PIN)	
		2	**264-7034**	1	SEAL-CONNECTOR	
	38	1,2,3	**130-5300**	9	CLIP	
	39	1	**141-4976**	8	SCREW-WASHER HEAD (4-40X0.5-IN)	
	40	2	**151-4977**	2	WASHER (4.445X9.525X1.092-MM THK)	
M	41	2	**153-8001**	2	BOLT-SOCKET HEAD (M4X0.7X20-MM)	
	42	2	**156-6175**	1	CLIP	
M	43	3	**174-8131**	2	SCREW-TRUSS HEAD (M4X0.7X12-MM)	
	44	2	**203-9007**	1	NUT (1-1/2-18-THD)	
	45	2	**211-0052**	1	NUT (1-11/16-18-THD)	
	46	3	**454-6614**	1	LAMP AS (24-VOLT) (REAR)	
		3	**8T-8729**	2	PIN-CONNECTOR (16-GA TO 18-GA)	
		3	**102-8802**	1	KIT-RECEPTACLE (2-PIN)	
					(INCLUDES RECEPTACLE AS & WEDGE)	
	47	3,4	**4P-8134**	4	CLIP	
M	48	3	**5C-2890**	2	NUT (M6X1-THD)	
M	49	3	**5C-8312**	2	NUT (M4X0.7-THD)	
	50	3	**5P-4116**	2	WASHER-HARD (8.8X20.5X2-MM THK)	
	51	2	**5P-7468**	1	CLIP (SLOT)	
	52	2	**5P-7469**	1	CLIP (TAB)	
	53	4	**6I-1418**	8	SPACER (8.2X12.7X28.7-MM THK)	
M	54	3	**6V-7357**	2	BOLT (M6X1X25-MM)	
	55	3	**6V-8801**	2	NUT (3/8-16-THD)	
M	56	2	**7I-2272**	8	BOLT (M5X0.8X12-MM)	
	57	2,3,4	**7K-1181**	51	STRAP-CABLE	
	58	3	**7X-0589**	1	WASHER-HARD (12X28.5X5-MM THK)	
	59	2	**8T-0328**	8	WASHER-HARD (5.5X10X1-MM THK)	
	60	1,2,3,4	**8T-4121**	22	WASHER-HARD (11X21X2.5-MM THK)	
M	61	1,2,3	**8T-4136**	16	BOLT (M10X1.5X25-MM)	
M	62	3,4	**8T-4137**	4	BOLT (M10X1.5X20-MM)	
M	63	1,2	**8T-4138**	16	BOLT (M6X1X20-MM)	
M	64	3	**8T-4908**	2	BOLT (M8X1.25X25-MM)	
M	65	4	**8T-6912**	8	BOLT (M8X1.25X50-MM)	
	66	2	**8T-9518**	1	GROMMET (24-MM ID)	
	67	4	**8T-9655**	16	MOUNT-ISOLATION (ISOLATION)	
	68	3	**9B-7233**	2	LOCKWASHER	
	69	4	**9N-0869**	10	WASHER-HARD (8.8X25.5X2-MM THK)	
M	70	3	**9X-1046**	2	SCREW (M4X0.7X18-MM)	
M	71	1,3	**9X-2043**	5	SCREW-TRUSS HEAD (M6X1X14-MM)	
M	72	2	**9X-2045**	8	SCREW-TRUSS HEAD (M6X1X20-MM)	
	73	1,2,3	**9X-8256**	20	WASHER (6.6X12X2-MM THK)	
	74	3	**264-3617**	2	LOCKWASHER	

377-6104 **WIRING GP-PLATFORM (**contd.**)** **i06588590**

NOTE	REF NO	GRAPHIC REF	PART NUMBER	QTY	PART NAME 1 2 3 4 5 6 (PRODUCT LEVEL)	SEE PAGE
	75	3	**7X-0608**	2	WASHER-HARD (10.2X16X2-MM THK)	
M	76	3	**5C-7261**	2	NUT (M8X1.25-THD)	

B - USE AS REQUIRED
E - ORDER BY THE CENTIMETER
M - METRIC PART
R - REMANUFACTURED PART MAY BE AVAILABLE
Y - SEPARATE ILLUSTRATION

377-6104 **WIRING GP-PLATFORM (**contd.**)** **i06588590**

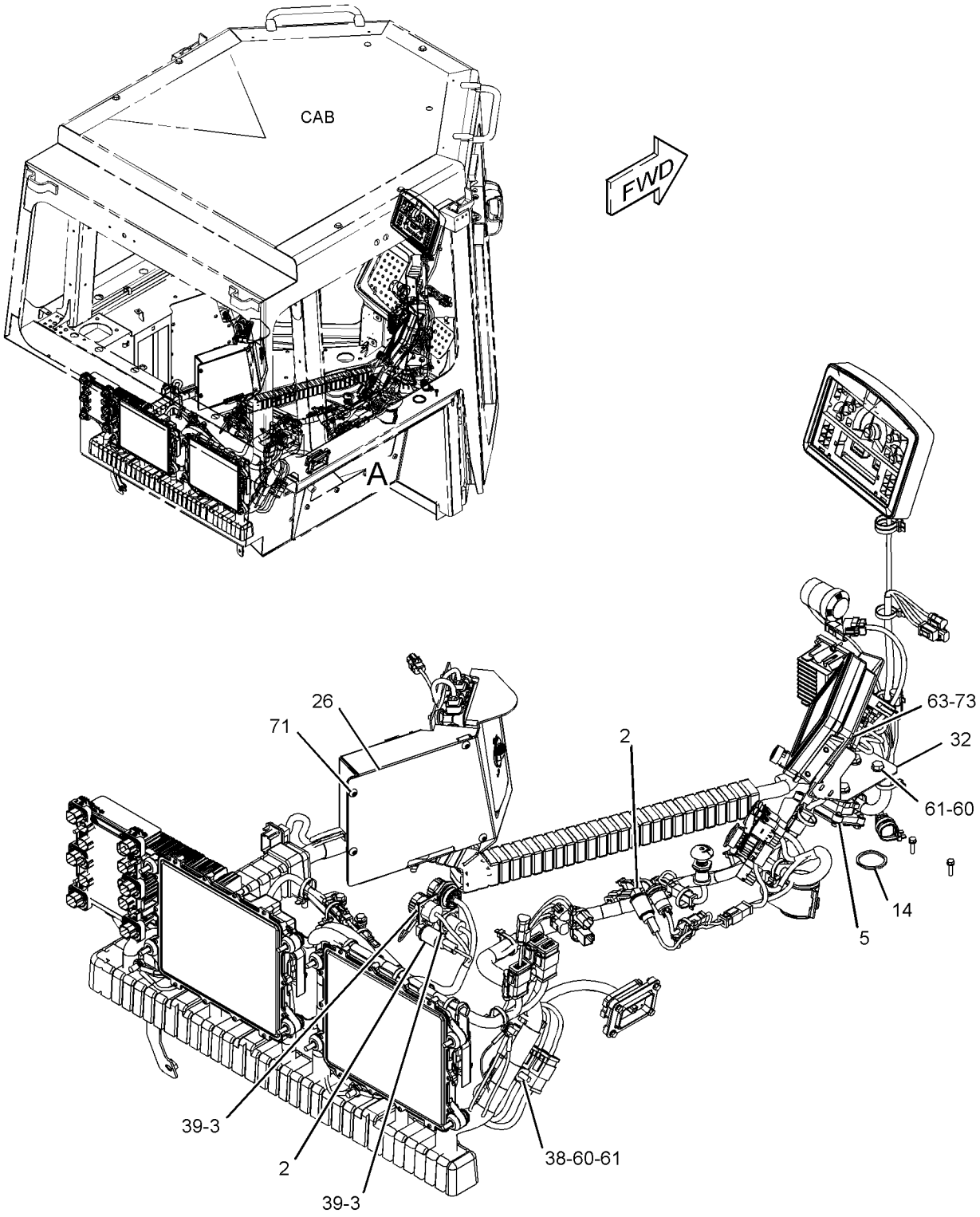

VIEW OF AREA A

GRAPHIC #1 g03500617

377-6104 **WIRING GP-PLATFORM (**contd.**)** **i06588590**

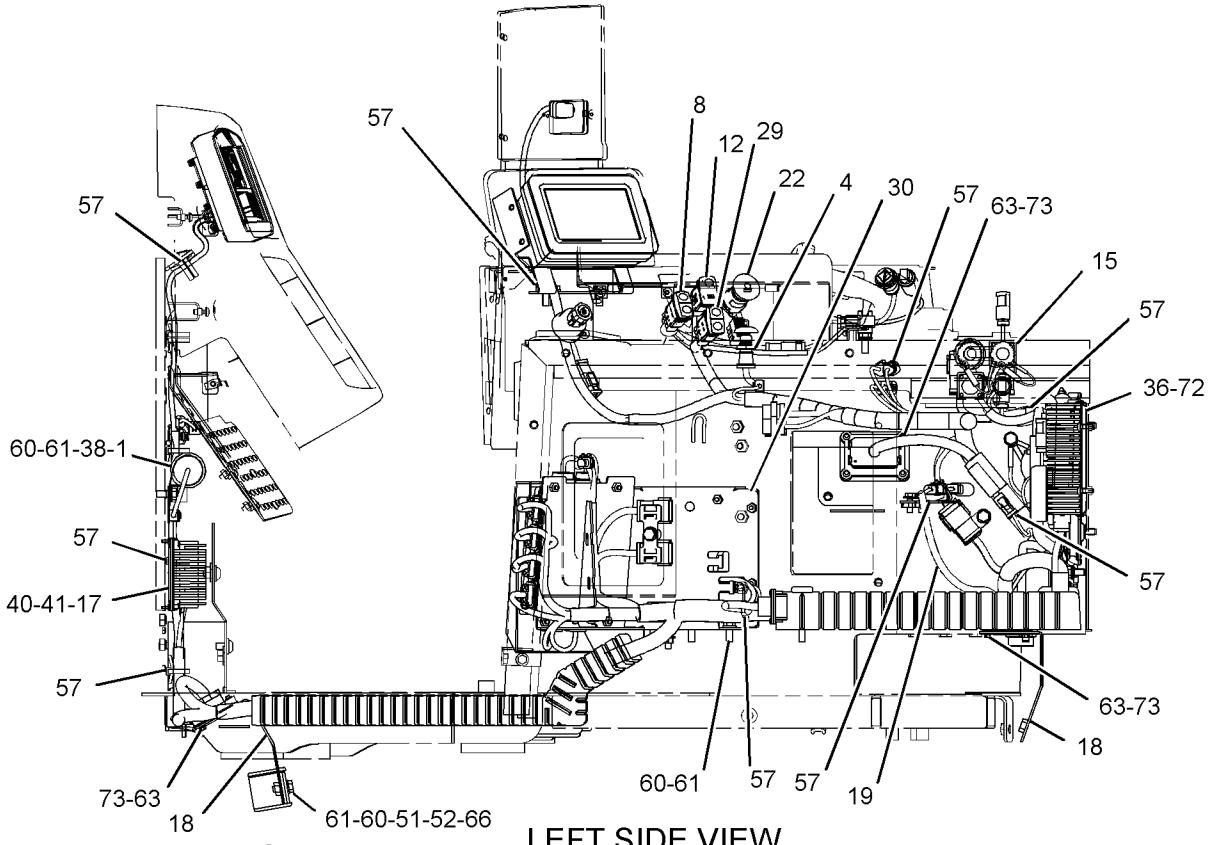

LEFT SIDE VIEW

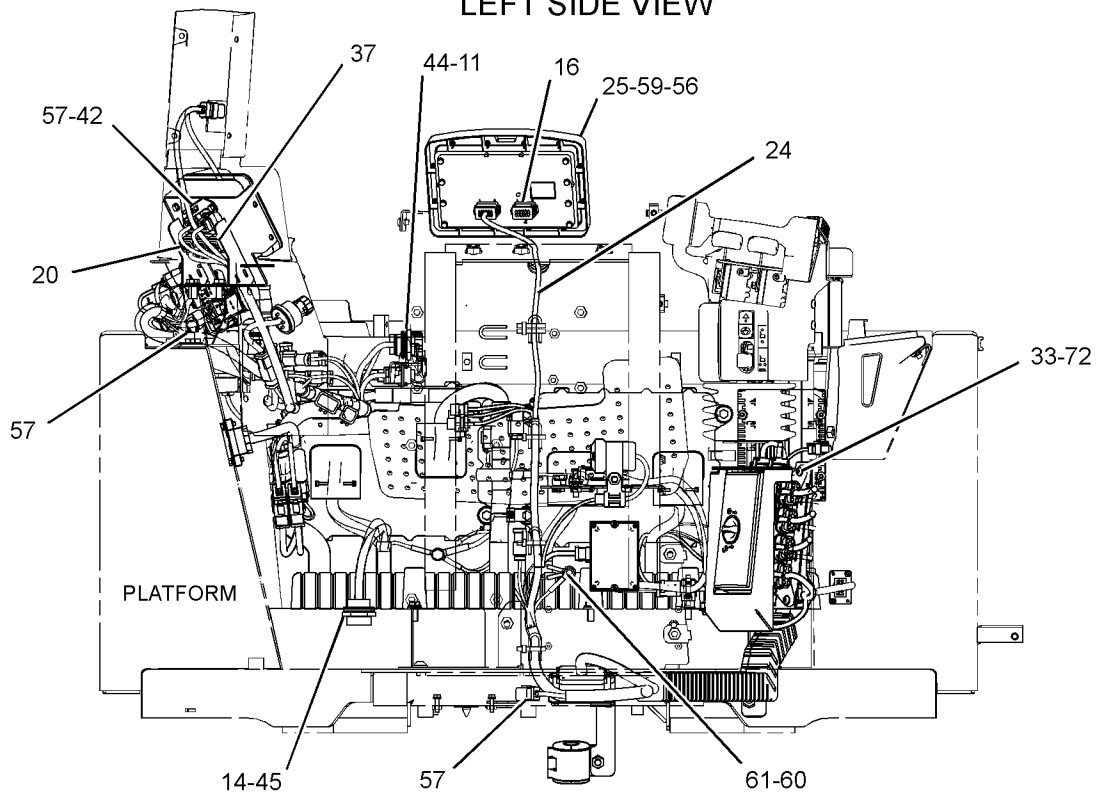

FRONT VIEW

GRAPHIC #2 g03500618

377-6104 **WIRING GP-PLATFORM (**contd.**)** **i06588590**

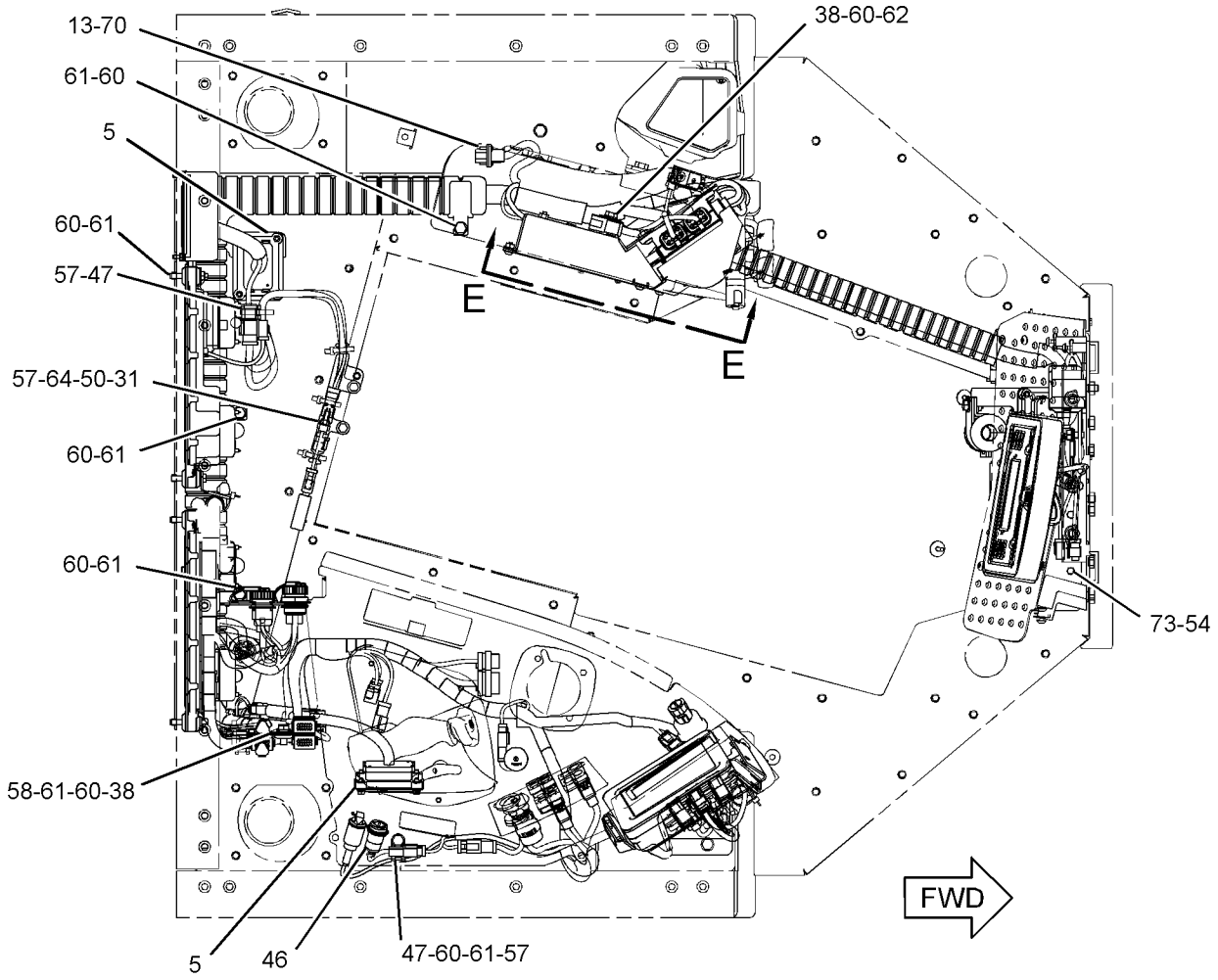

TOP VIEW

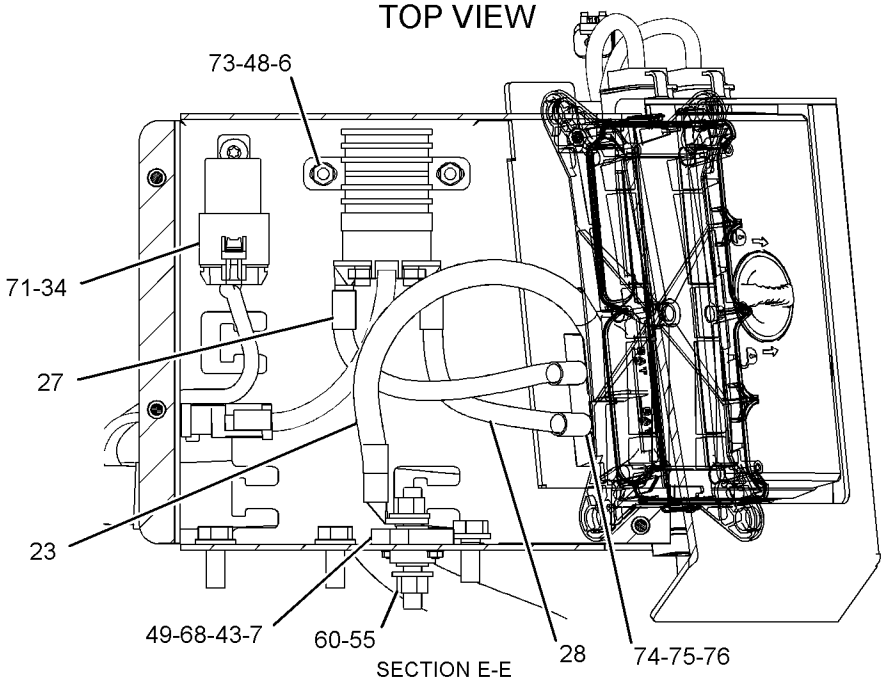

SECTION E-E

GRAPHIC #3 g03785878

377-6104 **WIRING GP-PLATFORM (**contd.**)** **i06588590**

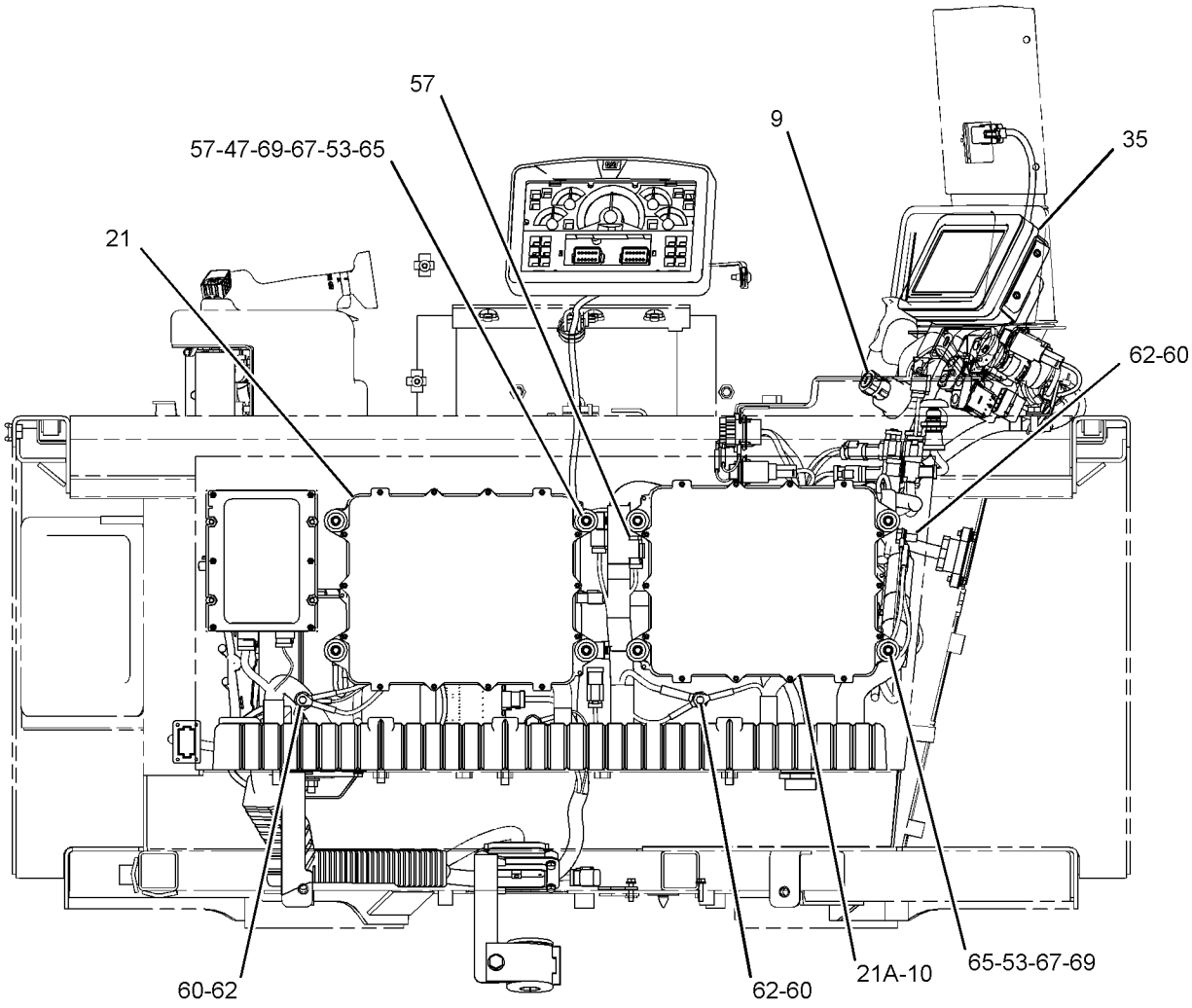

REAR VIEW

GRAPHIC #4 <END> g03500620

377-6104 WIRING GP-PLATFORM

S/N: RAB248-282
PART OF 359-6419 PLATFORM AR
AN ATTACHMENT

SMCS-1408 **i06588593**

NOTE	REF NO	GRAPHIC REF	PART NUMBER	QTY	PART NAME 1 2 3 4 5 6 (PRODUCT LEVEL)	SEE PAGE
Y	1	2	**3E-6328**	1	ALARM GP (24-VOLT) (FAULT INDICATOR)	195
	2	1	**117-2311**	2	SOCKET-AUXILIARY POWER (12-VOLT)	
	3	1	**128-6157**	2	PLATE	
Y	4	2	**158-6632**	1	SWITCH GP-PUSH BUTTON (HORN)	406
	5	1,3	**234-5925**	3	GASKET	
Y	6	3	**241-8368**	1	SWITCH GP-MAGNETIC (24-VOLT) (GLOW PLUG)	401
	7	3	**248-7959**	1	STUD-TERMINAL	
	8	2	**249-5481**	1	SWITCH AS-ROCKER (24-VOLT) (THROTTLE)	
Y	9	4	**255-2752**	1	SWITCH GP-START (IGNITION)	408
	10	4	**256-4617**	1	PLATE	
	11	2	**270-2679**	1	LOCKWASHER	
	12	2	**284-3623**	1	SWITCH AS-ROCKER (24-VOLT) (IMPLEMENT LOCKOUT)	
	13	3	**286-0323**	1	GASKET	
	14	1,2	**311-2813**	2	SEAL	
	15	2	**330-2152**	2	CAP AS	
					(EACH INCLUDES)	
D		2	**5P-5677**	1	WIRE (18-GA, BLACK)	
		2	**8C-6354**	1	CAP-RECEPTACLE (ET CONNECTOR)	
		2	**125-7875**	1	TUBE-HEAT SHRINK (7.44-MM DIA) (3-CM)	
		2	**5P-2766**	1	TERMINAL-RING (18-GA TO 22-GA, NO. 6 SCREW)	
	16	2	*331-9697*		PLUG AS	
		2	**8T-8737**	12	PLUG-SEAL	
		2	**155-2256**	1	KIT-CONNECTING PLUG (12-PIN)	
					(INCLUDES PLUG AS, WEDGE & INTERFACE SEAL)	
	17	2	**340-7161**	1	CONVERTER-POWER (24-VOLT TO 12-VOLT)	
	18	2	**344-9694**	2	BRACKET AS	
Y	19	2	**349-6089**	1	HARNESS AS-SWITCH (CONVERTER)	269
	20	2	**351-8647**	1	PLUG AS-CONNECTOR (12-PIN)	
		2	**8T-8737**	12	PLUG-SEAL	
		2	**241-8834**	1	PLUG AS-CONNECTOR (12-PIN)	
		2	**264-7034**	1	SEAL-CONNECTOR	
R	21	4	**365-6773**	1	CONTROL GP-UNPROGRAMMED (ELECTRONIC) (IMPLEMENT)	
R	21A	4	**365-6773**	1	CONTROL GP-UNPROGRAMMED (ELECTRONIC) (DRIVE TRAIN)	
	22	2	**367-9470**	1	SWITCH AS-PUSH BUTTON (SECONDARY STOP)	
		2	**102-8804**	1	KIT-RECEPTACLE (4-PIN)	
					(INCLUDES RECEPTACLE AS & WEDGE)	
		2	**9X-3401**	4	PIN-CONNECTOR (16-GA TO 18-GA)	
	23	3	**375-9258**	1	WIRE AS	
CY	24	2	**466-1712**	1	HARNESS AS-PLATFORM	264
	25	2	**380-5288**	1	MODULE GP-DISPLAY (INSTRUMENT CLUSTER)	
	26	1	**392-9245**	1	COVER AS	
	27	3	**393-1088**	1	WIRE AS	
	28	3	**393-7807**	1	WIRE AS	
	29	2	**396-1708**	1	SWITCH AS-ROCKER (24-VOLT) (LIGHTS)	
	30	2	**415-8267**	1	PANEL AS	
	31	3	**416-0641**	1	BRACKET AS	

377-6104 **WIRING GP-PLATFORM (**contd.**)** **i06588593**

NOTE	REF NO	GRAPHIC REF	PART NUMBER	QTY	PART NAME 1 2 3 4 5 6 (PRODUCT LEVEL)	SEE PAGE
	32	1	**419-0108**	1	PLATE AS	
Y	33	2	**419-8890**	1	PANEL GP-FUSE	357
	34	3	**441-3637**	1	RELAY AS-TIMER (24-VDC)	
Y	35	4	**441-5131**	1	MODULE GP-DISPLAY (MONITOR)	1130
	36	2	**443-6362**	1	CONVERTER-POWER (24-VOLT TO 12-VOLT)	
	37	2	*448-1882*	1	PLUG AS-CONNECTOR	
		2	**8T-8737**	12	PLUG-SEAL	
		2	**239-7356**	1	PLUG AS-CONNECTOR (12-PIN)	
		2	**264-7034**	1	SEAL-CONNECTOR	
	38	1,2,3	**130-5300**	9	CLIP	
	39	1	**141-4976**	8	SCREW-WASHER HEAD (4-40X0.5-IN)	
	40	2	**151-4977**	2	WASHER (4.445X9.525X1.092-MM THK)	
M	41	2	**153-8001**	2	BOLT-SOCKET HEAD (M4X0.7X20-MM)	
	42	2	**156-6175**	1	CLIP	
M	43	3	**174-8131**	2	SCREW-TRUSS HEAD (M4X0.7X12-MM)	
	44	2	**203-9007**	1	NUT (1-1/2-18-THD)	
	45	2	**211-0052**	1	NUT (1-11/16-18-THD)	
	46	3	**454-6614**	1	LAMP AS (24-VOLT) (REAR)	
		3	**8T-8729**	2	PIN-CONNECTOR (16-GA TO 18-GA)	
		3	**102-8802**	1	KIT-RECEPTACLE (2-PIN)	
					(INCLUDES RECEPTACLE AS & WEDGE)	
	47	3,4	**4P-8134**	4	CLIP	
M	48	3	**5C-2890**	2	NUT (M6X1-THD)	
M	49	3	**5C-8312**	2	NUT (M4X0.7-THD)	
	50	3	**5P-4116**	2	WASHER-HARD (8.8X20.5X2-MM THK)	
	51	2	**5P-7468**	1	CLIP (SLOT)	
	52	2	**5P-7469**	1	CLIP (TAB)	
	53	4	**6I-1418**	8	SPACER (8.2X12.7X28.7-MM THK)	
M	54	3	**6V-7357**	2	BOLT (M6X1X25-MM)	
	55	3	**6V-8801**	2	NUT (3/8-16-THD)	
M	56	2	**7I-2272**	8	BOLT (M5X0.8X12-MM)	
	57	2,3,4	**7K-1181**	51	STRAP-CABLE	
	58	3	**7X-0589**	1	WASHER-HARD (12X28.5X5-MM THK)	
	59	2	**8T-0328**	8	WASHER-HARD (5.5X10X1-MM THK)	
	60	1,2,3,4	**8T-4121**	22	WASHER-HARD (11X21X2.5-MM THK)	
M	61	1,2,3	**8T-4136**	16	BOLT (M10X1.5X25-MM)	
M	62	3,4	**8T-4137**	4	BOLT (M10X1.5X20-MM)	
M	63	1,2	**8T-4138**	16	BOLT (M6X1X20-MM)	
M	64	3	**8T-4908**	2	BOLT (M8X1.25X25-MM)	
M	65	4	**8T-6912**	8	BOLT (M8X1.25X50-MM)	
	66	2	**8T-9518**	1	GROMMET (24-MM ID)	
	67	4	**8T-9655**	16	MOUNT-ISOLATION (ISOLATION)	
	68	3	**9B-7233**	2	LOCKWASHER	
	69	4	**9N-0869**	10	WASHER-HARD (8.8X25.5X2-MM THK)	
M	70	3	**9X-1046**	2	SCREW (M4X0.7X18-MM)	
M	71	1,3	**9X-2043**	5	SCREW-TRUSS HEAD (M6X1X14-MM)	
M	72	2	**9X-2045**	8	SCREW-TRUSS HEAD (M6X1X20-MM)	
	73	1,2,3	**9X-8256**	20	WASHER (6.6X12X2-MM THK)	
CM	76	3	**344-5674**	2	NUT (M8X1.25-THD)	
C	77	3	**3F-9556**	4	LOCKWASHER	
C	78	3	**8T-4224**	4	WASHER-HARD (8.8X16X2-MM THK)	

377-6104 **WIRING GP-PLATFORM (**contd.**)** **i06588593**

NOTE	REF NO	GRAPHIC REF	PART NUMBER	QTY	PART NAME 1 2 3 4 5 6 (PRODUCT LEVEL)	SEE PAGE

C - CHANGE FROM PREVIOUS TYPE
D - ORDER BY THE METER
M - METRIC PART
R - REMANUFACTURED PART MAY BE AVAILABLE
Y - SEPARATE ILLUSTRATION

377-6104 **WIRING GP-PLATFORM (**contd.**)** **i06588593**

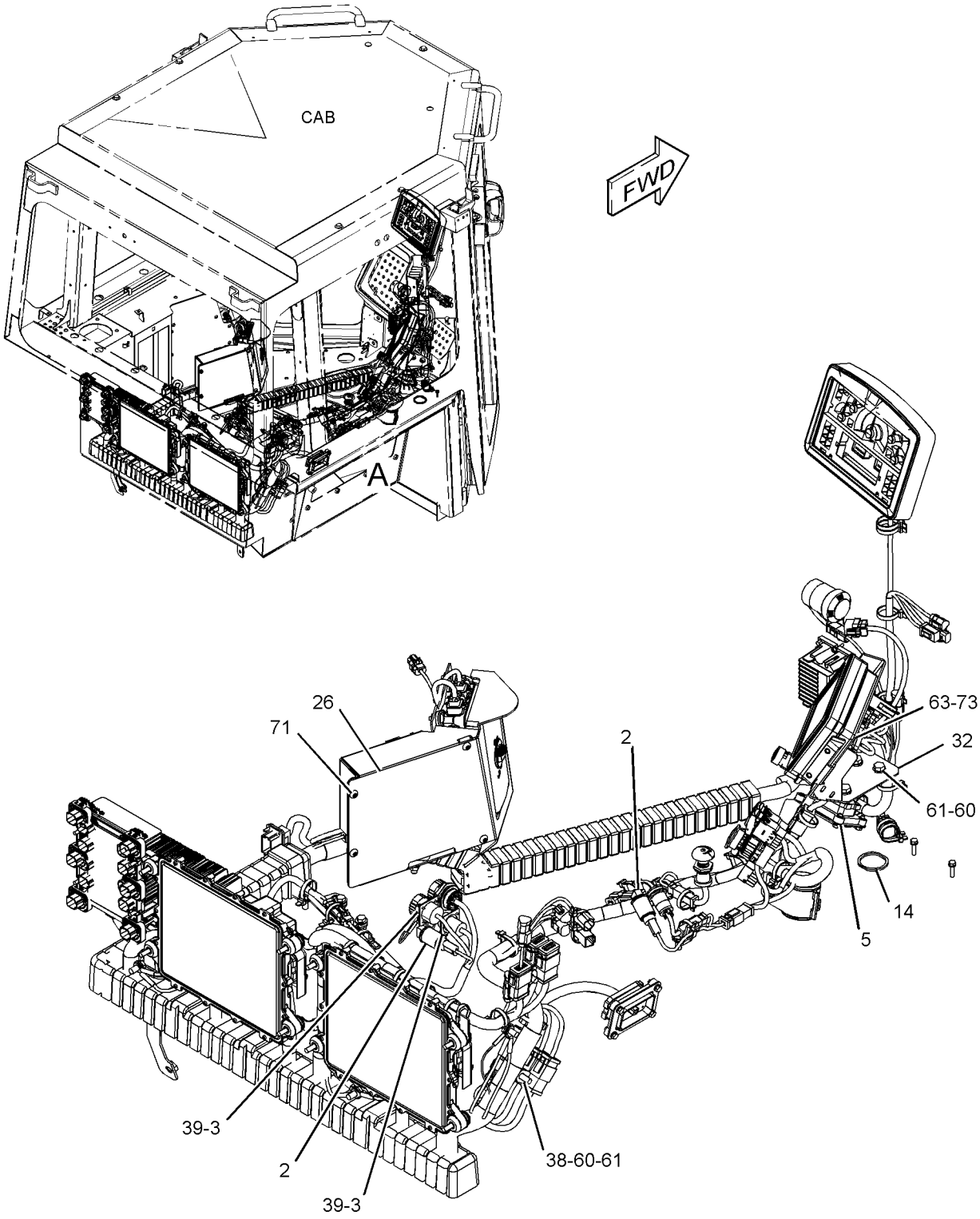

VIEW OF AREA A

GRAPHIC #1 g03500617

377-6104 **WIRING GP-PLATFORM (**contd.**)** **i06588593**

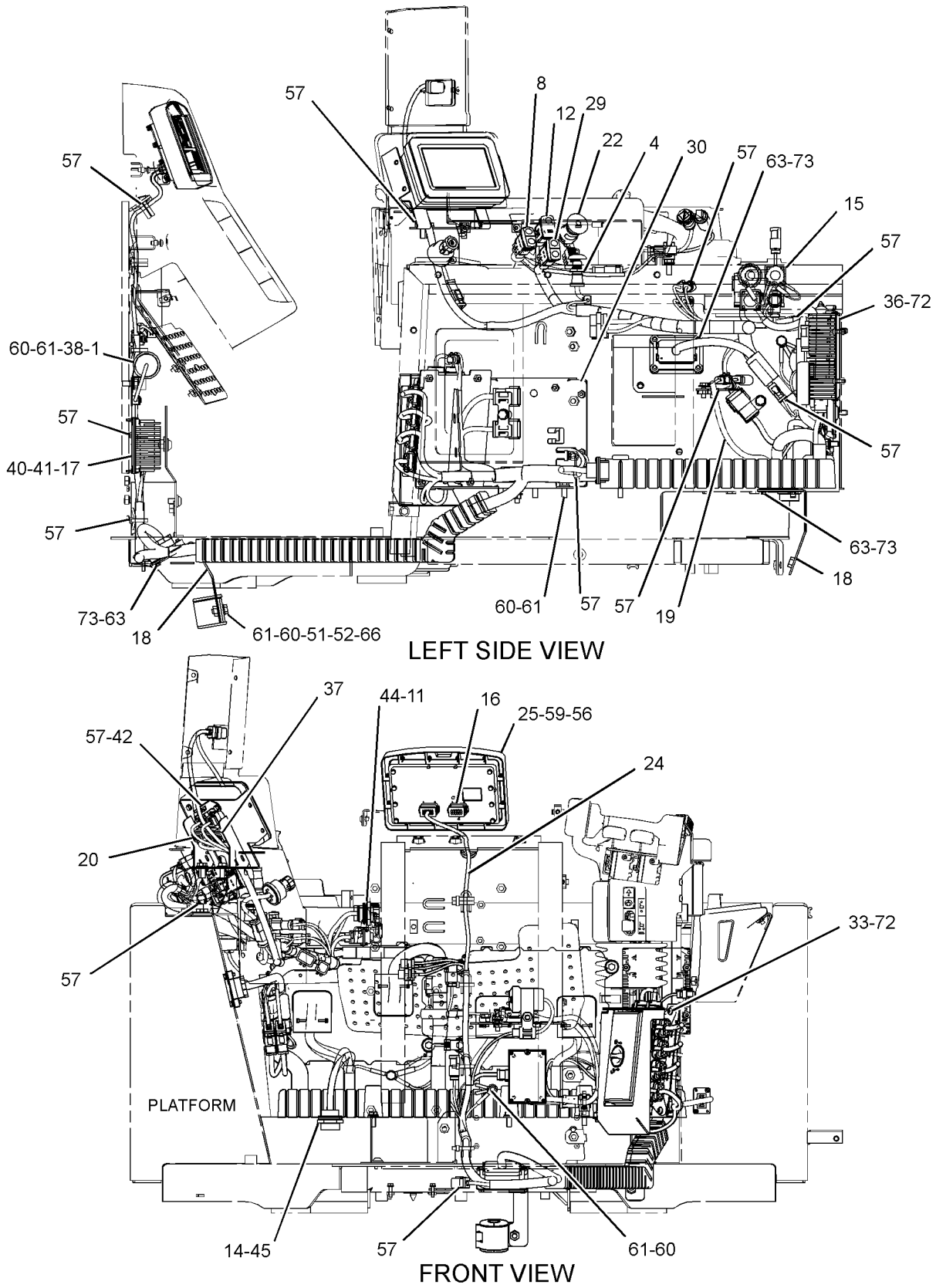

GRAPHIC #2 g03500618

377-6104 **WIRING GP-PLATFORM (**contd.**)** **i06588593**

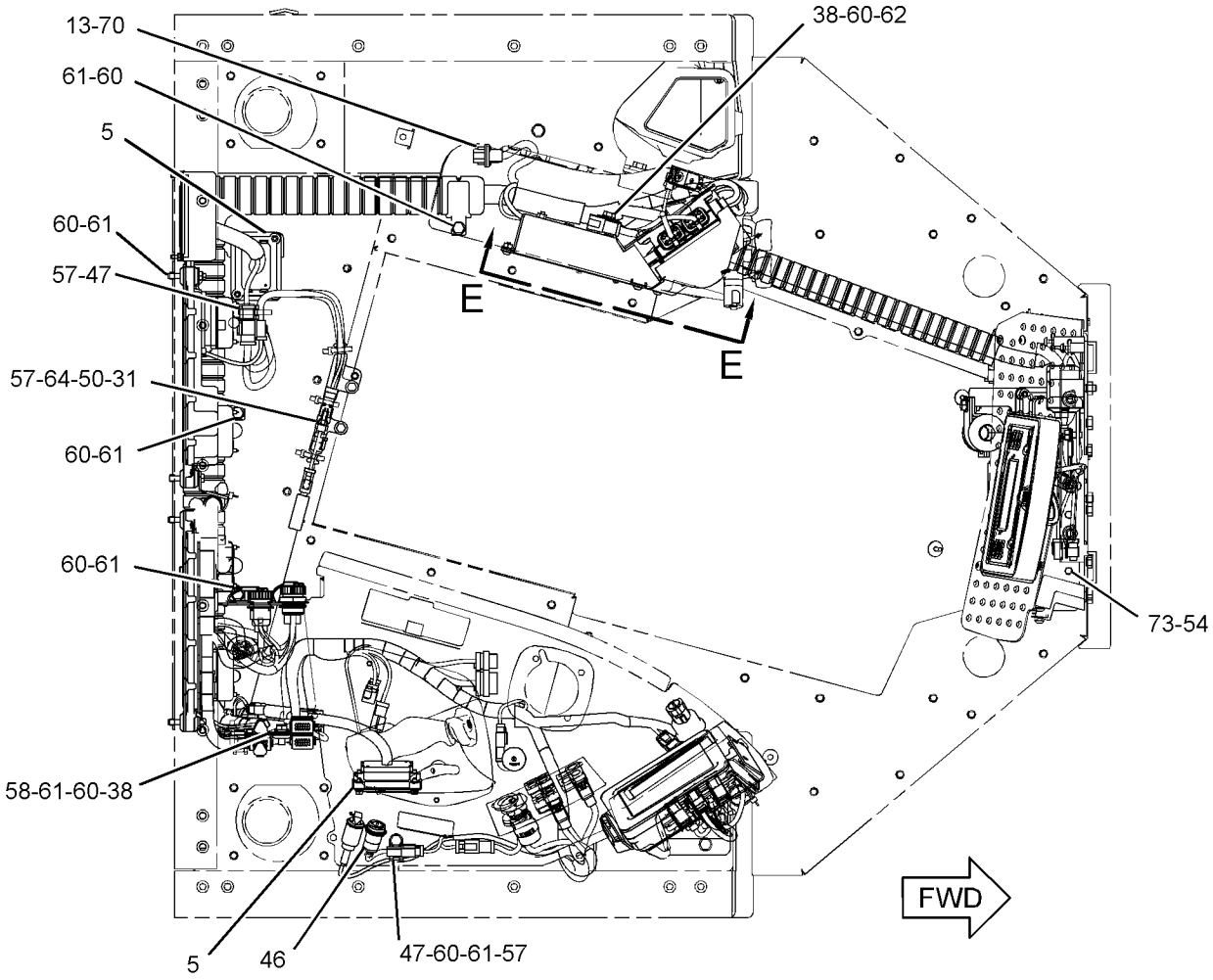

TOP VIEW

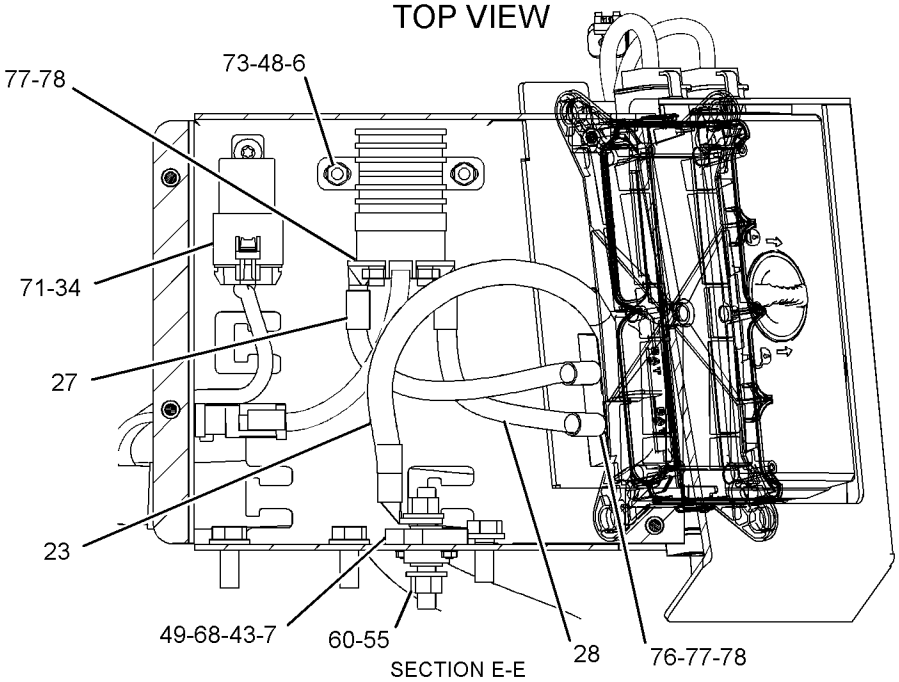

SECTION E-E

GRAPHIC #3 g03806748

377-6104 **WIRING GP-PLATFORM (**contd.**)** **i06588593**

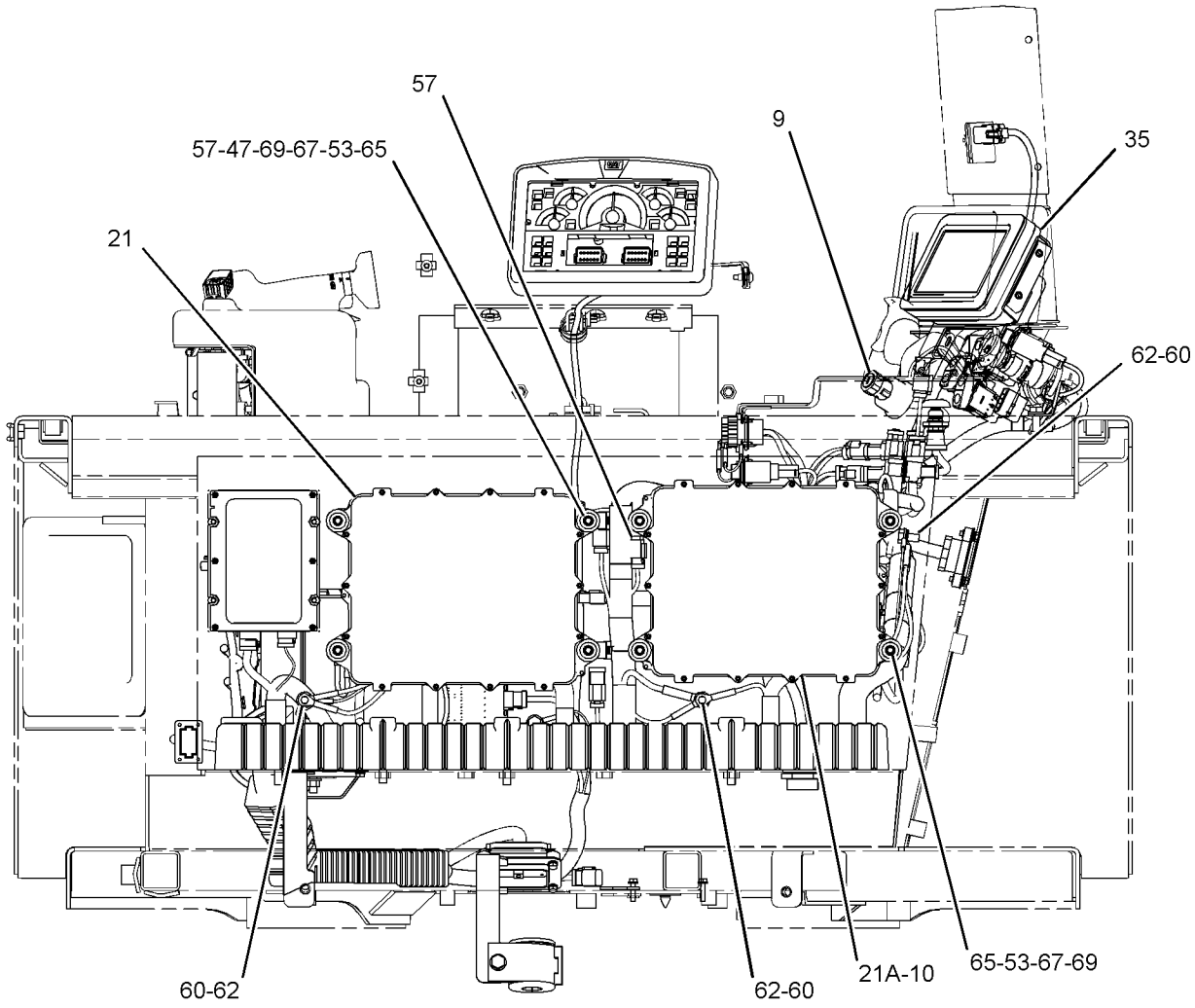

REAR VIEW

GRAPHIC #4 <END> g03500620

377-6104 WIRING GP-PLATFORM

S/N: RAB283-UP
PART OF 359-6419 PLATFORM AR
AN ATTACHMENT

SMCS-1408 **i06543518**

NOTE	REF NO	GRAPHIC REF	PART NUMBER	QTY	PART NAME 1 2 3 4 5 6 (PRODUCT LEVEL)	SEE PAGE
Y	1	2	**3E-6328**	1	ALARM GP (24-VOLT) (FAULT INDICATOR)	195
	2	1	**117-2311**	2	SOCKET-AUXILIARY POWER (12-VOLT)	
Y	4	2	**158-6632**	1	SWITCH GP-PUSH BUTTON (HORN)	406
	5	1,3	**234-5925**	3	GASKET	
Y	6	3	**241-8368**	1	SWITCH GP-MAGNETIC (24-VOLT) (GLOW PLUG)	401
	7	3	**248-7959**	1	STUD-TERMINAL	
	8	2	**249-5481**	1	SWITCH AS-ROCKER (24-VOLT) (THROTTLE)	
Y	9	4	**255-2752**	1	SWITCH GP-START (IGNITION)	408
	10	4	**256-4617**	1	PLATE	
	12	2	**284-3623**	1	SWITCH AS-ROCKER (24-VOLT) (IMPLEMENT LOCKOUT)	
	13	3	**286-0323**	1	GASKET	
	14	1,2	**311-2813**	2	SEAL	
	16	2	*331-9697*		PLUG AS	
		2	**8T-8737**	12	PLUG-SEAL	
		2	**155-2256**	1	KIT-CONNECTING PLUG (12-PIN)	
					(INCLUDES PLUG AS, WEDGE & INTERFACE SEAL)	
	17	2	**340-7161**	1	CONVERTER-POWER (24-VOLT TO 12-VOLT)	
	18	2	**344-9694**	2	BRACKET AS	
Y	19	2	**349-6089**	1	HARNESS AS-SWITCH (CONVERTER)	269
	20	2	*351-8647*	1	PLUG AS-CONNECTOR (12-PIN)	
		2	**8T-8737**	12	PLUG-SEAL	
		2	**241-8834**	1	PLUG AS-CONNECTOR (12-PIN)	
		2	**264-7034**	1	SEAL-CONNECTOR	
R	21	4	**365-6773**	1	CONTROL GP-UNPROGRAMMED (ELECTRONIC) (IMPLEMENT)	
R	21A	4	**365-6773**	1	CONTROL GP-UNPROGRAMMED (ELECTRONIC) (DRIVE TRAIN)	
	22	2	**367-9470**	1	SWITCH AS-PUSH BUTTON (SECONDARY STOP)	
		2	**102-8804**	1	KIT-RECEPTACLE (4-PIN)	
					(INCLUDES RECEPTACLE AS & WEDGE)	
		2	**9X-3401**	4	PIN-CONNECTOR (16-GA TO 18-GA)	
	23	3	**375-9258**	1	WIRE AS	
C	24	2	**481-5945**	1	HARNESS AS-PLATFORM	
		2	**344-1941**	4	BRACKET	
		2	*481-5946*	1	HARNESS AS-PLATFORM	
		2	**102-8802**	1	KIT-RECEPTACLE (2-PIN)	
		2	**102-8803**	1	KIT-RECEPTACLE (3-PIN)	
		2	**102-8804**	1	KIT-RECEPTACLE (4-PIN)	
		2	**102-8805**	1	KIT-RECEPTACLE (6-PIN)	
		2	**102-8801**	3	KIT-RECEPTACLE (12-PIN)	
					(EACH RECEPTACLE KIT INCLUDES RECEPTACLE AS & WEDGE)	
		2	**3E-5226**	7	SOCKET-CONNECTOR (12-GA TO 14-GA)	
		2	**5P-4571**	4	TERMINAL-BLADE (14-GA TO 16-GA)	
		2	**7R-2750**	53	SEAL-CONNECTOR	
		2	**7R-2751**	15	PLUG-CONNECTOR (1-PIN)	
		2	**9X-0196**	2	TERMINAL AS	
		2	**8T-8729**	15	PIN-CONNECTOR (16-GA TO 18-GA)	

377-6104 **WIRING GP-PLATFORM (**contd.**)** **i06543518**

NOTE	REF NO	GRAPHIC REF	PART NUMBER	QTY	PART NAME 1 2 3 4 5 6 (PRODUCT LEVEL)	SEE PAGE
		2	**8T-8730**	12	SOCKET-CONNECTOR (16-GA TO 18-GA)	
		2	**8T-8737**	309	PLUG-SEAL	
		2	**9W-0844**	26	SOCKET-CONNECTOR (14-GA TO 16-GA)	
		2	**9W-0852**	38	PIN-CONNECTOR (14-GA TO 16-GA)	
		2	**9X-3401**	176	PIN-CONNECTOR (16-GA TO 18-GA)	
		2	**9X-3402**	235	SOCKET-CONNECTOR (16-GA TO 18-GA)	
		2	**9X-6772**	8	STRAP-CABLE	
		2	**196-2412**	22	TERMINAL AS (16-GA)	
		2	**7R-2750**	1	SEAL-CONNECTOR	
		2	**115-3519**	3	PIN-CONNECTOR (12-GA TO 14-GA)	
E		2	**125-7874**		TUBE-HEAT SHRINK (5.72-MM DIA) (340-CM)	
E		2	**125-7875**		TUBE-HEAT SHRINK (7.44-MM DIA) (40-CM)	
		2	**126-1774**	4	COVER-CONNECTOR	
		2	**128-4123**	1	SEAL	
		2	**2L-8052**	1	TERMINAL-RING (6-GA, 3/8-IN SCREW)	
					—OR—	
		2	**2L-8060**	1	TERMINAL-RING (8-GA, 3/8-IN SCREW)	
		2	**2L-8069**	7	TERMINAL-RING (2-GA TO 10-GA, 3/8-IN SCREW)	
		2	**2L-8079**	4	TERMINAL-RING (14-GA TO 16-GA, 3/8-IN SCREW)	
		2	**134-2540**	3	RESISTOR AS-CONNECTION (3-PIN)	
		2	**147-1445**	2	PLUG AS-CONNECTOR (70-PIN)	
					(EACH INCLUDES)	
		2	**159-9322**	1	SEAL-O-RING	
		2	**147-1446**	2	PLUG AS-CONNECTOR (70-PIN)	
					(EACH INCLUDES)	
		2	**159-9322**	1	SEAL-O-RING	
		2	**155-2255**	2	KIT-CONNECTING PLUG (12-PIN)	
		2	**155-2256**	1	KIT-CONNECTING PLUG (12-PIN)	
		2	**155-2260**	6	KIT-CONNECTING PLUG (3-PIN)	
		2	**155-2270**	6	KIT-CONNECTING PLUG (2-PIN)	
		2	**155-2271**	4	KIT-CONNECTING PLUG (4-PIN)	
		2	**155-2274**	4	KIT-CONNECTING PLUG (6-PIN)	
					(EACH PLUG KIT INCLUDES PLUG AS, WEDGE, & INTERFACE SEAL)	
		2	**166-5229**	1	KIT-RECEPTACLE (12-PIN)	
					(INCLUDES RECEPTACLE AS & WEDGE)	
		2	**167-3692**	1	RECEPTACLE AS-CONNECTOR (31-PIN)	
		2	**196-2383**	1	KIT-CONNECTING PLUG (8-PIN)	
		2	**196-2384**	1	KIT-CONNECTING PLUG (8-PIN)	
					(EACH KIT INCLUDES PLUG AS, LOCK, TERMINAL ASSEMBLIES & INTERFACE SEAL)	
		2	**196-2413**	29	TERMINAL AS (12-GA)	
					(EACH INCLUDES)	
		2	**128-4123**	1	SEAL	
		2	**177-9653**	1	KIT-RECEPTACLE (4-PIN)	
					(INCLUDES RECEPTACLE AS & WEDGE)	
		2	**177-9656**	2	KIT-CONNECTING PLUG (4-PIN)	
					(INCLUDES PLUG AS & WEDGE)	
		2	**196-2385**	1	KIT-CONNECTING PLUG (8-PIN)	
		2	**196-2386**	1	KIT-CONNECTING PLUG (8-PIN)	
					(EACH KIT INCLUDES PLUG AS, LOCK, TERMINAL ASSEMBLIES & INTERFACE SEAL)	

377-6104 **WIRING GP-PLATFORM (**contd.**)** **i06543518**

NOTE	REF NO	GRAPHIC REF	PART NUMBER	QTY	PART NAME 1 2 3 4 5 6 (PRODUCT LEVEL)	SEE PAGE
		2	**185-1860**	31	SEAL-WIRE	
		2	**190-7614**	3	KIT-RECEPTACLE (12-PIN)	
					(INCLUDES RECEPTACLE AS & WEDGE)	
		2	**202-0313**	1	TERMINAL AS (18-GA)	
		2	**128-5016**	1	SEAL-CABLE	
		2	**202-0314**	3	TERMINAL AS (14-GA)	
					(EACH INCLUDES)	
		2	**128-4123**	1	SEAL	
		2	**202-5397**	11	PLUG	
		2	**203-9007**	1	NUT (1-1/2-18-THD)	
		2	**204-1297**	28	TERMINAL AS-BLADE (18-GA TO 20-GA)	
					(EACH INCLUDES)	
		2	**235-4123**	1	TERMINAL (18-GA TO 20-GA)	
		2	**214-4208**	3	RECEPTACLE AS-CONNECTOR (70-PIN)	
		2	**245-7434**	4	KIT-CONNECTING PLUG (10-PIN)	
					(EACH INCLUDES PLUG AS & WEDGE)	
		2	**228-4982**	1	RESISTOR AS	
		2	**8T-8729**	2	PIN-CONNECTOR (16-GA TO 18-GA)	
		2	**230-4009**	2	PLUG AS-CONNECTOR (12-PIN)	
					(EACH INCLUDES)	
		2	**455-0709**	1	SEAL-CONNECTOR	
		2	**230-4011**	1	PLUG AS-CONNECTOR (2-PIN)	
		2	**455-0704**	1	SEAL-CONNECTOR	
		2	**230-4013**	1	PLUG AS-CONNECTOR (3-PIN)	
		2	**455-0705**	1	SEAL-CONNECTOR	
		2	**230-5010**	2	PLUG AS-CONNECTOR (6-PIN)	
					(EACH INCLUDES)	
		2	**455-0707**	1	SEAL-CONNECTOR	
		2	**239-7352**	1	PLUG AS-CONNECTOR (6-PIN)	
		2	**455-0707**	1	SEAL-CONNECTOR	
		2	**242-6114**	1	KIT-CONNECTING PLUG (8-PIN)	
		2	**242-6116**	1	KIT-CONNECTING PLUG (8-PIN)	
		2	**242-6118**	1	KIT-CONNECTING PLUG (8-PIN)	
		2	**242-6120**	1	KIT-CONNECTING PLUG (8-PIN)	
					(EACH KIT INCLUDES PLUG AS, LOCK, TERMINAL ASSEMBLIES & INTERFACE SEAL)	
		2	**265-2106**	1	KIT-RECEPTACLE (4-PIN)	
					(INCLUDES RECEPTACLE AS & WEDGE)	
		2	**270-2679**	1	LOCKWASHER	
		2	**274-3775**	1	CAP-CONNECTOR	
		2	**274-3776**	1	CAP-SEAL	
		2	**274-3777**	2	CAP-CONNECTOR	
		2	**281-8811**	1	PLUG AS-CONNECTOR (6-PIN)	
		2	**455-0707**	1	SEAL-CONNECTOR	
E		2	**329-3734**		TAPE-ELECTRICAL (1022-CM)	
		2	*361-6052*	1	RESISTOR AS	
		2	**102-8802**	1	KIT-RECEPTACLE (2-PIN)	
					(INCLUDES RECEPTACLE AS & WEDGE)	
		2	**8T-8729**	2	PIN-CONNECTOR (16-GA TO 18-GA)	
		2	**370-4059**	1	KIT-RECEPTACLE (12-PIN)	
					(INCLUDES RECEPTACLE AS & WEDGE)	
		2	**451-8019**	1	RECEPTACLE AS-CONNECTOR (14-PIN)	

377-6104 **WIRING GP-PLATFORM (**contd.**)** **i06543518**

NOTE	REF NO	GRAPHIC REF	PART NUMBER	QTY	PART NAME 1 2 3 4 5 6 (PRODUCT LEVEL)	SEE PAGE
	25	2	**380-5288**	1	MODULE GP-DISPLAY (INSTRUMENT CLUSTER)	
	26	1	**392-9245**	1	COVER AS	
	27	3	**393-1088**	1	WIRE AS	
	28	3	**393-7807**	1	WIRE AS	
	29	2	**396-1708**	1	SWITCH AS-ROCKER (24-VOLT) (LIGHTS)	
	30	2	**415-8267**	1	PANEL AS	
	31	3	**416-0641**	1	BRACKET AS	
	32	1	**419-0108**	1	PLATE AS	
Y	33	2	**419-8890**	1	PANEL GP-FUSE	357
	34	3	**441-3637**	1	RELAY AS-TIMER (24-VDC)	
C	35	4	**459-2220**	1	CONTROL GP-ELECTRONIC (MONITOR)	
		4	**385-9302**	1	HOUSING AS-MONITOR	
	36	2	**443-6362**	1	CONVERTER-POWER (24-VOLT TO 12-VOLT)	
	37	2	*448-1882*	1	PLUG AS-CONNECTOR	
		2	**8T-8737**	12	PLUG-SEAL	
		2	**239-7356**	1	PLUG AS-CONNECTOR (12-PIN)	
		2	**264-7034**	1	SEAL-CONNECTOR	
	38	1,2,3	**130-5300**	9	CLIP	
	40	2	**151-4977**	2	WASHER (4.445X9.525X1.092-MM THK)	
M	41	2	**153-8001**	2	BOLT-SOCKET HEAD (M4X0.7X20-MM)	
	42	2	**156-6175**	1	CLIP	
M	43	3	**174-8131**	2	SCREW-TRUSS HEAD (M4X0.7X12-MM)	
	45	2	**211-0052**	1	NUT (1-11/16-18-THD)	
	46	3	**454-6614**	1	LAMP AS (24-VOLT) (REAR)	
		3	**8T-8729**	2	PIN-CONNECTOR (16-GA TO 18-GA)	
		3	**102-8802**	1	KIT-RECEPTACLE (2-PIN)	
					(INCLUDES RECEPTACLE AS & WEDGE)	
	47	3,4	**4P-8134**	4	CLIP	
M	48	3	**5C-2890**	2	NUT (M6X1-THD)	
M	49	3	**5C-8312**	2	NUT (M4X0.7-THD)	
	50	3	**5P-4116**	2	WASHER-HARD (8.8X20.5X2-MM THK)	
	51	2	**5P-7468**	1	CLIP (SLOT)	
	52	2	**5P-7469**	1	CLIP (TAB)	
	53	4	**6I-1418**	8	SPACER (8.2X12.7X28.7-MM THK)	
M	54	3	**6V-7357**	2	BOLT (M6X1X25-MM)	
	55	3	**6V-8801**	2	NUT (3/8-16-THD)	
M	56	2	**7I-2272**	8	BOLT (M5X0.8X12-MM)	
	57	2,3,4	**7K-1181**	51	STRAP-CABLE	
	58	3	**7X-0589**	1	WASHER-HARD (12X28.5X5-MM THK)	
	59	2	**8T-0328**	8	WASHER-HARD (5.5X10X1-MM THK)	
	60	1,2,3,4	**8T-4121**	22	WASHER-HARD (11X21X2.5-MM THK)	
M	61	1,2,3	**8T-4136**	16	BOLT (M10X1.5X25-MM)	
M	62	3,4	**8T-4137**	4	BOLT (M10X1.5X20-MM)	
M	63	1,2	**8T-4138**	16	BOLT (M6X1X20-MM)	
M	64	3	**8T-4908**	2	BOLT (M8X1.25X25-MM)	
M	65	4	**8T-6912**	8	BOLT (M8X1.25X50-MM)	
	66	2	**8T-9518**	1	GROMMET (24-MM ID)	
	67	4	**8T-9655**	16	MOUNT-ISOLATION (ISOLATION)	
	68	3	**9B-7233**	2	LOCKWASHER	
	69	4	**9N-0869**	10	WASHER-HARD (8.8X25.5X2-MM THK)	
CM	70	3,4	**9X-1046**	4	SCREW (M4X0.7X18-MM)	

377-6104 **WIRING GP-PLATFORM (**contd.**)** **i06543518**

NOTE	REF NO	GRAPHIC REF	PART NUMBER	QTY	PART NAME 1 2 3 4 5 6 (PRODUCT LEVEL)	SEE PAGE
M	71	1,3	**9X-2043**	5	SCREW-TRUSS HEAD (M6X1X14-MM)	
M	72	2	**9X-2045**	8	SCREW-TRUSS HEAD (M6X1X20-MM)	
	73	1,2,3	**9X-8256**	20	WASHER (6.6X12X2-MM THK)	
M	76	3	**344-5674**	2	NUT (M8X1.25-THD)	
	77	3	**3F-9556**	4	LOCKWASHER	
	78	3	**8T-4224**	4	WASHER-HARD (8.8X16X2-MM THK)	
C	79	4	**481-6778**	1	CAP AS	
C	80	4	**481-6759**	1	PLATE	

C - CHANGE FROM PREVIOUS TYPE
E - ORDER BY THE CENTIMETER
M - METRIC PART
R - REMANUFACTURED PART MAY BE AVAILABLE
Y - SEPARATE ILLUSTRATION

377-6104 **WIRING GP-PLATFORM (**contd.**)** **i06543518**

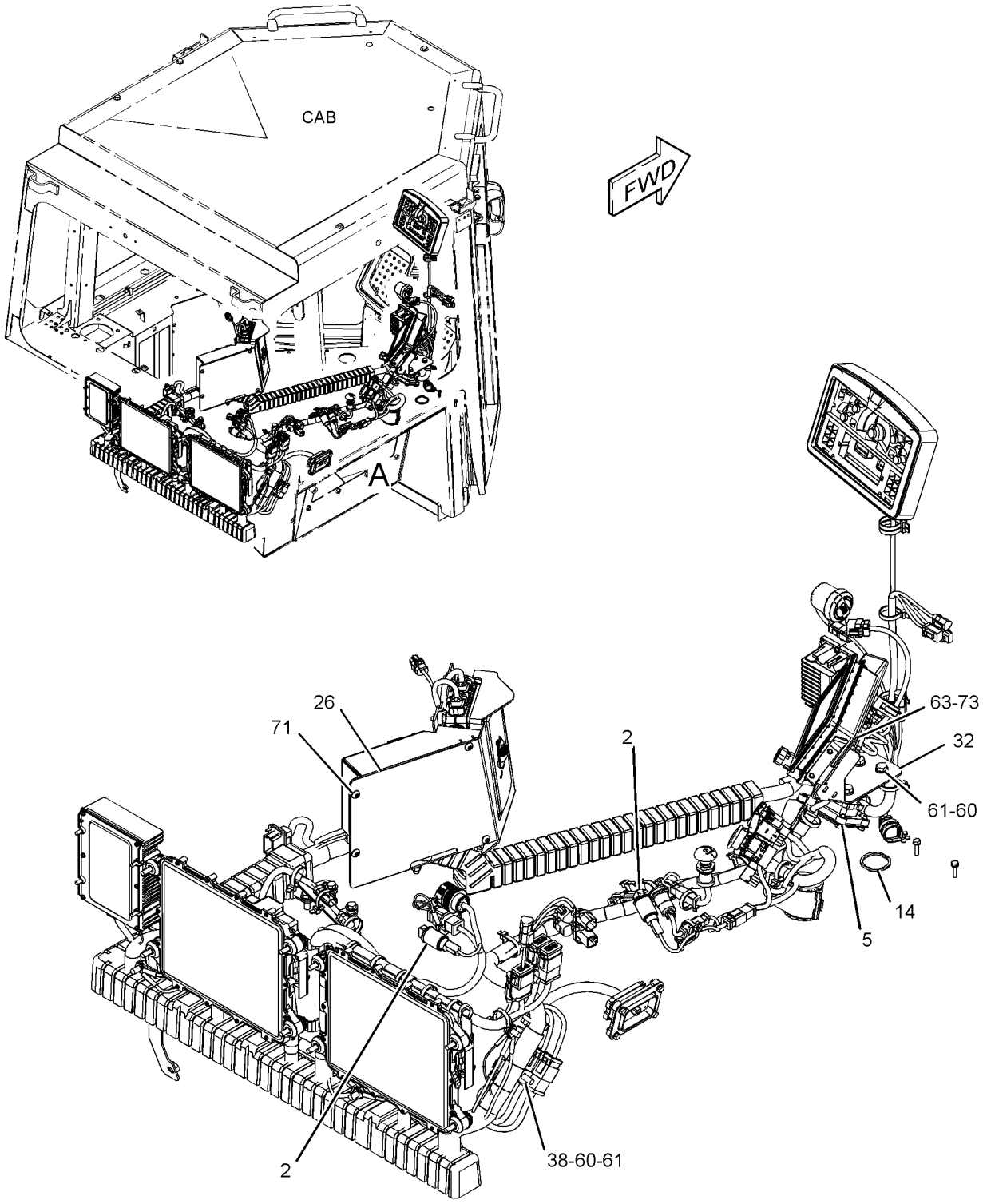

VIEW OF AREA A

GRAPHIC #1 g06036054

377-6104 **WIRING GP-PLATFORM (**contd.**)** **i06543518**

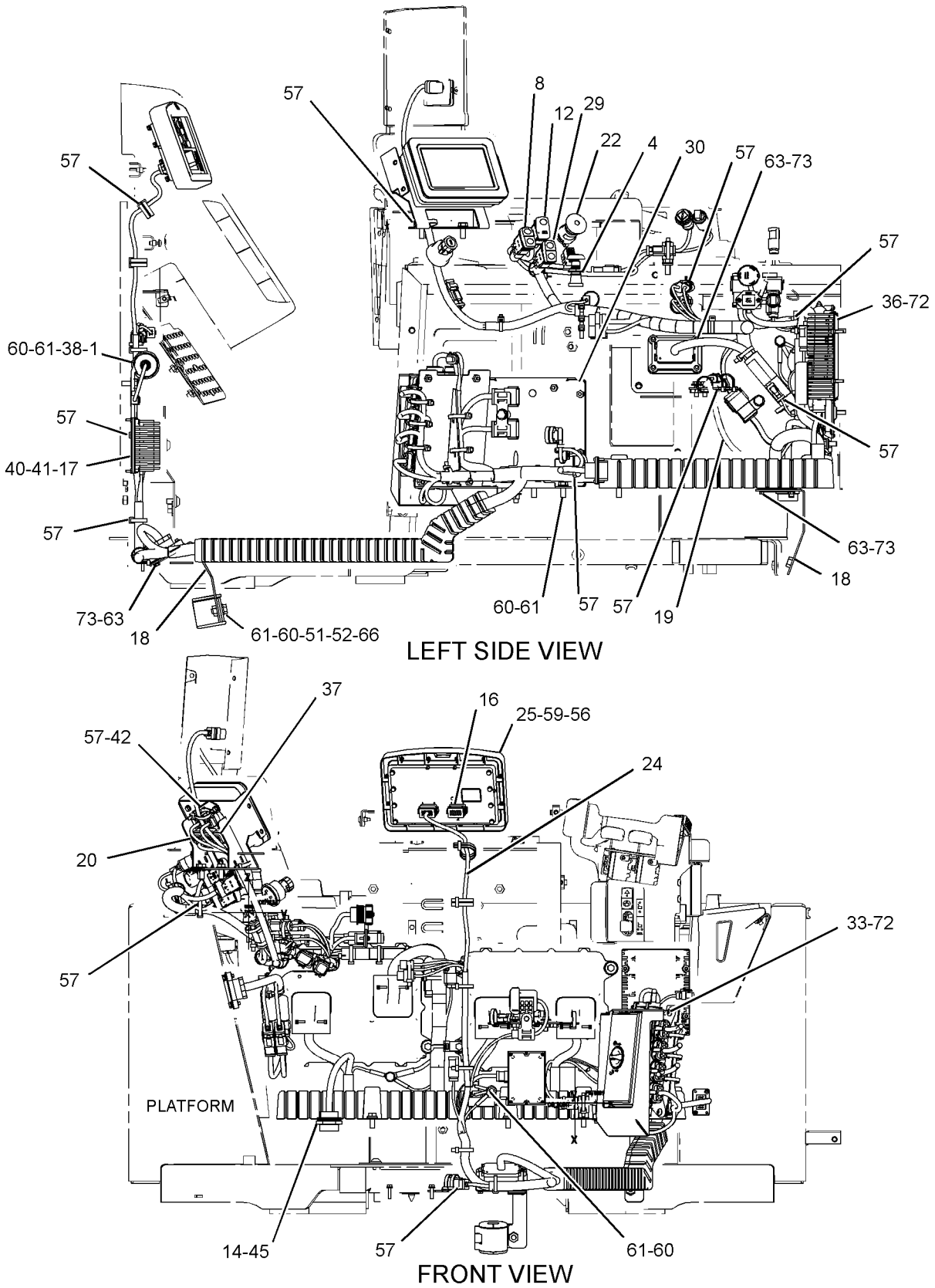

GRAPHIC #2 g06036055

377-6104 **WIRING GP-PLATFORM (**contd.**)** **i06543518**

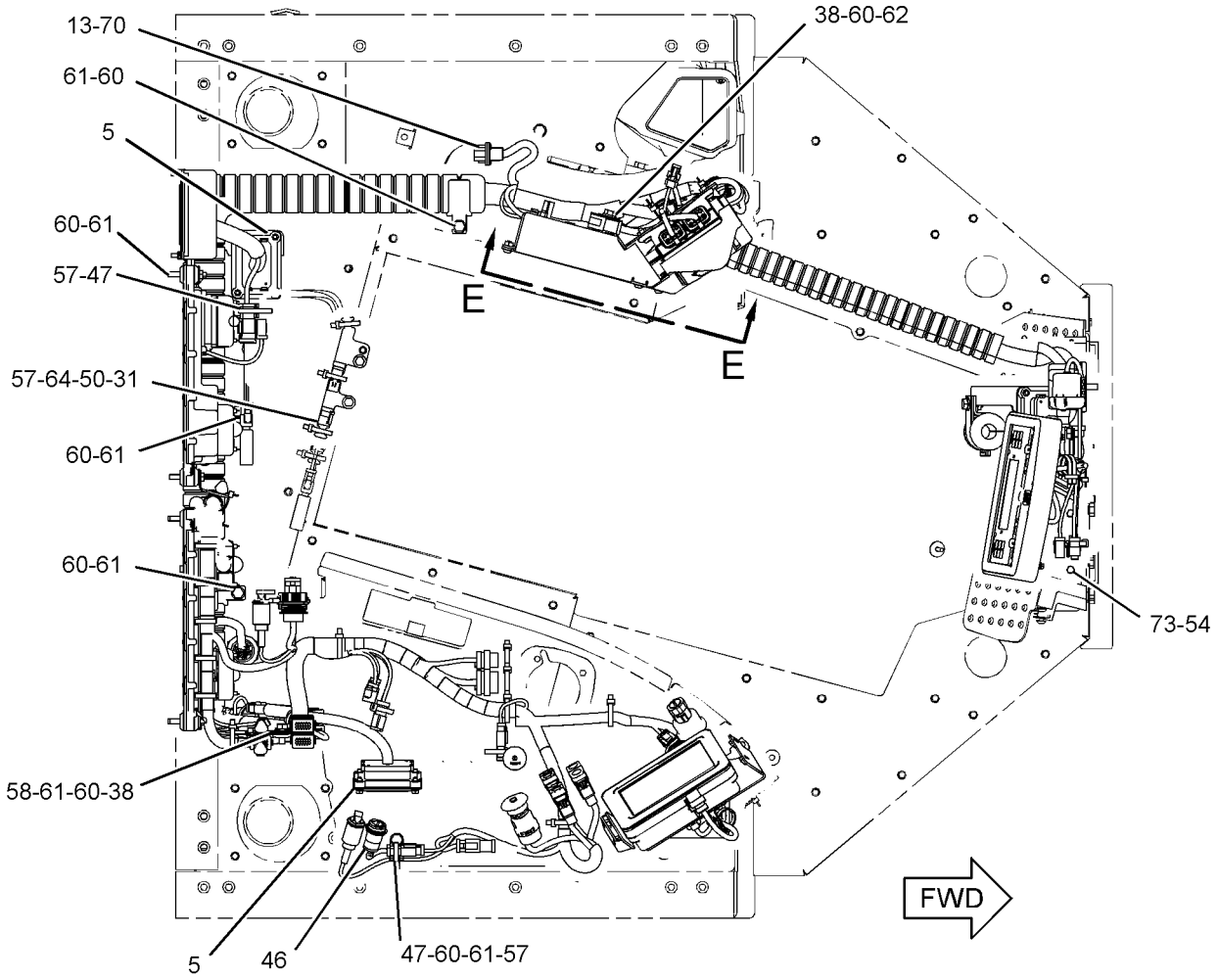

TOP VIEW

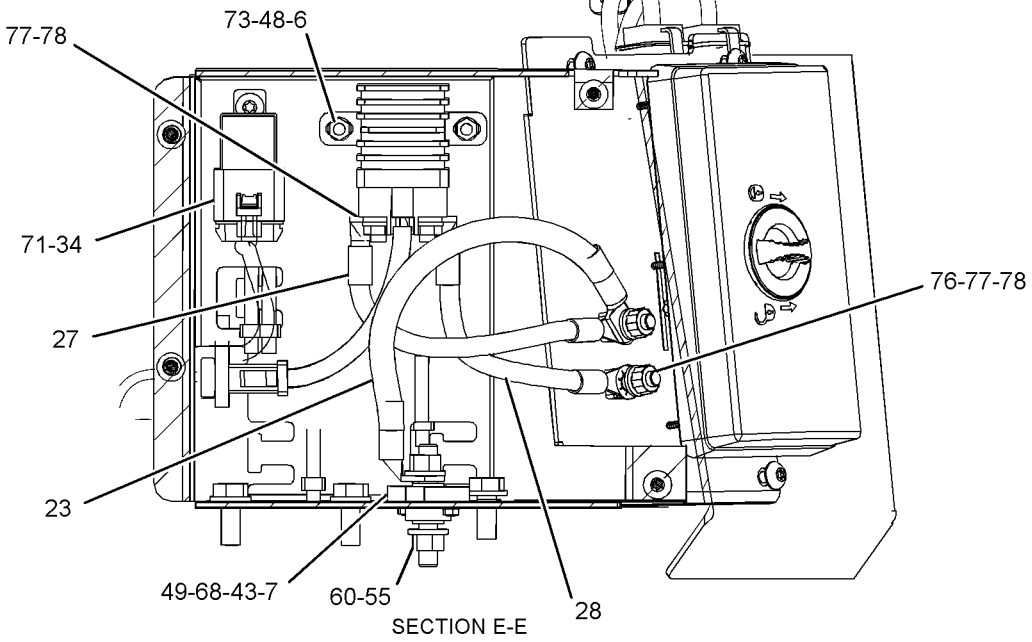

SECTION E-E

GRAPHIC #3 g06036056

377-6104 **WIRING GP-PLATFORM (**contd.**)** **i06543518**

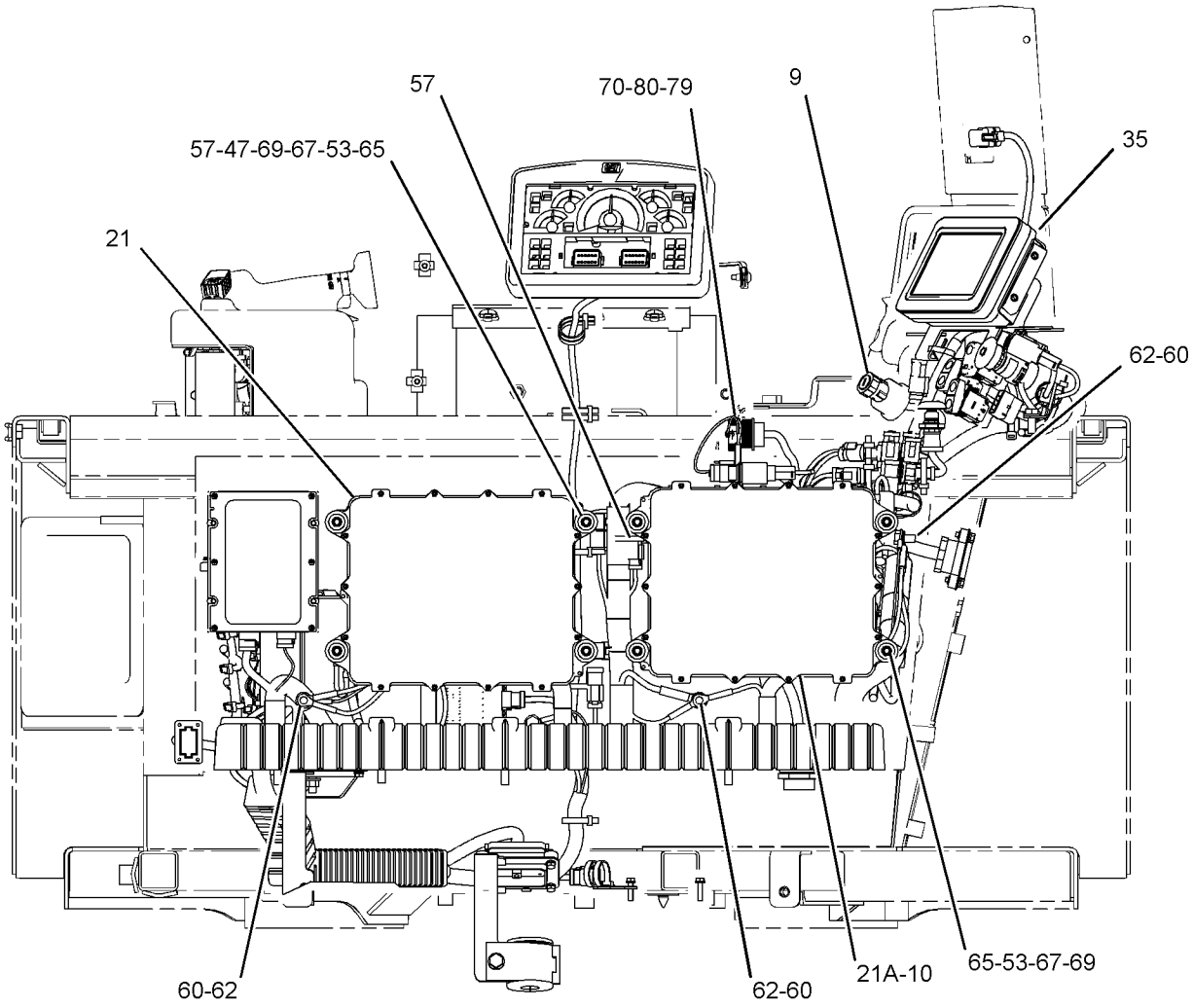

REAR VIEW

GRAPHIC #4 <END> g06036057

399-8983 WIRING GP-RECEIVER

S/N: RAB1-UP

PART OF 359-6359 INSTALLATION AR-CAES

AN ATTACHMENT

SMCS-1408 **i05643884**

NOTE	REF NO	GRAPHIC REF	PART NUMBER	QTY	PART NAME 1 2 3 4 5 6 (PRODUCT LEVEL)	SEE PAGE
	1	1	**392-5485**	1	RECEIVER GP-SATELLITE	
	2	1	**447-6491**	1	HARNESS AS-CAB	
		1	**102-8805**	1	KIT-RECEPTACLE (6-PIN)	
					(INCLUDES RECEPTACLE AS & WEDGE)	
		1	**8T-8737**	13	PLUG-SEAL	
		1	**9W-0844**	2	SOCKET-CONNECTOR (14-GA TO 16-GA)	
		1	**9W-0852**	1	PIN-CONNECTOR (14-GA TO 16-GA)	
		1	**9X-3401**	5	PIN-CONNECTOR (16-GA TO 18-GA)	
		1	**9X-3402**	15	SOCKET-CONNECTOR (16-GA TO 18-GA)	
E		1	**125-7874**		TUBE-HEAT SHRINK (5.72-MM DIA) (30-CM)	
		1	**134-2540**	2	RESISTOR AS-CONNECTION (3-PIN)	
		1	**155-2255**	2	KIT-CONNECTING PLUG (12-PIN)	
		1	**155-2260**	2	KIT-CONNECTING PLUG (3-PIN)	
					(EACH PLUG KIT INCLUDES PLUG AS, WEDGE, & INTERFACE SEAL)	
		1	**274-3779**	2	CAP-SEAL	
	3	1	**438-5957**	1	CABLE AS	
	4	1	**7K-1181**	7	STRAP-CABLE	
M	5	1	**7X-2533**	4	BOLT (M6X1X35-MM)	
	6	1	**9X-8256**	4	WASHER (6.6X12X2-MM THK)	

E - ORDER BY THE CENTIMETER
M - METRIC PART

399-8983 **WIRING GP-RECEIVER (**contd.**)** **i05643884**

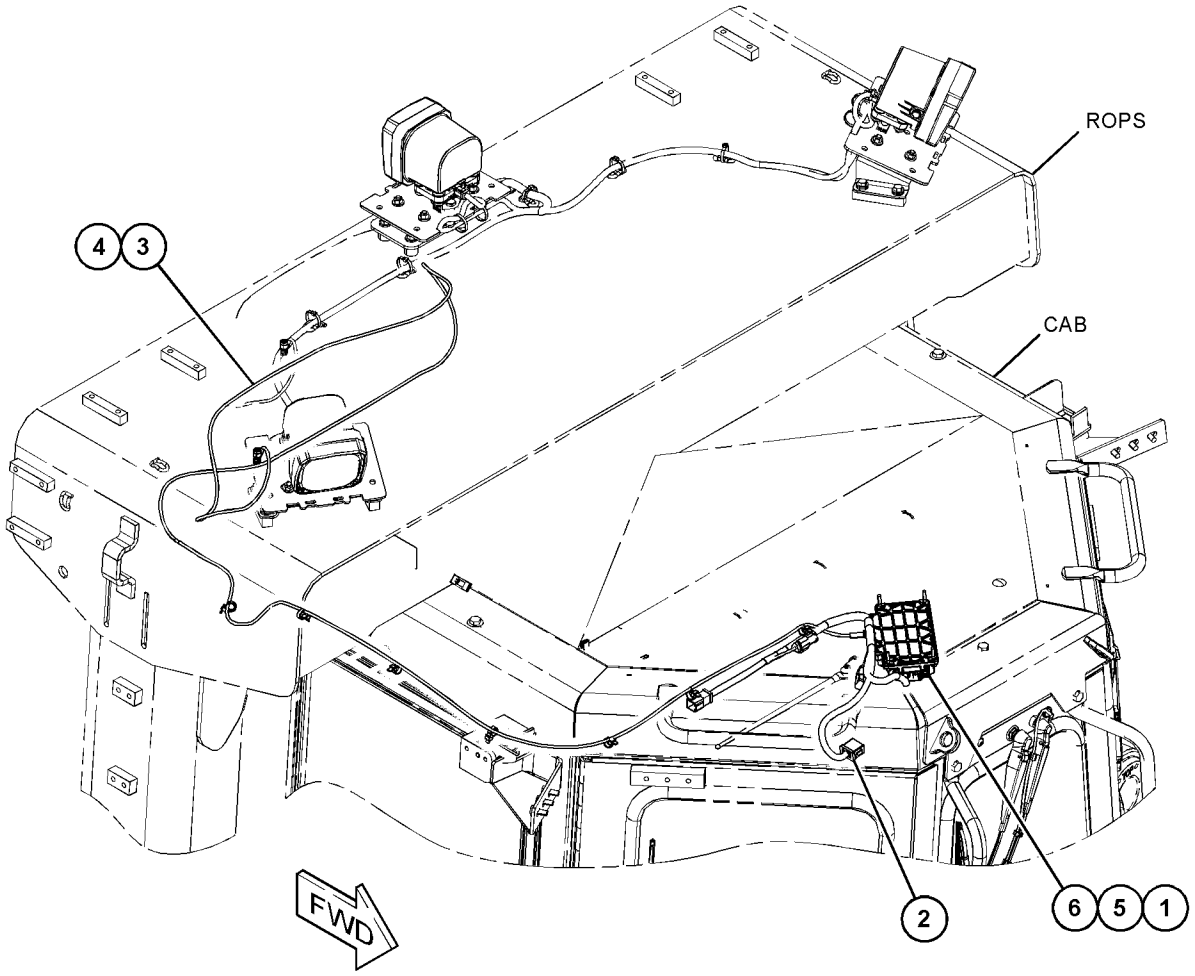

GRAPHIC #1 <END> g03446158

399-8986 WIRING GP-RECEIVER—GPS

S/N: RAB1-UP
PART OF 359-6360 INSTALLATION AR-CAES
AN ATTACHMENT

SMCS-1408 **i05443979**

NOTE	REF NO	GRAPHIC REF	PART NUMBER	QTY	PART NAME 1 2 3 4 5 6 (PRODUCT LEVEL)	SEE PAGE
	1	1	**352-4203**	2	STRAP-CABLE	
	2	1	**391-2010**	2	RECEIVER GP-SATELLITE (GPS)	
					(EACH INCLUDES)	
		1	**415-9459**	1	SOFTWARE GP-MONITOR	
	3	1	**447-6491**	1	HARNESS AS-CAB	
		1	**102-8805**	1	KIT-RECEPTACLE (6-PIN)	
					(INCLUDES RECEPTACLE AS & WEDGE)	
		1	**8T-8737**	13	PLUG-SEAL	
		1	**9W-0844**	2	SOCKET-CONNECTOR (14-GA TO 16-GA)	
		1	**9W-0852**	1	PIN-CONNECTOR (14-GA TO 16-GA)	
		1	**9X-3401**	5	PIN-CONNECTOR (16-GA TO 18-GA)	
		1	**9X-3402**	15	SOCKET-CONNECTOR (16-GA TO 18-GA)	
E		1	**125-7874**		TUBE-HEAT SHRINK (5.72-MM DIA) (30-CM)	
		1	**134-2540**	2	RESISTOR AS-CONNECTION (3-PIN)	
		1	**155-2255**	2	KIT-CONNECTING PLUG (12-PIN)	
		1	**155-2260**	2	KIT-CONNECTING PLUG (3-PIN)	
					(EACH PLUG KIT INCLUDES PLUG AS, WEDGE, & INTERFACE SEAL)	
		1	**274-3779**	1	CAP-SEAL	
	4	1	**438-5957**	2	CABLE AS	
	5	1	**4P-7581**	2	CLIP	
M	6	1	**6V-7357**	8	BOLT (M6X1X25-MM)	
	7	1	**7K-1181**	27	STRAP-CABLE	
	8	1	**9X-8256**	8	WASHER (6.6X12X2-MM THK)	

E - ORDER BY THE CENTIMETER
M - METRIC PART

399-8986 **WIRING GP-RECEIVER (**contd.**)** **i05443979**

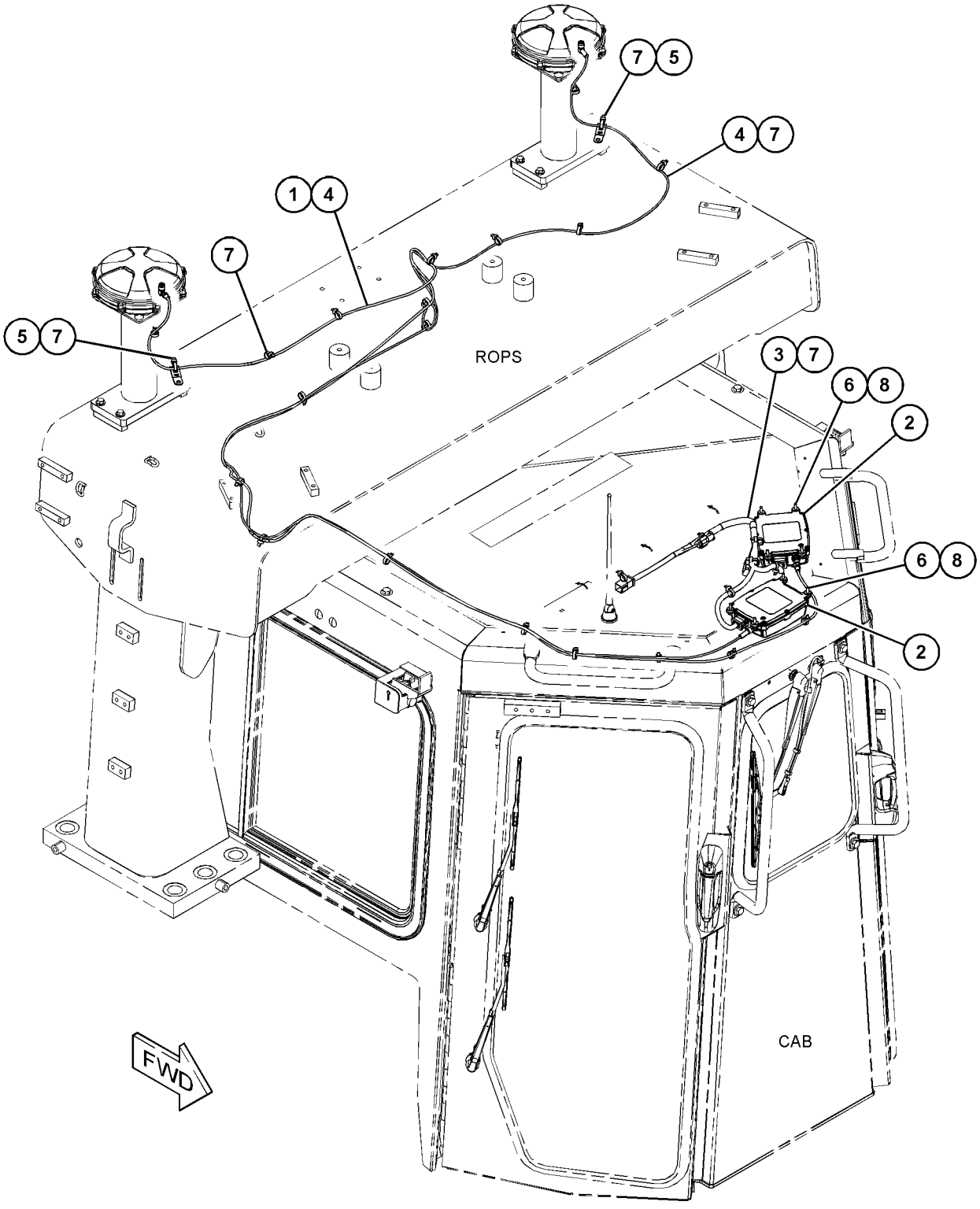

GRAPHIC #1 <END> g03480856

479-1474 WIRING GP-RECEIVER

S/N: RAB1-UP
PART OF 474-5717 ELECTRICAL AR
AN ATTACHMENT

SMCS-1408 **i06538353**

NOTE	REF NO	GRAPHIC REF	PART NUMBER	QTY	PART NAME 1 2 3 4 5 6 (PRODUCT LEVEL)	SEE PAGE
	1	1	**352-4203**	2	STRAP-CABLE	
	2	1	**362-9716**	2	RECEIVER GP-SATELLITE	
	3	1	**385-8201**	2	CAP AS-CONNECTOR	
Y	4	1	**447-6491**	1	HARNESS AS-CAB	249
	5	1	**438-5957**	2	CABLE AS	
	6	1	**4P-7581**	2	CLIP	
M	7	1	**6V-7357**	8	BOLT (M6X1X25-MM)	
	8	1	**7K-1181**	27	STRAP-CABLE	
	9	1	**9X-8256**	8	WASHER (6.6X12X2-MM THK)	

M - METRIC PART
Y - SEPARATE ILLUSTRATION

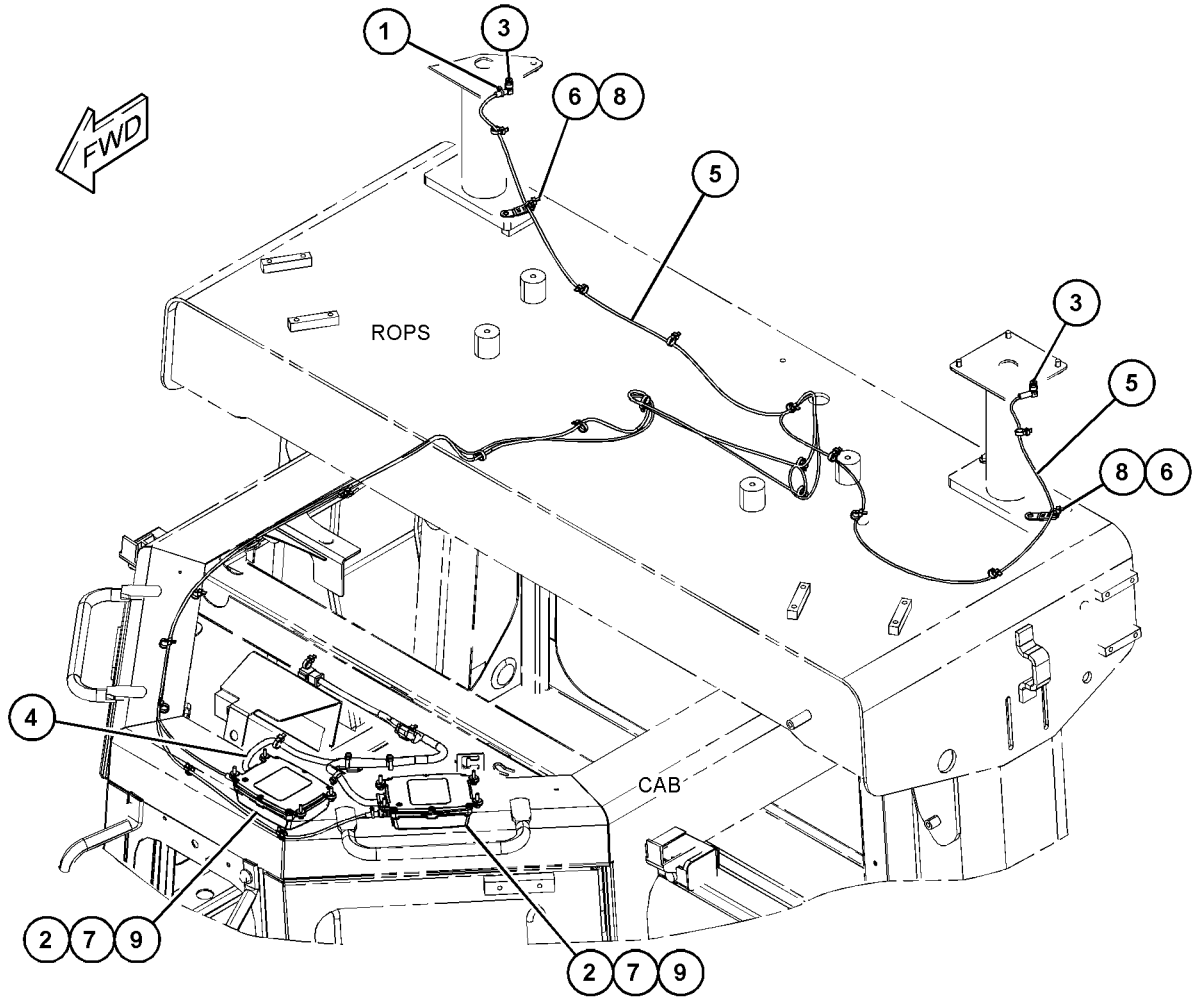

GRAPHIC #1 <END> g06033999

436-6929 WIRING GP-REMOTE CONTROL

S/N: RAB1-UP

PART OF 436-6514 PLATFORM AR

SMCS-1408 **i06066920**

NOTE	REF NO	GRAPHIC REF	PART NUMBER	QTY	PART NAME 1 2 3 4 5 6 (PRODUCT LEVEL)	SEE PAGE
	1	2	**8C-5607**	8	MOUNT-ISOLATION	
	2	2	**180-9900**	1	CAP AS	
		2	**5P-7958**	1	SLEEVE-CABLE SPLICE	
		2	**8C-6354**	1	CAP-RECEPTACLE (ET CONNECTOR)	
		2	**179-9392**	1	LANYARD	
	3	2	**217-5364**	1	HORN	
	4	1	**231-4502**	1	GUARD	
	5	1	**260-5865**	1	SWITCH AS-TOGGLE (COMMUNICATION ON/OFF)	
		1	**102-8803**	1	KIT-RECEPTACLE (3-PIN)	
					(INCLUDES RECEPTACLE AS & WEDGE)	
		1	**8T-8729**	3	PIN-CONNECTOR (16-GA TO 18-GA)	
	6	1	**331-3526**	1	SWITCH GP-BRAKE & POWER STOP (COMMAND) (PUSH BUTTON)	
		1	**203-7154**	1	SWITCH AS (PARKING BRAKE) (PARKING BRAKE)	
		1	**8T-8729**	3	PIN-CONNECTOR (16-GA TO 18-GA)	
		1	**9G-3695**	1	PLUG-SEAL	
	7	1	**346-1069**	1	PLATE AS	
R	8	2	**365-6787**	1	CONTROL GP-UNPROGRAMMED (IMPLEMENT)	
	9	2	**369-4098**	1	SWITCH AS-DISCONNECT (MASTER) (AUXILIARY)	
		2	**449-8192**	1	KIT-KNOB	
					(INCLUDES BEZEL, KNOW, HEX NUTS, & LOCKWASHER)	
		2	**2H-3922**	1	LOCKWASHER	
		2	**6F-7045**	2	NUT-FULL (3/8-24-THD)	
		2	**8H-5303**	2	NUT (3/4-16-THD)	
	10	2	**459-0787**	1	CONTROL GP-UNPROGRAMMED (NETWORK MANAGER)	
		2	**7X-6315**	1	STRAP AS-GROUND	
		2	**8C-8514**	1	SCREW-MACHINE (8-32X0.375-IN)	
		2	**134-4126**	1	WASHER (4.52X8.28X0.76-MM THK)	
		2	**175-4168**	12	SCREW-PAN HEAD (6-32X0.37-IN)	
	11	2	**419-5974**	3	ADAPTER AS (AT04-6P TO RJ45)	
					(EACH INCLUDES)	
		2	**432-2668**	1	NUT (13/16-28-THD)	
	12	2	**452-5994**	1	HARNESS AS-CONTROL	
		2	**102-8803**	2	KIT-RECEPTACLE (3-PIN)	
		2	**102-8805**	1	KIT-RECEPTACLE (6-PIN)	
					(EACH RECEPTACLE KIT INCLUDES RECEPTACLE AS & WEDGE)	
		2	**8T-8737**	176	PLUG-SEAL	
		2	**9W-1441**	1	FUSE (15-AMPERE)	
		2	**7K-1181**	4	STRAP-CABLE	
E		2	**125-7874**		TUBE-HEAT SHRINK (5.72-MM DIA) (45-CM)	
E		2	**125-7875**		TUBE-HEAT SHRINK (7.44-MM DIA) (15-CM)	
E		2	**125-7876**		TUBE-HEAT SHRINK (17.78-MM DIA) (40-CM)	
		2	**9X-3402**	97	SOCKET-CONNECTOR (16-GA TO 18-GA)	
					—OR—	
		2	**126-1768**	97	SOCKET-CONNECTOR (14-GA TO 16-GA)	
		2	**126-1767**	6	PIN-CONNECTOR (14-GA TO 16-GA)	
		2	**126-1774**	2	COVER-CONNECTOR	

436-6929 **WIRING GP-REMOTE CONTROL (**contd.**)** **i06066920**

NOTE	REF NO	GRAPHIC REF	PART NUMBER	QTY	PART NAME 1 2 3 4 5 6 (PRODUCT LEVEL)	SEE PAGE
		2	**5P-4571**	4	TERMINAL-BLADE (14-GA TO 16-GA)	
		2	**2L-8069**	2	TERMINAL-RING (2-GA TO 10-GA, 3/8-IN SCREW)	
		2	**131-3201**	2	BOOT	
		2	**133-0969**	7	CONNECTOR-SOCKET (16-GA TO 18-GA)	
		2	**126-1774**	2	COVER-CONNECTOR	
		2	**134-2540**	2	RESISTOR AS-CONNECTION (3-PIN)	
		2	**9X-3401**	55	PIN-CONNECTOR (16-GA TO 18-GA)	
					—OR—	
		2	**126-1767**	55	PIN-CONNECTOR (14-GA TO 16-GA)	
		2	**147-1445**	2	PLUG AS-CONNECTOR (70-PIN)	
		2	**147-1446**	1	PLUG AS-CONNECTOR (70-PIN)	
					(EACH PLUG AS INCLUDES)	
		2	**159-9322**	1	SEAL-O-RING	
		2	**155-2260**	4	KIT-CONNECTING PLUG (3-PIN)	
		2	**155-2274**	1	KIT-CONNECTING PLUG (6-PIN)	
					(EACH PLUG KIT INCLUDES PLUG AS, WEDGE, & INTERFACE SEAL)	
B		2	**1P-0810**		TAPE-ELECTRICAL	
		2	**167-3692**	2	RECEPTACLE AS-CONNECTOR (31-PIN)	
		2	**177-9656**	1	KIT-CONNECTING PLUG (4-PIN)	
					(INCLUDES PLUG AS & WEDGE)	
		2	**203-9007**	1	NUT (1-1/2-18-THD)	
		2	**211-0052**	2	NUT (1-11/16-18-THD)	
		2	**262-9151**	2	PIN-CONNECTOR (12-GA TO 14-GA)	
		2	**265-4123**	1	RECEPTACLE AS-CONNECTOR (9-PIN)	
		2	**270-2679**	1	LOCKWASHER	
		2	**304-5284**	1	HOLDER-FUSE	
		2	**310-0674**	2	LOCKWASHER	
BE		2	**329-3734**		TAPE-ELECTRICAL	
		2	**265-2106**	1	KIT-RECEPTACLE (4-PIN)	
		2	**336-6741**	1	KIT-RECEPTACLE CONNECTOR (6-PIN)	
					(EACH RECEPTACLE KIT INCLUDES RECEPTACLE AS & WEDGE)	
	13	1	**437-7407**	1	HARNESS AS-CONSOLE (RH)	
		1	**102-8802**	1	KIT-RECEPTACLE (2-PIN)	
					(INCLUDES RECEPTACLE AS & WEDGE)	
		1	**8T-8737**	17	PLUG-SEAL	
		1	**9X-3402**	32	SOCKET-CONNECTOR (16-GA TO 18-GA)	
					—OR—	
		1	**126-1768**	32	SOCKET-CONNECTOR (14-GA TO 16-GA)	
		1	**9X-3401**	4	PIN-CONNECTOR (16-GA TO 18-GA)	
					—OR—	
		1	**126-1767**	4	PIN-CONNECTOR (14-GA TO 16-GA)	
B		1	**1P-0810**		TAPE-ELECTRICAL	
		1	**230-4009**	1	PLUG AS-CONNECTOR (12-PIN)	
		1	**455-0709**	1	SEAL-CONNECTOR	
		1	**230-4012**	1	RECEPTACLE AS-CONNECTOR (2-PIN)	
		1	**230-5010**	1	PLUG AS-CONNECTOR (6-PIN)	
		1	**455-0707**	1	SEAL-CONNECTOR	
BE		1	**329-3734**		TAPE-ELECTRICAL	
	14	1	**437-7408**	1	HARNESS AS-CONSOLE (LH)	
		1	**8T-8737**	11	PLUG-SEAL	
E		1	**125-7874**		TUBE-HEAT SHRINK (5.72-MM DIA) (10-CM)	

436-6929 **WIRING GP-REMOTE CONTROL (**contd.**)** **i06066920**

NOTE	REF NO	GRAPHIC REF	PART NUMBER	QTY	PART NAME 1 2 3 4 5 6 (PRODUCT LEVEL)	SEE PAGE
E		1	**125-7875**		TUBE-HEAT SHRINK (7.44-MM DIA) (5-CM)	
		1	**9X-3402**	42	SOCKET-CONNECTOR (16-GA TO 18-GA)	
					—OR—	
		1	**126-1768**	42	SOCKET-CONNECTOR (14-GA TO 16-GA)	
		1	**155-2260**	2	KIT-CONNECTING PLUG (3-PIN)	
		1	**155-2271**	1	KIT-CONNECTING PLUG (4-PIN)	
		1	**155-2274**	2	KIT-CONNECTING PLUG (6-PIN)	
					(EACH PLUG KIT INCLUDES PLUG AS, WEDGE, & INTERFACE SEAL)	
B		1	**1P-0810**		TAPE-ELECTRICAL	
		1	**185-1860**	5	SEAL-WIRE	
		1	**202-5397**	5	PLUG	
		1	**204-1297**	5	TERMINAL AS-BLADE (18-GA TO 20-GA)	
					(EACH INCLUDES)	
		1	**235-4123**	1	TERMINAL (18-GA TO 20-GA)	
BE		1	**329-3734**		TAPE-ELECTRICAL	
		1	**346-1070**	1	TUBE	
	15	2	**443-5631**	1	HARNESS AS-WIRING (PEDAL)	
		2	**9X-3402**	12	SOCKET-CONNECTOR (16-GA TO 18-GA)	
					—OR—	
		2	**126-1768**	12	SOCKET-CONNECTOR (14-GA TO 16-GA)	
		2	**155-2274**	1	KIT-CONNECTING PLUG (6-PIN)	
					(INCLUDES PLUG AS, WEDGE & INTERFACE SEAL)	
B		2	**1P-0810**		TAPE-ELECTRICAL	
		2	**230-4013**	2	PLUG AS-CONNECTOR (3-PIN)	
					(EACH INCLUDES)	
		2	**455-0705**	1	SEAL-CONNECTOR	
	16	1	**444-8998**	1	HARNESS AS-CONSOLE (MAIN)	
		1	**8T-8737**	1	PLUG-SEAL	
		1	**9X-3402**	12	SOCKET-CONNECTOR (16-GA TO 18-GA)	
					—OR—	
		1	**126-1768**	12	SOCKET-CONNECTOR (14-GA TO 16-GA)	
		1	**155-2260**	1	KIT-CONNECTING PLUG (3-PIN)	
		1	**155-2271**	1	KIT-CONNECTING PLUG (4-PIN)	
		1	**155-2274**	1	KIT-CONNECTING PLUG (6-PIN)	
					(EACH PLUG KIT INCLUDES PLUG AS, WEDGE, & INTERFACE SEAL)	
B		1	**1P-0810**		TAPE-ELECTRICAL	
BE		1	**329-3734**		TAPE-ELECTRICAL	
	17	2	**444-9753**	1	PLATE AS	
	18	1	**096-1357**	2	CLIP	
M	19	1	**127-2170**	12	SCREW-TRUSS HEAD (M8X1.25X20-MM)	
	20	1	**130-5300**	1	CLIP	
	21	1	**1S-0994**	4	CLIP	
	22	2	**352-3970**	2	CLIP	
	23	1	**3E-4352**	4	WASHER-HARD (8.8X20.5X2.5-MM THK)	
	24	2	**3K-8782**	1	FUSE (10-AMPERE)	
	25	1,2	**3S-2093**	16	STRAP-CABLE	
	26	2	**4K-5122**	1	HOLDER AS-FUSE	
		2	**6T-8115**	1	NUT (1/2-24-THD)	
		2	**139-0178**	1	CAP	
	27	1	**4P-7581**	1	CLIP	
	28	2	**6I-1418**	4	SPACER (8.2X12.7X28.7-MM THK)	

436-6929 **WIRING GP-REMOTE CONTROL (**contd.**)** **i06066920**

NOTE	REF NO	GRAPHIC REF	PART NUMBER	QTY	PART NAME 1 2 3 4 5 6 (PRODUCT LEVEL)	SEE PAGE
	29	1	**7C-4354**	2	CLIP	
	30	1,2	**7K-1181**	20	STRAP-CABLE	
M	31	2	**7X-0818**	4	BOLT (M8X1.25X45-MM)	
	32	2	**8C-5608**	4	SPACER (6.5X9.5X25.4-MM THK)	
M	33	2	**8C-8451**	4	BOLT (M6X1X40-MM)	
	35	2	**8T-9655**	8	MOUNT-ISOLATION (ISOLATION)	
	36	2	**9N-0869**	8	WASHER-HARD (8.8X25.5X2-MM THK)	
M	37	2	**9X-2042**	4	SCREW-TRUSS HEAD (M6X1X12-MM)	
M	38	2	**9X-2045**	1	SCREW-TRUSS HEAD (M6X1X20-MM)	
	39	2	**9X-6165**	8	WASHER (6.5X22X2.5-MM THK)	
	40	2	**453-6665**	1	FILM-INFORMATION (ETHERNET)	
	41	2	**7T-0094**	2	SOCKET-CONNECTOR (12-GA TO 14-GA)	
	42	2	**440-0535**	3	CAP AS	
	43	1	**347-4734**	1	CLIP	
M	44	2	**8T-9405**	2	BOLT-SOCKET HEAD (M4X0.7X16-MM)	
M	45	2	**8T-2659**	2	LOCKNUT (M4X0.7-THD)	
M	46	2	**153-3568**	2	BOLT-SOCKET HEAD (M5X0.8X10-MM)	
	47	1	**8T-8737**	2	PLUG-SEAL	
	48	2	**8T-0328**	2	WASHER-HARD (5.5X10X1-MM THK)	
	49	1	**155-2270**	1	KIT-CONNECTING PLUG (2-PIN)	
					(INCLUDES PLUG AS, WEDGE & INTERFACE SEAL)	

B - USE AS REQUIRED
E - ORDER BY THE CENTIMETER
M - METRIC PART
R - REMANUFACTURED PART MAY BE AVAILABLE

436-6929 **WIRING GP-REMOTE CONTROL (**contd.**)** **i06066920**

REFER TO ALL ILLUSTRATIONS OF
THIS GROUP FOR AUXILIARY VIEWS

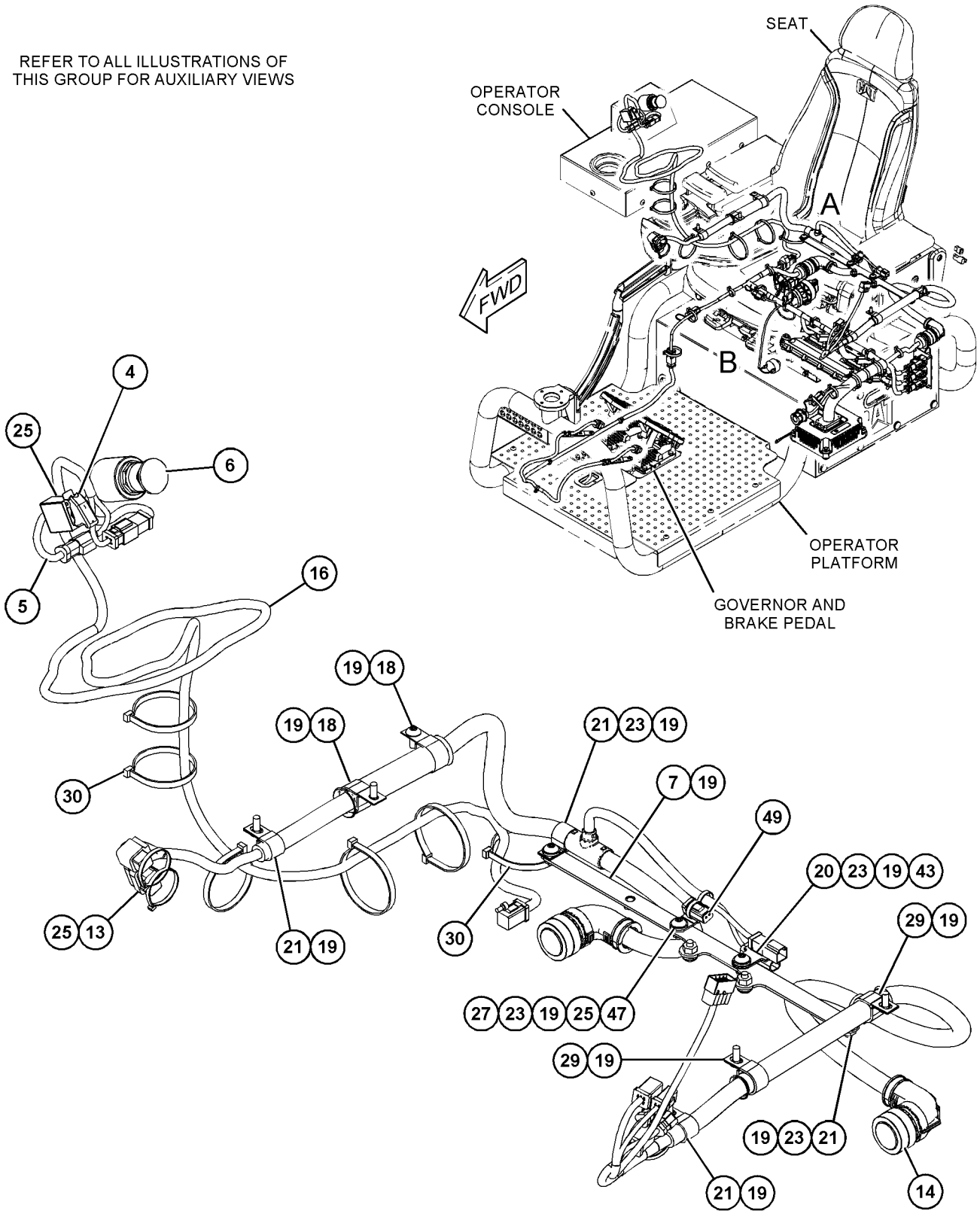

VIEW OF AREA A

GRAPHIC #1 g03793397

436-6929 **WIRING GP-REMOTE CONTROL (**contd.**)** **i06066920**

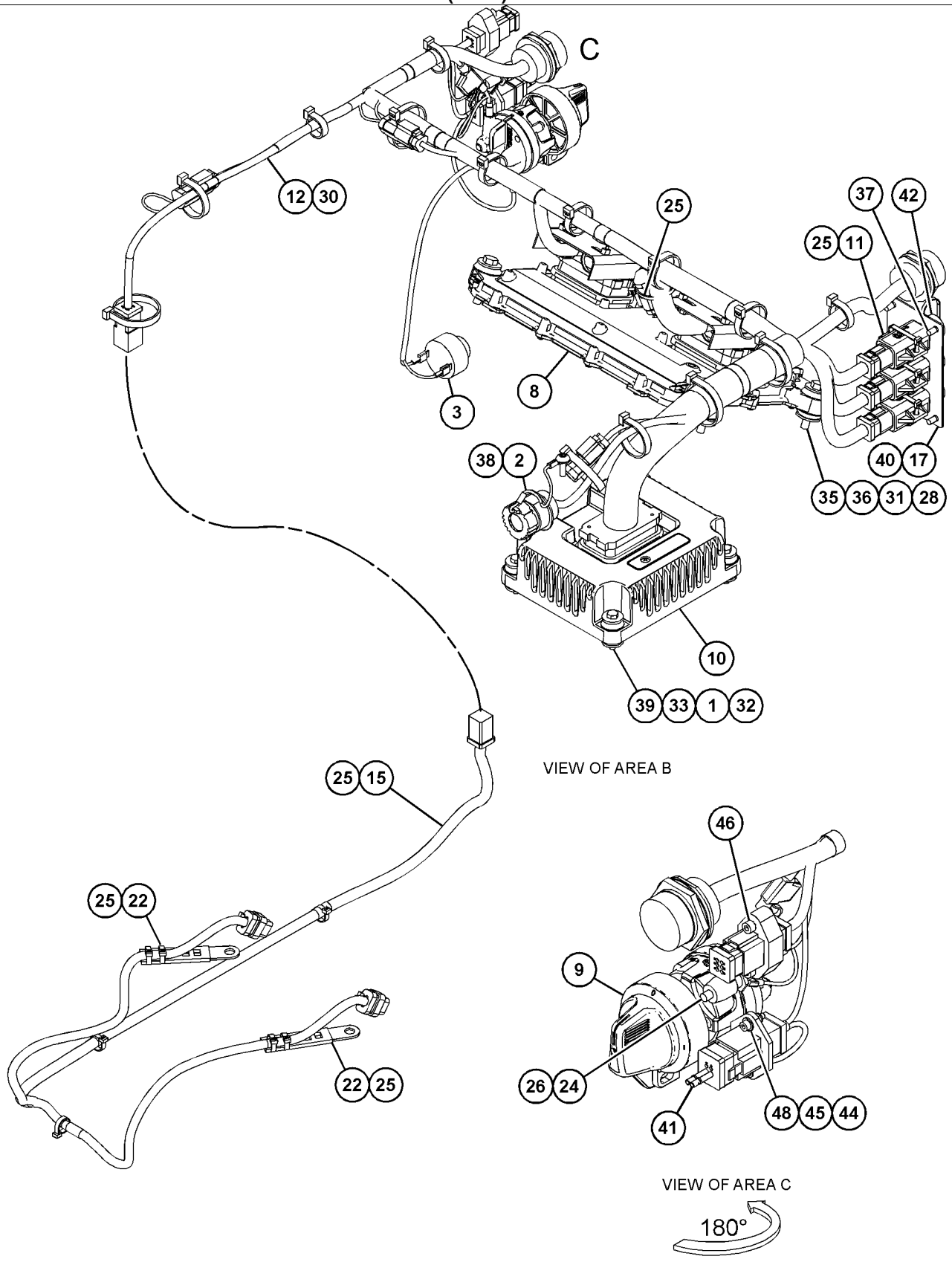

GRAPHIC #2 <END> g03793398

446-0214 WIRING GP-REMOTE CONTROL

S/N: RAB1-UP
PART OF 441-3258 CONTROL GP-REMOTE
AN ATTACHMENT

SMCS-1408 **i06589700**

NOTE	REF NO	GRAPHIC REF	PART NUMBER	QTY	PART NAME 1 2 3 4 5 6 (PRODUCT LEVEL)	SEE PAGE
Y	1	1	*457-5010*	1	WIRING GP-REMOTE CONTROL (CONSOLE, RH)	491
Y	2	1	*464-5878*	1	WIRING GP-REMOTE CONTROL	493
Y	3	1	*464-7601*	1	WIRING GP-CHASSIS	417

Y - SEPARATE ILLUSTRATION

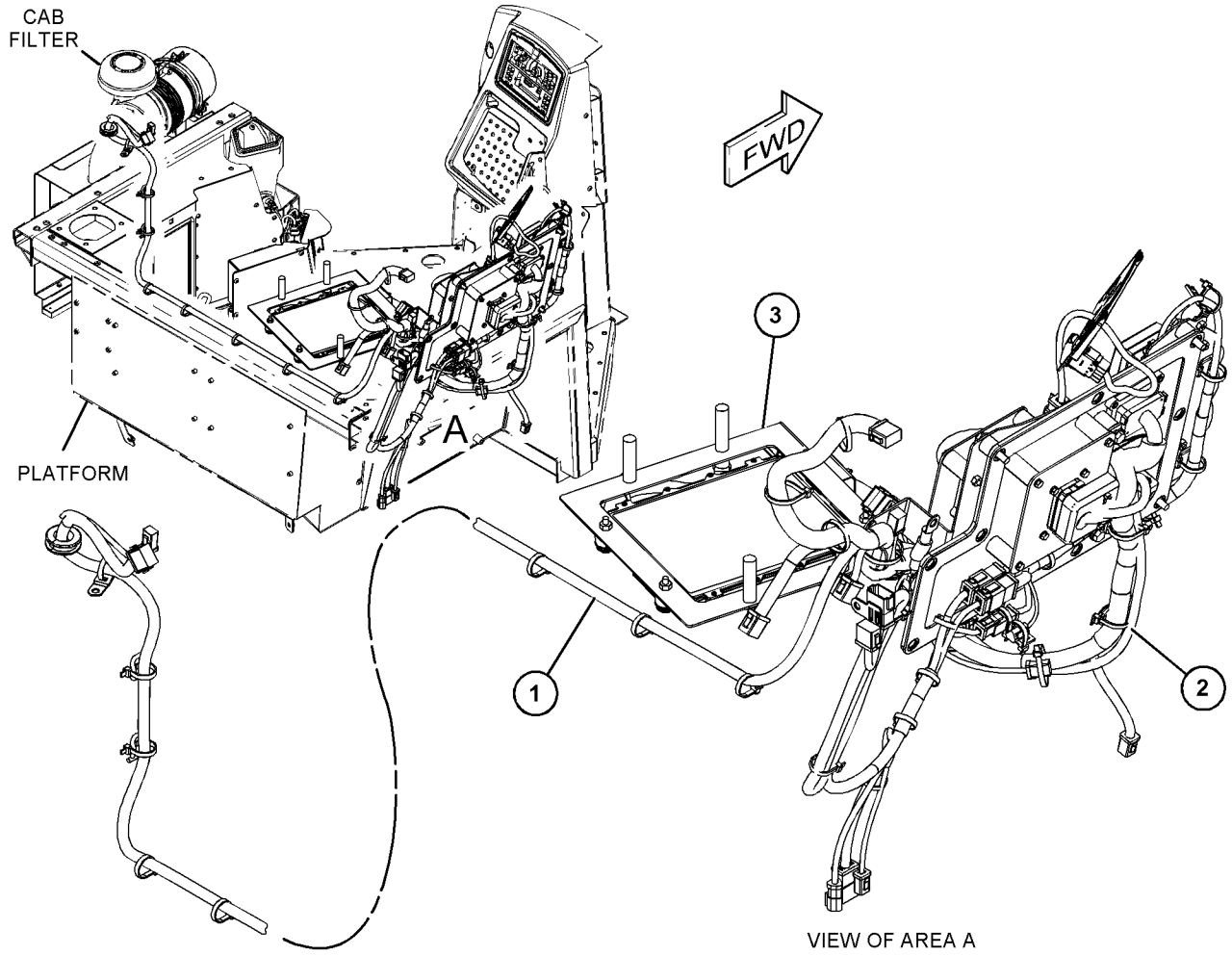

GRAPHIC #1 <END> g06039532

457-5010 WIRING GP-REMOTE CONTROL

S/N: RAB1-UP
PART OF 446-0214 WIRING GP-REMOTE CONTROL
AN ATTACHMENT

SMCS-1408 **i06589681**

NOTE	REF NO	GRAPHIC REF	PART NUMBER	QTY	PART NAME 1 2 3 4 5 6 (PRODUCT LEVEL)	SEE PAGE
	1	1	**380-8684**	1	PLATE AS	
	2	1	**380-8888**	1	RECEPTACLE AS	
		1	**8T-8737**	70	PLUG-SEAL	
		1	**224-2735**	1	RECEPTACLE AS-CONNECTOR (70-PIN)	
Y	3	1	**443-1880**	1	PANEL GP-FUSE	358
Y	4	1	**482-9116**	1	HARNESS AS-CONSOLE (RH)	255
	5	1	**485-9471**	1	PLATE AS	
	6	1	**130-5300**	2	CLIP	
	7	1	**132-5789**	1	CLIP	
	8	1	**7K-1181**	9	STRAP-CABLE	
M	9	1	**8T-3844**	4	BOLT (M6X1X70-MM)	
M	10	1	**8T-4138**	8	BOLT (M6X1X20-MM)	
M	11	1	**8T-4189**	2	BOLT (M8X1.25X20-MM)	
	12	1	**8T-4224**	2	WASHER-HARD (8.8X16X2-MM THK)	
	13	1	**9X-8256**	12	WASHER (6.6X12X2-MM THK)	

M - METRIC PART
Y - SEPARATE ILLUSTRATION

457-5010 **WIRING GP-REMOTE CONTROL (**contd.**)** **i06589681**

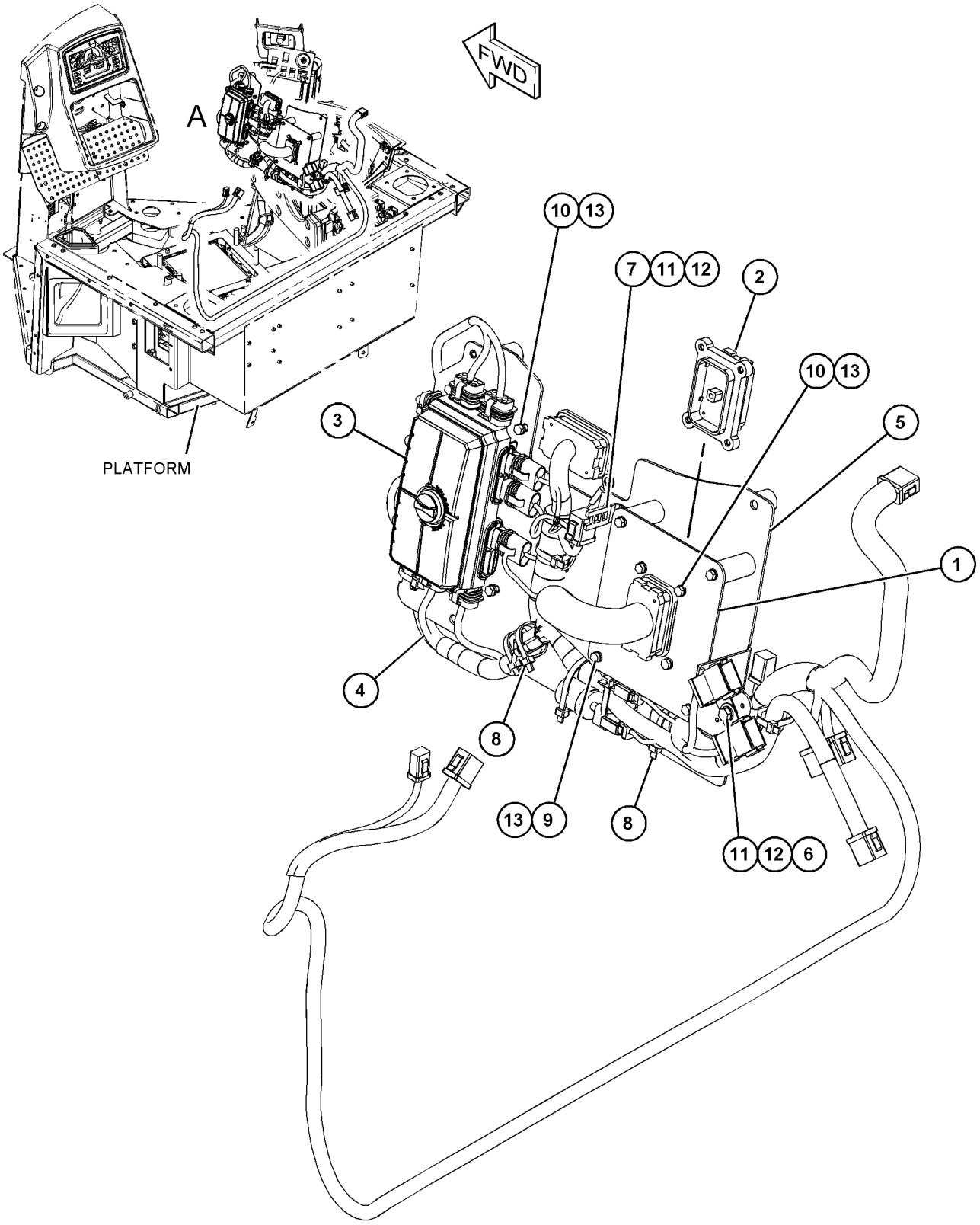

VIEW OF AREA A

GRAPHIC #1 <END> g06039549

464-5878 WIRING GP-REMOTE CONTROL

S/N: RAB1-UP
PART OF 446-0214 WIRING GP-REMOTE CONTROL
AN ATTACHMENT

SMCS-1408 **i06589691**

NOTE	REF NO	GRAPHIC REF	PART NUMBER	QTY	PART NAME 1 2 3 4 5 6 (PRODUCT LEVEL)	SEE PAGE
	1	1	**252-6954**	1	GASKET	
	2	1	**380-8684**	1	PLATE AS	
	3	1	**380-8888**	1	RECEPTACLE AS	
		1	**8T-8737**	70	PLUG-SEAL	
		1	**224-2735**	1	RECEPTACLE AS-CONNECTOR (70-PIN)	
Y	4	1	**482-9117**	1	HARNESS AS-CONTROL	257
	5	1	**485-9469**	1	PLATE AS	
	6	1	**130-5300**	2	CLIP	
	7	1	**132-5789**	1	CLIP	
	8	1	**4P-7581**	1	CLIP	
	9	1	**7K-1181**	5	STRAP-CABLE	
M	10	1	**8T-3844**	4	BOLT (M6X1X70-MM)	
	11	1	**8T-4121**	2	WASHER-HARD (11X21X2.5-MM THK)	
M	12	1	**8T-4138**	8	BOLT (M6X1X20-MM)	
M	13	1	**8T-4191**	1	BOLT (M10X1.5X16-MM)	
M	14	1	**8T-4195**	1	BOLT (M10X1.5X30-MM)	
	15	1	**9X-8256**	12	WASHER (6.6X12X2-MM THK)	

M - METRIC PART
Y - SEPARATE ILLUSTRATION

464-5878 **WIRING GP-REMOTE CONTROL (**contd.**)** **i06589691**

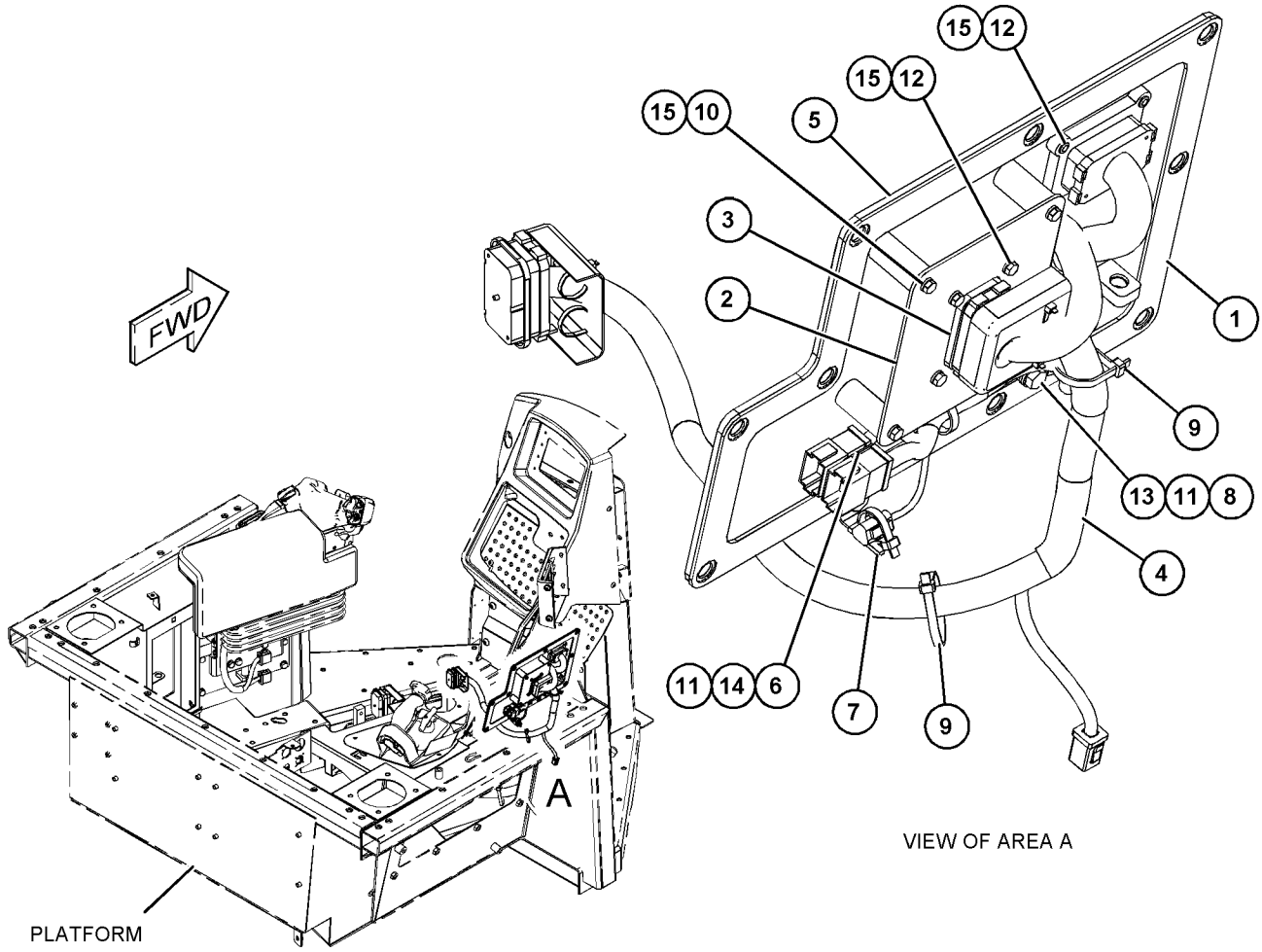

GRAPHIC #1 <END> g06039509

380-5291 WIRING GP-SERVICE CENTER–RIPPER

S/N: RAB1-UP

PART OF 399-7227 MOUNTING GP-RIPPER, 359-6373, 359-6374 RIPPER AR-MULTISHANK, 359-6370, 359-6371, 359-6372 RIPPER AR-SINGLE SHANK AN ATTACHMENT

SMCS-1408, 7513

i05843949

NOTE	REF NO	GRAPHIC REF	PART NUMBER	QTY	PART NAME 1 2 3 4 5 6 (PRODUCT LEVEL)	SEE PAGE
	1	1	**381-5744**	1	PLATE	
	2	1	**381-5746**	1	HARNESS AS-WIRING (GROUND LEVEL SERVICE)	
		1	**102-8803**	2	KIT-RECEPTACLE (3-PIN)	
					(EACH INCLUDES RECEPTACLE AS & WEDGE)	
G		1	**165-0021**		HOSE (43.7-IN)	
		1	**8T-8730**	2	SOCKET-CONNECTOR (16-GA TO 18-GA)	
		1	**8T-8737**	10	PLUG-SEAL	
		1	**9W-0844**	4	SOCKET-CONNECTOR (14-GA TO 16-GA)	
		1	**9X-3401**	3	PIN-CONNECTOR (16-GA TO 18-GA)	
		1	**9X-3402**	17	SOCKET-CONNECTOR (16-GA TO 18-GA)	
		1	**9X-7670**	1	COUPLING AS	
		1	**155-2255**	1	KIT-CONNECTING PLUG (12-PIN)	
		1	**155-2260**	2	KIT-CONNECTING PLUG (3-PIN)	
		1	**155-2270**	1	KIT-CONNECTING PLUG (2-PIN)	
		1	**155-2271**	1	KIT-CONNECTING PLUG (4-PIN)	
		1	**155-2274**	1	KIT-CONNECTING PLUG (6-PIN)	
					(EACH PLUG KIT INCLUDES PLUG AS, WEDGE, & INTERFACE SEAL)	
		1	**274-3774**	1	CAP-CONNECTOR	
		1	**274-3777**	1	CAP-CONNECTOR	
E		1	**311-4859**		TUBE-HEAT SHRINK (48-MM DIA) (8-CM)	
		1	*387-5366*	1	HARNESS AS-WIRING	
		1	**102-8804**	1	KIT-RECEPTACLE (4-PIN)	
					(INCLUDES RECEPTACLE AS & WEDGE)	
		1	**8T-8729**	2	PIN-CONNECTOR (16-GA TO 18-GA)	
	3	1	**5P-7464**	1	CLIP (SLOT)	
	4	1	**5P-7465**	1	CLIP (TAB)	
	5	1	**8T-4121**	12	WASHER-HARD (11X21X2.5-MM THK)	
M	6	1	**8T-4133**	4	NUT (M10X1.5-THD)	
M	7	1	**8T-4136**	4	BOLT (M10X1.5X25-MM)	
M	8	1	**8T-4137**	4	BOLT (M10X1.5X20-MM)	

E - ORDER BY THE CENTIMETER
G - ORDER BY THE INCH
M - METRIC PART

380-5291 **WIRING GP-SERVICE CENTER (**contd.**)** **i05843949**

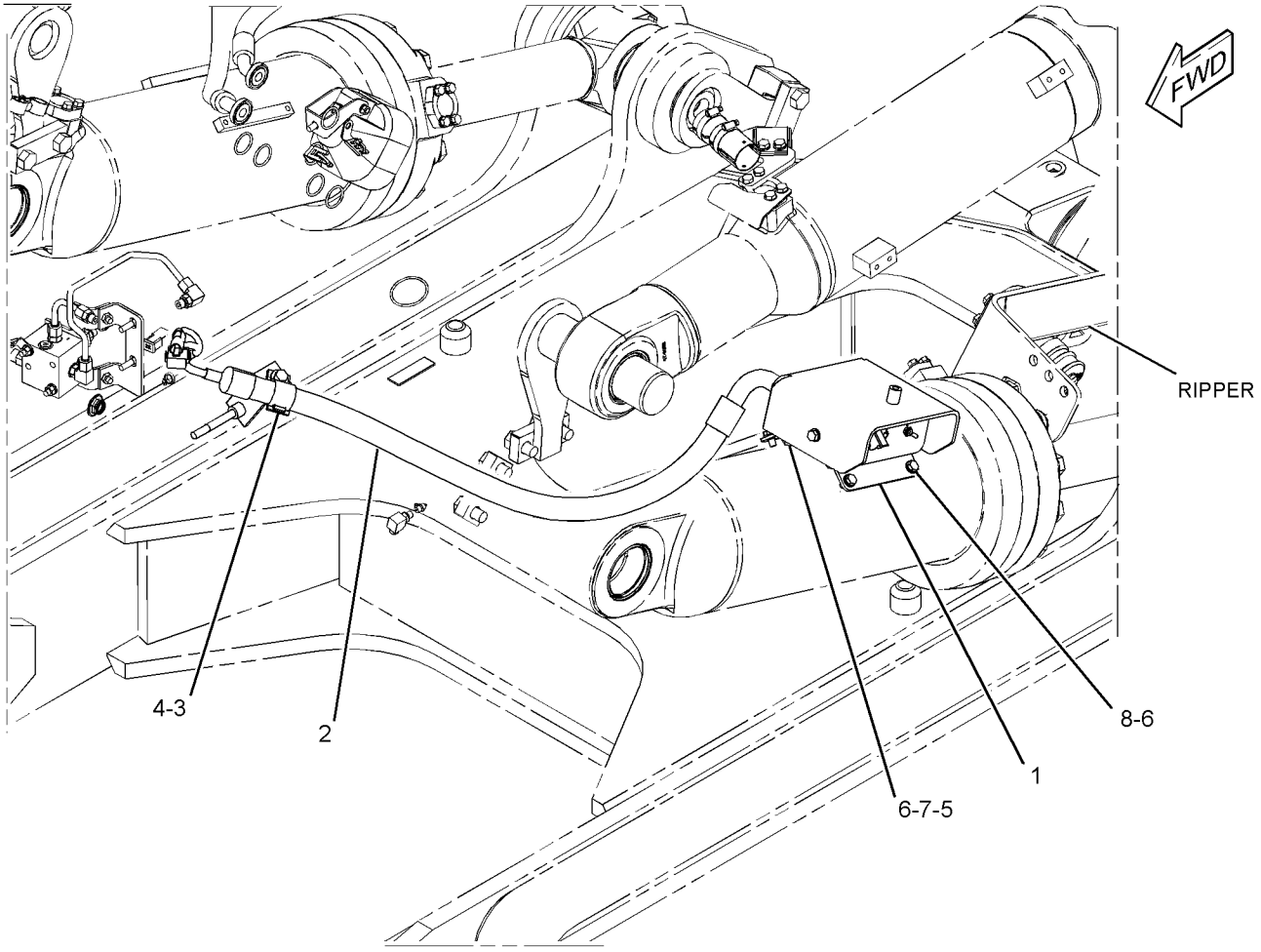

GRAPHIC #1 <END> g03468616

380-9598 WIRING GP-SERVICE CENTER—COUNTERWEIGHT

S/N: RAB1-UP

PART OF 399-7223, 399-7224, 399-7225 COUNTERWEIGHT AR

AN ATTACHMENT

SMCS-1408, 7513

i05843951

NOTE	REF NO	GRAPHIC REF	PART NUMBER	QTY	PART NAME 1 2 3 4 5 6 (PRODUCT LEVEL)	SEE PAGE
	1	1	**6V-8188**	1	NUT (1/2-13-THD)	
	2	1	**331-7449**	1	HARNESS AS-WIRING (GROUND LEVEL SERVICE)	
		1	**102-8803**	2	KIT-RECEPTACLE (3-PIN)	
					(EACH INCLUDES RECEPTACLE AS & WEDGE)	
G		1	**165-0021**		HOSE (65-IN)	
		1	**8T-8730**	2	SOCKET-CONNECTOR (16-GA TO 18-GA)	
		1	**8T-8737**	10	PLUG-SEAL	
		1	**9W-0844**	4	SOCKET-CONNECTOR (14-GA TO 16-GA)	
		1	**9X-3401**	3	PIN-CONNECTOR (16-GA TO 18-GA)	
		1	**9X-3402**	17	SOCKET-CONNECTOR (16-GA TO 18-GA)	
		1	**9X-7670**	1	COUPLING AS	
		1	**155-2255**	1	KIT-CONNECTING PLUG (12-PIN)	
		1	**155-2260**	2	KIT-CONNECTING PLUG (3-PIN)	
		1	**155-2270**	1	KIT-CONNECTING PLUG (2-PIN)	
		1	**155-2271**	1	KIT-CONNECTING PLUG (4-PIN)	
		1	**155-2274**	1	KIT-CONNECTING PLUG (6-PIN)	
					(EACH PLUG KIT INCLUDES PLUG AS, WEDGE, & INTERFACE SEAL)	
		1	**274-3774**	1	CAP-CONNECTOR	
		1	**274-3777**	1	CAP-CONNECTOR	
E		1	**311-4859**		TUBE-HEAT SHRINK (48-MM DIA) (8-CM)	
		1	*387-5366*	1	HARNESS AS-WIRING	
		1	**102-8804**	1	KIT-RECEPTACLE (4-PIN)	
					(INCLUDES RECEPTACLE AS & WEDGE)	
		1	**8T-8729**	2	PIN-CONNECTOR (16-GA TO 18-GA)	
	3	1	**416-0640**	1	BRACKET	
	4	1	**5P-1076**	3	WASHER-HARD (13.5X30X4-MM THK)	
	5	1	**5P-2566**	2	BOLT (1/2-13X1.5-IN)	
	6	1	**5P-7464**	2	CLIP (SLOT)	
	7	1	**5P-7465**	2	CLIP (TAB)	
M	8	1	**8T-4192**	2	BOLT (M12X1.75X25-MM)	
	9	1	**8T-4223**	2	WASHER-HARD (13.5X25.5X3-MM THK)	

E - ORDER BY THE CENTIMETER
G - ORDER BY THE INCH
M - METRIC PART

380-9598 **WIRING GP-SERVICE CENTER (**contd.**)** **i05843951**

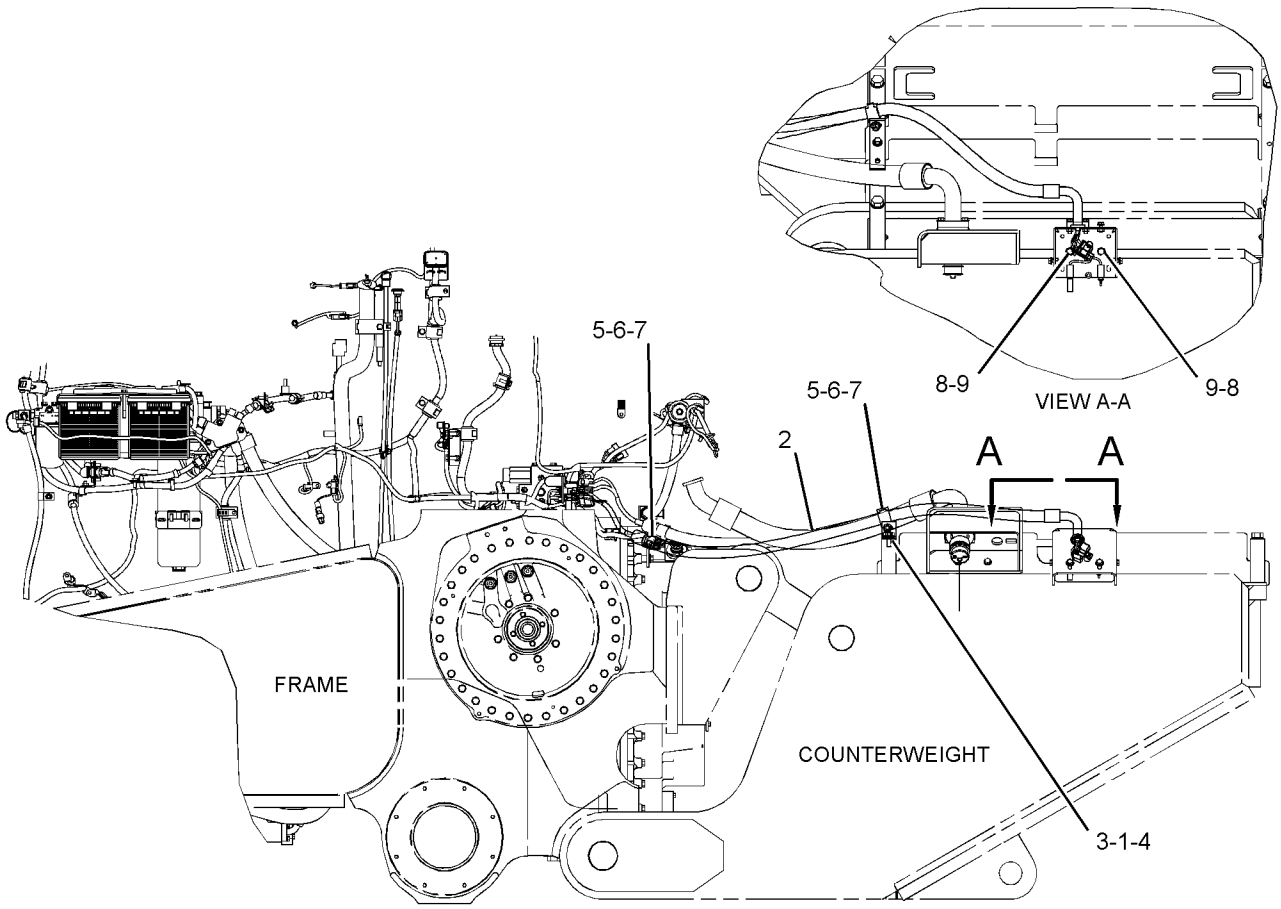

LEFT SIDE VIEW

GRAPHIC #1 <END> g03500056

452-6871 WIRING GP-SHUTDOWN

S/N: RAB1-UP

PART OF 441-3258 CONTROL GP-REMOTE

AN ATTACHMENT

SMCS-1408 **i06589721**

NOTE	REF NO	GRAPHIC REF	PART NUMBER	QTY	PART NAME 1 2 3 4 5 6 (PRODUCT LEVEL)	SEE PAGE
Y	1	1	**284-8381**	1	SWITCH AS-TOGGLE (ACCESS LIGHTS)	399
Y	2	1	**292-0358**	1	SWITCH GP-ROTARY (2-POSITION) (MANUAL, REMOTE CONTROL)	407
	3	1	**301-2980**	1	SWITCH AS-TOGGLE (ACCESS LADDER)	
		1	**102-8803**	1	KIT-RECEPTACLE (3-PIN)	
					(INCLUDES RECEPTACLE AS & WEDGE)	
		1	**8T-8729**	3	PIN-CONNECTOR (16-GA TO 18-GA)	
	4	1	**331-3526**	1	SWITCH GP-BRAKE & POWER STOP (COMMAND) (ENGINE SHUTDOWN)	
		1	**203-7154**	1	SWITCH AS (PARKING BRAKE)	
		1	**3E-3377**	1	WEDGE-RECEPTACLE LOCK (4-PIN)	
		1	**8T-8729**	3	PIN-CONNECTOR (16-GA TO 18-GA)	
		1	**9G-3695**	1	PLUG-SEAL	
	5	1	**347-4112**	1	COVER	
	6	1	**393-5631**	1	FILM-IDENTIFICATION (REMOTE CONTROL PANEL)	
	7	1	**398-8380**	1	PANEL AS	
	8	1	**7K-1181**	8	STRAP-CABLE	
	9	1	**8C-3206**	2	FLANGE-HALF	
	10	1	**8T-4121**	11	WASHER-HARD (11X21X2.5-MM THK)	
M	11	1	**8T-4136**	4	BOLT (M10X1.5X25-MM)	
M	12	1	**8T-4186**	4	BOLT (M10X1.5X40-MM)	
M	13	1	**8T-4195**	3	BOLT (M10X1.5X30-MM)	

M - METRIC PART
Y - SEPARATE ILLUSTRATION

452-6871 **WIRING GP-SHUTDOWN (**contd.**)** **i06589721**

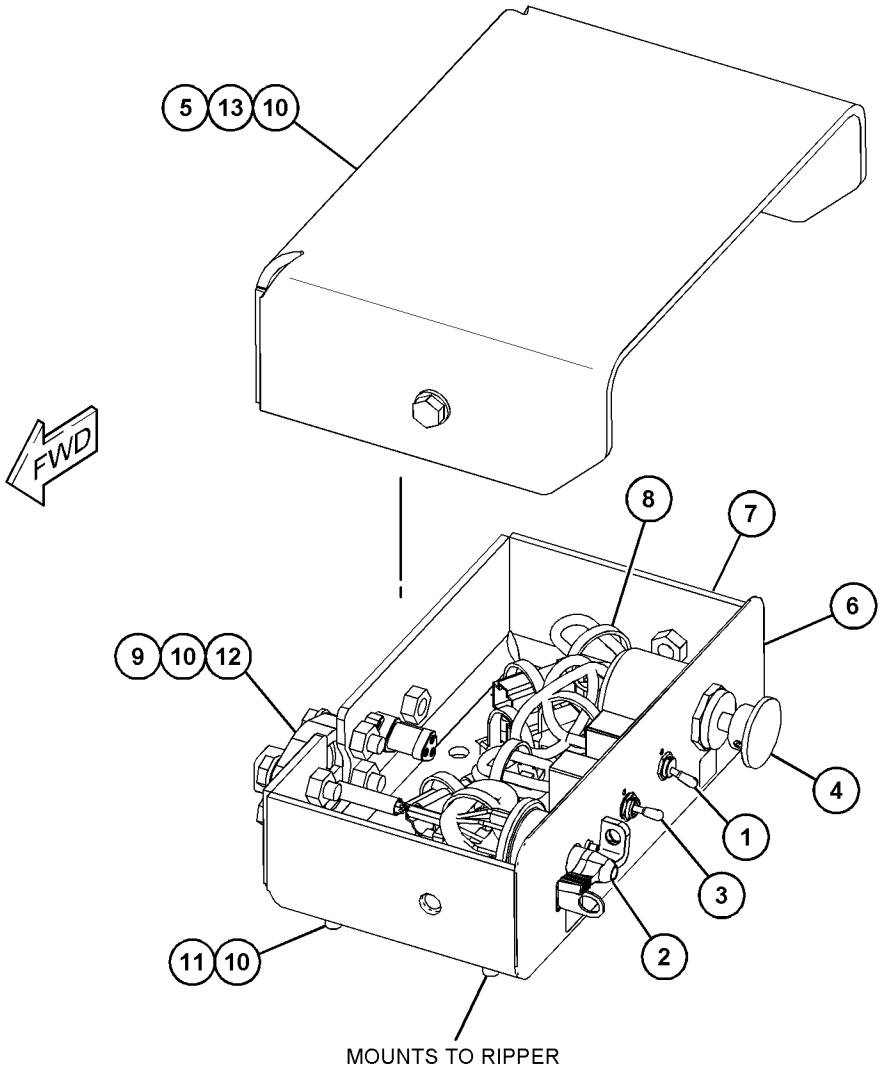

GRAPHIC #1 <END> g06039789

382-8010 WIRING GP-VALVE–IMPLEMENT

S/N: RAB1-UP

PART OF 359-6384 VALVE & LINES GP-HYD CONTROL

AN ATTACHMENT

SMCS-1408, 5734

i05468470

NOTE	REF NO	GRAPHIC REF	PART NUMBER	QTY	PART NAME 1 2 3 4 5 6 (PRODUCT LEVEL)	SEE PAGE
	1	1	**375-6126**	1	SENSOR GP-PRESSURE (INLET MANIFOLD)	
	2	1	**381-0188**	1	HARNESS AS-VALVE	
		1	**8T-8737**	13	PLUG-SEAL	
		1	**9X-3402**	45	SOCKET-CONNECTOR (16-GA TO 18-GA)	
E		1	**125-7875**		TUBE-HEAT SHRINK (7.44-MM DIA) (15-CM)	
		1	**155-2270**	12	KIT-CONNECTING PLUG (2-PIN)	
					(EACH PLUG KIT INCLUDES PLUG AS, WEDGE & INTERFACE SEAL)	
		1	**167-3693**	1	PLUG AS-CONNECTOR (31-PIN)	
		1	**237-0227**	1	PLUG AS-CONNECTOR (3-PIN)	
		1	**264-7030**	1	SEAL-CONNECTOR	
	3	1	**447-7306**	1	BRACKET AS	
	4	1	**447-8226**	1	BRACKET AS	
	5	1	**156-6175**	1	CLIP	
	6	1	**3J-1907**	1	SEAL-O-RING	
	7	1	**4P-7428**	1	CLIP	
	8	1	**7K-1181**	19	STRAP-CABLE	
	9	1	**7S-3916**	1	CLIP (TAB)	
	10	1	**7S-3919**	1	CLIP (SLOT)	
	11	1	**7V-6571**	1	GROMMET	
	12	1	**8T-4121**	2	WASHER-HARD (11X21X2.5-MM THK)	
M	13	1	**8T-4136**	2	BOLT (M10X1.5X25-MM)	
M	14	1	**8T-4970**	4	BOLT (M6X1X14-MM)	
	15	1	**9X-8256**	4	WASHER (6.6X12X2-MM THK)	

E - ORDER BY THE CENTIMETER
M - METRIC PART

382-8010 **WIRING GP-VALVE (**contd.**)** **i05468470**

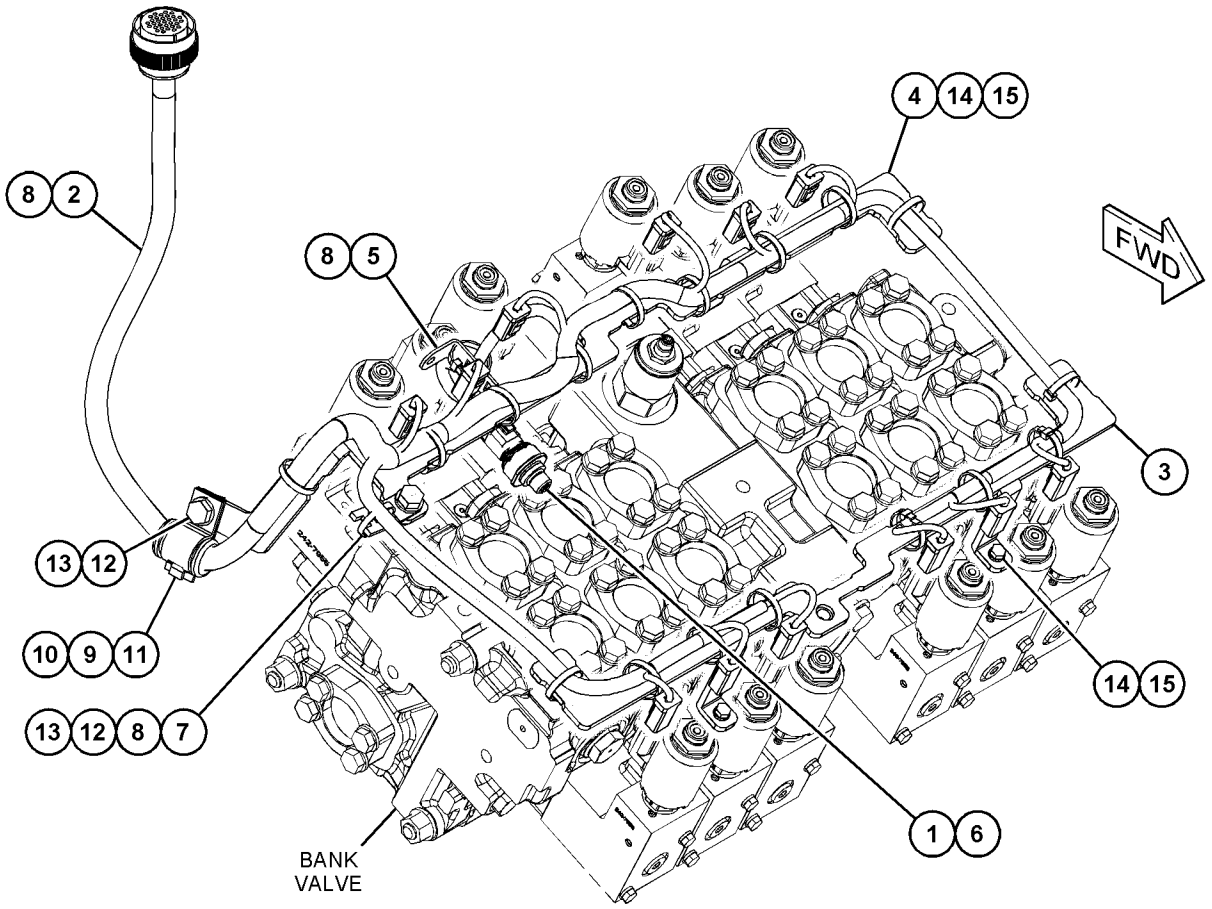

GRAPHIC #1 <END> g03497417

396-0434 WIRING GP-VALVE–IMPLEMENT

S/N: RAB1-UP

PART OF 359-6388 VALVE & LINES GP-HYD CONTROL

AN ATTACHMENT

SMCS-1408, 5734

i05805222

NOTE	REF NO	GRAPHIC REF	PART NUMBER	QTY	PART NAME 1 2 3 4 5 6 (PRODUCT LEVEL)	SEE PAGE
	1	1	**375-6126**	1	SENSOR GP-PRESSURE (FAN)	
	2	1	**396-0436**	1	HARNESS AS-VALVE	
		1	**8T-8737**	15	PLUG-SEAL	
		1	**9X-3402**	39	SOCKET-CONNECTOR (16-GA TO 18-GA)	
E		1	**125-7874**		TUBE-HEAT SHRINK (5.72-MM DIA) (5-CM)	
E		1	**125-7875**		TUBE-HEAT SHRINK (7.44-MM DIA) (10-CM)	
		1	**155-2270**	10	KIT-CONNECTING PLUG (2-PIN)	
					(EACH INCLUDES PLUG AS, WEDGE, & INTERFACE SEAL)	
		1	**167-3693**	1	PLUG AS-CONNECTOR (31-PIN)	
		1	**237-0227**	1	PLUG AS-CONNECTOR (3-PIN)	
		1	**264-7030**	1	SEAL-CONNECTOR	
	3	1	**447-7306**	1	BRACKET AS	
M		1	**8T-3490**	1	NUT-WELD (M10X1.5-THD)	
	4	1	**447-8226**	1	BRACKET AS	
M		1	**8T-3490**	2	NUT-WELD (M10X1.5-THD)	
	5	1	**156-6175**	1	CLIP	
	6	1	**1J-9671**	1	SEAL-O-RING	
	7	1	**4P-7428**	1	CLIP	
	8	1	**7K-1181**	18	STRAP-CABLE	
	9	1	**7S-3916**	1	CLIP (TAB)	
	10	1	**7S-3919**	1	CLIP (SLOT)	
	11	1	**7V-6571**	1	GROMMET	
	12	1	**8T-4121**	2	WASHER-HARD (11X21X2.5-MM THK)	
M	13	1	**8T-4136**	2	BOLT (M10X1.5X25-MM)	
M	14	1	**8T-4970**	4	BOLT (M6X1X14-MM)	
	15	1	**9X-8256**	4	WASHER (6.6X12X2-MM THK)	
	16	1	**274-3785**	1	CAP-SEAL	

E - ORDER BY THE CENTIMETER
M - METRIC PART

396-0434 **WIRING GP-VALVE (**contd.**)** **i05805222**

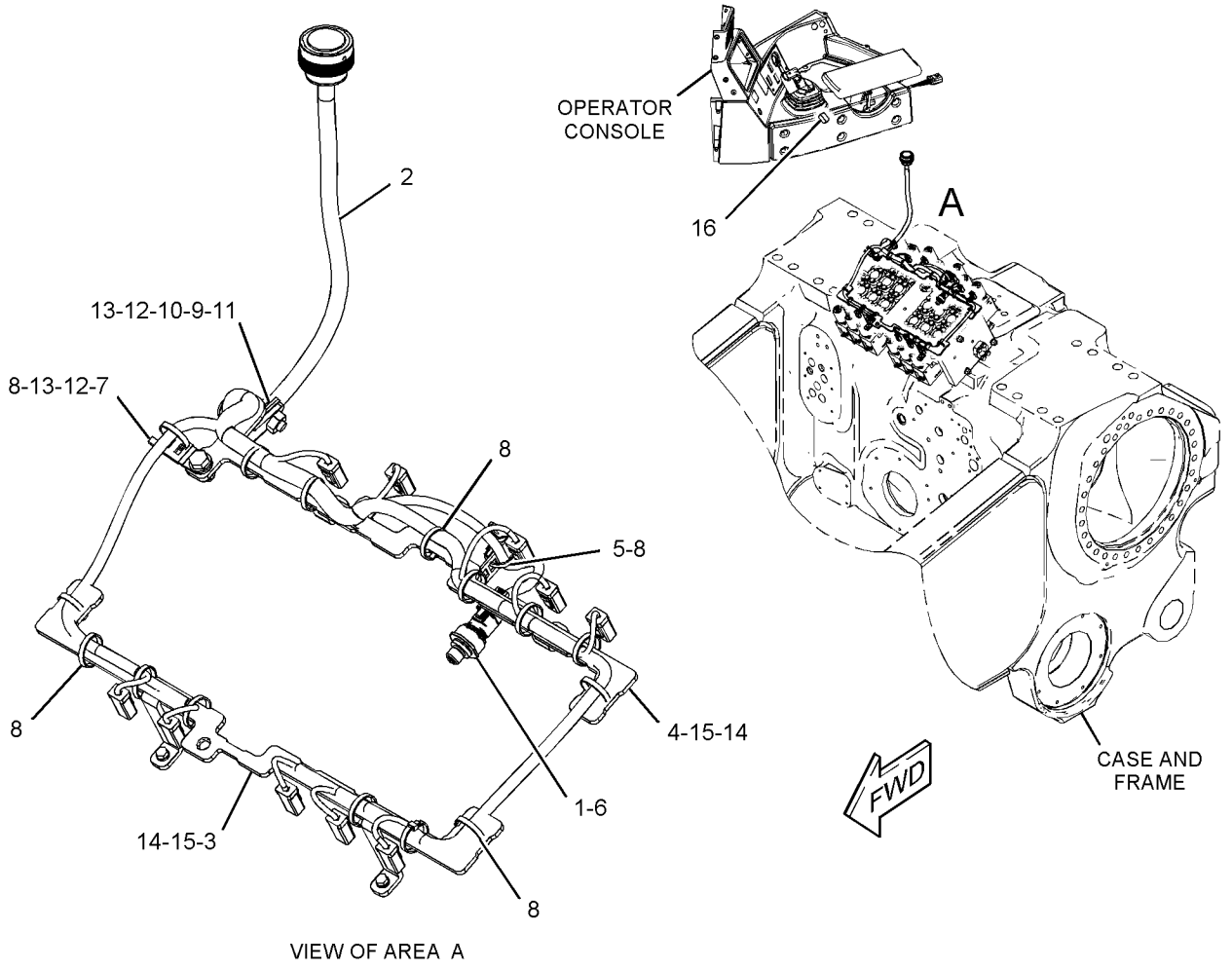

VIEW OF AREA A

GRAPHIC #1 <END> g03677586

110-2637 AXLE GP

S/N: RAB1-UP
PART OF 359-6405 POWER TRAIN AR
AN ATTACHMENT

SMCS-3282 **i01401277**

NOTE	REF NO	GRAPHIC REF	PART NUMBER	QTY	PART NAME 1 2 3 4 5 6 (PRODUCT LEVEL)	SEE PAGE
	1	1	**147-1226**	2	SHAFT AS	
					(EACH SHAFT AS INCLUDES)	
		1	**8E-0618**	1	BEARING-THRUST	
C	2	1	**150-1302**	2	SHAFT AS	
					(EACH SHAFT AS INCLUDES)	
		1	**8E-0618**	1	BEARING-THRUST	
					QUANTITIES SHOWN ARE THOSE REQUIRED FOR BOTH LH & RH SIDES	

C - CHANGE FROM PREVIOUS TYPE

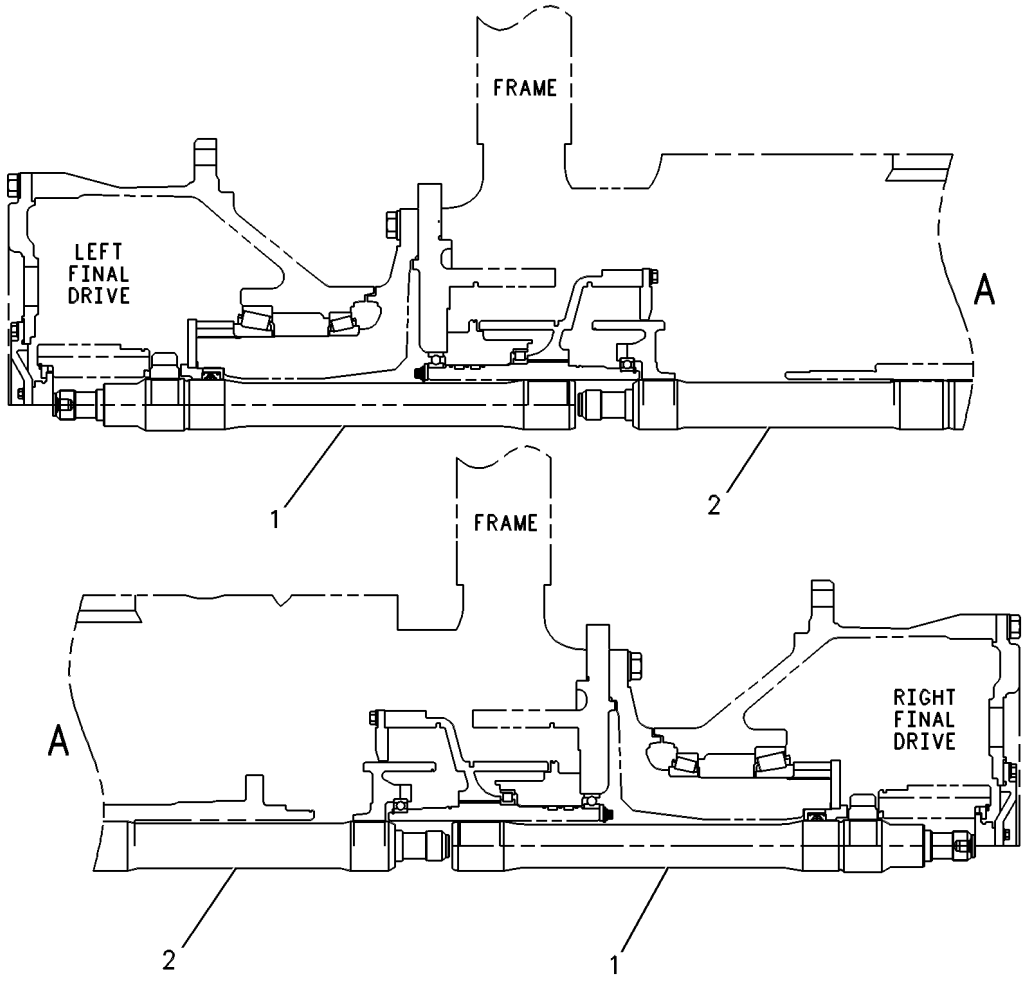

GRAPHIC #1 <END> g00252802

422-0091 CASE & PARTS GP-PLANETARY

S/N: NDM1-UP
PART OF 372-6094 TRANSMISSION AR
AN ATTACHMENT

SMCS-3030, 3064, 3160 **i05425346**

NOTE	REF NO	GRAPHIC REF	PART NUMBER	QTY	PART NAME 1 2 3 4 5 6 (PRODUCT LEVEL)	SEE PAGE
	1	1	**5K-5120**	1	STRIP	
	2	1	**5K-9235**	1	ELBOW-FLARED	
	3	1	**5K-9989**	1	TEE-FLARED	
	4	1	**8S-9130**	1	SCREEN-SUCTION	
	5	1	**9G-8615**	1	COVER	
	6	1	**9S-7710**	1	ELBOW-FLARED	
Y	7	1	**106-4150**	1	DRAIN GP-ECOLOGY	513
	8	1	**110-9291**	1	COVER AS	
		1	**7M-8480**	2	DOWEL	
	9	1	**110-9299**	1	TUBE AS	
	10	1	**110-9300**	1	TUBE AS	
	11	1	**112-4512**	1	TUBE	
	12	1	**172-3473**	1	CASE AS	
		1	**4B-9785**	3	BALL	
		1	**4D-8148**	2	DOWEL	
		1	**114-4655**	1	PLUG-CUP	
	13	1	**172-4275**	1	COVER	
	14	1	**186-3161**	1	GASKET-COVER	
	15	1	**034-3557**	25	BOLT-LOCKING (3/8-16X1.125-IN)	
	16	1	*164-5567*	3	COUPLER AS-QUICK DISCONNECT (MALE)	
					(EACH INCLUDES)	
		1	**6V-3965**	1	FITTING (QUICK DISCONNECT)	
		1	**214-7568**	1	SEAL-O-RING	
	17	1	*244-3712*	1	PLUG AS	
		1	**9S-4191**	1	PLUG (9/16-18-THD)	
		1	**214-7568**	1	SEAL-O-RING	
	18	1	*326-0316*	3	PLUG AS	
					(EACH INCLUDES)	
		1	**9S-6130**	1	PLUG	
		1	**228-7096**	1	SEAL-O-RING	
	19	1	**3P-0651**	1	SEAL-O-RING	
	20	1	**4K-5175**	4	BOLT-12 POINT HEAD (1/2-13X1.5-IN)	
	21	1	**5K-9107**	2	BOLT-LOCKING (3/8-16X0.75-IN)	
	22	1	**5M-2894**	1	WASHER-HARD (10.2X18.5X2.5-MM THK)	
	23	1	**5P-5846**	3	SEAL-O-RING	
	24	1	**5P-8247**	15	WASHER-HARD (17X32X3.5-MM THK)	
	25	1	**5P-8998**	1	FITTING	
	26	1	**5P-9519**	1	SEAL-O-RING	
	27	1	**6V-0852**	3	CAP-DUST	
	28	1	**6V-1196**	1	SEAL-O-RING	
	29	1	**8M-5266**	2	SEAL-O-RING	
	30	1	**8P-0058**	1	GASKET-COVER	
	31	1	**8T-2501**	4	BOLT (3/8-16X2-IN)	
	32	1	**8T-6762**	1	PLUG-PIPE (1/2-14-THD)	
	33	1	**9S-1350**	1	CLIP	
	34	1	**9X-8880**	15	BOLT (5/8-11X2-IN)	

Y - SEPARATE ILLUSTRATION

422-0091 **CASE & PARTS GP-PLANETARY (**contd.**)** **i05425346**

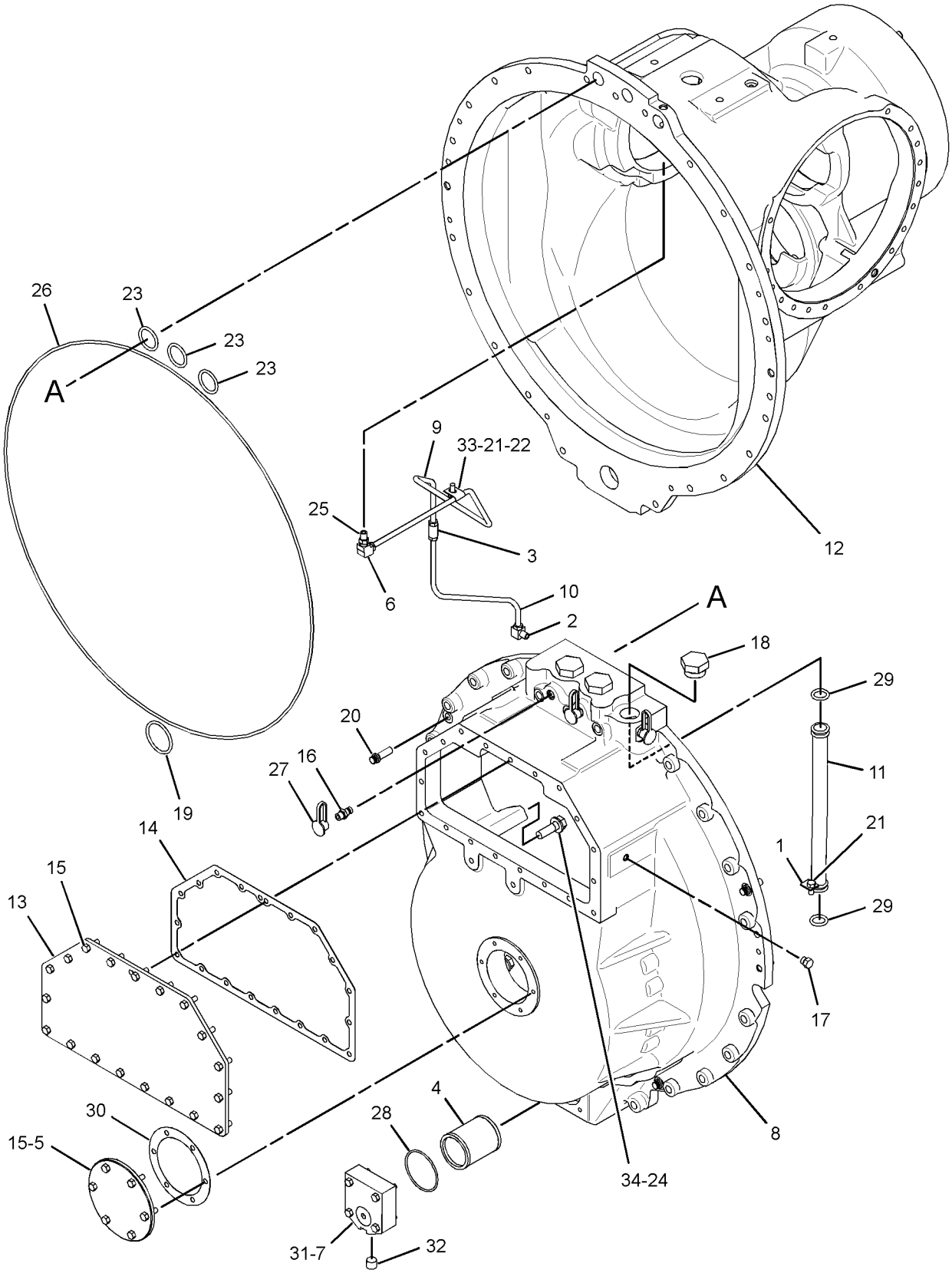

GRAPHIC #1 <END> g03438357

378-2003 CONTROL GP-TRANSMISSION HYD

S/N: NDM1-UP
PART OF 372-6094 TRANSMISSION AR
AN ATTACHMENT

SMCS-3073, 3167

i05670249

NOTE	REF NO	GRAPHIC REF	PART NUMBER	QTY	PART NAME 1 2 3 4 5 6 (PRODUCT LEVEL)	SEE PAGE
	1	1	**3J-6956**	2	SPRING	
	2	1	**5K-5120**	2	STRIP	
	3	1	**6Y-2584**	2	RETAINER	
	4	1	**104-6729**	1	RETAINER	
	5	1	**142-1767**	2	POPPET	
	6	1	**290-5562**	1	MOUNT (DUAL SWIVEL)	
	7	1	*369-6857*	1	PLUG AS	
		1	**360-3695**	1	PLUG	
		1	**3D-2824**	1	SEAL-O-RING	
	8	1	**384-3751**	1	MANIFOLD-TOP	
	9	1	**387-3332**	1	MANIFOLD	
	10	1	**388-7265**	1	TUBE AS	
Y	11	1	**421-8199**	1	VALVE GP-SOLENOID (CLUTCH PRESSURE)	589
J	12	1	**423-6535**	5	VALVE GP-SOLENOID (SHIFT)	
	13	1	**424-1537**	1	HARNESS AS-TRANSMISSION	
E		1	**8T-6342**		TUBE-HEAT SHRINK (3.2-MM DIA) (46-CM)	
E		1	**9X-2109**		TUBE-HEAT SHRINK (6.4-MM DIA) (10-CM)	
		1	**9X-3402**	16	SOCKET-CONNECTOR (16-GA TO 18-GA)	
					—OR—	
		1	**126-1768**	16	SOCKET-CONNECTOR (14-GA TO 16-GA)	
		1	**240-7876**	8	PLUG AS-CONNECTOR (2-PIN)	
		1	**264-7029**	1	SEAL-CONNECTOR	
		1	**331-4226**	8	KIT-CONNECTING PLUG (2-PIN)	
					(INCLUDES PLUG AS & WEDGE)	
	14	1	**437-7217**	1	TUBE AS	
	15	1	**0S-0509**	2	BOLT (3/8-16X0.75-IN)	
	16	1	**0S-1619**	4	BOLT (3/8-16X3-IN)	
	17	1	**104-6730**	1	GASKET	
M	18	1	**113-0920**	10	BOLT-SOCKET HEAD (M4X0.7X35-MM)	
	19	1	**132-5789**	1	CLIP	
	20	1	*164-5567*	5	COUPLER AS-QUICK DISCONNECT (MALE)	
					(EACH INCLUDES)	
		1	**6V-3965**	1	FITTING (QUICK DISCONNECT)	
		1	**214-7568**	1	SEAL-O-RING	
	21	1	**1A-2029**	2	BOLT (3/8-16X1.125-IN)	
	22	1	**285-6393**	3	CLIP	
	23	1	**2H-3855**	1	BOLT (1/2-13X0.875-IN)	
	24	1	*321-8657*	1	ELBOW AS	
		1	**6V-8076**	1	ELBOW	
		1	**214-7568**	1	SEAL-O-RING	
	25	1	**3S-2093**	12	STRAP-CABLE	
	26	1	**4D-1322**	2	RING-RETAINING	
	27	1	**4P-7429**	1	CLIP	
	28	1	**5M-2894**	4	WASHER-HARD (10.2X18.5X2.5-MM THK)	
	29	1	**5P-8245**	1	WASHER-HARD (13.5X25.5X3-MM THK)	
M	30	1	**6V-4249**	18	BOLT (M10X1.5X50-MM)	
	31	1	**6V-5839**	21	WASHER (11X21X2.5-MM THK)	

378-2003 **CONTROL GP-TRANSMISSION HYD (**contd.**)** **i05670249**

NOTE	REF NO	GRAPHIC REF	PART NUMBER	QTY	PART NAME 1 2 3 4 5 6 (PRODUCT LEVEL)	SEE PAGE
M	32	1	**6V-6317**	1	BOLT (M10X1.5X20-MM)	
	33	1	**451-1493**	4	SEAL-O-RING	
					AVAILABLE REPAIR KIT(S):	
J			**387-2867**	1	KIT-SEAL	
					(INCLUDES O-RINGS)	

E - ORDER BY THE CENTIMETER
J - KIT MARKED J SERVICES PART(S) MARKED J
M - METRIC PART
Y - SEPARATE ILLUSTRATION

378-2003 **CONTROL GP-TRANSMISSION HYD (**contd.**)** **i05670249**

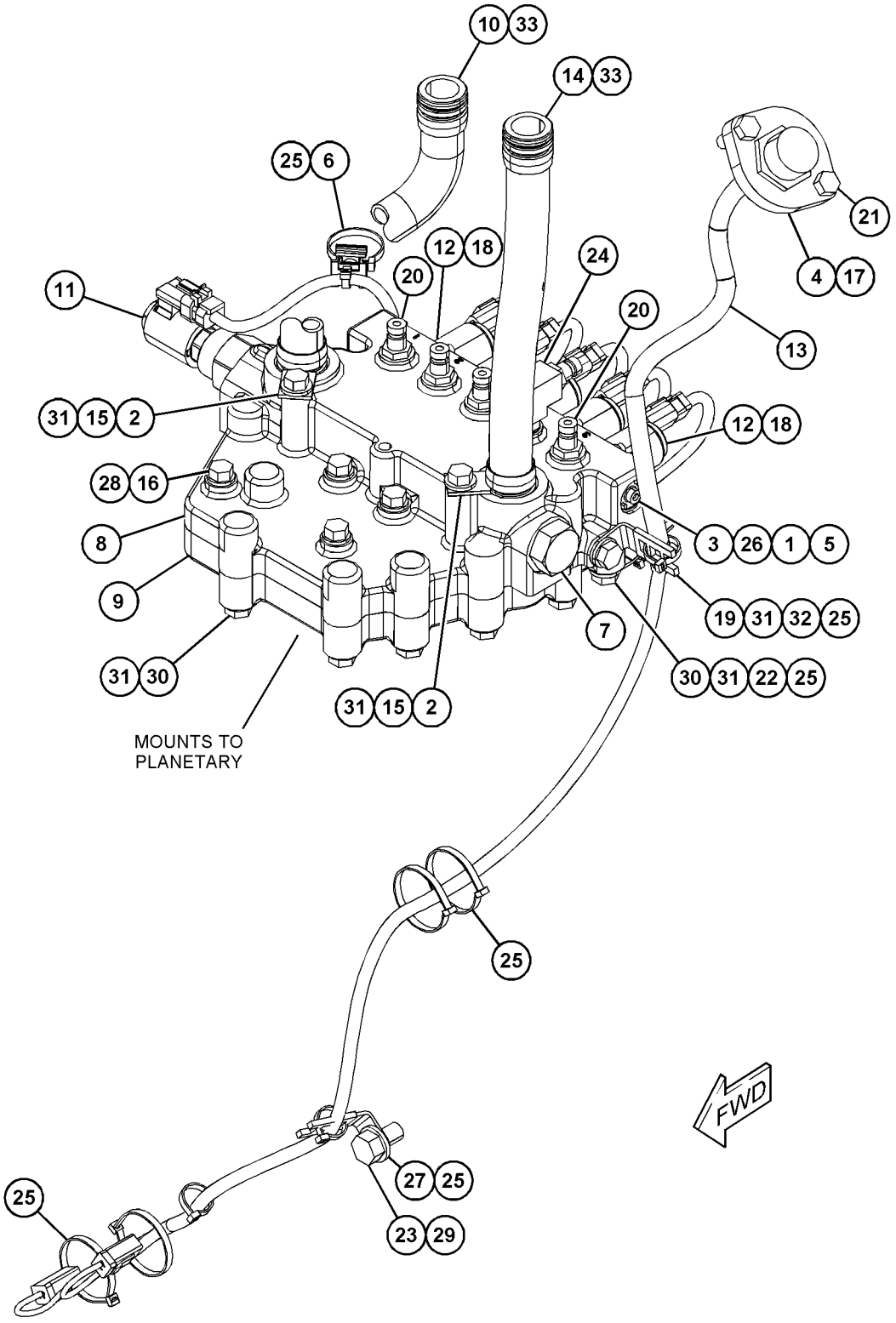

GRAPHIC #1 <END> g03457536

359-6466 COOLER GP-TRANSMISSION OIL

S/N: RAB1-UP
PART OF 359-6404 INSTALLATION AR-ENGINE
AN ATTACHMENT

SMCS-1375 **i05425899**

NOTE	REF NO	GRAPHIC REF	PART NUMBER	QTY	PART NAME 1 2 3 4 5 6 (PRODUCT LEVEL)	SEE PAGE
	1	1	**361-2155**	2	SUPPORT	
Y	2	1	*375-0765*	1	CORE GP-OIL COOLER	100
	3	1	**375-0766**	2	CLAMP	
	4	1	**6V-6609**	1	SEAL-O-RING	
M	5	1	**8T-4139**	4	BOLT (M12X1.75X30-MM)	
M	6	1	**8T-4183**	8	BOLT (M12X1.75X40-MM)	
	7	1	**8T-4223**	12	WASHER-HARD (13.5X25.5X3-MM THK)	
	8	1	**9S-4185**	1	PLUG	

M - METRIC PART
Y - SEPARATE ILLUSTRATION

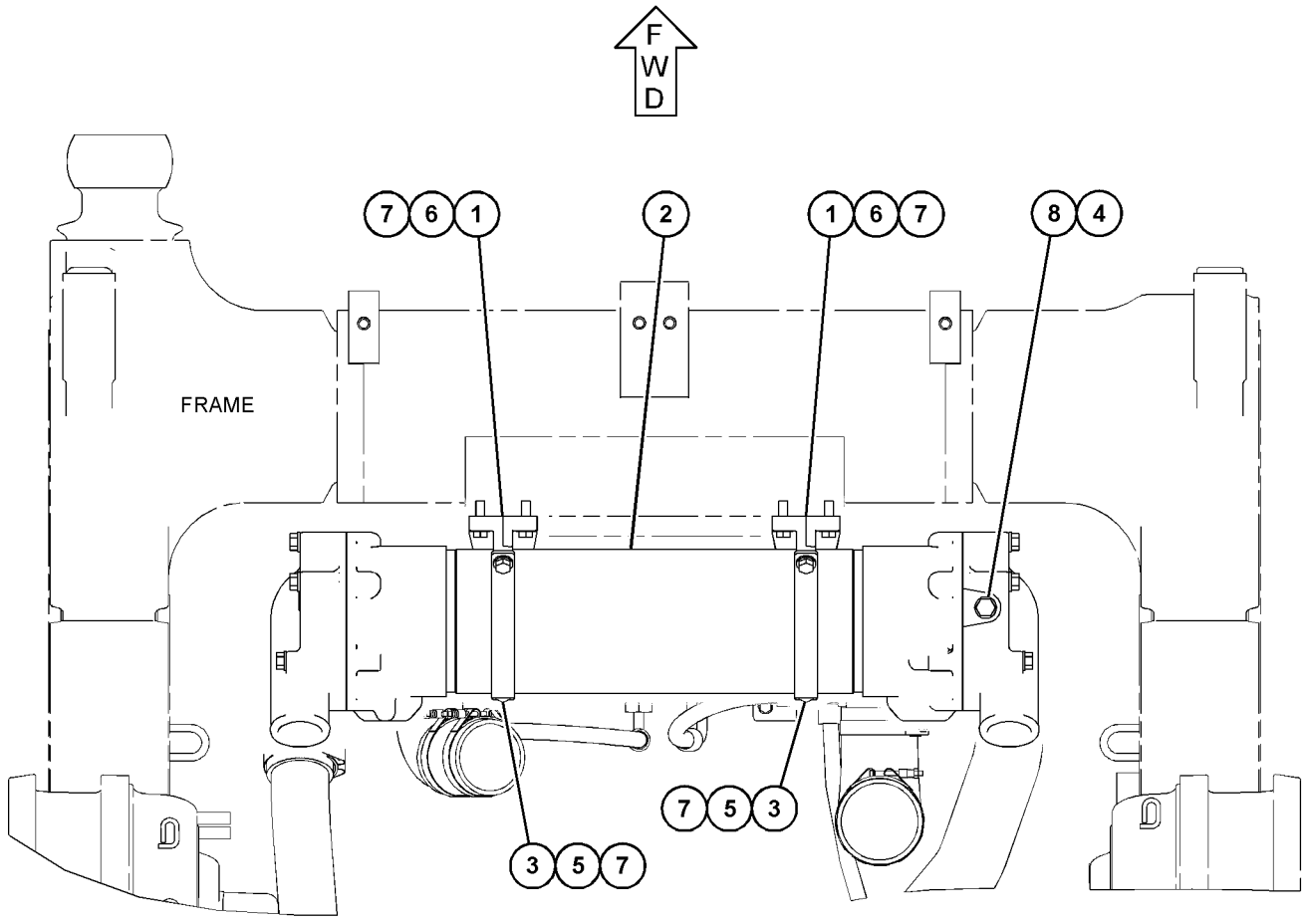

TOP VIEW

GRAPHIC #1 <END> g03480419

220-5548 COUPLING GP-PUMP

S/N: RAB1-UP
PART OF 359-6405 POWER TRAIN AR
AN ATTACHMENT

SMCS-5062 **i02050402**

NOTE	REF NO	GRAPHIC REF	PART NUMBER	QTY	PART NAME 1 2 3 4 5 6 (PRODUCT LEVEL)	SEE PAGE
	1	1	**211-9087**	2	COUPLING AS	
					(EACH INCLUDES)	
	1A	1	**6Y-2130**	3	BUSHING AS	
	1B	1	**211-9085**	3	BUSHING AS	
Y	2	1	*220-5549*	1	SLIP JOINT GP	567
	3	1	**8T-4121**	12	WASHER-HARD (11X21X2.5-MM THK)	
M	4	1	**8T-4182**	6	BOLT (M10X1.5X45-MM)	
M	5	1	**8T-4185**	6	BOLT (M10X1.5X50-MM)	

M - METRIC PART
Y - SEPARATE ILLUSTRATION

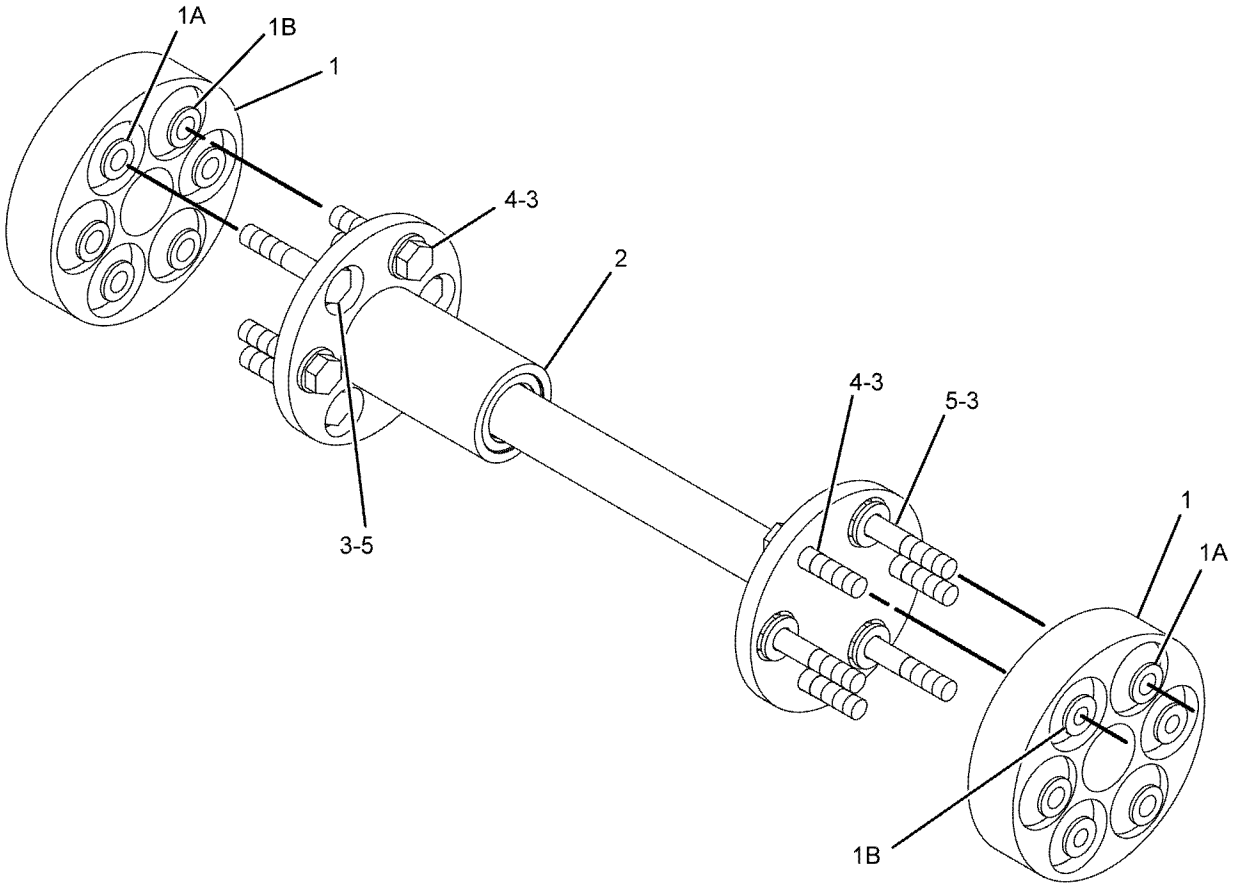

GRAPHIC #1 <END> g01052722

106-4150 DRAIN GP-ECOLOGY

S/N: RAB1-UP; NDM1-UP

PART OF 422-0091 CASE & PARTS GP-PLANETARY, 359-6482 TORQUE CONVERTER & HOUSING GP AN ATTACHMENT

SMCS-3100 **i04155814**

NOTE	REF NO	GRAPHIC REF	PART NUMBER	QTY	PART NAME 1 2 3 4 5 6 (PRODUCT LEVEL)	SEE PAGE
	1	1	**4N-3808**	1	PIN-SPRING	
	2	1	**5P-9658**	1	SEAL-O-RING	

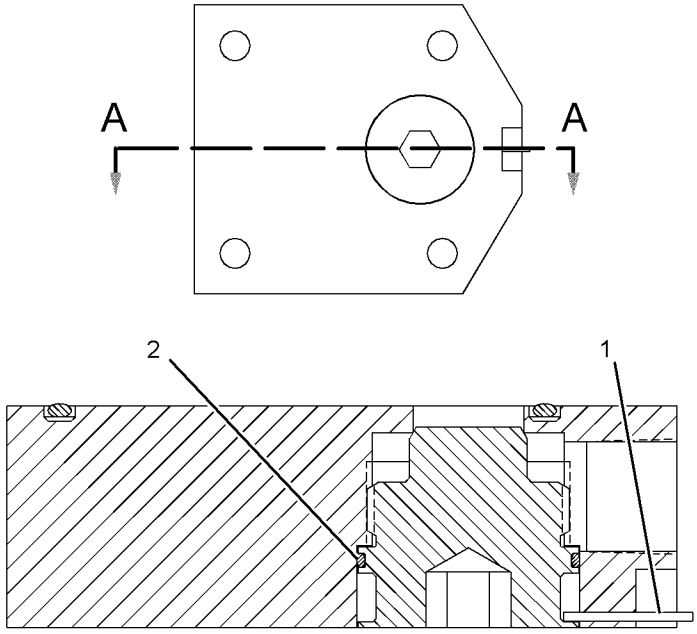

SECTION A-A

GRAPHIC #1 <END> g02350745

372-4564 DRIVE AR-FINAL

S/N: RAB1-UP

CANNOT BE USED WITH 372-4565—PAGE: 515, 372-4566—PAGE: 516, 372-4567—PAGE: 517 AN ATTACHMENT

SMCS-4050 **i04899341**

NOTE	REF NO	GRAPHIC REF	PART NUMBER	QTY	PART NAME 1 2 3 4 5 6 (PRODUCT LEVEL)	SEE PAGE
YR	1	1	**110-2656**	2	DRIVE GP-FINAL	518
Y	2	1	*350-9316*	1	MOUNTING GP-FINAL DRIVE	547

R - REMANUFACTURED PART MAY BE AVAILABLE
Y - SEPARATE ILLUSTRATION

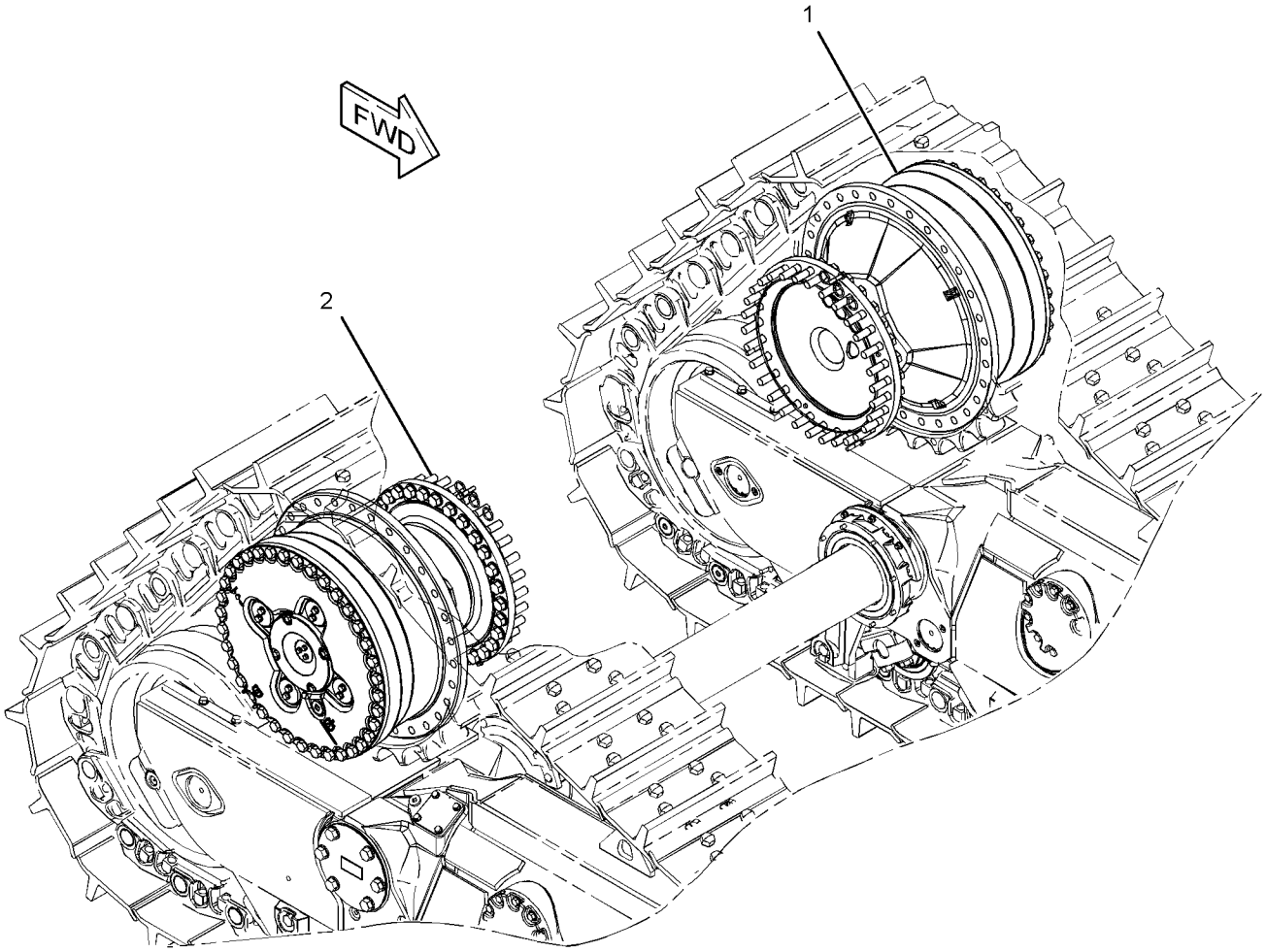

GRAPHIC #1 <END> g03097999

372-4565 DRIVE AR-FINAL–COLD WEATHER

S/N: RAB1-UP

CANNOT BE USED WITH 372-4564–PAGE: 514, 372-4566–PAGE: 516, 372-4567–PAGE: 517

AN ATTACHMENT

SMCS-4050 **i04899302**

NOTE	REF NO	GRAPHIC REF	PART NUMBER	QTY	PART NAME 1 2 3 4 5 6 (PRODUCT LEVEL)	SEE PAGE
Y	1	1	**110-2780**	2	DRIVE GP-FINAL (COLD WEATHER)	521
Y	2	1	*350-9316*	1	MOUNTING GP-FINAL DRIVE	547

Y - SEPARATE ILLUSTRATION

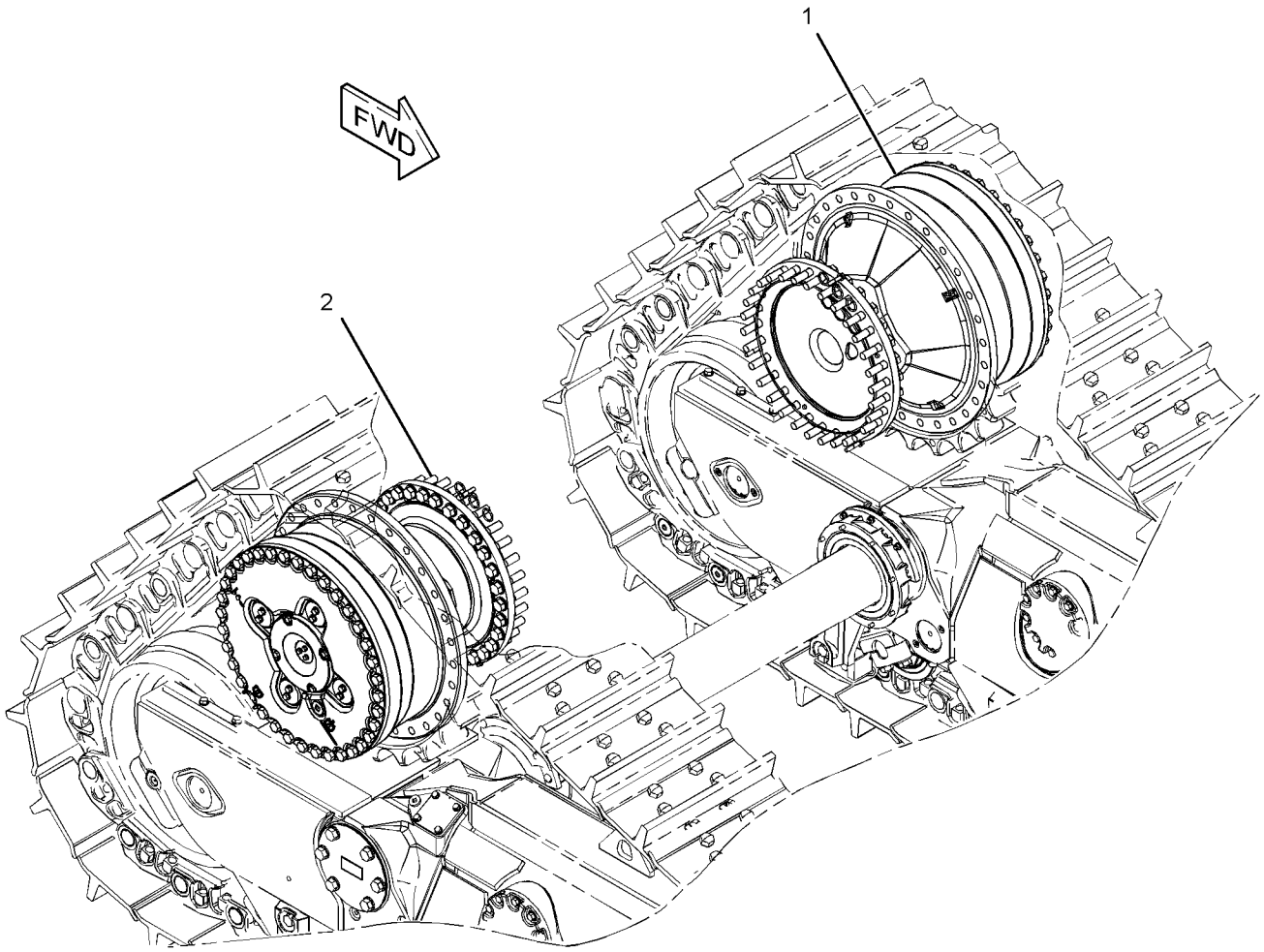

GRAPHIC #1 <END> g03097999

372-4566 DRIVE AR-FINAL—MUD ENVIRONMENT

S/N: RAB1-UP

CANNOT BE USED WITH 372-4564—PAGE: 514, 372-4565—PAGE: 515, 372-4567—PAGE: 517

AN ATTACHMENT

SMCS-4050 **i05957597**

NOTE	REF NO	GRAPHIC REF	PART NUMBER	QTY	PART NAME 1 2 3 4 5 6 (PRODUCT LEVEL)	SEE PAGE
Y	1	1	**282-4029**	2	DRIVE GP-FINAL (MUD ENVIRONMENT)	527
Y	2	1	*350-9316*	1	MOUNTING GP-FINAL DRIVE	547

Y - SEPARATE ILLUSTRATION

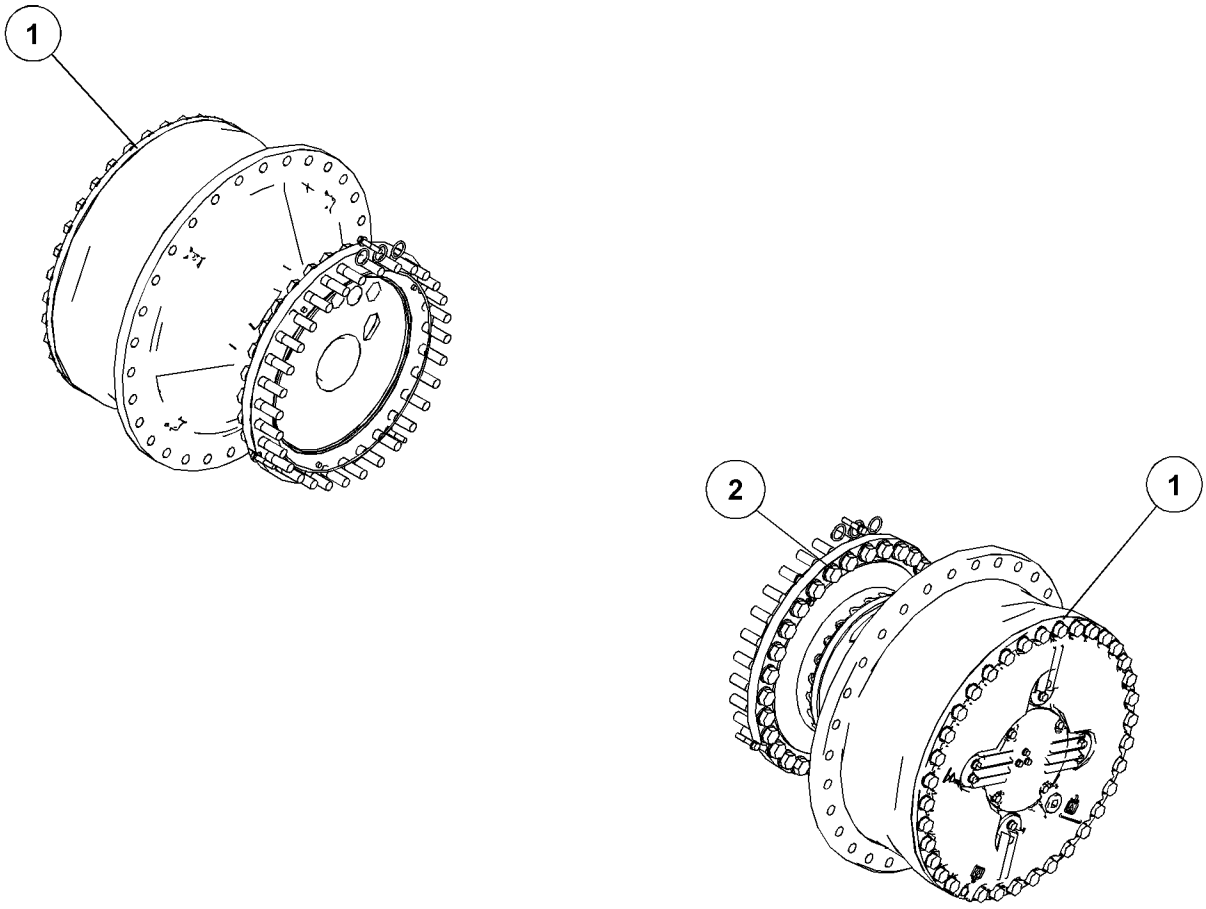

GRAPHIC #1 <END> g03095616

372-4567 DRIVE AR-FINAL—WASTE HANDLING

S/N: RAB1-UP

CANNOT BE USED WITH 372-4564—PAGE: 514, 372-4565—PAGE: 515, 372-4566—PAGE: 516 AN ATTACHMENT

SMCS-4050 **i04899327**

NOTE	REF NO	GRAPHIC REF	PART NUMBER	QTY	PART NAME 1 2 3 4 5 6 (PRODUCT LEVEL)	SEE PAGE
Y	1	1	**192-0722**	2	DRIVE GP-FINAL	524
Y	2	1	*371-6968*	1	MOUNTING GP-FINAL DRIVE	548

Y - SEPARATE ILLUSTRATION

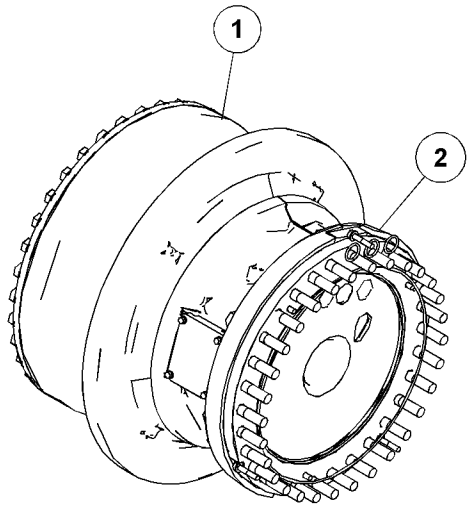

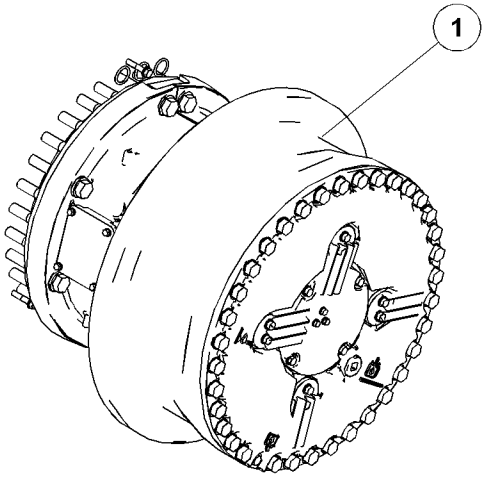

GRAPHIC #1 <END> g03099998

110-2656 DRIVE GP-FINAL*R

S/N: RAB1-UP
PART OF 372-4564 DRIVE AR-FINAL
AN ATTACHMENT

SMCS-4050 **i05173011**

NOTE	REF NO	GRAPHIC REF	PART NUMBER	QTY	PART NAME 1 2 3 4 5 6 (PRODUCT LEVEL)	SEE PAGE
	1	1	**8T-2502**	3	BOLT (3/8-16X1.125-IN)	
	2	1	**8T-4896**	3	WASHER-HARD (10.2X18.5X2.5-MM THK)	
	3	1	**030-8538**	8	BOLT (1/2-13X1.25-IN)	
	4	1	**5P-8245**	8	WASHER-HARD (13.5X25.5X3-MM THK)	
	5	1	**3P-8822**	1	COVER	
	6	1	**6V-3298**	1	PLUG-MAGNETIC (FINAL DRIVE, OIL FILL)	
	7	1	**2S-4078**	1	SEAL-O-RING	
	8	1	**9S-4185**	1	PLUG (FINAL DRIVE, OIL DRAIN)	
	9	1	**3K-0360**	1	SEAL-O-RING	
	10	1	**5F-7054**	1	SEAL-O-RING	
R	11	1	**3T-3294**	1	CARRIER-PLANETARY	
	12	1	**5D-7523**	1	SEAL-O-RING	
	13	1	**9M-5894**	1	SEAL-O-RING	
	14	1	**2S-0613**	1	RING-RETAINING	
	15	1	**3P-8827**	4	PLATE	
	16	1	**6V-1653**	4	SEAL-QUAD RING	
	17	1	**8T-9400**	35	BOLT (7/8-9X2.5-IN)	
	18	1	**8C-6913**	35	WASHER-HARD (24X41.5X4-MM THK)	
	19	1	**362-5414**	8	BEARING-TAPERED ROLLER	
	20	1	**1L-7319**	8	CUP-BEARING	
	21	1	**9W-9134**	4	GEAR-PLANETARY (25-TEETH)	
	22	1	**9W-9133**	1	GEAR-SUN (22-TEETH)	
	23	1	**7S-4326**	1	DOWEL	
R	24	1	**9W-9136**	1	CARRIER-PLANETARY	
	25	1	**3P-8820**	1	RING-THRUST	
	26	1	**6F-8146**	1	SEAL-O-RING	
	27	1	**8E-3124**	1	RETAINER	
	28	1	**5K-7143**	16	BOLT-SELF-LOCKING (1/2-13X1.5-IN)	
	29	1	**110-2665**	4	SHAFT-PLANETARY	
	30	1	**5P-8944**	1	RING-RETAINING	
	31	1	**8P-5698**	4	PLATE	
	32	1	**5D-0353**	8	BOLT-LOCKING (3/8-16X1-IN)	
	33	1	**110-2662**	1	GEAR-SUN (18-TEETH)	
	34	1	**9P-3801**	4	SHAFT	
C	35	1	**147-0071**	1	BEARING-THRUST	
	36	1	**110-2671**	1	RETAINER	
	37	1	**9P-3555**	1	GEAR-RING (74-TEETH)	
	38	1	**166-6930**	8	CONE-BEARING (TAPERED ROLLER)	
	39	1	**166-6931**	8	CUP (BEARING)	
	40	1	**9W-9132**	4	GEAR-PLANETARY (27-TEETH)	
	41	1	**9P-3657**	4	RING-LOCK	
	42	1	**6T-0609**	16	PIN	
	43	1	**9W-9135**	1	HUB-REACTION	
	44	1	**6T-6566**	1	RING-RETAINING	
	45	1	**124-2375**	1	SEAL-LIP TYPE	
	46	1	**126-0587**	1	CONE-SPECIAL TAPERED	

110-2656 **DRIVE GP-FINAL (**contd.**)** **i05173011**

NOTE	REF NO	GRAPHIC REF	PART NUMBER	QTY	PART NAME 1 2 3 4 5 6 (PRODUCT LEVEL)	SEE PAGE
	47	1	**6V-8281**	1	CUP-BEARING	
	48	1	**110-2664**	1	HUB-SPROCKET	
	49	1	**3D-9133**	1	CUP-BEARING	
	50	1	**126-0588**	1	CONE-SPECIAL TAPERED	
	51	1	**6Y-0857**	1	SEAL GP-DUO-CONE	
	51A	1	**4M-0736**	2	RING-SEALING	
R	52	1	**327-4420**	1	SPINDLE	
	54	1	**8T-4223**	4	WASHER-HARD (13.5X25.5X3-MM THK)	
	55	1	**8T-8917**	4	BOLT (1/2-13X1.25-IN)	
	56	1	**110-2670**	1	HOLDER	
	57	1	**110-2674**	1	RING-THRUST	

PARTS SHOWN IN GRAPHIC(S) WITHOUT A REFERENCE NUMBER ARE NOT SERVICED SEPARATELY

C - CHANGE FROM PREVIOUS TYPE
R - REMANUFACTURED PART MAY BE AVAILABLE

110-2656 **DRIVE GP-FINAL (**contd.**)** **i05173011**

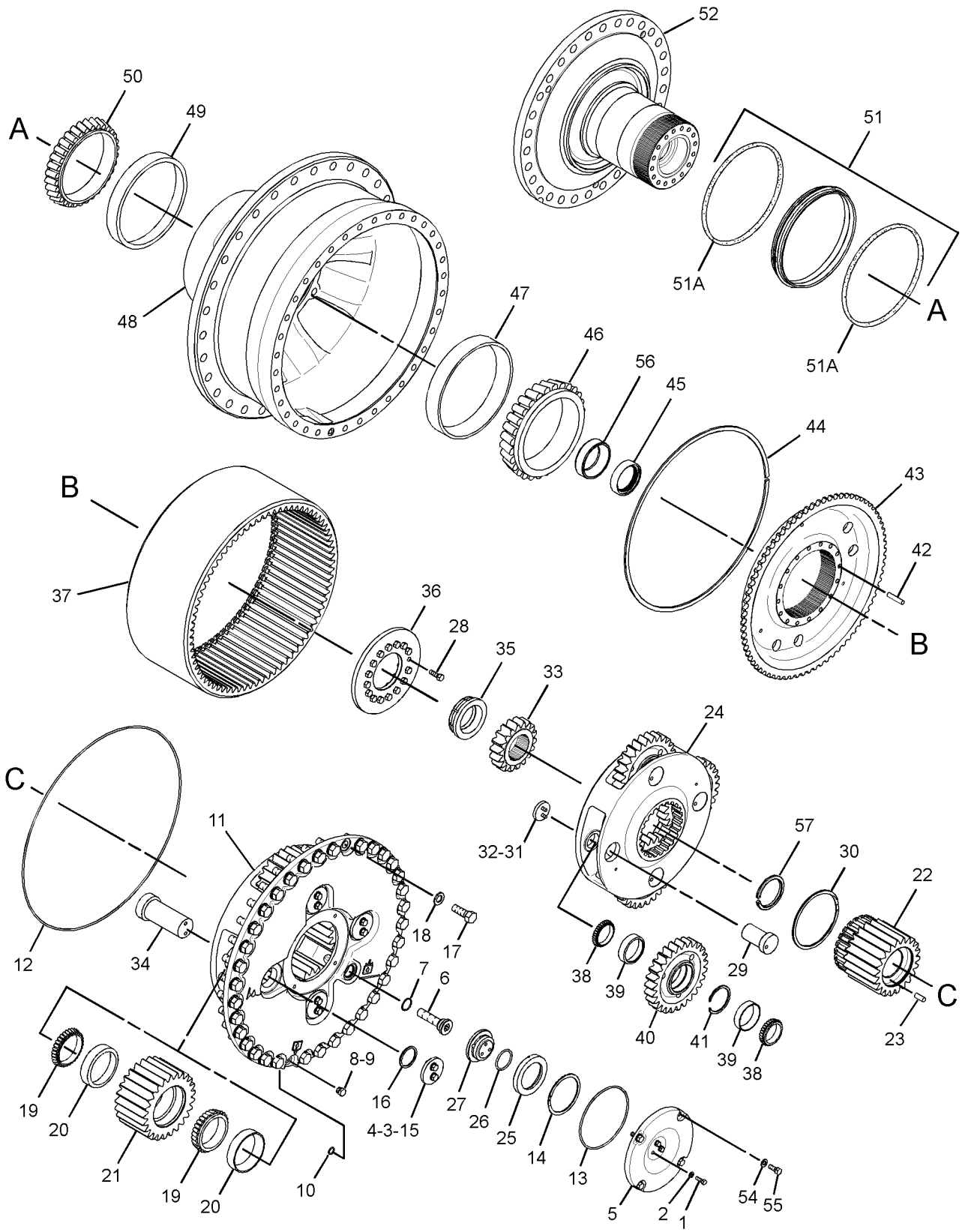

GRAPHIC #1 <END> g02162330

110-2780 DRIVE GP-FINAL—COLD WEATHER

S/N: RAB1-UP
PART OF 372-4565 DRIVE AR-FINAL
AN ATTACHMENT

SMCS-4050 **i04938221**

NOTE	REF NO	GRAPHIC REF	PART NUMBER	QTY	PART NAME 1 2 3 4 5 6 (PRODUCT LEVEL)	SEE PAGE
	1	1	**166-6931**	8	CUP (BEARING)	
	2	1	**1L-7319**	8	CUP-BEARING	
	3	1	**3D-9133**	1	CUP-BEARING	
	4	1	**3P-8820**	1	RING-THRUST	
	5	1	**3P-8822**	1	COVER	
	6	1	**3P-8827**	4	PLATE	
R	7	1	**3T-3294**	1	CARRIER-PLANETARY	
	8	1	**6T-0609**	16	PIN	
	9	1	**6T-6566**	1	RING-RETAINING	
	10	1	**6V-3298**	1	PLUG-MAGNETIC (FINAL DRIVE, OIL FILL)	
	11	1	**6V-8281**	1	CUP-BEARING	
	12	1	**8E-3124**	1	RETAINER	
	13	1	**8P-5698**	4	PLATE	
	14	1	**9P-3555**	1	GEAR-RING (74-TEETH)	
	15	1	**9P-3657**	4	RING-LOCK	
	16	1	**9P-3801**	4	SHAFT	
	17	1	**9W-9132**	4	GEAR-PLANETARY (27-TEETH)	
	18	1	**9W-9133**	1	GEAR-SUN (22-TEETH)	
	19	1	**9W-9134**	4	GEAR-PLANETARY (25-TEETH)	
	20	1	**9W-9135**	1	HUB-REACTION	
R	21	1	**9W-9136**	1	CARRIER-PLANETARY	
	22	1	**110-2662**	1	GEAR-SUN (18-TEETH)	
	23	1	**110-2664**	1	HUB-SPROCKET	
	24	1	**110-2665**	4	SHAFT-PLANETARY	
	25	1	**110-2670**	1	HOLDER	
	26	1	**110-2671**	1	RETAINER	
	27	1	**110-2674**	1	RING-THRUST	
	28	1	**118-2900**	1	SEAL GP-DUO-CONE	
		1	**3P-1849**	2	RING-SEALING	
	29	1	**124-2375**	1	SEAL-LIP TYPE	
	30	1	**126-0587**	1	CONE-SPECIAL TAPERED	
	31	1	**126-0588**	1	CONE-SPECIAL TAPERED	
	32	1	**147-0071**	1	BEARING-THRUST	
	33	1	**166-6930**	8	CONE-BEARING (TAPERED ROLLER)	
R	34	1	**327-4420**	1	SPINDLE	
	35	1	**362-5414**	8	BEARING-TAPERED ROLLER	
	36	1	**030-8538**	8	BOLT (1/2-13X1.25-IN)	
	37	1	**2S-0613**	1	RING-RETAINING	
	38	1	**2S-4078**	1	SEAL-O-RING	
	39	1	**3K-0360**	1	SEAL-O-RING	
	40	1	**5D-0353**	8	BOLT-LOCKING (3/8-16X1-IN)	
	41	1	**5D-7523**	1	SEAL-O-RING	
	42	1	**5F-7054**	1	SEAL-O-RING	
	43	1	**5K-7143**	16	BOLT-SELF-LOCKING (1/2-13X1.5-IN)	
	44	1	**5P-8245**	8	WASHER-HARD (13.5X25.5X3-MM THK)	
	45	1	**5P-8944**	1	RING-RETAINING	

110-2780 **DRIVE GP-FINAL (**contd.**)** **i04938221**

NOTE	REF NO	GRAPHIC REF	PART NUMBER	QTY	PART NAME 1 2 3 4 5 6 (PRODUCT LEVEL)	SEE PAGE
	46	1	**6F-8146**	1	SEAL-O-RING	
	47	1	**6V-1653**	4	SEAL-QUAD RING	
	48	1	**7S-4326**	1	DOWEL	
	49	1	**8C-6913**	35	WASHER-HARD (24X41.5X4-MM THK)	
	50	1	**8T-2502**	3	BOLT (3/8-16X1.125-IN)	
	51	1	**8T-4223**	4	WASHER-HARD (13.5X25.5X3-MM THK)	
	52	1	**8T-4896**	3	WASHER-HARD (10.2X18.5X2.5-MM THK)	
	53	1	**8T-8917**	4	BOLT (1/2-13X1.25-IN)	
	54	1	**8T-9400**	35	BOLT (7/8-9X2.5-IN)	
	55	1	**9M-5894**	1	SEAL-O-RING	
	56	1	**9S-4185**	1	PLUG (FINAL DRIVE, OIL DRAIN)	

R - REMANUFACTURED PART MAY BE AVAILABLE

110-2780 **DRIVE GP-FINAL (**contd.**)** **i04938221**

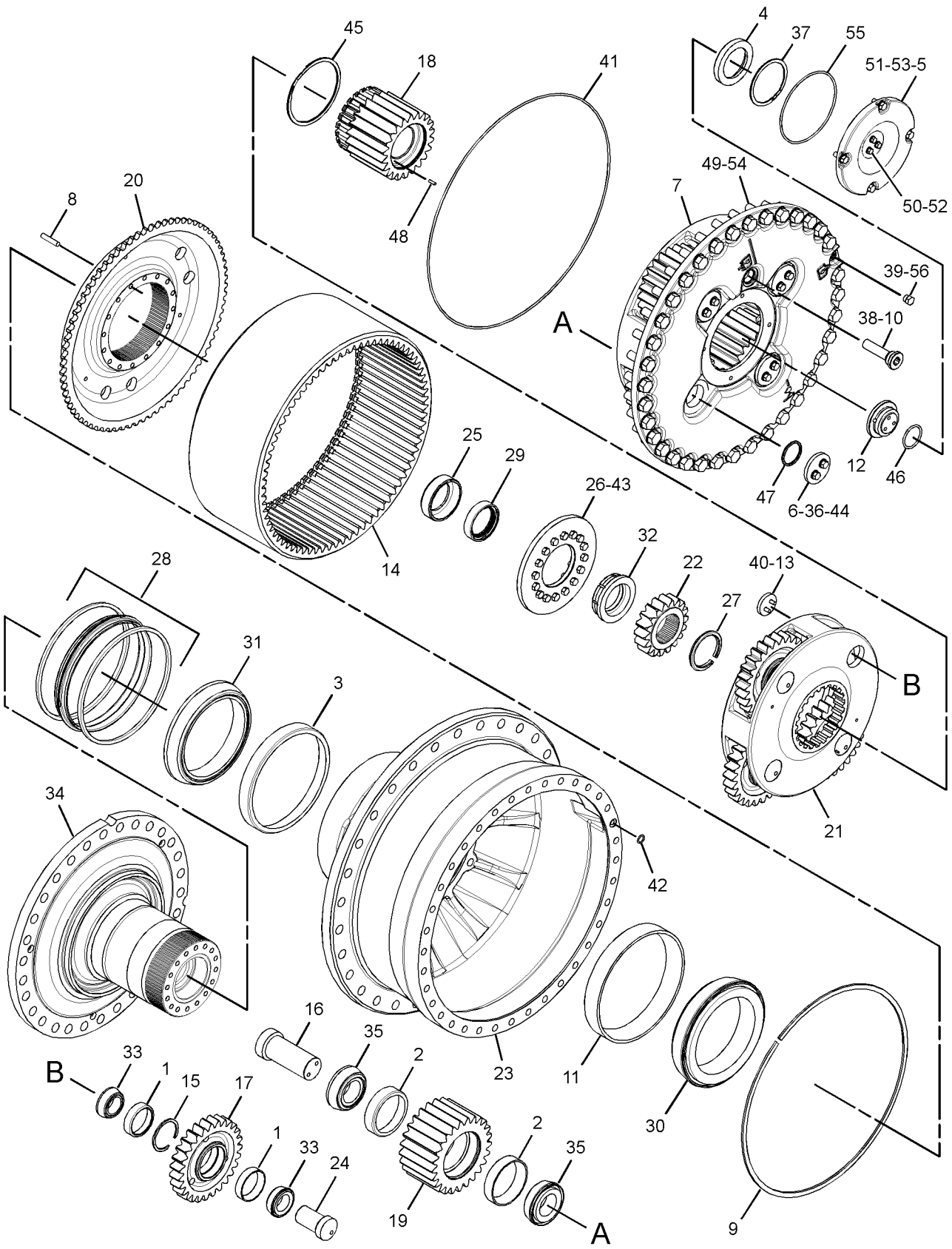

GRAPHIC #1 <END> g02438278

192-0722 DRIVE GP-FINAL—WASTE HANDLING

S/N: RAB1-UP
PART OF 372-4567 DRIVE AR-FINAL
AN ATTACHMENT

SMCS-4050 **i05196684**

NOTE	REF NO	GRAPHIC REF	PART NUMBER	QTY	PART NAME 1 2 3 4 5 6 (PRODUCT LEVEL)	SEE PAGE
	1	1	**166-6931**	8	CUP (BEARING)	
	2	1	**1L-7319**	8	CUP-BEARING	
	3	1	**3D-9133**	1	CUP-BEARING	
	4	1	**3P-8820**	1	RING-THRUST	
	5	1	**3P-8822**	1	COVER	
	6	1	**3P-8827**	4	PLATE	
R	7	1	**3T-3294**	1	CARRIER-PLANETARY	
	8	1	**6T-0609**	16	PIN	
	9	1	**6T-6566**	1	RING-RETAINING	
	10	1	**6V-3298**	1	PLUG-MAGNETIC (FINAL DRIVE, OIL FILL)	
	11	1	**6V-8281**	1	CUP-BEARING	
	12	1	**8E-3124**	1	RETAINER	
	13	1	**8P-5698**	4	PLATE	
	14	1	**9P-3555**	1	GEAR-RING (74-TEETH)	
	15	1	**9P-3657**	4	RING-LOCK	
	16	1	**9P-3801**	4	SHAFT	
	17	1	**9W-9132**	4	GEAR-PLANETARY (27-TEETH)	
	18	1	**9W-9133**	1	GEAR-SUN (22-TEETH)	
	19	1	**9W-9134**	4	GEAR-PLANETARY (25-TEETH)	
	20	1	**9W-9135**	1	HUB-REACTION	
R	21	1	**9W-9136**	1	CARRIER-PLANETARY	
	22	1	**110-2662**	1	GEAR-SUN (18-TEETH)	
	23	1	**110-2665**	4	SHAFT-PLANETARY	
	24	1	**110-2670**	1	HOLDER	
	25	1	**110-2671**	1	RETAINER	
	26	1	**110-2674**	1	RING-THRUST	
	27	1	**124-2375**	1	SEAL-LIP TYPE	
	28	1	**126-0587**	1	CONE-SPECIAL TAPERED	
	29	1	**126-0588**	1	CONE-SPECIAL TAPERED	
	30	1	**6Y-0857**	1	SEAL GP-DUO-CONE	
		1	**4M-0736**	2	RING-SEALING	
	31	1	**147-0071**	1	BEARING-THRUST	
	32	1	**166-6930**	8	CONE-BEARING (TAPERED ROLLER)	
	33	1	**189-3063**	2	RETAINER	
	34	1	**189-6244**	2	SEAL	
	35	1	**189-8869**	1	HUB AS-SPROCKET	
		1	**189-3065**	1	GUARD	
	36	1	**189-8874**	1	SPINDLE AS	
R		1	**327-4420**	1	SPINDLE	
		1	**189-3064**	1	GUARD	
	37	1	**362-5414**	8	BEARING-TAPERED ROLLER	
	38	1	**030-8538**	8	BOLT (1/2-13X1.25-IN)	
	39	1	**2S-0613**	1	RING-RETAINING	
	40	1	**2S-4078**	1	SEAL-O-RING	
	41	1	**3K-0360**	1	SEAL-O-RING	
	42	1	**5D-0353**	8	BOLT-LOCKING (3/8-16X1-IN)	

192-0722 **DRIVE GP-FINAL (**contd.**)** **i05196684**

NOTE	REF NO	GRAPHIC REF	PART NUMBER	QTY	PART NAME 1 2 3 4 5 6 (PRODUCT LEVEL)	SEE PAGE
	43	1	**5D-7523**	1	SEAL-O-RING	
	44	1	**5F-7054**	1	SEAL-O-RING	
	45	1	**5K-7143**	16	BOLT-SELF-LOCKING (1/2-13X1.5-IN)	
	46	1	**5P-8245**	8	WASHER-HARD (13.5X25.5X3-MM THK)	
	47	1	**5P-8944**	1	RING-RETAINING	
	48	1	**6F-8146**	1	SEAL-O-RING	
	49	1	**6V-1653**	4	SEAL-QUAD RING	
	50	1	**7S-4326**	1	DOWEL	
	51	1	**8C-6561**	16	BOLT (5/16-18X1.375-IN)	
	52	1	**8C-6913**	35	WASHER-HARD (24X41.5X4-MM THK)	
	53	1	**8T-2502**	3	BOLT (3/8-16X1.125-IN)	
	54	1	**8T-4223**	4	WASHER-HARD (13.5X25.5X3-MM THK)	
	55	1	**8T-4224**	16	WASHER-HARD (8.8X16X2-MM THK)	
	56	1	**8T-4896**	3	WASHER-HARD (10.2X18.5X2.5-MM THK)	
	57	1	**8T-8917**	4	BOLT (1/2-13X1.25-IN)	
	58	1	**8T-9400**	35	BOLT (7/8-9X2.5-IN)	
	59	1	**9M-5894**	1	SEAL-O-RING	
	60	1	**9S-4185**	1	PLUG (FINAL DRIVE, OIL DRAIN)	

R - REMANUFACTURED PART MAY BE AVAILABLE

192-0722 **DRIVE GP-FINAL (**contd.**)** **i05196684**

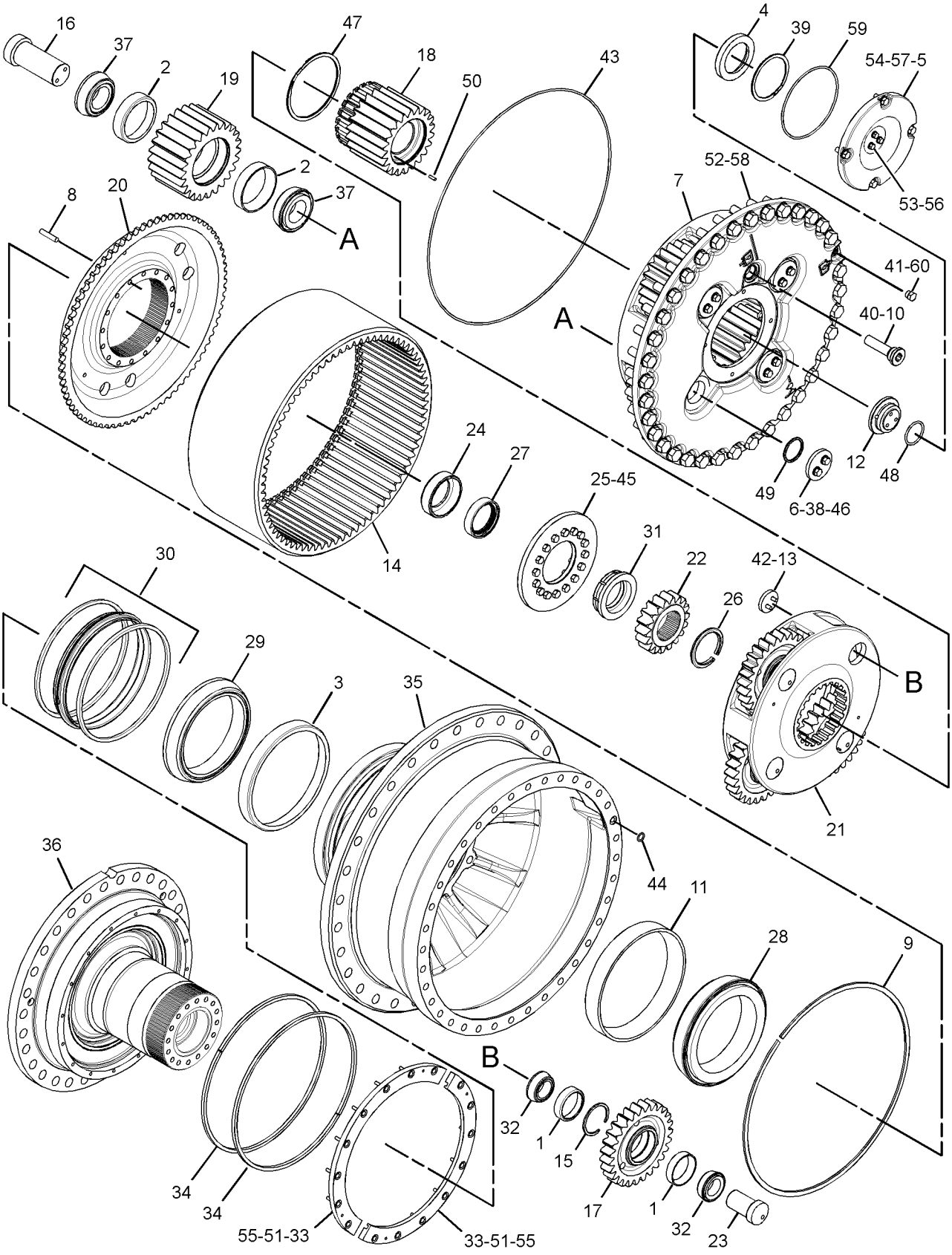

GRAPHIC #1 <END> g02438916

282-4029 DRIVE GP-FINAL—MUD ENVIRONMENT

S/N: RAB1-UP

PART OF 372-4566 DRIVE AR-FINAL

AN ATTACHMENT

SMCS-4050 **i04946734**

NOTE	REF NO	GRAPHIC REF	PART NUMBER	QTY	PART NAME 1 2 3 4 5 6 (PRODUCT LEVEL)	SEE PAGE
	1	1	**166-6931**	8	CUP (BEARING)	
	2	1	**362-5414**	8	BEARING-TAPERED ROLLER	
	3	1	**1L-7319**	8	CUP-BEARING	
	4	1	**2S-4078**	1	SEAL-O-RING	
	5	2	**3D-9133**	1	CUP-BEARING	
	6	1	**3P-8820**	1	RING-THRUST	
	7	1	**3P-8822**	1	COVER	
	8	1	**3P-8827**	4	PLATE	
R	9	1	**3T-3294**	1	CARRIER-PLANETARY	
	10	2	**4S-5879**	1	SEAL-O-RING	
	11	2	**6T-0609**	16	PIN	
	12	2	**6T-6566**	1	RING-RETAINING	
	13	1	**6V-3298**	1	PLUG-MAGNETIC (FINAL DRIVE, OIL FILL)	
	14	2	**6V-8281**	1	CUP-BEARING	
	15	2	**7S-8554**	1	SEAL-O-RING	
	16	1	**8E-3124**	1	RETAINER	
	17	1	**8P-5698**	4	PLATE	
	19	2	**9P-3555**	1	GEAR-RING (74-TEETH)	
	20	1	**9P-3657**	4	RING-LOCK	
	21	1	**9P-3801**	4	SHAFT	
	22	1	**9W-9132**	4	GEAR-PLANETARY (27-TEETH)	
	23	1	**9W-9133**	1	GEAR-SUN (22-TEETH)	
	24	1	**9W-9134**	4	GEAR-PLANETARY (25-TEETH)	
	25	2	**9W-9135**	1	HUB-REACTION	
R	26	1	**9W-9136**	1	CARRIER-PLANETARY	
	27	1	**110-2662**	1	GEAR-SUN (18-TEETH)	
	28	1	**110-2665**	4	SHAFT-PLANETARY	
	29	2	**110-2670**	1	HOLDER	
	30	2	**110-2671**	1	RETAINER	
	31	1	**110-2674**	1	RING-THRUST	
	32	2	**124-2375**	1	SEAL-LIP TYPE	
	33	2	**126-0587**	1	CONE-SPECIAL TAPERED	
	34	2	**126-0588**	1	CONE-SPECIAL TAPERED	
	35	2	**6Y-0857**	1	SEAL GP-DUO-CONE	
	35A	2	**4M-0736**	2	RING-SEALING	
	36	2	**147-0071**	1	BEARING-THRUST	
	37	1	**166-6930**	8	CONE-BEARING (TAPERED ROLLER)	
	39	2	**277-5789**	1	RING	
	40	2	**277-5790**	1	RING	
	41	2	**338-5722**	1	SPINDLE	
	42	2	**282-4028**	1	HUB-SPROCKET	
	43	1	**030-8538**	8	BOLT (1/2-13X1.25-IN)	
	45	1	**2S-0613**	1	RING-RETAINING	
	46	1	**3K-0360**	1	SEAL-O-RING	
	47	1	**5D-0353**	8	BOLT-LOCKING (3/8-16X1-IN)	
	48	1	**5D-7523**	1	SEAL-O-RING	

282-4029 **DRIVE GP-FINAL (**contd.**)** **i04946734**

NOTE	REF NO	GRAPHIC REF	PART NUMBER	QTY	PART NAME 1 2 3 4 5 6 (PRODUCT LEVEL)	SEE PAGE
	49	2	**5F-7054**	1	SEAL-O-RING	
	50	2	**5K-7143**	16	BOLT-SELF-LOCKING (1/2-13X1.5-IN)	
	51	1	**5P-8245**	8	WASHER-HARD (13.5X25.5X3-MM THK)	
	53	1	**5P-8944**	1	RING-RETAINING	
	54	1	**6F-8146**	1	SEAL-O-RING	
	55	2	**6L-5897**	16	BOLT (1/4-20X0.875-IN)	
	56	1	**6V-1653**	4	SEAL-QUAD RING	
	57	1	**7S-4326**	1	DOWEL	
	58	1	**8C-6913**	35	WASHER-HARD (24X41.5X4-MM THK)	
	60	1	**8T-2502**	3	BOLT (3/8-16X1.125-IN)	
	61	1	**8T-4223**	4	WASHER-HARD (13.5X25.5X3-MM THK)	
	62	1	**8T-4896**	3	WASHER-HARD (10.2X18.5X2.5-MM THK)	
	63	1	**8T-8917**	4	BOLT (1/2-13X1.25-IN)	
	64	1	**8T-9400**	35	BOLT (7/8-9X2.5-IN)	
	65	1	**9M-5894**	1	SEAL-O-RING	
	66	1	**9S-4185**	1	PLUG (FINAL DRIVE, OIL DRAIN)	

PARTS SHOWN IN GRAPHIC(S) WITHOUT A REFERENCE NUMBER ARE NOT SERVICED SEPARATELY

R - REMANUFACTURED PART MAY BE AVAILABLE

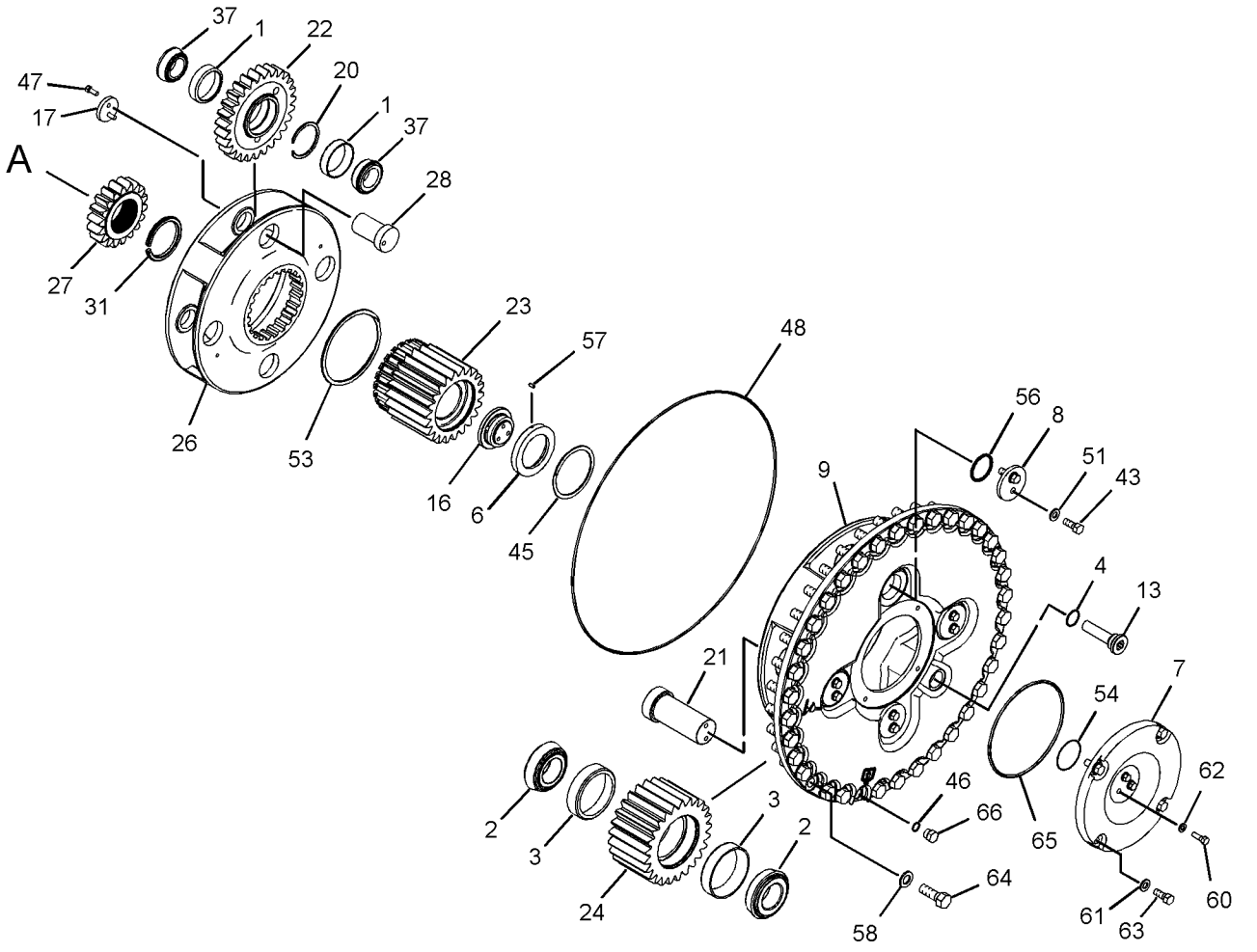

GRAPHIC #1 g01280393

282-4029 **DRIVE GP-FINAL (**contd.**)** **i04946734**

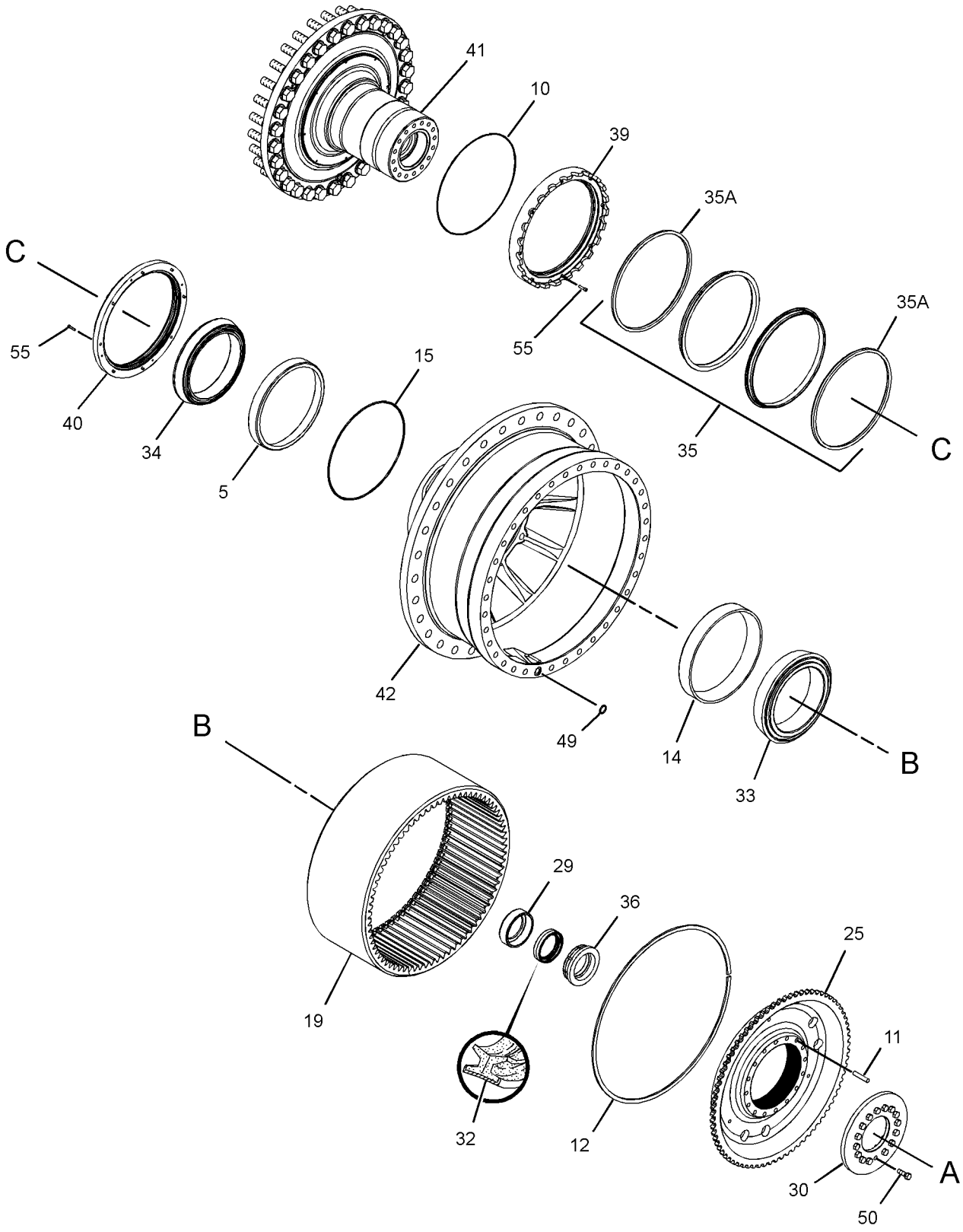

GRAPHIC #2 <END> g02126917

374-1211 FILLER GP-POWER TRAIN OIL

S/N: RAB1-UP

PART OF 359-6484 LINES GP-POWER TRAIN OIL

AN ATTACHMENT

SMCS-3005, 3081 **i05425210**

NOTE	REF NO	GRAPHIC REF	PART NUMBER	QTY	PART NAME 1 2 3 4 5 6 (PRODUCT LEVEL)	SEE PAGE
	1	1	**5K-9238**	1	CONNECTOR	
	2	1	**6N-2985**	1	CAP AS-FILLER (POWER TRAIN OIL)	
	3	1	**9G-5127**	2	BREATHER AS (TRANSMISSION)	
	4	1	**9M-5732**	1	RIVET-POP	
	5	1	**131-0136**	1	TUBE AS	
	6	1	*162-5709*	1	TEE AS	
		1	**109-6511**	1	TEE-O-RING	
		1	**6V-9746**	1	SEAL-O-RING	
		1	**7M-8485**	1	SEAL-O-RING	
	7	1	**292-8741**	1	BRACKET AS	
M		1	**8T-3490**	1	NUT-WELD (M10X1.5-THD)	
	8	1	**374-9975**	1	TUBE AS	
	9	1	**374-9984**	1	TUBE AS	
	10	1	**381-9005**	1	GAUGE AS-OIL LEVEL (DIPSTICK)	
	11	1	**1F-7854**	1	SPACER (11.01X19.05X49.21-MM THK)	
	12	1	**1P-3708**	1	SEAL-RECTANGULAR	
	13	1	**1P-5763**	2	FLANGE-HALF	
	14	1	*326-0315*	1	ADAPTER AS	
		1	**5P-3501**	1	ADAPTER	
		1	**3J-1907**	1	SEAL-O-RING	
	15	1	**4B-4274**	1	WASHER (5.5X13X1.2-MM THK)	
	16	1	**5P-7468**	1	CLIP (SLOT)	
	17	1	**5P-7469**	1	CLIP (TAB)	
	18	1	**6V-5656**	1	SEAL-O-RING	
	19	1	**7J-8611**	1	ELBOW-PIPE	
	20	1	**8T-1885**	1	CLIP (SLOT)	
	21	1	**8T-1886**	1	CLIP (TAB)	
	22	1	**8T-4121**	2	WASHER-HARD (11X21X2.5-MM THK)	
M	23	1	**8T-4139**	2	BOLT (M12X1.75X30-MM)	
M	24	1	**8T-4194**	4	BOLT (M12X1.75X50-MM)	
M	25	1	**8T-4196**	1	BOLT (M10X1.5X35-MM)	
	26	1	**8T-4223**	6	WASHER-HARD (13.5X25.5X3-MM THK)	
M	27	1	**8T-5005**	1	BOLT (M10X1.5X70-MM)	

M - METRIC PART

374-1211 **FILLER GP-POWER TRAIN OIL (**contd.**)** **i05425210**

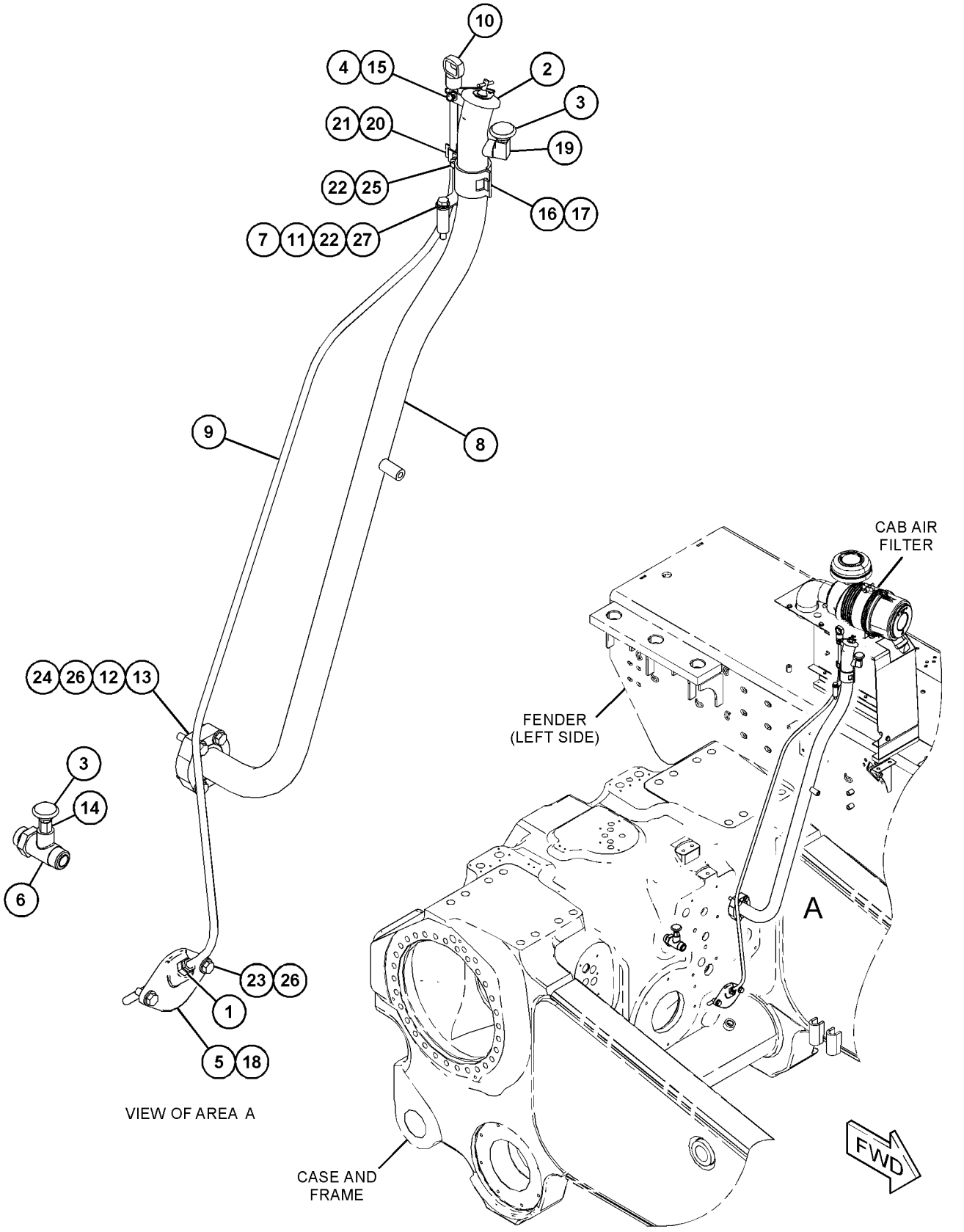

GRAPHIC #1 <END> g03458520

346-5574 FILTER GP-OIL—PRIMARY

S/N: RAB1-UP
FIELD REPLACEMENT ORDER 348-1088—PAGE: 534
PART OF 374-1209 LINES GP-TRANSMISSION OIL
AN ATTACHMENT

SMCS-3004, 3067 **i06051379**

NOTE	REF NO	GRAPHIC REF	PART NUMBER	QTY	PART NAME 1 2 3 4 5 6 (PRODUCT LEVEL)	SEE PAGE
	1	1	**367-9300**	1	SEAL-O-RING	
	2	1	**9S-6130**	1	PLUG	
	3	1	**4C-8358**	1	EYEBOLT	
	4	1	**127-9324**	1	DOWEL-BUSHING	
Y	5	1	**440-0257**	1	SWITCH GP-PRESSURE (POWER TRAIN OIL)	405
	6	1	**344-0004**	1	FILTER ELEMENT-OIL (POWER TRAIN)	
		1	**161-8068**	1	SEAL-O-RING	
	7	1	**373-5031**	1	HOUSING AS (BYPASS VALVE)	
		1	**8C-3079**	1	SEAL-O-RING	
	8	1	**373-5032**	1	COVER AS	
M	9	1	**096-4833**	4	BOLT-SOCKET HEAD (M5X0.8X20-MM)	
M	10	1	**099-0169**	4	BOLT (M16X2X55-MM)	
	11	1	**161-8068**	1	SEAL-O-RING	
	12	1	**5P-7815**	1	SEAL-O-RING	
	13	1	**8C-3079**	1	SEAL-O-RING	
	14	1	**8L-2786**	1	SEAL-O-RING	
	15	1	**9S-4185**	1	PLUG	

M - METRIC PART
Y - SEPARATE ILLUSTRATION

346-5574 **FILTER GP-OIL (**contd.**)** **i06051379**

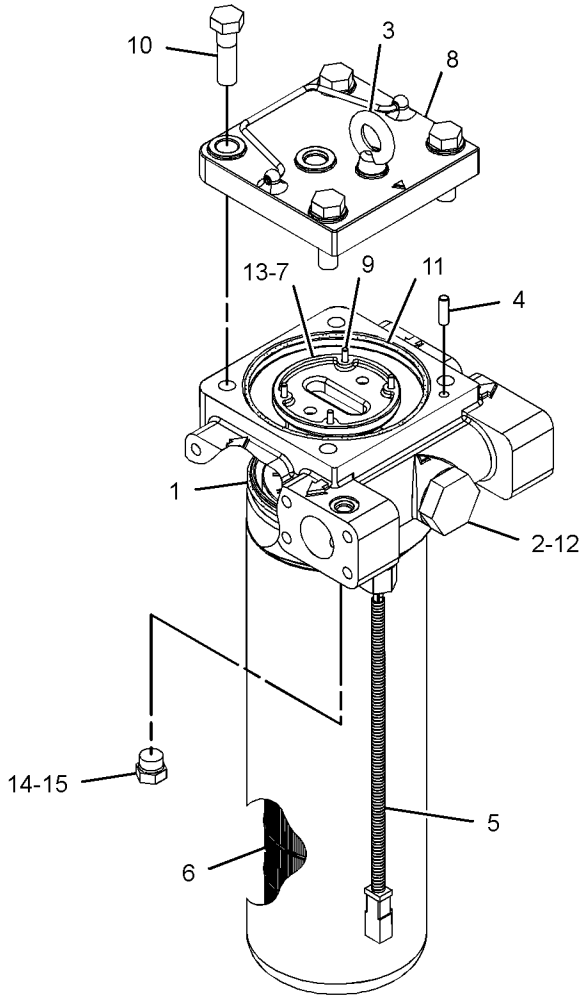

GRAPHIC #1 <END> g02656357

348-1088 FILTER GP-OIL—POWER TRAIN

S/N: RAB1-UP

FIELD REPLACEMENT FOR 346-5574—PAGE: 532

SMCS-3004, 3067 **i06250104**

NOTE	REF NO	GRAPHIC REF	PART NUMBER	QTY	PART NAME 1 2 3 4 5 6 (PRODUCT LEVEL)	SEE PAGE
	1	1	**367-9300**	1	SEAL-O-RING	
	2	1	*365-3465*	1	HOUSING AS-FILTER	
		1	**5P-9436**	1	PLUG	
		1	**6V-5050**	1	SEAL-O-RING	
	3	1	**4C-8358**	1	EYEBOLT	
	4	1	**061-9455**	2	SEAL-O-RING	
	5	1	**127-9324**	1	DOWEL-BUSHING	
Y	6	1	**440-0257**	1	SWITCH GP-PRESSURE (POWER TRAIN OIL)	405
	7	1	**344-0004**	1	FILTER ELEMENT-OIL	
	8	1	**373-5031**	1	HOUSING AS (BYPASS VALVE)	
		1	**8C-3079**	1	SEAL-O-RING	
		1	**447-0233**	1	GASKET-HOUSING	
	9	1	**373-5032**	1	COVER AS	
M	10	1	**096-4833**	4	BOLT-SOCKET HEAD (M5X0.8X20-MM)	
M	11	1	**099-0169**	4	BOLT (M16X2X55-MM)	
	12	1	**1P-4579**	4	FLANGE-HALF	
	13	1	**161-8068**	1	SEAL-O-RING	
	14	1	**2J-2668**	2	COVER-SHIPPING	
	15	1	**5P-7815**	1	SEAL-O-RING	
	16	1	**8C-3079**	1	SEAL-O-RING	
	17	1	**8L-2786**	1	SEAL-O-RING	
M	18	1	**8T-4184**	8	BOLT (M12X1.75X45-MM)	
	19	1	**8T-4223**	8	WASHER-HARD (13.5X25.5X3-MM THK)	
	20	1	**9S-4185**	1	PLUG	
	21	1	**9S-6130**	1	PLUG	

M - METRIC PART
Y - SEPARATE ILLUSTRATION

348-1088 **FILTER GP-OIL (**contd.**)** **i06250104**

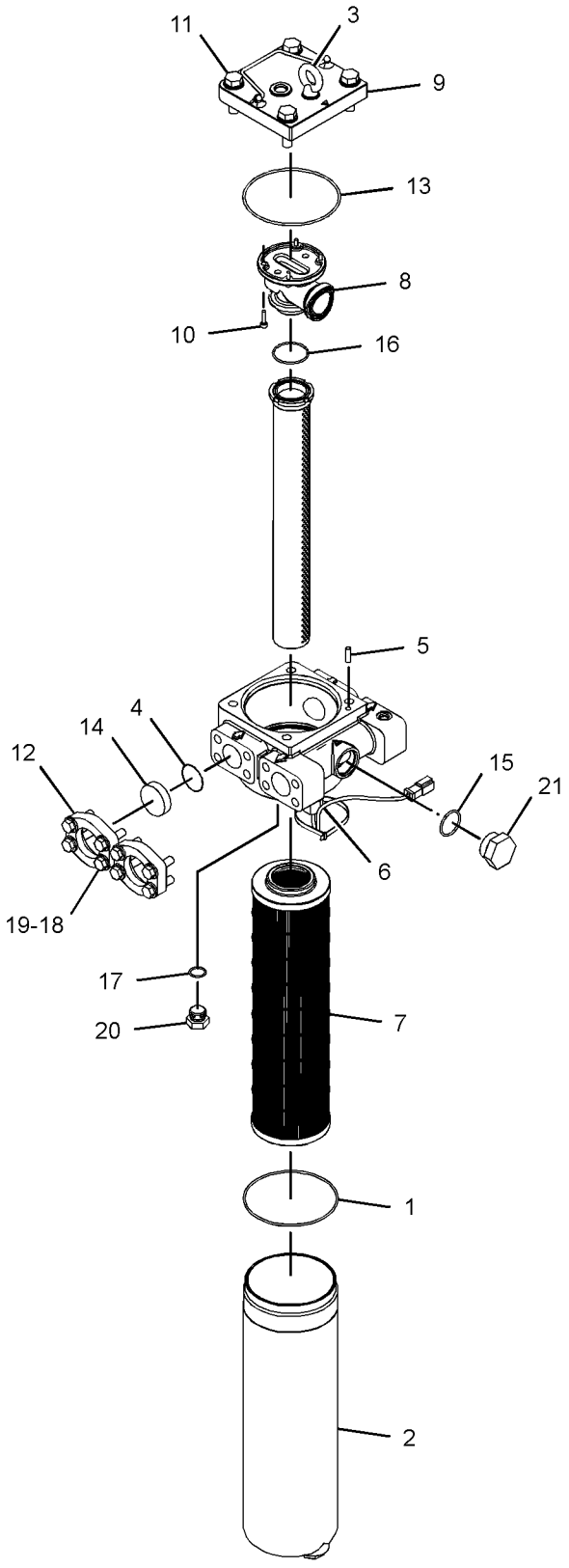

VIEW OF AREA A

GRAPHIC #1 <END> g03399514

213-5173 GEAR GP-BEVEL & TRANSFER

S/N: NDM1-UP
PART OF 372-6094 TRANSMISSION AR
AN ATTACHMENT

SMCS-3011 **i02050074**

NOTE	REF NO	GRAPHIC REF	PART NUMBER	QTY	PART NAME 1 2 3 4 5 6 (PRODUCT LEVEL)	SEE PAGE
	1	1	**112-1289**	1	PLATE AS	
		1	**4B-9785**	2	BALL	
	2	1	**9X-8881**	15	BOLT (5/8-11X2.25-IN)	
	3	1	**5P-8247**	19	WASHER-HARD (17X32X3.5-MM THK)	
	4	1	**5P-4143**	41	BOLT-LOCKING (1/2-13X2-IN)	
	5	1	**5P-8245**	41	WASHER-HARD (13.5X25.5X3-MM THK)	
	6	1	**110-9302**	1	CAGE-BEARING	
	7	1	**110-9303**	1	CAGE-BEARING	
	8	1	**110-9309**	1	BRACKET AS	
	9	1	**9X-8874**	2	BOLT (1/2-13X3-IN)	
	10	1	**7D-1649**	2	WASHER-HARD (13.5X32X5-MM THK)	
	11	1	**9G-3464**	2	BUSHING-TERMINAL	
	12	1	**6V-0458**	1	CUP-BEARING	
	13	1	**6V-0457**	1	CONE-BEARING	
	14	1	**110-9301**	1	PINION-BEVEL (23-TEETH)	
	15	1	**213-5175**	1	GEAR-TRANSFER (36-TEETH)	
B	16	1	**7G-2325**	4	SHIM PACK (INCLUDES 14-SHIMS)	
	17	1	**5K-3931**	1	CUP-BEARING	
	18	1	**5K-3932**	1	CONE-BEARING	
	19	1	**032-0676**	1	BOLT-LOCKING (5/8-11X3-IN)	
	20	1	**114-0325**	1	RETAINER	
	21	1	**5D-6659**	1	RACE & ROLLER AS	
	22	1	**213-5174**	1	GEAR-TRANSFER (33-TEETH)	
	23	1	**6Y-2546**	1	CONE-BEARING	
	24	1	**6Y-2547**	1	CUP-BEARING	
	25	1	**1M-6573**	1	CUP-BEARING (TAPERED ROLLER)	
	26	1	**9M-2744**	1	CONE-BEARING (TAPERED ROLLER)	
	27	1	**216-0273**	1	SEAL-LIP TYPE	
	28	1	**110-9306**	1	GEAR-BEVEL (29-TEETH)	
	29	1	**110-9307**	1	CAGE-BEARING	
	30	1	**9W-4163**	1	RACE-ROLLER BEARING	
	31	1	**9W-4162**	1	BEARING	
	32	1	**5P-1981**	1	RING-RETAINING	
	33	1	**9S-1367**	10	BOLT (1-14X3.75-IN)	
	34	1	**2K-7471**	10	LOCKNUT (1-14-THD)	
	35	1	**110-9305**	1	SHAFT-BEVEL GEAR	
B	36	1	**3T-4391**	2	SHIM PACK (INCLUDES 18-SHIMS)	
	37	1	**110-9304**	1	CAGE-BEARING	
	38	1	**112-7317**	1	BEARING AS	
	39	1	**121-9871**	1	NUT-BEARING	
	40	1	**122-4575**	1	LOCKWASHER-BEARING	
	41	1	**122-0333**	1	WASHER (112X155X7.14-MM THK)	
	42	1	**9X-8883**	4	BOLT (5/8-11X2.75-IN)	
	43	1	**1S-8385**	1	RING-RETAINING	
	44	1	**172-3467**	1	PLATE	
	45	1	**5K-9107**	4	BOLT-LOCKING (3/8-16X0.75-IN)	

B - USE AS REQUIRED

213-5173 **GEAR GP-BEVEL & TRANSFER** (contd.) **i02050074**

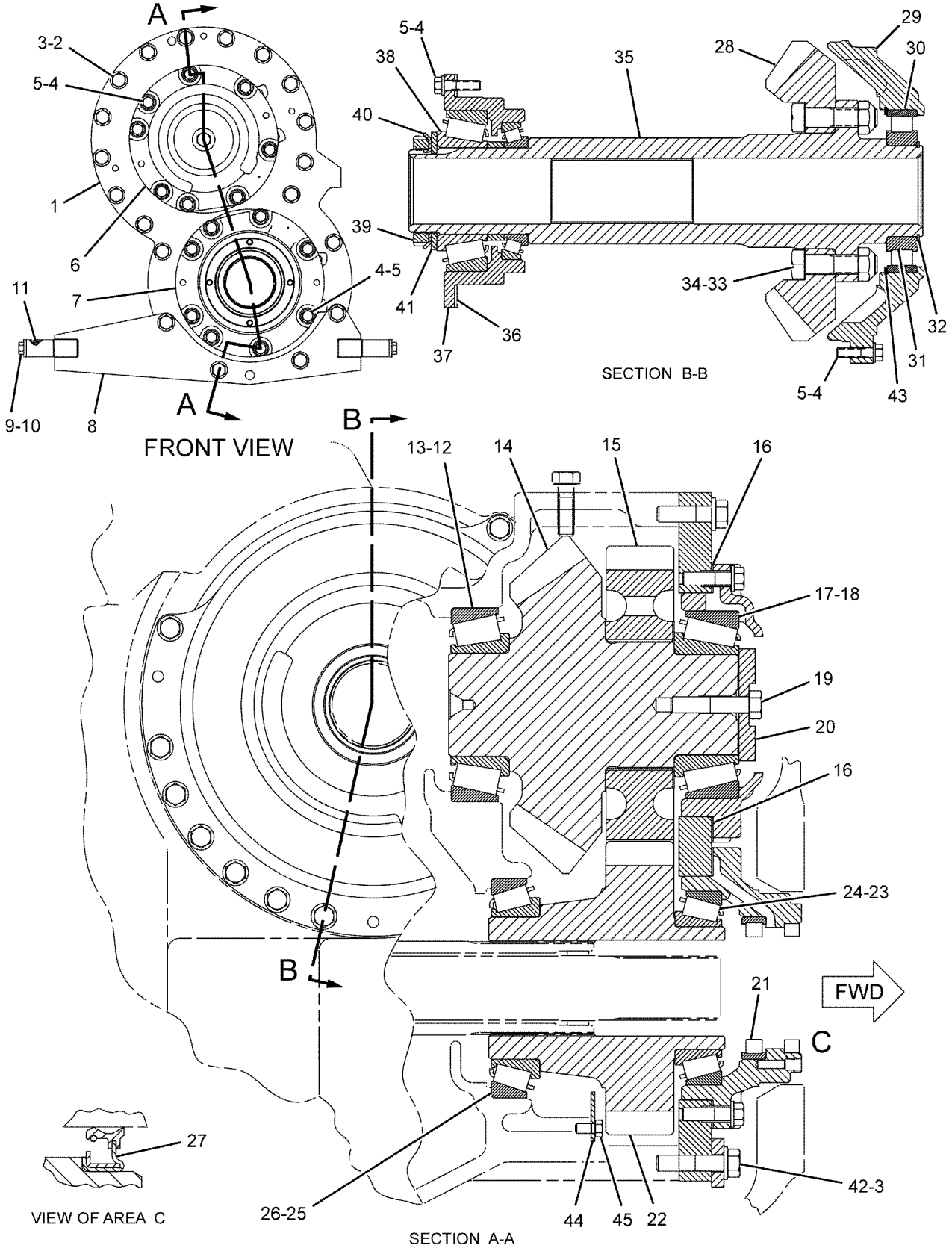

GRAPHIC #1 <END> g01054330

359-6484 LINES GP-POWER TRAIN OIL

S/N: RAB1-UP
PART OF 359-6405 POWER TRAIN AR
AN ATTACHMENT

SMCS-3016 **i05425081**

NOTE	REF NO	GRAPHIC REF	PART NUMBER	QTY	PART NAME 1 2 3 4 5 6 (PRODUCT LEVEL)	SEE PAGE
Y	1	1	*374-1209*	1	LINES GP-TRANSMISSION OIL	542
Y	2	1	*374-1210*	1	LINES GP-POWER TRAIN OIL	539
Y	3	1	*374-1211*	1	FILLER GP-POWER TRAIN OIL	530
Y	4	1	*374-1212*	1	PUMP & MTG GP-POWER TRAIN	557

Y - SEPARATE ILLUSTRATION

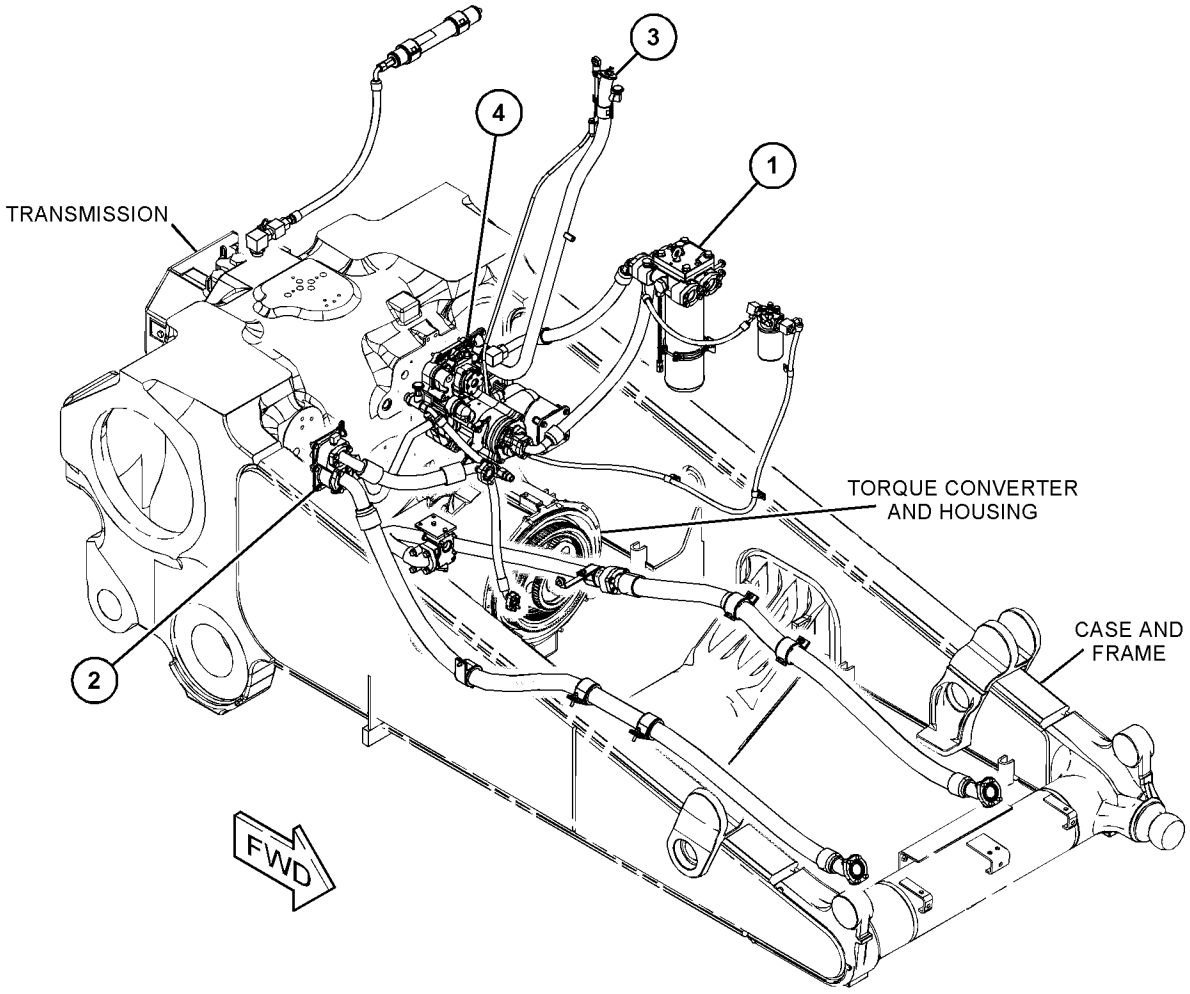

GRAPHIC #1 <END> g03486138

374-1210 LINES GP-POWER TRAIN OIL

S/N: RAB1-UP

PART OF 359-6484 LINES GP-POWER TRAIN OIL

AN ATTACHMENT

SMCS-3016 **i05806509**

NOTE	REF NO	GRAPHIC REF	PART NUMBER	QTY	PART NAME 1 2 3 4 5 6 (PRODUCT LEVEL)	SEE PAGE
	1	1	**2J-8163**	1	SEAL-O-RING	
	2	1	**8X-7517**	1	BRACKET AS	
M		1	**8T-3490**	1	NUT-WELD (M10X1.5-THD)	
	3	1	**142-3331**	1	BRACKET AS	
M		1	**8T-3490**	1	NUT-WELD (M10X1.5-THD)	
	4	1	**148-1928**	2	VALVE-RELIEF (POWER TRAIN OIL)	
	5	1	*219-9654*	1	CONNECTOR AS	
		1	**109-3657**	1	CONNECTOR	
		1	**6K-6307**	1	SEAL-O-RING	
		1	**6V-8400**	1	SEAL-O-RING	
I	6	1	**221-1840**	1	HOSE AS	
I	7	1	**221-1843**	1	HOSE AS	
I	8	1	**374-9978**	1	HOSE AS	
I	9	1	**374-9980**	1	HOSE AS	
Y	10	1	**381-0180**	1	VALVE GP-RELIEF (TORQUE CONVERTER OUTLET)	587
	11	1	**387-2015**	1	MANIFOLD	
	12	1	**388-4521**	1	TUBE AS	
I	13	1	**388-4522**	1	HOSE AS	
	14	1	**450-1095**	1	TUBE AS	
	15	1	**061-9455**	2	SEAL-O-RING	
	16	1	*148-8327*	1	CONNECTOR AS	
		1	**6V-8637**	1	CONNECTOR	
		1	**3D-2824**	1	SEAL-O-RING	
		1	**6V-9746**	1	SEAL-O-RING	
	17	1	*148-8373*	1	ELBOW AS	
		1	**8C-3364**	1	ELBOW	
		1	**6V-8400**	1	SEAL-O-RING	
		1	**7M-8485**	1	SEAL-O-RING	
	18	1	*164-5567*	2	COUPLER AS-QUICK DISCONNECT (MALE)	
					(EACH INCLUDES)	
		1	**6V-3965**	1	FITTING (QUICK DISCONNECT)	
		1	**214-7568**	1	SEAL-O-RING	
M	19	1	**180-3998**	5	STUD (M10X1.5X55-MM)	
	20	1	**1P-4576**	2	FLANGE-HALF	
	21	1	**1P-4579**	4	FLANGE-HALF	
	22	1	**1P-4582**	8	FLANGE-HALF	
	23	1	*241-6215*	1	ELBOW AS	
		1	**6V-8076**	1	ELBOW	
		1	**3J-1907**	1	SEAL-O-RING	
	24	1	**3E-6703**	1	SEAL-O-RING	
	25	1	**4J-0520**	1	SEAL-O-RING	
	26	1	**4J-5267**	1	SEAL-O-RING	
	27	1	**4L-6459**	1	BOLT (3/8-16X2.5-IN)	
	28	1	**5P-2566**	12	BOLT (1/2-13X1.5-IN)	
	29	1	**5S-7382**	4	BOLT (3/8-16X1.375-IN)	
	30	1	**6V-0852**	2	CAP-DUST	
	31	1	**6V-1572**	2	CLIP (SLOT)	

374-1210 **LINES GP-POWER TRAIN OIL (**contd.**)** **i05806509**

NOTE	REF NO	GRAPHIC REF	PART NUMBER	QTY	PART NAME 1 2 3 4 5 6 (PRODUCT LEVEL)	SEE PAGE
	32	1	**6V-1573**	2	CLIP (TAB)	
	33	1	**6V-1867**	5	CLIP (SLOT)	
	34	1	**6V-1868**	5	CLIP (TAB)	
	35	1	**6V-1869**	5	GROMMET (65-MM ID)	
	36	1	**6V-1875**	2	GROMMET (48-MM ID)	
	37	1	**6V-4365**	1	SEAL-O-RING	
	38	1	**6V-4368**	5	SEAL-O-RING	
	39	1	**7X-0290**	3	BOLT (3/8-16X3.5-IN)	
	40	1	**7X-7729**	15	WASHER (11X25X3-MM THK)	
	41	1	**8C-3206**	2	FLANGE-HALF	
	42	1	**8J-4351**	1	SEAL-O-RING	
	43	1	**8T-4121**	4	WASHER-HARD (11X21X2.5-MM THK)	
M	44	1	**344-5675**	5	NUT (M10X1.5-THD)	
M	45	1	**8T-4136**	5	BOLT (M10X1.5X25-MM)	
M	46	1	**8T-4137**	1	BOLT (M10X1.5X20-MM)	
M	47	1	**8T-4184**	12	BOLT (M12X1.75X45-MM)	
M	48	1	**8T-4186**	2	BOLT (M10X1.5X40-MM)	
M	49	1	**8T-4196**	4	BOLT (M10X1.5X35-MM)	
	50	1	**8T-4223**	26	WASHER-HARD (13.5X25.5X3-MM THK)	
	51	1	**8T-4896**	7	WASHER-HARD (10.2X18.5X2.5-MM THK)	
	52	1	**8T-7971**	2	WASHER-HARD (13.5X25.5X5-MM THK)	
	53	1	**8T-8919**	2	BOLT (1/2-13X1.75-IN)	
	54	1	**8T-9389**	2	BOLT (1/2-13X2.75-IN)	
	55	1	**033-6034**	2	SEAL-O-RING	
M	56	1	**227-6715**	1	STUD (M10X1.5X30-MM)	

I - REFER TO HYDRAULIC INFORMATION SYSTEM
M - METRIC PART
Y - SEPARATE ILLUSTRATION

374-1210 **LINES GP-POWER TRAIN OIL** (contd.) **i05806509**

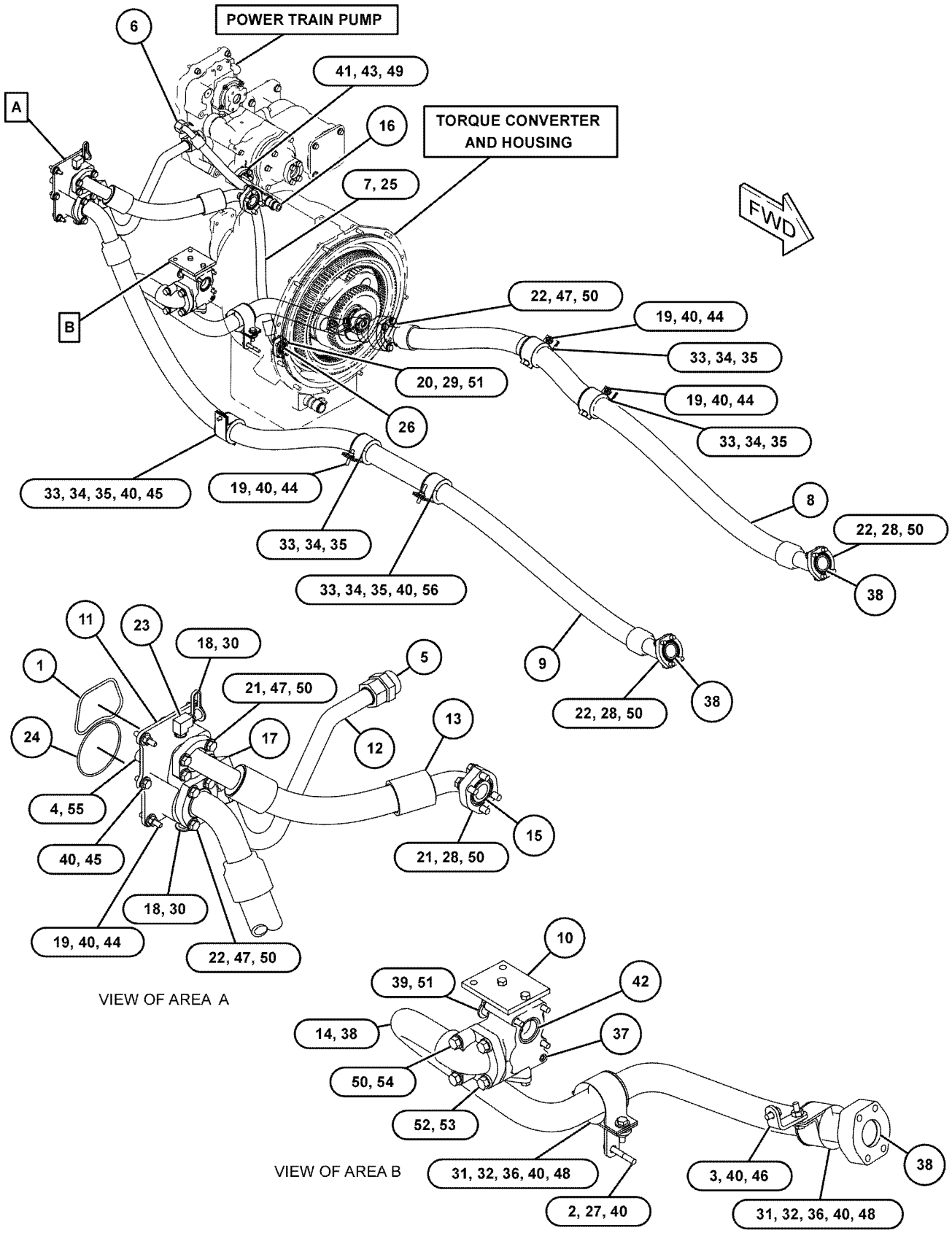

GRAPHIC #1 <END> g03806391

374-1209 LINES GP-TRANSMISSION OIL

S/N: RAB1-UP

PART OF 359-6484 LINES GP-POWER TRAIN OIL

AN ATTACHMENT

SMCS-3016, 3154

i05806508

NOTE	REF NO	GRAPHIC REF	PART NUMBER	QTY	PART NAME 1 2 3 4 5 6 (PRODUCT LEVEL)	SEE PAGE
	1	1	**6V-0852**	2	CAP-DUST	
	2	1	**8C-3447**	1	CAP-DUST	
	3	1	**8X-4660**	1	FLANGE	
	4	1	**124-3019**	1	BRACKET AS	
M		1	**8T-3490**	1	NUT-WELD (M10X1.5-THD)	
	5	1	**209-1464**	1	MANIFOLD	
	6	1	*241-6228*	1	CONNECTOR AS	
		1	**156-9791**	1	CONNECTOR-SPECIAL	
		1	**3K-0360**	1	SEAL-O-RING	
		1	**7J-9108**	1	SEAL-O-RING	
	7	1	*315-9868*	1	CONNECTOR AS	
		1	**315-9867**	1	ADAPTER-TEE	
		1	**3D-2824**	1	SEAL-O-RING	
Y	8	1	*331-7020*	1	ACCUMULATOR GP-HYDRAULIC (CHARGED)	871
	9	1	**338-9802**	1	FILTER GP-OIL (HYDRAULIC)	
		1	**126-1815**	1	FILTER-OIL (ULTRA HIGH EFFICIENCY)	
Y	10	1	*346-5574*	1	FILTER GP-OIL (PRIMARY)	532
Y	11	1	**357-4903**	1	VALVE GP-FLOW CONTROL (POWER TRAIN)	586
I	12	1	**374-9976**	1	HOSE AS	
I	13	1	**374-9977**	1	HOSE AS	
I	14	1	**374-9981**	1	HOSE AS	
I	15	1	**374-9982**	1	HOSE AS	
I	16	1	**374-9983**	1	HOSE AS	
	17	1	**061-7540**	1	SEAL-O-RING	
	18	1	**061-9455**	2	SEAL-O-RING	
	19	1	*148-8318*	1	CONNECTOR AS	
		1	**6V-8634**	1	CONNECTOR	
		1	**3K-0360**	1	SEAL-O-RING	
		1	**6V-8397**	1	SEAL-O-RING	
	20	1	*148-8373*	1	ELBOW AS	
		1	**8C-3364**	1	ELBOW	
		1	**6V-8400**	1	SEAL-O-RING	
		1	**7M-8485**	1	SEAL-O-RING	
	21	1	*148-8391*	1	ELBOW AS	
		1	**8T-8987**	1	ELBOW	
		1	**2S-4078**	1	SEAL-O-RING	
		1	**5K-9090**	1	SEAL-O-RING	
	22	1	*148-8412*	1	REDUCER AS	
		1	**6V-8944**	1	REDUCER	
		1	**6V-8398**	1	SEAL-O-RING	
	23	1	*148-8425*	1	TEE AS	
		1	**8T-4834**	1	TEE-SWIVEL-ORFS	
		1	**5K-9090**	1	SEAL-O-RING	
	24	1	*150-3028*	1	ELBOW AS	
		1	**6V-9343**	1	ELBOW	
		1	**3D-2824**	1	SEAL-O-RING	

374-1209 **LINES GP-TRANSMISSION OIL (**contd.**)** **i05806508**

NOTE	REF NO	GRAPHIC REF	PART NUMBER	QTY	PART NAME 1 2 3 4 5 6 (PRODUCT LEVEL)	SEE PAGE
		1	**6V-8397**	1	SEAL-O-RING	
	25	1	*150-4043*	1	CONNECTOR AS	
		1	**6V-9873**	1	CONNECTOR	
		1	**3J-1907**	1	SEAL-O-RING	
		1	**6V-8398**	1	SEAL-O-RING	
	26	1	**162-9523**	2	GROMMET	
	27	1	*164-5567*	2	COUPLER AS-QUICK DISCONNECT (MALE)	
					(EACH INCLUDES)	
		1	**6V-3965**	1	FITTING (QUICK DISCONNECT)	
		1	**214-7568**	1	SEAL-O-RING	
	28	1	*164-5590*	1	VALVE GP-FLUID SAMPLING	
		1	**8C-3446**	1	VALVE-SAMPLING	
		1	**3J-7354**	1	SEAL-O-RING	
	29	1	*169-7397*	1	ADAPTER AS	
		1	**3P-1932**	1	ADAPTER	
		1	**3K-0360**	1	SEAL-O-RING	
	30	1	**1P-3706**	1	SEAL-RECTANGULAR	
	31	1	**1P-4579**	4	FLANGE-HALF	
	32	1	**1S-6420**	3	CLIP	
	33	1	**338-2511**	1	CLAMP-MOUNTING	
	34	1	**4J-0522**	1	SEAL-O-RING	
	35	1	**5P-1076**	4	WASHER-HARD (13.5X30X4-MM THK)	
	36	1	**5P-8066**	1	SEAL-O-RING	
	37	1	**6V-1572**	2	CLIP (SLOT)	
	38	1	**6V-1573**	2	CLIP (TAB)	
	39	1	**7X-7729**	4	WASHER (11X25X3-MM THK)	
	40	1	**8T-4121**	10	WASHER-HARD (11X21X2.5-MM THK)	
M	41	1	**344-5675**	1	NUT (M10X1.5-THD)	
M	42	1	**8T-4136**	6	BOLT (M10X1.5X25-MM)	
M	43	1	**8T-4137**	4	BOLT (M10X1.5X20-MM)	
M	44	1	**8T-4183**	4	BOLT (M12X1.75X40-MM)	
	45	1	**8T-4223**	8	WASHER-HARD (13.5X25.5X3-MM THK)	
	46	1	**8T-4224**	2	WASHER-HARD (8.8X16X2-MM THK)	
M	47	1	**8T-4648**	4	BOLT (M12X1.75X70-MM)	
M	48	1	**8T-4908**	2	BOLT (M8X1.25X25-MM)	
M	49	1	**8T-4910**	2	BOLT (M12X1.75X60-MM)	
M	50	1	**8T-5005**	2	BOLT (M10X1.5X70-MM)	
M	51	1	**8T-6868**	2	BOLT (M12X1.75X80-MM)	
	52	1	**9X-6579**	1	NUT-ORIFICE (7/16-12-THD)	

I - REFER TO HYDRAULIC INFORMATION SYSTEM
M - METRIC PART
Y - SEPARATE ILLUSTRATION

374-1209 **LINES GP-TRANSMISSION OIL (**contd.**)** **i05806508**

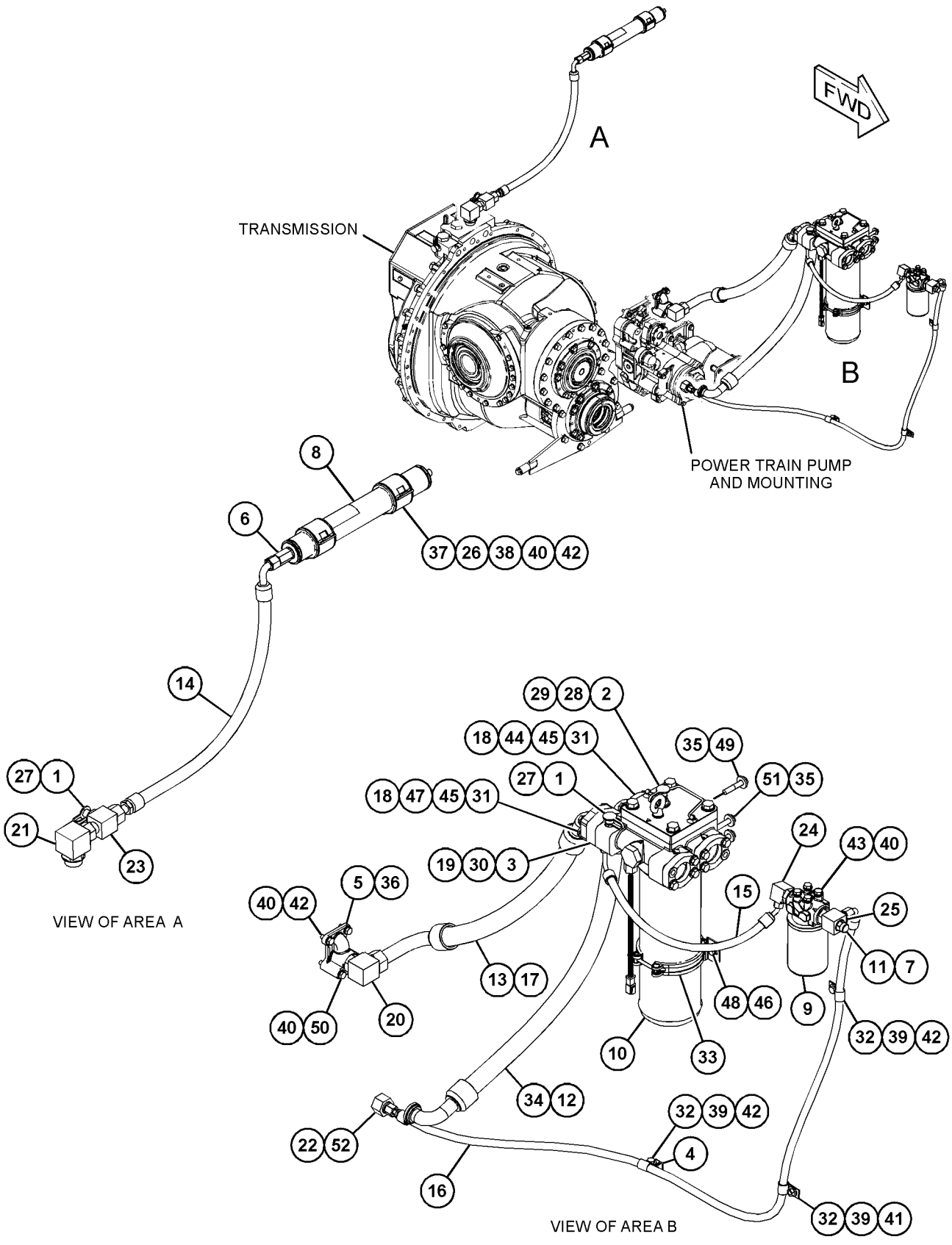

GRAPHIC #1 <END> g03479924

345-6789 MANIFOLD GP-CONTROL—IMPLEMENT, STEERING, BRAKE

S/N: RAB1-UP

PART OF 359-6489 VALVE & MTG GP-STEER & BRAKE

AN ATTACHMENT

SMCS-5264 **i06542622**

NOTE	REF NO	GRAPHIC REF	PART NUMBER	QTY	PART NAME 1 2 3 4 5 6 (PRODUCT LEVEL)	SEE PAGE
Y	1	1	**174-4909**	4	VALVE GP-SOLENOID (STEERING CLUTCH, BRAKE, RH, LH)	868
	2	1	**332-5911**	2	VALVE GP-CHECK	
J	3	1	**382-0936**	4	VALVE GP-PRESSURE REDUCING (IMPLEMENT, STEERING, BRAKE)	
L	4	1	**382-0937**	2	ACCUMULATOR GP	
	5	1	**382-0938**	2	VALVE GP-CONTROL (IMPLEMENT, STEERING, BRAKE)	
					(EACH INCLUDES)	
		1	**033-6027**	1	SEAL-O-RING	
		1	**033-6043**	1	SEAL-O-RING	
		1	**169-1616**	2	RING-BACKUP	
Y	6	1	**478-8207**	1	VALVE GP-SOLENOID (24-VOLT) (HYDRAULIC LOCKOUT)	590
	7	1	**6V-3965**	4	FITTING (QUICK DISCONNECT)	
	8	1	**214-7568**	4	SEAL-O-RING	
	9	1	**6V-0852**	4	CAP-DUST	
					AVAILABLE REPAIR KIT(S):	
J			**166-0321**	1	KIT-SEAL	
					(INCLUDES SEALS & BACKUP RINGS)	
L			**172-7753**	1	KIT-SEAL	
					(INCLUDES SEALS & BACKUP RING)	

J - KIT MARKED J SERVICES PART(S) MARKED J
L - KIT MARKED L SERVICES PART(S) MARKED L
Y - SEPARATE ILLUSTRATION

345-6789 **MANIFOLD GP-CONTROL (**contd.**)** **i06542622**

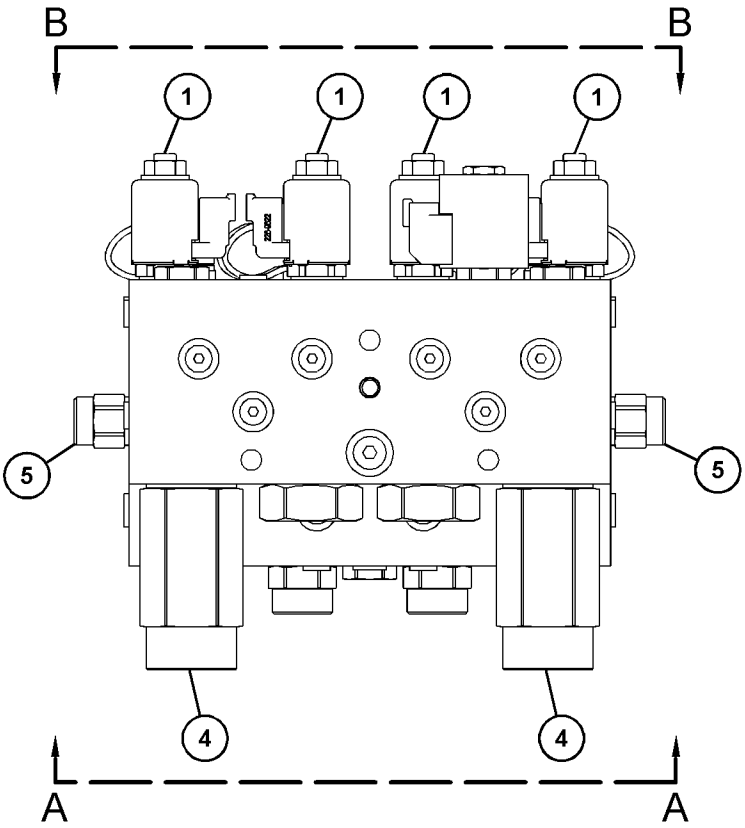

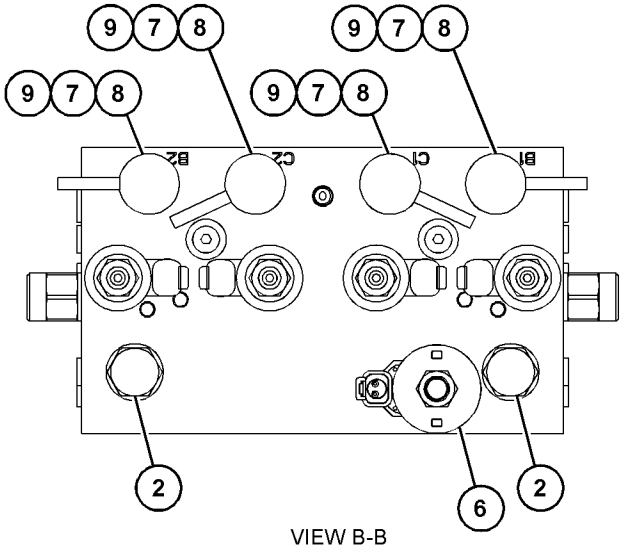

VIEW B-B

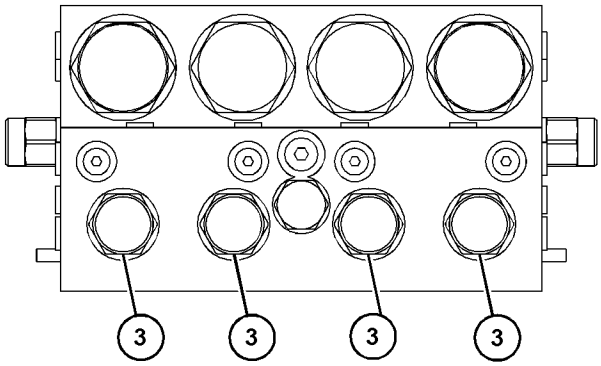

VIEW A-A

GRAPHIC #1 <END> g03491617

350-9316 MOUNTING GP-FINAL DRIVE

S/N: RAB1-UP

PART OF 372-4564, 372-4565, 372-4566 DRIVE AR-FINAL

AN ATTACHMENT

SMCS-4050 **i03833271**

NOTE	REF NO	GRAPHIC REF	PART NUMBER	QTY	PART NAME 1 2 3 4 5 6 (PRODUCT LEVEL)	SEE PAGE
	1	1	**6C-3214**	60	BOLT (1-8X4.5-IN)	
	2	1	**8T-9412**	6	BOLT-12 POINT HEAD (1/2-13X1.5-IN)	
	3	1	**4F-7389**	6	SEAL-O-RING	
	4	1	**5P-8245**	6	WASHER-HARD (13.5X25.5X3-MM THK)	
	5	1	**5P-8250**	60	WASHER (28X49X5-MM THK)	
	6	1	**8D-4771**	2	SEAL-O-RING	
	7	1	**9H-3360**	2	SEAL-O-RING	
	8	1	**9S-1366**	6	BOLT (1/2-13X2.5-IN)	

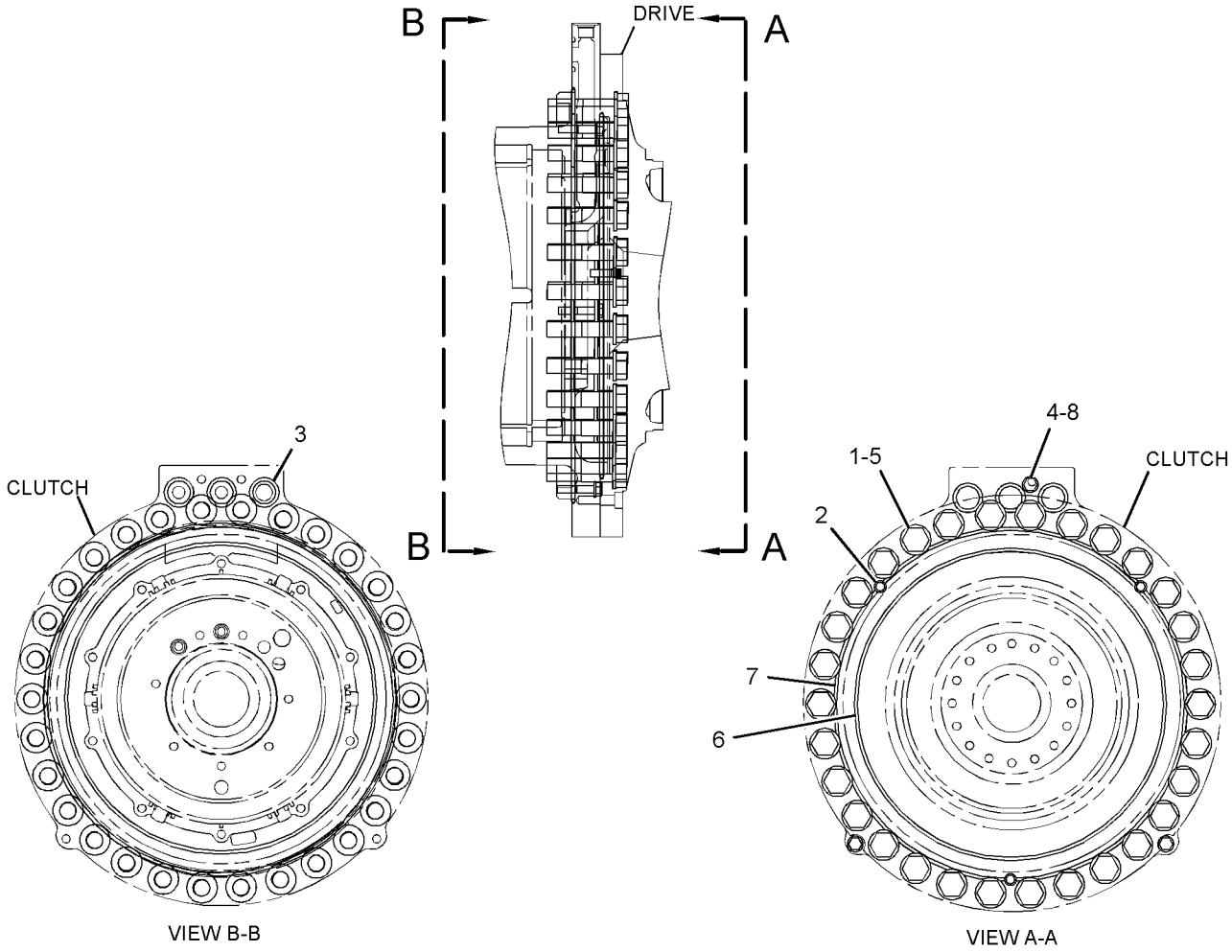

GRAPHIC #1 <END> g02543338

371-6968 MOUNTING GP-FINAL DRIVE—WASTE HANDLING

S/N: RAB1-UP
PART OF 372-4567 DRIVE AR-FINAL
AN ATTACHMENT

SMCS-4050 **i04899336**

NOTE	REF NO	GRAPHIC REF	PART NUMBER	QTY	PART NAME 1 2 3 4 5 6 (PRODUCT LEVEL)	SEE PAGE
	1	1	**186-3641**	4	GUARD	
	2	1	**188-8963**	4	SPACER	
	3	1	**188-9042**	4	COVER	
	4	1	**4F-7389**	6	SEAL-O-RING	
	5	1	**5B-5473**	16	BOLT (1-8X6.5-IN)	
	6	1	**5D-4661**	16	WASHER-HARD (28X52.5X8-MM THK)	
	7	1	**5M-2894**	16	WASHER-HARD (10.2X18.5X2.5-MM THK)	
	8	1	**5P-8245**	6	WASHER-HARD (13.5X25.5X3-MM THK)	
	9	1	**5P-8250**	44	WASHER (28X49X5-MM THK)	
	10	1	**6C-3214**	44	BOLT (1-8X4.5-IN)	
	11	1	**8D-4771**	2	SEAL-O-RING	
	12	1	**8T-9412**	6	BOLT-12 POINT HEAD (1/2-13X1.5-IN)	
	13	1	**9B-7237**	16	BOLT (3/8-16X1.25-IN)	
	14	1	**9H-3360**	2	SEAL-O-RING	
	15	1	**9S-1366**	6	BOLT (1/2-13X2.5-IN)	

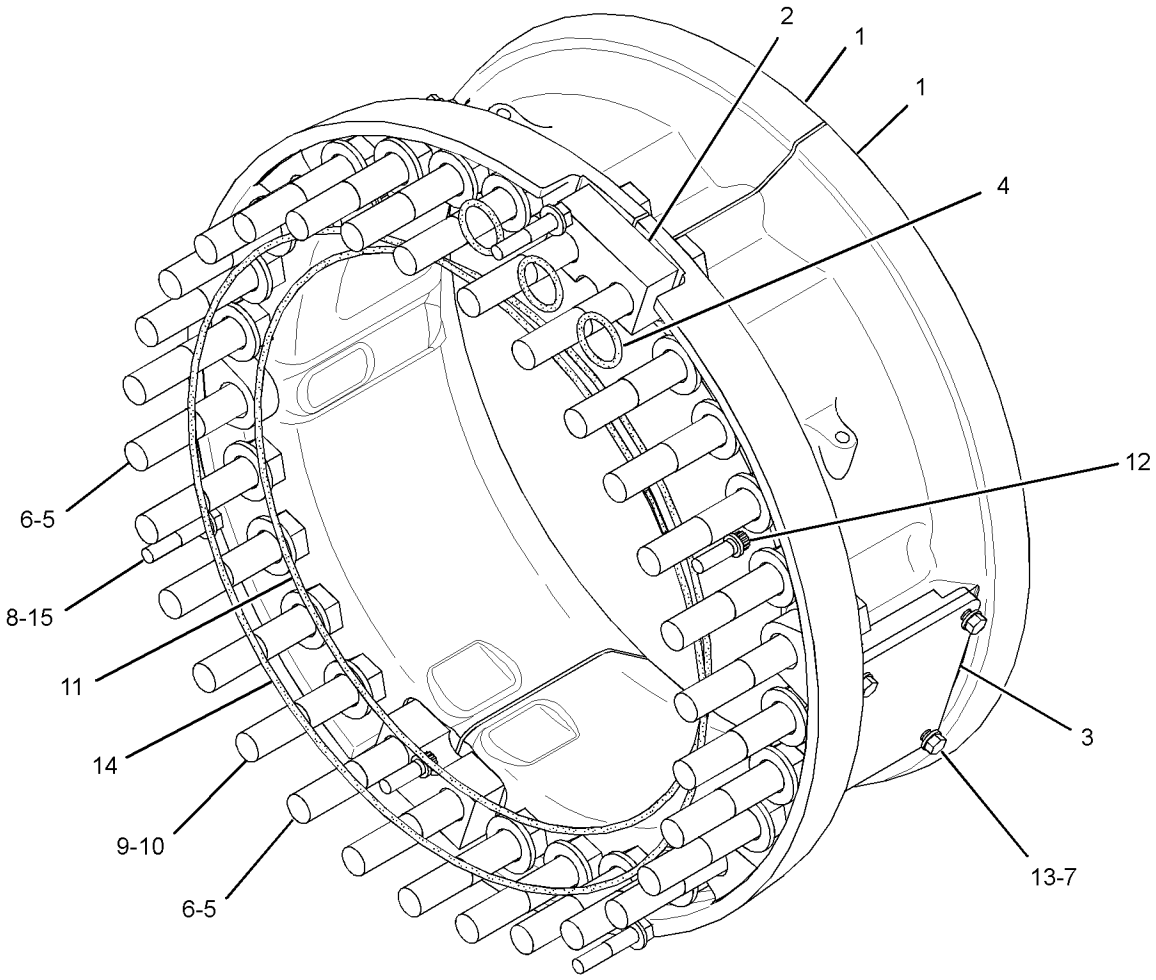

GRAPHIC #1 <END> g03098057

416-6550 MOUNTING GP-TRANSMISSION

S/N: RAB1-UP
PART OF 359-6405 POWER TRAIN AR
AN ATTACHMENT

SMCS-3082 **i05425253**

NOTE	REF NO	GRAPHIC REF	PART NUMBER	QTY	PART NAME 1 2 3 4 5 6 (PRODUCT LEVEL)	SEE PAGE
	1	1	**3T-5830**	1	PLATE	
	2	1	**0S-1591**	4	BOLT (3/8-16X1.5-IN)	
	3	1	**1B-2886**	17	BOLT (1/2-13X3.75-IN)	
	4	1	**2A-1531**	3	BOLT (1/2-13X6.5-IN)	
	5	1	**5J-5793**	2	BOLT-12 POINT HEAD (1/2-13X2-IN)	
	6	1	**5M-2894**	4	WASHER-HARD (10.2X18.5X2.5-MM THK)	
	7	1	**5P-8245**	22	WASHER-HARD (13.5X25.5X3-MM THK)	
	8	1	**5P-9519**	1	SEAL-O-RING	
	9	1	**6L-9284**	1	SEAL-O-RING	
	10	1	**7M-0475**	1	RING-SEALING	
	11	1	**9M-9647**	3	SEAL-O-RING	

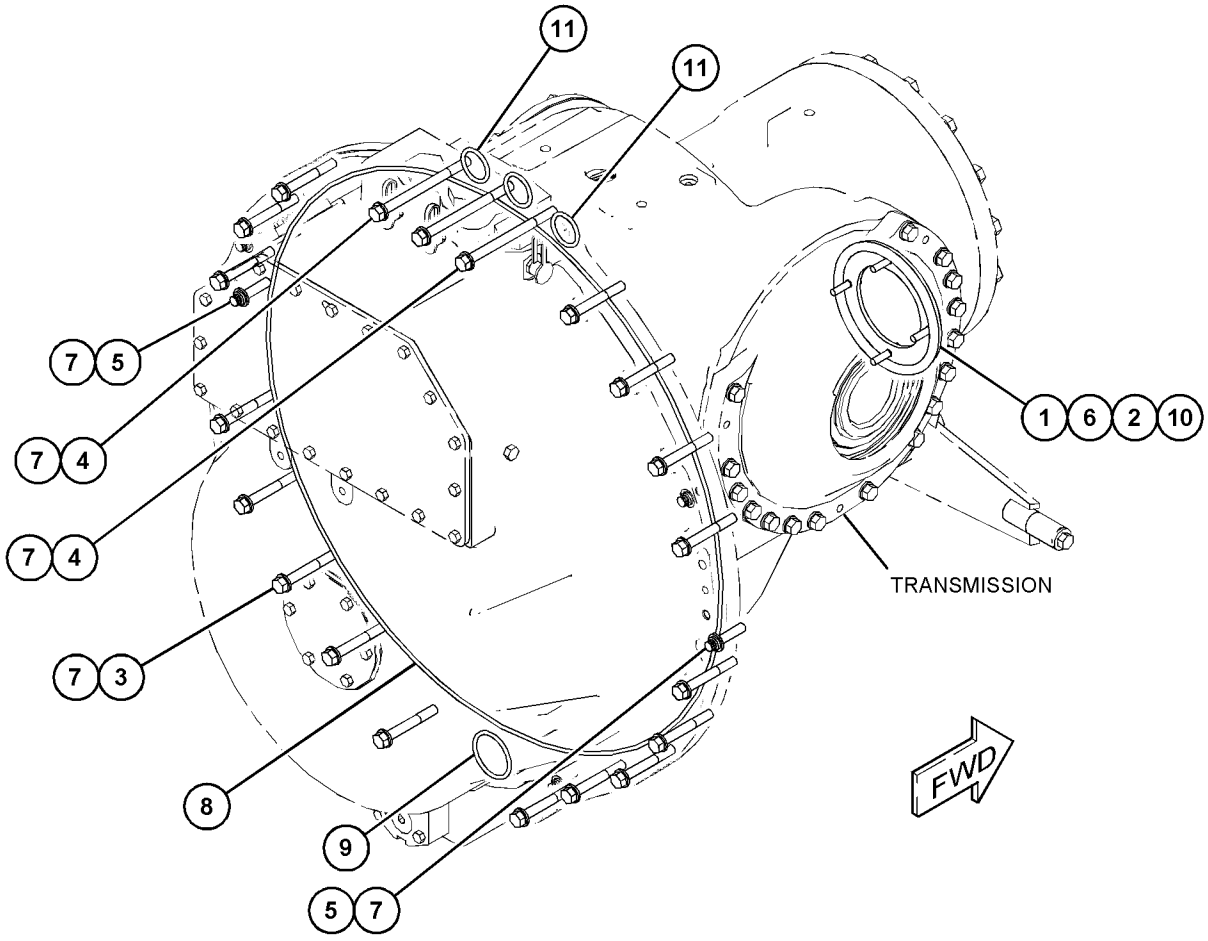

GRAPHIC #1 <END> g03455937

372-6095 PLANETARY GP-TRANSMISSION

S/N: NDM1-UP
PART OF 372-6094 TRANSMISSION AR
AN ATTACHMENT

SMCS-3160 **i05425355**

NOTE	REF NO	GRAPHIC REF	PART NUMBER	QTY	PART NAME 1 2 3 4 5 6 (PRODUCT LEVEL)	SEE PAGE
	1	1,2	**3P-3321**	2	SEAL-METAL RING	
R	2	1	**3P-7447**	10	PLATE-CLUTCH	
	3	2	**5M-6187**	1	RING-METAL SEAL	
	4	3	**5M-6126**	5	BEARING AS-ROLLER	
	5	1,2	**6F-0156**	2	RING-METAL SEAL	
	6	3	**5P-6254**	15	BEARING	
	7	3	**5P-8245**	21	WASHER-HARD (13.5X25.5X3-MM THK)	
	8	1	**6P-3458**	1	SPACER (2.179X3X0.366-IN THK)	
	9	3	**6P-6739**	5	SHAFT-PLANETARY	
	10	3	**6V-1720**	1	PLATE-SERIAL NUMBER (TRANSMISSION)	
	11	1,3	**6V-0836**	3	RING-RETAINING	
	12	3	**282-5042**	30	DISC-THRUST	
	13	3	**7G-2476**	5	GEAR-PLANETARY (20-TEETH)	
	14	1	**8E-2729**	6	DISC AS-FRICTION	
	15	3	**8E-8304**	10	DISC-THRUST	
	16	3	**8P-4047**	5	SHAFT-PLANETARY	
	17	2	**8P-4617**	1	SEAL-METAL RING	
	18	3	**9G-1919**	5	GEAR-PLANETARY (25-TEETH)	
	19	1,2,3	**8T-1141**	3	RING-RETAINING	
	20	2	**9M-1503**	1	RING-METAL SEAL	
	21	2	**9M-4355**	21	DAMPER-BOLT	
	22	1	**9W-5768**	1	GEAR-RING (86-TEETH)	
	23	3	**9W-6991**	2	RING-SEAL	
	24	1	**9W-9856**	6	DISC AS-FRICTION	
	25	2	**108-2735**	1	RING-LOCK	
	26	1,2	**108-2736**	2	RING-LOCK	
	27	1	**110-9248**	1	PLATE AS	
		1	**7M-8480**	1	DOWEL	
		1	**8T-1444**	2	DOWEL	
	28	2	**110-9251**	1	CARRIER-PLANETARY	
	29	2	**110-9258**	1	CARRIER-PLANETARY	
	30	2	**110-9262**	1	GEAR-SUN (50-TEETH)	
	31	3	**110-9269**	1	HOUSING-CLUTCH	
	32	3	**110-9272**	1	HUB AS	
		3	**4S-8537**	1	DOWEL	
	33	3	**110-9274**	1	HOUSING AS	
		3	**8B-1312**	3	DOWEL	
	34	3	**110-9282**	1	PLATE-RETAINER	
	35	2	**110-9284**	1	GEAR-RING (90-TEETH)	
	36	2	**110-9285**	1	GEAR-RING (79-TEETH)	
	37	3	**110-9286**	10	GEAR-PLANETARY (22-TEETH)	
	38	3	**355-9651**	1	MANIFOLD AS	
		3	**7M-8480**	2	DOWEL	
	39	3	**110-9287**	5	SHAFT-PLANETARY	
	40	1	**110-9288**	1	GEAR-RING (79-TEETH)	
	41	1	**110-9289**	1	GEAR-RING	

372-6095 **PLANETARY GP-TRANSMISSION (**contd.**)** **i05425355**

NOTE	REF NO	GRAPHIC REF	PART NUMBER	QTY	PART NAME 1 2 3 4 5 6 (PRODUCT LEVEL)	SEE PAGE
	42	2	**132-5538**	1	GEAR-SUN (36-TEETH)	
	43	3	**117-1385**	2	SEAL-O-RING	
	44	1	**132-5546**	1	GEAR-SUN (34-TEETH)	
	45	3	**153-5482**	1	PISTON-CLUTCH	
	46	2	**172-3262**	1	SHAFT AS-OUTPUT	
	46A	2	**111-8919**	1	BEARING-ROLLER	
		2	**3P-3103**	1	CARRIER-RING	
	47	1	**172-3263**	1	HOUSING AS	
		1	**9S-1343**	2	PLUG-CUP	
	48	3	**183-2264**	1	HOUSING AS	
	48A	3	**112-4509**	1	BUSHING	
		3	**4S-8537**	1	DOWEL	
		3	**6P-7564**	1	CARRIER-RING	
	49	3	**191-8304**	1	SENSOR GP-SPEED (TRANSMISSION OUTPUT 1)	
	50	3	**191-8305**	1	SENSOR GP-SPEED (TRANSMISSION OUTPUT 2)	
		3	**137-6645**	1	PAD-CONNECTOR	
	51	1	**205-3257**	1	PISTON	
	52	1	**207-3673**	1	PISTON	
	53	3	**219-3036**	6	DOWEL-REACTION	
	54	1	**219-3037**	6	DOWEL-REACTION	
	55	2	**221-1444**	2	PISTON	
	56	1	**232-7572**	12	ROD	
	57	1	**232-7575**	2	PLATE-CLUTCH	
	58	2	**233-9748**	7	DISC-FRICTION	
	59	3	**234-6707**	6	DISC-FRICTION	
	60	3	**239-5363**	1	ROTOR	
	61	2	**330-4576**	1	SHAFT AS-INPUT	
		2	**6F-0984**	1	DOWEL	
	62	3	**348-8602**	1	BRACKET AS	
		3	**8M-8489**	2	DOWEL	
R	63	2	**370-8590**	5	PLATE-CLUTCH	
R	64	3	**370-8592**	5	PLATE-CLUTCH	
	65	1	**372-6097**	1	HOUSING-CLUTCH	
	66	2	**372-6099**	1	HOUSING AS	
	67	3	**398-6196**	3	SPRING-DISC	
	68	2	**095-7950**	1	RING-RETAINING	
	69	3	**0S-1619**	2	BOLT (3/8-16X3-IN)	
	70	3	**5K-9107**	4	BOLT-LOCKING (3/8-16X0.75-IN)	
	71	2	**111-8920**	2	BALL BEARING	
	72	3	**112-4511**	5	PIN-SPRING	
	73	1	**114-4652**	12	SPRING	
	74	3	**355-9687**	1	SEAL AS	
	75	1	**110-9243**	1	CARRIER AS	
		1	**4S-8537**	1	DOWEL	
	76	3	**132-5789**	1	CLIP	
	77	3	**1M-8657**	21	BOLT (1/2-13X15.69-IN)	
	78	3	**1P-9261**	1	SEAL-RING	
	79	3	**2H-3755**	2	BOLT (5/16-18X0.43-IN)	
	80	3	**2S-8939**	1	RING-RETAINING	
	81	3	**352-3969**	1	CLIP	
	82	2	**379-6624**	24	SPRING	

372-6095 **PLANETARY GP-TRANSMISSION (**contd.**)** **i05425355**

NOTE	REF NO	GRAPHIC REF	PART NUMBER	QTY	PART NAME 1 2 3 4 5 6 (PRODUCT LEVEL)	SEE PAGE
	83	3	**3E-4352**	2	WASHER-HARD (8.8X20.5X2.5-MM THK)	
	84	3	**3P-2792**	1	SEAL-RING	
	85	1,2	**3P-2793**	3	SEAL-RING	
	86	1,2	**3P-2794**	3	SEAL-RING	
	87	1	**3P-7570**	1	RING-SEAL	
	88	3	**3S-2708**	10	PIN-SPRING	
	89	2	**5B-9318**	1	BALL	
	90	3	**5M-2894**	26	WASHER-HARD (10.2X18.5X2.5-MM THK)	
	91	2	**5M-4480**	2	RING-RETAINING	
	92	3	**5P-3414**	1	RING-RETAINING	
	93	1	**5P-9301**	1	BALL BEARING	
	94	1	**6V-8344**	1	RING-RETAINING	
	95	1,2,3	**6Y-3484**	3	BALL BEARING	
	96	1	**7G-4817**	1	RING-SEAL	
	97	3	**7J-6525**	2	RING-RETAINING	
	98	1	**8F-8544**	2	BOLT (3/8-16X6.25-IN)	
	99	1	**8K-2692**	1	RING-RETAINING	
	100	2	**8M-4395**	2	SEAL-O-RING	
	101	3	**8S-9191**	20	BOLT (3/8-16X4-IN)	

R - REMANUFACTURED PART MAY BE AVAILABLE

372-6095 **PLANETARY GP-TRANSMISSION (**contd.**)** **i05425355**

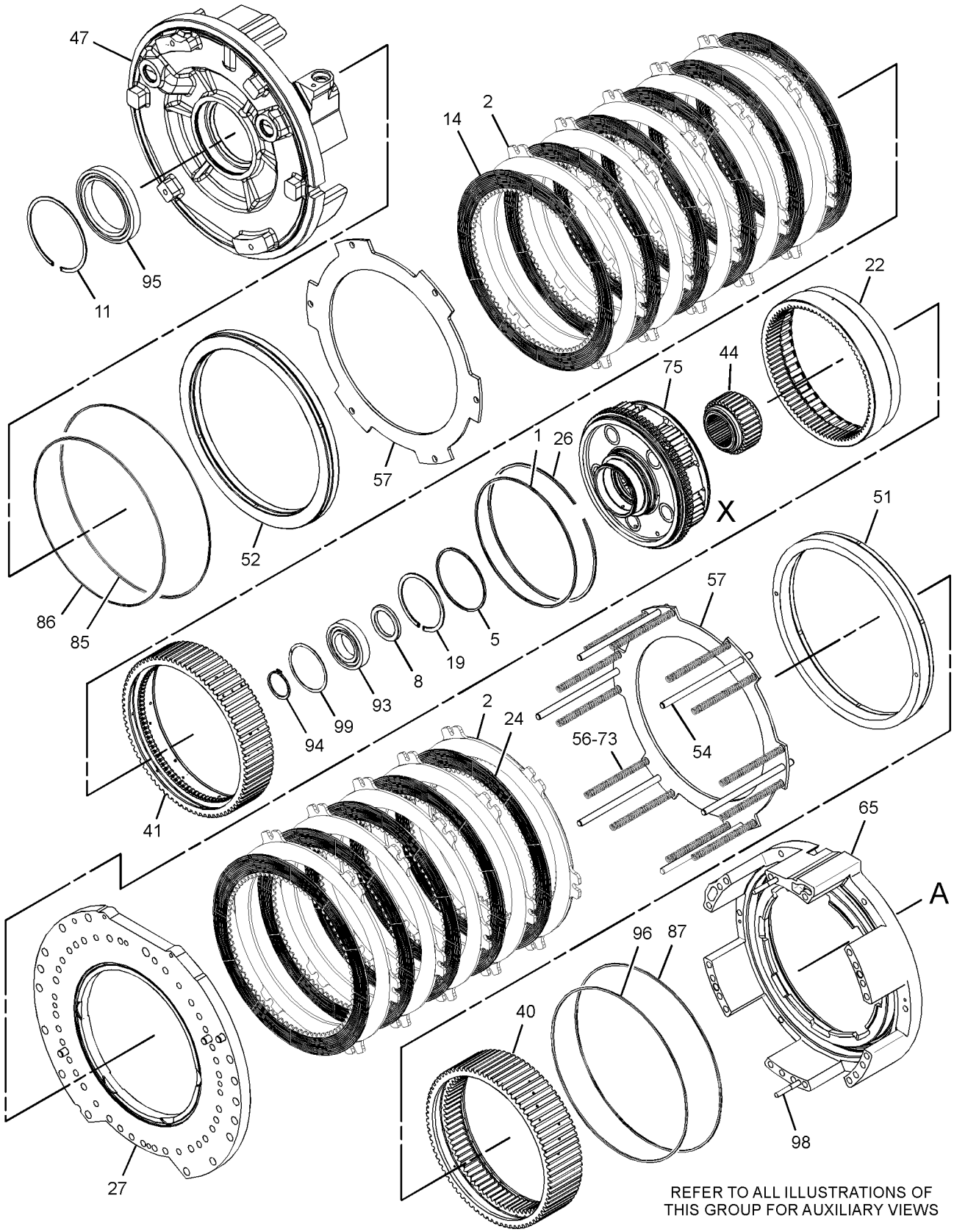

GRAPHIC #1

g03505940

372-6095 **PLANETARY GP-TRANSMISSION** (contd.) **i05425355**

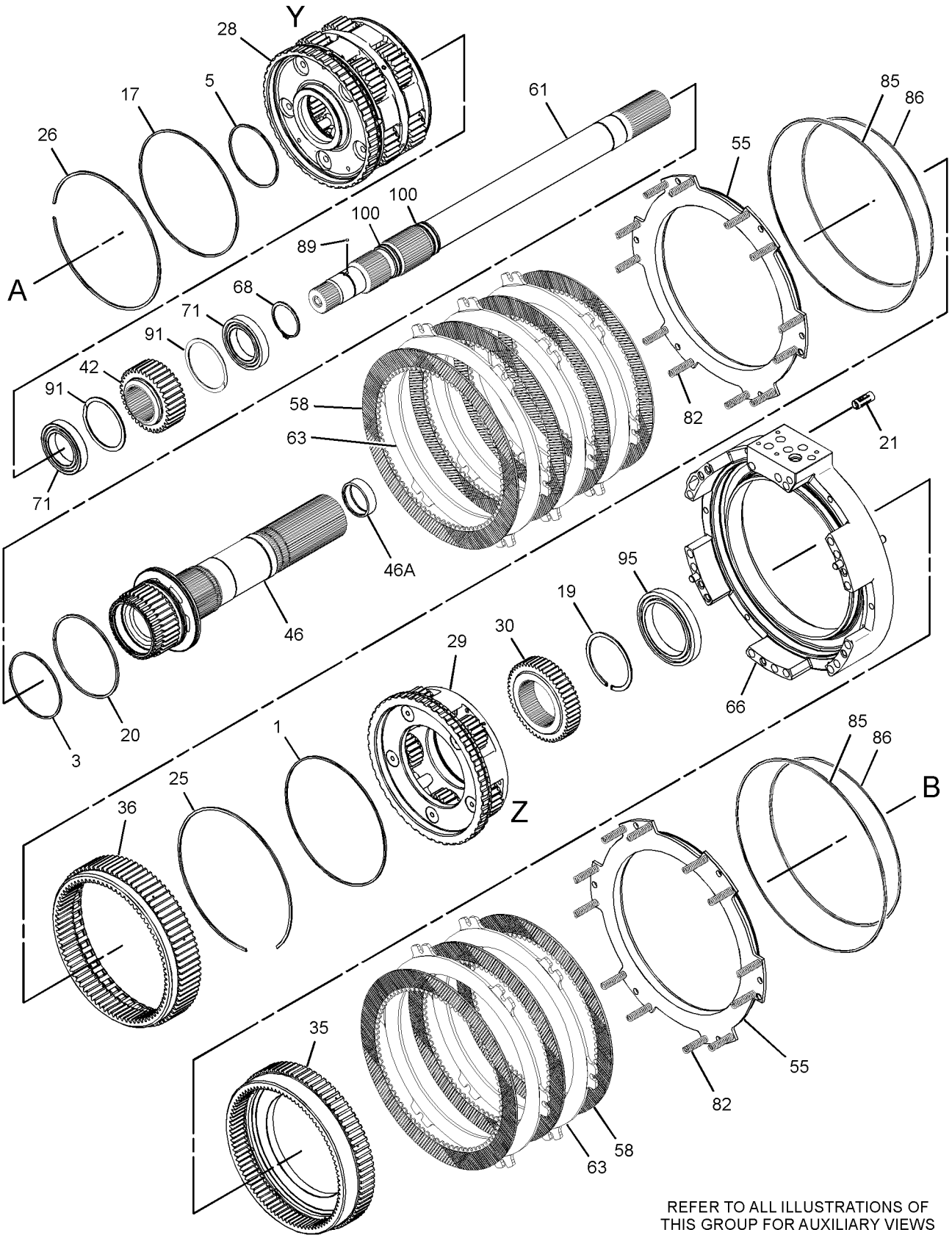

REFER TO ALL ILLUSTRATIONS OF THIS GROUP FOR AUXILIARY VIEWS

GRAPHIC #2

g03505942

372-6095 **PLANETARY GP-TRANSMISSION (**contd.**)** **i05425355**

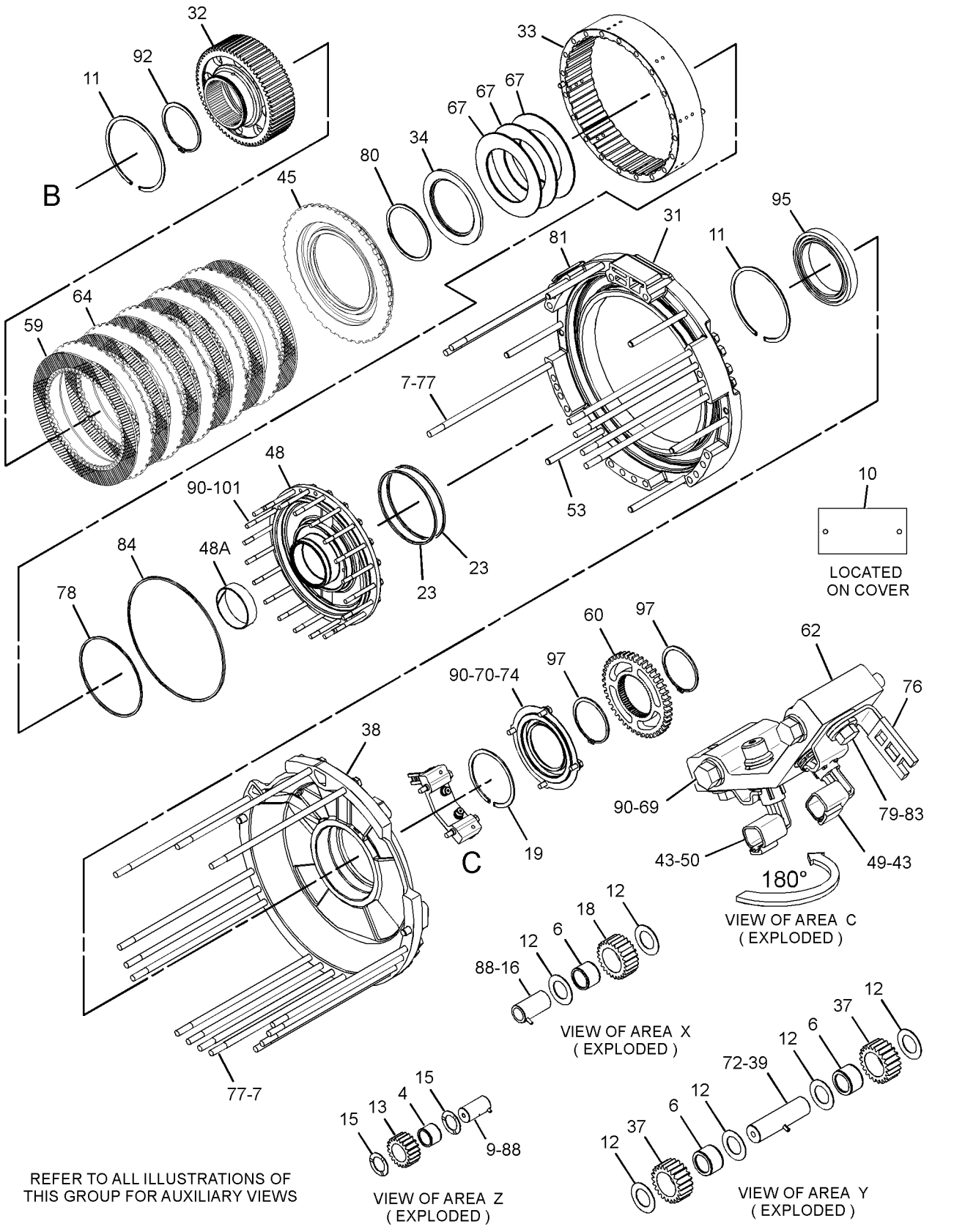

REFER TO ALL ILLUSTRATIONS OF
THIS GROUP FOR AUXILIARY VIEWS

GRAPHIC #3

<END>

g03505944

359-6405 POWER TRAIN AR

S/N: RAB1-UP
PART OF 440-9398 COMMON AR
AN ATTACHMENT

SMCS-3000, 4000

i05510666

NOTE	PART NUMBER	QTY	PART NAME 1 2 3 4 5 6 (PRODUCT LEVEL)	SEE PAGE
Y	*110-2637*	1	AXLE GP	505
YR	**237-1017**	2	CLUTCH & BRAKE GP-STEERING	853
Y	*220-5548*	1	COUPLING GP-PUMP	512
Y	*359-6484*	1	LINES GP-POWER TRAIN OIL	538
Y	*416-6550*	1	MOUNTING GP-TRANSMISSION	549
Y	*173-0245*	1	SHAFT GP-DRIVE	566
Y	*359-6482*	1	TORQUE CONVERTER & HOUSING GP	568
Y	**372-6094**	1	TRANSMISSION AR	584
Y	*359-6489*	1	VALVE & MTG GP-STEER & BRAKE	867

R - REMANUFACTURED PART MAY BE AVAILABLE
Y - SEPARATE ILLUSTRATION

<END>

374-1212 PUMP & MTG GP-POWER TRAIN

S/N: RAB1-UP
PART OF 359-6484 LINES GP-POWER TRAIN OIL
AN ATTACHMENT

SMCS-3203 **i05425216**

NOTE	REF NO	GRAPHIC REF	PART NUMBER	QTY	PART NAME 1 2 3 4 5 6 (PRODUCT LEVEL)	SEE PAGE
	1	1	**9P-9555**	1	SCREEN AS-SUCTION	
	2	1	**176-9966**	1	COVER-TOP	
	3	1	**216-4349**	1	SLEEVE	
	4	1	**221-1831**	1	HOUSING	
	5	1	**231-2188**	1	ADAPTER	
Y	6	1	**374-9554**	1	PUMP GP-GEAR (POWER TRAIN OIL)	559
	7	1	**061-9455**	3	SEAL-O-RING	
	8	1	**112-1574**	2	SEAL-O-RING	
M	9	1	**180-3998**	2	STUD (M10X1.5X55-MM)	
	10	1	**5D-5957**	2	SEAL-O-RING	
	11	1	**5K-1770**	1	SEAL-O-RING	
	12	1	**5P-1075**	4	WASHER-HARD (10.2X22.5X3-MM THK)	
	13	1	**5P-4889**	1	SEAL-O-RING	
	14	1	**6V-1904**	1	SEAL-O-RING	
	15	1	**8T-2501**	2	BOLT (3/8-16X2-IN)	
M	16	1	**8T-4133**	2	NUT (M10X1.5-THD)	
M	17	1	**8T-4194**	4	BOLT (M12X1.75X50-MM)	
	18	1	**8T-4223**	4	WASHER-HARD (13.5X25.5X3-MM THK)	
	19	1	**8T-4896**	4	WASHER-HARD (10.2X18.5X2.5-MM THK)	
	20	1	**9B-7237**	4	BOLT (3/8-16X1.25-IN)	
	21	1	**9M-7539**	1	SEAL-O-RING	

M - METRIC PART
Y - SEPARATE ILLUSTRATION

374-1212 **PUMP & MTG GP-POWER TRAIN (**contd.**)** **i05425216**

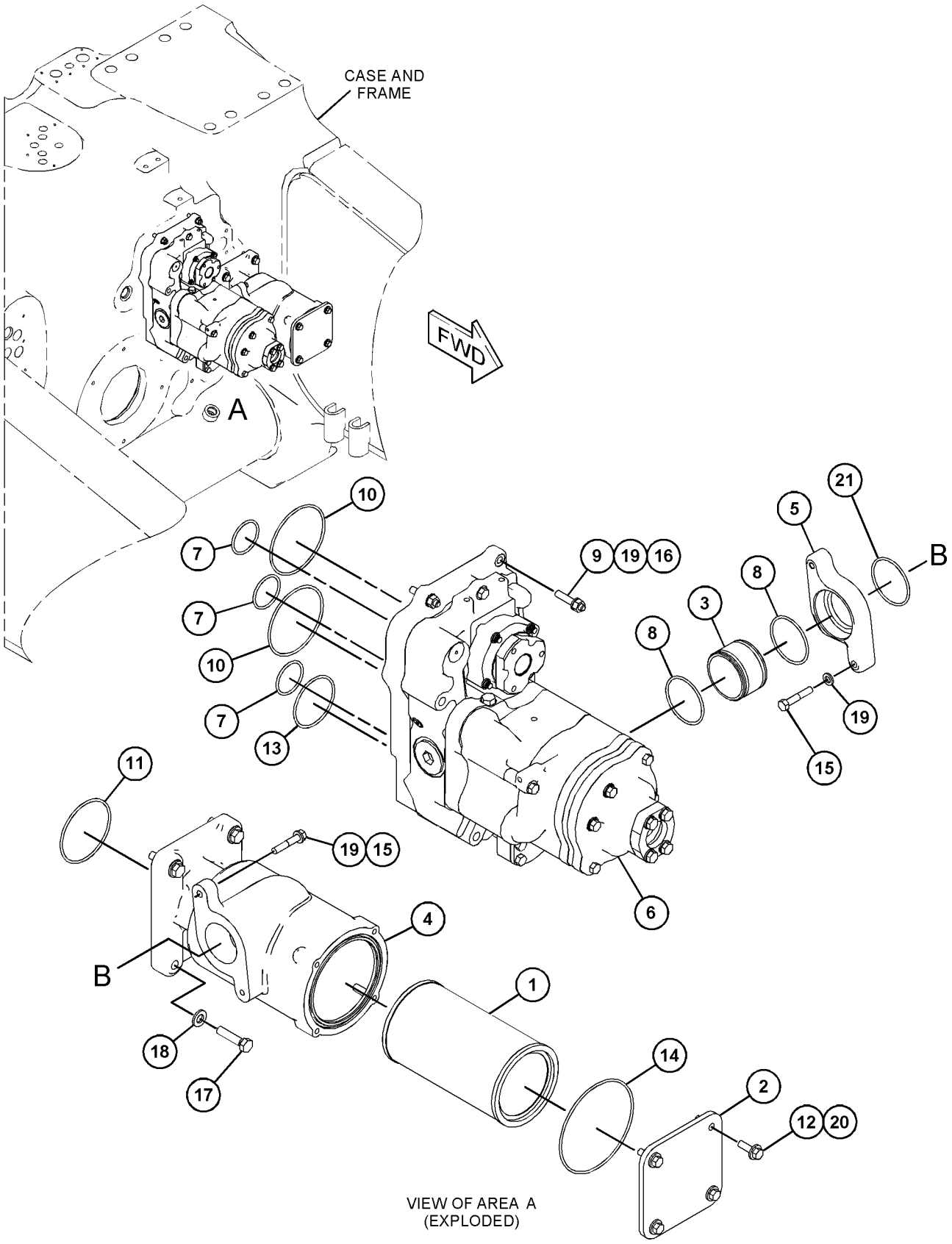

VIEW OF AREA A
(EXPLODED)

GRAPHIC #1 <END> g03458681

374-9554 PUMP GP-GEAR—POWER TRAIN OIL

S/N: RAB1-UP
PART OF 374-1212 PUMP & MTG GP-POWER TRAIN
AN ATTACHMENT

SMCS-3066, 3115, 5073 **i05774966**

NOTE	REF NO	GRAPHIC REF	PART NUMBER	QTY	PART NAME 1 2 3 4 5 6 (PRODUCT LEVEL)	SEE PAGE
	1	1	**5H-4279**	1	PLUG-CUP	
	2	1	**5P-9439**	1	BALL BEARING	
	3	1	**7G-2248**	1	CAGE-BEARING	
	4	1	**201-8394**	1	PLATE-MOUNTING	
	5	1	**206-4475**	1	GEAR (25-TEETH)	
	6	1	**208-7524**	1	SHAFT	
	7	1	**234-6928**	1	FLANGE	
Y	8	1	**374-9555**	1	PUMP GP-GEAR (POWER TRAIN OIL)	561
	10	1	**061-9455**	2	SEAL-O-RING	
	11	1	**0S-1591**	4	BOLT (3/8-16X1.5-IN)	
	12	1	**0T-0573**	1	BOLT (3/8-16X2.75-IN)	
	13	1	**111-4919**	1	SEAL-LIP TYPE	
	14	1	**1B-5675**	1	BALL BEARING AS	
	15	1	**1B-8714**	1	KEY-WOODRUFF	
	16	1	**1P-4578**	2	FLANGE-HALF	
	17	1	*208-2984*	1	PLUG AS	
		1	**5P-7684**	1	PLUG	
		1	**6K-6307**	1	SEAL-O-RING	
	18	1	**2H-5549**	1	RING-RETAINING	
	19	1	**2K-0337**	1	LOCKNUT (3/4-16-THD)	
	20	1	**2M-3974**	1	RING-RETAINING	
	21	1	**4J-0522**	1	SEAL-O-RING	
	22	1	**5P-4889**	1	SEAL-O-RING	
	23	1	**5P-8245**	4	WASHER-HARD (13.5X25.5X3-MM THK)	
	24	1	**6K-8714**	1	WASHER (20X51X3-MM THK)	
	25	1	**6L-4784**	4	BOLT-12 POINT HEAD (5/16-18X1.56-IN)	
	26	1	**6V-1196**	1	SEAL-O-RING	
	28	1	**7L-7524**	1	BOLT (3/8-16X10.25-IN)	
M	29	1	**8T-4196**	4	BOLT (M10X1.5X35-MM)	
M	30	1	**8T-4648**	1	BOLT (M12X1.75X70-MM)	
M	31	1	**8T-5001**	2	BOLT (M12X1.75X130-MM)	
M	32	1	**8T-7929**	1	BOLT (M12X1.75X180-MM)	
	33	1	**9M-1974**	4	WASHER-HARD (8.8X16X2-MM THK)	
	34	1	**8T-4121**	4	WASHER-HARD (11X21X2.5-MM THK)	
BF			**1U-8846**		SEALANT-GASKET	

B - USE AS REQUIRED
F - NOT SHOWN
M - METRIC PART
Y - SEPARATE ILLUSTRATION

374-9554 **PUMP GP-GEAR (**contd.**)** **i05774966**

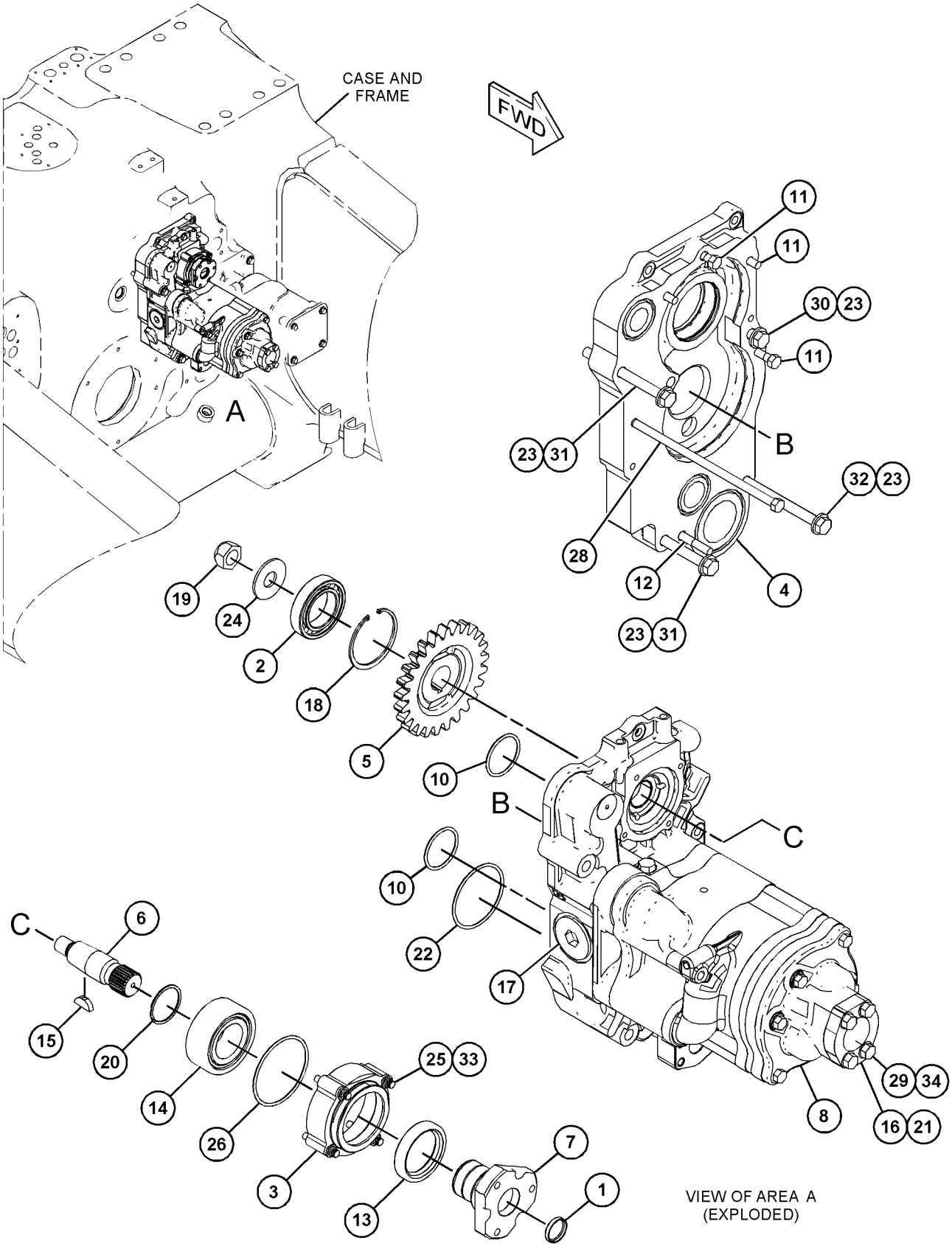

VIEW OF AREA A
(EXPLODED)

GRAPHIC #1

<END>

g03669210

374-9555 PUMP GP-GEAR—POWER TRAIN OIL

S/N: RAB1-UP
PART OF 374-9554 PUMP GP-GEAR
AN ATTACHMENT

SMCS-3066, 3115, 5073

i05572692

NOTE	REF NO	GRAPHIC REF	PART NUMBER	QTY	PART NAME 1 2 3 4 5 6 (PRODUCT LEVEL)	SEE PAGE
	1	1	**2S-0189**	2	BODY AS-OIL PUMP	
					(EACH INCLUDES)	
		1	**5M-3605**	2	DOWEL	
	2	1	**3T-8757**	4	GEAR (12-TEETH)	
	4	1	**9W-3273**	1	SPACER (OIL PUMP)	
	5	1	**206-4473**	1	GEAR (23-TEETH)	
	6	1	**208-8899**	2	GEAR (8-TEETH)	
	7	1	**449-3151**	1	BODY AS-OIL PUMP	
	7A	1	**365-1496**	1	BUSHING	
	7B	1	**209-0792**	1	BUSHING	
	7C	1	**1M-3780**	1	BUSHING	
		1	**5M-4987**	4	DOWEL	
		1	*183-7263*	1	PLUG AS	
		1	**3J-7354**	1	SEAL-O-RING	
		1	**9S-8002**	1	PLUG (7/16-20-THD)	
	8	1	**377-7469**	1	BODY AS-OIL PUMP	
	8A	1	**1M-3909**	2	BUSHING	
		1	**5M-4987**	2	DOWEL	
	9	1	**377-7471**	1	GEAR AS-PUMP	
		1	**2B-9373**	1	KEY-WOODRUFF	
	10	1	**377-7473**	1	GEAR AS-PUMP	
		1	**2B-9373**	1	KEY-WOODRUFF	
	11	1	**386-4907**	1	COVER AS-PUMP	
	11A	1	**379-5808**	2	BUSHING	
	12	1	**396-9299**	1	BODY-OIL PUMP	
	13	1	**422-4925**	1	MANIFOLD AS	
		1	**5M-3320**	4	BUSHING	
		1	**5M-4987**	2	DOWEL	
		1	**6P-3223**	6	DAMPER-BOLT	
		1	*439-4635*	2	PLUG AS	
					(EACH INCLUDES)	
		1	**9S-8002**	1	PLUG (7/16-20-THD)	
		1	**9X-7378**	1	SEAL-O-RING	
	14	1	**129-1609**	7	SEAL-O-RING	
	15	1	*148-8407*	1	PLUG AS	
		1	**9S-4191**	1	PLUG (9/16-18-THD)	
		1	**3J-1907**	1	SEAL-O-RING	
	16	1	**1B-8705**	3	KEY-WOODRUFF	
	17	1	**1B-8714**	1	KEY-WOODRUFF	
	18	1	**2B-9373**	1	KEY-WOODRUFF	
	19	1	**2K-0337**	1	LOCKNUT (3/4-16-THD)	
	20	1	**3S-0004**	4	WASHER (0.406X0.728X0.09-IN THK)	
	21	1	**4S-9134**	1	WASHER-HARD (20X30X3-MM THK)	
	22	1	**5P-4268**	5	SEAL-O-RING	
	23	1	**5P-6718**	1	SEAL-O-RING	
	24	1	**7L-7524**	6	BOLT (3/8-16X10.25-IN)	
	25	1	**9S-1018**	8	WASHER (9.73X19.05X0.84-MM THK)	

374-9555 **PUMP GP-GEAR (**contd.**)** **i05572692**

NOTE	REF NO	GRAPHIC REF	PART NUMBER	QTY	PART NAME 1 2 3 4 5 6 (PRODUCT LEVEL)	SEE PAGE
					PARTS SHOWN IN GRAPHIC(S) WITHOUT A REFERENCE NUMBER ARE NOT SERVICED SEPARATELY	

374-9555 **PUMP GP-GEAR (**contd.**)** **i05572692**

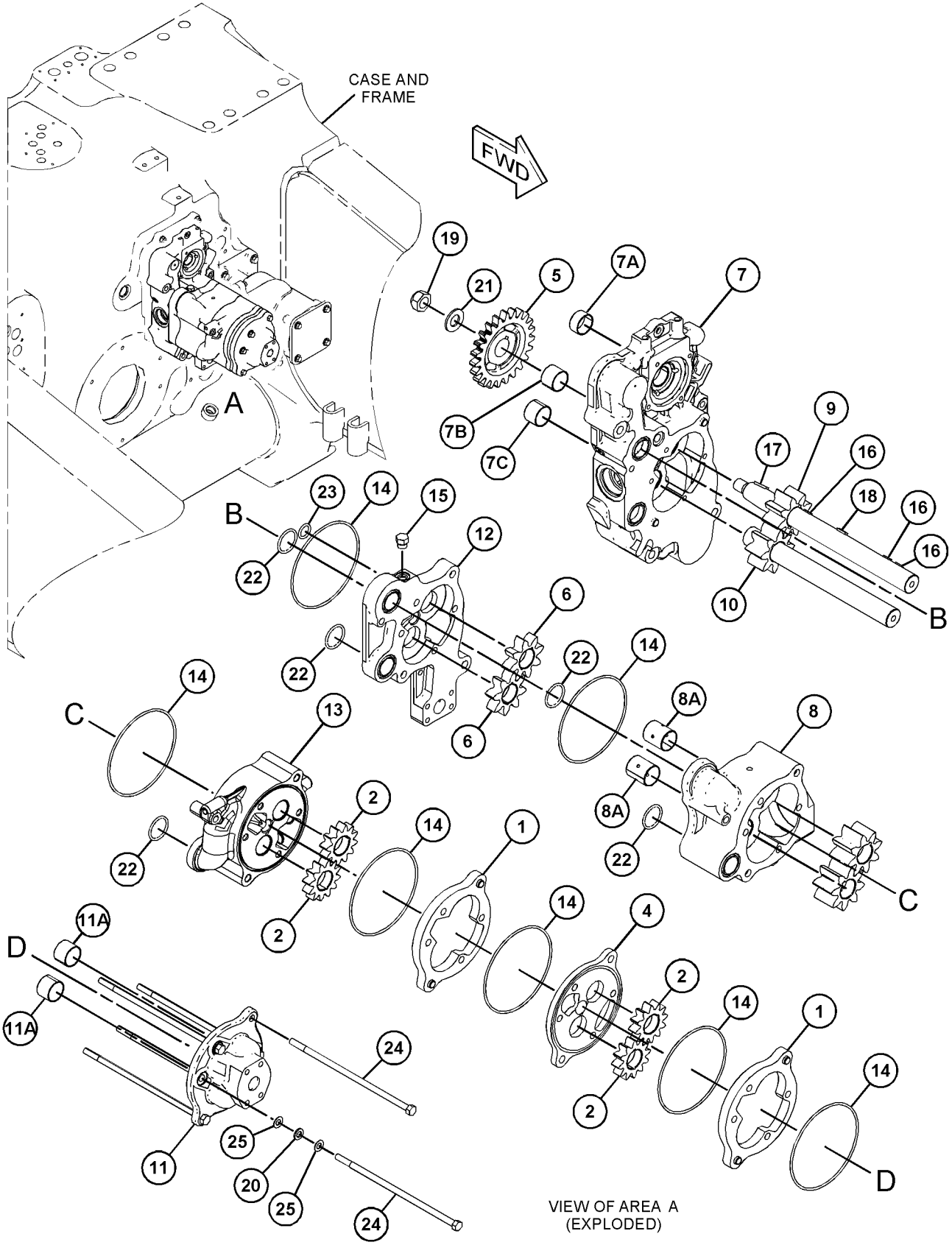

VIEW OF AREA A
(EXPLODED)

GRAPHIC #1 <END> g03532538

160-4928 SEGMENT GP-SPROCKET

S/N: RAB1-UP

260.35-MM (10.25-IN) PITCH

PART OF 381-0189, 381-0190, 381-0192, 381-0193, 381-0194, 381-0195 UNDERCARRIAGE AR AN ATTACHMENT

SMCS-4155 **i06602358**

NOTE	REF NO	GRAPHIC REF	PART NUMBER	QTY	PART NAME 1 2 3 4 5 6 (PRODUCT LEVEL)	SEE PAGE
	1	1	**2M-5656**	30	NUT (1-14-THD)	
	2	1	**278-2374**	5	SEGMENT	
	3	1	**5P-5422**	30	BOLT (1-14X3.64-IN)	
	4	1	**5P-8250**	30	WASHER (28X49X5-MM THK)	

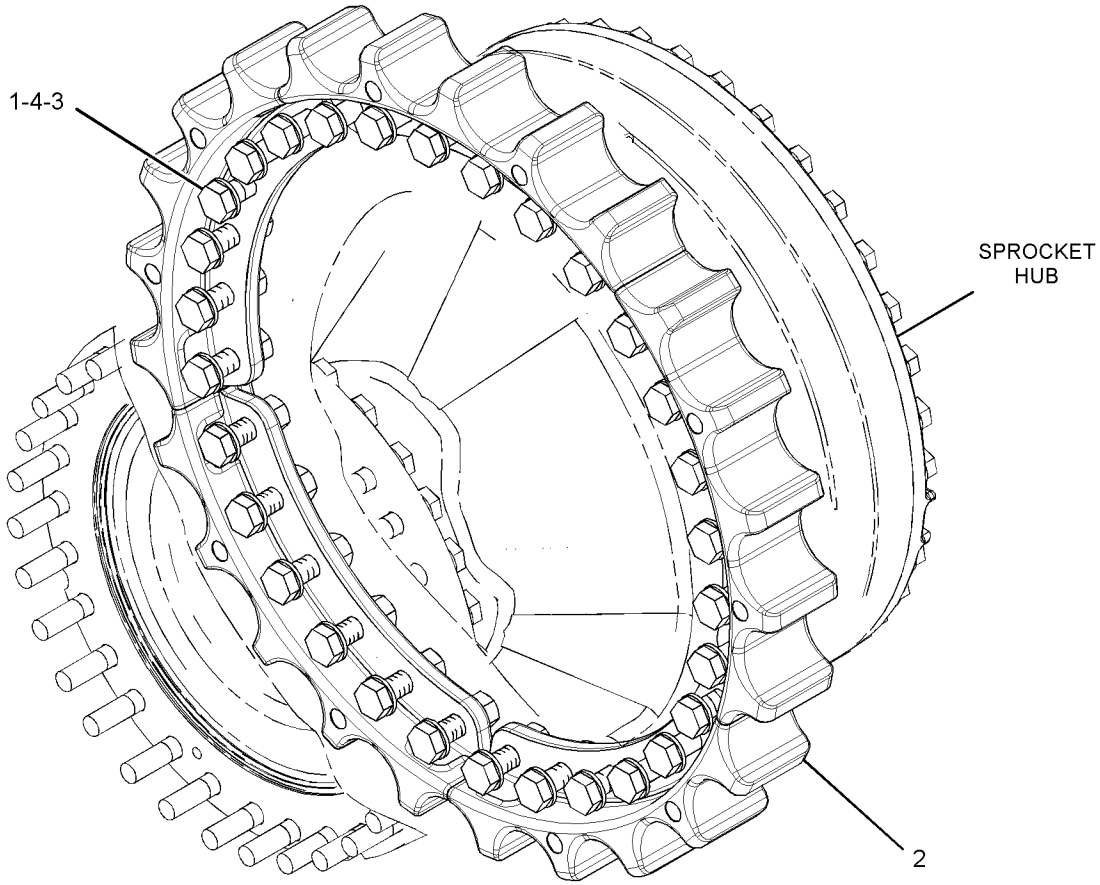

GRAPHIC #1 <END> g01429133

278-2351 SEGMENT GP-SPROCKET—SOUND SUPPRESSION

S/N: RAB1-UP
260.35-MM (10.25-IN) PITCH, 25-TOOTH
PART OF 381-0191 UNDERCARRIAGE AR
AN ATTACHMENT

SMCS-4155 **i02614290**

NOTE	REF NO	GRAPHIC REF	PART NUMBER	QTY	PART NAME 1 2 3 4 5 6 (PRODUCT LEVEL)	SEE PAGE
	1	1	**278-2352**	5	SEGMENT	
	2	1	**2M-5656**	30	NUT (1-14-THD)	
	3	1	**5P-5422**	30	BOLT (1-14X3.64-IN)	
	4	1	**5P-8250**	30	WASHER (28X49X5-MM THK)	

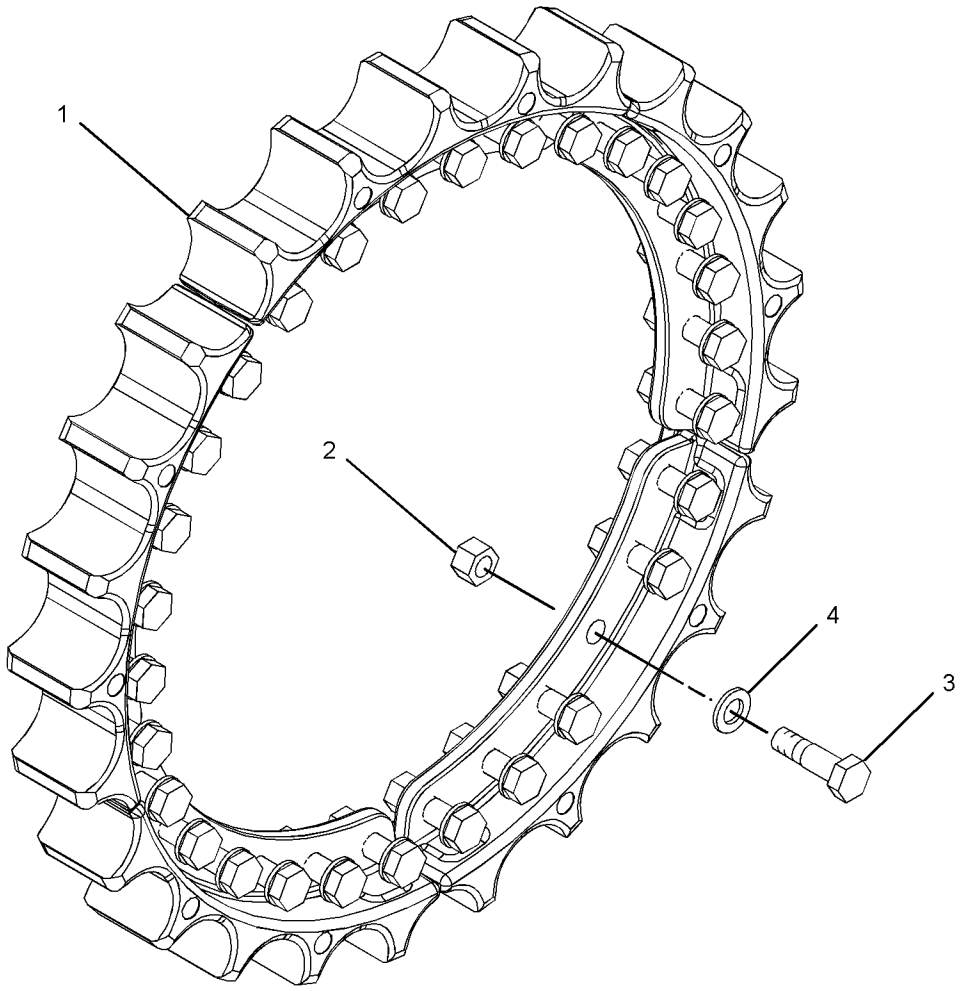

GRAPHIC #1 <END> g01310266

173-0245 SHAFT GP-DRIVE

S/N: RAB1-UP
PART OF 359-6405 POWER TRAIN AR
AN ATTACHMENT

SMCS-3253 **i01689320**

NOTE	REF NO	GRAPHIC REF	PART NUMBER	QTY	PART NAME 1 2 3 4 5 6 (PRODUCT LEVEL)	SEE PAGE
	1	1	**110-9311**	1	YOKE AS	
		1	**4F-8503**	1	PLUG-CUP	
Y	2	1	**173-0246**	1	UNIVERSAL JOINT GP	585
	3	1	**0S-1604**	8	BOLT (1/2-20X2.5-IN)	
	4	1	**5D-6657**	1	RACE	

Y - SEPARATE ILLUSTRATION

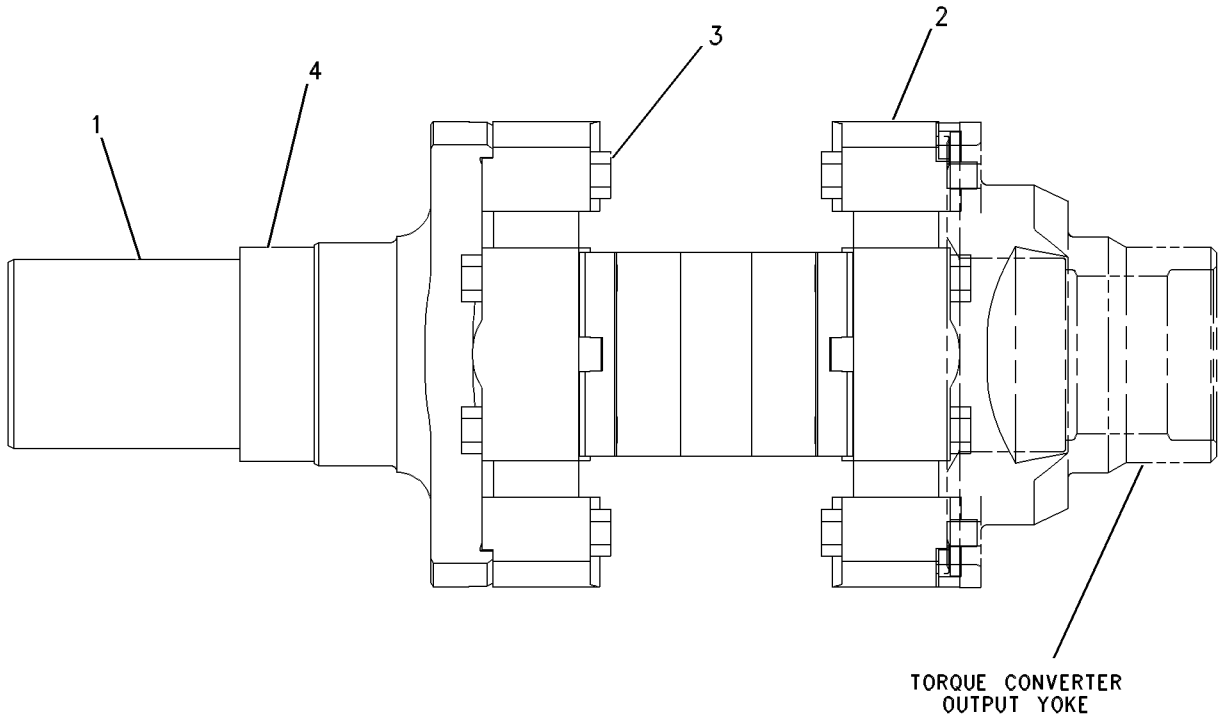

GRAPHIC #1 <END> g00648254

220-5549 SLIP JOINT GP

S/N: RAB1-UP
PART OF 220-5548 COUPLING GP-PUMP
AN ATTACHMENT

SMCS-3251 **i02050415**

NOTE	REF NO	GRAPHIC REF	PART NUMBER	QTY	PART NAME 1 2 3 4 5 6 (PRODUCT LEVEL)	SEE PAGE
	1	1	**2J-8333**	1	SEAL-LIP TYPE	
	2	1	**5H-4279**	1	PLUG-CUP	
	3	1	**209-3424**	1	YOKE	
	4	1	**220-5550**	1	YOKE	

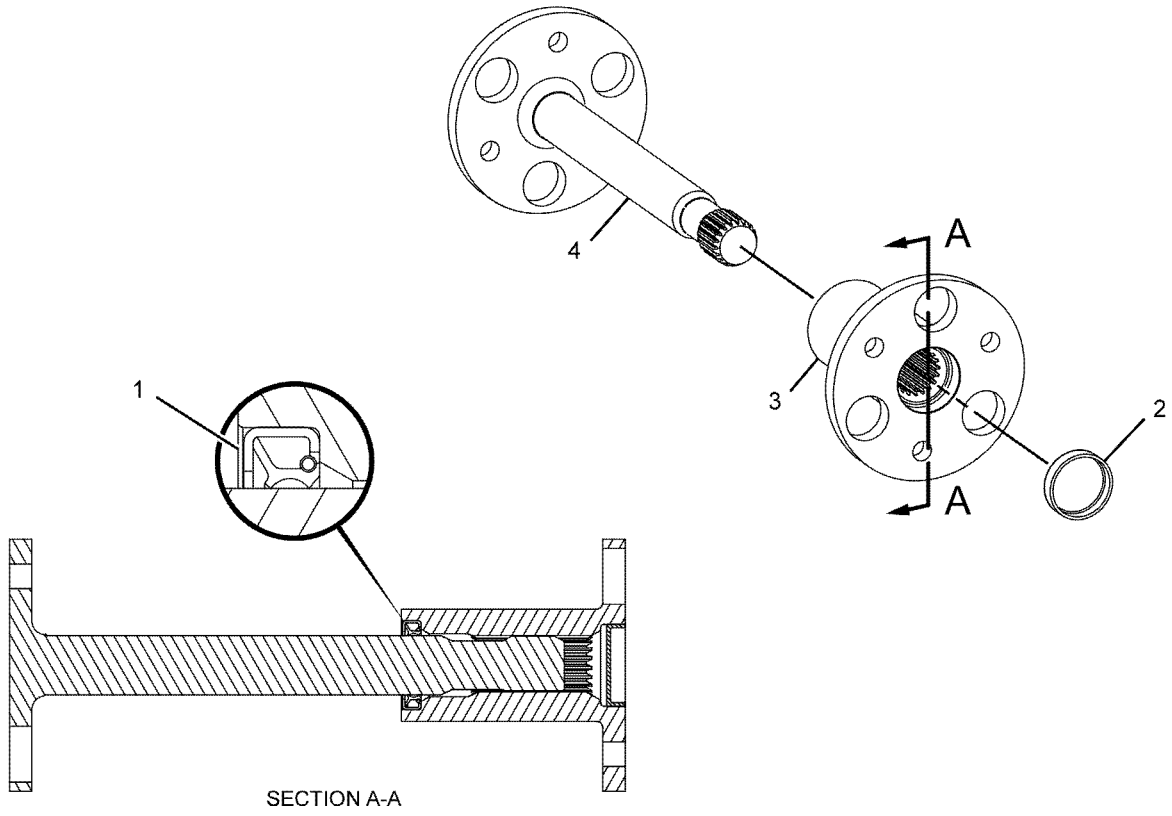

GRAPHIC #1 <END> g01039052

359-6482 TORQUE CONVERTER & HOUSING GP

S/N: RAB1-UP
PART OF 359-6405 POWER TRAIN AR
AN ATTACHMENT

SMCS-3101, 3105 **i05424718**

NOTE	REF NO	GRAPHIC REF	PART NUMBER	QTY	PART NAME 1 2 3 4 5 6 (PRODUCT LEVEL)	SEE PAGE
Y	1	1	**106-4150**	1	DRAIN GP-ECOLOGY	513
	2	1	**6P-8339**	1	LOCK	
	3	1	**6P-8340**	1	SLEEVE	
	4	1	**8E-7838**	1	GEAR-SUN (35-TEETH)	
	5	1	**8S-9130**	1	SCREEN-SUCTION (TORQUE CONVERTER SCAVENGE)	
	6	1	**174-3777**	1	YOKE	
Y	7	1	**374-5784**	1	TORQUE CONVERTER GP (WITH DIVIDER)	576
	8	1	**389-0689**	1	COVER	
	9	1	**0S-1585**	11	BOLT (1/2-13X1.5-IN)	
	10	1	**0S-1587**	1	BOLT (1/2-13X1.75-IN)	
	11	1	**117-7127**	1	SEAL-LIP TYPE	
	12	1	**165-4852**	2	SEAL-O-RING	
	13	1	**165-4854**	2	SEAL-O-RING	
	14	1	**1B-4367**	1	BOLT (5/8-11X3-IN)	
	15	1	*244-3712*	1	PLUG AS	
		1	**9S-4191**	1	PLUG (9/16-18-THD)	
		1	**214-7568**	1	SEAL-O-RING	
	16	1	**2K-5254**	1	BEARING-OUTER	
	17	1	**2M-0849**	1	WASHER-HARD (13.5X25.5X5-MM THK)	
	18	1	**3D-8241**	1	SEAL-O-RING	
	19	1	**3P-0653**	1	SEAL-O-RING	
	20	1	**4M-8910**	1	RING-RETAINING	
	21	1	**5P-2566**	10	BOLT (1/2-13X1.5-IN)	
	22	1	**5P-8245**	11	WASHER-HARD (13.5X25.5X3-MM THK)	
	23	1	**5S-7379**	1	BOLT (3/8-16X0.875-IN)	
	24	1	**6V-1196**	1	SEAL-O-RING	
	25	1	**7X-2623**	1	RING-RETAINING	
	26	1	**8E-8994**	1	SEAL-RING	
	27	1	**8T-2501**	4	BOLT (3/8-16X2-IN)	
	28	1	**8T-4223**	10	WASHER-HARD (13.5X25.5X3-MM THK)	
	29	1	**8T-4896**	1	WASHER-HARD (10.2X18.5X2.5-MM THK)	
	30	1	**8T-6762**	1	PLUG-PIPE (1/2-14-THD)	
	31	1	**9S-4372**	1	RETAINER	

Y - SEPARATE ILLUSTRATION

359-6482 **TORQUE CONVERTER & HOUSING GP** (contd.) **i05424718**

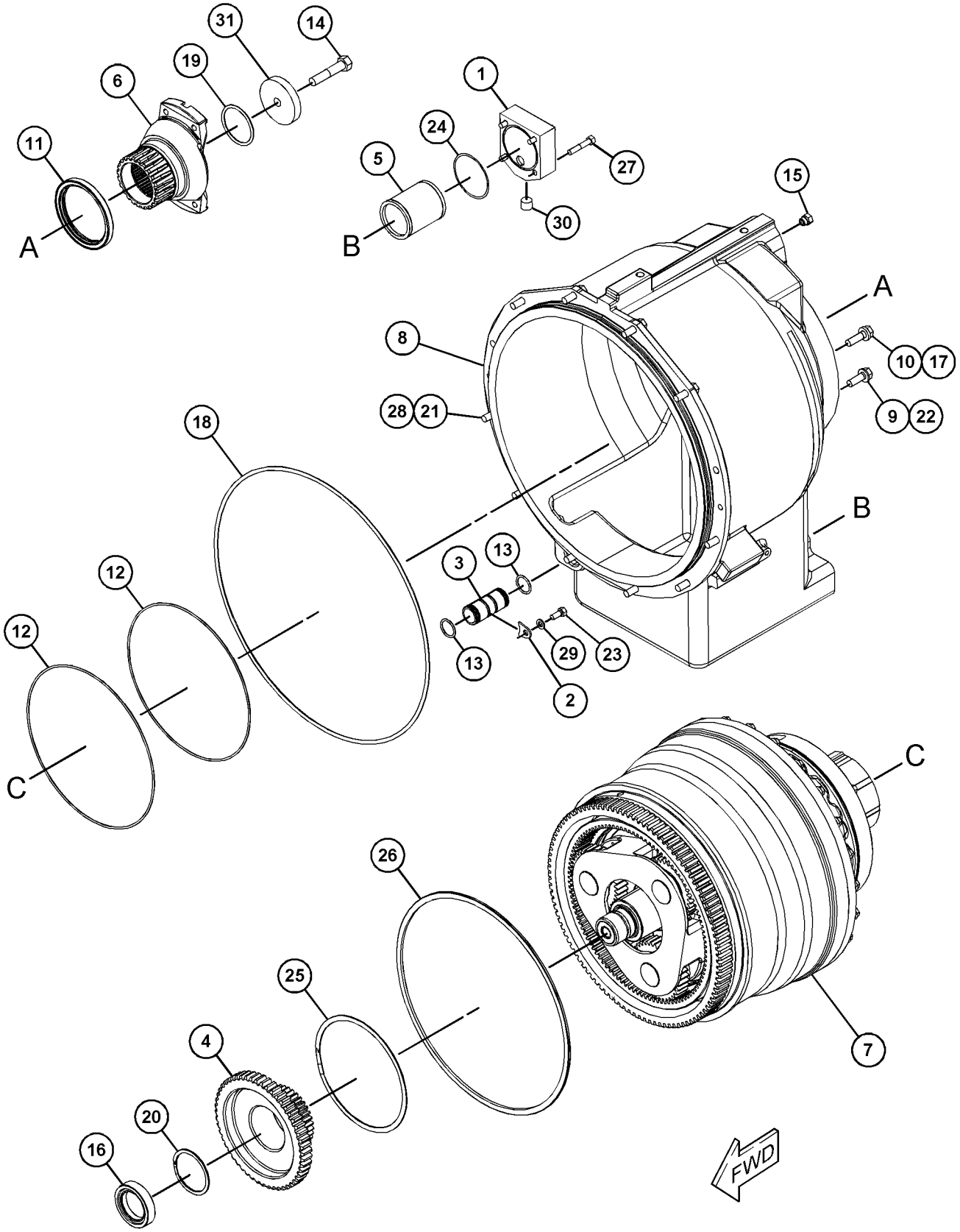

GRAPHIC #1 <END> g03453996

226-7612 TORQUE CONVERTER GP

S/N: AJ21-109, 112-115
PART OF 374-5784 TORQUE CONVERTER GP
AN ATTACHMENT

SMCS-3101 **i03606001**

NOTE	REF NO	GRAPHIC REF	PART NUMBER	QTY	PART NAME 1 2 3 4 5 6 (PRODUCT LEVEL)	SEE PAGE
	1	1	**5D-7449**	1	CUP-BEARING	
	2	1	**5F-1248**	1	CONE-BEARING	
	3	1	**1T-0229**	1	LOCKNUT-BEARING	
	4	1	**1T-0242**	1	LOCKWASHER-BEARING	
	5	1	**6P-3904**	1	RETAINER-BEARING	
	6	1	**6P-9163**	1	CARRIER-RING	
	7	1	**6Y-5636**	1	IMPELLER-CONVERTER	
	8	1	**6Y-5793**	1	RING-SEAL	
	9	1	**7G-5671**	1	HUB-IMPELLER	
	10	1	**7G-9922**	1	RING-SEAL	
	11	1	**7T-6993**	1	TURBINE-CONVERTER	
	12	1	**8P-6817**	1	HUB	
	13	1	**8P-9266**	1	STATOR-CONVERTER	
	14	1	**106-7098**	1	FLANGE AS	
	14A	1	**1T-0278**	2	BUSHING	
	15	1	**226-7615**	1	HOUSING-ROTATING	
	16	1	**226-7617**	1	SUPPORT-STATOR	
	17	1	**226-7618**	1	CARRIER-STATOR	
	18	1	**242-8030**	1	CARRIER-SEAL	
	19	1	**242-8031**	1	SLEEVE-WEAR	
	20	1	**242-8033**	1	PLATE-THRUST	
C	21	1	**324-9852**	1	FLANGE GP (TORQUE CONVERTER)	
	21A	1	**9S-4191**	2	PLUG (9/16-18-THD)	
		1	**033-6042**	2	SEAL-O-RING	
	21B	1	**9M-4007**	2	DOWEL	
C	22	1	**1A-2029**	8	BOLT (3/8-16X1.125-IN)	
	23	1	**1T-0241**	1	SETSCREW (5/16-18XO.75-IN)	
	24	1	**1T-0610**	1	BALL BEARING	
	25	1	**1T-0689**	24	WASHER (9.93X22.22X2.54-MM THK)	
	26	1	**2L-3650**	5	PIN-SPRING	
C	27	1	**3B-1915**	24	BOLT (3/8-16X1.375-IN)	
	28	1	**5M-2894**	8	WASHER-HARD (10.2X18.5X2.5-MM THK)	
	29	1	**5P-6393**	2	RING-RETAINING	
	30	1	**5P-8245**	36	WASHER-HARD (13.5X25.5X3-MM THK)	
	31	1	**5S-2389**	12	BOLT-SOCKET HEAD (1/2-13X2.75-IN)	
	32	1	**6H-1717**	36	BOLT (1/2-13X1.125-IN)	

C - CHANGE FROM PREVIOUS TYPE

226-7612 **TORQUE CONVERTER GP (**contd.**)** **i03606001**

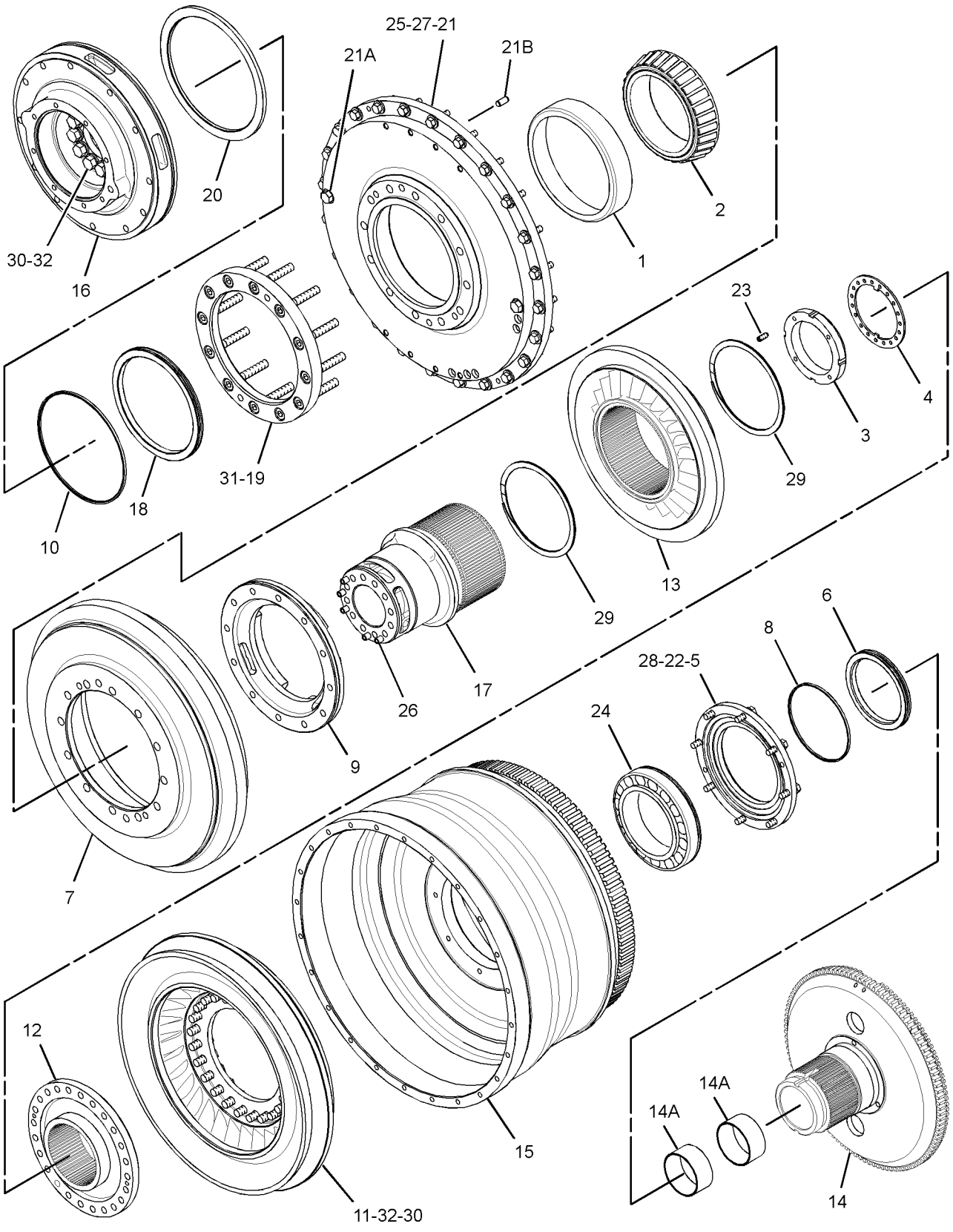

GRAPHIC #1 <END> g01832133

374-5783 TORQUE CONVERTER GP

S/N: AJ2110-111
PART OF 374-5784 TORQUE CONVERTER GP
AN ATTACHMENT

SMCS-3101 **i05411650**

NOTE	REF NO	GRAPHIC REF	PART NUMBER	QTY	PART NAME 1 2 3 4 5 6 (PRODUCT LEVEL)	SEE PAGE
	1	1	**6P-3904**	1	RETAINER-BEARING	
	2	1	**6P-9163**	1	CARRIER-RING	
	3	1	**6Y-5793**	1	RING-SEAL	
	4	1	**8P-9266**	1	STATOR-CONVERTER	
	5	1	**106-7098**	1	FLANGE AS	
	5A	1	**1T-0278**	2	BUSHING	
	6	1	**226-7615**	1	HOUSING-ROTATING	
	7	1	**226-7618**	1	CARRIER-STATOR	
	8	1	**242-8033**	1	PLATE-THRUST	
	9	1	**374-5778**	1	TURBINE	
	10	1	**374-5779**	1	SLEEVE	
	11	1	**374-5780**	1	IMPELLER	
	12	1	**374-5781**	1	SUPPORT	
	13	1	**375-4166**	1	RING-SEAL	
	14	1	**0S-1591**	24	BOLT (3/8-16X1.5-IN)	
	15	1	**1A-2029**	8	BOLT (3/8-16X1.125-IN)	
	16	1	**1T-0229**	1	LOCKNUT-BEARING	
	17	1	**1T-0241**	1	SETSCREW (5/16-18X0.75-IN)	
	18	1	**1T-0242**	1	LOCKWASHER-BEARING	
	19	1	**1T-0610**	1	BALL BEARING	
	20	1	*244-3712*	2	PLUG AS	
					(EACH INCLUDES)	
		1	**9S-4191**	1	PLUG (9/16-18-THD)	
		1	**214-7568**	1	SEAL-O-RING	
	21	1	**2L-3650**	5	PIN-SPRING	
	22	1	**5D-7449**	1	CUP-BEARING	
	23	1	**5F-1248**	1	CONE-BEARING	
	24	1	**5M-2894**	8	WASHER-HARD (10.2X18.5X2.5-MM THK)	
	25	1	**5P-6393**	2	RING-RETAINING	
	26	1	**5P-8245**	12	WASHER-HARD (13.5X25.5X3-MM THK)	
	27	1	**6H-1717**	12	BOLT (1/2-13X1.125-IN)	
M	28	1	**6V-8200**	12	BOLT-SOCKET HEAD (M12X1.75X35-MM)	
	29	1	**8T-7934**	24	WASHER-HARD (11X21X5-MM THK)	

M - METRIC PART

374-5783 **TORQUE CONVERTER GP** (contd.) **i05411650**

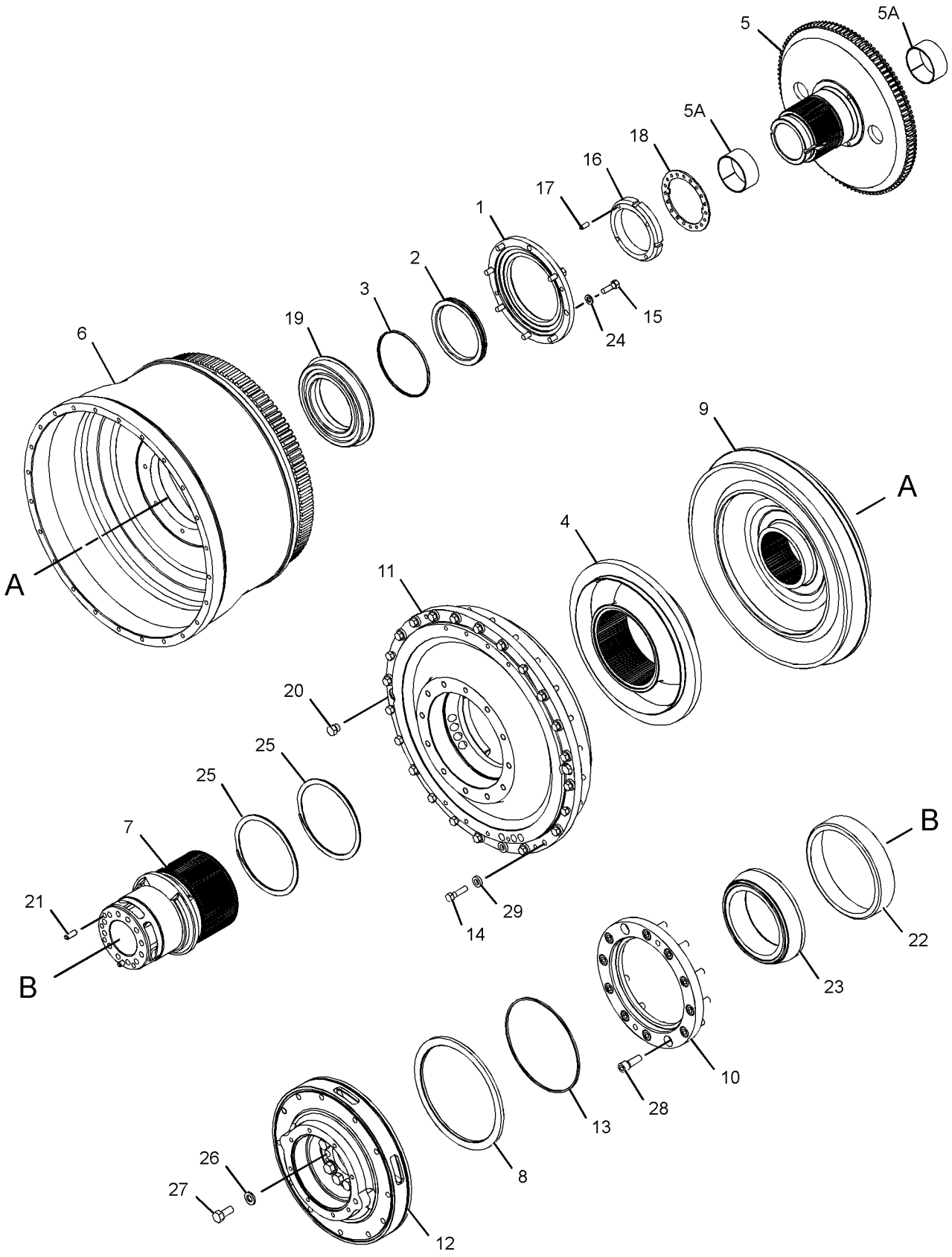

GRAPHIC #1 <END> g03426629

374-5783 TORQUE CONVERTER GP

S/N: AJ2110-111, 116-UP
PART OF 374-5784 TORQUE CONVERTER GP
AN ATTACHMENT

SMCS-3101 **i05959292**

NOTE	REF NO	GRAPHIC REF	PART NUMBER	QTY	PART NAME 1 2 3 4 5 6 (PRODUCT LEVEL)	SEE PAGE
	1	1	**6P-3904**	1	RETAINER-BEARING	
	2	1	**6P-9163**	1	CARRIER-RING	
	3	1	**6Y-5793**	1	RING-SEAL	
	4	1	**8P-9266**	1	STATOR-CONVERTER	
	5	1	**106-7098**	1	FLANGE AS	
	5A	1	**1T-0278**	2	BUSHING	
	6	1	**226-7615**	1	HOUSING-ROTATING	
	7	1	**226-7618**	1	CARRIER-STATOR	
	8	1	**242-8033**	1	PLATE-THRUST	
	9	1	**374-5778**	1	TURBINE	
C	10	1	**444-7094**	1	SLEEVE	
C	11	1	**453-2305**	1	IMPELLER AS	
	12	1	**374-5781**	1	SUPPORT	
	13	1	**375-4166**	1	RING-SEAL	
C	14	1	**3B-1915**	24	BOLT (3/8-16X1.375-IN)	
	15	1	**1A-2029**	8	BOLT (3/8-16X1.125-IN)	
	16	1	**1T-0229**	1	LOCKNUT-BEARING	
	17	1	**1T-0241**	1	SETSCREW (5/16-18X0.75-IN)	
	18	1	**1T-0242**	1	LOCKWASHER-BEARING	
	19	1	**1T-0610**	1	BALL BEARING	
	20	1	*244-3712*	2	PLUG AS	
					(EACH INCLUDES)	
		1	**9S-4191**	1	PLUG (9/16-18-THD)	
		1	**214-7568**	1	SEAL-O-RING	
	21	1	**2L-3650**	5	PIN-SPRING	
	23	1	**5F-1248**	1	CONE-BEARING	
	24	1	**5M-2894**	8	WASHER-HARD (10.2X18.5X2.5-MM THK)	
	25	1	**5P-6393**	2	RING-RETAINING	
	26	1	**5P-8245**	12	WASHER-HARD (13.5X25.5X3-MM THK)	
	27	1	**6H-1717**	12	BOLT (1/2-13X1.125-IN)	
CM	28	1	**6V-8200**	6	BOLT-SOCKET HEAD (M12X1.75X35-MM)	
	29	1	**8T-7934**	24	WASHER-HARD (11X21X5-MM THK)	

C - CHANGE FROM PREVIOUS TYPE
M - METRIC PART

374-5783 **TORQUE CONVERTER GP (**contd.**)** **i05959292**

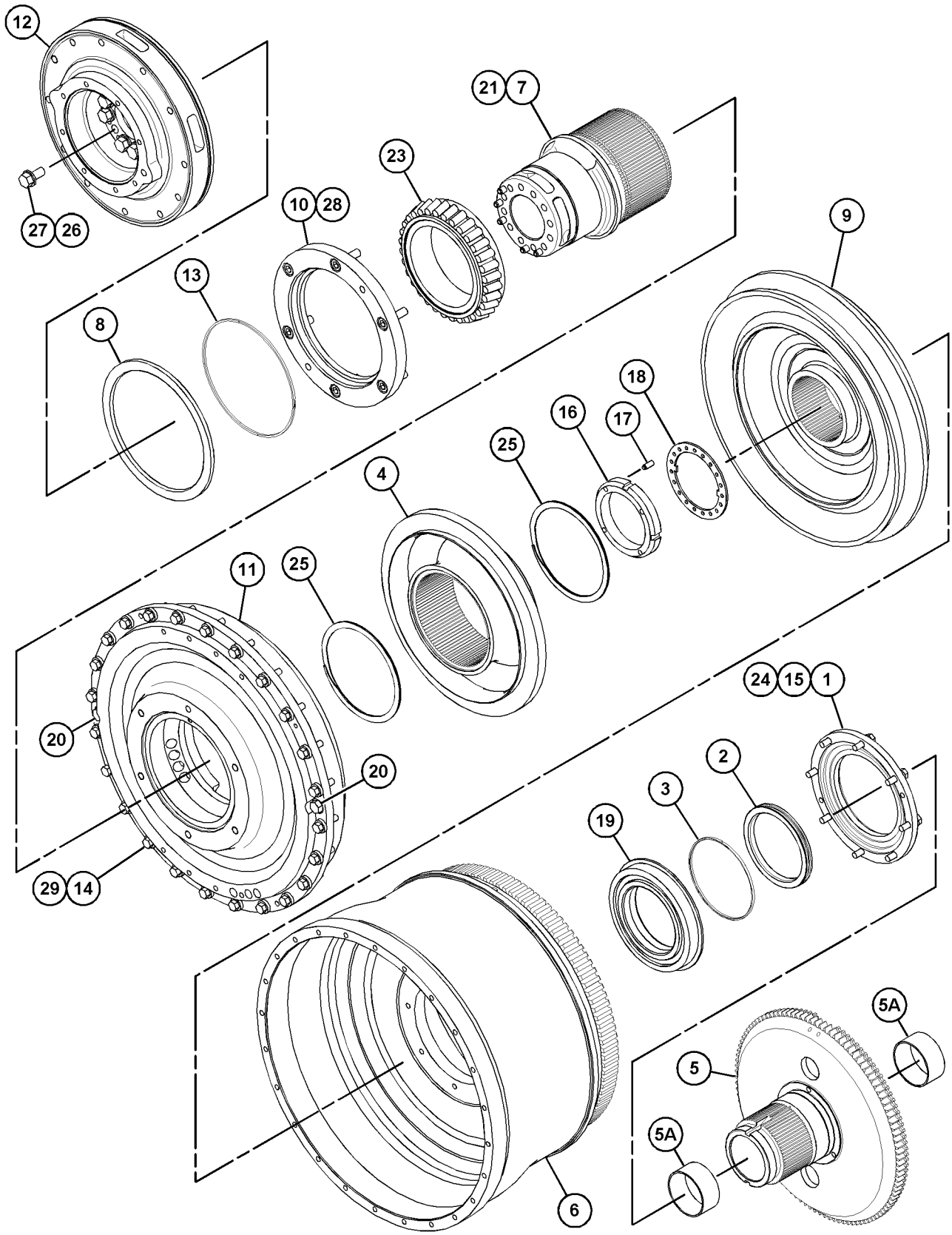

GRAPHIC #1 <END> g03806817

374-5784 TORQUE CONVERTER GP—WITH DIVIDER

S/N: AJ21-109

PART OF 359-6482 TORQUE CONVERTER & HOUSING GP

AN ATTACHMENT

SMCS-3101 **i05687109**

NOTE	REF NO	GRAPHIC REF	PART NUMBER	QTY	PART NAME 1 2 3 4 5 6 (PRODUCT LEVEL)	SEE PAGE
Y	1	1	*226-7612*	1	TORQUE CONVERTER GP	570
	2	1	**5H-8985**	2	PIN-SPRING	
	3	1	**9M-2076**	1	RING-SNAP	
	4	1	**9M-2074**	1	GEAR-RING (106-TEETH)	
	5	1	**106-7099**	1	CARRIER-PLANETARY	
	6	1	**6L-6560**	1	RING-RETAINING	
	7	1	**9P-4057**	1	SPACER (58X63.5X9.08-MM THK)	
	8	1	**8J-8322**	1	RING-RETAINING	
	9	1	**294-3370**	1	SHAFT AS	
	10	1	**5P-5405**	1	RACE-BEARING INNER	
	11	1	**6V-9176**	1	BALL BEARING	
	12	1	**8E-8316**	6	DISC-THRUST	
	13	1	**7G-5622**	3	GEAR-PLANETARY (35-TEETH)	
	14	1	**1S-9110**	3	ROLLER AS	
	15	1	**3S-2708**	3	PIN-SPRING	
	16	1	**1T-0141**	1	RING-METAL SEAL	
	17	1	**7L-9061**	1	SEAL-O-RING	
	18	1	**6Y-5888**	1	RING-SEAL	
	19	1	**336-2432**	1	RETAINER-BEARING	
	20	1	**8P-5056**	1	CARRIER-RING	
	21	1	**1A-2029**	8	BOLT (3/8-16X1.125-IN)	
	22	1	**5M-2894**	8	WASHER-HARD (10.2X18.5X2.5-MM THK)	
	23	1	**6V-5553**	1	SEAL-O-RING	
	24	1	**6P-3901**	3	SHAFT AS	
					(EACH INCLUDES)	
		1	**2A-3746**	1	PLUG-CUP	

Y - SEPARATE ILLUSTRATION

374-5784 **TORQUE CONVERTER GP** (contd.) **i05687109**

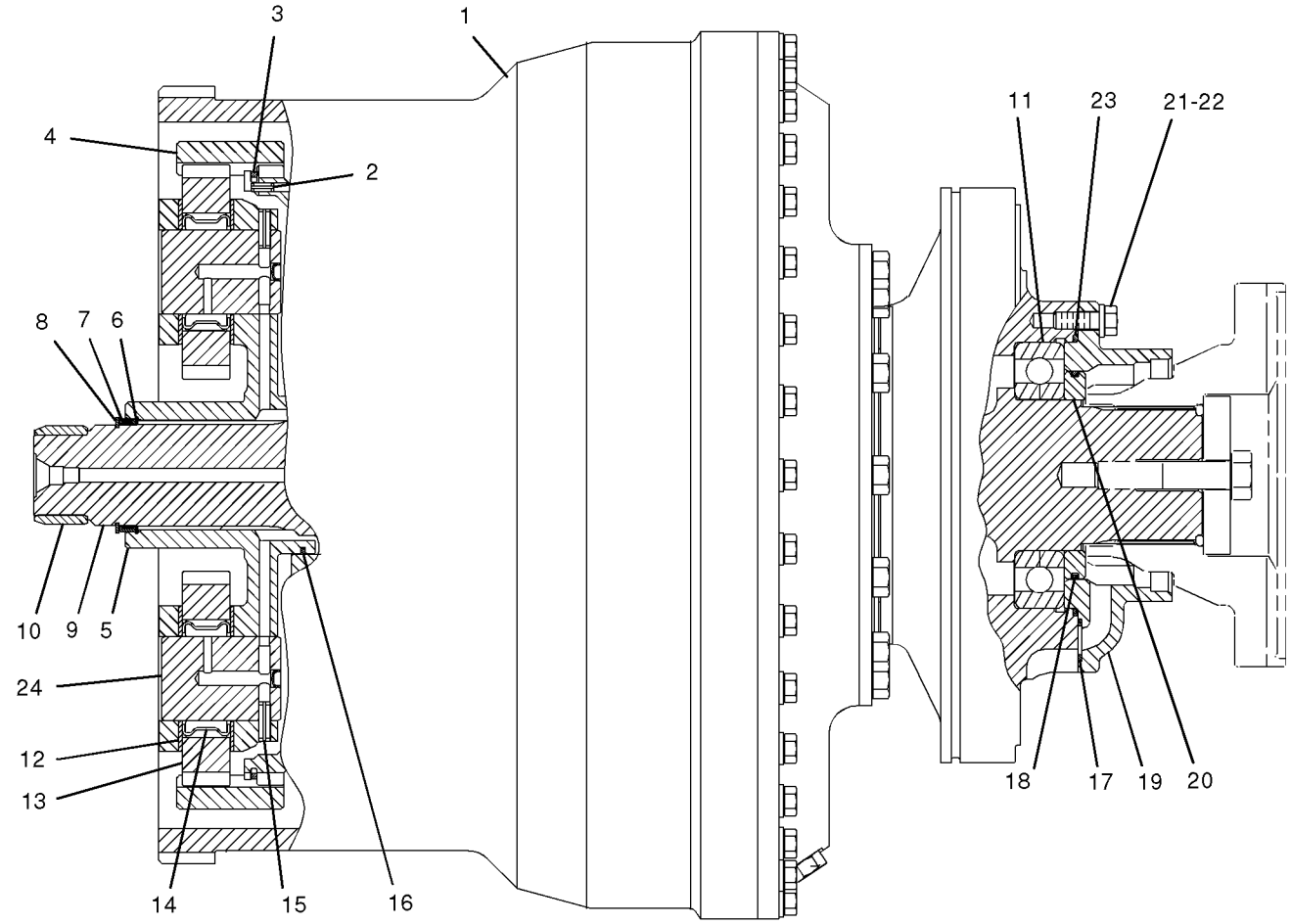

GRAPHIC #1 <END> g01055307

374-5784 TORQUE CONVERTER GP—WITH DIVIDER

S/N: AJ2110-111

PART OF 359-6482 TORQUE CONVERTER & HOUSING GP

AN ATTACHMENT

SMCS-3101 **i05914614**

NOTE	REF NO	GRAPHIC REF	PART NUMBER	QTY	PART NAME 1 2 3 4 5 6 (PRODUCT LEVEL)	SEE PAGE
CY	1	1	*374-5783*	1	TORQUE CONVERTER GP	572
	2	1	**5H-8985**	2	PIN-SPRING	
	3	1	**9M-2076**	1	RING-SNAP	
	4	1	**9M-2074**	1	GEAR-RING (106-TEETH)	
	5	1	**106-7099**	1	CARRIER-PLANETARY	
	6	1	**6L-6560**	1	RING-RETAINING	
	7	1	**9P-4057**	1	SPACER (58X63.5X9.08-MM THK)	
	8	1	**8J-8322**	1	RING-RETAINING	
	9	1	**294-3370**	1	SHAFT AS	
	10	1	**5P-5405**	1	RACE-BEARING INNER	
	11	1	**6V-9176**	1	BALL BEARING	
	12	1	**8E-8316**	6	DISC-THRUST	
	13	1	**7G-5622**	3	GEAR-PLANETARY (35-TEETH)	
	14	1	**1S-9110**	3	ROLLER AS	
	15	1	**3S-2708**	3	PIN-SPRING	
	16	1	**1T-0141**	1	RING-METAL SEAL	
	17	1	**7L-9061**	1	SEAL-O-RING	
	18	1	**6Y-5888**	1	RING-SEAL	
	19	1	**336-2432**	1	RETAINER-BEARING	
	20	1	**8P-5056**	1	CARRIER-RING	
	21	1	**1A-2029**	8	BOLT (3/8-16X1.125-IN)	
	22	1	**5M-2894**	8	WASHER-HARD (10.2X18.5X2.5-MM THK)	
	23	1	**6V-5553**	1	SEAL-O-RING	
	24	1	**6P-3901**	3	SHAFT AS	
					(EACH INCLUDES)	
		1	**2A-3746**	1	PLUG-CUP	

C - CHANGE FROM PREVIOUS TYPE
Y - SEPARATE ILLUSTRATION

374-5784 **TORQUE CONVERTER GP** (contd.) **i05914614**

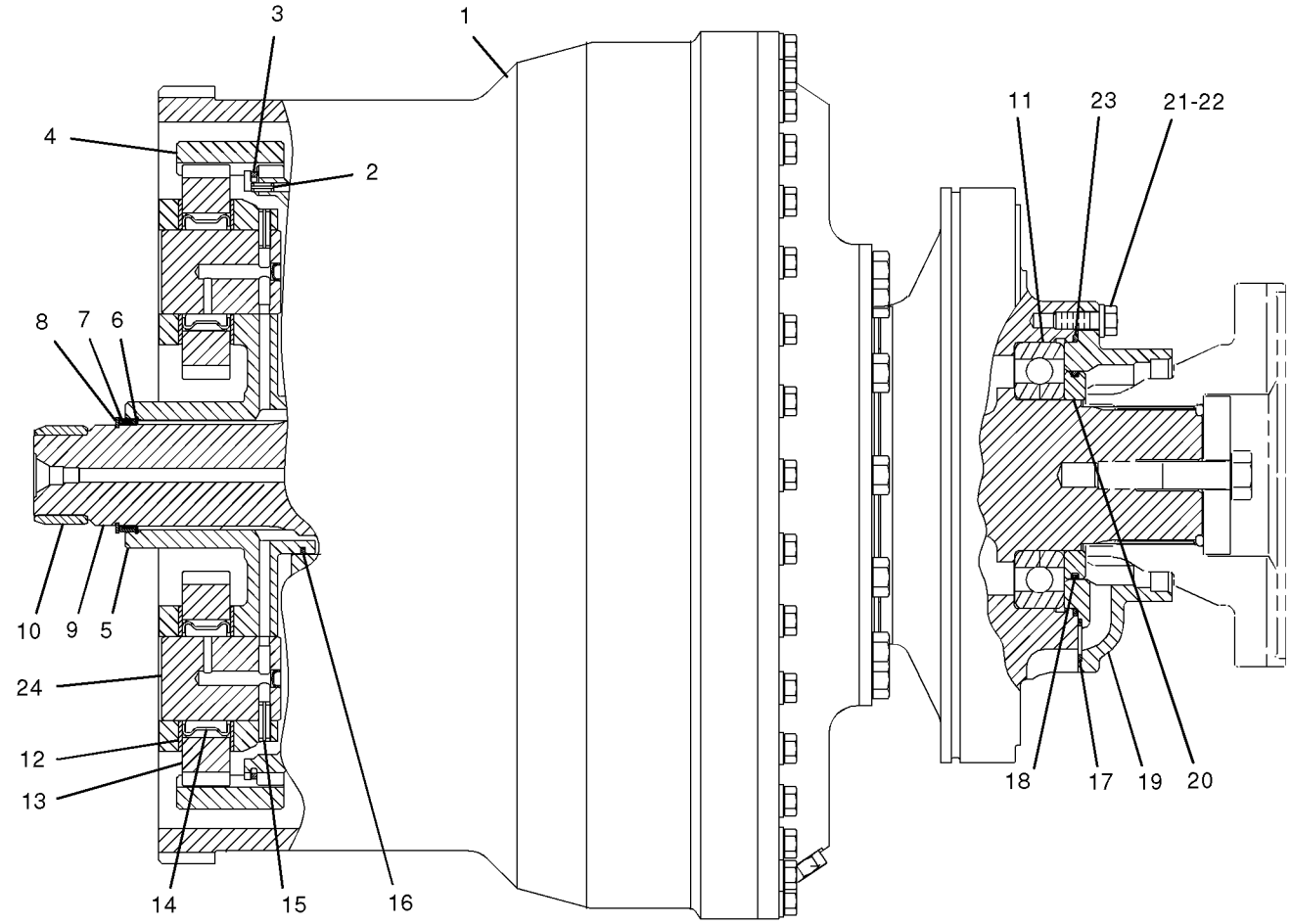

GRAPHIC #1 <END> g01055307

374-5784 TORQUE CONVERTER GP—WITH DIVIDER

S/N: AJ2112-115

PART OF 359-6482 TORQUE CONVERTER & HOUSING GP

AN ATTACHMENT

SMCS-3101 **i05959318**

NOTE	REF NO	GRAPHIC REF	PART NUMBER	QTY	PART NAME 1 2 3 4 5 6 (PRODUCT LEVEL)	SEE PAGE
CY	1	1	*226-7612*	1	TORQUE CONVERTER GP	570
	2	1	**5H-8985**	2	PIN-SPRING	
	3	1	**9M-2076**	1	RING-SNAP	
	4	1	**9M-2074**	1	GEAR-RING (106-TEETH)	
	5	1	**106-7099**	1	CARRIER-PLANETARY	
	6	1	**6L-6560**	1	RING-RETAINING	
	7	1	**9P-4057**	1	SPACER (58X63.5X9.08-MM THK)	
	8	1	**8J-8322**	1	RING-RETAINING	
	9	1	**294-3370**	1	SHAFT AS	
	10	1	**5P-5405**	1	RACE-BEARING INNER	
	11	1	**6V-9176**	1	BALL BEARING	
	12	1	**8E-8316**	6	DISC-THRUST	
	13	1	**7G-5622**	3	GEAR-PLANETARY (35-TEETH)	
	14	1	**1S-9110**	3	ROLLER AS	
	15	1	**3S-2708**	3	PIN-SPRING	
	16	1	**1T-0141**	1	RING-METAL SEAL	
	17	1	**7L-9061**	1	SEAL-O-RING	
	18	1	**6Y-5888**	1	RING-SEAL	
	19	1	**336-2432**	1	RETAINER-BEARING	
	20	1	**8P-5056**	1	CARRIER-RING	
	21	1	**1A-2029**	8	BOLT (3/8-16X1.125-IN)	
	22	1	**5M-2894**	8	WASHER-HARD (10.2X18.5X2.5-MM THK)	
	23	1	**6V-5553**	1	SEAL-O-RING	
	24	1	**6P-3901**	3	SHAFT AS	
					(EACH INCLUDES)	
		1	**2A-3746**	1	PLUG-CUP	

C - CHANGE FROM PREVIOUS TYPE
Y - SEPARATE ILLUSTRATION

374-5784 **TORQUE CONVERTER GP** (contd.) **i05959318**

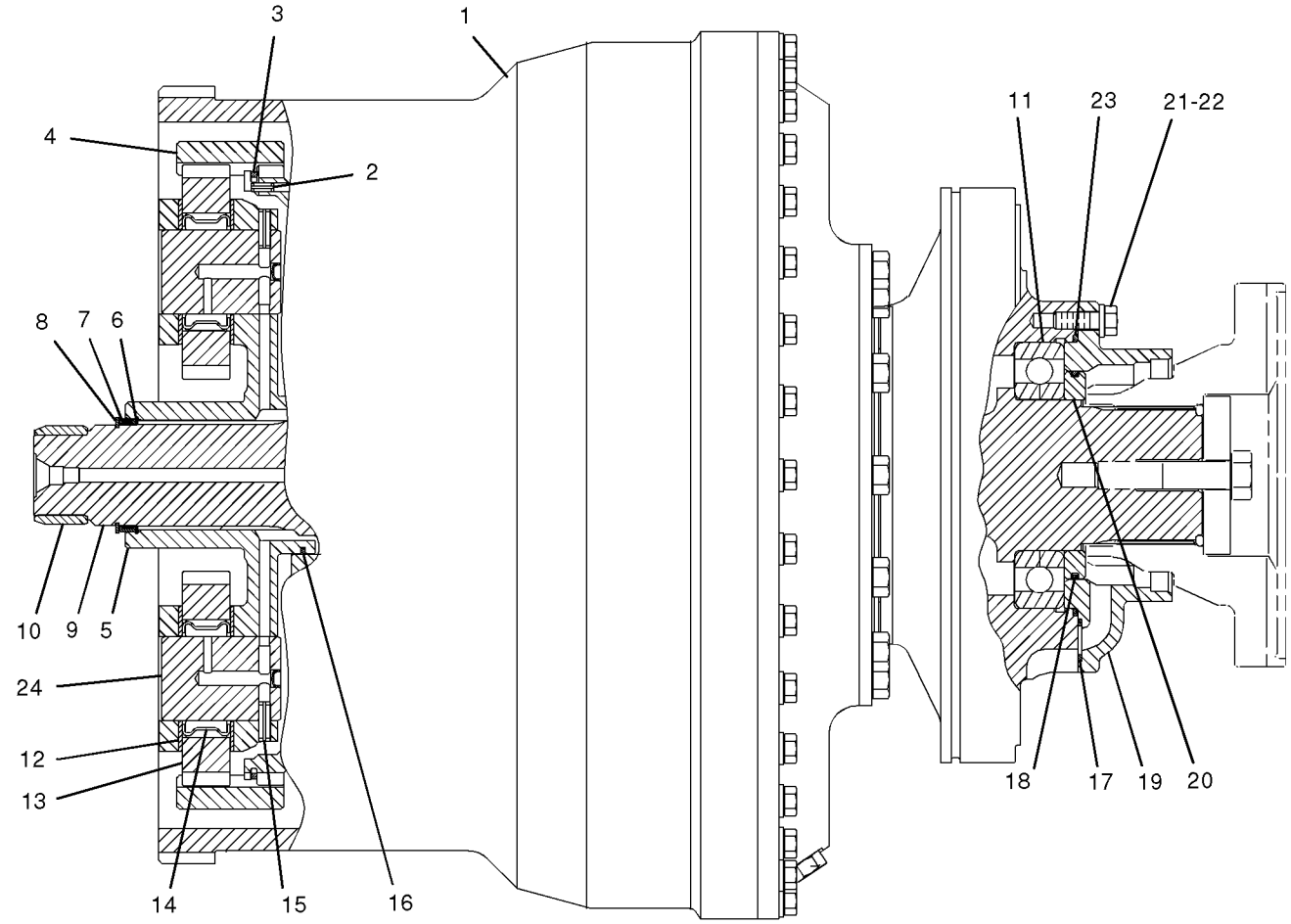

GRAPHIC #1 <END> g01055307

374-5784 TORQUE CONVERTER GP—WITH DIVIDER

S/N: AJ2116-UP

PART OF 359-6482 TORQUE CONVERTER & HOUSING GP

AN ATTACHMENT

SMCS-3101 **i05959391**

NOTE	REF NO	GRAPHIC REF	PART NUMBER	QTY	PART NAME 1 2 3 4 5 6 (PRODUCT LEVEL)	SEE PAGE
CY	1	1	*374-5783*	1	TORQUE CONVERTER GP	572
	2	1	**5H-8985**	2	PIN-SPRING	
	3	1	**9M-2076**	1	RING-SNAP	
	4	1	**9M-2074**	1	GEAR-RING (106-TEETH)	
	5	1	**106-7099**	1	CARRIER-PLANETARY	
	6	1	**6L-6560**	1	RING-RETAINING	
	7	1	**9P-4057**	1	SPACER (58X63.5X9.08-MM THK)	
	8	1	**8J-8322**	1	RING-RETAINING	
	9	1	**294-3370**	1	SHAFT AS	
	10	1	**5P-5405**	1	RACE-BEARING INNER	
	11	1	**6V-9176**	1	BALL BEARING	
	12	1	**8E-8316**	6	DISC-THRUST	
	13	1	**7G-5622**	3	GEAR-PLANETARY (35-TEETH)	
	14	1	**1S-9110**	3	ROLLER AS	
	15	1	**3S-2708**	3	PIN-SPRING	
	16	1	**1T-0141**	1	RING-METAL SEAL	
	17	1	**7L-9061**	1	SEAL-O-RING	
	18	1	**6Y-5888**	1	RING-SEAL	
	19	1	**336-2432**	1	RETAINER-BEARING	
	20	1	**8P-5056**	1	CARRIER-RING	
	21	1	**1A-2029**	8	BOLT (3/8-16X1.125-IN)	
	22	1	**5M-2894**	8	WASHER-HARD (10.2X18.5X2.5-MM THK)	
	23	1	**6V-5553**	1	SEAL-O-RING	
	24	1	**6P-3901**	3	SHAFT AS	
					(EACH INCLUDES)	
		1	**2A-3746**	1	PLUG-CUP	

C - CHANGE FROM PREVIOUS TYPE
Y - SEPARATE ILLUSTRATION

374-5784 **TORQUE CONVERTER GP** (contd.) **i05959391**

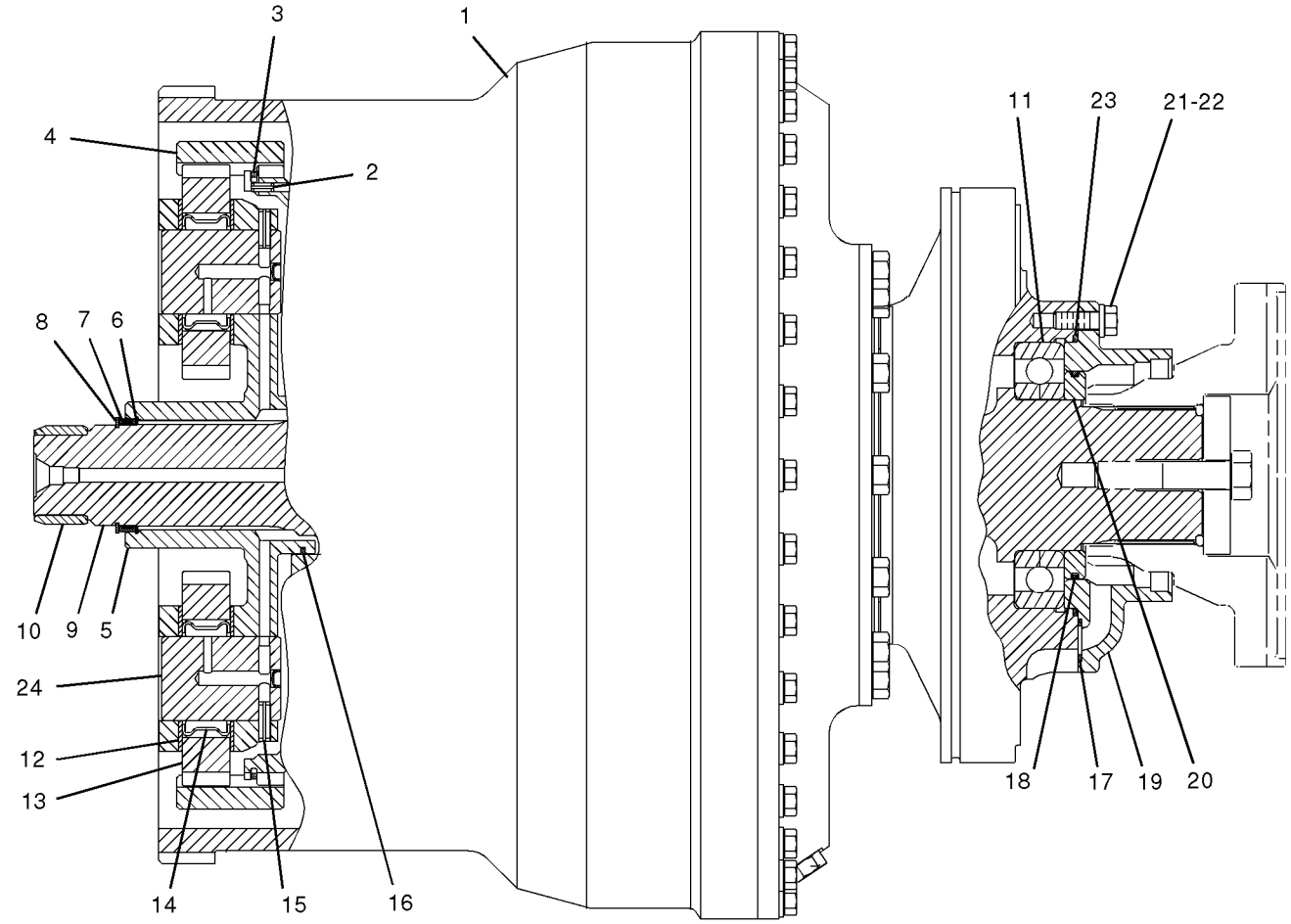

GRAPHIC #1 <END> g01055307

372-6094 TRANSMISSION AR

S/N: NDM1-UP
PART OF 359-6405 POWER TRAIN AR
AN ATTACHMENT

SMCS-3030 **i05425334**

NOTE	REF NO	GRAPHIC REF	PART NUMBER	QTY	PART NAME 1 2 3 4 5 6 (PRODUCT LEVEL)	SEE PAGE
Y	1	1	*213-5173*	1	GEAR GP-BEVEL & TRANSFER	536
Y	2	1	*372-6095*	1	PLANETARY GP-TRANSMISSION	550
Y	3	1	*378-2003*	1	CONTROL GP-TRANSMISSION HYD	508
Y	4	1	*422-0091*	1	CASE & PARTS GP-PLANETARY	506

Y - SEPARATE ILLUSTRATION

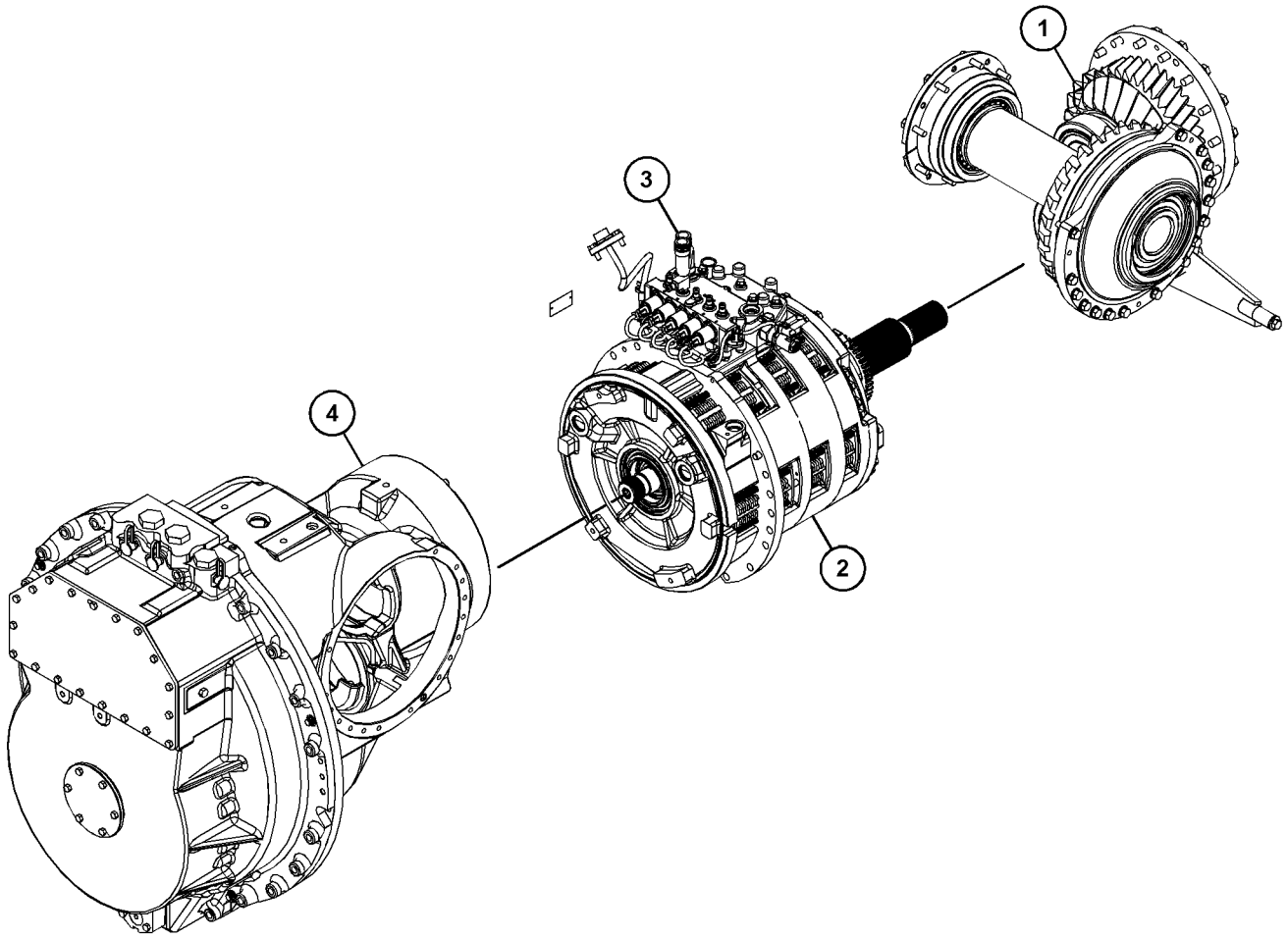

GRAPHIC #1 <END> g03492076

173-0246 UNIVERSAL JOINT GP

S/N: RAB1-UP
PART OF 173-0245 SHAFT GP-DRIVE
AN ATTACHMENT

SMCS-3251, 3253

i04166113

NOTE	REF NO	GRAPHIC REF	PART NUMBER	QTY	PART NAME 1 2 3 4 5 6 (PRODUCT LEVEL)	SEE PAGE
	1	1	**173-0888**	2	UNIVERSAL JOINT GP-ROTOR DRIVE	
	2	1	**173-0247**	1	YOKE-COUPLING	
	3	1	**0S-1604**	8	BOLT (1/2-20X2.5-IN)	

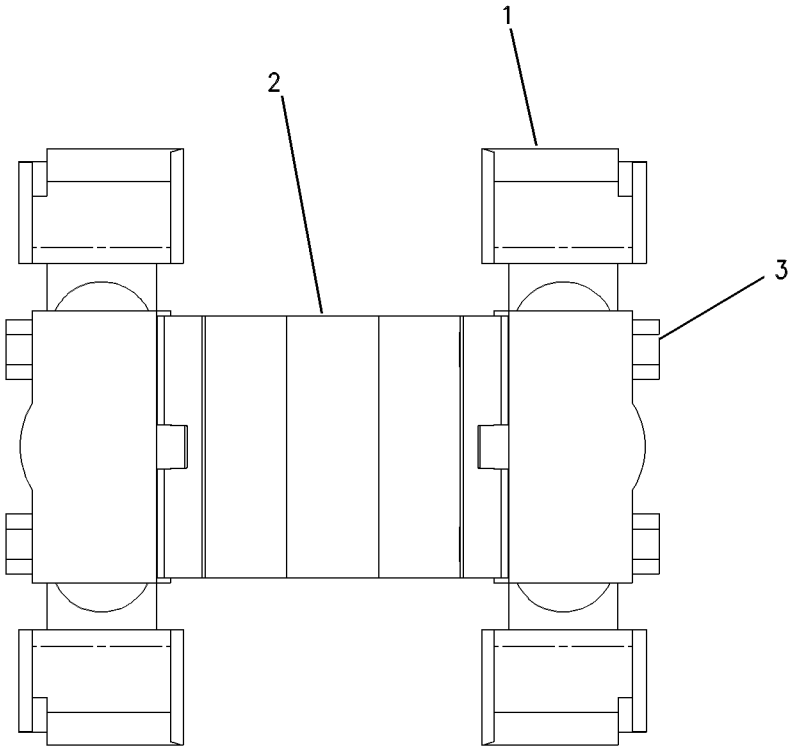

GRAPHIC #1

<END>

g00648256

357-4903 VALVE GP-FLOW CONTROL

S/N: RAB1-UP
PART OF 374-1209 LINES GP-TRANSMISSION OIL
AN ATTACHMENT

SMCS-3030, 5137

i04396033

NOTE	REF NO	GRAPHIC REF	PART NUMBER	QTY	PART NAME 1 2 3 4 5 6 (PRODUCT LEVEL)	SEE PAGE
	1	1	**3K-0360**	1	SEAL-O-RING	
	2	1	**1H-1023**	1	SEAL-O-RING	
	3	1	**6E-0381**	2	RING-BACKUP	

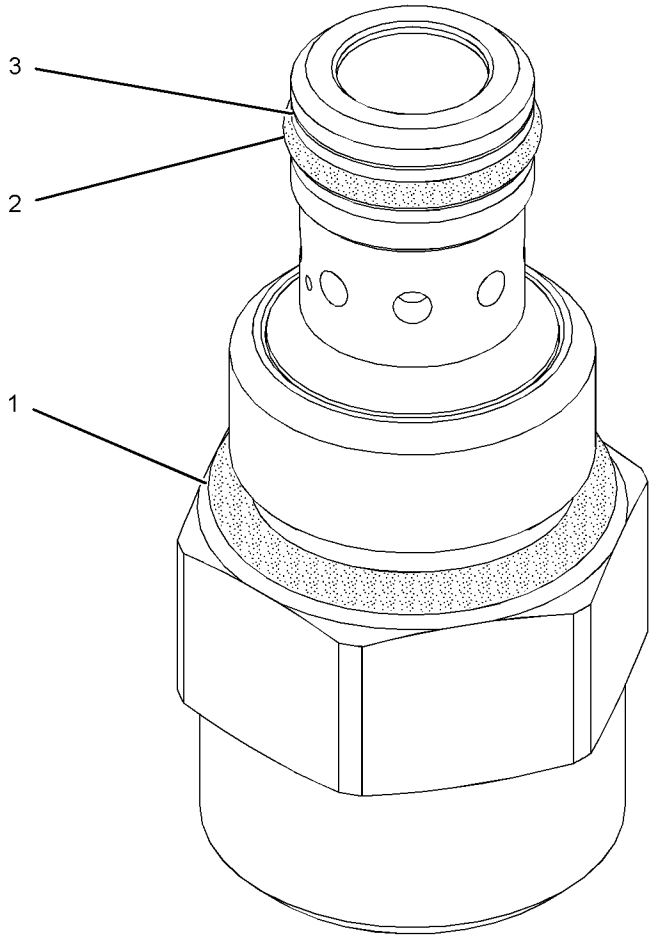

GRAPHIC #1

<END>

g02610916

381-0180 VALVE GP-RELIEF—TORQUE CONVERTER OUTLET

S/N: RAB1-UP
PART OF 374-1210 LINES GP-POWER TRAIN OIL
AN ATTACHMENT

SMCS-3133, 3182 **i05425188**

NOTE	REF NO	GRAPHIC REF	PART NUMBER	QTY	PART NAME 1 2 3 4 5 6 (PRODUCT LEVEL)	SEE PAGE
	1	1	**1W-9860**	1	SPRING	
	2	1	**6V-0852**	2	CAP-DUST	
	3	1	**8M-4992**	1	SEAL-O-RING	
	4	1	**7T-1784**	1	PLATE	
	5	1	**193-5463**	1	SPOOL	
	6	1	**8M-4986**	1	SEAL-O-RING	
	7	1	**0S-1594**	4	BOLT (3/8-16X1-IN)	
	8	1	*164-5567*	2	COUPLER AS-QUICK DISCONNECT (MALE)	
					(EACH INCLUDES)	
		1	**6V-3965**	1	FITTING (QUICK DISCONNECT)	
		1	**214-7568**	1	SEAL-O-RING	
B	9	1	**5M-9624**	3	SHIM (0.25-MM THK)	
	10	1	**4M-8239**	1	COVER	
B	11	1	**5M-9622**	1	SHIM (1.6-MM THK)	
B	12	1	**5M-9623**	1	SHIM (0.9-MM THK)	

PARTS SHOWN IN GRAPHIC(S) WITHOUT A REFERENCE NUMBER ARE NOT SERVICED SEPARATELY

B - USE AS REQUIRED

381-0180 **VALVE GP-RELIEF (**contd.**)** **i05425188**

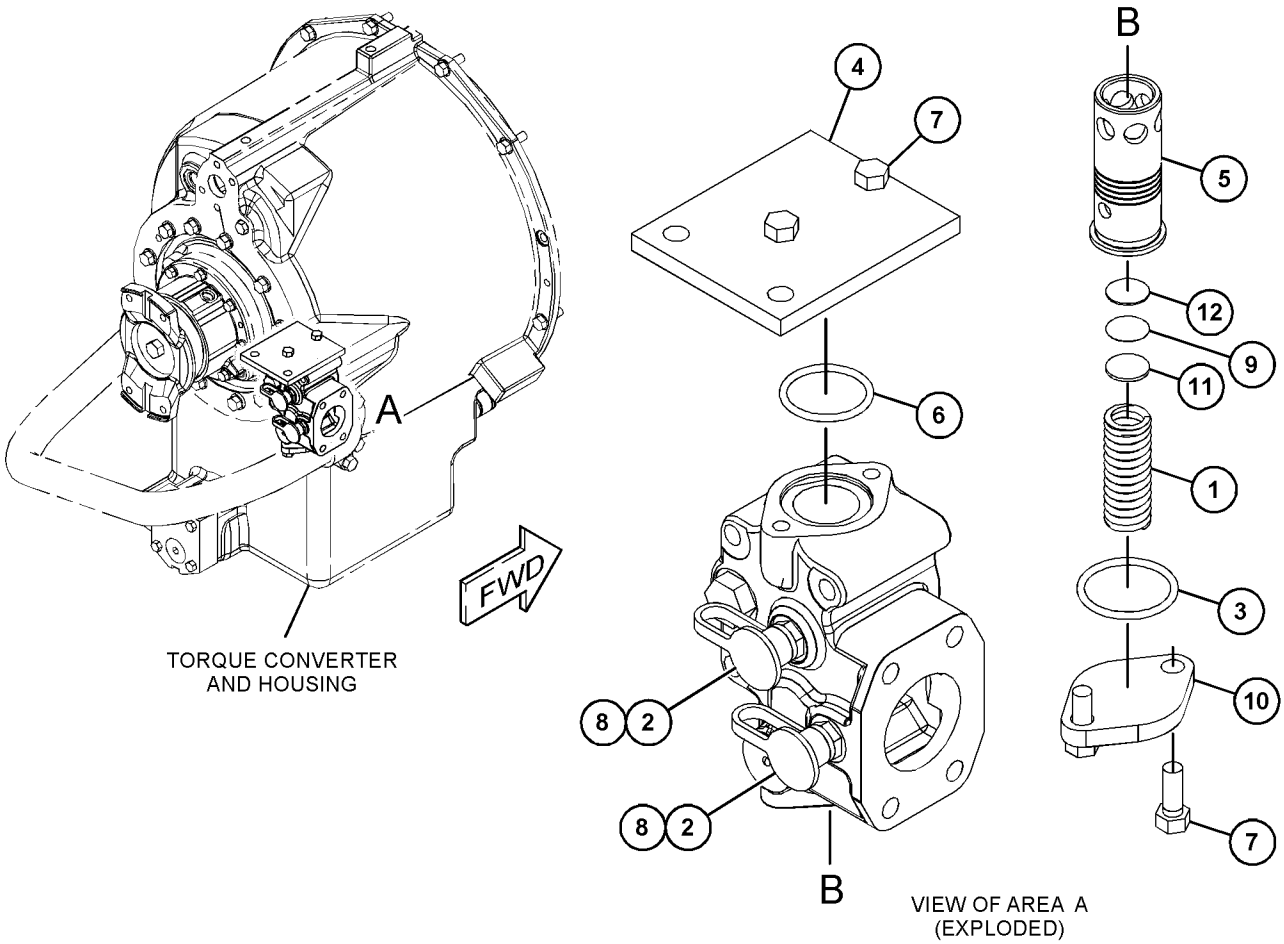

GRAPHIC #1 <END> g03485160

421-8199 VALVE GP-SOLENOID

S/N: NDM1-UP

PART OF 378-2003 CONTROL GP-TRANSMISSION HYD

AN ATTACHMENT

SMCS-4282, 5479

i05782308

NOTE	REF NO	GRAPHIC REF	PART NUMBER	QTY	PART NAME 1 2 3 4 5 6 (PRODUCT LEVEL)	SEE PAGE
	1	1	**450-1004**	1	NUT-SPECIAL	
	2	1	**421-6497**	1	COIL AS	
	3	1	**033-6034**	1	SEAL-O-RING	
	4	1	**215-4639**	1	SEAL-O-RING	
	5	1	**5P-7857**	1	RING-BACKUP	
	6	1	**5P-9186**	1	SEAL-O-RING	
	7	1	**6V-3838**	1	RING-BACKUP	

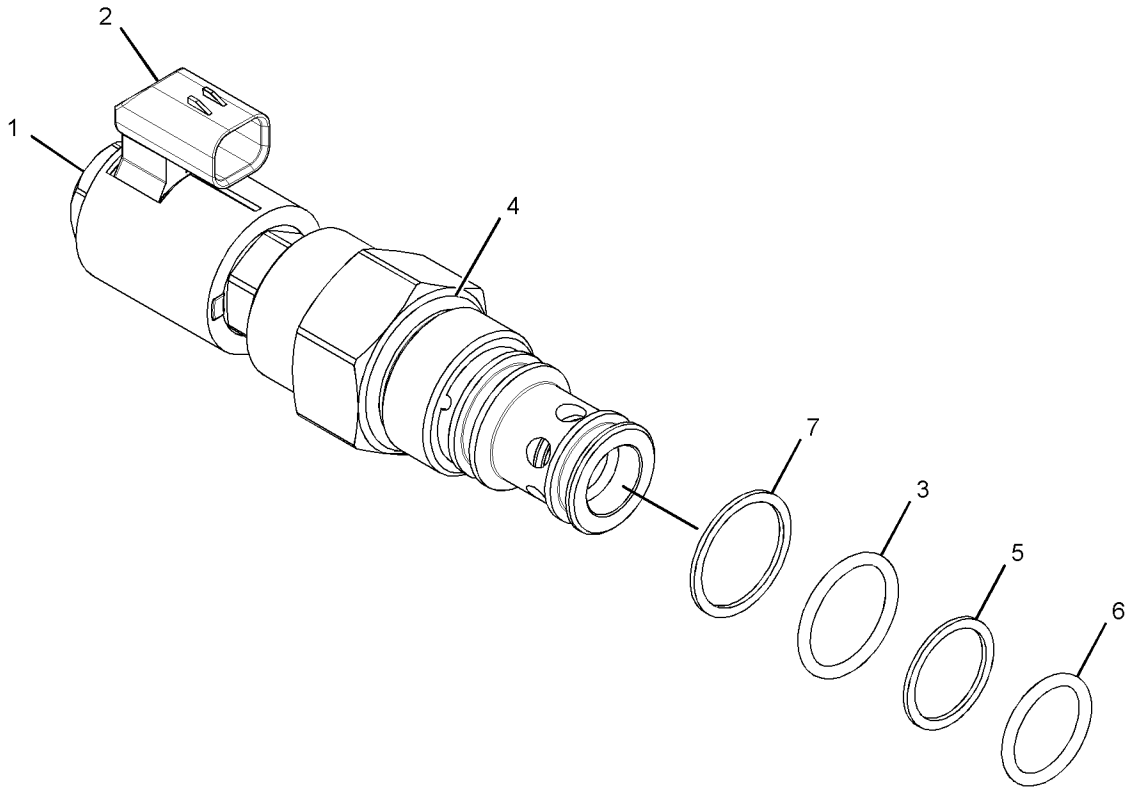

GRAPHIC #1 <END> g03416575

478-8207 VALVE GP-SOLENOID

S/N: RAB1-UP
24-VDC
PART OF 345-6789 MANIFOLD GP-CONTROL
AN ATTACHMENT

SMCS-4282, 5479 **i06523942**

NOTE	REF NO	GRAPHIC REF	PART NUMBER	QTY	PART NAME 1 2 3 4 5 6 (PRODUCT LEVEL)	SEE PAGE
	1	1	**254-0072**	1	COIL AS (24-VOLT)	
	2	1	**114-2772**	1	NUT (1/2-20-THD)	
					AVAILABLE REPAIR KIT(S):	
			277-8873	1	KIT-SEAL (SOLENOID VALVE)	
					(INCLUDES SEALS & BACKUP RINGS)	

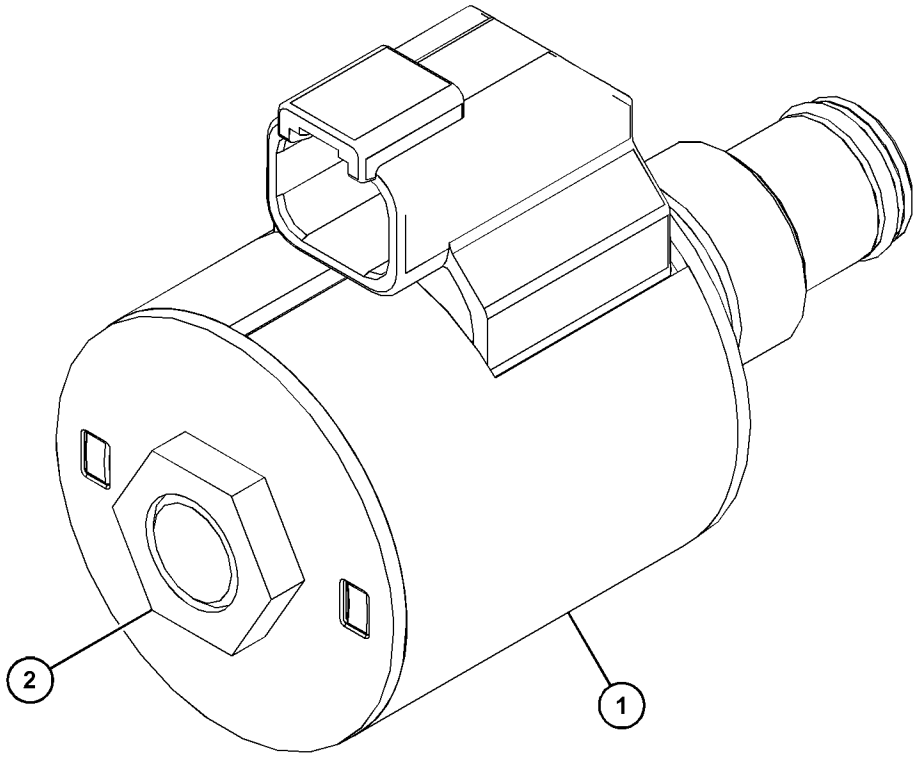

GRAPHIC #1 <END> g06015915

1Q-3458 BAR GP-STRIKER–RH

S/N: RAB1-UP
PART OF 381-0193 UNDERCARRIAGE AR
AN ATTACHMENT

SMCS-7180 **i01743664**

NOTE	REF NO	GRAPHIC REF	PART NUMBER	QTY	PART NAME 1 2 3 4 5 6 (PRODUCT LEVEL)	SEE PAGE
	1	1	**7X-0422**	6	BOLT (1-1/8-7-THD)	
	2	1	**1Q-3463**	1	PLATE AS	
	3	1	**1Q-3467**	1	PLATE AS	
	4	1	**7X-0531**	16	WASHER-HARD (31X52.5X6-MM THK)	
	5	1	**7X-0420**	10	BOLT (1.125-7X50.8-MM)	
	6	1	**1Q-3462**	1	PLATE AS	

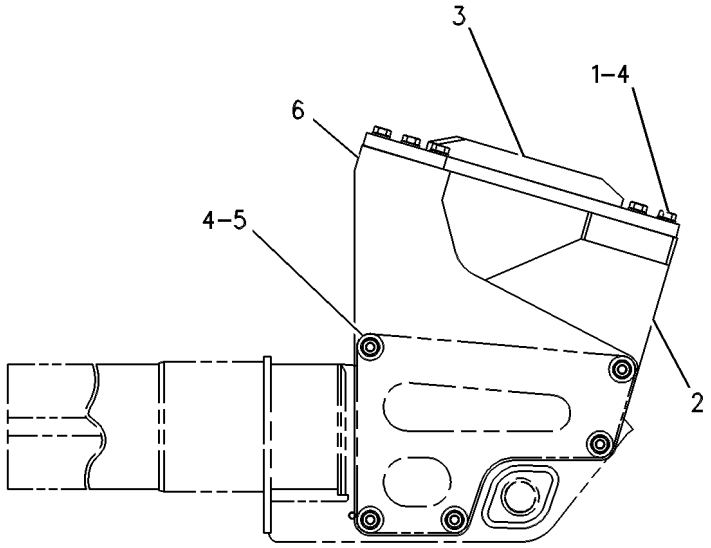

RIGHT SIDE VIEW

GRAPHIC #1 <END> g00350324

1Q-3468 BAR GP-STRIKER–LH

S/N: RAB1-UP
PART OF 381-0193 UNDERCARRIAGE AR
AN ATTACHMENT

SMCS-7180 **i01743668**

NOTE	REF NO	GRAPHIC REF	PART NUMBER	QTY	PART NAME 1 2 3 4 5 6 (PRODUCT LEVEL)	SEE PAGE
	1	1	**1Q-3465**	1	PLATE AS	
	2	1	**1Q-3466**	1	PLATE AS	
	3	1	**1Q-3453**	1	PLATE AS	
	4	1	**7X-0531**	16	WASHER-HARD (31X52.5X6-MM THK)	
	5	1	**7X-0422**	6	BOLT (1-1/8-7-THD)	
	6	1	**7X-0420**	10	BOLT (1.125-7X50.8-MM)	

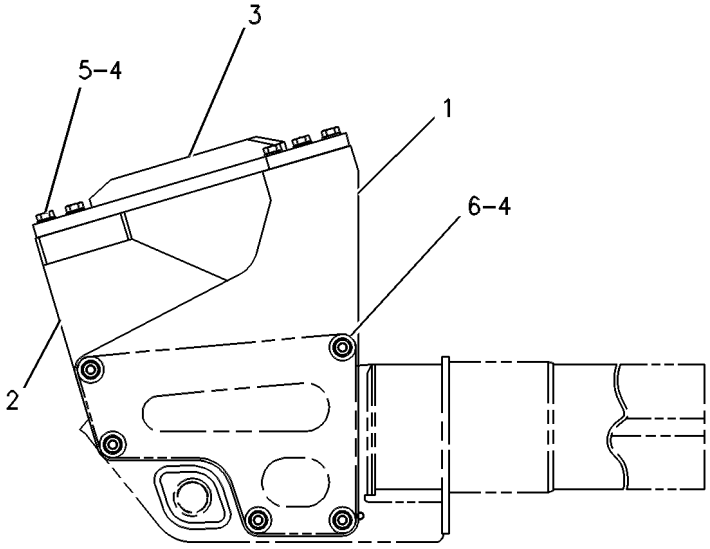

LEFT SIDE VIEW

GRAPHIC #1 <END> g00262996

256-7254 BAR GP-STRIKER

S/N: RAB1-UP
FOR USE WITH 248-6690—PAGE: 597, 248-6727—PAGE: 599
PART OF 399-7225 COUNTERWEIGHT AR
AN ATTACHMENT

SMCS-7180 **i02273954**

NOTE	REF NO	GRAPHIC REF	PART NUMBER	QTY	PART NAME 1 2 3 4 5 6 (PRODUCT LEVEL)	SEE PAGE
	1	1	**4Z-8959**	1	STRIKER AS	
	2	1	**4Z-8961**	1	STRIKER AS	

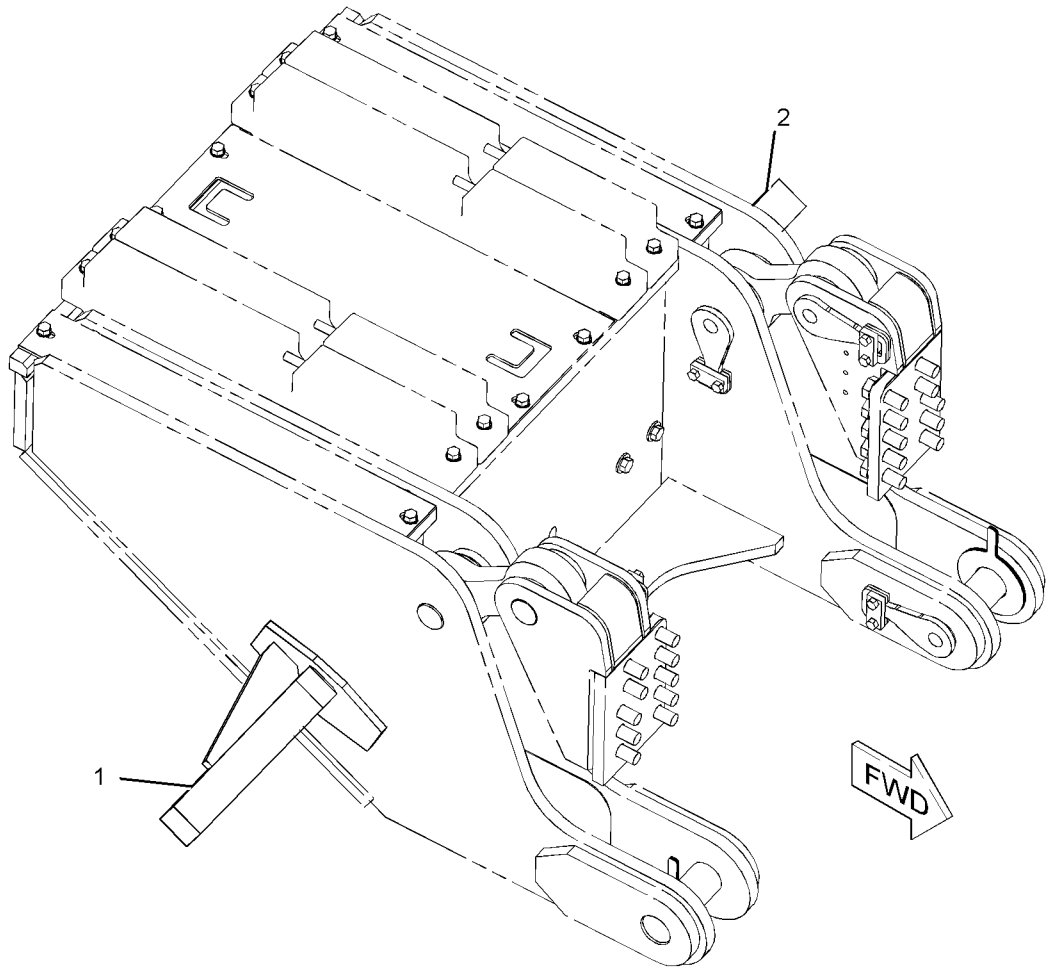

GRAPHIC #1 <END> g01140714

372-7045 CASE & FRAME GP

S/N: RAB1-UP
AN ATTACHMENT

SMCS-7051 **i05457816**

NOTE	REF NO	GRAPHIC REF	PART NUMBER	QTY	PART NAME 1 2 3 4 5 6 (PRODUCT LEVEL)	SEE PAGE
	1	1	**7T-4135**	2	BEARING	
	2	1	**106-8186**	1	VALVE AS-DRAIN (ECOLOGY) (CASE, FRAME)	
		1	**077-3241**	1	SEAL-O-RING	
	3	1	**106-8187**	1	PLUG-DRAIN (DRAIN) (CASE, FRAME)	
	4	1	**117-8547**	2	TUBE AS	
	5	1	**372-7044**	1	CASE & FRAME AS	
	5A	1	**9J-6067**	1	TRUNNION	
	6	1	**3T-9658**	2	BUSHING	
	7	1	**6F-0711**	1	SEAL-O-RING	
	8	1	**7M-8480**	1	DOWEL	
	9	1	**7T-9014**	4	BUSHING	
	10	1	**8P-0420**	2	BEARING	
	11	1	**8P-7598**	2	BUSHING	
	12	1	**8T-2502**	4	BOLT (3/8-16X1.125-IN)	
	13	1	**8T-4896**	4	WASHER-HARD (10.2X18.5X2.5-MM THK)	

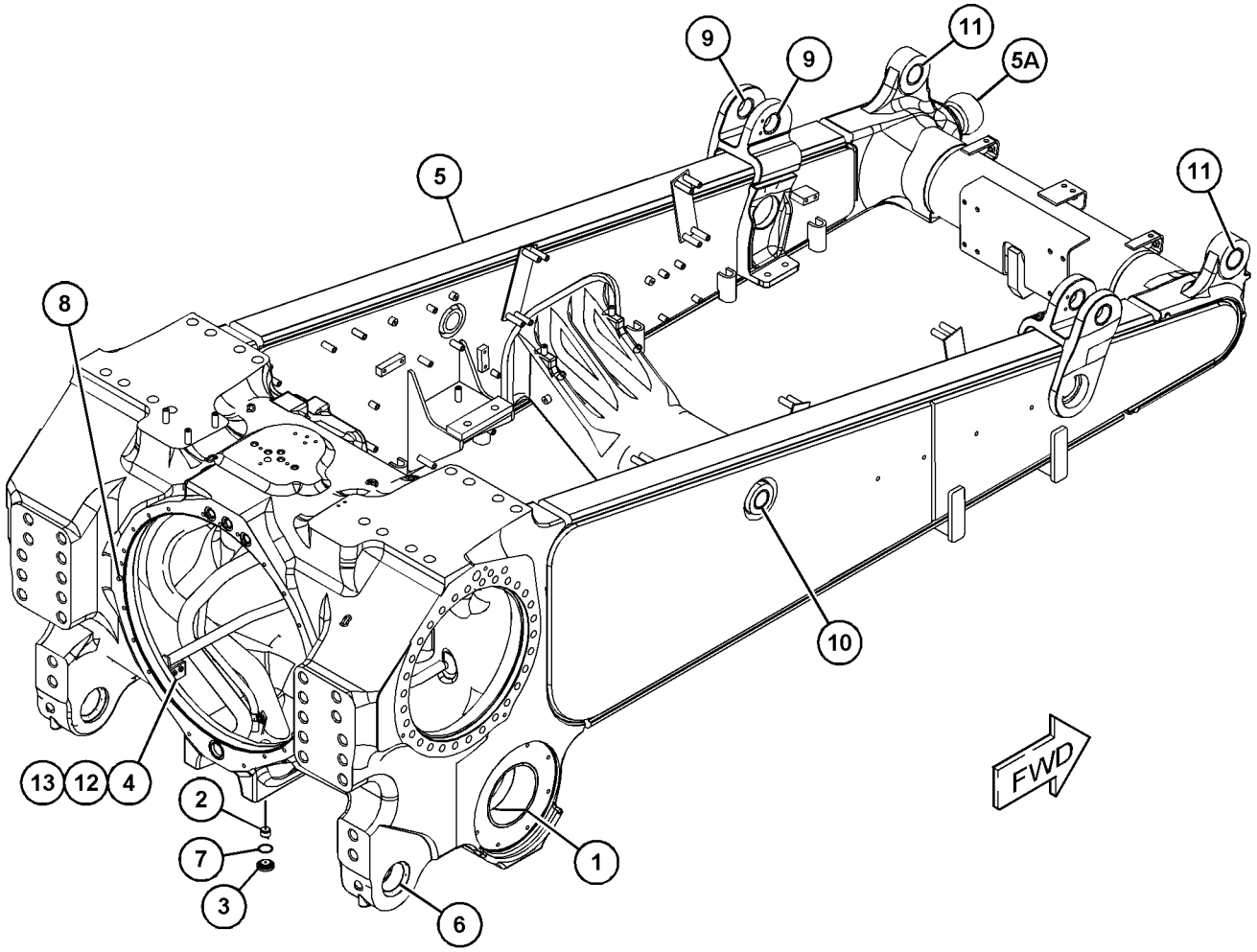

GRAPHIC #1 <END> g03480538

372-9206 CASE & FRAME GP

S/N: RAB1-UP
AN ATTACHMENT

SMCS-7051 **i05457949**

NOTE	REF NO	GRAPHIC REF	PART NUMBER	QTY	PART NAME 1 2 3 4 5 6 (PRODUCT LEVEL)	SEE PAGE
	1	1	**7T-4135**	2	BEARING	
	2	1	**106-8186**	1	VALVE AS-DRAIN (ECOLOGY) (CASE, FRAME)	
		1	**077-3241**	1	SEAL-O-RING	
	3	1	**106-8187**	1	PLUG-DRAIN (DRAIN) (CASE, FRAME)	
	4	1	**117-8547**	2	TUBE AS	
	5	1	**372-9205**	1	CASE & FRAME AS	
	5A	1	**3G-7698**	2	TRUNNION	
	5B	1	**9J-6067**	1	TRUNNION	
	6	1	**3T-9658**	2	BUSHING	
	7	1	**6F-0711**	1	SEAL-O-RING	
	8	1	**7M-8480**	1	DOWEL	
	9	1	**7T-9014**	4	BUSHING	
	10	1	**8P-0420**	2	BEARING	
	11	1	**8P-7598**	2	BUSHING	
	12	1	**8T-2502**	4	BOLT (3/8-16X1.125-IN)	
	13	1	**8T-4896**	4	WASHER-HARD (10.2X18.5X2.5-MM THK)	

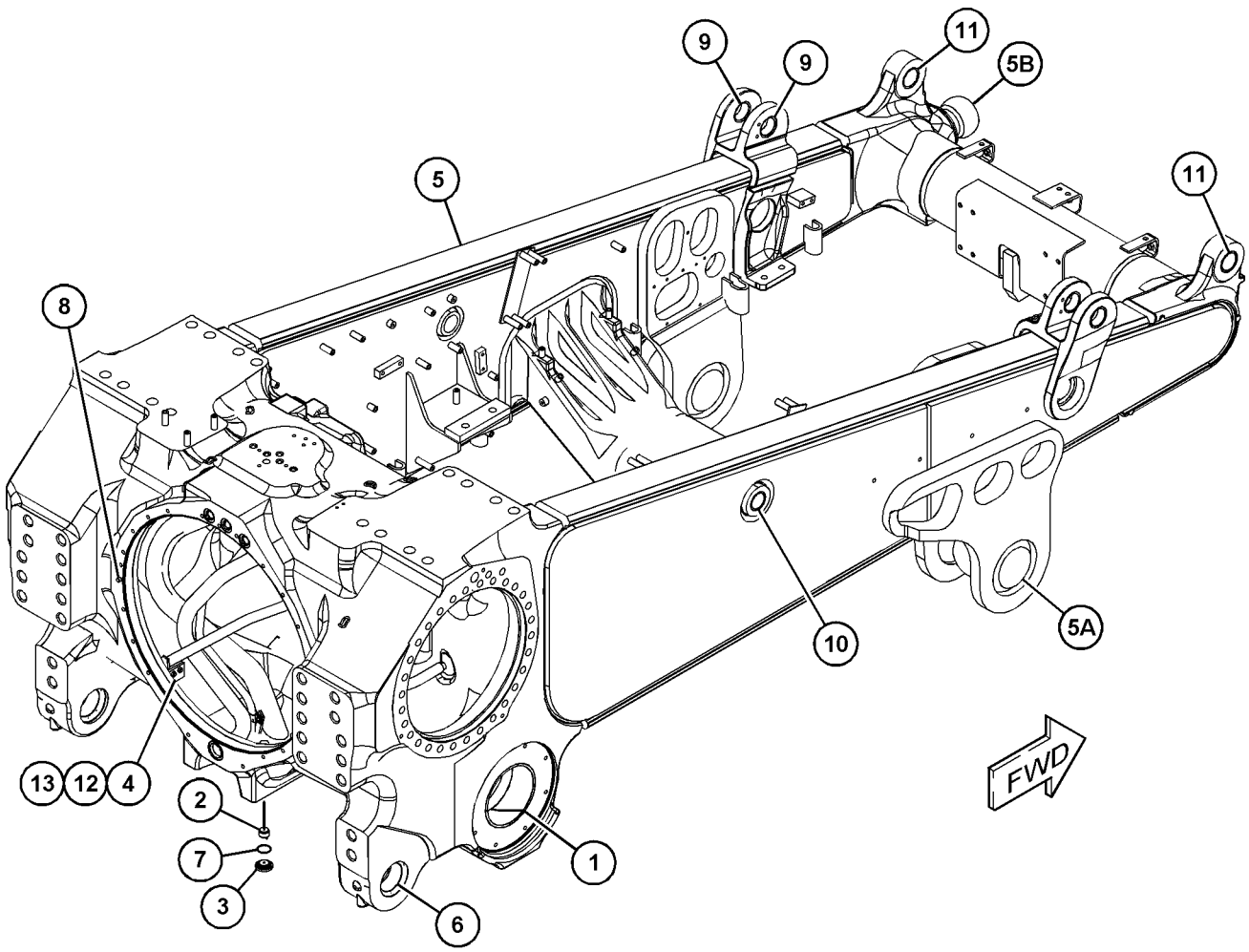

GRAPHIC #1 <END> g03480657

399-7223 COUNTERWEIGHT AR

S/N: RAB1-UP
AN ATTACHMENT

SMCS-7056 **i05447629**

NOTE	PART NUMBER	QTY	PART NAME 1 2 3 4 5 6 (PRODUCT LEVEL)	SEE PAGE
Y	*399-8673*	1	ADAPTER GP-FAST FILL FUEL	162
Y	*248-6727*	1	COUNTERWEIGHT GP	599
Y	*371-6937*	1	GUARD GP-BOTTOM	643
Y	*380-9598*	1	WIRING GP-SERVICE CENTER (COUNTERWEIGHT)	497
	228-6089	1	PLUG (ROCKER SWITCH)	

Y - SEPARATE ILLUSTRATION

<END>

399-7224 COUNTERWEIGHT AR

S/N: RAB1-UP
AN ATTACHMENT

SMCS-7056 **i05447731**

NOTE	PART NUMBER	QTY	PART NAME 1 2 3 4 5 6 (PRODUCT LEVEL)	SEE PAGE
Y	*399-8673*	1	ADAPTER GP-FAST FILL FUEL	162
Y	*248-6690*	1	COUNTERWEIGHT GP	597
Y	*371-6937*	1	GUARD GP-BOTTOM	643
Y	*380-9598*	1	WIRING GP-SERVICE CENTER (COUNTERWEIGHT)	497
	228-6089	1	PLUG (ROCKER SWITCH)	

Y - SEPARATE ILLUSTRATION

<END>

399-7225 COUNTERWEIGHT AR

S/N: RAB1-UP
AN ATTACHMENT

SMCS-7056 **i05447770**

NOTE	PART NUMBER	QTY	PART NAME 1 2 3 4 5 6 (PRODUCT LEVEL)	SEE PAGE
Y	*399-8673*	1	ADAPTER GP-FAST FILL FUEL	162
Y	*256-7254*	1	BAR GP-STRIKER	593
Y	*248-6690*	1	COUNTERWEIGHT GP	597
Y	*371-7038*	1	GUARD GP-POWER TRAIN	663
Y	*380-9598*	1	WIRING GP-SERVICE CENTER (COUNTERWEIGHT)	497
	228-6089	1	PLUG (ROCKER SWITCH)	

Y - SEPARATE ILLUSTRATION

<END>

248-6690 COUNTERWEIGHT GP

S/N: RAB1-UP
8619-KG (19002-LB)
PART OF 399-7224, 399-7225 COUNTERWEIGHT AR
AN ATTACHMENT

SMCS-7056 **i05265214**

NOTE	REF NO	GRAPHIC REF	PART NUMBER	QTY	PART NAME 1 2 3 4 5 6 (PRODUCT LEVEL)	SEE PAGE
	1	1	**4T-1389**	2	PIN AS	
	2	1	**7T-7222**	2	PIN AS	
	3	1	**7T-7305**	6	PLATE	
	4	1	**7X-0857**	20	BOLT (1-1/2-6X4-IN)	
	5	1	**9J-6689**	2	PIN AS	
	6	1	**9W-6371**	6	SPACER (108X230X3-MM THK)	
	7	1	**144-0344**	4	COUNTERWEIGHT AS	
	8	1	**418-3795**	1	COUNTERWEIGHT AS	
	9	1	**248-6713**	1	PLATE	
	10	1	**248-6715**	1	BRACKET AS (LH)	
	11	1	**248-6716**	1	BRACKET AS (RH)	
					(EACH BRACKET AS INCLUDES)	
		1	**2J-1227**	1	RETAINER	
	12	1	**248-6720**	2	LINK AS	
	13	1	**248-6722**	2	PLATE	
C	14	1	**299-1939**	4	PLATE	
C	15	1	**299-1942**	1	TUBE AS	
	16	1	**7X-0365**	12	BOLT (3/4-10X1.5-IN)	
C	17	1	**7X-0395**	8	BOLT (7/8-9X8-IN)	
	18	1	**7X-0537**	20	WASHER-HARD (40.5X67X6-MM THK)	
C	19	1	**8C-6913**	8	WASHER-HARD (24X41.5X4-MM THK)	

C - CHANGE FROM PREVIOUS TYPE

248-6690 **COUNTERWEIGHT GP (**contd.**)** **i05265214**

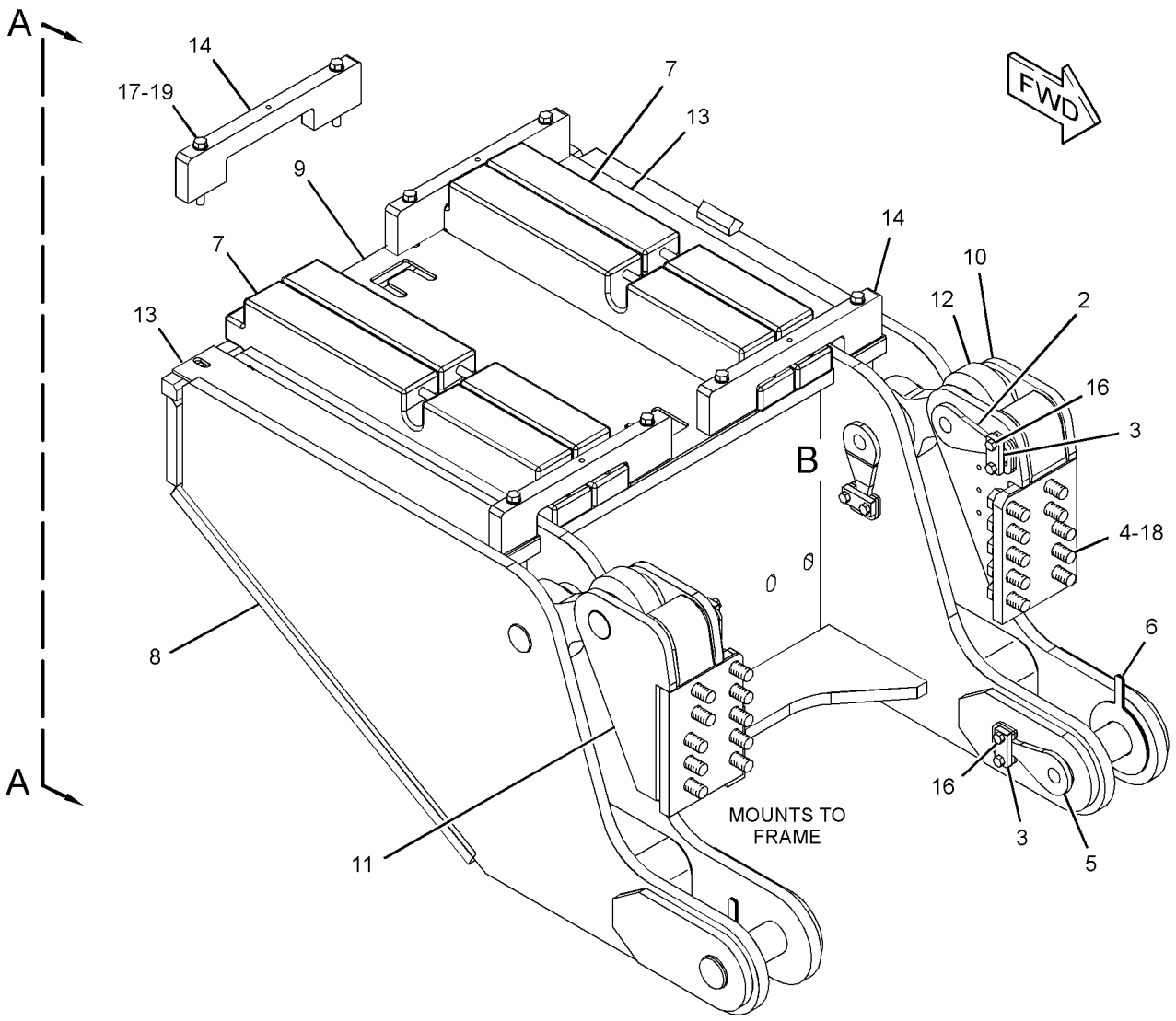

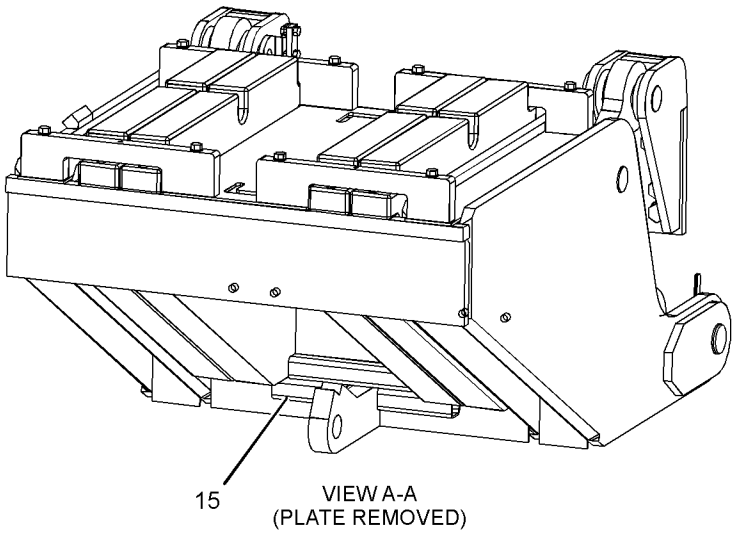

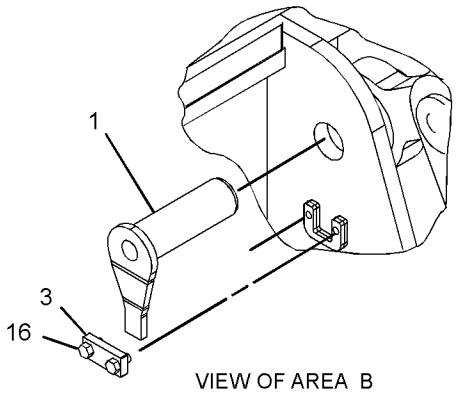

GRAPHIC #1 <END> g01346921

248-6727 COUNTERWEIGHT GP

S/N: RAB1-UP
7562-KG (16671-LB)
PART OF 399-7223 COUNTERWEIGHT AR
AN ATTACHMENT

SMCS-7056 **i05265213**

NOTE	REF NO	GRAPHIC REF	PART NUMBER	QTY	PART NAME 1 2 3 4 5 6 (PRODUCT LEVEL)	SEE PAGE
	1	1	**4T-1389**	2	PIN AS	
	2	1	**7T-7222**	2	PIN AS	
	3	1	**7T-7305**	6	PLATE	
	4	1	**7X-0857**	20	BOLT (1-1/2-6X4-IN)	
	5	1	**9J-6689**	2	PIN AS	
	6	1	**9W-6371**	6	SPACER (108X230X3-MM THK)	
	7	1	**144-0344**	3	COUNTERWEIGHT AS	
	8	1	**418-3795**	1	COUNTERWEIGHT AS	
	9	1	**248-6715**	1	BRACKET AS (LH)	
	10	1	**248-6716**	1	BRACKET AS (RH)	
					(EACH BRACKET AS INCLUDES)	
		1	**2J-1227**	1	RETAINER	
	11	1	**248-6720**	2	LINK AS	
	12	1	**248-6722**	2	PLATE	
	13	1	**248-6724**	2	PLATE	
C	14	1	**292-3151**	2	TUBE AS	
C	15	1	**292-3154**	2	PLATE	
C	16	1	**293-2948**	4	PLATE	
	17	1	**7X-0365**	12	BOLT (3/4-10X1.5-IN)	
C	18	1	**7X-0395**	12	BOLT (7/8-9X8-IN)	
	19	1	**7X-0537**	20	WASHER-HARD (40.5X67X6-MM THK)	
C	20	1	**8C-6913**	12	WASHER-HARD (24X41.5X4-MM THK)	

C - CHANGE FROM PREVIOUS TYPE

248-6727 **COUNTERWEIGHT GP (**contd.**)** **i05265213**

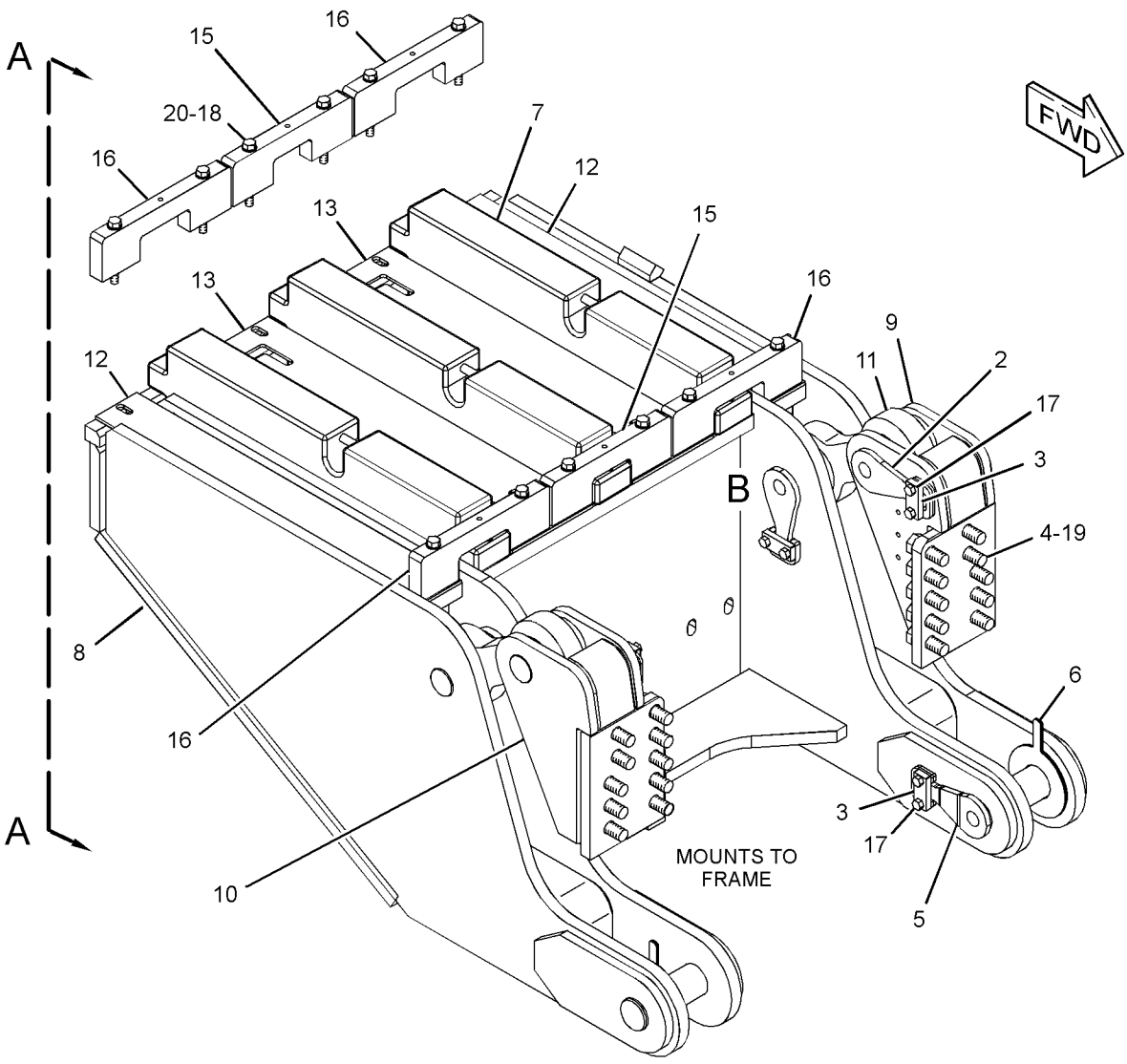

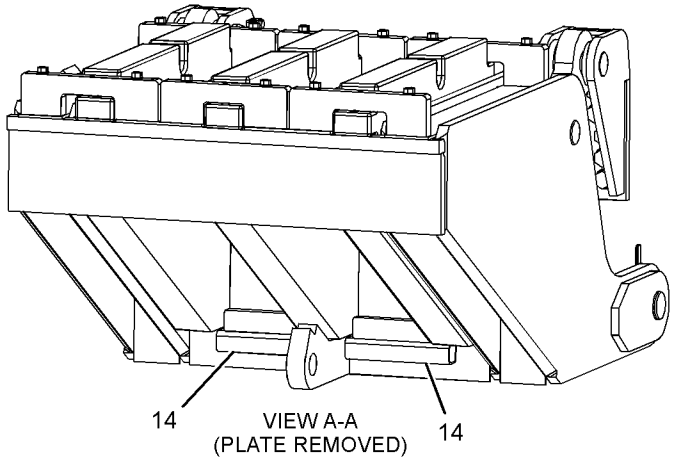

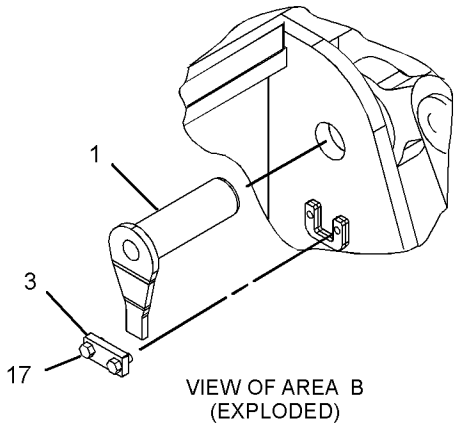

GRAPHIC #1 <END> g01346918

375-7615 COVER GP-HOOD

S/N: RAB1-UP
PART OF 359-6428, 359-6454 ENCLOSURE GP-ENGINE
AN ATTACHMENT

SMCS-7251 **i05458990**

NOTE	REF NO	GRAPHIC REF	PART NUMBER	QTY	PART NAME 1 2 3 4 5 6 (PRODUCT LEVEL)	SEE PAGE
	1	1	**358-0862**	1	COVER	
	2	1	**8T-4121**	4	WASHER-HARD (11X21X2.5-MM THK)	
M	3	1	**8T-4137**	4	BOLT (M10X1.5X20-MM)	

M - METRIC PART

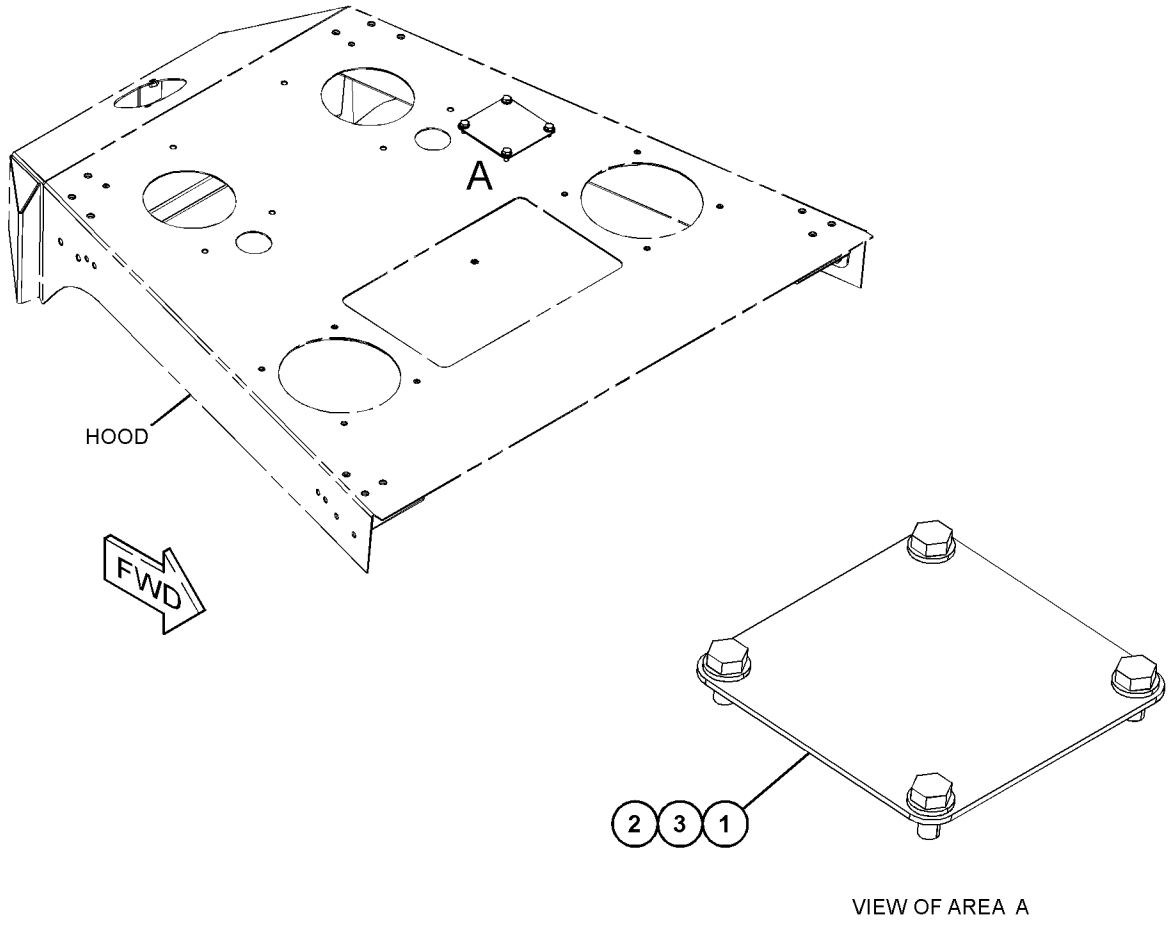

VIEW OF AREA A

GRAPHIC #1 <END> g03453832

381-3648 COVER GP-HOOD

S/N: RAB1-UP
PART OF 359-6500 INSTALLATION AR-ENGINE
ALSO AN ATTACHMENT

SMCS-7251 **i05421653**

NOTE	REF NO	GRAPHIC REF	PART NUMBER	QTY	PART NAME 1 2 3 4 5 6 (PRODUCT LEVEL)	SEE PAGE
	1	1	**382-9668**	1	COVER AS	
	2	1	**382-9669**	1	LINER	
	3	1	**7X-0579**	4	WASHER-HARD (8.8X25.5X2-MM THK)	
	4	1	**7X-0586**	4	WASHER-HARD (7.2X32X2-MM THK)	
M	5	1	**8T-4138**	4	BOLT (M6X1X20-MM)	
M	6	1	**8T-4908**	4	BOLT (M8X1.25X25-MM)	

M - METRIC PART

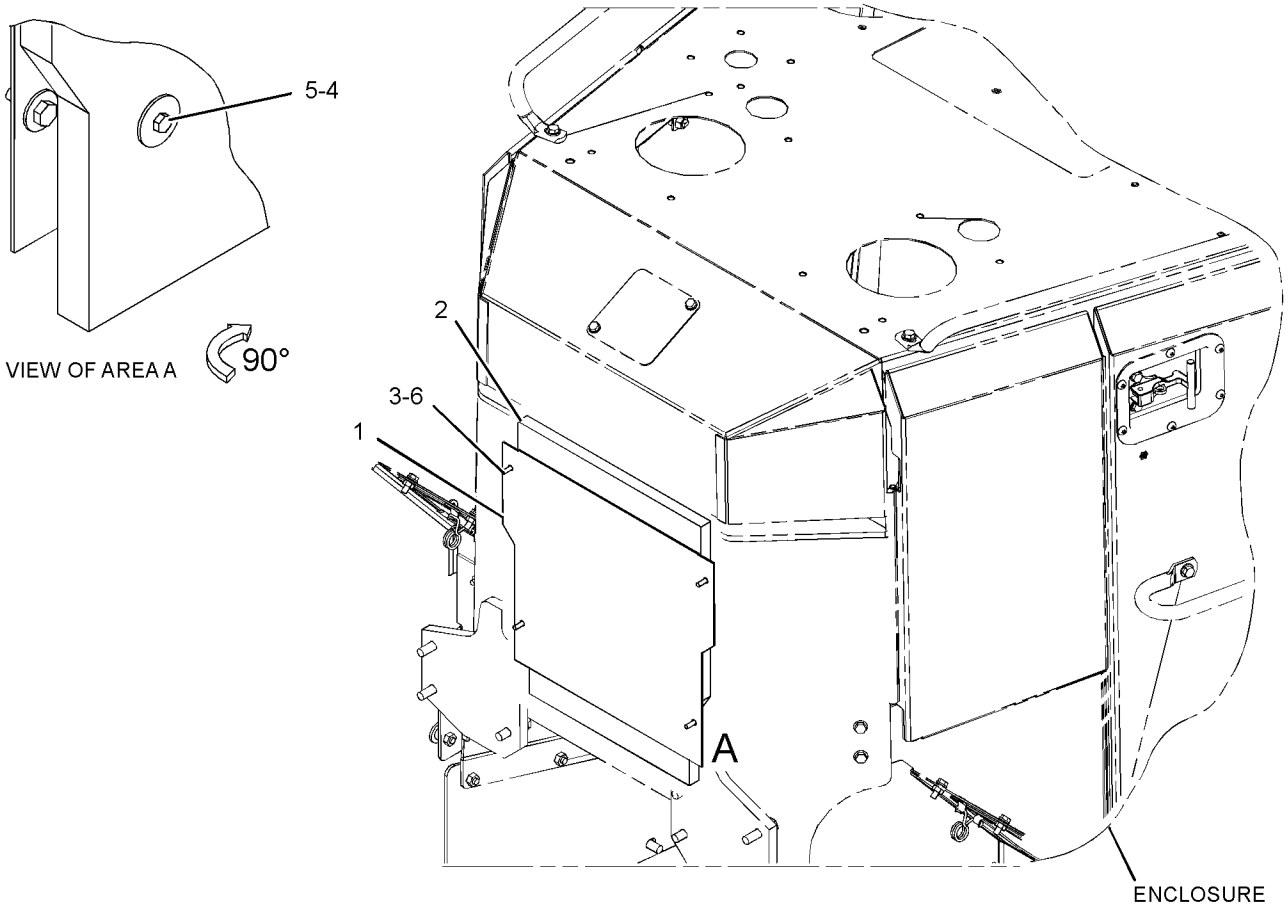

GRAPHIC #1 <END> g03488440

445-4705 COVER GP-PROTECTION

S/N: RAB1-UP
AN ATTACHMENT

SMCS-7050, 7250 **i05807162**

NOTE	REF NO	GRAPHIC REF	PART NUMBER	QTY	PART NAME 1 2 3 4 5 6 (PRODUCT LEVEL)	SEE PAGE
	1	1	**3E-5169**	1	GUARD-SWITCH	
	2	1	**282-8277**	1	PLATE AS	
		1	**252-6953**	1	PLATE AS	
		1	**252-6954**	1	GASKET	
		1	**282-8265**	1	PANEL	
Y	3	1	**284-8381**	1	SWITCH AS-TOGGLE (ACCESS LIGHTS)	399
	4	1	**301-2979**	1	SWITCH GP-TOGGLE (GROUND LEVEL SHUTDOWN)	
		1	**8T-8729**	3	PIN-CONNECTOR (16-GA TO 18-GA)	
		1	**102-8804**	1	KIT-RECEPTACLE (4-PIN)	
					(INCLUDES RECEPTACLE AS & WEDGE)	
	5	1	**332-1160**	1	PANEL AS	
M		1	**8T-3490**	7	NUT-WELD (M10X1.5-THD)	
M		1	**9R-2613**	1	BOSS-WELD (M10X1.5X25-MM)	
	6	1	**341-1826**	1	PLATE AS	
		1	**282-8261**	1	PANEL	
		1	**282-8264**	1	PANEL	
		1	**341-1827**	1	GASKET	
	7	1	**424-8355**	1	COVER AS	
	8	1	**130-5300**	2	CLIP	
	9	1	**4P-8134**	1	CLIP	
	10	1	**7K-1181**	3	STRAP-CABLE	
	11	1	**7X-7729**	9	WASHER (11X25X3-MM THK)	
	12	1	**8C-3206**	2	FLANGE-HALF	
	13	1	**8T-4121**	8	WASHER-HARD (11X21X2.5-MM THK)	
M	14	1	**8T-4136**	13	BOLT (M10X1.5X25-MM)	
M	15	1	**8T-4186**	4	BOLT (M10X1.5X40-MM)	
M	16	1	**9X-2040**	10	SCREW-TRUSS HEAD (M10X1.5X25-MM)	
	17	1	**228-6089**	1	PLUG (ROCKER SWITCH)	

M - METRIC PART
Y - SEPARATE ILLUSTRATION

445-4705 **COVER GP-PROTECTION (**contd.**)** **i05807162**

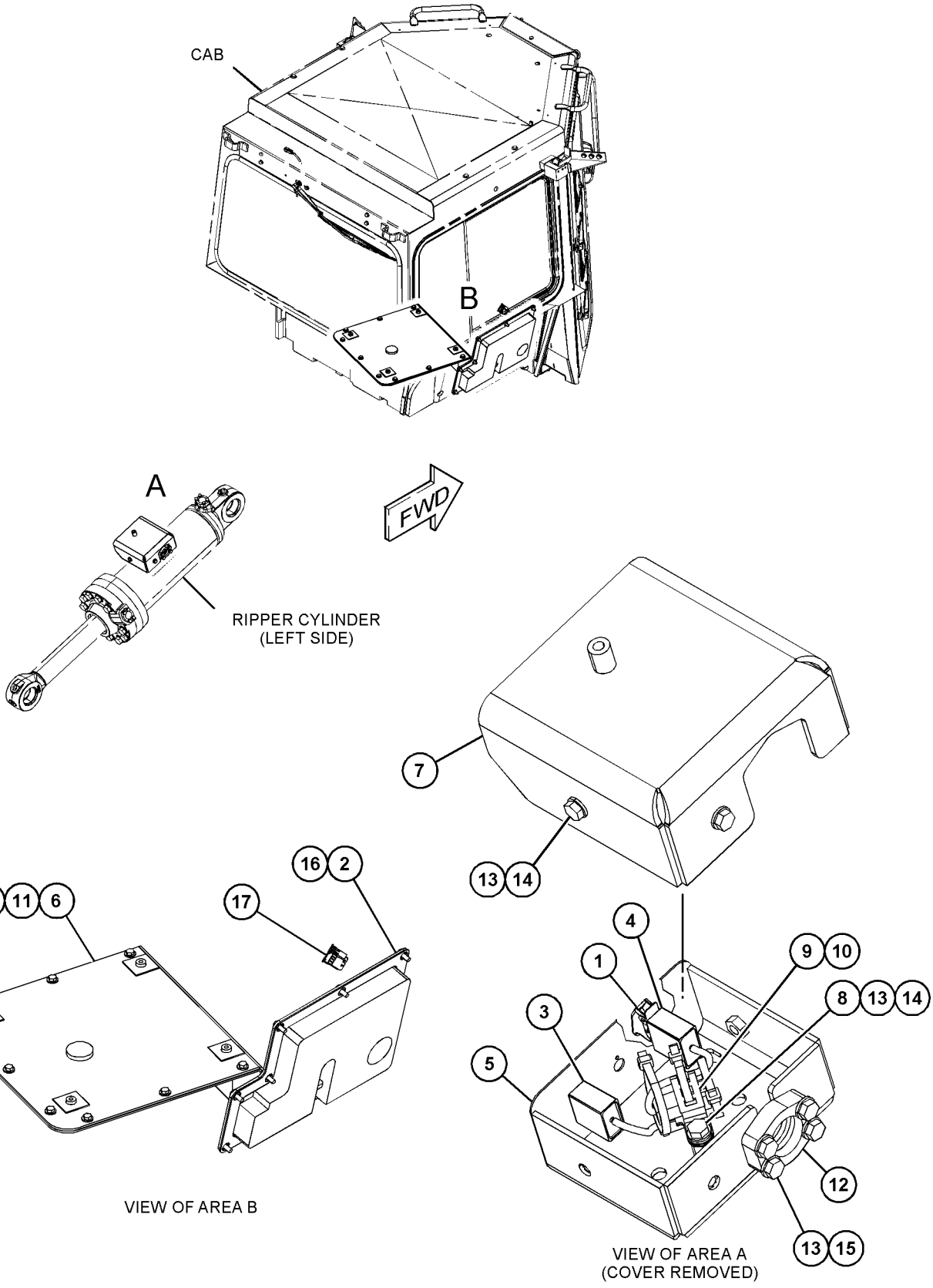

GRAPHIC #1 <END> g03694529

376-3675 DOOR GP-ACCESS

S/N: RAB1-UP
PART OF 359-6401 CHASSIS AR
AN ATTACHMENT

SMCS-7273 **i05424454**

NOTE	REF NO	GRAPHIC REF	PART NUMBER	QTY	PART NAME 1 2 3 4 5 6 (PRODUCT LEVEL)	SEE PAGE
	1	1	**246-2641**	1	PADLOCK GP	
		1	**5P-8500**	1	KEY	
	2	1	**8E-7561**	1	KNOB AS	
		1	**7S-2042**	1	STUD (3/8-16X1.5-IN)	
		1	**8E-1205**	1	KNOB	
		1	**8T-7566**	1	PIN-SPRING	
	3	1	**9S-8230**	1	PLATE AS	
		1	**1F-0750**	1	NUT-WELD (3/8-16-THD)	
	4	1	**235-1046**	1	PLATE AS	
M		1	**8T-3490**	2	NUT-WELD (M10X1.5-THD)	
	5	1	**317-7071**	2	SPACER	
	6	1	**441-7564**	1	COVER AS	
		1	**3P-5327**	1	HINGE	
M		1	**8T-3612**	1	NUT-WELD (M8X1.25-THD)	
	7	1	**441-7565**	1	PLATE AS	
M		1	**8T-3490**	2	NUT-WELD (M10X1.5-THD)	
	8	1	**447-2238**	1	COVER	
	9	1	**4H-1641**	1	PIN-SPRING	
	10	1	**5P-1076**	4	WASHER-HARD (13.5X30X4-MM THK)	
	11	1	**7X-7729**	3	WASHER (11X25X3-MM THK)	
M	12	1	**8T-4137**	1	BOLT (M10X1.5X20-MM)	
M	13	1	**8T-4139**	8	BOLT (M12X1.75X30-MM)	
M	14	1	**8T-4195**	4	BOLT (M10X1.5X30-MM)	
	15	1	**8T-4223**	4	WASHER-HARD (13.5X25.5X3-MM THK)	

M - METRIC PART

376-3675 **DOOR GP-ACCESS (**contd.**)** **i05424454**

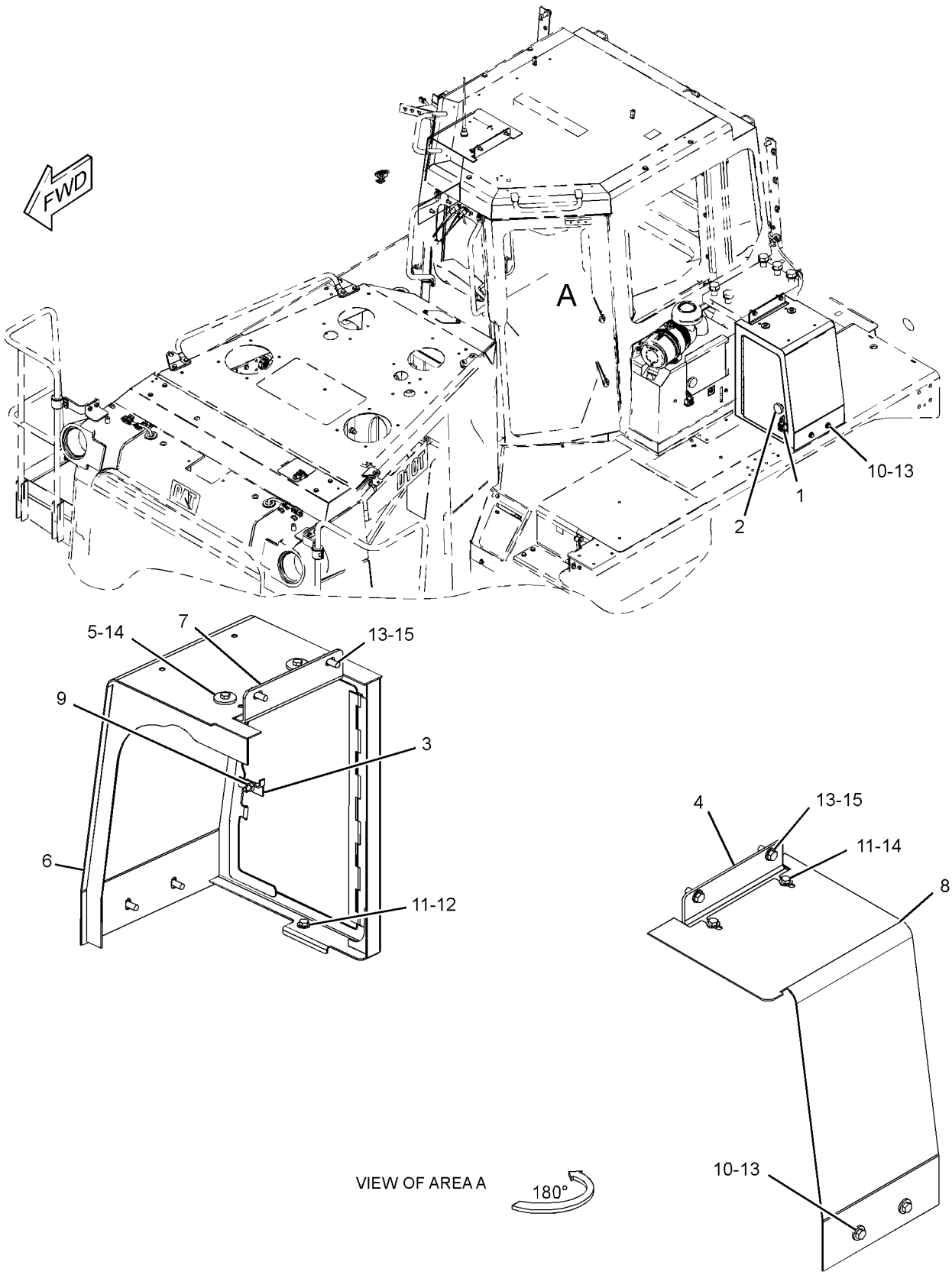

GRAPHIC #1 <END> g03429801

375-7592 DOOR GP-HOOD

S/N: RAB1-UP

PART OF 359-6428 ENCLOSURE GP-ENGINE, 359-6430 STOCKPILE AR

AN ATTACHMENT

SMCS-7273 **i05775307**

NOTE	REF NO	GRAPHIC REF	PART NUMBER	QTY	PART NAME 1 2 3 4 5 6 (PRODUCT LEVEL)	SEE PAGE
Y	1	1	*453-3019*	1	DOOR GP-HOOD (RH)	616
Y	2	1	*453-3021*	1	DOOR GP-HOOD (LH)	618
Y	3	1	*453-3023*	1	DOOR GP-HOOD (LH)	619
Y	4	1	*453-3024*	1	DOOR GP-HOOD (RH)	620

Y - SEPARATE ILLUSTRATION

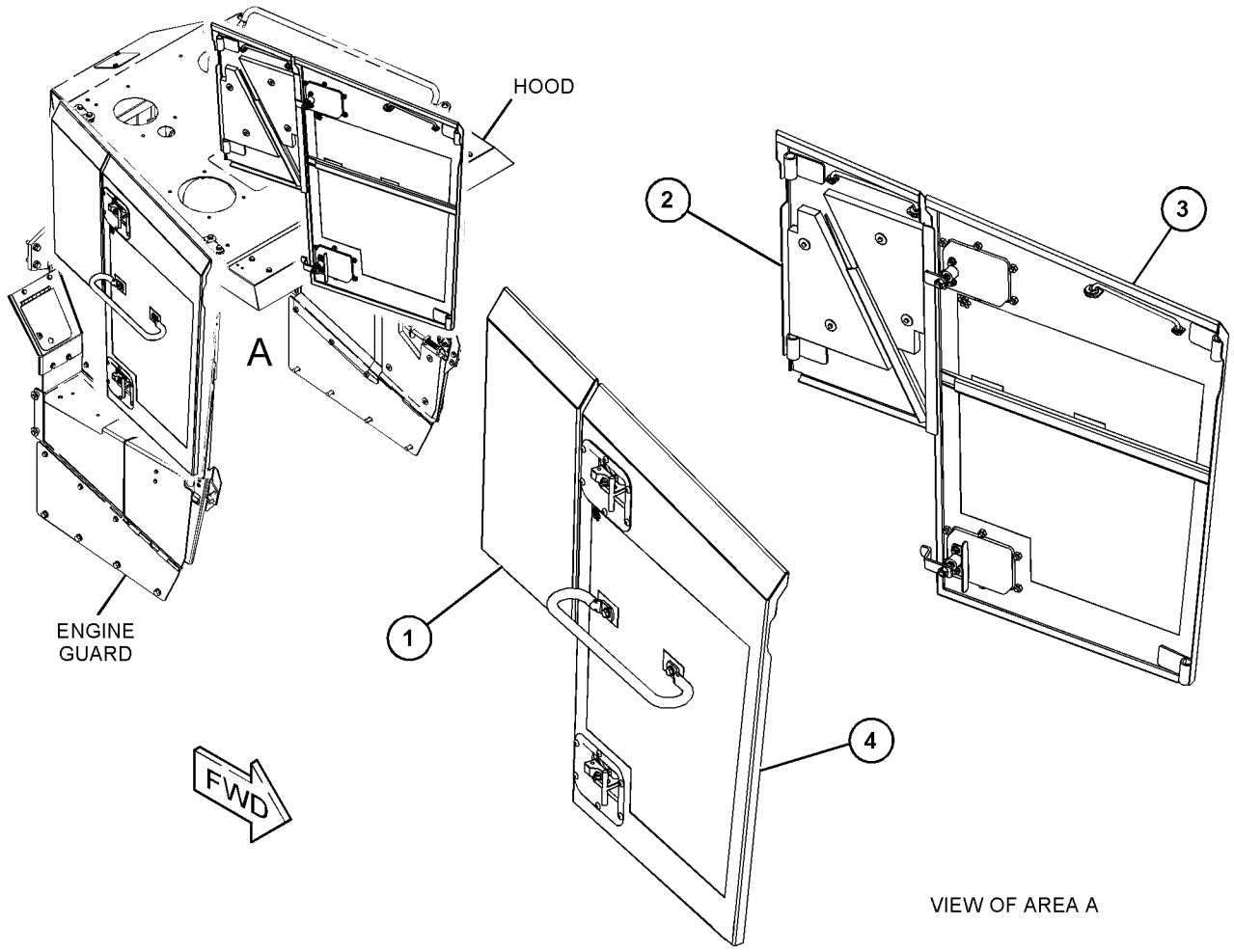

GRAPHIC #1 <END> g03811401

375-7598 DOOR GP-HOOD–LH

S/N: RAB1-UP
PART OF 453-3023 DOOR GP-HOOD
AN ATTACHMENT

SMCS-7273 **i05460554**

NOTE	REF NO	GRAPHIC REF	PART NUMBER	QTY	PART NAME 1 2 3 4 5 6 (PRODUCT LEVEL)	SEE PAGE
	1	1	**3B-4605**	1	PIN-COTTER	
	2	1	**4B-4278**	1	WASHER (10.2X20.5X1.6-MM THK)	
	3	1	**4H-2558**	1	GROMMET	
	4	1	**8T-9496**	4	LOCKNUT (9/16-18-THD)	
	5	1	**8Y-4000**	2	LATCH AS (T-BAR, COMPARTMENT)	
	6	1	**277-4877**	1	PAWL	
	7	1	**296-7613**	1	ROD AS	
	8	1	**375-7602**	1	DOOR AS-ACCESS (LH)	
	9	1	**379-5181**	1	PLATE	
	10	1	**444-2516**	1	PAWL	
	11	1	**4M-7470**	1	GROMMET	
M	12	1	**6V-7744**	4	LOCKNUT (M10X1.5-THD)	
M	13	1	**8C-8585**	12	SCREW-BUTTON HEAD (M10X1.5X20-MM)	
	14	1	**8T-4121**	8	WASHER-HARD (11X21X2.5-MM THK)	
M	15	1	**8T-4195**	4	BOLT (M10X1.5X30-MM)	
	16	1	**9W-8940**	2	PLATE	

M - METRIC PART

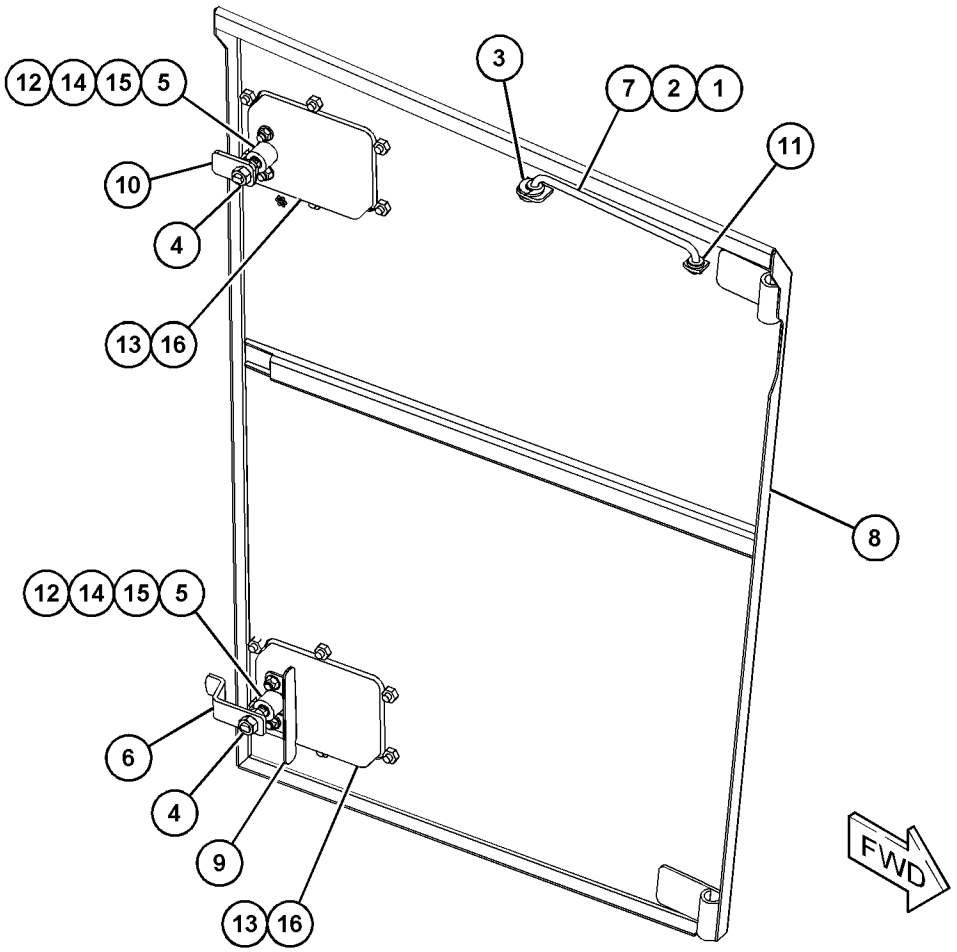

GRAPHIC #1 <END> g03486558

375-7599 DOOR GP-HOOD–RH

S/N: RAB1-UP
PART OF 453-3024 DOOR GP-HOOD
AN ATTACHMENT

SMCS-7273 **i05460559**

NOTE	REF NO	GRAPHIC REF	PART NUMBER	QTY	PART NAME 1 2 3 4 5 6 (PRODUCT LEVEL)	SEE PAGE
	1	1	**3B-4605**	1	PIN-COTTER	
	2	1	**4B-4278**	1	WASHER (10.2X20.5X1.6-MM THK)	
	3	1	**4H-2558**	1	GROMMET	
	4	1	**8T-9496**	4	LOCKNUT (9/16-18-THD)	
	5	1	**8Y-4000**	2	LATCH AS (T-BAR, COMPARTMENT)	
	6	1	**277-4877**	1	PAWL	
	7	1	**296-7613**	1	ROD AS	
	8	1	**375-7603**	1	DOOR AS-ACCESS (RH)	
	9	1	**379-5181**	1	PLATE	
	10	1	**444-2516**	1	PAWL	
	11	1	**4M-7470**	1	GROMMET	
M	12	1	**6V-7744**	4	LOCKNUT (M10X1.5-THD)	
M	13	1	**8C-8585**	12	SCREW-BUTTON HEAD (M10X1.5X20-MM)	
	14	1	**8T-4121**	8	WASHER-HARD (11X21X2.5-MM THK)	
M	15	1	**8T-4195**	4	BOLT (M10X1.5X30-MM)	
	16	1	**9W-8940**	2	PLATE	

M - METRIC PART

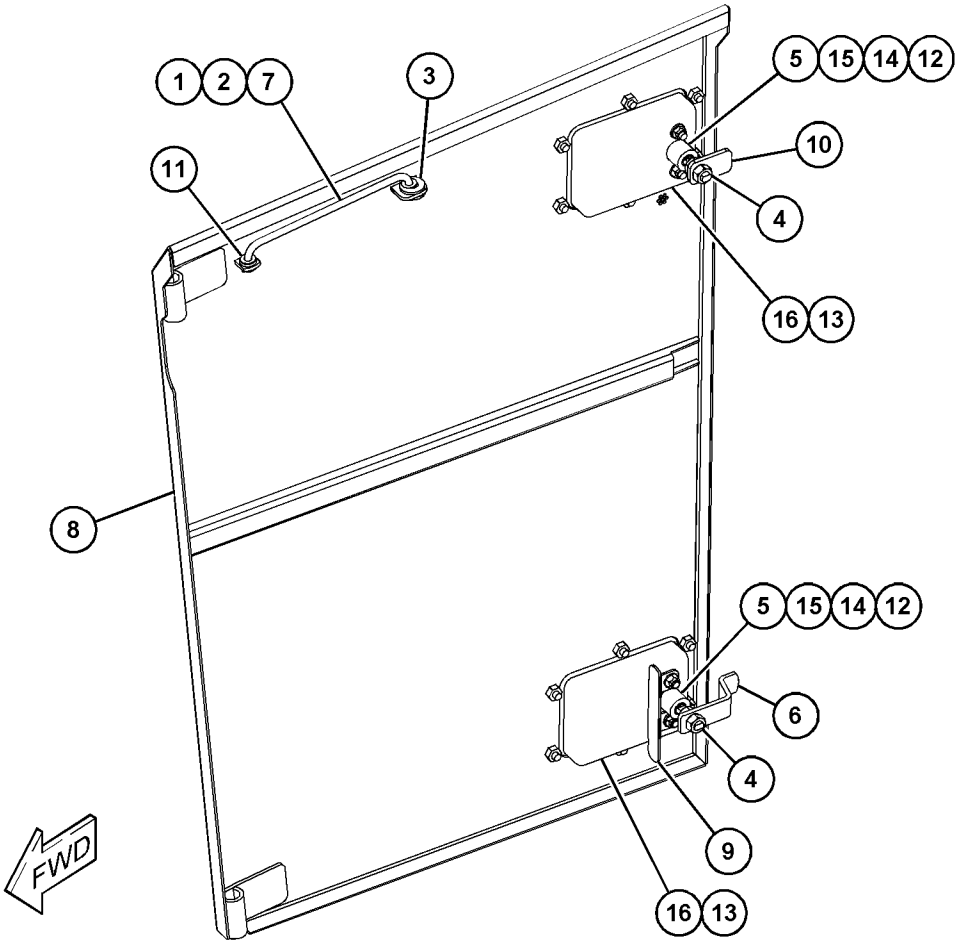

GRAPHIC #1 <END> g03486559

375-7600 DOOR GP-HOOD–LH

S/N: RAB1-UP
PART OF 453-3021 DOOR GP-HOOD
AN ATTACHMENT

SMCS-7273 **i05460632**

NOTE	REF NO	GRAPHIC REF	PART NUMBER	QTY	PART NAME 1 2 3 4 5 6 (PRODUCT LEVEL)	SEE PAGE
	1	1	**3B-4605**	1	PIN-COTTER	
	2	1	**4B-4278**	1	WASHER (10.2X20.5X1.6-MM THK)	
	3	1	**4H-2558**	1	GROMMET	
	4	1	**296-7613**	1	ROD AS	
	5	1	**375-7604**	1	DOOR AS-ACCESS (LH)	
	6	1	**4M-7470**	1	GROMMET	

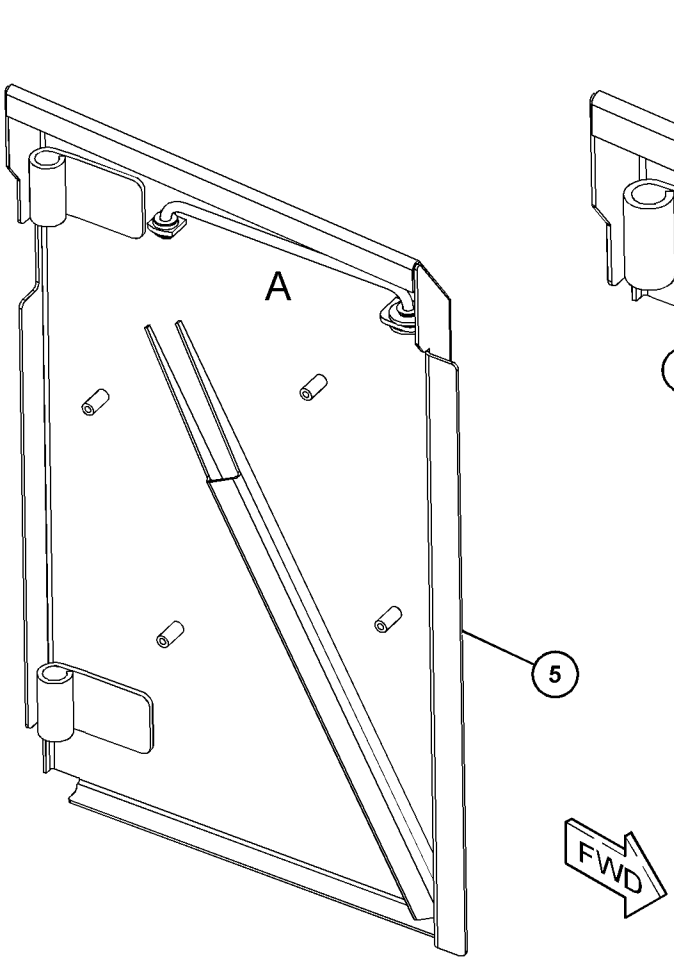

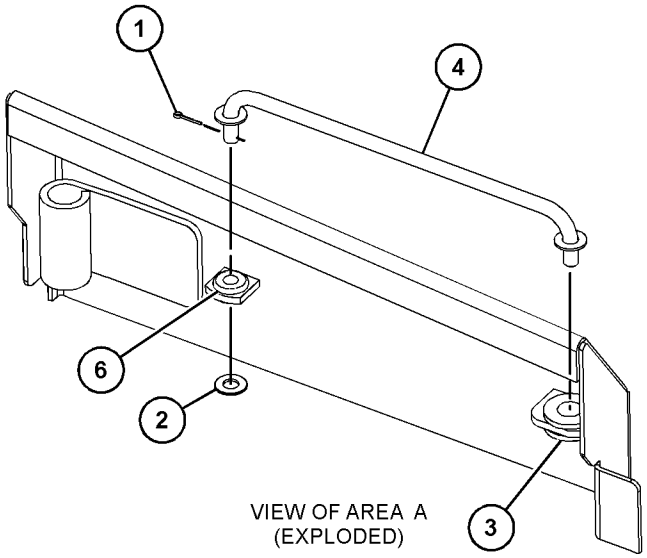

VIEW OF AREA A
(EXPLODED)

GRAPHIC #1 <END> g03486556

375-7601 DOOR GP-HOOD–RH

S/N: RAB1-UP
PART OF 453-3019 DOOR GP-HOOD
AN ATTACHMENT

SMCS-7273 **i05460650**

NOTE	REF NO	GRAPHIC REF	PART NUMBER	QTY	PART NAME 1 2 3 4 5 6 (PRODUCT LEVEL)	SEE PAGE
	1	1	**3B-4605**	1	PIN-COTTER	
	2	1	**4B-4278**	1	WASHER (10.2X20.5X1.6-MM THK)	
	3	1	**4H-2558**	1	GROMMET	
	4	1	**296-7613**	1	ROD AS	
	5	1	**375-7605**	1	DOOR AS-ACCESS (RH)	
	6	1	**4M-7470**	1	GROMMET	

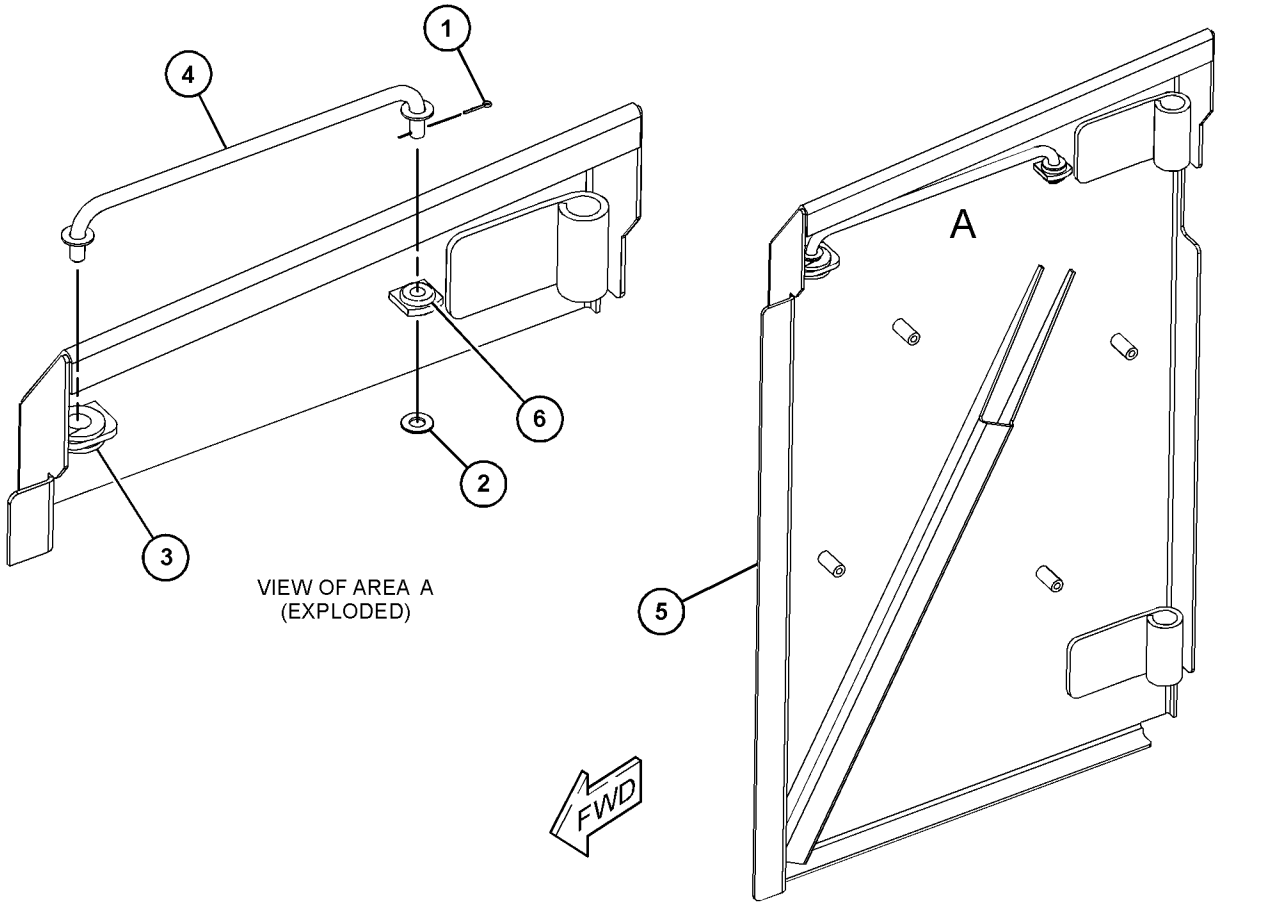

GRAPHIC #1 <END> g03486557

380-0956 DOOR GP-HOOD

S/N: RAB1-UP
PART OF 359-6454 ENCLOSURE GP-ENGINE
AN ATTACHMENT

SMCS-7273 **i05817166**

NOTE	REF NO	GRAPHIC REF	PART NUMBER	QTY	PART NAME 1 2 3 4 5 6 (PRODUCT LEVEL)	SEE PAGE
Y	1	1	*453-3020*	1	DOOR GP-HOOD (LH)	617
Y	2	1	*453-3021*	1	DOOR GP-HOOD (LH)	618
Y	3	1	*453-3019*	1	DOOR GP-HOOD (RH)	616
Y	4	1	*453-3018*	1	DOOR GP-HOOD (RH)	615

Y - SEPARATE ILLUSTRATION

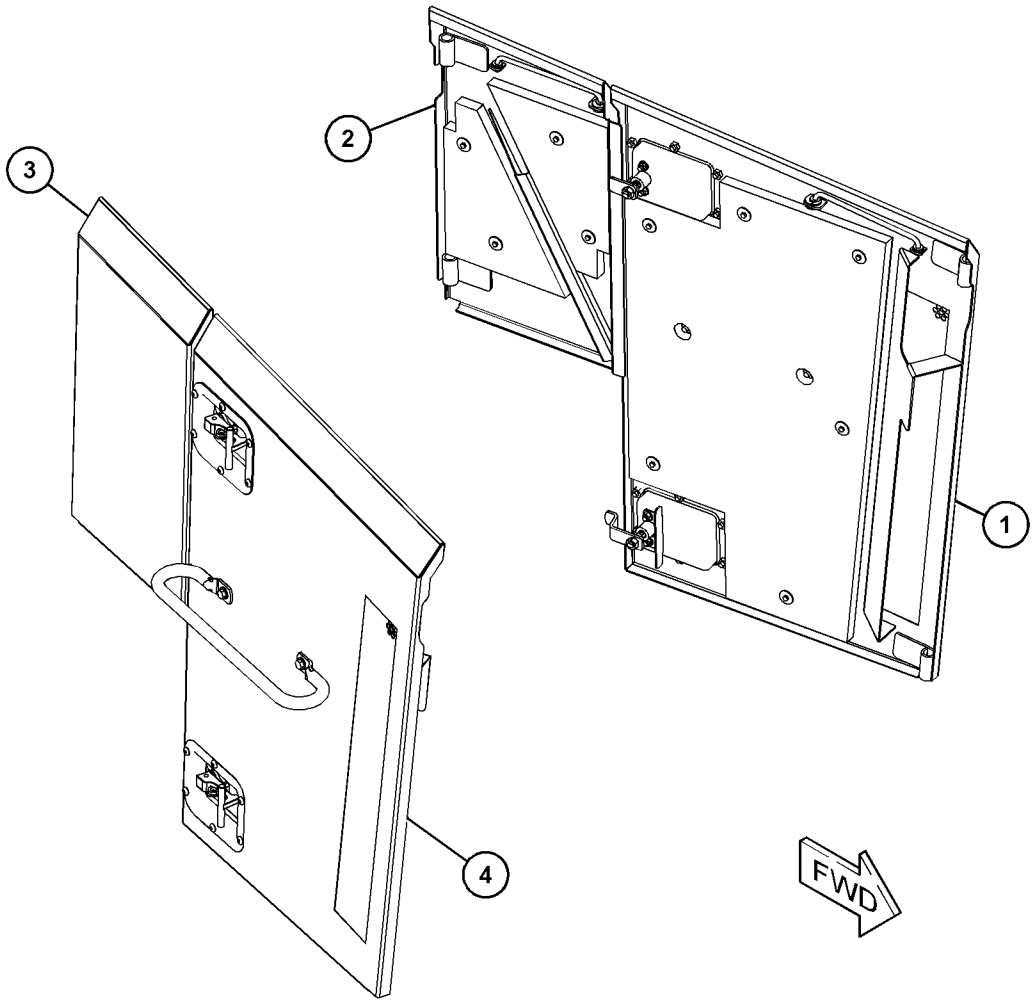

GRAPHIC #1 <END> g03683261

380-0957 DOOR GP-HOOD–LH

S/N: RAB1-UP
PART OF 453-3020 DOOR GP-HOOD
AN ATTACHMENT

SMCS-7273 **i05464152**

NOTE	REF NO	GRAPHIC REF	PART NUMBER	QTY	PART NAME 1 2 3 4 5 6 (PRODUCT LEVEL)	SEE PAGE
	1	1	**3B-4605**	1	PIN-COTTER	
	2	1	**4B-4278**	1	WASHER (10.2X20.5X1.6-MM THK)	
	3	1	**4H-2558**	1	GROMMET	
	4	1	**8T-9496**	4	LOCKNUT (9/16-18-THD)	
	5	1	**8Y-4000**	2	LATCH AS (T-BAR, COMPARTMENT)	
	6	1	**9W-8940**	2	PLATE	
	7	1	**277-4877**	1	PAWL	
	8	1	**296-7613**	1	ROD AS	
	9	1	**379-5181**	1	PLATE	
	10	1	**380-0958**	1	DOOR AS-ACCESS (LH)	
	11	1	**444-2516**	1	PAWL	
	12	1	**4M-7470**	1	GROMMET	
M	13	1	**6V-7744**	4	LOCKNUT (M10X1.5-THD)	
M	14	1	**8C-8585**	12	SCREW-BUTTON HEAD (M10X1.5X20-MM)	
	15	1	**8T-4121**	8	WASHER-HARD (11X21X2.5-MM THK)	
M	16	1	**8T-4195**	4	BOLT (M10X1.5X30-MM)	

M - METRIC PART

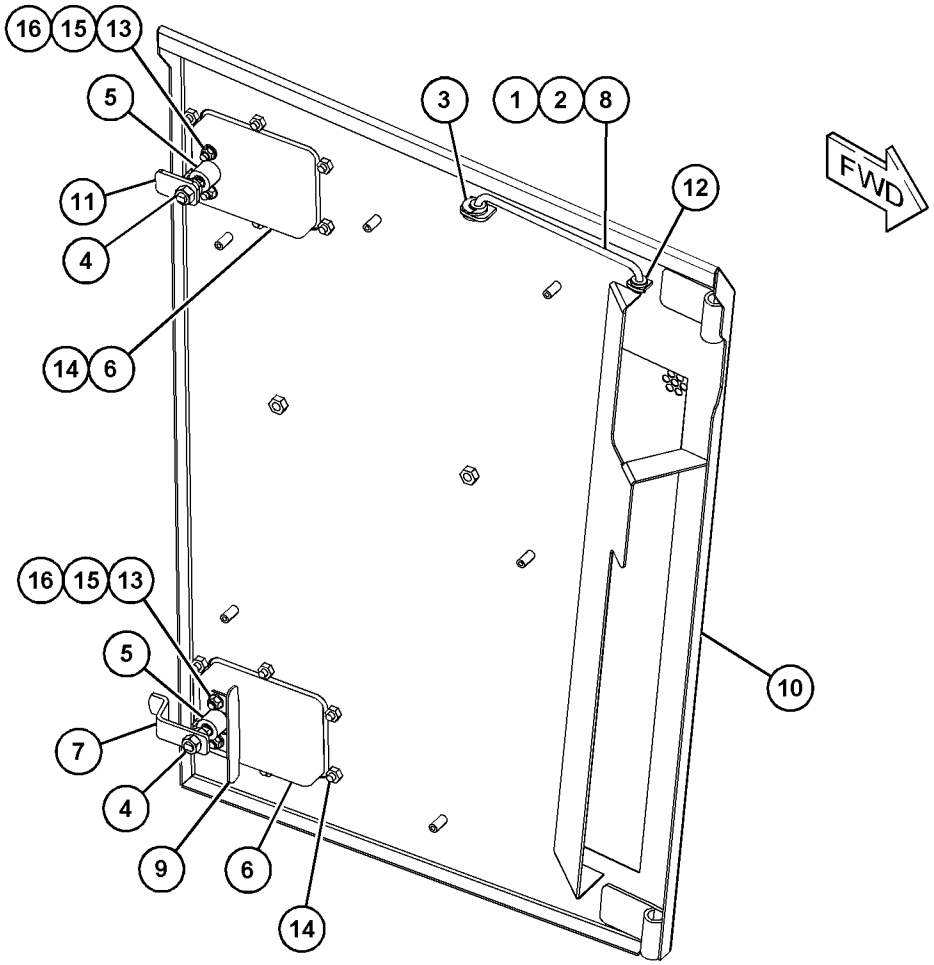

GRAPHIC #1 <END> g03505748

380-6864 DOOR GP-HOOD–RH

S/N: RAB1-UP
PART OF 453-3018 DOOR GP-HOOD
AN ATTACHMENT

SMCS-7273 **i05464150**

NOTE	REF NO	GRAPHIC REF	PART NUMBER	QTY	PART NAME 1 2 3 4 5 6 (PRODUCT LEVEL)	SEE PAGE
	1	1	**3B-4605**	1	PIN-COTTER	
	2	1	**4B-4278**	1	WASHER (10.2X20.5X1.6-MM THK)	
	3	1	**4H-2558**	1	GROMMET	
	4	1	**8T-9496**	4	LOCKNUT (9/16-18-THD)	
	5	1	**8Y-4000**	2	LATCH AS (T-BAR, COMPARTMENT)	
	6	1	**9W-8940**	2	PLATE	
	7	1	**277-4877**	1	PAWL	
	8	1	**296-7613**	1	ROD AS	
	9	1	**379-5181**	1	PLATE	
	10	1	**380-6863**	1	DOOR AS-ACCESS (RH)	
	11	1	**444-2516**	1	PAWL	
	12	1	**4M-7470**	1	GROMMET	
M	13	1	**6V-7744**	4	LOCKNUT (M10X1.5-THD)	
M	14	1	**8C-8585**	12	SCREW-BUTTON HEAD (M10X1.5X20-MM)	
	15	1	**8T-4121**	8	WASHER-HARD (11X21X2.5-MM THK)	
M	16	1	**8T-4195**	4	BOLT (M10X1.5X30-MM)	

M - METRIC PART

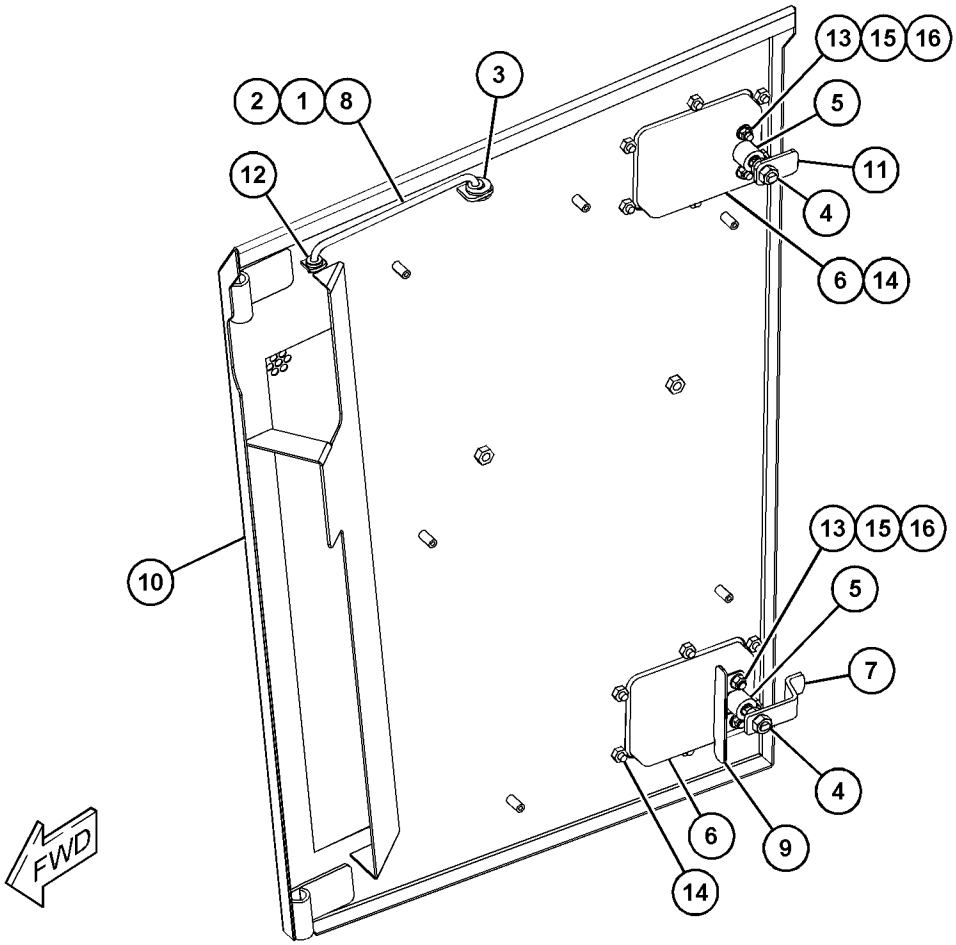

GRAPHIC #1 <END> g03505747

453-3018 DOOR GP-HOOD–RH

S/N: RAB1-UP
PART OF 380-0956 DOOR GP-HOOD
AN ATTACHMENT

SMCS-7273 **i05814770**

NOTE	REF NO	GRAPHIC REF	PART NUMBER	QTY	PART NAME 1 2 3 4 5 6 (PRODUCT LEVEL)	SEE PAGE
	1	1	**354-3100**	1	HANDHOLD	
	2	1	**380-0955**	1	LINER	
Y	3	1	*380-6864*	1	DOOR GP-HOOD (RH)	614
	4	1	**7X-0586**	6	WASHER-HARD (7.2X32X2-MM THK)	
M	5	1	**8T-4138**	6	BOLT (M6X1X20-MM)	
M	6	1	**8T-4139**	2	BOLT (M12X1.75X30-MM)	
	7	1	**8T-4223**	2	WASHER-HARD (13.5X25.5X3-MM THK)	

M - METRIC PART
Y - SEPARATE ILLUSTRATION

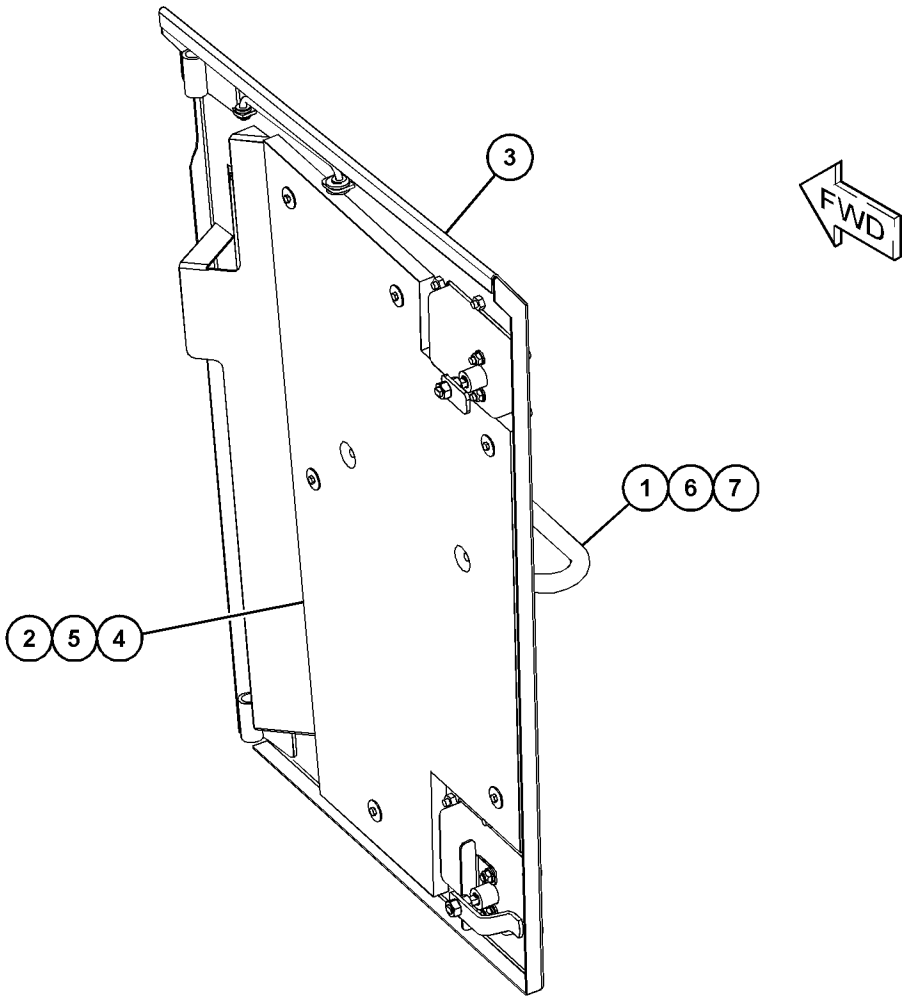

GRAPHIC #1 <END> g03682626

453-3019 DOOR GP-HOOD–RH

S/N: RAB1-UP
PART OF 375-7592, 380-0956 DOOR GP-HOOD
AN ATTACHMENT

SMCS-7273 **i05775329**

NOTE	REF NO	GRAPHIC REF	PART NUMBER	QTY	PART NAME 1 2 3 4 5 6 (PRODUCT LEVEL)	SEE PAGE
Y	1	1	*375-7601*	1	DOOR GP-HOOD (RH)	611
	2	1	**380-0950**	2	LINER	
	3	1	**7X-0586**	4	WASHER-HARD (7.2X32X2-MM THK)	
M	4	1	**8T-4138**	4	BOLT (M6X1X20-MM)	

M - METRIC PART
Y - SEPARATE ILLUSTRATION

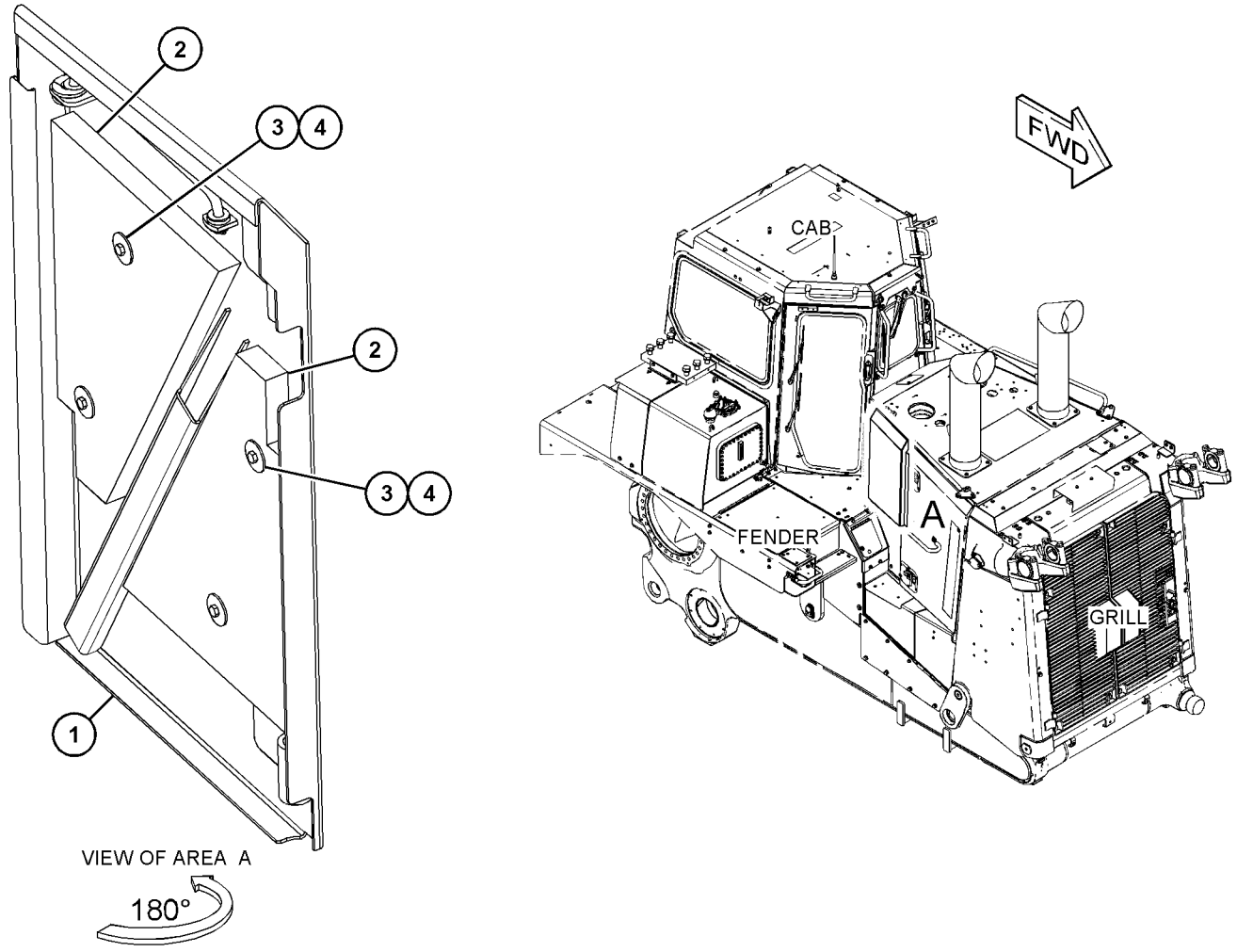

GRAPHIC #1 <END> g03665882

453-3020 DOOR GP-HOOD—LH

S/N: RAB1-UP
PART OF 380-0956 DOOR GP-HOOD
AN ATTACHMENT

SMCS-7273 **i05814771**

NOTE	REF NO	GRAPHIC REF	PART NUMBER	QTY	PART NAME 1 2 3 4 5 6 (PRODUCT LEVEL)	SEE PAGE
	1	1	**354-3100**	1	HANDHOLD	
	2	1	**380-0955**	1	LINER	
Y	3	1	*380-0957*	1	DOOR GP-HOOD (LH)	613
	4	1	**7X-0586**	6	WASHER-HARD (7.2X32X2-MM THK)	
M	5	1	**8T-4138**	6	BOLT (M6X1X20-MM)	
M	6	1	**8T-4139**	2	BOLT (M12X1.75X30-MM)	
	7	1	**8T-4223**	2	WASHER-HARD (13.5X25.5X3-MM THK)	

M - METRIC PART
Y - SEPARATE ILLUSTRATION

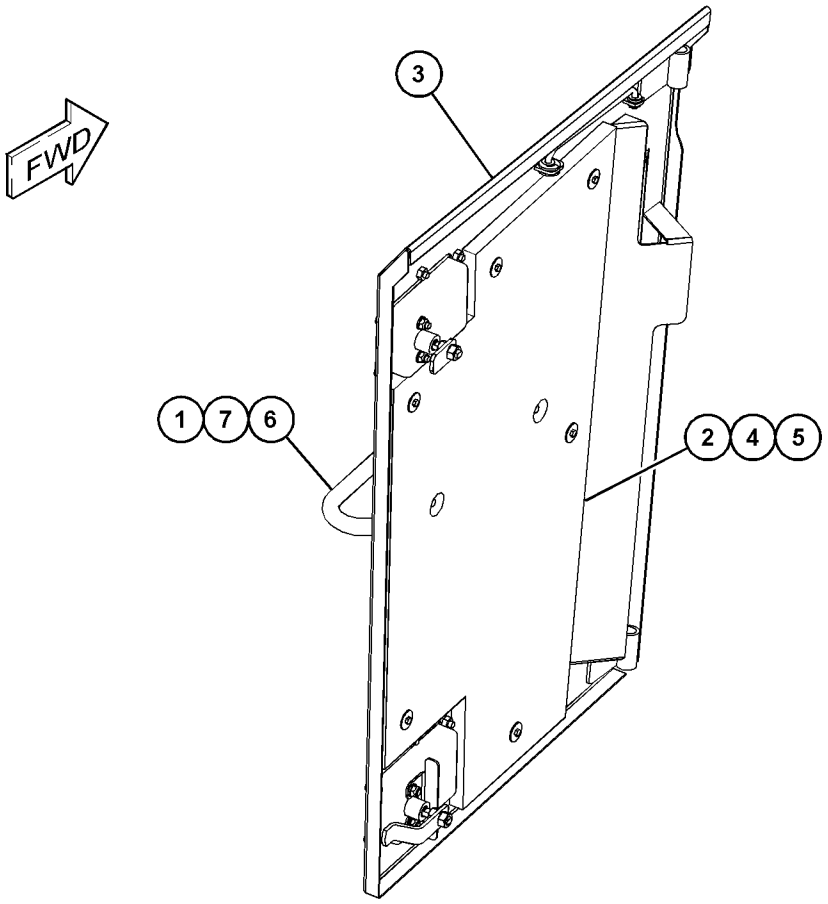

GRAPHIC #1 <END> g03682918

453-3021 DOOR GP-HOOD–LH

S/N: RAB1-UP
PART OF 375-7592, 380-0956 DOOR GP-HOOD
AN ATTACHMENT

SMCS-7273 **i05775337**

NOTE	REF NO	GRAPHIC REF	PART NUMBER	QTY	PART NAME 1 2 3 4 5 6 (PRODUCT LEVEL)	SEE PAGE
Y	1	1	*375-7600*	1	DOOR GP-HOOD (LH)	610
	2	1	**380-0950**	2	LINER	
	3	1	**7X-0586**	4	WASHER-HARD (7.2X32X2-MM THK)	
M	4	1	**8T-4138**	4	BOLT (M6X1X20-MM)	

M - METRIC PART
Y - SEPARATE ILLUSTRATION

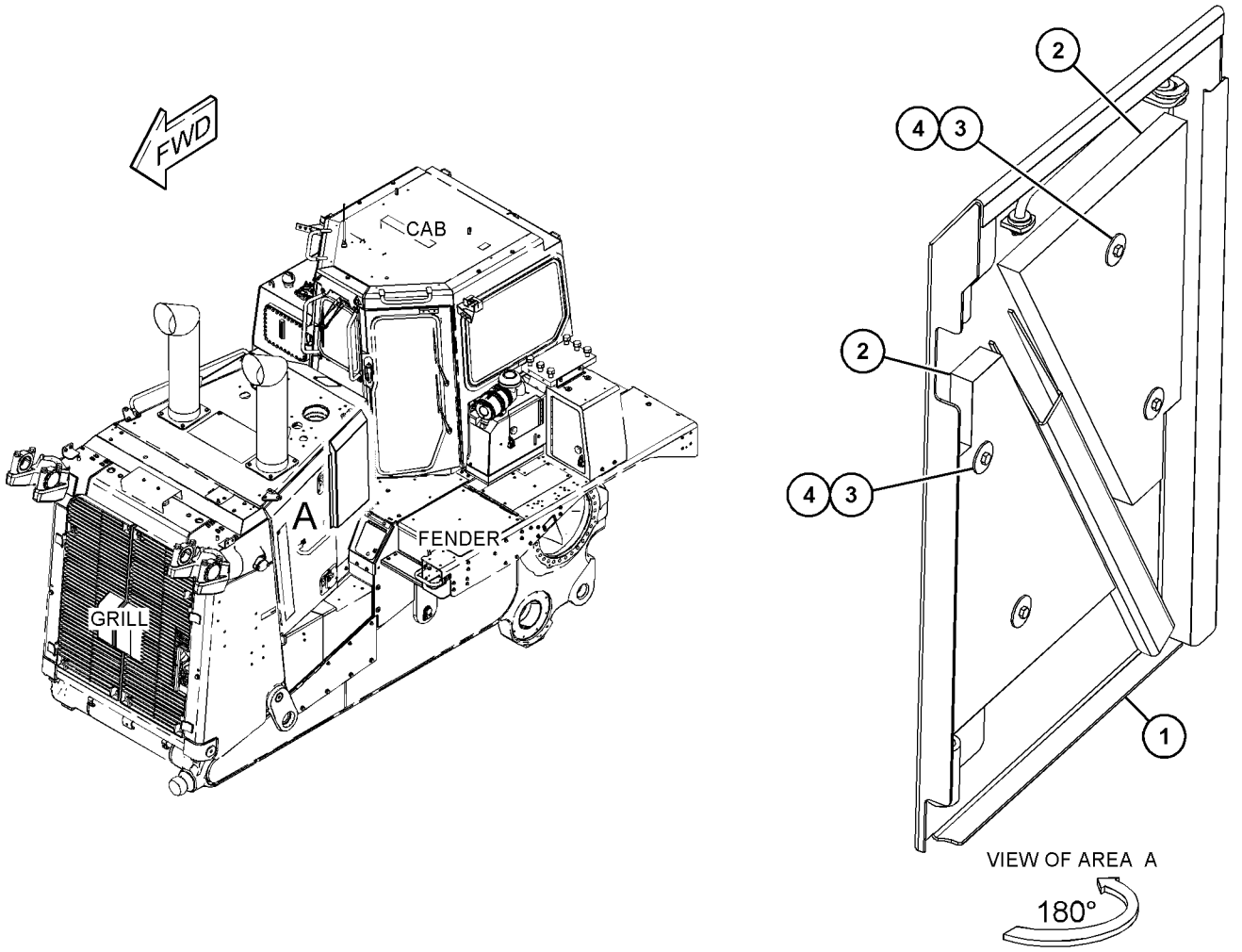

GRAPHIC #1 <END> g03665909

453-3023 DOOR GP-HOOD–LH

S/N: RAB1-UP
PART OF 375-7592 DOOR GP-HOOD
AN ATTACHMENT

SMCS-7273 **i05775338**

NOTE	REF NO	GRAPHIC REF	PART NUMBER	QTY	PART NAME 1 2 3 4 5 6 (PRODUCT LEVEL)	SEE PAGE
	1	1	**354-3100**	1	HANDHOLD	
Y	2	1	*375-7598*	1	DOOR GP-HOOD (LH)	608
M	3	1	**8T-4139**	2	BOLT (M12X1.75X30-MM)	
	4	1	**8T-4223**	2	WASHER-HARD (13.5X25.5X3-MM THK)	

M - METRIC PART
Y - SEPARATE ILLUSTRATION

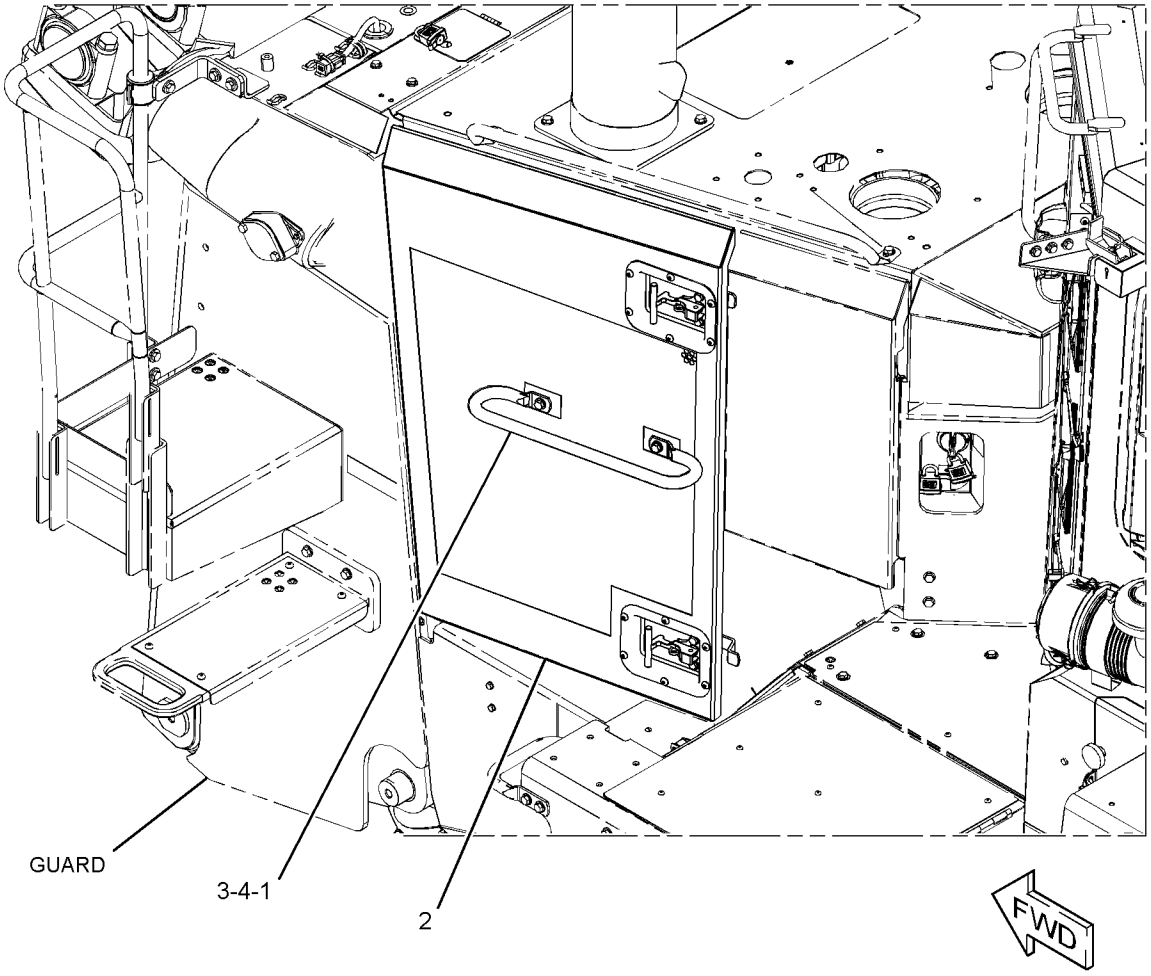

GRAPHIC #1 <END> g03665644

453-3024 DOOR GP-HOOD–RH

S/N: RAB1-UP
PART OF 375-7592 DOOR GP-HOOD
AN ATTACHMENT

SMCS-7273 **i05775339**

NOTE	REF NO	GRAPHIC REF	PART NUMBER	QTY	PART NAME 1 2 3 4 5 6 (PRODUCT LEVEL)	SEE PAGE
	1	1	**354-3100**	1	HANDHOLD	
Y	2	1	*375-7599*	1	DOOR GP-HOOD (RH)	609
M	3	1	**8T-4139**	2	BOLT (M12X1.75X30-MM)	
	4	1	**8T-4223**	2	WASHER-HARD (13.5X25.5X3-MM THK)	

M - METRIC PART
Y - SEPARATE ILLUSTRATION

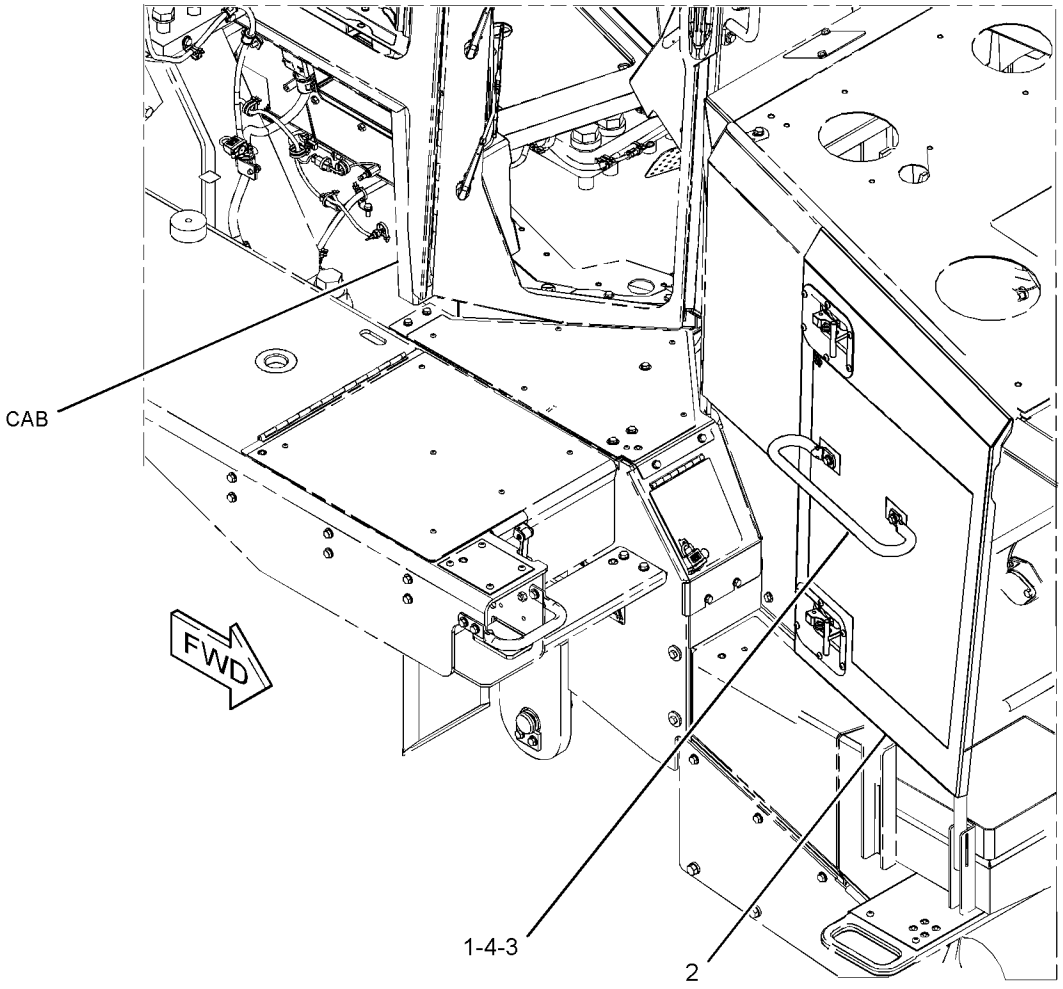

GRAPHIC #1 <END> g03667393

399-7226 DRAWBAR GP

S/N: RAB1-UP

AN ATTACHMENT

SMCS-7105, 7119

i05502510

NOTE	PART NUMBER	QTY	PART NAME 1 2 3 4 5 6 (PRODUCT LEVEL)	SEE PAGE
Y	*371-6973*	1	ADAPTER GP-FAST FILL FUEL	160
Y	*7T-7942*	1	DRAWBAR GP	622
Y	*371-6937*	1	GUARD GP-BOTTOM	643
Y	*380-9599*	1	MOUNTING GP-SENSOR (DRAWBAR)	355
	228-6089	1	PLUG (ROCKER SWITCH)	

Y - SEPARATE ILLUSTRATION

<END>

7T-7942 DRAWBAR GP

S/N: RAB1-UP
CANNOT BE USED WITH OTHER REAR MOUNTED EQUIPMENT
PART OF 399-7226 DRAWBAR GP
AN ATTACHMENT

SMCS-7105, 7119 **i04913549**

NOTE	REF NO	GRAPHIC REF	PART NUMBER	QTY	PART NAME 1 2 3 4 5 6 (PRODUCT LEVEL)	SEE PAGE
	1	1	**1H-4106**	1	PIN AS-DRAWBAR	
	2	1	**3T-7567**	2	BAR	
	3	1	**3T-8791**	1	BRACKET AS	
	4	1	**3T-8792**	1	BRACKET AS	
	5	1	**6T-0410**	2	PIN	
	6	1	**6V-8970**	6	BOLT (1-1/2-6-THD)	
	7	1	**7G-6623**	1	HITCH	
	8	1	**8E-9289**	1	LATCH	
	9	1	**399-8960**	1	DRAWBAR AS	
	10	1	**2H-1537**	6	BOLT (1-1/4-7X6-IN)	
	11	1	**3K-2889**	1	LOCKNUT (5/8-11-THD)	
	12	1	**3K-9770**	6	NUT-FULL (1-1/4-7-THD)	
	13	1	**3S-1349**	16	WASHER-HARD (31X52.5X6-MM THK)	
	14	1	**3S-6162**	6	WASHER-HARD (40.5X67X6-MM THK)	
	15	1	**4J-5977**	8	NUT-FULL (1-1/8-7-THD)	
	16	1	**4K-0684**	12	WASHER-HARD (34X55X6-MM THK)	
	17	1	**5M-0544**	8	BOLT (1-1/8-7X4.5-IN)	
	18	1	**8T-4223**	4	WASHER-HARD (13.5X25.5X3-MM THK)	
	19	1	**5T-4896**	14	SPACER (40.5X67X12-MM THK)	
	20	1	**7X-0349**	1	BOLT (5/8-11X3-IN)	
	21	1	**5P-2566**	4	BOLT (1/2-13X1.5-IN)	
	22	1	**356-2197**	1	FILM-INFORMATION (DRAWBAR, READ OMM)	

7T-7942 **DRAWBAR GP (**contd.**)** **i04913549**

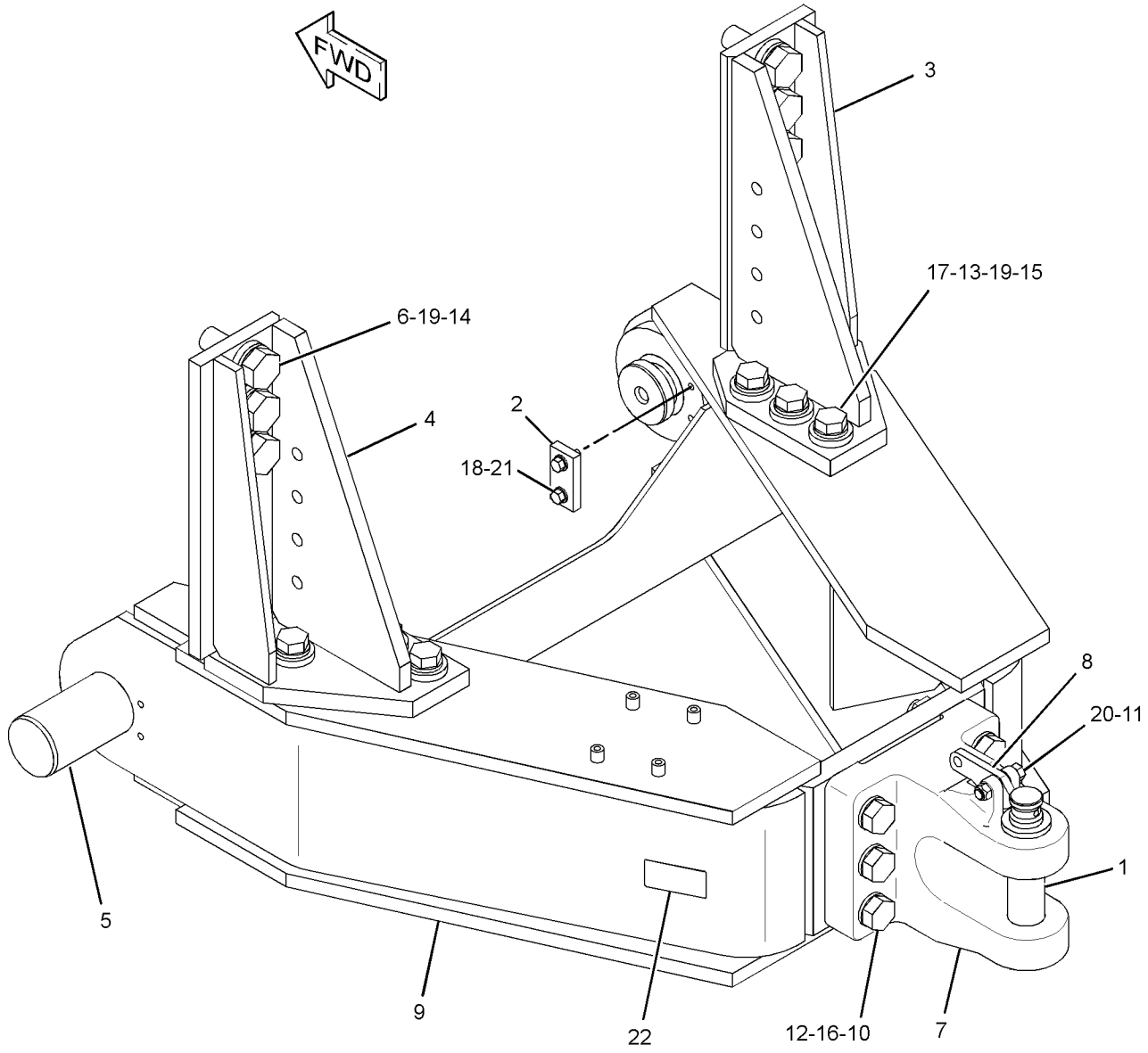

GRAPHIC #1 <END> g03096536

359-6428 ENCLOSURE GP-ENGINE

S/N: RAB1-UP
AN ATTACHMENT

SMCS-7263 **i05458933**

NOTE	PART NUMBER	QTY	PART NAME 1 2 3 4 5 6 (PRODUCT LEVEL)	SEE PAGE
Y	*375-7615*	1	COVER GP-HOOD	601
Y	*375-7592*	1	DOOR GP-HOOD	607
Y	*359-6473*	1	PRECLEANER GP	150
M	**8T-4184**	3	BOLT (M12X1.75X45-MM)	
	7G-1815	1	PLATE	
	3W-2647	3	SPACER (13.5X30X10-MM THK)	

M - METRIC PART
Y - SEPARATE ILLUSTRATION

<END>

359-6429 ENCLOSURE GP-ENGINE—HIGH DEBRIS

S/N: RAB1-UP
AN ATTACHMENT

SMCS-7263 **i05910359**

NOTE	PART NUMBER	QTY	PART NAME 1 2 3 4 5 6 (PRODUCT LEVEL)	SEE PAGE
Y	*359-6422*	1	HOOD & GUARD GP	679
Y	*359-6361*	1	LINES GP-ALTERNATOR AIR	336
Y	*359-6480*	1	PRECLEANER GP	151
M	**8T-4184**	3	BOLT (M12X1.75X45-MM)	
	7G-1815	1	PLATE	
	3W-2647	3	SPACER (13.5X30X10-MM THK)	

M - METRIC PART
Y - SEPARATE ILLUSTRATION

<END>

359-6454 ENCLOSURE GP-ENGINE—SOUND SUPPRESSION

S/N: RAB1-UP
AN ATTACHMENT

SMCS-7263 **i05458959**

NOTE	PART NUMBER	QTY	PART NAME 1 2 3 4 5 6 (PRODUCT LEVEL)	SEE PAGE
Y	*375-7615*	1	COVER GP-HOOD	601
Y	*380-0956*	1	DOOR GP-HOOD	612
Y	*359-6473*	1	PRECLEANER GP	150
Y	*381-0987*	1	SEAL GP-ENCLOSURE	713

Y - SEPARATE ILLUSTRATION

<END>

373-3193 FENDER GP

S/N: RAB1-UP
PART OF 359-6401 CHASSIS AR
AN ATTACHMENT

SMCS-7252 **i05424463**

NOTE	REF NO	GRAPHIC REF	PART NUMBER	QTY	PART NAME 1 2 3 4 5 6 (PRODUCT LEVEL)	SEE PAGE
	1	1,2	**246-2641**	2	PADLOCK GP	
					(EACH INCLUDES)	
		1,2	**5P-8500**	1	KEY	
	2	2	**9W-6958**	2	HANDHOLD (GRAB)	
	3	1,2	**9W-7006**	2	PIN	
	4	2	**068-5893**	6	SPACER (19.05X31.75X30.2-MM THK)	
	5	2	**232-3755**	2	PLATE	
	6	2	**245-6858**	1	PLATE	
	7	1	**379-3990**	1	BEAM AS	
	7A		**9W-0330**	2	BEARING	
	8	1	**380-1083**	1	SHIELD AS	
		1	**8T-7971**	4	WASHER-HARD (13.5X25.5X5-MM THK)	
Y	9	2	*380-2279*	1	FENDER GP (RH)	628
Y	10	1	*380-2280*	1	FENDER GP (LH)	629
	11	1,2	**380-2299**	2	PLATE AS	
	12	1,2	**380-2652**	2	PLATE-TREAD	
	13	2	**380-2918**	1	DECK AS (RH)	
	14	1	**380-2919**	1	DECK AS (LH)	
	15	1,2	**198-4780**	32	WASHER-HARD (17.5X32X8-MM THK)	
	16	1	**198-4781**	12	WASHER-HARD (22X40X10-MM THK)	
	17	2	**7X-0515**	12	WASHER-HARD (17X35X5-MM THK)	
M	18	1,2	**7X-2554**	8	BOLT (M16X2X70-MM)	
M	19	2	**7X-2555**	3	BOLT (M16X2X80-MM)	
	20	1,2	**8T-4121**	10	WASHER-HARD (11X21X2.5-MM THK)	
M	21	1,2	**8T-4132**	22	NUT (M16X2-THD)	
M	22	1,2	**8T-4136**	10	BOLT (M10X1.5X25-MM)	
M	23	2	**8T-4139**	10	BOLT (M12X1.75X30-MM)	
M	24	1	**8T-4141**	12	BOLT (M20X2.5X70-MM)	
M	25	1,2	**8T-4175**	11	BOLT (M16X2X90-MM)	
M	26	1,2	**8T-4183**	12	BOLT (M12X1.75X40-MM)	
M	27	1,2	**8T-4192**	22	BOLT (M12X1.75X25-MM)	
M	28	2	**8T-4196**	4	BOLT (M10X1.5X35-MM)	
	29	1,2	**8T-4223**	44	WASHER-HARD (13.5X25.5X3-MM THK)	
	30	2	**8T-4226**	4	WASHER-PLATED (10.5X45X3-MM THK)	
D	31	2	**5P-7211**	1	SEAL (1.6-M)	

D - ORDER BY THE METER
M - METRIC PART
Y - SEPARATE ILLUSTRATION

373-3193 **FENDER GP (**contd.**)** **i05424463**

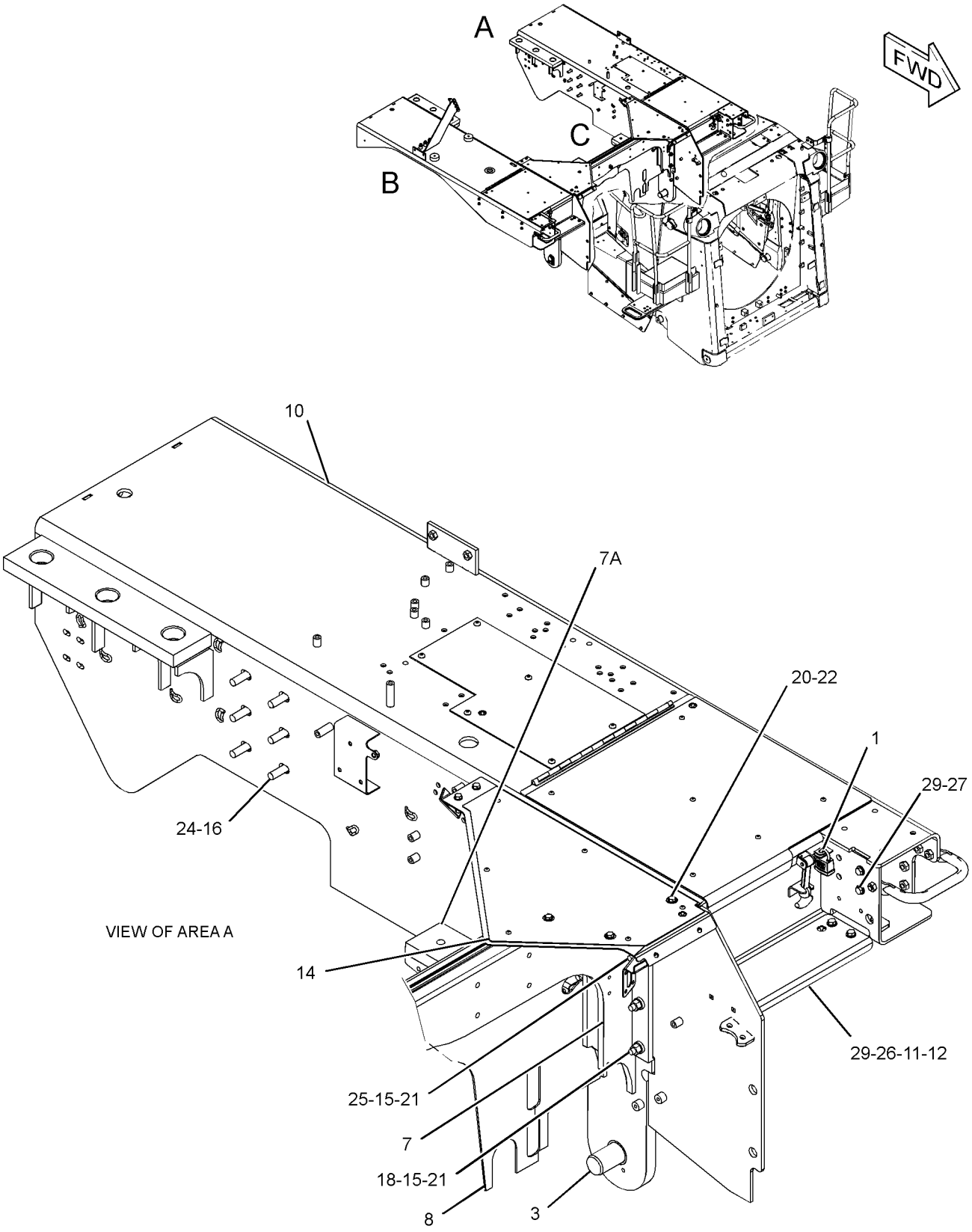

GRAPHIC #1 g03474687

373-3193 **FENDER GP (**contd.**)** **i05424463**

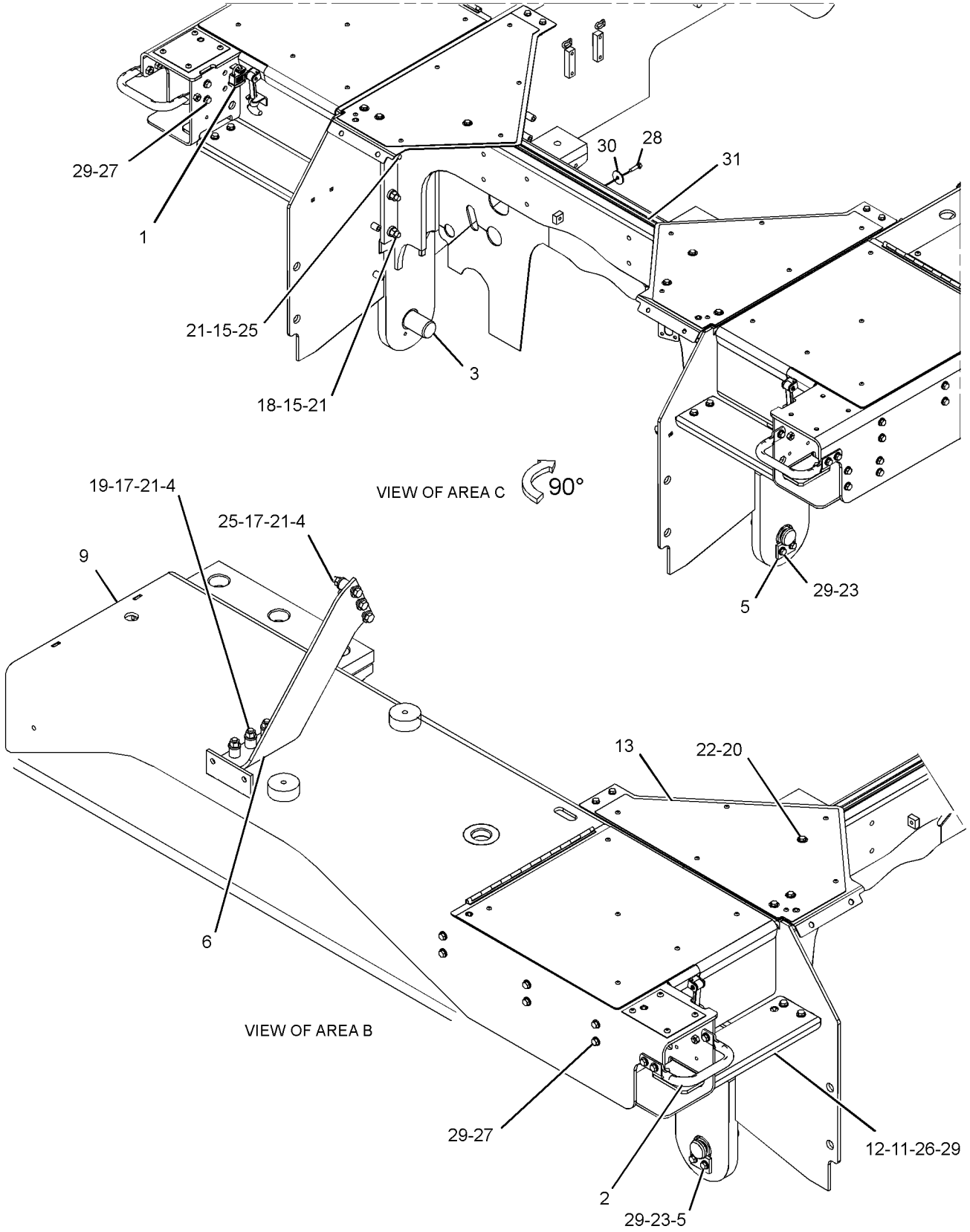

GRAPHIC #2 <END> g03474336

380-2279 FENDER GP–RH

S/N: RAB1-UP
PART OF 373-3193 FENDER GP
AN ATTACHMENT

SMCS-7252 **i06268556**

NOTE	REF NO	GRAPHIC REF	PART NUMBER	QTY	PART NAME 1 2 3 4 5 6 (PRODUCT LEVEL)	SEE PAGE
	1	1	**3T-2977**	1	PLATE	
	2	1	**3W-3110**	2	LOCK PIN	
	3	1	**9M-3835**	1	LATCH-RUBBER	
	4	1	**9W-0352**	1	LINK	
	5	1	**162-2480**	6	RIVET	
	6	1	**380-2281**	1	FENDER AS (RH)	
	7	1	**380-2938**	1	PLATE-TREAD	
	8	1	**096-3781**	1	PIN-CLEVIS	
	9	1	**2M-5795**	1	PIN-CLEVIS	
	10	1	**5V-1496**	1	RETAINER	
M	11	1	**8C-8585**	4	SCREW-BUTTON HEAD (M10X1.5X20-MM)	
	12	1	**8T-4223**	2	WASHER-HARD (13.5X25.5X3-MM THK)	

M - METRIC PART

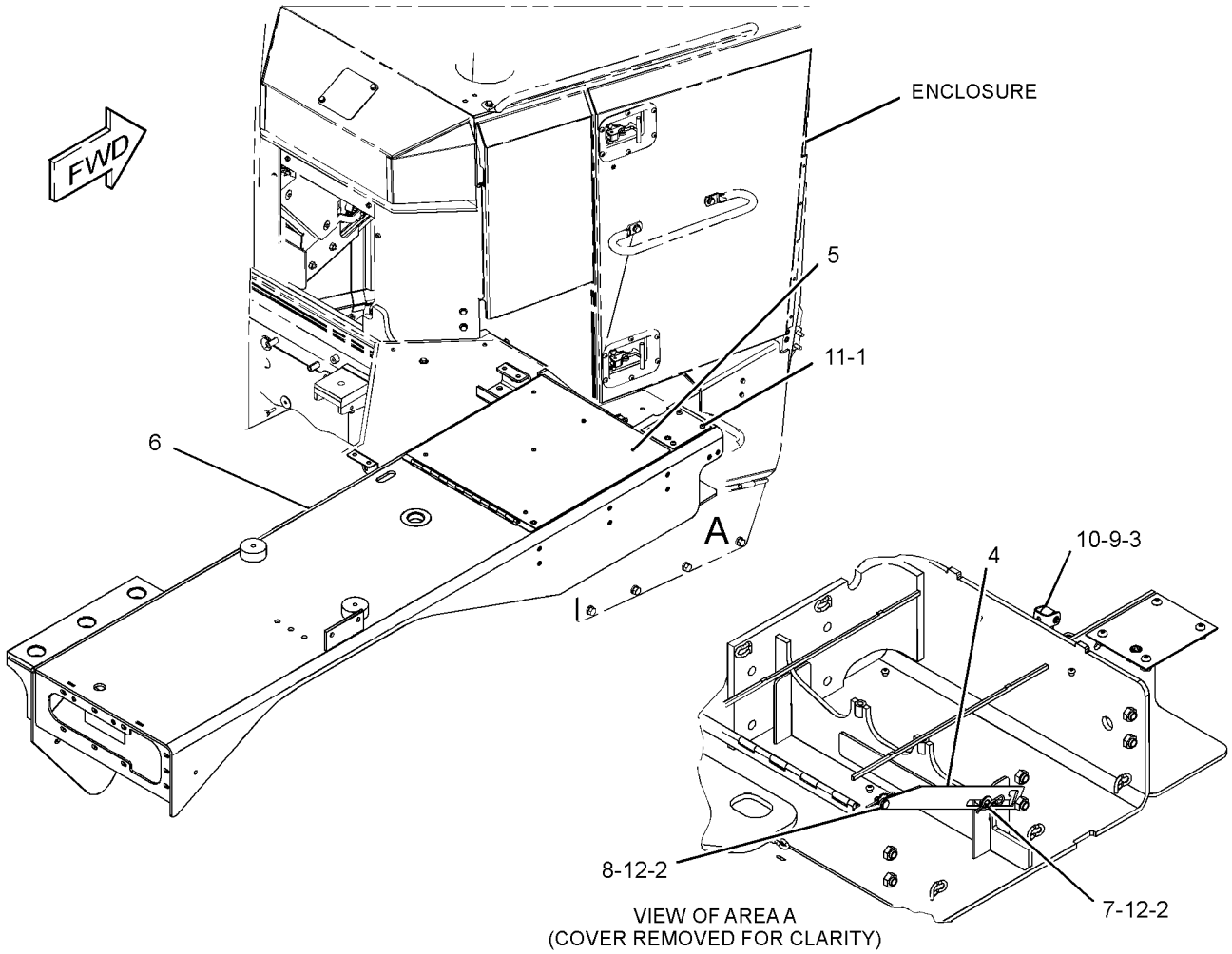

GRAPHIC #1 <END> g03475159

380-2280 FENDER GP–LH

S/N: RAB1-UP
PART OF 373-3193 FENDER GP
AN ATTACHMENT

SMCS-7252 **i06268557**

NOTE	REF NO	GRAPHIC REF	PART NUMBER	QTY	PART NAME 1 2 3 4 5 6 (PRODUCT LEVEL)	SEE PAGE
	1	1	**3W-3110**	2	LOCK PIN	
	2	1	**9M-3835**	1	LATCH-RUBBER	
	3	1	**9W-0352**	1	LINK	
	4	1	**162-2480**	6	RIVET	
	5	1	**314-3094**	1	PLATE	
	6	1	**365-6549**	1	PLATE	
	7	1	**380-2282**	1	FENDER AS (LH)	
	8	1	**380-2939**	1	PLATE-TREAD	
	9	1	**096-3781**	1	PIN-CLEVIS	
	10	1	**2M-5795**	1	PIN-CLEVIS	
	11	1	**5V-1496**	1	RETAINER	
M	12	1	**8C-8585**	6	SCREW-BUTTON HEAD (M10X1.5X20-MM)	
	13	1	**8T-4121**	4	WASHER-HARD (11X21X2.5-MM THK)	
M	14	1	**8T-4192**	7	BOLT (M12X1.75X25-MM)	
M	15	1	**8T-4195**	4	BOLT (M10X1.5X30-MM)	
	16	1	**8T-4223**	9	WASHER-HARD (13.5X25.5X3-MM THK)	

M - METRIC PART

380-2280 **FENDER GP (**contd.**)** **i06268557**

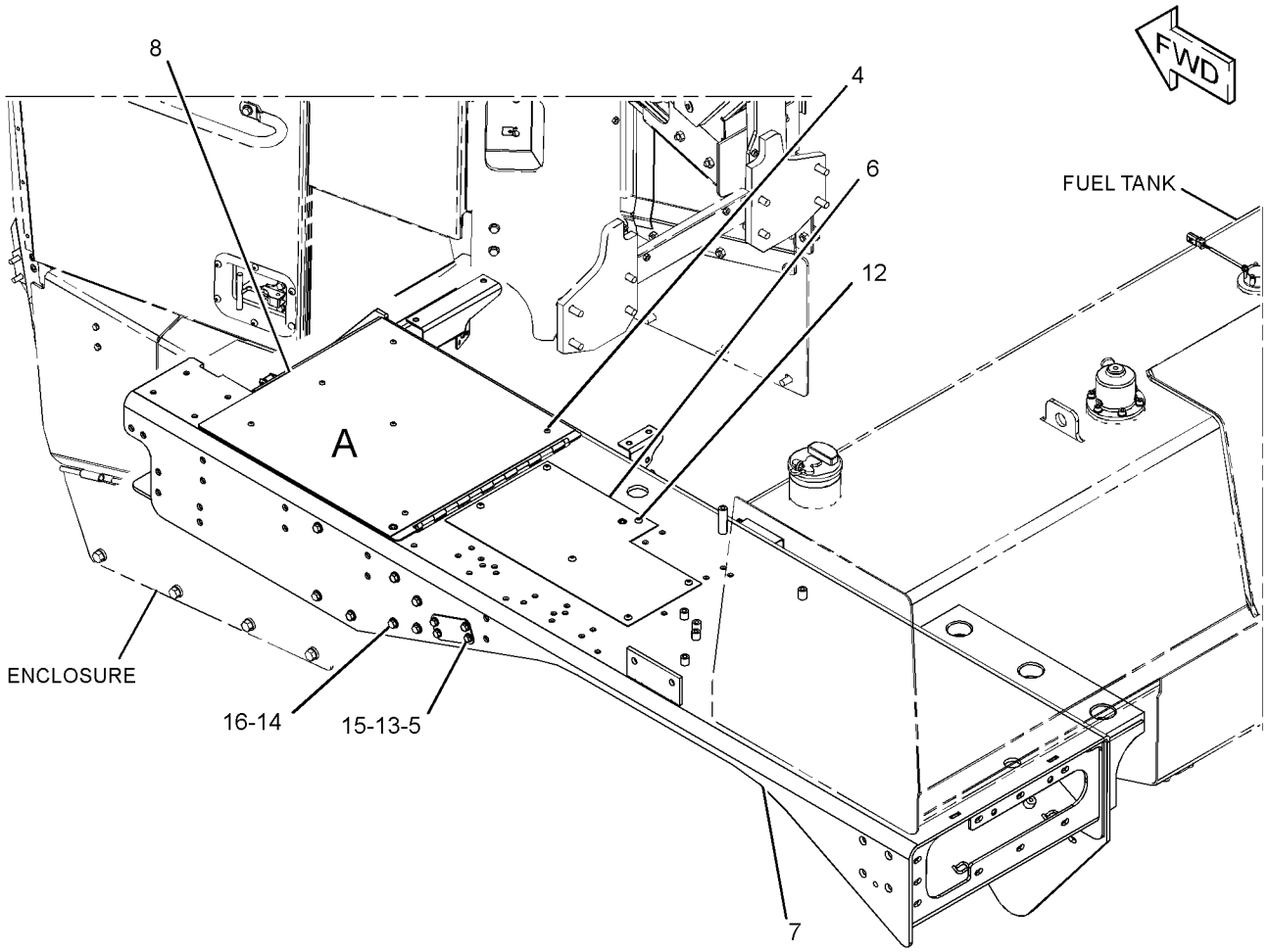

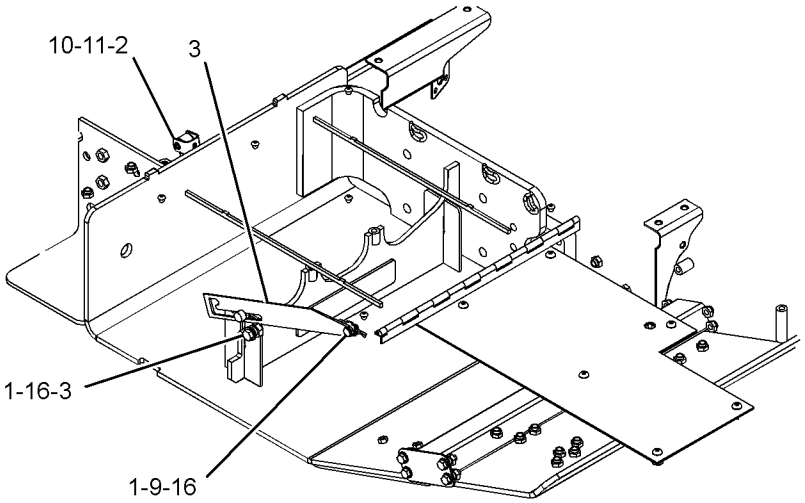

VIEW OF AREA A
(COVER REMOVED FOR CLARITY)

GRAPHIC #1 <END> g03475316

380-9650 FLOORPLATE GP

S/N: RAB1-UP
QUICK OPENING
PART OF 419-8211 MOUNTING GP-PLATFORM
AN ATTACHMENT

SMCS-7265 **i04529718**

NOTE	REF NO	GRAPHIC REF	PART NUMBER	QTY	PART NAME 1 2 3 4 5 6 (PRODUCT LEVEL)	SEE PAGE
	1	1	**355-0261**	1	BRACKET	
	2	1	**380-9651**	1	FLOORPLATE AS	
		1	**341-1408**	1	GASKET	
		1	**367-4990**	1	PANEL	
		1	**380-9652**	1	PLATE AS	
Y	3	1	*380-9733*	1	FLOORPLATE GP	632
	4	1	**8T-4121**	1	WASHER-HARD (11X21X2.5-MM THK)	
M	5	1	**8T-4137**	1	BOLT (M10X1.5X20-MM)	

M - METRIC PART
Y - SEPARATE ILLUSTRATION

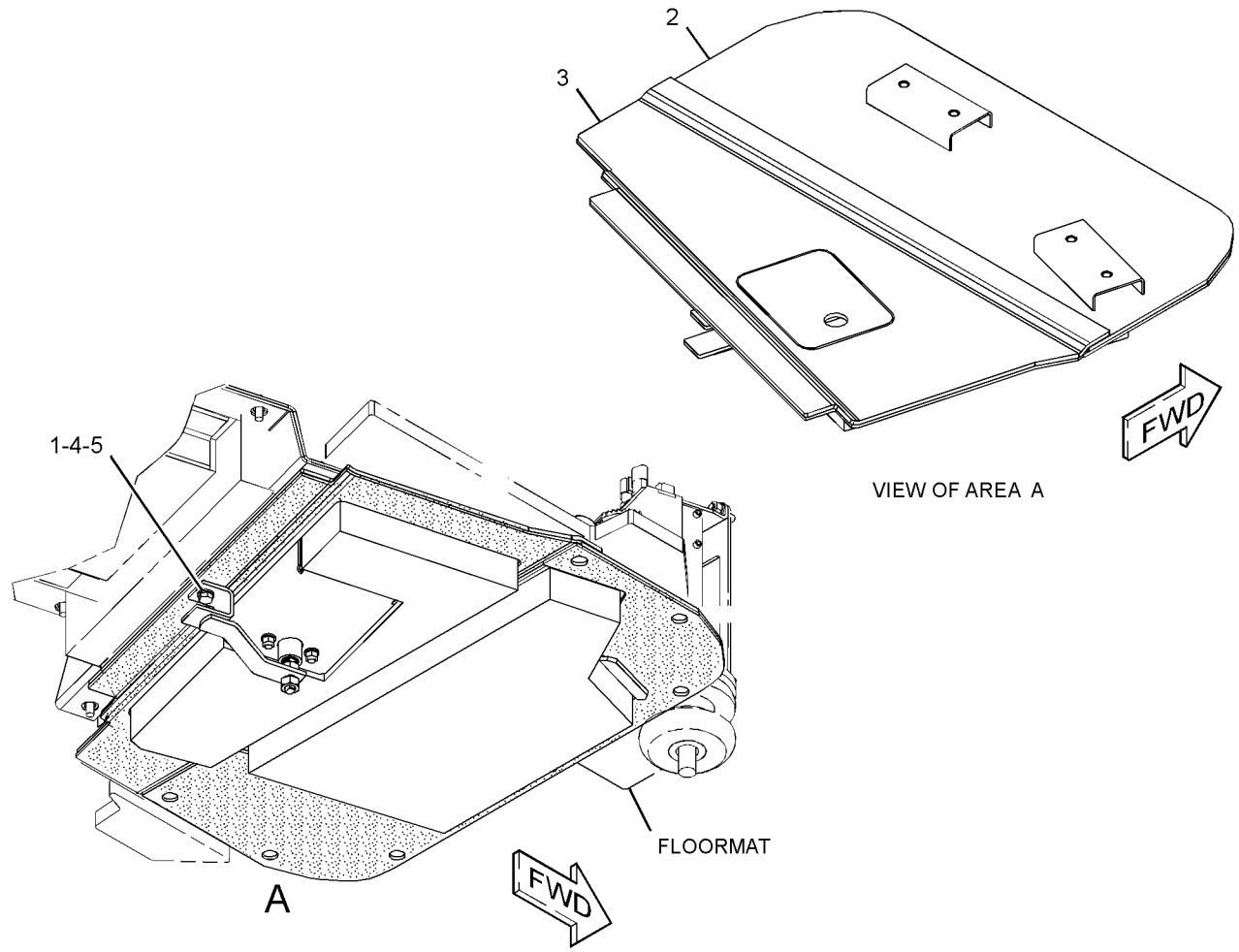

GRAPHIC #1 <END> g02724233

380-9733 FLOORPLATE GP

S/N: RAB1-UP
PART OF 380-9650 FLOORPLATE GP
AN ATTACHMENT

SMCS-7265 **i04529708**

NOTE	REF NO	GRAPHIC REF	PART NUMBER	QTY	PART NAME 1 2 3 4 5 6 (PRODUCT LEVEL)	SEE PAGE
	1	1	**8T-9496**	2	LOCKNUT (9/16-18-THD)	
JY	2	1	**8Y-6400**	1	LATCH GP (T-BAR, COMPARTMENT)	692
	3	1	**9W-8084**	1	PAWL	
	4	1	**274-6754**	1	COVER AS	
	5	1	**367-4986**	1	PLATE AS	
	6	1	**367-4988**	1	PANEL	
	7	1	**380-9734**	1	GASKET	
	8	1	**4L-6454**	2	BOLT (3/8-16X1-IN)	
	9	1	**6V-8801**	2	NUT (3/8-16-THD)	
	10	1	**8T-4896**	2	WASHER-HARD (10.2X18.5X2.5-MM THK)	

J - REQUIRES CORPORATE KEY
Y - SEPARATE ILLUSTRATION

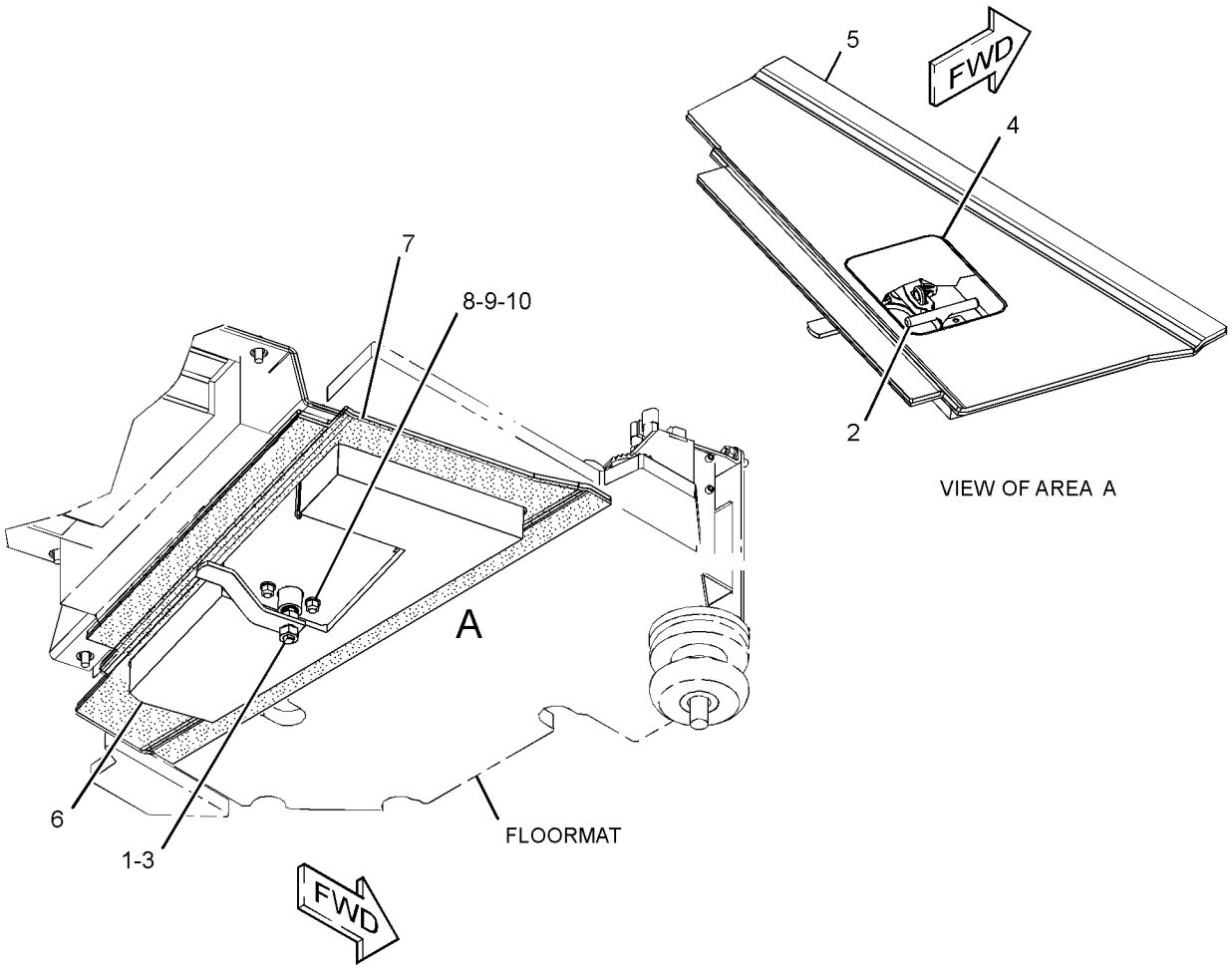

GRAPHIC #1 <END> g02724228

485-3330 GRILL GP-RADIATOR

S/N: RAB1-UP
PART OF 373-3194 GUARD GP-RADIATOR
AN ATTACHMENT

SMCS-7170 **i06575457**

NOTE	REF NO	GRAPHIC REF	PART NUMBER	QTY	PART NAME 1 2 3 4 5 6 (PRODUCT LEVEL)	SEE PAGE
	1	1	**378-2717**	1	GRILL AS-RADIATOR (RH)	
	2	1	**378-2718**	1	GRILL AS-RADIATOR (LH)	

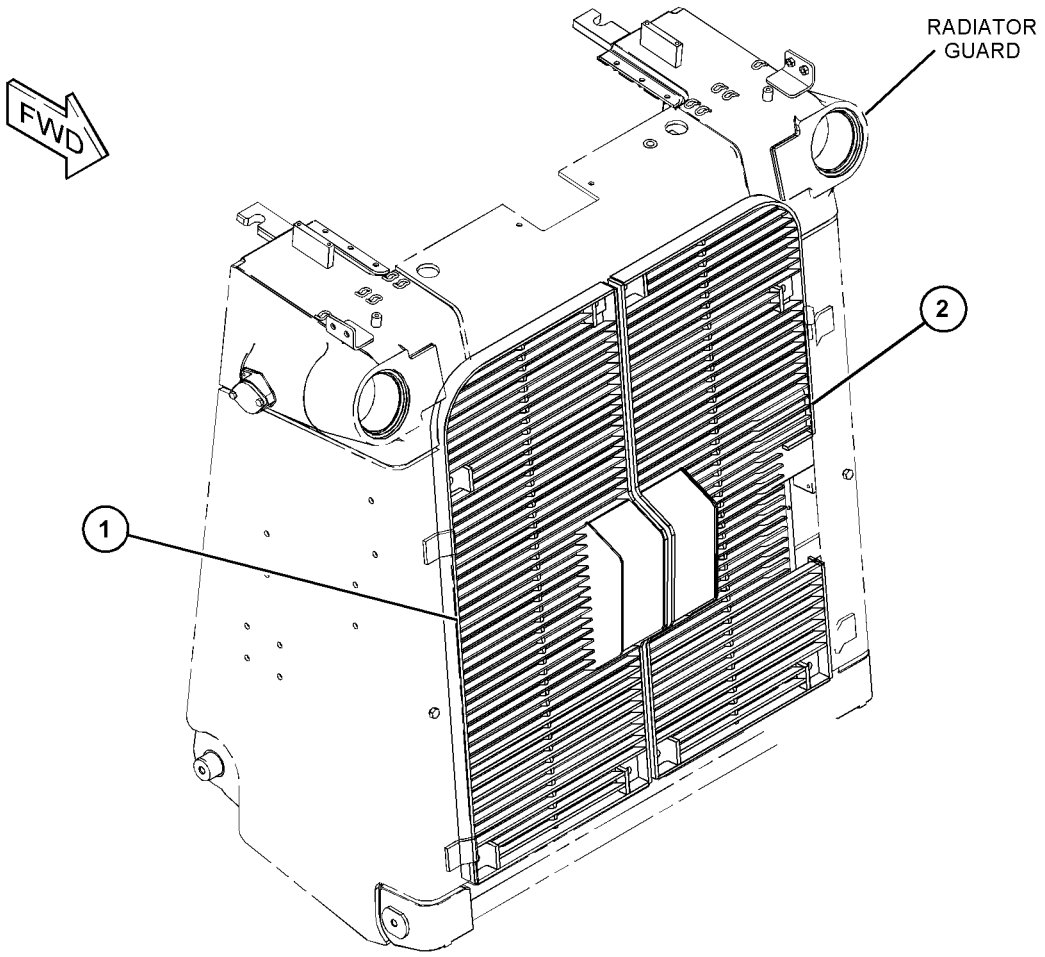

GRAPHIC #1 <END> g06030224

371-6930 GUARD GP-BOTTOM

S/N: RAB1-UP

AN ATTACHMENT

SMCS-7153 **i05406759**

NOTE	REF NO	GRAPHIC REF	PART NUMBER	QTY	PART NAME 1 2 3 4 5 6 (PRODUCT LEVEL)	SEE PAGE
	1	1	**8T-5361**	4	WASHER-HARD (28X49X5-MM THK)	
	2	1	**6P-8829**	14	RETAINER	
	3	1	**6T-5941**	4	PIN-SECONDARY BAR	
Y	4	1	*443-7061*	1	GUARD GP-BOTTOM	644
	7	1	**200-7134**	1	GUARD AS	
	8	1	**256-9990**	2	COVER AS-ACCESS	
	11	1	**3B-5317**	4	PIN-COTTER	
	12	1	**4L-6454**	2	BOLT (3/8-16X1-IN)	
	13	1	**6V-8190**	14	NUT (1-8-THD)	
	15	1	**7X-0405**	4	BOLT (1-8X2.75-IN)	
	16	1	**7X-0422**	4	BOLT (1-1/8-7-THD)	
	17	1	**7X-0444**	14	BOLT (1-8X6.5-IN)	
	18	1	**7X-0531**	4	WASHER-HARD (31X52.5X6-MM THK)	
	19	1	**7X-0549**	18	WASHER-HARD (28X52.5X8-MM THK)	
	20	1	**7X-0578**	2	WASHER-HARD (10.2X32X2.5-MM THK)	

Y - SEPARATE ILLUSTRATION

371-6930 **GUARD GP-BOTTOM (**contd.**)** **i05406759**

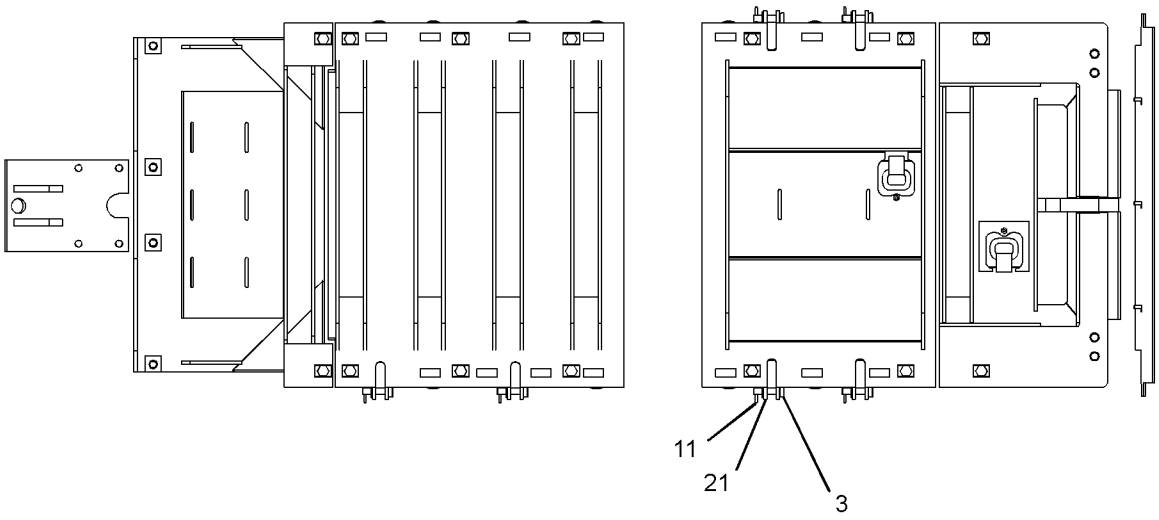

TOP VIEW

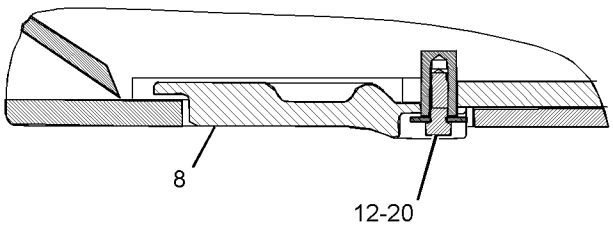

SECTION A-A

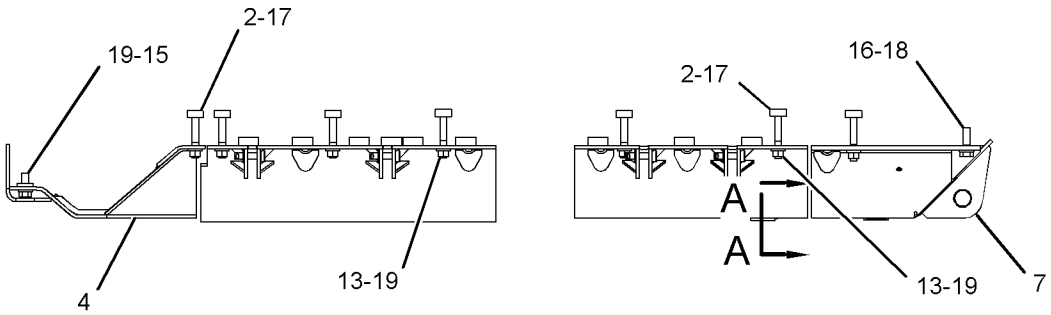

LEFT SIDE VIEW

GRAPHIC #1 <END> g03424410

371-6933 GUARD GP-BOTTOM

S/N: RAB1-UP
SEALED
CANNOT BE USED WITH 371-6935—PAGE: 639
AN ATTACHMENT

SMCS-7153 **i05406796**

NOTE	REF NO	GRAPHIC REF	PART NUMBER	QTY	PART NAME 1 2 3 4 5 6 (PRODUCT LEVEL)	SEE PAGE
	1	1	**8T-5361**	4	WASHER-HARD (28X49X5-MM THK)	
	2	1	**6P-8829**	14	RETAINER	
	3	1	**6T-5941**	4	PIN-SECONDARY BAR	
	6	1	**110-5436**	1	GUARD AS	
Y	7	1	*444-2815*	1	GUARD GP-BOTTOM	645
	8	1	**256-9990**	2	COVER AS-ACCESS	
	11	1	**3B-6677**	4	PIN-COTTER	
	12	1	**4L-6454**	2	BOLT (3/8-16X1-IN)	
	13	1	**6V-8190**	14	NUT (1-8-THD)	
	16	1	**7X-0405**	4	BOLT (1-8X2.75-IN)	
	17	1	**7X-0422**	4	BOLT (1-1/8-7-THD)	
	18	1	**7X-0444**	14	BOLT (1-8X6.5-IN)	
	19	1	**7X-0531**	4	WASHER-HARD (31X52.5X6-MM THK)	
	20	1	**7X-0549**	18	WASHER-HARD (28X52.5X8-MM THK)	
	21	1	**7X-0578**	2	WASHER-HARD (10.2X32X2.5-MM THK)	
D	25	1	**5P-5649**		SEAL-BULK (1.2-M EACH)	
D	26	1	**5P-7514**		SEAL (0.3-M)	
D	26A	1	**5P-7514**		SEAL (0.4-M EACH)	
D	26B	1	**5P-7514**		SEAL (1.2-M)	
D	26C	1	**5P-7514**		SEAL (0.1-M)	

D - ORDER BY THE METER
Y - SEPARATE ILLUSTRATION

371-6933 **GUARD GP-BOTTOM (**contd.**)** **i05406796**

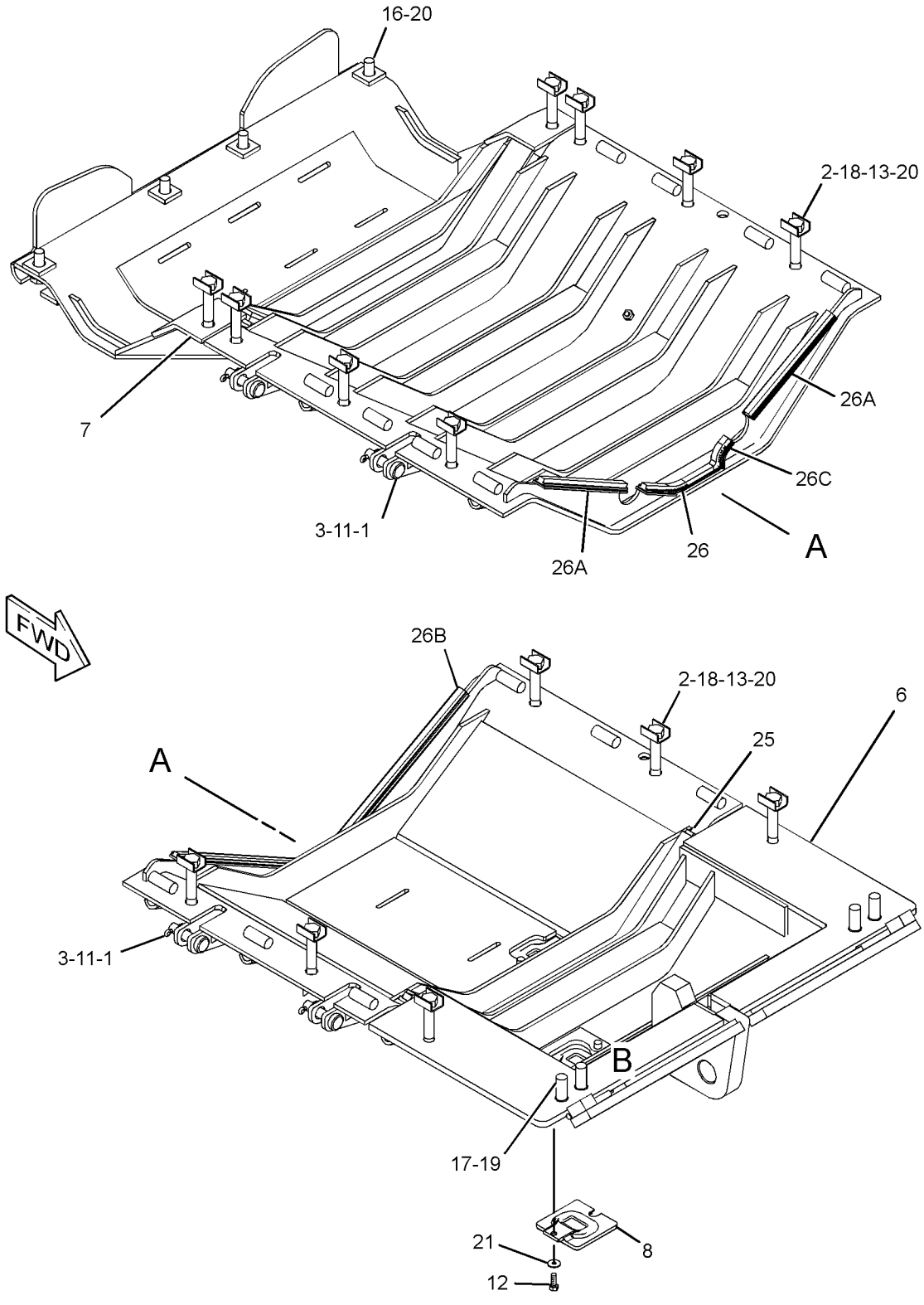

GRAPHIC #1 <END> g03424415

371-6934 GUARD GP-BOTTOM–FRONT

S/N: RAB1-UP

CANNOT BE USED WITH 371-6930–PAGE: 634, 371-6933–PAGE: 636, 371-6935–PAGE: 639, 371-6936–PAGE: 641

AN ATTACHMENT

SMCS-7153 **i06602387**

NOTE	REF NO	GRAPHIC REF	PART NUMBER	QTY	PART NAME 1 2 3 4 5 6 (PRODUCT LEVEL)	SEE PAGE
	1	1	**7X-0578**	1	WASHER-HARD (10.2X32X2.5-MM THK)	
	2	1	**6P-8829**	2	RETAINER	
	3	1	**7X-0549**	2	WASHER-HARD (28X52.5X8-MM THK)	
	4	1	**7X-0531**	4	WASHER-HARD (31X52.5X6-MM THK)	
	5	1	**110-5436**	1	GUARD AS	
	6	1	**256-9990**	1	COVER AS-ACCESS	
	7	1	**4L-6454**	1	BOLT (3/8-16X1-IN)	
	8	1	**6V-8190**	2	NUT (1-8-THD)	
	9	1	**7X-0444**	2	BOLT (1-8X6.5-IN)	
	10	1	**7X-0422**	4	BOLT (1-1/8-7-THD)	

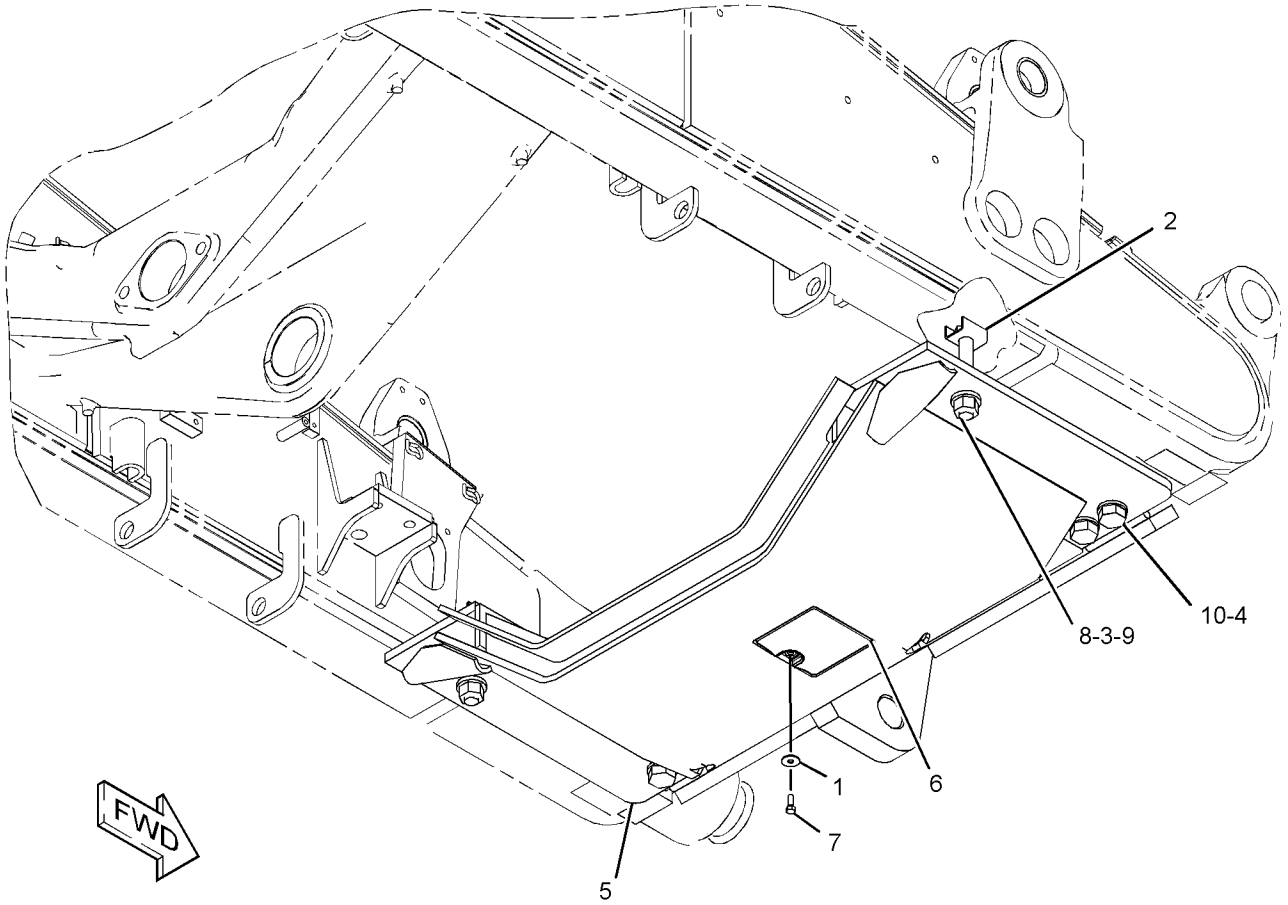

GRAPHIC #1 <END> g03120476

371-6935 GUARD GP-BOTTOM

S/N: RAB1-UP
WITH FRONT COUNTER WEIGHT
CANNOT BE USED WITH 371-6930—PAGE: 634, 371-6933—PAGE: 636, 371-6934—PAGE: 638
AN ATTACHMENT

SMCS-7153 **i05406758**

NOTE	REF NO	GRAPHIC REF	PART NUMBER	QTY	PART NAME 1 2 3 4 5 6 (PRODUCT LEVEL)	SEE PAGE
	1	1	**6P-8829**	14	RETAINER	
	2	1	**6T-5941**	4	PIN-SECONDARY BAR	
Y	3	1	*443-7061*	1	GUARD GP-BOTTOM	644
	4	1	**256-9990**	1	COVER AS-ACCESS	
	5	1	**223-5568**	1	COUNTERWEIGHT AS	
	6	1	**223-9672**	1	COVER	
	9	1	**2J-3507**	2	NUT-FULL (1-8-THD)	
	10	1	**2J-8348**	2	BOLT (1-8X10-IN)	
	11	1	**3B-6677**	4	PIN-COTTER	
	12	1	**3S-1349**	4	WASHER-HARD (31X52.5X6-MM THK)	
	13	1	**4L-6454**	1	BOLT (3/8-16X1-IN)	
	14	1	**5P-1076**	1	WASHER-HARD (13.5X30X4-MM THK)	
	15	1	**5P-2566**	1	BOLT (1/2-13X1.5-IN)	
	16	1	**5P-8250**	2	WASHER (28X49X5-MM THK)	
	17	1	**6V-8190**	12	NUT (1-8-THD)	
	18	1	**7K-6956**	2	BLOCK	
	19	1	**7X-0405**	4	BOLT (1-8X2.75-IN)	
	20	1	**7X-0444**	12	BOLT (1-8X6.5-IN)	
	21	1	**7X-0549**	16	WASHER-HARD (28X52.5X8-MM THK)	
	22	1	**7X-0578**	1	WASHER-HARD (10.2X32X2.5-MM THK)	
	23	1	**8H-5727**	4	BOLT (1-1/8-7X6-IN)	
	24	1	**8T-5361**	4	WASHER-HARD (28X49X5-MM THK)	

Y - SEPARATE ILLUSTRATION

371-6935 **GUARD GP-BOTTOM (**contd.**)** **i05406758**

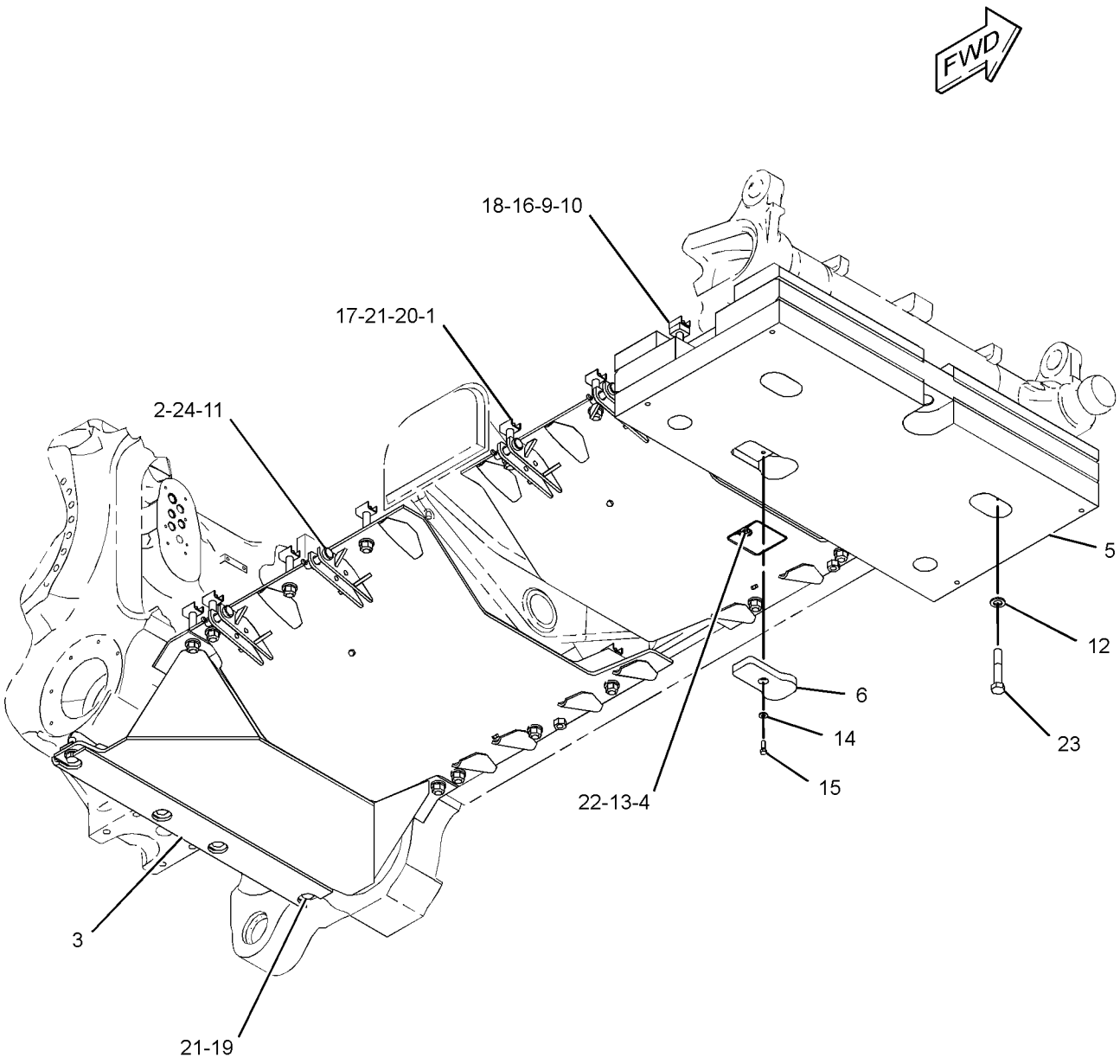

GRAPHIC #1 <END> g03424411

371-6936 GUARD GP-BOTTOM—TRUNNION

S/N: RAB1-UP

CANNOT BE USED WITH 371-6930—PAGE: 634, 371-6933—PAGE: 636, 371-6934—PAGE: 638, 371-6935—PAGE: 639

AN ATTACHMENT

SMCS-7153 **i05406811**

NOTE	REF NO	GRAPHIC REF	PART NUMBER	QTY	PART NAME 1 2 3 4 5 6 (PRODUCT LEVEL)	SEE PAGE
	1	1	**6P-8829**	14	RETAINER	
	2	1	**6T-5941**	2	PIN-SECONDARY BAR	
Y	3	1	*444-2816*	1	GUARD GP-BOTTOM	646
	4	1	**200-7134**	1	GUARD AS	
	5	1	**256-9990**	2	COVER AS-ACCESS	
	8	1	**3B-6677**	2	PIN-COTTER	
	9	1	**4L-6454**	1	BOLT (3/8-16X1-IN)	
	10	1	**6V-8190**	14	NUT (1-8-THD)	
	11	1	**7X-0405**	4	BOLT (1-8X2.75-IN)	
	12	1	**7X-0419**	2	BOLT (1-8X10-IN)	
	13	1	**7X-0422**	4	BOLT (1-1/8-7-THD)	
	14	1	**7X-0444**	12	BOLT (1-8X6.5-IN)	
	15	1	**7X-0531**	4	WASHER-HARD (31X52.5X6-MM THK)	
	16	1	**7X-0549**	18	WASHER-HARD (28X52.5X8-MM THK)	
	17	1	**7X-0578**	1	WASHER-HARD (10.2X32X2.5-MM THK)	
	18	1	**8T-5361**	2	WASHER-HARD (28X49X5-MM THK)	

Y - SEPARATE ILLUSTRATION

371-6936 **GUARD GP-BOTTOM (**contd.**)** **i05406811**

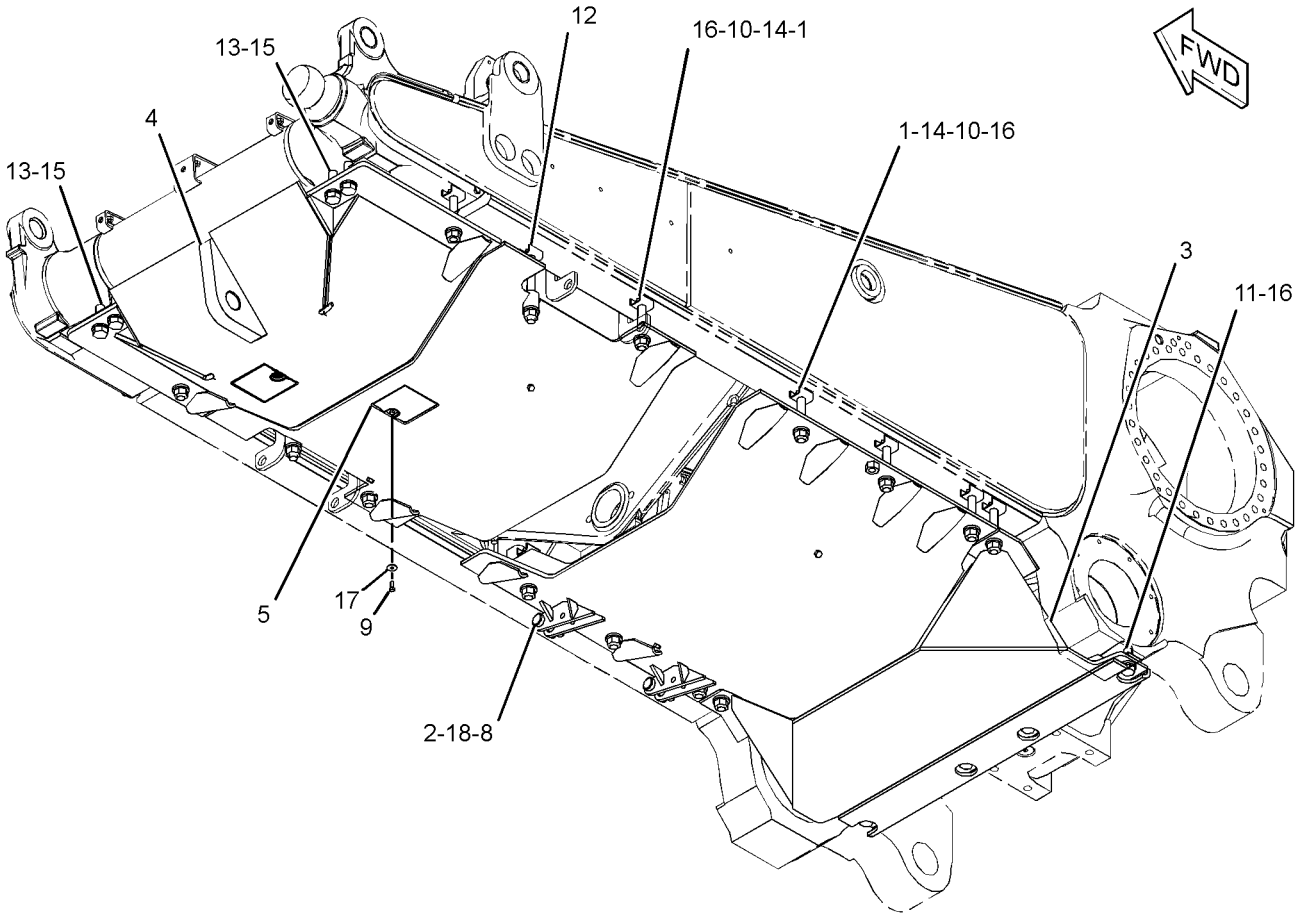

GRAPHIC #1 <END> g03424416

371-6937 GUARD GP-BOTTOM–REAR

S/N: RAB1-UP

PART OF 399-7223, 399-7224 COUNTERWEIGHT AR, 399-7226 DRAWBAR GP

AN ATTACHMENT

SMCS-7153 **i05139049**

NOTE	REF NO	GRAPHIC REF	PART NUMBER	QTY	PART NAME 1 2 3 4 5 6 (PRODUCT LEVEL)	SEE PAGE
	1	1	**7G-6503**	1	PLATE AS (INCLUDES XMSN OIL DRAIN ACCESS)	
	2	1	**7X-0403**	4	BOLT (1-8X2.25-IN)	
	3	1	**7X-0549**	4	WASHER-HARD (28X52.5X8-MM THK)	

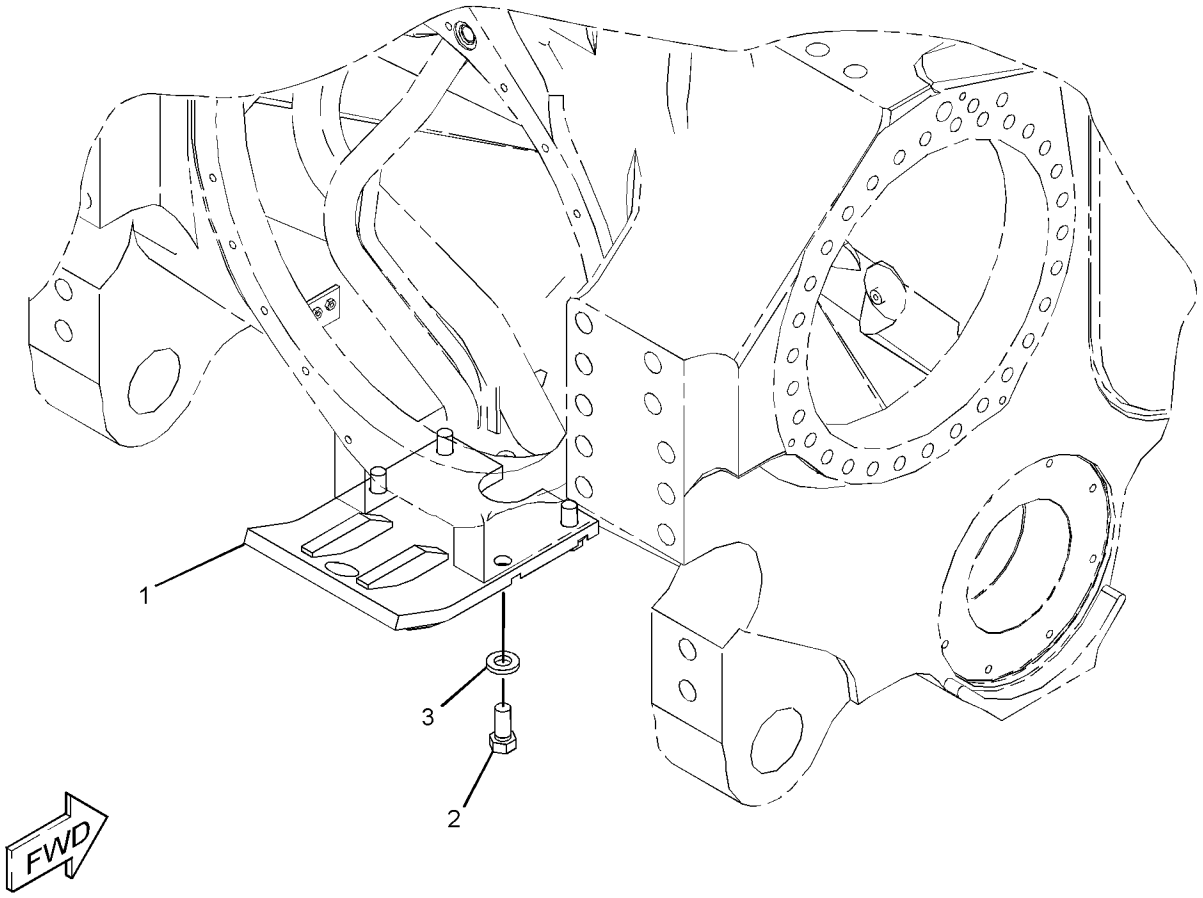

GRAPHIC #1 <END> g03120657

443-7061 GUARD GP-BOTTOM–REAR

S/N: RAB1-UP

PART OF 371-6930, 371-6935 GUARD GP-BOTTOM

AN ATTACHMENT

SMCS-7153 **i05406745**

NOTE	REF NO	GRAPHIC REF	PART NUMBER	QTY	PART NAME 1 2 3 4 5 6 (PRODUCT LEVEL)	SEE PAGE
	1	1	**7G-1814**	1	GUARD AS	
	2	1	**231-8148**	1	GUARD AS	
	3	1	**231-8149**	1	GUARD AS	

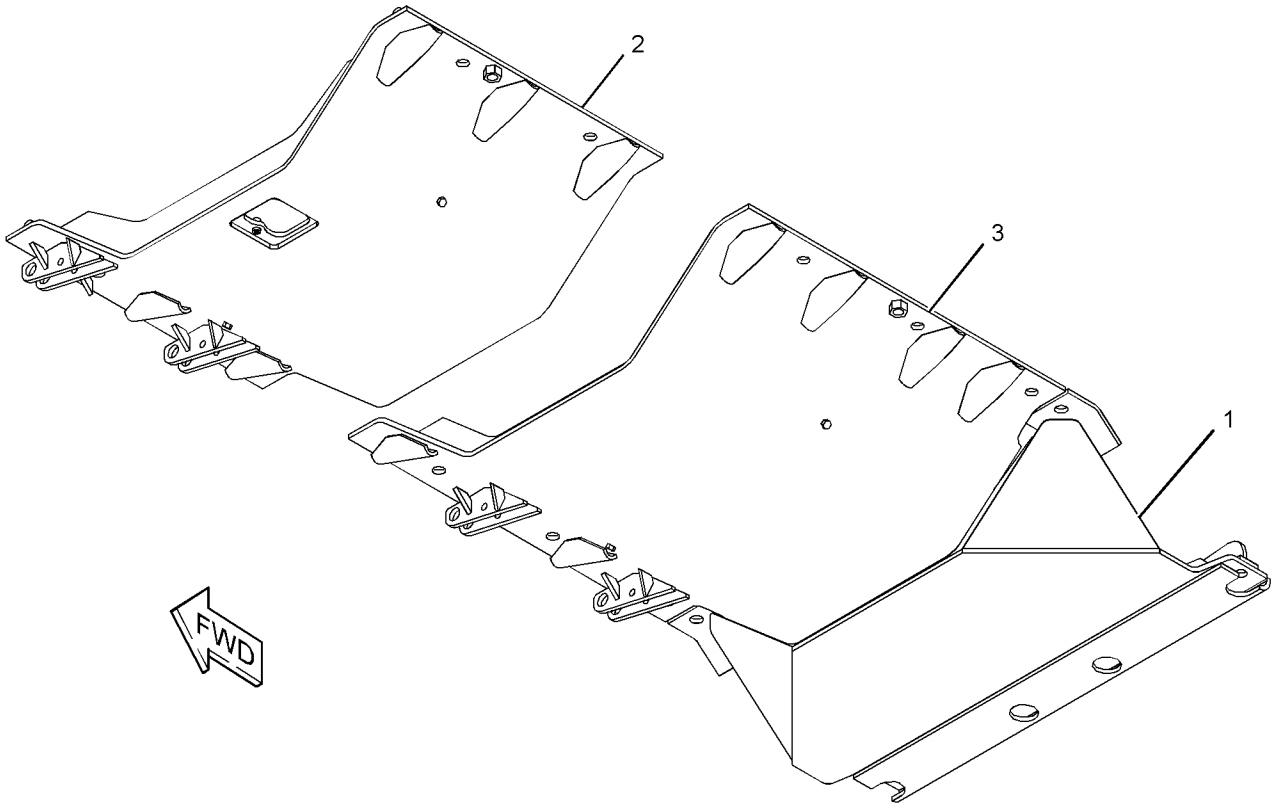

GRAPHIC #1 <END> g03424482

444-2815 GUARD GP-BOTTOM–REAR

S/N: RAB1-UP
PART OF 371-6933 GUARD GP-BOTTOM
AN ATTACHMENT

SMCS-7153 **i05406798**

NOTE	REF NO	GRAPHIC REF	PART NUMBER	QTY	PART NAME 1 2 3 4 5 6 (PRODUCT LEVEL)	SEE PAGE
	1	1	**110-5439**	1	GUARD AS	
	2	1	**243-1655**	1	GUARD AS	
	3	1	**243-1656**	1	GUARD AS	

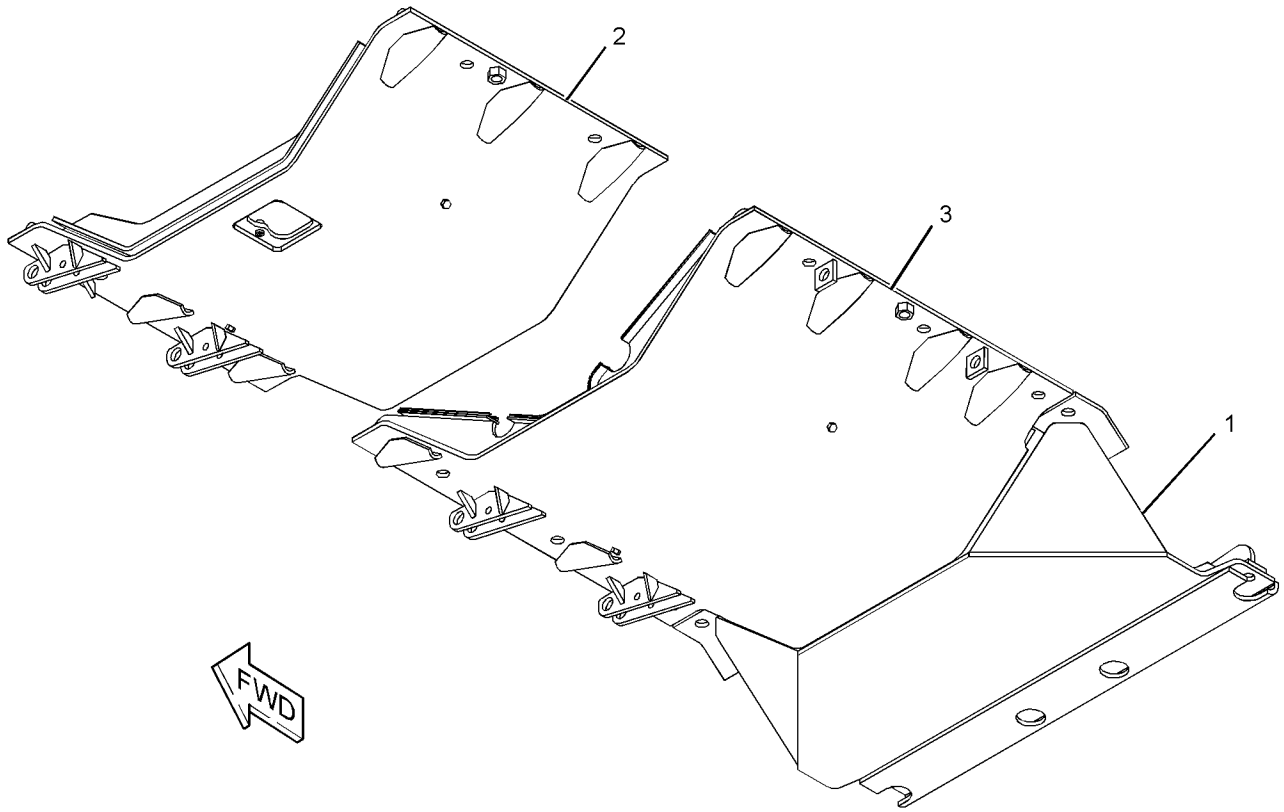

GRAPHIC #1 <END> g03424536

444-2816 GUARD GP-BOTTOM–REAR

S/N: RAB1-UP
PART OF 371-6936 GUARD GP-BOTTOM
AN ATTACHMENT

SMCS-7153 **i05406813**

NOTE	REF NO	GRAPHIC REF	PART NUMBER	QTY	PART NAME 1 2 3 4 5 6 (PRODUCT LEVEL)	SEE PAGE
	1	1	**7G-1814**	1	GUARD AS	
	2	1	**231-8149**	1	GUARD AS	
	3	1	**241-3751**	1	GUARD AS	

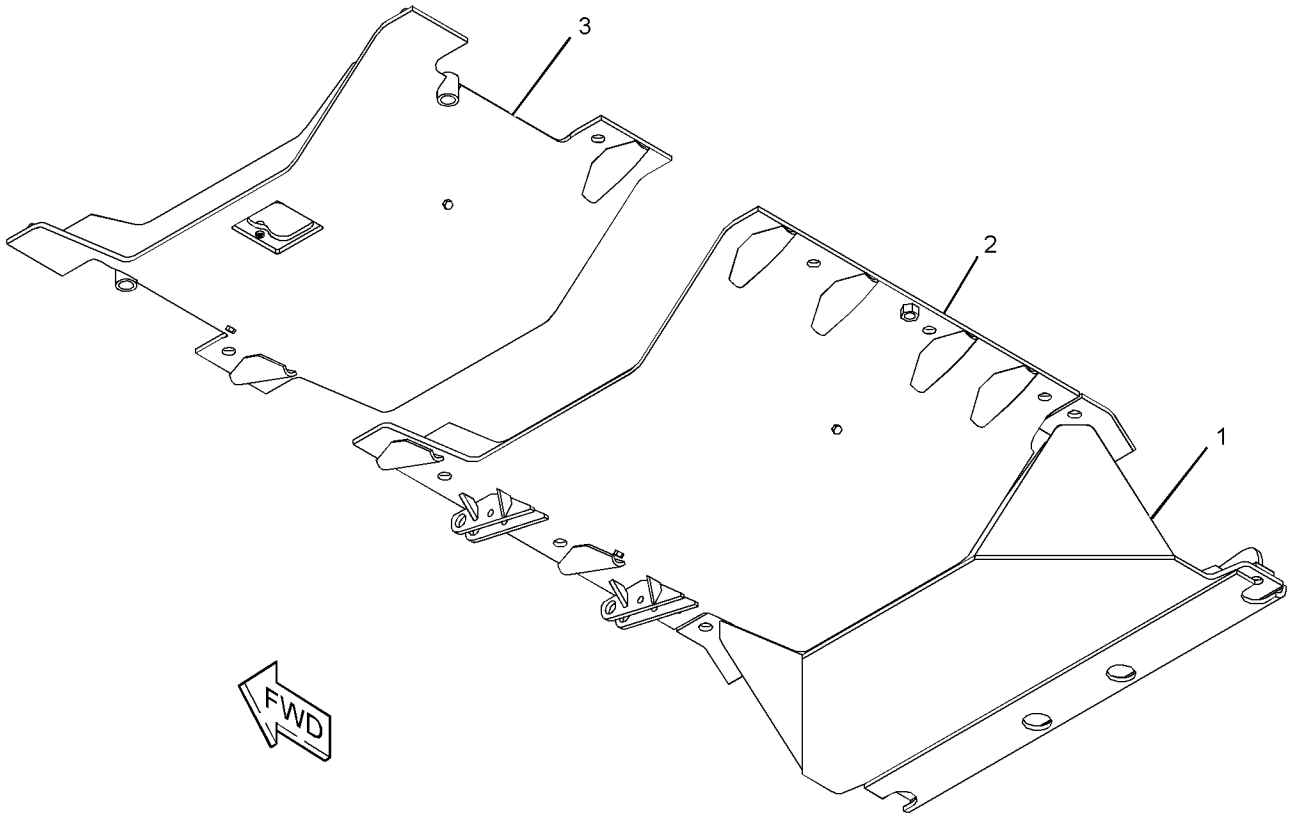

GRAPHIC #1 <END> g03424561

361-2158 GUARD GP-BRUSH

S/N: RAB1-UP
AN ATTACHMENT

SMCS-7158 **i05422657**

NOTE	REF NO	GRAPHIC REF	PART NUMBER	QTY	PART NAME 1 2 3 4 5 6 (PRODUCT LEVEL)	SEE PAGE
	1	1	**224-4214**	2	GUARD AS	
					(EACH INCLUDES)	
		1	**6N-8599**	2	CLIP	
M		1	**8T-3490**	2	NUT-WELD (M10X1.5-THD)	
	2	1	**224-4215**	2	GUARD AS	
					(EACH INCLUDES)	
		1	**6N-8599**	2	CLIP	
	3	1	**256-5357**	2	GUARD AS	
	4	1	**256-5358**	2	BRACKET	
	5	1	**7X-7729**	40	WASHER (11X25X3-MM THK)	
M	6	1	**8T-4136**	36	BOLT (M10X1.5X25-MM)	
M	7	1	**8T-4195**	4	BOLT (M10X1.5X30-MM)	

M - METRIC PART

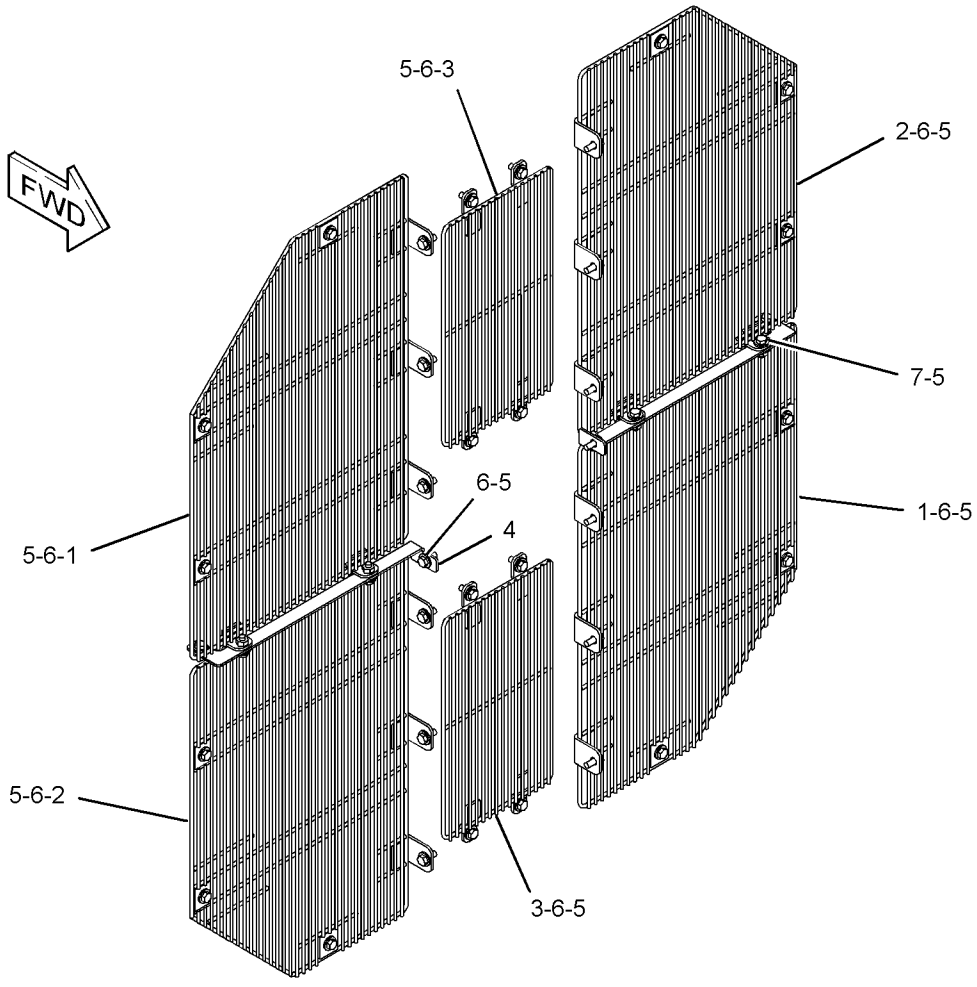

GRAPHIC #1 <END> g03432718

359-6413 GUARD GP-DRIVE SHAFT

S/N: RAB1-UP
PART OF 359-6401 CHASSIS AR
AN ATTACHMENT

SMCS-7153 **i06046797**

NOTE	REF NO	GRAPHIC REF	PART NUMBER	QTY	PART NAME 1 2 3 4 5 6 (PRODUCT LEVEL)	SEE PAGE
	1	1	**393-1483**	1	PLATE	
	2	1	**475-1901**	1	GUARD AS	
	3	1	**446-1460**	1	PLATE	
	4	1	**8T-4121**	4	WASHER-HARD (11X21X2.5-MM THK)	
M	5	1	**8T-4137**	4	BOLT (M10X1.5X20-MM)	
M	6	1	**8T-4139**	6	BOLT (M12X1.75X30-MM)	
	7	1	**8T-4223**	6	WASHER-HARD (13.5X25.5X3-MM THK)	

M - METRIC PART

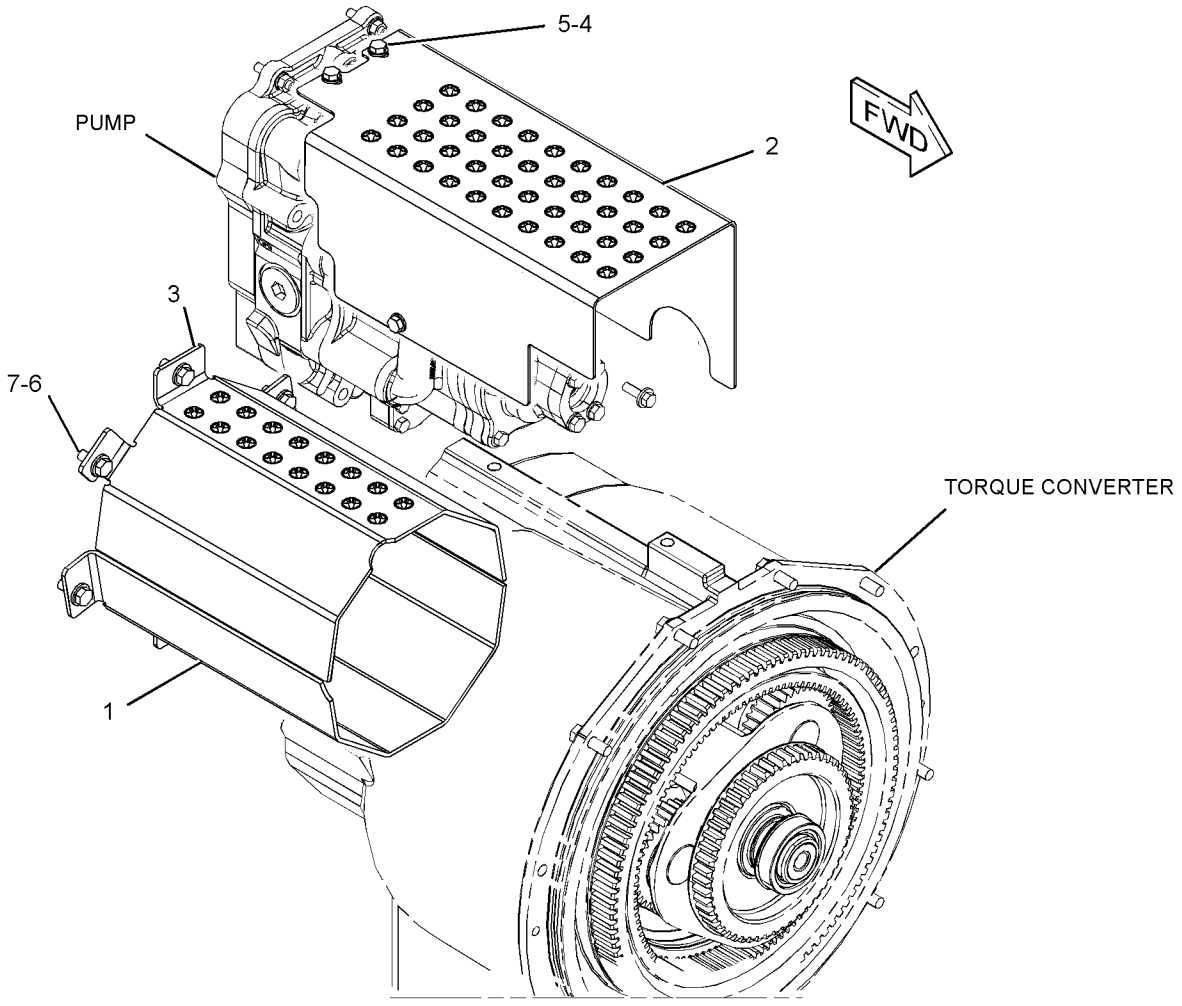

GRAPHIC #1 <END> g03473116

375-7594 GUARD GP-ENGINE

S/N: RAB1-UP
PART OF 359-6422 HOOD & GUARD GP
AN ATTACHMENT

SMCS-7154 **i05775306**

NOTE	REF NO	GRAPHIC REF	PART NUMBER	QTY	PART NAME 1 2 3 4 5 6 (PRODUCT LEVEL)	SEE PAGE
	1	1	**375-7651**	1	GUARD AS	
	2	1	**375-7652**	1	GUARD AS	
	3	1	**380-0959**	1	GUARD AS	
	4	1	**380-2660**	1	GUARD AS	
Y	5	1	*450-9000*	1	GUARD GP-ENGINE (RH)	655
Y	6	1	*450-9001*	1	GUARD GP-ENGINE (RH)	656
Y	7	1	*450-9002*	1	GUARD GP-ENGINE (RH)	657
Y	8	1	*450-9003*	1	GUARD GP-ENGINE (LH)	658
Y	9	1	*453-3016*	1	GUARD GP-ENGINE (LH)	659
Y	10	1	*453-3017*	1	GUARD GP-ENGINE (LH)	660

Y - SEPARATE ILLUSTRATION

375-7594 **GUARD GP-ENGINE (**contd.**)** **i05775306**

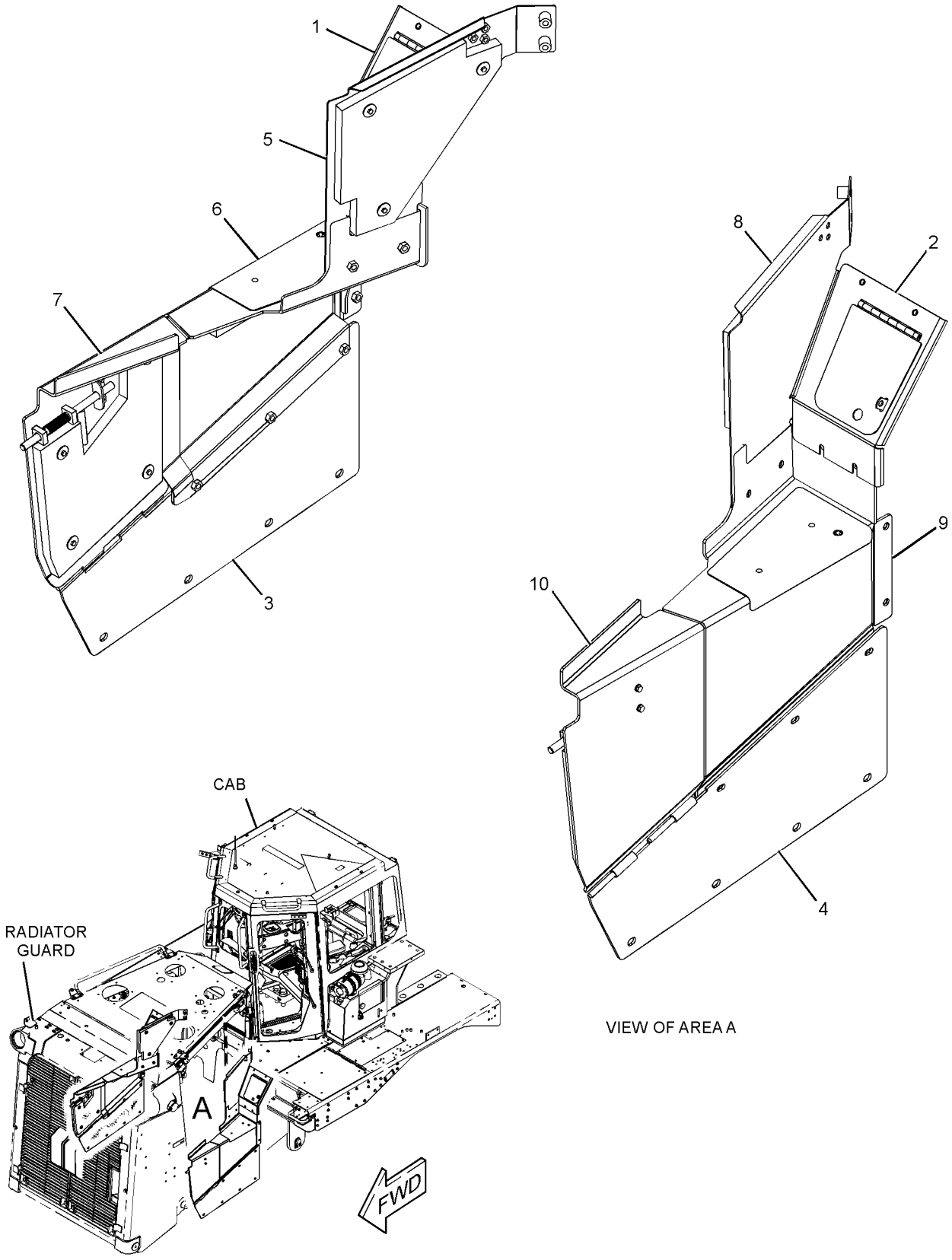

GRAPHIC #1 <END> g03811418

375-7606 GUARD GP-ENGINE—LH

S/N: RAB1-UP
PART OF 453-3017 GUARD GP-ENGINE
AN ATTACHMENT

SMCS-7154 **i05424349**

NOTE	REF NO	GRAPHIC REF	PART NUMBER	QTY	PART NAME 1 2 3 4 5 6 (PRODUCT LEVEL)	SEE PAGE
	1	1	**6B-0533**	1	SPRING	
	2	1	**9S-2075**	1	SPACER (0.5-IN)	
	3	1	**161-0832**	1	HANDLE AS	
	4	1	**262-5561**	1	GUIDE AS (LH)	
M		1	**8T-3612**	2	NUT-WELD (M8X1.25-THD)	
	5	1	**375-7616**	1	PLATE AS (LH)	
	6	1	**6H-3956**	1	PIN	
	7	1	**8T-4224**	2	WASHER-HARD (8.8X16X2-MM THK)	
M	8	1	**8T-4908**	2	BOLT (M8X1.25X25-MM)	

M - METRIC PART

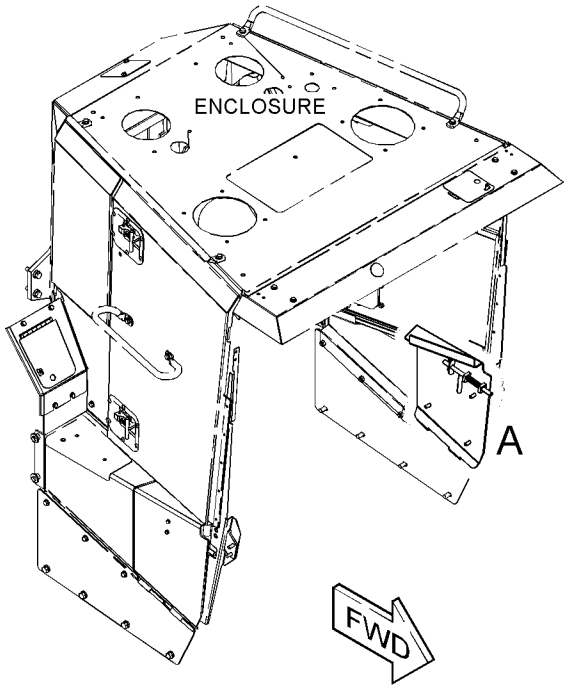

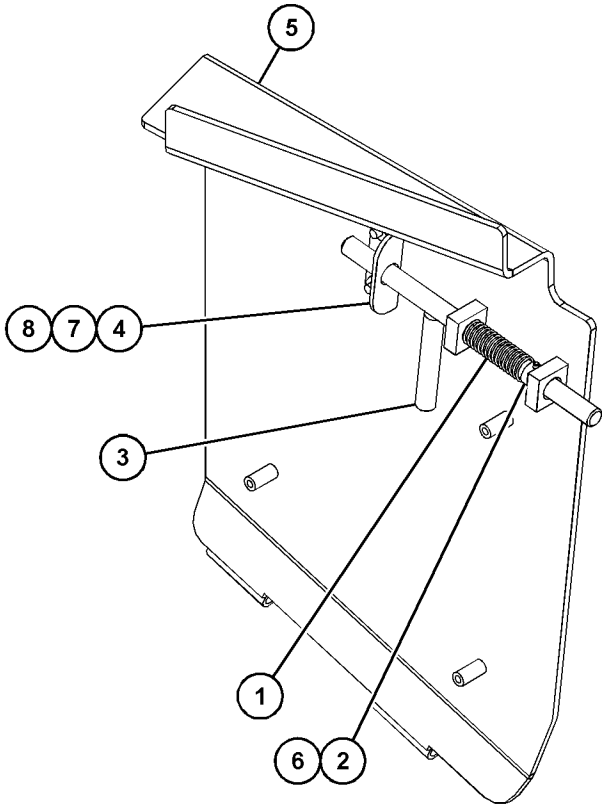

VIEW OF AREA A

GRAPHIC #1 <END> g03497256

375-7607 GUARD GP-ENGINE–RH

S/N: RAB1-UP
PART OF 450-9002 GUARD GP-ENGINE
AN ATTACHMENT

SMCS-7154 **i05424351**

NOTE	REF NO	GRAPHIC REF	PART NUMBER	QTY	PART NAME 1 2 3 4 5 6 (PRODUCT LEVEL)	SEE PAGE
	1	1	**6B-0533**	1	SPRING	
	2	1	**9S-2075**	1	SPACER (0.5-IN)	
	3	1	**161-0832**	1	HANDLE AS	
	4	1	**262-5561**	1	GUIDE AS (RH)	
M		1	**8T-3612**	2	NUT-WELD (M8X1.25-THD)	
	5	1	**375-7617**	1	PLATE AS (RH)	
	6	1	**6H-3956**	1	PIN	
	7	1	**8T-4224**	2	WASHER-HARD (8.8X16X2-MM THK)	
M	8	1	**8T-4908**	2	BOLT (M8X1.25X25-MM)	

M - METRIC PART

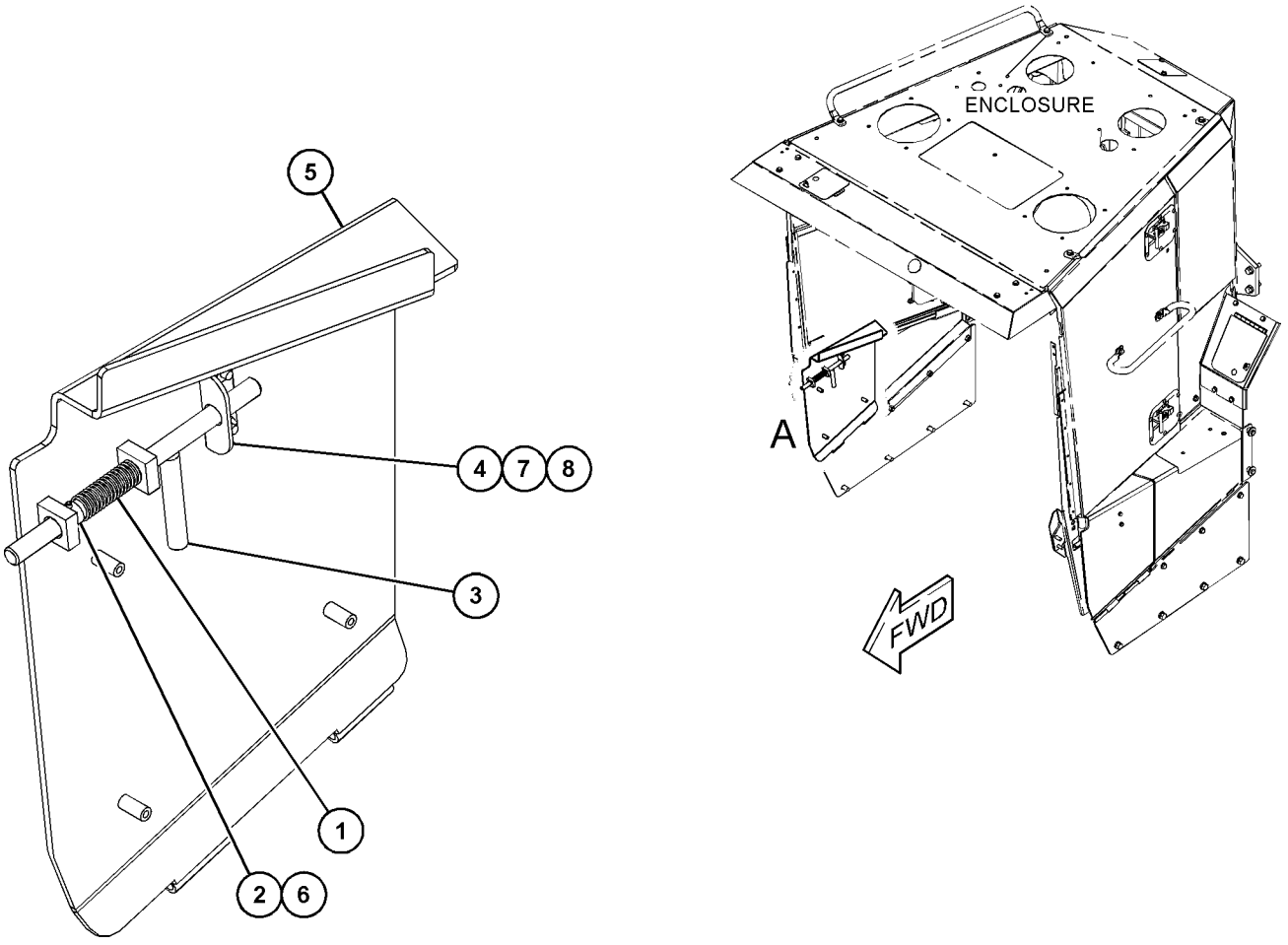

VIEW OF AREA A

GRAPHIC #1 <END> g03497296

433-9859 GUARD GP-ENGINE–LH

S/N: RAB1-UP
PART OF 453-3016 GUARD GP-ENGINE
AN ATTACHMENT

SMCS-7154 **i05424352**

NOTE	REF NO	GRAPHIC REF	PART NUMBER	QTY	PART NAME 1 2 3 4 5 6 (PRODUCT LEVEL)	SEE PAGE
	1	1	**162-2480**	2	RIVET	
	2	1	**380-2661**	1	TREAD (LH)	
	3	1	**433-9862**	1	GUARD AS (LH)	
M		1	**8T-3490**	2	NUT-WELD (M10X1.5-THD)	
M		1	**8T-3597**	7	NUT-WELD (M12X1.75-THD)	

M - METRIC PART

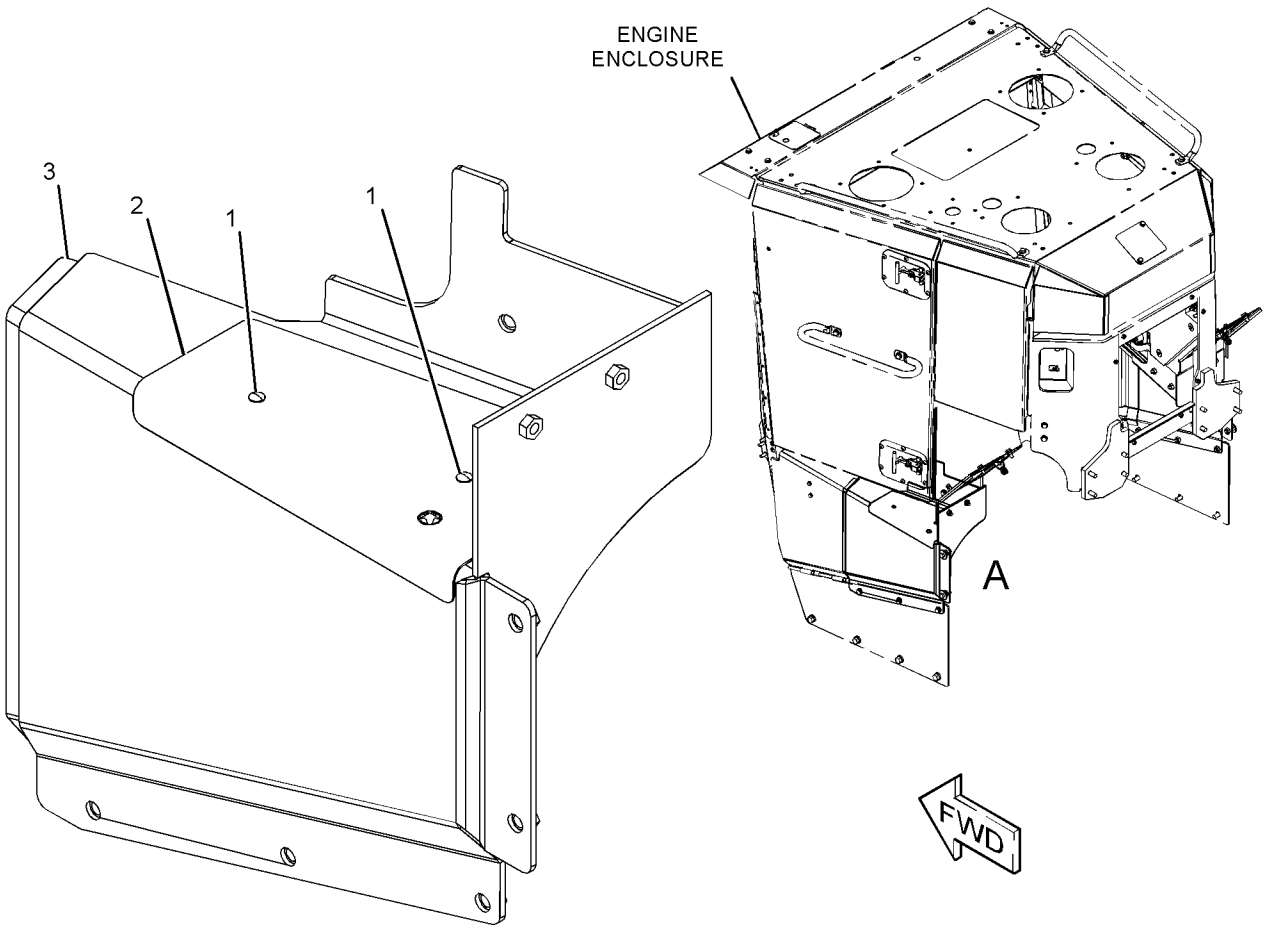

VIEW OF AREA A

GRAPHIC #1 <END> g03429621

433-9860 GUARD GP-ENGINE—RH

S/N: RAB1-UP
PART OF 450-9001 GUARD GP-ENGINE
AN ATTACHMENT

SMCS-7154 **i05424353**

NOTE	REF NO	GRAPHIC REF	PART NUMBER	QTY	PART NAME 1 2 3 4 5 6 (PRODUCT LEVEL)	SEE PAGE
	1	1	**162-2480**	2	RIVET	
	2	1	**380-2662**	1	TREAD (RH)	
	3	1	**433-9863**	1	GUARD AS (RH)	
M		1	**8T-3490**	2	NUT-WELD (M10X1.5-THD)	
M		1	**8T-3597**	7	NUT-WELD (M12X1.75-THD)	

M - METRIC PART

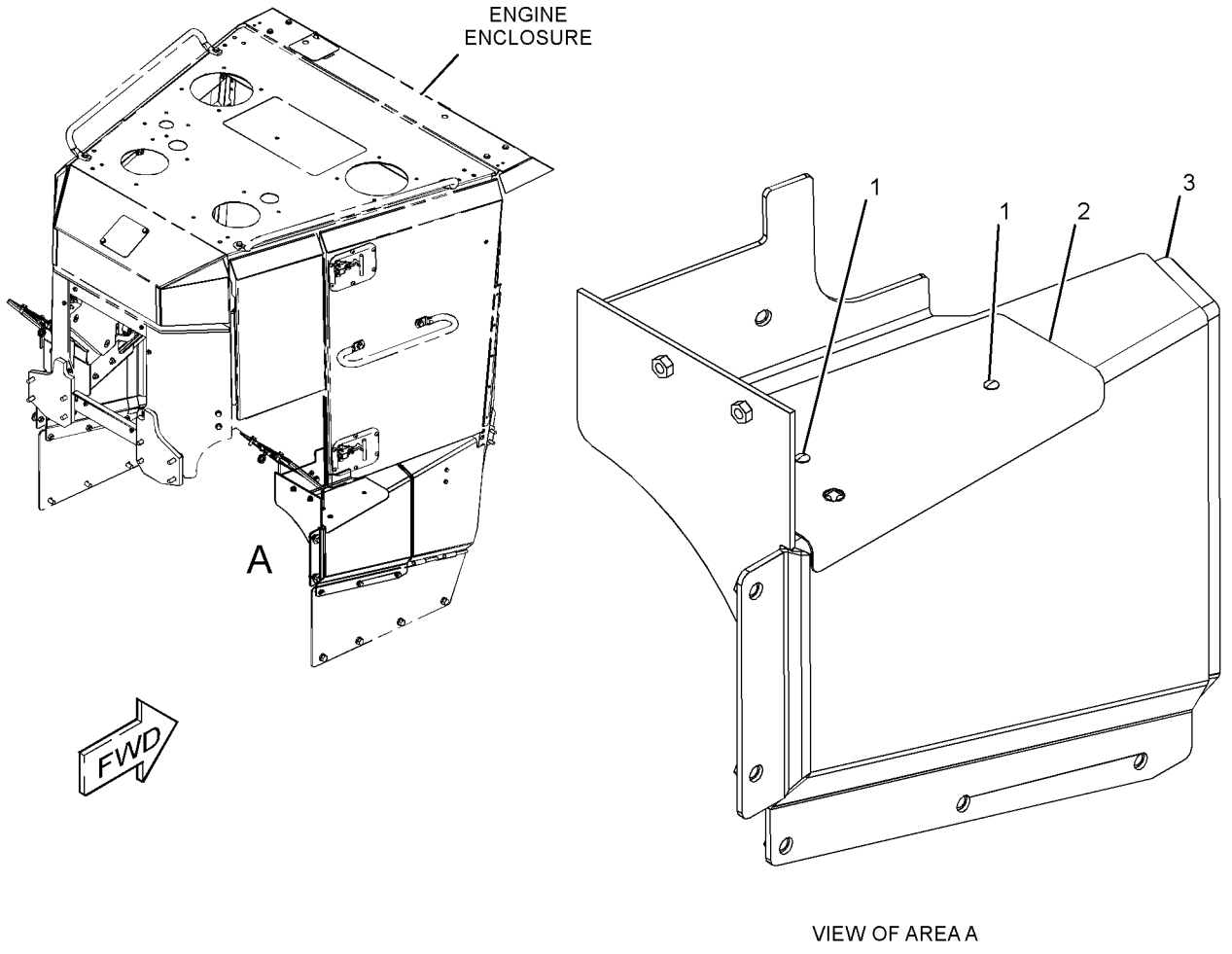

VIEW OF AREA A

GRAPHIC #1 <END> g03429624

450-9000 GUARD GP-ENGINE—RH

S/N: RAB1-UP
PART OF 375-7594 GUARD GP-ENGINE
AN ATTACHMENT

SMCS-7154 **i05775310**

NOTE	REF NO	GRAPHIC REF	PART NUMBER	QTY	PART NAME 1 2 3 4 5 6 (PRODUCT LEVEL)	SEE PAGE
	1	1	**375-7611**	1	GUARD AS	
	2	1	**380-0951**	1	LINER	
	3	1	**7X-0586**	3	WASHER-HARD (7.2X32X2-MM THK)	
M	4	1	**8T-4138**	3	BOLT (M6X1X20-MM)	

M - METRIC PART

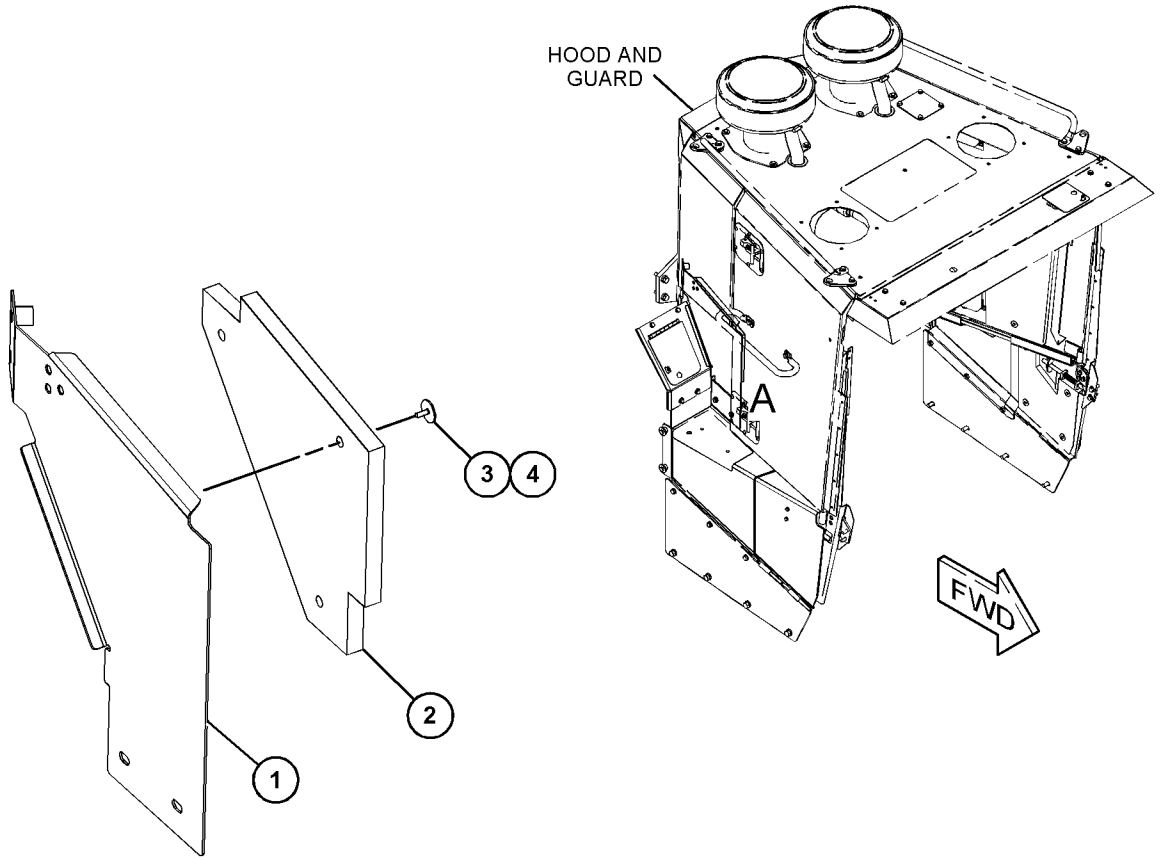

VIEW OF AREA A
(EXPLODED)

GRAPHIC #1 <END> g03665457

450-9001 GUARD GP-ENGINE–RH

S/N: RAB1-UP
PART OF 375-7594 GUARD GP-ENGINE
AN ATTACHMENT

SMCS-7154 **i05775317**

NOTE	REF NO	GRAPHIC REF	PART NUMBER	QTY	PART NAME 1 2 3 4 5 6 (PRODUCT LEVEL)	SEE PAGE
Y	1	1	*433-9860*	1	GUARD GP-ENGINE (RH)	654
	2	1	**433-9861**	1	LINER	
	3	1	**7X-0586**	2	WASHER-HARD (7.2X32X2-MM THK)	
M	4	1	**8T-4138**	2	BOLT (M6X1X20-MM)	

M - METRIC PART
Y - SEPARATE ILLUSTRATION

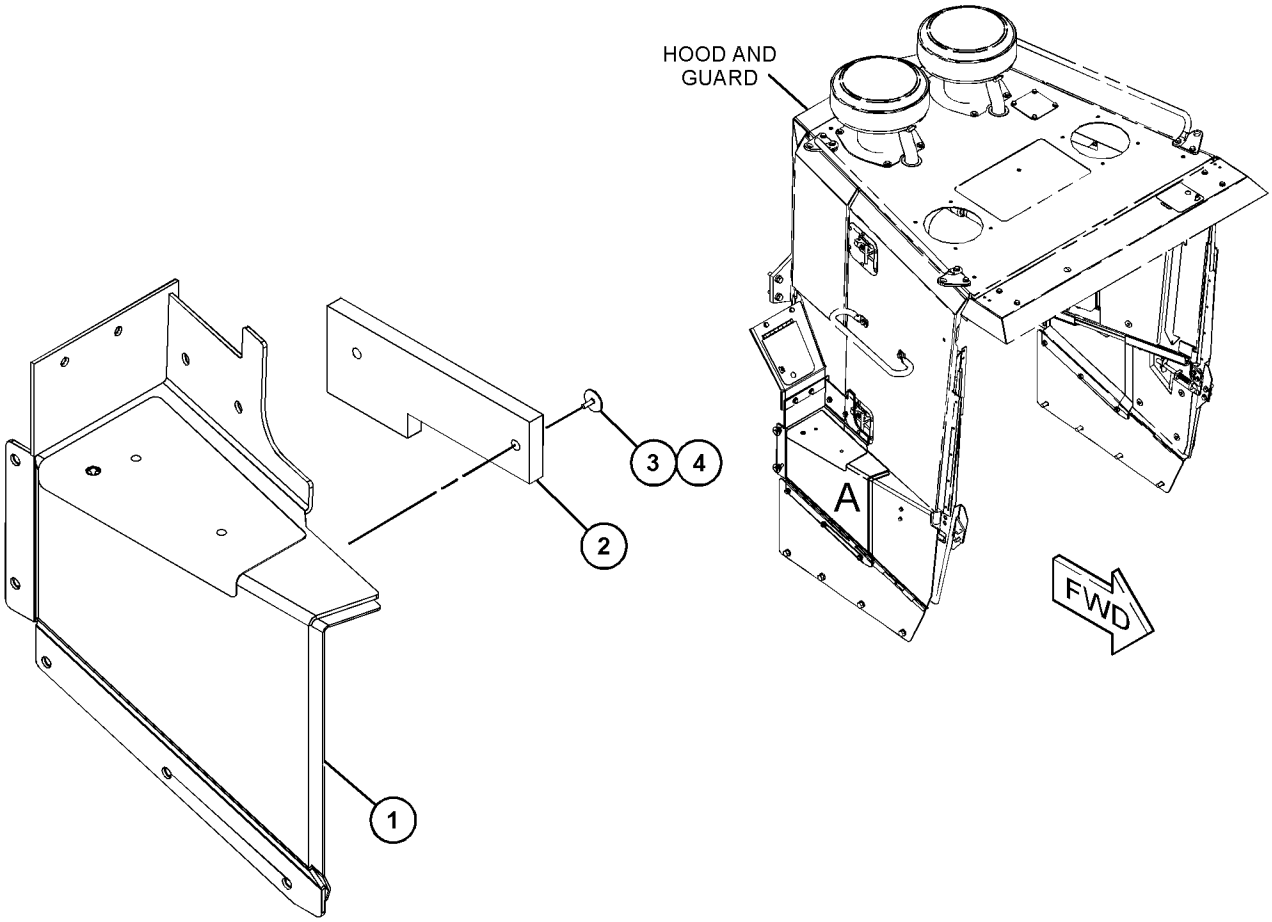

VIEW OF AREA A
(EXPLODED)

GRAPHIC #1 <END> g03665458

450-9002 GUARD GP-ENGINE—RH

S/N: RAB1-UP
PART OF 375-7594 GUARD GP-ENGINE
AN ATTACHMENT

SMCS-7154 **i05775318**

NOTE	REF NO	GRAPHIC REF	PART NUMBER	QTY	PART NAME 1 2 3 4 5 6 (PRODUCT LEVEL)	SEE PAGE
Y	1	1	*375-7607*	1	GUARD GP-ENGINE (RH)	652
	2	1	**380-0949**	1	LINER	
	3	1	**7X-0586**	4	WASHER-HARD (7.2X32X2-MM THK)	
M	4	1	**8T-4138**	4	BOLT (M6X1X20-MM)	

M - METRIC PART
Y - SEPARATE ILLUSTRATION

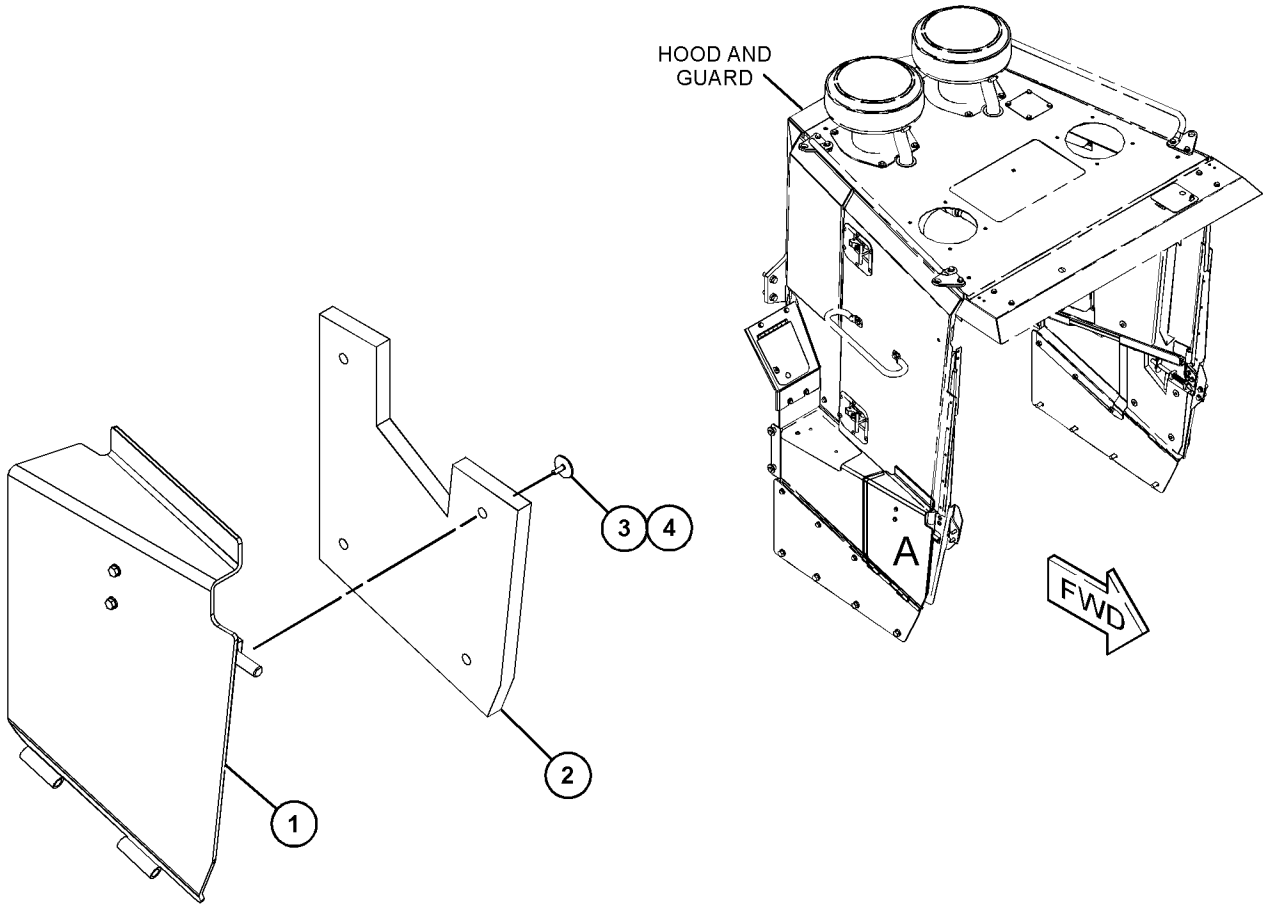

VIEW OF AREA A
(EXPLODED)

GRAPHIC #1 <END> g03665619

450-9003 GUARD GP-ENGINE–LH

S/N: RAB1-UP
PART OF 375-7594 GUARD GP-ENGINE
AN ATTACHMENT

SMCS-7154 **i05775327**

NOTE	REF NO	GRAPHIC REF	PART NUMBER	QTY	PART NAME 1 2 3 4 5 6 (PRODUCT LEVEL)	SEE PAGE
	1	1	**375-7610**	1	GUARD AS	
	2	1	**380-0951**	1	LINER	
	3	1	**7X-0586**	3	WASHER-HARD (7.2X32X2-MM THK)	
M	4	1	**8T-4138**	3	BOLT (M6X1X20-MM)	

M - METRIC PART

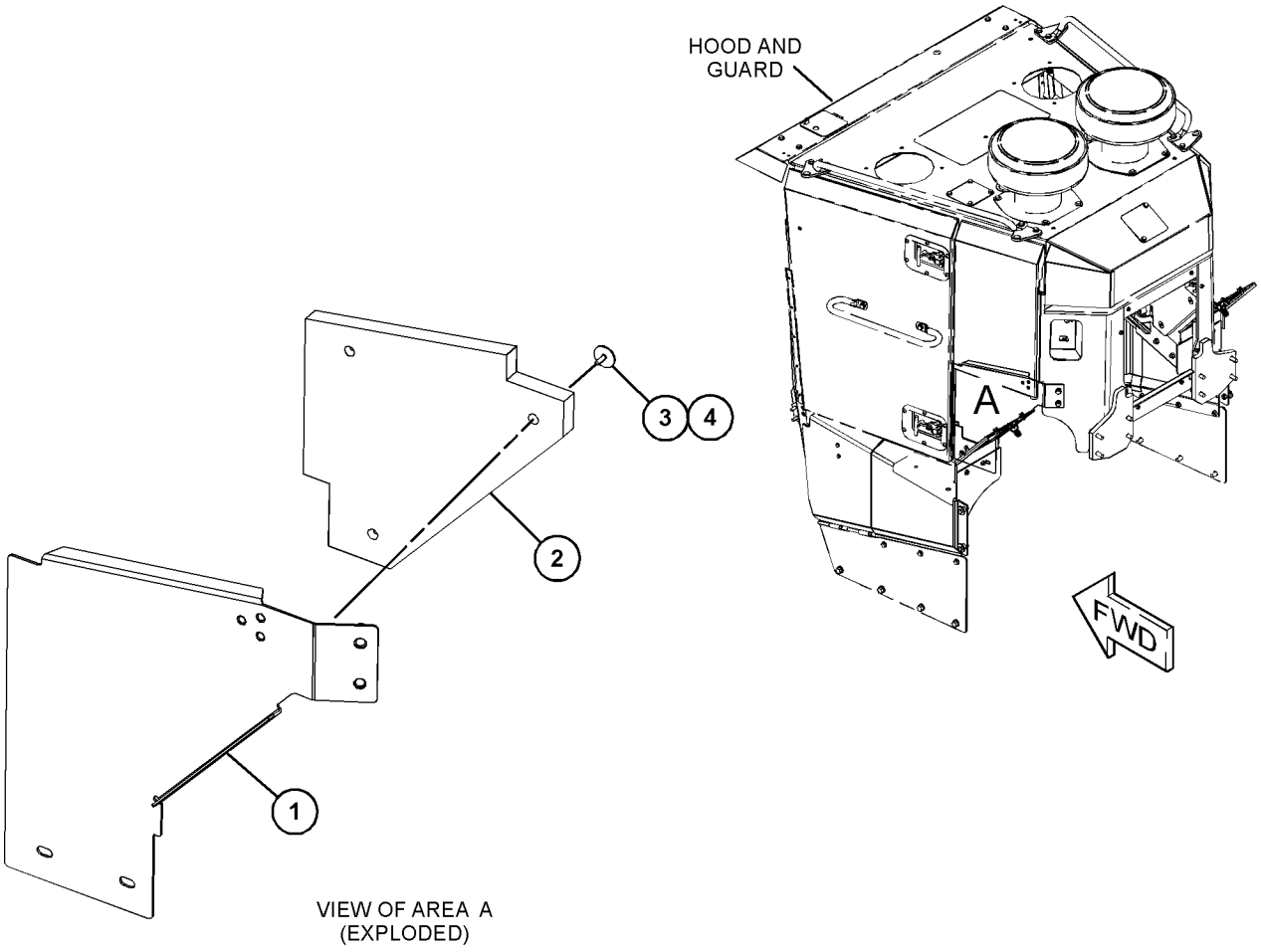

VIEW OF AREA A
(EXPLODED)

GRAPHIC #1 <END> g03665621

453-3016 GUARD GP-ENGINE–LH

S/N: RAB1-UP
PART OF 375-7594 GUARD GP-ENGINE
AN ATTACHMENT

SMCS-7154 **i05775326**

NOTE	REF NO	GRAPHIC REF	PART NUMBER	QTY	PART NAME 1 2 3 4 5 6 (PRODUCT LEVEL)	SEE PAGE
Y	1	1	*433-9859*	1	GUARD GP-ENGINE (LH)	653
	2	1	**433-9861**	1	LINER	
	3	1	**7X-0586**	2	WASHER-HARD (7.2X32X2-MM THK)	
M	4	1	**8T-4138**	2	BOLT (M6X1X20-MM)	

M - METRIC PART
Y - SEPARATE ILLUSTRATION

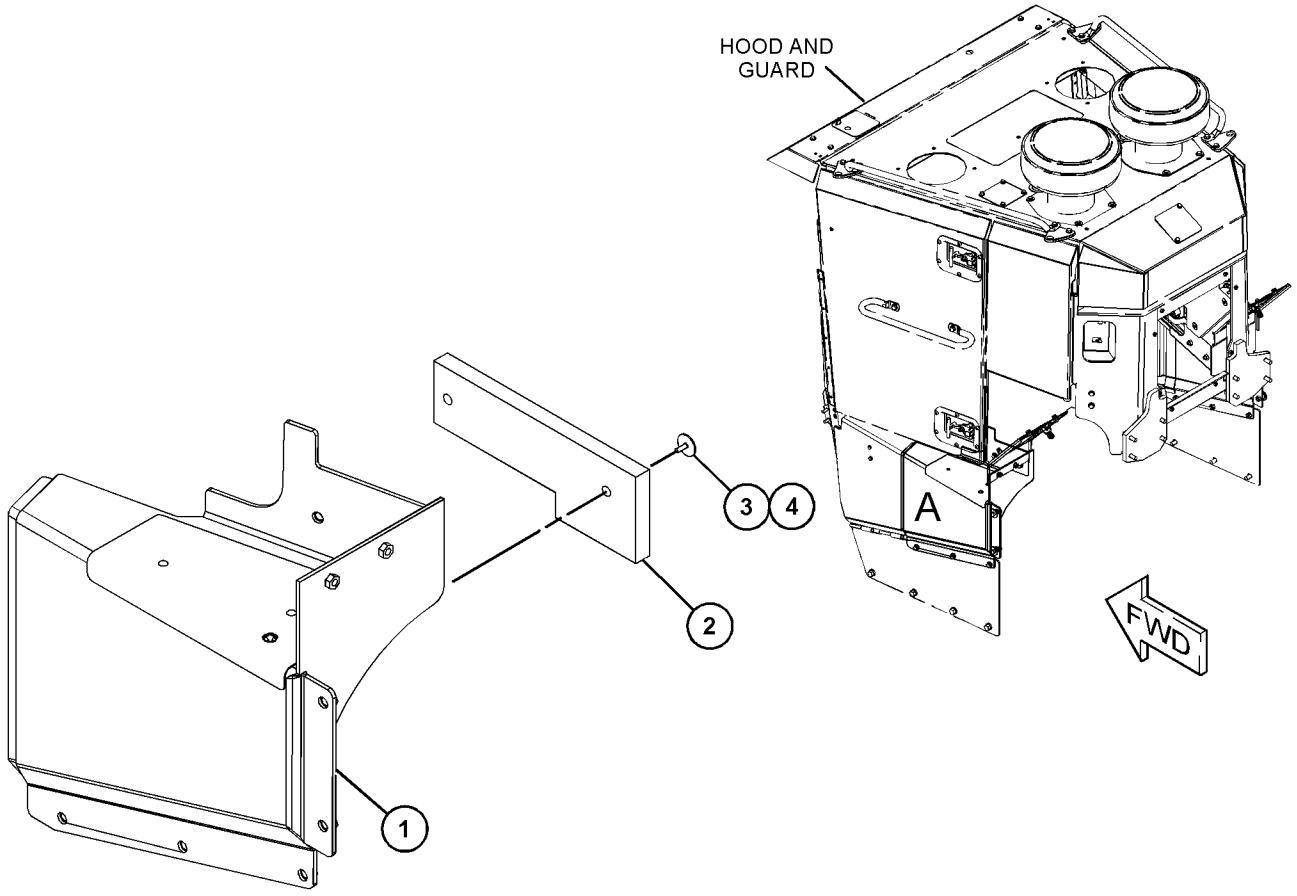

VIEW OF AREA A
(EXPLODED)

GRAPHIC #1 <END> g03665649

453-3017 GUARD GP-ENGINE–LH

S/N: RAB1-UP
PART OF 375-7594 GUARD GP-ENGINE
AN ATTACHMENT

SMCS-7154 **i05775328**

NOTE	REF NO	GRAPHIC REF	PART NUMBER	QTY	PART NAME 1 2 3 4 5 6 (PRODUCT LEVEL)	SEE PAGE
Y	1	1	*375-7606*	1	GUARD GP-ENGINE (LH)	651
	2	1	**380-0949**	1	LINER	
	3	1	**7X-0586**	4	WASHER-HARD (7.2X32X2-MM THK)	
M	4	1	**8T-4138**	4	BOLT (M6X1X20-MM)	

M - METRIC PART
Y - SEPARATE ILLUSTRATION

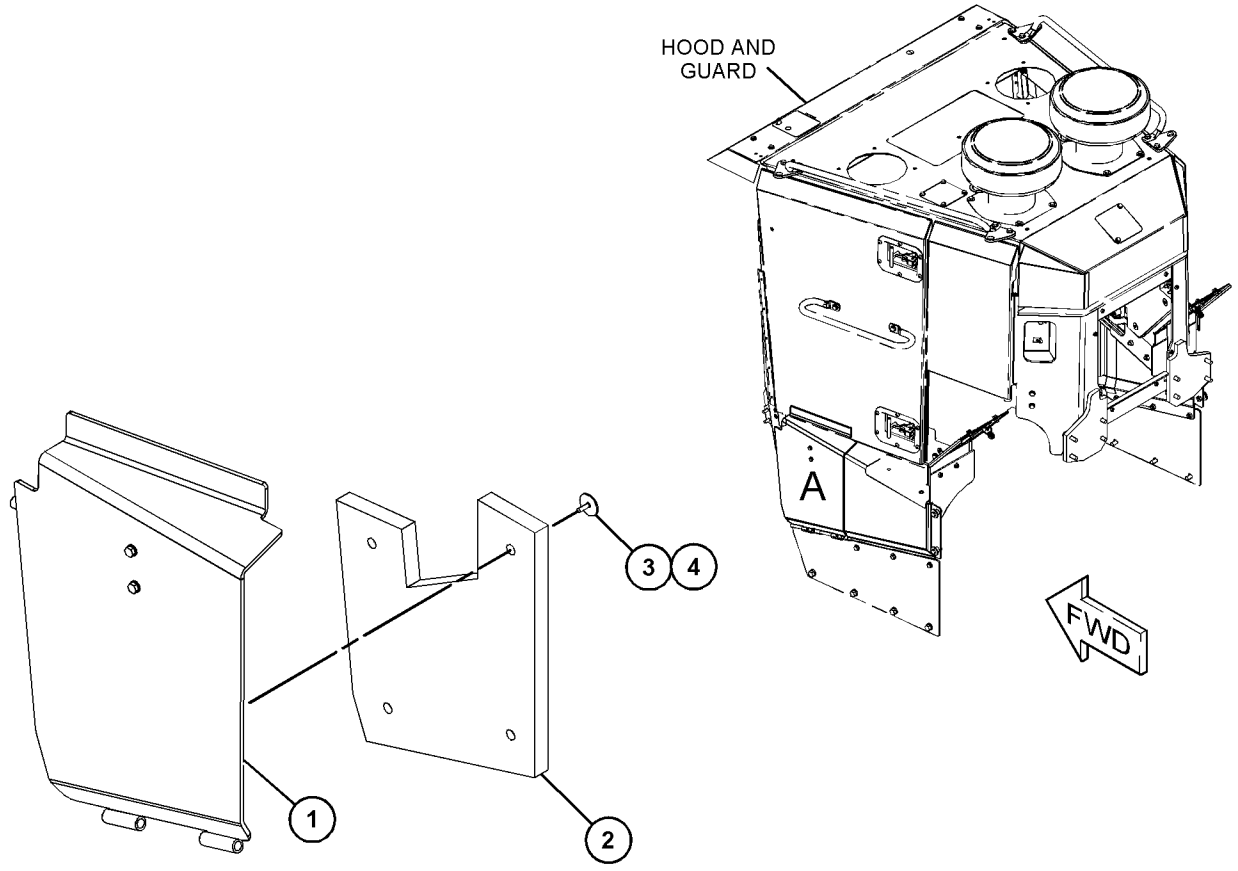

VIEW OF AREA A
(EXPLODED)

GRAPHIC #1 <END> g03665838

444-6976 GUARD GP-LINES

S/N: JZM1-UP
FOR USE WITH 440-5222–PAGE: 176
PART OF 359-6502, 443-0004 ENGINE AR-COMPLETE
AN ATTACHMENT

SMCS-7167 **i05540165**

NOTE	REF NO	GRAPHIC REF	PART NUMBER	QTY	PART NAME 1 2 3 4 5 6 (PRODUCT LEVEL)	SEE PAGE
	1	1	**444-6972**	1	GUARD	
	2	1	**444-6973**	1	GUARD	
	3	1	**444-6974**	1	GUARD	
	4	1	**444-6975**	1	GUARD	
	5	1	**4L-6454**	1	BOLT (3/8-16X1-IN)	
	6	1	**6V-8189**	2	NUT (5/16-18-THD)	
	7	1	**8T-4896**	8	WASHER-HARD (10.2X18.5X2.5-MM THK)	
	8	1	**8T-4224**	4	WASHER-HARD (8.8X16X2-MM THK)	
	9	1	**8T-7934**	1	WASHER-HARD (11X21X5-MM THK)	
	10	1	**6V-8801**	4	NUT (3/8-16-THD)	

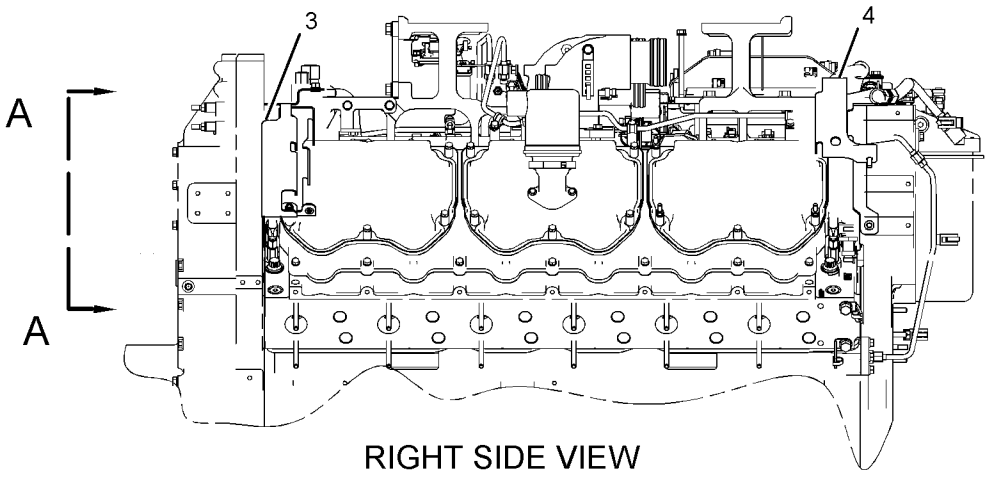

RIGHT SIDE VIEW

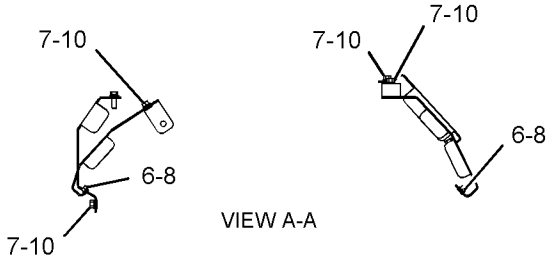

VIEW A-A

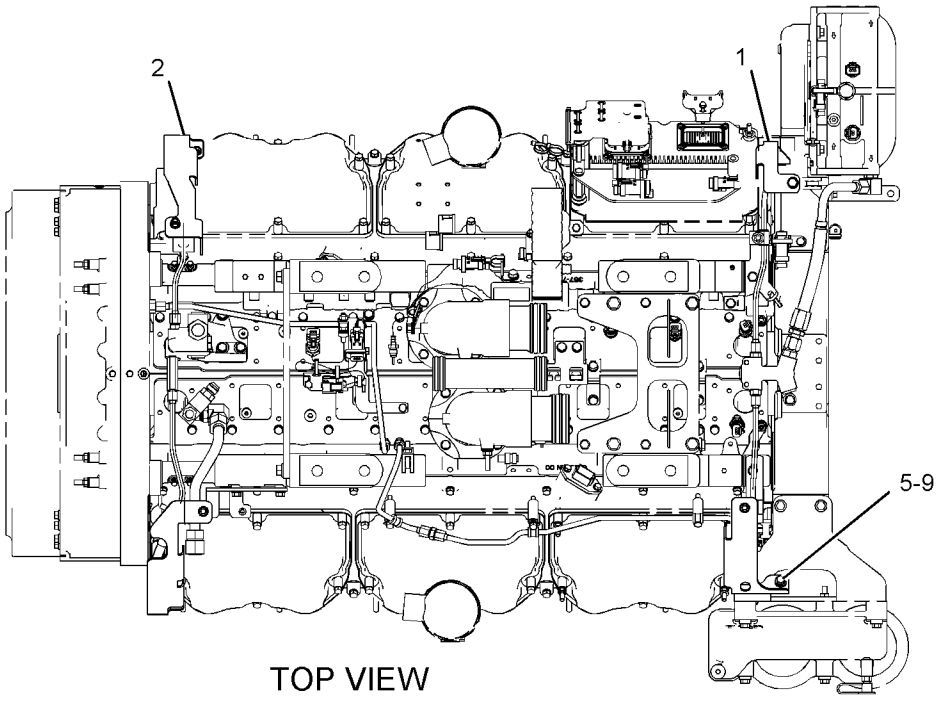

TOP VIEW

GRAPHIC #1 <END> g03527457

371-7038 GUARD GP-POWER TRAIN—WASTE HANDLING

S/N: RAB1-UP
PART OF 399-7225 COUNTERWEIGHT AR
AN ATTACHMENT

SMCS-7150 **i04937275**

NOTE	REF NO	GRAPHIC REF	PART NUMBER	QTY	PART NAME 1 2 3 4 5 6 (PRODUCT LEVEL)	SEE PAGE
	1	1	**4J-4262**	1	COVER	
	2	1	**119-7015**	1	GUARD AS	
	3	1	**255-0005**	2	PLATE AS	
	4	1	**267-3366**	1	GUARD AS	
	5	1	**274-3658**	1	GUARD AS	
	6	1	**7M-2360**	6	WASHER (19.8X41X9.5-MM THK)	
	7	1	**7X-0405**	12	BOLT (1-8X2.75-IN)	
	8	1	**7X-0616**	12	WASHER-HARD (28X57X6-MM THK)	
M	9	1	**8T-4193**	14	BOLT (M16X2X50-MM)	
	10	1	**8T-4223**	4	WASHER-HARD (13.5X25.5X3-MM THK)	
M	11	1	**8T-4956**	4	BOLT (M12X1.75X35-MM)	
	12	1	**9X-6138**	1	PLUG-PIPE	
	13	1	**9X-8257**	8	WASHER (17.5X30X3.5-MM THK)	

M - METRIC PART

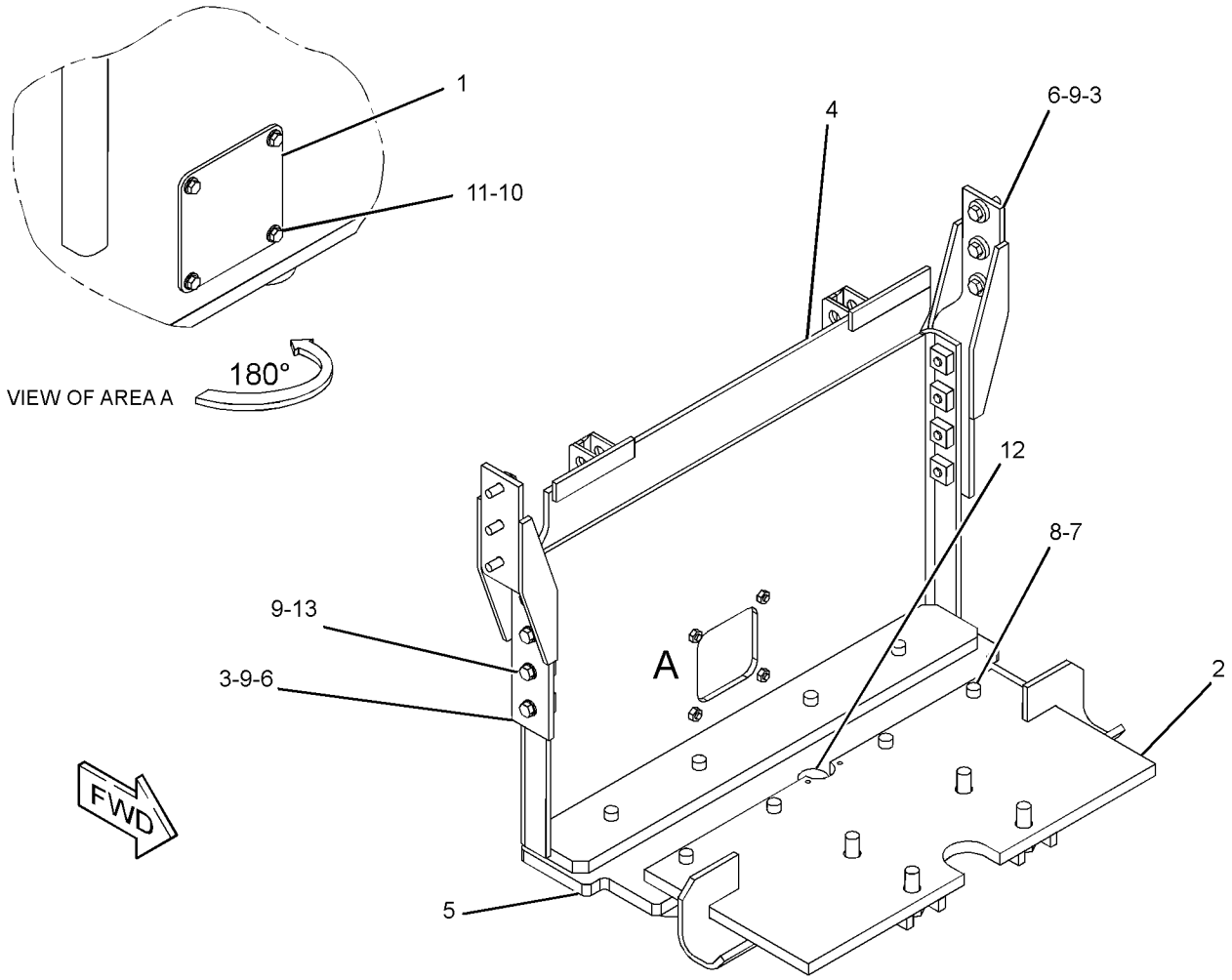

GRAPHIC #1 <END> g03136617

372-6746 GUARD GP-RADIATOR

S/N: RAB1-UP
PART OF 359-6401 CHASSIS AR
AN ATTACHMENT

SMCS-7155 **i05424359**

NOTE	REF NO	GRAPHIC REF	PART NUMBER	QTY	PART NAME 1 2 3 4 5 6 (PRODUCT LEVEL)	SEE PAGE
	1	1	**3B-8489**	2	FITTING-GREASE (1/8-27 PTF)	
	2	1	**4J-7083**	2	GASKET	
	3	1	**7K-6413**	2	FLANGE	
	4	1	**8T-0232**	2	PLUG	
	5	1	**9C-6984**	2	PLATE	
	6	1	**233-0888**	2	PIN	
	7	1	**233-0890**	2	PIN	
	8	1	**239-6987**	1	PLATE-SERIAL NUMBER (MACHINE)	
	9	1	**259-5762**	2	WASHER (23X80X12-MM THK)	
	10	1	**372-6747**	1	GUARD AS	
	10A	1	**7T-9014**	4	BUSHING	
	10B	1	**8P-7598**	2	BUSHING	
M	11	1	**7X-2562**	2	BOLT (M20X2.5X45-MM)	
	12	1	**8T-4123**	2	WASHER (3.62X5.75X0.375-MM THK)	
M	13	1	**8T-4139**	8	BOLT (M12X1.75X30-MM)	
M	14	1	**8T-4193**	2	BOLT (M16X2X50-MM)	
	15	1	**8T-4223**	4	WASHER-HARD (13.5X25.5X3-MM THK)	
	16	1	**9X-8257**	2	WASHER (17.5X30X3.5-MM THK)	

M - METRIC PART

372-6746 **GUARD GP-RADIATOR (**contd.**)** **i05424359**

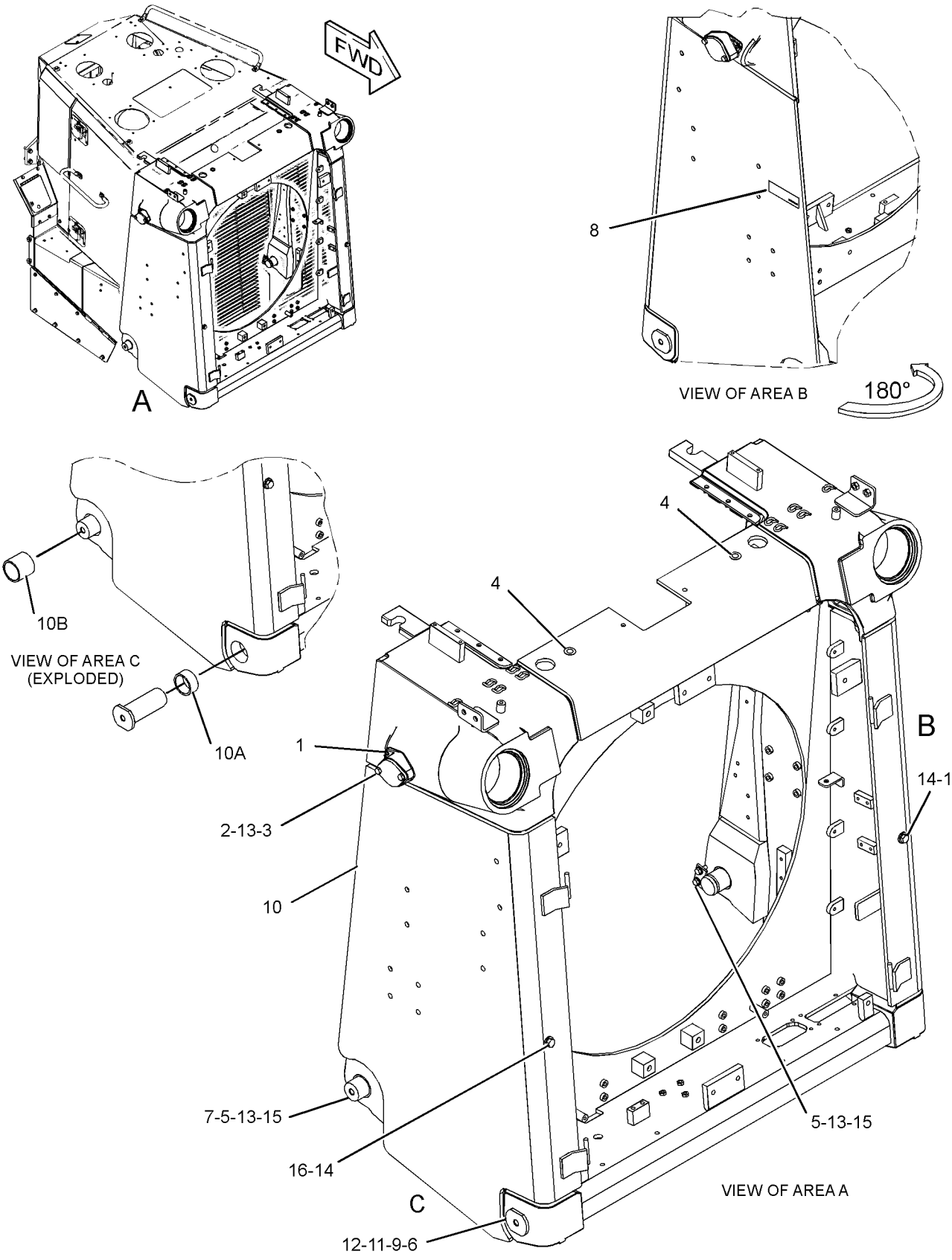

GRAPHIC #1 <END> g03430482

373-3194 GUARD GP-RADIATOR

S/N: RAB1-UP
PART OF 359-6401 CHASSIS AR
AN ATTACHMENT

SMCS-7155 **i06575456**

NOTE	REF NO	GRAPHIC REF	PART NUMBER	QTY	PART NAME 1 2 3 4 5 6 (PRODUCT LEVEL)	SEE PAGE
	1	1	**135-3173**	2	ROD	
Y	2	1	**485-3330**	1	GRILL GP-RADIATOR	633
M	3	1	**7X-2553**	8	BOLT (M16X2X40-MM)	
	4	1	**3B-4617**	4	PIN-COTTER	
	5	1	**9X-8257**	8	WASHER (17.5X30X3.5-MM THK)	

M - METRIC PART
Y - SEPARATE ILLUSTRATION

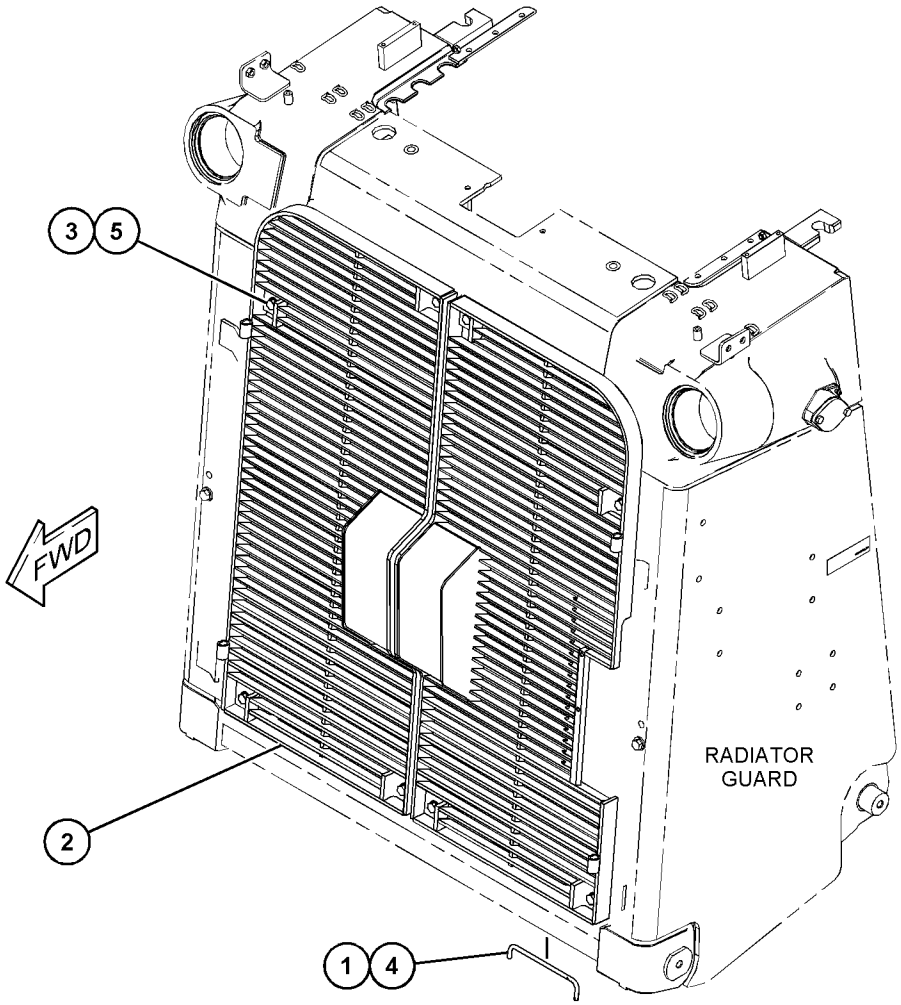

GRAPHIC #1 <END> g06031607

131-0785 GUARD GP-ROCK–UNIVERSAL BLADE

S/N: EPA1-UP

PART OF 346-6929, 422-0245 BLADE GP-UNIVERSAL

AN ATTACHMENT

SMCS-7182 **i00602752**

NOTE	REF NO	GRAPHIC REF	PART NUMBER	QTY	PART NAME 1 2 3 4 5 6 (PRODUCT LEVEL)	SEE PAGE
	1	1	**8E-9947**	1	GUARD AS	
	2	1	**131-0782**	1	GUARD AS	
	3	1	**131-0783**	1	GUARD AS	
	4	1	**131-0786**	2	PLATE	

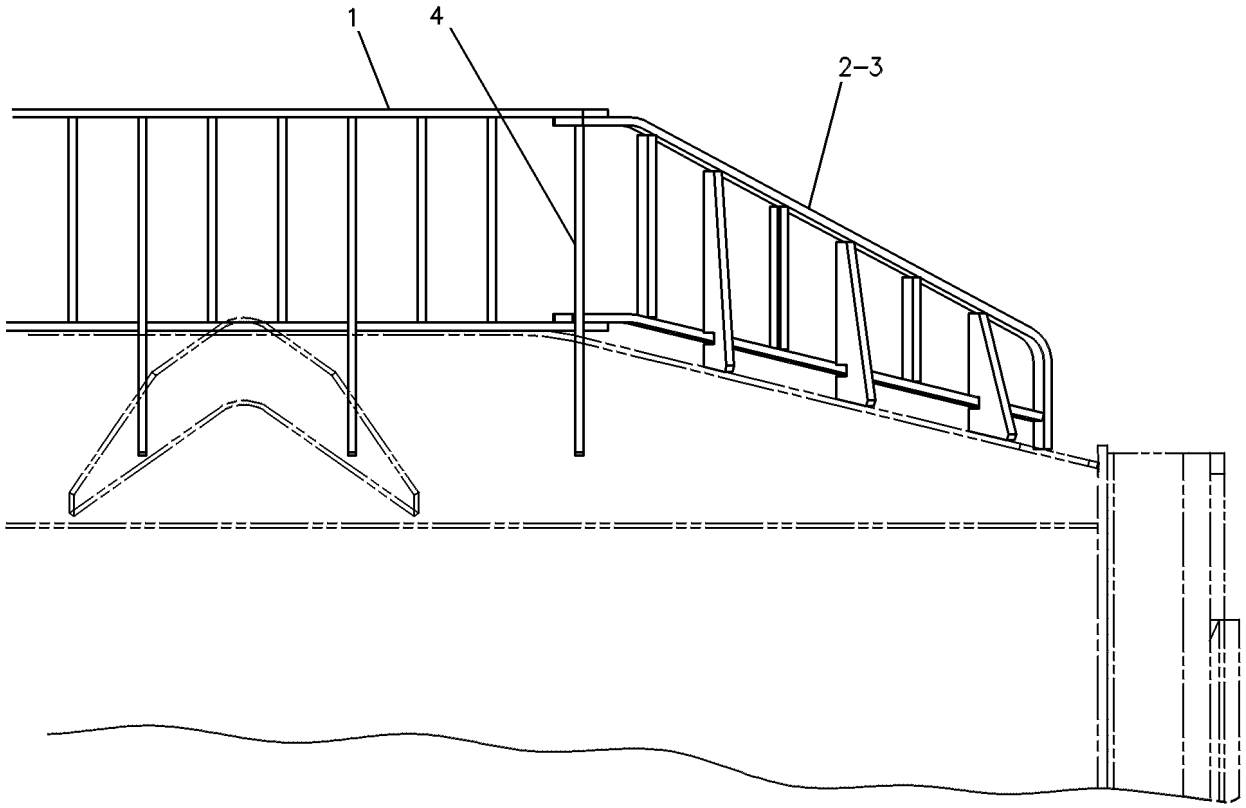

REAR VIEW

GRAPHIC #1 <END> g00234819

8E-9570 GUARD GP-ROCK—SEMI-UNIVERSAL BLADE

S/N: EPB1-UP

PART OF 346-6932 BLADE AS-SEMI-UNIVERSAL

AN ATTACHMENT

SMCS-7182 **i00596183**

NOTE	REF NO	GRAPHIC REF	PART NUMBER	QTY	PART NAME 1 2 3 4 5 6 (PRODUCT LEVEL)	SEE PAGE
	1	1	**8E-9947**	1	GUARD AS	
	2	1	**8E-6866**	1	GUARD AS	
	3	1	**8E-6757**	1	GUARD AS	
	4	1	**8E-9938**	2	PLATE	

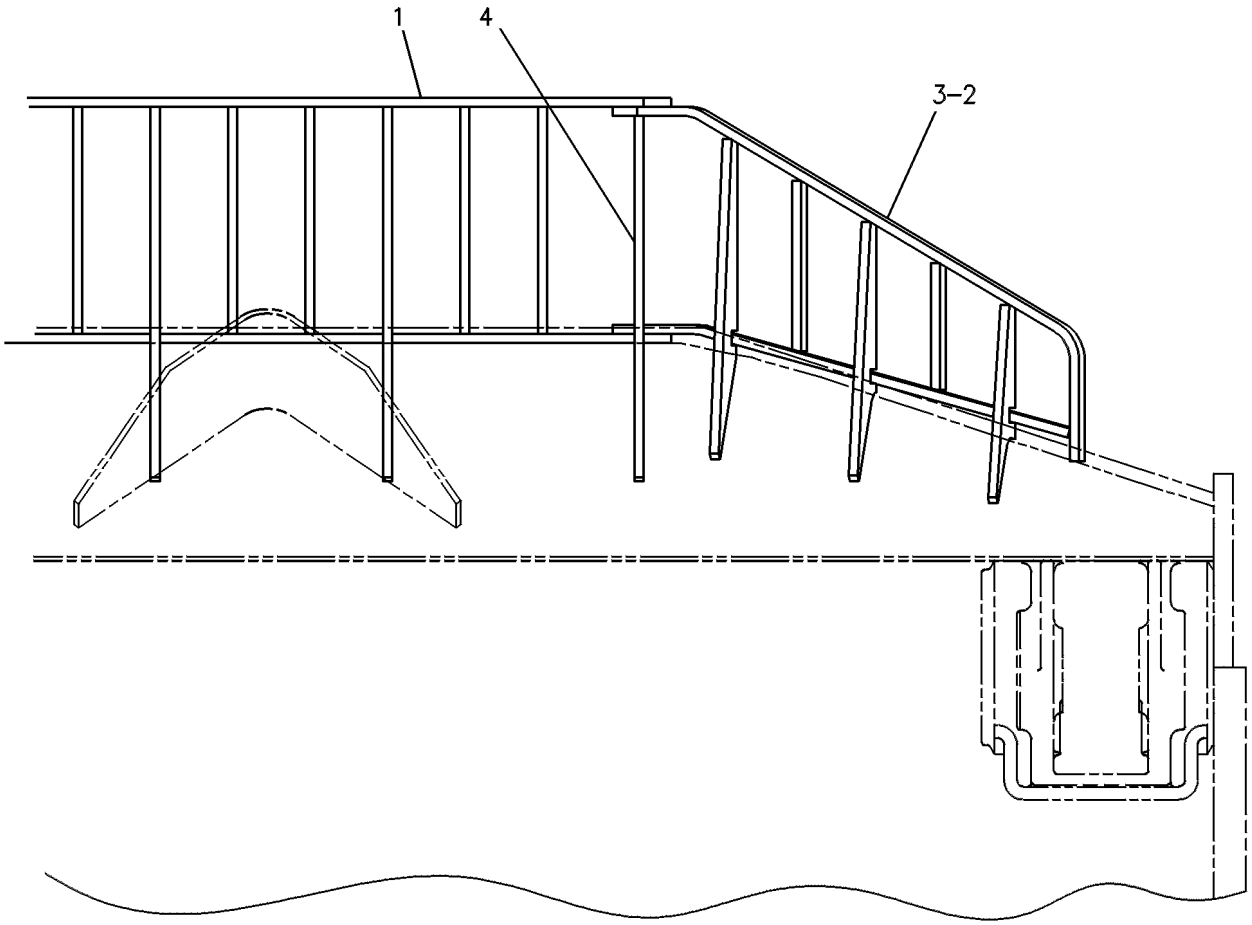

REAR VIEW

GRAPHIC #1 <END> g00234840

343-9915 GUARDRAIL GP–RH

S/N: RAB1-UP

PART OF 359-6485 GUARDRAIL GP, 359-6486 LADDER AR, 359-6487, 359-6488 PLATFORM AR AN ATTACHMENT

SMCS-7150, 7256

i04425849

NOTE	REF NO	GRAPHIC REF	PART NUMBER	QTY	PART NAME 1 2 3 4 5 6 (PRODUCT LEVEL)	SEE PAGE
	1	1	**343-9916**	1	GUARDRAIL AS (RH)	
	2	1	**343-9917**	1	GUARD	
	3	1	**5P-1076**	8	WASHER-HARD (13.5X30X4-MM THK)	
	4	1	**7X-0584**	8	WASHER-HARD (13.5X20.5X2-MM THK)	
M	5	1	**8T-4139**	8	BOLT (M12X1.75X30-MM)	
M	6	1	**8T-4192**	8	BOLT (M12X1.75X25-MM)	

M - METRIC PART

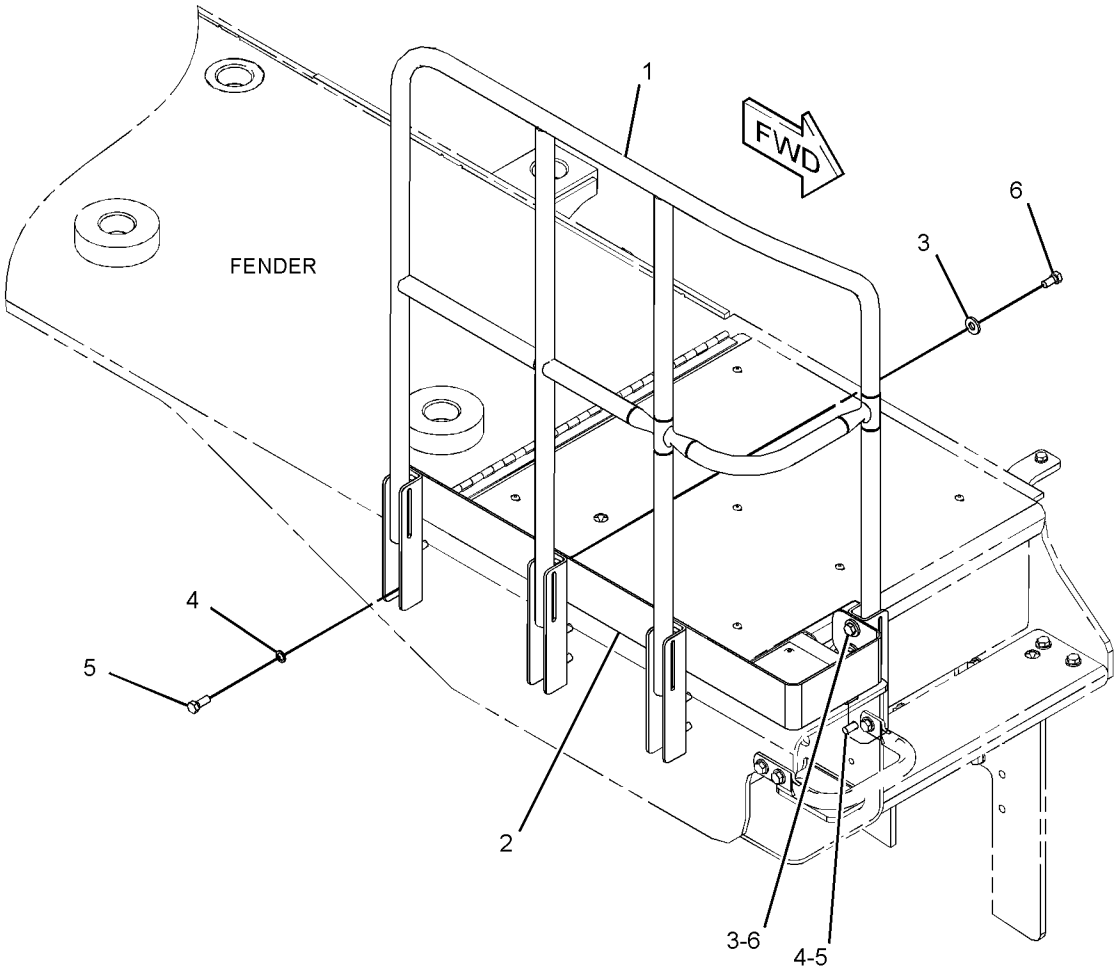

GRAPHIC #1 <END> g02647956

343-9930 GUARDRAIL GP–LH

S/N: RAB1-UP
PART OF 359-6485 GUARDRAIL GP
AN ATTACHMENT

SMCS-7150, 7256 **i04431612**

NOTE	REF NO	GRAPHIC REF	PART NUMBER	QTY	PART NAME 1 2 3 4 5 6 (PRODUCT LEVEL)	SEE PAGE
	1	1	**343-9932**	1	GUARDRAIL AS (LH)	
	2	1	**346-3281**	1	GUARD	
	3	1	**362-2899**	2	SUPPORT AS	
	4	1	**5P-1076**	8	WASHER-HARD (13.5X30X4-MM THK)	
	5	1	**7X-0584**	12	WASHER-HARD (13.5X20.5X2-MM THK)	
	6	1	**8T-4121**	4	WASHER-HARD (11X21X2.5-MM THK)	
M	7	1	**8T-4139**	12	BOLT (M12X1.75X30-MM)	
M	8	1	**8T-4192**	8	BOLT (M12X1.75X25-MM)	
M	9	1	**8T-4195**	4	BOLT (M10X1.5X30-MM)	

M - METRIC PART

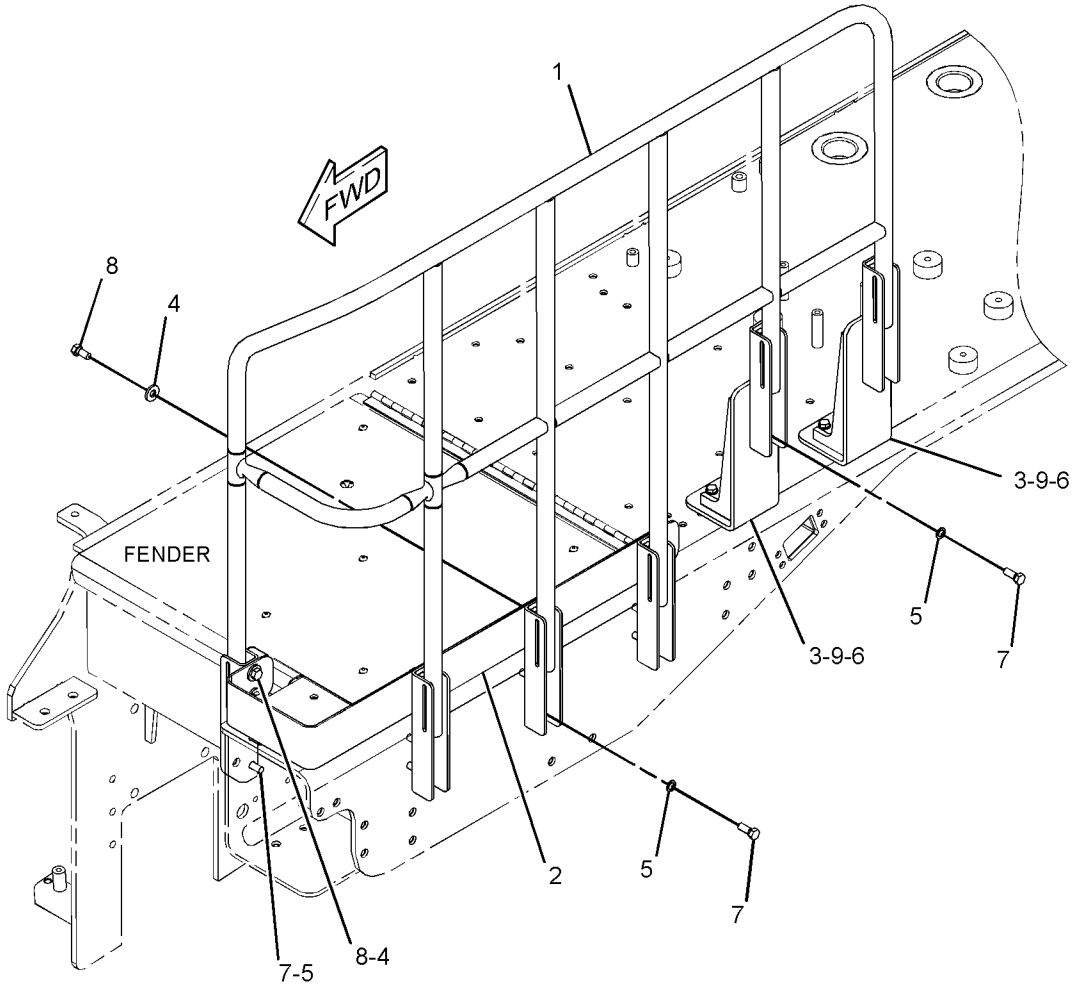

GRAPHIC #1 <END> g02647187

359-6485 GUARDRAIL GP

S/N: RAB1-UP

CANNOT BE USED WITH LADDER AR, ACCESS AR, PLATFORM AR AN ATTACHMENT

SMCS-7150, 7256 **i05430810**

NOTE	REF NO	GRAPHIC REF	PART NUMBER	QTY	PART NAME 1 2 3 4 5 6 (PRODUCT LEVEL)	SEE PAGE
	1	1	**3T-2977**	1	PLATE	
Y	2	1	*343-9915*	1	GUARDRAIL GP (RH)	669
Y	3	1	*343-9930*	1	GUARDRAIL GP (LH)	670
	4	1	**364-8119**	1	PLATE	
	5	1	**364-8120**	1	PLATE	
	6	1	**5P-1076**	4	WASHER-HARD (13.5X30X4-MM THK)	
M	7	1	**8T-4139**	4	BOLT (M12X1.75X30-MM)	
	8	1	**8T-4224**	4	WASHER-HARD (8.8X16X2-MM THK)	
M	9	1	**8T-4908**	4	BOLT (M8X1.25X25-MM)	
M	10	1	**9X-2041**	4	SCREW-TRUSS HEAD (M10X1.5X20-MM)	

M - METRIC PART
Y - SEPARATE ILLUSTRATION

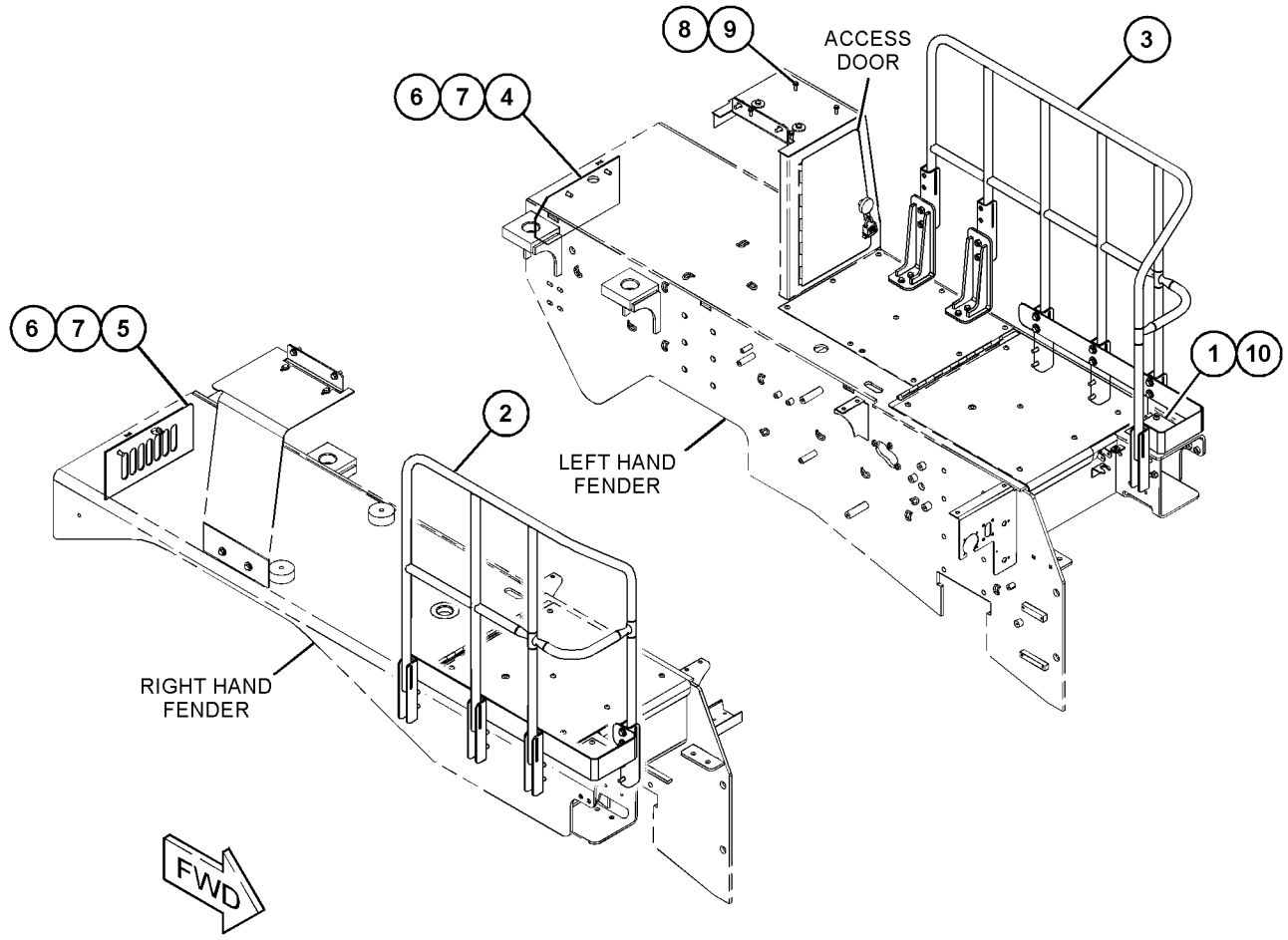

GRAPHIC #1 <END> g03431851

361-6351 GUARDRAIL GP–LH

S/N: RAB1-UP
PART OF 359-6486 LADDER AR
AN ATTACHMENT

SMCS-7150, 7256

i06575483

NOTE	REF NO	GRAPHIC REF	PART NUMBER	QTY	PART NAME 1 2 3 4 5 6 (PRODUCT LEVEL)	SEE PAGE
	1	1	**357-4887**	1	BRACKET AS	
M		1	**8T-3597**	2	NUT-WELD (M12X1.75-THD)	
	2	1	**361-6352**	1	HANDRAIL AS	
	3	1	**362-2899**	1	SUPPORT AS	
	4	1	**7X-0584**	6	WASHER-HARD (13.5X20.5X2-MM THK)	
	5	1	**8T-4121**	4	WASHER-HARD (11X21X2.5-MM THK)	
M	6	1	**8T-4139**	6	BOLT (M12X1.75X30-MM)	
M	7	1	**8T-4195**	4	BOLT (M10X1.5X30-MM)	

M - METRIC PART

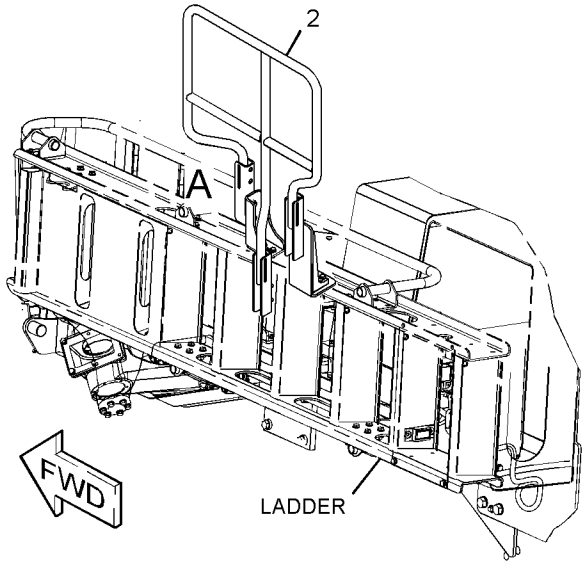

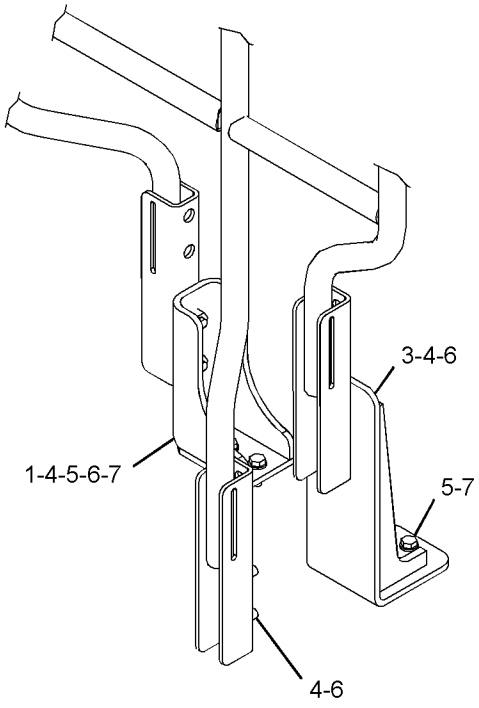

VIEW OF AREA A

GRAPHIC #1

<END>

g02710649

364-8110 GUARDRAIL GP–LH

S/N: RAB1-UP
PART OF 359-6487 PLATFORM AR
AN ATTACHMENT

SMCS-7150, 7256

i04432295

NOTE	REF NO	GRAPHIC REF	PART NUMBER	QTY	PART NAME 1 2 3 4 5 6 (PRODUCT LEVEL)	SEE PAGE
	1	1	**115-3580**	1	PLATE	
	2	1	**346-3281**	1	GUARD	
	3	1	**364-8111**	1	HANDRAIL AS (LH)	
	4	1	**5P-1076**	10	WASHER-HARD (13.5X30X4-MM THK)	
	5	1	**5P-7468**	2	CLIP (SLOT)	
	6	1	**5P-7469**	2	CLIP (TAB)	
	7	1	**6V-1874**	2	GROMMET (31-MM ID)	
	8	1	**7X-0584**	8	WASHER-HARD (13.5X20.5X2-MM THK)	
M	9	1	**8T-4139**	8	BOLT (M12X1.75X30-MM)	
M	10	1	**8T-4183**	2	BOLT (M12X1.75X40-MM)	
M	11	1	**8T-4192**	8	BOLT (M12X1.75X25-MM)	
	12	1	**8T-4223**	2	WASHER-HARD (13.5X25.5X3-MM THK)	
M	13	1	**8T-4244**	2	NUT (M12X1.75-THD)	

M - METRIC PART

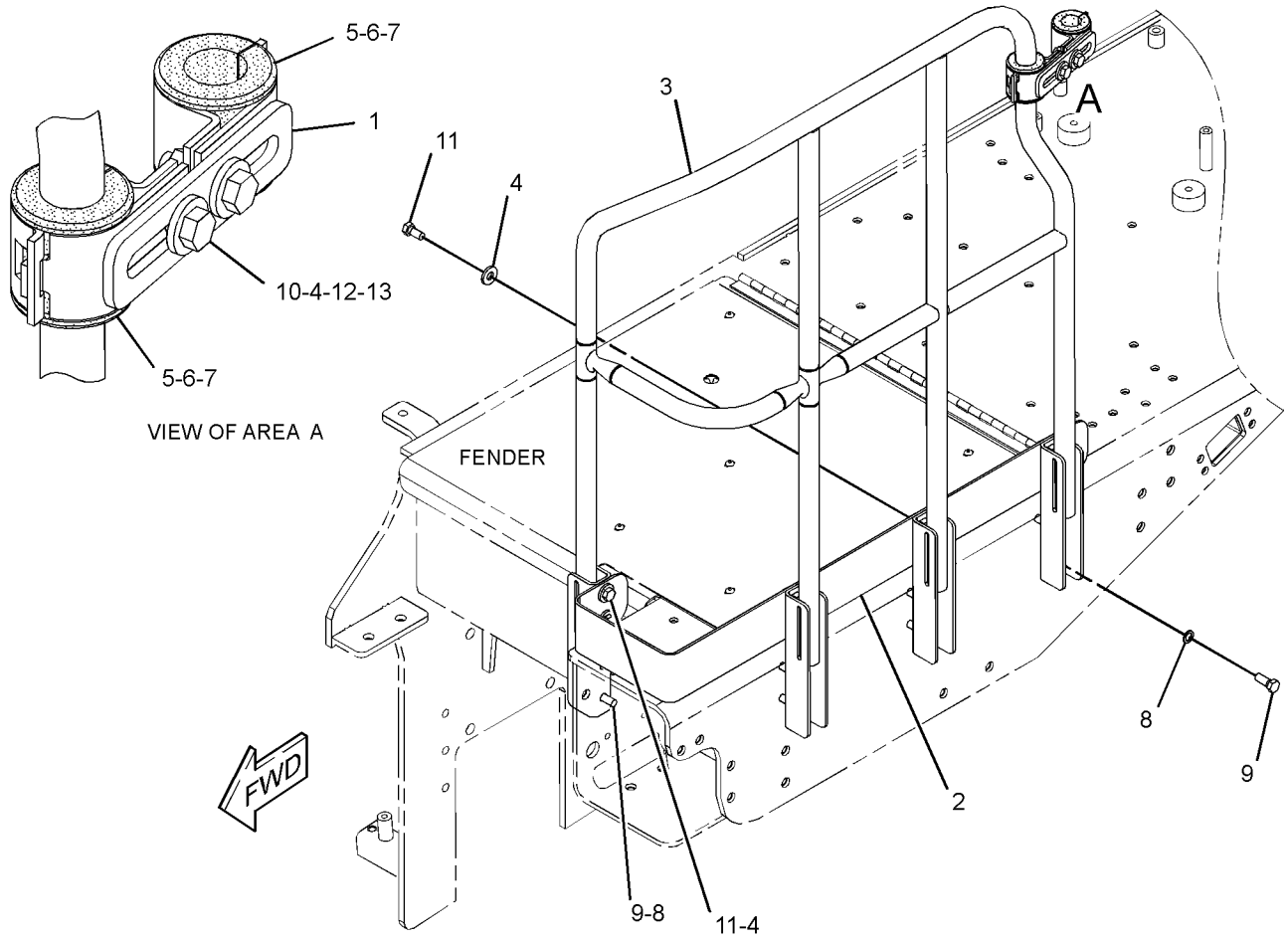

GRAPHIC #1 <END> g02646691

379-4753 GUARDRAIL GP–RH

S/N: RAB1-UP
PART OF 379-5590 STEP GP
AN ATTACHMENT

SMCS-7150, 7256

i05424397

NOTE	REF NO	GRAPHIC REF	PART NUMBER	QTY	PART NAME 1 2 3 4 5 6 (PRODUCT LEVEL)	SEE PAGE
	1	1	**357-4884**	1	CHANNEL AS	
M		1	**8T-3597**	4	NUT-WELD (M12X1.75-THD)	
	2	1	**379-4754**	1	HANDRAIL AS	
M		1	**8T-3597**	2	NUT-WELD (M12X1.75-THD)	
	3	1	**381-4078**	1	PLATE	
	4	1	**422-1349**	1	GUARD	
	5	1	**5P-1076**	9	WASHER-HARD (13.5X30X4-MM THK)	
	6	1	**5P-7468**	1	CLIP (SLOT)	
	7	1	**5P-7469**	1	CLIP (TAB)	
	8	1	**6V-1874**	1	GROMMET (31-MM ID)	
	9	1	**7X-0584**	8	WASHER-HARD (13.5X20.5X2-MM THK)	
M	10	1	**8T-4139**	8	BOLT (M12X1.75X30-MM)	
M	11	1	**8T-4184**	1	BOLT (M12X1.75X45-MM)	
M	12	1	**8T-4192**	4	BOLT (M12X1.75X25-MM)	
	13	1	**8T-4223**	1	WASHER-HARD (13.5X25.5X3-MM THK)	
M	14	1	**8T-4244**	1	NUT (M12X1.75-THD)	
M	15	1	**8T-4956**	4	BOLT (M12X1.75X35-MM)	

M - METRIC PART

379-4753 **GUARDRAIL GP (**contd.**)** **i05424397**

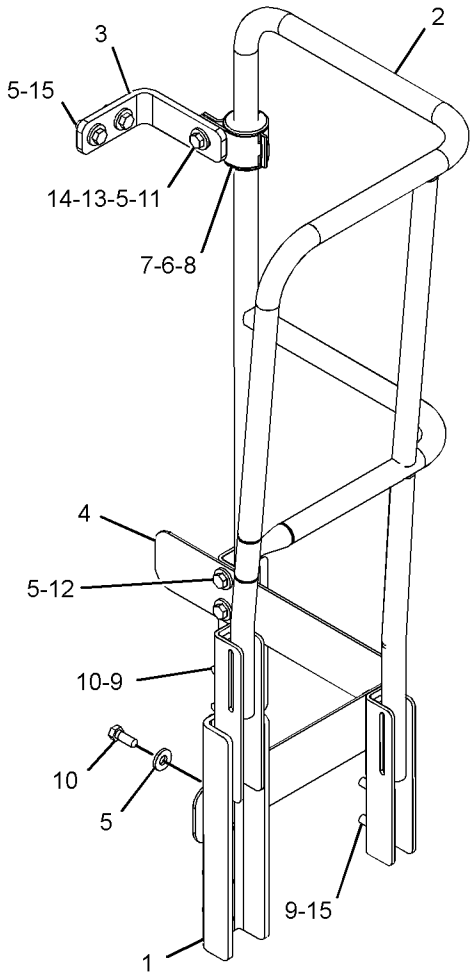

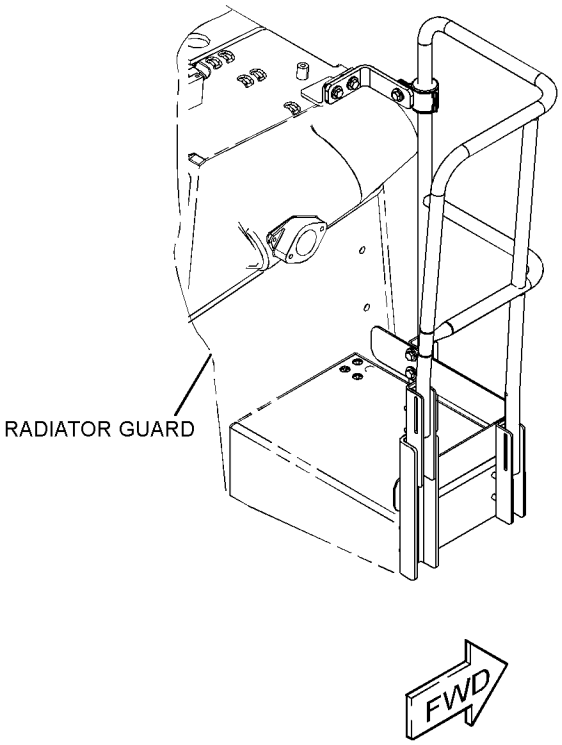

GRAPHIC #1 <END> g03474753

379-5591 GUARDRAIL GP–LH

S/N: RAB1-UP
PART OF 379-5590 STEP GP
AN ATTACHMENT

SMCS-7150, 7256

i05424399

NOTE	REF NO	GRAPHIC REF	PART NUMBER	QTY	PART NAME 1 2 3 4 5 6 (PRODUCT LEVEL)	SEE PAGE
	1	1	**357-4884**	1	CHANNEL AS	
M		1	**8T-3597**	4	NUT-WELD (M12X1.75-THD)	
	2	1	**379-5592**	1	HANDRAIL AS	
M		1	**8T-3597**	2	NUT-WELD (M12X1.75-THD)	
	3	1	**381-4078**	1	PLATE	
	4	1	**422-1349**	1	GUARD	
	5	1	**5P-1076**	9	WASHER-HARD (13.5X30X4-MM THK)	
	6	1	**5P-7468**	1	CLIP (SLOT)	
	7	1	**5P-7469**	1	CLIP (TAB)	
	8	1	**6V-1874**	1	GROMMET (31-MM ID)	
	9	1	**7X-0584**	8	WASHER-HARD (13.5X20.5X2-MM THK)	
M	10	1	**8T-4139**	8	BOLT (M12X1.75X30-MM)	
M	11	1	**8T-4184**	1	BOLT (M12X1.75X45-MM)	
M	12	1	**8T-4192**	4	BOLT (M12X1.75X25-MM)	
	13	1	**8T-4223**	1	WASHER-HARD (13.5X25.5X3-MM THK)	
M	14	1	**8T-4244**	1	NUT (M12X1.75-THD)	
M	15	1	**8T-4956**	4	BOLT (M12X1.75X35-MM)	

M - METRIC PART

379-5591 **GUARDRAIL GP (**contd.**)** **i05424399**

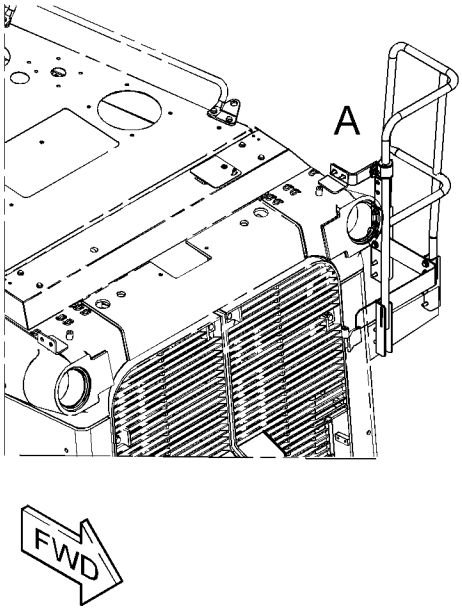

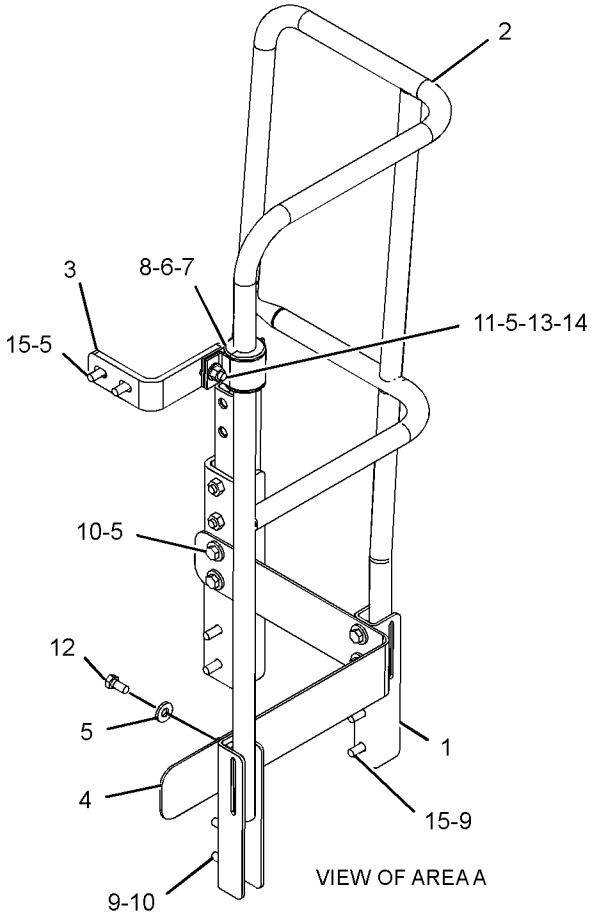

GRAPHIC #1 <END> g03428680

381-6642 HANDRAIL GP–LH

S/N: RAB1-UP

PART OF 359-6486 LADDER AR, 359-6488 PLATFORM AR

AN ATTACHMENT

SMCS-7256 **i05452731**

NOTE	REF NO	GRAPHIC REF	PART NUMBER	QTY	PART NAME 1 2 3 4 5 6 (PRODUCT LEVEL)	SEE PAGE
	1	1	**346-9640**	1	COVER	
	2	1	**381-6643**	1	HANDRAIL AS (LH)	
	3	1	**423-1948**	1	BRACKET AS	
	4	1	**7X-0584**	6	WASHER-HARD (13.5X20.5X2-MM THK)	
	5	1	**8T-4121**	4	WASHER-HARD (11X21X2.5-MM THK)	
M	6	1	**8T-4139**	6	BOLT (M12X1.75X30-MM)	
M	7	1	**8T-4196**	4	BOLT (M10X1.5X35-MM)	
M	8	1	**9X-2042**	2	SCREW-TRUSS HEAD (M6X1X12-MM)	

M - METRIC PART

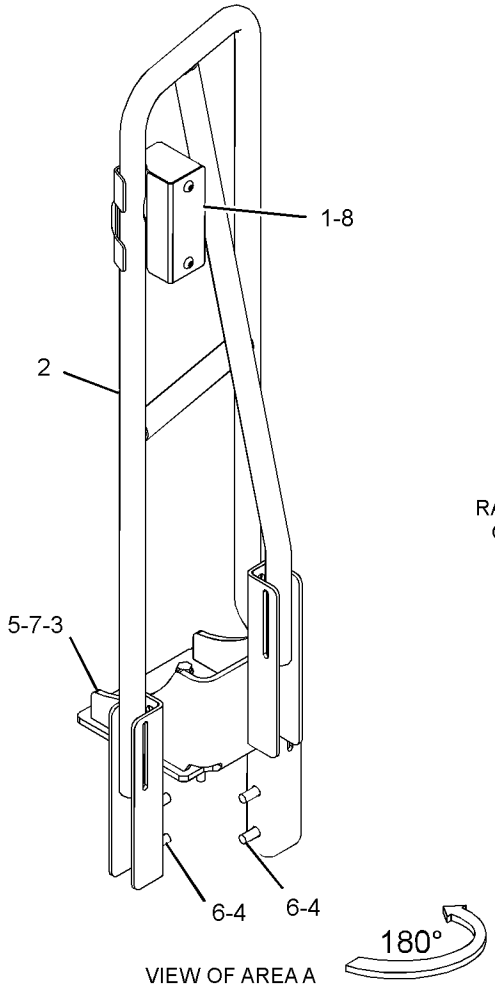

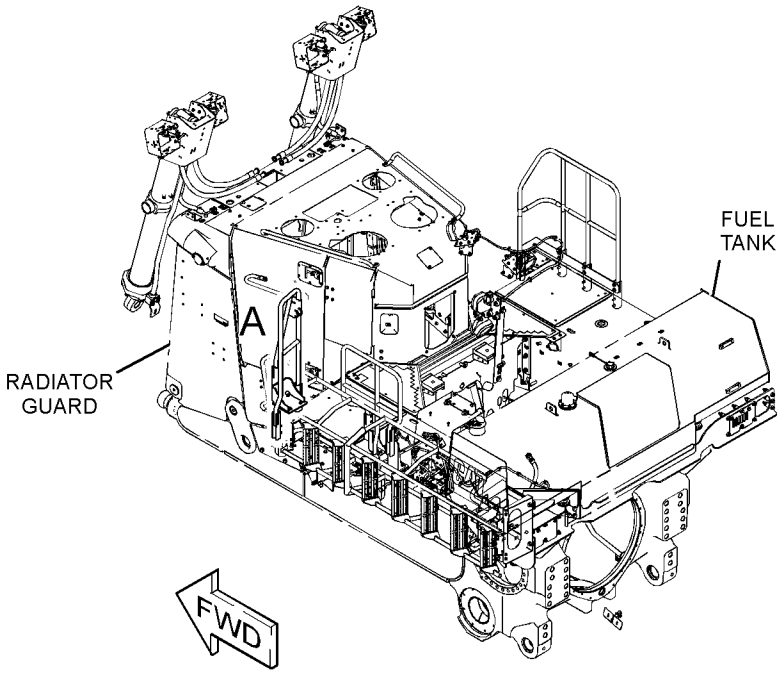

GRAPHIC #1 <END> g03498978

359-6422 HOOD & GUARD GP

S/N: RAB1-UP

PART OF 359-6401 CHASSIS AR, 359-6429 ENCLOSURE GP-ENGINE

AN ATTACHMENT

SMCS-7251 **i05423924**

NOTE	REF NO	GRAPHIC REF	PART NUMBER	QTY	PART NAME 1 2 3 4 5 6 (PRODUCT LEVEL)	SEE PAGE
	1	1	**6T-9927**	2	SLIDE	
	2	1	**7T-1819**	2	MOUNTING AS	
	3	1,2	**8E-4072**	4	SPACER (13.8X23.75X16-MM THK)	
	4	1	**9X-3994**	1	PLUG	
	5	1	**337-8902**	2	HANDHOLD	
	6	1,2	**344-3826**	4	PLATE	
	7	1	**375-7590**	1	HOOD AS	
	8	2	**375-7591**	1	SUPPORT AS	
Y	9	2	*375-7594*	1	GUARD GP-ENGINE	649
	10	1	**375-7648**	1	COVER AS	
	11	1	**376-9314**	1	PLATE AS	
M		1	**8T-3490**	3	NUT-WELD (M10X1.5-THD)	
	12	2	**376-9315**	1	PLATE AS	
M		2	**8T-3490**	3	NUT-WELD (M10X1.5-THD)	
	13	1,2	**379-5178**	2	PLATE AS	
					(EACH INCLUDES)	
M		1,2	**8T-3490**	3	NUT-WELD (M10X1.5-THD)	
	14	1	**380-0953**	1	PLATE	
	15	1,2	**380-8932**	2	PLATE AS	
					(EACH INCLUDES)	
M		1,2	**8T-3490**	3	NUT-WELD (M10X1.5-THD)	
	16	1	**381-3762**	1	BAFFLE AS (LH)	
		1	**6B-4594**	5	RIVET	
	17	2	**381-3763**	1	BAFFLE AS (RH)	
		2	**6B-4594**	5	RIVET	
	18	1,2	**444-2507**	2	PLATE	
	19	1	**444-2512**	2	PLATE	
	20	1,2	**445-6114**	4	PLATE	
	21	1,2	**447-0934**	4	HINGE AS (LH)	
	22	1,2	**447-0935**	4	HINGE AS (RH)	
	23	1,2	**030-7335**	8	BOLT-LOCKING (5/8-11X1.5-IN)	
	24	1,2	**198-4780**	8	WASHER-HARD (17.5X32X8-MM THK)	
	25	1	**1K-4649**	6	SPACER (0.516X1X1-IN THK)	
	26	1,2	**3E-4356**	8	WASHER-HARD (17.5X30X6-MM THK)	
	27	1	**6T-8714**	2	WASHER-HARD (28X125X12-MM THK)	
	28	1,2	**7X-0618**	4	WASHER-HARD (13.5X40X5-MM THK)	
	29	1,2	**8T-4121**	44	WASHER-HARD (11X21X2.5-MM THK)	
B	30	1,2	**7X-0619**	2	WASHER-HARD (20X30X2.5-MM THK)	
	31	1,2	**7X-7729**	8	WASHER (11X25X3-MM THK)	
M	32	1	**8T-4136**	10	BOLT (M10X1.5X25-MM)	
M	33	1,2	**8T-4137**	4	BOLT (M10X1.5X20-MM)	
M	34	1,2	**8T-4139**	18	BOLT (M12X1.75X30-MM)	
M	35	1,2	**8T-4140**	8	BOLT (M16X2X60-MM)	
M	36	1,2	**8T-4195**	38	BOLT (M10X1.5X30-MM)	
	37	1	**8T-4167**	1	WASHER-HARD (26X44X4-MM THK)	
M	38	1,2	**8T-4183**	8	BOLT (M12X1.75X40-MM)	
M	39	1,2	**8T-4194**	8	BOLT (M12X1.75X50-MM)	

359-6422 **HOOD & GUARD GP (**contd.**)** **i05423924**

NOTE	REF NO	GRAPHIC REF	PART NUMBER	QTY	PART NAME 1 2 3 4 5 6 (PRODUCT LEVEL)	SEE PAGE
	40	1,2	**8T-4223**	40	WASHER-HARD (13.5X25.5X3-MM THK)	
M	41	1	**8T-4649**	1	BOLT (M24X3X140-MM)	
M	42	1	**8T-4910**	6	BOLT (M12X1.75X60-MM)	
M	43	2	**8T-4956**	4	BOLT (M12X1.75X35-MM)	
D	44	1,2	**5P-7483**		SEAL (4.2-M EACH)	
D	44A	1,2	**5P-7483**		SEAL (4.6-M EACH)	
D	44B	1,2	**5P-7483**		SEAL (8.6-M EACH)	
D	45	1,2	**5P-7211**		SEAL (3.8-M EACH)	
D	45A	1,2	**5P-7211**		SEAL (7.0-M EACH)	
D	45B	1,2	**5P-7211**		SEAL (11.7-M EACH)	

B - USE AS REQUIRED
D - ORDER BY THE METER
M - METRIC PART
Y - SEPARATE ILLUSTRATION

359-6422 **HOOD & GUARD GP** (contd.) **i05423924**

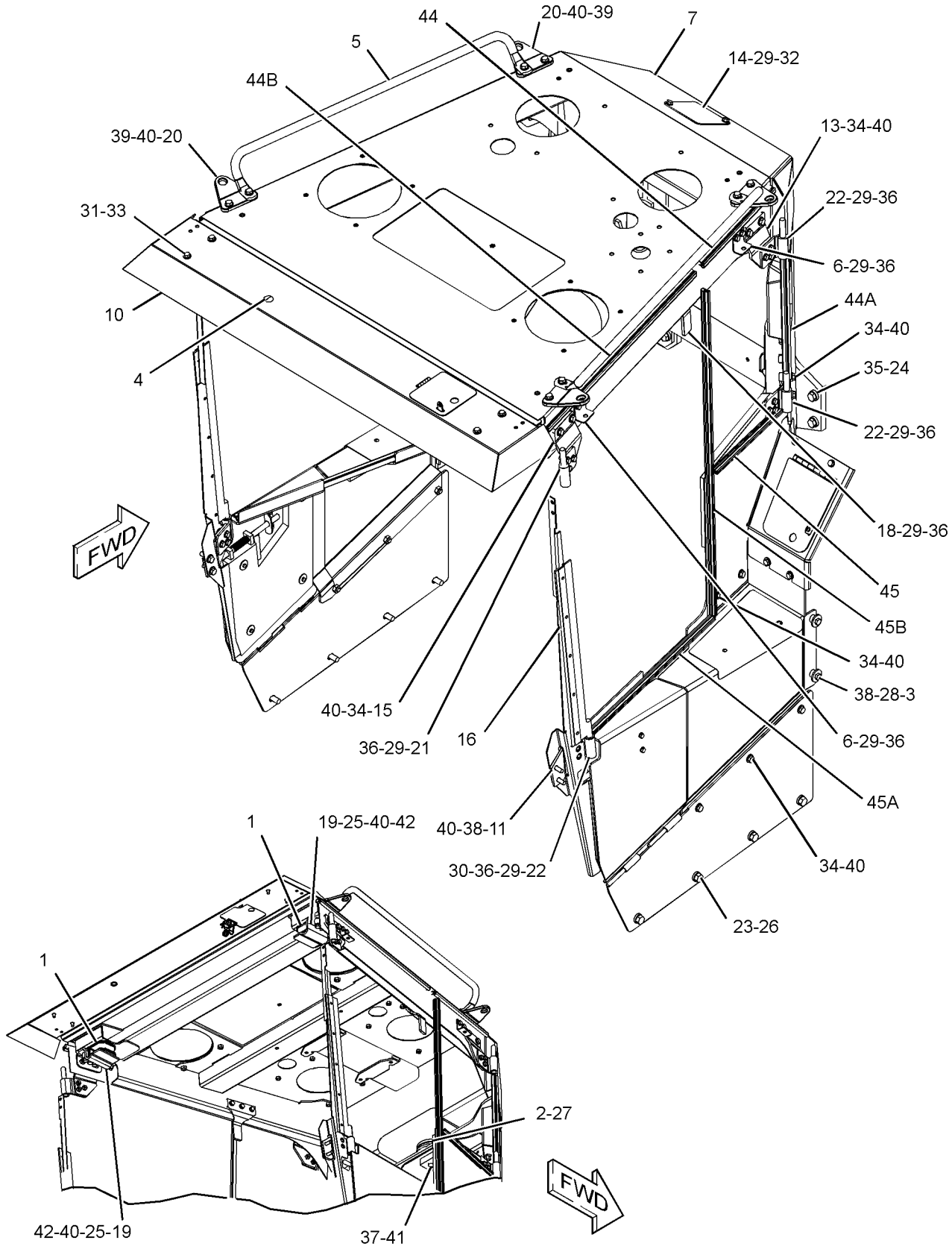

GRAPHIC #1 g03500901

359-6422 **HOOD & GUARD GP** (contd.) **i05423924**

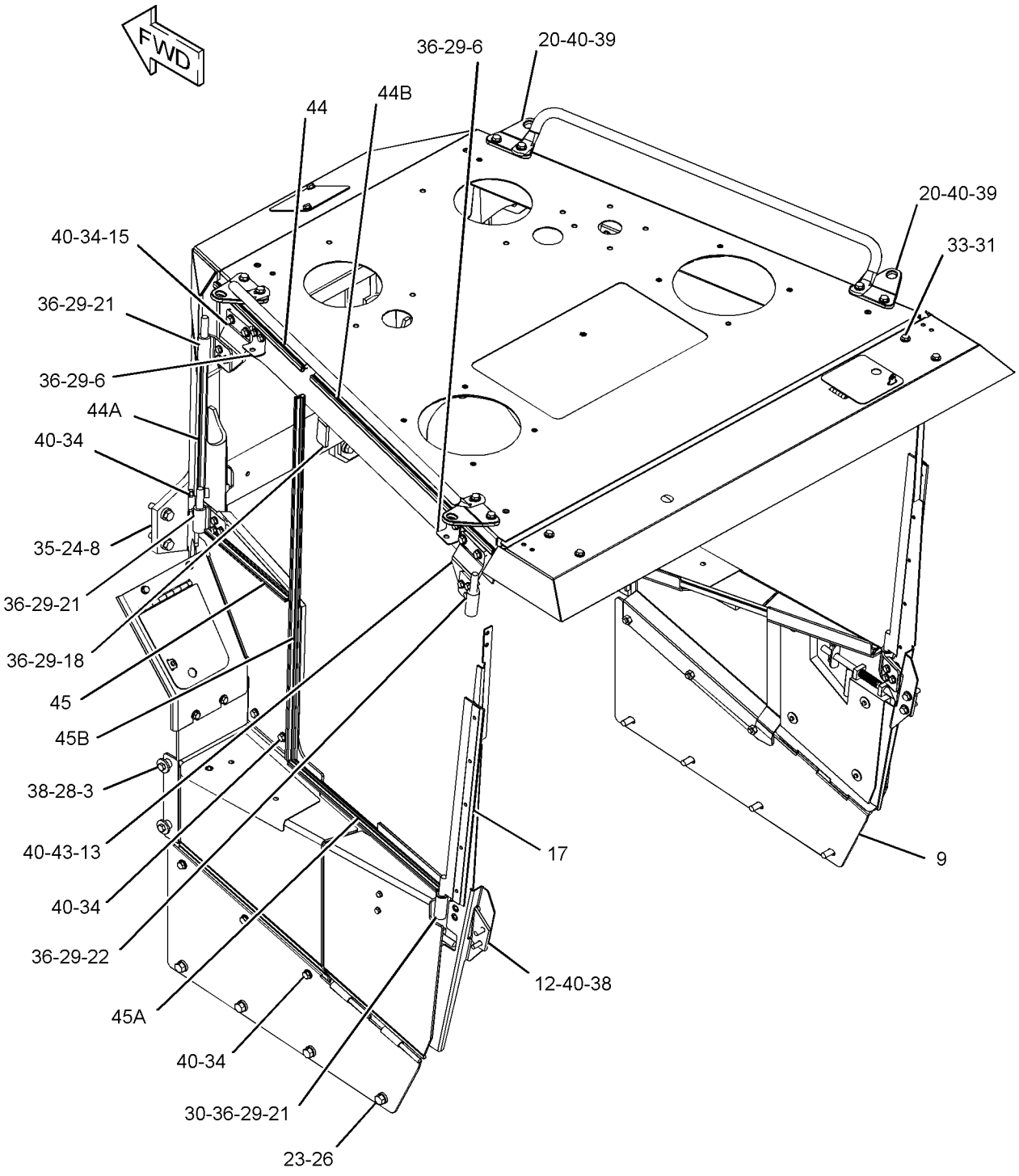

GRAPHIC #2 <END> g03500902

371-6932 INSULATION GP-HEAT–FOAM

S/N: RAB1-UP

CANNOT BE USED WITH 371-6930–PAGE: 634, 371-6933–PAGE: 636, 371-6934–PAGE: 638, 371-6936–PAGE: 641, 371-6935–PAGE: 639

PART OF 381-0191 UNDERCARRIAGE AR

AN ATTACHMENT

SMCS-7051, 7150, 7251, 7301 **i05081232**

NOTE	REF NO	GRAPHIC REF	PART NUMBER	QTY	PART NAME 1 2 3 4 5 6 (PRODUCT LEVEL)	SEE PAGE
	1	1	**278-4913**	1	INSULATION	
	2	1	**278-4914**	2	INSULATION	
	3	1	**278-4915**	1	INSULATION	
	4	1	**278-4916**	1	INSULATION	
	5	1	**278-4917**	1	INSULATION	
	6	1	**278-4918**	1	INSULATION	
	7	1	**278-4919**	1	INSULATION	

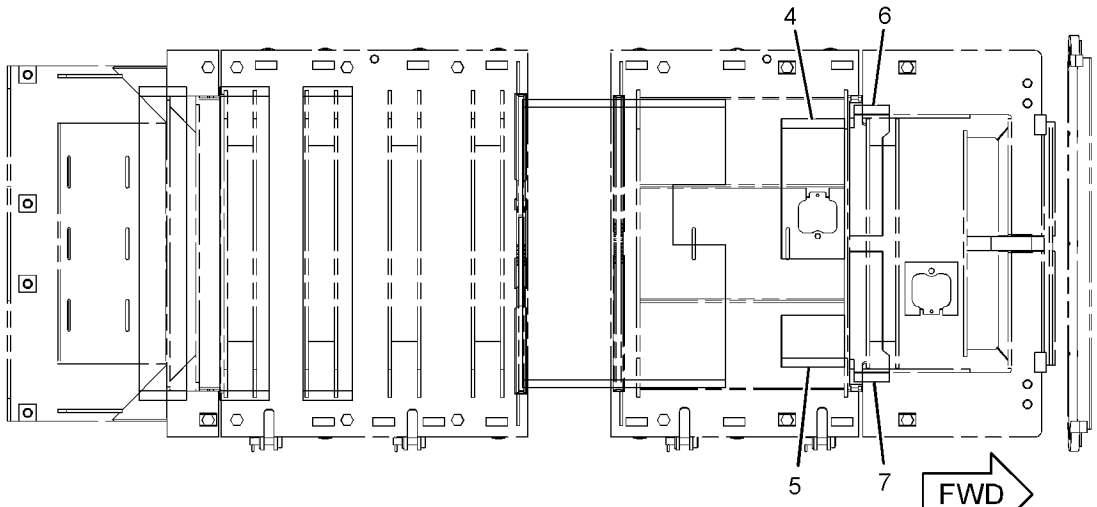

TOP VIEW

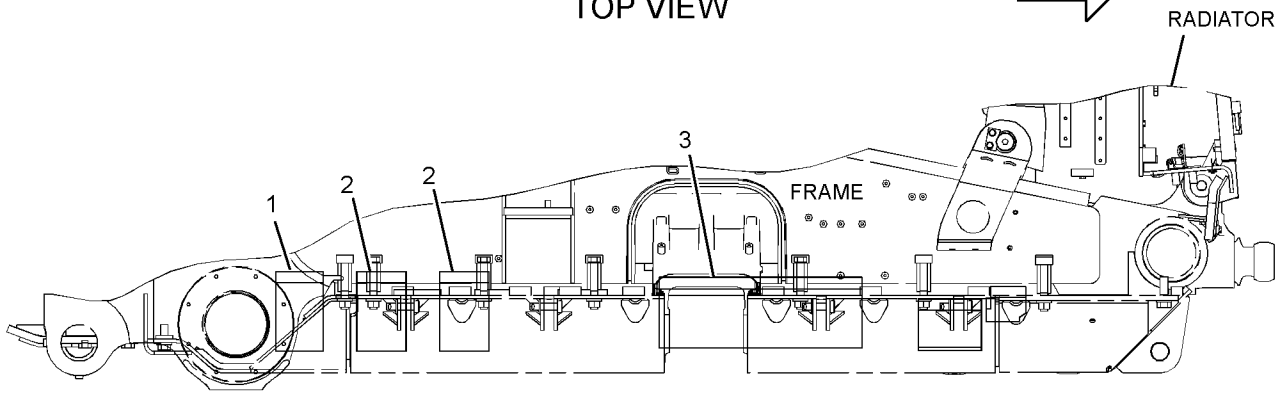

RIGHT SIDE VIEW

GRAPHIC #1 <END> g03317077

452-3402 KIT-RETROFIT–LADDER

S/N: RAB1-UP
FOR USE WITH REHS 7621
FIELD INSTALLATION

SMCS-7254 **i05808599**

NOTE	PART NUMBER	QTY	PART NAME 1 2 3 4 5 6 (PRODUCT LEVEL)	SEE PAGE
Y	**379-3837**	1	LADDER GP	689
Y	**379-6545**	1	PUMP GP-ELECTRIC DRIVE (LADDER)	969
	8T-6663	2	ADAPTER-PORT	
	4M-6425	2	BOLT (5/16-18X1-IN)	
M	**7X-2550**	18	BOLT (M12X1.75X110-MM)	
M	**8T-4136**	2	BOLT (M10X1.5X25-MM)	
M	**8T-4139**	14	BOLT (M12X1.75X30-MM)	
M	**8T-4191**	1	BOLT (M10X1.5X16-MM)	
M	**8T-4195**	7	BOLT (M10X1.5X30-MM)	
M	**8T-4196**	5	BOLT (M10X1.5X35-MM)	
M	**8T-4908**	6	BOLT (M8X1.25X25-MM)	
M	**8T-4956**	4	BOLT (M12X1.75X35-MM)	
M	**176-9237**	1	BOLT-SPECIAL (M10X1.5-THD)	
	357-4887	1	BRACKET AS	
M	**8T-3597**	2	NUT-WELD (M12X1.75-THD)	
	423-1948	1	BRACKET AS	
	444-7125	2	BRACKET AS	
	441-9942	1	CABLE AS	
	6V-0852	2	CAP-DUST	
	4D-6466	1	CLIP	
	4P-7581	4	CLIP	
	4P-8134	1	CLIP	
	5P-7468	1	CLIP (SLOT)	
	5P-7469	1	CLIP (TAB)	
	6V-1889	1	CLIP	
	8T-1887	2	CLIP (SLOT)	
	8T-1888	2	CLIP (TAB)	
	6V-8641	2	CONNECTOR	
	6V-8934	2	ADAPTER	
	346-9640	1	COVER	
	6V-8722	1	ELBOW	
	241-6942	1	FILM-INFORMATION (LADDER)	
	6V-3965	2	FITTING (QUICK DISCONNECT)	
	2V-1771	2	GROMMET	
	6V-0545	1	GROMMET	
	7B-1251	2	GROMMET	
	9D-3768	2	GROMMET	
	9K-0700	1	GROMMET	
	361-6352	1	HANDRAIL AS	
	381-6643	1	HANDRAIL AS (LH)	
	441-9193	1	HARNESS AS (LADDER ACCESS)	
	102-8802	1	KIT-RECEPTACLE (2-PIN)	
	102-8803	1	KIT-RECEPTACLE (3-PIN)	
			(EACH RECEPTACLE KIT INCLUDES RECEPTACLE AS & WEDGE)	
	3E-3371	1	WEDGE-RECEPTACLE LOCK (3-PIN)	
	8T-8729	2	PIN-CONNECTOR (16-GA TO 18-GA)	

452-3402 **KIT-RETROFIT (**contd.**)** **i05808599**

NOTE	PART NUMBER	QTY	PART NAME 1 2 3 4 5 6 (PRODUCT LEVEL)	SEE PAGE
	8T-8730	12	SOCKET-CONNECTOR (16-GA TO 18-GA)	
	8T-8737	3	PLUG-SEAL	
	9X-3401	3	PIN-CONNECTOR (16-GA TO 18-GA)	
	9X-3402	10	SOCKET-CONNECTOR (16-GA TO 18-GA)	
E	**125-7874**		TUBE-HEAT SHRINK (5.72-MM DIA) (15-CM)	
E	**125-7875**		TUBE-HEAT SHRINK (7.44-MM DIA) (5-CM)	
	155-2255	1	KIT-CONNECTING PLUG (12-PIN)	
	155-2260	3	KIT-CONNECTING PLUG (3-PIN)	
	155-2270	2	KIT-CONNECTING PLUG (2-PIN)	
			(EACH PLUG KIT INCLUDES PLUG AS, WEDGE & INTERFACE SEAL)	
	274-3774	1	CAP-CONNECTOR	
	331-0158	1	JUMPER AS	
	102-8803	1	KIT-RECEPTACLE (3-PIN)	
	3E-3371	1	WEDGE-RECEPTACLE LOCK (3-PIN)	
	8T-8737	1	PLUG-SEAL	
	9X-3401	2	PIN-CONNECTOR (16-GA TO 18-GA)	
	372-3819	1	HARNESS AS-SWITCH (RAISE, LOWER)	
	102-8803	1	KIT-RECEPTACLE (3-PIN)	
			(INCLUDES RECEPTACLE AS & WEDGE)	
	9X-3401	3	PIN-CONNECTOR (16-GA TO 18-GA)	
	9X-3402	3	SOCKET-CONNECTOR (16-GA TO 18-GA)	
	155-2260	1	KIT-CONNECTING PLUG (3-PIN)	
			(INCLUDES PLUG AS, WEDGE, & INTERFACE SEAL)	
	441-9192	1	HARNESS AS-SWITCH (ACCESS)	
	102-8801	1	KIT-RECEPTACLE (12-PIN)	
			(INCLUDES RECEPTACLE AS & WEDGE)	
	3E-5519	5	PLUG AS-CONNECTOR (5-PIN)	
	8T-8729	6	PIN-CONNECTOR (16-GA TO 18-GA)	
	8T-8730	8	SOCKET-CONNECTOR (16-GA TO 18-GA)	
	8T-8737	4	PLUG-SEAL	
	9X-1056	12	TERMINAL-RECEPTACLE (14-GA TO 16-GA)	
	9X-3401	5	PIN-CONNECTOR (16-GA TO 18-GA)	
	100-5041	10	TERMINAL-RECEPTACLE (18-GA TO 20-GA)	
E	**125-7874**		TUBE-HEAT SHRINK (5.72-MM DIA) (20-CM)	
E	**125-7875**		TUBE-HEAT SHRINK (7.44-MM DIA) (15-CM)	
	2L-8076	2	TERMINAL-RING (14-GA TO 16-GA, NO. 10 SCREW)	
	155-2270	2	KIT-CONNECTING PLUG (2-PIN)	
	155-2271	1	KIT-CONNECTING PLUG (4-PIN)	
			(EACH PLUG KIT INCLUDES PLUG AS, WEDGE & INTERFACE SEAL)	
	274-3774	1	CAP-CONNECTOR	
M	**6V-9189**	2	LOCKNUT (M8X1.25-THD)	
	5G-7820	1	MAGNET AS	
M	**8T-4133**	3	NUT (M10X1.5-THD)	
M	**329-3356**	18	NUT (M12X1.75-THD)	
M	**344-5675**	1	NUT (M10X1.5-THD)	
	383-3659	1	PLATE	
	383-3660	1	PLATE	
	453-6057	1	PLATE	
	3E-5239	5	RELAY AS (24-VOLT) (LADDER ACCESS)	
M	**9X-2042**	2	SCREW-TRUSS HEAD (M6X1X12-MM)	
M	**9X-2045**	5	SCREW-TRUSS HEAD (M6X1X20-MM)	

452-3402 **KIT-RETROFIT (**contd.**)** **i05808599**

NOTE	PART NUMBER	QTY	PART NAME 1 2 3 4 5 6 (PRODUCT LEVEL)	SEE PAGE
	3J-1907	2	SEAL-O-RING	
	3K-0360	1	SEAL-O-RING	
	4J-5477	4	SEAL-O-RING	
	6V-8397	2	SEAL-O-RING	
	7J-9108	1	SEAL-O-RING	
	214-7568	2	SEAL-O-RING	
	7G-1060	1	STRAP AS-GROUND	
	7K-1181	42	STRAP-CABLE	
	362-2899	1	SUPPORT AS	
	422-5456	1	SUPPORT AS	
	200-1898	1	SUPPRESSOR-ARC	
	301-2980	2	SWITCH AS-TOGGLE (OPERATOR LADDER UP, DOWN)	
			(EACH INCLUDES)	
	102-8803	1	KIT-RECEPTACLE (3-PIN)	
			(INCLUDES RECEPTACLE AS & WEDGE)	
	3E-3371	1	WEDGE-RECEPTACLE LOCK (3-PIN)	
	8T-8729	3	PIN-CONNECTOR (16-GA TO 18-GA)	
	7X-7729	1	WASHER (11X25X3-MM THK)	
	9X-6165	2	WASHER (6.5X22X2.5-MM THK)	
	5P-1076	4	WASHER-HARD (13.5X30X4-MM THK)	
	7X-0584	12	WASHER-HARD (13.5X20.5X2-MM THK)	
	8T-4121	18	WASHER-HARD (11X21X2.5-MM THK)	
	8T-4223	2	WASHER-HARD (13.5X25.5X3-MM THK)	
	8T-4224	10	WASHER-HARD (8.8X16X2-MM THK)	
	198-4778	36	WASHER-HARD (13.5X30X12-MM THK)	
	382-5435	1	WIRE AS	

E - ORDER BY THE CENTIMETER
M - METRIC PART
Y - SEPARATE ILLUSTRATION

<END>

359-6486 LADDER AR

S/N: RAB1-UP

CANNOT BE USED WITH 359-6485—PAGE: 671, 359-6488—PAGE: 1155, 359-6487—PAGE: 1153 AN ATTACHMENT

SMCS-7254 **i06602392**

NOTE	REF NO	GRAPHIC REF	PART NUMBER	QTY	PART NAME 1 2 3 4 5 6 (PRODUCT LEVEL)	SEE PAGE
Y	1	1	*343-9915*	1	GUARDRAIL GP (RH)	669
Y	2	1	*361-6351*	1	GUARDRAIL GP	672
Y	3	1	*419-8645*	1	WIRING GP-LADDER	450
Y	4	1	**379-3837**	1	LADDER GP	689
Y	5	1	*381-4072*	1	LINES GP-HYDRAULIC	913
Y	6	1	*381-4080*	1	WIRING GP-LADDER	447
Y	7	1	*381-6642*	1	HANDRAIL GP (LH)	678
	8	1	**383-3659**	1	PLATE	
	9	1	**383-3660**	1	PLATE	
	10	1	**422-5456**	1	SUPPORT AS	
	11	1	**198-4778**	36	WASHER-HARD (13.5X30X12-MM THK)	
M	12	1	**329-3356**	18	NUT (M12X1.75-THD)	
	13	1	**5P-1076**	4	WASHER-HARD (13.5X30X4-MM THK)	
	14	1	**8T-4224**	4	WASHER-HARD (8.8X16X2-MM THK)	
M	15	1	**8T-4908**	4	BOLT (M8X1.25X25-MM)	
M	16	1	**8T-4956**	4	BOLT (M12X1.75X35-MM)	
M	17	1	**7X-2550**	18	BOLT (M12X1.75X110-MM)	
	18	1	**453-6057**	1	PLATE	
M	19	1	**8T-4195**	2	BOLT (M10X1.5X30-MM)	
	20	1	**8T-4121**	2	WASHER-HARD (11X21X2.5-MM THK)	
	21	1	**198-4781**	3	WASHER-HARD (22X40X10-MM THK)	
M	22	1	**287-5701**	3	BOLT (M20X2.5X50-MM)	

M - METRIC PART
Y - SEPARATE ILLUSTRATION

359-6486 **LADDER AR** (contd.) **i06602392**

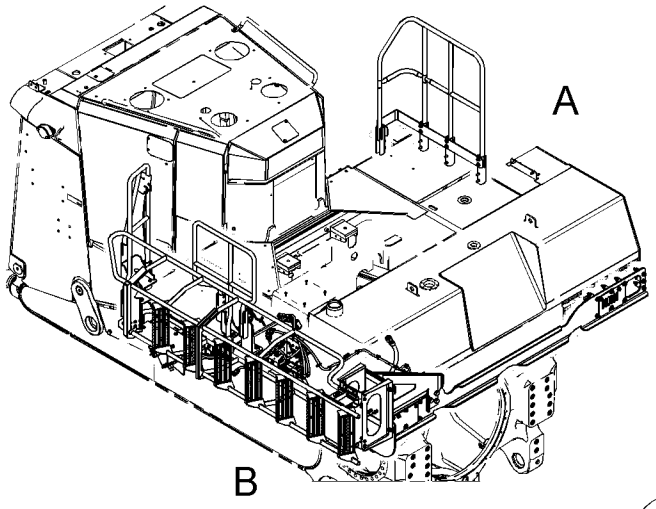

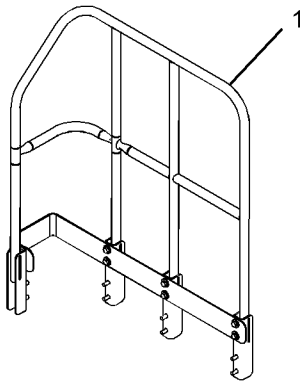

VIEW OF AREA A

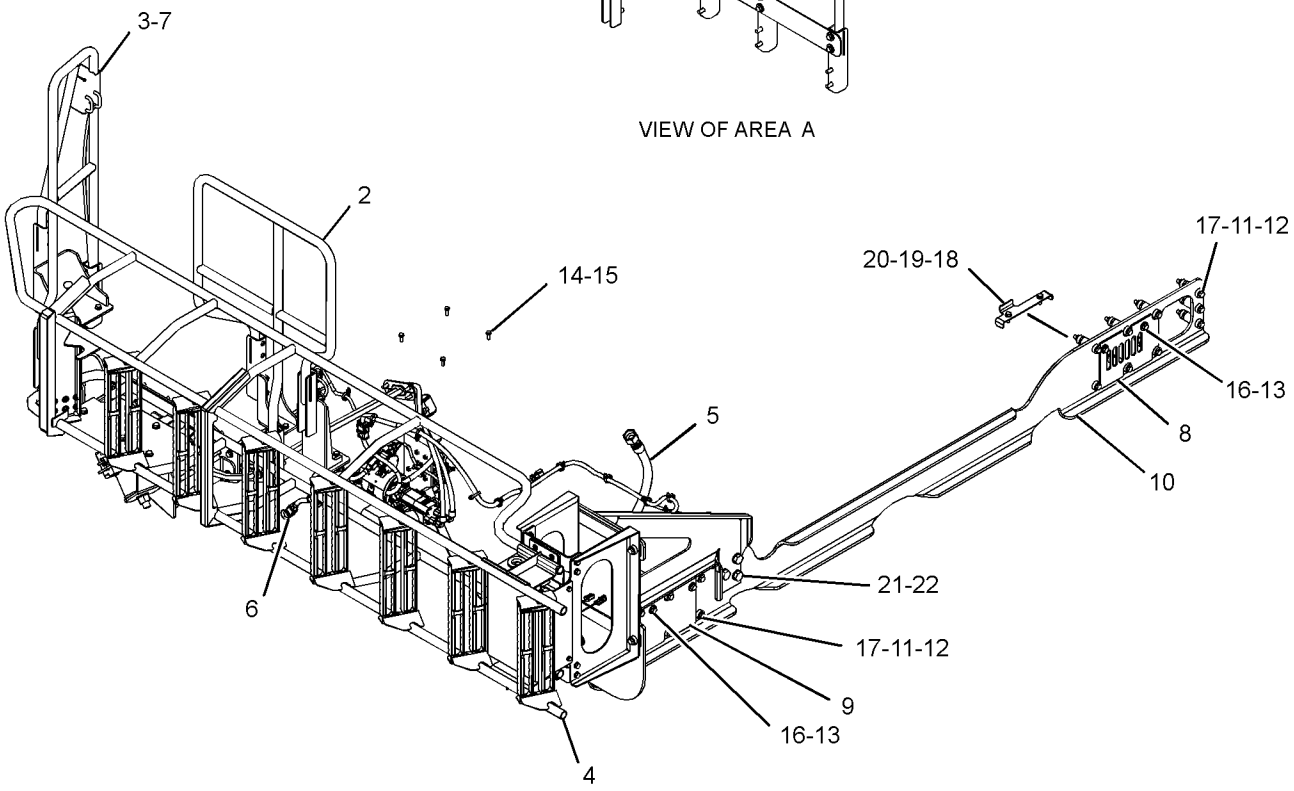

VIEW OF AREA B

GRAPHIC #1 <END> g03793847

379-3837 LADDER GP

S/N: RAB1-UP

PART OF 452-3402 KIT-RETROFIT, 359-6486 LADDER AR, 359-6488 PLATFORM AR

AN ATTACHMENT

SMCS-7254 **i05982973**

NOTE	REF NO	GRAPHIC REF	PART NUMBER	QTY	PART NAME 1 2 3 4 5 6 (PRODUCT LEVEL)	SEE PAGE
Y	1	1	*379-5147*	1	LADDER GP	690
	2	1	**379-8927**	1	ACTUATOR GP	
Y	3	1	*381-4071*	1	LINES GP-HYDRAULIC	911
M	4	1	**213-5007**	4	BOLT (M20X2.5X80-MM)	
M	5	1	**8T-4001**	1	NUT (M24X3-THD)	
	6	1	**8T-4121**	8	WASHER-HARD (11X21X2.5-MM THK)	
	7	1	**8T-4123**	8	WASHER (3.62X5.75X0.375-MM THK)	
M	8	1	**8T-4131**	4	NUT (M20X2.5-THD)	
M	9	1	**8T-4136**	8	BOLT (M10X1.5X25-MM)	
	10	1	**8T-4167**	2	WASHER-HARD (26X44X4-MM THK)	
M	11	1	**8T-5397**	1	BOLT (M24X3X280-MM)	

M - METRIC PART
Y - SEPARATE ILLUSTRATION

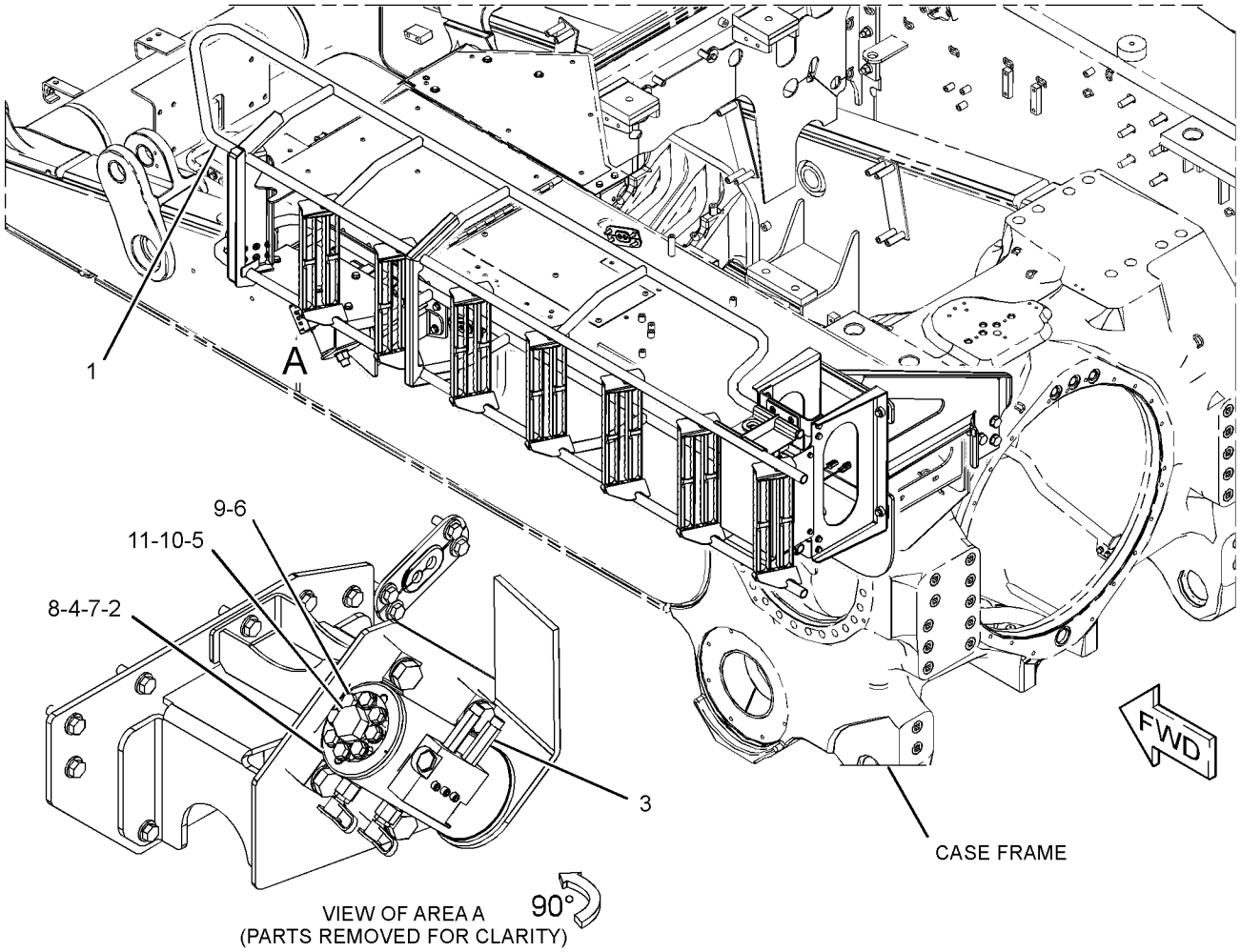

GRAPHIC #1 <END> g03493818

379-5147 LADDER GP

S/N: RAB1-UP
PART OF 379-3837 LADDER GP
AN ATTACHMENT

SMCS-7254 **i06031611**

NOTE	REF NO	GRAPHIC REF	PART NUMBER	QTY	PART NAME 1 2 3 4 5 6 (PRODUCT LEVEL)	SEE PAGE
	1	1	**369-3150**	1	SUPPORT AS	
	2	1	**376-0324**	1	HINGE AS	
	3	1	**376-0328**	1	HINGE AS	
	4	1	**379-3820**	1	LADDER AS	
Y	5	1	*379-8928*	1	LATCH GP-SWINGOUT LADDER	693
	6	1	**381-3633**	1	BRACKET AS	
	7	1	**420-8579**	1	COVER	
M	8	1	**106-4175**	4	BOLT (M20X2.5X60-MM)	
	9	1	**198-4778**	8	WASHER-HARD (13.5X30X12-MM THK)	
M	11	1	**329-3356**	4	NUT (M12X1.75-THD)	
	12	1	**5P-1076**	2	WASHER-HARD (13.5X30X4-MM THK)	
	13	1	**8T-4123**	4	WASHER (3.62X5.75X0.375-MM THK)	
M	14	1	**8T-4131**	4	NUT (M20X2.5-THD)	
M	15	1	**8T-4183**	15	BOLT (M12X1.75X40-MM)	
M	16	1	**8T-4184**	3	BOLT (M12X1.75X45-MM)	
M	17	1	**8T-4189**	4	BOLT (M8X1.25X20-MM)	
	18	1	**8T-4223**	16	WASHER-HARD (13.5X25.5X3-MM THK)	
	19	1	**8T-4224**	4	WASHER-HARD (8.8X16X2-MM THK)	
M	20	1	**8T-4910**	4	BOLT (M12X1.75X60-MM)	

M - METRIC PART
Y - SEPARATE ILLUSTRATION

379-5147 **LADDER GP** (contd.) **i06031611**

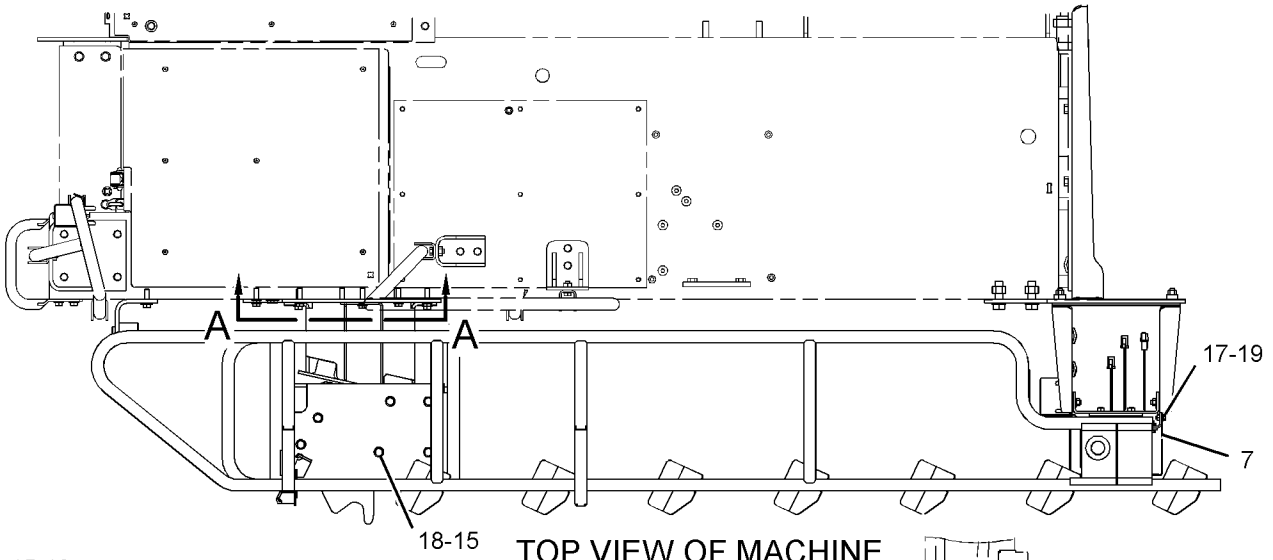

TOP VIEW OF MACHINE

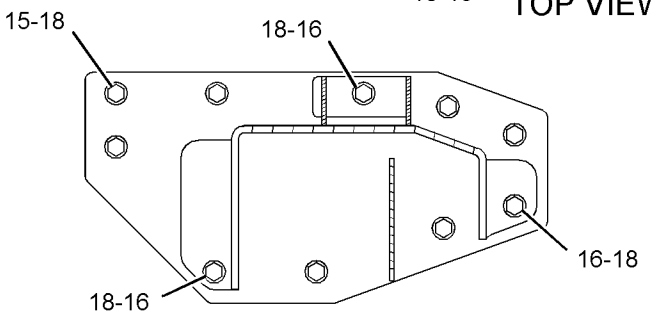

SECTION A-A

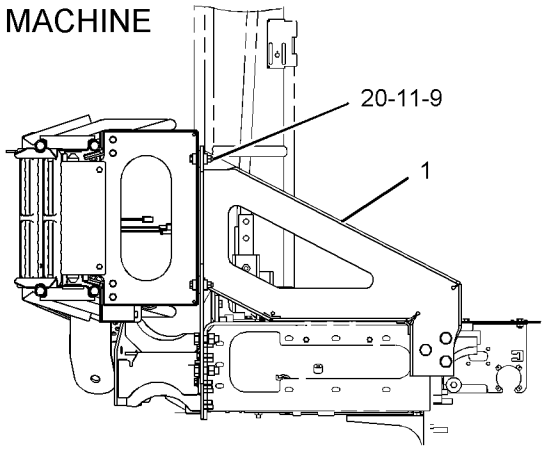

REAR VIEW OF MACHINE

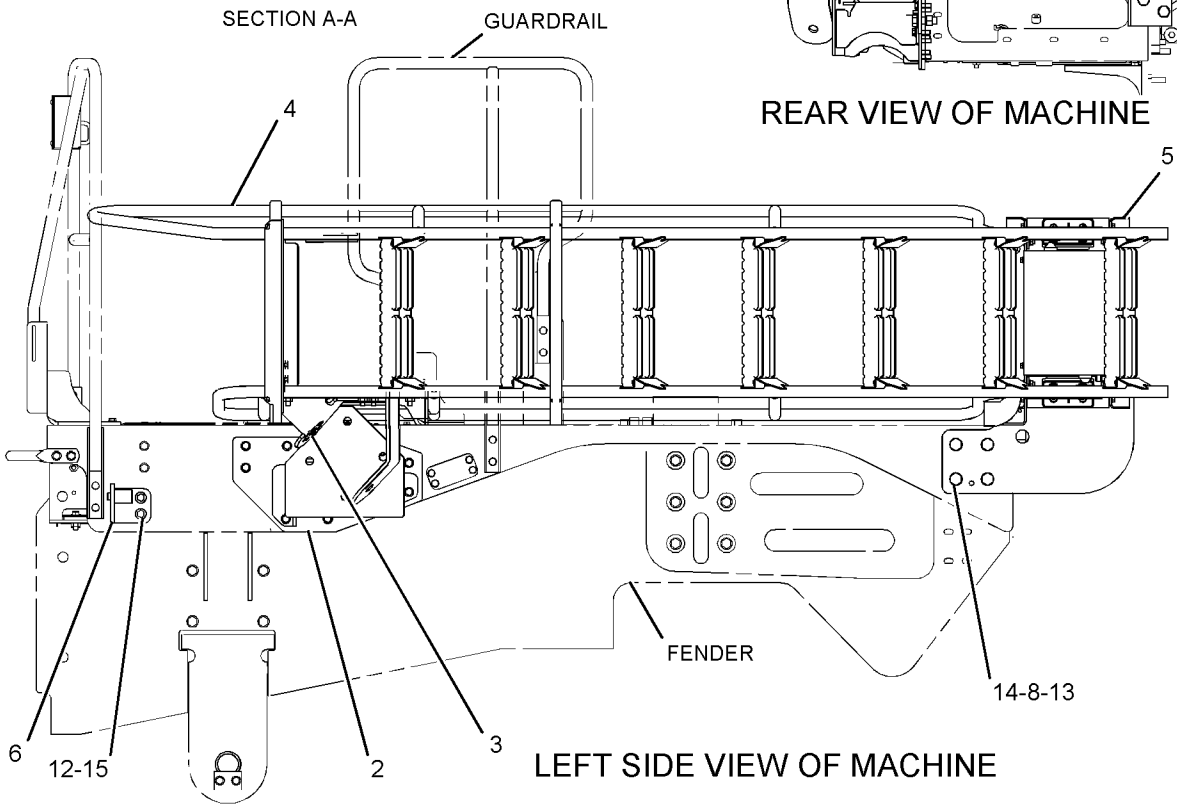

LEFT SIDE VIEW OF MACHINE

GRAPHIC #1 <END> g03804077

8Y-6400 LATCH GP

S/N: RAB1-UP
PART OF 380-9733 FLOORPLATE GP
AN ATTACHMENT

SMCS-7251 **i01743659**

NOTE	REF NO	GRAPHIC REF	PART NUMBER	QTY	PART NAME 1 2 3 4 5 6 (PRODUCT LEVEL)	SEE PAGE
	1	1	**7X-0766**	1	SPRING-LATCH	
	2	1	**8Y-5747**	1	BRACKET-MOUNTING	
	3	1	**8Y-3998**	1	HANDLE-LATCH	
	4	1	**8Y-3966**	1	WASHER (14.7X35X1.57-MM THK)	
	5	1	**8Y-8306**	1	SHAFT-LATCH	
	6	1	**6H-3956**	1	PIN	

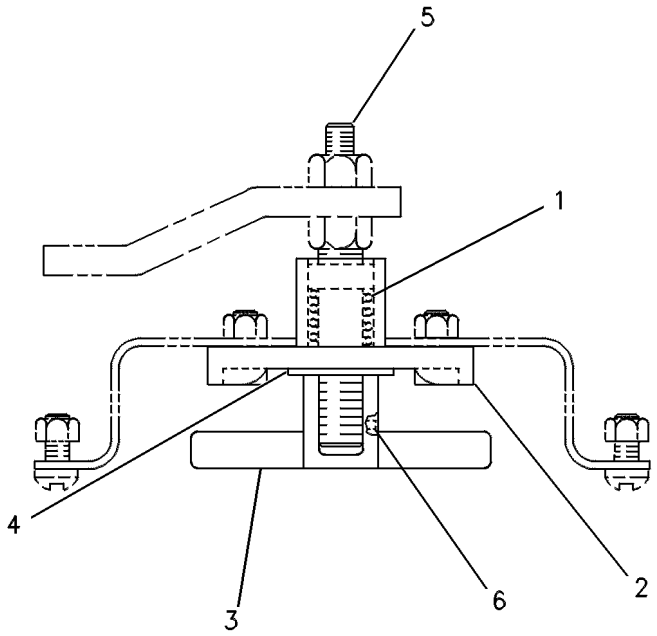

GRAPHIC #1 <END> g00236353

379-8928 LATCH GP-SWINGOUT LADDER

S/N: RAB1-UP
PART OF 379-5147 LADDER GP
AN ATTACHMENT

SMCS-7254 **i05452850**

NOTE	REF NO	GRAPHIC REF	PART NUMBER	QTY	PART NAME 1 2 3 4 5 6 (PRODUCT LEVEL)	SEE PAGE
	1	1	**2R-0364**	1	RING-RETAINING	
	2	1	**3E-4140**	4	WIPER-ROD	
	3	1	**8R-0739**	8	WASHER (10X18X1-MM THK)	
	4	1	**258-9906**	4	PAD	
	5	1	**263-5640**	1	SPACER (11X20X40-MM THK)	
	6	1	**279-1226**	2	BUSHING	
	7	1	**310-3978**	2	PLATE AS	
	8	1	**310-3980**	2	LEVER AS	
					(EACH INCLUDES)	
	8A	1	**3K-1505**	1	BUSHING	
	9	1	**310-3981**	1	ROD	
	10	1	**310-3982**	1	SHAFT	
	11	1	**310-3983**	2	PIN	
	12	1	**310-3985**	2	PLATE	
	13	1	**310-3986**	2	BLOCK-BEARING	
	14	1	**310-3988**	1	ACTUATOR GP	
	15	1	**315-6039**	1	ACTUATOR	
	16	1	**381-1838**	1	PLATE AS	
M	17	1	**153-3061**	8	BOLT (M8X1.25X130-MM)	
	18	1	**168-4511**	2	SCREW-PAN HEAD (10-32X1-IN)	
	19	1	**3B-4617**	3	PIN-COTTER	
	20	1	**6B-2781**	1	PIN	
	21	1	**6S-9277**	1	PIN	
	22	1	**7H-2614**	1	PIN	
	23	1	**7X-0599**	6	WASHER-HARD (13X20X2-MM THK)	
M	24	1	**8C-8585**	8	SCREW-BUTTON HEAD (M10X1.5X20-MM)	
	25	1	**8T-4121**	18	WASHER-HARD (11X21X2.5-MM THK)	
	26	1	**8T-4122**	2	WASHER-HARD (17X32X3.5-MM THK)	
M	27	1	**8T-4133**	8	NUT (M10X1.5-THD)	
M	28	1	**8T-4136**	1	BOLT (M10X1.5X25-MM)	
M	29	1	**8T-4178**	1	BOLT (M10X1.5X90-MM)	
M	30	1	**8T-4195**	8	BOLT (M10X1.5X30-MM)	
	31	1	**8T-4224**	12	WASHER-HARD (8.8X16X2-MM THK)	
M	32	1	**8T-4908**	4	BOLT (M8X1.25X25-MM)	

M - METRIC PART

379-8928 **LATCH GP-SWINGOUT LADDER (**contd.**)** **i05452850**

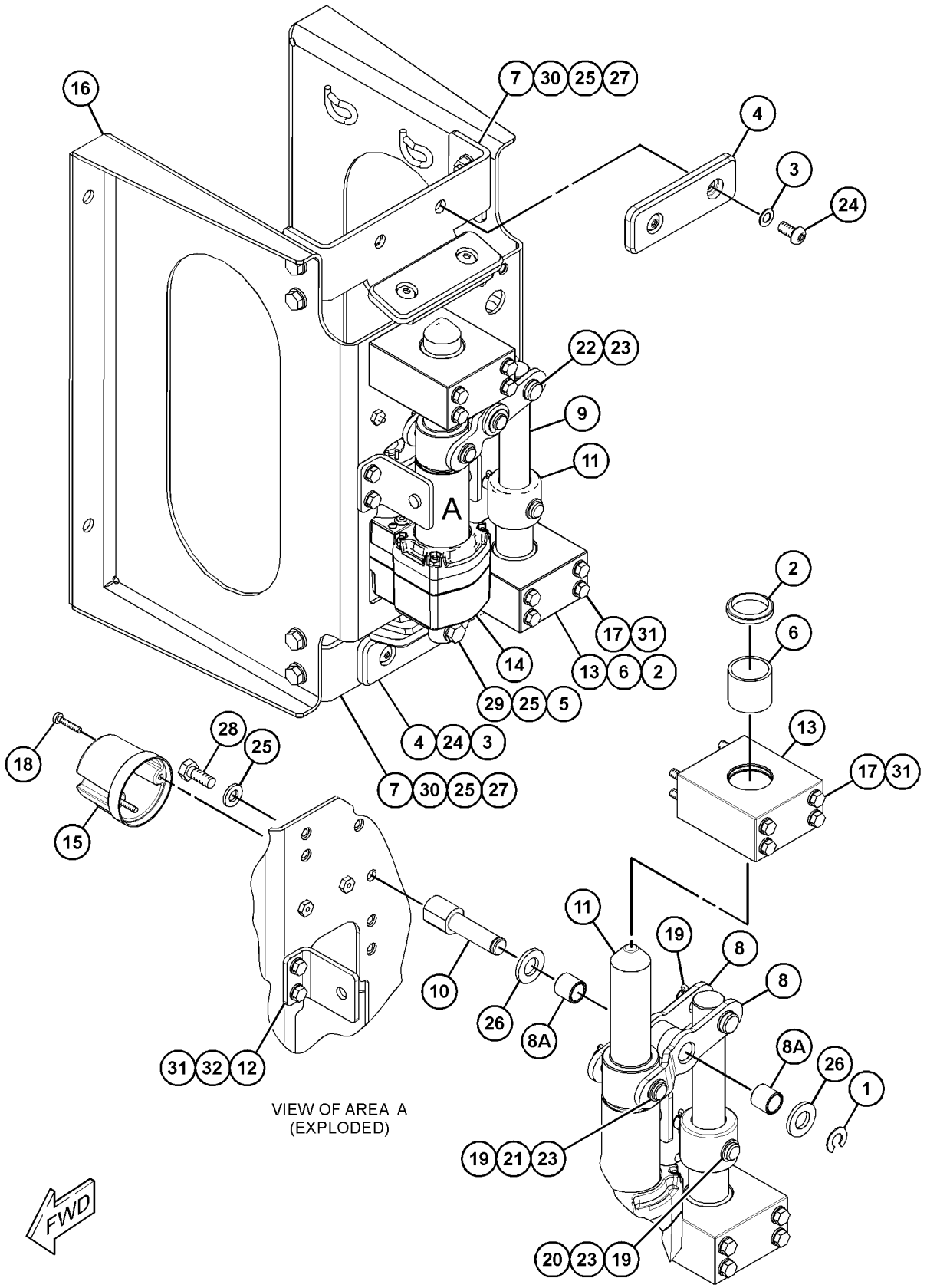

VIEW OF AREA A
(EXPLODED)

GRAPHIC #1 <END> g03492581

394-4312 LINES GP-AUTOMATIC LUBRICATION

S/N: RAB1-UP

PART OF 394-4311, 420-7713 LUBRICATION AR-AUTOMATIC

AN ATTACHMENT

SMCS-7510, 7540

i06004749

NOTE	REF NO	GRAPHIC REF	PART NUMBER	QTY	PART NAME 1 2 3 4 5 6 (PRODUCT LEVEL)	SEE PAGE
	1	1	**124-3019**	1	BRACKET AS	
M		1	**8T-3490**	1	NUT-WELD (M10X1.5-THD)	
	2	1	**162-6817**	2	TEE-SWIVEL	
	3	1	**189-1858**	1	COUPLER AS	
	4	1	**203-5443**	1	BRACKET AS	
	5	1	*250-1495*	1	ELBOW AS	
		1	**250-1494**	1	ELBOW	
		1	**6V-8398**	1	SEAL-O-RING	
	6	1	**391-4643**	1	BRACKET	
I	7	1	**394-4316**	1	HOSE AS	
I	8	1	**394-4317**	1	HOSE AS	
I	9	1	**394-4322**	1	HOSE AS	
I	10	1	**394-4323**	1	HOSE AS	
I	11	1	**394-4335**	1	HOSE AS	
Y	12	1	*422-1071*	1	VALVE GP-LUBE DISTRIBUTION (RIPPER)	725
	13	1	**435-2858**	1	BRACKET AS	
M		1	**8T-3490**	1	NUT-WELD (M10X1.5-THD)	
	14	1	**003-2143**	1	ELBOW	
	15	1	**105-7781**	1	SPACER (13.5X25X40-MM THK)	
	16	1	*148-8375*	1	ELBOW AS	
		1	**6V-8981**	1	ELBOW	
		1	**6V-8398**	2	SEAL-O-RING	
	17	1	**200-6345**	2	MOUNT (DUAL SWIVEL)	
	18	1	**204-2281**	4	STRAP-CABLE	
	19	1	**223-3490**	1	CLIP	
	20	1	*304-8002*	1	ADAPTER AS	
		1	**304-8001**	1	ADAPTER	
		1	**6V-8398**	1	SEAL-O-RING	
	21	1	**339-8937**	1	CLIP	
	22	1	**3B-6552**	2	ELBOW-PIPE	
	23	1	**3B-7255**	1	BUSHING-REDUCER	
	24	1	**3F-6166**	4	EXTENSION	
	25	1	**3J-5389**	1	PLUG	
	26	1	**4D-6466**	2	CLIP	
	27	1	**4D-7735**	5	CLIP	
	28	1	**4J-5477**	2	SEAL-O-RING	
	29	1	**5P-1076**	1	WASHER-HARD (13.5X30X4-MM THK)	
	30	1	**5P-9085**	1	CLIP	
	31	1	**5P-9938**	4	BOLT-HEAD LOCKING (3/8-16X1.375-IN)	
	32	1	**6D-4636**	1	CLIP	
	33	1	**1V-9365**	1	SPACER (0.493X0.675X1.19-IN THK)	
	34	1	**6V-9169**	2	NUT (13/16-16-THD)	
	35	1	**6V-9828**	2	CAP AS	
	36	1	**7K-1181**	1	STRAP-CABLE	
	37	1	**8L-5008**	4	ELBOW-PIPE	
	38	1	**8T-4121**	7	WASHER-HARD (11X21X2.5-MM THK)	

394-4312 **LINES GP-AUTOMATIC LUBRICATION (**contd.**)** **i06004749**

NOTE	REF NO	GRAPHIC REF	PART NUMBER	QTY	PART NAME 1 2 3 4 5 6 (PRODUCT LEVEL)	SEE PAGE
	39	1	**8T-4123**	1	WASHER (3.62X5.75X0.375-MM THK)	
M	40	1	**8T-4133**	3	NUT (M10X1.5-THD)	
M	41	1	**8T-4136**	2	BOLT (M10X1.5X25-MM)	
M	42	1	**8T-4137**	7	BOLT (M10X1.5X20-MM)	
M	43	1	**8T-4185**	1	BOLT (M10X1.5X50-MM)	
	44	1	**8T-4223**	4	WASHER-HARD (13.5X25.5X3-MM THK)	
M	45	1	**8T-4244**	2	NUT (M12X1.75-THD)	
	46	1	**8T-4896**	11	WASHER-HARD (10.2X18.5X2.5-MM THK)	
M	47	1	**8T-4956**	2	BOLT (M12X1.75X35-MM)	
M	48	1	**8T-6868**	1	BOLT (M12X1.75X80-MM)	
	49	1	**8T-9398**	3	BOLT (3/4-10X1.75-IN)	
	50	1	**9X-8250**	1	CLIP	
	51	1	**9X-8582**	11	CLIP	

I - REFER TO HYDRAULIC INFORMATION SYSTEM
M - METRIC PART
Y - SEPARATE ILLUSTRATION

394-4312 **LINES GP-AUTOMATIC LUBRICATION (**contd.**)** **i06004749**

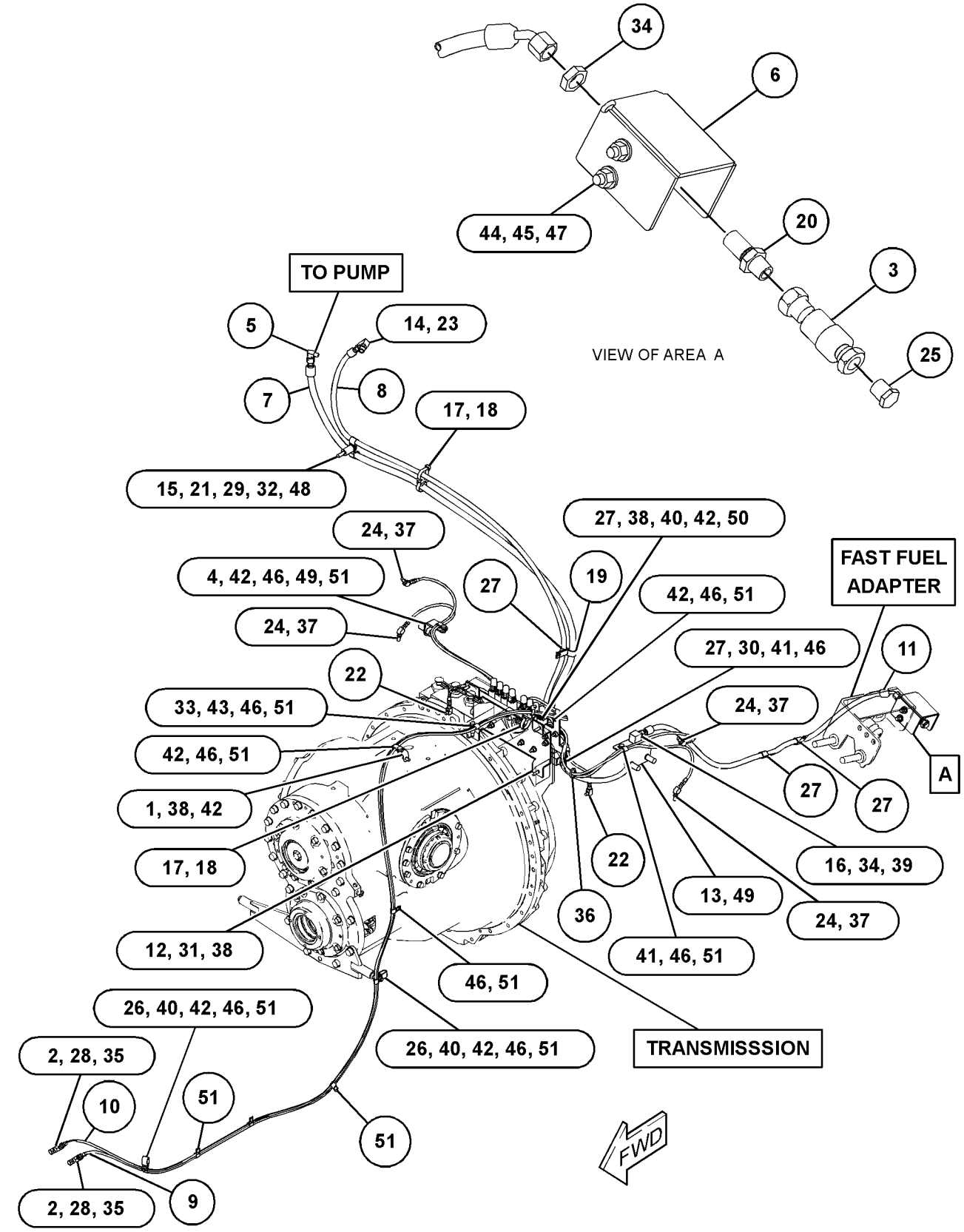

GRAPHIC #1 <END> g03796742

394-4313 LINES GP-AUTOMATIC LUBRICATION–REAR

S/N: RAB1-UP

PART OF 394-4311 LUBRICATION AR-AUTOMATIC

AN ATTACHMENT

SMCS-7510, 7540

i05767703

NOTE	REF NO	GRAPHIC REF	PART NUMBER	QTY	PART NAME 1 2 3 4 5 6 (PRODUCT LEVEL)	SEE PAGE
	1	1	**203-5443**	2	BRACKET AS	
	2	1	**271-2322**	1	BRACKET AS	
Y	3	1	*422-1075*	1	VALVE GP-LUBE DISTRIBUTION (RIPPER)	727
I	4	1	**457-1066**	1	HOSE AS	
	5	1	**091-9035**	1	SPACER (11X25X20-MM THK)	
	6	1	**3B-6552**	2	ELBOW-PIPE	
	7	1	**3F-6166**	4	EXTENSION	
	8	1	**4L-9337**	1	BOLT (3/8-16X1.5-IN)	
	9	1	**4M-8973**	4	ELBOW	
	10	1	**5P-1075**	2	WASHER-HARD (10.2X22.5X3-MM THK)	
	11	1	**5P-7464**	3	CLIP (SLOT)	
	12	1	**5P-7465**	3	CLIP (TAB)	
	13	1	**5P-9085**	2	CLIP	
	14	1	**6V-1249**	3	GROMMET (22-MM ID)	
	15	1	**6V-2383**	4	CLIP	
	16	1	**7X-0289**	1	BOLT (3/8-16X1.875-IN)	
	17	1	**7X-0366**	2	BOLT (3/4-10X2-IN)	
	18	1	**8T-4121**	5	WASHER-HARD (11X21X2.5-MM THK)	
M	19	1	**8T-4133**	2	NUT (M10X1.5-THD)	
M	20	1	**8T-4137**	9	BOLT (M10X1.5X20-MM)	
M	21	1	**8T-4139**	3	BOLT (M12X1.75X30-MM)	
M	22	1	**8T-4183**	1	BOLT (M12X1.75X40-MM)	
M	23	1	**8T-4192**	2	BOLT (M12X1.75X25-MM)	
	24	1	**8T-4223**	6	WASHER-HARD (13.5X25.5X3-MM THK)	
	25	1	**8T-4896**	6	WASHER-HARD (10.2X18.5X2.5-MM THK)	
	26	1	**9X-8582**	6	CLIP	

I - REFER TO HYDRAULIC INFORMATION SYSTEM
M - METRIC PART
Y - SEPARATE ILLUSTRATION

394-4313 **LINES GP-AUTOMATIC LUBRICATION (**contd.**)** **i05767703**

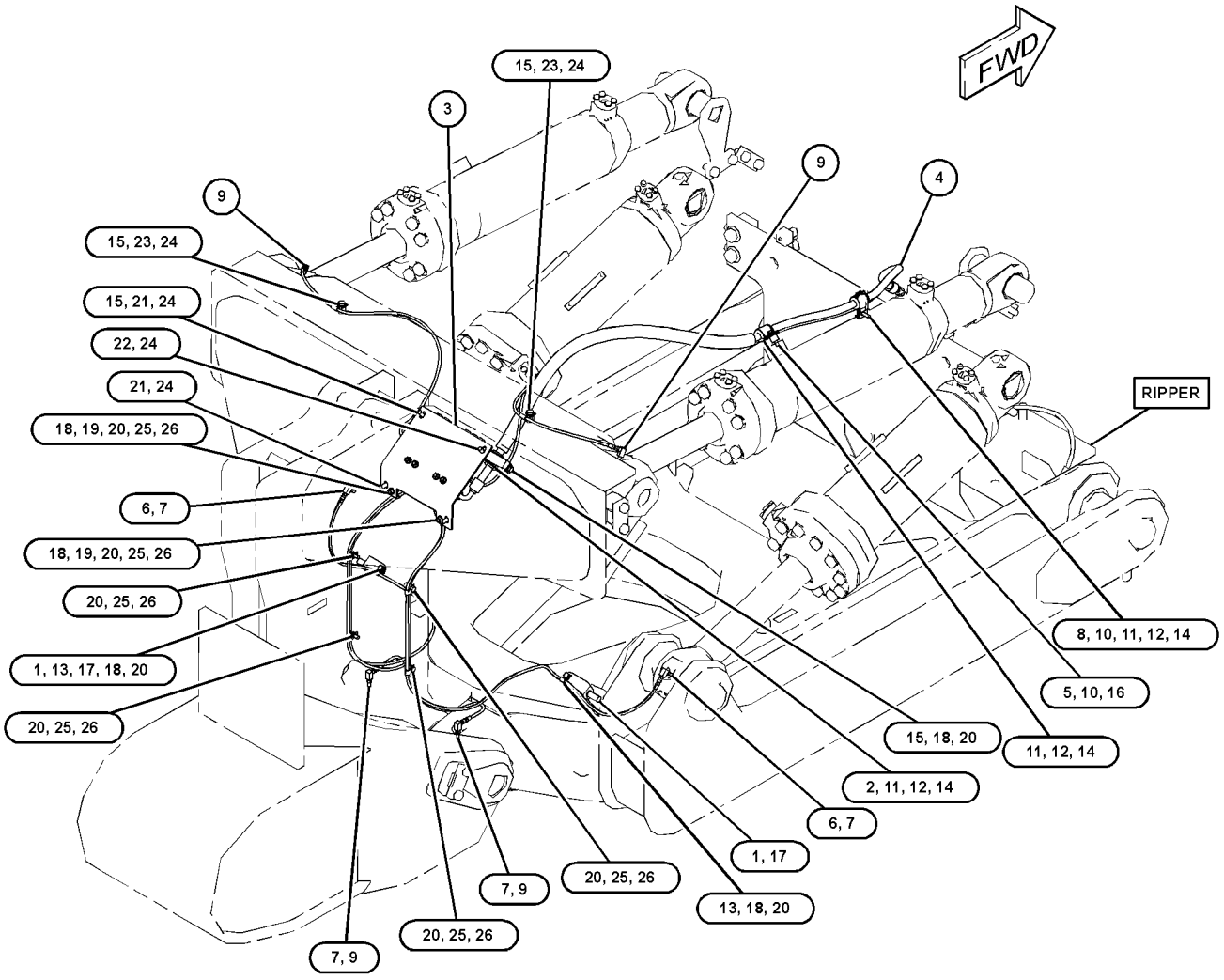

GRAPHIC #1 <END> g03692171

394-4314 LINES GP-AUTOMATIC LUBRICATION–FRONT

S/N: RAB1-UP

PART OF 394-4311, 420-7713 LUBRICATION AR-AUTOMATIC

AN ATTACHMENT

SMCS-7510, 7540

i06135065

NOTE	REF NO	GRAPHIC REF	PART NUMBER	QTY	PART NAME 1 2 3 4 5 6 (PRODUCT LEVEL)	SEE PAGE
	1	1	**1H-7855**	1	SPACER (0.531X1X1.38-IN THK)	
	2	1	**9J-4782**	2	PROTECTOR	
	3	1	**124-3019**	1	BRACKET AS	
M		1	**8T-3490**	1	NUT-WELD (M10X1.5-THD)	
	4	1	**127-9323**	1	BRACKET AS	
M		1	**8T-3490**	1	NUT-WELD (M10X1.5-THD)	
	5	1	**193-5576**	1	BRACKET AS	
M		1	**8T-3490**	1	NUT-WELD (M10X1.5-THD)	
Y	6	1	**269-5346**	1	VALVE GP-LUBE DISTRIBUTION (2-INJECTOR)	722
	7	1	**283-8305**	1	BRACKET AS	
M		1	**8T-3490**	1	NUT-WELD (M10X1.5-THD)	
I	8	1	**460-5880**	1	HOSE AS	
I	9	1	**394-4330**	1	HOSE AS	
I	10	1	**394-4331**	1	HOSE AS	
I	11	1	**394-4332**	1	HOSE AS	
	12	1	**420-0941**	2	SPACER (11.3X12.7X11-MM THK)	
	13	1	**421-5879**	1	BRACKET	
I	14	1	**422-1076**	1	HOSE AS	
	15	1	**422-9008**	1	BLOCK	
I	16	1	**447-7382**	1	HOSE AS	
	17	1	**091-1442**	1	SPACER (11X19X24-MM THK)	
	18	1	*148-8375*	3	ELBOW AS	
					(EACH INCLUDES)	
		1	**6V-8981**	1	ELBOW	
		1	**6V-8398**	2	SEAL-O-RING	
	19	1	**200-6345**	5	MOUNT (DUAL SWIVEL)	
	20	1	**204-2281**	10	STRAP-CABLE	
M	21	1	**259-7140**	1	STUD-TAPERLOCK (M10X1.5X80-MM)	
	22	1	**2D-1683**	2	FITTING (1/8-27 PTF)	
	23	1	*352-6496*	1	ADAPTER AS	
		1	**8C-6871**	1	CONNECTOR	
		1	**228-7090**	1	SEAL-O-RING	
	24	1	**3B-8489**	2	FITTING-GREASE (1/8-27 PTF)	
	25	1	**3J-5390**	1	PLUG	
	26	1	**4D-8123**	2	CLIP	
	27	1	**4M-8973**	2	ELBOW	
	28	1	**6V-9169**	3	NUT (13/16-16-THD)	
	29	1	**8T-4121**	8	WASHER-HARD (11X21X2.5-MM THK)	
	30	1	**8T-4123**	2	WASHER (3.62X5.75X0.375-MM THK)	
M	31	1	**8T-4133**	1	NUT (M10X1.5-THD)	
M	32	1	**8T-4136**	2	BOLT (M10X1.5X25-MM)	
M	33	1	**8T-4137**	3	BOLT (M10X1.5X20-MM)	
M	34	1	**8T-4172**	1	BOLT (M10X1.5X80-MM)	
M	35	1	**8T-4186**	1	BOLT (M10X1.5X40-MM)	
M	36	1	**8T-4192**	1	BOLT (M12X1.75X25-MM)	
	37	1	**8T-4223**	1	WASHER-HARD (13.5X25.5X3-MM THK)	
M	38	1	**8T-5005**	1	BOLT (M10X1.5X70-MM)	

394-4314 **LINES GP-AUTOMATIC LUBRICATION (**contd.**)** **i06135065**

NOTE	REF NO	GRAPHIC REF	PART NUMBER	QTY	PART NAME 1 2 3 4 5 6 (PRODUCT LEVEL)	SEE PAGE
	39	1	**9X-2027**	1	WASHER (11X18X2-MM THK)	
	40	1	**9X-8250**	8	CLIP	

I - REFER TO HYDRAULIC INFORMATION SYSTEM
M - METRIC PART
Y - SEPARATE ILLUSTRATION

394-4314 **LINES GP-AUTOMATIC LUBRICATION (**contd.**)** **i06135065**

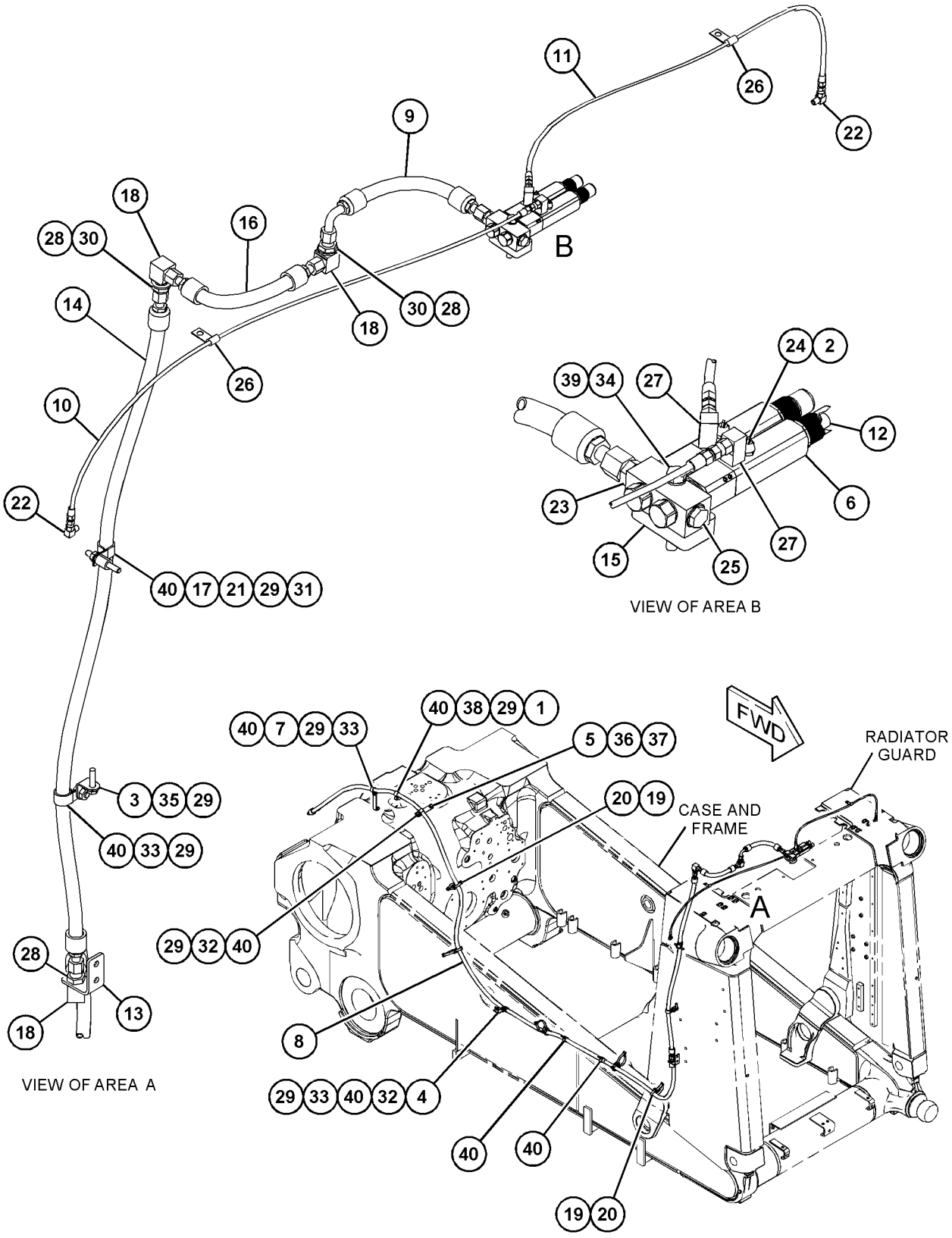

GRAPHIC #1 <END> g03686836

420-7714 LINES GP-AUTOMATIC LUBRICATION

S/N: RAB1-247

PART OF 420-7713 LUBRICATION AR-AUTOMATIC

AN ATTACHMENT

SMCS-7510, 7540

i05448028

NOTE	REF NO	GRAPHIC REF	PART NUMBER	QTY	PART NAME 1 2 3 4 5 6 (PRODUCT LEVEL)	SEE PAGE
I	1	1	**420-7715**	1	HOSE AS	
I	2	1	**420-7716**	1	HOSE AS	
	3	1	**420-7717**	1	PLATE AS	
	4	1	**420-7718**	2	PLATE AS	
Y	5	1	*423-0729*	1	VALVE GP-LUBE DISTRIBUTION (RIPPER, RH)	729
Y	6	1	*444-2663*	1	VALVE GP-LUBE DISTRIBUTION (RIPPER, LH)	731
	7	1	**448-4470**	2	BRACKET	
	8	1	**138-7500**	1	SPACER (11X25X50-MM THK)	
	9	1	**179-0469**	1	SPACER (11X20X40-MM THK)	
	10	1	**198-4777**	4	WASHER-HARD (11X25X10-MM THK)	
	11	1	**3F-6166**	4	EXTENSION	
	12	1	**4M-8973**	6	ELBOW	
	13	1	**5M-2894**	2	WASHER-HARD (10.2X18.5X2.5-MM THK)	
	14	1	**5P-7464**	4	CLIP (SLOT)	
	15	1	**5P-7465**	4	CLIP (TAB)	
	16	1	**6V-1249**	4	GROMMET (22-MM ID)	
	17	1	**7X-0575**	3	WASHER-HARD (10.2X22.5X5-MM THK)	
	18	1	**8T-2501**	4	BOLT (3/8-16X2-IN)	
	19	1	**8T-4121**	7	WASHER-HARD (11X21X2.5-MM THK)	
M	20	1	**8T-4136**	6	BOLT (M10X1.5X25-MM)	
M	21	1	**8T-4172**	1	BOLT (M10X1.5X80-MM)	
M	22	1	**8T-4186**	2	BOLT (M10X1.5X40-MM)	
M	23	1	**8T-4196**	4	BOLT (M10X1.5X35-MM)	
	24	1	**8T-7008**	1	BOLT (3/8-16X3-IN)	
	25	1	**9B-7237**	2	BOLT (3/8-16X1.25-IN)	
	26	1	**9X-2027**	4	WASHER (11X18X2-MM THK)	
	27	1	**9X-8250**	2	CLIP	
	28	1	**9X-8582**	2	CLIP	

I - REFER TO HYDRAULIC INFORMATION SYSTEM
M - METRIC PART
Y - SEPARATE ILLUSTRATION

420-7714 **LINES GP-AUTOMATIC LUBRICATION (**contd.**)** **i05448028**

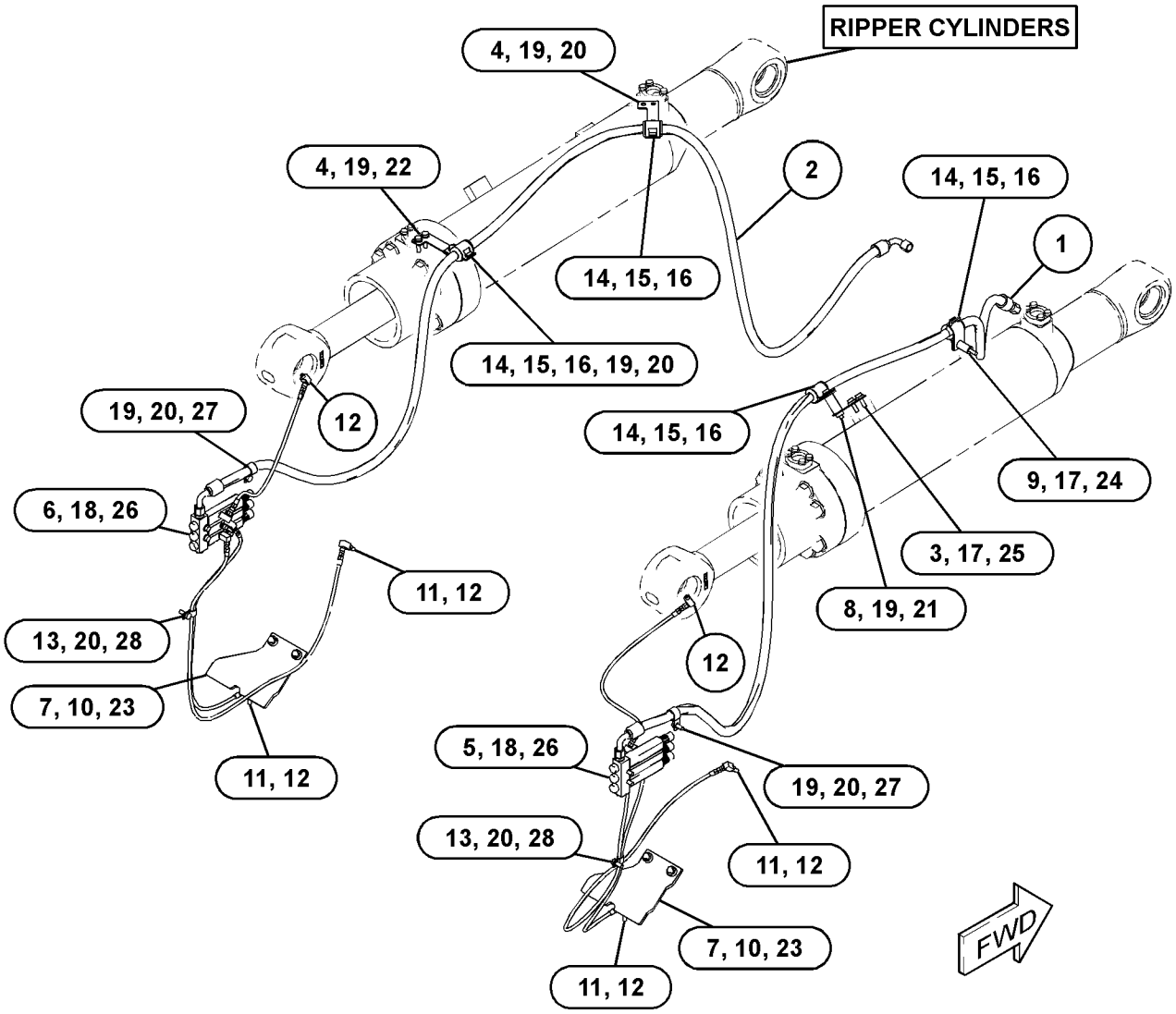

GRAPHIC #1 <END> g03502219

420-7714 LINES GP-AUTOMATIC LUBRICATION

S/N: RAB248-UP
PART OF 420-7713 LUBRICATION AR-AUTOMATIC
AN ATTACHMENT

SMCS-7510, 7540

i06038596

NOTE	REF NO	GRAPHIC REF	PART NUMBER	QTY	PART NAME 1 2 3 4 5 6 (PRODUCT LEVEL)	SEE PAGE
	1	1	**420-7717**	1	PLATE AS	
	2	1	**420-7718**	2	PLATE AS	
Y	3	1	*423-0729*	1	VALVE GP-LUBE DISTRIBUTION (RIPPER, RH)	729
Y	4	1	*444-2663*	1	VALVE GP-LUBE DISTRIBUTION (RIPPER, LH)	731
C	5	1	**459-7545**	2	BRACKET AS	
CI	6	1	**460-5303**	1	HOSE AS	
CI	7	1	**460-5304**	1	HOSE AS	
	8	1	**138-7500**	1	SPACER (11X25X50-MM THK)	
	9	1	**179-0469**	1	SPACER (11X20X40-MM THK)	
	10	1	**198-4777**	4	WASHER-HARD (11X25X10-MM THK)	
C	11	1	**3F-6166**	2	EXTENSION	
	12	1	**4M-8973**	6	ELBOW	
	13	1	**5M-2894**	2	WASHER-HARD (10.2X18.5X2.5-MM THK)	
C	14	1	**5P-7464**	6	CLIP (SLOT)	
C	15	1	**5P-7465**	6	CLIP (TAB)	
C	16	1	**6V-1249**	6	GROMMET (22-MM ID)	
	17	1	**7X-0575**	3	WASHER-HARD (10.2X22.5X5-MM THK)	
	18	1	**8T-2501**	4	BOLT (3/8-16X2-IN)	
	19	1	**8T-4121**	7	WASHER-HARD (11X21X2.5-MM THK)	
CM	20	1	**8T-4136**	4	BOLT (M10X1.5X25-MM)	
M	21	1	**8T-4172**	1	BOLT (M10X1.5X80-MM)	
CM	22	1	**8T-4186**	6	BOLT (M10X1.5X40-MM)	
CM	23	1	**8T-4195**	2	BOLT (M10X1.5X30-MM)	
	24	1	**8T-7008**	1	BOLT (3/8-16X3-IN)	
	25	1	**9B-7237**	2	BOLT (3/8-16X1.25-IN)	
	26	1	**9X-2027**	4	WASHER (11X18X2-MM THK)	
	27	1	**9X-8582**	2	CLIP	

C - CHANGE FROM PREVIOUS TYPE
I - REFER TO HYDRAULIC INFORMATION SYSTEM
M - METRIC PART
Y - SEPARATE ILLUSTRATION

420-7714 **LINES GP-AUTOMATIC LUBRICATION (**contd.**)** **i06038596**

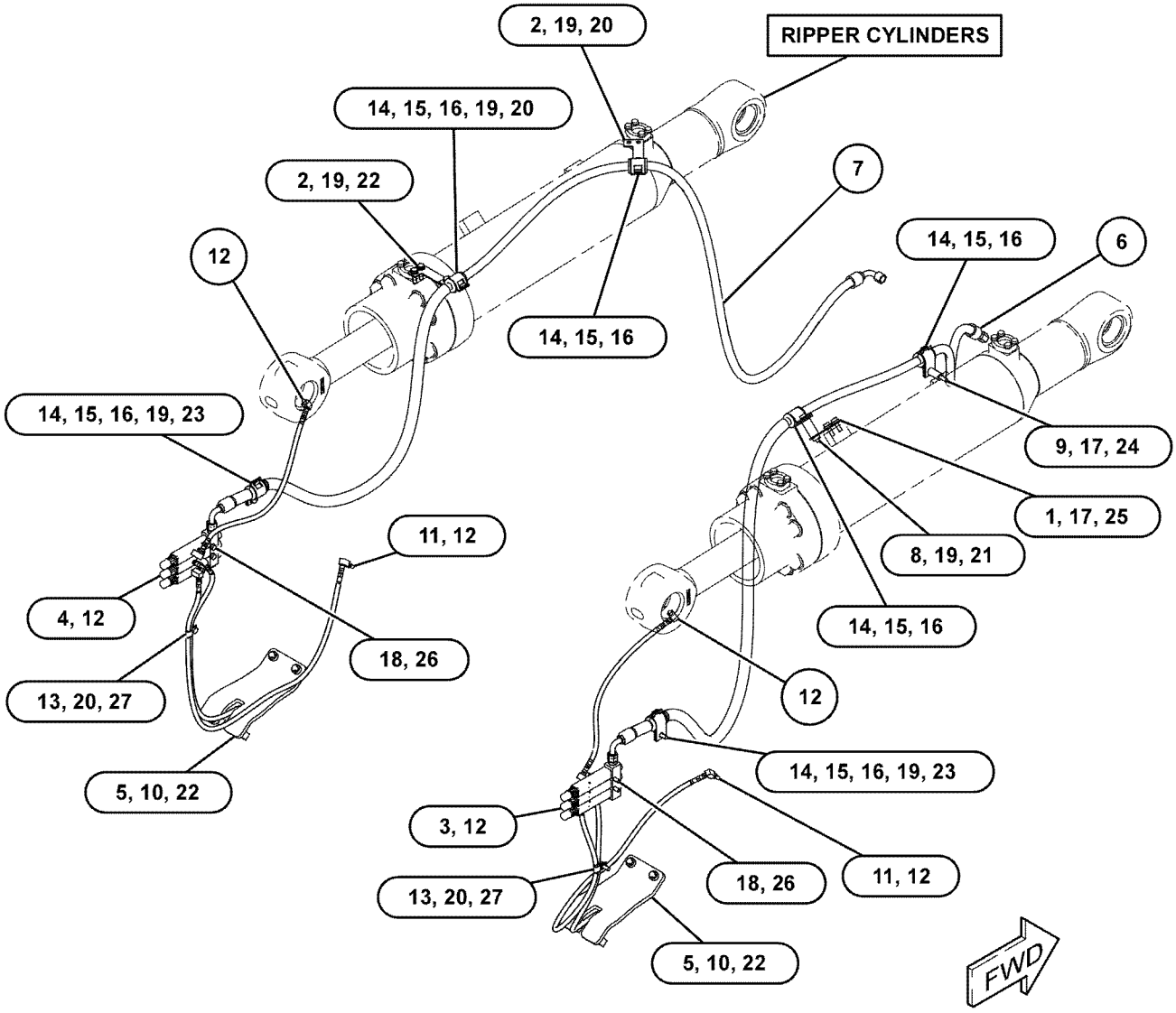

GRAPHIC #1 <END> g03795020

394-4311 LUBRICATION AR-AUTOMATIC—SINGLE SHANK RIPPER

S/N: RAB1-UP

FOR USE WITH 359-6370—PAGE: 1296, 359-6371—PAGE: 1296, 359-6372—PAGE: 1296

AN ATTACHMENT

SMCS-7540 **i06602410**

NOTE	REF NO	GRAPHIC REF	PART NUMBER	QTY	PART NAME 1 2 3 4 5 6 (PRODUCT LEVEL)	SEE PAGE
Y	1	1	*394-4312*	1	LINES GP-AUTOMATIC LUBRICATION	695
Y	2	1	*394-4313*	1	LINES GP-AUTOMATIC LUBRICATION	698
Y	3	1	*394-4314*	1	LINES GP-AUTOMATIC LUBRICATION (FRONT)	700
Y	4	1	*394-4315*	1	PUMP GP-LUBRICATION	709

Y - SEPARATE ILLUSTRATION

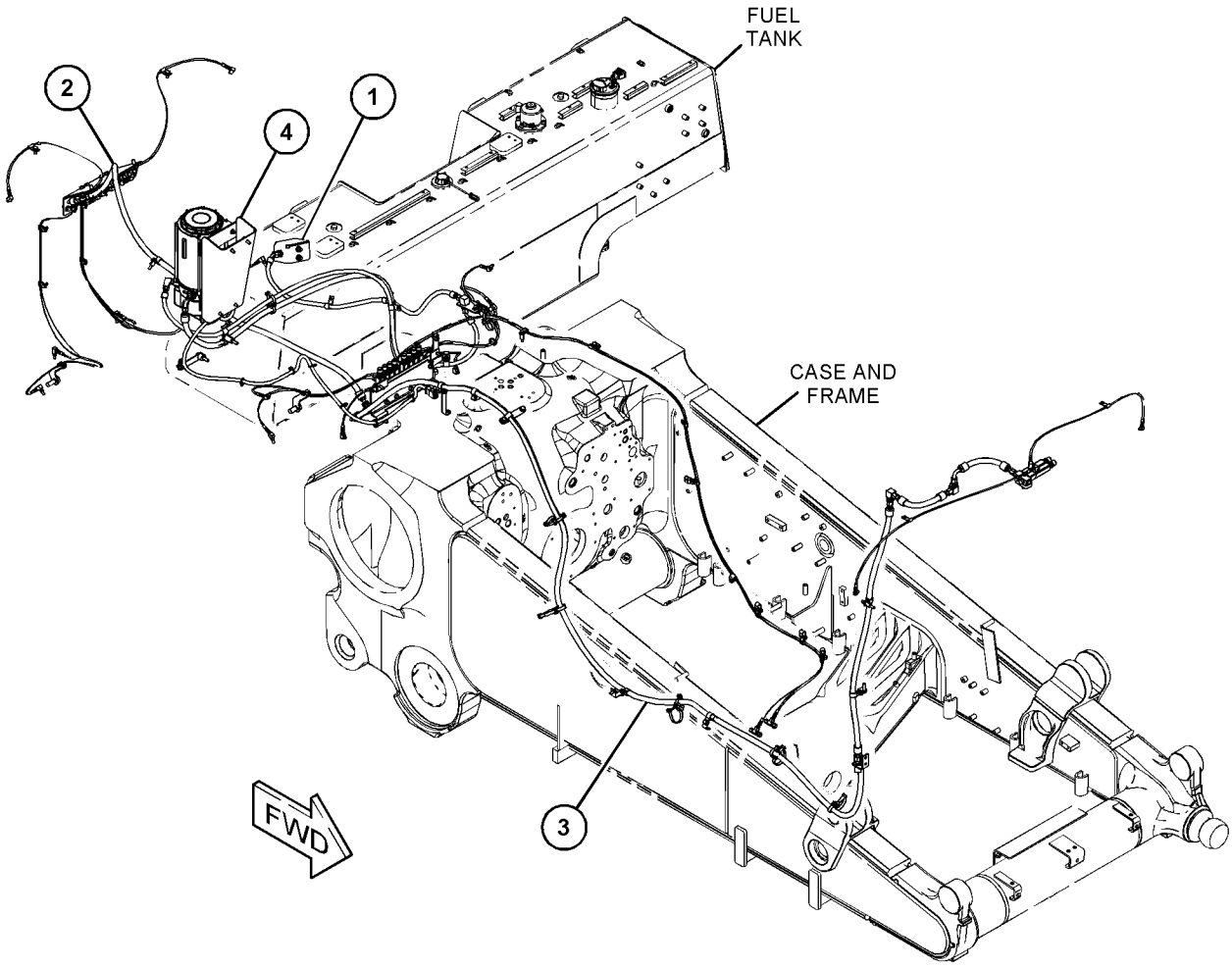

GRAPHIC #1 <END> g03485979

420-7713 LUBRICATION AR-AUTOMATIC—MULTISHANK RIPPER

S/N: RAB1-UP

FOR USE WITH 359-6373—PAGE: 1293, 359-6374—PAGE: 1293

AN ATTACHMENT

SMCS-7540 **i05447921**

NOTE	REF NO	GRAPHIC REF	PART NUMBER	QTY	PART NAME 1 2 3 4 5 6 (PRODUCT LEVEL)	SEE PAGE
Y	1	1	*394-4312*	1	LINES GP-AUTOMATIC LUBRICATION	695
Y	2	1	*394-4314*	1	LINES GP-AUTOMATIC LUBRICATION (FRONT)	700
Y	3	1	*394-4315*	1	PUMP GP-LUBRICATION (RIPPER)	709
Y	4	1	*420-7714*	1	LINES GP-AUTOMATIC LUBRICATION	703

Y - SEPARATE ILLUSTRATION

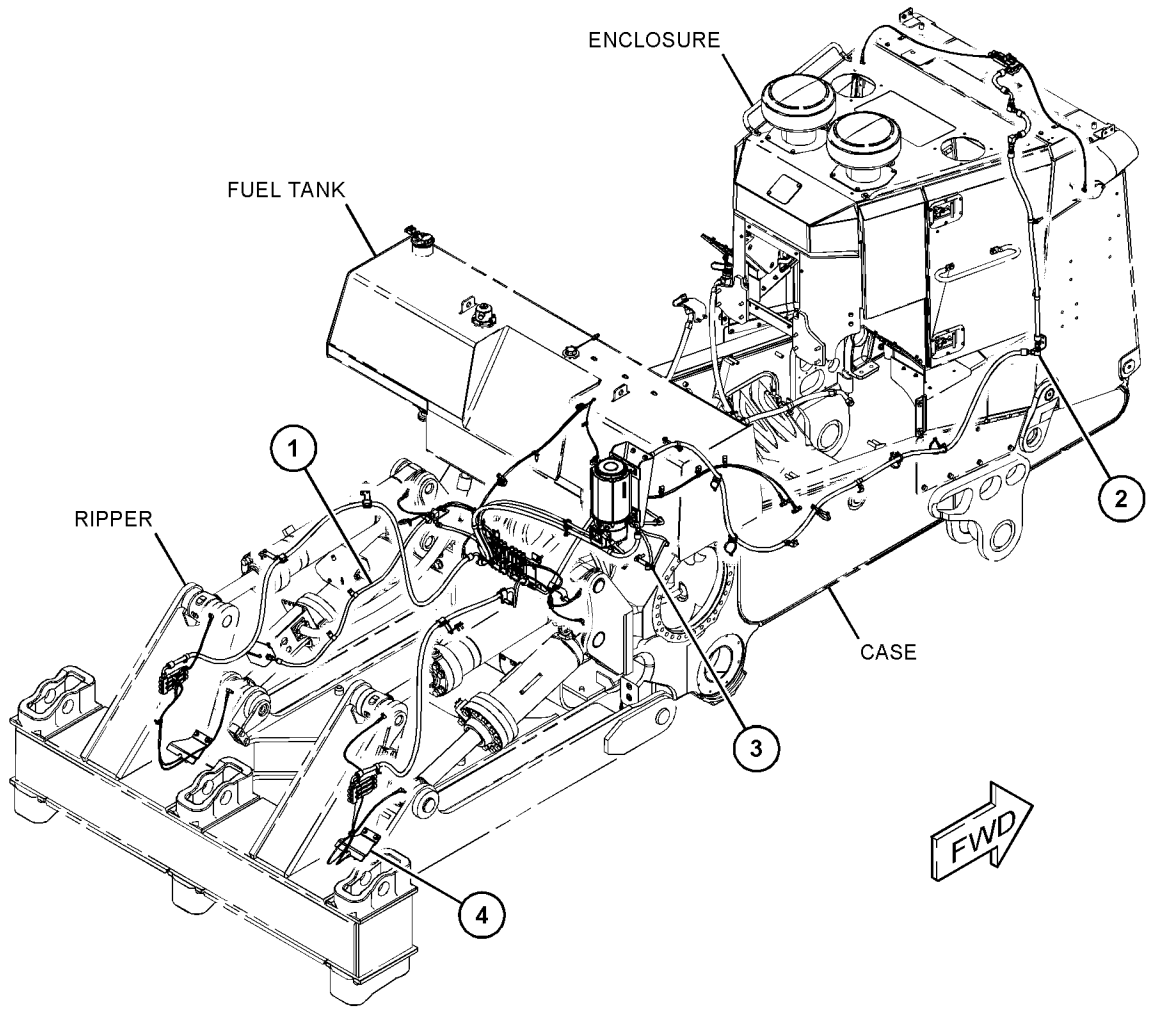

GRAPHIC #1 <END> g03499669

394-4315 PUMP GP-LUBRICATION—RIPPER

S/N: RAB1-UP

PART OF 394-4311, 420-7713 LUBRICATION AR-AUTOMATIC

AN ATTACHMENT

SMCS-7516, 7540

i05865538

NOTE	REF NO	GRAPHIC REF	PART NUMBER	QTY	PART NAME 1 2 3 4 5 6 (PRODUCT LEVEL)	SEE PAGE
	1	1	**294-5076**	1	PLATE AS	
	2	1	**394-4333**	1	BRACKET AS	
Y	3	1	**396-0946**	1	PUMP GP-LUBRICATION (RIPPER)	711
Y	4	1	**422-3616**	1	HARNESS AS-PUMP	268
	5	1	**198-4777**	4	WASHER-HARD (11X25X10-MM THK)	
	6	1	**1S-0994**	1	CLIP	
	7	1	**1W-8793**	1	SPACER (13.8X30X20-MM THK)	
	8	1	**2V-1771**	3	GROMMET	
	9	1	**7K-1181**	6	STRAP-CABLE	
	10	1	**7X-0589**	4	WASHER-HARD (12X28.5X5-MM THK)	
	11	1	**8S-0948**	2	CLIP	
	12	1	**8T-4121**	3	WASHER-HARD (11X21X2.5-MM THK)	
M	13	1	**8T-4136**	1	BOLT (M10X1.5X25-MM)	
M	14	1	**8T-4195**	4	BOLT (M10X1.5X30-MM)	
M	15	1	**8T-4196**	4	BOLT (M10X1.5X35-MM)	
	16	1	**8T-4223**	1	WASHER-HARD (13.5X25.5X3-MM THK)	
M	17	1	**8T-4910**	1	BOLT (M12X1.75X60-MM)	

M - METRIC PART
Y - SEPARATE ILLUSTRATION

394-4315 **PUMP GP-LUBRICATION (**contd.**)** **i05865538**

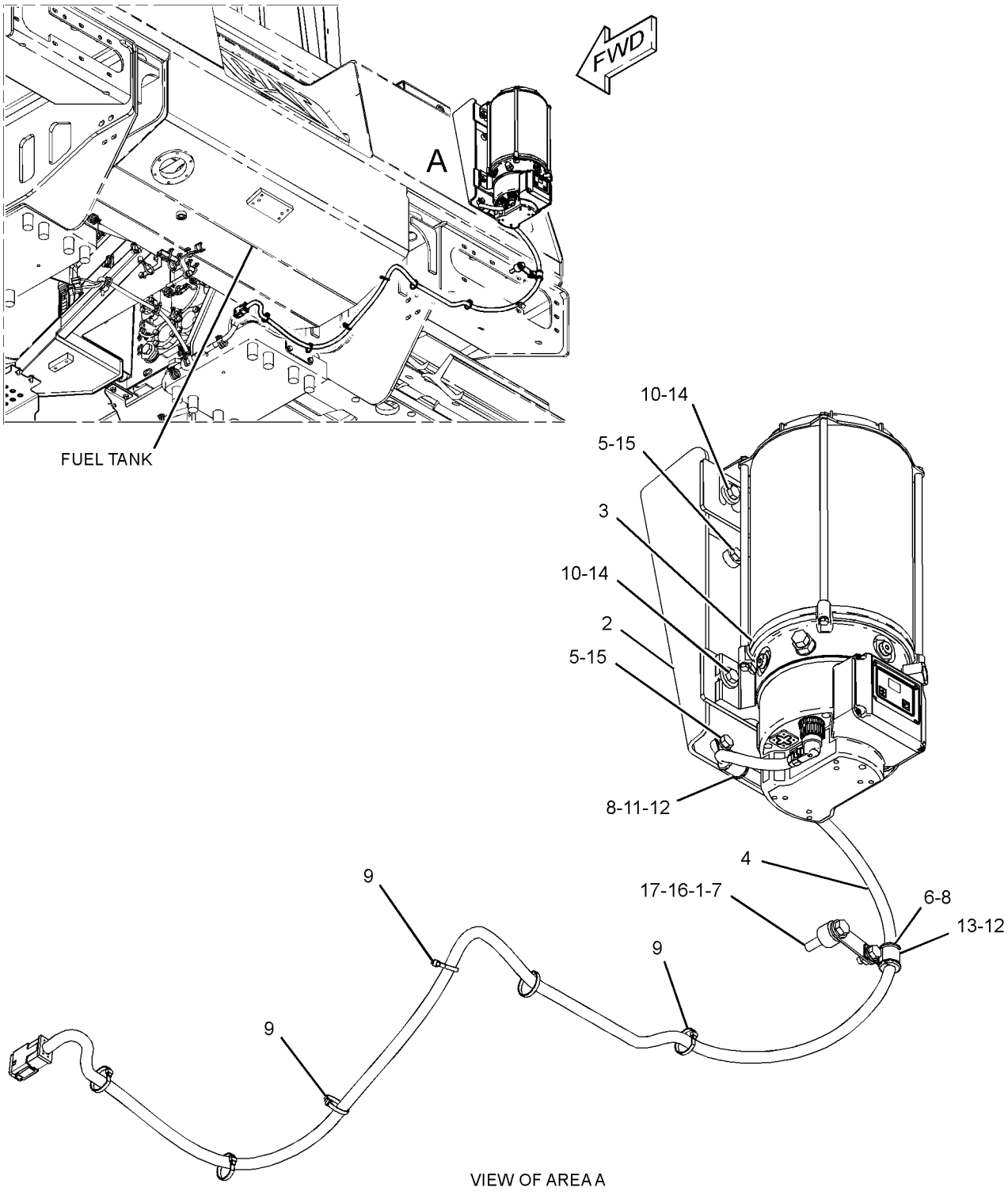

VIEW OF AREA A

GRAPHIC #1 <END> g03705202

396-0946 PUMP GP-LUBRICATION–RIPPER

S/N: RAB1-UP
PART OF 394-4315 PUMP GP-LUBRICATION
AN ATTACHMENT

SMCS-7516, 7540

i05345733

NOTE	REF NO	GRAPHIC REF	PART NUMBER	QTY	PART NAME 1 2 3 4 5 6 (PRODUCT LEVEL)	SEE PAGE
M	1	1	**193-9055**	4	SCREW-HEX FLANGE (M4X1.79X17-MM)	
	2	1	**419-5980**	3	PUMP-ELEMENT	
	3	1	**419-5981**	1	VALVE-RELIEF	
	4	1	**419-5982**	1	COVER-HOUSING	
	5	1	**419-5984**	1	RESERVOIR	
	6	1	**419-5985**	1	VALVE-RELIEF	
	7	1	**419-5986**	4	SLEEVE-SUPPORT	
	8	1	**419-5987**	1	COVER-RESERVOIR	
	9	1	**419-5988**	1	ADAPTER	
	10	1	**419-5990**	1	SEAL-O-RING	
	11	1	**419-5991**	2	SEAL-O-RING	
	12	1	**419-5992**	1	PLATE-RESERVOIR	
	13	1	**419-5993**	1	PADDLE	
M	14	1	**8C-8451**	4	BOLT (M6X1X40-MM)	
M	15	1	**8T-4138**	4	BOLT (M6X1X20-MM)	
	16	1	**9X-8256**	8	WASHER (6.6X12X2-MM THK)	

M - METRIC PART

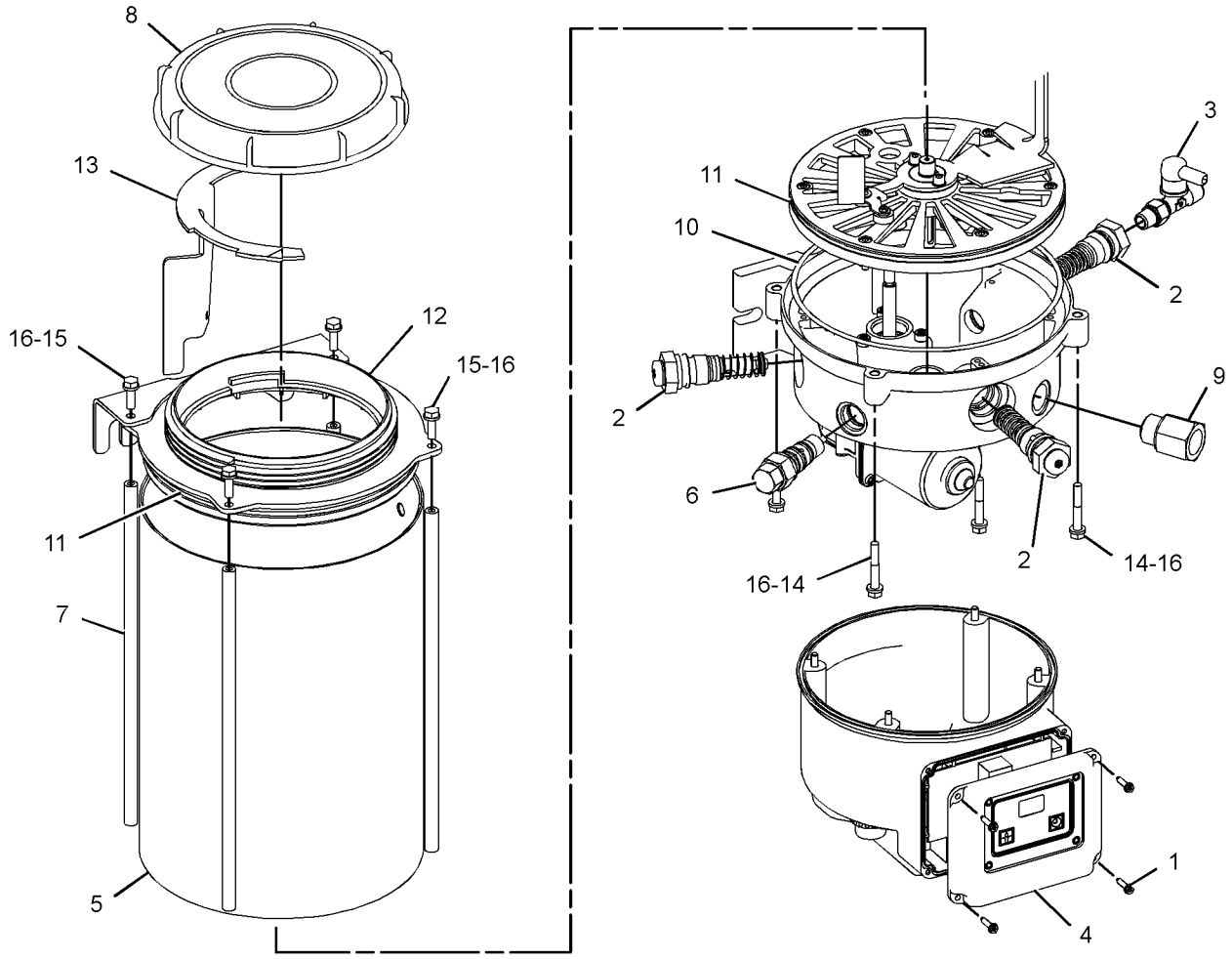

GRAPHIC #1 <END> g03397668

384-8844 SCREEN GP-PROTECTION—RADIATOR

S/N: RAB1-UP
PART OF 359-6430 STOCKPILE AR
AN ATTACHMENT

SMCS-7150 **i05423604**

NOTE	REF NO	GRAPHIC REF	PART NUMBER	QTY	PART NAME 1 2 3 4 5 6 (PRODUCT LEVEL)	SEE PAGE
	1	1	**358-7826**	4	CLIP AS	
					(EACH INCLUDES)	
M		1	**6V-9632**	1	NUT-WELD (M6X1-THD)	
	2	1	**365-8130**	8	CLIP AS	
					(EACH INCLUDES)	
M		1	**6V-9632**	1	NUT-WELD (M6X1-THD)	
	3	1	**415-4088**	1	SCREEN (RH)	
	4	1	**415-4089**	1	SCREEN (LH)	
	5	1	**5P-4115**	12	WASHER-HARD (7.2X19X2-MM THK)	
M	6	1	**8T-4138**	12	BOLT (M6X1X20-MM)	

M - METRIC PART

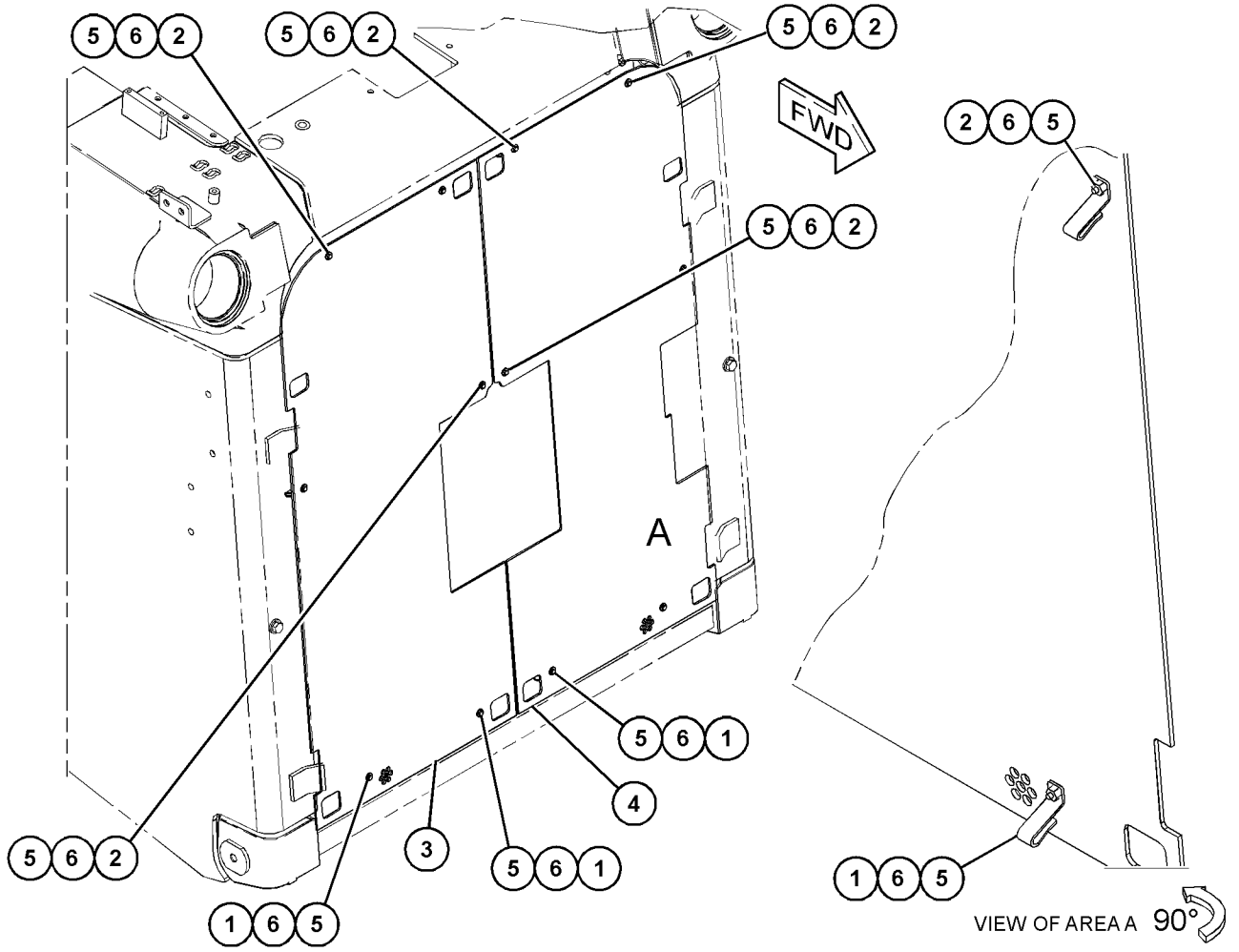

GRAPHIC #1 <END> g03432394

381-0987 SEAL GP-ENCLOSURE—SOUND SUPPRESSION

S/N: RAB1-UP
PART OF 359-6454 ENCLOSURE GP-ENGINE
AN ATTACHMENT

SMCS-7555 **i05628910**

NOTE	REF NO	GRAPHIC REF	PART NUMBER	QTY	PART NAME 1 2 3 4 5 6 (PRODUCT LEVEL)	SEE PAGE
	1	1	**7G-1815**	1	PLATE	
D	2	1	**6V-6604**		SEAL (1.8-M)	
	3	1	**381-4671**	1	BAFFLE	
	4	1	**381-4672**	2	BAFFLE	
	5	1	**3W-2647**	3	SPACER (13.5X30X10-MM THK)	
M	6	1	**8T-4184**	3	BOLT (M12X1.75X45-MM)	
D	7	1	**5P-7211**		SEAL (0.5-M EACH)	
E	8	1	**123-3827**		SEAL (67-CM EACH)	
E	8A	1	**123-3827**		SEAL (38-CM EACH)	

D - ORDER BY THE METER
E - ORDER BY THE CENTIMETER
M - METRIC PART

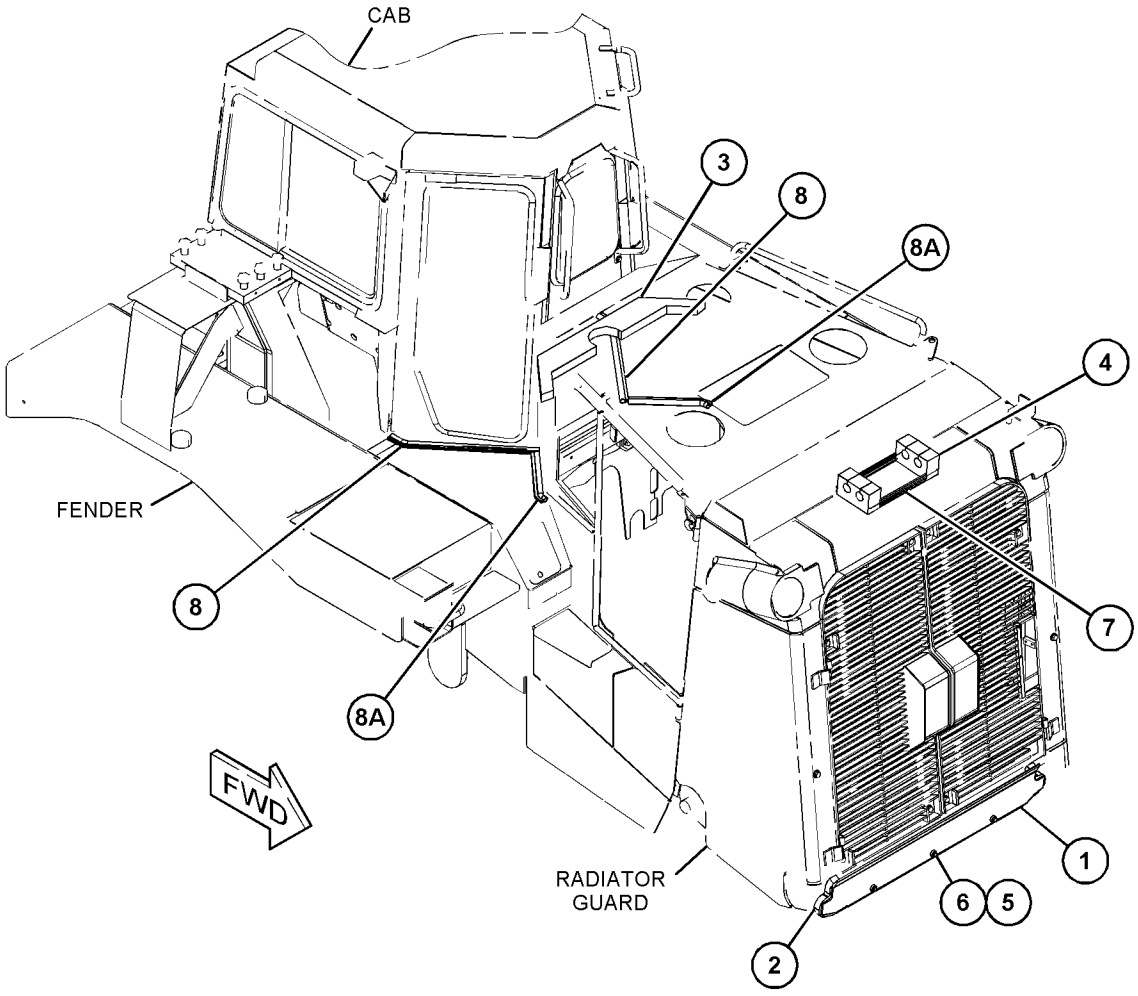

GRAPHIC #1 <END> g03583016

422-5438 SEAL GP-ENCLOSURE—HIGH DEBRIS

S/N: RAB1-UP
PART OF 359-6430 STOCKPILE AR
AN ATTACHMENT

SMCS-7555 **i05464315**

NOTE	REF NO	GRAPHIC REF	PART NUMBER	QTY	PART NAME 1 2 3 4 5 6 (PRODUCT LEVEL)	SEE PAGE
	1	1	**3W-2647**	3	SPACER (13.5X30X10-MM THK)	
	2	1	**110-5435**	1	PLATE AS	
	3	1	**381-4671**	1	BAFFLE	
	4	1	**422-5429**	1	BAFFLE AS	
		1	**6B-4594**	11	RIVET	
	5	1	**422-5430**	2	BAFFLE	
	6	1	**422-5431**	1	BAFFLE AS	
		1	**6B-4594**	2	RIVET	
	7	1	**422-5432**	1	BAFFLE AS	
	8	1	**422-5433**	1	BAFFLE AS	
	9	1	**422-5434**	1	BAFFLE	
	10	1	**422-5435**	1	BAFFLE (LH)	
	11	1	**422-5436**	1	PLATE AS	
M		1	**8T-3490**	2	NUT-WELD (M10X1.5-THD)	
	12	1	**422-5437**	1	SEAL	
	13	1	**422-7741**	1	BAFFLE	
	14	1	**422-7742**	1	PLATE AS	
M		1	**8T-3490**	2	NUT-WELD (M10X1.5-THD)	
	15	1	**422-7743**	1	BAFFLE	
	16	1	**422-7744**	1	BAFFLE AS	
	17	1	**422-7745**	1	BAFFLE AS	
	18	1	**422-8699**	1	BAFFLE	
	19	1	**422-8700**	1	BAFFLE AS	
		1	**6B-4594**	6	RIVET	
		1	**8T-7971**	2	WASHER-HARD (13.5X25.5X5-MM THK)	
	20	1	**422-8703**	1	SEAL	
	21	1	**443-9137**	1	BAFFLE AS	
		1	**6B-4594**	6	RIVET	
	22	1	**7X-0365**	6	BOLT (3/4-10X1.5-IN)	
	23	1	**7X-7729**	6	WASHER (11X25X3-MM THK)	
	24	1	**8T-4121**	4	WASHER-HARD (11X21X2.5-MM THK)	
M	25	1	**8T-4136**	10	BOLT (M10X1.5X25-MM)	
M	26	1	**8T-4184**	3	BOLT (M12X1.75X45-MM)	
	27	1	**8T-4223**	2	WASHER-HARD (13.5X25.5X3-MM THK)	
M	28	1	**8T-4956**	2	BOLT (M12X1.75X35-MM)	
	29	1	**8T-4994**	6	WASHER-HARD (20X36.5X3.5-MM THK)	
E	30	1	**238-9166**		SEAL (44-CM EACH)	
E	30A	1	**238-9166**		SEAL (29-CM)	
E	30B	1	**238-9166**		SEAL (31-CM)	
E	30C	1	**238-9166**		SEAL (94-CM)	
E	30D	1	**238-9166**		SEAL (60-CM)	
E	30E	1	**238-9166**		SEAL (67-CM)	
E	30F	1	**238-9166**		SEAL (58-CM)	
H	31	1	**5P-5933**		SEAL (6-DM EACH)	
H	31A	1	**5P-5933**		SEAL (2-DM EACH)	
H	31B	1	**5P-5933**		SEAL (1-DM EACH)	

422-5438 **SEAL GP-ENCLOSURE (**contd.**)** **i05464315**

NOTE	REF NO	GRAPHIC REF	PART NUMBER	QTY	PART NAME 1 2 3 4 5 6 (PRODUCT LEVEL)	SEE PAGE
D	32	1	**5P-7211**		SEAL (0.3-M EACH)	
D	32A	1	**5P-7211**		SEAL (1.7-M)	
D	32B	1	**5P-7211**		SEAL (1.0-M)	
D	32C	1	**5P-7211**		SEAL (0.7-M)	
D	32D	1	**5P-7211**		SEAL (0.1-M EACH)	
D	33	1	**5P-7483**		SEAL (0.3-M EACH)	
D	34	1	**6V-2499**		SEAL (0.5-M)	
D	35	1	**6V-5163**		SEAL (0.4-M)	
D	35A	1	**6V-5163**		SEAL (0.1-M)	
H	36	1	**6V-5654**		SEAL (2-DM EACH)	
H	36A	1	**6V-5654**		SEAL (1-DM EACH)	
H	36B	1	**6V-5654**		SEAL (4-DM EACH)	
H	36C	1	**6V-5654**		SEAL (5-DM EACH)	
H	36D	1	**6V-5654**		SEAL (7-DM EACH)	
D	37	1	**6V-6604**		SEAL (1.8-M)	
E	38	1	**123-3827**		SEAL (70-CM EACH)	
E	38A	1	**123-3827**		SEAL (38-CM EACH)	
E	39	1	**149-5933**		SEAL (35-CM)	
E	39A	1	**149-5933**		SEAL (10-CM)	
E	40	1	**3E-8349**		SEAL (151-CM)	

D - ORDER BY THE METER
E - ORDER BY THE CENTIMETER
H - SOLD BY THE DECIMETER
M - METRIC PART

422-5438 **SEAL GP-ENCLOSURE** (contd.) **i05464315**

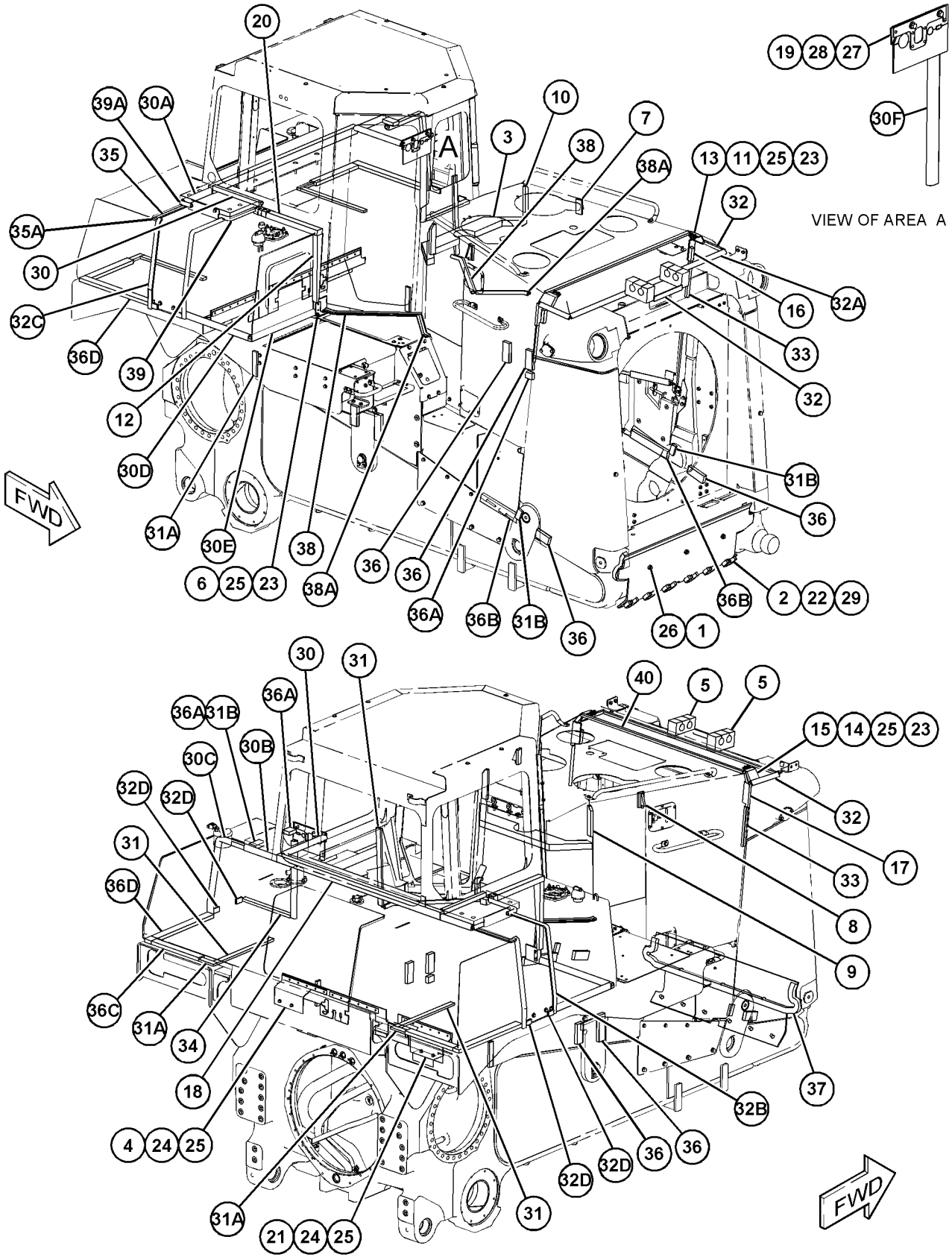

GRAPHIC #1 <END> g03515218

376-3677 STEP GP

S/N: RAB1-UP
PART OF 376-3676 PLATFORM AR
AN ATTACHMENT

SMCS-7254 **i05966572**

NOTE	REF NO	GRAPHIC REF	PART NUMBER	QTY	PART NAME 1 2 3 4 5 6 (PRODUCT LEVEL)	SEE PAGE
	1	1	**1K-8850**	1	SPRING	
	2	1	**6S-6251**	4	MOUNT	
	3	1	**9M-3835**	1	LATCH-RUBBER	
	4	1	**115-3580**	1	PLATE	
	5	1	**376-3684**	1	GUARDRAIL AS	
	6	1	**376-3688**	1	SUPPORT AS	
	7	1	**380-2398**	1	SUPPORT AS-SIDE	
	8	1	**445-1875**	1	SUPPORT AS	
	9	1	**445-1877**	1	FRAME AS	
	10	1	**2M-5795**	1	PIN-CLEVIS	
	11	1	**3B-4607**	1	PIN-COTTER	
	12	1	**5P-1076**	2	WASHER-HARD (13.5X30X4-MM THK)	
	13	1	**5P-7468**	2	CLIP (SLOT)	
	14	1	**5P-7469**	2	CLIP (TAB)	
	15	1	**6V-1874**	2	GROMMET (31-MM ID)	
	16	1	**7X-0618**	4	WASHER-HARD (13.5X40X5-MM THK)	
	17	1	**7X-3392**	4	WASHER-HARD (13.5X22.5X3-MM THK)	
	18	1	**8T-4121**	12	WASHER-HARD (11X21X2.5-MM THK)	
M	19	1	**8T-4183**	2	BOLT (M12X1.75X40-MM)	
M	20	1	**8T-4195**	6	BOLT (M10X1.5X30-MM)	
M	21	1	**8T-4196**	6	BOLT (M10X1.5X35-MM)	
	22	1	**8T-4223**	2	WASHER-HARD (13.5X25.5X3-MM THK)	
M	23	1	**8T-4244**	6	NUT (M12X1.75-THD)	
	24	1	**8T-4895**	4	WASHER (13.5X50X5-MM THK)	
M	25	1	**8T-4910**	4	BOLT (M12X1.75X60-MM)	

M - METRIC PART

376-3677 **STEP GP (**contd.**)** **i05966572**

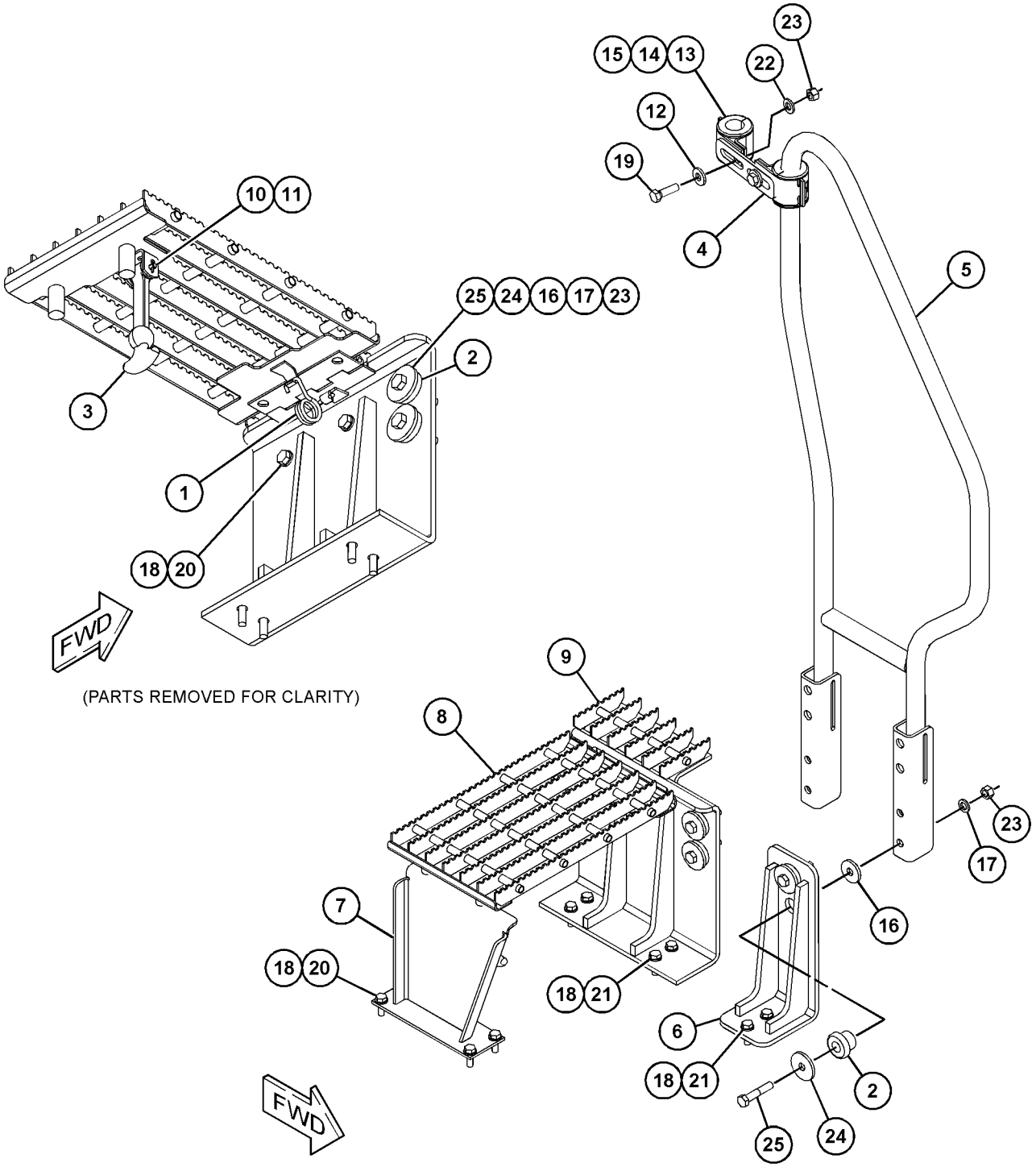

GRAPHIC #1 <END> g03505659

379-5590 STEP GP

S/N: RAB1-UP
PART OF 359-6401 CHASSIS AR
AN ATTACHMENT

SMCS-7254 **i05882650**

NOTE	REF NO	GRAPHIC REF	PART NUMBER	QTY	PART NAME 1 2 3 4 5 6 (PRODUCT LEVEL)	SEE PAGE
	1	1	**376-0308**	2	PLATE AS	
	2	1	**376-0320**	2	PLATE	
Y	3	1	**379-5591**	1	GUARDRAIL GP (LH)	676
Y	4	1	**379-4753**	1	GUARDRAIL GP (RH)	674
	5	1	*379-6458*	1	STEP AS (RH)	
M		1	**8T-3597**	6	NUT-WELD (M12X1.75-THD)	
	6	1	*379-5594*	1	STEP AS (LH)	
M		1	**8T-3597**	6	NUT-WELD (M12X1.75-THD)	
	7	1	**6J-0488**	8	SCREW-BUTTON HEAD (3/8-16X0.875-IN)	
M	8	1	**8T-4183**	8	BOLT (M12X1.75X40-MM)	
M	9	1	**8T-4194**	8	BOLT (M12X1.75X50-MM)	
	10	1	**8T-4223**	16	WASHER-HARD (13.5X25.5X3-MM THK)	

M - METRIC PART
Y - SEPARATE ILLUSTRATION

379-5590 **STEP GP** (contd.) **i05882650**

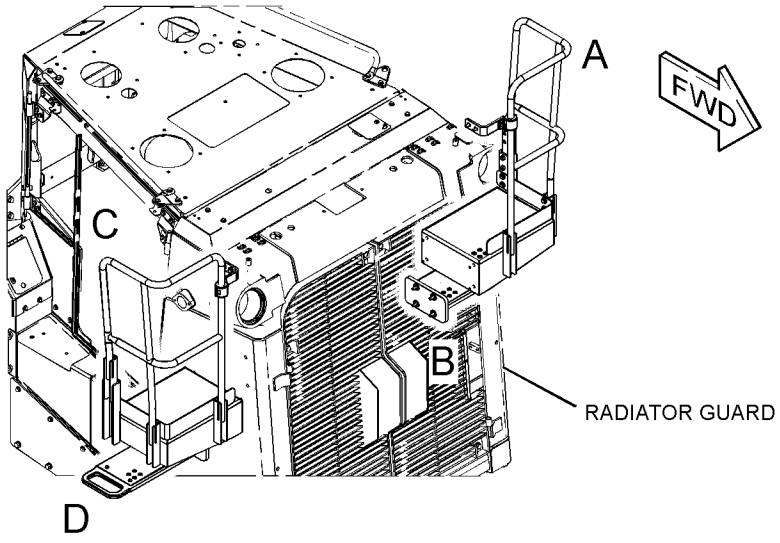

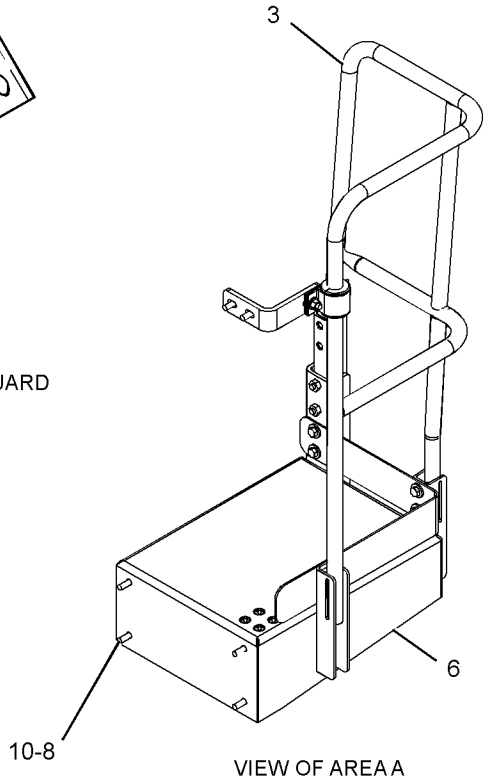

VIEW OF AREA A

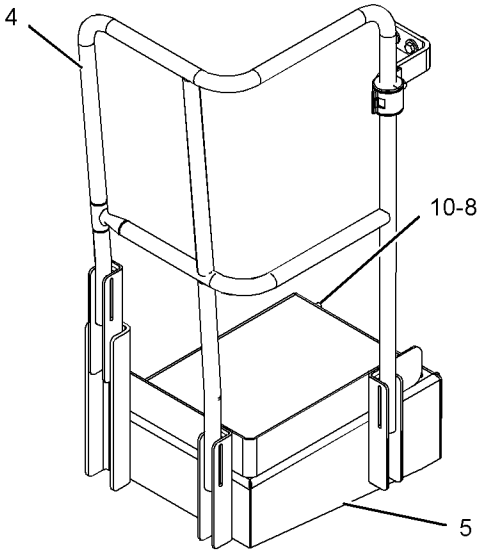

VIEW OF AREA C

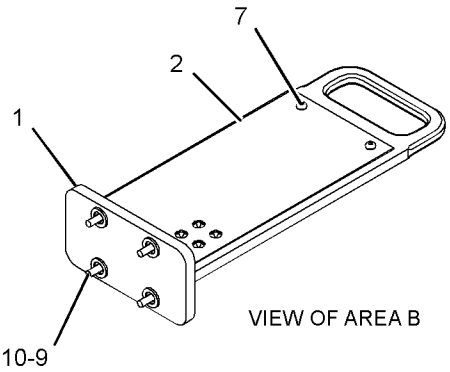

VIEW OF AREA B

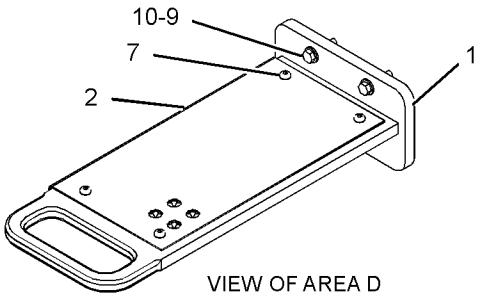

VIEW OF AREA D

GRAPHIC #1 <END> g03428744

421-4184 VALVE GP-DRAIN

S/N: RAB1-UP
PART OF 361-2157 LINES GP-WATER
ALSO AN ATTACHMENT

SMCS-1372 **i05421407**

NOTE	REF NO	GRAPHIC REF	PART NUMBER	QTY	PART NAME 1 2 3 4 5 6 (PRODUCT LEVEL)	SEE PAGE
	1	1	**6N-9590**	1	PLUG-DRAIN	
	2	1	**7E-9171**	1	ADAPTER-PLUG	
	3	1	**8M-7066**	1	GASKET	
	4	1	**375-0797**	1	BRACKET AS	
M		1	**8T-3490**	3	NUT-WELD (M10X1.5-THD)	
	5	1	**441-6869**	1	PLATE-DRAIN	
M	6	1	**140-0174**	2	BOLT (M10X1.5X75-MM)	
	7	1	**3J-5389**	1	PLUG	
	8	1	**8T-4121**	3	WASHER-HARD (11X21X2.5-MM THK)	
M	9	1	**8T-4182**	1	BOLT (M10X1.5X45-MM)	
	10	1	**8T-6756**	1	ELBOW	

M - METRIC PART

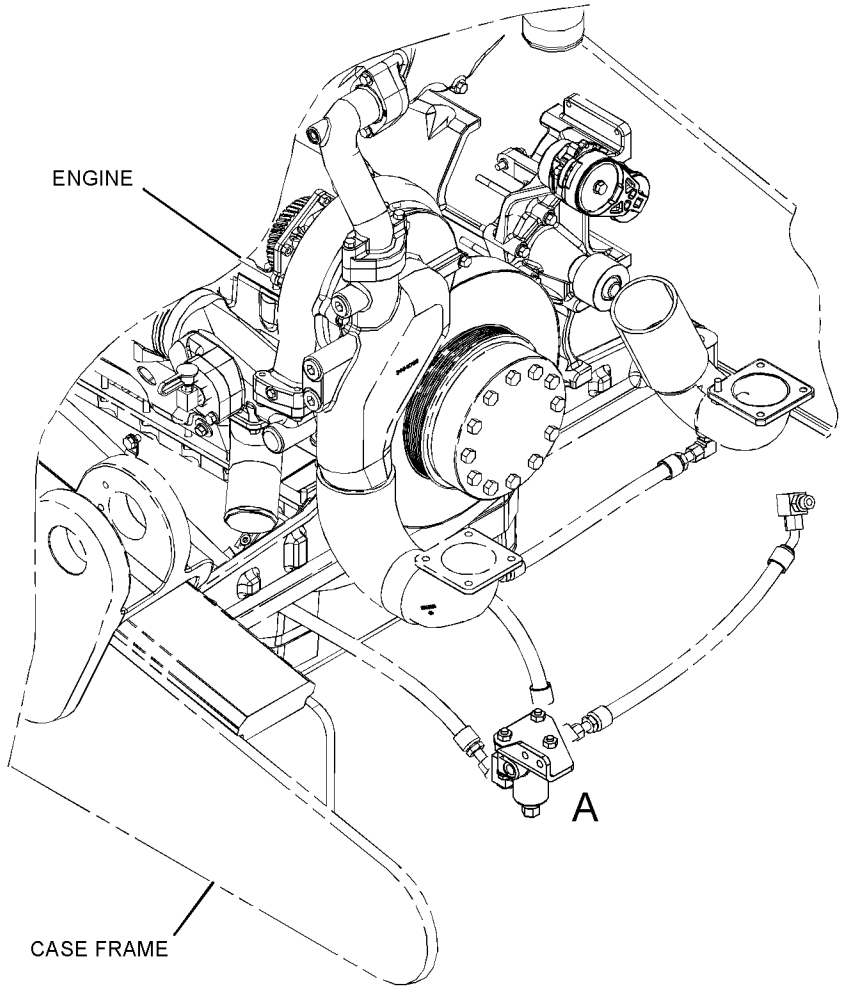

GRAPHIC #1

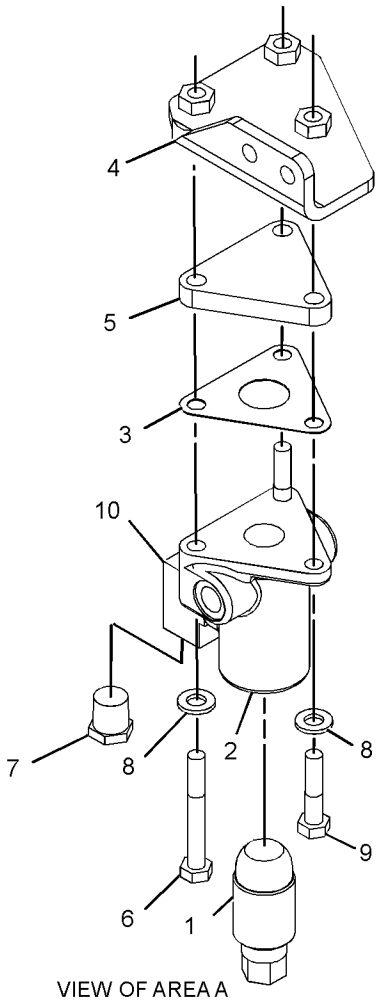

VIEW OF AREA A

<END>

g03480171

269-5346 VALVE GP-LUBE DISTRIBUTION–2-INJECTOR

S/N: RAB1-UP

PART OF 394-4314 LINES GP-AUTOMATIC LUBRICATION

AN ATTACHMENT

SMCS-7540 **i06135051**

NOTE	REF NO	GRAPHIC REF	PART NUMBER	QTY	PART NAME 1 2 3 4 5 6 (PRODUCT LEVEL)	SEE PAGE
	1	1	**8X-1106**	2	FITTING AS-GREASE (1/8-27-THD)	
	2	1	**307-3245**	2	INJECTOR AS	
					(EACH INCLUDES)	
		1	**444-6559**	1	CAP	
		1	**449-3815**	1	SCREW	
		1	**449-3816**	1	LOCKNUT (7/16-27-THD)	

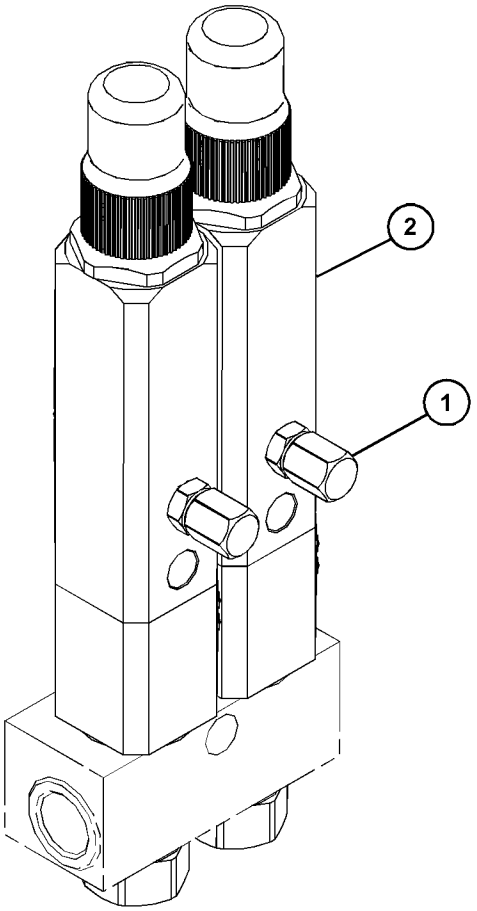

GRAPHIC #1 <END> g03823899

269-5348 VALVE GP-LUBE DISTRIBUTION–3-INJECTOR

S/N: RAB1-UP

PART OF 422-1075, 423-0729, 444-2663 VALVE GP-LUBE DISTRIBUTION AN ATTACHMENT

SMCS-7540 **i06565320**

NOTE	REF NO	GRAPHIC REF	PART NUMBER	QTY	PART NAME 1 2 3 4 5 6 (PRODUCT LEVEL)	SEE PAGE
	1	1	**307-3245**	3	INJECTOR AS	
					(EACH INCLUDES)	
		1	**444-6559**	1	CAP	
		1	**449-3815**	1	SCREW	
		1	**449-3816**	1	LOCKNUT (7/16-27-THD)	
	2	1	**8X-1106**	3	FITTING AS-GREASE (1/8-27-THD)	

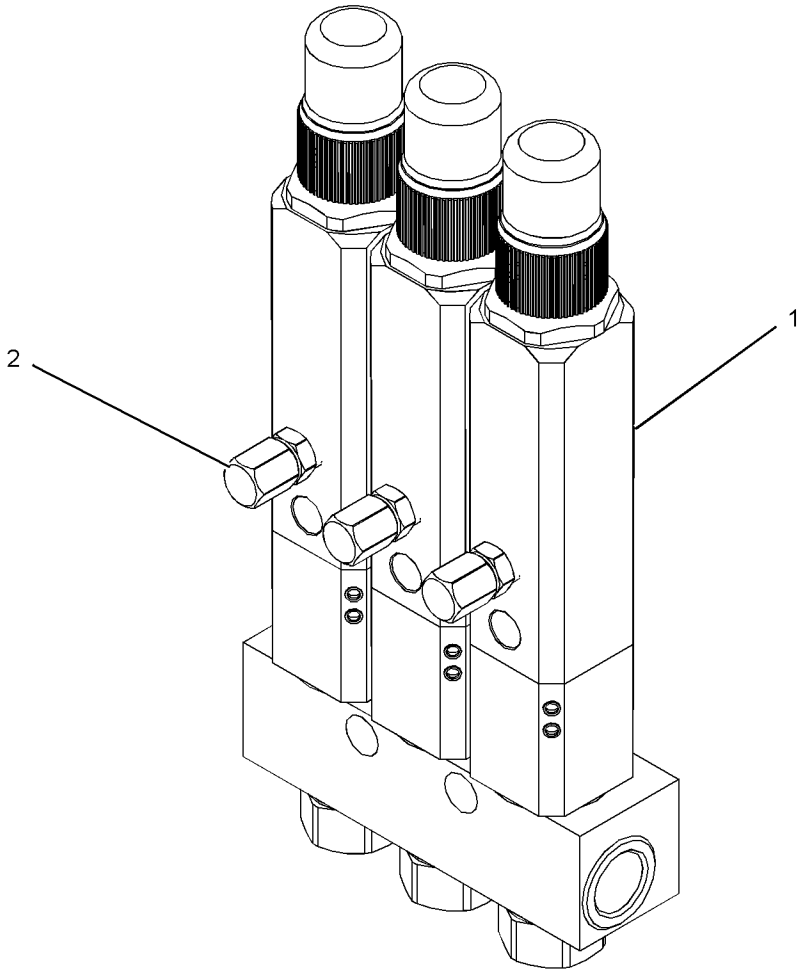

GRAPHIC #1 <END> g02758557

269-5352 VALVE GP-LUBE DISTRIBUTION–4-INJECTOR

S/N: RAB1-UP

PART OF 422-1071 VALVE GP-LUBE DISTRIBUTION

AN ATTACHMENT

SMCS-7540 **i06565332**

NOTE	REF NO	GRAPHIC REF	PART NUMBER	QTY	PART NAME 1 2 3 4 5 6 (PRODUCT LEVEL)	SEE PAGE
	1	1	**307-3245**	4	INJECTOR AS	
					(EACH INCLUDES)	
		1	**444-6559**	1	CAP	
		1	**449-3815**	1	SCREW	
		1	**449-3816**	1	LOCKNUT (7/16-27-THD)	
	2	1	**8X-1106**	4	FITTING AS-GREASE (1/8-27-THD)	
	3	1	**362-8366**	1	MANIFOLD	

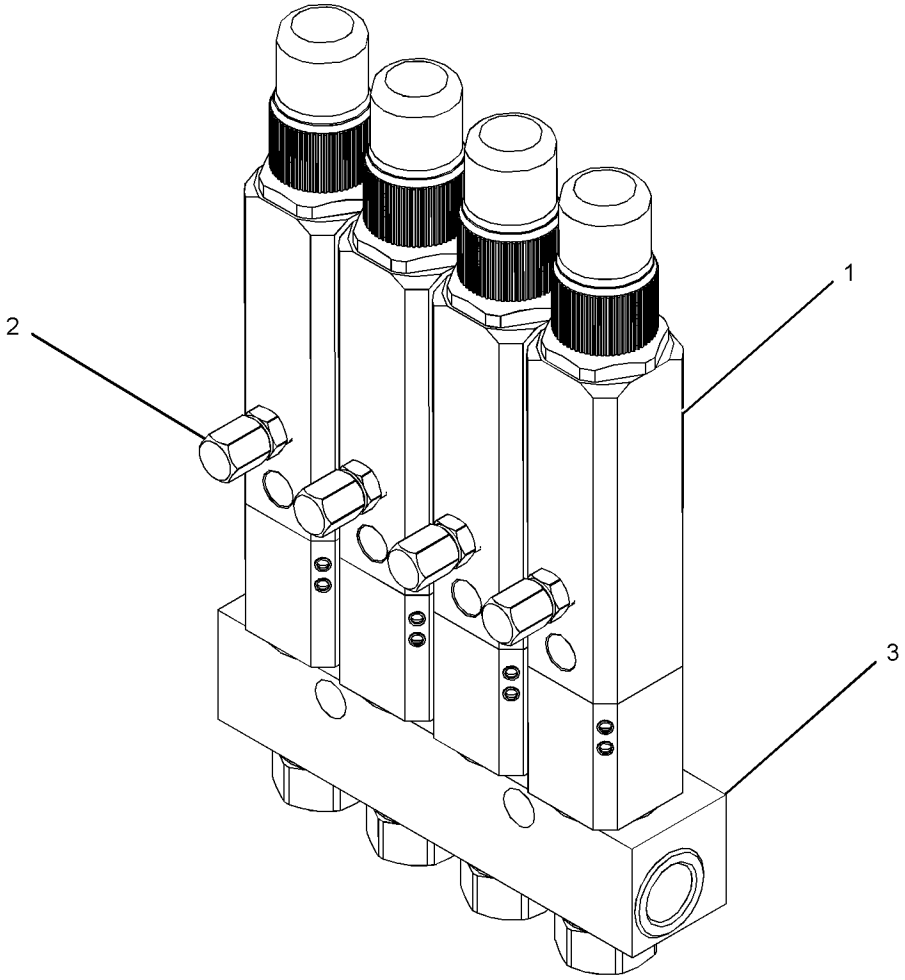

GRAPHIC #1 <END> g02758559

422-1071 VALVE GP-LUBE DISTRIBUTION—RIPPER

S/N: RAB1-UP
PART OF 394-4312 LINES GP-AUTOMATIC LUBRICATION
AN ATTACHMENT

SMCS-7540 **i05865537**

NOTE	REF NO	GRAPHIC REF	PART NUMBER	QTY	PART NAME 1 2 3 4 5 6 (PRODUCT LEVEL)	SEE PAGE
	1	1	**8T-4238**	2	ADAPTER	
Y	2	1	**269-5352**	2	VALVE GP-LUBE DISTRIBUTION (4-INJECTOR)	724
	3	1	**394-4318**	1	BRACKET	
I	4	1	**394-4319**	1	HOSE AS	
I	5	1	**394-4320**	1	HOSE AS	
I	6	1	**394-4321**	1	HOSE AS	
	7	1	**394-4334**	1	BRACKET AS	
	8	1	**420-0939**	2	SPACER (11.3X12.7X8.7-MM THK)	
	9	1	**420-0940**	4	SPACER (11.3X12.7X9.8-MM THK)	
	10	1	**420-0941**	2	SPACER (11.3X12.7X11-MM THK)	
I	11	1	**422-1072**	1	HOSE AS	
I	12	1	**422-1073**	1	HOSE AS	
I	13	1	**422-1074**	1	HOSE AS	
	14	1	**004-6683**	1	FITTING	
	15	1	*148-8428*	2	TEE AS	
					(EACH INCLUDES)	
		1	**6V-8782**	1	TEE	
		1	**3K-0360**	1	SEAL-O-RING	
		1	**6V-8398**	2	SEAL-O-RING	
	16	1	**2D-1683**	3	FITTING (1/8-27 PTF)	
	17	1	**4M-8973**	5	ELBOW	
	18	1	**6V-9830**	1	CAP AS	
	19	1	**8T-4121**	8	WASHER-HARD (11X21X2.5-MM THK)	
M	20	1	**8T-4133**	6	NUT (M10X1.5-THD)	
M	21	1	**8T-4136**	1	BOLT (M10X1.5X25-MM)	
M	22	1	**8T-4195**	2	BOLT (M10X1.5X30-MM)	
	23	1	**8T-4896**	1	WASHER-HARD (10.2X18.5X2.5-MM THK)	
M	24	1	**8T-6466**	4	BOLT (M10X1.5X60-MM)	
	25	1	**9X-2027**	4	WASHER (11X18X2-MM THK)	
	26	1	**9X-8582**	1	CLIP	

I - REFER TO HYDRAULIC INFORMATION SYSTEM
M - METRIC PART
Y - SEPARATE ILLUSTRATION

422-1071 **VALVE GP-LUBE DISTRIBUTION (**contd.**)** **i05865537**

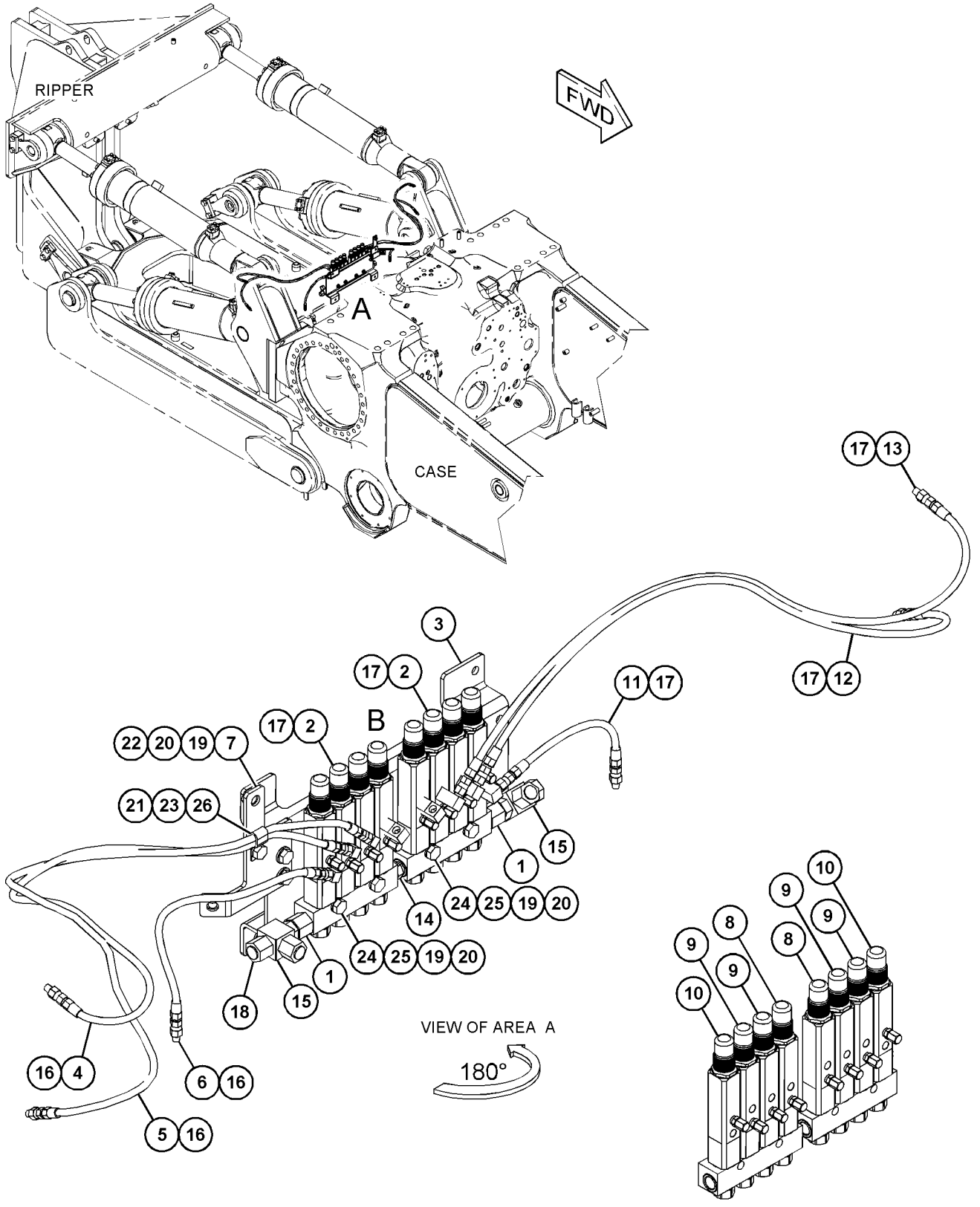

VIEW OF AREA B
(PARTS REMOVED FOR CLARITY)

GRAPHIC #1 <END> g03499840

422-1075 VALVE GP-LUBE DISTRIBUTION—RIPPER

S/N: RAB1-UP
PART OF 394-4313 LINES GP-AUTOMATIC LUBRICATION
AN ATTACHMENT

SMCS-7540 **i05806498**

NOTE	REF NO	GRAPHIC REF	PART NUMBER	QTY	PART NAME 1 2 3 4 5 6 (PRODUCT LEVEL)	SEE PAGE
Y	1	1	**269-5348**	2	VALVE GP-LUBE DISTRIBUTION (3-INJECTOR)	723
	2	1	**394-4324**	1	BRACKET	
I	3	1	**457-9741**	2	HOSE AS	
I	4	1	**394-4327**	2	HOSE AS	
I	5	1	**394-4328**	2	HOSE AS	
	6	1	**420-0940**	6	SPACER (11.3X12.7X9.8-MM THK)	
	7	1	**004-6683**	1	FITTING	
	8	1	*352-6496*	1	ADAPTER AS	
		1	**8C-6871**	1	CONNECTOR	
		1	**228-7090**	1	SEAL-O-RING	
	9	1	**3J-5390**	1	PLUG	
	10	1	**4M-8973**	6	ELBOW	
	11	1	**8T-4121**	4	WASHER-HARD (11X21X2.5-MM THK)	
M	12	1	**8T-4133**	4	NUT (M10X1.5-THD)	
M	13	1	**8T-4185**	4	BOLT (M10X1.5X50-MM)	
	14	1	**9X-2027**	4	WASHER (11X18X2-MM THK)	

I - REFER TO HYDRAULIC INFORMATION SYSTEM
M - METRIC PART
Y - SEPARATE ILLUSTRATION

422-1075 **VALVE GP-LUBE DISTRIBUTION (**contd.**)** **i05806498**

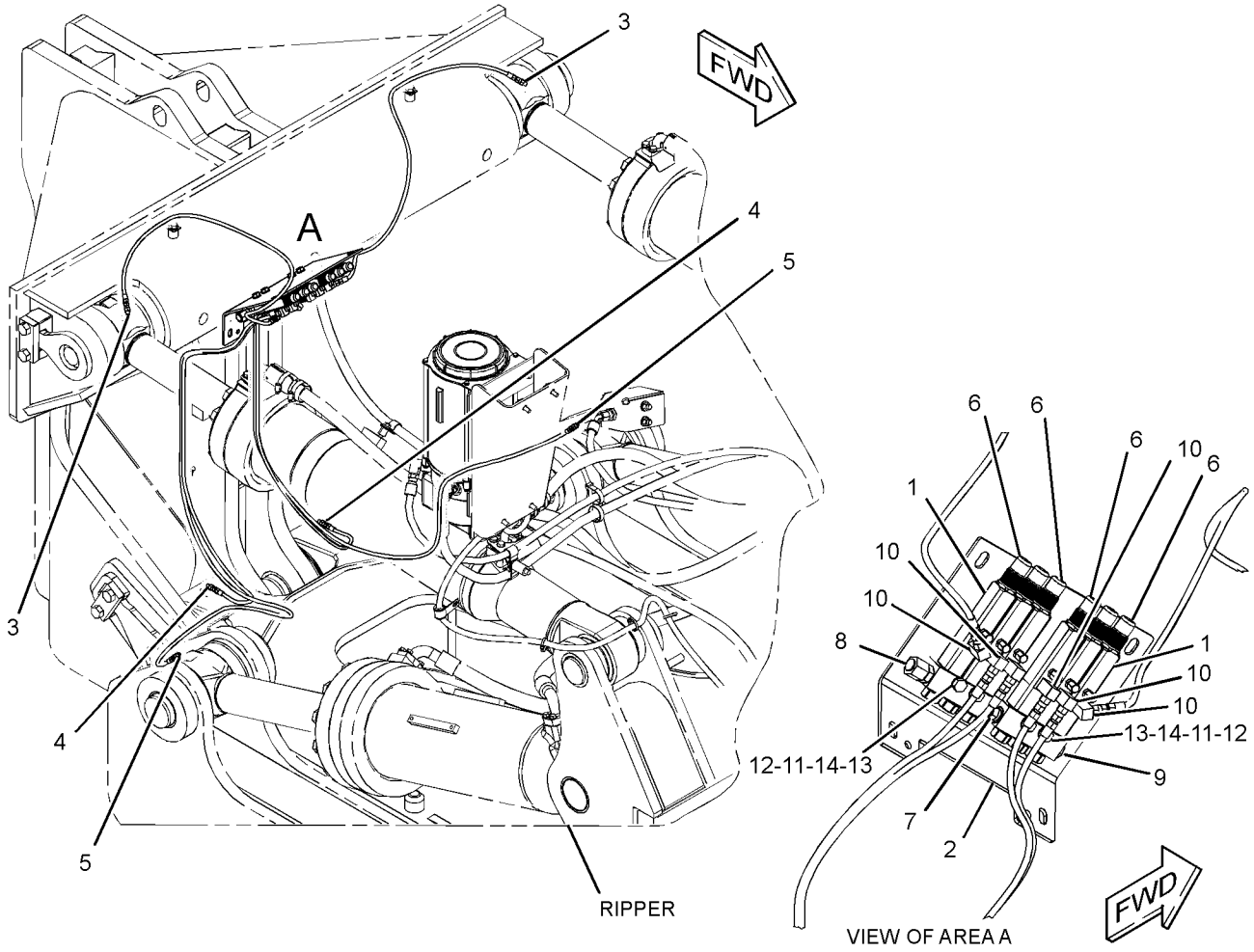

GRAPHIC #1 <END> g03494077

423-0729 VALVE GP-LUBE DISTRIBUTION–RIPPER, RH

S/N: RAB1-247

PART OF 420-7714 LINES GP-AUTOMATIC LUBRICATION

AN ATTACHMENT

SMCS-7540 **i05698099**

NOTE	REF NO	GRAPHIC REF	PART NUMBER	QTY	PART NAME 1 2 3 4 5 6 (PRODUCT LEVEL)	SEE PAGE
Y	1	1	**269-5348**	1	VALVE GP-LUBE DISTRIBUTION (3-INJECTOR)	723
	2	1	**420-0940**	3	SPACER (11.3X12.7X9.8-MM THK)	
I	3	1	**423-0730**	1	HOSE AS	
I	4	1	**423-0731**	1	HOSE AS	
I	5	1	**423-0732**	1	HOSE AS	
	6	1	*352-6496*	1	ADAPTER AS	
		1	**8C-6871**	1	CONNECTOR	
		1	**228-7090**	1	SEAL-O-RING	
	7	1	**3J-5390**	1	PLUG	
	8	1	**4M-8973**	3	ELBOW	

I - REFER TO HYDRAULIC INFORMATION SYSTEM
Y - SEPARATE ILLUSTRATION

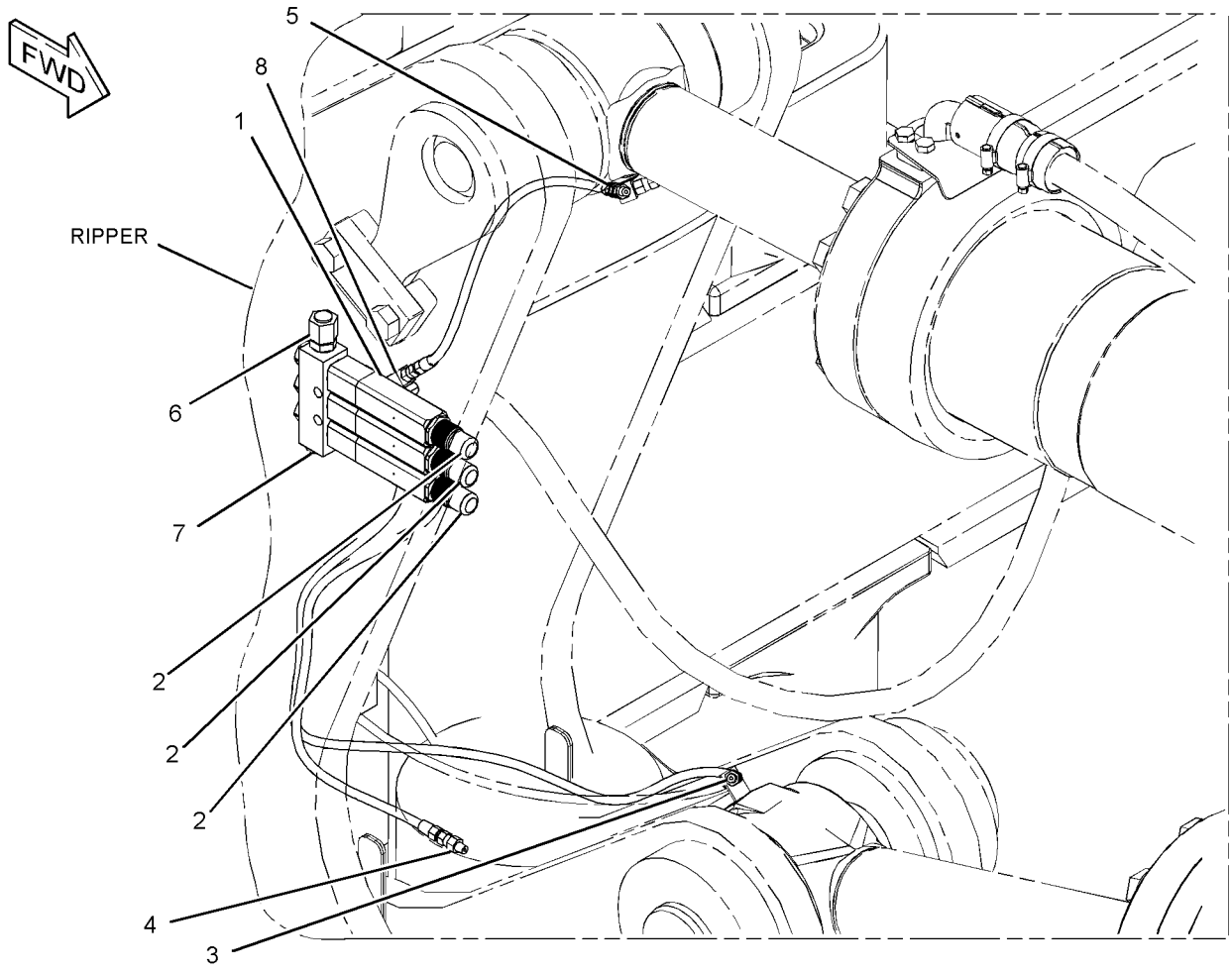

GRAPHIC #1 <END> g03566882

423-0729 VALVE GP-LUBE DISTRIBUTION—RIPPER, RH

S/N: RAB248-UP
PART OF 420-7714 LINES GP-AUTOMATIC LUBRICATION
AN ATTACHMENT

SMCS-7540 **i06038605**

NOTE	REF NO	GRAPHIC REF	PART NUMBER	QTY	PART NAME 1 2 3 4 5 6 (PRODUCT LEVEL)	SEE PAGE
Y	1	1	**269-5348**	1	VALVE GP-LUBE DISTRIBUTION (3-INJECTOR)	723
	2	1	**420-0940**	3	SPACER (11.3X12.7X9.8-MM THK)	
CI	3	1	**459-8439**	1	HOSE AS	
CI	4	1	**459-8440**	1	HOSE AS	
I	5	1	**423-0732**	1	HOSE AS	
	6	1	*352-6496*	1	ADAPTER AS	
		1	**8C-6871**	1	CONNECTOR	
		1	**228-7090**	1	SEAL-O-RING	
	7	1	**3J-5390**	1	PLUG	
	8	1	**4M-8973**	3	ELBOW	

C - CHANGE FROM PREVIOUS TYPE
I - REFER TO HYDRAULIC INFORMATION SYSTEM
Y - SEPARATE ILLUSTRATION

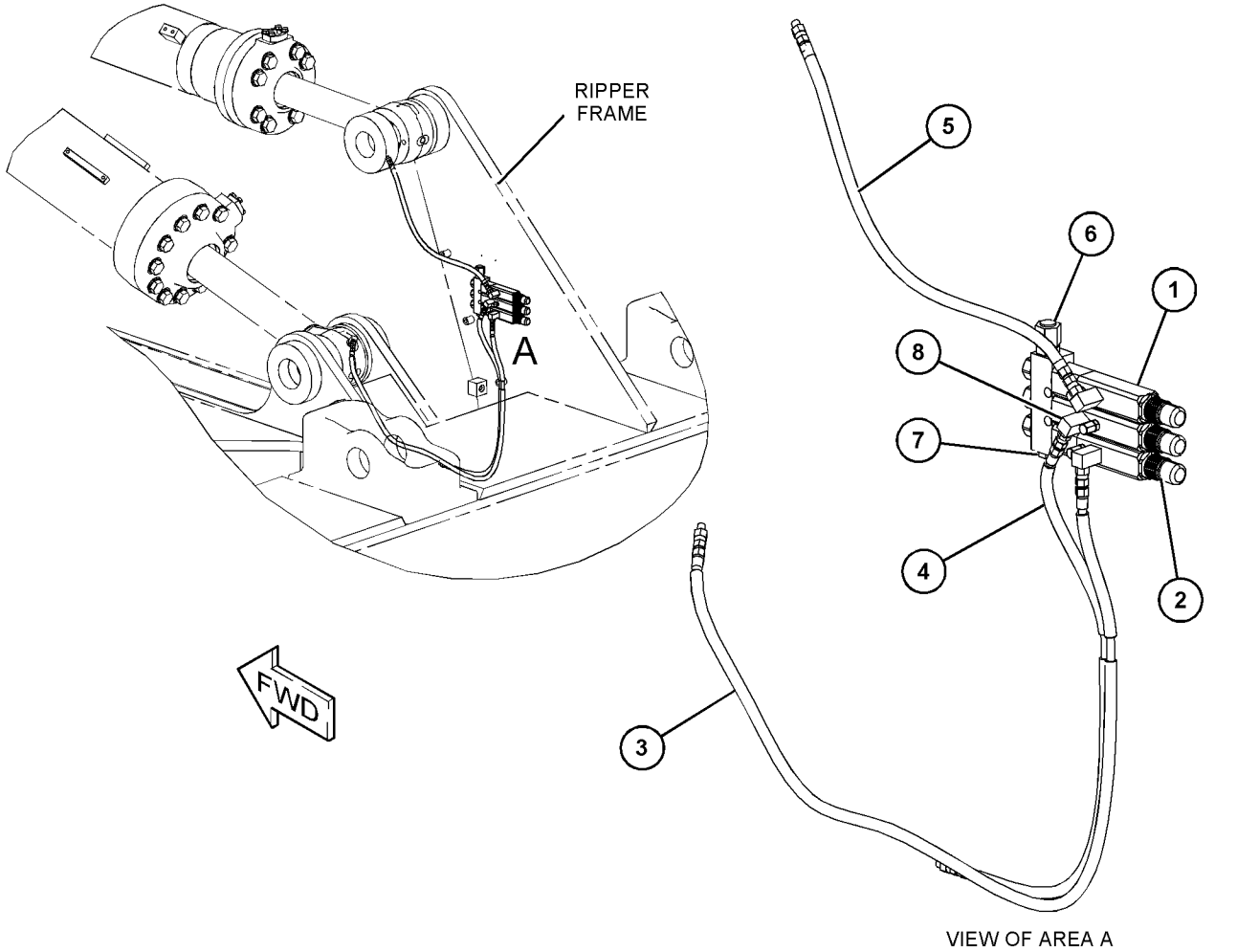

GRAPHIC #1 <END> g03795435

444-2663 VALVE GP-LUBE DISTRIBUTION–RIPPER, LH

S/N: RAB1-247
PART OF 420-7714 LINES GP-AUTOMATIC LUBRICATION
AN ATTACHMENT

SMCS-7540 **i05448070**

NOTE	REF NO	GRAPHIC REF	PART NUMBER	QTY	PART NAME 1 2 3 4 5 6 (PRODUCT LEVEL)	SEE PAGE
Y	1	1	**269-5348**	1	VALVE GP-LUBE DISTRIBUTION (3-INJECTOR)	723
	2	1	**420-0940**	3	SPACER (11.3X12.7X9.8-MM THK)	
I	3	1	**423-0730**	1	HOSE AS	
I	4	1	**423-0731**	1	HOSE AS	
I	5	1	**423-0732**	1	HOSE AS	
	6	1	*352-6496*	1	ADAPTER AS	
		1	**8C-6871**	1	CONNECTOR	
		1	**228-7090**	1	SEAL-O-RING	
	7	1	**3J-5390**	1	PLUG	
	8	1	**4M-8973**	3	ELBOW	
	9	1	**6V-9830**	1	CAP AS	

I - REFER TO HYDRAULIC INFORMATION SYSTEM
Y - SEPARATE ILLUSTRATION

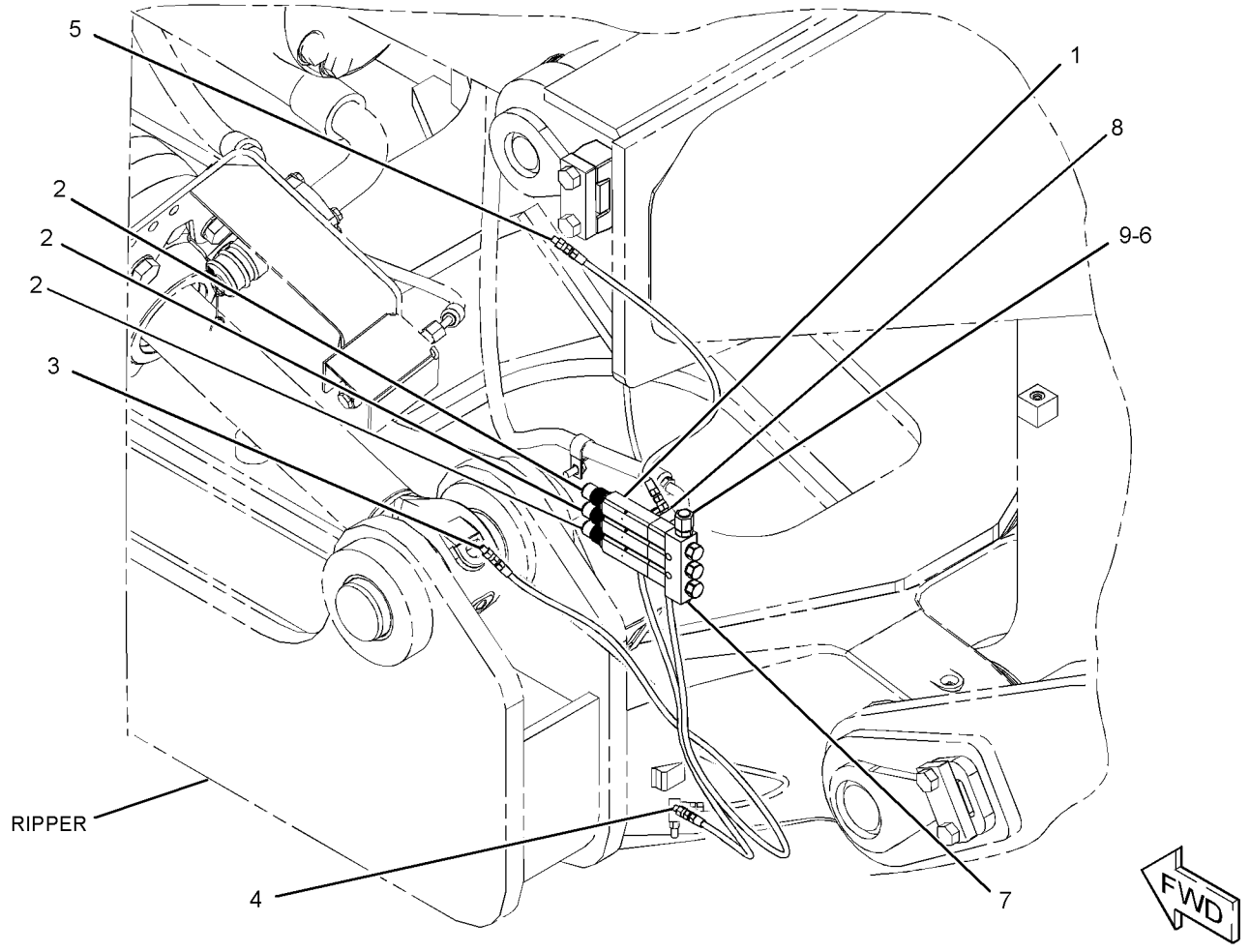

GRAPHIC #1 <END> g03487338

444-2663 VALVE GP-LUBE DISTRIBUTION—RIPPER, LH

S/N: RAB248-UP
PART OF 420-7714 LINES GP-AUTOMATIC LUBRICATION
AN ATTACHMENT

SMCS-7540 **i06038758**

NOTE	REF NO	GRAPHIC REF	PART NUMBER	QTY	PART NAME 1 2 3 4 5 6 (PRODUCT LEVEL)	SEE PAGE
Y	1	1	**269-5348**	1	VALVE GP-LUBE DISTRIBUTION (3-INJECTOR)	723
	2	1	**420-0940**	3	SPACER (11.3X12.7X9.8-MM THK)	
CI	3	1	**459-8439**	1	HOSE AS	
CI	4	1	**459-8440**	1	HOSE AS	
I	5	1	**423-0732**	1	HOSE AS	
	6	1	*352-6496*	1	ADAPTER AS	
		1	**8C-6871**	1	CONNECTOR	
		1	**228-7090**	1	SEAL-O-RING	
	7	1	**3J-5390**	1	PLUG	
	8	1	**4M-8973**	3	ELBOW	
	9	1	**6V-9830**	1	CAP AS	

C - CHANGE FROM PREVIOUS TYPE
I - REFER TO HYDRAULIC INFORMATION SYSTEM
Y - SEPARATE ILLUSTRATION

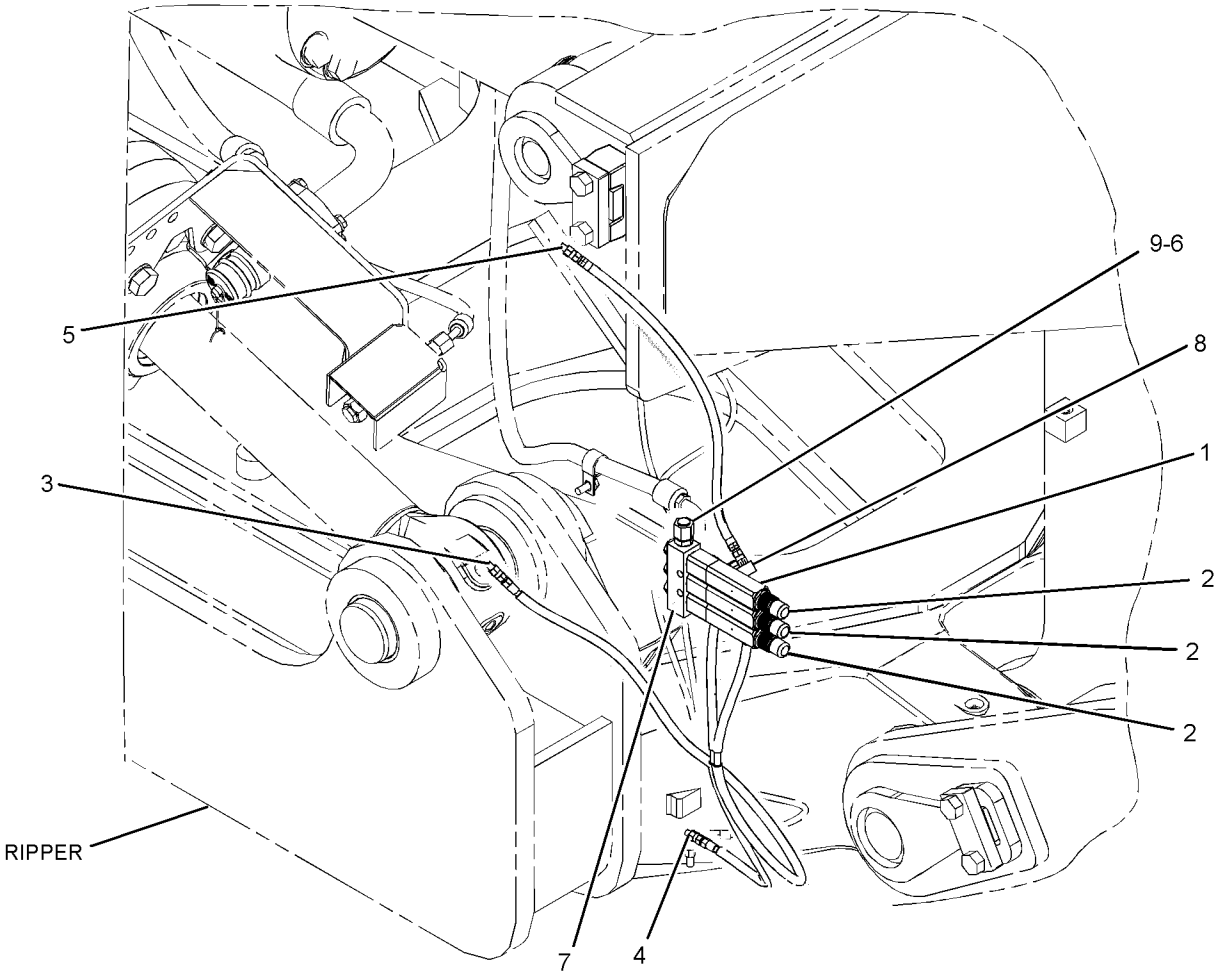

GRAPHIC #1 <END> g03789250

PART NUMBER INDEX

Part	Page
0	
0L-1143	21
	75
	78
0L-1178	797
	799
0L-1351	17
	19
	169
	176
	433
0L-1352	52
	53
	58
0L-2070	84
	169
	176
	178
0S-0509	17
	45
	104
	154
	433
	508
0S-1566	17
0S-1571	40
	45
	58
	169
	176
	178
0S-1573	73
0S-1585	84
	138
	568
	853
0S-1587	59
	568
0S-1588	15
	19
	21
	47
	78
	106
	137
	365
	385
	433
0S-1590	16
	21
	75
	112
	166
	176
0S-1591	82
	106
	112
	166
	549
	559
	572
0S-1594	15
	16
	82
	84
	86
	106
	112
	116
	169
	176
	178
	431
	433
	587
0S-1595	82
	84
	138
0S-1597	392
	395
0S-1604	566
	585
0S-1608	82
	84
	112
0S-1616	54
	104
0S-1617	433
0S-1618	104
	433
0S-1619	17
	50
	81
	106
	508
	551
0S-1621	433
0T-0055	59
	112
0T-0065	84
	106
0T-0489	1172
0T-0573	45
	178
	559
1	
1A-2029	17
	47
	59
	82
	86
	104
	106
	169
	178
	508
	570
	572
	574
	576
	578
	580
	582
1A-5822	853
1A-5964	81
1A-9579	12
1B-2578	402
1B-2886	549
1B-3623	44
1B-4367	568
1B-4430	412
1B-5675	559
1B-7182	117
1B-8705	45
	47
	561
1B-8714	559
	561
1C-2251	86
	112
1D-4629	795
1D-4706	21
1F-0748	80
	770
	772
1F-0750	78
	104
	300
	303
	306
	310
	314
	317
	389
	435
	441
	605
	1095
	1119
	1136
1F-1560	921
1F-7854	436
	442
	530
1F-7958	84
1G-3410	975
1G-6423	963
1H-1023	392
	395
	586
	998
	1001
	1003
	1005
1H-2629	392
	395
1H-3337	13
1H-4106	622
1H-7855	172
	700
1J-2192	889
	891
1J-9671	161
	503
	870
	871
	872
	927
1K-4649	201
	211
	221
	232
	306
	310
	320
	323
	326
	329
	679
1K-6870	160
1K-6872	160
	770
	772
1K-8850	717
1L-5072	1326
1L-5081	797
	799
1L-7319	518
	521
	524
	527
1M-0644	98
1M-3780	561
1M-3909	561
1M-6119	199
	209
	219
	389
1M-6120	199
	209
	219
	389
1M-6573	536
1M-8653	797
	799
1M-8657	551
1M-9968	393
	396
1M-9971	392
	395
1P-0810	271
	300
	303
	306
	310
	314
	317
	320
	323
	326
	329
	485
	486
1P-1367	84
1P-1376	169
	176
1P-3702	928
	992
	994
1P-3703	942
	953
	955
	957
1P-3704	881
	883
	885
	887
	923
	925
1P-3706	543
1P-3708	530
1P-4278	118
	120
	122
	171
1P-4576	539
	942
	953
	955
	957
1P-4577	897
	899
	901
1P-4578	84
	559
	935
1P-4579	534
	539
	543
	935
	979
	992
	994
1P-4582	158
	160
	161
	162
	539
1P-4584	935
	979
1P-5763	530

► PRIMARY REFERENCE

PART NUMBER INDEX

Part	Page
1P-6522	248
	1058
1P-7346	45
	797
	799
1P-7405	797
	799
1P-7625	178
1P-9254	770
	772
1P-9261	551
1P-9390	133
1Q-1592	199
	209
	219
	453
1Q-3453	592
1Q-3458	▶591
	851
1Q-3462	591
1Q-3463	591
1Q-3465	592
1Q-3466	592
1Q-3467	591
1Q-3468	▶592
	851
1Q-3626	772
1Q-3627	772
1Q-3783	1143
1Q-4651	829
1R-0755	164
1R-1808	77
1S-0004	59
1S-0994	201
	211
	221
	390
	486
	709
	918
1S-1015	108
	1121
1S-2342	199
	209
	219
	411
1S-4915	200
	201
	210
	211
	220
	221
	390
	435
	441
1S-6420	171
	543
	1121
1S-7251	200
	201
	210
	211
	220
	221
	389
	390
	436
	442
1S-7252	201
	211
	221
	389
	436
	442
1S-7446	392
	395
1S-8385	536
1S-9110	576
	578
	580
	582
1S-9593	343
	1014
	1075
	1077
1T-0068	734
	735
	736
1T-0141	576
	578
	580
	582
1T-0229	570
	572
	574
1T-0241	570
	572
	574
1T-0242	570
	572
	574
1T-0278	570
	572
	574
1T-0610	570
	572
	574
1T-0689	570
1T-0720	47
1T-0808	392
	395
1U-1187	1034
	1035
1U-3174	893
	895
1U-3658	1015
1U-8846	559
1V-5044	1150
1V-6688	1160
1V-9365	695
1W-1116	84
1W-3014	73
1W-3136	50
1W-6448	855
1W-7117	1214
	1216
1W-8620	150
	151
1W-8793	709
1W-8795	82
1W-9860	587

2

Part	Page
2A-1531	549
2A-1538	71
2A-2677	1239
2A-3746	576
	578
	580
	582
2A-4429	37
2A-4639	21
	166
2B-0858	982
2B-0941	178
2B-2695	45
	365
	385
2B-9373	561
2C-9259	1263
2D-1683	700
	725
2D-4202	979
2D-6235	1041
	1112
2D-6392	392
	395
2D-6403	1058
2D-6642	1112
2F-5326	733
2F-6678	393
	396
2F-7306	1236
	1237
2G-0493	982
2H-1190	750
	753
	755
	757
2H-1537	622
2H-3429	392
	395
2H-3745	770
	772
2H-3755	363
	431
	551
2H-3855	508
2H-3920	409
2H-3922	200
	210
	220
	406
	484
2H-3932	737
	739
	741
	743
	745
	747
2H-5549	559
2H-6124	979
2J-0564	889
	891
2J-1227	597
	599
2J-2668	534
2J-3507	639
	1032
	1033
	1267
	1268
2J-7686	901
2J-7761	1326
2J-8163	392
	395
	539
2J-8333	567
2J-8348	639
2K-0337	559
	561
2K-4973	52
	53
	1112
	1218
	1221
	1224
2K-5254	568
2K-6830	903
2K-7471	536
2K-8467	863
	864
2L-1699	980
2L-2685	82
2L-3650	570
	572
	574
2L-5894	1085
2L-6679	359
2L-8052	265
	455
	471
2L-8060	265
	455
	471
2L-8069	250
	251
	253
	265
	411
	435
	441
	455
	471
	485
2L-8075	244
2L-8076	389
	435
	441
	448
	685
2L-8077	94
2L-8078	244
2L-8079	253
	265
	411
	455
	471
2M-0849	568
2M-1538	16
	21
2M-3974	559
2M-5656	564
	565
2M-5795	628
	629
	717
2M-9780	94
	182
	853
	917
	918
	935
	963
	982
	1009
2N-2766	143
2P-1286	88
	90
	92
2P-1292	178
2P-1293	918
2P-1974	16
	21
2P-2772	15
	17
2P-3203	59
2P-3204	59
2P-3209	59
2P-3213	145
2P-4304	74
2P-4556	1116
2P-7557	145

▶ PRIMARY REFERENCE

PART NUMBER INDEX

Part	Page
2P-7636	179
2R-0364	693
2R-6806	169
	176
2S-0189	561
2S-0613	518
	521
	524
	527
2S-2053	82
2S-2596	998
	1001
	1003
	1005
2S-4078	518
	521
	524
	527
	542
	935
2S-5926	797
	799
2S-8939	551
2U-4504	1231
2V-0447	1281
	1297
	1298
2V-1256	1284
	1285
	1297
	1298
2V-1771	94
	201
	211
	221
	390
	436
	442
	447
	684
	709
2V-2043	88
	90
	92
2V-5019	1049
2V-9923	765
2W-3815	28
	30
2W-3875	45
2W-4087	45
2W-4474	143
2W-7940	1118
2W-9710	927
2Y-2347	1003
	1005

3

Part	Page
3B-0622	112
3B-0623	33
3B-0645	30
	33
	65
3B-1915	45
	59
	185
	186
	274
	275
	570
	574
	797
	799
3B-2263	971
	973
3B-4501	406
3B-4605	608
	609
	610
	611
	613
	614
3B-4607	717
3B-4617	666
	693
3B-5317	634
3B-6552	695
	698
3B-6677	636
	639
	641
3B-7255	695
3B-8489	664
	700
	733
	765
	893
	895
	897
	899
	901
	1015
	1025
	1028
	1279
	1281
3D-0472	765
3D-2824	88
	90
	92
	508
	539
	542
	768
	873
	917
	918
	927
	934
	935
	971
	973
	983
	996
	1123
3D-8241	568
3D-9133	519
	521
	524
	527
3E-2378	1322
3E-3365	406
3E-3371	262
	263
	265
	370
	371
	447
	450
	456
	684
	685
	686
3E-3377	254
	262
	265
	499
	1014
3E-3383	3
	265
	270
	271
	300
	337
	436
	442
	456
	1121
	1208
3E-3389	270
	300
	303
3E-4041	108
3E-4140	693
3E-4304	1090
	1092
3E-4319	918
3E-4352	3
	104
	243
	276
	277
	486
	552
3E-4353	980
	1214
	1216
3E-4356	679
3E-5169	603
3E-5226	265
	456
	470
3E-5239	447
	685
	1058
3E-5276	194
3E-5519	448
	685
3E-6328	▶195
	454
	463
	470
3E-6703	539
3E-6756	1279
	1281
3E-6758	1279
	1281
3E-6773	161
3E-7404	152
	1095
3E-8020	412
	1052
	1060
	1098
3E-8349	715
3E-8575	991
	▶1014
3E-8581	1014
3E-9375	372
	861
3E-9860	307
	310
	313
3F-6156	76
3F-6166	695
	698
	703
	705
3F-9556	464
	474
	1132
	1133
	1238
	1239
3G-2292	45
3G-3747	897
	899
3G-5596	1299
	1300
	1301
	1302
	1305
	1306
	1308
	1309
	1310
	1311
	1312
	1313
3G-6509	1308
	1313
3G-7698	595
3G-8047	930
	932
3G-8051	1034
	1035
3G-8052	1017
	1019
	1021
	1023
	1034
	1035
	1257
	1260
	1263
	1264
3G-8053	1017
	1019
	1021
	1023
	1036
	1038
3G-8054	930
	932
3G-8057	930
	932
3H-0442	1012
3H-3244	423
	426
3H-7654	750
	753
	757
3H-9675	737
	739
3J-1907	108
	125
	127
	199
	202
	209
	212
	219
	222
	387
	501
	530
	539
	543
	561
	686
	875
	905
	913
	917

► PRIMARY REFERENCE

PART NUMBER INDEX

Part	Page
	923
	925
	927
	928
	930
	932
	935
	959
	979
	985
	988
	991
	997
	998
	1001
	1003
	1005
3J-4278	770
	772
3J-4818	1112
	1218
	1221
	1224
3J-5389	695
	721
3J-5390	700
	727
	729
	730
	731
	732
3J-6956	508
3J-7354	122
	125
	127
	374
	375
	543
	561
	733
	765
	870
	871
	872
	906
	911
	934
	935
	971
	973
	979
	985
	988
	998
	1001
	1003
	1005
	1007
	1010
	1011
	1012
	1025
	1028
	1279
	1281
3K-0360	94
	108
	171
	178
	202
	212
	222
	436
	442
	518
	521
	524
	527
	542
	543
	586
	686
	725
	768
	770
	772
	865
	913
	927
	930
	932
	934
	959
	960
	1010
	1011
	1013
	1123
3K-0715	968
3K-1505	693
3K-2889	622
3K-3256	16
	21
	52
	53
	143
3K-4897	1085
3K-5234	736
3K-6235	1052
3K-8460	50
	927
3K-8782	486
3K-9770	622
	1268
	1269
	1270
3L-3380	392
	395
3N-3763	392
	395
3N-3790	1322
	1323
3P-0440	90
	92
3P-0651	506
3P-0653	568
3P-0657	165
3P-1210	963
3P-1323	27
3P-1849	521
3P-1932	543
3P-2404	915
	916
	918
	1116
3P-2792	552
3P-2793	552
3P-2794	552
3P-3103	551
3P-3321	550
3P-3441	853
3P-5327	605
3P-7447	550
3P-7570	552
3P-8820	518
	521
	524
	527
3P-8822	518
	521
	524
	527
3P-8827	518
	521
	524
	527
3P-9900	1218
	1221
	1224
3R-2299	1268
3R-8797	392
	395
3R-8801	392
	393
	395
	396
3S-0004	561
3S-0127	54
3S-1223	741
	743
	745
	747
3S-1349	622
	639
	893
	895
3S-1356	770
	772
3S-2093	259
	261
	363
	412
	486
	508
	858
	1058
	1097
	1101
	1104
	1105
	1112
	1221
	1224
	1227
	1229
	1231
3S-2708	552
	576
	578
	580
	582
3S-2713	67
3S-6162	622
3S-9643	112
3T-2977	628
	671
	1106
	1153
3T-3294	518
	521
	524
	527
3T-3418	392
	395
3T-3422	392
	395
3T-3423	392
	393
	395
	396
3T-3424	392
	393
	395
	396
3T-3434	393
3T-3601	853
3T-3602	853
3T-4391	536
3T-4709	359
3T-4710	359
3T-4717	853
3T-5830	549
3T-7354	979
3T-7567	622
3T-8459	1284
	1285
3T-8757	561
3T-8791	622
3T-8792	622
3T-9494	359
	393
	396
3T-9524	392
	395
3T-9525	►359
	392
	395
3T-9658	594
	595
3W-1547	1049
3W-2647	624
	713
	714
3W-3110	628
	629
3Y-2888	387

4

Part	Page
4B-1234	1236
	1237
4B-1270	858
	861
	1085
4B-1274	1236
	1237
4B-2049	393
	396
4B-3665	42
	43
4B-4158	737
	739
	741
	743
	1017
	1019
	1021
	1023
	1293
	1296
	1327
4B-4274	414
	415
	530
4B-4278	608
	609
	610
	611
	613
	614
	998
	1218
	1221
	1224

► PRIMARY REFERENCE

PART NUMBER INDEX

Part	Page
4B-9782	66
4B-9785	506
	536
4B-9808	1079
	1080
	1081
	1082
4C-8358	532
	534
4C-9612	54
4D-0514	1003
	1005
4D-1248	390
4D-1322	508
4D-1326	402
4D-2297	1098
	1230
4D-3704	44
4D-4508	737
	739
	770
	772
4D-6466	684
	695
	765
	913
4D-7733	1118
	1119
4D-7735	695
4D-8123	387
	700
4D-8148	506
4D-9517	1025
4F-2129	853
4F-2294	401
4F-4879	1193
	1195
	1196
	1197
4F-7389	547
	548
	979
4F-8503	566
4H-1641	45
	605
	1095
4H-2558	608
	609
	610
	611
	613
	614
4J-0520	539
	881
	883
	885
	887
	920
	921
	923
	925
	935
	938
	940
	944
	946
	947
	949
	951
	985
	988
	992
	994
4J-0522	543
	559
	935
	985
	988
	992
	994
4J-0524	934
	936
4J-0525	979
4J-0527	158
	160
	162
4J-0528	59
4J-2379	893
	895
4J-4262	663
4J-4606	889
	891
4J-5267	539
	942
	944
	946
	947
	949
	951
	953
	955
	957
4J-5351	998
	1001
4J-5477	686
	695
	765
	911
	913
	1025
	1028
	1279
	1281
4J-5977	622
4J-6888	897
	899
4J-7083	664
4J-7376	897
	899
4J-7533	991
	998
	1001
	1003
	1005
4J-8734	893
	895
4J-8997	992
	994
4J-9208	1267
	1268
4K-0684	622
	734
	735
	752
	1268
	1269
	1270
4K-1388	998
	1001
	1003
	1005
	1009
4K-2039	1013
4K-5122	486
4K-5175	506
	753
	757
	853
4K-9429	1147
4L-2729	393
	396
4L-6454	41
	80
	202
	212
	222
	300
	303
	307
	310
	314
	317
	320
	323
	326
	329
	436
	442
	453
	632
	634
	636
	638
	639
	641
	661
	768
	875
	983
	1201
4L-6459	230
	436
	539
	942
	953
	955
	957
4L-6499	402
4L-9337	76
	342
	344
	345
	698
	942
	953
	955
	957
	1136
4M-0189	962
4M-0736	519
	524
	527
4M-1336	117
4M-1831	392
	395
4M-1853	392
	395
4M-1854	392
	395
4M-1896	393
	396
4M-6425	235
	237
	387
	450
	684
4M-7470	608
	609
	610
	611
	613
	614
4M-8239	587
4M-8910	568
4M-8973	698
	700
	703
	705
	725
	727
	729
	730
	731
	732
4N-0342	45
4N-0683	30
	54
	73
4N-0684	26
	45
	47
4N-0685	27
4N-0699	59
4N-0794	15
	106
4N-0848	47
4N-0861	84
4N-0865	84
4N-0913	82
4N-0914	82
4N-1114	17
4N-1650	30
4N-1683	15
4N-1849	139
4N-1946	106
4N-1948	117
4N-2199	106
4N-2378	82
4N-2481	10
	►75
4N-2514	44
4N-3808	513
4N-3841	365
	385
4N-5339	98
4N-6658	27
4N-7183	47
4N-8411	84
4N-8770	84
4N-9915	1238
4P-0519	59
4P-0692	178
4P-0983	176
	178
4P-3563	178
4P-5546	71
4P-7233	104
4P-7428	47
	202
	212
	222
	334
	338
	343
	365
	385
	436
	442
	501
	503
	1121
4P-7429	17
	202
	212
	222
	232

► PRIMARY REFERENCE

PART NUMBER INDEX

Part	Page
	365
	385
	433
	436
	442
	508
	921
	1119
4P-7581	133
	169
	202
	212
	222
	230
	274
	275
	281
	338
	348
	350
	352
	353
	412
	417
	419
	421
	423
	426
	429
	431
	433
	436
	442
	447
	450
	481
	483
	486
	493
	684
4P-7820	16
	21
4P-8134	50
	61
	202
	212
	222
	232
	274
	275
	332
	338
	417
	436
	442
	450
	457
	464
	473
	603
	684
	875
4P-8525	23
	24
	25
4Q-5139	124
4Q-5140	124
4S-1936	921
	1116
	1118
	1119
4S-4455	436
	442
4S-5879	527
4S-8537	550
	551
4S-9134	561
4T-1108	998
	1001
4T-1389	597
	599
4T-1422	1281
4T-1649	998
4T-1700	1010
4T-1701	998
4T-1859	992
	994
4T-2069	737
	739
	741
	743
	745
	747
4T-3797	1017
	1019
	1021
	1023
4T-3981	942
	953
	955
	957
4T-4143	893
	895
4T-4509	1010
4T-4511	998
4T-5072	998
	1001
	1009
4T-5073	998
	1001
	1003
	1005
	1009
4T-5501	1306
4T-5502	1305
	1312
	1313
4T-6907	903
4T-9702	1034
	1035
4T-9707	1032
	1033
	1034
	1035
4V-8046	1236
	1237
4V-8256	1173
	1175
	1178
	1181
	1184
4V-8577	1218
	1221
	1224
4W-3027	23
	24
	25
4W-3034	23
	24
	25
4W-5698	26
4W-5699	26
4W-5700	26
4W-5701	26
4W-9890	59
4Z-8840	1294
4Z-8937	1311
	1312
4Z-8942	1294
4Z-8943	1292
4Z-8944	1293
	►1312
4Z-8946	►1292
	1293
4Z-8959	593
4Z-8961	593
4Z-9219	1292
4Z-9220	1294
5B-0213	47
5B-2638	50
5B-5473	548
5B-9318	552
5B-9603	106
5C-2874	232
	350
	353
5C-2890	457
	464
	473
	1058
	1218
	1221
	1224
5C-6565	202
	212
	222
	770
	772
	1136
5C-7261	94
	332
	357
	458
	923
	925
	1044
	1132
	1133
	1175
	1178
	1238
5C-8312	286
	288
	457
	464
	473
	1048
	1148
5C-9553	94
	281
	419
	423
	426
	856
	1090
	1092
	1098
	1160
5D-0353	518
	521
	524
	527
5D-1911	1326
5D-4661	548
5D-5957	557
5D-5958	145
5D-6657	566
5D-6659	536
5D-7449	570
	572
5D-7523	518
	521
	525
	527
5D-7635	340
5D-7927	979
5E-8771	45
	47
5F-1248	570
	572
	574
5F-3106	966
	967
5F-3488	979
5F-4899	16
	98
5F-7054	518
	521
	525
	528
5F-7403	47
5F-7404	47
5F-9144	199
	209
	219
	905
5G-1713	82
5G-3676	202
	212
	222
	390
	436
	442
5G-4109	171
5G-7820	450
	685
5H-1504	35
5H-4018	944
	949
	951
5H-4019	923
	925
	938
	992
	994
5H-4279	559
	567
5H-6733	979
5H-6734	737
	739
5H-8985	576
	578
	580
	582
5I-3876	1229
5J-3886	975
5J-4715	138
5J-5314	392
	395
5J-5365	965
5J-5402	903
5J-5793	549
5J-9454	733
5K-1770	557
5K-3931	536
5K-3932	536
5K-5120	506
	508
5K-7143	518
	521
	525

5

► PRIMARY REFERENCE

PART NUMBER INDEX

Part	Page
	528
5K-9090	59
	88
	90
	92
	94
	542
	923
	925
	934
	935
5K-9107	506
	536
	551
5K-9235	506
5K-9238	530
5K-9989	506
5L-4041	97
5L-4398	853
5L-4756	893
	895
	1015
5L-7200	406
	407
5M-0544	622
	893
	895
5M-2057	998
	1001
5M-2894	15
	16
	17
	19
	21
	45
	50
	52
	53
	58
	59
	75
	82
	84
	86
	98
	104
	106
	112
	137
	139
	143
	169
	176
	178
	185
	186
	365
	385
	431
	433
	506
	508
	548
	549
	552
	570
	572
	574
	576
	578
	580
	582
	703
	705
5M-3034	392
	395
5M-3062	274
	275
	300
	303
	307
	310
	313
	314
	317
	390
	436
	442
	1119
5M-3320	561
5M-3605	561
5M-4480	552
5M-4987	561
5M-5687	1158
5M-6126	550
5M-6187	550
5M-8500	1052
5M-9622	587
5M-9623	587
5M-9624	587
5N-0093	28
	30
5N-2840	88
	90
	92
5P-0076	138
5P-0537	45
	54
	104
	1178
5P-0597	76
	79
	80
	150
	151
	336
5P-0599	152
5P-0600	148
5P-0695	200
	201
	210
	211
	220
	221
	390
	435
	441
5P-0742	300
	303
	306
	310
	314
	317
	320
	323
	326
	329
5P-0743	768
5P-0767	1123
5P-1045	768
5P-1075	94
	230
	301
	303
	307
	310
	313
	314
	317
	320
	323
	326
	329
	330
	338
	341
	342
	344
	345
	346
	348
	350
	352
	355
	390
	423
	557
	698
	930
	932
	983
	1058
	1136
	1283
5P-1076	118
	120
	140
	202
	212
	222
	229
	497
	543
	605
	639
	669
	670
	671
	673
	674
	676
	686
	687
	690
	695
	717
	770
	772
	787
	789
	791
	793
	795
	962
	967
	985
	988
	1052
	1106
	1136
	1153
	1155
5P-1230	86
5P-1327	1293
	1296
5P-1370	47
5P-1465	118
	120
	122
5P-1471	150
	151
5P-1981	536
5P-2228	108
	301
	303
	307
	310
	314
	317
	320
	323
	326
	329
	787
	789
	791
	793
	795
	942
	953
	955
	957
5P-2321	411
5P-2322	965
5P-2566	160
	497
	539
	568
	622
	639
	741
	743
	745
	747
	770
	772
	793
	795
	881
	883
	885
	887
	953
5P-2600	201
	211
	221
5P-2618	161
5P-2766	454
	463
5P-2817	79
5P-2955	299
	307
	310
	313
5P-3092	737
	739
	741
	743
	745
	747
5P-3414	552
5P-3454	447
5P-3488	853
5P-3489	853
5P-3501	530
5P-3948	1121
5P-4115	243
	277
	712
5P-4116	94
	234
	387
	423
	426
	457
	464
	473

► PRIMARY REFERENCE

PART NUMBER INDEX

Part	Page
	856
	923
	925
	1041
	1044
	1095
	1098
5P-4143	536
5P-4268	561
5P-4295	108
5P-4318	47
5P-4423	1218
	1221
	1224
5P-4499	106
5P-4571	265
	271
	412
	455
	470
	485
	1097
5P-4869	133
5P-4889	557
	559
5P-5405	576
	578
	580
	582
5P-5422	564
	565
5P-5621	266
5P-5623	200
	210
	220
	265
5P-5624	266
5P-5637	1098
5P-5649	636
5P-5672	1058
5P-5677	266
	411
	454
	463
5P-5700	139
5P-5777	104
5P-5846	506
5P-5874	874
5P-5924	1058
5P-5933	122
	714
5P-5969	1052
5P-6006	244
5P-6010	1218
	1221
5P-6025	199
	209
	219
5P-6254	550
5P-6298	359
5P-6393	570
	572
	574
5P-6605	1233
	1235
5P-6718	561
5P-7086	412
5P-7211	625
	680
	713
	715
5P-7462	171
	436
5P-7463	171
	436
5P-7464	202
	212
	222
	355
	495
	497
	698
	703
	705
5P-7465	202
	212
	222
	355
	495
	497
	698
	703
	705
5P-7466	953
	957
5P-7467	953
	957
5P-7468	80
	457
	464
	473
	530
	673
	674
	676
	684
	717
	913
	921
	1106
5P-7469	80
	457
	464
	473
	530
	673
	674
	676
	684
	717
	913
	921
	1106
5P-7483	680
	715
5P-7513	1134
5P-7514	636
5P-7684	559
5P-7814	50
5P-7815	532
	534
5P-7857	589
5P-7892	84
5P-7957	1147
5P-7958	1
	484
5P-8066	543
5P-8068	82
	84
5P-8112	940
	953
	957
5P-8210	867
5P-8211	23
	24
	76
5P-8221	822-844
5P-8244	84
5P-8245	50
	55
	82
	84
	138
	202
	212
	222
	433
	508
	518
	521
	525
	528
	536
	547
	548
	549
	550
	559
	568
	570
	572
	574
	853
5P-8247	17
	506
	536
5P-8248	71
5P-8249	71
5P-8250	547
	548
	564
	565
	639
	1267
	1268
5P-8356	30
5P-8429	47
5P-8444	921
5P-8500	1
	171
	187
	188
	605
	625
	1095
	1322
5P-8522	301
	303
	307
	310
	315
	317
	321
	323
	326
	329
5P-8823	1269
	1270
5P-8907	1208
5P-8939	338
5P-8944	518
	521
	525
	528
5P-8998	506
5P-9085	387
	695
	698
5P-9186	589
5P-9301	552
5P-9436	534
5P-9439	559
5P-9519	506
	549
5P-9617	979
5P-9658	513
5P-9899	1279
	1281
5P-9938	695
	875
5S-0003	104
	433
5S-2389	570
5S-7348	228
5S-7379	315
	317
	355
	568
	942
	953
	955
	957
	1025
	1028
5S-7382	539
	897
	899
5T-4896	622
5T-7486	1103
	1173
	1175
	1178
	1181
	1184
5V-0500	122
5V-1496	628
	629
	1173
	1175
	1178
	1181
	1184
5W-1250	906
5W-8591	234

6

Part	Page
6B-0533	651
	652
6B-2781	693
6B-2882	143
6B-4594	679
	714
6C-3210	71
	942
	953
	955
	957
6C-3214	547
	548
6C-3218	774
	775
6C-9237	19
	61
6D-4246	108
6D-4247	390
	1123
6D-4636	695
6D-5801	163
6D-7573	1121
6D-9392	923
	925
6E-0381	586
6E-1637	1001

PART NUMBER INDEX

Part	Page
6E-2060	979
6E-2140	1009
6E-3113	▶903
	1289
	1292
6E-3667	893
	895
6E-3976	903
6E-3980	903
6E-4401	906
6E-4976	903
6E-5200	1010
6E-6527	1007
6E-6528	1007
	1008
6F-0156	550
6F-0253	407
6F-0711	594
	595
6F-0984	551
6F-7045	200
	210
	220
	484
6F-8146	518
	522
	525
	528
6F-9974	1214
	1216
6H-1717	570
	572
	574
6H-3956	651
	652
	692
6H-4005	286
	288
6H-9361	980
6I-0213	181
6I-0928	37
6I-1418	235
	237
	417
	457
	464
	473
	486
6I-2505	134
	135
6I-2506	134
	135
6I-4025	35
6I-4361	28
	30
6I-4362	28
	30
6I-4363	28
	30
6I-4364	28
	30
6I-4365	28
	30
6I-4366	28
	30
6I-4465	134
	135
6I-9471	102
	103
6J-0488	719
6J-2515	750
6J-2680	936
6J-2797	903
6J-3913	47
6J-5985	1017
	1019
	1021
	1023
6J-5986	1017
	1019
	1021
	1023
6J-7500	1017
	1019
	1021
	1023
	1036
	1038
6K-0138	1290
	1292
6K-0806	259
6K-3630	1290
	1292
6K-3771	84
6K-6307	539
	559
6K-6967	1025
	1028
6K-8178	443
6K-8714	559
6L-4428	30
6L-4784	559
6L-5897	528
6L-6560	576
	578
	580
	582
6L-9284	549
6M-5062	1013
6N-0008	106
6N-0977	45
6N-1025	45
6N-1026	45
6N-1027	45
6N-2343	98
6N-2656	59
6N-2985	530
6N-3279	392
	395
6N-3826	392
	395
6N-3896	71
6N-3897	71
6N-6037	39
6N-7654	39
6N-7692	134
	135
6N-8599	647
6N-9590	721
6P-3223	561
6P-3458	550
6P-3901	576
	578
	580
	582
6P-3904	570
	572
	574
6P-5317	853
6P-6739	550
6P-7564	551
6P-8339	568
6P-8340	568
6P-8829	634
	636
	638
	639
	641
6P-8901	1016
6P-9163	570
	572
	574
6R-7636	1070
	1072
6R-7943	865
6S-5993	765
6S-6251	717
6S-9277	693
6T-0234	853
6T-0363	359
6T-0371	359
6T-0372	359
6T-0410	622
6T-0465	201
	211
	221
6T-0609	518
	521
	524
	527
6T-0840	853
6T-0841	853
6T-0842	853
6T-1139	736
6T-1141	▶736
	774
	775
	845
	846
	849
	850
	851
	852
6T-1382	787
	789
	791
	793
	795
6T-2037	853
6T-3382	1014
6T-3610	456
6T-3631	399
6T-3632	399
6T-3633	399
6T-5941	634
	636
	639
	641
6T-6080	187
	188
6T-6566	518
	521
	524
	527
6T-8115	486
6T-8714	679
	1139
	1141
	1143
6T-9927	679
6V-0128	13
6V-0292	1210
6V-0301	935
6V-0457	536
6V-0458	536
6V-0545	80
	684
	913
6V-0683	171
	436
6V-0826	1025
	1028
6V-0836	550
6V-0852	506
	539
	542
	545
	587
	684
	911
	913
	918
	928
	936
	960
	985
	988
6V-0894	858
	861
6V-1196	506
	559
	568
6V-1230	125
	127
6V-1249	202
	212
	222
	698
	703
	705
6V-1322	392
	395
6V-1355	122
6V-1572	539
	543
6V-1573	540
	543
6V-1653	518
	522
	525
	528
6V-1720	550
6V-1722	1123
6V-1820	1066
	1067
	1068
	1069
6V-1867	90
	92
	540
6V-1868	90
	92
	540
6V-1869	90
	92
	540
6V-1874	673
	674
	676
	717
	1106
6V-1875	540
6V-1876	923
	925
6V-1889	684
	913
6V-1904	557
6V-1971	1
6V-2313	336
	350
	353
6V-2314	187
	188
6V-2317	861
	1041
	1070

▶ PRIMARY REFERENCE

PART NUMBER INDEX

Part	Page
	1072
6V-2360	797
	799
6V-2369	447
6V-2383	158
	162
	698
6V-2495	1116
6V-2499	715
6V-2689	412
	1208
6V-3251	104
6V-3298	518
	521
	524
	527
6V-3319	47
6V-3669	1162
6V-3821	182
6V-3838	589
6V-3938	968
6V-3940	1052
	1070
	1072
6V-3965	506
	508
	539
	543
	545
	587
	684
	911
	913
	918
	928
	935
	960
	985
	988
6V-3987	1070
	1072
	1083
6V-4249	508
6V-4356	108
6V-4357	108
6V-4365	540
6V-4368	540
6V-4432	100
6V-4589	47
	194
	202
	212
	222
	365
	385
	404
	868
6V-5048	54
	77
	141
6V-5050	534
6V-5063	106
	109
	112
6V-5064	104
	106
	274
	275
6V-5163	715
6V-5200	973
6V-5326	906
6V-5553	17
	576
	578
	580
	582
6V-5555	992
	994
6V-5556	998
	1010
	1011
6V-5586	906
6V-5590	42
	43
6V-5654	715
6V-5656	530
6V-5818	1231
6V-5839	47
	61
	178
	508
6V-5849	1238
6V-6213	1238
	1239
6V-6317	509
6V-6572	853
6V-6604	713
	715
6V-6609	27
	35
	104
	106
	115
	125
	127
	383
	511
6V-6923	192
6V-7238	1123
6V-7357	346
	348
	352
	362
	457
	464
	473
	481
	483
	1098
	1239
6V-7359	202
	212
	222
6V-7646	1098
6V-7723	977
6V-7732	980
6V-7744	608
	609
	613
	614
	980
6V-8076	508
	539
6V-8077	928
6V-8149	979
6V-8188	202
	212
	222
	392
	395
	497
	765
	953
	957
	992
	994
6V-8189	299
	436
	442
	661
6V-8190	634
	636
	638
	639
	641
6V-8200	572
	574
6V-8201	971
	973
6V-8227	1044
6V-8237	897
	899
	901
	903
	1025
	1028
6V-8245	125
	127
6V-8281	519
	521
	524
	527
6V-8337	865
6V-8344	552
6V-8351	963
6V-8352	1008
6V-8369	409
6V-8370	406
6V-8371	1009
6V-8376	1084
	1149
6V-8378	402
6V-8397	108
	125
	127
	542
	543
	686
	875
	913
	927
	934
	935
	985
	988
	1025
	1028
6V-8398	108
	178
	542
	543
	695
	700
	725
	917
	927
	930
	932
	934
6V-8400	539
	542
	935
6V-8455	61
6V-8625	108
	930
6V-8626	935
6V-8628	765
	1279
	1281
6V-8634	542
6V-8635	934
6V-8636	125
	127
	875
	927
	985
	988
6V-8637	272
	539
	917
	983
6V-8639	934
6V-8640	178
	917
6V-8641	684
	913
6V-8647	765
	1025
	1028
6V-8713	927
6V-8714	88
	90
	92
6V-8716	272
6V-8721	171
6V-8722	94
	684
	913
6V-8724	108
	875
	927
	985
	988
6V-8781	108
	927
6V-8782	725
	927
6V-8785	88
	90
	92
	935
6V-8786	935
6V-8801	230
	301
	303
	307
	310
	313
	315
	317
	321
	323
	326
	329
	341
	346
	348
	350
	352
	387
	390
	423
	437
	442
	457
	464
	473
	632
	661
	797
	799
	875
6V-8832	407
6V-8849	770
	772
6V-8928	1052

► PRIMARY REFERENCE

PART NUMBER INDEX

Part	Page
6V-8934	684
	913
	1025
	1028
6V-8944	542
6V-8969	1175
	1178
	1181
6V-8970	622
6V-8981	695
	700
6V-8983	917
6V-8990	918
6V-8997	917
6V-9000	765
6V-9002	930
	932
	934
6V-9003	86
6V-9004	918
6V-9007	174
	917
6V-9008	88
6V-9010	765
	911
6V-9027	106
	112
	118
	120
	125
	127
6V-9028	223
6V-9160	918
6V-9168	985
	988
	1025
	1028
6V-9169	695
	700
6V-9176	576
	578
	580
	582
6V-9182	174
	272
	934
6V-9189	292
	294
	295
	450
	685
6V-9200	934
6V-9343	542
6V-9632	281
	337
	712
	1041
	1070
	1072
	1163
6V-9667	1162
6V-9746	530
	539
	917
	918
	927
	928
	934
	935
	983
6V-9804	294
	295
6V-9828	695
	765
6V-9830	725
	731
	732
6V-9833	59
	936
6V-9835	765
6V-9840	935
6V-9849	765
6V-9850	985
	988
6V-9852	927
6V-9853	917
	927
6V-9854	59
6V-9872	934
	985
	988
6V-9873	543
	917
	930
	932
6V-9874	272
6V-9877	174
6W-3924	1238
6Y-0454	759
	760
	762
	764
6Y-0471	759
	760
	764
6Y-0473	750
	753
	755
	757
	759
	760
	762
	764
	776
	777
	778
	780
	787
	789
	791
	793
	795
6Y-0857	519
	524
	527
6Y-1202	1305
	1306
	1312
	1313
6Y-1204	1305
	1306
	1312
	1313
6Y-1577	762
6Y-1578	762
6Y-1579	759
	760
	764
6Y-2057	759
	760
	762
6Y-2090	71
6Y-2130	512
6Y-2546	536
6Y-2547	536
6Y-2584	508
6Y-2736	973
6Y-2737	973
6Y-3233	1257
	1260
6Y-3484	552
	853
6Y-3568	946
	947
6Y-3732	1052
6Y-3838	1034
6Y-5493	1257
	1260
6Y-5636	570
6Y-5793	570
	572
	574
6Y-5888	576
	578
	580
	582
6Y-6140	►1313
6Y-6584	199
	209
	219
6Y-8960	1305
	1306
6Y-9287	1279
7	
7B-1251	202
	212
	222
	447
	450
	684
7B-3235	47
	55
	76
7C-0145	106
7C-0307	106
7C-1511	98
7C-1512	98
7C-3910	141
7C-4354	487
7C-9614	30
7D-1195	979
7D-1553	79
7D-1649	55
	76
	536
	938
	1121
7D-6922	1112
7D-7111	190
	191
7D-7233	109
	336
7D-7453	1214
	1216
7D-9708	1214
	1216
7E-6508	12
7E-8630	141
7E-9171	721
7F-3425	139
7F-3488	392
	395
7F-3525	359
7F-6112	770
	772
7G-1060	94
	199
	209
	219
	447
	686
7G-1239	923
	925
7G-1814	644
	646
7G-1815	624
	713
7G-1952	737
	739
	741
	743
	745
	747
7G-1958	737
	739
	745
	747
7G-2176	98
7G-2248	559
7G-2325	536
7G-2419	797
	799
7G-2421	797
	799
7G-2476	550
7G-2704	770
	772
7G-3413	84
7G-3414	84
7G-3832	916
	918
	944
	947
	949
	951
	953
	957
7G-3833	172
	916
	918
	944
	947
	949
	951
	953
	957
7G-3834	172
	916
	918
	944
	947
	949
	951
	953
	957
7G-3907	787
	789
	791
	793
	795
7G-4332	759
	760
	762
	764
7G-4766	797
	799
7G-4817	552
7G-5221	787
	789
	791
	793
	795

► PRIMARY REFERENCE

PART NUMBER INDEX

Part	Page
7G-5606	920
	923
	925
7G-5622	576
	578
	580
	582
7G-5671	570
7G-5984	923
	925
	938
7G-5985	923
	925
	938
7G-5986	923
	925
	938
7G-6176	1146
7G-6503	643
7G-6623	622
7G-7053	1064
7G-8282	797
	799
7G-9709	737
	739
	741
	743
	745
	747
7G-9724	50
7G-9922	570
7H-1447	980
7H-2614	693
7I-2272	414
	415
	457
	464
	473
7I-2273	334
7I-8663	765
7J-0204	202
	212
	222
7J-2087	893
	895
7J-2966	1267
7J-2980	1268
7J-4169	1290
	1292
7J-6525	552
7J-8611	530
7J-9108	94
	542
	686
	913
	927
	935
7J-9933	998
	1001
	1003
	1005
	1009
7K-1181	90
	94
	152
	202
	212
	222
	230
	232
	265
	274
	275
	278
	281
	286
	288
	301
	303
	307
	311
	315
	317
	321
	323
	327
	329
	332
	334
	338
	340
	341
	343
	344
	346
	348
	350
	352
	353
	355
	362
	365
	385
	390
	412
	414
	415
	417
	419
	421
	423
	426
	429
	431
	433
	437
	442
	447
	450
	453
	454
	457
	464
	473
	479
	481
	483
	484
	487
	491
	493
	499
	501
	503
	603
	686
	695
	709
	856
	858
	861
	875
	1121
	1229
7K-3116	45
7K-3176	1121
7K-6413	664
7K-6956	639
7K-9211	1279
	1281
7L-2894	392
	395
7L-7524	559
	561
7L-9061	576
	578
	580
	582
7M-0324	392
	395
7M-0325	392
	395
7M-0326	392
	395
7M-0327	392
	395
7M-0475	549
7M-2360	663
7M-8480	506
	550
	594
	595
7M-8485	59
	88
	90
	92
	129
	130
	530
	539
	542
	934
	935
	998
	1001
	1003
	1005
7M-8651	392
	395
7M-9107	1305
	1306
	1312
	1313
7N-1277	1119
7N-2059	387
7N-2155	98
7N-2156	98
7N-2213	98
7N-2443	45
7N-7221	412
7N-7559	86
7N-7688	108
7N-7878	104
7N-8875	86
7N-9212	82
7N-9801	410
7R-2750	255
	265
	455
	456
	470
	471
7R-2751	255
	265
	456
	470
7R-8872	750
	753
	755
	757
7S-1912	928
7S-2042	605
	1095
7S-3916	501
	503
7S-3919	501
	503
7S-4326	518
	522
	525
	528
7S-5005	26
	45
7S-8554	527
7T-0094	487
7T-0375	787
	789
	791
	793
	795
7T-0715	759
7T-0716	759
7T-0724	822
	834
7T-1000	822-844
7T-1099	199
	209
	219
	417
	1136
7T-1784	587
7T-1819	679
7T-1885	853
7T-3264	1162
7T-3926	797
	799
7T-3927	797
	799
7T-3928	797
	799
7T-3974	392
	395
7T-4130	737
	739
	741
	743
	745
	747
7T-4131	737
	739
	741
	743
	745
	747
7T-4132	770
	772
7T-4133	737
	739
	770
	772
7T-4134	737
	739
	741
	743
	745
	747
7T-4135	594
	595
7T-4145	737
	739
	770
	772
7T-4501	1290
	1292
7T-4502	1290
	1292

PART NUMBER INDEX

Part	Page
7T-4532	1056
7T-4607	824
	837
7T-4809	1017
	1019
	1021
	1023
7T-4810	1017
	1019
	1021
	1023
7T-4966	1032
	1033
7T-5959	787
	789
	791
	793
	795
7T-6040	▶1016
7T-6192	797
7T-6193	799
7T-6799	408
7T-6993	570
7T-6994	853
7T-7190	1279
7T-7222	597
	599
	1284
7T-7303	1279
7T-7305	597
	599
	1279
	1281
7T-7547	1035
7T-7577	▶1015
	1038
7T-7578	1015
7T-7586	1015
7T-7942	621
	▶622
7T-8006	737
	739
	741
	743
	745
	747
7T-8331	131
7T-9014	594
	595
	664
7T-9309	787
	789
	793
7T-9515	406
7T-9793	1097
	1151
7V-6571	202
	212
	222
	501
	503
7W-2033	140
7W-2034	140
7W-2297	155
	156
7W-6528	98
7W-7141	98
7W-9094	112
7X-0277	437
	442
7X-0289	698
7X-0290	301
	303
	307
	311
	315
	317
	321
	323
	327
	329
	540
	875
7X-0328	100
	770
	772
7X-0341	160
7X-0342	188
	737
	739
	741
	743
	745
	747
7X-0343	1040
7X-0344	749
7X-0345	737
	739
	741
	743
	745
	747
	966
	967
	1290
7X-0346	72
7X-0349	622
7X-0365	597
	599
	714
	1162
	1279
	1281
7X-0366	698
7X-0379	1015
	1017
	1019
	1021
	1023
	1036
	1038
7X-0381	942
	953
	955
	957
7X-0383	942
	953
	955
	957
7X-0386	787
7X-0395	597
	599
7X-0396	1031
7X-0403	643
	1015
	1016
7X-0405	634
	636
	639
	641
	663
	1040
	1283
7X-0419	641
7X-0420	591
	592
	737
	739
	741
	743
	745
	747
	966
	967
	1290
7X-0422	591
	592
	634
	636
	638
	641
7X-0429	1161
7X-0439	1283
7X-0440	23
	24
	25
7X-0444	634
	636
	638
	639
	641
7X-0449	1031
7X-0455	71
7X-0465	423
	426
7X-0492	1025
7X-0515	625
	985
	988
	1290
	1292
7X-0531	591
	592
	634
	636
	638
	641
	770
	772
7X-0533	770
	772
	1161
7X-0537	597
	599
	1283
	1290
	1292
7X-0549	634
	636
	638
	639
	641
	643
7X-0562	392
	395
7X-0575	703
	705
7X-0578	387
	599
	634
	636
	638
	639
	641
	875
	1058
	1066
	1067
	1068
	1069
	1070
	1072
	1212
7X-0579	182
	235
	237
	433
	602
	1057
	1064
	1087
	1229
	1239
7X-0582	202
	212
	222
	453
	1162
7X-0584	669
	670
	672
	673
	674
	676
	678
	686
	1106
	1158
7X-0586	602
	615
	616
	617
	618
	655
	656
	657
	658
	659
	660
7X-0589	457
	464
	473
	709
7X-0590	770
	772
7X-0599	693
7X-0608	357
	458
7X-0616	663
	1283
7X-0618	679
	717
	1134
7X-0619	679
7X-0620	402
7X-0732	235
	237
7X-0766	692
7X-0796	97
7X-0818	487
	1229
7X-0857	597
	599
7X-1553	971
	973
7X-2465	965
7X-2533	479
7X-2534	281
	362
	419
	421
	429
7X-2538	41
7X-2546	1210
	1212
7X-2550	684
	687
	936
	1106
	1153

▶ PRIMARY REFERENCE

PART NUMBER INDEX

Part	Page
	1155
7X-2553	666
	985
	988
7X-2554	102
	103
	625
7X-2555	625
	982
7X-2556	122
7X-2562	664
7X-2565	187
	188
7X-2577	897
	899
7X-2621	1160
7X-2623	568
7X-3159	1085
7X-3229	1321
7X-3340	906
7X-3373	392
	395
7X-3392	717
	1134
7X-4736	150
	151
7X-4771	43
7X-6085	228
7X-6315	198
	241
	242
	244
	484
	1129
7X-7644	1321
7X-7702	1231
7X-7729	88
	90
	92
	94
	109
	118
	120
	122
	124
	146
	172
	174
	202
	212
	222
	229
	278
	417
	423
	426
	540
	543
	603
	605
	647
	679
	686
	714
	867
	881
	883
	885
	887
	911
	913
	915
	916
	918
	921
	923
	925
	928
	936
	938
	944
	947
	949
	1041
	1044
	1049
	1050
	1052
	1090
	1092
	1116
	1118
	1119
	1121
	1123
	1126
	1134
	1139
	1141
	1143
	1150
	1164
	1165
	1166
	1167
	1168
	1169
	1170
	1171
	1172
7X-7888	858
	861
7X-7927	1227
	1231
7X-7928	1227
	1231
7X-7929	1227
	1231
7X-7930	1227
	1231
7X-7958	86
	109
	336
7Y-0468	1103
	1173
	1175
	1178
	1181
	1184
7Y-3729	927
7Y-5215	889
	891
7Y-5219	906

8

8B-1312	550
8C-3079	532
	534
8C-3089	141
	185
	186
	392
	395
8C-3174	172
8C-3205	944
	949
	951
8C-3206	499
	540
	603
	881
	883
	885
	887
	923
	925
	938
	944
	949
	951
	979
	992
	994
8C-3364	539
	542
8C-3442	1052
8C-3445	77
8C-3446	77
	543
	979
8C-3447	542
8C-3451	927
	980
8C-3681	118
	120
	122
8C-5060	1239
8C-5346	1321
8C-5607	353
	362
	423
	426
	484
8C-5608	281
	353
	419
	421
	423
	426
	429
	487
8C-5723	59
8C-5917	199
	209
	219
	389
8C-6354	255
	454
	463
	484
8C-6364	374
8C-6561	437
	442
	525
8C-6865	1025
	1028
8C-6871	700
	727
	729
	730
	731
	732
8C-6913	518
	522
	525
	528
	597
	599
	787
	789
	791
	793
	795
8C-6915	1025
	1028
8C-6965	874
8C-7325	125
	127
8C-7581	1098
8C-8400	917
8C-8451	353
	423
	426
	487
	711
8C-8514	244
	484
	1236
	1237
8C-8585	608
	609
	613
	614
	628
	629
	693
	1156
8C-8843	1283
8C-9660	392
	395
8D-3508	1136
8D-3786	1136
8D-3932	1138
8D-4771	547
	548
8E-0618	505
8E-1042	940
8E-1043	940
8E-1118	1100
8E-1205	605
	1095
8E-1378	1031
8E-1597	1295
8E-2085	1272
8E-2086	1272
	1274
8E-2087	1274
8E-2685	1052
8E-2729	550
8E-2827	737
	739
	741
	743
	745
	747
8E-2900	849
	850
	851
	852
8E-2901	770
	772
8E-2902	770
	772
8E-3124	518
	521
	524
	527
8E-3241	300
	303
	306
	310
	314
	317

PART NUMBER INDEX

Part	Page
8E-3430	435
	441
8E-3431	435
	441
8E-3581	1257
8E-4072	679
8E-4541	1241
	1269
	1270
8E-4542	1241
	1269
	1270
8E-5080	1260
8E-5922	1052
8E-6619	776
	777
	778
	780
8E-6757	668
8E-6856	1052
	1090
	1092
8E-6866	668
8E-6867	1260
8E-7430	1257
8E-7561	605
	1095
8E-7791	1087
8E-7838	568
8E-8293	1227
8E-8304	550
8E-8316	576
	578
	580
	582
8E-8415	1308
	1313
8E-8914	1290
	1292
8E-8994	568
8E-9289	622
8E-9570	▶668
	1258
8E-9938	668
8E-9947	667
	668
8F-1326	908
	909
8F-1434	392
	395
	402
8F-6437	131
8F-7702	1041
8F-8544	552
8F-8733	750
	753
	755
	757
8F-9516	776
	777
	778
	780
8H-5303	200
	210
	220
	484
8H-5727	639
8J-0412	963
8J-1665	901
8J-3146	942
	953
	955
	957
8J-4351	82
	540
8J-4386	897
	899
8J-4917	1284
	1285
8J-5326	1034
	1035
8J-7236	1162
8J-8197	94
	172
	174
	1123
8J-8322	576
	578
	580
	582
8K-1433	1100
8K-2692	552
8K-5130	1032
	1033
8L-2746	868
8L-2777	67
8L-2786	363
	437
	442
	532
	534
8L-5008	695
	1025
	1028
8L-8413	199
	209
	219
	389
	1107
	1108
	1193
	1195
	1196
	1197
	1218
8M-4389	853
8M-4395	552
8M-4986	587
8M-4992	587
8M-5266	506
8M-7066	721
8M-8489	98
	551
8M-9024	81
8M-9124	78
	104
	166
8N-0397	82
8N-0422	59
8N-0423	59
8N-0590	104
8N-0612	82
8N-0869	200
	210
	220
	390
	436
	442
8N-0879	143
8N-2104	82
8N-3653	164
8N-4617	134
	135
8N-7669	133
8P-0058	506
8P-0420	594
	595
8P-4047	550
8P-4617	550
8P-4661	750
	753
	755
	757
8P-5056	576
	578
	580
	582
8P-5411	336
8P-5698	518
	521
	524
	527
8P-6817	570
8P-7598	594
	595
	664
8P-9142	733
8P-9266	570
	572
	574
8P-9770	1034
	1035
	1257
	1260
8R-0739	693
8S-0023	881
	883
	885
	887
	930
	932
8S-0024	881
	883
	885
	887
	930
	932
8S-0948	202
	212
	222
	709
8S-2332	390
	398
8S-2634	199
	209
	219
8S-4211	199
	209
	219
8S-4756	787
	789
	791
	793
	795
8S-9089	202
	212
	222
8S-9130	506
	568
8S-9191	50
	82
	181
	552
8T-0119	171
8T-0208	737
	739
	770
	772
8T-0232	664
8T-0267	858
	861
8T-0271	390
8T-0277	1052
8T-0325	232
8T-0328	187
	188
	202
	212
	222
	232
	278
	334
	393
	396
	457
	464
	473
	487
	1085
8T-0343	891
8T-0389	229
	294
	295
	980
8T-0643	881
	883
	885
	887
8T-0667	897
	899
	901
8T-0668	1025
	1028
8T-1141	550
8T-1158	973
8T-1172	1041
8T-1444	550
8T-1685	935
8T-1703	112
8T-1793	897
	899
8T-1885	530
8T-1886	530
8T-1887	94
	104
	202
	212
	222
	423
	437
	443
	447
	684
8T-1888	94
	104
	202
	212
	222
	423
	437
	443
	447
	684
8T-1889	169
	202
	212
	222
	338
	1025
	1028
8T-1890	169
	202
	212
	222
	338
	1025

▶ PRIMARY REFERENCE

PART NUMBER INDEX

Part	Page
	1028
8T-1893	423
	426
8T-1894	423
	426
8T-1895	202
	212
	222
	390
	437
	443
8T-1896	202
	212
	222
	390
	437
	443
8T-1897	88
	90
	92
	178
	301
	303
	307
	311
	315
	317
	321
	323
	327
	329
	437
	443
8T-1898	88
	90
	92
	178
	301
	303
	307
	311
	315
	317
	321
	323
	327
	329
	437
	443
8T-1981	797
	799
8T-2223	202
	212
	222
8T-2225	200
	201
	210
	211
	220
	221
	390
	435
	436
	441
	442
8T-2275	980
8T-2287	1126
8T-2353	911
	935
8T-2501	437
	443
	506
	557
	568
	703
	705
	1052
8T-2502	301
	303
	307
	311
	315
	317
	321
	323
	327
	329
	338
	341
	346
	348
	350
	352
	423
	518
	522
	525
	528
	594
	595
	930
	932
	1283
8T-2561	1126
8T-2658	1041
8T-2659	487
	908
	909
	1048
8T-2922	874
8T-3490	59
	90
	92
	94
	146
	171
	199
	200
	201
	209
	210
	211
	219
	220
	221
	306
	310
	313
	385
	387
	454
	503
	530
	539
	542
	603
	605
	647
	653
	654
	679
	695
	700
	714
	721
	856
	916
	917
	921
	927
	1041
	1049
	1116
	1118
	1123
	1126
	1143
8T-3597	108
	653
	654
	672
	674
	676
	684
	719
	1025
	1028
8T-3612	605
	651
	652
	1041
	1057
	1095
	1127
	1229
8T-3844	491
	493
8T-4001	689
8T-4121	3
	58
	79
	88
	90
	92
	94
	109
	118
	120
	122
	131
	133
	140
	150
	151
	152
	161
	172
	202
	212
	222
	230
	232
	238
	272
	286
	288
	294
	295
	301
	303
	307
	311
	315
	317
	321
	323
	327
	329
	332
	336
	338
	355
	362
	387
	389
	390
	412
	417
	423
	426
	437
	443
	447
	450
	457
	464
	473
	493
	495
	499
	501
	503
	512
	530
	540
	543
	559
	601
	603
	608
	609
	613
	614
	625
	629
	631
	648
	670
	672
	678
	679
	686
	687
	689
	693
	695
	698
	700
	703
	705
	709
	714
	717
	721
	725
	727
	765
	768
	856
	881
	883
	885
	887
	901
	913
	916
	918
	920
	923
	925
	928
	936
	938
	940
	944
	946

PART NUMBER INDEX

Part	Page
	947
	949
	951
	980
	985
	988
	992
	994
	1025
	1028
	1041
	1044
	1057
	1074
	1106
	1116
	1118
	1119
	1123
	1134
	1143
	1151
	1153
	1155
	1158
	1178
	1187
	1188
	1210
	1212
8T-4122	72
	118
	124
	693
	737
	739
	741
	743
	745
	747
	749
	966
	967
	1290
8T-4123	187
	188
	664
	689
	690
	696
	700
8T-4131	689
	690
8T-4132	625
	1036
	1038
8T-4133	88
	90
	92
	172
	202
	212
	222
	238
	286
	288
	338
	387
	390
	437
	443
	447
	450
	495
	557
	685
	693
	696
	698
	700
	725
	727
	765
	913
	921
	923
	925
	1041
	1044
	1074
	1116
	1118
	1123
	1143
	1173
	1178
	1184
	1198
8T-4136	3
	79
	88
	90
	92
	95
	109
	118
	120
	122
	150
	151
	161
	172
	174
	202
	212
	222
	230
	232
	238
	278
	301
	303
	307
	311
	315
	317
	321
	323
	327
	329
	355
	362
	387
	390
	437
	443
	457
	464
	473
	495
	499
	501
	503
	540
	543
	603
	625
	647
	679
	684
	689
	693
	696
	700
	703
	705
	709
	714
	725
	765
	768
	913
	916
	918
	920
	921
	923
	925
	928
	938
	980
	1025
	1041
	1044
	1050
	1074
	1090
	1092
	1116
	1118
	1119
	1121
	1123
	1126
	1139
	1141
	1143
	1187
	1188
8T-4137	94
	109
	118
	120
	202
	212
	222
	332
	336
	338
	342
	345
	387
	389
	390
	412
	417
	423
	426
	437
	443
	457
	464
	473
	495
	540
	543
	601
	605
	631
	648
	679
	696
	698
	700
	856
	921
	923
	925
	946
	947
	985
	988
	1049
	1057
	1058
	1116
	1119
	1134
	1151
8T-4138	152
	163
	278
	281
	334
	417
	419
	423
	426
	457
	464
	473
	491
	493
	602
	615
	616
	617
	618
	655
	656
	657
	658
	659
	660
	711
	712
	858
	861
8T-4139	94
	109
	118
	120
	162
	202
	212
	222
	511
	530
	605
	615
	617
	619
	620
	625
	648
	664
	669
	670
	671
	672
	673
	674
	676
	678
	679
	684

► PRIMARY REFERENCE

PART NUMBER INDEX

Part	Page
	698
	877
	913
	967
	985
	988
	1025
	1028
	1052
	1106
	1134
	1138
	1153
	1158
8T-4140	102
	103
	147
	679
8T-4141	625
8T-4145	998
	1001
	1003
	1005
8T-4149	171
8T-4167	158
	679
	689
	1139
	1141
	1143
	1290
	1292
8T-4171	417
	1239
8T-4172	58
	700
	703
	705
	928
	944
	949
	951
8T-4175	625
	982
	1036
	1038
8T-4178	202
	212
	222
	390
	423
	426
	693
	936
	949
	1134
	1210
	1212
8T-4179	338
	389
	390
8T-4182	133
	150
	151
	152
	272
	338
	417
	512
	721
	923
	925
	940
8T-4183	109
	136
	140
	229
	511
	543
	625
	673
	679
	690
	698
	717
	719
	877
	980
	986
	989
	1052
	1106
	1136
8T-4184	158
	161
	162
	534
	540
	624
	674
	676
	690
	713
	714
	936
	980
8T-4185	102
	103
	122
	202
	212
	222
	232
	417
	437
	443
	512
	696
	727
	998
8T-4186	88
	125
	127
	202
	212
	222
	229
	499
	540
	603
	700
	703
	705
	877
	881
	883
	885
	887
	1143
8T-4189	387
	491
	690
	1041
	1044
	1063
	1064
	1095
	1098
	1160
8T-4191	118
	120
	122
	417
	448
	493
	684
8T-4192	202
	212
	222
	497
	625
	629
	669
	670
	673
	674
	676
	698
	700
	1058
	1106
	1121
8T-4193	663
	664
8T-4194	102
	103
	122
	343
	530
	557
	679
	719
	962
	1036
	1038
	1138
8T-4195	88
	95
	109
	118
	120
	124
	131
	133
	140
	146
	172
	202
	212
	222
	232
	294
	295
	387
	390
	424
	426
	437
	443
	450
	493
	499
	605
	608
	609
	613
	614
	629
	647
	670
	672
	679
	684
	687
	693
	705
	709
	717
	725
	911
	916
	921
	940
	944
	946
	947
	949
	951
	1025
	1028
	1041
	1106
	1116
	1134
	1153
	1155
	1158
8T-4196	88
	122
	131
	172
	202
	212
	222
	437
	443
	530
	540
	559
	625
	678
	684
	703
	709
	717
	901
	913
	923
	925
	928
	936
	938
	944
	949
	951
	980
	992
	994
	1141
	1143
	1178
8T-4197	423
	426
8T-4198	202
	212
	222
8T-4200	856
	1041
	1095
	1229
8T-4205	13
	152
	334
	392
	395
	861

PART NUMBER INDEX

Part	Page
	1041
	1044
	1058
	1098
	1131
	1175
	1181
8T-4222	150
	151
	928
	1052
8T-4223	79
	80
	95
	100
	102
	103
	109
	136
	158
	160
	161
	162
	202
	212
	222
	301
	304
	307
	311
	315
	318
	321
	323
	327
	329
	334
	338
	343
	389
	390
	497
	511
	519
	522
	525
	528
	530
	534
	540
	543
	557
	568
	605
	615
	617
	619
	620
	622
	625
	628
	629
	648
	663
	664
	673
	674
	676
	680
	686
	690
	696
	698
	700
	709
	714
	717
	719
	737
	739
	741
	743
	745
	747
	755
	766
	770
	772
	877
	881
	883
	885
	887
	913
	918
	936
	942
	944
	949
	951
	953
	955
	957
	980
	992
	994
	1025
	1028
	1036
	1038
	1058
	1106
	1121
	1136
	1138
8T-4224	41
	235
	237
	292
	299
	307
	311
	313
	332
	387
	423
	426
	437
	443
	450
	464
	474
	491
	525
	543
	651
	652
	661
	671
	686
	687
	690
	693
	856
	923
	925
	1042
	1044
	1095
	1150
	1158
	1160
	1175
	1178
	1229
8T-4226	625
	877
8T-4238	725
8T-4244	673
	674
	676
	696
	717
	944
	949
	951
	1036
	1038
	1106
	1136
8T-4647	1148
8T-4648	543
	559
	986
	989
	1026
	1028
	1134
	1136
8T-4649	680
	1139
	1141
	1143
8T-4821	1136
8T-4834	542
8T-4835	755
	770
	772
	881
	883
	885
	887
8T-4895	717
8T-4896	41
	76
	80
	154
	202
	212
	222
	274
	275
	437
	443
	453
	518
	522
	525
	528
	540
	557
	568
	594
	595
	632
	661
	696
	698
	725
	768
	875
	897
	899
	942
	953
	955
	957
	1026
	1028
	1119
8T-4908	427
	450
	457
	464
	473
	543
	602
	651
	652
	671
	684
	687
	693
	923
	925
	1042
8T-4910	131
	334
	543
	680
	690
	709
	717
	1134
8T-4956	663
	674
	676
	680
	684
	687
	696
	714
	944
	949
	992
	994
	1052
	1136
	1155
	1158
8T-4967	1143
8T-4970	501
	503
	1095
8T-4985	109
8T-4994	160
	714
	1162
8T-5001	559
8T-5005	530
	543
	700
8T-5050	930
	932
8T-5071	737
	739
	741
	743
	745
	747
8T-5361	634
	636
	639
	641
	770
	772

► PRIMARY REFERENCE

PART NUMBER INDEX

Part	Page
	1016
8T-5372	1049
8T-5387	202
	212
	222
	301
	304
	307
	311
	315
	318
	321
	323
	327
	329
	417
8T-5397	689
8T-5400	1231
8T-5410	855
	1041
	1085
8T-5460	202
	212
	222
8T-5677	1085
8T-6342	508
8T-6430	202
	212
	222
8T-6466	118
	120
	172
	202
	213
	222
	417
	725
	766
	1044
8T-6663	684
	913
8T-6684	934
8T-6685	41
	1058
	1210
	1212
8T-6747	893
	895
8T-6756	721
8T-6757	30
	33
	165
8T-6761	59
8T-6762	506
	568
8T-6764	117
8T-6868	543
	696
	1134
	1136
8T-6869	182
	332
	1158
8T-6871	749
8T-6912	417
	457
	464
	473
	1158
8T-6974	423
	426
8T-7008	703
	705
	930
8T-7338	967
8T-7371	1017
	1019
	1021
	1023
8T-7525	865
8T-7538	897
	899
8T-7547	423
	426
8T-7566	605
	1095
	1175
	1178
	1181
	1189
	1201
	1203
8T-7929	559
8T-7934	41
	572
	574
	661
	980
	1042
	1187
	1188
8T-7970	935
8T-7971	118
	540
	625
	714
8T-8376	889
	891
8T-8380	901
8T-8382	897
	899
8T-8442	865
	971
	973
	1007
	1008
8T-8549	229
8T-8729	195
	199
	200
	209
	210
	219
	220
	251
	252
	253
	255
	256
	257
	258
	262
	265
	266
	267
	269
	270
	271
	286
	288
	298
	337
	355
	369
	370
	371
	382
	389
	399
	405
	408
	409
	410
	414
	415
	419
	421
	429
	435
	441
	447
	448
	450
	456
	457
	464
	470
	472
	473
	484
	495
	497
	499
	603
	684
	685
	686
	905
	1014
	1075
	1077
	1079
	1080
	1081
	1082
	1132
	1208
	1218
	1227
	1238
8T-8730	250
	251
	252
	253
	255
	256
	257
	258
	265
	286
	288
	337
	355
	401
	412
	419
	421
	429
	447
	448
	456
	471
	495
	497
	685
	858
8T-8736	255
	337
8T-8737	249
	250
	251
	252
	253
	254
	255
	256
	257
	258
	259
	262
	263
	265
	268
	269
	270
	278
	286
	288
	300
	303
	306
	310
	314
	317
	320
	323
	326
	329
	337
	343
	346
	348
	355
	365
	385
	408
	409
	411
	412
	414
	415
	419
	421
	429
	431
	435
	436
	441
	442
	447
	448
	454
	456
	457
	463
	464
	470
	471
	473
	479
	481
	484
	485
	486
	487
	491
	493
	495
	497
	501
	503
	685
	858
	1058
	1075
	1077

► PRIMARY REFERENCE

PART NUMBER INDEX

Part	Page
	1079
	1081
	1085
	1097
	1121
	1132
	1133
	1227
	1238
8T-8827	435
	441
	447
8T-8887	935
8T-8901	983
8T-8912	437
	443
8T-8917	80
	519
	522
	525
	528
	737
	739
	793
	795
	953
	957
	1017
	1019
	1021
	1023
8T-8919	79
	540
8T-8924	160
8T-8984	172
8T-8987	542
8T-9006	1041
8T-9102	374
8T-9358	985
	988
8T-9364	243
	277
8T-9368	1042
8T-9371	1218
	1221
	1224
8T-9377	307
	311
	321
	324
	327
	329
8T-9389	540
	770
	772
8T-9397	453
8T-9398	696
8T-9400	518
	522
	525
	528
8T-9405	487
8T-9407	390
8T-9412	547
	548
8T-9496	608
	609
	613
	614
	632
8T-9518	457
	464
	473
8T-9597	865
8T-9655	182
	235
	237
	417
	423
	426
	457
	464
	473
	487
8T-9658	423
	426
8T-9757	199
	209
	219
	389
8T-9905	1322
8U-2685	1009
8U-5467	350
	353
8U-5951	971
	973
8V-0622	199
	209
	219
	389
8W-1253	949
8W-8909	203
	213
	223
8X-0674	187
	188
8X-1106	722
	723
	724
8X-4660	542
8X-7517	539
	1118
8Y-3795	235
	237
8Y-3966	692
8Y-3998	692
8Y-4000	608
	609
	613
	614
8Y-5747	692
8Y-6343	1238
8Y-6388	1087
8Y-6400	632
	▶692
8Y-8297	1126
8Y-8306	692

9

9B-1117	1075
	1077
9B-1948	1015
9B-7233	407
	457
	464
	473
	1084
	1149
9B-7237	97
	390
	548
	557
	703
	705
	942
	953
	955
	957
9C-6984	664
9C-9785	248
9D-1829	90
	92
9D-3767	1049
	1095
9D-3768	450
	684
9D-6196	76
9D-6197	76
9F-5599	359
9F-5975	1173
	1175
	1179
	1181
	1184
	1189
	1191
	1198
	1201
	1203
9F-6304	84
9F-6656	1322
9F-8999	78
9G-0003	199
	209
	219
	389
9G-0004	199
	209
	219
	389
9G-0005	389
9G-0371	160
9G-1307	152
9G-1368	789
	791
	793
	795
9G-1919	550
9G-2398	733
9G-2401	770
	772
9G-2991	853
9G-3464	536
9G-3695	262
	415
	484
	499
	858
	861
	1085
9G-4101	392
	393
	395
	396
9G-4872	750
	753
	755
	757
	776
	777
	778
	780
	787
	789
	793
9G-5127	530
	768
9G-7101	143
	437
	443
9G-7516	737
	739
	741
	743
	745
	747
9G-8615	506
9G-8909	201
	211
	221
9H-1031	27
9H-3360	547
	548
9H-3757	392
	395
9H-6454	979
9J-1979	979
9J-2290	1285
9J-2365	1015
	1017
	1019
	1021
	1023
	1036
	1038
9J-2968	43
9J-4523	1292
9J-4782	700
	1279
	1281
9J-5942	965
9J-6006	910
	▶965
9J-6058	1257
	1260
9J-6062	1031
9J-6067	594
	595
	1257
	1260
	1263
	1264
9J-6073	1017
	1019
	1021
	1023
	▶1040
9J-6549	897
	899
9J-6662	1015
	1036
	1038
9J-6689	597
	599
	1281
9J-8126	998
	1001
9J-9055	1279
	1281
9K-0700	203
	213
	223
	450
	684
9L-5854	28
9L-9132	82
9M-1503	550
9M-1974	12
	104
	363
	365
	385
	431

► PRIMARY REFERENCE

PART NUMBER INDEX

Part	Page
	433
	559
	861
	1052
	1063
	1064
	1070
	1072
9M-2074	576
	578
	580
	582
9M-2076	576
	578
	580
	582
9M-2564	86
9M-2744	536
9M-2904	1112
9M-3835	628
	629
	717
9M-4007	570
9M-4355	550
9M-4584	178
9M-5590	108
9M-5732	530
9M-5884	1052
9M-5894	518
	522
	525
	528
	770
	772
9M-6871	104
9M-7394	1326
9M-7539	557
9M-8406	437
	443
9M-9647	549
9N-0869	417
	457
	464
	473
	487
9N-1756	1012
9N-1941	142
9N-1995	737
	739
	1052
	1090
	1092
	1322
9N-2038	155
	156
9N-2231	1229
9N-9545	140
9P-2704	787
	789
	791
	793
	795
9P-3066	982
9P-3555	518
	521
	524
	527
9P-3657	518
	521
	524
	527
9P-3801	518
	521
	524
	527
9P-4057	576
	578
	580
	582
9P-7121	190
	191
9P-9555	557
9R-2216	437
9R-2613	603
9R-2640	1025
9R-5008	178
9R-5616	1052
9R-6776	1279
	1281
9S-1018	561
9S-1343	551
9S-1350	506
9S-1366	547
	548
9S-1367	536
9S-2075	651
	652
9S-2544	392
	395
9S-4180	998
	1001
	1003
	1005
9S-4181	1003
	1005
9S-4182	112
	122
	979
9S-4183	971
	973
9S-4185	27
	106
	511
	518
	522
	525
	528
	532
	534
	770
	772
9S-4191	506
	561
	568
	570
	572
	574
	959
9S-4372	568
9S-6130	506
	532
	534
9S-7710	506
9S-8001	998
	1001
	1003
	1005
9S-8002	30
	54
	64
	112
	141
	163
	164
	374
	561
	733
	906
	971
	973
	998
	1001
	1003
	1005
9S-8003	164
9S-8004	35
	64
	84
	923
	925
	991
	998
	1001
	1003
	1005
9S-8005	35
	84
	115
	164
	166
	169
	176
	363
	865
	960
9S-8006	64
	166
	169
	176
	178
	182
	853
	963
9S-8008	30
	106
	112
9S-8230	605
	1095
9S-8750	104
9S-8752	16
	21
	59
	82
	86
	116
	433
9S-9334	106
	171
9T-3493	903
9T-3928	975
9T-3930	906
9T-4817	906
9T-5241	1103
	1173
	1175
	1179
	1181
	1184
9T-6043	1009
9T-6960	1009
9T-6963	1009
9T-7570	979
9T-7571	979
9T-7572	979
9T-8844	94
9T-9529	963
9T-9682	893
	895
9U-7069	733
9U-8047	920
	923
	925
9U-8263	1100
9U-8404	1284
9U-8746	1100
9U-9409	768
9U-9622	1290
9W-0330	625
9W-0352	628
	629
9W-0844	249
	250
	251
	252
	253
	255
	257
	258
	262
	263
	265
	268
	300
	303
	306
	310
	314
	317
	320
	323
	326
	329
	337
	346
	348
	355
	412
	456
	471
	479
	481
	495
	497
	1121
9W-0852	152
	249
	250
	251
	252
	253
	255
	257
	258
	262
	263
	265
	300
	303
	306
	310
	314
	317
	320
	323
	326
	329
	337
	343
	346
	348
	350
	353
	412
	456
	471

► PRIMARY REFERENCE

PART NUMBER INDEX

Part	Page
	479
	481
	1121
	1131
9W-1441	484
9W-1686	84
9W-1693	768
9W-1694	768
9W-1951	265
	456
9W-1991	930
9W-2109	963
9W-2110	963
9W-2380	737
	739
	770
9W-2409	1259
9W-2939	1017
	1019
	1021
	1023
9W-3273	561
9W-3401	343
9W-4162	536
9W-4163	536
9W-4194	752
	753
	755
	757
9W-4361	300
	303
	306
	310
	313
	314
	317
	320
	323
	326
	329
9W-4488	734
	735
9W-4489	787
	789
	791
	793
	795
9W-5265	762
9W-5266	762
9W-5575	737
	739
9W-5652	1243
	1244
	1246
	1248
	►1269
9W-5653	1249
	1250
	1251
	1253
	1255
	1256
	►1270
9W-5768	550
9W-6118	1257
	1260
9W-6343	1279
9W-6371	597
	599
	1279
	1281
9W-6656	1269
	1271
9W-6657	1269
	1270
	1271
	1273
9W-6658	1270
	1273
9W-6854	762
9W-6958	625
9W-6991	550
9W-7006	625
9W-8084	632
9W-8100	160
9W-8365	1312
	1313
9W-8940	608
	609
	613
	614
9W-9132	518
	521
	524
	527
9W-9133	518
	521
	524
	527
9W-9134	518
	521
	524
	527
9W-9135	518
	521
	524
	527
9W-9136	518
	521
	524
	527
9W-9499	776
	777
	778
	780
9W-9856	550
9W-9978	160
9X-0196	265
	454
	470
9X-0199	406
9X-1046	457
	464
	473
	1100
9X-1054	1058
9X-1056	448
	685
	1058
9X-1386	298
9X-1813	199
	200
	209
	210
	219
	220
	379
	400
	404
	405
	905
	1085
9X-2027	701
	703
	705
	725
	727
	1001
9X-2038	1060
	1083
	1087
	1239
9X-2040	603
	1052
	1158
	1214
	1216
9X-2041	671
	1106
	1151
	1153
	1210
	1212
9X-2042	487
	678
	685
	1060
	1083
	1090
	1092
	1212
9X-2043	457
	464
	474
	856
	1047
	1052
	1064
	1070
	1072
	1083
	1114
	1163
	1210
	1212
	1214
	1216
9X-2044	1060
	1087
	1098
	1114
	1131
	1210
	1212
9X-2045	412
	447
	457
	464
	474
	487
	685
	1060
	1083
	1087
	1090
	1092
	1114
	1210
	1212
9X-2046	1087
	1239
9X-2109	508
9X-2125	1164
	1165
	1166
	1167
	1168
	1169
	1170
	1171
9X-2201	109
	141
9X-2328	855
9X-2480	281
	419
	421
	429
9X-2488	1123
9X-2541	918
9X-2616	3
	243
	276
	277
9X-3401	3
	94
	187
	188
	249
	250
	251
	252
	253
	254
	255
	256
	257
	258
	259
	262
	263
	265
	268
	269
	270
	271
	276
	300
	303
	306
	310
	314
	317
	320
	323
	326
	329
	337
	346
	348
	350
	353
	355
	372
	373
	379
	406
	411
	412
	415
	419
	421
	429
	431
	436
	442
	447
	448
	450
	454
	456
	463
	470
	471
	479
	481
	485

► PRIMARY REFERENCE

PART NUMBER INDEX

Part	Page
	495
	497
	685
	858
	861
	1058
	1085
	1097
	1121
	1227
9X-3402	249
	250
	251
	252
	253
	254
	255
	256
	257
	258
	259
	262
	263
	265
	268
	269
	300
	303
	306
	310
	314
	317
	320
	323
	326
	329
	332
	337
	346
	348
	355
	411
	412
	415
	419
	421
	429
	431
	435
	436
	441
	442
	447
	450
	455
	471
	479
	481
	484
	485
	486
	495
	497
	501
	503
	508
	685
	858
	1097
	1121
	1227
9X-3452	1058
9X-3598	889
	891
9X-3610	901
9X-3994	679
9X-4244	292
9X-4385	350
	353
9X-4493	411
9X-4588	737
	739
	741
	743
	745
	747
9X-6138	663
9X-6165	281
	353
	362
	419
	421
	429
	447
	487
	686
9X-6340	1322
9X-6395	1010
9X-6458	16
	19
	21
	58
	81
	82
	112
	166
	169
	176
9X-6574	789
	791
	793
	795
9X-6579	543
9X-6615	858
	861
9X-6772	250
	255
	256
	257
	258
	471
	1042
9X-7287	161
9X-7317	168
9X-7371	116
9X-7377	874
9X-7378	203
	213
	223
	561
9X-7383	1121
9X-7430	33
9X-7670	355
	495
	497
9X-7675	963
9X-7737	404
9X-8250	696
	701
	703
	768
9X-8256	95
	278
	281
	336
	346
	348
	350
	352
	353
	362
	417
	419
	423
	426
	457
	464
	474
	479
	481
	483
	491
	493
	501
	503
	711
	856
	859
	861
	863
	864
	998
	1001
	1003
	1005
	1090
	1092
	1095
	1160
9X-8257	102
	103
	663
	664
	666
	967
	982
	1036
	1038
9X-8267	163
9X-8582	696
	698
	703
	705
	725
9X-8705	1227
9X-8874	536
9X-8875	39
	55
9X-8880	506
9X-8881	536
9X-8883	536
9X-8889	71
9X-8902	859
	861
	1208
9X-8979	963
	971
	973
9X-9825	200
	210
	220
	435
	441
9X-9896	281
	419
	421
	429
9Y-1792	98
9Y-3368	28
	30
9Y-6089	17
	389
	398
9Y-7595	203
	213
	223
	944
	949
9Y-9236	129
	130
	695
003-2143	725
004-6683	727
005-4173	104
030-1705	435
	441
030-1707	436
	442
030-1709	436
	442
030-4606	979
030-7335	679
030-7937	169
	176
030-7946	54
030-7959	104
030-8538	518
	521
	524
	527
031-5085	45
	47
031-8759	84
032-0676	536
033-6027	193
	545
033-6031	23
	24
	25
033-6033	192
	405
	874
033-6034	540
	589
	1007
033-6039	906
033-6042	570
033-6043	545
	874
	1007
	1008
034-3557	506
034-3679	108
	171
035-0425	201
	211
	221
045-4065	393
	396
053-2294	54
061-7540	84
	542
061-8639	54
	68
061-9455	534
	539
	542
	557
	559
061-9457	25
067-2551	171

0

PART NUMBER INDEX

Part	Page
067-3161	787
	789
	791
	793
	795
068-1270	1094
068-4174	179
068-5893	625
068-6405	942
	953
	955
	957
077-3241	594
	595
085-8091	923
	925
	1001
087-5436	889
	891
090-8635	176
091-0081	436
	442
091-1442	700
091-9035	201
	211
	221
	436
	442
	698
093-1571	889
	891
095-0641	374
095-0690	963
095-1632	889
	891
095-7424	42
095-7930	1048
095-7950	551
096-1357	486
096-1588	889
	891
096-3781	628
	629
096-4833	201
	211
	221
	532
	534
096-6166	286
	288
	1010
	1048
097-7234	271
	411
098-8968	61
099-0169	118
	120
	124
	532
	534
099-0492	863
099-3649	1150
	1158
	1160

1

Part	Page
100-5041	448
	685
	1058
100-5072	181
100-8010	998
	1001
	1003
	1005
100-8011	998
	1001
	1003
	1005
100-8012	998
	1003
	1005
101-0003	1218
	1221
	1224
101-0523	28
	30
101-0524	28
	30
101-0525	28
	30
101-0852	198
101-2867	1114
101-3129	94
	387
	1116
101-3374	45
101-7404	1158
102-3679	875
102-3680	875
102-5861	47
102-8801	250
	251
	253
	254
	255
	256
	257
	262
	265
	268
	269
	270
	338
	448
	455
	470
	685
102-8802	94
	152
	195
	199
	200
	209
	210
	219
	220
	250
	251
	253
	265
	266
	267
	268
	271
	298
	337
	379
	382
	399
	400
	405
	406
	410
	411
	435
	441
	447
	455
	457
	464
	470
	472
	473
	485
	684
	858
	905
	1042
	1056
	1097
	1131
	1218
	1227
102-8803	200
	210
	220
	228
	252
	255
	262
	263
	265
	286
	288
	337
	355
	365
	372
	385
	403
	411
	447
	450
	455
	470
	484
	495
	497
	499
	684
	685
	686
	1085
102-8804	250
	252
	254
	262
	265
	286
	288
	346
	348
	355
	454
	455
	463
	470
	495
	497
	603
	858
	861
	1014
	1085
	1149
102-8805	249
	251
	253
	256
	262
	263
	265
	270
	271
	300
	306
	314
	320
	326
	337
	350
	353
	407
	408
	412
	414
	415
	419
	421
	429
	436
	442
	470
	479
	481
	484
	855
	1058
	1121
	1132
	1133
	1227
	1238
102-8806	268
	270
	300
	303
	306
	310
	314
	317
	320
	323
	326
	329
	409
	455
102-9062	1296
	1308
	1313
102-9073	1308
	1313
103-0126	40
103-1107	1084
	1149
103-6262	855
103-8134	262
104-2091	1087
	1114
104-6202	436
	442
104-6729	508
104-6730	508
105-1634	971
	973
105-1635	971
	973
105-1636	971
	973
105-1638	971
	973
105-1642	971
	973

► PRIMARY REFERENCE

PART NUMBER INDEX

Part	Page
105-1646	978
105-1648	978
105-1650	978
105-1651	978
105-1653	978
105-2653	901
105-3031	971
	973
105-3032	971
	973
105-3033	971
	973
105-3035	865
105-3372	853
105-3484	161
105-5448	1279
	1281
105-7781	695
105-8034	411
105-8901	100
106-0471	853
106-0472	853
106-0476	853
106-1792	35
106-4150	506
	▶513
	568
106-4175	690
106-5673	35
106-7098	570
	572
	574
106-7099	576
	578
	580
	582
106-8186	594
	595
106-8187	594
	595
106-8715	917
107-0576	893
	895
107-1964	1148
107-3786	278
	1048
107-3947	776
	777
	778
	780
107-4057	776
	777
	778
	780
107-5769	112
107-9620	750
	753
	757
108-1304	300
	303
	306
	310
	314
	317
	320
	323
	326
	329
108-1434	178
108-2735	550
108-2736	550
108-3612	81
	143
108-4311	1218
	1221
	1224
108-5157	1010
108-6259	270
108-7930	117
109-0063	853
109-0074	106
109-0075	112
109-0076	112
109-0077	106
109-0362	1322
109-1633	1116
109-1634	1116
109-3001	390
	923
	925
109-3134	▶1305
109-3135	1305
	1310
109-3657	539
109-5839	59
109-5840	59
109-6511	530
109-6781	897
	899
110-0203	411
110-2218	178
110-2220	28
110-2637	▶505
	556
110-2656	514
	▶518
110-2662	518
	521
	524
	527
110-2664	519
	521
110-2665	518
	521
	524
	527
110-2670	519
	521
	524
	527
110-2671	518
	521
	524
	527
110-2674	519
	521
	524
	527
110-2780	515
	▶521
110-4506	1138
110-5435	714
110-5436	636
	638
110-5439	645
110-5918	982
110-6393	1046
110-7524	1234
110-8319	88
	90
	92
110-8330	81
110-8827	88
	90
	92
110-9243	551
110-9248	550
110-9251	550
110-9258	550
110-9262	550
110-9269	550
110-9272	550
110-9274	550
110-9282	550
110-9284	550
110-9285	550
110-9286	550
110-9287	550
110-9288	550
110-9289	550
110-9291	506
110-9299	506
110-9300	506
110-9301	536
110-9302	536
110-9303	536
110-9304	536
110-9305	536
110-9306	536
110-9307	536
110-9309	536
110-9311	566
111-2106	1279
	1281
111-2721	117
111-4374	112
111-4919	559
111-8314	299
	306
	310
	313
111-8919	551
111-8920	551
112-0858	855
	1085
112-1289	536
112-1574	557
112-3540	84
112-3931	158
112-4509	551
112-4511	551
112-4512	506
112-4550	3
	276
	447
112-4628	975
112-4629	975
112-4640	865
112-4657	975
112-6646	1066
	1067
	1068
	1069
	1070
	1072
112-7317	536
112-9217	45
113-0216	963
113-0920	508
113-4536	1257
	1260
113-5304	84
113-8490	357
113-8491	357
	358
113-8492	357
114-0325	536
114-0758	889
	891
114-2772	590
114-4652	551
114-4655	506
114-5157	1112
114-6658	423
	426
114-8843	251
	268
	346
	348
	350
	353
	415
114-9223	143
114-9365	306
	310
	320
	323
	326
	329
115-1867	1061
	1062
115-3018	1097
115-3519	471
115-3580	673
	717
	1106
116-1895	1005
	▶1009
116-2591	853
116-2592	853
116-3715	390
117-1385	551
117-2311	454
	463
	470
117-3006	893
	895
	1015
117-4491	1175
	1184
	1191
117-7127	568
117-7240	975
117-7241	975
117-7251	975
117-8131	1139
	1141
	1143
117-8547	594
	595
117-8801	45
	47
117-8929	1163
117-9712	45
118-0911	108
118-2140	1306
	1309
118-2141	▶1306
118-2900	521
118-2990	122
118-3508	230
	232
	415
118-4490	▶165
	183
118-5068	81
118-5619	412
	1114
118-8586	374
118-8693	979
119-0273	59
119-2073	1163
119-3662	250
	251
	252
	253

▶ PRIMARY REFERENCE

PART NUMBER INDEX

Part	Page
	256
	257
	263
	337
	343
	412
	435
	441
119-3859	1098
119-7015	663
	1283
119-7843	891
120-5737	120
120-5820	875
120-5821	875
120-9051	959
121-0153	403
121-0691	853
121-4057	1049
121-6653	1001
121-9871	536
122-0333	536
122-0447	33
122-0450	436
	442
122-1675	134
122-4271	1041
122-4393	265
	455
122-4424	265
	456
122-4575	536
122-6046	1041
122-7375	33
122-8612	33
122-9068	975
122-9718	975
123-1373	199
	209
	219
	389
123-3202	13
123-3827	713
	715
123-5798	960
123-5799	960
123-7583	975
123-9624	1001
123-9769	865
123-9812	858
	861
124-0174	118
	120
	122
124-0799	1041
124-1854	35
124-1855	35
124-2375	518
	521
	524
	527
124-3019	59
	94
	171
	542
	695
	700
	916
	917
	1116
	1123
124-3702	863
	864
124-6257	108
124-7000	355
124-9891	963
124-9898	963
124-9899	963
124-9900	963
124-9901	963
124-9957	960
125-0582	1208
125-0583	858
	861
	▶1208
125-1393	1010
125-3298	863
	1208
125-3299	864
125-3537	▶753
	847
	848
	851
	852
125-5835	363
125-6535	393
	396
125-6929	1150
125-7874	249
	250
	251
	252
	253
	256
	257
	260
	262
	263
	265
	268
	300
	306
	314
	320
	326
	337
	343
	411
	412
	419
	421
	429
	431
	435
	436
	441
	442
	447
	448
	455
	471
	479
	481
	484
	485
	503
	685
	858
	1058
	1097
125-7875	250
	256
	257
	260
	262
	265
	268
	269
	300
	306
	314
	320
	326
	337
	412
	419
	421
	429
	447
	448
	454
	455
	463
	471
	484
	486
	501
	503
	685
	858
	1058
	1227
125-7876	263
	484
125-8826	1208
125-9134	975
125-9794	16
	21
126-0559	23
	24
	25
126-0587	518
	521
	524
	527
126-0588	519
	521
	524
	527
126-1477	906
126-1767	94
	259
	262
	271
	372
	373
	379
	411
	431
	484
	485
	858
	861
	1056
	1058
	1085
	1097
126-1768	259
	332
	431
	435
	441
	484
	485
	486
	508
	1058
	1097
126-1774	250
	255
	256
	257
126-1815	542
126-1818	905
126-2372	1279
126-5703	968
126-5948	1014
126-7573	274
	275
126-7934	906
126-8295	456
126-8588	787
126-9587	975
127-0929	141
127-1960	424
	426
127-2170	414
	415
	486
	1060
	1061
	1062
	1090
	1092
	1127
	1160
	1175
	1178
	1210
	1212
127-3446	▶734
	845
	846
	849
	850
	851
	852
127-9323	387
	700
127-9324	532
	534
128-3504	▶735
	845
	846
	849
	850
	851
	852
128-4123	255
	265
	266
	454
	455
	456
	471
	472
128-4249	337
128-4414	787
	789
	791
	793
	795
128-5016	266
	455
	472
128-5040	1238
128-6157	454

PART NUMBER INDEX

Part	Page
	463
129-1609	561
129-2327	982
129-3172	17
129-3178	863
	864
129-3180	1025
	1028
129-5081	1257
	1260
	1263
129-8169	1040
129-8171	1040
129-8172	1040
129-9247	853
130-0701	1041
130-0793	365
	385
130-1985	1041
130-3281	149
130-5300	201
	211
	221
	300
	303
	338
	417
	457
	464
	473
	486
	491
	493
	603
130-6366	1290
130-7975	1041
130-9984	171
130-9989	1041
130-9990	1041
131-0136	530
131-0447	1085
	1208
131-0782	667
131-0783	667
131-0785	▶667
	1265
	1266
131-0786	667
131-1650	736
131-3093	1230
131-3201	485
131-7123	45
131-9288	263
132-0338	1173
	1175
	1178
	1181
	1184
132-3391	2
132-3877	1003
	1005
132-4699	▶1299
132-5538	551
132-5546	551
132-5789	47
	274
	275
	365
	385
	431
	433
	436
	442
	491
	493
	508
	551
132-7077	1084
	1149
132-7419	1208
132-7450	1085
	1208
132-7551	86
	104
132-7994	1281
133-0155	1041
133-0225	1281
133-0967	254
133-0969	485
133-2015	1281
133-6595	1041
133-6934	150
	151
	417
	443
133-6974	1041
133-7214	1041
133-7230	1041
133-7231	1041
133-7810	201
	211
	221
133-9012	1097
133-9660	387
134-0165	1138
134-2540	249
	251
	253
	262
	263
	265
	337
	412
	435
	441
	456
	471
	479
	481
	485
134-4126	198
	241
	242
	244
	484
134-7258	1321
135-0611	1238
135-3173	666
135-5105	1290
135-5114	1290
135-9579	1275
135-9580	1275
135-9668	1268
135-9671	1267
135-9672	1267
	1268
135-9673	1267
	1268
135-9941	935
136-1107	117
136-1122	201
	211
	221
136-1543	1147
136-3189	1238
136-3191	1238
136-4188	752
136-4992	423
	426
136-9066	1323
137-3749	42
137-4234	1267
	1268
137-5817	1085
137-6645	551
137-8479	1017
	1019
	1021
	1023
	1036
	1038
138-2828	1017
	1019
	1021
	1023
138-2834	1035
138-2835	1034
138-7500	178
	703
	705
138-8454	1048
138-8885	1112
138-8886	1112
139-0178	486
139-1537	979
139-2840	963
140-0174	721
140-0860	389
	435
	441
140-1739	971
	973
140-9267	1025
	1028
141-2723	1283
141-4976	457
	464
141-7219	1283
142-1767	508
142-2805	750
	753
	757
142-3331	539
142-3953	172
	201
	211
	221
	765
	768
	920
	923
	925
142-5867	70
142-5868	69
142-6217	28
142-7072	28
143-1288	1173
	1175
	1178
	1181
	1184
	1189
	1191
	1198
	1201
	1203
143-9393	21
144-0195	1227
	1231
144-0331	1075
	1077
	1085
	1208
144-0337	1025
	1028
144-0344	597
	599
144-1636	404
145-0326	1218
	1221
	1224
145-0909	968
145-6669	149
145-7028	199
	209
	219
	▶382
145-7328	1231
145-8503	98
145-9987	149
146-6346	1238
146-6747	389
	1322
147-0071	518
	521
	524
	527
147-0319	▶290
	313
	332
147-0385	122
147-1226	505
147-1445	256
	257
	258
	265
	456
	471
	485
147-1446	258
	265
	456
	471
	485
147-5330	749
147-5331	749
147-5332	749
147-5333	749
148-1928	539
148-8305	979
148-8316	765
	1025
	1028
148-8317	88
	90
	92
148-8318	542
148-8320	1025
	1028
148-8322	917
148-8325	913
148-8326	934
	985
	988
148-8327	539
	917
	983
148-8331	387
148-8335	934
148-8336	125
	127
	875
	927
	985
	988
148-8340	934

▶ PRIMARY REFERENCE

PART NUMBER INDEX

Part	Page
148-8341	927
148-8347	917
148-8351	765
148-8352	59
148-8354	934
148-8357	88
148-8360	934
148-8361	934
148-8362	934
148-8364	108
148-8367	985
	988
148-8369	765
148-8373	539
	542
148-8375	695
	700
148-8376	917
148-8378	108
	875
	927
	985
	988
148-8385	765
148-8390	935
148-8391	542
148-8392	917
	927
148-8393	927
148-8395	960
148-8405	927
148-8407	561
148-8412	542
148-8413	913
	1025
	1028
148-8425	542
148-8428	725
	927
148-8429	935
148-8431	88
	90
	92
	935
148-8435	108
	927
148-8442	935
148-8455	917
149-4889	1041
149-5933	715
149-6371	199
	209
	219
150-1156	62
150-1302	505
150-3028	542
150-4042	765
	911
150-4043	543
	917
150-4047	911
	935
150-4048	94
	913
150-5931	201
	211
	221
150-5968	765
151-4977	457
	464
	473
151-5145	77
	106
151-8366	1094
151-9275	3
	276
	1208
153-0088	1173
	1198
153-1256	117
153-2073	▶291
	299
	306
	310
153-3061	693
153-3568	487
153-5043	382
	399
	1097
153-5482	551
153-5710	199
	209
	219
	389
153-6237	917
153-6248	913
153-6249	935
153-6281	199
	209
	219
	389
153-7024	37
153-8001	457
	464
	473
154-3079	1087
154-3306	776
	777
	778
	780
154-3308	750
	753
	755
	757
154-4492	1279
	1281
154-7105	1095
154-8079	1060
154-9023	106
155-2255	249
	250
	251
	252
	253
	255
	256
	259
	263
	265
	268
	337
	346
	348
	355
	411
	419
	421
	429
	447
	455
	471
	479
	481
	495
	497
	685
	858
	1097
155-2256	255
	256
	265
	337
	411
	454
	455
	463
	470
	471
	858
155-2257	252
	268
	278
155-2258	250
	251
	256
	263
	268
	337
	346
	348
	456
155-2259	256
	268
155-2260	228
	249
	251
	253
	255
	257
	259
	262
	263
	266
	268
	269
	286
	288
	355
	412
	337
	355
	411
	435
	441
	447
	450
	455
	471
	479
	481
	485
	486
	495
	497
	685
	858
	1085
155-2265	255
	256
	268
	411
	419
	421
	429
155-2270	250
	251
	253
	255
	263
	266
	268
	300
	303
	306
	310
	314
	317
	320
	323
	326
	329
	332
	355
	365
	385
	401
	411
	435
	441
	447
	448
	455
	471
	487
	495
	497
	501
	503
	685
	1042
	1058
	1097
	1227
155-2271	250
	252
	254
	255
	262
	266
	286
	288
	355
	412
	448
	455
	471
	486
	495
	497
	685
	858
	1085
	1097
155-2274	250
	251
	253
	255
	257
	262
	263
	266
	269
	337
	355
	411
	411
	412
	415
	435
	441
	455
	471
	485
	486
	495
	497
	858
	1121
155-2745	745

PART NUMBER INDEX

Part	Page
	747
155-3624	122
	979
155-7321	1123
156-4215	797
	799
156-6175	94
	281
	419
	421
	429
	457
	464
	473
	501
	503
156-9791	542
157-0670	106
157-2284	1014
158-0250	293
158-0252	290
	291
	293
158-3032	893
	895
158-6632	▶406
	454
	463
	470
158-7864	1321
158-8581	1062
159-0377	▶1304
159-1503	768
159-7351	856
159-8049	200
	201
	210
	211
	220
	221
	389
	390
	435
	436
	441
	442
159-8050	201
	211
	221
	389
	390
	436
	442
159-8052	201
	211
	221
159-9322	250
	251
	253
	255
	256
	257
	258
	263
	265
	419
	421
	429
	435
	441
	456
	471
	485
160-0564	79
160-2252	90
160-4928	▶564
	849
	850
	851
	852
160-5458	1283
160-5843	1014
160-5844	1014
160-6765	1284
160-6767	1284
160-7689	250
	251
	253
	255
	257
	263
	435
	441
160-7690	419
	421
	429
161-0832	651
	652
161-2398	1214
	1216
161-6149	81
161-7293	54
161-8068	532
	534
161-9289	1187
	1188
	1193
	1195
	1196
	1197
162-0177	923
	925
	998
	1001
	1003
	1005
162-2167	776
	777
	778
	780
162-2168	750
	753
	755
	757
162-2222	163
162-2480	628
	629
	653
	654
162-5709	530
162-6556	1131
162-6816	906
162-6817	695
162-7210	901
162-7863	776
	777
	778
	780
162-7864	750
	753
	755
	757
162-8378	1075
	1077
162-8387	1075
	1077
162-8389	1075
	1077
162-9523	543
163-1135	1218
	1221
	1224
163-1137	1112
163-1201	199
	209
	219
163-2478	37
163-4519	250
164-0850	1066
	1067
	1068
	1069
164-1234	1218
	1221
	1224
164-2108	868
164-2924	389
164-3651	199
	209
	219
164-4180	1003
	1005
164-4187	62
164-4226	436
	442
164-4883	1175
	1178
	1181
	1189
	1201
	1203
164-5567	506
	508
	539
	543
	587
	911
	913
	918
	927
	935
	960
	985
	988
164-5590	543
	979
164-5594	59
164-5619	182
164-5798	336
164-6862	918
164-7556	292
164-8101	332
164-8474	1114
165-0021	355
	495
	497
165-0699	293
165-2273	1123
165-3925	58
165-3929	59
	385
165-3931	59
165-4852	568
165-4854	568
165-4931	928
165-4932	935
165-4933	918
165-6064	1283
165-6170	64
	81
165-9287	889
	891
166-0321	545
166-2904	33
166-4113	1034
	1035
166-5229	266
	455
	471
166-6930	518
	521
	524
	527
166-6931	518
	521
	524
	527
166-9445	755
167-1946	▶755
	850
	851
167-2190	903
167-2212	901
167-2300	903
167-2325	901
167-3692	266
	456
	471
	485
167-3693	501
	503
167-6805	975
167-8984	▶228
	278
168-2203	963
168-3378	977
168-3379	977
168-3382	977
168-3384	977
168-3385	977
168-4511	693
	1084
	1149
168-8772	1100
168-8806	768
169-1616	545
169-2876	1321
169-7380	1218
	1221
	1224
169-7397	543
170-0610	166
170-0612	50
170-2901	911
170-6771	768
171-0596	369
	370
	371
171-1230	1173
	1175
	1178
	1181
	1184
	1189
	1191
	1198
	1201
	1203
171-4047	1087
	1114
171-4364	169
171-5349	379
171-7077	238
	1074
	1143
171-8708	365

▶ PRIMARY REFERENCE

PART NUMBER INDEX

Part	Page
	385
	▶400
172-3262	551
172-3263	551
172-3467	536
172-3473	506
172-4275	506
172-4621	935
172-5277	983
172-7753	545
172-8591	1060
	1087
	1114
173-0245	556
	▶566
173-0246	566
	▶585
173-0247	585
173-0888	585
173-1016	163
173-2052	1147
173-3083	1181
	1203
173-3993	998
	1001
	1003
	1005
173-5787	1187
	1188
	1193
	1195
	1196
	1197
173-7035	1200
	1205
	1206
	1207
173-8919	256
173-9779	903
174-0050	161
174-0503	337
	338
	455
174-3777	568
174-4590	1322
174-4895	149
174-4909	545
	▶868
174-5763	412
174-7165	▶403
	450
174-7875	199
	209
	219
174-7916	10
	▶98
174-8131	457
	464
	473
175-0453	1005
175-3761	1238
175-4165	1075
	1077
	1080
	1082
175-4168	244
	484
175-4170	1075
	1077
175-4291	292
175-4292	292
175-7900	903
176-5647	106
176-8234	136
176-9237	684
	913
176-9299	263
	337
176-9966	557
177-1863	1175
	1181
	1189
	1191
	1201
	1203
177-3868	959
177-9653	266
	455
	471
177-9656	266
	455
	471
	485
178-0589	1297
	1298
178-1781	365
	385
178-2552	1290
178-2553	1290
178-3336	1116
	1118
	1119
	1121
178-7070	863
178-7907	1147
178-9603	1296
179-0469	703
	705
179-1532	1136
179-4324	334
179-7086	8
	9
	▶73
179-7376	1075
	1077
179-7400	163
179-8008	1136
179-8230	1136
179-8231	1136
179-9387	▶869
179-9392	484
180-2409	1298
180-3998	539
	557
	765
	923
	925
180-6213	963
	978
180-7350	62
180-9900	484
180-9933	935
183-1025	389
183-2264	551
183-3407	35
	64
	84
183-7121	118
	120
183-7263	374
	561
	998
	1001
	1003
	1005
183-7264	927
184-4396	787
	789
	791
	793
	795
185-0275	963
	▶977
185-0278	963
185-0280	963
185-0287	977
185-0289	977
185-0292	977
185-1497	47
185-1860	266
	412
	456
	472
	486
	858
185-1861	270
185-1924	1025
185-2647	196
185-2648	196
185-2654	196
185-3666	1139
	1141
	1143
185-4026	178
185-8833	982
186-2001	37
186-3161	506
186-3641	548
186-3735	400
	407
	411
	855
	1133
186-5107	1107
	1108
	1218
186-5397	901
187-6282	797
	799
187-6289	737
	739
	741
	743
187-8001	975
187-9630	998
	1001
	1003
	1005
188-2008	935
188-2128	365
	385
188-3034	122
188-6140	875
	▶991
188-6141	991
188-7536	163
188-7541	163
188-8849	290
	291
	293
188-8963	548
188-9042	548
188-9637	978
188-9640	971
	973
189-1707	1116
189-1858	695
189-1943	1173
	1198
189-3063	524
189-3064	524
189-3065	524
189-3158	250
189-4716	865
189-4720	865
189-6244	524
189-8869	524
189-8874	524
190-3635	41
190-3848	390
190-5386	1321
190-7614	255
	256
	266
	269
	419
	421
	429
	455
	472
190-7615	250
	252
	257
190-8609	797
	799
191-1782	182
191-1783	182
191-2933	1193
	1195
	1196
	1197
	1200
	1205
	1206
	1207
	▶1218
	▶1221
	▶1224
191-4522	975
191-8304	551
191-8305	551
191-9247	1013
192-0722	517
	▶524
192-2112	1097
192-4151	68
192-4576	906
192-4744	979
192-7470	963
192-7752	1218
	1221
	1224
192-7755	1218
	1221
	1224
192-7767	1218
	1221
	1224
192-7783	1218
	1221
	1224
192-7787	1218
	1221
	1224
192-7790	1218
	1221
	1224
192-7795	1218
	1221
	1224
192-7799	1218
	1221
	1224
192-7805	1218
192-7810	1218
	1221

▶ PRIMARY REFERENCE

PART NUMBER INDEX

Part	Page
	1224
192-7811	1112
192-7812	1112
	1218
	1221
	1224
192-7813	1112
192-7820	1218
	1221
	1224
192-7848	1219
	1221
	1224
192-9464	389
193-5463	587
193-5576	700
193-9055	711
	908
	909
193-9158	1257
	1260
	1263
193-9159	942
	953
	955
	957
193-9230	934
194-0620	47
194-1983	975
194-2903	171
194-5171	1238
	1239
194-6847	971
	973
195-0936	248
	412
	1052
	1090
	1092
	1114
195-0937	1052
195-2037	108
195-3370	1285
195-3371	1285
195-7869	1085
195-7870	1085
195-7871	1085
195-7872	1085
196-2381	255
196-2382	255
196-2383	255
	266
	455
	471
196-2384	255
	266
	455
	471
196-2385	255
	266
	455
	471
196-2386	255
	266
	455
	471
196-2412	255
	265
	455
	471
196-2413	255
	266
	455
	471
196-2414	256
196-5069	68
196-5070	68
196-8565	▶749
197-2112	94
197-6453	174
197-7499	286
	288
197-9322	28
198-2914	1013
198-4768	147
198-4777	102
	103
	118
	120
	125
	127
	131
	171
	390
	703
	705
	709
198-4778	122
	686
	687
	690
	1106
	1153
	1155
	1158
198-4780	102
	103
	625
	679
198-4781	625
	687
	1106
	1153
	1155
198-5351	865
198-7309	▶750
	850
2	
200-0750	▶873
	917
	927
200-1103	1238
200-1898	447
	686
200-2964	991
200-3311	42
200-5362	1008
200-5363	1008
200-6345	201
	211
	221
	695
	700
	944
	949
200-6410	112
200-7134	634
	641
201-5493	1097
201-8394	559
202-0313	266
	455
	472
202-0314	266
	454
	472
202-2605	80
202-3572	98
202-5397	266
	270
	472
	486
202-6535	975
202-6614	292
203-1095	973
203-2070	1058
203-2789	436
203-3831	117
203-5443	695
	698
203-7154	484
	499
203-7703	1193
	1195
	1196
	1197
203-8609	865
203-9007	457
	464
	472
	485
203-9381	770
	772
203-9382	770
	772
203-9383	770
	772
204-1297	266
	270
	412
	455
	472
	486
	858
204-2281	390
	695
	700
	944
	949
204-3334	865
	973
204-8000	95
	201
	211
	221
	417
	436
	442
204-8758	869
204-9530	1058
205-3257	551
205-6388	1172
205-8125	1123
206-1345	431
	433
	1098
206-2730	942
206-4473	561
206-4475	559
206-4881	906
	975
206-5575	435
	441
206-5823	1238
	1239
206-9295	405
207-3673	551
207-7107	733
207-7434	998
	1001
	1003
	1005
208-2984	559
208-5837	149
208-7524	559
208-8899	561
209-0746	1114
209-0792	561
209-1464	542
209-2152	1034
	1035
209-3186	770
	772
209-3424	567
209-3565	874
209-4542	826
209-4588	122
209-5179	1041
209-5776	1322
209-6063	963
209-9350	1041
209-9706	1151
210-4720	765
210-4721	765
210-4723	765
211-0052	3
	249
	278
	337
	457
	464
	473
	485
211-3122	37
211-5358	1218
	1221
	1224
211-9085	512
211-9087	512
211-9294	1219
	1221
	1224
211-9491	938
212-4483	975
212-7670	1090
	1092
212-7779	▶1112
	1219
	1222
	1224
212-7780	1112
212-7783	1112
213-3212	44
213-3217	62
213-4754	1112
213-4836	10
	▶62
213-5007	689
213-5170	1219
	1221
	1224
213-5173	▶536
	584
213-5174	536
213-5175	536
213-7322	770
	772
214-1639	891
214-1727	52
	53
214-1728	30
214-1751	1114

PART NUMBER INDEX

Part	Page
214-1780	1051
	▶1231
214-1838	1238
214-2015	1048
214-4208	257
	258
	266
	456
	472
214-7566	30
	64
	164
	375
214-7567	164
214-7568	35
	47
	64
	84
	169
	176
	363
	506
	508
	539
	543
	545
	568
	572
	574
	587
	686
	911
	913
	918
	928
	935
	960
	985
	988
215-4639	589
215-8140	853
216-0273	536
216-0811	7
	9
	▶44
216-4349	557
216-5582	33
216-8198	1162
217-0751	33
217-0752	33
217-3875	874
217-4248	1139
	1141
	1143
217-5364	484
217-6887	944
	949
	951
217-7219	47
217-7455	▶163
	183
217-8433	1100
217-8947	141
218-1837	930
218-1840	930
218-2373	868
218-2529	1175
	1178
	1181
	1189
	1191
	1198
	1201
	1203
218-3352	932
218-3353	932
218-3921	1258
	▶1287
218-3922	1287
218-3923	1287
218-3924	1287
218-7136	1075
	1077
219-0305	1322
219-3036	551
219-3037	551
219-4458	62
219-4474	108
219-5805	1041
219-6485	▶292
	300
	303
	306
	310
	314
	317
219-7239	853
219-9654	539
220-0199	983
220-3988	1114
220-3989	1114
220-5548	▶512
	556
220-5549	512
	▶567
220-5550	567
221-0812	768
221-0851	411
221-1444	551
221-1831	557
221-1840	539
221-1843	539
221-2616	235
	237
221-5401	944
	949
	951
221-5500	983
222-1463	856
222-1464	856
222-2825	1234
222-3676	▶733
	849
	850
	851
	852
222-3920	47
222-4737	998
	1001
	1003
	1005
222-5369	1238
222-5371	1238
222-5372	1238
222-5373	1238
222-5374	1238
222-5376	1238
222-5377	1238
222-5378	1239
222-6456	13
222-7001	759
	760
	762
	764
222-7890	858
222-7891	1041
222-7944	1320
223-3490	695
223-4461	1085
223-5568	639
223-6407	7
	9
	▶65
223-6408	10
	▶12
223-9135	26
223-9137	45
223-9672	639
224-0672	1320
224-1219	47
224-1220	47
224-1221	47
224-2735	491
	493
224-3242	184
224-4214	647
224-4215	647
224-4905	1048
224-5132	870
	871
	872
224-5152	870
	871
	872
224-5332	45
	47
224-9657	47
224-9664	47
224-9907	23
	24
	25
	235
	237
225-0312	1320
225-0313	389
225-1242	50
225-3099	35
225-3100	30
225-3188	1041
225-3191	1041
225-3193	1041
225-3854	337
225-3861	249
225-4174	1097
225-5966	27
225-6052	10
	▶26
226-0297	7
	9
	▶50
226-2009	979
226-2751	1085
226-2811	411
226-3492	94
	337
	435
	441
226-4909	336
226-4927	12
	▶13
226-5561	33
226-5613	145
226-6036	47
226-6052	47
226-7480	1085
226-7612	▶570
	576
	580
226-7615	570
	572
	574
226-7617	570
226-7618	570
	572
	574
226-9622	868
227-0159	47
227-5538	17
227-5978	▶293
227-6715	90
	92
	201
	211
	221
	540
227-6744	905
228-3581	1323
228-4947	380
	381
228-4982	266
	456
	472
228-5813	47
228-6056	294
	295
228-6089	596
	603
	621
	1286
	1293
	1296
228-7088	1025
228-7090	171
	178
	700
	727
	729
	730
	731
	732
228-7091	86
228-7092	171
	174
	272
228-7096	84
	506
228-7100	376
	377
228-7101	363
	378
228-7105	874
228-7597	840
229-0887	1321
229-1494	1175
	1178
	1184
	1189
	1191
	1201
229-1663	47
229-6259	62
229-9974	294
	295
230-1294	112
230-1296	112
230-1302	112
230-1341	1320
230-1550	55
230-3728	168
230-3775	168
230-4009	266
	337
	456
	472
	485
230-4010	337

▶ PRIMARY REFERENCE

PART NUMBER INDEX

Part	Page
230-4011	251
	253
	259
	266
	404
	431
	435
	436
	441
	442
	456
	472
	1097
230-4012	259
	269
	389
	431
	485
	1097
230-4013	250
	266
	300
	303
	306
	310
	314
	317
	320
	323
	326
	329
	456
	472
	486
230-4014	187
	188
	373
230-4086	332
230-4157	17
230-4691	1134
230-5008	259
230-5010	259
	266
	435
	441
	456
	472
	485
230-5011	259
	431
230-6202	47
230-7645	1044
230-7732	201
	211
	221
	300
	303
	307
	310
	314
	317
	320
	323
	326
	329
231-0167	1094
231-0858	336
231-2188	557
231-3472	199
	209
	219
231-3539	903
231-4470	50
231-4471	50
231-4502	484
231-4708	112
231-8148	644
231-8149	644
	646
232-1693	235
232-3226	62
232-3232	62
232-3317	873
232-3402	1320
232-3643	54
232-3755	625
232-7572	551
232-7575	551
232-7607	27
233-0888	664
233-0890	664
233-0891	235
233-5070	94
233-5621	906
233-6131	1097
233-8442	858
233-8554	856
233-9161	1048
	1060
233-9748	551
234-1642	768
234-2267	942
	953
	955
	957
234-2496	856
	▶1041
234-2500	1041
234-2875	855
234-2876	858
	861
234-2877	855
234-2878	858
	861
234-2879	1041
234-2880	856
234-4279	54
234-5012	363
	▶383
	435
	441
234-5013	164
	363
	▶384
234-5925	454
	463
	470
234-6031	828
234-6033	827
234-6173	942
	953
	955
	957
234-6176	942
	953
234-6707	551
234-6928	559
234-8877	752
234-8881	752
234-8937	15
	17
235-1046	605
235-1587	98
235-1861	55
235-2014	7
	9
	▶55
235-4123	266
	270
	412
	455
	472
	486
	858
235-4493	856
235-4494	▶855
	858
	861
235-4495	855
	▶1089
235-4498	1041
235-4753	112
235-8026	1322
235-9762	199
	209
	219
236-2502	112
236-4136	45
236-5605	37
236-6717	163
236-6733	98
237-0159	855
237-0166	263
	337
	412
237-0227	259
	375
	501
	503
237-0336	435
	442
237-0930	853
237-1016	853
237-1017	556
	▶853
237-3759	25
238-0251	1173
	1198
238-0294	62
238-0489	10
	▶181
238-4664	16
	21
238-5080	84
	108
	164
	166
	169
	174
	176
	178
	179
	272
	384
238-5081	64
	86
	166
	169
	171
	176
	178
	179
238-5082	30
	86
	171
	174
	272
238-5084	171
	174
	272
238-5085	877
	997
238-9166	118
	714
238-9860	50
	52
	53
238-9862	10
	▶52
239-1134	387
	▶410
239-1139	16
	21
239-1388	143
239-5225	112
239-5363	551
239-5571	15
239-5572	15
239-6987	664
239-7352	267
	456
	472
239-7356	457
	464
	473
239-9961	1052
240-2189	1087
240-4819	903
240-7356	1012
240-7876	508
240-9543	30
241-0037	870
	871
	872
241-1855	776
	777
	778
	780
241-3751	646
241-5786	1205
241-6170	363
241-6215	539
241-6228	542
241-6942	450
	684
241-8368	▶401
	454
	463
	470
241-8834	454
	463
	470
241-9265	142
242-5203	1042
242-6114	255
	267
	455
	472
242-6116	255
	267
	455
	472
242-6118	255
	267
	455
	472
242-6120	255
	267
	455
	472
242-7955	998
	1001
	1003
	1005
242-8030	570
242-8031	570

▶ PRIMARY REFERENCE

PART NUMBER INDEX

Part	Page
242-8033	570
	572
	574
243-0775	875
243-0781	979
243-1655	645
243-1656	645
243-2310	58
243-3177	891
243-3565	143
243-3566	143
243-6718	26
244-2095	1214
	1216
244-2109	1214
	1216
244-2115	1214
	1216
244-2620	1321
244-3457	▶149
	151
244-3462	149
244-3712	506
	568
	572
	574
244-4094	979
245-1737	935
245-3804	47
245-3856	1085
245-6858	625
245-7350	971
	973
	978
245-7434	266
	270
	412
	455
	472
	858
245-9740	979
245-9947	▶757
	849
246-2641	1
	171
	187
	188
	605
	625
	1095
	1322
246-4311	858
	875
246-6036	86
247-4285	292
247-4962	1322
247-6130	62
247-6876	1320
247-6878	1320
247-9908	37
248-0036	35
248-2841	357
	358
248-2929	1044
248-2939	1125
	▶1126
	1128
248-2946	1095
248-2947	1095
248-6690	596
	▶597
248-6713	597
248-6715	597
	599
248-6716	597
	599
248-6720	597
	599
248-6722	597
	599
248-6724	599
248-6727	596
	▶599
248-6772	1098
	1230
248-6862	1321
248-6979	230
248-7717	979
248-7959	454
	463
	470
249-2844	1173
	1175
	1178
	1181
	1184
249-2943	78
249-5481	454
	463
	470
250-1494	695
250-1495	695
250-2940	62
250-6239	143
250-8335	411
251-2176	973
251-2459	973
251-2460	973
251-3273	791
	795
251-4162	230
	232
251-4168	232
251-9905	733
252-4730	1126
252-5158	737
	739
	741
	743
	745
	747
252-5805	161
252-5806	161
252-6375	737
	739
	741
	743
	745
	747
252-6953	603
252-6954	493
	603
253-1344	737
	739
253-1346	741
	743
253-1347	737
	739
	1327
253-1549	1025
	1028
253-1752	26
253-2180	39
253-2673	199
	209
	219
253-8110	271
253-8113	271
253-8798	1212
254-0072	590
254-9012	1050
254-9013	1050
254-9317	▶1050
	1051
255-0005	663
255-0844	1092
255-0845	1090
255-0848	1092
255-0849	1090
255-1281	41
255-2752	▶408
	454
	463
	470
255-9267	853
256-4617	454
	463
	470
256-5357	647
256-5358	647
256-6453	199
	209
	219
	383
	384
	435
	441
256-6454	1044
256-7254	▶593
	596
256-9990	634
	636
	638
	639
	641
257-5029	1097
257-9827	752
257-9829	752
257-9834	750
	▶752
258-0817	141
258-4806	752
258-7318	1162
258-7319	1162
258-8721	67
258-9906	693
259-5762	664
259-7140	700
260-2998	390
260-5865	484
260-6728	1075
	1077
	1079
	1081
260-8590	998
	1001
	1005
	▶1012
260-8636	979
260-9144	768
260-9149	125
	127
260-9187	985
	988
260-9306	10
	▶14
260-9631	10
	▶57
261-1580	4
	101
261-3223	232
261-3429	33
261-3430	33
261-4281	276
	277
261-4983	334
261-5694	1147
261-5735	95
261-9674	755
261-9675	755
262-0767	1173
	1175
	1178
	1181
	1184
	1189
	1191
	1198
	1201
	1203
262-0779	1173
	1175
	1178
	1181
	1184
262-0780	1173
	1175
	1178
	1181
	1184
262-0781	1173
	1175
	1178
	1181
	1184
262-0785	1173
	1175
	1178
	1181
	1184
262-0786	1173
	1175
	1178
	1181
	1184
262-0787	1173
	1175
	1178
	1181
	1184
262-5561	651
	652
262-9151	485
263-1490	861
263-3823	1132
	1133
263-4920	33
263-5640	693
263-6902	1320
264-3617	357
	457
264-5732	259
264-7029	259
	404
	431
	435
	436
	441
	442
	456
	508
264-7030	259
	300
	303
	314
	317

▶ PRIMARY REFERENCE

PART NUMBER INDEX

Part	Page
	320
	323
	326
	329
	431
	436
	442
	456
	501
	503
264-7031	259
264-7032	259
	435
	441
	456
264-7034	337
	454
	456
	457
	463
	464
	470
	473
265-2106	472
	485
265-4123	485
265-7981	411
265-8182	358
266-1467	▶372
	858
	861
	1084
	1149
266-1474	1085
266-1475	858
	861
	1085
266-2404	1119
266-3214	1214
	1216
267-2154	774
	775
267-3196	874
267-3366	663
267-3507	158
	965
267-4211	25
267-5032	1097
267-5147	1173
	1198
267-5159	1173
	1178
	1184
267-5243	411
267-7369	979
267-8575	1098
267-9552	1214
	1216
267-9553	1214
	1216
267-9554	1214
	1216
267-9555	1214
	1216
267-9556	1214
	1216
267-9834	1214
	1216
268-0183	155
	156
268-1565	387
268-8310	942
	953
	955
	957
268-8749	3
268-8769	1230
268-8792	1131
268-9382	1212
269-1882	141
269-1981	▶373
	1149
269-1983	1150
269-5346	700
	▶722
269-5348	▶723
	727
	729
	730
	731
	732
269-5352	▶724
	725
270-2679	454
	463
	472
	485
270-3754	1263
270-3779	1268
271-2180	399
271-2322	698
271-5039	1236
	1237
271-5041	1236
	1237
271-5043	1236
	1237
271-5045	1236
	1237
271-5584	314
	317
	320
	323
	326
	329
271-7312	411
272-1889	41
	▶196
272-2379	244
273-1761	97
273-8703	17
273-8708	387
273-9827	983
274-3658	663
274-3774	250
	263
	300
	303
	306
	310
	314
	317
	320
	323
	326
	329
	355
	447
	448
	495
	497
	685
274-3775	250
	267
	456
	472
274-3776	250
	267
	456
	472
274-3777	250
	263
	267
	355
	412
	456
	472
	495
	497
274-3778	268
	412
274-3779	337
	412
	479
	481
274-3780	436
	442
274-3781	300
	303
	306
	310
	314
	317
	320
	323
	326
	329
274-3783	267
274-3785	503
274-4051	16
	21
274-4052	16
	21
274-4491	67
274-6085	921
274-6719	375
274-6754	632
274-6979	1314
274-9183	200
	210
	220
275-1253	164
	▶404
275-5941	1242
275-5942	1242
275-7741	▶409
	1148
275-7803	1172
276-1786	200
	210
	220
276-2414	823
	835
	841
276-2417	825
	838
	843
276-3642	1173
	1178
	1184
	1198
276-3644	1173
	1178
	1184
	1198
276-6807	88
276-9067	363
	▶375
277-1873	365
	385
	861
277-4877	608
	609
	613
	614
277-5789	527
277-5790	527
277-8102	1178
	1189
277-8103	1175
	1181
	1189
	1191
	1198
	1201
	1203
277-8873	590
277-8990	1151
277-9441	856
278-0237	770
	772
278-2325	59
278-2351	▶565
	850
278-2352	565
278-2374	564
278-4913	683
278-4914	683
278-4915	683
278-4916	683
278-4917	683
278-4918	683
278-4919	683
278-8844	259
	431
279-0850	1097
279-1226	693
279-3397	112
279-9828	380
279-9829	381
280-0440	1081
	1082
280-2688	76
280-2709	357
280-2710	357
280-3512	1214
280-3513	1216
280-3514	1214
280-3979	33
280-7870	865
	971
	973
	1007
	1008
280-9440	1070
	1072
280-9441	1070
	1072
280-9442	1070
	1072
280-9444	1070
	1072
280-9680	1070
	1072
280-9896	1070
	1072
281-0193	76
281-2921	1044
281-3121	885
	887
281-3136	1079
	1080
	1081
	1082
281-5934	174
281-5972	272

▶ PRIMARY REFERENCE

PART NUMBER INDEX

Part	Page
281-5979	174
281-5982	272
281-8803	259
	436
	442
281-8804	259
	431
281-8811	267
	456
	472
282-1953	1097
282-2033	1214
	1216
282-2034	1212
282-2035	1210
282-2036	1212
282-2037	1047
	1083
282-2628	1057
282-4028	527
282-4029	516
	▶527
282-5042	550
282-6689	1212
282-6690	1210
282-6691	1212
282-6695	1214
	1216
282-6701	1212
282-6702	1210
282-8261	603
282-8264	603
282-8265	603
282-8277	603
282-8827	960
282-9598	901
283-0775	152
283-8106	271
283-8305	700
283-8650	365
	385
	433
283-8827	1319
284-3623	454
	463
	470
284-3953	1087
	1114
284-6206	930
	932
284-7055	1212
	▶1214
284-7648	1212
284-8381	▶399
	499
	603
284-8532	419
285-0150	1079
	1080
	1081
	1082
285-1141	▶198
	419
	429
285-1142	198
285-3986	1052
285-5105	365
285-6393	508
285-7415	411
286-0323	454
	463
	470
286-0602	1210
286-0693	122
286-9740	1227
287-4596	906
287-5701	687
	1106
	1153
	1155
287-7506	▶1227
	1229
287-7507	1
	▶1229
288-0860	1229
288-3657	248
288-4881	33
288-4882	33
288-4883	33
288-4884	33
288-7324	259
288-8101	1146
288-8788	1227
289-1525	235
	237
	▶239
289-2073	1214
	1216
289-2078	1210
	▶1216
289-4027	▶865
	967
289-5150	259
	431
289-5151	259
289-6215	152
290-2770	284
	348
290-5562	508
290-5792	▶379
	435
	441
290-8160	294
	295
291-9334	1319
292-0358	199
	209
	219
	▶407
	499
292-3151	599
292-3154	599
292-5060	100
292-6402	▶1147
	1175
	1178
	1181
	1189
	1201
	1203
292-8741	90
	92
	530
292-9802	1150
293-0890	1233
293-0906	1233
293-2915	1173
	1175
	1178
	1181
	1184
293-2948	599
293-4983	1322
293-7400	1263
293-8350	1007
293-9379	1173
	1175
	1178
	1181
	1184
293-9380	1173
	1175
	1178
	1181
	1184
293-9665	1173
	1175
	1178
	1181
	1184
294-2435	1229
294-3313	201
	211
	221
294-3342	129
	130
294-3370	576
	578
	580
	582
294-5042	1175
	1181
	1189
	1191
	1201
	1203
294-5076	709
294-5169	1025
	1028
294-7139	1175
	1178
	1181
295-4155	1085
295-6472	1173
	1175
	1178
	1181
	1184
296-6539	200
	210
	219
296-7613	608
	609
	610
	611
	613
	614
297-7956	47
298-2634	1097
298-2635	1097
298-2636	1097
	▶1131
298-2640	1097
298-2641	1131
298-2642	1131
298-2645	1097
298-2646	1131
298-2648	1230
298-2649	1097
298-2651	1044
298-2652	1097
298-2656	1095
298-2658	1044
299-1939	597
299-1942	597
299-3424	1239
299-3436	789
	791
	793
299-5675	1173
	1198
299-5776	1320

3

Part	Page
300-1358	921
300-5575	45
300-6869	982
	▶1326
300-9805	363
	▶380
300-9806	363
	▶381
301-0589	419
301-2979	603
301-2980	447
	450
	499
	686
301-4108	▶194
	363
301-7422	1025
	1028
301-9279	971
	973
302-4289	50
303-3451	284
	285
303-4649	201
	211
	221
304-0326	1234
304-4029	1048
304-4030	3
	276
	▶1048
304-4031	1114
304-4032	1114
304-4034	1114
304-4035	1114
304-4038	1114
304-4040	1060
304-4041	1060
304-4044	1060
304-5284	485
304-5292	1234
304-6921	1314
304-7877	230
	232
	414
	415
304-8001	695
304-8002	695
304-8008	112
305-2332	1210
305-2333	1210
305-3458	861
	1070
	1072
305-3807	407
305-9191	1238
305-9194	1238
305-9195	1239
306-7490	187
306-9447	734
306-9449	735
307-0047	1322
307-0649	1148
307-2004	831
307-2007	832
307-2009	833
307-2338	861
307-2671	30
	64
	164
307-2673	84
	164

PART NUMBER INDEX

Part	Page
	166
	169
	176
307-3245	722
	723
	724
308-0852	1095
308-0857	▶1094
	1095
308-0918	867
309-5131	64
	166
	169
	176
	178
309-6517	152
309-7676	776
	777
309-7677	778
	780
309-7678	▶776
	847
	848
	850
	851
309-7679	774
	▶778
	847
	848
	850
	851
	852
309-7680	776
	777
	778
	780
310-0674	3
	249
	278
	485
310-1945	918
	951
310-3978	693
310-3980	693
310-3981	693
310-3982	693
310-3983	693
310-3985	693
310-3986	693
310-3988	693
310-5742	960
310-5893	118
	120
311-2813	454
	463
	470
311-3520	1098
311-4859	355
	495
	497
311-9319	893
	895
	897
	899
311-9320	893
	895
	897
	899
311-9321	893
	895
	897
	899
312-2807	830
312-3425	1321
312-5694	1267
	1268
312-8629	1013
313-2621	▶1032
	1036
	1038
313-2622	▶1033
	1036
	1038
313-2652	1034
	1035
313-3516	389
	435
	441
313-4085	66
313-7668	998
	1001
	1003
	1005
	▶1013
313-9614	169
	176
314-3094	629
314-4018	1056
314-5162	1173
	1175
	1178
	1181
	1184
	1189
	1191
	1198
	1201
	1203
314-5274	1218
	1221
	1224
314-5275	1218
	1221
	1224
314-6917	419
315-0180	200
	210
	220
315-4399	963
315-5491	201
	211
	221
315-6039	693
315-9859	30
315-9864	918
315-9867	542
315-9868	542
316-9154	54
316-9962	971
	973
317-1204	259
317-7071	605
317-8141	1057
317-8766	26
318-2946	112
318-3823	259
319-0785	50
	▶69
319-3487	200
	▶367
319-4168	1173
	1175
	1178
	1181
	1184
319-6216	272
319-6221	174
	272
319-6228	171
319-6234	171
319-7384	294
	295
319-7401	26
	▶70
320-0562	1116
320-0564	1116
320-3053	760
320-3054	760
320-3060	376
320-3061	378
320-3063	377
320-6171	200
	210
	220
320-9715	232
321-0123	232
321-1326	167
321-8642	164
321-8657	508
322-1221	▶167
	171
322-3161	1147
322-4474	1097
322-4964	1227
322-4979	1094
322-5048	102
	103
322-7615	169
323-2268	167
323-5863	1131
323-5864	1097
323-8854	1080
	1082
324-3336	389
324-7659	200
	210
	220
324-9711	41
	▶1056
324-9751	76
324-9852	570
325-1548	1131
325-4416	1058
	1098
	1116
325-5686	1092
325-5687	1090
325-5753	1058
325-7464	▶1132
	1239
325-8634	164
	▶376
326-0315	530
326-0316	506
326-4512	13
326-4855	▶1074
	1139
	1141
326-6488	1084
326-6601	1044
326-7963	1094
327-0282	1116
	1118
	1119
	1121
327-0283	1116
327-0376	▶192
	193
327-3492	1125
	▶1127
327-3494	1051
	▶1100
327-4420	519
	521
	524
327-4448	169
	176
	▶193
328-2917	109
328-2918	109
	122
328-9050	187
	188
329-1023	1056
329-3356	685
	687
	690
	918
	1106
	1153
	1155
329-3734	255
	256
	257
	258
	260
	267
	270
	271
	455
	472
	485
	486
	1097
329-4025	1046
	▶1058
329-5766	1074
	▶1149
330-2152	337
	454
	463
330-4576	551
330-5015	▶1133
	1239
330-5646	286
	288
330-9321	200
	210
	▶368
330-9758	171
331-0158	200
	210
	220
	447
	685
331-1134	363
	▶377
	435
	441
331-3505	▶1307
	1308
	1310
	1311
331-3506	▶1303
331-3510	▶1288
	1309
	1310
331-3526	484
	499
331-3594	263
331-3635	▶184
	185
331-4222	263
331-4226	508
331-5206	117
331-5207	117

PART NUMBER INDEX

Part	Page
331-6006	▶870
331-6188	47
331-7020	542
	▶871
331-7021	▶872
331-7449	497
331-7465	7
	9
	▶185
	▶186
331-9697	454
	463
	470
332-0296	363
	▶378
332-1160	603
332-3310	1052
332-3527	1048
332-5240	387
332-5911	545
332-6008	753
	755
	757
332-6423	775
	▶780
	849
332-6424	▶777
	849
332-7786	109
332-9270	58
332-9402	▶294
	307
	311
333-1195	▶148
	150
333-1207	58
333-2108	1095
333-7835	971
	973
	▶978
333-7837	978
333-7838	865
333-7839	865
333-7840	865
333-7841	865
333-7842	865
333-7843	865
333-7844	865
333-7845	865
333-7846	865
333-7847	865
333-7848	865
333-7849	865
333-7850	865
333-8242	959
334-1474	1057
334-1656	1097
334-1657	1097
334-1658	3
	276
334-3801	169
334-5375	112
334-8998	1060
334-9003	1087
334-9004	1087
334-9005	1087
334-9006	1087
334-9007	1087
334-9011	1060
334-9013	1087
334-9416	1097
334-9883	901
335-3370	355
335-3999	363
335-6911	927
335-7292	136
335-8136	1216
335-9156	1058
335-9269	7
	9
	▶39
336-0863	1052
336-0865	1052
336-0948	1052
336-1508	1233
336-1511	1233
336-2212	117
336-2432	576
	578
	580
	582
336-3545	▶360
	419
336-4939	1141
336-5577	1044
336-6483	1116
336-6672	1090
	1092
336-6718	1098
336-6741	485
336-7612	1322
337-3945	124
337-3946	124
337-5127	41
337-8254	1051
	▶1238
337-8902	679
337-9078	94
	▶402
338-1132	▶298
	334
338-2511	543
	923
	925
338-3453	393
	396
338-5535	342
338-5722	527
338-8439	436
	442
338-9802	542
339-0509	908
	909
	▶1066
	▶1067
339-3566	1139
	1141
339-3585	10
	▶35
339-8572	138
339-8937	695
339-9666	822
	834
339-9667	822
	834
340-1439	1151
340-2414	▶241
	242
340-2582	1087
340-2729	1025
	1028
340-4196	411
340-4989	411
	▶1148
340-5800	975
340-7161	454
	463
	470
341-0060	62
341-0087	27
	106
341-0107	171
341-1330	▶905
	927
341-1408	631
	1141
	1143
341-1826	603
341-1827	603
341-1970	1028
341-2315	1141
341-2316	1141
341-2862	42
	43
341-3119	131
341-3241	▶234
	1151
341-3578	770
	772
341-6039	1148
341-7467	▶1047
	1066
	1067
	1068
	1069
341-9000	927
	▶959
341-9211	104
342-8519	106
342-8944	1068
	1070
	▶1079
342-8946	1079
	1080
342-9022	241
	242
342-9290	241
	242
343-4347	7
	9
	▶15
343-4609	39
343-4835	73
343-6890	365
	385
343-6953	82
343-8341	▶1075
	1079
343-8888	106
343-9915	▶669
	671
	687
	1153
	1155
343-9916	669
	1106
343-9917	669
	1106
343-9930	▶670
	671
343-9932	670
344-0004	532
	534
344-0078	1227
344-1132	230
344-1941	470
344-2123	1236
	1237
344-2124	1236
	1237
344-2466	259
344-2733	414
344-3826	679
344-3847	414
	415
344-5583	▶164
	166
344-5594	411
344-5673	346
	348
	352
	861
344-5674	427
	464
	474
	1238
	1239
344-5675	94
	423
	426
	540
	543
	685
	913
	915
	918
	938
	944
	949
	980
344-7140	414
	415
344-7141	414
	415
344-7849	858
	861
	▶863
344-7850	858
	861
	▶864
344-8099	1025
	1028
344-9562	164
344-9694	454
	463
	470
345-0351	1321
345-2011	23
	24
345-2955	300
	303
	306
	310
	314
	317
	320
	323
	326
	329
345-6789	▶545
	867
345-7991	1075
345-8057	1175
345-9141	234
346-0020	908
	909
	▶1068
	▶1069
346-0351	770
	772
346-1069	484
346-1070	486
346-3281	670
	673
	1106
346-3800	▶1010

▶ PRIMARY REFERENCE

PART NUMBER INDEX

Part	Page
	1011
346-4360	1219
	1222
	1224
346-5574	▶532
	542
346-5786	112
346-6393	84
346-6914	1032
	▶1034
346-6915	1033
	▶1035
346-6916	▶1031
	1036
	1038
346-6917	1031
346-6918	1017
	1019
	▶1036
346-6920	▶942
	1017
346-6924	▶1017
346-6928	▶1260
	1262
	1265
	1266
346-6929	1249
	1253
	▶1265
346-6930	▶1249
	1252
346-6931	▶1257
	1258
	1259
346-6932	1243
	1246
	▶1258
346-6933	▶1243
	1245
346-6934	942
	953
	955
	957
346-6935	942
	955
346-6936	942
346-6937	942
346-6938	942
	955
346-6940	942
346-6945	1036
	1038
346-6946	1036
	1038
346-6949	1260
346-6950	1260
346-6951	1262
	1265
346-6952	1262
	1265
346-6953	1262
	1265
346-6954	1262
	1265
346-6981	178
346-7763	241
	242
346-8243	1095
346-9376	421
346-9640	678
	684
346-9696	8
	10
	▶431
347-0612	971
	973
	▶1007
	▶1008
347-0890	300
	303
	306
	310
	314
	317
	320
	323
	326
	329
347-2233	137
347-2281	1321
347-3437	235
	237
347-3908	1047
347-4112	499
347-4150	1235
347-4154	1235
347-4191	1085
347-4734	487
347-7065	10
	▶363
347-7092	58
347-7877	1325
347-9417	433
347-9427	▶295
	306
	310
347-9429	138
347-9437	7
	9
	▶145
347-9461	7
	9
	▶137
348-1088	▶534
348-2366	39
348-2533	7
	▶16
348-3626	11
	▶142
348-4037	7
	9
	▶116
348-4039	117
348-4046	7
	9
	▶235
348-4141	1234
348-4142	1234
348-4143	1234
348-4145	1234
348-4152	1234
348-7066	112
348-7743	57
348-7878	139
348-7879	7
	9
	▶139
348-8602	551
348-8717	1036
	1038
348-9904	▶27
	28
348-9905	▶28
	30
349-0648	1163
349-2528	10
	▶30
349-2933	143
349-3004	▶1163
349-3025	1163
349-3026	1163
349-6089	▶269
	454
	463
	470
349-6193	178
349-6255	393
	396
349-6530	▶392
	398
349-6571	389
	▶395
349-7059	190
	191
349-8519	86
349-8845	138
349-8846	138
349-8847	138
349-8848	138
349-8849	7
	9
	▶138
349-9380	▶77
	78
349-9447	235
	237
350-1328	7
	9
	▶166
350-1638	52
	53
350-1639	10
	▶53
350-3145	998
350-5811	148
350-7735	190
	191
350-8861	10
	▶54
350-9316	514
	515
	516
	▶547
351-0198	178
351-0258	178
351-0264	171
351-0266	171
351-0271	118
	120
351-0273	125
	127
351-1848	1168
	▶1193
351-1854	▶1173
	1187
351-1869	▶1175
	1195
351-1870	▶1178
	1196
351-1871	▶1181
	1193
351-1873	▶1184
	1197
351-2352	421
351-2680	737
351-2681	739
351-2685	▶1327
351-2840	998
351-6883	169
	176
351-7690	1066
	▶1080
351-8488	242
351-8492	▶242
	421
351-8496	112
	▶115
351-8647	454
	463
	470
351-9093	1070
	1072
351-9845	908
	909
351-9918	290
	291
	292
	293
352-3293	▶230
	1055
352-3294	▶414
	1055
352-3295	▶232
	1055
352-3964	338
	362
	436
	442
352-3965	1121
352-3967	436
	442
352-3968	94
	433
352-3969	433
	551
352-3970	201
	212
	221
	433
	486
352-4203	481
	483
352-4940	143
352-5146	234
	▶1085
352-5699	7
	9
	▶178
352-6152	7
	9
	▶84
352-6496	700
	727
	729
	730
	731
	732
352-6504	1025
352-7936	▶40
	45
352-7993	396
352-7994	393
352-8325	431
352-9703	759
	760
	762
	764
352-9954	998
	1001
	1003
	1005
352-9956	998
	1001
	1003
	1005
353-0196	7

▶ PRIMARY REFERENCE

PART NUMBER INDEX

Part	Page
	9
	▶76
353-1648	59
353-2548	1308
	1309
	1310
	1311
353-3129	1139
	1141
	1143
353-4515	200
	210
	220
353-5126	35
	115
353-5128	125
	127
353-5140	106
	112
353-5144	106
353-7179	934
353-7952	178
353-7954	169
353-7956	423
	426
353-7957	95
	423
	426
353-8573	1044
354-3100	615
	617
	619
	620
354-3515	7
	9
	▶106
354-5666	142
354-5668	142
354-8484	30
355-0261	631
355-0554	106
355-0598	419
355-1213	421
355-1290	▶737
	845
355-1291	▶739
	846
355-1292	▶845
	847
355-1293	▶846
	848
355-1294	▶847
355-1295	▶848
355-1296	741
	745
	▶797
	845
355-1297	743
	747
	▶799
	846
355-2287	10
	▶45
355-3016	1173
	1175
	1178
	1181
	1184
	1189
	1191
	1198
	1201
	1203
355-3018	1173
	1175
	1178
	1181
	1184
355-3025	1173
	1198
355-3148	200
	210
	220
355-3257	59
355-3389	106
355-5527	▶1084
	1143
355-7153	286
	288
355-7154	286
	288
355-7155	286
	288
355-7156	286
	288
355-7389	116
	▶117
355-8941	146
355-9651	550
355-9687	551
356-0298	200
	210
	220
356-0349	143
356-0350	143
356-2197	622
356-4833	7
	9
	▶19
356-5212	57
356-7507	200
	210
	220
356-7515	298
356-8327	362
356-8432	362
357-0336	7
	9
	▶78
357-1093	7
	9
	▶64
357-1292	7
	9
	▶169
357-1752	157
357-2890	41
357-4272	▶1095
	1151
357-4572	84
357-4884	674
	676
357-4887	672
	684
357-4903	542
	▶586
357-5154	1178
357-5155	1173
	1184
357-5161	1181
357-5166	1173
357-5167	1102
	1181
357-5168	1109
	1175
357-5169	1110
	1178
357-5170	1111
	1184
357-7163	62
357-7434	272
358-0862	601
358-3835	1163
358-3836	1163
358-3837	1163
358-4889	410
358-5259	789
	793
358-6133	1100
358-7691	171
	▶182
358-7692	182
	▶183
358-7693	171
358-7826	712
358-8118	234
358-9131	106
358-9477	983
358-9566	983
	996
359-1439	35
359-4778	281
359-6071	▶299
	300
	303
	314
	317
359-6353	▶276
359-6354	▶300
	▶303
359-6356	▶306
	▶310
359-6358	▶3
359-6359	▶276
359-6360	▶277
359-6361	4
	5
	▶336
	624
359-6364	11
	▶171
359-6365	▶174
359-6366	▶272
359-6367	▶158
	1286
	1293
	1296
359-6369	11
	▶140
359-6370	▶1296
359-6371	▶1296
359-6372	▶1296
359-6373	▶1293
359-6374	▶1293
359-6375	▶908
359-6376	▶908
359-6377	▶909
359-6378	▶909
359-6381	908
	▶915
359-6382	908
	▶920
359-6383	908
	▶944
359-6384	908
	909
	▶985
359-6387	908
	▶946
359-6388	908
	909
	▶988
359-6389	909
	▶916
359-6390	909
	▶921
359-6391	909
	▶947
359-6395	909
	▶949
359-6401	▶1
359-6403	1
	▶910
359-6404	1
	▶11
359-6405	1
	▶556
359-6406	1
	▶243
359-6411	1
	▶1051
359-6412	1
	▶765
359-6413	1
	▶648
359-6415	1
	▶1123
359-6416	1
	▶768
359-6418	1
	▶1321
359-6419	1
	▶1151
359-6421	1
	▶199
	▶209
	▶219
359-6422	1
	624
	▶679
359-6428	▶624
359-6429	▶624
359-6430	▶4
	▶5
359-6440	910
	▶917
359-6441	910
	▶923
	▶925
359-6442	910
	▶927
359-6443	910
	▶934
359-6444	910
	▶938
359-6445	910
	▶951
359-6447	910
	▶966
359-6448	910
	▶967
359-6449	910
	▶982
359-6451	910
	▶962
359-6454	▶624
359-6455	▶1046
359-6456	▶1046
359-6457	▶1046
359-6459	▶389
359-6461	11
	▶131
359-6462	11
	▶387
359-6463	11

▶ PRIMARY REFERENCE

PART NUMBER INDEX

Part	Page
	▶133
359-6465	11
	▶877
359-6466	11
	▶511
359-6467	11
	▶79
359-6468	11
	▶41
359-6469	11
	▶136
359-6470	11
	▶102
	▶103
359-6473	▶150
	624
359-6475	11
	▶398
359-6476	11
	▶71
359-6477	11
	▶125
	▶127
359-6480	4
	5
	▶151
	624
359-6482	556
	▶568
359-6484	▶538
	556
359-6485	▶671
359-6486	▶687
359-6487	▶1153
359-6488	▶1155
359-6489	556
	▶867
359-6492	▶88
359-6493	▶90
359-6494	▶92
359-6495	▶1055
359-6496	▶1055
359-6500	2
	▶11
359-6502	2
	▶7
359-6511	1
	▶1116
359-6512	1046
	▶1118
359-6513	1046
	▶1119
359-6514	1046
	▶1121
359-7328	162
359-7757	7
	9
	▶365
359-9903	▶787
	845
	846
359-9904	▶774
359-9905	774
	775
360-0187	294
	295
360-1328	259
360-3690	125
	127
360-3692	997
360-3695	508
360-3747	94
360-7923	1148
360-8016	81
361-1045	281
	421
361-2119	108
361-2154	100
361-2155	511
361-2156	11
	▶141
361-2157	11
	▶108
361-2158	▶647
361-2159	1046
	▶1057
361-3831	1317
361-4742	877
361-6052	267
	472
361-6351	▶672
	687
361-6352	672
	684
361-9746	1139
	1141
	1143
361-9747	1087
362-2224	1316
362-2225	1316
362-2899	670
	672
	686
362-3563	797
	799
362-3564	797
	799
362-3565	797
	799
362-3566	789
	791
	793
	795
362-3609	▶270
	417
362-5414	518
	521
	524
	527
362-7842	84
362-8366	724
362-8685	248
362-9716	483
363-2210	200
	210
	220
	▶229
363-4123	187
	188
363-4243	277
363-9053	269
	343
363-9099	285
363-9108	1288
	1309
363-9109	1288
	1309
364-0614	975
364-1427	1090
	1092
364-2657	294
	295
364-3719	908
	909
364-3800	741
	745
364-3801	743
	747
364-3802	▶741
	849
	850
	851
	852
364-3803	▶743
	849
	850
	851
	852
364-8110	▶673
	1153
364-8111	673
	1106
364-8119	671
364-8120	671
364-8168	232
364-8169	232
364-8725	1149
364-8726	1149
364-8946	276
	277
365-0576	178
365-0578	179
365-0947	124
365-1496	561
365-2131	348
365-3465	534
365-3532	1173
	1184
	1191
365-3533	1173
	1184
365-3535	1173
	1184
365-3536	1206
365-3544	1173
	1198
365-4307	27
365-6549	629
365-6773	454
	463
	470
365-6787	417
	484
365-8130	712
366-2067	1049
366-2072	1143
366-2081	1143
366-2126	188
366-4698	125
	127
366-4699	997
366-4909	789
	791
	793
	795
366-4972	998
	1010
	1011
366-5276	▶1049
	1143
366-5277	1049
366-5863	336
367-0021	1127
367-0026	414
	415
	1127
367-0844	1320
367-3077	1143
367-3561	1143
367-4986	632
367-4988	632
367-4990	631
367-5037	259
367-7722	971
	973
367-7900	112
367-9021	310
367-9022	306
	313
367-9300	532
	534
367-9470	454
	463
	470
367-9605	300
	303
	307
	310
	▶313
	314
	317
368-9883	148
369-1203	1143
369-3150	690
369-4098	200
	210
	220
	484
369-6857	508
369-9004	1173
	1175
	1178
	1181
	1184
	1189
	1191
	1198
	1201
	1203
370-1485	200
	210
	220
370-4059	267
	343
	472
370-8590	551
370-8592	551
370-9019	94
370-9894	1108
	1218
371-2275	▶6
	7
	9
371-2276	6
	▶10
371-6859	1
	▶1161
371-6879	1055
	▶1128
371-6930	▶634
371-6932	▶683
	850
371-6933	▶636
371-6934	▶638
371-6935	▶639
371-6936	▶641
371-6937	596
	621
	▶643
371-6968	517
	▶548
371-6973	▶160
	621
371-7002	▶930
	1289
371-7038	596

▶ PRIMARY REFERENCE

PART NUMBER INDEX

Part	Page
	▶663
371-8094	109
	336
372-0438	3
	276
372-1009	1229
372-1637	1048
372-2158	1107
	1108
	1218
372-2547	861
372-3819	450
	685
372-3874	822-844
372-3875	822-844
372-4283	881
	883
	▶889
372-4564	▶514
372-4565	▶515
372-4566	▶516
372-4567	▶517
372-4569	1046
	▶1136
372-4570	1046
	▶1138
372-4806	340
	341
372-5885	908
	909
372-6094	556
	▶584
372-6095	▶550
	584
372-6097	551
372-6099	551
372-6296	1316
372-6746	1
	▶664
372-6747	664
372-7044	594
372-7045	▶594
372-7056	889
	891
372-7057	889
	891
372-7088	889
372-7090	891
372-7094	889
372-8611	889
	891
372-8795	1289
	▶1290
372-8796	▶1289
	1296
372-9205	595
372-9206	▶595
373-0424	431
373-2313	1048
373-2319	1048
373-3188	▶187
373-3189	▶188
373-3193	1
	▶625
373-3194	1
	▶666
373-5031	532
	534
373-5032	532
	534
373-6407	877
373-6538	362
373-6629	967
	▶971
373-6630	966
	▶973
373-6631	967
	▶975
373-6632	962
	▶963
373-7406	823
	835
	841
373-7407	823
	835
	841
373-7408	825
	838
	843
373-7409	825
	838
	843
373-7410	824
	837
373-7411	824
	837
373-8155	969
373-8465	971
373-8620	348
373-9811	72
374-0650	145
374-0751	▶168
	181
374-1209	538
	▶542
374-1210	538
	▶539
374-1211	▶530
	538
374-1212	538
	▶557
374-2276	▶897
	1294
	1295
	1297
	1298
374-2277	▶899
	1294
	1295
	1297
	1298
374-2278	▶893
	1036
374-2279	▶895
	1036
	1038
374-2285	▶901
	1294
	1295
	1297
	1298
374-3562	▶1125
374-5778	572
	574
374-5779	572
374-5780	572
374-5781	572
	574
374-5783	▶572
	▶574
	578
	582
374-5784	568
	▶576
	▶578
	▶580
	▶582
374-6601	885
	887
	▶891
374-7146	▶979
	982
374-7147	979
374-7464	257
374-7466	257
	411
374-7467	256
	419
	421
	429
374-7468	419
	421
	429
374-8372	271
374-9554	557
	▶559
374-9555	559
	▶561
374-9585	▶152
374-9917	923
	925
374-9920	915
	916
374-9921	917
374-9926	917
374-9927	917
374-9928	915
	916
374-9929	920
	921
374-9930	923
	925
374-9931	920
	921
374-9932	923
	925
374-9940	927
374-9941	934
374-9944	927
374-9945	934
374-9946	934
374-9947	985
	988
374-9948	934
374-9949	934
374-9953	934
374-9954	934
374-9962	944
	949
374-9964	944
	949
374-9965	944
	946
	947
	949
374-9966	951
374-9967	944
	946
	947
	949
374-9968	951
374-9969	917
374-9972	923
	925
374-9975	530
374-9976	542
374-9977	542
374-9978	539
374-9980	539
374-9981	542
374-9982	542
374-9983	542
374-9984	530
375-0352	290
	291
	293
375-0762	▶122
375-0763	131
375-0764	108
375-0765	▶100
	511
375-0766	511
375-0767	1057
375-0768	1057
375-0770	125
	▶129
375-0771	129
375-0772	▶42
	102
375-0773	42
375-0774	102
375-0775	102
	103
375-0776	877
375-0777	877
375-0780	131
375-0781	131
375-0785	141
375-0786	122
375-0787	122
375-0788	▶118
	▶120
375-0791	141
375-0794	108
375-0797	721
375-0799	108
375-0801	108
375-0802	108
375-0803	141
375-0804	122
375-0805	122
375-0806	122
375-0807	118
	120
	122
375-0808	118
	120
	122
375-0809	108
375-0810	108
375-0811	108
375-0815	108
375-0816	108
375-4166	572
	574
375-5131	433
375-5417	1052
	▶1090
375-5418	1052
	▶1092
375-5491	▶155
	157
375-5492	▶156
	157
375-5493	8
	9
	▶157
375-6116	169
375-6118	169
375-6122	169
	176
375-6126	501
	503
375-6148	169
375-7121	59
375-7122	7

▶ PRIMARY REFERENCE

PART NUMBER INDEX

Part	Page
	9
	▶59
375-7166	▶1233
375-7590	679
375-7591	679
375-7592	4
	5
	▶607
	624
375-7594	▶649
	679
375-7598	▶608
	619
375-7599	▶609
	620
375-7600	▶610
	618
375-7601	▶611
	616
375-7602	608
375-7603	609
375-7604	610
375-7605	611
375-7606	▶651
	660
375-7607	▶652
	657
375-7610	658
375-7611	655
375-7615	▶601
	624
375-7616	651
375-7617	652
375-7648	679
375-7651	649
375-7652	649
375-7835	▶1234
375-9258	454
	463
	470
375-9542	7
	9
	▶112
376-0308	719
376-0320	719
376-0324	690
376-0328	690
376-0626	7
	9
	▶58
376-0929	160
376-1308	158
	162
376-1378	▶314
	▶317
376-1379	▶320
	▶323
376-1525	140
376-2254	891
376-2255	891
376-2257	374
376-2258	▶374
	891
376-3085	901
376-3089	901
376-3100	897
	899
376-3138	893
	895
376-3675	1
	▶605
376-3676	1106
	1153
	1155
	▶1156
376-3677	▶717
	1156
376-3684	717
376-3688	717
376-3691	1156
	▶1158
376-3692	1158
376-3704	1158
376-3707	1158
376-3713	1158
376-3715	1158
376-3718	1158
376-3854	166
376-4000	118
	120
376-4178	81
376-4179	7
	9
	▶81
376-6447	7
	9
	▶82
376-6601	8
	9
	▶72
376-6753	169
376-6754	169
376-7362	62
376-7511	374
376-8056	76
376-9314	679
376-9315	679
376-9911	300
	303
	306
	310
	314
	317
	320
	323
	326
	329
377-0858	300
	306
	314
	320
	326
377-0924	897
	899
377-1381	133
377-2257	1087
377-2997	200
	210
	220
377-2998	200
	210
	220
377-2999	200
	210
	220
377-3000	201
	211
	221
377-3001	389
377-3002	390
377-3003	390
377-3004	201
	211
	221
377-3005	201
	211
	221
377-3141	1112
377-3673	985
	▶994
377-3674	992
	994
	▶998
377-3675	992
	994
	▶1001
377-3676	992
	994
	▶1003
377-3677	992
	994
	▶1005
377-3686	992
	994
377-3919	895
377-3920	893
377-6017	889
	891
377-6020	889
	891
377-6104	▶454
	▶463
	▶470
	1151
377-6942	▶932
	1293
377-7469	561
377-7471	561
377-7473	561
377-8742	171
377-8743	171
377-8744	171
377-8745	174
377-8747	272
377-8748	272
377-8749	272
377-9493	435
	441
377-9494	435
	441
377-9495	435
	441
377-9496	201
	211
	221
377-9603	106
377-9609	179
377-9611	176
378-0575	84
378-0576	84
378-2003	▶508
	584
378-2717	633
378-2718	633
378-3286	1293
	▶1294
378-3287	1296
	▶1297
378-3288	▶940
	1294
	1295
	1297
	1298
378-4518	201
	211
	221
	▶268
378-4519	435
	441
378-4520	201
	211
	221
	▶250
378-4521	201
	211
	▶251
378-4522	436
	442
378-5564	188
	▶190
378-5654	1150
378-7785	▶238
	1151
378-9144	▶1283
	1286
	1294
	1295
	1297
	1298
378-9150	▶1284
378-9331	▶1279
	1294
	1295
378-9332	▶1281
	1297
	1298
379-0133	1164
	▶1195
379-0333	238
	▶856
379-0334	856
	▶858
379-3290	7
	9
	▶86
379-3291	7
	9
	▶104
379-3294	86
379-3295	86
379-3480	104
379-3509	897
	899
379-3645	387
379-3646	387
379-3820	690
379-3837	684
	687
	▶689
	1155
379-3990	625
379-4555	▶1025
379-4753	▶674
	719
379-4754	674
379-5053	59
379-5147	689
	▶690
379-5178	679
379-5181	608
	609
	613
	614
379-5198	171
379-5590	1
	▶719
379-5591	▶676
	719
379-5592	676
379-5594	719
379-5666	1151
379-5808	561
379-5834	104
379-6026	104
379-6027	104
379-6458	719

PART NUMBER INDEX

Part	Page
379-6545	684
	913
	▶969
379-6561	▶1051
379-6562	1051
	▶1052
379-6624	551
379-8601	187
	▶191
379-8839	1116
379-8841	1116
379-8842	1119
379-8844	1118
379-8927	689
379-8928	690
	▶693
379-9515	1051
	▶1134
380-0789	41
380-0838	1158
380-0937	765
380-0949	657
	660
380-0950	616
	618
380-0951	655
	658
380-0953	679
380-0955	615
	617
380-0956	▶612
	624
380-0957	▶613
	617
380-0958	613
380-0959	649
380-1083	625
380-1151	▶1164
	▶1165
380-1207	1309
380-1245	90
380-1246	90
380-1337	1134
380-1338	1134
380-1339	1134
380-1600	901
380-2279	625
	▶628
380-2280	625
	▶629
380-2281	628
380-2282	629
380-2299	625
380-2398	717
380-2652	625
380-2660	649
380-2661	653
380-2662	654
380-2918	625
380-2919	625
380-2938	628
380-2939	629
380-2951	858
380-2971	▶411
	1051
380-3970	454
380-5286	▶332
	1286
	1293
	1296
380-5288	456
	463
	473
380-5291	▶495
	1286
	1293
	1296
380-5938	801
	▶822
380-5939	▶801
380-5940	802
	▶823
380-5941	▶802
380-5942	803
	▶824
380-5943	▶803
380-5944	804
	▶825
380-5945	▶804
380-5946	▶759
	822
	823
	824
	825
	827
	828
	829
	830
	831
	832
	833
380-5972	6
380-6863	614
380-6864	▶614
	615
380-6884	362
380-6977	336
380-7133	201
	211
	221
	▶270
380-7422	▶770
	849
	850
	851
	852
380-7424	▶772
	850
	851
380-7428	733
380-7675	733
380-8041	94
380-8042	94
380-8106	▶94
380-8229	▶878
380-8230	▶879
380-8453	243
	276
	277
	▶362
380-8484	979
380-8684	491
	493
380-8888	491
	493
380-8932	679
380-9101	436
	442
380-9542	913
380-9543	913
380-9598	▶497
	596
380-9599	▶355
	621
380-9650	▶631
	1139
380-9651	631
380-9652	631
380-9733	631
	▶632
380-9734	632
380-9864	▶1028
381-0180	539
	▶587
381-0188	501
381-0189	▶849
381-0190	▶849
381-0191	▶850
381-0192	▶850
381-0193	▶851
381-0194	▶851
381-0195	▶852
381-0220	1046
381-0221	1
381-0405	908
	909
381-0695	940
381-0696	940
381-0697	940
381-0698	940
381-0987	624
	▶713
381-1006	140
381-1007	140
381-1838	693
381-2294	1025
	1028
381-2295	1025
	1028
381-2304	436
	442
381-2492	1058
381-2621	338
381-2644	923
	925
381-3165	▶875
	1293
	1296
381-3633	690
381-3648	11
	▶602
381-3726	94
381-3762	679
381-3763	679
381-4071	689
	▶911
381-4072	687
	▶913
	1155
381-4078	674
	676
381-4080	▶447
	687
	1155
381-4119	201
	211
	221
381-4538	1164
	1165
	1166
	1167
	1168
	1169
	1170
	1171
	▶1172
381-4592	985
	988
381-4593	985
	988
381-4594	985
	988
381-4671	713
	714
381-4672	713
381-5744	495
381-5746	495
381-6252	▶161
	187
	188
381-6276	979
381-6280	979
381-6285	979
381-6458	920
381-6642	▶678
	687
	1155
381-6643	678
	684
381-6883	21
381-8514	883
	887
381-8515	881
	885
381-8516	881
	883
	885
	887
381-8517	881
	883
	885
	887
381-8518	911
381-9005	530
381-9163	158
381-9383	158
382-0346	201
	211
	221
382-0936	545
382-0937	545
382-0938	545
382-1477	8
	10
	▶433
382-1861	940
382-1862	940
382-1863	940
382-4376	1321
382-4377	▶1314
	1321
382-4590	1314
382-4591	1314
382-5435	447
	686
382-5973	1318
382-8008	▶274
382-8010	▶501
	985
382-9272	874
382-9668	602
382-9669	602
383-1467	1150
383-3641	979
383-3659	685
	687
	1106
	1153
	1155
383-3660	685
	687
	1106
	1153
	1155
383-4703	979

PART NUMBER INDEX

Part	Page
383-8039	174
383-9098	▶1285
384-0742	9
	▶21
384-3018	836
	842
384-3022	839
	844
384-3751	508
384-7475	992
	994
384-8436	877
	997
384-8844	4
	▶712
384-9218	176
384-9907	26
385-0229	1102
	1109
	1110
	1111
385-0230	1102
	1109
	1110
	1111
385-4710	▶775
385-7511	152
385-7832	1170
	▶1196
385-7833	1166
	▶1197
385-8201	281
	483
385-9302	473
	1130
386-0173	960
386-0444	3
	276
386-1722	▶296
	321
	324
386-4907	561
386-6211	106
387-0314	1107
	1218
387-0317	1107
	1218
387-1083	979
387-2015	539
387-2583	146
387-2584	146
387-2867	509
387-3332	508
387-5366	355
	495
	497
387-8079	140
387-8080	140
387-8408	118
	120
	▶124
387-9526	23
388-1565	934
388-1566	934
388-4327	158
	160
	162
388-4521	539
388-4522	539
388-5295	1003
	1005
388-7265	508
389-0428	1064
389-0447	296
389-0689	568
389-0764	1158
389-0879	1189
	1191
	1198
	1201
	1203
389-3703	108
389-7519	▶1235
389-7520	1235
389-7521	1235
389-7522	1235
389-7523	1235
389-7524	1235
389-7525	1235
389-8169	97
390-0274	147
390-0303	147
390-0705	▶415
	1055
390-3915	934
390-6783	11
	▶147
390-6990	343
391-2010	481
391-2167	157
391-4643	695
392-0792	106
392-0895	274
392-3593	104
392-5485	479
392-7959	▶1276
392-7960	▶1277
392-7961	▶1278
392-9245	456
	463
	473
393-1088	456
	463
	473
393-1127	791
	795
393-1483	648
393-1602	357
393-3412	1046
393-5050	122
393-5115	143
393-5631	499
393-7245	▶1166
	▶1167
393-7361	278
393-7807	456
	463
	473
394-1398	186
394-4311	▶707
394-4312	▶695
	707
	708
394-4313	▶698
	707
394-4314	▶700
	707
	708
394-4315	707
	708
	▶709
394-4316	695
394-4317	695
394-4318	725
394-4319	725
394-4320	725
394-4321	725
394-4322	695
394-4323	695
394-4324	727
394-4327	727
394-4328	727
394-4330	700
394-4331	700
394-4332	700
394-4333	709
394-4334	725
394-4335	695
396-0009	975
396-0095	975
396-0434	▶503
	988
396-0436	503
396-0946	709
	▶711
396-1708	456
	463
	473
396-4988	275
396-6438	971
	973
396-8374	▶33
	37
396-8375	35
	▶37
396-9299	561
396-9709	102
	103
397-1179	▶74
	77
397-2937	106
397-3614	320
	323
	326
	329
397-6189	94
	▶97
397-6405	▶1107
	1222
397-7285	▶789
	850
	851
397-9340	2
	▶996
397-9341	2
	▶983
398-0204	975
398-5223	274
	275
398-5234	▶760
	826
	834
	835
	836
	837
	838
	839
	840
398-5235	▶826
398-5236	▶762
398-5246	805
	▶827
398-5247	▶805
398-5248	806
	▶828
398-5249	▶806
398-5250	807
	▶829
398-5251	▶807
398-5252	808
	▶830
398-5253	▶808
398-5254	809
	▶831
398-5255	▶809
398-5256	840
398-5257	840
398-5258	810
	▶832
398-5259	▶810
398-5260	811
	▶833
398-5261	▶811
398-5262	812
	▶834
398-5263	▶812
398-5264	813
	▶835
398-5265	▶813
398-5266	814
	▶836
398-5267	▶814
398-5268	815
	▶837
398-5269	▶815
398-5270	816
	▶838
398-5271	▶816
398-5272	817
	▶839
398-5273	▶817
398-5274	▶840
398-5277	827
398-5278	827
398-5279	828
398-5280	828
398-5281	829
398-5282	829
398-5283	830
398-5284	830
398-5285	831
398-5286	831
398-5287	832
398-5288	832
398-5289	833
398-5290	833
398-6196	551
398-6907	▶1168
	▶1169
398-6909	▶1170
	▶1171
398-8314	836
	842
398-8315	836
	842
398-8316	839
	844
398-8317	839
	844
398-8318	826
398-8319	826
398-8323	759
	760
	764
398-8324	759
	760
	764
398-8380	499
399-4829	1058
399-5083	7
	9
	▶47
399-5733	118
399-5736	118
	120
399-5737	118

▶ PRIMARY REFERENCE

PART NUMBER INDEX

Part Page

120
399-5792 1001
▶1011
399-5934 . . . . . ▶880
399-7223 . . . . . ▶596
399-7224 . . . . . ▶596
399-7225 . . . . . ▶596
399-7226 . . . . . ▶621
399-7227 . . . . . ▶1286
399-7260 1158
399-8382 88
399-8412 88
399-8673 . . . . . ▶162
596
399-8947 162
399-8955 320
323
326
329
399-8960 622
399-8983 276
▶479
399-8986 277
▶481
399-8989 243
276
277
▶337
399-8993 276
▶340
▶341
399-8996 277
▶342
399-8997 92
399-8998 92
399-9002 . . . . . ▶275
399-9595 1121

4

415-0025 1121
415-2348 243
276
277
▶278
415-4088 712
415-4089 712
415-7215 61
415-7216 7
9
▶61
415-7996 . . . . . ▶1271
415-7997 . . . . . ▶1272
415-7998 . . . . . ▶1273
415-7999 . . . . . ▶1274
415-8000 . . . . . ▶1275
415-8003 . . . . . ▶1241
415-8004 . . . . . ▶1242
415-8267 456
463
473
415-9402 988
▶992
415-9459 481
416-0014 1238
416-0246 1308
1309
1310
1311
416-0640 497
416-0641 457
463
473
416-2691 1121
416-4697 11
▶435
▶441
416-5446 340
416-6550 . . . . . ▶549
556
416-7689 1296
▶1298
416-7690 1293
▶1295
416-9803 2
▶1320
417-0112 58
417-1149 940
417-3044 985
988
417-4160 934
▶997
417-4722 . . . . . ▶244
281
417-5994 878
880
▶881
417-5995 878
▶883
417-5996 879
▶885
417-5997 879
880
▶887
417-6011 239
417-8579 7
9
▶17
417-9681 136
418-1743 940
418-2342 94
418-3586 133
▶134
418-3590 133
▶135
418-3781 147
418-3795 597
599
418-4034 94
418-4035 94
418-4380 387
418-5377 1087
418-5378 1087
418-5379 1060
418-5380 1114
418-5381 1114
418-5382 1114
418-6834 1097
418-6836 1097
418-6838 1230
418-6839 1098
418-6840 1044
▶1097
418-6841 1098
▶1230
418-6842 1098
418-9798 453
419-0108 457
464
473
419-0513 136
419-5040 . . . . . ▶280
419-5974 484
419-5980 711
419-5981 711
419-5982 711
419-5984 711
419-5985 711
419-5986 711
419-5987 711
419-5988 711
419-5990 711
419-5991 711
419-5992 711
419-5993 711
419-6122 337
419-6282 . . . . . ▶259
261
419-6286 . . . . . ▶261
433
419-6455 151
419-7292 934
419-7664 7
9
▶154
419-8146 1052
419-8211 . . . . . ▶1139
419-8226 88
419-8645 . . . . . ▶450
687
1155
419-8867 1323
419-8883 272
419-8890 . . . . . ▶357
457
464
473
419-9385 . . . . . ▶280
420-0899 243
▶245
420-0900 243
▶247
420-0901 243
▶245
420-0914 243
▶245
420-0939 725
420-0940 725
727
729
730
731
732
420-0941 700
725
420-4712 . . . . . ▶960
992
994
420-5767 374
420-6044 . . . . . ▶246
280
420-6045 . . . . . ▶246
280
420-6181 . . . . . ▶1044
1151
420-6199 1146
420-6204 1146
420-6205 1
▶1146
420-7713 . . . . . ▶708
420-7714 . . . . . ▶703
▶705
708
420-7715 703
420-7716 703
420-7717 703
705
420-7718 703
705
420-8579 690
420-9322 280
▶419
420-9324 280
▶421
420-9424 274
420-9425 275
421-0087 14
421-0097 14
421-1043 1051
▶1114
421-1044 . . . . . ▶1060
1151
421-1121 201
211
221
421-1229 1188
▶1198
421-3999 921
421-4021 131
421-4184 108
▶721
421-5583 298
421-5584 298
421-5585 298
421-5879 700
421-6177 917
421-6201 178
421-6486 1121
421-6497 589
421-6804 . . . . . ▶249
278
421-6805 . . . . . ▶263
278
421-8199 508
▶589
422-0091 . . . . . ▶506
584
422-0210 917
422-0245 1250
1256
▶1266
422-0246 . . . . . ▶1250
422-0247 1251
1255
▶1262
422-0248 . . . . . ▶1251
422-0249 1244
1248
▶1259
422-0250 . . . . . ▶1244
422-0251 1021
1023
▶1038
422-0252 . . . . . ▶953
1019
422-0253 . . . . . ▶955
1021
422-0254 . . . . . ▶957
1023
422-0255 . . . . . ▶1019
422-0256 . . . . . ▶1021
422-0257 . . . . . ▶1023
422-0258 953
957
422-0259 953
422-0260 953
422-0261 953
957
422-0262 955
422-1071 695
▶725
422-1072 725
422-1073 725
422-1074 725

▶ PRIMARY REFERENCE

PART NUMBER INDEX

Part	Page
422-1075	698
	▶727
422-1076	700
422-1349	674
	676
422-3616	▶268
	709
422-3791	276
	▶343
	▶344
422-3792	343
422-4896	154
422-4897	154
422-4925	561
422-5429	714
422-5430	714
422-5431	714
422-5432	714
422-5433	714
422-5434	714
422-5435	714
422-5436	714
422-5437	714
422-5438	4
	5
	▶714
422-5456	686
	687
	1106
	1153
	1155
422-7741	714
422-7742	714
422-7743	714
422-7744	714
422-7745	714
422-8699	714
422-8700	714
422-8703	714
422-9008	700
422-9106	1321
423-0729	703
	705
	▶729
	▶730
423-0730	729
	731
423-0731	729
	731
423-0732	729
	730
	731
	732
423-0798	▶1162
423-1948	678
	684
423-1982	172
423-1983	172
423-6535	508
423-8380	992
423-9860	917
423-9861	917
423-9978	1158
424-0186	1158
424-1537	508
424-4915	417
424-5598	▶297
	320
	323
	326
	329
424-8355	603
424-8920	1238
	1239
425-4309	1212
425-4310	1212
425-5635	171
425-8522	1081
	1082
426-3786	741
	743
	745
	747
426-3798	▶791
	849
426-3799	▶793
	852
426-3806	▶745
	851
426-3807	▶747
	851
426-3810	▶795
	849
427-6302	387
430-3375	7
	9
	▶153
430-3376	153
430-3377	153
430-3378	153
430-3379	153
430-5329	417
430-9008	285
430-9010	284
430-9016	284
	285
430-9017	284
	285
430-9018	284
	285
430-9019	284
	285
430-9022	284
	285
430-9023	284
	285
430-9453	220
	▶369
430-9454	210
	367
	▶370
430-9455	220
	368
	▶371
	385
431-1414	885
	887
431-7858	▶146
	147
431-8800	7
	9
	▶80
432-2668	484
	1101
	1104
	1105
432-8962	249
	250
	256
433-5754	▶271
	1221
	1224
433-6740	▶781
433-6741	▶784
433-6742	▶782
433-6743	▶785
433-6744	▶783
433-6745	▶786
433-7014	176
433-9859	▶653
	659
433-9860	▶654
	656
433-9861	656
	659
433-9862	653
433-9863	654
434-1356	360
434-2038	1314
434-2475	960
434-3203	1077
434-6549	997
435-2613	938
435-2614	938
435-2615	938
435-2616	938
435-2858	695
435-3388	374
435-3888	82
435-8538	13
	▶262
435-8555	1233
	▶1236
435-8557	1233
	▶1237
435-9302	148
435-9303	148
435-9304	148
436-1687	1189
	1191
	1198
	1201
	1203
436-1688	1189
	1191
	1198
	1201
	1203
436-6514	▶1157
436-6515	1157
	▶1160
436-6516	1160
436-6517	1160
436-6518	1160
436-6519	1157
	▶1187
	▶1188
436-6594	148
436-6929	▶484
	1157
436-8070	▶262
	453
436-8073	286
	288
436-8094	240
	▶452
436-8095	▶346
	▶348
436-8097	▶350
436-8983	163
437-0127	23
437-0128	23
437-3870	67
437-3876	57
	▶66
437-3877	66
	▶67
437-3880	68
437-3881	66
	▶68
437-5152	104
437-7217	508
437-7407	485
437-7408	485
438-3404	765
438-4319	▶423
	▶426
438-4790	770
	772
438-5385	167
438-5930	920
	921
438-5957	479
	481
	483
438-6388	944
	949
438-6389	944
	949
438-8094	1160
438-8118	1150
438-8119	▶1150
	1157
438-8164	1062
438-8167	1063
	1064
438-8170	▶1061
	1064
438-8171	▶1062
	1063
438-8172	1061
438-8173	1062
438-8174	▶1063
438-8175	▶1064
	1157
438-8684	1069
	1072
	▶1081
438-8686	1067
	▶1082
438-8703	765
438-8764	927
438-8769	923
	925
439-0387	▶1083
	1157
439-0388	1083
	▶1210
439-0389	1083
	▶1212
439-0390	▶861
	1083
439-0391	▶1070
	▶1072
	1083
439-0392	861
439-1013	342
	344
	345
439-1318	▶1077
	1081
439-1903	1116
439-2334	141
439-2875	171
439-3467	171
439-4341	277
	▶1129
439-4635	561
439-7256	248
439-7259	248
439-7289	248
439-7290	▶248
	1160
439-7522	1083
439-9960	1119
439-9961	1121

▶ PRIMARY REFERENCE

PART NUMBER INDEX

Part	Page
440-0257	▶405
	532
	534
440-0535	487
440-2105	281
	▶361
440-2658	1083
440-3362	1210
440-3497	176
440-5222	7
	9
	▶176
440-5229	176
440-5231	176
440-9398	▶1
	2
441-0314	320
	323
	326
	329
441-3249	423
	426
441-3250	423
	426
441-3258	▶240
441-3262	337
441-3637	457
	464
	473
441-5131	457
	464
	▶1130
441-6869	721
441-7415	178
441-7416	178
441-7564	605
441-7565	605
441-9192	448
	685
441-9193	447
	684
441-9942	447
	684
442-5287	1189
	1191
	1198
	1201
	1203
442-5726	973
442-5727	13
442-7773	415
442-8151	1221
	1224
443-0004	2
	▶9
443-1880	▶358
	491
443-2046	965
443-2047	965
443-3910	118
443-3911	118
443-4954	108
443-5631	486
443-6362	457
	464
	473
443-7061	634
	639
	▶644
443-8120	1169
	▶1200
443-8216	▶1201
	1207
443-8217	▶1189
	1205
443-8218	1200
	▶1203
443-8222	▶1191
	1206
443-8262	1171
	▶1205
443-8263	1167
	▶1206
443-8265	1165
	▶1207
443-8462	281
443-8573	▶1103
	1189
	1191
	1198
	1201
	1203
443-8574	1109
443-8575	1102
443-8576	1111
443-8578	1110
443-9137	714
444-1247	86
444-1284	88
444-1950	7
	9
	▶23
	24
	25
444-2507	679
444-2512	679
444-2516	608
	609
	613
	614
444-2624	923
	925
444-2625	923
	925
444-2663	703
	705
	▶731
	▶732
444-2815	636
	▶645
444-2816	641
	▶646
444-3415	920
444-3444	921
444-3483	934
444-3484	934
444-3485	985
444-3486	985
444-3523	988
444-3524	988
444-5607	80
444-5608	80
444-5644	▶326
	▶329
444-5740	▶2
444-5741	▶2
444-5742	▶2
444-5773	934
444-5865	1210
444-5873	1083
444-5874	1083
444-5956	1158
444-5959	1158
444-6559	722
	723
	724
444-6575	▶1252
444-6576	▶1245
444-6972	661
444-6973	661
444-6974	661
444-6975	661
444-6976	7
	9
	▶661
444-7094	574
444-7125	684
	913
444-7460	1064
444-8196	985
444-8506	980
444-8975	1158
444-8977	1158
444-8978	1158
444-8980	1158
444-8998	486
444-9094	1061
444-9544	1231
444-9711	1308
	1311
444-9753	486
445-1289	1158
445-1296	1158
445-1307	1160
445-1875	717
445-1877	717
445-2028	▶1308
445-2029	▶1309
445-2030	▶1310
445-2031	▶1311
445-2791	1198
445-4705	▶603
445-5003	988
445-5035	881
	883
	885
	887
445-6114	679
445-6234	1051
	▶1087
445-7979	7
	9
	▶143
445-7998	154
445-8002	154
445-8643	35
445-8773	881
	883
	885
	887
445-9278	985
	988
445-9279	985
	988
445-9402	915
	916
445-9427	917
445-9463	770
	772
445-9467	770
	772
446-0204	240
	▶1316
446-0214	240
	▶490
446-0271	▶352
446-0273	▶353
446-0635	▶1109
	1201
446-0637	▶1102
	1203
446-0642	▶1110
	1189
446-0649	▶1111
	1191
446-0650	1198
446-1026	80
446-1460	648
446-4127	104
446-6687	923
446-6813	81
446-8192	927
446-8393	411
446-8423	▶1141
446-8424	▶1143
446-9419	201
	211
	221
447-0233	534
447-0908	1150
447-0934	679
447-0935	679
447-1571	419
	421
	429
447-1968	1050
447-2238	605
447-6422	▶1317
447-6423	▶1318
447-6491	▶249
	479
	481
	483
447-7206	163
447-7306	501
	503
447-7382	700
447-8226	501
	503
447-8811	23
447-9719	6
	▶1323
448-0423	436
448-1355	86
448-1882	457
	464
	473
448-2775	917
448-2794	▶874
	975
448-2795	▶906
	975
448-2797	▶968
	975
448-2798	975
448-3693	24
	25
448-3694	24
448-3695	24
	25
448-4446	▶280
448-4460	▶1101
448-4470	703
448-4916	969
	▶970
448-4917	969
448-4919	969
448-4921	969
448-4930	969
448-5038	281
	419
448-7068	78
448-8277	1118
448-9142	201
	211
	221

PART NUMBER INDEX

Part	Page
448-9332	280
	►429
449-2331	337
449-3151	561
449-3815	722
	723
	724
449-3816	722
	723
	724
449-4217	176
449-5859	125
	127
449-7301	361
449-8192	200
	210
	220
	484
449-9059	24
	25
450-1004	589
450-1095	539
450-1410	913
450-2490	108
450-5183	►246
	280
450-6696	423
	426
450-6697	423
	426
450-7885	150
450-7886	150
450-9000	649
	►655
450-9001	649
	►656
450-9002	649
	►657
450-9003	649
	►658
450-9512	277
451-1363	1320
451-1490	240
	►245
451-1493	509
451-2182	776
	777
	778
	780
451-5453	►270
	1191
	1198
451-5918	346
	348
451-5919	353
451-8019	472
451-9041	►284
451-9042	►285
452-0328	853
452-1339	423
	426
452-1340	423
	426
452-3402	►684
452-3403	►1106
452-4705	423
	426
452-5994	484
452-6716	►1108
	1225
452-6789	285
452-6790	284
452-6871	240
	►499
452-9062	►286
	452
452-9063	452
	►453
453-2305	574
453-3016	649
	►659
453-3017	649
	►660
453-3018	612
	►615
453-3019	607
	612
	►616
453-3020	612
	►617
453-3021	607
	612
	►618
453-3023	607
	►619
453-3024	607
	►620
453-5531	19
453-5532	19
453-6057	685
	687
	1106
	1153
	1155
453-6665	487
453-7510	1300
453-7511	►1300
454-5382	1160
454-6614	457
	464
	473
454-9600	1303
	1307
454-9601	1303
	1307
455-0704	251
	253
	266
	472
455-0705	250
	266
	306
	310
	472
	486
455-0707	267
	472
	485
455-0709	266
	472
	485
455-1944	19
455-8009	245
456-3452	423
	426
456-3453	423
	426
456-4539	417
	1060
456-5024	►254
	423
	426
456-5035	423
456-5037	346
	350
	352
456-6531	►245
	1157
456-9151	176
456-9173	176
456-9178	176
456-9179	176
457-1066	698
457-2315	350
457-5010	490
	►491
457-5028	►288
	452
457-5701	946
	947
457-9162	140
457-9163	140
457-9164	140
457-9741	727
458-3628	►271
	352
458-6619	353
458-7085	938
458-8202	246
459-0786	244
459-0787	423
	426
	484
459-1800	230
	232
459-2220	473
459-2574	►1104
459-2575	►1105
459-7545	705
459-8439	730
	732
459-8440	730
	732
460-1194	7
	9
	►237
460-4009	►1267
460-5274	►1263
	1267
460-5303	705
460-5304	705
460-5880	700
460-8247	►1268
460-9714	►1264
	1268
461-0742	►1319
461-1343	278
461-2450	286
	288
461-5232	199
	209
	219
462-1768	►101
462-2801	1321
462-8051	►1301
462-8918	1101
	1104
	1105
462-9404	120
462-9405	120
462-9406	120
463-5254	385
463-5557	7
	►385
463-6779	246
463-9336	►764
	841
	842
	843
	844
464-3707	124
464-5878	490
	►493
464-6047	415
464-7601	►417
	490
465-1607	1101
465-1610	1105
465-1611	1104
465-2737	►1325
465-7890	764
466-1712	►264
	463
466-1713	264
	►265
467-1381	762
467-1382	762
467-2859	252
	257
467-7973	►1302
468-0109	759
	760
	762
	764
468-0110	759
	760
	762
	764
469-4772	925
470-1001	245
472-6229	341
472-8277	►281
	283
472-8281	►256
	281
472-8314	245
473-2338	424
	426
473-2339	424
	426
474-1053	245
474-5708	►1325
474-5710	1325
474-5713	1325
474-5717	►243
474-9468	426
475-1901	648
475-4997	426
475-8076	284
	285
475-8077	284
	285
475-8078	284
	285
475-8763	348
476-1899	246
476-1912	246
476-2031	334
476-6360	245
476-7086	►334
477-1244	247
477-2923	334
478-2318	1160
478-4950	196
478-4955	196
478-4958	196
478-4959	196
478-4961	196
478-4962	196
478-4963	196
478-4964	196
478-4967	196
478-4968	196
478-4970	196
478-4971	196
478-8207	545

► PRIMARY REFERENCE

PART NUMBER INDEX

Part	Page
	►590
479-1474	243
	►483
479-3043	1325
480-7702	►269
	344
481-2489	246
481-2514	25
481-3211	25
481-4705	246
481-4736	►246
	283
481-4737	►247
	283
481-5945	470
481-5946	470
481-6476	1321
481-6759	474
481-6778	474
481-7219	►263
	303
	310
	317
	323
	329
482-7522	246
482-8138	247
	361
482-9109	►252
	417
482-9116	►255
	491
482-9117	►257
	493
482-9118	►258
	417
482-9657	►283
484-1119	130
484-1120	127
	►130
484-4852	221
	►253
484-5850	1319
485-3330	►633
	666
485-9469	493
485-9470	417
485-9471	491
486-9787	43
486-9790	43
486-9827	43
486-9829	43
486-9830	►43
	103
489-4466	103
491-5613	245
491-8139	►1253
	1254
491-8140	►1254
491-8141	►1255
491-8142	►1256
491-8143	►1246
	1247
491-8144	►1247
491-8145	►1248
492-5064	243
	►345
495-3882	818
	►841
495-3883	►818
495-3886	819
	►842
495-3887	►819
495-3888	820
	►843
495-3889	►820
495-3890	821
	►844
495-3891	►821

► PRIMARY REFERENCE

MEMORANDA



©2016 Caterpillar
All Rights Reserved

CAT, CATERPILLAR, their respective logos, “Caterpillar Yellow”, and the POWER EDGE trade dress as well as corporate and product identity used herein, are trademarks of Caterpillar and may not be used without permission.

SEBP5809-12
VOLUME I
Pages 1-732

D10T2 TRACK-TYPE TRACTOR

RAB1-UP