CATERPILLAR®

SEBP2817-33
December 2003

VOLUME I
Pages 1-542

RUTHZIL TRATOR COMERCIAL DE PEÇAS LTDA 11 97083-6812 ROLANDO CITRANGULO

Parts Manual

SIS

See "General Information" for New Parts Manual Features.

D11R Track-Type Tractor

7PZ1-Up (Machine)
2GR1180-Up (Engine)
1SY1-Up (Transmission)
8PP1-Up (Bulldozer)
8RP1-Up (Bulldozer)
5MP1-Up (Ripper)
7CP1-Up (Ripper)
7DP1-Up (Ripper)
7YP1-Up (Ripper)
7ZP1-Up (Ripper)
4BT1-Up (Torque Converter)

Powered By 3508B Engine
This Parts Manual is also available in .PDF Format on Compact Disc (CD-ROM)-Caterpillar Form No. SERP2817-33

Product and Dealer Information

Note: For product identification plate locations, see the section “Product Identification Information” in the Operation and Maintenance Manual.

Delivery Date: _____

Product Information

Model: _____

Product Identification Number: _____

Engine Serial Number: _____

Transmission Serial Number: _____

Generator Serial Number: _____

Attachment Serial Numbers: _____

Attachment Information: _____

Customer Equipment Number: _____

Dealer Equipment Number: _____

Dealer Information

Name: _____ Branch: _____

Address: _____

_____

_____

	Dealer Contact	Phone Number	Hours
Sales:	_____	_____	_____
Parts:	_____	_____	_____
Service:	_____	_____	_____

Informations produit et concessionnaire

Nota: Voir l'emplacement de la plaque signalétique du produit au chapitre "Informations produit" du guide d'utilisation et d'entretien.

Date de livraison: _____

Informations produit

Modèle: _____

Numéro d'identification produit: _____

Numéro de série du moteur: _____

Numéro de série de la boîte de vitesses: _____

Numéro de série de l'alternateur: _____

Numéros de série d'équipement: _____

Informations sur l'équipement: _____

Numéro matériel client: _____

Numéro matériel concessionnaire: _____

Informations concessionnaire

Nom: _____ Agence: _____

Adresse: _____

_____

_____

	Contact concessionnaire	Numéro de téléphone	Heures
Ventes:			
Pièces:			
Service:			

Información del Producto/Distribuidor

Nota: Para saber la ubicación de las placas de identificación del producto, ver la sección “Información sobre identificación del producto” en el Manual de Operación y Mantenimiento.

Fecha de entrega: _____

Información del producto

Modelo: _____

Número de identificación del producto: _____

Número de serie del motor: _____

Número de serie de la transmisión: _____

Número de serie del generador: _____

Números de serie de los accesorios: _____

Información sobre los accesorios: _____

Número del equipo del cliente: _____

Número del equipo del distribuidor: _____

Información del distribuidor

Nombre: _____ Sucursal: _____

Dirección: _____

_____

_____

	Comunicación con el distribuidor	Número de teléfono	Horas
Ventas:	_____	_____	_____
Piezas:	_____	_____	_____
Servicio:	_____	_____	_____

Informações Sobre Produto e Revendedor

Nota: Para localizações da placa de identificação do produto, consulte a seção, “Informações Sobre Identificação do Produto” no Manual de Operação e Manutenção.

Data de Entrega: _____

Informações Sobre o Produto

Modelo: _____

Número de Identificação do Produto: _____

Número de Série do Motor: _____

Número de Série da Transmissão: _____

Número de Série do Gerador: _____

Números de Série de Acessórios: _____

Informações Sobre Acessórios: _____

Número do Equipamento do Cliente: _____

Número do Equipamento do Revendedor: _____

Informações Sobre o Revendedor

Nome: _____ Filial: _____

Endereço: _____

_____

_____

	Contato do Revendedor	Telefone	Horas
Vendas:	_____	_____	_____
Peças:	_____	_____	_____
Serviço:	_____	_____	_____

Produkt- und Händlerinformation

Anmerkung: Für die Lage der Produkt-Identnummer und Seriennummern siehe Abschnitt "Produkt-Identinformation" im Betriebs- und Wartungshandbuch.

Lieferdatum: _____

Produkt-Identinformation

Modell: _____

Produkt-Identnummer: _____

Seriennummer des Motors: _____

Seriennummer des Getriebes: _____

Seriennummer des Generators: _____

Seriennummern der Arbeitsgeräte: _____

Arbeitsgeräteinformation: _____

Kundennummer: _____

Händlernummer: _____

Händlerinformation

Name: _____ Niederlassung: _____

Adresse: _____

_____

_____

	Kontaktperson beim Händler	Telefon	Dienststunden
Verkauf:	_____	_____	_____
Ersatzteile:	_____	_____	_____
Service:	_____	_____	_____

MEMORANDA

TABLE OF CONTENTS

Name	Page
GENERAL INFORMATION	A25
REPAIR ALTERNATIVES	A44
SUPPLEMENTAL COOLANT ADDITIVES	A49
MAINTENANCE PARTS	A54
INDEX	A88
MACHINE ARRANGEMENT	1
CHASSIS AR	1
GENERAL AR	2
ENGINE ARRANGEMENT	3
ENGINE AR	3
INSTALLATION AR-ENGINE	5
BASIC ENGINE	6
BALANCER GP	6
BASE GP-VALVE COVER	7
CAMSHAFT GP	8
COVER GP-ACCESSORY DRIVE	10
COVER GP-CYLINDER BLOCK	11
COVER GP-FRONT HOUSING	14
COVER GP-VALVE MECHANISM	15
CRANKSHAFT GP	16
CYLINDER BLOCK AS	19
CYLINDER BLOCK GP	21
CYLINDER HEAD AS	28
CYLINDER HEAD GP	31
DAMPER GP	38
DRIVE GP-ACCESSORY	39
DRIVE GP-AUXILIARY	45
FASTENER GP-FRONT HOUSING	46
FLYWHEEL GP	47
GEAR GP-FRONT	48
GEAR GP-REAR	50
HOUSING GP-FLYWHEEL	52
HOUSING GP-FRONT	55
LIFTING GP-ENGINE	56
MOUNTING GP-ALTERNATOR	58
PAN GP-OIL	60
PISTON & ROD GP	62
SEAL GP-CRANKSHAFT	66
SUPPORT GP-ENGINE	67
TRUNNION GP-ENGINE	68
VALVE MECHANISM GP	69
YOKE GP	77
LUBRICATION SYSTEM	78
BREATHER GP	78
FILLER GP-ENGINE OIL	79
FILTER GP-ENGINE OIL	80
FUMES DISPOSAL GP	84
GAUGE GP-OIL LEVEL (DIPSTICK)	85
LINES GP-ENGINE OIL	86
LINES GP-TURBOCHARGER OIL	89
METERING AR-ENGINE OIL	93
METERING GP-ENGINE OIL	94
OIL CHANGE GP-HIGH SPEED	96
PRELUBRICATION AR-ENGINE	98
PUMP GP-ENGINE OIL	103
PUMP GP-SCAVENGE	105
TANK GP-ENGINE OIL	107
VALVE GP-METERING	109
COOLING SYSTEM	110
CONNECTION GP-WATER	110
COOLER GP-ENGINE OIL	112
CORE GP-OIL COOLER	113
FAN GP-SUCTION	114
HOUSING & REGULATOR GP	116
LINES GP-WATER	117
PUMP GP-AUXILIARY WATER	139
PUMP GP-WATER	144
RADIATOR GP	150
TANK GP-WATER	154
AIR INLET AND EXHAUST SYSTEM	163
AFTERCOOLER GP-WATER	163
AIR CLEANER GP	164
DUST EJECTOR GP	170
KIT-INSTALLATION	171
LINES GP-AIR	172
MANIFOLD GP-EXHAUST	178
MUFFLER GP	182
PRECLEANER AR	183
PRECLEANER GP	185
SHIELD GP-FUEL LINES	187
SHIELD GP-MANIFOLD	189
SUPPORT GP-AIR INLET	190
TURBOCHARGER GP	192
FUEL SYSTEM	198
ADAPTER	198
ADAPTER GP-FAST FILL FUEL	199
CONTROL GP-DECELERATOR	213
FILTER GP-FUEL	215
INJECTOR GP-FUEL	218
LINES GP-FUEL	219
LINES GP-FUEL INJECTION	223
PUMP GP-FUEL INJECTION	227
PUMP GP-FUEL PRIMING	229
PUMP GP-FUEL TRANSFER	230
TANK GP-FUEL	236
ELECTRICAL AND STARTING SYSTEM	240
ALARM GP	240

TABLE OF CONTENTS

Name	Page
ALTERNATOR GP-CHARGING	241
BATTERY & WIRING GP	246
BLOCK GP-JUNCTION	270
BLOCK GP-POWER	271
CONTROL & MTG GP-ELECTRONIC	272
CONTROL & MTG GP-ENGINE ELEK	277
CONTROL & MTG GP-POWER TRAIN	278
CONTROL & MTG GP-TRANSMISSION	280
CONTROL GP-ELECTRONIC	281
CONTROL GP-ENGINE ELECTRONIC	287
CONTROL GP-UNPROGRAMMED	291
CONVERTER GP-ELECTRICAL	295
ELECTRONICS AR-MACHINE	296
ELECTRONICS GP-IMPLEMENT	296
ELECTRONICS GP-MONITOR	296
ELECTRONICS GP-POWER TRAIN	297
HEATER GP-FUEL	298
HEATER GP-JACKET WATER	300
INSTALLATION GP-SECURITY	304
LAMP GP-DOME	306
LAMP GP-FLOOD	307
LIGHTING AR	312
LIGHTING GP-FLOOD	315
LIGHTING GP-FRONT	322
LIGHTING GP-REAR	323
LIGHTING GP-RIPPER	325
SENSOR & MTG GP-PRESSURE	326
SENSOR GP-FUEL LEVEL	329
SENSOR GP-POSITION	330
SENSOR GP-PRESSURE	338
SENSOR GP-SPEED	346
SENSOR GP-TEMPERATURE	349
SERVICE GP-IMPLEMENT	351
SERVICE GP-MONITOR	352
SERVICE GP-POWER TRAIN	353
STARTING AID GP-ETHER	354
STARTING MOTOR GP-ELECTRIC	358
STARTING MOTOR GP-PRELUB SYS	368
SWITCH GP-BYPASS	371
SWITCH GP-DISCONNECT	372
SWITCH GP-FLOW	373
SWITCH GP-MAGNETIC	374
SWITCH GP-START	379
THERMOCOUPLE GP	380
WARNING GP-BACKUP	381
WIRING GP-CONSOLE	382
WIRING GP-ENGINE	385
WIRING GP-PLATFORM	397
POWER TRAIN	401
AXLE GP-POWER TRAIN	401
CASE & PARTS GP-TRANSMISSION	402
CONTROL GP-BRAKE	404
CONTROL GP-TRANSMISSION	408
COOLER GP-TRANSMISSION OIL	409
COUPLING GP-PUMP	411
DRAIN GP-ECOLOGY	412
FILTER GP-OIL	413
FINAL DRIVE GP	415
GEAR GP-BEVEL & TRANSFER	422
GUARD GP-COUPLING	431
LINES GP-POWER TRAIN OIL	432
MOUNTING GP-TRANSMISSION	442
PLANETARY GP-TRANSMISSION	443
POWER TRAIN AR	453
PUMP GP-GEAR	454
SEAL-ROPE	459
SEGMENT GP-SPROCKET	460
SHAFT GP-DRIVE	461
TORQUE CONVERTER GP	463
TRANSMISSION AR	469
UNIVERSAL JOINT GP	472
VALVE GP-CONTROL	473
VALVE GP-FLUSHING	477
VALVE GP-PRIORITY	478
VALVE GP-RELIEF	480
VALVE GP-SELECTOR	481
VALVE GP-SELECTOR & PRESS CONT	482
VALVE GP-SOLENOID	484
VALVE GP-TRANSMISSION CONTROL	490
FRAME AND BODY	493
CASE & FRAME GP	493
COUNTERWEIGHT GP	495
COUNTERWEIGHT GP-REAR	496
ENCLOSURE GP-ENGINE	498
ENCLOSURE GP-FENDER	504
FENDER GP	511
GUARD GP-BOTTOM	520
GUARD GP-IDLER	522
GUARD GP-RADIATOR	525
GUARD GP-ROCK	529
GUARD GP-TRANSMISSION	531
HOOD & GUARD GP	534
SEAL SET	541
UNDERCARRIAGE	543
BAR GP-EQUALIZER	543
CAP GP-TRACK IDLER	550
CAP GP-TRACK ROLLER	552
FRAME GP-TELESCOPING RECOIL	553
IDLER GP-TRACK	578
LINK AS-TRACK	580
LUBRICATION GP-EQUALIZER BAR	586
LUBRICATION GP-PIVOT SHAFT	588
RING AS-TRACK LINK	590
ROLLER AR-TRACK CARRIER	591

TABLE OF CONTENTS

Name	Page
ROLLER GP-TRACK-DOUBLE FLANGE	596
ROLLER GP-TRACK-SINGLE FLANGE	598
SEAL GP-TRACK	600
STOP GP-EQUALIZER BAR	601
SUSPENSION GP-BOGIE	602
TRACK ADJUSTER & RECOIL GP	610
TRACK GP	614
UNDERCARRIAGE AR	617
STEERING AND BRAKING SYSTEM	620
ADJUSTER GP-STEER & TMSN CONT	620
CLUTCH & BRAKE GP-STEERING	623
CONTROL GP-PARKING BRAKE	625
CONTROL GP-STEERING & TMSN	626
DETENT GP	632
GEAR GP-STEERING	633
MANIFOLD & VALVE GP	637
SUPPORT GP-CONTROL	641
VALVE & MTG GP-STEER & BRAKE	642
VALVE GP-TRANSMISSION CONTROL	644
HYDRAULIC SYSTEM	648
ACCUMULATOR GP-HYDRAULIC	648
BYPASS GP-FILTER	649
CONTROL & MOUNTING GP	650
CONTROL AR-HYDRAULIC	652
CONTROL GP-HANDLE	654
CONTROL GP-HYDRAULIC	655
CONTROL GP-JOYSTICK	657
COOLER GP-HYDRAULIC OIL	665
CYLINDER & SENSOR GP-LIFT	666
CYLINDER & VALVE GP-BULLDOZER	667
CYLINDER & VALVE GP-LIFT	671
CYLINDER AR-TILT	677
CYLINDER GP-BULLDOZER LIFT	678
CYLINDER GP-TILT	690
CYLINDER GP-RIPPER	694
CYLINDER GP-RIPPER PIN PULLER	710
CYLINDER GP-TILT	711
CYLINDER GP-RIPPER TILT	713
FILTER GP-OIL	725
LINES GP-HYDRAULIC FAN	727
LINES GP-LIFT CYLINDER	749
LINES GP-PIN PULLER CYLINDER	760
LINES GP-PUMP	763
LINES GP-RELIEF	793
LINES GP-RIPPER	795
LINES GP-TILT CYLINDER	810
MANIFOLD GP-CONTROL	821
MOTOR GP-FAN	822
MOTOR GP-PISTON	824
MOUNTING GP-CYLINDER	825
PISTON & VALVE GP	828
PUMP GP-GEAR	830
PUMP GP-PISTON	834
ROTATING GP-MOTOR	843
ROTATING GP-PUMP	845
TANK & FILTER GP-HYDRAULIC	848
TANK & LINES GP-EXPANSION	852
VALVE & LINES GP-PIN PULLER	853
VALVE & MTG GP-CONTROL	857
VALVE & MTG GP-HYDRAULIC FAN	859
VALVE AR-RELIEF	861
VALVE AS-TANK	862
VALVE GP-BYPASS	863
VALVE GP-CHECK	864
VALVE GP-CONTROL	865
VALVE GP-MAKEUP	878
VALVE GP-PILOT	879
VALVE GP-PRESSURE REDUCING	886
VALVE GP-PRESS & FLOW CMPNSTR	889
VALVE GP-PUMP CONTROL	891
VALVE GP-QUICK-DROP	896
VALVE GP-SEQUENCE	897
VALVE GP-SHUTTLE	898
VALVE GP-SOLENOID	901
VALVE GP-TILT CONTROL	914
IMPLEMENTS	917
BEAM AS	917
BLOCK GP-PUSH	918
BRACE GP-BULLDOZER	920
BULLDOZER AR-SEMI-UNIVERSAL	921
BULLDOZER AR-UNIVERSAL	925
KIT-OVERPACK	928
LINES GP-GREASE	931
LINK GP-STABILIZER	932
PLATE GP-PUSH	933
PULLER AR-PIN	934
PULLER GP-PIN	935
PUSH ARM GP	938
PUSH ARM GP-STABILIZER	942
TRUNNION GP-BULLDOZER	945
WORK TOOLS	946
BIT GP-END	946
BIT-END	947
BLADE & EDGE GP	949
BLADE AS-SEMI-UNIVERSAL	950
BLADE AS-UNIVERSAL	953
BLADE GP-SEMI-UNIVERSAL	957
BLADE GP-UNIVERSAL	959
COVER GP-SHIPPING	960
EDGE GP-BIT & CUTTING	961
EDGE GP-CUTTING	966
EDGE-CUTTING	967

TABLE OF CONTENTS

Name	Page
FRAME GP-RIPPER	969
PLATE GP-WEAR	975
RIPPER AR	977
RIPPER GP	982
TOOTH GP-RIPPER	987
OPERATOR STATION	992
ADJUSTER GP-SEAT	992
AIR COMPRESSOR GP-SEAT	995
AIR CONDITIONER AR	996
AIR CONDITIONER GP	997
CAB AR	1006
CAB GP	1011
COMPRESSOR GP-REFRIGERANT	1015
CONDENSER GP-REFRIGERANT	1018
CONTROL & MTG GP-IMPLEMENT	1019
CONTROL GP-DISPLAY ELECTRONIC	1026
CONTROL GP-MONITOR SYS DIMMER	1028
EXTENSION GP-BACKREST	1029
FAN GP-DEFROSTER	1031
HEATER GP-CAB	1033
HOUSING GP-SEAT SUSPENSION	1042
INSTALLATION GP-RADIO	1048
INSTRUMENT GP	1049
KIT-REBUILD	1053
KIT-SEAT AIR COMPRESSOR	1054
KIT-WINDOW	1055
LINER GP-CAB	1056
LINES GP-AIR CONDITIONER	1057
LINES GP-HEATER	1064
MIRROR GP-REAR VIEW	1067
MODULE GP-MESSAGE CENTER	1068
MODULE GP-MONITOR KEYPAD	1070
MODULE GP-QUAD GAUGE	1072
MODULE GP-SPEEDOMETER & TACH	1073
MOTOR GP-WINDOW WIPER	1074
MOUNTING GP-CAB	1075
MOUNTING GP-RADIO	1077
MOUNTING GP-ROPS	1078
PAN GP-BACKREST	1079
PAN GP-SEAT	1083
PLATFORM AR	1085
PLATFORM GP	1086
PLATFORM GP-CAB	1088
RECLINER GP-SEAT	1092
ROPS GP	1094
SEAT AR	1095
SEAT BELT GP	1096
SEAT GP	1097
SEAT GP-SUSPENSION	1112
STEP GP	1122
SUPPRESSION AR-SOUND	1124
SUSPENSION GP-SEAT	1125
TANK GP-WINDOW WASHER	1136
WASHER GP-WINDOW	1141
WINDOW AS-SLIDING	1144
WINDOW GP-CAB	1145
WIPER GP-WINDOW	1160
WIPER PIVOT GP	1169
SERVICE EQUIPMENT AND SUPPLIES	1170
FILM GP	1170
PLATE & FILM GP	1172
PART NUMBER INDEX	B1

TABLE DES MATIÈRES

Désignation	Page
GÉNÉRALITÉS	A28
OPTIONS DE RÉPARATION	A45
ADDITIFS POUR LIQUIDE DE REFROIDISSEMENT	A50
PIÈCES DE RECHANGE	A59
INDEX	A103
VERSION DE MACHINE	1
VERSION DE CHASSIS	1
VUE DU MODÈLE	2
VERSION DE MOTEUR	3
MOTEUR (VERSION)	3
MONTAGE DE MOTEUR (VERSION)	5
MOTEUR STANDARD	6
BALANCEUR (ASS)	6
SUPPORT - CACHE-SOUPAPES (ASS)	7
ARBRE A CAMES (ASS)	8
COUVERCLE D'ENTRAINEMENT AUXILIAIRE (ASS)	10
BLOC-CYLINDRES - COUVERCLE (ASS)	11
COUVERCLE DE CARTER AV (ASS)	14
CACHE-SOUPAPES (ASS)	15
VILEBREQUIN (ASS)	16
BLOC-CYLINDRES (ENS)	19
BLOC-CYLINDRES (ASS)	21
CULASSE (ENS)	28
CULASSE (ASS)	31
AMORTISSEUR DE VIBRATIONS (ASS)	38
ENTRAÎNEMENT AUXILIAIRE (ASS)	39
BOULONNERIE DE CARTER AV (ASS)	46
VOLANT MOTEUR (ASS)	47
PIGNONNERIE AV (ASS)	48
PIGNON AR (ASS)	50
CARTER DE VOLANT (ASS)	52
CARTER AV (ASS)	55
OEILLETONS DE LEVAGE MOTEUR (ASS)	56
MONTAGE D'ALTERNATEUR (ASS)	58
HUILE MOTEUR - CARTER (ASS)	60
PISTON ET BIELLE (ASS)	62
JOINT DE VILEBREQUIN (ASS)	66
SUPPORT DE MOTEUR (ASS)	67
TOURILLON DE MOTEUR (ASS)	68
CULBUTERIE (ASS)	69
ETRIER (ASS)	77
CIRCUIT DE GRAISSAGE	78
RENIFLARD (ASS)	78
BOUCHON DE REMPLISSAGE D'HUILE MOTEUR (ASS)	79
FILTRE À HUILE MOTEUR (ASS)	80
DISPOSITIF D'EVACUATION DES VAPEURS DE CARTER	84
JAUGE D'HUILE MOTEUR (BAIONNETTE) (ASS)	85
CANALISATIONS D'HUILE MOTEUR (ASS)	86
CANALISATIONS D'HUILE DE TURBOCOMPRESSEUR (ASS)	89
VERSION DE RÉGULATION D'HUILE MOTEUR	93
RÉGULATION D'HUILE MOTEUR (ASS)	94
DISPOSITIF DE VIDANGE RAPIDE D'HUILE (ASS)	96
VERSION DE PRÉGRAISSAGE DE MOTEUR	98
POMPE A HUILE MOTEUR (ASS)	103
POMPE DE REPRISE (ASS)	105
RÉSERVOIR D'HUILE MOTEUR (ASS)	107
SOUPAPE DE RÉGULATION	109
CIRCUIT DE REFROIDISSEMENT	110
RACCORD D'EAU (ASS)	110
REFROIDISSEUR D'HUILE MOTEUR (ASS)	112
FAISCEAU DU REFROIDISSEUR D'HUILE (ASS)	113
VENTILATEUR ASPIRANT (ASS)	114
THERMOSTAT ET BOITIER (ASS)	116
CANALISATIONS D'EAU (ASS)	117
POMPE AUXILIAIRE D'EAU DOUCE (ASS)	139
POMPE A EAU (ASS)	144
RADIATEUR (ASS)	150
RÉSERVOIR D'EAU (ASS)	154
CIRCUIT D'ADMISSION D'AIR ET D'ECHAPPEMENT	163
ADMISSION REFROIDIE PAR EAU (ASS)	163
FILTRE A AIR (ASS)	164
ÉJECTEUR AUTOMATIQUE DE POUSSIÈRE (ASS)	170
KIT DE MONTAGE	171
CANALISATIONS D'AIR (ASS)	172

* TRADUCTION NON DISPONIBLE AU MOMENT DE LA PUBLICATION

TABLE DES MATIÈRES

Désignation	Page
COLLECTEUR D'ÉCHAPPEMENT (ASS)	178
SILENCIEUX (ASS)	182
PREFILTRE (VERSION)	183
PREFILTRE (ASS)	185
PROTECTION DE CANALISATIONS DE CARBURANT	187
ÉCRAN DE COLLECTEUR (ASS)	189
SUPPORTS D'ADMISSION D'AIR (ASS)	190
TURBOCOMPRESSEUR (ASS)	192
CIRCUIT DE CARBURANT	198
RACCORD	198
ADAPTATEUR DE REMPLIS. RAPIDE DE CARBURANT (ASS)	199
COMMANDE DE DECELERATEUR (ASS)	213
FILTRE A CARBURANT (ASS)	215
INJECTEUR DE CARBURANT (ASS)	218
CANALISATIONS DE CARBURANT (ASS)	219
CANALISATIONS D'INJECTION DE CARBURANT (ASS)	223
POMPE D'INJECTION DE CARBURANT (ASS)	227
POMPE D'AMORÇAGE DE CARBURANT (ASS)	229
POMPE D'ALIMENTATION EN CARBURANT (ASS)	230
RÉSERVOIR DE CARBURANT (ASS)	236
CIRCUIT DE DÉMARRAGE ET ÉLECTRIQUE	240
AVERTISSEUR (ASS)	240
ALTERNATEUR DE CHARGE (ASS)	241
BATTERIE ET CÂBLAGE	246
BLOC DE BRANCHEMENT (ASS)	270
BLOC-PUISSANCE (ASS)	271
COMMANDE ELECTRONIQUE ET MONTAGE (ASS)	272
COMMANDE ET MONTAGE - MOTEUR	277
COMMANDE ET MONTAGE-TRANSMISSION (ASS)	278
COMMANDE DE BOÎTE ET MONTAGE (ASS)	280
COMMANDE ELECTRONIQUE DE BOITE (ASS)	281
COMMANDE ELECTRONIQUE DE MOTEUR (ASS)	287
COMMANDE NON PROGRAMMEE (ASS)	291
TRANSFORMATION ELECTRIQUE (ASS)	295
COMPOSANTS ÉLECTRONIQUES DE LA MACHINE (VERSION)	296
COMMANDE ÉLECTRONIQUE D'ÉQUIPEMENT (ASS)	296
ÉLECTRONIQUE-MONITEUR (ASS)	296
ÉLECTRONIQUE DE TRANSMISSION (ASS)	297
RECHAUFFEUR DE CARBURANT (ASS)	298
EAU DES CHEMISES - RECHAUFFEUR (ASS)	300
MONTAGE-SÉCURITÉ (ASS)	304
PLAFONNIER (ASS)	306
LAMPE - PHARE (ASS)	307
ÉCLAIRAGE (VERSION)	312
ÉCLAIRAGE - PROJECTEURS (ASS)	315
ECLAIRAGE AV (ASS)	322
ECLAIRAGE AR (ASS)	323
ECLAIRAGE DE RIPPER (ASS)	325
CAPTEUR DE PRESSION ET MONTAGE	326
CAPTEUR DE NIVEAU DE CARBURANT (ASS)	329
SONDE - CIRCUIT DE CARBURANT	330
CAPTEUR DE PRESSION (ASS)	338
CAPTEUR DE VITESSE (ASS)	346
CAPTEUR DE TEMPERATURE (ASS)	349
ENTRETIEN D'ÉQUIPEMENT (ASS)	351
ENTRETIEN DU MONITEUR (ASS)	352
ENTRETIEN DE LA TRANSMISSION (ASS)	353
AUXILIAIRE DE DÉMARRAGE À L'ÉTHER	354
DÉMARREUR ÉLECTRIQUE (ASS)	358
DÉMARREUR - CIRCUIT DE PRÉGRAISSAGE	368
INTERRUPTEUR - DÉRIVATION (ASS)	371
ROBINET DE BATTERIE (ASS)	372
CONTACTEUR DE DEBIT (ASS)	373
CONTACTEUR MAGNETIQUE (ASS)	374
INTERRUPTEUR DE DÉMARRAGE (ASS)	379
THERMOCOUPLE (ASS)	380
AVERTISSEUR DE RECUL (ASS)	381
CABLAGE DE CONSOLE (ASS)	382
CABLAGE DE MOTEUR (ASS)	385
CABLAGE - PLATE-FORME (ASS)	397
TRANSMISSION	401
ARBRE DE TRANSMISSION (ASS)	401
CARTER ET PIECES DE BOITE (ASS)	402

* TRADUCTION NON DISPONIBLE AU MOMENT DE LA PUBLICATION

TABLE DES MATIÈRES

Désignation	Page
FREIN - COMMANDE (ASS)	404
COMMANDE DE BOITE DE VITESSES (ASS)	408
REFROIDISSEUR D'HUILE DE BOÎTE (ASS)	409
ACCOUPLEMENT DE POMPE (ASS)	411
VIDANGE-ÉCOLOGIE (ASS)	412
FILTRE A HUILE (ASS)	413
RÉDUCTEURS (ASS)	415
COURONNE ET ENGRENAGES DE TRANSFERT (ASS)	422
PROTECTION D'ACCOUPLEMENT (ASS)	431
CANALISATIONS D'HUILE DE TRANSMISSION (ASS)	432
REDUCTEUR MARIN - MONTAGE (ASS)	442
BOÎTE PLANÉTAIRE (ASS)	443
TRANSMISSION (VERSION)	453
POMPE A ENGRENAGES (ASS)	454
JOINT-CORDE	459
SEGMENT DE BARBOTIN (ASS)	460
ARBRE D'ENTRAÎNEMENT (ASS)	461
CONVERTISSEUR DE COUPLE (ASS)	463
BOÎTE DE VITESSES (VERSION)	469
JOINT UNIVERSEL (ASS)	472
DISTRIBUTEUR (ASS)	473
VANNE DE RINÇAGE (ASS)	477
SOUPAPE DE PRIORITE (ASS)	478
CLAPET DE DECHARGE (ASS)	480
SOUPAPE SÉLECTRICE (ASS)	481
SOUPAPE SELECTRICE ET REGULATRICE DE PRESSION	482
SOUPAPE - SOLÉNOÏDE (ASS)	484
DISTRIBUTEUR DE BOITE (ASS)	490
CHÂSSIS ET BENNE	493
CHÂSSIS ET CARTER (ASS)	493
CONTREPOIDS (ASS)	495
CONTREPOIDS AR (ASS)	496
CARENAGE DE MOTEUR (ASS)	498
CARENAGE - GARDE-BOUE (ASS)	504
GARDE-BOUE (ASS)	511
BLINDAGE INFÉRIEUR (ASS)	520
BLINDAGE DE ROUE AV (ASS)	522
PROTÈGE-RADIATEUR (ASS)	525
PARE-PIERRES (ASS)	529
BLINDAGE DE TRANSMISSION	531
CAPOT ET PROTECTION (ASS)	534
KIT DE JOINTS (ASS)	541
TRAIN DE ROULEMENT	543
BALANCIER DE SUSPENSION (ASS)	543
CHAPEAU DE ROUE AV (CHAINE) (ASS)	550
CHAPEAU DE GALET INFERIEUR (ASS)	552
CARTER TELESCOPIQUE DE MECANISME AMORTISSEUR	553
ROUE AV - CHAINES (ASS)	578
MAILLON DE CHAINE (ENS)	580
GRAISSAGE DE BALANCIER DE SUSPENSION (ASS)	586
GRAISSAGE DE LA TRAVERSE-PIVOT	588
ANNEAU DE MAILLON DE CHAÎNE (ENS)	590
GALET SUPERIEUR (VERSION)	591
GALET A BOUDIN DOUBLE (ASS)	596
GALET A BOUDIN SIMPLE (ASS)	598
JOINT-CHAÎNE (ASS)	600
BUTÉE DE BALANCIER DE SUSPENSION	601
SUSPENSION A BOGIES (ASS)	602
MECANISME AMORTISSEUR ET REGLAGE DE CHAINES (ASS)	610
CHAINES (ASS)	614
TRAIN DE ROULEMENT	617
CIRCUIT DE DIRECTION ET DE FREIN	620
RÉGLAGE DE COMMANDE DE DIRECT. ET DE BOÎTE	620
EMBRAYAGE ET FREIN DE DIRECTION (ASS)	623
COMMANDE DE FREIN DE STATIONNEMENT (ASS)	625
COMMANDE DE DIRECTION ET BOITE DE VITESSES	626
DISPOSITIF D'ARRÊT	632
ENGRENAGE DE DIRECTION (ASS)	633
COLLECTEUR ET SOUPAPE (ASS)	637
SUPPORT - COMMANDE (ASS)	641
*VALVE & MTG GP-STEER & BRAKE	642
SOUPAPE DE DIRECTION ET FREIN ET MONTAGE (ASS)	643
*VALVE GP-TRANSMISSION CONTROL	644
CIRCUIT HYDRAULIQUE	648
ACCUMULATEUR HYDRAULIQUE (ASS)	648
FILTRE DE DÉRIVATION (ASS)	649
COMMANDE ET MONTAGE (ASS)	650
COMMANDE HYDRAULIQUE (VERSION)	652
COMMANDE DE POIGNÉE (ASS)	654

* TRADUCTION NON DISPONIBLE AU MOMENT DE LA PUBLICATION

TABLE DES MATIÈRES

Désignation	Page
COMMANDE HYDRAULIQUE (ASS)	655
PALONNIER - GROUPE DE COMMANDE (ASS)	657
REFROIDISSEUR D'HUILE HYDRAULIQUE (ASS)	665
VÉRIN DE LEVAGE ET CAPTEUR (ASS)	666
SOUPAPE ET VÉRIN DE BULLDOZER	667
VÉRIN ET SOUPAPE DE LEVAGE (ASS)	671
VÉRIN D'INCLINAISON (VERSION)	677
VÉRIN DE LEVAGE DE LAME DE BULLDOZER (ASS)	678
*CYLINDER GP-BULLDOZER LIFT	682
VÉRIN DE LEVAGE DE LAME DE BULLDOZER (ASS)	686
VÉRIN D'INCLINAISON (ASS)	690
VERIN DE RIPPER (ASS)	694
VERIN D'EXTRACTEUR DE BROCHE DE RIPPER (ASS)	710
VÉRIN D'INCLINAISON (ASS)	711
VERIN D'INCLINAISON DU RIPPER (ASS)	713
FILTRE A HUILE (ASS)	725
CANALISATIONS HYDRAULIQUES DE VENTILATEUR (ASS)	727
CANALISATIONS DE VÉRIN DE LEVAGE (ASS)	749
CANALISATIONS D'EXTRACTEUR DE BROCHE (ASS)	760
CANALISATIONS DE POMPE (ASS)	763
CANALISATIONS-RELIEF (ASS)	793
CANALISATIONS DU RIPPER (ASS)	795
CANALISATIONS DU VÉRIN D'INCLINAISON (ASS)	810
COLLECTEUR - COMMANDE (ASS)	821
MOTEUR DE VENTILATEUR (ASS)	822
GROUPE DE MOTEUR A PISTONS	824
MONTAGE DE VÉRIN (ASS)	825
PISTON ET SOUPAPE (ASS)	828
POMPE A ENGRENAGES (ASS)	830
POMPE A PISTONS (ASS)	834
GROUPE DE ROTATION DE MOTEUR	843
GROUPE DE ROTATION DE POMPE	845
RÉSERVOIR HYDRAULIQUE ET FILTRE (ASS)	848
CANALISATIONS ET VASE D'EXPANSION	852
SOUPAPE ET CANALISATIONS-EXTRACTEUR DE BROCHE (ASS)	853
DISTRIBUTEUR ET MONTAGE (ASS)	857
SOUPAPE ET MONTAGE - VENTILATEUR HYDRAULIQUE (ASS)	859
SOUPAPE-RELIEF (VERSION)	861
SOUPAPE DE RESERVOIR (ENS)	862
SOUPAPE DE DÉRIVATION (ASS)	863
CLAPET DE RETENUE (ENS)	864
DISTRIBUTEUR (ASS)	865
CLAPET DE COMPENSATION (ASS)	878
SOUPAPE PILOTE (ASS)	879
SOUPAPE RÉDUCTRICE DE PRESSION (ASS)	886
SOUPAPE RÉGULATRICE DE PRESSION ET DÉBIT	889
DISTRIBUTEUR DE POMPE (ASS)	891
*VALVE GP-PUMP CONTROL	893
SOUPAPE D'ABAISSEMENT RAPIDE (ASS)	896
SOUPAPE DE SÉQUENCE (ASS)	897
VANNE PILOTE (ASS)	898
SOUPAPE - SOLÉNOÏDE (ASS)	901
DISTRIBUTEUR D'INCLINAISON (ASS)	914
ÉQUIPEMENTS	917
ENS. POUTRE	917
TAMPON DE POUSSÉE (ASS)	918
TIRANT DE BULLDOZER (ASS)	920
*BULLDOZER AR-SEMI-UNIVERSAL	921
*BULLDOZER AR-UNIVERSAL	925
KIT DE BOULONNERIE, JOINTS ET CALES D'ÉPAISSEUR	928
CANALISATIONS DE GRAISSAGE (ASS)	931
STABILISATEUR - BRAS DE POUSSEE (ASS)	932
PLAQUE DE POUSSÉE (ASS)	933
EXTRACTEUR DE BROCHE (VERSION)	934
EXTRACTEUR DE BROCHE (ASS)	935
BRAS DE POUSSÉE (ASS)	938
STABILISATEUR DU BRAS DE POUSSEE (ASS)	942
TOURILLON DE BULLDOZER (ASS)	945
OUTILS DE TRAVAIL	946
EMBOUT D'EXTRÉMITÉ (ASS)	946
EMBOUT D'EXTRÉMITÉ	947
LAME DE COUPE (ASS)	949
LAME SEMI-UNIVERSELLE (ENS)	950
*BLADE AS-SEMI-UNIVERSAL	953
LAME UNIVERSELLE (ENS)	953
LAME SEMI-UNIVERSELLE (ASS)	957
LAME UNIVERSELLE (ASS)	959
COUVERCLES D'EXPEDITION (ASS)	960
EMBOUT ET LAME DE COUPE (ASS)	961

* TRADUCTION NON DISPONIBLE AU MOMENT DE LA PUBLICATION

TABLE DES MATIÈRES

Désignation	Page
*EDGE GP-BIT & CUTTING	965
EMBOUT ET LAME DE COUPE (ASS)	965
LAME DE COUPE (ASS)	966
LAME DE COUPE	967
BATI DE RIPPER (ASS)	969
PLAQUE D'USURE (ASS)	975
RIPPER (VERSION)	977
RIPPER (ASS)	982
DENT DE RIPPER (ASS)	987
POSTE DE CONDUITE	992
REGLAGE DE SIEGE (ASS)	992
SIÈGE - COMPRESSEUR D'AIR (ASS)	995
CLIMATISEUR (VERSION)	996
CLIMATISEUR (ASS)	997
CABINE (VERSION)	1006
CABINE (ASS)	1011
COMPRESSEUR DE REFRIGERANT (ASS)	1015
CONDENSEUR DE RÉFRIGÉRANT	1018
COMMANDE D'ÉQUIPEMENT	1019
COMMANDE D'AFFICHAGE ÉLECTRONIQUE	1026
COMMANDE D'INVERSION DE LA CENTRALE DE SURVEILLANCE (ASS)	1028
RALLONGE DU DOSSIER DE SIEGE	1029
VENTILATEUR DÉGIVREUR (ASS)	1031
CHAUFFAGE DE CABINE (ASS)	1033
SUSPENSION DE SIEGE - CARTER (ASS)	1042
MONTAGE DE RADIO (ASS)	1048
TABLEAU DE BORD (ASS)	1049
KIT DE RÉNOVATION	1053
KIT DE COMPRESSEUR PNEUMATIQUE DE SIÈGE	1054
KIT-FENETRE	1055
CABINE - REVÊTEMENT (ASS)	1056
CANALISATIONS DE CLIMATISEUR (ASS)	1057
CANALISATIONS DE CHAUFFAGE (ASS)	1064
RÉTROVISEUR (ASS)	1067
MODULE (ASS)-CENTRE DE MESSAGE	1068
MODULE (ASS)-TOUCHE DE MODULE DE SURVEILLANCE	1070
MODULE - QUATRE INSTRUMENTS (ASS)	1072
MODULE D'INDICATEUR DE VITESSE ET COMPTE-TOURS (ASS)	1073
MOTEUR D'ESSUIE-GLACE (ASS)	1074
MONTAGE DE CABINE (ASS)	1075
MONTAGE DE RADIO (ASS)	1077
MONTAGE DU TOIT ROPS (ASS)	1078
COUVERCLE INFÉRIEUR-DOSSIER (ASS)	1079
SIEGE - COUVERCLE INFERIEUR (ASS)	1083
PLATE-FORME (VERSION)	1085
PLATE-FORME (ASS)	1086
PLATE-FORME - CABINE (ASS)	1088
SIÈGE INCLINABLE (ASS)	1092
TOIT ROPS (ASS)	1094
SIEGE (VERSION)	1095
CEINTURE DE SECURITE (ASS)	1096
SIÈGE (ASS)	1097
SIÈGE AVEC SUSPENSION (ASS)	1112
MARCHEPIED (ASS)	1122
INSONORISATION (VERSION)	1124
SIÈGE AVEC SUSPENSION (ASS)	1125
RÉSERVOIR - LAVE-GLACE (ASS)	1136
LAVE-GLACE - VITRE (ASS)	1141
VITRE COULISSANTE (ENS)	1144
VITRE DE CABINE (ASS)	1145
ESSUIE-GLACE (ASS)	1160
PIVOT D'ESSUIE-GLACE (ASS)	1169
MATÉRIEL ET FOURNITURES D'ENTRETIEN	1170
PLAQUE SIGNALÉTIQUE (ASS)	1170
PLAQUES SIGNALETIQUES ET AUTOCOLLANTS (ASS)	1172
INDEX DE NUMÉROS DE PIÈCES	B1

* TRADUCTION NON DISPONIBLE AU MOMENT DE LA PUBLICATION

CONTENIDO

Nombre	Página
INFORMACIÓN GENERAL	A32
ALTERNATIVAS DE REPARACIÓN	A46
ADITIVOS DE REFRIGERANTE SUPLEMENTARIOS	A51
PIEZAS DE MANTENIMIENTO	A67
INDICE	A120
CONFIGURACIÓN DE MÁQUINA	1
CHASIS (CONFIG)	1
CONFIGURACIÓN GENERAL	2
CONFIGURACIÓN DE MOTOR	3
CONFIGURACIÓN DE MOTORES	3
CONFIGURACIÓN DE INSTALACIÓN DEL MOTOR	5
MOTOR BÁSICO	6
EQUILIBRADOR (GR)	6
BASE DE LA TAPA DE VÁLVULAS (GR)	7
ÁRBOL DE LEVAS (GR)	8
TAPA DEL MANDO DE ACCESORIOS (GR)	10
TAPA DEL BLOQUE MOTOR (GR)	11
TAPA DE LA CAJA DELANTERA (GR)	14
TAPA DEL MECANISMO DE VÁLVULAS (GR)	15
CIGÜEÑAL (GR)	16
BLOQUE MOTOR (CONJ)	19
BLOQUE MOTOR (GR)	21
CULATA DE CILINDROS (CONJ)	28
CULATA DE CILINDROS (GR)	31
AMORTIGUADOR DE VIBRACIONES (GR)	38
ACCESORIOS - IMPULSOR DE (GR)	39
MANDO AUXILIAR (GR)	45
CAJA DELANTERA - TORNILLERÍA DE LA (GR)	46
VOLANTE (GR)	47
ENGRANAJE DELANTERO (GR)	48
ENGRANAJE TRASERO (GR)	50
VOLANTE - CAJA DE (GR)	52
CAJA DELANTERA (GR)	55
CÁNCAMOS DE LEVANTAMIENTO DEL MOTOR (GR)	56
MONTAJE DEL ALTERNADOR (GR)	58
CÁRTER - COLECTOR DEL (GR)	60
PISTÓN Y BIELA (GR)	62
SELLO DE CIGÜEÑAL (GR)	66
MOTOR - SOPORTE DEL (GR)	67
MUÑÓN DEL MOTOR (GR)	68
MECANISMO DE VÁLVULAS (GR)	69
YUGO (GR)	77
SISTEMA DE LUBRICACIÓN	78
RESPIRADERO (GR)	78
TUBO DE LLENADO DE ACEITE (GR)	79
FILTRO DE ACEITE DEL MOTOR (GR)	80
ESCAPE DE GASES (GR)	84
INDICADOR DEL NIVEL DE ACEITE (VARILLA) (GR)	85
TUBERÍAS DE ACEITE DEL MOTOR (GR)	86
TURBOCOMPRESOR - TUBERÍAS DE ACEITE DEL (GR)	89
DOSIFICADOR DE ACEITE DE MOTOR (CONF)	93
DOSIFICADOR DE ACEITE DE MOTOR (GR)	94
CAMBIO RÁPIDO DE ACEITE (GR)	96
PRELUBRICACION DEL MOTOR (CONFIG)	98
BOMBA DE ACEITE DEL MOTOR (GR)	103
BOMBA DE BARRIDO (GR)	105
GRUPO DE TANQUE, ACEITE DEL MOTOR	107
VÁLVULA DE DOSIFICACIÓN (GR)	109
SISTEMA DE ENFRIAMIENTO	110
AGUA - CONEXIÓN DE (GR)	110
ENFRIADOR DE ACEITE DEL MOTOR (GR)	112
NÚCLEO DEL ENFRIADOR DE ACEITE (GR)	113
SUCCIÓN - VENTILADOR DE (GR)	114
REGULADOR Y CAJA (GR)	116
TUBERÍAS DEL AGUA (GR)	117
BOMBA AUXILIAR DE AGUA DULCE (GR)	139
BOMBA DE AGUA (GR)	144
RADIADOR (GR)	150
TANQUE DEL AGUA (GR)	154
SISTEMA DE ADMISIÓN Y ESCAPE DE AIRE	163
POSENFRIADOR DE AGUA (GR)	163
FILTRO DE AIRE (GR)	164
EXPULSOR DE POLVO (GR)	170
JUEGO DE INSTALACIÓN	171
AIRE - TUBERÍAS DE (GR)	172
MÚLTIPLE DE ESCAPE (GR)	178
SILENCIADOR (GR)	182

* NO HAY TRADUCCION DISPONIBLE EN EL MOMENTO DE LA IMPRESION

CONTENIDO

Nombre	Página
ANTEFILTRO (CONFIG)	183
ANTEFILTRO (GR)	185
PROTECTOR DE LAS TUBERÍAS DE COMBUSTIBLE (GR)	187
MULTIPLE - PROTECTOR DEL	189
SOPORTE DE LA ADMISIÓN DE AIRE (GR)	190
TURBOCOMPRESOR (GR)	192
SISTEMA DE COMBUSTIBLE	198
ADAPTADOR	198
ADAPTADOR DE LLENADO RÁPIDO DE COMBUSTIBLE (GR)	199
CONTROL DEL DECELERADOR (GR)	213
FILTRO DE COMBUSTIBLE (GR)	215
INYECTOR DE COMBUSTIBLE (GR)	218
TUBERÍAS DE COMBUSTIBLE (GR)	219
TUBERÍAS DE INYECCIÓN DE COMBUSTIBLE (GR)	223
BOMBA DE INYECCIÓN DE COMBUSTIBLE (GR)	227
BOMBA DE CEBADO DE COMBUSTIBLE (GR)	229
BOMBA DE TRANSFERENCIA DE COMBUSTIBLE (GR)	230
COMBUSTIBLE - TANQUE DE (GR)	236
SISTEMA ELÉCTRICO Y DE ARRANQUE	240
ALARMA (GR)	240
CARGA - ALTERNADOR DE (GR)	241
BATERÍA Y CABLES (GR)	246
BLOQUE DE EMPALME (GR)	270
BLOQUE DE POTENCIA (GR)	271
CONTROL ELECTRÓNICO Y MONTAJE (GR)	272
CONTROL ELECTRÓNICO DEL MOTOR Y MONTAJE	277
CONTROL Y MONTAJE DE TREN DE FUERZA (GR)	278
CONTROL DE LA TRANSMISIÓN Y MONTAJE (GR)	280
CONTROL ELECTRÓNICO (GR)	281
CONTROL ELECTRÓNICO DEL MOTOR (GR)	287
CONTROL NO PROGRAMADO (GR)	291
CONVERTIDOR ELÉCTRICO (GR)	295
CONFIGURACIÓN ELECTRÓNICA DE LA MÁQUINA	296
IMPLEMENTOS (GR ELECTRÓNICO)	296
ELECTRONICA DE MONITOR (GR)	296
TREN DE FUERZA-GRUPO ELECTRÓNICO	297
CALENTADOR DEL COMBUSTIBLE (GR)	298
AGUA DE LAS CAMISAS - CALENTADOR DEL (GR)	300
INSTALACION DE SEGURIDAD (GR)	304
LÁMPARA DEL TECHO (GR)	306
REFLECTOR (GR)	307
LUCES (CONFIG)	312
LUCES DE REFLECTOR (GR)	315
LUCES DELANTERAS (GR)	322
LUCES TRASERAS (GR)	323
LUCES DEL DESGARRADOR (GR)	325
SENSOR DE PRESIÓN Y MONTAJE (GR)	326
SENSOR DE NIVEL DE COMBUSTIBLE (GR)	329
DETECTOR DE POSICIÓN (SISTEMA DE COMBUST.) (GR)	330
SENSOR DE PRESIÓN (GR)	338
SENSOR DE VELOCIDAD (GR)	346
SENSOR DE TEMPERATURA (GR)	349
SERVICIO DE IMPLEMENTO (GR)	351
SERVICIO DE MONITOR (GR)	352
SERVICIO DE TREN DE FUERZA (GR)	353
AUXILIAR DE ARRANQUE CON ÉTER (GR)	354
MOTOR DE ARRANQUE ELÉCTRICO (GR)	358
SISTEMA DE PRELUBRICACIÓN DEL MOTOR DE ARRANQUE (GR)	368
INTERRUPTOR DE DERIVACIÓN	371
DISYUNTOR (GR)	372
INTERRUPTOR DE FLUJO (GR)	373
INTERRUPTOR MAGNÉTICO (GR)	374
ARRANQUE - INTERRUPTOR DE (GR)	379
TERMOPAR (GR)	380
RETROCESO - ALARMA DE (GR)	381
CABLES DE LA CONSOLA (GR)	382
CABLES DEL MOTOR (GR)	385
CABLES DE LA PLATAFORMA (GR)	397
TREN DE FUERZA	401
EJE DEL TREN DE FUERZA (GR)	401
CAJA Y PIEZAS DE LA TRANSMISIÓN (GR)	402
CONTROL DEL FRENO (GR)	404
CONTROL DE LA TRANSMISIÓN (GR)	408
ENFRIADOR DE ACEITE DE LA TRANSMISIÓN (GR)	409
ACOPLAMIENTO DE BOMBA (GR)	411
DRENAJE DE SEGURIDAD ECOLÓGICA (GR)	412

* NO HAY TRADUCCION DISPONIBLE EN EL MOMENTO DE LA IMPRESION

CONTENIDO

Nombre	Página
FILTRO DE ACEITE (GR)	413
MANDO FINAL (GR)	415
ENGRANAJE DE TRANSFERENCIA Y CORONA (GR)	422
PROTECTOR DE ACOPLAMIENTO (GR)	431
TUBERÍAS DE ACEITE DEL TREN DE FUERZA (GR)	432
MONTAJE DE LA TRANSMISIÓN (GR)	442
TRANSMISIÓN PLANETARIA (GR)	443
TREN DE FUERZA (CONFIG)	453
BOMBA DE ENGRANAJES (GR)	454
SELLO DE CUERDA	459
SEGMENTO DE RUEDA MOTRIZ (GR)	460
EJE DE MANDO (GR)	461
CONVERTIDOR DE PAR (GR)	463
TRANSMISION (CONFIG)	469
JUNTA UNIVERSAL (GR)	472
VÁLVULA DE CONTROL (GR)	473
VÁLVULA DE DESCARGA (GR)	477
PRIORIDAD - VÁLVULA DE (GR)	478
VÁLVULA DE ALIVIO (GR)	480
VÁLVULA SELECTORA (GR)	481
VÁLVULA SELECTORA Y DE CONTROL DE PRESIÓN (GR)	482
VÁLVULA DE SOLENOIDE (GR)	484
VÁLVULA DE CONTROL DE LA TRANSMISIÓN (GR)	490
BASTIDOR Y CAJA	493
CAJA Y BASTIDOR (GR)	493
CONTRAPESO (GR)	495
CONTRAPESO TRASERO (GR)	496
COMPARTIMIENTO DEL MOTOR (GR)	498
CONTENIDO DEL GRUPO DE GUARDABARROS	504
GUARDABARROS (GR)	511
PROTECTOR INFERIOR (GR)	520
PROTECTOR DE RUEDA GUÍA	522
PROTECTOR DEL RADIADOR (GR)	525
PROTECTOR CONTRA ROCAS (GR)	529
PROTECTOR DE LA TRANSMISIÓN (GR)	531
CAPO Y PROTECTOR (GR)	534
JUEGO DE SELLOS	541
TREN DE RODAJE	543
BARRA COMPENSADORA (GR)	543
TAPA DE RUEDA GUÍA (GR)	550
TAPA DE RODILLO INFERIOR	552
BASTIDOR TELESCÓPICO DEL RESORTE TENSOR (GR)	553
RUEDA GUÍA DE CADENA (GR)	578
ESLABÓN DE CADENA (CONJ)	580
GRUPO DE LUBRICACIÓN DE BARRA ESTABILIZADORA	586
LUBRICACIÓN DE EJE PIVOTE (GR)	588
ANILLO DE ESLABON DE CADENA (CONJ)	590
RODILLO SUPERIOR DE CADENAS (CONFIG)	591
RODILLOS DE PESTAÑA DOBLE (GR)	596
RODILLOS DE PESTAÑA SIMPLE (GR)	598
SELLO DE CADENA (GR)	600
TOPE DE BARRA COMPENSADORA (GR)	601
SOPORTE BASCULANTE (GR)	602
RESORTE TENSOR Y AJUSTADOR DE LA CADENA (GR)	610
CADENAS (GR)	614
TREN DE RODAJE (CONFIG)	617
SISTEMA DE FRENOS Y DIRECCIÓN	620
AJUSTADOR DEL CONTROL DE DIRECCIÓN Y TRANSMISIÓN (GR)	620
FRENO Y EMBRAGUE DE DIRECCIÓN (GR)	623
CONTROL DEL FRENO DE ESTACIONAMIENTO	625
CONTROL DE DIRECCIÓN Y TRANSMISIÓN (GR)	626
TOPE (GR)	632
ENGRANAJE DE DIRECCIÓN (GR)	633
MÚLTIPLE Y VÁLVULA (GR)	637
SOPORTE DE CONTROL (GR)	641
*VALVE & MTG GP-STEER & BRAKE	642
VÁLVULA Y MONTAJE DE DIRECCIÓN Y FRENO (GR)	643
*VALVE GP-TRANSMISSION CONTROL	644
SISTEMA HIDRÁULICO	648
ACUMULADOR HIDRAULICO (GR)	648
FILTRO DE DERIVACIÓN (GR)	649
CONTROL Y MONTAJE (GR)	650
CONTROL HIDRÁULICO (CONFIG)	652
CONTROL DE MANIJA (GR)	654
CONTROL HIDRÁULICO (GR)	655
PALANCA UNIVERSAL DE CONTROL (GR)	657
ENFRIADOR DEL ACEITE HIDRAULICO (GR)	665
SENSOR Y CILINDRO DE LEVANTAMIENTO (GR)	666

* NO HAY TRADUCCION DISPONIBLE EN EL MOMENTO DE LA IMPRESION

CONTENIDO

Nombre	Página
VÁLVULA Y CILINDRO DE LA HOJA TOPADORA (GR)	667
VÁLVULA Y CILINDRO DE LEVANTAMIENTO (GR)	671
CILINDRO DE INCLINACIÓN (GR)	677
CILINDRO DE LEVANTAMIENTO DE LA HOJA TOPADORA (GR)	678
*CYLINDER GP-BULLDOZER LIFT	682
CILINDRO DE LEVANTAMIENTO DE LA HOJA TOPADORA (GR)	686
INCLINACIÓN HORIZONTAL - CILINDRO DE (GR)	690
CILINDRO DE DESGARRADOR (GR)	694
CILINDRO DEL EXTRACTOR DE PASADOR DEL DESGARRADOR (GR)	710
INCLINACIÓN HORIZONTAL - CILINDRO DE (GR)	711
CILINDRO DE INCLINACIÓN DEL DESGARRADOR (GR)	713
FILTRO DE ACEITE (GR)	725
TUBERÍAS HIDRÁULICAS DEL VENTILADOR (GR)	727
CILINDRO DE LEVANTAMIENTO - TUBERÍAS DEL (GR)	749
TUBERÍAS DE CILINDRO DE EXTRACTOR DE PASADORES	760
BOMBA - TUBERÍAS DE (GR)	763
TUBERIAS DE ALIVIO (GR)	793
TUBERÍAS DEL DESGARRADOR (GR)	795
TUBERÍAS DEL CILINDRO DE INCLINACIÓN (GR)	810
CONTROL DEL MULTIPLE (GR)	821
MOTOR DE VENTILADOR (GR)	822
PISTONES DEL MOTOR (GR)	824
MONTAJE DE CILINDRO (GR)	825
PISTÓN Y VÁLVULA (GR)	828
BOMBA DE ENGRANAJES (GR)	830
BOMBA DE PISTONES (GR)	834
GRUPO DE ROTACIÓN DEL MOTOR (GR)	843
GRUPO GIRATORIO DE BOMBA	845
TANQUE Y FILTRO HIDRÁULICOS (GR)	848
TANQUE Y TUBERÍAS DE EXPANSIÓN (GR)	852
VALVULA Y LINEAS DE EXTRACTOR DE PASADOR (GR)	853
VÁLVULA DE CONTROL Y MONTAJE (GR)	857
VÁLVULA Y MONTAJE DEL VENTILADOR HIDRÁULICO (GR)	859
VALVULA DE ALIVIO (CONFIG)	861
VALVULA DEL TANQUE (CONJ)	862
DERIVACIÓN - VÁLVULA DE (GR)	863
VÁLVULA DE RETENCIÓN (GR)	864
VÁLVULA DE CONTROL (GR)	865
VÁLVULA DE COMPENSACION (GR)	878
VÁLVULA PILOTO (GR)	879
VÁLVULA REDUCTORA DE PRESIÓN (GR)	886
VÁLVULA COMPENSADORA DE FLUJO Y PRESIÓN (GR)	889
VALVULA DE CONTROL DE LA BOMBA (GR)	891
*VALVE GP-PUMP CONTROL	893
VÁLVULA DE CAÍDA RÁPIDA (GR)	896
VÁLVULA DE SECUENCIA (GR)	897
VÁLVULA DE LANZADERA (GR)	898
VÁLVULA DE SOLENOIDE (GR)	901
VALVULA DE CONTROL DE INCLINACION (GR)	914
IMPLEMENTOS	917
VIGA (CONJ)	917
BLOQUE DE EMPUJE (GR)	918
SOPORTE DE LA HOJA TOPADORA	920
*BULLDOZER AR-SEMI-UNIVERSAL	921
*BULLDOZER AR-UNIVERSAL	925
JUEGO DE TORNILLERÍA, JUNTAS Y CALCES	928
TUBERÍAS DE ENGRASE (GR)	931
ESTABILIZADOR DEL BRAZO DE EMPUJE (GR)	932
PLANCHA DE EMPUJE (GR)	933
EXTRACTOR DE PASADOR (CONFIG)	934
EXTRACTOR DE PASADOR (GR)	935
BRAZO DE EMPUJE (GR)	938
ESTABILIZADOR DEL BRAZO DE EMPUJE (GR)	942
MUÑÓN DE LA HOJA TOPADORA (GR)	945
HERRAMIENTAS	946
CANTONERA DE EXTREMO (GR)	946
EXTREMO DE BROCA	947
HOJA Y CUCHILLA (GR)	949
HOJA SEMIUNIVERSAL (CONJ)	950
*BLADE AS-SEMI-UNIVERSAL	953
HOJA UNIVERSAL (CONJ)	953
HOJA SEMIUNIVERSAL (GR)	957
HOJA UNIVERSAL (GR)	959
TAPAS PROTECTORAS DE EMBARQUE (GR)	960
GRUPO DE CANTONERA Y CUCHILLA	961

* NO HAY TRADUCCION DISPONIBLE EN EL MOMENTO DE LA IMPRESION

CONTENIDO

Nombre	Página
*EDGE GP-BIT & CUTTING	965
GRUPO DE CANTONERA Y CUCHILLA	965
CUCHILLA (GR)	966
CUCHILLA	967
BASTIDOR DEL DESGARRADOR (GR)	969
PLANCHA DE DESGASTE (GR)	975
DESGARRADOR (CONFIG)	977
DESGARRADOR (GR)	982
DIENTE DE DESGARRADOR (GR)	987
CABINA DEL OPERADOR	992
AJUSTADOR DEL ASIENTO (GR)	992
COMPRESOR DE AIRE DEL ASIENTO (GR)	995
ACONDICIONADOR DE AIRE (CONFIG)	996
ACONDICIONADOR DE AIRE (GR)	997
CABINA (CONFIG)	1006
CABINA (GR)	1011
COMPRESOR DE REFRIGERANTE (GR)	1015
CONDENSADOR DE REFRIGERANTE (GR)	1018
CONTROL DE IMPLEMENTOS Y MONTAJE (GR)	1019
TABLERO ELECTRÓNICO DE CONTROL (GR)	1026
CONTROL ELECTRONICO DEL REDUCTOR DE LA LUZ INTERIOR DEL SISTEMA MONITOR (GR)	1028
EXTENSIÓN DEL RESPALDO (GR)	1029
VENTILADOR DESCONGELADOR (GR)	1031
CALEFACCIÓN DE LA CABINA (GR)	1033
CAJA DE LA SUSPENSIÓN DEL ASIENTO (GR)	1042
INSTALACIÓN DE RADIO (GR)	1048
INSTRUMENTOS (GR)	1049
JUEGO DE RECONSTRUCCIÓN	1053
JUEGO-ASIENTO DE COMPRESOR DE AIRE	1054
JUEGO DE VENTANAS	1055
REVESTIMIENTO DE LA CABINA (GR)	1056
TUBERÍAS DE ACONDICIONADOR DE AIRE (GR)	1057
TUBERÍAS DE LA CALEFACCIÓN (GR)	1064
RETROVISOR (GR)	1067
MODULO CENTRAL DE MENSAJES(GR)	1068
MODULO DEL TECLADO MONITOR (GR)	1070
MODULO ELECTRÓNICO DE CUATRO INDICADORES (GR)	1072
MÓDULO DEL TACÓMETRO Y DEL VELOCÍMETRO (GR)	1073
MOTOR-LIMPIAPARABRISAS (GR)	1074
GRUPO DE MONTAJE DE LA CABINA	1075
MONTAJE DE LA RADIO (GR)	1077
MONTAJE DE LA ESTRUCTURA ROPS (GR)	1078
SOPORTE DEL RESPALDO (GR)	1079
CUBIERTA INFERIOR DEL ASIENTO DEL OPERADOR (GR)	1083
PLATAFORMA (CONFIG)	1085
PLATAFORMA (GR)	1086
PLATAFORMA DE LA CABINA (GR)	1088
RECLINACION DE ASIENTO (GR)	1092
ESTRUCTURA ROPS (GR)	1094
CONFIGURACIÓN DE ASIENTO	1095
CINTURÓN DE SEGURIDAD (GR)	1096
ASIENTO (GR)	1097
SUSPENSIÓN - ASIENTO CON (GR)	1112
ESTRIBO DEL OPERADOR (GR)	1122
INSONORIZADOR (CONFIG)	1124
ASIENTO CON SUSPENSIÓN (GR)	1125
TANQUE DEL LAVAPARABRISAS (GR)	1136
LAVAPARABRISAS DE LA VENTANA (GR)	1141
VENTANA CORREDIZA (CONJ)	1144
VENTANA DE LA CABINA (GR)	1145
LIMPIAPARABRISAS DE LA VENTANA (GR)	1160
PIVOTE DEL LIMPIADOR (GR)	1169
EQUIPOS Y SUMINISTRO DE SERVICIOS	1170
ETIQUETA DE ADVERTENCIA (GR)	1170
CALCOMANÍAS Y PLACAS DE IDENTIFICACIÓN (GR)	1172
INDICE DE NUMEROS DE PIEZA	B1

* NO HAY TRADUCCION DISPONIBLE EN EL MOMENTO DE LA IMPRESION

ÍNDICE

Designação	Página
INFORMAÇÃO GERAL	A36
ALTERNATIVAS DE REPARO	A47
ADITIVOS SUPLEMENTARES DO LÍQUIDO ARREFECEDOR	A52
PEÇAS DE MANUTENÇÃO	A76
ÍNDICE	A138
MÁQUINA - ARRANJO	1
CHASSI	1
ARRANJO GERAL	2
MOTOR - ARRANJO	3
MOTOR	3
GRUPO DE INSTALAÇÃO - MOTOR	5
MOTOR BÁSICO	6
BALANCEADOR	6
BASE - TAMPA DA VÁLVULA	7
EIXO-COMANDO DE VÁLVULA	8
TAMPA - COMANDO DE ACESSÓRIOS	10
TAMPA - BLOCO DO MOTOR	11
TAMPA - CAIXA DIANTEIRA	14
TAMPA - MECANISMO DAS VÁLVULAS	15
VIRABREQUIM	16
BLOCO DO MOTOR	19
CABEÇOTE DO MOTOR	28
AMORTECEDOR	38
COMANDO DE ACESSÓRIOS	39
COMANDO AUXILIAR	45
FIXADORES - CAIXA DIANTEIRA	46
VOLANTE DO MOTOR	47
ENGRENAGENS DE DISTRIBUIÇÃO	48
ENGRENAGENS DE COMANDO TRASEIRO	50
CAIXA DO VOLANTE DO MOTOR	52
CAIXA DIANTEIRA	55
LEVANTAMENTO DO MOTOR	56
MONTAGEM - ALTERNADOR	58
CÁRTER DO ÓLEO DO MOTOR	60
PISTÃO E BIELA	62
RETENTOR DO VIRABREQUIM	66
SUPORTE DO MOTOR	67
MUNHÃO DO MOTOR	68
MECANISMO DAS VÁLVULAS	69
GARFO	77
SISTEMA DE LUBRIFICAÇÃO	78
RESPIRO	78
BOCAL DE ENCHIMENTO DE ÓLEO DO MOTOR	79
FILTRO - ÓLEO DO MOTOR	80
ELIMINAÇÃO DE VAPORES DO CÁRTER	84
INDICADOR - NÍVEL DO ÓLEO (VARETA)	85
TUBOS - ÓLEO DO MOTOR	86
TUBOS - ÓLEO DO TURBOALIMENTADOR	89
MEDIÇÃO - ÓLEO DO MOTOR	93
ÓLEO - ARRANJO PARA TROCA RÁPIDA	96
PRÊ-LUBRIFICAÇÃO	98
BOMBA DE ÓLEO - MOTOR	103
BOMBA AUXILIAR DO SISTEMA DE TRANSMISSÃO	105
TANQUE - ÓLEO DO MOTOR	107
VÁLVULA - MEDIÇÃO	109
SISTEMA DE ARREFECIMENTO	110
CONEXÃO - TUBO D'ÁGUA	110
ARREFECEDOR - ÓLEO DO MOTOR	112
COLMÉIA - ARREFECEDOR DE ÓLEO	113
VENTILADOR DE SUCÇÃO	114
TERMOSTATO / REGULADOR DE TEMPERATURA	116
TUBOS - ÁGUA	117
BOMBA AUXILIAR DE ÁGUA DOCE	139
BOMBA DE ÁGUA	144
RADIADOR	150
TANQUE DE ÁGUA	154
SISTEMA DA ADMISSÃO DE AR E DE ESCAPE	163
PÓS-ARREFECEDOR A ÁGUA	163
PURIFICADOR DE AR	164
EJETOR DE POEIRA	170
JOGO DE INSTALAÇÃO	171
TUBOS - AR	172
COLETOR DE ESCAPE	178
SILENCIADOR	182
PRÉ-PURIFICADOR	183
BLINDAGEM DOS TUBOS DO COMBUSTÍVEL	187
BLINDAGEM DO COLETOR	189
SUPORTE - ADMISSÃO DE AR	190
TURBOALIMENTADOR	192

* TRADUÇÃO NÃO DISPONÍVEL NO MOMENTO DA IMPRESSÃO

ÍNDICE

Designação	Página
SISTEMA DE COMBUSTÍVEL	198
ADAPTADOR	198
ADAPTADOR - ABASTECIMENTO RÁPIDO DE COMBUSTÍVEL	199
CONTROLE DO DESACELERADOR	213
FILTRO - COMBUSTÍVEL	215
INJETOR DE COMBUSTÍVEL	218
TUBOS - COMBUSTÍVEL	219
TUBOS - INJEÇÃO DO COMBUSTÍVEL	223
BOMBA DE INJEÇÃO DO COMBUSTÍVEL	227
BOMBA DE ESCORVA DO COMBUSTÍVEL	229
BOMBA DE TRANSFERÊNCIA DO COMBUSTÍVEL	230
TANQUE DE COMBUSTÍVEL	236
SISTEMA ELÉTRICO E DE PARTIDA	240
ALARME	240
ALTERNADOR DE CORRENTE	241
BATERIA E CABOS / FIOS ELÉTRICOS	246
BLOCO DE JUNÇÃO	270
BLOCO - FORÇA	271
CONTROLE ELETRÔNICO E MONTAGEM	272
CONTROLE ELETRÔNICO E MONTAGEM - MOTOR	277
CONTROLE DO TREM DE FORÇA E MONTAGEM	278
CONTROLE E MONTAGEM - TRANSMISSÃO	280
CONTROLE ELETRÔNICO	281
CONTROLE ELETRÔNICO - MOTOR	287
CONTROLE - NÃO PROGRAMADO	291
CONVERSOR ELÉTRICO	295
SISTEMA ELETRÔNICO - MÁQUINA	296
SIST. ELETRÔNICO - ACESSÓRIO	296
SISTEMA ELETRÔNICO - MONITOR	296
SISTEMA ELETRÔNICO - TREM DE FORÇA	297
AQUECEDOR DO COMBUSTÍVEL	298
AQUECEDOR DA ÁGUA DO MOTOR	300
INSTALAÇÃO-SEGURANÇA	304
LÂMPADA - TETO	306
LÂMPADA - FAROL	307
SISTEMA DE ILUMINAÇÃO	312
SISTEMA DE ILUMINAÇÃO - FARÓIS	315
ILUMINAÇÃO - DIANTEIRA	322
ILUMINAÇÃO - TRASEIRA	323
ILUMINAÇÃO - RÍPER	325
SENSOR DE PRESSÃO E MONTAGEM	326
SENSOR - NÍVEL DE COMBUSTÍVEL	329
EMISSOR - POSIÇÃO	330
SENSOR - PRESSÃO	338
SENSOR DE VELOCIDADE	346
SENSOR - TEMPERATURA	349
GR. DE SERVIÇO - ACESSÓRIO	351
MONITOR DE SERVIÇO	352
GR. DE SERVICO - TREM DE FORÇA	353
AUXILIAR DE PARTIDA A ÉTER	354
MOTOR ELÉTRICO DE PARTIDA	358
MOTOR DE PARTIDA - SISTEMA DE PRÉ-LUBRIFICAÇÃO	368
INTERRUPTOR DE DERIVAÇÃO	371
CHAVE GERAL	372
INTERRUPTOR - FLUXO	373
INTERRUPTOR - MAGNÉTICO	374
INTERRUPTOR - PARTIDA	379
TERMOPAR	380
ALARME DE MARCHA À RÉ	381
CABOS/FIOS ELÉTRICOS DO CONSOLE	382
CABOS/FIOS ELÉTRICOS - MOTOR	385
CABOS/FIOS ELÉTRICOS - PLATAFORMA	397
TREM DE FORÇA	401
SEMI-EIXO - TREM DE FORÇA	401
CAIXA E COMPONENTES - TRANSMISSÃO	402
CONTROLE DO FREIO	404
CONTROLE DA TRANSMISSÃO	408
ARREFECEDOR DE ÓLEO DA TRANSMISSÃO	409
ACOPLAMENTO DA BOMBA	411
DRENO - ECOLOGIA	412
FILTRO - ÓLEO	413
COMANDO FINAL	415
COROA E ENGRENAGEM DE TRANFERÊNCIA	422
PROTETOR - ACOPLAMENTO	431
TUBOS - ÓLEO DA TRANSMISSÃO	432
MONTAGEM - TRANSMISSÃO	442
ENGRENAGENS PLANETÁRIAS - TRANSMISSÃO	443
TREM DE FORÇA	453
BOMBA DE ENGRENAGENS	454
VEDADOR - CORDÃO	459
SEGMENTO DA RODA MOTRIZ	460
EIXO DE TRANSMISSÃO	461
CONVERSOR DE TORQUE	463
TRANSMISSÃO	469

* TRADUÇÃO NÃO DISPONÍVEL NO MOMENTO DA IMPRESSÃO

ÍNDICE

Designação	Página
JUNTA UNIVERSAL	472
VÁLVULA DE CONTROLE	473
VÁLVULA DE ENXAGUAR	477
VÁLVULA DE PRIORIDADE	478
VÁLVULA DE ALÍVIO	480
VÁLVULA SELETORA	481
VÁLVULA SELETORA E CONTROLE DE PRESSÃO	482
VÁLVULA SOLENÓIDE	484
VÁLVULA DE CONTROLE - TRANSMISSÃO	490
CHASSI E CARROCERIA	493
CAIXA E CHASSI	493
CONTRAPESO	495
CONTRAPESO TRASEIRO	496
COBERTURA DO MOTOR	498
COBERTURA - PÁRA-LAMA	504
PÁRA-LAMA	511
PROTETOR INFERIOR	520
PROTETOR - RODA-GUIA	522
PROTETOR - RADIADOR	525
PROTETOR - ROCHA	529
PROTETOR - TRANSMISSÃO	531
CAPÔ E PROTETOR	534
JOGO DE RETENTOR	541
MATERIAL RODANTE	543
BARRA DE SUSPENSÃO	543
TAMPA DA RODA-GUIA	550
TAMPA - ROLETE DAS ESTEIRAS	552
ARMAÇÃO TELESCÓPICA DA MOLA TENSORA	553
RODA-GUIA DAS ESTEIRAS	578
ELO DA ESTEIRA	580
LUBRIFICAÇÃO-BARRA EQUALIZADORA	586
EIXO PIVÔ - LUBRIFICAÇÃO	588
ANEL - ELO DA ESTEIRA	590
ROLETE SUPERIOR DA ESTEIRA	591
ROLETE DE ESTEIRA DE FLANGE DUPLO	596
ROLETE DE ESTEIRA DE FLANGE SIMPLES	598
RETENTOR - ESTEIRA	600
BATENTE - BARRA EQUALIZADORA	601
SUSPENSÃO - TRUQUE	602
AJUSTADOR DE ESTEIRAS E MOLA TENSORA	610
ESTEIRA	614
MATERIAL RODANTE	617
SISTEMA DE DIREÇÃO E DE FREIO	620
AJUSTADOR DO CONTROLE DA DIREÇÃO E TRANSMISSÃO	620
EMBREAGEM DE DIREÇÃO E FREIOS	623
CONTROLE DO FREIO DE ESTACIONAMENTO	625
CONTROLE DE DIREÇÃO E TRANSMISSÃO	626
RETEM	632
MECANISMO DE DIREÇÃO	633
COLETOR E VÁLVULA	637
SUPORTE - CONTROLE	641
*VALVE & MTG GP-STEER & BRAKE	642
VÁLVULA E MONTAGEM-DIREÇÃO E FREIO	643
*VALVE GP-TRANSMISSION CONTROL	644
SISTEMA HIDRÁULICO	648
ACUMULADOR HIDRÁULICO	648
FILTRO - DERIVAÇÃO	649
CONTROLE E GRUPO DE MONTAGEM	650
CONTROLE HIDRÁULICO	652
CONTROLE-CABO	654
CONTROLE HIDRÁULICO	655
CONTROLE - ALAVANCA	657
ARREFECEDOR DO ÓLEO HIDRÁULICO	665
CILINDRO DE LEVANTAMENTO E SENSOR	666
VÁLVULA DA LÂMINA E CILINDRO	667
CILINDRO E VÁLVULA DE LEVANTAMENTO	671
CILINDRO DE INCLINAÇÃO	677
CILINDRO - LEVANTAMENTO DA LÂMINA	678
*CYLINDER GP-BULLDOZER LIFT	682
CILINDRO - LEVANTAMENTO DA LÂMINA	686
CILINDRO DE INCLINAÇÃO	690
CILINDRO DO RÍPER	694
CILINDRO DO SACADOR DE PINO DO RIPER	710
CILINDRO DE INCLINAÇÃO	711
CILINDRO DE INCLINAÇÃO DO RÍPER	713
FILTRO - ÓLEO	725
TUBOS - VENTILADOR HIDRÁULICOS	727
TUBOS - CILINDRO DE LEVANTAMENTO	749

* TRADUÇÃO NÃO DISPONÍVEL NO MOMENTO DA IMPRESSÃO

ÍNDICE

Designação	Página
TUBOS - CILINDRO DO SACA-PINO	760
TUBOS - BOMBA	763
TUBOS DE ALÍVIO	793
TUBOS - RIPER	795
TUBOS - CILINDRO DE INCLINAÇÃO	810
COLETOR - CONTROLE	821
MOTOR - VENTILADOR	822
MOTOR - PISTÃO	824
MONTAGEM - CILINDRO	825
PISTÃO E VÁLVULA	828
BOMBA DE ENGRENAGENS	830
BOMBA DE PISTÃO	834
MOTOR DO GRUPO ROTATIVO	843
GRUPO ROTATIVO DA BOMBA	845
TANQUE HIDRÁULICO E FILTRO	848
TANQUE E TUBULAÇÕES - EXPANSÃO	852
VÁLVULA E TUBOS - SACADOR DE PINO	853
VÁLVULA DE CONTROLE E MONTAGEM	857
VÁLVULA DO VENTILADOR HIDRÁULICO	859
VÁLVULA DE ALÍVIO	861
VÁLVULA - TANQUE	862
VÁLVULA DE DERIVAÇÃO	863
VÁLVULA DE RETENÇÃO	864
VÁLVULA DE CONTROLE	865
VÁLVULA COMPENSADORA	878
VÁLVULA DE CONTROLE PILOTO	879
VÁLVULA DE REDUÇÃO DE PRESSÃO	886
VÁLVULA DE CONTROLE - PRESSÃO E COMPENSAÇÃO DE FLUXO	889
VÁLVULA DE CONTROLE DA BOMBA	891
*VALVE GP-PUMP CONTROL	893
VÁLVULA DE QUEDA RÁPIDA	896
VÁLVULA DE SEQUÊNCIA	897
VÁLVULA DE SEPARAÇÃO	898
VÁLVULA SOLENÓIDE	901
VÁLVULA DE CONTROLE DE INCLINAÇÃO	914
ACESSÓRIOS	917
BARRA, VIGA, TRAVE	917
BLOCO DE EMPUXO	918
TIRANTE DA LÂMINA	920
*BULLDOZER AR-SEMI-UNIVERSAL	921
*BULLDOZER AR-UNIVERSAL	925
JOGO DE GAXETA	928
TUBOS - GRAXA	931
ELO ESTABILIZADOR	932
CHAPA DE EMPUXO	933
SACA-PINO	934
BRAÇO DE EMPUXO	938
BRAÇO DE EMPUXO - ESTABILIZADOR	942
MUNHÃO DA LÂMINA	945
FERRAMENTAS DE TRABALHO	946
CANTO DE LÂMINA	946
LÂMINA E BORDA CORTANTE	949
LÂMINA SEMI-UNIVERSAL	950
*BLADE AS-SEMI-UNIVERSAL	953
LÂMINA UNIVERSAL	953
LÂMINA SEMI-UNIVERSAL	957
LÂMINA UNIVERSAL	959
TAMPA - EMBARQUE	960
BEIRA - PONTA CORTANTE	961
*EDGE GP-BIT & CUTTING	965
BEIRA - PONTA CORTANTE	965
BORDA CORTANTE	966
ARMAÇÃO DO RIPER	969
PLACA DE DESGASTE	975
RIPER	977
DENTE DO RÍPER	987
POSTO DO OPERADOR	992
AJUSTADOR DO ASSENTO	992
COMPRESSOR DE AR - ASSENTO	995
CONDICIONADOR DE AR	996
CABINE	1006
COMPRESSOR DE REFRIGERANTE	1015
CONDENSADOR DE REFRIGERANTE	1018
CONTROLE DO ACESSÓRIO E MONTAGEM	1019
CONTROLE ELETRÔNICO - VISOR	1026
CONTROLE - REDUTOR DE LUMINOSIDADE DO SIST. DE MONITORIZAÇÃO	1028
EXTENSÃO - ENCOSTO	1029
DESCONGELADOR	1031
AQUECEDOR DA CABINE	1033
CAIXA - SUSPENSÃO DO ASSENTO	1042
INSTALAÇÃO DO RÁDIO	1048
INSTRUMENTOS	1049
JOGO DE RECONDICIONAMENTO	1053
JOGO - COMPRESSOR DE AR DO ASSENTO	1054
JOGO-JANELA	1055
REVESTIMENTO DA CABINE	1056
TUBOS - AR CONDICIONADO	1057
TUBOS - AQUECEDOR	1064
ESPELHO RETROVISOR	1067
MÓDULO - CENTRO DE MENSAGEM	1068
MÓDULO - TECLADO DO MONITOR	1070

* TRADUÇÃO NÃO DISPONÍVEL NO MOMENTO DA IMPRESSÃO

ÍNDICE

Designação	Página
MÓDULO ELETRÔNICO DE QUATRO INDICADORES	1072
MÓDULO - VELOCÍMETRO E TACÔMETRO	1073
MOTOR - LIMPADOR DO VIDRO	1074
MONTAGEM - CABINE	1075
MONTAGEM - RÁDIO	1077
MONTAGEM - ESTRUTURA ROPS	1078
FUNDO - ENCOSTO	1079
ASSENTO - FUNDO	1083
PISO	1085
PLATAFORMA	1086
PLATAFORMA DA CABINE	1088
RECLINAÇÃO - ASSENTO	1092
ESTRUTURA ROPS	1094
ASSENTO	1095
CINTO DE SEGURANÇA	1096
ASSENTO	1097
ASSENTO COM SUSPENSÃO	1112
DEGRAU	1122
RUÍDO - ARRANJO PARA SUPRESSÃO	1124
SUSPENSÃO - ASSENTO	1125
TANQUE - LAVADOR DE JANELA	1136
LAVADOR DO VIDRO	1141
JANELA DESLIZANTE	1144
JANELA DA CABINE	1145
LIMPADOR DO VIDRO	1160
PIVÔ DO LIMPADOR	1169
EQUIPAMENTO DE SERVIÇO E SUPRIMENTOS	1170
DECALQUE	1170
PLACA E DECALQUE	1172
ÍNDICE DE NÚMERO DE PEÇA	B1

* TRADUÇÃO NÃO DISPONÍVEL NO MOMENTO DA IMPRESSÃO

INHALTSVERZEICHNIS

Bezeichnung	Seite
ALLGEMEINE HINWEISE	A40
REPARATURALTERNATIVEN	A48
KÜHLMITTELZUSATZ	A53
WARTUNGSTEILE	A82
STICHWORTVERZEICHNIS	A154
MASCHINE	1
FAHRWERK	1
GRUNDAUSFÜHRUNG	2
MOTORAUSFÜHRUNG	3
MOTORAUSFÜHRUNG	3
MOTOR-EINBAUSATZ	5
MOTOR (GRUNDAUSFÜHRUNG)	6
AUSGLEICHSWELLE	6
VENTILDECKEL - UNTERTEIL	7
NOCKENWELLE	8
STEUERANTRIEBSGEHÄUSE-DECKEL	10
MOTORBLOCKDECKEL	11
STIRNRADGEHÄUSEDECKEL	14
VENTILDECKEL	15
KURBELWELLE	16
MOTORBLOCK	19
ZYLINDERKOPF	28
DÄMPFER	38
NEBENANTRIEB	39
STIRNRADGEHÄUSE-HALTETEILE	46
SCHWUNGRAD	47
STIRNRAD	48
ZAHNRADVORGELEGE	50
SCHWUNGRADGEHÄUSE	52
STIRNRADGEHÄUSE	55
MOTORHUBÖSE	56
DREHSTROMGENERATOR - BEFESTIGUNG	58
ÖLWANNE	60
PLEUELSTANGE UND KOLBEN	62
KURBELWELLENDICHTUNG	66
MOTORAUFHÄNGUNG	67
MONTAGEZAPFEN	68
VENTILSTEUERUNG	69
JOCHSATZ	77
SCHMIERSYSTEM	78
ENTLÜFTER	78
MOTORÖLEINFÜLLSTUTZEN	79
ÖLFILTER	80
ENTDUNSTER	84
ÖLMESSSTAB	85
MOTORÖLLEITUNGEN	86
TURBOLADERÖLLEITUNGEN	89
*METERING AR-ENGINE OIL	93
*METERING GP-ENGINE OIL	94
ÖLSCHNELLWECHSELANSCHLUSS	96
MOTORVORSCHMIERUNG	98
SCHMIERPUMPE	103
RÜCKSPÜLPUMPE	105
MOTORÖLTANK	107
*VALVE GP-METERING	109
KÜHLSYSTEM	110
KÜHLWASSERANSCHLUSS	110
MOTORÖLKÜHLER	112
ÖLKÜHLERBLOCK	113
SAUGLÜFTER	114
KÜHLWASSER-TEMPERATURREGLER UND GEHÄUSE	116
KÜHLWASSERLEITUNGEN	117
ZUSATZSÜSSWASSERPUMPE	139
KÜHLWASSERPUMPE	144
KÜHLER	150
WASSERTANK	154
LUFTEINLASS- UND ABGASSYSTEM	163
LADELUFTKÜHLER, WASSERGE-KÜHLT	163
LUFTREINIGER	164
STAUBAUSWERFER	170
EINBAUSATZ	171
DRUCKLUFTLEITUNGEN	172
AUSPUFFKRÜMMER	178
SCHALLDÄMPFER	182
VORREINIGER	183
KRAFTSTOFFLEITUNGSSCHUTZ	187
KRÜMMERSCHILD	189
LUFTEINLASS-TRÄGER	190
TURBOLADER	192
KRAFTSTOFFSYSTEM	198
ADAPTER	198
SCHNELLBETANKUNGSAN-SCHLUSS	199
GASREDUZIERGESTÄNGE	213
KRAFTSTOFFILTER	215
KRAFTSTOFFEINSPRITZDÜSE	218
KRAFTSTOFFLEITUNGEN	219
KRAFTSTOFFEINSPRITZLEITUN-GEN	223
KRAFTSTOFFEINSPRITZPUMPE	227

* ÜBERSETZUNG ZUM ZEITPUNKT DER DRUCKLEGUNG NICHT VORHANDEN

INHALTSVERZEICHNIS

Bezeichnung	Seite
KRAFTSTOFF-ENTLÜFTUNGSPUMPE	229
KRAFTSTOFFÖRDERPUMPE	230
KRAFTSTOFFTANK	236
ELEKTRISCHE ANLAGE UND STARTSYSTEM	240
WARNVORRICHTUNG	240
DREHSTROMGENERATOR	241
BATTERIE UND VERDRAHTUNG	246
KLEMMLEISTE	270
STROMBLOCK	271
ELEKTRON. STEUERUNG UND ANBAUSATZ	272
STEUERUNGSEINHEIT, ELEKTRON. FÜR MOTOR UND BEFEST.	277
KRAFTÜBERTRAGUNGSSTEUERUNG UND MONTAGESATZ	278
GETRIEBESTEUERUNG UND BEFESTIGUNGSTEILE	280
STEUERUNG, ELEKTRON.	281
MOTORSTEUERUNG, ELEKTRON.	287
STEUERUNG - NICHT PROGRAMMIERT	291
ELEKTR. UMFORMER	295
ELEKTRONIK - MASCHINE	296
ARBEITSGERÄTEELEKTRONIK	296
ELEKTRONIK - MONITOR	296
KRAFTÜBERTRAGUNGSELEKTRONIK	297
KRAFTSTOFFHEIZUNG	298
UMLAUFKÜHLWASSERHEIZUNG	300
SICHERHEITSEINBAUSATZ	304
FAHRERHAUSBELEUCHTUNG	306
ARBEITSLEUCHTEN	307
BELEUCHTUNGSANLAGE	312
ARBEITSLEUCHTEN	315
FRONTBELEUCHTUNG	322
HECKBELEUCHTUNG	323
BELEUCHTUNGSANLAGE (AUFREISSER)	325
DRUCKSENSOR UND BEFESTIGUNGSTEILE	326
KRAFTSTOFFSTANDSENSOR	329
STELLUNGSSENSOR	330
DRUCKSENSOR	338
DREHZAHLSENSOR	346
TEMPERATURSENSOR	349
ARBEITSGERÄT - SERVICESATZ	351
MONITOR - SERVICE	352
ANTRIEBSSTRANG-WARTUNGSSATZ	353
ÄTHERSTARTHILFE	354
STARTERMOTOR	358
ANLASSMOTOR-VORSCHMIERANLAGE	368
UMGEHUNGSSCHALTER	371
TRENNSCHALTER	372
STRÖMUNGSSCHALTER	373
MAGNETSCHALTER	374
STARTSCHALTER	379
THERMOELEMENT	380
RÜCKFAHRWARNHORN	381
KONSOLENVERDRAHTUNG	382
MOTORVERDRAHTUNG	385
FAHRERPLATTFORMVERDRAHTUNG	397
KRAFTÜBERTRAGUNG	401
KRAFTÜBERTRAGUNGSACHSE	401
GETRIEBEGEHÄUSE UND TEILE	402
BREMSGESTÄNGE	404
GETRIEBESTEUERUNG	408
GETRIEBEÖLKÜHLER	409
PUMPENANSCHLUSS	411
ABLASS (UMWELTFREUNDLICH)	412
ÖLFILTER	413
SEITENANTRIEB	415
TELLERRAD- UND VORGELEGERADSATZ	422
KUPPLUNGSVERKLEIDUNG	431
ÖLLEITUNGEN - KRAFTÜBERTRAGUNG	432
GETRIEBEAUFLAGER	442
PLANETENGETRIEBE	443
KRAFTÜBERTRAGUNG	453
ZAHNRADPUMPE	454
SEILDICHTUNG	459
KETTENRADSEGMENT	460
ANTRIEBSWELLE	461
DREHMOMENTWANDLER	463
GETRIEBE	469
KREUZGELENK	472
STEUERVENTIL	473
SPÜLVENTIL	477
VORRANGVENTIL	478
ÜBERDRUCKVENTIL	480
SCHALTVENTIL	481
VENTIL - SCHALT- UND DRUCKSTEUERUNG	482
MAGNETVENTIL	484
GETRIEBESTEUERVENTIL	490
RAHMEN UND AUFBAU	493
RAHMEN UND GEHÄUSE	493
GEGENGEWICHT	495

* ÜBERSETZUNG ZUM ZEITPUNKT DER DRUCKLEGUNG NICHT VORHANDEN

INHALTSVERZEICHNIS

Bezeichnung	Seite
GEGENGEWICHT, HINTEN	496
MOTORVERKLEIDUNG	498
SCHUTZBLECHVERKLEIDUNG	504
SCHUTZBLECHE	511
PANZERWANNE	520
LEITRADSCHUTZ	522
KÜHLERSCHUTZ	525
STEINSCHUTZ	529
GETRIEBESCHUTZ	531
MOTORHAUBE UND VERKLEIDUNG	534
DICHTUNGSSATZ	541
LAUFWERK	543
QUERTRAVERSE	543
LEITRADAUFSATZ	550
LAUFROLLENAUFSATZ	552
LAUFROLLENRAHMEN (TELESKOPRÜCKLAUF)	553
LEITRAD	578
KETTENGLIEDER	580
SCHMIERVORRICHTUNG - QUERTRAVERSE	586
ACHSWELLENSCHMIERUNG	588
KETTENGLIEDRING	590
TRAGROLLEN	591
DOPPELFLANSCHROLLEN	596
EINZELFLANSCHROLLEN	598
KETTENDICHTUNG	600
ANSCHLAG - QUERTRAVERSE	601
LAUFROLLENRAHMEN-KNICKFEDERUNG	602
KETTENSPANNER UND -FEDERRÜCKLAUF	610
LAUFWERKSKETTE	614
LAUFWERKSRAHMEN	617
LENK- UND BREMSSYSTEM	620
LENK- UND GETRIEBEEINSTELLER	620
LENKKUPPLUNG UND BREMSE	623
FESTSTELLBREMSGESTÄNGE	625
LENK- UND GETRIEBESTEUERUNG	626
SPERRE	632
LENKTRIEB	633
KRÜMMER UND VENTIL	637
STÜTZGRUPPE - STEUERUNG	641
*VALVE & MTG GP-STEER & BRAKE	642
LENKUNGS- U. BREMSVENTIL	643
*VALVE GP-TRANSMISSION CONTROL	644
HYDRAULIKSYSTEM	648
HYDRAULIKDRUCKSPEICHER	648
NEBENSTROMFILTER	649
STEUERHEBEL U. BEFESTIGUNGSTEILE	650
HYDRAULIKSTEUERUNG	652
STEUERHEBEL	654
HYDRAULIKSTEUERUNG	655
JOYSTICK -STEUERUNG	657
HYDRAULIKÖLKÜHLER	665
HUBZYLINDER UND SENSOR	666
PLANIERSCHILDVENTIL UND -ZYLINDER	667
HUBZYLINDER U. VENTIL	671
KIPPZYLINDER	677
PLANIERSCHILDHUBZYLINDER	678
*CYLINDER GP-BULLDOZER LIFT	682
PLANIERSCHILDHUBZYLINDER	686
KIPPZYLINDER	690
AUFREISSERZYLINDER	694
AUFREISSER-BOLZENZIEHERZYLINDER	710
KIPPZYLINDER	711
AUFREISSERKIPPZYLINDER	713
ÖLFILTER	725
HYDRAULIKLÜFTERLEITUNGEN	727
HUBZYLINDERLEITUNGEN	749
BOLZENZIEHERZYLINDERLEITUNGEN	760
HYDRAULIKPUMPE UND LEITUNGEN	763
ÜBERDRUCKLEITUNGEN	793
AUFREISSERLEITUNGEN	795
NEIGEZYLINDERLEITUNGEN	810
STEUERKRÜMMER	821
LÜFTERMOTOR	822
KOLBENMOTOR	824
ZYLINDERAUFHÄNGUNG	825
KOLBEN UND VENTIL	828
ZAHNRADPUMPE	830
KOLBENPUMPE	834
MOTORDREHVORRICHTUNG	843
KOLBENPUMPENUMLAUFSATZ	845
HYDRAULIKTANK UND SCHMIERFILTER	848
AUSGLEICHSTANK U. LEITUNGEN	852
BOLZENZIEHER - VENTIL U. LEITUNGEN	853
STEUERVENTIL UND BEFESTIGUNGSTEILE	857
HYDRAULIKLÜFTERVENTIL U. BEFESTIGUNGSTEILE	859
DRUCKBEGRENZUNGSVENTIL	861
TANKVENTIL	862
NEBENSTROMVENTIL	863
SPERRVENTIL	864

* ÜBERSETZUNG ZUM ZEITPUNKT DER DRUCKLEGUNG NICHT VORHANDEN

INHALTSVERZEICHNIS

Bezeichnung	Seite
STEUERVENTIL	865
AUSGLEICHSVENTIL	878
VORSTEUERVENTIL	879
DRUCKREDUZIERVENTIL	886
DRUCK- U. STROMAUSGLEICHSVENTIL	889
PUMPENSTEUERVENTIL	891
*VALVE GP-PUMP CONTROL	893
SCHNELLSENKVENTIL	896
FOLGEVENTIL	897
PENDELVENTIL	898
MAGNETVENTIL	901
KIPPSTEUERVENTIL	914
ARBEITSGERÄTE	917
TRÄGER	917
SCHUBBLOCK	918
SCHILDSTREBE	920
*BULLDOZER AR-SEMI-UNIVERSAL	921
*BULLDOZER AR-UNIVERSAL	925
DICHTUNGSSATZ	928
SCHMIERLEITUNGEN	931
STABILISATORGELENK	932
SCHUBPLATTE	933
BOLZENZIEHER	934
SCHUBARM	938
SCHUBARM - STABILISATOR	942
MONTAGEZAPFEN (PLANIERSCHILDEINRICHTUNG)	945
ARBEITSGERÄTE	946
ENDMESSER	946
ECKMESSER	947
SCHILD UND SCHNEIDMESSER	949
SU-SCHILD	950
*BLADE AS-SEMI-UNIVERSAL	953
U-SCHILD	953
SU-SCHILD	957
U-SCHILD	959
VERSANDDECKEL	960
SCHNEIDMESSER UND EINSATZSTÜCK	961
*EDGE GP-BIT & CUTTING	965
SCHNEIDMESSER UND EINSATZSTÜCK	965
SCHNEIDMESSER	966
AUFREISSERRAHMEN	969
VERSCHLEISSPLATTEN	975
AUFREISSER	977
AUFREISSERZAHN	987
FAHRERHAUS	992
FAHRERSITZVERSTELLER	992
LUFTKOMPRESSORSITZ	995
KLIMAANLAGE	996
FAHRERHAUS	1006
KÄLTEMITTELKOMPRESSOR	1015
KÄLTEMITTELKONDENSATOR	1018
ARBEITSGERÄTEHEBEL UND BEFESTIGUNGSTEILE	1019
STEUERUNG, ELEKTRON. ANZEIGE	1026
ÜBERWACHUNGSSYSTEMDIMMER - STEUERUNG	1028
RÜCKLEHNENVERLÄNGERUNG	1029
ENTFROSTERGEBLÄSE	1031
FAHRERHAUSHEIZUNG	1033
FAHRERSITZFEDERUNGSGEHÄUSE	1042
RADIOEINBAUSATZ	1048
INSTRUMENTENSATZ	1049
KÜHLWASSERPUMPEN-REGENERIERSATZ	1053
*KIT-SEAT AIR COMPRESSOR	1054
FENSTERSATZ	1055
FAHRERHAUSAUSKLEIDUNG	1056
KLIMAANLAGENLEITUNGEN	1057
HEIZUNGSLEITUNGEN	1064
RÜCKSPIEGEL	1067
MELDEZENTRUMMODUL	1068
MODUL-MONITORTASTATUR	1070
MODUL - VIER ELEKTRON. ANZEIGEN	1072
GESCHWINDIGKEITS- U. DREHZAHLMESSERMODUL	1073
SCHEIBENWISCHERMOTOR	1074
FAHRERHAUSANBAUSATZ	1075
RADIOANBAUSATZ	1077
ÜBERROLLSCHUTZAUFLAGER	1078
SCHALE - RÜCKENLEHNE	1079
FAHRERSITZVERKLEIDUNG	1083
FAHRERPLATTFORM	1085
PLATTFORM	1086
FAHRERPLATTFORM	1088
VERSTELLBARER SITZ	1092
ÜBERROLLSCHUTZ	1094
FAHRERSITZ	1095
SICHERHEITSGURT	1096
FAHRERSITZ	1097
SCHWINGSITZ	1112
STEIGLEITER	1122
SCHALLDÄMPFUNG	1124
FAHRERSITZFEDERUNG	1125
SCHEIBENWASCHMITTELBEHÄLTER	1136
SCHEIBENWASCHANLAGE	1141
SCHIEBEFENSTER	1144
FAHRERHAUSFENSTER	1145

* ÜBERSETZUNG ZUM ZEITPUNKT DER DRUCKLEGUNG NICHT VORHANDEN

INHALTSVERZEICHNIS

Bezeichnung	Seite
SCHEIBENWISCHER	1160
WISCHERARM	1169
WARTUNGSAUSRÜSTUNG UND -ZUBEHÖR	1170
AUFKLEBER	1170
SCHILD UND AUFKLEBER	1172
ERSATZTEILNUMMERNINDEX	B1

* ÜBERSETZUNG ZUM ZEITPUNKT DER DRUCKLEGUNG NICHT VORHANDEN

1. MACHINE IDENTIFICATION

Caterpillar machines are identified by Product Identification Numbers (PIN). Some components included in a machine may be identified by Serial Numbers (S/N). Typical components that will be serialized include engines, transmissions, bulldozers, and rippers. The machine and engine are further identified by arrangement numbers and in some cases modification numbers. These numbers are shown on the product identification plate(s) and on the master plate in the operator's compartment.

Caterpillar dealers need all of these numbers to determine accurate parts identification.

SIS *New Feature*

Effective First Quarter 2001 the Caterpillar Product Identification Number (PIN) changed from 8 to 17 characters. In an effort to provide uniform equipment identification, Caterpillar and other construction equipment manufacturers are moving to comply with the latest version of the product identification numbering standard. Non-road machine PINs are defined by ISO 10261. The new PIN format will apply to all Caterpillar machines and generator sets. The PIN plates and frame marking will display the 17 character PIN. The new format will look like the following:

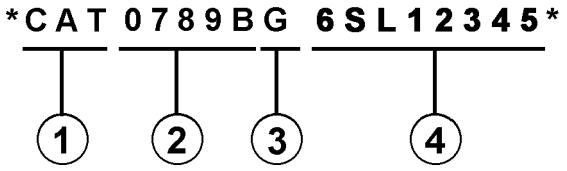

Where:

1. Caterpillar's World Manufacturing Code (characters 1-3)

2. Machine Descriptor (characters 4-8)

3. Check Character (character 9)

4. Machine Indicator Section (MIS) or Product Sequence Number (characters 10-17). These were previously referred to as the Serial Number.

Machines and generator sets produced before First Quarter 2001 will maintain their 8 character PIN format.

Components such as engines, transmissions, axles, etc. and work tools will continue to use an 8 character Serial Number (S/N).

2. ORDERING PARTS

⚠ WARNING

When replacement parts are required for this product Caterpillar recommends using Caterpillar replacement parts or parts with equivalent specifications including, but not limited to, physical dimensions, type, strength and material.

Failure to heed this warning can lead to premature failures, product damage, personal injury or death.

Quality Caterpillar replacement parts are available from Caterpillar dealers throughout the world. Their parts inventories are up to date and include all parts normally required to protect your investment in Caterpillar machines. Dealers may offer repair kits or remanufactured parts to allow selection of the most effective repair alternative for a particular situation. When ordering parts, your order should specify the quantity, part number, part name, and the serial number/product identification number of the machine for which the parts are needed.

3. PARTS MANUAL ORGANIZATION

Product information in this manual is presented as "information elements" that represent all of the components for the specific model. Engine Arrangement and Seat Group are examples of information elements. The information elements are organized alphabetically by part name and secondarily by part number within each major section of the manual.

4. TABLE OF CONTENTS

A table of contents (TOC) is found at the beginning of the manual. The TOC lists each section of the manual with a complete list of all information elements organized as they appear in the manual. Page numbers are provided for quick reference to detailed parts identification illustrations and serviceable consist lists.

5. MAINTENANCE PARTS INDEX

The Maintenance Parts Index, located near the beginning of the manual, references most frequently used maintenance part numbers, providing description, quantity, usage and page number. This information is organized alphabetically by part description.

6. INDEX

The index located near the front of the manual is an alphabetical listing of all information elements included in the manual. Page numbers are provided for quick reference to detailed parts identification illustrations and serviceable consist lists.

7. PART NUMBER INDEX

A numerical index listing all part numbers and the corresponding page number(s) appears at the back of the manual.

8. CAPTIONS

Captions located at the beginning of each information element identify the part number and part name along with additional descriptive information. PIN and S/N information found in each caption should be used to select correct information for a specific machine. Field replacement options, identification of optional attachment components, and where used ("part of") information is also provided.

The first line of a caption is shown in larger type font to indicate the beginning of an information element. Captions for additional pages that may be required to illustrate an information element will be shown in standard type font and will include the term *(contd.)* .

9. NON-SERVICED PARTS

In some instances it is necessary to display non-serviced parts that are a link to a lower level serviceable consist lists. These non-serviced part numbers are shown in *italic* type indicating that they are not available.

10. PARTS LIST REFERENCE NUMBERS

Numbers shown in the Ref No column correspond to numbers used in the associated graphic(s). An alphabetic suffix may be added to a reference number to identify lower level consist items. Numbers shown in the Graphic Ref column refer to the graphic number identifier displayed in the lower left corner of each illustration. The Graphic Ref number may be used in combination with the item Ref No to determine the correct part number. There may be intentional omission of a Ref No in a consist list as information is updated to reflect the latest serviceable part numbers.

11. INDENTED PART NAMES

When a part name is indented in a parts list, it is part of (included in) the group or assembly under which it is indented.

12. ILLUSTRATION REFERENCE LETTERS

When necessary, illustrations contain reference letters (A, B, C etc.) that are intended to track lines and harnesses from one point to another. They are also used to show where to reconnect illustrations that have been separated.

13. ABBREVIATIONS AND SYMBOLS

O.D. – Outside Diameter
I.D. – Inside Diameter
A – Not Part Of This Group
B – Use As Required
C – Change From Previous Type
D – Order By The Meter
E – Order By The Centimeter
F – Not Shown
G – Order By The Inch
I – See Hose Fabrication Guide
M – Metric Part
R – Remfg Part May Be Available
Y – Separate Illustration
Z – Not Serviced Separately

SIS *New Feature*

14.<END>

This symbol indicates the end of an information element.

NOTE:

Continuing improvement and advancement of product design may cause changes to your machine which may not be included in this publication. Whenever a question arises regarding your caterpillar product or this publication, please consult your caterpillar dealer for the latest available information.

FRAME AND BODY

8E-3299 PLATFORM GP-CAB

PIN 38K1-09999

SMCS-7253 100090751

NOTE	REF NO	GRAPHIC REF	PART NUMBER	QTY	PART NAME (1 2 3 4 5 6 PRODUCT LEVEL)	SEE PAGE
	1	1	3T-2953	1	PLATE AS	
	2	1	5B-2992	25	BOLT (3/8-16X.750IN)	
	3	1	6P-1075	41	WASHER-HARD (3MM THK)	
	4	1	9P-1444	2	SUPPORT AS-FOOT	
	5	1	9P-2228	19	BOLT (1/2-13X1IN)	
		1	9P-[illegible]4	19	WASHER-HARD (4MM THK)	
	6	1	9E-9136	1	COVER AS-LH	
		1	9F-2979	6	NUT-WELD (3/8-16 THD)	
		1	1P-0188	1	CLIP	
	7	1	7S-3411	4	COVER	
	8	1	6J-0488	18	SCREW-HEAD (3/8-16X.875IN)	
	9	1	9[illegible]4	1	COVER	
		1	9E-9[illegible]	1	GASKET	
	10	1	9E-3249	1	[illegible]	
		1	9E-3250	1	GASKET	
	11	1	3T-3635	1	HANDHOLD	
	12	1	9E-9078	1	COVER AS	
		1	9F-2979	8	NUT-WELD (3/8-16 THD)	
		1	9E-9079	1	GASKET	
	13	1	7T-0131	1	FLOORPLATE AS	
		1	1F-0748	4	NUT-WELD (1/2-13 THD)	
	14	1	7Y-9087	1	PLUG-BUTTON	
	15	1	7T-0136	1	PLATE AS	
		1	9F-2979	6	NUT-WELD (3/8-16 THD)	
	16	1	7T-9096	1	COVER	
		1	7T-9779	1	GASKET	
	17	1	3T-3981	1	PLATE AS	
	18	1	6T-9364	4	BOLT (1/4-20X.625IN)	
M		1	6T-4205	4	WASHER-HARD (2MM THK)	
	19	1	6L-9484	1	FLOOR MAT	
	20	1	9E-9946	1	MODULE AS-OPERATOR	
	21	1	3T-3634	1	HANDHOLD	
	22	1	9P-8571	2	PLUG	
	23	2	6T-9364	4	BOLT (1/4-20X.625IN)	
M		2	6T-4205	4	WASHER-HARD (2MM THK)	
	24	2	5B-3062	17	BOLT (3/8-16X.750IN)	
	26	2	6F-1075	21	WASHER-HARD (3MM THK)	
	26	2	7T-0135	1	SEAL	
	27	2	7X-0378	2	BOLT (3/4-10X5IN)	
		2	7X-0682	2	WASHER-HARD (6MM THK)	
	28	2	3T-3482	2	PLATE	
	29	2	3T-5290	1	PLATE AS	
		2	7S-0038	8	SPACER	
	30	2	3T-5281	1	SEAL	
	31	2	7S-0017	1	GASKET	
	32	2	7S-9018	1	COVER AS	
		2	2R-2276	2	WASHER	
		2	6P-9028	2	SCREW-KNURLED	
	33	2	9W-3429	1	COVER	
	34	2	9E-9697	1	COVER	
	35	2	9D-3031	8	SCREW-SOCKET HEAD	
	36	2	9W-3142	8	MOUNTING	
	37	2	9W-9027	2	PLATE	
	38	2	7X-0390	2	BOLT (7/8-9X5IN)	
		2	7X-0672	2	WASHER-HARD	
	39	2	4L-9454	4	BOLT (3/8-16X1.0IN)	
	40	2	3T-4788	1	COVER	

12 FRAME AND BODY 1 of 4 SELP4570-01

FRAME AND BODY

8E-3299 PLATFORM GP-CAB (contd.)

100090751

NOTE	REF NO	GRAPHIC REF	PART NUMBER	QTY	PART NAME (1 2 3 4 5 6 PRODUCT LEVEL)	SEE PAGE
	41	2	8E-3515	1	COVER	
	42	2	7T-0134	1	PLATE	
	43	2	7T-0139	1	GASKET	
	44	2	7S-9724	1	GASKET	
	45	2	7S-9723	1	COVER	
	46	2	6Y-1969	2	PLUG-BUTTON	

M-METRIC PART

SELP4570-01 2 of 4 FRAME AND BODY 13

FRAME AND BODY

8E-3299 PLATFORM GP-CAB (contd.)

100090751

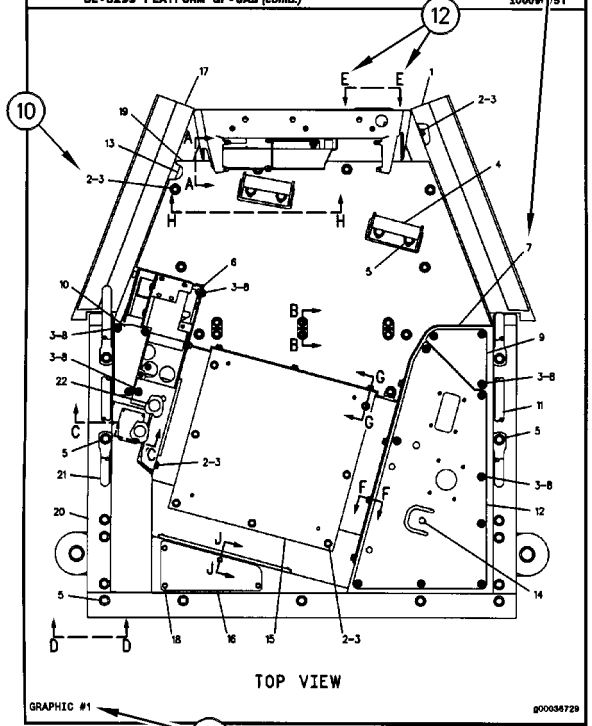

GRAPHIC #1 g00036729

14 FRAME AND BODY 3 of 4 SELP4570-01

FRAME AND BODY

8E-3299 PLATFORM GP-CAB (contd.)

100090751

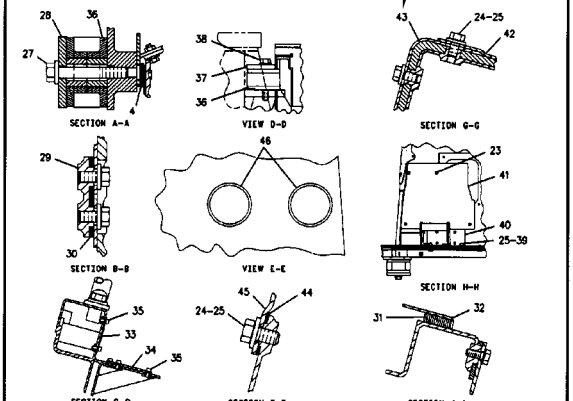

GRAPHIC #2 g00105874

SELP4570-01 4 of 4 FRAME AND BODY 15

1. IDENTIFICATION DE LA MACHINE

Toutes les machines Caterpillar portent un numéro d'identification (PIN). Certains composants des machines peuvent porter des numéros de série (S/N). En général, parmi les composants qui portent des numéros de série il y a les moteurs, les transmissions, les bulldozers et les rippers. En plus, la machine et le moteur peuvent recevoir des numéros de version, et dans certains cas, de modification. Ces numéros figurent sur les plaques de numéro de série et sur la plaque signalétique principale qui se trouve dans le poste de conduite.

Les concessionnaires Caterpillar doivent connaître tous ces numéros pour identifier correctement les pièces.

SIS ***Nouvelle Caractéristique***

À partir du premier trimestre 2001, le numéro d'identification produit (PIN) Caterpillar passe de 8 à 17 caractères. Afin de permettre une identification uniforme des matériels, Caterpillar et d'autres constructeurs de machines de travaux publics s'efforcent de se conformer à la norme la plus récente portant sur les numéros d'identification des produits. Les numéros d'identification (PIN) de machines de chantier sont définis par la norme ISO 10261. Le nouveau format du numéro d'identification est valable pour toutes les machines et tous les groupes électrogènes Caterpillar. Le numéro d'identification produit (PIN) figurant sur la plaque et sur le châssis se composera de 17 caractères. Le nouveau format ressemblera à ceci:

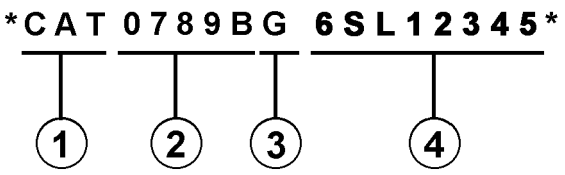

Il se décomposera de la façon suivante:

1. Code international de fabrication de Caterpillar (caractères 1 à 3)

2. Descriptif de la machine (caractères 4 à 8)

3. Contrôle (caractère 9)

4. Indicateur machine (MIS) ou numéro de séquence produit (caractères 10 à 17). Ceux-ci étaient auparavant désignés sous le terme de numéro de série.

Les machines et les groupes électrogènes construits avant le premier trimestre 2001 garderont le format à 8 caractères du numéro d'identification produit (PIN).

Les organes tels que les moteurs, les boîtes de vitesses, les essieux, etc., continueront d'être désignés par un numéro de série (S/N) à 8 caractères.

2. COMMANDE DE PIÈCES

⚠ DANGER

Lorsqu'il faut remplacer des pièces de rechange pour ce produit Caterpillar recommande d'utiliser les pièces de rechange Caterpillar ou les pièces qui ont des spécifications équivalentes dont les dimensions physiques, le type, la force et le matériau. Ces équivalences ne se limitent pas à l'énoncé précédent.

L'inobservation de cette mise en garde peut entraîner des défaillances prématurées, des dommages au produit, des blessures ou même la mort.

Les concessionnaires Caterpillar fournissent dans le monde entier des pièces de rechange de qualité Caterpillar. Leurs stocks de pièces sont constamment réapprovisionnés et comptent toutes les pièces nécessaires pour assurer la bonne marche de vos machines Caterpillar. Certains concessionnaires proposent également des kits de réparation ou des pièces rénovées, ce qui permet de choisir la solution la plus économique dans une situation donnée. Lors des commandes de pièces, mentionner la quantité, le numéro et la désignation des pièces ainsi que le numéro de série ou le numéro d'identification (PIN) de la machine pour laquelle ces pièces sont requises.

3. ORGANISATION DU CATALOGUE DE PIÈCES

Les renseignements sur les produits sont présentés sous forme de "Information element" (élément d'information) représentant tous les composants d'un modèle donné. "Engine Arrangement" (version de moteur) et "Seat Group" (assemblage de siège)" sont des exemples d'éléments d'information. Les éléments d'information sont classés par ordre alphabétique par la désignation standard des pièces et par numéros de pièces dans chaque partie importante du manuel.

4. TABLE DES MATIÈRES

Nouvelle Caractéristique

La table des matières se trouve au début du manuel. La table des matières fournit la liste de tous les chapitres du manuel avec une liste complète de tous les éléments d'information classés par ordre d'apparition dans le manuel. Les numéros de page sont fournis afin que l'utilisateur puisse trouver rapidement les illustrations détaillées concernant l'identification des pièces et les listes des pièces d'entretien.

5. INDEX DES PIÈCES D'ENTRETIEN

La rubrique "Index des pièces d'entretien" qui se trouve au début du manuel renvoie aux pièces d'entretien les plus fréquemment utilisées en précisant la désignation, la quantité, là où la pièce est utilisée et le numéro de page. Ces pièces sont classés par ordre alphabétique.

6. INDEX

L'index qui se trouve vers le début du manuel est une liste alphabétique de tous les éléments d'information du manuel. Les numéros de page sont fournis afin que l'utilisateur puisse trouver rapidement les illustrations détaillées concernant l'identification des pièces et les listes des pièces d'entretien.

7. INDEX DES NUMÉROS DE PIÈCES

Une liste numérique de tous les numéros de pièces et des pages correspondantes se trouve à la fin du manuel.

8. LÉGENDES

Les légendes qui se trouvent en haut de chaque page de chaque élément d'information fournissent le numéro de pièce, la désignation ainsi que des renseignements supplémentaires sur les pièces. Les renseignements concernant les numéros de série (S/N) qui se trouvent dans chaque légende doivent être utilisés pour sélectionner les informations correctes pour un moteur donné. Les informations concernant les options de remplacement sur le chantier, l'identification des composants des équipements offerts en option et les lieux d'application sont aussi fournies.

Nouvelle Caractéristique

Les lettres de la première ligne d'une légende sont présentées en police plus grande afin d'indiquer le début d'une unité d'information. Les légendes qui pourraient être requises pour des pages supplémentaires afin d'illustrer une unité d'information seront présentées en police standard et comprendront le terme (à suivre).

9. PIÈCES NON FOURNIES

Nouvelle Caractéristique

Dans certains cas, il est nécessaire d'indiquer les pièces non fournies qui sont en aval de la liste des pièces d'entretien. Les numéros des pièces non fournies dans la liste des pièces et les légendes seront en italique pour signaler qu'ils ne sont pas disponibles.

10. NUMÉROS DE RÉFÉRENCE DE LA LISTE DES PIÈCES

Nouvelle Caractéristique

Les numéros indiqués dans la colonne des numéros de références correspondent aux numéros utilisés dans les illustrations auxquelles ils sont associés. Un suffixe alphabétique peut être ajouté à un numéro de référence pour identifier la liste des articles en aval. Les numéros indiqués dans la colonne de référence de l'illustration renvoient à l'identification du numéro affiché dans le coin inférieur gauche de chaque illustration. Le numéro de référence de l'illustration pourrait être utilisé avec le numéro de référence de l'article pour déterminer le numéro de pièce correct. Il peut y avoir une omission intentionnelle d'un numéro de référence dans une liste de pièces suite à la mise à jour des informations en vue de refléter les numéros de pièces les plus récentes.

11. DÉSIGNATIONS DE PIÈCES EN RETRAIT

Lorsqu'une désignation de pièce est en retrait, cela veut dire que l'article en regard fait partie de l'ensemble sous lequel il figure.

12. LETTRES DE RÉFÉRENCE DES ILLUSTRATIONS

Quand cela est nécessaire, les illustrations comportent des lettres de référence (A, B, C, etc.) pour montrer le trajet des canalisations et faisceaux de câbles d'un point à l'autre. Elles sont utilisées également pour indiquer où relier les illustrations séparées auparavant.

13. ABRÉVIATIONS ET SYMBOLES

O.D. – Diamètre extérieur
I.D. – Diamètre intérieur
A – Ne fait pas partie de ce groupe
B – Utiliser selon besoin
C – Modification
D – Commander par mètre
E – Commander par centimètre
F – Non représenté
G – Commander par pouce
I – Voir "Hose Fabrication Guide"
M – Pièce métrique
R – Pièce rénovée éventuellement disponible
Y – Illustration séparée
Z – Non fourni séparément

NOTA:

En raison du progrès technique et des améliorations continuelles apportées au matériel, votre machine comporte peut-être des modifications qui n'apparaissent pas dans la présente publication. En cas de doute sur un détail de votre machine Caterpillar ou sur le texte de la présente publication, adressez-vous à votre concessionnaire Caterpillar.

FRAME AND BODY

8E-3299 PLATFORM GP-CAB

PIN 3SK1-09999

SMCS-7253 100090751

NOTE	REF NO	GRAPHIC REF	PART NUMBER	QTY	PART NAME 1 2 3 4 5 6 (PRODUCT LEVEL)	SEE PAGE
	1	1	3T-3953	1	PLATE AS	
	2	1	5B-2092	25	BOLT (3/8-16X.750IN)	
	3	1	5P-1075	41	WASHER-HARD (3MM THK)	
	4	1	9P-1444	2	SUPPORT AS-FOOT	
	5	1	9P-2229	19	BOLT (1/2-13X1IN)	
		1	5P-[illegible]4	19	WASHER-HARD (4MM THK)	
	6	1	9E-9136	1	COVER AS-LH	
		1	9F-2979	6	NUT-WELD (3/8-16 THD)	
		1	1P-0188	1	CLIP	
	7	1	7S-3411	4	COVER	
	8	1	6J-0488	18	SCREW-HEAD (3/8-16X.875IN)	
	9	1	[illegible]-4474	1	COVER	
		1	9E-9[illegible]7		GASKET	
	10	1	9E-3249	1	[illegible]	
		1	9E-3250	1	GASKET	
	11	1	3T-3935	1	HANDHOLD	
	12	1	9E-9078	1	COVER AS	
		1	9F-2979	8	NUT-WELD (3/8-16 THD)	
		1	9E-9079	1	GASKET	
	13	1	7T-0131	1	FLOORPLATE AS	
		1	1F-0748	4	NUT-WELD (1/2-13 THD)	
	14	1	7Y-9087	1	PLUG-BUTTON	
	15	1	7T-0136	1	PLATE AS	
		1	9F-2978	6	NUT-WELD (3/8-16 THD)	
	16	1	7T-9096	1	COVER	
		1	7T-9779	1	GASKET	
	17	1	3T-3981	1	PLATE AS	
	18	1	6T-9364	4	BOLT (1/4-20X.625IN)	
M		1	6T-4205	4	WASHER-HARD (2MM THK)	
	19	1	6L-9484	1	FLOOR MAT	
	20	1	9E-9946	1	MODULE AS-OPERATOR	
	21	1	3T-3934	1	HANDHOLD	
	22	1	9P-8571	2	PLUG	
	23	2	6T-9364	4	BOLT (1/4-20X.625IN)	
M		2	6T-4205	4	WASHER-HARD (2MM THK)	
	24	2	5B-2092	17	BOLT (3/8-16X.750IN)	
	26	2	5P-1075	21	WASHER-HARD (3MM THK)	
	26	2	7T-9126	1	SEAL	
	27	2	7X-9378	2	BOLT (3/4-10X5IN)	
		2	7X-0682	2	WASHER-HARD (6MM THK)	
	28	2	3T-3482	2	PLATE	
	29	2	3T-5290	1	PLATE AS	
		2	7S-0028	8	SPACER	
	30	2	3T-5281	1	SEAL	
	31	2	7S-9017	1	GASKET	
	32	2	7S-9016	1	COVER AS	
		2	2R-2276	2	WASHER	
		2	6P-9028	2	SCREW-KNURLED	
	33	2	9W-3429	1	COVER	
	34	2	9E-9097	1	COVER	
	35	2	9D-3031	8	SCREW-SOCKET HEAD	
	36	2	9W-3142	8	MOUNTING	
	37	2	9W-9027	2	PLATE	
	38	2	7X-0390	2	BOLT (7/8-9X5IN)	
		2	7X-0672	2	WASHER-HARD	
	39	2	4L-9454	4	BOLT (3/8-16X1.0IN)	
	40	2	3T-4788	1	COVER	

FRAME AND BODY

8E-3299 PLATFORM GP-CAB (contd.)

100090751

NOTE	REF NO	GRAPHIC REF	PART NUMBER	QTY	PART NAME 1 2 3 4 5 6 (PRODUCT LEVEL)	SEE PAGE
	41	2	5E-3515	1	COVER	
	42	2	7T-0134	1	PLATE	
	43	2	7T-0139	1	GASKET	
	44	2	7S-9724	1	GASKET	
	45	2	7S-9723	1	COVER	
	46	2	6V-1969	2	PLUG-BUTTON	

M-METRIC PART

FRAME AND BODY

8E-3299 PLATFORM GP-CAB (contd.)

100090751

TOP VIEW

GRAPHIC #1 g00036729

FRAME AND BODY

8E-3299 PLATFORM GP-CAB (contd.)

100090751

SECTION A-A VIEW D-D SECTION G-G

SECTION B-B VIEW E-E SECTION H-H

SECTION C-C SECTION F-F SECTION J-J

GRAPHIC #2 g00105874

1. MÁQUINAS

Las máquinas Caterpillar se identifican con Números de Identificación del Producto (PIN). Algunos componentes incluídos en la máquina pueden estar identificados con Números de Serie (N/S). Los componentes que tienen típicamente esta identificación incluyen motores, transmisiones, hojas topadoras y desgarradores. La máquina y el motor se identifican además con Números de Configuración y en algunos casos, Números de Modificación. Estos números están en las placas de identificación del producto o en la placa principal en la cabina del operador.

Los distribuidores Caterpillar necesitan estos números para identificar con exactitud los números de piezas de repuesto.

SIS *Nueva Característica*

A partir del primer trimestre del 2001, el Número de Identificación de Producto (PIN) de Caterpillar cambió de 8 a 17 caracteres. Para hacer más uniforme el método de identificación de equipos, Caterpillar y otros fabricantes de equipo de construcción han tomado medidas para cumplir con la versión más reciente de la norma de numeración de identificación de productos. Los Números de Identificación de Producto para máquinas que no se operan en carreteras son definidos por la norma ISO 10261. El nuevo formato PIN corresponderá a todas las máquinas y grupos electrógenos Caterpillar. Las placas y los caracteres PIN estampados en el bastidor mostrarán el PIN de 17 caracteres. El nuevo formato tendrá la apariencia siguiente:

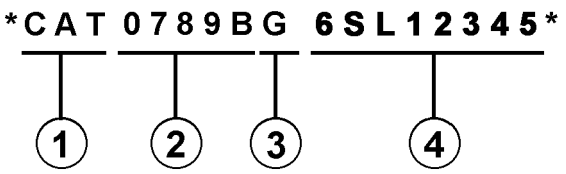

Significado de los caracteres:

1. Código de Fabricación Mundial de Caterpillar (caracteres 1-3)

2. Sección Descriptor de la Máquina (caracteres 4-8)

3. Carácter de Verificación (carácter 9)

4. Sección Indicador de la Máquina (MIS) o Número de Secuencia de Producto (caracteres 10-17). Anteriormente, estos caracteres constituían el Número de Serie.

Las máquinas y grupos electrógenos producidos antes del primer semestre del 2001 mantendrán su formato PIN de 8 caracteres.

Los componentes como motores, transmisiones, ejes, herramientas de trabajo, etc., continuarán usando un Número de Serie (S/N) de 8 caracteres.

2. COMO PEDIR REPUESTOS

⚠ ADVERTENCIA

Cuando se necesiten piezas de repuesto para este producto, Caterpillar recomienda usar piezas de repuesto Caterpillar o piezas que tengan especificaciones equivalentes incluyendo, pero sin estar limitadas a, dimensiones físicas, tipo, fortaleza y material.

El no hacer caso de esta advertencia puede llevar a fallas prematuras, daños al producto y lesiones graves o mortales.

Las piezas de repuesto Caterpillar de calidad están a la disposición de los distribuidores Caterpillar en todo el mundo. Sus existencias actualizadas incluyen todas las piezas normalmente requeridas para proteger su inversión en máquinas Caterpillar. Los distribuidores pueden tener juegos de reparación o piezas remanufacturadas para permitir la selección de la mejor alternativa de reparación en un caso en particular. Al pedir piezas de repuesto, especifique en su pedido la cantidad, el número de pieza, el nombre de la pieza y el número de serie/número de identificación del producto, de la máquina para la cual se necesitan estas piezas.

3. ORGANIZACION DEL MANUAL DE PIEZAS

La información sobre el producto, se presenta en este manual, como "elementos de información" que representan todos los componentes de un modelo específico. Las configuraciones de motores y los grupos de asientos son ejemplos de elementos de información. Los elementos de información están organizados primeramente por nombres de piezas en orden alfabético y en segundo lugar, por el número de pieza dentro de cada sección principal del manual.

4. CONTENIDO

La página de Contenido se encuentra al principio del manual. El Contenido indica cada sección del manual con una lista completa de todos los elementos de información organizados en el orden que aparecen en el manual. Los números de página proporcionan una referencia rápida a las ilustraciones detalladas de identificación de piezas y a las listas de componentes de repuesto de dichas piezas.

5. ÍNDICE DE PIEZAS DE MANTENIMIENTO

Al principio de este catálogo se encuentra un índice de los números de piezas utilizadas más frecuentemente para el mantenimiento, que incluye descripción, cantidad necesaria, lugar de utilización y número de página. Esta información está organizada alfabéticamente, por descripción de la pieza.

6. ÍNDICE

El Índice, ubicado cerca del principio del manual, es una lista en orden alfabético de todos los elementos de información incluídos en el manual. Los números de página proporcionan una referencia rápida a las ilustraciones detalladas de identificación de piezas y a las listas de componentes de repuesto de dichas piezas.

7. INDICE NUMÉRICO DE PIEZAS

Un índice numérico de piezas con el correspondiente número de página aparece al final de este catálogo.

8. TÍTULOS

Los títulos ubicados al principio de cada elemento de información identifican el número y el nombre de la pieza junto con información descriptiva. Se debe usar información sobre los Números de Identificación de Pieza (PIN) y los números de serie (S/N) para seleccionar la información que corresponda a una máquina en particular. También se suministra información sobre las opciones de reparación en el campo, la identificación de componentes de accesorios optativos y el lugar de ubicación de la pieza ("es parte de").

La primera línea del título se muestra con un tipo de letra más grande para indicar el comienzo de un elemento de información. Si se requieren páginas adicionales para ilustrar un elemento de información, los títulos se muestran con un tipo de letra normal y la continuación se indica entre paréntesis.

9. PIEZAS QUE NO SE SUMINISTRAN COMO REPUESTO

En algunos casos es necesario indicar piezas que no se suministran como repuesto pero que pueden estar conectadas a listas de componentes de otras piezas de repuesto. En tal caso, dichas piezas se muestran en cursiva para indicar que no son piezas disponibles.

10. NÚMEROS DE REFERENCIA

Los números en la columna de No. de Referencia corresponden a los números indicados en la ilustración que pertenece a ese número de pieza. Los números que tienen un sufijo alfabético identifican artículos de las listas de componentes de piezas. Los números en la columna de Referencia de la ilustración se identifican en la esquina inferior izquierda de cada ilustración. Para determinar el número de pieza correcto se puede utilizar tanto el No. de Referencia de la ilustración como el No. de Referencia del artículo. A medida que se actualiza la información para indicar los más recientes números de piezas de repuesto, puede omitirse intencionalmente un No. de Referencia en una lista de componentes de piezas.

11. NOMBRES DE PIEZA SANGRADOS

Cuando el nombre de una pieza está sangrado en una lista, significa que esta pieza forma parte del grupo o conjunto del renglón inmediatamente superior.

12. LETRAS DE REFERENCIA DE ILUSTRACIONES

Las ilustraciones contienen algunas veces letras de referencia (A, B, C etc.) cuyo propósito es seguir el trayecto de líneas y mazos de cables de un punto a otro. También se utilizan para mostrar dónde volver a unir ilustraciones que se habían separado.

13. ABREVIATURAS Y SIMBOLOS

O.D. – Diámetro exterior
I.D. – Diámetro interior
A – No es pieza de este grupo
B – Utilizado según la demanda
C – Indica cambio
D – Se pide por metro
E – Se pide por centímetro
F – No se muestra
G – Se pide por pulgada
I – Ver "Hose Fabrication Guide"
M – Pieza métrica
R – Puede estar disponible como pieza remanufacturada
Y – Ilustración separada
Z – No se suministra por separado

SIS *Nueva Característica*

14.<END>

Este símbolo indica el final de un elemento de información.

NOTA:

Las contínuas mejoras y adelantos en diseño podrían originar cambios a su máquina que no se incluyen en esta publicación. Cuando tenga alguna pregunta acerca de su producto Caterpillar o de esta publicación, consulte al distribuidor Caterpillar para obtener la información más reciente.

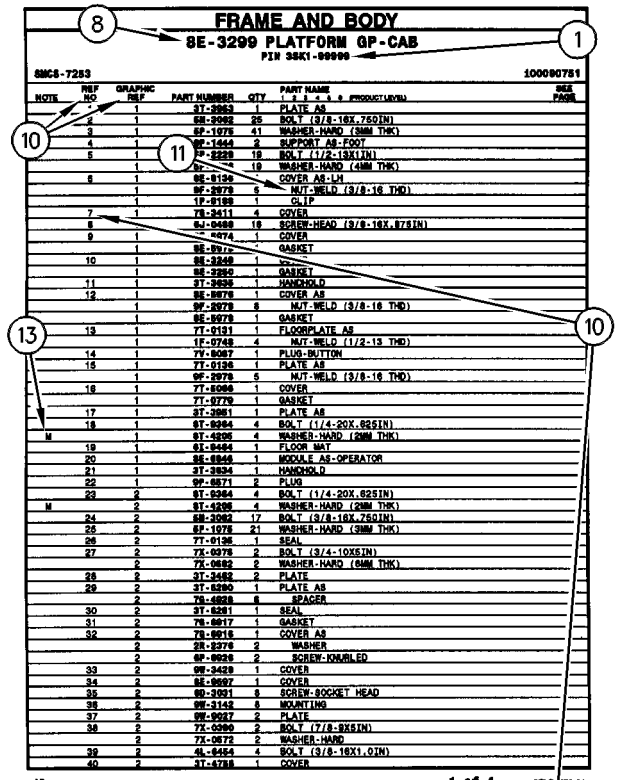

FRAME AND BODY

8E-3299 PLATFORM GP-CAB

PIN 38K1-09999

SMCS-7253 100090751

NOTE	REF NO	GRAPHIC REF	PART NUMBER	QTY	PART NAME (1 2 3 4 5 6 PRODUCT LEVEL)	SEE PAGE
	1	1	3T-3953	1	PLATE AS	
	2	1	5B-3992	25	BOLT (3/8-16X.750IN)	
	3	1	6P-1075	41	WASHER-HARD (3MM THK)	
	4	1	9P-1444	2	SUPPORT AS-FOOT	
	5	1	9P-2229	19	BOLT (1/2-13X1IN)	
		1	6P-[illegible]4	19	WASHER-HARD (4MM THK)	
	6	1	8E-8136	1	COVER AS-LH	
		1	9F-2979	6	NUT-WELD (3/8-16 THD)	
		1	1P-8188	1	CLIP	
	7	1	7S-3411	4	COVER	
	8	1	6J-0488	18	SCREW-HEAD (3/8-16X.875IN)	
	9	1	[illegible]-4474	1	COVER	
		1	8E-8[illegible]7	1	GASKET	
	10	1	8E-3248	1	[illegible]	
		1	8E-3250	1	GASKET	
	11	1	3T-3835	1	HANDHOLD	
	12	1	8E-8878	1	COVER AS	
		1	9F-2979	8	NUT-WELD (3/8-16 THD)	
		1	8E-8078	1	GASKET	
	13	1	7T-0131	1	FLOORPLATE AS	
		1	1F-0748	4	NUT-WELD (1/2-13 THD)	
	14	1	7Y-8087	1	PLUG-BUTTON	
	15	1	7T-0136	1	PLATE AS	
		1	9F-2978	6	NUT-WELD (3/8-16 THD)	
	16	1	7T-8086	1	COVER	
		1	7T-0779	1	GASKET	
	17	1	3T-3981	1	PLATE AS	
	18	1	6T-9364	4	BOLT (1/4-20X.625IN)	
M		1	6T-4205	4	WASHER-HARD (2MM THK)	
	19	1	6L-8484	1	FLOOR MAT	
	20	1	9E-8946	1	MODULE AS-OPERATOR	
	21	1	3T-3834	1	HANDHOLD	
	22	1	9P-8571	2	PLUG	
	23	2	6T-9364	4	BOLT (1/4-20X.625IN)	
M		2	6T-4205	4	WASHER-HARD (2MM THK)	
	24	2	5B-3982	17	BOLT (3/8-16X.750IN)	
	26	2	6F-1075	21	WASHER-HARD (3MM THK)	
	26	2	7T-0135	1	SEAL	
	27	2	7X-0378	2	BOLT (3/4-10X5IN)	
		2	7X-0682	2	WASHER-HARD (5MM THK)	
	28	2	3T-3482	2	PLATE	
	29	2	3T-8280	1	PLATE AS	
		2	7S-8038	8	SPACER	
	30	2	3T-8281	1	SEAL	
	31	2	7S-8017	1	GASKET	
	32	2	7S-8018	1	COVER AS	
		2	2R-2276	2	WASHER	
		2	6P-8028	2	SCREW-KNURLED	
	33	2	9W-3429	1	COVER	
	34	2	8E-8697	1	COVER	
	35	2	9D-3031	8	SCREW-SOCKET HEAD	
	36	2	9W-3142	8	MOUNTING	
	37	2	9W-9027	2	PLATE	
	38	2	7X-0390	2	BOLT (7/8-9X5IN)	
		2	7X-0672	2	WASHER-HARD	
	39	2	4L-8454	4	BOLT (3/8-16X1.0IN)	
	40	2	3T-4788	1	COVER	

12 FRAME AND BODY 1 of 4 SELP4570-01

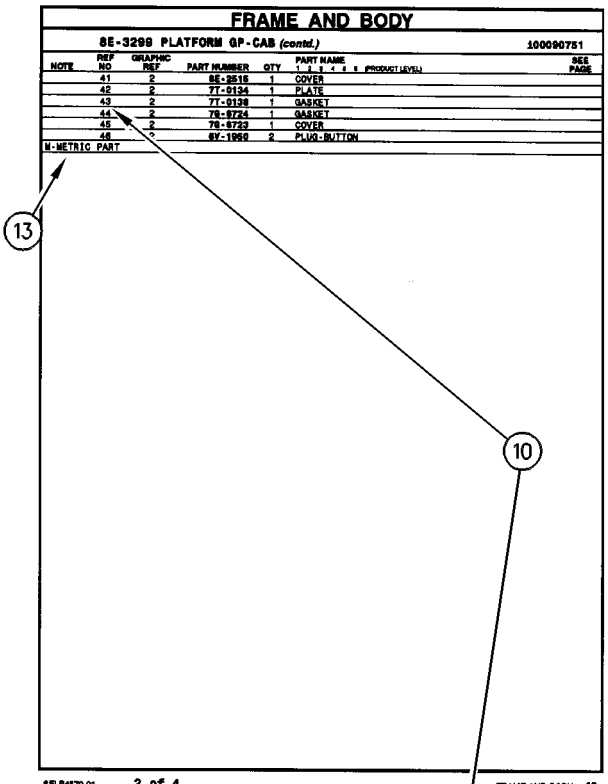

FRAME AND BODY

8E-3299 PLATFORM GP-CAB (contd.)

100090751

NOTE	REF NO	GRAPHIC REF	PART NUMBER	QTY	PART NAME (1 2 3 4 5 6 PRODUCT LEVEL)	SEE PAGE
	41	2	8E-3515	1	COVER	
	42	2	7T-0134	1	PLATE	
	43	2	7T-0139	1	GASKET	
	44	2	7S-8724	1	GASKET	
	45	2	7S-8723	1	COVER	
	46	2	6V-1969	2	PLUG-BUTTON	

M-METRIC PART

SELP4570-01 2 of 4 FRAME AND BODY 13

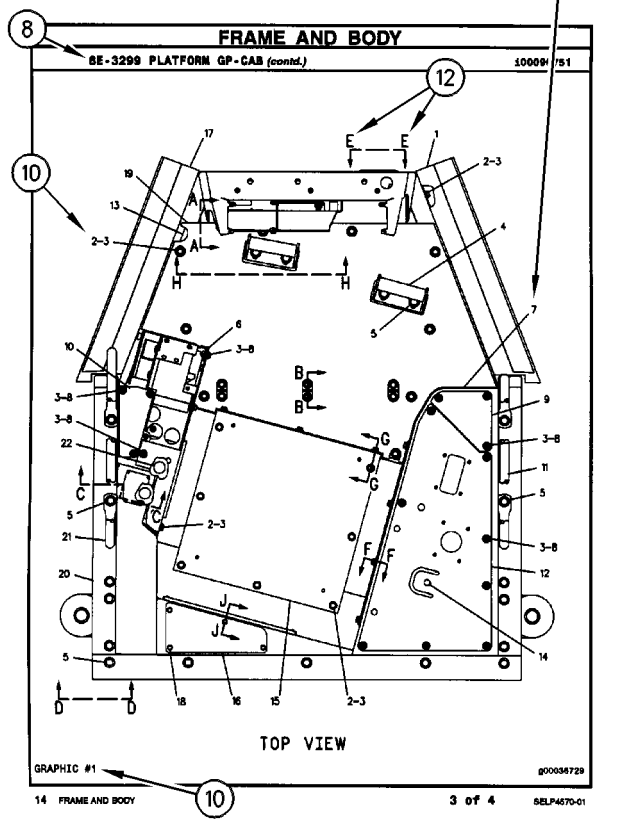

FRAME AND BODY

8E-3299 PLATFORM GP-CAB (contd.)

100090751

TOP VIEW

GRAPHIC #1 g00036729

14 FRAME AND BODY 10 3 of 4 SELP4570-01

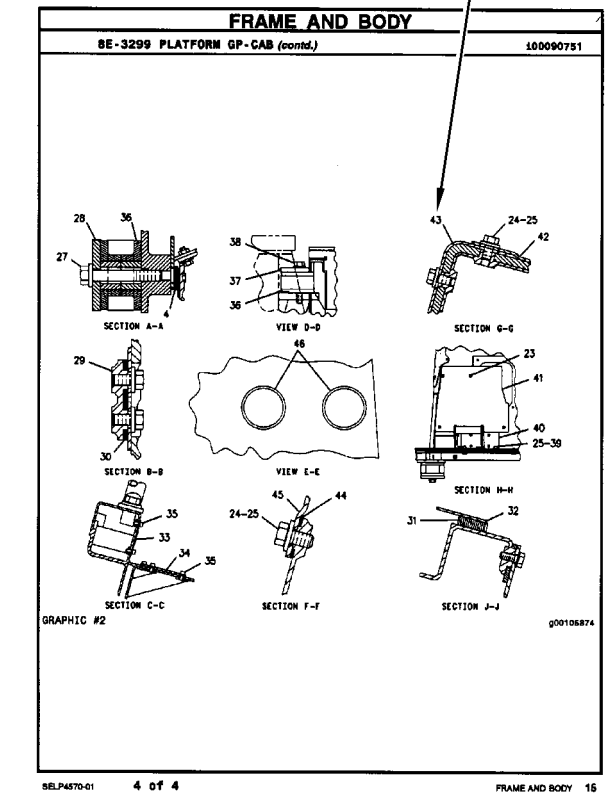

FRAME AND BODY

8E-3299 PLATFORM GP-CAB (contd.)

100090751

SECTION A-A VIEW D-D SECTION G-G

SECTION B-B VIEW E-E SECTION H-H

SECTION C-C SECTION F-F SECTION J-J

GRAPHIC #2 g00105874

SELP4570-01 4 of 4 FRAME AND BODY 15

INFORMAÇÃO GERAL

1. IDENTIFICAÇÃO DA MÁQUINA

As máquinas Caterpillar são identificadas pelos Números de Informação do Produto (PIN). Alguns componentes incluídos numa máquina podem ser identificados por Números de Série (S/N). Componentes típicos que serão enumerados com números de série incluem motores, transmissões, lâminas e ríperes. Além do número de série, a máquina e o motor são ainda identificados por números de arranjo e, em alguns casos, números de modificações. Tais números encontram-se na(s) placa(s) de identificação do produto e na placa mestre no compartimento do operador.

SIS ***Novidades***

A partir do primeiro trimestre de 2001 o Número de Identificação de Produto da Caterpillar (PIN) precisa ser mudado de 8 para 17 caracteres. Esforçando-se para fornecer uma identificação uniforme de equipamentos, a Caterpillar e outros fabricantes de equipamento de construção estão mudando para atender a versão mais atualizada do padrão de identificação de produtos. Os números de PIN para produtos de aplicações não rodoviárias são definidos pela ISO 10261. O novo formato de número PIN será adotado em todas as máquinas e grupos geradores Caterpillar. As placas e as marcações do chassi mostrarão os 17 dígitos de PIN. O novo formato terá a seguinte disposição:

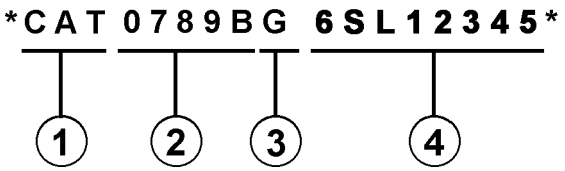

Onde:

1. Código de Fabricação Mundial da Caterpillar (dígitos 1-3)

2. Descrição da Máquina (dígitos 4-8)

3. Dígito de Verificação (dígito 9)

4. Seção de Indicador da Máquina (MIS) ou Número de Seqüência de Produto (dígitos 10-17). Estes eram anteriormente chamados de Número de Série.

Máquinas e grupos geradores produzidos antes do primeiro trimestre de 2001 manterão o formato de 8 caracteres de PIN.

Componentes como motores, transmissões, eixos, ferramentas de trabalho, etc. continuarão a usar Número de Série (S/N) com oito caracteres.

2. COMO OBTER PEÇAS

⚠ CUIDADO

Quando peças de substituição são exigidas para este produto, a Caterpillar recomenda a utilização de peças de substituição Caterpillar ou peças com as especificações equivalentes incluindo, mas não limitadas, à dimensões físicas, tipos, resistência e materiais.

A inobservância desta advertência poderá resultar em falhas prematuras, danos ao produto, ferimentos ou morte.

As Peças de Reposição de Qualidade Caterpillar encontram-se disponíveis nos revendedores Caterpillar no mundo inteiro. Seus estoques de peças são atualizados e incluem todas as peças normalmente necessárias para proteger seu investimento em máquinas Caterpillar. Alguns revendedores podem oferecer jogos de reparo ou peças de troca/remanufaturadas disponíveis como uma opção da alternativa de reparo mais eficaz para uma situação específica. Ao encomendar peças, seu pedido deve especificar a quantidade, o número e o nome da peça e o número de série/número de identificação do produto referentes à máquina para a qual as peças se destinam.

3. ORGANIZAÇÃO DO MANUAL DE PEÇAS

A informação do produto neste manual é apresentada em forma de "elementos de informação" que representam todos os componentes para o modelo específico. Arranjo de Motor e Grupo de Assento são exemplos de elementos de informação. Os elementos de informação são organizados em ordem alfabética por nome de peça ou secundariamente, por número de peça incluído em cada seção principal do manual.

4. LISTA DE CONTEÚDOS

A Lista de Conteúdos (TOC) se encontra no princípio do manual. A Lista de Conteúdos (TOC) relaciona em cada seção do manual uma lista completa com todos os elementos de informação organizados conforme aparecem no manual. Números de página são fornecidos para que se tenha referência rápida de ilustrações de peças detalhadas e listas de conteúdos que podem receber serviço de manutenção.

5. ÍNDICE DE PEÇAS DE MANUTENÇÃO

O Índice de Peças de Manutenção, localizado perto do princípio do manual, faz referência aos números de peça de manutenção usados com maior frequência, fornecendo uma descrição, a quantidade, o uso e o número de página. Esta informação é organizada com a descrição da peça em ordem alfabética.

6. ÍNDICE

O Índice localizado perto do princípio do manual, consiste de uma lista em ordem alfabética de todos os elementos de informação incluídos no manual. Números de página são fornecidos para que se tenha referência rápida de ilustrações de peças detalhadas e listas de conteúdos que podem receber serviço de manutenção.

7. ÍNDICE DE NÚMERO DE PEÇA

Um índice numérico relacionando todos os números de peça e a(s) página(s) correspondentes, aparece no final do manual.

8. LEGENDAS

As legendas localizadas no início de cada elemento de informação identificam o número e o nome de peça, juntamente com informação descritiva adicional. Informações sobre o Número de Informação do Produto (PIN) e o Número de Série (S/N) encontradas em cada legenda devem ser usadas para selecionar a informação correta sobre uma máquina específica. Opções de substituição no campo, identificação de componentes de acessórios opcionais e informações sobre onde são utilizados ("parte de") são também fornecidas.

A primeira linha de uma legenda é indicada em tipo maior para indicar o princípio de um elemento de informação. Legendas para páginas adicionais que podem ser necessárias para ilustrar um elemento de informação serão apresentadas em tipo padrão e incluirão o termo *(continua)* .

9. NÃO DISPONÍVEL SEPARADAMENTE

Em alguns casos, é necessário mostrar peças não disponíveis separadamente que têm uma ligação com listas de conteúdos de nível inferior que podem receber serviço de manutenção. Os números de peça destes componentes não disponíveis aparecerão em *itálico* , a fim de indicar que não estão disponíveis.

10. NÙMEROS DE REFERÊNCIA À LISTA DE PEÇAS

Os números indicados na coluna Ref No (No. de Referência) correspondem-se aos números usados no(s) gráfico(s) correspondente(s). Um sufixo com letras pode ser acrescentado a um número de referência para identificar itens de conteúdo de nível inferior. Os números indicados na coluna Graphic Ref (Referência de Gráfico) referem-se ao identificador de número de gráfico presente no canto esquerdo inferior de cada ilustração. O número de Referência de Gráfico pode ser usado em combinação com o item Ref No para determinar-se o número de peça correto. Poderá haver omissão intencional de um número de referência (Ref No) de uma lista de conteúdos uma vez que as informações são atualizadas para refletir os números de peça mais recentes que podem receber serviço de manutenção.

11. NOMES DE PEÇAS DESALINHADOS

Quando um nome de peça encontra-se desalinhado numa lista de peças, significa que tal item faz parte do (está incluído no) grupo ou conjunto sob o qual está relacionado.

12. LETRAS DE REFERÊNCIA NAS ILUSTRAÇÕES

Quando necessário, as ilustrações contêm letras de referência (A, B, C, etc.) que são utilizadas para seguir tubulações e cabos elétricos de um ponto a outro. Também foram utilizadas para indicar onde se pode reconectar as ilustrações que foram separadas.

13. ABREVIAÇÕES E SÍMBOLOS

O.D. – "Outside Diameter" (Diâmetro Externo)
I.D. – "Inside Diameter" (Diâmetro Interno)
A – Não faz parte deste grupo
B – Use conforme necessário
C – Indica modificação
D – Vendido por metro
E – Vendido por centímetro
F – Não ilustrado
G – Vendido por polegada
I – Consulte o seu revendedor quanto a mangueira
M – Peça métrica
R – Peça remanufaturada pode estar disponível; consulte o seu revendedor Cat
Y – Ilustração separada
Z – Não disponível separadamente

SIS *Novidades*

14. <END>

Este símbolo indica o final de um elemento de informação.

INFORMAÇÃO GERAL

NOTA:

Os contínuos aperfeiçoamentos e avanços no projeto do produto podem ocasionar modificações em sua máquina que talvez ainda não estejam incluídas nesta publicação. Sempre que surgirem dúvidas quanto a um produto Caterpillar ou quanto à presente publicação, consulte o seu revendedor Caterpillar para obter as informações mais recentes disponíveis.

FRAME AND BODY

8E-3299 PLATFORM GP-CAB

PIN 3SK1-09999

SMCS-7253 100090751

NOTE	REF NO	GRAPHIC REF	PART NUMBER	QTY	PART NAME (1 2 3 4 5 6 PRODUCT LEVEL)	SEE PAGE
	1	1	3T-3963	1	PLATE AS	
	2	1	5B-2992	25	BOLT (3/8-16X.750IN)	
	3	1	6P-1075	41	WASHER-HARD (38MM THK)	
	4	1	8P-1444	2	SUPPORT AS-FOOT	
	5	1	8P-2228	19	BOLT (1/2-13X1IN)	
		1	8P-[illegible]4	19	WASHER-HARD (41MM THK)	
	6	1	8E-8136	1	COVER AS-LH	
		1	9F-2978	6	NUT-WELD (3/8-16 THD)	
		1	1P-8188	1	CLIP	
	7	1	7S-3411	4	COVER	
	8	1	6J-0488	18	SCREW-HEAD (3/8-16X.875IN)	
	9	1	[illegible]-4474	1	COVER	
		1	8E-8[illegible]7		GASKET	
	10	1	8E-3248	1	[illegible]	
		1	8E-3250	1	GASKET	
	11	1	3T-3635	1	HANDHOLD	
	12	1	8E-8078	1	COVER AS	
		1	9F-2978	8	NUT-WELD (3/8-16 THD)	
		1	8E-8078	1	GASKET	
	13	1	7T-0131	1	FLOORPLATE AS	
		1	1F-0748	4	NUT-WELD (1/2-13 THD)	
	14	1	7Y-8087	1	PLUG-BUTTON	
	15	1	7T-0136	1	PLATE AS	
		1	9F-2978	6	NUT-WELD (3/8-16 THD)	
	16	1	7T-8086	1	COVER	
		1	7T-8779	1	GASKET	
	17	1	3T-3981	1	PLATE AS	
	18	1	6T-9364	4	BOLT (1/4-20X.625IN)	
M		1	6T-4205	4	WASHER-HARD (2MM THK)	
	19	1	6L-8484	1	FLOOR MAT	
	20	1	9E-8946	1	MODULE AS-OPERATOR	
	21	1	3T-3634	1	HANDHOLD	
	22	1	9P-8571	2	PLUG	
	23	2	6T-9364	4	BOLT (1/4-20X.625IN)	
M		2	6T-4205	4	WASHER-HARD (2MM THK)	
	24	2	5B-3062	17	BOLT (3/8-16X.750IN)	
	26	2	6F-1075	21	WASHER-HARD (38MM THK)	
	26	2	7T-0135	1	SEAL	
	27	2	7X-0378	2	BOLT (3/4-10X5IN)	
		2	7X-0682	2	WASHER-HARD (64MM THK)	
	28	2	3T-3482	2	PLATE	
	29	2	3T-8280	1	PLATE AS	
		2	7S-0038	8	SPACER	
	30	2	3T-8281	1	SEAL	
	31	2	7S-8017	1	GASKET	
	32	2	7S-8018	1	COVER AS	
		2	2R-2276	2	WASHER	
		2	6P-0028	2	SCREW-KNURLED	
	33	2	9W-3429	1	COVER	
	34	2	8E-8697	1	COVER	
	35	2	9D-3031	8	SCREW-SOCKET HEAD	
	36	2	9W-3142	8	MOUNTING	
	37	2	9W-9027	2	PLATE	
	38	2	7X-0390	2	BOLT (7/8-9X5IN)	
		2	7X-0672	2	WASHER-HARD	
	39	2	4L-8454	4	BOLT (3/8-16X1.0IN)	
	40	2	3T-4788	1	COVER	

12 FRAME AND BODY 1 of 4 SELP4570-01

FRAME AND BODY

8E-3299 PLATFORM GP-CAB (contd.)

100090751

NOTE	REF NO	GRAPHIC REF	PART NUMBER	QTY	PART NAME (1 2 3 4 5 6 PRODUCT LEVEL)	SEE PAGE
	41	2	8E-3515	1	COVER	
	42	2	7T-0134	1	PLATE	
	43	2	7T-0139	1	GASKET	
	44	2	7S-8724	1	GASKET	
	45	2	7S-8723	1	COVER	
	46	2	6Y-1969	2	PLUG-BUTTON	

M-METRIC PART

SELP4570-01 2 of 4 FRAME AND BODY 13

FRAME AND BODY

8E-3299 PLATFORM GP-CAB (contd.)

100090751

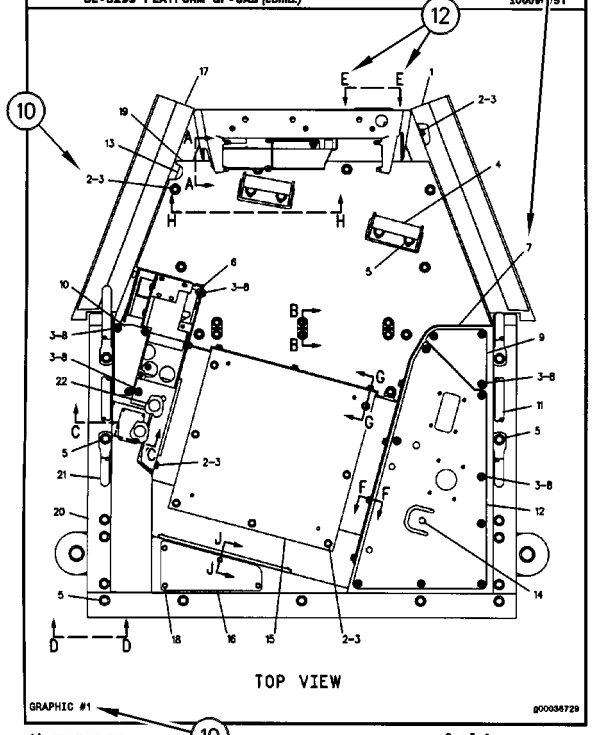

GRAPHIC #1 g00036729

14 FRAME AND BODY 3 of 4 SELP4570-01

FRAME AND BODY

8E-3299 PLATFORM GP-CAB (contd.)

100090751

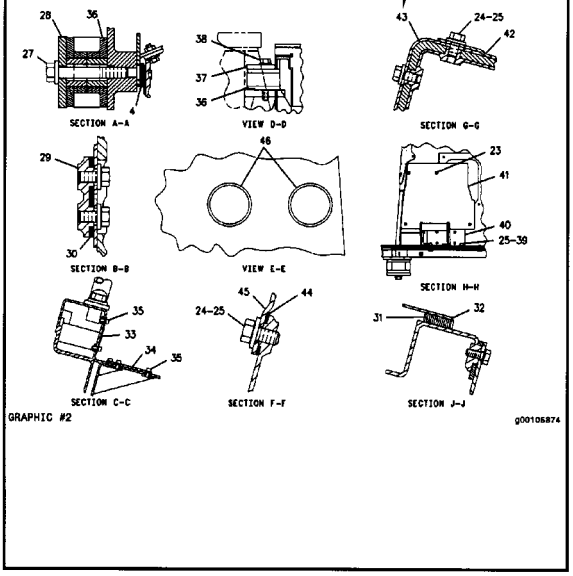

GRAPHIC #2 g00105874

SELP4570-01 4 of 4 FRAME AND BODY 15

ALLGEMEINE HINWEISE

1. MASCHINENKENNZEICHNUNG

Caterpillar-Maschinen sind mit PRODUCT IDENTIFICATION NUMBERS (PIN) (Produkt-Identnummern) gekennzeichnet. Einige Baugruppen, z.B. Motoren, Getriebe, Planierschilde und Aufreißer, sind mit SERIAL NUMBERS (S/N) (Seriennummern) gekennzeichnet. An der Maschine und am Motor befinden sich außerdem ARRANGEMENT NUMBERS (Ausrüstungsnummern) sowie in einigen Fällen MODIFICATION NUMBERS (Änderungsnummern). Sie befinden sich auf den PIN-Schildern und auf dem Typenschild im Fahrerhaus.

Bei Ersatzteilbestellungen müssen dem Händler alle diese Nummern zur Verfügung gestellt werden.

SIS ***Neu im Parts Manual***

Vom ersten Quartal 2001 ab wurde die Caterpillar Produkt-Identnummer (PIN) von 8 auf 17 Zeichen geändert. Um zur Standardisierung der Produkt-Identnummer beizutragen, sind Caterpillar und andere Baumaschinenhersteller bestrebt, die aktuellste Norm zur Produkt-Identnummerierung einzuführen. Produkt-Identnummern für Baumaschinen sind durch ISO 10261 definiert. Das neue Format der Produkt-Identnummern gilt für alle Caterpillar-Maschinen und -Stromaggregate. Die Produkt-Identschilder und -Identrahmenmarkierung enthalten die aus 17 Zeichen bestehende Identnummer. Das neue Format hat folgende Abschnitte:

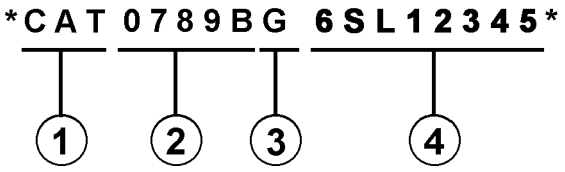

Abschnitte:

1. Caterpillars weltweiter Herstellungscode (Zeichen 1-3)

2. Modell (Zeichen 4-8)

3. Kontrollzeichen (Zeichen 9)

4. Maschinenspezifische Kennung (MIS) oder Produktsequenznummer (Zeichen 10-17). Diese wurde früher als Seriennummer bezeichnet.

Für vor dem ersten Quartal 2001 hergestellte Maschinen und Stromaggregate wird das aus 8 Zeichen bestehende PIN-Format beibehalten.

Bauteile wie z.B. Motoren, Getriebe, Achsen sowie Arbeitsgeräte werden weiterhin eine aus 8 Zeichen bestehende Seriennummer (S/N) aufweisen.

2. BESTELLEN VON ERSATZTEILEN

⚠ WARNUNG

Wenn für diese Maschine Ersatzteile benötigt werden, empfiehlt Caterpillar, ausschließlich Caterpillar-Ersatzteile oder solche zu verwenden, die die gleichen technischen Merkmale hinsichtlich Typ, Festigkeit, Werkzeugeigenschaften und die gleichen Maße aufweisen.

Bei Nichtbeachtung dieser Warnung besteht Verletzungs- oder sogar Lebensgefahr! Ferner kann Nichtbeachtung vorzeitige Ausfälle der Teile und Beschädigung der Maschine zur Folge haben.

Original Caterpillar-Ersatzteile können weltweit bei jedem Caterpillar-Händlern bestellt werden. Die umfangreichen Händlerlager enthalten normalerweise alle Teile, die Sie für Ihre Caterpillar-Maschine benötigen. Einige Händler bieten Reparatursätze, Austausch- oder werküberholte Teile an, so daß Sie eine Auswahl unter verschiedenen Reparaturmöglichkeiten treffen können. Ihre Bestellung muß folgende Angaben enthalten: Anzahl der benötigten Teile, Bestellnummer, Bezeichnung des Teils, Serien-Nr./Produkt-Ident-Nr., Ausrüstungs-Nr. und Änderungs-Nr. der Maschine, für die diese Teile benötigt werden.

3. AUFBAU DES PARTS MANUAL

Die Produktinformationen für alle Komponenten eines bestimmten Modells sind in INFORMATION ELEMENTS (Informationseinheiten) gegliedert. ENGINE ARRANGEMENT (Motorausführung) und SEAT GROUP (Fahrersitz) sind Beispiele für solche Informationseinheiten. Sie sind innerhalb jeder Gruppe alphabetisch, entsprechend der Ersatzteilbezeichnung, und zusätzlich numerisch, entsprechend der Ersatzteilnummer, geordnet.

4. INHALTSVERZEICHNIS

Das Inhaltsverzeichnis befindet sich am Anfang des Buches. Im Inhaltsverzeichnis werden die einzelnen Abschnitte des Buches aufgeführt. Die Abschnitte enthalten eine vollständige Aufstellung aller Informationseinheiten. Diese sind entsprechend ihrem Erscheinen im Buch geordnet. Das Inhaltsverzeichnis enthält Seitenangaben für Schnellverweise auf detaillierte Abbildungen und Teillisten.

5. INDEX FÜR WARTUNGSTEILE

Der Index für Wartungsteile vorn im Buch enthält die Bestellnummern, Seitenangaben, Mengenangaben und Informationen über den Einsatzbereich für die am häufigsten benötigten Ersatzteile. Die Angaben sind alphabetisch entsprechend der Teilebezeichnung geordnet.

6. INDEX

Der Index vorn im Buch enthält eine alphabetische Liste aller Informationseinheiten. Er enthält Seitenangaben für Schnellverweise auf detaillierte Abbildungen und Teillisten.

7. INDEX FÜR BESTELLNUMMERN

Hinten im Buch befindet sich ein numerischer Index, mit allen Bestellnummern und dem Hinweis auf die Seite, auf der sich die betreffende Abbildung befindet.

8. ÜBERSCHRIFTEN

Die Überschriften, die sich am Anfang jeder der Informationseinheiten befinden, enthalten Bestellnummern, Ersatzteilbezeichnungen und zusätzliche beschreibende Informationen. Produkt-Ident- und Seriennummern in den Überschriften sollten zur Auswahl der richtigen Informationen für die betreffende Maschine verwendet werden. Die Überschriften enthalten außerdem Informationen über möglichen Außendienstersatz, mögliche Baugerätekomponenten und die Baugruppe, zu der das Teil gehört.

Die erste Zeile einer Überschrift erscheint in einer größeren Schriftart, um den Anfang einer Informationseinheit zu kennzeichnen. Überschriften für zusätzliche Seiten, die zur Erläuterung einer Informationseinheit notwendig sind, erscheinen in normaler Schriftart und enthalten den Begriff "(contd.)".

9. NICHT EINZELN LIEFERBARE TEILE

In einigen Fällen ist es notwendig nicht lieferbare Teile, die selbst mit einer eigenen Teilliste im Buch vertreten sind, aufzuführen. Die Bestellnummern dieser nicht einzeln lieferbaren Teile erscheinen kursiv, wodurch angezeigt wird, daß sie nur in Verbindung mit anderen Teilen lieferbar sind.

10. REFERENZNUMMER FÜR ERSATZTEILE

Die Zahlen, die in der Spalte "Ref No" aufgeführt sind, stimmen mit den Zahlen in den beigefügten Abbildungen überein. Ein Buchstaben-Suffix kann zu einer Referenznummer hinzugefügt werden, um zu kennzeichnen, daß das Teil mit einer eigenen Teilliste im Buch aufgeführt ist. Die in der Spalte "Graphic Ref" angeführten Zahlen verweisen auf die Identifikationsnummer der Abbildung, die sich in der linken unteren Ecke der Abbildung befindet. Diese Nummer kann zusammen mit der Referenznummer des Teils angegeben werden, um die richtige Ersatzteilnummer zu ermitteln. Referenznummern können absichtlich weggelassen werden, da die Nummern der lieferbaren Ersatzteile ständig aktualisiert werden.

11. EINGERÜCKTE BEZEICHNUNGEN

Wenn eine Bezeichnung eingerückt ist, wird dadurch angezeigt, daß das Teil zu einer Baugruppe gehört, unter deren Bezeichnung es eingerückt ist.

12. REFERENZBUCHSTABEN

Falls erforderlich sind in den Abbildungen Referenzbuchstaben enthalten (z.B. A, B, C, usw.), die Leitungen und Kabelbäume von einem Punkt zum anderen verfolgen. Außerdem geben sie die Stelle an, an der getrennte Abbildungen fortgesetzt werden.

13. ABKÜRZUNGEN UND SYMBOLE

O.D. – Außendurchmesser
I.D. – Innendurchmesser
A – kein Teil dieser Gruppe
B – nach Bedarf verwenden
C – Hinweis auf eine Änderung
D – in Meter-Länge bestellen
E – in Zentimeter-Länge bestellen
F – nicht gezeigt
G – in Zoll-Länge bestellen
I – siehe "Hose Fabrication Guide"
M – metrisches Teil
R – werküberholtes Teil unter Umständen lieferbar
Y – separate Abbildung
Z – nicht einzeln lieferbar

SIS *Neu im Parts Manual*

14. <END>

Dieses Symbol zeigt das Ende eines Informationselements an.

ANMERKUNG:

Ständig vorgenommene Verbesserungen und Weiterentwicklungen an Ihrer Maschine können Änderungen verursachen, die in der vorliegenden Ausgabe noch nicht berücksichtigt sind. Fragen zu Ihrer Caterpillar-Maschine oder diesem Ersatzteilbuch beantwortet Ihr Caterpillar-Händler.

ALLGEMEINE HINWEISE

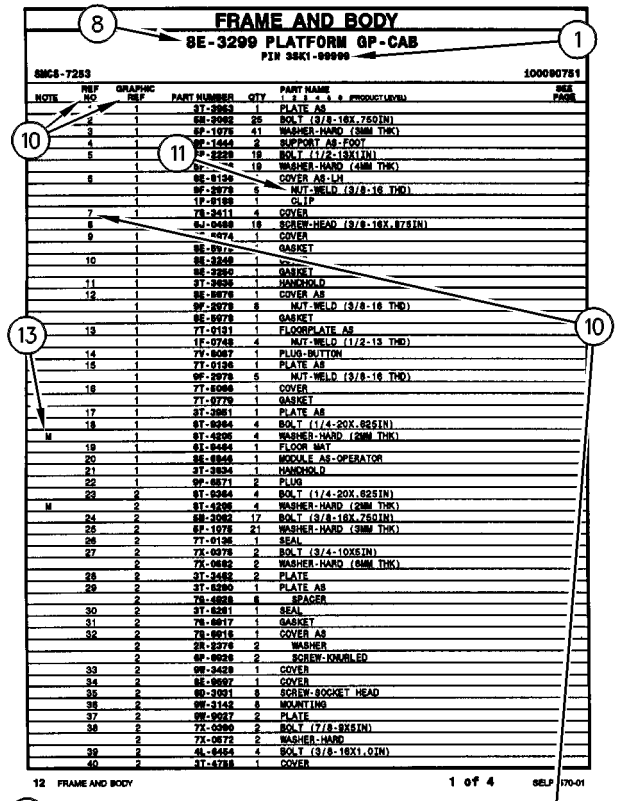

NOTE	REF NO	GRAPHIC REF	PART NUMBER	QTY	PART NAME (1 2 3 4 5 6 PRODUCT LEVEL)	SEE PAGE
	1	1	3T-2953	1	PLATE AS	
	2	1	5B-2992	25	BOLT (3/8-16X.750IN)	
	3	1	5P-1075	41	WASHER-HARD (3MM THK)	
	4	1	9P-1444	2	SUPPORT AS-FOOT	
	5	1	9P-2229	19	BOLT (1/2-13X1IN)	
		1	5P-[illegible]4	19	WASHER-HARD (4MM THK)	
	6	1	9E-9136	1	COVER AS-LH	
		1	9F-2979	6	NUT-WELD (3/8-16 THD)	
		1	1P-0188	1	CLIP	
	7	1	7S-3411	4	COVER	
	8	1	6J-0488	18	SCREW-HEAD (3/8-16X.875IN)	
	9	1	[illegible]-4474	1	COVER	
		1	9E-9[illegible]7		GASKET	
	10	1	9E-3249	1	[illegible]	
		1	9E-3250	1	GASKET	
	11	1	3T-3935	1	HANDHOLD	
	12	1	9E-9078	1	COVER AS	
		1	9F-2979	8	NUT-WELD (3/8-16 THD)	
		1	9E-9079	1	GASKET	
	13	1	7T-0131	1	FLOORPLATE AS	
		1	1F-0748	4	NUT-WELD (1/2-13 THD)	
	14	1	7Y-9087	1	PLUG-BUTTON	
	15	1	7T-0136	1	PLATE AS	
		1	9F-2979	6	NUT-WELD (3/8-16 THD)	
	16	1	7T-9096	1	COVER	
		1	7T-9779	1	GASKET	
	17	1	3T-3981	1	PLATE AS	
	18	1	6T-9364	4	BOLT (1/4-20X.625IN)	
M		1	6T-4205	4	WASHER-HARD (2MM THK)	
	19	1	6L-9484	1	FLOOR MAT	
	20	1	9E-9946	1	MODULE AS-OPERATOR	
	21	1	3T-3934	1	HANDHOLD	
	22	1	9P-8571	2	PLUG	
	23	2	6T-9364	4	BOLT (1/4-20X.625IN)	
M		2	6T-4205	4	WASHER-HARD (2MM THK)	
	24	2	5B-3062	17	BOLT (3/8-16X.750IN)	
	25	2	5P-1075	21	WASHER-HARD (3MM THK)	
	26	2	7T-9135	1	SEAL	
	27	2	7X-9378	2	BOLT (3/4-10X5IN)	
		2	7X-0682	2	WASHER-HARD (6MM THK)	
	28	2	3T-3482	2	PLATE	
	29	2	3T-5290	1	PLATE AS	
		2	7S-0028	8	SPACER	
	30	2	3T-5281	1	SEAL	
	31	2	7S-9017	1	GASKET	
	32	2	7S-9016	1	COVER AS	
		2	2R-2276	2	WASHER	
		2	6P-9028	2	SCREW-KNURLED	
	33	2	9W-3429	1	COVER	
	34	2	9E-9697	1	COVER	
	35	2	9D-3931	8	SCREW-SOCKET HEAD	
	36	2	9W-3142	8	MOUNTING	
	37	2	9W-9027	2	PLATE	
	38	2	7X-0390	2	BOLT (7/8-9X5IN)	
		2	7X-0672	2	WASHER-HARD	
	39	2	4L-9454	4	BOLT (3/8-16X1.0IN)	
	40	2	3T-4788	1	COVER	

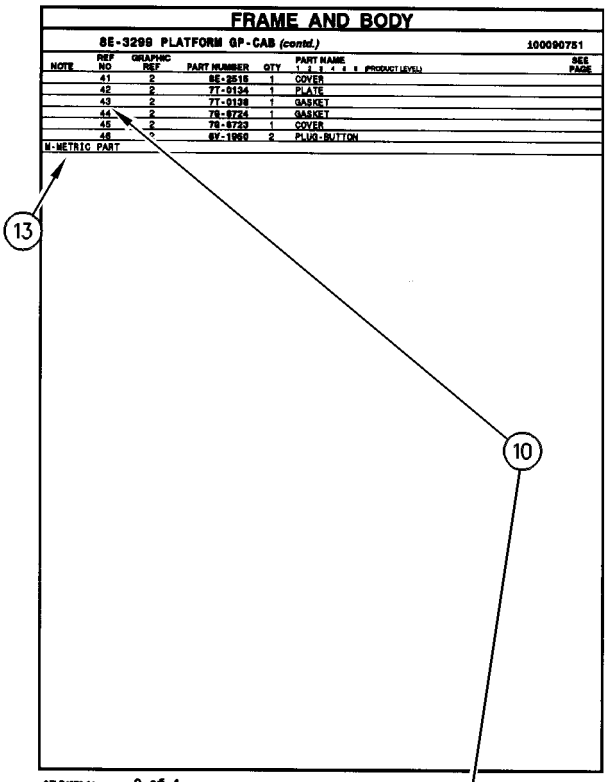

NOTE	REF NO	GRAPHIC REF	PART NUMBER	QTY	PART NAME (1 2 3 4 5 6 PRODUCT LEVEL)	SEE PAGE
	41	2	8E-3515	1	COVER	
	42	2	7T-0134	1	PLATE	
	43	2	7T-0139	1	GASKET	
	44	2	7S-9724	1	GASKET	
	45	2	7S-9723	1	COVER	
	46	2	6V-1969	2	PLUG-BUTTON	
M-METRIC PART						

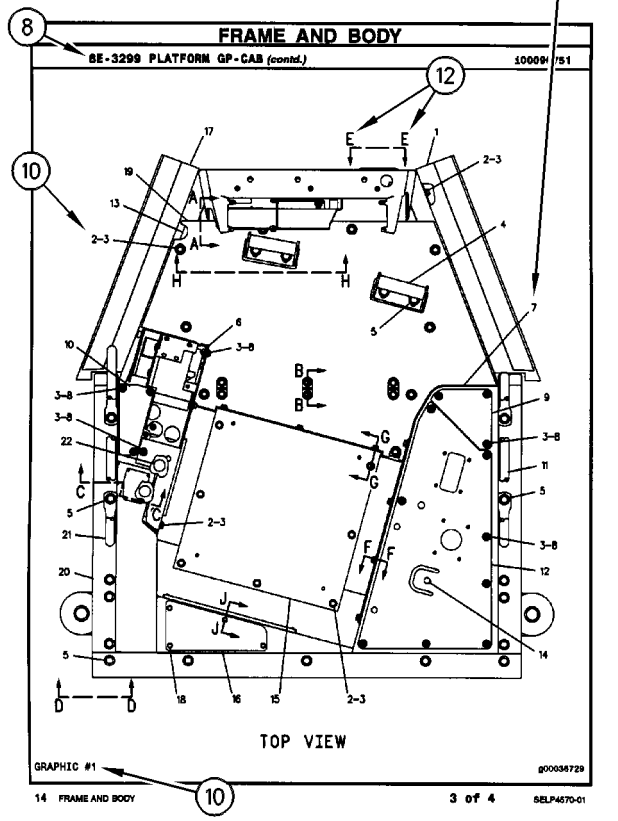

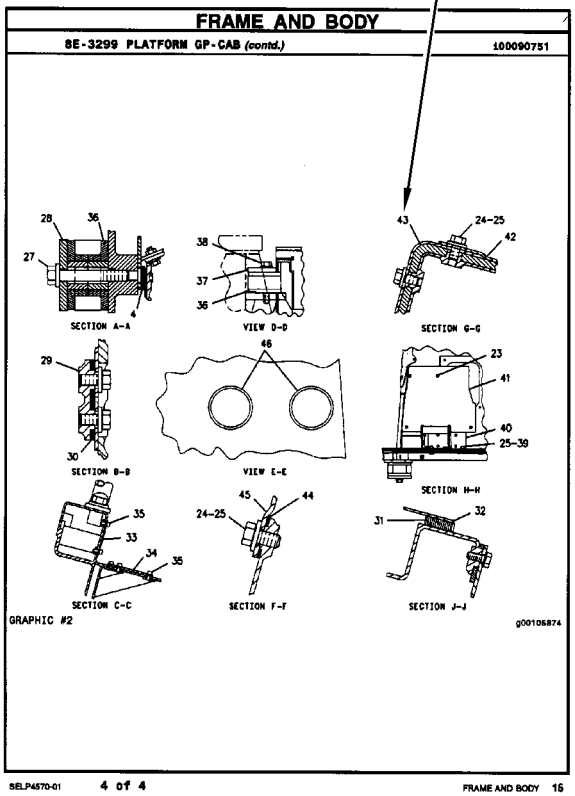

REMANUFACTURED COMPONENTS

As an option when making repairs consider Caterpillar Remanufactured Components. Components that are available through the Caterpillar Remanufactured Program are identified three ways in the parts book:

- with the letter R in the note field of the parts list
- with an R* at the beginning of the first line of the caption
- with an *R at the end of the first line of the caption

Typical components included in the Remanufacturing Program include:

ALTERNATORS
CONNECTING RODS
CRANKSHAFTS - UNDERSIZE
CRANKSHAFTS - UPGRADE TO NEW
CYLINDER HEADS
ELECTRONIC CONTROL MODULES (ECM)
ELECTRONIC SENSORS
FUEL INJECTORS
FUEL NOZZLES
FUEL PUMPS
GOVERNORS
OIL PUMPS
PISTONS
SHORT BLOCKS
STARTERS
TURBOCHARGERS - COMPLETE
TURBOCHARGER CARTRIDGES
WATER PUMPS

Caterpillar Remanufactured engines for many engine arrangements are also available.

COMPOSANTS RÉNOVÉS

Comme option de réparation, considérer les composants rénovés Caterpillar. Les composants disponibles dans le cadre du programme Caterpillar de composants rénovés sont identifiés de trois façons dans le catalogue de pièces:

- avec la lettre "R" dans l'espace note de la liste des pièces
- avec R* au début de la première ligne des légendes
- avec *R à la fin de la première ligne des légendes

Les composants suivants figurent parmi les composants typiques du programme de rénovation:

ALTERNATEURS
BIELLES
VILEBREQUINS - SOUS-DIMENSIONNÉS
VILEBREQUINS - REMIS À NEUF
CULASSES
MODULES DE COMMANDE ÉLECTRONIQUE (ECM)
CAPTEURS ÉLECTRONIQUES
INJECTEURS
TÊTES D'INJECTEURS
POMPES À CARBURANT
RÉGULATEURS
POMPES À HUILE
PISTONS
BLOCS EMBIELLÉS
DÉMARREURS
TURBOCOMPRESSEURS - COMPLETS
CARTOUCHES DE TURBOCOMPRESSEUR
POMPES À EAU

Des moteurs rénovés sont aussi disponibles pour plusieurs versions de moteur.

COMPONENTES REMANUFACTURADOS

Al hacer reparaciones, tenga en cuenta la opción de Componentes Remanufacturados Caterpillar. Los componentes que están disponibles por medio del programa de Productos Remanufacturados Caterpillar se identifican de tres maneras en el manual de piezas:

- con la letra R en el espacio de Nota de la lista de piezas
- con una R* al comienzo de la primera línea de la leyenda
- con una *R al final de la primera línea de la leyenda

Los componentes que se incluyen típicamente en el Programa de Productos Remanufacturados son:

ALTERNADORES
BIELAS
CIGÜEÑALES - BAJOMEDIDA
CIGÜEÑALES - REMANUFACTURADOS A NUEVO
CULATAS
MÓDULOS DE CONTROL ELECTRÓNICO (ECM)
SENSORES ELECTRONICOS
INYECTORES
BOQUILLAS
BOMBAS DE COMBUSTIBLE
REGULADORES
BOMBAS DE ACEITE
PISTONES
MONOBLOQUES
MOTORES DE ARRANQUE
TURBOCOMPRESORES - COMPLETOS
NÚCLEOS DE TURBOCOMPRESOR
BOMBAS DE AGUA

También hay disponibles motores Remanufacturados Caterpillar para muchas de las configuraciones de motores.

COMPONENTES REMANUFATURADOS

Considere o uso de Componentes Remanufaturados Caterpillar ao efetuar reparos. Os componentes disponíveis através do Programa de Remanufatura Caterpillar são identificados de três formas no manual de peças:

- com um R na área da nota da lista de peças
- com um R* no princípio da primeira linha da legenda
- com um *R no final da primeira linha da legenda

Os componentes típicos que constam no Programa de Remanufatura incluem:

ALTERNADORES
BIELAS
VIRABREQUINS - SUBMEDIDAS
VIRABREQUINS - ATUALIZAÇÃO
CABEÇOTES
MÓDULOS DE CONTROLE ELETRÔNICO (ECM)
SENSORES ELETRÔNICOS
INJETORES DE COMBUSTÍVEL
BICOS DE ABASTECIMENTO DE COMBUSTÍVEL
BOMBAS DE COMBUSTÍVEL
GOVERNADORES
BOMBAS DE ÓLEO
PISTÕES
BLOCOS BÁSICOS DO MOTOR
MOTORES DE PARTIDA
TURBOALIMENTADORES - COMPLETOS
CARTUCHOS DE TURBOALIMENTADORES
BOMBAS D'ÁGUA

Motores Remanufaturados Caterpillar também encontram-se disponíveis para diversos arranjos de motor.

WERKÜBERHOLTE AT-PRODUKTE

Bei Reparaturen sollten werküberholte AT-Produkte von Caterpillar in Betracht gezogen werden. Die durch das AT-Programm von Caterpillar erhältlichen Teile sind im Parts Book auf drei verschiedene Arten gekennzeichnet:

- mit dem Buchstaben R in der Spalte NOTE der Ersatzteilliste
- mit einem R* am Anfang der ersten Zeile der Überschrift
- mit einem *R am Ende der ersten Zeile der Überschrift

Das AT-Programm umfaßt u.a. folgende Produkte:

DREHSTROMGENERATOREN
PLEUELSTANGEN
KURBELWELLEN - MIT UNTERMASS
KURBELWELLEN - MIT ORIGINALMASS
ZYLINDERKÖPFE
ELEKTRONISCHE STEUEREINHEITEN (EMC)
ELEKTRONISCHE SENSOREN
PUMPENDÜSEN
EINSPRITZDÜSEN
KRAFTSTOFFPUMPEN
DREHZAHLREGLER
ÖLPUMPEN
KOLBEN
TEILMOTOREN
ANLASSER
TURBOLADER - KOMPLETT
TURBOLADERLAUFZEUGE
KÜHLWASSERPUMPEN

Viele Motoren können durch werküberholte AT-Motoren von Caterpillar ersetzt werden.

SUPPLEMENTAL COOLANT ADDITIVES

CUSTOMER BENEFITS:

Protects against cavitation, foam, erosion, corrosion, and scale buildup in cooling systems.

- Provides measured coolant conditioner.

DESCRIPTION:

Additives deplete from the coolant with normal operation. For this reason, Supplemental Coolant Additives (SCA) must be added to all heavy duty coolants at regular intervals. In addition, when not using a fully formulated, pre-charged antifreeze, like Caterpillar's DEAC, an initial charge of SCA must be added to the cooling system. The amount of SCA added to the system is dependent on the capacity of the system.

The SCA for initial fill is provided as a liquid. SCA's for maintenance intervals are available in liquid form and as a spin-on element. (No Spin-on available for 3600 Family of Engines)

NOTE:

The amount of SCA added at initial fill is not the same as the amount added at maintenance intervals.

The coolant additive elements can be used with any ethylene or propylene glycol type antifreeze which meets ASTM D4985 or ASTM D5345 Specifications.

NOTE:

For use with standard heavy duty coolant only, not for use with Extended Life Coolant.

PARTS NEEDED:

Cooling System Capacity		Liquid SCA at Initial Fill	Liquid SCA at Maintenance*	Spin-on SCA Maintenance Element*
Liters	Gallons			
22-30	(6-8)	3P-2044 (1)	6V-3542 (1)	111-2370 (1)
30-38	(8-10)	3P-2044 (1) 6V-3542 (1)	111-2372 (1)	111-2369 (1)
38-49	(10-13)	3P-2044 (1) 8T-1589 (1)	111-2372 (1)	111-2369 (1)
49-64	(13-17)	3P-2044 (2)	8T-1589 (1)	9N-3368 (1)
64-83	(17-22)	3P-2044 (2) 8T-1589 (1)	111-2372 (1) 6V-3542 (1)	111-2371 (1)
83-114	(22-30)	3P-2044 (3) 8T-1589 (1)	3P-2044 (1)	9N-3718 (1)
114-163	(30-43)	3P-2044 (5)	3P-2044 (1) 6V-3542 (1)	111-2371 (2)
163-242	(43-64)	3P-2044 (8)	3P-2044 (2)	9N-3718 (2)

** Normal maintenance period is 250 hrs. See your Operation and Maintenance Manual for complete coolant maintenance instructions.*

( ) Indicates quantity required.

ADDITIFS POUR LIQUIDE DE REFROIDISSEMENT

AVANTAGES POUR LE CLIENT

L'additif protège contre la cavitation, la mousse, l'érosion, la corrosion et l'accumulation de dépôts dans le circuit de refroidissement.

- L'additif complémentaire fournit une quantité mesurée d'additif.

DESCRIPTION:

Les additifs s'épuisent pendant l'utilisation du moteur. C'est pourquoi l'on doit ajouter de l'additif au liquide de refroidissement/antigel pour moteurs diesel à intervalles réguliers. En plus, si l'on n'utilise pas de l'antigel entièrement formulé et pré-chargé comme le liquide de refroidissement/antigel Caterpillar pour moteurs diesel, une quantité initiale d'additif doit être ajoutée au circuit de refroidissement. La quantité d'additif à ajouter au circuit dépend de la contenance du circuit.

L'additif pour le remplissage initial est fourni sous forme liquide. L'additif pour l'entretien ultérieur est disponible sous forme liquide et sous forme d'élément à visser. (Il n'y a pas d'élément à visser pour les moteurs de la famille 3600).

NOTA:

La quantité d'additif à ajouter au remplissage initial diffère de la quantité à ajouter aux intervalles d'entretien.

Les éléments d'additif peuvent être utilisés avec tout antigel de type éthylène ou propylène-glycol conforme à la norme ASTM D4985 ou ASTM D5345.

NOTA:

A utiliser uniquement avec du liquide de refroidissement pour moteurs diesel et non avec le liquide de refroidissement longue durée.

PIÈCES NÉCESSAIRES:

Contenance du circuit de refroidissement		Additif liquide au remplissage initial	Additif liquide aux intervalles d'entretien*	Elément d'additif à visser aux intervalles d'entretien*
Litres	Gallons U.S.			
22-30	(6-8)	3P-2044 (1)	6V-3542 (1)	111-2370 (1)
30-38	(8-10)	3P-2044 (1) 6V-3542 (1)	111-2372 (1)	111-2369 (1)
38-49	(10-13)	3P-2044 (1) 8T-1589 (1)	111-2372 (1)	111-2369 (1)
49-64	(13-17)	3P-2044 (2)	8T-1589 (1)	9N-3368 (1)
64-83	(17-22)	3P-2044 (2) 8T-1589 (1)	111-2372 (1) 6V-3542 (1)	111-2371 (1)
83-114	(22-30)	3P-2044 (3) 8T-1589 (1)	3P-2044 (1)	9N-3718 (1)
114-163	(30-43)	3P-2044 (5)	3P-2044 (1) 6V-3542 (1)	111-2371 (2)
163-242	(43-64)	3P-2044 (8)	3P-2044 (2)	9N-3718 (2)

** L'intervalle d'entretien normal est de 250 heures-service. Voir le Guide d'utilisation et d'entretien pour de plus amples renseignements concernant l'entretien du circuit de refroidissement.*

( ) Indique la quantité exigée.

ADITIVOS DE REFRIGERANTE SUPLEMENTARIOS

VENTAJAS PARA EL USUARIO:

Protegen contra la cavitación, la formación de espuma, la corrosión y la acumulación de escamas en los sistemas de enfriamiento.

- Suministra un acondicionador dosificado de refrigerante.

DESCRIPCIÓN:

Los aditivos en el refrigerante se agotan con la operación normal. Por esta razón, se debe agregar Aditivo de refrigerante suplementario (SCA) a todos los refrigerantes para servicio pesado, a intervalos regulares. Además, cuando no se usa un anticongelante de precarga completo, tal como el DEAC de Caterpillar, es necesario agregar una cantidad de aditivo de refrigerante suplementario inicial al sistema de enfriamiento. La cantidad de aditivo que se debe agregar depende de la capacidad del sistema.

El SCA de llenado inicial es líquido. El que se usa para el mantenimiento está disponible tanto en líquido como en un elemento enroscable. (No hay elemento enroscable disponible para la Familia de Motores 3600).

NOTA:

La cantidad de aditivo de llenado inicial no es la misma que se agrega en los intervalos de mantenimiento.

Los elementos de aditivo de refrigerante se pueden usar con cualquier anticongelante de tipo glicol etilénico o propílico que esté de acuerdo con las especificaciones de las normas ASTM D4985 o ASTM D5345.

NOTA:

Se debe utilizar únicamente con refrigerante estándar para servicio pesado; no se debe usar con Refrigerante de Larga Duración.

PIEZAS NECESARIAS:

Capacidad del Sistema de Enfriamiento		SCA líquido de llenado inicial	SCA líquido de mantenimiento*	Elemento de mantenimiento enroscable*
litros	gal EE.UU.			
22-30	6-8	3P-2044 (1)	6V-3542 (1)	111-2370 (1)
30-38	8-10	3P-2044 (1) 6V-3542 (1)	111-2372 (1)	111-2369 (1)
38-49	10-13	3P-2044 (1) 8T-1589 (1)	111-2372 (1)	111-2369 (1)
49-64	13-17	3P-2044 (2)	8T-1589 (1)	9N-3368 (1)
64-83	17-22	3P-2044 (2) 8T-1589 (1)	111-2372 (1) 6V-3542 (1)	111-2371 (1)
83-114	22-30	3P-2044 (3) 8T-1589 (1)	3P-2044 (1)	9N-3718 (1)
114-163	30-43	3P-2044 (5)	3P-2044 (1) 6V-3542 (1)	111-2371 (2)
163-242	43-64	3P-2044 (8)	3P-2044 (2)	9N-3718 (2)

** El período normal de mantenimiento es de 250 horas. Para ver las instrucciones completas sobre el mantenimiento del refrigerante, consulte el Manual de Operación y Mantenimiento.*

( ) Indica la cantidad necesaria.

ADITIVOS SUPLEMENTARES DO LÍQUIDO ARREFECEDOR

BENEFÍCIOS PARA O CLIENTE:

Protege contra cavitação, espuma, erosão, corrosão e acúmulo de crostas nos sistemas de arrefecimento.

- Fornece uma quantidade pré-determinada de condicionador de arrefecimento.

DESCRIÇÃO:

Com a operação normal, os aditivos se esgotam do líquido arrefecedor. Por isso, Aditivos Suplementares do Líquido Arrefecedor (SCA) devem ser acrescentados a todos os líquidos arrefecedores para serviço pesado em intervalos regulares. Além disso, quando um anticongelante pré-carregado, totalmente formulado não for usado, como o DEAC Caterpillar, uma carga inicial de SCA deve ser acrescentada ao sistema de arrefecimento. A quantidade de SCA acrescentada ao sistema depende da capacidade do sistema.

O SCA para abastecimento inicial é fornecido em forma de líquido. Os aditivos suplementares (SCA) para intervalos de manutenção estão à disposição em forma líquida e como um elemento com roscas. (Exceto os Motores da Família 3600)

NOTA:

A quantidade de SCA adicionada no abastecimento inicial não é a mesma que a acrescentada nos intervalos de manutenção.

Os elementos do aditivo do líquido arrefecedor podem ser usados com qualquer tipo de anticongelante etileno ou propileno que satisfaz as Especificações ASTM D4985 ou ASTM D5345.

NOTA:

Para uso apenas com líquido arrefecedor para serviço pesado padrão, não deve ser usado com Líquido Arrefecedor de Vida Longa.

PEÇAS NECESSÁRIAS:

Capacidade do Sistema de Arrefecimento		Líquido SCA Durante Abastecimento Inicial	Líquido SCA Durante Manutenção*	Elemento de Manutenção de SCA com Roscas*
Litros	Galões			
22-30	6-8	3P-2044 (1)	6V-3542 (1)	111-2370 (1)
30-38	8-10	3P-2044 (1) 6V-3542 (1)	111-2372 (1)	111-2369 (1)
38-49	10-13	3P-2044 (1) 8T-1589 (1)	111-2372 (1)	111-2369 (1)
49-64	13-17	3P-2044 (2)	8T-1589 (1)	9N-3368 (1)
64-83	17-22	3P-2044 (2) 8T-1589 (1)	111-2372 (1) 6V-3542 (1)	111-2371 (1)
83-114	22-30	3P-2044 (3) 8T-1589 (1)	3P-2044 (1)	9N-3718 (1)
114-163	30-43	3P-2044 (5)	3P-2044 (1) 6V-3542 (1)	111-2371 (2)
163-242	43-64	3P-2044 (8)	3P-2044 (2)	9N-3718 (2)

** O período normal de manutenção é de 250 horas. Consulte o Manual de Operação e Manutenção para obter instruções completas quanto à manutenção do líquido arrefecedor.*

( ) Indica a quantidade exigida.

KÜHLMITTELZUSATZ

VORTEILE FÜR DEN KUNDEN:

Schutz gegen Kavitation, Schaumbildung, Erosion, Korrosion und Kesselsteinbildung in Kühlsystemen.

- Richtig dosierter Kühlmittelzusatz

BESCHREIBUNG:

Additive erschöpfen sich während des Motorbetriebs. Deshalb muß allen HD-Kühlmitteln regelmäßig Kühlmittelzusatz beigefügt werden. Wenn bei Erstfüllung kein vollwertiges Fertigkühlmittel, wie das Frostschutz- und Kühlmittel für Dieselmotoren von Caterpiller (DEAC), verwendet wird, muß bei Erstfüllung Kühlmittelzusatz beigefügt werden. Wieviel Kühlmittelzusatz beigefügt werden muß, hängt vom Inhalt des Kühlsystems ab.

Für Erstfüllung ist Kühlmittelzusatz nur in flüssiger Form erhältlich. Für Wartungsintervalle ist Kühlmittelzusatz in flüssiger Form und als Zusatzelement erhältlich. (Für die Motorbaureihe 3600 sind keine Zusatzelemente erhältlich.)

ANMERKUNG:

Die Kühlmittelmenge bei Erstfüllung ist nicht die gleiche Menge, die bei Wartungsintervallen beigefügt werden muß.

Die Kühlmittelzusatzelemente können mit allen Frostschutzmitteln auf Ethylen- oder Propylenglykolbasis verwendet werden, die den Standards nach ASTM D4985 oder ASTM D5345 entsprechen.

ANMERKUNG:

Den Kühlmittelzusatz nicht mit Langzeitkühlmittel (ELC) von Caterpillar verwenden. Der Kühlmittelzusatz ist nur für HD-Kühlmittel bestimmt.

TEILEBEZEICHNUNG:

Kühlsysteminhalt		Kühlmittelzusatz bei Erstfüllung	Flüssiger Kühlmittelzusatz bei Wartung*	Kühlmittelzusatzelement bei Wartung*
Liter	US-Gall.			
22-30	(6-8)	3P-2044 (1)	6V-3542 (1)	111-2370 (1)
30-38	(8-10)	3P-2044 (1) 6V-3542 (1)	111-2372 (1)	111-2369 (1)
38-49	(10-13)	3P-2044 (1) 8T-1589 (1)	111-2372 (1)	111-2369 (1)
49-64	(13-17)	3P-2044 (2)	8T-1589 (1)	9N-3368 (1)
64-83	(17-22)	3P-2044 (2) 8T-1589 (1)	111-2372 (1) 6V-3542 (1)	111-2371 (1)
83-114	(22-30)	3P-2044 (3) 8T-1589 (1)	3P-2044 (1)	9N-3718 (1)
114-163	(30-43)	3P-2044 (5)	3P-2044 (1) 6V-3542 (1)	111-2371 (2)
163-242	(43-64)	3P-2044 (8)	3P-2044 (2)	9N-3718 (2)

** Der normale Wartungsintervall beträgt 250 Betriebsstunden. Für vollständige Anweisungen zur Wartung des Kühlsystems, siehe Betriebs- und Wartungshandbuch.*

( ) Erforderliche Anzahl

MAINTENANCE PARTS

DESCRIPTION	PART NUMBER	QTY	WHERE USED	PAGE
AIR INLET AND EXHAUST SYSTEM				
ELEMENT AS-PRIMARY (AIR FILTER)	123-6855	1	AIR CLEANER GP	166
ELEMENT AS-PRIMARY (AIR FILTER) (ULTRA HIGH EFFICIENCY)	132-7168	1	AIR CLEANER GP	169
ELEMENT AS-SECONDARY (AIR FILTER)	106-3973	1	AIR CLEANER GP	169
	123-6856	1	AIR CLEANER GP	166
ELEMENT-FILTER (AIR CLEANER)	7M-1674	1	AIR CLEANER GP	167
ELEMENT-FILTER (AIR INLET SUPPORT)	7M-1674	1	SUPPORT GP-AIR INLET	190
		1	SUPPORT GP-AIR INLET	191
BASIC ENGINE				
PLUG-DRAIN (CYLINDER BLOCK)	5F-0304	2	COVER GP-CYLINDER BLOCK	11
PLUG-OIL DRAIN (ENGINE OIL PAN)	6I-0723	1	PAN GP-OIL	60
SCREEN AS (ENGINE OIL PAN)	7N-5395	1	PAN GP-OIL	60
SEAL (VALVE COVER)	208-2364	1	COVER GP-VALVE MECHANISM	15
V-BELT (ALTERNATOR)	100-3725	1	MOUNTING GP-ALTERNATOR	58
COOLING SYSTEM				
FILTER-WATER (WATER PUMP)	4N-5834	2	PUMP GP-WATER	144
		2	PUMP GP-WATER	148
PLUG-DRAIN (TRANSMISSION COOLER)	7N-1447	1	LINES GP-WATER	132
PLUG-DRAIN (WATER PUMP)	3F-1358	1	PUMP GP-AUXILIARY WATER	139
REGULATOR-TEMPERATURE	6I-4950	4	HOUSING & REGULATOR GP	116
ELECTRICAL AND STARTING SYSTEM				
BATTERY (12-VOLT)	9X-9730	4	BATTERY & WIRING GP	246
		4	BATTERY & WIRING GP	260
		4	BATTERY & WIRING GP	267
BRUSH AS (STARTING MOTOR)	3T-9524	6	STARTING MOTOR GP-ELECTRIC	365
		6	STARTING MOTOR GP-PRELUB SYS	368
CIRCUIT BREAKER AS (10-AMPERE) (ELECTRONIC CLUTCH/BRAKE)	6T-3642	1	WIRING GP-CONSOLE	382
CIRCUIT BREAKER AS (10-AMPERE) (START KEY)	6T-3642	1	WIRING GP-CONSOLE	382
CIRCUIT BREAKER AS (15-AMPERE) (BLOWER)	6T-3643	1	WIRING GP-CONSOLE	382
CIRCUIT BREAKER AS (15-AMPERE) (ENGINE)	6T-3643	1	WIRING GP-CONSOLE	382
CIRCUIT BREAKER AS (15-AMPERE) (FRONT FLOODS)	3T-2662	1	WIRING GP-CONSOLE	382
CIRCUIT BREAKER AS (15-AMPERE) (IMPLEMENT)	6T-3643	1	WIRING GP-CONSOLE	382
CYLINDER AS-ETHER	7X-1062	1	STARTING AID GP-ETHER	356
ELEMENT AS-JACKET WATER HEATER (120 VOLT,1500 WATT)	9G-6655	2	HEATER GP-JACKET WATER	300
		2	HEATER GP-JACKET WATER	302
ELEMENT AS-JACKET WATER HEATER (240 VOLT, 1500 WATT)	6T-3764	2	HEATER GP-JACKET WATER	301
		2	HEATER GP-JACKET WATER	303
FILTER & GASKET AS (ETHER STARTING AID)	9X-7138	1	STARTING AID GP-ETHER	354

MAINTENANCE PARTS

DESCRIPTION	PART NUMBER	QTY	WHERE USED	PAGE
FILTER-FOAM (FUEL SENSOR)	111-4402	1	BATTERY & WIRING GP	246
		1	BATTERY & WIRING GP	257
		1	BATTERY & WIRING GP	264
FUSE (10-AMPERE)	9W-1442	10	WIRING GP-CONSOLE	383
FUSE (15-AMPERE)	9W-1441	3	WIRING GP-CONSOLE	383
FUSE (20-AMPERE)	9W-1446	3	WIRING GP-CONSOLE	383
FUSE (30 AMP) (POWER CONVERTER)	8T-9636	2	CONVERTER GP-ELECTRICAL	295
HOLDER AS-BRUSH (STARTING MOTOR)	6T-0363	6	STARTING MOTOR GP-ELECTRIC	366
		6	STARTING MOTOR GP-PRELUB SYS	369
KEY (BATTERY DISCONNECT)	8H-5306	1	SWITCH GP-DISCONNECT	372
LAMP AS-FLOOD (HID) (24 VOLT)(70 WATT)(CLEAR)	213-4998	1	LAMP GP-FLOOD	310
		1	LAMP GP-FLOOD	311
LAMP AS (12-VOLT) (SECURITY INSTALLATION)	165-5655	1	INSTALLATION GP-SECURITY	305
LAMP-HALOGEN (24-VOLT, 65-WATT) (FLOODLIGHT)	9X-3463	1	LAMP GP-FLOOD	307
		1	LAMP GP-FLOOD	308
		1	LAMP GP-FLOOD	309
LAMP (24-VOLT) (CLEAR)(DOME)	7N-9943	1	LAMP GP-DOME	306
LAMP (24-VOLT) (IMPLEMENT LOCKOUT)	3E-8825	1	WIRING GP-PLATFORM	397
LAMP (24-VOLT) (INSTRUMENT PANEL)	7N-5876	4	WIRING GP-PLATFORM	397
LAMP (24 VOLT) (KEYPAD)	123-9294	1	CONTROL GP-ELECTRONIC	281
		1	CONTROL GP-ELECTRONIC	283
		1	CONTROL GP-ELECTRONIC	285
LAMP (24-VOLT) (REAR FAULT)	7N-1996	1	WIRING GP-PLATFORM	397
LAMP (24-VOLT) (THROTTLE CONTROL)	3E-8825	2	WIRING GP-PLATFORM	399
SCREEN (ETHER STARTING AID)	160-8761	1	STARTING AID GP-ETHER	354
SPRING (STARTING MOTOR)	3T-9494	6	STARTING MOTOR GP-ELECTRIC	365
		6	STARTING MOTOR GP-PRELUB SYS	369
VALVE-BREATHER	3K-6905	1	WIRING GP-ENGINE	386
FRAME AND BODY				
PADLOCK GP (FENDER)	5P-8502	2	FENDER GP	511
		2	FENDER GP	515
PADLOCK GP (FENDER ENCLOSURE)	5P-8502	1	ENCLOSURE GP-FENDER	504
		1	ENCLOSURE GP-FENDER	506
		1	ENCLOSURE GP-FENDER	508
PADLOCK GP (HOOD)	5P-8502	2	HOOD & GUARD GP	534
		1	HOOD & GUARD GP	537
PLUG (DRAIN) (CASE)(TRANSMISSION)	106-8187	1	CASE & FRAME GP	493

MAINTENANCE PARTS

DESCRIPTION	PART NUMBER	QTY	WHERE USED	PAGE
FUEL SYSTEM				
CAP AS-FILLER (FUEL, LOCKING, VENTED)	7X-7700	1	TANK GP-FUEL	239
CAP AS-FUEL TANK FILLER (LOCKING)	101-8909	1	ADAPTER GP-FAST FILL FUEL	199
		1	ADAPTER GP-FAST FILL FUEL	201
		1	ADAPTER GP-FAST FILL FUEL	203
CAP AS-FUEL TANK (VENTED LOCKING)	7X-7700	1	TANK GP-FUEL	237
FILTER AS-FUEL	1R-0755	2	FILTER GP-FUEL	215
FILTER ELEMENT AS-FUEL	9M-2342	1	FILTER GP-FUEL	215
GASKET (FUEL PRIMING PUMP)	9Y-8389	1	PUMP GP-FUEL PRIMING	229
PADLOCK GP (FUEL LINES)	5P-8502	1	LINES GP-FUEL	219
PADLOCK GP (FUEL TANK)	5P-8502	1	TANK GP-FUEL	236
		1	TANK GP-FUEL	238
SCREEN-FUEL TANK	6T-7774	1	LINES GP-FUEL	219
SEAL-RING (FUEL FILTER)	8H-2778	1	FILTER GP-FUEL	215
STRAINER-FUEL (TANK)	9P-7121	1	TANK GP-FUEL	238
		1	TANK GP-FUEL	239
HYDRAULIC SYSTEM				
CAP-FILLER (HYDRAULIC TANK)	4J-3754	1	TANK & FILTER GP-HYDRAULIC	848
COVER-HYDRAULIC CAP (HYDRAULIC TANK FILL)	5D-1902	1	TANK & FILTER GP-HYDRAULIC	848
FILTER ELEMENT AS-OIL (FAN RETURN)	132-8875	1	FILTER GP-OIL	725
FILTER ELEMENT AS-OIL (HYDRAULIC)	167-2009	2	TANK & FILTER GP-HYDRAULIC	848
FILTER ELEMENT-HYDRAULIC (BRAKE ACTUATION OIL)	134-0964	1	FILTER GP-OIL	726
PADLOCK GP (HYDRAULIC FAN LINES)	5P-8502	1	LINES GP-HYDRAULIC FAN	727
		1	LINES GP-HYDRAULIC FAN	733
		1	LINES GP-HYDRAULIC FAN	743
PADLOCK GP (HYDRAULIC TANK)	5P-8502	1	LINES GP-HYDRAULIC FAN	739
PLUG (DRAIN) (HYDRAULIC TANK)	106-8187	1	TANK & FILTER GP-HYDRAULIC	848
SCREEN AS (HYDRAULIC TANK)	9T-4946	1	TANK & FILTER GP-HYDRAULIC	848
SCREEN (HYDRAULIC TANK)	9T-6680	1	TANK & FILTER GP-HYDRAULIC	848
STRAINER AS (HYDRAULIC TANK FILL)	3D-6678	1	TANK & FILTER GP-HYDRAULIC	848
LUBRICATION SYSTEM				
BREATHER AS (ENGINE)	4W-3027	1	BREATHER GP	78
CAP AS (ENGINE OIL)	9S-9272	1	FILTER GP-ENGINE OIL	80
		1	FILTER GP-ENGINE OIL	82
CAP AS-OIL FILLER (ENGINE)	6N-2206	1	FILLER GP-ENGINE OIL	79
CAP-FILLER (CRANKCASE)	110-8826	1	OIL CHANGE GP-HIGH SPEED	96
FILTER AS-ENGINE OIL	2P-4005	2	FILTER GP-ENGINE OIL	80
		2	FILTER GP-ENGINE OIL	82
PADLOCK GP (ENGINE OIL FILL TUBE)	5P-8502	1	FILLER GP-ENGINE OIL	79
SCREEN-SCAVENGE (ENGINE OIL)	4P-4917	1	PUMP GP-SCAVENGE	105
	4P-5500	1	PUMP GP-SCAVENGE	105

MAINTENANCE PARTS

DESCRIPTION	PART NUMBER	QTY	WHERE USED	PAGE
OPERATOR STATION				
ACCUMULATOR-REFRIGERANT	170-0235	1	LINES GP-AIR CONDITIONER	1057
BLADE AS-WIPER (FRONT WINDOW)	6V-5851	1	WIPER GP-WINDOW	1162
		1	WIPER GP-WINDOW	1166
BLADE AS-WIPER (REAR WINDOW)	5C-8811	1	WIPER GP-WINDOW	1162
		1	WIPER GP-WINDOW	1166
BLADE AS-WIPER (RH & LH DOOR)	6V-5849	4	WIPER GP-WINDOW	1162
		4	WIPER GP-WINDOW	1166
CAP AS (AIR CONDITIONER) (HIGH SIDE)	3E-4052	1	LINES GP-AIR CONDITIONER	1057
		1	LINES GP-AIR CONDITIONER	1061
CAP AS (AIR CONDITIONER) (LOW SIDE)	3E-4051	1	LINES GP-AIR CONDITIONER	1061
		1	LINES GP-AIR CONDITIONER	1057
CAP-VENTED (WINDOW WASHER TANK)	8E-8292	1	TANK GP-WINDOW WASHER	1136
		1	TANK GP-WINDOW WASHER	1138
FILTER-AIR (CAB) (HIGH EFFICIENCY)	175-2839	1	HEATER GP-CAB	1039
	175-2841	1	HEATER GP-CAB	1039
FILTER-AIR (CAB) (ODOR REDUCTION)	175-2832	1	HEATER GP-CAB	1039
FILTER-AIR (CAB) (STANDARD)	7T-1890	1	AIR CONDITIONER GP	1003
		1	HEATER GP-CAB	1039
FILTER-CAB AIR (STANDARD)	107-0266	1	AIR CONDITIONER GP	1003
		1	HEATER GP-CAB	1039
LAMP (24-VOLT) (ACTION INDICATOR)	7N-1996	1	INSTRUMENT GP	1049
		1	INSTRUMENT GP	1051
SEAT BELT GP (RETRACTABLE)	222-0345	1	SEAT GP	1110
		1	SEAT GP	1111
V-BELT (REFRIGERANT COMPRESSOR)	1P-9744	1	COMPRESSOR GP-REFRIGERANT	1016
POWER TRAIN				
BREATHER (POWER TRAIN)	9G-9981	1	LINES GP-POWER TRAIN OIL	433
		1	LINES GP-POWER TRAIN OIL	437
CAP AS-OIL FILLER (POWER TRAIN)	6N-2985	1	LINES GP-POWER TRAIN OIL	433
		1	LINES GP-POWER TRAIN OIL	437
FILTER ELEMENT AS-OIL (HYDRAULIC) (TRANSMISSION)	132-8876	2	FILTER GP-OIL	413
		2	LINES GP-POWER TRAIN OIL	437
PLUG-DRAIN (CASE & FRAME)	4B-7739	1	LINES GP-POWER TRAIN OIL	433
PLUG-DRAIN (FINAL DRIVE)	5F-0304	1	FINAL DRIVE GP	415
		1	FINAL DRIVE GP	418
PLUG-DRAIN (POWER TRAIN)	4B-7739	1	LINES GP-POWER TRAIN OIL	437
PLUG-MAGNETIC (FINAL DRIVE)	6V-3298	1	FINAL DRIVE GP	415
		1	FINAL DRIVE GP	418
PLUG (TRANSMISSION FILTER)	9S-4183	1	FILTER GP-OIL	413
SCREEN AS (POWER TRAIN)	9P-0214	1	LINES GP-POWER TRAIN OIL	433
		1	LINES GP-POWER TRAIN OIL	437
	130-6747	1	LINES GP-POWER TRAIN OIL	437
SCREEN AS (POWER TRAIN OIL LINES)	130-6747	1	LINES GP-POWER TRAIN OIL	432
SCREEN-SUCTION (TORQUE CONVERTER)	8S-9130	1	TORQUE CONVERTER GP	467

MAINTENANCE PARTS

DESCRIPTION	PART NUMBER	QTY	WHERE USED	PAGE
UNDERCARRIAGE				
BREATHER (LUBRICATION TANK)	198-7711	1	LUBRICATION GP-EQUALIZER BAR	586
CAP AS-OIL FILLER (LUBRICATION TANK)	5L-2952	1	LUBRICATION GP-EQUALIZER BAR	586
CAP AS-OIL LEVEL (PILOT SHAFT LUBRICATION BOTTLE)	9W-8277	1	LUBRICATION GP-PIVOT SHAFT	588
PLUG-DRAIN (TELESCOPING RECOIL FRAME)	4T-2069	6	FRAME GP-TELESCOPING RECOIL	553
		6	FRAME GP-TELESCOPING RECOIL	556
		6	FRAME GP-TELESCOPING RECOIL	559
		6	FRAME GP-TELESCOPING RECOIL	563
		3	FRAME GP-TELESCOPING RECOIL	566
		3	FRAME GP-TELESCOPING RECOIL	569
		3	FRAME GP-TELESCOPING RECOIL	572
		3	FRAME GP-TELESCOPING RECOIL	575

PIÈCES DE RECHANGE

DESCRIPTION	NUMÉRO DE PIECÈS	QTÉ	DOMAINE D'APPLICATION	PAGE
CHÂSSIS ET BENNE				
BOUCHON FILETÉ (VIDANGE) (CASE)(TRANSMISSION)	106-8187	1	CHÂSSIS ET CARTER (ASS)	493
CADENAS (ASS) (CAPOT)	5P-8502	2	CAPOT ET PROTECTION (ASS)	534
		1	CAPOT ET PROTECTION (ASS)	537
CADENAS (ASS) (CARÉNAGE DE GARDE-BOUE)	5P-8502	1	CARENAGE - GARDE-BOUE (ASS)	504
		1	CARENAGE - GARDE-BOUE (ASS)	506
		1	CARENAGE - GARDE-BOUE (ASS)	508
CADENAS (ASS) (GARDE-BOUE)	5P-8502	2	GARDE-BOUE (ASS)	511
		2	GARDE-BOUE (ASS)	515
CIRCUIT D'ADMISSION D'AIR ET D'ECHAPPEMENT				
ÉLÉMENT DE FILTRE (FILTRE À AIR)	7M-1674	1	FILTRE A AIR (ASS)	167
ÉLÉMENT DE FILTRE (SUPPORT D'ADMISSION D'AIR)	7M-1674	1	SUPPORTS D'ADMISSION D'AIR (ASS)	190
		1	SUPPORTS D'ADMISSION D'AIR (ASS)	191
ÉLÉMENT PRINCIPAL (ENS) (FILTRE A AIR)	123-6855	1	FILTRE A AIR (ASS)	166
ÉLÉMENT PRINCIPAL (ENS) (FILTRE À AIR) (TRÈS GRANDE EFFICACITÉ)	132-7168	1	FILTRE A AIR (ASS)	169
ÉLÉMENT SECONDAIRE (ENS) (FILTRE A AIR)	106-3973	1	FILTRE A AIR (ASS)	169
	123-6856	1	FILTRE A AIR (ASS)	166

PIÈCES DE RECHANGE

DESCRIPTION	NUMÉRO DE PIECÈS	QTÉ	DOMAINE D'APPLICATION	PAGE
CIRCUIT DE CARBURANT				
BOUCHON DE GOULOTTE DE REMPLISSAGE (ENS) (CARBURANT, VERROUILLAGE, AÉRÉ)	7X-7700	1	RÉSERVOIR DE CARBURANT (ASS)	239
BOUCHON DE REMPLISSAGE DU RÉSERVOIR DE CARBURANT (VERROUILLAGE)	101-8909	1	ADAPTATEUR DE REMPLIS. RAPIDE DE CARBURANT (ASS)	199
		1	ADAPTATEUR DE REMPLIS. RAPIDE DE CARBURANT (ASS)	201
		1	ADAPTATEUR DE REMPLIS. RAPIDE DE CARBURANT (ASS)	203
BOUCHON DE RÉSERVOIR DE CARBURANT (ENS) (VERROUILLAGE AÉRÉ)	7X-7700	1	RÉSERVOIR DE CARBURANT (ASS)	237
CADENAS (ASS) (CANALISATIONS DE CARBURANT)	5P-8502	1	CANALISATIONS DE CARBURANT (ASS)	219
CADENAS (ASS) (RESERVOIR DE CARBURANT)	5P-8502	1	RÉSERVOIR DE CARBURANT (ASS)	236
		1	RÉSERVOIR DE CARBURANT (ASS)	238
ÉLÉMENT DE FILTRE (ENS)-CARBURANT	9M-2342	1	FILTRE A CARBURANT (ASS)	215
FILTRE A CARBURANT (ENS)	1R-0755	2	FILTRE A CARBURANT (ASS)	215
FILTRE À CARBURANT (RÉSERVOIR)	9P-7121	1	RÉSERVOIR DE CARBURANT (ASS)	238
		1	RÉSERVOIR DE CARBURANT (ASS)	239
JOINT PLAT (POMPE D'AMORÇAGE DE CARBURANT)	9Y-8389	1	POMPE D'AMORÇAGE DE CARBURANT (ASS)	229
SEGMENT D'ÉTANCHÉITÉ (FILTRE À CARBURANT)	8H-2778	1	FILTRE A CARBURANT (ASS)	215
TAMIS - RÉSERVOIR DE CARBURANT	6T-7774	1	CANALISATIONS DE CARBURANT (ASS)	219
CIRCUIT DE DÉMARRAGE ET ÉLECTRIQUE				
AMPOULE (24 VOLTS) (ANOMALIE ARRIÈRE)	7N-1996	1	CABLAGE - PLATE-FORME (ASS)	397
AMPOULE (24 VOLTS) (COMMANDE D'ACCÉLÉRATION)	3E-8825	2	CABLAGE - PLATE-FORME (ASS)	399
AMPOULE (24 VOLTS) (TABLEAU DE BORD)	7N-5876	4	CABLAGE - PLATE-FORME (ASS)	397
AMPOULE (24 VOLTS) (TOUCHE)	123-9294	1	COMMANDE ELECTRONIQUE DE BOITE (ASS)	281
		1	COMMANDE ELECTRONIQUE DE BOITE (ASS)	283
		1	COMMANDE ELECTRONIQUE DE BOITE (ASS)	285
AMPOULE (24 VOLTS) (TRANSPARENTE)(PLAFONNIER)	7N-9943	1	PLAFONNIER (ASS)	306
AMPOULE (24 VOLTS) (VERROUILLAGE D'ÉQUIPEMENT)	3E-8825	1	CABLAGE - PLATE-FORME (ASS)	397
BATTERIE (12 VOLTS)	9X-9730	4	BATTERIE ET CÂBLAGE	246
		4	BATTERIE ET CÂBLAGE	260
		4	BATTERIE ET CÂBLAGE	267
BROSSE (ENS) (DÉMARREUR)	3T-9524	6	DÉMARREUR - CIRCUIT DE PRÉGRAISSAGE	368
		6	DÉMARREUR ÉLECTRIQUE (ASS)	365

PIÈCES DE RECHANGE

DESCRIPTION	NUMÉRO DE PIECÈS	QTÉ	DOMAINE D'APPLICATION	PAGE
CLÉ (COUPE-BATTERIE)	8H-5306	1	ROBINET DE BATTERIE (ASS)	372
CYLINDRE D'ETHER (ENS)	7X-1062	1	AUXILIAIRE DE DÉMARRAGE À L'ÉTHER	356
DISJONCTEUR (ENS) (10A) (CLÉ DE CONTACT)	6T-3642	1	CABLAGE DE CONSOLE (ASS)	382
DISJONCTEUR (ENS) (10A) (DISJONCTEUR D'EMBRAYAGE/FREIN ÉLECTRONIQUE)	6T-3642	1	CABLAGE DE CONSOLE (ASS)	382
DISJONCTEUR (ENS) (15A) (ÉQUIPEMENT)	6T-3643	1	CABLAGE DE CONSOLE (ASS)	382
DISJONCTEUR (ENS) (15A) (MOTEUR)	6T-3643	1	CABLAGE DE CONSOLE (ASS)	382
DISJONCTEUR (ENS) (15A) (PROJECTEURS AVANT)	3T-2662	1	CABLAGE DE CONSOLE (ASS)	382
DISJONCTEUR (ENS) (15A) (SOUFFLANT)	6T-3643	1	CABLAGE DE CONSOLE (ASS)	382
ÉCRAN (DÉMARRAGE À L'ÉTHER)	160-8761	1	AUXILIAIRE DE DÉMARRAGE À L'ÉTHER	354
ÉLÉMENT DU RÉCHAUFFEUR D'EAU DES CHEMISES (ENS) (120 VOLTS,1500 WATTS)	9G-6655	2	EAU DES CHEMISES - RECHAUFFEUR (ASS)	300
		2	EAU DES CHEMISES - RECHAUFFEUR (ASS)	302
ÉLÉMENT DU RÉCHAUFFEUR D'EAU DES CHEMISES (ENS) (240 VOLTS, 1500 WATTS)	6T-3764	2	EAU DES CHEMISES - RECHAUFFEUR (ASS)	301
		2	EAU DES CHEMISES - RECHAUFFEUR (ASS)	303
FILTRE A MOUSSE (CAPTEUR DE CARBURANT)	111-4402	1	BATTERIE ET CÂBLAGE	246
		1	BATTERIE ET CÂBLAGE	257
		1	BATTERIE ET CÂBLAGE	264
FILTRE ET JOINT (ENS) (DÉMARRAGE À L'ÉTHER)	9X-7138	1	AUXILIAIRE DE DÉMARRAGE À L'ÉTHER	354
FUSIBLE (10A)	9W-1442	10	CABLAGE DE CONSOLE (ASS)	383
FUSIBLE (15A)	9W-1441	3	CABLAGE DE CONSOLE (ASS)	383
FUSIBLE (20A)	9W-1446	3	CABLAGE DE CONSOLE (ASS)	383
FUSIBLE (30A) (DÉVOLTEUR POUR COURANT)	8T-9636	2	TRANSFORMATION ELECTRIQUE (ASS)	295
LAMPE - PHARE (ENS) (HID) (24 VOLTS)(70 WATTS)(EFFACER)	213-4998	1	LAMPE - PHARE (ASS)	310
		1	LAMPE - PHARE (ASS)	311
LAMPE (ENS) (12 VOLTS) (MONTAGE DE SYSTÈME DE SÉCURITÉ)	165-5655	1	MONTAGE-SÉCURITÉ (ASS)	305
LAMPE HALOGÈNE (24V, 65W) (PROJECTEUR)	9X-3463	1	LAMPE - PHARE (ASS)	307
		1	LAMPE - PHARE (ASS)	308
		1	LAMPE - PHARE (ASS)	309
PORTE-BALAIS (ENS) (DÉMARREUR)	6T-0363	6	DÉMARREUR - CIRCUIT DE PRÉGRAISSAGE	369
		6	DÉMARREUR ÉLECTRIQUE (ASS)	366
RESSORT (DÉMARREUR)	3T-9494	6	DÉMARREUR - CIRCUIT DE PRÉGRAISSAGE	369
		6	DÉMARREUR ÉLECTRIQUE (ASS)	365
SOUPAPE - RENIFLARD	3K-6905	1	CABLAGE DE MOTEUR (ASS)	386

PIÈCES DE RECHANGE

DESCRIPTION	NUMÉRO DE PIECÈS	QTÉ	DOMAINE D'APPLICATION	PAGE
CIRCUIT DE GRAISSAGE				
BOUCHON DE GOULOTTE DE REMPLISSAGE (CARTER)	110-8826	1	DISPOSITIF DE VIDANGE RAPIDE D'HUILE (ASS)	96
BOUCHON DE GOULOTTE DE REMPLISSAGE D'HUILE MOTEUR (MOTEUR)	6N-2206	1	BOUCHON DE REMPLISSAGE D'HUILE MOTEUR (ASS)	79
CADENAS (ASS) (GOULOTTTE DE REMPLISSAGE D'HUILE MOTEUR)	5P-8502	1	BOUCHON DE REMPLISSAGE D'HUILE MOTEUR (ASS)	79
CHAPEAU (ENS) (HUILE MOTEUR)	9S-9272	1	FILTRE À HUILE MOTEUR (ASS)	80
		1	FILTRE À HUILE MOTEUR (ASS)	82
ÉCRAN - REPRISE (HUILE MOTEUR)	4P-4917	1	POMPE DE REPRISE (ASS)	105
	4P-5500	1	POMPE DE REPRISE (ASS)	105
FILTRE A HUILE MOTEUR (ENS)	2P-4005	2	FILTRE À HUILE MOTEUR (ASS)	80
		2	FILTRE À HUILE MOTEUR (ASS)	82
RENIFLARD (ENS) (MOTEUR)	4W-3027	1	RENIFLARD (ASS)	78
CIRCUIT DE REFROIDISSEMENT				
BOUCHON DE VIDANGE (POMPE À EAU)	3F-1358	1	POMPE AUXILIAIRE D'EAU DOUCE (ASS)	139
BOUCHON DE VIDANGE (REFROIDISSEUR DE BOÎTE DE VITESSES)	7N-1447	1	CANALISATIONS D'EAU (ASS)	132
FILTRE -EAU (POMPE À EAU)	4N-5834	2	POMPE A EAU (ASS)	144
		2	POMPE A EAU (ASS)	148
THERMOSTAT	6I-4950	4	THERMOSTAT ET BOITIER (ASS)	116

PIÈCES DE RECHANGE

DESCRIPTION	NUMÉRO DE PIECÈS	QTÉ	DOMAINE D'APPLICATION	PAGE
CIRCUIT HYDRAULIQUE				
BOUCHON DE GOULOTTE DE REMPLISSAGE (RÉSERVOIR HYDRAULIQUE)	4J-3754	1	RÉSERVOIR HYDRAULIQUE ET FILTRE (ASS)	848
BOUCHON FILETÉ (VIDANGE) (RÉSERVOIR HYDRAULIQUE)	106-8187	1	RÉSERVOIR HYDRAULIQUE ET FILTRE (ASS)	848
CADENAS (ASS) (CANALISATIONS DE VENTILATEUR HYDRAULIQUE)	5P-8502	1	CANALISATIONS HYDRAULIQUES DE VENTILATEUR (ASS)	727
		1	CANALISATIONS HYDRAULIQUES DE VENTILATEUR (ASS)	733
		1	CANALISATIONS HYDRAULIQUES DE VENTILATEUR (ASS)	743
CADENAS (ASS) (RÉSERVOIR HYDRAULIQUE)	5P-8502	1	CANALISATIONS HYDRAULIQUES DE VENTILATEUR (ASS)	739
COUVERCLE - BOUCHON DU RÉSERVOIR HYDRAULIQUE (REMPLISSAGE DE RÉSERVOIR HYDRAULIQUE)	5D-1902	1	RÉSERVOIR HYDRAULIQUE ET FILTRE (ASS)	848
CREPINE (ENS) (REMPLISSAGE DE RÉSERVOIR HYDRAULIQUE)	3D-6678	1	RÉSERVOIR HYDRAULIQUE ET FILTRE (ASS)	848
ÉCRAN (ENS) (RÉSERVOIR HYDRAULIQUE)	9T-4946	1	RÉSERVOIR HYDRAULIQUE ET FILTRE (ASS)	848
ÉCRAN (RÉSERVOIR HYDRAULIQUE)	9T-6680	1	RÉSERVOIR HYDRAULIQUE ET FILTRE (ASS)	848
ÉLÉMENT DE FILTRE À HUILE (ENS) (HYDRAULIQUE)	167-2009	2	RÉSERVOIR HYDRAULIQUE ET FILTRE (ASS)	848
ÉLÉMENT DE FILTRE À HUILE (ENS) (RETOUR DE VENTILATEUR)	132-8875	1	FILTRE A HUILE (ASS)	725
ÉLÉMENT DE FILTRE-HYDRAULIQUE (HUILE D'ACTIONNEMENT DE FREIN)	134-0964	1	FILTRE A HUILE (ASS)	726
MOTEUR STANDARD				
BOUCHON DE VIDANGE (BLOC-CYLINDRE)	5F-0304	2	BLOC-CYLINDRES - COUVERCLE (ASS)	11
BOUCHON DE VIDANGE D'HUILE (CARTER D'HUILE MOTEUR)	6I-0723	1	HUILE MOTEUR - CARTER (ASS)	60
BOURRELET D'ÉTANCHÉITÉ (CACHE-SOUPAPES)	208-2364	1	CACHE-SOUPAPES (ASS)	15
COURROIE TRAPEZOIDALE (ALTERNATEUR)	100-3725	1	MONTAGE D'ALTERNATEUR (ASS)	58
ÉCRAN (ENS) (CARTER D'HUILE MOTEUR)	7N-5395	1	HUILE MOTEUR - CARTER (ASS)	60

PIÈCES DE RECHANGE

DESCRIPTION	NUMÉRO DE PIECÈS	QTÉ	DOMAINE D'APPLICATION	PAGE
POSTE DE CONDUITE				
ACCUMULATEUR - RÉFRIGÉRANT	170-0235	1	CANALISATIONS DE CLIMATISEUR (ASS)	1057
AMPOULE (24 VOLTS) (TÉMOIN D'ACTION)	7N-1996	1	TABLEAU DE BORD (ASS)	1049
		1	TABLEAU DE BORD (ASS)	1051
BALAI D'ESSUIE-GLACE (ENS) (PORTE DROITE ET GAUCHE)	6V-5849	4	ESSUIE-GLACE (ASS)	1162
		4	ESSUIE-GLACE (ASS)	1166
BALAI D'ESSUIE-GLACE (ENS) (VITRE ARRIÈRE)	5C-8811	1	ESSUIE-GLACE (ASS)	1162
		1	ESSUIE-GLACE (ASS)	1166
BALAI D'ESSUIE-GLACE (ENS) (VITRE AVANT)	6V-5851	1	ESSUIE-GLACE (ASS)	1162
		1	ESSUIE-GLACE (ASS)	1166
BOUCHON À ÉVENT (RÉSERVOIR DE LAVE-GLACE DE VITRE)	8E-8292	1	RÉSERVOIR - LAVE-GLACE (ASS)	1136
		1	RÉSERVOIR - LAVE-GLACE (ASS)	1138
CEINTURE DE SECURITE (ASS) (RÉTRACTABLE)	222-0345	1	SIÈGE (ASS)	1110
		1	SIÈGE (ASS)	1111
CHAPEAU (ENS) (CLIMATISEUR) (CÔTÉ INFÉRIEUR)	3E-4051	1	CANALISATIONS DE CLIMATISEUR (ASS)	1057
		1	CANALISATIONS DE CLIMATISEUR (ASS)	1061
CHAPEAU (ENS) (CLIMATISEUR) (CÔTÉ SUPÉRIEUR)	3E-4052	1	CANALISATIONS DE CLIMATISEUR (ASS)	1057
		1	CANALISATIONS DE CLIMATISEUR (ASS)	1061
COURROIE TRAPEZOIDALE (COMPRESSEUR DE RÉFRIGÉRANT)	1P-9744	1	COMPRESSEUR DE REFRIGERANT (ASS)	1016
FILTRE À AIR (CABINE) (GRANDE EFFICACITÉ)	175-2839	1	CHAUFFAGE DE CABINE (ASS)	1039
	175-2841	1	CHAUFFAGE DE CABINE (ASS)	1039
FILTRE À AIR (CABINE) (RÉDUCTION DES ODEURS)	175-2832	1	CHAUFFAGE DE CABINE (ASS)	1039
FILTRE À AIR (CABINE) (STANDARD)	7T-1890	1	CHAUFFAGE DE CABINE (ASS)	1039
		1	CLIMATISEUR (ASS)	1003
FILTRE À AIR DE CABINE (STANDARD)	107-0266	1	CHAUFFAGE DE CABINE (ASS)	1039
		1	CLIMATISEUR (ASS)	1003

PIÈCES DE RECHANGE

DESCRIPTION	NUMÉRO DE PIECÈS	QTÉ	DOMAINE D'APPLICATION	PAGE
TRAIN DE ROULEMENT				
BOUCHON DE CONTROLE DE NIVEAU D'HUILE (ENS) (FLACON D'HUILE DE GRAISSAGE D'ARBRE PILOTE)	9W-8277	1	GRAISSAGE DE LA TRAVERSE-PIVOT	588
BOUCHON DE GOULOTTE DE REMPLISSAGE D'HUILE MOTEUR (RÉSERVOIR DE GRAISSAGE)	5L-2952	1	GRAISSAGE DE BALANCIER DE SUSPENSION (ASS)	586
BOUCHON DE VIDANGE (CHÂSSIS AMORTISSEUR TÉLESCOPIQUE)	4T-2069	6	CARTER TELESCOPIQUE DE MECANISME AMORTISSEUR	553
		6	CARTER TELESCOPIQUE DE MECANISME AMORTISSEUR	556
		6	CARTER TELESCOPIQUE DE MECANISME AMORTISSEUR	559
		6	CARTER TELESCOPIQUE DE MECANISME AMORTISSEUR	563
		3	CARTER TELESCOPIQUE DE MECANISME AMORTISSEUR	566
		3	CARTER TELESCOPIQUE DE MECANISME AMORTISSEUR	569
		3	CARTER TELESCOPIQUE DE MECANISME AMORTISSEUR	572
		3	CARTER TELESCOPIQUE DE MECANISME AMORTISSEUR	575
RENIFLARD (RÉSERVOIR DE GRAISSAGE)	198-7711	1	GRAISSAGE DE BALANCIER DE SUSPENSION (ASS)	586

PIÈCES DE RECHANGE

DESCRIPTION	NUMÉRO DE PIECÈS	QTÉ	DOMAINE D'APPLICATION	PAGE
TRANSMISSION				
BOUCHON AIMANTÉ (RÉDUCTEUR)	6V-3298	1	RÉDUCTEURS (ASS)	415
		1	RÉDUCTEURS (ASS)	418
BOUCHON DE GOULOTTE DE REMPLISSAGE D'HUILE MOTEUR (TRANSMISSION)	6N-2985	1	CANALISATIONS D'HUILE DE TRANSMISSION (ASS)	433
		1	CANALISATIONS D'HUILE DE TRANSMISSION (ASS)	437
BOUCHON DE VIDANGE (CARTER ET BÂTI)	4B-7739	1	CANALISATIONS D'HUILE DE TRANSMISSION (ASS)	433
BOUCHON DE VIDANGE (RÉDUCTEUR)	5F-0304	1	RÉDUCTEURS (ASS)	415
		1	RÉDUCTEURS (ASS)	418
BOUCHON DE VIDANGE (TRANSMISSION)	4B-7739	1	CANALISATIONS D'HUILE DE TRANSMISSION (ASS)	437
BOUCHON FILETÉ (FILTRE HYDRAULIQUE)	9S-4183	1	FILTRE A HUILE (ASS)	413
ÉCRAN (ENS) (CANALISATIONS D'HUILE DE TRANSMISSION)	130-6747	1	CANALISATIONS D'HUILE DE TRANSMISSION (ASS)	432
ÉCRAN (ENS) (TRANSMISSION)	9P-0214	1	CANALISATIONS D'HUILE DE TRANSMISSION (ASS)	433
		1	CANALISATIONS D'HUILE DE TRANSMISSION (ASS)	437
	130-6747	1	CANALISATIONS D'HUILE DE TRANSMISSION (ASS)	437
ÉLÉMENT DE FILTRE À HUILE (ENS) (HYDRAULIQUE) (BOîTE DE VITESSES)	132-8876	2	CANALISATIONS D'HUILE DE TRANSMISSION (ASS)	437
		2	FILTRE A HUILE (ASS)	413
RENIFLARD (TRANSMISSION)	9G-9981	1	CANALISATIONS D'HUILE DE TRANSMISSION (ASS)	433
		1	CANALISATIONS D'HUILE DE TRANSMISSION (ASS)	437
TAMIS D'ASPIRATION (CONVERTISSEUR DE COUPLE)	8S-9130	1	CONVERTISSEUR DE COUPLE (ASS)	467

PIEZAS DE MANTENIMIENTO

DESCRIPCION	NUMERO DE PIEZA	CANT	SE UTILIZA EN	PAGINA
BASTIDOR Y CAJA				
CANDADO (GR) (CAPÓ)	5P-8502	2	CAPO Y PROTECTOR (GR)	534
		1	CAPO Y PROTECTOR (GR)	537
CANDADO (GR) (COMPARTIMENTO DE GUARDABARROS)	5P-8502	1	CONTENIDO DEL GRUPO DE GUARDABARROS	504
		1	CONTENIDO DEL GRUPO DE GUARDABARROS	506
		1	CONTENIDO DEL GRUPO DE GUARDABARROS	508
CANDADO (GR) (*FENDER)	5P-8502	2	GUARDABARROS (GR)	511
		2	GUARDABARROS (GR)	515
TAPÓN (DRENAJE) (CAJA DE TRANSMISION)	106-8187	1	CAJA Y BASTIDOR (GR)	493

* NO HAY TRADUCCION DISPONIBLE EN EL MOMENTO DE LA IMPRESION

PIEZAS DE MANTENIMIENTO

DESCRIPCION	NUMERO DE PIEZA	CANT	SE UTILIZA EN	PAGINA
CABINA DEL OPERADOR				
ACUMULADOR DE REFRIGERANTE	170-0235	1	TUBERÍAS DE ACONDICIONADOR DE AIRE (GR)	1057
CINTURÓN DE SEGURIDAD (GR) (RETRACTIL)	222-0345	1	ASIENTO (GR)	1110
		1	ASIENTO (GR)	1111
CORREA TRAPEZOIDAL (COMPRESOR DEL REFRIGERANTE)	1P-9744	1	COMPRESOR DE REFRIGERANTE (GR)	1016
FILTRO DE AIRE (CABINA) (ALTA EFICIENCIA)	175-2839	1	CALEFACCIÓN DE LA CABINA (GR)	1039
	175-2841	1	CALEFACCIÓN DE LA CABINA (GR)	1039
FILTRO DE AIRE (CABINA) (ESTANDAR)	7T-1890	1	ACONDICIONADOR DE AIRE (GR)	1003
		1	CALEFACCIÓN DE LA CABINA (GR)	1039
FILTRO DE AIRE (CABINA) (REDUCCION DE OLORES)	175-2832	1	CALEFACCIÓN DE LA CABINA (GR)	1039
FILTRO DE AIRE DE CABINA (ESTANDAR)	107-0266	1	ACONDICIONADOR DE AIRE (GR)	1003
		1	CALEFACCIÓN DE LA CABINA (GR)	1039
HOJA DE LIMPIAPARABRISAS (CONJ) (PUERTA DEL LADO DERECHO E IZQUIERDO)	6V-5849	4	LIMPIAPARABRISAS DE LA VENTANA (GR)	1162
		4	LIMPIAPARABRISAS DE LA VENTANA (GR)	1166
HOJA DE LIMPIAPARABRISAS (CONJ) (VENTANA DELANTERA)	6V-5851	1	LIMPIAPARABRISAS DE LA VENTANA (GR)	1162
		1	LIMPIAPARABRISAS DE LA VENTANA (GR)	1166
HOJA DE LIMPIAPARABRISAS (CONJ) (VENTANA POSTERIOR)	5C-8811	1	LIMPIAPARABRISAS DE LA VENTANA (GR)	1162
		1	LIMPIAPARABRISAS DE LA VENTANA (GR)	1166
LÁMPARA (24 VOLTIOS) (INDICADOR DE ACCION)	7N-1996	1	INSTRUMENTOS (GR)	1049
		1	INSTRUMENTOS (GR)	1051
TAPA CON RESPIRADERO (TANQUE DE LIMPIPARABRISA)	8E-8292	1	TANQUE DEL LAVAPARABRISAS (GR)	1136
		1	TANQUE DEL LAVAPARABRISAS (GR)	1138
TAPÓN (CONJ) (ACONDICIONADOR DE AIRE) (LADO ALTO)	3E-4052	1	TUBERÍAS DE ACONDICIONADOR DE AIRE (GR)	1057
		1	TUBERÍAS DE ACONDICIONADOR DE AIRE (GR)	1061
TAPÓN (CONJ) (ACONDICIONADOR DE AIRE) (LADO BAJO)	3E-4051	1	TUBERÍAS DE ACONDICIONADOR DE AIRE (GR)	1057
		1	TUBERÍAS DE ACONDICIONADOR DE AIRE (GR)	1061

* NO HAY TRADUCCION DISPONIBLE EN EL MOMENTO DE LA IMPRESION

PIEZAS DE MANTENIMIENTO

DESCRIPCION	NUMERO DE PIEZA	CANT	SE UTILIZA EN	PAGINA
MOTOR BÁSICO				
CORREA TRAPEZOIDAL (ALTERNADOR)	100-3725	1	MONTAJE DEL ALTERNADOR (GR)	58
PANTALLA (CONJ) (COLECTOR DE ACEITE DEL MOTOR)	7N-5395	1	CÁRTER - COLECTOR DEL (GR)	60
SELLO (TAPA DE VÁLVULA)	208-2364	1	TAPA DEL MECANISMO DE VÁLVULAS (GR)	15
TAPÓN DE DRENAJE (BLOQUE DE MOTOR)	5F-0304	2	TAPA DEL BLOQUE MOTOR (GR)	11
TAPON DE DRENAJE DE ACEITE (COLECTOR DE ACEITE DEL MOTOR)	6I-0723	1	CÁRTER - COLECTOR DEL (GR)	60
SISTEMA DE ADMISIÓN Y ESCAPE DE AIRE				
ELEMENTO DE FILTRO (FILTRO DE AIRE)	7M-1674	1	FILTRO DE AIRE (GR)	167
ELEMENTO DE FILTRO (SOPORTE DE ADMISION DE AIRE)	7M-1674	1	SOPORTE DE LA ADMISIÓN DE AIRE (GR)	190
		1	SOPORTE DE LA ADMISIÓN DE AIRE (GR)	191
ELEMENTO PRIMARIO (CONJ) (FILTRO DE AIRE)	123-6855	1	FILTRO DE AIRE (GR)	166
ELEMENTO PRIMARIO (CONJ) (FILTRO DE AIRE) (EFICIENCIA ULTRA ALTA)	132-7168	1	FILTRO DE AIRE (GR)	169
ELEMENTO SECUNDARIO (CONJ) (FILTRO DE AIRE)	106-3973	1	FILTRO DE AIRE (GR)	169
	123-6856	1	FILTRO DE AIRE (GR)	166

* NO HAY TRADUCCION DISPONIBLE EN EL MOMENTO DE LA IMPRESION

PIEZAS DE MANTENIMIENTO

DESCRIPCION	NUMERO DE PIEZA	CANT	SE UTILIZA EN	PAGINA
SISTEMA DE COMBUSTIBLE				
CANDADO (GR) (TANQUE DE COMBUSTIBLE)	5P-8502	1	COMBUSTIBLE - TANQUE DE (GR)	238
		1	COMBUSTIBLE - TANQUE DE (GR)	236
CANDADO (GR) (TUBERIAS DE COMBUSTIBLE)	5P-8502	1	TUBERÍAS DE COMBUSTIBLE (GR)	219
COLADOR DE COMBUSTIBLE (TANQUE)	9P-7121	1	COMBUSTIBLE - TANQUE DE (GR)	238
		1	COMBUSTIBLE - TANQUE DE (GR)	239
ELEMENTO DE FILTRO DE COMBUSTIBLE (CONJ)	9M-2342	1	FILTRO DE COMBUSTIBLE (GR)	215
EMPAQUETADURA (BOMBA DE CEBADO DE COMBUSTIBLE)	9Y-8389	1	BOMBA DE CEBADO DE COMBUSTIBLE (GR)	229
FILTRO DE COMBUSTIBLE (CONJ)	1R-0755	2	FILTRO DE COMBUSTIBLE (GR)	215
REJILLA DEL TANQUE DE COMBUSTIBLE	6T-7774	1	TUBERÍAS DE COMBUSTIBLE (GR)	219
SELLO ANULAR (FILTRO DE COMBUSTIBLE)	8H-2778	1	FILTRO DE COMBUSTIBLE (GR)	215
TAPA DE LLENADO (CONJ) (COMBUSTIBLE, TRABA, VENTILACIÓN)	7X-7700	1	COMBUSTIBLE - TANQUE DE (GR)	239
TAPA DEL TANQUE DE COMBUSTIBLE (CONJ) (RESPIRADERO CON TRABA)	7X-7700	1	COMBUSTIBLE - TANQUE DE (GR)	237
TAPA DEL TUBO DE LLENADO DEL TANQUE DE COMBUSTIBLE (CONJ) (TRABA)	101-8909	1	ADAPTADOR DE LLENADO RÁPIDO DE COMBUSTIBLE (GR)	199
		1	ADAPTADOR DE LLENADO RÁPIDO DE COMBUSTIBLE (GR)	201
		1	ADAPTADOR DE LLENADO RÁPIDO DE COMBUSTIBLE (GR)	203
SISTEMA DE ENFRIAMIENTO				
FILTRO DE AGUA (BOMBA DE AGUA)	4N-5834	2	BOMBA DE AGUA (GR)	144
		2	BOMBA DE AGUA (GR)	148
REGULADOR DE TEMPERATURA (TERMOSTATO)	6I-4950	4	REGULADOR Y CAJA (GR)	116
TAPÓN DE DRENAJE (BOMBA DE AGUA)	3F-1358	1	BOMBA AUXILIAR DE AGUA DULCE (GR)	139
TAPÓN DE DRENAJE (ENFRIADOR DE TRANSMISION)	7N-1447	1	TUBERÍAS DEL AGUA (GR)	132

* NO HAY TRADUCCION DISPONIBLE EN EL MOMENTO DE LA IMPRESION

PIEZAS DE MANTENIMIENTO

DESCRIPCION	NUMERO DE PIEZA	CANT	SE UTILIZA EN	PAGINA
SISTEMA DE LUBRICACIÓN				
CANDADO (GR) (TUBERIA DE LLENADO DE ACITE DE MOTORN)	5P-8502	1	TUBO DE LLENADO DE ACEITE (GR)	79
FILTRO DE ACEITE DEL MOTOR (CONJ)	2P-4005	2	FILTRO DE ACEITE DEL MOTOR (GR)	82
		2	FILTRO DE ACEITE DEL MOTOR (GR)	80
REJILLA PARA BARRIDO (ACEITE DEL MOTOR)	4P-4917	1	BOMBA DE BARRIDO (GR)	105
	4P-5500	1	BOMBA DE BARRIDO (GR)	105
RESPIRADERO (CONJ) (MOTOR)	4W-3027	1	RESPIRADERO (GR)	78
TAPA DEL TUBO DE LLENADO (CÁRTER DEL MOTOR)	110-8826	1	CAMBIO RÁPIDO DE ACEITE (GR)	96
TAPA DEL TUBO DE LLENADO DE ACEITE (CONJ) (MOTOR)	6N-2206	1	TUBO DE LLENADO DE ACEITE (GR)	79
TAPÓN (CONJ) (ACEITE DEL MOTOR)	9S-9272	1	FILTRO DE ACEITE DEL MOTOR (GR)	80
		1	FILTRO DE ACEITE DEL MOTOR (GR)	82
SISTEMA ELÉCTRICO Y DE ARRANQUE				
BATERÍA (12 VOLTIOS)	9X-9730	4	BATERÍA Y CABLES (GR)	246
		4	BATERÍA Y CABLES (GR)	260
		4	BATERÍA Y CABLES (GR)	267
CILINDRO DE ÉTER (CONJ)	7X-1062	1	AUXILIAR DE ARRANQUE CON ÉTER (GR)	356
CONFIGURACION DE LAMPARA DE REFLECTOR (DESCARGA DE ALTA INTENSIDAD) (24 VOLTIOS)(70 VATIOS)(TRANSPARENTE)	213-4998	1	REFLECTOR (GR)	310
		1	REFLECTOR (GR)	311
DISYUNTOR (CONJ) (10-AMPERIOS) (EMBRAGUE ELECTRONICO/FRENO)	6T-3642	1	CABLES DE LA CONSOLA (GR)	382
DISYUNTOR (CONJ) (10-AMPERIOS) (LLAVE DE ARRANQUE)	6T-3642	1	CABLES DE LA CONSOLA (GR)	382
DISYUNTOR (CONJ) (15 AMPERIOS) (FAROLES DELANTEROS)	3T-2662	1	CABLES DE LA CONSOLA (GR)	382
DISYUNTOR (CONJ) (15 AMPERIOS) (IMPLEMENTO)	6T-3643	1	CABLES DE LA CONSOLA (GR)	382
DISYUNTOR (CONJ) (15 AMPERIOS) (MOTOR)	6T-3643	1	CABLES DE LA CONSOLA (GR)	382
DISYUNTOR (CONJ) (15 AMPERIOS) (VENTILADOR SOPLADOR)	6T-3643	1	CABLES DE LA CONSOLA (GR)	382
ELEMENTO DEL CALENTADOR DEL AGUA DE LAS CAMISAS (120 VOLTIOS, 1500 VATIOS)	9G-6655	2	AGUA DE LAS CAMISAS - CALENTADOR DEL (GR)	300
		2	AGUA DE LAS CAMISAS - CALENTADOR DEL (GR)	302
ELEMENTO DEL CALENTADOR DEL AGUA DE LAS CAMISAS (240 VOLTIOS, 1500 VATIOS)	6T-3764	2	AGUA DE LAS CAMISAS - CALENTADOR DEL (GR)	301
		2	AGUA DE LAS CAMISAS - CALENTADOR DEL (GR)	303
ESCOBILLA (CONJ) (MOTOR DE ARRANQUE)	3T-9524	6	MOTOR DE ARRANQUE ELÉCTRICO (GR)	365

* NO HAY TRADUCCION DISPONIBLE EN EL MOMENTO DE LA IMPRESION

PIEZAS DE MANTENIMIENTO

DESCRIPCION	NUMERO DE PIEZA	CANT	SE UTILIZA EN	PAGINA
		6	SISTEMA DE PRELUBRICACIÓN DEL MOTOR DE ARRANQUE (GR)	368
FILTRO ESPONJOSO (SENSOR DE COMBUSTIBLE)	111-4402	1	BATERÍA Y CABLES (GR)	246
		1	BATERÍA Y CABLES (GR)	257
		1	BATERÍA Y CABLES (GR)	264
FILTRO Y EMPAQUETADURA (CONJ) (AUXILIAR DE ARRANQUE CON ÉTER)	9X-7138	1	AUXILIAR DE ARRANQUE CON ÉTER (GR)	354
FUSIBLE (10-AMPERIOS)	9W-1442	10	CABLES DE LA CONSOLA (GR)	383
FUSIBLE (15 AMPERIOS)	9W-1441	3	CABLES DE LA CONSOLA (GR)	383
FUSIBLE (20-AMPERIOS)	9W-1446	3	CABLES DE LA CONSOLA (GR)	383
FUSIBLE (30 A) (TRANSFORMADOR DE CORRIENTE)	8T-9636	2	CONVERTIDOR ELÉCTRICO (GR)	295
LÁMPARA (CONJ) (12 VOLTIOS) (INSTALACIÓN DE SEGURIDAD)	165-5655	1	INSTALACION DE SEGURIDAD (GR)	305
LÁMPARA (24 VOLTIOS) (CONTROL DEL ACELERADOR)	3E-8825	2	CABLES DE LA PLATAFORMA (GR)	399
LÁMPARA (24 VOLTIOS) (FALLA TRASERA)	7N-1996	1	CABLES DE LA PLATAFORMA (GR)	397
LÁMPARA (24 VOLTIOS) (IMPLEMENTO DE LA TRABA)	3E-8825	1	CABLES DE LA PLATAFORMA (GR)	397
LÁMPARA (24 VOLTIOS) (TABLERO DE INSTRUMENTOS)	7N-5876	4	CABLES DE LA PLATAFORMA (GR)	397
LÁMPARA (24 VOLTIOS) (TECLADO)	123-9294	1	CONTROL ELECTRÓNICO (GR)	281
		1	CONTROL ELECTRÓNICO (GR)	283
		1	CONTROL ELECTRÓNICO (GR)	285
LÁMPARA (24 VOLTIOS) (TRANSPARENTE)(TECHO)	7N-9943	1	LÁMPARA DEL TECHO (GR)	306
LLAVE (DESCONECTAR BATERIA)	8H-5306	1	DISYUNTOR (GR)	372
LUCES DE ALÓGENO (24 VOLTIOS, 65 VATIOS) (REFLECTOR)	9X-3463	1	REFLECTOR (GR)	307
		1	REFLECTOR (GR)	308
		1	REFLECTOR (GR)	309
PORTAESCOBILLAS (CONJ) (MOTOR DE ARRANQUE)	6T-0363	6	MOTOR DE ARRANQUE ELÉCTRICO (GR)	366
		6	SISTEMA DE PRELUBRICACIÓN DEL MOTOR DE ARRANQUE (GR)	369
REJILLA (AUXILIAR DE ARRANQUE CON ÉTER)	160-8761	1	AUXILIAR DE ARRANQUE CON ÉTER (GR)	354
RESORTE (MOTOR DE ARRANQUE)	3T-9494	6	MOTOR DE ARRANQUE ELÉCTRICO (GR)	365
		6	SISTEMA DE PRELUBRICACIÓN DEL MOTOR DE ARRANQUE (GR)	369
VÁLVULA-RESPIRADERO	3K-6905	1	CABLES DEL MOTOR (GR)	386

* NO HAY TRADUCCION DISPONIBLE EN EL MOMENTO DE LA IMPRESION

PIEZAS DE MANTENIMIENTO

DESCRIPCION	NUMERO DE PIEZA	CANT	SE UTILIZA EN	PAGINA
SISTEMA HIDRÁULICO				
CANDADO (GR) (TANQUE HIDRÁULICO)	5P-8502	1	TUBERÍAS HIDRÁULICAS DEL VENTILADOR (GR)	739
CANDADO (GR) (TUBERIAS HIDAULICAS DEL VENTILADOR)	5P-8502	1	TUBERÍAS HIDRÁULICAS DEL VENTILADOR (GR)	727
		1	TUBERÍAS HIDRÁULICAS DEL VENTILADOR (GR)	733
		1	TUBERÍAS HIDRÁULICAS DEL VENTILADOR (GR)	743
COLADOR (CONJ) (LLENADO DEL TANQUE HIDRÁULICO)	3D-6678	1	TANQUE Y FILTRO HIDRÁULICOS (GR)	848
ELEMENTO DE FILTRO DE ACEITE (CONJ) (HIDRAULICO)	167-2009	2	TANQUE Y FILTRO HIDRÁULICOS (GR)	848
ELEMENTO DE FILTRO DE ACEITE (CONJ) (VENTILADOR DE RETORNO)	132-8875	1	FILTRO DE ACEITE (GR)	725
ELEMENTO DE FILTRO HIDRÁULICO (ACEITE DE ACTIVACIÓN DE FRENO)	134-0964	1	FILTRO DE ACEITE (GR)	726
PANTALLA (CONJ) (TANQUE HIDRÁULICO)	9T-4946	1	TANQUE Y FILTRO HIDRÁULICOS (GR)	848
REJILLA (TANQUE HIDRÁULICO)	9T-6680	1	TANQUE Y FILTRO HIDRÁULICOS (GR)	848
TAPA DEL TUBO DE LLENADO (TANQUE HIDRÁULICO)	4J-3754	1	TANQUE Y FILTRO HIDRÁULICOS (GR)	848
TAPA PROTECTORA DEL TANQUE HIDRÁULICO (LLENADO DEL TANQUE HIDRÁULICO)	5D-1902	1	TANQUE Y FILTRO HIDRÁULICOS (GR)	848
TAPÓN (DRENAJE) (TANQUE HIDRÁULICO)	106-8187	1	TANQUE Y FILTRO HIDRÁULICOS (GR)	848

* NO HAY TRADUCCION DISPONIBLE EN EL MOMENTO DE LA IMPRESION

PIEZAS DE MANTENIMIENTO

DESCRIPCION	NUMERO DE PIEZA	CANT	SE UTILIZA EN	PAGINA
TREN DE FUERZA				
ELEMENTO DE FILTRO DE ACEITE (CONJ) (HIDRAULICO) (TRANSMISION)	132-8876	2	FILTRO DE ACEITE (GR)	413
		2	TUBERÍAS DE ACEITE DEL TREN DE FUERZA (GR)	437
PANTALLA (CONJ) (TREN DE FUERZA)	9P-0214	1	TUBERÍAS DE ACEITE DEL TREN DE FUERZA (GR)	433
		1	TUBERÍAS DE ACEITE DEL TREN DE FUERZA (GR)	437
	130-6747	1	TUBERÍAS DE ACEITE DEL TREN DE FUERZA (GR)	437
PANTALLA (CONJ) (TUBERIAS DE ACEITE DEL TREN DE FUERZA)	130-6747	1	TUBERÍAS DE ACEITE DEL TREN DE FUERZA (GR)	432
REJILLA DE SUCCIÓN (CONVERTIDOR DE PAR)	8S-9130	1	CONVERTIDOR DE PAR (GR)	467
RESPIRADERO (TREN DE FUERZA)	9G-9981	1	TUBERÍAS DE ACEITE DEL TREN DE FUERZA (GR)	433
		1	TUBERÍAS DE ACEITE DEL TREN DE FUERZA (GR)	437
TAPA DEL TUBO DE LLENADO DE ACEITE (CONJ) (TREN DE FUERZA)	6N-2985	1	TUBERÍAS DE ACEITE DEL TREN DE FUERZA (GR)	433
		1	TUBERÍAS DE ACEITE DEL TREN DE FUERZA (GR)	437
TAPÓN DE DRENAJE (CAJA Y BASTIDOR)	4B-7739	1	TUBERÍAS DE ACEITE DEL TREN DE FUERZA (GR)	433
TAPÓN DE DRENAJE (MANDO FINAL)	5F-0304	1	MANDO FINAL (GR)	415
		1	MANDO FINAL (GR)	418
TAPÓN DE DRENAJE (TREN DE FUERZA)	4B-7739	1	TUBERÍAS DE ACEITE DEL TREN DE FUERZA (GR)	437
TAPÓN (FILTRO DE LA TRANSMISION)	9S-4183	1	FILTRO DE ACEITE (GR)	413
TAPÓN MAGNÉTICO (MANDO FINAL)	6V-3298	1	MANDO FINAL (GR)	415
		1	MANDO FINAL (GR)	418

* NO HAY TRADUCCION DISPONIBLE EN EL MOMENTO DE LA IMPRESION

PIEZAS DE MANTENIMIENTO

DESCRIPCION	NUMERO DE PIEZA	CANT	SE UTILIZA EN	PAGINA
TREN DE RODAJE				
RESPIRADERO (TANQUE DE LUBRICACION)	198-7711	1	GRUPO DE LUBRICACIÓN DE BARRA ESTABILIZADORA	586
TAPA DE NIVEL DE ACEITE (CONJ) (BOTELLA DE LUBRICACIÓN DEL EJE PILOTO)	9W-8277	1	LUBRICACIÓN DE EJE PIVOTE (GR)	588
TAPA DEL TUBO DE LLENADO DE ACEITE (CONJ) (TANQUE DE LUBRICACION)	5L-2952	1	GRUPO DE LUBRICACIÓN DE BARRA ESTABILIZADORA	586
TAPÓN DE DRENAJE (BASTIDOR TELESCOPICOESPIRAL)	4T-2069	6	BASTIDOR TELESCÓPICO DEL RESORTE TENSOR (GR)	553
		6	BASTIDOR TELESCÓPICO DEL RESORTE TENSOR (GR)	556
		6	BASTIDOR TELESCÓPICO DEL RESORTE TENSOR (GR)	559
		6	BASTIDOR TELESCÓPICO DEL RESORTE TENSOR (GR)	563
		3	BASTIDOR TELESCÓPICO DEL RESORTE TENSOR (GR)	566
		3	BASTIDOR TELESCÓPICO DEL RESORTE TENSOR (GR)	569
		3	BASTIDOR TELESCÓPICO DEL RESORTE TENSOR (GR)	572
		3	BASTIDOR TELESCÓPICO DEL RESORTE TENSOR (GR)	575

* NO HAY TRADUCCION DISPONIBLE EN EL MOMENTO DE LA IMPRESION

PEÇAS DE MANUTENÇÃO

DESCRIÇÃO	NÚMERO DE PEÇA	QUANT	UTILIZADA EM	PÁGINA
CHASSI E CARROCERIA				
CADEADO (CAPÔ)	5P-8502	2	CAPÔ E PROTETOR	534
		1	CAPÔ E PROTETOR	537
CADEADO (COBERTURA DO PÁRA-LAMA)	5P-8502	1	COBERTURA - PÁRA-LAMA	504
		1	COBERTURA - PÁRA-LAMA	506
		1	COBERTURA - PÁRA-LAMA	508
CADEADO (PÁRA-LAMA)	5P-8502	2	PÁRA-LAMA	511
		2	PÁRA-LAMA	515
TAMPÃO (DRENAGEM) (CAIXA)(TRANSMISSÃO)	106-8187	1	CAIXA E CHASSI	493
MATERIAL RODANTE				
BUJÃO DO DRENO (ARMAÇÃO DO TENSOR TELESCÓPICO)	4T-2069	6	ARMAÇÃO TELESCÓPICA DA MOLA TENSORA	553
		6	ARMAÇÃO TELESCÓPICA DA MOLA TENSORA	556
		6	ARMAÇÃO TELESCÓPICA DA MOLA TENSORA	559
		6	ARMAÇÃO TELESCÓPICA DA MOLA TENSORA	563
		3	ARMAÇÃO TELESCÓPICA DA MOLA TENSORA	566
		3	ARMAÇÃO TELESCÓPICA DA MOLA TENSORA	569
		3	ARMAÇÃO TELESCÓPICA DA MOLA TENSORA	572
		3	ARMAÇÃO TELESCÓPICA DA MOLA TENSORA	575
RESPIRO (TANQUE DE LUBRIFICAÇÃO)	198-7711	1	LUBRIFICAÇÃO-BARRA EQUALIZADORA	586
TAMPA - BOCAL DE ENCHIMENTO DE ÓLEO (TANQUE DE LUBRIFICAÇÃO)	5L-2952	1	LUBRIFICAÇÃO-BARRA EQUALIZADORA	586
TAMPA - NÍVEL DO ÓLEO (GARRAFA DE LUBRIFICAÇÃO DO EIXO PILOTO)	9W-8277	1	EIXO PIVÔ - LUBRIFICAÇÃO	588
MOTOR BÁSICO				
BUJÃO - DRENAGEM DO ÓLEO (CÁRTER DE ÓLEO DO MOTOR)	6I-0723	1	CÁRTER DO ÓLEO DO MOTOR	60
BUJÃO DO DRENO (BLOCO DO CILINDRO)	5F-0304	2	TAMPA - BLOCO DO MOTOR	11
CORREIA EM V (ALTERNADOR)	100-3725	1	MONTAGEM - ALTERNADOR	58
RETENTOR (MECANISMO DAS VÁLVULAS - TAMPA)	208-2364	1	TAMPA - MECANISMO DAS VÁLVULAS	15
TELA FILTRANTE (CÁRTER DE ÓLEO DO MOTOR)	7N-5395	1	CÁRTER DO ÓLEO DO MOTOR	60

PEÇAS DE MANUTENÇÃO

DESCRIÇÃO	NÚMERO DE PEÇA	QUANT	UTILIZADA EM	PÁGINA
POSTO DO OPERADOR				
ACUMULADOR - REFRIGERANTE	170-0235	1	TUBOS - AR CONDICIONADO	1057
CINTO DE SEGURANÇA (RETRÁTIL)	222-0345	1	ASSENTO	1110
		1	ASSENTO	1111
CORREIA EM V (COMPRESSOR DO REFRIGERANTE)	1P-9744	1	COMPRESSOR DE REFRIGERANTE	1016
FILTRO - AR (CABINE) (ALTA EFICIÊNCIA)	175-2839	1	AQUECEDOR DA CABINE	1039
	175-2841	1	AQUECEDOR DA CABINE	1039
FILTRO - AR (CABINE) (PADRÃO)	7T-1890	1	AQUECEDOR DA CABINE	1039
		1	CONDICIONADOR DE AR	1003
FILTRO - AR (CABINE) (REDUÇÃO DE ODOR)	175-2832	1	AQUECEDOR DA CABINE	1039
FILTRO DE AR DE CABINA (PADRÃO)	107-0266	1	AQUECEDOR DA CABINE	1039
		1	CONDICIONADOR DE AR	1003
LÂMINA DO LIMPADOR DE PÁRA-BRISA (PORTA - LADO DIREITO E ESQUERDO)	6V-5849	4	LIMPADOR DO VIDRO	1162
		4	LIMPADOR DO VIDRO	1166
LÂMINA DO LIMPADOR DE PÁRA-BRISA (VIDRO DIANTEIRO)	6V-5851	1	LIMPADOR DO VIDRO	1162
		1	LIMPADOR DO VIDRO	1166
LÂMINA DO LIMPADOR DE PÁRA-BRISA (VIDRO TRASEIRO)	5C-8811	1	LIMPADOR DO VIDRO	1162
		1	LIMPADOR DO VIDRO	1166
LÂMPADA (24 VOLTS) (INDICADOR DE AÇÃO)	7N-1996	1	INSTRUMENTOS	1049
		1	INSTRUMENTOS	1051
TAMPA COM RESPIRO (TANQUE DO LAVADOR DE VIDROS)	8E-8292	1	TANQUE - LAVADOR DE JANELA	1136
		1	TANQUE - LAVADOR DE JANELA	1138
TAMPA (CONDICIONADOR DE AR) (LADO ALTO)	3E-4052	1	TUBOS - AR CONDICIONADO	1057
		1	TUBOS - AR CONDICIONADO	1061
TAMPA (CONDICIONADOR DE AR) (LADO BAIXO)	3E-4051	1	TUBOS - AR CONDICIONADO	1057
		1	TUBOS - AR CONDICIONADO	1061
SISTEMA DA ADMISSÃO DE AR E DE ESCAPE				
ELEMENTO - FILTRANTE (PURIFICADOR DE AR)	7M-1674	1	PURIFICADOR DE AR	167
ELEMENTO - FILTRANTE (SUPORTE DA ENTRADA DE AR)	7M-1674	1	SUPORTE - ADMISSÃO DE AR	190
		1	SUPORTE - ADMISSÃO DE AR	191
ELEMENTO - PRIMÁRIO (FILTRO DE AR)	123-6855	1	PURIFICADOR DE AR	166
ELEMENTO - PRIMÁRIO (FILTRO DE AR) (EFICIÊNCIA ULTRA ALTA)	132-7168	1	PURIFICADOR DE AR	169
ELEMENTO - SECUNDÁRIO (FILTRO DE AR)	106-3973	1	PURIFICADOR DE AR	169
	123-6856	1	PURIFICADOR DE AR	166

PEÇAS DE MANUTENÇÃO

DESCRIÇÃO	NÚMERO DE PEÇA	QUANT	UTILIZADA EM	PÁGINA
SISTEMA DE ARREFECIMENTO				
BUJÃO DO DRENO (ARREFECEDOR DE TRANSMISSÃO)	7N-1447	1	TUBOS - ÁGUA	132
BUJÃO DO DRENO (BOMBA D'ÁGUA)	3F-1358	1	BOMBA AUXILIAR DE ÁGUA DOCE	139
FILTRO - ÁGUA (BOMBA D'ÁGUA)	4N-5834	2	BOMBA DE ÁGUA	144
		2	BOMBA DE ÁGUA	148
REGULADOR DE TEMPERATURA/TERMOSTATO	6I-4950	4	TERMOSTATO / REGULADOR DE TEMPERATURA	116
SISTEMA DE COMBUSTÍVEL				
CADEADO (TANQUE DE COMBUSTÍVEL)	5P-8502	1	TANQUE DE COMBUSTÍVEL	236
		1	TANQUE DE COMBUSTÍVEL	238
CADEADO (TUBULAÇÕES DE COMBUSTÍVEL)	5P-8502	1	TUBOS - COMBUSTÍVEL	219
ELEMENTO - FILTRO DE COMBUSTÍVEL	9M-2342	1	FILTRO - COMBUSTÍVEL	215
FILTRO - COMBUSTÍVEL	1R-0755	2	FILTRO - COMBUSTÍVEL	215
FILTRO - COMBUSTÍVEL (TANQUE)	9P-7121	1	TANQUE DE COMBUSTÍVEL	238
		1	TANQUE DE COMBUSTÍVEL	239
JUNTA (BOMBA DE ESCORVA DO COMBUSTÍVEL)	9Y-8389	1	BOMBA DE ESCORVA DO COMBUSTÍVEL	229
RETENTOR TIPO ANEL (FILTRO DE COMBUSTÍVEL)	8H-2778	1	FILTRO - COMBUSTÍVEL	215
TAMPA - BOCAL DE ENCHIMENTO (COMBUSTÍVEL, TRAVA, COM RESPIRO)	7X-7700	1	TANQUE DE COMBUSTÍVEL	239
TAMPA DO BOCAL DE ENCHIMENTO DO TANQUE DE COMBUSTÍVEL (TRAVAMENTO)	101-8909	1	ADAPTADOR - ABASTECIMENTO RÁPIDO DE COMBUSTÍVEL	199
		1	ADAPTADOR - ABASTECIMENTO RÁPIDO DE COMBUSTÍVEL	201
		1	ADAPTADOR - ABASTECIMENTO RÁPIDO DE COMBUSTÍVEL	203
TAMPA DO TANQUE DE COMBUSTÍVEL (TRAVA COM RESPIRO)	7X-7700	1	TANQUE DE COMBUSTÍVEL	237
TELA DO TANQUE DE COMBUSTÍVEL	6T-7774	1	TUBOS - COMBUSTÍVEL	219
SISTEMA DE LUBRIFICAÇÃO				
CADEADO (TUBO DE ENCHIMENTO DO OLEO DO MOTOR)	5P-8502	1	BOCAL DE ENCHIMENTO DE ÓLEO DO MOTOR	79
FILTRO - ÓLEO DO MOTOR	2P-4005	2	FILTRO - ÓLEO DO MOTOR	80
		2	FILTRO - ÓLEO DO MOTOR	82
RESPIRO (MOTOR)	4W-3027	1	RESPIRO	78
TAMPA - BOCAL DE ENCHIMENTO (CÁRTER DO MOTOR)	110-8826	1	ÓLEO - ARRANJO PARA TROCA RÁPIDA	96
TAMPA - BOCAL DE ENCHIMENTO DE ÓLEO (MOTOR)	6N-2206	1	BOCAL DE ENCHIMENTO DE ÓLEO DO MOTOR	79
TAMPA (ÓLEO DO MOTOR)	9S-9272	1	FILTRO - ÓLEO DO MOTOR	80
		1	FILTRO - ÓLEO DO MOTOR	82
TELA - RETORNO (ÓLEO DO MOTOR)	4P-4917	1	BOMBA AUXILIAR DO SISTEMA DE TRANSMISSÃO	105
	4P-5500	1	BOMBA AUXILIAR DO SISTEMA DE TRANSMISSÃO	105

PEÇAS DE MANUTENÇÃO

DESCRIÇÃO	NÚMERO DE PEÇA	QUANT	UTILIZADA EM	PÁGINA
SISTEMA ELÉTRICO E DE PARTIDA				
BATERIA (12-VOLTS)	9X-9730	4	BATERIA E CABOS / FIOS ELÉTRICOS	246
		4	BATERIA E CABOS / FIOS ELÉTRICOS	260
		4	BATERIA E CABOS / FIOS ELÉTRICOS	267
CHAVE (DESCONECTAR A BATERIA)	8H-5306	1	CHAVE GERAL	372
CILINDRO DE ÉTER	7X-1062	1	AUXILIAR DE PARTIDA A ÉTER	356
DISJUNTOR AUTOMÁTICO DE CIRCUITO (10 AMPERES) (CHAVE DE PARTIDA)	6T-3642	1	CABOS/FIOS ELÉTRICOS DO CONSOLE	382
DISJUNTOR AUTOMÁTICO DE CIRCUITO (10 AMPERES) (FREIO/EMBREAGEM ELETRÔNICOS)	6T-3642	1	CABOS/FIOS ELÉTRICOS DO CONSOLE	382
DISJUNTOR AUTOMÁTICO DE CIRCUITO (15 AMPERES) (FARÓIS DIANTEIROS)	3T-2662	1	CABOS/FIOS ELÉTRICOS DO CONSOLE	382
DISJUNTOR AUTOMÁTICO DE CIRCUITO (15 AMPERES) (IMPLEMENTO)	6T-3643	1	CABOS/FIOS ELÉTRICOS DO CONSOLE	382
DISJUNTOR AUTOMÁTICO DE CIRCUITO (15 AMPERES) (MOTOR)	6T-3643	1	CABOS/FIOS ELÉTRICOS DO CONSOLE	382
DISJUNTOR AUTOMÁTICO DE CIRCUITO (15 AMPERES) (VENTILADOR)	6T-3643	1	CABOS/FIOS ELÉTRICOS DO CONSOLE	382
ELEMENTO - AQUECEDOR DE ÁGUA DA CAMISA (120 VOLTS,1500 WATTS)	9G-6655	2	AQUECEDOR DA ÁGUA DO MOTOR	300
		2	AQUECEDOR DA ÁGUA DO MOTOR	302
ELEMENTO - AQUECEDOR DE ÁGUA DA CAMISA (240 VOLTS, 1500 WATTS)	6T-3764	2	AQUECEDOR DA ÁGUA DO MOTOR	301
		2	AQUECEDOR DA ÁGUA DO MOTOR	303
ESCOVA (MOTOR DE PARTIDA)	3T-9524	6	MOTOR DE PARTIDA - SISTEMA DE PRÉ-LUBRIFICAÇÃO	368
		6	MOTOR ELÉTRICO DE PARTIDA	365
FILTRO - ESPUMA (SENSOR DE COMBUSTÍVEL)	111-4402	1	BATERIA E CABOS / FIOS ELÉTRICOS	246
		1	BATERIA E CABOS / FIOS ELÉTRICOS	257
		1	BATERIA E CABOS / FIOS ELÉTRICOS	264
FILTRO E JUNTA (AUXILIAR DE PARTIDA A ÉTER)	9X-7138	1	AUXILIAR DE PARTIDA A ÉTER	354
FUSÍVEL (10 AMPERES)	9W-1442	10	CABOS/FIOS ELÉTRICOS DO CONSOLE	383
FUSÍVEL (15 AMPERES)	9W-1441	3	CABOS/FIOS ELÉTRICOS DO CONSOLE	383
FUSÍVEL (20-AMPERES)	9W-1446	3	CABOS/FIOS ELÉTRICOS DO CONSOLE	383
FUSÍVEL (30 A) (CONVERSOR DE ENERGIA)	8T-9636	2	CONVERSOR ELÉTRICO	295
LÂMPADA - FAROL (HID) (24 VOLTS)(70 WATTS)(APAGAR)	213-4998	1	LÂMPADA - FAROL	310
		1	LÂMPADA - FAROL	311
LÂMPADA - HALOGÊNEO (24 VOLTS, 65 WATTS) (FAROL)	9X-3463	1	LÂMPADA - FAROL	307
		1	LÂMPADA - FAROL	308
		1	LÂMPADA - FAROL	309

PEÇAS DE MANUTENÇÃO

DESCRIÇÃO	NÚMERO DE PEÇA	QUANT	UTILIZADA EM	PÁGINA
LÂMPADA (12-VOLTS) (INSTALAÇAO DE SEGURANÇA)	165-5655	1	INSTALAÇÃO-SEGURANÇA	305
LÂMPADA (24 V) (TECLADO)	123-9294	1	CONTROLE ELETRÔNICO	281
		1	CONTROLE ELETRÔNICO	283
		1	CONTROLE ELETRÔNICO	285
LÂMPADA (24 VOLTS) (CONTROLE DO ACELERADOR)	3E-8825	2	CABOS/FIOS ELÉTRICOS - PLATAFORMA	399
LÂMPADA (24 VOLTS) (FALHA TRASEIRA)	7N-1996	1	CABOS/FIOS ELÉTRICOS - PLATAFORMA	397
LÂMPADA (24 VOLTS) (PAINEL DE INSTRUMENTOS)	7N-5876	4	CABOS/FIOS ELÉTRICOS - PLATAFORMA	397
LÂMPADA (24 VOLTS) (TRANSPARENTE)(TETO)	7N-9943	1	LÂMPADA - TETO	306
LÂMPADA (24 VOLTS) (TRAVA DO ACESSÓRIO)	3E-8825	1	CABOS/FIOS ELÉTRICOS - PLATAFORMA	397
MOLA (MOTOR DE PARTIDA)	3T-9494	6	MOTOR DE PARTIDA - SISTEMA DE PRÉ-LUBRIFICAÇÃO	369
		6	MOTOR ELÉTRICO DE PARTIDA	365
SUPORTE - ESCOVA (MOTOR DE PARTIDA)	6T-0363	6	MOTOR DE PARTIDA - SISTEMA DE PRÉ-LUBRIFICAÇÃO	369
		6	MOTOR ELÉTRICO DE PARTIDA	366
TELA FILTRANTE (AUXILIAR DE PARTIDA A ÉTER)	160-8761	1	AUXILIAR DE PARTIDA A ÉTER	354
VÁLVULA DO RESPIRO	3K-6905	1	CABOS/FIOS ELÉTRICOS - MOTOR	386
SISTEMA HIDRÁULICO				
CADEADO (TANQUE HIDRÁULICO)	5P-8502	1	TUBOS - VENTILADOR HIDRÁULICOS	739
CADEADO (TUBULAÇÕES DO VENTILADOR HIDRÁULICO)	5P-8502	1	TUBOS - VENTILADOR HIDRÁULICOS	727
		1	TUBOS - VENTILADOR HIDRÁULICOS	733
		1	TUBOS - VENTILADOR HIDRÁULICOS	743
ELEMENTO FILTRANTE - ÓLEO (HIDRÁULICO)	167-2009	2	TANQUE HIDRÁULICO E FILTRO	848
ELEMENTO FILTRANTE - ÓLEO (RETORNO DO VENTILADOR)	132-8875	1	FILTRO - ÓLEO	725
FILTRO - ELEMENTO HIDRÁULICO (ÓLEO DO ACIONADOR DO FREIO)	134-0964	1	FILTRO - ÓLEO	726
TAMPA - BOCAL DE ENCHIMENTO (TANQUE HIDRÁULICO)	4J-3754	1	TANQUE HIDRÁULICO E FILTRO	848
TAMPA DO RESERVATÓRIO HIDRÁULICO (ENCHIMENTO DO TANUQE HIDRÁULICO)	5D-1902	1	TANQUE HIDRÁULICO E FILTRO	848
TAMPÃO (DRENAGEM) (TANQUE HIDRÁULICO)	106-8187	1	TANQUE HIDRÁULICO E FILTRO	848
TELA FILTRANTE (ENCHIMENTO DO TANUQE HIDRÁULICO)	3D-6678	1	TANQUE HIDRÁULICO E FILTRO	848
TELA FILTRANTE (TANQUE HIDRÁULICO)	9T-4946	1	TANQUE HIDRÁULICO E FILTRO	848
	9T-6680	1	TANQUE HIDRÁULICO E FILTRO	848

PEÇAS DE MANUTENÇÃO

DESCRIÇÃO	NÚMERO DE PEÇA	QUANT	UTILIZADA EM	PÁGINA
TREM DE FORÇA				
BUJÃO DO DRENO (CAIXA E CHASSI)	4B-7739	1	TUBOS - ÓLEO DA TRANSMISSÃO	433
BUJÃO DO DRENO (COMANDO FINAL)	5F-0304	1	COMANDO FINAL	415
		1	COMANDO FINAL	418
BUJÃO DO DRENO (TREM DE FORÇA)	4B-7739	1	TUBOS - ÓLEO DA TRANSMISSÃO	437
BUJÃO MAGNÉTICO (COMANDO FINAL)	6V-3298	1	COMANDO FINAL	415
		1	COMANDO FINAL	418
ELEMENTO FILTRANTE - ÓLEO (HIDRÁULICO) (TRANSMISSÃO)	132-8876	2	FILTRO - ÓLEO	413
		2	TUBOS - ÓLEO DA TRANSMISSÃO	437
RESPIRO (TREM DE FORÇA)	9G-9981	1	TUBOS - ÓLEO DA TRANSMISSÃO	433
		1	TUBOS - ÓLEO DA TRANSMISSÃO	437
TAMPA - BOCAL DE ENCHIMENTO DE ÓLEO (TREM DE FORÇA)	6N-2985	1	TUBOS - ÓLEO DA TRANSMISSÃO	433
		1	TUBOS - ÓLEO DA TRANSMISSÃO	437
TAMPÃO (FILTRO DA TRANSMISSÃO)	9S-4183	1	FILTRO - ÓLEO	413
TELA DE SUCÇÃO (CONVERSOR DE TORQUE)	8S-9130	1	CONVERSOR DE TORQUE	467
TELA FILTRANTE (TREM DE FORÇA)	9P-0214	1	TUBOS - ÓLEO DA TRANSMISSÃO	433
		1	TUBOS - ÓLEO DA TRANSMISSÃO	437
	130-6747	1	TUBOS - ÓLEO DA TRANSMISSÃO	437
TELA FILTRANTE (TUBOS DE ÓLEO DO TREM DE FORÇA)	130-6747	1	TUBOS - ÓLEO DA TRANSMISSÃO	432

WARTUNGSTEILE

BESCHREIBUNG	ERSATZTEIL-NUMMER	MENGE	VERWENDET IN	SEITE
ELEKTRISCHE ANLAGE UND STARTSYSTEM				
ARBEITSLEUCHTEN (HID) (24V)(70W)(FARBLOS)	213-4998	1	ARBEITSLEUCHTEN	310
		1	ARBEITSLEUCHTEN	311
ÄTHERSTARTHILFEZYLINDER	7X-1062	1	ÄTHERSTARTHILFE	356
BATTERIE (12 V)	9X-9730	4	BATTERIE UND VERDRAHTUNG	246
		4	BATTERIE UND VERDRAHTUNG	260
		4	BATTERIE UND VERDRAHTUNG	267
BELEUCHTUNGSANLAGE (12 V) (*SECURITY INSTALLATION)	165-5655	1	SICHERHEITSEINBAUSATZ	305
BÜRSTENHALTER (STARTERMOTOR)	6T-0363	6	ANLASSMOTOR-VORSCHMIER-ANLAGE	369
		6	STARTERMOTOR	366
BÜRSTENSATZ (STARTERMOTOR)	3T-9524	6	ANLASSMOTOR-VORSCHMIER-ANLAGE	368
		6	STARTERMOTOR	365
ENTLÜFTERVENTIL	3K-6905	1	MOTORVERDRAHTUNG	386
FEDER (STARTERMOTOR)	3T-9494	6	ANLASSMOTOR-VORSCHMIER-ANLAGE	369
		6	STARTERMOTOR	365
FILTER U. DICHTUNG (ÄTHERSTARTHILFE)	9X-7138	1	ÄTHERSTARTHILFE	354
HALOGENSCHINWERFER (24V)(65W) (ARBEITSSCHEINWERFER)	9X-3463	1	ARBEITSLEUCHTEN	307
		1	ARBEITSLEUCHTEN	308
		1	ARBEITSLEUCHTEN	309
LEUCHTE (24 V) (ARBEITSGERÄTESPERRE)	3E-8825	1	FAHRERPLATTFORMVERDRAHTUNG	397
LEUCHTE (24 V) (DREZAHLREGELUNG)	3E-8825	2	FAHRERPLATTFORMVERDRAHTUNG	399
LEUCHTE (24 V) (FEHLER - HINTEN)	7N-1996	1	FAHRERPLATTFORMVERDRAHTUNG	397
LEUCHTE (24 V) (INSTRUMENTENTAFEL)	7N-5876	4	FAHRERPLATTFORMVERDRAHTUNG	397
LEUCHTE (24 V) (KLAR)(INNENLEUCHTE)	7N-9943	1	FAHRERHAUSBELEUCHTUNG	306
LEUCHTE (24 V) (TASTATUR)	123-9294	1	STEUERUNG, ELEKTRON.	281
		1	STEUERUNG, ELEKTRON.	283
		1	STEUERUNG, ELEKTRON.	285
SCHAUMFILTER (KRAFTSTOFFSENSOR)	111-4402	1	BATTERIE UND VERDRAHTUNG	246
		1	BATTERIE UND VERDRAHTUNG	257
		1	BATTERIE UND VERDRAHTUNG	264
SCHLÜSSEL (HAUPTSCHALTER)	8H-5306	1	TRENNSCHALTER	372
SCREEN (ÄTHERSTARTHILFE)	160-8761	1	ÄTHERSTARTHILFE	354
SICHERUNG (10 A)	9W-1442	10	KONSOLENVERDRAHTUNG	383
SICHERUNG (15 A)	9W-1441	3	KONSOLENVERDRAHTUNG	383
SICHERUNG (20 A)	9W-1446	3	KONSOLENVERDRAHTUNG	383
SICHERUNG (30 A) (UMFORMER)	8T-9636	2	ELEKTR. UMFORMER	295
UMLAUFKÜHLWASSERHEIZUNGS-ELEMENT (120 V, 1500 W)	9G-6655	2	UMLAUFKÜHLWASSERHEIZUNG	300
		2	UMLAUFKÜHLWASSERHEIZUNG	302
UMLAUFKÜHLWASSERHEIZUNGS-ELEMENT (240V, 1500W)	6T-3764	2	UMLAUFKÜHLWASSERHEIZUNG	301

* ÜBERSETZUNG ZUM ZEITPUNKT DER DRUCKLEGUNG NICHT VORHANDEN

WARTUNGSTEILE

BESCHREIBUNG	ERSATZTEIL-NUMMER	MENGE	VERWENDET IN	SEITE
		2	UMLAUFKÜHLWASSERHEIZUNG	303
UNTERBRECHER (10 A) (KUPPLUNG/BREMSE - ELEKTRONISCH)	6T-3642	1	KONSOLENVERDRAHTUNG	382
UNTERBRECHER (10 A) (STARTSCHLÜSSELSCHALTER)	6T-3642	1	KONSOLENVERDRAHTUNG	382
UNTERBRECHER (15 A) (ARBEITSGERÄT)	6T-3643	1	KONSOLENVERDRAHTUNG	382
UNTERBRECHER (15 A) (ARBEITSLEUCHTEN, VORNE)	3T-2662	1	KONSOLENVERDRAHTUNG	382
UNTERBRECHER (15 A) (LÜFTER)	6T-3643	1	KONSOLENVERDRAHTUNG	382
UNTERBRECHER (15 A) (MOTOR)	6T-3643	1	KONSOLENVERDRAHTUNG	382
FAHRERHAUS				
FAHRERHAUSLUFTFILTER (STANDARD)	107-0266	1	FAHRERHAUSHEIZUNG	1039
		1	KLIMAANLAGE	1003
KÄLTEMITTEL-DRUCKSPEICHER	170-0235	1	KLIMAANLAGENLEITUNGEN	1057
KAPPE (KLIMAANLAGE) (HOHE SEITE)	3E-4052	1	KLIMAANLAGENLEITUNGEN	1057
		1	KLIMAANLAGENLEITUNGEN	1061
KAPPE (KLIMAANLAGE) (UNTERE SEITE)	3E-4051	1	KLIMAANLAGENLEITUNGEN	1057
		1	KLIMAANLAGENLEITUNGEN	1061
KAPPE MIT ENTLÜFTER (SCHEIBEN-WASCHMITTELBEHÄLTER)	8E-8292	1	SCHEIBENWASCHMITTELBEHÄLTER	1136
		1	SCHEIBENWASCHMITTELBEHÄLTER	1138
KEILRIEMEN (KÄLTEMITTELKOM-PRESSOR)	1P-9744	1	KÄLTEMITTELKOMPRESSOR	1016
LEUCHTE (24 V) (WARNANZEIGE)	7N-1996	1	INSTRUMENTENSATZ	1049
		1	INSTRUMENTENSATZ	1051
LUFTFILTER (FAHRERHAUS) (GERUCHSREDUZIERUNG)	175-2832	1	FAHRERHAUSHEIZUNG	1039
LUFTFILTER (FAHRERHAUS) (HOCHLEISTUNG)	175-2839	1	FAHRERHAUSHEIZUNG	1039
	175-2841	1	FAHRERHAUSHEIZUNG	1039
LUFTFILTER (FAHRERHAUS) (STANDARD)	7T-1890	1	FAHRERHAUSHEIZUNG	1039
		1	KLIMAANLAGE	1003
SCHEIBENWISCHERBLATT (FENSTER, HINTEN)	5C-8811	1	SCHEIBENWISCHER	1162
		1	SCHEIBENWISCHER	1166
SCHEIBENWISCHERBLATT (FENSTER, VORNE)	6V-5851	1	SCHEIBENWISCHER	1162
		1	SCHEIBENWISCHER	1166
SCHEIBENWISCHERBLATT (RECHTE U. LINKE TÜR)	6V-5849	4	SCHEIBENWISCHER	1162
		4	SCHEIBENWISCHER	1166
SICHERHEITSGURT (AUSZIEHBAR)	222-0345	1	FAHRERSITZ	1110
		1	FAHRERSITZ	1111

* ÜBERSETZUNG ZUM ZEITPUNKT DER DRUCKLEGUNG NICHT VORHANDEN

WARTUNGSTEILE

BESCHREIBUNG	ERSATZTEIL-NUMMER	MENGE	VERWENDET IN	SEITE
HYDRAULIKSYSTEM				
EINFÜLLSTUTZENKAPPE (HYDRAULIKTANK)	4J-3754	1	HYDRAULIKTANK UND SCHMIERFILTER	848
FILTERELEMENT - HYDRAULIK (BREMSBETÄTIGUNGSÖL)	134-0964	1	ÖLFILTER	726
FILTERSIEB (HYDRAULIKTANKEIN-FÜLLSIEB)	3D-6678	1	HYDRAULIKTANK UND SCHMIERFILTER	848
HYDRAULIKTANKKAPPENDECKEL (HYDRAULIKTANKEINFÜLLSIEB)	5D-1902	1	HYDRAULIKTANK UND SCHMIERFILTER	848
ÖLFILTERELEMENT (HYDRAULISCH)	167-2009	2	HYDRAULIKTANK UND SCHMIERFILTER	848
ÖLFILTERELEMENT (LÜFTERRÜCKFÜHRLEITUNGEN)	132-8875	1	ÖLFILTER	725
SCHRAUBE (ABLASS) (HYDRAULIKTANK)	106-8187	1	HYDRAULIKTANK UND SCHMIERFILTER	848
SCREEN (HYDRAULIKTANK)	9T-6680	1	HYDRAULIKTANK UND SCHMIERFILTER	848
SIEB (HYDRAULIKTANK)	9T-4946	1	HYDRAULIKTANK UND SCHMIERFILTER	848
VORHÄNGESCHLOSS (HYDRAULIKLÜFTERLEITUNGN)	5P-8502	1	HYDRAULIKLÜFTERLEITUNGEN	727
		1	HYDRAULIKLÜFTERLEITUNGEN	733
		1	HYDRAULIKLÜFTERLEITUNGEN	743
VORHÄNGESCHLOSS (HYDRAULIKTANK)	5P-8502	1	HYDRAULIKLÜFTERLEITUNGEN	739
KRAFTSTOFFSYSTEM				
DICHTUNG (KRAFTSTOFFENTLÜF-TUNGSPUMPE)	9Y-8389	1	KRAFTSTOFF-ENTLÜFTUNGSPUMPE	229
DICHTUNGSRING (KRAFTSTOFFILTER)	8H-2778	1	KRAFTSTOFFILTER	215
EINFÜLLKAPPE (KRAFTSTOFF, SPERRUNG, LÜFTUNG)	7X-7700	1	KRAFTSTOFFTANK	239
KRAFTSTOFFFILTEREINSATZ	9M-2342	1	KRAFTSTOFFILTER	215
KRAFTSTOFFILTER	1R-0755	2	KRAFTSTOFFILTER	215
KRAFTSTOFFKAPPE (SPERRUNG)	101-8909	1	SCHNELLBETANKUNGSANSCHLUSS	199
		1	SCHNELLBETANKUNGSANSCHLUSS	201
		1	SCHNELLBETANKUNGSANSCHLUSS	203
KRAFTSTOFFSIEB (TANK)	9P-7121	1	KRAFTSTOFFTANK	238
		1	KRAFTSTOFFTANK	239
KRAFTSTOFFTANKKAPPE (ENTLÜFTUNGSSPERRE)	7X-7700	1	KRAFTSTOFFTANK	237
KRAFTSTOFFTANKSIEB	6T-7774	1	KRAFTSTOFFLEITUNGEN	219
VORHÄNGESCHLOSS (KRAFTSTOFFLEITUNGEN)	5P-8502	1	KRAFTSTOFFLEITUNGEN	219
VORHÄNGESCHLOSS (KRAFTSTOFFTANK)	5P-8502	1	KRAFTSTOFFTANK	236
		1	KRAFTSTOFFTANK	238

* ÜBERSETZUNG ZUM ZEITPUNKT DER DRUCKLEGUNG NICHT VORHANDEN

WARTUNGSTEILE

BESCHREIBUNG	ERSATZTEIL-NUMMER	MENGE	VERWENDET IN	SEITE
KRAFTÜBERTRAGUNG				
ABLASSSTOPFEN (GEHÄUSE U. RAHMEN)	4B-7739	1	ÖLLEITUNGEN - KRAFTÜBERTRAGUNG	433
ABLASSSTOPFEN (KRAFTÜBERTRAGUNG)	4B-7739	1	ÖLLEITUNGEN - KRAFTÜBERTRAGUNG	437
ABLASSSTOPFEN (SEITENANTRIEB)	5F-0304	1	SEITENANTRIEB	415
		1	SEITENANTRIEB	418
ANSAUGSIEB (DREHMOMENTWANDLER)	8S-9130	1	DREHMOMENTWANDLER	467
ENTLÜFTER (KRAFTÜBERTRAGUNG)	9G-9981	1	ÖLLEITUNGEN - KRAFTÜBERTRAGUNG	433
		1	ÖLLEITUNGEN - KRAFTÜBERTRAGUNG	437
MAGNETSTOPFEN (SEITENANTRIEB)	6V-3298	1	SEITENANTRIEB	415
		1	SEITENANTRIEB	418
ÖLEINFÜLLSTUTZEN (KRAFTÜBERTRAGUNG)	6N-2985	1	ÖLLEITUNGEN - KRAFTÜBERTRAGUNG	433
		1	ÖLLEITUNGEN - KRAFTÜBERTRAGUNG	437
ÖLFILTERELEMENT (HYDRAULISCH) (GETRIEBE)	132-8876	2	ÖLFILTER	413
		2	ÖLLEITUNGEN - KRAFTÜBERTRAGUNG	437
SCHRAUBE (GETRIEBEFILTER)	9S-4183	1	ÖLFILTER	413
SIEB (KRAFTÜBERTRAGUNG)	9P-0214	1	ÖLLEITUNGEN - KRAFTÜBERTRAGUNG	433
		1	ÖLLEITUNGEN - KRAFTÜBERTRAGUNG	437
	130-6747	1	ÖLLEITUNGEN - KRAFTÜBERTRAGUNG	437
SIEB (KRAFTÜBERTRAGUNG - ÖLLEITUNGEN)	130-6747	1	ÖLLEITUNGEN - KRAFTÜBERTRAGUNG	432
KÜHLSYSTEM				
ABLASSSTOPFEN (GETRIEBEKÜHLER)	7N-1447	1	KÜHLWASSERLEITUNGEN	132
ABLASSSTOPFEN (WASSERPUMPE)	3F-1358	1	ZUSATZSÜSSWASSERPUMPE	139
TEMPERATURREGLER	6I-4950	4	KÜHLWASSER-TEMPERATURREGLER UND GEHÄUSE	116
WASSERFILTER (WASSERPUMPE)	4N-5834	2	KÜHLWASSERPUMPE	144
		2	KÜHLWASSERPUMPE	148

* ÜBERSETZUNG ZUM ZEITPUNKT DER DRUCKLEGUNG NICHT VORHANDEN

WARTUNGSTEILE

BESCHREIBUNG	ERSATZTEIL-NUMMER	MENGE	VERWENDET IN	SEITE
LAUFWERK				
ABLASSSTOPFEN (TELESKOPRÜCKLAUFRAHMEN)	4T-2069	6	LAUFROLLENRAHMEN (TELESKOPRÜCKLAUF)	553
		6	LAUFROLLENRAHMEN (TELESKOPRÜCKLAUF)	556
		6	LAUFROLLENRAHMEN (TELESKOPRÜCKLAUF)	559
		6	LAUFROLLENRAHMEN (TELESKOPRÜCKLAUF)	563
		3	LAUFROLLENRAHMEN (TELESKOPRÜCKLAUF)	566
		3	LAUFROLLENRAHMEN (TELESKOPRÜCKLAUF)	569
		3	LAUFROLLENRAHMEN (TELESKOPRÜCKLAUF)	572
		3	LAUFROLLENRAHMEN (TELESKOPRÜCKLAUF)	575
ENTLÜFTER (SCHMIERMITTELTANK)	198-7711	1	SCHMIERVORRICHTUNG - QUERTRAVERSE	586
ÖLEINFÜLLSTUTZEN (SCHMIERMITTELTANK)	5L-2952	1	SCHMIERVORRICHTUNG - QUERTRAVERSE	586
ÖLSTANDKAPPE (VORSTEUERWELLENSCHMIERBEHÄLTER)	9W-8277	1	ACHSWELLENSCHMIERUNG	588
LUFTEINLASS- UND ABGASSYSTEM				
FILTER (LUFTEINLASSUNTERSTÜTZUNG)	7M-1674	1	LUFTEINLASS-TRÄGER	190
		1	LUFTEINLASS-TRÄGER	191
FILTER (LUFTREINIGER)	7M-1674	1	LUFTREINIGER	167
HAUPTFILTER (LUFTFILTER)	123-6855	1	LUFTREINIGER	166
HAUPTFILTER (LUFTFILTER) (ULTRA HOCHLEISTUNG)	132-7168	1	LUFTREINIGER	169
SICHERHEITSFILTER (LUFTFILTER)	106-3973	1	LUFTREINIGER	169
	123-6856	1	LUFTREINIGER	166
MOTOR (GRUNDAUSFÜHRUNG)				
ABLASSSTOPFEN (ZYLINDERBLOCK)	5F-0304	2	MOTORBLOCKDECKEL	11
DICHTUNG (VENTILDECKEL)	208-2364	1	VENTILDECKEL	15
KEILRIEMEN (DREHSTROMGENERATOR)	100-3725	1	DREHSTROMGENERATOR - BEFESTIGUNG	58
ÖLABLASSSCHRAUBE (MOTORÖLWANNE)	6I-0723	1	ÖLWANNE	60
SIEB (MOTORÖLWANNE)	7N-5395	1	ÖLWANNE	60

* ÜBERSETZUNG ZUM ZEITPUNKT DER DRUCKLEGUNG NICHT VORHANDEN

WARTUNGSTEILE

BESCHREIBUNG	ERSATZTEIL-NUMMER	MENGE	VERWENDET IN	SEITE
RAHMEN UND AUFBAU				
SCHRAUBE (ABLASS) (GEHÄUSE)(GETRIEBE)	106-8187	1	RAHMEN UND GEHÄUSE	493
VORHÄNGESCHLOSS (HAUBE)	5P-8502	2	MOTORHAUBE UND VERKLEIDUNG	534
		1	MOTORHAUBE UND VERKLEIDUNG	537
VORHÄNGESCHLOSS (KOTFLÜGEL)	5P-8502	2	SCHUTZBLECHE	511
		2	SCHUTZBLECHE	515
VORHÄNGESCHLOSS (SCHUTZBLECHVERKLEIDUNG)	5P-8502	1	SCHUTZBLECHVERKLEIDUNG	504
		1	SCHUTZBLECHVERKLEIDUNG	506
		1	SCHUTZBLECHVERKLEIDUNG	508
SCHMIERSYSTEM				
ABSAUGSIEB (MOTORÖL)	4P-4917	1	RÜCKSPÜLPUMPE	105
	4P-5500	1	RÜCKSPÜLPUMPE	105
EINFÜLLSTUTZENKAPPE (KURBELGEHÄUSE)	110-8826	1	ÖLSCHNELLWECHSELANSCHLUSS	96
ENTLÜFTER (MOTOR)	4W-3027	1	ENTLÜFTER	78
KAPPE (MOTORÖL)	9S-9272	1	ÖLFILTER	80
		1	ÖLFILTER	82
ÖLEINFÜLLSTUTZEN (MOTOR)	6N-2206	1	MOTORÖLEINFÜLLSTUTZEN	79
ÖLFILTER	2P-4005	2	ÖLFILTER	80
		2	ÖLFILTER	82
VORHÄNGESCHLOSS (*ENGINE OIL FILL TUBE)	5P-8502	1	MOTORÖLEINFÜLLSTUTZEN	79

* ÜBERSETZUNG ZUM ZEITPUNKT DER DRUCKLEGUNG NICHT VORHANDEN

INDEX

Name	Page

A

ACCUMULATOR GP-HYDRAULIC–PILOT OIL . . . 648
ACCUMULATOR GP-HYDRAULIC–UNCHARGED 648
ACCUMULATOR-REFRIGERANT 1057
ADAPTER–FAST FILL FUEL 198
ADAPTER GP-FAST FILL FUEL 199, 201, 203, 205, 207, 209, 211
ADJUSTER GP-SEAT 992, 994
ADJUSTER GP-STEER & TMSN CONT 620
AFTERCOOLER GP-WATER 163
AIR CLEANER GP 164, 166, 167, 169
AIR COMPRESSOR GP-SEAT 995
AIR CONDITIONER AR 996
AIR CONDITIONER GP 997, 1000, 1003
ALARM GP–EMS ACTION 240
ALTERNATOR GP-CHARGING 241, 242, 244
ASHTRAY 1003, 1039
AXLE GP-POWER TRAIN 401

B

BALANCER GP 6
BAR GP-EQUALIZER 543, 545, 547, 549
BASE GP-VALVE COVER 7
BATTERY & WIRING GP 246, 256, 263
BATTERY (12-VOLT) 246, 260, 267
BEAM AS–RIPPER 917
BEARING AS-MAIN (STANDARD) 17, 18
BIT-END–LH 948
BIT-END–RH 947
BIT GP-END 946
BLADE & EDGE GP 949
BLADE AS-SEMI-UNIVERSAL 950, 951, 953
BLADE AS-UNIVERSAL 953, 954, 956
BLADE AS-WIPER (FRONT WINDOW) 1166
BLADE AS-WIPER (FRONT WINDOW) 1162
BLADE AS-WIPER (REAR WINDOW) 1162, 1166
BLADE AS-WIPER (RH & LH DOOR) 1162, 1166
BLADE GP-SEMI-UNIVERSAL 957
BLADE GP-UNIVERSAL 959
BLOCK GP-JUNCTION 270
BLOCK GP-POWER 271
BLOCK GP-PUSH 918, 919
BODY AS-OIL PUMP (CONVERTER SCAVENGE) 454
BRACE GP-BULLDOZER 920
BREATHER AS (ENGINE) 78
BREATHER AS (ENGINE OIL METERING TANK) 107
BREATHER GP–CRANKCASE 78
BREATHER (LUBRICATION TANK) 586
BREATHER (POWER TRAIN) 433, 437
BRUSH AS (STARTING MOTOR) 365, 368
BULLDOZER AR-SEMI-UNIVERSAL 921, 922, 923, 924
BULLDOZER AR-UNIVERSAL 925, 926, 927
BYPASS GP-FILTER–HYDRAULIC TANK 649

C

CAB AR 1006, 1007, 1009
CAB GP 1011
CAMSHAFT GP 8, 9
CAP AS (AIR CONDITIONER) (HIGH SIDE) 1057, 1061
CAP AS (AIR CONDITIONER) (LOW SIDE) 1057
CAP AS (AIR CONDITIONER) (LOW SIDE) 1061
CAP AS (ENGINE OIL) 80, 82
CAP AS-FILLER (FUEL, LOCKING, VENTED) . . . 239

INDEX

Name	Page
CAP AS-FUEL TANK FILLER (LOCKING)	199, 201, 203
CAP AS-FUEL TANK (VENTED LOCKING)	237
CAP AS-OIL FILLER (ENGINE)	79
CAP AS-OIL FILLER (LUBRICATION TANK)	586
CAP AS-OIL FILLER (POWER TRAIN)	433, 437
CAP AS-OIL LEVEL (PILOT SHAFT LUBRICATION BOTTLE)	588
CAP-FILLER (CRANKCASE)	96
CAP-FILLER (HYDRAULIC TANK)	848
CAP GP-TRACK IDLER	550, 551
CAP GP-TRACK ROLLER	552
CAP-OIL FILLER (METERING TANK)	107
CAP-VENTED (WINDOW WASHER TANK)	1136, 1138
CASE & FRAME GP	493
CASE & PARTS GP-TRANSMISSION	402
CHASSIS AR	1
CIRCUIT BREAKER AS (10-AMPERE) (ELECTRONIC CLUTCH/BRAKE)	382
CIRCUIT BREAKER AS (10-AMPERE) (START KEY)	382
CIRCUIT BREAKER AS (15-AMPERE) (BLOWER)	382
CIRCUIT BREAKER AS (15-AMPERE) (ENGINE)	382
CIRCUIT BREAKER AS (15-AMPERE) (FRONT FLOODS)	382
CIRCUIT BREAKER AS (15-AMPERE) (IMPLEMENT)	382
CLUTCH & BRAKE GP-STEERING	623
COMPRESSOR GP-REFRIGERANT	1015, 1016
CONDENSER GP-REFRIGERANT	1018
CONNECTION GP-WATER	110, 111
CONSOLE-SWITCH (WINDOW WIPER)	1166
CONSOLE-SWITCH (WINDOW WIPER)	1162
CONTROL & MOUNTING GP	650
CONTROL & MTG GP-ELECTRONIC– IMPLEMENT CONTROL	275
CONTROL & MTG GP-ELECTRONIC– KEYPAD	272, 273
CONTROL & MTG GP-ELECTRONIC–VIDS	274
CONTROL & MTG GP-ENGINE ELEK	277
CONTROL & MTG GP-IMPLEMENT–BLADE	1020, 1021, 1022, 1023, 1024, 1025
CONTROL & MTG GP-IMPLEMENT–RIPPER	1019
CONTROL & MTG GP-JOYSTICK	1020
CONTROL & MTG GP-POWER TRAIN	278, 279
CONTROL & MTG GP-TRANSMISSION	280
CONTROL AR-HYDRAULIC	652
CONTROL AR-HYDRAULIC–RIPPER	653
CONTROL AR-HYDRAULIC–SINGLE TILT	653
CONTROL AS-ELECTRONIC (DASH LIGHT)	1049, 1051
CONTROL GP-BRAKE	404, 406
CONTROL GP-DECELERATOR	213
CONTROL GP-DISPLAY ELECTRONIC– INDICATOR STRIP	1026
CONTROL GP-DISPLAY ELECTRONIC– OPERATOR FUNCTION STATUS IND	1027
CONTROL GP-ELECTRONIC–KEYPAD	281, 283, 285
CONTROL GP-ELECTRONIC (ENGLISH KEYPAD)	272
CONTROL GP-ELECTRONIC (INTERNATIONAL KEYPAD)	272
CONTROL GP-ENGINE ELECTRONIC	287, 288, 289, 290
CONTROL GP-HANDLE–BLADE	654
CONTROL GP-HYDRAULIC–RIPPER	655
CONTROL GP-JOYSTICK–BLADE	657, 659, 661, 662, 663, 664
CONTROL GP-MONITOR SYS DIMMER	1028
CONTROL GP-PARKING BRAKE	625
CONTROL GP-STEERING & TMSN	626, 628, 630
CONTROL GP-TRANSMISSION	408
CONTROL GP-UNPROGRAMMED– IMPLEMENT CONTROL	292
CONTROL GP-UNPROGRAMMED– POWER TRAIN	291, 294
CONTROL GP-UNPROGRAMMED–VIDS	293
CONTROL GP-UNPROGRAMMED (SECURITY)	304
CONVERTER GP-ELECTRICAL	295
CONVERTER-POWER (24-VOLT TO 12-VOLT) (10 AMPS)	397
CONVERTER-POWER (24 VOLT TO 12 VOLT)(25 AMP)	295

INDEX

Name	Page
COOLER GP-ENGINE OIL	112
COOLER GP-HYDRAULIC OIL	665
COOLER GP-TRANSMISSION OIL	409
	410
CORE AS-AFTERCOOLER	163
CORE GP-OIL COOLER	113
COUNTERWEIGHT GP	495
COUNTERWEIGHT GP-REAR	496
COUPLING GP-PUMP–POWER TRAIN	411
COVER GP-ACCESSORY DRIVE	10
COVER GP-CYLINDER BLOCK	11
	12
COVER GP-FRONT HOUSING	14
COVER GP-SHIPPING–TRANSMISSION	960
COVER GP-VALVE MECHANISM	15
COVER-HYDRAULIC CAP (HYDRAULIC TANK FILL)	848
CRANKSHAFT GP	16
	17
	18
CYLINDER & SENSOR GP-LIFT–RH	666
CYLINDER & VALVE GP-BULLDOZER–LH LIFT	669
CYLINDER & VALVE GP-BULLDOZER–RH LIFT	667
CYLINDER & VALVE GP-LIFT–LH	673
	676
CYLINDER & VALVE GP-LIFT–RH	671
	675
CYLINDER AR-TILT–SINGLE TILT	677
CYLINDER AS-ETHER	356
CYLINDER BLOCK AS	19
	20
CYLINDER BLOCK GP	21
	23
	25
	26
CYLINDER GP-BULLDOZER LIFT–LH	678
	684
	688
CYLINDER GP-BULLDOZER LIFT–RH	680
	682
	686
CYLINDER GP-RIPPER–LH	698
	700
	706
	708
CYLINDER GP-RIPPER–RH	694
	696
	702
	704
CYLINDER GP-RIPPER PIN PULLER	710
CYLINDER GP-RIPPER TILT–LH	717
	719
	723
CYLINDER GP-RIPPER TILT–RH	713
	715
	721
CYLINDER GP-TILT–LH	692
CYLINDER GP-TILT–RH	690
CYLINDER GP-TILT–SINGLE TILT	711
CYLINDER HEAD AS	28
	29
	30
CYLINDER HEAD GP	31
	33
	35
	37

D

DAMPER GP	38
DETENT GP–STEERING	632
DETENT GP-CONTROL (IMPLEMENT)	650
	657
	659
	662
	663
	664
DRAIN GP-ECOLOGY–TORQUE CONVERTER	412
DRIVE GP-ACCESSORY	39
	41
	43
DRIVE GP-AUXILIARY	45
DUST EJECTOR GP–EXHAUST	170

E

EDGE-CUTTING	967
	968
EDGE GP-BIT & CUTTING	961
	962
	963
	964
	965
EDGE GP-CUTTING	966
ELECTRONICS AR-MACHINE	296
ELECTRONICS GP-ENGINE RATINGS	3
ELECTRONICS GP-IMPLEMENT	296
ELECTRONICS GP-MONITOR	296
ELECTRONICS GP-POWER TRAIN	297
ELEMENT AS-JACKET WATER HEATER (120 VOLT,1500 WATT)	300
	302
ELEMENT AS-JACKET WATER HEATER (240 VOLT, 1500 WATT)	301
	303
ELEMENT AS-PRIMARY (AIR FILTER)	166

INDEX

Name	Page
ELEMENT AS-PRIMARY (AIR FILTER) (ULTRA HIGH EFFICIENCY)	169
ELEMENT AS-SECONDARY (AIR FILTER)	169
ELEMENT AS-SECONDARY (AIR FILTER)	166
ELEMENT-FILTER (AIR CLEANER)	167
ELEMENT-FILTER (AIR INLET SUPPORT)	190
	191
ENCLOSURE GP-ENGINE	498
	500
	502
ENCLOSURE GP-FENDER	504
	506
	508
ENCLOSURE GP-FENDER– OIL RENEWAL SYSTEM	510
ENGINE AR	3
EXTENSION GP-BACKREST–CLOTH	1029
EXTENSION GP-BACKREST–VINYL	1030
EXTENSION GP-BACKREST (CLOTH)	1111
EXTENSION GP-BACKREST (VINYL)	1110

F

FAN GP-DEFROSTER	1031
FAN GP-SUCTION	114
	115
FASTENER GP-CYLINDER HEAD	31
	33
FASTENER GP-FRONT HOUSING	46
FENDER GP	511
	515
	518
	519
FILLER GP-ENGINE OIL	79
FILM (AUTOCARRY KEYPAD)	1071
FILM (EXCITER COIL)	305
FILM GP–MACHINE	1170
FILM-IDENTIFICATION (BLADE POSITION)	281
	283
	285
FILM-IDENTIFICATION (ENG OIL FILTER)	1173
FILM-IDENTIFICATION (FUSE)	382
FILM-IDENTIFICATION (FUSE PANEL)	382
FILM-IDENTIFICATION (GROUP & SEQUENCE NO.) (A/C)	997
	1000
FILM-IDENTIFICATION (GROUP & SEQUENCE NO.) (HEATER)	1036
FILM-IDENTIFICATION (GROUP, SEQUENCE NO.) (HEATER)	1033
FILM (IGNITION SWITCH)	305
FILM-INSTRUCTION (AUTO BLADE PITCH ANGLE)	1173
FILM-INSTRUCTION (DOZER OPERATON)	1173
FILM-INSTRUCTION (OIL RENEWAL SYSTEM)	107
FILM-INSTRUCTION (RIPPER CONTROLS)	1019
FILM-INSTRUCTION (RIPPER PIN PULLER SWITCH)	853
	855
FILM-INSTRUCTION (SEAT ADJUSTMENT)	1125
	1127
	1130
	1132
	1134
FILM-INSTRUCTION (WATER IN, WATER OUT) (HEATER)	1033
FILM-INSTRUCTION (WATER IN/WATER OUT) (A/C)	1000
FILM-INSTRUCTION (WATER IN/WATER OUT) (A/C)	997
FILM-INSTRUCTION (WATER IN/WATER OUT) (HEATER)	1036
FILM-INSTRUCTION (WINDOW WIPER/WASHER)	1162
	1166
FILM-KEYPAD	1070
FILM-NOTICE (PRELUBRICATION PUMP)	98
	101
FILM-NOTICE (RADIO)	1048
	1077
FILM-OIL (ENGINE)	107
FILM-PANEL (ACTION INDICATOR)	1049
	1051
FILM-PANEL (AIR CONDITIONER & BLOWER)	1039
FILM-PANEL (INSTRUMENT)	1049
	1051
FILM-PANEL (INSTRUMENT)	1049
	1051
FILM-PANEL (TEMPERATURE CONTROL)	1003
FILM (PARKING BRAKE)	625
FILM (PLATE-NAME)	648
FILM (SEAT CUSHION IDENTIFICATION)	1081
	1082
FILM (SECURITY)	305
FILM (START)	305
FILM-STRIPE	238
FILM-STRIPE (FUEL TANK)(REAR LEFT SIDE)	238
FILM-STRIPE (FUEL TANK)(REAR RIGHT SIDE)	238
FILM-STRIPE (FUEL TANK)(REAR RIGHT SIDE)	238
FILM-WARNING (GUIDE)	553
	556
	559
	563

INDEX

Name	Page
	566
	569
	572
	575
FILM-WARNING (JUMPER CABLE CONNECTION)	1173
FILTER & GASKET AS (ETHER STARTING AID)	354
FILTER-AIR (CAB) (HIGH EFFICIENCY)	1039
FILTER-AIR (CAB) (HIGH EFFICIENCY)	1039
FILTER-AIR (CAB) (ODOR REDUCTION)	1039
FILTER-AIR (CAB) (STANDARD)	1003
FILTER-AIR (CAB) (STANDARD)	1039
FILTER AS-ENGINE OIL	80
	82
FILTER AS-FUEL	215
FILTER-CAB AIR (STANDARD)	1003
	1039
FILTER ELEMENT AS-FUEL	215
FILTER ELEMENT AS-OIL (FAN RETURN)	725
FILTER ELEMENT AS-OIL (HYDRAULIC)	848
FILTER ELEMENT AS-OIL (HYDRAULIC) (TRANSMISSION)	413
	437
FILTER ELEMENT-HYDRAULIC (BRAKE ACTUATION OIL)	726
FILTER-FOAM (FUEL SENSOR)	257
	264
FILTER-FOAM (FUEL SENSOR)	246
FILTER GP-ENGINE OIL	80
	82
FILTER GP-FUEL	215
FILTER GP-OIL–PILOT SUPPLY	726
FILTER GP-OIL–TRANSMISSION	413
	725
FILTER-WATER (WATER PUMP)	144
FILTER-WATER (WATER PUMP)	148
FINAL DRIVE GP	415
	418
FLOOR MAT-LOWER	1075
FLOOR MAT-UPPER	1075
FLYWHEEL GP	47
FRAME GP-RIPPER–MULTI-SHANK	971
	973
FRAME GP-RIPPER–SINGLE SHANK	969
FRAME GP-TELESCOPING RECOIL	553
	556
	559
	563
FRAME GP-TELESCOPING RECOIL–LH	572
	575
FRAME GP-TELESCOPING RECOIL–RH	566
	569
FUMES DISPOSAL GP	84
FUSE (10-AMPERE)	383
FUSE (15-AMPERE)	383
FUSE (20-AMPERE)	383
FUSE (30 AMP) (POWER CONVERTER)	295

G

Name	Page
GASKET (FUEL PRIMING PUMP)	229
GAUGE GP-OIL LEVEL (DIPSTICK)	85
GEAR GP-BEVEL & TRANSFER	422
	426
GEAR GP-FRONT	48
GEAR GP-REAR	50
GEAR GP-STEERING	633
	635
GENERAL AR	2
GUARD GP-BOTTOM–FRAME	520
GUARD GP-COUPLING–PUMP DRIVE	431
GUARD GP-IDLER	522
	523
	524
GUARD GP-RADIATOR	525
	527
GUARD GP-ROCK–BLADE	529
	530
GUARD GP-TRANSMISSION	531
	533

H

Name	Page
HARNESS AS (A/C BLOWER MOTOR)	997
	1000
HARNESS AS (A/C WATER VALVE CONTROL)	997
	1000
HARNESS AS (BLOWER MOTOR)	1033
	1036
HARNESS AS (BRAKE HOUSING)	406
HARNESS AS (CAB ROOF)	1141
HARNESS AS (ETHER STARTING AID)	354
HARNESS AS (FAN SPEED SWITCH)	1033
	1036
HARNESS AS-FRONT LIGHTING (LIFT CYLINDER)	749
	751
HARNESS AS-HEATER & AIR COND	1057
	1061
HARNESS AS-HEATER (JACKET WATER)	303
HARNESS AS-KEYPAD	281
	283
	285
HARNESS AS (LH FENDER)	248
	257
	264
HARNESS AS-LIGHTING (REAR)	313
HARNESS AS (POWER)	382

INDEX

Name	Page
HARNESS AS (POWER CONVERTER)	295
HARNESS AS (PRESSURE SENSOR JUMPER)	250, 258
HARNESS AS-PUMP (WINDOW WASHER)	1137
HARNESS AS (RADIATOR GUARD)	246, 257, 264
HARNESS AS-RADIO	1141
HARNESS AS-REAR LIGHTING	313
HARNESS AS (RH FENDER)	247, 257, 264
HARNESS AS (RIPPER)	318
HARNESS AS (RIPPER LIGHTING)	325
HARNESS AS (ROPS)	318
HARNESS AS (SECURITY INSTALLATION)	305
HARNESS AS-SENSOR (OIL LEVEL) (METERING TANK)	107
HARNESS AS (SIDE LIGHTS)	246, 259, 266
HARNESS AS-SWITCH (REAR WIPER)	1163, 1167
HARNESS AS-SWITCH (WIPER)	1162, 1166
HARNESS AS (TRANSMISSION)	246, 258, 265
HARNESS AS-VALVE (AIR COMPRESSOR)	1134
HARNESS AS (WINDOW WASHER PUMP)	1138
HARNESS AS-WIRING (CRANK WITHOUT INJECTION)	393
HARNESS AS-WIRING (INJECTOR TO ENGINE)	71
HARNESS AS-WIRING (VALVE MECHANISM)	69, 73, 75
HEATER GP-CAB	1033, 1036, 1039
HEATER GP-FUEL	298
HEATER GP-JACKET WATER	300, 301, 302, 303
HOLDER AS-BRUSH (STARTING MOTOR)	366, 369
HOOD & GUARD GP	534, 537
HORN AS (24-VOLT, HIGH TONE)	246, 258, 265
HORN AS (24-VOLT, LOW TONE)	246
HOUSING & REGULATOR GP	116
HOUSING GP-FLYWHEEL	52, 53
HOUSING GP-FRONT	55
HOUSING GP-SEAT SUSPENSION	1042, 1045

I

Name	Page
IDLER GP-TRACK	578, 579
INJECTOR GP-FUEL	218, 228
INSTALLATION AR-ENGINE	5
INSTALLATION GP-RADIO	1048
INSTALLATION GP-SECURITY	304, 305
INSTRUMENT GP	1049, 1051

K

Name	Page
KEY AS-ELECTRONIC (GRAY)	304
KEY AS-ELECTRONIC (YELLOW)	304
KEY (BATTERY DISCONNECT)	372
KIT-ACCUMULATOR SERVICE	648
KIT-ADJUSTER (SEAT PAN)	1083
KIT-AIR VALVE (SUSPENSION SEAT)	1134
KIT-ALTERNATOR TERMINAL	244
KIT-BACK TILT (SEAT PAN)	1083
KIT-BEARING (ALTERNATOR)	242
KIT-BEARING (ROTATING MOTOR)	843
KIT-BEARING (STARTER BEARING)	368
KIT-BEARING (STARTER BEARING)	365
KIT-BEARING (SUSPENSION SEAT)	1043, 1046
KIT-BELT TETHER (SUSPENSION SEAT)	1125, 1130
KIT-BRUSH (A/C FAN MOTOR)	997
KIT-BRUSH (HEATER FAN MOTOR)	1034
KIT-BUMPER (WEIGHT ADJUSTMENT) (SUSPENSION SEAT)	1042, 1046
KIT-CAP FILTER (FUEL TANK)	237
KIT-CAP FILTER (FUEL TANK)	239
KIT-CATCH (CAB WINDOW)	1153, 1155
KIT-CONNECTING PLUG (12 PIN)	628
KIT-CONNECTING PLUG (2 PIN)	323
KIT-CONNECTING PLUG (2 PIN)	323
KIT-CONNECTING PLUG (2-PIN)	318
KIT-CONNECTING PLUG (3 PIN)	628
KIT-CONNECTING PLUG (3-PIN) (PRESSURE SENSOR)	340
KIT-CONNECTING PLUG (6 PIN)	628

INDEX

Name	Page
KIT-CONNECTING PLUG (6 PINS)	1027
KIT-CUSHION (BACKREST EXTENSION)	1029
KIT-CUSHION (VINYL BACK REST)	1030
KIT-FASTENER (SUSPENSION SEAT)	1127
	1132
KIT-FOLLOWER (SUSPENSION SEAT)	1043
	1046
KIT-GASKET (SINGLE CYLINDER LINER)	4
KIT-GASKET (SINGLE FUEL INJECTOR)	4
KIT-HARDWARE (ALTERNATOR)	244
KIT-HARDWARE (ALTERNATOR)	242
KIT-HARDWARE (RECTIFIER)	1034
KIT-HARDWARE (SOLENOID VALVE)	486
KIT-INDICATOR (WEIGHT ADJUSTMENT) (SUSPENSION SEAT)	1046
KIT-INDICATOR (WEIGHT ADJUSTMENT) (SUSPENSION SEAT)	1043
KIT-INSTALLATION– TURBINE PRECLEANER-2 REQUIRED	171
KIT-LEAF SPRING (CAB WINDOW)	1151
	1152
KIT-MAIN BEARING (CRANKSHAFT)	17
	18
KIT-OVERPACK–BULLDOZER	928
KIT-OVERPACK–RIPPER	930
KIT-PLUG (4-PIN)	398
KIT-REBUILD– FINGER TIP CONTROL GEARBOX	1053
KIT-REBUILD (WATER PUMP)	144
	148
KIT-REBUILD (WATER PUMP)	4
KIT-RECEPTACLE (12 PIN)	628
KIT-RECEPTACLE (2 PIN)	323
	371
	381
	385
	389
	393
	628
	726
	1001
	1068
	1069
KIT-RECEPTACLE (2-PIN)	347
KIT-RECEPTACLE (2 PIN) (MAGNETIC SWITCH)	375
KIT-RECEPTACLE (3 PIN)	386
	390
	393
	394
	1039
KIT-RECEPTACLE (3 PIN)	1141
KIT-RECEPTACLE (4 PIN)	901
	903
	1026
	1070
	1071
KIT-RECEPTACLE (6 PIN)	641
	1001
	1028
	1039
	1068
	1069
	1073
	1074
	1161
KIT-RECEPTACLE (6-PIN)	1160
KIT-RETAINING BOLT (ENGINE ELECTRONIC CONTROL)	287
	290
KIT-RETAINING BOLT (UNPROGRAMMED CONTROL)	291
	294
KIT-ROLLER (SUSPENSION SEAT)	1127
	1132
KIT-RUNNER GUIDE (CAB WINDOW)	1153
	1155
KIT-SEAL	864
	913
KIT-SEAL (CARTRIDGE ASSEMBLY)	909
KIT-SEAL (GEAR PUMP)	830
KIT-SEAL (RIPPER CYLINDER)	694
	698
KIT-SEAL (RIPPER TILT CYLINDER)	713
	717
KIT-SEAL (SEQUENCE VALVE)	897
KIT-SEAL (SOLENOID VALVE)	484
	488
	859
	860
	901
	902
	903
	904
	907
	908
	910
	912
KIT-SEAT AIR COMPRESSOR	1054
KIT-SEAT CUSHION (SUSPENSION SEAT)	1099
KIT-SEAT CUSHION (VINYL) (SEAT)	1097
KIT-SEAT KNOB (SEAT)	1097
KIT-SEAT KNOB (SUSPENSION SEAT)	1099
KIT-SEAT TILT (SEAT PAN)	1083
KIT-SECTION (FRONT) (GEAR PUMP)	830
KIT-SECTION (REAR) (GEAR PUMP)	830
KIT-SHOCK ABSORBER (SUSPENSION SEAT)	1134
KIT-SLIDER BLOCK (SUSPENSION SEAT)	1112
	1113

INDEX

Name	Page
	1115
	1118
	1119
	1120
	1121
KIT-SPRING (HEIGHT ADJUSTMENT) (SUSPENSION SEAT)	1042
	1045
KIT-SPRING (SUSPENSION SEAT)	1043
	1045
KIT-STARTING MOTOR GEAR	366
	369
KIT-SUSPENSION BOOT (SUSPENSION SEAT)	1125
	1130
KIT-SUSPENSION KNOB (HEIGHT ADJUSTMENT) (SUSPENSION SEAT)	1042
	1045
KIT-SUSPENSION ROLLER (SUSPENSION SEAT)	1130
KIT-SUSPENSION ROLLER (SUSPENSION SEAT)	1125
KIT-TERMINAL (ALTERNATOR)	242
KIT-TERMINAL LOCK (FUSE BLOCK)	383
KIT-TERMINAL (STARTING MOTOR)	366
	369
KIT-TERMINAL (STARTING MOTOR)	360
	363
KIT-TETHER (SUSPENSION SEAT)	1127
	1132
	1134
KIT-TILT PAN (SEAT)	1097
KIT-TILT PAN (SUSPENSION SEAT)	1099
KIT-VENT (FAST FILL FUEL ADAPTER)	199
	201
	203
KIT-WINDOW–GLASS	1055
KIT-WIPER BLADE (WINDOW)	1163
	1167
KIT-WIRING HARNESS (AIR SUSPENSION SEAT)	1132
KIT-WIRING HARNESS (AIR SUSPENSION SEAT) (SUSPENSION SEAT)	1127

L

Name	Page
LAMP AS-FLOOD (HID) (24 VOLT)(70 WATT)(CLEAR)	310
	311
LAMP AS (12-VOLT) (SECURITY INSTALLATION)	305
LAMP GP-DOME	306
LAMP GP-FLOOD–HID, VERTICAL MOUNT	311
LAMP GP-FLOOD–HIGH BEAM	309
LAMP GP-FLOOD– HIGH INTENSITY DISCHARGE– SUSPENDED	310
LAMP GP-FLOOD–SUSPENDED	307
LAMP GP-FLOOD–VERTICAL	308
LAMP-HALOGEN (24-VOLT, 65-WATT) (FLOODLIGHT)	307
	308
	309
LAMP (24-VOLT) (ACTION INDICATOR)	1049
	1051
LAMP (24-VOLT) (CLEAR)(DOME)	306
LAMP (24-VOLT) (IMPLEMENT LOCKOUT)	397
LAMP (24-VOLT) (INSTRUMENT PANEL)	397
LAMP (24 VOLT) (KEYPAD)	281
	283
	285
LAMP (24-VOLT) (REAR FAULT)	397
LAMP (24-VOLT) (THROTTLE CONTROL)	399
LIFTING GP-ENGINE	56
	57
LIGHTING AR–HIGH BEAM	312
LIGHTING AR–4 LAMP	313
LIGHTING GP-FLOOD– HIGH INTENSITY DISCHARGE	318
LIGHTING GP-FLOOD–MACHINE	316
LIGHTING GP-FLOOD–SUSPENDED	315
LIGHTING GP-FRONT	322
LIGHTING GP-REAR	323
LIGHTING GP-RIPPER	325
LINER GP-CAB	1056
LINES GP-AIR	172
	173
	174
	176
LINES GP-AIR CONDITIONER	1057
	1061
LINES GP-ENGINE OIL	86
LINES GP-FUEL–CHASSIS	219
LINES GP-FUEL–LH	222
LINES GP-FUEL–RH	221
LINES GP-FUEL INJECTION	223
LINES GP-GREASE–RIPPER	931
LINES GP-HEATER	1064
	1066
LINES GP-HYDRAULIC FAN	727
	733
	739
	743
LINES GP-HYDRAULIC FAN– COLD WEATHER BYPASS	748
LINES GP-LIFT CYLINDER	749
	751
	753

INDEX

Name	Page
	757
LINES GP-PIN PULLER CYLINDER	760
	761
	762
LINES GP-POWER TRAIN OIL	432
	437
LINES GP-PUMP	763
	769
	775
	780
	783
	788
LINES GP-RELIEF–DUAL TILT	793
LINES GP-RIPPER	795
	796
	798
	801
	804
	807
LINES GP-TILT CYLINDER–BLADE	812
LINES GP-TILT CYLINDER–CHASSIS	814
	818
LINES GP-TILT CYLINDER–DUAL	810
LINES GP-TURBOCHARGER OIL	89
	91
LINES GP-WATER	124
LINES GP-WATER–AFTERCOOLER	119
	121
	131
LINES GP-WATER–BYPASS	127
	129
LINES GP-WATER–CAB HEATER	138
LINES GP-WATER–LOWER	117
LINES GP-WATER–TRANSMISSION COOLER	132
LINES GP-WATER–TURBO	134
LINES GP-WATER–UPPER	136
LINES GP-WATER (AFTERCOOLER)	5
LINES GP-WATER (TRANSMISSION COOLER)	5
LINK AS-TRACK	580
	581
	582
	583
	584
	585
LINK GP-STABILIZER	932
LITERATURE GP	1
LUBRICATION GP-EQUALIZER BAR	586
LUBRICATION GP-PIVOT SHAFT	588
MANIFOLD & VALVE GP–PARKING, SECONDARY BRAKE	637
MANIFOLD & VALVE GP–RH, LH STEERING CLUTCH, BRAKE	638
	639
	640
MANIFOLD GP-CONTROL–HYDRAULIC FAN	821
MANIFOLD GP-EXHAUST	178
	180
METERING AR-ENGINE OIL	93
METERING GP-ENGINE OIL	94
MIRROR GP-REAR VIEW	1067
MODULE GP-MESSAGE CENTER	1068
	1069
MODULE GP-MONITOR KEYPAD	1070
	1071
MODULE GP-QUAD GAUGE	1072
MODULE GP-SPEEDOMETER & TACH	1073
MOTOR GP-ELECTRIC (27 VOLT) (A/C)	1000
MOTOR GP-ELECTRIC (27 VOLT) (HEATER)	1036
MOTOR GP-FAN	822
	823
MOTOR GP-PISTON–FAN	824
MOTOR GP-WINDOW WIPER–FRONT	1074
MOTOR GP-WINDOW WIPER (DOOR WIPERS)	1162
	1166
MOUNTING GP-ALTERNATOR	58
MOUNTING GP-CAB	1075
MOUNTING GP-CYLINDER	826
MOUNTING GP-CYLINDER–LIFT	825
	827
MOUNTING GP-RADIO	1077
MOUNTING GP-ROPS	1078
MOUNTING GP-TRANSMISSION	442
MUFFLER GP	182
OIL CHANGE GP-HIGH SPEED	96
PADLOCK GP (ENGINE OIL FILL TUBE)	79
PADLOCK GP (FENDER)	511
	515
PADLOCK GP (FENDER ENCLOSURE)	504
	506
	508
PADLOCK GP (FUEL LINES)	219
PADLOCK GP (FUEL TANK)	236
	238
PADLOCK GP (HOOD)	534
	537
PADLOCK GP (HYDRAULIC FAN LINES)	727
	733
	743

M

O

P

INDEX

Name	Page
PADLOCK GP (HYDRAULIC TANK)	739
PAN GP-BACKREST–CONTOUR SEAT	1079
PAN GP-BACKREST–VINYL	1080
	1081
	1082
PAN GP-OIL	60
PAN GP-SEAT	1083
PISTON & ROD GP	62
	64
PISTON & VALVE GP	829
PISTON & VALVE GP–RIPPER	828
PLANETARY GP-TRANSMISSION	443
	448
PLATE & FILM GP–BULLDOZER	1172
PLATE & FILM GP–MACHINE	1172
PLATE & FILM GP–RIPPER	1172
PLATE GP-PUSH–BLADE	933
PLATE GP-WEAR–BLADE	975
	976
PLATE-INSTRUCTION (AIR CONDITIONER)	996
PLATE-INSTRUCTION (AIR CONDITIONER)	1172
PLATE-SERIAL NUMBER	1172
PLATE-WARNING (HIGH PRESSURE CYLINDER)	553
PLATE-WARNING (HIGH PRESSURE CYLINDER)	556
	559
	563
	566
	569
	572
	575
PLATE-WARNING (RECOIL SPRING)	553
	556
	566
	569
	572
	575
PLATE-WARNING (RECOIL SPRING)	559
	563
PLATFORM AR	1085
PLATFORM GP	1086
PLATFORM GP-CAB	1088
	1090
PLUG-DRAIN (CASE & FRAME)	433
PLUG (DRAIN) (CASE)(TRANSMISSION)	493
PLUG-DRAIN (CYLINDER BLOCK)	11
PLUG-DRAIN (FINAL DRIVE)	415
	418
PLUG (DRAIN) (HYDRAULIC TANK)	848
PLUG-DRAIN (POWER TRAIN)	437
PLUG-DRAIN (TELESCOPING RECOIL FRAME)	553
	556
	559
	563
	566
	569
	572
	575
PLUG-DRAIN (TRANSMISSION COOLER)	132
PLUG-DRAIN (WATER PUMP)	139
PLUG-MAGNETIC (FINAL DRIVE)	415
	418
PLUG-OIL DRAIN (ENGINE OIL PAN)	60
PLUG (TRANSMISSION FILTER)	413
POWER TRAIN AR	453
PRECLEANER AR	183
	184
PRECLEANER GP	185
	186
PRELUBRICATION AR-ENGINE	98
	100
PULLER AR-PIN–RIPPER	934
PULLER GP-PIN–RIPPER	935
	936
	937
PUMP GP-AUXILIARY WATER	139
	141
	142
	143
PUMP GP-ENGINE OIL	103
	104
PUMP GP-FUEL INJECTION	227
	228
PUMP GP-FUEL PRIMING	229
PUMP GP-FUEL TRANSFER	230
	231
	232
	234
PUMP GP-GEAR–BRAKE COOLING–TORQUE CONVERTER CHARGING–TRANSMISSION CHARGING	457
PUMP GP-GEAR–IMPLEMENT	830
	832
PUMP GP-GEAR–TORQUE CONVERTER–TRANSMISSION	455
PUMP GP-GEAR–TORQUE CONVERTER SCAVENGE–TRANSMISSION SCAVENGE	454
PUMP GP-PISTON–FRONT HYDRAULIC FAN	838
	840
PUMP GP-PISTON–HYDRAULIC FAN	842
PUMP GP-PISTON–REAR HYDRAULIC FAN	834
	836
PUMP GP-SCAVENGE	105
PUMP GP-SCAVENGE–ENGINE OIL	106
PUMP GP-WATER	144
	146
	147

INDEX

Name	Page
	148
PUSH ARM GP–LH	939
	941
PUSH ARM GP–RH	938
	940
PUSH ARM GP-STABILIZER	942
	944

R

RADIATOR GP	150
	152
RECEIVER-DRYER GP (AIR CONDITIONER)	1057
	1061
RECLINER GP-SEAT	1092
	1093
REGULATOR-TEMPERATURE	116
RELAY AS (12-VOLT) (SECURITY INSTALLATION)	305
RELAY AS (24-VOLT) (PRESSURIZER)	1163
	1167
RELAY AS (24-VOLT) (SECURITY INSTALLATION)	305
RESISTOR AS (ETHER SOLENOID LOAD)	354
RING AS-TRACK LINK	590
RIPPER AR–MULTI-SHANK	978
	980
	981
RIPPER AR–SINGLE SHANK	977
	979
RIPPER GP–MULTI-SHANK	983
	985
	986
RIPPER GP–SINGLE SHANK	982
	984
ROLLER AR-TRACK CARRIER	591
	592
	593
	594
	595
ROLLER GP-TRACK-DOUBLE FLANGE	596
	597
ROLLER GP-TRACK-SINGLE FLANGE	598
	599
ROPS GP	1094
ROTATING GP-MOTOR–FAN	843
ROTATING GP-PUMP	847
ROTATING GP-PUMP– FRONT HYDRAULIC FAN	845
ROTATING GP-PUMP– REAR HYDRAULIC FAN	846

S

SCREEN AS (ENGINE OIL PAN)	60
SCREEN AS (HYDRAULIC TANK)	848
SCREEN AS (POWER TRAIN)	433
	437
SCREEN AS (POWER TRAIN OIL LINES)	432
SCREEN (ETHER STARTING AID)	354
SCREEN-FUEL TANK	219
SCREEN (HYDRAULIC TANK)	848
SCREEN-SCAVENGE (ENGINE OIL)	105
SCREEN-SUCTION (TORQUE CONVERTER)	467
SEAL GP	143
SEAL GP-CRANKSHAFT	66
SEAL GP-TRACK	600
SEAL GP (WATER PUMP)	139
SEAL GP-WATER PUMP	144
	148
SEAL-RING (FUEL FILTER)	215
SEAL-ROPE	459
SEAL SET–TRACK	541
SEAL (VALVE COVER)	15
SEAT AR	1095
SEAT BELT GP–RETRACTABLE	1096
SEAT BELT GP (RETRACTABLE)	1110
	1111
SEAT GP	1099
	1101
	1102
	1103
	1104
	1106
	1108
	1110
	1111
SEAT GP–VINYL	1097
SEAT GP-SUSPENSION	1112
	1113
	1114
	1115
	1116
	1117
	1118
	1119
	1120
	1121
SEGMENT GP-SPROCKET	460
SENSOR & MTG GP-PRESSURE– TURBO INLET	326
	327
SENSOR GP-EXHAUST TEMPERATURE (LH TURBO)	385
	389
	393
SENSOR GP-EXHAUST TEMPERATURE (RH TURBO)	385
	389
	393

INDEX

Name	Page
SENSOR GP-FUEL LEVEL–ULTRASONIC	329
SENSOR GP-LIQUID LEVEL (ENGINE OIL METERING TANK)	107
SENSOR GP-POSITION–BLADE LIFT	333, 337
SENSOR GP-POSITION–BLADE TILT	333, 336
SENSOR GP-POSITION–BRAKE–STEERING	335
SENSOR GP-POSITION–DECELERATOR PEDAL	331
SENSOR GP-POSITION–RH, LH STEERING LEVER	330
SENSOR GP-POSITION–STEERING, TMSN CONTROL HANDLE	332, 334
SENSOR GP-POSITION (LIFT CYLINDER)	666
SENSOR GP-POSITION (RIPPER RAISE & LOWER)	655
SENSOR GP-POSITION (RIPPER TILT)	655
SENSOR GP-PRESSURE–ATM–CRANKCASE–TURBO INLET–TURBO OUTLET	339
SENSOR GP-PRESSURE–FAN	342
SENSOR GP-PRESSURE–FILTERED ENGINE OIL	341, 344
SENSOR GP-PRESSURE–MAIN HYDRAULIC PUMP–TILT HYDRAULIC PUMP	345
SENSOR GP-PRESSURE–MAIN PUMP, MAIN TILT	338
SENSOR GP-PRESSURE–TURBO OUTLET	340, 343
SENSOR GP-PRESSURE (ATMOSPHERIC)	393
SENSOR GP-PRESSURE (CRANKCASE)	393
SENSOR GP-PRESSURE (FILTERED OIL)	389
SENSOR GP-PRESSURE (FILTERED OIL)	385
SENSOR GP-PRESSURE (LH TURBO INLET)	327
SENSOR GP-PRESSURE (RH TURBO INLET)	327
SENSOR GP-PRESSURE (TURBO OUTLET)	393
SENSOR GP-PRESSURE (TURBO OUTLET)	385
SENSOR GP-SPEED–ENGINE SPEED/TIMING	346
SENSOR GP-SPEED–ODOMETER	348
SENSOR GP-SPEED–TIMING CALIBRATION PROBE–ENGINE	347
SENSOR GP-SPEED (TIMING)	393
SENSOR GP-SPEED (TIMING CALIBRATION PROBE)	385, 389, 393
SENSOR GP-TEMPERATURE–POWER TRAIN OIL	350
SENSOR GP-TEMPERATURE–STEERING OIL	349
SENSOR GP-TEMPERATURE (AFTERCOOLER COOLANT OUTLET)	386, 390, 394
SENSOR GP-TEMPERATURE (COOLANT)	385, 389, 393
SENSOR GP-TEMPERATURE (INLET AIR)	327, 394
SERVICE GP-IMPLEMENT	351
SERVICE GP-MONITOR–VIMS	352
SERVICE GP-POWER TRAIN	353
SHAFT GP-DRIVE	461
SHIELD GP-FUEL LINES	187
SHIELD GP-MANIFOLD	189
SOFTWARE GP-IMPLEMENT	296, 351
SOFTWARE GP-MACHINE (SECURITY)	304
SOFTWARE GP-MONITOR (VIMS)	296, 352
SOFTWARE GP-POWER TRAIN	297, 353
SOLENOID AS (STARTING MOTOR)	362, 365, 368
SOLENOID AS (STARTING MOTOR)	359
SPIDER & BEARING GP	472
SPRING (STARTING MOTOR)	365, 369
STARTING AID GP-ETHER	354, 356
STARTING MOTOR GP-ELECTRIC	358, 359, 362, 365
STARTING MOTOR GP-PRELUB SYS	368
STEP GP	1122
STOP GP-EQUALIZER BAR	601
STRAINER AS (HYDRAULIC TANK FILL)	848
STRAINER-FUEL (TANK)	238, 239
SUPPORT GP-AIR INLET–LH	191
SUPPORT GP-AIR INLET–RH	190
SUPPORT GP-CONTROL–UPSHIFT, DOWNSHIFT	641
SUPPORT GP-ENGINE	67
SUPPRESSION AR-SOUND	1124
SUSPENSION GP-BOGIE–LH	607, 608
SUSPENSION GP-BOGIE–RH	604, 605
SUSPENSION GP-BOGIE–RH, LH	602, 603

INDEX

Name	Page
SUSPENSION GP-SEAT–AIR	1127, 1132, 1134
SUSPENSION GP-SEAT–SHOCK ABSORBER	1125, 1130
SWITCH AS (BLOWER SPEED)	1039
SWITCH AS (DIFFERENTIAL PRESSURE)	726
SWITCH AS (FRONT LIGHTS)	397
SWITCH AS (FRONT,REAR,RH & LH DOOR)	1166
SWITCH AS (FRONT,REAR,RH & LH DOOR)	1162
SWITCH AS-LIMIT (BRAKE)	404, 406
SWITCH AS-LIMIT (REVERSE)	626, 628
SWITCH AS-MAGNETIC (STARTER RELAY)	100
SWITCH AS-PRESSURE (A/C HIGH)	1057, 1061
SWITCH AS-PRESSURE (A/C LOW)	1057, 1061
SWITCH AS-PRESSURE (ENGINE OIL)	98, 100
SWITCH AS-PRESSURE (FUEL FILTER DIFFERENTIAL)	385, 389, 393
SWITCH AS-PUSH BUTTON (AUTO DOWNSHIFT)	1049, 1051
SWITCH AS-PUSH BUTTON (DOWNSHIFT)	641
SWITCH AS-PUSH BUTTON (RIPPER AUTO STOW)	655
SWITCH AS-PUSH BUTTON (UPSHIFT)	641
SWITCH AS (REAR LIGHTS)	397
SWITCH AS-ROCKER (AIR CONDITIONER ON/OFF)	1003
SWITCH AS-ROCKER (AIR CONDITIONER ON/OFF)	1039
SWITCH AS-ROCKER (AUXILIARY)	397
SWITCH AS (ROCKER) (CONSOLE RAISE/LOWER)	620
SWITCH AS-ROCKER (PARKING BRAKE)	625
SWITCH AS-ROCKER (SIDE LIGHTS)	397
SWITCH AS-ROCKER (24-VOLT) (IMPLEMENT LOCKOUT)	397
SWITCH AS-ROCKER (24-VOLT, SEALED-ILLUMINATED) (IMPLEMENT LOCKOUT)	397
SWITCH AS-ROCKER (24-VOLT, SEALED-ILLUMINATED) (THROTTLE CONTROL)	399
SWITCH AS (ROTARY) (FAN SPEED CONTROL)	1003
SWITCH AS-TEMPERATURE (A/C)	997
SWITCH AS-TEMPERATURE (POWER TRAIN OIL)	249, 256, 263
SWITCH AS-THERMOSTAT (A/C)	1000
SWITCH AS (24-VOLT, ILLUMINATED) (THROTTLE CONTROL)	399
SWITCH GP-BYPASS–POWER TRAIN OIL	371
SWITCH GP-DISCONNECT–BATTERY	372
SWITCH GP-FLOW–ENGINE COOLANT	373
SWITCH GP-FLOW (COOLANT)	389
SWITCH GP-MAGNETIC–ENGINE PRELUBRICATION	374, 376, 377
SWITCH GP-MAGNETIC–MAIN RELAY	378
SWITCH GP-MAGNETIC–STARTER RELAY	375
SWITCH GP-MAGNETIC (24-VOLT) (START RELAY 1)	382
SWITCH GP-MAGNETIC (24-VOLT) (START RELAY 2)	382
SWITCH GP-ROCKER (START AID)	399
SWITCH GP-START–KEY	379
SWITCH GP-TOGGLE (DEFROSTER FAN CONTROL)	1031
SWITCH GP-TOGGLE (RIPPER PIN PULLER)	853, 855

T

Name	Page
TANK & FILTER GP-HYDRAULIC	848
TANK & LINES GP-EXPANSION	852
TANK GP-ENGINE OIL–METERING	107
TANK GP-FUEL	236, 237, 238, 239
TANK GP-WATER	154, 157, 160
TANK GP-WINDOW WASHER	1136, 1137, 1138, 1140
THERMOCOUPLE GP	380
TIMER AS-ON DELAY (24 VOLT) (A/C)	1061
TIMER (PRELUBRICATION)	98, 100
TOOTH GP-RIPPER–MULTI-SHANK	987, 988, 991
TOOTH GP-RIPPER–SINGLE SHANK	989, 990
TORQUE CONVERTER GP	463, 465

INDEX

Name	Page
	467
TRACK ADJUSTER & RECOIL GP	610
	612
TRACK GP–2 REQUIRED	614
	615
	616
	617
TRANSMISSION AR	469
	470
	471
TRUNNION GP-BULLDOZER	945
TRUNNION GP-ENGINE	68
TURBOCHARGER GP	192
	193
	194
	195
	196
	197

U

UNDERCARRIAGE AR	617
UNDERCARRIAGE AR–LH	618
	619
UNDERCARRIAGE AR–RH	618
	619
UNIVERSAL JOINT GP	472

V

V-BELT (ALTERNATOR)	58
V-BELT (REFRIGERANT COMPRESSOR)	1016
VALVE & LINES GP-PIN PULLER	853
	855
VALVE & MTG GP-CONTROL–RIPPER PIN	857
	858
VALVE & MTG GP-HYDRAULIC FAN	859
	860
VALVE & MTG GP-STEER & BRAKE	642
	643
VALVE AR-RELIEF–DUAL TILT	861
VALVE AS-ETHER START	354
VALVE AS-TANK–FAST FILL FUEL	862
VALVE-BREATHER	386
	390
	394
VALVE GP-BYPASS– HYDRAULIC OIL COOLER	863
VALVE GP-CHECK–HYDRAULIC FAN	864
VALVE GP-CHECK–HYDRAULIC OIL FILTER	864
VALVE GP-CHECK (PARK BRAKE RELEASE)	864
VALVE GP-CONTROL–BULLDOZER	865
	871
VALVE GP-CONTROL–IMPLEMENT	876
VALVE GP-CONTROL–PILOT ON, OFF	875
VALVE GP-CONTROL–RIPPER	869
VALVE GP-CONTROL–TRANSMISSION	473
	475
VALVE GP-DIVERTER (COLD WEATHER CLIMATE ONLY)	869
VALVE GP-FLUSHING– ROTATING FAN MOTOR	477
VALVE GP-MAKEUP–HYDRAULIC FAN	878
VALVE GP-METERING–ENGINE OIL	109
VALVE GP-PILOT–IMPLEMENT	879
	881
	883
	884
VALVE GP-PRESS & FLOW CMPNSTR– FRONT HYDRAULIC FAN	889
VALVE GP-PRESSURE REDUCING– DOZER LIFT	888
VALVE GP-PRESSURE REDUCING– IMPLEMENT	886
	887
VALVE GP-PRIORITY–BRAKE–STEERING	478
VALVE GP-PUMP CONTROL– FRONT HYDRAULIC FAN	893
VALVE GP-PUMP CONTROL– REAR HYDRAULIC FAN	891
	894
VALVE GP-QUICK-DROP–BULLDOZER	896
VALVE GP-RELIEF–TORQUE CONVERTER	480
VALVE GP-RELIEF (DUAL TILT LINES)	793
VALVE GP-RELIEF (REFRIGERANT COMPRESSOR)	1015
VALVE GP-SELECTOR–TRANSMISSION	481
VALVE GP-SELECTOR & PRESS CONT	482
VALVE GP-SELECTOR (TRANSMISSION)	473
	475
VALVE GP-SEQUENCE– HYDRAULIC FAN FLUID FLOW	897
VALVE GP-SHUTTLE–BALL RESOLVER	898
	899
VALVE GP-SHUTTLE–DOZER LIFT	900
VALVE GP-SOLENOID–BULLDOZER TILT	902
	903
VALVE GP-SOLENOID–FAN DEMAND VALVE	911
VALVE GP-SOLENOID–HYDRAULIC FAN	906
VALVE GP-SOLENOID– HYDRAULIC FAN BYPASS ON, OFF	907
VALVE GP-SOLENOID– HYDRAULIC LOCKOUT	912
VALVE GP-SOLENOID–IMPLEMENT	904
	910
	913
VALVE GP-SOLENOID– IMPLEMENT LOCKOUT	908
VALVE GP-SOLENOID– PARKING, SECONDARY BRAKE	486

INDEX

Name	Page
VALVE GP-SOLENOID– PRESSURE COMPENSATION OVERRIDE	909
VALVE GP-SOLENOID– RH, LH STEERING CLUTCH, BRAKE	485
	488
	489
VALVE GP-SOLENOID–RIPPER PIN	901
VALVE GP-SOLENOID– TRANSMISSION CLUTCH	484
	487
VALVE GP-TILT CONTROL	914
	915
VALVE GP-TRANSMISSION CONTROL	490
	491
	644
	646
VALVE MECHANISM GP	69
	71
	73
	75

W

WARNING GP-BACKUP	381
WASHER GP-WINDOW	1141
WINDOW AS-SLIDING–LH	1144
WINDOW AS-SLIDING–RH	1144
WINDOW GP-CAB–LH	1149
	1150
	1153
WINDOW GP-CAB–LH SLIDING	1146
	1152
WINDOW GP-CAB–REAR	1158
	1159
WINDOW GP-CAB–REAR SLIDING	1156
	1157
WINDOW GP-CAB–RH	1147
	1148
	1155
WINDOW GP-CAB–RH SLIDING	1145
	1151
WIPER GP-WINDOW	1160
	1162
	1166
WIPER GP-WINDOW–REAR	1161
WIPER PIVOT GP–REAR WINDOW	1169
WIRING GP-CONSOLE	382
WIRING GP-ENGINE	385
	389
	393
WIRING GP-PLATFORM	397

Y

YOKE GP	77

INDEX

Désignation	Page

A

ACCOUPLEMENT DE POMPE (ASS)	411
ACCUMULATEUR - RÉFRIGÉRANT	1057
ACCUMULATEUR HYDRAULIQUE (ASS)	648
ADAPTATEUR DE REMPLIS. RAPIDE DE CARBURANT (ASS)	199 201 203 205 207 209 211
ADMISSION REFROIDIE PAR EAU (ASS)	163
ALTERNATEUR DE CHARGE (ASS)	241 242 244
AMORTISSEUR DE VIBRATIONS (ASS)	38
AMPOULE (24 VOLTS) (ANOMALIE ARRIÈRE)	397
AMPOULE (24 VOLTS) (COMMANDE D'ACCÉLÉRATION)	399
AMPOULE (24 VOLTS) (TABLEAU DE BORD)	397
AMPOULE (24 VOLTS) (TÉMOIN D'ACTION)	1051
AMPOULE (24 VOLTS) (TÉMOIN D'ACTION)	1049
AMPOULE (24 VOLTS) (TOUCHE)	281 283 285
AMPOULE (24 VOLTS) (TRANSPARENTE)(PLAFONNIER)	306
AMPOULE (24 VOLTS) (VERROUILLAGE D'ÉQUIPEMENT)	397
ANNEAU DE MAILLON DE CHAÎNE (ENS)	590
ARBRE A CAMES (ASS)	8 9
ARBRE DE TRANSMISSION (ASS)	401
ARBRE D'ENTRAÎNEMENT (ASS)	461
AUTOCOLLANT-BLOC DE TOUCHES	1070
AUTOCOLLANT (BOBINE D'EXCITATRICE)	305
AUTOCOLLANT (CONTACTEUR D'ALLUMAGE)	305
AUTOCOLLANT DE MISE EN GARDE (CONNEXION DE CÂBLES VOLANTS)	1173
AUTOCOLLANT DE MISE EN GARDE (GUIDE)	553 556 559 563 566 569 572 575
AUTOCOLLANT (DÉMARRAGE)	305
AUTOCOLLANT D'IDENTIFICATION (ASSEMBLAGE ET NO DE SÉQUENCE) (CLIMATISEUR)	997 1000
AUTOCOLLANT D'IDENTIFICATION (ASSEMBLAGE ET NO DE SÉQUENCE) (RÉCHAUFFEUR)	1036
AUTOCOLLANT D'IDENTIFICATION (FILTRE À HUILE MOTEUR)	1173
AUTOCOLLANT D'IDENTIFICATION (FUSIBLE)	382
AUTOCOLLANT D'IDENTIFICATION (GROUPE, NUMÉRO SÉQUENTIEL) (RÉCHAUFFEUR)	1033
AUTOCOLLANT D'IDENTIFICATION (PANNEAU DE FUSIBLES)	382
AUTOCOLLANT D'IDENTIFICATION (POSITION DE LAME)	281
AUTOCOLLANT D'IDENTIFICATION (POSITION DE LAME)	283 285
AUTOCOLLANT DU PANNEAU (CLIMATISEUR ET SOUFFLANTE)	1039
AUTOCOLLANT DU PANNEAU (COMMANDE DE TEMPÉRATURE)	1003
AUTOCOLLANT DU PANNEAU (INSTRUMENT)	1049 1051
AUTOCOLLANT DU PANNEAU (INSTRUMENT)	1049 1051
AUTOCOLLANT DU PANNEAU (TÉMOIN D'ACTION)	1049 1051
AUTOCOLLANT (FREIN DE STATIONNEMENT)	625
AUTOCOLLANT-HUILE (MOTEUR)	107
AUTOCOLLANT (IDENTIFICATION DU COUSSIN DE SIÈGE)	1081 1082
AUTOCOLLANT (PLAQUE-NOM)	648
AUTOCOLLANT (SÉCURITÉ)	305
AUTOCOLLANT (TOUCHE TRANSPORT AUTO)	1071
AUXILIAIRE DE DÉMARRAGE À L'ÉTHER	354 356
AVERTISSEUR (ASS)	240
AVERTISSEUR DE RECUL (ASS)	381

B

BALAI D'ESSUIE-GLACE (ENS) (PORTE DROITE ET GAUCHE)	1162 1166

INDEX

Désignation	Page
BALAI D'ESSUIE-GLACE (ENS) (VITRE ARRIÈRE)	1162, 1166
BALAI D'ESSUIE-GLACE (ENS) (VITRE AVANT)	1166
BALAI D'ESSUIE-GLACE (ENS) (VITRE AVANT)	1162
BALANCEUR (ASS)	6
BALANCIER DE SUSPENSION (ASS)	543, 545, 547, 549
BANDE AUTOCOLLANTE	238
BANDE AUTOCOLLANTE (RÉSERVOIR DE CARBURANT)(CÔTÉ DROIT ARRIÈRE)	238
BANDE AUTOCOLLANTE (RÉSERVOIR DE CARBURANT)(CÔTÉ DROIT ARRIÈRE)	238
BANDE AUTOCOLLANTE (RÉSERVOIR DECARBURANT)(CÔTÉ GAUCHE ARRIÈRE)	238
BATI DE RIPPER (ASS)	969, 971, 973
BATTERIE ET CÂBLAGE	246, 256, 263
BATTERIE (12 VOLTS)	246, 260, 267
*BLADE AS-SEMI-UNIVERSAL	953
BLINDAGE DE ROUE AV (ASS)	522, 523, 524
BLINDAGE DE TRANSMISSION	531, 533
BLINDAGE INFÉRIEUR (ASS)	520
BLOC-CYLINDRES - COUVERCLE (ASS)	11, 12
BLOC-CYLINDRES (ASS)	21, 23, 25, 26
BLOC-CYLINDRES (ENS)	19, 20
BLOC DE BRANCHEMENT (ASS)	270
BLOC-PUISSANCE (ASS)	271
BOÎTE DE VITESSES (VERSION)	469, 470, 471
BOÎTE PLANÉTAIRE (ASS)	443, 448
BOUCHON À ÉVENT (RÉSERVOIR DE LAVE-GLACE DE VITRE)	1136, 1138
BOUCHON AIMANTÉ (RÉDUCTEUR)	415, 418
BOUCHON DE CONTROLE DE NIVEAU D'HUILE (ENS) (FLACON D'HUILE DE GRAISSAGE D'ARBRE PILOTE)	588
BOUCHON DE GOULOTTE DE REMPLISSAGE (CARTER)	96
BOUCHON DE GOULOTTE DE REMPLISSAGE D'HUILE MOTEUR (MOTEUR)	79
BOUCHON DE GOULOTTE DE REMPLISSAGE D'HUILE MOTEUR (RÉSERVOIR DE GRAISSAGE)	586
BOUCHON DE GOULOTTE DE REMPLISSAGE D'HUILE MOTEUR (TRANSMISSION)	437
BOUCHON DE GOULOTTE DE REMPLISSAGE D'HUILE MOTEUR (TRANSMISSION)	433
BOUCHON DE GOULOTTE DE REMPLISSAGE D'HUILE (RÉSERVOIR DE RÉGULATION)	107
BOUCHON DE GOULOTTE DE REMPLISSAGE (ENS) (CARBURANT, VERROUILLAGE, AÉRÉ)	239
BOUCHON DE GOULOTTE DE REMPLISSAGE (RÉSERVOIR HYDRAULIQUE)	848
BOUCHON DE REMPLISSAGE D'HUILE MOTEUR (ASS)	79
BOUCHON DE REMPLISSAGE DU RÉSERVOIR DE CARBURANT (VERROUILLAGE)	199, 201, 203
BOUCHON DE RÉSERVOIR DE CARBURANT (ENS) (VERROUILLAGE AÉRÉ)	237
BOUCHON DE VIDANGE (BLOC-CYLINDRE)	11
BOUCHON DE VIDANGE (CARTER ET BÂTI)	433
BOUCHON DE VIDANGE (CHÂSSIS AMORTISSEUR TÉLESCOPIQUE)	553, 556, 559, 563, 566, 569, 572, 575
BOUCHON DE VIDANGE D'HUILE (CARTER D'HUILE MOTEUR)	60
BOUCHON DE VIDANGE (POMPE À EAU)	139
BOUCHON DE VIDANGE (RÉDUCTEUR)	415, 418
BOUCHON DE VIDANGE (REFROIDISSEUR DE BOÎTE DE VITESSES)	132
BOUCHON DE VIDANGE (TRANSMISSION)	437
BOUCHON FILETÉ (FILTRE HYDRAULIQUE)	413
BOUCHON FILETÉ (VIDANGE) (CASE)(TRANSMISSION)	493
BOUCHON FILETÉ (VIDANGE) (RÉSERVOIR HYDRAULIQUE)	848
BOULONNERIE DE CARTER AV (ASS)	46

INDEX

Désignation	Page
BOULONNERIE DE LA CULASSE (ASS)	31
	33
BOURRELET D'ÉTANCHÉITÉ (CACHE-SOUPAPES)	15
BRAS DE POUSSÉE (ASS)	938
	939
	940
	941
BROSSE (ENS) (DÉMARREUR)	365
	368
*BULLDOZER AR-SEMI-UNIVERSAL	921
	922
	923
	924
*BULLDOZER AR-UNIVERSAL	925
	926
	927
BUTÉE DE BALANCIER DE SUSPENSION	601

C

CABINE - REVÊTEMENT (ASS)	1056
CABINE (ASS)	1011
CABINE (VERSION)	1006
	1007
	1009
CABLAGE - PLATE-FORME (ASS)	397
CABLAGE DE CONSOLE (ASS)	382
CABLAGE DE MOTEUR (ASS)	385
	389
	393
CACHE-SOUPAPES (ASS)	15
CADENAS (ASS) (CANALISATIONS DE CARBURANT)	219
CADENAS (ASS) (CANALISATIONS DE VENTILATEUR HYDRAULIQUE)	727
	733
	743
CADENAS (ASS) (CAPOT)	534
	537
CADENAS (ASS) (CARÉNAGE DE GARDE-BOUE)	504
	506
	508
CADENAS (ASS) (GARDE-BOUE)	511
	515
CADENAS (ASS) (GOULOTTTE DE REMPLISSAGE D'HUILE MOTEUR)	79
CADENAS (ASS) (RESERVOIR DE CARBURANT)	236
	238
CADENAS (ASS) (RÉSERVOIR HYDRAULIQUE)	739
CANALISATIONS D'AIR (ASS)	172
	173
	174
	176
CANALISATIONS DE CARBURANT (ASS)	219
	221
	222
CANALISATIONS DE CHAUFFAGE (ASS)	1064
	1066
CANALISATIONS DE CLIMATISEUR (ASS)	1057
	1061
CANALISATIONS DE GRAISSAGE (ASS)	931
CANALISATIONS DE POMPE (ASS)	763
	769
	775
	780
	783
	788
CANALISATIONS DE VÉRIN DE LEVAGE (ASS)	749
	751
	753
	757
CANALISATIONS D'EAU (ASS)	117
	119
	121
	124
	127
	129
	131
	132
	134
	136
	138
CANALISATIONS D'EAU (ASS) (REFROIDISSEUR D'ADMISSION)	5
CANALISATIONS D'EAU (ASS) (REFROIDISSEUR DE BOÎTE DE VITESSES)	5
CANALISATIONS D'EXTRACTEUR DE BROCHE (ASS)	760
	761
	762
CANALISATIONS D'HUILE DE TRANSMISSION (ASS)	432
CANALISATIONS D'HUILE DE TRANSMISSION (ASS)	437
CANALISATIONS D'HUILE DE TURBOCOMPRESSEUR (ASS)	89
	91
CANALISATIONS D'HUILE MOTEUR (ASS)	86
CANALISATIONS D'INJECTION DE CARBURANT (ASS)	223
CANALISATIONS DU RIPPER (ASS)	795
	796
	798
	801

INDEX

Désignation	Page
	804
	807
CANALISATIONS DU VÉRIN D'INCLINAISON (ASS)	810
	812
	814
	818
CANALISATIONS ET VASE D'EXPANSION	852
CANALISATIONS HYDRAULIQUES DE VENTILATEUR (ASS)	727
	733
	739
	743
	748
CANALISATIONS-RELIEF (ASS)	793
CAPOT ET PROTECTION (ASS)	534
	537
CAPTEUR DE NIVEAU DE CARBURANT (ASS)	329
CAPTEUR DE NIVEAU DU LIQUIDE (ASS) (RÉSERVOIR DE RÉGULATION D'HUILE MOTEUR)	107
CAPTEUR DE PRESSION (ASS)	338
	339
	340
	341
	342
	343
	344
	345
CAPTEUR DE PRESSION (ASS) (ADMISSION DU TURBOCOMPRESSEUR DROITE)	327
CAPTEUR DE PRESSION (ASS) (ADMISSION DU TURBOCOMPRESSEUR GAUCHE)	327
CAPTEUR DE PRESSION (ASS) (ATMOSPHÉRIQUE)	393
CAPTEUR DE PRESSION (ASS) (CARTER)	393
CAPTEUR DE PRESSION (ASS) (HUILE FILTRÉE)	385
	389
CAPTEUR DE PRESSION (ASS) (SORTIE DE TURBOCOMPRESSEUR)	385
	393
CAPTEUR DE PRESSION ET MONTAGE	326
	327
CAPTEUR DE TEMPERATURE (ASS)	349
	350
CAPTEUR DE TEMPERATURE (ASS) (ADMISION D'AIR)	327
	394
CAPTEUR DE TEMPERATURE (ASS) (LIQUIDE DE REFROIDISSEMENT)	385
	389
CAPTEUR DE TEMPERATURE (ASS) (LIQUIDE DE REFROIDISSEMENT)	393
CAPTEUR DE TEMPERATURE (ASS) (SORTIE DE LIQUIDE DE REFROID. - REFROIDISSEUR D'ADMISSION)	386
	390
	394
CAPTEUR DE TEMPERATURE D'ECHAPPEMENT (ASS) (TURBO DROIT)	385
	389
	393
CAPTEUR DE TEMPERATURE D'ECHAPPEMENT (ASS) (TURBO GAUCHE)	385
	389
	393
CAPTEUR DE VITESSE (ASS)	346
	347
	348
CAPTEUR DE VITESSE (ASS) (CALAGE)	393
CAPTEUR DE VITESSE (ASS) (SONDE D'ÉTALONNAGE DU CALAGE)	385
	389
	393
CARENAGE - GARDE-BOUE (ASS)	504
	506
	508
	510
CARENAGE DE MOTEUR (ASS)	498
	500
	502
CARTER AV (ASS)	55
CARTER DE VOLANT (ASS)	52
	53
CARTER ET PIECES DE BOITE (ASS)	402
CARTER TELESCOPIQUE DE MECANISME AMORTISSEUR	553
	556
	559
	563
	566
	569
	572
	575
CEINTURE DE SECURITE (ASS)	1096
CEINTURE DE SECURITE (ASS) (RÉTRACTABLE)	1110
	1111
CENDRIER	1003
	1039
CHAINES (ASS)	614
	615
	616
	617
CHAPEAU DE GALET INFERIEUR (ASS)	552
CHAPEAU DE ROUE AV (CHAINE) (ASS)	550
	551

INDEX

Désignation	Page
CHAPEAU (ENS) (CLIMATISEUR) (CÔTÉ INFÉRIEUR)	1057
CHAPEAU (ENS) (CLIMATISEUR) (CÔTÉ INFÉRIEUR)	1061
CHAPEAU (ENS) (CLIMATISEUR) (CÔTÉ SUPÉRIEUR)	1057
CHAPEAU (ENS) (CLIMATISEUR) (CÔTÉ SUPÉRIEUR)	1061
CHAPEAU (ENS) (HUILE MOTEUR)	80
	82
CHÂSSIS ET CARTER (ASS)	493
CHAUFFAGE DE CABINE (ASS)	1033
	1039
CHAUFFAGE DE CABINE (ASS)	1036
CLAPET DE COMPENSATION (ASS)	878
CLAPET DE DECHARGE (ASS)	480
CLAPET DE DECHARGE (ASS) (CANALISATIONS DE DOUBLE DÉVERS)	793
CLAPET DE DECHARGE (ASS) (COMPRESSEUR DE RÉFRIGÉRANT)	1015
CLAPET DE RETENUE (ENS)	864
CLAPET DE RETENUE (ENS) (DESSERRAGE DE FREIN DE STATIONNEMENT)	864
CLÉ (COUPE-BATTERIE)	372
CLÉ ÉLECTRONIQUE (ENS) (GRIS)	304
CLÉ ÉLECTRONIQUE (ENS) (JAUNE)	304
CLIMATISEUR (ASS)	997
	1000
	1003
CLIMATISEUR (VERSION)	996
COLLECTEUR - COMMANDE (ASS)	821
COLLECTEUR D'ÉCHAPPEMENT (ASS)	178
	180
COLLECTEUR ET SOUPAPE (ASS)	637
	638
	639
	640
COMMANDE D'AFFICHAGE ÉLECTRONIQUE	1026
	1027
COMMANDE DE BOITE DE VITESSES (ASS)	408
COMMANDE DE BOÎTE ET MONTAGE (ASS)	280
COMMANDE DE DECELERATEUR (ASS)	213
COMMANDE DE DIRECTION ET BOITE DE VITESSES	626
	628
	630
COMMANDE DE FREIN DE STATIONNEMENT (ASS)	625
COMMANDE DE POIGNÉE (ASS)	654
COMMANDE D'ÉQUIPEMENT	1019
	1020
	1021
	1022
	1023
	1024
	1025
COMMANDE D'INVERSION DE LA CENTRALE DE SURVEILLANCE (ASS)	1028
COMMANDE ELECTRONIQUE DE BOITE (ASS)	281
COMMANDE ELECTRONIQUE DE BOITE (ASS)	283
	285
COMMANDE ELECTRONIQUE DE BOITE (ASS) (CLAVIER ANGLAIS)	272
COMMANDE ELECTRONIQUE DE BOITE (ASS) (CLAVIER INTERNATIONAL)	272
COMMANDE ELECTRONIQUE DE MOTEUR (ASS)	287
	288
	289
	290
COMMANDE ÉLECTRONIQUE D'ÉQUIPEMENT (ASS)	296
COMMANDE ELECTRONIQUE (ENS) (LAMPE DE TABLEAU DE BORD)	1049
	1051
COMMANDE ELECTRONIQUE ET MONTAGE (ASS)	272
	273
	274
	275
COMMANDE ET MONTAGE - LEVIER (ASS)	1020
COMMANDE ET MONTAGE - MOTEUR	277
COMMANDE ET MONTAGE (ASS)	650
COMMANDE ET MONTAGE-TRANSMISSION (ASS)	278
	279
COMMANDE HYDRAULIQUE (ASS)	655
COMMANDE HYDRAULIQUE (VERSION)	652
	653
COMMANDE NON PROGRAMMEE (ASS)	291
	292
	293
	294
COMMANDE NON PROGRAMMEE (ASS) (SÉCURITÉ)	304
COMPOSANTS ÉLECTRONIQUES DE LA MACHINE (VERSION)	296
COMPRESSEUR DE REFRIGERANT (ASS)	1016
COMPRESSEUR DE REFRIGERANT (ASS)	1015
CONDENSEUR DE RÉFRIGÉRANT	1018
CONTACTEUR DE CONSOLE (ESSUIE GLACE (ASS))	1166
CONTACTEUR DE CONSOLE (ESSUIE GLACE (ASS))	1162
CONTACTEUR DE DEBIT (ASS)	373
CONTACTEUR DE DEBIT (ASS) (LIQUIDE DE REFROIDISSEMENT)	389

INDEX

Désignation	Page
CONTACTEUR (ENS) (À BASCULE) (RELEVAGE/ABAISSEMENT DE LA CONSOLE (ASS))	620
CONTACTEUR (ENS) (FEUX ARRIÈRE)	397
CONTACTEUR (ENS) (PHARES AV)	397
CONTACTEUR (ENS) (PORTIERE AVANT,ARRIERE,DROITE ET GAUCHE)	1162
	1166
CONTACTEUR (ENS) (PRESSION DIFFÉRENTIEL)	726
CONTACTEUR (ENS) (ROTATIF) (COMMANDE DE VITESSE DE VENTILATEUR)	1003
CONTACTEUR (ENS) (VENTILATEUR SOUFFLANT)	1039
CONTACTEUR (ENS) (24V, ALLUMÉ) (COMMANDE D'ACCÉLÉRATION)	399
CONTACTEUR MAGNETIQUE (ASS)	374
	375
CONTACTEUR MAGNETIQUE (ASS)	376
	377
	378
CONTACTEUR MAGNETIQUE (ASS) (24 VOLTS) (DÉMARRER RELAIS 1)	382
CONTACTEUR MAGNETIQUE (ASS) (24 VOLTS) (DÉMARRER RELAIS 2)	382
CONTACTEUR MAGNETIQUE (ENS) (RELAIS DE DÉMARREUR)	100
CONTREPOIDS AR (ASS)	496
CONTREPOIDS (ASS)	495
CONVERTISSEUR DE COUPLE (ASS)	463
	465
	467
CORPS-POMPE À HUILE (ENS) (REPRISE DE CONVERTISSEUR)	454
COURONNE ET ENGRENAGES DE TRANSFERT (ASS)	422
	426
COURROIE TRAPEZOIDALE (ALTERNATEUR)	58
COURROIE TRAPEZOIDALE (COMPRESSEUR DE RÉFRIGÉRANT)	1016
COUVERCLE - BOUCHON DU RÉSERVOIR HYDRAULIQUE (REMPLISSAGE DE RÉSERVOIR HYDRAULIQUE)	848
COUVERCLE DE CARTER AV (ASS)	14
COUVERCLE D'ENTRAINEMENT AUXILIAIRE (ASS)	10
COUVERCLE INFÉRIEUR-DOSSIER (ASS)	1082
COUVERCLE INFÉRIEUR-DOSSIER (ASS)	1079
	1080
	1081
COUVERCLES D'EXPEDITION (ASS)	960
CRAN DE COMMANDE (ASS) (ÉQUIPEMENT)	650
CRAN DE COMMANDE (ASS) (ÉQUIPEMENT)	657
	659
	662
	663
	664
CREPINE (ENS) (REMPLISSAGE DE RÉSERVOIR HYDRAULIQUE)	848
CROISILLON ET ROULEMENT	472
CULASSE (ASS)	31
	33
	35
	37
CULASSE (ENS)	28
	29
	30
CULBUTERIE (ASS)	69
	71
	73
	75
*CYLINDER GP-BULLDOZER LIFT	682
	684
CYLINDRE D'ETHER (ENS)	356

D

DÉMARREUR - CIRCUIT DE PRÉGRAISSAGE	368
DÉMARREUR ÉLECTRIQUE (ASS)	358
	359
	362
	365
DENT DE RIPPER (ASS)	987
	988
	989
	990
	991
DISJONCTEUR DE SECURITE (ENS) (FREIN)	406
DISJONCTEUR DE SECURITE (ENS) (FREIN)	404
DISJONCTEUR DE SECURITE (ENS) (INVERSION)	626
	628
DISJONCTEUR (ENS) (10A) (CLÉ DE CONTACT)	382
DISJONCTEUR (ENS) (10A) (DISJONCTEUR D'EMBRAYAGE/FREIN ÉLECTRONIQUE)	382
DISJONCTEUR (ENS) (15A) (ÉQUIPEMENT)	382
DISJONCTEUR (ENS) (15A) (MOTEUR)	382
DISJONCTEUR (ENS) (15A) (PROJECTEURS AVANT)	382
DISJONCTEUR (ENS) (15A) (SOUFFLANT)	382
DISPOSITIF D'ARRÊT	632

INDEX

Désignation	Page
DISPOSITIF DE VIDANGE RAPIDE D'HUILE (ASS)	96
DISPOSITIF D'EVACUATION DES VAPEURS DE CARTER	84
DISTRIBUTEUR (ASS)	473 475 865 869 871 875 876
DISTRIBUTEUR DE BOITE (ASS)	490 491
DISTRIBUTEUR DE POMPE (ASS)	891
DISTRIBUTEUR D'INCLINAISON (ASS)	914 915
DISTRIBUTEUR ET MONTAGE (ASS)	857 858

E

Désignation	Page
EAU DES CHEMISES - RECHAUFFEUR (ASS)	301 302 303
EAU DES CHEMISES - RECHAUFFEUR (ASS)	300
ÉCLAIRAGE - PROJECTEURS (ASS)	315 316 318
ECLAIRAGE AR (ASS)	323
ECLAIRAGE AV (ASS)	322
ECLAIRAGE DE RIPPER (ASS)	325
ÉCLAIRAGE (VERSION)	312 313
ÉCRAN - REPRISE (HUILE MOTEUR)	105
ÉCRAN DE COLLECTEUR (ASS)	189
ÉCRAN (DÉMARRAGE À L'ÉTHER)	354
ÉCRAN (ENS) (CANALISATIONS D'HUILE DE TRANSMISSION)	432
ÉCRAN (ENS) (CARTER D'HUILE MOTEUR)	60
ÉCRAN (ENS) (RÉSERVOIR HYDRAULIQUE)	848
ÉCRAN (ENS) (TRANSMISSION)	433 437
ÉCRAN (RÉSERVOIR HYDRAULIQUE)	848
*EDGE GP-BIT & CUTTING	965
ÉJECTEUR AUTOMATIQUE DE POUSSIÈRE (ASS)	170
ÉLECTRONIQUE DE TRANSMISSION (ASS)	297
ÉLECTRONIQUE-MONITEUR (ASS)	296
ÉLÉMENT DE FILTRE À HUILE (ENS) (HYDRAULIQUE)	848
ÉLÉMENT DE FILTRE À HUILE (ENS) (HYDRAULIQUE) (BOÎTE DE VITESSES)	413 437
ÉLÉMENT DE FILTRE À HUILE (ENS) (RETOUR DE VENTILATEUR)	725
ÉLÉMENT DE FILTRE (ENS)-CARBURANT	215
ÉLÉMENT DE FILTRE (FILTRE À AIR)	167
ÉLÉMENT DE FILTRE-HYDRAULIQUE (HUILE D'ACTIONNEMENT DE FREIN)	726
ÉLÉMENT DE FILTRE (SUPPORT D'ADMISSION D'AIR)	190 191
ÉLÉMENT DU RÉCHAUFFEUR D'EAU DES CHEMISES (ENS) (120 VOLTS,1500 WATTS)	300 302
ÉLÉMENT DU RÉCHAUFFEUR D'EAU DES CHEMISES (ENS) (240 VOLTS, 1500 WATTS)	301 303
ÉLÉMENT PRINCIPAL (ENS) (FILTRE A AIR)	166
ÉLÉMENT PRINCIPAL (ENS) (FILTRE À AIR) (TRÈS GRANDE EFFICACITÉ)	169
ÉLÉMENT SECONDAIRE (ENS) (FILTRE A AIR)	166 169
EMBOUT D'EXTRÉMITÉ	947 948
EMBOUT D'EXTRÉMITÉ (ASS)	946
EMBOUT ET LAME DE COUPE (ASS)	961 962 963 964 965
EMBRAYAGE ET FREIN DE DIRECTION (ASS)	623
ENGRENAGE DE DIRECTION (ASS)	633 635
ENS. POUTRE	917
ENTRAÎNEMENT AUXILIAIRE (ASS)	39 41 43 45
ENTRETIEN DE LA TRANSMISSION (ASS)	353
ENTRETIEN D'ÉQUIPEMENT (ASS)	351
ENTRETIEN DU MONITEUR (ASS)	352
ESSUIE-GLACE (ASS)	1160 1161 1162 1166
ETRIER (ASS)	77
EXTRACTEUR DE BROCHE (ASS)	935 936 937
EXTRACTEUR DE BROCHE (VERSION)	934

INDEX

Désignation	Page

F

Désignation	Page
FAISCEAU DE CABLES - CAPTEUR (ENS) (NIVEAU D'HUILE) (RÉSERVOIR DE RÉGULATION)	107
FAISCEAU DE CABLES (ENS) (BOÎTE DE VITESSES)	246
FAISCEAU DE CABLES (ENS) (BOÎTE DE VITESSES)	258, 265
FAISCEAU DE CABLES (ENS) (CARTER DE FREIN)	406
FAISCEAU DE CABLES (ENS) (CAVALIER DE CAPTEUR DE PRESSION)	250, 258
FAISCEAU DE CABLES (ENS) (COMMANDE DE SOUPAPE D'EAU DE CLIMATISEUR)	997, 1000
FAISCEAU DE CABLES (ENS) (CONTACTEUR DE VITESSE DE VENTILATEUR)	1033, 1036
FAISCEAU DE CABLES (ENS) (CULBUTERIE)	73, 75
FAISCEAU DE CABLES (ENS) (CULBUTERIE)	69
FAISCEAU DE CABLES (ENS) (DÉMARRAGE À L'ÉTHER)	354
FAISCEAU DE CABLES (ENS) (DÉMARRAGE SANS INJECTION)	393
FAISCEAU DE CABLES (ENS) (DÉVOLTEUR POUR COURANT)	295
FAISCEAU DE CABLES (ENS) (ÉCLAIRAGE DE RIPPER)	325
FAISCEAU DE CABLES (ENS) (ÉCLAIRAGE LATÉRAL)	246, 259
FAISCEAU DE CABLES (ENS) (ÉCLAIRAGE LATÉRAL)	266
FAISCEAU DE CABLES (ENS) (GARDE-BOUE DROIT)	247, 257, 264
FAISCEAU DE CABLES (ENS) (GARDE-BOUE GAUCHE)	248, 257, 264
FAISCEAU DE CABLES (ENS) (INJECTEUR AU MOTEUR)	71
FAISCEAU DE CABLES (ENS) (MONTAGE DE SYSTÈME DE SÉCURITÉ)	305
FAISCEAU DE CABLES (ENS) (MOTEUR DE VENTILATEUR DE CLIMATISEUR)	997, 1000
FAISCEAU DE CABLES (ENS) (MOTEUR SOUFFLANT)	1033, 1036
FAISCEAU DE CABLES (ENS) (POMPE DE LAVE-GLACE)	1138
FAISCEAU DE CABLES (ENS) (PROTÈGE-RADIATEUR)	246
FAISCEAU DE CABLES (ENS) (PROTÈGE-RADIATEUR)	257, 264
FAISCEAU DE CABLES (ENS) (PUISSANCE)	382
FAISCEAU DE CABLES (ENS) (RIPPER)	318
FAISCEAU DE CABLES (ENS) (ROPS)	318
FAISCEAU DE CABLES (ENS) (TOIT DE CABINE)	1141
FAISCEAU DE CHAUFFAGE ET CLIMATISATION	1057, 1061
FAISCEAU DE CONTACTEUR (ENS) (ESSUIE-GLACE)	1162, 1166
FAISCEAU DE CONTACTEUR (ENS) (ESSUIE-GLACE AR)	1163, 1167
FAISCEAU DE RADIO (ENS)	1141
FAISCEAU DE REFROIDISSEUR D'ADMISSION (ENS)	163
FAISCEAU DE SOUPAPE (ENS) (COMPRESSEUR D'AIR)	1134
FAISCEAU D'ÉCLAIRAGE ARRIÈRE (ENS)	313
FAISCEAU D'ÉCLAIRAGE AVANT (ENS) (LEVAGE DE VÉRIN)	749, 751
FAISCEAU D'ÉCLAIRAGE (ENS) (ARRIÈRE)	313
FAISCEAU DU REFROIDISSEUR D'HUILE (ASS)	113
FILTRE -EAU (POMPE À EAU)	148
FILTRE -EAU (POMPE À EAU)	144
FILTRE A AIR (ASS)	164, 166, 167, 169
FILTRE À AIR (CABINE) (GRANDE EFFICACITÉ)	1039
FILTRE À AIR (CABINE) (GRANDE EFFICACITÉ)	1039
FILTRE À AIR (CABINE) (RÉDUCTION DES ODEURS)	1039
FILTRE À AIR (CABINE) (STANDARD)	1039
FILTRE À AIR (CABINE) (STANDARD)	1003
FILTRE À AIR DE CABINE (STANDARD)	1003, 1039
FILTRE A CARBURANT (ASS)	215
FILTRE A CARBURANT (ENS)	215
FILTRE À CARBURANT (RÉSERVOIR)	238

INDEX

Désignation	Page
	239
FILTRE A HUILE (ASS)	413
	725
	726
FILTRE À HUILE MOTEUR (ASS)	80
	82
FILTRE A HUILE MOTEUR (ENS)	80
	82
FILTRE A MOUSSE (CAPTEUR DE CARBURANT)	246
	257
	264
FILTRE DE DÉRIVATION (ASS)	649
FILTRE ET JOINT (ENS) (DÉMARRAGE À L'ÉTHER)	354
FREIN - COMMANDE (ASS)	404
	406
FUSIBLE (10A)	383
FUSIBLE (15A)	383
FUSIBLE (20A)	383
FUSIBLE (30A) (DÉVOLTEUR POUR COURANT)	295

G

GALET A BOUDIN DOUBLE (ASS)	596
	597
GALET A BOUDIN SIMPLE (ASS)	598
	599
GALET SUPERIEUR (VERSION)	591
	592
	593
	594
	595
GARDE-BOUE (ASS)	511
	515
	518
	519
GRAISSAGE DE BALANCIER DE SUSPENSION (ASS)	586
GRAISSAGE DE LA TRAVERSE-PIVOT	588
GROUPE DE MOTEUR A PISTONS	824
GROUPE DE ROTATION DE MOTEUR	843
GROUPE DE ROTATION DE POMPE	845
	846
	847

H

HUILE MOTEUR - CARTER (ASS)	60

I

INJECTEUR DE CARBURANT (ASS)	228
INJECTEUR DE CARBURANT (ASS)	218
INSONORISATION (VERSION)	1124
INTERRUPTEUR - BOUTON-POUSSOIR (ENS) (ARRIMAGE AUTOMATIQUE DE RIPPER)	655
INTERRUPTEUR - BOUTON-POUSSOIR (ENS) (CHANG. DE VITESSE)	641
INTERRUPTEUR - BOUTON-POUSSOIR (ENS) (PASSAGE DE VITESSE)	641
INTERRUPTEUR - BOUTON-POUSSOIR (ENS) (RÉTROGRADAGE AUTOMATIQUE)	1049
	1051
INTERRUPTEUR - DÉRIVATION (ASS)	371
INTERRUPTEUR À BASCULE (ASS) (AUXILIAIRE DE DÉMARRAGE)	399
INTERRUPTEUR À BASCULE (ASS) (COMMANDE DE VENTILATEUR DE DÉGIVREUR)	1031
INTERRUPTEUR À BASCULE (ASS) (EXTRACTEUR DE BROCHE DE RIPPER)	853
	855
INTERRUPTEUR BALANCIER (ENS) (AUXILIAIRE)	397
INTERRUPTEUR BALANCIER (ENS) (CLIMATISEUR MARCHE/ARRÊT)	1003
INTERRUPTEUR BALANCIER (ENS) (CLIMATISEUR MARCHE/ARRÊT)	1039
INTERRUPTEUR BALANCIER (ENS) (ÉCLAIRAGE LATÉRAL)	397
INTERRUPTEUR BALANCIER (ENS) (FREIN DE STATIONNEMENT)	625
INTERRUPTEUR BALANCIER (ENS) (24 VOLTS) (VERROUILLAGE D'ÉQUIPEMENT)	397
INTERRUPTEUR BALANCIER (ENS) (24V, ÉTANCHE-ALLUMÉ) (COMMANDE D'ACCÉLÉRATION)	399
INTERRUPTEUR BALANCIER (ENS) (24V, ÉTANCHE-ALLUMÉ) (VERROUILLAGE D'ÉQUIPEMENT)	397
INTERRUPTEUR DE DÉMARRAGE (ASS)	379
INTERRUPTEUR DE THERMOSTAT (ENS) (CLIMATISEUR)	1000

J

JAUGE D'HUILE MOTEUR (BAIONNETTE) (ASS)	85
JOINT (ASS)	143
JOINT (ASS) (POMPE À EAU)	139
JOINT-CHAÎNE (ASS)	600
JOINT-CORDE	459
JOINT DE VILEBREQUIN (ASS)	66
JOINT PLAT (POMPE D'AMORÇAGE DE CARBURANT)	229
JOINT-POMPE À EAU (ASS)	144
	148
JOINT UNIVERSEL (ASS)	472

Désignation — Page

K

KIT - BLOCAGE DE BORNE (BLOC FUSIBLE) . . . 383
KIT - COUSSIN (DOSSIER DE VINYLE) 1030
KIT - COUSSIN (RALLONGE DE DOSSIER) 1029
KIT - SECTION (ARRIÈRE) (POMPE À ENGRENAGES) 830
KIT - SECTION (AVANT) (POMPE À ENGRENAGES) 830
KIT D'AMORTISSEUR (SIEGE A SUSPENSION) 1134
KIT D'ATTACHE DE CEINTURE DE SECURITE (SIEGE A SUSPENSION) 1125, 1130
KIT D'ATTACHE (SIEGE A SUSPENSION) 1127, 1132, 1134
KIT DE BALAI D'ESSUIE-GLACE (GLACE) 1163, 1167
KIT DE BALAIS (MOTEUR DE VENTILATEUR DE CLIMATISEUR) 997
KIT DE BALAIS (MOTEUR DE VENTILATEUR DE RÉCHAUFFEUR) 1034
KIT DE BEC (VITRE DE CABINE) 1153, 1155
KIT DE BLOC COULISSANT (SIEGE A SUSPENSION) 1112, 1113, 1115, 1118, 1119, 1120, 1121
KIT DE BORNE (ALTERNATEUR) 242
KIT DE BORNE D'ALTERNATEUR 244
KIT DE BORNE (DÉMARREUR) 360, 363, 366, 369
KIT DE BOUCHON (4 BROCHES) 398
KIT DE BOUGIE (12 BROCHES) 628
KIT DE BOUGIE (2 BROCHES) 323
KIT DE BOUGIE (2 BROCHES) 318
KIT DE BOUGIE (2 BROCHES) 323
KIT DE BOUGIE (3 BROCHES) 628
KIT DE BOUGIE (3 BROCHES) (CAPTEUR DE PRESSION) 340
KIT DE BOUGIE (6 BROCHES) 628, 1027
KIT DE BOULONNERIE (ALTERNATEUR) 242, 244
KIT DE BOULONNERIE (ÉLECTROVANNE) 486
KIT DE BOULONNERIE, JOINTS ET CALES D'ÉPAISSEUR 928, 930
KIT DE BOULONNERIE (REDRESSEUR) 1034
KIT DE BOULONNERIE (SIEGE A SUSPENSION) 1127, 1132
KIT DE BOUTON DE SIEGE (SIÈGE) 1097
KIT DE BOUTON DE SIEGE (SIEGE A SUSPENSION) 1099
KIT DE BOUTON (REGLAGE DE HAUTEUR) (SIEGE A SUSPENSION) 1042, 1045
KIT DE CHAPEAU DE FILTRE (RÉSERVOIR DE CARBURANT) 237, 239
KIT DE COMPRESSEUR PNEUMATIQUE DE SIÈGE 1054
KIT DE COUSSIN DE SIEGE (SIEGE A SUSPENSION) 1099
KIT DE COUSSIN DE SIEGE (VINYLE) (SIÈGE) 1097
KIT DE COUSSINET (ALTERNATEUR) 242
KIT DE COUSSINET (MOTEUR DE ROTATION) 843
KIT DE COUSSINET (PALIER DE DÉMARREUR) 365, 368
KIT DE COUSSINET (SIEGE A SUSPENSION) 1043, 1046
KIT DE FAISCEAU DE CABLAGE (SIÈGE À SUSPENSION PNEUMATIQUE) . . . 1132
KIT DE FAISCEAU DE CABLAGE (SIÈGE À SUSPENSION PNEUMATIQUE) (SIEGE A SUSPENSION) 1127
KIT DE GAINE (SIEGE A SUSPENSION) 1125, 1130
KIT DE GUIDE (VITRE DE CABINE) 1153, 1155
KIT DE JOINTS 864, 913
KIT DE JOINTS (ASS) 541
KIT DE JOINTS (CARTOUCHE COMPLÈTE) 909
KIT DE JOINTS (ÉLECTROVANNE) 484, 488, 859, 860, 901, 902, 903, 904, 907, 908, 910, 912
KIT DE JOINTS (POMPE À ENGRENAGES) 830
KIT DE JOINTS (SOUPAPE DE PRIORITÉ) 897

INDEX

Désignation	Page
KIT DE JOINTS (VÉRIN DE RIPER)	694, 698
KIT DE JOINTS (VÉRIN D'INCLINAISON DE RIPPER)	713, 717
KIT DE MONTAGE	171
KIT DE PALIER PRINCIPAL (VILEBREQUIN)	17, 18
KIT DE PANNEAU DU DOSSIER DU SIEGE (SIÈGE)	1097
KIT DE PANNEAU DU DOSSIER DU SIEGE (SIEGE A SUSPENSION)	1099
KIT DE PARE-CHOCS (RÉGLAGE DU POIDS) (SIEGE A SUSPENSION)	1042, 1046
KIT DE POUSSOIR (SIEGE A SUSPENSION)	1043, 1046
KIT DE PRISE FEMELLE (12 BROCHES)	628
KIT DE PRISE FEMELLE (2 BROCHES)	323, 347, 385, 389, 628, 726, 1001, 1068, 1069
KIT DE PRISE FEMELLE (2 BROCHES)	371, 381
KIT DE PRISE FEMELLE (2 BROCHES)	385, 389, 393
KIT DE PRISE FEMELLE (2 BROCHES) (CONTACTEUR MAGNÉTIQUE)	375
KIT DE PRISE FEMELLE (3 BROCHES)	1141
KIT DE PRISE FEMELLE (3 BROCHES)	386, 390, 393, 394, 1039
KIT DE PRISE FEMELLE (4 BROCHES)	1026, 1070, 1071
KIT DE PRISE FEMELLE (4 BROCHES)	901, 903
KIT DE PRISE FEMELLE (6 BROCHES)	1001, 1028, 1039, 1068, 1069, 1073, 1074, 1160, 1161
KIT DE PRISE FEMELLE (6 BROCHES)	641
KIT DE REDRESSEMENT (CUVETTE DE SIÈGE)	1083
KIT DE REGLAGE (CUVETTE DE SIÈGE)	1083
KIT DE REGLAGE DE SIEGE - INCLINAISON (CUVETTE DE SIÈGE)	1083
KIT DE RENIFLARD (RACCORD DE REMPLISSAGE RAPIDE DE CARBURANT)	199, 201, 203
KIT DE RÉNOVATION	1053
KIT DE RÉNOVATION (POMPE À EAU)	4, 144, 148
KIT DE RESSORT (VITRE DE CABINE)	1151, 1152
KIT DE RESSORTS (REGLAGE DE HAUTEUR) (SIEGE A SUSPENSION)	1042, 1045
KIT DE RESSORTS (SIEGE A SUSPENSION)	1043, 1045
KIT DE ROULEAU (SIEGE A SUSPENSION)	1125, 1127, 1130, 1132
KIT DE SOUPAPE PNEUMATIQUE (SIEGE A SUSPENSION)	1134
KIT DE VIS DE RETENUE (COMMANDE ÉLECTRONIQUE DE MOTEUR)	287, 290
KIT DE VIS DE RETENUE (COMMANDE NON PROGRAMMÉE)	291, 294
KIT D'ENGRENAGE DE DÉMARREUR	366, 369
KIT D'ENTRETIEN D'ACCUMULATEUR	648
KIT D'INDICATEUR (RÉGLAGE DU POIDS) (SIEGE A SUSPENSION)	1043, 1046
KIT-FENETRE	1055
KIT (JOINT CHASSIS PORTEUR) (CHEMISE DE CYLINDRE UNIQUE)	4
KIT (JOINT CHASSIS PORTEUR) (INJECTEUR UNIQUE)	4
KLAXON (ENS) (24V, FAIBLE)	246
KLAXON (ENS) (24V, FORT)	246, 258, 265

L

Désignation	Page
LAME DE COUPE	967, 968
LAME DE COUPE (ASS)	949, 966
LAME SEMI-UNIVERSELLE (ASS)	957

INDEX

Désignation	Page
LAME SEMI-UNIVERSELLE (ENS)	950
	951
LAME UNIVERSELLE (ASS)	959
LAME UNIVERSELLE (ENS)	953
	954
	956
LAMPE - PHARE (ASS)	308
	309
	310
	311
LAMPE - PHARE (ASS)	307
LAMPE - PHARE (ENS) (HID) (24 VOLTS)(70 WATTS)(EFFACER)	310
	311
LAMPE (ENS) (12 VOLTS) (MONTAGE DE SYSTÈME DE SÉCURITÉ)	305
LAMPE HALOGÈNE (24V, 65W) (PROJECTEUR)	307
	308
	309
LAVE-GLACE - VITRE (ASS)	1141
LITTÉRATURE (ASS)	1
LOGICIEL - ÉLECTROMODULE (ASS) (VIMS)	296
LOGICIEL - ÉLECTROMODULE (ASS) (VIMS)	352
LOGICIEL - MACHINE (ENS) (SÉCURITÉ)	304
LOGICIEL - TRANSMISSION (ASS)	353
LOGICIEL - TRANSMISSION (ENS)	297
	353
LOGICIEL-ÉQUIPEMENT (ASS)	296
LOGICIEL-ÉQUIPEMENT (ASS)	351

M

MAILLON DE CHAINE (ENS)	580
	581
	582
	583
	584
	585
MANOCONTACT (ENS) (CLIM. BAS)	1057
	1061
MANOCONTACT (ENS) (CLIMATISEUR ÉLEVÉ)	1057
	1061
MANOCONTACT (ENS) (DIFFÉRENTIEL DE FILTRE À CARBURANT)	385
	389
	393
MANOCONTACT (ENS) (HUILE MOTEUR)	98
MANOCONTACT (ENS) (HUILE MOTEUR)	100
MARCHEPIED (ASS)	1122
MECANISME AMORTISSEUR ET REGLAGE DE CHAINES (ASS)	610
	612
MINUTERIE (ENS) À TEMPORISATION (24 VOLTS) (CLIMATISEUR)	1061
MINUTERIE (PRÉGRAISSAGE)	98
	100
MODULE - QUATRE INSTRUMENTS (ASS)	1072
MODULE (ASS)-CENTRE DE MESSAGE	1068
	1069
MODULE (ASS)-TOUCHE DE MODULE DE SURVEILLANCE	1070
	1071
MODULE D'INDICATEUR DE VITESSE ET COMPTE-TOURS (ASS)	1073
MONTAGE D'ALTERNATEUR (ASS)	58
MONTAGE DE CABINE (ASS)	1075
MONTAGE DE MOTEUR (VERSION)	5
MONTAGE DE RADIO (ASS)	1077
MONTAGE DE RADIO (ASS)	1048
MONTAGE DE VÉRIN (ASS)	825
	826
	827
MONTAGE DU TOIT ROPS (ASS)	1078
MONTAGE-SÉCURITÉ (ASS)	304
	305
MOTEUR DE VENTILATEUR (ASS)	822
	823
MOTEUR D'ESSUIE-GLACE (ASS)	1074
MOTEUR D'ESSUIE-GLACE (ASS) (ESSUIE-GLACES DE PORTE)	1162
	1166
MOTEUR ELECTRIQUE (ASS) (27 VOLTS) (CLIMATISEUR)	1000
MOTEUR ELECTRIQUE (ASS) (27 VOLTS) (RÉCHAUFFEUR)	1036
MOTEUR (VERSION)	3

O

OEILLETONS DE LEVAGE MOTEUR (ASS)	56
	57

P

PALIER PRINCIPAL (ENS) (STANDARD)	17
	18
PALONNIER - GROUPE DE COMMANDE (ASS)	657
	659
	661
	662
	663
	664
PARE-PIERRES (ASS)	529
	530
PIGNON AR (ASS)	50
PIGNONNERIE AV (ASS)	48

INDEX

Désignation	Page
PISTON ET BIELLE (ASS)	62
	64
PISTON ET SOUPAPE (ASS)	828
	829
PIVOT D'ESSUIE-GLACE (ASS)	1169
PLAFONNIER (ASS)	306
PLAQUE - AVERTISSEMENT (RESSORT AMORTISSEUR)	553
	556
	559
	563
	566
	569
	572
	575
PLAQUE - AVERTISSEMENT (VÉRIN HAUTE PRESSION)	553
	556
	559
	563
	569
	572
	575
PLAQUE - AVERTISSEMENT (VÉRIN HAUTE PRESSION)	566
PLAQUE DE NUMÉRO DE SÉRIE	1172
PLAQUE DE POUSSÉE (ASS)	933
PLAQUE D'INSTRUCTIONS (CLIMATISEUR)	996
	1172
PLAQUE D'USURE (ASS)	975
	976
PLAQUE SIGNALÉTIQUE (ASS)	1170
PLAQUE SIGNALÉTIQUE (REMARQUE) (POMPE DE PRÉGRAISSAGE)	98
	101
PLAQUE SIGNALÉTIQUE (REMARQUE) (RADIO)	1048
PLAQUE SIGNALÉTIQUE (REMARQUE) (RADIO)	1077
PLAQUES SIGNALETIQUES ET AUTOCOLLANTS (ASS)	1172
PLATE-FORME - CABINE (ASS)	1088
	1090
PLATE-FORME (ASS)	1086
PLATE-FORME (VERSION)	1085
POMPE A EAU (ASS)	146
	147
	148
POMPE A EAU (ASS)	144
POMPE A ENGRENAGES (ASS)	454
	455
	457
POMPE A ENGRENAGES (ASS)	832
POMPE A ENGRENAGES (ASS)	830
POMPE A HUILE MOTEUR (ASS)	103
	104
POMPE A PISTONS (ASS)	834
	836
	838
	840
	842
POMPE AUXILIAIRE D'EAU DOUCE (ASS)	139
	141
	142
	143
POMPE D'ALIMENTATION EN CARBURANT (ASS)	230
	231
	232
	234
POMPE D'AMORÇAGE DE CARBURANT (ASS)	229
POMPE DE FAISCEAU (ENS) (LAVE-GLACE)	1137
POMPE DE REPRISE (ASS)	105
POMPE DE REPRISE (ASS)	106
POMPE D'INJECTION DE CARBURANT (ASS)	227
	228
PORTE-BALAIS (ENS) (DÉMARREUR)	366
	369
PREFILTRE (ASS)	185
	186
PREFILTRE (VERSION)	183
	184
PROTECTION D'ACCOUPLEMENT (ASS)	431
PROTECTION DE CANALISATIONS DE CARBURANT	187
PROTÈGE-RADIATEUR (ASS)	525
	527

R

RACCORD	198
RACCORD D'EAU (ASS)	110
	111
RADIATEUR (ASS)	150
	152
RALLONGE DU DOSSIER DE SIEGE	1029
	1030
RALLONGE DU DOSSIER DE SIEGE (EN TOILE)	1111
RALLONGE DU DOSSIER DE SIEGE (VINYLE)	1110
RÉCEPTEUR-DÉSHYDRATEUR (ASS) (CLIMATISEUR)	1057
	1061
RECHAUFFEUR DE CARBURANT (ASS)	298
RÉCHAUFFEUR DE FAISCEAU (ENS) (EAU DE CHEMISE)	303
REDUCTEUR MARIN - MONTAGE (ASS)	442

INDEX

Désignation	Page
RÉDUCTEURS (ASS)	418
RÉDUCTEURS (ASS)	415
REFROIDISSEUR D'HUILE DE BOÎTE (ASS)	409
	410
REFROIDISSEUR D'HUILE HYDRAULIQUE (ASS)	665
REFROIDISSEUR D'HUILE MOTEUR (ASS)	112
RÉGLAGE DE COMMANDE DE DIRECT. ET DE BOÎTE	620
REGLAGE DE SIEGE (ASS)	992
	994
RÉGLAGE ÉLECTRO. DE PUISSANCE DU MOTEUR	3
RÉGULATION D'HUILE MOTEUR (ASS)	94
RELAIS (ENS) (12 VOLTS) (MONTAGE DE SYSTÈME DE SÉCURITÉ)	305
RELAIS (ENS) (24 VOLTS) (MONTAGE DE SYSTÈME DE SÉCURITÉ)	305
RELAIS (ENS) (24 VOLTS) (SURPRESSEUR)	1163
	1167
RENIFLARD (ASS)	78
RENIFLARD (ENS) (MOTEUR)	78
RENIFLARD (ENS) (RÉSERVOIR DE RÉGULATION D'HUILE MOTEUR)	107
RENIFLARD (RÉSERVOIR DE GRAISSAGE)	586
RENIFLARD (TRANSMISSION)	433
	437
RÉSERVOIR - LAVE-GLACE (ASS)	1136
	1137
	1138
RÉSERVOIR - LAVE-GLACE (ASS)	1140
RÉSERVOIR DE CARBURANT (ASS)	236
	237
	238
	239
RÉSERVOIR D'EAU (ASS)	154
	157
	160
RÉSERVOIR D'HUILE MOTEUR (ASS)	107
RÉSERVOIR HYDRAULIQUE ET FILTRE (ASS)	848
RESISTANCE (ENS) (CHARGE DE SOLÉNOÏDE D'ÉTHER)	354
RESSORT (DÉMARREUR)	365
	369
RÉTROVISEUR (ASS)	1067
RIPPER (ASS)	982
	983
	984
	985
	986
RIPPER (VERSION)	977
	978
	979
	980
	981
ROBINET DE BATTERIE (ASS)	372
ROTATION DE LA ROUE DU VENTILATEUR SOUFFLANT (ANGLE D'ATTAQUE AUTOMATIQUE DE LAME)	1173
ROTATION DE LA ROUE DU VENTILATEUR SOUFFLANT (CIRCUIT DE RENOUVELLEMENT D'HUILE)	107
ROTATION DE LA ROUE DU VENTILATEUR SOUFFLANT (COMMANDES DE RIPPER)	1019
ROTATION DE LA ROUE DU VENTILATEUR SOUFFLANT (CONTACTEUR D'EXTRACTEUR DE BROCHES DE RIPPEER)	853
	855
ROTATION DE LA ROUE DU VENTILATEUR SOUFFLANT (ENTRÉE D'EAU, SORTIE D'EAU) (RÉCHAUFFEUR)	1033
ROTATION DE LA ROUE DU VENTILATEUR SOUFFLANT (ENTRÉE D'EAU/SORTIE D'EAU) (CLIMATISEUR)	997
	1000
ROTATION DE LA ROUE DU VENTILATEUR SOUFFLANT (ENTRÉE D'EAU/SORTIE D'EAU) (RÉCHAUFFEUR)	1036
ROTATION DE LA ROUE DU VENTILATEUR SOUFFLANT (FONCTIONNEMENT DE LA LAME)	1173
ROTATION DE LA ROUE DU VENTILATEUR SOUFFLANT (LAVE-GLACE/ESSUIE-GLACE)	1162
	1166
ROTATION DE LA ROUE DU VENTILATEUR SOUFFLANT (RÉGLAGE DU SIÈGE)	1127
ROTATION DE LA ROUE DU VENTILATEUR SOUFFLANT (RÉGLAGE DU SIÈGE)	1130
	1132
	1134
ROTATION DE LA ROUE DU VENTILATEUR SOUFFLANT (RÉGLAGE DU SIÈGE)	1125
ROUE AV - CHAINES (ASS)	578
	579

S

SEGMENT DE BARBOTIN (ASS)	460
SEGMENT D'ÉTANCHÉITÉ (FILTRE À CARBURANT)	215
SIÈGE - COMPRESSEUR D'AIR (ASS)	995
SIEGE - COUVERCLE INFERIEUR (ASS)	1083
SIÈGE (ASS)	1097
	1099

INDEX

Désignation	Page
	1101
	1102
	1103
	1104
	1106
	1108
	1110
	1111
SIÈGE AVEC SUSPENSION (ASS)	1113
	1114
	1115
	1116
	1117
	1118
	1119
	1120
	1121
	1125
	1127
	1130
	1132
	1134
SIÈGE AVEC SUSPENSION (ASS)	1112
SIÈGE INCLINABLE (ASS)	1092
	1093
SIEGE (VERSION)	1095
SILENCIEUX (ASS)	182
SOLÉNOÏDE (ENS) (DÉMARREUR)	359
	362
	365
	368
SONDE - CIRCUIT DE CARBURANT	330
	331
	332
	333
	334
	335
	336
	337
SONDE - CIRCUIT DE CARBURANT (INCLINAISON DE RIPPER)	655
SONDE - CIRCUIT DE CARBURANT (LEVAGE DE VÉRIN)	666
SONDE - CIRCUIT DE CARBURANT (RELEVAGE ET ABAISSEMENT DE RIPPER)	655
SOUPAPE - RENIFLARD	386
	390
	394
SOUPAPE - SOLÉNOÏDE (ASS)	484
	485
	486
	489
	901
	902
	903
	904
	906
	907
	908
	909
	910
	911
	912
	913
SOUPAPE - SOLÉNOÏDE (ASS)	487
	488
SOUPAPE D'ABAISSEMENT RAPIDE (ASS)	896
SOUPAPE DE DÉRIVATION (ASS)	863
SOUPAPE DE DERIVATION (ASS) (CLIMAT FROID UNIQUEMENT)	869
SOUPAPE DE DIRECTION ET FREIN ET MONTAGE (ASS)	643
SOUPAPE DE PRIORITE (ASS)	478
SOUPAPE DE RÉGULATION	109
SOUPAPE DE RESERVOIR (ENS)	862
SOUPAPE DE SÉQUENCE (ASS)	897
SOUPAPE-DÉMARRAGE À L'ÉTHER (ENS)	354
SOUPAPE ET CANALISATIONS-EXTRACTEUR DE BROCHE (ASS)	853
	855
SOUPAPE ET MONTAGE - VENTILATEUR HYDRAULIQUE (ASS)	859
	860
SOUPAPE ET VÉRIN DE BULLDOZER	667
	669
SOUPAPE PILOTE (ASS)	879
	881
	883
	884
SOUPAPE RÉDUCTRICE DE PRESSION (ASS)	886
	887
	888
SOUPAPE RÉGULATRICE DE PRESSION ET DÉBIT	889
SOUPAPE-RELIEF (VERSION)	861
SOUPAPE SÉLECTRICE (ASS)	481
SOUPAPE SÉLECTRICE (ASS) (BOÎTE DE VITESSES)	473
	475
SOUPAPE SELECTRICE ET REGULATRICE DE PRESSION	482
STABILISATEUR - BRAS DE POUSSEE (ASS)	932
STABILISATEUR DU BRAS DE POUSSEE (ASS)	942
	944
SUPPORT - CACHE-SOUPAPES (ASS)	7
SUPPORT - COMMANDE (ASS)	641
SUPPORT DE MOTEUR (ASS)	67

INDEX

Désignation	Page
SUPPORTS D'ADMISSION D'AIR (ASS)	190
	191
SUSPENSION A BOGIES (ASS)	602
	603
	604
	605
	607
	608
SUSPENSION DE SIEGE - CARTER (ASS)	1042
	1045

T

TABLEAU DE BORD (ASS)	1051
TABLEAU DE BORD (ASS)	1049
TAMIS - RÉSERVOIR DE CARBURANT	219
TAMIS D'ASPIRATION (CONVERTISSEUR DE COUPLE)	467
TAMPON DE POUSSÉE (ASS)	918
	919
TAPIS DE SOL (INFERIEUR)	1075
TAPIS DE SOL (SUPERIEUR)	1075
THERMOCONTACT (ENS) (CLIMATISEUR)	997
THERMOCONTACT (ENS) (HUILE DE TRANSMISSION)	249
	256
	263
THERMOCOUPLE (ASS)	380
THERMOSTAT	116
THERMOSTAT ET BOITIER (ASS)	116
TIRANT DE BULLDOZER (ASS)	920
TOIT ROPS (ASS)	1094
TOUCHE DE FAISCEAU (ENS)	281
	283
	285
TOURILLON DE BULLDOZER (ASS)	945
TOURILLON DE MOTEUR (ASS)	68
TRAIN DE ROULEMENT	617
	618
	619
TRANSFORMATEUR DE PUISSANCE (DE 24 VOLTS À 12 VOLTS)(25 AMP)	295
TRANSFORMATEUR DE PUISSANCE (24-VOLTS À 12-VOLTS) (10 A)	397
TRANSFORMATION ELECTRIQUE (ASS)	295
TRANSMISSION (VERSION)	453
TURBOCOMPRESSEUR (ASS)	192
	193
	194
	195
	196
	197

V

*VALVE & MTG GP-STEER & BRAKE	642
*VALVE GP-PUMP CONTROL	893
	894
*VALVE GP-TRANSMISSION CONTROL	644
	646
VANNE DE RINÇAGE (ASS)	477
VANNE PILOTE (ASS)	898
	899
	900
VENTILATEUR ASPIRANT (ASS)	114
	115
VENTILATEUR DÉGIVREUR (ASS)	1031
VÉRIN DE LEVAGE DE LAME DE BULLDOZER (ASS)	678
	680
	686
	688
VÉRIN DE LEVAGE ET CAPTEUR (ASS)	666
VERIN DE RIPPER (ASS)	694
	696
	698
	700
	702
	704
	706
	708
VERIN D'EXTRACTEUR DE BROCHE DE RIPPER (ASS)	710
VÉRIN D'INCLINAISON (ASS)	690
	692
	711
VERIN D'INCLINAISON DU RIPPER (ASS)	713
	715
	717
	719
	721
	723
VÉRIN D'INCLINAISON (VERSION)	677
VÉRIN ET SOUPAPE DE LEVAGE (ASS)	671
	673
	675
	676
VERSION DE CHASSIS	1
VERSION DE PRÉGRAISSAGE DE MOTEUR	98
	100
VERSION DE RÉGULATION D'HUILE MOTEUR	93
VIDANGE-ÉCOLOGIE (ASS)	412
VILEBREQUIN (ASS)	18
VILEBREQUIN (ASS)	16
	17
VITRE COULISSANTE (ENS)	1144
VITRE DE CABINE (ASS)	1145

INDEX

Désignation	Page	Désignation	Page
	1146		
	1147		
	1148		
	1149		
	1150		
	1151		
	1155		
	1156		
	1157		
	1158		
	1159		
VITRE DE CABINE (ASS)	1152		
	1153		
VOLANT MOTEUR (ASS)	47		
VUE DU MODÈLE	2		

INDICE

Nombre	Página
A	
ACCESORIOS - IMPULSOR DE (GR)	39, 41, 43
ACONDICIONADOR DE AIRE (CONFIG)	996
ACONDICIONADOR DE AIRE (CONFIG)	996
ACONDICIONADOR DE AIRE (GR)	997, 1000, 1003
ACOPLAMIENTO DE BOMBA (GR)	411
ACUMULADOR DE REFRIGERANTE	1057
ACUMULADOR HIDRAULICO (GR)	648
ADAPTADOR	198
ADAPTADOR DE LLENADO RÁPIDO DE COMBUSTIBLE (GR)	199, 201, 203, 205, 207, 209, 211
AGUA - CONEXIÓN DE (GR)	110, 111
AGUA DE LAS CAMISAS - CALENTADOR DEL (GR)	300, 301, 302, 303
AIRE - TUBERÍAS DE (GR)	172, 173, 174, 176
AJUSTADOR DEL ASIENTO (GR)	992, 994
AJUSTADOR DEL CONTROL DE DIRECCIÓN Y TRANSMISIÓN (GR)	620
ALARMA (GR)	240
ALFOMBRILLA INFERIOR	1075
ALFOMBRILLA SUPERIOR	1075
AMORTIGUADOR DE VIBRACIONES (GR)	38
ANILLO DE ESLABON DE CADENA (CONJ)	590
ANTEFILTRO (CONFIG)	183, 184
ANTEFILTRO (GR)	185, 186
ÁRBOL DE LEVAS (GR)	8, 9
ARRANQUE - INTERRUPTOR DE (GR)	379
ASIENTO CON SUSPENSIÓN (GR)	1127, 1130, 1132, 1134
ASIENTO CON SUSPENSIÓN (GR)	1125
ASIENTO (GR)	1097, 1099, 1101, 1102, 1103, 1104, 1106, 1108, 1110, 1111
AUXILIAR DE ARRANQUE CON ÉTER (GR)	354, 356
B	
BARRA COMPENSADORA (GR)	543, 545, 547, 549
BASE DE LA TAPA DE VÁLVULAS (GR)	7
BASTIDOR DEL DESGARRADOR (GR)	969, 971, 973
BASTIDOR TELESCÓPICO DEL RESORTE TENSOR (GR)	553, 556, 559, 563, 566, 569, 572, 575
BATERÍA Y CABLES (GR)	246, 256
BATERÍA Y CABLES (GR)	263
BATERÍA (12 VOLTIOS)	246, 260, 267
*BLADE AS-SEMI-UNIVERSAL	953
BLOQUE DE EMPALME (GR)	270
BLOQUE DE EMPUJE (GR)	918, 919
BLOQUE DE POTENCIA (GR)	271
BLOQUE DESLIZANTE-JUEGO (ASIENTO DE SUSPENSION)	1112, 1113, 1115, 1118, 1119, 1120, 1121
BLOQUE MOTOR (CONJ)	19, 20

* NO HAY TRADUCCION DISPONIBLE EN EL MOMENTO DE LA IMPRESION

INDICE

Nombre	Página
BLOQUE MOTOR (GR)	21
	23
	25
	26
BOCINA (CONJ) (24-VOLTIOS, TONO ALTO)	246
BOCINA (CONJ) (24-VOLTIOS, TONO ALTO)	258
	265
BOCINA (CONJ) (24-VOLTIOS, TONO BAJO)	246
BOMBA - TUBERÍAS DE (GR)	763
	769
	775
	780
	783
	788
BOMBA AUXILIAR DE AGUA DULCE (GR)	139
BOMBA AUXILIAR DE AGUA DULCE (GR)	141
	142
	143
BOMBA DE ACEITE DEL MOTOR (GR)	103
	104
BOMBA DE AGUA (GR)	144
	146
	147
	148
BOMBA DE BARRIDO (GR)	105
	106
BOMBA DE CEBADO DE COMBUSTIBLE (GR)	229
BOMBA DE ENGRANAJES (GR)	455
	457
	832
BOMBA DE ENGRANAJES (GR)	454
	830
BOMBA DE INYECCIÓN DE COMBUSTIBLE (GR)	227
	228
BOMBA DE PISTONES (GR)	834
	836
	838
	840
	842
BOMBA DE TRANSFERENCIA DE COMBUSTIBLE (GR)	230
	231
	232
	234
BRAZO DE EMPUJE (GR)	938
	939
	940
	941
*BULLDOZER AR-SEMI-UNIVERSAL	921
	922
	923
	924
*BULLDOZER AR-UNIVERSAL	925
	926
	927

C

CABINA (CONFIG)	1006
	1007
	1009
CABINA (GR)	1011
CABLES CONJ-TECLADO	281
	283
	285
CABLES DE LA CONSOLA (GR)	382
CABLES DE LA PLATAFORMA (GR)	397
CABLES DEL MOTOR (GR)	385
	389
	393
CADENAS (GR)	614
	615
	616
	617
CAJA DE LA BOMBA DEL ACEITE (CONJ) (BARRIDO DE CONVERTIDOR)	454
CAJA DE LA SUSPENSIÓN DEL ASIENTO (GR)	1045
CAJA DE LA SUSPENSIÓN DEL ASIENTO (GR)	1042
CAJA DELANTERA - TORNILLERÍA DE LA (GR)	46
CAJA DELANTERA (GR)	55
CAJA Y BASTIDOR (GR)	493
CAJA Y PIEZAS DE LA TRANSMISIÓN (GR)	402
CALCOMANÍA (ARRANQUE)	305
CALCOMANÍA DE ADVERTENCIA (AGUA ADENTRO/AGUA AFUERA) (A/A)	997
CALCOMANÍA DE ADVERTENCIA (AGUA ADENTRO/AGUA AFUERA) (A/A)	1000
CALCOMANÍA DE ADVERTENCIA (AGUA ADENTRO/AGUA AFUERA) (CALEFACTOR)	1036
CALCOMANÍA DE ADVERTENCIA (ASIENTO AJUSTABLE)	1125
	1130
	1132
	1134
CALCOMANÍA DE ADVERTENCIA (ASIENTO AJUSTABLE)	1127
CALCOMANÍA DE ADVERTENCIA (BOMBA DE PRELUBRICACION)	98

* NO HAY TRADUCCION DISPONIBLE EN EL MOMENTO DE LA IMPRESION

INDICE

Nombre	Página
	101
CALCOMANÍA DE ADVERTENCIA (CONEXION DE CABLES AUXILIARES DE ARRANQUE)	1173
CALCOMANÍA DE ADVERTENCIA (CONTROLES DEL DESGARRADOR)	1019
CALCOMANÍA DE ADVERTENCIA (ENTRADA DE AGUA, SALIDA DE AGUA) (CALEFACTOR)	1033
CALCOMANÍA DE ADVERTENCIA (GUIA)	553
	556
	559
	563
	566
	569
	572
	575
CALCOMANÍA DE ADVERTENCIA (LIMPIADOR/LAVADOR DE VENTANAS)	1162
	1166
CALCOMANÍA DE ADVERTENCIA (OPERACION DE TOPADOR)	1173
CALCOMANÍA DE ADVERTENCIA (PASO DE ANGULO DE LA HOJA AUTOMATICO)	1173
CALCOMANÍA DE ADVERTENCIA (RADIO)	1077
CALCOMANÍA DE ADVERTENCIA (RADIO)	1048
CALCOMANÍA DE ADVERTENCIA (*RIPPER PIN PULLER SWITCH)	853
	855
CALCOMANÍA DE ADVERTENCIA (SISTEMA DE RENOVACION DE ACEITE)	107
CALCOMANÍA DE IDENTIFICACIÓN (FILTRO DE ACEITE DE MOTOR)	1173
CALCOMANÍA DE IDENTIFICACIÓN (FUSIBLE)	382
CALCOMANÍA DE IDENTIFICACIÓN (GRUPO, NÚMERO DE SECUENCIA) (CALEFACTOR)	1033
CALCOMANÍA DE IDENTIFICACIÓN (NUMERO DE GRUPO Y SECUENCIA) (A/A)	997
	1000
CALCOMANÍA DE IDENTIFICACIÓN (NUMERO DE GRUPO Y SECUENCIA) (CALEFACTOR)	1036
CALCOMANÍA DE IDENTIFICACIÓN (POSICION DE LA HOJA)	281
	283
	285
CALCOMANÍA DE IDENTIFICACIÓN (TABLERO DE FUSIBLES)	382
CALCOMANÍA DE RAYAS	238
CALCOMANÍA DE RAYAS (TANQUE DE COMBUSTIBLE)(PARTE IZQUIERDA TRASERA)	238
CALCOMANÍA DE RAYAS (TANQUE DE COMBUSTIBLE)(PARTE TRASERA DERECHA)	238
CALCOMANÍA (FRENO DE ESTACIONAMIENTO)	625
CALCOMANÍA (IDENTIFICACION DE COJIN DE ASIENTO)	1081
	1082
CALCOMANÍA (INTERRUPTOR DE ENCENDIDO)	305
CALCOMANÍA (INTERUPTOR DE IGNICION)	305
CALCOMANÍA (PLACA, NOMBRE)	648
CALCOMANÍA (PORTADOR DE TECLADO)	1071
CALCOMANÍA (SEGURIDAD)	305
CALCOMANÍA (SERPENTIN EXITADOR)	305
CALCOMANIA-TECLADO	1070
CALCOMANÍAS Y PLACAS DE IDENTIFICACIÓN (GR)	1172
CALEFACCIÓN DE LA CABINA (GR)	1036
	1039
CALEFACCIÓN DE LA CABINA (GR)	1033
CALENTADOR DEL COMBUSTIBLE (GR)	298
CAMBIO RÁPIDO DE ACEITE (GR)	96
CÁNCAMOS DE LEVANTAMIENTO DEL MOTOR (GR)	56
	57
CANDADO (GR) (CAPÓ)	534
	537
CANDADO (GR) (COMPARTIMENTO DE GUARDABARROS)	504
	506
	508
CANDADO (GR) (*FENDER)	511
	515
CANDADO (GR) (TANQUE DE COMBUSTIBLE)	236
	238
CANDADO (GR) (TANQUE HIDRÁULICO)	739
CANDADO (GR) (TUBERIA DE LLENADO DE ACITE DE MOTORN)	79
CANDADO (GR) (TUBERIAS DE COMBUSTIBLE)	219
CANDADO (GR) (TUBERIAS HIDAULICAS DEL VENTILADOR)	727
	733
	743
CANTONERA DE EXTREMO (GR)	946
CAPO Y PROTECTOR (GR)	534
	537
CARGA - ALTERNADOR DE (GR)	241

* NO HAY TRADUCCION DISPONIBLE EN EL MOMENTO DE LA IMPRESION

INDICE

Nombre	Página
	242
CARGA - ALTERNADOR DE (GR)	244
CÁRTER - COLECTOR DEL (GR)	60
CENICERO	1003
	1039
CHASIS (CONFIG)	1
CIGÜEÑAL (GR)	16
	17
	18
CILINDRO DE DESGARRADOR (GR)	694
	696
	698
	700
	702
	704
	706
	708
CILINDRO DE ÉTER (CONJ)	356
CILINDRO DE INCLINACIÓN DEL DESGARRADOR (GR)	713
	715
	717
	719
	721
	723
CILINDRO DE INCLINACIÓN (GR)	677
CILINDRO DE LEVANTAMIENTO - TUBERÍAS DEL (GR)	751
	753
	757
CILINDRO DE LEVANTAMIENTO - TUBERÍAS DEL (GR)	749
CILINDRO DE LEVANTAMIENTO DE LA HOJA TOPADORA (GR)	678
	680
	686
	688
CILINDRO DEL EXTRACTOR DE PASADOR DEL DESGARRADOR (GR)	710
CINTURÓN DE SEGURIDAD (GR)	1096
CINTURÓN DE SEGURIDAD (GR) (RETRACTIL)	1110
	1111
COLADOR (CONJ) (LLENADO DEL TANQUE HIDRÁULICO)	848
COLADOR DE COMBUSTIBLE (TANQUE)	238
	239
COMBUSTIBLE - TANQUE DE (GR)	236
	237
	238
COMBUSTIBLE - TANQUE DE (GR)	239
COMPARTIMIENTO DEL MOTOR (GR)	498
	500
	502
COMPRESOR DE AIRE DEL ASIENTO (GR)	995
COMPRESOR DE REFRIGERANTE (GR)	1015
COMPRESOR DE REFRIGERANTE (GR)	1016
CONDENSADOR DE REFRIGERANTE (GR)	1018
CONFIGURACIÓN DE ASIENTO	1095
CONFIGURACIÓN DE CABLERIA, CALENTADOR Y ACONDICIONADOR DE AIRE	1057
	1061
CONFIGURACIÓN DE INSTALACIÓN DEL MOTOR	5
CONFIGURACION DE LAMPARA DE REFLECTOR (DESCARGA DE ALTA INTENSIDAD) (24 VOLTIOS)(70 VATIOS)(TRANSPARENTE)	310
	311
CONFIGURACIÓN DE MOTORES	3
CONFIGURACIÓN ELECTRÓNICA DE LA MÁQUINA	296
CONFIGURACIÓN GENERAL	2
CONJUNTO, COJINETE DE BANCADA (ESTANDAR)	18
CONJUNTO, COJINETE DE BANCADA (ESTANDAR)	17
CONJUNTO DE CABLERIA, RADIO	1141
CONJUNTO DE CABLES-BOMBA (LIMPIAPARABRISAS)	1137
CONJUNTO DE CABLES-CALENTADOR (*JACKET WATER)	303
CONJUNTO DE CABLES, VÁLVULA (COMPRESOR DE AIRE)	1134
CONJUNTO DE LLAVE, ELECTRONICA (AMARILLO)	304
CONJUNTO DE LLAVE, ELECTRONICA (*GRAY)	304
CONJUNTO DE RESISTOR (SOLENOIDE CARGADOR DE ETER)	354
CONJUNTO, MAZO DE CABLES, LUCES DELANTERAS (CILINDRO DE LEVANTAMIENTO)	749
	751
CONSOLA-INTERRUPTOR (LIMPIADOR DE VENTANA)	1162
	1166
CONTENIDO DEL GRUPO DE GUARDABARROS	504
	506
	508
	510
CONTRAPESO (GR)	495
CONTRAPESO TRASERO (GR)	496

* NO HAY TRADUCCION DISPONIBLE EN EL MOMENTO DE LA IMPRESION

INDICE

Nombre	Página
CONTROL DE DIRECCIÓN Y TRANSMISIÓN (GR)	626, 628
CONTROL DE DIRECCIÓN Y TRANSMISIÓN (GR)	630
CONTROL DE IMPLEMENTOS Y MONTAJE (GR)	1020
CONTROL DE IMPLEMENTOS Y MONTAJE (GR)	1021, 1022, 1023, 1024, 1025
CONTROL DE IMPLEMENTOS Y MONTAJE (GR)	1019
CONTROL DE LA TRANSMISIÓN (GR)	408
CONTROL DE LA TRANSMISIÓN Y MONTAJE (GR)	280
CONTROL DE MANIJA (GR)	654
CONTROL DEL DECELERADOR (GR)	213
CONTROL DEL FRENO DE ESTACIONAMIENTO	625
CONTROL DEL FRENO (GR)	404, 406
CONTROL DEL MULTIPLE (GR)	821
CONTROL ELECTRÓNICO (CONJ) (LUZ DE TABLERO)	1049, 1051
CONTROL ELECTRÓNICO DEL MOTOR (GR)	288, 289, 290
CONTROL ELECTRÓNICO DEL MOTOR (GR)	287
CONTROL ELECTRÓNICO DEL MOTOR Y MONTAJE	277
CONTROL ELECTRONICO DEL REDUCTOR DE LA LUZ INTERIOR DEL SISTEMA MONITOR (GR)	1028
CONTROL ELECTRÓNICO (GR)	281, 285
CONTROL ELECTRÓNICO (GR)	283
CONTROL ELECTRÓNICO (GR) (TECLADO INGLES)	272
CONTROL ELECTRÓNICO (GR) (TECLADO INTERNACIONAL)	272
CONTROL ELECTRÓNICO Y MONTAJE (GR)	272, 273, 274, 275
CONTROL HIDRÁULICO (CONFIG)	652, 653
CONTROL HIDRÁULICO (GR)	655
CONTROL NO PROGRAMADO (GR)	291, 292, 293, 294
CONTROL NO PROGRAMADO (GR) (SEGURIDAD)	304
CONTROL Y MONTAJE DE TREN DE FUERZA (GR)	278, 279
CONTROL Y MONTAJE (GR)	650
CONVERTIDOR DE PAR (GR)	463, 465, 467
CONVERTIDOR DE VOLTAJE (24 VOLTIOS A 12 VOLTIOS) (10 AMP.)	397
CONVERTIDOR DE VOLTAJE (24 VOLTIOS A 12 VOLTIOS)(25 AMPERIOS)	295
CONVERTIDOR ELÉCTRICO (GR)	295
CORREA TRAPEZOIDAL (ALTERNADOR)	58
CORREA TRAPEZOIDAL (COMPRESOR DEL REFRIGERANTE)	1016
CRONOMETRO DE DEMORA DE ACTIVACION (CONJ) (24 VOLTIOS) (A/A)	1061
CRUCETA Y COJINETE (GR)	472
CUBIERTA INFERIOR DEL ASIENTO DEL OPERADOR (GR)	1083
CUCHILLA	967, 968
CUCHILLA (GR)	966
CULATA DE CILINDROS - TORNILLERÍA DE LA (GR)	31, 33
CULATA DE CILINDROS (CONJ)	28, 29, 30
CULATA DE CILINDROS (GR)	33, 35, 37
CULATA DE CILINDROS (GR)	31
*CYLINDER GP-BULLDOZER LIFT	682, 684

D

Nombre	Página
DERIVACIÓN - VÁLVULA DE (GR)	863
DESGARRADOR (CONFIG)	977, 978, 979, 980, 981
DESGARRADOR (GR)	982, 983, 984

* NO HAY TRADUCCION DISPONIBLE EN EL MOMENTO DE LA IMPRESION

INDICE

Nombre	Página
	985
	986
DETECTOR DE POSICIÓN (SISTEMA DE COMBUST.) (GR)	330
	331
	332
	333
	334
	335
	336
	337
DETECTOR DE POSICIÓN (SISTEMA DE COMBUST.) (GR) (CILINDRO DE LEVANTAMIENTO)	666
DETECTOR DE POSICIÓN (SISTEMA DE COMBUST.) (GR) (INCLINACION DE DESGARRADOR)	655
DETECTOR DE POSICIÓN (SISTEMA DE COMBUST.) (GR) (LEVANTAR Y BAJAR EL DESGARRADOR)	655
DIENTE DE DESGARRADOR (GR)	987
	988
	989
	990
	991
DISYUNTOR (CONJ) (10-AMPERIOS) (EMBRAGUE ELECTRONICO/FRENO)	382
DISYUNTOR (CONJ) (10-AMPERIOS) (LLAVE DE ARRANQUE)	382
DISYUNTOR (CONJ) (15 AMPERIOS) (FAROLES DELANTEROS)	382
DISYUNTOR (CONJ) (15 AMPERIOS) (IMPLEMENTO)	382
DISYUNTOR (CONJ) (15 AMPERIOS) (MOTOR)	382
DISYUNTOR (CONJ) (15 AMPERIOS) (VENTILADOR SOPLADOR)	382
DISYUNTOR (GR)	372
DOSIFICADOR DE ACEITE DE MOTOR (CONF)	93
DOSIFICADOR DE ACEITE DE MOTOR (GR)	94
DRENAJE DE SEGURIDAD ECOLÓGICA (GR)	412

E

Nombre	Página
*EDGE GP-BIT & CUTTING	965
EJE DE MANDO (GR)	461
EJE DEL TREN DE FUERZA (GR)	401
ELECTRONICA DE MONITOR (GR)	296
ELEMENTO DE FILTRO DE ACEITE (CONJ) (HIDRAULICO)	848
ELEMENTO DE FILTRO DE ACEITE (CONJ) (HIDRAULICO) (TRANSMISION)	413
ELEMENTO DE FILTRO DE ACEITE (CONJ) (HIDRAULICO) (TRANSMISION)	437
ELEMENTO DE FILTRO DE ACEITE (CONJ) (VENTILADOR DE RETORNO)	725
ELEMENTO DE FILTRO DE COMBUSTIBLE (CONJ)	215
ELEMENTO DE FILTRO (FILTRO DE AIRE)	167
ELEMENTO DE FILTRO HIDRÁULICO (ACEITE DE ACTIVACIÓN DE FRENO)	726
ELEMENTO DE FILTRO (SOPORTE DE ADMISION DE AIRE)	190
	191
ELEMENTO DEL CALENTADOR DEL AGUA DE LAS CAMISAS (120 VOLTIOS, 1500 VATIOS)	300
	302
ELEMENTO DEL CALENTADOR DEL AGUA DE LAS CAMISAS (240 VOLTIOS, 1500 VATIOS)	301
	303
ELEMENTO PRIMARIO (CONJ) (FILTRO DE AIRE)	166
ELEMENTO PRIMARIO (CONJ) (FILTRO DE AIRE) (EFICIENCIA ULTRA ALTA)	169
ELEMENTO SECUNDARIO (CONJ) (FILTRO DE AIRE)	166
	169
EMPAQUETADURA (BOMBA DE CEBADO DE COMBUSTIBLE)	229
ENFRIADOR DE ACEITE DE LA TRANSMISIÓN (GR)	409
	410
ENFRIADOR DE ACEITE DEL MOTOR (GR)	112
ENFRIADOR DEL ACEITE HIDRAULICO (GR)	665
ENGRANAJE DE DIRECCIÓN (GR)	633
	635
ENGRANAJE DE TRANSFERENCIA Y CORONA (GR)	422
	426
ENGRANAJE DELANTERO (GR)	48
ENGRANAJE TRASERO (GR)	50
EQUILIBRADOR (GR)	6
ESCAPE DE GASES (GR)	84
ESCOBILLA (CONJ) (MOTOR DE ARRANQUE)	365
	368
ESLABÓN DE CADENA (CONJ)	580
	581
	582

* NO HAY TRADUCCION DISPONIBLE EN EL MOMENTO DE LA IMPRESION

INDICE

Nombre	Página
	583
	584
	585
ESTABILIZADOR DEL BRAZO DE EMPUJE (GR)	932
	942
	944
ESTRIBO DEL OPERADOR (GR)	1122
ESTRUCTURA ROPS (GR)	1094
ETIQUETA - ACEITE (MOTOR)	107
ETIQUETA DE ADVERTENCIA (GR)	1170
EXPULSOR DE POLVO (GR)	170
EXTENSIÓN DEL RESPALDO (GR)	1029
EXTENSIÓN DEL RESPALDO (GR)	1030
EXTENSIÓN DEL RESPALDO (GR) (TELA)	1111
EXTENSIÓN DEL RESPALDO (GR) (VINIL)	1110
EXTRACTOR DE PASADOR (CONFIG)	934
EXTRACTOR DE PASADOR (GR)	935
	936
	937
EXTREMO DE BROCA	947
	948

F

FILTRO DE ACEITE DEL MOTOR (CONJ)	80
	82
FILTRO DE ACEITE DEL MOTOR (GR)	80
	82
FILTRO DE ACEITE (GR)	413
	725
	726
FILTRO DE AGUA (BOMBA DE AGUA)	148
FILTRO DE AGUA (BOMBA DE AGUA)	144
FILTRO DE AIRE (CABINA) (ALTA EFICIENCIA)	1039
FILTRO DE AIRE (CABINA) (ESTANDAR)	1003
FILTRO DE AIRE (CABINA) (ESTANDAR)	1039
FILTRO DE AIRE (CABINA) (REDUCCION DE OLORES)	1039
FILTRO DE AIRE DE CABINA (ESTANDAR)	1003
	1039
FILTRO DE AIRE (GR)	164
	166
	167
	169
FILTRO DE COMBUSTIBLE (CONJ)	215
FILTRO DE COMBUSTIBLE (GR)	215
FILTRO DE DERIVACIÓN (GR)	649
FILTRO ESPONJOSO (SENSOR DE COMBUSTIBLE)	246
	257
	264
FILTRO Y EMPAQUETADURA (CONJ) (AUXILIAR DE ARRANQUE CON ÉTER)	354
FRENO Y EMBRAGUE DE DIRECCIÓN (GR)	623
FUSIBLE (10-AMPERIOS)	383
FUSIBLE (15 AMPERIOS)	383
FUSIBLE (20-AMPERIOS)	383
FUSIBLE (30 A) (TRANSFORMADOR DE CORRIENTE)	295

G

GRUPO DE CANTONERA Y CUCHILLA	961
	962
	963
	964
	965
GRUPO DE LUBRICACIÓN DE BARRA ESTABILIZADORA	586
GRUPO DE MONTAJE DE LA CABINA	1075
GRUPO DE ROTACIÓN DEL MOTOR (GR)	843
GRUPO DE SELLO	143
GRUPO DE SELLO (BOMBA DE AGUA)	139
GRUPO DE TANQUE, ACEITE DEL MOTOR	107
GRUPO DE TOPE, CONTROL (IMPLEMENTO)	650
	657
	659
	662
	663
	664
GRUPO ELECTRONICO DE CLASIFICACION DE MOTORES	3
GRUPO GIRATORIO DE BOMBA	845
	846
	847
GUARDABARROS (GR)	511
GUARDABARROS (GR)	515
	518
	519

H

HOJA DE LIMPIAPARABRISAS (CONJ) (PUERTA DEL LADO DERECHO E IZQUIERDO)	1162
	1166
HOJA DE LIMPIAPARABRISAS (CONJ) (VENTANA DELANTERA)	1162
	1166
HOJA DE LIMPIAPARABRISAS (CONJ) (VENTANA POSTERIOR)	1162
	1166
HOJA SEMIUNIVERSAL (CONJ)	950
	951

* NO HAY TRADUCCION DISPONIBLE EN EL MOMENTO DE LA IMPRESION

INDICE

Nombre	Página
HOJA SEMIUNIVERSAL (GR)	957
HOJA UNIVERSAL (CONJ)	953 954 956
HOJA UNIVERSAL (GR)	959
HOJA Y CUCHILLA (GR)	949
I	
IMPLEMENTOS (GR ELECTRÓNICO)	296
INCLINACIÓN HORIZONTAL - CILINDRO DE (GR)	690 692 711
INDICADOR DEL NIVEL DE ACEITE (VARILLA) (GR)	85
INSONORIZADOR (CONFIG)	1124
INSTALACIÓN DE RADIO (GR)	1048
INSTALACION DE SEGURIDAD (GR)	304 305
INSTRUMENTOS (GR)	1049 1051
INTERRUPTOR (CONJ) (BASCULANTE) (CONSOLA LEVANTAR/BAJAR)	620
INTERRUPTOR (CONJ) (LUCES DELANTERAS)	397
INTERRUPTOR (CONJ) (LUCES TRASERAS)	397
INTERRUPTOR (CONJ) (PRESIÓN DEL DIFERENCIAL)	726
INTERRUPTOR (CONJ) (PUERTA DELANTERA, TRASERA, LATERAL IZQUIERDA Y DERECHA)	1162 1166
INTERRUPTOR (CONJ) (ROTATORIO) (CONTROL DE VELOCIDAD DEL VENTILADOR)	1003
INTERRUPTOR (CONJ) (VELOCIDAD DEL VENTILADOR)	1039
INTERRUPTOR (CONJ) (24-VOLTIOS, ILUMINADO) (CONTROL DEL ACELERADOR)	399
INTERRUPTOR DE DERIVACIÓN	371
INTERRUPTOR DE FLUJO (GR)	373
INTERRUPTOR DE FLUJO (GR) (REFRIGERANTE)	389
INTERRUPTOR DE LÍMITE (CONJ) (FRENO)	404 406
INTERRUPTOR DE LÍMITE (CONJ) (REVERSA)	626 628
INTERRUPTOR DE PRESIÓN (CONJ) (ACEITE DEL MOTOR)	98 100
INTERRUPTOR DE PRESIÓN (CONJ) (ACOND. DE AIRE BAJO)	1057
INTERRUPTOR DE PRESIÓN (CONJ) (ACOND. DE AIRE BAJO)	1061
INTERRUPTOR DE PRESIÓN (CONJ) (AIRE ACOND. ALTO)	1057 1061
INTERRUPTOR DE PRESIÓN (CONJ) (DIFERENCIAL DE FILTRO DEL COMBUSTIBLE)	389 393
INTERRUPTOR DE PRESIÓN (CONJ) (DIFERENCIAL DE FILTRO DEL COMBUSTIBLE)	385
INTERRUPTOR DE TEMPERATURA (CONJ) (A/A)	997
INTERRUPTOR DE TEMPERATURA (CONJ) (ACEITE DEL TREN DE FUERZA)	249 256 263
INTERRUPTOR DE VOLQUETE (CONJ) (ACONDICIONADOR DE AIRE ACTIVACION/DESACTIV.)	1039
INTERRUPTOR DE VOLQUETE (CONJ) (ACONDICIONADOR DE AIRE ACTIVACION/DESACTIV.)	1003
INTERRUPTOR DE VOLQUETE (CONJ) (AUXILIAR)	397
INTERRUPTOR DE VOLQUETE (CONJ) (FRENO DE ESTACIONAMIENTO)	625
INTERRUPTOR DE VOLQUETE (CONJ) (LUCES LATERALES)	397
INTERRUPTOR DE VOLQUETE (CONJ) (24 VOLTIOS) (IMPLEMENTO DE LA TRABA)	397
INTERRUPTOR DE VOLQUETE (CONJ) (24-VOLTIOS, SELLADO-ILUMINADO) (CONTROL DEL ACELERADOR)	399
INTERRUPTOR DE VOLQUETE (CONJ) (24-VOLTIOS, SELLADO-ILUMINADO) (IMPLEMENTO DE LA TRABA)	397
INTERRUPTOR DE VOLQUETE (GR) (AUXILIAR DE ARRANQUE)	399
INTERRUPTOR DE VOLQUETE (GR) (CONTROL DEL VENTILADOR DESCONGELADOR)	1031
INTERRUPTOR DE VOLQUETE (GR) (EXT DE PASADOR DE DESG)	853 855
INTERRUPTOR DEL TERMOSTATO (CONJ) (A/A)	1000
INTERRUPTOR MAGNÉTICO (CONJ) (RELE DE ARRANQUE)	100
INTERRUPTOR MAGNÉTICO (GR)	376

* NO HAY TRADUCCION DISPONIBLE EN EL MOMENTO DE LA IMPRESION

INDICE

Nombre	Página
	377
	378
INTERRUPTOR MAGNÉTICO (GR)	374
	375
INTERRUPTOR MAGNÉTICO (GR) (24 VOLTIOS) (RELE DE ARRANQUE 1)	382
INTERRUPTOR MAGNÉTICO (GR) (24 VOLTIOS) (RELE DE ARRANQUE 2)	382
INTERRUPTOR PULSADOR (CONJ) (CAMBIAR A UNA MARCHA SUPERIOR)	641
INTERRUPTOR PULSADOR (CONJ) (CAMBIO DESC. AUTOMATICO)	1049
	1051
INTERRUPTOR PULSADOR (CONJ) (CAMBIO DESCENDENTE)	641
INTERRUPTOR PULSADOR (CONJ) (DESGARRADOR APILADOR AUTOMATICO)	655
INYECTOR DE COMBUSTIBLE (GR)	218
	228

J

JUEGO-ACUMULADOR DE SERVICIO	648
JUEGO-ASIENTO DE COMPRESOR DE AIRE	1054
JUEGO DE AJUSTE DEL ASIENTO (SOPORTE INFERIOR DEL ASIENTO)	1083
JUEGO DE ALDABA (VENTANA DE CABINA)	1153
	1155
JUEGO DE AMORTIGUADOR (ASIENTO DE SUSPENSION)	1134
JUEGO DE AMORTIGUADOR (EXTENSION DEL RESPALDO)	1029
JUEGO DE AMORTIGUADOR (RESPALDO DE VINILO)	1030
JUEGO DE ATADURA (ASIENTO DE SUSPENSION)	1127
	1132
	1134
JUEGO DE BOTÓN (AJUSTE DE ALTURA) (ASIENTO DE SUSPENSION)	1042
	1045
JUEGO DE BOTÓN DEL ASIENTO (ASIENTO)	1097
JUEGO DE BOTÓN DEL ASIENTO (ASIENTO DE SUSPENSION)	1099
JUEGO DE COJÍN DEL ASIENTO (ASIENTO DE SUSPENSION)	1099
JUEGO DE COJÍN DEL ASIENTO (VINILO) (ASIENTO)	1097
JUEGO DE COJINETE PRINCIPAL (CIGÜEÑAL)	17
	18
JUEGO DE COJINETES (ALTERNADOR)	242
JUEGO DE COJINETES (ASIENTO DE SUSPENSION)	1043
	1046
JUEGO DE COJINETES (COJINETE DE MOTOR DE ARRANQUE)	368
JUEGO DE COJINETES (COJINETE DE MOTOR DE ARRANQUE)	365
JUEGO DE COJINETES (MOTOR GIRATORIO)	843
JUEGO DE EMPAQUETADURA (INYECTOR DE COMBUSTIBLE SENCILLO)	4
JUEGO DE EMPAQUETADURA (UNA SOLA CAMISA DE CILINDRO)	4
JUEGO DE ENCHUFE (12 CLAVIJAS)	628
JUEGO DE ENCHUFE (2 CLAVIJAS)	323
JUEGO DE ENCHUFE (2 CLAVIJAS)	318
	323
JUEGO DE ENCHUFE (3 CLAVIJAS)	628
JUEGO DE ENCHUFE (3-CLAVIJAS) (SENSOR DE LA PRESIÓN)	340
JUEGO DE ENCHUFE (6 CLAVIJAS)	628
	1027
JUEGO DE ENGRANAJE DEL MOTOR DE ARRANQUE	366
	369
JUEGO DE ESCOBILLAS (MOTOR DEL VENTILADOR DEL CALENTADOR)	1034
JUEGO DE ESCOBILLAS (VENTILADOR DE AIRE ACONDICIONADO DEL MOTOR)	997
JUEGO DE FILTRO DE TAPA (TANQUE DE COMBUSTIBLE)	237
JUEGO DE FILTRO DE TAPA (TANQUE DE COMBUSTIBLE)	239
JUEGO DE FUNDA DE LA SUSPENSIÓN DEL ASIENTO (ASIENTO DE SUSPENSION)	1125
	1130
JUEGO DE GUÍA (VENTANA DE CABINA)	1153
	1155
JUEGO DE HOJA DE LIMPIAPARABRISAS (VENTANA)	1163
	1167
JUEGO DE INCLINACIÓN DE ASIENTO (SOPORTE INFERIOR DEL ASIENTO)	1083
JUEGO DE INCLINACIÓN TRASERA (SOPORTE INFERIOR DEL ASIENTO)	1083
JUEGO DE INDICADOR (AJUSTE DE PESO) (ASIENTO DE SUSPENSION)	1043
	1046
JUEGO DE INSTALACIÓN	171
JUEGO DE MAZO DE CABLES (ASIENTO CON SUSPENSIÓN DE AIRE)	1132

* NO HAY TRADUCCION DISPONIBLE EN EL MOMENTO DE LA IMPRESION

INDICE

Nombre	Página
JUEGO DE MAZO DE CABLES (ASIENTO CON SUSPENSIÓN DE AIRE) (ASIENTO DE SUSPENSION)	1127
JUEGO DE PANEL DEL RESPALDO DEL ASIENTO (ASIENTO)	1097
JUEGO DE PANEL DEL RESPALDO DEL ASIENTO (ASIENTO DE SUSPENSION)	1099
JUEGO DE PARAGOLPES (AJUSTE DE PESO) (ASIENTO DE SUSPENSION)	1042
JUEGO DE PARAGOLPES (AJUSTE DE PESO) (ASIENTO DE SUSPENSION)	1046
JUEGO DE PERNO RETENEDOR (CONTROL ELECTRONICO DE MOTOR)	287 290
JUEGO DE PERNO RETENEDOR (CONTROL NO PROGRAMADO)	291 294
JUEGO DE RECEPTÁCULO (12 CLAVIJAS)	628
JUEGO DE RECEPTÁCULO (2 CLAVIJAS)	371 381 628 726 1068 1069
JUEGO DE RECEPTÁCULO (2 CLAVIJAS)	385 389 393
JUEGO DE RECEPTÁCULO (2 CLAVIJAS)	323
JUEGO DE RECEPTÁCULO (2 CLAVIJAS)	385 389
JUEGO DE RECEPTÁCULO (2 CLAVIJAS)	347
JUEGO DE RECEPTÁCULO (2 CLAVIJAS)	1001
JUEGO DE RECEPTÁCULO (2 CLAVIJAS) (INTERRUPTOR MAGNETICO)	375
JUEGO DE RECEPTÁCULO (3 CLAVIJAS)	386 390 393 394 1039
JUEGO DE RECEPTÁCULO (3 CLAVIJAS)	1141
JUEGO DE RECEPTÁCULO (4 CLAVIJAS)	901 903 1026 1070
JUEGO DE RECEPTÁCULO (4 CLAVIJAS)	1071
JUEGO DE RECEPTÁCULO (6 CLAVIJAS)	641 1028 1039 1068 1069 1073 1074 1161
JUEGO DE RECEPTÁCULO (6 CLAVIJAS)	1001
JUEGO DE RECEPTÁCULO (6-CLAVIJAS)	1160
JUEGO DE RECONSTRUCCIÓN	1053
JUEGO DE RECONSTRUCCIÓN (BOMBA DE AGUA)	4 144 148
JUEGO DE RESORTE DE HOJA DE BALLESTA (VENTANA DE CABINA)	1151 1152
JUEGO DE RESORTES (AJUSTE DE ALTURA) (ASIENTO DE SUSPENSION)	1042
JUEGO DE RESORTES (AJUSTE DE ALTURA) (ASIENTO DE SUSPENSION)	1045
JUEGO DE RESORTES (ASIENTO DE SUSPENSION)	1043 1045
JUEGO DE RESPIRADERO (ADAPTADOR DE REABASTECIMIENTO RAPIDO DE COMBUSTIBLE)	199 201 203
JUEGO DE RESTRICCIÓN DEL CINTURÓN (ASIENTO DE SUSPENSION)	1125 1130
JUEGO DE RODILLO (ASIENTO DE SUSPENSION)	1125 1127 1130 1132
JUEGO DE SECCION (*FRONT) (BOMBA DE ENGRANAJE)	830
JUEGO DE SECCION (TRASERO) (BOMBA DE ENGRANAJE)	830
JUEGO DE SEGUIDOR (ASIENTO DE SUSPENSION)	1043 1046
JUEGO DE SELLOS	541 864 913
JUEGO DE SELLOS (ANGULO DEL CILINDRO DESGARRADOR)	713 717
JUEGO DE SELLOS (BOMBA DE ENGRANAJE)	830
JUEGO DE SELLOS (CILINDRO DE DESGARRADOR)	694 698
JUEGO DE SELLOS (CONJUNTO DE CARTUCHO)	909
JUEGO DE SELLOS (VÁLVULA DE SECUENCIA)	897

* NO HAY TRADUCCION DISPONIBLE EN EL MOMENTO DE LA IMPRESION

INDICE

Nombre	Página
JUEGO DE SELLOS (VALVULA DE SOLENOIDE)	484, 488, 859, 860, 901, 902, 903, 904, 907, 908, 910, 912
JUEGO DE TAPÓN (4-CLAVIJA)	398
JUEGO DE TERMINAL (ALTERNADOR)	242
JUEGO DE TERMINAL DE ALTERNADOR	244
JUEGO DE TERMINAL (MOTOR DE ARRANQUE)	360, 363, 366, 369
JUEGO DE TORNILLERÍA (ALTERNADOR)	242, 244
JUEGO DE TORNILLERÍA (ASIENTO DE SUSPENSION)	1127, 1132
JUEGO DE TORNILLERÍA, JUNTAS Y CALCES	928, 930
JUEGO DE TORNILLERÍA (RECTIFICADOR)	1034
JUEGO DE TORNILLERÍA (VALVULA DE SOLENOIDE)	486
JUEGO DE TRABA DE TERMINAL (BLOQUE DE FUSIBLES)	383
JUEGO DE VALVULA DE AIRE (ASIENTO DE SUSPENSION)	1134
JUEGO DE VENTANAS	1055
JUNTA UNIVERSAL (GR)	472

L

Nombre	Página
LÁMPARA (CONJ) (12 VOLTIOS) (INSTALACIÓN DE SEGURIDAD)	305
LÁMPARA DEL TECHO (GR)	306
LÁMPARA (24 VOLTIOS) (CONTROL DEL ACELERADOR)	399
LÁMPARA (24 VOLTIOS) (FALLA TRASERA)	397
LÁMPARA (24 VOLTIOS) (IMPLEMENTO DE LA TRABA)	397
LÁMPARA (24 VOLTIOS) (INDICADOR DE ACCION)	1049
LÁMPARA (24 VOLTIOS) (INDICADOR DE ACCION)	1051
LÁMPARA (24 VOLTIOS) (TABLERO DE INSTRUMENTOS)	397
LÁMPARA (24 VOLTIOS) (TECLADO)	281, 283, 285
LÁMPARA (24 VOLTIOS) (TRANSPARENTE)(TECHO)	306
LAVAPARABRISAS DE LA VENTANA (GR)	1141
LIMPIAPARABRISAS DE LA VENTANA (GR)	1160, 1161, 1162
LIMPIAPARABRISAS DE LA VENTANA (GR)	1166
LLAVE (DESCONECTAR BATERIA)	372
LUBRICACIÓN DE EJE PIVOTE (GR)	588
LUCES (CONFIG)	312, 313
LUCES DE ALÓGENO (24 VOLTIOS, 65 VATIOS) (REFLECTOR)	307, 308, 309
LUCES DE REFLECTOR (GR)	315, 316, 318
LUCES DEL DESGARRADOR (GR)	325
LUCES DELANTERAS (GR)	322
LUCES TRASERAS (GR)	323

M

Nombre	Página
MANDO AUXILIAR (GR)	45
MANDO FINAL (GR)	415, 418
MAZO DE CABLES (AUXILIAR DE ARRANQUE CON ÉTER)	354
MAZO DE CABLES (BOMBA DEL LIMPIAPARABRISAS)	1138
MAZO DE CABLES (COMPARTIMENTO DE FRENO)	406
MAZO DE CABLES (CONJ) (CARTER SIN INYECCIÓN)	393
MAZO DE CABLES (CONMUTADOR DE VELOCIDAD DE VENTILADOR)	1033, 1036
MAZO DE CABLES DE LUCES TRASERAS (CONJ)	313
MAZO DE CABLES DE SENSOR (CONJ) (NIVEL DE ACEITE) (TANQUE DOSIFICADOR)	107
MAZO DE CABLES (DESGARRADOR)	318
MAZO DE CABLES (GUARDABARRO IZQUIERDO)	248, 257, 264

* NO HAY TRADUCCION DISPONIBLE EN EL MOMENTO DE LA IMPRESION

INDICE

Nombre	Página
MAZO DE CABLES (GUARDABARROS DEL LADO IZQUIERDO)	257, 264
MAZO DE CABLES (GUARDABARROS DEL LADO IZQUIERDO)	247
MAZO DE CABLES (INSTALACIÓN DE SEGURIDAD)	305
MAZO DE CABLES (INYECTOR AL MOTOR)	71
MAZO DE CABLES (LIMPIAPARABRISA TRASERO)	1163, 1167
MAZO DE CABLES (LUCES DEL DESGARRADOR)	325
MAZO DE CABLES, LUCES (TRASERO/A)	313
MAZO DE CABLES (MECANISMO DE VALVULA)	69, 73, 75
MAZO DE CABLES (MOTOR DE SOPLADOR DE ACOND. DE AIRE)	997, 1000
MAZO DE CABLES (MOTOR DEL VENTILADOR SOPLADOR)	1033, 1036
MAZO DE CABLES (POTENCIA)	382
MAZO DE CABLES (PROTECTOR DE RADIADOR)	246, 257, 264
MAZO DE CABLES (PUENTE DE SENSOR DE PRESION)	250, 258
MAZO DE CABLES (ROPS)	318
MAZO DE CABLES (*SIDE LIGHTS)	246, 259, 266
MAZO DE CABLES (TECHO DE CABINA)	1141
MAZO DE CABLES (TRANSFORMADOR DE CORRIENTE)	295
MAZO DE CABLES (TRANSMISION)	246, 258, 265
MAZO DE CABLES (VALVULA DE CONTROL DE AGUA, AIRE ACONDICIONADO)	997, 1000
MAZO DE CABLES (*WIPER)	1162, 1166
MECANISMO DE VÁLVULAS (GR)	69, 71, 73, 75
MODULO CENTRAL DE MENSAJES(GR)	1068, 1069
MÓDULO DEL TACÓMETRO Y DEL VELOCÍMETRO (GR)	1073
MODULO DEL TECLADO MONITOR (GR)	1070, 1071
MODULO ELECTRÓNICO DE CUATRO INDICADORES (GR)	1072
MONTAJE DE CILINDRO (GR)	825, 826, 827
MONTAJE DE LA ESTRUCTURA ROPS (GR)	1078
MONTAJE DE LA RADIO (GR)	1077
MONTAJE DE LA TRANSMISIÓN (GR)	442
MONTAJE DEL ALTERNADOR (GR)	58
MOTOR - SOPORTE DEL (GR)	67
MOTOR DE ARRANQUE ELÉCTRICO (GR)	358, 359, 362, 365
MOTOR DE VENTILADOR (GR)	822, 823
MOTOR ELÉCTRICO (GR) (27 VOLTIOS) (A/A)	1000
MOTOR ELÉCTRICO (GR) (27 VOLTIOS) (CALEFACTOR)	1036
MOTOR-LIMPIAPARABRISAS (GR)	1074
MOTOR-LIMPIAPARABRISAS (GR) (LIMPIAPARABRISAS DE LAS PUERTAS)	1162, 1166
MULTIPLE - PROTECTOR DEL	189
MÚLTIPLE DE ESCAPE (GR)	178, 180
MÚLTIPLE Y VÁLVULA (GR)	637, 638, 639, 640
MUÑÓN DE LA HOJA TOPADORA (GR)	945
MUÑÓN DEL MOTOR (GR)	68

N

Nombre	Página
NÚCLEO DEL ENFRIADOR DE ACEITE (GR)	113
NUCLEO DEL POSENFRIADOR	163

P

Nombre	Página
PALANCA UNIVERSAL-CONTROL Y MONTAJE (GR)	1020
PALANCA UNIVERSAL DE CONTROL (GR)	657, 659, 661, 662, 663, 664

* NO HAY TRADUCCION DISPONIBLE EN EL MOMENTO DE LA IMPRESION

INDICE

Nombre	Página
PANTALLA (CONJ) (COLECTOR DE ACEITE DEL MOTOR)	60
PANTALLA (CONJ) (TANQUE HIDRÁULICO)	848
PANTALLA (CONJ) (TREN DE FUERZA)	433, 437
PANTALLA (CONJ) (TUBERIAS DE ACEITE DEL TREN DE FUERZA)	432
PISTÓN Y BIELA (GR)	62, 64
PISTÓN Y VÁLVULA (GR)	828, 829
PISTONES DEL MOTOR (GR)	824
PIVOTE DEL LIMPIADOR (GR)	1169
PLACA DE ADVERTENCIA (CILINDRO PARA ALTA PRESION)	553, 556, 559, 563, 566, 569, 572, 575
PLACA DE ADVERTENCIA (RESORTE DE AMORTIGUACION)	553, 556, 559, 563, 566, 569, 572, 575
PLACA DE INSTRUCCIONES (ACONDICIONADOR DE AIRE)	996, 1172
PLACA DEL NÚMERO DE SERIE	1172
PLACA DEL TABLERO (ACONDICIONADOR DE AIRE Y SOPLADOR)	1039
PLACA DEL TABLERO (CONTROL DE TEMPERATURA)	1003
PLACA DEL TABLERO (INDICADOR DE ACCION)	1049, 1051
PLACA DEL TABLERO (INSTRUMENTO)	1049, 1051
PLACA DEL TABLERO (INSTRUMENTO)	1049, 1051
PLANCHA DE DESGASTE (GR)	975, 976
PLANCHA DE EMPUJE (GR)	933
PLATAFORMA (CONFIG)	1085
PLATAFORMA DE LA CABINA (GR)	1088, 1090
PLATAFORMA (GR)	1086
PORTAESCOBILLAS (CONJ) (MOTOR DE ARRANQUE)	366, 369
POSENFRIADOR DE AGUA (GR)	163
PRELUBRICACION DEL MOTOR (CONFIG)	100
PRELUBRICACION DEL MOTOR (CONFIG)	98
PRIORIDAD - VÁLVULA DE (GR)	478
PROTECTOR CONTRA ROCAS (GR)	529, 530
PROTECTOR DE ACOPLAMIENTO (GR)	431
PROTECTOR DE LA TRANSMISIÓN (GR)	531, 533
PROTECTOR DE LAS TUBERÍAS DE COMBUSTIBLE (GR)	187
PROTECTOR DE RUEDA GUÍA	522, 523, 524
PROTECTOR DEL RADIADOR (GR)	525, 527
PROTECTOR INFERIOR (GR)	520
PUBLICACIONES (GR)	1

R

Nombre	Página
RADIADOR (GR)	150, 152
RECEPTOR-SECADOR (GR) (ACONDICIONADOR DE AIRE)	1057, 1061
RECLINACION DE ASIENTO (GR)	1092, 1093
REFLECTOR (GR)	307, 308, 309, 310, 311
REGULADOR DE TEMPERATURA (TERMOSTATO)	116
REGULADOR Y CAJA (GR)	116
REJILLA (AUXILIAR DE ARRANQUE CON ÉTER)	354
REJILLA DE SUCCIÓN (CONVERTIDOR DE PAR)	467
REJILLA DEL TANQUE DE COMBUSTIBLE	219
REJILLA PARA BARRIDO (ACEITE DEL MOTOR)	105
REJILLA (TANQUE HIDRÁULICO)	848
RELÉ (CONJ) (12 VOLTIOS) (INSTALACIÓN DE SEGURIDAD)	305
RELÉ (CONJ) (24 VOLTIOS) (INSTALACIÓN DE SEGURIDAD)	305
RELÉ (CONJ) (24 VOLTIOS) (PRESIONADOR)	1163

* NO HAY TRADUCCION DISPONIBLE EN EL MOMENTO DE LA IMPRESION

INDICE

Nombre	Página
	1167
RESORTE (MOTOR DE ARRANQUE)	365
	369
RESORTE TENSOR Y AJUSTADOR DE LA CADENA (GR)	610
	612
RESPIRADERO (CONJ) (MOTOR)	78
RESPIRADERO (CONJ) (TANQUE DE DOSIFICACION DE ACEITE DE MOTOR)	107
RESPIRADERO (GR)	78
RESPIRADERO (TANQUE DE LUBRICACION)	586
RESPIRADERO (TREN DE FUERZA)	433
	437
RETROCESO - ALARMA DE (GR)	381
RETROVISOR (GR)	1067
REVESTIMIENTO DE LA CABINA (GR)	1056
RODILLO SUPERIOR DE CADENAS (CONFIG)	591
	592
	593
	594
	595
RODILLOS DE PESTAÑA DOBLE (GR)	596
	597
RODILLOS DE PESTAÑA SIMPLE (GR)	598
	599
RUEDA GUÍA DE CADENA (GR)	578
	579

S

SEGMENTO DE RUEDA MOTRIZ (GR)	460
SELLO ANULAR (FILTRO DE COMBUSTIBLE)	215
SELLO DE BOMBA DE AGUA (GR)	144
	148
SELLO DE CADENA (GR)	600
SELLO DE CIGÜEÑAL (GR)	66
SELLO DE CUERDA	459
SELLO (TAPA DE VÁLVULA)	15
SENSOR DE NIVEL DE COMBUSTIBLE (GR)	329
SENSOR DE PRESIÓN (GR)	338
	339
	340
SENSOR DE PRESIÓN (GR)	341
	342
	343
	344
	345
SENSOR DE PRESIÓN (GR) (ACEITE FILTRADO)	389
SENSOR DE PRESIÓN (GR) (ACEITE FILTRADO)	385
SENSOR DE PRESIÓN (GR) (ATMOSFERICA)	393
SENSOR DE PRESIÓN (GR) (CÁRTER DEL MOTOR)	393
SENSOR DE PRESIÓN (GR) (ENTRADA DERECHA DEL TURBOCOMPRESOR)	327
SENSOR DE PRESIÓN (GR) (SALIDA DE TURBOCOMPRESOR)	385
	393
SENSOR DE PRESIÓN (GR) (TURBO ADMISIÓN DEL LADO IZQ.)	327
SENSOR DE PRESIÓN Y MONTAJE (GR)	326
	327
SENSOR DE TEMPERATURA DE ESCAPE (GR) (TURBO. DEL LADO DER.)	385
	389
SENSOR DE TEMPERATURA DE ESCAPE (GR) (TURBO. DEL LADO DER.)	393
SENSOR DE TEMPERATURA DE ESCAPE (GR) (TURBO. DEL LADO IZQ.)	385
	389
SENSOR DE TEMPERATURA DE ESCAPE (GR) (TURBO. DEL LADO IZQ.)	393
SENSOR DE TEMPERATURA (GR)	349
	350
SENSOR DE TEMPERATURA (GR) (AIRE DE ADMISIÓN)	327
SENSOR DE TEMPERATURA (GR) (AIRE DE ADMISIÓN)	394
SENSOR DE TEMPERATURA (GR) (POSENFRIADOR DE LA SALIDA DEL REFRIGERANTE)	386
	390
	394
SENSOR DE TEMPERATURA (GR) (REFRIGERANTE)	393
SENSOR DE TEMPERATURA (GR) (REFRIGERANTE)	385
	389
SENSOR DE VELOCIDAD (GR)	346
	347
	348
SENSOR DE VELOCIDAD (GR) (SINCRONIZACIÓN)	393
SENSOR DE VELOCIDAD (GR) (SINCRONIZACIÓN DE LA CALIBRACIÓN DE LA SONDA)	385
	389
	393
SENSOR DEL NIVEL DE LÍQUIDO (TANQUE DE DOSIFICACION DE ACEITE DE MOTOR)	107

* NO HAY TRADUCCION DISPONIBLE EN EL MOMENTO DE LA IMPRESION

INDICE

Nombre	Página
SENSOR Y CILINDRO DE LEVANTAMIENTO (GR)	666
SERVICIO DE IMPLEMENTO (GR)	351
SERVICIO DE MONITOR (GR)	352
SERVICIO DE TREN DE FUERZA (GR)	353
SILENCIADOR (GR)	182
SINCRONIZADOR (PRELUBRICACION)	98
	100
SISTEMA DE PRELUBRICACIÓN DEL MOTOR DE ARRANQUE (GR)	368
SOFTWARE DE IMPLEMENTO (GR)	296
SOFTWARE DE IMPLEMENTO (GR)	351
SOFTWARE DEL MONITOR (GR) (SISTEMA DE INFORMACIÓN VITAL)	296
SOFTWARE DEL MONITOR (GR) (SISTEMA DE INFORMACIÓN VITAL)	352
SOFTWARE DEL TREN DE FUERZA (GR)	297
SOFTWARE DEL TREN DE FUERZA (GR)	353
SOFTWARE PARA LA MAQUINA (GR) (SEGURIDAD)	304
SOLENOIDE (CONJ) (MOTOR DE ARRANQUE)	359
	365
	368
SOLENOIDE (CONJ) (MOTOR DE ARRANQUE)	362
SOPORTE BASCULANTE (GR)	602
	603
	604
	605
	607
	608
SOPORTE DE CONTROL (GR)	641
SOPORTE DE LA ADMISIÓN DE AIRE (GR)	190
	191
SOPORTE DE LA HOJA TOPADORA	920
SOPORTE DEL RESPALDO (GR)	1079
	1080
	1081
	1082
SUCCIÓN - VENTILADOR DE (GR)	114
	115
SUSPENSIÓN - ASIENTO CON (GR)	1112
SUSPENSIÓN - ASIENTO CON (GR)	1113
	1114
	1115
	1116
	1117
	1118
	1119
	1120
	1121

T

Nombre	Página
TABLERO ELECTRÓNICO DE CONTROL (GR)	1026
	1027
TANQUE DEL AGUA (GR)	154
	157
	160
TANQUE DEL LAVAPARABRISAS (GR)	1136
	1137
	1140
TANQUE DEL LAVAPARABRISAS (GR)	1138
TANQUE Y FILTRO HIDRÁULICOS (GR)	848
TANQUE Y TUBERÍAS DE EXPANSIÓN (GR)	852
TAPA CON RESPIRADERO (TANQUE DE LIMPIPARABRISA)	1136
	1138
TAPA DE LA CAJA DELANTERA (GR)	14
TAPA DE LLENADO (CONJ) (COMBUSTIBLE, TRABA, VENTILACIÓN)	239
TAPA DE NIVEL DE ACEITE (CONJ) (BOTELLA DE LUBRICACIÓN DEL EJE PILOTO)	588
TAPA DE RODILLO INFERIOR	552
TAPA DE RUEDA GUÍA (GR)	550
	551
TAPA DEL BLOQUE MOTOR (GR)	11
	12
TAPA DEL MANDO DE ACCESORIOS (GR)	10
TAPA DEL MECANISMO DE VÁLVULAS (GR)	15
TAPA DEL TANQUE DE COMBUSTIBLE (CONJ) (RESPIRADERO CON TRABA)	237
TAPA DEL TUBO DE LLENADO (CÁRTER DEL MOTOR)	96
TAPA DEL TUBO DE LLENADO DE ACEITE (CONJ) (MOTOR)	79
TAPA DEL TUBO DE LLENADO DE ACEITE (CONJ) (TANQUE DE LUBRICACION)	586
TAPA DEL TUBO DE LLENADO DE ACEITE (CONJ) (TREN DE FUERZA)	437
TAPA DEL TUBO DE LLENADO DE ACEITE (CONJ) (TREN DE FUERZA)	433
TAPA DEL TUBO DE LLENADO DE ACEITE (TANQUE DOSIFICADOR)	107
TAPA DEL TUBO DE LLENADO DEL TANQUE DE COMBUSTIBLE (CONJ) (TRABA)	199
	201
	203
TAPA DEL TUBO DE LLENADO (TANQUE HIDRÁULICO)	848
TAPA PROTECTORA DEL TANQUE HIDRÁULICO (LLENADO DEL TANQUE HIDRÁULICO)	848
TAPAS PROTECTORAS DE EMBARQUE (GR)	960
TAPÓN (CONJ) (ACEITE DEL MOTOR)	80

* NO HAY TRADUCCION DISPONIBLE EN EL MOMENTO DE LA IMPRESION

INDICE

Nombre	Página
	82
TAPÓN (CONJ) (ACONDICIONADOR DE AIRE) (LADO ALTO)	1057 1061
TAPÓN (CONJ) (ACONDICIONADOR DE AIRE) (LADO BAJO)	1057 1061
TAPÓN DE DRENAJE (BASTIDOR TELESCOPICOESPIRAL)	553 556 559 563 566 569 572 575
TAPÓN DE DRENAJE (BLOQUE DE MOTOR)	11
TAPÓN DE DRENAJE (BOMBA DE AGUA)	139
TAPÓN DE DRENAJE (CAJA Y BASTIDOR)	433
TAPON DE DRENAJE DE ACEITE (COLECTOR DE ACEITE DEL MOTOR)	60
TAPÓN DE DRENAJE (ENFRIADOR DE TRANSMISION)	132
TAPÓN DE DRENAJE (MANDO FINAL)	415
TAPÓN DE DRENAJE (MANDO FINAL)	418
TAPÓN DE DRENAJE (TREN DE FUERZA)	437
TAPÓN (DRENAJE) (CAJA DE TRANSMISION)	493
TAPÓN (DRENAJE) (TANQUE HIDRÁULICO)	848
TAPÓN (FILTRO DE LA TRANSMISION)	413
TAPÓN MAGNÉTICO (MANDO FINAL)	415 418
TERMOPAR (GR)	380
TOPE DE BARRA COMPENSADORA (GR)	601
TOPE (GR)	632
TRANSMISION (CONFIG)	469 470 471
TRANSMISIÓN PLANETARIA (GR)	443 448
TREN DE FUERZA (CONFIG)	453
TREN DE FUERZA-GRUPO ELECTRÓNICO	297
TREN DE RODAJE (CONFIG)	617 618 619
TUBERÍAS DE ACEITE DEL MOTOR (GR)	86
TUBERÍAS DE ACEITE DEL TREN DE FUERZA (GR)	432
TUBERÍAS DE ACEITE DEL TREN DE FUERZA (GR)	437
TUBERÍAS DE ACONDICIONADOR DE AIRE (GR)	1057 1061
TUBERIAS DE ALIVIO (GR)	793
TUBERÍAS DE CILINDRO DE EXTRACTOR DE PASADORES	760 761 762
TUBERÍAS DE COMBUSTIBLE (GR)	219 221 222
TUBERÍAS DE ENGRASE (GR)	931
TUBERÍAS DE INYECCIÓN DE COMBUSTIBLE (GR)	223
TUBERÍAS DE LA CALEFACCIÓN (GR)	1064 1066
TUBERÍAS DEL AGUA (GR)	117 119 121 124 127 129 131 132
TUBERÍAS DEL AGUA (GR)	134 136 138
TUBERÍAS DEL AGUA (GR) (ENFRIADOR DE TRANSMISION)	5
TUBERÍAS DEL AGUA (GR) (POSENFRIADOR)	5
TUBERÍAS DEL CILINDRO DE INCLINACIÓN (GR)	810 812 814 818
TUBERÍAS DEL DESGARRADOR (GR)	795 796 798 801 804 807
TUBERÍAS HIDRÁULICAS DEL VENTILADOR (GR)	727 733 739 743 748
TUBO DE LLENADO DE ACEITE (GR)	79
TURBOCOMPRESOR - TUBERÍAS DE ACEITE DEL (GR)	89 91
TURBOCOMPRESOR (GR)	192 193 194 195

* NO HAY TRADUCCION DISPONIBLE EN EL MOMENTO DE LA IMPRESION

INDICE

Nombre	Página
	196
	197
V	
*VALVE & MTG GP-STEER & BRAKE	642
*VALVE GP-PUMP CONTROL	893
	894
*VALVE GP-TRANSMISSION CONTROL	644
	646
VÁLVULA COMPENSADORA DE FLUJO Y PRESIÓN (GR)	889
VÁLVULA DE ACTIVACIÓN DEL ÉTER	354
VALVULA DE ALIVIO (CONFIG)	861
VÁLVULA DE ALIVIO (GR)	480
VÁLVULA DE ALIVIO (GR) (COMPRESOR DEL REFRIGERANTE)	1015
VÁLVULA DE ALIVIO (GR) (TUBERIAS DE INCLINACION DOBLE)	793
VÁLVULA DE CAÍDA RÁPIDA (GR)	896
VÁLVULA DE COMPENSACION (GR)	878
VALVULA DE CONTROL DE INCLINACION (GR)	914
	915
VALVULA DE CONTROL DE LA BOMBA (GR)	891
VÁLVULA DE CONTROL DE LA TRANSMISIÓN (GR)	490
	491
VÁLVULA DE CONTROL (GR)	473
	865
	869
VÁLVULA DE CONTROL (GR)	871
	875
	876
VÁLVULA DE CONTROL (GR)	475
VÁLVULA DE CONTROL Y MONTAJE (GR)	857
	858
VÁLVULA DE DERIVACIÓN (GR) (SOLAMENTE CLIMA DE TIEMPO DE FRIO)	869
VÁLVULA DE DESCARGA (GR)	477
VÁLVULA DE DOSIFICACIÓN (GR)	109
VÁLVULA DE LANZADERA (GR)	898
	899
	900
VÁLVULA DE RETENCIÓN (GR)	864
VÁLVULA DE RETENCIÓN (GR) (DESCONEXION DEL FRENO DE ESTACIONAMIENTO)	864
VÁLVULA DE SECUENCIA (GR)	897
VÁLVULA DE SOLENOIDE (GR)	484
	485
	486
	487
	488
	489
	901
	902
	903
	904
	906
	907
	908
	909
	910
	911
	912
	913
VALVULA DEL TANQUE (CONJ)	862
VÁLVULA PILOTO (GR)	879
	881
	883
	884
VÁLVULA REDUCTORA DE PRESIÓN (GR)	886
	887
	888
VÁLVULA-RESPIRADERO	386
	390
	394
VÁLVULA SELECTORA (GR)	481
VÁLVULA SELECTORA (GR) (TRANSMISION)	473
	475
VÁLVULA SELECTORA Y DE CONTROL DE PRESIÓN (GR)	482
VÁLVULA Y CILINDRO DE LA HOJA TOPADORA (GR)	667
	669
VÁLVULA Y CILINDRO DE LEVANTAMIENTO (GR)	671
	673
	675
	676
VALVULA Y LINEAS DE EXTRACTOR DE PASADOR (GR)	853
	855
VÁLVULA Y MONTAJE DE DIRECCIÓN Y FRENO (GR)	643
VÁLVULA Y MONTAJE DEL VENTILADOR HIDRÁULICO (GR)	859
	860
VENTANA CORREDIZA (CONJ)	1144
VENTANA DE LA CABINA (GR)	1152
	1153
	1155
	1156
	1157

* NO HAY TRADUCCION DISPONIBLE EN EL MOMENTO DE LA IMPRESION

INDICE

Nombre	Página
	1158
	1159
VENTANA DE LA CABINA (GR)	1145
	1146
	1147
	1148
	1149
	1150
	1151
VENTILADOR DESCONGELADOR (GR)	1031
VIGA (CONJ)	917
VOLANTE - CAJA DE (GR)	52
	53
VOLANTE (GR)	47

Y

YUGO (GR)	77

* NO HAY TRADUCCION DISPONIBLE EN EL MOMENTO DE LA IMPRESION

ÍNDICE

Designação	Página

A

ACOPLAMENTO DA BOMBA 411
ACUMULADOR - REFRIGERANTE 1057
ACUMULADOR HIDRÁULICO 648
ADAPTADOR 198
ADAPTADOR - ABASTECIMENTO RÁPIDO DE COMBUSTÍVEL 199
201
203
205
207
209
211
ADESIVO - ÓLEO (MOTOR) 107
AJUSTADOR DE ESTEIRAS E MOLA TENSORA 610
612
AJUSTADOR DO ASSENTO 992
994
AJUSTADOR DO CONTROLE DA DIREÇÃO E TRANSMISSÃO 620
ALARME 240
ALARME DE MARCHA À RÉ 381
ALAVANCA DE CONTROLE E MONTAGEM 1020
ALTERNADOR DE CORRENTE 241
242
244
AMORTECEDOR 38
ANEL - ELO DA ESTEIRA 590
AQUECEDOR DA ÁGUA DO MOTOR 300
301
302
303
AQUECEDOR DA CABINE 1033
1036
1039
AQUECEDOR DO COMBUSTÍVEL 298
ARMAÇÃO DO RIPER 969
971
973
ARMAÇÃO TELESCÓPICA DA MOLA TENSORA 553
556
559
563
566
569
572
575
ARRANJO GERAL 2
ARREFECEDOR - ÓLEO DO MOTOR 112
ARREFECEDOR DE ÓLEO DA TRANSMISSÃO 409
410
ARREFECEDOR DO ÓLEO HIDRÁULICO 665
ASSENTO 1095
1097
1099
1101
1102
1103
1104
1106
1108
1110
1111
ASSENTO - FUNDO 1083
ASSENTO COM SUSPENSÃO 1112
1113
1114
1115
1116
1117
1118
1119
1120
1121
AUXILIAR DE PARTIDA A ÉTER 354
356

B

BALANCEADOR 6
BARRA DE SUSPENSÃO 543
545
547
549
BARRA, VIGA, TRAVE 917
BASE - TAMPA DA VÁLVULA 7
BATENTE - BARRA EQUALIZADORA 601
BATERIA E CABOS / FIOS ELÉTRICOS 246
256
263
BATERIA (12-VOLTS) 246
BATERIA (12-VOLTS) 260
267
BEIRA - PONTA CORTANTE 961
962
963
964
965
*BLADE AS-SEMI-UNIVERSAL 953
BLINDAGEM DO COLETOR 189
BLINDAGEM DOS TUBOS DO COMBUSTÍVEL 187
BLOCO - FORÇA 271

* TRADUÇÃO NÃO DISPONÍVEL NO MOMENTO DA IMPRESSÃO

ÍNDICE

Designação	Página
BLOCO DE EMPUXO	918
	919
BLOCO DE JUNÇÃO	270
BLOCO DO MOTOR	19
	20
	21
	23
	25
	26
BOCAL DE ENCHIMENTO DE ÓLEO DO MOTOR	79
BOMBA AUXILIAR DE ÁGUA DOCE	139
	141
	142
	143
BOMBA AUXILIAR DO SISTEMA DE TRANSMISSÃO	105
	106
BOMBA DE ÁGUA	144
	146
	147
	148
BOMBA DE ENGRENAGENS	454
	455
	457
	830
	832
BOMBA DE ESCORVA DO COMBUSTÍVEL	229
BOMBA DE INJEÇÃO DO COMBUSTÍVEL	227
	228
BOMBA DE ÓLEO - MOTOR	103
	104
BOMBA DE PISTÃO	834
	836
	838
	840
	842
BOMBA DE TRANSFERÊNCIA DO COMBUSTÍVEL	230
	231
	232
	234
BORDA CORTANTE	966
	967
	968
BRAÇO DE EMPUXO	938
	939
	940
	941
BRAÇO DE EMPUXO - ESTABILIZADOR	942
	944
BUJÃO - DRENAGEM DO ÓLEO (CÁRTER DE ÓLEO DO MOTOR)	60
BUJÃO DO DRENO (ARMAÇÃO DO TENSOR TELESCÓPICO)	553
	556
	559
	563
	566
	569
	572
	575
BUJÃO DO DRENO (ARREFECEDOR DE TRANSMISSÃO)	132
BUJÃO DO DRENO (BLOCO DO CILINDRO)	11
BUJÃO DO DRENO (BOMBA D'ÁGUA)	139
BUJÃO DO DRENO (CAIXA E CHASSI)	433
BUJÃO DO DRENO (COMANDO FINAL)	415
	418
BUJÃO DO DRENO (TREM DE FORÇA)	437
BUJÃO MAGNÉTICO (COMANDO FINAL)	415
	418
*BULLDOZER AR-SEMI-UNIVERSAL	921
	922
	923
	924
*BULLDOZER AR-UNIVERSAL	925
	926
	927
BUZINA (24 VOLTS, TOM ALTO)	258
	265
BUZINA (24 VOLTS, TOM ALTO)	246
BUZINA (24 VOLTS, TOM BAIXO)	246

C

CABEÇOTE DO MOTOR	28
	29
	30
	31
	33
	35
	37
CABINE	1006
	1007
	1009
	1011
CABOS/FIOS ELÉTRICOS - MOTOR	385
	389
	393
CABOS/FIOS ELÉTRICOS - PLATAFORMA	397
CABOS/FIOS ELÉTRICOS DO CONSOLE	382
CADEADO (CAPÔ)	534
	537
CADEADO (COBERTURA DO PÁRA-LAMA)	504
	506

* TRADUÇÃO NÃO DISPONÍVEL NO MOMENTO DA IMPRESSÃO

ÍNDICE

Designação	Página
	508
CADEADO (PÁRA-LAMA)	511
	515
CADEADO (TANQUE DE COMBUSTÍVEL)	236
	238
CADEADO (TANQUE HIDRÁULICO)	739
CADEADO (TUBO DE ENCHIMENTO DO OLEO DO MOTOR)	79
CADEADO (TUBULAÇÕES DE COMBUSTÍVEL)	219
CADEADO (TUBULAÇÕES DO VENTILADOR HIDRÁULICO)	727
	733
	743
CAIXA - SUSPENSÃO DO ASSENTO	1042
	1045
CAIXA DIANTEIRA	55
CAIXA DO VOLANTE DO MOTOR	52
	53
CAIXA E CHASSI	493
CAIXA E COMPONENTES - TRANSMISSÃO	402
CANTO DE LÂMINA	946
	947
	948
CAPÔ E PROTETOR	534
	537
CÁRTER DO ÓLEO DO MOTOR	60
CHAPA DE EMPUXO	933
CHASSI	1
CHAVE - ELETRÔNICO (AMARELO)	304
CHAVE - ELETRÔNICO (CINZA)	304
CHAVE (DESCONECTAR A BATERIA)	372
CHAVE GERAL	372
CHICOTE - CABOS ELÉTRICOS (INJETOR PARA MOTOR)	71
CHICOTE - CABOS ELÉTRICOS (MECANISMO DE VÁLVULA)	69
	73
	75
CHICOTE - CABOS ELÉTRICOS (PARTIDA SEM INJEÇÃO)	393
CHICOTE - ILUMINAÇÃO (PARTE TRASEIRA)	313
CHICOTE - SENSOR (NÍVEL DO ÓLEO) (TANQUE DE MEDIÇÃO)	107
CHICOTE - VÁLVULA (COMPRESSOR DE AR)	1134
CHICOTE (ALOJAMENTO DO FREIO)	406
CHICOTE (AUXILIAR DE PARTIDA A ÉTER)	354
CHICOTE (BOMBA DO LAVADOR DE VIDROS)	1138
CHICOTE (CABO AUXILIAR DO SENSOR DE PRESSÃO)	250
CHICOTE (CABO AUXILIAR DO SENSOR DE PRESSÃO)	258
CHICOTE (CONTROLE DA VÁLVULA DA ÁGUA DO AR CONDICIONADO)	997
	1000
CHICOTE (CONVERSOR DE ENERGIA)	295
CHICOTE (FORÇA)	382
CHICOTE (ILUMINAÇÃO DO RÍPER)	325
CHICOTE (INSTALAÇAO DE SEGURANÇA)	305
CHICOTE (INTERRUPTOR DE VELOCIDADE DO VENTILADOR)	1033
	1036
CHICOTE (LUZES LATERAIS)	246
	259
	266
CHICOTE (MOTOR DO VENTILADOR)	1033
	1036
CHICOTE (MOTOR SOPRADOR DE COND. DE AR)	997
	1000
CHICOTE (PÁRA-LAMA DIREITO)	247
	257
	264
CHICOTE (PÁRA-LAMA ESQUERDO)	257
	264
CHICOTE (PÁRA-LAMA ESQUERDO)	248
CHICOTE (PROTETOR DO RADIADOR)	257
	264
CHICOTE (PROTETOR DO RADIADOR)	246
CHICOTE (RIPER)	318
CHICOTE (ROPS)	318
CHICOTE (TETO DA CABINE)	1141
CHICOTE (TRANSMISSÃO)	246
	258
	265
CILINDRO - LEVANTAMENTO DA LÂMINA	678
	680
	686
	688
CILINDRO DE ÉTER	356
CILINDRO DE INCLINAÇÃO	677
	690
	692
	711
CILINDRO DE INCLINAÇÃO DO RÍPER	713
	715
	717
	719
	721
	723
CILINDRO DE LEVANTAMENTO E SENSOR	666
CILINDRO DO RÍPER	694
	696

* TRADUÇÃO NÃO DISPONÍVEL NO MOMENTO DA IMPRESSÃO

ÍNDICE

Designação	Página
	698
	700
	702
	704
	706
	708
CILINDRO DO SACADOR DE PINO DO RIPER	710
CILINDRO E VÁLVULA DE LEVANTAMENTO	671
	673
	675
	676
CINTO DE SEGURANÇA	1096
CINTO DE SEGURANÇA (RETRÁTIL)	1110
	1111
CINZEIRO	1003
	1039
COBERTURA - PÁRA-LAMA	504
	506
	508
	510
COBERTURA DO MOTOR	498
	500
	502
COLETOR - CONTROLE	821
COLETOR DE ESCAPE	178
	180
COLETOR E VÁLVULA	637
	638
	639
	640
COLMÉIA - ARREFECEDOR DE ÓLEO	113
COLMEIA DO ARREFECEDOR DA ADMISSAO	163
COMANDO AUXILIAR	45
COMANDO DE ACESSÓRIOS	39
	41
	43
COMANDO FINAL	415
	418
COMPRESSOR DE AR - ASSENTO	995
COMPRESSOR DE REFRIGERANTE	1015
	1016
CONDENSADOR DE REFRIGERANTE	1018
CONDICIONADOR DE AR	996
	997
	1000
	1003
CONEXÃO - TUBO D'ÁGUA	110
	111
CONSOLE - INTERRUPTOR (LIMPADOR DO VIDRO DA JANELA)	1162
	1166
CONTRAPESO	495
CONTRAPESO TRASEIRO	496
CONTROLE - ALAVANCA	657
	659
	661
	662
	663
	664
CONTROLE - NÃO PROGRAMADO	291
	292
	293
	294
CONTROLE - NÃO PROGRAMADO (SEGURANÇA)	304
CONTROLE - REDUTOR DE LUMINOSIDADE DO SIST. DE MONITORIZAÇÃO	1028
CONTROLE-CABO	654
CONTROLE DA TRANSMISSÃO	408
CONTROLE DE DIREÇÃO E TRANSMISSÃO	626
	628
	630
CONTROLE DO ACESSÓRIO E MONTAGEM	1019
	1020
	1021
	1022
	1023
	1024
	1025
CONTROLE DO DESACELERADOR	213
CONTROLE DO FREIO	404
	406
CONTROLE DO FREIO DE ESTACIONAMENTO	625
CONTROLE DO TREM DE FORÇA E MONTAGEM	278
	279
CONTROLE E GRUPO DE MONTAGEM	650
CONTROLE E MONTAGEM - TRANSMISSÃO	280
CONTROLE ELETRÔNICO	281
	283
	285
CONTROLE ELETRÔNICO - MOTOR	287
	288
	289
	290
CONTROLE ELETRÔNICO - VISOR	1026
	1027
CONTROLE ELETRÔNICO E MONTAGEM	272
	273
	274
	275
CONTROLE ELETRÔNICO E MONTAGEM - MOTOR	277

* TRADUÇÃO NÃO DISPONÍVEL NO MOMENTO DA IMPRESSÃO

ÍNDICE

Designação	Página
CONTROLE ELETRÔNICO (LUZ DO PAINEL DE INSTRUMENTOS)	1049, 1051
CONTROLE ELETRÔNICO (TECLADO - INGLÊS)	272
CONTROLE ELETRÔNICO (TECLADO INTERNACIONAL)	272
CONTROLE HIDRÁULICO	652, 653, 655
CONVERSOR DE POTÊNCIA (24-VOLTS A 12-VOLTS) (10 AMP.)	397
CONVERSOR DE POTÊNCIA (24 VOLTS A 12 VOLTS)(25 AMP)	295
CONVERSOR DE TORQUE	463, 465, 467
CONVERSOR ELÉTRICO	295
COROA E ENGRENAGEM DE TRANFERÊNCIA	422, 426
CORREIA EM V (ALTERNADOR)	58
CORREIA EM V (COMPRESSOR DO REFRIGERANTE)	1016
CRONÔMETRO-ESPERA DE LIGAÇÃÕ (24 V) (AR CONDICIONADO)	1061
CRUZETA E MANCAL	472
*CYLINDER GP-BULLDOZER LIFT	682, 684

D

Designação	Página
DECALQUE	1170
DECALQUE - ADVERTÊNCIA (CONEXÃO DO CABO AUXILIAR DE PARTIDA)	1173
DECALQUE - ADVERTÊNCIA (GUIA)	553, 556, 559, 563, 566, 569, 572, 575
DECALQUE - AVISO (BOMBA DE PRÉ-LUBRIFICAÇÃO)	98, 101
DECALQUE - AVISO (RADIO)	1077
DECALQUE - AVISO (RÁDIO)	1048, 1077
DECALQUE - IDENTIFICAÇÃO (FILTRO DE ÓLEO DO MOTOR)	1173
DECALQUE - IDENTIFICAÇÃO (FUSÍVEL)	382
DECALQUE - IDENTIFICAÇÃO (GRUPO, NO. DE SEQÜÊNCIA) (AQUECEDOR)	1033
DECALQUE - IDENTIFICAÇÃO (NO. DE SEQÜÊNCIA E GRUPO) (AQUECEDOR)	1036
DECALQUE - IDENTIFICAÇÃO (NO. DE SEQÜÊNCIA E GRUPO) (AR CONDICIONADO)	997, 1000
DECALQUE - IDENTIFICAÇÃO (PAINEL DE FUSÍVEIS)	382
DECALQUE - IDENTIFICAÇÃO (POSIÇÃO DA LÂMINA)	281, 283, 285
DECALQUE - INSTRUÇÃO (AJUSTE DO ASSENTO)	1125, 1127, 1130, 1132, 1134
DECALQUE - INSTRUÇÃO (ÂNGULO DO PASSO AUTOMÁTICO DA LÂMINA)	1173
DECALQUE - INSTRUÇÃO (CONTROLES DO RÍPER)	1019
DECALQUE - INSTRUÇÃO (ENTRADA E SAIDA DE AGUA) (AQUECEDOR)	1033
DECALQUE - INSTRUÇÃO (ENTRADA E SAÍDA DE ÁGUA) (AQUECEDOR)	1036
DECALQUE - INSTRUÇÃO (ENTRADA E SAÍDA DE ÁGUA) (AR CONDICIONADO)	997, 1000
DECALQUE - INSTRUÇÃO (INTERRUPTOR DO EXTRATOR DE PINOS DO RÍPER)	853, 855
DECALQUE - INSTRUÇÃO (LIMPADOR E LAVADOR DO VIDRO)	1162, 1166
DECALQUE - INSTRUÇÃO (OPERAÇÃO DA LÂMINA)	1173
DECALQUE - INSTRUÇÃO (SISTEMA DE RENOVAÇÃO DE ÓLEO)	107
DECALQUE - PAINEL (CONDICIONADOR DE AR E SOPRADOR)	1039
DECALQUE - PAINEL (CONTROLE DE TEMPERATURA)	1003
DECALQUE - PAINEL (INDICADOR DE AÇÃO)	1049, 1051

* TRADUÇÃO NÃO DISPONÍVEL NO MOMENTO DA IMPRESSÃO

ÍNDICE

Designação	Página
DECALQUE - PAINEL (INSTRUMENTO)	1049, 1051
DECALQUE - TECLADO	1070
DECALQUE - TIRA	238
DECALQUE - TIRA (TANQUE DE COMBUSTÍVEL)(LADO DIREITO TRASEIRO)	238
DECALQUE - TIRA (TANQUE DE COMBUSTÍVEL)(LADO ESQUERDO TRASEIRO)	238
DECALQUE (ALMOFADA DO ASSENTO - IDENTIFICAÇÃO)	1081, 1082
DECALQUE (BOBINA DO EXCITADOR)	305
DECALQUE (FREIO DE ESTACIONAMENTO)	625
DECALQUE (IGNIÇÃO)	305
DECALQUE (INTERRUTPOR DE IGNIÇAO)	305
DECALQUE (PARTIDA)	305
DECALQUE (PLACA - NOME)	648
DECALQUE (SEGURANÇA)	305
DECALQUE (TECLADO DE CARREGAMENTO AUTOMÁTICO)	1071
DEGRAU	1122
DENTE DO RÍPER	987, 988, 989, 990, 991
DESCONGELADOR	1031
DISJUNTOR AUTOMÁTICO DE CIRCUITO (10 AMPERES) (CHAVE DE PARTIDA)	382
DISJUNTOR AUTOMÁTICO DE CIRCUITO (10 AMPERES) (FREIO/EMBREAGEM ELETRÔNICOS)	382
DISJUNTOR AUTOMÁTICO DE CIRCUITO (15 AMPERES) (FARÓIS DIANTEIROS)	382
DISJUNTOR AUTOMÁTICO DE CIRCUITO (15 AMPERES) (IMPLEMENTO)	382
DISJUNTOR AUTOMÁTICO DE CIRCUITO (15 AMPERES) (MOTOR)	382
DISJUNTOR AUTOMÁTICO DE CIRCUITO (15 AMPERES) (VENTILADOR)	382
DRENO - ECOLOGIA	412
ELEMENTO - AQUECEDOR DE ÁGUA DA CAMISA (120 VOLTS,1500 WATTS)	300, 302
ELEMENTO - AQUECEDOR DE ÁGUA DA CAMISA (240 VOLTS, 1500 WATTS)	301, 303
ELEMENTO - FILTRANTE (PURIFICADOR DE AR)	167
ELEMENTO - FILTRANTE (SUPORTE DA ENTRADA DE AR)	190, 191
ELEMENTO - FILTRO DE COMBUSTÍVEL	215
ELEMENTO - PRIMÁRIO (FILTRO DE AR)	166
ELEMENTO - PRIMÁRIO (FILTRO DE AR) (EFICIÊNCIA ULTRA ALTA)	169
ELEMENTO - SECUNDÁRIO (FILTRO DE AR)	166, 169
ELEMENTO FILTRANTE - ÓLEO (HIDRÁULICO)	848
ELEMENTO FILTRANTE - ÓLEO (HIDRÁULICO) (TRANSMISSÃO)	413, 437
ELEMENTO FILTRANTE - ÓLEO (RETORNO DO VENTILADOR)	725
ELIMINAÇÃO DE VAPORES DO CÁRTER	84
ELO DA ESTEIRA	580, 581, 582, 583, 584, 585
ELO ESTABILIZADOR	932
EMBREAGEM DE DIREÇÃO E FREIOS	623
EMISSOR - POSIÇÃO	330, 331, 332, 333, 334, 335, 336, 337
EMISSOR - POSIÇÃO (CILINDRO DE LEVANTAMENTO)	666
EMISSOR - POSIÇÃO (INCLINAÇÃO DO RÍPER)	655
EMISSOR - POSIÇÃO (RÍPER - LEVANTAR E ABAIXAR)	655
ENGRENAGENS DE COMANDO TRASEIRO	50
ENGRENAGENS DE DISTRIBUIÇÃO	48
ENGRENAGENS PLANETÁRIAS - TRANSMISSÃO	443, 448
ESCOVA (MOTOR DE PARTIDA)	365
*EDGE GP-BIT & CUTTING	965
EIXO-COMANDO DE VÁLVULA	8, 9
EIXO DE TRANSMISSÃO	461
EIXO PIVÔ - LUBRIFICAÇÃO	588
EJETOR DE POEIRA	170

E

* TRADUÇÃO NÃO DISPONÍVEL NO MOMENTO DA IMPRESSÃO

ÍNDICE

Designação	Página
	368
ESPELHO RETROVISOR	1067
ESTEIRA	614
	615
	616
	617
ESTRUTURA - BOMBA DE ÓLEO (RETORNO - CONVERSOR)	454
ESTRUTURA ROPS	1094
EXTENSÃO - ENCOSTO	1029
	1030
EXTENSÃO - ENCOSTO (TECIDO)	1111
EXTENSÃO - ENCOSTO (VINIL)	1110

F

FIAÇÃO - AQUECEDOR E AR CONDICIONADO	1057
	1061
FIACAO - BOMBA (LAVADOR DO VIDRO)	1137
FIAÇÃO - INTERRUPTOR (LIMPADOR)	1162
	1166
FIAÇÃO - INTERRUPTOR (LIMPADOR TRASEIRO)	1163
	1167
FIAÇÃO - LUZES TRASEIRAS	313
FIAÇÃO - TECLADO	281
	283
	285
FIAÇÃO -LUZES DIANTEIRAS (CILINDRO DE LEVANTAMENTO)	749
	751
FIAÇÃO ELÉTRICA-AQUECEDOR (ÁGUA DA CAMISA)	303
FIAÇÃO-RÁDIO	1141
FILTRO - ÁGUA (BOMBA D'ÁGUA)	144
	148
FILTRO - AR (CABINE) (ALTA EFICIÊNCIA)	1039
FILTRO - AR (CABINE) (PADRÃO)	1003
	1039
FILTRO - AR (CABINE) (REDUÇÃO DE ODOR)	1039
FILTRO - COMBUSTÍVEL	215
FILTRO - COMBUSTÍVEL (TANQUE)	238
	239
FILTRO - DERIVAÇÃO	649
FILTRO - ELEMENTO HIDRÁULICO (ÓLEO DO ACIONADOR DO FREIO)	726
FILTRO - ESPUMA (SENSOR DE COMBUSTÍVEL)	246
	257
	264
FILTRO - ÓLEO	413
	725
	726
FILTRO - ÓLEO DO MOTOR	80
	82
FILTRO DE AR DE CABINA (PADRÃO)	1003
	1039
FILTRO E JUNTA (AUXILIAR DE PARTIDA A ÉTER)	354
FIXADORES - CABEÇOTE DO MOTOR	31
	33
FIXADORES - CAIXA DIANTEIRA	46
FUNDO - ENCOSTO	1079
	1080
	1081
	1082
FUSÍVEL (10 AMPERES)	383
FUSÍVEL (15 AMPERES)	383
FUSÍVEL (20-AMPERES)	383
FUSÍVEL (30 A) (CONVERSOR DE ENERGIA)	295

G

GARFO	77
GR. DE SERVIÇO - ACESSÓRIO	351
GR. DE SERVICO - TREM DE FORÇA	353
GRUPO DE INSTALAÇÃO - MOTOR	5
GRUPO ROTATIVO DA BOMBA	845
	846
	847

I

ILUMINAÇÃO - DIANTEIRA	322
ILUMINAÇÃO - RÍPER	325
ILUMINAÇÃO - TRASEIRA	323
INDICADOR - NÍVEL DO ÓLEO (VARETA)	85
INJETOR DE COMBUSTÍVEL	218
	228
INSTALAÇÃO DO RÁDIO	1048
INSTALAÇÃO-SEGURANÇA	304
	305
INSTRUMENTOS	1049
	1051
INTERRUPTOR - BALANCIM (AUXILIAR)	397
INTERRUPTOR - BALANCIM (AUXILIAR DE PARTIDA)	399
INTERRUPTOR - BALANCIM (CONTROLE DO VENTILADOR DE DESCONGELAMENTO)	1031
INTERRUPTOR - BALANCIM (FREIO DE ESTACIONAMENTO)	625
INTERRUPTOR - BALANCIM (LIGAR - DESLIGAR AR CONDICIONADO)	1003
	1039

* TRADUÇÃO NÃO DISPONÍVEL NO MOMENTO DA IMPRESSÃO

ÍNDICE

Designação	Página
INTERRUPTOR - BALANCIM (LUZES LATERAIS)	397
INTERRUPTOR - BALANCIM (SACA-PINO DO RIPER)	853 855
INTERRUPTOR - BALANCIM (24 VOLTS) (TRAVA DO ACESSÓRIO)	397
INTERRUPTOR - BALANCIM (24 VOLTS, VEDADO - ILUMINADO) (CONTROLE DO ACELERADOR)	399
INTERRUPTOR - BALANCIM (24 VOLTS, VEDADO - ILUMINADO) (TRAVA DO ACESSÓRIO)	397
INTERRUPTOR - BOTÃO (EMPILHAMENTO AUTOMÁTICO DO RÍPER)	655
INTERRUPTOR - BOTÃO (MUDANÇA AUTOMÁTICA PARA MARCHA MAIS BAIXA)	1049 1051
INTERRUPTOR - BOTÃO (MUDANÇA MARCHAS ACIMA)	641
INTERRUPTOR - BOTÃO (REDUÇÃO DE MARCHA)	641
INTERRUPTOR - FLUXO	373
INTERRUPTOR - FLUXO (LÍQUIDO ARREFECEDOR)	389
INTERRUPTOR - LIMITADOR (FREIO)	404 406
INTERRUPTOR - LIMITADOR (MARCHA À RÉ)	626 628
INTERRUPTOR - MAGNÉTICO	374 375 376 377 378
INTERRUPTOR - MAGNÉTICO (RELÉ DO MOTOR DE PARTIDA)	100
INTERRUPTOR - MAGNÉTICO (24 VOLTS) (RELÉ DE PARTIDA NÚMERO 1)	382
INTERRUPTOR - MAGNÉTICO (24 VOLTS) (RELÉ DE PARTIDA NÚMERO 2)	382
INTERRUPTOR - PARTIDA	379
INTERRUPTOR - PRESSÃO (A-C ALTA)	1057 1061
INTERRUPTOR - PRESSÃO (A-C BAIXA)	1057 1061
INTERRUPTOR - PRESSÃO (DIFERENCIAL DO FILTRO DE COMBUSTÍVEL)	385 389 393
INTERRUPTOR - PRESSÃO (ÓLEO DO MOTOR)	98 100
INTERRUPTOR - TEMPERATURA (AR CONDICIONADO)	997
INTERRUPTOR - TEMPERATURA (ÓLEO DO TREM DE FORÇA)	249 256 263
INTERRUPTOR - TERMOSTATO (AR CONDICIONADO)	1000
INTERRUPTOR (BALANCIM) (CONSOLE - LEVANTAR/ABAIXAR)	620
INTERRUPTOR DE DERIVAÇÃO	371
INTERRUPTOR (GIRATÓRIO) (CONTROLE DE VELOCIDADE DO VENTILADOR)	1003
INTERRUPTOR (LUZES DIANTEIRAS)	397
INTERRUPTOR (LUZES TRASEIRAS)	397
INTERRUPTOR (PORTAS-DIANTEIRA, TRASEIRA, LADO DIREITO & LADO ESQUERDO)	1162 1166
INTERRUPTOR (PRESSÃO DO DIFERENCIAL)	726
INTERRUPTOR (VELOCIDADE DO VENTILADOR)	1039
INTERRUPTOR (24 VOLTS, ILUMINADO) (CONTROLE DO ACELERADOR)	399

J

JANELA DA CABINE	1145 1146 1147 1148 1149 1150 1151 1152 1153 1155 1156 1157 1158 1159
JANELA DESLIZANTE	1144
JOGO - COMPRESSOR DE AR DO ASSENTO	1054
JOGO - MANCAL PRINCIPAL (VIRABREQUIM)	17 18
JOGO - SERVIÇO DO ACUMULADOR	648
JOGO DE AJUSTADOR (FUNDO DO ASSENTO)	1083

* TRADUÇÃO NÃO DISPONÍVEL NO MOMENTO DA IMPRESSÃO

ÍNDICE

Designação	Página
JOGO DE ALMOFADA DO ASSENTO (ASSENTO DA SUSPENSÃO)	1099
JOGO DE ALMOFADA DO ASSENTO (VINIL) (ASSENTO)	1097
JOGO DE ALMOFADA (ENCOSTO DE VINIL)	1030
JOGO DE ALMOFADA (EXTENSÃO DO ENCOSTO DO ASSENTO)	1029
JOGO DE AMORTECEDOR DE CHOQUES (ASSENTO DA SUSPENSÃO)	1134
JOGO DE BLOCO DESLIZADOR (ASSENTO DA SUSPENSÃO)	1112 1113 1115 1118 1119 1120 1121
JOGO DE BOTÃO DE SUSPENSÃO (AJUSTE DE ALTURA) (ASSENTO DA SUSPENSÃO)	1042 1045
JOGO DE BUJÃO (4 PINOS)	398
JOGO DE CÁRTER DE INCLINAÇÃO (ASSENTO)	1097
JOGO DE CÁRTER DE INCLINAÇÃO (ASSENTO DA SUSPENSÃO)	1099
JOGO DE CHICOTE (ASSENTO COM SUSPENSÃO A AR)	1132
JOGO DE CHICOTE (ASSENTO COM SUSPENSÃO A AR) (ASSENTO DA SUSPENSÃO)	1127
JOGO DE COIFA DE SUSPENSÃO (ASSENTO DA SUSPENSÃO)	1125 1130
JOGO DE CORDÃO (ASSENTO DA SUSPENSÃO)	1127 1132 1134
JOGO DE ENGRENAGENS DO MOTOR DE PARTIDA	366 369
JOGO DE ESCOVA (MOTOR DO VENTILADOR DO AQUECEDOR)	1034
JOGO DE ESCOVA (MOTOR DO VENTILADOR DO AR CONDICIONADO)	997
JOGO DE FILTRO DA TAMPA (TANQUE DE COMBUSTÍVEL)	237 239
JOGO DE FIXADOR DE CORREIA (ASSENTO DA SUSPENSÃO)	1125 1130
JOGO DE FIXADORES (ALTERNADOR)	244
JOGO DE FIXADORES (ALTERNADOR)	242
JOGO DE FIXADORES (ASSENTO DA SUSPENSÃO)	1127 1132
JOGO DE FIXADORES (RETIFICADOR)	1034
JOGO DE FIXADORES (VÁLVULA SOLENÓIDE)	486
JOGO DE GAXETA	928 930
JOGO DE GUIA DE TRILHO (VIDRO DA CABINE)	1153 1155
JOGO DE INCLINAÇÃO DO ASSENTO (FUNDO DO ASSENTO)	1083
JOGO DE INCLINAÇÃO TRASEIRA (FUNDO DO ASSENTO)	1083
JOGO DE INDICADOR (AJUSTAGEM DO PESO) (ASSENTO DA SUSPENSÃO)	1046
JOGO DE INDICADOR (AJUSTAGEM DO PESO) (ASSENTO DA SUSPENSÃO)	1043
JOGO DE INSTALAÇÃO	171
JOGO DE JUNTAS (CAMISA DO CILINDRO SIMPLES)	4
JOGO DE JUNTAS (INJETOR DE COMBUSTÍVEL SIMPLES)	4
JOGO DE LÂMINA DO LIMPADOR DE PÁRA-BRISA (JANELA)	1163 1167
JOGO DE MAÇANETA DO ASSENTO (ASSENTO)	1097
JOGO DE MAÇANETA DO ASSENTO (ASSENTO DA SUSPENSÃO)	1099
JOGO DE MANCAL (ALTERNADOR)	242
JOGO DE MANCAL (ASSENTO DA SUSPENSÃO)	1043 1046
JOGO DE MANCAL (MANCAL DO MOTOR DE PARTIDA)	365 368
JOGO DE MANCAL (MOTOR GIRATÓRIO)	843
JOGO DE MOLA (AJUSTE DE ALTURA) (ASSENTO DA SUSPENSÃO)	1042 1045
JOGO DE MOLA (ASSENTO DA SUSPENSÃO)	1045
JOGO DE MOLA (ASSENTO DA SUSPENSÃO)	1043
JOGO DE MOLA DE FOLHA (VIDRO DA CABINE)	1151 1152
JOGO DE PÁRA-CHOQUE (AJUSTAGEM DO PESO) (ASSENTO DA SUSPENSÃO)	1042 1046

* TRADUÇÃO NÃO DISPONÍVEL NO MOMENTO DA IMPRESSÃO

ÍNDICE

Designação	Página
JOGO DE PARAFUSO DE RETENÇÃO (CONTROLE ELETRÔNICO DO MOTOR)	287, 290
JOGO DE PARAFUSO DE RETENÇÃO (CONTROLE NÃO PROGRAMADO)	291, 294
JOGO DE RECEPTÁCULO (12 PINOS)	628
JOGO DE RECEPTÁCULO (2 PINOS)	323, 347, 371, 381, 385, 389, 393, 628, 726, 1001, 1068, 1069
JOGO DE RECEPTÁCULO (2 PINOS) (INTERRUPTOR MAGNÉTICO)	375
JOGO DE RECEPTÁCULO (3 PINOS)	386, 390, 393, 394, 1039, 1141
JOGO DE RECEPTÁCULO (4 PINOS)	901, 903, 1026, 1070, 1071
JOGO DE RECEPTÁCULO (6 PINOS)	641, 1001, 1028, 1039, 1068, 1069, 1073, 1074, 1160, 1161
JOGO DE RECONDICIONAMENTO	1053
JOGO DE RECONDICIONAMENTO (BOMBA DE ÁGUA)	4, 144, 148
JOGO DE RESPIRO (ADAPTADOR DE ABASTECIMENTO RÁPIDO DE COMBUSTÍVEL)	199, 201, 203
JOGO DE RETENTOR	541, 864, 913
JOGO DE RETENTOR (BOMBA DE ENGRENAGEM)	830
JOGO DE RETENTOR (CILINDRO DE INCLINAÇÃO DO RÍPER)	713, 717
JOGO DE RETENTOR (CILINDRO DO RÍPER)	694, 698
JOGO DE RETENTOR (CONJUNTO DE CARTUCHO)	909
JOGO DE RETENTOR (VÁLVULA DE SEQÜÊNCIA)	897
JOGO DE RETENTOR (VÁLVULA SOLENÓIDE)	484, 488, 859, 860, 901, 902, 903, 904, 907, 908, 910, 912
JOGO DE ROLETE DE SUSPENSÃO (ASSENTO DA SUSPENSÃO)	1125, 1130
JOGO DE ROLO (ASSENTO DA SUSPENSÃO)	1127, 1132
JOGO DE SEÇÃO (DIANTEIRO) (BOMBA DE ENGRENAGEM)	830
JOGO DE SEÇÃO (PARTE TRASEIRA) (BOMBA DE ENGRENAGEM)	830
JOGO DE SEGUIDOR (ASSENTO DA SUSPENSÃO)	1043, 1046
JOGO DE TERMINAL ALTERNADOR	244
JOGO DE TERMINAL (ALTERNADOR)	242
JOGO DE TERMINAL (MOTOR DE PARTIDA)	360, 363, 366, 369
JOGO DE TOMADA DE CONEXÃO (12 PINOS)	628
JOGO DE TOMADA DE CONEXÃO (2 PINOS)	318, 323
JOGO DE TOMADA DE CONEXÃO (3 PINOS)	628
JOGO DE TOMADA DE CONEXÃO (3 PINOS) (SENSOR DE PRESSÃO)	340

* TRADUÇÃO NÃO DISPONÍVEL NO MOMENTO DA IMPRESSÃO

ÍNDICE

Designação	Página
JOGO DE TOMADA DE CONEXÃO (6 PINOS)	628, 1027
JOGO DE TRAVA DE TERMINAL (BLOCO DE FUSÍVEIS)	383
JOGO DE TRINCO (VIDRO DA CABINE)	1153, 1155
JOGO DE VÁLVULA DE AR (ASSENTO DA SUSPENSÃO)	1134
JOGO-JANELA	1055
JUNTA (BOMBA DE ESCORVA DO COMBUSTÍVEL)	229
JUNTA UNIVERSAL	472

L

LÂMINA DO LIMPADOR DE PÁRA-BRISA (PORTA - LADO DIREITO E ESQUERDO)	1162, 1166
LÂMINA DO LIMPADOR DE PÁRA-BRISA (VIDRO DIANTEIRO)	1162
LÂMINA DO LIMPADOR DE PÁRA-BRISA (VIDRO DIANTEIRO)	1166
LÂMINA DO LIMPADOR DE PÁRA-BRISA (VIDRO TRASEIRO)	1162, 1166
LÂMINA E BORDA CORTANTE	949
LÂMINA SEMI-UNIVERSAL	950, 951, 957
LÂMINA UNIVERSAL	953, 954, 956, 959
LÂMPADA - FAROL	307, 308, 309, 310, 311
LÂMPADA - FAROL (HID) (24 VOLTS)(70 WATTS)(APAGAR)	310, 311
LÂMPADA - HALOGÊNEO (24 VOLTS, 65 WATTS) (FAROL)	307, 308, 309
LÂMPADA - TETO	306
LÂMPADA (12-VOLTS) (INSTALAÇAO DE SEGURANÇA)	305
LÂMPADA (24 V) (TECLADO)	281, 283, 285
LÂMPADA (24 VOLTS) (CONTROLE DO ACELERADOR)	399
LÂMPADA (24 VOLTS) (FALHA TRASEIRA)	397
LÂMPADA (24 VOLTS) (INDICADOR DE AÇÃO)	1051
LÂMPADA (24 VOLTS) (INDICADOR DE AÇÃO)	1049
LÂMPADA (24 VOLTS) (PAINEL DE INSTRUMENTOS)	397
LÂMPADA (24 VOLTS) (TRANSPARENTE)(TETO)	306
LÂMPADA (24 VOLTS) (TRAVA DO ACESSÓRIO)	397
LAVADOR DO VIDRO	1141
LEVANTAMENTO DO MOTOR	56, 57
LIMPADOR DO VIDRO	1160, 1161, 1162, 1166
LUBRIFICAÇÃO-BARRA EQUALIZADORA	586

M

MANCAL - PRINCIPAL (PADRÃO)	17, 18
MATERIAL RODANTE	617, 618, 619
MECANISMO DAS VÁLVULAS	69, 71, 73, 75
MECANISMO DE DIREÇÃO	633, 635
MEDIÇÃO - ÓLEO DO MOTOR	93, 94
MÓDULO - CENTRO DE MENSAGEM	1068, 1069
MÓDULO - TECLADO DO MONITOR	1070, 1071
MÓDULO - VELOCÍMETRO E TACÔMETRO	1073
MÓDULO ELETRÔNICO DE QUATRO INDICADORES	1072
MOLA (MOTOR DE PARTIDA)	365, 369
MONITOR DE SERVIÇO	352
MONTAGEM - ALTERNADOR	58
MONTAGEM - CABINE	1075
MONTAGEM - CILINDRO	825, 826, 827
MONTAGEM - ESTRUTURA ROPS	1078
MONTAGEM - RÁDIO	1077
MONTAGEM - TRANSMISSÃO	442

* TRADUÇÃO NÃO DISPONÍVEL NO MOMENTO DA IMPRESSÃO

ÍNDICE

Designação	Página
MOTOR	3
MOTOR - LIMPADOR DO VIDRO	1074
MOTOR - LIMPADOR DO VIDRO (LIMPADORES DE PORTA)	1162
	1166
MOTOR - PISTÃO	824
MOTOR - VENTILADOR	822
	823
MOTOR DE PARTIDA - SISTEMA DE PRÉ-LUBRIFICAÇÃO	368
MOTOR DO GRUPO ROTATIVO	843
MOTOR ELÉTRICO DE PARTIDA	358
	359
	362
	365
MOTOR ELÉTRICO (27 VOLT) (AQUECEDOR)	1036
MOTOR ELÉTRICO (27 VOLT) (AR CONDICIONADO)	1000
MUNHÃO DA LÂMINA	945
MUNHÃO DO MOTOR	68

O

ÓLEO - ARRANJO PARA TROCA RÁPIDA	96

P

PÁRA-LAMA	511
	515
	518
	519
PISO	1085
PISTÃO E BIELA	62
	64
PISTÃO E VÁLVULA	828
	829
PIVÔ DO LIMPADOR	1169
PLACA - NÚMERO DE SÉRIE	1172
PLACA DE ADVERTÊNCIA (CILINDRO DE ALTA PRESSÃO)	553
PLACA DE ADVERTÊNCIA (CILINDRO DE ALTA PRESSÃO)	556
	559
	563
	566
	569
	572
	575
PLACA DE ADVERTÊNCIA (MOLA TENSORA)	553
	556
	559
	563
	566
	569
	572
	575
PLACA DE DESGASTE	975
	976
PLACA DE INSTRUÇÃO (CONDICIONADOR DE AR)	1172
PLACA DE INSTRUÇÃO (CONDICIONADOR DE AR)	996
PLACA E DECALQUE	1172
PLATAFORMA	1086
PLATAFORMA DA CABINE	1088
	1090
PÓS-ARREFECEDOR A ÁGUA	163
PRÊ-LUBRIFICAÇÃO	98
	100
PRÉ-PURIFICADOR	183
	184
	185
	186
PROTETOR - ACOPLAMENTO	431
PROTETOR - RADIADOR	525
	527
PROTETOR - ROCHA	529
	530
PROTETOR - RODA-GUIA	522
	523
	524
PROTETOR - TRANSMISSÃO	531
	533
PROTETOR INFERIOR	520
PUBLICAÇÃO	1
PURIFICADOR DE AR	164
	166
	167
	169

R

RADIADOR	150
	152
RECEPTOR - SECADOR (CONDICIONADOR DE AR)	1057
	1061
RECLINAÇÃO - ASSENTO	1092
	1093
REGULADOR DE TEMPERATURA/ TERMOSTATO	116
RELÉ (CONJ) (12-VOLTS) (INSTALAÇAO DE SEGURANÇA)	305

* TRADUÇÃO NÃO DISPONÍVEL NO MOMENTO DA IMPRESSÃO

ÍNDICE

Designação	Página
RELÉ (CONJ) (24 VOLTS) (INSTALAÇAO DE SEGURANÇA)	305
RELÉ (CONJ) (24 VOLTS) (PRESSURIZADOR)	1163, 1167
RESISTOR (CARGA DO SOLENÓIDE DE ÉTER)	354
RESPIRO	78
RESPIRO (MOTOR)	78
RESPIRO (TANQUE DE LUBRIFICAÇÃO)	586
RESPIRO (TANQUE DE MEDIÇÃO DO ÓLEO DO MOTOR)	107
RESPIRO (TREM DE FORÇA)	433, 437
RETEM	632
RETÉM - CONTROLE (IMPLEMENTO)	650, 657, 659, 662, 663, 664
RETENTOR - BOMBA D'ÁGUA	144, 148
RETENTOR - ESTEIRA	600
RETENTOR DO VIRABREQUIM	66
RETENTOR (MECANISMO DAS VÁLVULAS - TAMPA)	15
RETENTOR TIPO ANEL (FILTRO DE COMBUSTÍVEL)	215
REVESTIMENTO DA CABINE	1056
RIPER	977, 978, 979, 980, 981, 982, 983, 984, 985, 986
RODA-GUIA DAS ESTEIRAS	578, 579
ROLETE DE ESTEIRA DE FLANGE DUPLO	596, 597
ROLETE DE ESTEIRA DE FLANGE SIMPLES	598, 599
ROLETE SUPERIOR DA ESTEIRA	591, 592, 593, 594, 595
RUÍDO - ARRANJO PARA SUPRESSÃO	1124

S

Designação	Página
SACA-PINO	934, 935, 936, 937
SEGMENTO DA RODA MOTRIZ	460
SEMI-EIXO - TREM DE FORÇA	401
SENSOR - NÍVEL DE COMBUSTÍVEL	329
SENSOR - NÍVEL DE LÍQUIDO (TANQUE DE MEDIÇÃO DO ÓLEO DO MOTOR)	107
SENSOR - PRESSÃO	338, 339, 340, 341, 342, 343, 344, 345
SENSOR - PRESSÃO (ADMISSÃO DO TURBOALIMENTADOR - LADO DIREITO)	327
SENSOR - PRESSÃO (ATMOSFÉRICA)	393
SENSOR - PRESSÃO (CÁRTER DO MOTOR)	393
SENSOR - PRESSÃO (ENTRADA DO TURBOALIMENTADOR - LADO ESQUERDO)	327
SENSOR - PRESSÃO (ÓLEO FILTRADO)	385, 389
SENSOR - PRESSÃO (SAÍDA DO TURBOALIMENTADOR)	385, 393
SENSOR - TEMPERATURA	349, 350
SENSOR - TEMPERATURA DE ESCAPE (TURBO - LADO DIREITO)	385, 389
SENSOR - TEMPERATURA DE ESCAPE (TURBO - LADO DIREITO)	393
SENSOR - TEMPERATURA DE ESCAPE (TURBO - LADO ESQUERDO)	385, 389
SENSOR - TEMPERATURA DE ESCAPE (TURBO - LADO ESQUERDO)	393
SENSOR - TEMPERATURA (ENTRADA DO AR)	327
SENSOR - TEMPERATURA (ENTRADA DO AR)	394
SENSOR - TEMPERATURA (LÍQUIDO ARREFECEDOR)	393
SENSOR - TEMPERATURA (LÍQUIDO ARREFECEDOR)	385, 389

* TRADUÇÃO NÃO DISPONÍVEL NO MOMENTO DA IMPRESSÃO

ÍNDICE

Designação	Página
SENSOR - TEMPERATURA (SAÍDA DE LÍQUIDO ARREFECEDOR DO PÓS-ARREFECEDOR)	386, 390, 394
SENSOR DE PRESSÃO E MONTAGEM	326, 327
SENSOR DE VELOCIDADE	346, 347, 348
SENSOR DE VELOCIDADE (REGULAGEM DA CALIBRAÇÃO)	385, 389, 393
SENSOR DE VELOCIDADE (REGULAGEM DE INJEÇÃO OU IGNIÇÃO)	393
SILENCIADOR	182
SINCRONIZADOR (PRÉ-LUBRIFICAÇÃO)	98, 100
SIST. ELETRÔNICO - ACESSÓRIO	296
SISTEMA DE ILUMINAÇÃO	312, 313
SISTEMA DE ILUMINAÇÃO - FARÓIS	315, 316, 318
SISTEMA ELETRÔNICO - CLASSIFICAÇÕES DO MOTOR	3
SISTEMA ELETRÔNICO - MÁQUINA	296
SISTEMA ELETRÔNICO - MONITOR	296
SISTEMA ELETRÔNICO - TREM DE FORÇA	297
SOFTWARE - ACESSÓRIO	296, 351
SOFTWARE - MÁQUINA (SEGURANÇA)	304
SOFTWARE - MONITOR (VIMS)	296, 352
SOFTWARE - TREM DE FORÇA	297, 353
SOLENÓIDE (MOTOR DE PARTIDA)	359, 362, 365, 368
SUPORTE - ADMISSÃO DE AR	190, 191
SUPORTE - CONTROLE	641
SUPORTE - ESCOVA (MOTOR DE PARTIDA)	366, 369
SUPORTE DO MOTOR	67
SUSPENSÃO - ASSENTO	1125, 1127, 1130, 1132, 1134
SUSPENSÃO - TRUQUE	602, 603, 604, 605, 607, 608

T

Designação	Página
TAMPA - BLOCO DO MOTOR	11, 12
TAMPA - BOCAL DE ENCHIMENTO (CÁRTER DO MOTOR)	96
TAMPA - BOCAL DE ENCHIMENTO (COMBUSTÍVEL, TRAVA, COM RESPIRO)	239
TAMPA - BOCAL DE ENCHIMENTO DE ÓLEO (MOTOR)	79
TAMPA - BOCAL DE ENCHIMENTO DE ÓLEO (TANQUE DE LUBRIFICAÇÃO)	586
TAMPA - BOCAL DE ENCHIMENTO DE ÓLEO (TANQUE DE MEDIÇÃO)	107
TAMPA - BOCAL DE ENCHIMENTO DE ÓLEO (TREM DE FORÇA)	433, 437
TAMPA - BOCAL DE ENCHIMENTO (TANQUE HIDRÁULICO)	848
TAMPA - CAIXA DIANTEIRA	14
TAMPA - COMANDO DE ACESSÓRIOS	10
TAMPA - EMBARQUE	960
TAMPA - MECANISMO DAS VÁLVULAS	15
TAMPA - NÍVEL DO ÓLEO (GARRAFA DE LUBRIFICAÇÃO DO EIXO PILOTO)	588
TAMPA - ROLETE DAS ESTEIRAS	552
TAMPA COM RESPIRO (TANQUE DO LAVADOR DE VIDROS)	1136, 1138
TAMPA (CONDICIONADOR DE AR) (LADO ALTO)	1057, 1061
TAMPA (CONDICIONADOR DE AR) (LADO BAIXO)	1057, 1061
TAMPA DA RODA-GUIA	550, 551
TAMPA DO BOCAL DE ENCHIMENTO DO TANQUE DE COMBUSTÍVEL (TRAVAMENTO)	199, 201, 203
TAMPA DO RESERVATÓRIO HIDRÁULICO (ENCHIMENTO DO TANUQE HIDRÁULICO)	848
TAMPA DO TANQUE DE COMBUSTÍVEL (TRAVA COM RESPIRO)	237

* TRADUÇÃO NÃO DISPONÍVEL NO MOMENTO DA IMPRESSÃO

ÍNDICE

Designação	Página
TAMPA (ÓLEO DO MOTOR)	80
	82
TAMPÃO (DRENAGEM) (CAIXA)(TRANSMISSÃO)	493
TAMPÃO (DRENAGEM) (TANQUE HIDRÁULICO)	848
TAMPÃO (FILTRO DA TRANSMISSÃO)	413
TANQUE - LAVADOR DE JANELA	1136
	1137
	1138
	1140
TANQUE - ÓLEO DO MOTOR	107
TANQUE DE ÁGUA	154
	157
	160
TANQUE DE COMBUSTÍVEL	236
	237
	238
	239
TANQUE E TUBULAÇÕES - EXPANSÃO	852
TANQUE HIDRÁULICO E FILTRO	848
TAPETE INFERIOR	1075
TAPETE SUPERIOR	1075
TELA - RETORNO (ÓLEO DO MOTOR)	105
TELA DE SUCÇÃO (CONVERSOR DE TORQUE)	467
TELA DO TANQUE DE COMBUSTÍVEL	219
TELA FILTRANTE (AUXILIAR DE PARTIDA A ÉTER)	354
TELA FILTRANTE (CÁRTER DE ÓLEO DO MOTOR)	60
TELA FILTRANTE (ENCHIMENTO DO TANUQE HIDRÁULICO)	848
TELA FILTRANTE (TANQUE HIDRÁULICO)	848
TELA FILTRANTE (TANQUE HIDRÁULICO)	848
TELA FILTRANTE (TREM DE FORÇA)	433
	437
TELA FILTRANTE (TUBOS DE ÓLEO DO TREM DE FORÇA)	432
TERMOPAR	380
TERMOSTATO / REGULADOR DE TEMPERATURA	116
TIRANTE DA LÂMINA	920
TRANSMISSÃO	469
	470
	471
TREM DE FORÇA	453
TUBOS - ÁGUA	117
	119
	121
	124
	127
	129
	131
	132
	134
	136
	138
TUBOS - ÁGUA (ARREFECEDOR DE TRANSMISSÃO)	5
TUBOS - ÁGUA (PÓS-ARREFECEDOR)	5
TUBOS - AQUECEDOR	1064
	1066
TUBOS - AR	172
	173
	174
	176
TUBOS - AR CONDICIONADO	1057
	1061
TUBOS - BOMBA	763
	769
	775
	780
	783
	788
TUBOS - CILINDRO DE INCLINAÇÃO	810
	812
	814
	818
TUBOS - CILINDRO DE LEVANTAMENTO	749
	751
	753
	757
TUBOS - CILINDRO DO SACA-PINO	760
	761
	762
TUBOS - COMBUSTÍVEL	219
	221
	222
TUBOS - GRAXA	931
TUBOS - INJEÇÃO DO COMBUSTÍVEL	223
TUBOS - ÓLEO DA TRANSMISSÃO	432
	437
TUBOS - ÓLEO DO MOTOR	86
TUBOS - ÓLEO DO TURBOALIMENTADOR	89
	91
TUBOS - RIPER	795
	796
	798
	801
	804
	807
TUBOS - VENTILADOR HIDRÁULICOS	727
	733
	739
	743

* TRADUÇÃO NÃO DISPONÍVEL NO MOMENTO DA IMPRESSÃO

ÍNDICE

Designação	Página
	748
TUBOS DE ALÍVIO	793
TURBOALIMENTADOR	192
	193
	194
	195
	196
	197
V	
*VALVE & MTG GP-STEER & BRAKE	642
*VALVE GP-PUMP CONTROL	893
	894
*VALVE GP-TRANSMISSION CONTROL	644
	646
VÁLVULA - MEDIÇÃO	109
VÁLVULA - PARTIDA A ÉTER	354
VÁLVULA - TANQUE	862
VÁLVULA COMPENSADORA	878
VÁLVULA DA LÂMINA E CILINDRO	667
	669
VÁLVULA DE ALÍVIO	480
	861
VÁLVULA DE ALÍVIO (COMPRESSOR DO REFRIGERANTE)	1015
VÁLVULA DE ALÍVIO (TUBULAÇÕES DE DUPLA INCLINAÇÃO)	793
VÁLVULA DE CONTROLE	473
	475
	865
	869
	871
	875
	876
VÁLVULA DE CONTROLE - PRESSÃO E COMPENSAÇÃO DE FLUXO	889
VÁLVULA DE CONTROLE - TRANSMISSÃO	490
	491
VÁLVULA DE CONTROLE DA BOMBA	891
VÁLVULA DE CONTROLE DE INCLINAÇÃO	914
	915
VÁLVULA DE CONTROLE E MONTAGEM	857
	858
VÁLVULA DE CONTROLE PILOTO	879
	881
	883
	884
VÁLVULA DE DERIVAÇÃO	863
VÁLVULA DE ENXAGUAR	477
VÁLVULA DE PRIORIDADE	478
VÁLVULA DE QUEDA RÁPIDA	896
VÁLVULA DE REDUÇÃO DE PRESSÃO	886
	887
	888
VÁLVULA DE RETENÇÃO	864
VÁLVULA DE RETENÇÃO (DESENGATE DO FREIO DE ESTACIONAMENTO)	864
VÁLVULA DE SEPARAÇÃO	898
	899
	900
VÁLVULA DE SEQUÊNCIA	897
VÁLVULA DESVIADORA (SOMENTE CLIMA DE TEMPO FRIO)	869
VÁLVULA DO RESPIRO	386
	390
	394
VÁLVULA DO VENTILADOR HIDRÁULICO	859
	860
VÁLVULA E MONTAGEM-DIREÇÃO E FREIO	643
VÁLVULA E TUBOS - SACADOR DE PINO	853
	855
VÁLVULA SELETORA	481
VÁLVULA SELETORA E CONTROLE DE PRESSÃO	482
VÁLVULA SELETORA (TRANSMISSÃO)	473
	475
VÁLVULA SOLENÓIDE	484
	485
	486
	487
	488
	489
	901
	902
	903
	904
	906
	907
	908
	909
	910
	911
	912
	913
VEDADOR	143
VEDADOR - CORDÃO	459
VEDADOR (BOMBA D'ÁGUA)	139
VENTILADOR DE SUCÇÃO	114
	115
VIRABREQUIM	16
	17
	18
VOLANTE DO MOTOR	47

* TRADUÇÃO NÃO DISPONÍVEL NO MOMENTO DA IMPRESSÃO

STICHWORTVERZEICHNIS

Bezeichnung	Seite
A	
ABLASS (UMWELTFREUNDLICH)	412
ABLASSSTOPFEN (GEHÄUSE U. RAHMEN)	433
ABLASSSTOPFEN (GETRIEBEKÜHLER)	132
ABLASSSTOPFEN (KRAFTÜBERTRAGUNG)	437
ABLASSSTOPFEN (SEITENANTRIEB)	415
	418
ABLASSSTOPFEN (TELESKOPRÜCKLAUFRAHMEN)	553
	556
	559
	563
	566
	569
	572
	575
ABLASSSTOPFEN (WASSERPUMPE)	139
ABLASSSTOPFEN (ZYLINDERBLOCK)	11
ABSAUGSIEB (MOTORÖL)	105
ABSCHNITT-EINBAUSATZ (HINTEN) (ZAHNRADPUMPE)	830
ABSCHNITT-EINBAUSATZ (VORN) (ZAHNRADPUMPE)	830
ACHSWELLENSCHMIERUNG	588
ADAPTER	198
ANLASSMOTOR-VORSCHMIERANLAGE	368
ANSAUGSIEB (DREHMOMENTWANDLER)	467
ANSCHLAG - QUERTRAVERSE	601
ANSCHLUSSKLEMMENSATZ (DREHSTROMGENERATOR)	242
ANSCHLUSSKLEMMENSATZ (STARTERMOTOR)	360
	363
	366
	369
ANSCHLUSSSPERRSATZ (SICHERUNGSBLOCK)	383
ANTRIEBSSTRANG-WARTUNGSSATZ	353
ANTRIEBSWELLE	461
ANZEIGEN-EINBAUSATZ (GEWICHTSEINSTELLUNG) (SCHWINGSITZ)	1043
	1046
ANZUGSLEINE (SCHWINGSITZ)	1127
	1132
	1134
ARBEITSGERÄT - SERVICESATZ	351
ARBEITSGERÄTE-SOFTWARE	296
	351
ARBEITSGERÄTEELEKTRONIK	296
ARBEITSGERÄTEHEBEL UND BEFESTIGUNGSTEILE	1019
	1020
	1021
	1022
	1023
	1024
	1025
ARBEITSLEUCHTEN	307
	308
	309
	310
	311
	315
	316
	318
ARBEITSLEUCHTEN (HID) (24V)(70W) (FARBLOS)	310
	311
ARRETIERUNGSEINBAUSATZ (FAHRERHAUSFENSTER)	1153
	1155
ASCHENBECHER	1003
	1039
ÄTHERSTARTHILFE	354
	356
ÄTHERSTARTHILFEVENTIL	354
ÄTHERSTARTHILFEZYLINDER	356
AUFKLEBER	238
	1170
AUFKLEBER - TASTENFELD	1070
AUFKLEBER (AUTOCARRY - TASTATUR)	1071
AUFKLEBER (ERREGERSPULE)	305
AUFKLEBER (FESTSTELLBREMSE)	625
AUFKLEBER (*IGNITION SWITCH)	305
AUFKLEBER (KRAFTSTOFFTANK)(HINTEN, LINKE SEITE)	238
AUFKLEBER (KRAFTSTOFFTANK)(HINTEN, RECHTE SEITE)	238
AUFKLEBER (NAMENSSCHILD)	648
AUFKLEBER (RADIO)	1048
	1077
AUFKLEBER (SICHERHEIT)	305
AUFKLEBER (SITZKISSENKENNUNG)	1081
	1082
AUFKLEBER (START)	305
AUFKLEBER (STARTSCHLÜSSELSCHALTER)	305
AUFKLEBER (VORSCHMIERPUMPE)	98
	101
AUFREISSER	977
	978
	979
	980
	981
	982
	983

* ÜBERSETZUNG ZUM ZEITPUNKT DER DRUCKLEGUNG NICHT VORHANDEN

STICHWORTVERZEICHNIS

Bezeichnung	Seite
	984
	985
	986
AUFREISSER-BOLZENZIEHERZYLINDER	710
AUFREISSERKIPPZYLINDER	713
	715
	717
	719
	721
	723
AUFREISSERLEITUNGEN	795
	796
	798
	801
	804
	807
AUFREISSERRAHMEN	969
	971
	973
AUFREISSERZAHN	987
	988
	989
	990
	991
AUFREISSERZYLINDER	694
	696
	698
	700
	702
	704
	706
	708
AUSGLEICHSTANK U. LEITUNGEN	852
AUSGLEICHSVENTIL	878
AUSGLEICHSWELLE	6
AUSPUFFKRÜMMER	178
	180
AUSPUFFTEMPERATURSENSOR (TURBOLADER, LINKS)	385
	389
	393
AUSPUFFTEMPERATURSENSOR (TURBOLADER RECHTS)	385
	389
	393

B

Bezeichnung	Seite
BATTERIE UND VERDRAHTUNG	246
	256
	263
BATTERIE (12 V)	246
	260
	267
BEFESTIGUNGSSCHRAUBENSATZ (ELEKTRON. MOTORSTEUERUNG)	287
	290
BEFESTIGUNGSSCHRAUBENSATZ (NICHT PROGRAMMIERTE STEUERUNG)	291
	294
BEFESTIGUNGSTEILE (DREHSTROMGENERATOR)	242
	244
BEFESTIGUNGSTEILE (GLEICHRICHTER)	1034
BEFESTIGUNGSTEILE (SOLENOIDVENTIL)	486
BELEUCHTUNGSANLAGE	312
	313
BELEUCHTUNGSANLAGE (AUFREISSER)	325
BELEUCHTUNGSANLAGE (12 V) (*SECURITY INSTALLATION)	305
BELEUCHTUNGSKABELSTRANG (HINTEN)	313
*BLADE AS-SEMI-UNIVERSAL	953
BLATTFEDERSATZ (FAHRERHAUSFENSTER)	1151
	1152
BOLZENZIEHER	934
	935
	936
	937
BOLZENZIEHER - VENTIL U. LEITUNGEN	853
	855
BOLZENZIEHERZYLINDERLEITUNGEN	760
	761
	762
BREMSGESTÄNGE	404
	406
*BULLDOZER AR-SEMI-UNIVERSAL	921
	922
	923
	924
*BULLDOZER AR-UNIVERSAL	925
	926
	927
BÜRSTEN-EINBAUSATZ (GEBLÄSE - KLIMAANLAGE)	997
BÜRSTEN-EINBAUSATZ (HEIZGEBLÄSEMOTOR)	1034
BÜRSTENHALTER (STARTERMOTOR)	366
	369
BÜRSTENSATZ (STARTERMOTOR)	365
	368

C

Bezeichnung	Seite
*CYLINDER GP-BULLDOZER LIFT	682
	684

* ÜBERSETZUNG ZUM ZEITPUNKT DER DRUCKLEGUNG NICHT VORHANDEN

STICHWORTVERZEICHNIS

Bezeichnung	Seite
D	
DÄMPFER	38
DICHTUNG	143
DICHTUNG (KRAFTSTOFFENTLÜFTUNGS-PUMPE)	229
DICHTUNG (VENTILDECKEL)	15
DICHTUNG (WASSERPUMPE)	139
DICHTUNGSRING (KRAFTSTOFFILTER)	215
DICHTUNGSSATZ	541
	864
	913
	928
	930
DICHTUNGSSATZ (AUFREISSERKIPPZYLIN-DER)	713
	717
DICHTUNGSSATZ (AUFREISSERZYLINDER)	694
	698
DICHTUNGSSATZ (*CARTRIDGE ASSEMBLY)	909
DICHTUNGSSATZ (EINZELEINSPRITZUNG)	4
DICHTUNGSSATZ (EINZELZYLINDERLAUF-BUCHSE)	4
DICHTUNGSSATZ (SEQUENZVENTIL)	897
DICHTUNGSSATZ (SOLENOIDVENTIL)	484
	488
	859
	860
	901
	902
	903
	904
	907
	908
	910
	912
DICHTUNGSSATZ (ZAHNRADPUMPE)	830
DOKUMENTATION	1
DOPPELFLANSCHROLLEN	596
	597
DREHMOMENTWANDLER	463
	465
	467
DREHSTROMGENERATOR	241
	242
	244
DREHSTROMGENERATOR - AN-SCHLUSSKLEMMENSATZ	244
DREHSTROMGENERATOR - BEFESTIGUNG	58
DREHZAHLSENSOR	346
	347
	348
DREHZAHLSENSOR (STEUERZEITKALIBRIE-RUNGSSONDE)	385
	389
	393
DREHZAHLSENSOR (ZÜNDEINSTELLUNG)	393
DRUCK- U. STROMAUSGLEICHSVENTIL	889
DRUCKBEGRENZUNGSVENTIL	861
DRUCKKNOPFSCHALTER (AUFREISSER AUTO VERSTAUUNG)	655
DRUCKKNOPFSCHALTER (AUTOM. HERUNTERSCHALTEN)	1049
	1051
DRUCKKNOPFSCHALTER (HERUNTERSCHAL-TEN)	641
DRUCKKNOPFSCHALTER (HOCHSCHAL-TEN)	641
DRUCKLUFTLEITUNGEN	172
	173
	174
	176
DRUCKLUFTVENTILSATZ (SCHWINGSITZ)	1134
DRUCKREDUZIERVENTIL	886
	887
	888
DRUCKSCHALTER (KLIMAANLAGE HOCH)	1057
	1061
DRUCKSCHALTER (KLIMAANLAGE NIEDRIG)	1057
DRUCKSCHALTER (KLIMAANLAGE NIEDRIG)	1061
DRUCKSCHALTER (KRAFTSTOFFILTER)	385
	389
	393
DRUCKSCHALTER (MOTORÖL)	98
	100
DRUCKSENSOR	338
	339
	340
	341
	342
	343
	344
	345
DRUCKSENSOR (ATMOSPHÄRISCH)	393
DRUCKSENSOR (GEFILTERTES ÖL)	385
	389
DRUCKSENSOR (KURBELGEHÄUSE)	393
DRUCKSENSOR (TURBOLADERAUSLASS)	385
	393
DRUCKSENSOR (TURBOLADEREINLASS, LINKS)	327
DRUCKSENSOR (TURBOLADEREINLASS, RECHTS)	327

* ÜBERSETZUNG ZUM ZEITPUNKT DER DRUCKLEGUNG NICHT VORHANDEN

STICHWORTVERZEICHNIS

Bezeichnung	Seite
DRUCKSENSOR UND BEFESTIGUNGSTEILE	326 327
DRUCKSPEICHERWARTUNGSSATZ	648

E

ECKMESSER	947 948
*EDGE GP-BIT & CUTTING	965
EINBAUSATZ	171
EINFÜLLKAPPE (KRAFTSTOFF, SPERRUNG, LÜFTUNG)	239
EINFÜLLSTUTZENKAPPE (HYDRAULIKTANK)	848
EINFÜLLSTUTZENKAPPE (KURBELGEHÄUSE)	96
EINSTELLER-EINBAUSATZ (SITZWANNE)	1083
EINZELFLANSCHROLLEN	598 599
ELEKTR. UMFORMER	295
ELEKTR. UMFORMER (24 V BIS 12 V)(25 A)	295
ELEKTR. UMFORMER (24V - 24V) (10 A)	397
ELEKTRON. STEUERUNG (INSTRUMENTENBRETTBELEUCHTUNG)	1049 1051
ELEKTRON. STEUERUNG UND ANBAUSATZ	272 273 274 275
ELEKTRONIK - MASCHINE	296
ELEKTRONIK - MONITOR	296
ELEKTRONIK - MOTORNENNLEISTUNG	3
ELEKTRONISCHER SCHLÜSSEL (GELB)	304
ELEKTRONISCHER SCHLÜSSEL (GRAU)	304
ENDMESSER	946
ENDSCHALTER (BREMSE)	404 406
ENDSCHALTER (RÜCKWÄRTS)	626 628
ENTDUNSTER	84
ENTFROSTERGEBLÄSE	1031
ENTLÜFTER	78
ENTLÜFTER (*ENGINE OIL METERING TANK)	107
ENTLÜFTER (KRAFTÜBERTRAGUNG)	433 437
ENTLÜFTER (MOTOR)	78
ENTLÜFTER (SCHMIERMITTELTANK)	586
ENTLÜFTERVENTIL	386 390 394
ENTLÜFTUNGSSATZ (SCHNELLBETANKUNGSADAPTER)	199 201 203

F

FAHRERHAUS	1006 1007 1009 1011
FAHRERHAUSANBAUSATZ	1075
FAHRERHAUSAUSKLEIDUNG	1056
FAHRERHAUSBELEUCHTUNG	306
FAHRERHAUSFENSTER	1145 1146 1147 1148 1149 1150 1151 1152 1153 1155 1156 1157 1158 1159
FAHRERHAUSHEIZUNG	1033 1036 1039
FAHRERHAUSLUFTFILTER (STANDARD)	1003 1039
FAHRERPLATTFORM	1085 1088 1090
FAHRERPLATTFORMVERDRAHTUNG	397
FAHRERSITZ	1095 1097 1099 1101 1102 1103 1104 1106 1108 1110 1111
FAHRERSITZ, KIPPVORRICHTUNG (SITZWANNE)	1083
FAHRERSITZFEDERUNG	1125 1127 1130

* ÜBERSETZUNG ZUM ZEITPUNKT DER DRUCKLEGUNG NICHT VORHANDEN

STICHWORTVERZEICHNIS

Bezeichnung	Seite
	1132
	1134
FAHRERSITZFEDERUNGSGEHÄUSE	1042
	1045
FAHRERSITZVERKLEIDUNG	1083
FAHRERSITZVERSTELLER	992
	994
FAHRWERK	1
FEDER-EINBAUSATZ (HÖHENEINSTELLUNG) (SCHWINGSITZ)	1042
	1045
FEDER-EINBAUSATZ (SCHWINGSITZ)	1043
	1045
FEDER (STARTERMOTOR)	365
	369
FEDERUNGS-EINBAUSATZ (EINSTELLKNOPF) (HÖHENEINSTELLUNG) (SCHWINGSITZ)	1042
	1045
FEDERUNGS-EINBAUSATZ (MANSCHETTE) (SCHWINGSITZ)	1125
	1130
FEDERUNGS-EINBAUSATZ (ROLLE) (SCHWINGSITZ)	1130
FEDERUNGS-EINBAUSATZ (ROLLE) (SCHWINGSITZ)	1125
FENSTERSATZ	1055
FESTSTELLBREMSGESTÄNGE	625
*FILM-OIL (MOTOR)	107
FILTER (LUFTEINLASSUNTERSTÜTZUNG)	190
	191
FILTER (LUFTREINIGER)	167
FILTER U. DICHTUNG (ÄTHERSTARTHILFE)	354
FILTERELEMENT - HYDRAULIK (BREMSBETÄTIGUNGSÖL)	726
FILTERSIEB (HYDRAULIKTANKEINFÜLL-SIEB)	848
FLÜSSIGKEITSSTANDSENSOR (*ENGINE OIL METERING TANK)	107
FOLGEVENTIL	897
FRONTBELEUCHTUNG	322
FUSSMATTE (OBERE)	1075
FUSSMATTE (UNTERE)	1075

G

Bezeichnung	Seite
GASREDUZIERGESTÄNGE	213
GEGENGEWICHT	495
GEGENGEWICHT, HINTEN	496
GESCHWINDIGKEITS- U. DREHZAHLMESSER-MODUL	1073
GETRIEBE	469
	470
	471
GETRIEBEAUFLAGER	442
GETRIEBEGEHÄUSE UND TEILE	402
GETRIEBEÖLKÜHLER	409
	410
GETRIEBESCHUTZ	531
	533
GETRIEBESTEUERUNG	408
GETRIEBESTEUERUNG UND BEFESTIGUNGS-TEILE	280
GETRIEBESTEUERVENTIL	490
	491
GLEITSCHIENENBLOCK-EINBAUSATZ (SCHWINGSITZ)	1112
	1113
	1115
	1118
	1119
	1120
	1121
GRUNDAUSFÜHRUNG	2

H

Bezeichnung	Seite
HALOGENSCHINWERFER (24V)(65W) (ARBEITSSCHEINWERFER)	307
	308
	309
HALTETEILESATZ (SCHWINGSITZ)	1127
	1132
HAUPTFILTER (LUFTFILTER)	166
HAUPTFILTER (LUFTFILTER) (ULTRA HOCHLEISTUNG)	169
HAUPTLAGER (STANDARD)	17
	18
HAUPTLAGERSATZ (KURBELWELLE)	17
	18
HECKBELEUCHTUNG	323
HEIZUNGSKABELSTRANG (UMLAUFKÜHL-WASSER)	303
HEIZUNGSLEITUNGEN	1064
	1066
HUBZYLINDER U. VENTIL	671
	673
	675
	676
HUBZYLINDER UND SENSOR	666
HUBZYLINDERLEITUNGEN	749
	751
	753
	757
HYDRAULIKDRUCKSPEICHER	648
HYDRAULIKLÜFTERLEITUNGEN	727
	733

* ÜBERSETZUNG ZUM ZEITPUNKT DER DRUCKLEGUNG NICHT VORHANDEN

STICHWORTVERZEICHNIS

Bezeichnung	Seite
	739
	743
	748
HYDRAULIKLÜFTERVENTIL U. BEFESTIGUNGSTEILE	859
	860
HYDRAULIKÖLKÜHLER	665
HYDRAULIKPUMPE UND LEITUNGEN	763
	769
	775
	780
	783
	788
HYDRAULIKSTEUERUNG	652
	653
	655
HYDRAULIKTANK UND SCHMIERFILTER	848
HYDRAULIKTANKKAPPENDECKEL (HYDRAULIKTANKEINFÜLLSIEB)	848

I

IDENTIFIZIERUNGS-AUFKLEBER (GRUPPE, SEQUENZNR.) (HEIZUNG)	1033
IDENTIFIZIERUNGS-AUFKLEBER (GRUPPEN- U. SEQUENZNR.) (A/C)	997
	1000
IDENTIFIZIERUNGS-AUFKLEBER (GRUPPEN- U. SEQUENZNR.) (HEIZUNG)	1036
IDENTIFIZIERUNGS-AUFKLEBER (MOTORÖLFILTER)	1173
IDENTIFIZIERUNGS-AUFKLEBER (SCHILDSTELLUNG)	281
	283
	285
IDENTIFIZIERUNGS-AUFKLEBER (SICHERUNG)	382
IDENTIFIZIERUNGS-AUFKLEBER (SICHERUNGSTAFEL)	382
INSTRUKTIONS-AUFKLEBER (AUFREISSER-STEUERUNGEN)	1019
INSTRUKTIONS-AUFKLEBER (AUFREISSER-ZIEHSCHALTER)	853
	855
INSTRUKTIONS-AUFKLEBER (AUTOMATISCHE SCHILDNEIGUNG)	1173
INSTRUKTIONS-AUFKLEBER (DOZERBE-TRIEB)	1173
INSTRUKTIONS-AUFKLEBER (FÜR SITZVERSTELLUNG)	1127
	1130
	1132
	1134
INSTRUKTIONS-AUFKLEBER (FÜR SITZVERSTELLUNG)	1125
INSTRUKTIONS-AUFKLEBER (*OIL RENEWAL SYSTEM)	107
INSTRUKTIONS-AUFKLEBER (SCHEIBENWI-SCHER/-WASCHER)	1162
	1166
INSTRUKTIONS-AUFKLEBER (WASSER - EINLASS/AUSLASS) (A/C)	997
INSTRUKTIONS-AUFKLEBER (WASSER - EINLASS/AUSLASS) (A/C)	1000
INSTRUKTIONS-AUFKLEBER (WASSER - EINLASS/AUSLASS) (HEIZUNG)	1036
INSTRUKTIONS-AUFKLEBER (*WATER IN, WATER OUT) (HEIZUNG)	1033
INSTRUKTONSSCHILD (KLIMAANLAGE)	996
	1172
INSTRUMENTENBRETT-AUFKLEBER (ANZEIGE)	1049
	1051
INSTRUMENTENBRETT-AUFKLEBER (KLIMAANLAGE U. GEBLÄSE)	1039
INSTRUMENTENBRETT-AUFKLEBER (TEMPERATURREGELUNG)	1003
INSTRUMENTENBRETT-AUFKLEBER (WARNANZEIGE)	1049
	1051
INSTRUMENTENSATZ	1049
	1051

J

JOCHSATZ	77
JOYSTICK -STEUERUNG	657
	659
	661
	662
	663
	664
JOYSTICKSTEUERUNG U. BEFESTIGUNG	1020

K

KABELSTRANG - HECKBELEUCHTUNG	313
KABELSTRANG - HEIZUNG U. KLIMAANLAGE	1057
KABELSTRANG - HEIZUNG U. KLIMAANLAGE	1061
KABELSTRANG - VORDERE BELEUCHTUNG (HUBZYLINDER)	749
	751
KABELSTRANG (ÄTHERSTARTHILFE)	354
KABELSTRANG (AUFREISSER)	318

* ÜBERSETZUNG ZUM ZEITPUNKT DER DRUCKLEGUNG NICHT VORHANDEN

STICHWORTVERZEICHNIS

Bezeichnung	Seite
KABELSTRANG (AUFREISSERBELEUCHTUNG)	325
KABELSTRANG (BREMSGEHÄUSE)	406
KABELSTRANG (DRUCKSENSOR, ÜBERBRÜCKUNG)	250, 258
KABELSTRANG (FAHRERHAUSDACH)	1141
KABELSTRANG (GEBLÄSEGESCHWINDIGKEITSSCHALTER)	1033, 1036
KABELSTRANG (GEBLÄSEMOTOR)	1033, 1036
KABELSTRANG (GETRIEBE)	246, 258, 265
KABELSTRANG (KLIMAANLAGE - GEBLÄSEMOTOR)	997, 1000
KABELSTRANG (KÜHLERSCHUTZ)	246
KABELSTRANG (KÜHLERSCHUTZ)	257, 264
KABELSTRANG (*POWER)	382
KABELSTRANG (SCHEIBENWASCHMITTELPUMPE)	1138
KABELSTRANG (*SECURITY INSTALLATION)	305
KABELSTRANG (SEITENLEUCHTEN)	246, 259, 266
KABELSTRANG (STOSSSTANGE, LINKS)	248, 257, 264
KABELSTRANG (STOSSSTANGE, RECHTS)	247
KABELSTRANG (STOSSSTANGE, RECHTS)	257, 264
KABELSTRANG (ÜBERROLLSCHUTZ)	318
KABELSTRANG (UMFORMER)	295
KABELSTRANG (WASSERKÜHLSTEERUNG - KLIMAANLAGE)	997, 1000
KÄLTEMITTEL-DRUCKSPEICHER	1057
KÄLTEMITTELKOMPRESSOR	1015, 1016
KÄLTEMITTELKONDENSATOR	1018
KÄLTEMITTELTROCKNER (KLIMAANLAGE)	1057, 1061
KAPPE (KLIMAANLAGE) (HOHE SEITE)	1057, 1061
KAPPE (KLIMAANLAGE) (UNTERE SEITE)	1057, 1061
KAPPE MIT ENTLÜFTER (SCHEIBENWASCHMITTELBEHÄLTER)	1136, 1138
KAPPE (MOTORÖL)	80, 82
KAPPENFILTERSATZ (KRAFTSTOFFTANK)	237, 239
KEILRIEMEN (DREHSTROMGENERATOR)	58
KEILRIEMEN (KÄLTEMITTELKOMPRESSOR)	1016
KETTENDICHTUNG	600
KETTENGLIEDER	580, 581, 582, 583, 584, 585
KETTENGLIEDRING	590
KETTENRADSEGMENT	460
KETTENSPANNER UND -FEDERRÜCKLAUF	610, 612
KIPPSCHALTER (AUFREISSERBOLZENZIEHER)	853, 855
KIPPSCHALTER (ENTFROSTERGEBLÄSESTEUERUNG)	1031
KIPPSCHALTER (FESTSTELLBREMSE)	625
KIPPSCHALTER (KLIMAANLAGE EIN/AUS)	1003, 1039
KIPPSCHALTER (SEITENLEUCHTEN)	397
KIPPSCHALTER (STARTHILFE)	399
KIPPSCHALTER (ZUSATZ)	397
KIPPSCHALTER (24 V) (ARBEITSGERÄTESPERRE)	397
KIPPSCHALTER (*24-VOLT, SEALED-ILLUMINATED) (ARBEITSGERÄTESPERRE)	397
KIPPSCHALTER (*24-VOLT, SEALED-ILLUMINATED) (DREZAHLREGELUNG)	399
KIPPSTEUERVENTIL	914, 915
KIPPVORRICHTUNG NACH HINTEN, REPARATURSATZ (SITZWANNE)	1083
KIPPWANNENSATZ (SCHWINGSITZ)	1099
KIPPWANNENSATZ (SITZ)	1097
KIPPZYLINDER	677, 690, 692, 711
*KIT-SEAT AIR COMPRESSOR	1054
KLEMMLEISTE	270
KLIMAANLAGE	996, 997, 1000, 1003
KLIMAANLAGENLEITUNGEN	1057, 1061

* ÜBERSETZUNG ZUM ZEITPUNKT DER DRUCKLEGUNG NICHT VORHANDEN

STICHWORTVERZEICHNIS

Bezeichnung	Seite
KOLBEN UND VENTIL	828, 829
KOLBENMOTOR	824
KOLBENPUMPE	834, 836, 838, 840, 842
KOLBENPUMPENUMLAUFSATZ	845, 846, 847
KONSOLENSCHALTER (SCHEIBENWISCHER)	1162, 1166
KONSOLENVERDRAHTUNG	382
KRAFTSTOFF-ENTLÜFTUNGSPUMPE	229
KRAFTSTOFFEINSPRITZDÜSE	218, 228
KRAFTSTOFFEINSPRITZLEITUNGEN	223
KRAFTSTOFFEINSPRITZPUMPE	227, 228
KRAFTSTOFFFILTEREINSATZ	215
KRAFTSTOFFHEIZUNG	298
KRAFTSTOFFILTER	215
KRAFTSTOFFKAPPE (SPERRUNG)	199, 201, 203
KRAFTSTOFFLEITUNGEN	219, 221, 222
KRAFTSTOFFLEITUNGSSCHUTZ	187
KRAFTSTOFFÖRDERPUMPE	230, 231, 232, 234
KRAFTSTOFFSIEB (TANK)	238, 239
KRAFTSTOFFSTANDSENSOR	329
KRAFTSTOFFTANK	236, 237, 238, 239
KRAFTSTOFFTANKKAPPE (ENTLÜFTUNGSSPERRE)	237
KRAFTSTOFFTANKSIEB	219
KRAFTÜBERTRAGUNG	453
KRAFTÜBERTRAGUNGSACHSE	401
KRAFTÜBERTRAGUNGSELEKTRONIK	297
KRAFTÜBERTRAGUNGSSTEUERUNG UND MONTAGESATZ	278, 279
KREUZGELENK	472
KREUZGELENK UND LAGER	472
KRÜMMER UND VENTIL	637, 638, 639, 640
KRÜMMERSCHILD	189
KÜHLER	150, 152
KÜHLERSCHUTZ	525, 527
KÜHLWASSER-TEMPERATURREGLER UND GEHÄUSE	116
KÜHLWASSERANSCHLUSS	110, 111
KÜHLWASSERLEITUNGEN	117, 119, 121, 124, 127, 129, 131, 132, 134, 136, 138
KÜHLWASSERLEITUNGEN (GETRIEBEKÜHLER)	5
KÜHLWASSERLEITUNGEN (LADELUFTKÜHLER)	5
KÜHLWASSERPUMPE	144, 146, 147, 148
KÜHLWASSERPUMPEN-REGENERIERSATZ	1053
KÜHLWASSERPUMPEN-REGENERIERSATZ (WASSERPUMPE)	4, 144, 148
KUPPLUNGSVERKLEIDUNG	431
KURBELWELLE	16, 17, 18
KURBELWELLENDICHTUNG	66

L

Bezeichnung	Seite
LADELUFTKÜHLER, WASSERGEKÜHLT	163
LADELUFTKÜHLERBLOCK	163
LAGERSATZ (DREHSTROMGENERATOR)	242
LAGERSATZ (ROTATIONSMOTOR)	843
LAGERSATZ (SCHWINGSITZ)	1043, 1046
LAGERSATZ (STARTERLAGER)	365, 368

* ÜBERSETZUNG ZUM ZEITPUNKT DER DRUCKLEGUNG NICHT VORHANDEN

STICHWORTVERZEICHNIS

Bezeichnung	Seite
LAUFFÜHRUNGSSATZ (FAHRERHAUSFENSTER)	1153, 1155
LAUFROLLENAUFSATZ	552
LAUFROLLENRAHMEN-KNICKFEDERUNG	602, 603, 604, 605, 607, 608
LAUFROLLENRAHMEN (TELESKOPRÜCKLAUF)	556, 559, 563, 566, 569, 572, 575
LAUFROLLENRAHMEN (TELESKOPRÜCKLAUF)	553
LAUFWERKSKETTE	614, 615, 616, 617
LAUFWERKSRAHMEN	617, 618, 619
LEITRAD	578, 579
LEITRADAUFSATZ	550, 551
LEITRADSCHUTZ	522, 523, 524
LENK- UND GETRIEBEEINSTELLER	620
LENK- UND GETRIEBESTEUERUNG	626, 628, 630
LENKKUPPLUNG UND BREMSE	623
LENKTRIEB	633, 635
LENKUNGS- U. BREMSVENTIL	643
LEUCHTE (24 V) (ARBEITSGERÄTESPERRE)	397
LEUCHTE (24 V) (DREZAHLREGELUNG)	399
LEUCHTE (24 V) (FEHLER - HINTEN)	397
LEUCHTE (24 V) (INSTRUMENTENTAFEL)	397
LEUCHTE (24 V) (KLAR)(INNENLEUCHTE)	306
LEUCHTE (24 V) (TASTATUR)	281, 283, 285
LEUCHTE (24 V) (WARNANZEIGE)	1049, 1051
LUFTEINLASS-TRÄGER	190, 191
LÜFTERMOTOR	822, 823
LUFTFILTER (FAHRERHAUS) (GERUCHSREDUZIERUNG)	1039
LUFTFILTER (FAHRERHAUS) (HOCHLEISTUNG)	1039
LUFTFILTER (FAHRERHAUS) (STANDARD)	1003
LUFTFILTER (FAHRERHAUS) (STANDARD)	1039
LUFTKOMPRESSORSITZ	995
LUFTREINIGER	164, 166, 167, 169

M

Bezeichnung	Seite
MAGNETSCHALTER	374, 375, 376, 377, 378
MAGNETSCHALTER (STARTERRELAIS)	100
MAGNETSCHALTER (24 V) (STARTRELAIS 1)	382
MAGNETSCHALTER (24 V) (STRATRELAIS 2)	382
MAGNETSPULE (STARTERMOTOR)	359, 362, 365, 368
MAGNETSTOPFEN (SEITENANTRIEB)	415, 418
MAGNETVENTIL	484, 485, 486, 487, 488, 489, 901, 902, 903, 904, 906, 907, 908, 909, 910, 911, 912, 913
MELDEZENTRUMMODUL	1068

* ÜBERSETZUNG ZUM ZEITPUNKT DER DRUCKLEGUNG NICHT VORHANDEN

STICHWORTVERZEICHNIS

Bezeichnung	Seite
	1069
*METERING AR-ENGINE OIL	93
*METERING GP-ENGINE OIL	94
MODUL - VIER ELEKTRON. ANZEIGEN	1072
MODUL-MONITORTASTATUR	1070
	1071
MONITOR - SERVICE	352
MONITOR - SOFTWARE (VIMS)	296
	352
MONTAGEZAPFEN	68
MONTAGEZAPFEN (PLANIERSCHILDEINRICHTUNG)	945
MOTOR-EINBAUSATZ	5
MOTOR, ELEKTR. (27 V) (A/C)	1000
MOTOR, ELEKTR. (27 V) (HEIZUNG)	1036
MOTORAUFHÄNGUNG	67
MOTORAUSFÜHRUNG	3
MOTORBLOCK	19
	20
	21
	23
	25
	26
MOTORBLOCKDECKEL	11
	12
MOTORDREHVORRICHTUNG	843
MOTORHAUBE UND VERKLEIDUNG	534
	537
MOTORHUBÖSE	56
	57
MOTORÖLEINFÜLLSTUTZEN	79
MOTORÖLKÜHLER	112
MOTORÖLLEITUNGEN	86
MOTORÖLTANK	107
MOTORSTEUERUNG, ELEKTRON.	287
	288
	289
	290
MOTORVERDRAHTUNG	385
	389
	393
MOTORVERKLEIDUNG	498
	500
	502
MOTORVORSCHMIERUNG	98
	100

N

Bezeichnung	Seite
NEBENANTRIEB	39
	41
	43
	45
NEBENSTROMFILTER	649
NEBENSTROMVENTIL	863
NEIGEZYLINDERLEITUNGEN	810
	812
	814
	818
NOCKENWELLE	8
	9

O

Bezeichnung	Seite
ÖLABLASSSCHRAUBE (MOTORÖLWANNE)	60
ÖLEINFÜLLKAPPE (*METERING TANK)	107
ÖLEINFÜLLSTUTZEN (KRAFTÜBERTRAGUNG)	433
	437
ÖLEINFÜLLSTUTZEN (MOTOR)	79
ÖLEINFÜLLSTUTZEN (SCHMIERMITTELTANK)	586
ÖLFILTER	80
	82
	413
	725
	726
ÖLFILTERELEMENT (HYDRAULISCH)	848
ÖLFILTERELEMENT (HYDRAULISCH) (GETRIEBE)	413
ÖLFILTERELEMENT (HYDRAULISCH) (GETRIEBE)	437
ÖLFILTERELEMENT (LÜFTERRÜCKFÜHRLEITUNGEN)	725
ÖLKÜHLERBLOCK	113
ÖLLEITUNGEN - KRAFTÜBERTRAGUNG	432
	437
ÖLMESSSTAB	85
ÖLPUMPENGEHÄUSE (WANDLERSPÜLUNG)	454
ÖLSCHNELLWECHSELANSCHLUSS	96
ÖLSTANDKAPPE (VORSTEUERWELLENSCHMIERBEHÄLTER)	588
ÖLWANNE	60

P

Bezeichnung	Seite
PANZERWANNE	520
PENDELVENTIL	898
	899
	900
PLANETENGETRIEBE	443
	448
PLANIERSCHILDHUBZYLINDER	678
	680
	686

* ÜBERSETZUNG ZUM ZEITPUNKT DER DRUCKLEGUNG NICHT VORHANDEN

STICHWORTVERZEICHNIS

Bezeichnung	Seite
	688
PLANIERSCHILDVENTIL UND -ZYLINDER	667
	669
PLATTFORM	1086
PLEUELSTANGE UND KOLBEN	62
	64
POLSTEREINBAUSATZ (RÜCKLEHNENVERLÄNGERUNG)	1029
POLSTEREINBAUSATZ (VINYLRÜCKENLEHNE)	1030
PUMPENANSCHLUSS	411
PUMPENKABELSTRANG (SCHEIBENWASCHER)	1137
PUMPENSTEUERVENTIL	891

Q

QUERTRAVERSE	543
	545
	547
	549

R

RADIO - KABELSTRANG	1141
RADIOANBAUSATZ	1077
RADIOEINBAUSATZ	1048
RAHMEN UND GEHÄUSE	493
RASTE - STEUERUNG (ARBEITSGERÄT)	650
	657
	659
	662
	663
	664
RELAIS (12 V) (*SECURITY INSTALLATION)	305
RELAIS (24 V) (DRUCKBEAUFSCHLAGUNG)	1163
	1167
RELAIS (24 V) (*SECURITY INSTALLATION)	305
ROLLENSATZ (SCHWINGSITZ)	1127
	1132
RÜCKFAHRWARNHORN	381
RÜCKLEHNENVERLÄNGERUNG	1029
	1030
RÜCKLEHNENVERLÄNGERUNG (STOFF)	1111
RÜCKLEHNENVERLÄNGERUNG (VINYL)	1110
RÜCKSPIEGEL	1067
RÜCKSPÜLPUMPE	105
	106

S

SAUGLÜFTER	114
	115
SCHALE - RÜCKENLEHNE	1079
	1080
	1081
	1082
SCHALLDÄMPFER	182
SCHALLDÄMPFUNG	1124
SCHALTER (DIFFERENTIALDRUCK)	726
SCHALTER (FRONTSCHEINWERFER)	397
SCHALTER (GEBLÄSEGESCHWINDIGKEIT)	1039
SCHALTER (HINTERE LEUCHTEN)	397
SCHALTER (KIPPSCHALTER) (KONSOLE ANHEBEN/ABSENKEN)	620
SCHALTER (ROTIEREND) (GEBLÄSESTEUERUNG)	1003
SCHALTER (VORNE, HINTEN, RECHTS U. LINKS TÜR)	1162
	1166
SCHALTER (*24-VOLT, ILLUMINATED) (DREZAHLREGELUNG)	399
SCHALTERKABELSTRANG (SCHEIBENWISCHER)	1162
	1166
SCHALTERKABELSTRANG (SCHEIBENWISCHER, HINTEN)	1163
	1167
SCHALTVENTIL	481
SCHALTVENTIL (GETRIEBE)	473
	475
SCHAUMFILTER (KRAFTSTOFFSENSOR)	257
	264
SCHAUMFILTER (KRAFTSTOFFSENSOR)	246
SCHEIBENWASCHANLAGE	1141
SCHEIBENWASCHMITTELBEHÄLTER	1136
	1137
	1138
	1140
SCHEIBENWISCHER	1160
	1161
	1162
	1166
SCHEIBENWISCHERBLATT (FENSTER, HINTEN)	1162
	1166
SCHEIBENWISCHERBLATT (FENSTER, VORNE)	1162
SCHEIBENWISCHERBLATT (FENSTER, VORNE)	1166
SCHEIBENWISCHERBLATT (RECHTE U. LINKE TÜR)	1162
	1166
SCHEIBENWISCHERBLATTSATZ (FENSTER)	1163
	1167

* ÜBERSETZUNG ZUM ZEITPUNKT DER DRUCKLEGUNG NICHT VORHANDEN

STICHWORTVERZEICHNIS

Bezeichnung	Seite
SCHEIBENWISCHERMOTOR	1074
SCHEIBENWISCHERMOTOR (TÜRWISCHER)	1162
	1166
SCHIEBEFENSTER	1144
SCHILD UND AUFKLEBER	1172
SCHILD UND SCHNEIDMESSER	949
SCHILDSTREBE	920
SCHLÜSSEL (HAUPTSCHALTER)	372
SCHMIERLEITUNGEN	931
SCHMIERPUMPE	103
	104
SCHMIERVORRICHTUNG - QUERTRAVERSE	586
SCHNEIDMESSER	966
	967
	968
SCHNEIDMESSER UND EINSATZSTÜCK	961
	962
	963
	964
	965
SCHNELLBETANKUNGSANSCHLUSS	199
	201
	203
	205
	207
	209
	211
SCHNELLSENKVENTIL	896
SCHRAUBE (ABLASS) (GEHÄUSE) (GETRIEBE)	493
SCHRAUBE (ABLASS) (HYDRAULIKTANK)	848
SCHRAUBE (GETRIEBEFILTER)	413
SCHUBARM	938
	939
	940
	941
SCHUBARM - STABILISATOR	942
	944
SCHUBBLOCK	918
	919
SCHUBPLATTE	933
SCHUTZBLECHE	511
	515
	518
	519
SCHUTZBLECHVERKLEIDUNG	504
	506
	508
	510
SCHWINGSITZ	1112
	1113
	1114
	1115
	1116
	1117
	1118
	1119
	1120
	1121
SCHWUNGRAD	47
SCHWUNGRADGEHÄUSE	52
	53
SCREEN (ÄTHERSTARTHILFE)	354
SCREEN (HYDRAULIKTANK)	848
SEILDICHTUNG	459
SEITENANTRIEB	415
	418
SENSOR, KABELSTRANG (ÖLSTAND) (*METERING TANK)	107
SENSORANSCHLUSSSATZ (12POLIG)	628
SENSORANSCHLUSSSATZ (2POLIG)	318
	323
SENSORANSCHLUSSSATZ (3 STIFTE) (DRUCKSENSOR)	340
SENSORANSCHLUSSSATZ (3POLIG)	628
SENSORANSCHLUSSSATZ (6POLIG)	628
	1027
SERIENNUMMERNSCHILD	1172
SICHERHEITSEINBAUSATZ	304
	305
SICHERHEITSFILTER (LUFTFILTER)	166
	169
SICHERHEITSGURT	1096
SICHERHEITSGURT (AUSZIEHBAR)	1110
	1111
SICHERUNG (10 A)	383
SICHERUNG (15 A)	383
SICHERUNG (20 A)	383
SICHERUNG (30 A) (UMFORMER)	295
SIEB (HYDRAULIKTANK)	848
SIEB (KRAFTÜBERTRAGUNG)	433
	437
SIEB (KRAFTÜBERTRAGUNG - ÖLLEITUNGEN)	432
SIEB (MOTORÖLWANNE)	60
SITZGURT-HALTESEIL (SCHWINGSITZ)	1125
	1130
SITZHEBEL-EINBAUSATZ (SCHWINGSITZ)	1099
SITZHEBEL-EINBAUSATZ (SITZ)	1097
SITZKISSENEINBAUSATZ (PVC) (SITZ)	1097
SITZKISSENEINBAUSATZ (SCHWINGSITZ)	1099
SOFTWARE - KRAFTÜBERTRAGUNG	297
	353
SOFTWARE - MASCHINE (SICHERHEIT)	304

* ÜBERSETZUNG ZUM ZEITPUNKT DER DRUCKLEGUNG NICHT VORHANDEN

STICHWORTVERZEICHNIS

Bezeichnung	Seite
SPERRE	632
SPERRVENTIL	864
SPERRVENTIL (FESTSTELLBREMSFREIGABE)	864
SPÜLVENTIL	477
STABILISATORGELENK	932
STARTERMOTOR	358
	359
	362
	365
STARTERMOTORZAHNRAD	366
	369
STARTSCHALTER	379
STAUBAUSWERFER	170
STECKDOSEN - EINBAUSATZ (12POLIG)	628
STECKDOSEN - EINBAUSATZ (2POLIG)	347
	371
	381
	385
	389
	726
	1068
	1069
STECKDOSEN - EINBAUSATZ (2POLIG)	323
STECKDOSEN - EINBAUSATZ (2POLIG)	385
	389
	393
STECKDOSEN - EINBAUSATZ (2POLIG)	628
	1001
STECKDOSEN - EINBAUSATZ (2POLIG) (MAGNETSCHALTER)	375
STECKDOSEN - EINBAUSATZ (3POLIG)	386
	390
	393
	394
	1039
	1141
STECKDOSEN - EINBAUSATZ (4 POLIG)	901
	903
	1026
STECKDOSEN - EINBAUSATZ (4 POLIG)	1070
	1071
STECKDOSEN - EINBAUSATZ (6 STIFTE)	1160
STECKDOSEN - EINBAUSATZ (6POLIG)	641
	1028
	1039
	1068
	1069
	1073
	1074
	1161
STECKDOSEN - EINBAUSATZ (6POLIG)	1001
STEIGLEITER	1122
STEINSCHUTZ	529
	530
STELLUNGSSENSOR	330
	331
	332
	333
	334
	335
	336
	337
STELLUNGSSENSOR (AUFREISSER ANHEBEN/ABSENKEN)	655
STELLUNGSSENSOR (AUFREISSERNEIGUNG)	655
STELLUNGSSENSOR (HUBZYLINDER)	666
STEUERANTRIEBSGEHÄUSEDECKEL	10
STEUERHEBEL	654
STEUERHEBEL U. BEFESTIGUNGSTEILE	650
STEUERKRÜMMER	821
STEUERUNG - NICHT PROGRAMMIERT	291
	292
	293
	294
STEUERUNG - NICHT PROGRAMMIERT (SICHERHEIT)	304
STEUERUNG, ELEKTRON.	281
	285
STEUERUNG, ELEKTRON.	283
STEUERUNG, ELEKTRON. ANZEIGE	1026
	1027
STEUERUNG, ELEKTRON. (TASTENFELD ENGLISCH)	272
STEUERUNG, ELEKTRON. (TASTENFELD INTERNATIONALE AUSFÜHRUNG)	272
STEUERUNGSEINHEIT, ELEKTRON. FÜR MOTOR UND BEFEST.	277
STEUERVENTIL	473
	475
	865
	869
	871
	875
	876
STEUERVENTIL UND BEFESTIGUNGSTEILE	857
	858
STIRNRAD	48
STIRNRADGEHÄUSE	55
STIRNRADGEHÄUSE-HALTETEILE	46
STIRNRADGEHÄUSEDECKEL	14
STOPFENSATZ (4 STIFTE)	398
STOSSDÄMPFER-REPARATURSATZ (SCHWINGSITZ)	1134

* ÜBERSETZUNG ZUM ZEITPUNKT DER DRUCKLEGUNG NICHT VORHANDEN

STICHWORTVERZEICHNIS

Bezeichnung	Seite
STOSSSTANGEN-EINBAUSATZ (GEWICHT-SEINSTELLUNG) (SCHWINGSITZ)	1042
STOSSSTANGEN-EINBAUSATZ (GEWICHT-SEINSTELLUNG) (SCHWINGSITZ)	1046
STROMBLOCK	271
STRÖMUNGSSCHALTER	373
STRÖMUNGSSCHALTER (KÜHLMITTEL)	389
STÜTZGRUPPE - STEUERUNG	641
SU-SCHILD	950 951 957

T

TANKVENTIL	862
TASTATURKABELSTRANG	281 283 285
TELLERRAD- UND VORGELEGERADSATZ	422 426
TEMPERATURREGLER	116
TEMPERATURSCHALTER (A/C)	997
TEMPERATURSCHALTER (KRAFTÜBERTRAGUNGSÖL)	249 256 263
TEMPERATURSENSOR	349 350
TEMPERATURSENSOR (ANSAUGLUFT)	327 394
TEMPERATURSENSOR (KÜHLMITTEL)	385 389 393
TEMPERATURSENSOR (LADELUFTKÜHLER-KÜHLMITTELAUSLASS)	386 390 394
THERMOELEMENT	380
THERMOSTATSCHALTER (A/C)	1000
TRÄGER	917
TRAGROLLEN	591 592 593 594 595
TRENNSCHALTER	372
TURBOLADER	192 193 194 195 196 197
TURBOLADERÖLLEITUNGEN	89 91

U

U-SCHILD	953 954 956 959
ÜBERDRUCKLEITUNGEN	793
ÜBERDRUCKVENTIL	480
ÜBERDRUCKVENTIL (DUALKIPPLEITUNGEN)	793
ÜBERDRUCKVENTIL (KÄLTEMITTELKOMPRESSOR)	1015
ÜBERROLLSCHUTZ	1094
ÜBERROLLSCHUTZAUFLAGER	1078
ÜBERWACHUNGSSYSTEMDIMMER - STEUERUNG	1028
UMGEHUNGSSCHALTER	371
UMLAUFKÜHLWASSERHEIZUNG	300 301 302 303
UMLAUFKÜHLWASSERHEIZUNGS-ELEMENT (120 V, 1500 W)	300
UMLAUFKÜHLWASSERHEIZUNGS-ELEMENT (120 V, 1500 W)	302
UMLAUFKÜHLWASSERHEIZUNGS-ELEMENT (240V, 1500W)	301 303
UMLEITVENTIL (NUR FÜR TIEFE UMGEBUNGSTEMPERATUREN)	869
UNTERBRECHER (10 A) (KUPPLUNG/BREMSE - ELEKTRONISCH)	382
UNTERBRECHER (10 A) (STARTSCHLÜSSEL-SCHALTER)	382
UNTERBRECHER (15 A) (ARBEITSGERÄT)	382
UNTERBRECHER (15 A) (ARBEITSLEUCHTEN, VORNE)	382
UNTERBRECHER (15 A) (LÜFTER)	382
UNTERBRECHER (15 A) (MOTOR)	382

V

*VALVE & MTG GP-STEER & BRAKE	642
*VALVE GP-METERING	109
*VALVE GP-PUMP CONTROL	893 894
*VALVE GP-TRANSMISSION CONTROL	644 646
VENTIL - SCHALT- UND DRUCKSTEUERUNG	482
VENTILDECKEL	15

* ÜBERSETZUNG ZUM ZEITPUNKT DER DRUCKLEGUNG NICHT VORHANDEN

STICHWORTVERZEICHNIS

Bezeichnung	Seite
VENTILDECKEL - UNTERTEIL	7
VENTILKABELSTRANG (LUFTKOMPRESSOR)	1134
VENTILSTEUERUNG	69
	71
	73
	75
VENTILSTÖSSELSATZ (SCHWINGSITZ)	1043
	1046
VENTILSTÖSSELSATZ (SCHWINGSITZ)	1043
VERDRAHTUNGSKABELBAUM (DURCHDREHEN OHNE EINSPRITZUNG)	393
VERDRAHTUNGSKABELBAUM (EINSPRITZUNG ZUM MOTOR)	71
VERDRAHTUNGSKABELBAUM (VENTILMECHANISMUS)	69
	73
	75
VERDRAHTUNGSSATZ (LUFTGEFEDERTER SITZ)	1132
VERDRAHTUNGSSATZ (LUFTGEFEDERTER SITZ) (SCHWINGSITZ)	1127
VERSANDDECKEL	960
VERSCHLEISSPLATTEN	975
	976
VERSTELLBARER SITZ	1092
	1093
VERZÖGERUNGSZEITGEBER (24 V) (A/C)	1061
VORHÄNGESCHLOSS (*ENGINE OIL FILL TUBE)	79
VORHÄNGESCHLOSS (HAUBE)	534
	537
VORHÄNGESCHLOSS (HYDRAULIKLÜFTERLEITUNGN)	727
	733
	743
VORHÄNGESCHLOSS (HYDRAULIKTANK)	739
VORHÄNGESCHLOSS (KOTFLÜGEL)	511
	515
VORHÄNGESCHLOSS (KRAFTSTOFFLEITUNGEN)	219
VORHÄNGESCHLOSS (KRAFTSTOFFTANK)	236
	238
VORHÄNGESCHLOSS (SCHUTZBLECHVERKLEIDUNG)	504
	506
	508
VORRANGVENTIL	478
VORREINIGER	183
	184
	185
	186
VORSTEUERVENTIL	879
	881
	883
	884

W

Bezeichnung	Seite
WARNAUFKLEBER (FÜHRUNG)	553
	556
	559
	563
	566
	569
	572
	575
WARNAUFKLEBER (ÜBERBRÜCKUNGSKABELVERBINDUNG)	1173
WARNHORN (*24-VOLT, HIGH TONE)	246
	258
	265
WARNHORN (*24-VOLT, LOW TONE)	246
WARNSCHILD (HOCHDRUCKZYLINDER)	553
	556
	559
	563
	566
	569
	572
	575
WARNSCHILD (KETTENSPANNFEDER)	553
	556
	559
	563
	566
	569
	572
	575
WARNVORRICHTUNG	240
WASSERFILTER (WASSERPUMPE)	144
	148
WASSERPUMPENDICHTUNG	144
	148
WASSERTANK	154
	157
	160
WIDERSTAND (ÄTHERSOLENOIDLADUNG)	354
WISCHERARM	1169

Z

Bezeichnung	Seite
ZAHNRADPUMPE	454
	455
	457
	830

* ÜBERSETZUNG ZUM ZEITPUNKT DER DRUCKLEGUNG NICHT VORHANDEN

STICHWORTVERZEICHNIS

Bezeichnung	Seite	Bezeichnung	Seite
	832		
ZAHNRADVORGELEGE	50		
ZEITGEBER (VORSCHMIERUNG)	98		
	100		
ZUSATZSÜSSWASSERPUMPE	139		
	141		
	142		
	143		
ZYLINDERAUFHÄNGUNG	825		
	826		
	827		
ZYLINDERKOPF	28		
	29		
	30		
	31		
	33		
	35		
	37		
ZYLINDERKOPF-HALTETEILE	31		
	33		

* ÜBERSETZUNG ZUM ZEITPUNKT DER DRUCKLEGUNG NICHT VORHANDEN

MEMORANDA

MACHINE ARRANGEMENT

155-5552 CHASSIS AR

S/N: 7PZ1-UP

PART OF 155-5550 GENERAL AR

SMCS-7000 **i01988468**

NOTE	PART NUMBER	QTY	PART NAME 1 2 3 4 5 6 (PRODUCT LEVEL)	SEE PAGE
Y	*156-9936*	1	BATTERY & WIRING GP	246
Y	*157-3738*	1	CAB AR	1006
Y	*158-4227*	1	CASE & FRAME GP	493
Y	*173-3262*	1	CONTROL & MTG GP-ELECTRONIC	274
Y	*170-3715*	1	CONTROL & MTG GP-ELECTRONIC	272
Y	*172-7938*	1	CONTROL GP-DECELERATOR	213
Y	*159-7221*	1	ENCLOSURE GP-ENGINE	498
			S/N: 7PZ616-UP	
Y	*159-3793*	1	ENCLOSURE GP-FENDER	504
Y	*157-3513*	1	FENDER GP	511
Y	*127-8051*	1	GUARD GP-BOTTOM	520
Y	*127-9444*	1	GUARD GP-COUPLING	431
Y	*157-1988*	1	GUARD GP-RADIATOR	525
Y	*147-4459*	1	HOOD & GUARD GP	534
			S/N: 7PZ1-387	
Y	*195-9536*	1	HOOD & GUARD GP	537
			S/N: 7PZ388-UP	
Y	*157-5913*	1	INSTRUMENT GP	1049
Y	*134-0978*	1	LIGHTING GP-FLOOD	316
Y	*140-2751*	1	LINES GP-FUEL	219
Y	*172-5596*	1	LINES GP-HYDRAULIC FAN	727
	6V-1970	1	LITERATURE GP	
	5P-8500	2	KEY	
	5P-7958	1	SLEEVE-CABLE SPLICE	
Y	*9W-1699*	1	LUBRICATION GP-PIVOT SHAFT	588
Y	*173-9170*	1	MOUNTING GP-ROPS	1078
Y	*159-4699*	1	PLATE & FILM GP	1172
Y	*136-9138*	1	PLATFORM GP-CAB	1088
			S/N: 7PZ1-563	
Y	*204-2643*	1	PLATFORM GP-CAB	1090
			S/N: 7PZ564-UP	
Y	*167-7953*	1	ROPS GP	1094
Y	*137-7368*	1	SEAT GP	1102
			S/N: 7PZ1-391	
Y	*156-7418*	1	SEAT GP	1103
			S/N: 7PZ392-UP	
Y	**163-0575**	1	TANK & FILTER GP-HYDRAULIC	848
Y	*158-5031*	1	TANK GP-FUEL	236
Y	*156-9937*	1	WIRING GP-PLATFORM	397
Y	*210-4729*	1	LUBRICATION GP-EQUALIZER BAR	586
			S/N: 7PZ564-UP	

Y-SEPARATE ILLUSTRATION

<END>

MACHINE ARRANGEMENT

155-5550 GENERAL AR

S/N: 7PZ1-UP

SMCS-7000 **i01220699**

NOTE	PART NUMBER	QTY	PART NAME 1 2 3 4 5 6 (PRODUCT LEVEL)	SEE PAGE
Y	*155-5552*	1	CHASSIS AR	1
Y	*155-5553*	1	CONTROL AR-HYDRAULIC	652
Y	*155-5555*	1	ELECTRONICS AR-MACHINE	296
Y	*155-5556*	1	ENGINE AR	3
Y	*155-5557*	1	INSTALLATION AR-ENGINE	5
Y	*112-9167*	1	POWER TRAIN AR	453
Y	*139-7697*	1	UNDERCARRIAGE AR	617

Y-SEPARATE ILLUSTRATION

<END>

ENGINE ARRANGEMENT

155-5556 ENGINE AR

S/N: 2GR1180-UP

PART OF 155-5550 GENERAL AR

SMCS-1000 **i02022801**

NOTE	PART NUMBER	QTY	PART NAME 1 2 3 4 5 6 (PRODUCT LEVEL)	SEE PAGE
Y	*172-0209*	1	AFTERCOOLER GP-WATER	163
Y	*217-7086*	1	AIR CLEANER GP	167
			S/N: 2GR4243, 4316, 4323, 4367, 4388, 4420-UP	
YR	**165-5140**	1	ALTERNATOR GP-CHARGING	241
			S/N: 2GR1180-3457	
YR	**200-8277**	1	ALTERNATOR GP-CHARGING	244
			S/N: 2GR3458-3866	
YR	**197-8820**	1	ALTERNATOR GP-CHARGING	242
			S/N: 2GR3867-UP	
Y	*101-0833*	1	BALANCER GP	6
Y	*7E-9081*	2	BREATHER GP	78
Y	*106-4582*	1	CAMSHAFT GP	8
Y	*141-7105*	1	COMPRESSOR GP-REFRIGERANT	1016
			S/N: 2GR4544-UP	
Y	*156-9814*	1	CONNECTION GP-WATER	111
			S/N: 2GR1180-3945, 3947-4088, 4090-4312	
Y	*127-4451*	1	CONNECTION GP-WATER	110
			S/N: 2GR3946, 4089, 4313-UP	
Y	*175-5213*	1	CONTROL & MTG GP-ENGINE ELEK	277
Y	*4W-5893*	1	COOLER GP-ENGINE OIL	112
Y	*7N-9182*	1	COOLER GP-HYDRAULIC OIL	665
Y	*156-9844*	1	COVER GP-ACCESSORY DRIVE	10
Y	*119-6288*	1	COVER GP-CYLINDER BLOCK (CENTRAL STRUCTURE)	12
Y	*104-4776*	1	COVER GP-CYLINDER BLOCK (REAR STRUCTURE)	11
Y	*7W-2378*	1	COVER GP-FRONT HOUSING	14
Y	*101-0831*	6	COVER GP-VALVE MECHANISM	15
Y	*101-0336*	1	CRANKSHAFT GP	16
			S/N: 2GR1180-4648	
Y	*241-0222*	1	CRANKSHAFT GP	18
			S/N: 2GR4649-UP	
Y	*101-0827*	1	CYLINDER BLOCK GP	21
			S/N: 2GR1180-4492, 4494-4517	
Y	*237-7957*	1	CYLINDER BLOCK GP	26
			S/N: 2GR4493, 4518-UP	
Y	*101-0830*	8	CYLINDER HEAD GP	31
Y	*8N-7182*	1	DAMPER GP	38
Y	*7E-6620*	1	DRIVE GP-ACCESSORY	39
Y	*156-9812*	1	DRIVE GP-ACCESSORY (LOWER LH)	43
Y	*8N-8161*	1	DRIVE GP-ACCESSORY (FLYWHEEL HOUSING LOWER)	41
Y	*7E-6612*	1	DRIVE GP-AUXILIARY	45
	157-1270	1	ELECTRONICS GP-ENGINE RATINGS	
Y	*214-6006*	1	FASTENER GP-FRONT HOUSING	46
			S/N: 2GR3819-UP	
Y	*1W-0419*	1	FILLER GP-ENGINE OIL	79
Y	*1W-0714*	1	FILTER GP-ENGINE OIL	80
Y	*6I-4468*	1	FILTER GP-FUEL	215
Y	*9Y-7211*	1	FLYWHEEL GP	47
Y	*1W-0417*	1	GAUGE GP-OIL LEVEL (DIPSTICK)	85
Y	*8N-7174*	1	GEAR GP-FRONT	48
Y	*101-1361*	1	GEAR GP-REAR	50
Y	*170-1152*	1	HOUSING & REGULATOR GP	116
Y	*106-7600*	1	HOUSING GP-FLYWHEEL	52
Y	*4P-5426*	1	HOUSING GP-FRONT	55
Y	*7E-6872*	1	LIFTING GP-ENGINE	56
			S/N: 2GR1180-2951	

ENGINE ARRANGEMENT

155-5556 ENGINE AR *(contd.)* i02022801

NOTE	PART NUMBER	QTY	PART NAME 1 2 3 4 5 6 (PRODUCT LEVEL)	SEE PAGE
Y	*194-4898*	1	LIFTING GP-ENGINE	57
			S/N: 2GR2952-UP	
Y	*156-9819*	1	LINES GP-AIR	174
			S/N: 2GR1180-4242, 4244-4315, 4317-4322, 4324-4366, 4368-4387, 4389-4419	
Y	*230-1050*	1	LINES GP-AIR	176
			S/N: 2GR4243, 4316, 4323, 4367, 4388, 4420-UP	
Y	*1W-0717*	1	LINES GP-ENGINE OIL	86
Y	*117-0078*	1	LINES GP-FUEL INJECTION	223
Y	*109-8082*	1	LINES GP-TURBOCHARGER OIL	89
Y	*217-7041*	1	LINES GP-WATER	138
			S/N: 2GR3946, 4089, 4209-UP	
Y	*156-9815*	1	LINES GP-WATER (AFTERCOOLER)	119
Y	*156-9840*	1	LINES GP-WATER (BYPASS)	127
Y	*4P-5540*	1	LINES GP-WATER (LOWER)	117
Y	*169-4346*	1	LINES GP-WATER (TURBO)	134
Y	*172-0199*	1	LINES GP-WATER (UPPER)	136
Y	*121-5731*	1	MANIFOLD GP-EXHAUST	178
Y	*184-3239*	1	MOUNTING GP-ALTERNATOR	58
Y	*7E-6103*	1	PAN GP-OIL	60
Y	*101-0829*	8	PISTON & ROD GP	62
			S/N: 2GR1180-4492, 4494-4517	
Y	*223-6363*	8	PISTON & ROD GP	64
			S/N: 2GR4493, 4518-UP	
Y	*156-9850*	1	PUMP GP-AUXILIARY WATER	141
Y	*7N-8715*	1	PUMP GP-ENGINE OIL	103
Y	*100-8780*	8	PUMP GP-FUEL INJECTION	227
Y	*165-9154*	1	PUMP GP-FUEL PRIMING	229
Y	*8N-6151*	1	PUMP GP-FUEL TRANSFER	230
Y	*1N-3240*	1	PUMP GP-SCAVENGE	105
Y	*169-4691*	1	PUMP GP-WATER	146
Y	*184-2444*	1	SEAL GP-CRANKSHAFT	66
Y	*127-4496*	1	SENSOR & MTG GP-PRESSURE	326
			S/N: 2GR4479-UP	
Y	*6I-1792*	1	SHIELD GP-FUEL LINES	187
Y	*133-5951*	1	SHIELD GP-MANIFOLD	189
Y	*179-7092*	1	STARTING AID GP-ETHER	356
Y	*1W-6363*	1	STARTING MOTOR GP-ELECTRIC	358
Y	*178-6363*	8	THERMOCOUPLE GP	380
			S/N: 2GR1180-3709	
Y	*7N-1863*	1	TRUNNION GP-ENGINE	68
Y	*169-4801*	1	TURBOCHARGER GP	192
Y	*100-3905*	8	VALVE MECHANISM GP	69
			S/N: 2GR1180-3248	
Y	*195-1928*	8	VALVE MECHANISM GP	71
			S/N: 2GR3249-3945, 3947-4037, 4039-4088, 4090-4104	
Y	*224-9869*	8	VALVE MECHANISM GP	73
			S/N: 2GR3946, 4038, 4089, 4105-UP	
Y	*156-9816*	1	WIRING GP-ENGINE	385
			AVAILABLE GASKET KIT(S):	
	202-8627		KIT-GASKET (CENTRAL, LOWER STRUCTURE)	
	197-5346		KIT-GASKET (OIL PUMP)	
	6V-3774		KIT-GASKET (SINGLE CYLINDER LINER)	
	106-3385		KIT-GASKET (SINGLE FUEL INJECTOR)	
	201-1277		KIT-GASKET (TURBOCHARGER)	
	222-5153		KIT-REBUILD (WATER PUMP)	

R-REMFG PART MAY BE AVAILABLE
Y-SEPARATE ILLUSTRATION

ENGINE ARRANGEMENT

155-5557 INSTALLATION AR-ENGINE

S/N: 7PZ1-UP

PART OF 155-5550 GENERAL AR

SMCS-1000 **i01969903**

NOTE	PART NUMBER	QTY	PART NAME 1 2 3 4 5 6 (PRODUCT LEVEL)	SEE PAGE
Y	*123-6853*	1	AIR CLEANER GP	164
			S/N: 7PZ1-681	
Y	*127-4487*	1	COOLER GP-TRANSMISSION OIL	409
Y	*1W-3508*	1	DUST EJECTOR GP	170
Y	*156-9842*	1	FAN GP-SUCTION	114
Y	*129-9478*	1	FUMES DISPOSAL GP	84
Y	*1W-0725*	1	LINES GP-AIR	172
Y	*156-9843*	1	LINES GP-WATER (AFTERCOOLER)	131
			S/N: 7PZ1-675	
Y	*159-4756*	1	LINES GP-WATER (TRANSMISSION COOLER)	132
Y	*127-4490*	1	MOTOR GP-FAN	822
			S/N: 7PZ1-288	
Y	*176-7002*	1	MOTOR GP-FAN	823
			S/N: 7PZ289-UP	
Y	*1W-0726*	1	MUFFLER GP	182
Y	*230-1053*	1	PRECLEANER GP	186
			S/N: 7PZ682-UP	
Y	**172-5638**	1	PUMP GP-PISTON	842
Y	*156-9846*	1	RADIATOR GP	152
Y	*169-2887*	1	SENSOR & MTG GP-PRESSURE (ATMOSPHERIC)	327
			S/N: 7PZ1-288	
Y	*127-4496*	1	SENSOR & MTG GP-PRESSURE (ATMOSPHERIC)	326
			S/N: 7PZ289-703	
Y	*179-7091*	1	STARTING AID GP-ETHER	354
			S/N: 7PZ289-UP	
Y	*8N-8114*	1	SUPPORT GP-ENGINE (REAR)	67
Y	*156-9813*	1	TANK GP-WATER	154
Y	**4T-0884**	1	VALVE GP-BYPASS	863
Y	*1W-8160*	1	YOKE GP (ACCESSORY DRIVE)	77

Y-SEPARATE ILLUSTRATION

BASIC ENGINE

101-0833 BALANCER GP

S/N: 2GR1180-UP

PART OF 155-5556 ENGINE AR

SMCS-1220 **i01909750**

NOTE	REF NO	GRAPHIC REF	PART NUMBER	QTY	PART NAME 1 2 3 4 5 6 (PRODUCT LEVEL)	SEE PAGE
	1	1	**4W-4998**	1	SHAFT-CLUSTER GEAR	
	2	1	**101-1365**	1	PLATE-THRUST	
	3	1	**101-9043**	1	GEAR AS-BALANCER (92 TEETH)	
	3A	1	**7N-6983**	1	BEARING-SLEEVE	
	4	1	**0L-1351**	4	BOLT (3/8-16X0.875 IN)	
	5	1	**8M-2530**	4	BOLT-12 POINT HEAD (1/2-13X1.25 IN)	

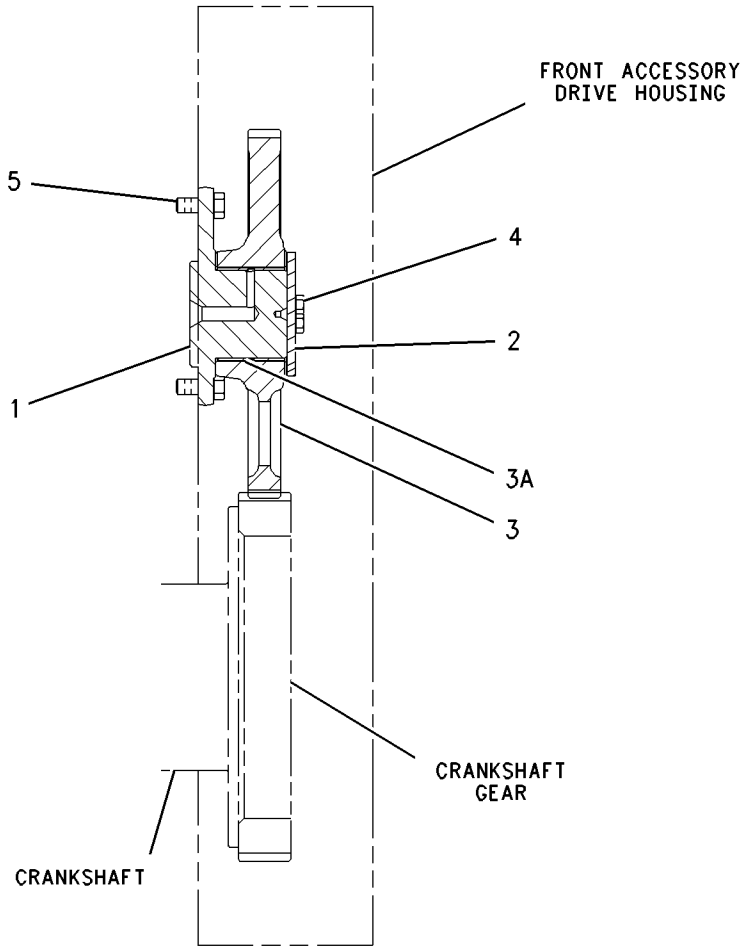

RIGHT SIDE VIEW

GRAPHIC #1

<END>

g00995181

120-7413 BASE GP-VALVE COVER

S/N: 2GR1180-UP

PART OF 100-3905, 195-1928, 224-9869 VALVE MECHANISM GP

SMCS-1120 **i01925005**

NOTE	REF NO	GRAPHIC REF	PART NUMBER	QTY	PART NAME 1 2 3 4 5 6 (PRODUCT LEVEL)	SEE PAGE
	1	1	**119-0839**	1	SPACER (17.5X30.94X98MM) (RH)	
	2	1	**6V-6228**	3	SEAL-O-RING	
	3	1	**119-0838**	1	SPACER (17.5X30.94X98MM) (LH)	
	4	1	**120-7412**	1	BASE AS-ROCKER ARM	
	4A	1	**120-4339**	1	WASHER-SPRING	
	4B	1	**8N-4387**	1	DOWEL-HOLLOW	

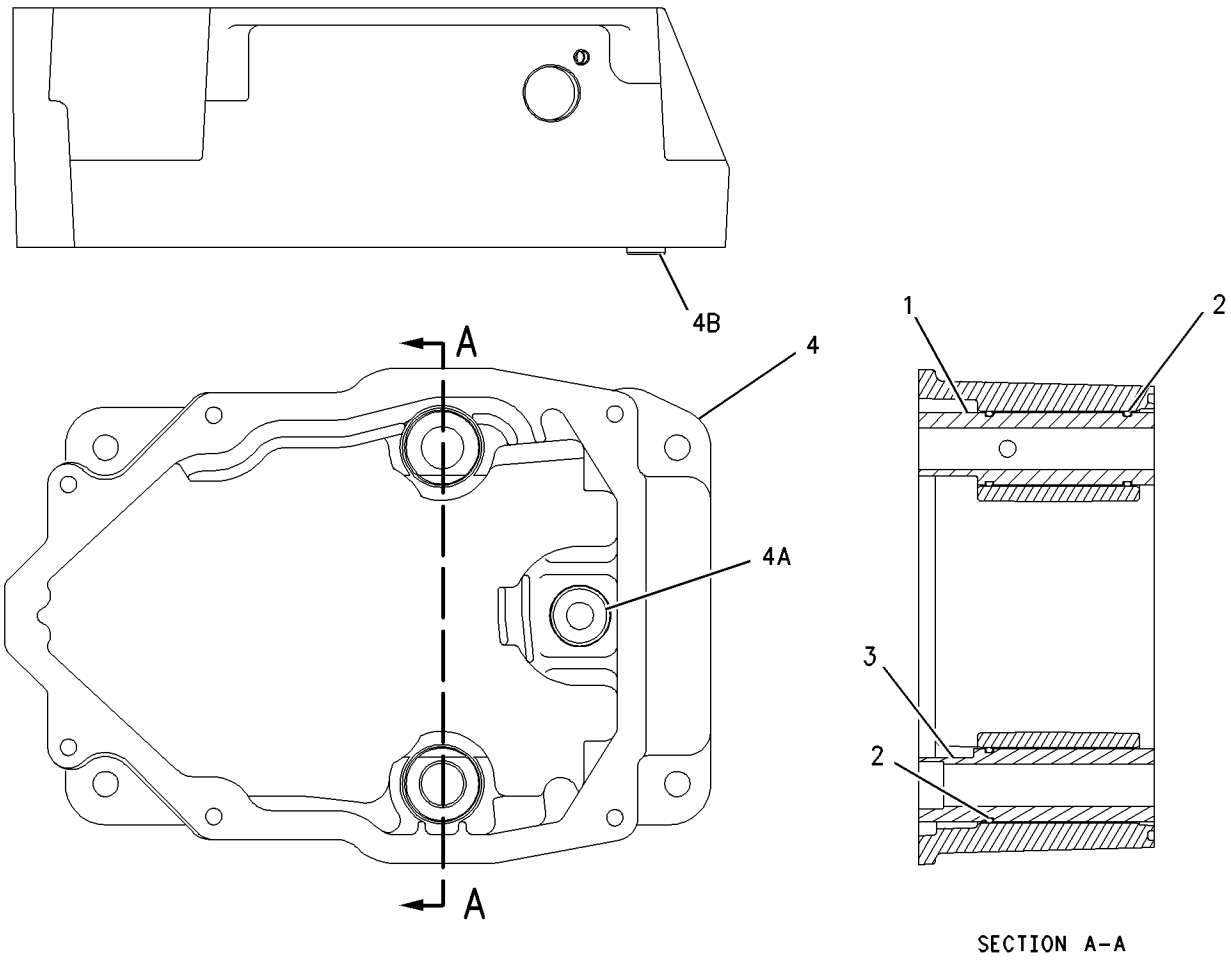

GRAPHIC #1 **<END>** g00842340

106-4582 CAMSHAFT GP

S/N: 2GR1180-2334

PART OF 155-5556 ENGINE AR

SMCS-1210, 1211, 1212 **i01990469**

NOTE	REF NO	GRAPHIC REF	PART NUMBER	QTY	PART NAME 1 2 3 4 5 6 (PRODUCT LEVEL)	SEE PAGE
R	1	1	**127-5404**	1	CAMSHAFT AS (LH)	
		1	**5B-5821**	1	DOWEL	
	2	1	**1A-2029**	4	BOLT (3/8-16X1.125 IN)	
	3	1	**4W-6664**	2	PLATE AS-TIMING	
	4	1	**0S-0509**	2	BOLT (3/8-16X0.75 IN)	
	5	1	**5M-2894**	2	WASHER-HARD (10.2X18.5X2.5MM THK)	
R	6	1	**133-4079**	1	CAMSHAFT AS (RH)	
		1	**5B-5821**	1	DOWEL	
	7	1	**128-5994**	2	WASHER AS-THRUST	
					(EACH INCLUDES)	
		1	**4B-4161**	1	SCREW-DRIVE (NO.6X3/8)	
	8	1	**117-9308**	2	PLATE	

R-REMFG PART MAY BE AVAILABLE

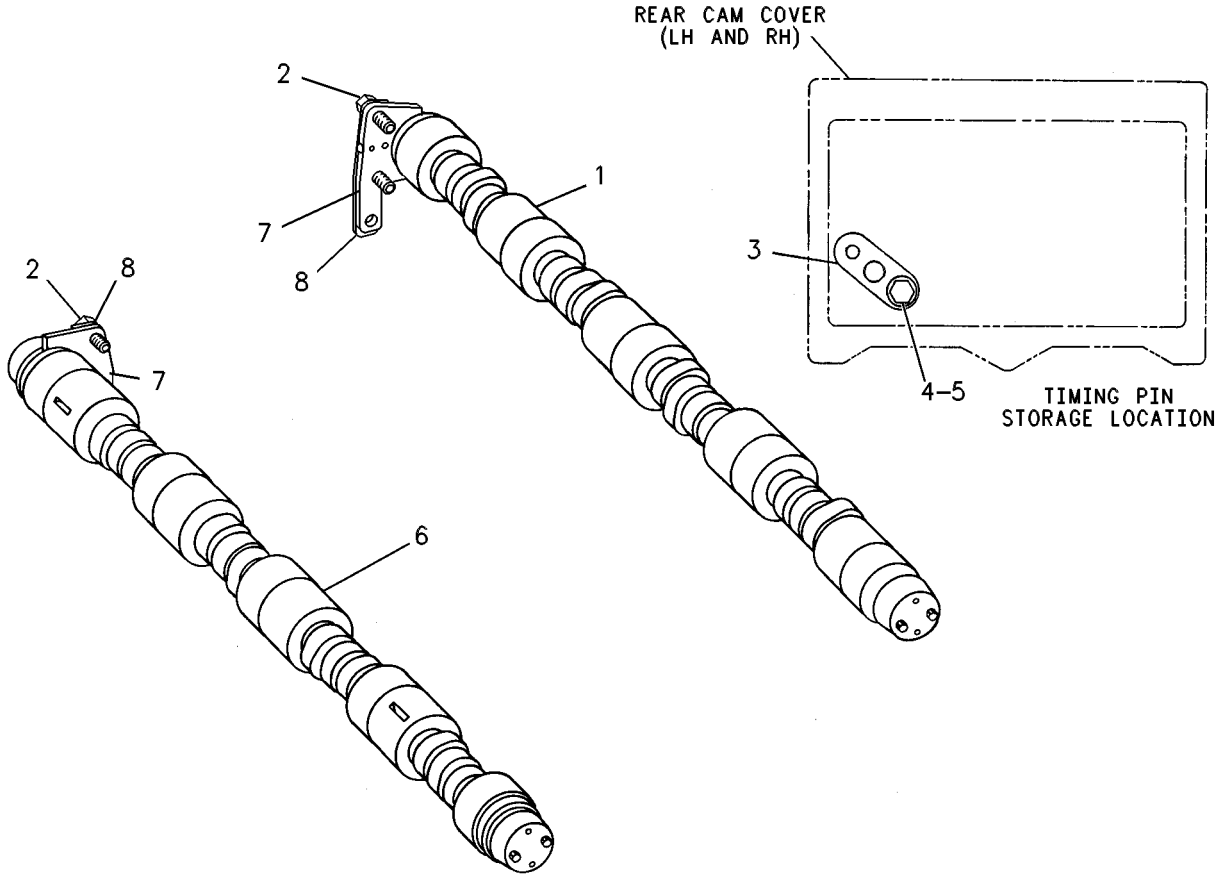

GRAPHIC #1 **<END>** g00086036

106-4582 CAMSHAFT GP

S/N: 2GR2335-UP

PART OF 155-5556 ENGINE AR

SMCS-1210, 1211, 1212 **i01990466**

NOTE	REF NO	GRAPHIC REF	PART NUMBER	QTY	PART NAME 1 2 3 4 5 6 (PRODUCT LEVEL)	SEE PAGE
R	1	1	**127-5404**	1	CAMSHAFT AS (LH)	
		1	**5B-5821**	1	DOWEL	
C	2	1	**0L-1351**	4	BOLT (3/8-16X0.875 IN)	
	3	1	**4W-6664**	2	PLATE AS-TIMING	
	4	1	**0S-0509**	2	BOLT (3/8-16X0.75 IN)	
	5	1	**5M-2894**	2	WASHER-HARD (10.2X18.5X2.5MM THK)	
R	6	1	**133-4079**	1	CAMSHAFT AS (RH)	
		1	**5B-5821**	1	DOWEL	
C	7	1	**7N-3218**	2	WASHER-THRUST	

C-CHANGE FROM PREVIOUS TYPE
R-REMFG PART MAY BE AVAILABLE

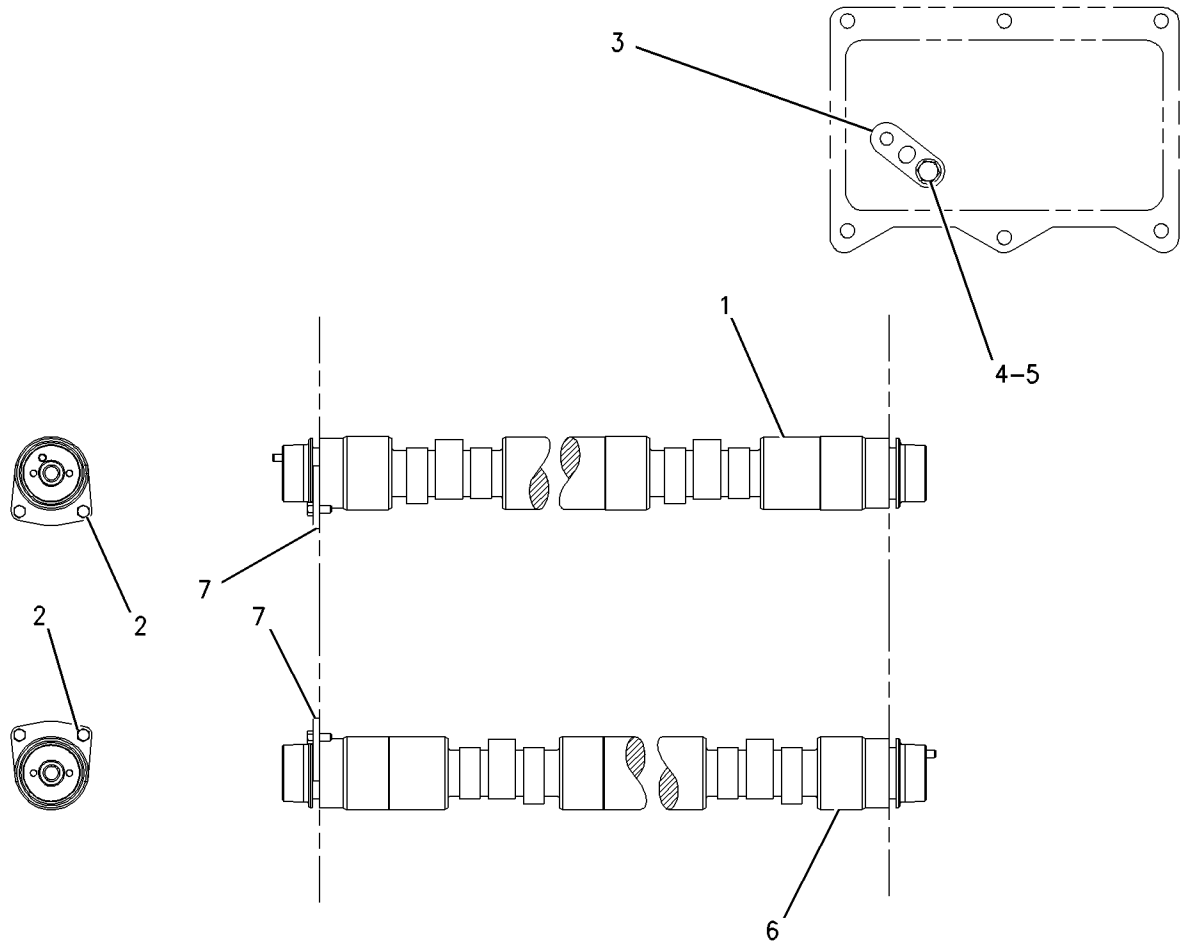

GRAPHIC #1 **<END>** g00673338

BASIC ENGINE

156-9844 COVER GP-ACCESSORY DRIVE

S/N: 2GR1180-UP

PART OF 155-5556 ENGINE AR

SMCS-1207 **i01967651**

NOTE	REF NO	GRAPHIC REF	PART NUMBER	QTY	PART NAME 1 2 3 4 5 6 (PRODUCT LEVEL)	SEE PAGE
	1	1	**3P-1896**	2	PLUG-CUP	
	2	1	**7N-4951**	2	COVER	
	3	1	**7N-4952**	2	COVER	
	4	1	**1A-2029**	20	BOLT (3/8-16X1.125 IN)	
	5	1	**235-3546**	2	SEAL-O-RING	
	6	1	**5P-0840**	2	SEAL-O-RING	
	7	1	**6V-3348**	2	SEAL-O-RING	
	8	1	**5M-2894**	20	WASHER-HARD (10.2X18.5X2.5MM THK)	
	9	1	**235-3548**	2	SEAL-O-RING	

QUANTITIES SHOWN ARE THOSE REQUIRED FOR BOTH LH AND RH SIDES

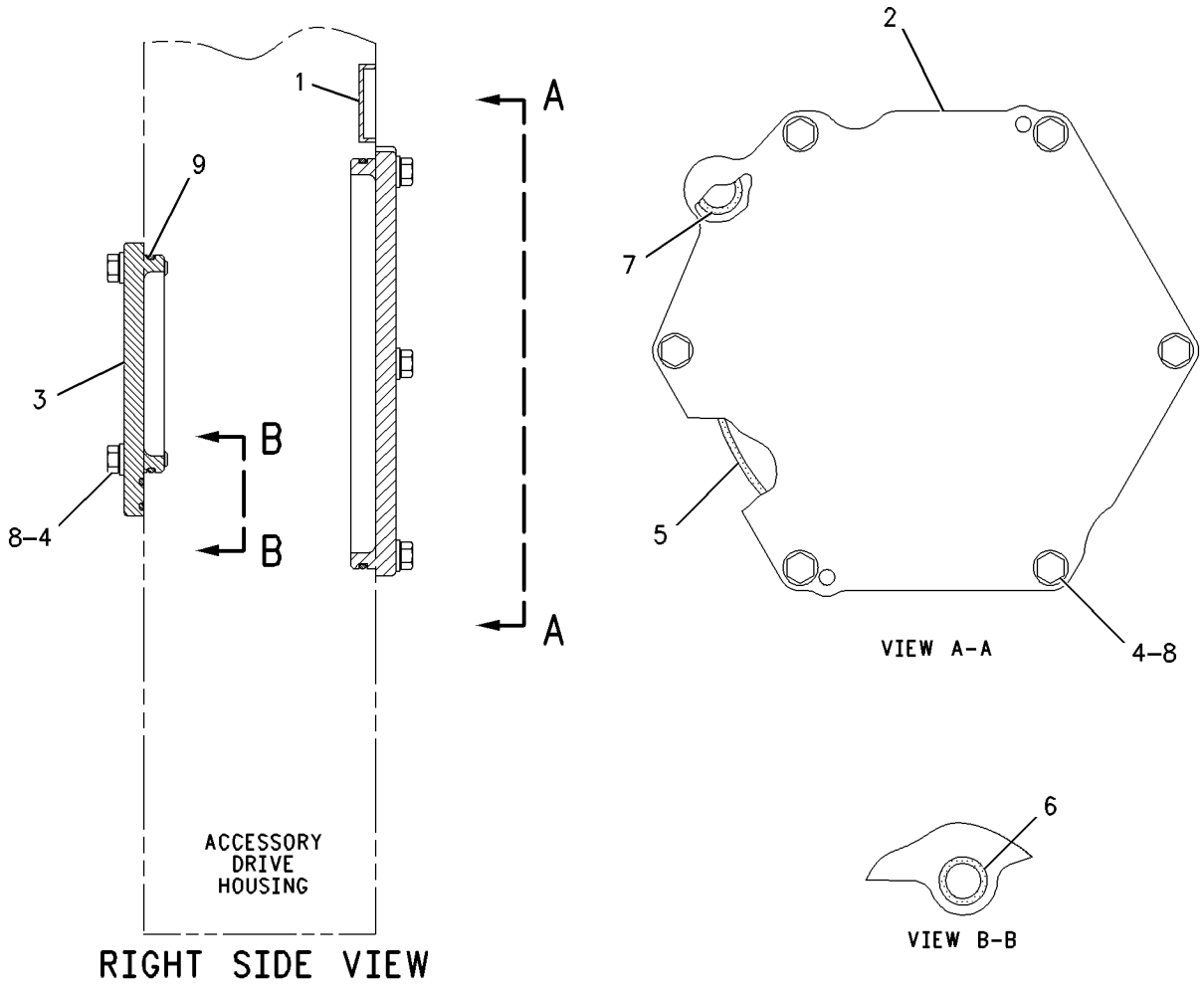

GRAPHIC #1 **<END>** g00695208

BASIC ENGINE

104-4776 COVER GP-CYLINDER BLOCK

S/N: 2GR1180-UP
REAR STRUCTURE
PART OF 155-5556 ENGINE AR

SMCS-1201 **i02029711**

NOTE	REF NO	GRAPHIC REF	PART NUMBER	QTY	PART NAME 1 2 3 4 5 6 (PRODUCT LEVEL)	SEE PAGE
	1	1	**4B-8407**	3	GASKET	
	2	1	**4N-0933**	1	GASKET	
	3	1	**5F-0304**	2	PLUG-DRAIN (CYLINDER BLOCK)	
	4	1	**7N-4319**	2	COVER	
	5	1	**7N-4320**	2	GASKET	
	6	1	**8T-6765**	1	PLUG-PIPE	
	7	1	**9L-4234**	1	SPACER (.406X1X.962-IN THK)	
	8	1	**104-4767**	1	ADAPTER	
	9	1	**104-4768**	1	COVER	
	10	1	**0S-1591**	3	BOLT (3/8-16X1.5-IN)	
	11	1	**0S-1594**	15	BOLT (3/8-16X25.4-IN)	
	12	1	**0T-0055**	1	BOLT (3/8-16X4.25-IN)	
	13	1	**5M-2894**	19	WASHER-HARD (10.2X18.5X2.5-MM THK)	

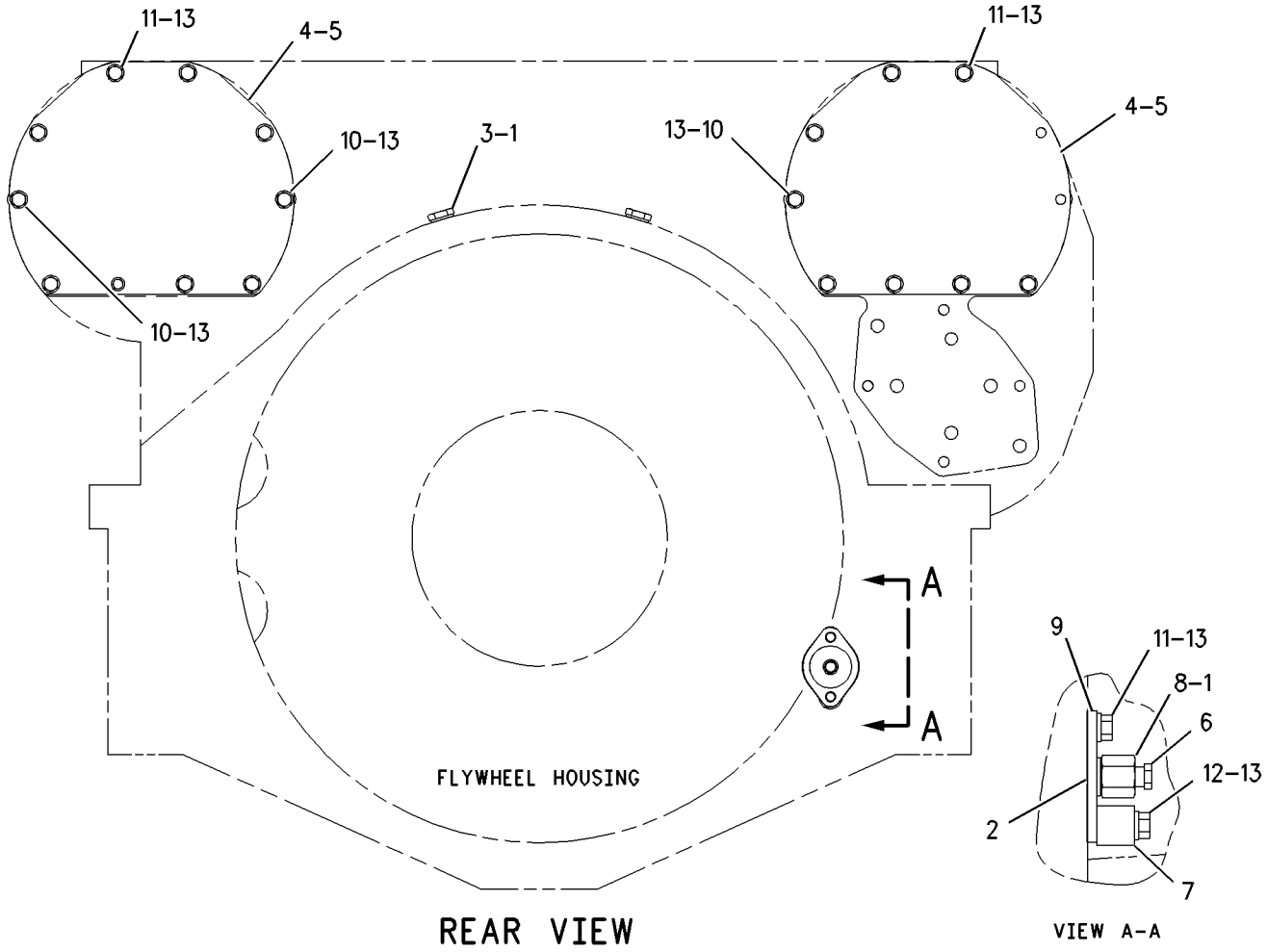

GRAPHIC #1 **<END>** g00802318

BASIC ENGINE

119-6288 COVER GP-CYLINDER BLOCK

S/N: 2GR1180-UP
CENTRAL STRUCTURE
PART OF 155-5556 ENGINE AR

SMCS-1201 **i01719866**

NOTE	REF NO	GRAPHIC REF	PART NUMBER	QTY	PART NAME 1 2 3 4 5 6 (PRODUCT LEVEL)	SEE PAGE
	1	1	**8N-9992**	4	COVER-CAMSHAFT	
	2	1	**0S-1594**	55	BOLT (3/8-16X1 IN)	
	3	1	**208-2362**	8	SEAL	
	4	1	**2W-0752**	1	GASKET	
	5	1	**0S-1588**	4	BOLT (3/8-16X1.25 IN)	
	6	1	**7N-3298**	2	COVER-BLOCK	
	7	1	**7N-4945**	3	GASKET	
	8	1	**8T-6761**	3	PLUG-PIPE	
	9	1	**208-2363**	8	SEAL	
	10	1	**5M-2894**	86	WASHER-HARD (10.2X18.5X2.5MM THK)	
	11	1	**1N-2914**	8	COVER-CYLINDER BLOCK SIDE	
	12	1	**8N-9993**	4	COVER-CAMSHAFT	
	13	1	**9X-8872**	31	BOLT-LOCKING (3/8-16X0.875 IN)	
	14	1	**209-5218**	1	BRACKET	
B	15	1	**0S-1594**	1	BOLT (3/8-16X1 IN)	
B	16	1	**5M-2894**	1	WASHER-HARD (10.2X18.5X2.5MM THK)	
	17	1	**2W-7628**	1	PLATE-DRAIN	
B	18	1	**7X-7732**	1	PLUG-PIPE	
	19	1	**3B-1915**	4	BOLT (3/8-16X1.37 IN)	
B	20	1	**9X-8872**	1	BOLT-LOCKING (3/8-16X0.875 IN)	
B	21	1	**5M-2894**	1	WASHER-HARD (10.2X18.5X2.5MM THK)	

B-USE AS REQUIRED

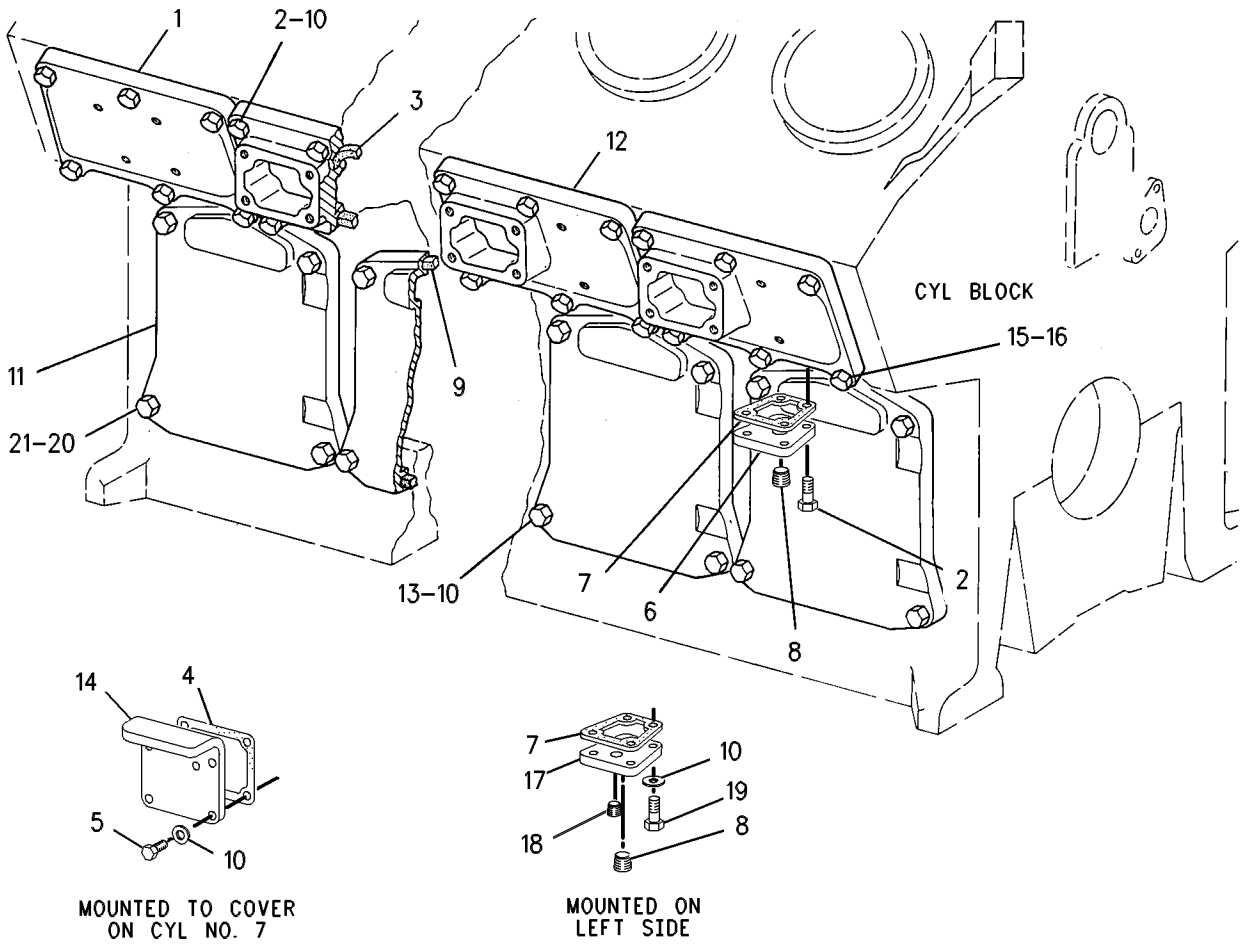

GRAPHIC #1 **<END>** g00609043

BASIC ENGINE

7W-2378 COVER GP-FRONT HOUSING

S/N: 2GR1180-UP

PART OF 155-5556 ENGINE AR

SMCS-1151, 1162, 1166 **i01334029**

NOTE	REF NO	GRAPHIC REF	PART NUMBER	QTY	PART NAME 1 2 3 4 5 6 (PRODUCT LEVEL)	SEE PAGE
	1	1	**2W-5285**	1	COVER	
	2	1	**8N-9885**	1	GASKET-DRIVE HOUSING	
	3	1	**1A-2029**	7	BOLT (3/8-16X1.125 IN)	
	4	1	**5M-2894**	7	WASHER-HARD (2.5MM THK)	

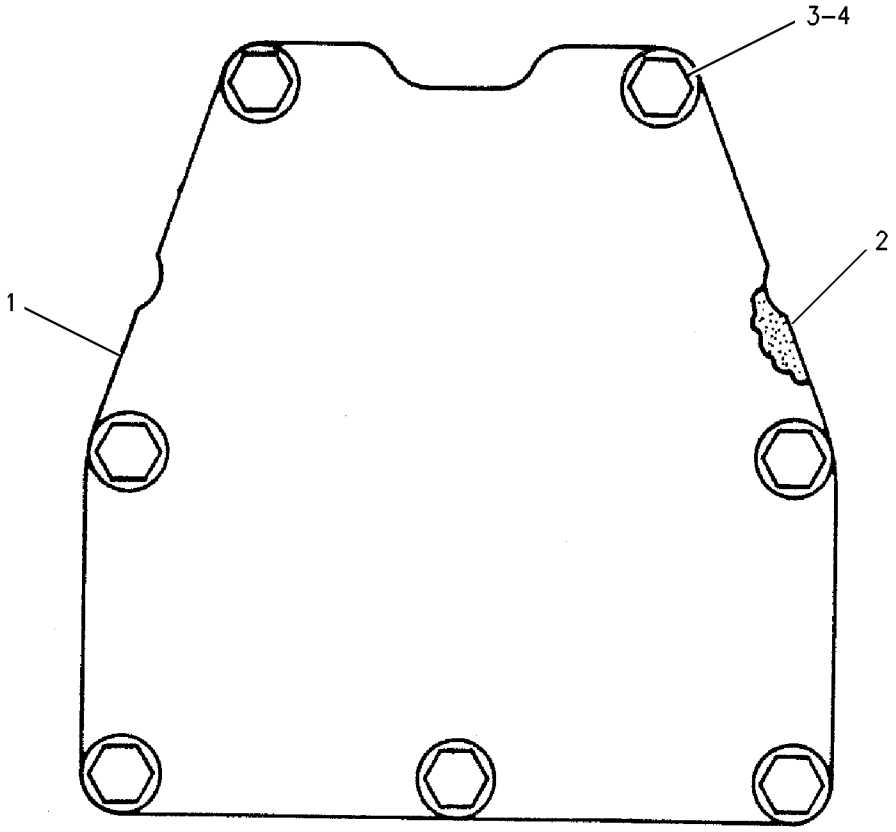

GRAPHIC #1 **<END>** g00705512

BASIC ENGINE

101-0831 COVER GP-VALVE MECHANISM

S/N: 2GR1180-UP

PART OF 155-5556 ENGINE AR

SMCS-1107, 1120 **i01955596**

NOTE	REF NO	GRAPHIC REF	PART NUMBER	QTY	PART NAME 1 2 3 4 5 6 (PRODUCT LEVEL)	SEE PAGE
	1	1	**101-4197**	1	COVER	
	2	1	**1A-9579**	3	BOLT (5/16-18X1.5 IN)	
	3	1	**9M-1974**	3	WASHER-HARD (8.8X16X2MM THK)	
	4	1	**208-2364**	1	SEAL (VALVE COVER)	
B	5	1	**1A-9579**	1	BOLT (5/16-18X1.5 IN)	
B	6	1	**9M-1974**	1	WASHER-HARD (8.8X16X2MM THK)	

B-USE AS REQUIRED

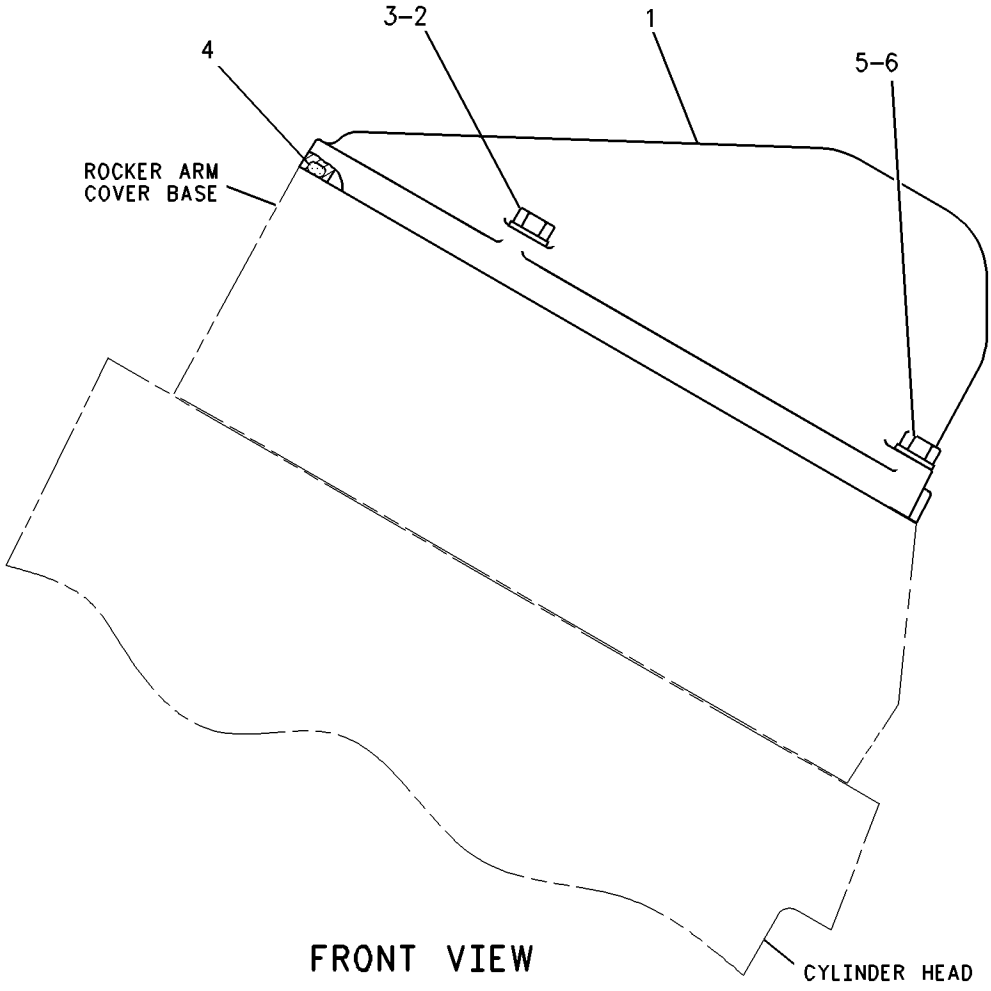

GRAPHIC #1 **<END>** g00773092

101-0336 CRANKSHAFT GP

S/N: 2GR1180-2409

PART OF 155-5556 ENGINE AR

SMCS-1202, 1203, 1204, 1230, 1231, 1232 **i00751453**

NOTE	REF NO	GRAPHIC REF	PART NUMBER	QTY	PART NAME 1 2 3 4 5 6 (PRODUCT LEVEL)	SEE PAGE
	1	1	**152-7625**	1	CRANKSHAFT AS	
	2	1	**128-4845**	18	BOLT AS	
	3	1	**7N-2003**	12	DOWEL	
	4	1	**2W-2288**	8	PLUG	
	5	1	**7C-6209**	2	PLATE-THRUST	
	6	1	**105-0253**	5	BEARING-MAIN	
A		1	**105-0254**	5	BEARING-MAIN (0.63MM US)	
A		1	**105-0255**	5	BEARING-MAIN (1.27MM US)	
A		1	**105-0256**	5	BEARING-MAIN (0.63MM OS)	
A		1	**105-0257**	5	BEARING-MAIN (0.63MM US-0.63MM OS)	

A-NOT PART OF THIS GROUP

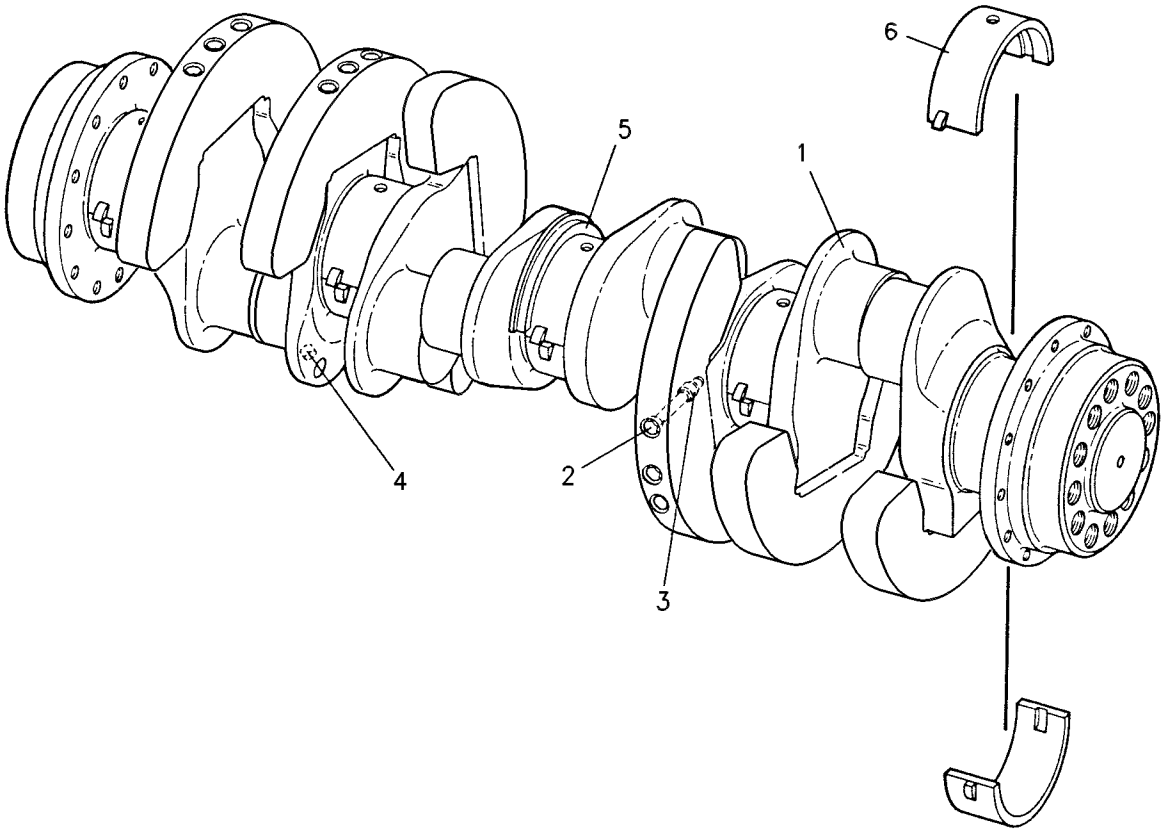

GRAPHIC #1 **<END>** g00338016

BASIC ENGINE

101-0336 CRANKSHAFT GP

S/N: 2GR2410-4648

PART OF 155-5556 ENGINE AR

SMCS-1202, 1203, 1204, 1230, 1231, 1232 **i01977597**

NOTE	REF NO	GRAPHIC REF	PART NUMBER	QTY	PART NAME 1 2 3 4 5 6 (PRODUCT LEVEL)	SEE PAGE
R	1	1	**152-7625**	1	CRANKSHAFT AS	
	2	1	**128-4845**	18	BOLT AS	
	3	1	**7N-2003**	12	DOWEL	
	4	1	**2W-2288**	8	PLUG	
J	5	1	**7C-6209**	2	PLATE-THRUST	
CJ	6	1	**149-6031**	5	BEARING AS-MAIN (STANDARD)	
ABC		1	**149-6032**		BEARING-MAIN (0.63MM US ID)	
ABC		1	**149-6033**		BEARING-MAIN (1.27MM US ID)	
ABC		1	**149-6034**		BEARING-MAIN (0.63MM OS OD)	
ABC		1	**149-6035**		BEARING-MAIN (0.63MM US ID - 0.63MM OS OD)	
					AVAILABLE REPAIR KIT(S):	
J			**196-9527**		KIT-MAIN BEARING (CRANKSHAFT)	

A-NOT PART OF THIS GROUP
B-USE AS REQUIRED
C-CHANGE FROM PREVIOUS TYPE
J-KIT MARKED J INCLUDES PARTS MARKED J
R-REMFG PART MAY BE AVAILABLE

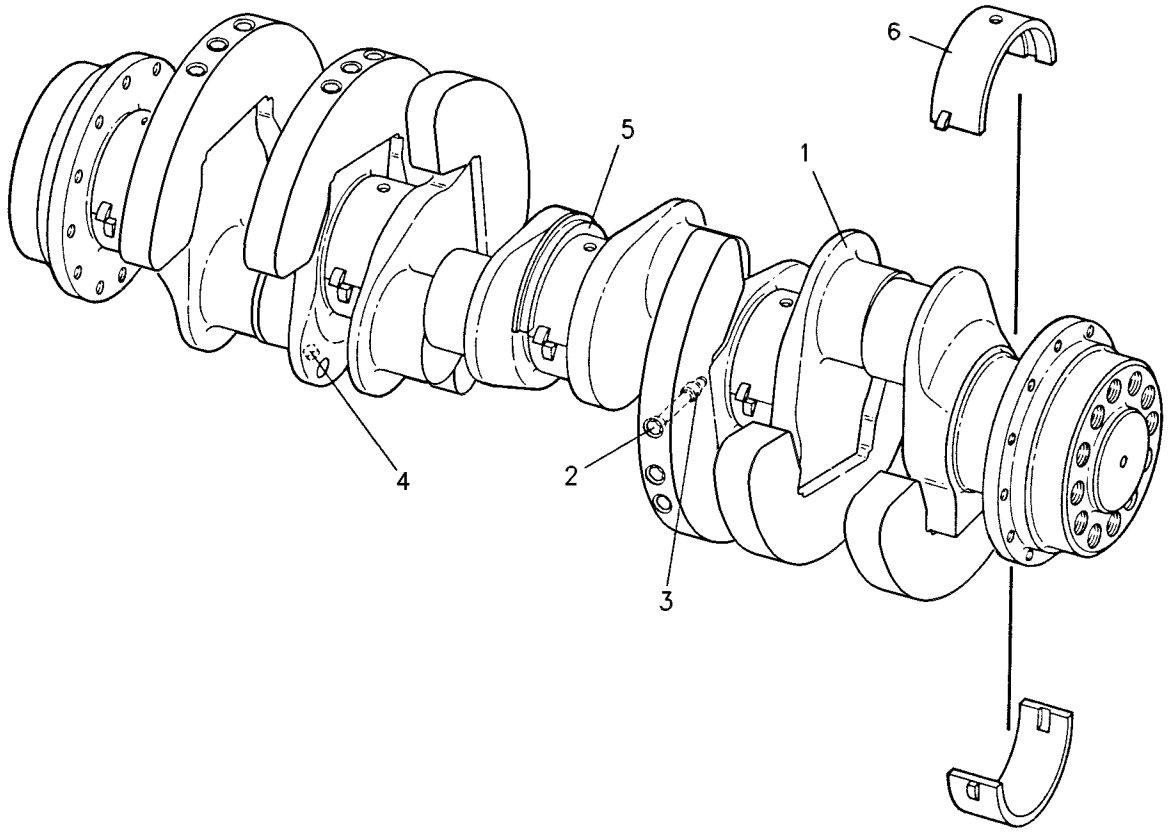

GRAPHIC #1 **<END>** g00338016

BASIC ENGINE

241-0222 CRANKSHAFT GP

S/N: 2GR4649-UP

PART OF 155-5556 ENGINE AR

SMCS-1202, 1203, 1204, 1230, 1231, 1232 **i01983478**

NOTE	REF NO	GRAPHIC REF	PART NUMBER	QTY	PART NAME 1 2 3 4 5 6 (PRODUCT LEVEL)	SEE PAGE
	1	1	**241-0221**	1	CRANKSHAFT AS	
	2	1	**128-4845**	18	BOLT AS	
	3	1	**7N-2003**	12	DOWEL	
	4	1	**2W-2288**	8	PLUG	
J	5	1	**7C-6209**	2	PLATE-THRUST	
J	6	1	**149-6031**	5	BEARING AS-MAIN (STANDARD)	
AB		1	**149-6032**		BEARING-MAIN (0.63MM US ID)	
AB		1	**149-6033**		BEARING-MAIN (1.27MM US ID)	
AB		1	**149-6034**		BEARING-MAIN (0.63MM OS OD)	
AB		1	**149-6035**		BEARING-MAIN (0.63MM US ID - 0.63MM OS OD)	
					AVAILABLE REPAIR KIT(S):	
J			**196-9527**		KIT-MAIN BEARING (CRANKSHAFT)	

A-NOT PART OF THIS GROUP
B-USE AS REQUIRED
J-KIT MARKED J INCLUDES PARTS MARKED J

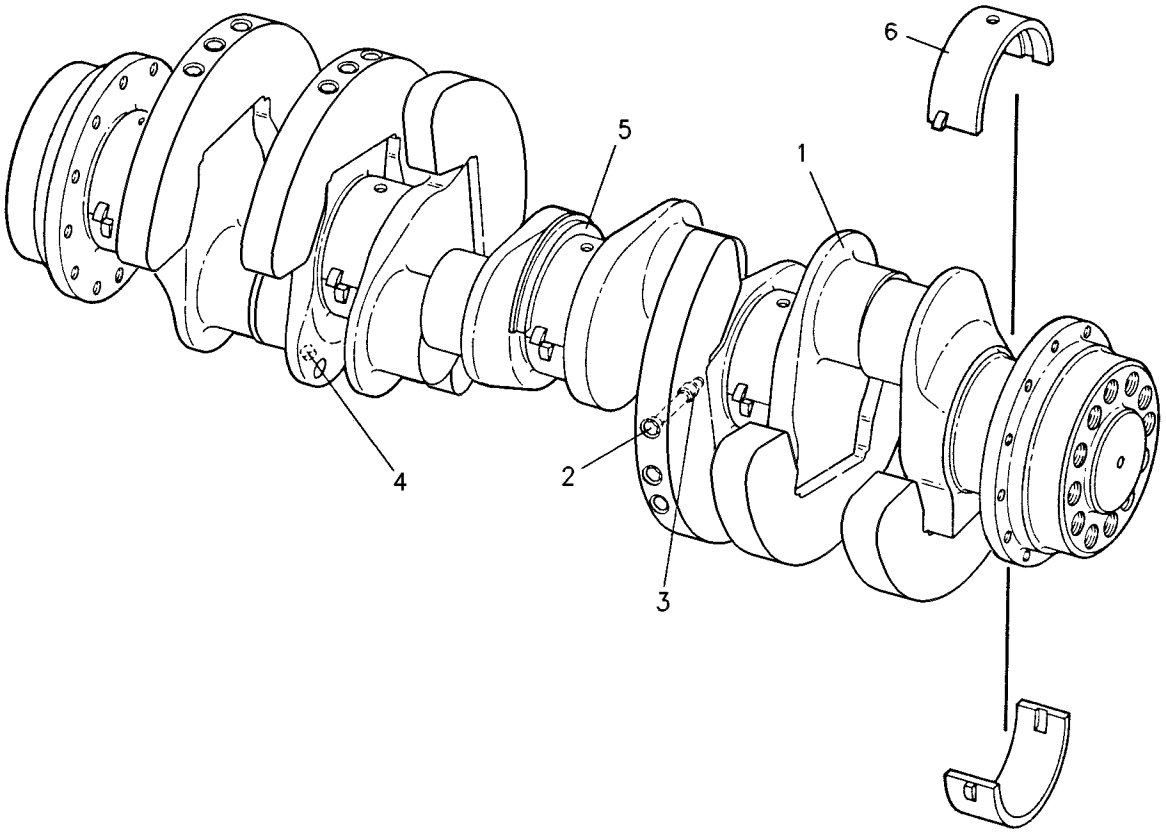

GRAPHIC #1 **<END>** g00338016

BASIC ENGINE

101-1171 CYLINDER BLOCK AS

S/N: 2GR1180-UP

PART OF 101-0827, 237-7957 CYLINDER BLOCK GP

FIELD REPLACEMENT ORDER 115-3503–PAGE 25

SMCS-1117, 1201, 1211, 1216, 1217, 1221, 1222, 1223, 1224, 1238, 1239, 1240, 1331

i01967341

NOTE	REF NO	GRAPHIC REF	PART NUMBER	QTY	PART NAME 1 2 3 4 5 6 (PRODUCT LEVEL)	SEE PAGE
	1	1	**5P-8249**	20	WASHER-HARD (24X41.5X4MM THK)	
	2	1	**7X-7925**	20	BOLT (7/8-14X11 IN)	
	3	1	**223-1696**	5	CAP-CRANKSHAFT BEARING	
	4	1	**4W-4813**	1	PLUG	
	5	1	**8T-2929**	1	SEAL-O-RING	
	6	1	**211-7826**	8	LINER-CYLINDER	
	7	1	**7N-2046**	24	SEAL-O-RING	
	8	1	**8N-4707**	8	BAND-FILLER	
	9	1	**8T-2928**	1	SEAL-O-RING	

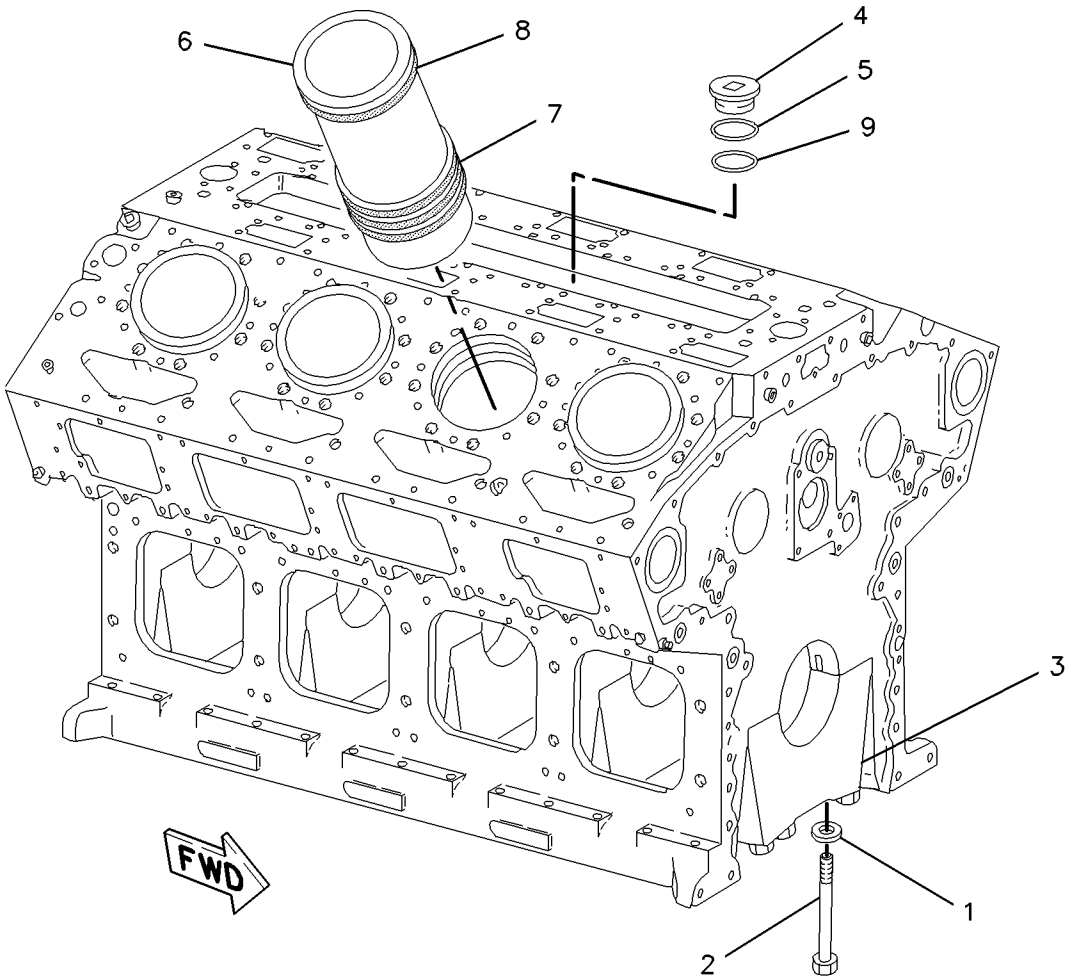

GRAPHIC #1

<END>

g00728242

106-2778 CYLINDER BLOCK AS

S/N: 2GR1180-UP

PART OF 115-3503 CYLINDER BLOCK GP

SMCS-1117, 1201, 1211, 1216, 1217, 1221, 1222, 1223, 1224, 1238, 1239, 1240, 1331 **i01909379**

NOTE	REF NO	GRAPHIC REF	PART NUMBER	QTY	PART NAME 1 2 3 4 5 6 (PRODUCT LEVEL)	SEE PAGE
	2	1	**5P-8249**	20	WASHER-HARD (24X41.5X4MM THK)	
	3	1	**7X-7925**	20	BOLT (7/8-14X11 IN)	
	4	1	**9Y-9175**	5	CAP-CRANKSHAFT BEARING	
	5	1	**4W-4813**	1	PLUG	
	6	1	**8T-2929**	1	SEAL-O-RING	
	7	1	**8T-2928**	1	SEAL-O-RING	

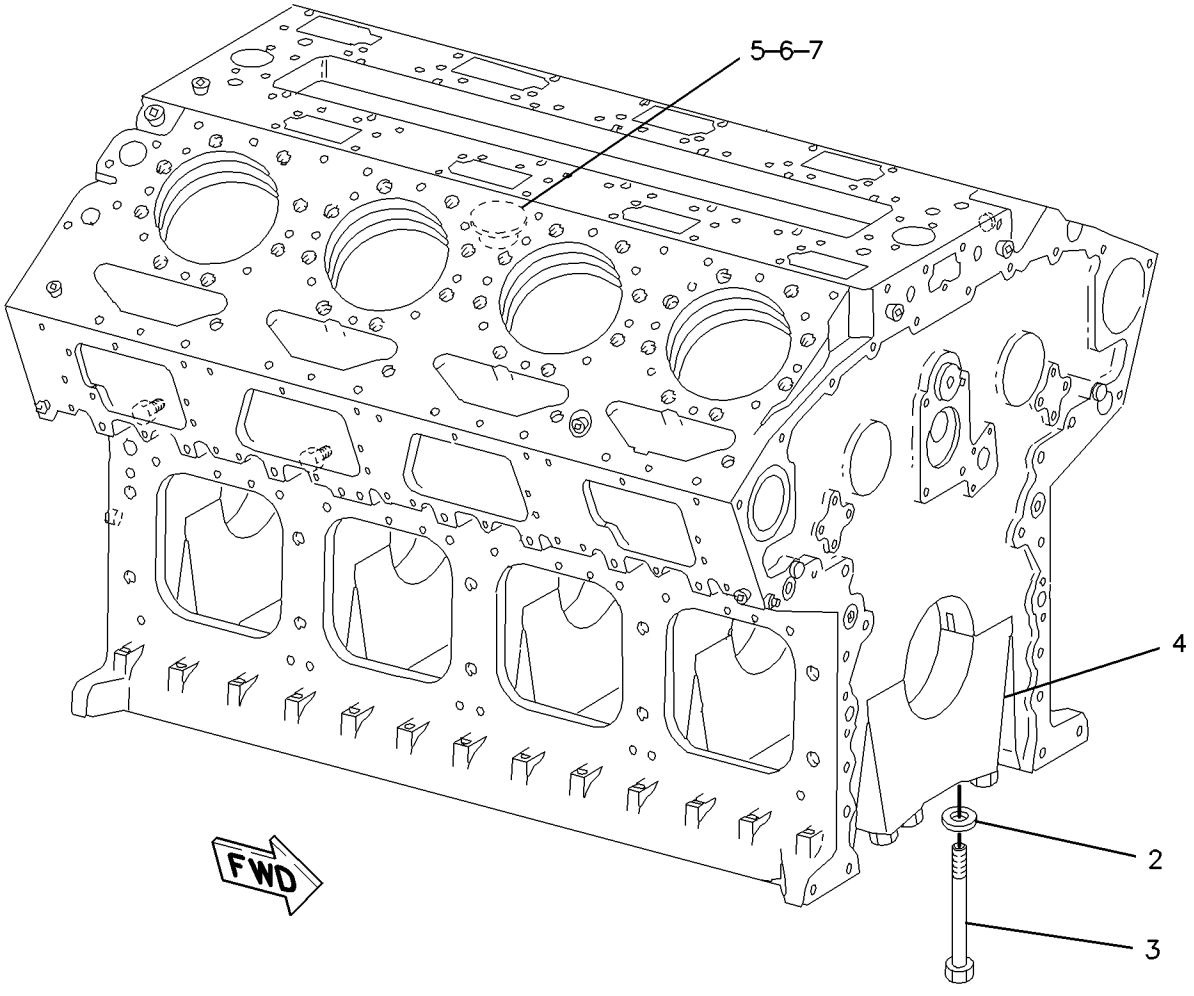

GRAPHIC #1 **<END>** g00994931

BASIC ENGINE

101-0827 CYLINDER BLOCK GP

S/N: 2GR1180-2334

PART OF 155-5556 ENGINE AR

SMCS-1201 **i01420591**

NOTE	REF NO	GRAPHIC REF	PART NUMBER	QTY	PART NAME 1 2 3 4 5 6 (PRODUCT LEVEL)	SEE PAGE
Y	1	1	*101-1171*	1	CYLINDER BLOCK AS	19
	2	1	**9M-1974**	8	WASHER-HARD (8.8X16X2MM THK)	
	3	1	**5P-8245**	1	WASHER-HARD (13.5X25.5X3MM THK)	
	4	1	**1A-2029**	1	BOLT (3/8-16X1.125 IN)	
B	5	1	**7X-7731**	1	PLUG-PIPE	
	6	1	**9S-4191**	6	PLUG-O-RING	
	7	1	**2W-2940**	8	PLUG-OIL MANIFOLD	
	8	1	**7N-2044**	2	DOWEL	
	9	1	**8T-6762**	4	PLUG-PIPE	
	10	1	**5M-2894**	9	WASHER-HARD (10.2X18.5X2.5MM THK)	
	11	1	**7N-2047**	3	DOWEL	
	12	1	**7X-4805**	3	SEAL-O-RING (9.12MM ID)	
	13	1	**116-3253**	8	TUBE AS-OIL JET	
	14	1	**0T-0102**	8	BOLT (3/8-16X0.625 IN)	
	15	1	**101-1198**	10	BEARING-CAMSHAFT	
	16	1	**4N-0683**	2	DOWEL	
	17	1	**8T-6763**	16	PLUG-PIPE	
	18	1	**0S-1595**	1	BOLT (1/2-13X1.25 IN)	
	19	1	**8T-0099**	16	DOWEL	
	20	1	**7N-5641**	2	PLUG-MANIFOLD	
	21	1	**7N-2049**	8	DOWEL	
	22	1	**5P-0840**	16	SEAL-O-RING (12.29MM ID)	
	23	1	**144-5692**	8	GASKET-PLATE	
	24	1	**110-6994**	8	PLATE-SPACER	
	25	1	**5F-9657**	4	SEAL-O-RING (36.09MM ID)	
	26	1	**5P-8210**	1	SEAL-O-RING (31.34MM ID)	
	27	1	**1B-2790**	8	BOLT (5/16-18X1.375 IN)	
	28	1	**7C-3722**	8	RETAINER AS-JET	
					(EACH INCLUDES)	
		1	**6V-3537**	1	DOWEL	
	29	1	**8N-8056**	1	COVER	
	30	1	**6V-3348**	8	SEAL-O-RING (18.42MM ID)	
	31	1	**4W-4813**	1	PLUG	
	32	1	**8T-2929**	1	SEAL-O-RING (63.2MM ID)	
	33	1	**8T-2928**	1	SEAL-O-RING (53.1MM ID)	
	34	1	**033-6042**	6	SEAL-O-RING (11.89MM ID)	
B	35	1	**8N-8056**	1	COVER	
B	36	1	**1A-2029**	1	BOLT (3/8-16X1.125 IN)	
B	37	1	**5M-2894**	1	WASHER-HARD (10.2X18.5X2.5MM THK)	
	38	1	**7X-7731**	1	PLUG-PIPE	
B	39	1	**5P-8245**	1	WASHER-HARD (13.5X25.5X3MM THK)	
B	40	1	**0S-1595**	1	BOLT (1/2-13X1.25 IN)	
B	41	1	**5P-8210**	1	SEAL-O-RING (31.34MM ID)	

B-USE AS REQUIRED
Y-SEPARATE ILLUSTRATION

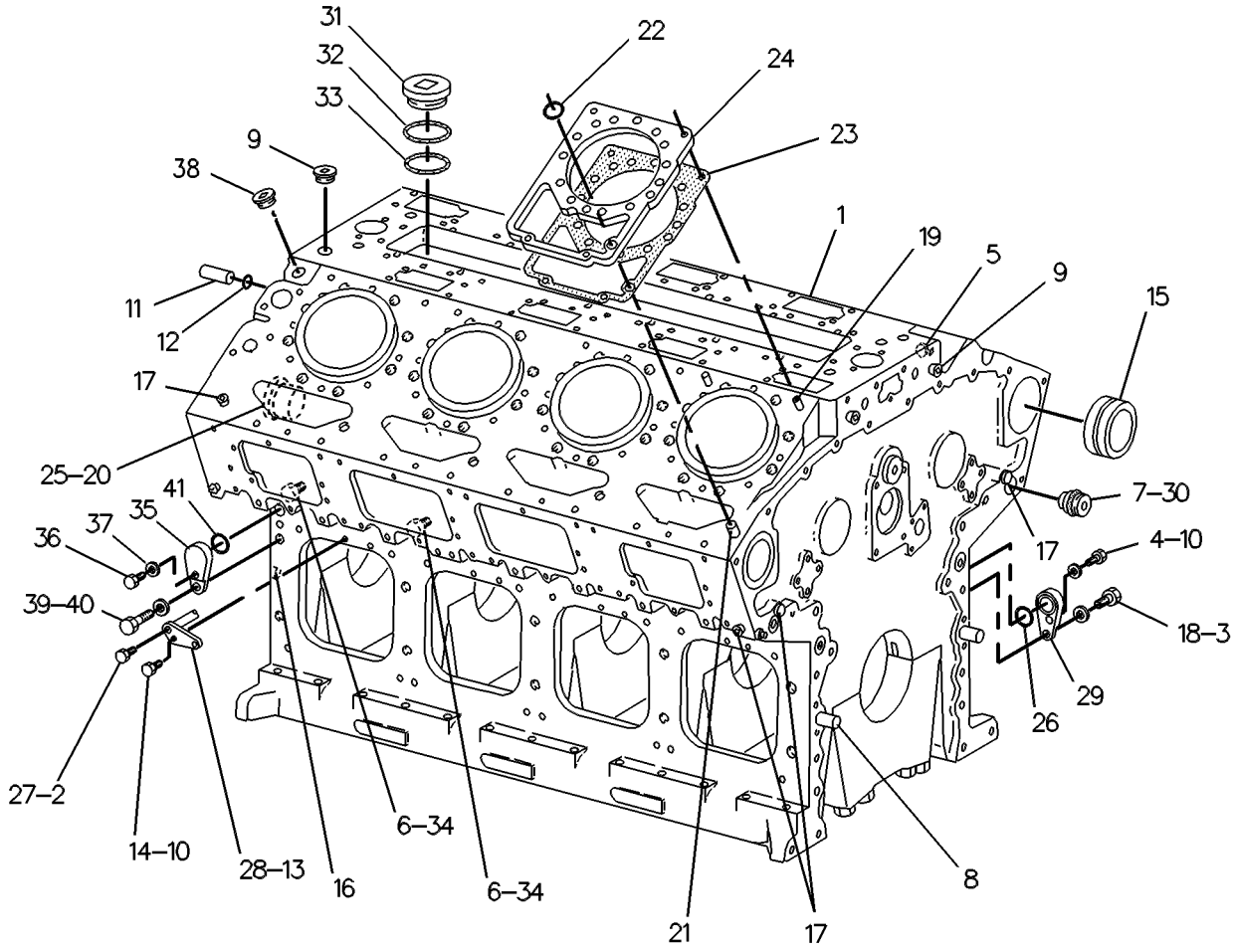

GRAPHIC #1 **<END>** g00086042

BASIC ENGINE

101-0827 CYLINDER BLOCK GP

S/N: 2GR2335-4492, 4494-4517
PART OF 155-5556 ENGINE AR

SMCS-1201 **i01661313**

NOTE	REF NO	GRAPHIC REF	PART NUMBER	QTY	PART NAME 1 2 3 4 5 6 (PRODUCT LEVEL)	SEE PAGE
Y	1	1	*101-1171*	1	CYLINDER BLOCK AS	19
	2	1	**9M-1974**	8	WASHER-HARD (8.8X16X2MM THK)	
	3	1	**5P-8245**	1	WASHER-HARD (13.5X25.5X3MM THK)	
	4	1	**1A-2029**	1	BOLT (3/8-16X1.125 IN)	
B	5	1	**7X-7731**	1	PLUG-PIPE (3/4-14 NPTF THD)	
	6	1	**9S-4191**	6	PLUG	
	7	1	**2W-2940**	8	PLUG-OIL MANIFOLD	
	8	1	**7N-2044**	2	DOWEL	
	9	1	**8T-6762**	4	PLUG-PIPE	
	10	1	**5M-2894**	9	WASHER-HARD (10.2X18.5X2.5MM THK)	
	11	1	**7N-2047**	3	DOWEL	
	12	1	**7X-4805**	3	SEAL-O-RING	
	13	1	**116-3253**	8	TUBE AS-OIL JET	
	14	1	**0T-0102**	8	BOLT (3/8-16X0.625 IN)	
	15	1	**101-1198**	10	BEARING-CAMSHAFT	
	16	1	**4N-0683**	2	DOWEL	
C	17	1	**8T-6763**	17	PLUG-PIPE	
	18	1	**0S-1595**	1	BOLT (1/2-13X1.25 IN)	
	19	1	**8T-0099**	16	DOWEL	
	20	1	**7N-5641**	2	PLUG-MANIFOLD	
	21	1	**7N-2049**	8	DOWEL	
	22	1	**5P-0840**	16	SEAL-O-RING	
	23	1	**144-5692**	8	GASKET-PLATE	
	24	1	**110-6994**	8	PLATE-SPACER	
	25	1	**5F-9657**	4	SEAL-O-RING	
	26	1	**5P-8210**	1	SEAL-O-RING	
	27	1	**7X-7731**	1	PLUG-PIPE (3/4-14 NPTF THD)	
	28	1	**4W-4813**	1	PLUG	
	29	1	**8N-8056**	1	COVER	
	30	1	**6V-3348**	8	SEAL-O-RING	
	31	1	**7C-3722**	8	RETAINER AS-JET	
					(EACH INCLUDES)	
		1	**6V-3537**	1	DOWEL	
	32	1	**1B-2790**	8	BOLT (5/16-18X1.375 IN)	
	33	1	**8T-2929**	1	SEAL-O-RING	
	34	1	**033-6042**	6	SEAL-O-RING	
	35	1	**8T-2928**	1	SEAL-O-RING	
B	36	1	**8N-8056**	1	COVER	
B	37	1	**1A-2029**	1	BOLT (3/8-16X1.125 IN)	
B	38	1	**5M-2894**	1	WASHER-HARD (10.2X18.5X2.5MM THK)	
B	39	1	**5P-8245**	1	WASHER-HARD (13.5X25.5X3MM THK)	
B	40	1	**0S-1595**	1	BOLT (1/2-13X1.25 IN)	
B	41	1	**5P-8210**	1	SEAL-O-RING	
B	42	1	**8T-6763**	1	PLUG-PIPE	

B-USE AS REQUIRED
C-CHANGE FROM PREVIOUS TYPE
Y-SEPARATE ILLUSTRATION

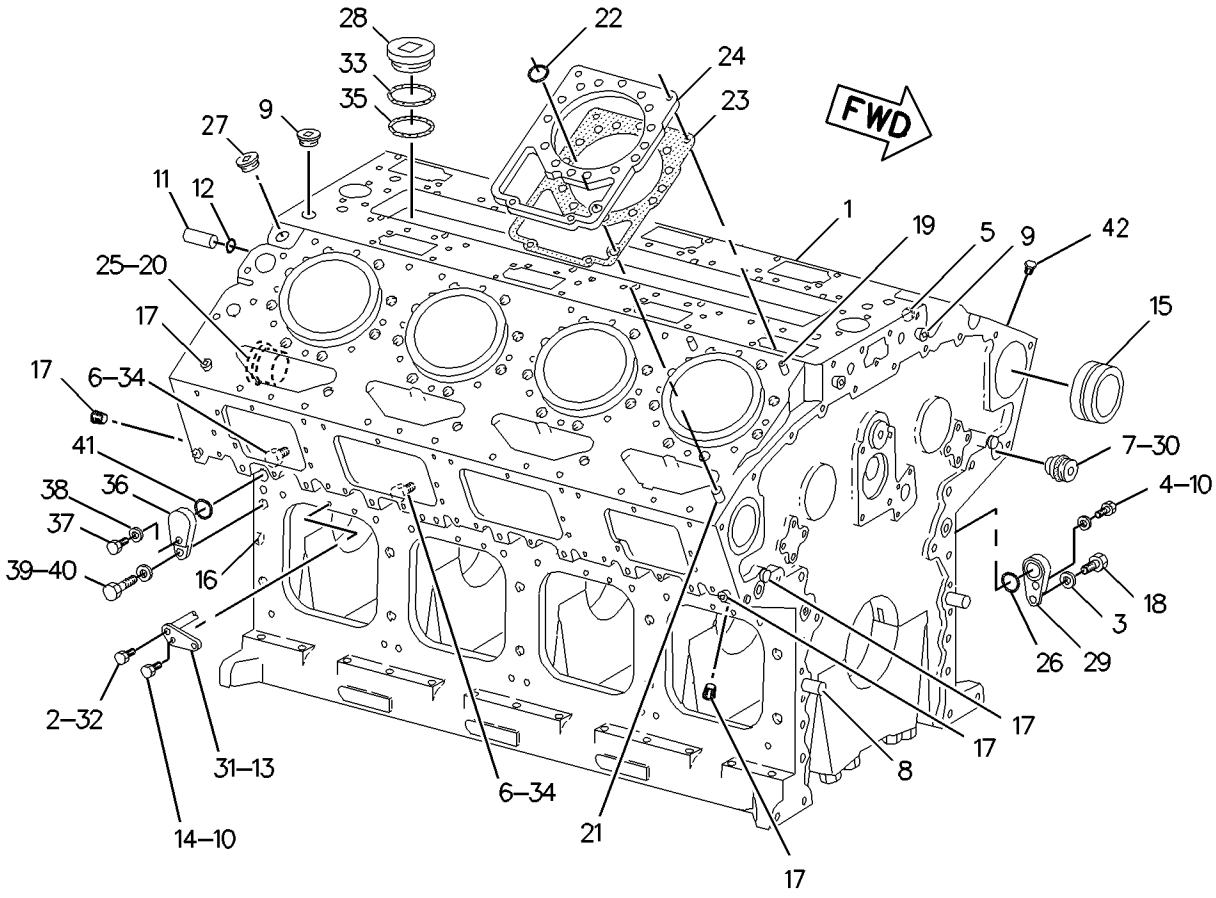

GRAPHIC #1 **<END>** g00810669

BASIC ENGINE

115-3503 CYLINDER BLOCK GP

S/N: 2GR1180-UP

FIELD REPLACEMENT FOR 101-1171—PAGE 19

SMCS-1201 **i01909884**

NOTE	REF NO	GRAPHIC REF	PART NUMBER	QTY	PART NAME 1 2 3 4 5 6 (PRODUCT LEVEL)	SEE PAGE
	1	1	**9S-4191**	6	PLUG (9/16-18 THD)	
	2	1	**8T-6762**	4	PLUG-PIPE	
	3	1	**7X-7731**	2	PLUG-PIPE	
	4	1	**8T-6763**	18	PLUG-PIPE	
	5	1	**2W-2940**	8	PLUG-OIL MANIFOLD	
	6	1	**6V-3348**	8	SEAL-O-RING	
	7	1	**7N-5641**	2	PLUG-MANIFOLD	
	8	1	**5F-9657**	4	SEAL-O-RING	
	9	1	**033-6042**	6	SEAL-O-RING	
Y	10	1	*106-2778*	1	CYLINDER BLOCK AS	20

Y-SEPARATE ILLUSTRATION

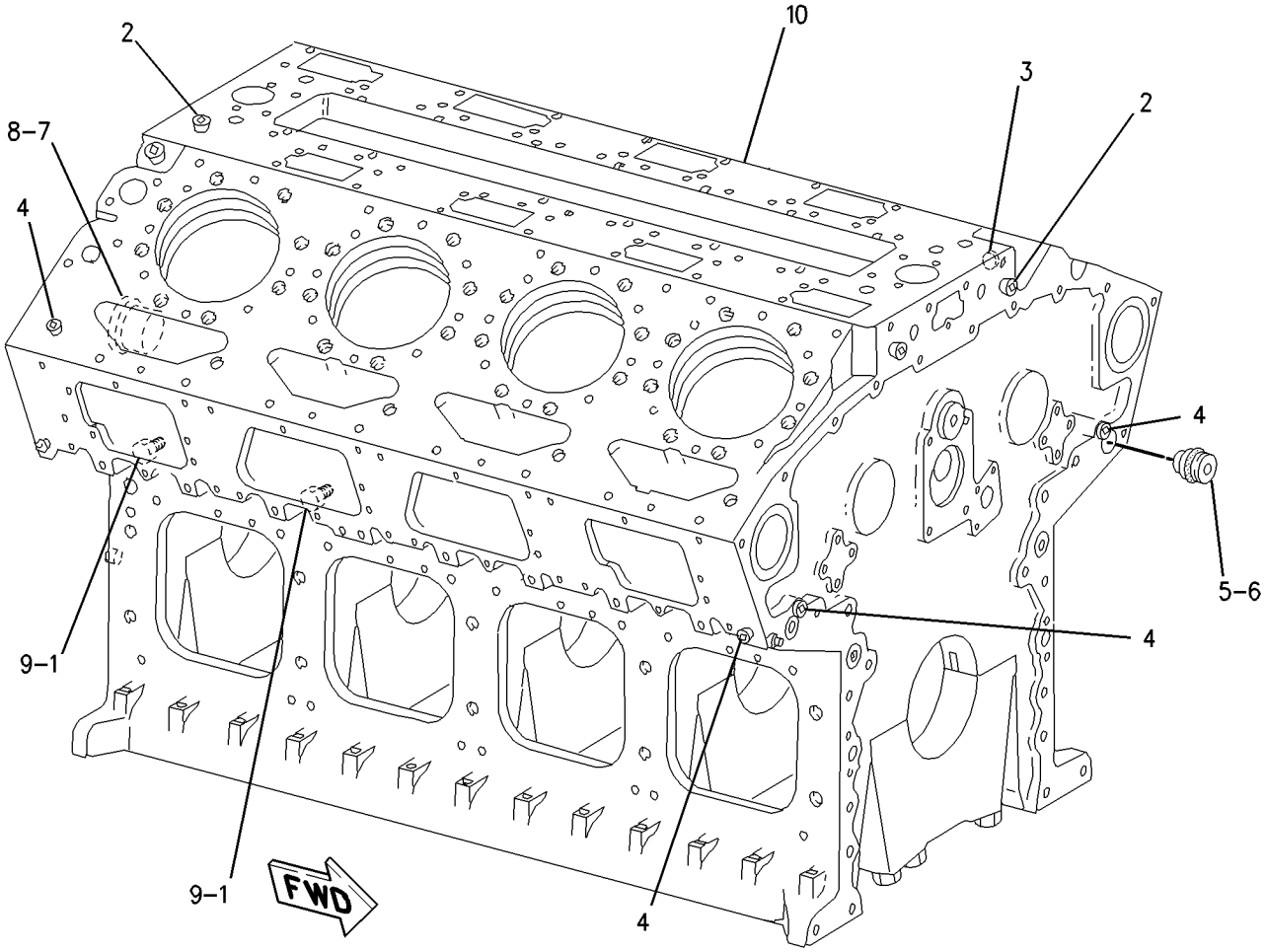

GRAPHIC #1 **<END>** g00995238

BASIC ENGINE

237-7957 CYLINDER BLOCK GP

S/N: 2GR4493, 4518-UP
PART OF 155-5556 ENGINE AR

SMCS-1201 **i01933174**

NOTE	REF NO	GRAPHIC REF	PART NUMBER	QTY	PART NAME 1 2 3 4 5 6 (PRODUCT LEVEL)	SEE PAGE
Y	1	1	*101-1171*	1	CYLINDER BLOCK AS	19
	3	1	**5P-8245**	1	WASHER-HARD (13.5X25.5X3MM THK)	
	4	1	**1A-2029**	1	BOLT (3/8-16X1.125 IN)	
B	5	1	**7X-7731**	1	PLUG-PIPE	
	6	1	**9S-4191**	6	PLUG	
	7	1	**2W-2940**	8	PLUG-OIL MANIFOLD	
	8	1	**7N-2044**	2	DOWEL	
	9	1	**8T-6762**	4	PLUG-PIPE	
	10	1	**5M-2894**	1	WASHER-HARD (10.2X18.5X2.5MM THK)	
	11	1	**7N-2047**	3	DOWEL	
	12	1	**7X-4805**	3	SEAL-O-RING	
	15	1	**101-1198**	10	BEARING-CAMSHAFT	
	16	1	**4N-0683**	2	DOWEL	
	17	1	**8T-6763**	17	PLUG-PIPE	
	18	1	**0S-1595**	1	BOLT (1/2-13X1.25 IN)	
	19	1	**8T-0099**	16	DOWEL	
	20	1	**7N-5641**	2	PLUG-MANIFOLD	
	21	1	**7N-2049**	8	DOWEL	
	22	1	**5P-0840**	16	SEAL-O-RING	
	23	1	**144-5692**	8	GASKET-PLATE	
	24	1	**110-6994**	8	PLATE-SPACER	
	25	1	**5F-9657**	4	SEAL-O-RING	
	26	1	**5P-8210**	1	SEAL-O-RING	
	27	1	**7X-7731**	1	PLUG-PIPE	
	28	1	**4W-4813**	1	PLUG	
	29	1	**8N-8056**	1	COVER	
	30	1	**6V-3348**	8	SEAL-O-RING	
	33	1	**8T-2929**	1	SEAL-O-RING	
	34	1	**033-6042**	6	SEAL-O-RING	
	35	1	**8T-2928**	1	SEAL-O-RING	
B	36	1	**8N-8056**	1	COVER	
B	37	1	**1A-2029**	1	BOLT (3/8-16X1.125 IN)	
B	38	1	**5M-2894**	1	WASHER-HARD (10.2X18.5X2.5MM THK)	
B	39	1	**5P-8245**	1	WASHER-HARD (13.5X25.5X3MM THK)	
B	40	1	**0S-1595**	1	BOLT (1/2-13X1.25 IN)	
B	41	1	**5P-8210**	1	SEAL-O-RING	
B	42	1	**8T-6763**	1	PLUG-PIPE	

B-USE AS REQUIRED
Y-SEPARATE ILLUSTRATION

237-7957 **CYLINDER BLOCK GP** *(contd.)* **i01933174**

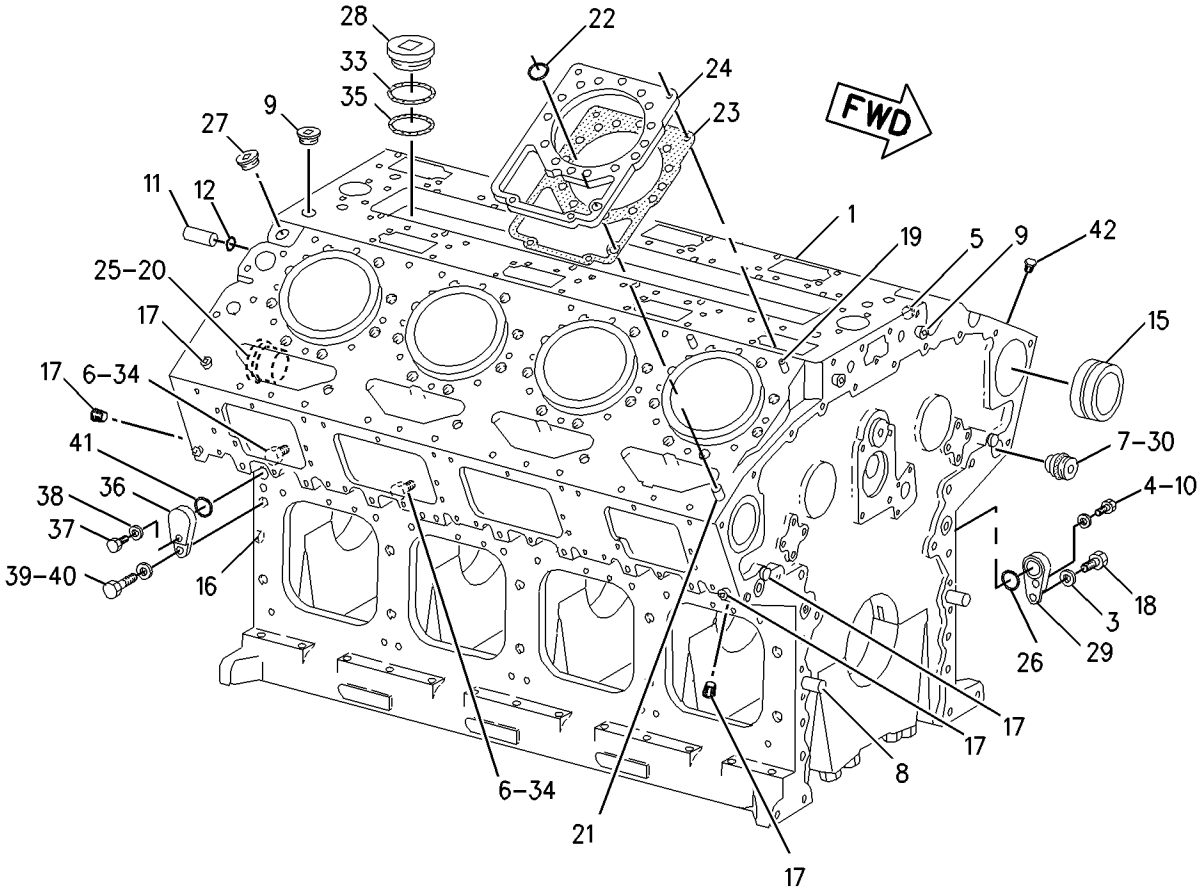

GRAPHIC #1 **<END>** g01005738

154-1612 CYLINDER HEAD AS

S/N: 2GR1180-UP

PART OF 161-2508, 242-5328 CYLINDER HEAD AS, 145-3216, 201-4257 CYLINDER HEAD GP

FIELD REPLACEMENT ORDER 242-5328—PAGE 30

SMCS-1100, 1101, 1103, 1104, 1105, 1106, 1108, 1109, 1115, 1117, 1121, 1124, 1125

i01925366

NOTE	REF NO	GRAPHIC REF	PART NUMBER	QTY	PART NAME 1 2 3 4 5 6 (PRODUCT LEVEL)	SEE PAGE
	1	1	**3B-0623**	5	PLUG-CUP	
	2	1	**3B-0645**	5	PLUG-CUP	
	3	1	**3J-7354**	4	SEAL-O-RING	
	4	1	**9S-8002**	4	PLUG	
	5	1	**130-2607**	2	INSERT-VALVE SEAT (INLET) (STANDARD)	
AB		1	**149-1981**		INSERT-VALVE SEAT (INLET) (0.508MM OS)	
	6	1	**130-2608**	2	INSERT-VALVE SEAT (EXHAUST) (STANDARD)	
AB		1	**166-5945**		INSERT-VALVE SEAT (EXHAUST) (0.508MM OS)	

A-NOT PART OF THIS GROUP
B-USE AS REQUIRED

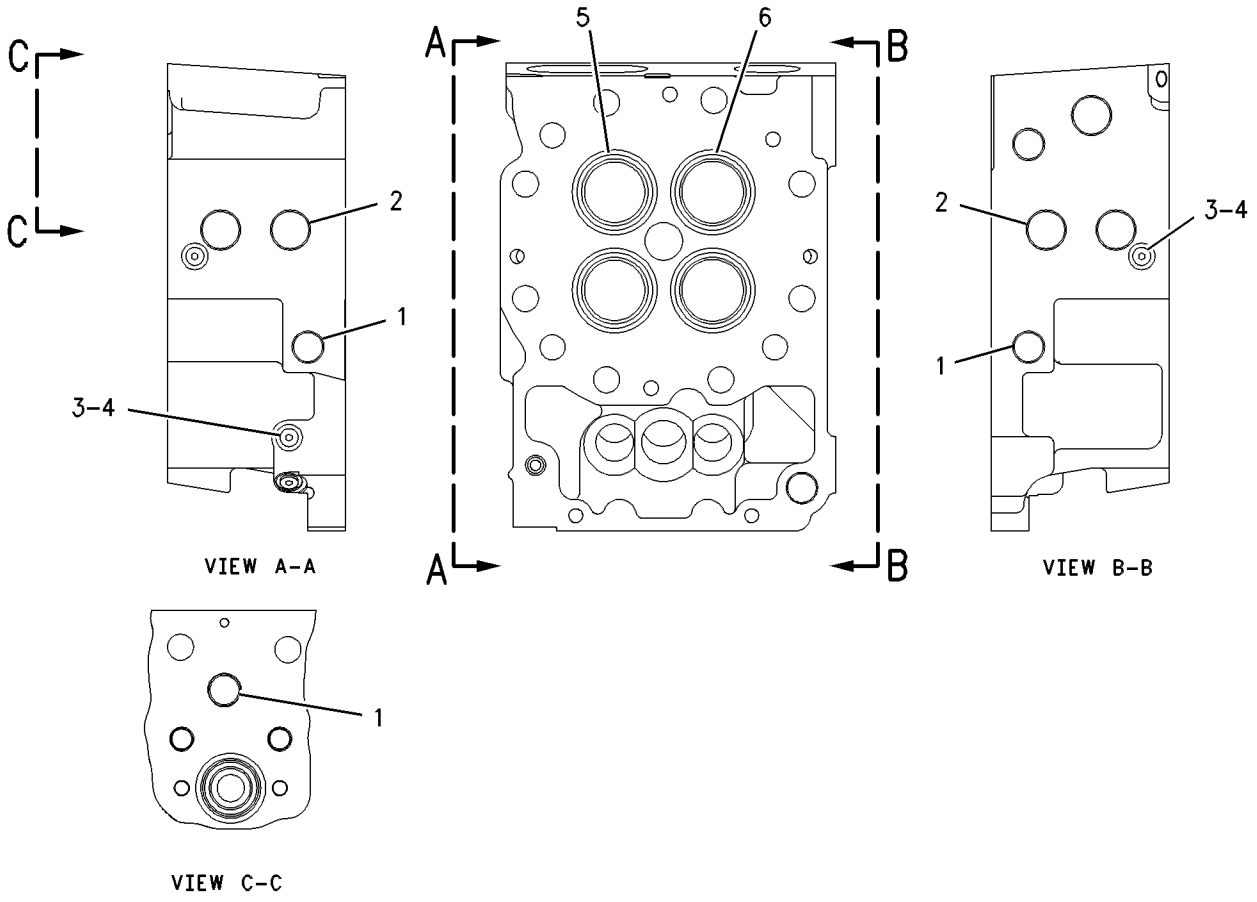

GRAPHIC #1

<END>

g00358157

161-2508 CYLINDER HEAD AS*R

S/N: 2GR1180-UP

FIELD REPLACEMENT FOR 154-1612—PAGE 28. REPLACED BY 242-5328—PAGE 30

SMCS-1100, 1101, 1103, 1104, 1105, 1106, 1108, 1109, 1115, 1117, 1121, 1124, 1125

i01514940

NOTE	REF NO	GRAPHIC REF	PART NUMBER	QTY	PART NAME 1 2 3 4 5 6 (PRODUCT LEVEL)	SEE PAGE
Y	1	1	**154-1612**	1	CYLINDER HEAD AS	28
	2	1	**133-9306**	2	GUIDE-VALVE (EXHAUST)	
AB		1	**149-1982**		GUIDE-VALVE (0.508MM OS OD) (EXHAUST)	
AB		1	**166-5944**		GUIDE-VALVE (0.127MM OS OD) (EXHAUST)	
	2A	1	**133-9306**	2	GUIDE-VALVE (INLET)	
AB		1	**149-1982**		GUIDE-VALVE (0.508MM OS OD) (INLET)	
AB		1	**166-5944**		GUIDE-VALVE (0.127MM OS OD) (INLET)	
	3	1	**7N-1902**	2	DOWEL	
	4	1	**8T-6759**	1	PLUG-PIPE	

A-NOT PART OF THIS GROUP
B-USE AS REQUIRED
Y-SEPARATE ILLUSTRATION

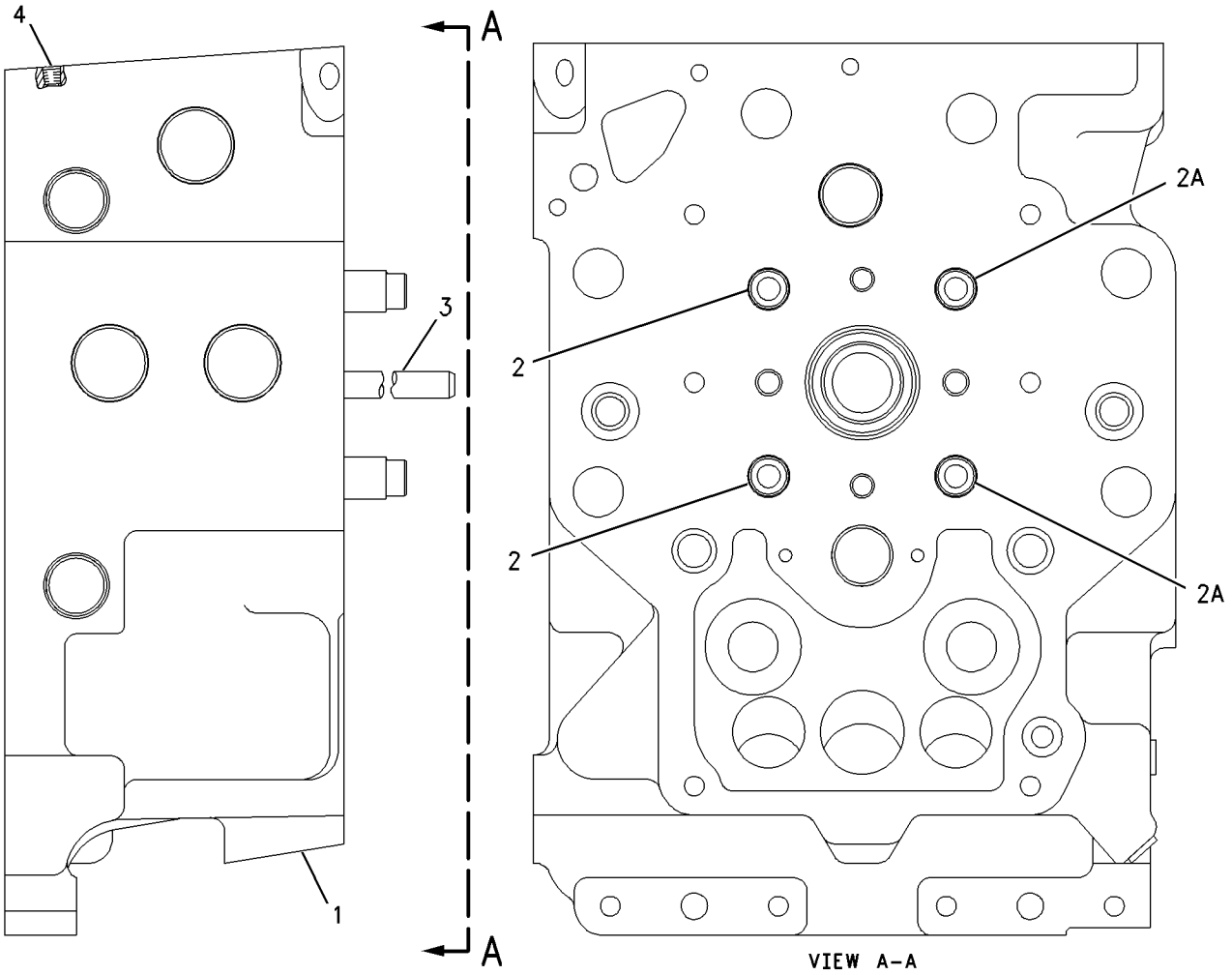

GRAPHIC #1

<END>

g00787167

242-5328 CYLINDER HEAD AS

S/N: 2GR1180-UP

FIELD REPLACEMENT FOR 154-1612—PAGE 28

SMCS-1100, 1101, 1103, 1104, 1105, 1106, 1108, 1109, 1115, 1117, 1121, 1124, 1125 **i01990729**

NOTE	REF NO	GRAPHIC REF	PART NUMBER	QTY	PART NAME 1 2 3 4 5 6 (PRODUCT LEVEL)	SEE PAGE
	1	1	**8T-6757**	1	PLUG-PIPE	
	2	1	**133-9306**	2	GUIDE-VALVE (EXHAUST)	
AB		1	**149-1982**		GUIDE-VALVE (0.508MM OS OD)	
AB		1	**166-5944**		GUIDE-VALVE (0.127MM OS OD)	
Y	3	1	*154-1612*	1	CYLINDER HEAD AS	28
	4	1	**197-6995**	2	GUIDE-VALVE (INLET)	

A-NOT PART OF THIS GROUP
B-USE AS REQUIRED
Y-SEPARATE ILLUSTRATION

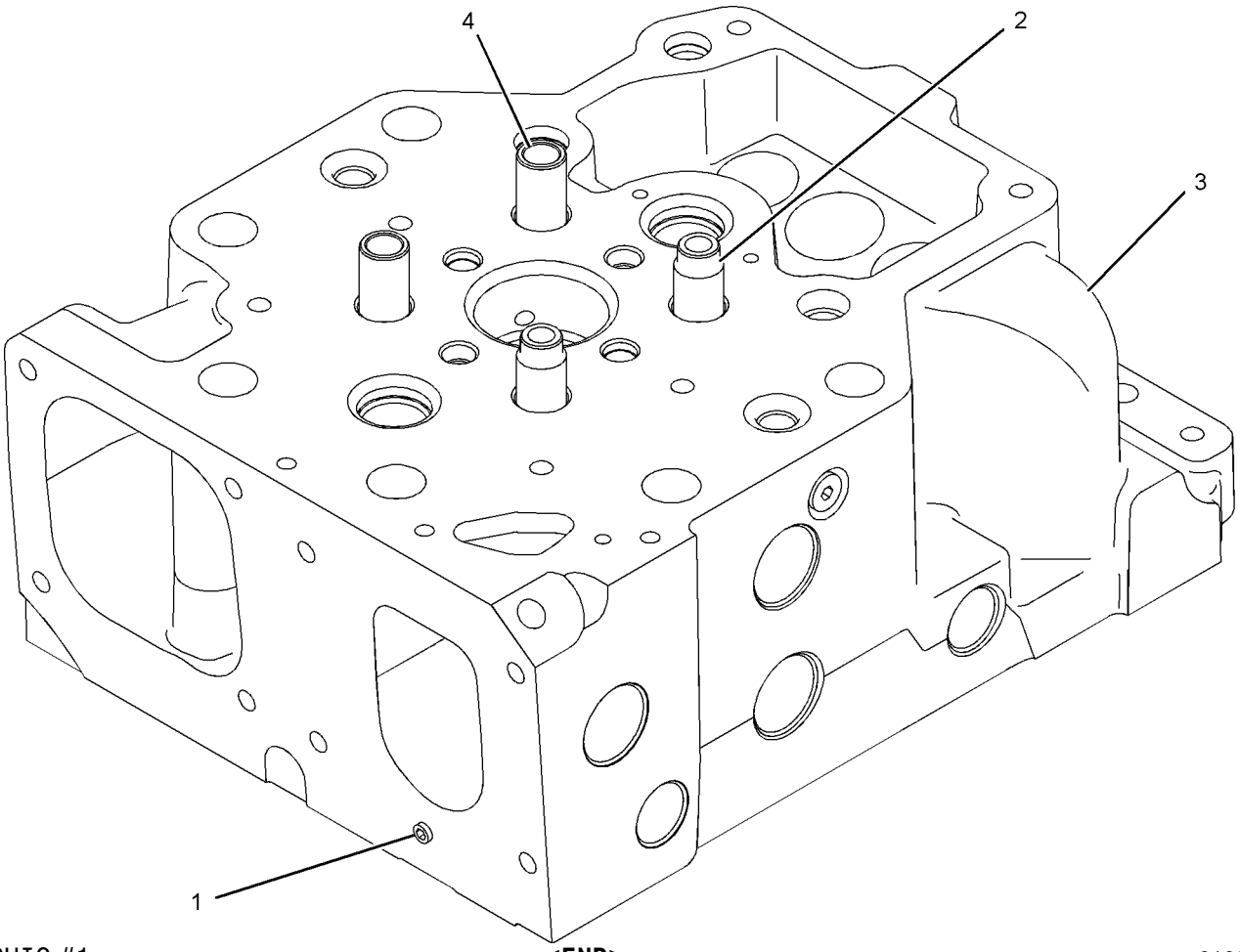

GRAPHIC #1 **<END>** g01036730

BASIC ENGINE

101-0830 CYLINDER HEAD GP

S/N: 2GR1180-4627

PART OF 155-5556 ENGINE AR

SMCS-1100, 1103, 1104, 1105, 1106, 1108, 1109, 1115, 1117, 1121, 1124, 1125 **i01961187**

NOTE	REF NO	GRAPHIC REF	PART NUMBER	QTY	PART NAME 1 2 3 4 5 6 (PRODUCT LEVEL)	SEE PAGE
B	1	1	**5B-7890**	1	PLUG-PIPE	
CYR	2	1	**145-3216**	1	CYLINDER HEAD GP	35
	3	1	**131-0420**	6	FASTENER GP-CYLINDER HEAD	
					(EACH INCLUDES)	
		1	**187-7738**	1	WASHER-HARD (21X36.5X3.5MM THK)	
		1	**7N-1961**	1	BOLT-12 POINT HEAD (3/4-16X8.5 IN)	
	4	1	**131-0421**	2	FASTENER GP-CYLINDER HEAD	
					(EACH INCLUDES)	
		1	**187-7738**	1	WASHER-HARD (21X36.5X3.5MM THK)	
		1	**7N-1961**	1	BOLT-12 POINT HEAD (3/4-16X8.5 IN)	
		1	**9Y-0635**	1	SPACER (19.35X30.18X45MM THK)	
	5	1	**204-5427**	4	SEAL	
	6	1	**5B-0213**	2	BOLT (3/8-16 X 2.375 IN)	
	7	1	**5M-2894**	2	WASHER-HARD (10.2X18.5X2.5MM THK)	
	8	1	**110-6991**	1	GASKET-CYLINDER HEAD	
	9	1	**204-5426**	4	SEAL	

B-USE AS REQUIRED
C-CHANGE FROM PREVIOUS TYPE
R-REMFG PART MAY BE AVAILABLE
Y-SEPARATE ILLUSTRATION

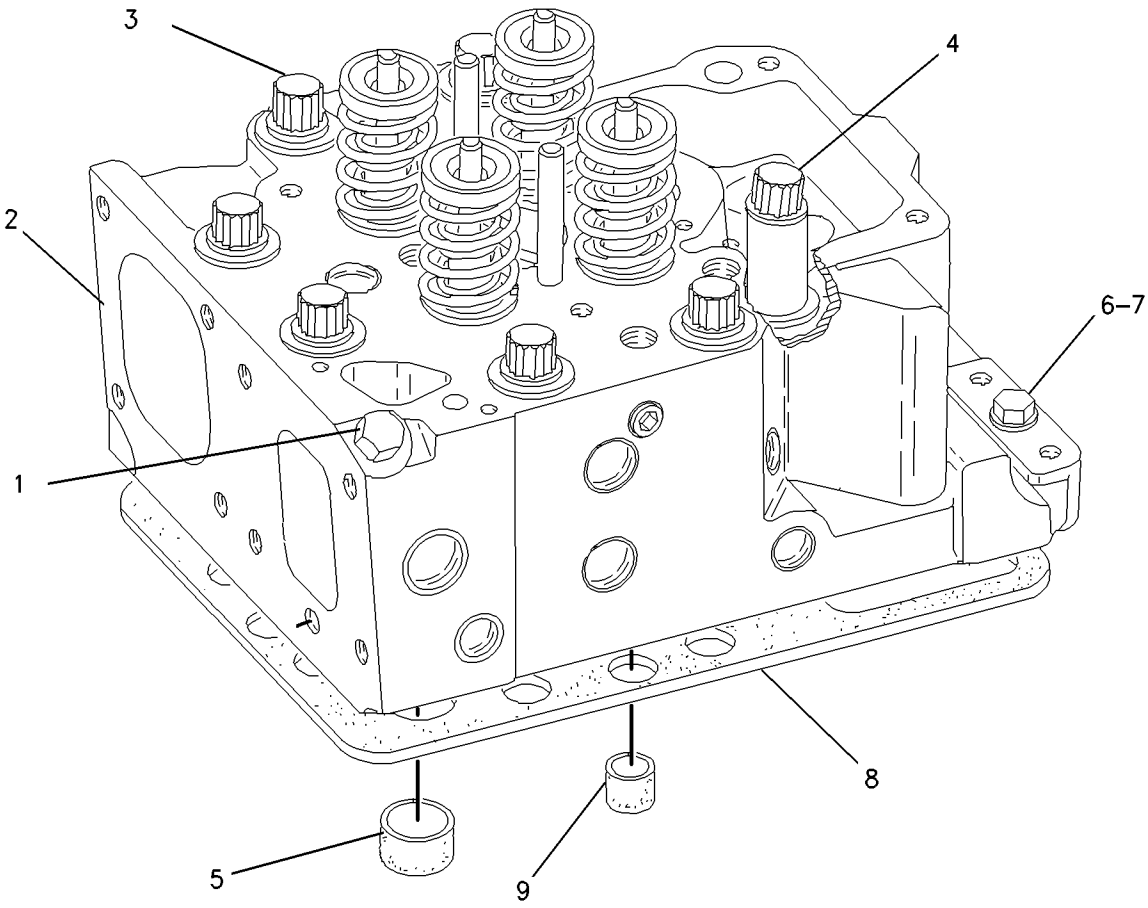

GRAPHIC #1 **<END>** g00903072

BASIC ENGINE

101-0830 CYLINDER HEAD GP

S/N: 2GR4628-UP

PART OF 155-5556 ENGINE AR

SMCS-1100, 1103, 1104, 1105, 1106, 1108, 1109, 1115, 1117, 1121, 1124, 1125 **i01958937**

NOTE	REF NO	GRAPHIC REF	PART NUMBER	QTY	PART NAME 1 2 3 4 5 6 (PRODUCT LEVEL)	SEE PAGE
B	1	1	**5B-7890**	1	PLUG-PIPE	
CY	2	1	**201-4257**	1	CYLINDER HEAD GP	37
	3	1	**131-0420**	6	FASTENER GP-CYLINDER HEAD	
					(EACH INCLUDES)	
		1	**187-7738**	1	WASHER-HARD (21X36.5X3.5MM THK)	
		1	**7N-1961**	1	BOLT-12 POINT HEAD (3/4-16X8.5 IN)	
	4	1	**131-0421**	2	FASTENER GP-CYLINDER HEAD	
					(EACH INCLUDES)	
		1	**187-7738**	1	WASHER-HARD (21X36.5X3.5MM THK)	
		1	**7N-1961**	1	BOLT-12 POINT HEAD (3/4-16X8.5 IN)	
		1	**9Y-0635**	1	SPACER (19.35X30.18X45MM THK)	
	5	1	**204-5427**	4	SEAL	
	6	1	**5B-0213**	2	BOLT (3/8-16 X 2.375 IN)	
	7	1	**5M-2894**	2	WASHER-HARD (10.2X18.5X2.5MM THK)	
	8	1	**110-6991**	1	GASKET-CYLINDER HEAD	
	9	1	**204-5426**	4	SEAL	

B-USE AS REQUIRED
C-CHANGE FROM PREVIOUS TYPE
Y-SEPARATE ILLUSTRATION

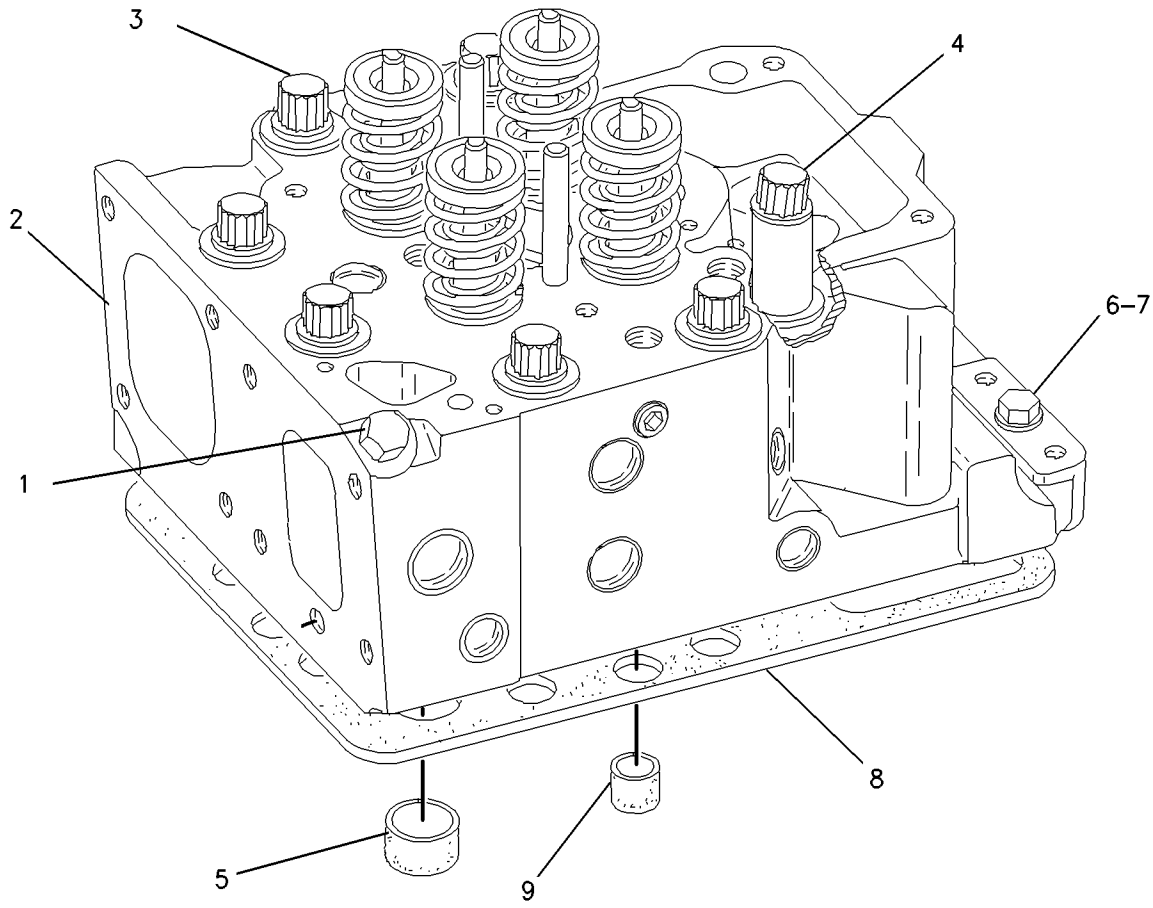

GRAPHIC #1 **<END>** g00903072

145-3216 CYLINDER HEAD GP*R

S/N: 2GR1180-4627

PART OF 101-0830 CYLINDER HEAD GP

SMCS-1100, 1103, 1104, 1105, 1106, 1108, 1109, 1115, 1117, 1121, 1124, 1125

i01893121

NOTE	REF NO	GRAPHIC REF	PART NUMBER	QTY	PART NAME 1 2 3 4 5 6 (PRODUCT LEVEL)	SEE PAGE
	1	1	**2A-4429**	8	LOCK-RETAINER	
	2	1	**137-6856**	2	SEAL (VALVE STEM) (INTAKE)	
	3	1	**197-6999**	4	ROTOCOIL AS	
	4	1	**7N-1902**	2	DOWEL	
	5	1	**101-1180**	4	SPRING-VALVE (OUTER)	
	6	1	**101-1177**	4	SPRING-VALVE (INNER)	
	7	1	**8T-6759**	1	PLUG-PIPE	
	8	1	**210-2542**	2	VALVE-INLET	
C	9	1	**210-2529**	2	VALVE (EXHAUST)	
CY	10	1	**154-1612**	1	CYLINDER HEAD AS	28
	11	1	**133-9306**	2	GUIDE-VALVE (INLET)	
	11A	1	**133-9306**	2	GUIDE-VALVE (EXHAUST)	
AB		1	**149-1982**		GUIDE-VALVE (0.508MM OS OD)	
AB		1	**166-5944**		GUIDE-VALVE (0.127MM OS OD)	
	12	1	**2W-2662**	2	SEAT-SPRING (EXHAUST)	

A-NOT PART OF THIS GROUP
B-USE AS REQUIRED
C-CHANGE FROM PREVIOUS TYPE
Y-SEPARATE ILLUSTRATION

145-3216 CYLINDER HEAD GP *(contd.)* **i01893121**

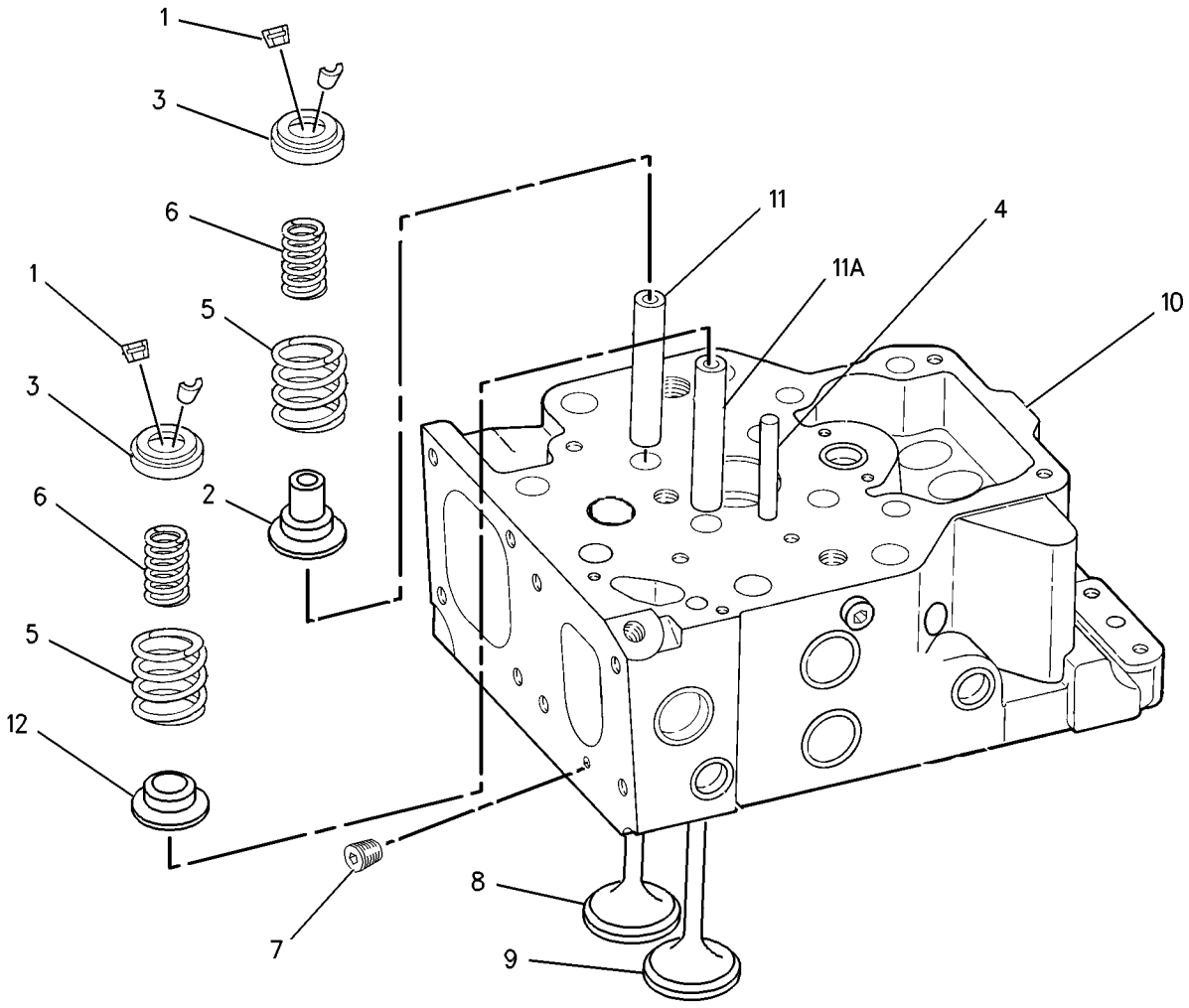

GRAPHIC #1 **<END>** g00800239

201-4257 CYLINDER HEAD GP

S/N: 2GR4628-UP

PART OF 101-0830 CYLINDER HEAD GP

SMCS-1100, 1103, 1104, 1105, 1106, 1108, 1109, 1115, 1117, 1121, 1124, 1125 **i01946433**

NOTE	REF NO	GRAPHIC REF	PART NUMBER	QTY	PART NAME 1 2 3 4 5 6 (PRODUCT LEVEL)	SEE PAGE
	1	1	**2A-4429**	4	LOCK-RETAINER	
	2	1	**133-9306**	2	GUIDE-VALVE	
Y	3	1	**154-1612**	1	CYLINDER HEAD AS	28
	4	1	**194-4897**	2	VALVE-EXHAUST	
	5	1	**194-4901**	4	SPRING (VALVE)	
	6	1	**194-4902**	4	SPRING (VALVE)	
	7	1	**197-6995**	2	GUIDE-VALVE	
	8	1	**197-7006**	2	SEAL	
	9	1	**197-7055**	4	LOCK-RETAINER	
	10	1	**197-7062**	2	ROTOCOIL AS	
	11	1	**197-7063**	2	ROTOCOIL AS	
	12	1	**209-0962**	2	WASHER (17.80X45X7.29MM THK)	
	13	1	**210-2542**	2	VALVE-INLET	
	14	1	**8T-6759**	1	PLUG-PIPE	

Y-SEPARATE ILLUSTRATION

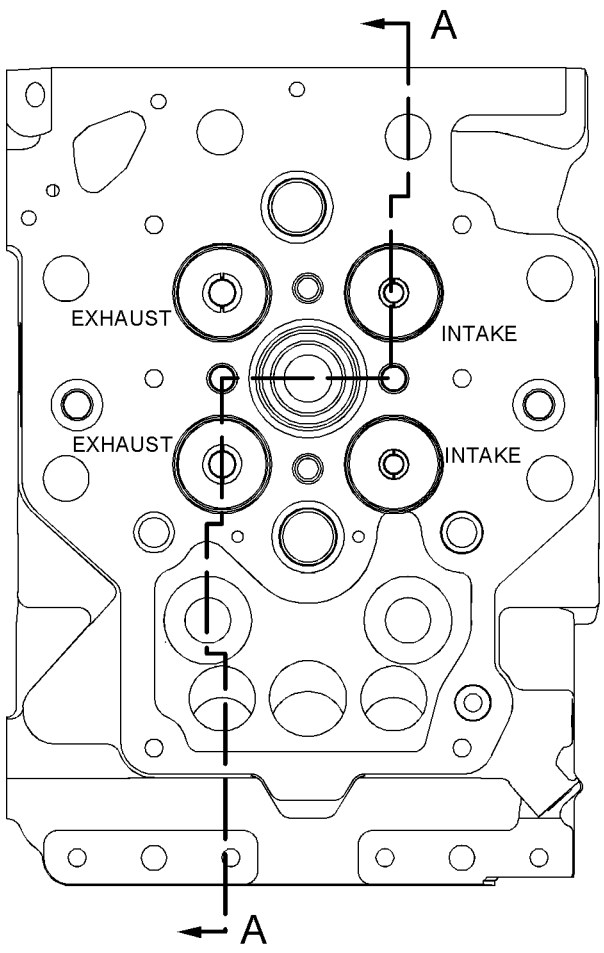

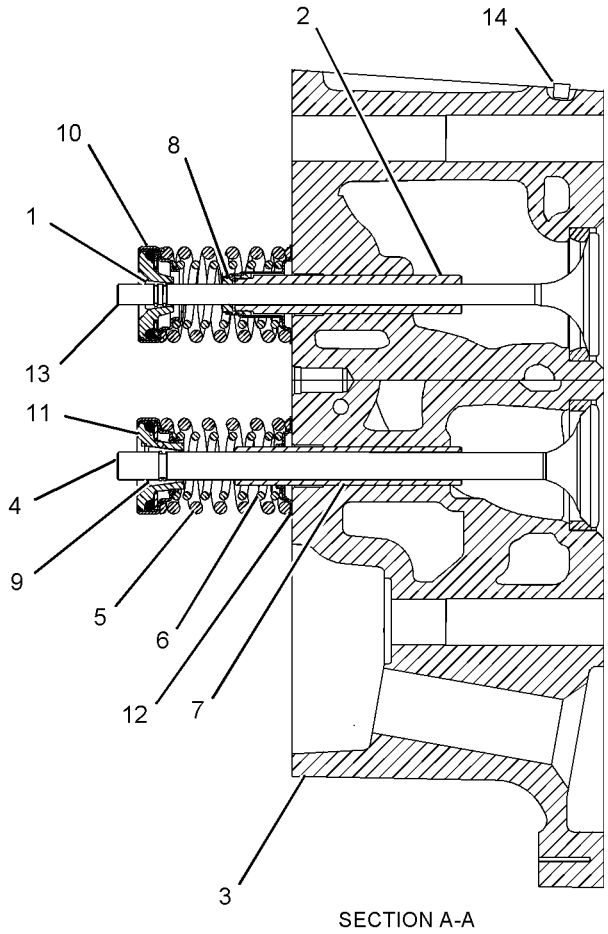

SECTION A-A

GRAPHIC #1 **<END>** g01014060

8N-7182 DAMPER GP

S/N: 2GR1180-UP

PART OF 155-5556 ENGINE AR

SMCS-1205 **i01935581**

NOTE	REF NO	GRAPHIC REF	PART NUMBER	QTY	PART NAME 1 2 3 4 5 6 (PRODUCT LEVEL)	SEE PAGE
C	1	1	**7E-0854**	1	ADAPTER-DAMPER	
R	2	1	**193-3288**	1	DAMPER AS	
	3	1	**8S-4757**	6	BOLT (1-14X8 IN)	
	4	1	**5P-8250**	6	WASHER (28X49X5MM THK)	
	5	1	**7B-3235**	10	BOLT (1/2-13X1.375 IN)	
	6	1	**2M-0849**	10	WASHER-HARD (13.5X25.5X5MM THK)	

C-CHANGE FROM PREVIOUS TYPE
R-REMFG PART MAY BE AVAILABLE

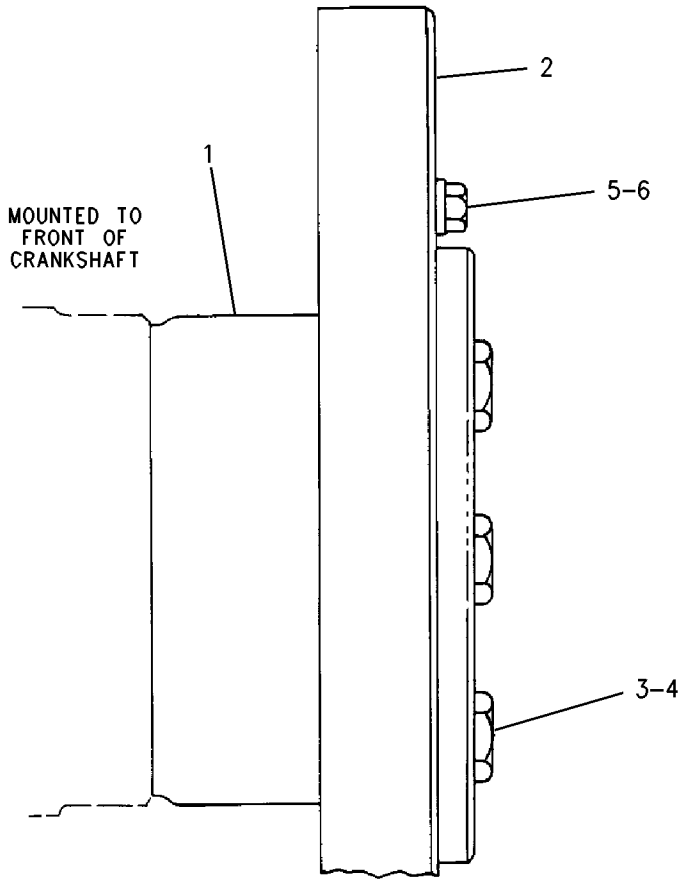

RIGHT SIDE VIEW

GRAPHIC #1 **<END>** g00995346

BASIC ENGINE

7E-6620 DRIVE GP-ACCESSORY

S/N: 2GR1180-UP

PART OF 155-5556 ENGINE AR

SMCS-1207 **i01990586**

NOTE	REF NO	GRAPHIC REF	PART NUMBER	QTY	PART NAME 1 2 3 4 5 6 (PRODUCT LEVEL)	SEE PAGE
	1	1	**7E-6619**	1	HOUSING-ACCESSORY DRIVE	
	2	1	**7N-3007**	3	SHAFT AS	
					(EACH INCLUDES)	
		1	**8T-2153**	1	SETSCREW-SOCKET (1/4-28X7.94MM)	
	3	1	**107-8748**	2	GEAR-AUXILIARY DRIVE (75 TEETH)	
	4	1	**107-8749**	1	GEAR-AUXILIARY DRIVE (83 TEETH)	
	5	1	**2D-8154**	8	STUD (TAPERLOCK)	
		1	**1F-7958**	8	NUT-FULL (1/2-13 THD)	
		1	**5P-8245**	8	WASHER-HARD (13.5X25.5X3MM THK)	
	6	1	**0L-1026**	3	PLUG-CUP	
	7	1	**8T-6757**	2	PLUG-PIPE	
	8	1	**7X-7731**	2	PLUG-PIPE	
	9	1	**7N-8525**	6	WASHER-THRUST	
	10	1	**8N-2757**	2	ADAPTER AS	
					(EACH INCLUDES)	
		1	**7N-3011**	1	BEARING-SLEEVE	
	11	1	**3F-5792**	3	SEAL-O-RING	
	12	1	**8M-5253**	3	SEAL-O-RING	
	13	1	**8N-2802**	1	COVER	
	14	1	**9Y-8386**	1	GASKET	
	15	1	**1W-4736**	1	GASKET-COVER	
	16	1	**0S-1588**	36	BOLT (3/8-16X1.25 IN)	
		1	**5M-2894**	36	WASHER-HARD (10.2X18.5X2.5MM THK)	
	17	1	**1T-0765**	20	BOLT (3/8-16X1 IN)	
	18	1	**7N-3011**	3	BEARING-SLEEVE	
	19	1	**3F-6795**	6	DOWEL	
	20	1	**7N-2047**	2	DOWEL	
B	21	1	**1F-7958**	4	NUT-FULL (1/2-13 THD)	
B	22	1	**2D-8154**	4	STUD (TAPERLOCK)	
B	23	1	**2J-6274**	1	SEAL-O-RING	
B	24	1	**5P-8247**	2	WASHER-HARD (17X32X3.5MM THK)	
B	25	1	**4K-0367**	2	NUT-FULL (5/8-11 THD)	
B	26	1	**5P-8245**	4	WASHER-HARD (13.5X25.5X3MM THK)	
B	27	1	**6L-7655**	2	STUD-TAPERLOCK	
	28	1	**129-9476**	1	ADAPTER AS	
		1	**7N-3011**	1	BEARING-SLEEVE	

B-USE AS REQUIRED

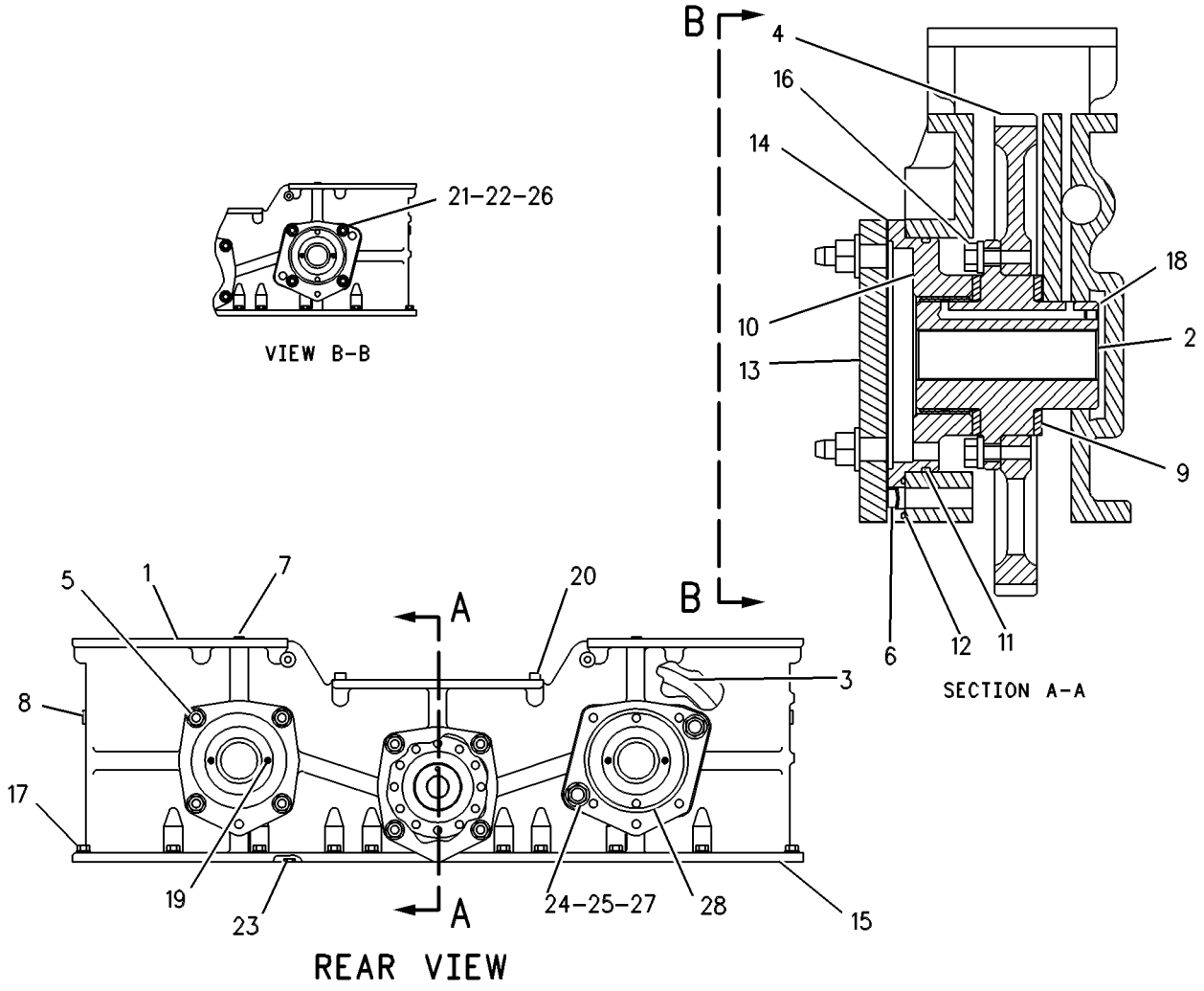

GRAPHIC #1 **<END>** g00087210

BASIC ENGINE

8N-8161 DRIVE GP-ACCESSORY

S/N: 2GR1180-UP

FLYWHEEL HOUSING LOWER

PART OF 155-5556 ENGINE AR

SMCS-1207 **i01983457**

NOTE	REF NO	GRAPHIC REF	PART NUMBER	QTY	PART NAME 1 2 3 4 5 6 (PRODUCT LEVEL)	SEE PAGE
C	1	1	**1V-6341**	2	SEAL	
C	2	1	**5R-7137**	4	WASHER-SEALING	
	3	1	**7N-2865**	1	GEAR-DRIVE (73 TEETH)	
	4	1	**7N-2909**	1	GEAR AS-CLUSTER (60 & 50 TEETH)	
		1	**7N-2910**	1	BEARING-SLEEVE	
	5	1	**7N-3005**	1	SHAFT-IDLER	
	6	1	**7N-3006**	2	WASHER-THRUST	
	7	1	**7N-8525**	2	WASHER-THRUST	
	8	1	**8N-8039**	1	ADAPTER AS	
		1	**7N-3011**	1	BEARING-SLEEVE	
	9	1	**8N-8041**	1	SHAFT AS	
		1	**8T-2153**	1	SETSCREW-SOCKET (1/4-28X7.94MM)	
	10	1	**163-2600**	1	CAGE AS	
		1	**3F-6795**	2	DOWEL	
C	11	1	**1A-1460**	4	BOLT (1/2-13X2 IN)	
	12	1	**1D-4574**	1	BOLT (1/2-13X6 IN)	
	13	1	**1F-7958**	2	NUT-FULL (1/2-13 THD)	
	14	1	**2D-8426**	2	STUD-TAPERLOCK	
C	15	1	**3D-8439**	2	STUD (5/8-11 X 3.4 IN OAL) (TAPERLOCK)	
	16	1	**3F-5792**	1	SEAL-O-RING	
	17	1	**4K-0367**	2	NUT-FULL (5/8-11 THD)	
	18	1	**5D-3954**	2	STUD-TAPERLOCK	
	19	1	**5D-9514**	1	BOLT (5/8-11X6.25 IN)	
	20	1	**5P-2546**	12	BOLT-12 POINT HEAD (7/16-14X1.25 IN)	
C	21	1	**5P-8245**	7	WASHER-HARD (13.5X25.5X3MM THK)	
	22	1	**5P-8247**	3	WASHER-HARD (17X32X3.5MM THK)	
	23	1	**235-3548**	1	SEAL-O-RING	

C-CHANGE FROM PREVIOUS TYPE

8N-8161 **DRIVE GP-ACCESSORY** *(contd.)* **i01983457**

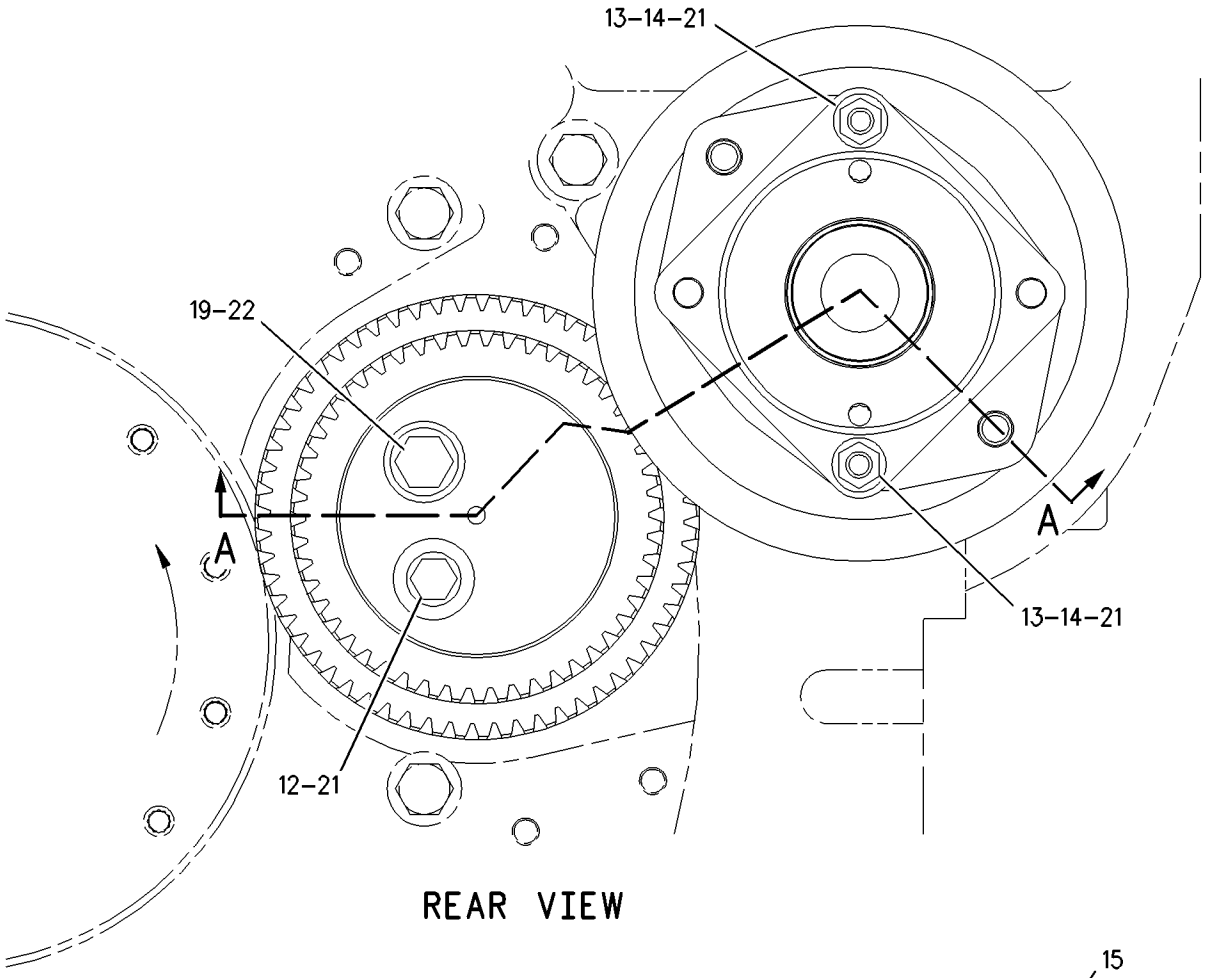

REAR VIEW

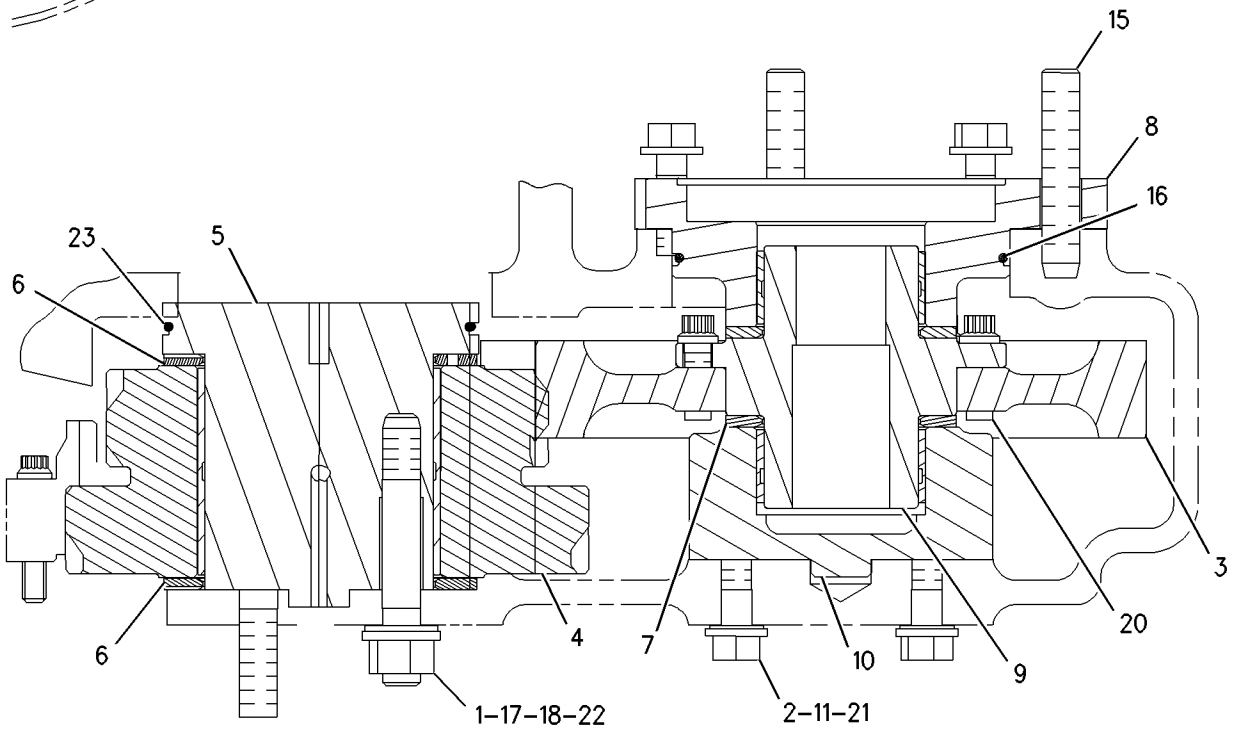

SECTION A-A

GRAPHIC #1 **<END>** g00893680

BASIC ENGINE

156-9812 DRIVE GP-ACCESSORY

S/N: 2GR1180-UP

LOWER LH

PART OF 155-5556 ENGINE AR

SMCS-1207 **i01967648**

NOTE	REF NO	GRAPHIC REF	PART NUMBER	QTY	PART NAME 1 2 3 4 5 6 (PRODUCT LEVEL)	SEE PAGE
	1	1	**5R-7136**	1	WASHER-SEALING	
	2	1	**5R-7137**	2	WASHER-SEALING	
	3	1	**7C-3258**	1	WASHER AS-THRUST	
		1	**7N-2047**	1	DOWEL	
	4	1	**7C-3260**	1	SHAFT	
	5	1	**7E-0275**	1	GEAR-WATER PUMP DRIVE (69 TEETH)	
	6	1	**7N-5279**	1	ADAPTER AS	
		1	**127-5400**	1	BEARING-SLEEVE	
	7	1	**7N-5874**	1	SHAFT-AUXILIARY DRIVE	
	8	1	**7N-7539**	2	WASHER-THRUST	
	9	1	**7N-8374**	1	COVER	
	10	1	**8N-8210**	1	ADAPTER AS	
		1	**127-5400**	1	BEARING-SLEEVE	
	11	1	**144-8263**	1	GEAR AS-IDLER (53 TEETH)	
	12	1	**235-3546**	1	SEAL-O-RING	
	13	1	**235-3548**	2	SEAL-O-RING	
	14	1	**0S-1592**	2	BOLT (5/8-11X1.25 IN)	
	15	1	**0S-1594**	6	BOLT (3/8-16X1 IN)	
	16	1	**0T-0055**	1	BOLT (3/8-16X4.25 IN)	
	17	1	**1T-0765**	6	BOLT (3/8-16X1 IN)	
	18	1	**2B-2695**	4	BOLT (5/16-18X0.875 IN)	
	19	1	**5M-2894**	1	WASHER-HARD (10.2X18.5X2.5MM THK)	
	20	1	**5P-0840**	1	SEAL-O-RING	
	21	1	**5P-8245**	2	WASHER-HARD (13.5X25.5X3MM THK)	
	22	1	**5P-8247**	2	WASHER-HARD (17X32X3.5MM THK)	
	23	1	**6K-3771**	12	BOLT-12 POINT HEAD (7/16-14X1.5 IN)	
	24	1	**6V-3348**	1	SEAL-O-RING	
	25	1	**8T-6757**	2	PLUG-PIPE	
	26	1	**8T-6759**	1	PLUG-PIPE	
	27	1	**9M-1974**	4	WASHER-HARD (8.8X16X2MM THK)	
	28	1	**9X-7371**	1	SEAL-O-RING	
	29	1	**9X-8879**	2	BOLT (1/2-13X5.5 IN)	

156-9812 **DRIVE GP-ACCESSORY** *(contd.)* **i01967648**

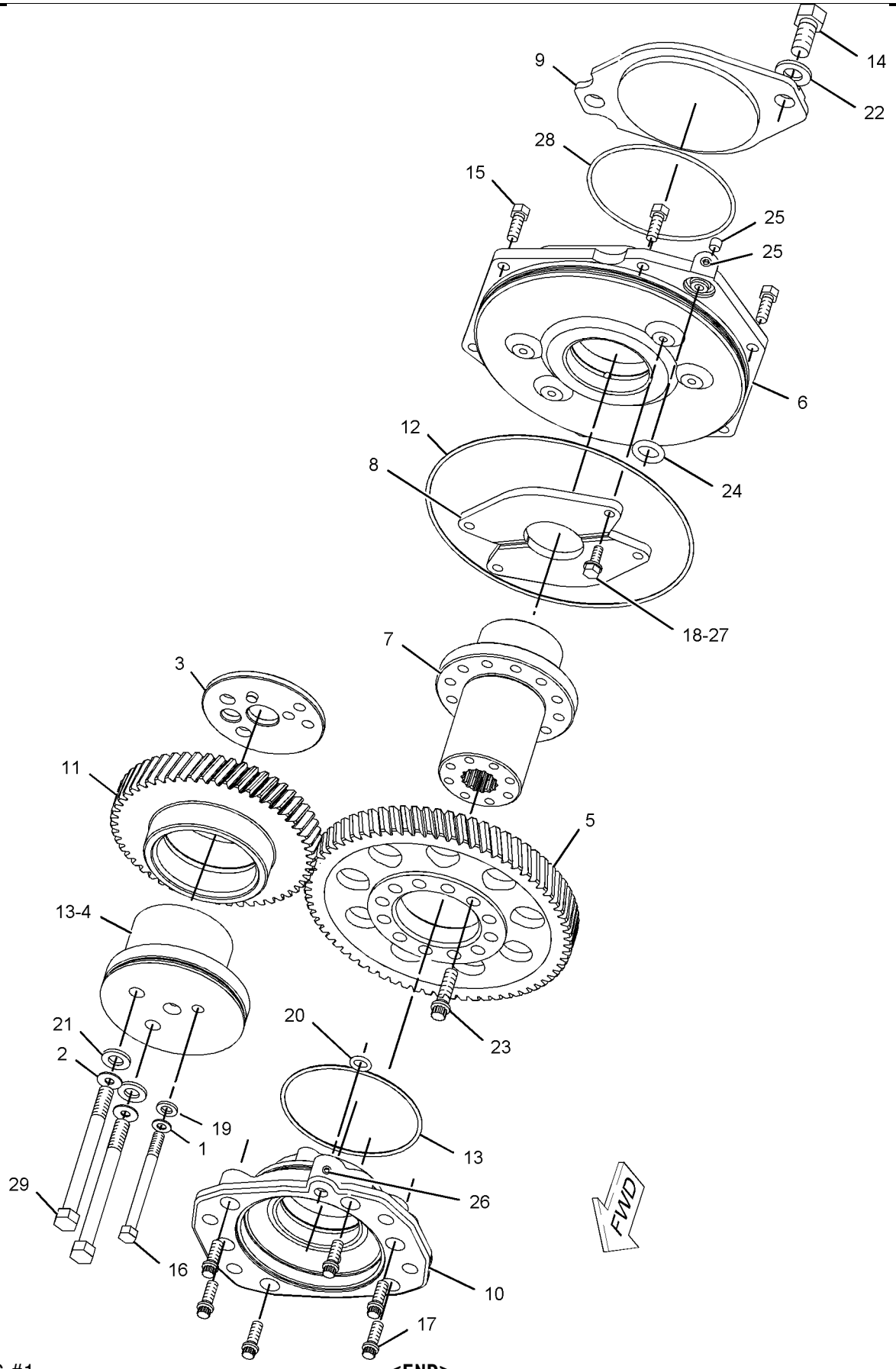

GRAPHIC #1 **<END>** g01023193

BASIC ENGINE

7E-6612 DRIVE GP-AUXILIARY

S/N: 2GR1180-UP

PART OF 155-5556 ENGINE AR

SMCS-1207 **i01692215**

NOTE	REF NO	GRAPHIC REF	PART NUMBER	QTY	PART NAME 1 2 3 4 5 6 (PRODUCT LEVEL)	SEE PAGE
	1	1	**7E-6615**	1	GASKET	
	2	1	**4P-3550**	1	SHAFT AS	
		1	**8T-2153**	1	SETSCREW-SOCKET (1/4-28X7.94MM)	
	3	1	**6H-1717**	4	BOLT (1/2-13X1.125 IN)	
		1	**5P-8245**	4	WASHER-HARD (13.5X25.5X3MM THK)	
	4	1	**1A-2029**	6	BOLT (3/8-16X1.125 IN)	
	5	1	**119-6355**	1	SEAL-LIP TYPE	
	6	1	**137-8290**	1	ADAPTER AS	
	7	1	**7N-3011**	1	BEARING-SLEEVE	
	8	1	**7E-6362**	1	GEAR (60 TEETH)	
	9	1	**7N-8525**	2	WASHER-THRUST	
	10	1	**5P-2546**	12	BOLT-12 POINT HEAD (7/16-14X1.25 IN)	
	11	1	**7E-6611**	1	HOUSING AS-DRIVE	
		1	**3F-6795**	2	DOWEL	
	12	1	**7N-3011**	1	BEARING-SLEEVE	
	13	1	**3F-5792**	1	SEAL-O-RING	
	14	1	**109-5721**	1	SEAL (DIRT)	
	15	1	**0S-1588**	2	BOLT (3/8-16X1.25 IN)	
	16	1	**5M-2894**	2	WASHER-HARD (10.2X18.5X2.5MM THK)	

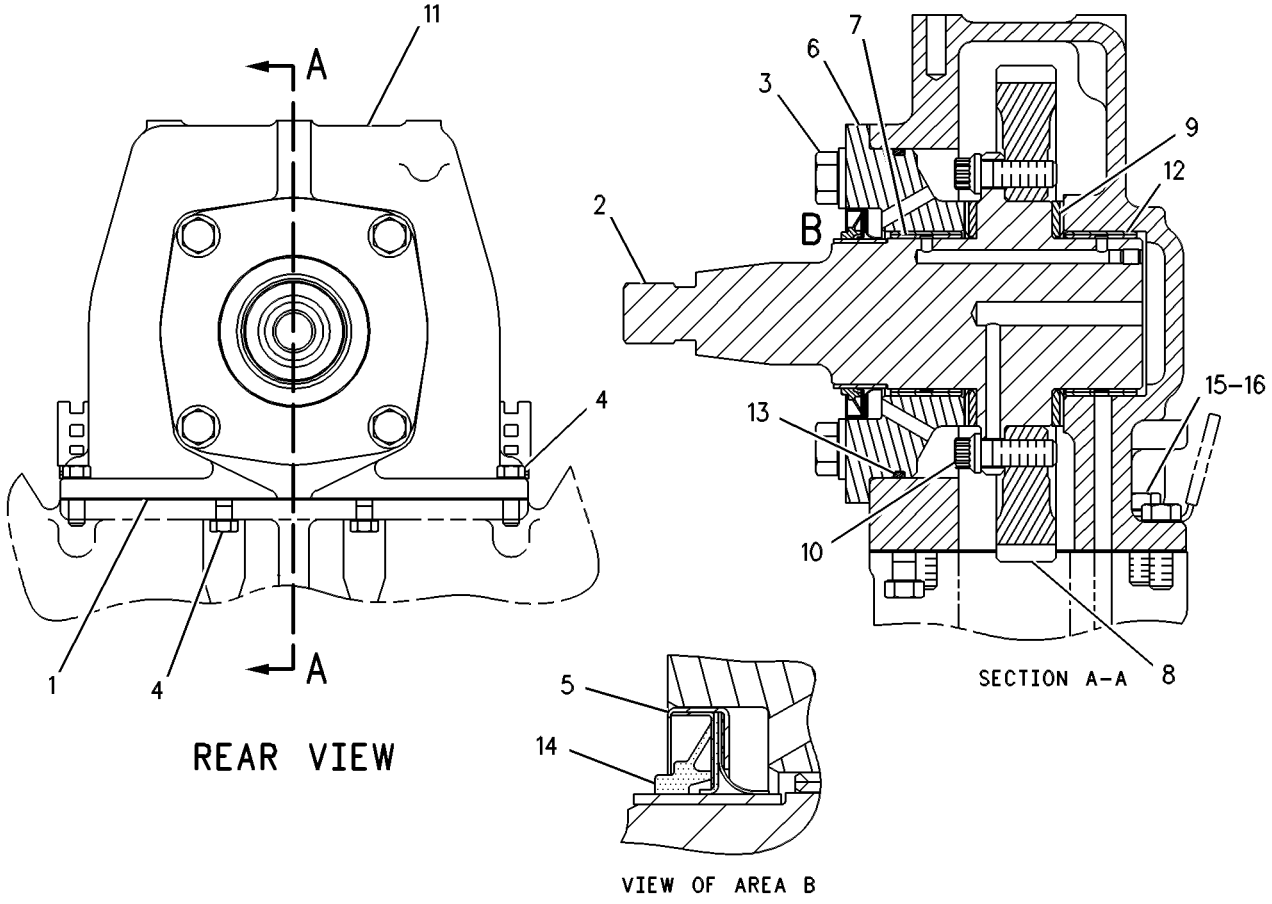

GRAPHIC #1 **<END>** g00368842

214-6006 FASTENER GP-FRONT HOUSING

S/N: 2GR3819-UP

PART OF 155-5556 ENGINE AR

SMCS-1151 **i01948155**

NOTE	REF NO	GRAPHIC REF	PART NUMBER	QTY	PART NAME 1 2 3 4 5 6 (PRODUCT LEVEL)	SEE PAGE
	1	1	**1D-4597**	2	BOLT (5/8-11X6.5 IN)	
	2	1	**9H-8260**	6	BOLT (1/2-13X6.25 IN)	

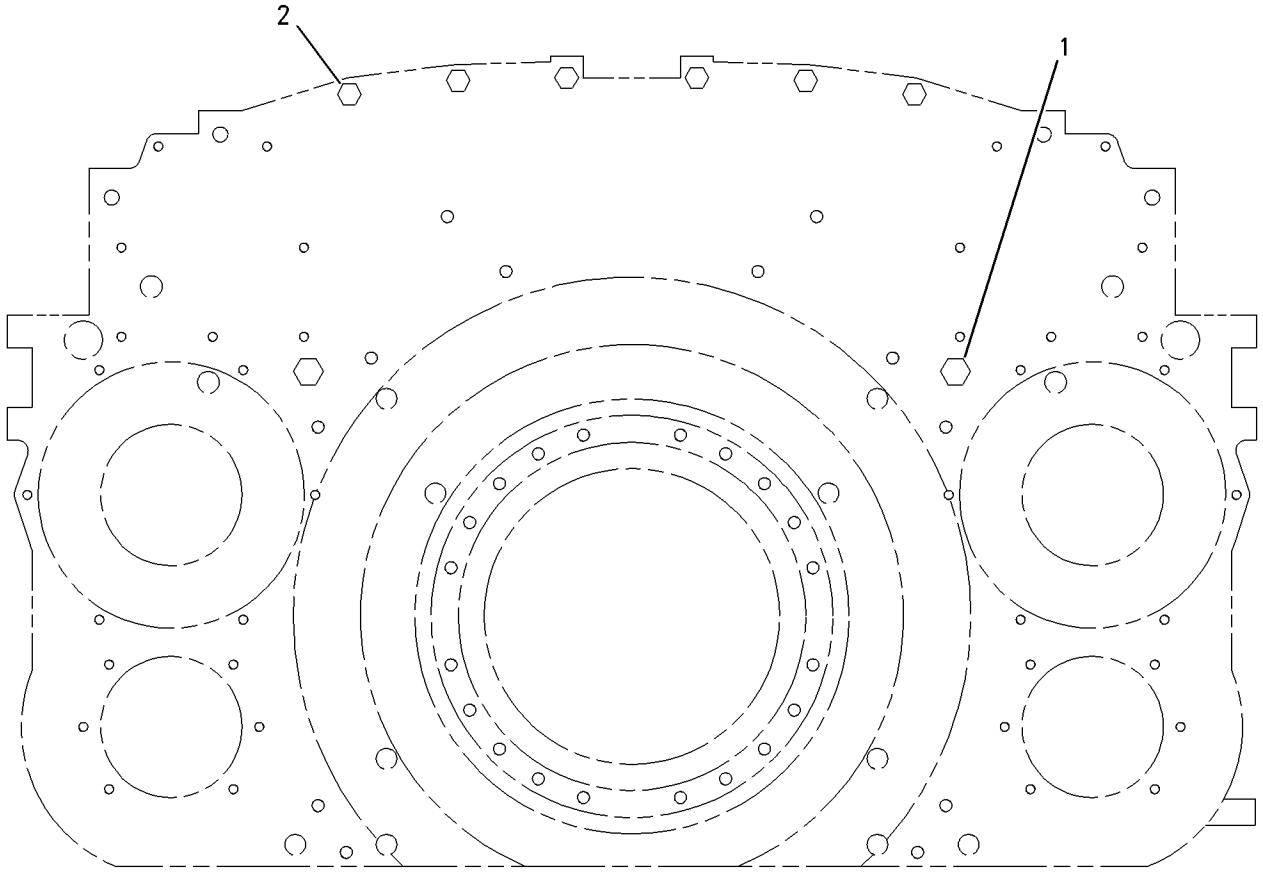

FRONT VIEW

GRAPHIC #1 **<END>** g00891070

BASIC ENGINE

9Y-7211 FLYWHEEL GP

S/N: 2GR1180-UP

PART OF 155-5556 ENGINE AR

SMCS-1156, 1158 **i01420598**

NOTE	REF NO	GRAPHIC REF	PART NUMBER	QTY	PART NAME 1 2 3 4 5 6 (PRODUCT LEVEL)	SEE PAGE
	1	1	**9Y-7208**	1	FLYWHEEL AS	
	2	1	**8N-0896**	1	GEAR (151 TEETH)	
	3	1	**5P-5855**	16	BOLT-12 POINT HEAD (1/2-13X1.75 IN)	
	4	1	**9Y-7209**	1	SPLINE-FLYWHEEL	
	5	1	**5P-8839**	12	WASHER-HARD (28X42X4MM THK)	
	6	1	**6V-5661**	12	BOLT-12 POINT HEAD (1-14 THD)	

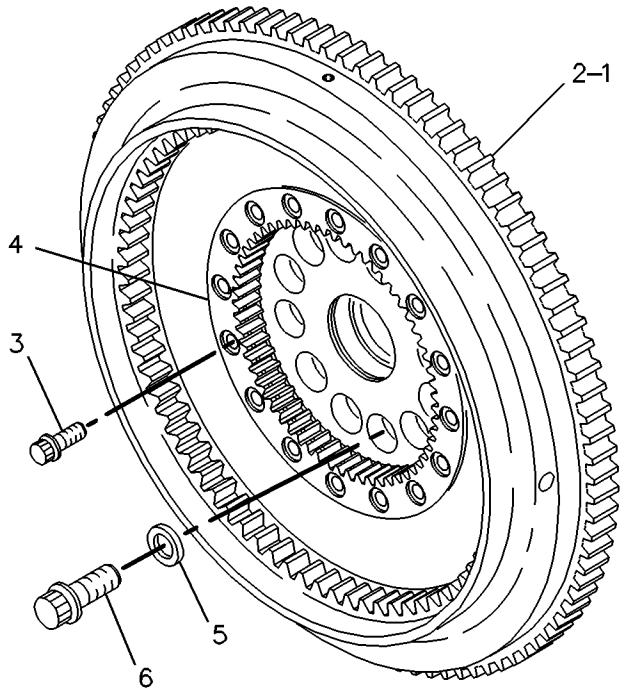

GRAPHIC #1 **<END>** g00206650

BASIC ENGINE

8N-7174 GEAR GP-FRONT

S/N: 2GR1180-UP
SAE STANDARD ENGINE ROTATION
PART OF 155-5556 ENGINE AR

SMCS-1206 **i01980068**

NOTE	REF NO	GRAPHIC REF	PART NUMBER	QTY	PART NAME 1 2 3 4 5 6 (PRODUCT LEVEL)	SEE PAGE
	1	1	**2W-2895**	1	GEAR-CRANKSHAFT (92 TEETH)	
	2	1	**3S-1307**	12	BOLT-12 POINT HEAD (3/8-16X2 IN)	
	3	1	**144-8263**	1	GEAR AS-IDLER (53 TEETH)	
	3A	1	**140-9597**	1	BEARING-SLEEVE	
C	4	1	**7C-3260**	1	SHAFT	
	5	1	**235-3548**	2	SEAL-O-RING	
C	6	1	**7C-3258**	1	WASHER AS-THRUST	
	6A	1	**7N-2047**	1	DOWEL	
	7	1	**9X-8879**	2	BOLT (1/2-13X5.5 IN)	
C	8	1	**0T-0055**	1	BOLT (3/8-16X4.25 IN)	
	9	1	**7E-0275**	1	GEAR-WATER PUMP DRIVE (69 TEETH)	
B	10	1	**6K-3771**	12	BOLT-12 POINT HEAD (7/16-14X1.5 IN)	
	11	1	**7N-5239**	1	SHAFT AS-PUMP DRIVE	
	11A	1	**8T-2153**	1	SETSCREW-SOCKET (1/4-28X7.94MM)	
	12	1	**7N-5263**	1	ADAPTER AS-PUMP (OIL)	
	12A	1	**127-5400**	1	BEARING-SLEEVE	
	13	1	**235-3546**	1	SEAL-O-RING	
	14	1	**6V-3348**	1	SEAL-O-RING	
	15	1	**0S-1594**	2	BOLT (3/8-16X1 IN)	
	16	1	**7N-5246**	2	WASHER-THRUST	
	17	1	**4B-3388**	4	BOLT (5/16-18X1.125 IN)	
	18	1	**7N-5245**	1	ADAPTER AS-PUMP (WATER)	
	18A	1	**127-5400**	1	BEARING-SLEEVE	
	19	1	**9M-1974**	4	WASHER-HARD (8.8X16X2MM THK)	
C	20	1	**5P-8245**	2	WASHER-HARD (13.5X25.5X3MM THK)	
C	21	1	**5R-7137**	2	WASHER-SEALING	
C	22	1	**5M-2894**	6	WASHER-HARD (10.2X18.5X2.5MM THK)	
C	23	1	**5R-7136**	1	WASHER-SEALING	
	24	1	**0S-1590**	5	BOLT (3/8-16X2 IN)	
	25	1	**7C-8246**	5	SPACER (10.5X20X24MM THK)	

B-USE AS REQUIRED
C-CHANGE FROM PREVIOUS TYPE

8N-7174 **GEAR GP-FRONT** *(contd.)* **i01980068**

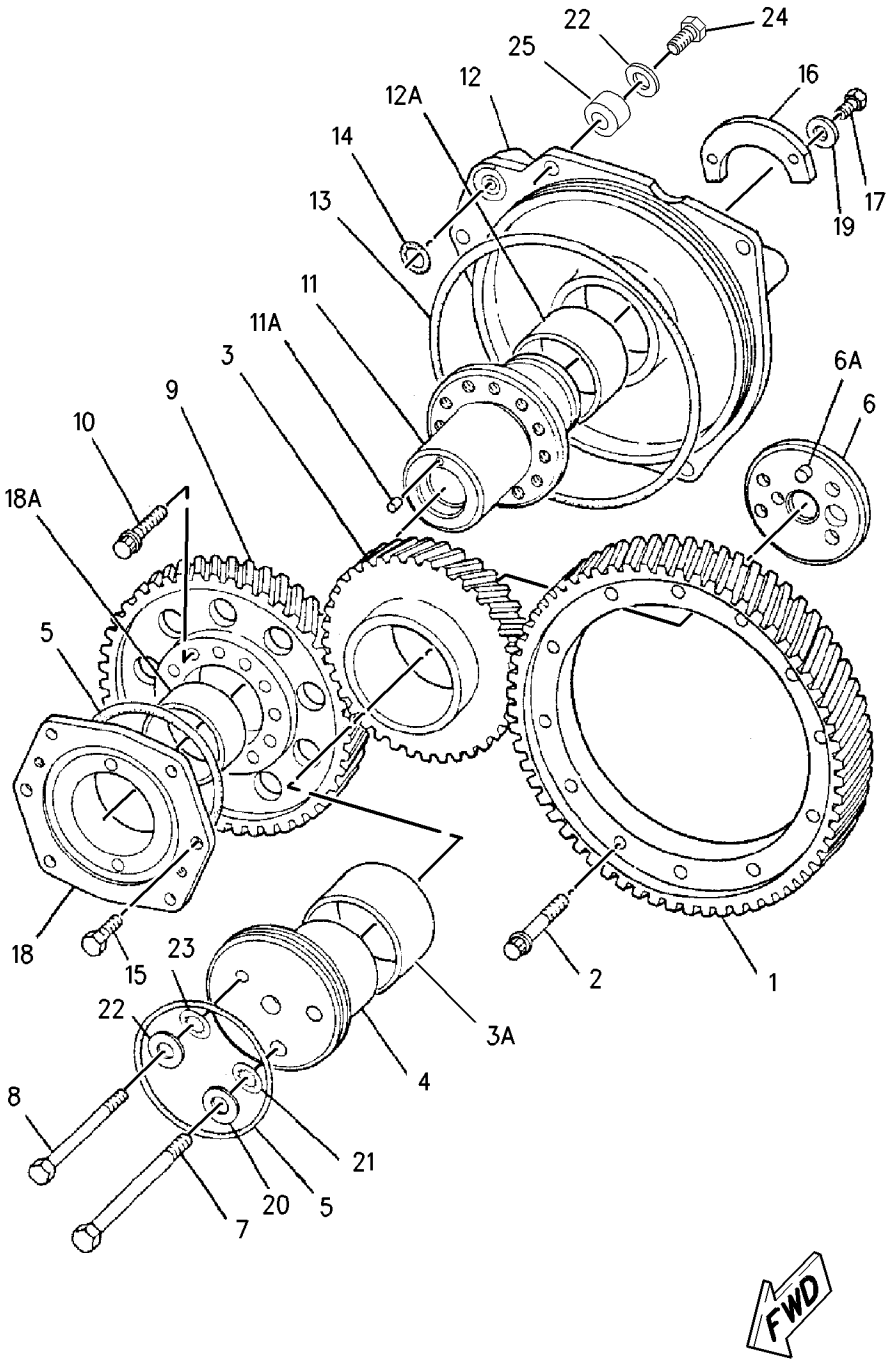

GRAPHIC #1 **<END>** g00703991

BASIC ENGINE

101-1361 GEAR GP-REAR

S/N: 2GR1180-UP

PART OF 155-5556 ENGINE AR

SMCS-1204 **i01692217**

NOTE	REF NO	GRAPHIC REF	PART NUMBER	QTY	PART NAME 1 2 3 4 5 6 (PRODUCT LEVEL)	SEE PAGE
	1	1	**3S-1307**	12	BOLT-12 POINT HEAD (3/8-16X2 IN)	
	2	1	**101-1377**	1	GEAR AS-IDLER (35 & 92 TEETH)	
	2A	1	**4P-5460**	1	BEARING-SLEEVE	
	3	1	**101-1378**	1	SHAFT-CLUSTER GEAR	
	4	1	**8M-2530**	4	BOLT-12 POINT HEAD (1/2-13X1.25 IN)	
	5	1	**101-1365**	1	PLATE-THRUST	
	6	1	**0L-1351**	4	BOLT (3/8-16X0.875 IN)	
	7	1	**101-1364**	2	GEAR AS-IDLER (69 TEETH)	
					(EACH INCLUDES)	
	7A	1	**125-9751**	1	BEARING-SLEEVE	
	8	1	**101-1367**	2	SHAFT-IDLER	
	9	1	**5P-8248**	2	WASHER-HARD (20X36.5X3.5MM THK)	
	10	1	**9X-8887**	2	BOLT (3/4-10X3 IN)	
	11	1	**1B-4367**	4	BOLT (5/8-11X3 IN)	
	12	1	**101-1368**	2	WASHER-THRUST (19.50 X 106 X 1.9MM THK)	
	13	1	**101-1369**	2	GEAR-CAMSHAFT DRIVE (70 TEETH)	
	14	1	**4W-4586**	1	PLATE	
	15	1	**101-1370**	1	GEAR-CRANKSHAFT (92 TEETH)	
	16	1	**7E-5324**	1	RING	
	17	1	**8S-2331**	2	BOLT-12 POINT HEAD (5/8-11 X 2 IN)	

101-1361 **GEAR GP-REAR** *(contd.)* **i01692217**

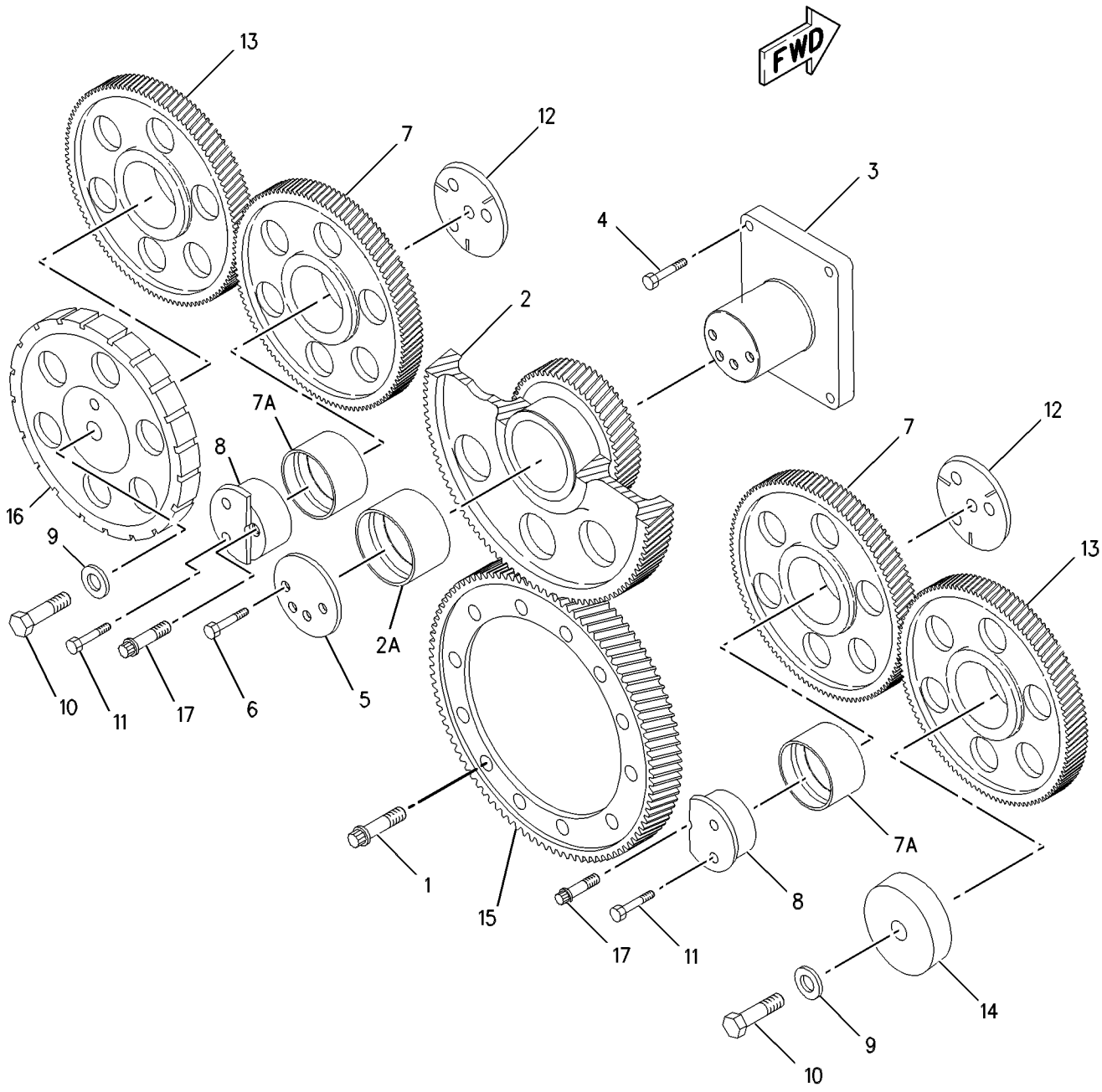

GRAPHIC #1 **<END>** g00661102

BASIC ENGINE

106-7600 HOUSING GP-FLYWHEEL

S/N: 2GR1180-4314

PART OF 155-5556 ENGINE AR

SMCS-1157 **i02000292**

NOTE	REF NO	GRAPHIC REF	PART NUMBER	QTY	PART NAME 1 2 3 4 5 6 (PRODUCT LEVEL)	SEE PAGE
	1	1	**106-7598**	1	HOUSING AS-FLYWHEEL	
	1A	1	**3F-6808**	1	DOWEL	
	1B	1	**7N-2047**	3	DOWEL	
	1C	1	**3F-6795**	2	DOWEL	
	2	1	**5P-8245**	14	WASHER-HARD (13.5X25.5X3MM THK)	
	3	1	**1A-1460**	2	BOLT (1/2-13X2 IN)	
	4	1	**5P-4626**	2	BOLT (5/8-11X10.5 IN)	
	5	1	**0S-1595**	7	BOLT (1/2-13X1.25 IN)	
	6	1	**8T-6763**	5	PLUG-PIPE	
	7	1	**1D-4574**	7	BOLT (1/2-13X6 IN)	
	8	1	**5D-9514**	11	BOLT (5/8-11X6.25 IN)	
	9	1	**1D-4597**	1	BOLT (5/8-11X6.5 IN)	
	10	1	**5P-8247**	14	WASHER-HARD (17X32X3.5MM THK)	
B	11	1	**104-4767**	1	ADAPTER	
B	12	1	**4B-8407**	1	GASKET	
B	13	1	**8T-6765**	1	PLUG-PIPE	
B	14	1	**9S-4185**	1	PLUG	
B	15	1	**3K-0360**	1	SEAL-O-RING	

B-USE AS REQUIRED

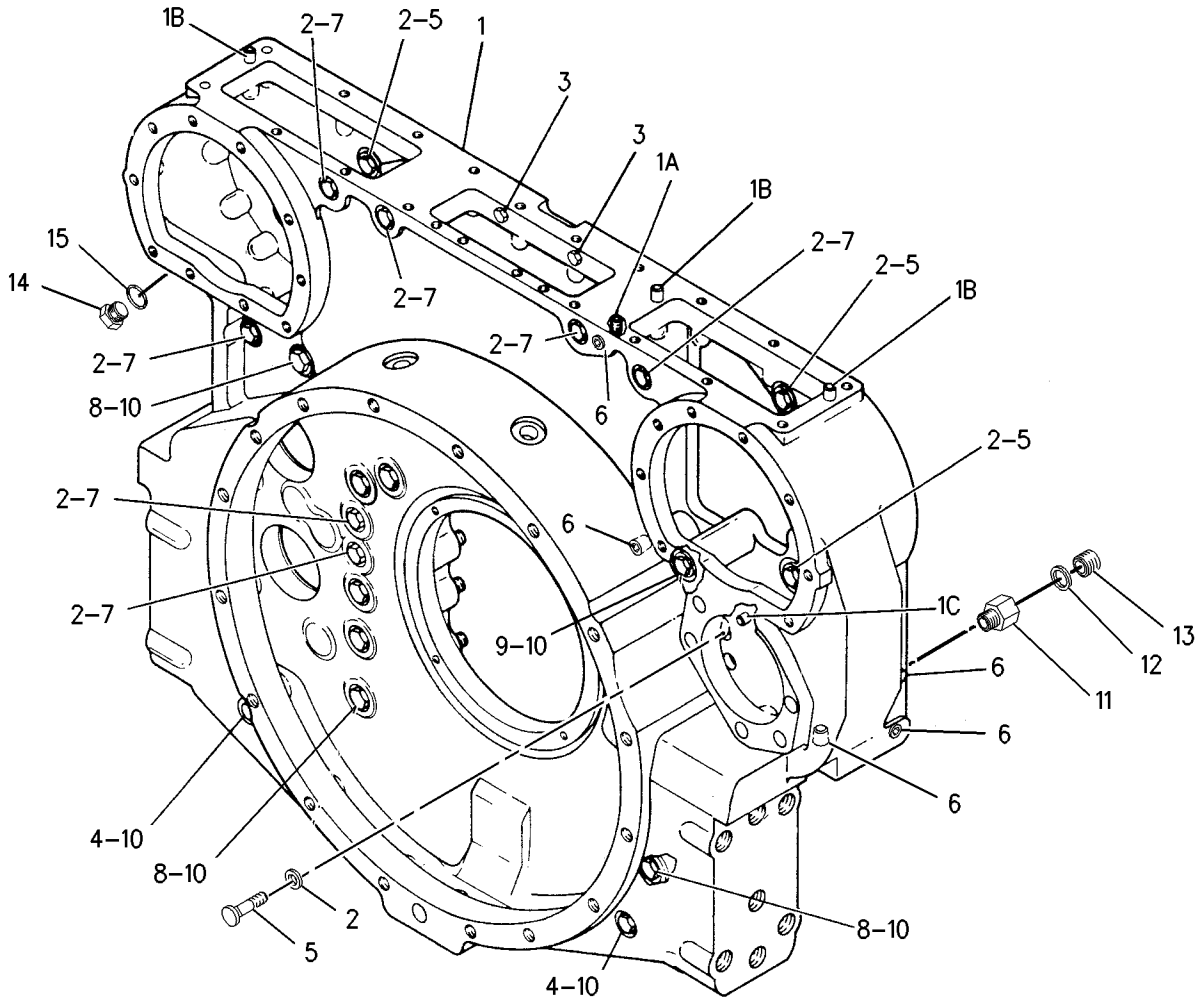

GRAPHIC #1 **<END>** g01002955

106-7600 HOUSING GP-FLYWHEEL

S/N: 2GR4315-UP

PART OF 155-5556 ENGINE AR

SMCS-1157 **i02000295**

NOTE	REF NO	GRAPHIC REF	PART NUMBER	QTY	PART NAME 1 2 3 4 5 6 (PRODUCT LEVEL)	SEE PAGE
	1	1	**106-7598**	1	HOUSING AS-FLYWHEEL	
	1A	1	**3F-6808**	1	DOWEL	
	1B	1	**7N-2047**	3	DOWEL	
	1C	1	**3F-6795**	2	DOWEL	
	2	1	**5P-8245**	14	WASHER-HARD (13.5X25.5X3MM THK)	
C	3	1	**9X-8873**	8	BOLT (1/2-13X2.25 IN)	
	4	1	**5P-4626**	2	BOLT (5/8-11X10.5 IN)	
C	5	1	**0S-1595**	1	BOLT (1/2-13X1.25 IN)	
	6	1	**8T-6763**	5	PLUG-PIPE	
	7	1	**1D-4574**	7	BOLT (1/2-13X6 IN)	
	8	1	**5D-9514**	11	BOLT (5/8-11X6.25 IN)	
	9	1	**1D-4597**	1	BOLT (5/8-11X6.5 IN)	
	10	1	**5P-8247**	14	WASHER-HARD (17X32X3.5MM THK)	
B	11	1	**104-4767**	1	ADAPTER	
B	12	1	**4B-8407**	1	GASKET	
B	13	1	**8T-6765**	1	PLUG-PIPE	
B	14	1	**9S-4185**	1	PLUG	
B	15	1	**3K-0360**	1	SEAL-O-RING	

B-USE AS REQUIRED
C-CHANGE FROM PREVIOUS TYPE

106-7600 **HOUSING GP-FLYWHEEL** *(contd.)* **i02000295**

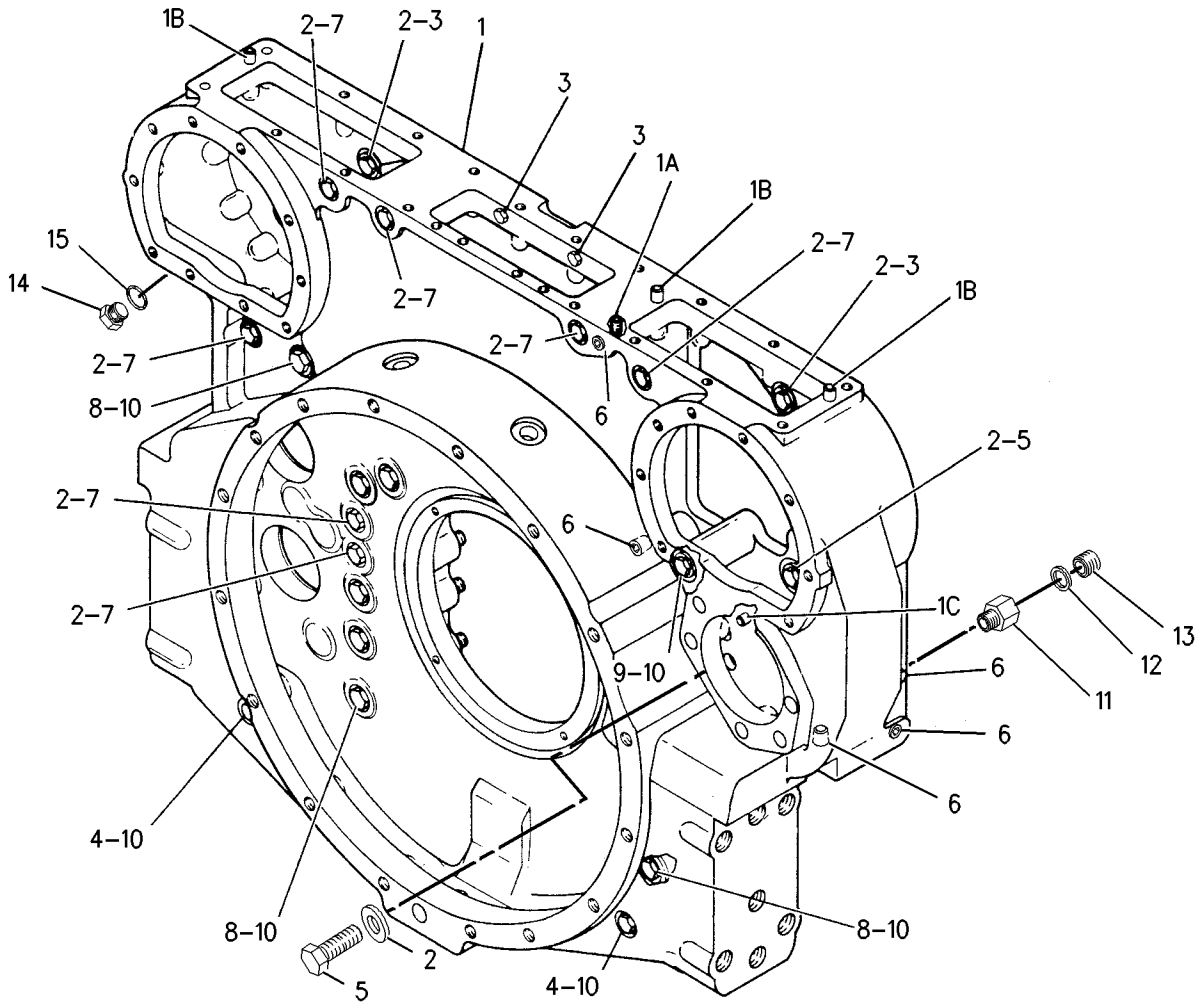

GRAPHIC #1 **<END>** g01007294

BASIC ENGINE

4P-5426 HOUSING GP-FRONT

S/N: 2GR1180-UP

PART OF 155-5556 ENGINE AR

SMCS-1151, 1162, 1166 **i02016248**

NOTE	REF NO	GRAPHIC REF	PART NUMBER	QTY	PART NAME 1 2 3 4 5 6 (PRODUCT LEVEL)	SEE PAGE
	1	1	**0S-1587**	4	BOLT (1/2-13X1.75-IN)	
	2	1	**1D-4593**	10	BOLT (5/8-11X5.5-IN)	
	3	1	**102-8634**	1	HOUSING-ACCESSORY DRIVE	
	4	1	**1B-4218**	6	WASHER (25/64X5/8X.064-IN THK)	
	5	1	**2A-5220**	6	PLUG-DRAIN	
B	6	1	**8T-6765**	7	PLUG-PIPE	
	7	1	**8T-6762**	1	PLUG-PIPE	
	8	1	**8T-6758**	1	PLUG-PIPE	
	9	1	**9H-8260**	4	BOLT (1/2-13X6.25-IN)	
	10	1	**7N-3049**	1	GASKET	

B-USE AS REQUIRED

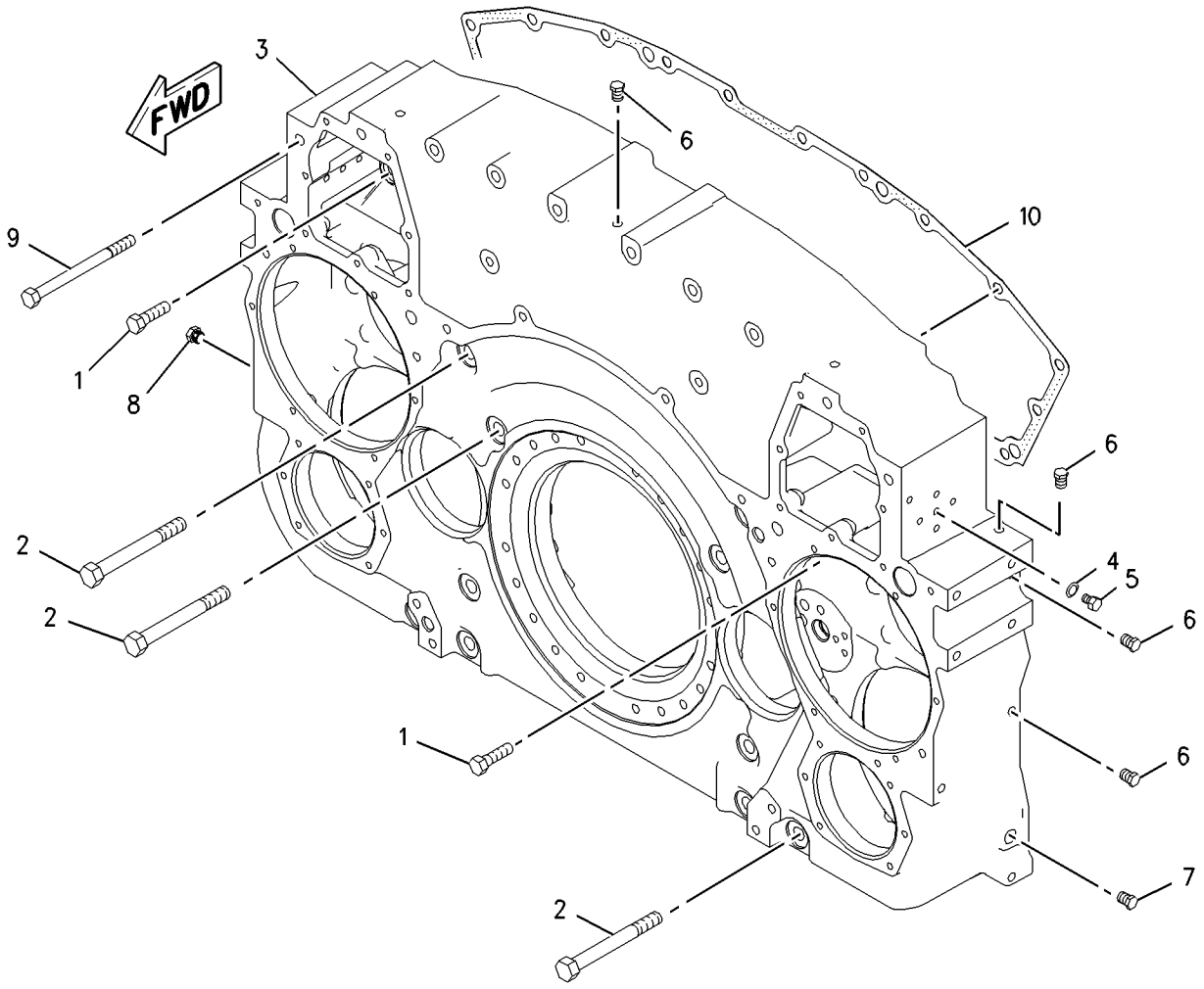

GRAPHIC #1 **<END>** g00995169

7E-6872 LIFTING GP-ENGINE

S/N: 2GR1180-2951
PART OF 155-5556 ENGINE AR

SMCS-1122 **i01971880**

NOTE	REF NO	GRAPHIC REF	PART NUMBER	QTY	PART NAME 1 2 3 4 5 6 (PRODUCT LEVEL)	SEE PAGE
	1	1	**7N-2326**	2	EYE-LIFTING	
	2	1	**7N-2328**	4	DOWEL	
	3	1	**155-0726**	2	BRACKET AS	
	4	1	**193-3286**	1	RETAINER-EYE (REAR)	
	5	1	**4P-4642**	1	RETAINER-EYE (FRONT)	
	6	1	**0S-0509**	4	BOLT (3/8-16X0.75 IN)	
	7	1	**5P-1075**	4	WASHER-HARD (10.2X22.5X3MM THK)	

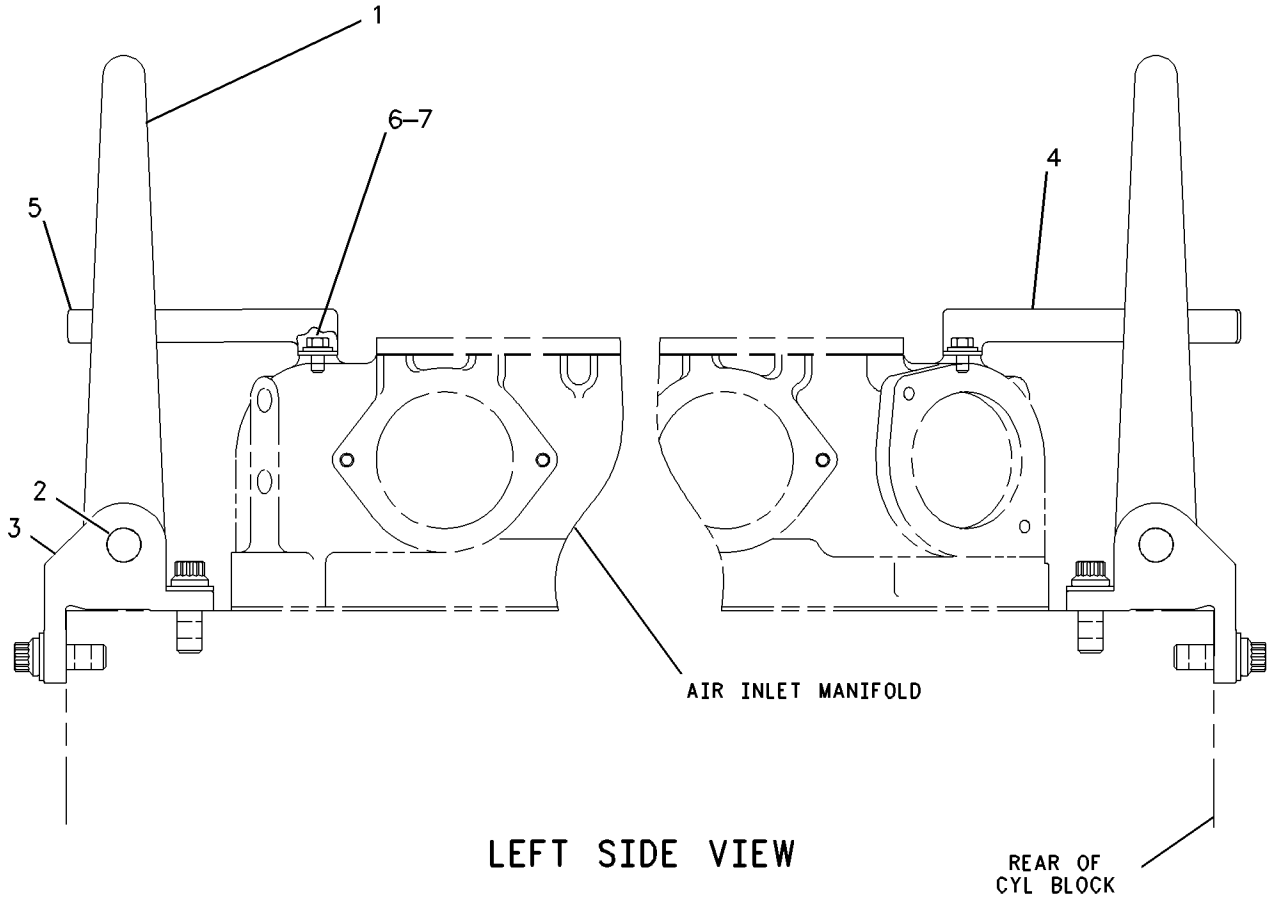

LEFT SIDE VIEW

GRAPHIC #1 **<END>** g00799817

BASIC ENGINE

194-4898 LIFTING GP-ENGINE

S/N: 2GR2952-UP

PART OF 155-5556 ENGINE AR

SMCS-1122 **i01456245**

NOTE	REF NO	GRAPHIC REF	PART NUMBER	QTY	PART NAME 1 2 3 4 5 6 (PRODUCT LEVEL)	SEE PAGE
	1	1	**7N-2326**	2	EYE-LIFTING	
	2	1	**7N-2328**	4	DOWEL (40MM OAL)	
	3	1	**155-0726**	2	BRACKET AS	
					(EACH INCLUDES 2 BRACKETS & HARDWARE)	
	4	1	**0S-0509**	4	BOLT (3/8-16X0.75 IN)	
	5	1	**5P-1075**	4	WASHER-HARD (10.2X22.5X3MM THK)	
	6	1	**4P-4642**	2	RETAINER-EYE	

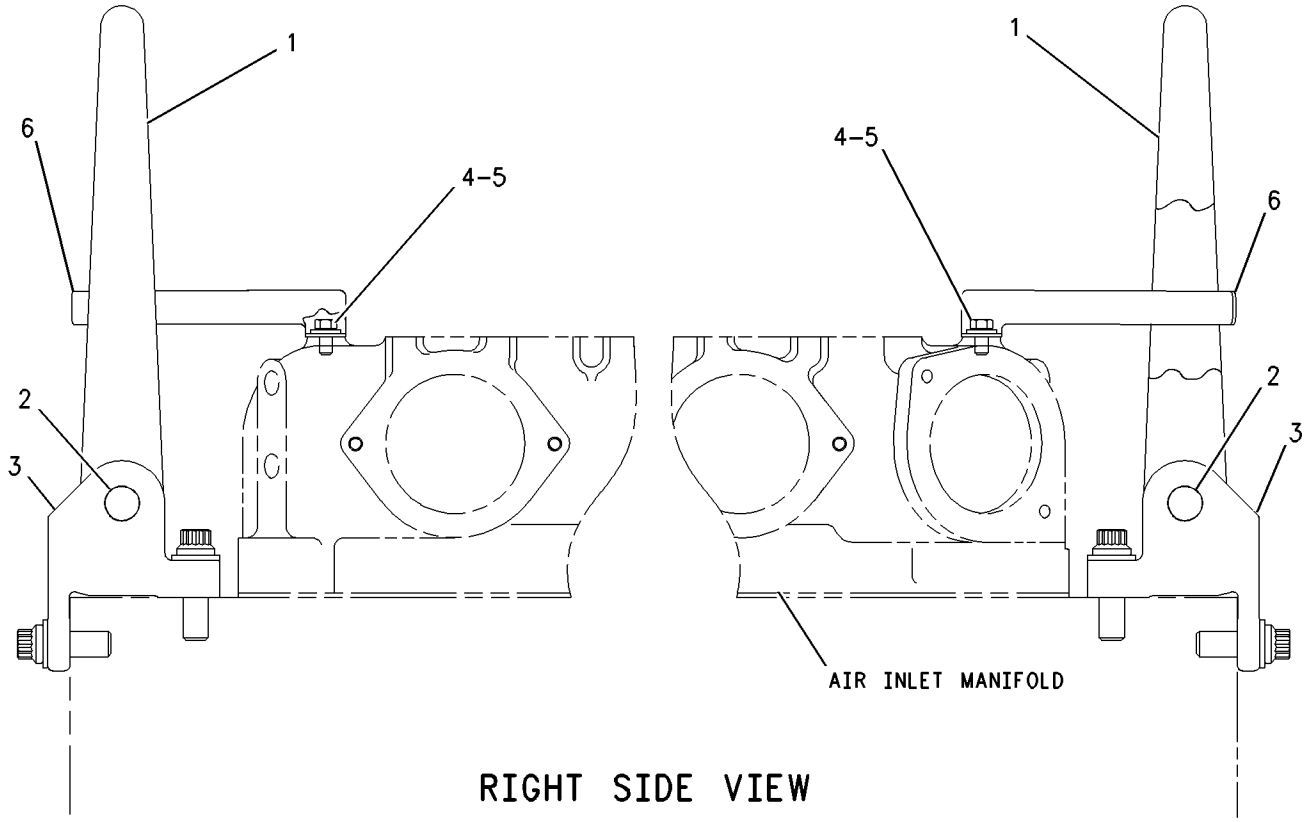

RIGHT SIDE VIEW

GRAPHIC #1 **<END>** g00766060

BASIC ENGINE

184-3239 MOUNTING GP-ALTERNATOR

S/N: 2GR1180-UP

PART OF 155-5556 ENGINE AR

SMCS-1405 **i01990593**

NOTE	REF NO	GRAPHIC REF	PART NUMBER	QTY	PART NAME 1 2 3 4 5 6 (PRODUCT LEVEL)	SEE PAGE
	1	1	**2K-7471**	1	LOCKNUT (1-14 THD)	
	2	1	**4S-5780**	1	ROD	
	3	1	**7E-6617**	1	SUPPORT-ALTERNATOR	
	4	1	**7E-6623**	1	PLATE AS	
	5	1	**7N-2597**	1	SPACER (13.5X25.4X8.08MM THK)	
	6	1	**8S-5383**	1	BLOCK	
	7	1	**100-3724**	1	PULLEY	
	8	1	**100-3725**	1	V-BELT (ALTERNATOR)	
	9	1	**138-2515**	1	PULLEY	
	10	1	**184-3238**	1	GUARD AS-ALTERNATOR	
	11	1	**188-4788**	2	COUPLER	
	12	1	**0S-1589**	1	BOLT (5/8-11X1.75 IN)	
	13	1	**0S-1594**	4	BOLT (3/8-16X1 IN)	
	14	1	**1D-4574**	1	BOLT (1/2-13X6 IN)	
	15	1	**1F-7958**	2	NUT-FULL (1/2-13 THD)	
	16	1	**4K-0367**	2	NUT-FULL (5/8-11 THD)	
	17	1	**5M-2894**	4	WASHER-HARD (10.2X18.5X2.5MM THK)	
	18	1	**5P-8245**	5	WASHER-HARD (13.5X25.5X3MM THK)	
	19	1	**5P-8247**	3	WASHER-HARD (17X32X3.5MM THK)	
	20	1	**5P-8250**	1	WASHER (28X49X5MM THK)	
	21	1	**7B-3235**	4	BOLT (1/2-13X1.375 IN)	
	22	1	**9S-1366**	1	BOLT (1/2-13X2.5 IN)	

184-3239 **MOUNTING GP-ALTERNATOR** ***(contd.)*** **i01990593**

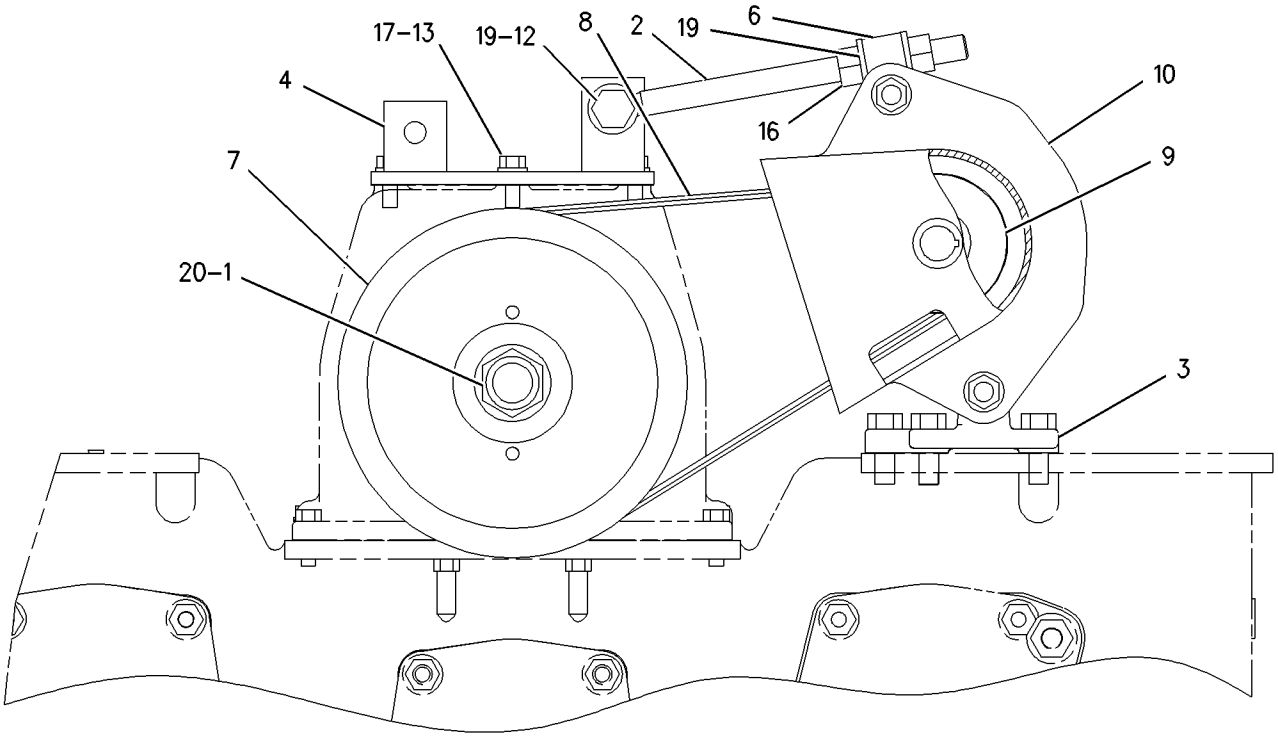

REAR VIEW

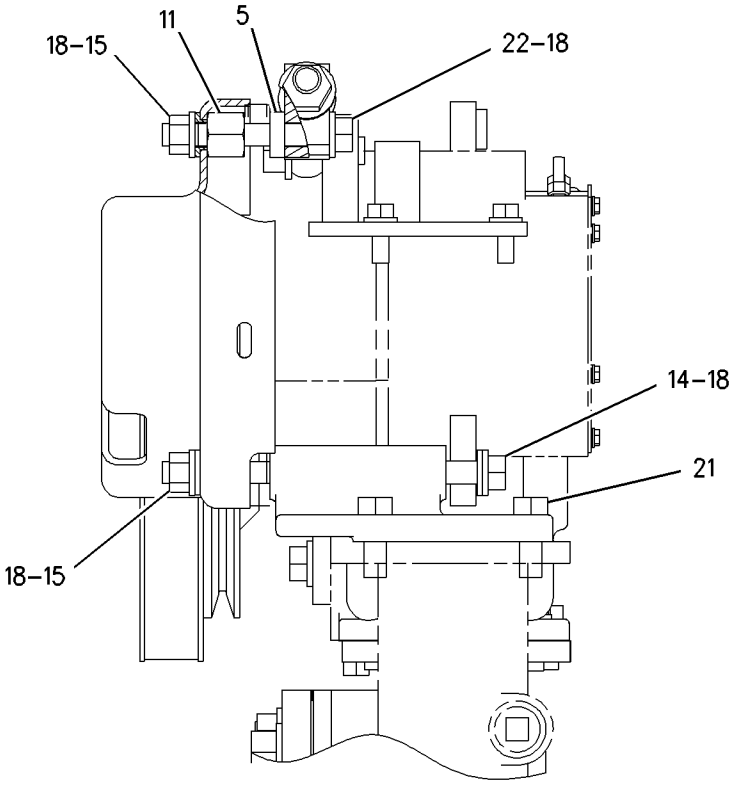

RIGHT SIDE VIEW

GRAPHIC #1 **<END>** g00767687

BASIC ENGINE

7E-6103 PAN GP-OIL

S/N: 2GR1180-UP

PART OF 155-5556 ENGINE AR

SMCS-1302 **i02029693**

NOTE	REF NO	GRAPHIC REF	PART NUMBER	QTY	PART NAME 1 2 3 4 5 6 (PRODUCT LEVEL)	SEE PAGE
	1	1	**0S-1588**	2	BOLT (3/8-16X1.25-IN)	
	2	1	**8M-3175**	56	WASHER-HARD (10.2X16X3-MM THK)	
C	3	1	**137-8254**	1	PAN AS-OIL	
	4	1	**7E-2631**	1	GASKET-OIL PAN	
	5	1	**0S-1591**	7	BOLT (3/8-16X1.5-IN)	
	6	1	**0T-0065**	1	BOLT (3/8-16X3.5-IN)	
	7	1	**2B-2695**	6	BOLT (5/16-18X0.875-IN)	
	8	1	**9M-1974**	6	WASHER-HARD (8.8X16X2-MM THK)	
	9	1	**7N-5418**	1	FLANGE	
	10	1	**7N-5395**	1	SCREEN AS (ENGINE OIL PAN)	
	11	1	**6V-5167**	1	SEAL-O-RING	
	12	1	**4W-9571**	1	BELL-PUMP SUCTION	
	13	1	**3H-7654**	14	WASHER-HARD (13.5X22.5X3-MM THK)	
	14	1	**2A-4639**	16	BOLT (3/8-16X1.625-IN)	
	15	1	**0S-1608**	12	BOLT (3/8-16X3.75-IN)	
	16	1	**5P-7701**	1	SEAL-O-RING	
	17	1	**7W-6492**	1	PLUG-PIPE	
	18	1	**8T-6761**	1	PLUG-PIPE	
	19	1	**0S-1587**	2	BOLT (1/2-13X1.75-IN)	
C	20	1	**6I-0724**	1	ADAPTER-PLUG	
C		1	**6I-0723**	1	PLUG-OIL DRAIN (ENGINE OIL PAN)	
	21	1	**9S-4181**	4	PLUG	
	22	1	**1T-0720**	18	BOLT-12 POINT HEAD (3/8-16X1.25-IN)	
C	23	1	**5P-8068**	1	SEAL-O-RING	
	24	1	**141-7103**	1	PAN AS-OIL	
	25	1	**7N-5417**	1	ELBOW	
	26	1	**7X-4810**	1	SEAL-O-RING	
	27	1	**4F-3765**	1	GASKET-SHAFT	
	28	1	**4N-0996**	1	COVER	
	29	1	**0S-1594**	2	BOLT (3/8-16X25.4-IN)	
	30	1	**137-8255**	1	PAN-OIL	
	31	1	**132-6260**	2	SEAL-INTEGRAL	
	32	1	**6V-0973**	1	SEAL-O-RING	
	33	1	**7W-5994**	1	ELBOW	
	34	1	**6V-5101**	1	SEAL-O-RING	
	35	1	**8T-9383**	1	BOLT (1/2-13X0.75-IN)	
	36	1	**6F-7062**	1	WASHER (12.7X19.05X1.83-MM THK)	
	37	1	**4K-5175**	14	BOLT-12 POINT HEAD (1/2-13X1.5-IN)	
C	38	1	**3D-2824**	1	SEAL-O-RING	
	39	1	**7M-8485**	3	SEAL-O-RING	
C	40	1	**2M-9780**	1	SEAL-O-RING	
C	41	1	**9S-4190**	1	PLUG	
C	42	1	**9S-4183**	1	PLUG	

C-CHANGE FROM PREVIOUS TYPE

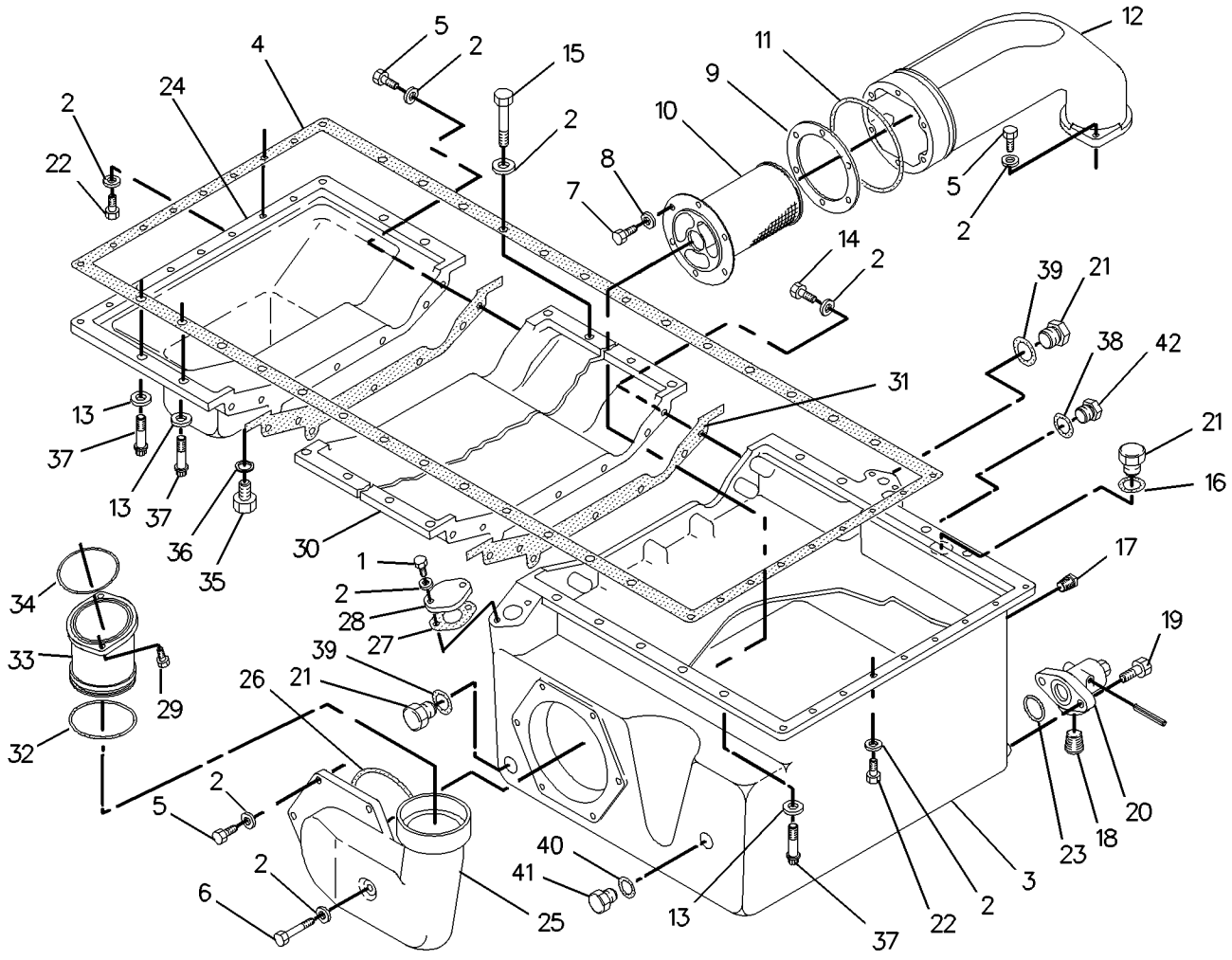

GRAPHIC #1 **<END>** g00793459

101-0829 PISTON & ROD GP

S/N: 2GR1180-4492, 4494-4517

PART OF 155-5556 ENGINE AR

SMCS-1213, 1214, 1215, 1218, 1219, 1225, 1239 **i01834385**

NOTE	REF NO	GRAPHIC REF	PART NUMBER	QTY	PART NAME 1 2 3 4 5 6 (PRODUCT LEVEL)	SEE PAGE
R	1	1	**144-0725**	1	ROD AS	
		1	**118-1655**	1	BEARING-SLEEVE	
		1	**7N-2043**	1	DOWEL	
		1	**7N-2405**	4	BOLT-CONNECTING ROD	
	2	1	**125-2782**	1	SKIRT-PISTON	
R	3	1	**144-0720**	1	CROWN AS-PISTON	
	4	1	**138-8507**	1	PIN-PISTON	
	5	1	**107-7330**	1	BEARING-CONNECTING ROD (STANDARD)	
AB		1	**107-7331**		BEARING-CONNECTING ROD (0.63MM US ID)	
AB		1	**107-7332**		BEARING-CONNECTING ROD (1.27MM US ID)	
AB		1	**107-7333**		BEARING-CONNECTING ROD (0.25MM OS OD)	
AB		1	**107-7334**		BEARING-CONNECTING ROD (0.63MM US ID, 0.25MM OS OD)	
AB		1	**107-7335**		BEARING-CONNECTING ROD (1.27MM US ID, 0.25MM OS OD)	
	6	1	**8N-7296**	2	RETAINER-PIN	
	7	1	**229-1631**	1	RING-PISTON (TOP)	
	8	1	**144-5695**	1	RING-PISTON (INTERMEDIATE)	
	9	1	**123-4268**	1	RING-PISTON (OIL)	

A-NOT PART OF THIS GROUP
B-USE AS REQUIRED
R-REMFG PART MAY BE AVAILABLE

101-0829 **PISTON & ROD GP** *(contd.)* **i01834385**

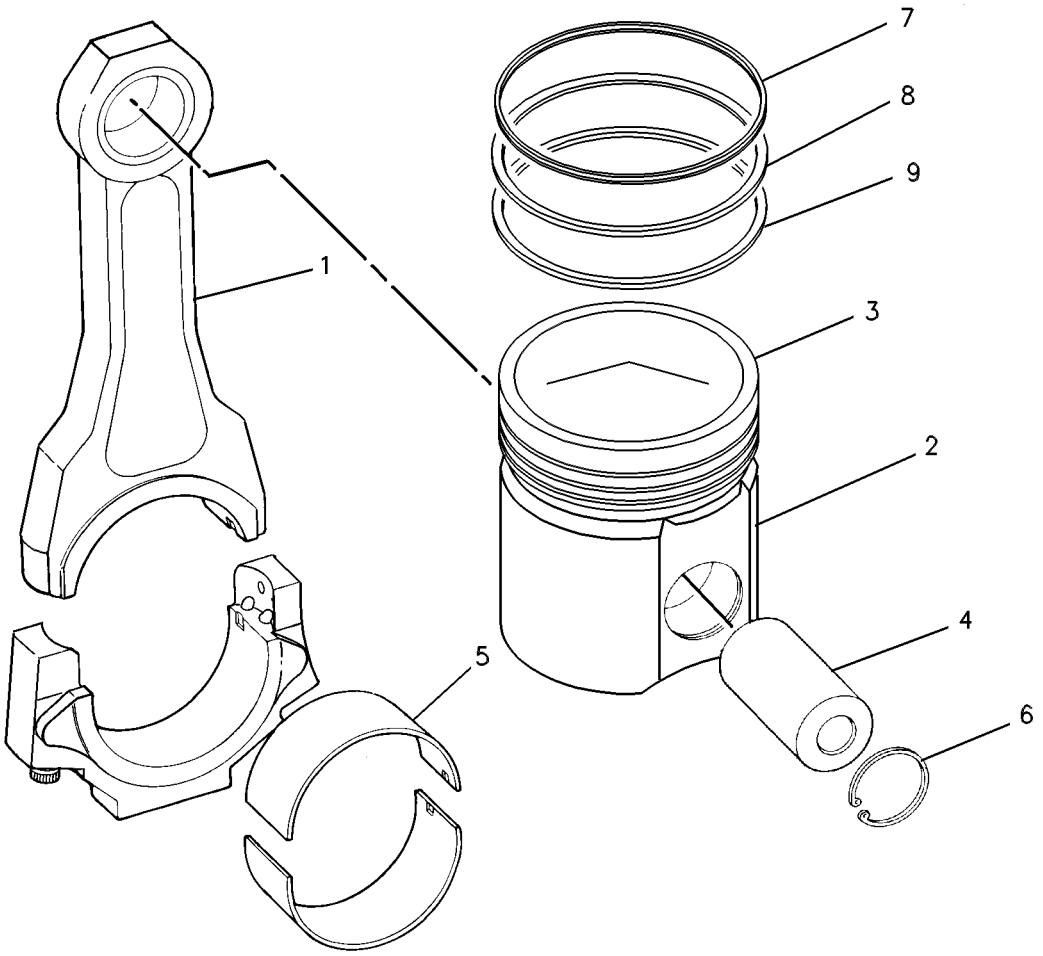

GRAPHIC #1 **<END>** g00085724

BASIC ENGINE

223-6363 PISTON & ROD GP

S/N: 2GR4493, 4518-UP

PART OF 155-5556 ENGINE AR

SMCS-1213, 1214, 1215, 1218, 1219, 1225, 1239 **i01933168**

NOTE	REF NO	GRAPHIC REF	PART NUMBER	QTY	PART NAME 1 2 3 4 5 6 (PRODUCT LEVEL)	SEE PAGE
R	1	1	**144-0725**	1	ROD AS	
		1	**7N-2043**	1	DOWEL	
		1	**7N-2405**	4	BOLT-CONNECTING ROD	
		1	**118-1655**	1	BEARING-SLEEVE	
	2	1	**107-7330**	1	BEARING-CONNECTING ROD (STANDARD)	
AB		1	**107-7331**		BEARING-CONNECTING ROD (0.63MM US ID)	
AB		1	**107-7332**		BEARING-CONNECTING ROD (1.27MM US ID)	
AB		1	**107-7333**		BEARING-CONNECTING ROD (0.25MM OS OD)	
AB		1	**107-7334**		BEARING-CONNECTING ROD (0.63MM US ID, 0.25MM OS OD)	
AB		1	**107-7335**		BEARING-CONNECTING ROD (1.27MM US ID, 0.25MM OS OD)	
	3	1	**144-5695**	1	RING-PISTON (INTERMEDIATE)	
	4	1	**197-0560**	1	PIN-PISTON	
	5	1	**214-6073**	2	RETAINER	
	6	1	**214-6066**	1	RING-PISTON (TOP)	
	7	1	**223-6361**	1	RING-PISTON (OIL)	
	8	1	**233-2431**	1	PISTON AS	
	9	1	**193-3282**	1	RETAINER AS	
		1	**6V-3537**	1	DOWEL	
	10	1	**204-5447**	1	JET AS-PISTON COOLING	
	11	1	**0T-0102**	1	BOLT (3/8-16X0.625 IN)	
	12	1	**1B-2790**	1	BOLT (5/16-18X1.375 IN)	
	13	1	**5M-2894**	1	WASHER-HARD (10.2X18.5X2.5MM THK)	
	14	1	**9M-1974**	1	WASHER-HARD (8.8X16X2MM THK)	

A-NOT PART OF THIS GROUP
B-USE AS REQUIRED
R-REMFG PART MAY BE AVAILABLE

223-6363 **PISTON & ROD GP** *(contd.)* **i01933168**

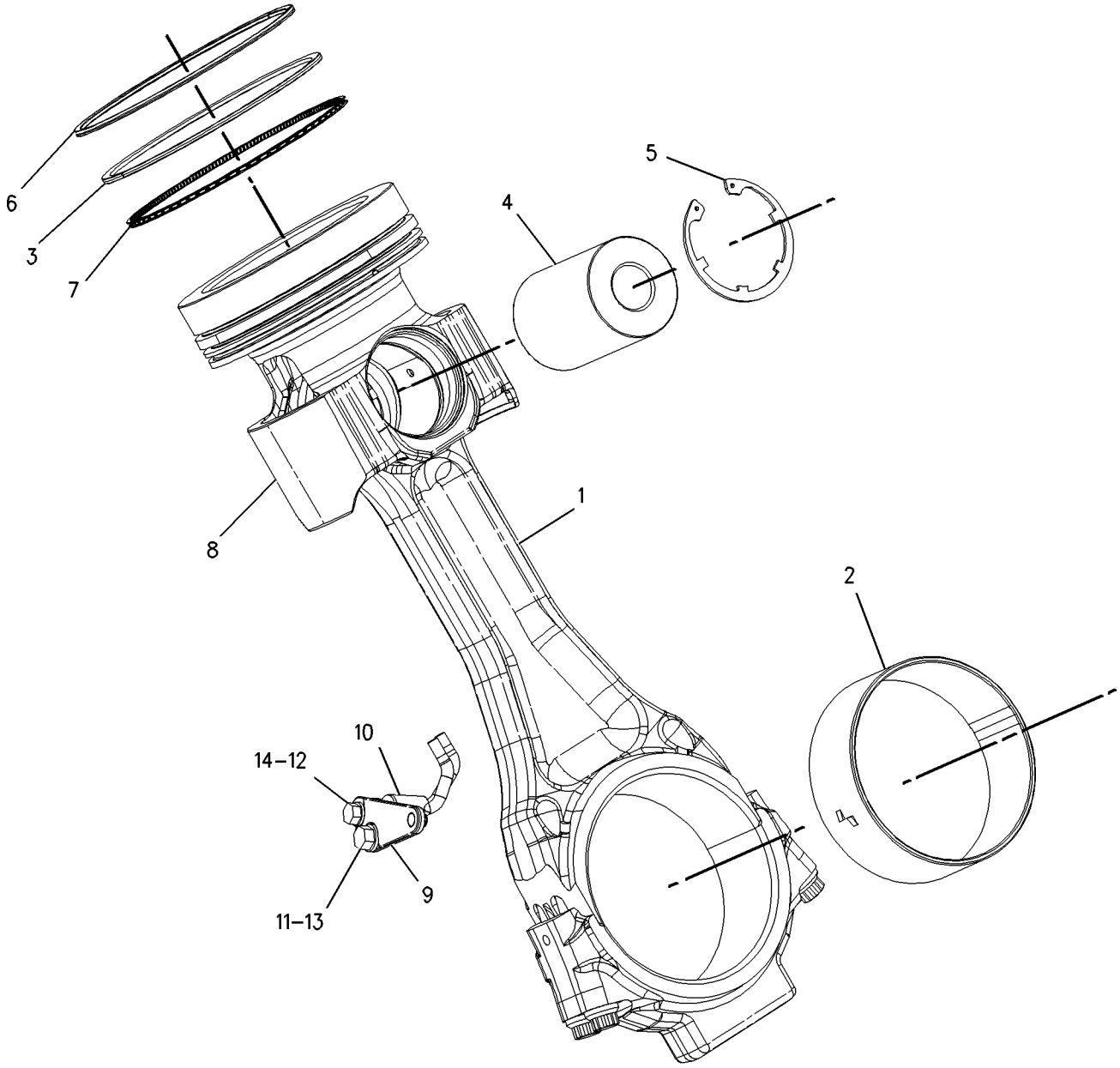

GRAPHIC #1 **<END>** g01007083

184-2444 SEAL GP-CRANKSHAFT

S/N: 2GR1180-UP

PART OF 155-5556 ENGINE AR

SMCS-1160, 1161 **i02000299**

NOTE	REF NO	GRAPHIC REF	PART NUMBER	QTY	PART NAME 1 2 3 4 5 6 (PRODUCT LEVEL)	SEE PAGE
	1	1	**113-8432**	1	SEAL GP-CRANKSHAFT (CW ROTATION)	
	2	1	**184-2443**	1	SEAL (DIRT)	
	3	1	**197-3888**	1	SEAL GP-CRANKSHAFT (CCW ROTATION)	

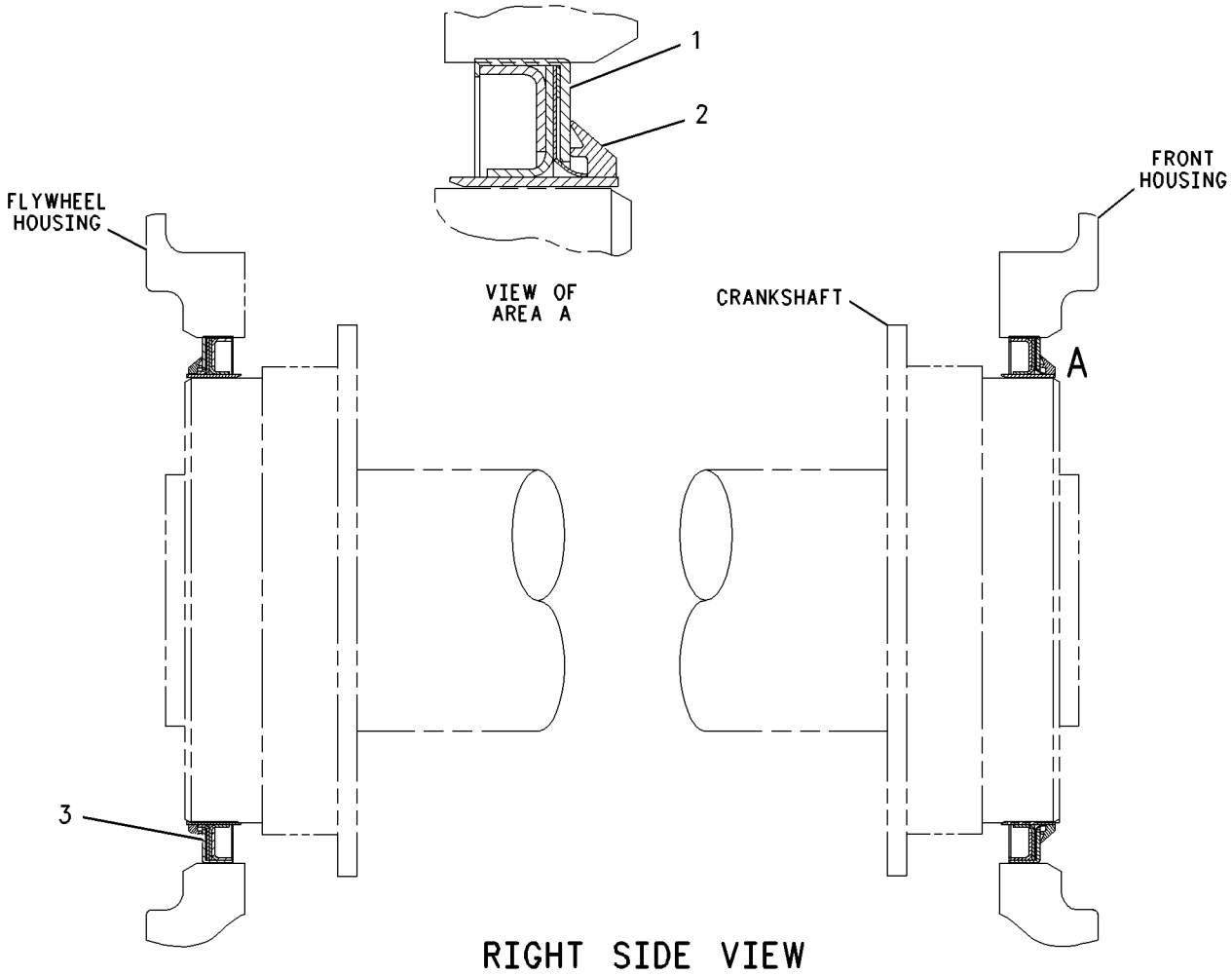

GRAPHIC #1

<END>

g00795326

8N-8114 SUPPORT GP-ENGINE

S/N: 7PZ1-UP

REAR

PART OF 155-5557 INSTALLATION AR-ENGINE

SMCS-1152, 1153, 1154 **i01420609**

NOTE	REF NO	GRAPHIC REF	PART NUMBER	QTY	PART NAME 1 2 3 4 5 6 (PRODUCT LEVEL)	SEE PAGE
	1	1	**4W-1557**	1	SUPPORT-LH	
	2	1	**4W-1555**	2	SUPPORT-ENGINE REAR	
	3	1	**4W-0077**	2	MOUNT AS	
	4	1	**2H-3745**	12	BOLT (1-14X2.75 IN)	
	5	1	**5P-8250**	20	WASHER (28X49X5MM THK)	
	6	1	**3B-2968**	4	BOLT (3/4-10X3.5 IN)	
	7	1	**5P-8248**	8	WASHER-HARD (20X36.5X3.5MM THK)	
	8	1	**4W-1556**	2	CAP	
	9	1	**4W-1558**	1	SUPPORT-RH	
	10	1	**1D-4608**	4	BOLT (3/4-10X2.75 IN)	
	11	1	**5S-7379**	4	BOLT (3/8-16X.875 IN)	
	12	1	**8T-4896**	4	WASHER-HARD (10.2X18.5X2.5MM THK)	
	13	1	**2G-5538**	2	PLATE	
	14	1	**1D-4637**	8	BOLT (1-8X3.25 IN)	

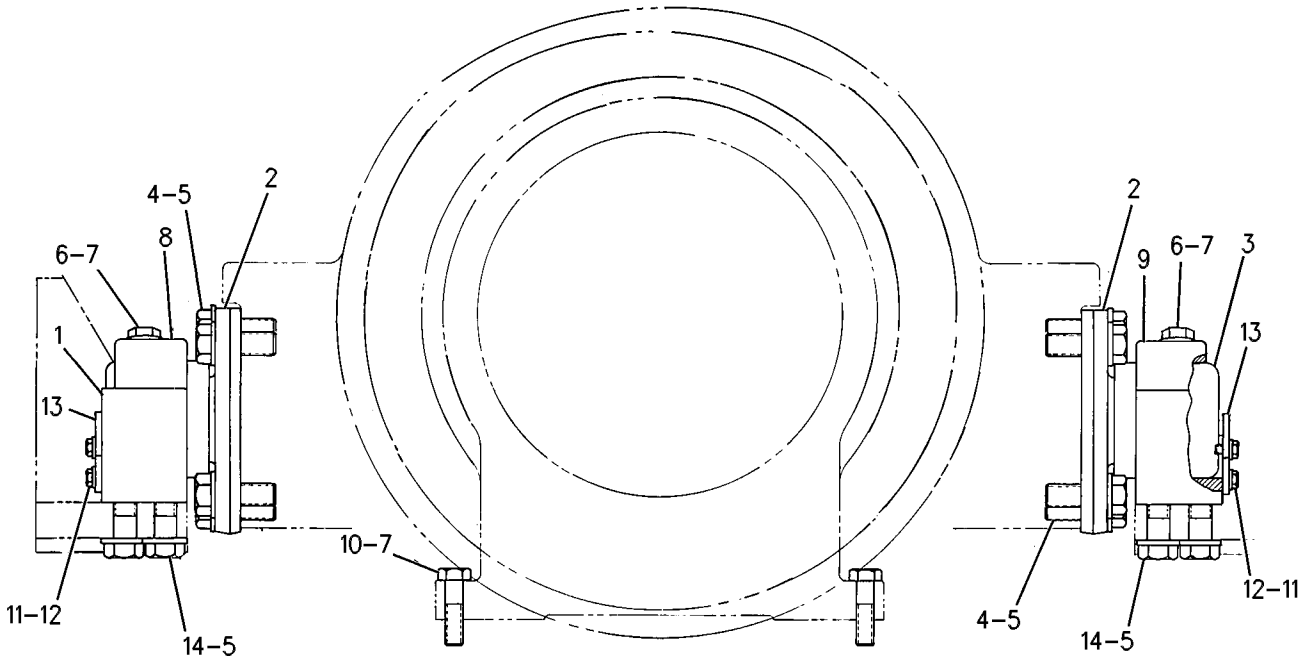

GRAPHIC #1 **<END>** g00476648

7N-1863 TRUNNION GP-ENGINE

S/N: 2GR1180-UP

PART OF 155-5556 ENGINE AR

FOR USE WITH REMOTE MOUNTED TRANSMISSION WITH FLEXIBLE COUPLING BETWEEN FLYWHEEL & TRANSMISSION, AND 3-POINT MOUNTING SYSTEM

SMCS-1152, 1153, 1154 **i01935613**

NOTE	REF NO	GRAPHIC REF	PART NUMBER	QTY	PART NAME 1 2 3 4 5 6 (PRODUCT LEVEL)	SEE PAGE
C	1	1	**8S-4734**	16	BOLT (9/16-12X2 IN)	
C	2	1	**5P-8246**	16	WASHER-HARD (15.5X29X3MM THK)	
	3	1	**8N-1287**	1	SUPPORT-OUTER	
	4	1	**5P-8245**	20	WASHER-HARD (13.5X25.5X3MM THK)	
	5	1	**1D-4566**	20	BOLT (1/2-13X3.5 IN)	
	6	1	**9X-7438**	1	MOUNT AS	

C-CHANGE FROM PREVIOUS TYPE

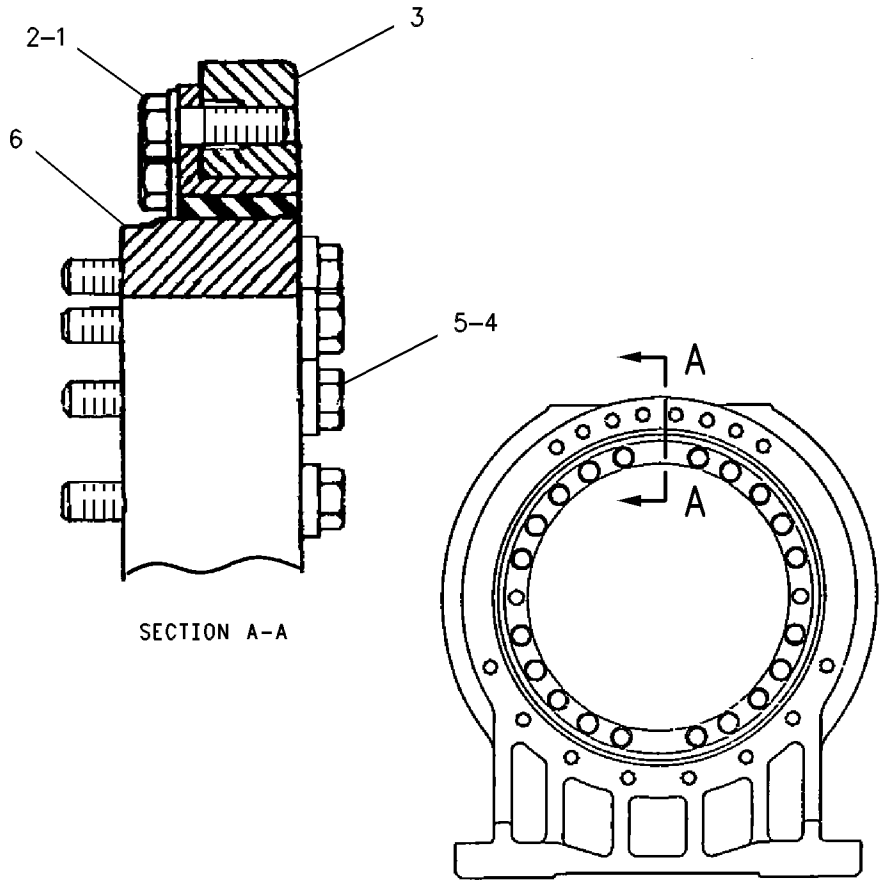

GRAPHIC #1 **<END>** g00621983

BASIC ENGINE

100-3905 VALVE MECHANISM GP

S/N: 2GR1180-3248

PART OF 155-5556 ENGINE AR

SMCS-1102, 1112, 1121, 1123, 1208, 1209 **i02003631**

NOTE	REF NO	GRAPHIC REF	PART NUMBER	QTY	PART NAME 1 2 3 4 5 6 (PRODUCT LEVEL)	SEE PAGE
	1	1	**117-9315**	1	SEAL	
R	2	1	**136-9640**	1	LIFTER AS-UNIT INJECTOR	
	3	1	**184-2449**	2	LIFTER AS-VALVE	
	4	1	**5M-2894**	4	WASHER-HARD (10.2X18.5X2.5MM THK)	
	5	1	**0L-1143**	2	BOLT (3/8-16X2.50 IN)	
	6	1	**100-3880**	2	PUSHROD-VALVE	
	7	1	**200-2003**	2	SCREW-ADJUSTING (1/2-20-3B THD X 2.42IN)	
	8	1	**3J-9196**	2	NUT-JAM (1/2-20 THD)	
	9	1	**7N-4782**	2	SPRING-LIFTER GUIDE	
	10	1	**9S-1354**	1	NUT (5/8-18 THD)	
	11	1	**100-3879**	1	PUSHROD	
	12	1	**2N-5842**	2	SCREW (3/8-24X1 IN)	
	13	1	**9L-7712**	2	NUT (3/8-24 THD)	
	14	1	**129-4181**	2	BRIDGE AS	
	15	1	**230-2619**	1	SCREW-ADJUSTING	
	16	1	**9F-7707**	3	RING-RETAINING	
	17	1	**100-3877**	1	RETAINER-SPRING	
	18	1	**5P-7530**	1	SEAL-O-RING	
	19	1	**5P-0537**	1	WASHER-HARD (7.2X14.5X2MM THK)	
R	20	1	**154-6388**	2	ROCKER ARM AS	
					(EACH INCLUDES)	
		1	**8N-7197**	1	SOCKET-ARM	
		1	**230-2620**	1	BEARING-SLEEVE	
	21	1	**196-4791**	1	SHAFT AS	
	22	1	**0S-1615**	1	BOLT (1/4-20X0.75 IN)	
	23	1	**9X-0352**	1	RECEPTACLE AS	
	24	1	**6J-2245**	1	SEAL-O-RING	
	25	1	**132-6469**	1	HARNESS AS-WIRING (VALVE MECHANISM)	
		1	**155-2270**	1	KIT-CONNECTING PLUG (2-PIN)	
					(INCLUDES PLUG AS. AND WEDGE)	
Y	26	1	**120-7413**	1	BASE GP-VALVE COVER	7
	27	1	**100-3878**	1	SPRING-INJECTOR	
	28	1	**8D-7942**	2	BOLT-12 POINT HEAD (5/8-11X6.5 IN)	
	29	1	**7E-6508**	1	CAP AS	
	30	1	**0S-1590**	2	BOLT (3/8-16X2 IN)	
	31	1	**154-6389**	3	BUTTON	
R	32	1	**196-4793**	1	ROCKER ARM AS	
		1	**8N-7197**	1	SOCKET-ARM	
		1	**230-2620**	1	BEARING-SLEEVE	

R-REMFG PART MAY BE AVAILABLE
Y-SEPARATE ILLUSTRATION

100-3905 **VALVE MECHANISM GP** ***(contd.)*** **i02003631**

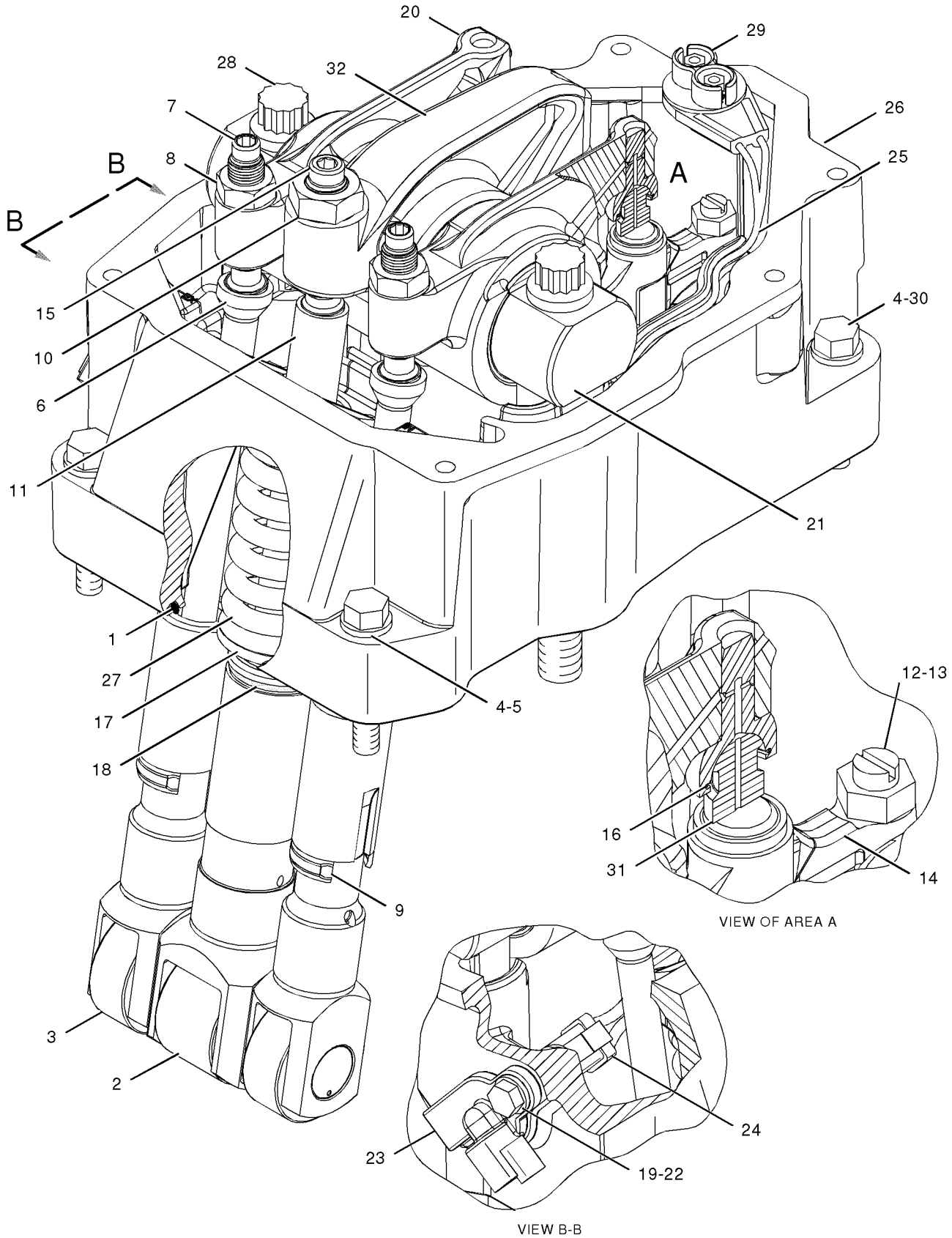

GRAPHIC #1 **<END>** g01025240

BASIC ENGINE

195-1928 VALVE MECHANISM GP

S/N: 2GR3249-3945, 3947-4037, 4039-4088, 4090-4104

PART OF 155-5556 ENGINE AR

SMCS-1102, 1112, 1121, 1123, 1208, 1209 **i01980187**

NOTE	REF NO	GRAPHIC REF	PART NUMBER	QTY	PART NAME 1 2 3 4 5 6 (PRODUCT LEVEL)	SEE PAGE
	1	1	**117-9315**	1	SEAL	
R	2	1	**192-8746**	2	LIFTER AS (VALVE)	
R	3	1	**192-8747**	1	LIFTER AS (INJECTOR)	
	4	1	**5M-2894**	4	WASHER-HARD (10.2X18.5X2.5MM THK)	
	5	1	**0L-2070**	2	BOLT (3/8-16X2.25 IN)	
	6	1	**100-3880**	2	PUSHROD-VALVE	
	7	1	**200-2003**	2	SCREW-ADJUSTING (1/2-20-3B THD X 2.42IN)	
	8	1	**3J-9196**	2	NUT-JAM (1/2-20 THD)	
	9	1	**7N-4782**	2	SPRING-LIFTER GUIDE	
	10	1	**9S-1354**	1	NUT (5/8-18 THD)	
	11	1	**100-3879**	1	PUSHROD	
	12	1	**230-2619**	1	SCREW-ADJUSTING	
R	13	1	**230-2621**	2	ROCKER ARM AS	
					(EACH INCLUDES)	
		1	**8N-7197**	1	SOCKET-ARM	
		1	**230-2620**	1	BEARING-SLEEVE	
R	14	1	**230-2622**	1	ROCKER ARM AS	
		1	**8N-7197**	1	SOCKET-ARM	
		1	**230-2620**	1	BEARING-SLEEVE	
	15	1	**230-2633**	1	SHAFT AS	
	16	1	**9F-7707**	3	RING-RETAINING	
	17	1	**100-3877**	1	RETAINER-SPRING	
	18	1	**5P-7530**	1	SEAL-O-RING	
	19	1	**5P-0537**	1	WASHER-HARD (7.2X14.5X2MM THK)	
	20	1	**230-3152**	2	BRIDGE (EXHAUST)	
	21	1	**230-3153**	2	BRIDGE (INLET)	
	22	1	**0S-1615**	1	BOLT (1/4-20X0.75 IN)	
	23	1	**9X-0352**	1	RECEPTACLE AS	
	24	1	**6J-2245**	1	SEAL-O-RING	
	25	1	**132-6469**	1	HARNESS AS-WIRING (INJECTOR TO ENGINE)	
Y	26	1	*120-7413*	1	BASE GP-VALVE COVER	7
	27	1	**100-3878**	1	SPRING-INJECTOR	
	28	1	**8D-7942**	2	BOLT-12 POINT HEAD (5/8-11X6.5 IN)	
	29	1	**7E-6508**	1	CAP AS	
	30	1	**0S-1590**	2	BOLT (3/8-16X2 IN)	
	31	1	**154-6389**	3	BUTTON	

R-REMFG PART MAY BE AVAILABLE
Y-SEPARATE ILLUSTRATION

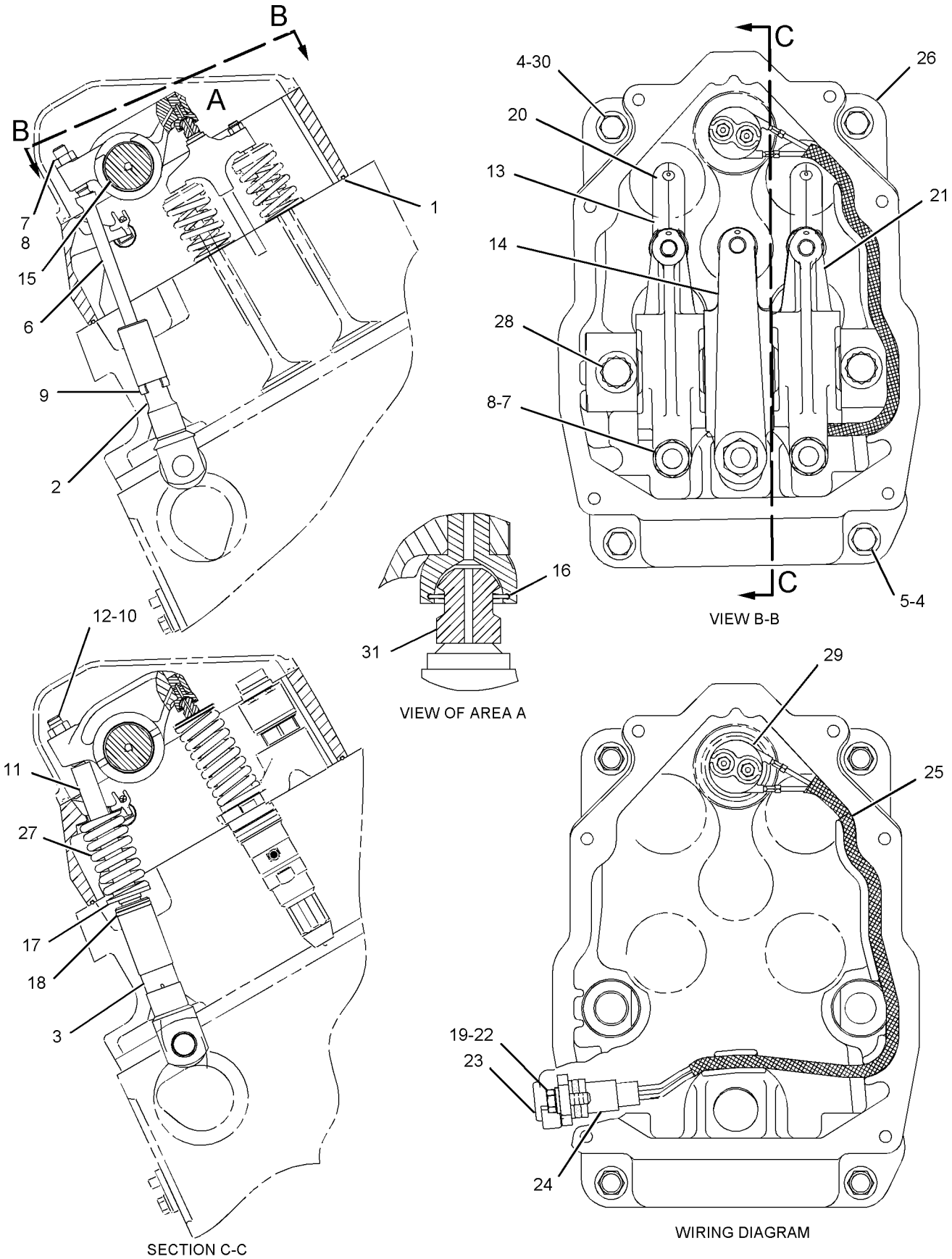

GRAPHIC #1 **<END>** g01026460

BASIC ENGINE

224-9869 VALVE MECHANISM GP

S/N: 2GR3946, 4038, 4089, 4105-4582

PART OF 155-5556 ENGINE AR

SMCS-1102, 1112, 1121, 1123, 1208, 1209 **i02005422**

NOTE	REF NO	GRAPHIC REF	PART NUMBER	QTY	PART NAME 1 2 3 4 5 6 (PRODUCT LEVEL)	SEE PAGE
	1	1	**117-9315**	1	SEAL	
R	2	1	**197-7004**	1	LIFTER AS-INJECTOR (INJECTOR)	
R	3	1	**229-5490**	2	LIFTER AS-VALVE	
	4	1	**5M-2894**	4	WASHER-HARD (10.2X18.5X2.5MM THK)	
	5	1	**0L-2070**	2	BOLT (3/8-16X2.25 IN)	
	6	1	**100-3880**	2	PUSHROD-VALVE	
	7	1	**200-2003**	2	SCREW-ADJUSTING (1/2-20-3B THD X 2.42IN)	
	8	1	**3J-9196**	2	NUT-JAM (1/2-20 THD)	
	9	1	**7N-4782**	2	SPRING-LIFTER GUIDE	
	10	1	**9S-1354**	1	NUT (5/8-18 THD)	
	11	1	**100-3879**	1	PUSHROD	
	12	1	**2N-5842**	2	SCREW (3/8-24X1 IN)	
	13	1	**9L-7712**	2	NUT (3/8-24 THD)	
	14	1	**129-4181**	2	BRIDGE AS	
	15	1	**230-2619**	1	SCREW-ADJUSTING	
	16	1	**9F-7707**	3	RING-RETAINING	
	17	1	**100-3877**	1	RETAINER-SPRING	
	18	1	**5P-7530**	1	SEAL-O-RING	
	19	1	**5P-0537**	1	WASHER-HARD (7.2X14.5X2MM THK)	
R	20	1	**154-6388**	2	ROCKER ARM AS	
					(EACH INCLUDES)	
		1	**8N-7197**	1	SOCKET-ARM	
		1	**123-4271**	1	BEARING-SLEEVE	
	21	1	**196-4791**	1	SHAFT AS	
	22	1	**0S-1615**	1	BOLT (1/4-20X0.75 IN)	
	23	1	**9X-0352**	1	RECEPTACLE AS	
	24	1	**6J-2245**	1	SEAL-O-RING	
	25	1	**132-6469**	1	HARNESS AS-WIRING (VALVE MECHANISM)	
Y	26	1	*120-7413*	1	BASE GP-VALVE COVER	7
	27	1	**100-3878**	1	SPRING-INJECTOR	
	28	1	**8D-7942**	2	BOLT-12 POINT HEAD (5/8-11X6.5 IN)	
	29	1	**7E-6508**	1	CAP AS	
	30	1	**0S-1590**	2	BOLT (3/8-16X2 IN)	
	31	1	**154-6389**	3	BUTTON	
R	32	1	**196-4793**	1	ROCKER ARM AS	
		1	**8N-7197**	1	SOCKET-ARM	
		1	**123-4271**	1	BEARING-SLEEVE	

R-REMFG PART MAY BE AVAILABLE
Y-SEPARATE ILLUSTRATION

224-9869 **VALVE MECHANISM GP** ***(contd.)*** **i02005422**

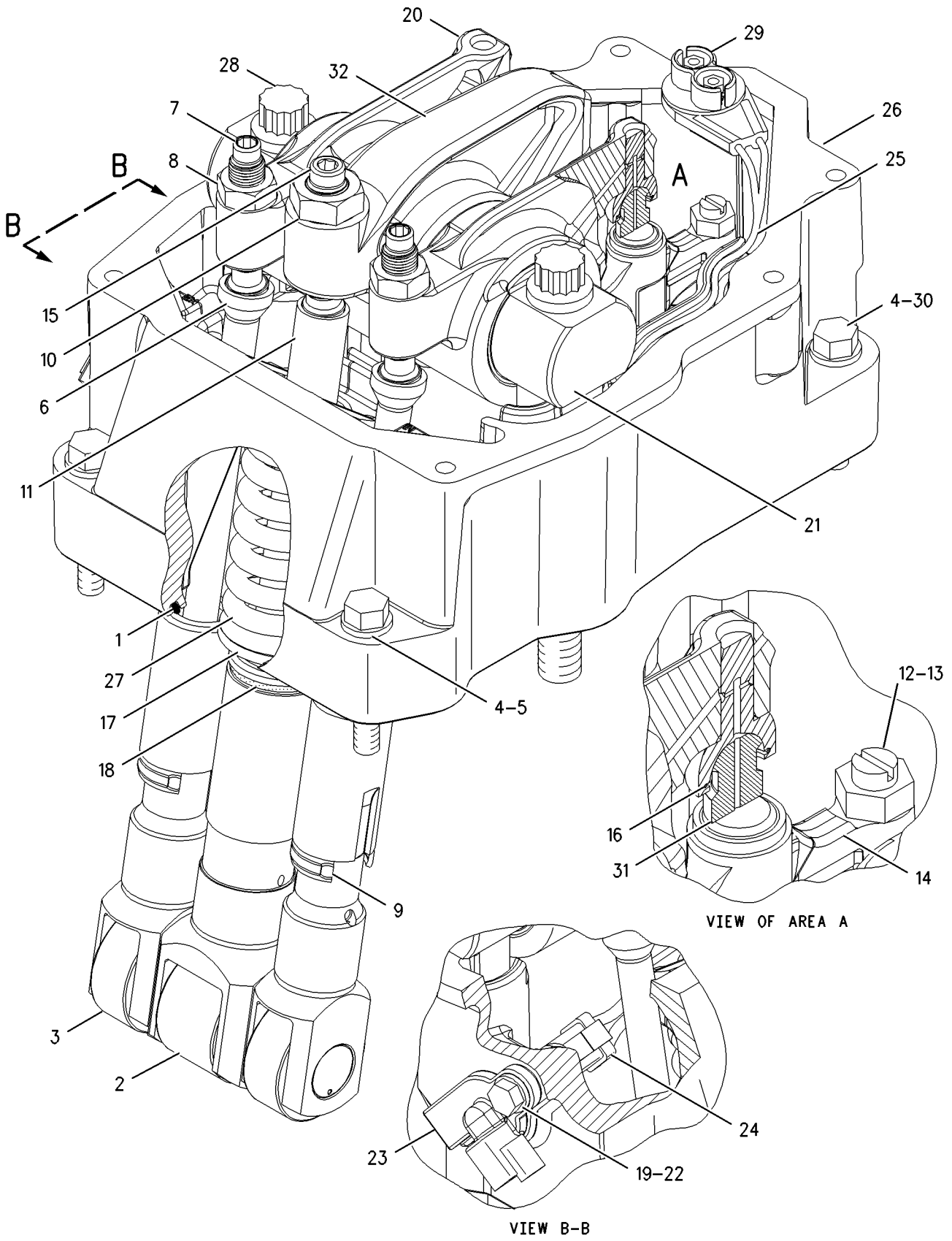

GRAPHIC #1 **<END>** g00944866

BASIC ENGINE

224-9869 VALVE MECHANISM GP

S/N: 2GR4583-UP

PART OF 155-5556 ENGINE AR

SMCS-1102, 1112, 1121, 1123, 1208, 1209 **i02005418**

NOTE	REF NO	GRAPHIC REF	PART NUMBER	QTY	PART NAME 1 2 3 4 5 6 (PRODUCT LEVEL)	SEE PAGE
	1	1	**117-9315**	1	SEAL	
R	2	1	**197-7004**	1	LIFTER AS-INJECTOR	
	3	1	**230-2619**	1	SCREW-ADJUSTING	
	4	1	**5M-2894**	4	WASHER-HARD (10.2X18.5X2.5MM THK)	
	5	1	**0L-2070**	2	BOLT (3/8-16X2.25 IN)	
	6	1	**100-3880**	2	PUSHROD-VALVE	
	7	1	**200-2003**	2	SCREW-ADJUSTING (1/2-20-3B THD X 2.42IN)	
	8	1	**3J-9196**	2	NUT-JAM (1/2-20 THD)	
	9	1	**7N-4782**	2	SPRING-LIFTER GUIDE	
	10	1	**9S-1354**	1	NUT (5/8-18 THD)	
	11	1	**100-3879**	1	PUSHROD	
CR	12	1	**230-2621**	2	ROCKER ARM AS	
					(EACH INCLUDES)	
		1	**8N-7197**		SOCKET-ARM	
		1	**230-2620**		BEARING-SLEEVE	
CR	13	1	**230-2622**	1	ROCKER ARM AS	
		1	**8N-7197**		SOCKET-ARM	
		1	**230-2620**		BEARING-SLEEVE	
C	14	1	**230-2633**	1	SHAFT AS	
	15	1	**230-3152**	1	BRIDGE (EXHAUST)	
	16	1	**9F-7707**	3	RING-RETAINING	
	17	1	**100-3877**	1	RETAINER-SPRING	
	18	1	**5P-7530**	1	SEAL-O-RING	
	19	1	**5P-0537**	1	WASHER-HARD (7.2X14.5X2MM THK)	
	20	1	**230-3153**	1	BRIDGE (INLET)	
R	21	1	**230-7875**	2	LIFTER AS-VALVE	
	22	1	**0S-1615**	1	BOLT (1/4-20X0.75 IN)	
	23	1	**9X-0352**	1	RECEPTACLE AS	
	24	1	**6J-2245**	1	SEAL-O-RING	
	25	1	**132-6469**	1	HARNESS AS-WIRING (VALVE MECHANISM)	
Y	26	1	*120-7413*	1	BASE GP-VALVE COVER	7
	27	1	**100-3878**	1	SPRING-INJECTOR	
	28	1	**8D-7942**	2	BOLT-12 POINT HEAD (5/8-11X6.5 IN)	
	29	1	**7E-6508**	1	CAP AS	
	30	1	**0S-1590**	2	BOLT (3/8-16X2 IN)	
	31	1	**154-6389**	3	BUTTON	

C-CHANGE FROM PREVIOUS TYPE
R-REMFG PART MAY BE AVAILABLE
Y-SEPARATE ILLUSTRATION

224-9869 **VALVE MECHANISM GP** ***(contd.)*** **i02005418**

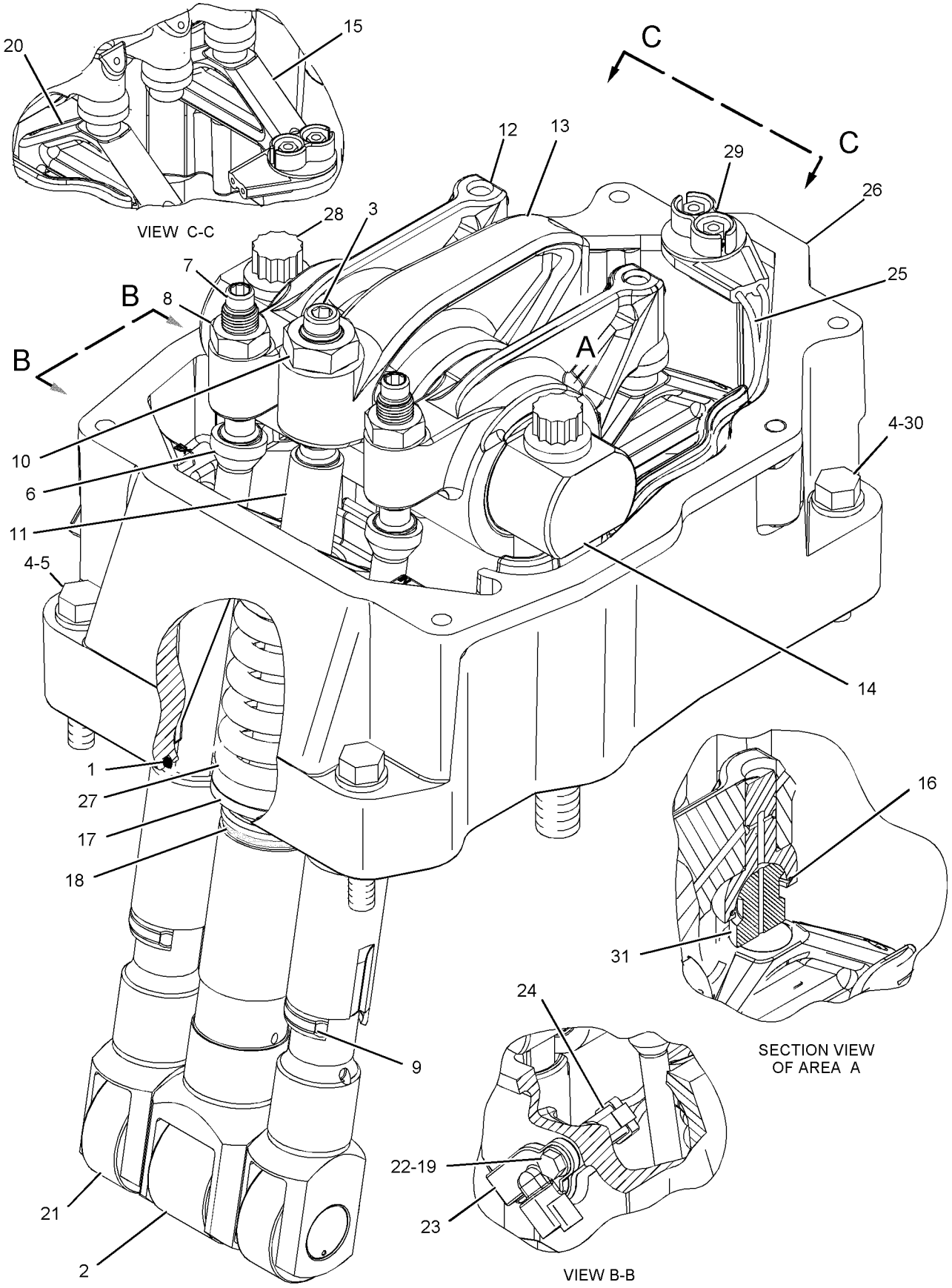

GRAPHIC #1 **<END>** g01023668

1W-8160 YOKE GP

S/N: 7PZ1-UP
ACCESSORY DRIVE
PART OF 155-5557 INSTALLATION AR-ENGINE

SMCS-1207, 3108 **i00681624**

NOTE	REF NO	GRAPHIC REF	PART NUMBER	QTY	PART NAME 1 2 3 4 5 6 (PRODUCT LEVEL)	SEE PAGE
	1	1	**8N-7574**	1	COVER-REAR GEAR	
	2	1	**7G-7014**	1	FLANGE-STUB	
	3	1	**8T-2230**	1	SEAL-LIP	
	4	1	**6V-8188**	4	NUT (1/2-13 THD)	
	5	1	**6V-8260**	1	SEAL-O-RING (123.42MM ID)	

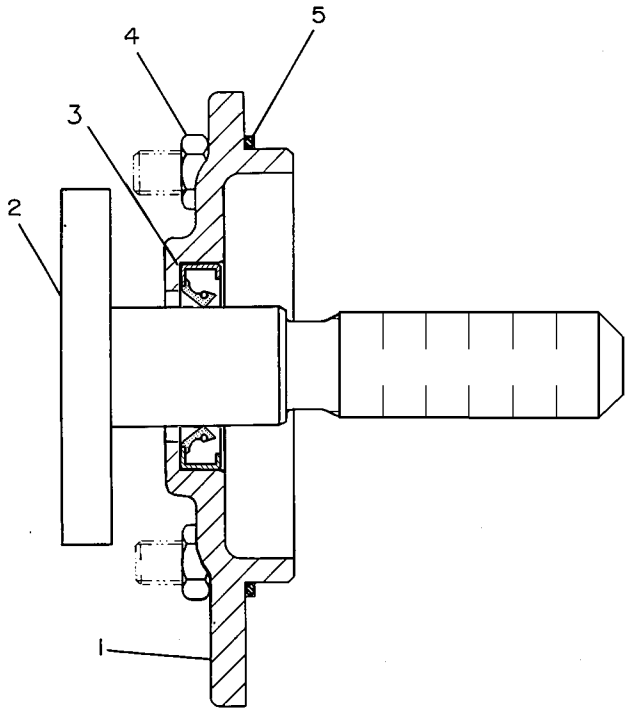

GRAPHIC #1 **<END>** g00219283

7E-9081 BREATHER GP–CRANKCASE

S/N: 2GR1180-UP

PART OF 155-5556 ENGINE AR

SMCS-1317 **i01726177**

NOTE	REF NO	GRAPHIC REF	PART NUMBER	QTY	PART NAME 1 2 3 4 5 6 (PRODUCT LEVEL)	SEE PAGE
	1	1	**101-4199**	1	COVER AS	
	2	1	**4W-3027**	1	BREATHER AS (ENGINE)	
	3	1	**5P-0597**	1	CLAMP-HOSE	
	4	1	**4W-3034**	1	CLAMP	
	5	1	**208-2364**	1	SEAL	
	6	1	**033-6031**	1	SEAL-O-RING	
	7	1	**1A-9579**	4	BOLT (5/16-18X1.5 IN)	
	8	1	**9M-1974**	4	WASHER-HARD (8.8X16X2MM THK)	

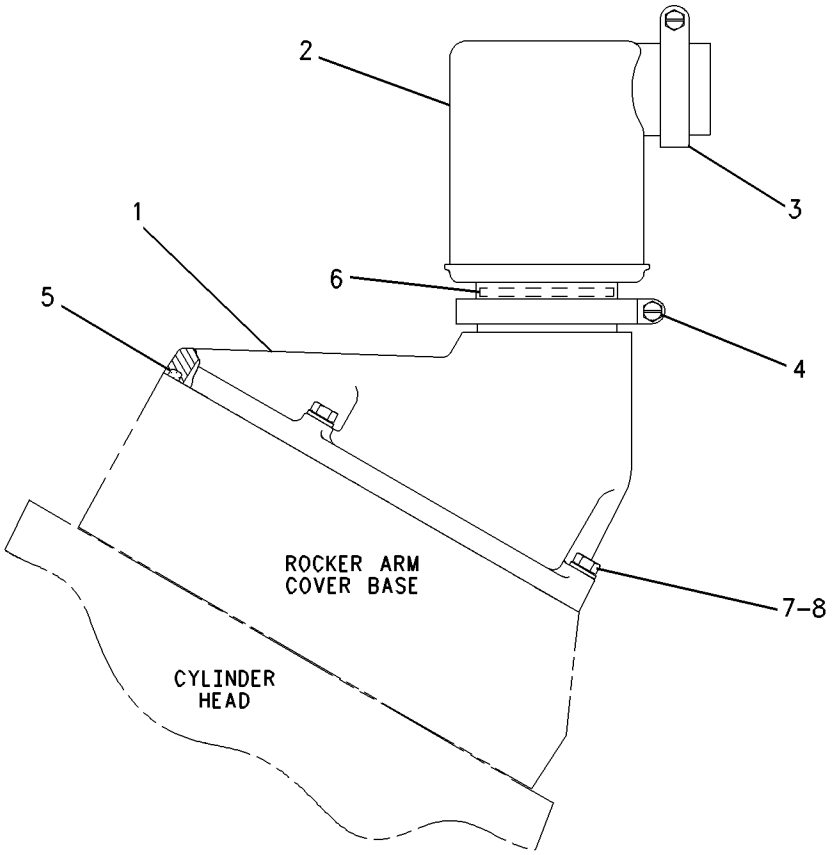

GRAPHIC #1 **<END>** g00910023

LUBRICATION SYSTEM

1W-0419 FILLER GP-ENGINE OIL

S/N: 2GR1180-UP

PART OF 155-5556 ENGINE AR

SMCS-1316 **i02029681**

NOTE	REF NO	GRAPHIC REF	PART NUMBER	QTY	PART NAME 1 2 3 4 5 6 (PRODUCT LEVEL)	SEE PAGE
	1	1	**0T-0055**	1	BOLT (3/8-16X4.25-IN)	
C	2	1	**2W-0752**	1	GASKET	
	3	1	**5M-2894**	2	WASHER-HARD (10.2X18.5X2.5-MM THK)	
	4	1	**5P-8502**	1	PADLOCK GP (ENGINE OIL FILL TUBE)	
		1	**5P-8500**	1	KEY	
		1	**8Y-6364**	1	SLEEVE	
C	5	1	**6N-2206**	1	CAP AS-OIL FILLER (ENGINE)	
C	6	1	**7C-4060**	1	TUBE AS	
C	7	1	**7C-5694**	1	HASP	
C	8	1	**039-6937**	1	BOLT-SHOULDER (1/4-20X1-IN)	
	9	1	**0S-1588**	2	BOLT (3/8-16X1.25-IN)	
C	10	1	**2D-6235**	1	LOCKNUT (1/4-20-THD)	

C-CHANGE FROM PREVIOUS TYPE

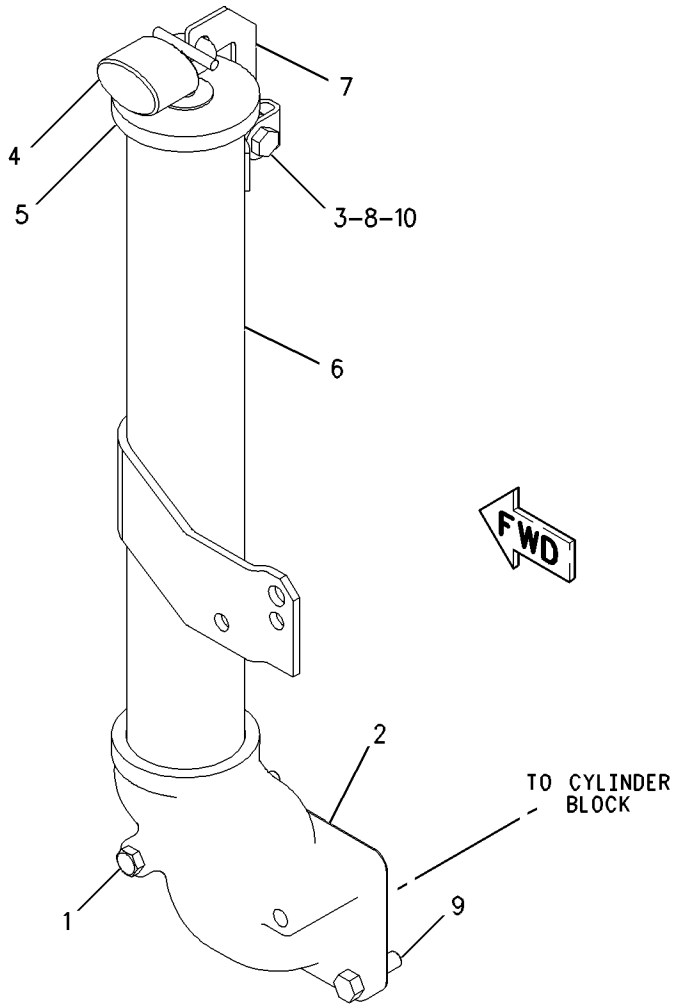

GRAPHIC #1 **<END>** g00767559

LUBRICATION SYSTEM

1W-0714 FILTER GP-ENGINE OIL

S/N: 2GR1180-2632

PART OF 155-5556 ENGINE AR

SMCS-1306, 1308, 1318 **i02001604**

NOTE	REF NO	GRAPHIC REF	PART NUMBER	QTY	PART NAME 1 2 3 4 5 6 (PRODUCT LEVEL)	SEE PAGE
B	1	1	**0S-1571**	3	BOLT (3/8-16X1.75 IN)	
B	2	1	**9S-8752**	3	NUT-FULL (3/8-16 THD)	
	3	1	**1P-1367**	2	PLUNGER	
	4	1	**1S-7106**	2	COVER	
	5	1	**1W-2750**	1	ADAPTER-BASE	
	6	1	**2P-4005**	2	FILTER AS-ENGINE OIL	
	7	1	**7F-9090**	4	SCREW-DRIVE (NO 8X3/8 IN)	
	8	1	**7G-6713**	2	SPRING-MAIN	
	9	1	**8C-3445**	1	CAP-DUST	
	10	1	**8C-3446**	1	VALVE AS-FLUID SAMPLING	
	11	1	**8N-2001**	2	BASE AS-OIL FILTER	
					(EACH INCLUDES)	
		1	**2P-4304**	1	STUD-TAPERLOCK	
	12	1	**9S-9271**	1	COUPLER-MALE	
	13	1	**9S-9272**	1	CAP AS (ENGINE OIL)	
	14	1	**9Y-8387**	2	GASKET	
	15	1	**9Y-8388**	3	GASKET	
	16	1	**111-6119**	2	SHIELD	
	17	1	**141-7110**	1	PLATE-DRAIN	
	18	1	**0S-1571**	3	BOLT (3/8-16X1.75 IN)	
	19	1	**0S-1591**	13	BOLT (3/8-16X1.5 IN)	
	20	1	**0S-1594**	6	BOLT (3/8-16X25.4 IN)	
	21	1	**0S-1608**	1	BOLT (3/8-16X3.75 IN)	
	22	1	**1A-5964**	1	BOLT (3/8-16X4.5 IN)	
	23	1	**2B-2695**	4	BOLT (5/16-18X0.875 IN)	
	24	1	**2M-9780**	1	SEAL-O-RING	
	25	1	**3J-7354**	1	SEAL-O-RING	
	26	1	**6V-5048**	1	SEAL-O-RING	
	27	1	**9M-1974**	4	WASHER-HARD (8.8X16X2MM THK)	
	28	1	**9S-4182**	1	PLUG	
	29	1	**9S-4190**	1	PLUG	
	30	1	**9S-8752**	18	NUT-FULL (3/8-16 THD)	

B-USE AS REQUIRED

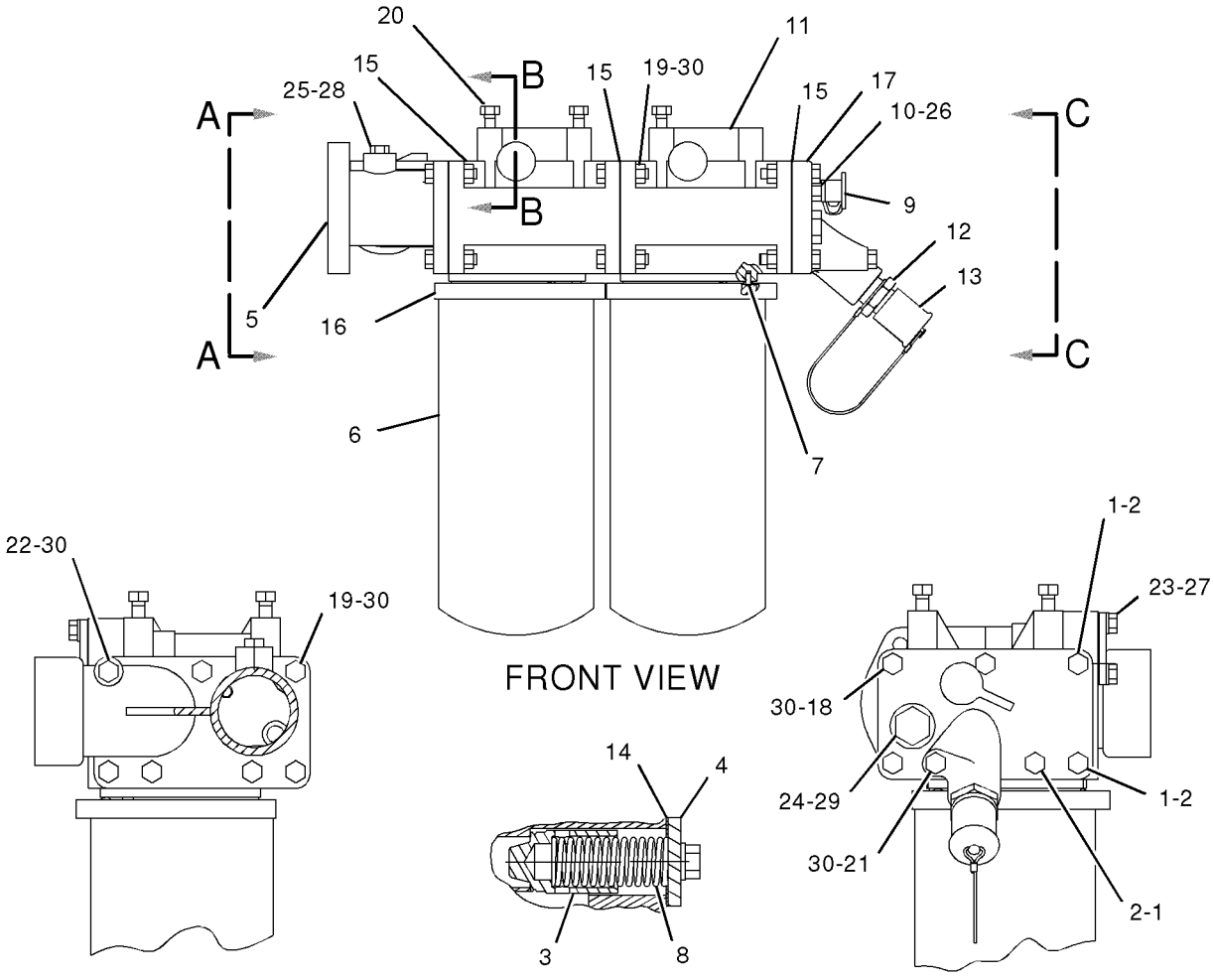

GRAPHIC #1

<END>

g01038086

LUBRICATION SYSTEM

1W-0714 FILTER GP-ENGINE OIL

S/N: 2GR2633-UP

PART OF 155-5556 ENGINE AR

SMCS-1306, 1308, 1318 **i02029683**

NOTE	REF NO	GRAPHIC REF	PART NUMBER	QTY	PART NAME 1 2 3 4 5 6 (PRODUCT LEVEL)	SEE PAGE
B	1	1	**0S-1571**	3	BOLT (3/8-16X1.75-IN)	
B	2	1	**9S-8752**	3	NUT-FULL (3/8-16-THD)	
	3	1	**1P-1367**	2	PLUNGER	
	4	1	**1S-7106**	2	COVER	
	5	1	**1W-2750**	1	ADAPTER-BASE	
	6	1	**2P-4005**	2	FILTER AS-ENGINE OIL	
	7	1	**7F-9090**	4	SCREW-DRIVE (NO 8X3/8-IN)	
	8	1	**7G-6713**	2	SPRING-MAIN	
	9	1	**8C-3445**	1	CAP-DUST	
	10	1	**8C-3446**	1	VALVE AS-FLUID SAMPLING	
	11	1	**9S-9271**	1	COUPLER-MALE	
	12	1	**9S-9272**	1	CAP AS (ENGINE OIL)	
	13	1	**9Y-8387**	2	GASKET	
C	14	1	**9Y-8388**	2	GASKET	
	15	1	**111-6119**	2	SHIELD	
	16	1	**141-7110**	1	PLATE-DRAIN	
C	17	1	**151-9270**	1	BASE AS-OIL FILTER	
		1	**2P-4304**	2	STUD-TAPERLOCK	
	18	1	**0S-1571**	3	BOLT (3/8-16X1.75-IN)	
C	19	1	**0S-1591**	6	BOLT (3/8-16X1.5-IN)	
	20	1	**0S-1594**	6	BOLT (3/8-16X25.4-IN)	
	21	1	**0S-1608**	1	BOLT (3/8-16X3.75-IN)	
	22	1	**1A-5964**	1	BOLT (3/8-16X4.5-IN)	
	23	1	**2B-2695**	4	BOLT (5/16-18X0.875-IN)	
	24	1	**2M-9780**	1	SEAL-O-RING	
	25	1	**3J-7354**	1	SEAL-O-RING	
	26	1	**6V-5048**	1	SEAL-O-RING	
	27	1	**9M-1974**	4	WASHER-HARD (8.8X16X2-MM THK)	
	28	1	**9S-4182**	1	PLUG	
	29	1	**9S-4190**	1	PLUG	
C	30	1	**9S-8752**	11	NUT-FULL (3/8-16-THD)	

B-USE AS REQUIRED
C-CHANGE FROM PREVIOUS TYPE

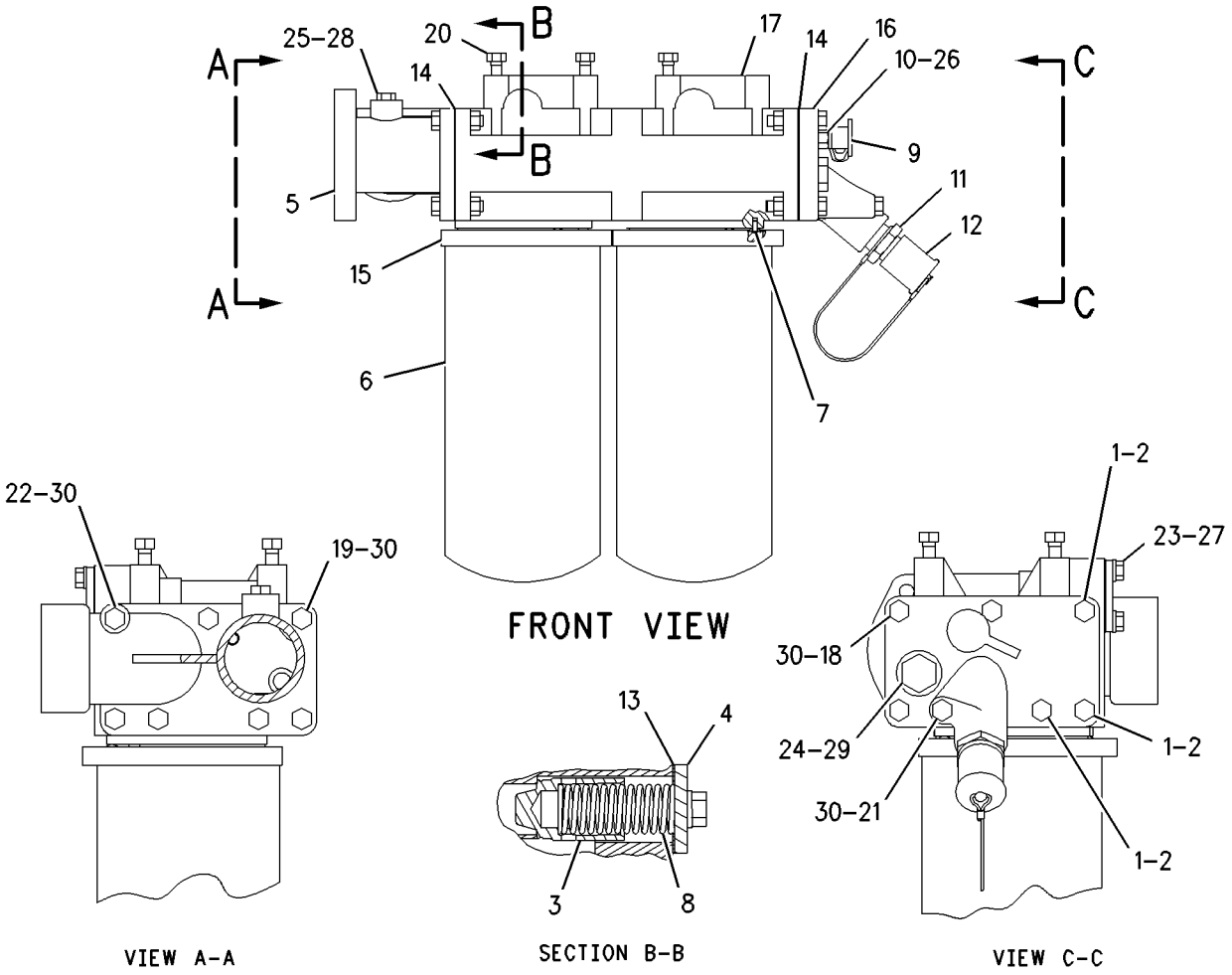

GRAPHIC #1 **<END>** g00732633

LUBRICATION SYSTEM

129-9478 FUMES DISPOSAL GP

S/N: 7PZ1-UP

PART OF 155-5557 INSTALLATION AR-ENGINE

SMCS-1317 **i01495107**

NOTE	REF NO	GRAPHIC REF	PART NUMBER	QTY	PART NAME 1 2 3 4 5 6 (PRODUCT LEVEL)	SEE PAGE
	1	1	**5P-0597**	2	CLAMP-HOSE	
	2	1	**8L-8137**	2	CLIP	
	3	1	**9Y-0677**	1	HOSE-DISPOSAL	
	4	1	**9Y-0876**	1	TUBE	
	5	1	**111-7093**	2	CLIP	
	6	1	**129-9481**	1	TUBE	
	7	1	**137-8229**	1	HOSE	
	8	1	**5S-7379**	4	BOLT (3/8-16X0.875 IN)	
	9	1	**8T-4896**	4	WASHER-HARD (10.2X18.5X2.5MM THK)	

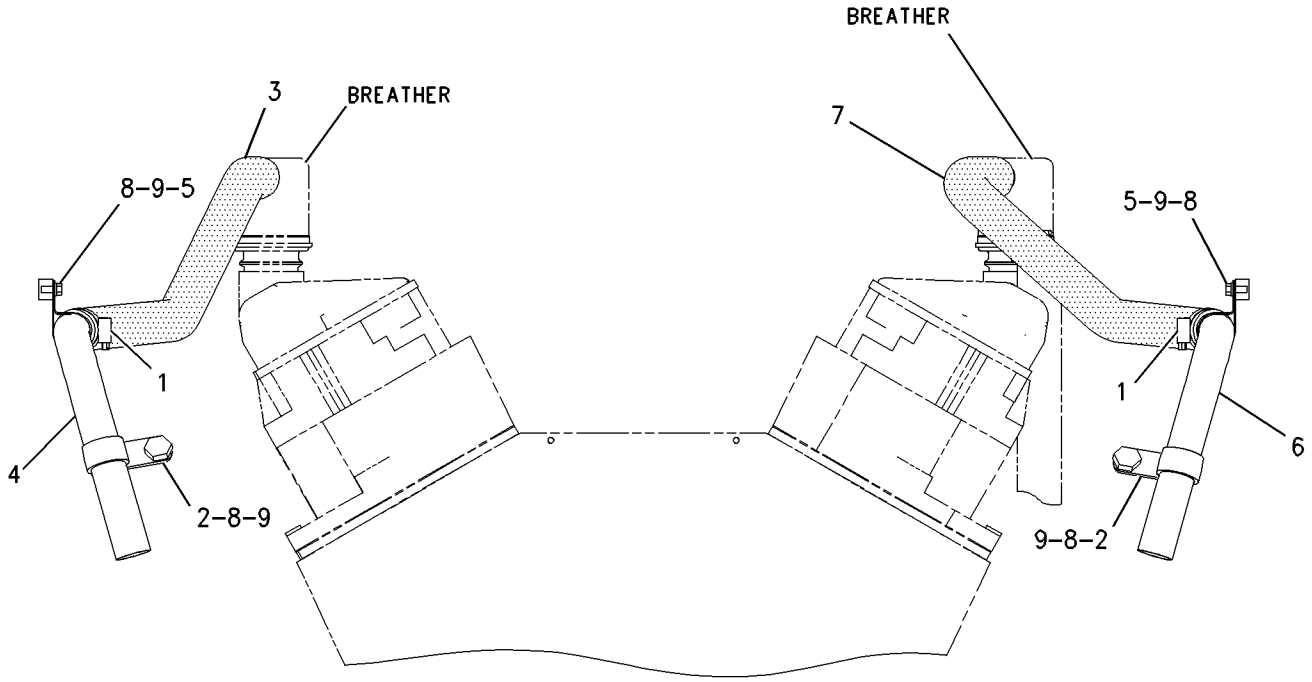

FRONT VIEW

GRAPHIC #1 **<END>** g00793597

1W-0417 GAUGE GP-OIL LEVEL (DIPSTICK)

S/N: 2GR1180-UP
PART OF 155-5556 ENGINE AR

SMCS-1326 **i01692244**

NOTE	REF NO	GRAPHIC REF	PART NUMBER	QTY	PART NAME 1 2 3 4 5 6 (PRODUCT LEVEL)	SEE PAGE
	1	1	**110-2741**	1	GAUGE AS-OIL LEVEL (DIPSTICK)	
C	2	1	**7E-0595**	1	GUIDE AS	
	3	1	**0S-1588**	2	BOLT (3/8-16X1.25 IN)	
C	4	1	**5M-2894**	5	WASHER-HARD (10.2X18.5X2.5MM THK)	
	5	1	**4S-7907**	1	GASKET	
	6	1	**4P-0692**	4	CLAMP AS	
	7	1	**5B-2638**	1	BOLT (3/8-16X5.25 IN)	
	8	1	**0L-1143**	1	BOLT (3/8-16X2.50 IN)	
	9	1	**5P-8502**	1	PADLOCK GP	
A		1	**5P-8500**	1	KEY	
A		1	**8Y-6364**	1	SLEEVE	
	10	1	**9S-8752**	1	NUT-FULL (3/8-16 THD)	

A-NOT PART OF THIS GROUP
C-CHANGE FROM PREVIOUS TYPE

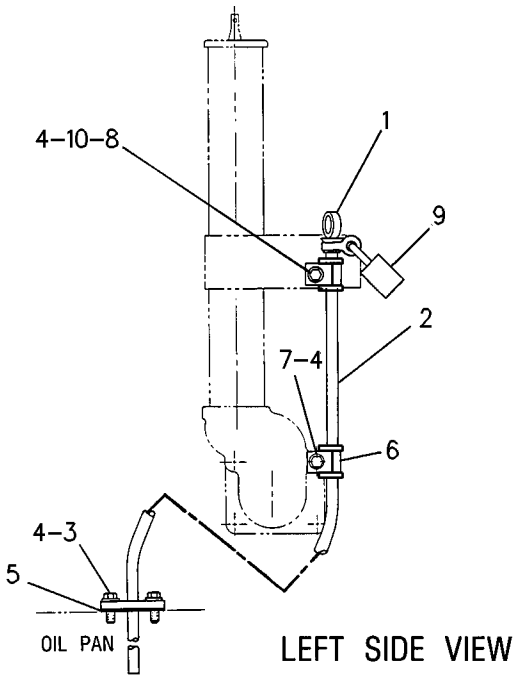

LEFT SIDE VIEW

GRAPHIC #1 **<END>** g00230531

LUBRICATION SYSTEM

1W-0717 LINES GP-ENGINE OIL

S/N: 2GR1180-UP

PART OF 155-5556 ENGINE AR

SMCS-1307 **i02029684**

NOTE	REF NO	GRAPHIC REF	PART NUMBER	QTY	PART NAME 1 2 3 4 5 6 (PRODUCT LEVEL)	SEE PAGE
	1	1	**9S-8752**	4	NUT-FULL (3/8-16-THD)	
B	2	1	**0S-1594**	9	BOLT (3/8-16X25.4-IN)	
	3	1	**7W-1856**	1	SUPPORT-TUBE	
	4	1	**7W-4379**	1	TUBE AS	
	5	1	**1A-1460**	4	BOLT (1/2-13X2-IN)	
		1	**5P-8245**	4	WASHER-HARD (13.5X25.5X3-MM THK)	
	6	1	**1P-3709**	1	SEAL-RECTANGULAR	
	7	1	**4P-2535**	1	ELBOW AS	
	8	1	**1P-5764**	2	FLANGE-HALF	
	9	1	**061-9456**	4	SEAL-O-RING	
	10	1	**0S-1588**	6	BOLT (3/8-16X1.25-IN)	
	11	1	**8N-2929**	2	COVER	
	12	1	**7D-6954**	1	CLAMP	
	13	1	**0S-1571**	2	BOLT (3/8-16X1.75-IN)	
B	14	1	**8T-6762**	1	PLUG-PIPE	
C	15	1	**5P-1404**	2	ADAPTER-O-RING	
C		1	**6V-4589**	2	SEAL-O-RING	
C	16	1	**2W-7226**	1	ADAPTER (TURBO OIL SUPPLY)	
	17	1	**109-2332**	1	SEAL-O-RING	
	18	1	**0L-1143**	4	BOLT (3/8-16X2.50-IN)	
	19	1,2	**5M-2894**	18	WASHER-HARD (10.2X18.5X2.5-MM THK)	
	20	1	**111-3820**	1	RING-RETAINING	
	21	1	**7N-5416**	1	ELBOW-OUTLET (OIL PUMP)	
	22	1	**6V-3908**	1	SEAL-O-RING	
	23	1	**3P-0655**	2	SEAL-O-RING	
	24	1	**4W-5597**	1	COVER	
	25	1	**1A-2029**	4	BOLT (3/8-16X1.125-IN)	
	26	1	**0S-1591**	2	BOLT (3/8-16X1.5-IN)	
	27	1	**4W-5596**	1	COVER	
	28	1	**5F-4899**	1	BOLT (3/8-16X5.5-IN)	
	29	1	**7C-9217**	1	ELBOW	
	30	1	**9S-4182**	1	PLUG	
		1	**6V-5048**	1	SEAL-O-RING	
	31	1	**8M-9024**	2	WASHER-HARD (10.2X22.5X5-MM THK)	
	32	1	**100-8075**	2	CLAMP AS	
	33	1	**9S-4191**	2	PLUG	
	34	1	**3J-1907**	2	SEAL-O-RING	
	35	2	**3P-0655**	1	SEAL-O-RING	
	36	2	**8T-6765**	1	PLUG-PIPE	
	37	2	**7N-5413**	1	ELBOW (OIL COOLER INLET)	
	38	2	**0S-1594**	4	BOLT (3/8-16X25.4-IN)	
	39	2	**4B-3140**	1	COVER	
	40	2	**5P-5846**	1	SEAL-O-RING	
	41	2	**1N-3333**	1	TUBE	
	42	2	**109-2332**	4	SEAL-O-RING	
	43	2	**1N-3873**	1	TUBE	
	44	2	**2W-1969**	1	VALVE-BYPASS	
	45	2	**2W-1635**	1	SPRING	
	46	2	**5P-4892**	1	SEAL-O-RING	
	47	2	**5B-2638**	2	BOLT (3/8-16X5.25-IN)	
	48	2	**2W-1053**	1	PLUG	
		2	**5P-7817**	1	SEAL-O-RING	
B	49	2	**1A-5964**	1	BOLT (3/8-16X4.5-IN)	
	50	2	**7X-7730**	1	PLUG-PIPE	
B	51	2	**6B-5072**	1	BUSHING-TERMINAL	
	52	2	**6B-9202**	1	SPRING	

1W-0717 LINES GP-ENGINE OIL *(contd.)* i02029684

NOTE	REF NO	GRAPHIC REF	PART NUMBER	QTY	PART NAME 1 2 3 4 5 6 (PRODUCT LEVEL)	SEE PAGE
	53	2	**7N-7697**	2	PLUNGER AS	
					(EACH INCLUDES)	
		2	**7M-1808**	1	DOWEL	
	54	2	**5M-2894**	2	WASHER-HARD (10.2X18.5X2.5-MM THK)	
B	55	2	**6V-3966**	1	FITTING AS	
B	56	2	**6V-0852**	1	CAP-DUST	
C	57	2	**3B-1915**	2	BOLT (3/8-16X1.75-IN)	
BC	58	1	**6V-0852**	1	CAP-DUST	
BC	59	1	**6V-3966**	1	FITTING AS	
	60	2	**1A-5964**	1	BOLT (3/8-16X4.5-IN)	

B-USE AS REQUIRED
C-CHANGE FROM PREVIOUS TYPE

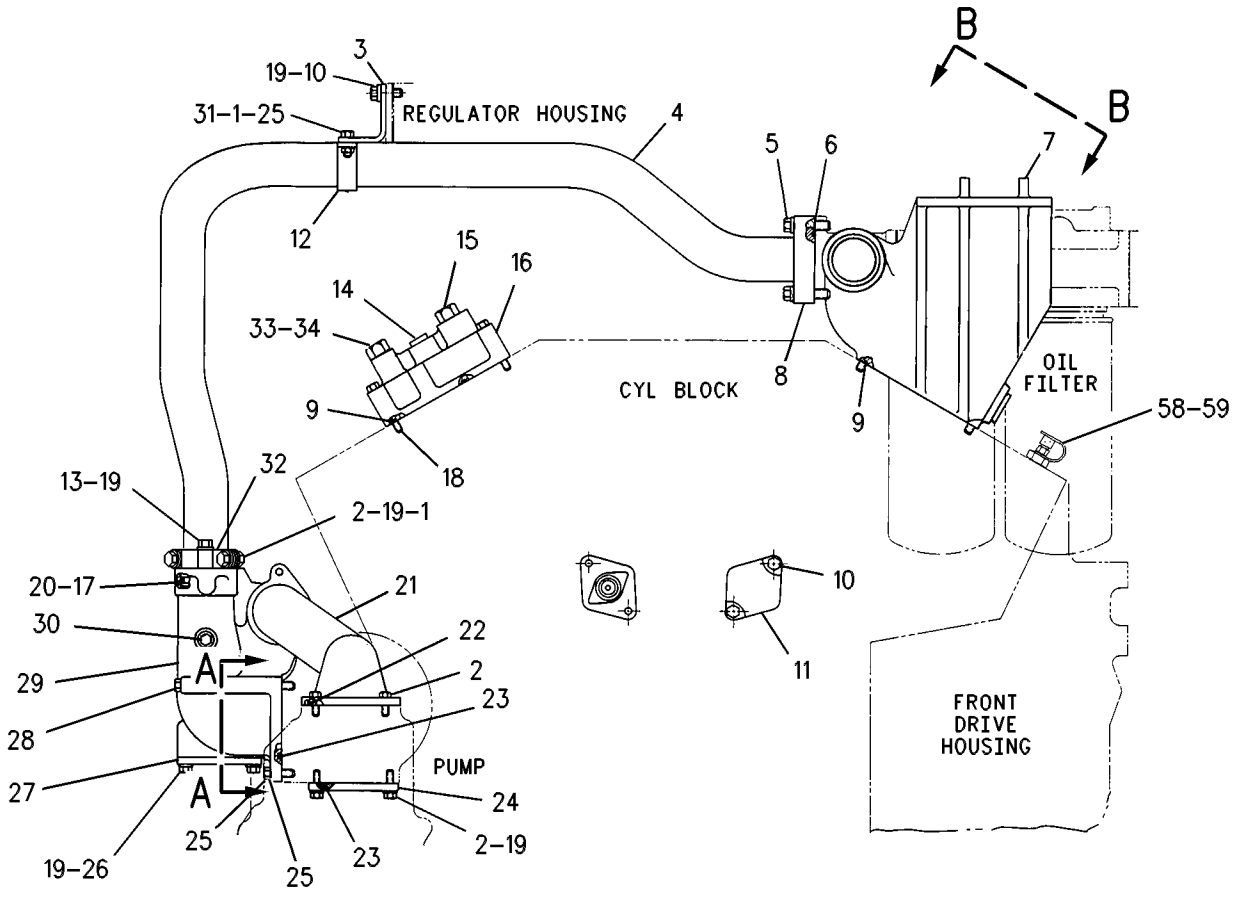

FRONT VIEW

REFER TO ALL ILLUSTRATIONS OF THIS GROUP FOR AUXILIARY VIEWS

GRAPHIC #1

g00534459

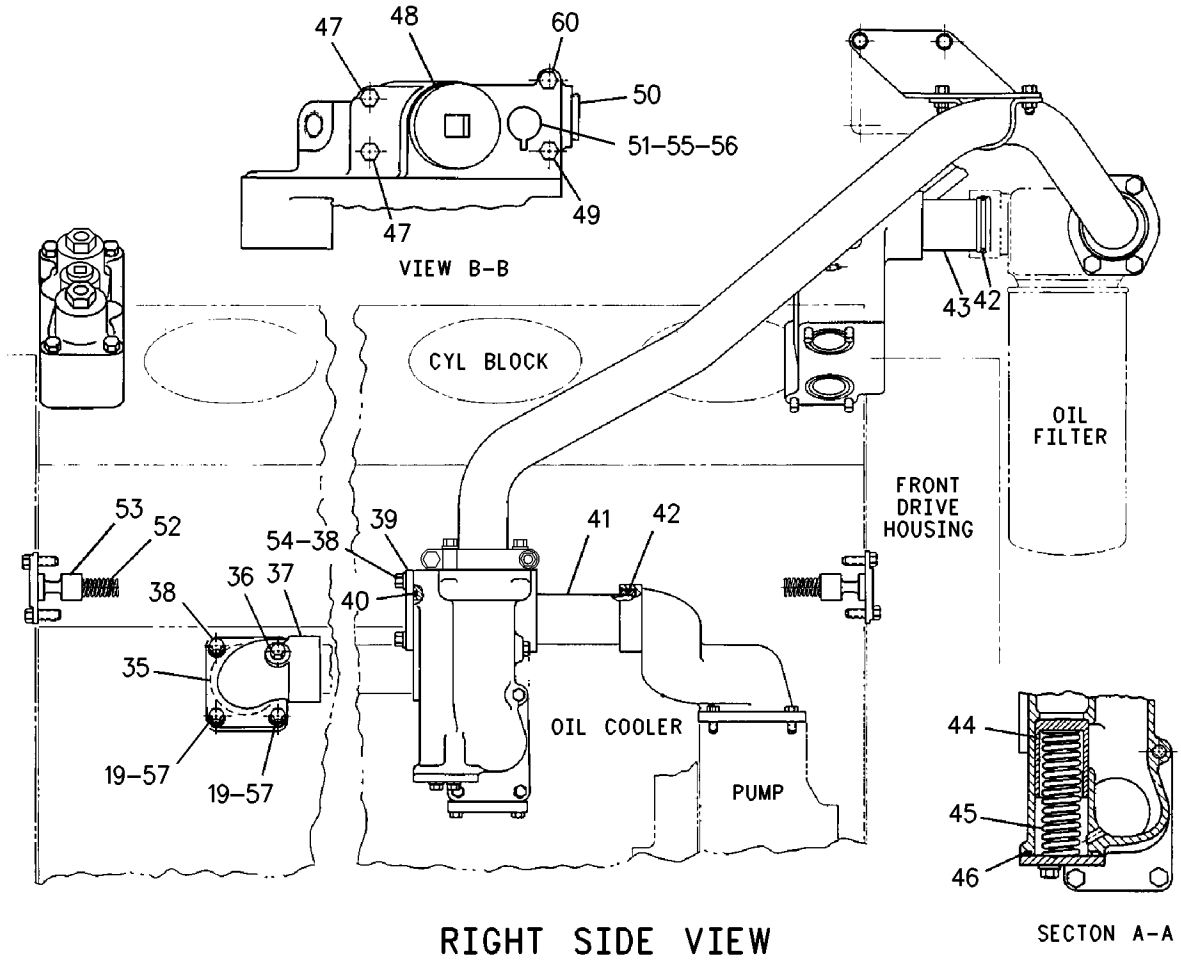

GRAPHIC #2 **<END>** g00918068

LUBRICATION SYSTEM

109-8082 LINES GP-TURBOCHARGER OIL

S/N: 2GR1180-4208

PART OF 155-5556 ENGINE AR

SMCS-1052, 1307 **i01990912**

NOTE	REF NO	GRAPHIC REF	PART NUMBER	QTY	PART NAME 1 2 3 4 5 6 (PRODUCT LEVEL)	SEE PAGE
	1	1	**7N-5094**	2	ELBOW-DRAIN	
	2	1	**5P-9890**	4	SEAL-O-RING	
	3	1	**7C-4171**	1	TUBE	
	4	1	**7E-5335**	2	BRACKET	
	5	1	**6K-5535**	2	CLIP (SLOT)	
	6	1	**6K-5536**	2	CLIP (TAB)	
	7	1	**0S-1594**	1	BOLT (3/8-16X1 IN)	
	8	1	**9L-9132**	4	WASHER (10.2X25.5X2.5MM THK)	
	9	1	**9S-8752**	2	NUT-FULL (3/8-16 THD)	
	10	1	**9Y-5814**	2	ELBOW-DRAIN	
	11	1	**0S-1608**	2	BOLT (3/8-16X3.75 IN)	
	12	1	**7N-7559**	2	GASKET	
	13	1	**2P-7636**	2	CONNECTOR	
	14	1	**0T-0055**	2	BOLT (3/8-16X4.25 IN)	
	15	1	**5M-2894**	6	WASHER-HARD (10.2X18.5X2.5MM THK)	
	16	1	**4P-4460**	2	GASKET	
	17	1	**8L-2786**	2	SEAL-O-RING	
	18	1	**3B-1915**	2	BOLT (3/8-16X1.75 IN)	
	19	1	**8S-9191**	2	BOLT (3/8-16X4 IN)	
	20	1	**1W-7990**	1	TUBE	
	21	1	**0S-1588**	8	BOLT (3/8-16X1.25 IN)	
	22	1	**2W-0752**	2	GASKET	
	23	1	**031-4136**	1	TEE-FLARED	
	24	1	**6V-4589**	1	SEAL-O-RING	
	25	1	**4P-0692**	4	CLAMP AS	
					(EACH INCLUDES)	
		1	**108-1434**	1	GROMMET	
	26	1	**0L-2070**	2	BOLT (3/8-16X2.25 IN)	
	27	1	**9Y-0047**	8	CLAMP	
		1	**100-3237**	8	GROMMET	
	28	1	**2B-2694**	4	BOLT (5/16-18X2 IN)	
	29	1	**9N-0869**	4	WASHER-HARD (8.8X25.5X2.0MM THK)	
	30	1	**2V-4387**	1	SPACER (.406X1X.91 IN THK)	
	31	1	**0S-1590**	1	BOLT (3/8-16X2 IN)	
	32	1	**184-3229**	2	HOSE AS	
	33	1	**5P-4900**	2	ELBOW-FLARED	
	34	1	**6I-0804**	1	ADAPTER-TURBOCHARGER OIL	
	35	1	**6I-0805**	1	ADAPTER-TURBOCHARGER OIL	
	36	1	**6I-0810**	1	TUBE AS-OIL	
	37	1	**6I-0809**	1	TUBE AS-OIL	

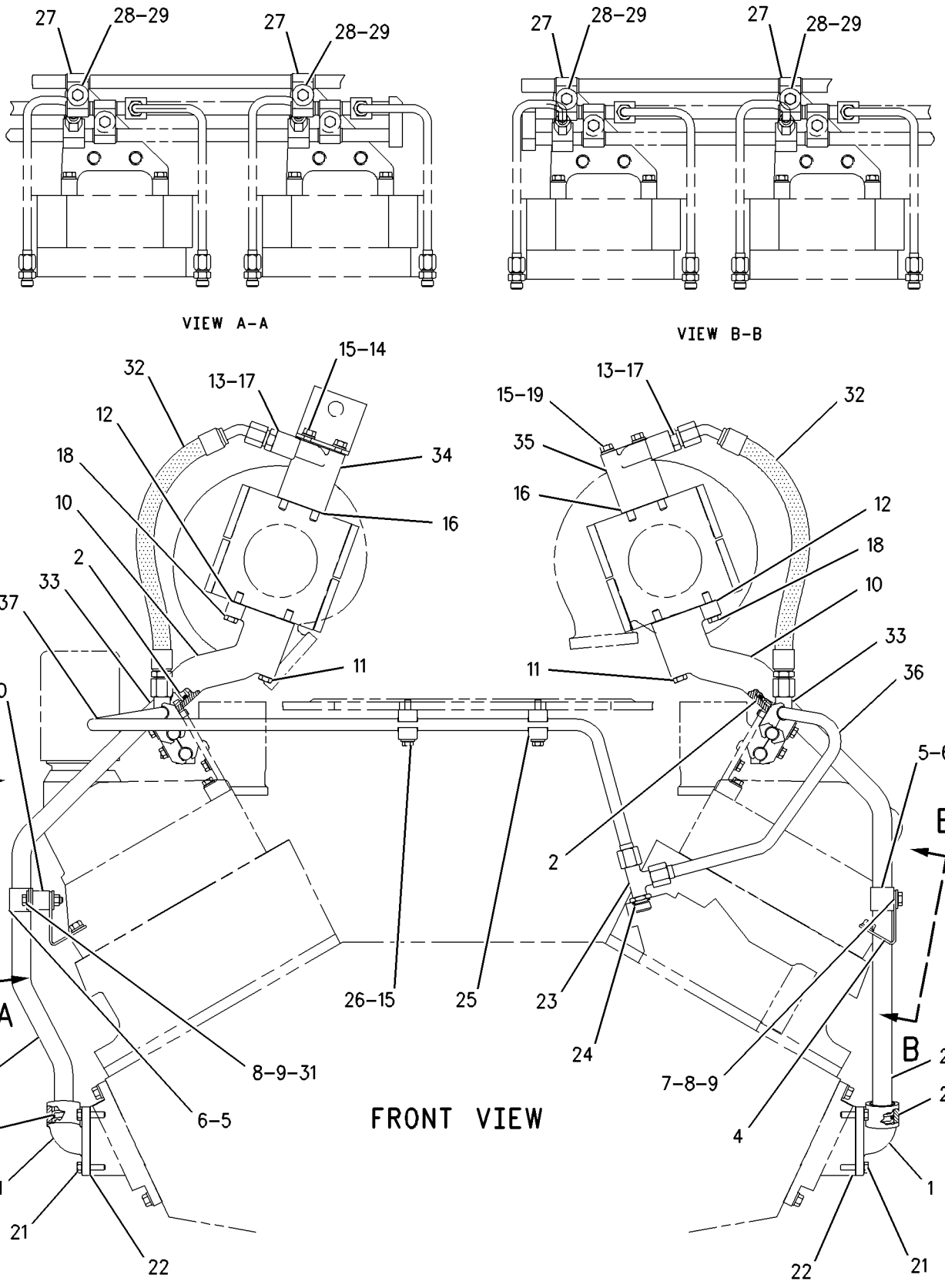

GRAPHIC #1 **<END>** g00756859

LUBRICATION SYSTEM

109-8082 LINES GP-TURBOCHARGER OIL

S/N: 2GR4209-UP

PART OF 155-5556 ENGINE AR

SMCS-1052, 1307 **i01820084**

NOTE	REF NO	GRAPHIC REF	PART NUMBER	QTY	PART NAME 1 2 3 4 5 6 (PRODUCT LEVEL)	SEE PAGE
	1	1	**1W-7990**	1	TUBE	
	2	1	**2V-4387**	1	SPACER (.406X1X.91 IN THK)	
	3	1	**2W-0752**	2	GASKET	
	4	1	**4P-0692**	4	CLAMP AS	
					(EACH INCLUDES)	
		1	**108-1434**	1	GROMMET	
	5	1	**6I-0804**	1	ADAPTER-TURBOCHARGER OIL	
	6	1	**6I-0805**	1	ADAPTER-TURBOCHARGER OIL	
	7	1	**6I-0809**	1	TUBE AS-OIL	
	8	1	**6I-0810**	1	TUBE AS-OIL	
	9	1	**7C-4171**	1	TUBE	
	10	1	**7E-5335**	2	BRACKET	
	11	1	**7N-5094**	2	ELBOW-DRAIN	
	12	1	**7N-7559**	2	GASKET	
	13	1	**9Y-0047**	8	CLAMP	
	14	1	**9Y-5814**	2	ELBOW-DRAIN	
	15	1	**184-3229**	2	HOSE AS	
	16	1	**031-4136**	1	TEE-FLARED	
C	17	1	**0L-1143**	2	BOLT (3/8-16X2.50 IN)	
	18	1	**0S-1588**	8	BOLT (3/8-16X1.25 IN)	
	19	1	**0S-1590**	1	BOLT (3/8-16X2 IN)	
	20	1	**0S-1594**	1	BOLT (3/8-16X1 IN)	
	21	1	**0S-1608**	2	BOLT (3/8-16X3.75 IN)	
	22	1	**0T-0055**	2	BOLT (3/8-16X4.25 IN)	
	23	1	**100-3237**	8	GROMMET	
	24	1	**2B-2694**	4	BOLT (5/16-18X2 IN)	
	25	1	**2P-7636**	2	CONNECTOR	
	26	1	**3B-1915**	2	BOLT (3/8-16X1.37 IN)	
	27	1	**5M-2894**	6	WASHER-HARD (10.2X18.5X2.5MM THK)	
	28	1	**5P-4900**	2	ELBOW-FLARED	
	29	1	**5P-9890**	4	SEAL-O-RING	
	30	1	**6K-5535**	2	CLIP (SLOT)	
	31	1	**6K-5536**	2	CLIP (TAB)	
	32	1	**6V-4589**	1	SEAL-O-RING	
	33	1	**8L-2786**	2	SEAL-O-RING	
C	34	1	**8S-0948**	4	CLIP	
	35	1	**8S-9191**	2	BOLT (3/8-16X4 IN)	
C	36	1	**9G-4328**	2	PLATE	
	37	1	**9L-9132**	4	WASHER (10.2X25.5X2.5MM THK)	
	38	1	**9N-0869**	4	WASHER-HARD (8.8X25.5X2.0MM THK)	
	39	1	**9S-8752**	2	NUT-FULL (3/8-16 THD)	
	40	1	**4P-4460**	2	GASKET	

C-CHANGE FROM PREVIOUS TYPE

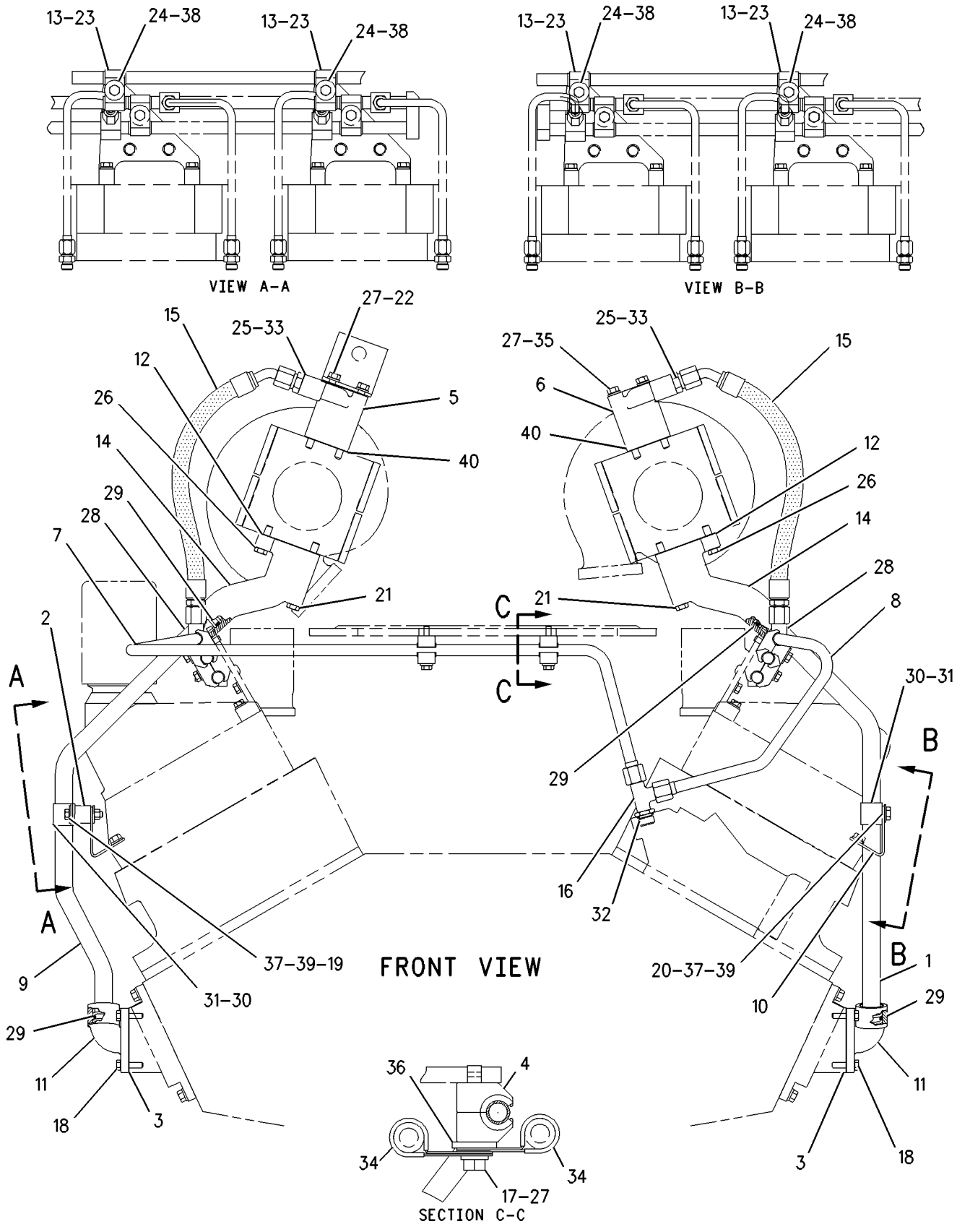

GRAPHIC #1 **<END>** g00946902

LUBRICATION SYSTEM

237-0131 METERING AR-ENGINE OIL

S/N: 7PZ754-UP

AN ATTACHMENT

SMCS-1307 **i02024440**

NOTE	PART NUMBER	QTY	PART NAME 1 2 3 4 5 6 (PRODUCT LEVEL)	SEE PAGE
Y	*237-0132*	1	METERING GP-ENGINE OIL	94
Y	*237-0133*	1	TANK GP-ENGINE OIL	107

Y-SEPARATE ILLUSTRATION

<END>

LUBRICATION SYSTEM

237-0132 METERING GP-ENGINE OIL

S/N: 7PZ754-UP

PART OF 237-0131 METERING AR-ENGINE OIL

AN ATTACHMENT

SMCS-1307 **i02024455**

NOTE	REF NO	GRAPHIC REF	PART NUMBER	QTY	PART NAME 1 2 3 4 5 6 (PRODUCT LEVEL)	SEE PAGE
	1	1	**1W-8129**	1	SUPPORT	
	2	1	**2W-0752**	1	GASKET	
	3	1	**4P-7850**	1	COVER	
	4	1	**8N-9993**	1	COVER-CAMSHAFT	
	5	1	**208-2362**	1	SEAL	
Y	6	1	**235-0266**	1	VALVE GP-METERING (ENGINE OIL)	109
I	7	1	**235-0270**	1	HOSE AS	
I	8	1	**235-0274**	1	HOSE AS	
I	9	1	**235-0275**	1	HOSE AS	
	10	1	*148-8325*	1	CONNECTOR GP	
		1	**3J-1907**	1	SEAL-O-RING	
		1	**4J-5477**	1	SEAL-O-RING	
		1	**6V-8641**	1	CONNECTOR	
	11	1	*148-8368*	1	ELBOW GP	
		1	**3J-1907**	1	SEAL-O-RING	
		1	**4J-5477**	1	SEAL-O-RING	
		1	**6V-8627**	1	ELBOW	
	12	1	*148-8369*	1	ELBOW GP	
		1	**3J-7354**	1	SEAL-O-RING	
		1	**4J-5477**	1	SEAL-O-RING	
		1	**6V-8628**	1	ELBOW	
	13	1	*148-8385*	1	ELBOW GP	
		1	**3J-7354**	1	SEAL-O-RING	
		1	**4J-5477**	1	SEAL-O-RING	
		1	**6V-9000**	1	ELBOW	
	14	1	*215-3191*	1	REDUCER AS	
		1	**4J-5477**	1	SEAL-O-RING	
		1	**6V-8937**	1	REDUCER-O-RING	
	15	1	**4I-4655**	4	CLIP	
	16	1	**5M-2894**	10	WASHER-HARD (10.2X18.5X2.5-MM THK)	
	17	1	**6V-8555**	1	NUT-FACE SEAL (1-14-THD)	
	18	1	**6V-8801**	2	NUT (3/8-16-THD)	
	19	1	**6V-9831**	1	CAP AS	
	20	1	**6V-9838**	1	TEE-SWIVEL	
	21	1	**7J-9108**	2	SEAL-O-RING	
	22	1	**8T-8915**	2	BOLT (3/8-16X3.25-IN)	
	23	1	**8T-9379**	2	BOLT (3/8-16X4.25-IN)	
	24	1	**9B-7237**	4	BOLT (3/8-16X1.25-IN)	

I-REFER TO HYDRAULIC INFORMATION SYSTEM
Y-SEPARATE ILLUSTRATION

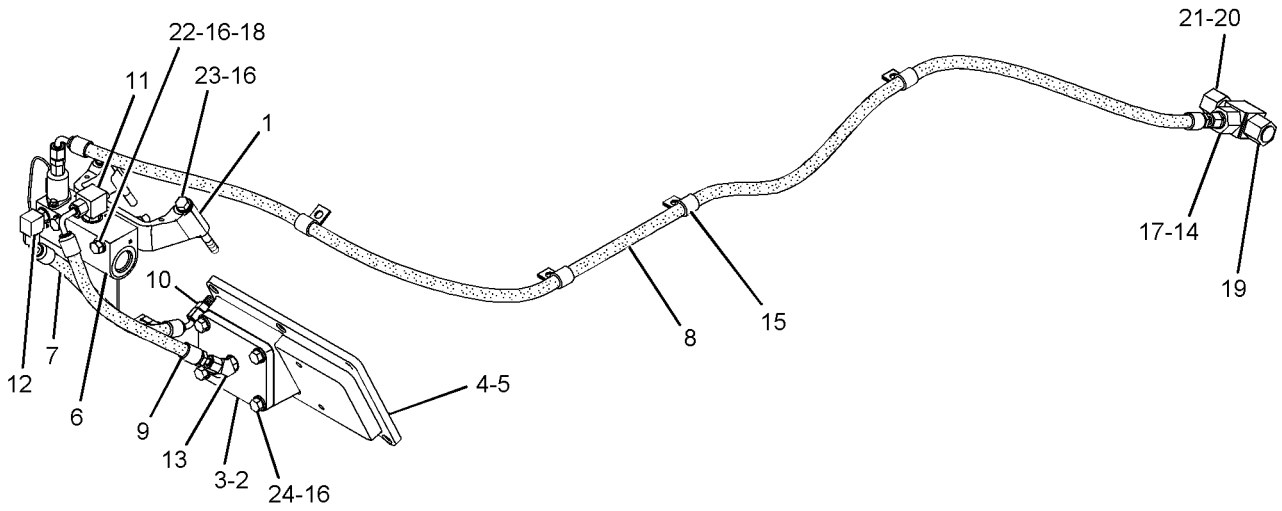

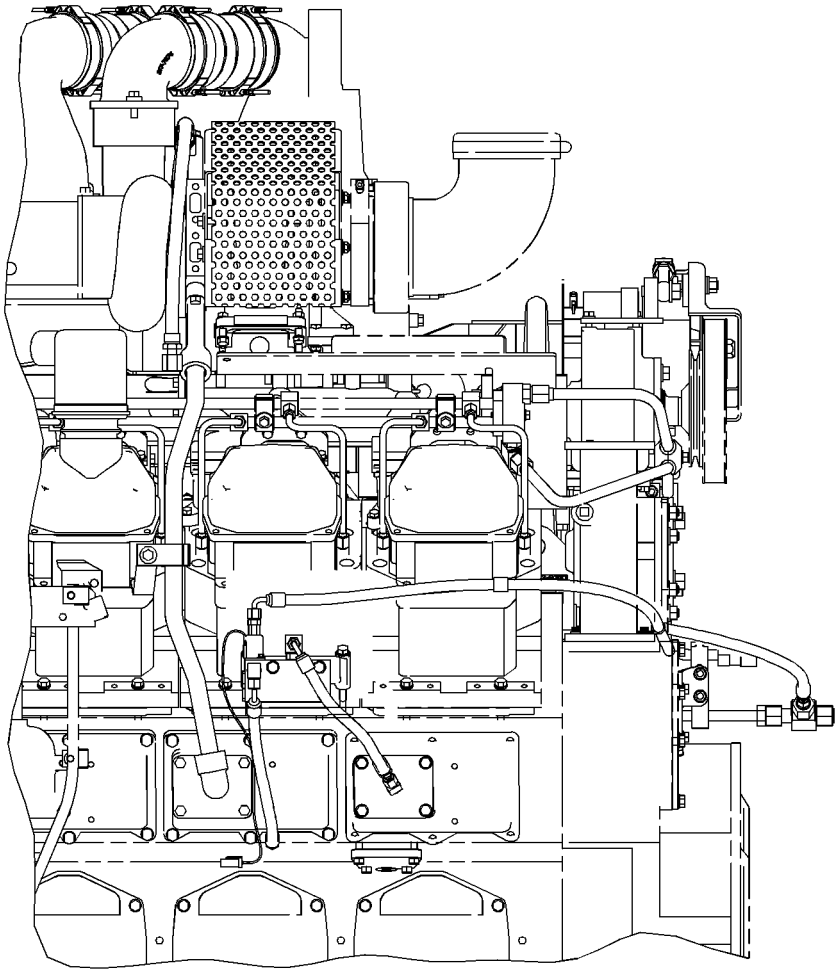

LEFT SIDE VIEW OF ENGINE

GRAPHIC #1 **<END>** g01045971

LUBRICATION SYSTEM

130-7924 OIL CHANGE GP-HIGH SPEED

S/N: 7PZ1-UP
AN ATTACHMENT

SMCS-1325 **i01988465**

NOTE	REF NO	GRAPHIC REF	PART NUMBER	QTY	PART NAME 1 2 3 4 5 6 (PRODUCT LEVEL)	SEE PAGE
	1	1	**1K-5888**	1	SPACER (.42X.67X.63 IN THK)	
	2	1	**2P-1286**	1	LOCKNUT-BULKHEAD (1-5/16-12 THD)	
	3	1	**2V-2043**	1	LOCKNUT-FLARED (1-5/8-12 THD)	
	4	1	**207-8829**	1	TUBE AS	
	5	1	**6V-9833**	1	CAP AS (OIL)	
	6	1	**110-8319**	1	RECEIVER AS (TRANSMISSION OIL)	
		1	**110-8318**	1	CAP (TRANSMISSION OIL)	
	7	1	**110-8827**	1	RECEIVER AS (ENGINE OIL)	
		1	**110-8826**	1	CAP-FILLER (CRANKCASE)	
	8	1	**130-7903**	1	BRACKET	
I	9	1	**130-7904**	1	HOSE AS	
I	10	1	**130-7905**	1	HOSE AS	
	11	1	**8T-9377**	1	BOLT (3/8-16X2.25 IN)	
	12	1	**1S-0004**	1	SEAL-O-RING	
	13	1	*148-8317*	1	CONNECTOR GP	
		1	**3D-2824**	1	SEAL-O-RING	
		1	**5K-9090**	1	SEAL-O-RING	
		1	**6V-8714**	1	CONNECTOR	
	14	1	**4S-4455**	2	CLIP	
	15	1	*148-8335*	3	CONNECTOR AS	
					(EACH INCLUDES)	
		1	**5K-9090**	1	SEAL-O-RING	
		1	**6V-8635**	1	CONNECTOR	
		1	**7M-8485**	1	SEAL-O-RING	
	16	1	**5P-1075**	2	WASHER-HARD (10.2X22.5X3MM THK)	
	17	1	**6K-9549**	1	BRACKET	
	18	1	**6K-9550**	1	CLIP	
	19	1	**8D-9947**	1	CLIP	
	20	1	*148-8429*	1	TEE AS	
		1	**5K-9090**	2	SEAL-O-RING	
		1	**6V-9840**	1	TEE-SWIVEL	
	21	1	**8T-9375**	2	BOLT (3/8-16X1.75 IN)	
	22	1	**6V-8801**	2	NUT (3/8-16 THD)	

I-REFER TO HYDRAULIC INFORMATION SYSTEM

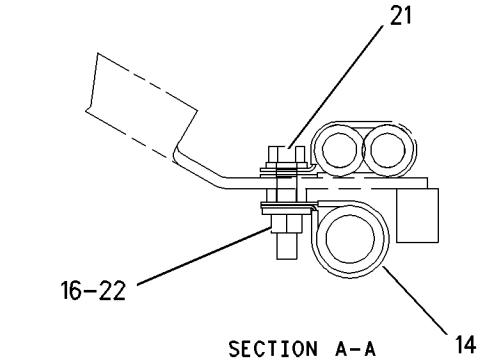

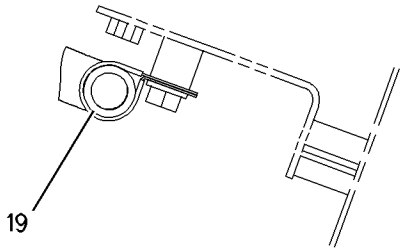

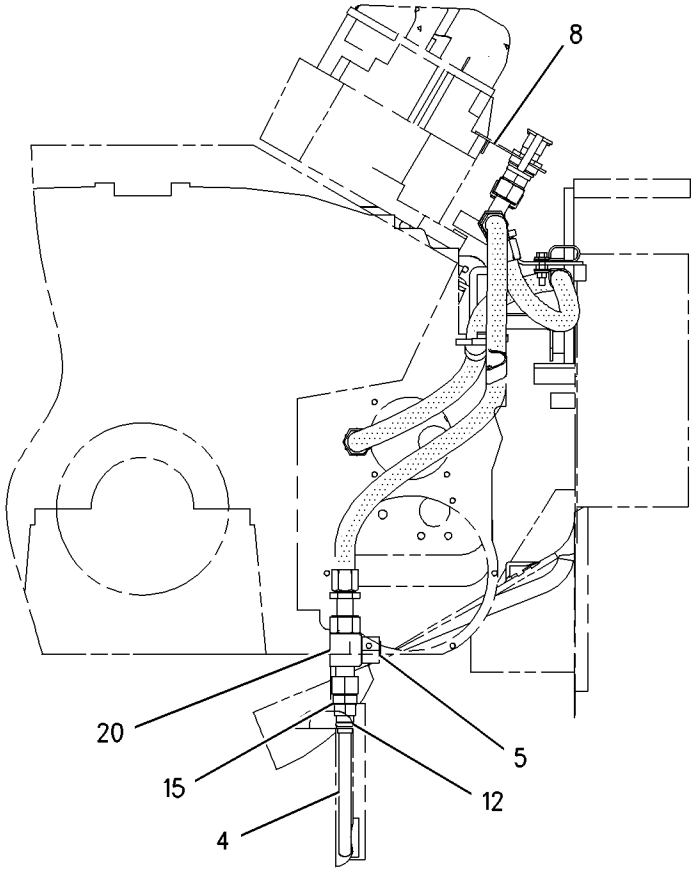

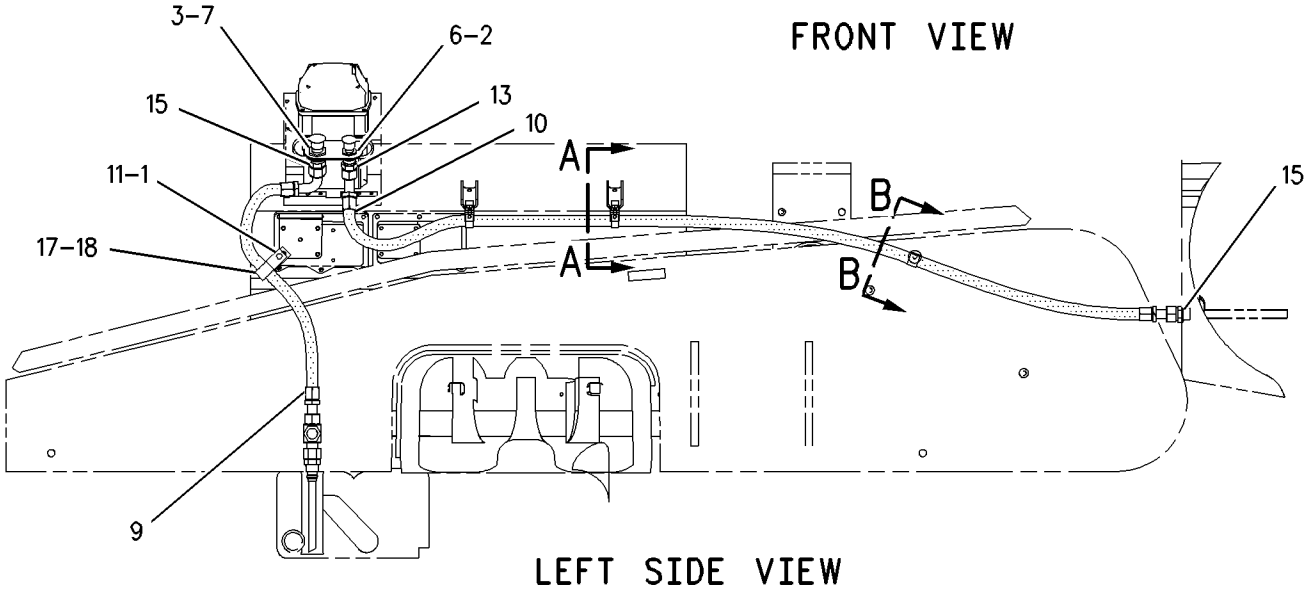

GRAPHIC #1 **<END>** g00697716

LUBRICATION SYSTEM

163-1924 PRELUBRICATION AR-ENGINE

S/N: 7PZ1-UP
AN ATTACHMENT
TYPE 1

SMCS-1319 **i01989518**

NOTE	REF NO	GRAPHIC REF	PART NUMBER	QTY	PART NAME 1 2 3 4 5 6 (PRODUCT LEVEL)	SEE PAGE
Y	1	1	**3E-0154**	1	SWITCH GP-MAGNETIC	374
	2	1	**3P-0764**	1	PLUG	
	3	1	**3S-8665**	2	CLIP	
	4	1	**3W-2647**	1	SPACER (13.5X30X10MM THK)	
	5	1	**6N-2656**	1	TUBE AS-OIL CHANGE	
	6	1	**6V-9833**	1	CAP AS	
		1	**6V-8557**	1	NUT-FACE SEAL	
	7	1	**8T-7529**	1	CLIP	
	8	1	**9X-6772**	7	STRAP-CABLE	
	9	1	**105-9152**	1	SWITCH AS-PRESSURE (ENGINE OIL)	
		1	**102-8802**	1	KIT-RECEPTACLE (2-PIN)	
					(INCLUDES RECEPTACLE AS & WEDGE)	
		1	**3E-3365**	1	WEDGE-RECEPTACLE LOCK (2 PIN)	
		1	**8T-8729**	2	PIN-CONNECTOR	
	10	1	**123-5150**	1	VALVE-CHECK	
Y	11	1	*123-8689*	1	STARTING MOTOR GP-PRELUB SYS	368
	12	1	**140-3108**	1	TIMER (PRELUBRICATION)	
	13	1	*148-8335*	1	CONNECTOR AS	
		1	**5K-9090**	1	SEAL-O-RING	
		1	**6V-8635**	1	CONNECTOR	
		1	**7M-8485**	1	SEAL-O-RING	
	14	1	*148-8342*	1	CONNECTOR GP	
		1	**3K-0360**	1	SEAL-O-RING	
		1	**6V-8632**	1	CONNECTOR	
		1	**7J-9108**	1	SEAL-O-RING	
	15	1	*148-8429*	1	TEE AS	
		1	**5K-9090**	2	SEAL-O-RING	
		1	**6V-9840**	1	TEE-SWIVEL	
	16	1	*153-6239*	1	CONNECTOR AS	
		1	**2M-9780**	1	SEAL-O-RING	
		1	**5K-9090**	1	SEAL-O-RING	
		1	**8C-4000**	1	CONNECTOR	
I	17	1	**174-1921**	1	HOSE AS	
I	18	1	**174-3352**	1	HOSE AS	
	19	1	**174-8883**	1	HARNESS AS	
	20	1	**179-6740**	1	BRACKET AS	
		1	**9F-6445**	2	NUT-WELD (1/4-24 THD)	
	21	1	**1S-0004**	1	SEAL-O-RING	
	22	1	**2M-9780**	2	SEAL-O-RING	
	23	1	**4M-5281**	4	BOLT (1/4-20X.750 IN)	
	24	1	**4M-5317**	1	BUSHING-REDUCING	
	25	1	**4P-8134**	3	CLIP	
	26	1	**5P-1075**	2	WASHER-HARD (10.2X22.5X3MM THK)	
	27	1	**7J-9108**	1	SEAL-O-RING	
	28	1	**8T-4205**	6	WASHER-HARD (7.2X14.5X2MM THK)	
	29	1	**8T-4223**	2	WASHER-HARD (13.5X25.5X3MM THK)	
	30	1	**8T-8917**	1	BOLT (1/2-13X1.25 IN)	
	31	1	**8T-9367**	2	BOLT (1/4-20X2 IN)	
	32	1	**9B-7237**	2	BOLT (3/8-16X1.25 IN)	
	33	1	**125-0473**	1	FILM-NOTICE (PRELUBRICATION PUMP)	

I-REFER TO HYDRAULIC INFORMATION SYSTEM
Y-SEPARATE ILLUSTRATION

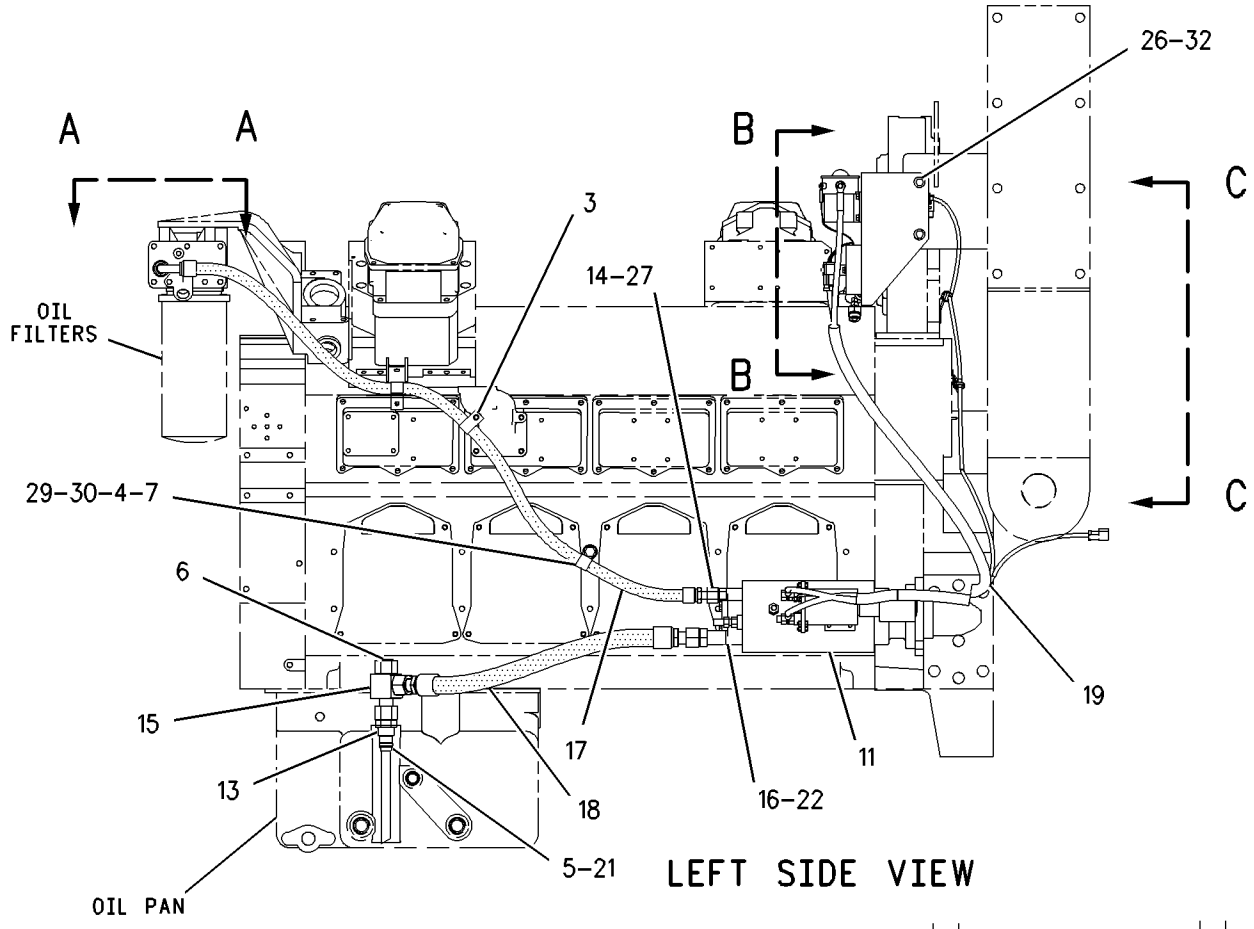

LEFT SIDE VIEW

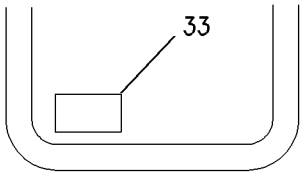

CAB VIEW

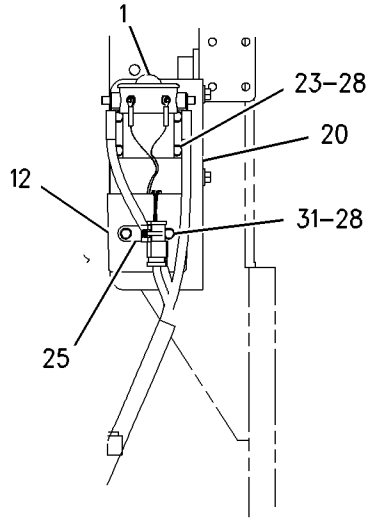

VIEW B-B

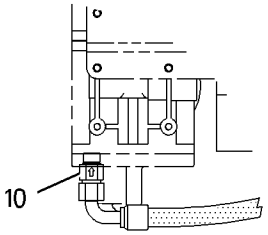

VIEW A-A

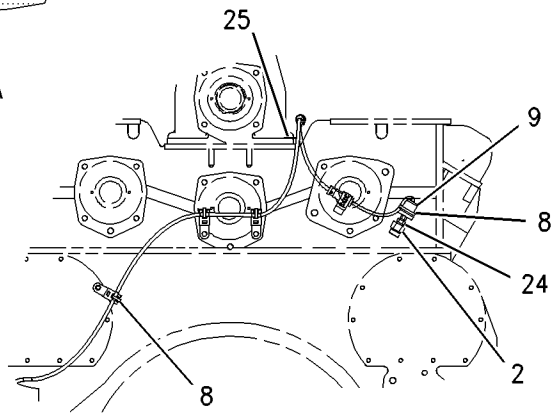

VIEW C-C

GRAPHIC #1 **<END>** g00664539

LUBRICATION SYSTEM

163-1924 PRELUBRICATION AR-ENGINE

S/N: 7PZ1-UP
AN ATTACHMENT
TYPE 2

SMCS-1319 **i01989517**

NOTE	REF NO	GRAPHIC REF	PART NUMBER	QTY	PART NAME 1 2 3 4 5 6 (PRODUCT LEVEL)	SEE PAGE
C	1	1	**3P-0764**	1	PLUG	
	2	1	**3S-8665**	2	CLIP	
	3	1	**3W-2647**	1	SPACER (13.5X30X10MM THK)	
	4	1	**6V-9833**	1	CAP AS (ENGINE OIL)	
	5	1	**8T-7529**	1	CLIP	
B	6	1	**9X-6772**	7	STRAP-CABLE	
	7	1	**105-9152**	1	SWITCH AS-PRESSURE (ENGINE OIL)	
		1	**102-8802**	1	KIT-RECEPTACLE (2-PIN)	
					(INCLUDES RECEPTACLE AS & WEDGE)	
		1	**186-3735**	2	PIN-CONNECTOR	
	8	1	**123-5150**	1	VALVE-CHECK (PREVENTS BACKFLOW)	
Y	9	1	*123-8689*	1	STARTING MOTOR GP-PRELUB SYS	368
	10	1	**140-3108**	1	TIMER (PRELUBRICATION)	
	11	1	*148-8335*	1	CONNECTOR AS	
		1	**5K-9090**	1	SEAL-O-RING	
		1	**6V-8635**	1	CONNECTOR	
		1	**7M-8485**	1	SEAL-O-RING	
	12	1	*148-8342*	1	CONNECTOR GP	
		1	**3K-0360**	1	SEAL-O-RING	
		1	**6V-8632**	1	CONNECTOR	
		1	**7J-9108**	1	SEAL-O-RING	
	13	1	*148-8429*	1	TEE AS	
		1	**5K-9090**	2	SEAL-O-RING	
		1	**6V-9840**	1	TEE-SWIVEL	
	14	1	*153-6239*	1	CONNECTOR AS	
		1	**2M-9780**	1	SEAL-O-RING	
		1	**5K-9090**	1	SEAL-O-RING	
		1	**8C-4000**	1	CONNECTOR	
I	15	1	**174-1921**	1	HOSE AS	
I	16	1	**174-3352**	1	HOSE AS	
	17	1	**174-8883**	1	HARNESS AS (PRELUBE TIMER)	
		1	**102-8803**	1	KIT-RECEPTACLE (3-PIN)	
		1	**102-8802**	1	KIT-RECEPTACLE (2-PIN)	
		1	**102-8805**	1	KIT-RECEPTACLE (6-PIN)	
					(EACH INCLUDES RECEPTACLE AS & WEDGE)	
		1	**155-2260**	1	KIT-CONNECTING PLUG (3-PIN)	
		1	**155-2270**	1	KIT-CONNECTING PLUG (2-PIN)	
		1	**155-2274**	1	KIT-CONNECTING PLUG (6-PIN)	
					(EACH INCLUDES PLUG AS & WEDGE)	
C	18	1	**179-0006**	1	SWITCH AS-MAGNETIC (STARTER RELAY)	
		1	**1B-2578**	2	NUT (3/8-16 THD)	
		1	**4D-1326**	2	LOCKWASHER (EXTERNAL TOOTH)	
		1	**4L-6499**	2	WASHER (0.38X0.88X0.02 IN THK)	
		1	**6V-8378**	2	NUT (10-32 THD)	
		1	**7X-0620**	2	WASHER-HARD (5.5X13X1.6MM THK)	
		1	**8F-1434**	2	LOCKWASHER (INTERNAL TOOTH)	
	19	1	**179-6740**	1	BRACKET AS	
		1	**9F-6445**	2	NUT-WELD (1/4-24 THD)	
	20	1	**207-8829**	1	TUBE AS	
	21	1	**1S-0004**	1	SEAL-O-RING	
	22	1	**2M-9780**	2	SEAL-O-RING	
	23	1	**4M-5281**	4	BOLT (1/4-20X.750 IN)	
	24	1	**4M-5317**	1	BUSHING-REDUCING	
	25	1	**4P-8134**	3	CLIP	
	26	1	**5P-1075**	2	WASHER-HARD (10.2X22.5X3MM THK)	

163-1924 **PRELUBRICATION AR-ENGINE** *(contd.)* **i01989517**

NOTE	REF NO	GRAPHIC REF	PART NUMBER	QTY	PART NAME 1 2 3 4 5 6 (PRODUCT LEVEL)	SEE PAGE
	27	1	**7J-9108**	1	SEAL-O-RING	
	28	1	**8T-4205**	6	WASHER-HARD (7.2X14.5X2MM THK)	
	29	1	**8T-4223**	1	WASHER-HARD (13.5X25.5X3MM THK)	
	30	1	**8T-8917**	1	BOLT (1/2-13X1.25 IN)	
	31	1	**8T-9367**	2	BOLT (1/4-20X2 IN)	
	32	1	**9B-7237**	2	BOLT (3/8-16X1.25 IN)	
	33	1	**125-0473**	1	FILM-NOTICE (PRELUBRICATION PUMP)	

B-USE AS REQUIRED
C-CHANGE FROM PREVIOUS TYPE
I-REFER TO HYDRAULIC INFORMATION SYSTEM
Y-SEPARATE ILLUSTRATION

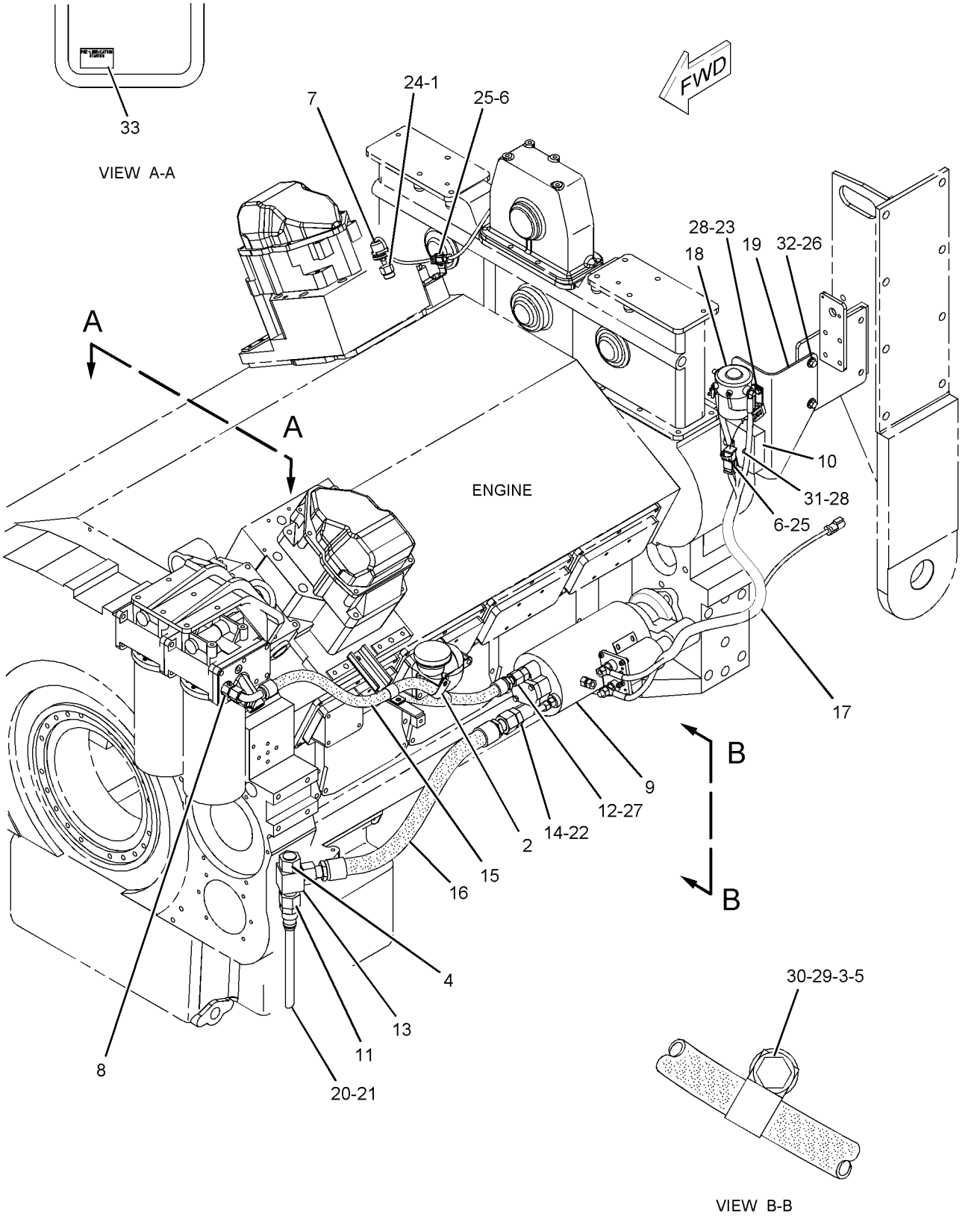

GRAPHIC #1 **<END>** g01026130

7N-8715 PUMP GP-ENGINE OIL

S/N: 2GR1180-UP
TWO SECTION GEAR
PART OF 155-5556 ENGINE AR

SMCS-1304, 1315 **i01420625**

NOTE	REF NO	GRAPHIC REF	PART NUMBER	QTY	PART NAME 1 2 3 4 5 6 (PRODUCT LEVEL)	SEE PAGE
CY	1	1	**7W-0053**	1	PUMP GP-ENGINE OIL	104
C	2	1	**6V-7681**	1	SEAL-O-RING (164.69MM ID)	
	3	1	**4S-5882**	1	BOLT (1/2-13X7.25 IN)	
		1	**5P-8245**	1	WASHER-HARD (13.5X25.5X3MM THK)	
B	4	1	**4S-5882**	2	BOLT (1/2-13X7.25 IN)	
B		1	**5P-8245**	2	WASHER-HARD (13.5X25.5X3MM THK)	

B-USE AS REQUIRED
C-CHANGE FROM PREVIOUS TYPE
Y-SEPARATE ILLUSTRATION

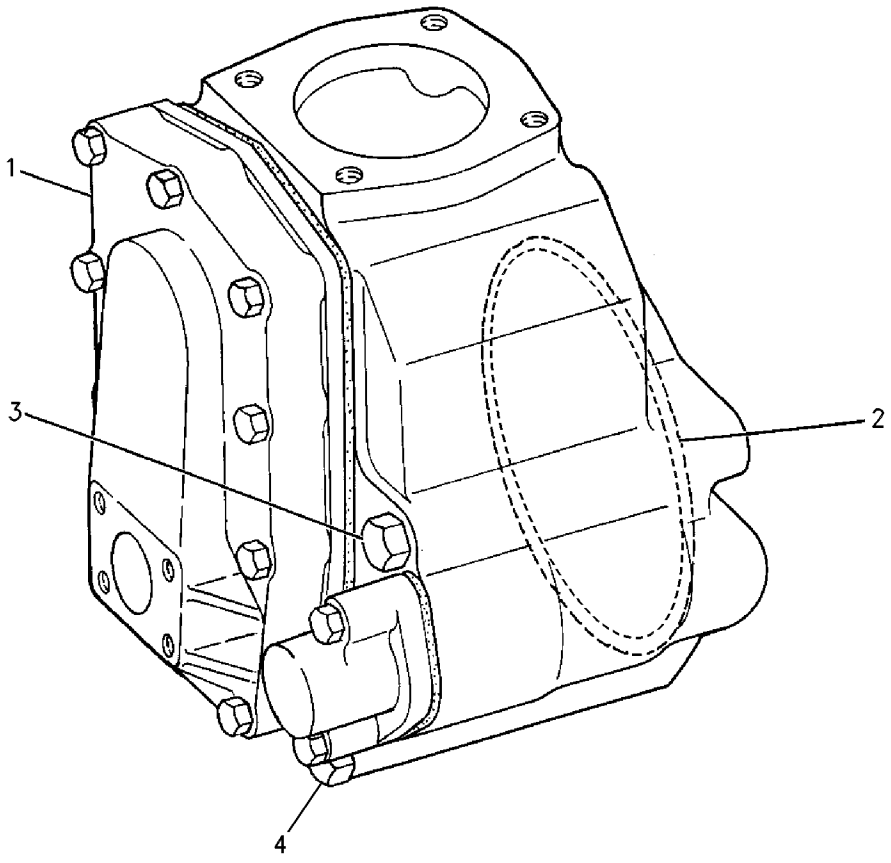

GRAPHIC #1 **<END>** g00623771

7W-0053 PUMP GP-ENGINE OIL*R

S/N: 2GR1180-UP
TWO SECTION GEAR
PART OF 7N-8715 PUMP GP-ENGINE OIL

SMCS-1304, 1315 **i01692296**

NOTE	REF NO	GRAPHIC REF	PART NUMBER	QTY	PART NAME 1 2 3 4 5 6 (PRODUCT LEVEL)	SEE PAGE
	1	1	**0S-1590**	9	BOLT (3/8-16X2 IN)	
	2	1	**5M-2894**	11	WASHER-HARD (10.2X18.5X2.5MM THK)	
	3	1	**7N-5057**	1	GASKET	
	4	1	**7W-0050**	1	COVER AS-PUMP	
	5	1	**1W-6005**	3	BEARING-SLEEVE	
	6	1	**4M-3248**	2	DOWEL-HOLLOW	
	7	1	**2W-5476**	2	SHAFT AS-IDLER	
	8	1	**7F-1866**	2	BOLT (3/8-16X3.0 IN)	
	9	1	**7W-0051**	1	BODY AS-OIL PUMP	
C	10	1	**1W-6005**	3	BEARING-SLEEVE	
	11	1	**1N-4637**	1	COVER AS-PUMP	
	12	1	**7N-2043**	2	DOWEL	
	13	1	**7N-5449**	1	SPOOL-PRESSURE RELIEF	
	14	1	**0S-1585**	6	BOLT (1/2-13X1.50 IN)	
	15	1	**2S-2760**	1	SPRING	
	16	1	**2W-6619**	1	SHAFT AS-PUMP DRIVE	
	17	1	**111-1349**	1	GASKET	
	18	1	**7N-5049**	1	COVER-RELIEF VALVE	

C-CHANGE FROM PREVIOUS TYPE

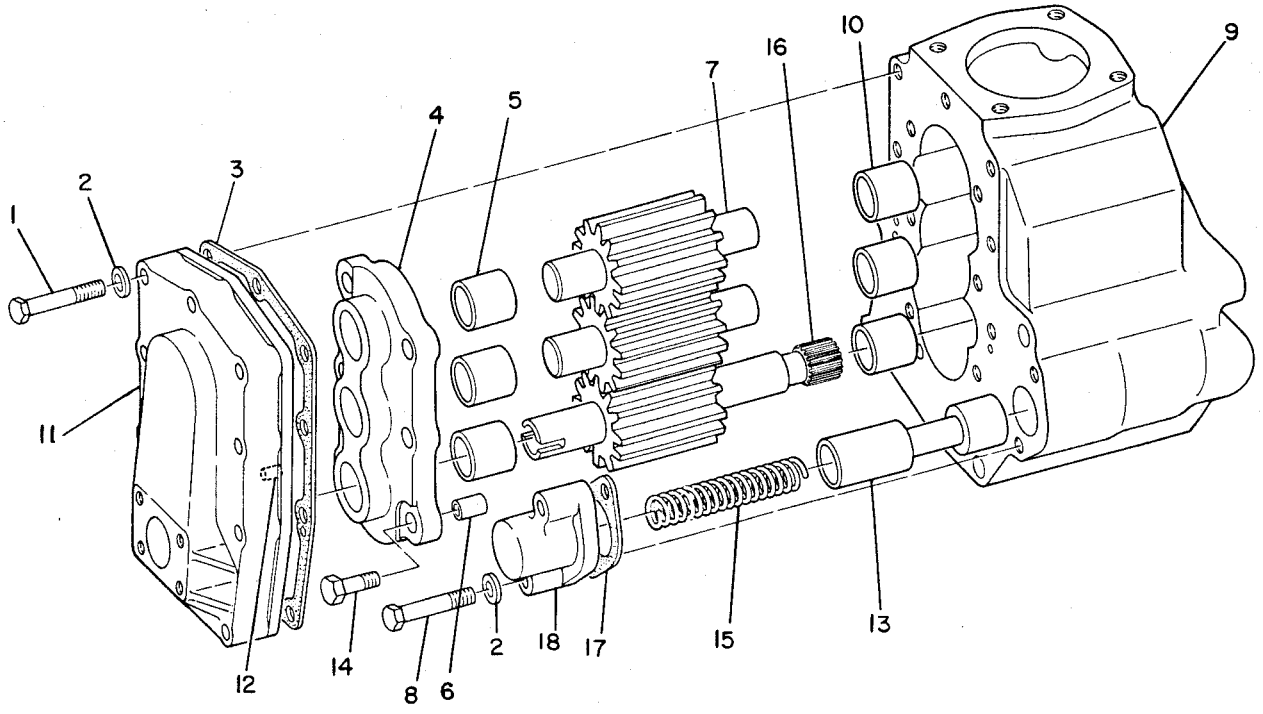

GRAPHIC #1 **<END>** g00082118

LUBRICATION SYSTEM

1N-3240 PUMP GP-SCAVENGE

S/N: 2GR1180-UP
PART OF 155-5556 ENGINE AR

SMCS-1312 **i01670071**

NOTE	REF NO	GRAPHIC REF	PART NUMBER	QTY	PART NAME 1 2 3 4 5 6 (PRODUCT LEVEL)	SEE PAGE
YR	1	1	**8N-9164**	1	PUMP GP-SCAVENGE (ENGINE OIL)	106
	2	1	**4F-9351**	4	BOLT-GROUND BODY (3/8-16X1X1.375 IN)	
	3	1	**1N-3243**	1	TUBE AS	
C	4	1	**3P-0657**	2	SEAL-O-RING	
	5	1	**6K-6164**	1	CLIP	
	6	1	**6K-6167**	1	CLIP	
	7	1	**0L-1351**	3	BOLT (3/8-16X0.875 IN)	
	8	1	**5M-2894**	9	WASHER-HARD (10.2X18.5X2.5MM THK)	
	9	1	**1N-3193**	1	HOUSING	
	10	1	**0S-1590**	2	BOLT (3/8-16X2 IN)	
C	11	1	**4P-5500**	1	SCREEN-SCAVENGE (ENGINE OIL)	
	12	1	**4W-8921**	1	COVER-SCAVENGE PUMP	
C	13	1	**0S-1591**	6	BOLT (3/8-16X1.5 IN)	
	14	1	**1N-3239**	1	ELBOW (SCAVENGE DISCHARGE)	
C	15	1	**032-3174**	2	BOLT	
C	16	1	**4P-4917**	1	SCREEN-SCAVENGE (ENGINE OIL)	

C-CHANGE FROM PREVIOUS TYPE
R-REMFG PART MAY BE AVAILABLE
Y-SEPARATE ILLUSTRATION

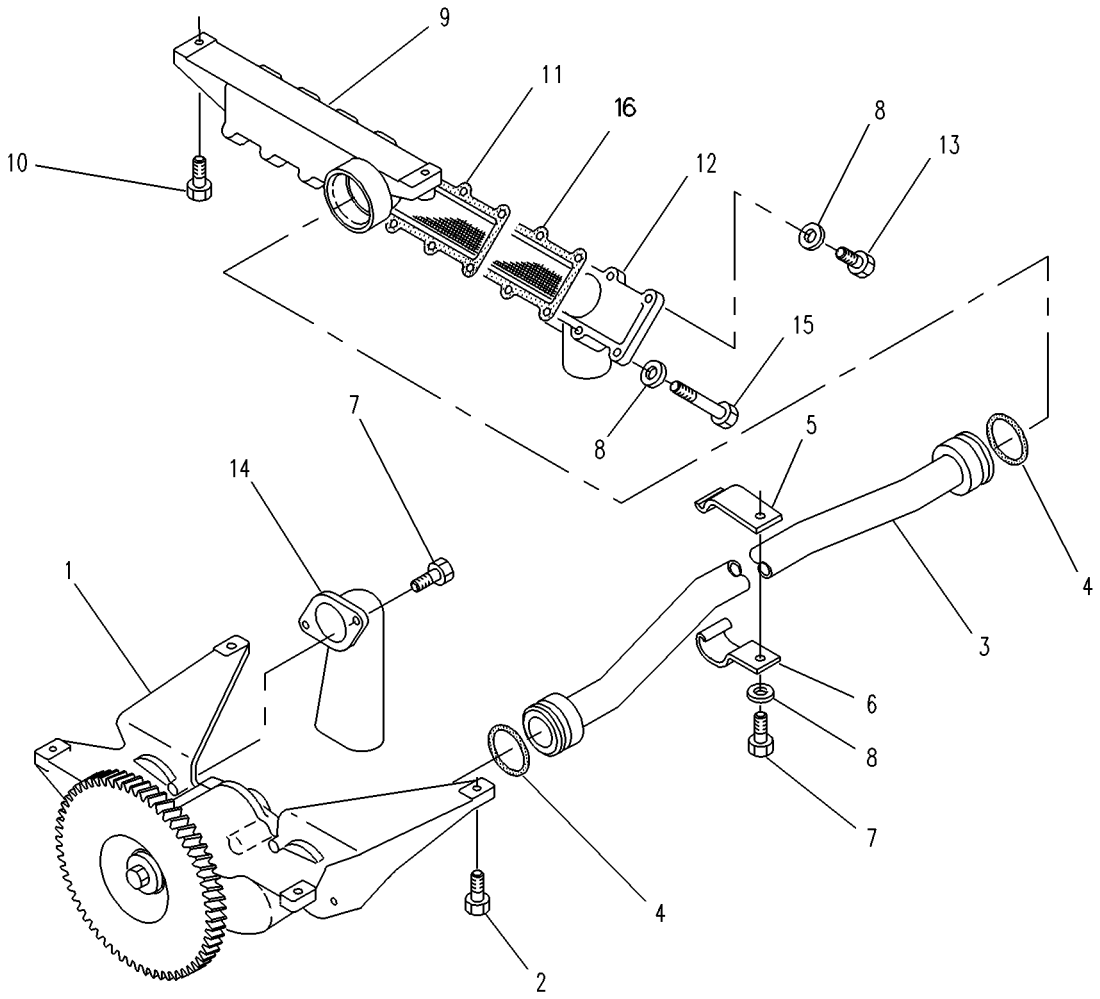

GRAPHIC #1 **<END>** g00219271

8N-9164 PUMP GP-SCAVENGE–ENGINE OIL*R

S/N: 2GR1180-UP

PART OF 1N-3240 PUMP GP-SCAVENGE

SMCS-1312 **i01692302**

NOTE	REF NO	GRAPHIC REF	PART NUMBER	QTY	PART NAME 1 2 3 4 5 6 (PRODUCT LEVEL)	SEE PAGE
C	1	1	**2W-6727**	1	BODY AS-PUMP	
C	1A	1	**1W-6005**	2	BEARING-SLEEVE	
C	2	1	**7W-0059**	1	SHAFT AS-PUMP	
C	3	1	**176-3225**	1	SHAFT AS-DRIVE	
	4	1	**7N-8527**	1	COVER AS-PUMP	
	4A	1	**4M-3248**	2	DOWEL-HOLLOW	
	4B	1	**1W-6005**	2	BEARING-SLEEVE	
	5	1	**0S-1587**	4	BOLT (1/2-13X1.75 IN)	
	7	1	**0S-0484**	1	BOLT (1/2-20X2.25 IN)	
	8	1	**053-4679**	1	WASHER (10.0MM THK)	
C	9	1	**161-2513**	1	GEAR-DRIVE (71 TEETH)	

C-CHANGE FROM PREVIOUS TYPE

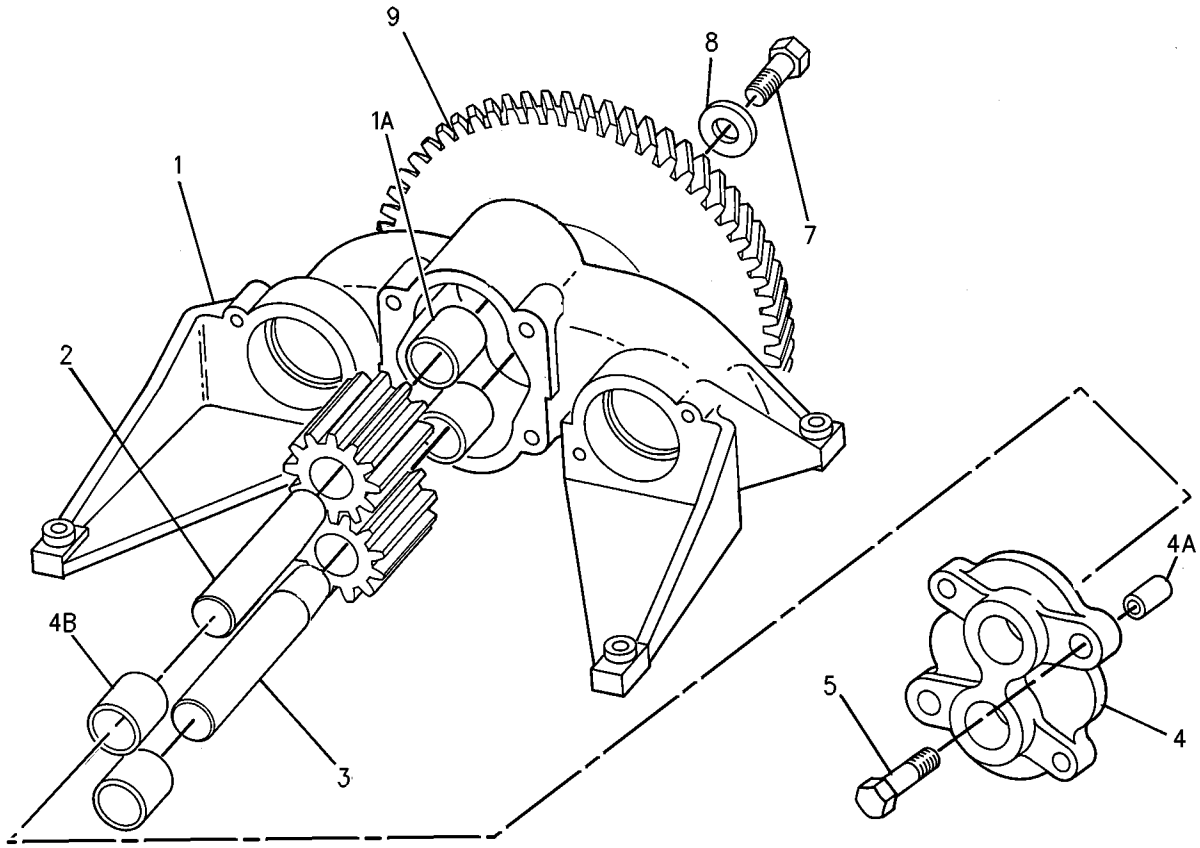

GRAPHIC #1 **<END>** g00649813

LUBRICATION SYSTEM

237-0133 TANK GP-ENGINE OIL–METERING

S/N: 7PZ754-UP
PART OF 237-0131 METERING AR-ENGINE OIL
AN ATTACHMENT

SMCS-1302, 1308 **i02024479**

NOTE	REF NO	GRAPHIC REF	PART NUMBER	QTY	PART NAME 1 2 3 4 5 6 (PRODUCT LEVEL)	SEE PAGE
	1	1	**9G-5127**	1	BREATHER AS (ENGINE OIL METERING TANK)	
	2	1	**9Y-9236**	3	BODY AS-GAUGE	
	3	1	**133-6934**	2	SPACER (11X20X25-MM THK)	
	4	1	**141-0374**	1	SENSOR GP-LIQUID LEVEL (ENGINE OIL METERING TANK)	
I	5	1	**235-2329**	1	HOSE AS	
	6	1	**238-8656**	1	TANK AS	
	7	1	**240-6901**	1	HARNESS AS-SENSOR (OIL LEVEL) (METERING TANK)	
		1	**102-8802**	1	KIT-RECEPTACLE (2-PIN)	
					(INCLUDES RECEPTACLE AS & WEDGE)	
		1	**155-2260**	1	KIT-CONNECTING PLUG (3-PIN)	
		1	**155-2270**	1	KIT-CONNECTING PLUG (2-PIN)	
					(EACH INCLUDES PLUG AS & WEDGE)	
	8	1	**240-9030**	1	CAP-OIL FILLER (METERING TANK)	
	9	1	**0S-1621**	3	BOLT (1/2-13X1-IN)	
	10	1	*148-8327*	1	CONNECTOR AS	
		1	**3D-2824**	1	SEAL-O-RING	
		1	**6V-8637**	1	CONNECTOR	
		1	**6V-9746**	1	SEAL-O-RING	
	11	1	*148-8390*	1	ELBOW GP	
		1	**2M-9780**	1	SEAL-O-RING	
		1	**6V-8626**	1	ELBOW	
		1	**7J-9108**	1	SEAL-O-RING	
	12	1	**159-1643**	1	FILM-OIL (ENGINE)	
	13	1	**1S-0994**	3	CLIP	
	14	1	**240-9497**	2	FILM-INSTRUCTION (OIL RENEWAL SYSTEM)	
	15	1	**2M-9780**	1	SEAL-O-RING	
	16	1	**3K-0360**	1	SEAL-O-RING	
	17	1	**7K-1181**	21	STRAP-CABLE	
	18	1	**7M-8485**	3	SEAL-O-RING	
	19	1	**8T-2501**	2	BOLT (3/8-16X2-IN)	
	20	1	**8T-4223**	5	WASHER-HARD (13.5X25.5X3-MM THK)	
	21	1	**8T-4896**	2	WASHER-HARD (10.2X18.5X2.5-MM THK)	
	22	1	**8T-8919**	2	BOLT (1/2-13X1.75-IN)	
	23	1	**9S-4190**	1	PLUG	
B	24	1	**0S-1621**	2	BOLT (1/2-13X1-IN)	
B	25	1	**8T-4223**	4	WASHER-HARD (13.5X25.5X3-MM THK)	

B-USE AS REQUIRED
I-REFER TO HYDRAULIC INFORMATION SYSTEM

237-0133 **TANK GP-ENGINE OIL** ***(contd.)*** **i02024479**

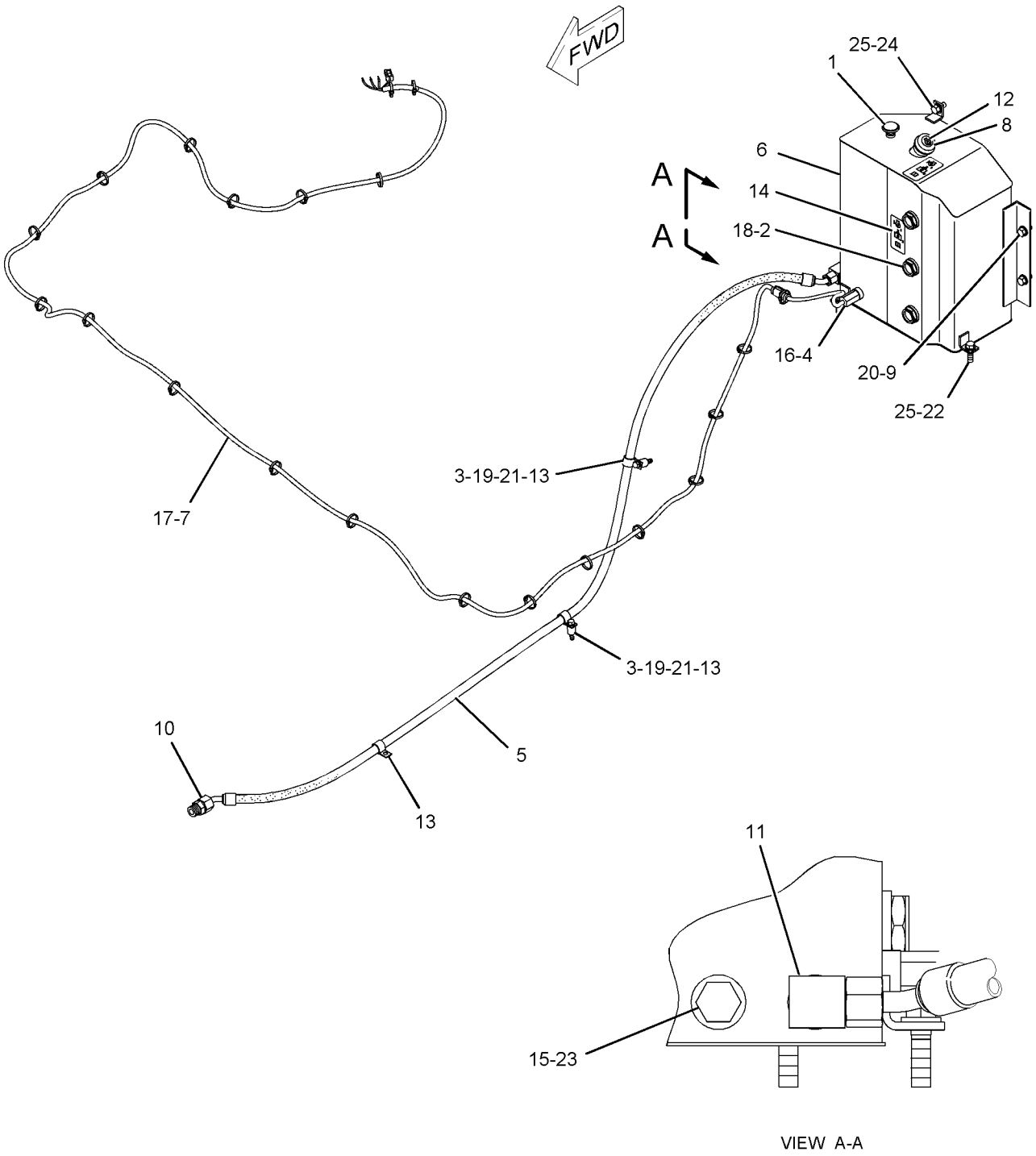

GRAPHIC #1 **<END>** g01045886

235-0266 VALVE GP-METERING—ENGINE OIL

S/N: 7PZ754-UP

PART OF 237-0132 METERING GP-ENGINE OIL

AN ATTACHMENT

SMCS-1307, 130M **i02024457**

NOTE	REF NO	GRAPHIC REF	PART NUMBER	QTY	PART NAME 1 2 3 4 5 6 (PRODUCT LEVEL)	SEE PAGE
	1	1	**155-2270**	1	KIT-CONNECTING PLUG (2-PIN)	
					(INCLUDES PLUG AS & WEDGE)	
	2	1	**186-3736**	2	SOCKET-CONNECTOR	
	3	1	**3J-1907**	1	SEAL-O-RING	
	4	1	**3J-7354**	2	SEAL-O-RING	
	5	1	**4J-5477**	3	SEAL-O-RING	
	6	1	**6V-8641**	1	CONNECTOR	
	7	1	**6V-8647**	2	CONNECTOR	

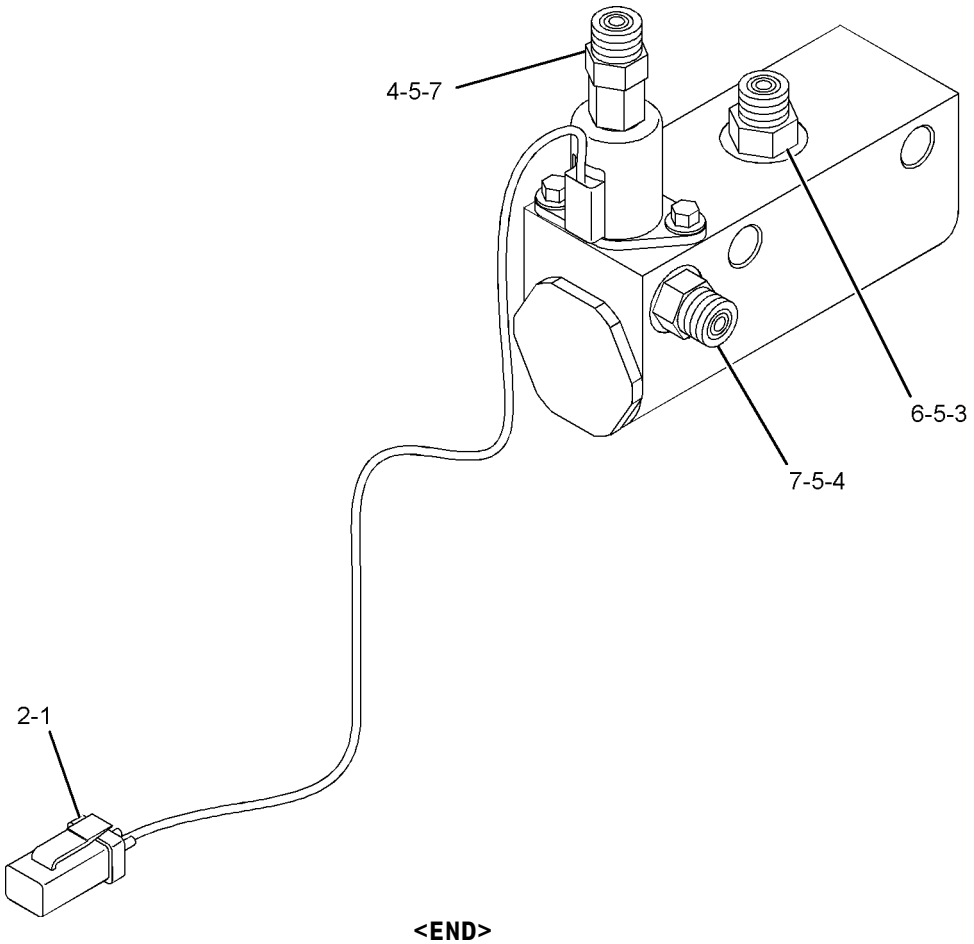

GRAPHIC #1 **<END>** g01045803

127-4451 CONNECTION GP-WATER

S/N: 2GR3946, 4089, 4313-UP
PART OF 155-5556 ENGINE AR

SMCS-1380 **i01692327**

NOTE	REF NO	GRAPHIC REF	PART NUMBER	QTY	PART NAME 1 2 3 4 5 6 (PRODUCT LEVEL)	SEE PAGE
	3	1	**7E-6016**	2	GASKET	
	4	1	**7E-6017**	1	COVER	
	5	1	**7N-3368**	1	GASKET	
	7	1	**7N-4930**	1	ELBOW-OUTLET	
	8	1	**8N-8089**	1	GASKET	
	9	1	**8T-6765**	1	PLUG-PIPE	
	10	1	**137-8206**	1	ELBOW	
	11	1	**167-9559**	1	ADAPTER	
	12	1	**0S-1594**	5	BOLT (3/8-16X1 IN)	
	13	1	**1A-2029**	4	BOLT (3/8-16X1.125 IN)	
	14	1	**4F-0411**	3	BOLT (3/8-16X6.5 IN)	
	15	1	**4L-4644**	1	STUD-TAPERLOCK	
	16	1	**5M-2894**	5	WASHER-HARD (10.2X18.5X2.5MM THK)	
	17	1	**8T-6762**	1	PLUG-PIPE	
	18	1	**9S-8752**	1	NUT-FULL (3/8-16 THD)	

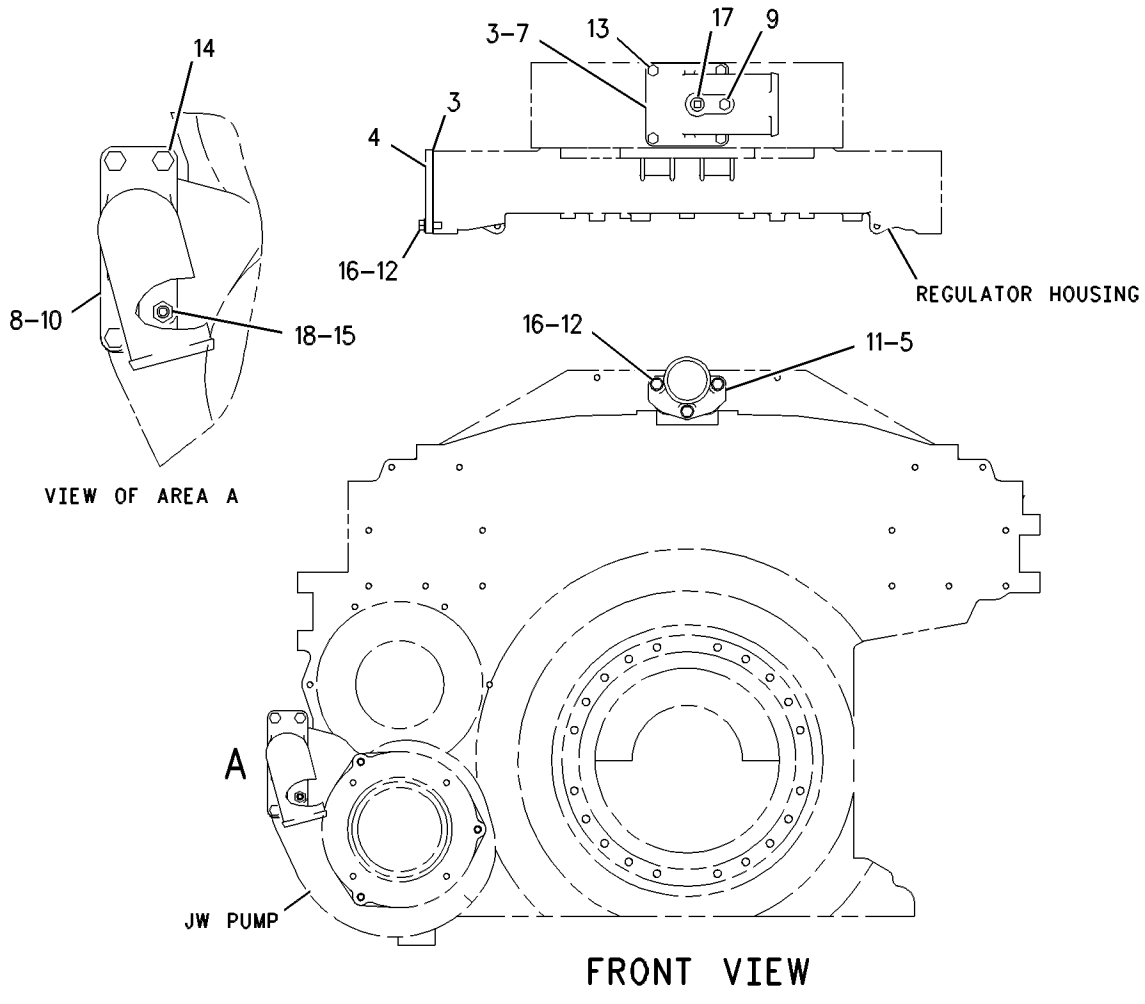

GRAPHIC #1 **<END>** g00623063

COOLING SYSTEM

156-9814 CONNECTION GP-WATER

S/N: 2GR1180-3945, 3947-4088, 4090-4312
PART OF 155-5556 ENGINE AR

SMCS-1380 **i01135175**

NOTE	REF NO	GRAPHIC REF	PART NUMBER	QTY	PART NAME 1 2 3 4 5 6 (PRODUCT LEVEL)	SEE PAGE
	1	1	**7E-6016**	2	GASKET	
	2	1	**7E-6017**	1	COVER	
	3	1	**7N-3368**	1	GASKET	
	4	1	**8N-8089**	1	GASKET	
	5	1	**137-8206**	1	ELBOW	
	6	1	**156-9822**	1	ELBOW-OUTLET	
	7	1	**167-9559**	1	ADAPTER	
	8	1	**0S-1594**	5	BOLT (3/8-16X1 IN)	
	9	1	**1A-2029**	4	BOLT (3/8-16X1.125IN)	
	10	1	**3J-1907**	4	SEAL-O-RING (11.89MM ID)	
	11	1	**4F-0411**	3	BOLT (3/8-16X6.5IN)	
	12	1	**4L-4644**	1	STUD-TAPERLOCK	
	13	1	**5M-2894**	5	WASHER (2.5MM THK)	
	14	1	**9S-4191**	4	PLUG-O-RING (9/16-18 THD)	
	15	1	**9S-8752**	1	NUT (3/8-16 THD)	

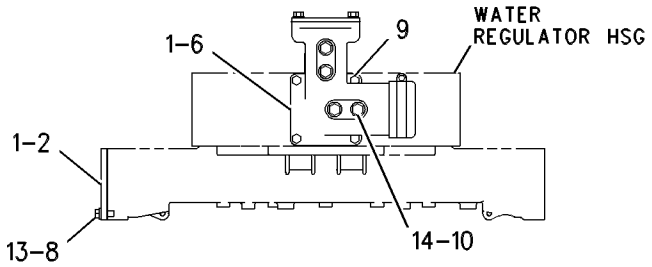

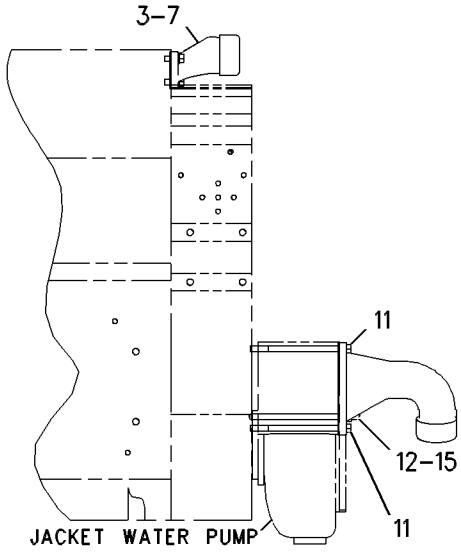

RIGHT SIDE VIEW

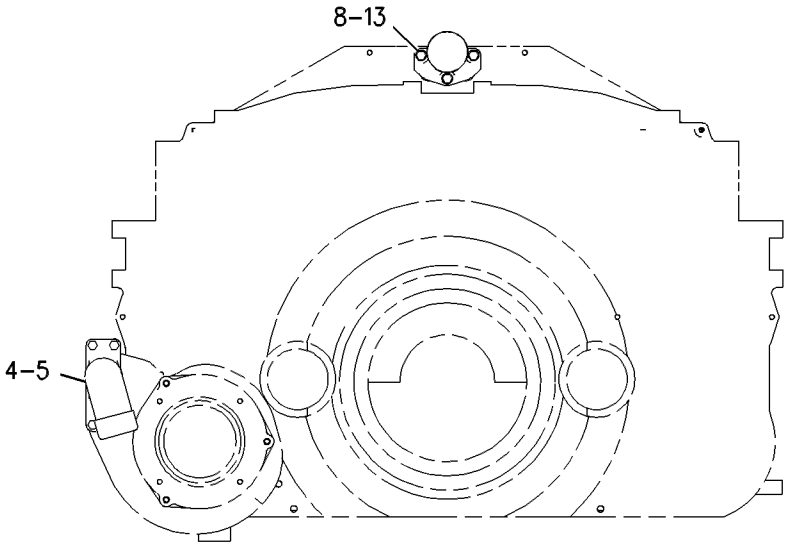

FRONT VIEW

GRAPHIC #1 **<END>** g00603680

COOLING SYSTEM

4W-5893 COOLER GP-ENGINE OIL

S/N: 2GR1180-UP

PART OF 155-5556 ENGINE AR

SMCS-1378 **i01692330**

NOTE	REF NO	GRAPHIC REF	PART NUMBER	QTY	PART NAME 1 2 3 4 5 6 (PRODUCT LEVEL)	SEE PAGE
	1	1	**3B-1915**	5	BOLT (3/8-16X1.37 IN)	
	2	1	**4L-8606**	2	GASKET	
	3	1	**7W-1928**	1	TUBE	
	4	1	**109-2332**	2	SEAL-O-RING	
	5	1	**8S-9191**	8	BOLT (3/8-16X4 IN)	
CR	6	1	**124-5142**	1	CORE AS-OIL COOLER	
	7	1	**1A-5183**	3	BOLT (3/8-16X4.75 IN)	

C-CHANGE FROM PREVIOUS TYPE
R-REMFG PART MAY BE AVAILABLE

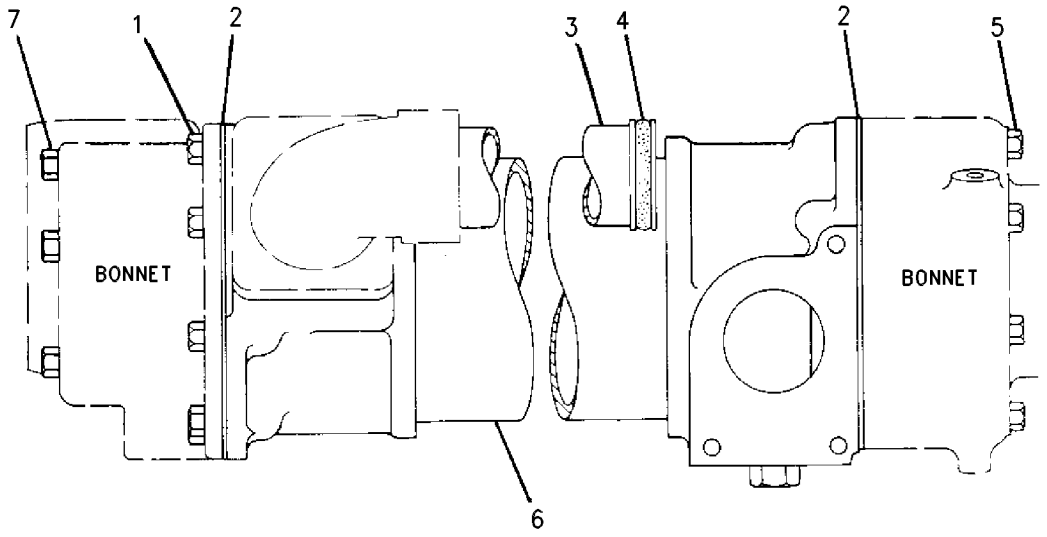

GRAPHIC #1 **<END>** g00620602

4W-5363 CORE GP-OIL COOLER*R

S/N: 2GR1180-UP

PART OF 7N-9182 COOLER GP-HYDRAULIC OIL

SMCS-1374, 1375, 1378 **i01205968**

NOTE	REF NO	GRAPHIC REF	PART NUMBER	QTY	PART NAME 1 2 3 4 5 6 (PRODUCT LEVEL)	SEE PAGE
	1	1	**9S-4191**	1	PLUG-O-RING (9/16-18 THD)	
	2	1	**6V-5049**	1	SEAL-O-RING (11.89MM ID)	

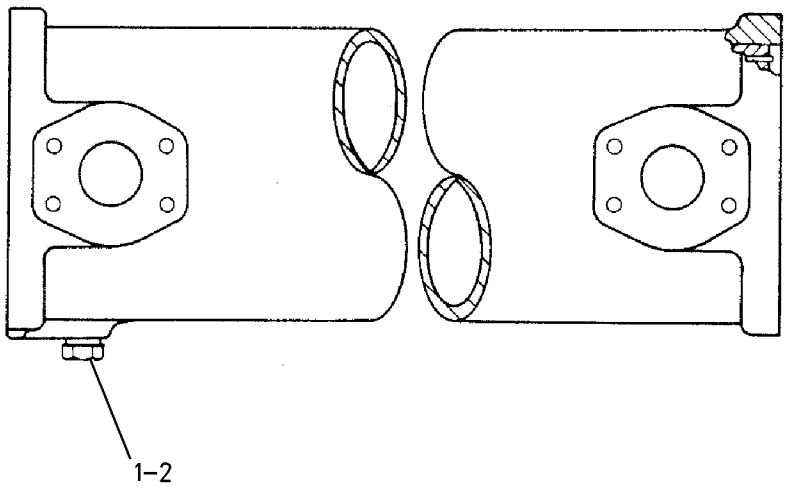

GRAPHIC #1 **<END>** g00645080

156-9842 FAN GP-SUCTION

S/N: 7PZ1-UP
142 CM (56 INCH)
PART OF 155-5557 INSTALLATION AR-ENGINE
TYPE 1

SMCS-1356, 1360 **i01610996**

NOTE	REF NO	GRAPHIC REF	PART NUMBER	QTY	PART NAME 1 2 3 4 5 6 (PRODUCT LEVEL)	SEE PAGE
	1	1	**129-9466**	1	ADAPTER-FAN	
	2	1	**160-0734**	2	GUARD AS-FAN	
	3	1	**160-0735**	2	GUARD AS-FAN	
	4	1	**160-0737**	1	SPIDER AS-FAN (8 BLADES)	
	5	1	**5P-1075**	36	WASHER-HARD (10.2X22.5X3MM THK)	
	6	1	**5S-7379**	24	BOLT (3/8-16X0.875 IN)	
	7	1	**5S-7383**	8	BOLT (3/8-16X1.75 IN)	
	8	1	**6T-5765**	1	WASHER-RETAINING	
	9	1	**6V-8801**	6	NUT (3/8-16 THD)	
	10	1	**7X-0346**	1	BOLT (5/8-11X2 IN)	
	11	1	**8T-2502**	6	BOLT (3/8-16X1.125 IN)	
	12	1	**8T-4896**	8	WASHER-HARD (10.2X18.5X2.5MM THK)	

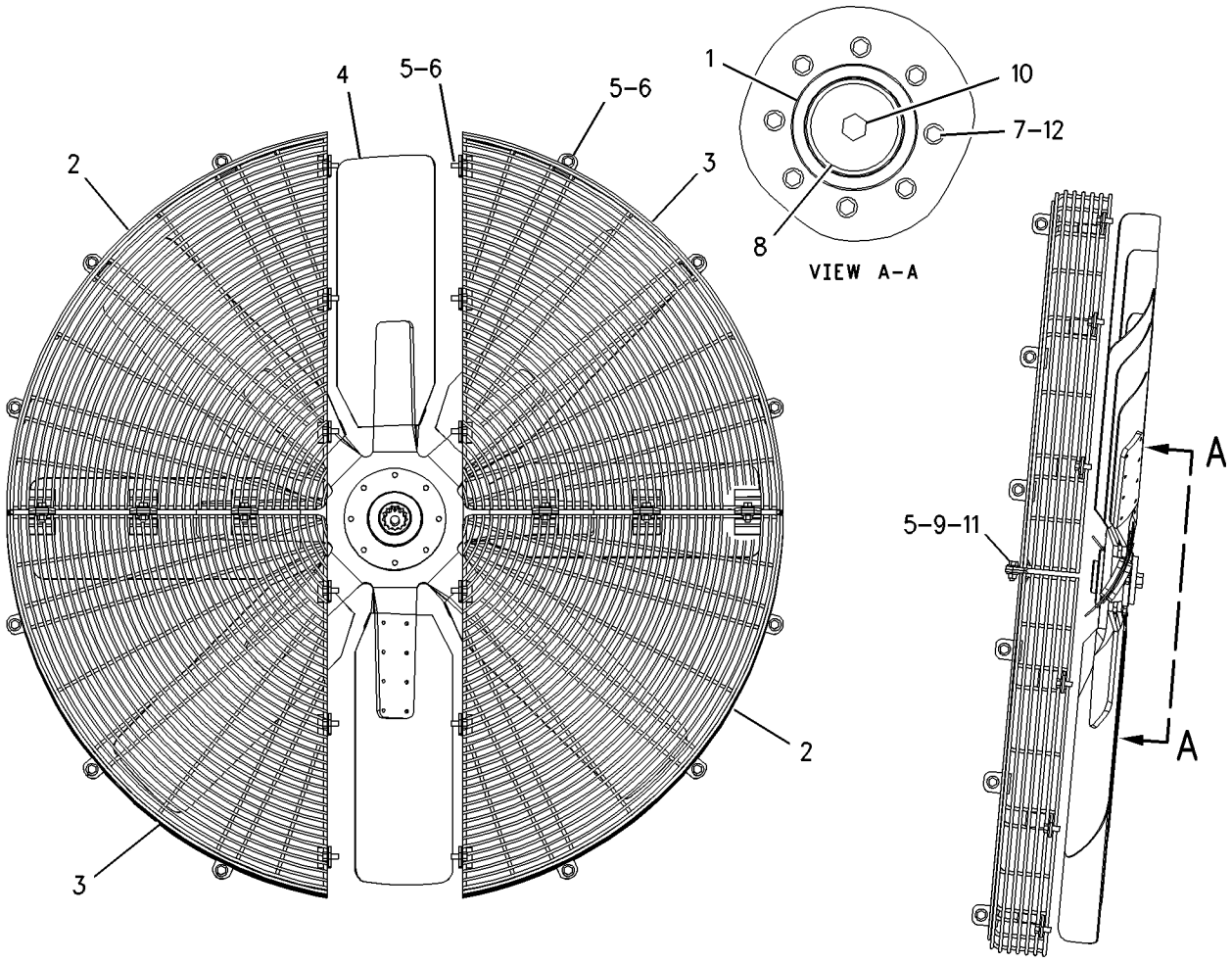

GRAPHIC #1 **<END>** g00833967

COOLING SYSTEM

156-9842 FAN GP-SUCTION

S/N: 7PZ1-UP
142 CM (56 INCH)
PART OF 155-5557 INSTALLATION AR-ENGINE
TYPE 2

SMCS-1356, 1360 **i01928216**

NOTE	REF NO	GRAPHIC REF	PART NUMBER	QTY	PART NAME 1 2 3 4 5 6 (PRODUCT LEVEL)	SEE PAGE
	1	1	**129-9466**	1	ADAPTER-FAN	
	2	1	**160-0734**	2	GUARD AS-FAN	
	3	1	**160-0735**	2	GUARD AS-FAN	
C	4	1	**232-4571**	1	SPIDER AS-FAN (11 BLADES)	
	5	1	**5P-1075**	36	WASHER-HARD (10.2X22.5X3MM THK)	
	6	1	**5S-7379**	24	BOLT (3/8-16X0.875 IN)	
	7	1	**5S-7383**	8	BOLT (3/8-16X1.75 IN)	
	8	1	**6T-5765**	1	WASHER-RETAINING	
	9	1	**6V-8801**	6	NUT (3/8-16 THD)	
	10	1	**7X-0346**	1	BOLT (5/8-11X2 IN)	
	11	1	**8T-2502**	6	BOLT (3/8-16X1.125 IN)	
	12	1	**8T-4896**	8	WASHER-HARD (10.2X18.5X2.5MM THK)	

C-CHANGE FROM PREVIOUS TYPE

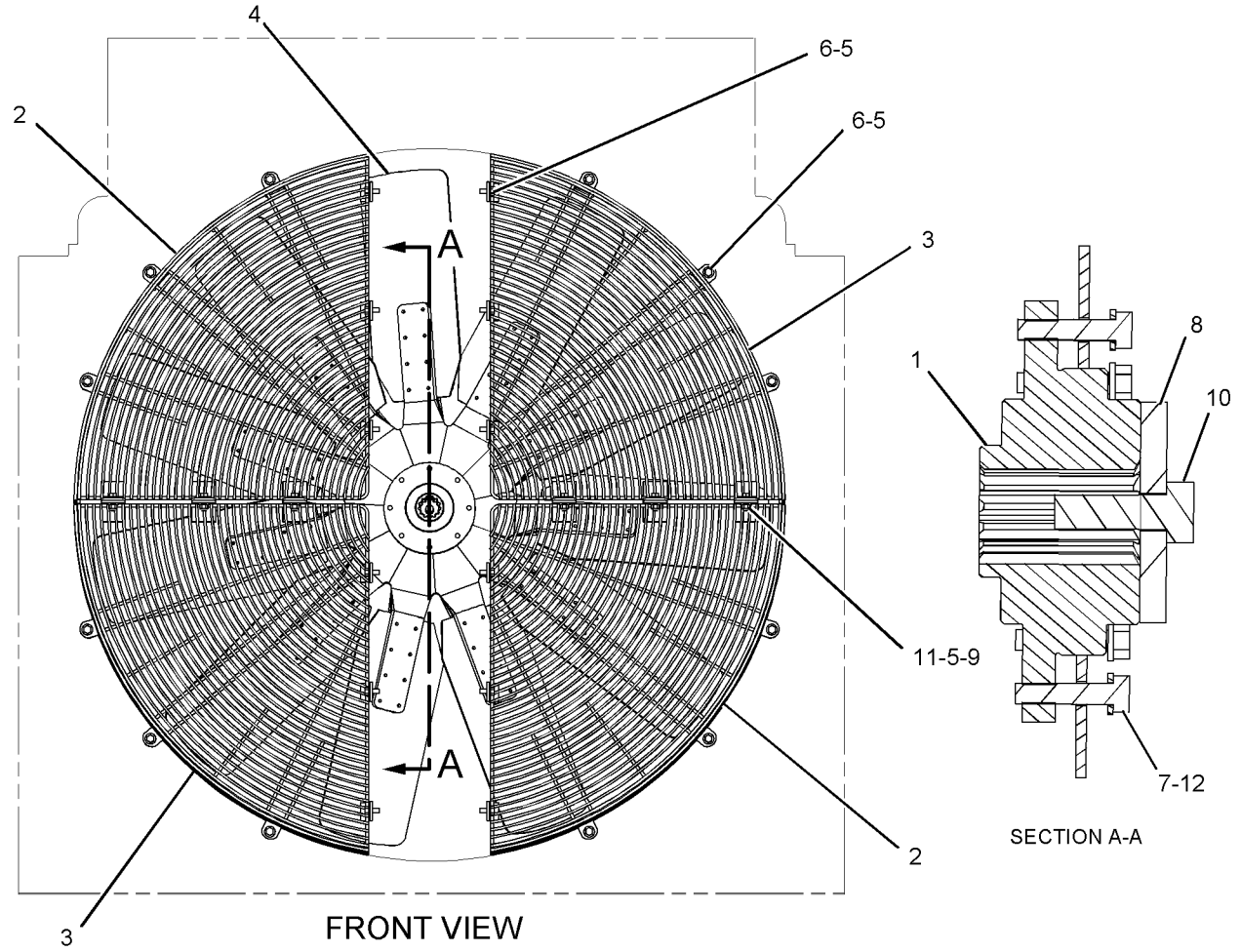

GRAPHIC #1 **<END>** g01023788

170-1152 HOUSING & REGULATOR GP

S/N: 2GR1180-UP

PART OF 155-5556 ENGINE AR

SMCS-1355, 1393 **i01105037**

NOTE	REF NO	GRAPHIC REF	PART NUMBER	QTY	PART NAME 1 2 3 4 5 6 (PRODUCT LEVEL)	SEE PAGE
	1	1	**7N-4927**	1	GASKET-HOUSING COVER	
	2	1	**6I-4950**	4	REGULATOR-TEMPERATURE	
	3	1	**170-1151**	1	HOUSING AS-REGULATOR	
	3A	1	**3S-9643**	4	SEAL-LIP	

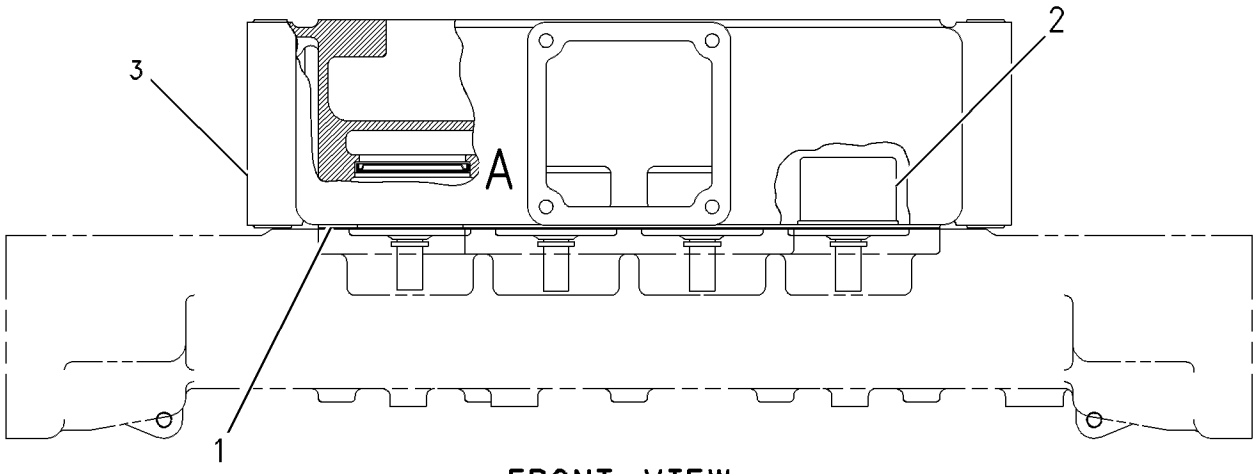

FRONT VIEW

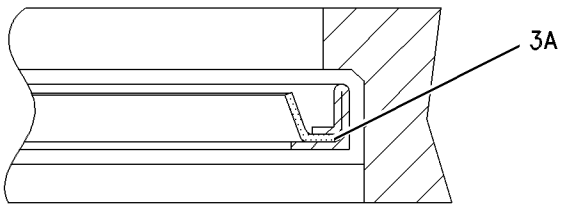

DETAIL A

GRAPHIC #1 **<END>** g00582479

4P-5540 LINES GP-WATER—LOWER

S/N: 2GR1180-UP

PART OF 155-5556 ENGINE AR

SMCS-1355, 1380, 1393 **i02001463**

NOTE	REF NO	GRAPHIC REF	PART NUMBER	QTY	PART NAME 1 2 3 4 5 6 (PRODUCT LEVEL)	SEE PAGE
	1	1	**4N-1320**	1	GASKET-ADAPTER	
	2	1	**4P-7048**	1	BRACKET	
	3	1	**7N-4939**	1	BONNET-OIL COOLER	
	4	1	**7N-4940**	1	BRACKET	
	5	1	**7N-4945**	1	GASKET	
	6	1	**7N-6426**	1	BONNET-OIL COOLER	
	7	1	**7W-3541**	1	ADAPTER-WATER LINE	
	8	1	**8N-0386**	1	FLANGE	
	9	1	**8N-7641**	1	TUBE	
	10	1	**8N-8089**	1	GASKET	
	11	1	**0S-1571**	2	BOLT (3/8-16X1.75 IN)	
	12	1	**0S-1585**	2	BOLT (1/2-13X1.50 IN)	
	13	1	**1A-2029**	2	BOLT (3/8-16X1.125 IN)	
	14	1	**1D-4706**	2	BOLT (3/8-16X6 IN)	
	15	1	**2A-4639**	4	BOLT (3/8-16X1.625 IN)	
	16	1	**5M-2894**	6	WASHER-HARD (10.2X18.5X2.5MM THK)	
	17	1	**5P-8245**	2	WASHER-HARD (13.5X25.5X3MM THK)	
	18	1	**6V-5066**	2	SEAL-O-RING	
	19	1	**6V-6609**	1	SEAL-O-RING	
	20	1	**8T-6758**	1	PLUG-PIPE	
	21	1	**8T-6761**	1	PLUG-PIPE	
B	22	1	**8T-6762**	1	PLUG-PIPE	
	23	1	**8T-6765**	2	PLUG-PIPE	
	24	1	**9S-4185**	1	PLUG	

B-USE AS REQUIRED

4P-5540 **LINES GP-WATER** *(contd.)* **i02001463**

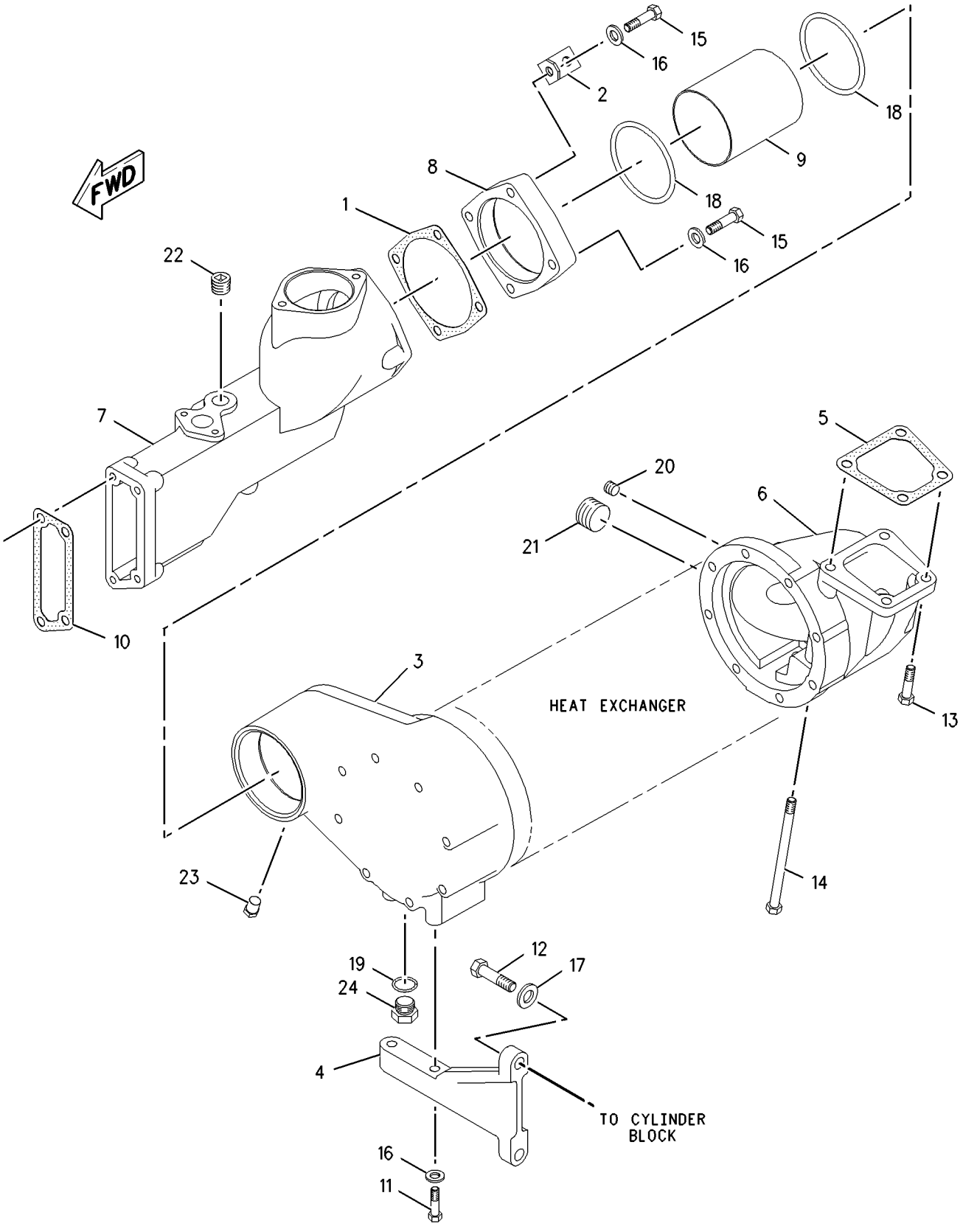

GRAPHIC #1 **<END>** g01000856

COOLING SYSTEM

156-9815 LINES GP-WATER–AFTERCOOLER

S/N: 2GR1180-4208

PART OF 155-5556 ENGINE AR

SMCS-1355, 1380, 1393 **i01683470**

NOTE	REF NO	GRAPHIC REF	PART NUMBER	QTY	PART NAME 1 2 3 4 5 6 (PRODUCT LEVEL)	SEE PAGE
	12	1	**1A-9066**	2	GASKET	
	13	1	**4H-7993**	1	CLIP	
	14	1	**4S-5882**	1	BOLT (1/2-13X7.25 IN)	
	15	1	**4W-0530**	2	RING-RETAINING	
	16	1	**4W-0531**	4	RETAINER	
	17	1	**6H-6698**	1	COVER	
	18	1	**7C-9597**	2	FLANGE	
	19	1	**7F-2050**	1	LOCKNUT (3/4-16 THD)	
	20	1	**7W-1855**	2	RING-RETAINING	
	21	1	**7W-3535**	1	ELBOW	
	22	1	**7W-3543**	1	PLATE	
	23	1	**8T-3569**	1	CONNECTOR	
I	24	1	**9W-5215**	1	HOSE AS	
	25	1	**151-2682**	1	BRACKET	
	26	1	**156-9820**	1	ELBOW-OUTLET	
	27	1	**156-9825**	1	ELBOW-OUTLET	
	28	1	**156-9833**	1	ELBOW-INLET	
	29	1	**159-4762**	1	TUBE AS	
	30	1	**165-7830**	1	ELBOW	
	31	1	**169-2619**	1	BRACKET	
	32	1	**170-1155**	4	CLAMP AS	
	33	1	**177-0609**	1	TUBE	
	34	1	**187-4606**	1	HOSE AS	
	35	1	**030-3978**	1	CONNECTOR	
	36	1	**030-7943**	1	ELBOW	
	37	1	**030-7962**	1	ELBOW	
	38	1	**0L-2070**	3	BOLT (3/8-16X2.25 IN)	
	39	1	**0S-1571**	4	BOLT (3/8-16X1.75 IN)	
	40	1	**0S-1585**	6	BOLT (1/2-13X1.50 IN)	
	41	1	**0S-1588**	2	BOLT (3/8-16X1.25 IN)	
	42	1	**0S-1594**	24	BOLT (3/8-16X1 IN)	
	43	1	**1A-1460**	1	BOLT (1/2-13X2 IN)	
	44	1	**1A-5964**	2	BOLT (3/8-16X4.5 IN)	
	45	1	**1C-2251**	2	BOLT (3/8-16X1.87 IN)	
	46	1	**3B-1915**	4	BOLT (3/8-16X1.37 IN)	
	47	1	**3J-7354**	3	SEAL-O-RING	
	48	1	**3K-0360**	1	SEAL-O-RING	
	49	1	**5B-4399**	1	SEAL-O-RING	
	50	1	**5M-2894**	16	WASHER-HARD (10.2X18.5X2.5MM THK)	
	51	1	**5P-2645**	1	ELBOW	
	52	1	**5P-8245**	2	WASHER-HARD (13.5X25.5X3MM THK)	
	53	1	**6J-2680**	3	SEAL-O-RING	
	54	1	**8M-9024**	2	WASHER-HARD (10.2X22.5X5MM THK)	
	55	1	**8T-1919**	4	SEAL-O-RING	
	56	1	**8T-6767**	1	PLUG-PIPE	
	57	1	**9L-9132**	2	WASHER (10.2X25.5X2.5MM THK)	
	58	1	**9S-4182**	1	PLUG	
	59	1	**9S-8752**	9	NUT-FULL (3/8-16 THD)	
	60	1	**9X-6458**	4	WASHER-HARD (10.2X22.5X3MM THK)	

I-SEE HOSE FABRICATION GUIDE

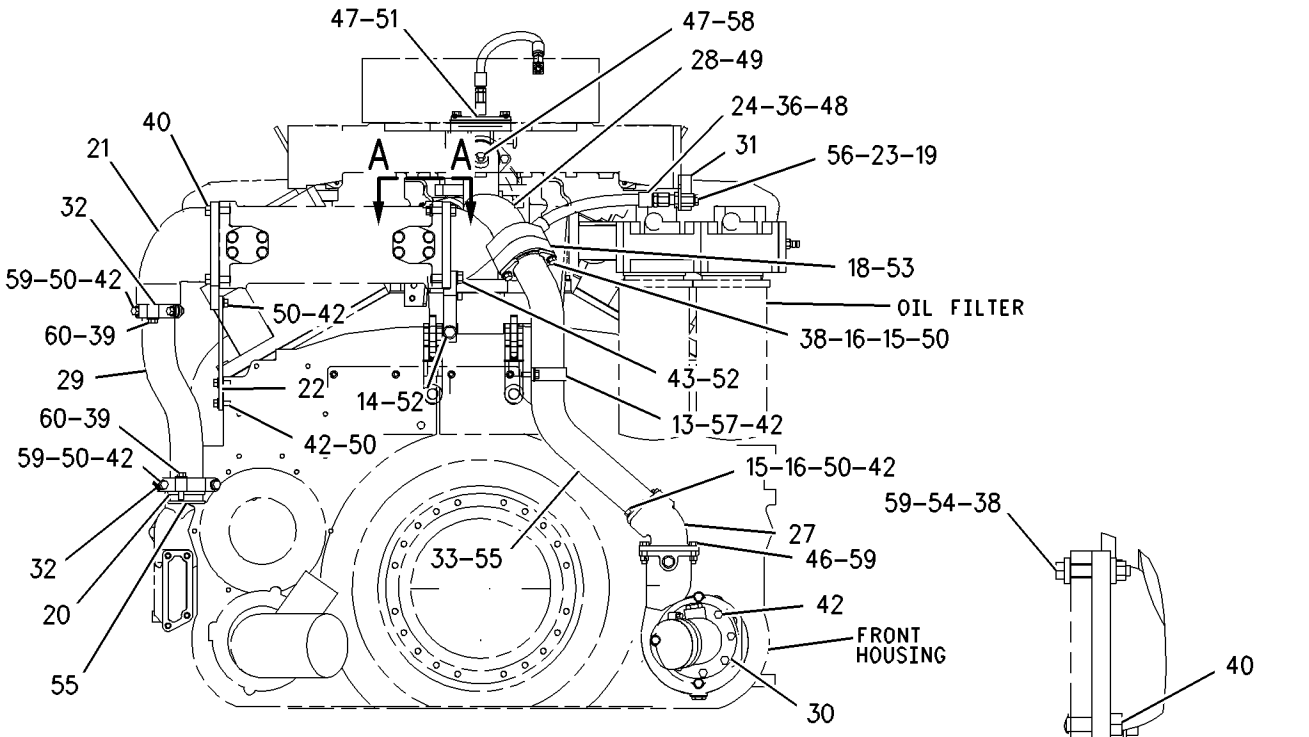

FRONT VIEW

SECTION A-A

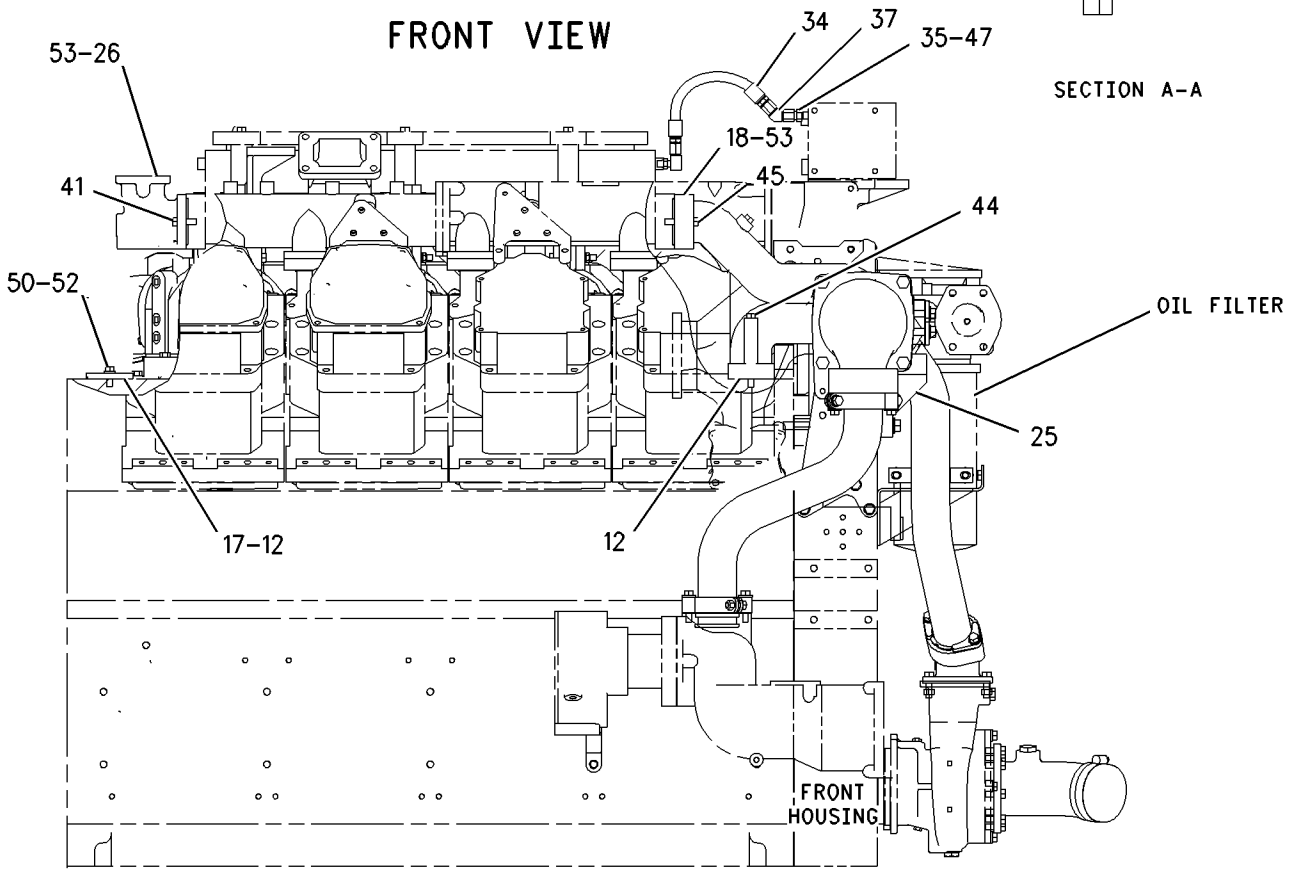

RIGHT SIDE VIEW

GRAPHIC #1 **<END>** g00876716

COOLING SYSTEM

156-9815 LINES GP-WATER–AFTERCOOLER

S/N: 2GR4209-4312

PART OF 155-5556 ENGINE AR

SMCS-1355, 1380, 1393 **i01820009**

NOTE	REF NO	GRAPHIC REF	PART NUMBER	QTY	PART NAME 1 2 3 4 5 6 (PRODUCT LEVEL)	SEE PAGE
	1	2	**1A-9066**	2	GASKET	
	2	1	**4H-7993**	1	CLIP	
	3	1	**4S-5882**	1	BOLT (1/2-13X7.25 IN)	
	4	1	**4W-0530**	2	RING-RETAINING	
	5	1	**4W-0531**	4	RETAINER	
	6	2	**6H-6698**	1	COVER	
	7	1,2	**7C-9597**	2	FLANGE	
	8	1	**7W-1855**	2	RING-RETAINING	
	9	1	**7W-3535**	1	ELBOW	
	10	1	**7W-3543**	1	PLATE	
	11	2	**151-2682**	1	BRACKET	
	12	2	**156-9820**	1	ELBOW-OUTLET	
	13	1	**156-9825**	1	ELBOW-OUTLET	
	14	1	**156-9833**	1	ELBOW	
	15	1	**159-4762**	1	TUBE AS	
	16	1	**165-7830**	1	ELBOW	
	17	1	**170-1155**	4	CLAMP AS	
	18	1	**177-0609**	1	TUBE	
	19	1	**0L-2070**	3	BOLT (3/8-16X2.25 IN)	
	20	1	**0S-1571**	4	BOLT (3/8-16X1.75 IN)	
	21	1	**0S-1585**	6	BOLT (1/2-13X1.50 IN)	
	22	2	**0S-1588**	2	BOLT (3/8-16X1.25 IN)	
	23	1,2	**0S-1594**	24	BOLT (3/8-16X1 IN)	
C	24	1	**148-8411**	1	PLUG AS	
	25	1	**1A-1460**	1	BOLT (1/2-13X2 IN)	
	26	2	**1A-5964**	2	BOLT (3/8-16X4.5 IN)	
	27	2	**1C-2251**	2	BOLT (3/8-16X1.87 IN)	
	28	1	**3B-1915**	4	BOLT (3/8-16X1.75 IN)	
	29	1,2	**3J-7354**	3	SEAL-O-RING	
	30	1	**5B-4399**	1	SEAL-O-RING	
	31	1,2	**5M-2894**	16	WASHER-HARD (10.2X18.5X2.5MM THK)	
	32	1	**5P-2645**	1	ELBOW	
	33	1	**5P-8245**	2	WASHER-HARD (13.5X25.5X3MM THK)	
	34	1,2	**6J-2680**	3	SEAL-O-RING	
	35	1	**8M-9024**	2	WASHER-HARD (10.2X22.5X5MM THK)	
	36	1	**8T-1919**	4	SEAL-O-RING	
	37	1	**9L-9132**	2	WASHER (10.2X25.5X2.5MM THK)	
C	38	1,2	**9S-4182**	2	PLUG	
	39	1	**9S-8752**	9	NUT-FULL (3/8-16 THD)	
	40	1	**9X-6458**	4	WASHER-HARD (10.2X22.5X3MM THK)	

C-CHANGE FROM PREVIOUS TYPE

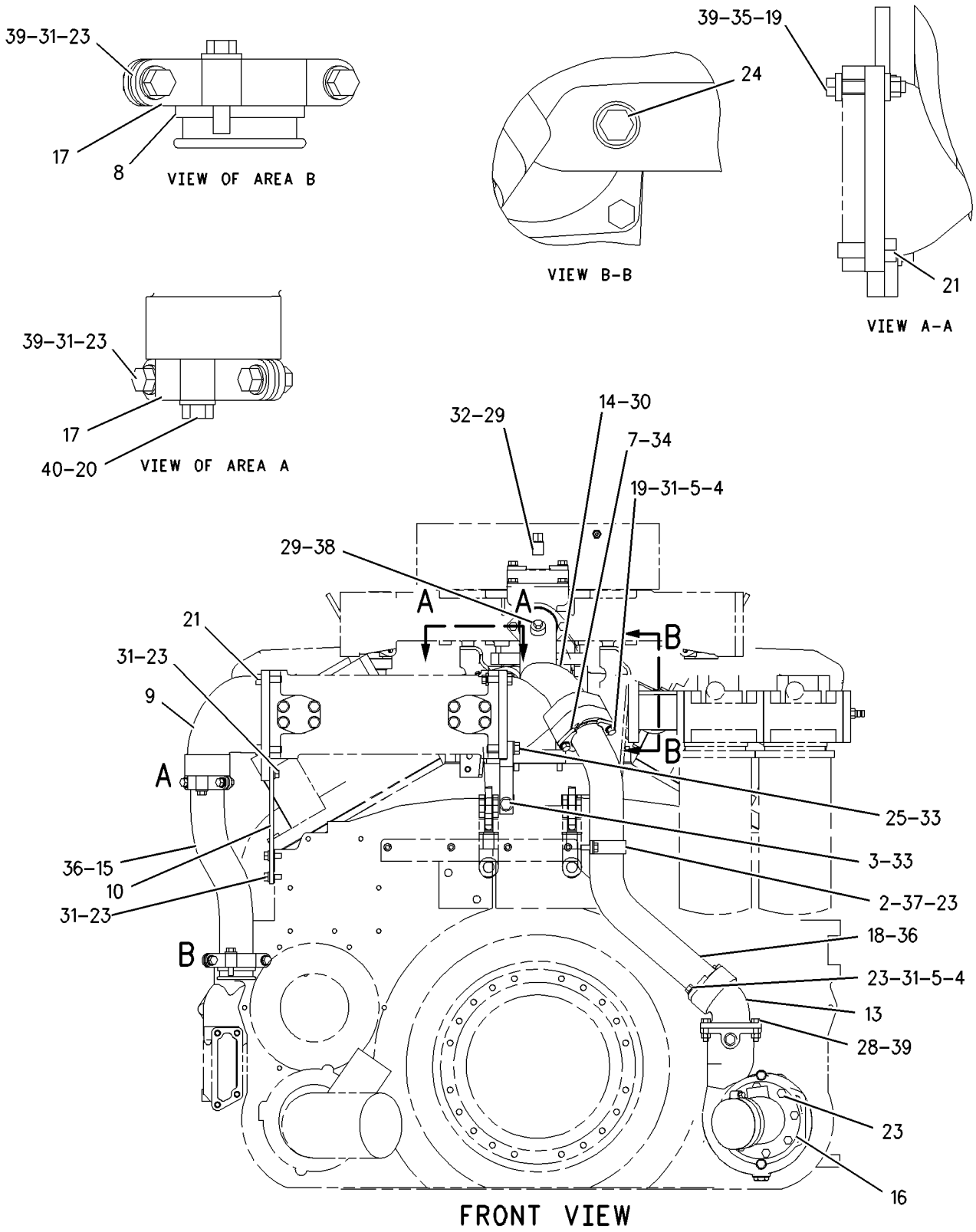

GRAPHIC #1 g01001939

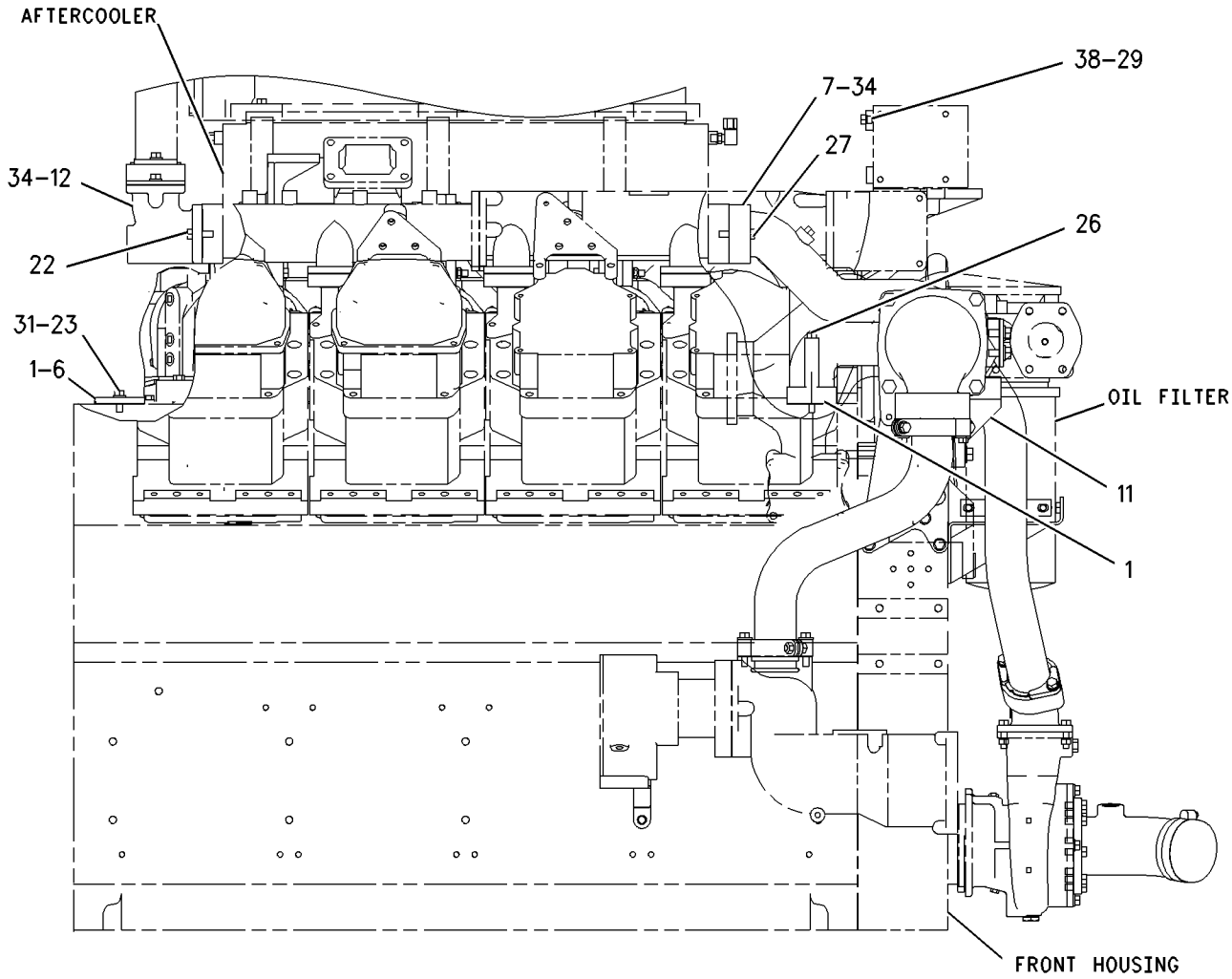

RIGHT SIDE VIEW

GRAPHIC #2 **<END>** g01001938

COOLING SYSTEM

156-9815 LINES GP-WATER

S/N: 2GR4313-UP
AFTERCOOLER
PART OF 155-5556 ENGINE AR

SMCS-1355, 1380, 1393 **i02000828**

NOTE	REF NO	GRAPHIC REF	PART NUMBER	QTY	PART NAME 1 2 3 4 5 6 (PRODUCT LEVEL)	SEE PAGE
	1	2	**1A-9066**	2	GASKET	
	2	1	**4H-7993**	1	CLIP	
	3	1	**4S-5882**	1	BOLT (1/2-13X7.25 IN)	
	4	1	**4W-0530**	2	RING-RETAINING	
	5	1	**4W-0531**	4	RETAINER	
C	6	2	**6B-7469**	2	SPACER (13/32X7/8X7/8 IN THK)	
C	7	1,2	**7C-9597**	3	FLANGE	
	8	1	**7W-1855**	2	RING-RETAINING	
	9	1	**7W-3535**	1	ELBOW	
	10	1	**7W-3543**	1	PLATE	
	11	2	**151-2682**	1	BRACKET	
	12	1	**156-9825**	1	ELBOW-OUTLET	
	13	1	**156-9833**	1	ELBOW	
	14	1	**159-4762**	1	TUBE AS	
	15	1	**165-7830**	1	ELBOW	
	16	1	**170-1155**	4	CLAMP AS	
	17	1	**177-0609**	1	TUBE	
C	18	2	**217-7058**	1	ELBOW	
C	19	2	**0L-1143**	2	BOLT (3/8-16X2.50 IN)	
	20	1	**0L-2070**	3	BOLT (3/8-16X2.25 IN)	
	21	1	**0S-1571**	4	BOLT (3/8-16X1.75 IN)	
	22	1	**0S-1585**	6	BOLT (1/2-13X1.50 IN)	
C	23	1	**0S-1594**	22	BOLT (3/8-16X1 IN)	
	24	1	**148-8411**	1	PLUG AS	
	25	1	**1A-1460**	1	BOLT (1/2-13X2 IN)	
	26	2	**1A-5964**	2	BOLT (3/8-16X4.5 IN)	
C	27	2	**1C-2251**	4	BOLT (3/8-16X1.87 IN)	
	28	1	**3B-1915**	4	BOLT (3/8-16X1.75 IN)	
	29	1,2	**3J-7354**	3	SEAL-O-RING	
C	30	1,2	**5B-4399**	2	SEAL-O-RING	
	31	1,2	**5M-2894**	16	WASHER-HARD (10.2X18.5X2.5MM THK)	
	32	1	**5P-2645**	1	ELBOW	
	33	1	**5P-8245**	2	WASHER-HARD (13.5X25.5X3MM THK)	
	34	1,2	**6J-2680**	3	SEAL-O-RING	
	35	1	**8M-9024**	2	WASHER-HARD (10.2X22.5X5MM THK)	
	36	1	**8T-1919**	4	SEAL-O-RING	
	37	1	**9L-9132**	2	WASHER (10.2X25.5X2.5MM THK)	
	38	1,2	**9S-4182**	2	PLUG	
	39	1	**9S-8752**	9	NUT-FULL (3/8-16 THD)	
	40	1	**9X-6458**	4	WASHER-HARD (10.2X22.5X3MM THK)	

C-CHANGE FROM PREVIOUS TYPE

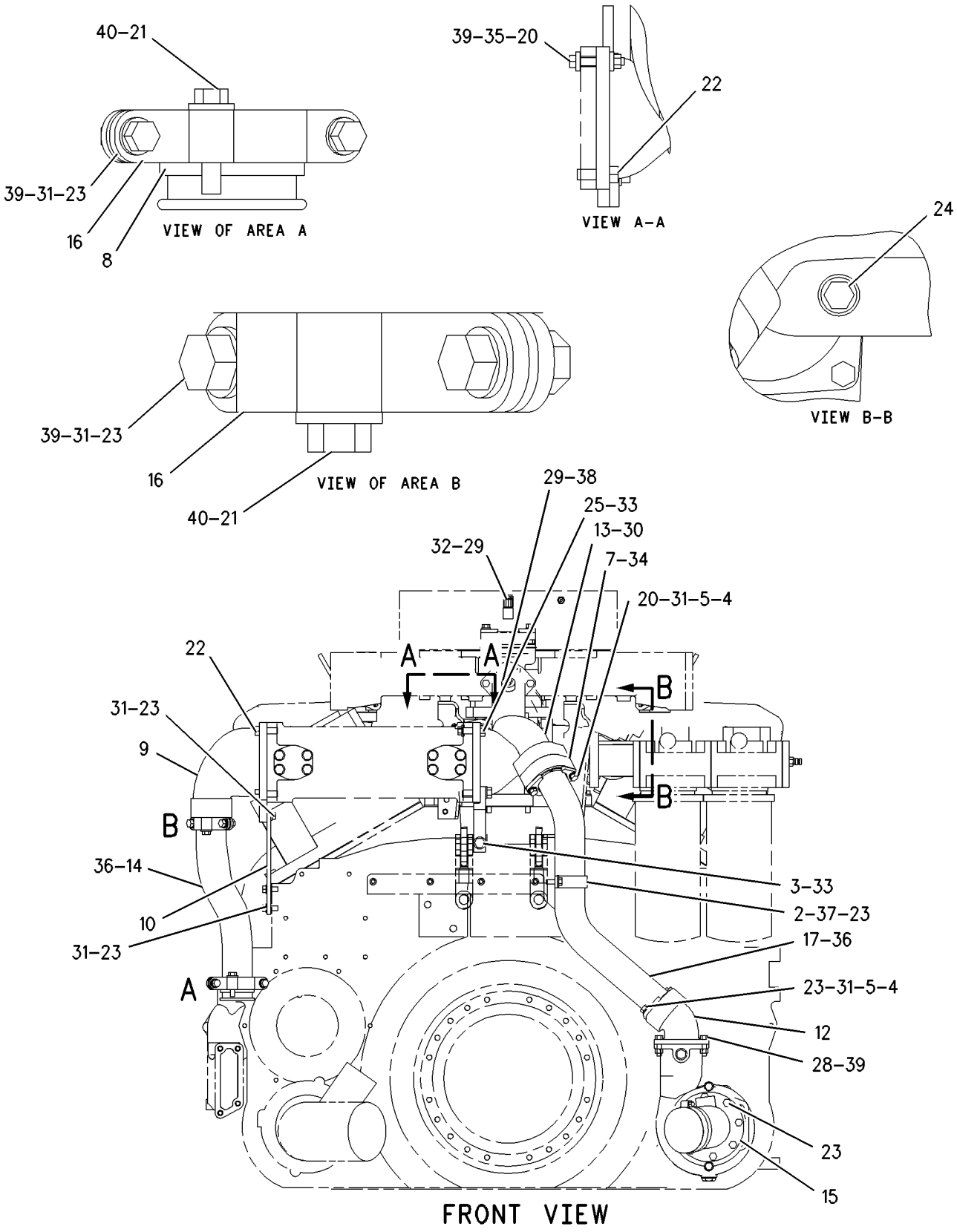

GRAPHIC #1 g01002070

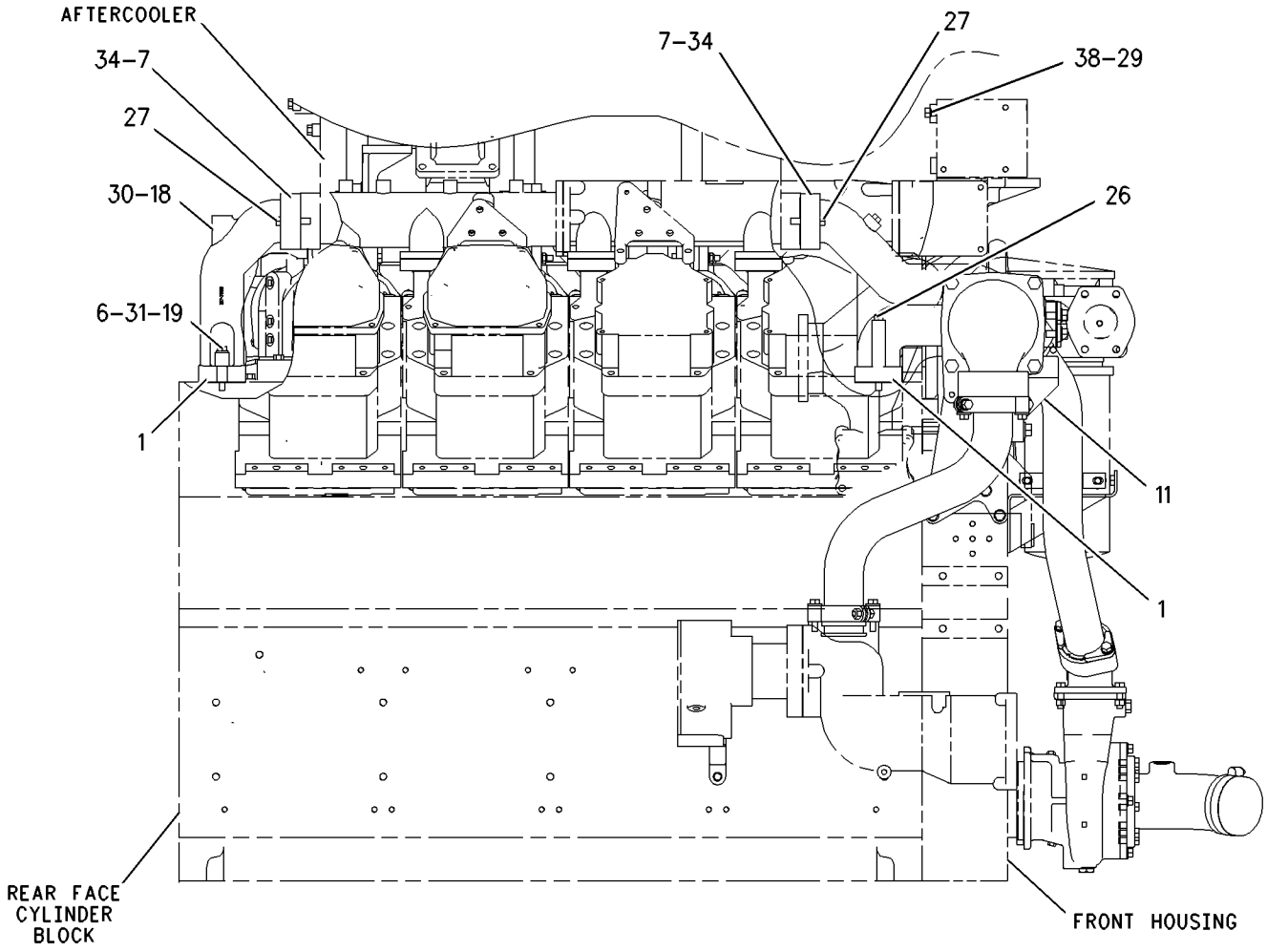

GRAPHIC #2 **<END>** g01002072

COOLING SYSTEM

156-9840 LINES GP-WATER—BYPASS

S/N: 2GR1180-4208

PART OF 155-5556 ENGINE AR

SMCS-1355, 1380, 1393 **i01788742**

NOTE	REF NO	GRAPHIC REF	PART NUMBER	QTY	PART NAME 1 2 3 4 5 6 (PRODUCT LEVEL)	SEE PAGE
	1	1	**2N-0931**	1	GASKET	
	2	1	**2N-1117**	1	CLAMP	
	3	1	**4W-3100**	1	GASKET	
	4	1	**9F-2773**	1	BOLT (3/8-16X8.5 IN)	
	5	1	**9L-9132**	3	WASHER (10.2X25.5X2.5MM THK)	
BE	6	1	**5P-1265**		HOSE	
	7	1	**7W-3540**	1	ELBOW	
	8	1	**8N-8718**	1	TUBE	
	9	1	**144-0367**	4	CLAMP-HOSE	
	10	1	**137-8173**	1	SHIM (10MM THK)	
	11	1	**137-8239**	1	ADAPTER	
	12	1	**170-1159**	1	COVER	
	13	1	**177-0259**	1	SUPPORT AS	
		1	**1F-0750**	6	NUT-WELD (3/8-16 THD)	
	14	1	**0S-1594**	9	BOLT (3/8-16X1 IN)	
	15	1	**0S-1621**	3	BOLT (1/2-13X1 IN)	
	16	1	**0T-0065**	1	BOLT (3/8-16X3.5 IN)	
	17	1	**1D-4706**	3	BOLT (3/8-16X6 IN)	
	18	1	**3E-7430**	1	PLUG-PIPE	
	19	1	**5M-2894**	4	WASHER-HARD (10.2X18.5X2.5MM THK)	
	20	1	**5P-8245**	3	WASHER-HARD (13.5X25.5X3MM THK)	
	21	1	**6V-6809**	1	SEAL-O-RING	
	22	1	**8T-6765**	1	PLUG-PIPE	

B-USE AS REQUIRED
E-ORDER BY THE CENTIMETER

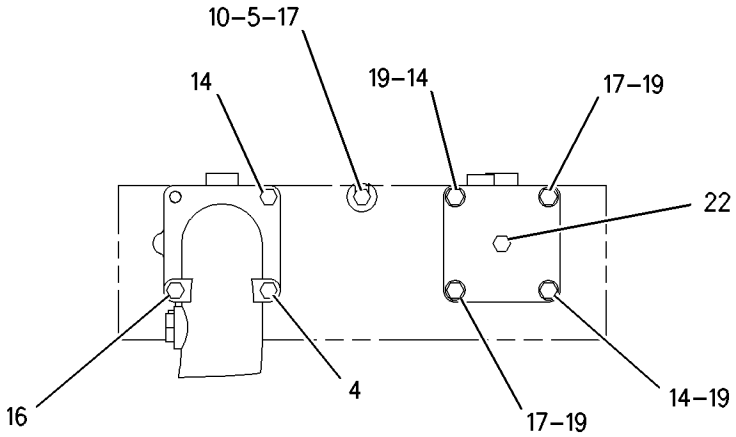

VIEW A-A

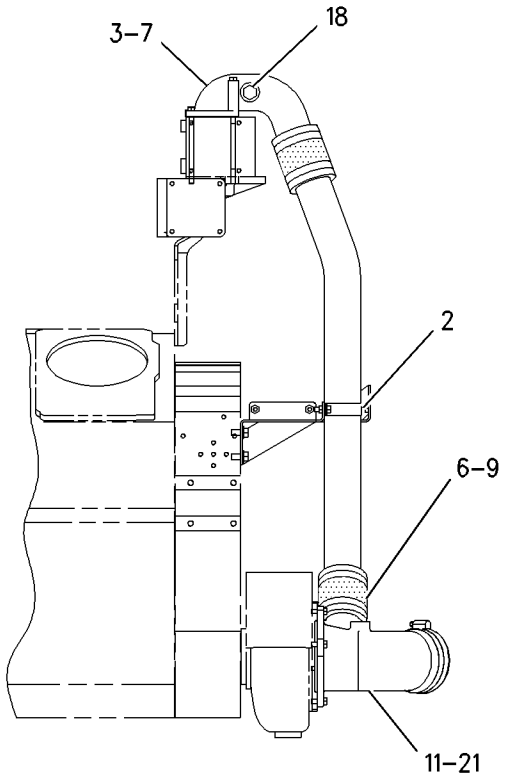

RIGHT SIDE VIEW

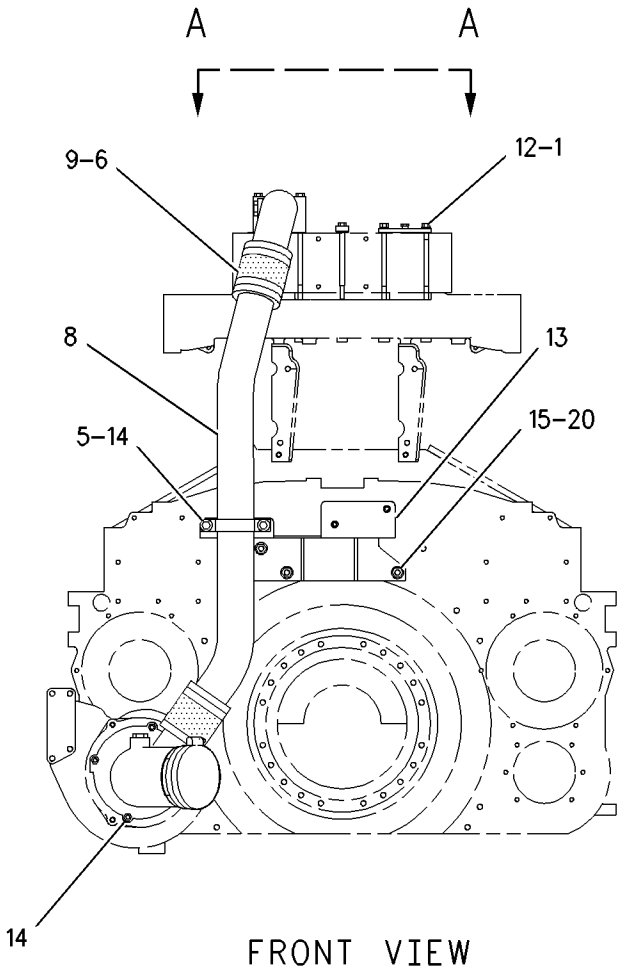

FRONT VIEW

GRAPHIC #1 **<END>** g00857876

156-9840 LINES GP-WATER–BYPASS

S/N: 2GR4209-UP

PART OF 155-5556 ENGINE AR

SMCS-1355, 1380, 1393 **i01820123**

NOTE	REF NO	GRAPHIC REF	PART NUMBER	QTY	PART NAME 1 2 3 4 5 6 (PRODUCT LEVEL)	SEE PAGE
	1	1	**2N-0931**	1	GASKET	
	2	1	**2N-1117**	1	CLAMP	
	3	1	**4W-3100**	1	GASKET	
E	4	1	**5P-1265**		HOSE (12CM EACH)	
	5	1	**7W-3540**	1	ELBOW	
	6	1	**8N-8718**	1	TUBE	
B	7	1	**137-8173**	1	SHIM (10MM THK)	
	8	1	**137-8239**	1	ADAPTER	
	9	1	**144-0367**	4	CLAMP-HOSE	
	10	1	**170-1159**	1	COVER	
	11	1	**177-0259**	1	SUPPORT AS	
		1	**1F-0750**	6	NUT-WELD (3/8-16 THD)	
	12	1	**0S-1594**	9	BOLT (3/8-16X1 IN)	
	13	1	**0S-1621**	3	BOLT (1/2-13X1 IN)	
	14	1	**0T-0065**	1	BOLT (3/8-16X3.5 IN)	
	15	1	**1D-4706**	3	BOLT (3/8-16X6 IN)	
	16	1	**5M-2894**	4	WASHER-HARD (10.2X18.5X2.5MM THK)	
	17	1	**5P-8245**	3	WASHER-HARD (13.5X25.5X3MM THK)	
	18	1	**6V-6809**	1	SEAL-O-RING	
	19	1	**8T-6765**	1	PLUG-PIPE	
	20	1	**9F-2773**	1	BOLT (3/8-16X8.5 IN)	
	21	1	**9L-9132**	3	WASHER (10.2X25.5X2.5MM THK)	

B-USE AS REQUIRED
E-ORDER BY THE CENTIMETER

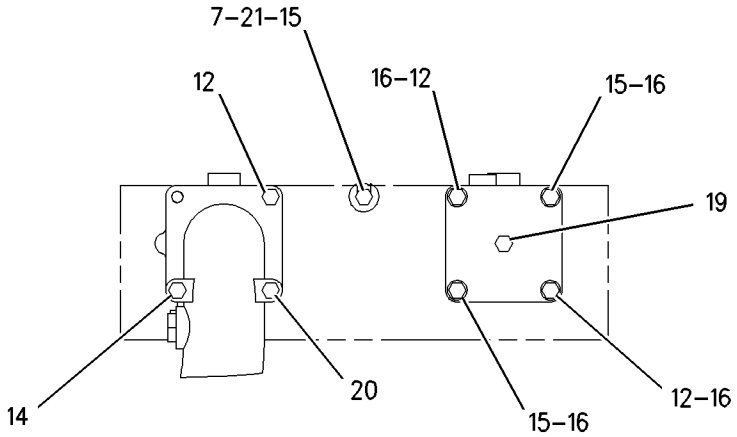

VIEW A-A

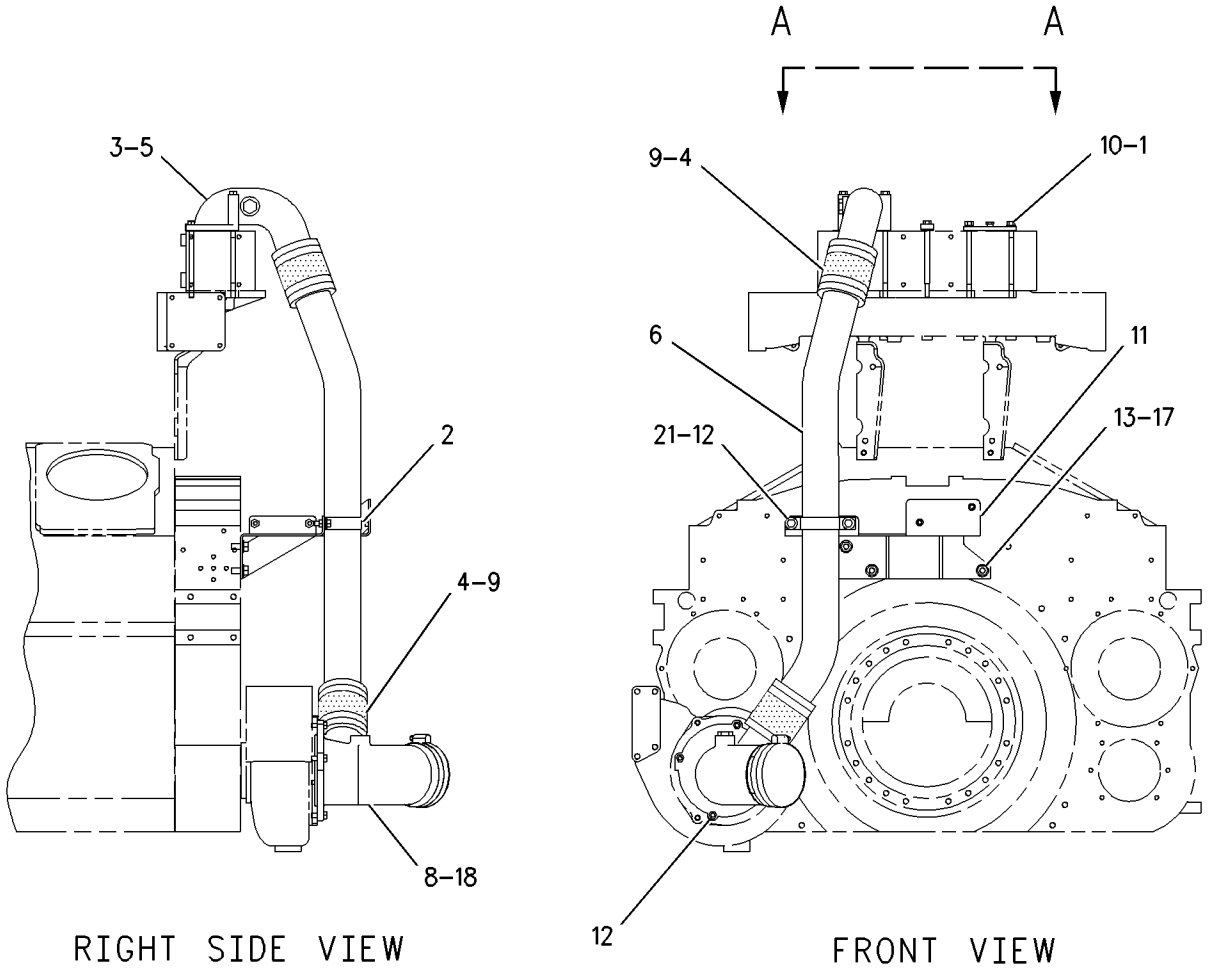

RIGHT SIDE VIEW

FRONT VIEW

GRAPHIC #1 **<END>** g00947209

COOLING SYSTEM

156-9843 LINES GP-WATER–AFTERCOOLER

S/N: 7PZ1-675

PART OF 155-5557 INSTALLATION AR-ENGINE

SMCS-1355, 1380, 1393 **i02000872**

NOTE	REF NO	GRAPHIC REF	PART NUMBER	QTY	PART NAME 1 2 3 4 5 6 (PRODUCT LEVEL)	SEE PAGE
	1	1	**4W-0530**	2	RING-RETAINING	
	2	1	**4W-0531**	4	RETAINER	
	3	1	**7C-9597**	2	FLANGE	
	4	1	**160-6194**	2	CLIP-SADDLE	
B	5	1	**164-7699**	4	SHIM (3MM THK)	
	6	1	**165-7816**	1	TUBE AS	
	7	1	**0L-2070**	4	BOLT (3/8-16X2.25 IN)	
	8	1	**5C-6565**	4	BOLT (1/2-13X1.125 IN)	
	9	1	**5H-8848**	2	SEAL-O-RING	
	10	1	**5M-2894**	4	WASHER-HARD (10.2X18.5X2.5MM THK)	
	11	1	**5P-1076**	4	WASHER-HARD (13.5X30X4MM THK)	
	12	1	**8T-1919**	2	SEAL-O-RING	

B-USE AS REQUIRED

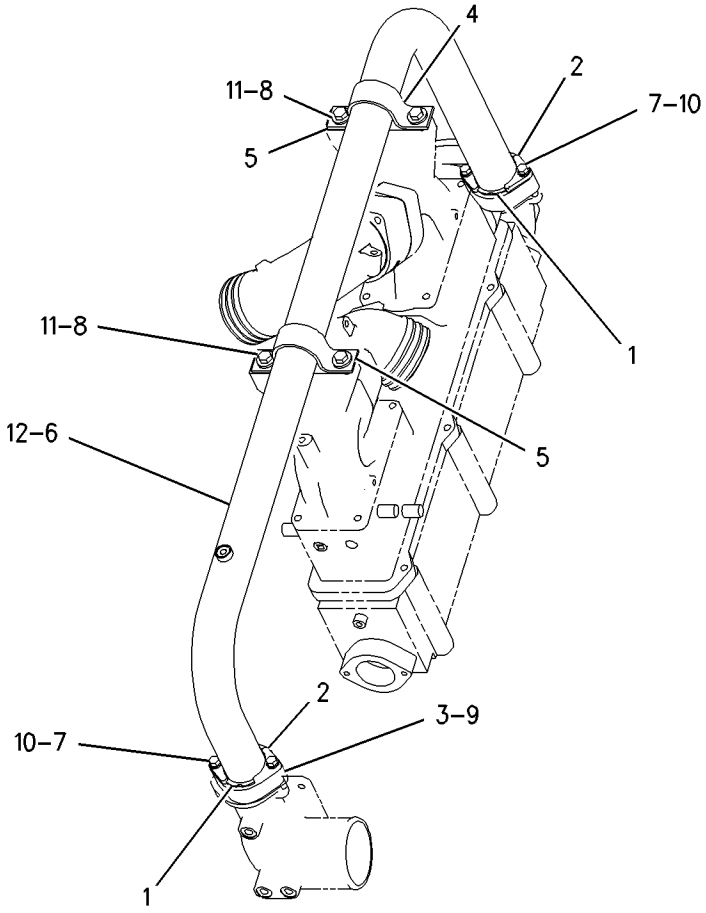

GRAPHIC #1 **<END>** g00777384

159-4756 LINES GP-WATER—TRANSMISSION COOLER

S/N: 7PZ1-UP

PART OF 155-5557 INSTALLATION AR-ENGINE

SMCS-1355, 1380, 1393 **i02029831**

NOTE	REF NO	GRAPHIC REF	PART NUMBER	QTY	PART NAME 1 2 3 4 5 6 (PRODUCT LEVEL)	SEE PAGE
	1	1	**2W-7622**	2	PLATE-DRAIN	
	2	1	**4F-0186**	1	NIPPLE-PIPE	
	3	1	**4H-7993**	1	CLIP	
	4	1	**5G-6504**	1	LUG	
E	5	1	**5P-1262**		HOSE (13CM EACH)	
	6	1	**7N-1464**	1	VALVE AS-DRAIN	
		1	**3B-0551**	1	PLUG-PIPE	
		1	**7N-1447**	1	PLUG-DRAIN (TRANSMISSION COOLER)	
		1	**7N-1448**	1	ADAPTER-PLUG	
		1	**9H-6687**	1	PIN-SPRING	
	7	1	**7T-2035**	1	ANGLE	
	8	1	**8C-6871**	1	CONNECTOR	
	9	1	**8T-4984**	6	CLAMP-HOSE	
	10	1	**9B-4179**	1	HOSE	
	11	1	**9M-3116**	2	GASKET	
	12	1	**003-9514**	1	COUPLING-PIPE	
	13	1	**129-9472**	1	BONNET	
	14	1	**164-7736**	1	HOSE AS	
	15	1	**164-7737**	1	HOSE AS	
	16	1	**164-7738**	1	HOSE AS	
	17	1	**164-7739**	1	HOSE AS	
	18	1	**165-7825**	1	BONNET	
	19	1	**176-8191**	1	TUBE	
	20	1	**1S-1015**	1	CLIP	
	21	1	**3D-2824**	3	SEAL-O-RING	
	22	1	**3K-0360**	2	SEAL-O-RING	
	23	1	**4L-6454**	2	BOLT (3/8-16X1-IN)	
	24	1	**5P-1075**	2	WASHER-HARD (10.2X22.5X3-MM THK)	
	25	1	**5P-2566**	1	BOLT (1/2-13X1.5-IN)	
	26	1	**5P-7854**	1	CLIP	
	27	1	**6V-8398**	2	SEAL-O-RING	
	28	1	**6V-8637**	1	CONNECTOR	
	29	1	**6V-8639**	1	CONNECTOR	
	30	1	**6V-8777**	1	TEE-FACE SEAL	
	31	1	**6V-8784**	1	TEE-FACE SEAL	
	32	1	**6V-8801**	5	NUT (3/8-16-THD)	
	33	1	**6V-9746**	6	SEAL-O-RING	
	34	1	**6V-9877**	1	ELBOW	
	35	1	**7X-0337**	1	BOLT (1/2-13X5.75-IN)	
	36	1	**8T-4223**	1	WASHER-HARD (13.5X25.5X3-MM THK)	
	37	1	**8T-4896**	8	WASHER-HARD (10.2X18.5X2.5-MM THK)	
	38	1	**8T-7529**	1	CLIP	
	39	1	**8T-8919**	19	BOLT (1/2-13X1.75-IN)	
	40	1	**8T-9377**	4	BOLT (3/8-16X2.25-IN)	
	41	1	**9B-7237**	1	BOLT (3/8-16X1.25-IN)	

E-ORDER BY THE CENTIMETER

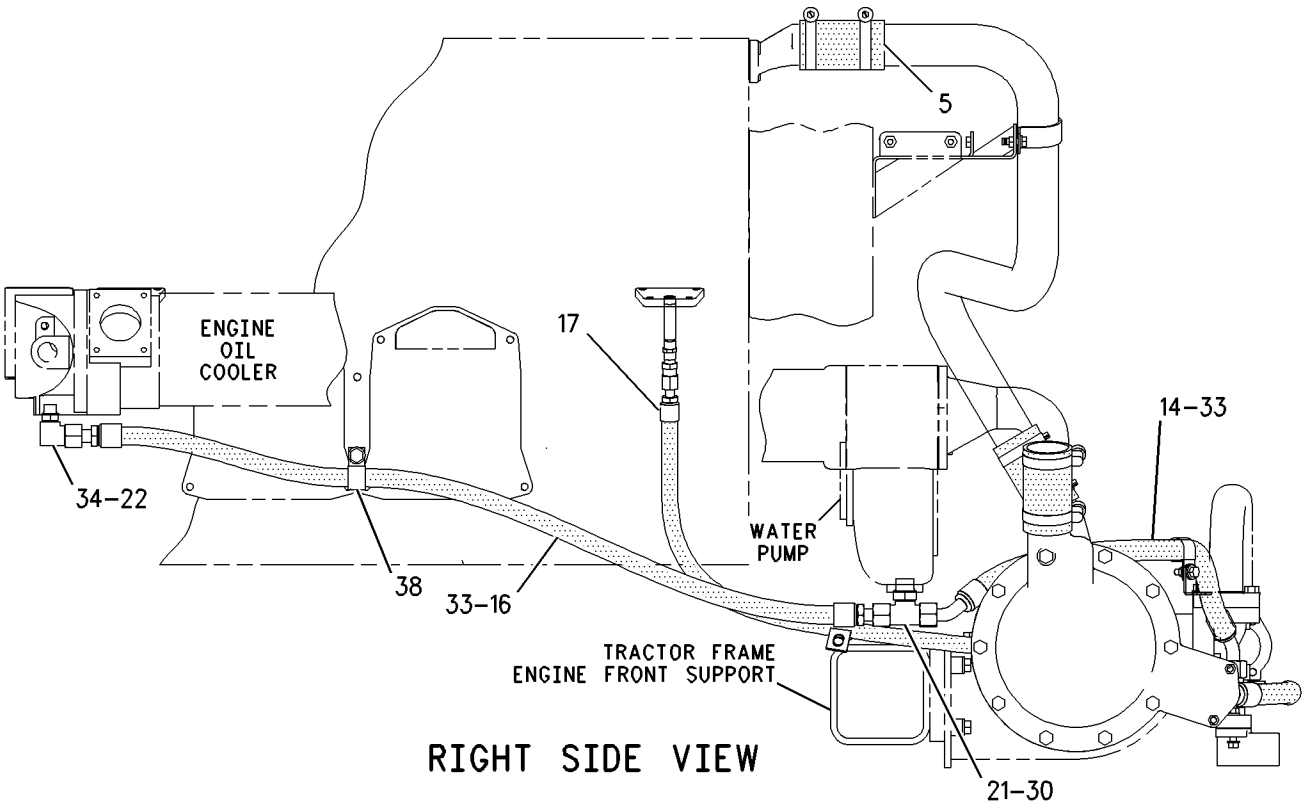

RIGHT SIDE VIEW

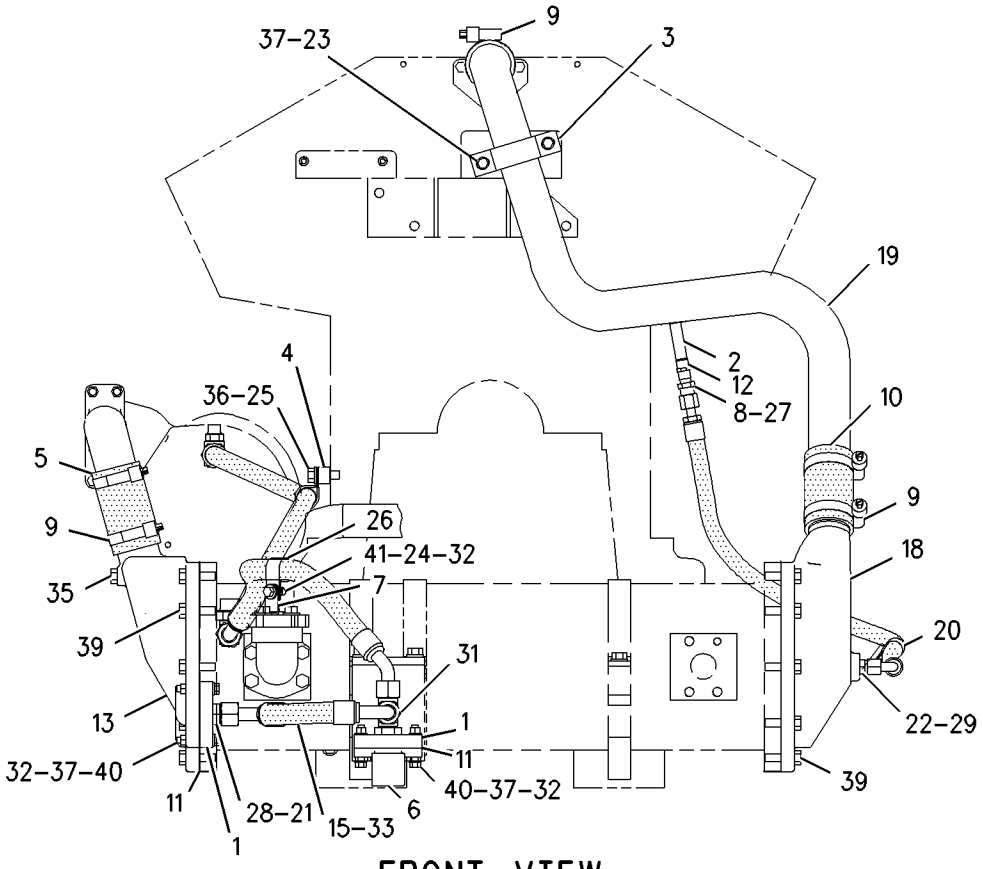

FRONT VIEW

GRAPHIC #1 **<END>** g00867740

COOLING SYSTEM

169-4346 LINES GP-WATER–TURBO

S/N: 2GR1180-UP

PART OF 155-5556 ENGINE AR

SMCS-1355, 1380, 1393 **i01983524**

NOTE	REF NO	GRAPHIC REF	PART NUMBER	QTY	PART NAME 1 2 3 4 5 6 (PRODUCT LEVEL)	SEE PAGE
	2	1	**4P-0707**	2	CLAMP AS	
	3	1	**4W-5461**	2	TUBE AS	
	4	1	**4W-5463**	2	BRACKET	
	5	1	**7F-2050**	2	LOCKNUT (3/4-16 THD)	
	6	1	**241-3283**	8	GASKET	
	7	1	**7N-7878**	4	PLATE-COVER	
	8	1	**8N-0788**	2	COVER	
	9	1	**8T-1885**	2	CLIP (SLOT)	
	10	1	**8T-1886**	2	CLIP (TAB)	
	11	1	**112-6053**	1	TUBE AS	
	12	1	**112-6054**	1	TUBE AS	
	13	1	**113-8188**	2	ELBOW	
	14	1	**152-6504**	2	BRACKET AS	
	15	1	**155-0499**	1	TUBE AS	
	16	1	**169-4349**	1	BRACKET	
	17	1	**169-4357**	2	BRACKET	
	18	1	**118-4728**	2	ELBOW	
	19	1	**0L-1143**	1	BOLT (3/8-16X2.50 IN)	
	20	1	**0S-1588**	4	BOLT (3/8-16X1.25 IN)	
	21	1	**0S-1594**	8	BOLT (3/8-16X1 IN)	
	22	1	**0S-1608**	2	BOLT (3/8-16X3.75 IN)	
	23	1	**0S-1617**	2	BOLT (5/16-18X0.75 IN)	
	24	1	**1A-2029**	2	BOLT (3/8-16X1.125 IN)	
	25	1	**2P-2204**	1	ELBOW-UNION	
	26	1	**2P-8130**	1	TEE-UNION (BULKHEAD)	
	27	1	**3B-1915**	2	BOLT (3/8-16X1.75 IN)	
	28	1	**3E-4352**	2	WASHER-HARD (8.8X20.5X2.5MM THK)	
	29	1	**3K-0360**	2	SEAL-O-RING	
	30	1	**5M-2894**	14	WASHER-HARD (10.2X18.5X2.5MM THK)	
	31	1	**6V-6609**	2	SEAL-O-RING	
	32	1	**8M-0505**	2	CONNECTOR	
	33	1	**8M-0755**	2	CONNECTOR	
	34	1	**9S-8752**	1	NUT-FULL (3/8-16 THD)	
	35	1	**9X-6458**	6	WASHER-HARD (10.2X22.5X3MM THK)	

169-4346 **LINES GP-WATER** ***(contd.)*** **i01983524**

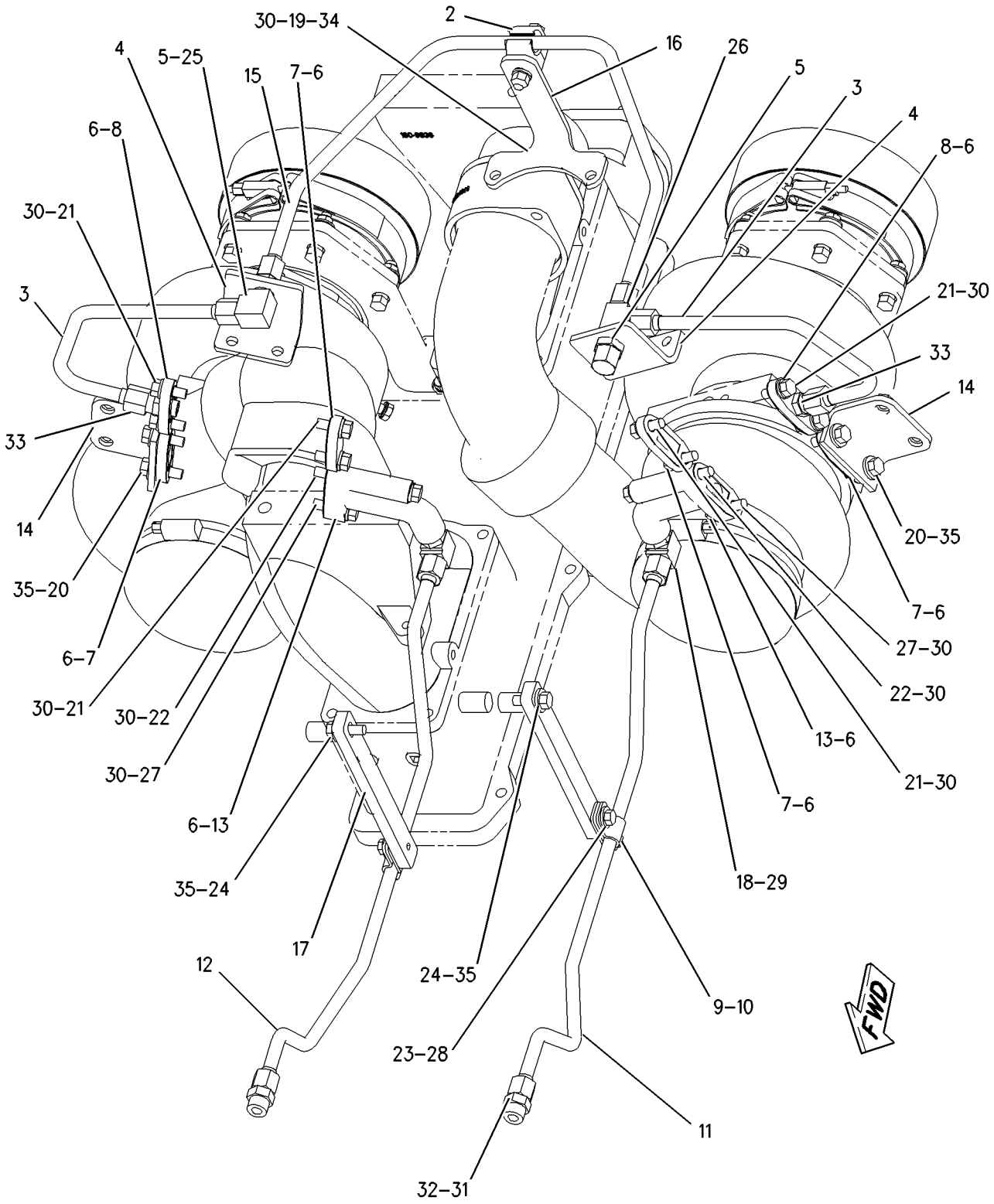

GRAPHIC #1 **<END>** g00868289

COOLING SYSTEM

172-0199 LINES GP-WATER—UPPER

S/N: 2GR1180-UP

PART OF 155-5556 ENGINE AR

SMCS-1355, 1380, 1393 **i01967646**

NOTE	REF NO	GRAPHIC REF	PART NUMBER	QTY	PART NAME 1 2 3 4 5 6 (PRODUCT LEVEL)	SEE PAGE
	1	1	**4P-1654**	1	MANIFOLD-REAR-LH	
	2	1	**154-1618**	1	MANIFOLD-FRONT (LH)	
	3	1	**9Y-4090**	1	HOUSING-REGULATOR	
	4	1	**8N-9528**	2	BRACKET	
	5	1	**0S-1594**	23	BOLT (3/8-16X1 IN)	
	6	1	**5M-2894**	7	WASHER-HARD (10.2X18.5X2.5MM THK)	
	7	1	**9S-4182**	1	PLUG	
	8	1	**6V-9027**	1	SEAL-O-RING	
	9	1	**8T-6762**	4	PLUG-PIPE	
	10	1	**6V-9769**	8	SEAL-O-RING	
	11	1	**2W-3146**	8	FLANGE	
	12	1	**8N-7639**	8	ELBOW	
	13	1	**1B-7182**	32	BOLT (5/16-18X1.25 IN)	
	14	1	**7N-3297**	1	COVER	
	15	1	**7N-3368**	1	GASKET	
	16	1	**1W-8545**	2	GASKET	
	17	1	**127-2176**	8	SEAL-INTEGRAL	
	18	1	**0S-1618**	30	BOLT (5/16-18X1 IN)	
	19	1	**9M-1974**	30	WASHER-HARD (8.8X16X2MM THK)	
	20	1	**8N-4524**	8	GASKET	
	21	1	**133-8382**	4	BRACKET	
	22	1	**122-8856**	2	GASKET	
	23	1	**4P-3896**	1	MANIFOLD-REAR-RH	
	24	1	**154-1619**	1	MANIFOLD-FRONT (RH)	
	25	1	**135-0175**	4	BRACKET	

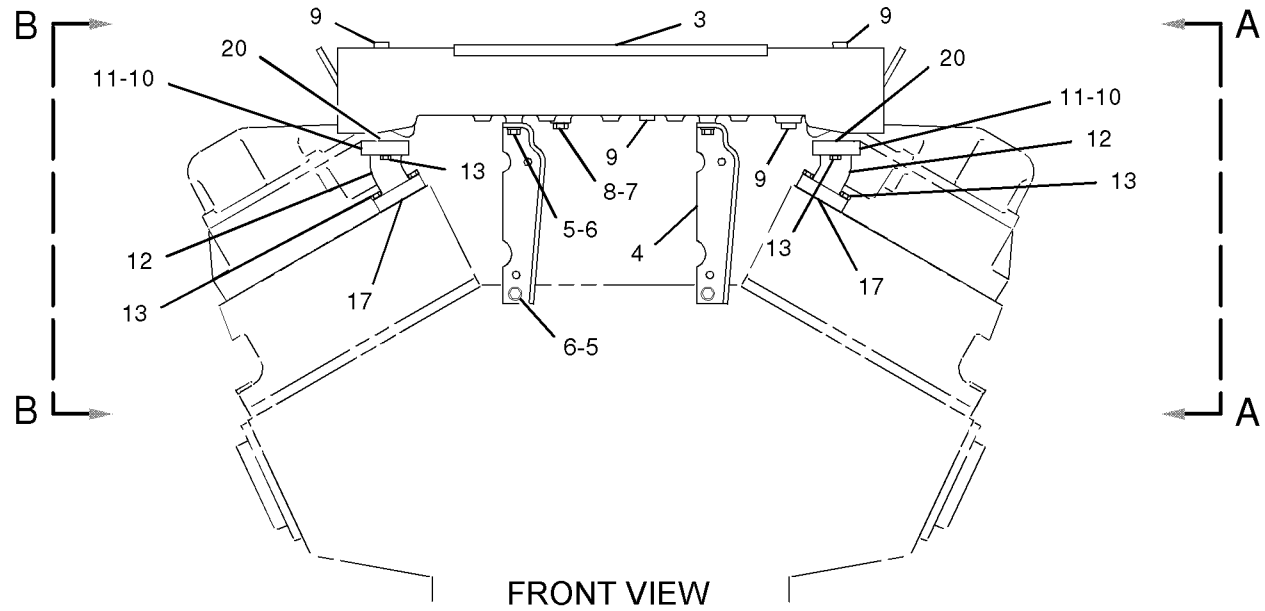

FRONT VIEW

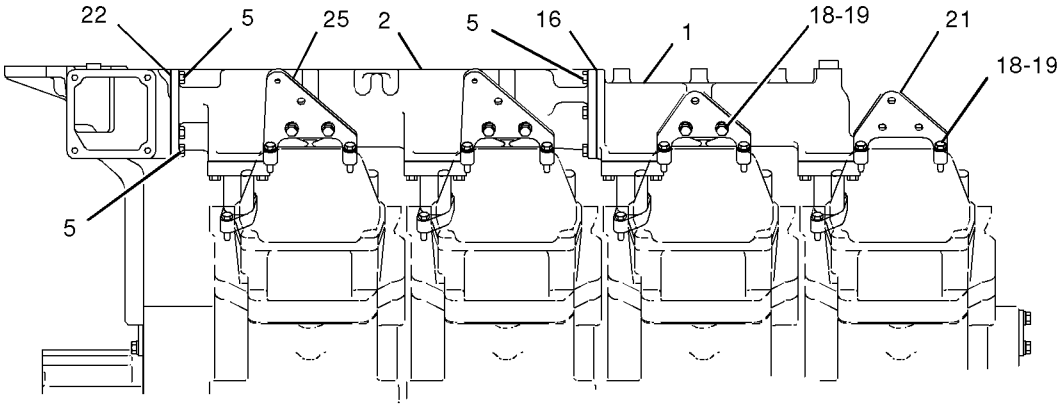

VIEW A-A

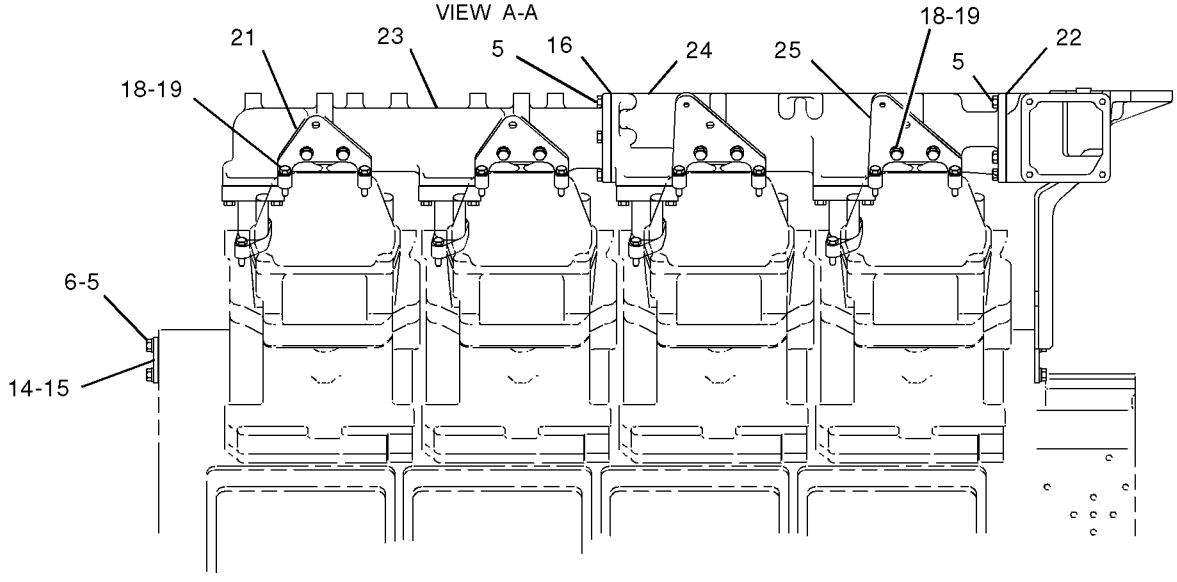

VIEW B-B

GRAPHIC #1 **<END>** g01022096

217-7041 LINES GP-WATER—CAB HEATER

S/N: 2GR3946, 4089, 4209-UP

PART OF 155-5556 ENGINE AR

SMCS-1355, 1380, 1393 **i01820004**

NOTE	REF NO	GRAPHIC REF	PART NUMBER	QTY	PART NAME 1 2 3 4 5 6 (PRODUCT LEVEL)	SEE PAGE
	1	1	**7F-2050**	2	LOCKNUT	
	2	1	**8T-3569**	2	CONNECTOR	
	3	1	**005-7889**	2	VALVE AS	
	4	1	**129-9519**	1	BRACKET	
	5	1	**169-2619**	1	BRACKET	
I	6	1	**217-7042**	1	HOSE AS	
I	7	1	**217-7043**	1	HOSE AS	
	8	1	**003-9514**	2	COUPLING-PIPE	
	9	1	**004-7626**	1	CONNECTOR	
	10	1	**0L-1351**	2	BOLT (3/8-16X0.875 IN)	
	11	1	**3R-5387**	1	CONNECTOR	
	12	1	**4F-0186**	2	NIPPLE-PIPE	
	13	1	**5M-2894**	2	WASHER-HARD (10.2X18.5X2.5MM THK)	
	14	1	**6D-4246**	2	CLIP	

I-SEE HOSE FABRICATION GUIDE

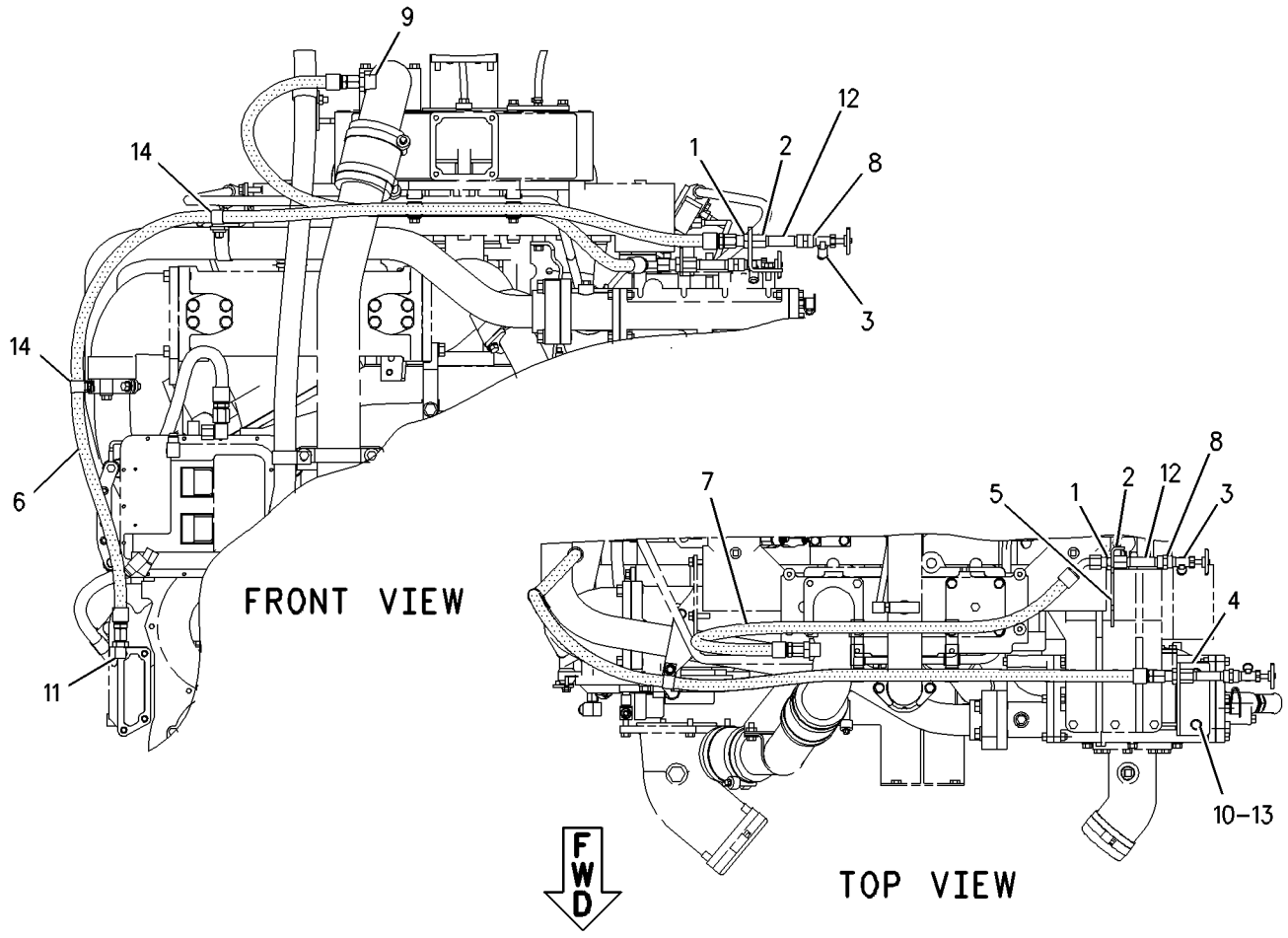

GRAPHIC #1 **<END>** g00996911

COOLING SYSTEM

156-9817 PUMP GP-AUXILIARY WATER

S/N: 2GR1180-4088

PART OF 156-9850 PUMP GP-AUXILIARY WATER

SMCS-1361 **i02029677**

NOTE	REF NO	GRAPHIC REF	PART NUMBER	QTY	PART NAME 1 2 3 4 5 6 (PRODUCT LEVEL)	SEE PAGE
	1	1	**4L-9337**	1	BOLT (3/8-16X1.5-IN)	
	2	1	**4W-3864**	1	SEAL GP (WATER PUMP)	
	3	1	**7N-4758**	1	WASHER-THRUST	
	4	1	**7W-6492**	1	PLUG-PIPE	
					—OR—	
	4A	1	**3F-1358**	1	PLUG-DRAIN (WATER PUMP)	
	4B	1	**2A-1162**	1	GASKET	
	5	1	**8N-8460**	1	SHAFT AS	
	6	1	**8T-2561**	1	WASHER-HARD (10.5X28.5X5-MM THK)	
	7	1	**156-9849**	1	HOUSING AS	
	7A	1	**8M-9321**	1	BEARING-SLEEVE	
	8	1	**165-7831**	1	ADAPTER	
	9	1	**169-4339**	1	IMPELLER	
	10	1	**0S-1588**	4	BOLT (3/8-16X1.25-IN)	
	11	1	**0S-1618**	2	BOLT (5/16-18X1-IN)	
	12	1	**1N-5999**	1	PLUG	
	13	1	**3J-1907**	1	SEAL-O-RING	
	14	1	**5M-2894**	4	WASHER-HARD (10.2X18.5X2.5-MM THK)	
	15	1	**7J-0204**	1	SEAL-O-RING	
	16	1	**8C-5236**	1	SEAL-LIP TYPE	
	17	1	**8T-6764**	1	PLUG-PIPE	
	18	1	**9M-1974**	2	WASHER-HARD (8.8X16X2-MM THK)	
	19	1	**9M-3786**	1	SEAL-O-RING	
	20	1	**9S-4191**	1	PLUG	

156-9817 PUMP GP-AUXILIARY WATER *(contd.)* i02029677

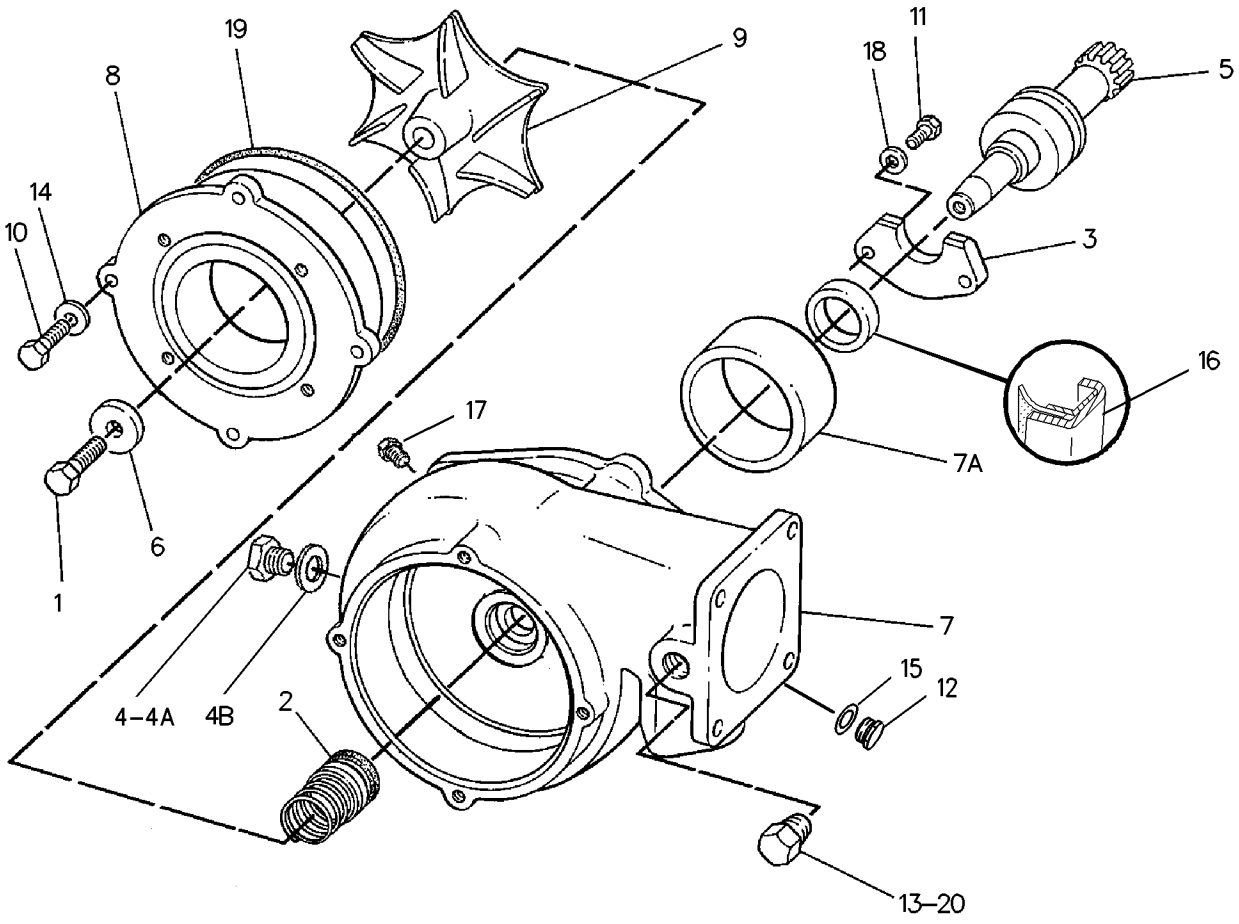

GRAPHIC #1 **<END>** g00820324

COOLING SYSTEM

156-9850 PUMP GP-AUXILIARY WATER

S/N: 2GR1180-4088

PART OF 155-5556 ENGINE AR

SMCS-1361 **i01141906**

NOTE	REF NO	GRAPHIC REF	PART NUMBER	QTY	PART NAME 1 2 3 4 5 6 (PRODUCT LEVEL)	SEE PAGE
	1	1	**3P-6061**	1	GASKET	
Y	2	1	**156-9817**	1	PUMP GP-AUXILIARY WATER	139
	3	1	**2M-4453**	1	SEAL-O-RING (12.29MM ID)	
	4	1	**4B-4043**	4	BOLT (5/8-11X1.375IN)	
	5	1	**4F-7387**	1	SEAL-O-RING (100.97MM ID)	
	6	1	**5F-3106**	1	SEAL-O-RING (126.59MM ID)	
	7	1	**5P-8247**	4	WASHER-HARD (3.5MM THK)	

Y-SEPARATE ILLUSTRATION

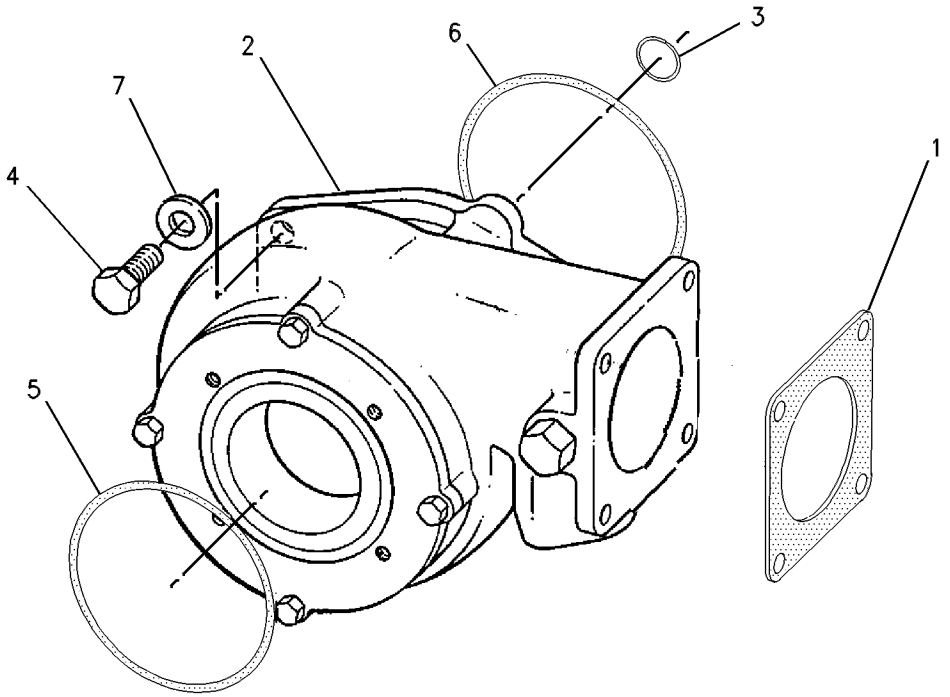

GRAPHIC #1 **<END>** g00605345

156-9850 PUMP GP-AUXILIARY WATER

S/N: 2GR4089-UP

PART OF 155-5556 ENGINE AR

SMCS-1361 **i01782887**

NOTE	REF NO	GRAPHIC REF	PART NUMBER	QTY	PART NAME 1 2 3 4 5 6 (PRODUCT LEVEL)	SEE PAGE
	1	1	**3P-6061**	1	GASKET	
CY	2	1	**212-8167**	1	PUMP GP-AUXILIARY WATER	143
	3	1	**2M-4453**	1	SEAL-O-RING	
	4	1	**4B-4043**	4	BOLT (5/8-11X1.375 IN)	
	5	1	**4F-7387**	1	SEAL-O-RING	
	6	1	**5F-3106**	1	SEAL-O-RING	
	7	1	**5P-8247**	4	WASHER-HARD (17X32X3.5MM THK)	

C-CHANGE FROM PREVIOUS TYPE
Y-SEPARATE ILLUSTRATION

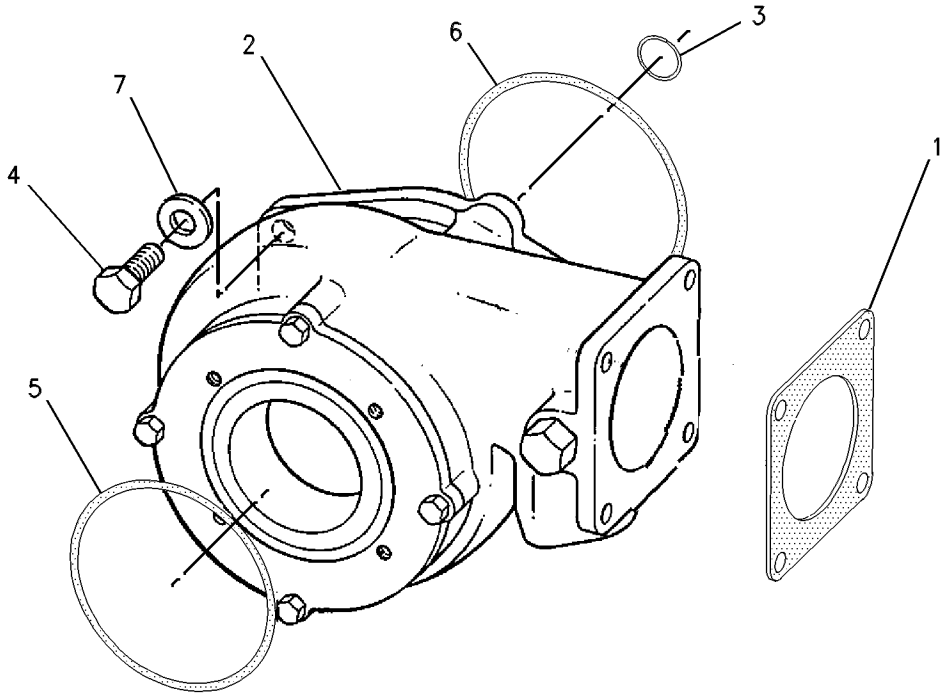

GRAPHIC #1 **<END>** g00605345

COOLING SYSTEM

212-8167 PUMP GP-AUXILIARY WATER

S/N: 2GR4089-UP

PART OF 156-9850 PUMP GP-AUXILIARY WATER

SMCS-1361 **i01782932**

NOTE	REF NO	GRAPHIC REF	PART NUMBER	QTY	PART NAME 1 2 3 4 5 6 (PRODUCT LEVEL)	SEE PAGE
	1	1	**4W-3864**	1	SEAL GP	
	2	1	**7N-4758**	1	WASHER-THRUST	
	3	1	**156-9849**	1	HOUSING AS	
		1	**8M-9321**	1	BEARING-SLEEVE	
	4	1	**165-7831**	1	ADAPTER-INLET	
	5	1	**212-8178**	1	SHAFT	
	6	1	**212-8181**	1	IMPELLER	
	7	1	**0S-1588**	4	BOLT (3/8-16X1.25 IN)	
	8	1	**0S-1618**	2	BOLT (5/16-18X1 IN)	
	9	1	**1N-5999**	1	PLUG	
	10	1	**3J-1907**	1	SEAL-O-RING	
	11	1	**5M-2894**	4	WASHER-HARD (10.2X18.5X2.5MM THK)	
	12	1	**7J-0204**	1	SEAL-O-RING	
	13	1	**7W-6492**	1	PLUG-PIPE	
	14	1	**8C-5236**	1	SEAL-LIP	
	15	1	**8T-6764**	1	PLUG-PIPE	
	16	1	**9M-1974**	2	WASHER-HARD (8.8X16X2MM THK)	
	17	1	**9M-3786**	1	SEAL-O-RING	
	18	1	**9S-4191**	1	PLUG	

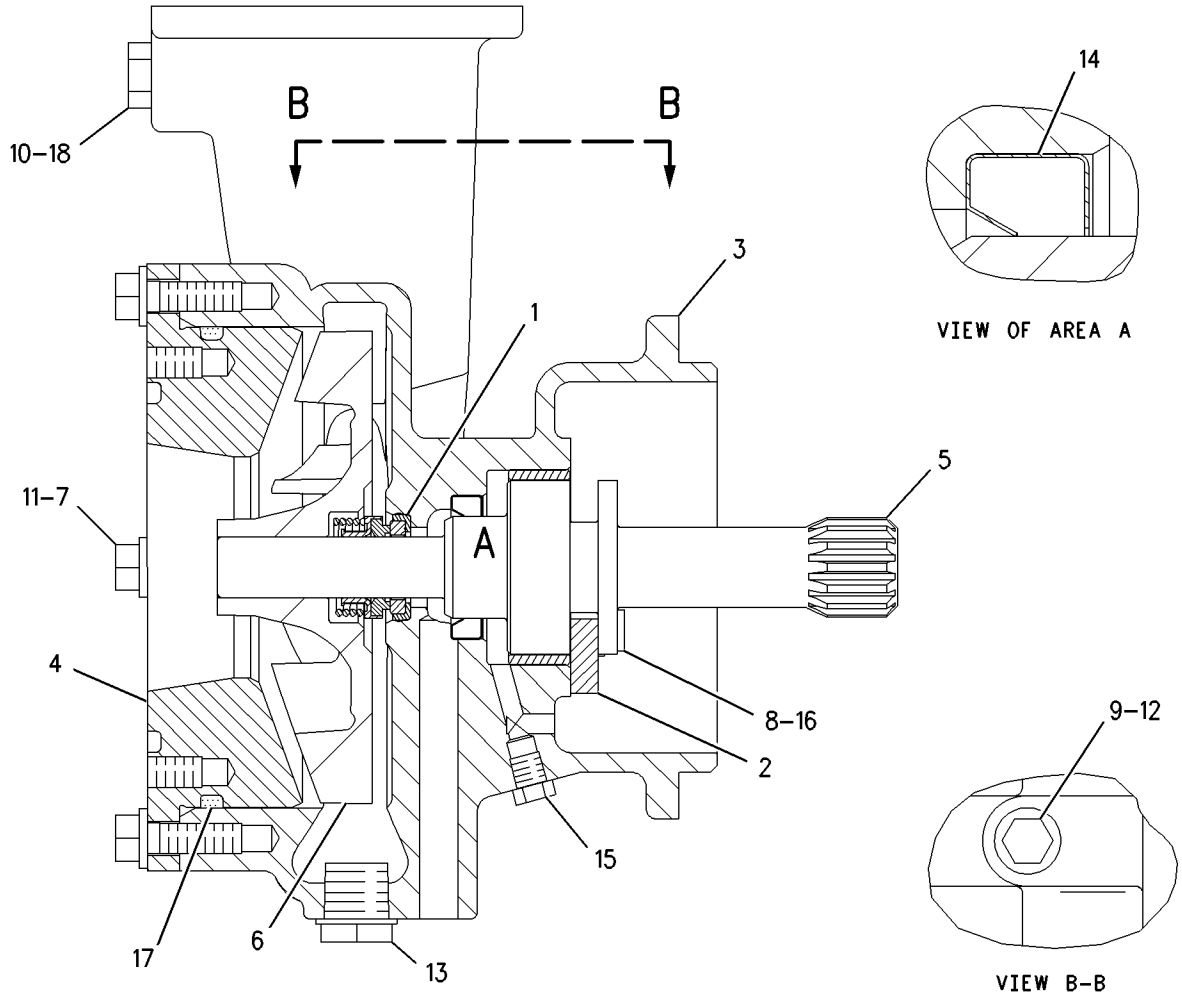

GRAPHIC #1 **<END>** g00932539

COOLING SYSTEM

166-4380 PUMP GP-WATER*R

S/N: 2GR1180-3986

PART OF 169-4691 PUMP GP-WATER

SMCS-1361 **i01816742**

NOTE	REF NO	GRAPHIC REF	PART NUMBER	QTY	PART NAME 1 2 3 4 5 6 (PRODUCT LEVEL)	SEE PAGE
	1	1	**2W-7777**	1	HOUSING AS	
J		1	**3D-2824**	1	SEAL-O-RING	
J		1	**4N-5834**	2	FILTER-WATER (WATER PUMP)	
		1	**7G-8478**	1	ADAPTER	
		1	**8T-6765**	1	PLUG-PIPE	
J	2	1	**2W-9723**	1	SHAFT AS-PUMP DRIVE	
		1	**6F-7172**	1	DOWEL	
	3	1	**0S-1618**	2	BOLT (5/16-18X1 IN)	
J	4	1	**9M-1974**	2	WASHER-HARD (8.8X16X2MM THK)	
J	5	1	**7N-4758**	1	WASHER-THRUST	
J	6	1	**8C-5236**	1	SEAL-LIP	
J	7	1	**166-4376**	1	SEAL GP-WATER PUMP	
	8	1	**2W-9724**	1	IMPELLER-PUMP	
J	9	1	**6V-8287**	1	LOCKNUT	
J	10	1	**5S-0581**	1	WASHER-HARD (17X38X8MM THK)	
J	11	1	**166-4374**	1	RING AS	
		1	**1L-5316**	1	PIN-SPRING	
					AVAILABLE REPAIR KIT(S):	
J			**190-8921**		KIT-REBUILD (WATER PUMP)	

J-KIT MARKED J INCLUDES PARTS MARKED J

166-4380 PUMP GP-WATER ***(contd.)*** **i01816742**

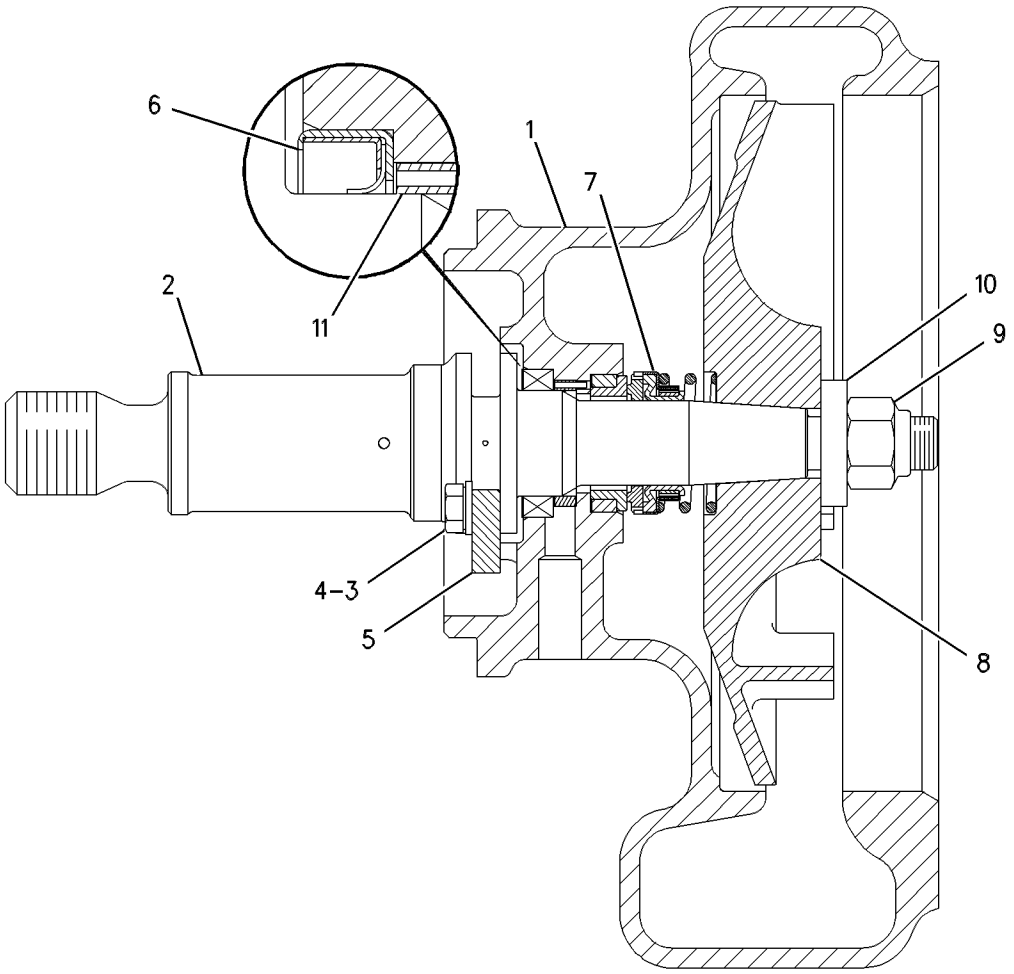

GRAPHIC #1 **<END>** g00580354

169-4691 PUMP GP-WATER

S/N: 2GR1180-3986

PART OF 155-5556 ENGINE AR

SMCS-1361 **i01990934**

NOTE	REF NO	GRAPHIC REF	PART NUMBER	QTY	PART NAME 1 2 3 4 5 6 (PRODUCT LEVEL)	SEE PAGE
YR	1	1	**166-4380**	1	PUMP GP-WATER	144
	2	1	**8N-6423**	1	COVER	
	3	1	**9S-8752**	3	NUT-FULL (3/8-16 THD)	
	4	1	**9M-2151**	3	STUD-TAPERLOCK (3/8-16X1.38 IN)	
	5	1	**1H-8278**	1	SEAL-O-RING	
	6	1	**3B-1915**	4	BOLT (3/8-16X1.75 IN)	
	7	1	**5H-6734**	1	SEAL-O-RING	

R-REMFG PART MAY BE AVAILABLE
Y-SEPARATE ILLUSTRATION

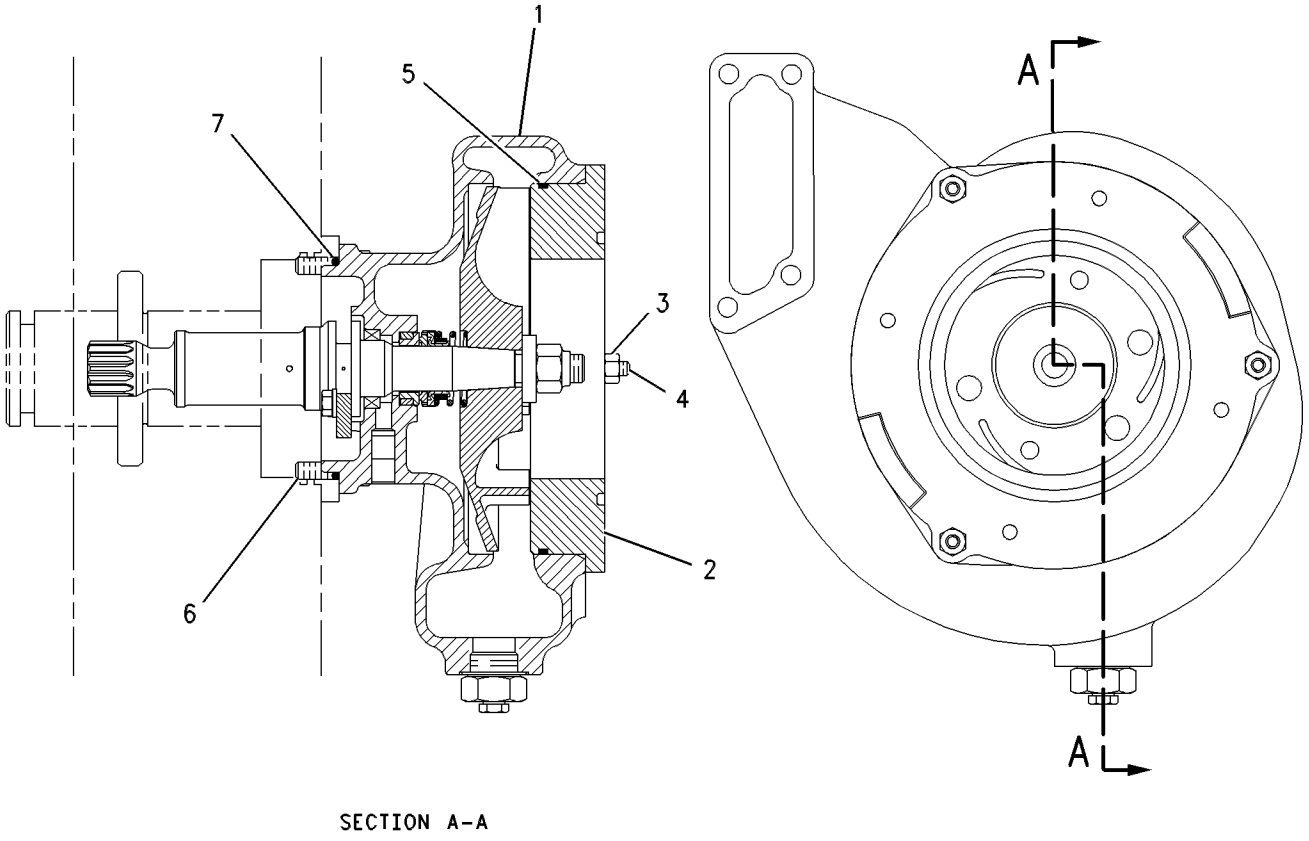

SECTION A-A

GRAPHIC #1 **<END>** g00582376

COOLING SYSTEM

169-4691 PUMP GP-WATER

S/N: 2GR3987-UP

PART OF 155-5556 ENGINE AR

SMCS-1361 **i01967844**

NOTE	REF NO	GRAPHIC REF	PART NUMBER	QTY	PART NAME 1 2 3 4 5 6 (PRODUCT LEVEL)	SEE PAGE
CYR	1	1	**212-8175**	1	PUMP GP-WATER	148
	2	1	**8N-6423**	1	COVER	
	3	1	**9S-8752**	3	NUT-FULL (3/8-16 THD)	
	4	1	**9M-2151**	3	STUD-TAPERLOCK (3/8-16X1.38 IN)	
	5	1	**149-5462**	1	SEAL-O-RING	
	6	1	**3B-1915**	4	BOLT (3/8-16X1.75 IN)	
	7	1	**5H-6734**	1	SEAL-O-RING	

C-CHANGE FROM PREVIOUS TYPE
R-REMFG PART MAY BE AVAILABLE
Y-SEPARATE ILLUSTRATION

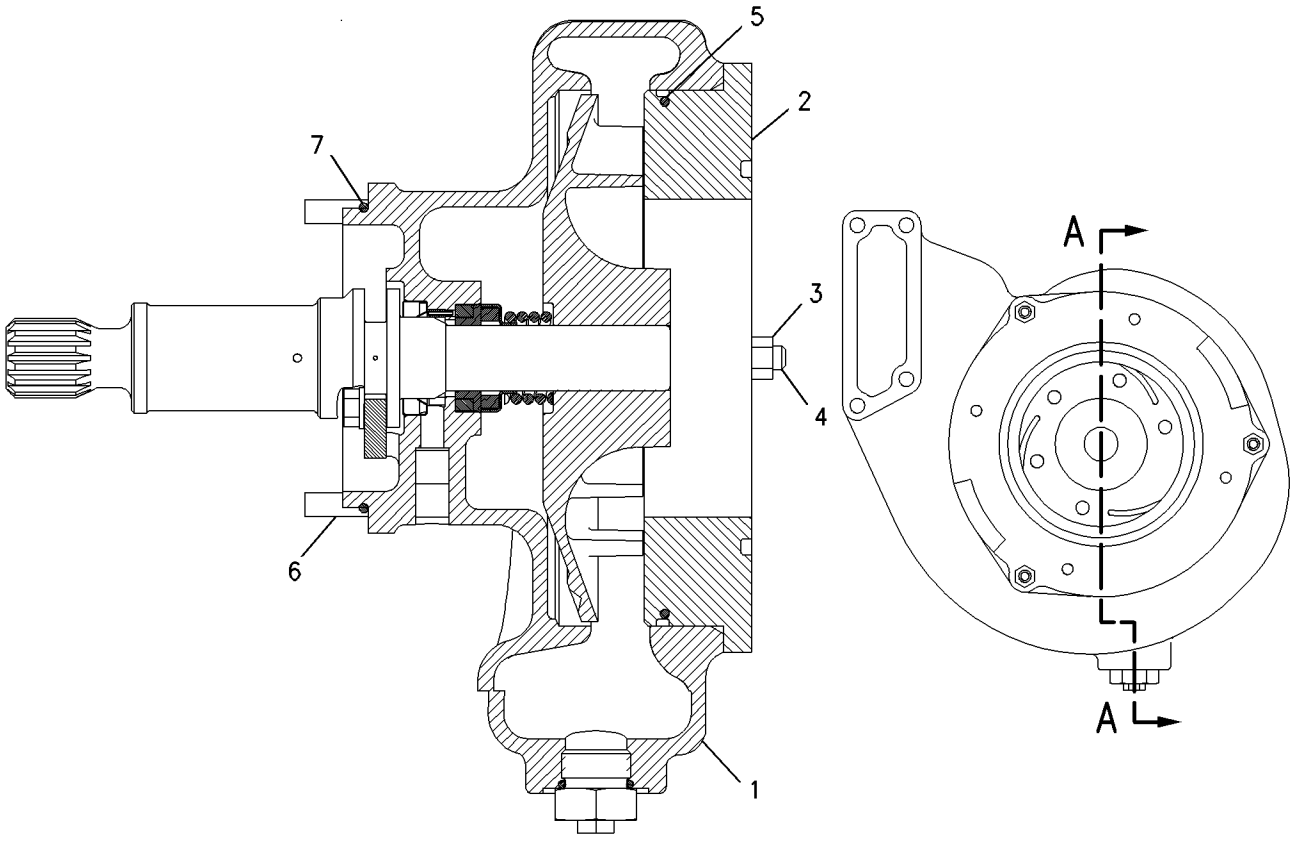

SECTION A-A

GRAPHIC #1 **<END>** g00906342

COOLING SYSTEM

212-8175 PUMP GP-WATER*R

S/N: 2GR3987-UP

PART OF 169-4691 PUMP GP-WATER

SMCS-1361 **i02000896**

NOTE	REF NO	GRAPHIC REF	PART NUMBER	QTY	PART NAME 1 2 3 4 5 6 (PRODUCT LEVEL)	SEE PAGE
	1	1	**2W-7777**	1	HOUSING AS	
J		1	**3D-2824**	1	SEAL-O-RING	
J		1	**4N-5834**	2	FILTER-WATER (WATER PUMP)	
		1	**7G-8478**	1	ADAPTER	
		1	**8T-6765**	1	PLUG-PIPE	
J	2	1	**212-8180**	1	SHAFT	
		1	**4B-9782**	1	BALL	
J	3	1	**0S-1618**	2	BOLT (5/16-18X1 IN)	
J	4	1	**9M-1974**	2	WASHER-HARD (8.8X16X2MM THK)	
J	5	1	**7N-4758**	1	WASHER-THRUST	
J	6	1	**8C-5236**	1	SEAL-LIP TYPE	
J	7	1	**166-4376**	1	SEAL GP-WATER PUMP	
J	8	1	**212-8187**	1	IMPELLER	
J	9	1	**166-4374**	1	RING AS	
		1	**1L-5316**	1	PIN-SPRING	
					AVAILABLE REPAIR KIT(S):	
J			**222-5153**		KIT-REBUILD (WATER PUMP)	

J-KIT MARKED J INCLUDES PARTS MARKED J

212-8175 PUMP GP-WATER ***(contd.)*** **i02000896**

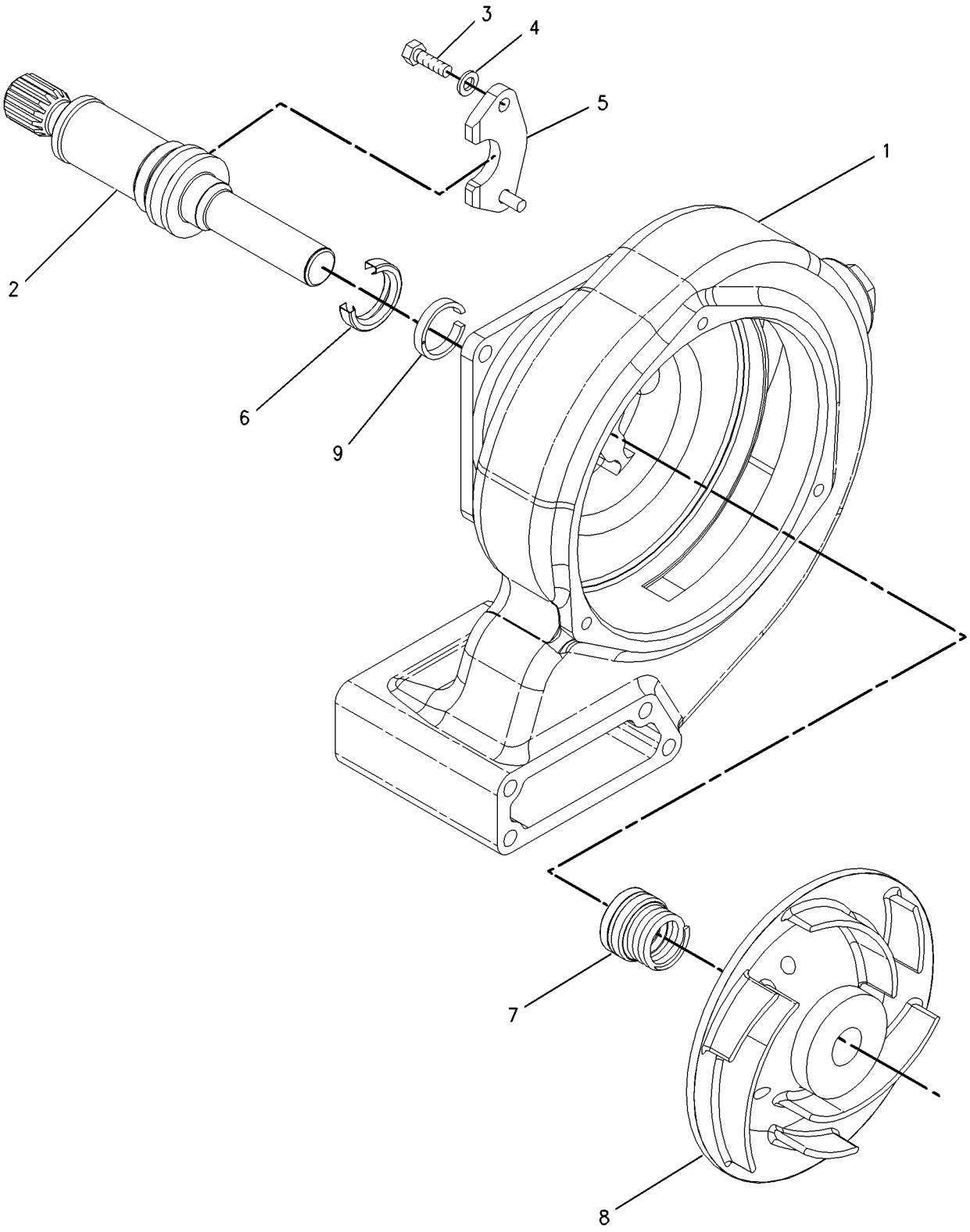

GRAPHIC #1 **<END>** g00901131

COOLING SYSTEM

156-9845 RADIATOR GP

S/N: 7PZ1-UP
AMOCS (ADVANCED MODULAR COOLING SYSTEM)
PART OF 156-9846 RADIATOR GP

SMCS-1353 **i02000923**

NOTE	REF NO	GRAPHIC REF	PART NUMBER	QTY	PART NAME 1 2 3 4 5 6 (PRODUCT LEVEL)	SEE PAGE
E	1	1	**150-1974**		SEAL (147CM)	
E	1A	1	**150-1974**		SEAL (266CM)	
D	2	1	**6V-0505**		SEAL (.3M EACH)	
	3	1	**1P-4278**	22	CLAMP-HOSE	
	4	1	**6I-2431**	12	SEAL	
	5	1	**6I-2435**	12	SPACER (80X108X25MM THK)	
	6	1	**9G-8140**	26	SPACER (10.5X25X15MM THK)	
	7	1	**106-4572**	11	HOSE	
	8	1	**119-6308**	1	PLATE AS	
	9	1	**133-6006**	1	ANGLE	
	10	1	**137-8228**	2	RETAINER	
	11	1	**137-8284**	1	CHANNEL AS	
	12	1	**137-8285**	1	CHANNEL AS	
	13	1	**146-6204**	8	RETAINER	
	14	1	**153-1886**	1	BRACKET AS (RH)	
	15	1	**153-1887**	1	BRACKET AS (LH)	
	16	1	**165-7827**	1	TANK AS	
	17	1	**175-5228**	1	RETAINER AS (LH)	
	18	1	**175-5229**	1	RETAINER AS (RH)	
	19	1	**175-5239**	1	PLATE AS	
	20	1	**213-8188**	12	CORE AS-RADIATOR	
	21	1	**4L-6454**	24	BOLT (3/8-16X1 IN)	
	22	1	**4L-9337**	4	BOLT (3/8-16X1.5 IN)	
	23	1	**5P-1075**	79	WASHER-HARD (10.2X22.5X3MM THK)	
	24	1	**5S-7382**	24	BOLT (3/8-16X1.375 IN)	
	25	1	**7X-0289**	22	BOLT (3/8-16X1.875 IN)	
	26	1	**7X-0575**	16	WASHER-HARD (10.2X22.5X5MM THK)	
	27	1	**8T-2502**	8	BOLT (3/8-16X1.125 IN)	
	28	1	**8T-4896**	22	WASHER-HARD (10.2X18.5X2.5MM THK)	
	29	1	**9B-7237**	27	BOLT (3/8-16X1.25 IN)	

D-ORDER BY THE METER
E-ORDER BY THE CENTIMETER

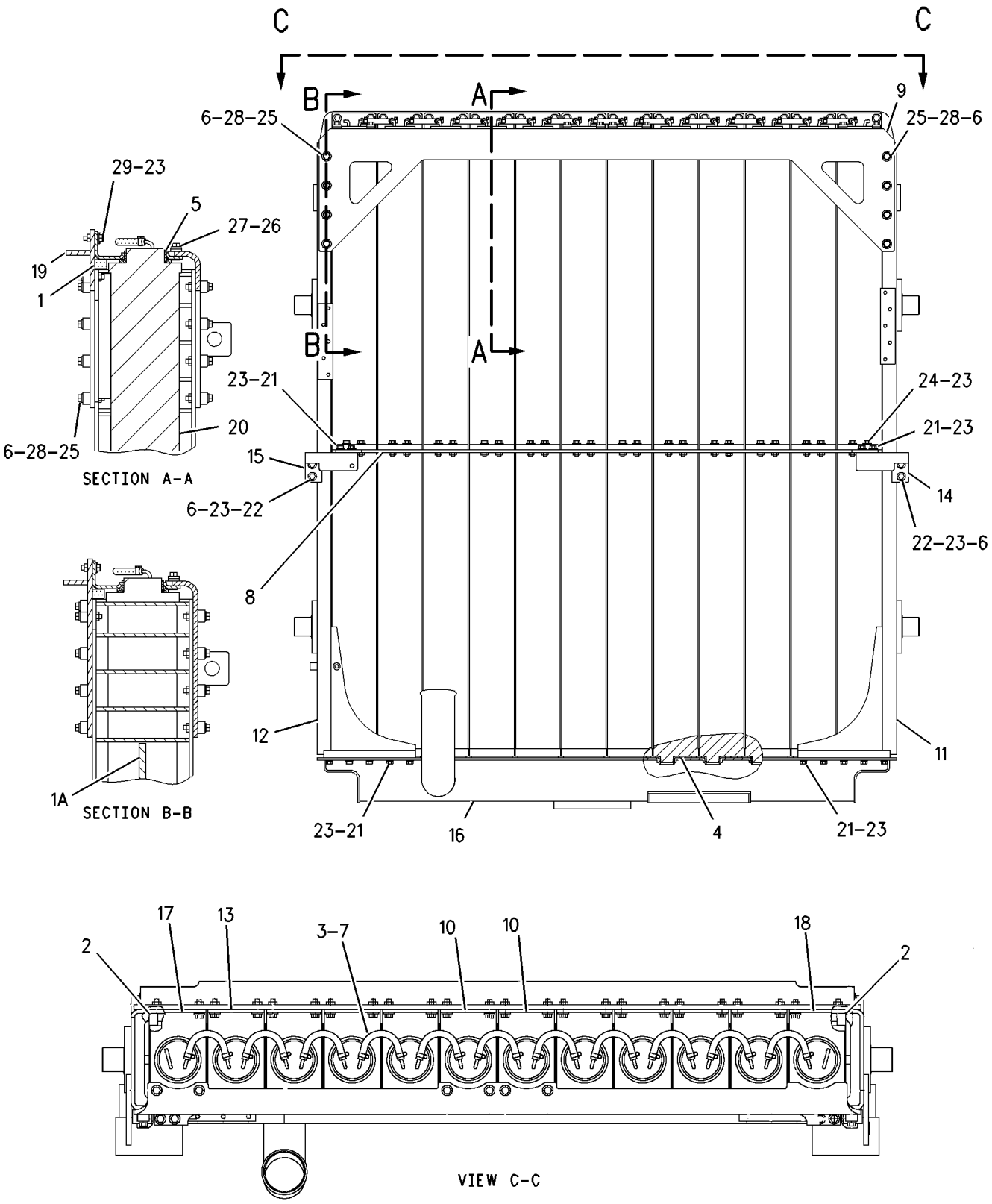

GRAPHIC #1 **<END>** g00998584

COOLING SYSTEM

156-9846 RADIATOR GP

S/N: 7PZ1-UP
142 CM (56 INCH) FAN
PART OF 155-5557 INSTALLATION AR-ENGINE

SMCS-1353 **i01820645**

NOTE	REF NO	GRAPHIC REF	PART NUMBER	QTY	PART NAME 1 2 3 4 5 6 (PRODUCT LEVEL)	SEE PAGE
	1	1	**3T-0449**	4	PLATE	
E	2	1	**5P-0764**		HOSE (18CM)	
	3	1	**6T-2424**	1	BAFFLE AS (RH TOP)	
		1	**6B-4594**	3	RIVET	
	4	1	**6Y-1237**	1	BAFFLE AS-RH (INTERMEDIATE)	
		1	**4B-4674**	1	WASHER (6.4X14.5X1.6MM THK)	
		1	**6B-4594**	5	RIVET	
	5	1	**6Y-1241**	1	BAFFLE AS-RH (BOTTOM)	
		1	**6B-4594**	7	RIVET	
	6	1	**7N-1639**	4	CAP (RADIATOR)	
	7	1	**7N-3864**	4	SUPPORT	
	8	1	**7T-6823**	1	BAFFLE AS-LH (TOP)	
		1	**6B-4594**	3	RIVET	
	9	1	**8N-7257**	4	MOUNT AS	
	10	1	**8T-4985**	6	CLAMP-HOSE	
	11	1	**8T-4987**	2	CLAMP-HOSE	
E	12	1	**5P-0764**		HOSE (14CM)	
	13	1	**129-9485**	1	TUBE	
	14	1	**129-9495**	1	HOSE	
	15	1	**133-5956**	1	BAFFLE AS-LH (INTERMEDIATE)	
	16	1	**133-5957**	1	BAFFLE AS-LH (BOTTOM)	
	17	1	**151-8165**	1	HOSE	
Y	18	1	*156-9845*	1	RADIATOR GP	150
	19	1	**160-0727**	4	BAFFLE AS-FAN	
					(EACH INCLUDES)	
D		1	**5P-6410**		SEAL (1.3M)	
		1	**6B-4594**	8	RIVET	
		1	**7G-5186**	3	SPACER (13X19X4.5MM THK)	
	20	1	**160-0729**	1	BAFFLE AS-RADIATOR (TOP)	
		1	**6B-4594**	16	RIVET	
	21	1	**160-0731**	1	BAFFLE AS-RADIATOR (BOTTOM)	
		1	**6B-4594**	20	RIVET	
	22	1	**165-7828**	1	GASKET	
	23	1	**165-7829**	1	ELBOW-OUTLET	
	24	1	**103-0892**	1	GROMMET	
	25	1	**5M-3062**	20	BOLT (3/8-16X0.75 IN)	
	26	1	**5P-1075**	12	WASHER-HARD (10.2X22.5X3MM THK)	
	27	1	**5S-7379**	12	BOLT (3/8-16X0.875 IN)	
	28	1	**5S-7382**	1	BOLT (3/8-16X1.375 IN)	
	29	1	**6V-6782**	1	CLIP (SLOT)	
	30	1	**6V-6783**	1	CLIP (TAB)	
	31	1	**6V-8801**	1	NUT (3/8-16 THD)	
	32	1	**7X-0349**	12	BOLT (5/8-11X3 IN)	
	33	1	**8T-4122**	12	WASHER-HARD (17X32X3.5MM THK)	
	34	1	**8T-4223**	8	WASHER-HARD (13.5X25.5X3MM THK)	
	35	1	**8T-4896**	22	WASHER-HARD (10.2X18.5X2.5MM THK)	
	36	1	**8T-8917**	8	BOLT (1/2-13X1.25 IN)	
	37	1	**8T-8920**	8	BOLT (1/2-13X3.25 IN)	

D-ORDER BY THE METER
E-ORDER BY THE CENTIMETER
Y-SEPARATE ILLUSTRATION

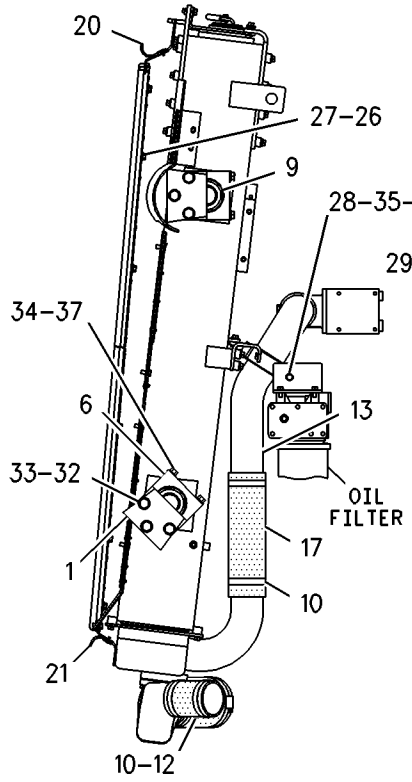

LEFT SIDE VIEW

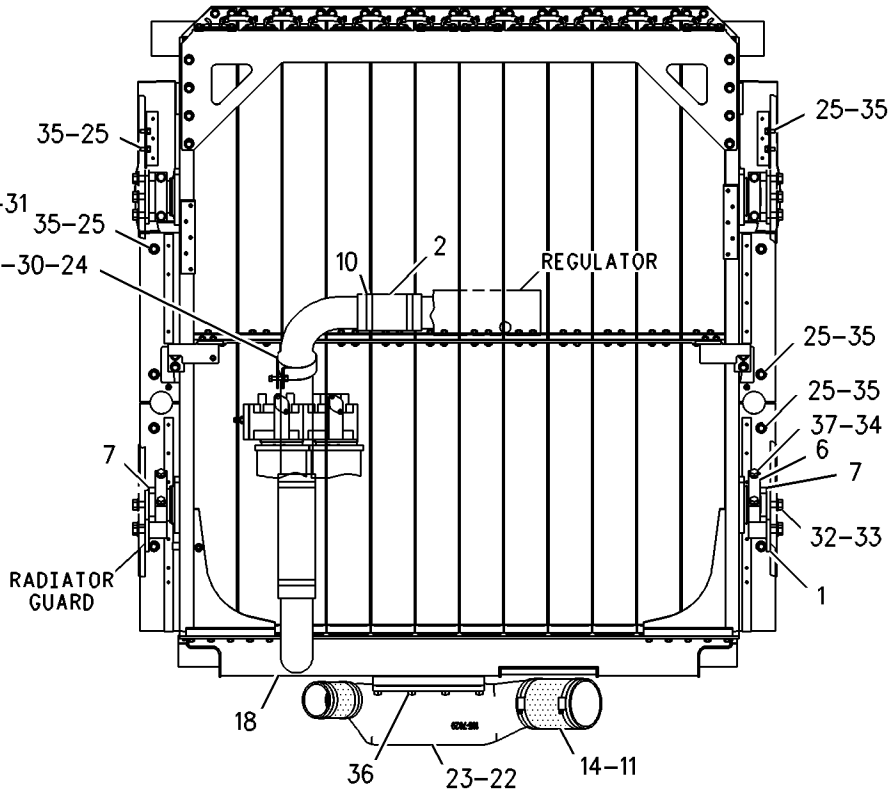

REAR VIEW

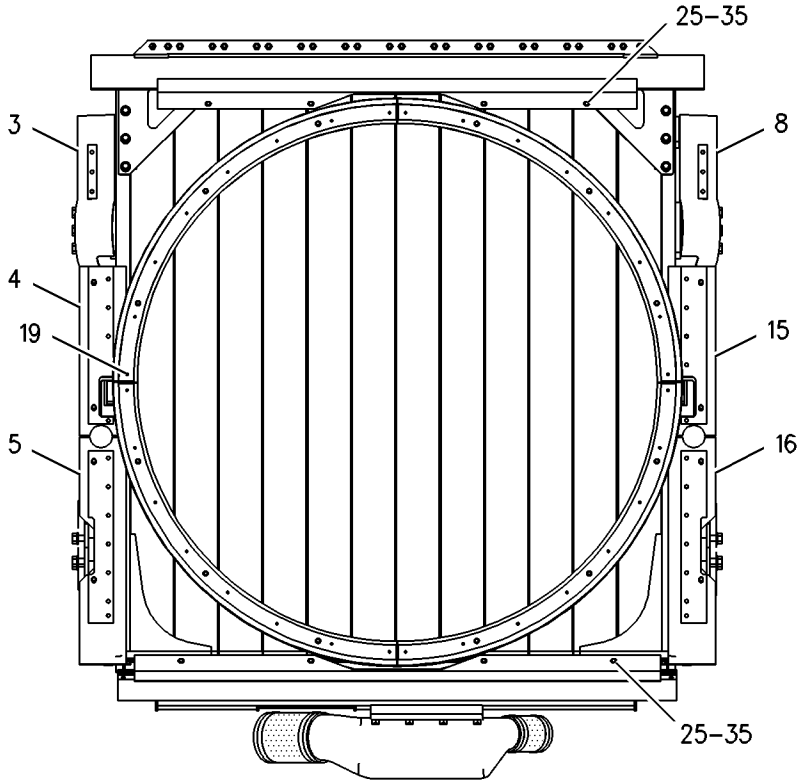

FRONT VIEW

GRAPHIC #1 **<END>** g00946466

COOLING SYSTEM

156-9813 TANK GP-WATER

S/N: 7PZ1-640
AMOCS EXPANSION
PART OF 155-5557 INSTALLATION AR-ENGINE

SMCS-1377 **i01988467**

NOTE	REF NO	GRAPHIC REF	PART NUMBER	QTY	PART NAME 1 2 3 4 5 6 (PRODUCT LEVEL)	SEE PAGE
E	1	2	**5P-1251**		HOSE (180CM)	
E	2	1	**5P-1465**		HOSE (21CM)	
E	2A	1	**5P-1465**		HOSE (49CM)	
E	2B	1	**5P-1465**		HOSE (14CM)	
E	2C	1	**5P-1465**		HOSE (43CM)	
E	2D	1	**5P-1465**		HOSE (27CM)	
E	2E	1	**5P-1465**		HOSE (102CM)	
E	2F	1	**5P-1465**		HOSE (188CM)	
E	2G	1	**5P-1465**		HOSE (88CM)	
E	2H	1	**5P-1465**		HOSE (23CM)	
	3	1	**1M-1462**	1	CLIP	
	4	1	**1P-4278**	17	CLAMP-HOSE	
	5	1	**1P-9328**	4	FITTING	
	6	1	**2D-7325**	1	TEE-PIPE	
	7	1	**5P-2937**	2	ADAPTER-O-RING	
	8	1	**6L-5568**	1	GASKET	
	9	2	**6V-2492**	1	CONNECTOR	
	10	1	**6V-8245**	4	ELBOW	
	11	2	**7T-0266**	1	BRACKET AS	
		2	**1F-0750**	1	NUT-WELD (3/8-16THD)	
	12	1,2	**7X-7958**	2	CLAMP-HOSE	
	13	1	**9Y-9236**	1	BODY AS-GAUGE	
	14	1	**109-6550**	2	TEE	
	15	1	**133-5999**	2	SUPPORT AS	
	16	1	**137-8202**	1	BRACKET AS	
	17	1	**150-1978**	1	CAP AS (SHUNT TANK)	
I	18	1	**162-2257**	1	HOSE AS	
	19	1	**178-6360**	1	TANK AS-RADIATOR	
	20	1	**178-6362**	1	TUBE AS	
	21	1	**3J-7354**	6	SEAL-O-RING	
	22	1	**3K-0360**	1	SEAL-O-RING	
	23	1	**4D-9517**	7	CLIP	
	24	1,2	**4L-6454**	5	BOLT (3/8-16X1 IN)	
	25	1	**5M-3062**	1	BOLT (3/8-16X0.75 IN)	
	26	1	**5P-1075**	6	WASHER-HARD (10.2X22.5X3MM THK)	
	27	1	**6V-8801**	2	NUT (3/8-16 THD)	
	28	2	**7D-7233**	2	CLIP	
	29	1	**7M-8485**	1	SEAL-O-RING	
	30	2	**7X-0289**	1	BOLT (3/8-16X1.875 IN)	
	31	1	**7X-0325**	6	BOLT (1/2-13X2.5 IN)	
	32	1	**8M-0505**	1	CONNECTOR	
	33	1	**8M-2770**	5	CLIP	
	34	1	**8T-2502**	2	BOLT (3/8-16X1.125 IN)	
	35	1,2	**8T-4223**	14	WASHER-HARD (13.5X25.5X3MM THK)	
	36	1,2	**8T-4835**	8	BOLT (1/2-13X2 IN)	
	37	1,2	**8T-4896**	5	WASHER-HARD (10.2X18.5X2.5MM THK)	

E-ORDER BY THE CENTIMETER
I-REFER TO HYDRAULIC INFORMATION SYSTEM

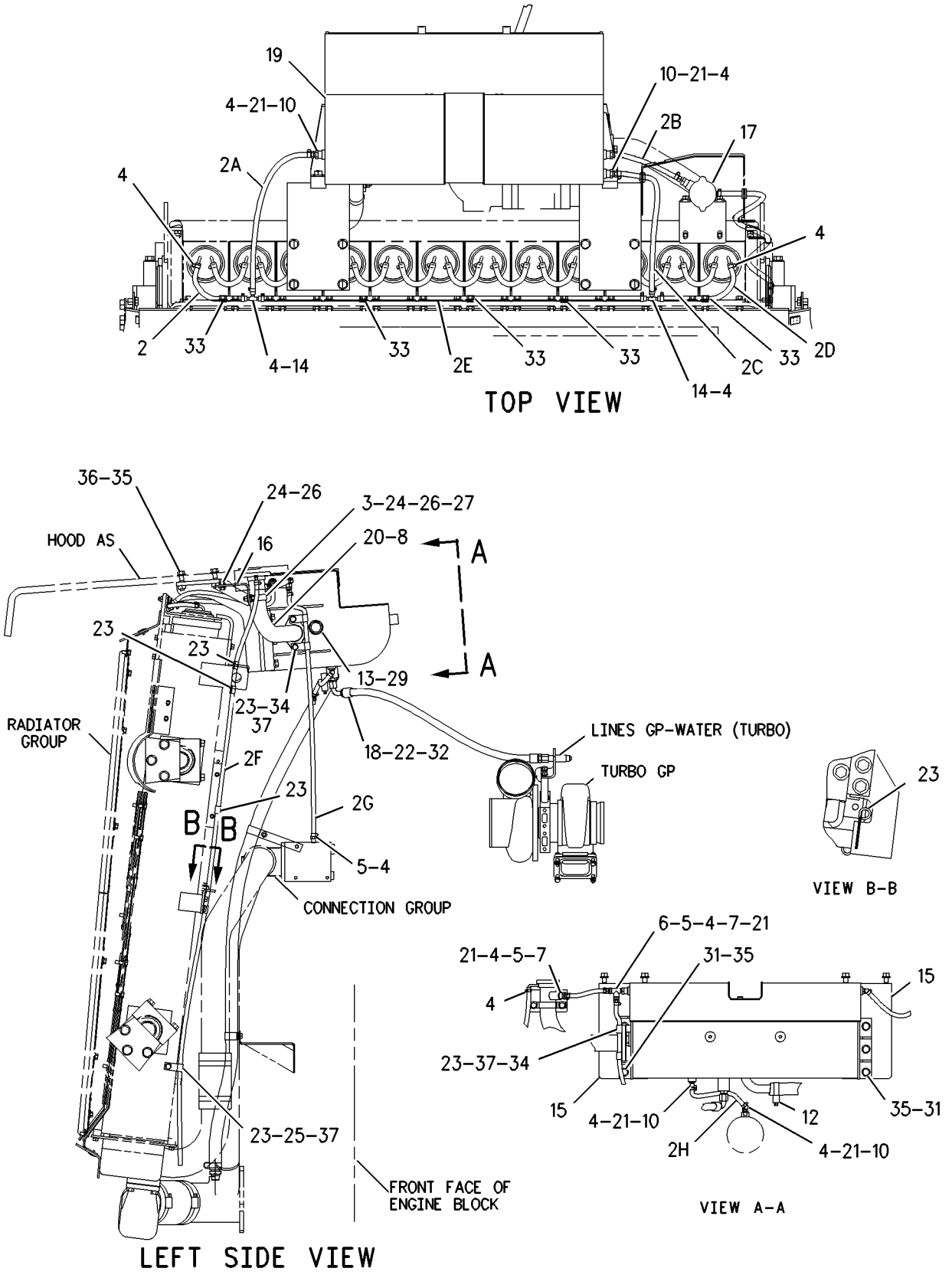

GRAPHIC #1 g00686454

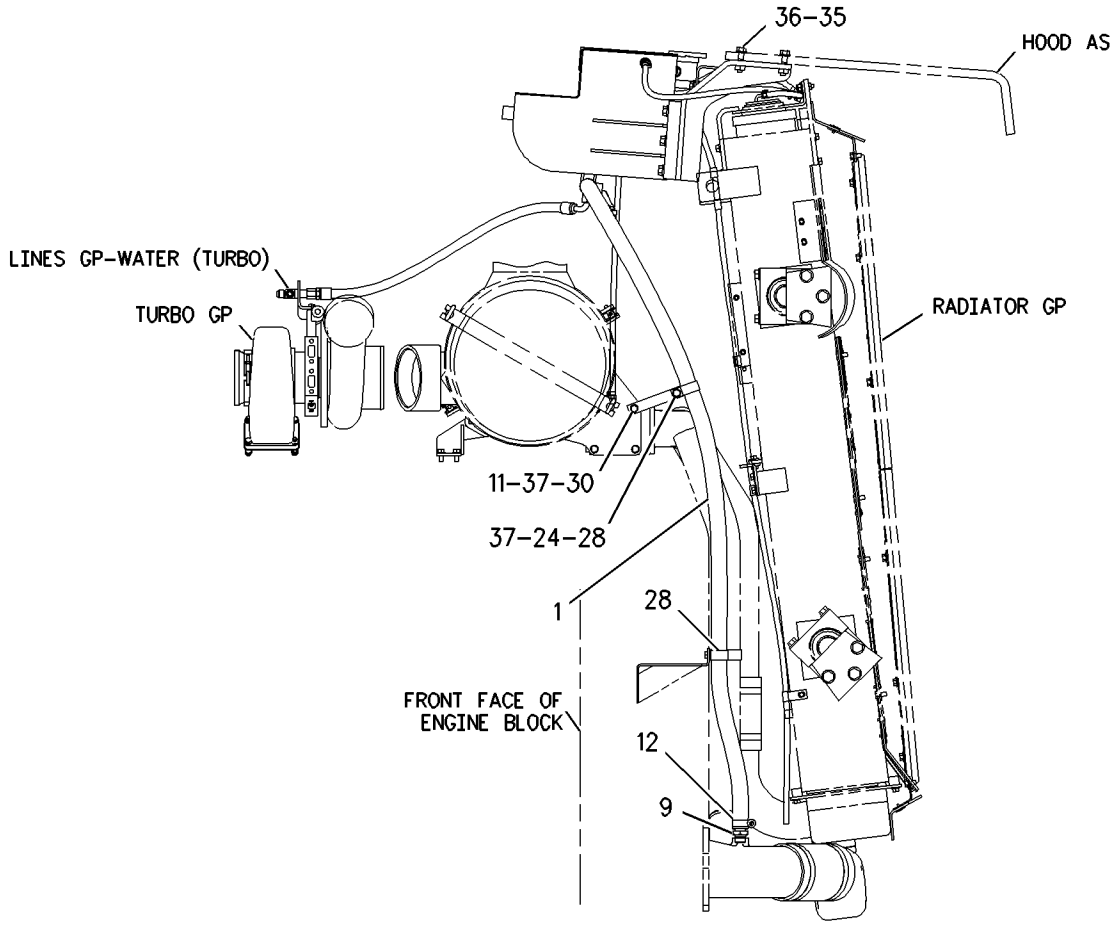

RIGHT SIDE VIEW

GRAPHIC #2 **<END>** g00683024

COOLING SYSTEM

156-9813 TANK GP-WATER

S/N: 7PZ641-670
AMOCS EXPANSION
PART OF 155-5557 INSTALLATION AR-ENGINE

SMCS-1377 **i01973693**

NOTE	REF NO	GRAPHIC REF	PART NUMBER	QTY	PART NAME 1 2 3 4 5 6 (PRODUCT LEVEL)	SEE PAGE
E	1	1,2	**5P-1251**		HOSE (180CM)	
E	2	2	**5P-1465**		HOSE (21CM)	
E	2A	2	**5P-1465**		HOSE (49CM)	
E	2B	2	**5P-1465**		HOSE (14CM)	
E	2C	2	**5P-1465**		HOSE (43CM)	
E	2D	2	**5P-1465**		HOSE (27CM)	
E	2E	2	**5P-1465**		HOSE (102CM)	
E	2F	2	**5P-1465**		HOSE (188CM)	
E	2G	2	**5P-1465**		HOSE (88CM)	
CE	2H	2	**5P-1465**		HOSE (21CM)	
	3	2	**1M-1462**	1	CLIP	
	4	2	**1P-4278**	17	CLAMP-HOSE	
	5	2	**1P-9328**	4	FITTING	
	6	2	**2D-7325**	1	TEE-PIPE	
	7	2	**5P-2937**	2	ADAPTER-O-RING	
	8	2	**6L-5568**	1	GASKET	
	9	1	**6V-2492**	1	CONNECTOR	
C	10	2	**6V-8245**	3	ELBOW	
	11	1	**7T-0266**	1	BRACKET AS	
		1	**1F-0750**	1	NUT-WELD (3/8-16THD)	
	12	1,2	**7X-7958**	2	CLAMP-HOSE	
	13	2	**9Y-9236**	1	BODY AS-GAUGE	
	14	2	**109-6550**	2	TEE	
	15	2	**133-5999**	2	SUPPORT AS	
	16	2	**137-8202**	1	BRACKET AS	
	17	2	**150-1978**	1	CAP AS (SHUNT TANK)	
I	18	2	**162-2257**	1	HOSE AS	
	19	2	**178-6360**	1	TANK AS-RADIATOR	
	20	2	**178-6362**	1	TUBE AS	
	21	2	**3J-7354**	6	SEAL-O-RING	
	22	2	**3K-0360**	1	SEAL-O-RING	
	23	2	**4D-9517**	7	CLIP	
	24	1,2	**4L-6454**	5	BOLT (3/8-16X1 IN)	
	25	2	**5M-3062**	1	BOLT (3/8-16X0.75 IN)	
	26	2	**5P-1075**	6	WASHER-HARD (10.2X22.5X3MM THK)	
	27	2	**6V-8801**	2	NUT (3/8-16 THD)	
	28	1	**7D-7233**	2	CLIP	
	29	2	**7M-8485**	1	SEAL-O-RING	
	30	1	**7X-0289**	1	BOLT (3/8-16X1.875 IN)	
	31	2	**7X-0325**	6	BOLT (1/2-13X2.5 IN)	
	32	2	**8M-0505**	1	CONNECTOR	
	33	2	**8M-2770**	5	CLIP	
	34	2	**8T-2502**	2	BOLT (3/8-16X1.125 IN)	
	35	1,2	**8T-4223**	14	WASHER-HARD (13.5X25.5X3MM THK)	
	36	1,2	**8T-4835**	8	BOLT (1/2-13X2 IN)	
	37	1,2	**8T-4896**	5	WASHER-HARD (10.2X18.5X2.5MM THK)	
C	38	2	**230-5452**	1	HOSE AS	
C	39	2	**216-1302**	1	TEE	
C	40	2	**206-3421**	1	ELBOW	
C	41	2	**030-7947**	1	ELBOW	
C	42	2	**3J-1907**	2	SEAL-O-RING	

C-CHANGE FROM PREVIOUS TYPE
E-ORDER BY THE CENTIMETER
I-REFER TO HYDRAULIC INFORMATION SYSTEM

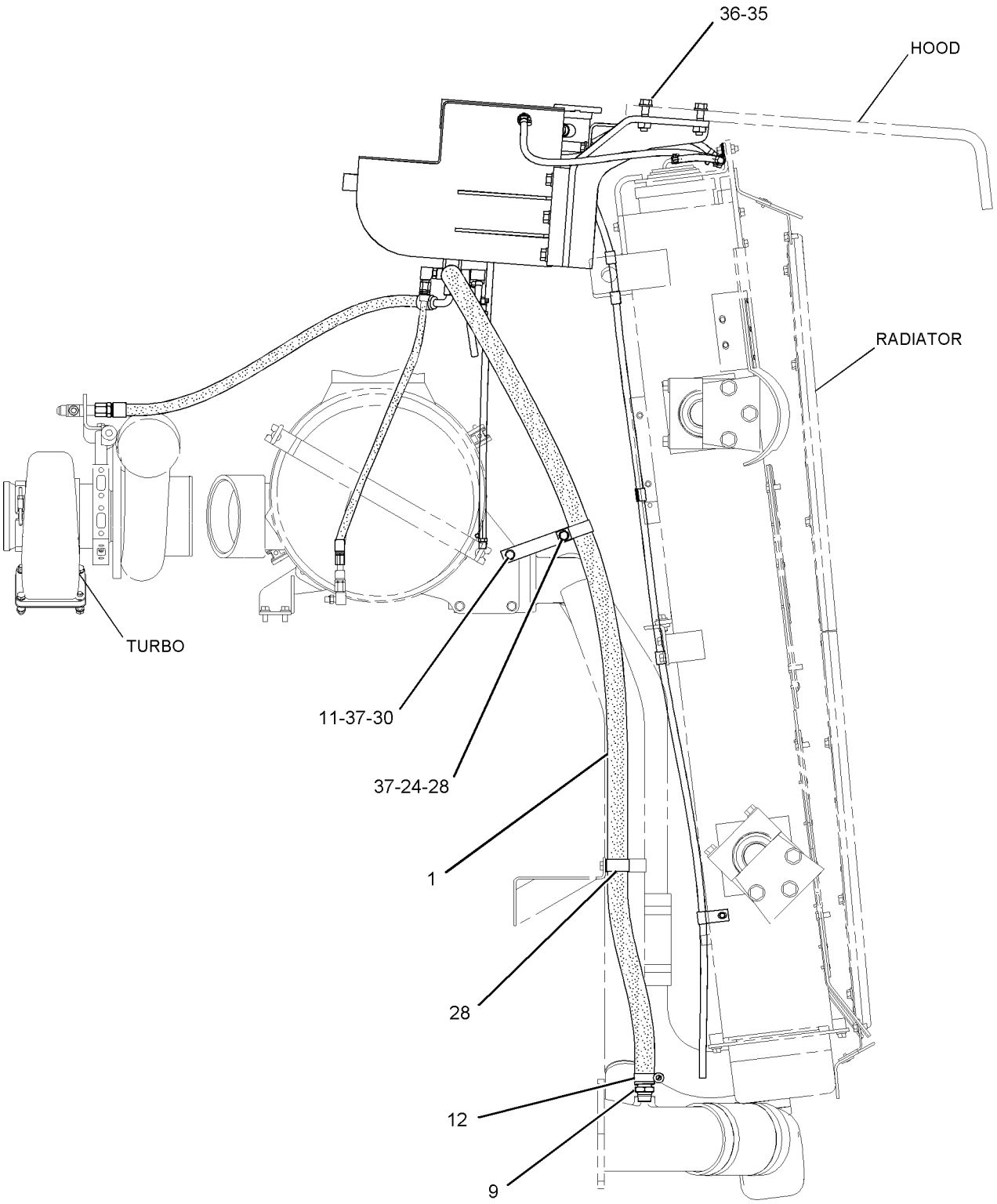

RIGHT SIDE VIEW

GRAPHIC #1

g01024055

156-9813 **TANK GP-WATER** ***(contd.)*** **i01973693**

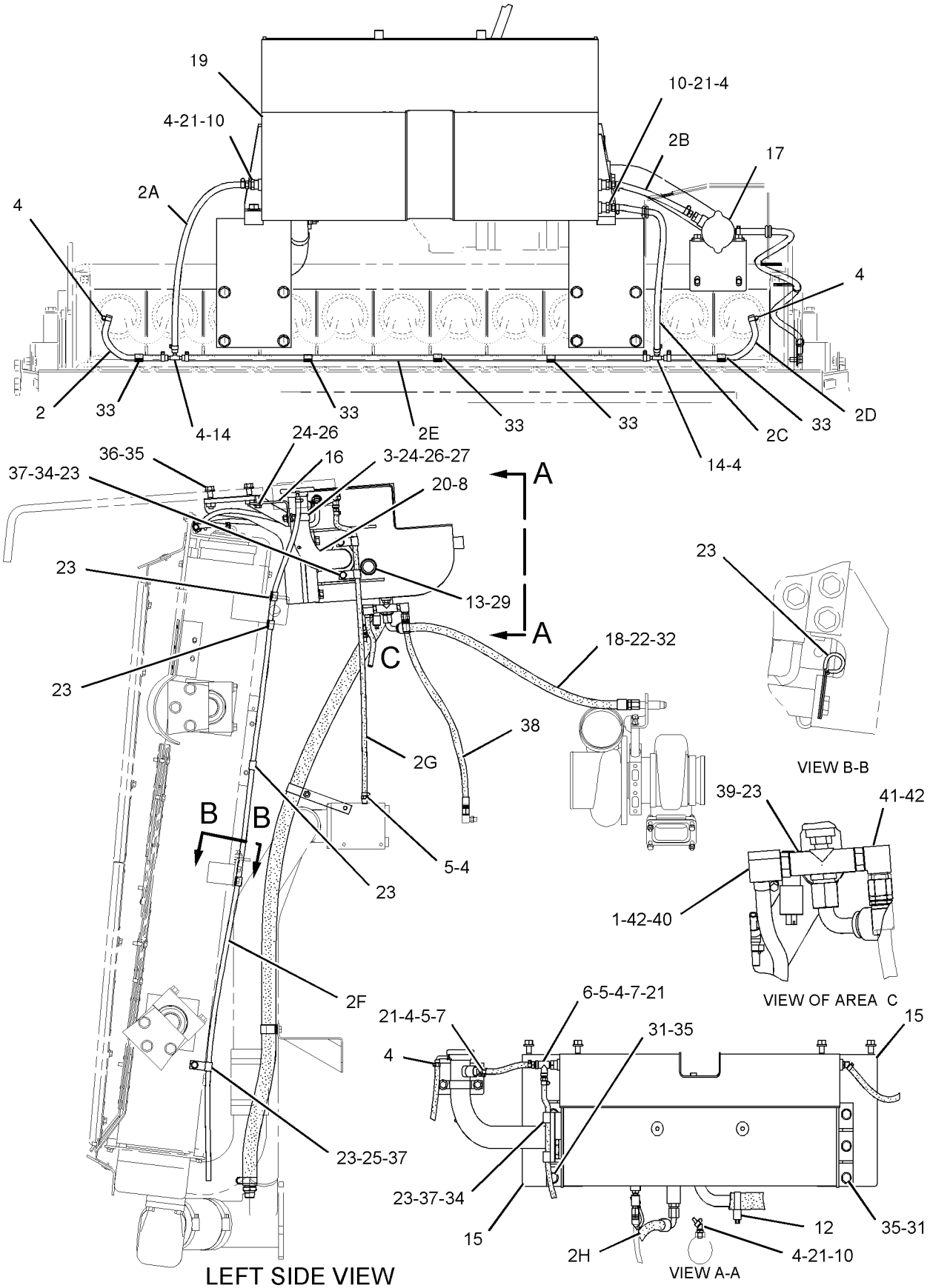

GRAPHIC #2 **<END>** g01024056

COOLING SYSTEM

156-9813 TANK GP-WATER

S/N: 7PZ671-UP
AMOCS EXPANSION
PART OF 155-5557 INSTALLATION AR-ENGINE

SMCS-1377 **i01930731**

NOTE	REF NO	GRAPHIC REF	PART NUMBER	QTY	PART NAME 1 2 3 4 5 6 (PRODUCT LEVEL)	SEE PAGE
E	1	1	**5P-1251**		HOSE (180CM)	
E	2	2	**5P-1465**		HOSE (21CM)	
E	2A	2	**5P-1465**		HOSE (49CM)	
E	2B	2	**5P-1465**		HOSE (14CM)	
E	2C	2	**5P-1465**		HOSE (43CM)	
E	2D	2	**5P-1465**		HOSE (27CM)	
E	2E	2	**5P-1465**		HOSE (102CM)	
E	2F	2	**5P-1465**		HOSE (188CM)	
E	2G	2	**5P-1465**		HOSE (88CM)	
	3	2	**1M-1462**	1	CLIP	
C	4	2	**1P-4278**	15	CLAMP-HOSE	
	5	2	**1P-9328**	4	FITTING	
	6	2	**2D-7325**	1	TEE-PIPE	
	7	2	**5P-2937**	2	ADAPTER-O-RING	
	8	2	**6L-5568**	1	GASKET	
	9	1	**6V-2492**	1	CONNECTOR	
C	10	2	**6V-8245**	2	ELBOW	
	11	1	**7T-0266**	1	BRACKET AS	
		1	**1F-0750**	1	NUT-WELD (3/8-16THD)	
	12	1,2	**7X-7958**	2	CLAMP-HOSE	
	13	2	**9Y-9236**	1	BODY AS-GAUGE	
C	14	2	**192-5425**	2	TEE	
	15	2	**133-5999**	2	SUPPORT AS	
	16	2	**137-8202**	1	BRACKET AS	
	17	2	**150-1978**	1	CAP AS (SHUNT TANK)	
I	18	2	**162-2257**	1	HOSE AS	
	19	2	**178-6360**	1	TANK AS-RADIATOR	
	20	2	**178-6362**	1	TUBE AS	
C	21	2	**3J-7354**	5	SEAL-O-RING	
	22	2	**3K-0360**	1	SEAL-O-RING	
	23	2	**4D-9517**	7	CLIP	
	24	1,2	**4L-6454**	5	BOLT (3/8-16X1 IN)	
	25	2	**5M-3062**	1	BOLT (3/8-16X0.75 IN)	
	26	2	**5P-1075**	6	WASHER-HARD (10.2X22.5X3MM THK)	
	27	2	**6V-8801**	2	NUT (3/8-16 THD)	
	28	1	**7D-7233**	2	CLIP	
	29	2	**7M-8485**	1	SEAL-O-RING	
	30	1	**7X-0289**	1	BOLT (3/8-16X1.875 IN)	
	31	2	**7X-0325**	6	BOLT (1/2-13X2.5 IN)	
	32	2	**8M-0505**	1	CONNECTOR	
	33	2	**8M-2770**	5	CLIP	
	34	2	**8T-2502**	2	BOLT (3/8-16X1.125 IN)	
	35	1,2	**8T-4223**	14	WASHER-HARD (13.5X25.5X3MM THK)	
	36	1,2	**8T-4835**	8	BOLT (1/2-13X2 IN)	
	37	1,2	**8T-4896**	5	WASHER-HARD (10.2X18.5X2.5MM THK)	
	38	2	**230-5452**	1	HOSE AS	
C	39	2	**030-3978**	1	CONNECTOR	

C-CHANGE FROM PREVIOUS TYPE
E-ORDER BY THE CENTIMETER
I-REFER TO HYDRAULIC INFORMATION SYSTEM

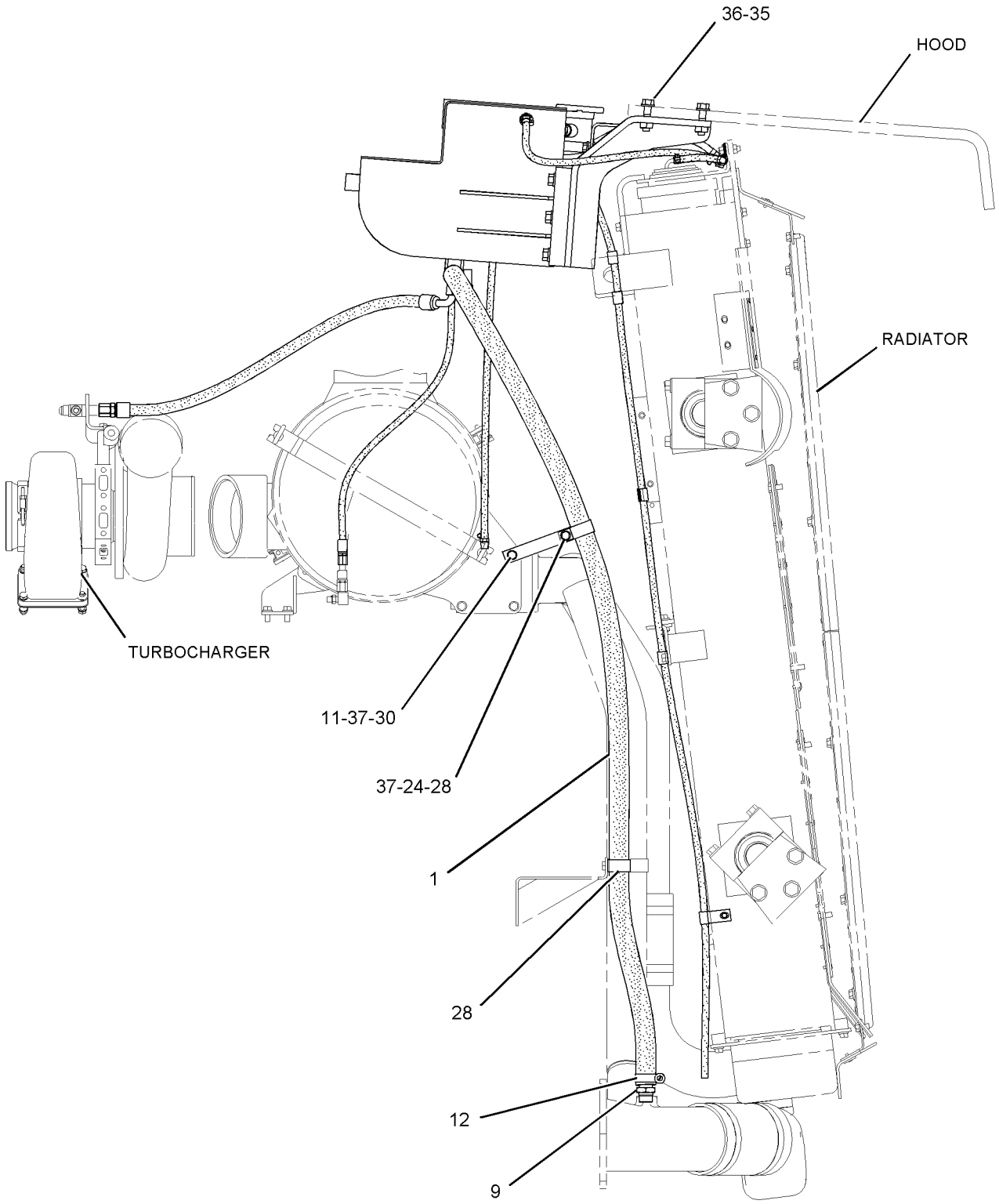

RIGHT SIDE VIEW

GRAPHIC #1

g01026294

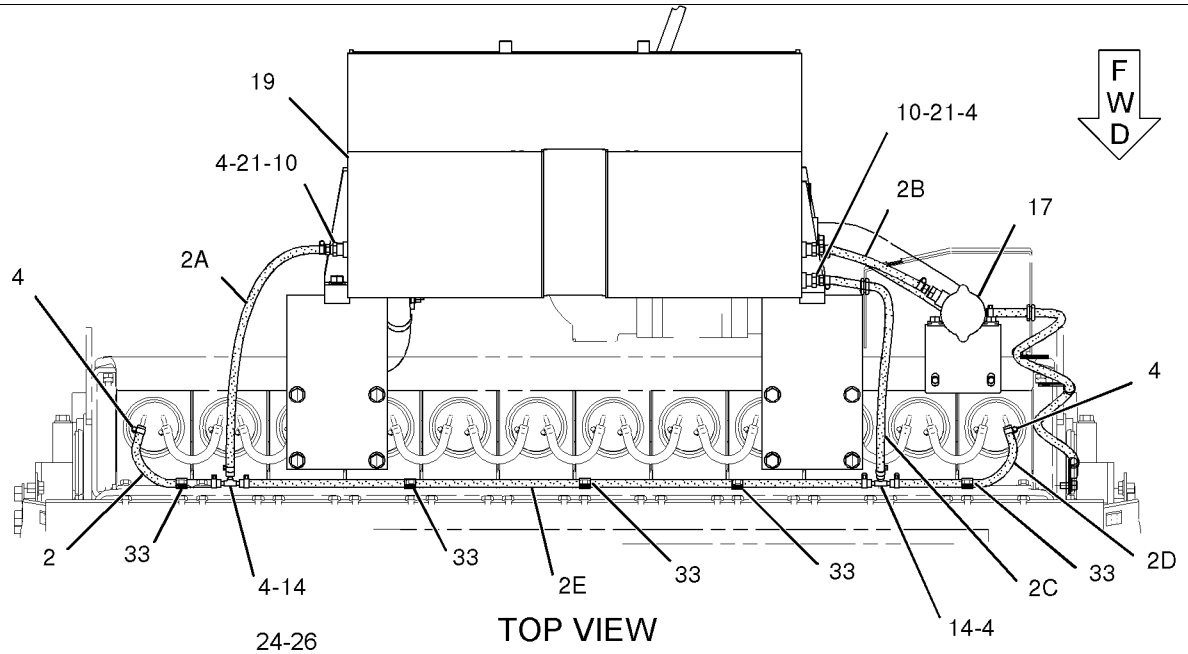

TOP VIEW

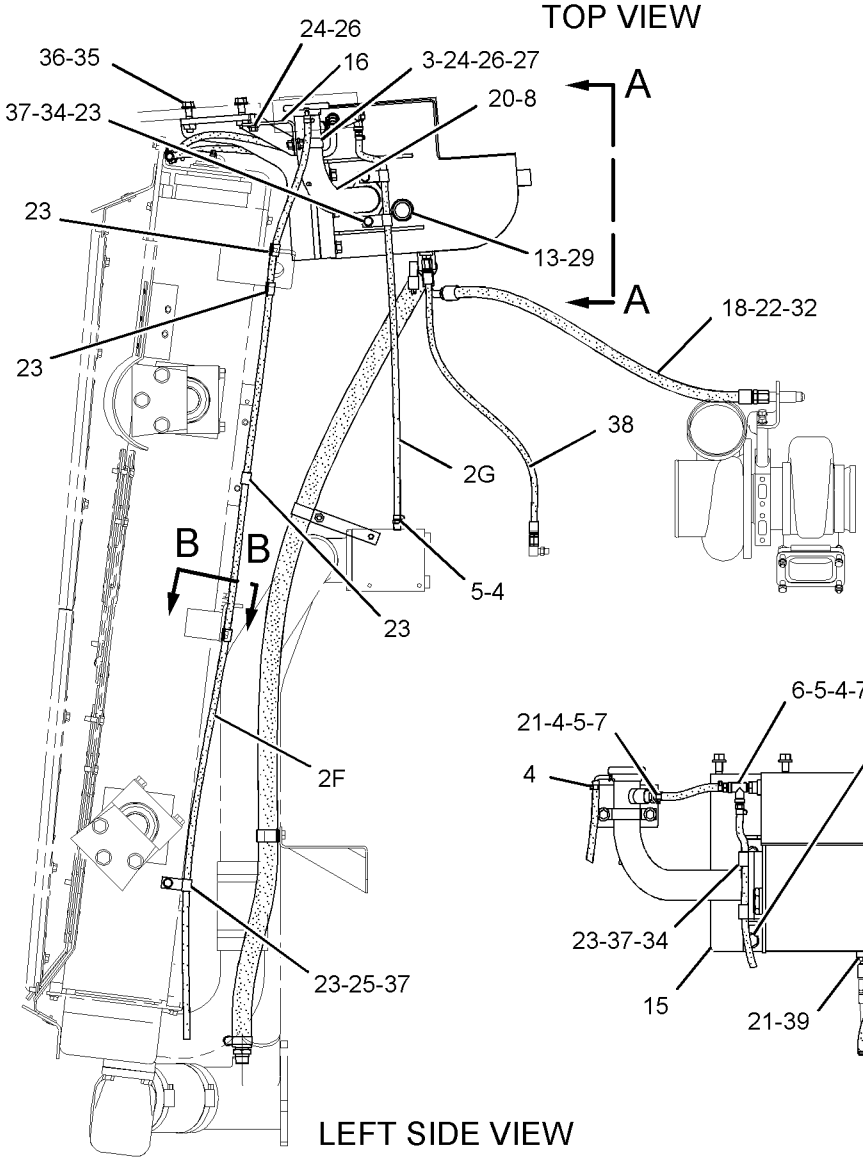

LEFT SIDE VIEW

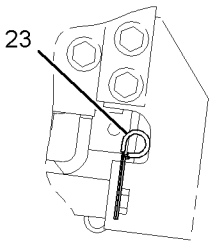

VIEW B-B

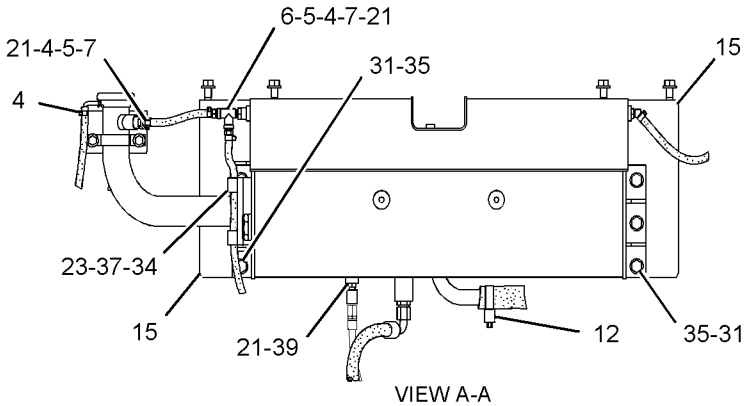

VIEW A-A

GRAPHIC #2 **<END>** g01026295

AIR INLET AND EXHAUST SYSTEM

172-0209 AFTERCOOLER GP-WATER

S/N: 2GR1180-UP

PART OF 155-5556 ENGINE AR

SMCS-1063, 1064, 1079 **i02000928**

NOTE	REF NO	GRAPHIC REF	PART NUMBER	QTY	PART NAME 1 2 3 4 5 6 (PRODUCT LEVEL)	SEE PAGE
	1	1	**107-3758**	2	SEAL	
	2	1	**196-9200**	1	CORE AS-AFTERCOOLER	
	3	1	**6V-9027**	1	SEAL-O-RING	
	4	1	**9S-4182**	1	PLUG	

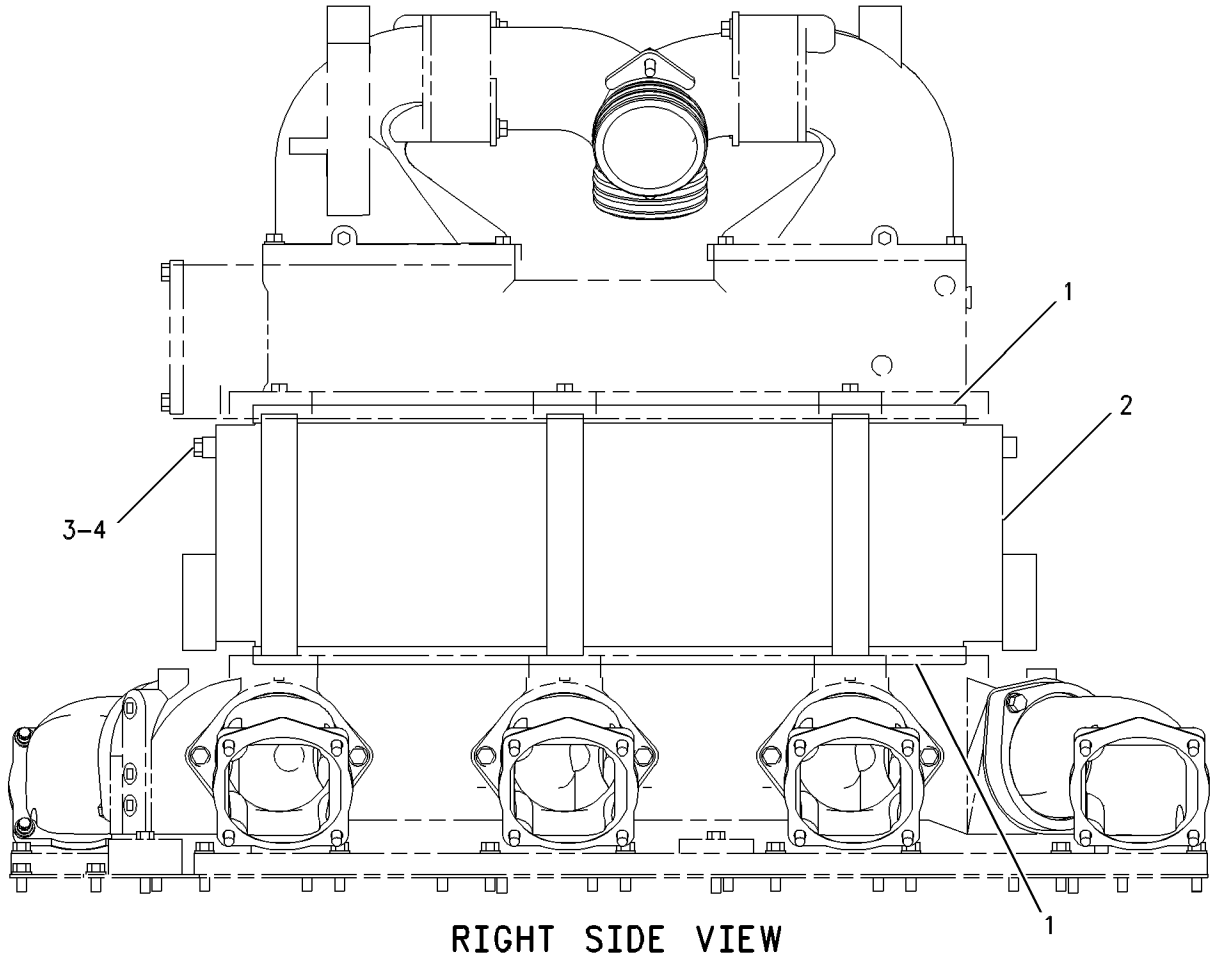

RIGHT SIDE VIEW

GRAPHIC #1 **<END>** g00582591

AIR INLET AND EXHAUST SYSTEM

123-6853 AIR CLEANER GP

S/N: 7PZ1-681

PART OF 155-5557 INSTALLATION AR-ENGINE

SMCS-1051, 1054 **i01637927**

NOTE	REF NO	GRAPHIC REF	PART NUMBER	QTY	PART NAME 1 2 3 4 5 6 (PRODUCT LEVEL)	SEE PAGE
B	1	1	**5S-7383**	1	BOLT (3/8-16X1.75 IN)	
B	2	1	**8T-4896**	1	WASHER-HARD (10.2X18.5X2.5MM THK)	
	3	1	**1W-9745**	1	BRACKET AS-LH	
	4	1	**1W-9747**	1	BRACKET AS-RH	
	5	1	**5P-4869**	4	CLAMP-HOSE	
	6	1	**7C-9770**	2	GASKET	
	7	1	**7S-8817**	2	PRECLEANER AS	
					(EACH INCLUDES)	
		1	**0S-1591**	1	BOLT (3/8-16X1.5 IN)	
		1	**6V-8801**	1	NUT (3/8-16 THD)	
	8	1	**9M-2151**	20	STUD-TAPERLOCK (3/8-16X1.38 IN)	
	9	1	**112-6039**	1	PLATE AS	
Y	10	1	**123-6854**	2	AIR CLEANER GP	166
	11	1	**123-6857**	1	BODY AS-PRECLEANER (LH)	
	12	1	**123-6858**	1	BODY AS-PRECLEANER (RH)	
	13	1	**123-6922**	2	ELBOW	
Y	14	1	**135-3103**	1	SUPPORT GP-AIR INLET (RH)	190
Y	15	1	**135-3104**	1	SUPPORT GP-AIR INLET (LH)	191
	16	1	**2K-4973**	20	LOCKNUT (3/8-16 THD)	
	17	1	**5M-3062**	8	BOLT (3/8-16X0.75 IN)	
	18	1	**5S-7379**	16	BOLT (3/8-16X0.875 IN)	
	19	1	**5S-7382**	2	BOLT (3/8-16X1.375 IN)	
	20	1	**5S-7383**	5	BOLT (3/8-16X1.75 IN)	
	21	1	**8T-4896**	51	WASHER-HARD (10.2X18.5X2.5MM THK)	

B-USE AS REQUIRED
Y-SEPARATE ILLUSTRATION

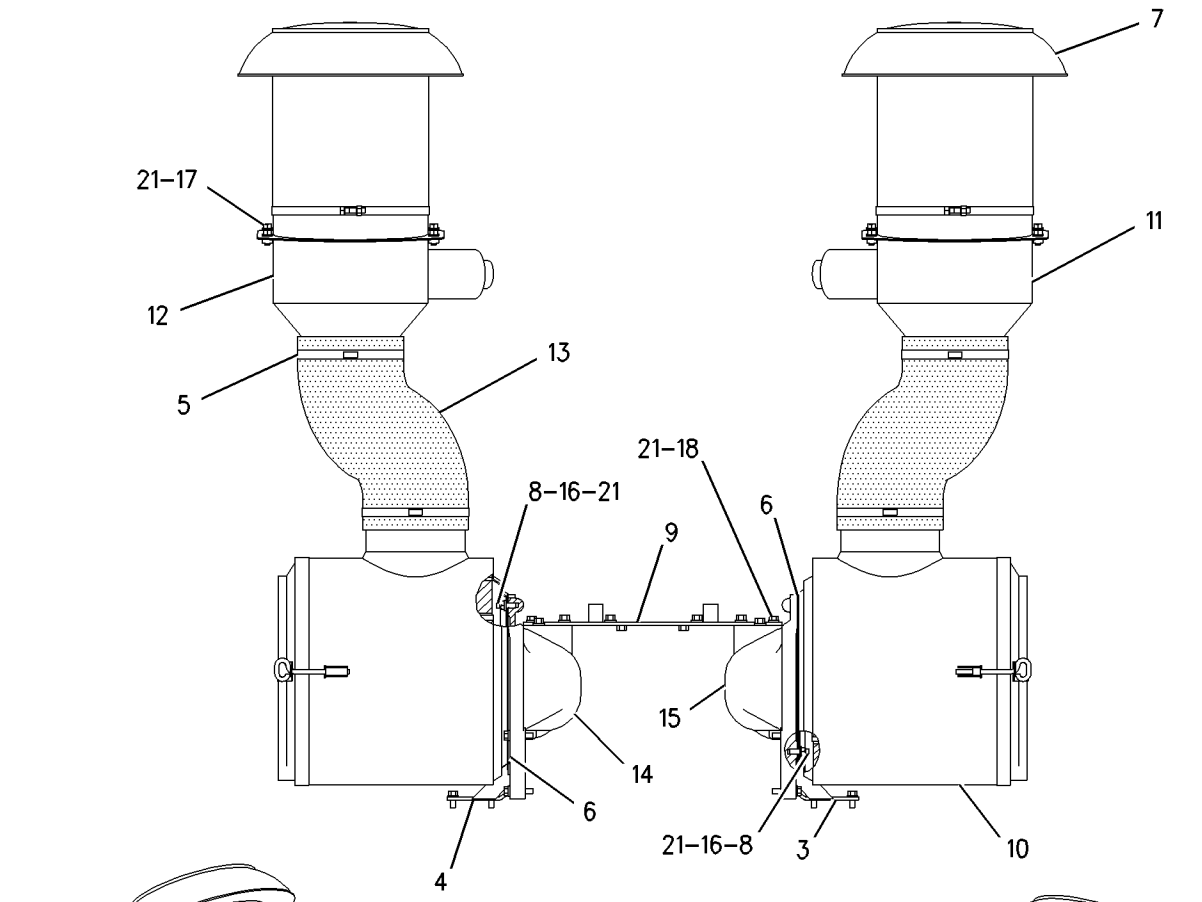

FRONT VIEW

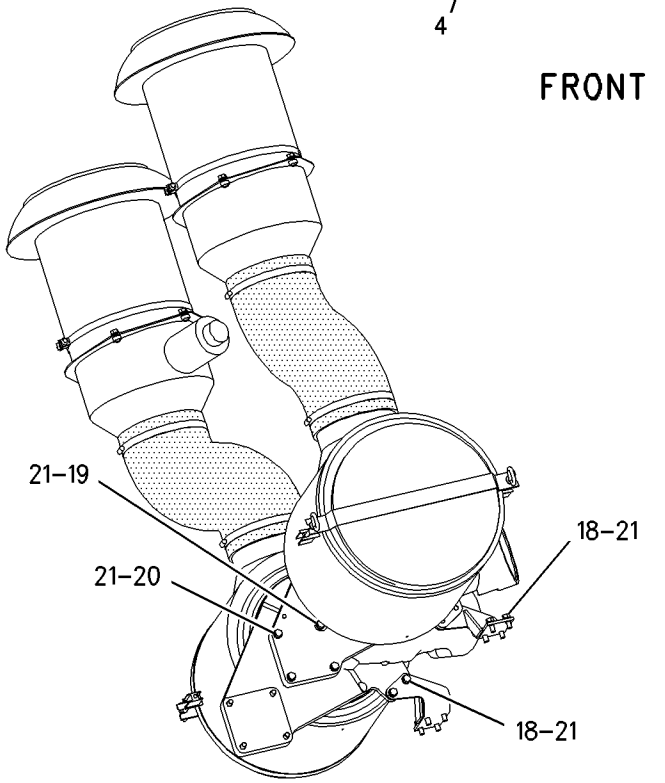

RIGHT SIDE VIEW

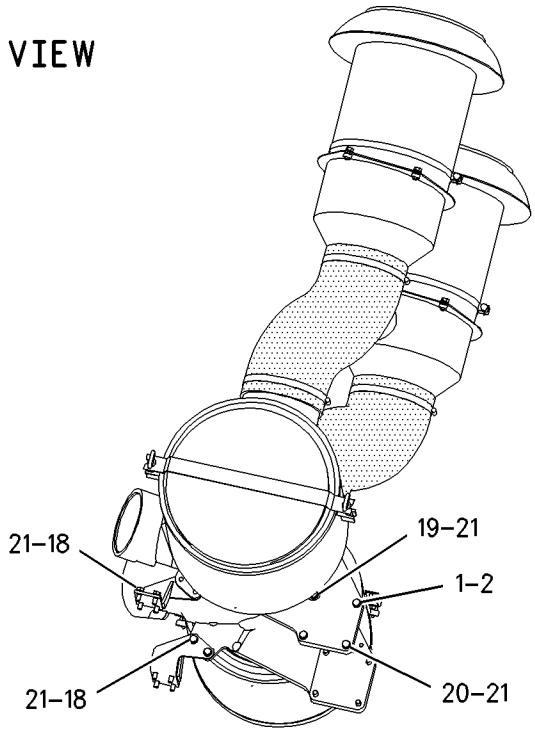

LEFT SIDE VIEW

GRAPHIC #1 **<END>** g00859483

AIR INLET AND EXHAUST SYSTEM

123-6854 AIR CLEANER GP

S/N: 7PZ1-681

PART OF 123-6853 AIR CLEANER GP

SMCS-1051, 1054 **i01988466**

NOTE	REF NO	GRAPHIC REF	PART NUMBER	QTY	PART NAME 1 2 3 4 5 6 (PRODUCT LEVEL)	SEE PAGE
	1	1	**111-4376**	1	COVER AS	
E	2	1	**7X-2634**		SEAL (128CM)	
	3	1	**9M-3695**	2	ROD AS	
	4	1	**123-6855**	1	ELEMENT AS-PRIMARY (AIR FILTER)	
	5	1	**123-6856**	1	ELEMENT AS-SECONDARY (AIR FILTER)	

E-ORDER BY THE CENTIMETER

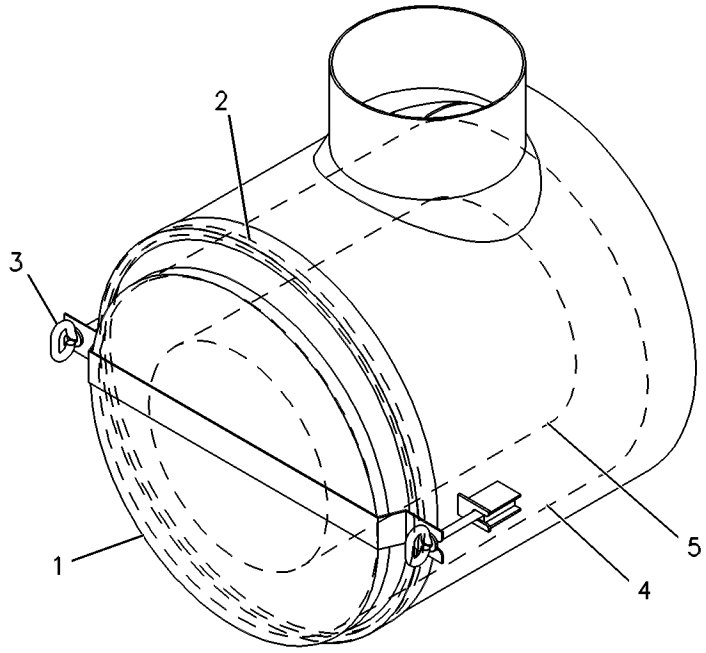

GRAPHIC #1 **<END>** g00254201

AIR INLET AND EXHAUST SYSTEM

217-7086 AIR CLEANER GP

S/N: 2GR4243, 4316, 4323, 4367, 4388, 4420-UP

PART OF 155-5556 ENGINE AR

SMCS-1051, 1054 **i01928289**

NOTE	REF NO	GRAPHIC REF	PART NUMBER	QTY	PART NAME 1 2 3 4 5 6 (PRODUCT LEVEL)	SEE PAGE
	1	1	**1W-9745**	1	BRACKET AS-LH	
	2	1	**1W-9747**	1	BRACKET AS-RH	
	3	1	**9M-2151**	20	STUD-TAPERLOCK (3/8-16X1.38 IN)	
	4	1	**112-6039**	1	PLATE AS	
	5	1	**217-7087**	2	HOSE	
Y	6	1	**228-0692**	2	AIR CLEANER GP	169
	7	1	**230-0941**	2	SEAL-INTEGRAL	
	8	1	**217-7071**	1	SUPPORT (AIR CLEANER) (RH)	
		1	**7M-1674**	1	ELEMENT-FILTER (AIR CLEANER)	
	9	1	**217-7072**	1	SUPPORT (AIR CLEANER) (LH)	
		1	**7M-1674**	1	ELEMENT-FILTER (AIR CLEANER)	
	10	1	**233-8350**	8	CLAMP	
	11	1	**2K-4973**	20	LOCKNUT (3/8-16 THD)	
	12	1	**5S-7379**	16	BOLT (3/8-16X0.875 IN)	
	13	1	**5S-7382**	2	BOLT (3/8-16X1.375 IN)	
	14	1	**5S-7383**	6	BOLT (3/8-16X1.75 IN)	
	15	1	**8T-4896**	44	WASHER-HARD (10.2X18.5X2.5MM THK)	

Y-SEPARATE ILLUSTRATION

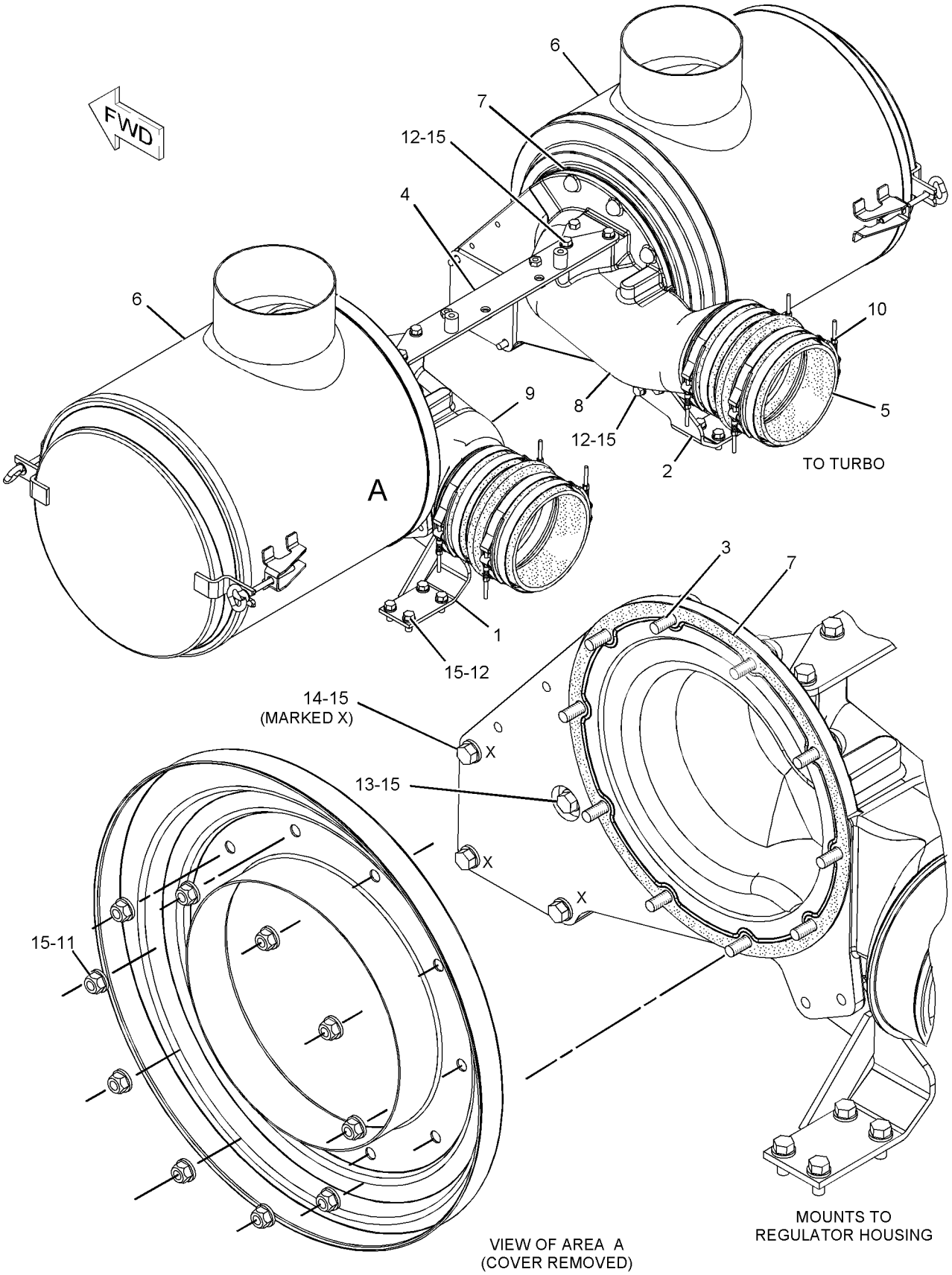

GRAPHIC #1 **<END>** g01022787

AIR INLET AND EXHAUST SYSTEM

228-0692 AIR CLEANER GP

S/N: 2GR4243, 4316, 4323, 4367, 4388, 4420-UP

PART OF 217-7086 AIR CLEANER GP

SMCS-1051, 1054 **i01967179**

NOTE	REF NO	GRAPHIC REF	PART NUMBER	QTY	PART NAME 1 2 3 4 5 6 (PRODUCT LEVEL)	SEE PAGE
	1	1	**7C-0190**	1	COVER AS	
E	1A	1	**7X-2634**		SEAL (128CM)	
	2	1	**9M-3695**	2	ROD AS	
	3	1	**132-7168**	1	ELEMENT AS-PRIMARY (AIR FILTER) (ULTRA HIGH EFFICIENCY)	
	4	1	**106-3973**	1	ELEMENT AS-SECONDARY (AIR FILTER)	

E-ORDER BY THE CENTIMETER

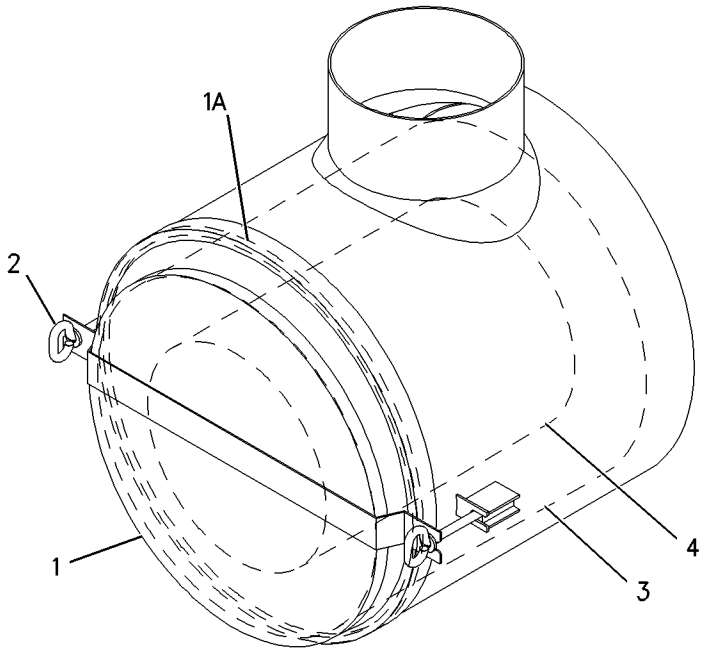

GRAPHIC #1 **<END>** g00929020

AIR INLET AND EXHAUST SYSTEM

1W-3508 DUST EJECTOR GP–EXHAUST

S/N: 7PZ1-UP

PART OF 155-5557 INSTALLATION AR-ENGINE

SMCS-1068 **i01988463**

NOTE	REF NO	GRAPHIC REF	PART NUMBER	QTY	PART NAME 1 2 3 4 5 6 (PRODUCT LEVEL)	SEE PAGE
	1	1	**7W-1208**	2	CLAMP	
	2	1	**8T-7008**	2	BOLT (3/8-16X3 IN)	
	3	1	**5P-1075**	4	WASHER-HARD (10.2X22.5X3MM THK)	
	4	1	**2K-4973**	2	LOCKNUT (3/8-16 THD)	
	5	1	**7W-5524**	2	EJECTOR AS-EXHAUST	
	6	1	**7S-5003**	2	CAP AS-RAIN (EXHAUST)	
	7	1	**5P-0597**	4	CLAMP-HOSE	
	8	1	**100-8033**	2	HOSE	
	9	1	**4L-6454**	2	BOLT (3/8-16X1 IN)	
	10	1	**1W-1115**	2	ELBOW	
	11	1	**7W-2478**	2	GASKET	
B	12	1	**130-3374**	2	CLIP	
B	13	1	**9B-7237**	2	BOLT (3/8-16X1.25 IN)	
B	14	1	**8T-4896**	2	WASHER-HARD (10.2X18.5X2.5MM THK)	
	15	1	**7X-0290**	2	BOLT (3/8-16X3.50 IN)	

B-USE AS REQUIRED

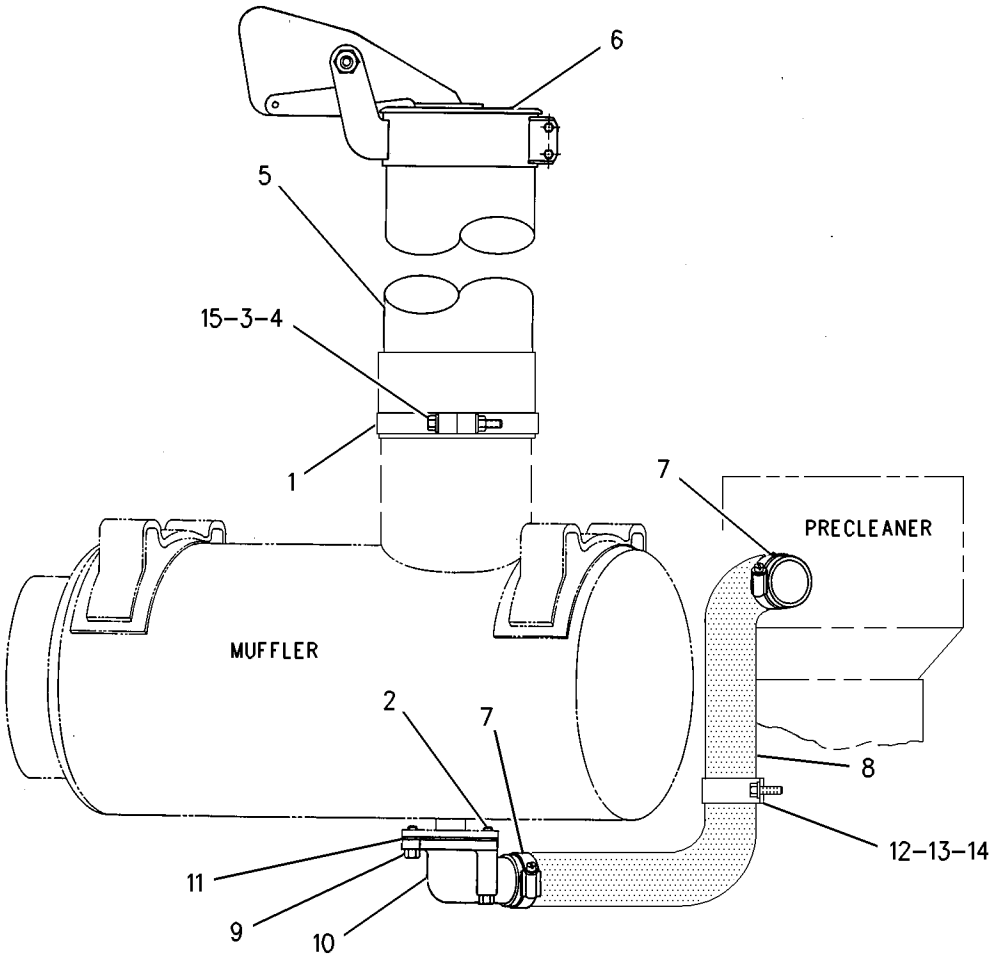

GRAPHIC #1 **<END>** g00736562

AIR INLET AND EXHAUST SYSTEM

154-2386 KIT-INSTALLATION—TURBINE PRECLEANER-2 REQUIRED

S/N: 7PZ1-UP

FOR USE WITH 130-3281—PAGE 185

FIELD INSTALLATION

SMCS-1051 **i01232502**

NOTE	REF NO	GRAPHIC REF	PART NUMBER	QTY	PART NAME 1 2 3 4 5 6 (PRODUCT LEVEL)	SEE PAGE
	1	1	**107-7495**	1	DAMPER	
Z	2	1			PIPE AS	
	3	1	**4L-6454**	6	BOLT (3/8-16X1 IN)	
	4	1	**4W-5596**	1	COVER	
	5	1	**6V-8801**	4	NUT (3/8-16 THD)	
	6	1	**7W-2478**	1	GASKET	
	7	1	**8T-4896**	10	WASHER-HARD (2.5MM THK)	

Z-NOT SERVICED SEPARATELY

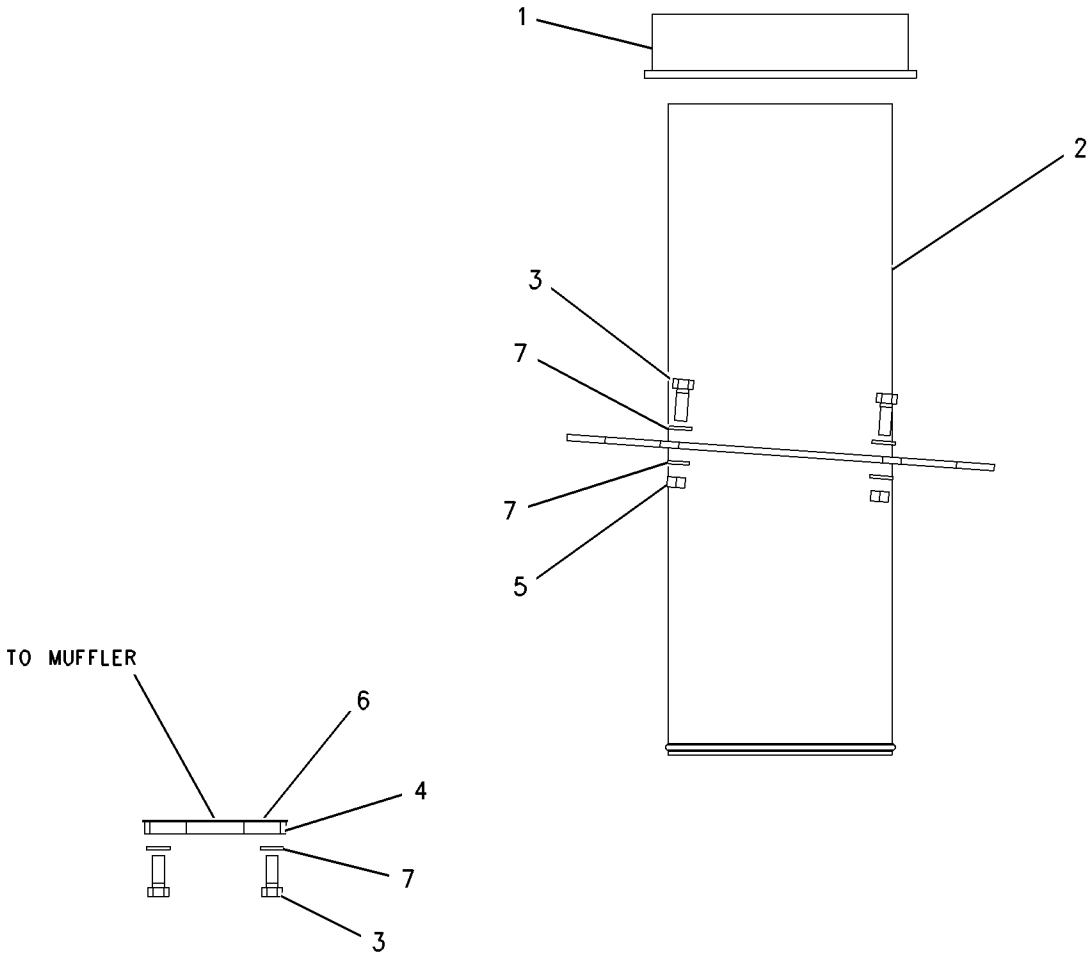

GRAPHIC #1 **<END>** g00659545

AIR INLET AND EXHAUST SYSTEM

1W-0725 LINES GP-AIR

S/N: 7PZ1-681

PART OF 155-5557 INSTALLATION AR-ENGINE

SMCS-1071 **i01645062**

NOTE	REF NO	GRAPHIC REF	PART NUMBER	QTY	PART NAME 1 2 3 4 5 6 (PRODUCT LEVEL)	SEE PAGE
	1	1	**1W-2976**	2	ELBOW	
	2	1	**6V-5103**	8	SEAL-O-RING	
	3	1	**8N-2729**	2	RING-METAL SEAL	
	4	1	**2W-6965**	2	COUPLING	
	5	1	**2W-1080**	2	ELBOW AS-EXHAUST	
	6	1	**1W-6694**	2	CLAMP	
	7	1	**8N-2730**	2	RING-METAL SEAL	

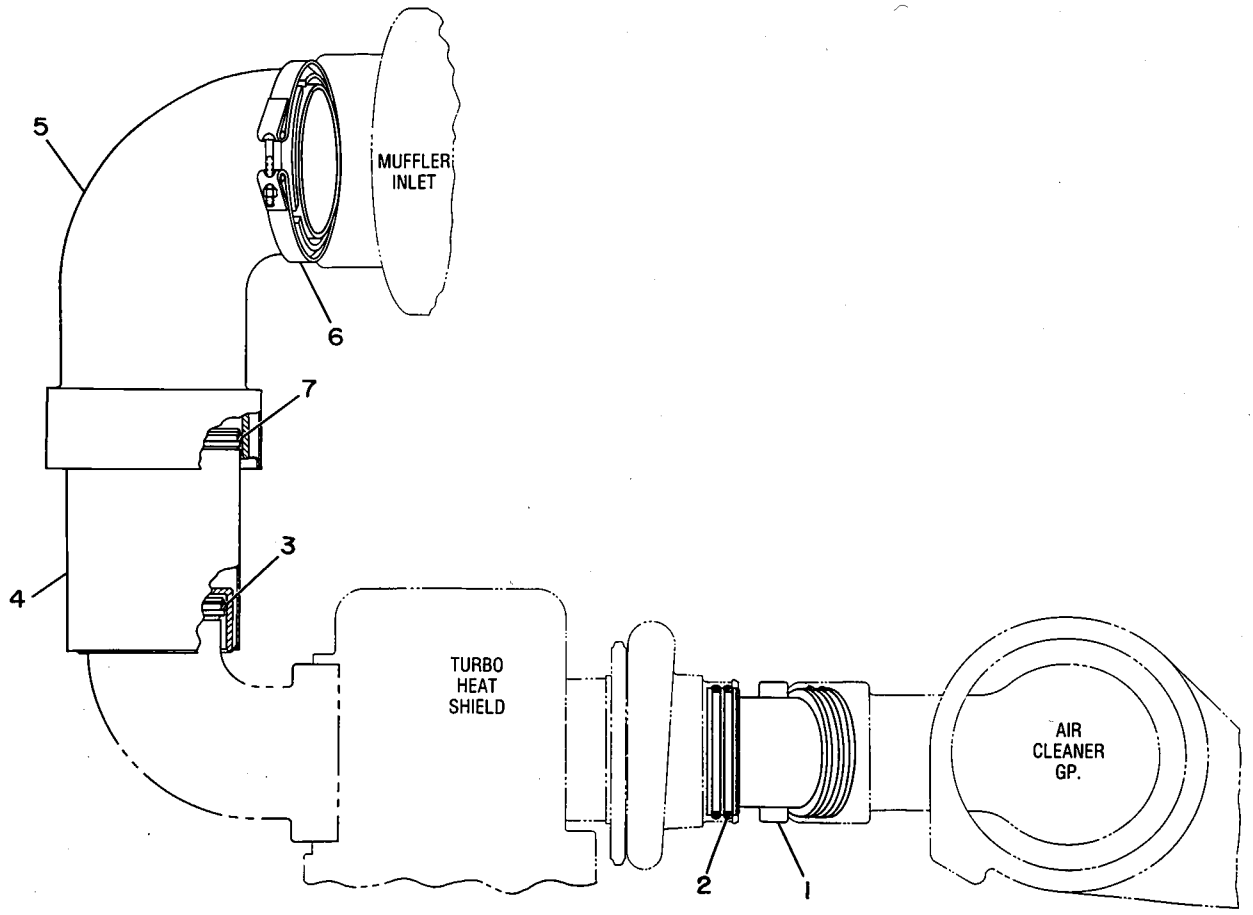

GRAPHIC #1 **<END>** g00202100

AIR INLET AND EXHAUST SYSTEM

1W-0725 LINES GP-AIR

S/N: 7PZ682-UP

PART OF 155-5557 INSTALLATION AR-ENGINE

SMCS-1071 **i01928865**

NOTE	REF NO	GRAPHIC REF	PART NUMBER	QTY	PART NAME 1 2 3 4 5 6 (PRODUCT LEVEL)	SEE PAGE
	1	1	**1W-6694**	2	CLAMP	
					(EACH INCLUDES)	
		1	**8T-0193**	1	NUT-FULL (5/16-24 THD)	
	2	1	**2W-1080**	2	ELBOW AS-EXHAUST	
	3	1	**2W-6965**	2	COUPLING	
	4	1	**8N-2729**	2	RING-METAL SEAL (EXHAUST)	
	5	1	**8N-2730**	2	RING-METAL SEAL (EXHAUST)	

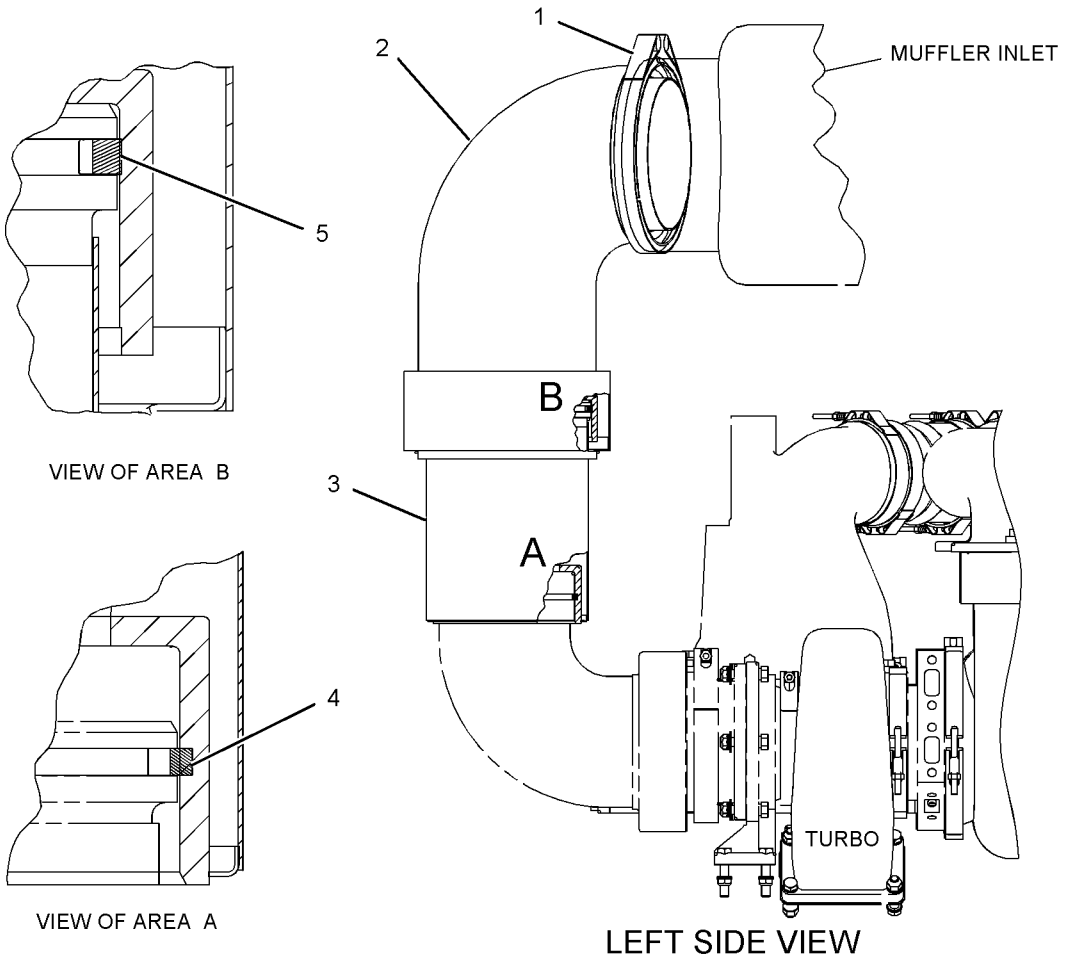

GRAPHIC #1 **<END>** g01023650

AIR INLET AND EXHAUST SYSTEM

156-9819 LINES GP-AIR

S/N: 2GR1180-4242, 4244-4315, 4317-4322, 4324-4366, 4368-4387, 4389-4419

PART OF 155-5556 ENGINE AR

SMCS-1071 **i02008955**

NOTE	REF NO	GRAPHIC REF	PART NUMBER	QTY	PART NAME 1 2 3 4 5 6 (PRODUCT LEVEL)	SEE PAGE
	1	1	**1S-1150**	12	SPACER (4.83MM THK)	
	2	1	**2N-2765**	8	BOLT-HIGH TEMPERATURE (3/8-16X1.75 IN)	
	3	1	**2W-1568**	2	ELBOW AS	
	4	1	**4W-0226**	2	ADAPTER	
	5	1	**7C-7909**	6	ELBOW	
	6	1	**7C-7910**	2	ELBOW	
	7	1	**7C-8199**	8	FLANGE	
	8	1	**7L-3195**	12	BOLT-HIGH TEMPERATURE (3/8-16X1-3/4 IN)	
	9	1	**7N-5080**	8	GASKET-MANIFOLD	
	10	1	**7N-5087**	2	GASKET-EXHAUST OUTLET	
	11	1	**7W-3145**	8	PLATE	
	12	1	**7X-1387**	12	WASHER (10.26X22.22X1.9MM THK)	
	13	1	**8N-4401**	2	CLAMP-V-BAND	
					(EACH INCLUDES)	
		1	**8T-0193**	1	NUT-FULL (5/16-24 THD)	
	14	1	**110-9517**	1	COVER	
	15	1	**112-3591**	1	COVER	
	16	1	**123-6982**	2	BAR	
	17	1	**123-6983**	1	PLATE	
	18	1	**127-8112**	1	SUPPORT-EXHAUST PIPE (LH)	
	19	1	**127-8113**	1	SUPPORT-EXHAUST PIPE (RH)	
	20	1	**144-5690**	1	ELBOW	
	21	1	**144-5691**	1	ELBOW	
	22	1	**146-7383**	2	FLANGE	
	23	1	**160-9836**	2	ELBOW	
	24	1	**168-7800**	20	LOCKNUT (3/8-16 THD)	
	25	1	**174-9338**	1	MANIFOLD	
	26	1	**0S-0509**	6	BOLT (3/8-16X0.75 IN)	
	27	1	**0S-1590**	4	BOLT (3/8-16X2 IN)	
	28	1	**0S-1591**	18	BOLT (3/8-16X1.5 IN)	
	29	1	**0S-1594**	12	BOLT (3/8-16X25.4 IN)	
	30	1	**0S-1619**	4	BOLT (3/8-16X3 IN)	
	31	1	**109-7411**	2	SEAL-O-RING	
	32	1	**1T-0720**	32	BOLT-12 POINT HEAD (3/8-16X1.25 IN)	
	33	1	**2A-4639**	16	BOLT (3/8-16X1.625 IN)	
	34	1	**3K-0360**	2	SEAL-O-RING	
	35	1	**4S-5898**	8	SEAL-O-RING	
	36	1	**5D-5957**	2	SEAL-O-RING	
	37	1	**5M-2894**	86	WASHER-HARD (10.2X18.5X2.5MM THK)	
	38	1	**5P-8940**	1	SEAL-O-RING	
	39	1	**6J-0934**	6	BOLT (3/8-16X10.75IN)	
	40	1	**6V-3917**	8	SEAL-O-RING	
	41	1	**6V-5101**	8	SEAL-O-RING	
	42	1	**8T-6762**	7	PLUG-PIPE	
	43	1	**8T-6764**	2	PLUG-PIPE	
	44	1	**9S-4185**	2	PLUG	

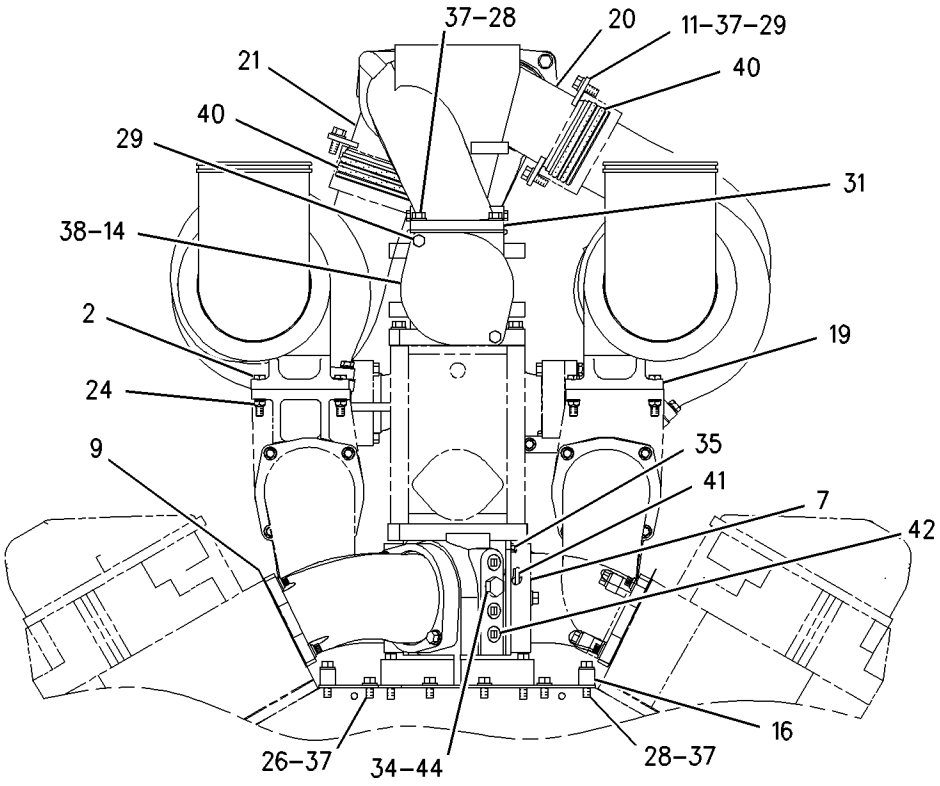

REAR VIEW

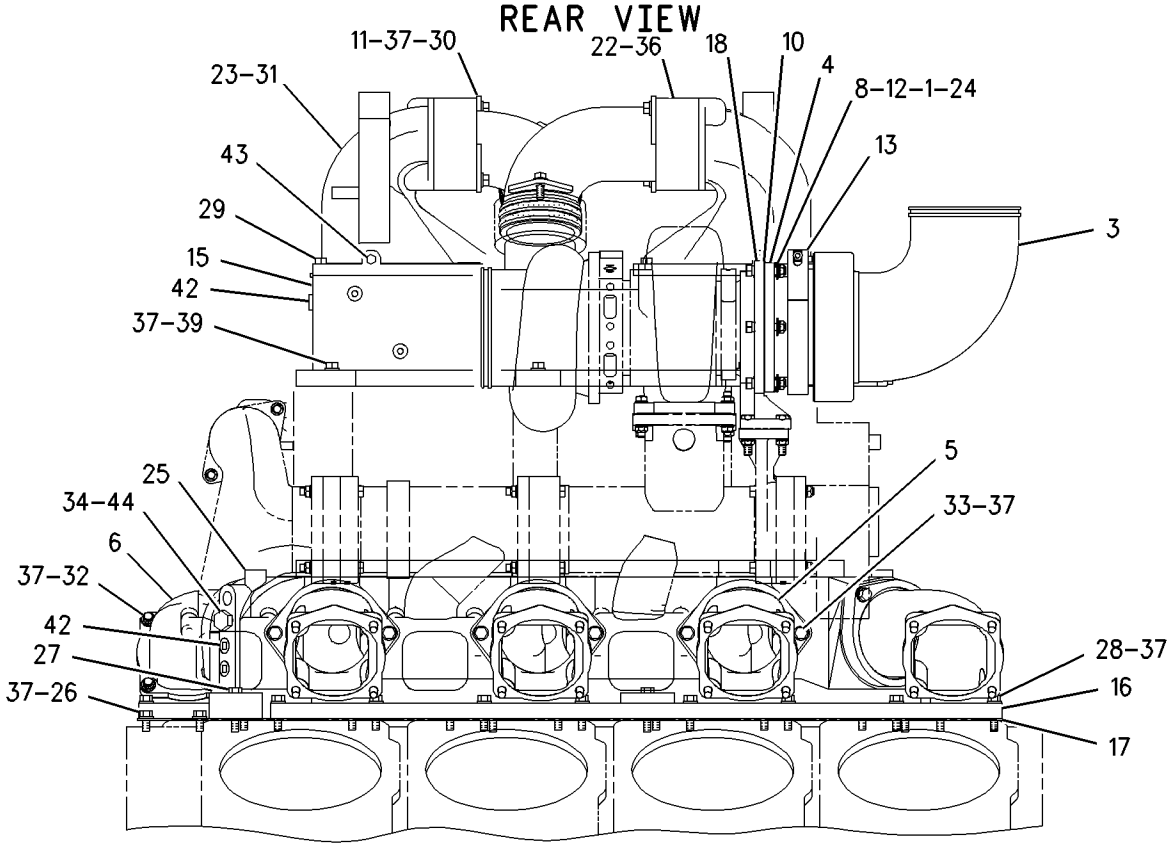

LEFT SIDE VIEW

GRAPHIC #1 **<END>** g00794239

AIR INLET AND EXHAUST SYSTEM

230-1050 LINES GP-AIR

S/N: 2GR4243, 4316, 4323, 4367, 4388, 4420-UP
PART OF 155-5556 ENGINE AR

SMCS-1071 **i02000822**

NOTE	REF NO	GRAPHIC REF	PART NUMBER	QTY	PART NAME 1 2 3 4 5 6 (PRODUCT LEVEL)	SEE PAGE
	1	1	**1S-1150**	12	SPACER (4.83MM THK)	
	2	1	**2N-2765**	8	BOLT-HIGH TEMPERATURE (3/8-16X1.75 IN)	
	3	1	**2W-1568**	2	ELBOW AS	
	4	1	**4W-0226**	2	ADAPTER	
	5	1	**7C-7909**	6	ELBOW	
	6	1	**7C-7910**	2	ELBOW	
	7	1	**7C-8199**	8	FLANGE	
	8	1	**7L-3195**	12	BOLT-HIGH TEMPERATURE (3/8-16X1-3/4 IN)	
	9	1	**7N-5080**	8	GASKET-MANIFOLD	
	10	1	**7N-5087**	2	GASKET-EXHAUST OUTLET	
	11	1	**7X-1387**	12	WASHER (10.26X22.22X1.9MM THK)	
	12	1	**8M-9124**	4	WASHER (10X22.5X8MM THK)	
	13	1	**8N-4401**	2	CLAMP-V-BAND	
					(EACH INCLUDES)	
		1	**8T-0193**	1	NUT-FULL (5/16-24 THD)	
	14	1	**109-7411**	2	SEAL-O-RING	
	15	1	**110-9517**	1	COVER	
	16	1	**112-3591**	1	COVER (AIR INLET)	
	17	1	**123-6982**	2	BAR	
	18	1	**123-6983**	1	PLATE	
	19	1	**127-8112**	1	SUPPORT-EXHAUST PIPE (LH)	
	20	1	**127-8113**	1	SUPPORT-EXHAUST PIPE (RH)	
	21	1	**168-7800**	20	LOCKNUT (HIGH TEMPERATURE)	
	22	1	**174-9338**	1	MANIFOLD	
	23	1	**217-7073**	2	ELBOW	
	24	1	**217-7074**	1	ELBOW	
	25	1	**217-7075**	1	ELBOW	
	26	1	**217-7088**	2	HOSE	
	27	1	**0S-0509**	6	BOLT (3/8-16X0.75 IN)	
	28	1	**0S-1588**	10	BOLT (3/8-16X1.25 IN)	
	29	1	**0S-1590**	4	BOLT (3/8-16X2 IN)	
	30	1	**0S-1591**	18	BOLT (3/8-16X1.5 IN)	
	31	1	**0S-1594**	2	BOLT (3/8-16X1 IN)	
	32	1	**1T-0720**	32	BOLT-12 POINT HEAD (3/8-16X1.25 IN)	
	33	1	**216-2211**	8	CLAMP	
	34	1	**2A-4639**	16	BOLT (3/8-16X1.625 IN)	
	35	1	**3K-0360**	1	SEAL-O-RING	
	36	1	**4S-5898**	8	SEAL-O-RING	
	37	1	**5M-2894**	78	WASHER-HARD (10.2X18.5X2.5MM THK)	
	38	1	**5P-8940**	1	SEAL-O-RING	
	39	1	**6J-0934**	6	BOLT (3/8-16X10.75IN)	
	40	1	**6V-3917**	4	SEAL-O-RING	
	41	1	**6V-5101**	8	SEAL-O-RING	
	42	1	**8T-6762**	7	PLUG-PIPE	
	43	1	**8T-6764**	2	PLUG-PIPE	
	44	1	**9S-4185**	1	PLUG	

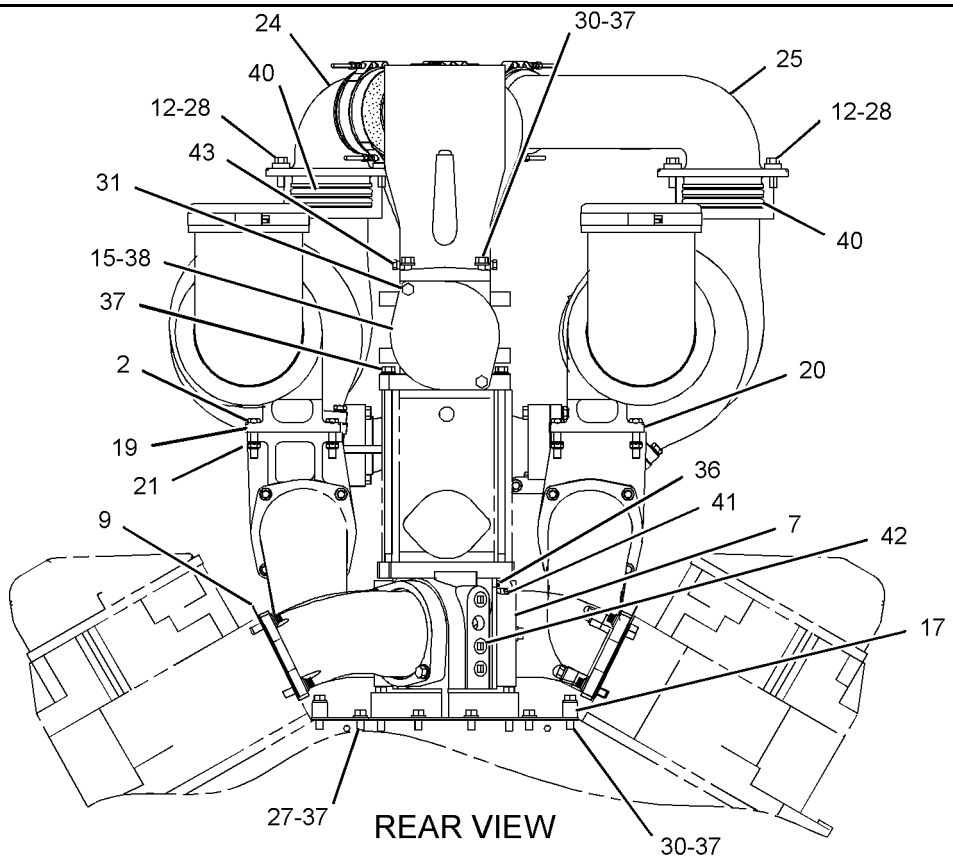

REAR VIEW

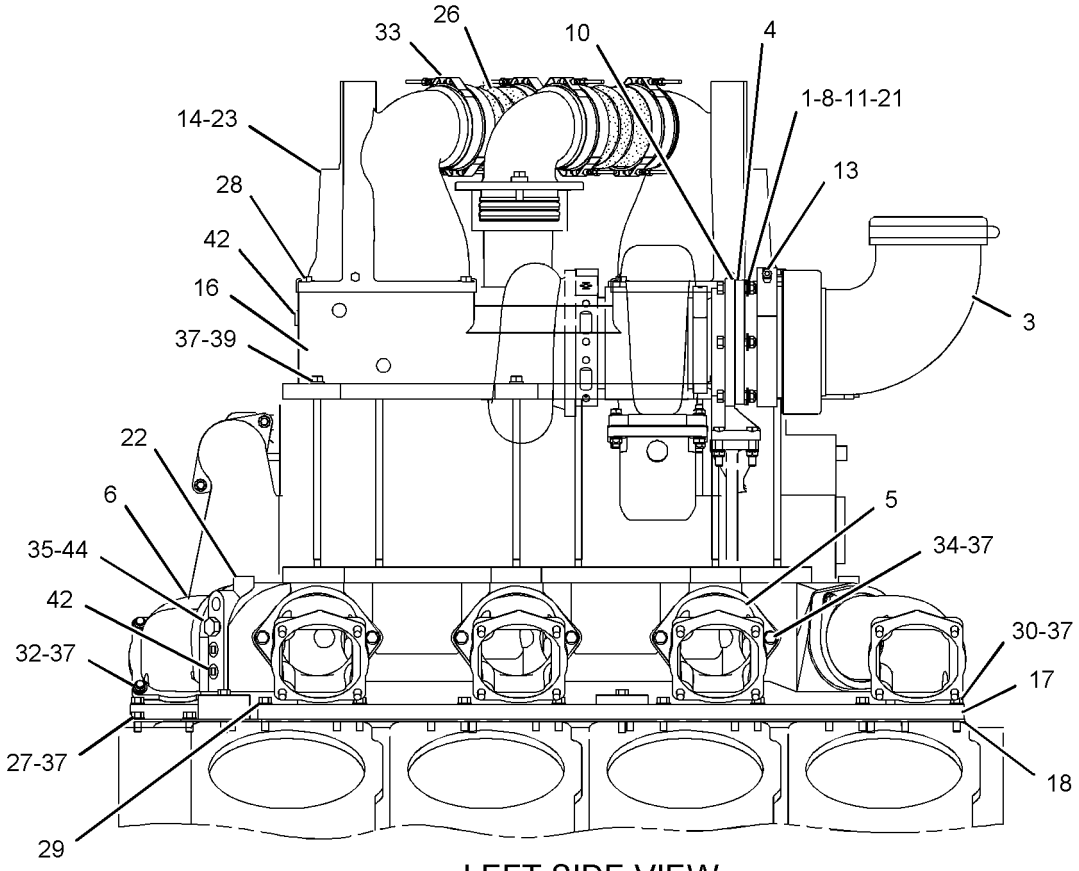

LEFT SIDE VIEW

GRAPHIC #1

<END>

g01009303

AIR INLET AND EXHAUST SYSTEM

121-5731 MANIFOLD GP-EXHAUST

S/N: 2GR1180-3601

PART OF 155-5556 ENGINE AR

SMCS-1059 **i02008961**

NOTE	REF NO	GRAPHIC REF	PART NUMBER	QTY	PART NAME 1 2 3 4 5 6 (PRODUCT LEVEL)	SEE PAGE
	1	1	**1W-5499**	2	SLEEVE-EXHAUST MANIFOLD	
	2	1	**5P-2755**	8	BOLT-HIGH TEMPERATURE (3/8-16X2.75 IN)	
	3	1	**5P-3345**	16	BOLT (3/8-16X3 IN)	
	4	1	**5P-3961**	32	BOLT (3/8-16X2.5 IN)	
	5	1	**7L-6443**	4	BOLT (3/8-16X2.25 IN)	
	6	1	**7W-8145**	8	GASKET-EXHAUST MANIFOLD	
	7	1	**9L-2295**	1	BOLT-HIGH TEMPERATURE (3/8-16X1.5 IN)	
	8	1	**107-8719**	2	SLEEVE-EXHAUST MANIFOLD	
	9	1	**110-8771**	1	MANIFOLD-EXHAUST (LH FRONT)	
	10	1	**110-8772**	1	MANIFOLD-EXHAUST (RH FRONT)	
	11	1	**113-8172**	1	MANIFOLD-EXHAUST (LH REAR)	
	12	1	**113-8189**	1	SPACER (10.5X22.5X30MM THK)	
	13	1	**115-0553**	1	MANIFOLD-EXHAUST (INTERMEDIATE) (LH)	
	14	1	**115-0554**	1	MANIFOLD-EXHAUST (INTERMEDIATE) (LH)	
	15	1	**115-0555**	1	MANIFOLD-EXHAUST (RH REAR)	
	16	1	**115-0556**	1	MANIFOLD-EXHAUST (INTERMEDIATE) (RH)	
	17	1	**115-0557**	1	MANIFOLD-EXHAUST (INTERMEDIATE) (RH)	
	18	1	**127-8269**	4	SEAL-EXHAUST	
	19	1	**129-9547**	1	MANIFOLD-EXHAUST	
	20	1	**153-7474**	6	SLEEVE-EXHAUST MANIFOLD	
	21	1	**166-8420**	1	SLEEVE-ELBOW SUPPORT (LH)	
	22	1	**166-8421**	1	SLEEVE-ELBOW SUPPORT (RH)	
	23	1	**168-7800**	29	LOCKNUT (3/8-16 THD)	
	24	1	**198-0230**	31	SPACER (10.5X19X15MM THK)	
	25	1	**5M-2894**	32	WASHER-HARD (10.2X18.5X2.5MM THK)	

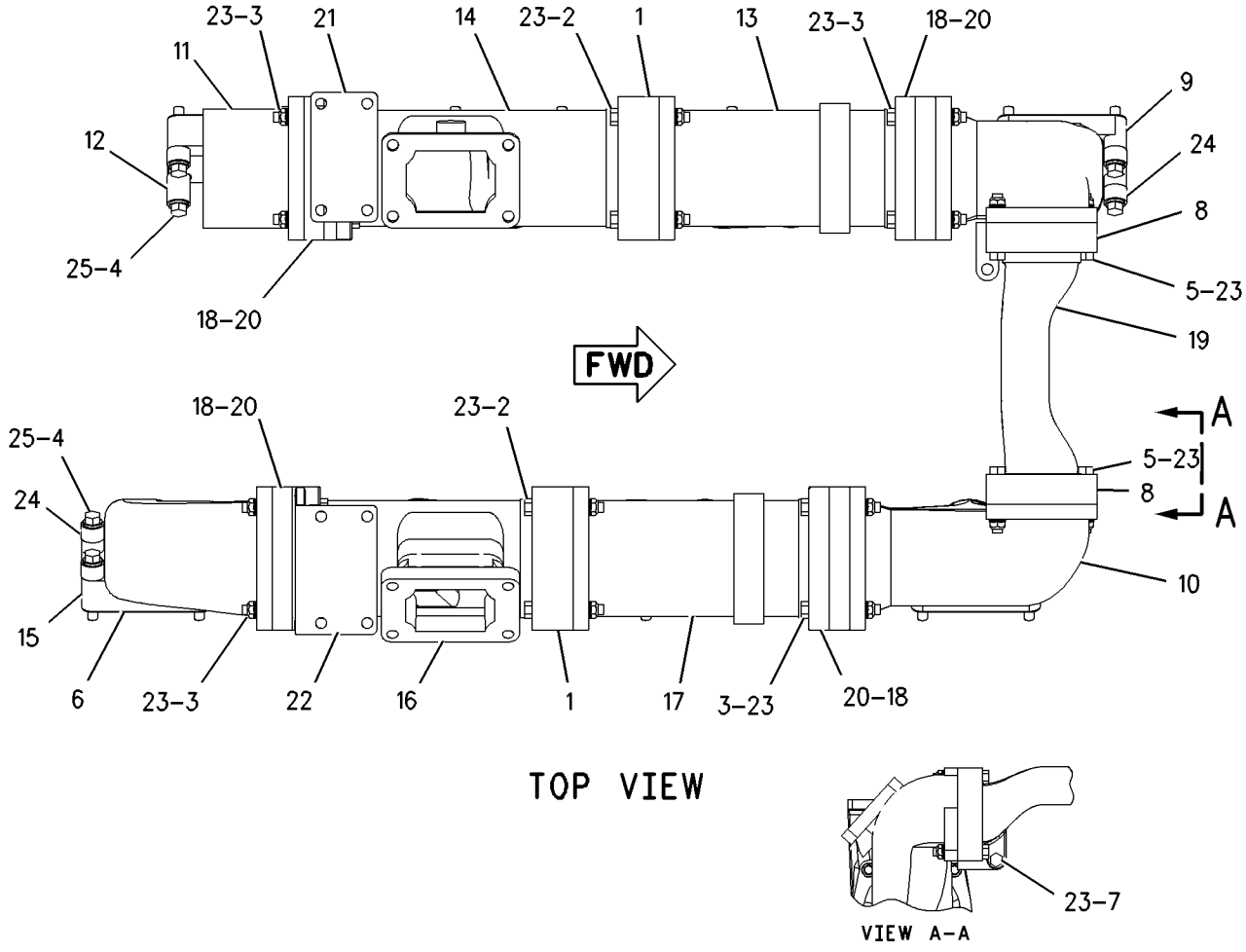

GRAPHIC #1 **<END>** g00786992

AIR INLET AND EXHAUST SYSTEM

121-5731 MANIFOLD GP-EXHAUST

S/N: 2GR3602-UP

PART OF 155-5556 ENGINE AR

SMCS-1059 **i02001064**

NOTE	REF NO	GRAPHIC REF	PART NUMBER	QTY	PART NAME 1 2 3 4 5 6 (PRODUCT LEVEL)	SEE PAGE
C	1	1	**4P-7680**	3	SPACER (10.5X22.5X15MM THK)	
C	2	1	**5P-3345**	24	BOLT (3/8-16X3 IN)	
C	3	1	**5P-3961**	4	BOLT (3/8-16X2.5 IN)	
	4	1	**7L-6443**	4	BOLT (3/8-16X2.25 IN)	
	5	1	**7W-8145**	8	GASKET-EXHAUST MANIFOLD	
	6	1	**9L-2295**	1	BOLT-HIGH TEMPERATURE (3/8-16X1.5 IN)	
	7	1	**107-8719**	2	SLEEVE-EXHAUST MANIFOLD	
	8	1	**110-8771**	1	MANIFOLD-EXHAUST (LH FRONT)	
	9	1	**110-8772**	1	MANIFOLD-EXHAUST (RH FRONT)	
	10	1	**113-8172**	1	MANIFOLD-EXHAUST (LH REAR)	
	11	1	**113-8189**	1	SPACER (10.5X22.5X30MM THK)	
	12	1	**115-0553**	1	MANIFOLD-EXHAUST (INTERMEDIATE) (LH)	
	13	1	**115-0554**	1	MANIFOLD-EXHAUST (INTERMEDIATE) (LH)	
	14	1	**115-0555**	1	MANIFOLD-EXHAUST (RH REAR)	
	15	1	**115-0556**	1	MANIFOLD-EXHAUST (INTERMEDIATE) (RH)	
	16	1	**115-0557**	1	MANIFOLD-EXHAUST (INTERMEDIATE) (RH)	
C	17	1	**127-8269**	6	SEAL-EXHAUST	
	18	1	**129-9547**	1	MANIFOLD-EXHAUST	
	19	1	**166-8420**	1	SLEEVE-ELBOW SUPPORT (LH)	
	20	1	**166-8421**	1	SLEEVE-ELBOW SUPPORT (RH)	
C	21	1	**203-2143**	10	SLEEVE (EXHAUST MANIFOLD)	
C	22	1	**203-2163**	28	SPACER (10.5X22.5X21.35MM THK)	
C	23	1	**2N-2766**	29	LOCKNUT (3/8-16 THD)	
	24	1	**5M-2894**	32	WASHER-HARD (10.2X18.5X2.5MM THK)	
C	25	1	**5P-3875**	28	BOLT (3/8-16X2.75 IN)	

C-CHANGE FROM PREVIOUS TYPE

121-5731 **MANIFOLD GP-EXHAUST** *(contd.)* **i02001064**

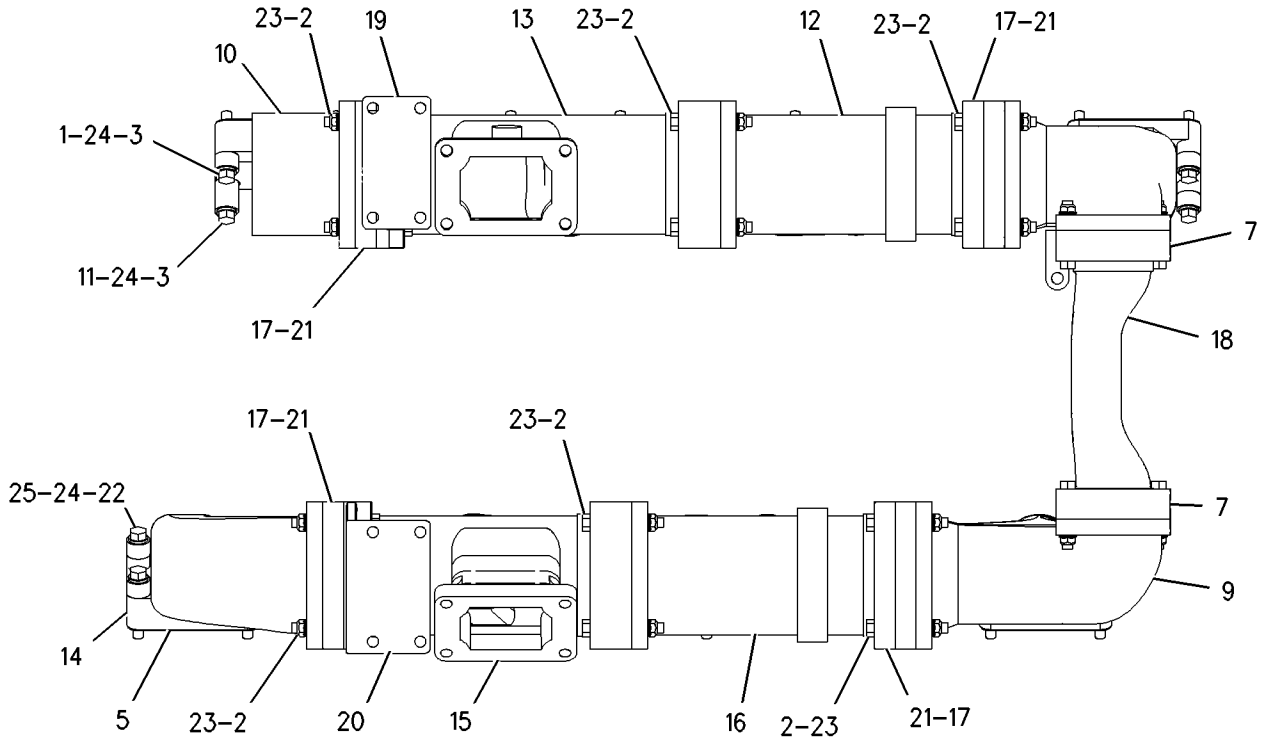

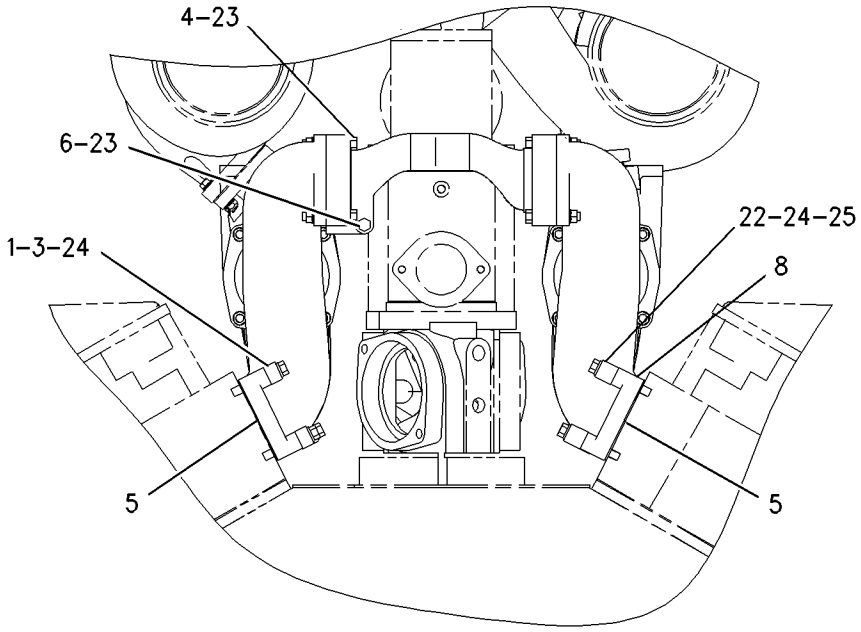

GRAPHIC #1 **<END>** g00873123

AIR INLET AND EXHAUST SYSTEM

1W-0726 MUFFLER GP

S/N: 7PZ1-UP

PART OF 155-5557 INSTALLATION AR-ENGINE

SMCS-1062 **i02001098**

NOTE	REF NO	GRAPHIC REF	PART NUMBER	QTY	PART NAME 1 2 3 4 5 6 (PRODUCT LEVEL)	SEE PAGE
	1	1	**7W-3659**	1	MUFFLER AS (LH)	
	2	1	**7W-3660**	1	MUFFLER AS (RH)	
	3	1	**0S-1585**	4	BOLT (1/2-13X1.50 IN)	
	4	1	**0L-1329**	4	BOLT (1/2-13X3-IN)	
	5	1	**5P-8245**	8	WASHER-HARD (13.5X25.5X3MM THK)	

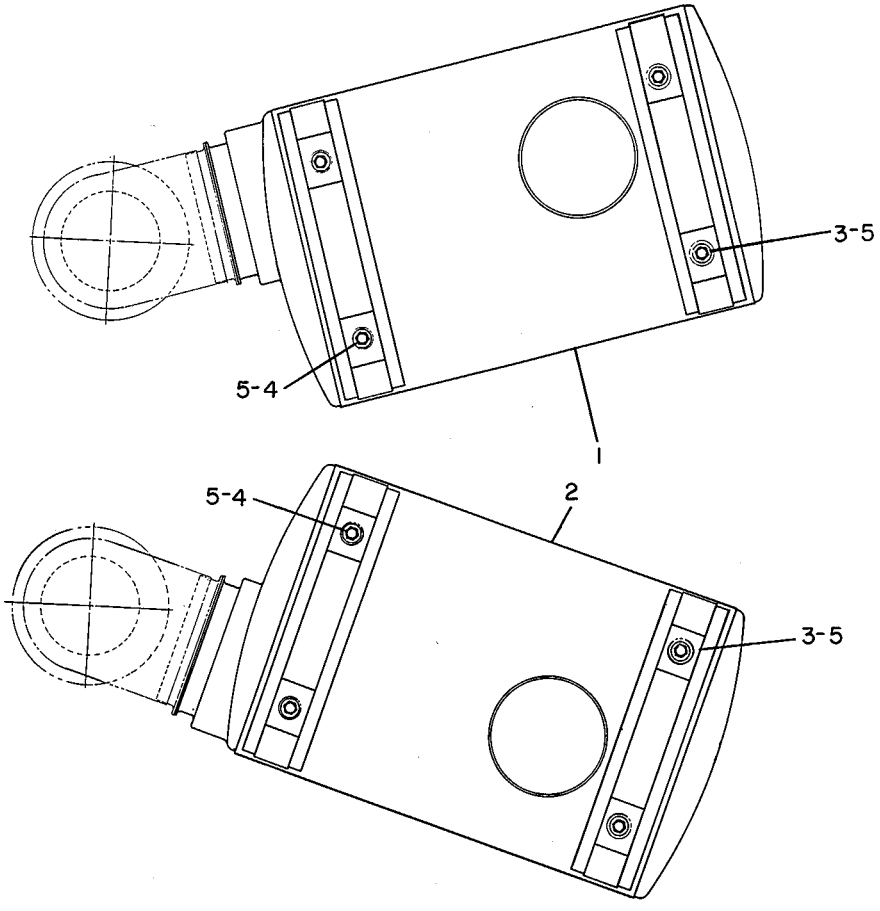

GRAPHIC #1 **<END>** g00175323

AIR INLET AND EXHAUST SYSTEM

102-4367 PRECLEANER AR

S/N: 7PZ1-UP
TURBINE-NO SCREEN
AN ATTACHMENT
TYPE 1

SMCS-1055 **i01513096**

NOTE	REF NO	GRAPHIC REF	PART NUMBER	QTY	PART NAME 1 2 3 4 5 6 (PRODUCT LEVEL)	SEE PAGE
C	1	1	**203-9786**	2	PRECLEANER AS	
					(EACH INCLUDES)	
C		1	**107-7495**	2	DAMPER	
C	2	1	**4W-5596**	2	COVER	
C	3	1	**7W-2478**	2	GASKET	
C	4	1	**4L-6454**	12	BOLT (3/8-16X1 IN)	
C	5	1	**8T-4896**	20	WASHER-HARD (10.2X18.5X2.5MM THK)	
C	6	1	**6V-8801**	8	NUT (3/8-16 THD)	

QUANTITIES SHOWN ARE THOSE REQUIRED FOR BOTH LH AND RH SIDES
C-CHANGE FROM PREVIOUS TYPE

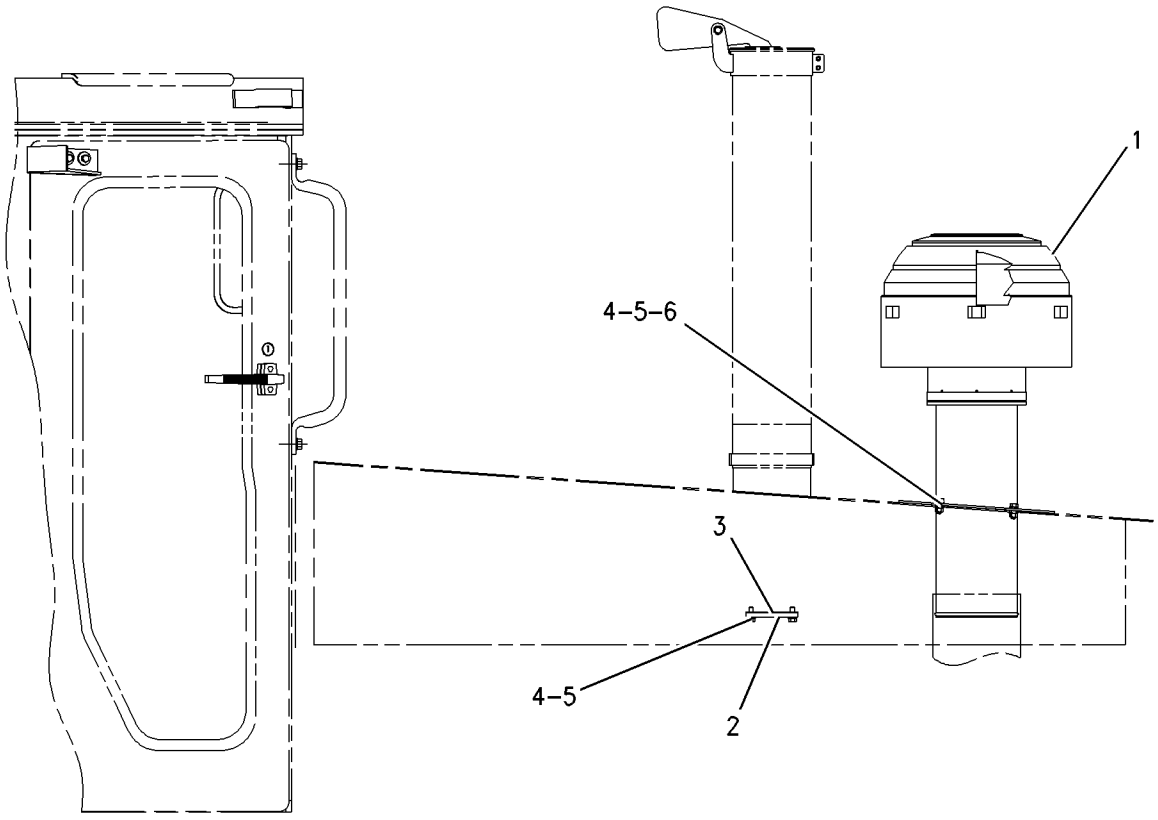

GRAPHIC #1 **<END>** g00787028

AIR INLET AND EXHAUST SYSTEM

102-4367 PRECLEANER AR

S/N: 7PZ1-UP
TURBINE-NO SCREEN
AN ATTACHMENT
TYPE 2

SMCS-1055 **i01612574**

NOTE	REF NO	GRAPHIC REF	PART NUMBER	QTY	PART NAME 1 2 3 4 5 6 (PRODUCT LEVEL)	SEE PAGE
C	1	1	*207-5049*	2	PRECLEANER AS	
					(EACH INCLUDES)	
C		1	**107-7495**	2	DAMPER	
	2	1	**4W-5596**	2	COVER	
	3	1	**7W-2478**	2	GASKET	
C	4	1	**4L-6454**	4	BOLT (3/8-16X1 IN)	
C	5	1	**8T-4896**	12	WASHER-HARD (10.2X18.5X2.5MM THK)	
C	6	1	**9B-7237**	8	BOLT (3/8-16X1.25 IN)	
C	7	1	**207-5048**	2	PIPE AS	
					(EACH INCLUDES)	
C		1	**1F-0750**	4	NUT-WELD (3/8-16 THD)	

C-CHANGE FROM PREVIOUS TYPE

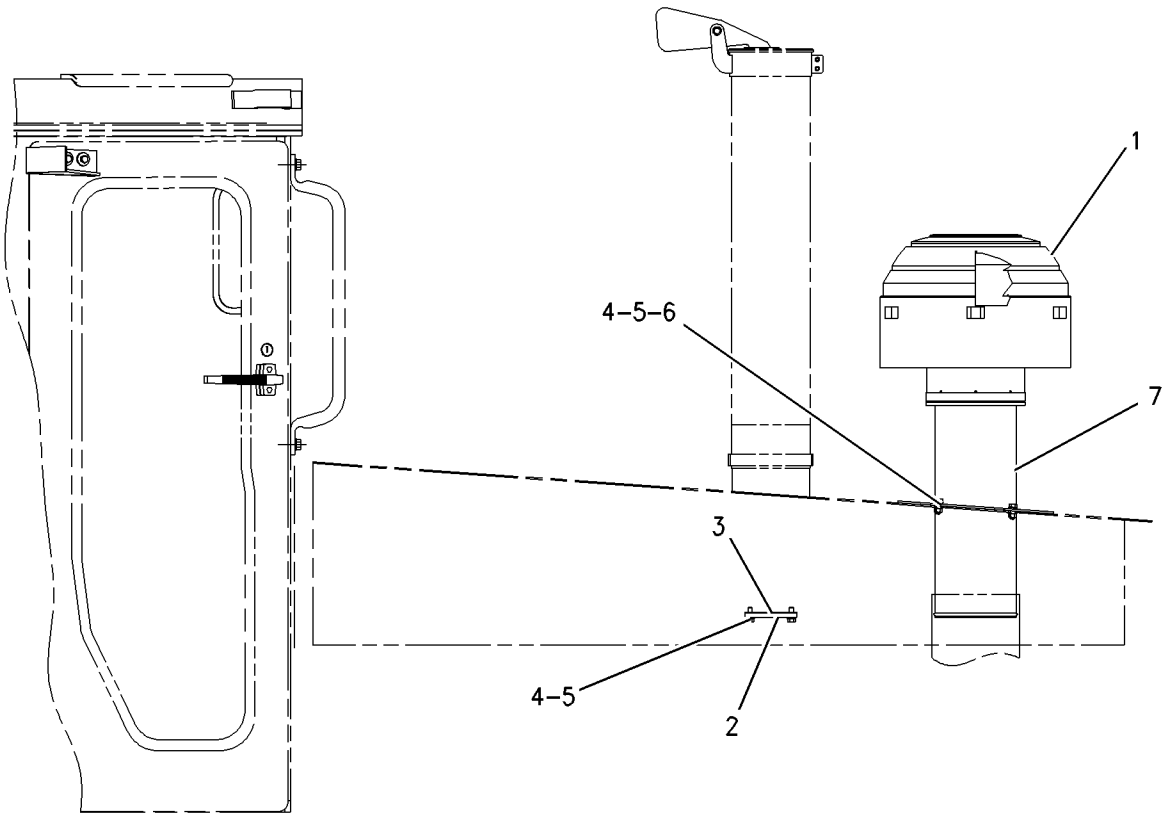

GRAPHIC #1 **<END>** g00848410

AIR INLET AND EXHAUST SYSTEM

130-3281 PRECLEANER GP

S/N: 7PZ1-UP
AIR-TURBINE
FIELD INSTALLATION

SMCS-1055 **i01508321**

NOTE	REF NO	GRAPHIC REF	PART NUMBER	QTY	PART NAME 1 2 3 4 5 6 (PRODUCT LEVEL)	SEE PAGE
	1	1	**174-4895**	2	CLAMP	

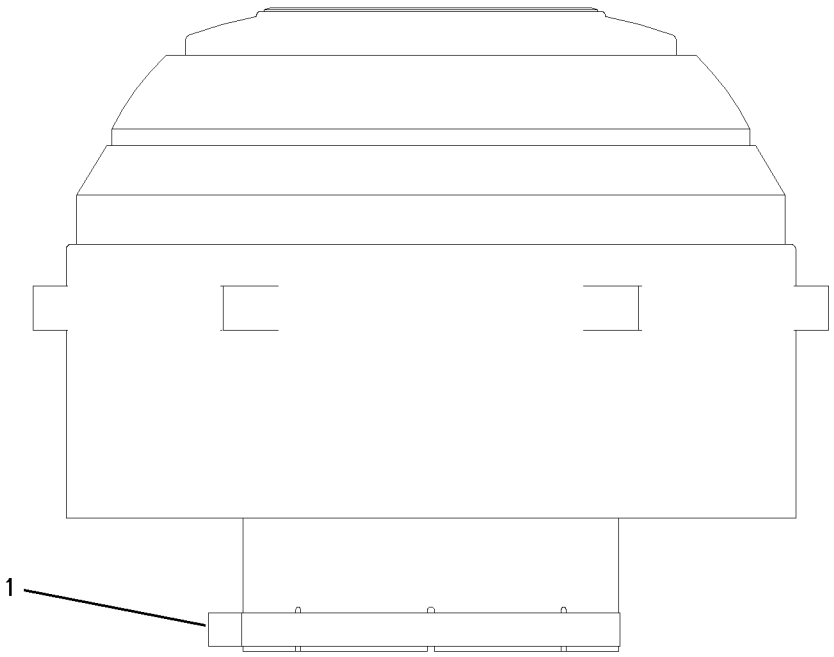

GRAPHIC #1 **<END>** g00658715

AIR INLET AND EXHAUST SYSTEM

230-1053 PRECLEANER GP

S/N: 7PZ682-UP

AIR

PART OF 155-5557 INSTALLATION AR-ENGINE

SMCS-1055 **i01958582**

NOTE	REF NO	GRAPHIC REF	PART NUMBER	QTY	PART NAME 1 2 3 4 5 6 (PRODUCT LEVEL)	SEE PAGE
	1	1	**5P-4869**	4	CLAMP-HOSE	
	2	1	**7S-8817**	2	PRECLEANER AS	
					(EACH INCLUDES)	
		1	**0S-1591**	1	BOLT (3/8-16X1.5 IN)	
			6V-8801	1	NUT (3/8-16 THD)	
	3	1	**123-6857**	1	BODY AS-PRECLEANER (LH)	
	4	1	**123-6858**	1	BODY AS-PRECLEANER (RH)	
	5	1	**123-6922**	2	ELBOW	
	6	1	**5M-3062**	8	BOLT (3/8-16X0.75 IN)	
	7	1	**8T-4896**	8	WASHER-HARD (10.2X18.5X2.5MM THK)	

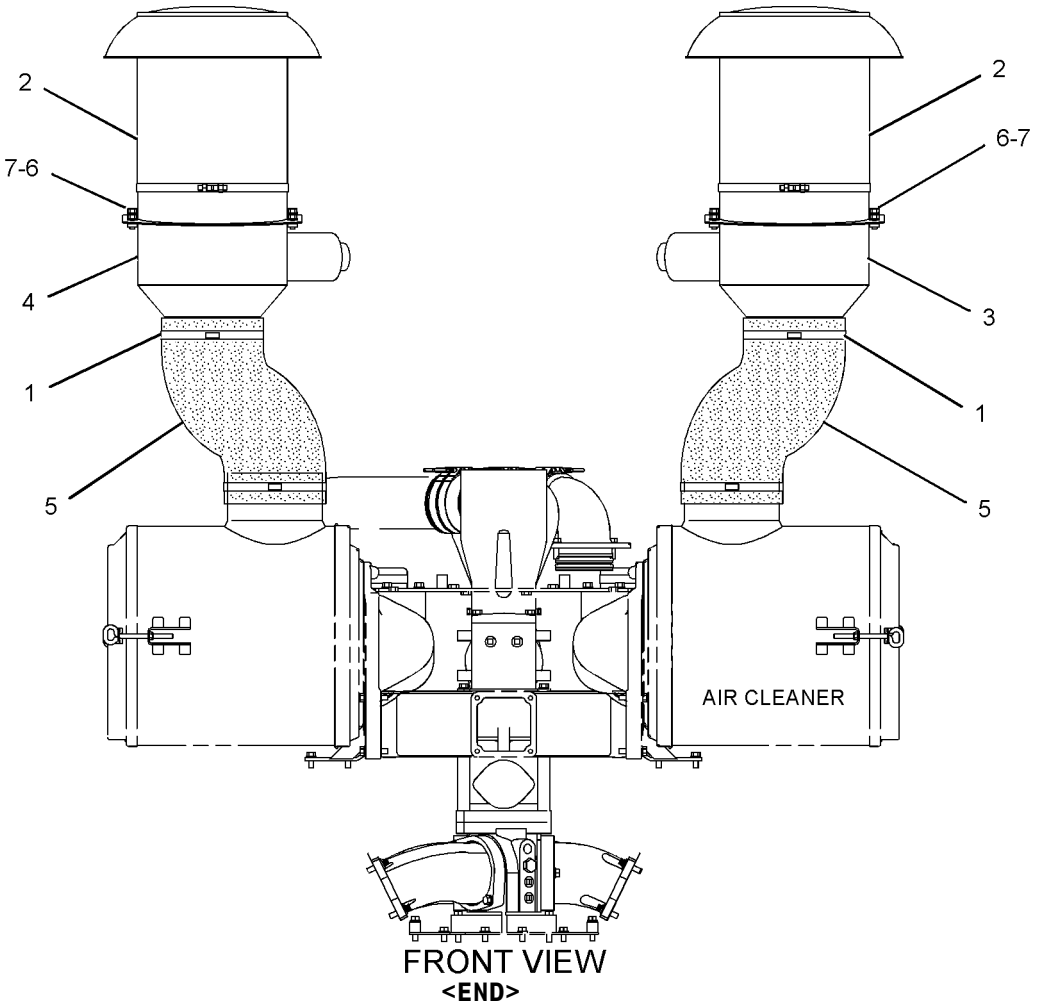

FRONT VIEW

<END>

GRAPHIC #1 g01022824

AIR INLET AND EXHAUST SYSTEM

6I-1792 SHIELD GP-FUEL LINES

S/N: 2GR1180-UP

PART OF 155-5556 ENGINE AR

SMCS-1067 **i01629783**

NOTE	REF NO	GRAPHIC REF	PART NUMBER	QTY	PART NAME 1 2 3 4 5 6 (PRODUCT LEVEL)	SEE PAGE
	1	1	**152-6505**	1	SHIELD AS (RH)	
	2	1	**152-6506**	1	SHIELD AS (LH)	
	3	1	**154-3560**	2	SHIELD	
	4	1	**154-3561**	2	STRAP	
C	5	1	**169-7027**	1	SHIELD (LEFT FRONT)	
C	6	1	**169-7028**	1	SHIELD AS (RIGHT FRONT)	
C	7	1	**169-7030**	1	BRACKET	
C	8	1	**169-7033**	1	BRACKET	
C	9	1	**169-7161**	1	SHIELD AS (RH)	
C	10	1	**169-7162**	1	SHIELD AS (LH)	
C	11	1	**0L-1351**	11	BOLT (3/8-16X0.875 IN)	
C	12	1	**0S-1594**	6	BOLT (3/8-16X1 IN)	
C	13	1	**0S-1617**	11	BOLT (5/16-18X0.75 IN)	
C	14	1	**132-7551**	2	SPACER (11X19X6MM THK)	
	15	1	**3B-1915**	2	BOLT (3/8-16X1.37 IN)	
C	16	1	**3E-4352**	11	WASHER-HARD (8.8X20.5X2.5MM THK)	
	17	1	**5M-2894**	4	WASHER-HARD (10.2X18.5X2.5MM THK)	
	18	1	**9S-8752**	2	NUT-FULL (3/8-16 THD)	
C	19	1	**9X-6458**	21	WASHER-HARD (10.2X22.5X3MM THK)	

C-CHANGE FROM PREVIOUS TYPE

6I-1792 **SHIELD GP-FUEL LINES** *(contd.)* **i01629783**

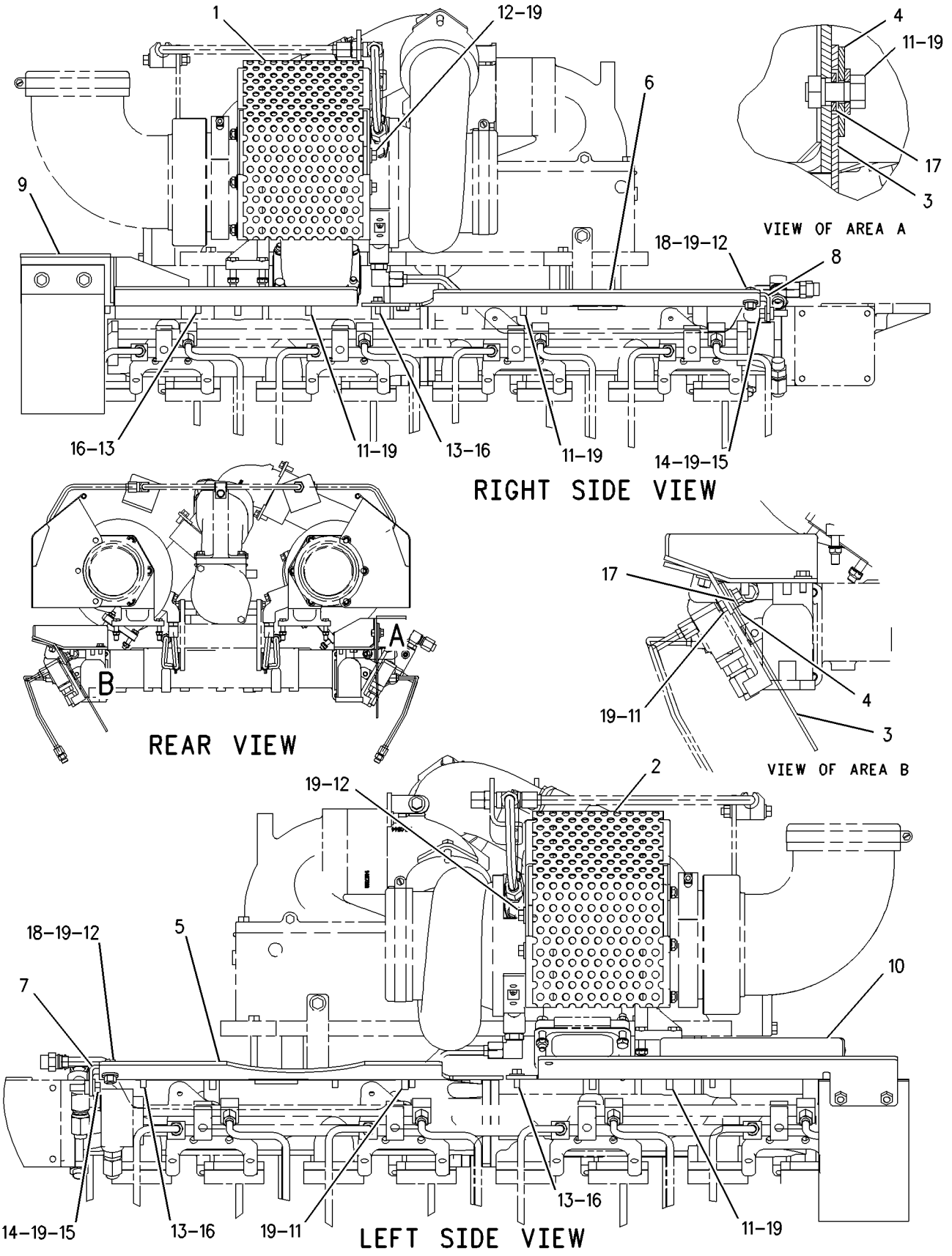

GRAPHIC #1 **<END>** g00876724

AIR INLET AND EXHAUST SYSTEM

133-5951 SHIELD GP-MANIFOLD

S/N: 2GR1180-UP

PART OF 155-5556 ENGINE AR

SMCS-1067 **i02001815**

NOTE	REF NO	GRAPHIC REF	PART NUMBER	QTY	PART NAME 1 2 3 4 5 6 (PRODUCT LEVEL)	SEE PAGE
	1	1	**129-9541**	1	SHIELD AS-MANIFOLD	
	2	1	**133-5952**	1	STRAP AS	
	3	1	**133-5953**	1	SHIELD AS-MANIFOLD	
	4	1	**133-5954**	1	STRAP AS	

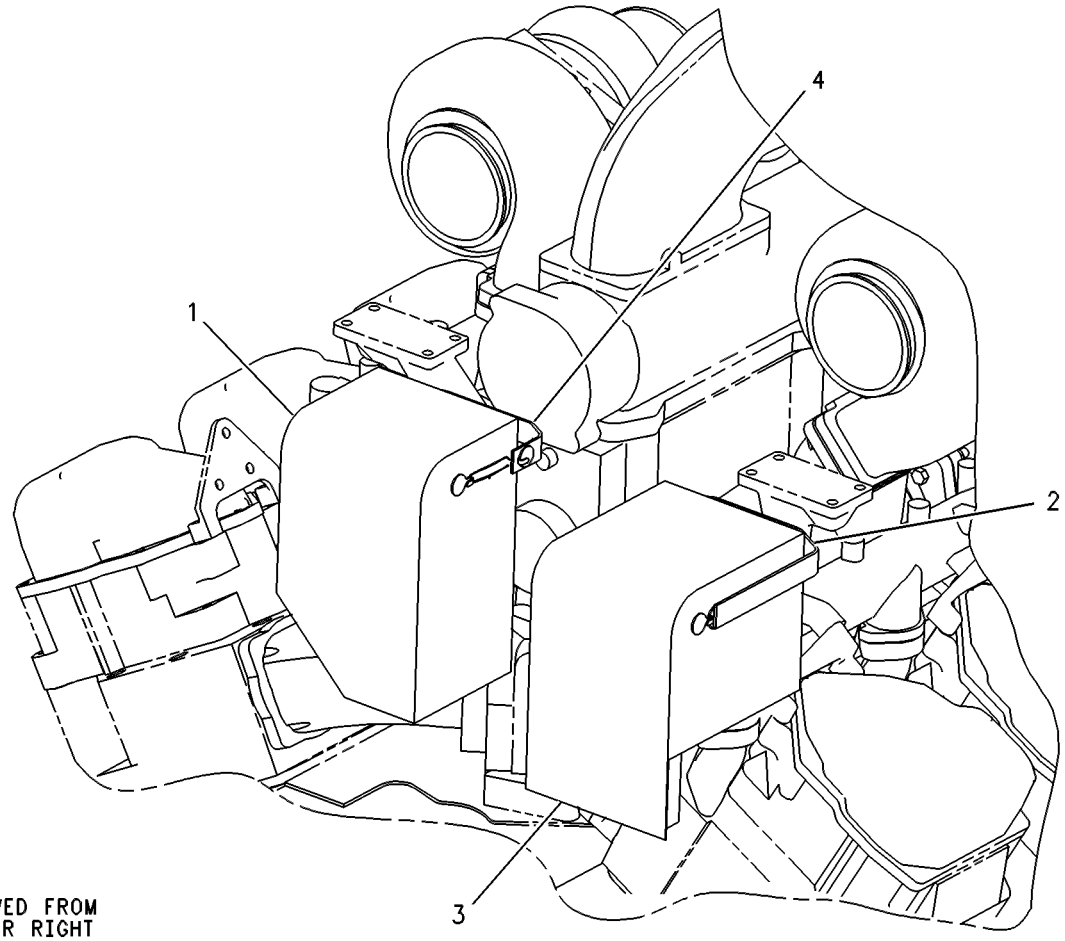

VIEWED FROM
UPPER RIGHT
REAR OF ENGINE

GRAPHIC #1 **<END>** g00274203

135-3103 SUPPORT GP-AIR INLET–RH

S/N: 7PZ1-681

PART OF 123-6853 AIR CLEANER GP

SMCS-1051, 1087 **i01988503**

NOTE	REF NO	GRAPHIC REF	PART NUMBER	QTY	PART NAME 1 2 3 4 5 6 (PRODUCT LEVEL)	SEE PAGE
	1	1	**7M-1674**	1	ELEMENT-FILTER (AIR INLET SUPPORT)	
	2	1	**112-6042**	1	SUPPORT-AIR CLEANER	

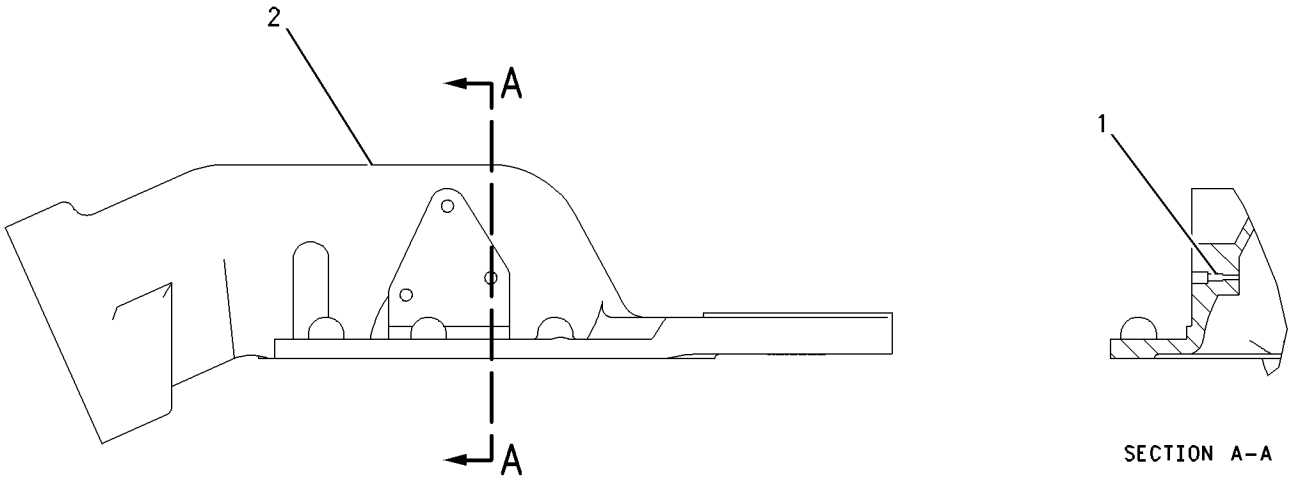

SECTION A-A

GRAPHIC #1 **<END>** g00657573

AIR INLET AND EXHAUST SYSTEM

135-3104 SUPPORT GP-AIR INLET–LH

S/N: 7PZ1-681

PART OF 123-6853 AIR CLEANER GP

SMCS-1051, 1087 **i01988505**

NOTE	REF NO	GRAPHIC REF	PART NUMBER	QTY	PART NAME 1 2 3 4 5 6 (PRODUCT LEVEL)	SEE PAGE
	1	1	**7M-1674**	1	ELEMENT-FILTER (AIR INLET SUPPORT)	
	2	1	**112-6041**	1	SUPPORT-AIR CLEANER	

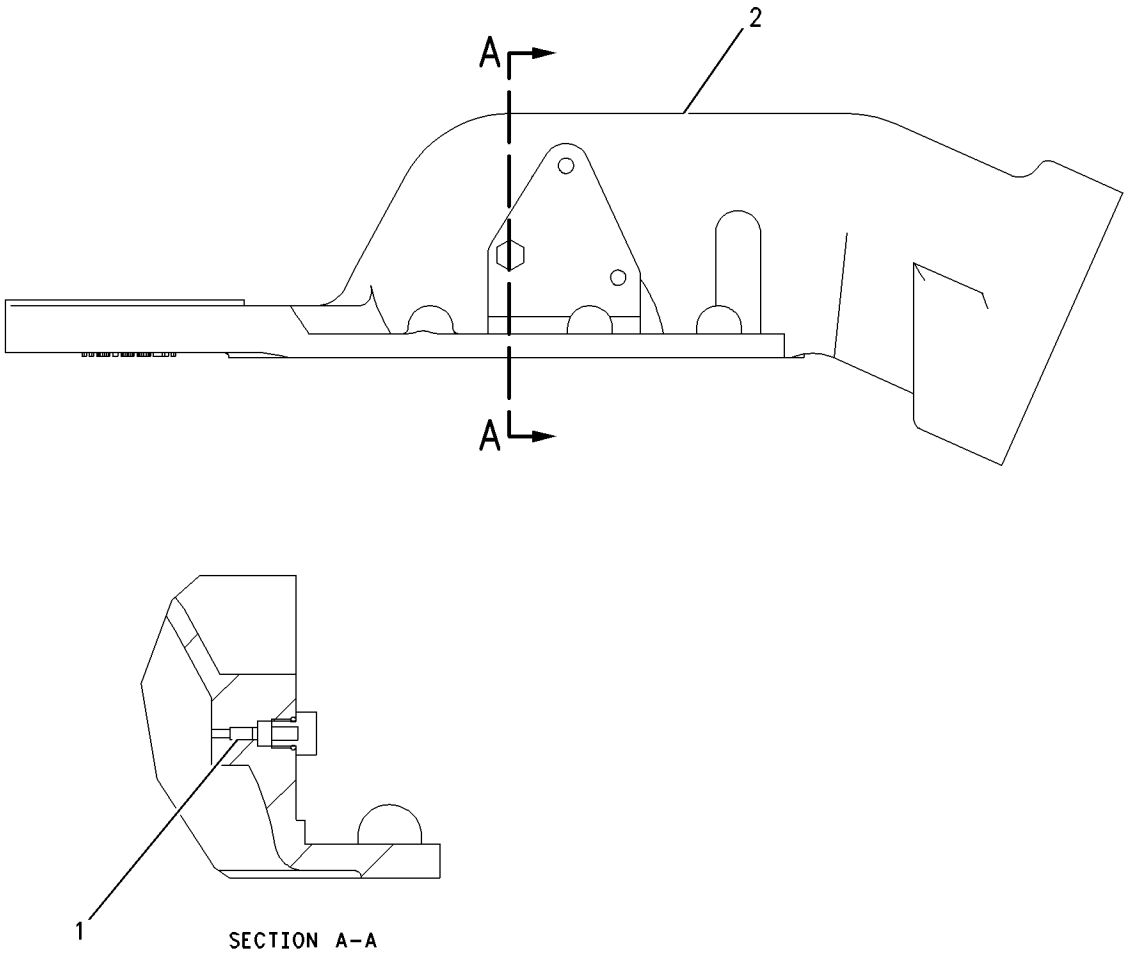

GRAPHIC #1 **<END>** g00644999

AIR INLET AND EXHAUST SYSTEM

169-4801 TURBOCHARGER GP

S/N: 2GR1180-3777

PART OF 155-5556 ENGINE AR

SMCS-1052, 1053 **i02008978**

NOTE	REF NO	GRAPHIC REF	PART NUMBER	QTY	PART NAME 1 2 3 4 5 6 (PRODUCT LEVEL)	SEE PAGE
	1	1	**2N-2765**	8	BOLT-HIGH TEMPERATURE (3/8-16X1.75 IN)	
	2	1	**6L-3005**	2	CLAMP-BAND	
					(EACH INCLUDES)	
		1	**8T-0122**	1	NUT-FULL (1/4-28 THD)	
	3	1	**121-5736**	2	GASKET	
	4	1	**124-5514**	2	COUPLING-EXHAUST	
	5	1	**168-7800**	8	LOCKNUT (3/8-16 THD)	
YR	6	1	**174-7087**	2	TURBOCHARGER GP	195

R-REMFG PART MAY BE AVAILABLE
Y-SEPARATE ILLUSTRATION

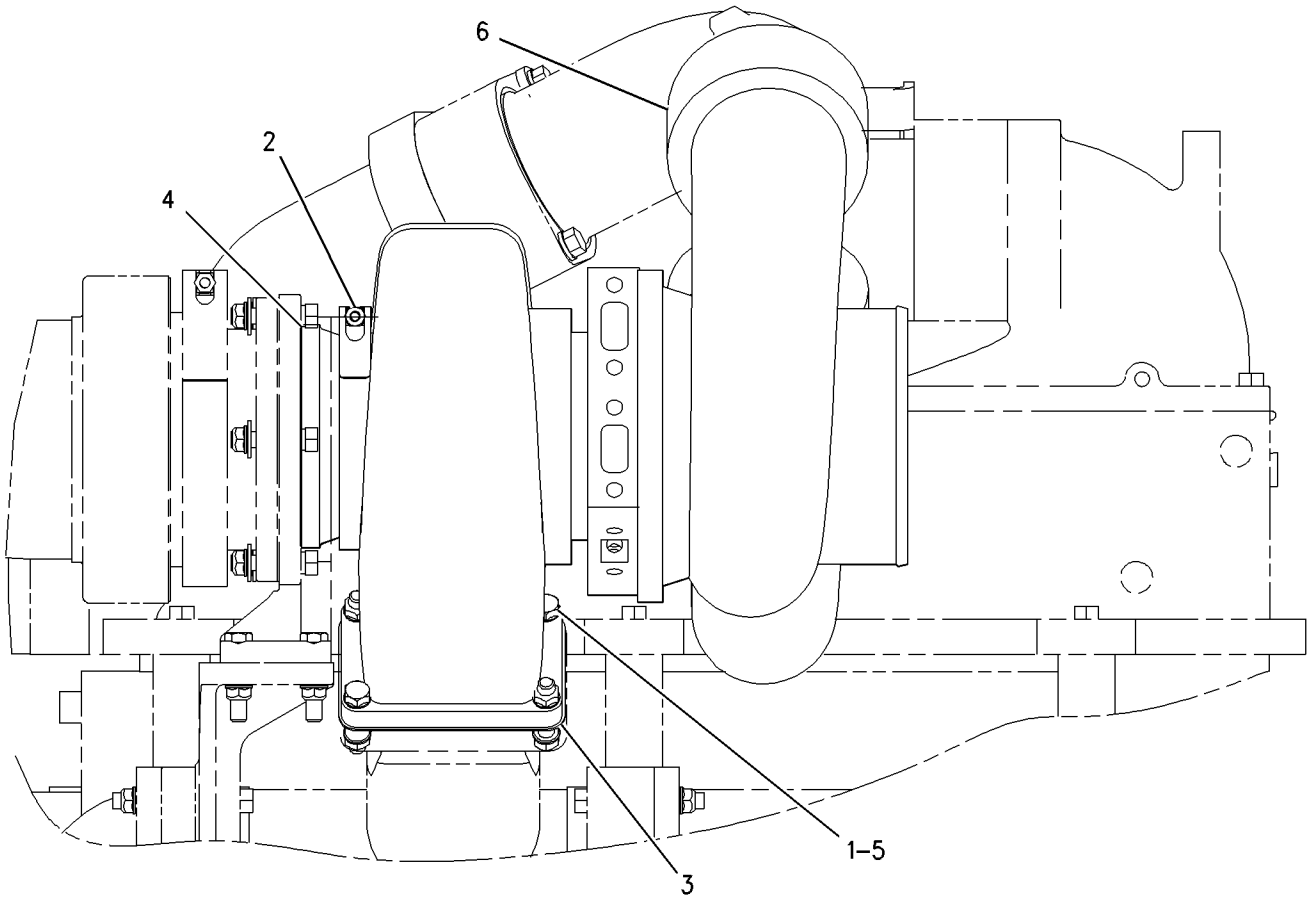

RIGHT SIDE VIEW

GRAPHIC #1 **<END>** g00687318

AIR INLET AND EXHAUST SYSTEM

169-4801 TURBOCHARGER GP

S/N: 2GR3778-4242, 4244-4315, 4317-4322, 4324-4366, 4368-4387, 4389-4419
PART OF 155-5556 ENGINE AR

SMCS-1052, 1053 **i02008990**

NOTE	REF NO	GRAPHIC REF	PART NUMBER	QTY	PART NAME 1 2 3 4 5 6 (PRODUCT LEVEL)	SEE PAGE
	1	1	**2N-2765**	8	BOLT-HIGH TEMPERATURE (3/8-16X1.75 IN)	
	2	1	**6L-3005**	2	CLAMP-BAND	
					(EACH INCLUDES)	
		1	**8T-0122**	1	NUT-FULL (1/4-28 THD)	
	3	1	**121-5736**	2	GASKET	
	4	1	**124-5514**	2	COUPLING-EXHAUST	
CYR	5	1	**204-5476**	2	TURBOCHARGER GP	196
C	6	1	**2N-2766**	8	LOCKNUT (3/8-16 THD) (HIGH TEMPERATURE)	

C-CHANGE FROM PREVIOUS TYPE
R-REMFG PART MAY BE AVAILABLE
Y-SEPARATE ILLUSTRATION

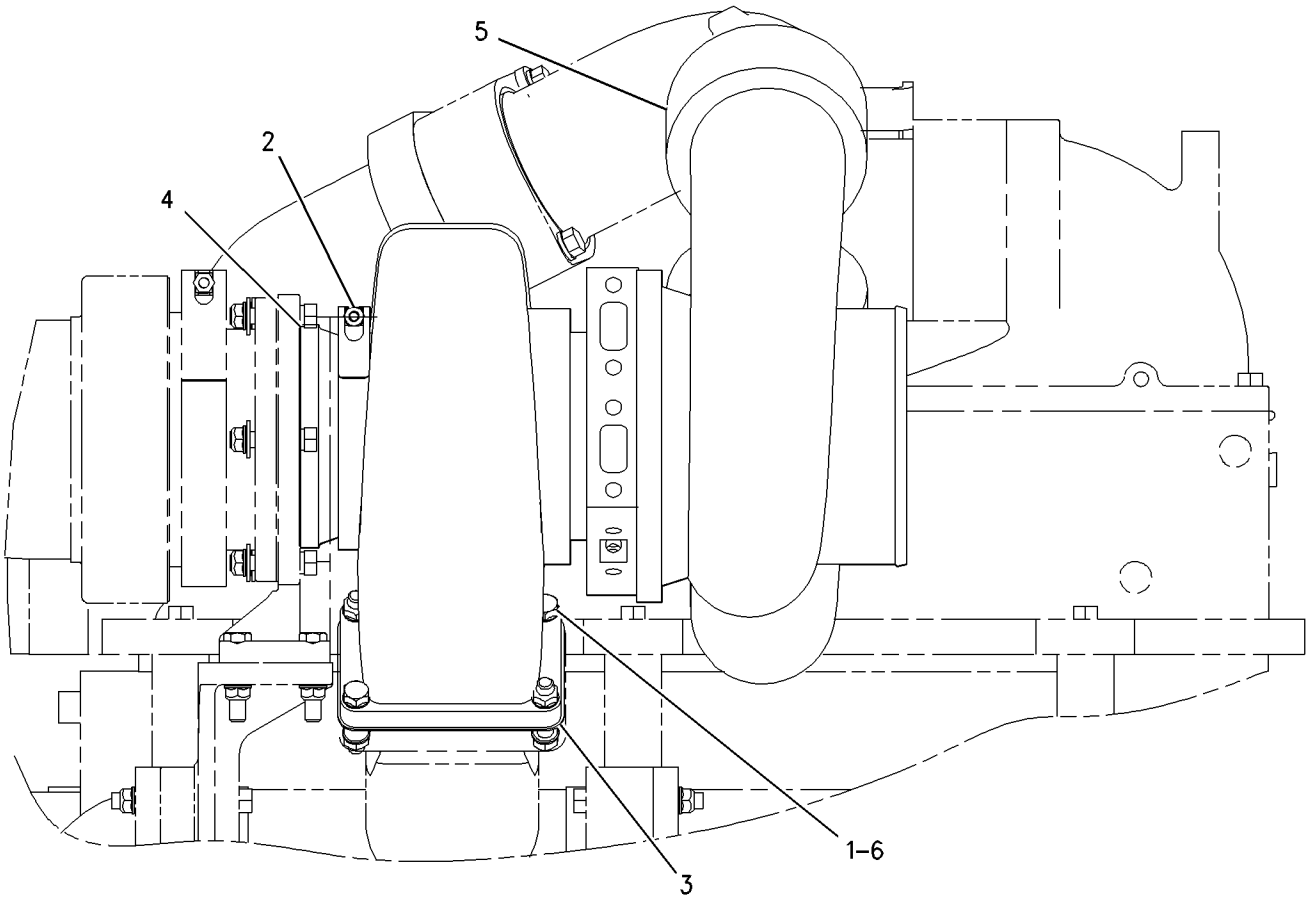

RIGHT SIDE VIEW

GRAPHIC #1 **<END>** g00868973

AIR INLET AND EXHAUST SYSTEM

169-4801 TURBOCHARGER GP

S/N: 2GR4243, 4316, 4323, 4367, 4388, 4420-UP
PART OF 155-5556 ENGINE AR

SMCS-1052, 1053 **i02008992**

NOTE	REF NO	GRAPHIC REF	PART NUMBER	QTY	PART NAME 1 2 3 4 5 6 (PRODUCT LEVEL)	SEE PAGE
	1	1	**2N-2765**	8	BOLT-HIGH TEMPERATURE (3/8-16X1.75 IN)	
	2	1	**6L-3005**	2	CLAMP-BAND	
					(EACH INCLUDES)	
		1	**8T-0122**	1	NUT-FULL (1/4-28 THD)	
	3	1	**121-5736**	2	GASKET	
	4	1	**124-5514**	2	COUPLING-EXHAUST	
CYR	5	1	**230-1060**	2	TURBOCHARGER GP	197
	6	1	**2N-2766**	8	LOCKNUT (3/8-16 THD) (HIGH TEMPERATURE)	

C-CHANGE FROM PREVIOUS TYPE
R-REMFG PART MAY BE AVAILABLE
Y-SEPARATE ILLUSTRATION

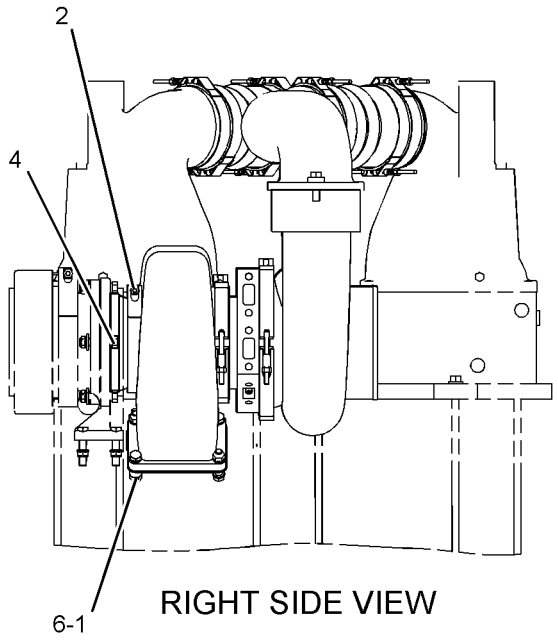

RIGHT SIDE VIEW

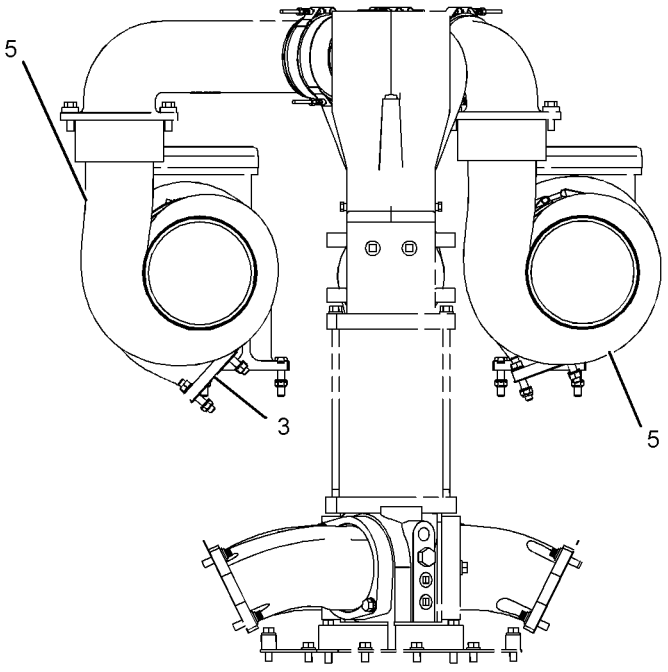

FRONT VIEW

GRAPHIC #1 **<END>** g01008928

AIR INLET AND EXHAUST SYSTEM

174-7087 TURBOCHARGER GP*R

S/N: 2GR1180-3777

PART OF 169-4801 TURBOCHARGER GP

SMCS-1052, 1053 **i02008995**

NOTE	REF NO	GRAPHIC REF	PART NUMBER	QTY	PART NAME 1 2 3 4 5 6 (PRODUCT LEVEL)	SEE PAGE
R	1	1	**174-7086**	1	CARTRIDGE GP-TURBOCHARGER	
	2	1	**115-3525**	1	HOUSING-TURBINE	
	3	1	**136-6302**	1	COVER-COMPRESSOR	
	4	1	**9N-2038**	1	CLAMP AS (TURBINE) (TURBINE)	
		1	**7M-9918**	1	LOCKNUT (1/4-28 THD)	
	5	1	**4W-9977**	1	CLAMP AS (COMPRESSOR) (COMPRESSOR)	
		1	**7M-9918**	1	LOCKNUT (1/4-28 THD)	

R-REMFG PART MAY BE AVAILABLE

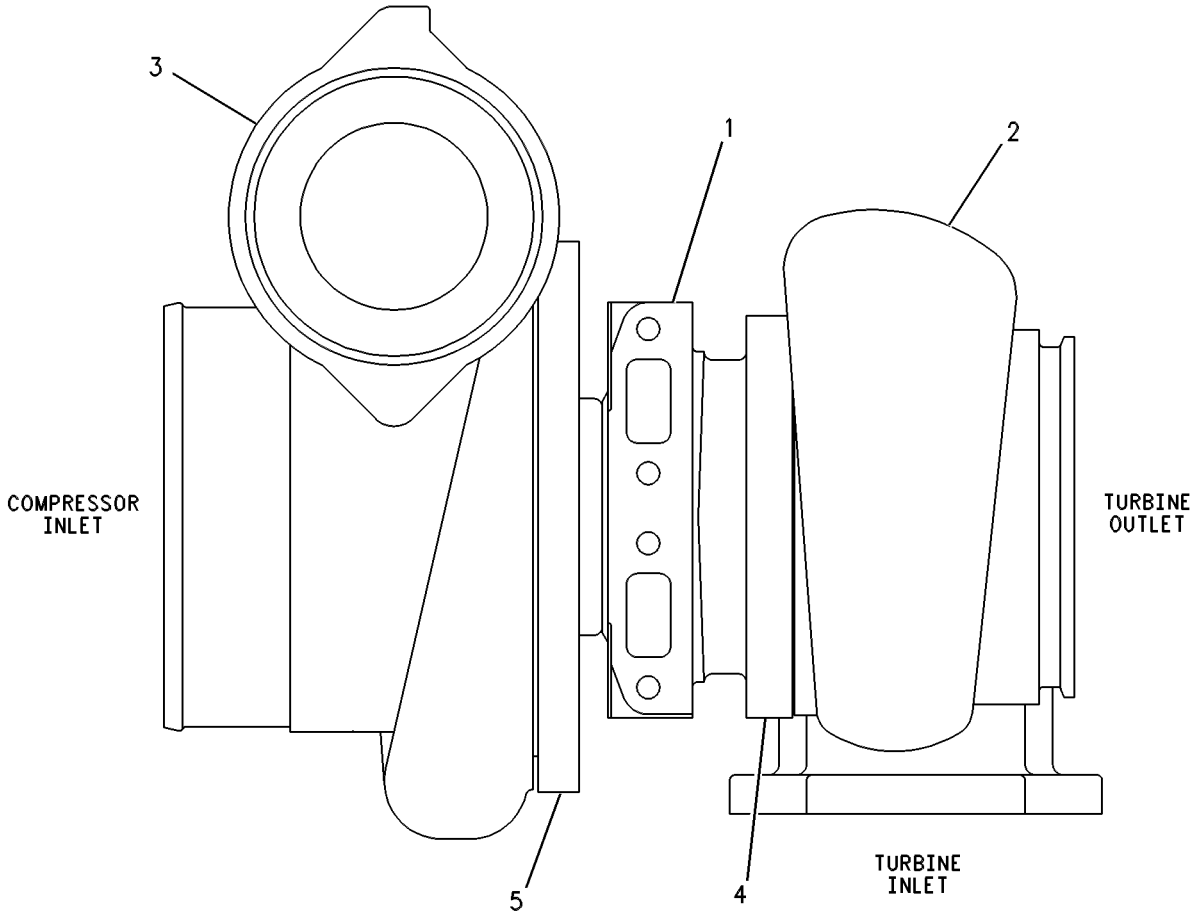

GRAPHIC #1 **<END>** g00273019

AIR INLET AND EXHAUST SYSTEM

204-5476 TURBOCHARGER GP

S/N: 2GR3778-4242, 4244-4315, 4317-4322, 4324-4366, 4368-4387, 4389-4419

PART OF 169-4801 TURBOCHARGER GP

SMCS-1052, 1053 **i01678706**

NOTE	REF NO	GRAPHIC REF	PART NUMBER	QTY	PART NAME 1 2 3 4 5 6 (PRODUCT LEVEL)	SEE PAGE
	1	1	**204-5480**	1	CARTRIDGE GP-TURBOCHARGER	
	2	1	**115-3525**	1	HOUSING-TURBINE	
	3	1	**210-2541**	1	COVER (COMPRESSOR)	
	4	1	**9N-2038**	1	CLAMP AS (TURBINE)	
		1	**7M-9918**	1	LOCKNUT (1/4-28 THD)	
	5	1	**4W-9977**	1	CLAMP AS (COMPRESSOR)	
		1	**7M-9918**	1	LOCKNUT (1/4-28 THD)	

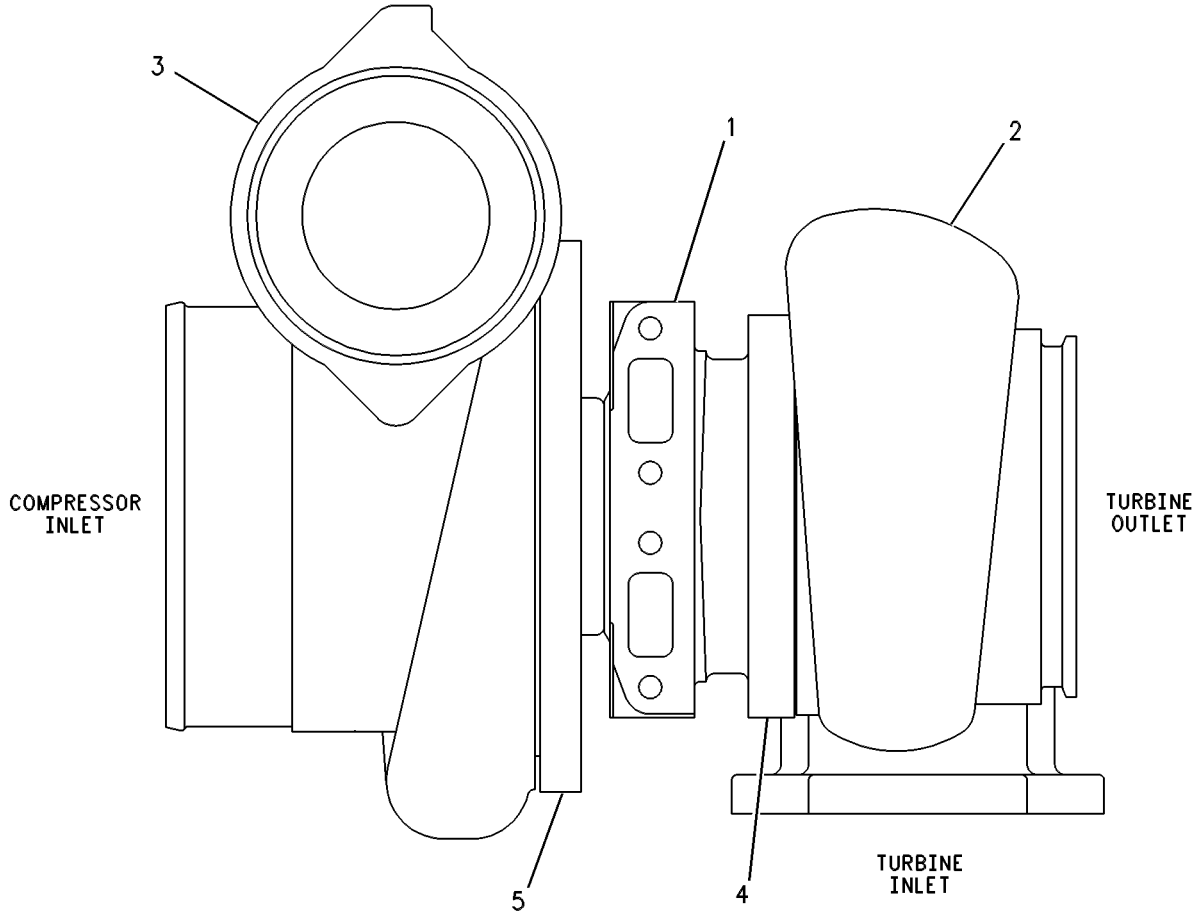

GRAPHIC #1 **<END>** g00273019

AIR INLET AND EXHAUST SYSTEM

230-1060 TURBOCHARGER GP*R

S/N: 2GR4243, 4316, 4323, 4367, 4388, 4420-UP

PART OF 169-4801 TURBOCHARGER GP

SMCS-1052, 1053 **i02009000**

NOTE	REF NO	GRAPHIC REF	PART NUMBER	QTY	PART NAME 1 2 3 4 5 6 (PRODUCT LEVEL)	SEE PAGE
R	1	1	**204-5480**	1	CARTRIDGE GP-TURBOCHARGER	
	2	1	**115-3525**	1	HOUSING-TURBINE	
	3	1	**230-1061**	1	COVER (COMPRESSOR)	
	4	1	**9N-2038**	1	CLAMP AS (TURBINE)	
		1	**7M-9918**	1	LOCKNUT (1/4-28 THD)	
	5	1	**4W-9977**	1	CLAMP AS (COMPRESSOR)	
		1	**7M-9918**	1	LOCKNUT (1/4-28 THD)	

R-REMFG PART MAY BE AVAILABLE

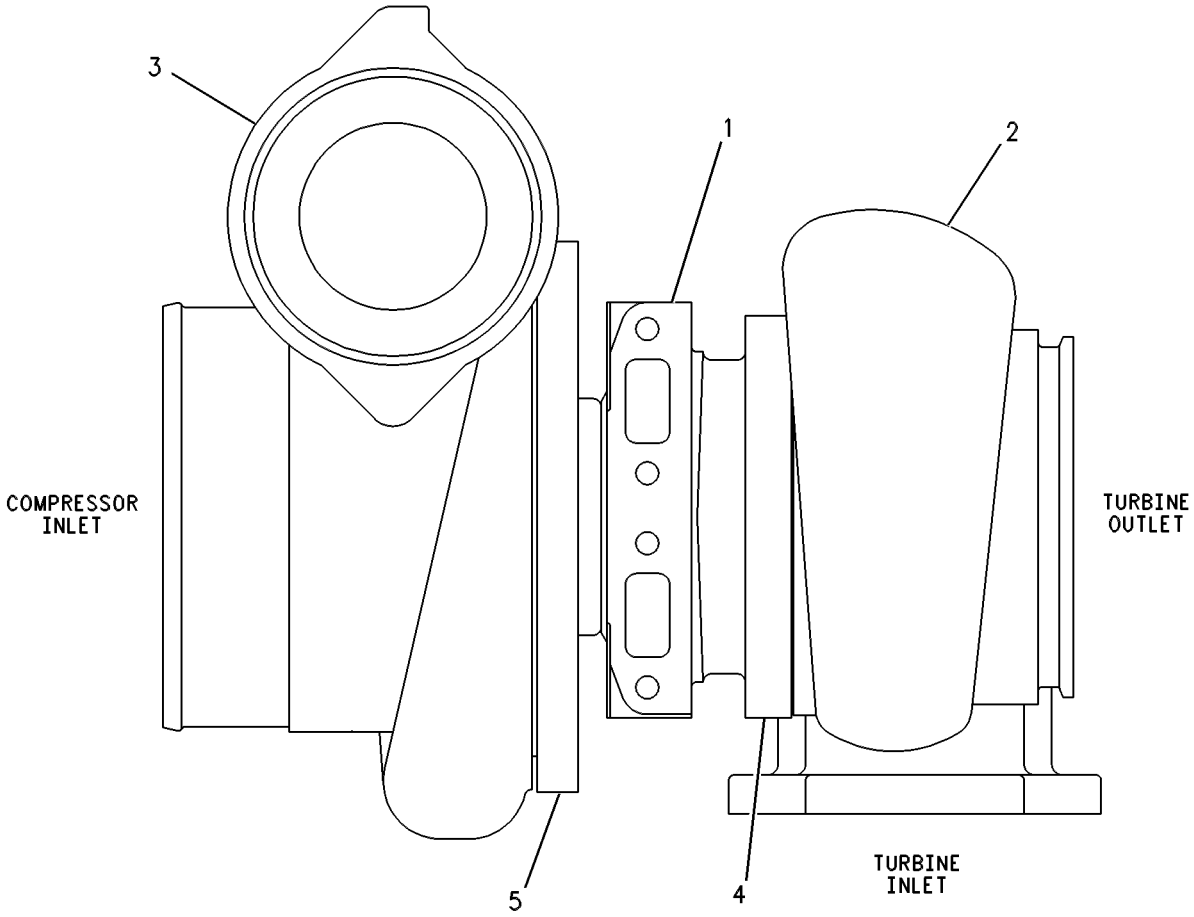

GRAPHIC #1 **<END>** g00273019

205-7303 ADAPTER—FAST FILL FUEL

S/N: 7PZ1-UP
VENT AS
FIELD INSTALLATION

SMCS-1710 **i01663763**

NOTE	REF NO	GRAPHIC REF	PART NUMBER	QTY	PART NAME 1 2 3 4 5 6 (PRODUCT LEVEL)	SEE PAGE
					(NO SERVICED PARTS)	

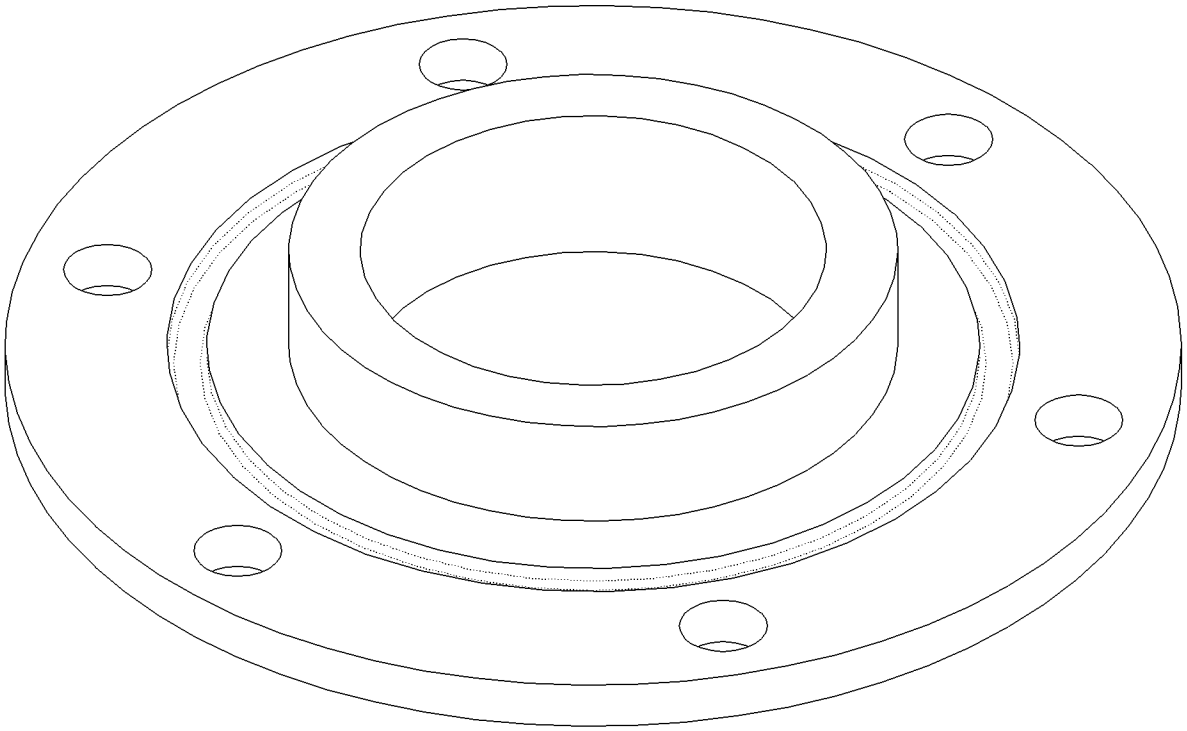

GRAPHIC #1 **<END>** g00859063

FUEL SYSTEM

8E-8862 ADAPTER GP-FAST FILL FUEL

S/N: 7PZ1-UP
FOR USE WITH MACHINES EQUIPPED WITH RIPPER
AN ATTACHMENT

SMCS-1710 **i01988498**

NOTE	REF NO	GRAPHIC REF	PART NUMBER	QTY	PART NAME 1 2 3 4 5 6 (PRODUCT LEVEL)	SEE PAGE
J	1	1	**6G-7803**	1	VENT AS	
	2	1	**6V-9273**	1	BALL	
	3	1	**6Y-0091**	1	BLOCK AS	
	4	1	**6Y-0677**	1	BRACKET AS	
		1	**1F-0748**	2	NUT-WELD (1/2-13 THD)	
	5	1	**7T-2413**	1	SHAFT	
I	6	1	**8E-3234**	1	HOSE AS	
	7	1	**9D-0630**	1	CAP-DUST	
	8	1	**101-8909**	1	CAP AS-FUEL TANK FILLER (LOCKING)	
		1	**9X-8600**	1	SEAL-O-RING	
C	9	1	**183-3202**	1	ADAPTER	
	10	1	**217-5703**	1	VALVE AS-TANK (FAST FILL FUEL)	
	11	1	**1B-5170**	1	PLUG-PIPE	
	12	1	**1P-4582**	4	FLANGE-HALF	
	13	1	**4J-0527**	2	SEAL-O-RING	
C	14	1	**4L-6454**	7	BOLT (3/8-16X1 IN)	
C	15	1	**5H-6734**	1	SEAL-O-RING	
	16	1	**6V-2686**	1	CLIP	
	17	1	**6V-8801**	1	NUT (3/8-16 THD)	
	18	1	**7X-0340**	2	BOLT (1/2-13X6.5 IN)	
	19	1	**7X-0445**	2	BOLT (1/1/4-7X5 IN)	
	20	1	**7X-0533**	2	WASHER-HARD (34X55X6MM THK)	
	21	1	**8T-4223**	10	WASHER-HARD (13.5X25.5X3MM THK)	
C	22	1	**8T-4896**	8	WASHER-HARD (10.2X18.5X2.5MM THK)	
	23	1	**8T-8919**	8	BOLT (1/2-13X1.75 IN)	
					AVAILABLE REPAIR KIT(S):	
J			**5T-8645**	1	KIT-VENT (FAST FILL FUEL ADAPTER)	
					(INCLUDES BALL CAGE, CLAMP, BODY SEAL, 2 HOLLOW BALLS, 1 SOLID BALL, 2 ROLL PINS,	
					SCREEN, VALVE SEAL, COVER AND (2) O-RING SEALS)	

C-CHANGE FROM PREVIOUS TYPE
I-REFER TO HYDRAULIC INFORMATION SYSTEM
J-REPAIR KIT(S) MARKED J AVAILABLE FOR PART MARKED J

8E-8862 **ADAPTER GP-FAST FILL FUEL** ***(contd.)*** **i01988498**

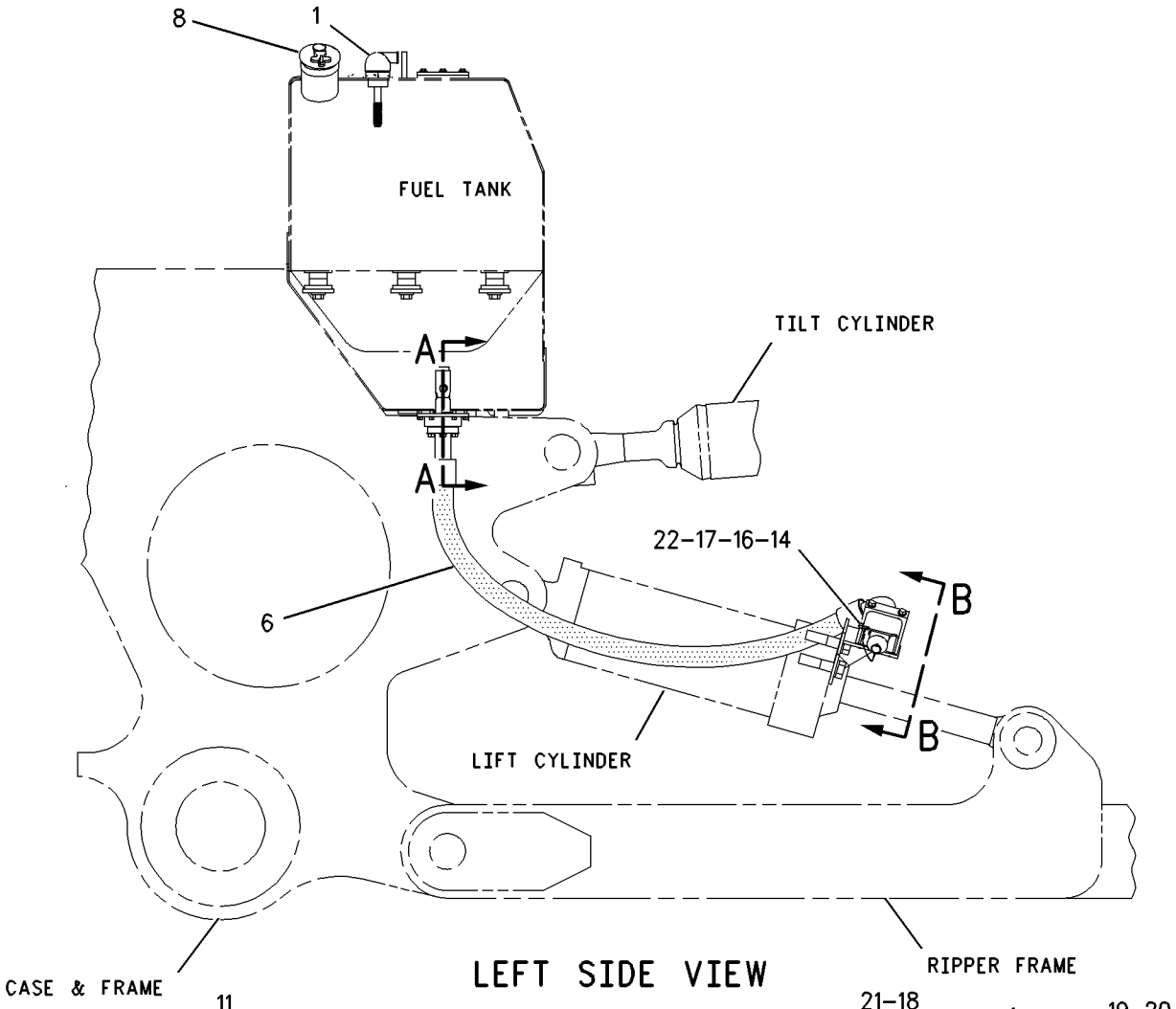

LEFT SIDE VIEW

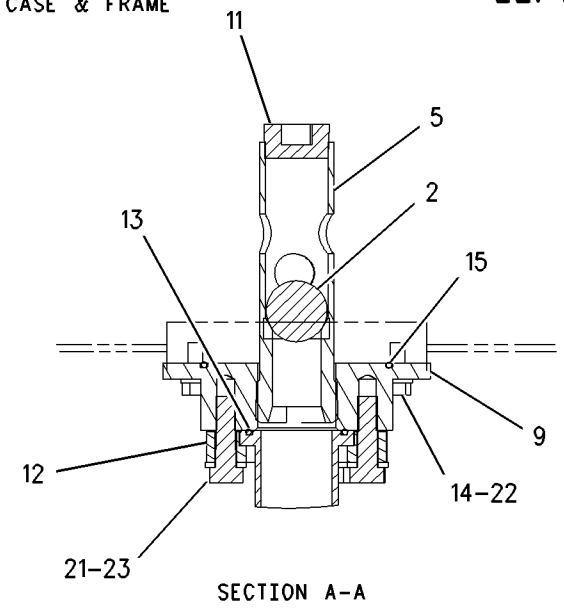

SECTION A-A

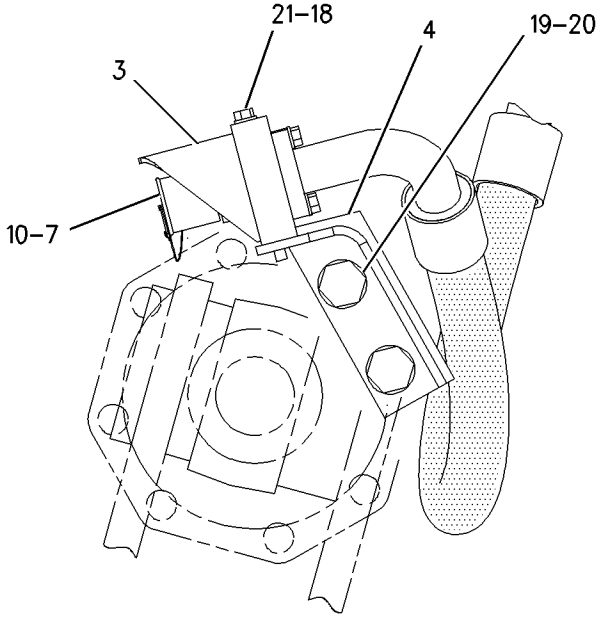

VIEW B-B

GRAPHIC #1 **<END>** g00881967

FUEL SYSTEM

102-9881 ADAPTER GP-FAST FILL FUEL

S/N: 7PZ1-UP

FOR USE WITH MACHINES EQUIPPED WITH TRANSMISSION GUARD AN ATTACHMENT

SMCS-1710 **i01989508**

NOTE	REF NO	GRAPHIC REF	PART NUMBER	QTY	PART NAME 1 2 3 4 5 6 (PRODUCT LEVEL)	SEE PAGE
J	1	1	**6G-7803**	1	VENT AS	
I	2	1	**154-6560**	1	HOSE AS	
	3	1	**8T-8919**	8	BOLT (1/2-13X1.75 IN)	
	4	1	**8T-4223**	10	WASHER-HARD (13.5X25.5X3MM THK)	
	5	1	**9D-0630**	1	CAP-DUST	
Y	6	1	**2G-9000**	1	VALVE AS-TANK (FAST FILL FUEL)	862
	7	1	**9G-0371**	1	BLOCK AS	
	8	1	**7X-0339**	2	BOLT (1/2-13X6.25 IN)	
	9	1	**1P-4582**	4	FLANGE-HALF	
	10	1	**4J-0527**	2	SEAL-O-RING	
	11	1	**7T-2413**	1	SHAFT	
	12	1	**1B-5170**	1	PLUG-PIPE	
	13	1	**6V-9273**	1	BALL	
	14	1	**101-8909**	1	CAP AS-FUEL TANK FILLER (LOCKING)	
		1	**9X-8600**	1	SEAL-O-RING	
C	15	1	**183-3202**	1	ADAPTER	
C	16	1	**8T-4896**	6	WASHER-HARD (10.2X18.5X2.5MM THK)	
C	17	1	**4L-6454**	6	BOLT (3/8-16X1 IN)	
C	18	1	**5H-6734**	1	SEAL-O-RING	
					AVAILABLE REPAIR KIT(S):	
J			**5T-8645**	1	KIT-VENT (FAST FILL FUEL ADAPTER)	
					(INCLUDES BALL CAGE, CLAMP, BODY SEAL, 2 HOLLOW BALLS, 1 SOLID BALL, 2 ROLL PINS, SCREEN, VALVE SEAL, COVER, & 2 O-RING SEALS)	

C-CHANGE FROM PREVIOUS TYPE
I-REFER TO HYDRAULIC INFORMATION SYSTEM
J-REPAIR KIT(S) MARKED J AVAILABLE FOR PART MARKED J
Y-SEPARATE ILLUSTRATION

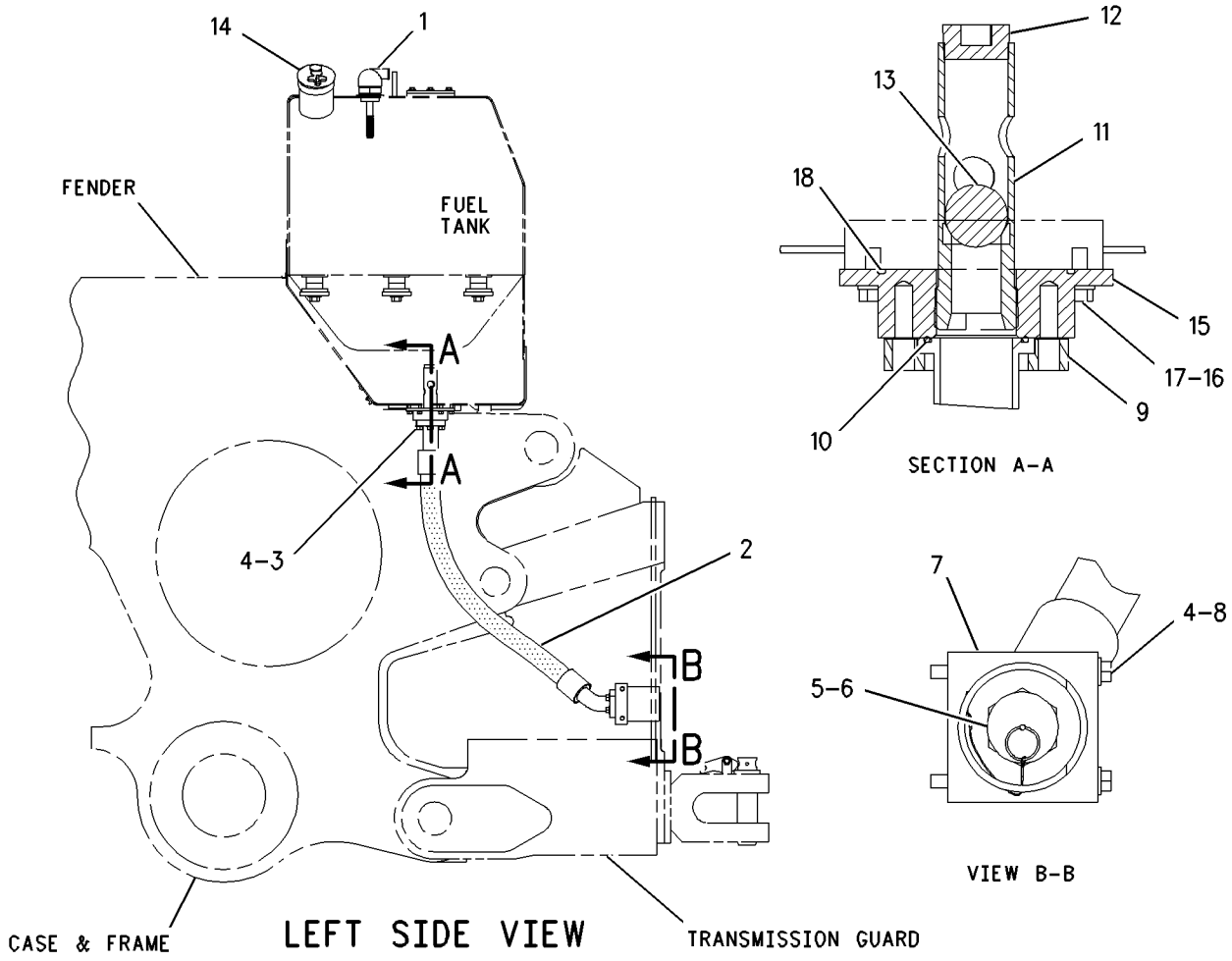

GRAPHIC #1 **<END>** g00687319

FUEL SYSTEM

102-9882 ADAPTER GP-FAST FILL FUEL

S/N: 7PZ1-UP

FOR USE WITH MACHINES EQUIPPED WITH REAR COUNTERWEIGHT AN ATTACHMENT

SMCS-1710 **i01989509**

NOTE	REF NO	GRAPHIC REF	PART NUMBER	QTY	PART NAME 1 2 3 4 5 6 (PRODUCT LEVEL)	SEE PAGE
J	1	1	**6G-7803**	1	VENT AS	
I	2	1	**154-6560**	1	HOSE AS	
	3	1	**8T-8919**	8	BOLT (1/2-13X1.75 IN)	
	4	1	**8T-4223**	10	WASHER-HARD (13.5X25.5X3MM THK)	
	5	1	**9D-0630**	1	CAP-DUST	
	6	1	**217-5703**	1	VALVE AS-TANK (FAST FILL FUEL)	
	7	1	**9G-0371**	1	BLOCK AS	
	8	1	**7X-0339**	2	BOLT (1/2-13X6.25 IN)	
	9	1	**1P-4582**	4	FLANGE-HALF	
	10	1	**022-0234**	1	COUPLING	
	11	1	**7T-2413**	1	SHAFT	
	12	1	**1B-5170**	1	PLUG-PIPE	
	13	1	**6V-9273**	1	BALL	
	14	1	**101-8909**	1	CAP AS-FUEL TANK FILLER (LOCKING)	
		1	**9X-8600**	1	SEAL-O-RING	
	15	1	**8T-3510**	1	NIPPLE-PIPE	
	16	1	**4J-0527**	2	SEAL-O-RING	
C	17	1	**183-3202**	1	ADAPTER	
C	18	1	**4L-6454**	6	BOLT (3/8-16X1 IN)	
C	19	1	**8T-4896**	6	WASHER-HARD (10.2X18.5X2.5MM THK)	
C	20	1	**5H-6734**	1	SEAL-O-RING	
					AVAILABLE REPAIR KIT(S):	
J			**5T-8645**	1	KIT-VENT (FAST FILL FUEL ADAPTER)	
					(INCLUDES BALL CAGE, CLAMP, BODY SEAL, 2 HOLLOW BALLS, 1 SOLID BALL, 2 ROLL PINS, SCREEN, VALVE SEAL, COVER & 2 O-RING SEALS)	

C-CHANGE FROM PREVIOUS TYPE
I-REFER TO HYDRAULIC INFORMATION SYSTEM
J-REPAIR KIT(S) MARKED J AVAILABLE FOR PART MARKED J

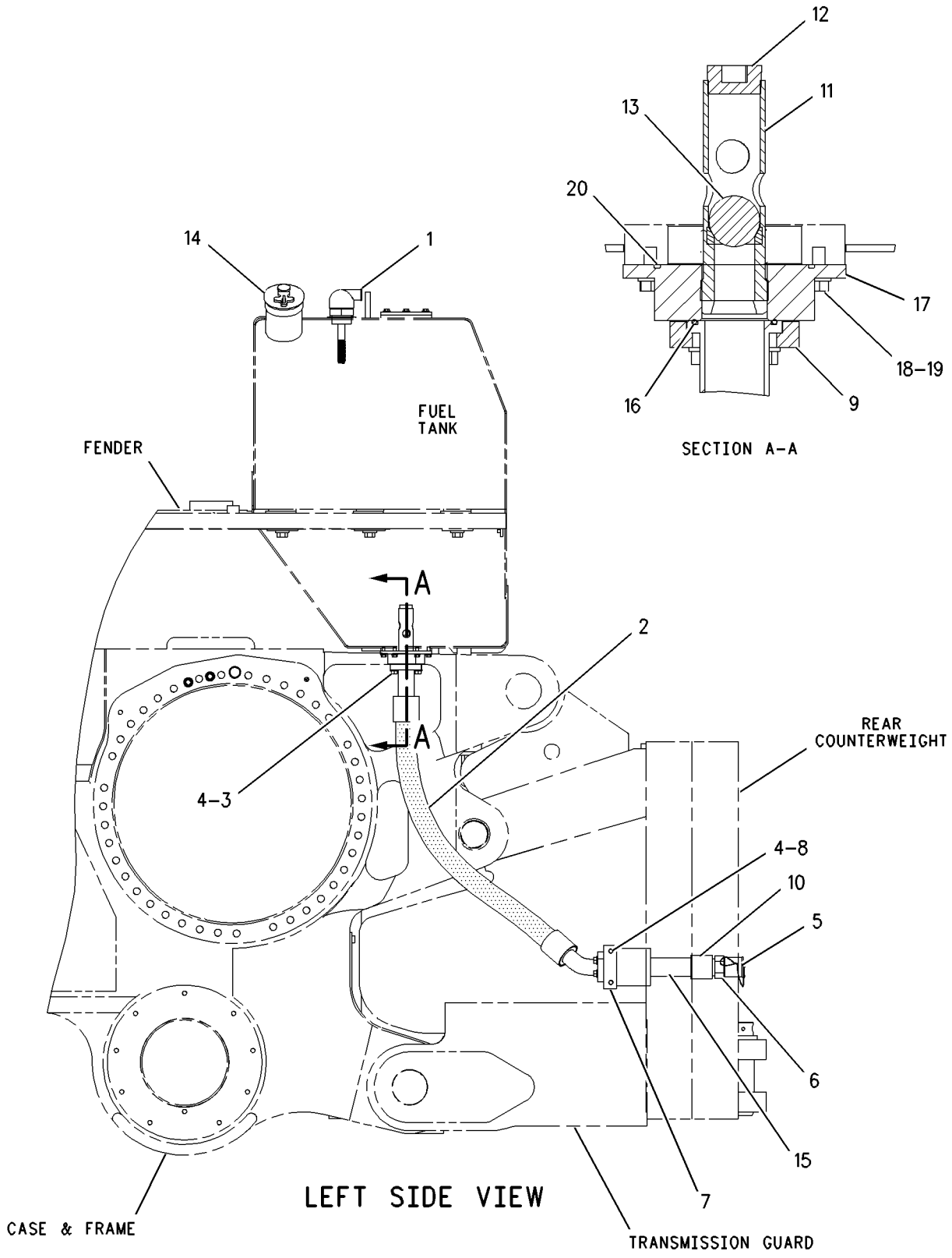

GRAPHIC #1 **<END>** g00687325

172-9210 ADAPTER GP-FAST FILL FUEL

S/N: 7PZ1-UP

FOR USE WITH MACHINES EQUIPPED WITH RIPPER, 4C-6716 FILLER AS-FUEL AN ATTACHMENT

SMCS-1710 **i01988496**

NOTE	REF NO	GRAPHIC REF	PART NUMBER	QTY	PART NAME 1 2 3 4 5 6 (PRODUCT LEVEL)	SEE PAGE
	1	1	**124-2463**	1	ADAPTER GP-FAST FILL FUEL	
	2	1	**6Y-0091**	1	BLOCK AS	
	3	1	**6Y-0677**	1	BRACKET AS	
		1	**1F-0748**	2	NUT-WELD (1/2-13 THD)	
I	4	1	**8E-3234**	1	HOSE AS	
	5	1	**9D-0630**	1	CAP-DUST	
	6	1	**163-5455**	1	VALVE AS	
	7	1	**172-9468**	1	HOSE AS	
	8	1	**188-5095**	1	VENT AS	
	9	1	**1H-8128**	1	SEAL-O-RING	
	10	1	**1J-9671**	2	SEAL-O-RING	
	11	1	**1P-4582**	4	FLANGE-HALF	
	12	1	**2D-4534**	6	BOLT-SOCKET HEAD (3/8-16X1 IN)	
	13	1	**4J-0527**	2	SEAL-O-RING	
	14	1	**4L-6454**	7	BOLT (3/8-16X1 IN)	
	15	1	**5H-6734**	1	SEAL-O-RING	
	16	1	**5P-2566**	4	BOLT (1/2-13X1.5 IN)	
	17	1	**5P-2618**	2	CONNECTOR	
	18	1	**7X-0340**	2	BOLT (1/2-13X6.5 IN)	
	19	1	**7X-0445**	2	BOLT (1/1/4-7X5 IN)	
	20	1	**7X-0533**	2	WASHER-HARD (34X55X6MM THK)	
	21	1	**8T-4223**	10	WASHER-HARD (13.5X25.5X3MM THK)	
	22	1	**8T-4896**	14	WASHER-HARD (10.2X18.5X2.5MM THK)	
	23	1	**8T-8919**	8	BOLT (1/2-13X1.75 IN)	
	24	1	**6V-2686**	1	CLIP	
	25	1	**6V-8801**	1	NUT (3/8-16 THD)	

I-REFER TO HYDRAULIC INFORMATION SYSTEM

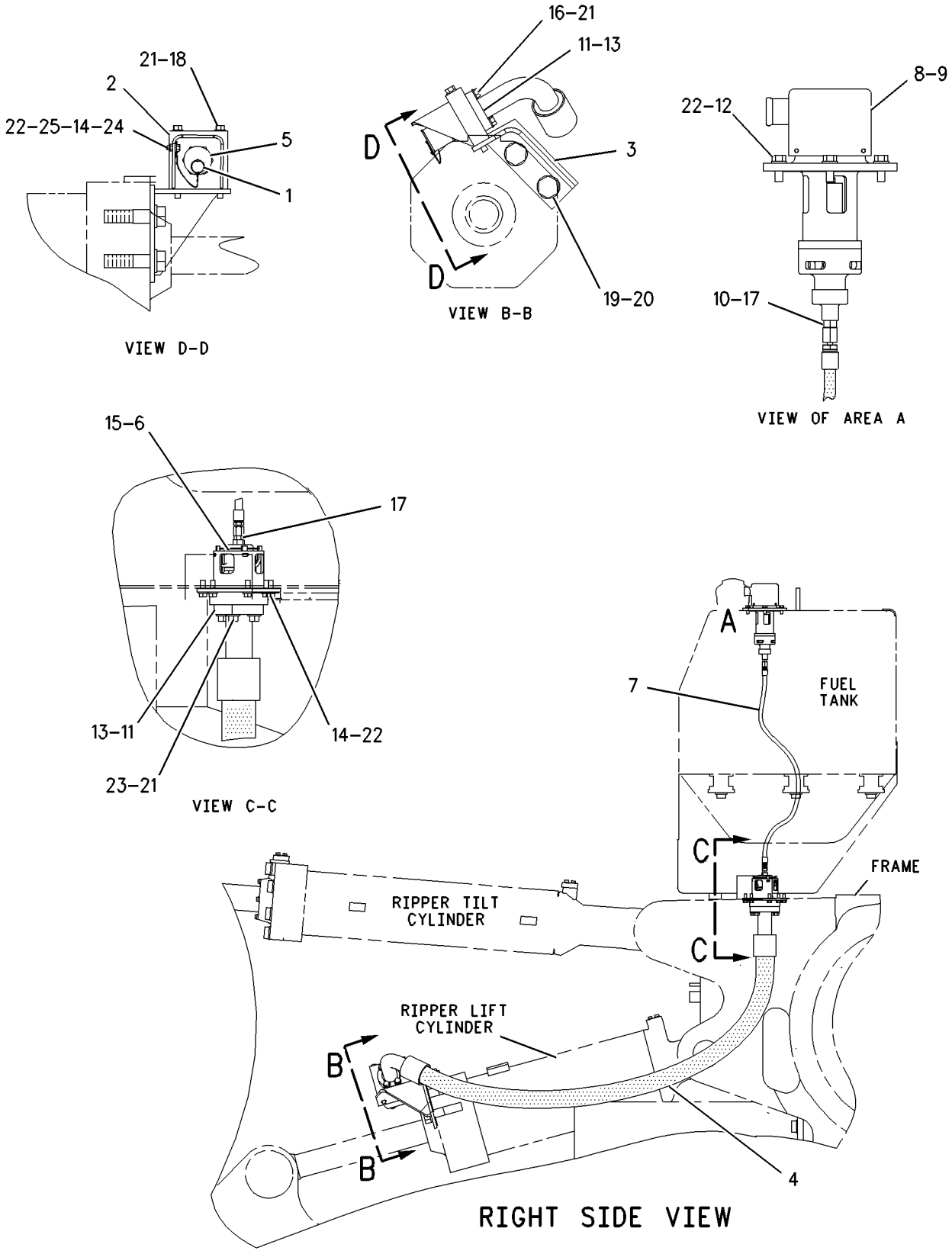

GRAPHIC #1 **<END>** g00786055

172-9211 ADAPTER GP-FAST FILL FUEL

S/N: 7PZ1-UP

FOR USE WITH MACHINES EQUIPPED WITH TRANSMISSION GUARDS, 4C-6716 FILLER AS-FUEL AN ATTACHMENT

SMCS-1710 **i01988494**

NOTE	REF NO	GRAPHIC REF	PART NUMBER	QTY	PART NAME 1 2 3 4 5 6 (PRODUCT LEVEL)	SEE PAGE
	1	1	**124-2463**	1	ADAPTER GP-FAST FILL FUEL	
	2	1	**9D-0630**	1	CAP-DUST	
	3	1	**9G-0371**	1	BLOCK AS	
I	4	1	**154-6560**	1	HOSE AS	
	5	1	**163-5455**	1	VALVE AS (FAST FILL FUEL)	
	6	1	**172-9468**	1	HOSE AS	
	7	1	**188-5095**	1	VENT AS	
	8	1	**1H-8128**	1	SEAL-O-RING	
	9	1	**1J-9671**	2	SEAL-O-RING	
	10	1	**1P-4582**	4	FLANGE-HALF	
	11	1	**2D-4534**	6	BOLT-SOCKET HEAD (3/8-16X1 IN)	
	12	1	**4J-0527**	2	SEAL-O-RING	
	13	1	**4L-6454**	6	BOLT (3/8-16X1 IN)	
	14	1	**5H-6734**	1	SEAL-O-RING	
	15	1	**5P-2566**	4	BOLT (1/2-13X1.5 IN)	
	16	1	**5P-2618**	2	CONNECTOR	
	17	1	**7X-0339**	2	BOLT (1/2-13X6.25 IN)	
	18	1	**8T-4223**	10	WASHER-HARD (13.5X25.5X3MM THK)	
	19	1	**8T-4896**	12	WASHER-HARD (10.2X18.5X2.5MM THK)	
	20	1	**8T-8919**	4	BOLT (1/2-13X1.75 IN)	

I-REFER TO HYDRAULIC INFORMATION SYSTEM

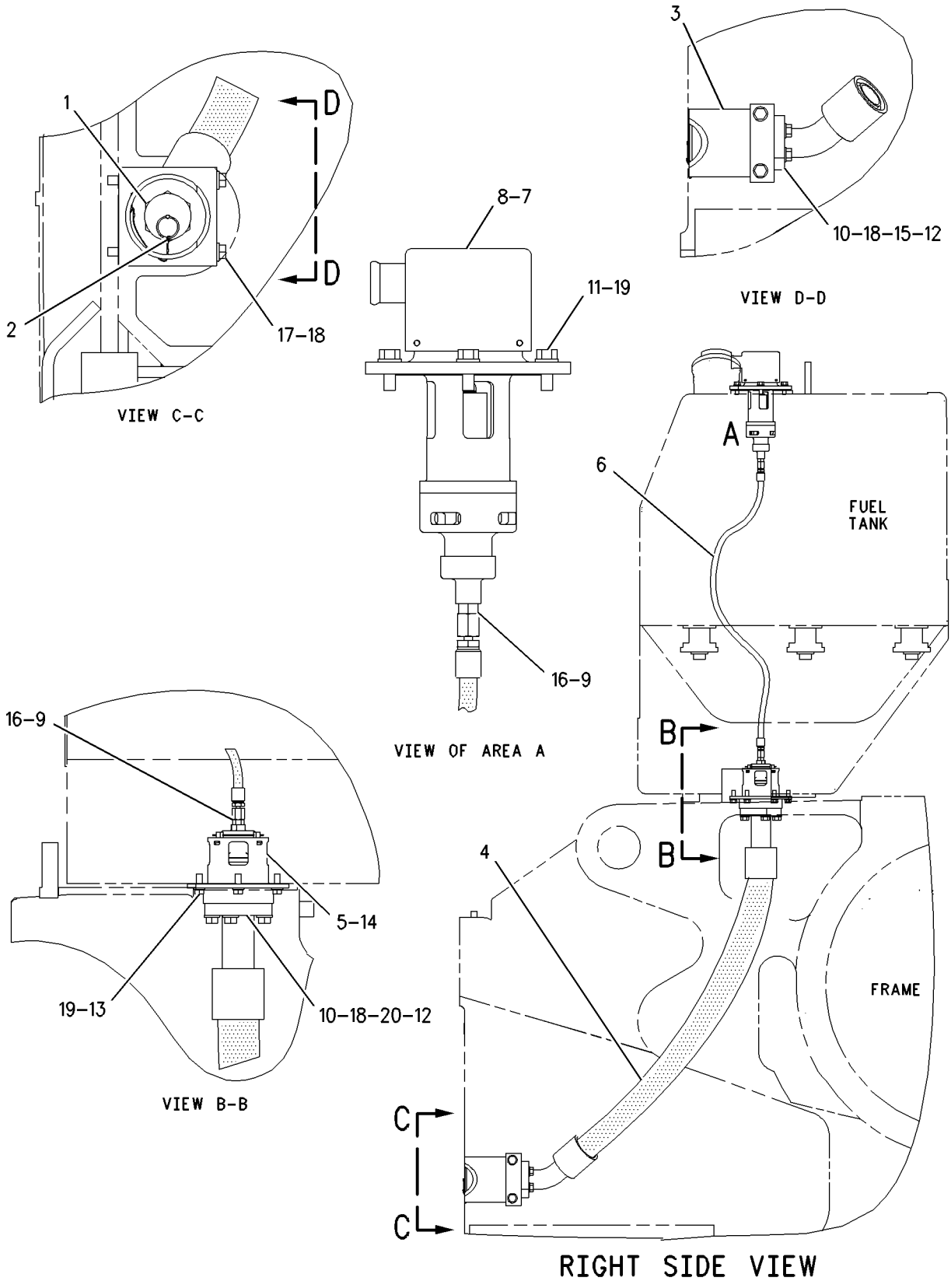

GRAPHIC #1 **<END>** g00804437

172-9213 ADAPTER GP-FAST FILL FUEL

S/N: 7PZ1-UP

FOR USE WITH MACHINES EQUIPPED WITH COUNTERWEIGHT, 4C-6716 FILLER AS-FUEL AN ATTACHMENT

SMCS-1710 **i01988497**

NOTE	REF NO	GRAPHIC REF	PART NUMBER	QTY	PART NAME 1 2 3 4 5 6 (PRODUCT LEVEL)	SEE PAGE
	1	1	**124-2463**	1	ADAPTER GP-FAST FILL FUEL	
	2	1	**8T-3510**	1	NIPPLE-PIPE	
	3	1	**9D-0630**	1	CAP-DUST	
	4	1	**9G-0371**	1	BLOCK AS	
I	5	1	**154-6560**	1	HOSE AS	
	6	1	**163-5455**	1	VALVE AS (FAST FILL FUEL)	
	7	1	**172-9468**	1	HOSE AS	
	8	1	**188-5095**	1	VENT AS	
	9	1	**022-0234**	1	COUPLING	
	10	1	**1H-8128**	1	SEAL-O-RING	
	11	1	**1J-9671**	2	SEAL-O-RING	
	12	1	**1P-4582**	4	FLANGE-HALF	
	13	1	**2D-4534**	6	BOLT-SOCKET HEAD (3/8-16X1 IN)	
	14	1	**4J-0527**	2	SEAL-O-RING	
	15	1	**4L-6454**	6	BOLT (3/8-16X1 IN)	
	16	1	**5H-6734**	1	SEAL-O-RING	
	17	1	**5P-2566**	4	BOLT (1/2-13X1.5 IN)	
	18	1	**5P-2618**	2	CONNECTOR	
	19	1	**7X-0339**	2	BOLT (1/2-13X6.25 IN)	
	20	1	**8T-4223**	10	WASHER-HARD (13.5X25.5X3MM THK)	
	21	1	**8T-4896**	12	WASHER-HARD (10.2X18.5X2.5MM THK)	
	22	1	**8T-8919**	4	BOLT (1/2-13X1.75 IN)	

I-REFER TO HYDRAULIC INFORMATION SYSTEM

172-9213 **ADAPTER GP-FAST FILL FUEL** *(contd.)* **i01988497**

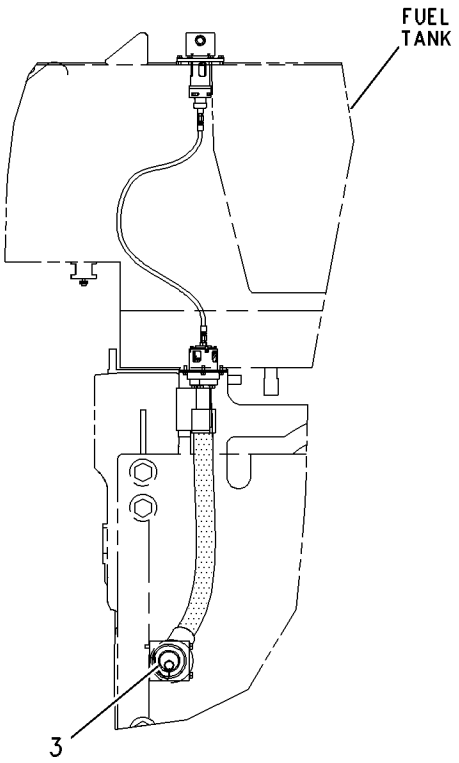

REAR VIEW

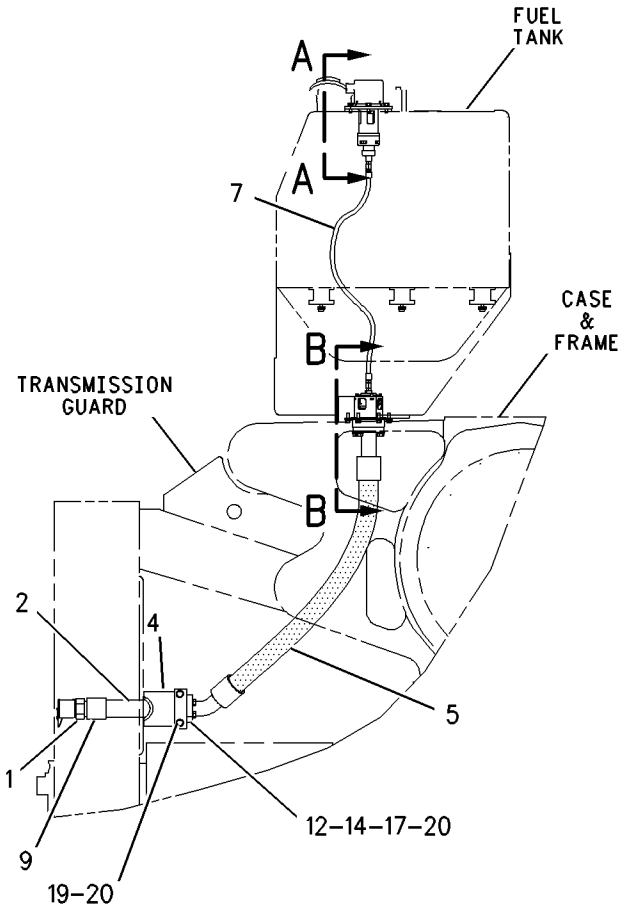

RIGHT SIDE VIEW

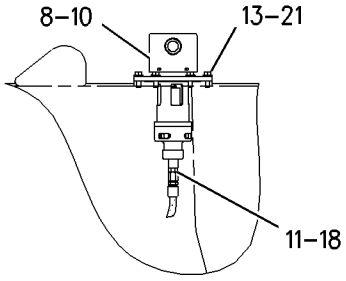

SECTION A-A

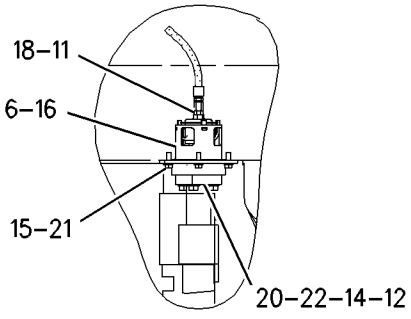

SECTION B-B

GRAPHIC #1 **<END>** g00801167

172-9214 ADAPTER GP-FAST FILL FUEL

S/N: 7PZ1-UP

FOR USE WITH MACHINE EQUIPPED WITH EXTENDED COUNTERWEIGHT

AN ATTACHMENT

SMCS-1710 **i01988499**

NOTE	REF NO	GRAPHIC REF	PART NUMBER	QTY	PART NAME 1 2 3 4 5 6 (PRODUCT LEVEL)	SEE PAGE
	1	1	**124-2463**	1	ADAPTER GP-FAST FILL FUEL	
	2	1	**6Y-0091**	1	BLOCK AS	
I	3	1	**8E-3234**	1	HOSE AS	
	4	1	**9D-0630**	1	CAP-DUST	
	5	1	**163-5455**	1	VALVE AS (FSST FILL FUEL)	
	6	1	**172-9468**	1	HOSE AS	
	7	1	**188-5095**	1	VENT AS	
	8	1	**1H-8128**	1	SEAL-O-RING	
	9	1	**1J-9671**	2	SEAL-O-RING	
	10	1	**1P-4582**	4	FLANGE-HALF	
	11	1	**2D-4534**	6	BOLT-SOCKET HEAD (3/8-16X1 IN)	
	12	1	**4J-0527**	2	SEAL-O-RING	
	13	1	**4L-6454**	7	BOLT (3/8-16X1 IN)	
	14	1	**5H-6734**	1	SEAL-O-RING	
	15	1	**5P-2566**	4	BOLT (1/2-13X1.5 IN)	
	16	1	**5P-2618**	2	CONNECTOR	
	17	1	**7X-0399**	2	BOLT (1-8X1.25 IN)	
	18	1	**8T-4223**	10	WASHER-HARD (13.5X25.5X3MM THK)	
	19	1	**8T-4896**	14	WASHER-HARD (10.2X18.5X2.5MM THK)	
	20	1	**8T-8919**	4	BOLT (1/2-13X1.75 IN)	
	21	1	**6V-2686**	1	CLIP	
	22	1	**6V-8801**	1	NUT (3/8-16 THD)	

I-REFER TO HYDRAULIC INFORMATION SYSTEM

172-9214 **ADAPTER GP-FAST FILL FUEL** *(contd.)* **i01988499**

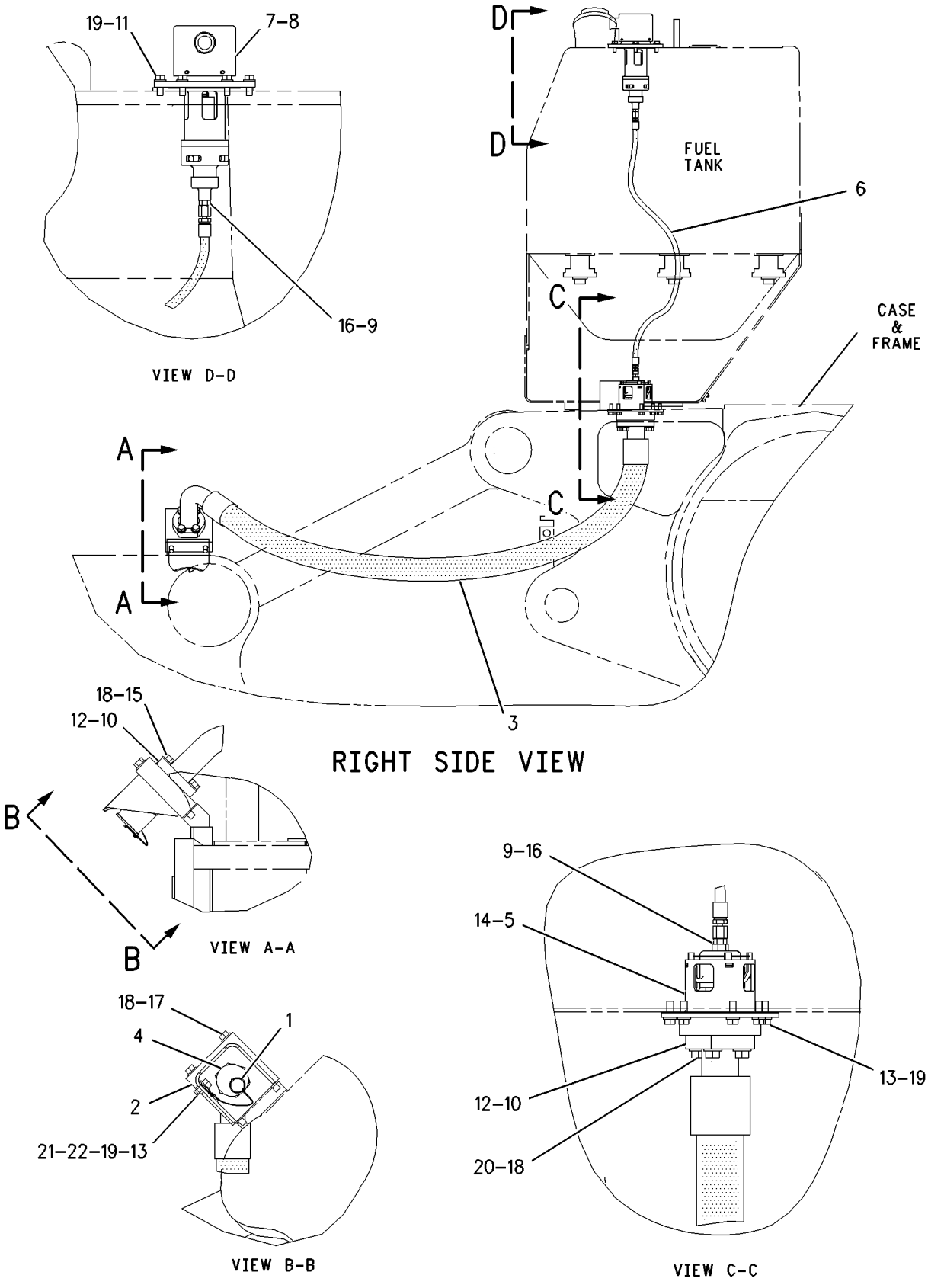

GRAPHIC #1 **<END>** g00790384

172-7938 CONTROL GP-DECELERATOR

S/N: 7PZ1-UP

PART OF 155-5552 CHASSIS AR

SMCS-1276 **i01516020**

NOTE	REF NO	GRAPHIC REF	PART NUMBER	QTY	PART NAME 1 2 3 4 5 6 (PRODUCT LEVEL)	SEE PAGE
	1	1	**6I-8363**	1	HOUSING AS	
		1	**1F-0750**	2	NUT-WELD (3/8-16 THD)	
	2	1	**7G-7684**	1	LEVER	
	3	1	**6I-8361**	1	SHAFT	
	4	1	**6V-7607**	2	WASHER-HARD (20X30X2.5MM THK)	
	5	1	**9B-7237**	5	BOLT (3/8-16X1.25 IN)	
	6	1	**5P-1075**	4	WASHER-HARD (10.2X22.5X3MM THK)	
	7	1	**9G-0772**	1	PEDAL	
	8	1	**2N-3162**	2	SCREW-MACHINE (10-24X1.25 IN)	
Y	9	1	**160-2443**	1	SENSOR GP-POSITION	331
	10	1	**2J-6356**	1	RING-RETAINING	
	11	1	**1B-8706**	1	KEY-WOODRUFF	
	12	1	**2K-7979**	2	BEARING-SLEEVE	
	13	1	**8T-2502**	1	BOLT (3/8-16X1.125 IN)	
	14	1	**4B-3609**	1	SETSCREW-SQUARE HEAD	
	15	1	**1B-2578**	2	NUT (3/8-16 THD)	
	16	1	**194-7034**	1	SPRING	
	17	1	**4B-3611**	1	SETSCREW-SQUARE HEAD	
	18	1	**105-1515**	1	GASKET	
	19	1	**8C-5608**	1	SPACER (6.5X9.5X25.4MM THK)	
	20	1	**7X-3178**	1	BOLT (1/4-20X1.625 IN)	
	21	1	**8T-4205**	2	WASHER-HARD (7.2X14.5X2MM THK)	

Y-SEPARATE ILLUSTRATION

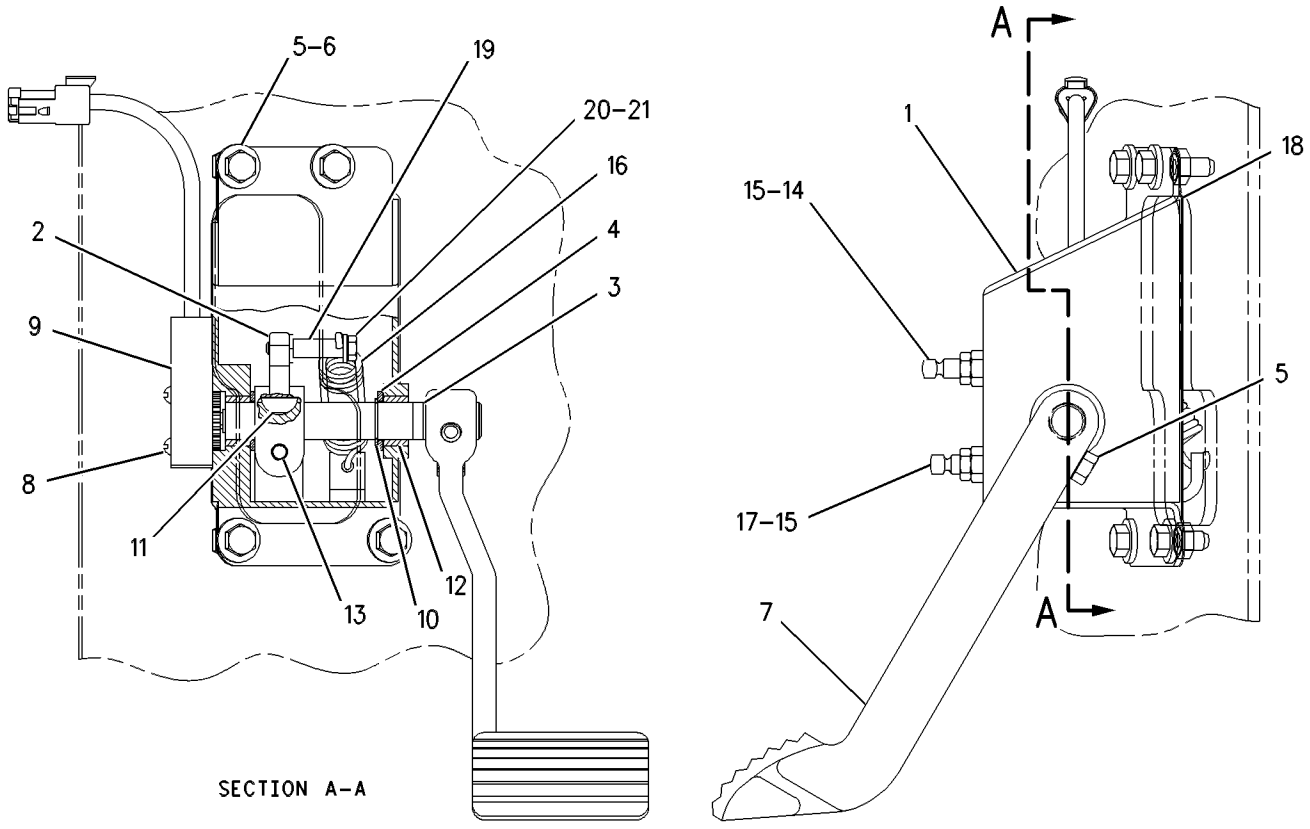

GRAPHIC #1 **<END>** g00580709

FUEL SYSTEM

6I-4468 FILTER GP-FUEL

S/N: 2GR1180-UP

PART OF 155-5556 ENGINE AR

SMCS-1261 **i02029670**

NOTE	REF NO	GRAPHIC REF	PART NUMBER	QTY	PART NAME 1 2 3 4 5 6 (PRODUCT LEVEL)	SEE PAGE
	1	1	**9S-4185**	2	PLUG	
		1	**3K-0360**	2	SEAL-O-RING	
	2	1	**2W-2258**	1	BASE AS-FILTER	
		1	**8N-3653**	1	STUD-TAPERLOCK	
		1	**6N-1127**	1	SHIELD-OIL FILTER	
		1	**7F-9090**	2	SCREW-DRIVE (NO 8X3/8-IN)	
	3	1	**0S-1588**	4	BOLT (3/8-16X1.25-IN)	
	4	1	**5M-2894**	16	WASHER-HARD (10.2X18.5X2.5-MM THK)	
	5	1	**9S-4191**	3	PLUG	
		1	**3J-1907**	3	SEAL-O-RING	
	6	1	**0S-1594**	1	BOLT (3/8-16X25.4-IN)	
	7	1	**7L-6326**	1	CLIP	
	8	1	**3B-1915**	1	BOLT (3/8-16X1.75-IN)	
	9	1	**0S-1571**	3	BOLT (3/8-16X1.75-IN)	
	10	1	**9S-8752**	5	NUT-FULL (3/8-16-THD)	
	11	1	**2K-8198**	2	SEAL-O-RING	
	12	1	**1W-7559**	1	BASE AS-FUEL FILTER	
		1	**6N-1127**	1	SHIELD-OIL FILTER	
		1	**7F-9090**	2	SCREW-DRIVE (NO 8X3/8-IN)	
		1	**8N-3653**	1	STUD-TAPERLOCK	
	13	1	**1R-0755**	2	FILTER AS-FUEL	
	14	1	**0S-1591**	2	BOLT (3/8-16X1.5-IN)	
	15	2	**8H-2778**	1	SEAL-RING (FUEL FILTER)	
	16	2	**6V-0871**	1	GROMMET	
	17	2	**2H-3429**	1	RING-RETAINING	
	18	2	**5M-2894**	6	WASHER-HARD (10.2X18.5X2.5-MM THK)	
	19	2	**7W-0888**	1	BRACKET	
	20	2	**0T-0055**	2	BOLT (3/8-16X4.25-IN)	
	21	2	**1W-8129**	1	SUPPORT	
	22	2	**0S-1588**	4	BOLT (3/8-16X1.25-IN)	
	23	2	**9S-8752**	2	NUT-FULL (3/8-16-THD)	
	24	2	**9W-6825**	1	BRACKET	
	25	2	**9S-8005**	1	PLUG	
	26	2	**3K-0360**	2	SEAL-O-RING	
	27	2	**3B-1915**	2	BOLT (3/8-16X1.75-IN)	
	28	2	**1L-3769**	1	RING-RETAINING	
	29	2	**7M-4672**	1	WASHER (.656X1.31X.109-IN THK)	
	30	2	**7N-1628**	1	NUT (3/8-24-THD)	
	31	2	**5H-8038**	1	SEAL-O-RING	
	32	2	**9S-4185**	1	PLUG	
	33	2	**8H-7202**	1	CASE AS-FUEL FILTER	
	34	2	**9M-2342**	1	FILTER ELEMENT AS-FUEL	
	35	2	**7H-9678**	1	RETAINER-ELEMENT	
	36	2	**7S-9323**	1	SPRING	

6I-4468 **FILTER GP-FUEL** *(contd.)* **i02029670**

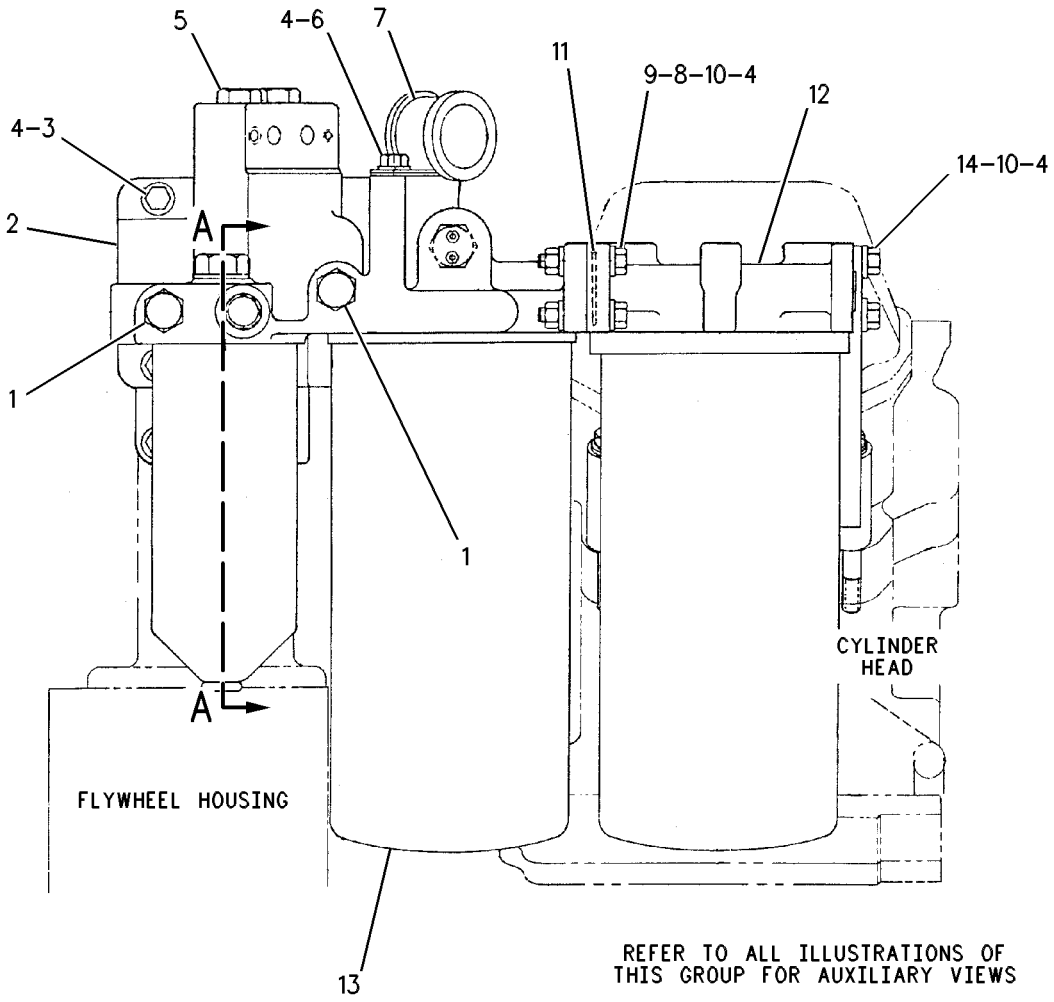

GRAPHIC #1 g00326266

6I-4468 **FILTER GP-FUEL** *(contd.)* **i02029670**

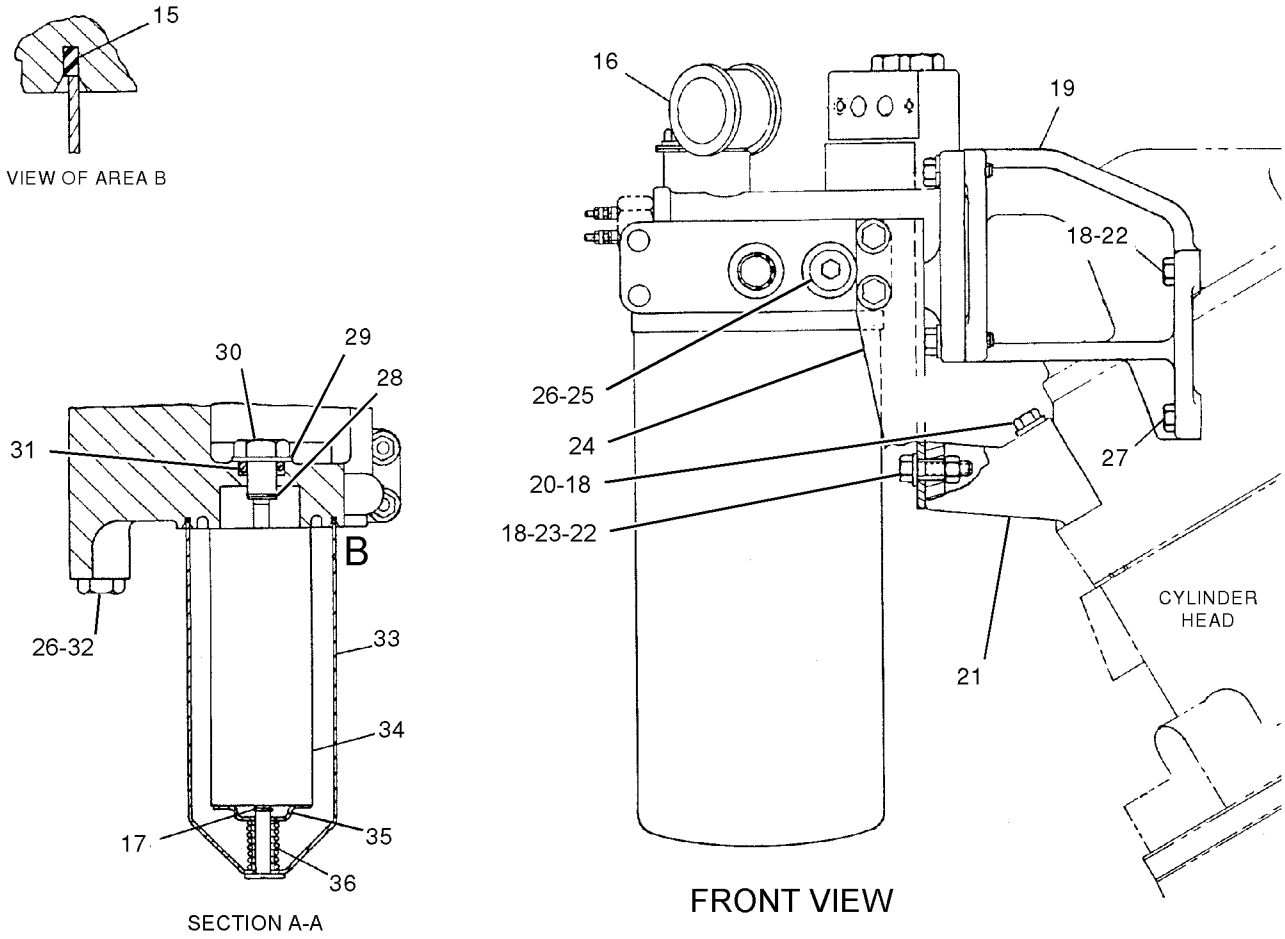

GRAPHIC #2

<END>

g01044596

150-4453 INJECTOR GP-FUEL*R

S/N: 2GR1180-4680

PART OF 100-8780 PUMP GP-FUEL INJECTION

SMCS-1251, 1254, 1290, 1713 **i01550058**

NOTE	REF NO	GRAPHIC REF	PART NUMBER	QTY	PART NAME 1 2 3 4 5 6 (PRODUCT LEVEL)	SEE PAGE
	1	1	**194-9584**	1	SEAL-O-RING	
	2	1	**9X-7735**	1	SEAL-O-RING	

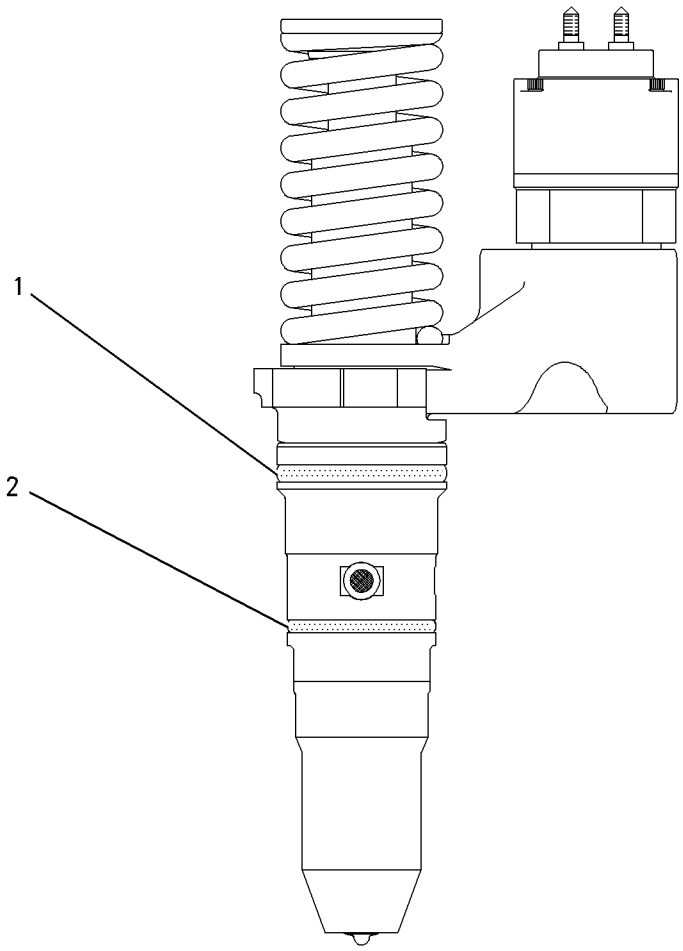

GRAPHIC #1 **<END>** g00636078

FUEL SYSTEM

140-2751 LINES GP-FUEL—CHASSIS

S/N: 7PZ1-UP

PART OF 155-5552 CHASSIS AR

SMCS-1274 **i02023426**

NOTE	REF NO	GRAPHIC REF	PART NUMBER	QTY	PART NAME 1 2 3 4 5 6 (PRODUCT LEVEL)	SEE PAGE
	1	1	**5D-1026**	1	CLAMP-HOSE	
	2	1	**5P-8502**	1	PADLOCK GP (FUEL LINES)	
		1	**5P-8500**	1	KEY	
		1	**8Y-6364**	1	SLEEVE	
	3	1	**6T-7774**	1	SCREEN-FUEL TANK	
	4	1	**6V-8358**	1	VALVE-BALL (MANUAL SHUTOFF)	
	5	1	**7T-7693**	1	BRACKET AS	
		1	**1F-0748**	2	NUT-WELD (1/2-13-THD)	
I	6	1	**7T-8328**	1	HOSE AS	
	7	1	**8T-3491**	1	ELBOW	
	8	1	**8T-6638**	1	VALVE-BALL	
I	9	1	**107-0335**	1	HOSE AS	
	10	1	**033-6783**	1	FITTING	
	11	1	**6V-8626**	1	ELBOW	
		1	**2M-9780**	1	SEAL-O-RING	
	12	1	**6V-9004**	1	ELBOW	
	13	1	**3D-2824**	5	SEAL-O-RING	
	14	1	**5C-6565**	1	BOLT (1/2-13X1.125-IN)	
	15	1	**5P-2228**	2	BOLT (1/2-13X1-IN)	
	16	1	**6V-9746**	2	SEAL-O-RING	
	17	1	**7J-9108**	2	SEAL-O-RING	
	18	1	**8J-8197**	4	CLIP	
	19	1	**8T-4223**	9	WASHER-HARD (13.5X25.5X3-MM THK)	
	20	1	**8T-7529**	4	CLIP	
	21	1	**8T-8917**	5	BOLT (1/2-13X1.25-IN)	
E	22	1	**5P-1695**		HOSE (80-CM)	
	23	1	**5P-2566**	1	BOLT (1/2-13X1.5-IN)	

E-ORDER BY THE CENTIMETER
I-REFER TO HYDRAULIC INFORMATION SYSTEM

140-2751 **LINES GP-FUEL** ***(contd.)*** **i02023426**

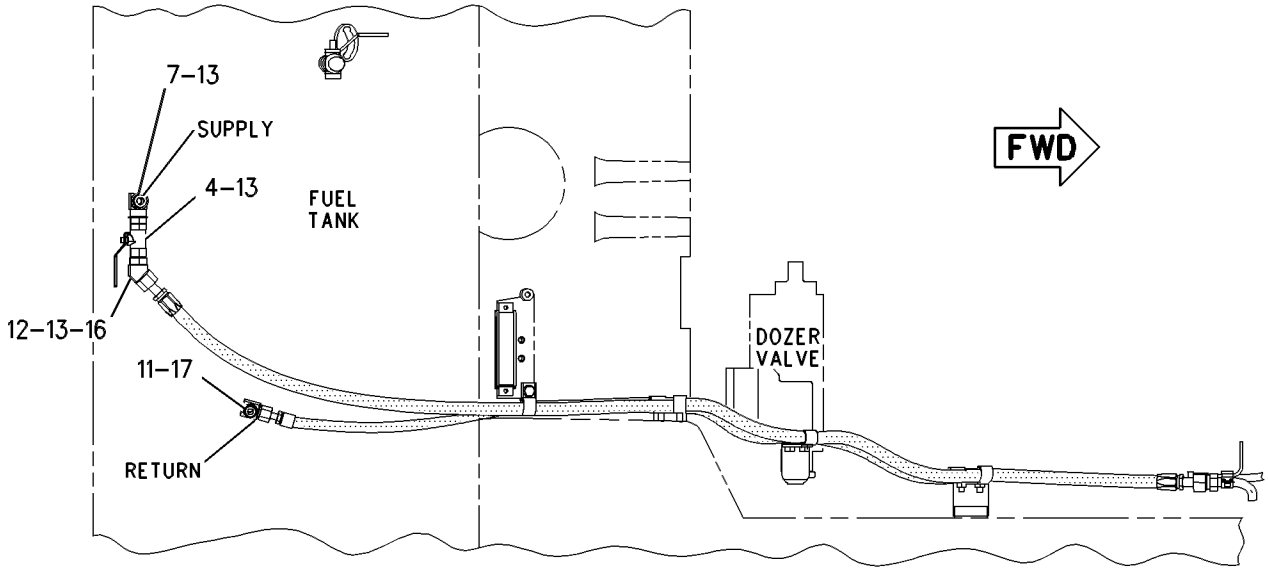

TOP VIEW

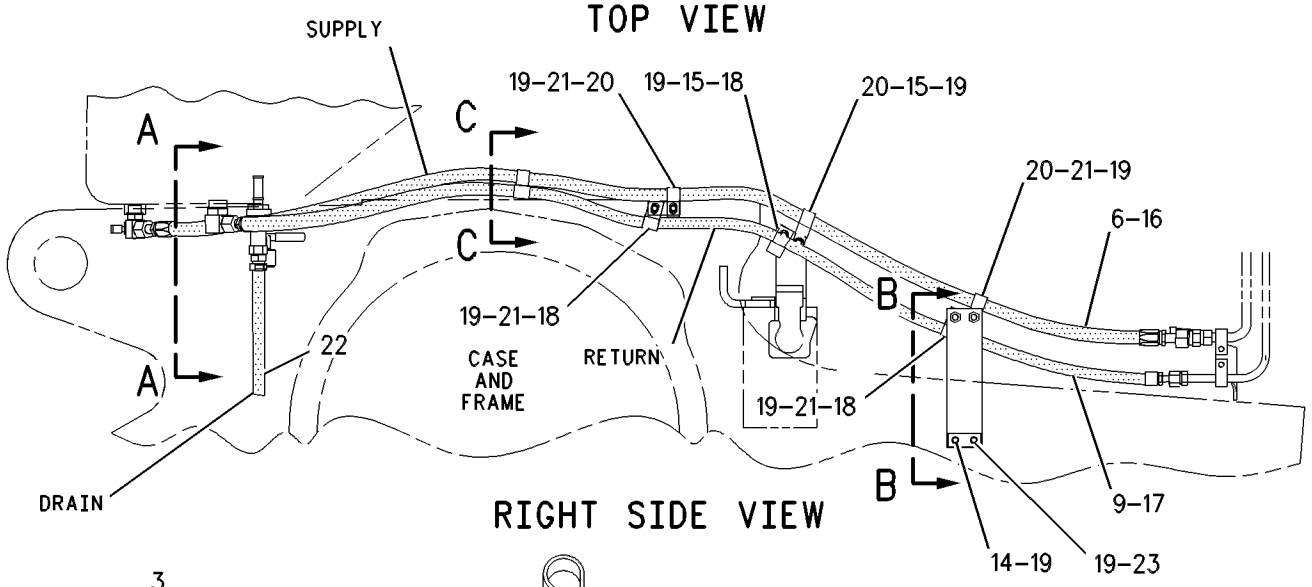

RIGHT SIDE VIEW

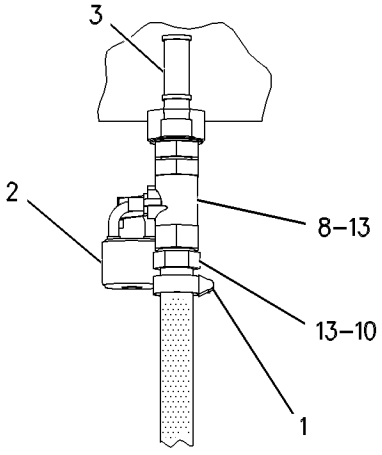

VIEW A-A

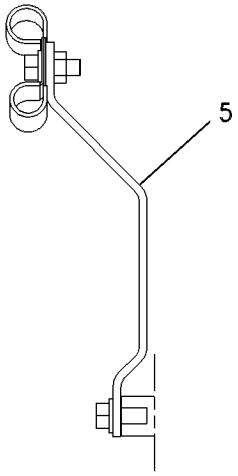

VIEW B-B

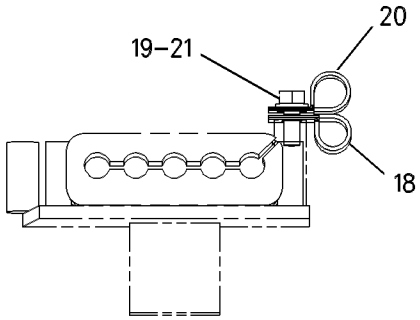

VIEW C-C

GRAPHIC #1 **<END>** g00656489

156-9751 LINES GP-FUEL–RH

S/N: 2GR1180-UP

PART OF 117-0078 LINES GP-FUEL INJECTION

SMCS-1274 **i01909887**

NOTE	REF NO	GRAPHIC REF	PART NUMBER	QTY	PART NAME 1 2 3 4 5 6 (PRODUCT LEVEL)	SEE PAGE
	1	1	**9Y-0047**	4	CLAMP	
	2	1	**147-3745**	4	WASHER-RETAINING	
	3	1	**156-9748**	4	CLAMP	
	4	1	**100-3237**	8	GROMMET	
	5	1	**1D-4539**	4	BOLT (5/16-18X2.5 IN)	
	6	1	**9N-0869**	4	WASHER-HARD (8.8X25.5X2.0MM THK)	

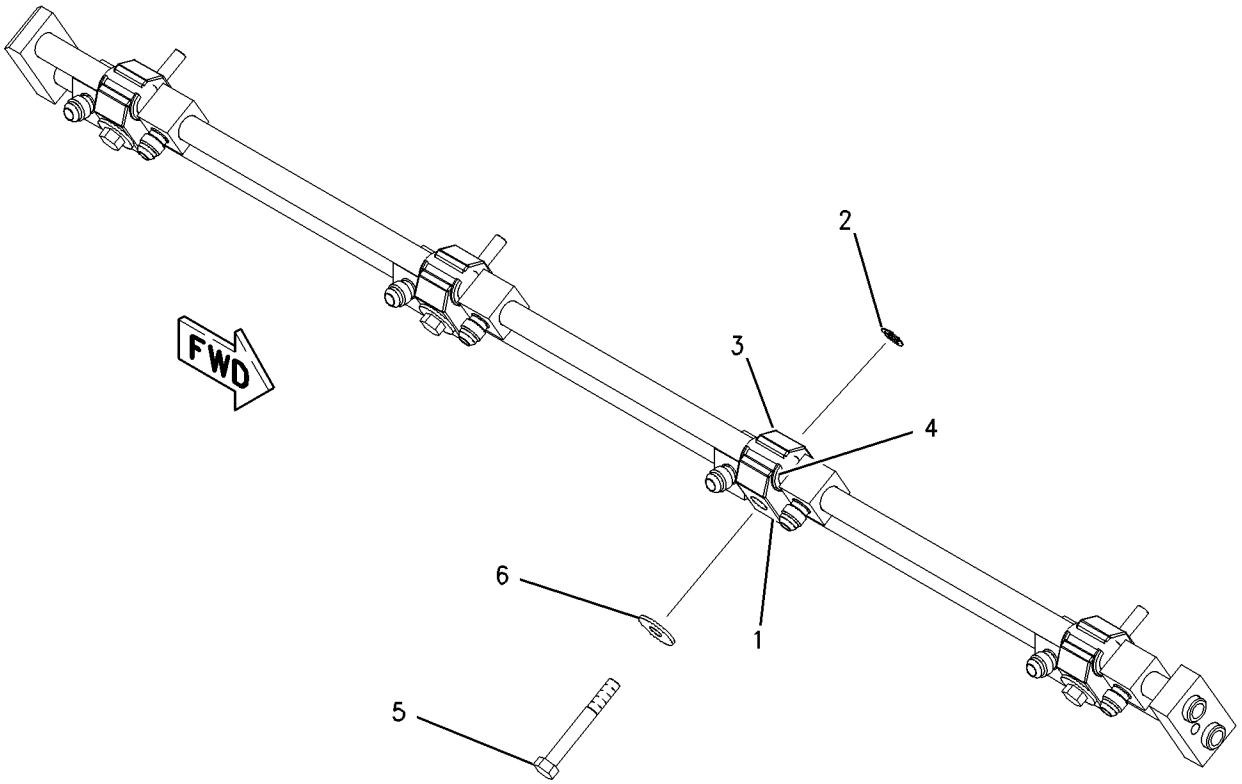

GRAPHIC #1 **<END>** g00995338

156-9752 LINES GP-FUEL–LH

S/N: 2GR1180-UP

PART OF 117-0078 LINES GP-FUEL INJECTION

SMCS-1274 **i01909819**

NOTE	REF NO	GRAPHIC REF	PART NUMBER	QTY	PART NAME 1 2 3 4 5 6 (PRODUCT LEVEL)	SEE PAGE
	1	1	**9Y-0047**	4	CLAMP	
	2	1	**147-3745**	4	WASHER-RETAINING	
	3	1	**156-9748**	4	CLAMP	
	4	1	**100-3237**	8	GROMMET	
	5	1	**1D-4539**	4	BOLT (5/16-18X2.5 IN)	
	6	1	**9N-0869**	4	WASHER-HARD (8.8X25.5X2.0MM THK)	

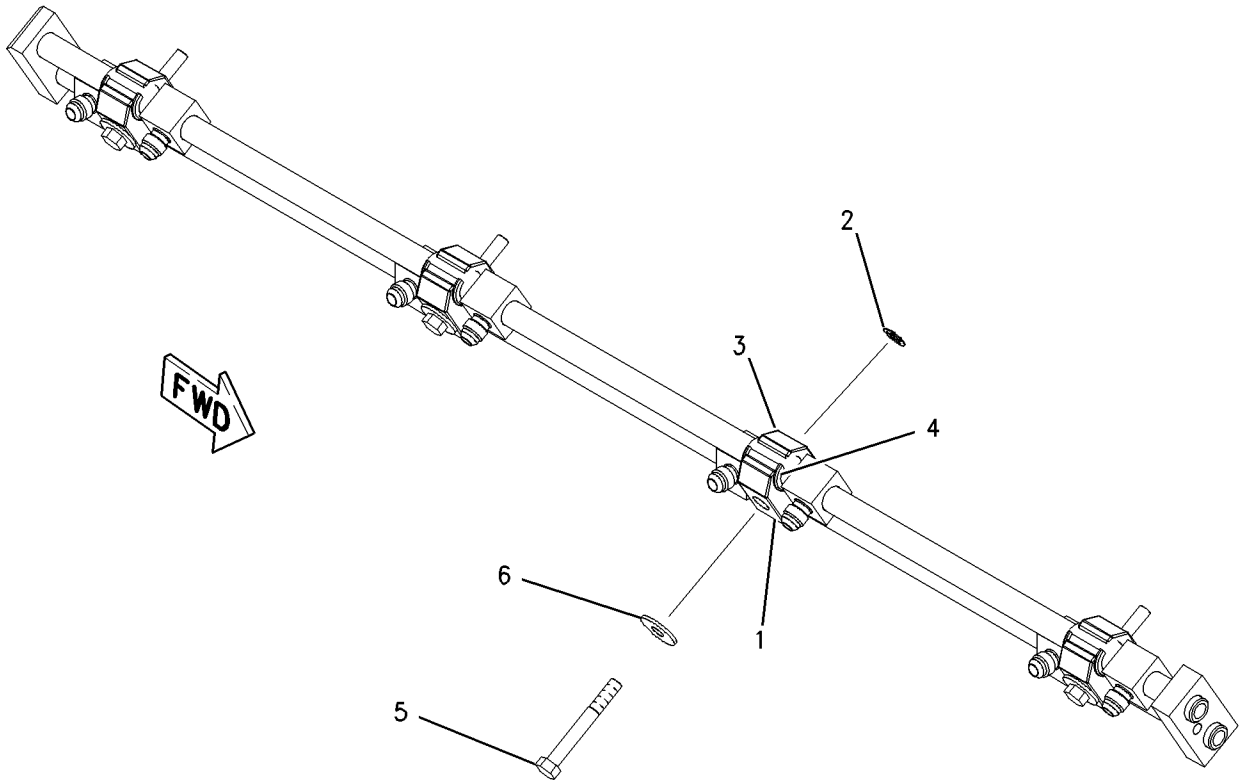

GRAPHIC #1 **<END>** g00995215

FUEL SYSTEM

117-0078 LINES GP-FUEL INJECTION

S/N: 2GR1180-UP

PART OF 155-5556 ENGINE AR

SMCS-1252, 1254 **i01967653**

NOTE	REF NO	GRAPHIC REF	PART NUMBER	QTY	PART NAME 1 2 3 4 5 6 (PRODUCT LEVEL)	SEE PAGE
	1	1,2	**6V-4589**	8	SEAL-O-RING	
	2	2	**6V-5049**	17	SEAL-O-RING	
	3	1	**6V-5048**	1	SEAL-O-RING	
	4	1,2	**8L-2786**	3	SEAL-O-RING	
	5	1,2	**4P-0692**	12	CLAMP AS	
					(EACH INCLUDES)	
		1,2	**108-1434**	1	GROMMET	
	6	1	**4P-0693**	4	CLAMP AS	
					(EACH INCLUDES)	
		1	**108-1434**	1	GROMMET	
	7	1	**4P-4342**	1	ADAPTER-MANIFOLD	
	8	1	**4P-4343**	1	ADAPTER-MANIFOLD	
	9	1	**4W-1807**	1	ELBOW-FLARED	
	10	2	**4W-3846**	1	TUBE AS	
	11	1	**4W-3847**	1	PLATE	
	12	2	**4W-3863**	1	BRACKET	
	13	2	**6K-4947**	1	CLIP (TAB)	
	14	2	**6L-2479**	1	BRACE	
	15	2	**7C-7677**	8	TUBE AS	
	16	2	**7C-7678**	8	TUBE AS	
	17	2	**7C-8397**	1	BRACKET AS	
		2	**1F-0750**	4	NUT-WELD (3/8-16THD)	
	18	2	**7C-8398**	1	BRACKET AS	
		2	**1F-0750**	2	NUT-WELD (3/8-16THD)	
	19	1	**7C-8399**	1	TUBE AS	
I	20	2	**7C-8401**	1	HOSE AS	
I	21	2	**7C-8402**	1	HOSE AS	
	22	1	**7E-0527**	1	TUBE AS	
	23	2	**7E-5343**	1	TUBE AS	
	24	2	**7E-5344**	1	TUBE AS	
	25	2	**7E-9085**	1	TUBE AS	
	26	1,2	**7N-6806**	4	SEAL-RECTANGULAR	
	27	2	**7W-2122**	16	CONNECTOR-PORT	
	28	2	**9N-4053**	1	SPRING	
	29	2	**091-0081**	2	SPACER (10.5X20X10.0MM THK)	
	30	2	**114-5477**	1	PLUNGER-REGULATING VALVE	
CY	31	1	**156-9751**	1	LINES GP-FUEL (RH)	221
CY	32	2	**156-9752**	1	LINES GP-FUEL (LH)	222
	33	2	**167-9569**	1	HOSE AS	
	34	2	**184-3232**	1	HOSE AS	
	35	1	**118-4728**	1	ELBOW	
	36	1	**030-7949**	4	ELBOW-FLARED	
	37	2	**030-7982**	1	UNION-FLARED	
	38	2	**068-4174**	1	ELBOW	
	39	2	**0L-1351**	1	BOLT (3/8-16X0.875 IN)	
	40	1,2	**0L-2070**	8	BOLT (3/8-16X2.25 IN)	
	41	2	**0S-0509**	1	BOLT (3/8-16X0.75 IN)	
	42	1	**0S-1571**	1	BOLT (3/8-16X1.75 IN)	
	43	1,2	**0S-1588**	3	BOLT (3/8-16X1.25 IN)	
	44	2	**0S-1594**	5	BOLT (3/8-16X1 IN)	
	45	1,2	**1P-7625**	2	ELBOW	
	46	1	**2B-2694**	1	BOLT (5/16-18X2 IN)	
	47	2	**2P-1296**	1	TEE	
	48	1	**4B-0831**	1	BOLT (5/16-18X3.75 IN)	
	49	1,2	**5M-2894**	18	WASHER-HARD (10.2X18.5X2.5MM THK)	
	50	2	**5P-4295**	4	CLIP	

117-0078 LINES GP-FUEL INJECTION *(contd.)* i01967653

NOTE	REF NO	GRAPHIC REF	PART NUMBER	QTY	PART NAME 1 2 3 4 5 6 (PRODUCT LEVEL)	SEE PAGE
	51	2	**5S-0003**	1	NUT (5/16-18 THD)	
	52	2	**6K-4948**	1	CLIP (SLOT)	
	53	2	**6K-8178**	1	CLIP	
	54	2	**8M-0547**	2	ELBOW (SWIVEL)	
	55	2	**8T-1887**	1	CLIP (SLOT)	
	56	2	**8T-1888**	1	CLIP (TAB)	
	57	2	**9L-9132**	5	WASHER (10.2X25.5X2.5MM THK)	
C	58	1,2	**9M-1974**	3	WASHER-HARD (8.8X16X2MM THK)	
	59	1	**9M-4584**	1	CONNECTOR	
	60	1	**9S-4182**	1	PLUG	
	61	2	**9S-4191**	1	PLUG	
	62	1,2	**9S-8752**	5	NUT-FULL (3/8-16 THD)	
	63	2	**9X-6458**	1	WASHER-HARD (10.2X22.5X3MM THK)	

C-CHANGE FROM PREVIOUS TYPE
I-SEE HOSE FABRICATION GUIDE
Y-SEPARATE ILLUSTRATION

117-0078 **LINES GP-FUEL INJECTION** *(contd.)* **i01967653**

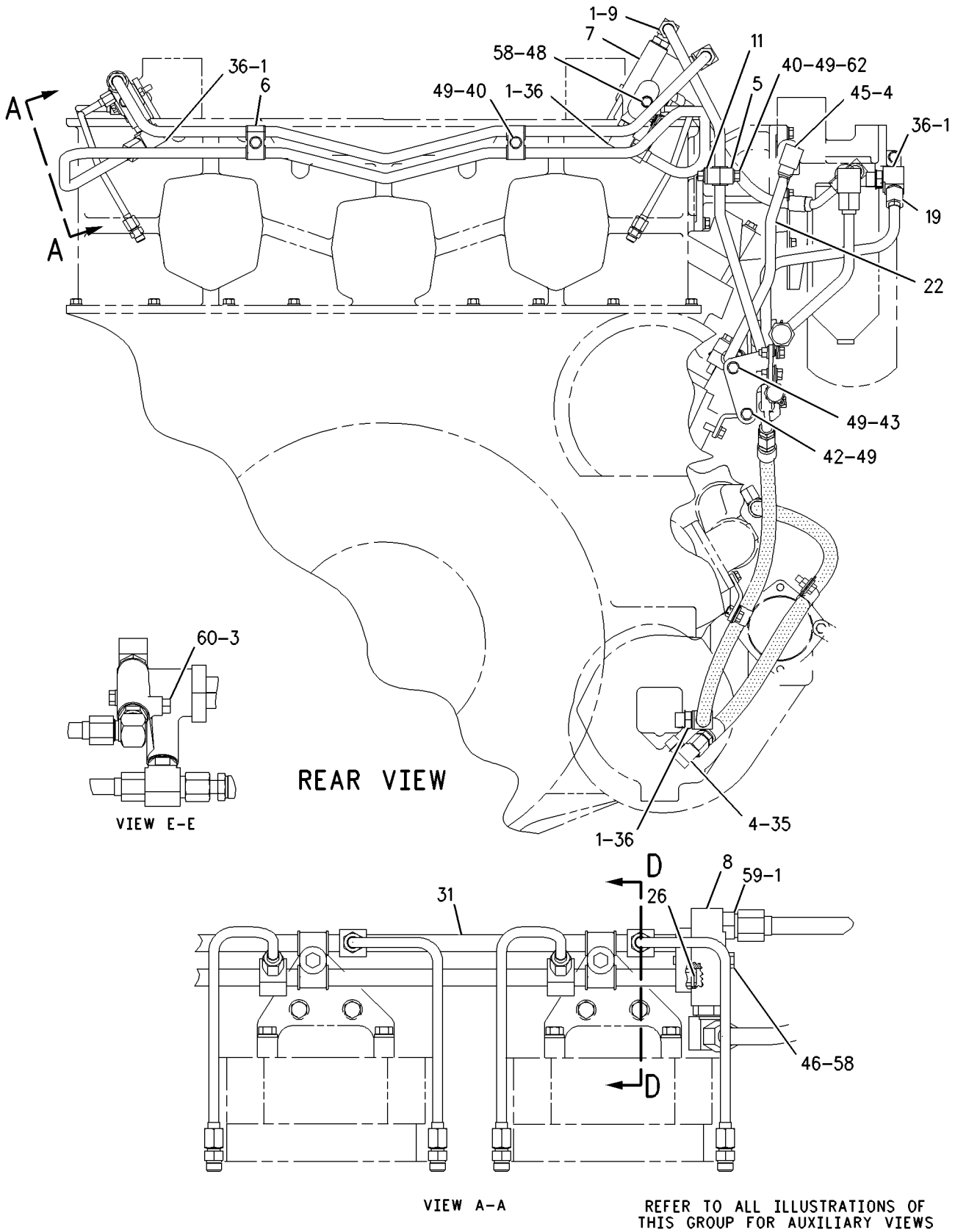

GRAPHIC #1

g00979740

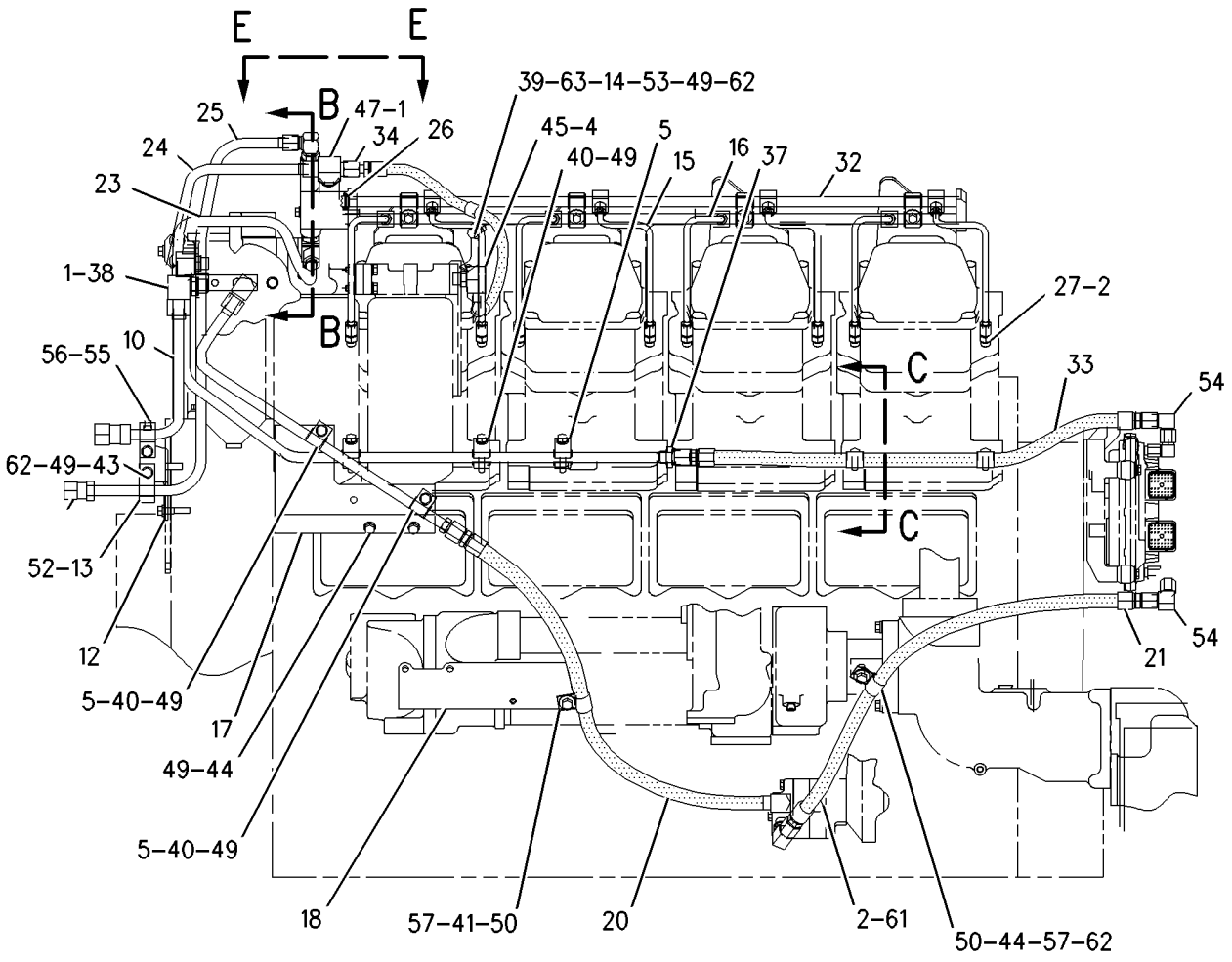

RIGHT SIDE VIEW

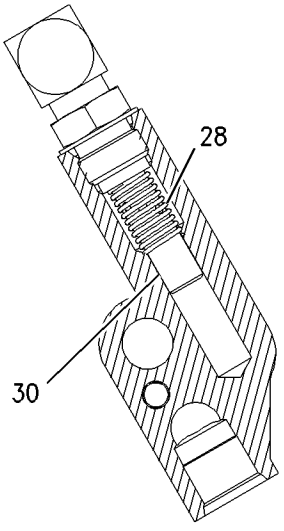

SECTION B-B

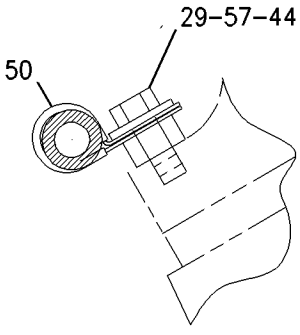

VIEW C-C

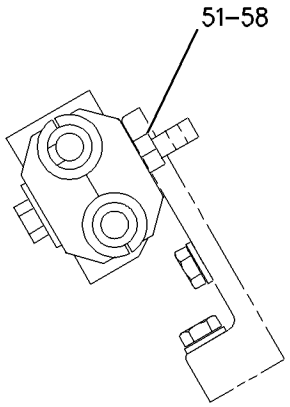

SECTION D-D

REFER TO ALL ILLUSTRATIONS OF THIS GROUP FOR AUXILIARY VIEWS

GRAPHIC #2 **<END>** g00979741

100-8780 PUMP GP-FUEL INJECTION

S/N: 2GR1180-4680
PART OF 155-5556 ENGINE AR

SMCS-1251, 1290 **i01967649**

NOTE	REF NO	GRAPHIC REF	PART NUMBER	QTY	PART NAME 1 2 3 4 5 6 (PRODUCT LEVEL)	SEE PAGE
CYR	1	1	**150-4453**	1	INJECTOR GP-FUEL	218
	2	1	**234-4182**	1	PLUG	
	3	1	**7E-2580**	1	CLAMP-INJECTOR	
	4	1	**7N-5487**	1	WASHER (12X22X9.5MM THK)	
	5	1	**7F-8698**	1	BOLT (7/16-14X3.5 IN)	

C-CHANGE FROM PREVIOUS TYPE
R-REMFG PART MAY BE AVAILABLE
Y-SEPARATE ILLUSTRATION

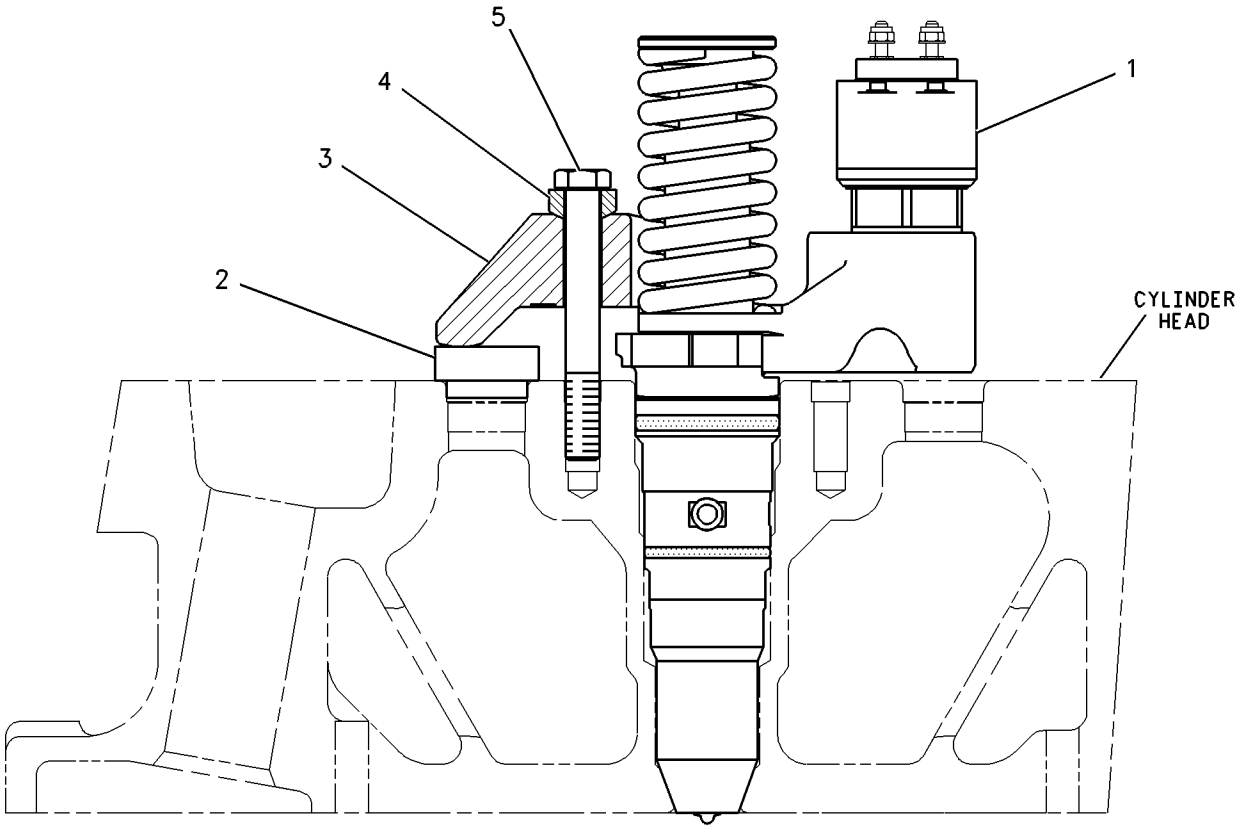

GRAPHIC #1 **<END>** g00635582

FUEL SYSTEM

100-8780 PUMP GP-FUEL INJECTION

S/N: 2GR4681-UP

PART OF 155-5556 ENGINE AR

SMCS-1251, 1290 **i02004148**

NOTE	REF NO	GRAPHIC REF	PART NUMBER	QTY	PART NAME 1 2 3 4 5 6 (PRODUCT LEVEL)	SEE PAGE
C	1	1	**229-0190**	1	INJECTOR GP-FUEL	
	1A	1	**194-9584**	1	SEAL-O-RING	
	1B	1	**9X-7735**	1	SEAL-O-RING	
	2	1	**234-4182**	1	PLUG	
	3	1	**7E-2580**	1	CLAMP-INJECTOR	
	4	1	**7N-5487**	1	WASHER (12X22X9.5MM THK)	
	5	1	**7F-8698**	1	BOLT (7/16-14X3.5 IN)	

C-CHANGE FROM PREVIOUS TYPE

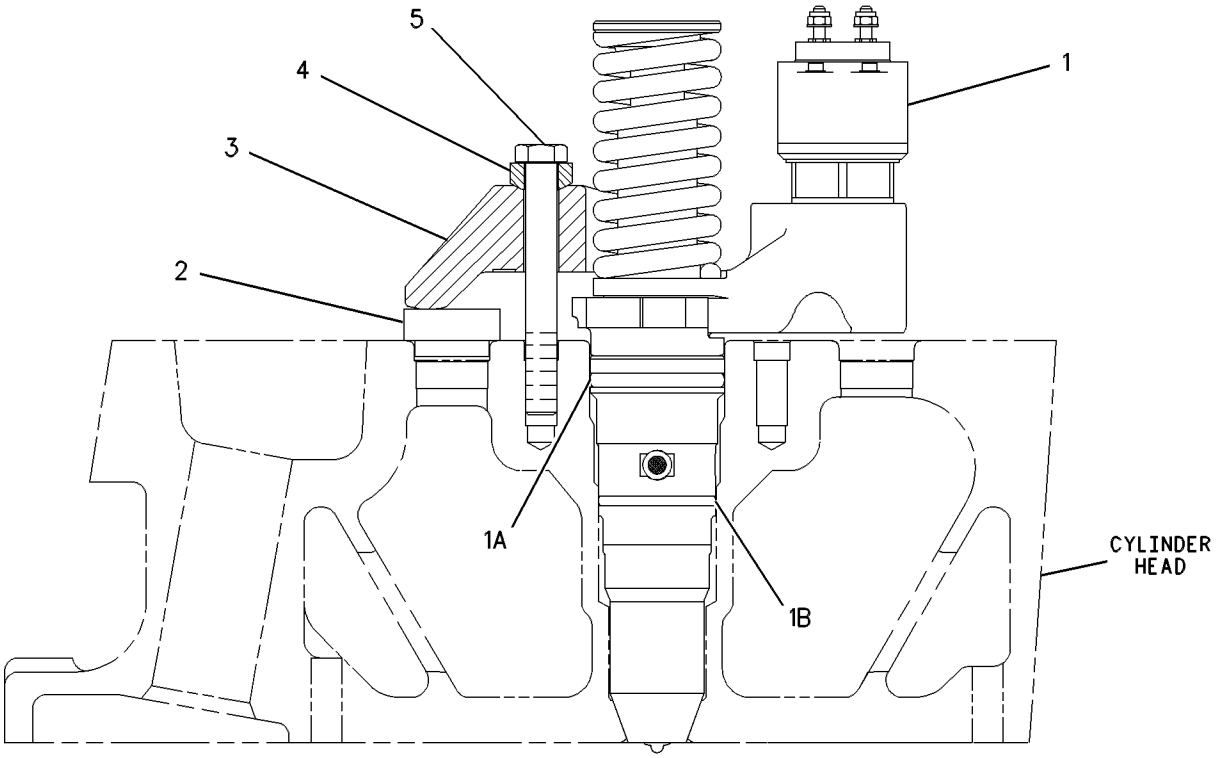

GRAPHIC #1 **<END>** g00608936

FUEL SYSTEM

165-9154 PUMP GP-FUEL PRIMING

S/N: 2GR1180-UP

PART OF 155-5556 ENGINE AR

SMCS-1258 **i01988500**

NOTE	REF NO	GRAPHIC REF	PART NUMBER	QTY	PART NAME 1 2 3 4 5 6 (PRODUCT LEVEL)	SEE PAGE
	1	1	**9Y-8389**	1	GASKET (FUEL PRIMING PUMP)	
	2	1	**183-2823**	1	PUMP AS-FUEL PRIMING	
	3	1	**1B-2790**	1	BOLT (5/16-18X1.375 IN)	
	4	1	**5P-0537**	1	WASHER-HARD (7.2X14.5X2MM THK)	
	5	1	**7B-2742**	1	BOLT (1/4-20X1.25 IN)	
	6	1	**9M-1974**	1	WASHER-HARD (8.8X16X2MM THK)	

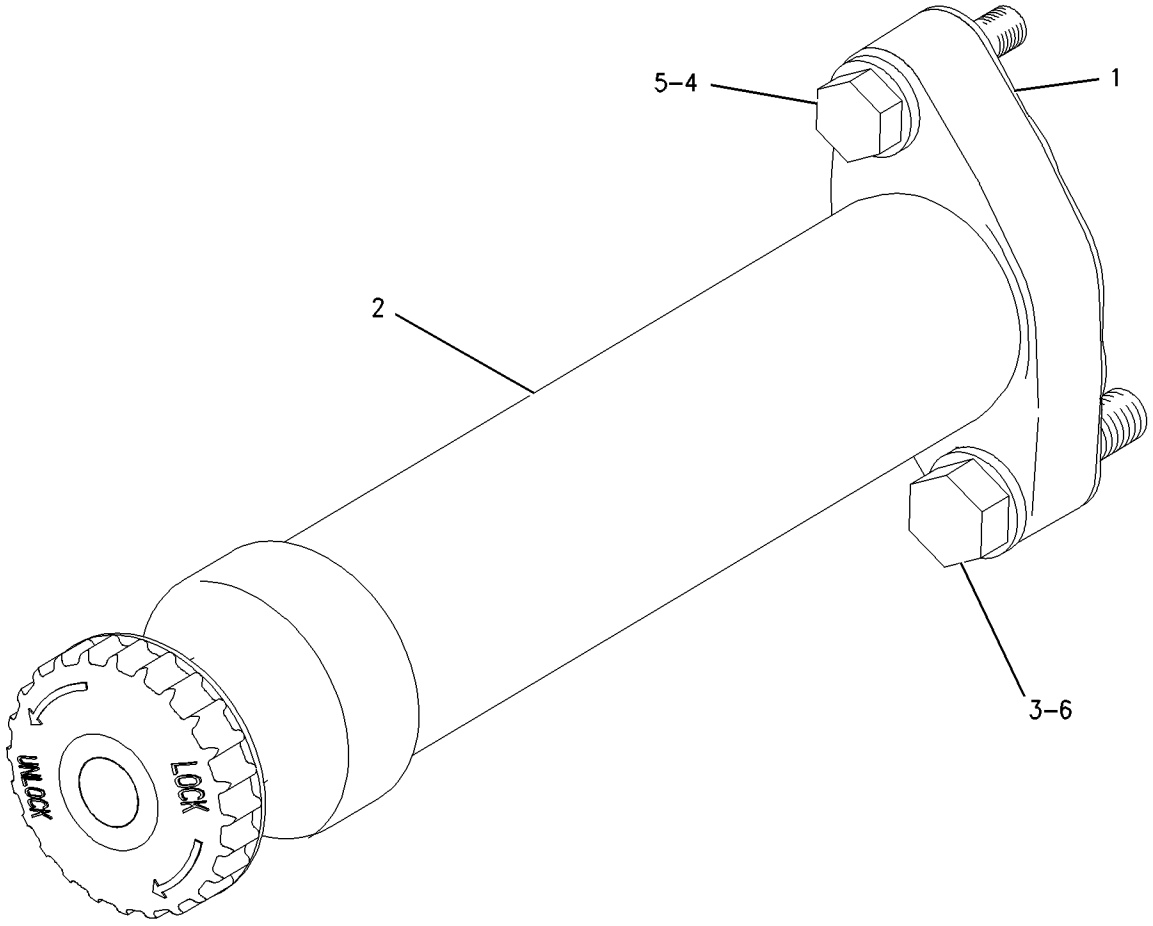

GRAPHIC #1 **<END>** g00655069

8N-6151 PUMP GP-FUEL TRANSFER

S/N: 2GR1180-4158
ONE SECTION GEAR
PART OF 155-5556 ENGINE AR

SMCS-1256 **i01488765**

NOTE	REF NO	GRAPHIC REF	PART NUMBER	QTY	PART NAME 1 2 3 4 5 6 (PRODUCT LEVEL)	SEE PAGE
	1	1	**1N-4636**	1	COUPLING-DRIVE	
CYR	2	1	**169-8615**	1	PUMP GP-FUEL TRANSFER	232
	3	1	**1H-9696**	1	SEAL-O-RING	
	4	1	**3H-3243**	2	BOLT (5/16-18X4.75 IN)	
	5	1	**5L-1761**	2	BOLT (5/16-18X5.5 IN)	

C-CHANGE FROM PREVIOUS TYPE
R-REMFG PART MAY BE AVAILABLE
Y-SEPARATE ILLUSTRATION

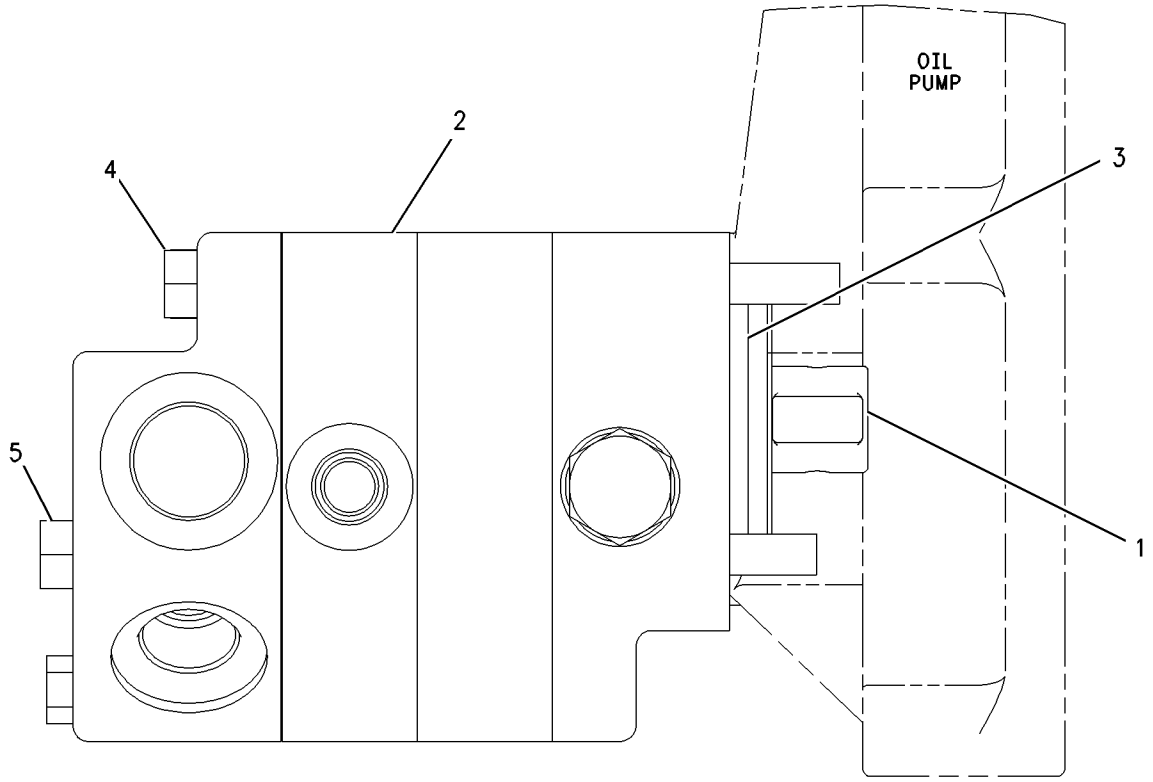

GRAPHIC #1 **<END>** g00773828

8N-6151 PUMP GP-FUEL TRANSFER

S/N: 2GR4159-UP
ONE SECTION GEAR
PART OF 155-5556 ENGINE AR

SMCS-1256 **i01834323**

NOTE	REF NO	GRAPHIC REF	PART NUMBER	QTY	PART NAME 1 2 3 4 5 6 (PRODUCT LEVEL)	SEE PAGE
	1	1	**1N-4636**	1	COUPLING-DRIVE	
CY	2	1	**225-4260**	1	PUMP GP-FUEL TRANSFER	234
	3	1	**1H-9696**	1	SEAL-O-RING	
	4	1	**3H-3243**	2	BOLT (5/16-18X4.75 IN)	
	5	1	**5L-1761**	2	BOLT (5/16-18X5.5 IN)	

C-CHANGE FROM PREVIOUS TYPE
Y-SEPARATE ILLUSTRATION

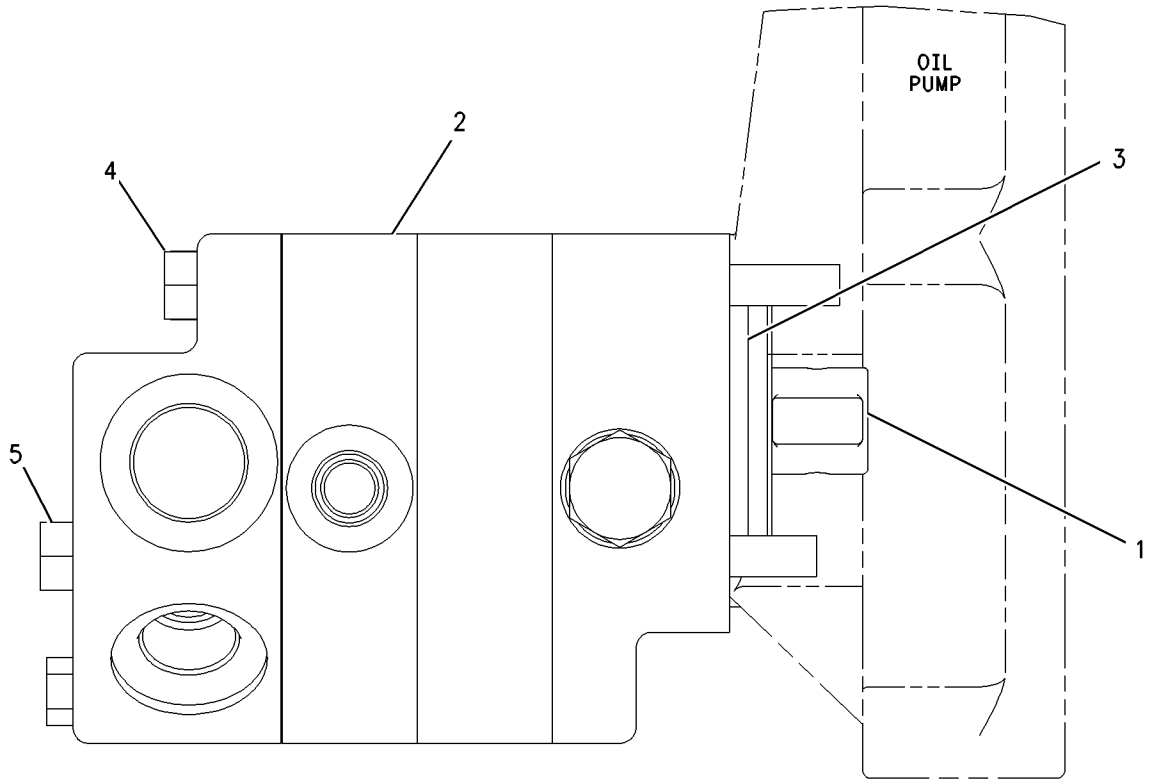

GRAPHIC #1 **<END>** g00773828

169-8615 PUMP GP-FUEL TRANSFER*R

S/N: 2GR1180-4158
ONE SECTION GEAR
PART OF 8N-6151 PUMP GP-FUEL TRANSFER

SMCS-1256 **i02001188**

NOTE	REF NO	GRAPHIC REF	PART NUMBER	QTY	PART NAME 1 2 3 4 5 6 (PRODUCT LEVEL)	SEE PAGE
	1	1	**1W-4003**	1	GEAR AS-IDLER	
	2	1	**1W-4005**	1	HEAD AS	
		1	**1W-4009**	1	VALVE AS	
	3	1	**1W-4006**	1	CASING	
	4	1	**1W-4007**	1	POPPET-VALVE (RELIEF)	
	5	1	**1W-4008**	1	GASKET	
	6	1	**1W-4010**	1	PLATE AS	
		1	**7C-2870**	2	BUSHING-TERMINAL	
	7	1	**1W-4121**	1	BRACKET AS	
		1	**7C-2870**	2	BUSHING-TERMINAL	
	8	1	**1W-4655**	1	SPRING-RELIEF VALVE	
	9	1	**1W-6935**	2	SLEEVE	
	10	1	**1W-6936**	1	CAP	
	11	1	**6V-0895**	2	SEAL-O-RING	
	12	1	**112-3597**	1	SEAL-LIP TYPE	
	13	1	**124-9437**	1	SHAFT AS-DRIVE	
	14	1	**169-8617**	1	SEAL-LIP TYPE	
	15	1	**7W-3556**	1	WASHER (146.03X213X8MM THK)	
	16	1	**8F-8178**	1	BOLT (1/4-20X3.25 IN)	
	17	1	**8S-4710**	1	BOLT (1/4-20X4 IN)	

169-8615 PUMP GP-FUEL TRANSFER *(contd.)* i02001188

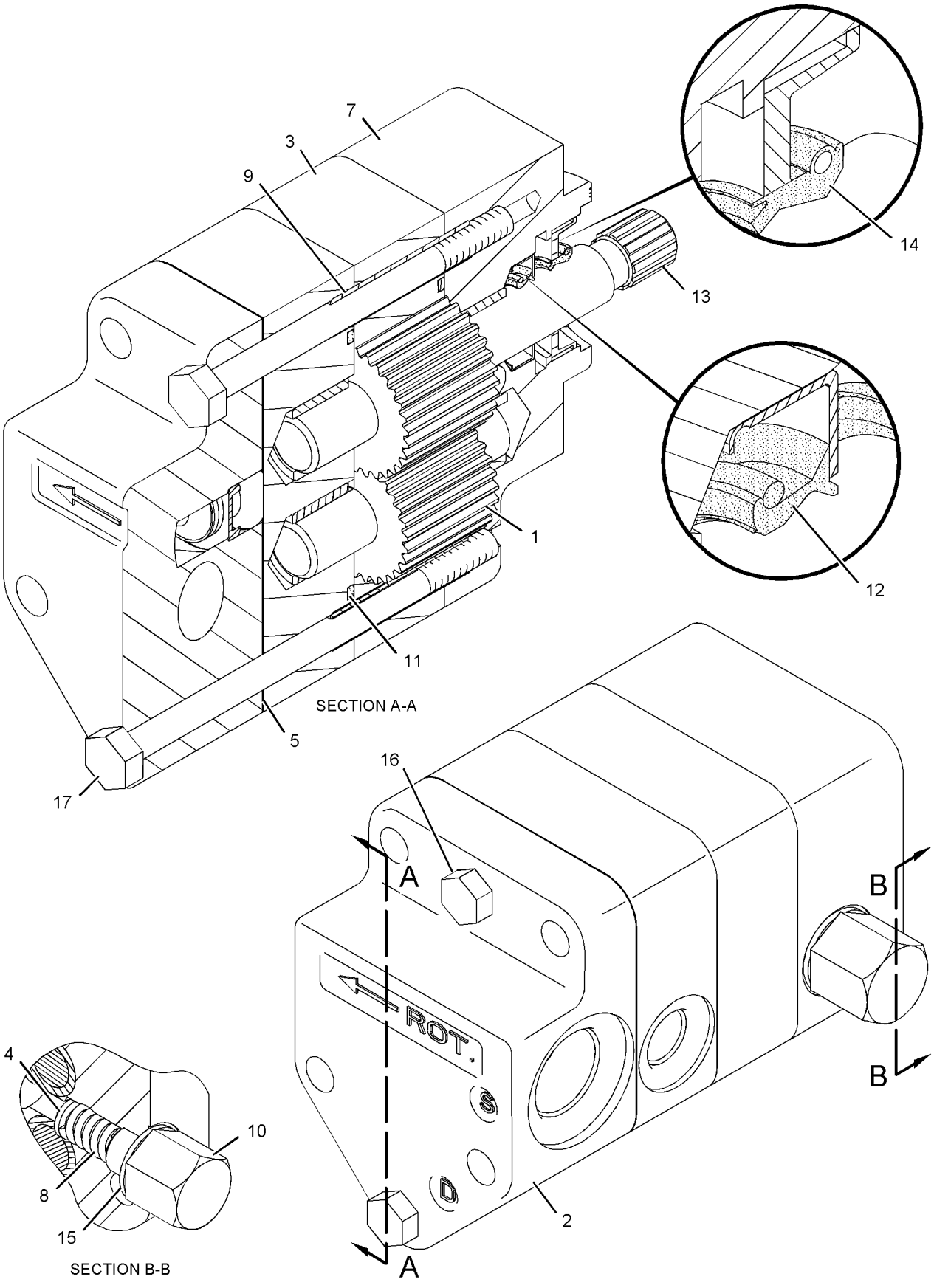

GRAPHIC #1 **<END>** g01036070

225-4260 PUMP GP-FUEL TRANSFER

S/N: 2GR4159-UP
ONE SECTION GEAR
PART OF 8N-6151 PUMP GP-FUEL TRANSFER

SMCS-1256 **i01974398**

NOTE	REF NO	GRAPHIC REF	PART NUMBER	QTY	PART NAME 1 2 3 4 5 6 (PRODUCT LEVEL)	SEE PAGE
	1	1	**1W-4003**	1	GEAR AS-IDLER	
	2	1	**1W-4005**	1	HEAD AS	
		1	**1W-4009**	1	VALVE AS	
	3	1	**1W-4006**	1	CASING	
	4	1	**1W-4007**	1	POPPET-VALVE (RELIEF)	
	5	1	**1W-4008**	1	GASKET	
	6	1	**1W-4010**	1	PLATE AS	
		1	**7C-2870**	2	BUSHING-TERMINAL	
	7	1	**1W-4121**	1	BRACKET AS	
		1	**7C-2870**	2	BUSHING-TERMINAL	
	8	1	**1W-4655**	1	SPRING-RELIEF VALVE	
	9	1	**1W-6935**	2	SLEEVE	
	10	1	**1W-6936**	1	CAP	
	11	1	**6V-0895**	2	SEAL-O-RING	
	12	1	**112-3597**	1	SEAL-LIP (INNER)	
	13	1	**169-8617**	1	SEAL-LIP TYPE (OUTER)	
	14	1	**225-4259**	1	SHAFT AS-DRIVE	
	15	1	**7W-3556**	1	WASHER (146.03X213X8MM THK)	
	16	1	**8F-8178**	1	BOLT (1/4-20X3.25 IN)	
	17	1	**8S-4710**	1	BOLT (1/4-20X4 IN)	

225-4260 **PUMP GP-FUEL TRANSFER** ***(contd.)*** **i01974398**

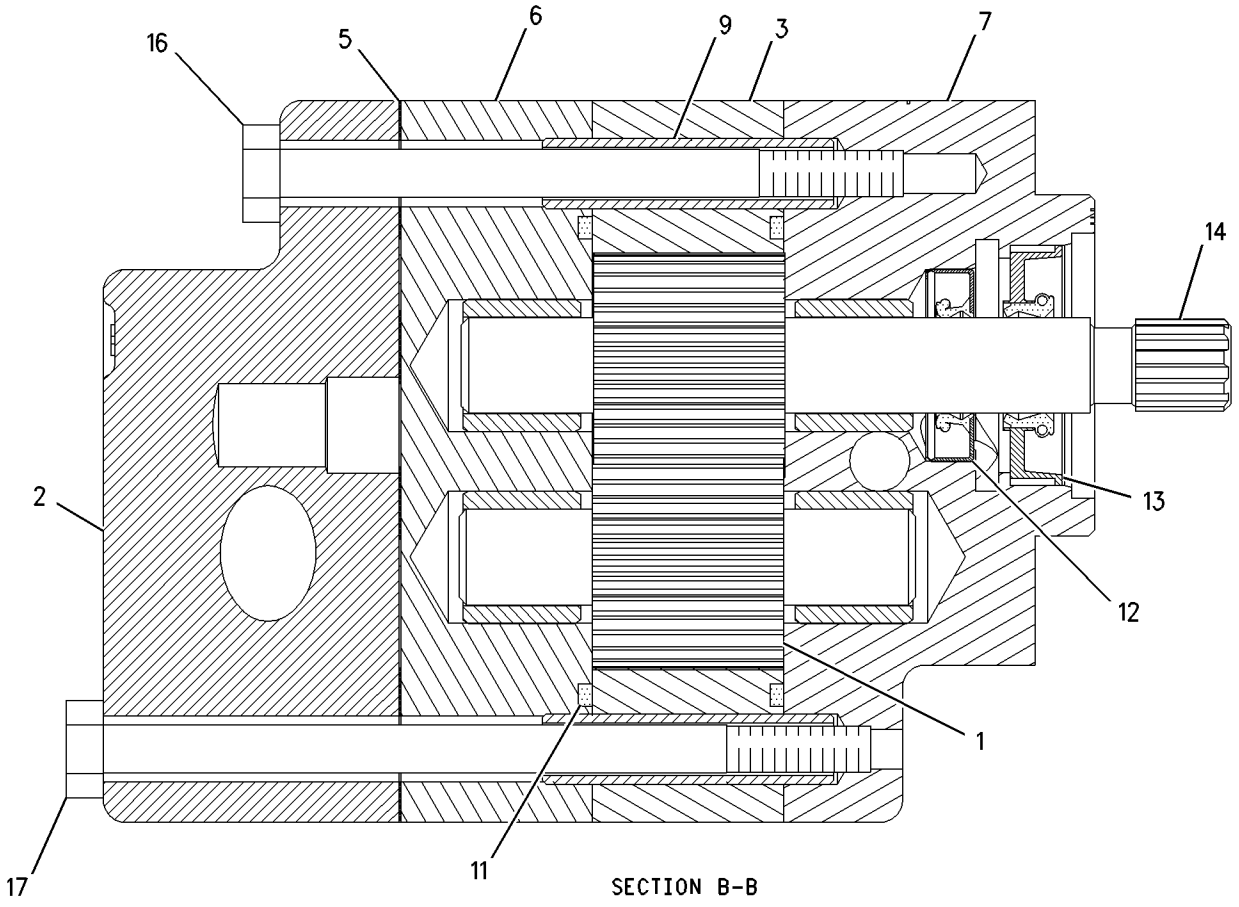

SECTION B-B

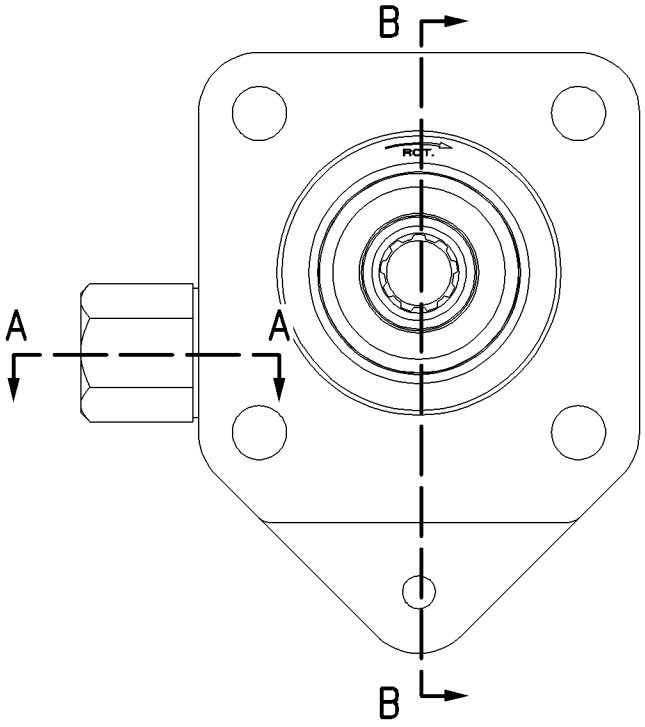

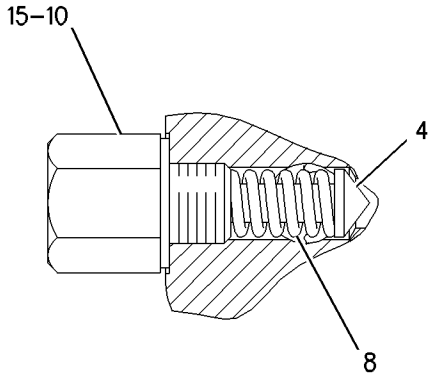

SECTION A-A

GRAPHIC #1 **<END>** g00954635

158-5031 TANK GP-FUEL

S/N: 7PZ1-UP
1609 LITER (425 GAL)
PART OF 155-5552 CHASSIS AR

SMCS-1273 **i01988521**

NOTE	REF NO	GRAPHIC REF	PART NUMBER	QTY	PART NAME 1 2 3 4 5 6 (PRODUCT LEVEL)	SEE PAGE
	1	1	**5P-8502**	1	PADLOCK GP (FUEL TANK)	
		1	**5P-8500**	1	KEY	
		1	**8Y-6364**	1	SLEEVE	
	2	1	**6T-6080**	12	MOUNTING	
	3	1	**8T-9311**	6	BOLT (3/4-10X4.50 IN)	
Y	4	1	**204-4439**	1	TANK GP-FUEL	239
	5	1	**6T-6079**	6	WASHER (20X100X12MM THK)	
	6	1	**7X-0582**	6	WASHER-HARD (20X44.5X6MM THK)	

Y-SEPARATE ILLUSTRATION

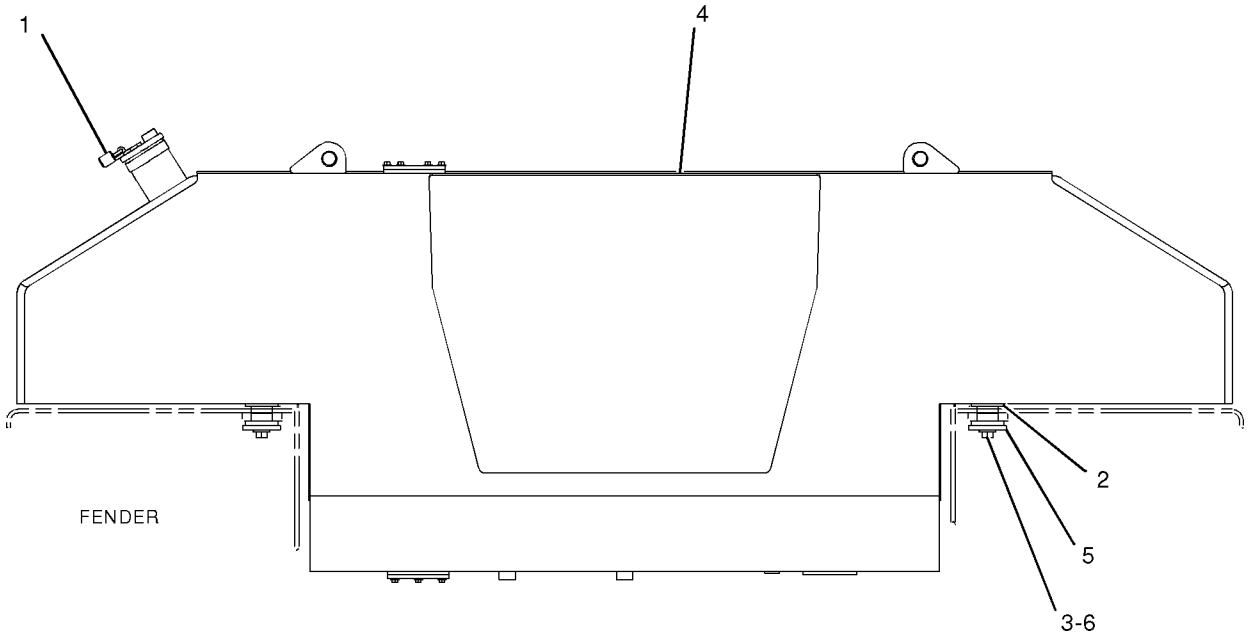

GRAPHIC #1 **<END>** g01027365

FUEL SYSTEM

202-0502 TANK GP-FUEL

S/N: 7PZ754-UP
1989.75 LITER (525 GAL)
PART OF 202-0503 TANK GP-FUEL
AN ATTACHMENT

SMCS-1273 **i01811997**

NOTE	REF NO	GRAPHIC REF	PART NUMBER	QTY	PART NAME 1 2 3 4 5 6 (PRODUCT LEVEL)	SEE PAGE
	1	1	**7X-7700**	1	CAP AS-FUEL TANK (VENTED LOCKING)	
		1	**9X-2205**	1	KIT-CAP FILTER (FUEL TANK)	
		1	**9X-8600**	1	SEAL-O-RING	
	2	1	**164-3417**	1	COVER	
	3	1	**187-1679**	1	COVER	
	4	1	**222-4434**	1	TANK AS-FUEL	
	5	1	**1H-8128**	1	SEAL-O-RING	
	6	1	**4L-6454**	12	BOLT (3/8-16X1 IN)	
	7	1	**5H-6734**	1	SEAL-O-RING	
	8	1	**8T-4896**	12	WASHER-HARD (10.2X18.5X2.5MM THK)	

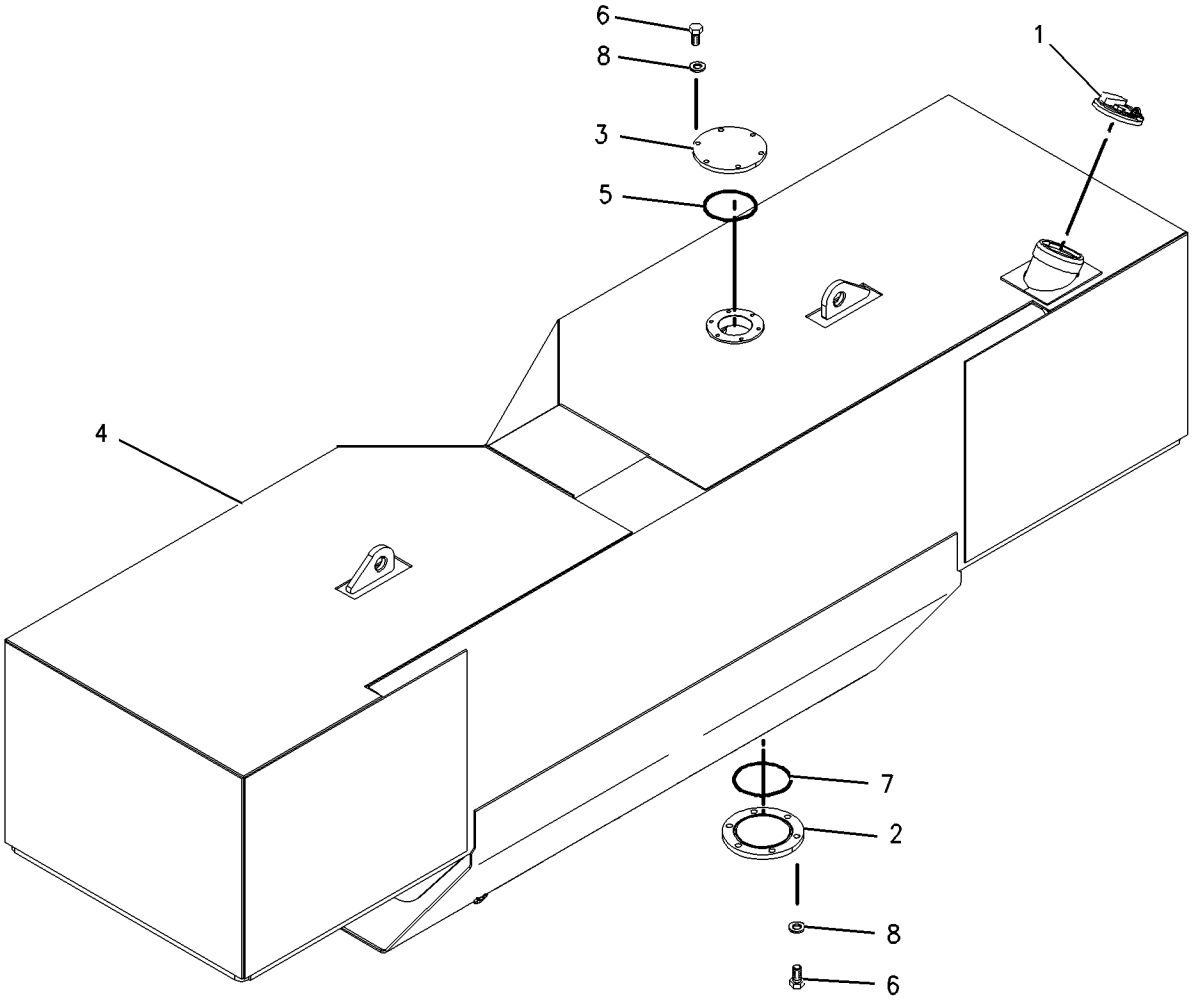

GRAPHIC #1 **<END>** g00934913

202-0503 TANK GP-FUEL

S/N: 7PZ754-UP
1989.75 LITER (525 GAL)
PART OF 237-0138 PLATFORM AR
AN ATTACHMENT

SMCS-1273 **i01844146**

NOTE	PART NUMBER	QTY	PART NAME 1 2 3 4 5 6 (PRODUCT LEVEL)	SEE PAGE
Y	**202-0502**	1	TANK GP-FUEL	237
	8T-9311	6	BOLT (3/4-10X4.50 IN)	
	202-1390	1	FILM-STRIPE (FUEL TANK)(REAR RIGHT SIDE)	
	202-1391	1	FILM-STRIPE (FUEL TANK)(REAR LEFT SIDE)	
	202-1392	1	FILM-STRIPE (FUEL TANK)(REAR LEFT SIDE)	
	202-1393	1	FILM-STRIPE (FUEL TANK)(REAR RIGHT SIDE)	
	6T-6080	12	MOUNTING	
	5P-8502	1	PADLOCK GP (FUEL TANK)	
	5P-8500	1	KEY	
	9P-7121	1	STRAINER-FUEL (TANK)	
	6T-6079	6	WASHER (20X100X12MM THK)	
	7X-0582	6	WASHER-HARD (20X44.5X6MM THK)	
			*****STANDARD REMOVALS*****	
N	**158-5031**	1	TANK GP-FUEL	
L	**3E-9733**	1	FILM-STRIPE	
L	**3E-9736**	1	FILM-STRIPE	
L	**173-1638**	1	FILM-STRIPE	
L	**173-1639**	1	FILM-STRIPE	

L-PART OF STANDARD FILM GP
N-PART OF STANDARD TANK GP-FUEL
Y-SEPARATE ILLUSTRATION

<END>

FUEL SYSTEM

204-4439 TANK GP-FUEL

S/N: 7PZ1-UP
1609 LITER (425 GAL)
PART OF 158-5031 TANK GP-FUEL

SMCS-1273 **i02023461**

NOTE	REF NO	GRAPHIC REF	PART NUMBER	QTY	PART NAME 1 2 3 4 5 6 (PRODUCT LEVEL)	SEE PAGE
	1	1	**7X-7700**	1	CAP AS-FILLER (FUEL, LOCKING, VENTED)	
		1	**9X-8600**	1	SEAL-O-RING	
		1	**9X-2205**	1	KIT-CAP FILTER (FUEL TANK)	
					(INCLUDES FILTER AS.,SCREWS,GASKETS & VALVE)	
	2	1	**9P-7121**	1	STRAINER-FUEL (TANK)	
	3	1	**158-5032**	1	TANK AS	
	4	1	**164-3417**	1	COVER	
	5	1	**187-1679**	1	COVER	
	6	1	**1H-8128**	1	SEAL-O-RING	
	7	1	**4L-6454**	12	BOLT (3/8-16X1-IN)	
	8	1	**5H-6734**	1	SEAL-O-RING	
	9	1	**8T-4896**	12	WASHER-HARD (10.2X18.5X2.5-MM THK)	

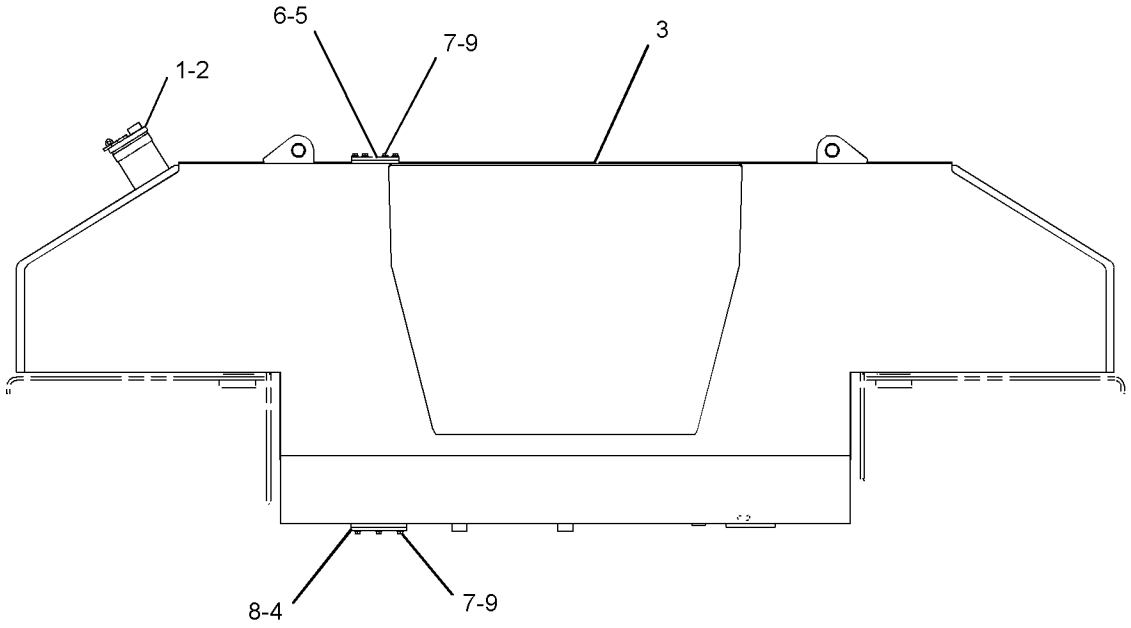

FRONT VIEW

GRAPHIC #1 **<END>** g01044649

3E-6328 ALARM GP—EMS ACTION

S/N: 7PZ1-UP
24 VOLT
PART OF 156-9937 WIRING GP-PLATFORM

SMCS-7400, 7402, 7407 **i02021589**

NOTE	REF NO	GRAPHIC REF	PART NUMBER	QTY	PART NAME 1 2 3 4 5 6 (PRODUCT LEVEL)	SEE PAGE
	1	1	**102-8802**	1	KIT-RECEPTACLE (2-PIN)	
					(INCLUDES RECEPTACLE AS & WEDGE)	
	2	1	**186-3735**	2	PIN-CONNECTOR	
	3	1	**3E-3365**	1	WEDGE-RECEPTACLE LOCK (2-PIN)	

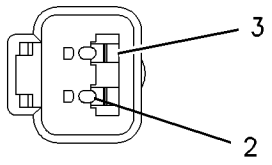

VIEW A–A

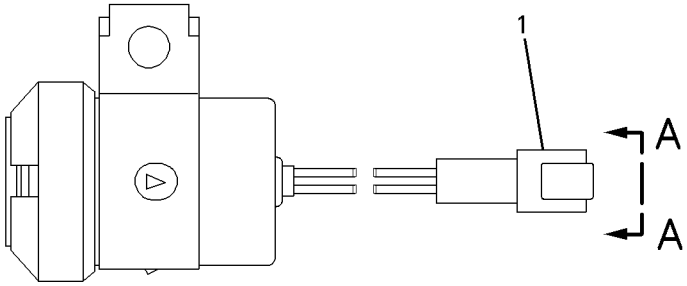

GRAPHIC #1 **<END>** g00826023

165-5140 ALTERNATOR GP-CHARGING

S/N: 2GR1180-3457
24 VOLT, 100 AMPERE
PART OF 155-5556 ENGINE AR

SMCS-1405 **i01242199**

NOTE	PART NUMBER	QTY	PART NAME 1 2 3 4 5 6 (PRODUCT LEVEL)	SEE PAGE
			(NO SERVICED PARTS)	

<END>

197-8820 ALTERNATOR GP-CHARGING*R

S/N: 2GR3867-UP
24 VOLT,95 AMPERE
PART OF 155-5556 ENGINE AR

SMCS-1405 **i01979063**

NOTE	REF NO	GRAPHIC REF	PART NUMBER	QTY	PART NAME 1 2 3 4 5 6 (PRODUCT LEVEL)	SEE PAGE
	1	1	**185-2653**	1	FRAME	
	2	1	**5S-7349**	1	BOLT (1/4-20X0.5 IN)	
	3	1	**185-2639**	1	FAN AS	
	4	1	**1H-3244**	1	LOCKWASHER	
	5	1	**185-2645**	1	FRAME	
	6	1	**2K-4821**	1	LOCKNUT (5/8-18 THD)	
	7	1	**5P-8247**	1	WASHER-HARD (17X32X3.5MM THK)	
	8	1	**185-2651**	1	COVER	
	9	1	**8T-4205**	1	WASHER-HARD (7.2X14.5X2MM THK)	
	10	1	**185-2647**	1	GROMMET	
	11	1	**9L-6770**	1	CAP (ALTERNATOR AC TAP)	
	12	1	**205-0626**	1	STATOR AS-ALTERNATOR	
	13	1	**185-2638**	2	COLLAR	
	14	1	**185-2654**	1	PLATE	
	15	1	**185-2650**	1	ROTOR AS	
	16	1	**185-2644**	1	COIL AS	
	17	1	**185-2648**	1	REGULATOR AS	
	18	1	**6V-8189**	1	NUT (5/16-18 THD)	
	19	1	**8T-4224**	1	WASHER-HARD (8.8X16X2MM THK)	
	20	1	**3F-9556**	1	LOCKWASHER	
					AVAILABLE REPAIR KIT(S):	
			185-2655		KIT-BEARING (ALTERNATOR)	
					(INCLUDES 2 BEARINGS)	
			199-8436		KIT-TERMINAL (ALTERNATOR)	
					(INCLUDES HOLDER AS, PLATE, INSULATOR, PIN, BOLTS, GROMMET, AND NUT	
			199-7891		KIT-TERMINAL (ALTERNATOR)	
					(INCLUDES INSULATORS, WASHERS, AND NUTS)	
			185-2658		KIT-HARDWARE (ALTERNATOR)	
					(INCLUDES BOLTS)	

197-8820 ALTERNATOR GP-CHARGING ***(contd.)*** **i01979063**

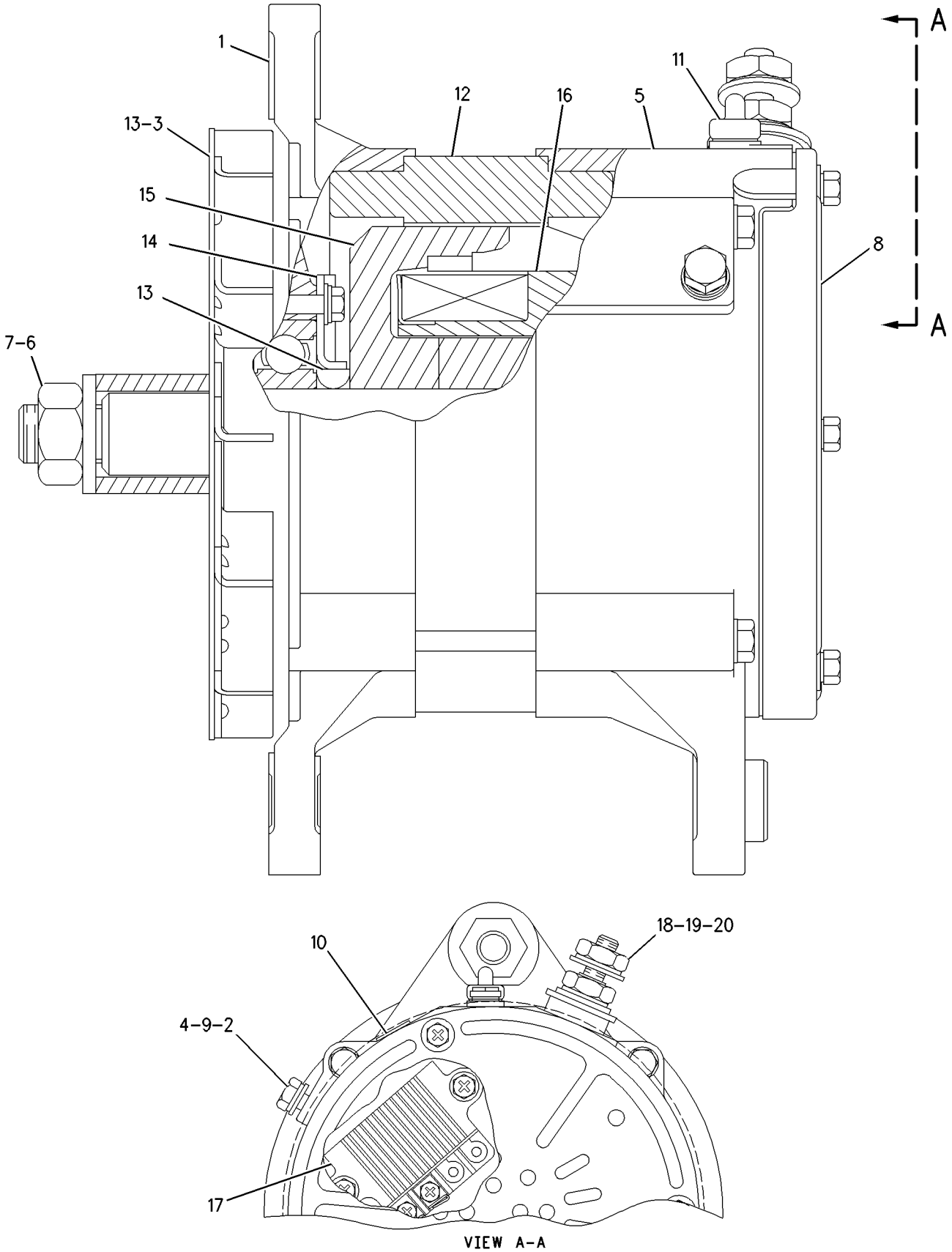

GRAPHIC #1 **<END>** g00873198

200-8277 ALTERNATOR GP-CHARGING*R

S/N: 2GR3458-3866
24 VOLT, 100 AMPERE
PART OF 155-5556 ENGINE AR

SMCS-1405 **i01901622**

NOTE	REF NO	GRAPHIC REF	PART NUMBER	QTY	PART NAME 1 2 3 4 5 6 (PRODUCT LEVEL)	SEE PAGE
	1	1	**8T-4205**	2	WASHER-HARD (7.2X14.5X2MM THK)	
	2	1	**1H-3244**	2	LOCKWASHER	
	3	1	**6V-8187**	1	NUT (1/4-28 THD)	
	4	1	**5S-7349**	1	BOLT (1/4-20X0.5 IN)	
	5	1	**9L-6770**	1	CAP	
	6	1	**9N-0943**	1	PLUG-BEARING WELL	
	7	1	**5P-3418**	1	BEARING-ROLLER	
	8	1	**5P-3419**	1	RACE-BEARING INNER	
	9	1	**132-1225**	1	RECTIFIER AS-ALTERNATOR	
	10	1	**202-2708**	1	DIODE AS	
	11	1	**3T-6354**	1	REGULATOR AS (24 VOLT)	
	12	1	**3E-5458**	1	CAPACITOR AS-ALTERNATOR	
	13	1	**202-9897**	1	BEARING-SPECIAL BALL	
	14	1	**100-6531**	1	FAN-ALTERNATOR	
	15	1	**187-2034**	1	NUT-FLANGE (5/8-18 THD)	
	16	1	**202-2783**	1	PLATE	
	17	1	**202-2699**	1	HOUSING AS	
	18	1	**202-2700**	1	FRAME	
	19	1	**202-2707**	1	STATOR AS-ALTERNATOR	
	20	1	**202-2703**	1	COIL AS	
	21	1	**9S-2390**	1	RETAINER	
	22	1	**9S-2302**	1	ROTOR AS	
	23	1	**4B-2047**	1	NUT (10-24 THD)	
	24	1	**8T-0328**	1	WASHER-HARD (5.5X10X1MM THK)	
	25	1	**8F-1434**	1	LOCKWASHER	
	26	1	**202-2784**	1	KIT-ALTERNATOR TERMINAL	
					(INCLUDES NUT, LOCKWASHERS, WASHERS, INSULATORS, SCREW, CONNECTOR, ADAPTER)	
	27	1	**202-2785**	1	KIT-ALTERNATOR TERMINAL	
					(INCLUDES STUD, BUSHINGS, WASHERS, CONNECTOR, NUT)	
	28	1	**202-2786**	1	KIT-ALTERNATOR TERMINAL	
					(INCLUDES NUTS, LOCKWASHER, BUSHINGS, WASHERS, CONNECTOR, STUD)	
					AVAILABLE REPAIR KIT(S):	
			202-2787	1	KIT-HARDWARE (ALTERNATOR)	
					(INCLUDES NUTS, PLUG, SCREWS, LOCKWASHER, CONNECTOR, BOLTS, COLLAR, BOOT)	

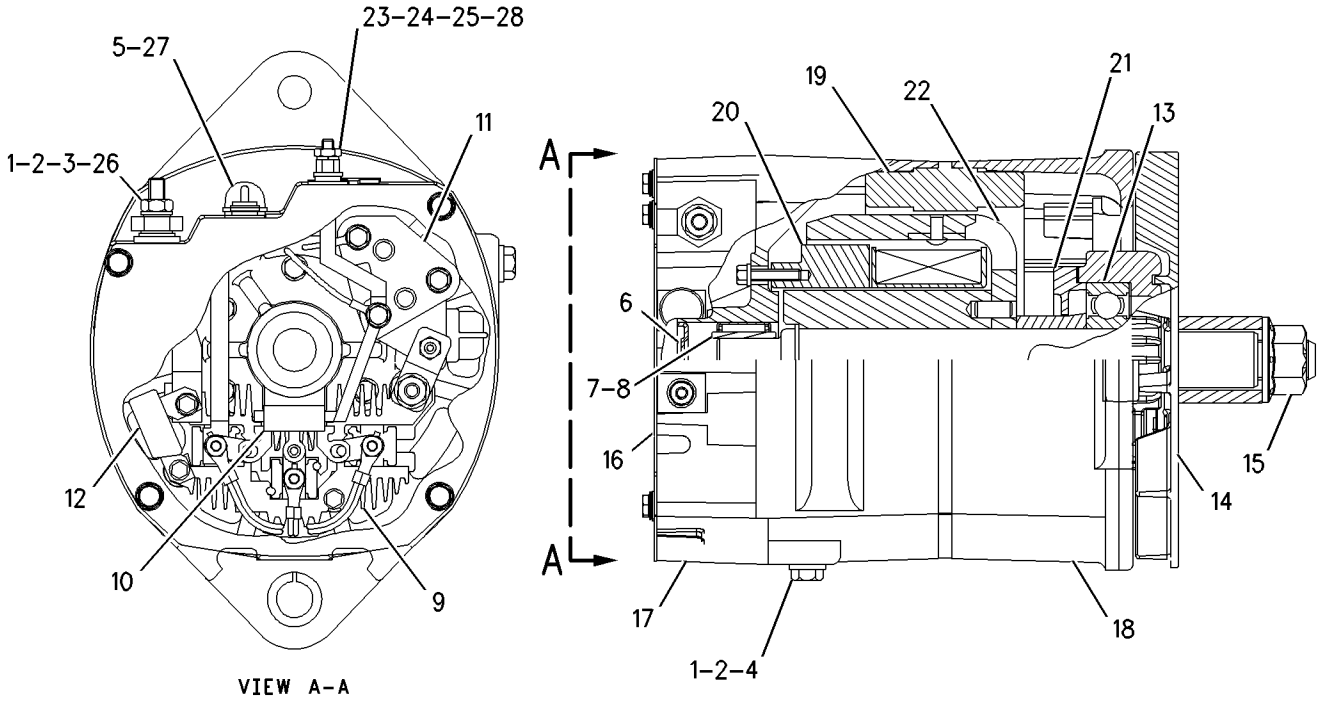

GRAPHIC #1 **<END>** g00825731

ELECTRICAL AND STARTING SYSTEM

156-9936 BATTERY & WIRING GP

S/N: 7PZ1-717

PART OF 155-5552 CHASSIS AR

SMCS-1401, 1402, 1408 **i02029652**

NOTE	REF NO	GRAPHIC REF	PART NUMBER	QTY	PART NAME 1 2 3 4 5 6 (PRODUCT LEVEL)	SEE PAGE
	1	4	**174-7875**	1	HORN AS (24-VOLT, HIGH TONE)	
	2	4	**163-1201**	1	HORN AS (24-VOLT, LOW TONE)	
	3	1,3,4	**5M-3062**	12	BOLT (3/8-16X0.75-IN)	
	4	1,3	**7G-1060**	5	STRAP AS-GROUND	
	5	1,4	**137-0248**	6	GROMMET-SPLIT	
	6	4	**161-6600**	1	HARNESS AS (RADIATOR GUARD)	
		4	**102-8801**	1	KIT-RECEPTACLE (12-PIN)	
		4	**102-8802**	1	KIT-RECEPTACLE (2-PIN)	
		4	**102-8803**	1	KIT-RECEPTACLE (3-PIN)	
		4	**102-8805**	1	KIT-RECEPTACLE (6-PIN)	
					(INCLUDE RECEPTACLE AS & WEDGE)	
		4	**155-2260**	1	KIT-CONNECTING PLUG (3-PIN)	
		4	**155-2270**		KIT-CONNECTING PLUG (2-PIN)	
		4	**155-2271**	1	KIT-CONNECTING PLUG (4-PIN)	
		4	**155-2274**	1	KIT-CONNECTING PLUG (6-PIN)	
					(INCLUDE PLUG AS & WEDGE)	
B	7	1,2,3, 4,5	**7K-1181**	85	STRAP-CABLE	
	8	3	**6V-5051**	1	SEAL-O-RING	
	9	2	**8T-2502**	4	BOLT (3/8-16X1.125-IN)	
	10	3	**9B-7237**	3	BOLT (3/8-16X1.25-IN)	
	11	2	**177-5211**	1	HARNESS AS (TRANSMISSION)	
		2	**102-8805**	1	KIT-RECEPTACLE (6-PIN)	
					(INCLUDES RECEPTACLE AS & WEDGE)	
	12	1,2,5	**4L-6454**	9	BOLT (3/8-16X1-IN)	
	13	1,2,3	**4P-7581**	5	CLIP	
	14	4	**132-6545**	2	HARNESS AS (SIDE LIGHTS)	
		4	**102-8802**	1	KIT-RECEPTACLE (2-PIN)	
					(INCLUDES RECEPTACLE AS & WEDGE)	
		4	**155-2270**	1	KIT-CONNECTING PLUG (2-PIN)	
					(INCLUDES PLUG AS & WEDGE)	
	15	5	**5P-2228**	3	BOLT (1/2-13X1-IN)	
	16	3	**111-4402**	1	FILTER-FOAM (FUEL SENSOR)	
	17	3	**3E-7753**	1	FLOAT AS	
	18	1	**3K-6060**	4	LOCKNUT (3/8-16-THD)	
	19	1	**153-6281**	2	HOLD DOWN AS	
	20	1	**9X-9730**	4	BATTERY (12-VOLT)	
					(EACH INCLUDES)	
		1	**7N-0060**	6	VENT AS (BATTERY)	
	21	1	**8V-0622**	2	CABLE AS	
					(EACH INCLUDES)	
		1	**8C-5917**	1	TERMINAL AS-BATTERY (POSITIVE)	
		1	**1M-6119**	2	BOLT (5/16-18X1.375-IN)	
		1	**1M-6120**	2	NUT (5/16-18-THD)	
		1	**8T-9757**	1	TERMINAL AS-BATTERY (NEGATIVE)	
E		1	**5P-0761**		CABLE (00-GA, RED) (14CM)	
		1	**9G-0003**	2	COVER-TERMINAL (BLACK)	
		1	**9G-0004**	2	COVER-TERMINAL (RED)	
	22	1	**132-6289**	1	CABLE AS	
		1	**9G-8909**	1	COVER-TERMINAL (BLACK)	
		1	**1S-4915**	2	LINER (CONDUIT)	
		1	**1S-7252**	1	TERMINAL-RING (FOR 3/8-IN BOLT)	
E		1	**5P-0747**		CABLE (00-GA, BLACK) (205CM)	
BE		1	**5P-0695**		CONDUIT	
BE		1	**8T-2225**		TUBE-HEAT SHRINK	
		1	**3S-2093**	1	STRAP-CABLE	

156-9936 **BATTERY & WIRING GP** *(contd.)* **i02029652**

NOTE	REF NO	GRAPHIC REF	PART NUMBER	QTY	PART NAME 1 2 3 4 5 6 (PRODUCT LEVEL)	SEE PAGE
		1	**7N-5274**	1	COVER-TERMINAL (BLACK)	
		1	**3S-6050**	1	TERMINAL AS-BATTERY (NEGATIVE)	
		1	**1M-6119**	1	BOLT (5/16-18X1.375-IN)	
		1	**1M-6120**	1	NUT (5/16-18-THD)	
	23	1	**9W-9472**	1	CABLE AS	
E		1	**5P-0761**		CABLE (00-GA, RED) (152CM)	
		1	**1S-7251**	1	TERMINAL-RING (FOR 1/2-IN BOLT)	
		1	**8N-0869**	1	COVER-TERMINAL (RED)	
BE		1	**5P-0695**		CONDUIT	
		1	**1S-4915**	2	LINER (CONDUIT)	
BE		1	**8T-2225**		TUBE-HEAT SHRINK	
		1	**3S-2093**	1	STRAP-CABLE	
		1	**8N-1725**	1	COVER-TERMINAL (RED)	
		1	**3S-6049**	1	TERMINAL AS-BATTERY (POSITIVE)	
		1	**1M-6120**	1	NUT (5/16-18-THD)	
		1	**1M-6119**	1	BOLT (5/16-18X1.375-IN)	
	24	1	**132-6290**	1	CABLE AS	
		1	**1S-4915**	2	LINER (CONDUIT)	
		1	**1S-7251**	1	TERMINAL-RING (FOR 1/2-IN BOLT)	
E		1	**5P-0761**		CABLE (00-GA, RED) (320CM)	
BE		1	**5P-0695**		CONDUIT	
BE		1	**8T-2225**		TUBE-HEAT SHRINK	
		1	**3S-2093**	1	STRAP-CABLE	
		1	**8N-1725**	1	COVER-TERMINAL (RED)	
		1	**3S-6049**	1	TERMINAL AS-BATTERY (POSITIVE)	
		1	**1M-6119**	1	BOLT (5/16-18X1.375-IN)	
		1	**1M-6120**	1	NUT (5/16-18-THD)	
	25	3,5	**7B-1251**	8	GROMMET	
	26	3	**160-0635**	1	HARNESS AS (RH FENDER)	
		1	**113-0580**	2	RECEPTACLE AS (40-PIN)	
		3	**102-8802**	1	KIT-RECEPTACLE (2-PIN)	
		3	**102-8803**	1	KIT-RECEPTACLE (3-PIN)	
					(EACH INCLUDE RECEPTACLE AS & WEDGE)	
		1	**110-6846**	1	PLUG AS-CONNECTOR (40-PIN)	
		1	**110-6847**	1	PLUG AS-CONNECTOR (40-PIN)	
		3	**155-2269**	1	PLUG AS-CONNECTOR (2-PIN)	
		3	**155-2272**	1	PLUG AS-CONNECTOR (4-PIN)	
		3	**155-2255**	1	KIT-CONNECTING PLUG (12-PIN)	
		1	**155-2260**	1	KIT-CONNECTING PLUG (3-PIN)	
		3	**155-2274**	1	KIT-CONNECTING PLUG (6-PIN)	
					(EACH INCLUDE PLUG AS & WEDGE)	
Y	27	2	**118-7226**	1	SENSOR GP-TEMPERATURE (STEERING OIL)	349
	28	1,2,3	**3J-1907**	3	SEAL-O-RING	
Y	29	3	**124-9325**	1	SENSOR GP-FUEL LEVEL (ULTRASONIC)	329
	30	3	**8T-2501**	4	BOLT (3/8-16X2-IN)	
	31	1	**4P-7582**	2	CLIP	
	32	3,5	**8T-4223**	5	WASHER-HARD (13.5X25.5X3-MM THK)	
	33	3	**6T-5268**	2	CABLE AS	
					(EACH INCLUDES)	
E		3	**5P-0761**		CABLE (00-GA, RED) (185CM)	
		3	**1S-7251**	2	TERMINAL-RING (FOR 1/2-IN BOLT)	
		3	**8N-0869**	2	COVER-TERMINAL (RED)	
BE		3	**8T-2225**		TUBE-HEAT SHRINK	
		3	**1S-4915**	2	LINER (CONDUIT)	
BE		3	**5P-0695**		CONDUIT	
	34	3	**8D-9671**	1	CLIP	
	35	3	**8S-0948**	1	CLIP	
	36	3	**5S-7379**	3	BOLT (3/8-16X0.875-IN)	
Y	37	3	**9W-0742**	1	BLOCK GP-JUNCTION	270

156-9936 **BATTERY & WIRING GP** ***(contd.)*** **i02029652**

NOTE	REF NO	GRAPHIC REF	PART NUMBER	QTY	PART NAME 1 2 3 4 5 6 (PRODUCT LEVEL)	SEE PAGE
	38	3	**8T-9384**	2	BOLT (1/2-13X0.875-IN)	
	39	3	**160-0634**	1	HARNESS AS (LH FENDER)	
		3	**113-0580**	1	RECEPTACLE AS (40-PIN)	
		3	**102-8801**	1	KIT-RECEPTACLE (12-PIN)	
		3	**102-8802**	1	KIT-RECEPTACLE (2-PIN)	
		3	**102-8803**	1	KIT-RECEPTACLE (3-PIN)	
		3	**102-8804**	1	KIT-RECEPTACLE (4-PIN)	
		3	**102-8805**	1	KIT-RECEPTACLE (6-PIN)	
		3	**102-8806**	1	KIT-RECEPTACLE (8-PIN)	
					(EACH INCLUDE RECEPTACLE AS & WEDGE)	
		3	**110-6846**	1	PLUG AS-CONNECTOR (40-PIN)	
		3	**155-2269**	1	PLUG AS-CONNECTOR (2-PIN)	
		3	**155-2272**	1	PLUG AS-CONNECTOR (4-PIN)	
		3	**155-2255**	1	KIT-CONNECTING PLUG (12-PIN)	
		3	**155-2260**	1	KIT-CONNECTING PLUG (3-PIN)	
		3	**155-2265**	1	KIT-CONNECTING PLUG (8-PIN)	
		3	**155-2274**	1	KIT-CONNECTING PLUG (6-PIN)	
					(EACH INCLUDE PLUG AS & WEDGE)	
	40	3	**118-6365**	1	PLATE AS	
		3	**6V-6716**	2	RIVET-TRUSS HEAD	
		3	**109-1645**	1	CLIP	
	41	2	**8T-0151**	1	ADAPTER	
	42	1	**132-6287**	1	CABLE AS	
		1	**1S-4915**	2	LINER (CONDUIT)	
		1	**1S-7252**	1	TERMINAL-RING (FOR 3/8-IN BOLT)	
		1	**9G-8909**	1	COVER-TERMINAL (BLACK)	
E		1	**5P-0747**		CABLE (00-GA, BLACK) (265CM)	
BE		1	**5P-0695**		CONDUIT	
BE		1	**8T-2225**		TUBE-HEAT SHRINK	
		1	**3S-2093**	1	STRAP-CABLE	
		1	**7N-5274**	1	COVER-TERMINAL (BLACK)	
		1	**3S-6050**	1	TERMINAL AS-BATTERY (NEGATIVE)	
		1	**1M-6119**	1	BOLT (5/16-18X1.375-IN)	
		1	**1M-6120**	1	NUT (5/16-18-THD)	
Y	43	2,3	**164-7577**	3	SWITCH GP-BYPASS (POWER TRAIN OIL)	371
Y	44	5	**123-6449**	1	WARNING GP-BACKUP	381
	45	5	**7X-0291**	2	BOLT (3/8-16X3.75-IN)	
	46	5	**6T-5265**	2	CABLE AS	
					(EACH INCLUDES)	
E		5	**5P-0747**		CABLE (00-GA, BLACK) (115CM)	
		5	**1S-7252**	1	TERMINAL-RING (FOR 3/8-IN BOLT)	
		5	**1S-7251**	1	TERMINAL-RING (FOR 1/2-IN BOLT)	
		5	**9G-8909**	1	COVER-TERMINAL (BLACK)	
	47	1	**4P-0947**	1	GROMMET	
	48	5	**2Y-1834**	2	CLIP	
	49	5	**5K-8652**	2	BRACKET	
	50	1	**5C-6266**	2	BOLT (5/8-11X1-IN)	
Y	51	2	**7N-0719**	1	SWITCH GP-DISCONNECT (BATTERY)	372
	52	2	**6T-5269**	1	RECEPTACLE AS	
		2	**1S-7251**	2	TERMINAL-RING (FOR 1/2-IN BOLT)	
E		2	**5P-0747**		CABLE (00-GA, BLACK) (42CM)	
E		2	**5P-0761**		CABLE (00-GA, RED) (130CM)	
BE		2	**5P-0695**		CONDUIT	
		2	**1S-4915**	2	LINER (CONDUIT)	
BE		2	**6V-2722**		TUBE-HEAT SHRINK	
BE		2	**8T-2225**		TUBE-HEAT SHRINK	
	53	2	**8S-2634**	1	COVER AS	
		2	**2P-2975**	2	SEAL-O-RING	
	54	2	**104-8636**	1	CABLE AS	

156-9936 **BATTERY & WIRING GP** ***(contd.)*** **i02029652**

NOTE	REF NO	GRAPHIC REF	PART NUMBER	QTY	PART NAME 1 2 3 4 5 6 (PRODUCT LEVEL)	SEE PAGE
		2	**035-0425**	2	RING-TERMINAL (FOR 3/8-IN BOLT)	
E		2	**5P-0744**		CABLE (000-GA) (47CM)(BLACK)	
		2	**5A-4252**	1	CAP (COVER TERMINAL)	
	55	1	**3K-0360**	1	SEAL-O-RING	
	56	1,3,5	**6V-8801**	17	NUT (3/8-16-THD)	
	57	1,2,3, 4,5	**5P-1075**	36	WASHER-HARD (10.2X22.5X3-MM THK)	
	58	1	**113-4316**	1	PLATE AS	
		1	**6C-3680**	6	RIVET-POP	
		1	**109-1645**	3	CLIP	
	59	1	**8T-4122**	2	WASHER-HARD (17X32X3.5-MM THK)	
	60	3	**8T-4896**	16	WASHER-HARD (10.2X18.5X2.5-MM THK)	
	61	1	**3E-9350**	1	SWITCH AS-TEMPERATURE (POWER TRAIN OIL)	
		1	**102-8802**	1	KIT-RECEPTACLE (2-PIN)	
					(INCLUDES RECEPTACLE AS & WEDGE)	
		1	**3E-3365**	1	WEDGE-RECEPTACLE LOCK (2-PIN)	
		1	**8T-8729**	2	PIN-CONNECTOR	
Y	62	1	**193-2550**	1	SENSOR GP-SPEED (ODOMETER)	348
Y	63	1	**167-1709**	1	SENSOR GP-PRESSURE (FAN PUMP)	342
	64	1,3	**7J-0204**	3	SEAL-O-RING	
	65	2	**2P-8421**	1	ADAPTER-O-RING	
	66	2	**3D-2824**	1	SEAL-O-RING	
	67	1	**6G-3432**	1	ADAPTER (HEX)	
	68	1	**6V-9028**	1	SEAL-O-RING	
Y	69	1	**134-2252**	1	SENSOR GP-TEMPERATURE (POWER TRAIN OIL)	350
	70	3	**3T-9549**	2	ADAPTER (POWER TRAIN OIL)	
	71	3	**2S-4078**	2	SEAL-O-RING	
	72	1	**169-4253**	1	CABLE AS	
		1	**1S-4915**	2	LINER (CONDUIT)	
BE		1	**5P-0695**		CONDUIT	
		1	**5P-0760**		CABLE (0-GA) (240CM)(RED)	
		1	**8N-0869**	2	COVER-TERMINAL (RED)	
BE		1	**8T-2225**		TUBE-HEAT SHRINK	
		1	**170-3793**	1	RING-TERMINAL	
		1	**174-0129**	1	RING-TERMINAL	
	73	1	**169-4256**	1	CABLE AS	
		1	**1S-4915**	2	LINER (CONDUIT)	
BE		1	**5P-0695**		CONDUIT	
		1	**5P-0760**		CABLE (0-GA) (120CM)(RED)	
		1	**8N-0869**	2	COVER-TERMINAL (RED)	
BE		1	**8T-2225**		TUBE-HEAT SHRINK	
		1	**170-3795**	2	RING-TERMINAL	
Y	74	1	**164-9436**	1	BLOCK GP-POWER	271
	75	1,3	**109-5735**	2	PLATE AS	
					(EACH INCLUDES)	
		1,3	**6V-6716**	4	RIVET-TRUSS HEAD	
		1,3	**109-1645**	2	CLIP	
Y	76	3	**155-3549**	1	SENSOR GP-PRESSURE (MAIN PUMP PRESSURE)	338
Y	77	3	**155-3549**	1	SENSOR GP-PRESSURE (MAIN TILT PRESSURE)	338
	78	3	**8S-0024**	2	CLIP (TAB)	
B	79	2	**102-8802**	4	KIT-RECEPTACLE (2-PIN)	
					(EACH INCLUDES RECEPTACLE AS & WEDGE)	
					(FOR USE WITHOUT RIPPER)	
B	80	2	**9G-3695**	8	PLUG (GROMMET SEALING)	
					(FOR USE WITHOUT RIPPER)	
	81	2	**163-0263**	1	WIRE AS	
BD	82	2	**5P-6025**		LOCKWIRE (100-CM)	
	85	2	**124-8957**	1	PLATE AS	
		2	**7T-1099**	3	LINK	

156-9936 **BATTERY & WIRING GP** ***(contd.)*** **i02029652**

NOTE	REF NO	GRAPHIC REF	PART NUMBER	QTY	PART NAME 1 2 3 4 5 6 (PRODUCT LEVEL)	SEE PAGE
B	86	2	**5P-2424**	1	BOLT (1/2-13X2.25-IN)	
					(FOR USE WITHOUT RIPPER)	
B	87	2	**7J-8673**	1	PIPE	
					(FOR USE WITHOUT RIPPER)	
B	88	1	**1S-1015**	1	CLIP	
	89	2	**4P-8134**	3	CLIP	
	90	1,5	**4P-7428**	3	CLIP	
	91	3	**034-3665**	1	STRAP-GROUNDING	
Y	92	3	**134-2252**	1	SENSOR GP-TEMPERATURE (HYDRAULIC OIL)	350
	93	3	**8S-0023**	2	CLIP (SLOT)	
B	94	2	**8T-4223**	1	WASHER-HARD (13.5X25.5X3-MM THK)	
					FOR USE WITHOUT RIPPER	
B	95	2	**4P-8134**	1	CLIP	
					FOR USE WITHOUT RIPPER	
	96	3	**221-7682**	1	HARNESS AS (PRESSURE SENSOR JUMPER)	
		3	**102-8806**	1	KIT-RECEPTACLE (8-PIN)	
					(INCLUDES RECEPTACLE AS & WEDGE)	

B-USE AS REQUIRED
D-ORDER BY THE METER
E-ORDER BY THE CENTIMETER
Y-SEPARATE ILLUSTRATION

156-9936 **BATTERY & WIRING GP** ***(contd.)*** **i02029652**

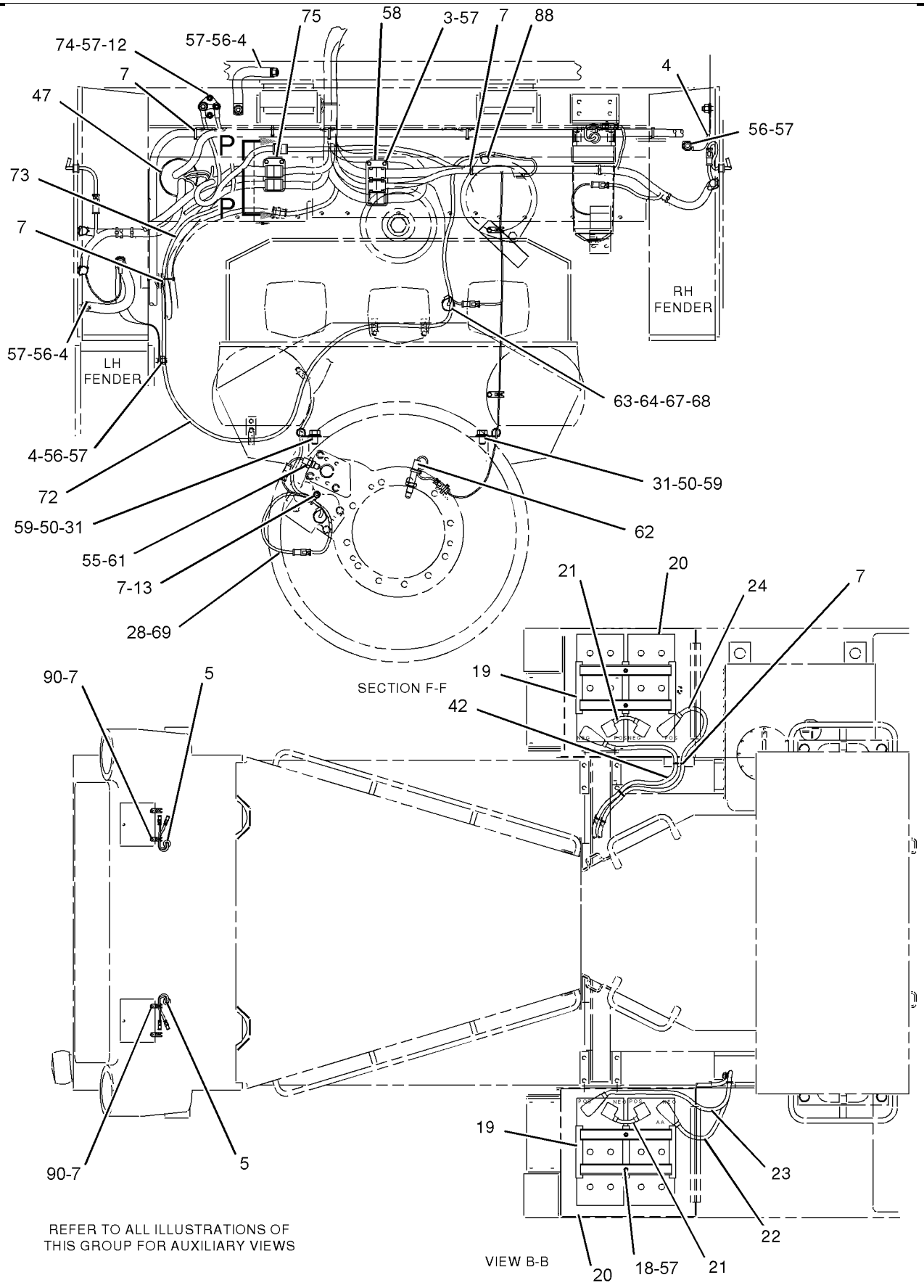

GRAPHIC #1 g00935843

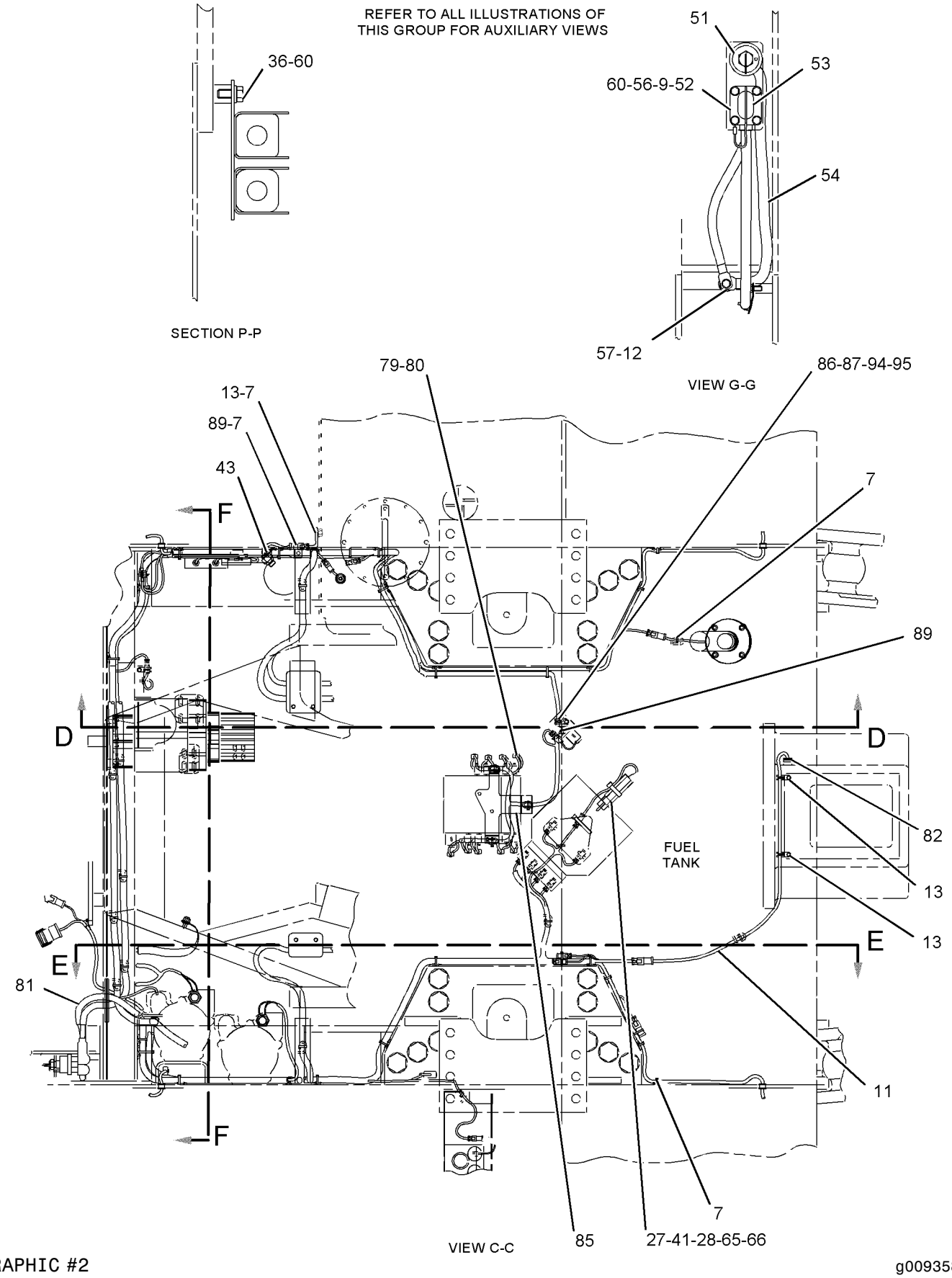

GRAPHIC #2

g00935844

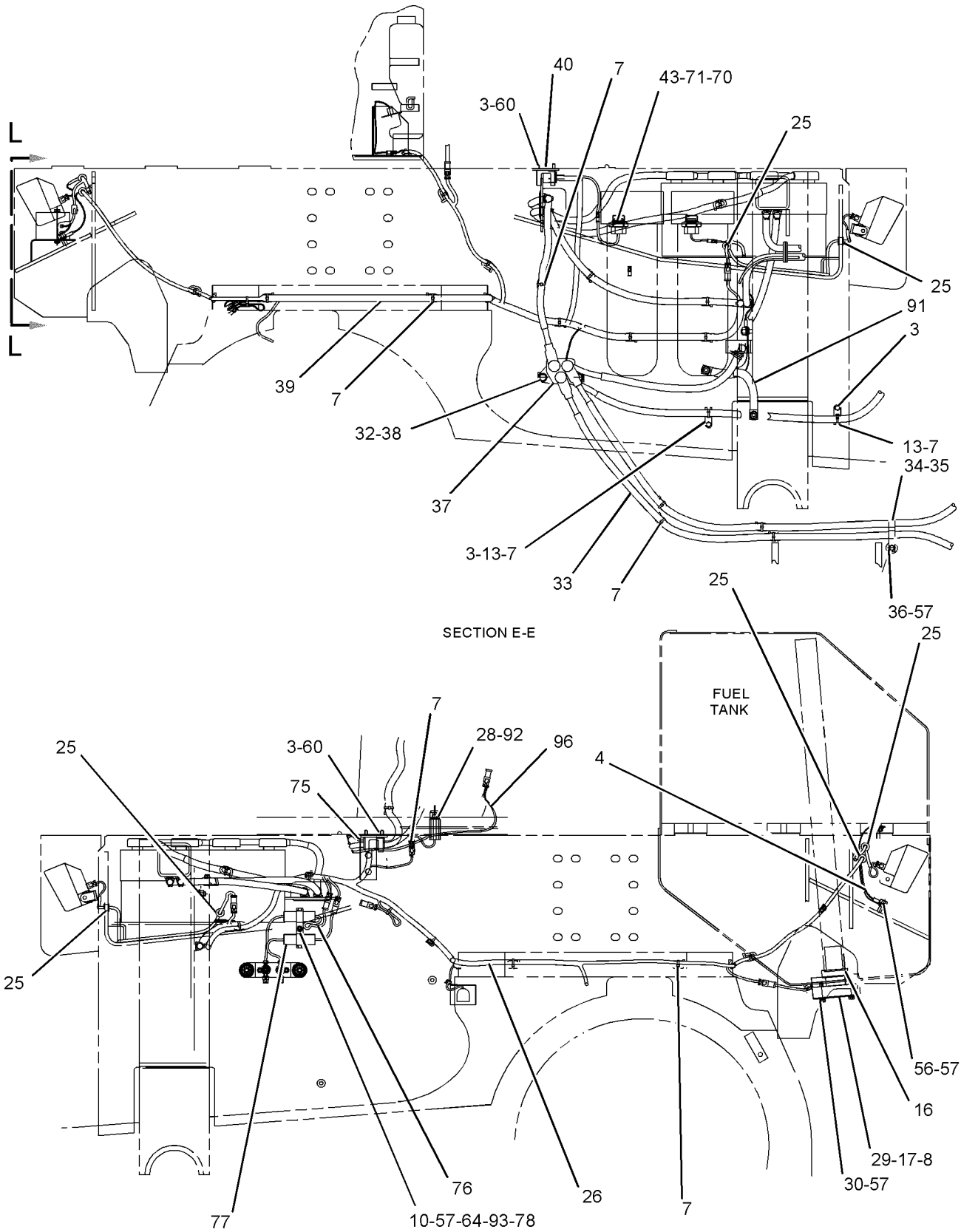

GRAPHIC #3

g00935845

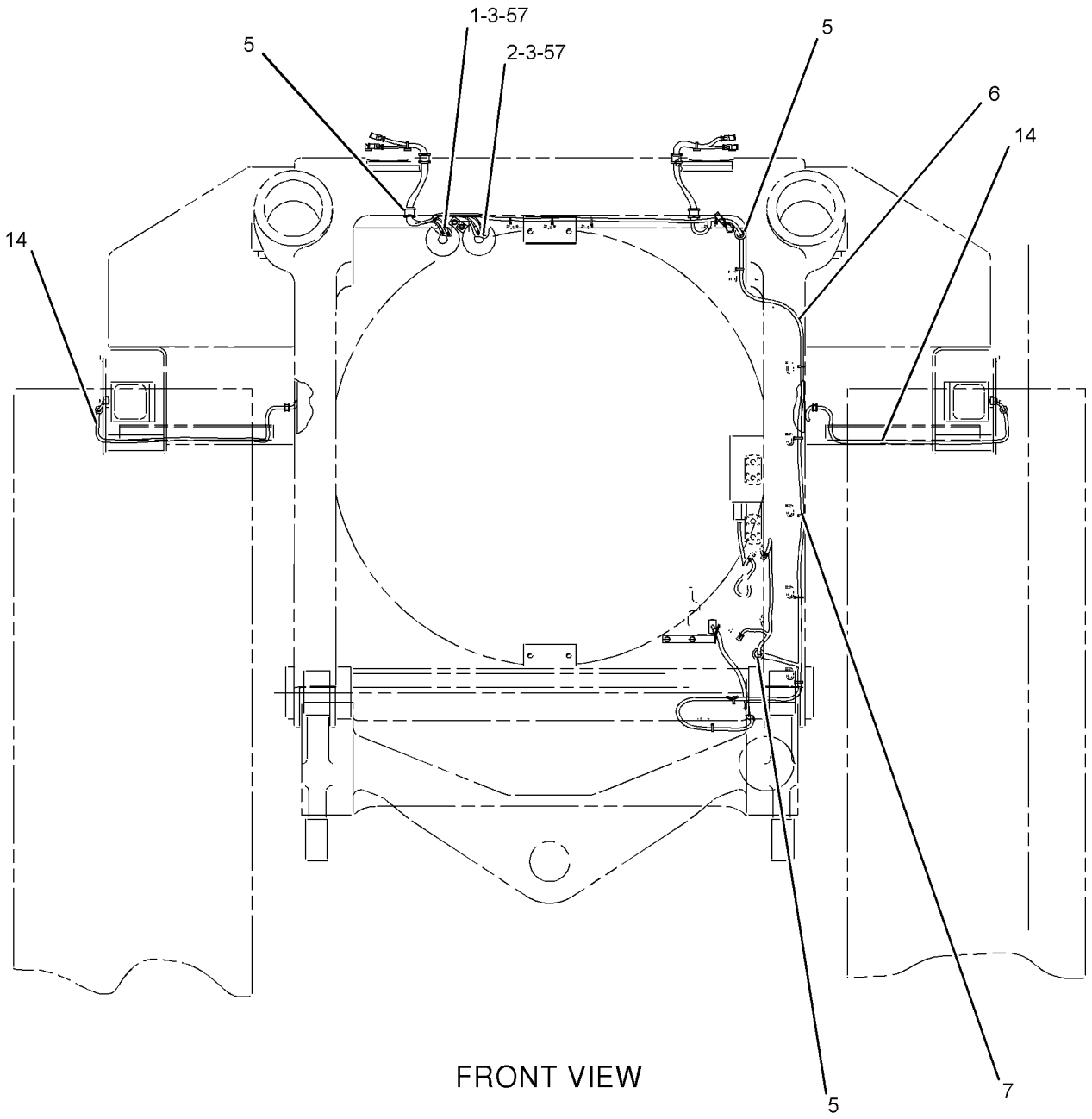

GRAPHIC #4

g01010889

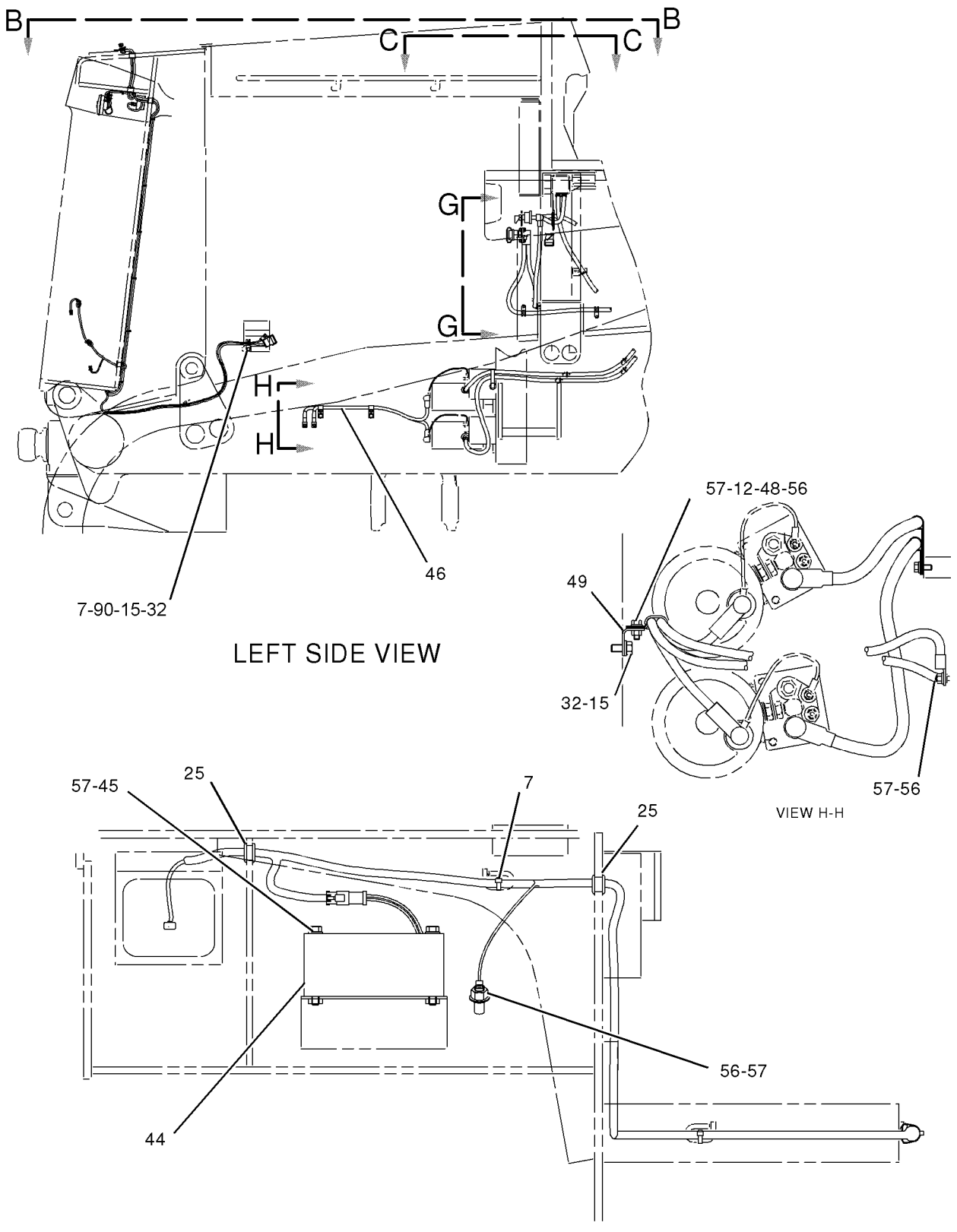

GRAPHIC #5 **<END>** g01010890

ELECTRICAL AND STARTING SYSTEM

156-9936 BATTERY & WIRING GP

S/N: 7PZ718-731

PART OF 155-5552 CHASSIS AR

SMCS-1401, 1402, 1408 **i02029653**

NOTE	REF NO	GRAPHIC REF	PART NUMBER	QTY	PART NAME 1 2 3 4 5 6 (PRODUCT LEVEL)	SEE PAGE
	1	1	**3E-7753**	1	FLOAT AS	
	2	2	**3E-9350**	1	SWITCH AS-TEMPERATURE (POWER TRAIN OIL)	
		2	**102-8802**	1	KIT-RECEPTACLE (2-PIN)	
					(INCLUDES RECEPTACLE AS & WEDGE)	
		2	**3E-3365**	1	WEDGE-RECEPTACLE LOCK (2-PIN)	
		2	**8T-8729**	2	PIN-CONNECTOR	
	3	2	**3T-9549**	2	ADAPTER (POWER TRAIN OIL)	
	4	1	**5K-8652**	2	BRACKET	
BD	5	1	**5P-6025**		LOCKWIRE (100-CM)	
	6	2	**6G-3432**	1	ADAPTER (HEX)	
	7	1	**6T-5265**	2	CABLE AS	
					(EACH INCLUDES)	
E		1	**5P-0747**		CABLE (00-GA, BLACK) (115CM)	
		1	**1S-7252**	1	TERMINAL-RING (FOR 3/8-IN BOLT)	
		1	**1S-7251**	1	TERMINAL-RING (FOR 1/2-IN BOLT)	
		1	**9G-8909**	1	COVER-TERMINAL (BLACK)	
	8	1	**6T-5269**	1	RECEPTACLE AS	
		1	**1S-7251**	2	TERMINAL-RING (FOR 1/2-IN BOLT)	
E		1	**5P-0747**		CABLE (00-GA, BLACK) (42CM)	
E		1	**5P-0761**		CABLE (00-GA, RED) (130CM)	
BE		1	**5P-0695**		CONDUIT	
		1	**1S-4915**	2	LINER (CONDUIT)	
BD		1	**6V-2722**		TUBE-HEAT SHRINK	
BE		1	**8T-2225**		TUBE-HEAT SHRINK	
B	9	1	**7J-8673**	1	PIPE	
Y	10	1	**7N-0719**	1	SWITCH GP-DISCONNECT (BATTERY)	372
	11	1	**8S-2634**	1	COVER AS	
		1	**2P-2975**	2	SEAL-O-RING	
	12	1	**8V-0622**	2	CABLE AS	
					(EACH INCLUDES)	
		1	**8C-5917**	1	TERMINAL AS-BATTERY (POSITIVE)	
		1	**1M-6119**	2	BOLT (5/16-18X1.375-IN)	
		1	**1M-6120**	2	NUT (5/16-18-THD)	
		1	**8T-9757**	1	TERMINAL AS-BATTERY (NEGATIVE)	
E		1	**5P-0761**		CABLE (00-GA, RED) (14CM)	
		1	**9G-0003**	2	COVER-TERMINAL (BLACK)	
		1	**9G-0004**	2	COVER-TERMINAL (RED)	
B	13	1	**9G-3695**	8	PLUG (GROMMET SEALING)	
Y	14	2	**9W-0742**	1	BLOCK GP-JUNCTION	270
	15	1	**9W-9472**	1	CABLE AS	
E		1	**5P-0761**		CABLE (00-GA, RED) (152CM)	
		1	**1S-7251**	1	TERMINAL-RING (FOR 1/2-IN BOLT)	
		1	**8N-0869**	1	COVER-TERMINAL (RED)	
BE		1	**5P-0695**		CONDUIT	
		1	**1S-4915**	2	LINER (CONDUIT)	
BE		1	**8T-2225**		TUBE-HEAT SHRINK	
		1	**3S-2093**	1	STRAP-CABLE	
		1	**8N-1725**	1	COVER-TERMINAL (RED)	
		1	**3S-6049**	1	TERMINAL AS-BATTERY (POSITIVE)	
		1	**1M-6120**	1	NUT (5/16-18-THD)	
		1	**1M-6119**	1	BOLT (5/16-18X1.375-IN)	
	16	1	**034-3665**	1	STRAP-GROUNDING	
	17	1	**104-8636**	1	CABLE AS	
		1	**035-0425**	2	RING-TERMINAL (FOR 3/8-IN BOLT)	
E		1	**5P-0744**		CABLE (000-GA) (47CM)(BLACK)	
		1	**5A-4252**	1	CAP (COVER TERMINAL)	

156-9936 **BATTERY & WIRING GP** ***(contd.)*** **i02029653**

NOTE	REF NO	GRAPHIC REF	PART NUMBER	QTY	PART NAME 1 2 3 4 5 6 (PRODUCT LEVEL)	SEE PAGE
	18	1,2	**109-5735**	2	PLATE AS	
					(EACH INCLUDES)	
		1,2	**6V-6716**	4	RIVET-TRUSS HEAD	
		1,2	**109-1645**	2	CLIP	
	19	1	**111-4402**	1	FILTER-FOAM (FUEL SENSOR)	
	20	2	**113-4316**	1	PLATE AS	
		2	**6C-3680**	6	RIVET-POP	
		2	**109-1645**	3	CLIP	
	21	1	**118-6365**	1	PLATE AS	
		1	**6V-6716**	2	RIVET-TRUSS HEAD	
		1	**109-1645**	1	CLIP	
Y	22	1	**118-7226**	1	SENSOR GP-TEMPERATURE (STEERING OIL)	349
Y	23	1	**123-6449**	1	WARNING GP-BACKUP	381
	24	1	**124-8957**	1	PLATE AS	
		1	**7T-1099**	3	LINK	
Y	25	1	**124-9325**	1	SENSOR GP-FUEL LEVEL (ULTRASONIC)	329
	26	1	**132-6287**	1	CABLE AS	
		1	**1S-4915**	2	LINER (CONDUIT)	
		1	**1S-7252**	1	TERMINAL-RING (FOR 3/8-IN BOLT)	
		1	**9G-8909**	1	COVER-TERMINAL (BLACK)	
E		1	**5P-0747**		CABLE (00-GA, BLACK) (265CM)	
BE		1	**5P-0695**		CONDUIT	
BE		1	**8T-2225**		TUBE-HEAT SHRINK	
		1	**3S-2093**	1	STRAP-CABLE	
		1	**7N-5274**	1	COVER-TERMINAL (BLACK)	
		1	**3S-6050**	1	TERMINAL AS-BATTERY (NEGATIVE)	
		1	**1M-6119**	1	BOLT (5/16-18X1.375-IN)	
		1	**1M-6120**	1	NUT (5/16-18-THD)	
Y	27	1	**134-2252**	1	SENSOR GP-TEMPERATURE (TORQUE CONVERTER)	350
Y	27A	1	**134-2252**	1	SENSOR GP-TEMPERATURE (HYDRAULIC OIL)	350
	28	1	**137-0248**	6	GROMMET-SPLIT	
	29	1	**153-6281**	2	HOLD DOWN AS	
	30	1	**160-0634**	1	HARNESS AS (LH FENDER)	
		1	**102-8801**	1	KIT-RECEPTACLE (12-PIN)	
		1	**102-8802**	1	KIT-RECEPTACLE (2-PIN)	
		1	**102-8803**	1	KIT-RECEPTACLE (3-PIN)	
		1	**102-8804**	1	KIT-RECEPTACLE (4-PIN)	
		1	**102-8805**	1	KIT-RECEPTACLE (6-PIN)	
		1	**102-8806**	1	KIT-RECEPTACLE (8-PIN)	
					(EACH INCLUDES RECEPTACLE AS & WEDGE)	
		1	**155-2255**	1	KIT-CONNECTING PLUG (12-PIN)	
		1	**155-2260**	1	KIT-CONNECTING PLUG (3-PIN)	
		1	**155-2265**	1	KIT-CONNECTING PLUG (8-PIN)	
		1	**155-2274**	1	KIT-CONNECTING PLUG (6-PIN)	
					(EACH INCLUDES PLUG AS & WEDGE)	
	31	1	**160-0635**	1	HARNESS AS (RH FENDER)	
		1	**102-8802**	1	KIT-RECEPTACLE (2-PIN)	
		1	**102-8803**	1	KIT-RECEPTACLE (3-PIN)	
					(EACH INCLUDES RECEPTACLE AS & WEDGE)	
		1	**155-2255**	1	KIT-CONNECTING PLUG (12-PIN)	
		1	**155-2260**	1	KIT-CONNECTING PLUG (3-PIN)	
		1	**155-2270**	1	KIT-CONNECTING PLUG (2-PIN)	
					(EACH INCLUDES PLUG AS & WEDGE)	
	32	1	**161-6600**	1	HARNESS AS (RADIATOR GUARD)	
		1	**102-8801**	1	KIT-RECEPTACLE (12-PIN)	
		1	**102-8802**	1	KIT-RECEPTACLE (2-PIN)	
		1	**102-8803**	1	KIT-RECEPTACLE (3-PIN)	
		1	**102-8805**	1	KIT-RECEPTACLE (6-PIN)	
					(EACH INCLUDES RECEPTACLE AS & WEDGE)	

156-9936 **BATTERY & WIRING GP** ***(contd.)*** **i02029653**

NOTE	REF NO	GRAPHIC REF	PART NUMBER	QTY	PART NAME 1 2 3 4 5 6 (PRODUCT LEVEL)	SEE PAGE
		1	**155-2255**	1	KIT-CONNECTING PLUG (12-PIN)	
		1	**155-2260**	1	KIT-CONNECTING PLUG (3-PIN)	
		1	**155-2270**	1	KIT-CONNECTING PLUG (2-PIN)	
		1	**155-2271**	1	KIT-CONNECTING PLUG (4-PIN)	
		1	**155-2274**	1	KIT-CONNECTING PLUG (6-PIN)	
					(EACH INCLUDES PLUG AS & WEDGE)	
	33	1	**163-0263**	1	WIRE AS	
Y	34	2	**164-9436**	1	BLOCK GP-POWER	271
Y	35	2	**167-1709**	1	SENSOR GP-PRESSURE (FAN PUMP)	342
	36	2	**169-4253**	1	CABLE AS	
		2	**1S-4915**	2	LINER (CONDUIT)	
BE		2	**5P-0695**		CONDUIT	
E		2	**5P-0760**		CABLE (0-GA) (240CM)(RED)	
		2	**8N-0869**	2	COVER-TERMINAL (RED)	
BE		2	**8T-2225**		TUBE-HEAT SHRINK	
		2	**170-3793**	1	RING-TERMINAL	
		2	**174-0129**	1	RING-TERMINAL	
	37	2	**169-4256**	1	CABLE AS	
		2	**1S-4915**	2	LINER (CONDUIT)	
BE		2	**5P-0695**		CONDUIT	
E		2	**5P-0760**		CABLE (0-GA) (120CM)(RED)	
		2	**8N-0869**	2	COVER-TERMINAL (RED)	
BE		2	**8T-2225**		TUBE-HEAT SHRINK	
		2	**170-3795**	2	RING-TERMINAL	
	38	1	**174-7875**	1	HORN AS (24-VOLT, HIGH TONE)	
		1	**3E-3365**	1	WEDGE-RECEPTACLE LOCK (2-PIN)	
BE		1	**9X-1813**		SLEEVE	
		1	**9X-3401**	2	PIN-CONNECTOR	
		1	**102-8802**	1	KIT-RECEPTACLE (2-PIN)	
					(INCLUDES RECEPTACLE AS & WEDGE)	
	39	1	**177-5211**	1	HARNESS AS (TRANSMISSION)	
		1	**102-8805**	1	KIT-RECEPTACLE (6-PIN)	
					(INCLUDES RECEPTACLE AS & WEDGE)	
		1	**155-2274**	1	KIT-CONNECTING PLUG (6-PIN)	
					(INCLUDES PLUG AS & WEDGE)	
Y	40	2	**193-2550**	1	SENSOR GP-SPEED (ODOMETER)	348
	41	1	**221-7682**	1	HARNESS AS (PRESSURE SENSOR JUMPER)	
		1	**102-8806**	1	KIT-RECEPTACLE (8-PIN)	
					(INCLUDES RECEPTACLE AS & WEDGE)	
		1	**155-2265**	1	KIT-CONNECTING PLUG (8-PIN)	
					(INCLUDES PLUG AS & WEDGE)	
C	42	1	**234-6939**	1	PLATE AS	
		1	**7T-1099**	2	LINK	
C	43	1	**235-5553**	2	CABLE AS	
					(EACH INCLUDES)	
E		1	**5P-0761**		CABLE (00-GA, RED) (180CM)	
		1	**1S-4915**	2	LINER (CONDUIT)	
		1	**1S-7251**	2	TERMINAL-RING (FOR 1/2-IN BOLT)	
BE		1	**5P-0695**		CONDUIT	
		1	**8T-2225**		TUBE-HEAT SHRINK	
	44	1	**132-6289**	1	CABLE AS	
		1	**9G-8909**	1	COVER-TERMINAL (BLACK)	
		1	**1S-4915**	2	LINER (CONDUIT)	
		1	**1S-7252**	1	TERMINAL-RING (FOR 3/8-IN BOLT)	
E		1	**5P-0747**		CABLE (00-GA, BLACK) (205CM)	
BE		1	**5P-0695**		CONDUIT	
BE		1	**8T-2225**		TUBE-HEAT SHRINK	
		1	**3S-2093**	1	STRAP-CABLE	
		1	**7N-5274**	1	COVER-TERMINAL (BLACK)	

156-9936 **BATTERY & WIRING GP** ***(contd.)*** **i02029653**

NOTE	REF NO	GRAPHIC REF	PART NUMBER	QTY	PART NAME 1 2 3 4 5 6 (PRODUCT LEVEL)	SEE PAGE
		1	**3S-6050**	1	TERMINAL AS-BATTERY (NEGATIVE)	
		1	**1M-6119**	1	BOLT (5/16-18X1.375-IN)	
		1	**1M-6120**	1	NUT (5/16-18-THD)	
	45	1	**132-6290**	1	CABLE AS	
		1	**1S-4915**	2	LINER (CONDUIT)	
		1	**1S-7251**	1	TERMINAL-RING (FOR 1/2-IN BOLT)	
E		1	**5P-0761**		CABLE (00-GA, RED) (320CM)	
BE		1	**5P-0695**		CONDUIT	
BE		1	**8T-2225**		TUBE-HEAT SHRINK	
		1	**3S-2093**	1	STRAP-CABLE	
		1	**8N-1725**	1	COVER-TERMINAL (RED)	
		1	**3S-6049**	1	TERMINAL AS-BATTERY (POSITIVE)	
		1	**1M-6119**	1	BOLT (5/16-18X1.375-IN)	
		1	**1M-6120**	1	NUT (5/16-18-THD)	
	46	1	**132-6545**	2	HARNESS AS (SIDE LIGHTS)	
					(EACH INCLUDES)	
		1	**102-8802**	1	KIT-RECEPTACLE (2-PIN)	
					(INCLUDES RECEPTACLE AS & WEDGE)	
		1	**155-2270**	1	KIT-CONNECTING PLUG (2-PIN)	
					(INCLUDES PLUG AS & WEDGE)	
Y	47	1	**155-3549**	1	SENSOR GP-PRESSURE (MAIN PUMP PRESSURE)	338
Y	47A	1	**155-3549**	1	SENSOR GP-PRESSURE (MAIN TILT PRESSURE)	338
	48	1	**163-1201**	1	HORN AS (24-VOLT, LOW TONE)	
Y	49	2	**164-7577**	1	SWITCH GP-BYPASS (HYDRAULIC FILTER PRESSURE SW)	371
Y	49A	2	**164-7577**	1	SWITCH GP-BYPASS (TRANSMISSION FILTER BYPASS)	371
Y	49B	2	**164-7577**	1	SWITCH GP-BYPASS (TORQUE CONVERTER FILTER BYPASS)	371
	50	1	**1S-1015**	1	CLIP	
	51	1	**2P-8421**	1	ADAPTER-O-RING	
	52	2	**2S-4078**	2	SEAL-O-RING	
	53	1	**2Y-1834**	2	CLIP	
	54	1	**3D-2824**	1	SEAL-O-RING	
B	55	1	**102-8802**	4	KIT-RECEPTACLE (2-PIN)	
					(EACH INCLUDES RECEPTACLE AS & WEDGE)	
	56	1	**3J-1907**	3	SEAL-O-RING	
	57	2	**3K-0360**	1	SEAL-O-RING	
	58	1	**3K-6060**	4	LOCKNUT (3/8-16-THD)	
	59	1,2	**4L-6454**	4	BOLT (3/8-16X1-IN)	
	60	1	**4P-0947**	1	GROMMET	
	61	1	**4P-7428**	3	CLIP	
B	62	1	**4P-7429**	1	CLIP	
	63	1,2	**4P-7581**	8	CLIP	
	64	2	**4P-7582**	2	CLIP	
	65	1,2	**4P-8134**	1	CLIP	
	66	2	**5C-6266**	2	BOLT (5/8-11X1-IN)	
	67	1,2	**5M-3062**	13	BOLT (3/8-16X0.75-IN)	
C	68	1,2	**5P-1075**	33	WASHER-HARD (10.2X22.5X3-MM THK)	
	69	1	**5P-2228**	3	BOLT (1/2-13X1-IN)	
B	70	1	**5P-2424**	1	BOLT (1/2-13X2.25-IN)	
	71	1	**6V-5051**	1	SEAL-O-RING	
C	72	1,2	**6V-8801**	10	NUT (3/8-16-THD)	
	73	2	**6V-9028**	1	SEAL-O-RING	
C	74	1	**7B-1251**	6	GROMMET	
	75	1,2	**7G-1060**	4	STRAP AS-GROUND	
	76	1,2	**7J-0204**	3	SEAL-O-RING	
BC	77	1,2	**7K-1181**	100	STRAP-CABLE	
	78	1	**7X-0291**	2	BOLT (3/8-16X3.75-IN)	
	79	1	**8S-0023**	2	CLIP (SLOT)	
	80	1	**8S-0024**	2	CLIP (TAB)	
	81	1	**8T-0151**	1	ADAPTER	

156-9936 **BATTERY & WIRING GP** ***(contd.)*** **i02029653**

NOTE	REF NO	GRAPHIC REF	PART NUMBER	QTY	PART NAME 1 2 3 4 5 6 (PRODUCT LEVEL)	SEE PAGE
	82	1	**8T-2501**	4	BOLT (3/8-16X2-IN)	
	83	1	**8T-2502**	4	BOLT (3/8-16X1.125-IN)	
	84	2	**8T-4122**	2	WASHER-HARD (17X32X3.5-MM THK)	
CM	85	1,2	**8T-4137**	9	BOLT (M10X1.5X20-MM)	
	86	1,2	**8T-4223**	6	WASHER-HARD (13.5X25.5X3-MM THK)	
	87	1,2	**8T-4896**	16	WASHER-HARD (10.2X18.5X2.5-MM THK)	
	88	2	**8T-9384**	2	BOLT (1/2-13X0.875-IN)	
	89	1	**9B-7237**	1	BOLT (3/8-16X1.25-IN)	
	90	1	**9X-9730**	4	BATTERY (12-VOLT)	
					(EACH INCLUDES)	
		1	**7N-0060**	6	VENT AS (BATTERY)	

B-USE AS REQUIRED
C-CHANGE FROM PREVIOUS TYPE
D-ORDER BY THE METER
E-ORDER BY THE CENTIMETER
M-METRIC PART
Y-SEPARATE ILLUSTRATION

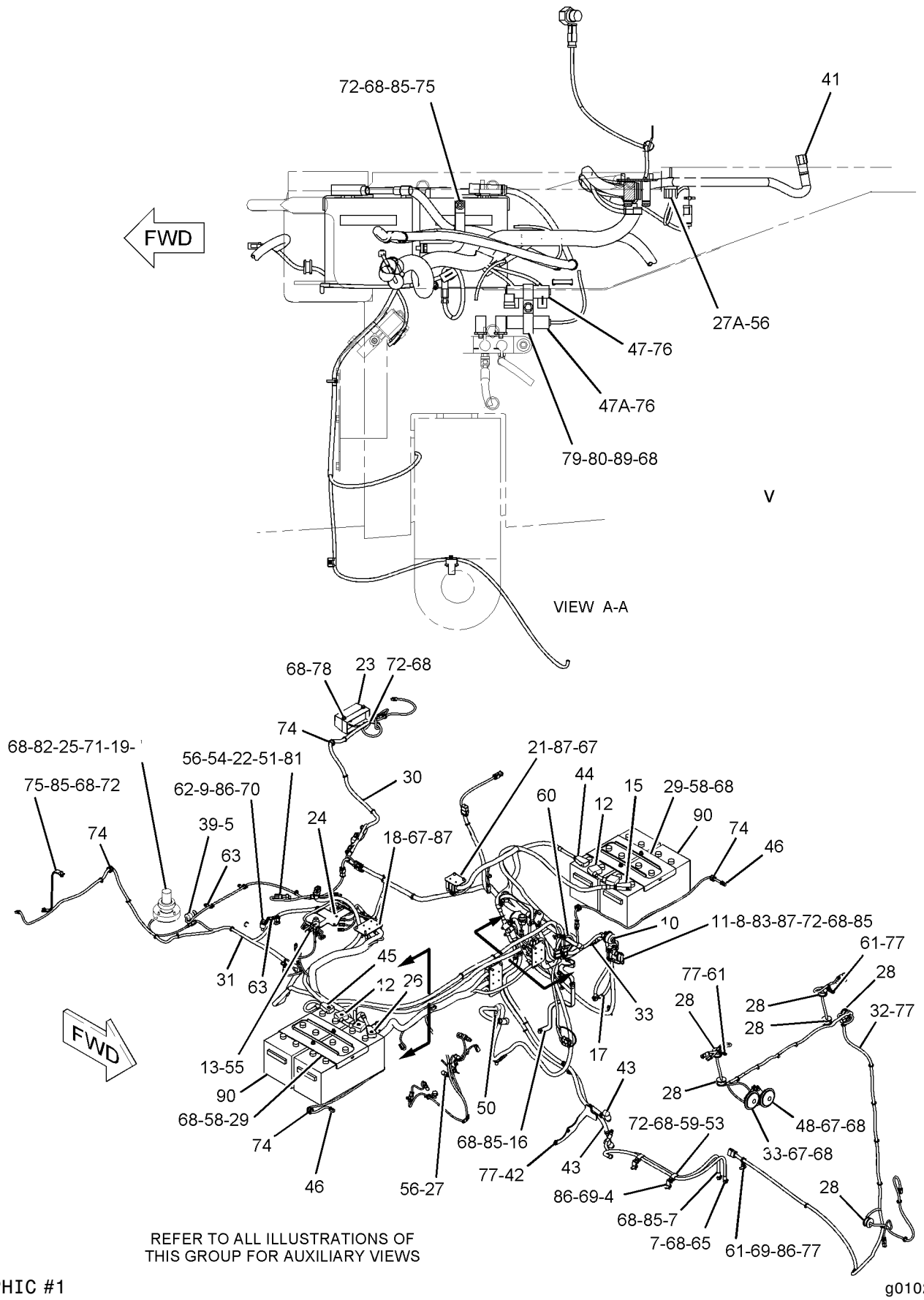

GRAPHIC #1

g01027310

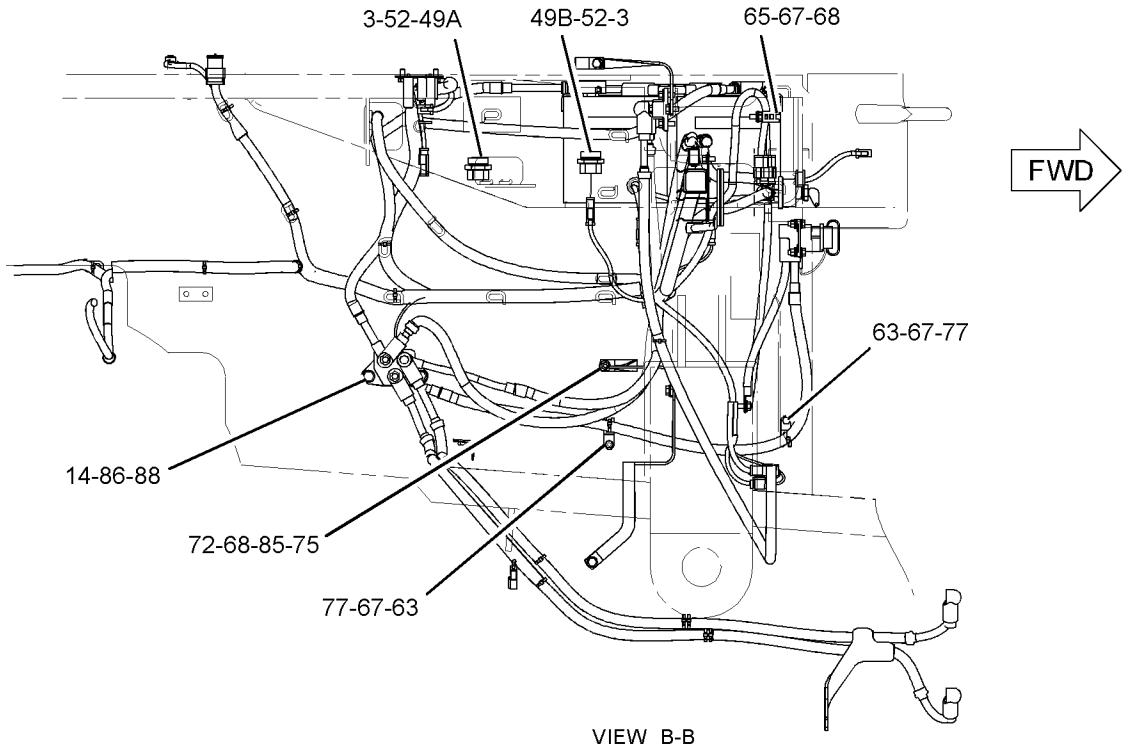

VIEW B-B

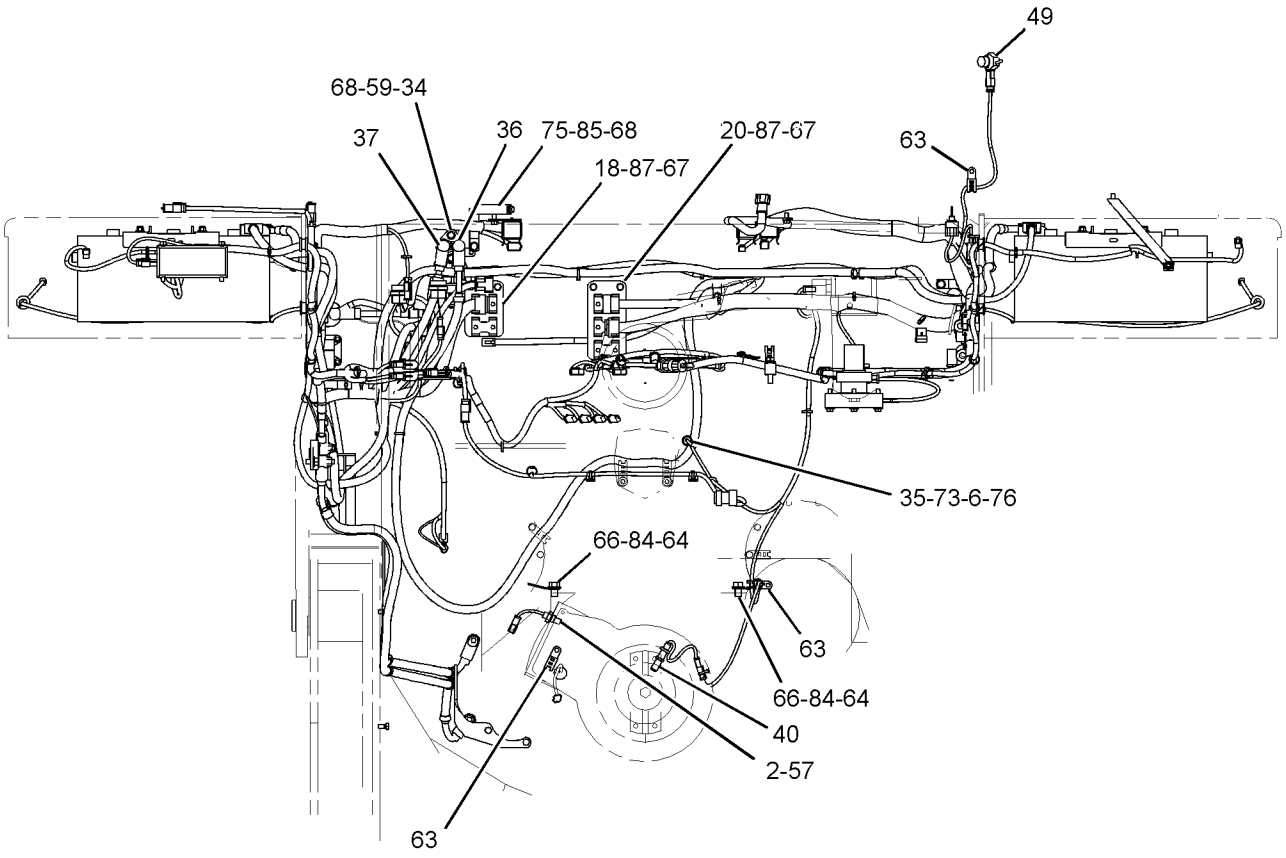

REAR VIEW

REFER TO ALL ILLUSTRATIONS OF THIS GROUP FOR AUXILIARY VIEWS

GRAPHIC #2

<END>

g01027348

156-9936 BATTERY & WIRING GP

S/N: 7PZ732-UP

PART OF 155-5552 CHASSIS AR

SMCS-1401, 1402, 1408 **i02018739**

NOTE	REF NO	GRAPHIC REF	PART NUMBER	QTY	PART NAME 1 2 3 4 5 6 (PRODUCT LEVEL)	SEE PAGE
	1	1	**3E-7753**	1	FLOAT AS	
	2	2	**3E-9350**	1	SWITCH AS-TEMPERATURE (POWER TRAIN OIL)	
		2	**102-8802**	1	KIT-RECEPTACLE (2-PIN)	
					(INCLUDES RECEPTACLE AS & WEDGE)	
		2	**3E-3365**	1	WEDGE-RECEPTACLE LOCK (2-PIN)	
		2	**8T-8729**	2	PIN-CONNECTOR	
	3	2	**3T-9549**	2	ADAPTER (POWER TRAIN OIL)	
	4	1	**5K-8652**	2	BRACKET	
BD	5	1	**5P-6025**		LOCKWIRE (100-CM)	
	6	2	**6G-3432**	1	ADAPTER (HEX)	
	7	1	**6T-5265**	2	CABLE AS (STARTER GROUND)	
					(EACH INCLUDES)	
E		1	**5P-0747**		CABLE (00-GA, BLACK) (115CM)	
		1	**1S-7252**	1	TERMINAL-RING (FOR 3/8-IN BOLT)	
		1	**1S-7251**	1	TERMINAL-RING (FOR 1/2-IN BOLT)	
		1	**9G-8909**	1	COVER-TERMINAL (BLACK)	
	8	1	**6T-5269**	1	RECEPTACLE AS (BUS BAR TO FRAME GROUND)	
		1	**1S-7251**	2	TERMINAL-RING (FOR 1/2-IN BOLT)	
E		1	**5P-0747**		CABLE (00-GA, BLACK) (42CM)	
E		1	**5P-0761**		CABLE (00-GA, RED) (130CM)	
BE		1	**5P-0695**		CONDUIT	
		1	**1S-4915**	2	LINER (CONDUIT)	
BD		1	**6V-2722**		TUBE-HEAT SHRINK	
BE		1	**8T-2225**		TUBE-HEAT SHRINK	
B	9	1	**7J-8673**	1	PIPE	
Y	10	1	**7N-0719**	1	SWITCH GP-DISCONNECT (BATTERY)	372
	11	1	**8S-2634**	1	COVER AS	
		1	**2P-2975**	2	SEAL-O-RING	
	12	1	**8V-0622**	2	CABLE AS (LH BAT POS. TO RH BAT NEG.)	
					(EACH INCLUDES)	
		1	**8C-5917**	1	TERMINAL AS-BATTERY (POSITIVE)	
		1	**1M-6119**	2	BOLT (5/16-18X1.375-IN)	
		1	**1M-6120**	2	NUT (5/16-18-THD)	
		1	**8T-9757**	1	TERMINAL AS-BATTERY (NEGATIVE)	
E		1	**5P-0761**		CABLE (00-GA, RED) (14CM)	
		1	**9G-0003**	2	COVER-TERMINAL (BLACK)	
		1	**9G-0004**	2	COVER-TERMINAL (RED)	
B	13	1	**9G-3695**	8	PLUG (GROMMET SEALING)	
Y	14	2	**9W-0742**	1	BLOCK GP-JUNCTION	270
	15	1	**9W-9472**	1	CABLE AS (LH BAT POS. TO BUS BAR)	
E		1	**5P-0761**		CABLE (00-GA, RED) (152CM)	
		1	**1S-7251**	1	TERMINAL-RING (FOR 1/2-IN BOLT)	
		1	**8N-0869**	1	COVER-TERMINAL (RED)	
BE		1	**5P-0695**		CONDUIT	
		1	**1S-4915**	2	LINER (CONDUIT)	
BE		1	**8T-2225**		TUBE-HEAT SHRINK	
		1	**3S-2093**	1	STRAP-CABLE	
		1	**8N-1725**	1	COVER-TERMINAL (RED)	
		1	**3S-6049**	1	TERMINAL AS-BATTERY (POSITIVE)	
		1	**1M-6120**	1	NUT (5/16-18-THD)	
		1	**1M-6119**	1	BOLT (5/16-18X1.375-IN)	
	16	1	**034-3665**	1	STRAP-GROUNDING	
	17	1	**104-8636**	1	CABLE AS (DISC SWITCH TO FRAME GROUND)	
		1	**035-0425**	2	RING-TERMINAL (FOR 3/8-IN BOLT)	
E		1	**5P-0744**		CABLE (000-GA) (47CM)(BLACK)	
		1	**5A-4252**	1	CAP (COVER TERMINAL)	

156-9936 **BATTERY & WIRING GP** ***(contd.)*** **i02018739**

NOTE	REF NO	GRAPHIC REF	PART NUMBER	QTY	PART NAME 1 2 3 4 5 6 (PRODUCT LEVEL)	SEE PAGE
	18	1,2	**109-5735**	2	PLATE AS	
					(EACH INCLUDES)	
		1,2	**6V-6716**	4	RIVET-TRUSS HEAD	
		1,2	**109-1645**	2	CLIP	
	19	1	**111-4402**	1	FILTER-FOAM (FUEL SENSOR)	
	20	2	**113-4316**	1	PLATE AS	
		2	**6C-3680**	6	RIVET-POP	
		2	**109-1645**	3	CLIP	
	21	1	**118-6365**	1	PLATE AS	
		1	**6V-6716**	2	RIVET-TRUSS HEAD	
		1	**109-1645**	1	CLIP	
Y	22	1	**118-7226**	1	SENSOR GP-TEMPERATURE (STEERING OIL)	349
Y	23	1	**123-6449**	1	WARNING GP-BACKUP	381
	24	1	**124-8957**	1	PLATE AS	
		1	**7T-1099**	3	LINK	
Y	25	1	**124-9325**	1	SENSOR GP-FUEL LEVEL (ULTRASONIC)	329
	26	1	**132-6287**	1	CABLE AS (RH SIDE BAT NEG TO DISC SWITCH)	
		1	**1S-4915**	2	LINER (CONDUIT)	
		1	**1S-7252**	1	TERMINAL-RING (FOR 3/8-IN BOLT)	
		1	**9G-8909**	1	COVER-TERMINAL (BLACK)	
E		1	**5P-0747**		CABLE (00-GA, BLACK) (265CM)	
BE		1	**5P-0695**		CONDUIT	
BE		1	**8T-2225**		TUBE-HEAT SHRINK	
		1	**3S-2093**	1	STRAP-CABLE	
		1	**7N-5274**	1	COVER-TERMINAL (BLACK)	
		1	**3S-6050**	1	TERMINAL AS-BATTERY (NEGATIVE)	
		1	**1M-6119**	1	BOLT (5/16-18X1.375-IN)	
		1	**1M-6120**	1	NUT (5/16-18-THD)	
Y	27	1	**134-2252**	1	SENSOR GP-TEMPERATURE (TORQUE CONVERTER)	350
Y	27A	1	**134-2252**	1	SENSOR GP-TEMPERATURE (HYDRAULIC OIL)	350
	28	1	**137-0248**	6	GROMMET-SPLIT	
	29	1	**153-6281**	2	HOLD DOWN AS	
	30	1	**160-0634**	1	HARNESS AS (LH FENDER)	
		1	**102-8801**	1	KIT-RECEPTACLE (12-PIN)	
		1	**102-8802**	1	KIT-RECEPTACLE (2-PIN)	
		1	**102-8803**	1	KIT-RECEPTACLE (3-PIN)	
		1	**102-8804**	1	KIT-RECEPTACLE (4-PIN)	
		1	**102-8805**	1	KIT-RECEPTACLE (6-PIN)	
		1	**102-8806**	1	KIT-RECEPTACLE (8-PIN)	
					(EACH INCLUDES RECEPTACLE AS & WEDGE)	
		1	**155-2255**	1	KIT-CONNECTING PLUG (12-PIN)	
		1	**155-2260**	1	KIT-CONNECTING PLUG (3-PIN)	
		1	**155-2265**	1	KIT-CONNECTING PLUG (8-PIN)	
		1	**155-2274**	1	KIT-CONNECTING PLUG (6-PIN)	
					(EACH INCLUDES PLUG AS & WEDGE)	
C	31	1	**239-4214**	1	HARNESS AS (RH FENDER)	
		1	**102-8802**	1	KIT-RECEPTACLE (2-PIN)	
		1	**102-8803**	1	KIT-RECEPTACLE (3-PIN)	
		1	**102-8805**	1	KIT-RECEPTACLE (6-PIN)	
		1	**102-8801**	1	KIT-RECEPTACLE (12-PIN)	
					(EACH INCLUDES RECEPTACLE AS & WEDGE)	
		1	**155-2260**	1	KIT-CONNECTING PLUG (3-PIN)	
		1	**155-2274**	1	KIT-CONNECTING PLUG (6-PIN)	
		1	**155-2265**	1	KIT-CONNECTING PLUG (8-PIN)	
		1	**155-2255**	1	KIT-CONNECTING PLUG (12-PIN)	
					(EACH INCLUDES PLUG AS & WEDGE)	
	32	1	**161-6600**	1	HARNESS AS (RADIATOR GUARD)	
		1	**102-8802**	1	KIT-RECEPTACLE (2-PIN)	
		1	**102-8803**	1	KIT-RECEPTACLE (3-PIN)	

156-9936 **BATTERY & WIRING GP** ***(contd.)*** **i02018739**

NOTE	REF NO	GRAPHIC REF	PART NUMBER	QTY	PART NAME 1 2 3 4 5 6 (PRODUCT LEVEL)	SEE PAGE
		1	**102-8805**	1	KIT-RECEPTACLE (6-PIN)	
		1	**102-8801**	1	KIT-RECEPTACLE (12-PIN)	
					(EACH INCLUDES RECEPTACLE AS & WEDGE)	
		1	**155-2270**	1	KIT-CONNECTING PLUG (2-PIN)	
		1	**155-2260**	1	KIT-CONNECTING PLUG (3-PIN)	
		1	**155-2271**	1	KIT-CONNECTING PLUG (4-PIN)	
		1	**155-2274**	1	KIT-CONNECTING PLUG (6-PIN)	
		1	**155-2255**	1	KIT-CONNECTING PLUG (12-PIN)	
					(EACH INCLUDES PLUG AS & WEDGE)	
	33	1	**163-0263**	1	WIRE AS	
Y	34	2	**164-9436**	1	BLOCK GP-POWER	271
Y	35	2	**167-1709**	1	SENSOR GP-PRESSURE (FAN PUMP)	342
	36	2	**169-4253**	1	CABLE AS (ALTERNATOR TO JUNCTION BLOCK)	
		2	**1S-4915**	2	LINER (CONDUIT)	
BE		2	**5P-0695**		CONDUIT	
E		2	**5P-0760**		CABLE (0-GA) (240CM)(RED)	
		2	**8N-0869**	2	COVER-TERMINAL (RED)	
BE		2	**8T-2225**		TUBE-HEAT SHRINK	
		2	**170-3793**	1	RING-TERMINAL	
		2	**174-0129**	1	RING-TERMINAL	
	37	2	**169-4256**	1	CABLE AS (JUNCTION BLOCK TO BUS BAR)	
		2	**1S-4915**	2	LINER (CONDUIT)	
BE		2	**5P-0695**		CONDUIT	
E		2	**5P-0760**		CABLE (0-GA) (120CM)(RED)	
		2	**8N-0869**	2	COVER-TERMINAL (RED)	
BE		2	**8T-2225**		TUBE-HEAT SHRINK	
		2	**170-3795**	2	RING-TERMINAL	
	38	1	**174-7875**	1	HORN AS (24-VOLT, HIGH TONE)	
		1	**3E-3365**	1	WEDGE-RECEPTACLE LOCK (2-PIN)	
BE		1	**9X-1813**		SLEEVE	
		1	**9X-3401**	2	PIN-CONNECTOR	
		1	**102-8802**	1	KIT-RECEPTACLE (2-PIN)	
					(INCLUDES RECEPTACLE AS & WEDGE)	
	39	1	**177-5211**	1	HARNESS AS (TRANSMISSION)	
		1	**102-8805**	1	KIT-RECEPTACLE (6-PIN)	
					(INCLUDES RECEPTACLE AS & WEDGE)	
		1	**155-2274**	1	KIT-CONNECTING PLUG (6-PIN)	
					(INCLUDES PLUG AS & WEDGE)	
Y	40	2	**193-2550**	1	SENSOR GP-SPEED (ODOMETER)	348
	42	1	**234-6939**	1	PLATE AS	
		1	**7T-1099**	2	LINK	
	43	1	**235-5553**	2	CABLE AS (BUS BAR TO STARTERS)	
					(EACH INCLUDES)	
E		1	**5P-0761**		CABLE (00-GA, RED) (180CM)	
		1	**1S-4915**	2	LINER (CONDUIT)	
		1	**1S-7251**	2	TERMINAL-RING (FOR 1/2-IN BOLT)	
BE		1	**5P-0695**		CONDUIT	
		1	**8T-2225**		TUBE-HEAT SHRINK	
	44	1	**132-6289**	1	CABLE AS (LH SIDE BAT NEG TO DISC SWITCH)	
		1	**9G-8909**	1	COVER-TERMINAL (BLACK)	
		1	**1S-4915**	2	LINER (CONDUIT)	
		1	**1S-7252**	1	TERMINAL-RING (FOR 3/8-IN BOLT)	
E		1	**5P-0747**		CABLE (00-GA, BLACK) (205CM)	
BE		1	**5P-0695**		CONDUIT	
BE		1	**8T-2225**		TUBE-HEAT SHRINK	
		1	**3S-2093**	1	STRAP-CABLE	
		1	**7N-5274**	1	COVER-TERMINAL (BLACK)	
		1	**3S-6050**	1	TERMINAL AS-BATTERY (NEGATIVE)	
		1	**1M-6119**	1	BOLT (5/16-18X1.375-IN)	

156-9936 **BATTERY & WIRING GP** *(contd.)* **i02018739**

NOTE	REF NO	GRAPHIC REF	PART NUMBER	QTY	PART NAME 1 2 3 4 5 6 (PRODUCT LEVEL)	SEE PAGE
		1	**1M-6120**	1	NUT (5/16-18-THD)	
	45	1	**132-6290**	1	CABLE AS (RH BAT POS. TO BUS BAR)	
		1	**1S-4915**	2	LINER (CONDUIT)	
		1	**1S-7251**	1	TERMINAL-RING (FOR 1/2-IN BOLT)	
E		1	**5P-0761**		CABLE (00-GA, RED) (320CM)	
BE		1	**5P-0695**		CONDUIT	
BE		1	**8T-2225**		TUBE-HEAT SHRINK	
		1	**3S-2093**	1	STRAP-CABLE	
		1	**8N-1725**	1	COVER-TERMINAL (RED)	
		1	**3S-6049**	1	TERMINAL AS-BATTERY (POSITIVE)	
		1	**1M-6119**	1	BOLT (5/16-18X1.375-IN)	
		1	**1M-6120**	1	NUT (5/16-18-THD)	
	46	1	**132-6545**	2	HARNESS AS (SIDE LIGHTS)	
					(EACH INCLUDES)	
		1	**102-8802**	1	KIT-RECEPTACLE (2-PIN)	
					(INCLUDES RECEPTACLE AS & WEDGE)	
		1	**155-2270**	1	KIT-CONNECTING PLUG (2-PIN)	
					(INCLUDES PLUG AS & WEDGE)	
CY	47	1	**221-3406**	1	SENSOR GP-PRESSURE (MAIN PUMP PRESSURE)	345
CY	47A	1	**221-3406**	1	SENSOR GP-PRESSURE (MAIN TILT PRESSURE)	345
	48	1	**163-1201**	1	HORN AS (24-VOLT, LOW TONE)	
Y	49	2	**164-7577**	1	SWITCH GP-BYPASS (HYD FILTER PRESSURE SWITCH)	371
Y	49A	2	**164-7577**	1	SWITCH GP-BYPASS (TRANSMISSION FILTER)	371
Y	49B	2	**164-7577**	1	SWITCH GP-BYPASS (TORQUE CONVERTER FILTER)	371
C	50	1	**1S-0994**	1	CLIP	
	51	1	**2P-8421**	1	ADAPTER-O-RING	
	52	2	**2S-4078**	2	SEAL-O-RING	
	53	1	**2Y-1834**	2	CLIP	
	54	1	**3D-2824**	1	SEAL-O-RING	
B	55	1	**102-8802**	4	KIT-RECEPTACLE (2-PIN)	
					(EACH INCLUDES RECEPTACLE AS & WEDGE)	
	56	1	**3J-1907**	3	SEAL-O-RING	
	57	2	**3K-0360**	1	SEAL-O-RING	
	58	1	**3K-6060**	4	LOCKNUT (3/8-16-THD)	
	59	1,2	**4L-6454**	4	BOLT (3/8-16X1-IN)	
	60	1	**4P-0947**	1	GROMMET	
	61	1	**4P-7428**	3	CLIP	
B	62	1	**4P-7429**	1	CLIP	
	63	1,2	**4P-7581**	8	CLIP	
	64	2	**4P-7582**	2	CLIP	
	65	1,2	**4P-8134**	1	CLIP	
	66	2	**5C-6266**	2	BOLT (5/8-11X1-IN)	
	67	1,2	**5M-3062**	13	BOLT (3/8-16X0.75-IN)	
C	68	1,2	**5P-1075**	32	WASHER-HARD (10.2X22.5X3-MM THK)	
	69	1	**5P-2228**	3	BOLT (1/2-13X1-IN)	
B	70	1	**5P-2424**	1	BOLT (1/2-13X2.25-IN)	
	71	1	**6V-5051**	1	SEAL-O-RING	
C	72	1,2	**6V-8801**	6	NUT (3/8-16-THD)	
	73	2	**6V-9028**	1	SEAL-O-RING	
	74	1	**7B-1251**	6	GROMMET	
	75	1,2	**7G-1060**	4	STRAP AS-GROUND (CHASSIS)	
C	76	2	**7J-0204**	1	SEAL-O-RING	
B	77	1,2	**7K-1181**	100	STRAP-CABLE	
	78	1	**7X-0291**	2	BOLT (3/8-16X3.75-IN)	
	81	1	**8T-0151**	1	ADAPTER	
	82	1	**8T-2501**	4	BOLT (3/8-16X2-IN)	
	83	1	**8T-2502**	4	BOLT (3/8-16X1.125-IN)	
	84	2	**8T-4122**	2	WASHER-HARD (17X32X3.5-MM THK)	
CM	85	1,2	**8T-4137**	13	BOLT (M10X1.5X20-MM)	

156-9936 **BATTERY & WIRING GP** *(contd.)* **i02018739**

NOTE	REF NO	GRAPHIC REF	PART NUMBER	QTY	PART NAME 1 2 3 4 5 6 (PRODUCT LEVEL)	SEE PAGE
	86	1,2	**8T-4223**	6	WASHER-HARD (13.5X25.5X3-MM THK)	
	87	1,2	**8T-4896**	16	WASHER-HARD (10.2X18.5X2.5-MM THK)	
	88	2	**8T-9384**	2	BOLT (1/2-13X0.875-IN)	
C	89	1	**209-1742**	1	PLUG AS	
	90	1	**9X-9730**	4	BATTERY (12-VOLT)	
					(EACH INCLUDES)	
		1	**7N-0060**	6	VENT AS (BATTERY)	

B-USE AS REQUIRED
C-CHANGE FROM PREVIOUS TYPE
D-ORDER BY THE METER
E-ORDER BY THE CENTIMETER
M-METRIC PART
Y-SEPARATE ILLUSTRATION

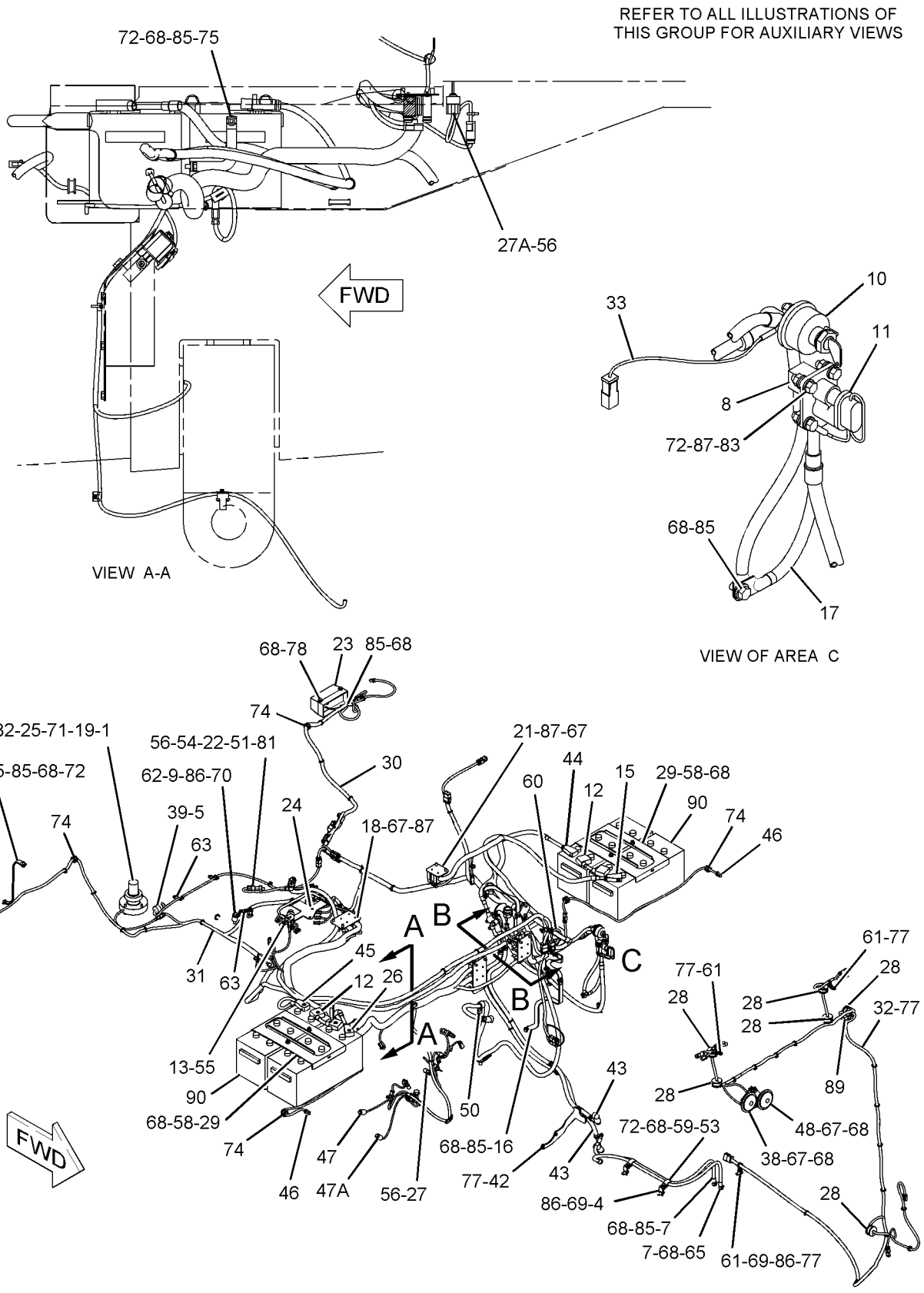

GRAPHIC #1

g01045289

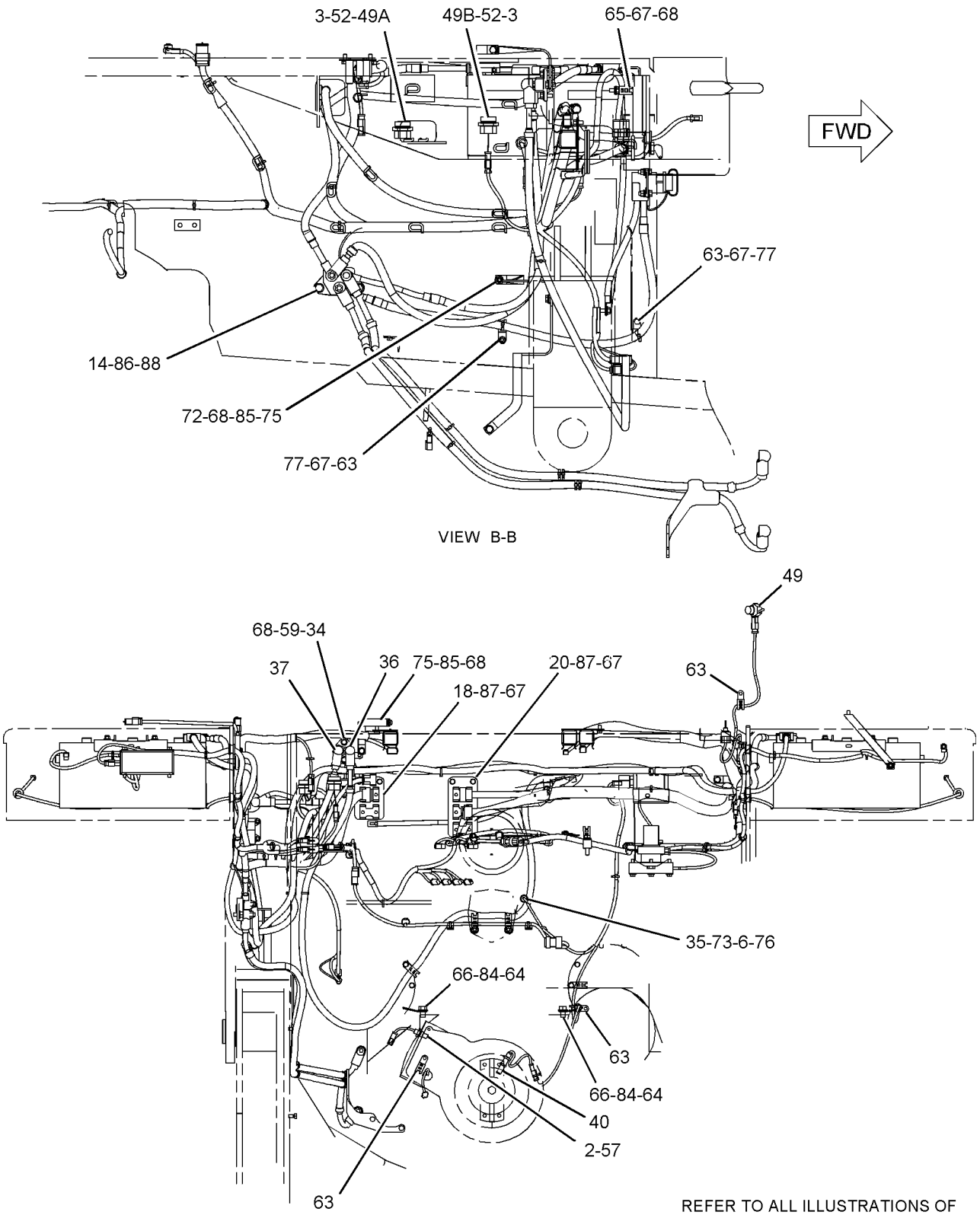

REFER TO ALL ILLUSTRATIONS OF THIS GROUP FOR AUXILIARY VIEWS

GRAPHIC #2

<END>

g01045290

9W-0742 BLOCK GP-JUNCTION

S/N: 7PZ1-UP

PART OF 156-9936 BATTERY & WIRING GP

SMCS-1408 **i01727104**

NOTE	REF NO	GRAPHIC REF	PART NUMBER	QTY	PART NAME 1 2 3 4 5 6 (PRODUCT LEVEL)	SEE PAGE
	1	1	**8C-6358**	1	JUNCTION BLOCK AS	
	1A	1	**8T-3519**	3	BOLT-BRONZE (1/2-13X2.0 IN)	
BD	2	1	**6V-2722**		TUBE-HEAT SHRINK	
	3	1	**7F-0560**	6	WASHER (2.57MM THK)	
	4	1	**8T-3518**	6	NUT-FULL (1/2-13 THD)	

B-USE AS REQUIRED
D-ORDER BY THE METER

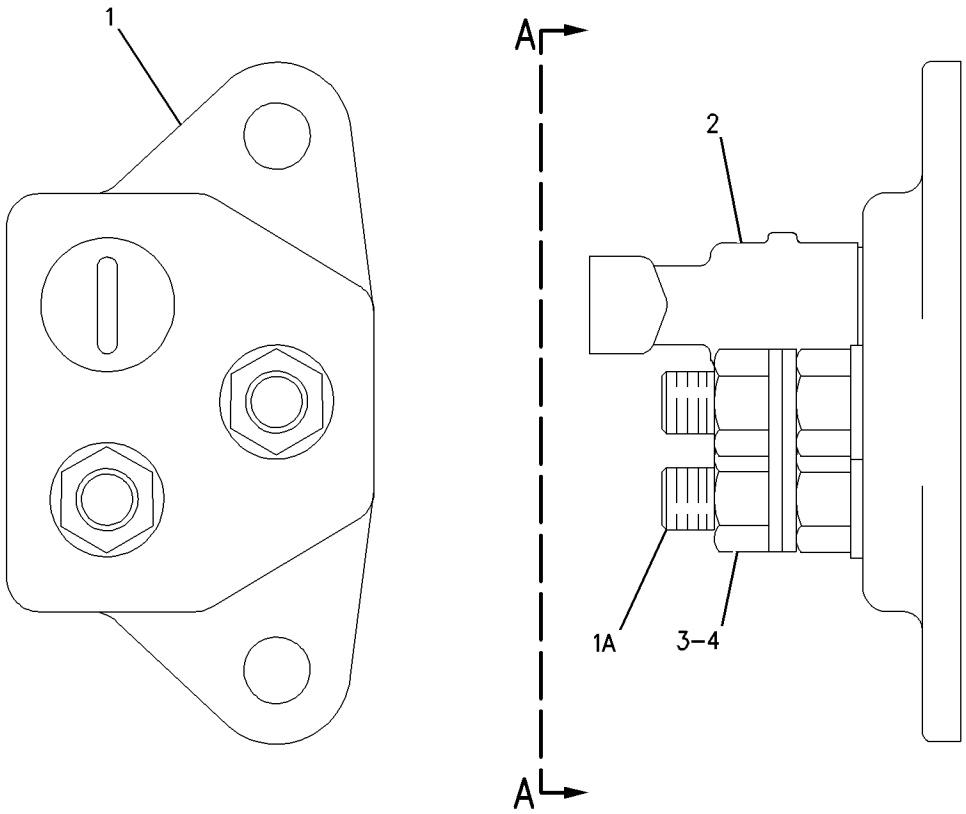

VIEW A-A

GRAPHIC #1 **<END>** g00650721

164-9436 BLOCK GP-POWER

S/N: 7PZ1-UP

PART OF 156-9936 BATTERY & WIRING GP

SMCS-1408 **i01988523**

NOTE	REF NO	GRAPHIC REF	PART NUMBER	QTY	PART NAME 1 2 3 4 5 6 (PRODUCT LEVEL)	SEE PAGE
	1	1	**1D-5117**	1	NUT-JAM (1/2-13 THD)	
	2	1	**3K-6060**	1	LOCKNUT (3/8-16 THD)	
	3	1	**5P-1075**	2	WASHER-HARD (10.2X22.5X3MM THK)	
	4	1	**5P-1076**	2	WASHER-HARD (13.5X30X4MM THK)	
	5	1	**6V-8801**	1	NUT (3/8-16 THD)	
	6	1	**9B-7237**	1	BOLT (3/8-16X1.25 IN)	
	7	1	**5P-2566**	1	BOLT (1/2-13X1.5 IN)	
	8	1	**9X-0941**	1	LOCKNUT (1/2-13 THD)	

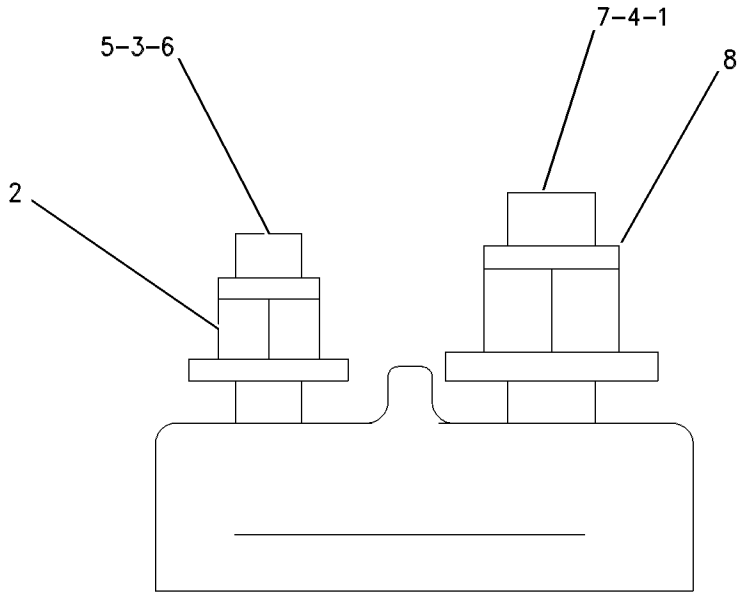

GRAPHIC #1 **<END>** g00520404

170-3715 CONTROL & MTG GP-ELECTRONIC–KEYPAD

S/N: 7PZ1-677

PART OF 155-5552 CHASSIS AR

SMCS-1901 **i01240247**

NOTE	REF NO	GRAPHIC REF	PART NUMBER	QTY	PART NAME 1 2 3 4 5 6 (PRODUCT LEVEL)	SEE PAGE
	1	1	**9P-6571**	2	PLUG	
Y	2	1	*165-5018*	1	CONTROL GP-ELECTRONIC (ENGLISH KEYPAD)	281
					–OR–	
AY		1	*183-2076*	1	CONTROL GP-ELECTRONIC (INTERNATIONAL KEYPAD)	283
	3	1	**5M-3062**	2	BOLT (3/8-16X.75IN)	
	4	1	**5P-1075**	2	WASHER-HARD (3MM THK)	

A-NOT PART OF THIS GROUP
Y-SEPARATE ILLUSTRATION

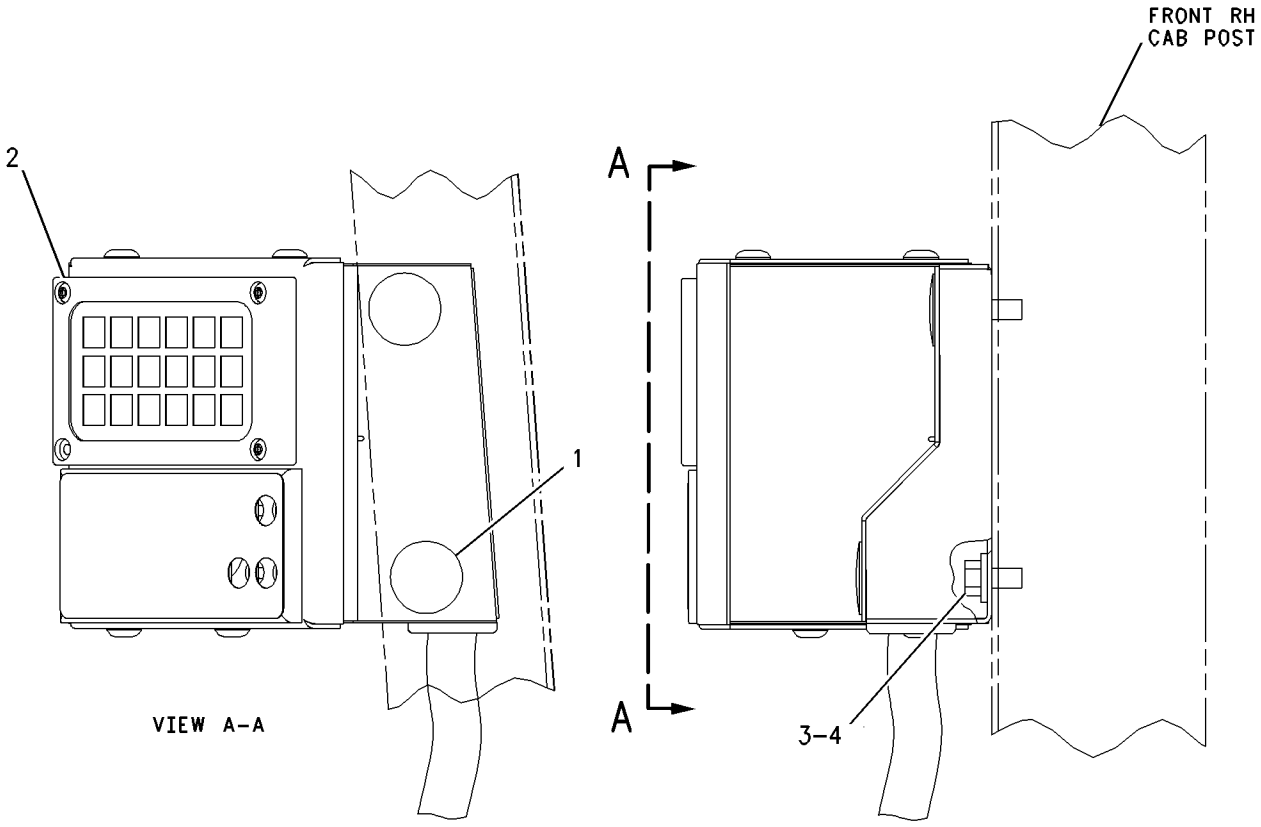

GRAPHIC #1 **<END>** g00663348

170-3715 CONTROL & MTG GP-ELECTRONIC–KEYPAD

S/N: 7PZ678-UP

PART OF 155-5552 CHASSIS AR

SMCS-1901 **i01988517**

NOTE	REF NO	GRAPHIC REF	PART NUMBER	QTY	PART NAME 1 2 3 4 5 6 (PRODUCT LEVEL)	SEE PAGE
	1	1	**9P-6571**	2	PLUG	
Y	2	1	**183-2076**	1	CONTROL GP-ELECTRONIC (INTERNATIONAL KEYPAD)	283
	3	1	**5M-3062**	2	BOLT (3/8-16X0.75 IN)	
	4	1	**5P-1075**	2	WASHER-HARD (10.2X22.5X3MM THK)	

Y-SEPARATE ILLUSTRATION

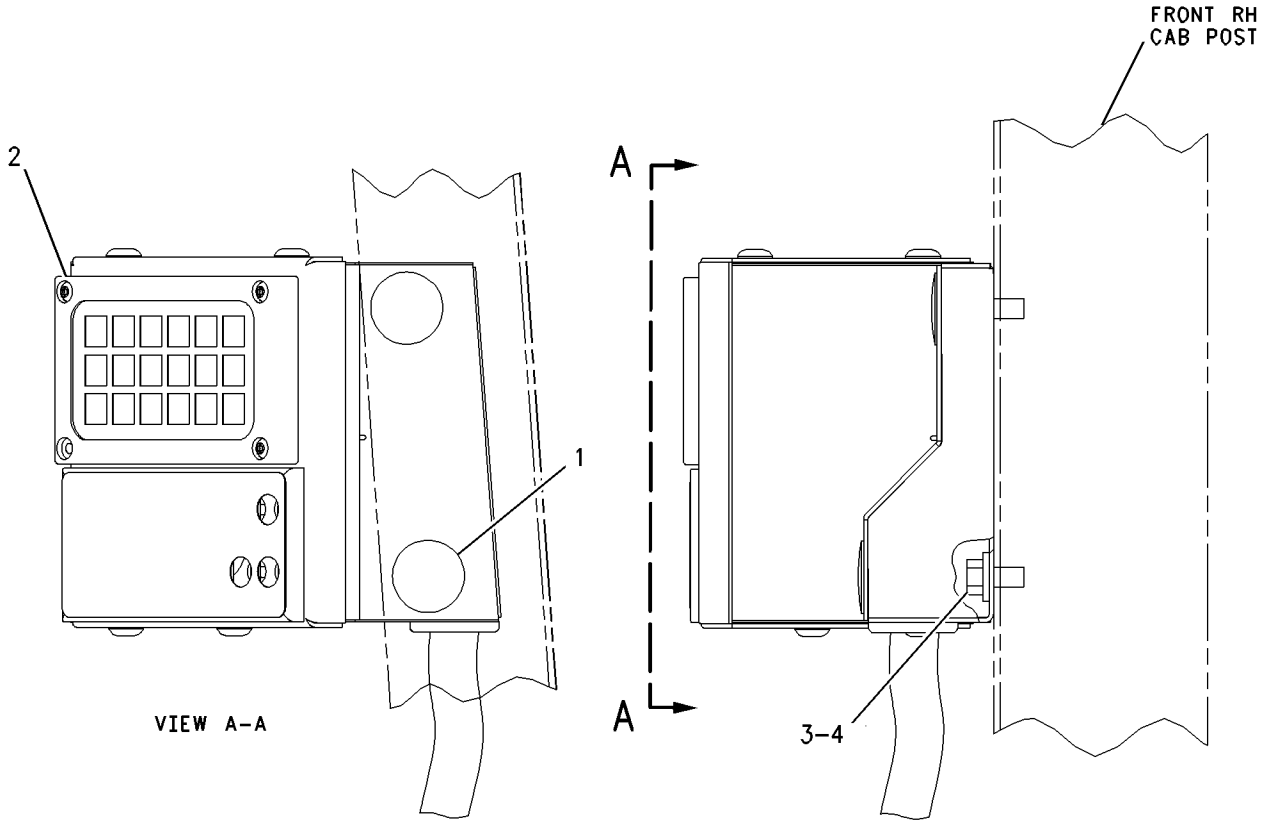

GRAPHIC #1 **<END>** g00663348

ELECTRICAL AND STARTING SYSTEM

173-3262 CONTROL & MTG GP-ELECTRONIC–VIDS

S/N: 7PZ1-UP

PART OF 155-5552 CHASSIS AR

SMCS-1901 **i01700443**

NOTE	REF NO	GRAPHIC REF	PART NUMBER	QTY	PART NAME 1 2 3 4 5 6 (PRODUCT LEVEL)	SEE PAGE
	1	1	**3S-2093**	2	STRAP-CABLE	
	2	1	**6I-1418**	4	SPACER (8.2X12.7X28.7MM THK)	
	3	1	**8L-5449**	2	SPACER (0.69 IN THK)	
	4	1	**8T-9655**	8	MOUNT (ISOLATION)	
	5	1	**133-3489**	1	PLATE AS	
		1	**9D-4439**	4	STUD-WELD (3/8-16X1.0 IN OAL)	
	6	1	**143-9666**	1	BRACKET AS	
M		1	**8T-3612**	4	NUT-WELD (M8X1.25 THD)	
Y	7	1	**169-0489**	1	CONTROL GP-UNPROGRAMMED	293
	8	1	**4P-8134**	1	CLIP (LADDER)	
	9	1	**5M-3062**	3	BOLT (3/8-16X0.75 IN)	
	10	1	**6V-8801**	1	NUT (3/8-16 THD)	
M	11	1	**7X-0818**	2	BOLT (M8X1.25X45MM)	
	12	1	**8T-4224**	3	WASHER-HARD (8.8X16X2MM THK)	
	13	1	**8T-4896**	4	WASHER-HARD (10.2X18.5X2.5MM THK)	
M	14	1	**8T-6870**	2	BOLT (M8X1.25X70MM)	
	15	1	**9N-0869**	8	WASHER-HARD (8.8X25.5X2MM THK)	

M-METRIC PART
Y-SEPARATE ILLUSTRATION

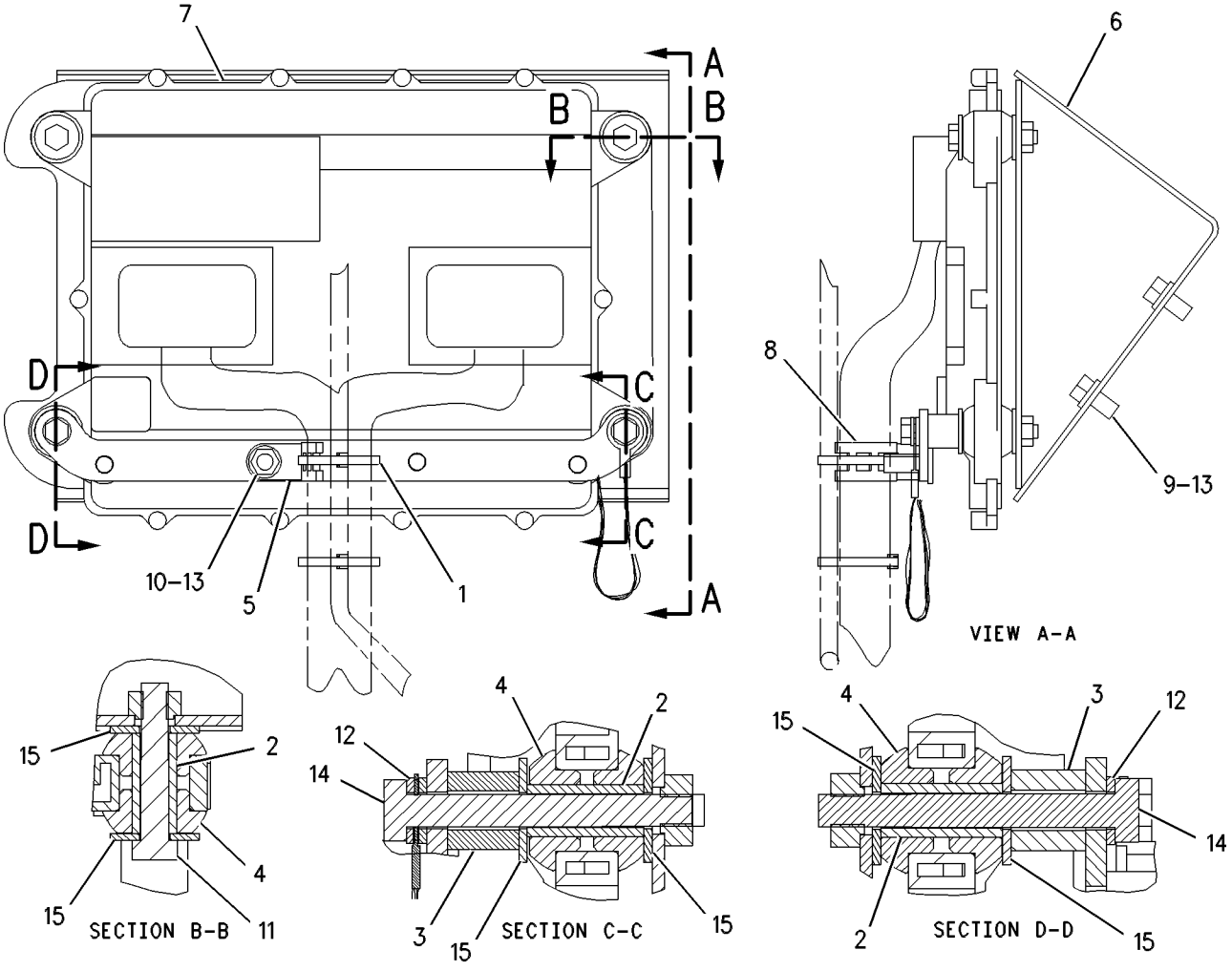

GRAPHIC #1 **<END>** g00581241

173-3263 CONTROL & MTG GP-ELECTRONIC—IMPLEMENT CONTROL

S/N: 7PZ1-UP

PART OF 155-5553 CONTROL AR-HYDRAULIC

SMCS-1901 **i01700455**

NOTE	REF NO	GRAPHIC REF	PART NUMBER	QTY	PART NAME 1 2 3 4 5 6 (PRODUCT LEVEL)	SEE PAGE
	1	1	**3S-2093**	1	STRAP-CABLE	
	2	1	**8L-5449**	2	SPACER (0.69 IN THK)	
	3	1	**8T-9655**	8	MOUNT (ISOLATION)	
	4	1	**133-3489**	1	PLATE AS	
	5	1	**9D-4439**	4	STUD-WELD (3/8-16X1.0 IN OAL)	
	6	1	**150-6259**	1	BRACKET AS	
Y	7	1	**166-7731**	1	CONTROL GP-UNPROGRAMMED	292
	8	1	**4L-6454**	4	BOLT (3/8-16X1 IN)	
	9	1	**4P-8134**	1	CLIP (LADDER)	
	10	1	**6V-8801**	1	NUT (3/8-16 THD)	
M	11	1	**8T-3647**	2	BOLT (M8X1.25X80MM)	
	12	1	**8T-4224**	3	WASHER-HARD (8.8X16X2MM THK)	
	13	1	**8T-4896**	5	WASHER-HARD (10.2X18.5X2.5MM THK)	
M	14	1	**8T-6869**	2	BOLT (M8X1.25X60MM)	
	15	1	**9N-0869**	4	WASHER-HARD (8.8X25.5X2MM THK)	
	16	1	**145-0487**	4	SPACER (43.6MM THK)	

M-METRIC PART
Y-SEPARATE ILLUSTRATION

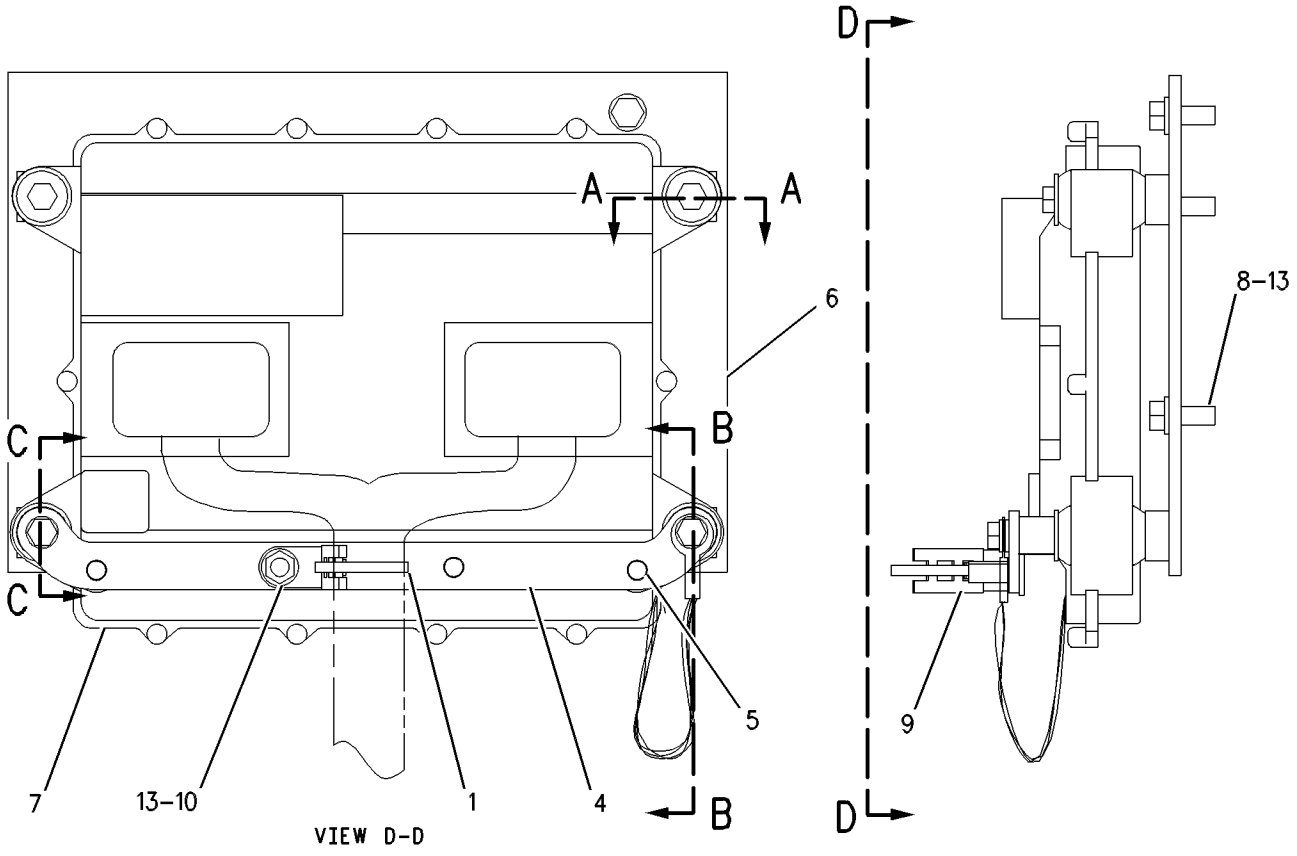

VIEW D-D

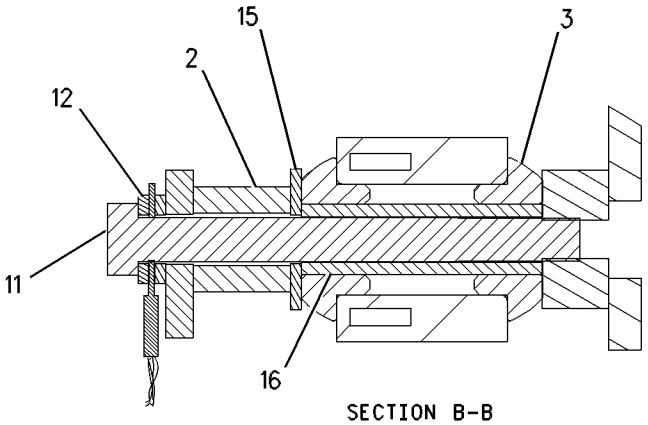

SECTION B-B

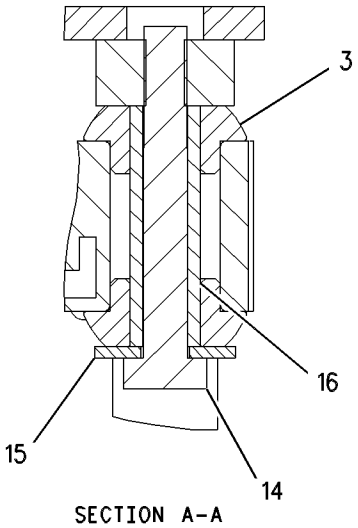

SECTION A-A

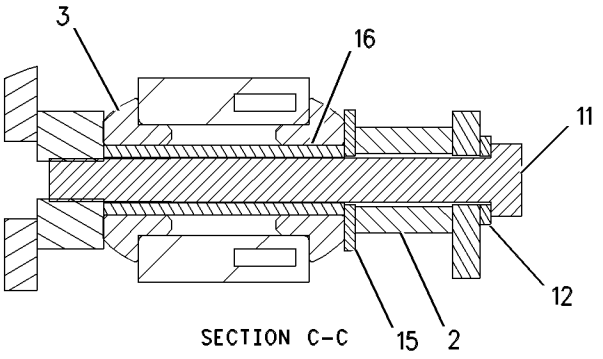

SECTION C-C

GRAPHIC #1 **<END>** g00579714

175-5213 CONTROL & MTG GP-ENGINE ELEK

S/N: 2GR1180-UP

PART OF 155-5556 ENGINE AR

SMCS-1901 **i01203094**

NOTE	REF NO	GRAPHIC REF	PART NUMBER	QTY	PART NAME 1 2 3 4 5 6 (PRODUCT LEVEL)	SEE PAGE
Y	1	1	*132-8900*	1	CONTROL GP-ENGINE ELECTRONIC	288
	2	1	**110-2760**	1	BRACKET	
	3	1	**1A-2029**	7	BOLT (3/8-16X1.125IN)	
	4	1	**8T-9655**	8	MOUNT (ISOLATION)	
	5	1	**9M-1974**	2	WASHER-HARD (2MM THK)	
	6	1	**9N-0869**	4	WASHER-HARD (2MM THK)	
	7	1	**1B-9575**	2	BOLT (5/16-18X1.75IN)	
	8	1	**6I-1418**	4	SPACER (28.7MM THK)	
	9	1	**112-4387**	2	ELBOW (90 DEGREE SWIVEL, FLARED)	
	10	1	**8N-9885**	1	GASKET-DRIVE HOUSING	
	11	1	**5M-2894**	7	WASHER (2.5MM THK)	
	12	1	**2B-2694**	2	BOLT (5/16-18X2IN)	
	13	1	**166-8417**	1	BRACKET AS	
		1	**1F-0750**	4	NUT-WELD (3/8-16 THD)	

Y-SEPARATE ILLUSTRATION

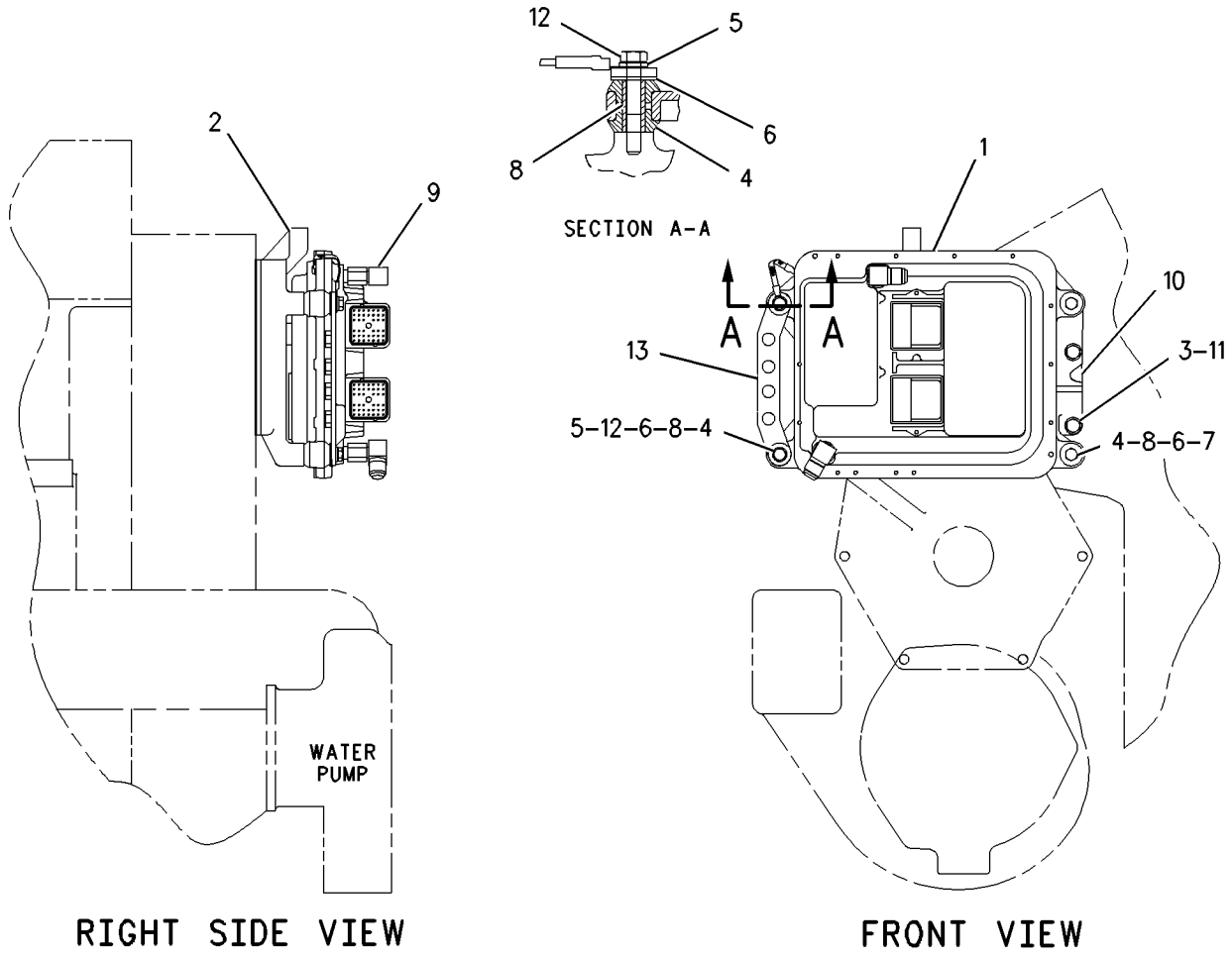

GRAPHIC #1 **<END>** g00657575

158-8077 CONTROL & MTG GP-POWER TRAIN

S/N: 7PZ1-UP
PART OF 112-9167 POWER TRAIN AR
TYPE 1

SMCS-3065, 4800 **i01988524**

NOTE	REF NO	GRAPHIC REF	PART NUMBER	QTY	PART NAME 1 2 3 4 5 6 (PRODUCT LEVEL)	SEE PAGE
	1	1	**6I-1418**	4	SPACER (8.2X12.7X28.7MM THK)	
	2	1	**8T-9655**	8	MOUNT (ISOLATION)	
Y	3	1	**160-1758**	1	CONTROL GP-UNPROGRAMMED	291
	4	1	**8T-4224**	1	WASHER-HARD (8.8X16X2MM THK)	
	5	1	**9N-0869**	4	WASHER-HARD (8.8X25.5X2.0MM THK)	
M	6	1	**7X-0818**	4	BOLT (M8X1.25X45MM)	

M-METRIC PART
Y-SEPARATE ILLUSTRATION

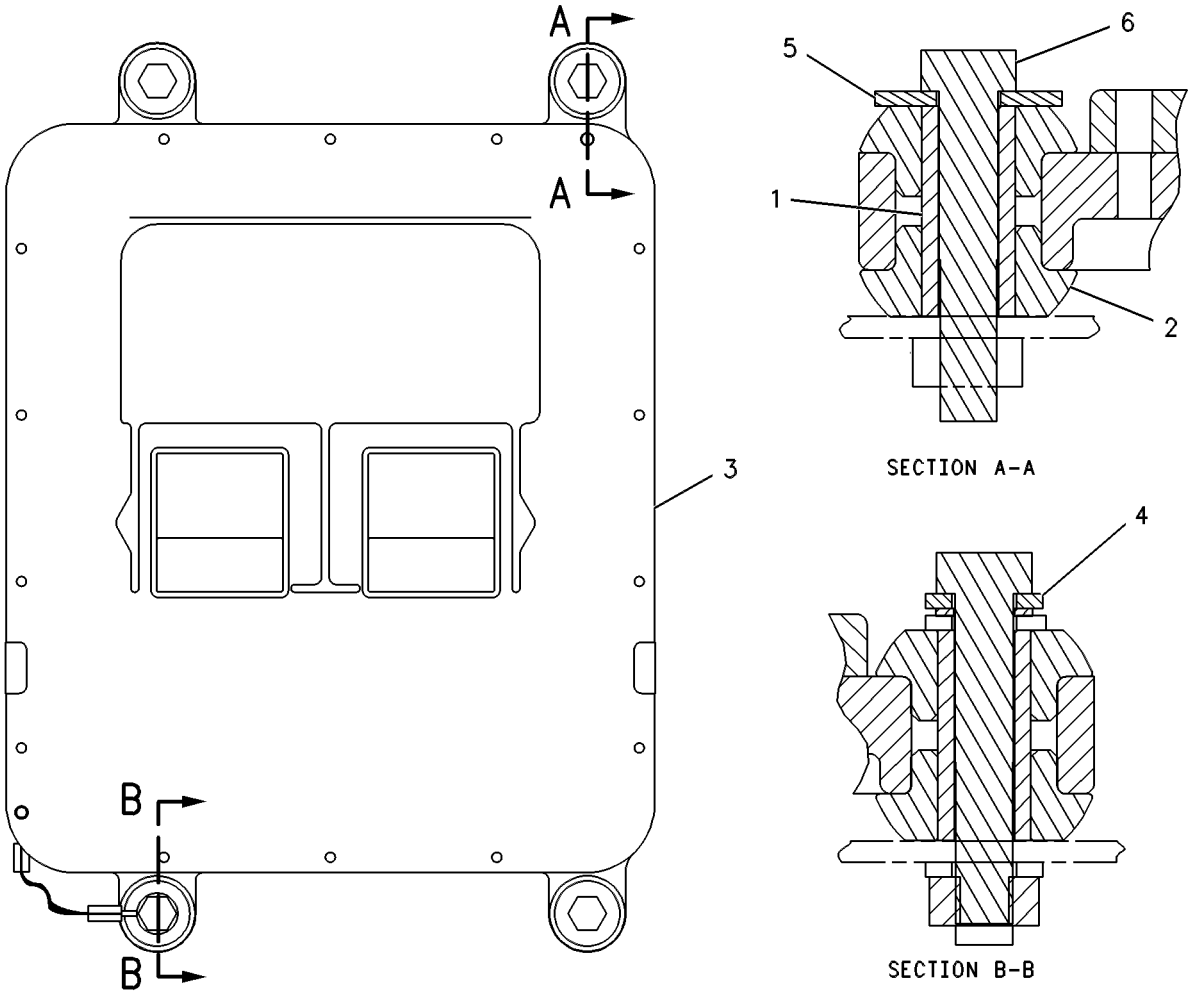

GRAPHIC #1 **<END>** g00258550

158-8077 CONTROL & MTG GP-POWER TRAIN

S/N: 7PZ1-UP
PART OF 112-9167 POWER TRAIN AR
TYPE 2

SMCS-3065, 4800 **i01741413**

NOTE	REF NO	GRAPHIC REF	PART NUMBER	QTY	PART NAME 1 2 3 4 5 6 (PRODUCT LEVEL)	SEE PAGE
	1	1	**6I-1418**	4	SPACER (8.2X12.7X28.7MM THK)	
	2	1	**8T-9655**	8	MOUNT (ISOLATION)	
CY	3	1	**172-9389**	1	CONTROL GP-UNPROGRAMMED	294
	4	1	**8T-4224**	1	WASHER-HARD (8.8X16X2MM THK)	
	5	1	**9N-0869**	4	WASHER-HARD (8.8X25.5X2MM THK)	
M	6	1	**7X-0818**	4	BOLT (M8X1.25X45MM)	

C-CHANGE FROM PREVIOUS TYPE
M-METRIC PART
Y-SEPARATE ILLUSTRATION

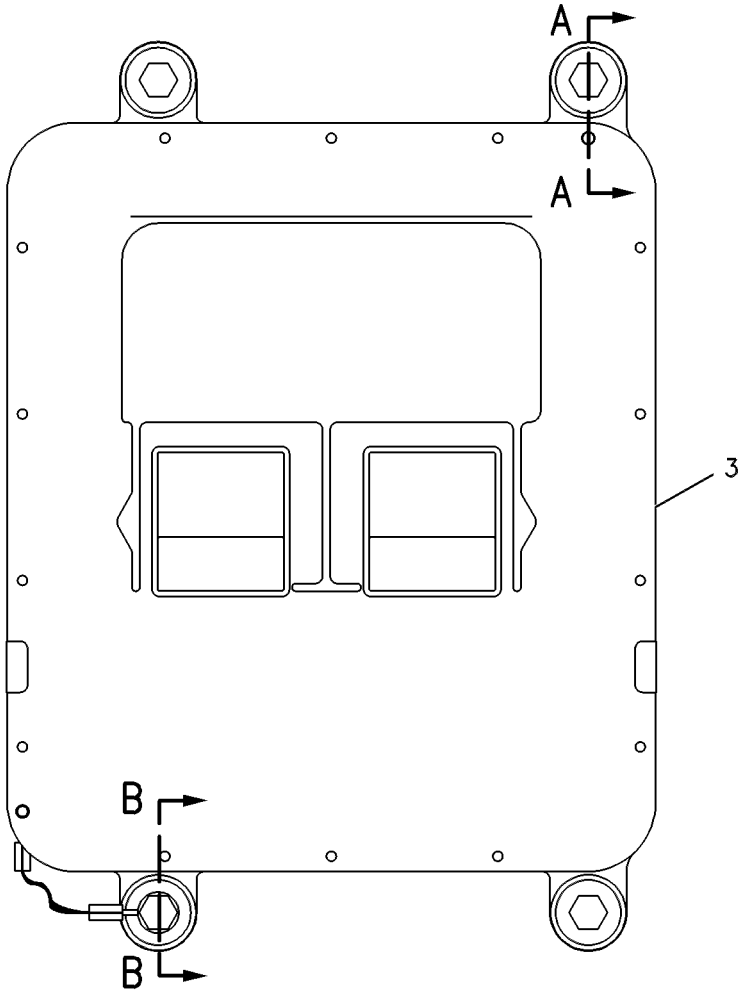

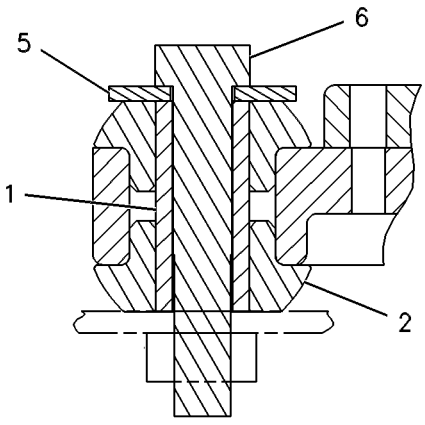

SECTION A-A

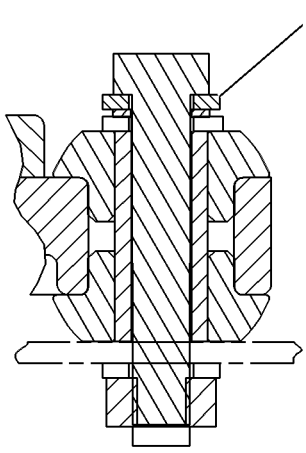

SECTION B-B

GRAPHIC #1 **<END>** g00258550

115-7412 CONTROL & MTG GP-TRANSMISSION

S/N: 7PZ1-UP
ELECTRONIC
PART OF 112-9167 POWER TRAIN AR

SMCS-3168 **i00945132**

NOTE	REF NO	GRAPHIC REF	PART NUMBER	QTY	PART NAME 1 2 3 4 5 6 (PRODUCT LEVEL)	SEE PAGE
	1	1	**6F-7012**	2	STUD (3/8-16 THD)	
Y	2	1	*124-2356*	1	CONTROL GP-STEERING & TMSN	630
	3	1	**5M-3062**	4	BOLT (3/8-16X.75IN)	
	4	1	**6V-8801**	2	NUT (3/8-16 THD)	
	5	1	**8T-4896**	4	WASHER-HARD (2.5MM THK)	

Y-SEPARATE ILLUSTRATION

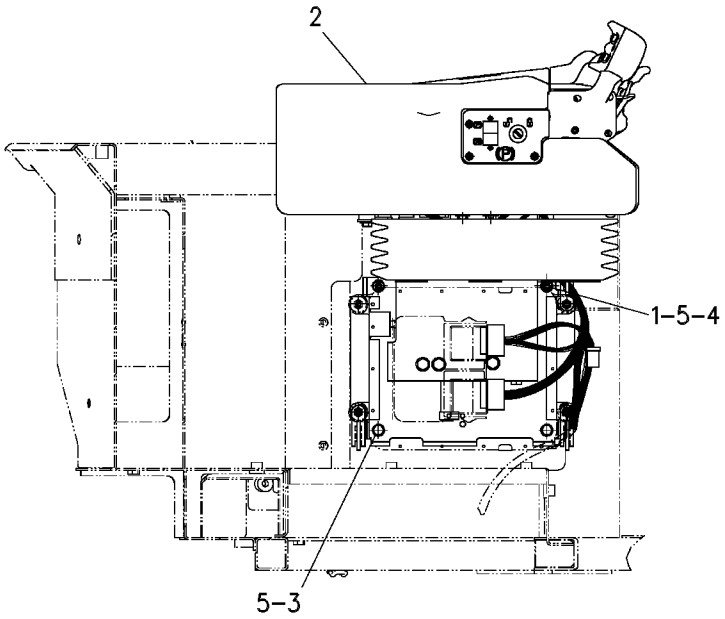

RIGHT SIDE VIEW

GRAPHIC #1 **<END>** g00272760

165-5018 CONTROL GP-ELECTRONIC–KEYPAD

S/N: 7PZ1-677
(WITH ENGLISH VERSION KEYPAD)
PART OF 170-3715 CONTROL & MTG GP-ELECTRONIC

SMCS-7490 **i01988520**

NOTE	REF NO	GRAPHIC REF	PART NUMBER	QTY	PART NAME 1 2 3 4 5 6 (PRODUCT LEVEL)	SEE PAGE
	1	1	**9X-6259**	4	SCREW-MACHINE (6-32 X 0.375 IN)	
	2	1	**136-6140**	1	COVER AS	
	3	1	**136-6142**	1	PLATE AS	
		1	**9F-6445**	4	NUT-WELD (1/4-24 THD)	
	4	1	**143-3974**	1	COVER AS	
Y	5	1	**149-6470**	1	CONTROL GP-DISPLAY ELECTRONIC	1027
Y	6	1	**225-9217**	1	MODULE GP-MONITOR KEYPAD	1071
	7	1	**173-1646**	1	FILM-IDENTIFICATION (BLADE POSITION)	
	8	1	**096-6166**	4	WASHER-HARD (4.5X9X1MM THK)	
M	9	1	**129-3178**	4	LOCKNUT (M6X1 THD)	
	10	1	**1M-4543**	1	GROMMET	
	11	1	**6V-3884**	4	SCREW-HEX SOCKET (1/4-20X0.5 IN)	
M	12	1	**7Y-7256**	4	SCREW-TRUSS HEAD (M4X0.7X35MM)	
BD	13	1	**5P-5969**		SEAL	
	14	1	**143-9484**	1	HARNESS AS-KEYPAD	
	15	1	**123-9294**	1	LAMP (24 VOLT) (KEYPAD)	

B-USE AS REQUIRED
D-ORDER BY THE METER
M-METRIC PART
Y-SEPARATE ILLUSTRATION

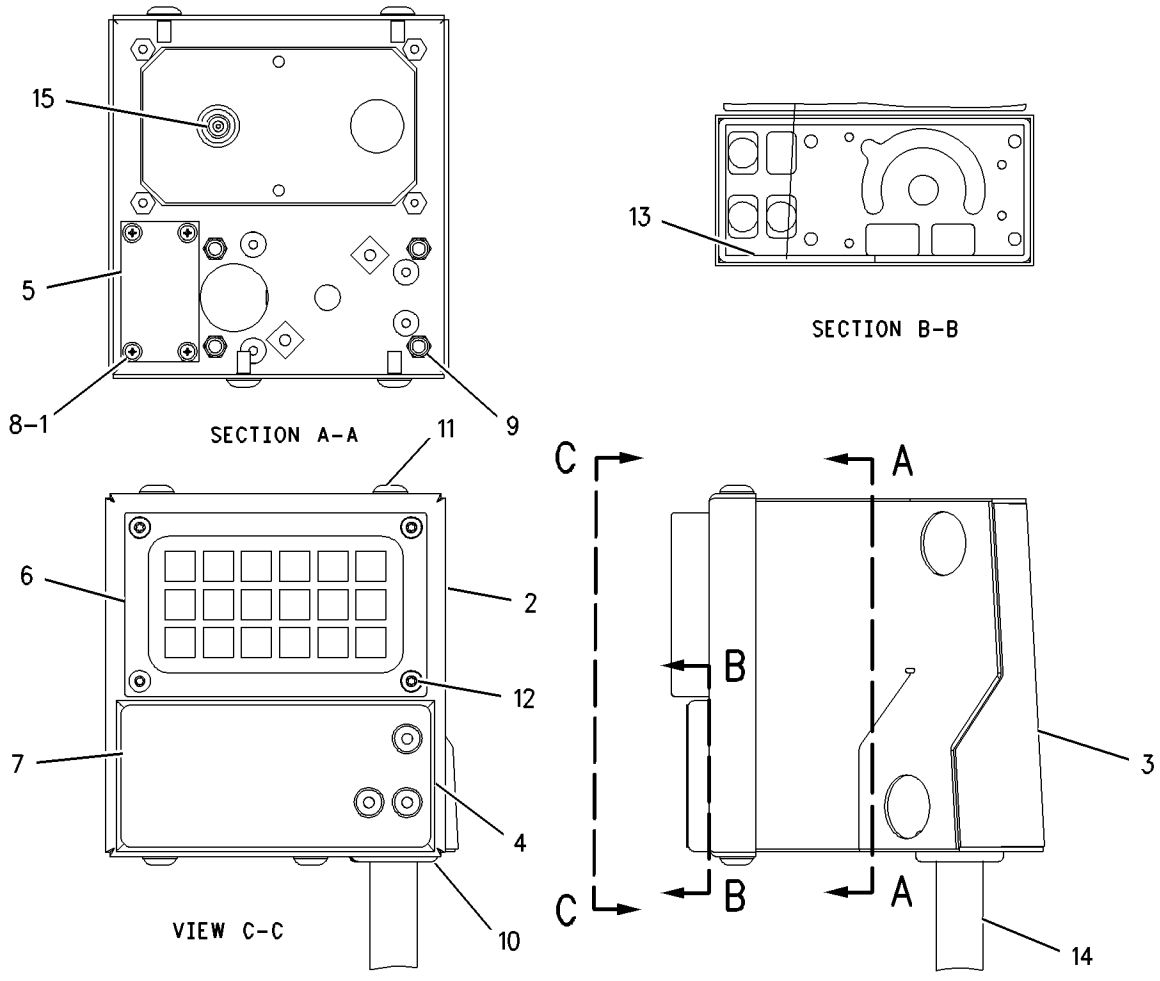

GRAPHIC #1 **<END>** g00663349

183-2076 CONTROL GP-ELECTRONIC—KEYPAD

S/N: 7PZ1-677
(WITH INTERNATIONAL VERSION KEYPAD)
PART OF 170-3715 CONTROL & MTG GP-ELECTRONIC

SMCS-7490 **i01988519**

NOTE	REF NO	GRAPHIC REF	PART NUMBER	QTY	PART NAME 1 2 3 4 5 6 (PRODUCT LEVEL)	SEE PAGE
	1	1	**9X-6259**	4	SCREW-MACHINE (6-32 X 0.375 IN)	
	2	1	**123-9294**	1	LAMP (24 VOLT) (KEYPAD)	
	3	1	**136-6140**	1	COVER AS	
	4	1	**136-6142**	1	PLATE AS	
		1	**9F-6445**	4	NUT-WELD (1/4-24 THD)	
	5	1	**143-3974**	1	COVER AS	
Y	6	1	**149-6470**	1	CONTROL GP-DISPLAY ELECTRONIC	1027
	7	1	**173-1646**	1	FILM-IDENTIFICATION (BLADE POSITION)	
Y	8	1	**183-2009**	1	MODULE GP-MONITOR KEYPAD (INTERNATIONAL VERSION)	1070
	9	1	**096-6166**	4	WASHER-HARD (4.5X9X1MM THK)	
M	10	1	**129-3178**	4	LOCKNUT (M6X1 THD)	
	11	1	**1M-4543**	1	GROMMET	
	12	1	**6V-3884**	4	SCREW-HEX SOCKET (1/4-20X0.5 IN)	
M	13	1	**7Y-7256**	4	SCREW-TRUSS HEAD (M4X0.7X35MM)	
BD	14	1	**5P-5969**		SEAL	
	15	1	**143-9484**	1	HARNESS AS-KEYPAD	

B-USE AS REQUIRED
D-ORDER BY THE METER
M-METRIC PART
Y-SEPARATE ILLUSTRATION

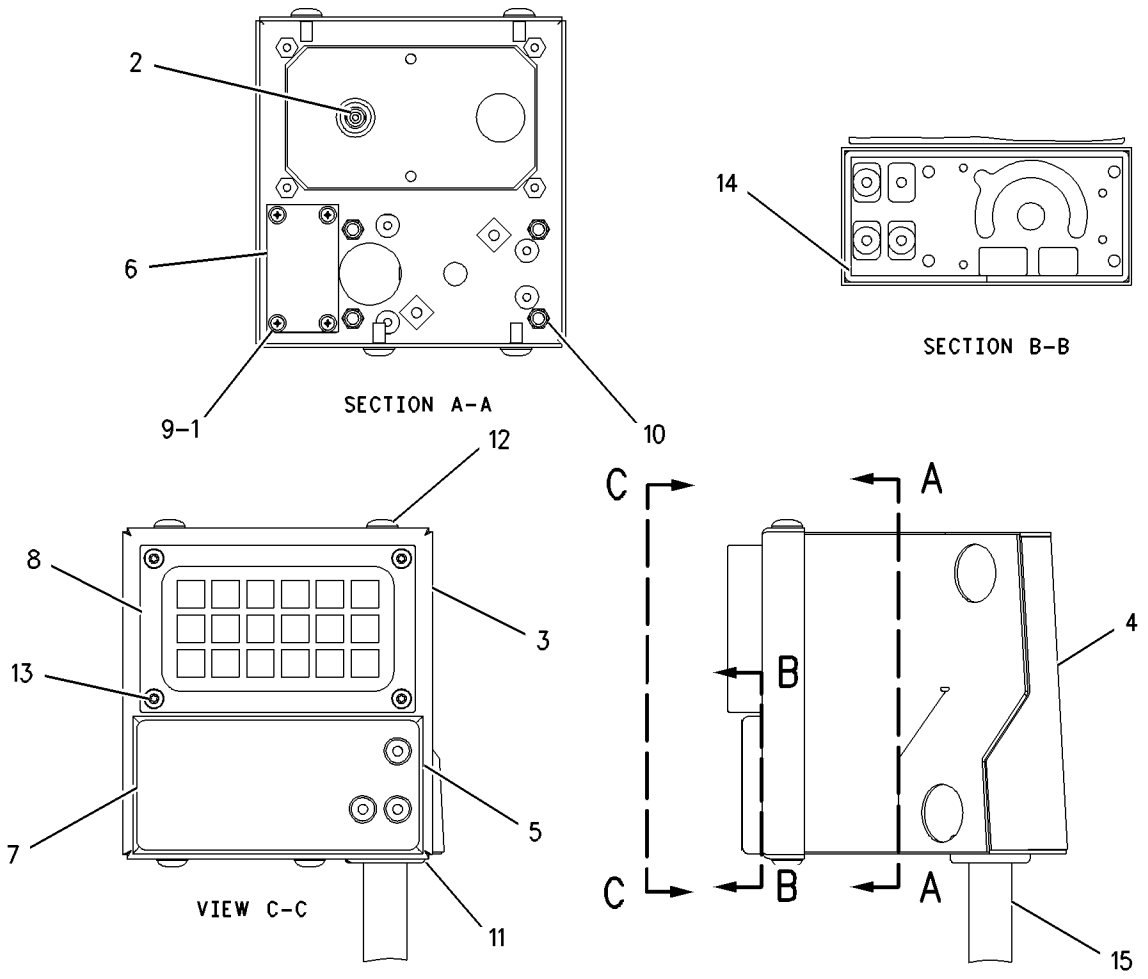

GRAPHIC #1 **<END>** g00664942

183-2076 CONTROL GP-ELECTRONIC—KEYPAD

S/N: 7PZ678-UP
(WITH INTERNATIONAL VERSION KEYPAD)
PART OF 170-3715 CONTROL & MTG GP-ELECTRONIC

SMCS-7490 **i01988518**

NOTE	REF NO	GRAPHIC REF	PART NUMBER	QTY	PART NAME 1 2 3 4 5 6 (PRODUCT LEVEL)	SEE PAGE
	1	1	**9X-6259**	4	SCREW-MACHINE (6-32 X 0.375 IN)	
	2	1	**123-9294**	1	LAMP (24 VOLT) (KEYPAD)	
	3	1	**136-6140**	1	COVER AS	
	4	1	**136-6142**	1	PLATE AS	
	5	1	**143-3974**	1	COVER AS	
Y	6	1	**149-6470**	1	CONTROL GP-DISPLAY ELECTRONIC	1027
	7	1	**173-1646**	1	FILM-IDENTIFICATION (BLADE POSITION)	
Y	8	1	**225-9217**	1	MODULE GP-MONITOR KEYPAD (INTERNATIONAL VERSION)	1071
	9	1	**096-6166**	4	WASHER-HARD (4.5X9X1MM THK)	
M	10	1	**129-3178**	4	LOCKNUT (M6X1 THD)	
	11	1	**1M-4543**	1	GROMMET	
	12	1	**6V-3884**	4	SCREW-HEX SOCKET (1/4-20X0.5 IN)	
M	13	1	**7Y-7256**	4	SCREW-TRUSS HEAD (M4X0.7X35MM)	
BD	14	1	**5P-5969**		SEAL	
	15	1	**143-9484**	1	HARNESS AS-KEYPAD	
		1	**102-8805**	2	KIT-RECEPTACLE (6-PIN)	
					(EACH INCLUDES RECEPTACLE AS & WEDGE)	
		1	**155-2260**	1	KIT-CONNECTING PLUG (3-PIN)	
		1	**155-2274**	1	KIT-CONNECTING PLUG (6-PIN)	
					(EACH INCLUDES PLUG AS & WEDGE)	
		1	**155-2272**	2	PLUG AS-CONNECTOR (4-PIN)	

B-USE AS REQUIRED
D-ORDER BY THE METER
M-METRIC PART
Y-SEPARATE ILLUSTRATION

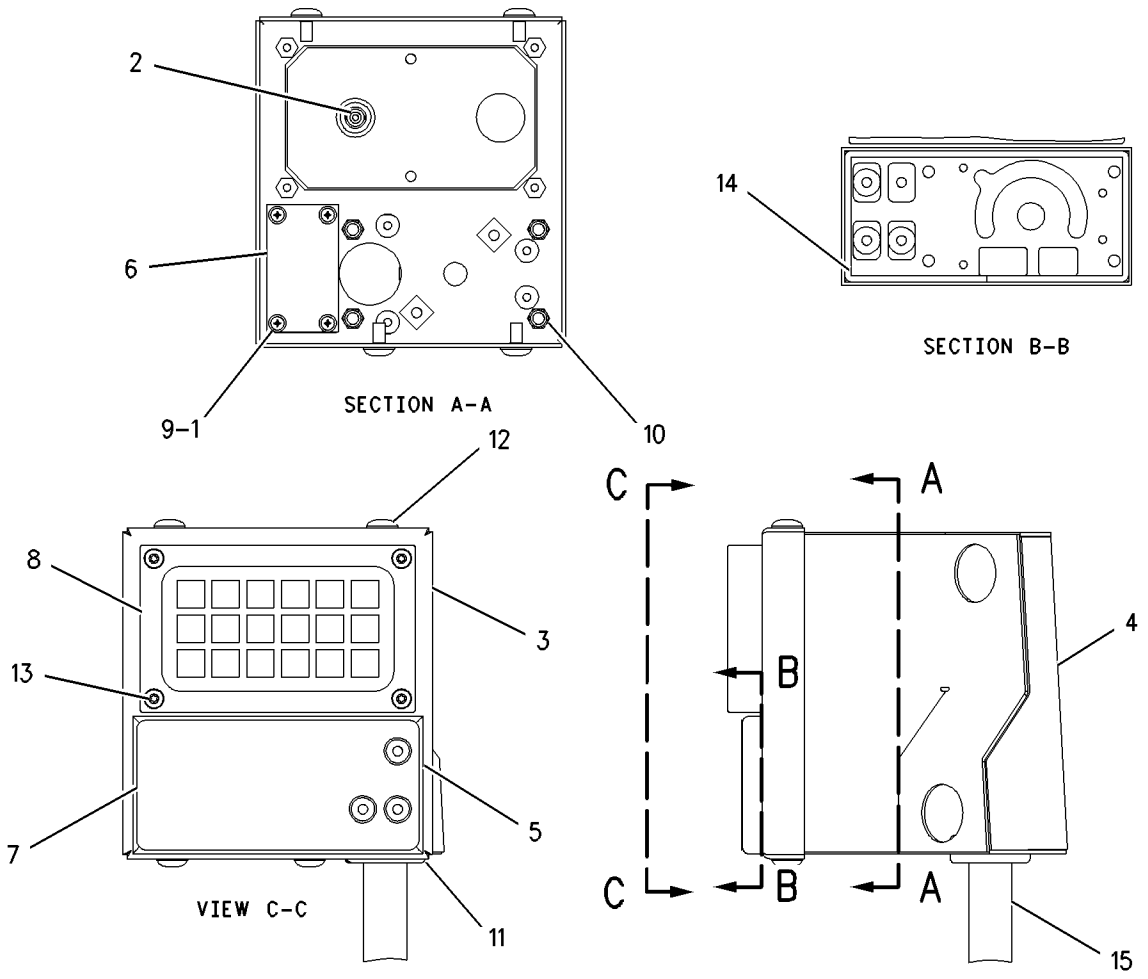

GRAPHIC #1 **<END>** g00664942

130-7481 CONTROL GP-ENGINE ELECTRONIC

S/N: 2GR1180-2282

PART OF 132-8900 CONTROL GP-ENGINE ELECTRONIC

SMCS-1901 **i02001203**

NOTE	REF NO	GRAPHIC REF	PART NUMBER	QTY	PART NAME 1 2 3 4 5 6 (PRODUCT LEVEL)	SEE PAGE
	2	1	**111-8411**	1	COVER	
	3	1	**6V-1179**	1	SEAL-O-RING	
	4	1	**8S-8158**	1	SEAL-WIRE	
D	5	1	**8C-8418**		LOCKWIRE (.2M)	
M	6	1	**102-4087**	4	BOLT (M5X.8X12MM)	
	7	1	**2H-2615**	4	WASHER (.219X.41X.0312 IN THK)	
	8	1	**126-7574**	1	SCREW-PAN HEAD (8-32X9.52MM)	
	9	1	**7X-6315**	1	STRAP AS-GROUND	
					AVAILABLE REPAIR KIT(S):	
M			**6V-6703**	2	KIT-RETAINING BOLT (ENGINE ELECTRONIC CONTROL)	
					(EACH INCLUDES BOLT, RING AND SEALS)	

D-ORDER BY THE METER
M-METRIC PART

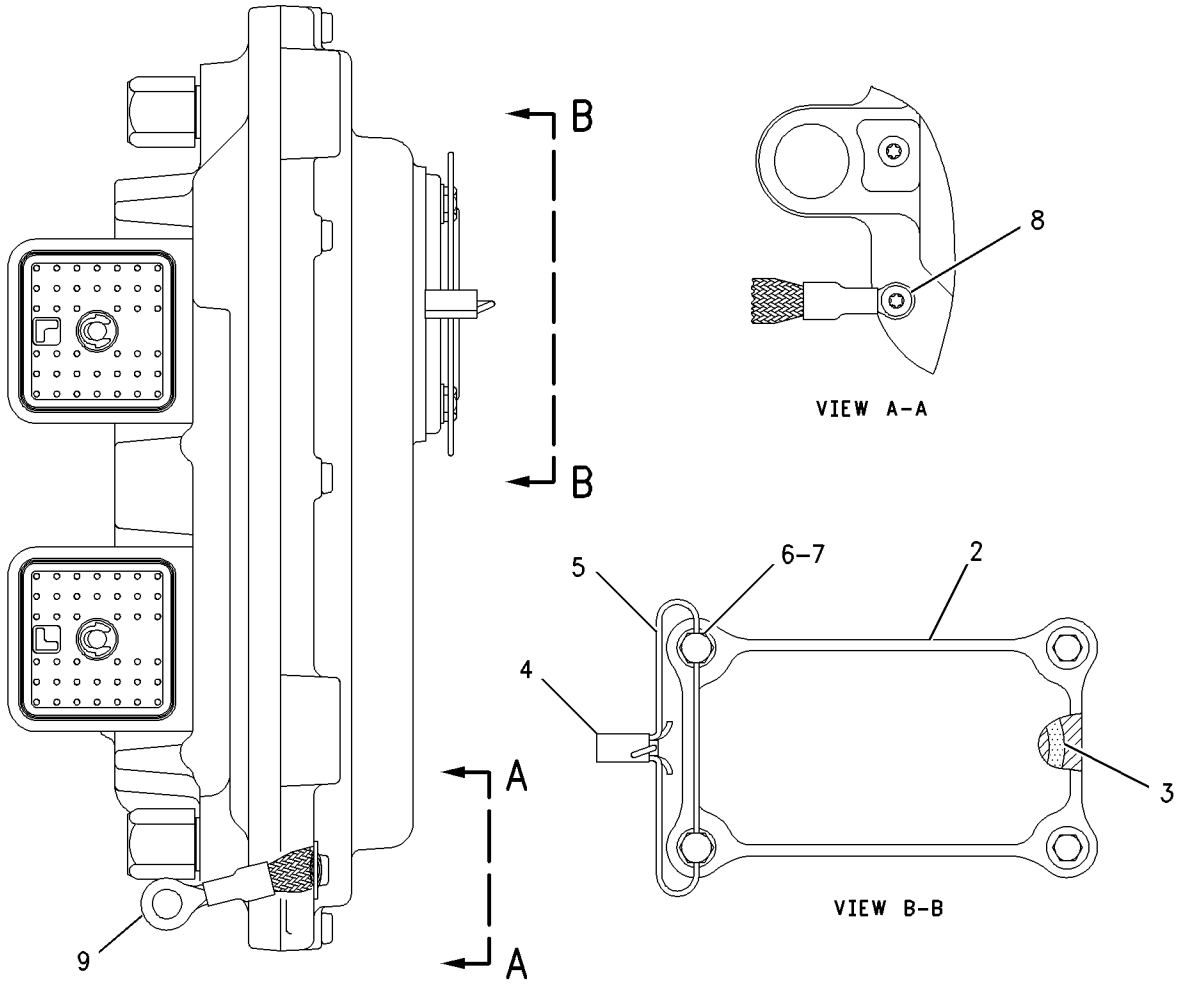

GRAPHIC #1 **<END>** g00872924

132-8900 CONTROL GP-ENGINE ELECTRONIC

S/N: 2GR1180-2282

PART OF 175-5213 CONTROL & MTG GP-ENGINE ELEK

SMCS-1901 **i01591084**

NOTE	REF NO	GRAPHIC REF	PART NUMBER	QTY	PART NAME 1 2 3 4 5 6 (PRODUCT LEVEL)	SEE PAGE
Y	1	1	**130-7481**	1	CONTROL GP-ENGINE ELECTRONIC (PERSONALITY MODULE)	287

Y-SEPARATE ILLUSTRATION

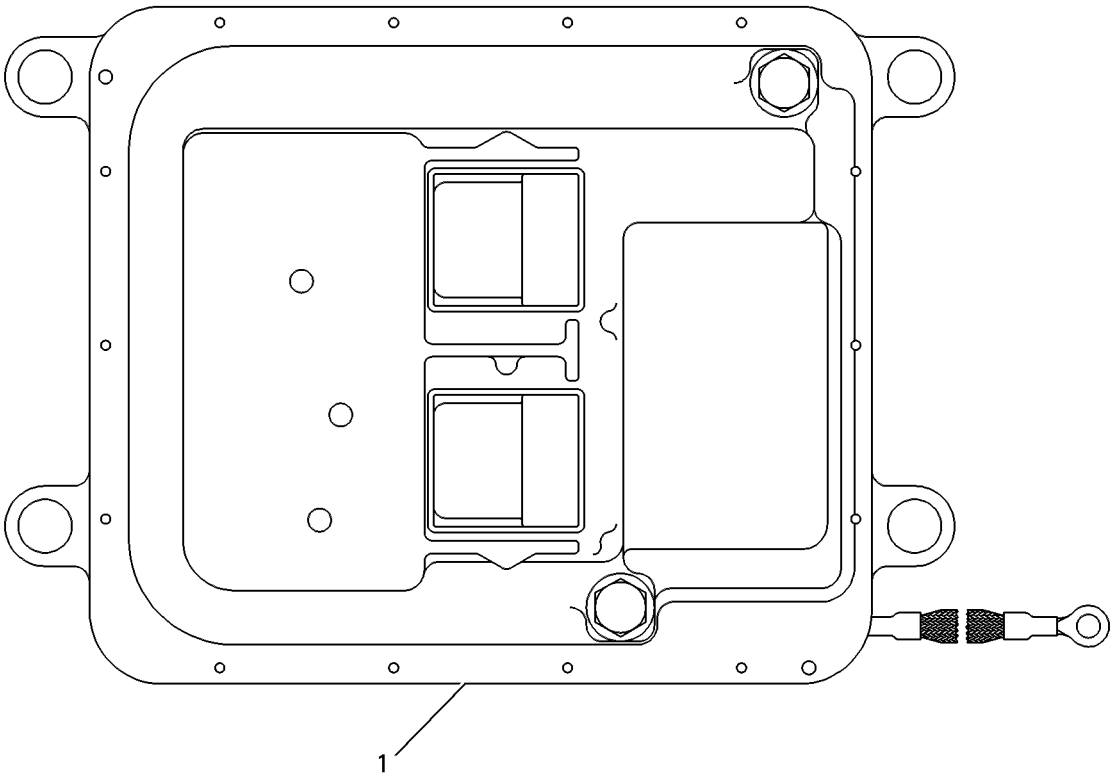

GRAPHIC #1 **<END>** g00260096

ELECTRICAL AND STARTING SYSTEM

132-8900 CONTROL GP-ENGINE ELECTRONIC

S/N: 2GR2283-UP

PART OF 175-5213 CONTROL & MTG GP-ENGINE ELEK

SMCS-1901 **i01683039**

NOTE	REF NO	GRAPHIC REF	PART NUMBER	QTY	PART NAME 1 2 3 4 5 6 (PRODUCT LEVEL)	SEE PAGE
CY	1	1	**176-7503**	1	CONTROL GP-ENGINE ELECTRONIC	290

C-CHANGE FROM PREVIOUS TYPE
Y-SEPARATE ILLUSTRATION

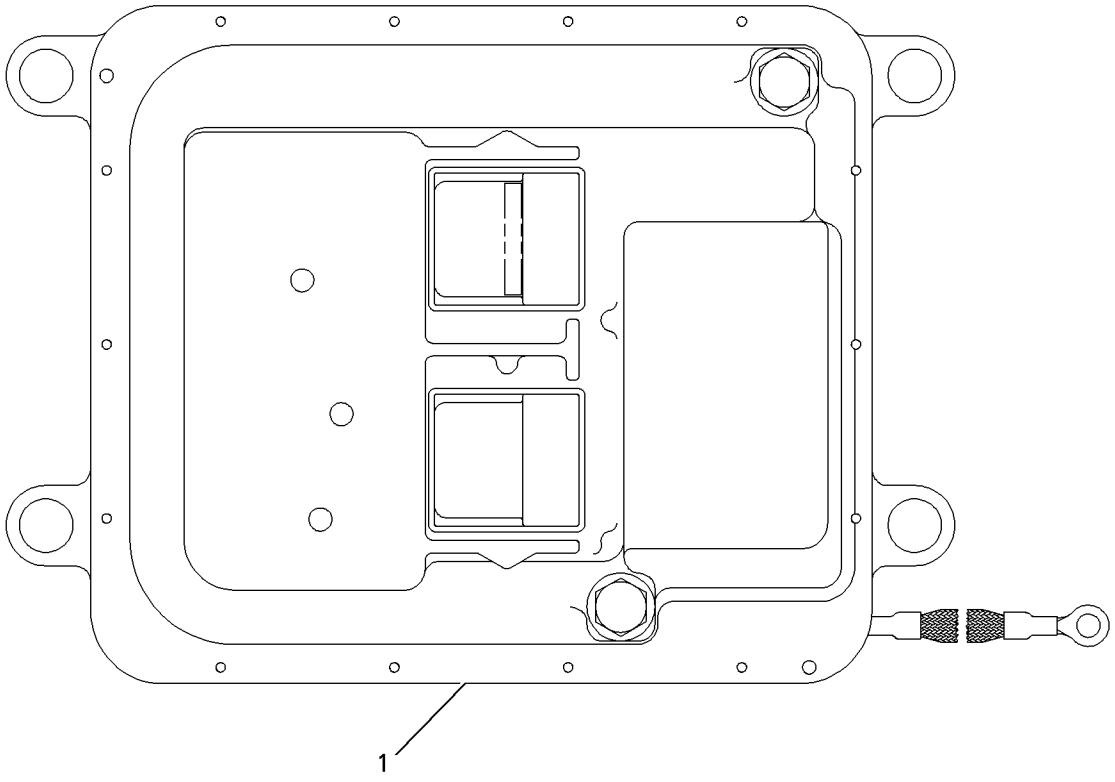

GRAPHIC #1 **<END>** g00673713

176-7503 CONTROL GP-ENGINE ELECTRONIC

S/N: 2GR2283-UP

PART OF 132-8900 CONTROL GP-ENGINE ELECTRONIC

SMCS-1901 **i01734364**

NOTE	REF NO	GRAPHIC REF	PART NUMBER	QTY	PART NAME 1 2 3 4 5 6 (PRODUCT LEVEL)	SEE PAGE
	2	1	**111-8411**	1	COVER	
	3	1	**6V-1179**	1	SEAL-O-RING	
	4	1	**8S-8158**	1	SEAL-WIRE	
D	5	1	**8C-8418**		LOCKWIRE (.2M)	
M	6	1	**102-4087**	4	BOLT (M5X.8X12MM)	
	7	1	**2H-2615**	4	WASHER (.219X.41X.0312 IN THK)	
	8	1	**126-7574**	1	SCREW-PAN HEAD (8-32X9.52MM) (SELF LOCKING)	
	9	1	**7X-6315**	1	STRAP AS	
					AVAILABLE REPAIR KIT(S):	
M			**6V-6703**	2	KIT-RETAINING BOLT (ENGINE ELECTRONIC CONTROL)	
					(EACH INCLUDES BOLT, SEALS AND RINGS)	

D-ORDER BY THE METER
M-METRIC PART

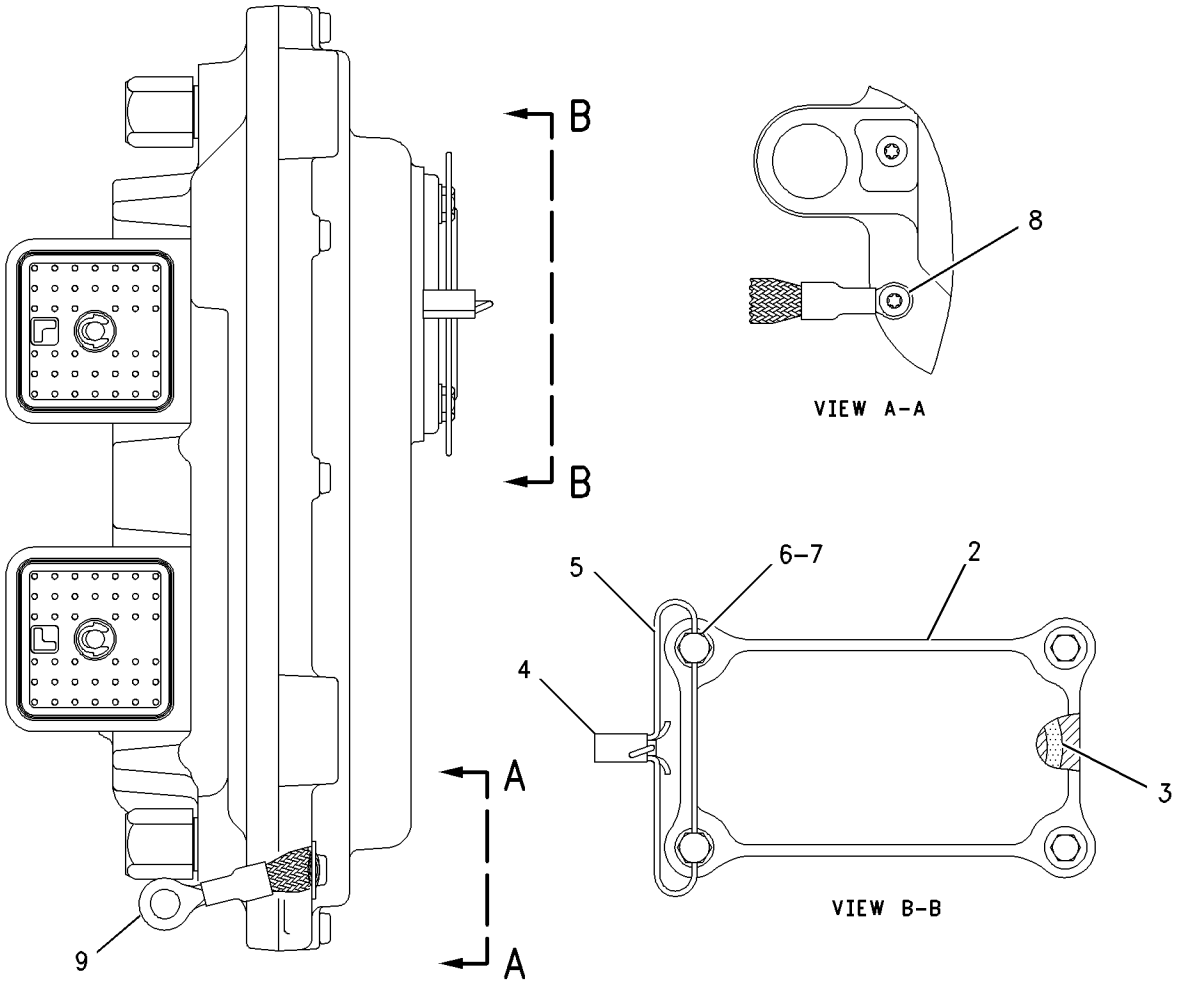

GRAPHIC #1 **<END>** g00872924

160-1758 CONTROL GP-UNPROGRAMMED–POWER TRAIN

S/N: 7PZ1-UP

PART OF 158-8077 CONTROL & MTG GP-POWER TRAIN

SMCS-7610 **i01989527**

NOTE	REF NO	GRAPHIC REF	PART NUMBER	QTY	PART NAME 1 2 3 4 5 6 (PRODUCT LEVEL)	SEE PAGE
	1	1	**7X-6315**	1	STRAP AS-GROUND	
	2	1	**101-0852**	1	SCREW-PAN HEAD (NO 8 X 3/8 IN)	
M	3	1	**6V-6703**	2	KIT-RETAINING BOLT (UNPROGRAMMED CONTROL) (EACH INCLUDES BOLT, RING, AND SEALS)	
					FOR SOFTWARE, SEE ELECTRONICS GP	

M-METRIC PART

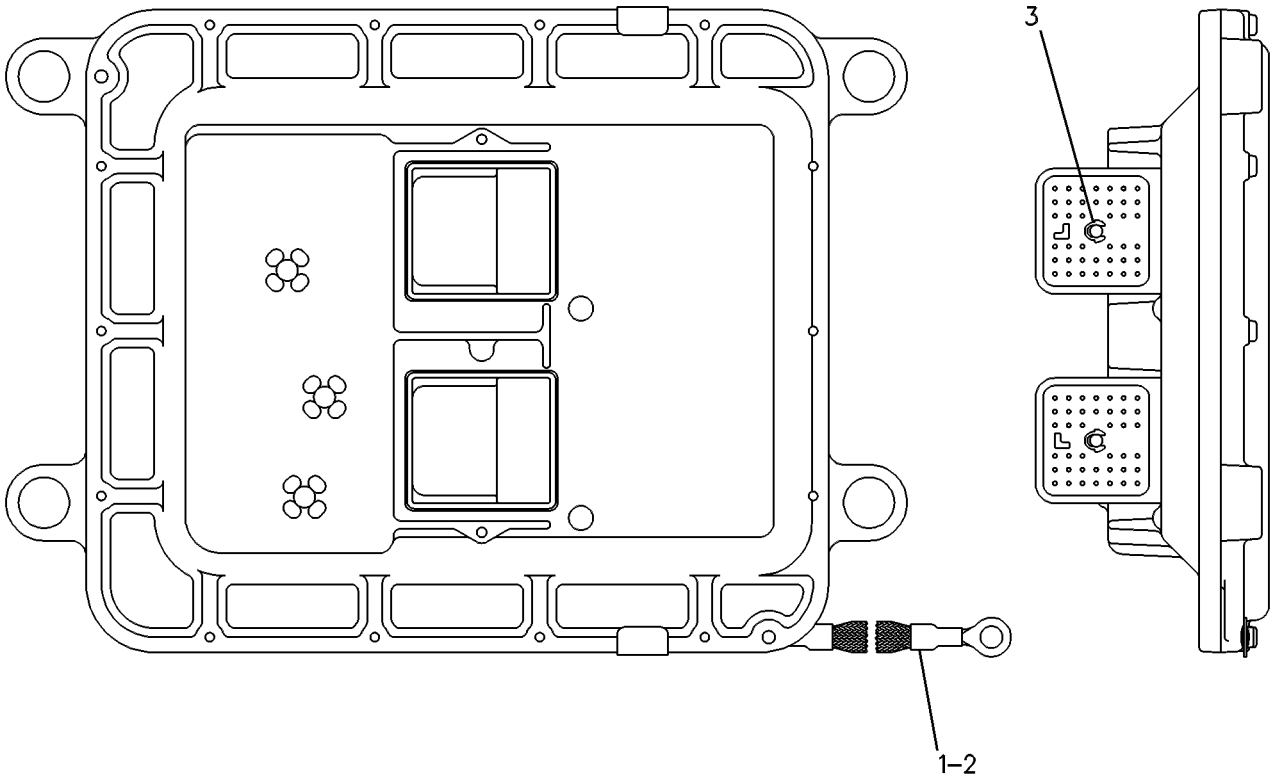

GRAPHIC #1 **<END>** g00087166

166-7731 CONTROL GP-UNPROGRAMMED–IMPLEMENT CONTROL

S/N: 7PZ1-UP

PART OF 173-3263 CONTROL & MTG GP-ELECTRONIC, 236-6586 SERVICE GP-IMPLEMENT

SMCS-7610 **i01091777**

NOTE	REF NO	GRAPHIC REF	PART NUMBER	QTY	PART NAME 1 2 3 4 5 6 (PRODUCT LEVEL)	SEE PAGE
	1	1	**134-4126**	1	WASHER	
	2	1	**7X-6315**	1	STRAP-GROUNDING	
	3	1	**120-4897**	1	SCREW-PAN HEAD	

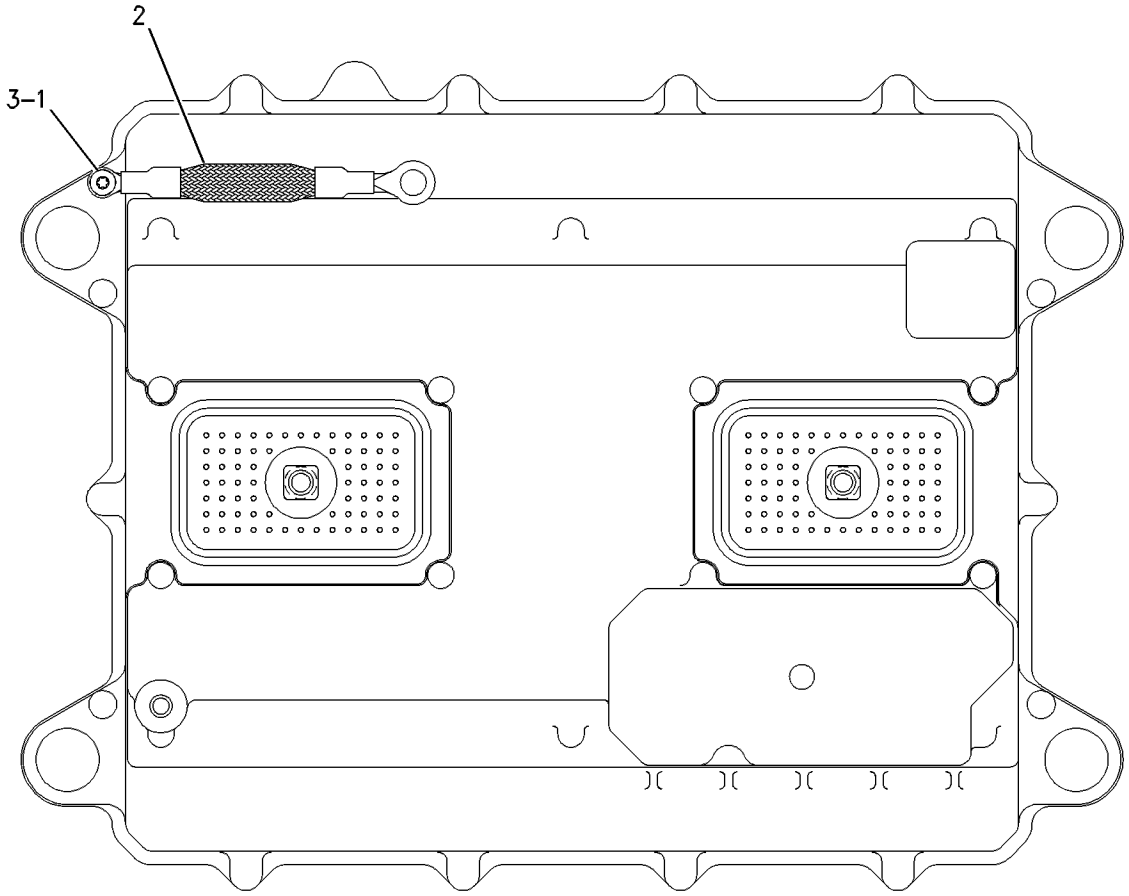

GRAPHIC #1 **<END>** g00580081

169-0489 CONTROL GP-UNPROGRAMMED–VIDS

S/N: 7PZ1-UP

PART OF 173-3262 CONTROL & MTG GP-ELECTRONIC, 239-7919 SERVICE GP-MONITOR

SMCS-7610 **i02023801**

NOTE	REF NO	GRAPHIC REF	PART NUMBER	QTY	PART NAME 1 2 3 4 5 6 (PRODUCT LEVEL)	SEE PAGE
	1	1	**134-4126**	1	WASHER (4.52X8.28X.76-MM THK)	
	2	1	**184-2472**	2	SCREW-PAN HEAD (NO.8-32X9.52-MM)	
	3	1	**7X-6315**	1	STRAP AS-GROUND	
Z	4	1		1	CONTROL AS	

Z-NOT SERVICED SEPARATELY

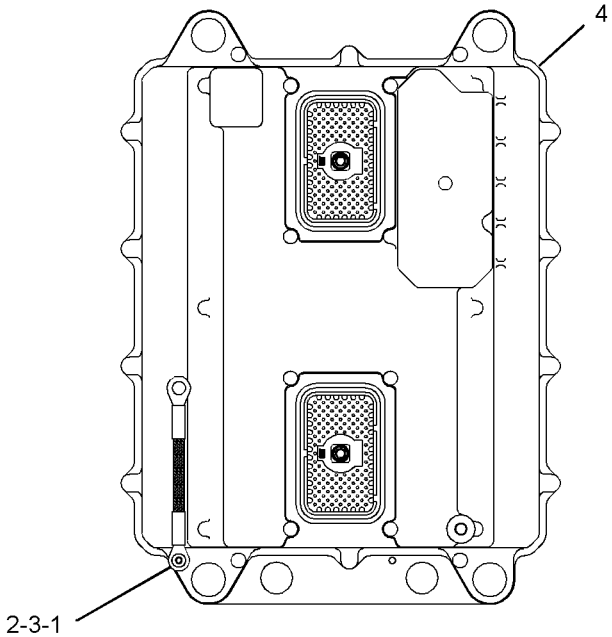

GRAPHIC #1 **<END>** g01044926

172-9389 CONTROL GP-UNPROGRAMMED–POWER TRAIN

S/N: 7PZ1-UP

PART OF 158-8077 CONTROL & MTG GP-POWER TRAIN, 218-0425 SERVICE GP-POWER TRAIN

SMCS-7610 **i01988516**

NOTE	REF NO	GRAPHIC REF	PART NUMBER	QTY	PART NAME 1 2 3 4 5 6 (PRODUCT LEVEL)	SEE PAGE
	1	1	**7X-6315**	1	STRAP AS-GROUND	
	2	1	**101-0852**	1	SCREW-PAN HEAD (NO 8 X 3/8 IN)	
M	3	1	**6V-6703**	2	KIT-RETAINING BOLT (UNPROGRAMMED CONTROL)	
					(EACH INCLUDES BOLT, RING, AND SEALS)	
	4	1	**134-4126**	1	WASHER (4.52X8.28X.76MM THK)	
					FOR SOFTWARE, SEE ELECTRONICS GP	

M-METRIC PART

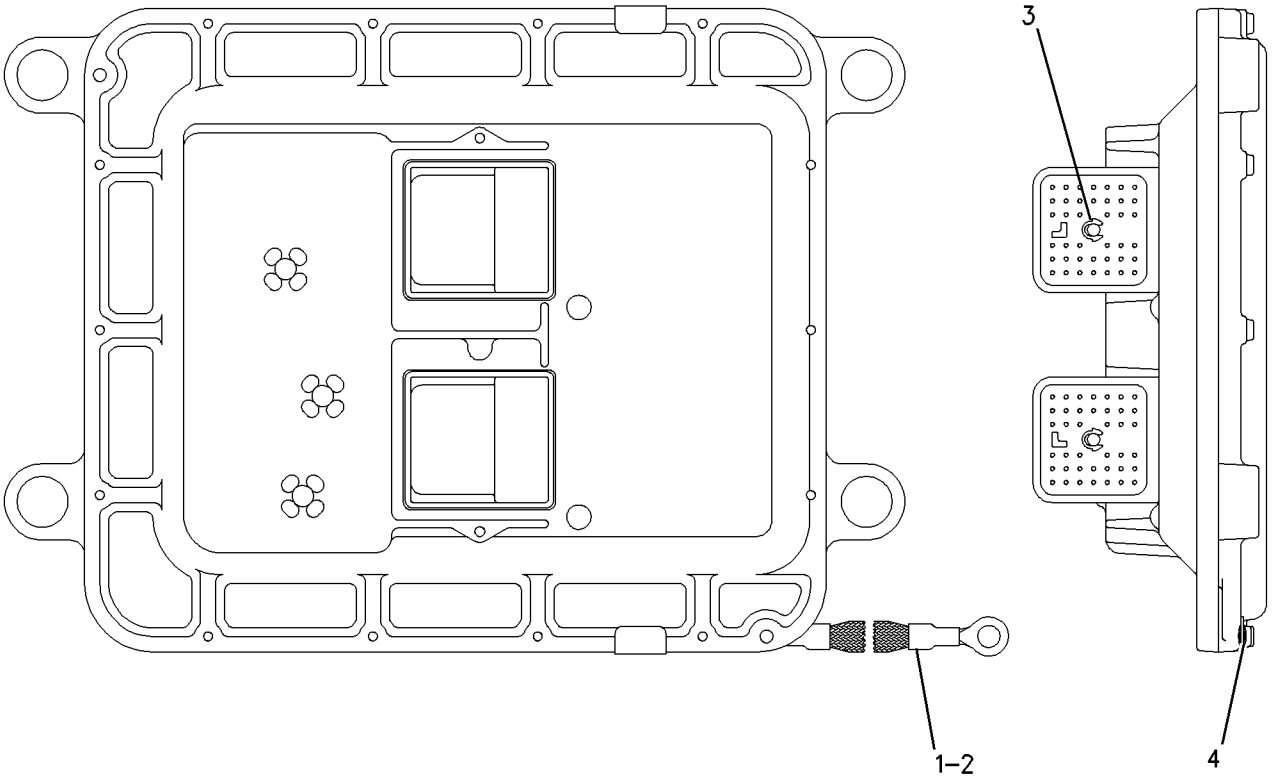

GRAPHIC #1 **<END>** g00951290

ELECTRICAL AND STARTING SYSTEM

159-5200 CONVERTER GP-ELECTRICAL

S/N: 7PZ1-UP
(24 VOLTS TO 12 VOLTS)(25 AMP)
AN ATTACHMENT

SMCS-1421 **i01988559**

NOTE	REF NO	GRAPHIC REF	PART NUMBER	QTY	PART NAME 1 2 3 4 5 6 (PRODUCT LEVEL)	SEE PAGE
	1	1	**3E-8646**	1	CONVERTER-POWER (24 VOLT TO 12 VOLT)(25 AMP)	
		1	**8T-9636**	2	FUSE (30 AMP) (POWER CONVERTER)	
	2	1	**9X-6772**	3	STRAP-CABLE	
	3	1	**160-0633**	1	HARNESS AS (POWER CONVERTER)	
	4	1	**9X-2498**	8	SCREW-HEX FLANGE (10-24X0.5 IN)	

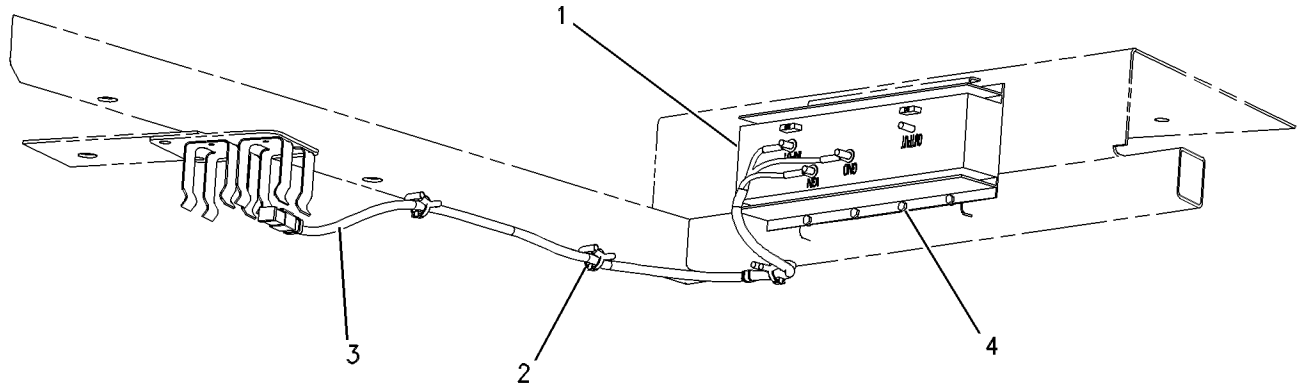

GRAPHIC #1 **<END>** g00573516

155-5555 ELECTRONICS AR-MACHINE

S/N: 7PZ1-UP

PART OF 155-5550 GENERAL AR

SMCS-7000 **i01142051**

NOTE	PART NUMBER	QTY	PART NAME 1 2 3 4 5 6 (PRODUCT LEVEL)	SEE PAGE
Y	*173-7246*	1	ELECTRONICS GP-IMPLEMENT	296
Y	*173-7459*	1	ELECTRONICS GP-POWER TRAIN	297
Y	*173-7247*	1	ELECTRONICS GP-MONITOR (VIDS)	296

Y-SEPARATE ILLUSTRATION

<END>

173-7246 ELECTRONICS GP-IMPLEMENT

S/N: 7PZ1-UP

PART OF 155-5555 ELECTRONICS AR-MACHINE

SMCS-5701, 7610, 7620 **i02023743**

NOTE	PART NUMBER	QTY	PART NAME 1 2 3 4 5 6 (PRODUCT LEVEL)	SEE PAGE
	236-6585	1	SOFTWARE GP-IMPLEMENT	
			(SOFTWARE ONLY)	
Y	**236-6586**	1	SERVICE GP-IMPLEMENT	351
			(OPTIONAL SERVICE REPLACEMENT) (INCLUDES CONTROL GP & SOFTWARE)	

Y-SEPARATE ILLUSTRATION

<END>

173-7247 ELECTRONICS GP-MONITOR

S/N: 7PZ1-UP

PART OF 155-5555 ELECTRONICS AR-MACHINE

SMCS-7490, 7601, 7603, 7610, 7620 **i02023741**

NOTE	PART NUMBER	QTY	PART NAME 1 2 3 4 5 6 (PRODUCT LEVEL)	SEE PAGE
	239-7918	1	SOFTWARE GP-MONITOR (VIMS)	
			(SOFTWARE ONLY)	
Y	**239-7919**	1	SERVICE GP-MONITOR	352
			(OPTIONAL SERVICE REPLACEMENT) (INCLUDES CONTROL GP & SOFTWARE)	

Y-SEPARATE ILLUSTRATION

<END>

ELECTRICAL AND STARTING SYSTEM

173-7459 ELECTRONICS GP-POWER TRAIN

S/N: 7PZ1-UP

PART OF 155-5555 ELECTRONICS AR-MACHINE

SMCS-4800, 4808, 7610, 7620 **i02023632**

NOTE	PART NUMBER	QTY	PART NAME 1 2 3 4 5 6 (PRODUCT LEVEL)	SEE PAGE
	218-0424	1	SOFTWARE GP-POWER TRAIN	
			(SOFTWARE ONLY)	
Y	**218-0425**	1	SERVICE GP-POWER TRAIN	353
			(OPTIONAL SERVICE REPLACEMENT) (INCLUDES CONTROL GP & SOFTWARE)	

Y-SEPARATE ILLUSTRATION

<END>

6I-9455 HEATER GP-FUEL

S/N: 7PZ1-UP
AN ATTACHMENT

SMCS-1296 **i01707303**

NOTE	REF NO	GRAPHIC REF	PART NUMBER	QTY	PART NAME 1 2 3 4 5 6 (PRODUCT LEVEL)	SEE PAGE
	1	1	**7W-5300**	1	HEATER-FUEL	
	2	1	**7X-0288**	3	BOLT (3/8-16X1.625 IN)	
	3	1	**8T-4896**	4	WASHER-HARD (10.2X18.5X2.5MM THK)	
	4	1	**8C-6875**	1	CONNECTOR	
		1	**5K-9090**	1	SEAL-O-RING	
	5	1	**0S-1594**	1	BOLT (3/8-16X1 IN)	
	6	1	**6I-9459**	1	TUBE AS	
	7	1	**6V-9746**	2	SEAL-O-RING	
	8	1	**7J-9108**	1	SEAL-O-RING	
		1	**6I-9458**	1	TUBE AS	
	9	1	**8T-1887**	1	CLIP (SLOT)	
		1	**8T-1888**	1	CLIP (TAB)	
	10	1	**0S-1591**	1	BOLT (3/8-16X1.5 IN)	
	11	1	**8T-2502**	1	BOLT (3/8-16X1.125 IN)	
	12	1	**6K-4947**	1	CLIP (TAB)	
		1	**6K-4948**	1	CLIP (SLOT)	
	13	1	**5M-2894**	2	WASHER-HARD (10.2X18.5X2.5MM THK)	
I	14	1	**6I-9457**	1	HOSE AS	
	15	1	**9X-2398**	1	ELBOW	
	16	1	**6B-9081**	2	BUSHING-REDUCING	
	17	1	**061-6717**	1	ELBOW-FLARED	
I	18	1	**6I-9456**	1	HOSE AS	
	19	1	**2P-8511**	1	ELBOW-FLARED	
	20	1	**1A-2029**	2	BOLT (3/8-16X1.125 IN)	

I-SEE HOSE FABRICATION GUIDE

6I-9455 **HEATER GP-FUEL** ***(contd.)*** **i01707303**

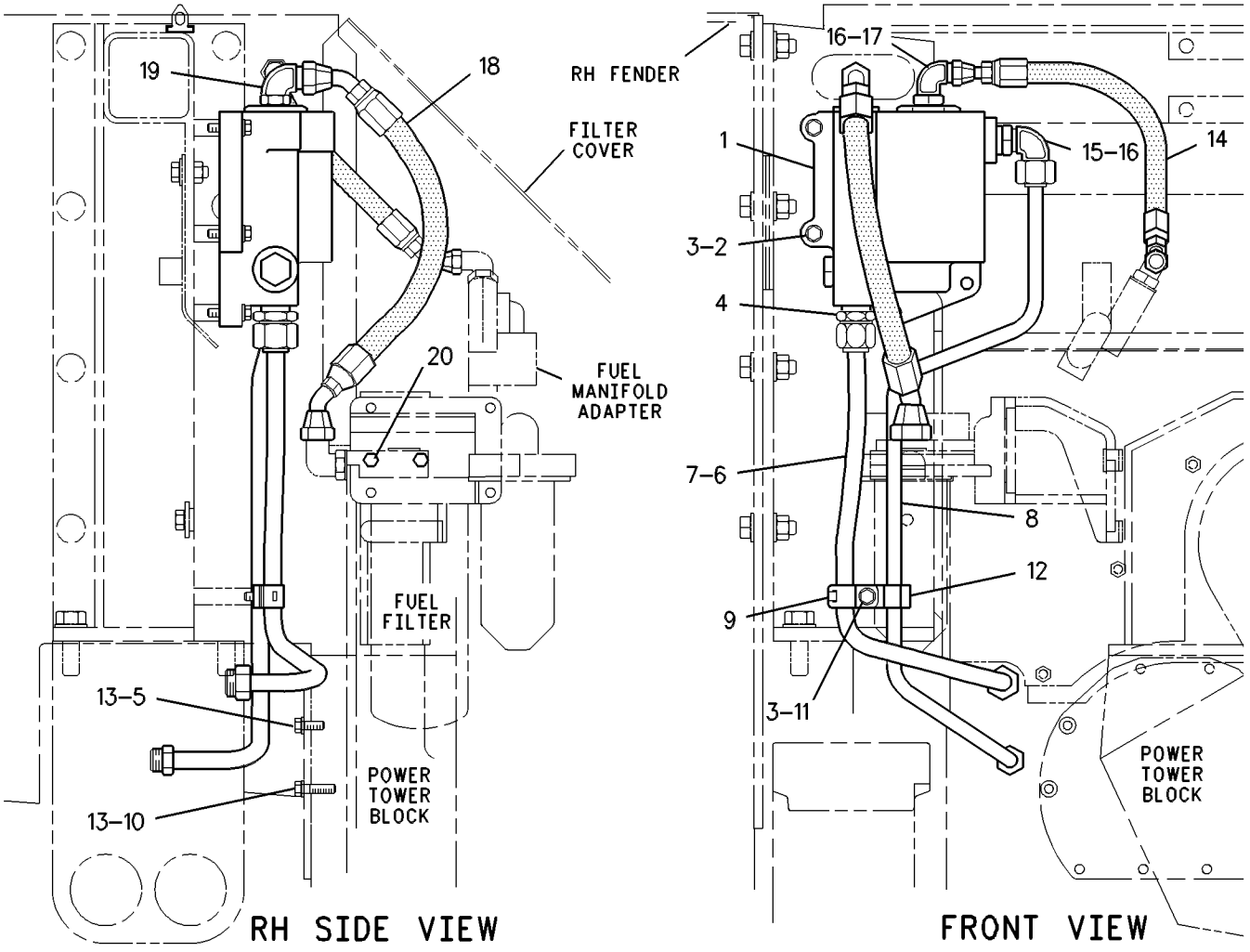

GRAPHIC #1 **<END>** g00526359

ELECTRICAL AND STARTING SYSTEM

7W-8154 HEATER GP-JACKET WATER

S/N: 7PZ1-UP
120 VOLT
AN ATTACHMENT

SMCS-1383 **i01988557**

NOTE	REF NO	GRAPHIC REF	PART NUMBER	QTY	PART NAME 1 2 3 4 5 6 (PRODUCT LEVEL)	SEE PAGE
	1	1	**9G-6655**	2	ELEMENT AS-JACKET WATER HEATER (120 VOLT,1500 WATT)	
	2	1	**9N-5253**	2	CORD AS-JACKET WATER HEATER	
	3	1	**6N-1604**	2	CAP AS-DUST	

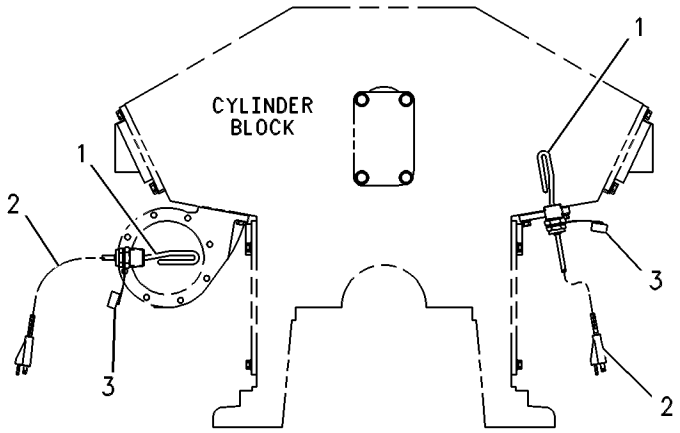

FRONT VIEW

GRAPHIC #1 **<END>** g00087996

7W-8155 HEATER GP-JACKET WATER

S/N: 7PZ1-UP
240 VOLT
AN ATTACHMENT

SMCS-1383 **i01989506**

NOTE	REF NO	GRAPHIC REF	PART NUMBER	QTY	PART NAME 1 2 3 4 5 6 (PRODUCT LEVEL)	SEE PAGE
	1	1	**6T-3764**	2	ELEMENT AS-JACKET WATER HEATER (240 VOLT, 1500 WATT)	
	2	1	**4N-8227**	2	CORD AS-HEATER	
	3	1	**6N-1604**	2	CAP AS-DUST	

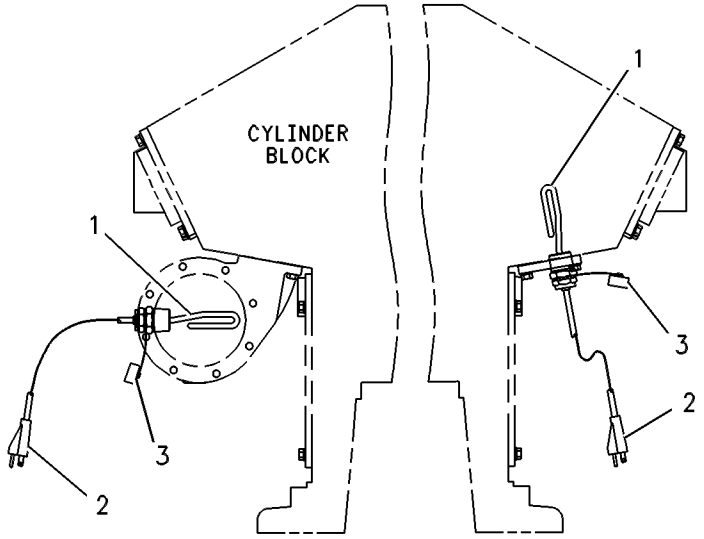

FRONT VIEW

GRAPHIC #1 **<END>** g00106470

205-5779 HEATER GP-JACKET WATER

S/N: 7PZ1-UP
120VOLT/30 AMPERE
AN ATTACHMENT

SMCS-1383 **i01988553**

NOTE	REF NO	GRAPHIC REF	PART NUMBER	QTY	PART NAME 1 2 3 4 5 6 (PRODUCT LEVEL)	SEE PAGE
	1	1	**7K-1181**	17	STRAP-CABLE	
	2	1	**9G-6655**	2	ELEMENT AS-JACKET WATER HEATER (120 VOLT,1500 WATT)	
	3	1	**205-5781**	1	CORD AS	
		1	**6D-5801**	4	NUT (8-32 THD)	
		1	**6N-0412**	4	SCREW AS-MACHINE	
	4	1	**4L-6454**	2	BOLT (3/8-16X1 IN)	
	5	1	**4P-8134**	5	CLIP	
	6	1	**5M-3062**	1	BOLT (3/8-16X0.75 IN)	
	7	1	**8T-4896**	3	WASHER-HARD (10.2X18.5X2.5MM THK)	

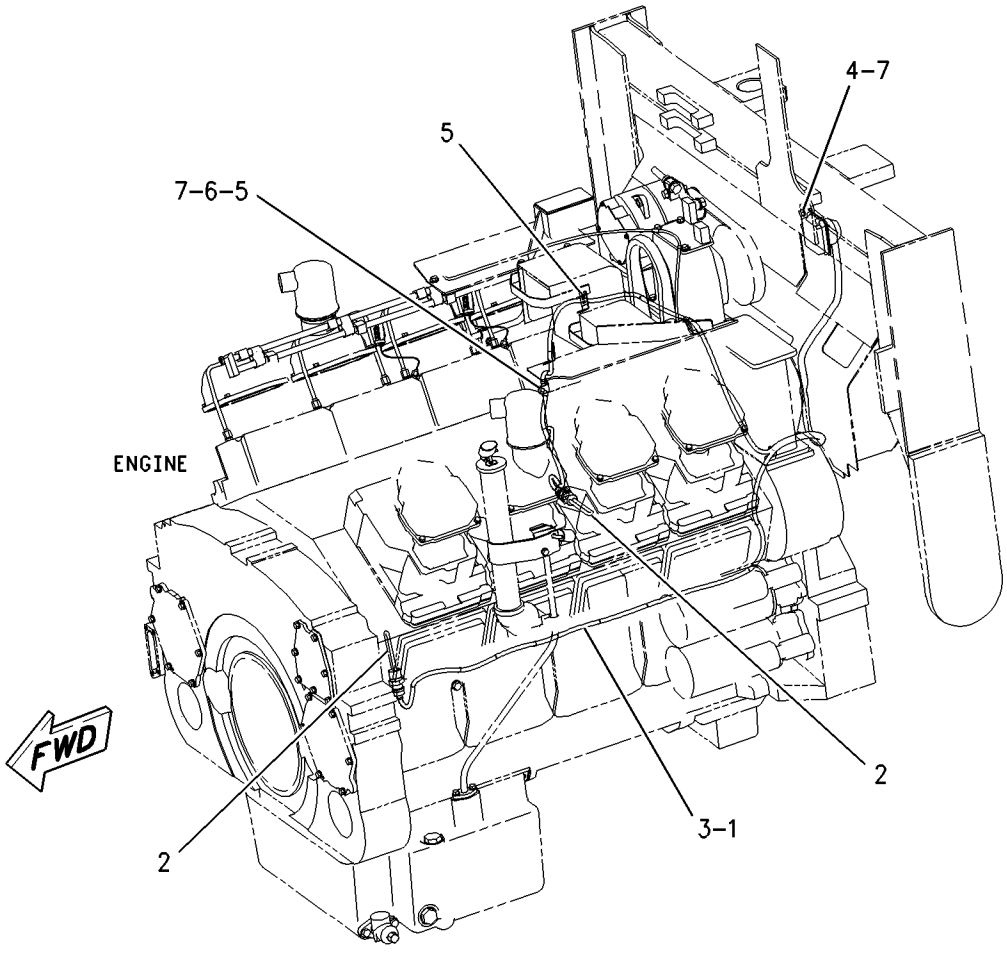

GRAPHIC #1 **<END>** g00954068

206-2926 HEATER GP-JACKET WATER

S/N: 7PZ1-UP
AN ATTACHMENT

SMCS-1383 **i01989088**

NOTE	REF NO	GRAPHIC REF	PART NUMBER	QTY	PART NAME 1 2 3 4 5 6 (PRODUCT LEVEL)	SEE PAGE
	1	1	**6T-3764**	2	ELEMENT AS-JACKET WATER HEATER (240 VOLT, 1500 WATT)	
	2	1	**7K-1181**	17	STRAP-CABLE	
	3	1	**192-7931**	1	HARNESS AS-HEATER (JACKET WATER)	
	4	1	**4L-6454**	2	BOLT (3/8-16X1 IN)	
	5	1	**4P-8134**	5	CLIP	
	6	1	**5M-3062**	1	BOLT (3/8-16X0.75 IN)	
	7	1	**8T-4896**	3	WASHER-HARD (10.2X18.5X2.5MM THK)	

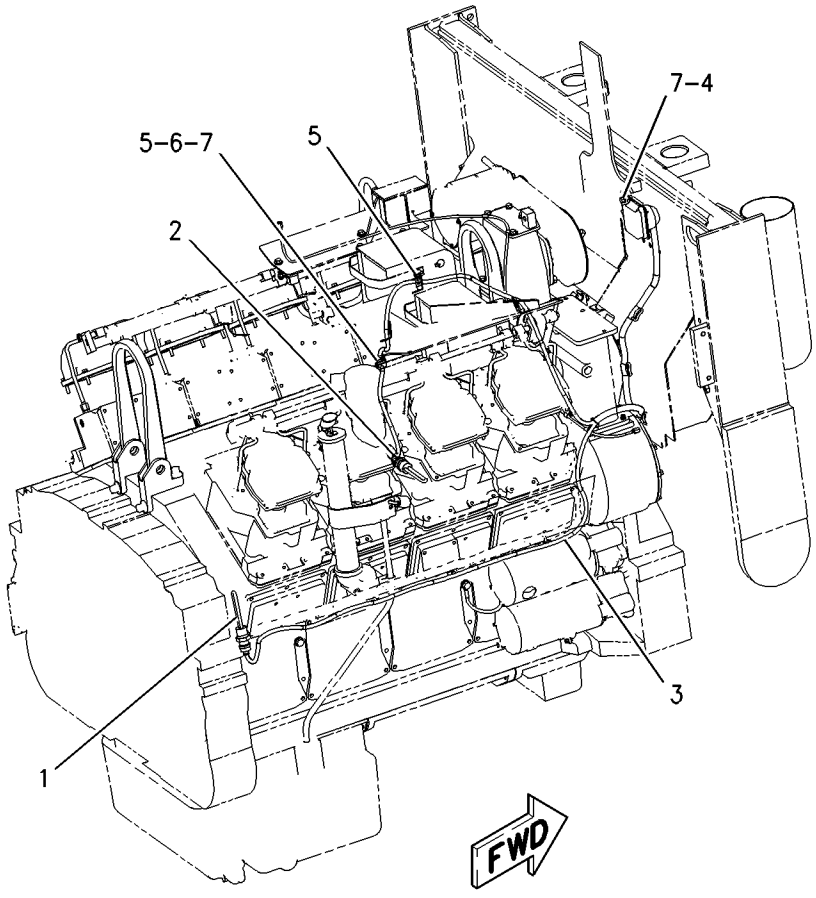

GRAPHIC #1 **<END>** g00875087

207-5262 INSTALLATION GP-SECURITY

S/N: 7PZ1-UP

PART OF 237-5920 INSTALLATION GP-SECURITY

SMCS-7631 **i02029619**

NOTE	REF NO	GRAPHIC REF	PART NUMBER	QTY	PART NAME 1 2 3 4 5 6 (PRODUCT LEVEL)	SEE PAGE
	1	1	*156-6155*	1	CONTROL GP-UNPROGRAMMED (SECURITY)	
	1A	1	**7X-6315**	1	STRAP AS-GROUND	
	1B	1	**184-2472**	1	SCREW-PAN HEAD (NO.8-32X9.52-MM)	
	1C	1	**134-4126**	1	WASHER (4.52X8.28X.76-MM THK)	
	2	1	**232-9737**	1	SOFTWARE GP-MACHINE (SECURITY)	
	3	1	**206-5162**	2	KEY AS-ELECTRONIC (YELLOW)	
					—OR—	
		1	**206-5165**	1	KEY AS-ELECTRONIC (GRAY)	
	4	1	**219-6314**	2	KEY RING (IDENTIFICATION)	

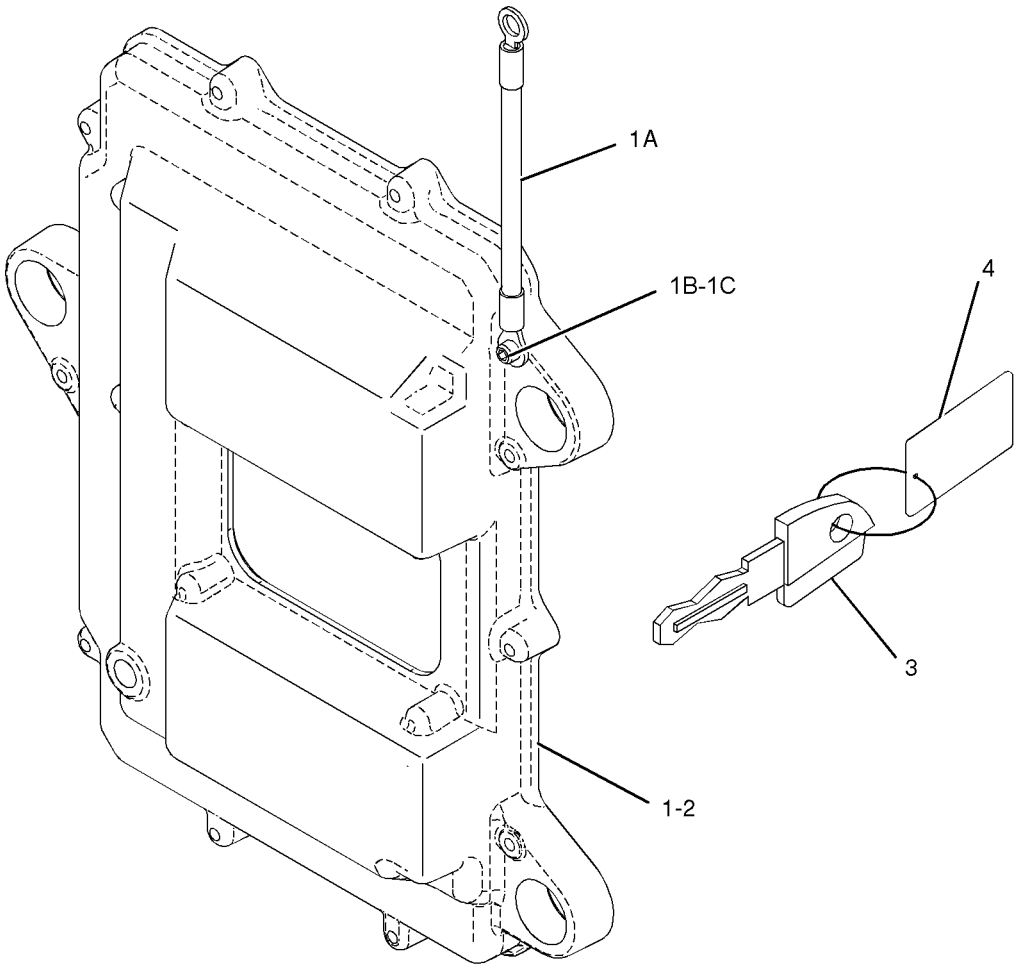

GRAPHIC #1

<END>

g01026135

237-5920 INSTALLATION GP-SECURITY

S/N: 7PZ1-UP
UNIVERSAL ATTACHMENT KIT
FIELD INSTALLATION

SMCS-7631 **i02029620**

NOTE	PART NUMBER	QTY	PART NAME 1 2 3 4 5 6 (PRODUCT LEVEL)	SEE PAGE
	205-8257	1	COIL AS (EXCITER)	
	186-3735	2	PIN-CONNECTOR	
	222-3870	1	COIL AS (FERRITE)	
	102-8802	2	KIT-RECEPTACLE (2-PIN)	
			(INCLUDES RECEPTACLE AS & WEDGE)	
	186-3735	4	PIN-CONNECTOR	
BE	**9X-1813**		SLEEVE	
Y	**207-5262**	1	INSTALLATION GP-SECURITY	304
	198-5389	1	FILM (IGNITION SWITCH)	
	200-5125	1	FILM (IGNITION SWITCH)	
	205-0826	1	FILM (SECURITY)	
	224-3385	1	FILM (START)	
	226-5602	1	FILM (EXCITER COIL)	
	225-8513	1	HARNESS AS (SECURITY INSTALLATION)	
	186-3735	6	PIN-CONNECTOR	
	155-2260	1	KIT-CONNECTING PLUG (3-PIN)	
	155-2270	3	KIT-CONNECTING PLUG (2-PIN)	
			(EACH INCLUDES PLUG AS & WEDGE)	
	102-8802	1	KIT-RECEPTACLE (2-PIN)	
	102-8803	1	KIT-RECEPTACLE (3-PIN)	
			(EACH INCLUDES RECEPTACLE AS & WEDGE)	
	165-5655	1	LAMP AS (12-VOLT) (SECURITY INSTALLATION)	
	186-3735	3	PIN-CONNECTOR	
M	**6V-9189**	3	LOCKNUT (M8X1.25-THD)	
M	**129-3178**	4	LOCKNUT (M6X1-THD)	
	8T-9655	6	MOUNT (ISOLATION)	
	149-9818	1	PLATE	
	213-2323	1	PLATE AS	
	230-8173	1	PLATE-COVER	
	3E-5239	2	RELAY AS (24-VOLT) (SECURITY INSTALLATION)	
	115-1615	2	RELAY AS (12-VOLT) (SECURITY INSTALLATION)	
	200-6260	3	SCREW-BUTTON HEAD	
M	**184-0982**	2	SCREW-PAN HEAD (M6X1X16-MM THK)	
	141-4976	4	SCREW-WASHER HEAD (4-40X0.5-IN)	
	6I-1418	3	SPACER (8.2X12.7X28.7-MM THK)	
	115-8109	2	SPLICE-WIRE	
	7K-1181	20	STRAP-CABLE	
	151-6320	2	TOOL-WIRE REMOVAL	
	9N-0869	6	WASHER-HARD (8.8X25.5X2.0-MM THK)	
			(NO ILLUSTRATION AVAILABLE AT TIME OF PUBLICATION)	

B-USE AS REQUIRED
E-ORDER BY THE CENTIMETER
M-METRIC PART
Y-SEPARATE ILLUSTRATION

<END>

3E-6389 LAMP GP-DOME

S/N: 7PZ1-UP
24-VOLT. WITH SWITCH
PART OF 157-3737 CAB GP
ALSO AN ATTACHMENT

SMCS-1433 **i02029616**

NOTE	REF NO	GRAPHIC REF	PART NUMBER	QTY	PART NAME 1 2 3 4 5 6 (PRODUCT LEVEL)	SEE PAGE
	1	1	**7N-9943**	1	LAMP (24-VOLT) (CLEAR)(DOME)	
	2	1	**102-8803**	1	KIT-RECEPTACLE (3-PIN)	
					(INCLUDES RECEPTACLE AS & WEDGE)	
	3	1	**3E-3371**	1	WEDGE-RECEPTACLE LOCK (3-PIN)	
	4	1	**8T-8729**	3	PIN-CONNECTOR	
	5	1	**7T-0020**	1	LENS (DOME LAMP)	

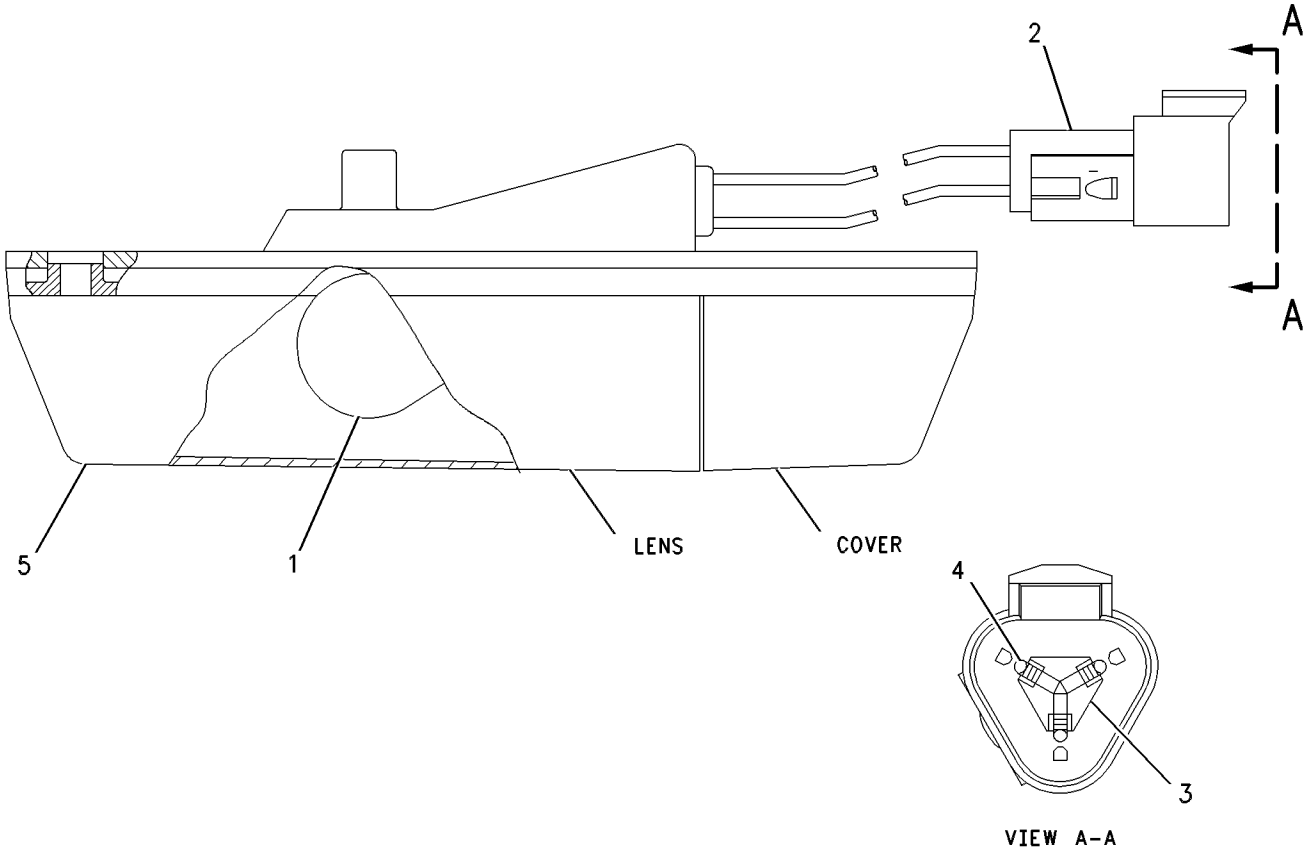

GRAPHIC #1 **<END>** g00647928

147-0319 LAMP GP-FLOOD–SUSPENDED

S/N: 5MP1-UP; 7CP1-UP; 7DP1-UP; 7ZP1-UP; 8PP1-UP; 8RP1-UP; 7PZ1-UP
24 VOLT
PART OF 125-2001 LIGHTING GP-FLOOD
AN ATTACHMENT

SMCS-1434 **i02029617**

NOTE	REF NO	GRAPHIC REF	PART NUMBER	QTY	PART NAME 1 2 3 4 5 6 (PRODUCT LEVEL)	SEE PAGE
	1	1	**9X-3463**	1	LAMP-HALOGEN (24-VOLT, 65-WATT) (FLOODLIGHT)	
	2	1	**158-0250**	1	BODY AS-LAMP	
	3	1	**158-0248**	1	LENS AS	
	4	1	**158-0252**	1	BEZEL	
	5	1	**188-8849**	2	CLAMP	

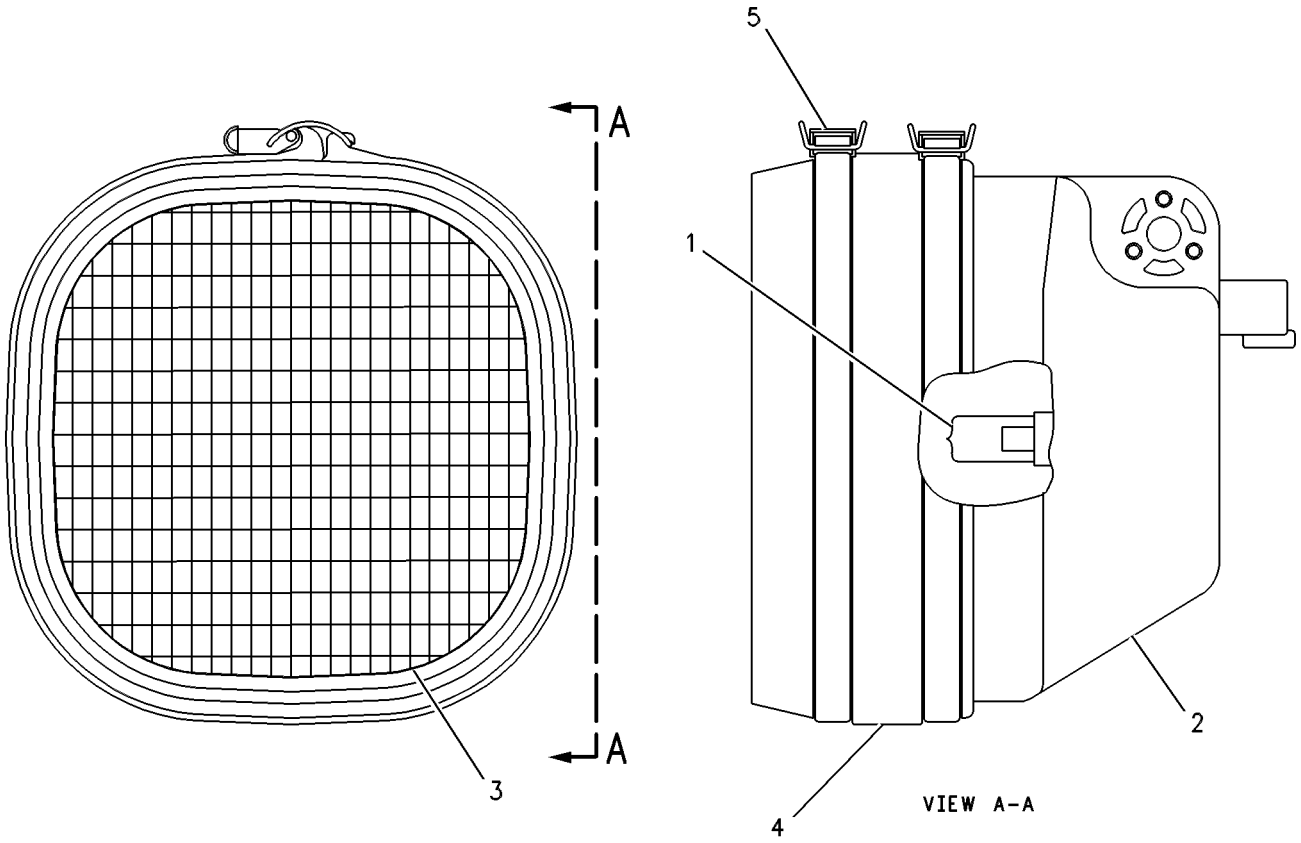

GRAPHIC #1 **<END>** g00458549

153-2073 LAMP GP-FLOOD–VERTICAL

S/N: 7PZ1-UP
24-VOLT
PART OF 134-0978 LIGHTING GP-FLOOD

SMCS-1434 **i02029621**

NOTE	REF NO	GRAPHIC REF	PART NUMBER	QTY	PART NAME 1 2 3 4 5 6 (PRODUCT LEVEL)	SEE PAGE
	1	1	**9X-3463**	1	LAMP-HALOGEN (24-VOLT, 65-WATT) (FLOODLIGHT)	
	2	1	**158-0250**	1	BODY AS-LAMP	
	3	1	**158-0248**	1	LENS AS	
	4	1	**158-0252**	1	BEZEL	
	5	1	**188-8849**	2	CLAMP	

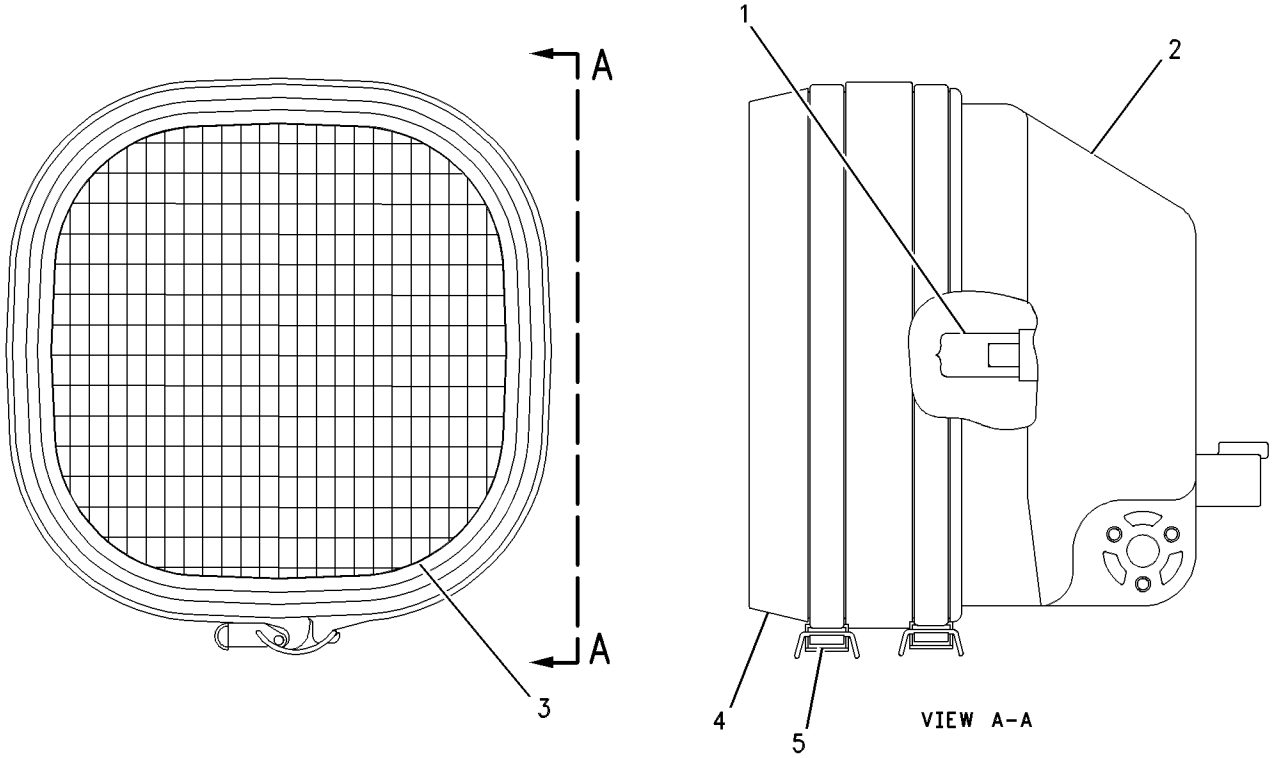

GRAPHIC #1 **<END>** g00449633

157-0305 LAMP GP-FLOOD–HIGH BEAM

S/N: 7PZ1-UP
24 VOLT. SUSPENDED
PART OF 153-8916, 156-9938 LIGHTING AR
AN ATTACHMENT

SMCS-1434 **i02029832**

NOTE	REF NO	GRAPHIC REF	PART NUMBER	QTY	PART NAME 1 2 3 4 5 6 (PRODUCT LEVEL)	SEE PAGE
	1	1	**188-8849**	2	CLAMP	
	2	1	**9X-3463**	1	LAMP-HALOGEN (24-VOLT, 65-WATT) (FLOODLIGHT)	
	3	1	**158-0250**	1	BODY AS-LAMP	
	4	1	**158-0249**	1	LENS AS	
	5	1	**158-0252**	1	BEZEL	

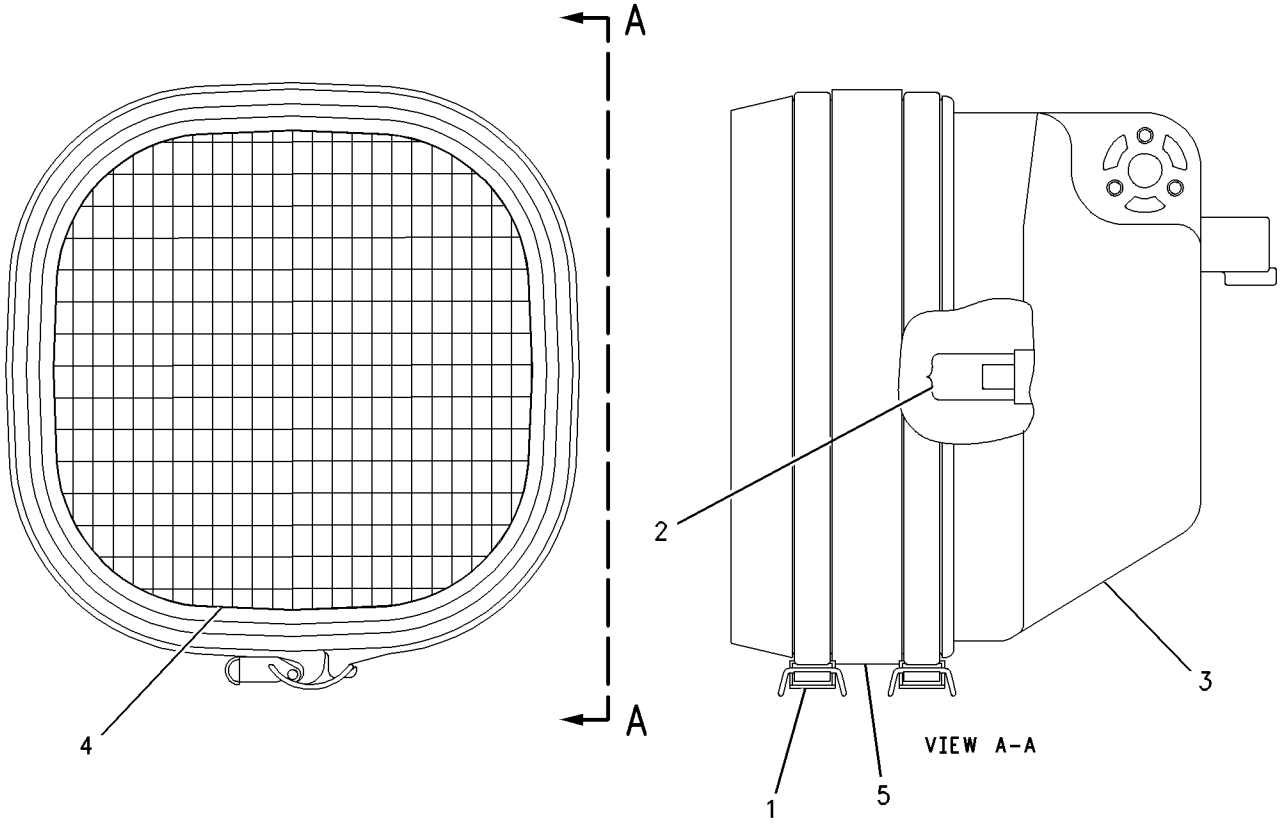

GRAPHIC #1 **<END>** g00725230

180-9846 LAMP GP-FLOOD–HIGH INTENSITY DISCHARGE–SUSPENDED

S/N: 7PZ1-UP
CLEAR
PART OF 192-5391 LIGHTING GP-FLOOD
FOR USE WITH HIGH VIBRATION APPLICATIONS
AN ATTACHMENT

SMCS-1434 **i01958498**

NOTE	REF NO	GRAPHIC REF	PART NUMBER	QTY	PART NAME 1 2 3 4 5 6 (PRODUCT LEVEL)	SEE PAGE
	1	1	**213-4998**	1	LAMP AS-FLOOD (HID) (24 VOLT)(70 WATT)(CLEAR)	
	2	1	**9X-9896**	8	MOUNT (ISOLATION)	
	3	1	**8C-5608**	4	SPACER (6.5X9.5X25.4MM THK)	
	4	1	**9X-6165**	4	WASHER (6.5X22X2.5MM THK)	
M	5	1	**120-9027**	4	SCREW-PAN HEAD (M3X.5X16MM)	
M	6	1	**7X-2533**	4	BOLT (M6X1X35MM)	
M	7	1	**8T-6868**	1	BOLT (M12X1.75X80MM)	
M	8	1	**129-3180**	1	LOCKNUT (M12X1.75 THD)	
	9	1	**215-1933**	1	BRACKET	

M-METRIC PART

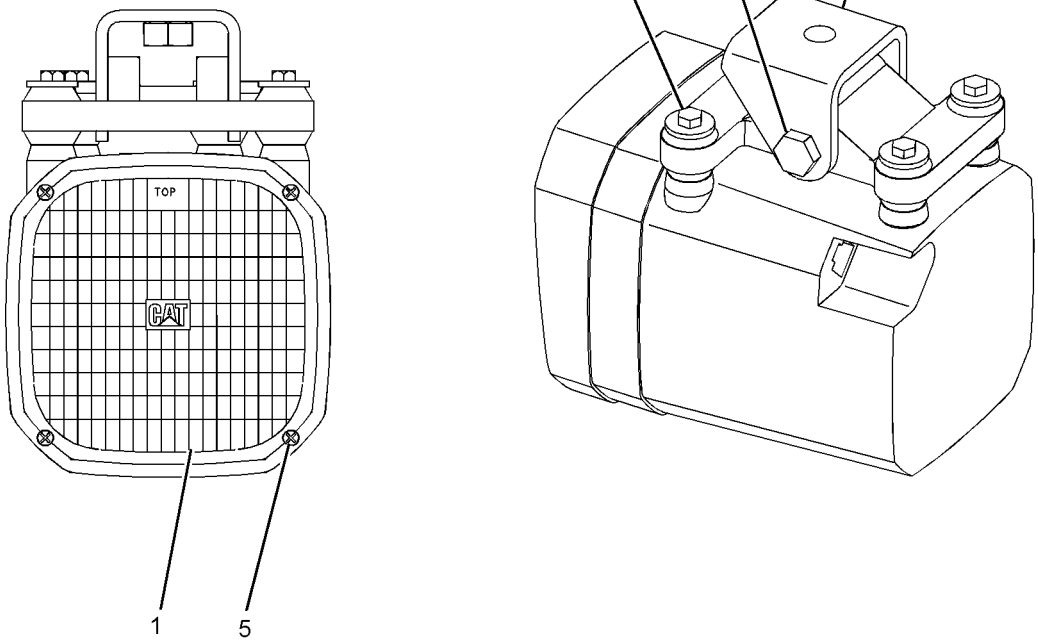

GRAPHIC #1 **<END>** g01020822

180-9847 LAMP GP-FLOOD—HID, VERTICAL MOUNT

S/N: 7PZ1-UP
24-VOLT, 70-WATT. CLEAR
PART OF 192-5391 LIGHTING GP-FLOOD
FOR USE WITH HIGH VIBRATION APPLICATIONS
AN ATTACHMENT

SMCS-1434 **i01988560**

NOTE	REF NO	GRAPHIC REF	PART NUMBER	QTY	PART NAME 1 2 3 4 5 6 (PRODUCT LEVEL)	SEE PAGE
	1	1	**213-4998**	1	LAMP AS-FLOOD (HID) (24 VOLT)(70 WATT)(CLEAR)	
	2	1	**9X-9896**	8	MOUNT (ISOLATION)	
	3	1	**8C-5608**	4	SPACER (6.5X9.5X25.4MM THK)	
	4	1	**9X-6165**	4	WASHER (6.5X22X2.5MM THK)	
M	5	1	**120-9027**	4	SCREW-PAN HEAD (M3X.5X16MM)	
M	6	1	**7X-2533**	4	BOLT (M6X1X35MM)	
M	7	1	**8T-6868**	1	BOLT (M12X1.75X80MM)	
M	8	1	**129-3180**	1	LOCKNUT (M12X1.75 THD)	
	9	1	**215-1933**	1	BRACKET	

M-METRIC PART

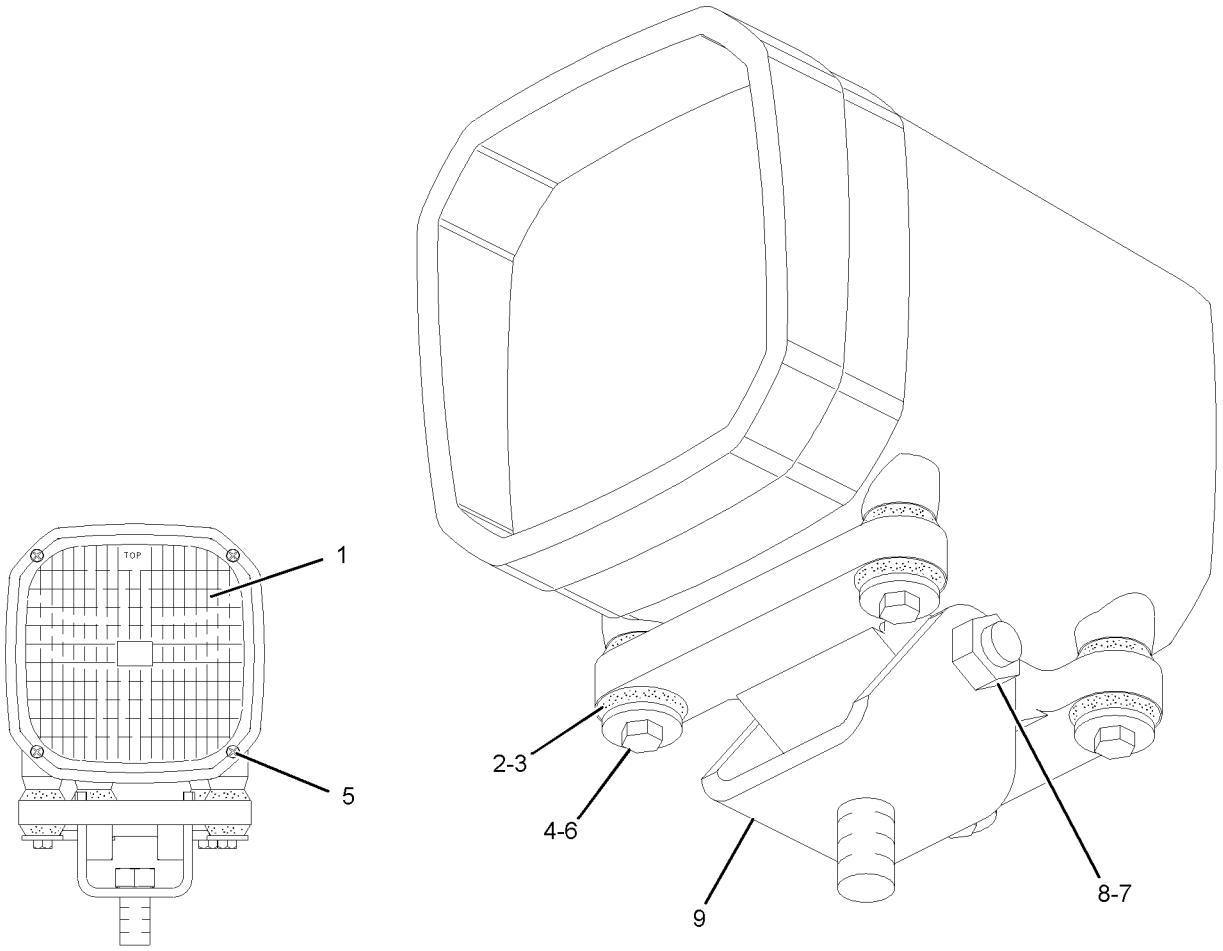

GRAPHIC #1 **<END>** g01023961

153-8916 LIGHTING AR—HIGH BEAM

S/N: 7PZ1-UP

CANNOT BE USED WITH 102-4395—PAGE 322

AN ATTACHMENT

SMCS-1429 **i01692361**

NOTE	PART NUMBER	QTY	PART NAME 1 2 3 4 5 6 (PRODUCT LEVEL)	SEE PAGE
	5M-3062	2	BOLT (3/8-16X0.75 IN)	
	5P-2955	2	BOLT (5/16-18X2.50 IN)	
	111-8314	2	BRACKET AS	
	5P-8522	2	GROMMET	
	114-2368	2	GUARD AS	
			(EACH INCLUDES)	
	7T-1099	1	LINK	
Y	**157-0305**	2	LAMP GP-FLOOD (24V) (HIGH BEAM)(SUSPENDED)	309
	9W-4361	8	MOUNT	
	6V-8189	2	NUT (5/16-18 THD)	
	6V-8801	16	NUT (3/8-16 THD)	
	9X-6772	10	STRAP-CABLE	
	5P-1075	18	WASHER-HARD (10.2X22.5X3MM THK)	
	8T-4224	4	WASHER-HARD (8.8X16X2MM THK)	

Y-SEPARATE ILLUSTRATION

<END>

156-9938 LIGHTING AR–4 LAMP

S/N: 7PZ1-UP
ROPS MOUNTED-SPOT
CANNOT BE USED WITH 114-3107–PAGE 323
AN ATTACHMENT

SMCS-1429 **i02023592**

NOTE	REF NO	GRAPHIC REF	PART NUMBER	QTY	PART NAME 1 2 3 4 5 6 (PRODUCT LEVEL)	SEE PAGE
	1	1	**1Q-1592**	1	PLATE AS	
		1	**7T-1099**	4	LINK	
	2	1	**9W-4361**	8	MOUNT	
	3	1	**9X-6772**	20	STRAP-CABLE	
	4	1	**111-8314**	4	BRACKET AS	
	5	1	**114-9363**	2	GUARD AS	
					(EACH INCLUDES)	
		1	**7T-1099**	2	LINK	
	6	1	**114-9365**	2	PLATE	
	7	1	**115-1888**	1	HARNESS AS-LIGHTING (REAR)	
		1	**155-2270**	2	KIT-CONNECTING PLUG (2-PIN)	
					(EACH INCLUDES PLUG AS & WEDGE)	
		1	**102-8802**	2	KIT-RECEPTACLE (2-PIN)	
					(EACH INCLUDES RECEPTACLE AS & WEDGE)	
	8	1	**153-0976**	1	HARNESS AS-REAR LIGHTING	
		1	**155-2270**	4	KIT-CONNECTING PLUG (2-PIN)	
					(EACH INCLUDES PLUG AS & WEDGE)	
		1	**102-8802**	3	KIT-RECEPTACLE (2-PIN)	
					(EACH INCLUDES RECEPTACLE AS & WEDGE)	
Y	9	1	**157-0305**	4	LAMP GP-FLOOD (24-VOLT) (HIGH BEAM)(SUSPENDED)	309
	10	1	**4L-6454**	8	BOLT (3/8-16X1-IN)	
	11	1	**5M-3062**	4	BOLT (3/8-16X0.75-IN)	
	12	1	**5P-1075**	20	WASHER-HARD (10.2X22.5X3-MM THK)	
	13	1	**5P-2955**	4	BOLT (5/16-18X2.50-IN)	
	14	1	**5P-8522**	2	GROMMET	
	15	1	**6V-8189**	4	NUT (5/16-18-THD)	
	16	1	**6V-8801**	16	NUT (3/8-16-THD)	
	17	1	**7X-0582**	2	WASHER-HARD (20X44.5X6-MM THK)	
M	18	1	**8T-4224**	8	WASHER-HARD (8.8X16X2-MM THK)	
	19	1	**8T-9397**	2	BOLT (3/4-10X1.25-IN)	

M-METRIC PART
Y-SEPARATE ILLUSTRATION

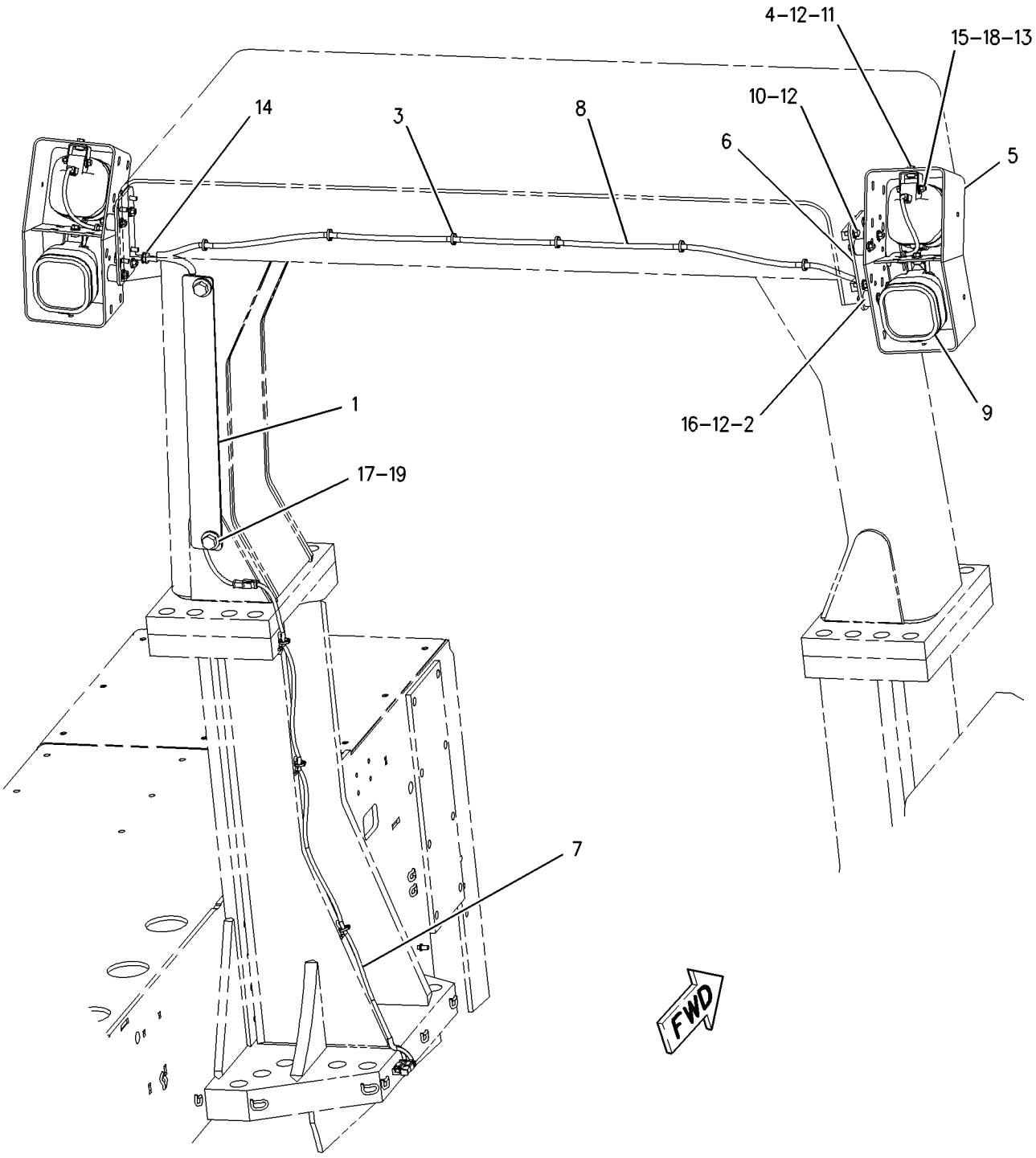

GRAPHIC #1 **<END>** g00659539

125-2001 LIGHTING GP-FLOOD—SUSPENDED

S/N: 5MP1-UP; 7CP1-UP; 7DP1-UP; 7ZP1-UP; 8PP1-UP; 8RP1-UP; 7PZ1-UP
PART OF 102-4395 LIGHTING GP-FRONT, 114-3107 LIGHTING GP-REAR, 131-2141 LIGHTING GP-RIPPER, 120-9016 LINES GP-LIFT CYLINDER
AN ATTACHMENT

SMCS-1434 **i01714235**

NOTE	REF NO	GRAPHIC REF	PART NUMBER	QTY	PART NAME 1 2 3 4 5 6 (PRODUCT LEVEL)	SEE PAGE
	1	1	**9W-4361**	4	MOUNT	
	2	1	**111-8314**	1	BRACKET AS	
		1	**1F-0750**	1	NUT-WELD (3/8-16 THD)	
Y	3	1	**147-0319**	1	LAMP GP-FLOOD (24V)(SUSPENDED)	307
	4	1	**167-1884**	1	GUARD	
	5	1	**5M-3062**	1	BOLT (3/8-16X0.75 IN)	
	6	1	**5P-1075**	9	WASHER-HARD (10.2X22.5X3MM THK)	
	7	1	**5P-2955**	1	BOLT (5/16-18X2.50 IN)	
	8	1	**6V-8189**	1	NUT (5/16-18 THD)	
	9	1	**6V-8801**	8	NUT (3/8-16 THD)	
	10	1	**8T-4224**	2	WASHER-HARD (8.8X16X2MM THK)	

Y-SEPARATE ILLUSTRATION

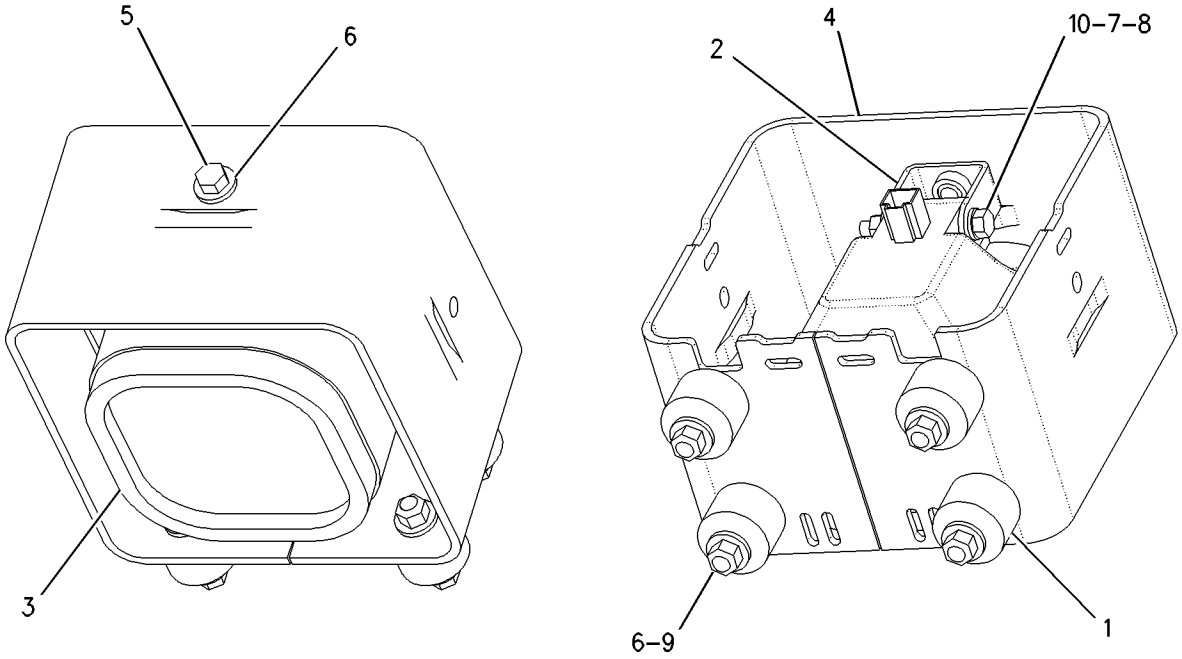

GRAPHIC #1 **<END>** g00887298

134-0978 LIGHTING GP-FLOOD—MACHINE

S/N: 7PZ1-UP

4 LAMP

PART OF 155-5552 CHASSIS AR

SMCS-1434 **i01988558**

NOTE	REF NO	GRAPHIC REF	PART NUMBER	QTY	PART NAME 1 2 3 4 5 6 (PRODUCT LEVEL)	SEE PAGE
CY	1	1	**153-2073**	4	LAMP GP-FLOOD (24 VOLT)	308
	2	1	**8T-4224**	8	WASHER-HARD (8.8X16X2MM THK)	
	3	1	**5P-2955**	4	BOLT (5/16-18X2.50 IN)	
	4	1	**6V-8189**	4	NUT (5/16-18 THD)	
	5	1	**5P-1075**	8	WASHER-HARD (10.2X22.5X3MM THK)	
	6	1	**5M-3062**	4	BOLT (3/8-16X0.75 IN)	
	7	1	**111-8314**	4	BRACKET AS	
	8	1	**8E-3241**	4	BRACKET AS	
					(EACH BRACKET AS INCLUDES)	
		1	**1F-0750**	1	NUT-WELD (3/8-16THD)	
	9	1	**8T-2502**	4	BOLT (3/8-16X1.125 IN)	

C-CHANGE FROM PREVIOUS TYPE
Y-SEPARATE ILLUSTRATION

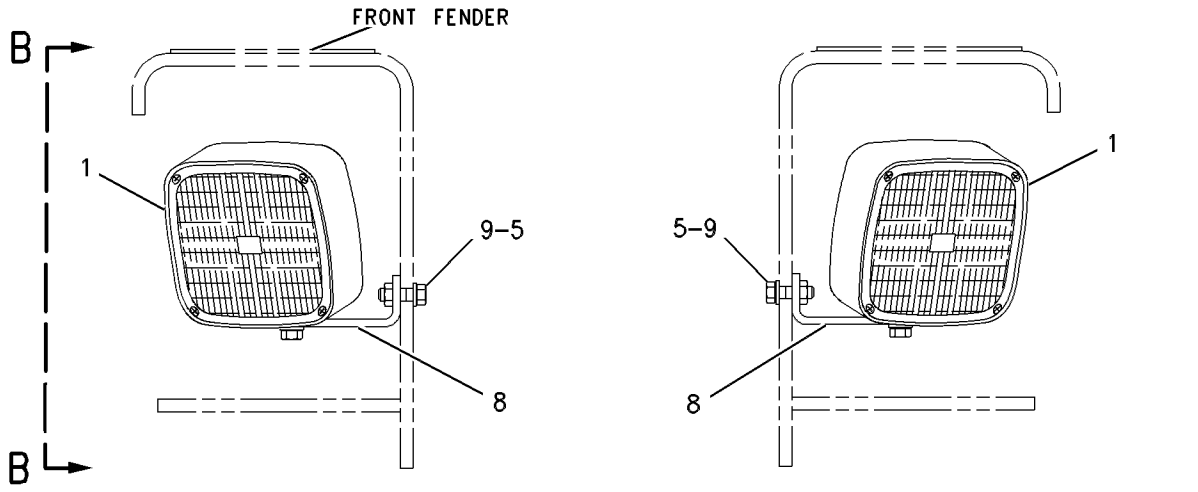

SIDE FLOOD LIGHTS

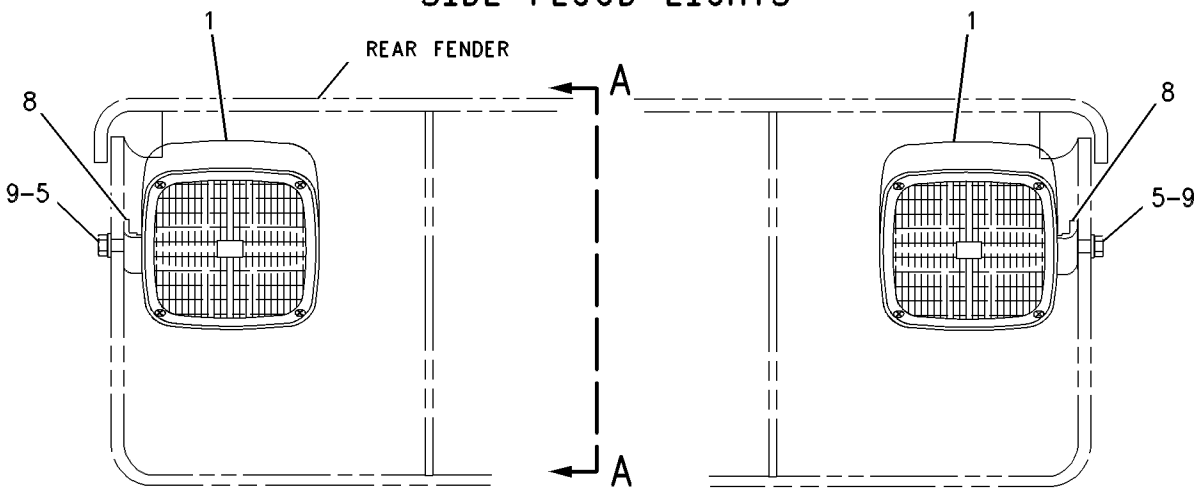

REAR LIGHTS

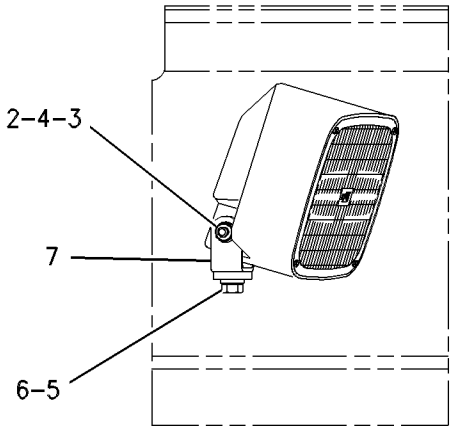

VIEW B-B

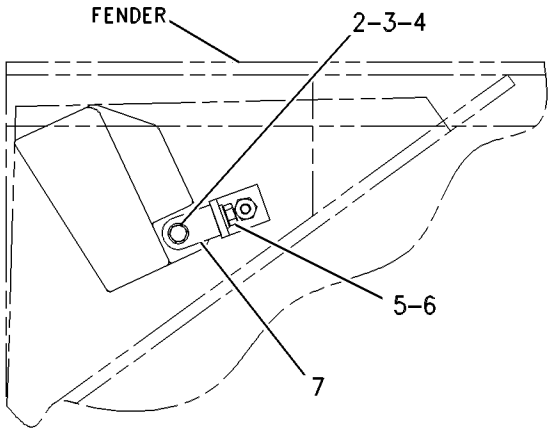

VIEW A-A

GRAPHIC #1 **<END>** g00451083

192-5391 LIGHTING GP-FLOOD—HIGH INTENSITY DISCHARGE

S/N: 7PZ1-UP

FOR USE WITH 120-9016—PAGE 749. CANNOT BE USED WITH 102-4395—PAGE 322, 153-8916—PAGE 312, 114-3107—PAGE 323, 156-9938—PAGE 313 AN ATTACHMENT

SMCS-1434 **i01988554**

NOTE	REF NO	GRAPHIC REF	PART NUMBER	QTY	PART NAME 1 2 3 4 5 6 (PRODUCT LEVEL)	SEE PAGE
	1	1	**1Q-1592**	1	PLATE AS	
	2	1,2,3	**7K-1181**	31	STRAP-CABLE	
	3	1,2,3	**9W-4361**	20	MOUNT	
	4	1	**115-1888**	1	HARNESS AS (RIPPER)	
		1	**102-8802**	1	KIT-RECEPTACLE (2-PIN)	
					(INCLUDES RECEPTACLE AS & WEDGE)	
		1	**155-2270**	1	KIT-CONNECTING PLUG (2-PIN)	
					(INCLUDES PLUG AS & WEDGE)	
	5	1,2,3	**143-2466**	5	GUARD-LIGHT	
Y	6	1,2,3	**180-9846**	4	LAMP GP-FLOOD (24 VOLT. SUSPENDED MOUNT)	310
Y	7	2	**180-9847**	1	LAMP GP-FLOOD (24-VOLT/70-WATT)	311
	8	3	**217-0242**	2	BRACKET AS	
		3	**7T-1099**	2	LINK	
	9	3	**229-8284**	2	BRACKET	
	10	1	**229-8285**	1	HARNESS AS (ROPS)	
		1	**102-8802**	1	KIT-RECEPTACLE (2-PIN)	
					(INCLUDES RECEPTACLE AS & WEDGE	
		1	**155-2270**	1	KIT-CONNECTING PLUG (2-PIN)	
					(INCLUDES PLUG AS & WEDGE)	
	11	2	**229-8779**	1	BRACKET	
	12	2	**231-1946**	1	BRACKET	
	13	2	**231-1947**	1	BRACKET	
	14	1	**233-6020**	2	BRACKET AS	
		1	**1F-0750**	4	NUT-WELD (3/8-16THD)	
	15	2	**242-9228**	2	BRACKET	
	16	1,2	**4L-6454**	16	BOLT (3/8-16X1 IN)	
	17	1	**5D-7635**	2	GROMMET	
	18	1,2,3	**5P-1075**	88	WASHER-HARD (10.2X22.5X3MM THK)	
	19	1,2,3	**5P-1076**	13	WASHER-HARD (13.5X30X4MM THK)	
	20	3	**5P-8522**	2	GROMMET	
	21	2	**5S-7382**	4	BOLT (3/8-16X1.375 IN)	
	22	1,2,3	**6V-8801**	56	NUT (3/8-16 THD)	
	23	1	**7X-0582**	2	WASHER-HARD (20X44.5X6MM THK)	
	24	3	**8C-4436**	8	BOLT (1/2-13X1.375 IN)	
M	25	1,2,3	**8T-4139**	5	BOLT (M12X1.75X30MM)	
	26	1	**8T-9397**	2	BOLT (3/4-10X1.25 IN)	
	27	2,3	**9B-7237**	12	BOLT (3/8-16X1.25 IN)	

M-METRIC PART
Y-SEPARATE ILLUSTRATION

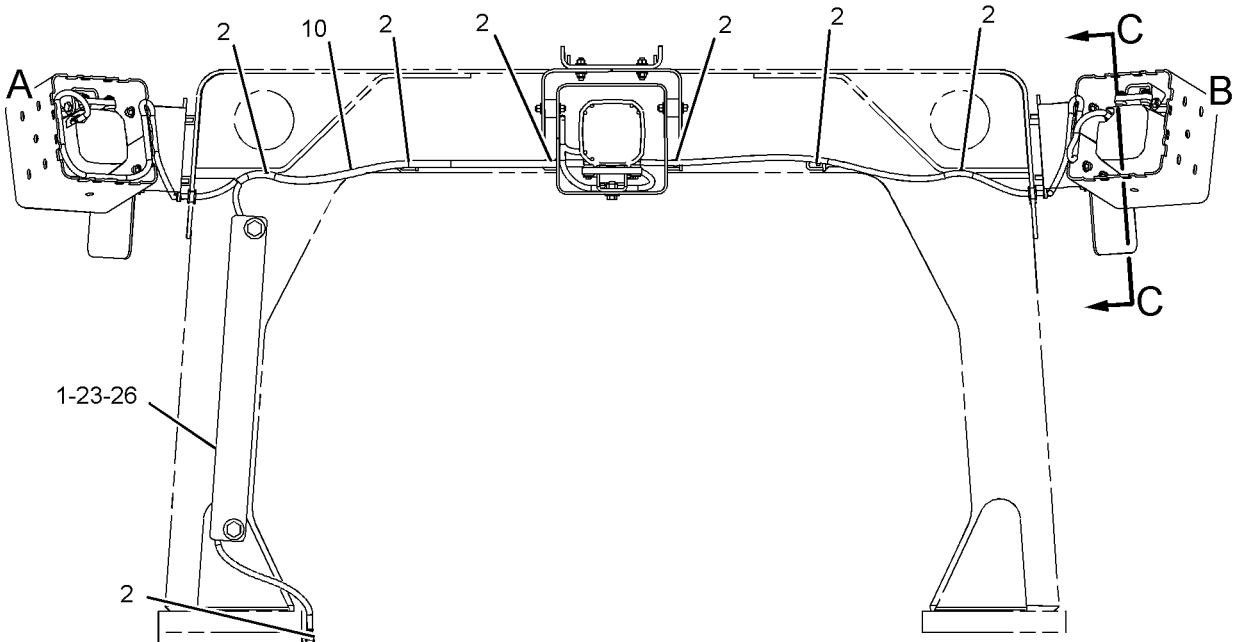

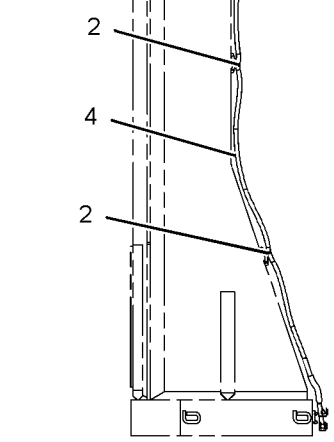

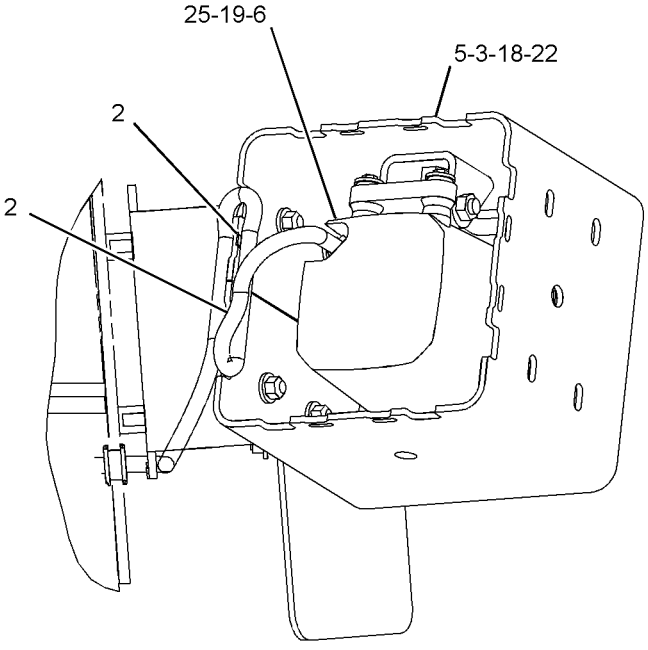

VIEW OF AREA B

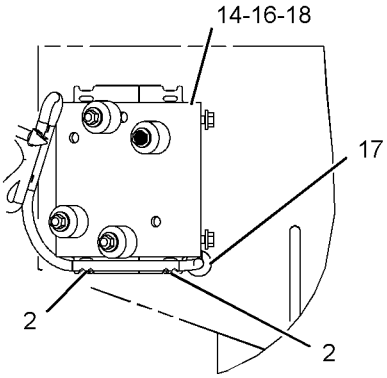

SECTION C-C

REFER TO ALL ILLUSTRATIONS OF THIS GROUP FOR AUXILIARY VIEWS

GRAPHIC #1

g01026192

REFER TO ALL ILLUSTRATIONS OF
THIS GROUP FOR AUXILIARY VIEWS

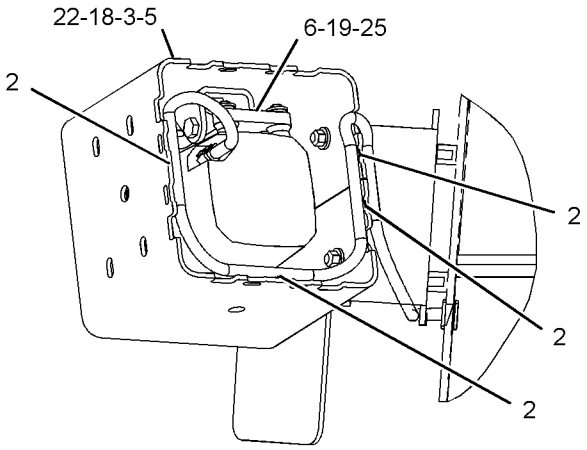

VIEW OF AREA A

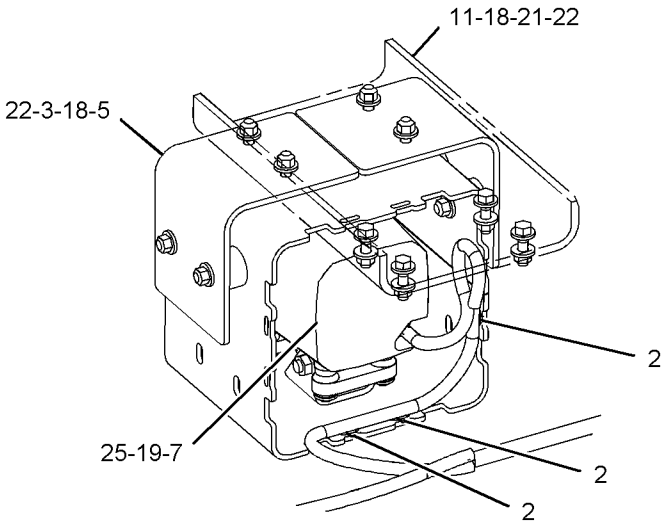

VIEW OF AREA D

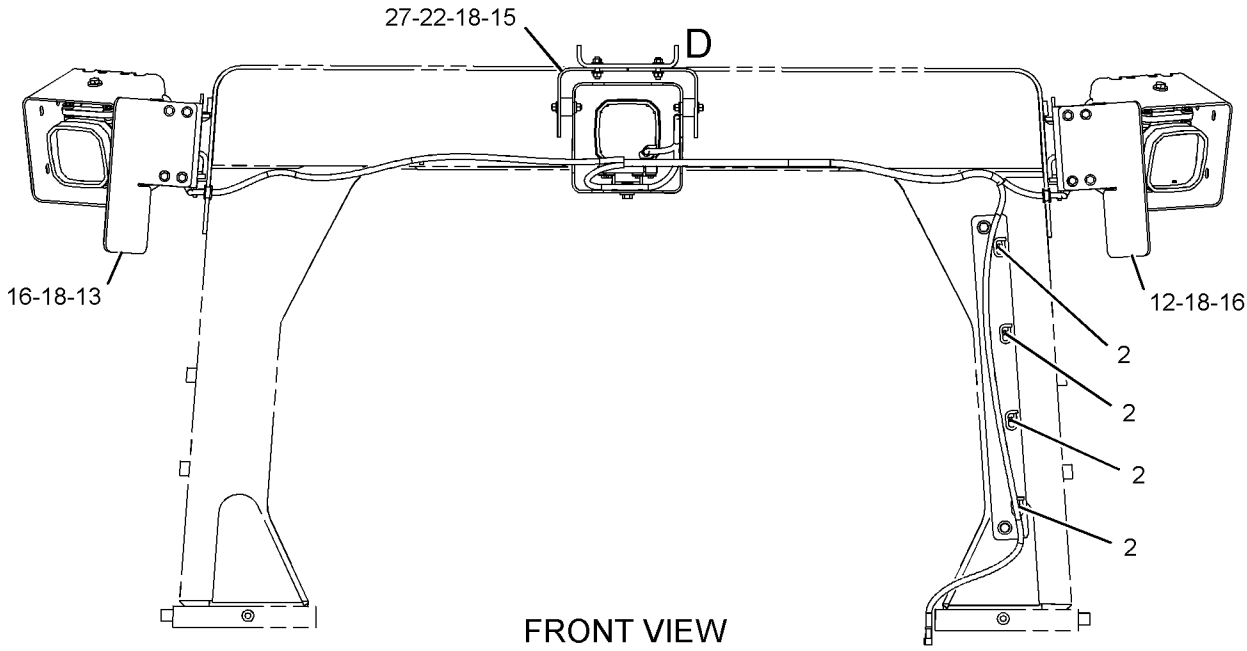

FRONT VIEW

GRAPHIC #2

g01026204

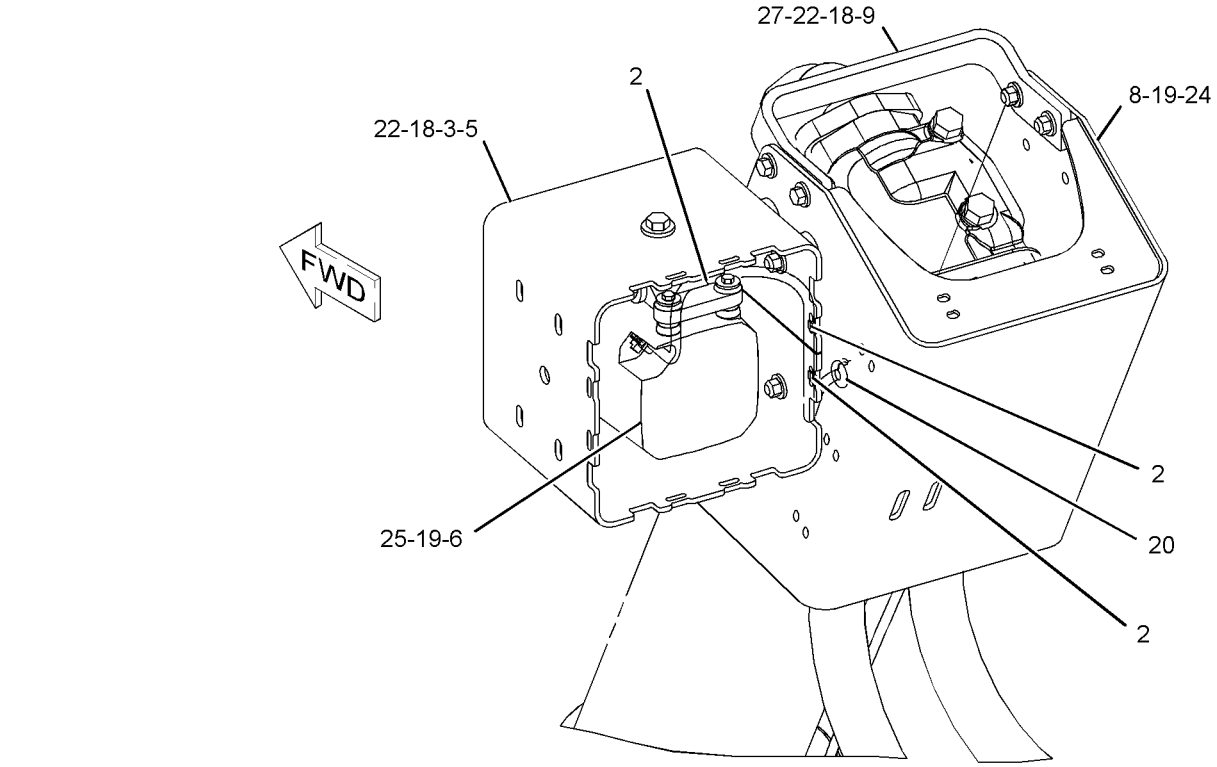

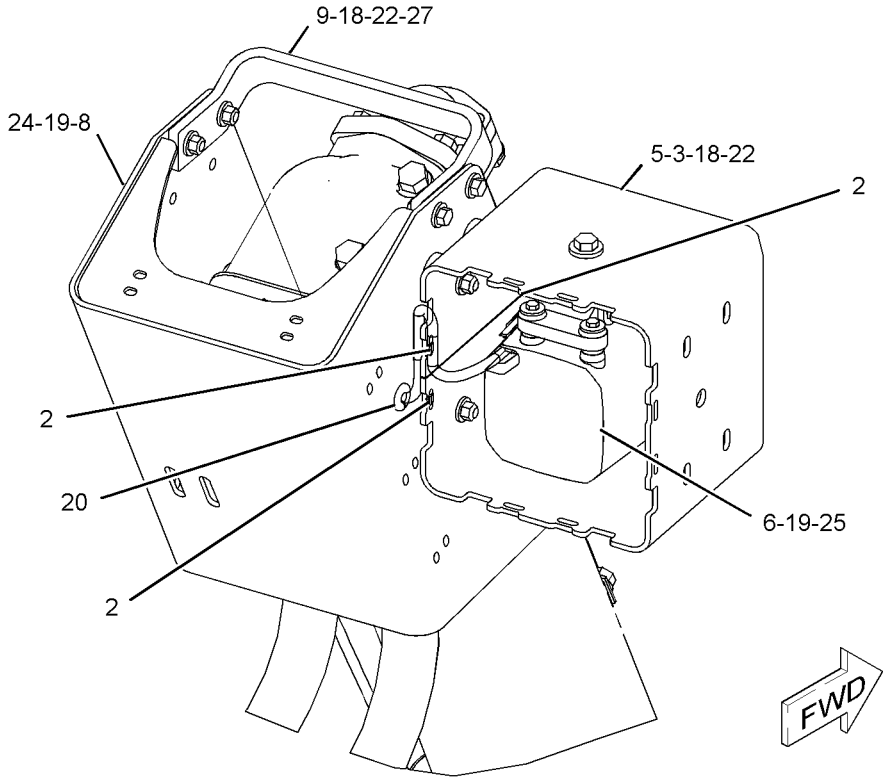

GRAPHIC #3

<END>

g01026208

102-4395 LIGHTING GP-FRONT

S/N: 7PZ1-UP
2 LAMP
CANNOT BE USED WITH 153-8916—PAGE 312
AN ATTACHMENT

SMCS-1429 **i00899020**

NOTE	REF NO	GRAPHIC REF	PART NUMBER	QTY	PART NAME 1 2 3 4 5 6 (PRODUCT LEVEL)	SEE PAGE
	1	1	**5P-8522**	2	GROMMET	
					(FOR USE ON D10R, D11R, & D11R CARRY DOZER)	
	2	1	**9D-3768**	2	GROMMET (14.29MM ID)	
					(FOR USE ON D9R)	
	3	1	**5P-8522**	2	GROMMET (9.5MM ID)	
					(FOR USE ON D8R)	
YC	4	1	*125-2001*	2	LIGHTING GP-FLOOD	315
	5	1	**9X-6772**	2	STRAP-CABLE	

C-CHANGE FROM PREVIOUS TYPE
Y-SEPARATE ILLUSTRATION

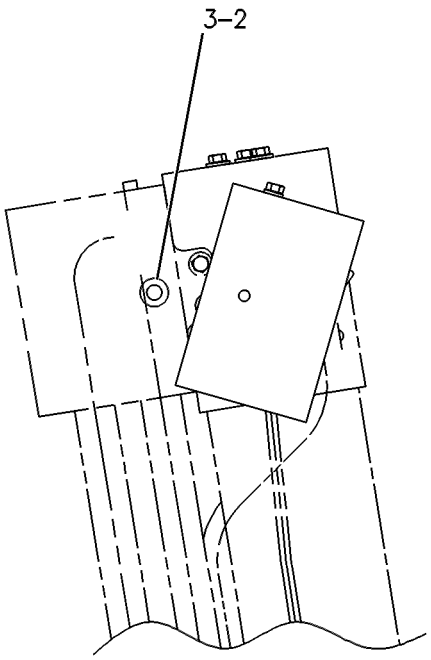

RIGHT SIDE VIEW

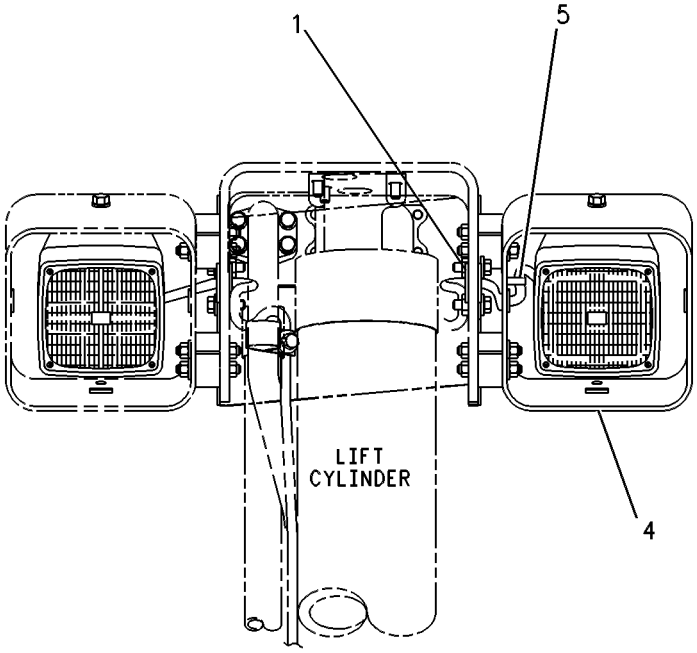

FRONT VIEW

GRAPHIC #1 **<END>** g00453511

114-3107 LIGHTING GP-REAR

S/N: 7PZ1-UP
2 LAMP
CANNOT BE USED WITH 156-9938—PAGE 313
AN ATTACHMENT

SMCS-1429 **i01866218**

NOTE	REF NO	GRAPHIC REF	PART NUMBER	QTY	PART NAME 1 2 3 4 5 6 (PRODUCT LEVEL)	SEE PAGE
B	1	1	**7K-1181**	21	STRAP-CABLE	
	2	1	**5D-7635**	2	GROMMET	
	3	1	**1Q-1592**	1	PLATE AS	
		1	**7T-1099**	4	LINK	
	4	1	**114-9365**	2	PLATE	
	5	1	**8T-9397**	2	BOLT (3/4-10X1.25 IN)	
	6	1	**7X-0582**	2	WASHER-HARD (20X44.5X6MM THK)	
	7	1	**115-1888**	1	HARNESS AS (RIPPER)	
		1	**155-2270**	2	KIT-CONNECTING PLUG (2 PIN)	
					(INCLUDES PLUG AS & WEDGE)	
		1	**102-8802**	2	KIT-RECEPTACLE (2 PIN)	
					(INCLUDES RECEPTACLE AS & WEDGE)	
		1	**8T-8737**	2	PLUG-SEAL	
Y	8	1	*125-2001*	2	LIGHTING GP-FLOOD	315
	9	1	**4L-6454**	8	BOLT (3/8-16X1 IN)	
	10	1	**5P-1075**	8	WASHER-HARD (10.2X22.5X3MM THK)	
	11	1	**153-0976**	1	HARNESS AS (FRONT)	
		1	**155-2270**	4	KIT-CONNECTING PLUG (2 PIN)	
					(INCLUDES PLUG AS & WEDGE)	
		1	**102-8802**	3	KIT-RECEPTACLE (2 PIN)	
					(INCLUDES RECEPTACLE AS & WEDGE)	
		1	**9G-3695**	4	PLUG (GROMMET SEALING)	
	12	1	**4P-7428**	1	CLIP	
	13	1	**8T-9384**	1	BOLT (1/2-13X0.875 IN)	
	14	1	**8T-4223**	1	WASHER-HARD (13.5X25.5X3MM THK)	

B-USE AS REQUIRED
Y-SEPARATE ILLUSTRATION

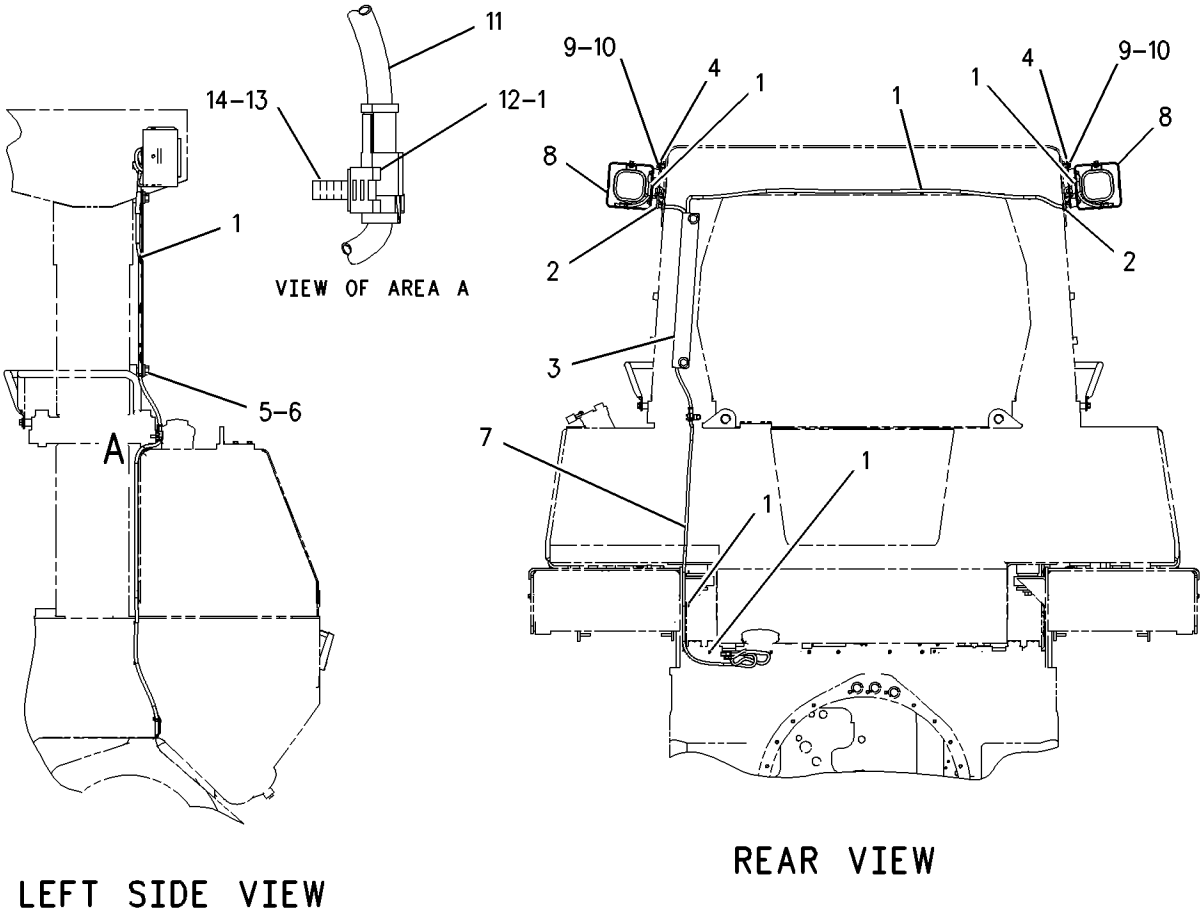

GRAPHIC #1 **<END>** g00838106

131-2141 LIGHTING GP-RIPPER

S/N: 5MP1-UP; 7CP1-UP; 7DP1-UP; 7ZP1-UP
PART OF 127-1031, 130-6458, 130-6462, 161-2420 RIPPER AR
AN ATTACHMENT

SMCS-1429 **i01834371**

NOTE	REF NO	GRAPHIC REF	PART NUMBER	QTY	PART NAME 1 2 3 4 5 6 (PRODUCT LEVEL)	SEE PAGE
	1	1	**9X-6772**	2	STRAP-CABLE	
	2	1	**125-2000**	1	HARNESS AS (RIPPER LIGHTING)	
Y	3	1	*125-2001*	1	LIGHTING GP-FLOOD	315
	4	1	**133-7114**	1	BRACKET AS-LIGHT	
	5	1	**4P-7581**	1	CLIP	
	6	1	**5P-1075**	3	WASHER-HARD (10.2X22.5X3MM THK)	
		1	**7X-0293**	3	BOLT (3/8-16X4.75 IN)	

Y-SEPARATE ILLUSTRATION

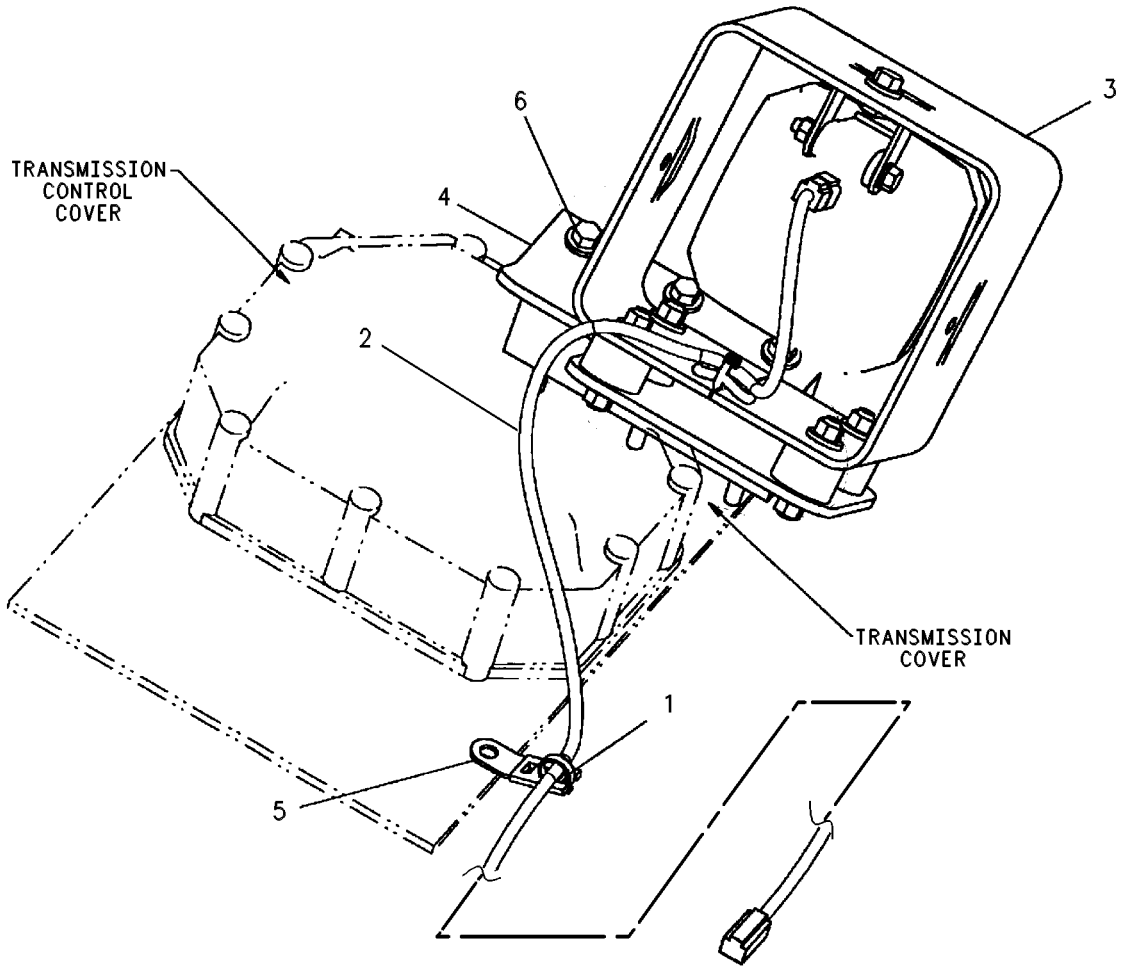

GRAPHIC #1 **<END>** g00294343

127-4496 SENSOR & MTG GP-PRESSURE—TURBO INLET

S/N: 2GR4479-UP; 7PZ289-703

PART OF 155-5556 ENGINE AR, 155-5557 INSTALLATION AR-ENGINE

SMCS-1408 **i01988552**

NOTE	REF NO	GRAPHIC REF	PART NUMBER	QTY	PART NAME 1 2 3 4 5 6 (PRODUCT LEVEL)	SEE PAGE
	1	1	**116-0118**	2	CLIP	
	2	1	**4P-7581**	3	CLIP	
	3	1	**9X-0262**	2	ADAPTER	
CY	4	1	**161-9926**	2	SENSOR GP-PRESSURE	339
	5	1	**9X-6772**	6	STRAP-CABLE	
	6	1	**6V-5048**	4	SEAL-O-RING	
	7	1	**8T-2502**	2	BOLT (3/8-16X1.125 IN)	
	8	1	**8T-4896**	4	WASHER-HARD (10.2X18.5X2.5MM THK)	
	9	1	**4P-8134**	1	CLIP	
	10	1	**5M-3062**	2	BOLT (3/8-16X0.75 IN)	

C-CHANGE FROM PREVIOUS TYPE
Y-SEPARATE ILLUSTRATION

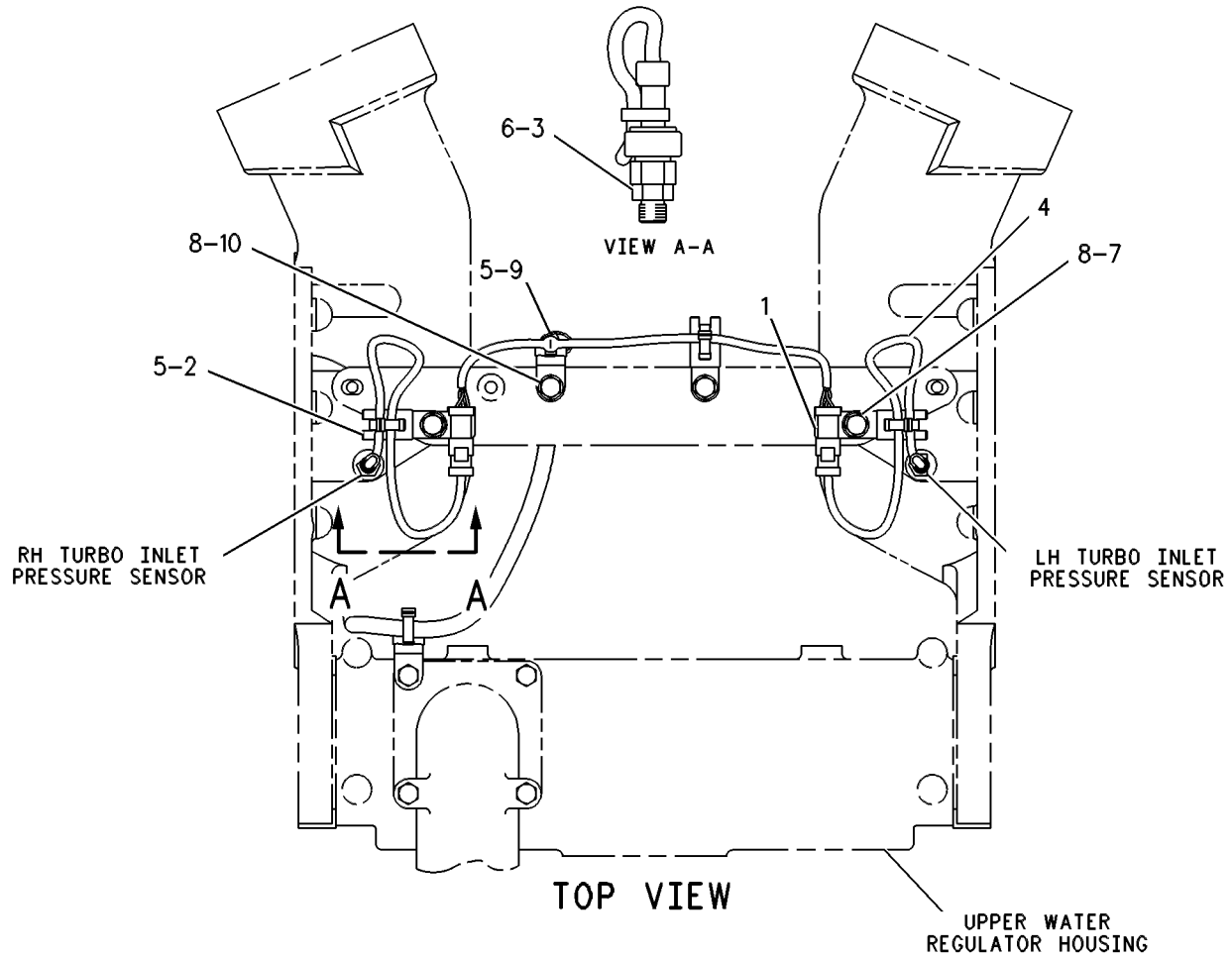

GRAPHIC #1 **<END>** g00287333

169-2887 SENSOR & MTG GP-PRESSURE—TURBO INLET

S/N: 7PZ1-288

PART OF 155-5557 INSTALLATION AR-ENGINE

SMCS-1408 **i02001262**

NOTE	REF NO	GRAPHIC REF	PART NUMBER	QTY	PART NAME 1 2 3 4 5 6 (PRODUCT LEVEL)	SEE PAGE
	1	1	**116-0118**	3	CLIP	
	2	1	**4P-7581**	3	CLIP	
	3	1	**9X-0262**	2	ADAPTER	
Y	4	1	**161-9926**	1	SENSOR GP-PRESSURE (LH TURBO INLET)	339
Y	4A	1	**161-9926**	1	SENSOR GP-PRESSURE (RH TURBO INLET)	339
	5	1	**9X-6772**	6	STRAP-CABLE	
	6	1	**6V-5048**	4	SEAL-O-RING	
	7	1	**8T-2502**	3	BOLT (3/8-16X1.125 IN)	
	8	1	**8T-4896**	5	WASHER-HARD (10.2X18.5X2.5MM THK)	
	9	1	**4P-8134**	1	CLIP	
	10	1	**5M-3062**	2	BOLT (3/8-16X0.75 IN)	
	11	1	**107-8618**	1	SENSOR GP-TEMPERATURE (INLET AIR)	
		1	**3E-3371**	1	WEDGE-RECEPTACLE LOCK (3-PIN)	
		1	**8T-8729**	3	PIN-CONNECTOR	
E		1	**112-4550**		SLEEVE (31CM)	
		1	**102-8803**	1	KIT-RECEPTACLE (3-PIN)	
					(INCLUDES RECEPTACLE AS AND WEDGE)	
	12	1	**8L-2786**	1	SEAL-O-RING	

E-ORDER BY THE CENTIMETER
Y-SEPARATE ILLUSTRATION

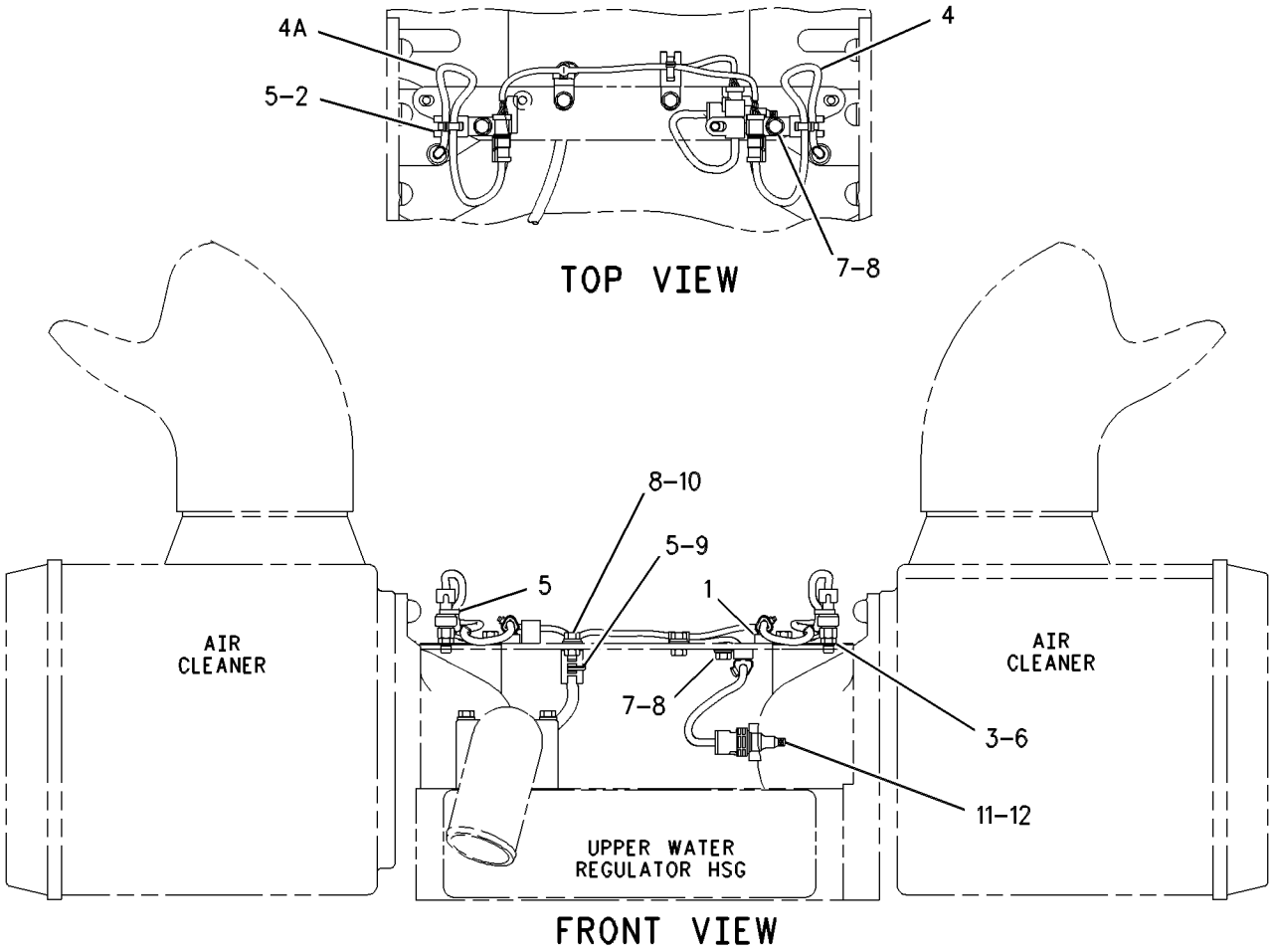

GRAPHIC #1 **<END>** g00590132

124-9325 SENSOR GP-FUEL LEVEL–ULTRASONIC

S/N: 7PZ1-UP

PART OF 156-9936 BATTERY & WIRING GP

SMCS-1273 **i01988607**

NOTE	REF NO	GRAPHIC REF	PART NUMBER	QTY	PART NAME 1 2 3 4 5 6 (PRODUCT LEVEL)	SEE PAGE
	1	1	**102-8804**	1	KIT-RECEPTACLE (4-PIN)	
					(INCLUDES RECEPTACLE AS & WEDGE)	
	2	1	**3E-3377**	1	WEDGE-RECEPTACLE LOCK (4-PIN)	
	3	1	**8T-8729**	4	PIN-CONNECTOR	
E	4	1	**9X-1813**		SLEEVE (34CM)	

E-ORDER BY THE CENTIMETER

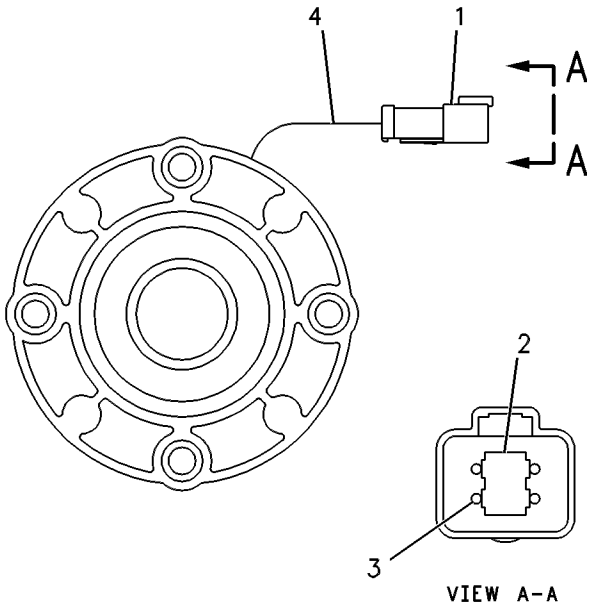

GRAPHIC #1 **<END>** g00085712

147-1680 SENSOR GP-POSITION–RH, LH STEERING LEVER

S/N: 7PZ1-UP

PART OF 115-7411 CONTROL GP-BRAKE, 122-1512 CONTROL GP-STEERING & TMSN

SMCS-1408 **i01988608**

NOTE	REF NO	GRAPHIC REF	PART NUMBER	QTY	PART NAME 1 2 3 4 5 6 (PRODUCT LEVEL)	SEE PAGE
	1	1	**102-8803**	1	KIT-RECEPTACLE (3-PIN)	
					(INCLUDES RECEPTALE AS AND WEDGE)	
	2	1	**8T-8729**	3	PIN-CONNECTOR	

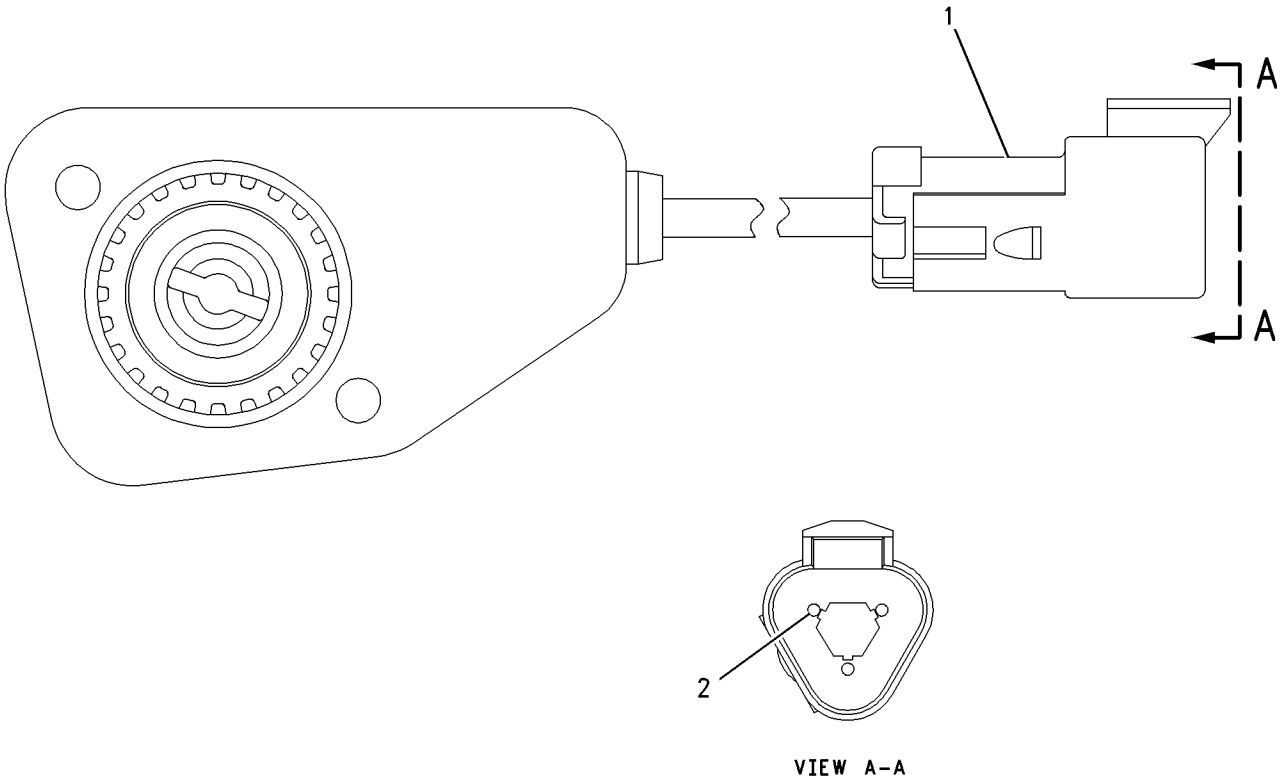

VIEW A-A

GRAPHIC #1 **<END>** g00711081

160-2443 SENSOR GP-POSITION–DECELERATOR PEDAL

S/N: 7PZ1-UP
ROTARY
PART OF 172-7938 CONTROL GP-DECELERATOR

SMCS-1408 **i01988609**

NOTE	REF NO	GRAPHIC REF	PART NUMBER	QTY	PART NAME 1 2 3 4 5 6 (PRODUCT LEVEL)	SEE PAGE
	1	1	**102-8803**	1	KIT-RECEPTACLE (3-PIN)	
					(KIT INCLUDES RECEPTACLE AS & WEDGE)	
	2	1	**8T-8729**	3	PIN-CONNECTOR	
	3	1	**3E-3371**	1	WEDGE-RECEPTACLE LOCK (3 PIN)	

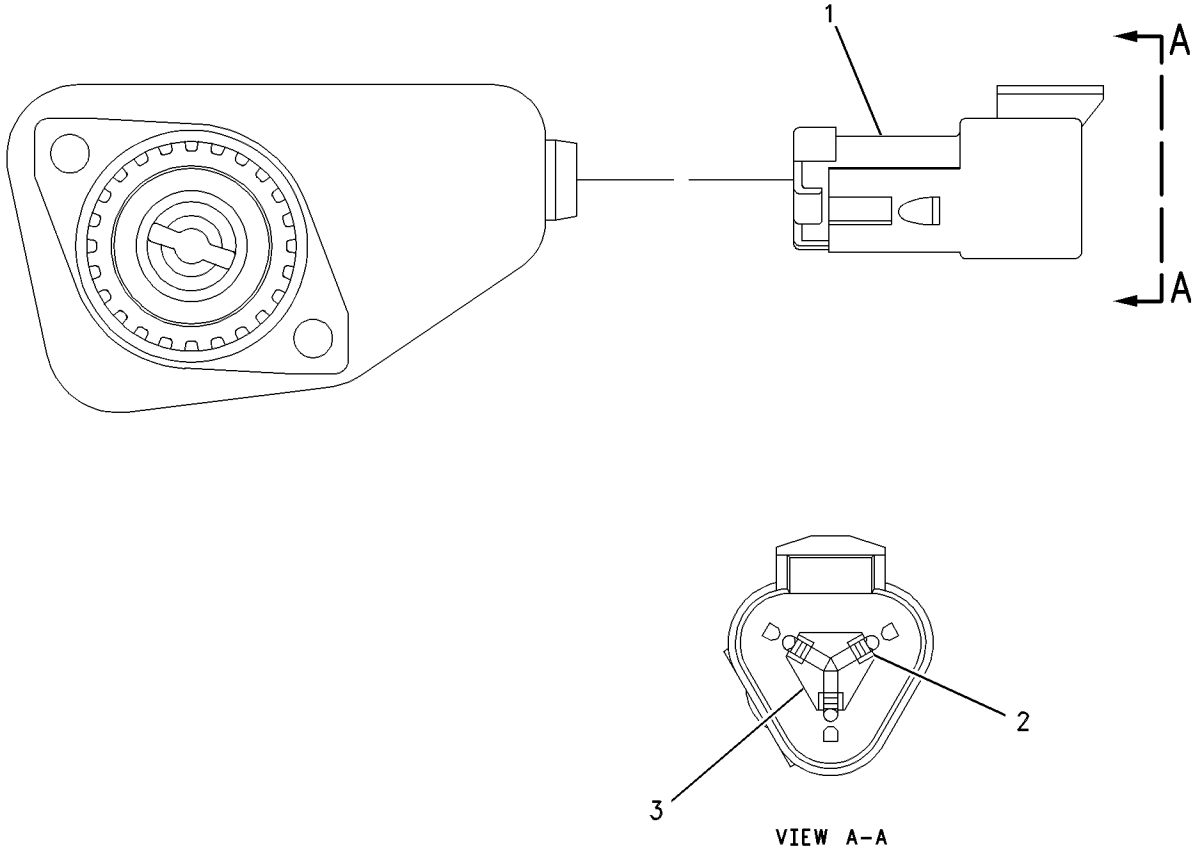

GRAPHIC #1 **<END>** g00637818

161-8979 SENSOR GP-POSITION–STEERING, TMSN CONTROL HANDLE

S/N: 7PZ1-UP
SPRINGLESS
PART OF 122-1512 CONTROL GP-STEERING & TMSN
FIELD REPLACEMENT ORDER 214-4862–PAGE 334

SMCS-1408 **i01988615**

NOTE	REF NO	GRAPHIC REF	PART NUMBER	QTY	PART NAME 1 2 3 4 5 6 (PRODUCT LEVEL)	SEE PAGE
	1	1	**102-8803**	1	KIT-RECEPTACLE (3-PIN)	
					(INCLUDES RECEPTACLE AS & WEDGE)	
	2	1	**8T-8729**	3	PIN-CONNECTOR	
	3	1	**3E-3371**	1	WEDGE-RECEPTACLE LOCK (3 PIN)	

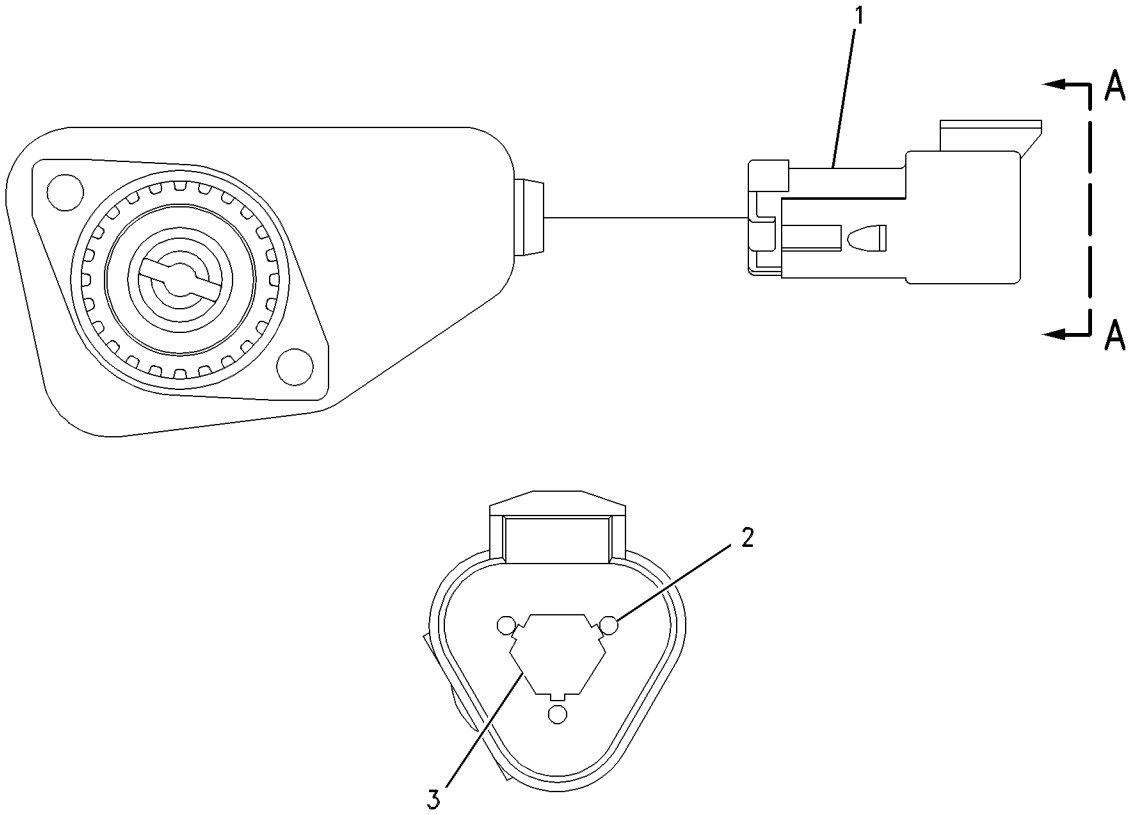

VIEW A-A

GRAPHIC #1 **<END>** g00550816

196-9565 SENSOR GP-POSITION—BLADE TILT

S/N: 7PZ564-685
PART OF 177-4980, 185-8734 CONTROL GP-JOYSTICK
FIELD REPLACEMENT ORDER 230-6266—PAGE 336
ALSO AN ATTACHMENT

SMCS-1408 **i01981602**

NOTE	PART NUMBER	QTY	PART NAME 1 2 3 4 5 6 (PRODUCT LEVEL)	SEE PAGE
			(NO SERVICED PARTS)	

<END>

196-9566 SENSOR GP-POSITION—BLADE LIFT

S/N: 7PZ564-685
PART OF 177-4980, 185-8734 CONTROL GP-JOYSTICK
FIELD REPLACEMENT ORDER 230-6267—PAGE 337
ALSO AN ATTACHMENT

SMCS-1408 **i01981603**

NOTE	PART NUMBER	QTY	PART NAME 1 2 3 4 5 6 (PRODUCT LEVEL)	SEE PAGE
			(NO SERVICED PARTS)	

<END>

214-4862 SENSOR GP-POSITION—STEERING, TMSN CONTROL HANDLE

S/N: 7PZ1-UP

PART OF 122-1512 CONTROL GP-STEERING & TMSN

FIELD REPLACEMENT FOR 161-8979—PAGE 332

SMCS-1408 **i01988610**

NOTE	REF NO	GRAPHIC REF	PART NUMBER	QTY	PART NAME 1 2 3 4 5 6 (PRODUCT LEVEL)	SEE PAGE
	1	1	**102-8803**	1	KIT-RECEPTACLE (3-PIN)	
					(INCLUDES RECEPTACLE AS & WEDGE)	
	2	1	**186-3735**	3	PIN-CONNECTOR	
	3	1	**3E-3371**	1	WEDGE-RECEPTACLE LOCK (3 PIN)	

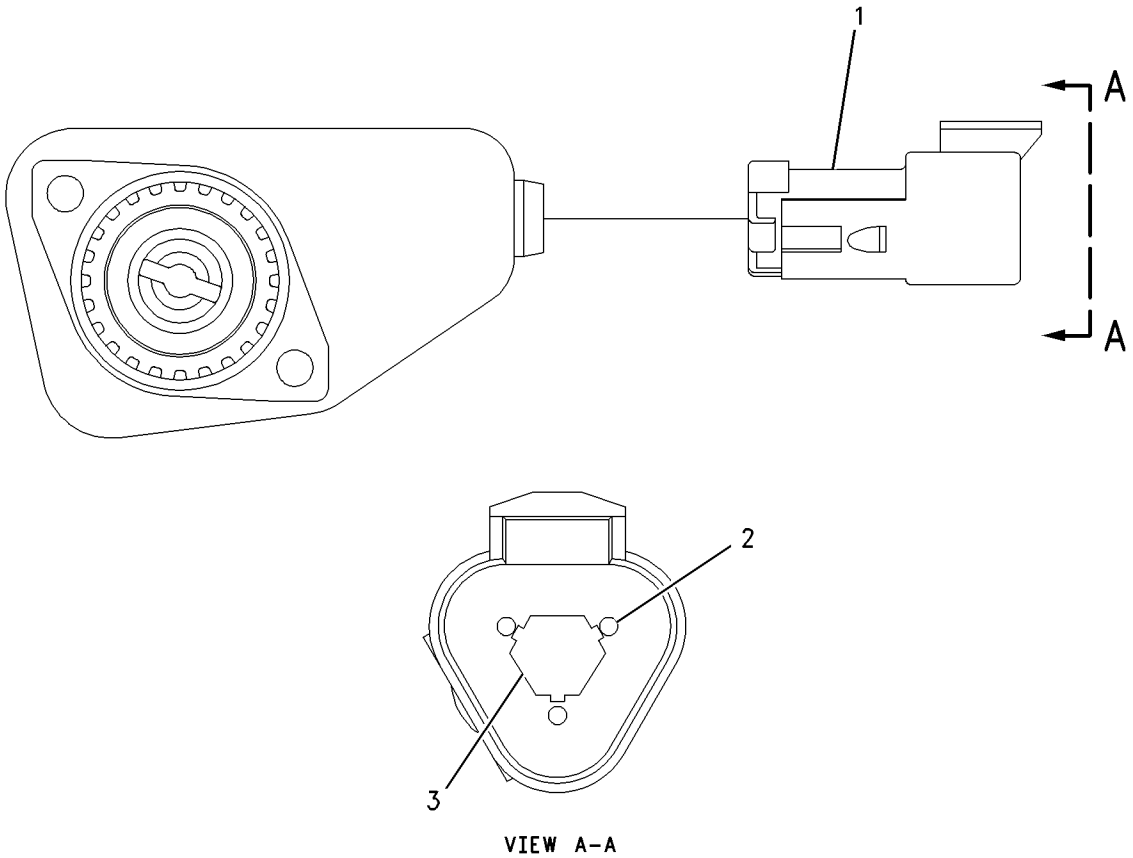

VIEW A-A

GRAPHIC #1 **<END>** g00893828

214-4863 SENSOR GP-POSITION–BRAKE–STEERING

S/N: 7PZ1-UP

PART OF 115-7411 CONTROL GP-BRAKE, 122-1512 CONTROL GP-STEERING & TMSN

SMCS-1408 **i01988611**

NOTE	REF NO	GRAPHIC REF	PART NUMBER	QTY	PART NAME 1 2 3 4 5 6 (PRODUCT LEVEL)	SEE PAGE
	1	1	**102-8803**	1	KIT-RECEPTACLE (3-PIN)	
					(INCLUDES RECEPTACLE AS & WEDGE)	
	2	1	**186-3735**	1	PIN-CONNECTOR	
	3	1	**3E-3371**	1	WEDGE-RECEPTACLE LOCK (3 PIN)	

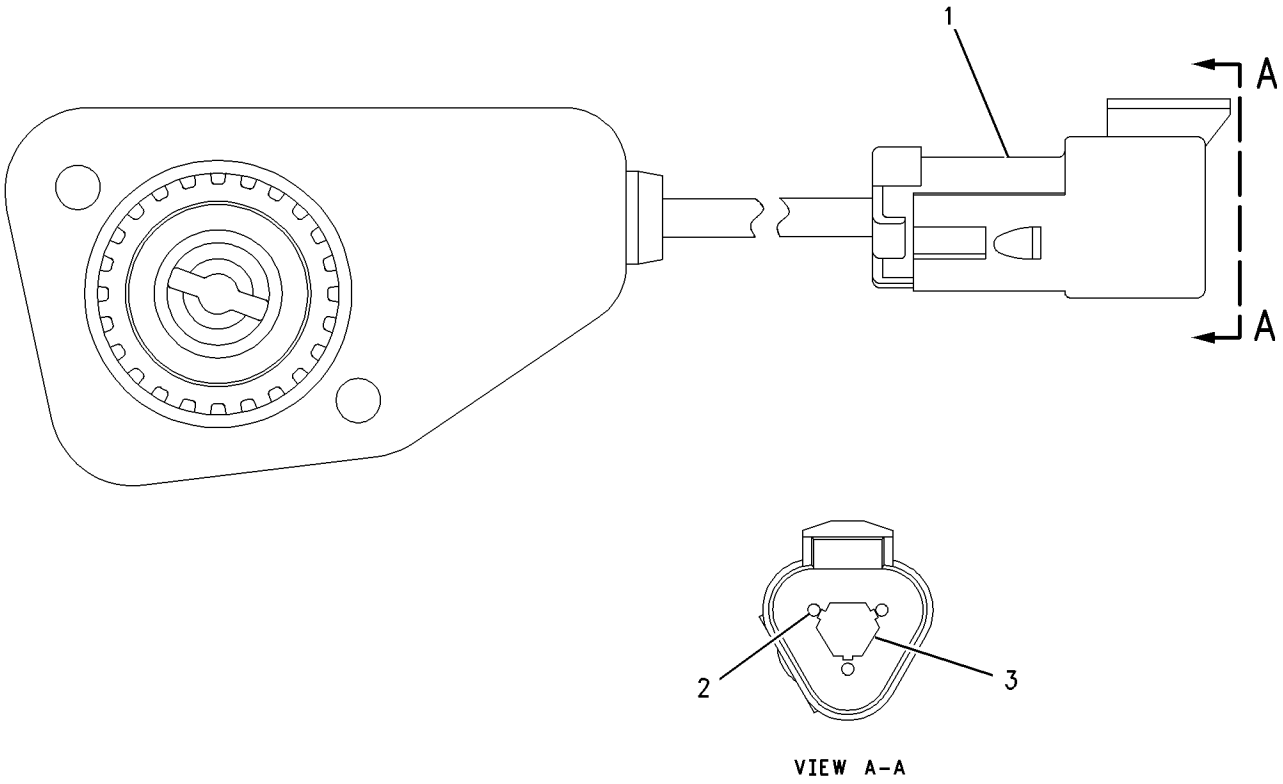

VIEW A-A

GRAPHIC #1 **<END>** g00925281

230-6266 SENSOR GP-POSITION—BLADE TILT

S/N: 7PZ686-UP

PART OF 232-3780 CONTROL & MOUNTING GP, 232-3779 CONTROL GP-JOYSTICK

FIELD REPLACEMENT FOR 196-9565—PAGE 333

ALSO AN ATTACHMENT

SMCS-1408 **i01953390**

NOTE	REF NO	GRAPHIC REF	PART NUMBER	QTY	PART NAME 1 2 3 4 5 6 (PRODUCT LEVEL)	SEE PAGE
					NO SERVICED PARTS	

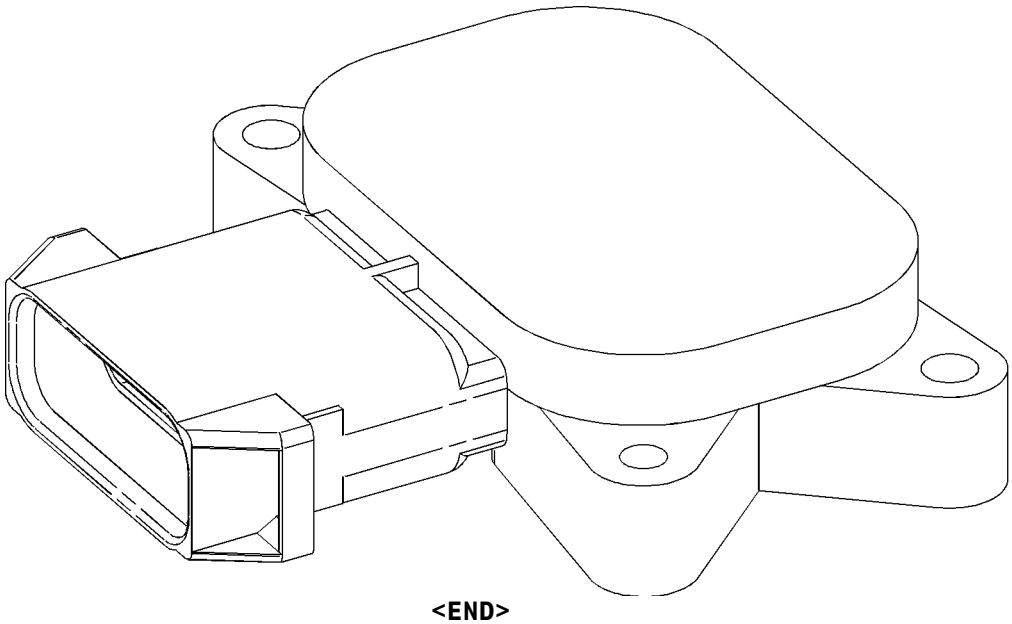

GRAPHIC #1 **<END>** g01023717

230-6267 SENSOR GP-POSITION—BLADE LIFT

S/N: 7PZ686-UP

PART OF 232-3780 CONTROL & MOUNTING GP, 232-3779 CONTROL GP-JOYSTICK

FIELD REPLACEMENT FOR 196-9566—PAGE 333

ALSO AN ATTACHMENT

SMCS-1408 **i01952667**

NOTE	REF NO	GRAPHIC REF	PART NUMBER	QTY	PART NAME 1 2 3 4 5 6 (PRODUCT LEVEL)	SEE PAGE
					(NO SERVICED PARTS)	

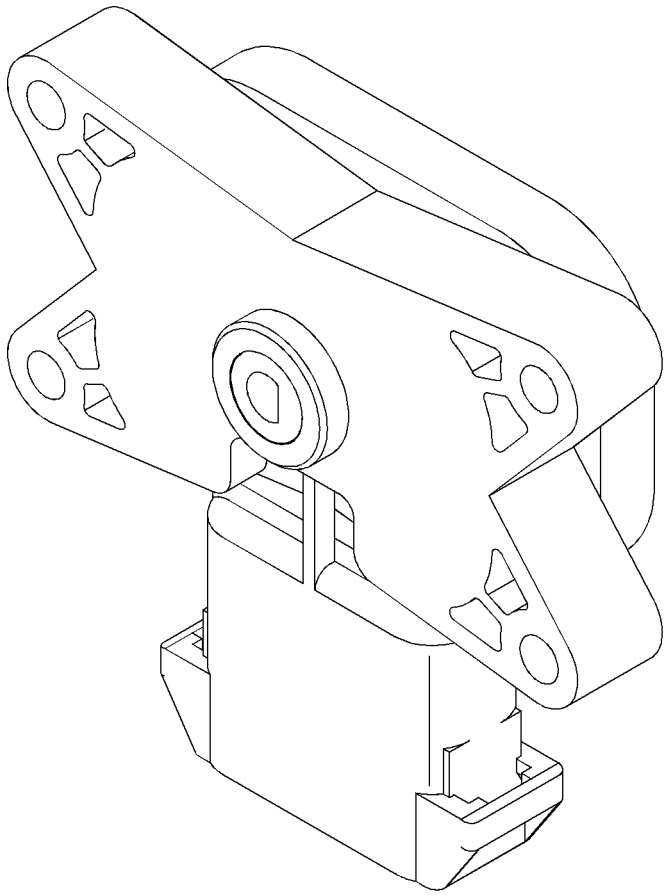

GRAPHIC #1

<END>

g01021931

155-3549 SENSOR GP-PRESSURE–MAIN PUMP, MAIN TILT

S/N: 7PZ1-731

PART OF 156-9936 BATTERY & WIRING GP

SMCS-1408 **i00898282**

NOTE	REF NO	GRAPHIC REF	PART NUMBER	QTY	PART NAME 1 2 3 4 5 6 (PRODUCT LEVEL)	SEE PAGE
BE	1	1	**8T-2225**		TUBE	
BE	2	1	**9X-1813**		SLEEVE	
	3	1	**8T-8731**	1	PLUG-CONNECTOR	
	4	1	**8T-8730**	3	SOCKET-CONNECTOR	

B-USE AS REQUIRED
E-ORDER BY THE CENTIMETER

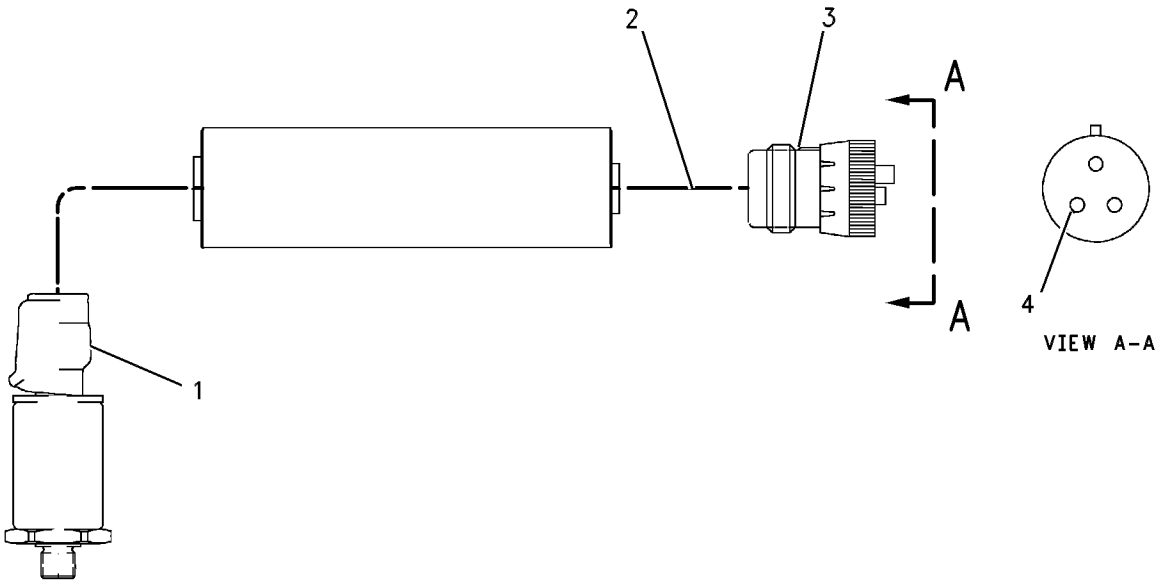

GRAPHIC #1 **<END>** g00374193

161-9926 SENSOR GP-PRESSURE–ATM–CRANKCASE–TURBO INLET–TURBO OUTLET

S/N: 2GR1180-UP; 7PZ1-703

PART OF 127-4496, 169-2887 SENSOR & MTG GP-PRESSURE, 156-9816 WIRING GP-ENGINE

SMCS-1408 **i02000749**

NOTE	REF NO	GRAPHIC REF	PART NUMBER	QTY	PART NAME 1 2 3 4 5 6 (PRODUCT LEVEL)	SEE PAGE
E	1	1	**9X-1813**		SLEEVE (34CM)	
	2	1	**155-2260**	1	KIT-CONNECTING PLUG (3-PIN)	
					(INCLUDES PLUG AS. AND WEDGE)	
	3	1	**180-9340**	3	SOCKET-CONNECTOR	
	4	1	**3E-3368**	1	WEDGE-PLUG LOCK	

E-ORDER BY THE CENTIMETER

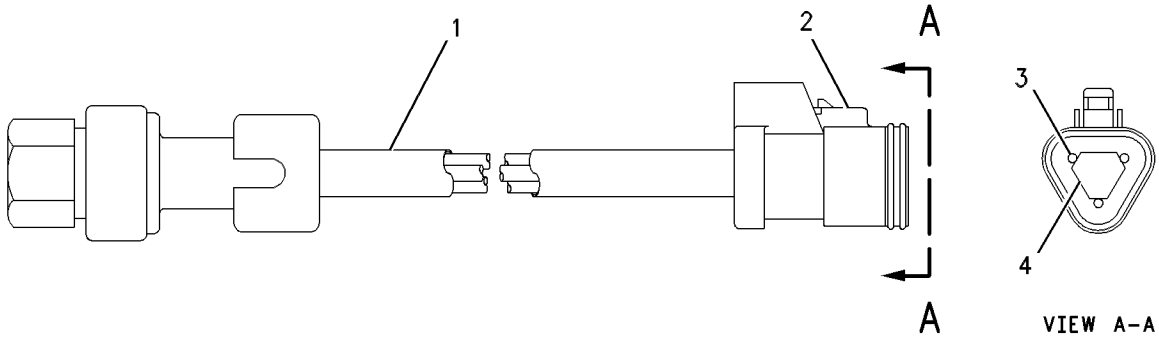

GRAPHIC #1 **<END>** g00513129

161-9929 SENSOR GP-PRESSURE–TURBO OUTLET

S/N: 2GR1180-3296

PART OF 156-9816 WIRING GP-ENGINE

SMCS-1408 **i01990288**

NOTE	REF NO	GRAPHIC REF	PART NUMBER	QTY	PART NAME 1 2 3 4 5 6 (PRODUCT LEVEL)	SEE PAGE
E	1	1	**138-3094**		SLEEVE (34CM)	
	2	1	**155-2260**	1	KIT-CONNECTING PLUG (3-PIN) (PRESSURE SENSOR)	
					(INCLUDES PLUG ASSEMBLY & WEDGE)	
	3	1	**8T-8730**	3	SOCKET-CONNECTOR	
	4	1	**3E-3368**	1	WEDGE-PLUG LOCK	

E-ORDER BY THE CENTIMETER

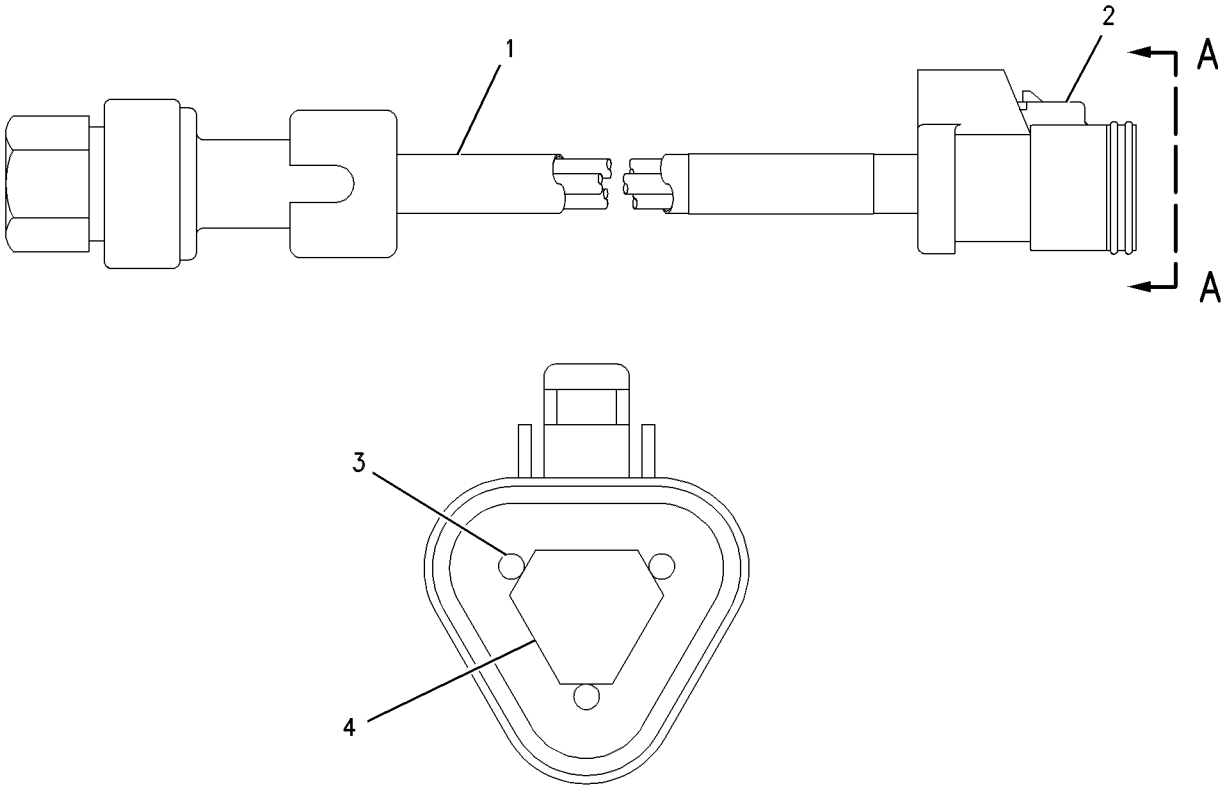

VIEW A-A

GRAPHIC #1 **<END>** g00468388

161-9931 SENSOR GP-PRESSURE–FILTERED ENGINE OIL

S/N: 2GR1180-3653

PART OF 156-9816 WIRING GP-ENGINE

SMCS-1408 **i01988637**

NOTE	REF NO	GRAPHIC REF	PART NUMBER	QTY	PART NAME 1 2 3 4 5 6 (PRODUCT LEVEL)	SEE PAGE
BE	1	1	**9X-1813**		SLEEVE	
	2	1	**155-2260**	1	KIT-CONNECTING PLUG (3-PIN) (PRESSURE SENSOR)	
					(INCLUDES PLUG AS & WEDGE)	
	4	1	**186-3736**	3	SOCKET-CONNECTOR	
	5	1	**3E-3368**	1	WEDGE-PLUG LOCK	

B-USE AS REQUIRED
E-ORDER BY THE CENTIMETER

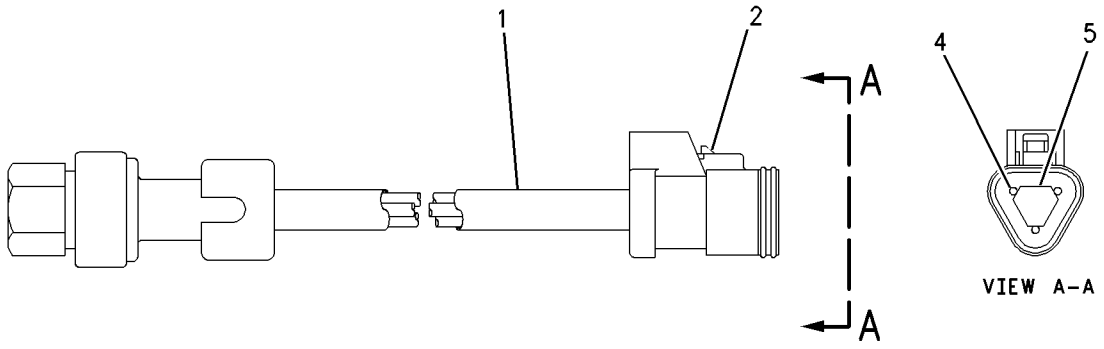

GRAPHIC #1 **<END>** g00807023

167-1709 SENSOR GP-PRESSURE–FAN

S/N: 7PZ1-UP

PART OF 156-9936 BATTERY & WIRING GP

SMCS-1408 **i01988642**

NOTE	REF NO	GRAPHIC REF	PART NUMBER	QTY	PART NAME 1 2 3 4 5 6 (PRODUCT LEVEL)	SEE PAGE
BE	1	1	**9X-1813**		SLEEVE	
	2	1	**155-2260**	1	KIT-CONNECTING PLUG (3-PIN)	
					(INCLUDES PLUG AS & WEDGE)	
	3	1	**9X-3402**	3	SOCKET-CONNECTOR	
	4	1	**3E-3368**	1	WEDGE-PLUG LOCK (3 PIN)	

B-USE AS REQUIRED
E-ORDER BY THE CENTIMETER

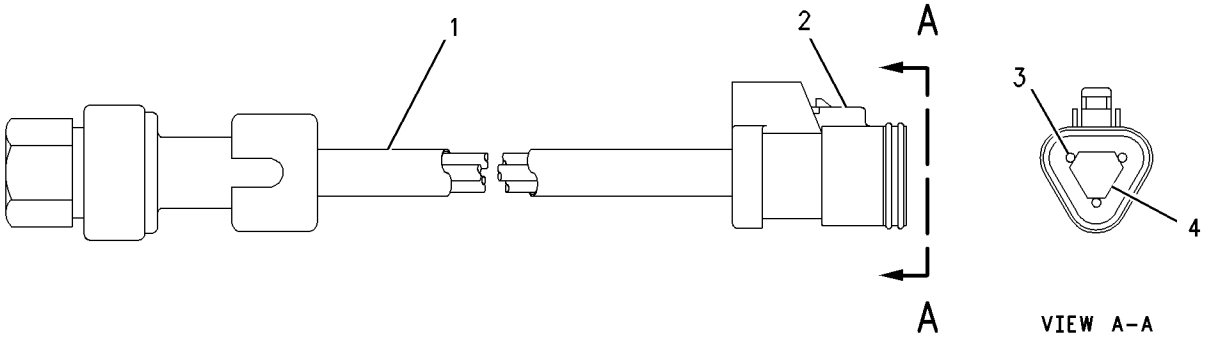

GRAPHIC #1 **<END>** g00888131

194-6724 SENSOR GP-PRESSURE–TURBO OUTLET

S/N: 2GR3297-UP
PART OF 156-9816 WIRING GP-ENGINE
FIELD REPLACEMENT FOR 161-9929–PAGE 340

SMCS-1408 **i02000927**

NOTE	REF NO	GRAPHIC REF	PART NUMBER	QTY	PART NAME 1 2 3 4 5 6 (PRODUCT LEVEL)	SEE PAGE
BE	1	1	**138-3094**		SLEEVE (34CM)	
	2	1	**155-2260**	1	KIT-CONNECTING PLUG (3-PIN)	
					(INCLUDES PLUG AS. AND WEDGE)	
	3	1	**180-9340**	3	SOCKET-CONNECTOR	
	4	1	**3E-3368**	1	WEDGE-PLUG LOCK	

B-USE AS REQUIRED
E-ORDER BY THE CENTIMETER

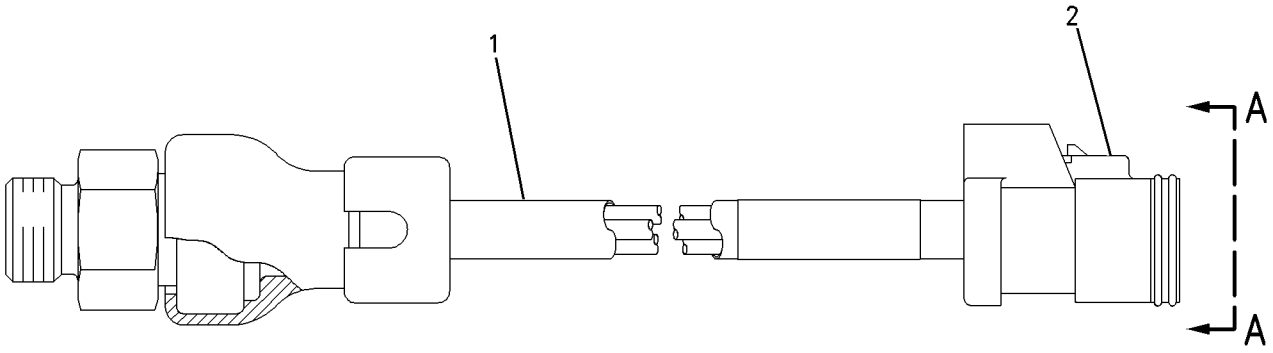

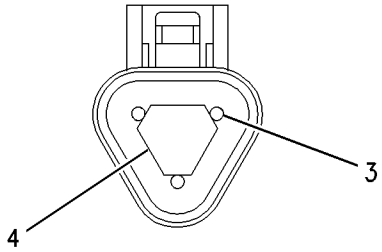

VIEW A-A

GRAPHIC #1 **<END>** g00807030

194-6725 SENSOR GP-PRESSURE–FILTERED ENGINE OIL

S/N: 2GR3654-UP

PART OF 156-9816 WIRING GP-ENGINE

SMCS-1408 **i01988647**

NOTE	REF NO	GRAPHIC REF	PART NUMBER	QTY	PART NAME 1 2 3 4 5 6 (PRODUCT LEVEL)	SEE PAGE
E	1	1	**9X-1813**		SLEEVE (34CM)	
	2	1	**155-2260**	1	KIT-CONNECTING PLUG (3-PIN)	
					(INCLUDES PLUG AS AND WEDGE)	
	3	1	**180-9340**	3	SOCKET-CONNECTOR	
	4	1	**3E-3368**	1	WEDGE-PLUG LOCK	

E-ORDER BY THE CENTIMETER

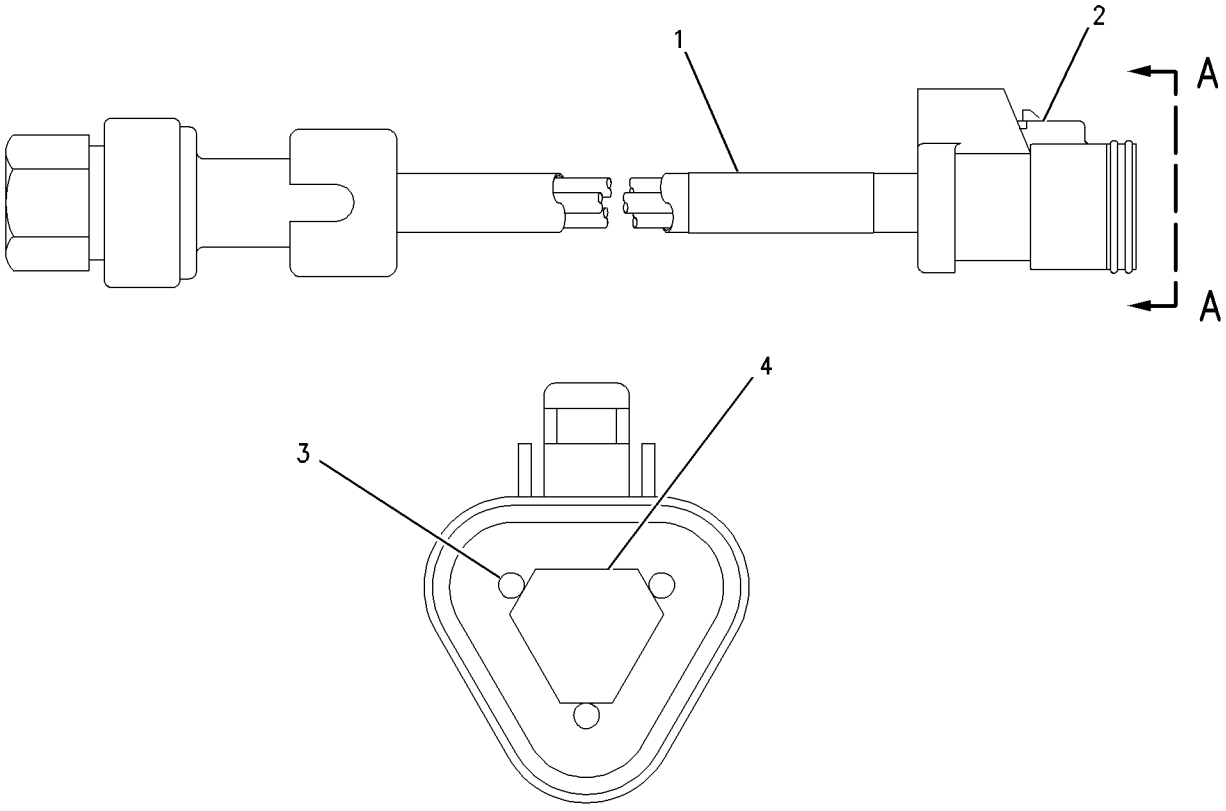

VIEW A-A

GRAPHIC #1 **<END>** g00851220

221-3406 SENSOR GP-PRESSURE–MAIN HYDRAULIC PUMP–TILT HYDRAULIC PUMP

S/N: 7PZ660-664, 732-UP

PART OF 156-9936 BATTERY & WIRING GP, 173-1553 LINES GP-PUMP

SMCS-1408 **i02003755**

NOTE	REF NO	GRAPHIC REF	PART NUMBER	QTY	PART NAME 1 2 3 4 5 6 (PRODUCT LEVEL)	SEE PAGE
	1	1	**155-2260**	1	KIT-CONNECTING PLUG (3-PIN)	
	2	1	*180-9340*	3	SOCKET-CONNECTOR	
	3	1	**155-2276**	1	WEDGE-PLUG LOCK (3 PIN)	

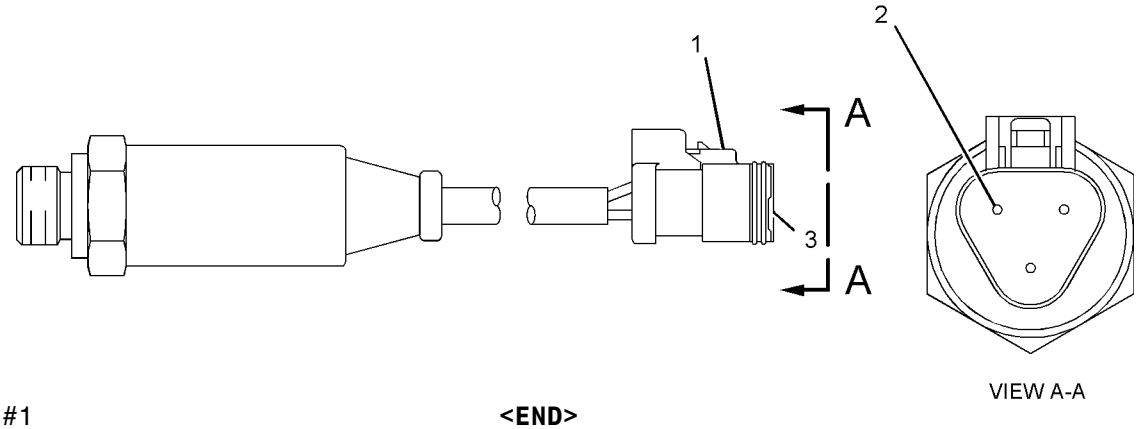

GRAPHIC #1 **<END>** g01037697

129-6628 SENSOR GP-SPEED—ENGINE SPEED/TIMING

S/N: 2GR1180-UP

PART OF 156-9816 WIRING GP-ENGINE

SMCS-1408 **i02000934**

NOTE	REF NO	GRAPHIC REF	PART NUMBER	QTY	PART NAME 1 2 3 4 5 6 (PRODUCT LEVEL)	SEE PAGE
BE	1	1	**9X-1813**		SLEEVE (31CM)	
	2	1	**155-2260**	1	KIT-CONNECTING PLUG (3-PIN)	
					(INCLUDES PLUG AS. AND WEDGE)	
	3	1	**102-8813**	1	SEAL	
	4	1	**3E-3368**	1	WEDGE-PLUG LOCK	
	5	1	**186-3736**	3	SOCKET-CONNECTOR	
	6	1	**8L-2786**	1	SEAL-O-RING	

B-USE AS REQUIRED
E-ORDER BY THE CENTIMETER

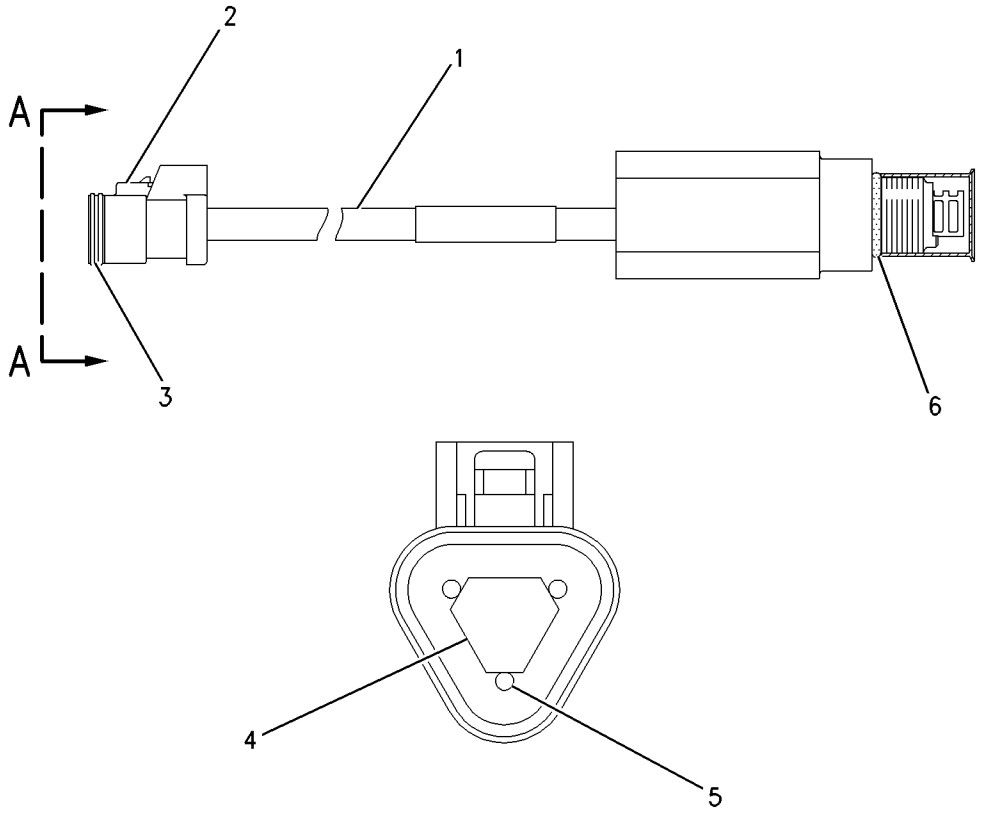

VIEW A–A

GRAPHIC #1 **<END>** g00714038

189-5746 SENSOR GP-SPEED–TIMING CALIBRATION PROBE–ENGINE

S/N: 2GR1180-UP

PART OF 156-9816 WIRING GP-ENGINE

SMCS-1408 **i02000933**

NOTE	REF NO	GRAPHIC REF	PART NUMBER	QTY	PART NAME 1 2 3 4 5 6 (PRODUCT LEVEL)	SEE PAGE
	1	1	**171-5349**	1	STRAP-MARKER	
	2	1	**102-8802**	1	KIT-RECEPTACLE (2-PIN)	
					(INCLUDES RECEPTACLE AS. AND WEDGE)	
	3	1	**186-3735**	2	PIN-CONNECTOR	
	4	1	**3E-3365**	1	WEDGE-RECEPTACLE LOCK (2-PIN)	
E	5	1	**9X-1386**		SLEEVE (14CM)	

E-ORDER BY THE CENTIMETER

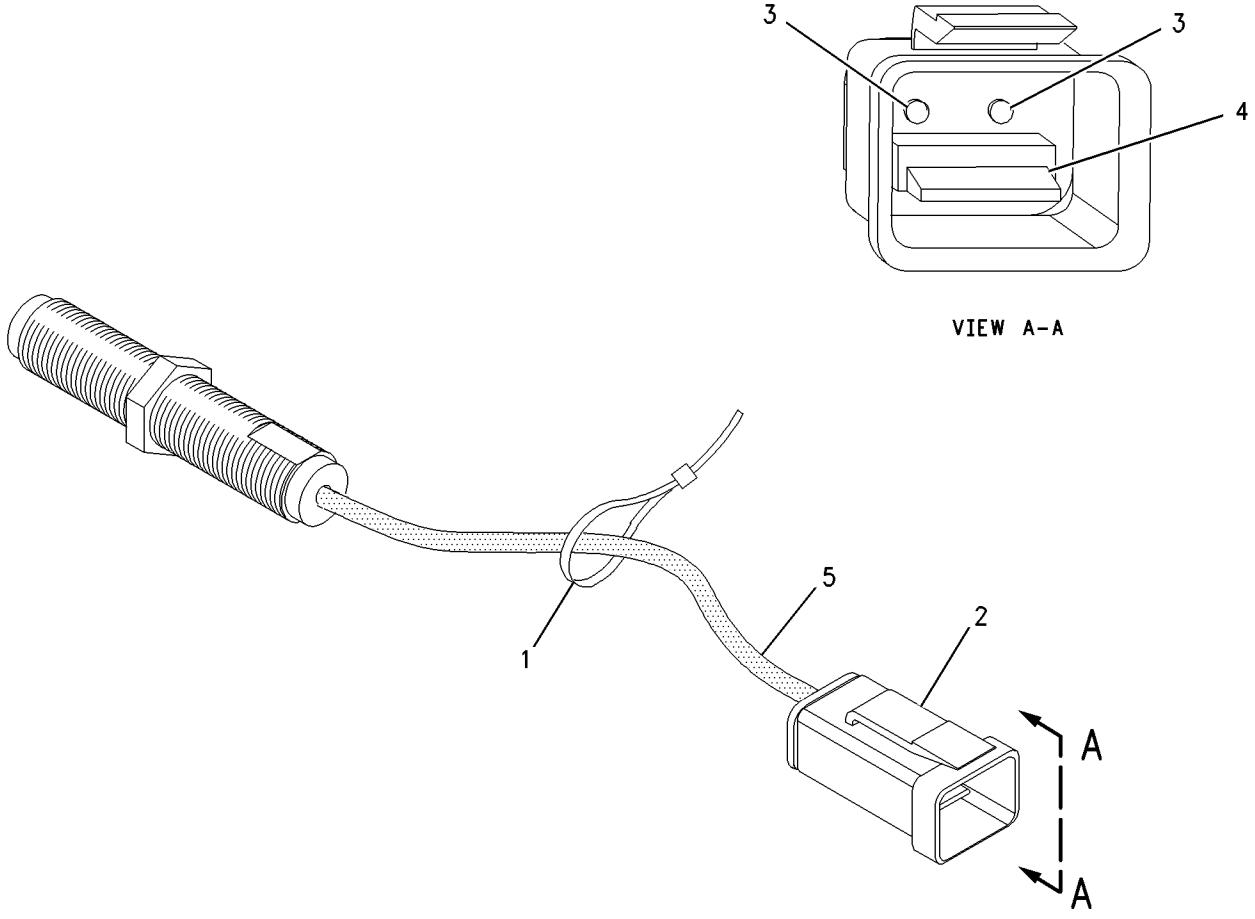

GRAPHIC #1 **<END>** g00837278

193-2550 SENSOR GP-SPEED–ODOMETER

S/N: 7PZ1-UP

PART OF 156-9936 BATTERY & WIRING GP

SMCS-1408 **i01988645**

NOTE	REF NO	GRAPHIC REF	PART NUMBER	QTY	PART NAME 1 2 3 4 5 6 (PRODUCT LEVEL)	SEE PAGE
	1	1	**171-5349**	1	STRAP-MARKER	
	2	1	**102-8802**	1	KIT-RECEPTACLE (2-PIN)	
					(INCLUDES RECEPTACLE AS & WEDGE)	
	3	1	**8T-8729**	2	PIN-CONNECTOR	
	4	1	**3E-3365**	1	WEDGE-RECEPTACLE LOCK (2 PIN)	
BE	5	1	**9X-1813**		SLEEVE	

B-USE AS REQUIRED
E-ORDER BY THE CENTIMETER

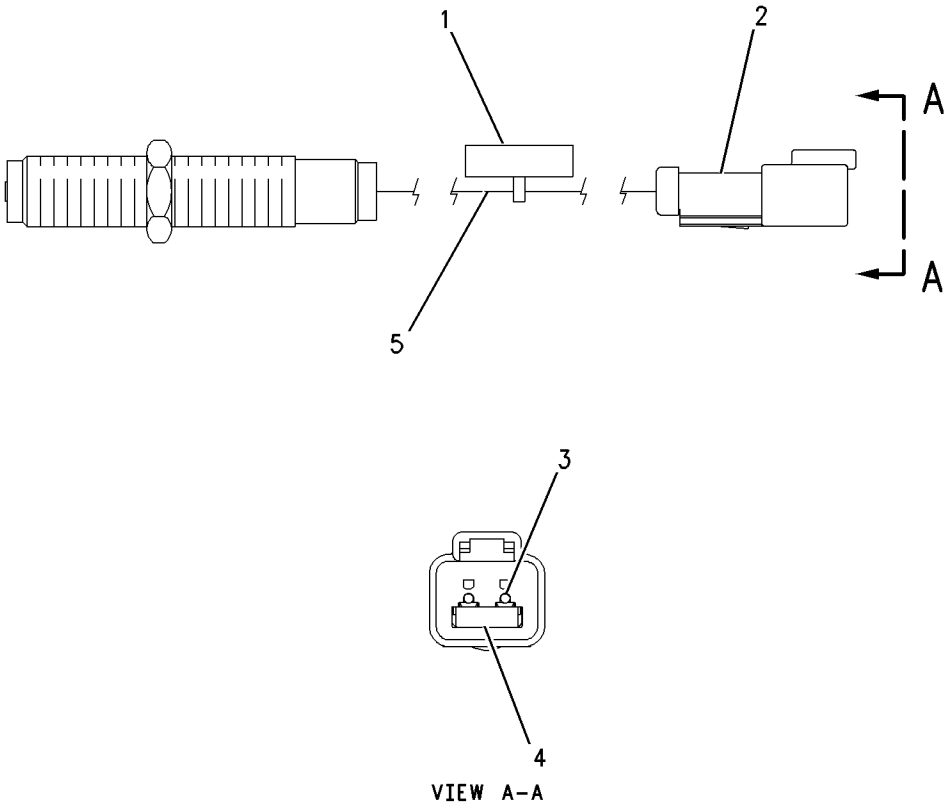

GRAPHIC #1 **<END>** g00690327

118-7226 SENSOR GP-TEMPERATURE–STEERING OIL

S/N: 7PZ1-UP
8 VOLT. PULSE WIDTH MODULATION
PART OF 156-9936 BATTERY & WIRING GP

SMCS-1408, 1906, 1921, 1922, 7400 **i01988638**

NOTE	REF NO	GRAPHIC REF	PART NUMBER	QTY	PART NAME 1 2 3 4 5 6 (PRODUCT LEVEL)	SEE PAGE
E	1	1	**9X-1813**		SLEEVE (33CM)	
	2	1	**102-8803**	1	KIT-RECEPTACLE (3-PIN)	
					(INCLUDES RECEPTACLE AS & WEDGE)	
	3	1	**186-3735**	3	PIN-CONNECTOR	
	4	1	**3E-3371**	1	WEDGE-RECEPTACLE LOCK (3 PIN)	

E-ORDER BY THE CENTIMETER

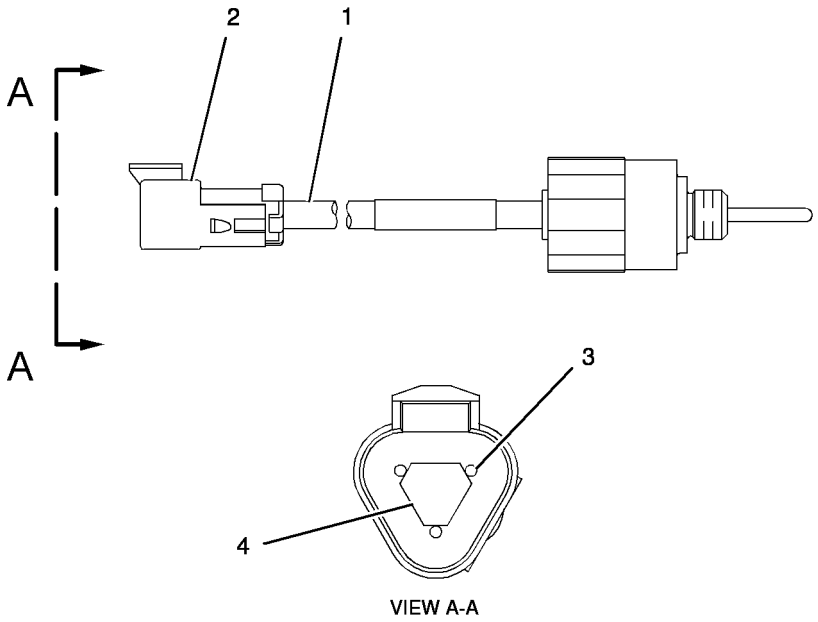

VIEW A-A

GRAPHIC #1 **<END>** g01023677

134-2252 SENSOR GP-TEMPERATURE–POWER TRAIN OIL

S/N: 7PZ1-UP
8 VOLT
PART OF 156-9936 BATTERY & WIRING GP

SMCS-1408, 1906, 1921, 1922, 7400 **i01988640**

NOTE	REF NO	GRAPHIC REF	PART NUMBER	QTY	PART NAME 1 2 3 4 5 6 (PRODUCT LEVEL)	SEE PAGE
	1	1	**3E-3371**	1	WEDGE-RECEPTACLE LOCK (3 PIN)	
BE	2	1	**9X-1386**		SLEEVE	
	3	1	**102-8803**	1	KIT-RECEPTACLE (3-PIN)	
					(INCLUDES RECEPTACLE AS & WEDGE)	
	4	1	**8T-8729**	3	PIN-CONNECTOR	

B-USE AS REQUIRED
E-ORDER BY THE CENTIMETER

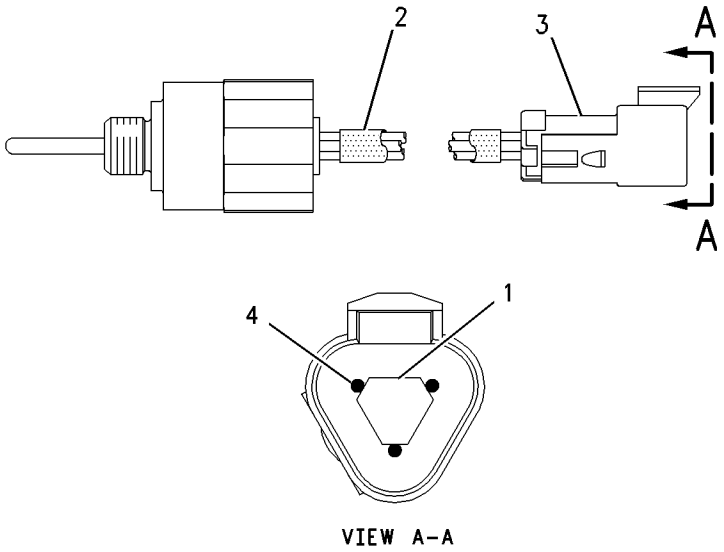

VIEW A–A

GRAPHIC #1 **<END>** g00658816

236-6586 SERVICE GP-IMPLEMENT

S/N: 7PZ1-UP

PART OF 173-7246 ELECTRONICS GP-IMPLEMENT

SMCS-7610 **i02023758**

NOTE	REF NO	GRAPHIC REF	PART NUMBER	QTY	PART NAME 1 2 3 4 5 6 (PRODUCT LEVEL)	SEE PAGE
Y	1	1	**166-7731**	1	CONTROL GP-UNPROGRAMMED	292
			236-6585	1	SOFTWARE GP-IMPLEMENT	

Y-SEPARATE ILLUSTRATION

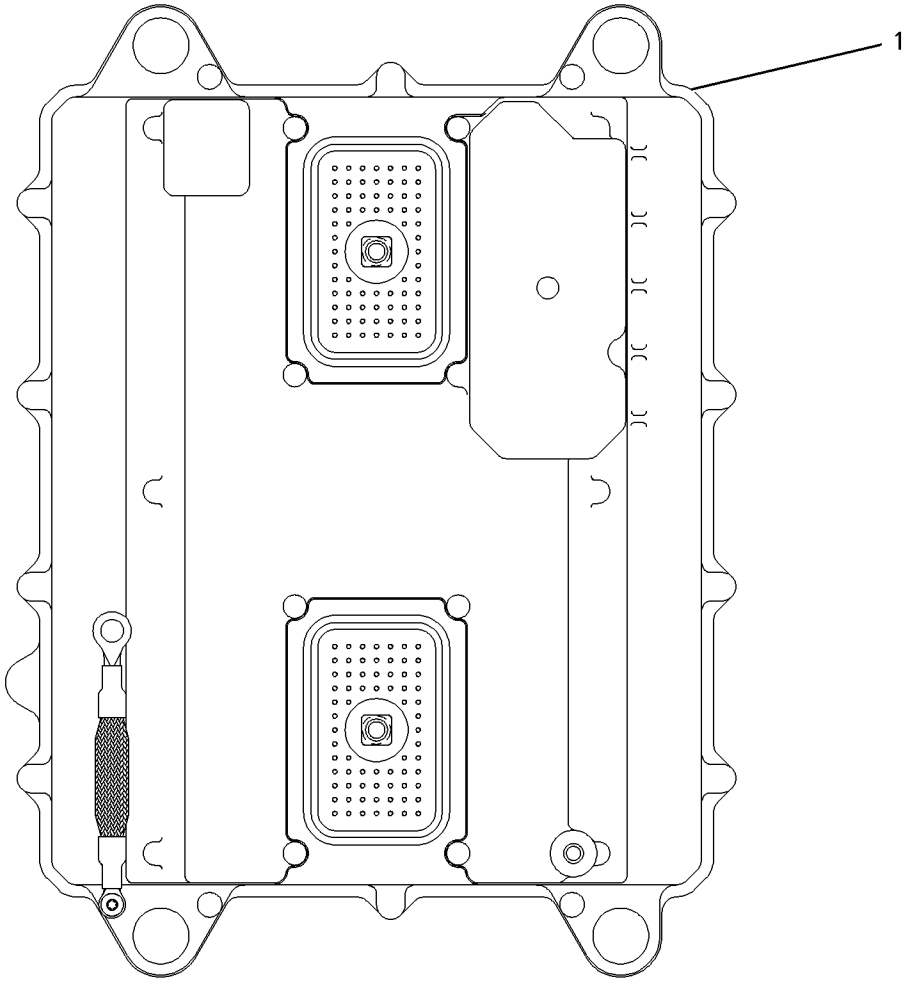

GRAPHIC #1 **<END>** g00863314

239-7919 SERVICE GP-MONITOR–VIMS

S/N: 7PZ1-UP

PART OF 173-7247 ELECTRONICS GP-MONITOR

SMCS-7610 **i02023791**

NOTE	REF NO	GRAPHIC REF	PART NUMBER	QTY	PART NAME 1 2 3 4 5 6 (PRODUCT LEVEL)	SEE PAGE
Y	1	1	**169-0489**	1	CONTROL GP-UNPROGRAMMED	293
			239-7918	1	SOFTWARE GP-MONITOR (VIMS)	

Y-SEPARATE ILLUSTRATION

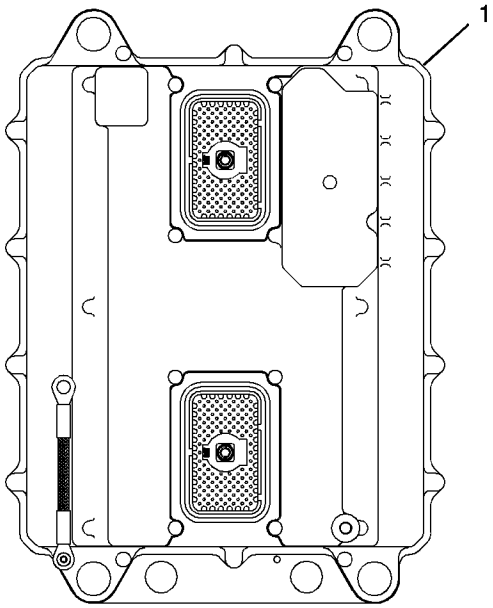

GRAPHIC #1

<END>

g01044909

218-0425 SERVICE GP-POWER TRAIN

S/N: 7PZ1-UP

PART OF 173-7459 ELECTRONICS GP-POWER TRAIN

SMCS-7610 **i02023729**

NOTE	REF NO	GRAPHIC REF	PART NUMBER	QTY	PART NAME 1 2 3 4 5 6 (PRODUCT LEVEL)	SEE PAGE
Y	1		**172-9389**	1	CONTROL GP-UNPROGRAMMED	294
			218-0424	1	SOFTWARE GP-POWER TRAIN	

Y-SEPARATE ILLUSTRATION

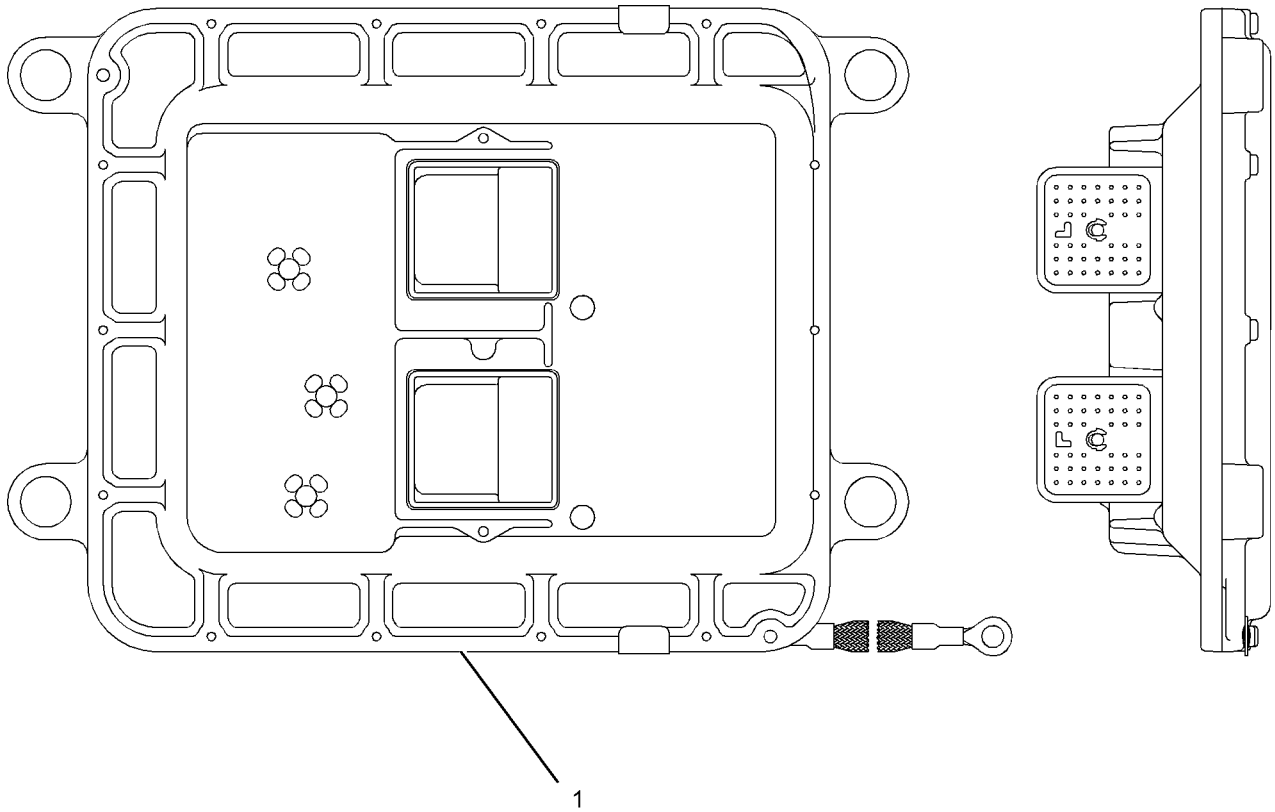

GRAPHIC #1 **<END>** g01044785

ELECTRICAL AND STARTING SYSTEM

179-7091 STARTING AID GP-ETHER

S/N: 7PZ289-UP

PART OF 155-5557 INSTALLATION AR-ENGINE

SMCS-1456 **i02001364**

NOTE	REF NO	GRAPHIC REF	PART NUMBER	QTY	PART NAME 1 2 3 4 5 6 (PRODUCT LEVEL)	SEE PAGE
	1	1	**3E-5239**	2	RELAY AS (24-VOLT) (ETHER STARTING AID)	
	2	1	**5P-0598**	1	CLAMP	
	3	1	**9X-6772**	2	STRAP-CABLE	
	4	1	**123-8773**	1	VALVE AS-ETHER START	
		1	**3E-3365**	1	WEDGE-RECEPTACLE LOCK (2-PIN)	
		1	**8T-8729**	2	PIN-CONNECTOR	
		1	**9X-7138**	1	FILTER & GASKET AS (ETHER STARTING AID)	
		1	**102-8802**	1	KIT-RECEPTACLE (2-PIN)	
					(INCLUDES RECEPTACLE AS AND WEDGE)	
	5	1	**124-6704**	1	RESISTOR AS (ETHER SOLENOID LOAD)	
	6	1	**132-0342**	1	HARNESS AS (ETHER STARTING AID)	
	7	1	**160-8767**	1	FITTING AS	
		1	**160-8761**	1	SCREEN (ETHER STARTING AID)	
	8	1	**5M-3062**	1	BOLT (3/8-16X0.75 IN)	
	9	1	**5S-7349**	2	BOLT (1/4-20X0.5 IN)	
	10	1	**8T-4205**	2	WASHER-HARD (7.2X14.5X2MM THK)	
	11	1	**8T-4224**	4	WASHER-HARD (8.8X16X2MM THK)	
	12	1	**8T-4896**	1	WASHER-HARD (10.2X18.5X2.5MM THK)	
	13	1	**8T-5391**	4	BOLT (5/16-18X0.5 IN)	
AF		1	**7X-1062**	1	CYLINDER AS-ETHER	

A-NOT PART OF THIS GROUP
F-NOT SHOWN

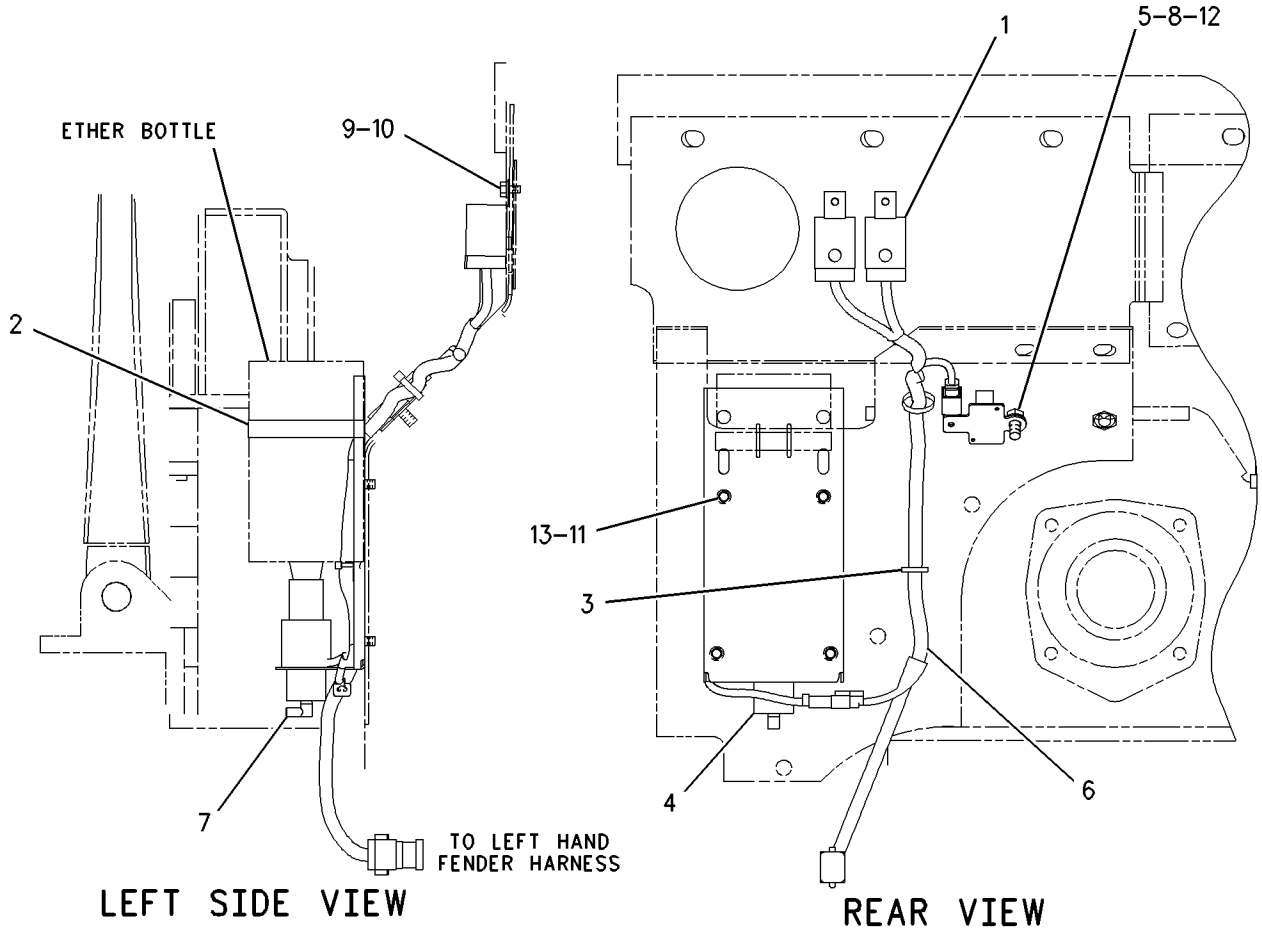

GRAPHIC #1

<END>

g00685696

179-7092 STARTING AID GP-ETHER

S/N: 2GR1180-UP

PART OF 155-5556 ENGINE AR

SMCS-1456 **i01328282**

NOTE	REF NO	GRAPHIC REF	PART NUMBER	QTY	PART NAME 1 2 3 4 5 6 (PRODUCT LEVEL)	SEE PAGE
	1	1	**118-8454**	2	NOZZLE AS-ETHER	
	2	1	**135-6143**	1	PLATE AS	
		1	**1F-0750**	2	NUT-WELD (3/8-16 THD)	
	3	1	**0S-0509**	2	BOLT (3/8-16X.75 IN)	
	4	1	**0S-1588**	2	BOLT (3/8-16X1.25 IN)	
	5	1	**133-9660**	1	UNION-FLARED	
	6	1	**135-6987**	1	HOSE AS	
	7	1	**135-7862**	2	HOSE AS	
	8	1	**1T-0720**	2	BOLT-12 POINT HEAD (3/8-16X1.25 IN)	
	9	1	**5M-2894**	7	WASHER-HARD (2.5MM THK)	
	10	1	**7D-1728**	5	CLIP	
	11	1	**8M-2772**	6	CLIP (6.35MM ID)	
	12	1	**8T-4896**	2	WASHER-HARD (10.2X18.5X2.5MM THK)	
AF			**7X-1062**	1	CYLINDER AS-ETHER	

A-NOT PART OF THIS GROUP
F-NOT SHOWN

179-7092 **STARTING AID GP-ETHER** ***(contd.)*** **i01328282**

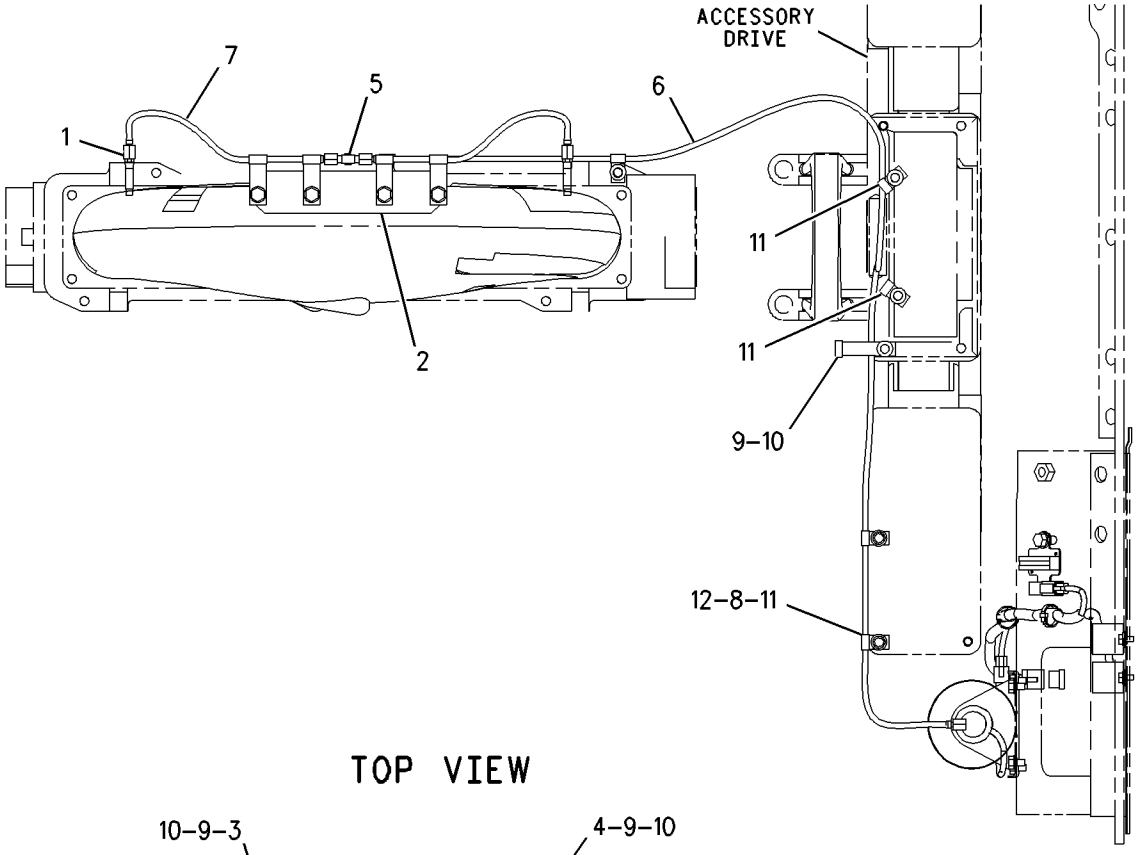

TOP VIEW

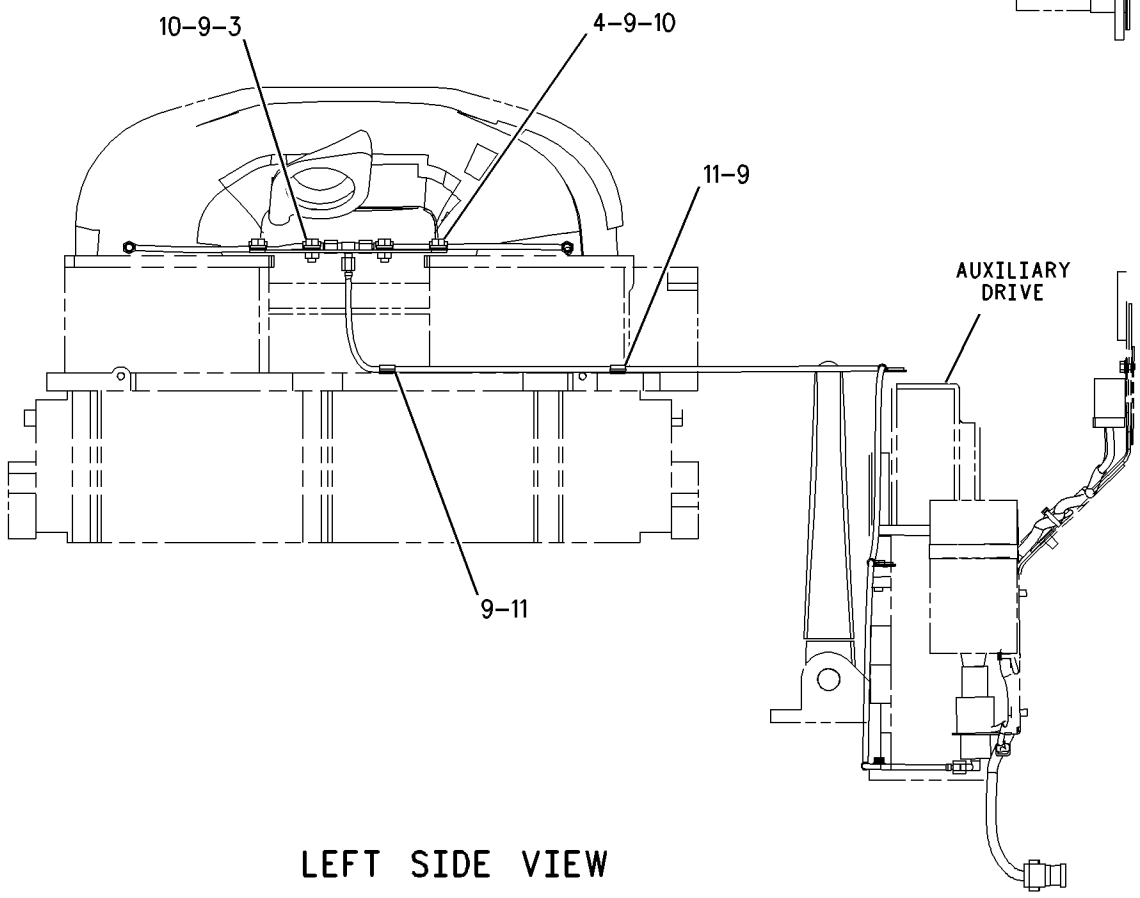

LEFT SIDE VIEW

GRAPHIC #1 **<END>** g00703344

1W-6363 STARTING MOTOR GP-ELECTRIC

S/N: 2GR1180-UP
24 VOLT
PART OF 155-5556 ENGINE AR

SMCS-1453 **i01740118**

NOTE	REF NO	GRAPHIC REF	PART NUMBER	QTY	PART NAME 1 2 3 4 5 6 (PRODUCT LEVEL)	SEE PAGE
Y	1	1	*6V-0889*	2	STARTING MOTOR GP-ELECTRIC	362
	2	1	**7N-6494**	2	GASKET	
C	3	1	**110-5991**	1	CABLE AS	
		1	**1S-7251**	1	TERMINAL-RING (FOR 1/2 IN BOLT)	
E		1	**5P-0747**		CABLE (00GA)(BLACK) (19CM)	
		1	**9X-9825**	1	TERMINAL-CABLE	
	4	1	**7J-8902**	6	BOLT-12 POINT HEAD (5/8-11X1.50 IN)	
C	5	1	**8T-4223**	1	WASHER-HARD (13.5X25.5X3MM THK)	
C	6	1	**8T-9383**	1	BOLT (1/2-13X0.75 IN)	

C-CHANGE FROM PREVIOUS TYPE
E-ORDER BY THE CENTIMETER
Y-SEPARATE ILLUSTRATION

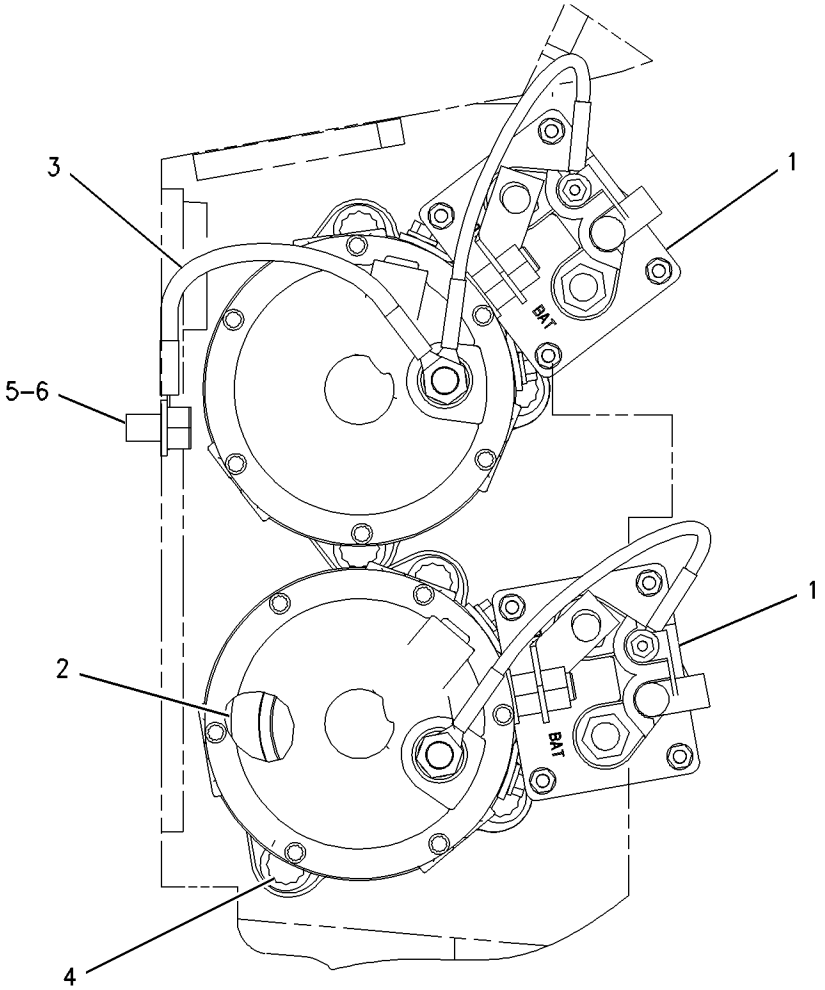

FRONT VIEW

GRAPHIC #1 **<END>** g00854551

6V-0513 STARTING MOTOR GP-ELECTRIC*R

S/N: 2GR1180-UP

FIELD REPLACEMENT FOR 6V-0889—PAGE 362

SMCS-1453 **i02029614**

NOTE	REF NO	GRAPHIC REF	PART NUMBER	QTY	PART NAME 1 2 3 4 5 6 (PRODUCT LEVEL)	SEE PAGE
	1	1	**036-9823**	13	BOLT	
	2	1	**3L-3380**	1	BUSHING-TERMINAL	
	3	1	**3T-3418**	1	FRAME AS-END	
	4	1	**3T-3423**	1	CUP	
	5	1	**9G-4101**	1	BUSHING-END	
	6	1	**3T-3424**	1	PLUG-FELT	
	7	1	**7M-0327**	1	WASHER-THRUST (17.40X25.4X1.6-MM THK)	
	8	1	**7M-8651**	1	ARMATURE AS	
	9	1	**7M-0324**	1	COIL AS-FIELD	
	10	1	**9H-3757**	2	WASHER (0.516X1X0.094-IN THK)	
	11	1	**7X-0562**	6	WASHER-HARD (13.5X19X0.8-MM THK)	
	12	1	**6V-8188**	6	NUT (1/2-13-THD)	
	13	1	**7M-0326**	1	CONNECTOR	
	14	1	**8T-4205**	4	WASHER-HARD (7.2X14.5X2-MM THK)	
	15	1	**125-6533**	1	SOLENOID AS (STARTING MOTOR)	
		1	**3R-8801**	1	CLAMP	
	16	1	**6V-1322**	4	BOLT (1/4-20X0.375-IN)	
	17	1	**4M-1831**	4	PLUG-LEVER HOUSING	
	18	1	**7L-2894**	4	GASKET	
	19	1	**3F-0379**	12	SCREW-POLE SHOE (3/8-24-THD)	
	20	1	**7M-0325**	1	INSULATOR	
	21	1	**7F-3488**	6	SHOE-POLE	
	22	1	**1S-7446**	3	SCREW-MACHINE (8-32X0.437-THD)	
	23	1	**3T-9524**	6	BRUSH AS (STARTING MOTOR)	
	24	1	**9S-2544**	6	SCREW-HEX HEAD (8-32X11.13-MM)	
	25	1	**3T-9525**	1	PLATE AS-BRUSH	
	26	1	**6T-0371**	1	INSULATOR	
	27	1	**5P-6298**	12	SCREW-MACHINE (10-32X0.5-IN)	
		1	**9F-5599**	12	LOCKWASHER	
	28	1	**7F-3525**	6	WASHER-BUSHING (.209X.39X.09-MM THK)	
	29	1	**6T-0372**	1	PLATE	
	30	1	**3T-4709**	3	PLATE	
	31	1	**2L-6679**	3	PLATE-INSULATOR	
	32	1	**3T-4710**	3	PLATE	
	33	1	**6T-0363**	6	HOLDER AS-BRUSH (STARTING MOTOR)	
					(EACH INCLUDES)	
	34	1	**3T-9494**	1	SPRING (STARTING MOTOR)	
	35	1	**2D-6392**	1	SEAL-O-RING	
	36	1	**2J-8163**	2	SEAL-O-RING	
	37	1	**7F-3491**	2	WASHER (0.516X1X0.094-IN THK)	
	38	1	**3R-8801**	1	CLAMP	
	39	1	**6N-3826**	1	DRIVE AS-MOTOR	
	40	1	**1H-2629**	3	STRIP-INSULATION	
	41	1	**3T-3422**	1	WIRE AS	
	42	1	**9M-7606**	1	PLUNGER AS	
	43	1	**036-9821**	1	WASHER	
	44	1	**4M-1829**	1	BOOT-RUBBER	
	45	1	**4M-1828**	1	RETAINER-SPRING	
	46	1	**9M-7609**	1	SPRING	
	47	1	**1H-1023**	1	SEAL-O-RING	
	48	1	**3E-7771**	1	HOUSING AS	
	49	1	**3T-3424**	2	PLUG-FELT	
	50	1	**3T-3423**	2	CUP	
	51	1	**1M-9968**	1	BUSHING	
	52	1	**2F-6678**	1	SEAL-LIP TYPE	
	53	1	**4L-2729**	1	WASHER (0.844X1.9X0.188-IN THK)	

6V-0513 STARTING MOTOR GP-ELECTRIC *(contd.)* i02029614

NOTE	REF NO	GRAPHIC REF	PART NUMBER	QTY	PART NAME 1 2 3 4 5 6 (PRODUCT LEVEL)	SEE PAGE
	54	1	**4M-1854**	1	SHAFT-LEVER	
	55	1	**2H-3429**	2	RING-RETAINING	
	56	1	**4M-1853**	1	LEVER AS-SHIFT	
	57	1	**5M-3034**	1	LOCKNUT	
	58	1	**1M-9971**	1	SPACER (.840X1.72X1.88-IN THK)	
	59	1	**4M-1827**	1	RETAINER-SPRING	
	60	1	**8C-3089**	1	SEAL-O-RING	
	61	1	**3E-7768**	1	HOUSING AS	
	62	1	**4M-1896**	1	BUSHING-TERMINAL	
	63	1	**8C-9660**	3	WASHER (4.6X7.9X0.8-MM THK)	
	64	1	**3T-9494**	6	SPRING (STARTING MOTOR)	
	65	1	**5J-5314**	5	BOLT (5/16-18X1.5-IN)	
J	66	1	**3N-3763**	1	KIT-TERMINAL (STARTING MOTOR)	
JZ		1		1	INSULATOR	
JZ	67	1		1	BUSHING	
JZ	68	1		1	BUSHING	
JZ	69	1		1	WASHER	
	70	1	**7X-3373**	1	BOLT (5/16-18X0.88-IN)	
	71	1	**6N-3279**	1	INSULATOR	
	72	1	**4B-2049**	6	NUT (10-32-THD)	
	73	1	**8T-0328**	10	WASHER-HARD (5.5X10X1-MM THK)	
	74	1	**8F-1434**	2	LOCKWASHER (INTERNAL TOOTH)	
B	75	1	**3T-3434**	6	PLUG	
	76	1	**6T-0362**	1	INSULATOR	
	77	1	**045-4065**	4	SCREW-MACHINE (10-32X0.75-IN)	
	78	1	**125-6535**	1	COVER-STARTING MOTOR	
	79	1	**125-6536**	1	TERMINAL AS	
	80	1	**7T-9123**	1	GASKET-PLATE	

B-USE AS REQUIRED
J-KIT MARKED J INCLUDES PART(S) MARKED J
Z-NOT SERVICED SEPARATELY

6V-0513 STARTING MOTOR GP-ELECTRIC *(contd.)* i02029614

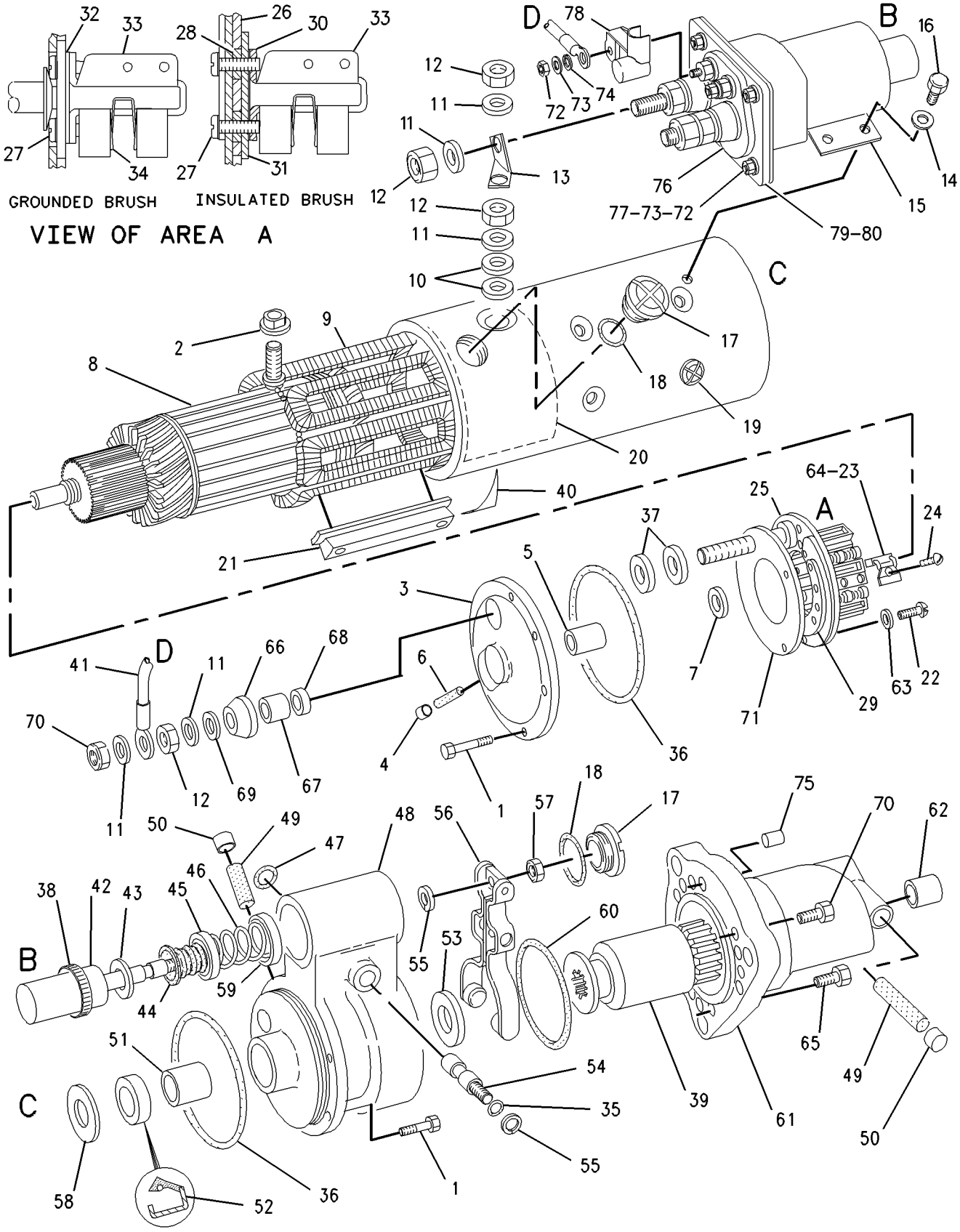

GRAPHIC #1 **<END>** g00673263

ELECTRICAL AND STARTING SYSTEM

6V-0889 STARTING MOTOR GP-ELECTRIC

S/N: 2GR1180-UP
PART OF 1W-6363 STARTING MOTOR GP-ELECTRIC
FIELD REPLACEMENT ORDER 6V-0513—PAGE 359

SMCS-1453 **i02029613**

NOTE	REF NO	GRAPHIC REF	PART NUMBER	QTY	PART NAME 1 2 3 4 5 6 (PRODUCT LEVEL)	SEE PAGE
	1	1	**036-9823**	13	BOLT	
	2	1	**3L-3380**	1	BUSHING-TERMINAL	
	3	1	**3T-3418**	1	FRAME AS-END	
	4	1	**3T-3423**	1	CUP	
	5	1	**9G-4101**	1	BUSHING-END	
	6	1	**3T-3424**	1	PLUG-FELT	
	7	1	**7M-0327**	1	WASHER-THRUST (17.40X25.4X1.6-MM THK)	
	8	1	**7M-8651**	1	ARMATURE AS	
	9	1	**7M-0324**	1	COIL AS-FIELD	
	10	1	**9H-3757**	2	WASHER (0.516X1X0.094-IN THK)	
	11	1	**7X-0562**	6	WASHER-HARD (13.5X19X0.8-MM THK)	
	12	1	**6V-8188**	6	NUT (1/2-13-THD)	
	13	1	**7M-0326**	1	CONNECTOR	
	14	1	**8T-4205**	4	WASHER-HARD (7.2X14.5X2-MM THK)	
C	15	1	**125-6533**	1	SOLENOID AS (STARTING MOTOR)	
C		1	**3R-8801**	1	CLAMP	
	16	1	**6V-1322**	4	BOLT (1/4-20X0.375-IN)	
	17	1	**4M-1831**	4	PLUG-LEVER HOUSING	
	18	1	**7L-2894**	4	GASKET	
	19	1	**3F-0379**	12	SCREW-POLE SHOE (3/8-24-THD)	
	20	1	**7M-0325**	1	INSULATOR	
	21	1	**7F-3488**	6	SHOE-POLE	
	22	1	**1S-7446**	3	SCREW-MACHINE (8-32X0.437-THD)	
	23	1	**3T-9524**	6	BRUSH AS (STARTING MOTOR)	
C	24	1	**9S-2544**	9	SCREW-HEX HEAD (8-32X11.13-MM)	
	25	1	**3T-9525**	1	PLATE AS-BRUSH	
	26	1	**6T-0371**	1	INSULATOR	
	27	1	**3T-4711**	12	SCREW AS	
		1	**9F-5599**	12	LOCKWASHER	
	28	1	**7F-3525**	6	WASHER-BUSHING (.209X.39X.09-MM THK)	
	29	1	**6T-0372**	1	PLATE	
	30	1	**3T-4709**	3	PLATE	
	31	1	**2L-6679**	3	PLATE-INSULATOR	
	32	1	**3T-4710**	3	PLATE	
	33	1	**6T-0363**	6	HOLDER AS-BRUSH (STARTING MOTOR)	
					(EACH INCLUDES)	
	34	1	**3T-9494**	1	SPRING (STARTING MOTOR)	
	35	1	**2D-6392**	1	SEAL-O-RING	
	36	1	**2J-8163**	2	SEAL-O-RING	
	37	1	**7F-3491**	2	WASHER (0.516X1X0.094-IN THK)	
	38	1	**3R-8801**	1	CLAMP	
	39	1	**6N-3826**	1	DRIVE AS-MOTOR	
	40	1	**1H-2629**	3	STRIP-INSULATION	
	41	1	**3T-3422**	1	WIRE AS	
	42	1	**9M-7606**	1	PLUNGER AS	
	43	1	**036-9821**	1	WASHER	
	44	1	**4M-1829**	1	BOOT-RUBBER	
	45	1	**4M-1828**	1	RETAINER-SPRING	
	46	1	**9M-7609**	1	SPRING	
	47	1	**1H-1023**	1	SEAL-O-RING	
	48	1	**3E-7771**	1	HOUSING AS	
	49	1	**3T-3424**	2	PLUG-FELT	
	50	1	**3T-3423**	2	CUP	
	51	1	**1M-9968**	1	BUSHING	
	52	1	**2F-6678**	1	SEAL-LIP TYPE	

6V-0889 **STARTING MOTOR GP-ELECTRIC** *(contd.)* i02029613

NOTE	REF NO	GRAPHIC REF	PART NUMBER	QTY	PART NAME 1 2 3 4 5 6 (PRODUCT LEVEL)	SEE PAGE
	53	1	**4L-2729**	1	WASHER (0.844X1.9X0.188-IN THK)	
	54	1	**4M-1854**	1	SHAFT-LEVER	
	55	1	**2H-3429**	2	RING-RETAINING	
	56	1	**4M-1853**	1	LEVER AS-SHIFT	
	57	1	**5M-3034**	1	LOCKNUT	
	58	1	**1M-9971**	1	SPACER (.840X1.72X1.88-IN THK)	
	59	1	**4M-1827**	1	RETAINER-SPRING	
	60	1	**8C-3089**	1	SEAL-O-RING	
	61	1	**3E-7768**	1	HOUSING AS	
	62	1	**4M-1896**	1	BUSHING-TERMINAL	
	63	1	**8C-9660**	3	WASHER (4.6X7.9X0.8-MM THK)	
	64	1	**3T-9494**	6	SPRING (STARTING MOTOR BRUSH)	
	65	1	**5J-5314**	5	BOLT (5/16-18X1.5-IN)	
	66	1	**3N-3763**	1	KIT-TERMINAL (STARTING MOTOR)	
					(INCLUDES INSULATOR, BUSHINGS, & WASHER)	
	70	1	**7X-3373**	1	BOLT (5/16-18X0.88-IN)	
	71	1	**6N-3279**	1	INSULATOR	
	72	1	**4B-2049**	6	NUT (10-32-THD)	
	73	1	**8T-0328**	10	WASHER-HARD (5.5X10X1-MM THK)	
	74	1	**8F-1434**	2	LOCKWASHER (INTERNAL TOOTH)	
B	75	1	**3T-3434**	6	PLUG	
	76	1	**6T-0362**	1	INSULATOR	
	77	1	**045-4065**	4	SCREW-MACHINE (10-32X0.75-IN)	
C	78	1	**125-6535**	1	COVER-STARTING MOTOR	
	79	1	**125-6536**	1	TERMINAL AS	
	80	1	**7T-9123**	1	GASKET-PLATE	

B-USE AS REQUIRED
C-CHANGE FROM PREVIOUS TYPE

6V-0889 **STARTING MOTOR GP-ELECTRIC** *(contd.)* **i02029613**

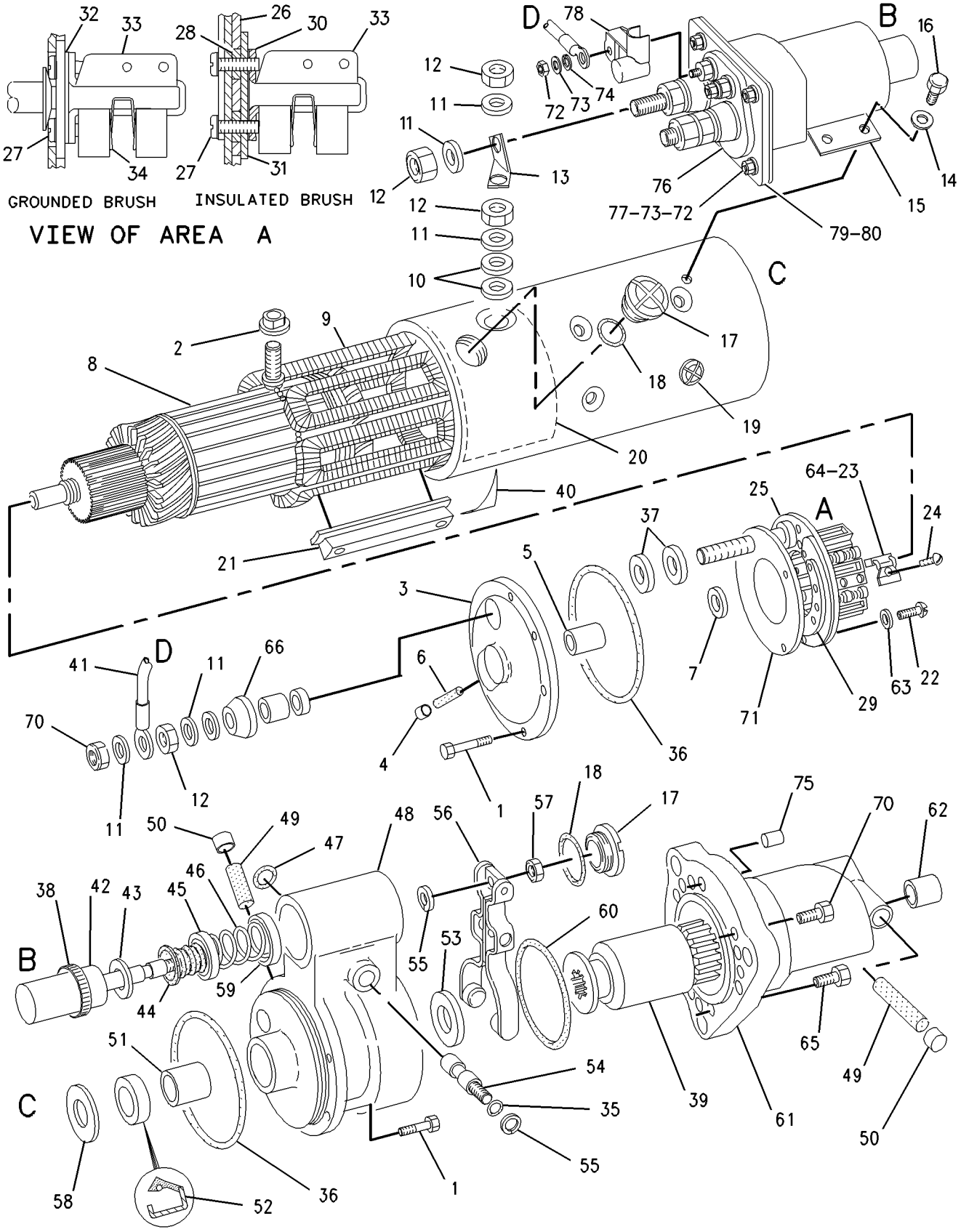

GRAPHIC #1 **<END>** g00634893

ELECTRICAL AND STARTING SYSTEM

123-8686 STARTING MOTOR GP-ELECTRIC*R

S/N: 7PZ1-UP

24 VOLT

FIELD REPLACEMENT FOR 123-8689—PAGE 368

SMCS-1453 **i01988680**

NOTE	REF NO	GRAPHIC REF	PART NUMBER	QTY	PART NAME 1 2 3 4 5 6 (PRODUCT LEVEL)	SEE PAGE
	1	1	**7M-0326**	1	CONNECTOR	
	2	1	**9H-3757**	2	WASHER (0.516X1X0.094 IN THK)	
	3	1	**1S-7446**	3	SCREW-MACHINE (8-32X0.437 THD)	
	4	1	**8C-9660**	3	WASHER (4.6X7.9X0.8MM THK)	
	5	1	**9S-2544**	9	SCREW-HEX HEAD (8-32X11.13MM)	
	6	1	**4L-7124**	4	BOLT (1/4-20X1.25 IN)	
	7	1	**117-0610**	1	KIT-BEARING (STARTER BEARING)	
					(INCLUDES WASHERS & BEARING)	
	8	1	**125-6536**	1	TERMINAL AS	
	9	1	**7F-3491**	2	WASHER (0.516X1X0.094 IN THK)	
	10	1	**3T-3422**	1	WIRE AS	
	11	1	**2J-8163**	2	SEAL-O-RING	
	12	1	**7X-3373**	1	BOLT (5/16-18X0.88 IN)	
	13	1	**3T-3434**	6	PLUG	
	14	1	**5J-5314**	5	BOLT (5/16-18X1.5 IN)	
	15	1	**3L-3380**	1	BUSHING-TERMINAL	
	16	1	**036-9821**	1	WASHER	
	17	1	**4M-1828**	1	RETAINER-SPRING	
	18	1	**4M-1829**	1	BOOT-RUBBER	
	19	1	**9M-7606**	1	PLUNGER AS	
	20	1	**9M-7609**	1	SPRING	
	21	1	**4M-1827**	1	RETAINER-SPRING	
	22	1	**8C-3089**	1	SEAL-O-RING	
	23	1	**4M-1853**	1	LEVER AS-SHIFT	
	24	1	**5M-3034**	1	LOCKNUT	
	25	1	**7L-2894**	4	GASKET	
	26	1	**4M-1831**	4	PLUG-LEVER HOUSING	
	27	1	**4M-1854**	1	SHAFT-LEVER	
	28	1	**1H-1023**	1	SEAL-O-RING	
	29	1	**2D-6392**	1	SEAL-O-RING	
	30	1	**3E-7768**	1	HOUSING AS	
	31	1	**6N-3826**	1	DRIVE AS-MOTOR	
	32	1	**2H-3429**	2	RING-RETAINING	
	33	1	**6V-1322**	4	BOLT (1/4-20X0.375 IN)	
	34	1	**8T-4205**	4	WASHER-HARD (7.2X14.5X2MM THK)	
	35	1	**6N-3279**	1	INSULATOR	
	36	1	**036-9823**	13	BOLT	
	37	1	**111-9862**	1	COVER-STARTING MOTOR	
	38	1	**1H-2629**	3	STRIP-INSULATION	
	39	1	**7M-0324**	1	COIL AS-FIELD	
	40	1	**3F-0379**	12	SCREW-POLE SHOE (3/8-24 THD)	
	41	1	**7F-3488**	6	SHOE-POLE	
	42	1	**111-9864**	1	GASKET	
	43	1	**7M-0325**	1	INSULATOR	
	44	1	**3T-9524**	6	BRUSH AS (STARTING MOTOR)	
	45	1	**125-6533**	1	SOLENOID AS (STARTING MOTOR)	
		1	**3R-8801**	1	CLAMP	
	46	1	**125-6537**	1	INSULATOR	
	47	1	**3R-8801**	1	CLAMP	
	48	1	**8F-1434**	2	LOCKWASHER (INTERNAL TOOTH)	
	49	1	**6V-8188**	6	NUT (1/2-13 THD)	
	50	1	**7X-0562**	6	WASHER-HARD (13.5X19X0.8MM THK)	
	51	1	**4B-2049**	6	NUT (10-32 THD)	
	52	1	**8T-0328**	10	WASHER-HARD (5.5X10X1MM THK)	
	53	1	**3T-9494**	6	SPRING (STARTING MOTOR)	

123-8686 STARTING MOTOR GP-ELECTRIC *(contd.)* i01988680

NOTE	REF NO	GRAPHIC REF	PART NUMBER	QTY	PART NAME 1 2 3 4 5 6 (PRODUCT LEVEL)	SEE PAGE
	54	1	**123-9776**	1	ARMATURE AS-STARTING MOTOR	
	55	1	**123-9773**	1	HOUSING AS-STARTING MOTOR	
	56	1	**3T-3424**	2	PLUG-FELT	
	57	1	**3T-3423**	2	CUP	
	58	1	**1M-9968**	1	BUSHING	
	59	1	**2F-6678**	1	SEAL-LIP TYPE	
	60	1	**4M-1896**	1	BUSHING-TERMINAL	
	61	1	**045-4065**	4	SCREW-MACHINE (10-32X0.75 IN)	
	62	1	**6V-8373**	3	SCREW-MACHINE (6-32X0.187 IN)	
	63	1	**9G-6770**	1	CONTACT AS	
	64	1	**6T-1120**	1	BUSHING-TERMINAL	
	65	1	**4M-1815**	1	SPRING-CONTACT	
	66	1	**125-6535**	1	COVER-STARTING MOTOR	
	67	1	**7T-9123**	1	GASKET-PLATE	
	68	1	**3T-9525**	1	PLATE AS-BRUSH	
	69	1	**6T-0371**	1	INSULATOR	
	70	1	**5P-6298**	12	SCREW-MACHINE (10-32X0.5 IN)	
		1	**9F-5599**	12	LOCKWASHER	
	71	1	**7F-3525**	6	WASHER-BUSHING (.209X.39X.09MM THK)	
	72	1	**6T-0372**	1	PLATE (OUTSIDE)	
	73	1	**3T-4709**	3	PLATE (.51MM THK)	
	74	1	**2L-6679**	3	PLATE-INSULATOR	
	75	1	**3T-4710**	3	PLATE (1.6MM THK)	
	76	1	**6T-0363**	6	HOLDER AS-BRUSH (STARTING MOTOR)	
J	77	1	**3N-3763**	1	KIT-TERMINAL (STARTING MOTOR)	
JZ	78	1		1	BUSHING	
JZ	79	1		1	WASHER (0.38X0.88X0.02 IN THK)	
JZ	80	1		1	INSULATOR	
JZ	81	1		1	BUSHING	
	82	1	**111-9866**	1	KIT-STARTING MOTOR GEAR	
	83	1	**147-0633**	1	HOUSING AS	

J-KIT MARKED J INCLUDES PART(S) MARKED J
Z-NOT SERVICED SEPARATELY

123-8686 STARTING MOTOR GP-ELECTRIC *(contd.)* i01988680

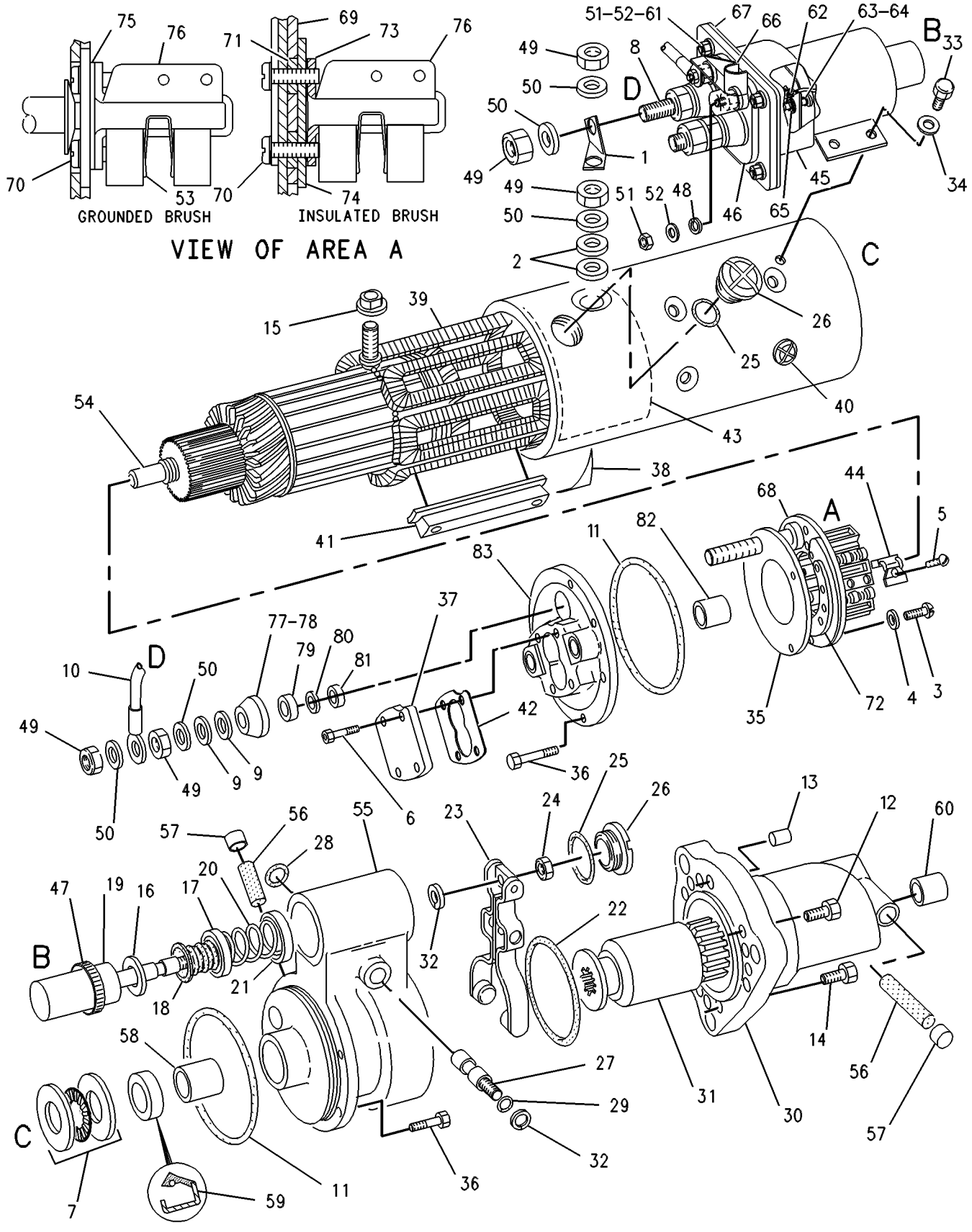

GRAPHIC #1 **<END>** g00282910

ELECTRICAL AND STARTING SYSTEM

123-8689 STARTING MOTOR GP-PRELUB SYS

S/N: 7PZ1-UP
PART OF 163-1924 PRELUBRICATION AR-ENGINE
FIELD REPLACEMENT ORDER 123-8686—PAGE 365
AN ATTACHMENT

SMCS-1453 **i01988681**

NOTE	REF NO	GRAPHIC REF	PART NUMBER	QTY	PART NAME 1 2 3 4 5 6 (PRODUCT LEVEL)	SEE PAGE
	1	1	**7M-0326**	1	CONNECTOR	
	2	1	**9H-3757**	2	WASHER (0.516X1X0.094 IN THK)	
	3	1	**1S-7446**	3	SCREW-MACHINE (8-32X0.437 THD)	
	4	1	**8C-9660**	3	WASHER (4.6X7.9X0.8MM THK)	
	5	1	**9S-2544**	9	SCREW-HEX HEAD (8-32X11.13MM)	
	6	1	**4L-7124**	4	BOLT (1/4-20X1.25 IN)	
	7	1	**117-0610**	1	KIT-BEARING (STARTER BEARING)	
					(INCLUDES WASHER & BEARING)	
	8	1	**125-6536**	1	TERMINAL AS	
	9	1	**7F-3491**	2	WASHER (0.516X1X0.094 IN THK)	
	10	1	**3T-3422**	1	WIRE AS	
	11	1	**2J-8163**	2	SEAL-O-RING	
	12	1	**7X-3373**	1	BOLT (5/16-18X0.88 IN)	
	13	1	**3T-3434**	6	PLUG	
	14	1	**5J-5314**	5	BOLT (5/16-18X1.5 IN)	
	15	1	**3L-3380**	1	BUSHING-TERMINAL	
	16	1	**036-9821**	1	WASHER	
	17	1	**4M-1828**	1	RETAINER-SPRING	
	18	1	**4M-1829**	1	BOOT-RUBBER	
	19	1	**9M-7606**	1	PLUNGER AS	
	20	1	**9M-7609**	1	SPRING	
	21	1	**4M-1827**	1	RETAINER-SPRING	
	22	1	**8C-3089**	1	SEAL-O-RING	
	23	1	**4M-1853**	1	LEVER AS-SHIFT	
	24	1	**5M-3034**	1	LOCKNUT	
	25	1	**7L-2894**	4	GASKET	
	26	1	**4M-1831**	4	PLUG-LEVER HOUSING	
	27	1	**4M-1854**	1	SHAFT-LEVER	
	28	1	**1H-1023**	1	SEAL-O-RING	
	29	1	**2D-6392**	1	SEAL-O-RING	
	30	1	**3E-7768**	1	HOUSING AS	
	31	1	**6N-3826**	1	DRIVE AS-MOTOR	
	32	1	**2H-3429**	2	RING-RETAINING	
	33	1	**6V-1322**	4	BOLT (1/4-20X0.375 IN)	
	34	1	**8T-4205**	4	WASHER-HARD (7.2X14.5X2MM THK)	
	35	1	**6N-3279**	1	INSULATOR	
	36	1	**036-9823**	13	BOLT	
	37	1	**111-9862**	1	COVER-STARTING MOTOR	
	38	1	**1H-2629**	3	STRIP-INSULATION	
	39	1	**7M-0324**	1	COIL AS-FIELD	
	40	1	**3F-0379**	12	SCREW-POLE SHOE (3/8-24 THD)	
	41	1	**7F-3488**	6	SHOE-POLE	
	42	1	**111-9864**	1	GASKET	
	43	1	**7M-0325**	1	INSULATOR	
	44	1	**3T-9524**	6	BRUSH AS (STARTING MOTOR)	
	45	1	**125-6533**	1	SOLENOID AS (STARTING MOTOR)	
		1	**3R-8801**	1	CLAMP	
	46	1	**125-6537**	1	INSULATOR	
	47	1	**3R-8801**	1	CLAMP	
	48	1	**8F-1434**	2	LOCKWASHER (INTERNAL TOOTH)	
	49	1	**6V-8188**	6	NUT (1/2-13 THD)	
	50	1	**7X-0562**	6	WASHER-HARD (13.5X19X0.8MM THK)	
	51	1	**4B-2049**	6	NUT (10-32 THD)	
	52	1	**8T-0328**	10	WASHER-HARD (5.5X10X1MM THK)	

123-8689 **STARTING MOTOR GP-PRELUB SYS** *(contd.)* **i01988681**

NOTE	REF NO	GRAPHIC REF	PART NUMBER	QTY	PART NAME 1 2 3 4 5 6 (PRODUCT LEVEL)	SEE PAGE
	53	1	**3T-9494**	6	SPRING (STARTING MOTOR)	
	54	1	**123-9776**	1	ARMATURE AS-STARTING MOTOR	
	55	1	**123-9773**	1	HOUSING AS-STARTING MOTOR	
	56	1	**3T-3424**	2	PLUG-FELT	
	57	1	**3T-3423**	2	CUP	
	58	1	**1M-9968**	1	BUSHING	
	59	1	**2F-6678**	1	SEAL-LIP TYPE	
	60	1	**4M-1896**	1	BUSHING-TERMINAL	
	61	1	**045-4065**	4	SCREW-MACHINE (10-32X0.75 IN)	
	62	1	**6V-8373**	3	SCREW-MACHINE (6-32X0.187 IN)	
	63	1	**9G-6770**	1	CONTACT AS	
	64	1	**6T-1120**	1	BUSHING-TERMINAL	
	65	1	**4M-1815**	1	SPRING-CONTACT	
	66	1	**125-6535**	1	COVER-STARTING MOTOR	
	67	1	**7T-9123**	1	GASKET-PLATE	
	68	1	**3T-9525**	1	PLATE AS-BRUSH	
	69	1	**6T-0371**	1	INSULATOR	
	70	1	**5P-6298**	12	SCREW-MACHINE (10-32X0.5 IN)	
		1	**9F-5599**	12	LOCKWASHER	
	71	1	**7F-3525**	6	WASHER-BUSHING (.209X.39X.09MM THK)	
	72	1	**6T-0372**	1	PLATE (OUTSIDE)	
	73	1	**3T-4709**	3	PLATE (.51MM THK)	
	74	1	**2L-6679**	3	PLATE-INSULATOR	
	75	1	**3T-4710**	3	PLATE (1.6MM THK)	
	76	1	**6T-0363**	6	HOLDER AS-BRUSH (STARTING MOTOR)	
	77	1	**147-0633**	1	HOUSING AS	
	78	1	**111-9866**	1	KIT-STARTING MOTOR GEAR	
	79	1	**3N-3763**	1	KIT-TERMINAL (STARTING MOTOR)	
Z	80	1		1	BUSHING	
Z	81	1		1	WASHER (0.38X0.88X0.02 IN THK)	
Z	82	1		1	INSULATOR	
Z	83	1		1	BUSHING	

Z-NOT SERVICED SEPARATELY

123-8689 **STARTING MOTOR GP-PRELUB SYS** ***(contd.)*** **i01988681**

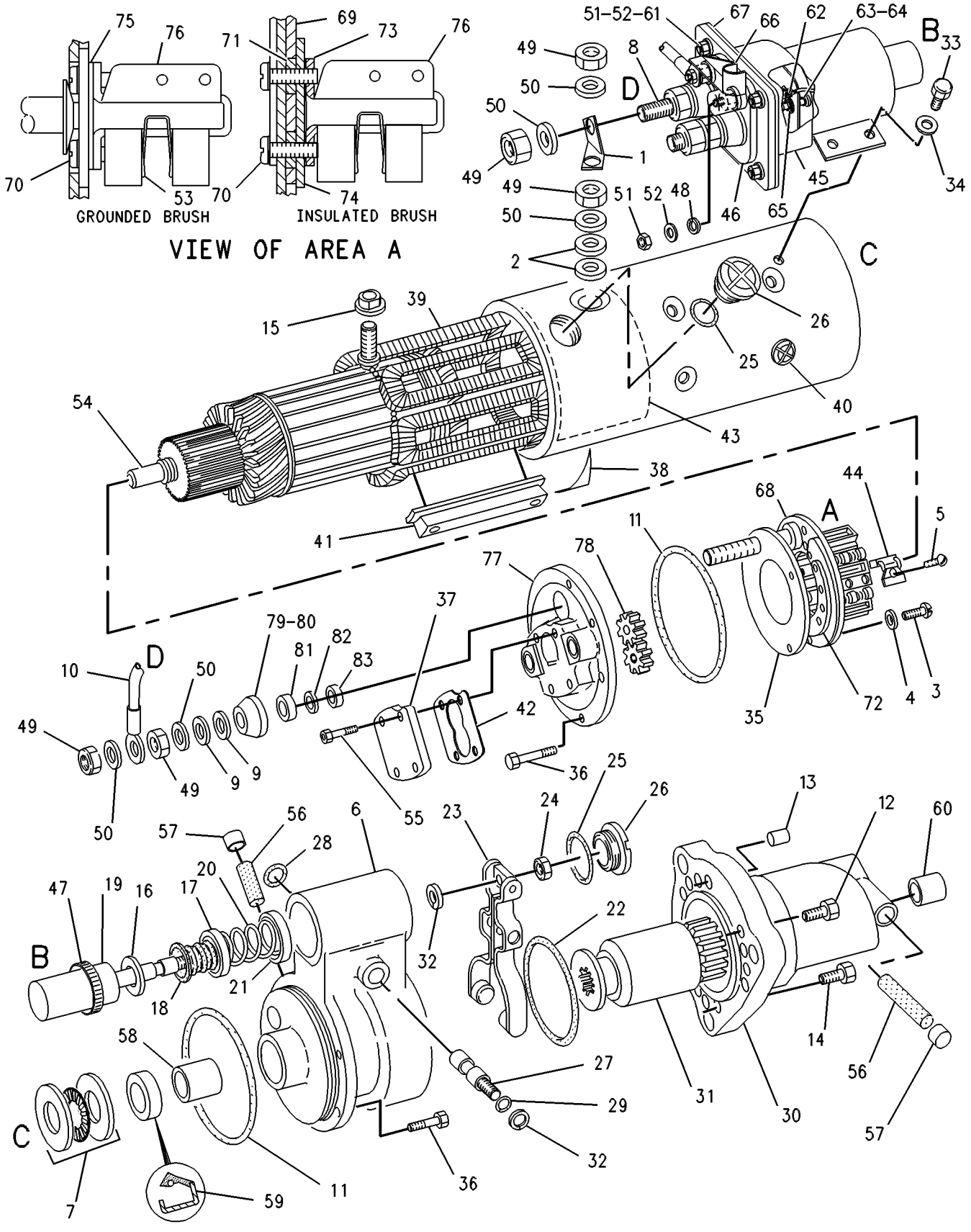

GRAPHIC #1 **<END>** g00284944

164-7577 SWITCH GP-BYPASS–POWER TRAIN OIL

S/N: 7PZ1-UP

PART OF 156-9936 BATTERY & WIRING GP

SMCS-1408 **i01903858**

NOTE	REF NO	GRAPHIC REF	PART NUMBER	QTY	PART NAME 1 2 3 4 5 6 (PRODUCT LEVEL)	SEE PAGE
BE	1	1	**9X-1813**		SLEEVE	
J	2	1	**102-8802**	1	KIT-RECEPTACLE (2 PIN)	
	3	1	**186-3735**	2	PIN-CONNECTOR	
J	4	1	**3E-3365**	1	WEDGE-RECEPTACLE LOCK (2 PIN)	
	5	1	**3D-2824**	1	SEAL-O-RING	
Z	6	1		1	SWITCH AS	

B-USE AS REQUIRED
E-ORDER BY THE CENTIMETER
J-KIT MARKED J INCLUDES PART(S) MARKED J
Z-NOT SERVICED SEPARATELY

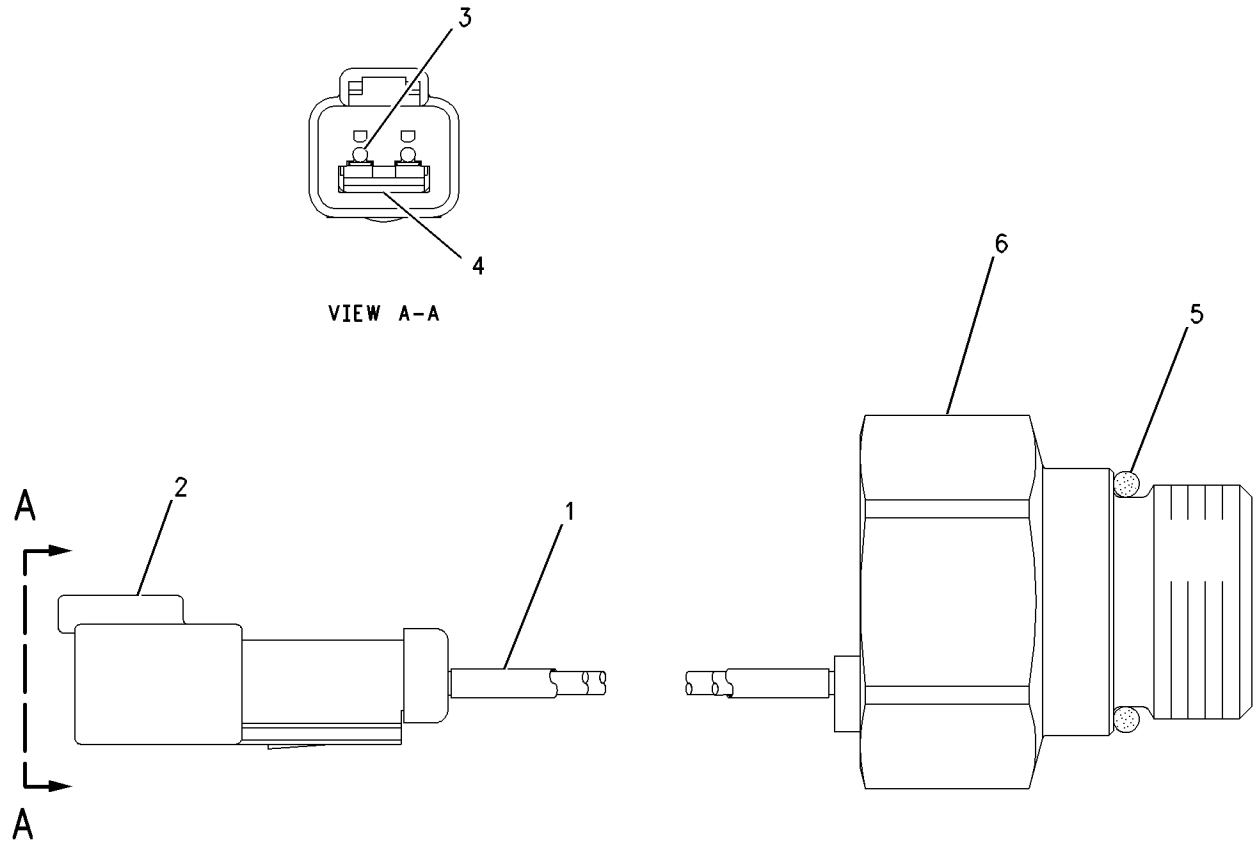

GRAPHIC #1 **<END>** g00750019

7N-0719 SWITCH GP-DISCONNECT–BATTERY

S/N: 7PZ1-UP

PART OF 156-9936 BATTERY & WIRING GP

SMCS-1411 **i01289277**

NOTE	REF NO	GRAPHIC REF	PART NUMBER	QTY	PART NAME 1 2 3 4 5 6 (PRODUCT LEVEL)	SEE PAGE
	1	1	**8H-5306**	1	KEY (BATTERY DISCONNECT)	
	2	1	**8H-5303**	1	NUT (3/4-16-2A THD)	
	3	1	**2H-3922**	2	LOCKWASHER (19.9X31.3X1.3MM THK)	
	4	1	**9F-5644**	2	LOCKWASHER (9.93X17.3X.9MM THK)	
	5	1	**6F-7045**	2	NUT-FULL (3/8X24 THD)	

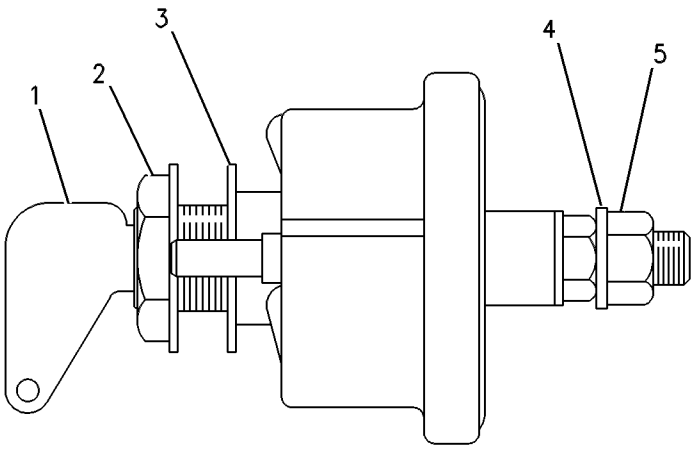

GRAPHIC #1 **<END>** g00117885

171-8708 SWITCH GP-FLOW–ENGINE COOLANT

S/N: 2GR1180-UP

PART OF 156-9816 WIRING GP-ENGINE

SMCS-1435 **i01582521**

NOTE	REF NO	GRAPHIC REF	PART NUMBER	QTY	PART NAME 1 2 3 4 5 6 (PRODUCT LEVEL)	SEE PAGE
					(NO SERVICED PARTS)	

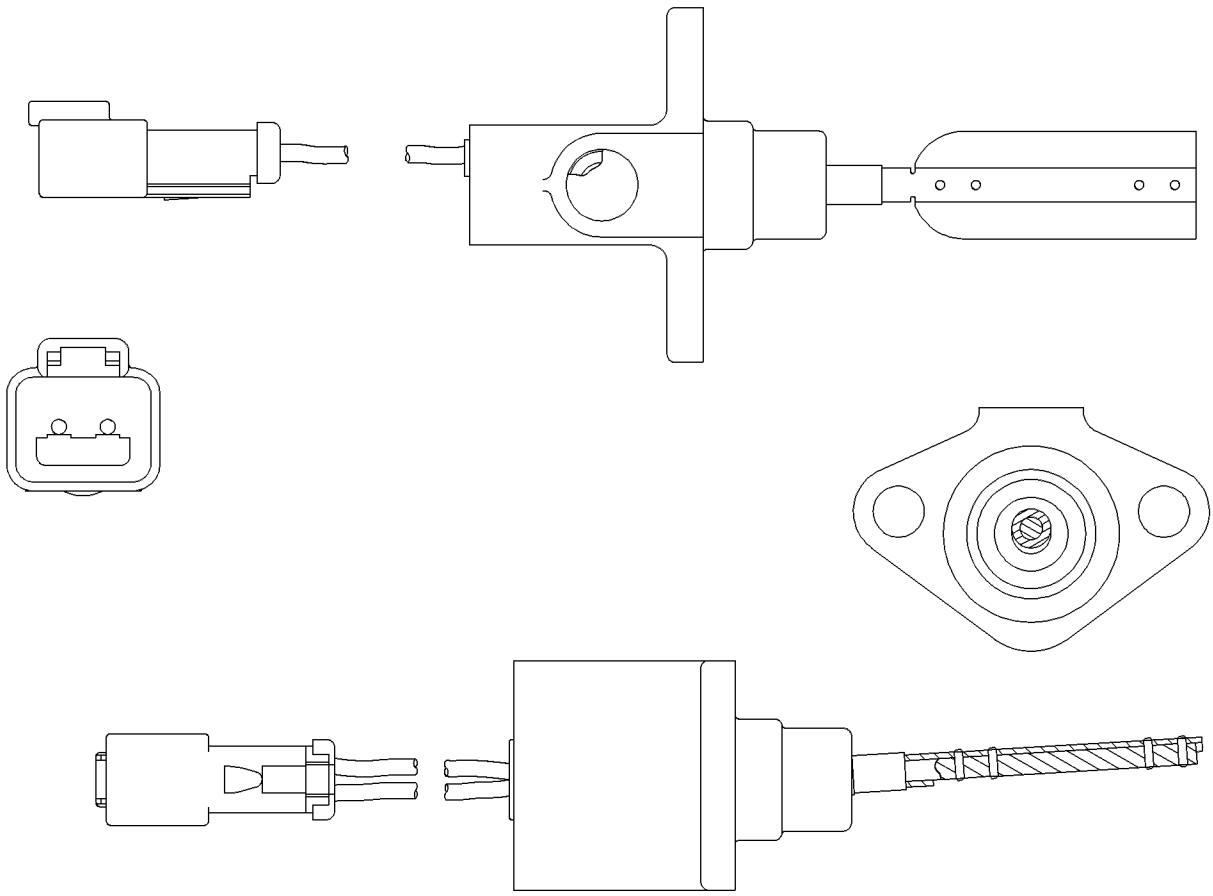

GRAPHIC #1 **<END>** g00613049

3E-0154 SWITCH GP-MAGNETIC—ENGINE PRELUBRICATION

S/N: 7PZ1-UP
24-32 VOLT
PART OF 163-1924 PRELUBRICATION AR-ENGINE
AN ATTACHMENT

SMCS-7499 **i01988684**

NOTE	REF NO	GRAPHIC REF	PART NUMBER	QTY	PART NAME 1 2 3 4 5 6 (PRODUCT LEVEL)	SEE PAGE
Y	1	1	*142-3984*	1	SWITCH GP-MAGNETIC (24-32V)	376
					—OR—	
Y		1	*142-3985*	1	SWITCH GP-MAGNETIC (24-32V)	377

Y-SEPARATE ILLUSTRATION

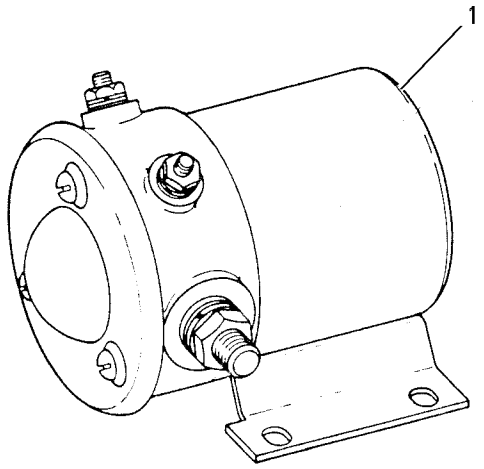

GRAPHIC #1 **<END>** g00287482

125-1302 SWITCH GP-MAGNETIC–STARTER RELAY

S/N: 7PZ1-UP
PART OF 167-7493 WIRING GP-CONSOLE
FOR USE WITH 24 VOLT DC NOMINAL SYSTEM VOLTAGE

SMCS-7499 **i01914424**

NOTE	REF NO	GRAPHIC REF	PART NUMBER	QTY	PART NAME 1 2 3 4 5 6 (PRODUCT LEVEL)	SEE PAGE
	1	1	**102-8802**	1	KIT-RECEPTACLE (2 PIN) (MAGNETIC SWITCH)	
					(INCLUDES RECEPTACLE AS & WEDGE)	
	2	1	**186-3735**	2	PIN-CONNECTOR	
	3	1	**1H-3338**	2	LOCKWASHER	
	4	1	**012-0380**	2	LOCKWASHER	
M	5	1	**5C-2890**	2	NUT (M6X1 THD)	
BE	6	1	**9X-1813**		SLEEVE	

B-USE AS REQUIRED
E-ORDER BY THE CENTIMETER
M-METRIC PART

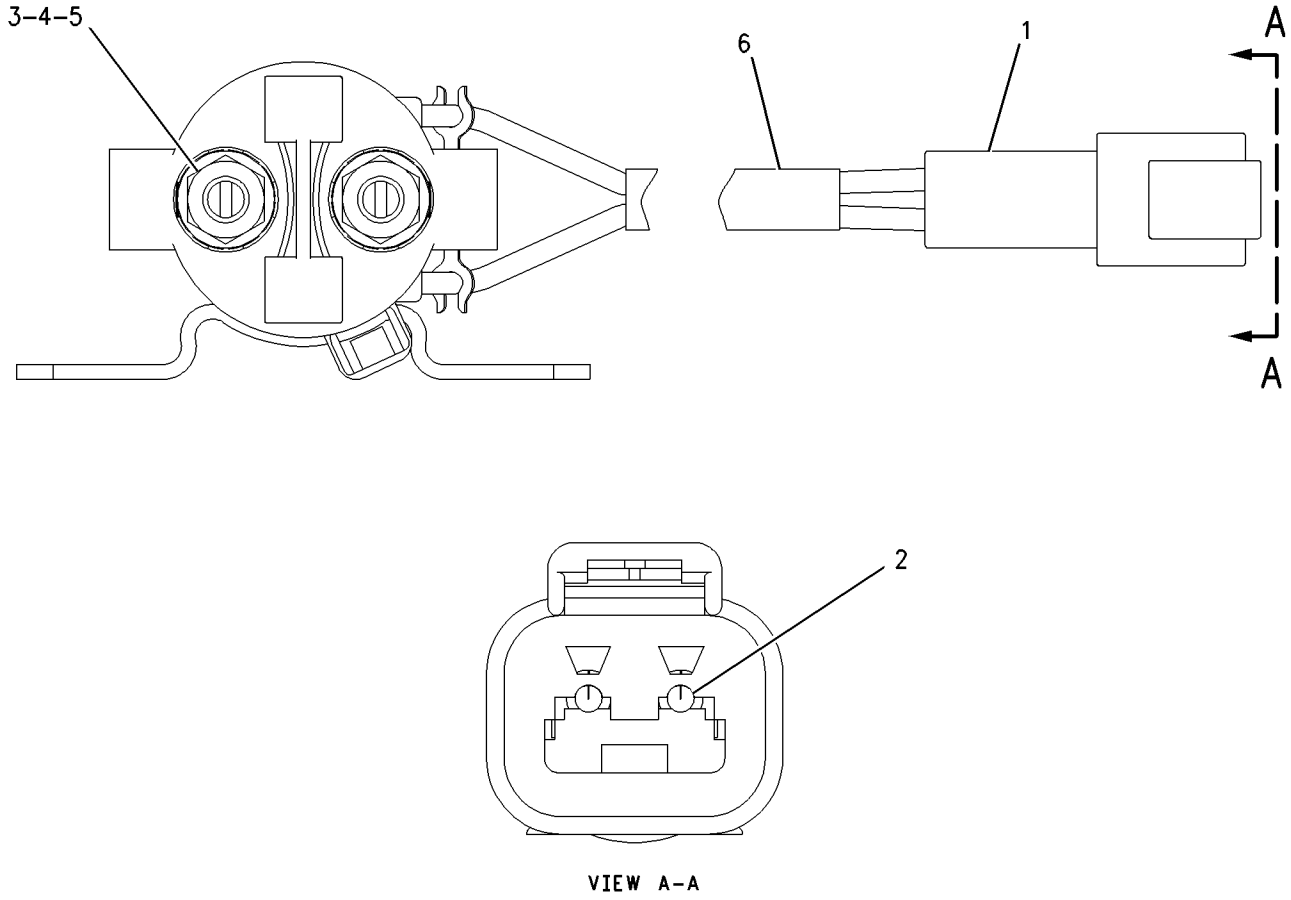

VIEW A–A

GRAPHIC #1 **<END>** g00988001

142-3984 SWITCH GP-MAGNETIC—ENGINE PRELUBRICATION

S/N: 7PZ1-UP
24-32 VOLT
PART OF 3E-0154 SWITCH GP-MAGNETIC
AN ATTACHMENT

SMCS-7499 **i01663043**

NOTE	REF NO	GRAPHIC REF	PART NUMBER	QTY	PART NAME 1 2 3 4 5 6 (PRODUCT LEVEL)	SEE PAGE
	1	1	**8F-1434**	2	LOCKWASHER	
	2	1	**6V-8378**	2	NUT (10-32 THD)	
	3	1	**7X-0620**	2	WASHER-HARD (5.5X13X1.6MM THK)	
	4	1	**4D-1326**	2	LOCKWASHER	
	5	1	**1B-2578**	2	NUT (3/8-16 THD)	
	6	1	**4L-6499**	2	WASHER (0.38X0.88X0.02 IN THK)	

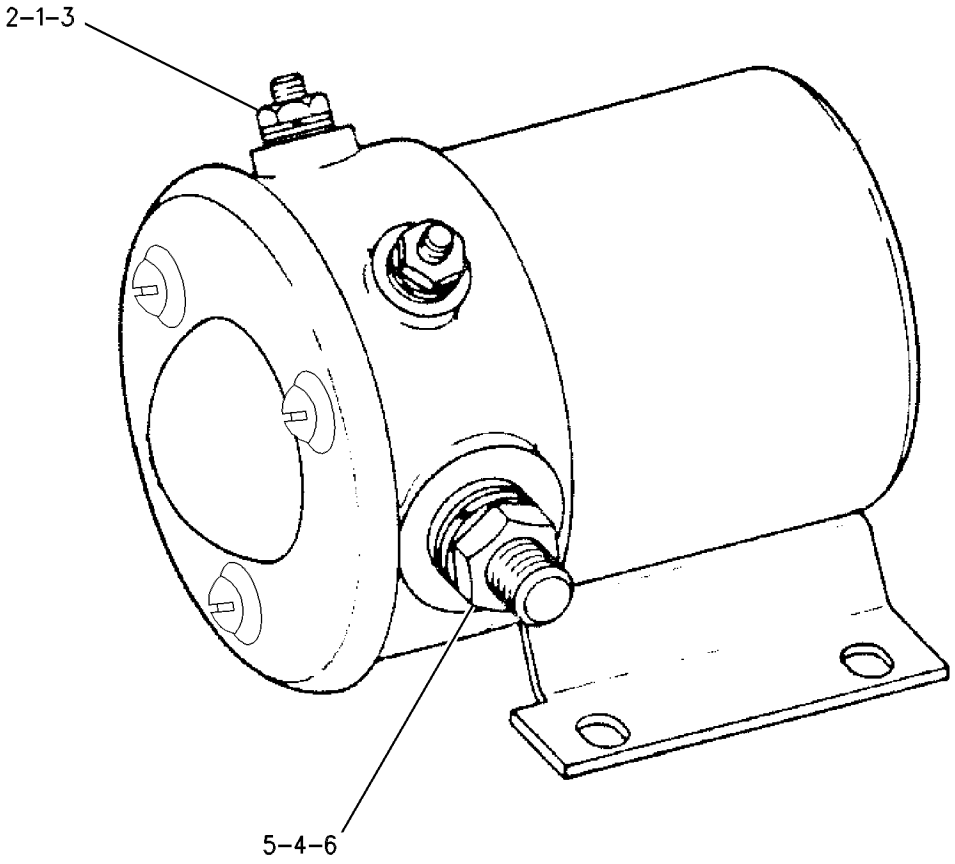

GRAPHIC #1 **<END>** g00639786

142-3985 SWITCH GP-MAGNETIC—ENGINE PRELUBRICATION

S/N: 7PZ1-UP
24-32 VOLT
PART OF 3E-0154 SWITCH GP-MAGNETIC
AN ATTACHMENT

SMCS-7499 **i01663046**

NOTE	REF NO	GRAPHIC REF	PART NUMBER	QTY	PART NAME 1 2 3 4 5 6 (PRODUCT LEVEL)	SEE PAGE
	1	1	**8F-1434**	2	LOCKWASHER	
	2	1	**6V-8378**	2	NUT (10-32 THD)	
	3	1	**7X-0620**	2	WASHER-HARD (5.5X13X1.6MM THK)	
	4	1	**9F-5644**	2	LOCKWASHER	
	5	1	**1B-2578**	2	NUT (3/8-16 THD)	

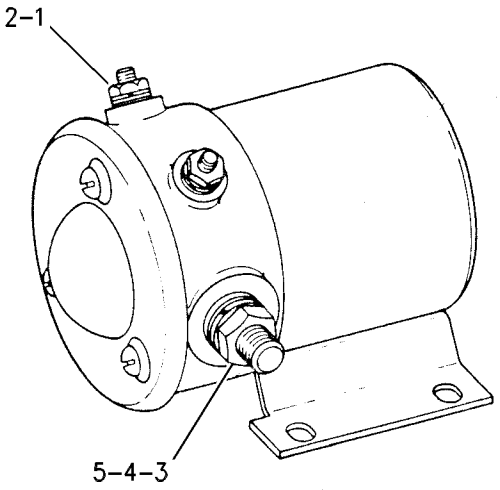

GRAPHIC #1 **<END>** g00287483

167-0138 SWITCH GP-MAGNETIC–MAIN RELAY

S/N: 7PZ1-UP
24 VOLT
PART OF 167-7493 WIRING GP-CONSOLE

SMCS-7499 **i02021591**

NOTE	REF NO	GRAPHIC REF	PART NUMBER	QTY	PART NAME 1 2 3 4 5 6 (PRODUCT LEVEL)	SEE PAGE
	1	1	**4F-2294**	2	NUT-JAM (5/16-24-THD)	
	2	1	**6V-8186**	2	NUT-FULL (5/16-24-THD)	
J	3	1	**155-2270**	1	KIT-CONNECTING PLUG (2-PIN)	
	4	1	**186-3736**	2	SOCKET-CONNECTOR	
J	5	1	**155-2261**	1	WEDGE-PLUG LOCK (2-PIN)	

J-KIT MARKED J INCLUDES PART(S) MARKED J

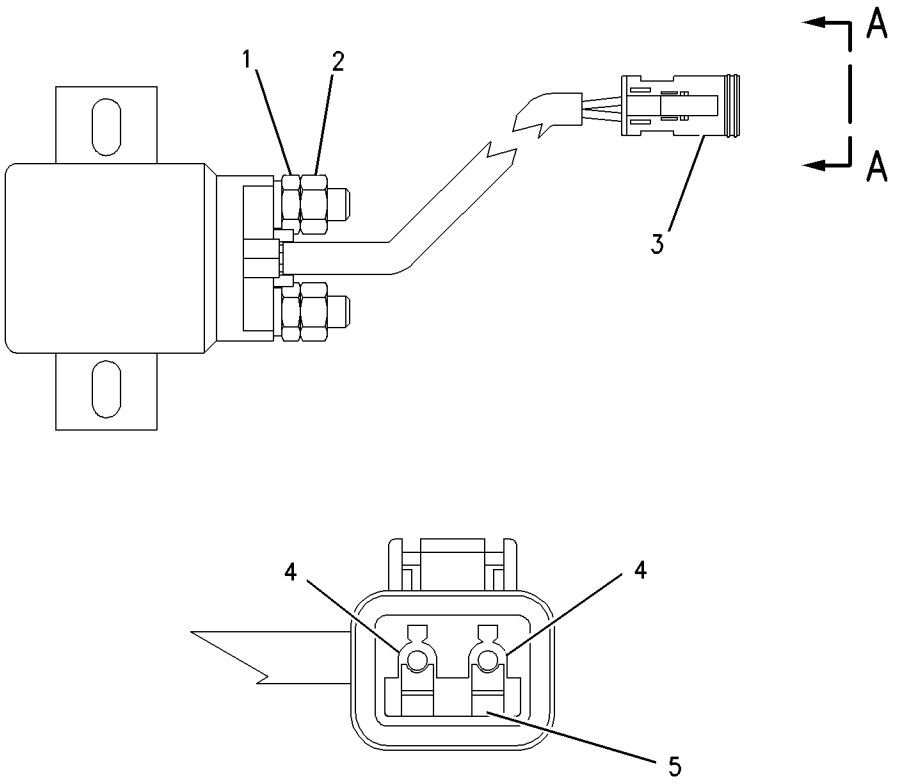

VIEW A-A

GRAPHIC #1 **<END>** g00831588

9G-7641 SWITCH GP-START–KEY

S/N: 7PZ1-UP

PART OF 156-9937 WIRING GP-PLATFORM

SMCS-1416 **i01934582**

NOTE	REF NO	GRAPHIC REF	PART NUMBER	QTY	PART NAME 1 2 3 4 5 6 (PRODUCT LEVEL)	SEE PAGE
JZ	1	1		1	LOCK AS-CYLINDER (IGNITION SWITCH)	
	2	1	**6V-8362**	4	SCREW-MACHINE (8-32X0.31 IN)	
	3	1	**9B-7233**	4	LOCKWASHER (4.37X8.39X.52MM THK)	
	4	1	**7T-6799**	1	NUT-MOUNTING (1-32 THD)	

J-REQUIRES 5P8500 KEY
Z-NOT SERVICED SEPARATELY

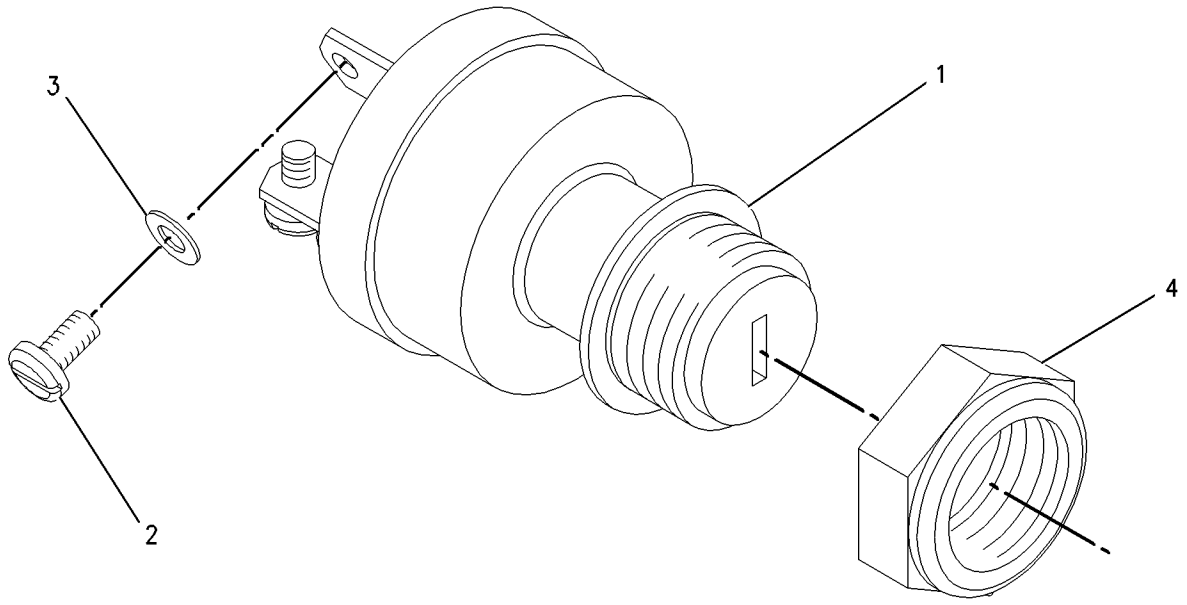

GRAPHIC #1 **<END>** g00886885

178-6363 THERMOCOUPLE GP

S/N: 2GR1180-3709

PART OF 155-5556 ENGINE AR

SMCS-7498 **i01237466**

NOTE	REF NO	GRAPHIC REF	PART NUMBER	QTY	PART NAME 1 2 3 4 5 6 (PRODUCT LEVEL)	SEE PAGE
	1	1	**5N-2126**	1	ADAPTER-EXHAUST (THERMOCOUPLE)	
	2	1	**7E-6830**	1	THERMOCOUPLE	
		1	**100-8077**	1	CAP AS	
	3	1	**9X-6772**	1	STRAP-CABLE	
	4	1	**4P-8134**	1	CLIP (10.5MM ID)	

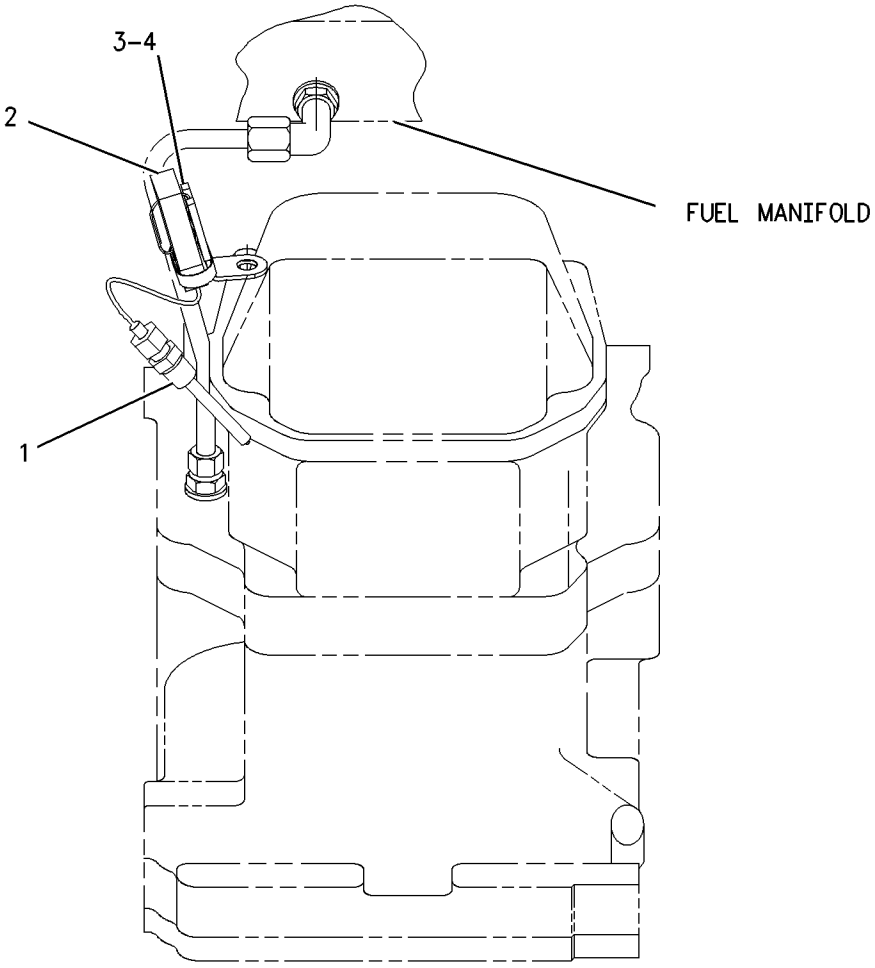

GRAPHIC #1 **<END>** g00662570

123-6449 WARNING GP-BACKUP

S/N: 7PZ1-659, 661-UP

PART OF 156-9936 BATTERY & WIRING GP

SMCS-7406 **i01612351**

NOTE	REF NO	GRAPHIC REF	PART NUMBER	QTY	PART NAME 1 2 3 4 5 6 (PRODUCT LEVEL)	SEE PAGE
	1	1	**102-8802**	1	KIT-RECEPTACLE (2 PIN)	
					(KIT INCLUDES RECEPTACLE AS AND WEDGE)	
	2	1	**3E-3365**	1	WEDGE-RECEPTACLE LOCK (2 PIN)	
	3	1	**186-3735**	2	PIN-CONNECTOR	
D	4	1	**5P-5677**		WIRE-ELECTRICAL (18 GA) (0.6M)	
E	5	1	**9X-1813**		SLEEVE (28CM)	

D-ORDER BY THE METER
E-ORDER BY THE CENTIMETER

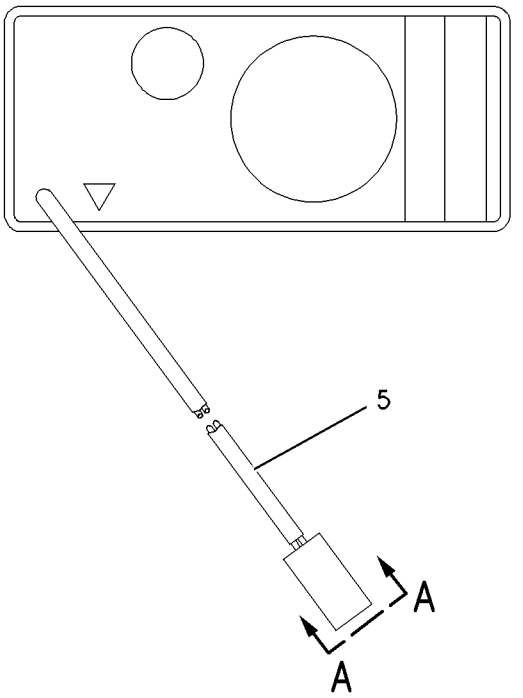

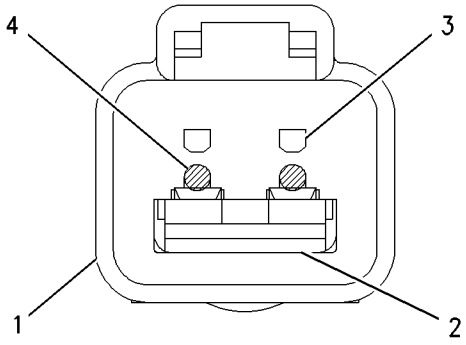

VIEW A-A

GRAPHIC #1 **<END>** g00677117

ELECTRICAL AND STARTING SYSTEM

167-7493 WIRING GP-CONSOLE

S/N: 7PZ1-UP

PART OF 156-9937 WIRING GP-PLATFORM

SMCS-1408 **i02029611**

NOTE	REF NO	GRAPHIC REF	PART NUMBER	QTY	PART NAME 1 2 3 4 5 6 (PRODUCT LEVEL)	SEE PAGE
	1	1	**3T-2662**	1	CIRCUIT BREAKER AS (15-AMPERE) (FRONT FLOODS)	
		1	**6V-8376**	2	SCREW-MACHINE (8-32X0.25-IN)	
		1	**9B-7233**	2	LOCKWASHER (4.4X8.4X0.5-MM THK)	
	2	1	**6T-3642**	1	CIRCUIT BREAKER AS (10-AMPERE) (ELECTRONIC CLUTCH/BRAKE)	
		1	**6V-8376**	2	SCREW-MACHINE (8-32X0.25-IN)	
		1	**9B-7233**	2	LOCKWASHER (4.4X8.4X0.5-MM THK)	
	3	1	**6T-3643**	1	CIRCUIT BREAKER AS (15-AMPERE) (ENGINE)	
		1	**6V-8376**	2	SCREW-MACHINE (8-32X0.25-IN)	
		1	**9B-7233**	2	LOCKWASHER (4.4X8.4X0.5-MM THK)	
	4	1	**8C-6354**	1	CAP-RECEPTACLE	
BE		1	**125-7875**		TUBE-HEAT SHRINK	
BD		1	**5P-5677**		WIRE-ELECTRICAL (18-GA)	
		1	**155-2271**	1	KIT-CONNECTING PLUG (4-PIN)	
					(INCLUDES PLUG AS & WEDGE)	
	5	1	**6T-3642**	1	CIRCUIT BREAKER AS (10-AMPERE) (START KEY)	
		1	**6V-8376**	2	SCREW-MACHINE (8-32X0.25-IN)	
		1	**9B-7233**	2	LOCKWASHER (4.4X8.4X0.5-MM THK)	
Y	6	1	**125-1302**	1	SWITCH GP-MAGNETIC (24-VOLT) (START RELAY 1)	375
	7	1	**128-6157**	1	PLATE	
	8	1	**128-8405**	1	STRAP	
	9	1	**155-1556**	1	STRAP	
	10	1	**155-1996**	1	CLIP	
	11	1	**155-1998**	1	STUD	
	12	1	**155-2001**	1	RETAINER	
	13	1	**159-2943**	1	WIRE AS	
	14	1	**159-4689**	1	FILM-IDENTIFICATION (FUSE)	
	15	1	**159-4696**	1	FILM-IDENTIFICATION (FUSE)	
	16	1	**159-4697**	1	FILM-IDENTIFICATION (FUSE)	
	17	1	**164-9980**	1	FILM-IDENTIFICATION (FUSE PANEL)	
	18	1	**166-7164**	1	CIRCUIT BREAKER AS (125-AMPERE) (MAIN)	
		1	**6V-8183**	2	NUT-FULL (3/8-24-THD)	
		1	**9F-5644**	2	LOCKWASHER	
		1	**7X-0608**	2	WASHER-HARD (10.2X16X2.0-MM THK)	
Y	19	1	**167-0138**	1	SWITCH GP-MAGNETIC (24-VOLT) (MAIN RELAY)	378
	20	1	**167-3830**	1	PLATE AS	
	21	1	**167-7499**	1	BRACKET	
	22	1	**168-0264**	1	STRAP	
	23	1	**168-0265**	1	STRAP	
	24	1	**168-0267**	1	WIRE AS	
	25	1	**168-0270**	1	HARNESS AS (POWER)	
	26	1	**6T-3643**	1	CIRCUIT BREAKER AS (15-AMPERE) (IMPLEMENT)	
		1	**6V-8376**	2	SCREW-MACHINE (8-32X0.25-IN)	
		1	**9B-7233**	2	LOCKWASHER (4.4X8.4X0.5-MM THK)	
Y	27	1	**125-1302**	1	SWITCH GP-MAGNETIC (24-VOLT) (START RELAY 2)	375
	28	1	**6T-3643**	1	CIRCUIT BREAKER AS (15-AMPERE) (BLOWER)	
		1	**6V-8376**	2	SCREW-MACHINE (8-32X0.25-IN)	
		1	**9B-7233**	2	LOCKWASHER (4.4X8.4X0.5-MM THK)	
	29	1	**033-8755**	2	SCREW (1/4-20X1-IN)	
	30	1	**068-4209**	12	SCREW (8-32X0.75-IN)	
	31	1	**2D-6235**	2	LOCKNUT (1/4-20-THD)	
	32	1	**9X-6258**	2	SCREW-MACHINE (6-32X.50-IN)	
	33	1	**3S-9557**	4	SCREW-PAN HEAD (4-40X0.5-IN)	
	34	1	**6V-5645**	4	SCREW-MACHINE (10-32X0.87-IN)	
	35	1	**6V-8185**	6	NUT (1/4-20-THD)	
	36	1	**8T-4205**	6	WASHER-HARD (7.2X14.5X2-MM THK)	

167-7493 **WIRING GP-CONSOLE** ***(contd.)*** **i02029611**

NOTE	REF NO	GRAPHIC REF	PART NUMBER	QTY	PART NAME 1 2 3 4 5 6 (PRODUCT LEVEL)	SEE PAGE
	37	1	**168-0275**	1	FUSE BLOCK & HARNESS AS	
		1	**168-0269**	1	HARNESS AS-FUSE PANEL	
		1	**9W-1441**	3	FUSE (15-AMPERE)	
		1	**9W-1442**	10	FUSE (10-AMPERE)	
		1	**9W-1446**	3	FUSE (20-AMPERE)	
	38	1	**151-1396**	1	BLOCK AS-FUSE (16 POLE)	
		1	**151-1398**	2	KIT-TERMINAL LOCK (FUSE BLOCK)	
		1	**6V-8185**	2	NUT (1/4-20-THD)	
		1	**1H-3244**	2	LOCKWASHER (6.64X11.91X.65-MM THK)	
	39	1	**151-1397**	1	COVER-FUSE BLOCK	
	40	1	**7D-6922**	2	LOCKNUT (6-32-THD)	

B-USE AS REQUIRED
D-ORDER BY THE METER
E-ORDER BY THE CENTIMETER
Y-SEPARATE ILLUSTRATION

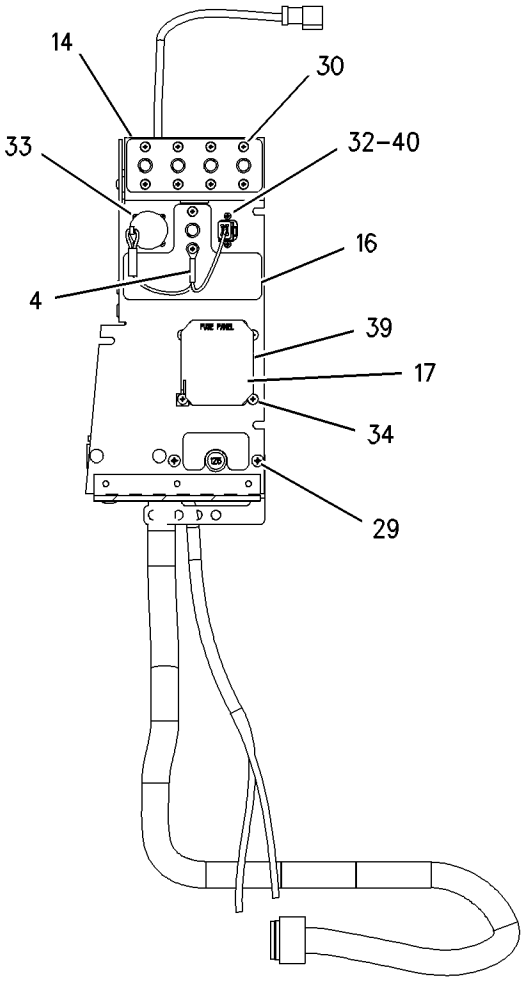

SECTION A-A

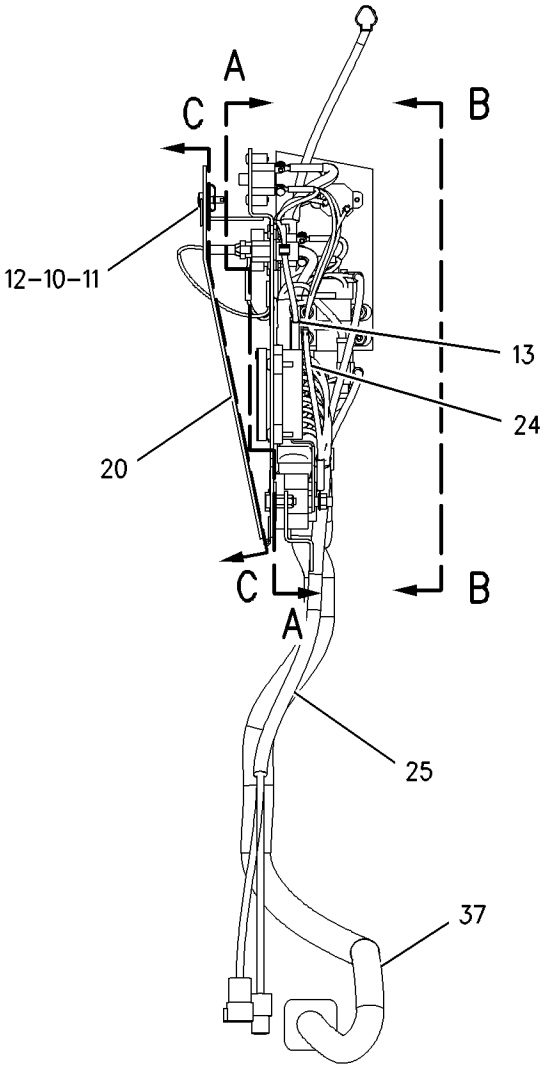

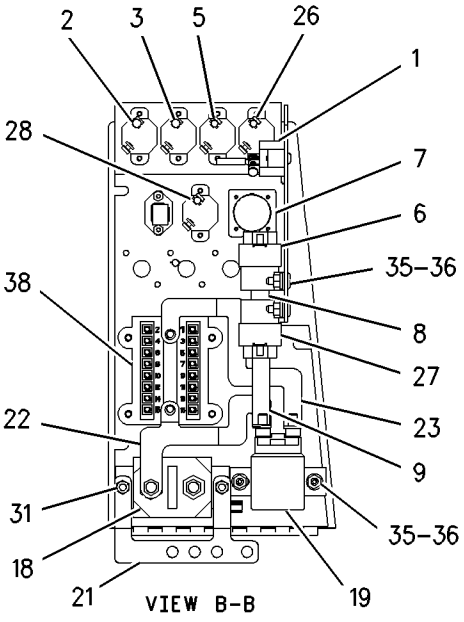

VIEW B-B

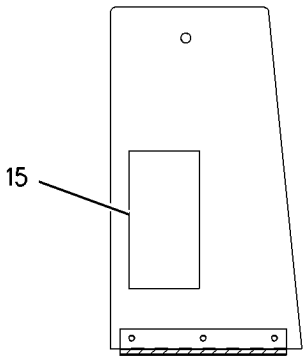

SECTION C-C

GRAPHIC #1 **<END>** g00760393

156-9816 WIRING GP-ENGINE

S/N: 2GR1180-3296

PART OF 155-5556 ENGINE AR

SMCS-1403, 1408 **i01563447**

NOTE	REF NO	GRAPHIC REF	PART NUMBER	QTY	PART NAME 1 2 3 4 5 6 (PRODUCT LEVEL)	SEE PAGE
	1	1,2	**9X-6772**	87	STRAP-CABLE	
	2	1,2	**4P-8134**	46	CLIP	
	3	1,2	**4P-7428**	8	CLIP	
	4	1,2	**1A-2029**	5	BOLT (3/8-16X1.125 IN)	
	5	2	**4T-8338**	1	PLATE	
	6	1,2	**116-0118**	3	CLIP	
	7	2	**2V-3216**	2	CLIP	
	8	1,2	**5M-2894**	27	WASHER-HARD (10.2X18.5X2.5MM THK)	
	9	1	**117-0067**	1	ELBOW	
	10	1	**6V-5048**	9	SEAL-O-RING	
Y	11	1	**161-9929**	1	SENSOR GP-PRESSURE (TURBO OUTLET)	340
	12	1	**9X-0262**	2	ADAPTER	
	13	1	**117-0069**	2	BLOCK-SENSOR MOUNTING	
	14	2	**8T-6764**	2	PLUG-PIPE	
	15	1,2	**0S-1594**	4	BOLT (3/8-16X1 IN)	
	16	1	**001-9440**	1	CONNECTOR-FLARED	
Y	17	1	**161-9926**	1	SENSOR GP-PRESSURE (CRANKCASE)	339
Y	17A	1	**161-9926**	1	SENSOR GP-PRESSURE (ATMOSPHERIC)	339
	18	1	**9X-0263**	1	ADAPTER	
	19	1	**170-1127**	1	HOSE AS	
Y	20	1	**171-8708**	1	SWITCH GP-FLOW (COOLANT)	373
	21	1	**2B-2695**	2	BOLT (5/16-18X0.875 IN)	
	22	1	**9M-1974**	2	WASHER-HARD (8.8X16X2MM THK)	
	23	1	**4N-3841**	1	GASKET	
	24	1	**5P-8245**	2	WASHER-HARD (13.5X25.5X3MM THK)	
	25	1	**0S-1621**	2	BOLT (1/2-13X1 IN)	
Y	26	1	**161-9931**	1	SENSOR GP-PRESSURE (FILTERED OIL)	341
	27	1	**124-0289**	2	CLIP	
	28	1	**163-7882**	1	SENSOR GP-EXHAUST TEMPERATURE (RH TURBO)	
	28A	1	**163-7882**	1	SENSOR GP-EXHAUST TEMPERATURE (LH TURBO)	
	29	1	**144-5661**	1	SWITCH AS-PRESSURE (FUEL FILTER DIFFERENTIAL)	
		1	**2M-9780**	1	SEAL-O-RING	
		1	**6V-3922**	1	SEAL-O-RING	
		1	**8T-8729**	2	PIN-CONNECTOR	
E		1	**9X-1813**		SLEEVE (14CM)	
		1	**102-8802**	1	KIT-RECEPTACLE (2 PIN)	
					(INCLUDES WEDGE & RECEPTACLE AS)	
	30	1	**4P-7581**	9	CLIP	
	31	1	**4B-4281**	1	WASHER (16.8X33X2.5MM THK)	
	32	1	**6V-2455**	1	SENSOR GP-SPEED (TIMING CALIBRATION PROBE)	
		1	**3E-3365**	1	WEDGE-RECEPTACLE LOCK (2 PIN)	
		1	**8T-8729**	2	PIN-CONNECTOR	
E		1	**9X-1386**		SLEEVE (14CM)	
		1	**102-8802**	1	KIT-RECEPTACLE (2 PIN)	
					(INCLUDES WEDGE & RECEPTACLE AS)	
	33	2	**121-2844**	1	HARNESS AS (CRANK WITHOUT INJECTION)	
	34	1,2	**9S-8752**	4	NUT-FULL (3/8-16 THD)	
	35	1,2	**0S-0509**	8	BOLT (3/8-16X0.75 IN)	
Y	36	1	**129-6628**	1	SENSOR GP-SPEED (TIMING)	346
	37	1	**8L-2786**	1	SEAL-O-RING	
	38	1	**0S-1588**	2	BOLT (3/8-16X1.25 IN)	
	39	1	**8T-6767**	2	PLUG-PIPE	
	40	1	**7W-6492**	1	PLUG-PIPE	
	41	1,2	**3K-0360**	2	SEAL-O-RING	
	42	1	**102-2240**	1	SENSOR GP-TEMPERATURE (COOLANT)	
		1	**8T-8729**	3	PIN-CONNECTOR	

156-9816 **WIRING GP-ENGINE** ***(contd.)*** **i01563447**

NOTE	REF NO	GRAPHIC REF	PART NUMBER	QTY	PART NAME 1 2 3 4 5 6 (PRODUCT LEVEL)	SEE PAGE
		1	**3E-3371**	1	WEDGE-RECEPTACLE LOCK (3 PIN)	
		1	**102-8803**	1	KIT-RECEPTACLE (3 PIN)	
					(INCLUDES WEDGE & RECEPTACLE AS)	
	42A	2	**102-2240**	1	SENSOR GP-TEMPERATURE (AFTERCOOLER COOLANT OUTLET)	
		2	**8T-8729**	3	PIN-CONNECTOR	
		2	**3E-3371**	1	WEDGE-RECEPTACLE LOCK (3 PIN)	
		2	**102-8803**	1	KIT-RECEPTACLE (3 PIN)	
					(INCLUDES WEDGE & RECEPTACLE AS)	
	43	1	**7E-5326**	1	COVER	
	44	1	**7E-6016**	1	GASKET	
	45	2	**156-9841**	1	HARNESS AS-WIRING	
	46	1	**8B-1931**	1	BUSHING-REDUCING	
	47	1	**5P-3426**	1	ELBOW	
	48	1	**0S-1620**	1	BOLT (1/2-13X0.75 IN)	
	49	1	**3H-7654**	1	WASHER-HARD (13.5X22.5X3MM THK)	
	52	2	**0L-1351**	2	BOLT (3/8-16X0.875 IN)	
	53	1	**3K-6905**	1	VALVE-BREATHER	
	54	2	**115-3069**	2	CLIP AS-CONNECTOR	
	56	1	**0S-1591**	2	BOLT (3/8-16X1.5 IN)	
	58	1	**5P-5528**	1	ADAPTER-O-RING	

E-ORDER BY THE CENTIMETER
Y-SEPARATE ILLUSTRATION

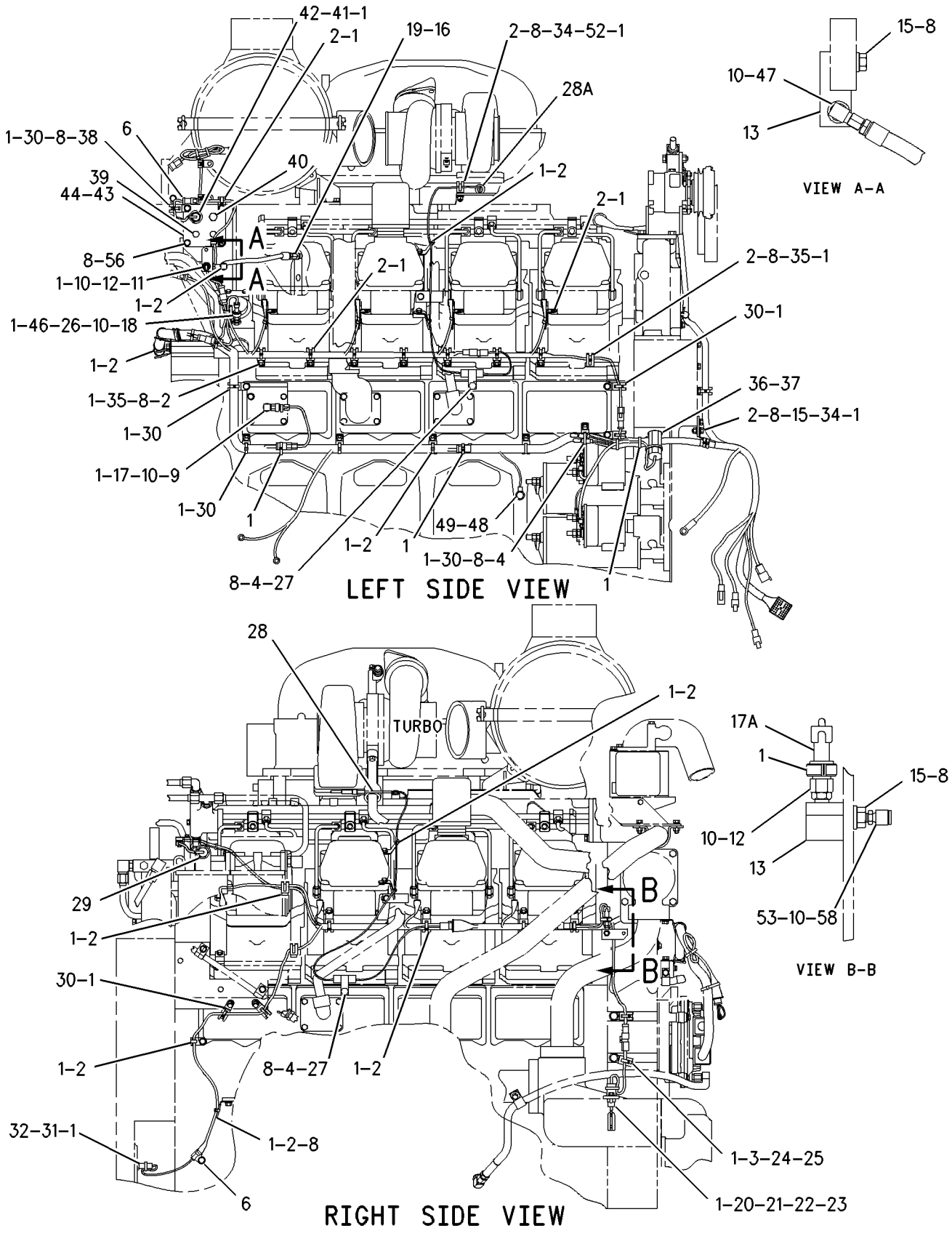

GRAPHIC #1 g00706913

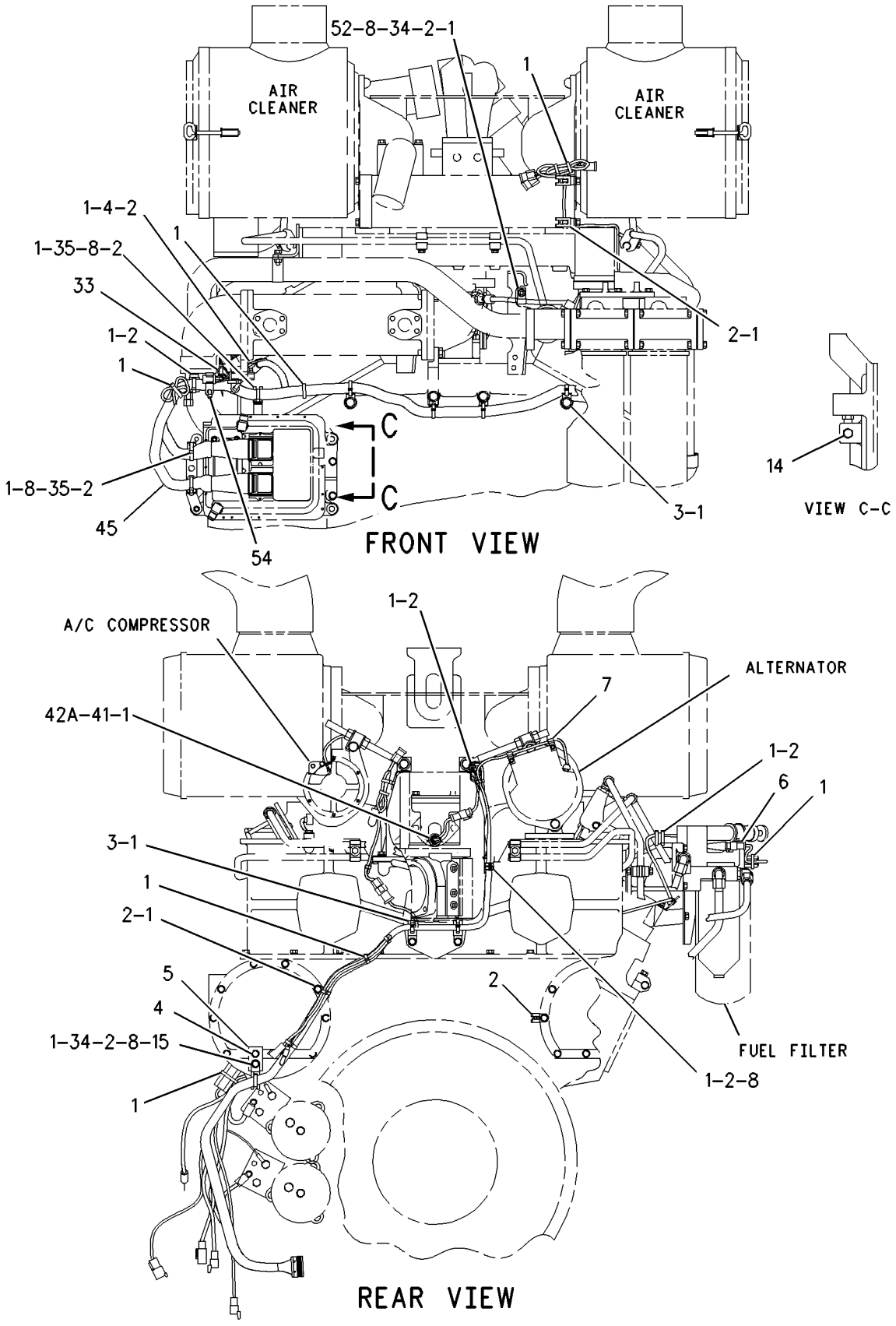

GRAPHIC #2 **<END>** g00706918

156-9816 WIRING GP-ENGINE

S/N: 2GR3297-3653

PART OF 155-5556 ENGINE AR

SMCS-1403, 1408 **i01541085**

NOTE	REF NO	GRAPHIC REF	PART NUMBER	QTY	PART NAME 1 2 3 4 5 6 (PRODUCT LEVEL)	SEE PAGE
C	1	1,2	**9X-6772**	98	STRAP-CABLE	
C	2	1,2	**4P-8134**	48	CLIP	
C	3	1,2	**4P-7428**	5	CLIP	
	4	1,2	**1A-2029**	5	BOLT (3/8-16X1.125 IN)	
	5	2	**4T-8338**	1	PLATE	
C	6	1	**116-0118**	1	CLIP	
C	7	2	**4P-7429**	3	CLIP	
	8	1,2	**5M-2894**	27	WASHER-HARD (10.2X18.5X2.5MM THK)	
	9	1	**117-0067**	1	ELBOW	
	10	1	**6V-5048**	9	SEAL-O-RING	
CY	11	1	**194-6724**	1	SENSOR GP-PRESSURE (TURBO OUTLET)	343
	12	1	**9X-0262**	2	ADAPTER	
	13	1	**117-0069**	2	BLOCK-SENSOR MOUNTING	
	14	2	**8T-6764**	2	PLUG-PIPE	
	15	1,2	**0S-1594**	4	BOLT (3/8-16X1 IN)	
	16	1	**001-9440**	1	CONNECTOR-FLARED	
Y	17	1	**161-9926**	1	SENSOR GP-PRESSURE (CRANKCASE)	339
Y	17A	1	**161-9926**	1	SENSOR GP-PRESSURE (ATMOSPHERIC)	339
	18	1	**9X-0263**	1	ADAPTER	
	19	1	**170-1127**	1	HOSE AS	
Y	20	1	**171-8708**	1	SWITCH GP-FLOW (COOLANT)	373
	21	1	**2B-2695**	2	BOLT (5/16-18X0.875 IN)	
	22	1	**9M-1974**	2	WASHER-HARD (8.8X16X2MM THK)	
	23	1	**4N-3841**	1	GASKET	
	24	1	**5P-8245**	2	WASHER-HARD (13.5X25.5X3MM THK)	
	25	1	**0S-1621**	2	BOLT (1/2-13X1 IN)	
Y	26	1	**161-9931**	1	SENSOR GP-PRESSURE (FILTERED OIL)	341
	27	1	**124-0289**	2	CLIP	
	28	1	**163-7882**	1	SENSOR GP-EXHAUST TEMPERATURE (RH TURBO)	
	28A	1	**163-7882**	1	SENSOR GP-EXHAUST TEMPERATURE (LH TURBO)	
	29	1	**144-5661**	1	SWITCH AS-PRESSURE (FUEL FILTER DIFFERENTIAL)	
		1	**2M-9780**	1	SEAL-O-RING	
		1	**6V-3922**	1	SEAL-O-RING	
		1	**8T-8729**	2	PIN-CONNECTOR	
E		1	**9X-1813**		SLEEVE (14CM)	
		1	**102-8802**	1	KIT-RECEPTACLE (2 PIN)	
					(INCLUDES WEDGE & RECEPTACLE AS)	
C	30	1	**4P-7581**	11	CLIP	
	31	1	**4B-4281**	1	WASHER (16.8X33X2.5MM THK)	
C	32	1	**189-5746**	1	SENSOR GP-SPEED (TIMING CALIBRATION PROBE)	
		1	**3E-3365**	1	WEDGE-RECEPTACLE LOCK (2 PIN)	
		1	**8T-8729**	2	PIN-CONNECTOR	
E		1	**9X-1386**		SLEEVE (14CM)	
		1	**171-5349**	1	STRAP-MARKER	
		1	**102-8802**	1	KIT-RECEPTACLE (2 PIN)	
					(INCLUDES WEDGE & RECEPTACLE AS)	
	33	2	**121-2844**	1	HARNESS AS (CRANK WITHOUT INJECTION)	
C	34	1,2	**9S-8752**	3	NUT-FULL (3/8-16 THD)	
	35	1,2	**0S-0509**	8	BOLT (3/8-16X0.75 IN)	
Y	36	1	**129-6628**	1	SENSOR GP-SPEED (TIMING)	346
	37	1	**8L-2786**	1	SEAL-O-RING	
	38	1	**0S-1588**	2	BOLT (3/8-16X1.25 IN)	
	39	1	**8T-6767**	2	PLUG-PIPE	
	40	1	**7W-6492**	1	PLUG-PIPE	
	41	1,2	**3K-0360**	2	SEAL-O-RING	
	42	1	**102-2240**	1	SENSOR GP-TEMPERATURE (COOLANT)	

156-9816 **WIRING GP-ENGINE** ***(contd.)*** **i01541085**

NOTE	REF NO	GRAPHIC REF	PART NUMBER	QTY	PART NAME 1 2 3 4 5 6 (PRODUCT LEVEL)	SEE PAGE
		1	**8T-8729**	3	PIN-CONNECTOR	
		1	**3E-3371**	1	WEDGE-RECEPTACLE LOCK (3 PIN)	
		1	**102-8803**	1	KIT-RECEPTACLE (3 PIN)	
					(INCLUDES WEDGE & RECEPTACLE AS)	
	42A	2	**102-2240**	1	SENSOR GP-TEMPERATURE (AFTERCOOLER COOLANT OUTLET)	
		2	**8T-8729**	3	PIN-CONNECTOR	
		2	**3E-3371**	1	WEDGE-RECEPTACLE LOCK (3 PIN)	
		2	**102-8803**	1	KIT-RECEPTACLE (3 PIN)	
					(INCLUDES WEDGE & RECEPTACLE AS)	
	43	1	**7E-5326**	1	COVER	
	44	1	**7E-6016**	1	GASKET	
	45	2	**156-9841**	1	HARNESS AS-WIRING	
	46	1	**8B-1931**	1	BUSHING-REDUCING	
	47	1	**5P-3426**	1	ELBOW	
	48	1	**0S-1620**	1	BOLT (1/2-13X0.75 IN)	
	49	1	**3H-7654**	1	WASHER-HARD (13.5X22.5X3MM THK)	
C	50	1	**0T-0102**	2	BOLT (3/8-16X0.625 IN)	
C	52	2	**0L-1351**	1	BOLT (3/8-16X0.875 IN)	
	53	1	**3K-6905**	1	VALVE-BREATHER	
	54	2	**115-3069**	2	CLIP AS-CONNECTOR	
	56	1	**0S-1591**	2	BOLT (3/8-16X1.5 IN)	
	58	1	**5P-5528**	1	ADAPTER-O-RING	

C-CHANGE FROM PREVIOUS TYPE
E-ORDER BY THE CENTIMETER
Y-SEPARATE ILLUSTRATION

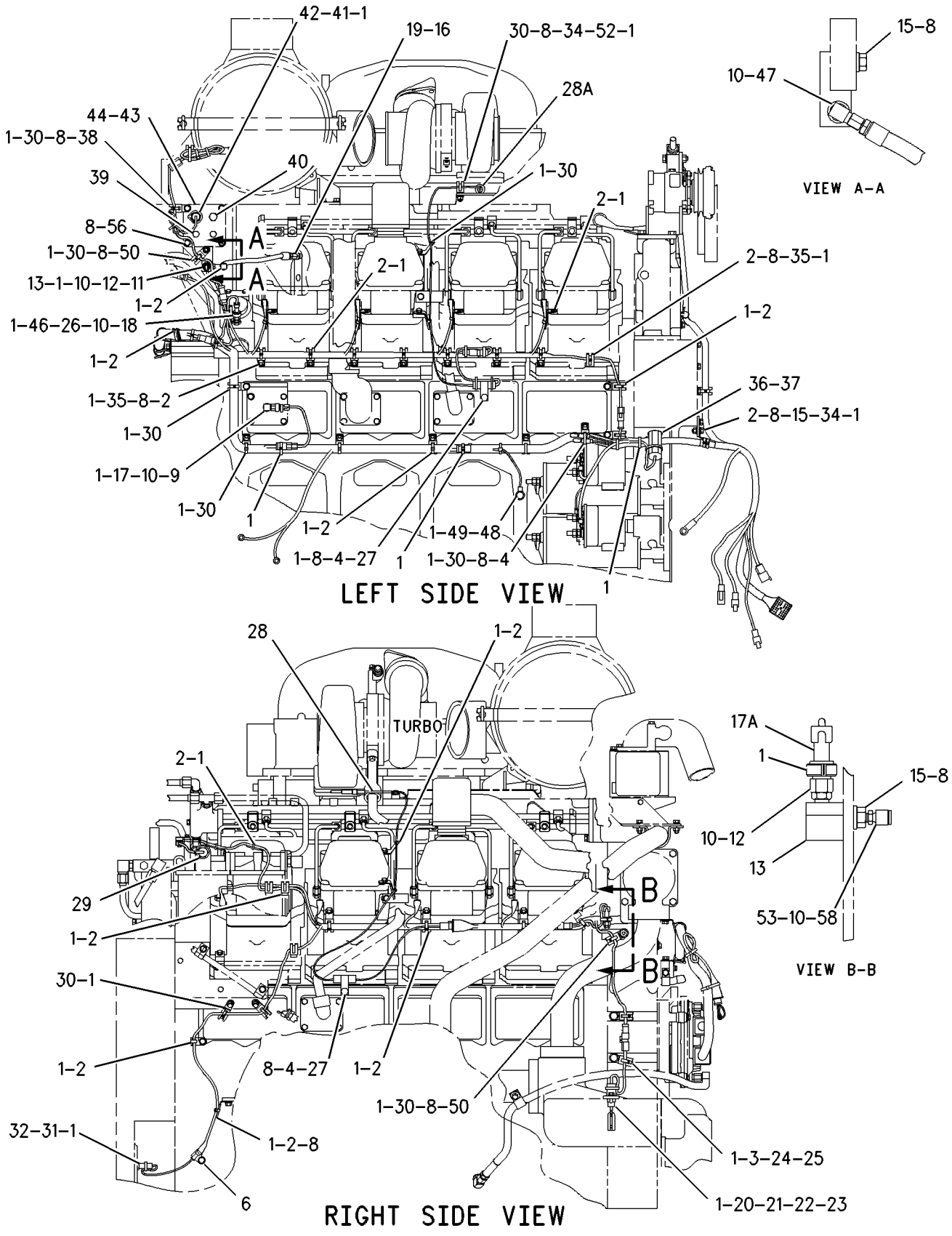

GRAPHIC #1 g00800850

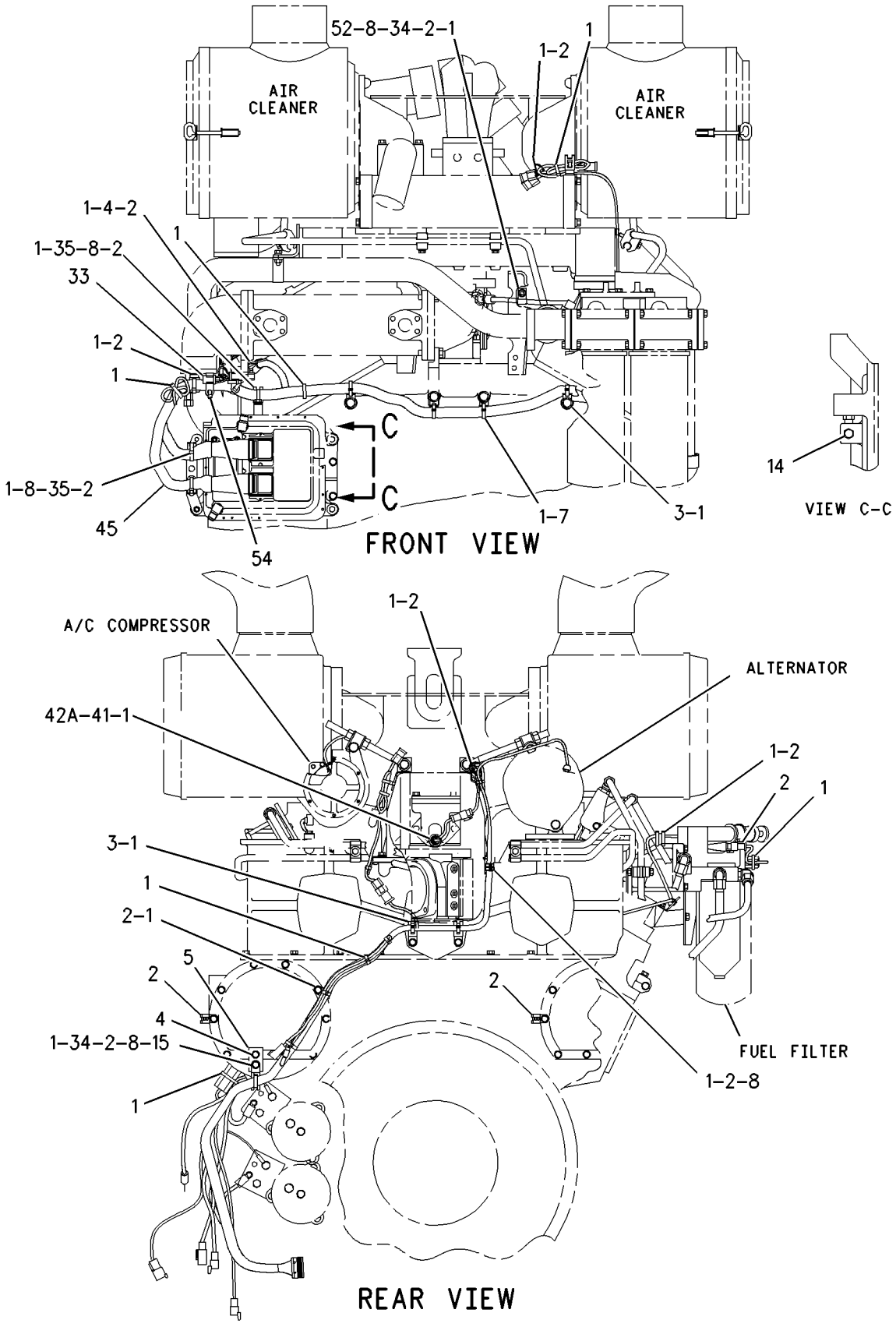

GRAPHIC #2 **<END>** g00800883

ELECTRICAL AND STARTING SYSTEM

156-9816 WIRING GP-ENGINE

S/N: 2GR3654-UP

PART OF 155-5556 ENGINE AR

SMCS-1403, 1408 **i01969693**

NOTE	REF NO	GRAPHIC REF	PART NUMBER	QTY	PART NAME 1 2 3 4 5 6 (PRODUCT LEVEL)	SEE PAGE
	1	1,2	**9X-6772**	100	STRAP-CABLE	
	2	1,2	**4P-8134**	49	CLIP	
	3	1,2	**4P-7428**	5	CLIP	
	4	1,2	**1A-2029**	5	BOLT (3/8-16X1.125 IN)	
	5	2	**4T-8338**	1	PLATE	
	6	1	**116-0118**	1	CLIP	
	7	2	**4P-7429**	3	CLIP	
	8	1,2	**5M-2894**	29	WASHER-HARD (10.2X18.5X2.5MM THK)	
	9	1	**117-0067**	1	ELBOW	
	10	1	**6V-5048**	9	SEAL-O-RING	
Y	11	1	**194-6724**	1	SENSOR GP-PRESSURE (TURBO OUTLET)	343
	12	1	**9X-0262**	2	ADAPTER	
	13	1	**117-0069**	2	BLOCK-SENSOR MOUNTING (TURBOCHARGER BOOST)	
	14	2	**8T-6764**	2	PLUG-PIPE	
	15	1,2	**0S-1594**	5	BOLT (3/8-16X1 IN)	
	16	1	**001-9440**	1	CONNECTOR	
Y	17	1	**161-9926**	1	SENSOR GP-PRESSURE (CRANKCASE)	339
Y	17A	1	**161-9926**	1	SENSOR GP-PRESSURE (ATMOSPHERIC)	339
	18	1	**9X-0263**	1	ADAPTER	
	19	1	**170-1127**	1	HOSE AS	
Y	20	1	**171-8708**	1	SWITCH GP-FLOW (COOLANT)	373
	21	1	**2B-2695**	2	BOLT (5/16-18X0.875 IN)	
	22	1	**9M-1974**	2	WASHER-HARD (8.8X16X2MM THK)	
	23	1	**4N-3841**	1	GASKET	
	24	1	**5P-8245**	2	WASHER-HARD (13.5X25.5X3MM THK)	
	25	1	**0S-1621**	2	BOLT (1/2-13X1 IN)	
CY	26	1	**194-6725**	1	SENSOR GP-PRESSURE (FILTERED OIL)	344
	27	1	**124-0289**	2	CLIP	
	28	1	**163-7882**	1	SENSOR GP-EXHAUST TEMPERATURE (RH TURBO)	
	28A	1	**163-7882**	1	SENSOR GP-EXHAUST TEMPERATURE (LH TURBO)	
	29	1	**144-5661**	1	SWITCH AS-PRESSURE (FUEL FILTER DIFFERENTIAL)	
E		1	**9X-1813**		SLEEVE (14CM)	
		1	**2M-9780**	1	SEAL-O-RING	
		1	**6V-3922**	1	SEAL-O-RING	
		1	**8T-8729**	2	PIN-CONNECTOR	
		1	**102-8802**	1	KIT-RECEPTACLE (2 PIN)	
					(INCLUDES WEDGE AND RECEPTACLE AS)	
	30	1	**4P-7581**	11	CLIP	
	31	1	**4B-4281**	1	WASHER (16.8X33X2.5MM THK)	
Y	32	1	**189-5746**	1	SENSOR GP-SPEED (TIMING CALIBRATION PROBE)	347
	33	2	**121-2844**	1	HARNESS AS-WIRING (CRANK WITHOUT INJECTION)	
	34	1,2	**9S-8752**	4	NUT-FULL (3/8-16 THD)	
	35	1,2	**0S-0509**	8	BOLT (3/8-16X0.75 IN)	
Y	36	1	**129-6628**	1	SENSOR GP-SPEED (TIMING)	346
	37	1	**8L-2786**	1	SEAL-O-RING	
	38	1	**0S-1588**	2	BOLT (3/8-16X1.25 IN)	
	39	1	**8T-6767**	2	PLUG-PIPE	
	40	1	**7W-6492**	1	PLUG-PIPE	
	41	1,2	**3K-0360**	2	SEAL-O-RING	
	42	1	**102-2240**	1	SENSOR GP-TEMPERATURE (COOLANT)	
E		1	**9X-1813**		SLEEVE (31CM)	
		1	**186-3735**	3	PIN-CONNECTOR	
		1	**3E-3371**	1	WEDGE-RECEPTACLE LOCK (3 PIN)	
		1	**102-8803**	1	KIT-RECEPTACLE (3 PIN)	
					(INCLUDES WEDGE AND RECEPTACLE AS)	

156-9816 **WIRING GP-ENGINE** ***(contd.)*** **i01969693**

NOTE	REF NO	GRAPHIC REF	PART NUMBER	QTY	PART NAME 1 2 3 4 5 6 (PRODUCT LEVEL)	SEE PAGE
	42A	2	**102-2240**	1	SENSOR GP-TEMPERATURE (AFTERCOOLER COOLANT OUTLET)	
E		2	**9X-1813**		SLEEVE (31CM)	
		2	**186-3735**	3	PIN-CONNECTOR	
		2	**3E-3371**	1	WEDGE-RECEPTACLE LOCK (3 PIN)	
		2	**102-8803**	1	KIT-RECEPTACLE (3 PIN)	
					(INCLUDES WEDGE AND RECEPTACLE AS)	
	43	1	**7E-5326**	1	COVER	
	44	1	**7E-6016**	1	GASKET	
	45	2	**156-9841**	1	HARNESS AS-WIRING	
	46	1	**8B-1931**	1	BUSHING-REDUCING	
	47	1	**5P-3426**	1	ELBOW	
	48	1	**0S-1620**	1	BOLT (1/2-13X0.75 IN)	
	49	1	**3H-7654**	1	WASHER-HARD (13.5X22.5X3MM THK)	
	50	1	**0T-0102**	2	BOLT (3/8-16X0.625 IN)	
	51	2	**107-8618**	1	SENSOR GP-TEMPERATURE (INLET AIR)	
E		2	**112-4550**		SLEEVE (31CM)	
		2	**3E-3371**	1	WEDGE-RECEPTACLE LOCK (3 PIN)	
		2	**186-3735**	3	PIN-CONNECTOR	
		2	**102-8803**	1	KIT-RECEPTACLE (3 PIN)	
					(INCLUDES PLUG AS AND WEDGE)	
	52	1	**0L-1351**	1	BOLT (3/8-16X0.875 IN)	
	53	1	**3K-6905**	1	VALVE-BREATHER	
	54	2	**115-3069**	2	CLIP AS-CONNECTOR (3 PIN)	
	55	2	**164-0241**	1	SLEEVE	
	56	1	**0S-1591**	2	BOLT (3/8-16X1.5 IN)	
	58	1	**5P-5528**	1	ADAPTER-O-RING	
	59	2	**6V-6609**	1	SEAL-O-RING	
	60	1	**5P-9085**	1	CLIP	

C-CHANGE FROM PREVIOUS TYPE
E-ORDER BY THE CENTIMETER
Y-SEPARATE ILLUSTRATION

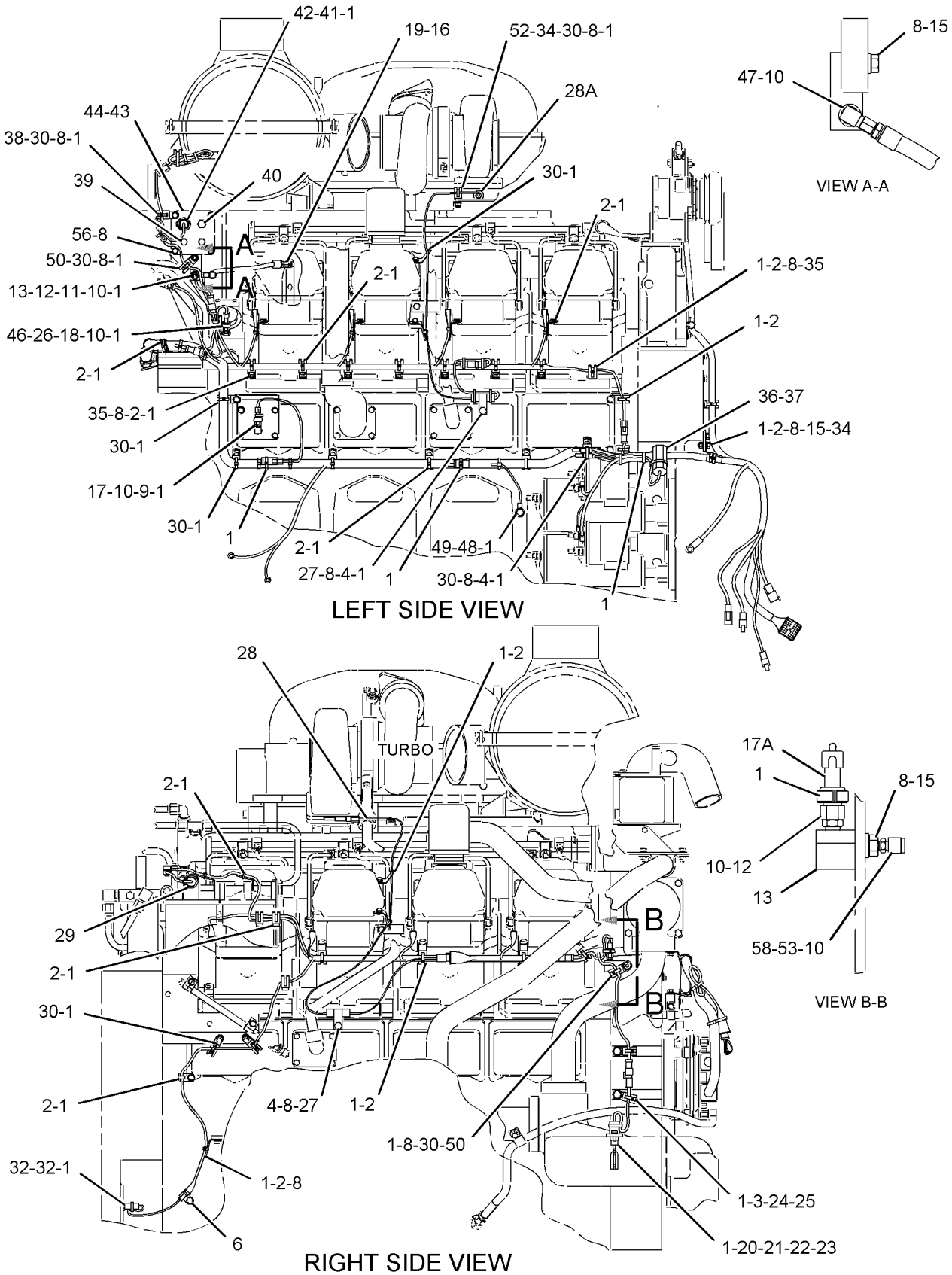

GRAPHIC #1 g01021868

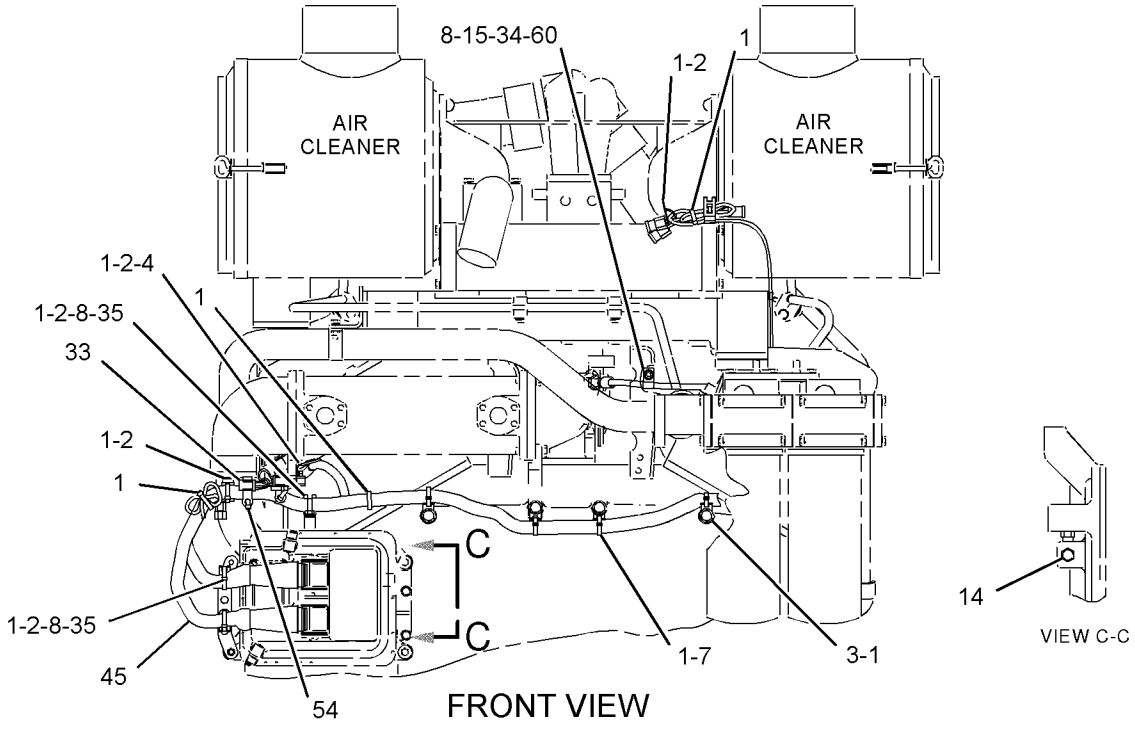

FRONT VIEW

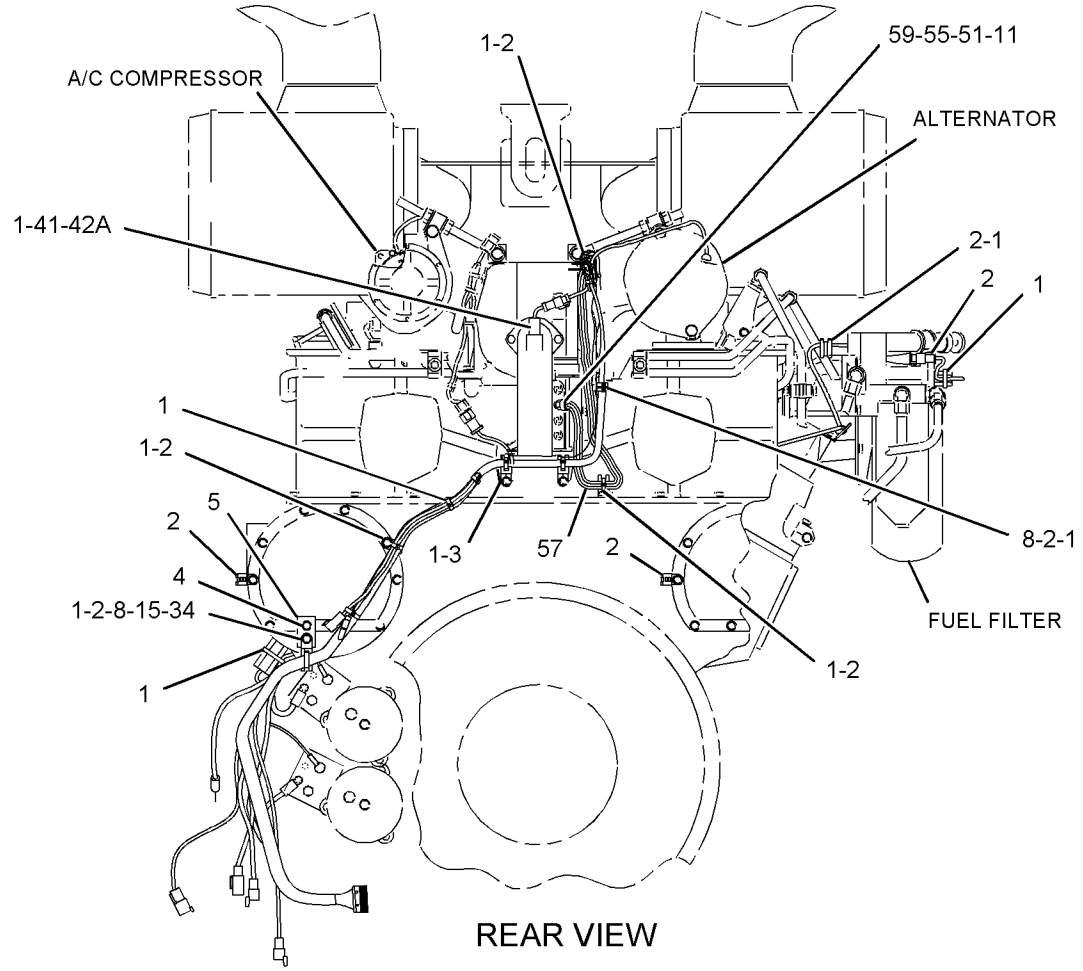

REAR VIEW

GRAPHIC #2

<END>

g01021865

156-9937 WIRING GP-PLATFORM

S/N: 7PZ1-UP

PART OF 155-5552 CHASSIS AR

SMCS-1408 **i02029598**

NOTE	REF NO	GRAPHIC REF	PART NUMBER	QTY	PART NAME 1 2 3 4 5 6 (PRODUCT LEVEL)	SEE PAGE
Y	1	1	**3E-6328**	1	ALARM GP (24-VOLT)	240
	2	1	**6T-3990**	1	SWITCH AS-ROCKER (SIDE LIGHTS)	
	3	1	**6T-3990**	1	SWITCH AS-ROCKER (AUXILIARY)	
					(EACH SWITCH AS INCLUDES)	
		1	**3L-8187**	2	LOCKWASHER	
		1	**6V-8374**	2	SCREW-MACHINE (6-32X0.25-IN)	
	4	1	**6T-5814**	1	SWITCH AS (FRONT LIGHTS)	
	5	1	**6T-5814**	1	SWITCH AS (REAR LIGHTS)	
					(EACH SWITCH AS INCLUDES)	
		1	**3L-8187**	4	LOCKWASHER	
		1	**6V-8374**	4	SCREW-MACHINE (6-32X0.25-IN)	
	6	1	**6V-8927**	10	BOLT-SOCKET HEAD (6-32X0.5-IN)	
	7	1	**7N-1996**	1	LAMP (24-VOLT) (REAR FAULT)	
	8	1	**7N-5876**	4	LAMP (24-VOLT) (INSTRUMENT PANEL)	
	9	1	**9G-3695**	11	PLUG (GROMMET SEALING)	
Y	10	1	**9G-7641**	1	SWITCH GP-START (KEY)	379
Y	11	1	**103-5526**	1	CONTROL GP-MONITOR SYS DIMMER	1028
	12	1	**122-2738**	1	RETAINER	
	13	1	**125-4490**	1	CLIP	
	14	1	**137-3937**	1	FILM-IDENTIFICATION (MALFUNCTION)	
	15	1	**189-2319**	1	SEAL	
	16	1	*116-4502*	1	SWITCH AS-ROCKER (24-VOLT, SEALED-ILLUMINATED) (IMPLEMENT LOCKOUT)	
		1	**116-4503**	1	SWITCH AS-ROCKER (24-VOLT) (IMPLEMENT LOCKOUT)	
		1	**116-4501**	1	ACTUATOR-ROCKER	
		1	**3E-8825**	1	LAMP (24-VOLT) (IMPLEMENT LOCKOUT)	
	17	1	**148-0334**	1	GROMMET-SPLIT	
	18	1	**6T-7058**	1	LENS-RED	
BD	19	1	**5P-5901**		SEAL	
	20	1	**158-6632**	1	SWITCH AS-HORN	
		1	**2H-3922**	1	LOCKWASHER	
		1	**6V-8370**	1	NUT-HEX (3/4-32-THD)	
		1	**3E-3365**	1	WEDGE-RECEPTACLE LOCK (2-PIN)	
		1	**7T-9515**	1	KNOB-HORN	
		1	**3B-4501**	1	LOCKWASHER (4.4X5.8X1-MM THK)	
		1	**5L-7200**	1	SCREW (8-32X0.375-IN)	
		1	**9X-0199**	1	BOOT-SWITCH	
		1	**9X-3401**	2	PIN-CONNECTOR	
		1	**102-8802**	1	KIT-RECEPTACLE (2-PIN)	
					(INCLUDES RECEPTACLE AS & WEDGE)	
	21	1	**209-0381**	1	CONVERTER-POWER (24-VOLT TO 12-VOLT) (10 AMPS)	
	22	1	**159-3449**	1	SOCKET AS (12-VOLT POWER OUTLET)	
		1	**3E-3365**	1	WEDGE-RECEPTACLE LOCK (2-PIN)	
		1	**8T-8729**	2	PIN-CONNECTOR	
		1	**102-8802**	1	KIT-RECEPTACLE (2-PIN)	
					(INCLUDES RECEPTACLE AS & WEDGE)	
	23	1	**239-2404**	1	HARNESS AS (RH CONSOLE)	
		1	**102-8802**	2	KIT-RECEPTACLE (2-PIN)	
		1	**102-8804**	1	KIT-RECEPTACLE (4-PIN)	
		1	**102-8805**	2	KIT-RECEPTACLE (6-PIN)	
		1	**102-8801**	1	KIT-RECEPTACLE (12-PIN)	
					(EACH INCLUDES RECEPTACLE AS & WEDGE)	
		1	**110-6845**	2	PLUG AS-CONNECTOR (40-PIN)	
		1	**9G-3695**	224	PLUG (GROMMET SEALING)	
		1	**113-0581**	1	RECEPTACLE AS	

156-9937 **WIRING GP-PLATFORM** ***(contd.)*** **i02029598**

NOTE	REF NO	GRAPHIC REF	PART NUMBER	QTY	PART NAME 1 2 3 4 5 6 (PRODUCT LEVEL)	SEE PAGE
		1	**147-1445**	1	PLUG AS-CONNECTOR (70-PIN)	
		1	**155-2255**	1	KIT-CONNECTING PLUG (12-PIN)	
		1	**155-2265**	2	KIT-CONNECTING PLUG (8-PIN)	
		1	**155-2260**	4	KIT-CONNECTING PLUG (3-PIN)	
		1	**155-2270**	5	KIT-CONNECTING PLUG (2-PIN)	
		1	**155-2274**	5	KIT-CONNECTING PLUG (6-PIN)	
					(EACH INCLUDES PLUG AS & WEDGE)	
		1	**160-7689**	2	PLUG AS-CONNECTOR (70-PIN)	
		1	**160-7690**	1	PLUG AS-CONNECTOR (70-PIN)	
	24	1	**160-0637**	1	HARNESS AS (PEDESTAL)	
		1	**155-2270**	2	KIT-CONNECTING PLUG (2-PIN)	
		1	**102-8807**	1	KIT-CONNECTING PLUG (2-PIN)	
					(EACH INCLUDES PLUG AS & WEDGE)	
		1	**102-8804**	1	KIT-RECEPTACLE (4-PIN)	
		1	**102-8801**	1	KIT-RECEPTACLE (12-PIN)	
					(EACH INCLUDES RECEPTACLE AS & WEDGE)	
		1	**110-6845**	1	PLUG AS-CONNECTOR (40-PIN)	
		1	**110-6846**	1	PLUG AS-CONNECTOR (40-PIN)	
		1	**9G-3695**	33	PLUG (GROMMET SEALING)	
		1	**113-0581**	1	RECEPTACLE AS	
		1	**113-0580**	3	RECEPTACLE AS (40-PIN)	
		1	**113-0582**	1	RECEPTACLE AS (40-PIN)	
		1	**155-2260**	3	KIT-CONNECTING PLUG (3-PIN)	
		1	**155-2270**	1	KIT-CONNECTING PLUG (2-PIN)	
		1	**155-2270**	1	KIT-CONNECTING PLUG (2-PIN)	
		1	**155-2274**	1	KIT-CONNECTING PLUG (6-PIN)	
					(EACH INCLUDES PLUG AS & WEDGE)	
	25	1	**160-0638**	1	HARNESS AS (DASH)	
		1	**155-2270**	1	KIT-CONNECTING PLUG (2-PIN)	
		1	**155-2260**	1	KIT-CONNECTING PLUG (3-PIN)	
		1	**155-2271**	4	KIT-CONNECTING PLUG (4-PIN)	
		1	**155-2274**	3	KIT-CONNECTING PLUG (6-PIN)	
					(EACH INCLUDES PLUG AS & WEDGE)	
		1	**110-6845**	1	PLUG AS-CONNECTOR (40-PIN)	
		1	**3T-3159**	5	SPRING	
		1	**3T-3278**	5	BOOT	
		1	**9G-3695**	5	PLUG (GROMMET SEALING)	
	26	1	**187-5177**	1	HARNESS AS (RH CONSOLE COVER)	
		1	**102-8803**	1	KIT-RECEPTACLE (3-PIN)	
		1	**9G-3695**	6	PLUG (GROMMET SEALING)	
		1	**113-0580**	1	RECEPTACLE AS (40-PIN)	
		1	**155-2255**	1	KIT-CONNECTING PLUG (12-PIN)	
		1	**155-2260**	2	KIT-CONNECTING PLUG (3-PIN)	
		1	**155-2270**	2	KIT-CONNECTING PLUG (2-PIN)	
		1	**155-2271**	1	KIT-CONNECTING PLUG (4-PIN)	
		1	**180-0050**	2	KIT-PLUG (4-PIN)	
					(EACH INCLUDES PLUG AS & WEDGE)	
Y	27	1	*167-7493*	1	WIRING GP-CONSOLE	382
	28	1	**169-4254**	1	CABLE AS	
E		1	**159-8047**		CABLE-ELECTRICAL (00-GA, RED) (68 CM)	
		1	**170-3793**	2	RING-TERMINAL	
		1	**1S-4915**	2	LINER (CONDUIT)	
BE		1	**5P-0695**		CONDUIT	
BE		1	**8T-2225**		TUBE-HEAT SHRINK	
	29	1	**169-4255**	1	CABLE AS	
E		1	**159-8047**		CABLE-ELECTRICAL (00-GA, RED) (73 CM)	
		1	**170-3793**	1	RING-TERMINAL (3/8 IN. OR M10 FASTENER)	
		1	**170-3795**	1	RING-TERMINAL (1/2 IN. OR M12 FASTENER)	
		1	**1S-4915**	2	LINER (CONDUIT)	

156-9937 **WIRING GP-PLATFORM** ***(contd.)*** **i02029598**

NOTE	REF NO	GRAPHIC REF	PART NUMBER	QTY	PART NAME 1 2 3 4 5 6 (PRODUCT LEVEL)	SEE PAGE
BE		1	**5P-0695**		CONDUIT	
BE		1	**8T-2225**		TUBE-HEAT SHRINK	
	30	1	**170-3461**	1	BASE AS-LIGHT	
		1	**102-8802**	1	KIT-RECEPTACLE (2-PIN)	
					(INCLUDES RECEPTACLE AS & WEDGE)	
		1	**3E-3365**	1	WEDGE-RECEPTACLE LOCK (2-PIN)	
		1	**8T-8729**	2	PIN-CONNECTOR	
BD		1	**5P-5623**	2	WIRE (16-GA)	
BD		1	**6V-2689**		TUBE-HEAT SHRINK	
BE		1	**9X-1813**		SLEEVE	
	31	1	**173-6623**	1	WIRE AS	
	32	1	**102-8803**	1	KIT-RECEPTACLE (3-PIN)	
					(INCLUDES RECEPTACLE AS & WEDGE)	
	33	1	**102-8806**	1	KIT-RECEPTACLE (8-PIN)	
					(INCLUDES RECEPTACLE AS & WEDGE)	
	34	1	*3E-9044*	1	SWITCH AS-ROCKER (24-VOLT, SEALED-ILLUMINATED) (THROTTLE CONTROL)	
		1	**105-9149**	1	SWITCH AS (24-VOLT, ILLUMINATED) (THROTTLE CONTROL)	
		1	**6V-1748**	1	ACTUATOR-ROCKER	
		1	**3E-8825**	2	LAMP (24-VOLT) (THROTTLE CONTROL)	
	35	1	**3P-3839**	1	GROMMET	
	36	1	**4M-5281**	5	BOLT (1/4-20X0.75-IN)	
	37	1	**4P-8134**	1	CLIP	
	38	1	**5F-9757**	1	GROMMET	
	39	1	**5M-3062**	3	BOLT (3/8-16X0.75-IN)	
	40	1	**5P-1075**	2	WASHER-HARD (10.2X22.5X3-MM THK)	
	41	1	**5P-6264**	1	GROMMET	
	42	1	**6P-6641**	1	GROMMET	
	43	1	**6V-8801**	2	NUT (3/8-16-THD)	
	44	1	**8T-4205**	7	WASHER-HARD (7.2X14.5X2-MM THK)	
	45	1	**8T-4896**	5	WASHER-HARD (10.2X18.5X2.5-MM THK)	
	46	1	**8T-9367**	2	BOLT (1/4-20X2-IN)	
	47	1	**9X-2498**	4	SCREW-HEX FLANGE (10-24X0.5-IN)	
	48	1	**6T-6066**	1	SWITCH GP-ROCKER (START AID)	
		1	**3L-8187**	2	LOCKWASHER	
		1	**6V-8374**	2	SCREW-MACHINE (6-32X0.25-IN)	
M	49	1	**8T-4191**	2	BOLT (M10X1.5X16-MM)	
BF			**7K-1181**	35	STRAP-CABLE	
BF			**1S-9593**	10	STRAP-CABLE	
BF			**9X-6772**	10	STRAP-CABLE	
BF			**3S-2093**	10	STRAP-CABLE	
F			**131-3916**	1	PLUG AS	
					(CODE PLUG FOR FINGER TIP CONTROL CONSOLE HARNESS)	
F			**102-8805**	1	KIT-RECEPTACLE (6-PIN)	
					(INCLUDES RECEPTACLE AS & WEDGE)	
F			**3E-3383**	1	WEDGE-RECEPTACLE LOCK (6-PIN)	
BDF			**5P-5677**		WIRE-ELECTRICAL (18-GA)	
F			**8T-8729**	2	PIN-CONNECTOR	
F			**8T-8737**	4	PLUG-SEAL	

B-USE AS REQUIRED
D-ORDER BY THE METER
E-ORDER BY THE CENTIMETER
F-NOT SHOWN
M-METRIC PART
Y-SEPARATE ILLUSTRATION

156-9937 **WIRING GP-PLATFORM** ***(contd.)*** **i02029598**

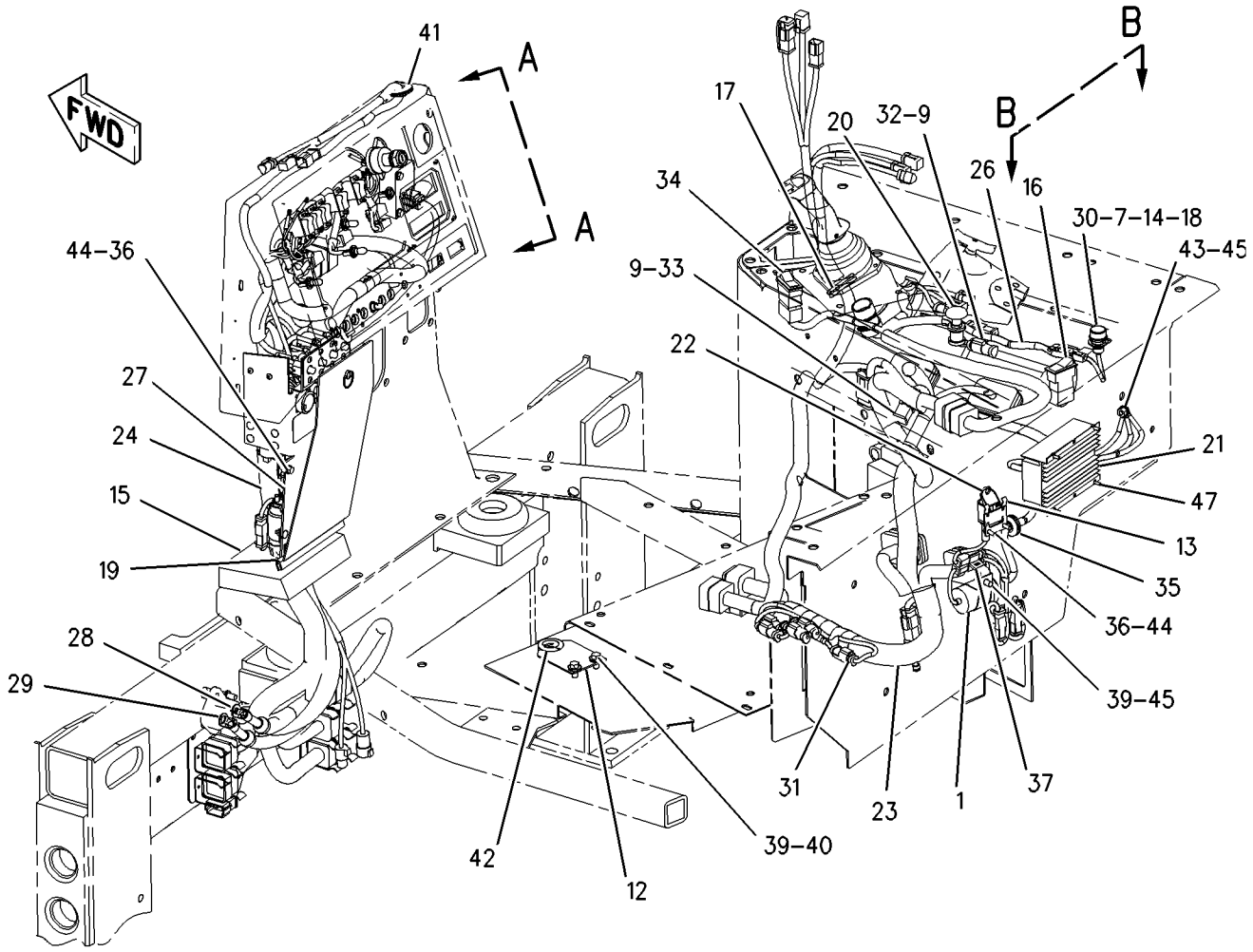

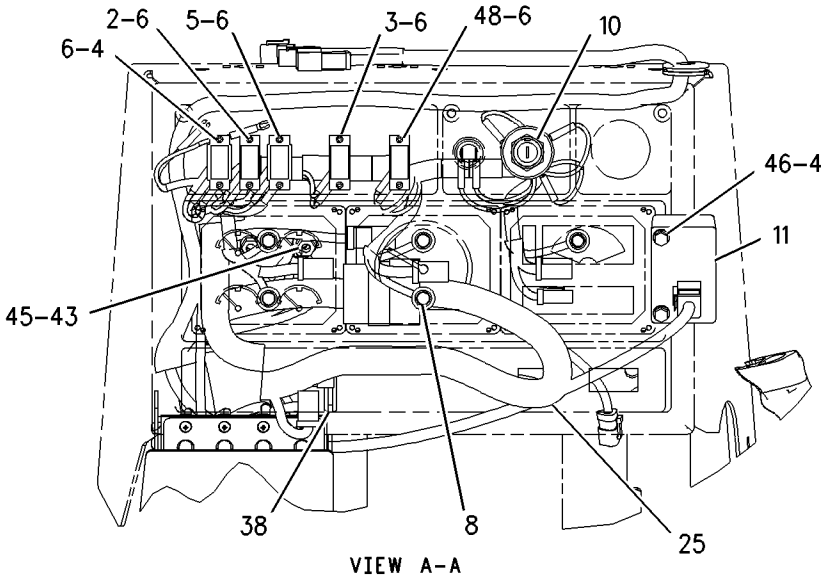

VIEW A-A

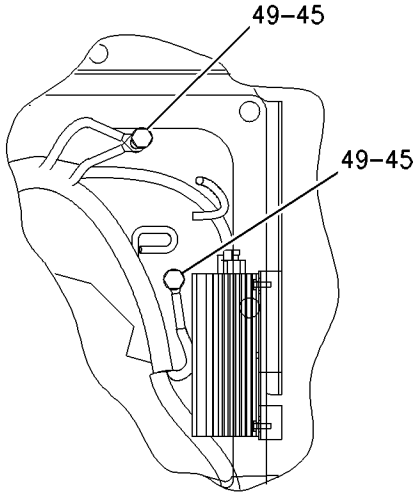

VIEW B-B

GRAPHIC #1 **<END>** g00939839

134-6035 AXLE GP-POWER TRAIN

S/N: 7PZ1-UP

PART OF 112-9167 POWER TRAIN AR

SMCS-3259 **i00737614**

NOTE	REF NO	GRAPHIC REF	PART NUMBER	QTY	PART NAME 1 2 3 4 5 6 (PRODUCT LEVEL)	SEE PAGE
	1	1	**150-1310**	2	SHAFT AS	
					(EACH INCLUDES)	
		1	**149-2408**	1	BEARING-THRUST	
	2	1	**150-1308**	2	SHAFT AS	
					(EACH INCLUDES)	
		1	**8E-0618**	1	BEARING-THRUST	

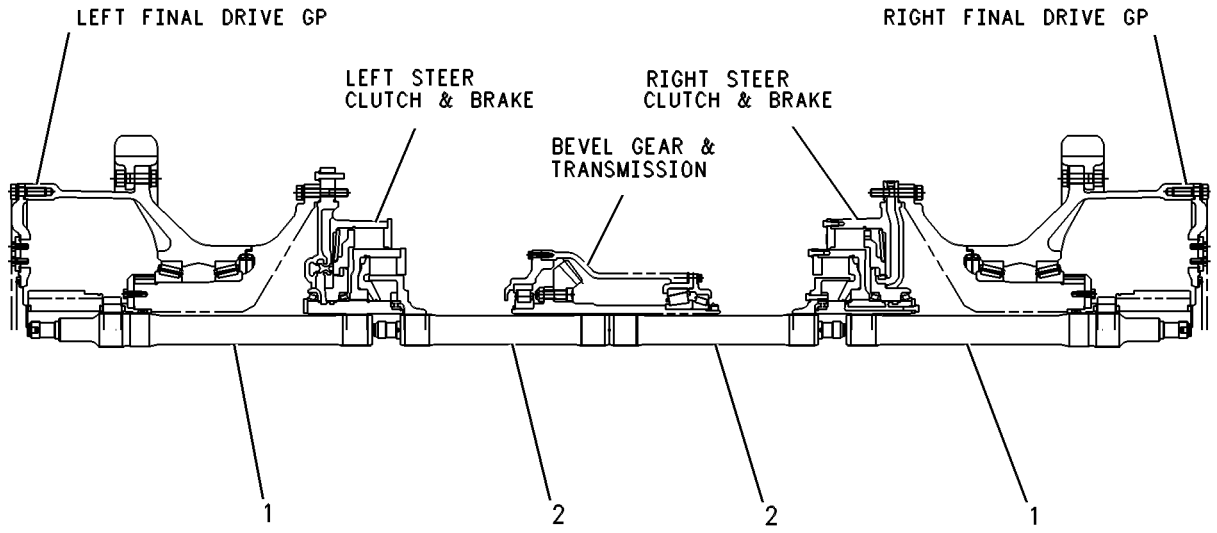

GRAPHIC #1 **<END>** g00272315

116-5920 CASE & PARTS GP-TRANSMISSION

S/N: 1SY1-UP

PART OF 116-9505, 194-3805 TRANSMISSION AR

SMCS-3064 **i01988687**

NOTE	REF NO	GRAPHIC REF	PART NUMBER	QTY	PART NAME 1 2 3 4 5 6 (PRODUCT LEVEL)	SEE PAGE
	1	1	**8E-4928**	1	COVER	
	2	1	**8E-4929**	1	GASKET	
	3	1	**132-9877**	2	ADAPTER	
	4	1	**4K-1388**	2	SEAL-O-RING	
	5	1	**132-9875**	1	COVER AS	
		1	**1F-0750**	6	NUT-WELD (3/8-16THD)	
	6	1	**8E-7249**	1	GASKET	
	7	1	**8M-4986**	2	SEAL-O-RING	
	8	1	**9X-8885**	23	BOLT (3/4-10X2.25 IN)	
	9	1	**5P-8248**	23	WASHER-HARD (20X36.5X3.5MM THK)	
	10	1	**7S-8554**	1	SEAL-O-RING	
	11	1	**5P-1404**	2	ADAPTER-O-RING	
	12	1	**2M-9780**	2	SEAL-O-RING	
	13	1	**6V-3965**	3	FITTING (QUICK DISCONNECT)	
	14	1	**3J-1907**	11	SEAL-O-RING	
	15	1	**6V-0852**	3	CAP-DUST	
	16	1	**9S-4191**	4	PLUG	
	17	1	**0T-0065**	4	BOLT (3/8-16X3.5 IN)	
	18	1	**5M-2894**	8	WASHER-HARD (10.2X18.5X2.5MM THK)	
	19	1	**8M-4992**	2	SEAL-O-RING	
	20	1	**0L-1351**	14	BOLT (3/8-16X0.875 IN)	
	21	1	**3P-7739**	1	MANIFOLD	
	22	1	**143-4621**	1	CASE AS	
		1	**8P-0618**	1	TUBE	
	23	1	**4B-4043**	5	BOLT (5/8-11X1.375 IN)	
	24	1	**131-4094**	1	MANIFOLD	
	25	1	**1H-5728**	1	SEAL-O-RING	
	26	1	**9M-6267**	1	COVER	
	27	1	**0S-1595**	4	BOLT (1/2-13X1.25 IN)	
	28	1	**0S-1621**	4	BOLT (1/2-13X1 IN)	
	29	1	**9M-9647**	4	SEAL-O-RING	
	30	1	**5D-6176**	1	COVER	
	31	1	**9S-1018**	12	WASHER (9.73X19.05X.84MM THK)	
	32	1	**3S-0004**	6	WASHER (0.406X0.728X0.09 IN THK)	
	33	1	**0S-1608**	10	BOLT (3/8-16X3.75 IN)	
	34	1	**8E-1717**	2	ADAPTER	
	35	1	**8E-7253**	2	SLEEVE	
	36	1	**8M-8157**	4	SEAL-O-RING	
	37	1	**6V-8077**	2	ELBOW	

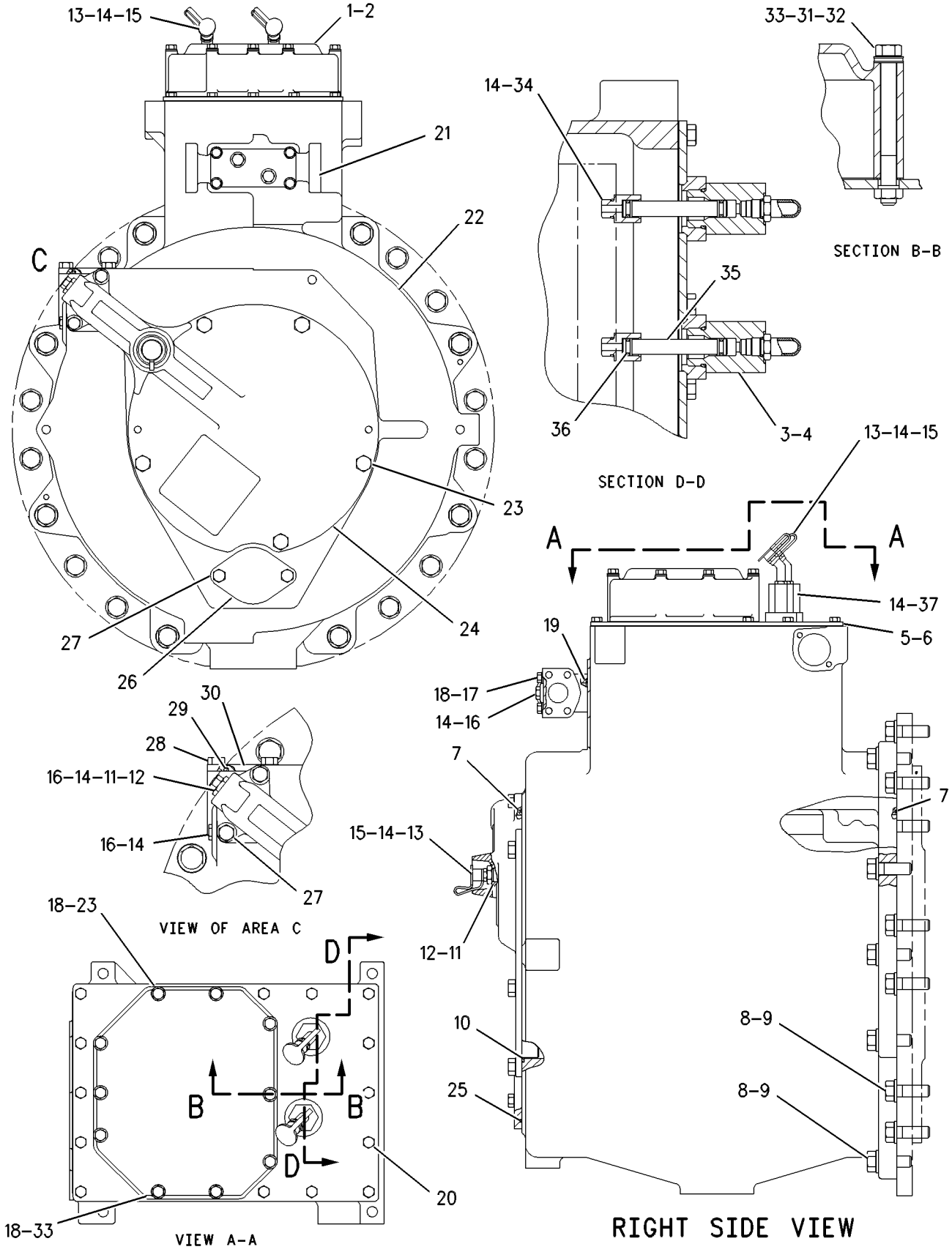

GRAPHIC #1 **<END>** g00384774

POWER TRAIN

115-7411 CONTROL GP-BRAKE

S/N: 7PZ1-UP
PART OF 112-9167 POWER TRAIN AR
TYPE 1

SMCS-4284 **i01743999**

NOTE	REF NO	GRAPHIC REF	PART NUMBER	QTY	PART NAME 1 2 3 4 5 6 (PRODUCT LEVEL)	SEE PAGE
	1	1	**148-3663**	1	HOUSING	
	2	1	**117-9758**	1	SHAFT	
	3	1	**7G-8420**	1	PEDAL	
	4	1	**8T-8919**	1	BOLT (1/2-13X1.75 IN)	
	5	1	**148-3664**	1	LEVER	
	6	1	**1B-8714**	1	KEY-WOODRUFF	
	7	1	**7X-0288**	1	BOLT (3/8-16X1.625 IN)	
	8	1	**8T-4167**	1	WASHER-HARD (26X44X4MM THK)	
	9	1	**9S-6465**	1	BEARING-ROLLER	
	10	1	**8F-5340**	1	SEAL-LIP	
	11	1	**7P-4190**	1	BEARING-ROLLER	
	12	1	**112-7686**	1	HARNESS AS (BRAKE HOUSING)	
	13	1	**6V-7607**	1	WASHER-HARD (20X30X2.5MM THK)	
	14	1	**2J-6356**	1	RING-RETAINING	
	15	1	**9G-5209**	1	BRACKET	
	16	1	**5D-0353**	2	BOLT-LOCKING (3/8-16X1 IN)	
	17	1	**8T-4896**	2	WASHER-HARD (10.2X18.5X2.5MM THK)	
	18	1	**9G-5212**	1	LINK	
	19	1	**7T-0905**	2	BOLT-ANCHOR	
	20	1	**8T-4223**	3	WASHER-HARD (13.5X25.5X3MM THK)	
	21	1	**9G-5211**	2	SPACER (12.95X19.05X9.0MM THK)	
	22	1	**1K-6872**	2	LOCKNUT (1/2-13 THD)	
	23	1	**9G-5213**	1	SPRING	
CY	24	1	**147-1680**	1	SENSOR GP-POSITION (BRAKE)	330
	25	1	**2N-3162**	2	SCREW-MACHINE (10-24X1.25 IN)	
	26	1	**9B-7237**	4	BOLT (3/8-16X1.25 IN)	
	27	1	**148-2712**	1	PLATE	
	28	1	**132-7077**	1	SWITCH AS-LIMIT (BRAKE)	
		1	**6V-8376**	3	SCREW-MACHINE (8-32X0.25 IN)	
		1	**9B-7233**	3	LOCKWASHER	
	29	1	**9X-6281**	2	SCREW-MACHINE (4-40X1 IN)	
	30	1	**096-5962**	4	WASHER-HARD (3.4X7X0.8MM THK)	
	31	1	**148-2713**	1	PLATE	
	32	1	**7J-9018**	2	BOLT-SOCKET HEAD (10-24X.625 IN)	
	33	1	**8T-0328**	2	WASHER-HARD (5.5X10X1MM THK)	
	34	1	**148-2714**	1	SPRING	
	35	1	**9M-5731**	2	RIVET-POP	
M	36	1	**106-5472**	1	SETSCREW-HEX SOCKET (M5X0.8X20MM)	
	37	1	**2B-0858**	1	PLUG-PIPE	
	38	1	**6V-0894**	1	SEAL-O-RING	
	39	1	**5P-1075**	4	WASHER-HARD (10.2X22.5X3MM THK)	

C-CHANGE FROM PREVIOUS TYPE
M-METRIC PART
Y-SEPARATE ILLUSTRATION

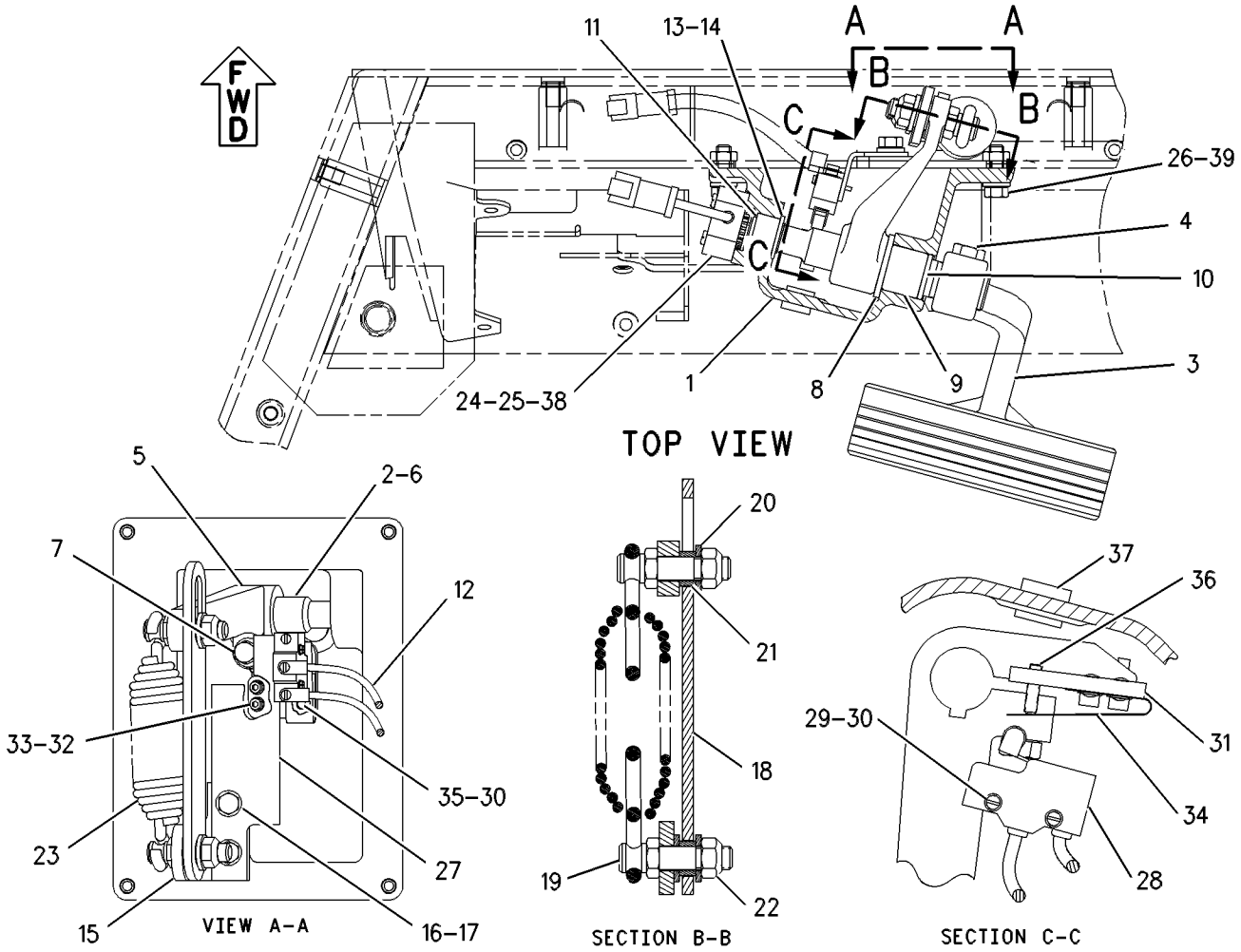

GRAPHIC #1 **<END>** g00578627

115-7411 CONTROL GP-BRAKE

S/N: 7PZ1-UP
PART OF 112-9167 POWER TRAIN AR
TYPE 2

SMCS-4284 **i01988685**

NOTE	REF NO	GRAPHIC REF	PART NUMBER	QTY	PART NAME 1 2 3 4 5 6 (PRODUCT LEVEL)	SEE PAGE
	1	1	**148-3663**	1	HOUSING	
	2	1	**117-9758**	1	SHAFT	
	3	1	**7G-8420**	1	PEDAL	
	4	1	**8T-8919**	1	BOLT (1/2-13X1.75 IN)	
	5	1	**148-3664**	1	LEVER	
	6	1	**1B-8714**	1	KEY-WOODRUFF	
	7	1	**7X-0288**	1	BOLT (3/8-16X1.625 IN)	
	8	1	**8T-4167**	1	WASHER-HARD (26X44X4MM THK)	
	9	1	**9S-6465**	1	BEARING-ROLLER	
	10	1	**8F-5340**	1	SEAL-LIP TYPE	
	11	1	**7P-4190**	1	BEARING-ROLLER	
	12	1	**112-7686**	1	HARNESS AS (BRAKE HOUSING)	
		1	**102-8802**	1	KIT-RECEPTACLE (2-PIN)	
					(INCLUDES RECEPTACLE AS & WEDGE)	
	13	1	**6V-7607**	1	WASHER-HARD (20X30X2.5MM THK)	
	14	1	**2J-6356**	1	RING-RETAINING	
	15	1	**9G-5209**	1	BRACKET	
	16	1	**5D-0353**	2	BOLT-LOCKING (3/8-16X1 IN)	
	17	1	**8T-4896**	2	WASHER-HARD (10.2X18.5X2.5MM THK)	
	18	1	**9G-5212**	1	LINK	
	19	1	**7T-0905**	2	BOLT-ANCHOR	
	20	1	**8T-4223**	3	WASHER-HARD (13.5X25.5X3MM THK)	
	21	1	**9G-5211**	2	SPACER (12.95X19.05X9.0MM THK)	
	22	1	**1K-6872**	2	LOCKNUT (1/2-13 THD)	
	23	1	**9G-5213**	1	SPRING	
CY	24	1	**214-4863**	1	SENSOR GP-POSITION (ROTARY) (BRAKE)	335
	25	1	**2N-3162**	2	SCREW-MACHINE (10-24X1.25 IN)	
	26	1	**9B-7237**	4	BOLT (3/8-16X1.25 IN)	
	27	1	**148-2712**	1	PLATE	
	28	1	**132-7077**	1	SWITCH AS-LIMIT (BRAKE)	
		1	**6V-8376**	3	SCREW-MACHINE (8-32X0.25 IN)	
		1	**9B-7233**	3	LOCKWASHER	
	29	1	**9X-6281**	2	SCREW-MACHINE (4-40X1 IN)	
	30	1	**096-5962**	4	WASHER-HARD (3.4X7X0.8MM THK)	
	31	1	**148-2713**	1	PLATE	
	32	1	**7J-9018**	2	BOLT-SOCKET HEAD (10-24X.625 IN)	
	33	1	**8T-0328**	2	WASHER-HARD (5.5X10X1MM THK)	
	34	1	**148-2714**	1	SPRING	
	35	1	**9M-5731**	2	RIVET-POP	
M	36	1	**106-5472**	1	SETSCREW-HEX SOCKET (M5X0.8X20MM)	
	37	1	**2B-0858**	1	PLUG-PIPE	
	38	1	**6V-0894**	1	SEAL-O-RING	
	39	1	**5P-1075**	4	WASHER-HARD (10.2X22.5X3MM THK)	

C-CHANGE FROM PREVIOUS TYPE
M-METRIC PART
Y-SEPARATE ILLUSTRATION

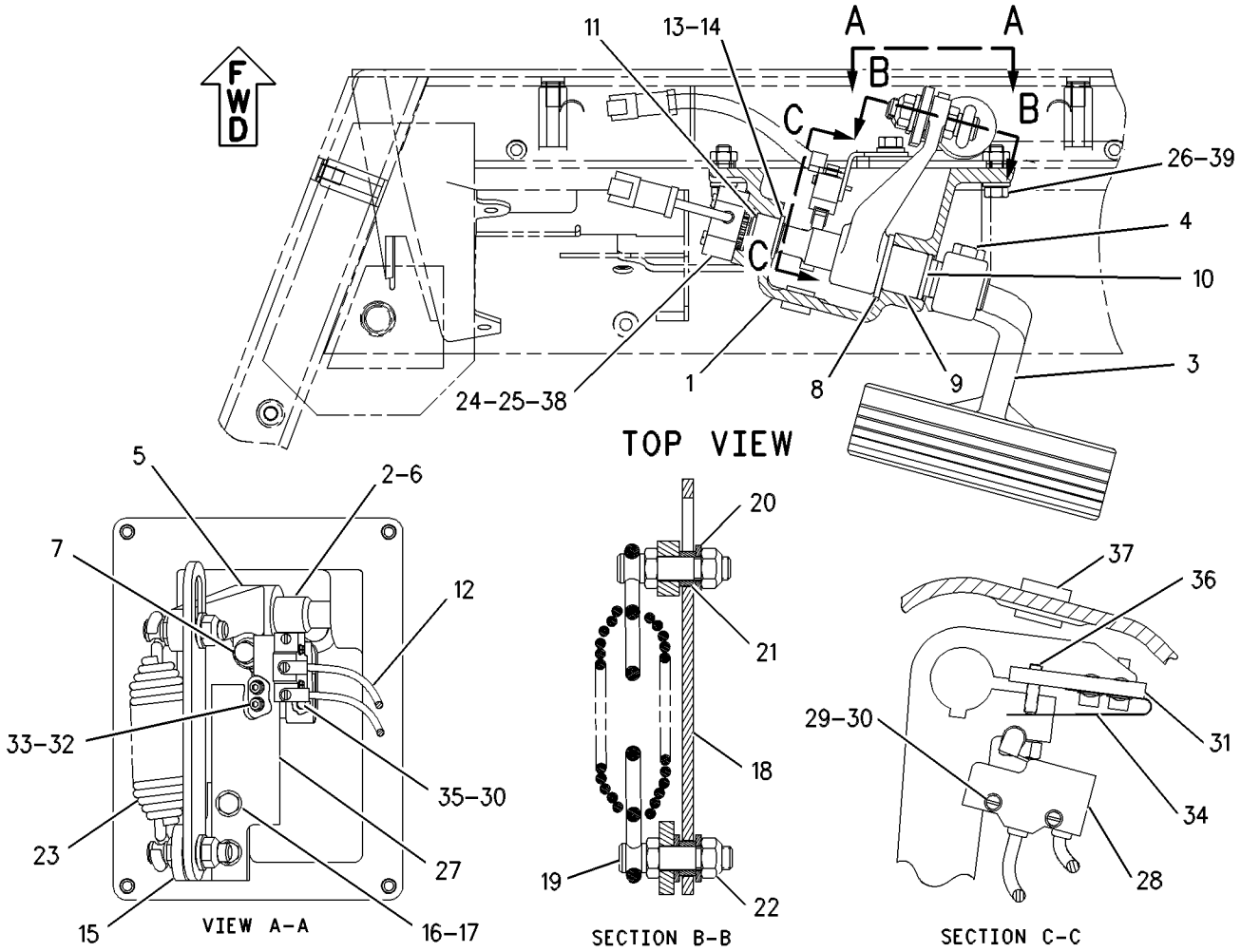

GRAPHIC #1 **<END>** g00578627

145-6480 CONTROL GP-TRANSMISSION

S/N: 1SY1-UP

PART OF 116-9505, 194-3805 TRANSMISSION AR

SMCS-3065 **i01977943**

NOTE	REF NO	GRAPHIC REF	PART NUMBER	QTY	PART NAME 1 2 3 4 5 6 (PRODUCT LEVEL)	SEE PAGE
Y	1	1	*155-2639*	1	VALVE GP-CONTROL	473
	2	1	**6B-1557**	4	BOLT (3/8-16X7.5 IN)	
	3	1	**5M-2894**	4	WASHER-HARD (10.2X18.5X2.5MM THK)	
	4	1	**6P-4977**	2	SLEEVE	
	5	1	**8M-4432**	4	SEAL-O-RING	
	6	1	**141-8466**	1	RETAINER	
	7	1	**8L-5922**	1	BOLT-LOCKING (5/16-18X0.563 IN)	
	8	1	**104-6729**	1	RETAINER	
	9	1	**104-6730**	1	GASKET	
	10	1	**034-3557**	2	BOLT-LOCKING (3/8-16X1.125 IN)	

Y-SEPARATE ILLUSTRATION

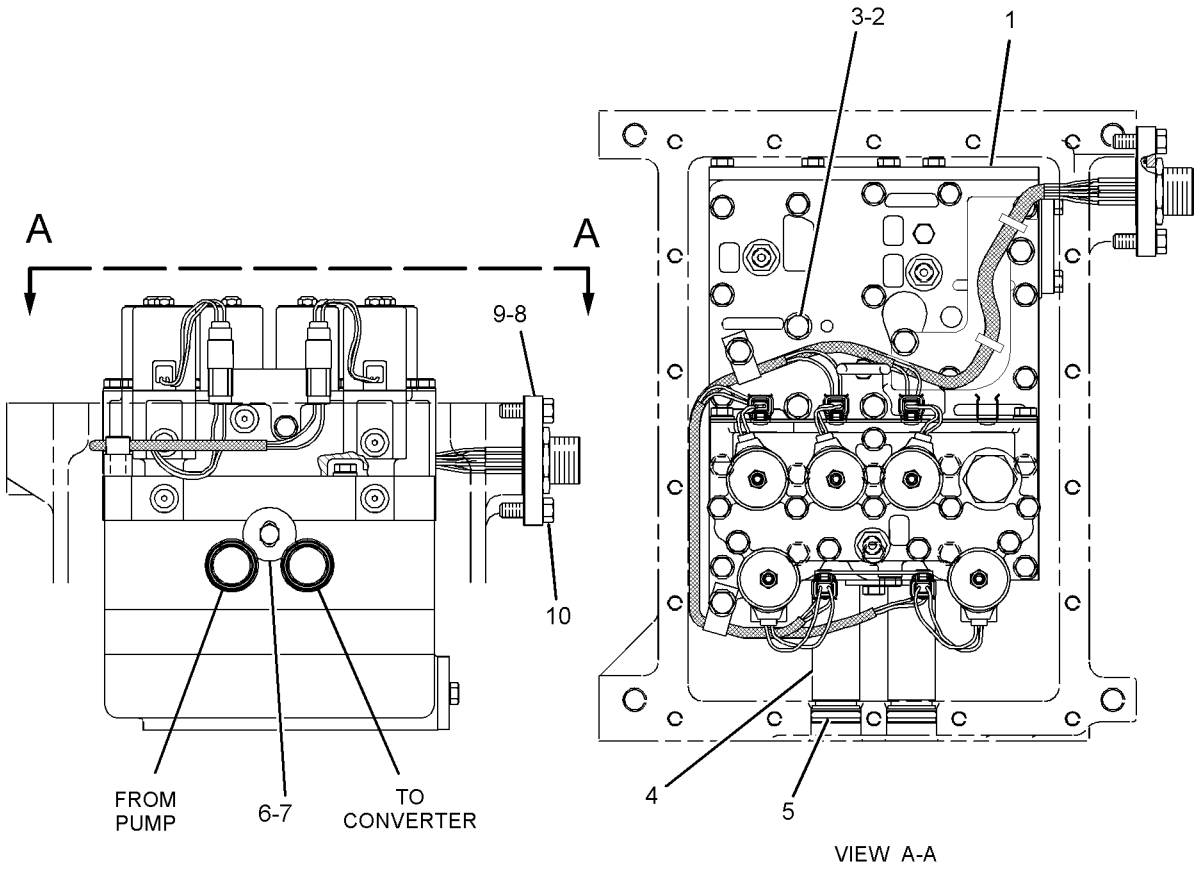

GRAPHIC #1 **<END>** g01025956

127-4487 COOLER GP-TRANSMISSION OIL

S/N: 7PZ1-744

PART OF 155-5557 INSTALLATION AR-ENGINE

SMCS-1375 **i01421257**

NOTE	REF NO	GRAPHIC REF	PART NUMBER	QTY	PART NAME 1 2 3 4 5 6 (PRODUCT LEVEL)	SEE PAGE
	1	1	**5G-6504**	8	LUG	
	2	1	**121-5746**	2	GASKET	
R	3	1	**126-6059**	1	CORE AS-TRANSMISSION COOLER	
	4	1	**137-8198**	2	SUPPORT AS	
	5	1	**137-8199**	4	CLIP	
	6	1	**137-8212**	1	PLATE	
	7	1	**5C-6565**	3	BOLT (1/2-13X1.25 IN)	
	8	1	**5P-1076**	2	WASHER-HARD (13.5X30X4MM THK)	
	9	1	**6V-8188**	2	NUT (1/2-13 THD)	
	10	1	**8C-4436**	1	BOLT (1/2-13X1.375 IN)	
	11	1	**8T-4223**	16	WASHER-HARD (13.5X25.5X3MM THK)	
	12	1	**8T-4835**	8	BOLT (1/2-13X2 IN)	
	13	1	**8T-8919**	2	BOLT (1/2-13X1.75 IN)	

R-REMFG PART MAY BE AVAILABLE

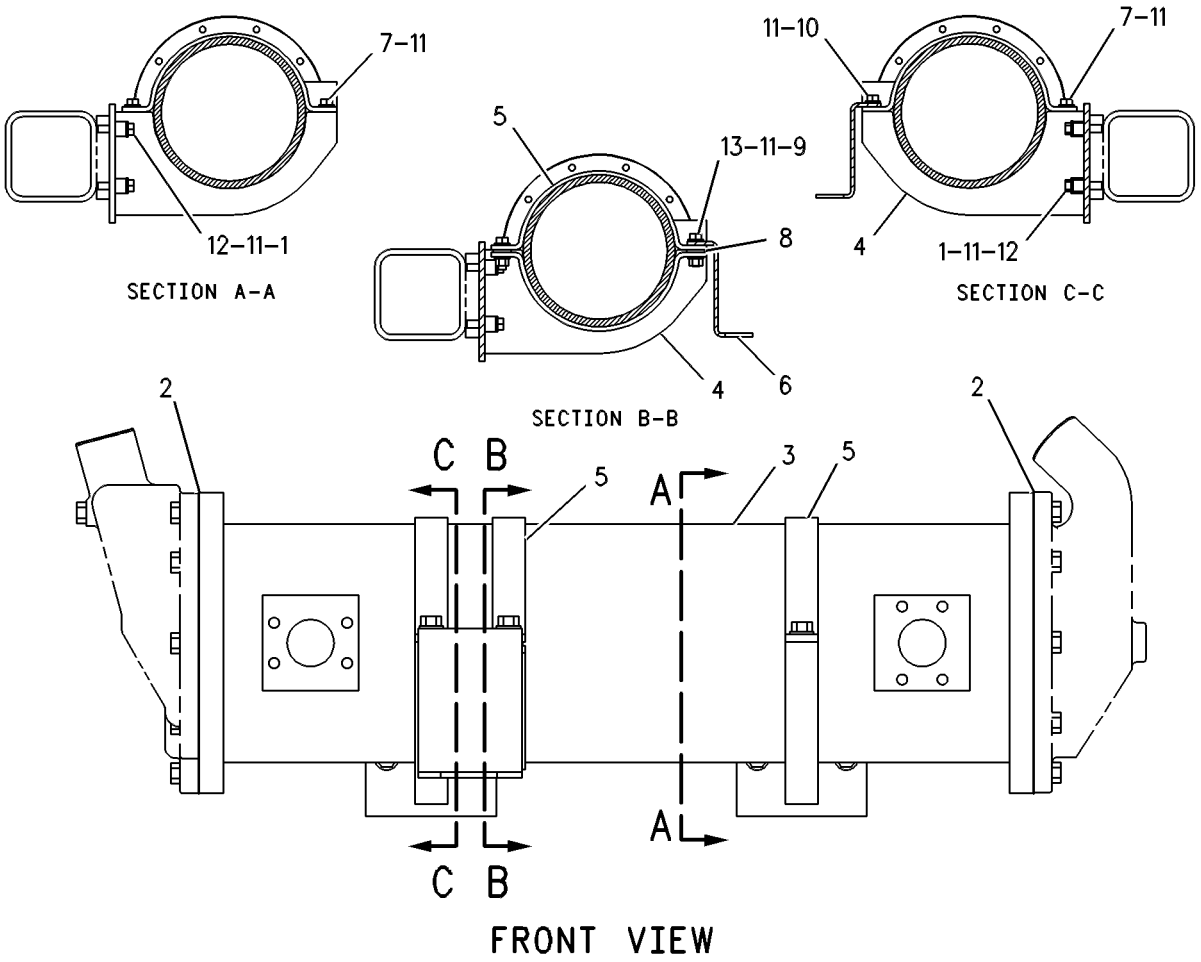

GRAPHIC #1 **<END>** g00273043

127-4487 COOLER GP-TRANSMISSION OIL

S/N: 7PZ745-UP

PART OF 155-5557 INSTALLATION AR-ENGINE

SMCS-1375 **i02023898**

NOTE	REF NO	GRAPHIC REF	PART NUMBER	QTY	PART NAME 1 2 3 4 5 6 (PRODUCT LEVEL)	SEE PAGE
	1	1	**5G-6504**	8	LUG	
	2	1	**121-5746**	2	GASKET	
C	3	1	**243-5761**	1	CORE AS-OIL COOLER	
	4	1	**137-8198**	2	SUPPORT AS	
	5	1	**137-8199**	4	CLIP	
	6	1	**137-8212**	1	PLATE	
	7	1	**5C-6565**	3	BOLT (1/2-13X1.125-IN)	
	8	1	**5P-1076**	2	WASHER-HARD (13.5X30X4-MM THK)	
	9	1	**6V-8188**	2	NUT (1/2-13-THD)	
	10	1	**8C-4436**	1	BOLT (1/2-13X1.375-IN)	
	11	1	**8T-4223**	16	WASHER-HARD (13.5X25.5X3-MM THK)	
	12	1	**8T-4835**	8	BOLT (1/2-13X2-IN)	
	13	1	**8T-8919**	2	BOLT (1/2-13X1.75-IN)	

C-CHANGE FROM PREVIOUS TYPE

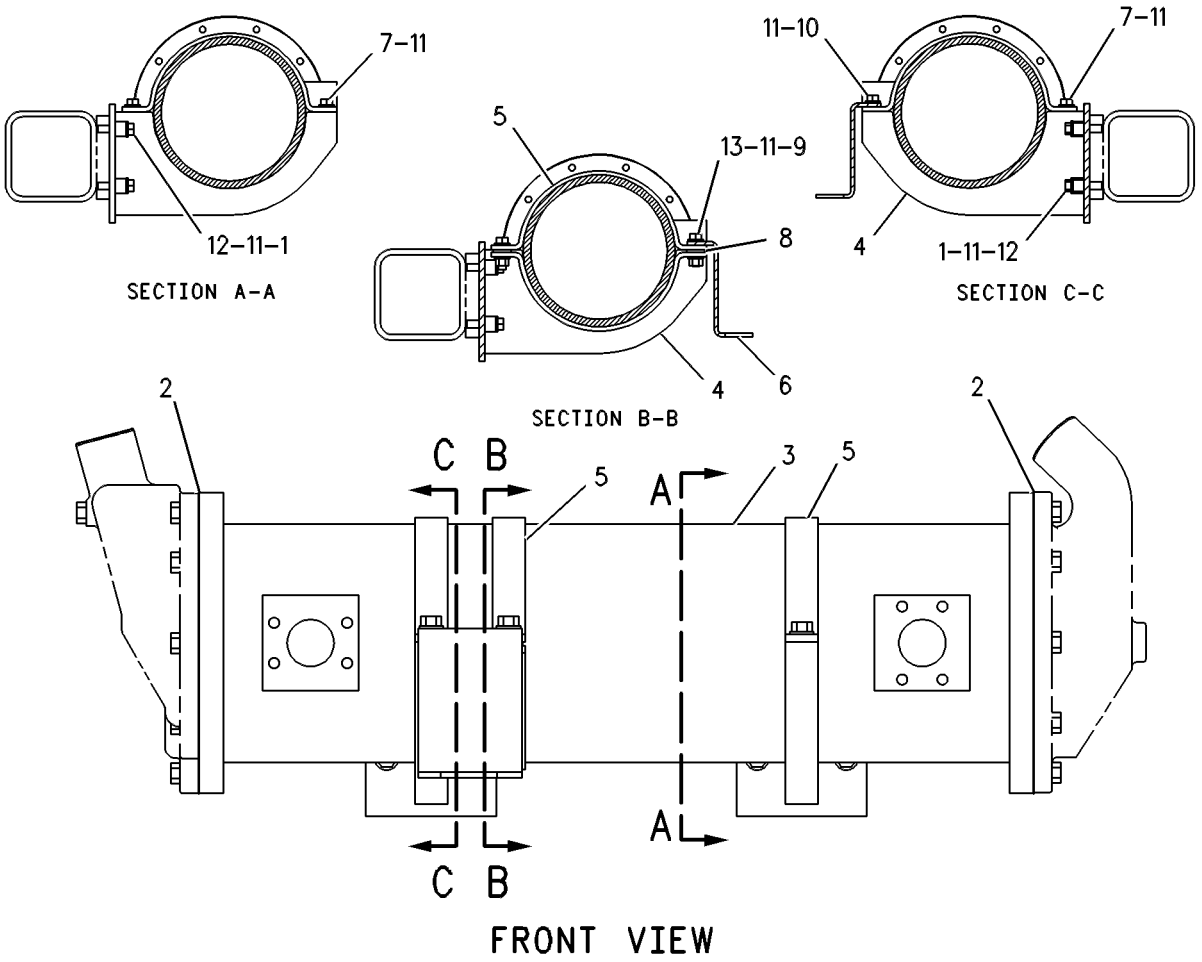

GRAPHIC #1 **<END>** g00273043

125-6511 COUPLING GP-PUMP—POWER TRAIN

S/N: 7PZ1-UP

PART OF 112-9167 POWER TRAIN AR

SMCS-5062 **i01692375**

NOTE	REF NO	GRAPHIC REF	PART NUMBER	QTY	PART NAME 1 2 3 4 5 6 (PRODUCT LEVEL)	SEE PAGE
	1	1	**156-5903**	1	TUBE AS	
	2	1	**8T-2501**	6	BOLT (3/8-16X2 IN)	
	3	1	**8T-4896**	12	WASHER-HARD (10.2X18.5X2.5MM THK)	
	4	1	**5S-7383**	6	BOLT (3/8-16X1.75 IN)	
	5	1	**3E-4880**	2	COUPLING AS	
					(EACH INCLUDES)	
	6	1	**6Y-2130**	3	BUSHING AS	
					(EACH INCLUDES)	
	7	1	**8E-5170**	1	SLEEVE	
	8	1	**3E-4876**	3	BUSHING AS	
					(EACH INCLUDES)	
	9	1	**3E-4875**	1	SLEEVE	

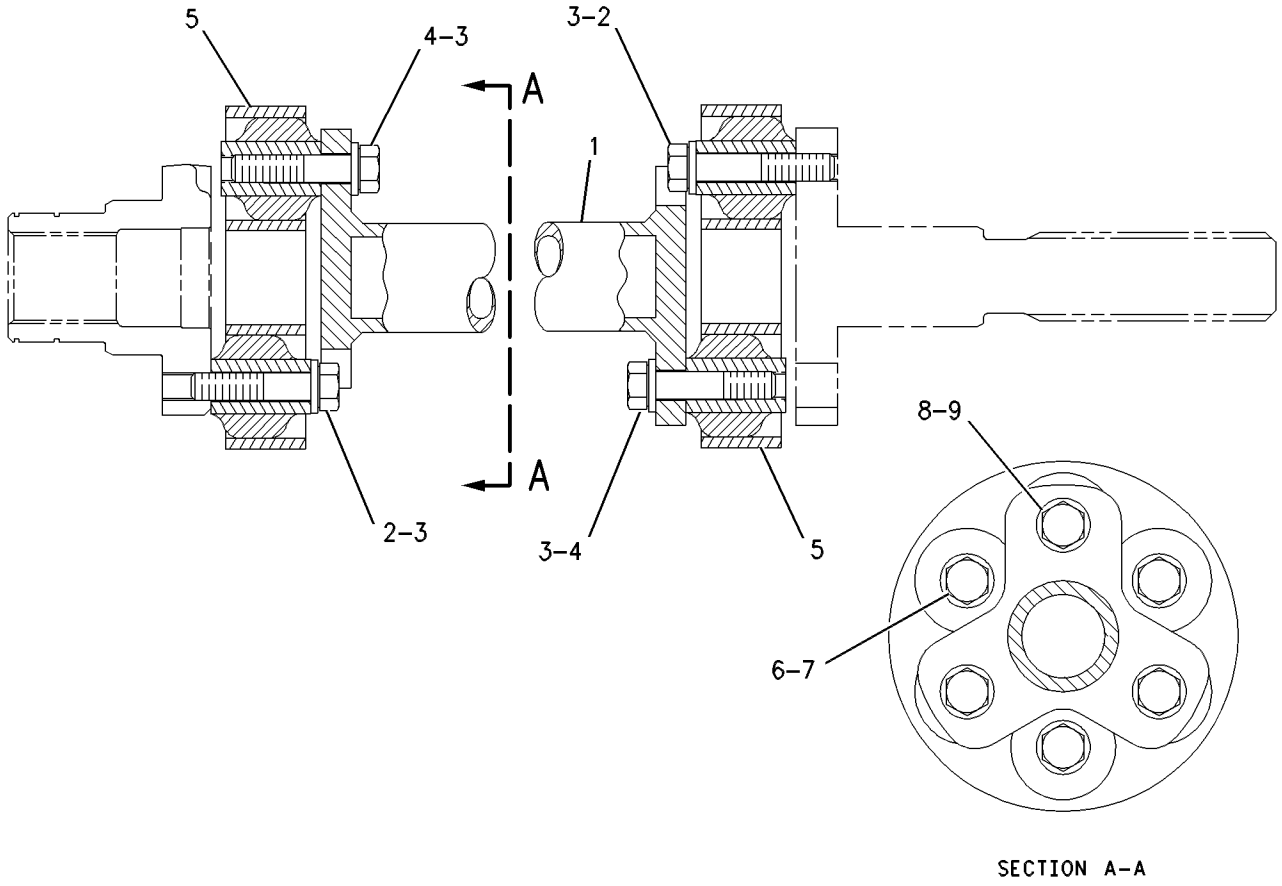

GRAPHIC #1 **<END>** g00356076

106-4150 DRAIN GP-ECOLOGY–TORQUE CONVERTER

S/N: 7PZ1-UP

PART OF 121-0030 TORQUE CONVERTER GP

SMCS-3100 **i01590582**

NOTE	REF NO	GRAPHIC REF	PART NUMBER	QTY	PART NAME 1 2 3 4 5 6 (PRODUCT LEVEL)	SEE PAGE
	1	1	**4N-3808**	1	PIN-SPRING	
	2	1	**5P-9658**	1	SEAL-O-RING	
A	3	1	**2H-3931**	1	SEAL-O-RING	

A-NOT PART OF THIS GROUP

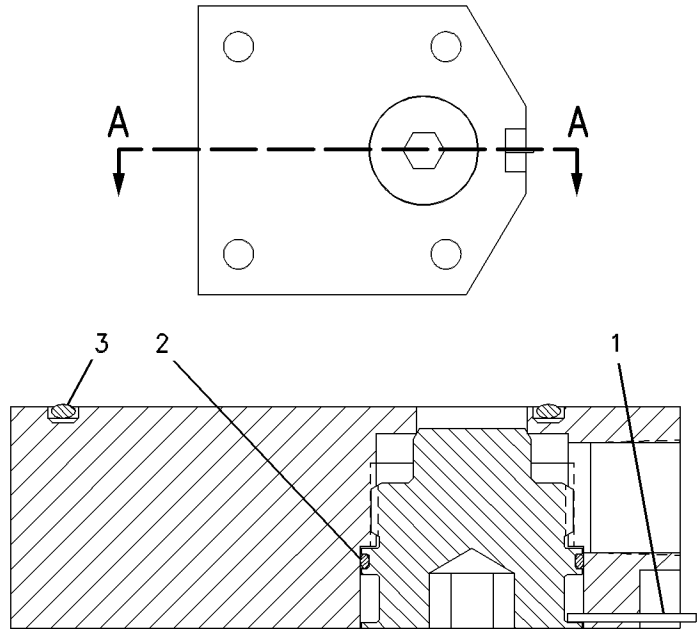

SECTION A-A

GRAPHIC #1 **<END>** g00543496

133-1301 FILTER GP-OIL–TRANSMISSION

S/N: 7PZ1-UP
WITH HOUSING
PART OF 127-7480 LINES GP-POWER TRAIN OIL

SMCS-3004, 3067 **i01988682**

NOTE	REF NO	GRAPHIC REF	PART NUMBER	QTY	PART NAME 1 2 3 4 5 6 (PRODUCT LEVEL)	SEE PAGE
	1	1	**7B-3235**	5	BOLT (1/2-13X1.375 IN)	
	2	1	**9S-4191**	1	PLUG	
	3	1	**3J-1907**	1	SEAL-O-RING	
	4	1	**133-1321**	1	COVER AS	
		1	**143-4601**	1	STUD-TAPERLOCK	
	5	1	**2K-4472**	1	SEAL-O-RING	
	6	1	**6D-9157**	1	SEAL-O-RING	
	7	1	**202-9709**	1	HOUSING AS-FILTER (TRANSMISSION)	
	8	1	**132-8876**	2	FILTER ELEMENT AS-OIL (HYDRAULIC) (TRANSMISSION)	
	9	1	**202-8057**	1	RETAINER	
	10	1	**4L-4986**	1	LOCKNUT (7/8-14 THD)	
	11	1	**9S-4183**	1	PLUG (TRANSMISSION FILTER)	
	12	1	**3D-2824**	1	SEAL-O-RING (TRANSMISSION FILTER)	
	13	1	**133-1299**	1	RETAINER	
	14	1	**133-2198**	1	SPRING	
	15	1	**7M-1297**	1	SPRING	
	16	1	**9S-8010**	1	PLUG	
	17	1	**9S-4182**	1	PLUG	
	18	1	**3J-7354**	1	SEAL-O-RING	
	21	1	**2S-4078**	1	SEAL-O-RING	
	22	1	**7G-4998**	1	SPOOL-BYPASS	
	23	1	**8C-3446**	1	VALVE AS-FLUID SAMPLING	
	24	1	**6V-5048**	1	SEAL-O-RING	
	25	1	**8C-3447**	1	CAP-DUST	

133-1301 **FILTER GP-OIL** ***(contd.)*** **i01988682**

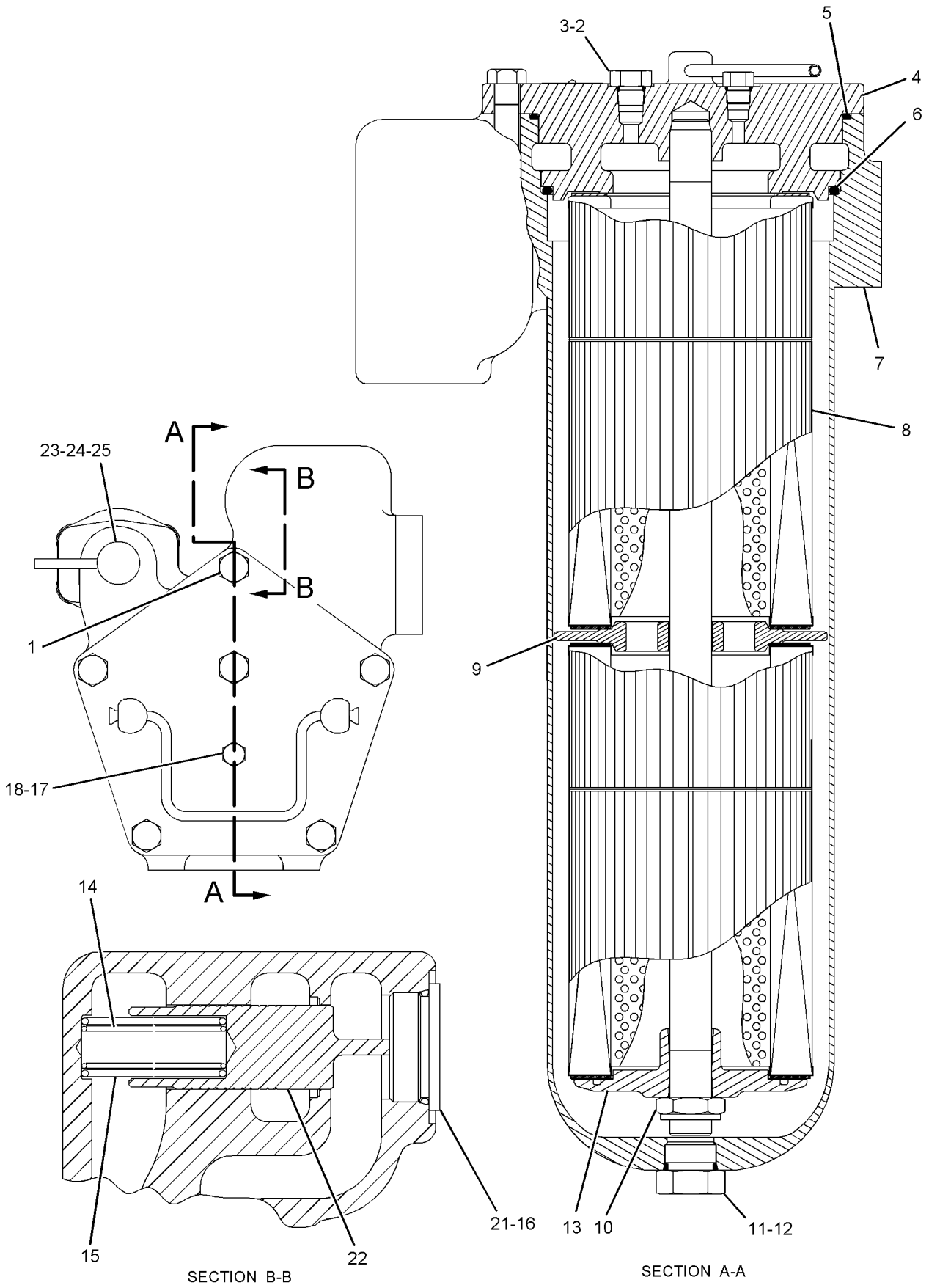

GRAPHIC #1 **<END>** g01027369

176-1223 FINAL DRIVE GP*R

S/N: 7PZ1-UP

SMCS-4050 **i01988683**

NOTE	REF NO	GRAPHIC REF	PART NUMBER	QTY	PART NAME 1 2 3 4 5 6 (PRODUCT LEVEL)	SEE PAGE
	1	1,2	**5P-4057**	1	SEAL-O-RING	
R	2	1,2	**134-5994**	1	HUB-SUPPORT	
	3	1,2	**134-6032**	1	BEARING-THRUST	
	4	1,2	**124-2377**	1	SEAL-LIP TYPE	
	5	1,2	**139-6870**	1	CONE-SPECIAL TAPERED	
	6	1,2	**9W-1547**	2	CUP-BEARING	
	7	1,2	**199-2807**	1	HUB-SPROCKET	
	8	1,2	**139-6871**	1	CONE-SPECIAL TAPERED	
	9	1,2	**5P-7989**	1	RING-RETAINING	
	10	1,2	**134-5993**	1	HUB-REACTION	
	11	1,2	**3P-6349**	4	RING-LOCK	
	12	1,2	**164-9921**	8	CUP-SPECIAL TAPERED	
	13	1,2	**164-9920**	8	CONE-SPECIAL TAPERED	
	14	1,2	**153-6332**	1	GEAR-RING (74 TEETH)	
	15	1,2	**7X-0408**	35	BOLT (1-8X3.5 IN)	
	16	1,2	**7X-0576**	35	WASHER-HARD (28X44.5X6MM THK)	
	17	1,2	**124-0504**	8	CUP-TAPERED	
	18	1,2	**124-0503**	8	CONE	
	19	1,2	**134-5996**	1	CARRIER-PLANETARY	
	20	1,2	**030-7335**	32	BOLT-LOCKING (5/8-11X1.5 IN)	
	21	1,2	**3P-6375**	4	RETAINER	
	22	1,2	**8T-3279**	4	SEAL-QUAD RING	
	23	1,2	**3S-3074**	1	SEAL-O-RING	
	24	1,2	**203-8474**	1	COVER	
	25	1,2	**134-6036**	1	RETAINER	
	26	1,2	**5P-1702**	1	RING-RETAINING	
	27	1,2	**134-5997**	1	CARRIER-PLANETARY	
	28	1,2	**8T-8917**	4	BOLT (1/2-13X1.25 IN)	
	29	1,2	**110-2653**	1	BEARING-SLEEVE	
	30	1,2	**207-6936**	1	GEAR-SUN (18 TEETH)	
	31	1,2	**3D-3295**	1	SEAL-O-RING	
	32	1,2	**5F-0304**	1	PLUG-DRAIN (FINAL DRIVE)	
	33	1,2	**1S-3888**	1	WASHER-PLUG	
	34	1,2	**3H-3385**	1	SEAL-O-RING (FINAL DRIVE OIL DRAIN)	
	35	1,2	**5F-7054**	1	SEAL-O-RING	
	36	1,2	**134-6033**	4	RETAINER	
	37	1,2	**207-6937**	4	GEAR-PLANET (27 TEETH)	
	38	1,2	**134-6030**	4	SHAFT-PLANETARY	
	39	1,2	**207-6939**	4	GEAR-PLANET (25 TEETH)	
	40	1,2	**6T-0609**	20	PIN	
	41	1,2	**143-4758**	4	SHAFT-PLANETARY	
	42	1,2	**207-6938**	1	GEAR-SUN (22 TEETH)	
	43	1,2	**172-5093**	1	SEAL GP-DUO-CONE	
		1	**137-4344**	2	RING-TORIC	
	44	1,2	**6T-0611**	1	WASHER (102X148X9.3MM THK)	
	45	1,2	**6V-3298**	1	PLUG-MAGNETIC (FINAL DRIVE)	
	46	1,2	**2S-4078**	1	SEAL-O-RING	
	47	1,2	**110-2652**	2	RING-THRUST	
	48	1,2	**8T-4223**	4	WASHER-HARD (13.5X25.5X3MM THK)	

R-REMFG PART MAY BE AVAILABLE

176-1223 FINAL DRIVE GP *(contd.)*

i01988683

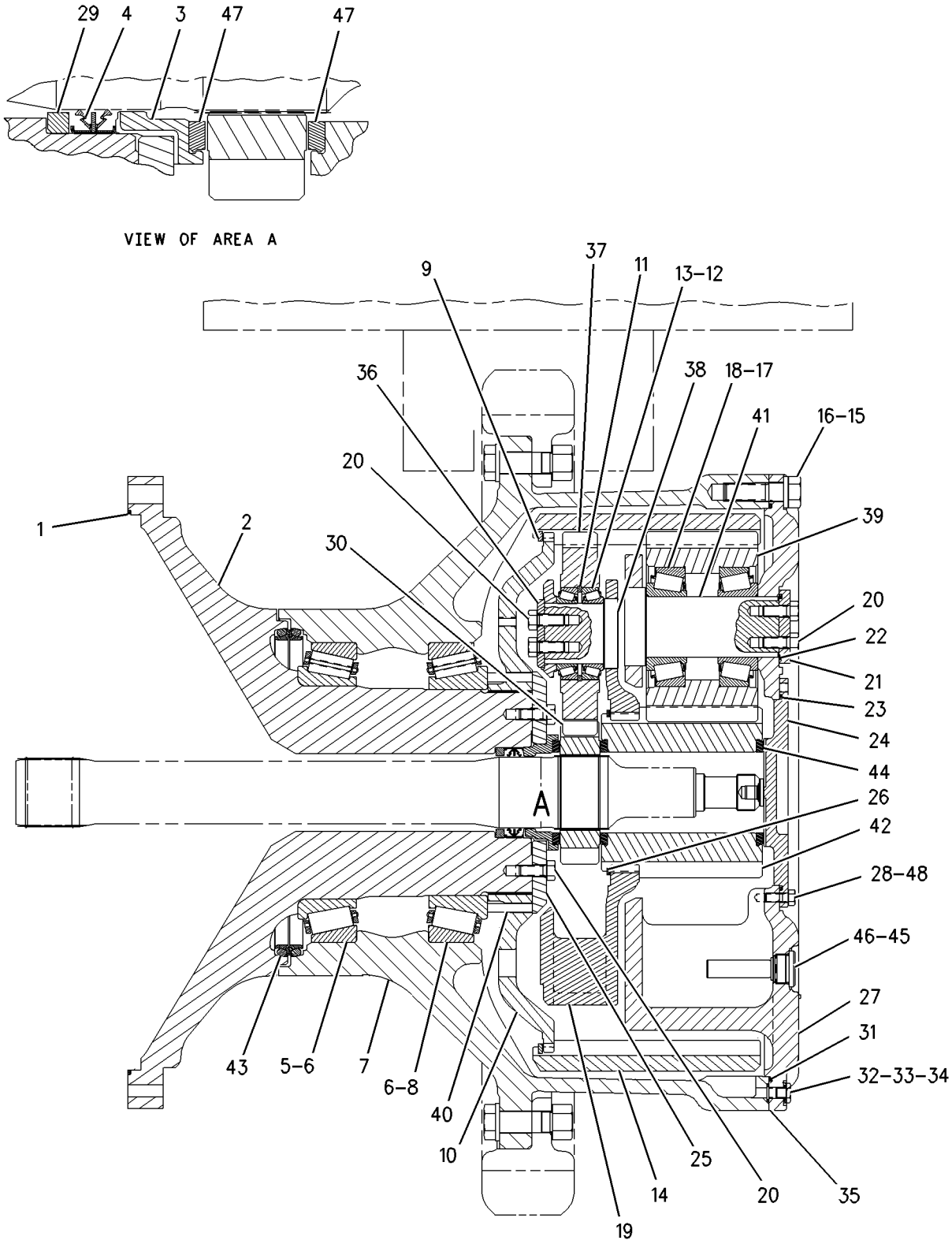

GRAPHIC #1

g01000909

176-1223 FINAL DRIVE GP *(contd.)* **i01988683**

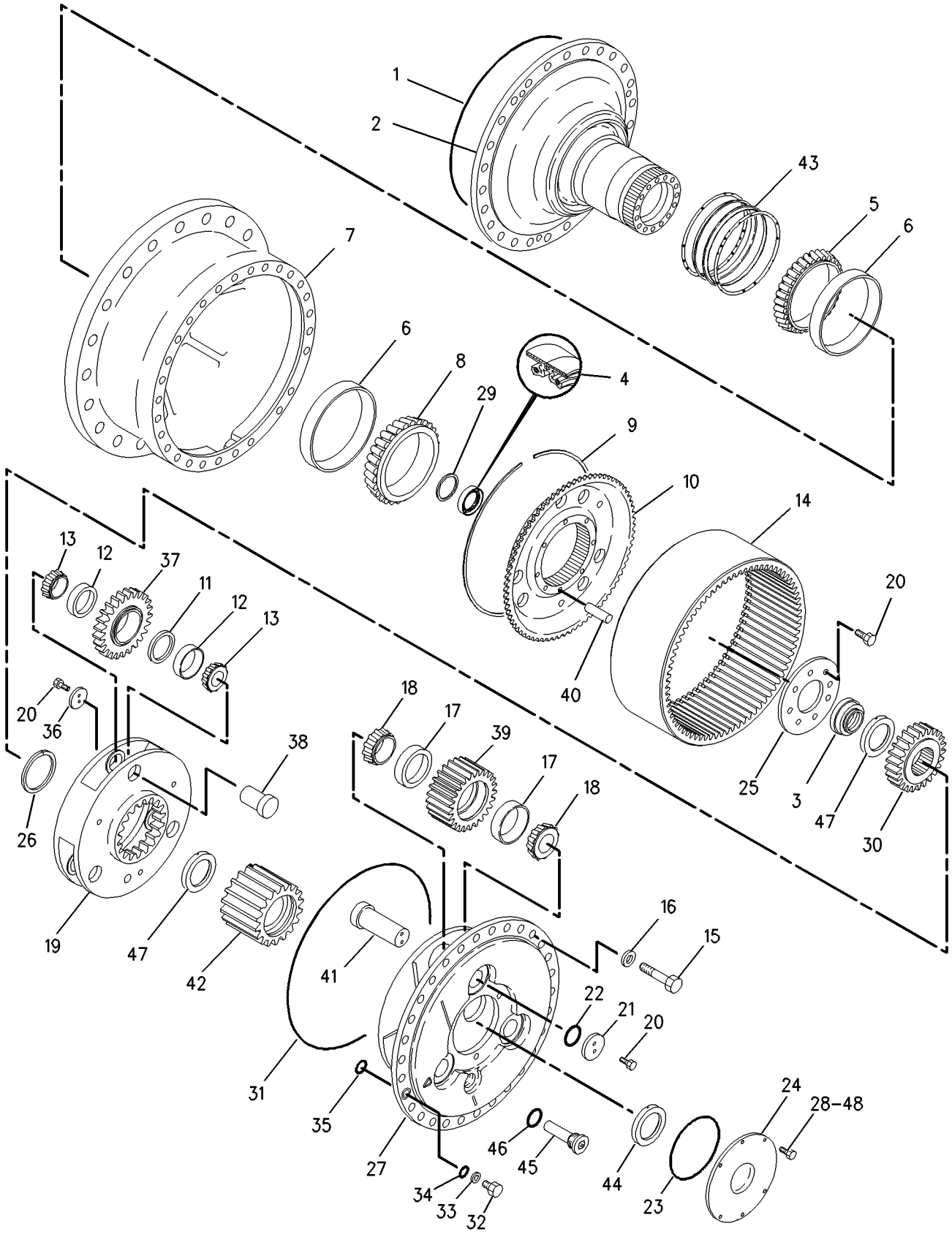

GRAPHIC #2 **<END>** g01000913

176-1236 FINAL DRIVE GP

S/N: 7PZ1-UP

PART OF 112-9167 POWER TRAIN AR

FIELD REPLACEMENT ORDER 176-1223—PAGE 415

SMCS-4050 **i01923397**

NOTE	REF NO	GRAPHIC REF	PART NUMBER	QTY	PART NAME 1 2 3 4 5 6 (PRODUCT LEVEL)	SEE PAGE
Y	1	1,2	*136-6968*	1	SEGMENT GP-SPROCKET	460
	2	1,2	**5P-4057**	1	SEAL-O-RING	
R	3	1,2	**134-5994**	1	HUB-SUPPORT	
	4	1,2	**1D-4643**	40	BOLT (1-8X5.50 IN)	
	5	1,2	**9M-2828**	40	WASHER-HARD (28X44.5X6MM THK)	
	6	1,2	**134-6032**	1	BEARING-THRUST	
	7	1,2	**124-2377**	1	SEAL-LIP TYPE	
	8	1,2	**139-6870**	1	CONE-SPECIAL TAPERED	
	9	1,2	**9W-1547**	2	CUP-BEARING	
	10	1,2	**199-2807**	1	HUB-SPROCKET	
	11	1,2	**139-6871**	1	CONE-SPECIAL TAPERED	
	12	1,2	**5P-7989**	1	RING-RETAINING	
	13	1,2	**134-5993**	1	HUB-REACTION	
	14	1,2	**3P-6349**	4	RING-LOCK	
	15	1,2	**164-9921**	8	CUP-SPECIAL TAPERED	
	16	1,2	**164-9920**	8	CONE-SPECIAL TAPERED	
	17	1,2	**153-6332**	1	GEAR-RING (74 TEETH)	
	18	1,2	**7X-0408**	35	BOLT (1-8X3.5 IN)	
	19	1,2	**7X-0576**	35	WASHER-HARD (28X44.5X6MM THK)	
	20	1,2	**124-0504**	8	CUP-TAPERED	
	21	1,2	**124-0503**	8	CONE-TAPERED	
	22	1,2	**134-5996**	1	CARRIER-PLANETARY	
	23	1,2	**030-7335**	32	BOLT-LOCKING (5/8-11X1.5 IN)	
	24	1,2	**3P-6375**	4	RETAINER	
	25	1,2	**8T-3279**	4	SEAL-QUAD RING	
	26	1,2	**3S-3074**	1	SEAL-O-RING	
	27	1,2	**203-8474**	1	COVER	
	28	1,2	**134-6036**	1	RETAINER	
	29	1,2	**5P-1702**	1	RING-RETAINING	
	30	1,2	**134-5997**	1	CARRIER-PLANETARY	
	31	1,2	**8T-8917**	4	BOLT (1/2-13X1.25 IN)	
	32	1,2	**110-2653**	1	BEARING-SLEEVE	
	33	1,2	**207-6936**	1	GEAR-SUN (18 TEETH)	
	34	1,2	**3D-3295**	1	SEAL-O-RING	
	35	1,2	**5F-0304**	1	PLUG-DRAIN (FINAL DRIVE)	
	36	1,2	**1S-3888**	1	WASHER-PLUG	
	37	1,2	**3H-3385**	1	SEAL-O-RING	
	38	1,2	**5F-7054**	1	SEAL-O-RING	
	39	1,2	**134-6033**	4	RETAINER	
	40	1,2	**207-6937**	4	GEAR-PLANET (27 TEETH)	
	41	1,2	**134-6030**	4	SHAFT-PLANETARY	
	42	1,2	**207-6939**	4	GEAR-PLANET (25 TEETH)	
	43	1,2	**6T-0609**	20	PIN	
	44	1,2	**143-4758**	4	SHAFT-PLANETARY	
	45	1,2	**207-6938**	1	GEAR-SUN (22 TEETH)	
	46	1,2	**172-5093**	1	SEAL GP-DUO-CONE	
		1,2	**137-4344**	2	RING-TORIC	
	47	1,2	**6T-0611**	1	WASHER (102X148X9.3MM THK)	
	48	1,2	**8T-4122**	3	WASHER-HARD (17X32X3.5MM THK)	
	49	1,2	**7X-0350**	3	BOLT (5/8-11X3.50 IN)	
	50	1,2	**2S-4078**	1	SEAL-O-RING	
	51	1,2	**6V-3298**	1	PLUG-MAGNETIC (FINAL DRIVE)	
	52	1,2	**110-2652**	2	RING-THRUST	
	53	1,2	**8T-4223**	4	WASHER-HARD (13.5X25.5X3MM THK)	

R-REMFG PART MAY BE AVAILABLE
Y-SEPARATE ILLUSTRATION

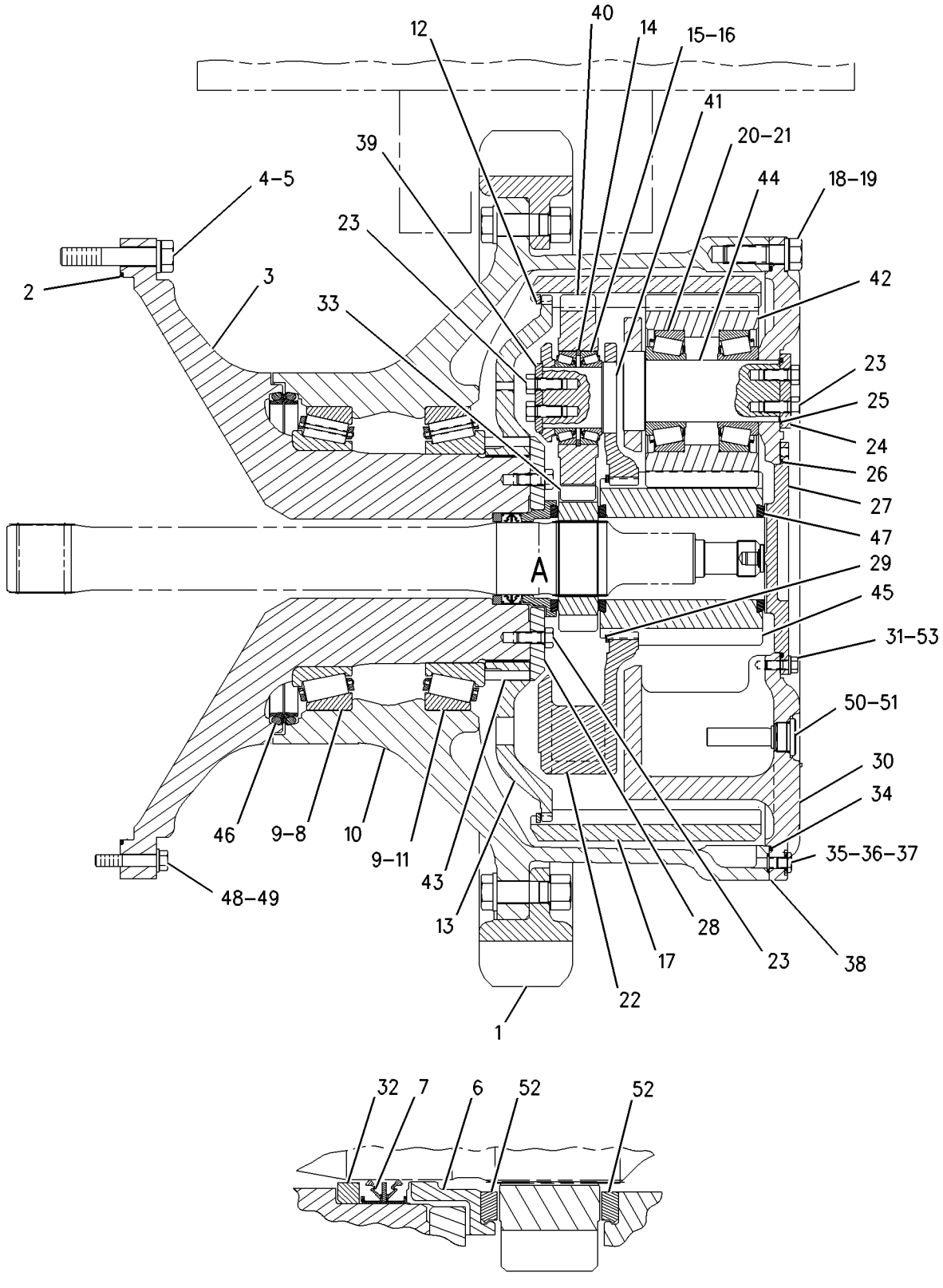

VIEW OF AREA A

GRAPHIC #1 g01000899

176-1236 **FINAL DRIVE GP** ***(contd.)*** **i01923397**

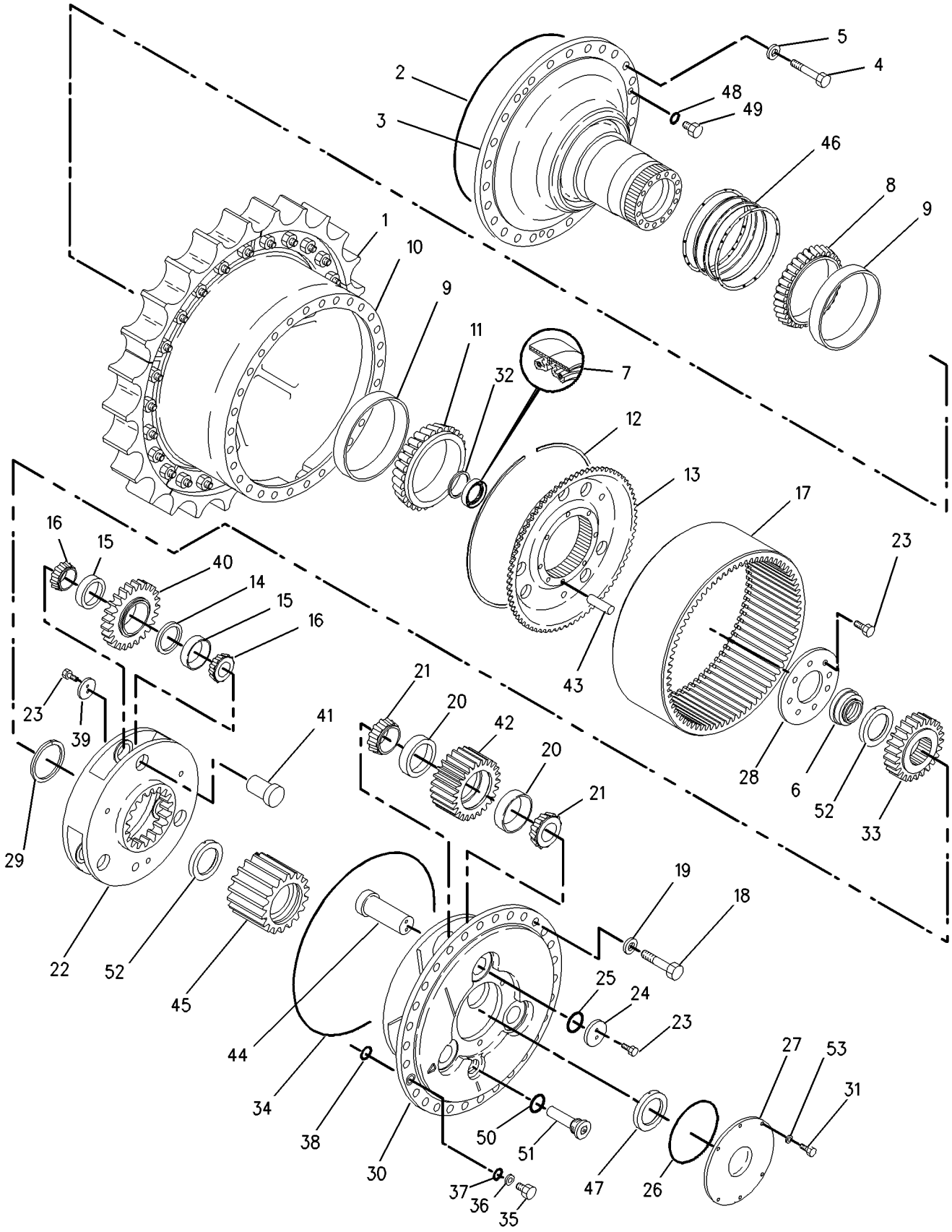

GRAPHIC #2 **<END>** g01000898

POWER TRAIN

116-9492 GEAR GP-BEVEL & TRANSFER

S/N: 1SY1-1146

PART OF 116-9491 TRANSMISSION AR

SMCS-3011 **i01988688**

NOTE	REF NO	GRAPHIC REF	PART NUMBER	QTY	PART NAME 1 2 3 4 5 6 (PRODUCT LEVEL)	SEE PAGE
	1	3	**116-9496**	1	CASE & HOUSING AS	
		3	**1S-9292**	3	DOWEL	
	2	1	**9X-8881**	16	BOLT (5/8-11X2.25 IN)	
		1	**5P-8247**	16	WASHER-HARD (17X32X3.5MM THK)	
	3	3	**151-3258**	1	RING-RETAINING	
B	4	3	**138-0428**	1	SHIM PACK (INCLUDES 9 SHIMS)	
	5	3	**3P-2564**	1	RACE-BEARING OUTER	
	6	3	**116-9502**	1	GEAR-TRANSFER (21 TEETH)	
	7	3	**7S-3004**	1	RING-RETAINING	
	8	3	**3P-2582**	1	BALL BEARING	
	9	3	**1M-9653**	1	RING-RETAINING	
	10	3	**116-9500**	1	CAGE-BEARING	
	11	3	**5P-2545**	1	SEAL-O-RING	
	12	3	**5D-6428**	1	SEAL-O-RING	
	13	3	**119-4132**	1	BEARING AS-SPECIAL	
	14	3	**138-0427**	1	COVER-BEARING	
	15	3	**0S-1590**	8	BOLT (3/8-16X2 IN)	
	16	3	**119-4140**	2	CUP-SPECIAL TAPERED	
	17	3	**119-4139**	2	CONE-SPECIAL TAPERED	
	18	3	**5P-4254**	2	BOLT-LOCKING (5/8-18X1.5 IN)	
	19	3	**119-3373**	1	RETAINER	
B	20	3	**9G-9295**	4	SHIM PACK (INCLUDES 16 SHIMS) (EACH)	
	21	3	**9X-8885**	9	BOLT (3/4-10X2.25 IN)	
	22	3	**5P-8248**	9	WASHER-HARD (20X36.5X3.5MM THK)	
	23	3	**2K-2939**	1	SEAL-O-RING	
	24	3	**116-9494**	1	CAGE-BEARING	
	25	3	**116-9493**	1	SPACER	
	26	3	**7T-8121**	1	GEAR-TRANSFER (27 TEETH)	
	27	3	**112-9802**	1	PINION-BEVEL (21 TEETH)	
	28	3	**119-4131**	1	RACE-SPECIAL ROLLER	
	29	3	**119-4130**	1	BEARING-SPECIAL RACE	
	30	3	**8C-8550**	1	RING-RETAINING	
	31	1	**9S-4191**	1	PLUG	
	32	1	**3J-1907**	1	SEAL-O-RING	
	33	1	**3T-8876**	1	DOWEL	
	34	1,2	**0T-0200**	6	PLUG-CUP	
	35	2	**116-9504**	1	CAGE-BEARING	
	36	2	**2K-7471**	12	LOCKNUT (1-14 THD)	
	37	2	**9S-1367**	12	BOLT (1-14X3.75 IN)	
	38	2	**8T-7583**	1	RING	
	39	2	**119-4135**	1	RACE-BEARING	
	40	2	**119-4136**	1	RACE-ROLLER BEARING	
	41	2	**5P-4143**	34	BOLT-LOCKING (1/2-13X2 IN)	
	42	2	**5P-8245**	34	WASHER-HARD (13.5X25.5X3MM THK)	
	43	2	**141-6346**	1	GEAR-BEVEL (26 TEETH)	
	44	2	**141-6347**	1	SHAFT-BEVEL	
	45	2	**116-9495**	1	CAGE-BEARING	
	46	2	**125-3942**	1	PLUG-PIPE	
	47	2	**119-4133**	1	CONE-SPECIAL TAPERED	
B	48	2	**119-3380**	4	SHIM PACK (INCLUDES 18 SHIMS)	
	49	2	**116-9501**	1	CAGE-BEARING	
	50	2	**119-3711**	1	NUT-BEARING	
	51	2	**119-3381**	1	WASHER-BEARING LOCK	
	52	2	**119-3851**	1	LOCKWASHER	
	53	2	**119-4137**	1	CONE-SPECIAL TAPERED	
	54	2	**1M-6573**	1	CUP-BEARING	

116-9492 GEAR GP-BEVEL & TRANSFER *(contd.)* i01988688

NOTE	REF NO	GRAPHIC REF	PART NUMBER	QTY	PART NAME 1 2 3 4 5 6 (PRODUCT LEVEL)	SEE PAGE
	55	2	**5P-4043**	2	BOLT-LOCKING (1/2-13X1.25 IN)	
	56	2	**178-7586**	1	COVER	
	57	2	**5P-6241**	12	BOLT-LOCKING (5/8-11X2.62 IN)	
	58	2	**119-3376**	1	COVER-BEARING	
	59	3	**8M-5661**	1	SEAL-O-RING	
	60	3	**8M-4447**	1	SEAL-O-RING	
	61	2	**6T-2203**	2	DOWEL	
	62	2,3	**8M-4986**	2	SEAL-O-RING	
	63	3	**6V-6654**	1	BEARING AS	
	64	3	**119-3378**	1	COUPLER AS	
		3	**4S-8541**	1	DOWEL	
	65	2	**6Y-4736**	1	CUP-BEARING	

B-USE AS REQUIRED

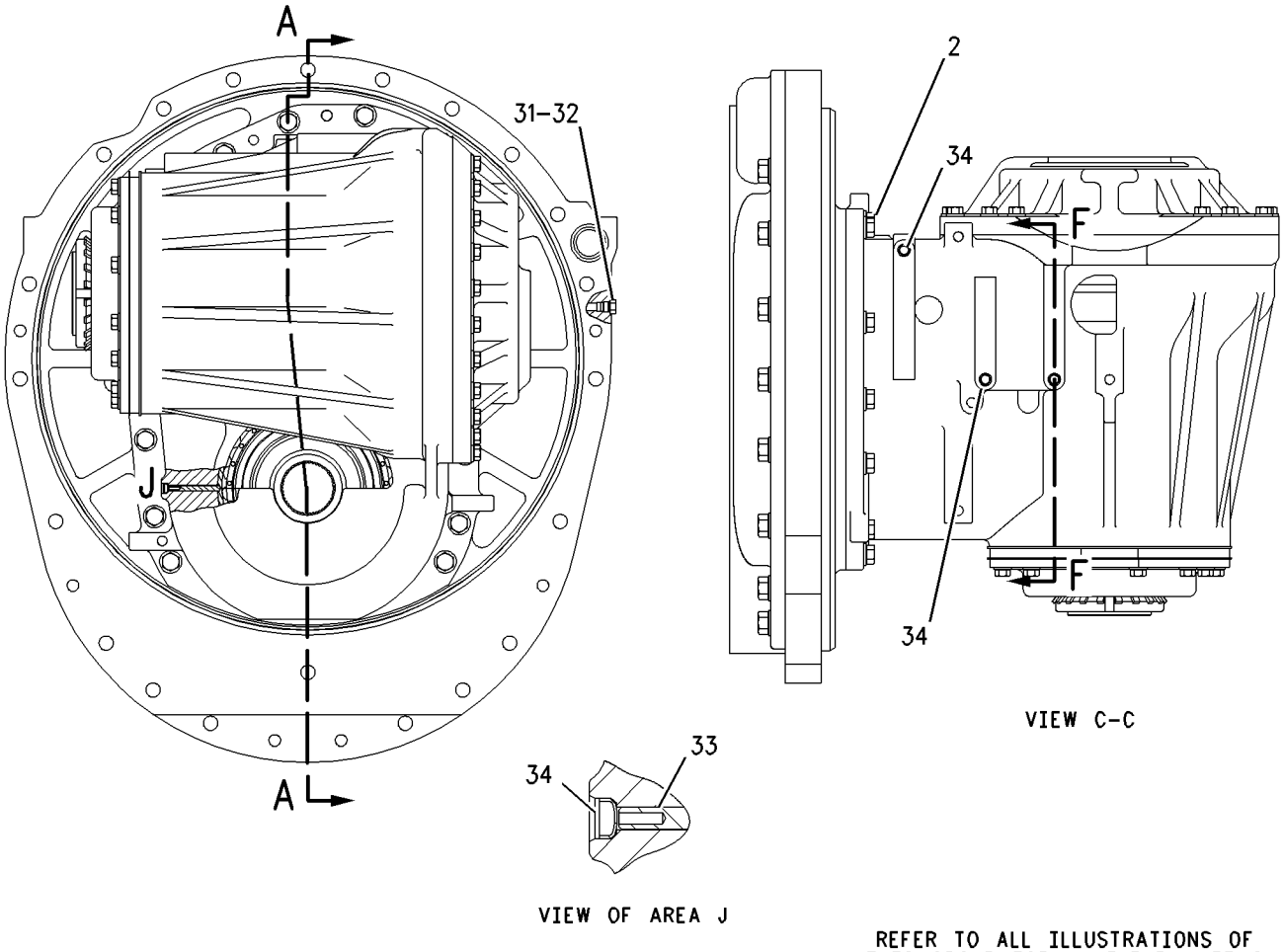

GRAPHIC #1

g00654266

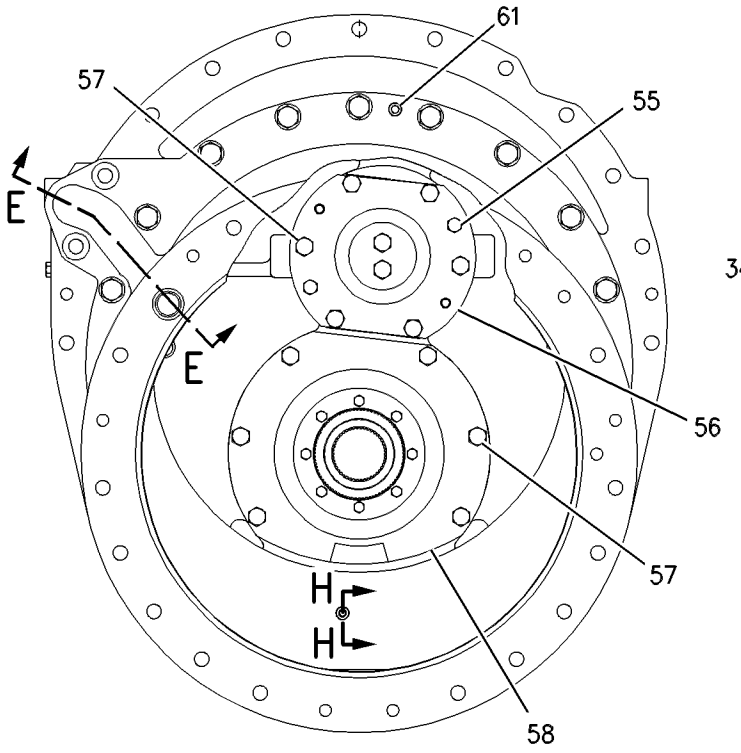

VIEW D-D

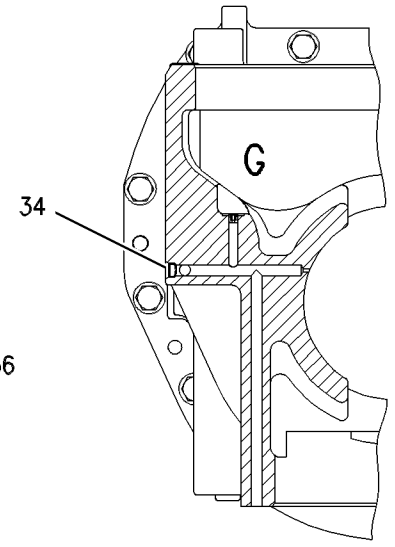

SECTION F-F

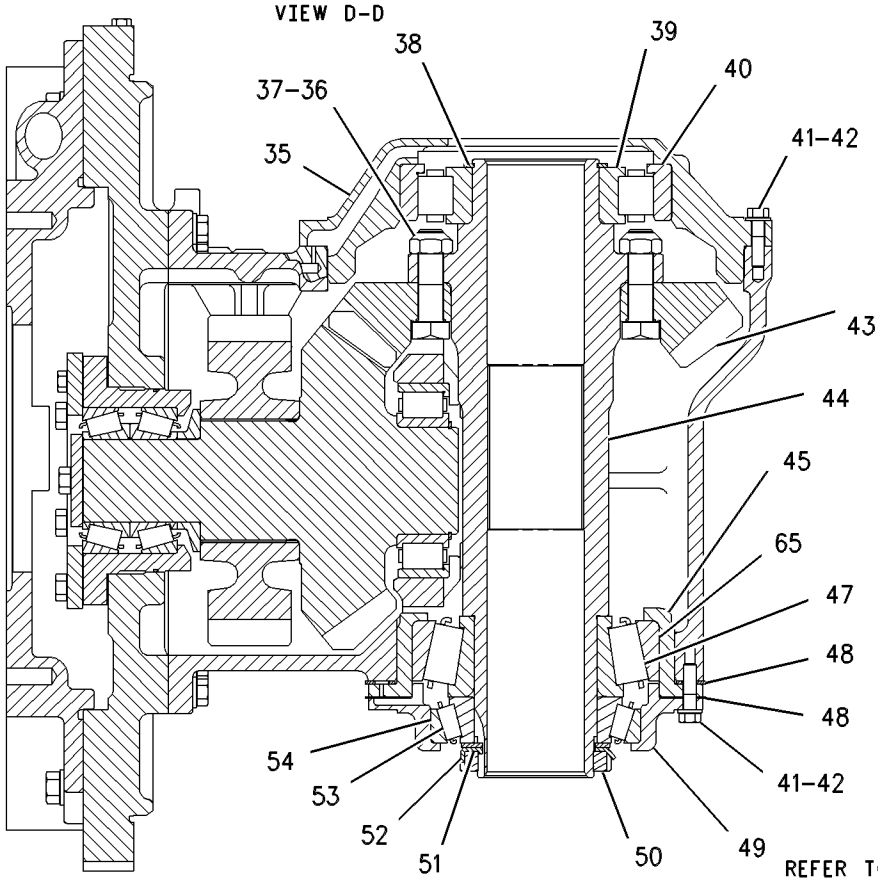

SECTION B-B

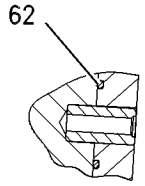

SECTION H-H

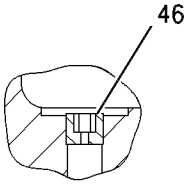

VIEW OF AREA G

REFER TO ALL ILLUSTRATIONS OF THIS GROUP FOR AUXILIARY VIEWS

GRAPHIC #2

g00654267

116-9492 GEAR GP-BEVEL & TRANSFER *(contd.)* i01988688

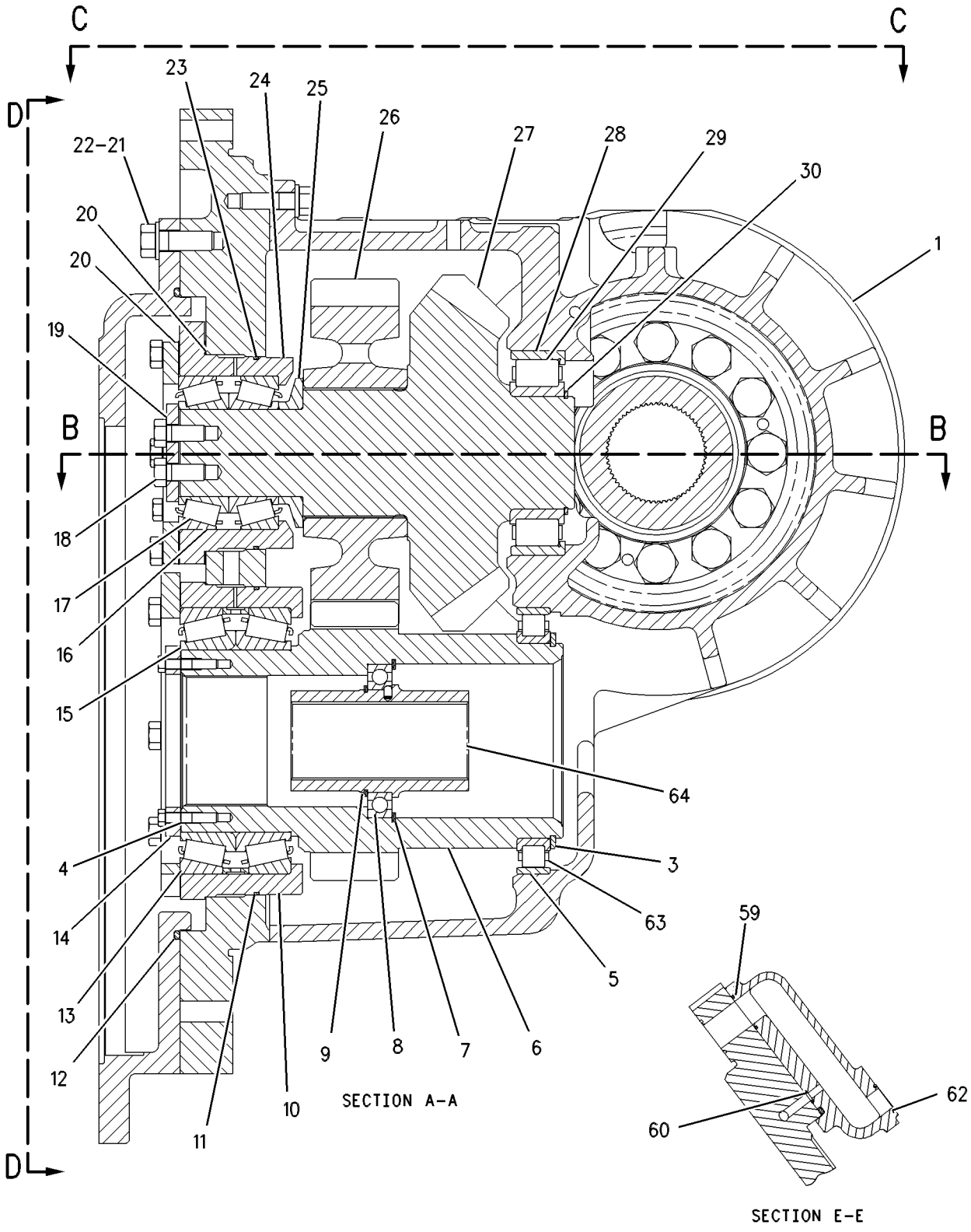

REFER TO ALL ILLUSTRATIONS OF THIS GROUP FOR AUXILIARY VIEWS

GRAPHIC #3 **<END>** g00654268

POWER TRAIN

183-2272 GEAR GP-BEVEL & TRANSFER

S/N: 1SY1147-UP

PART OF 116-9491 TRANSMISSION AR

SMCS-3011 **i01992074**

NOTE	REF NO	GRAPHIC REF	PART NUMBER	QTY	PART NAME 1 2 3 4 5 6 (PRODUCT LEVEL)	SEE PAGE
	1	1	**183-2265**	1	HOUSING AS	
		1	**5P-8248**	4	WASHER-HARD (20X36.5X3.5MM THK)	
		1	**9X-8885**	4	BOLT (3/4-10X2.25 IN)	
	2	1	**119-3378**	1	COUPLER AS	
		1	**4S-8541**	1	DOWEL	
	3	1	**151-3258**	1	RING-RETAINING	
	4	1	**6V-6654**	1	BEARING AS-SPECIAL (INNER)	
	5	1	**3P-2564**	1	RACE-BEARING OUTER	
	6	1	**116-9502**	1	GEAR-TRANSFER (21 TEETH)	
	7	1	**7S-3004**	1	RING-RETAINING	
	8	1	**3P-2582**	1	BALL BEARING	
	9	1	**1M-9653**	1	RING-RETAINING	
	10	1	**116-9500**	1	CAGE-BEARING	
	11	1	**5P-2545**	1	SEAL-O-RING	
	12	1	**5D-6428**	1	SEAL-O-RING	
	13	1	**119-4132**	1	BEARING AS-SPECIAL (TAPERED)	
	14	1	**138-0427**	1	COVER-BEARING	
	15	1	**0S-1590**	8	BOLT (3/8-16X2 IN)	
	16	1	**119-4140**	2	CUP-SPECIAL TAPERED	
	17	1	**119-4139**	2	CONE-SPECIAL TAPERED	
	18	1	**5P-4254**	2	BOLT-LOCKING (5/8-18X1.5 IN)	
	19	1	**183-2256**	1	RETAINER	
B	20	1	**9G-9295**	4	SHIM PACK (INCLUDES 16 SHIMS)	
	21	1	**9X-8885**	9	BOLT (3/4-10X2.25 IN)	
	22	1	**5P-8248**	9	WASHER-HARD (20X36.5X3.5MM THK)	
	23	1	**2K-2939**	1	SEAL-O-RING	
	24	1	**116-9494**	1	CAGE-BEARING	
	25	1	**183-2258**	1	SPACER	
	26	1	**183-2259**	1	GEAR-TRANSFER (27 TEETH)	
	27	1	**183-2257**	1	PINION-BEVEL	
	28	1	**240-5921**	1	RACE-SPECIAL ROLLER (OUTER)	
	29	1	**240-5920**	1	BEARING AS-SPECIAL (INNER)	
	30	1	**8C-8550**	1	RING-RETAINING	
	31	1	**9S-4191**	1	PLUG	
	32	1	**3J-1907**	1	SEAL-O-RING	
	33	1	**3T-8876**	1	DOWEL	
	34	1,3	**0T-0200**	6	PLUG-CUP	
	35	2	**116-9504**	1	CAGE-BEARING	
	36	2	**2K-7471**	12	LOCKNUT	
	37	2	**9S-1367**	12	BOLT (1-14X3.75 IN)	
	38	2	**8T-7583**	1	RING	
	39	2	**119-4135**	1	RACE-BEARING (INNER)	
	40	2	**119-4136**	1	RACE-ROLLER BEARING (OUTER)	
	41	2	**5P-4143**	34	BOLT-LOCKING (1/2-13X2 IN)	
	42	2,3	**5P-8245**	36	WASHER-HARD (13.5X25.5X3MM THK)	
	43	2	**141-6346**	1	GEAR-BEVEL (26 TEETH)	
	44	2	**141-6347**	1	SHAFT-BEVEL	
	45	2	**116-9495**	1	CAGE-BEARING	
	46	2	**6Y-4736**	1	CUP-BEARING	
	47	2	**119-4133**	1	CONE-SPECIAL TAPERED	
B	48	2	**119-3380**	4	SHIM PACK (INCLUDES 18 SHIMS)	
	49	2	**116-9501**	1	CAGE-BEARING	
	50	2	**119-3711**	1	NUT-BEARING	
	51	2	**119-3381**	1	WASHER-BEARING LOCK	
	52	2	**119-3851**	1	LOCKWASHER	
	53	2	**119-4137**	1	CONE-SPECIAL TAPERED	

183-2272 GEAR GP-BEVEL & TRANSFER *(contd.)* i01992074

NOTE	REF NO	GRAPHIC REF	PART NUMBER	QTY	PART NAME 1 2 3 4 5 6 (PRODUCT LEVEL)	SEE PAGE
	54	2	**1M-6573**	1	CUP-BEARING	
	55	1	**187-8039**	1	TUBE AS	
	56	3	**178-7586**	1	COVER	
	57	3	**5P-6241**	12	BOLT-LOCKING (5/8-11X2.62 IN)	
	58	3	**119-3376**	1	COVER-BEARING	
	59	3	**8M-5661**	1	SEAL-O-RING	
	60	3	**8M-4447**	1	SEAL-O-RING	
	61	3	**6T-2203**	2	DOWEL	
	62	3	**8M-4986**	2	SEAL-O-RING	
	63	3	**125-3942**	1	PLUG-PIPE	
B	64	1	**138-0428**	1	SHIM PACK (INCLUDES 9 SHIMS)	
	65	3	**188-0782**	1	TUBE AS	
	66	3	**155-6400**	2	BUSHING	
	67	3	**8K-5443**	2	CLIP	
	68	3	**6V-0314**	2	BOLT-LOCKING	
	69	3	**6L-3616**	1	CONNECTOR	
	70	1	**4H-6141**	1	CONNECTOR	
	71	1	**161-8068**	1	SEAL-O-RING	

B-USE AS REQUIRED

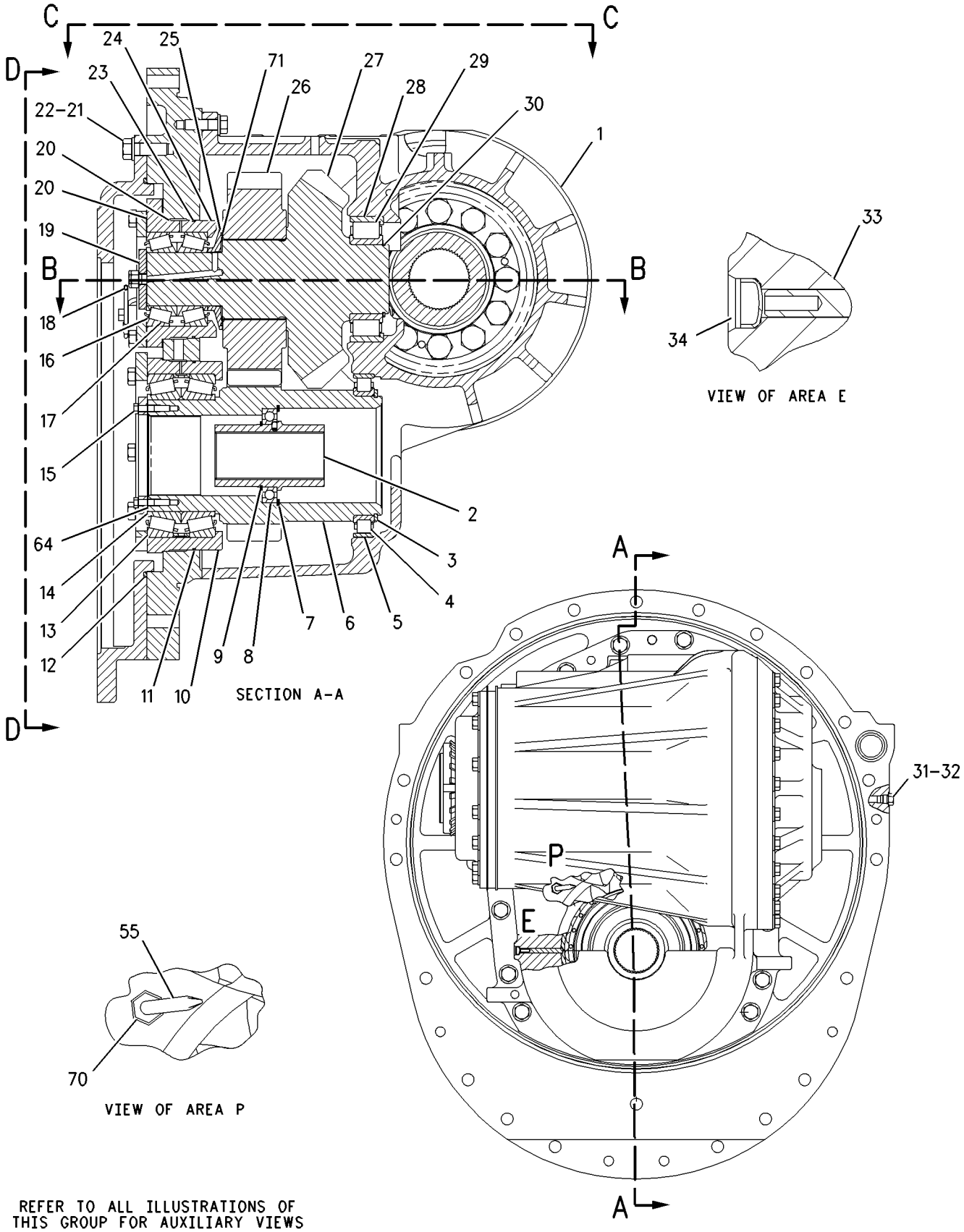

REFER TO ALL ILLUSTRATIONS OF THIS GROUP FOR AUXILIARY VIEWS

GRAPHIC #1 g00798574

183-2272 GEAR GP-BEVEL & TRANSFER *(contd.)* i01992074

REFER TO ALL ILLUSTRATIONS OF
THIS GROUP FOR AUXILIARY VIEWS

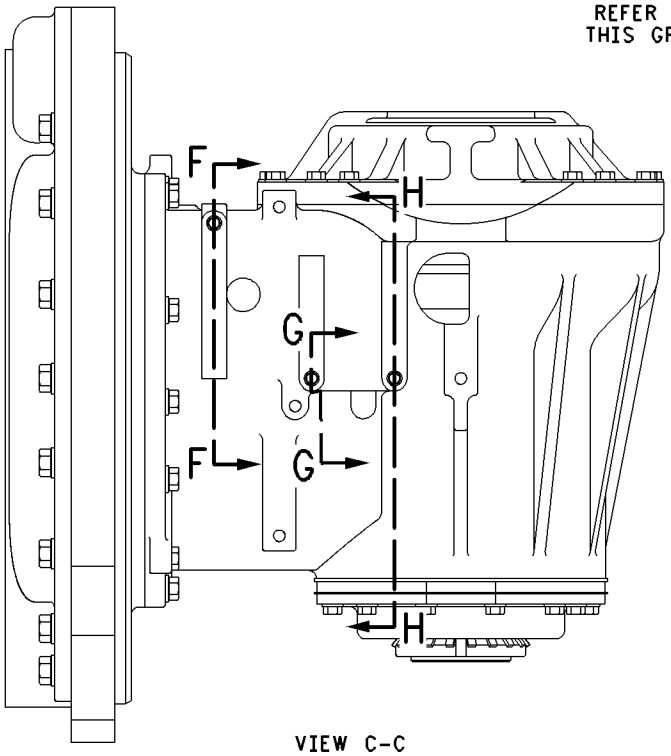

VIEW C-C

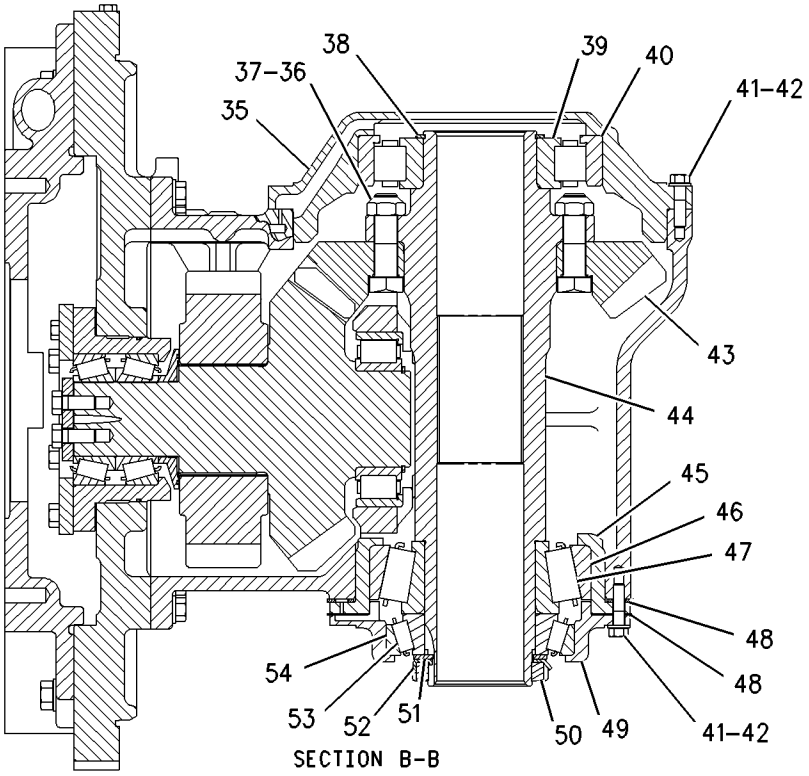

SECTION B-B

GRAPHIC #2 g00798717

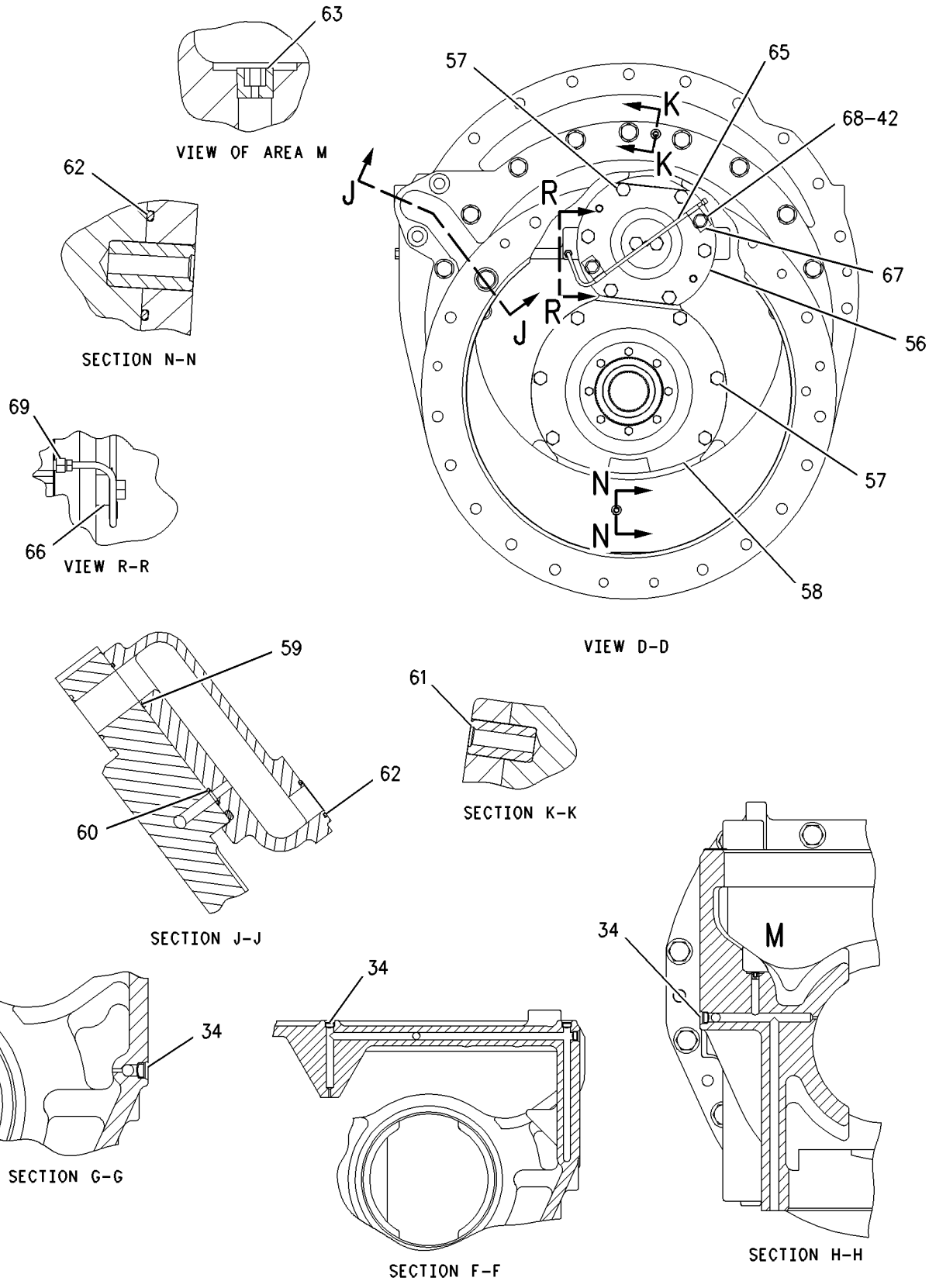

GRAPHIC #3 **<END>** g00798758

127-9444 GUARD GP-COUPLING—PUMP DRIVE

S/N: 7PZ1-UP

PART OF 155-5552 CHASSIS AR

SMCS-7153 **i01289409**

NOTE	REF NO	GRAPHIC REF	PART NUMBER	QTY	PART NAME 1 2 3 4 5 6 (PRODUCT LEVEL)	SEE PAGE
	1	1	**130-6254**	2	GUARD AS	
					(EACH INCLUDES)	
		1	**1F-0750**	3	NUT-WELD (3/8-16 THD)	
	2	1	**5M-3062**	10	BOLT (3/8-16X.75 IN)	
	3	1	**8T-4896**	10	WASHER-HARD (2.5MM THK)	

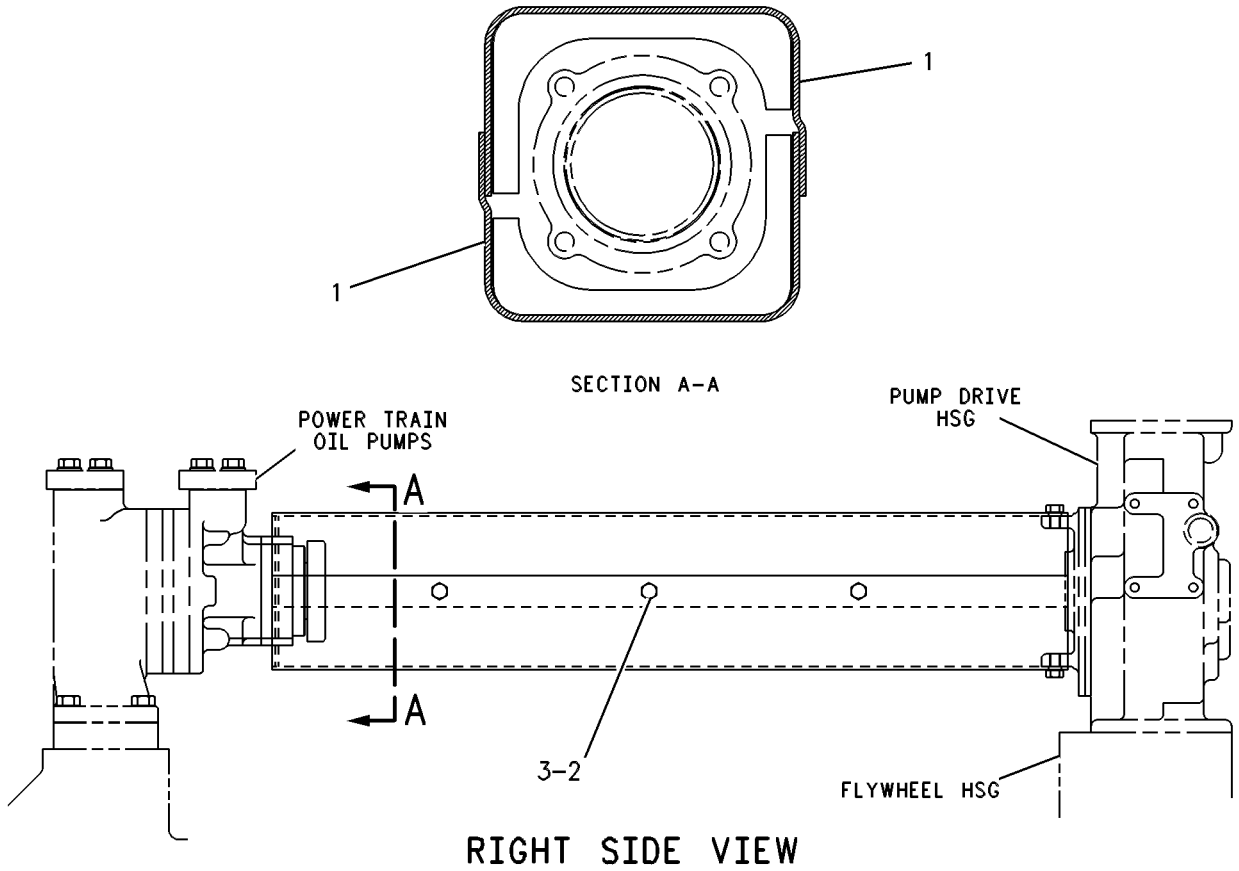

GRAPHIC #1 **<END>** g00272021

127-7480 LINES GP-POWER TRAIN OIL

S/N: 7PZ1-663

PART OF 112-9167 POWER TRAIN AR

SMCS-3016 **i01989511**

NOTE	REF NO	GRAPHIC REF	PART NUMBER	QTY	PART NAME 1 2 3 4 5 6 (PRODUCT LEVEL)	SEE PAGE
	1	1	**3T-3980**	1	BRACKET AS	
		1	**1F-0748**	1	NUT-WELD (1/2-13 THD)	
		1	**5H-9394**	1	BOSS (3/8-16X1.0 IN)	
	2	1	**4D-6763**	1	ELBOW	
	3	1	**5J-6796**	4	STUD-TAPERLOCK	
	4	1	**6T-5376**	1	ADAPTER	
	5	1	**3J-1907**	1	SEAL-O-RING	
		1	**6V-0852**	1	CAP-DUST	
		1	**6V-3965**	1	FITTING (QUICK DISCONNECT)	
Y	6	1	**8E-9727**	1	VALVE GP-RELIEF	480
	7	1	**150-1241**	1	TUBE AS	
I	8	1	**8W-0234**	1	HOSE AS	
	9	1	**9P-5925**	1	COVER	
	10	1	**9S-4181**	1	PLUG	
		1	**7M-8485**	1	SEAL-O-RING	
	11	1	**9S-8010**	1	PLUG	
		1	**2S-4078**	1	SEAL-O-RING	
Y	12	1	**112-5326**	1	VALVE GP-PRIORITY	478
Y	13	1	**142-5000**	1	PUMP GP-GEAR	455
	14	1	**126-5512**	1	SLEEVE	
		1	**112-1574**	2	SEAL-O-RING	
	15	1	**144-0500**	1	HOUSING	
I	16	1	**145-1850**	1	HOSE AS	
I	17	1	**145-1851**	1	HOSE AS	
	18	1	**130-3395**	1	MANIFOLD	
	19	1	**130-3398**	1	TUBE AS	
	20	1	**130-3399**	1	TUBE AS	
	21	1	**130-6747**	1	SCREEN AS (POWER TRAIN OIL LINES)	
I	22	1	**145-7316**	1	HOSE AS	
	23	1	**145-1852**	1	TUBE AS	
	24	1	**137-8476**	2	ORIFICE	
	25	1	**1P-3708**	2	SEAL-RECTANGULAR	
	26	1	**1P-4578**	8	FLANGE-HALF	
	27	1	**1P-4579**	6	FLANGE-HALF	
	28	1	**1P-4582**	14	FLANGE-HALF	
	29	1	**1T-0765**	3	BOLT (3/8-16X1 IN)	
	30	1	**2P-3538**	1	SEAL-O-RING	
	31	1	**3E-8026**	4	CLIP (SLOT)	
		1	**3E-8027**	4	CLIP (TAB)	
	32	1	**3K-0360**	1	SEAL-O-RING	
		1	**6V-8639**	1	CONNECTOR	
	33	1	**5P-2566**	16	BOLT (1/2-13X1.5 IN)	
	34	1	**5P-7464**	1	CLIP (SLOT)	
		1	**5P-7465**	1	CLIP (TAB)	
	35	1	**5P-7468**	2	CLIP (SLOT)	
	36	1	**6V-3835**	1	SEAL-O-RING	
	37	1	**5P-7469**	2	CLIP (TAB)	
	38	1	**7X-0331**	3	BOLT (1/2-13X4.25 IN)	
	39	1	**6V-5102**	1	SEAL-O-RING	
	40	1	**6V-8182**	4	NUT (3/4-10 THD)	
	41	1	**6V-8398**	2	SEAL-O-RING	
	42	1	**7X-0290**	4	BOLT (3/8-16X3.50 IN)	
	43	1	**7X-0308**	16	BOLT (7/16-14X1.375 IN)	
	44	1	**9M-9729**	1	SEAL-O-RING	
	45	1	**7X-0332**	1	BOLT (1/2-13X4.5 IN)	
	46	1	**8C-4436**	4	BOLT (1/2-13X1.375 IN)	

127-7480 LINES GP-POWER TRAIN OIL *(contd.)* i01989511

NOTE	REF NO	GRAPHIC REF	PART NUMBER	QTY	PART NAME 1 2 3 4 5 6 (PRODUCT LEVEL)	SEE PAGE
	47	1	**8M-4390**	8	SEAL-O-RING	
	48	1	**8M-4443**	2	SEAL-O-RING	
	49	1	**8M-4986**	5	SEAL-O-RING	
	50	1	**8M-4992**	1	SEAL-O-RING	
	51	1	**8M-5010**	1	SEAL-O-RING	
	52	1	**8M-5127**	1	SEAL-O-RING	
	53	1	**8M-5254**	1	SEAL-O-RING	
	54	1	**8M-5661**	2	SEAL-O-RING	
	55	1	**8M-8157**	2	SEAL-O-RING	
	56	1	**8T-4223**	67	WASHER-HARD (13.5X25.5X3MM THK)	
	57	1	**8T-4835**	4	BOLT (1/2-13X2 IN)	
	58	1	**8T-4896**	4	WASHER-HARD (10.2X18.5X2.5MM THK)	
	59	1	**8T-4994**	4	WASHER-HARD (20X36.5X3.5MM THK)	
	60	1	**8T-5360**	16	WASHER (12X22.5X2.5MM THK)	
	61	1	**8T-8917**	11	BOLT (1/2-13X1.25 IN)	
	62	1	**8T-8919**	28	BOLT (1/2-13X1.75 IN)	
	63	2	**9S-4183**	1	PLUG	
	64	2	**3T-4014**	4	CLAMP	
I	65	2	**144-7358**	1	HOSE AS	
I	66	2	**3T-6868**	1	HOSE AS	
I	67	2	**147-2013**	1	HOSE AS	
I	68	2	**3T-6870**	1	HOSE AS	
I	69	2	**3T-6871**	1	HOSE AS	
I	70	2	**147-3313**	1	HOSE AS	
I	71	2	**3T-6874**	1	HOSE AS	
	72	2	**138-9162**	1	GAUGE AS-OIL LEVEL (DIPSTICK)	
	73	2	**4B-7739**	1	PLUG-DRAIN (CASE & FRAME)	
I	74	2	**5L-1410**	1	HOSE AS	
	75	2	**6N-2985**	1	CAP AS-OIL FILLER (POWER TRAIN)	
	76	2	**6T-0258**	1	ELBOW	
	77	2	**6T-6618**	1	BRACKET AS	
		2	**1F-0750**	1	NUT-WELD (3/8-16THD)	
		2	**9F-2978**	1	NUT-WELD (3/8-16 THD)	
	78	2	**6V-0852**	1	CAP-DUST	
		2	**6V-3965**	1	FITTING (QUICK DISCONNECT)	
	79	2	**9G-9981**	1	BREATHER (POWER TRAIN)	
	80	2	**9P-0214**	1	SCREEN AS (POWER TRAIN)	
I	81	2	**141-9503**	1	HOSE AS	
		2	**6V-9746**	2	SEAL-O-RING	
	82	2	**130-3396**	1	TUBE AS	
	83	2	**8C-3446**	1	VALVE AS-FLUID SAMPLING	
	84	2	**8C-3447**	1	CAP-DUST	
	85	2	**130-3397**	1	TUBE AS	
	86	2	**9B-7237**	6	BOLT (3/8-16X1.25 IN)	
Y	87	2	*133-1301*	2	FILTER GP-OIL	413
I	88	2	**137-3587**	1	HOSE AS	
	89	2	**137-4621**	1	TUBE AS	
	90	2	**6V-9002**	1	ELBOW	
	91	2	**1P-4578**	18	FLANGE-HALF	
	92	2	**1P-4579**	2	FLANGE-HALF	
	93	2	**1P-4582**	4	FLANGE-HALF	
	94	2	**2B-0858**	1	PLUG-PIPE	
	95	2	**3D-2824**	3	SEAL-O-RING	
	96	2	**3J-1907**	2	SEAL-O-RING	
	97	2	**3J-7354**	1	SEAL-O-RING	
	98	2	**3K-0360**	2	SEAL-O-RING	
	99	2	**5M-3038**	1	SEAL-O-RING	
	100	2	**3E-8026**	1	CLIP (SLOT)	
		2	**3E-8027**	1	CLIP (TAB)	

127-7480 **LINES GP-POWER TRAIN OIL** ***(contd.)*** **i01989511**

NOTE	REF NO	GRAPHIC REF	PART NUMBER	QTY	PART NAME 1 2 3 4 5 6 (PRODUCT LEVEL)	SEE PAGE
	101	2	**5P-2566**	22	BOLT (1/2-13X1.5 IN)	
	102	2	**5P-7466**	1	CLIP (SLOT)	
		2	**5P-7467**	1	CLIP (TAB)	
	103	2	**5P-9617**	1	ADAPTER	
	104	2	**5S-7349**	1	BOLT (1/4-20X0.5 IN)	
		2	**8T-4205**	1	WASHER-HARD (7.2X14.5X2MM THK)	
	105	2	**5S-7379**	5	BOLT (3/8-16X0.875 IN)	
	106	2	**6V-8625**	1	ELBOW	
	107	2	**6V-8801**	1	NUT (3/8-16 THD)	
	108	2	**6V-9004**	2	ELBOW	
	109	2	**7X-0308**	36	BOLT (7/16-14X1.375 IN)	
	110	2	**7X-0317**	4	BOLT (7/16-14X3.75 IN)	
	111	2	**8M-4390**	2	SEAL-O-RING	
	112	2	**8M-4986**	11	SEAL-O-RING	
	113	2	**8M-4987**	1	SEAL-O-RING	
	114	2	**8M-5661**	2	SEAL-O-RING	
	115	2	**8T-2502**	4	BOLT (3/8-16X1.125 IN)	
	116	2	**8T-4223**	26	WASHER-HARD (13.5X25.5X3MM THK)	
	117	2	**8T-4896**	21	WASHER-HARD (10.2X18.5X2.5MM THK)	
	118	2	**8T-5360**	40	WASHER (12X22.5X2.5MM THK)	
	119	2	**8T-8917**	2	BOLT (1/2-13X1.25 IN)	
	120	2	**144-0498**	1	SPACER	
	121	2	**138-3251**	2	SPACER	
	122	2	**7X-0292**	2	BOLT (3/8-16X4.50 IN)	
	123	2	**147-4711**	2	BRACKET	
	124	2	**3P-4165**	2	CLAMP AS	
	125	2	**141-0863**	1	ANGLE AS	
	126	2	**4L-6454**	2	BOLT (3/8-16X1 IN)	
	127	2	**7X-0303**	1	BOLT	
	128	2	**7X-0289**	4	BOLT (3/8-16X1.875 IN)	
	129	2	**1K-6872**	2	LOCKNUT (1/2-13 THD)	
	130	2	**6V-8398**	1	SEAL-O-RING	
	131	2	**072-4568**	1	NIPPLE-PIPE	
	132	2	**003-9514**	1	COUPLING-PIPE	

I-REFER TO HYDRAULIC INFORMATION SYSTEM
Y-SEPARATE ILLUSTRATION

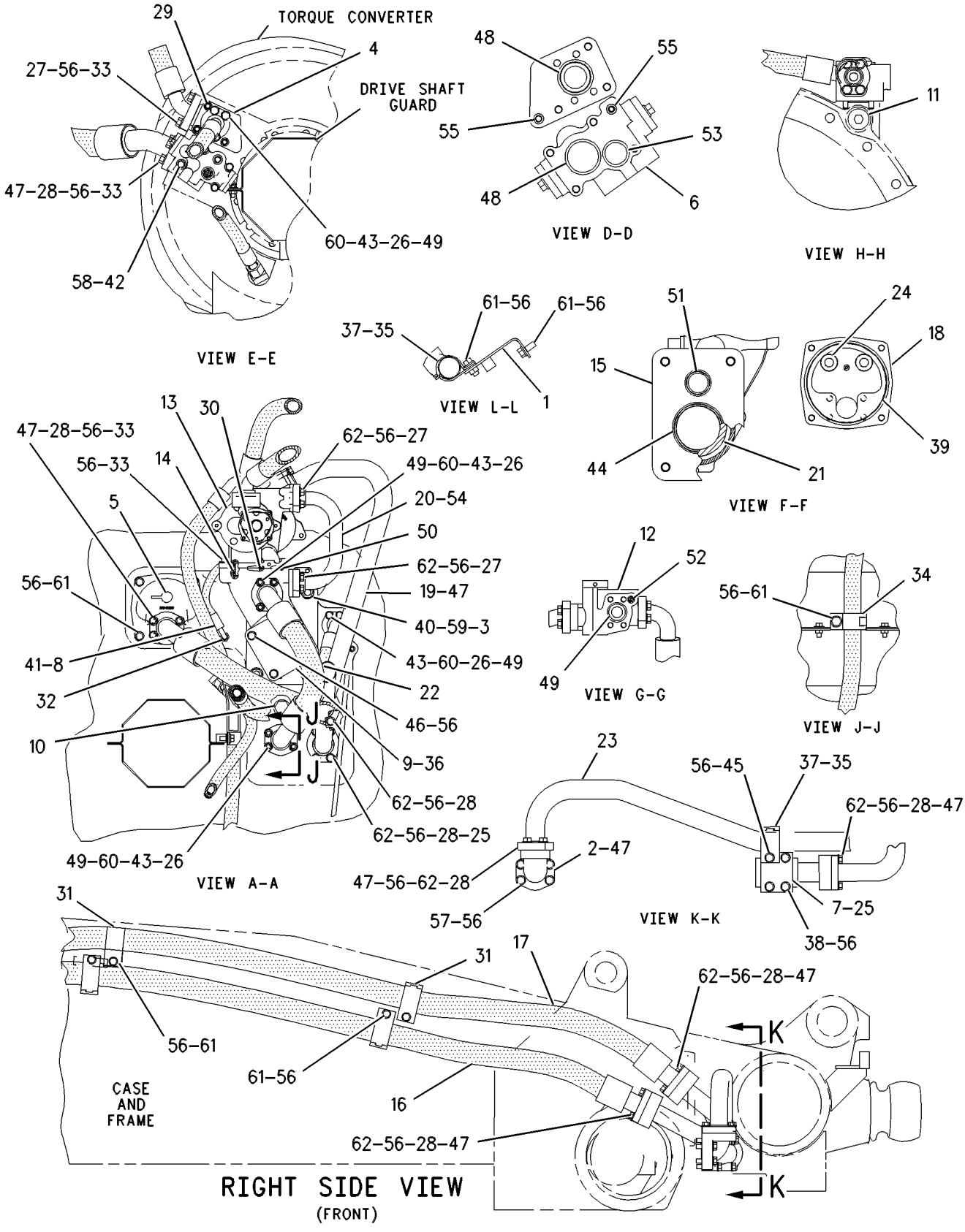

GRAPHIC #1 g00458733

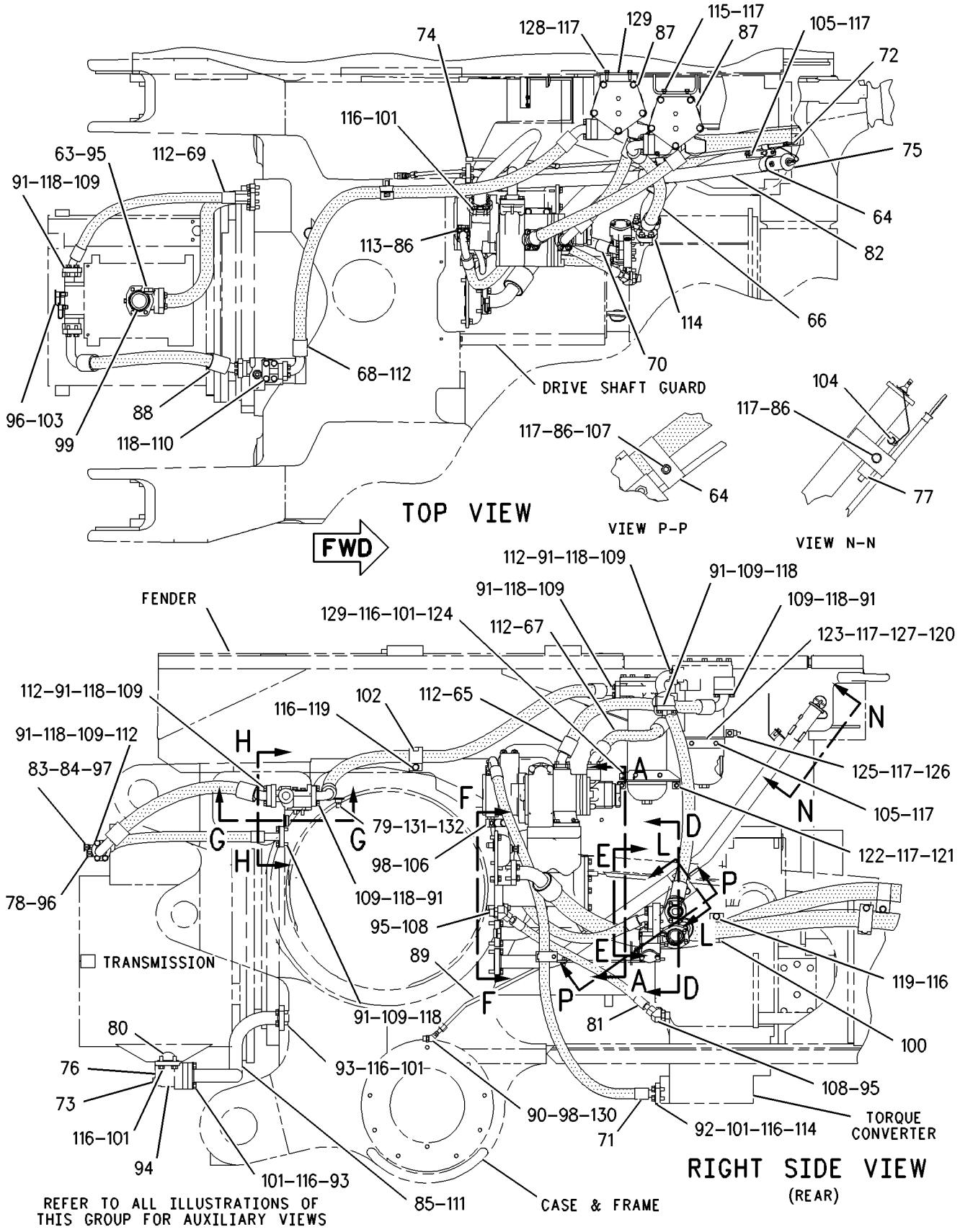

GRAPHIC #2 **<END>** g00764510

127-7480 LINES GP-POWER TRAIN OIL

S/N: 7PZ664-UP

PART OF 112-9167 POWER TRAIN AR

SMCS-3016 **i02029599**

NOTE	REF NO	GRAPHIC REF	PART NUMBER	QTY	PART NAME 1 2 3 4 5 6 (PRODUCT LEVEL)	SEE PAGE
	1	1,2	**3P-4165**	2	CLAMP AS	
	2	1	**3T-3980**	1	BRACKET AS	
		1	**1F-0748**	1	NUT-WELD (1/2-13-THD)	
		1	**5H-9394**	1	BOSS (3/8-16X1.0-IN)	
	3	1	**3T-4014**	4	CLAMP	
I	4	1	**3T-6868**	1	HOSE AS	
I	5	1	**3T-6870**	1	HOSE AS	
I	6	1	**3T-6871**	1	HOSE AS	
I	7	1	**3T-6874**	1	HOSE AS	
	8	1	**4B-7739**	1	PLUG-DRAIN (POWER TRAIN)	
	9	1	**4D-6763**	1	ELBOW	
	10	2	**5J-6796**	4	STUD-TAPERLOCK	
I	11	2	**5L-1410**	1	HOSE AS	
	12	1	**6N-2985**	1	CAP AS-OIL FILLER (POWER TRAIN)	
	13	1	**6T-0258**	1	ELBOW	
	14	2	**6T-5376**	1	ADAPTER	
	15	1	**6T-6618**	1	BRACKET AS	
		1	**1F-0750**	1	NUT-WELD (3/8-16-THD)	
		1	**9F-2978**	1	NUT-WELD (3/8-16-THD)	
	16	2	**6V-0852**	2	CAP-DUST	
	17	2	**6V-3965**	2	FITTING (QUICK DISCONNECT) (POWER TRAIN)	
	18	2	**8C-3446**	1	VALVE AS-FLUID SAMPLING	
	19	2	**8C-3447**	1	CAP-DUST	
Y	20	1	**8E-9727**	1	VALVE GP-RELIEF (POWER TRAIN OIL)	480
I	21	2	**8W-0234**	1	HOSE AS	
	22	1	**9G-9981**	1	BREATHER (POWER TRAIN)	
	23	1	**9P-0214**	1	SCREEN AS (POWER TRAIN)	
	24	2	**9P-5925**	1	COVER	
	25	2	**9S-4181**	1	PLUG	
	26	1	**9S-8010**	1	PLUG	
Y	27	1	**112-5326**	1	VALVE GP-PRIORITY (TRANSMISSION CONTROL)	478
	28	2	**126-5512**	1	SLEEVE	
	29	1	**130-3395**	1	MANIFOLD	
	30	1	**130-3396**	1	TUBE AS	
	31	1	**130-3397**	1	TUBE AS	
	32	2	**130-3398**	1	TUBE AS	
	33	2	**130-3399**	1	TUBE AS	
	34	1	**130-6747**	1	SCREEN AS (POWER TRAIN)	
	35	2	**132-8876**	2	FILTER ELEMENT AS-OIL (HYDRAULIC) (TRANSMISSION)	
Y	36	1	*133-1301*	2	FILTER GP-OIL	413
I	37	1	**137-3587**	1	HOSE AS	
	38	1	**137-4621**	1	TUBE AS	
	39	1	**137-8476**	2	ORIFICE	
	40	2	**138-3251**	2	SPACER	
	41	1	**138-9162**	1	GAUGE AS-OIL LEVEL (DIPSTICK)	
	42	2	**141-0863**	1	ANGLE AS	
I	43	1	**141-9503**	1	HOSE AS	
Y	44	2	**142-5000**	1	PUMP GP-GEAR	455
	45	2	**144-0498**	1	SPACER	
	46	1	**144-0500**	1	HOUSING	
I	47	1	**144-7358**	1	HOSE AS	
I	48	1	**145-1850**	1	HOSE AS	
I	49	1	**145-1851**	1	HOSE AS	
	50	1	**145-1852**	1	TUBE AS	
I	51	2	**145-7316**	1	HOSE AS	

127-7480 LINES GP-POWER TRAIN OIL *(contd.)* i02029599

NOTE	REF NO	GRAPHIC REF	PART NUMBER	QTY	PART NAME 1 2 3 4 5 6 (PRODUCT LEVEL)	SEE PAGE
I	52	1	**147-2013**	1	HOSE AS	
	53	1	**147-4711**	2	BRACKET	
	54	2	*148-8305*	1	ADAPTER GP	
		2	**3J-1907**	1	SEAL-O-RING	
		2	**5P-9617**	1	ADAPTER	
	55	2	*148-8340*	1	CONNECTOR GP	
		2	**3K-0360**	1	SEAL-O-RING	
		2	**6V-8398**	1	SEAL-O-RING	
		2	**6V-8639**	1	CONNECTOR	
	56	1	*148-8354*	1	ELBOW GP	
		1	**3K-0360**	1	SEAL-O-RING	
		1	**6V-8398**	1	SEAL-O-RING	
		1	**6V-9002**	1	ELBOW	
	57	1	*148-8364*	1	ELBOW AS	
		1	**3K-0360**	1	SEAL-O-RING	
		1	**6V-8398**	1	SEAL-O-RING	
		1	**6V-8625**	1	ELBOW	
	58	2	*148-8408*	1	PLUG AS	
		2	**3D-2824**	1	SEAL-O-RING	
		2	**9S-4183**	1	PLUG	
	59	1	**150-1241**	1	TUBE AS	
	60	1	*153-6237*	2	ELBOW GP	
		1	**3D-2824**	1	SEAL-O-RING	
		1	**6V-9004**	1	ELBOW	
		1	**6V-9746**	1	SEAL-O-RING	
CI	61	1	**229-5679**	1	HOSE AS	
	62	1	**003-9514**	1	COUPLING-PIPE	
	63	1	**072-4568**	1	NIPPLE-PIPE	
	64	2	**112-1574**	2	SEAL-O-RING	
	65	1,2	**1K-6872**	2	LOCKNUT (1/2-13-THD)	
	66	1	**1P-3708**	2	SEAL-RECTANGULAR	
	67	1,2	**1P-4578**	26	FLANGE-HALF	
	68	1,2	**1P-4579**	8	FLANGE-HALF	
	69	1,2	**1P-4582**	18	FLANGE-HALF	
	70	2	**1T-0765**	3	BOLT (3/8-16X1-IN)	
	71	1	**2B-0858**	1	PLUG-PIPE	
	72	2	**2P-3538**	1	SEAL-O-RING	
	73	1	**2S-4078**	1	SEAL-O-RING	
	74	1	**3E-8026**	5	CLIP (SLOT)	
	75	1	**3E-8027**	5	CLIP (TAB)	
	76	2	**3J-1907**	2	SEAL-O-RING	
	77	2	**3J-7354**	1	SEAL-O-RING	
	78	1,2	**4L-6454**	2	BOLT (3/8-16X1-IN)	
	79	2	**5M-3038**	1	SEAL-O-RING	
	80	1,2	**5P-2566**	38	BOLT (1/2-13X1.5-IN)	
C	81	2	**5P-7464**	2	CLIP (SLOT)	
C	82	2	**5P-7465**	2	CLIP (TAB)	
	83	1	**5P-7466**	1	CLIP (SLOT)	
	84	1	**5P-7467**	1	CLIP (TAB)	
	85	1	**5P-7468**	2	CLIP (SLOT)	
	86	1	**5P-7469**	2	CLIP (TAB)	
	87	1	**5S-7349**	1	BOLT (1/4-20X0.5-IN)	
	88	1	**5S-7379**	5	BOLT (3/8-16X0.875-IN)	
	89	2	**6V-3835**	1	SEAL-O-RING	
	90	1	**6V-5102**	1	SEAL-O-RING	
	91	2	**6V-8182**	4	NUT (3/4-10-THD)	
	92	1	**6V-8801**	1	NUT (3/8-16-THD)	
	93	2	**7M-8485**	1	SEAL-O-RING	
	94	2	**7X-0289**	4	BOLT (3/8-16X1.875-IN)	

127-7480 LINES GP-POWER TRAIN OIL *(contd.)* i02029599

NOTE	REF NO	GRAPHIC REF	PART NUMBER	QTY	PART NAME 1 2 3 4 5 6 (PRODUCT LEVEL)	SEE PAGE
	95	2	**7X-0290**	4	BOLT (3/8-16X3.50-IN)	
	96	1	**7X-0292**	2	BOLT (3/8-16X4.50-IN)	
	97	2	**7X-0303**	1	BOLT	
	98	1,2	**7X-0308**	52	BOLT (7/16-14X1.375-IN)	
	99	2	**7X-0317**	4	BOLT (7/16-14X3.75-IN)	
	100	1	**7X-0331**	3	BOLT (1/2-13X4.25-IN)	
	101	1	**7X-0332**	1	BOLT (1/2-13X4.5-IN)	
	102	2	**8C-4436**	4	BOLT (1/2-13X1.375-IN)	
	103	1,2	**8M-4390**	10	SEAL-O-RING	
	104	1	**8M-4443**	2	SEAL-O-RING	
	105	1,2	**8M-4986**	16	SEAL-O-RING	
	106	1	**8M-4987**	1	SEAL-O-RING	
	107	2	**8M-4992**	1	SEAL-O-RING	
	108	1	**8M-5010**	1	SEAL-O-RING	
	109	1	**8M-5127**	1	SEAL-O-RING	
	110	1	**8M-5254**	1	SEAL-O-RING	
	111	1,2	**8M-5661**	4	SEAL-O-RING	
	112	1	**8M-8157**	2	SEAL-O-RING	
	113	2	**8T-2502**	4	BOLT (3/8-16X1.125-IN)	
	114	1	**8T-4205**	1	WASHER-HARD (7.2X14.5X2-MM THK)	
	115	1,2	**8T-4223**	93	WASHER-HARD (13.5X25.5X3-MM THK)	
	116	1	**8T-4835**	4	BOLT (1/2-13X2-IN)	
C	117	1,2	**8T-4896**	26	WASHER-HARD (10.2X18.5X2.5-MM THK)	
	118	2	**8T-4994**	4	WASHER-HARD (20X36.5X3.5-MM THK)	
	119	1,2	**8T-5360**	56	WASHER (12X22.5X2.5-MM THK)	
	120	1,2	**8T-8917**	13	BOLT (1/2-13X1.25-IN)	
	121	1,2	**8T-8919**	28	BOLT (1/2-13X1.75-IN)	
C	122	1,2	**9B-7237**	7	BOLT (3/8-16X1.25-IN)	
	123	1	**9M-9729**	1	SEAL-O-RING	

C-CHANGE FROM PREVIOUS TYPE
I-REFER TO HYDRAULIC INFORMATION SYSTEM
Y-SEPARATE ILLUSTRATION

127-7480 **LINES GP-POWER TRAIN OIL** *(contd.)* **i02029599**

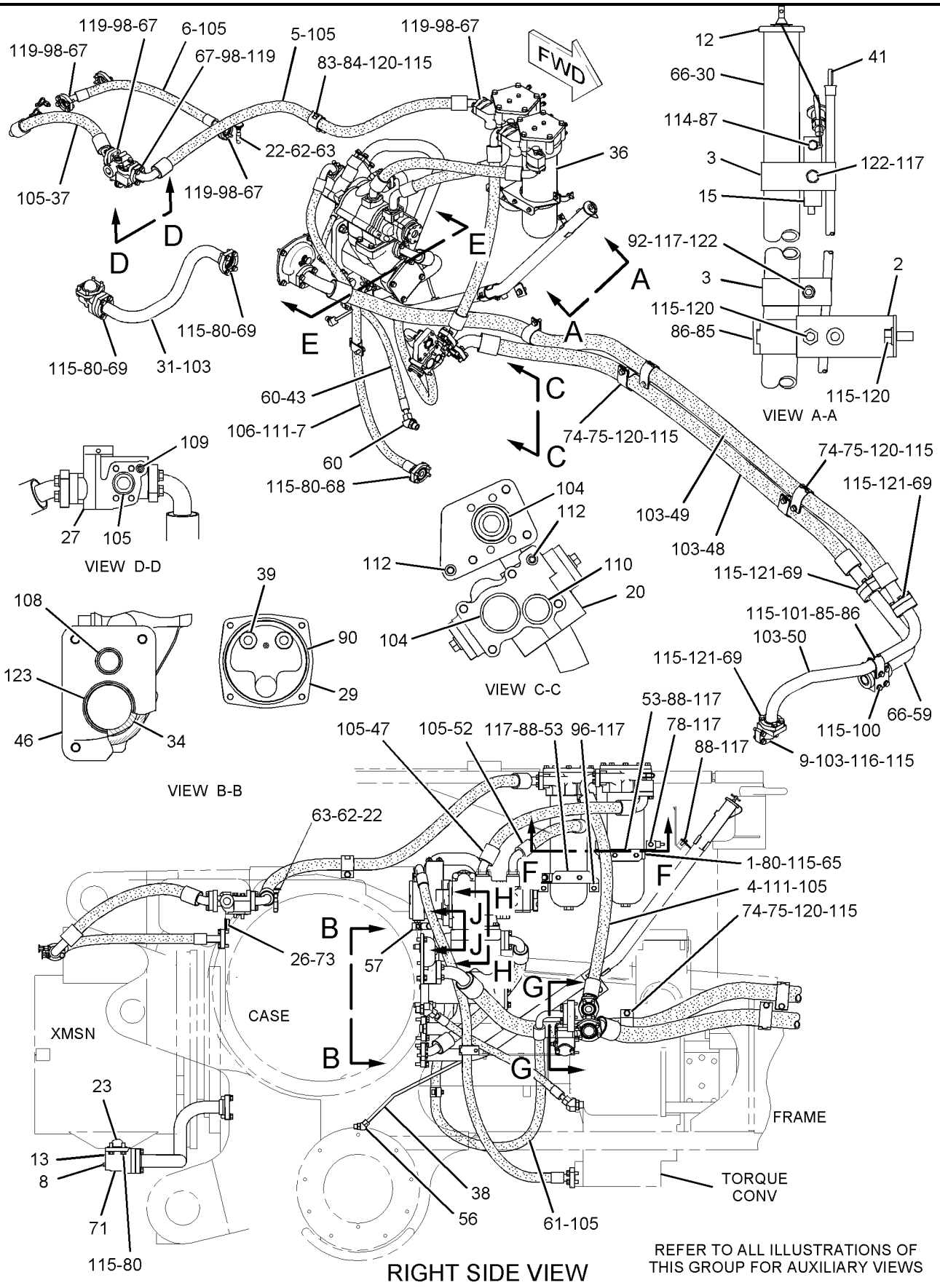

GRAPHIC #1 g01029494

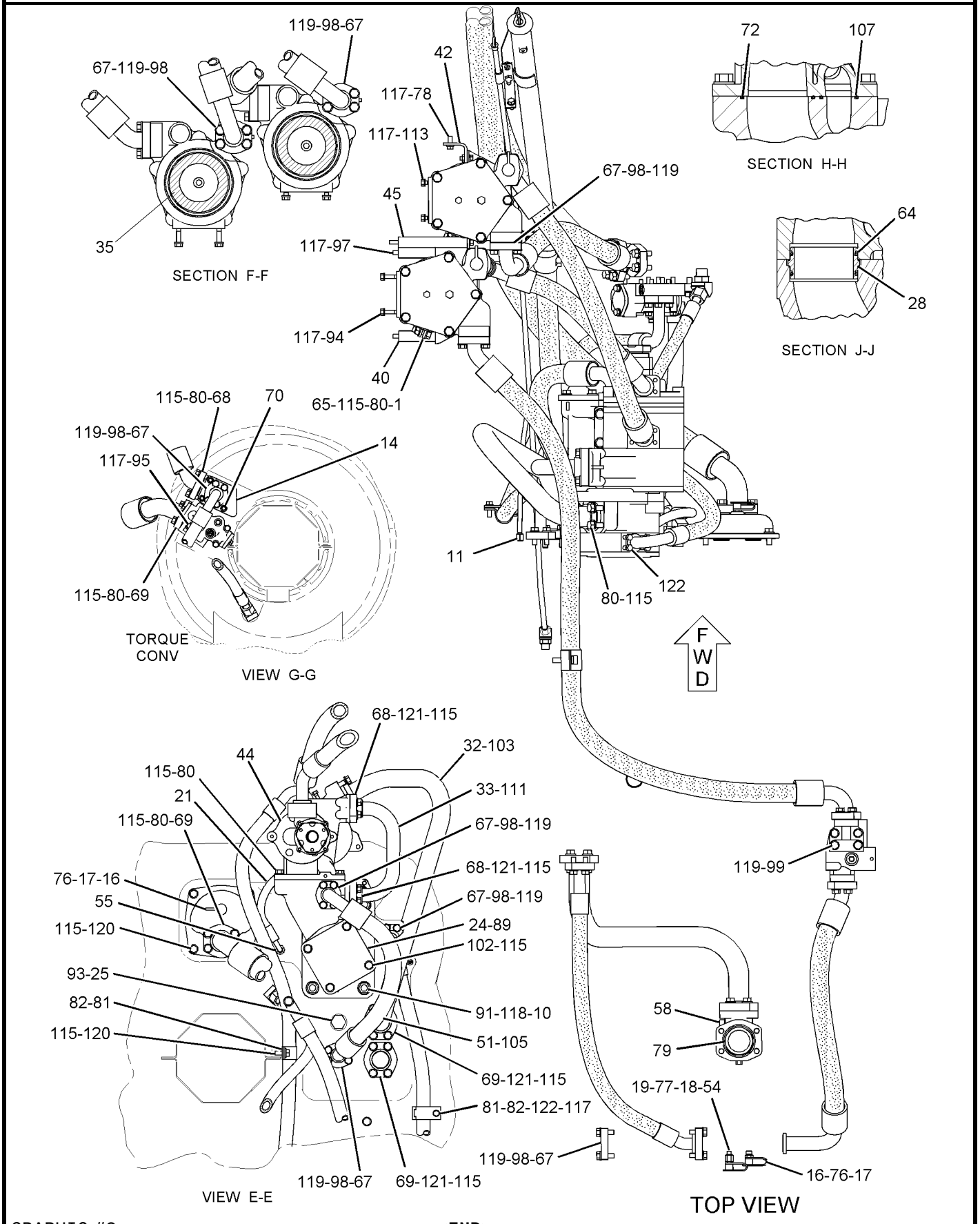

GRAPHIC #2 **<END>** g01029495

127-7486 MOUNTING GP-TRANSMISSION

S/N: 7PZ1-UP

PART OF 112-9167 POWER TRAIN AR

SMCS-3082 **i01707327**

NOTE	REF NO	GRAPHIC REF	PART NUMBER	QTY	PART NAME 1 2 3 4 5 6 (PRODUCT LEVEL)	SEE PAGE
	1	1	**7X-0369**	11	BOLT (3/4-10X3.25 IN)	
	2	1	**8C-8842**	2	BOLT (3/4-10X4 IN)	
	3	1	**1J-8930**	6	BOLT (3/4-10X7.5 IN)	
	4	1	**8T-4994**	19	WASHER-HARD (20X36.5X3.5MM THK)	
	5	1	**5P-4057**	1	SEAL-O-RING	
	6	1	**8M-5661**	1	SEAL-O-RING	
	7	1	**8C-5224**	4	PLUG-SEAL	

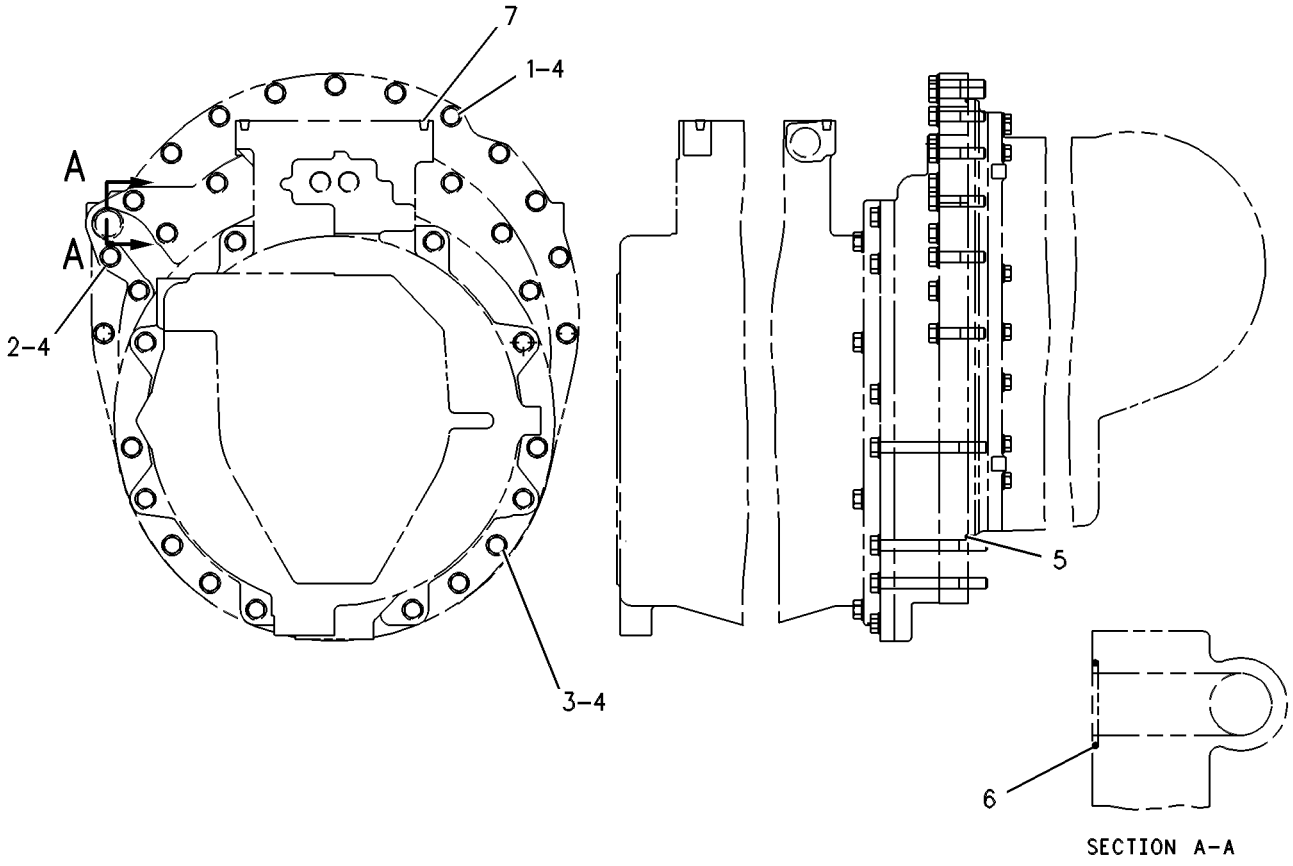

GRAPHIC #1 **<END>** g00272215

POWER TRAIN

116-4623 PLANETARY GP-TRANSMISSION

S/N: 1SY1-1157

PART OF 116-9505 TRANSMISSION AR

SMCS-3160 **i01563462**

NOTE	REF NO	GRAPHIC REF	PART NUMBER	QTY	PART NAME 1 2 3 4 5 6 (PRODUCT LEVEL)	SEE PAGE
	1	1	**5P-1670**	17	BOLT (3/4-10X18.5 IN)	
		1	**2S-0115**	17	WASHER-HARD (20X36.5X5MM THK)	
	2	1	**147-2696**	1	HOUSING-CLUTCH	
	3	1	**6Y-1365**	1	PLATE AS-CENTER	
		1	**3F-3442**	2	DOWEL	
	4	1	**6Y-5875**	1	HOUSING-CLUTCH	
	5	1	**0S-0509**	4	BOLT (3/8-16X0.75 IN)	
	6	1	**5S-5880**	2	LOCK-NUT	
	7	1	**6V-6458**	3	RING-RETAINING	
	8	1	**8P-5839**	1	HOUSING-CLUTCH	
	9	1	**5D-6428**	2	SEAL-O-RING	
	10	1	**3T-6366**	1	HOUSING AS-SUPPORT	
	11	1	**1D-4569**	12	BOLT (1/2-13X4.25 IN)	
		1	**1T-0808**	12	WASHER (.516X.812X0.09IN THK)	
	12	1	**3P-7570**	1	RING-SEAL	
	13	1	**8P-9569**	1	RING-SEAL	
	14	1	**9S-8008**	2	PLUG-O-RING	
		1	**3D-2824**	2	SEAL-O-RING	
	15	1	**3E-4371**	1	RING-RETAINING	
	16	1	**6Y-7269**	1	HOUSING AS-ROTATION	
		1	**7M-5130**	1	PIN-SPRING	
		1	**7M-8480**	2	DOWEL	
		1	**9G-0647**	1	CARRIER-RING	
	17	1	**6Y-7260**	1	SHAFT AS-OUTPUT	
		1	**1T-0766**	2	BEARING-SLEEVE	
		1	**4S-8537**	1	DOWEL	
	18	1	**6Y-8123**	1	SHAFT AS	
		1	**6Y-8122**	1	PLUG-ORIFICE	
	19	1	**9U-9498**	1	CAGE-BEARING	
	20	1	**5P-8245**	7	WASHER-HARD (13.5X25.5X3MM THK)	
		1	**7B-3235**	7	BOLT (1/2-13X1.375 IN)	
	21	1	**3P-7832**	6	DOWEL	
	22	1	**0S-1594**	8	BOLT (3/8-16X1 IN)	
	23	1	**4M-5397**	4	LOCK-NUT	
	24	1	**0S-1591**	6	BOLT (3/8-16X1.5 IN)	
		1	**5M-2894**	6	WASHER-HARD (10.2X18.5X2.5MM THK)	
	25	1	**0L-2070**	2	BOLT (3/8-16X2.25 IN)	
	26	2	**8E-8310**	8	DISC-THRUST	
	27	2	**3P-7564**	1	GEAR-SUN (47 TEETH)	
	28	2	**7G-3467**	4	GEAR-PLANETARY (20 TEETH)	
	29	2	**5M-7925**	4	BEARING-ROLLER	
	30	2	**3P-7558**	4	SHAFT AS-PLANETARY	
					(EACH INCLUDES)	
		2	**3S-0036**	1	PLUG-CORE	
	31	2	**7G-3470**	4	GEAR-PLANETARY (22 TEETH)	
	32	2	**1P-3958**	4	ROLLER AS-SPECIAL	
	33	2	**8E-8316**	24	DISC-THRUST	
	34	2	**9G-9603**	6	DOWEL	
	35	2	**1S-9110**	8	ROLLER AS	
	36	2	**2H-9445**	8	PIN-SPRING	
	37	2	**5L-5032**	1	SEAL-O-RING	
	38	2	**5P-6727**	1	BALL BEARING	
	39	2	**6Y-5874**	1	RETAINER-BEARING	
	40	2	**8P-7236**	1	RETAINER	
	41	2	**8P-7243**	1	CARRIER-RING	
	42	2	**5P-6726**	1	RING-RETAINING (132.82MM ID)	

116-4623 PLANETARY GP-TRANSMISSION *(contd.)* i01563462

NOTE	REF NO	GRAPHIC REF	PART NUMBER	QTY	PART NAME 1 2 3 4 5 6 (PRODUCT LEVEL)	SEE PAGE
	43	2	**115-0761**	1	CARRIER AS	
		2	**4B-9782**	4	BALL (9.525MM)	
		2	**4S-8541**	1	DOWEL	
	44	2	**115-0763**	1	COUPLING	
	45	2	**156-2828**	1	PISTON-CLUTCH	
	46	2	**8E-0985**	19	DISC AS-CLUTCH	
R	47	2	**3P-7584**	15	PLATE-CLUTCH	
	48	2	**119-3379**	1	GEAR-COUPLING	
	49	2	**3P-7149**	1	CAGE-BEARING	
	50	2	**5P-6651**	1	RING-RETAINING	
	51	2	**188-4655**	1	GEAR AS-RING (82 TEETH)	
	52	2	**156-2825**	1	PISTON-CLUTCH	
	53	2	**6Y-8116**	1	HOUSING AS-CLUTCH	
		2	**4D-8148**	4	DOWEL	
	54	2	**6I-9790**	17	DAMPER-BOLT	
	55	2	**3P-7601**	2	PLATE-LOCK	
	56	2	**187-1367**	2	BEARING-SPECIAL BALL	
	57	3	**8P-7242**	4	SHAFT AS-PLANETARY	
					(EACH INCLUDES)	
		3	**2A-3746**	1	PLUG-CUP	
	58	3	**3K-2559**	1	RING-RETAINING	
	59	3	**3S-2708**	5	PIN-SPRING	
	60	3	**4H-7925**	1	RING-METAL SEAL	
	61	3	**6F-0155**	2	RING-METAL SEAL	
	62	3	**148-6559**	1	BALL BEARING	
	63	3	**8P-7244**	1	GEAR-SUN (30 TEETH)	
	64	3	**115-0764**	1	RING-LOCK	
	65	3	**9G-9557**	2	RING-SEAL	
	66	3	**3P-7612**	4	RING-SEAL	
	67	3	**3S-8035**	2	RING-SEAL	
	68	3	**6Y-7270**	1	GEAR AS-SUN (38 TEETH)	
		3	**4S-8537**	1	DOWEL	
	69	3	**4M-1708**	1	RING	
	70	3	**1N-5410**	1	RING-RETAINING	
	71	3	**3P-7563**	1	GEAR-SUN (38 TEETH)	
	72	3	**3P-7586**	1	GEAR-RING (82 TEETH)	
	73	3	**6Y-5951**	1	PISTON-CLUTCH	
	74	3	**7G-3469**	4	GEAR-PLANETARY (24 TEETH)	
	75	3	**3P-7575**	1	GEAR-RING (85 TEETH)	
	76	3	**7G-7745**	1	PISTON-CLUTCH	
	77	3	**8P-6292**	1	RING-SEAL	
	78	3	**169-7055**	5	DISC-CLUTCH	
	79	3	**8P-3133**	1	HUB	
	80	3	**3P-7006**	1	CARRIER-PLANETARY	
R	81	3	**3P-7447**	4	PLATE-CLUTCH	
	82	3	**6Y-5877**	1	PISTON-CLUTCH	
	83	3	**9S-8010**	1	PLUG-O-RING	
		3	**2S-4078**	1	SEAL-O-RING	
	84	3	**8F-6230**	2	SEAL-O-RING	
	85	3	**148-9643**	2	RING-SEAL	
	86	3	**5P-1669**	1	BALL BEARING	
	87	3	**3P-7566**	12	SPRING	
	88	3	**1B-2524**	12	PIN	
	89	3	**9H-5537**	24	SPRING	
	90	3	**6Y-7261**	1	RING-SEAL	
	91	3	**115-0767**	1	CARRIER-PLANETARY	
	92	3	**9W-9099**	4	GEAR-PLANETARY (22 TEETH)	
	93	3	**148-0330**	4	BEARING	
	94	3	**9W-9100**	4	SHAFT-PLANETARY	

116-4623 **PLANETARY GP-TRANSMISSION** *(contd.)* **i01563462**

NOTE	REF NO	GRAPHIC REF	PART NUMBER	QTY	PART NAME 1 2 3 4 5 6 (PRODUCT LEVEL)	SEE PAGE
	95	3	**1S-8480**	24	SPRING (20 COILS)	
	96	3	**3P-7576**	6	DOWEL	

R-REMFG PART MAY BE AVAILABLE

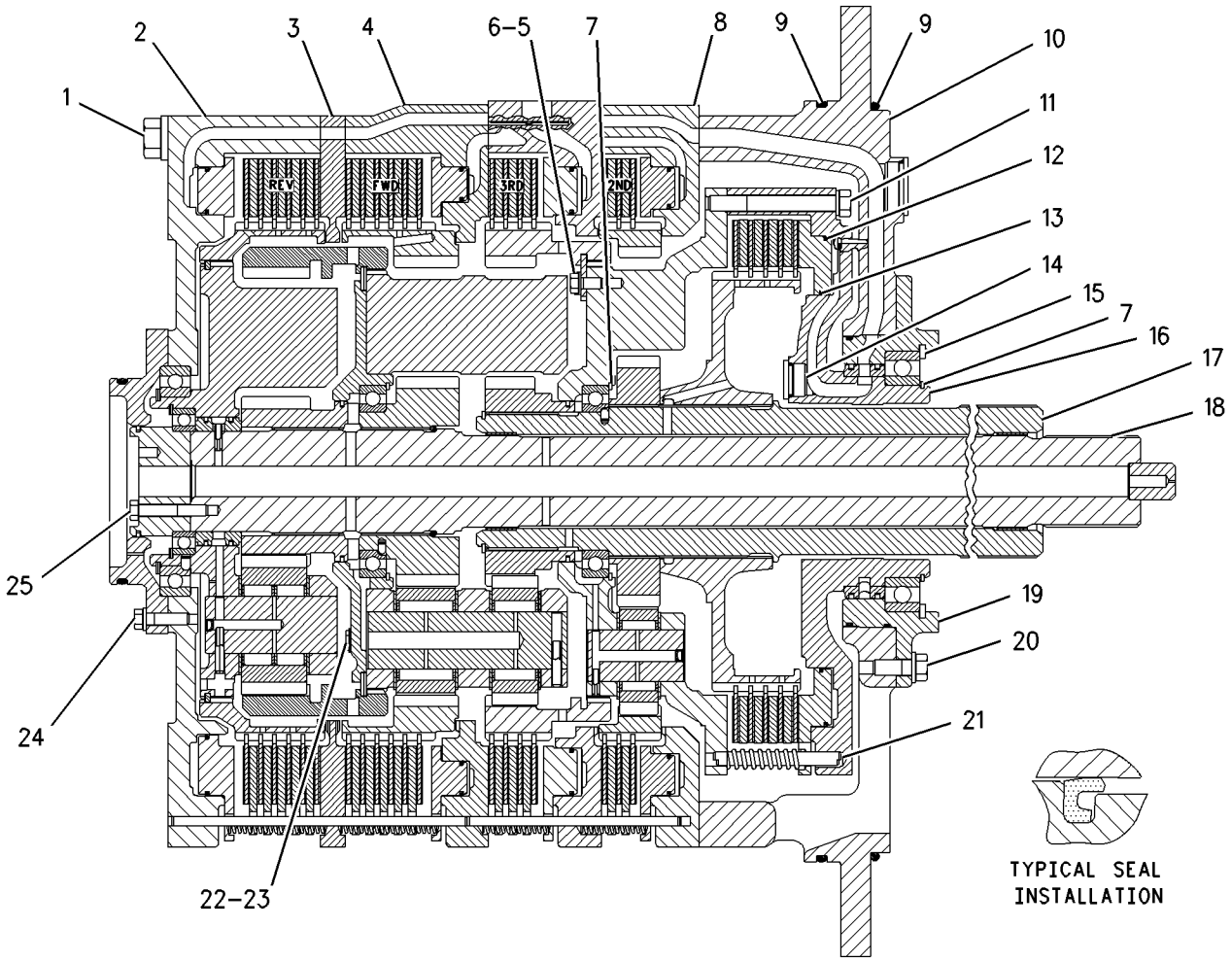

GRAPHIC #1 g00638067

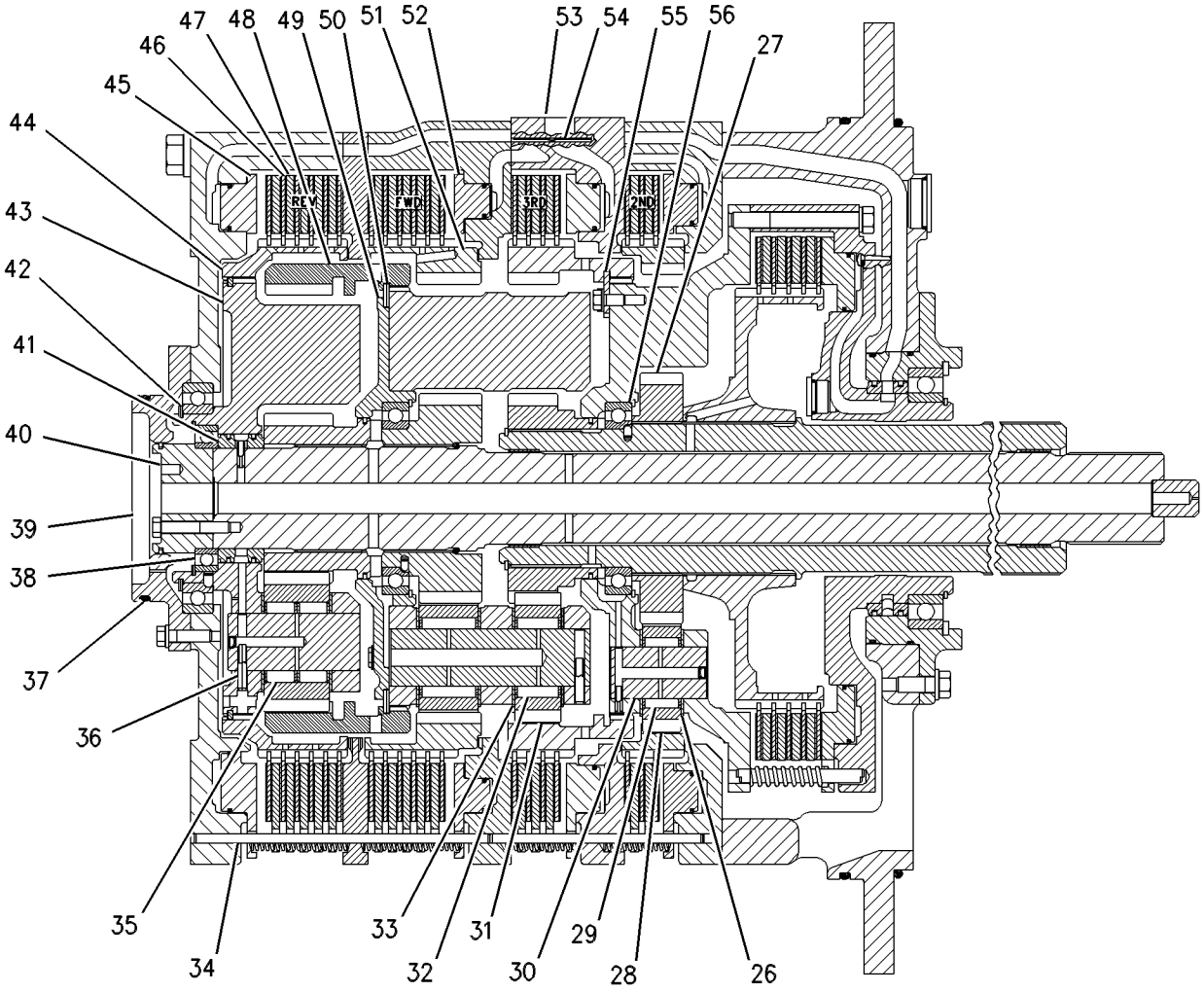

GRAPHIC #2

g00363874

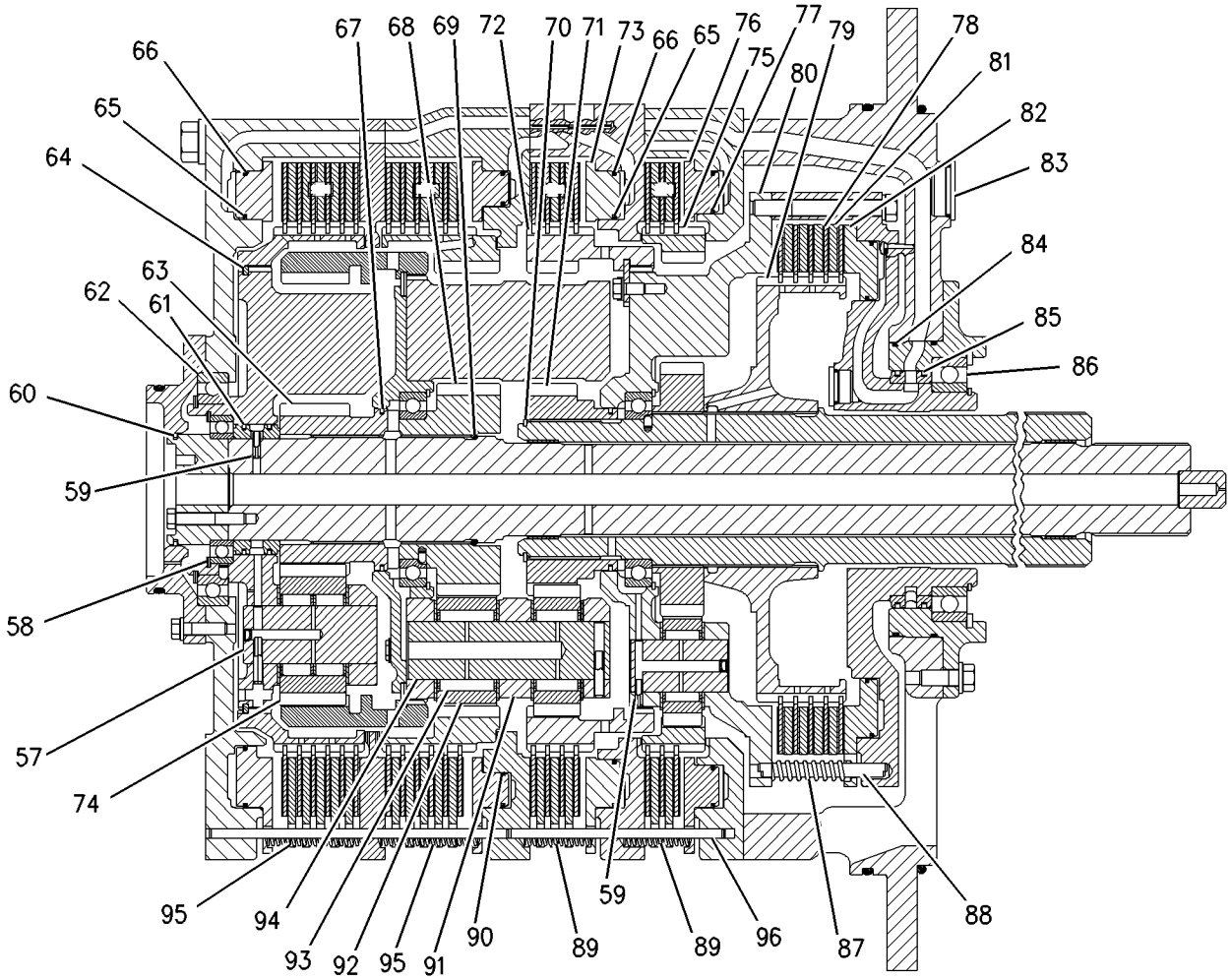

GRAPHIC #3 **<END>** g00638063

POWER TRAIN

194-3806 PLANETARY GP-TRANSMISSION

S/N: 1SY1158-UP

PART OF 194-3805 TRANSMISSION AR

SMCS-3160 **i01622493**

NOTE	REF NO	GRAPHIC REF	PART NUMBER	QTY	PART NAME 1 2 3 4 5 6 (PRODUCT LEVEL)	SEE PAGE
	1	1	**5P-1670**	17	BOLT (3/4-10X18.5 IN)	
		1	**2S-0115**	17	WASHER-HARD (20X36.5X5MM THK)	
	2	1	**194-3807**	1	HOUSING-CLUTCH	
	3	1	**194-3812**	1	PLATE AS-CENTER	
		1	**3F-3442**	2	DOWEL	
	4	1	**194-3814**	1	HOUSING-CLUTCH	
	5	1	**0S-0509**	4	BOLT (3/8-16X0.75 IN)	
	6	1	**5S-5880**	2	LOCK-NUT	
	7	1	**6V-6458**	3	RING-RETAINING	
	8	1	**194-3820**	1	HOUSING-CLUTCH	
	9	1	**5D-6428**	2	SEAL-O-RING	
	10	1	**3T-6366**	1	HOUSING AS-SUPPORT	
	11	1	**1D-4569**	12	BOLT (1/2-13X4.25 IN)	
		1	**1T-0808**	12	WASHER (.516X.812X0.09IN THK)	
	12	1	**3P-7570**	1	RING-SEAL	
	13	1	**8P-9569**	1	RING-SEAL	
	14	1	**9S-8008**	2	PLUG	
		1	**3D-2824**	2	SEAL-O-RING	
	15	1	**3E-4371**	1	RING-RETAINING	
	16	1	**6Y-7269**	1	HOUSING AS-ROTATION	
		1	**7M-5130**	1	PIN-SPRING	
		1	**7M-8480**	2	DOWEL	
		1	**9G-0647**	1	CARRIER-RING	
	17	1	**6Y-7260**	1	SHAFT AS-OUTPUT	
		1	**1T-0766**	2	BEARING-SLEEVE	
		1	**4S-8537**	1	DOWEL	
	18	1	**6Y-8123**	1	SHAFT AS	
		1	**6Y-8122**	1	PLUG-ORIFICE	
	19	1	**9U-9498**	1	CAGE-BEARING	
	20	1	**5P-8245**	7	WASHER-HARD (13.5X25.5X3MM THK)	
		1	**7B-3235**	7	BOLT (1/2-13X1.375 IN)	
	21	1	**3P-7832**	6	DOWEL	
	22	1	**0S-1594**	8	BOLT (3/8-16X1 IN)	
	23	1	**4M-5397**	4	LOCK-NUT	
	24	1	**0S-1591**	6	BOLT (3/8-16X1.5 IN)	
		1	**5M-2894**	6	WASHER-HARD (10.2X18.5X2.5MM THK)	
	25	1	**0L-2070**	2	BOLT (3/8-16X2.25 IN)	
	26	2	**8E-8310**	8	DISC-THRUST	
	27	2	**3P-7564**	1	GEAR-SUN (47 TEETH)	
	28	2	**7G-3467**	4	GEAR-PLANETARY (20 TEETH)	
	29	2	**5M-7925**	4	BEARING-ROLLER	
	30	2	**3P-7558**	4	SHAFT AS-PLANETARY	
					(EACH INCLUDES)	
		2	**3S-0036**	1	PLUG-CORE	
	31	2	**7G-3470**	4	GEAR-PLANETARY (22 TEETH)	
	32	2	**1P-3958**	4	ROLLER AS-SPECIAL	
	33	2	**8E-8316**	24	DISC-THRUST	
	34	2	**191-4546**	6	DOWEL-REACTION	
	35	2	**1S-9110**	8	ROLLER AS	
	36	2	**2H-9445**	8	PIN-SPRING	
	37	2	**5L-5032**	1	SEAL-O-RING	
	38	2	**5P-6727**	1	BALL BEARING	
	39	2	**153-2838**	1	RETAINER-BEARING	
	40	2	**8P-7236**	1	RETAINER	
	41	2	**8P-7243**	1	CARRIER-RING	
	42	2	**5P-6726**	1	RING-RETAINING (132.82MM ID)	

194-3806 PLANETARY GP-TRANSMISSION *(contd.)* i01622493

NOTE	REF NO	GRAPHIC REF	PART NUMBER	QTY	PART NAME 1 2 3 4 5 6 (PRODUCT LEVEL)	SEE PAGE
	43	2	**115-0761**	1	CARRIER AS	
		2	**4B-9782**	4	BALL	
		2	**4S-8541**	1	DOWEL	
	44	2	**115-0763**	1	COUPLING	
	45	2	**194-3809**	1	PISTON-CLUTCH	
	46	2	**8E-0985**	19	DISC AS-CLUTCH	
	47	2	**194-3811**	15	PLATE-CLUTCH	
	48	2	**119-3379**	1	GEAR-COUPLING	
	49	2	**3P-7149**	1	CAGE-BEARING	
	50	2	**5P-6651**	1	RING-RETAINING	
	51	2	**188-4655**	1	GEAR AS-RING (82 TEETH)	
	52	2	**194-3815**	1	PISTON-CLUTCH	
	53	2	**194-3816**	1	HOUSING AS-CLUTCH	
		2	**4D-8148**	4	DOWEL	
	54	2	**6I-9790**	17	DAMPER-BOLT	
	55	2	**3P-7601**	2	PLATE-LOCK	
	56	2	**187-1367**	2	BEARING-SPECIAL BALL	
	57	3	**8P-7242**	4	SHAFT AS-PLANETARY	
					(EACH INCLUDES)	
		3	**2A-3746**	1	PLUG-CUP	
	58	3	**3K-2559**	1	RING-RETAINING	
	59	3	**3S-2708**	5	PIN-SPRING	
	60	3	**4H-7925**	1	RING-METAL SEAL	
	61	3	**6F-0155**	2	RING-METAL SEAL	
	62	3	**148-6559**	1	BALL BEARING	
	63	3	**8P-7244**	1	GEAR-SUN (30 TEETH)	
	64	3	**115-0764**	1	RING-LOCK	
	65	3	**9G-9557**	2	RING-SEAL	
	66	3	**3P-7612**	4	RING-SEAL	
	67	3	**3S-8035**	2	RING-SEAL	
	68	3	**6Y-7270**	1	GEAR AS-SUN (38 TEETH)	
		3	**4S-8537**	1	DOWEL	
	69	3	**4M-1708**	1	RING	
	70	3	**1N-5410**	1	RING-RETAINING	
	71	3	**3P-7563**	1	GEAR-SUN (38 TEETH)	
	72	3	**3P-7586**	1	GEAR-RING (82 TEETH)	
	73	3	**194-3819**	1	PISTON-CLUTCH	
	74	3	**7G-3469**	4	GEAR-PLANETARY (24 TEETH)	
	75	3	**3P-7575**	1	GEAR-RING (85 TEETH)	
	76	3	**194-3821**	1	PISTON-CLUTCH	
	77	3	**8P-6292**	1	RING-SEAL	
	78	3	**169-7055**	5	DISC-CLUTCH	
	79	3	**8P-3133**	1	HUB	
	80	3	**193-8609**	1	CARRIER-PLANETARY	
R	81	3	**3P-7447**	4	PLATE-CLUTCH	
	82	3	**6Y-5877**	1	PISTON-CLUTCH	
	83	3	**9S-8010**	1	PLUG	
		3	**2S-4078**	1	SEAL-O-RING	
	84	3	**8F-6230**	2	SEAL-O-RING	
	85	3	**148-9643**	2	RING-SEAL	
	86	3	**5P-1669**	1	BALL BEARING	
	87	3	**3P-7566**	12	SPRING	
	88	3	**1B-2524**	12	PIN	
	89	3	**9H-5537**	24	SPRING	
	90	3	**6Y-7261**	1	RING-SEAL	
	91	3	**115-0767**	1	CARRIER-PLANETARY	
	92	3	**9W-9099**	4	GEAR-PLANETARY (22 TEETH)	
	93	3	**148-0330**	4	BEARING	
	94	3	**9W-9100**	4	SHAFT-PLANETARY	

194-3806 **PLANETARY GP-TRANSMISSION** *(contd.)* **i01622493**

NOTE	REF NO	GRAPHIC REF	PART NUMBER	QTY	PART NAME 1 2 3 4 5 6 (PRODUCT LEVEL)	SEE PAGE
	95	3	**1S-8480**	24	SPRING (.364X.562X3.27 IN)	
	96	3	**194-3822**	6	DOWEL-REACTION	
R-REMFG PART MAY BE AVAILABLE						

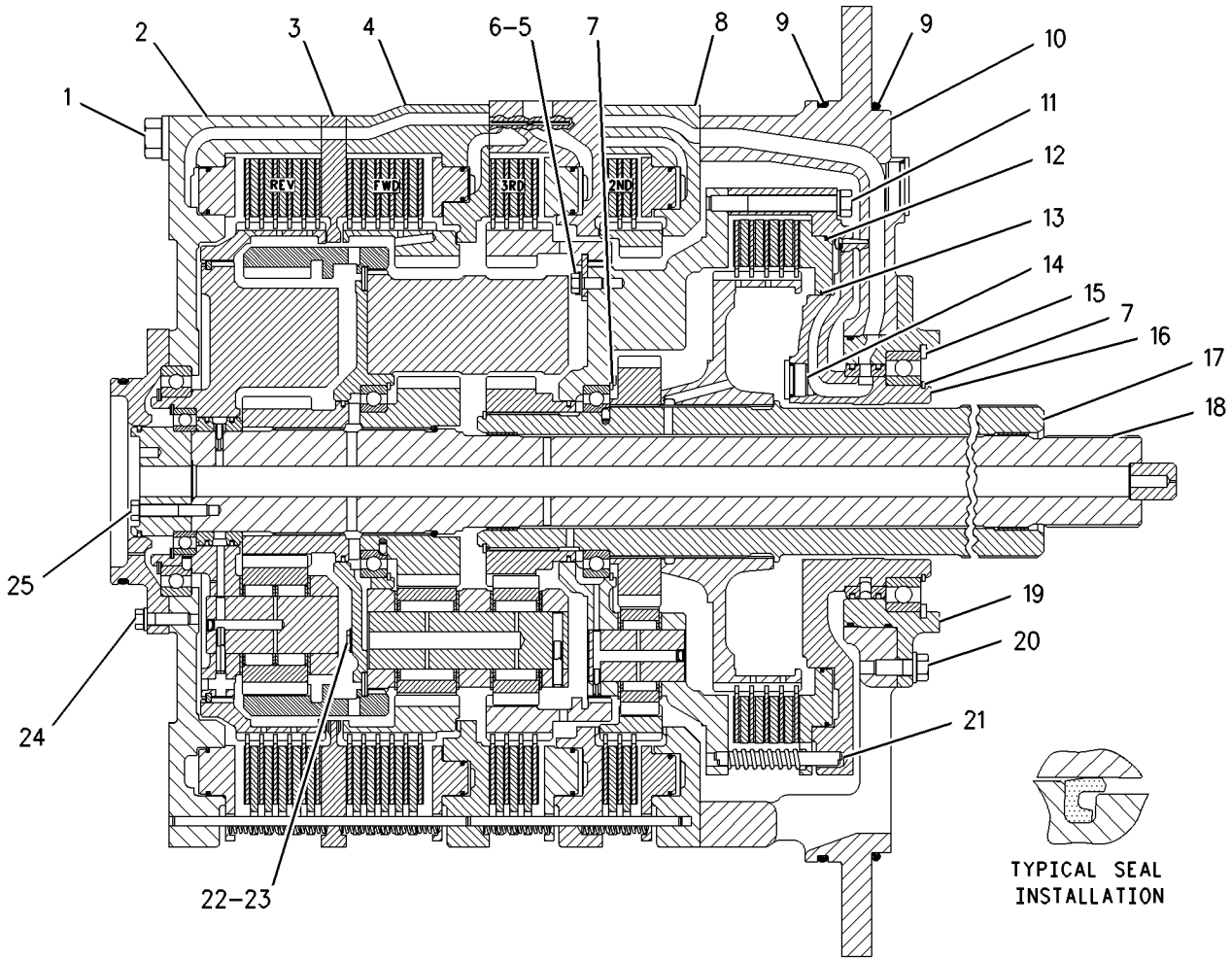

GRAPHIC #1 g00857841

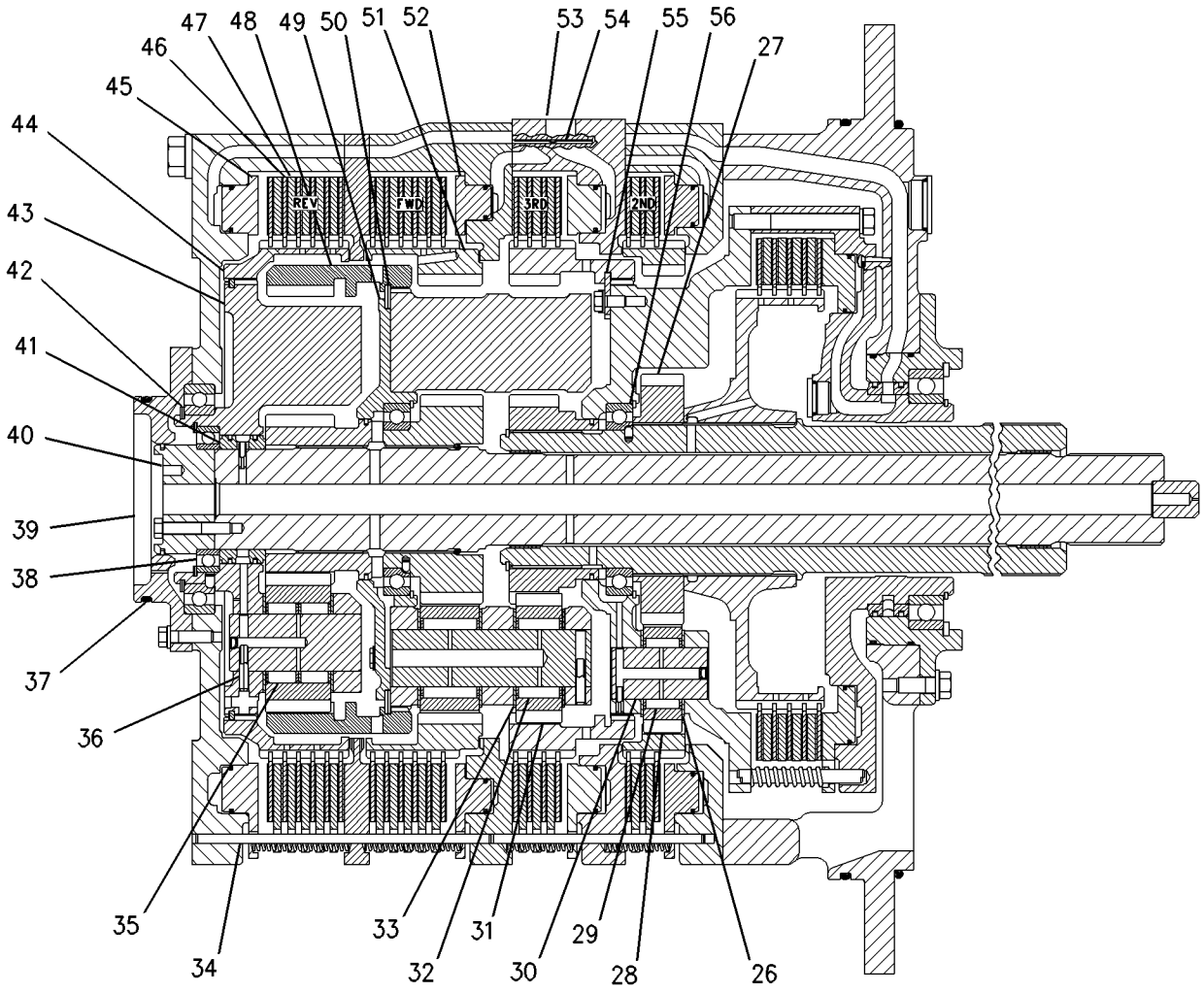

GRAPHIC #2

g00857842

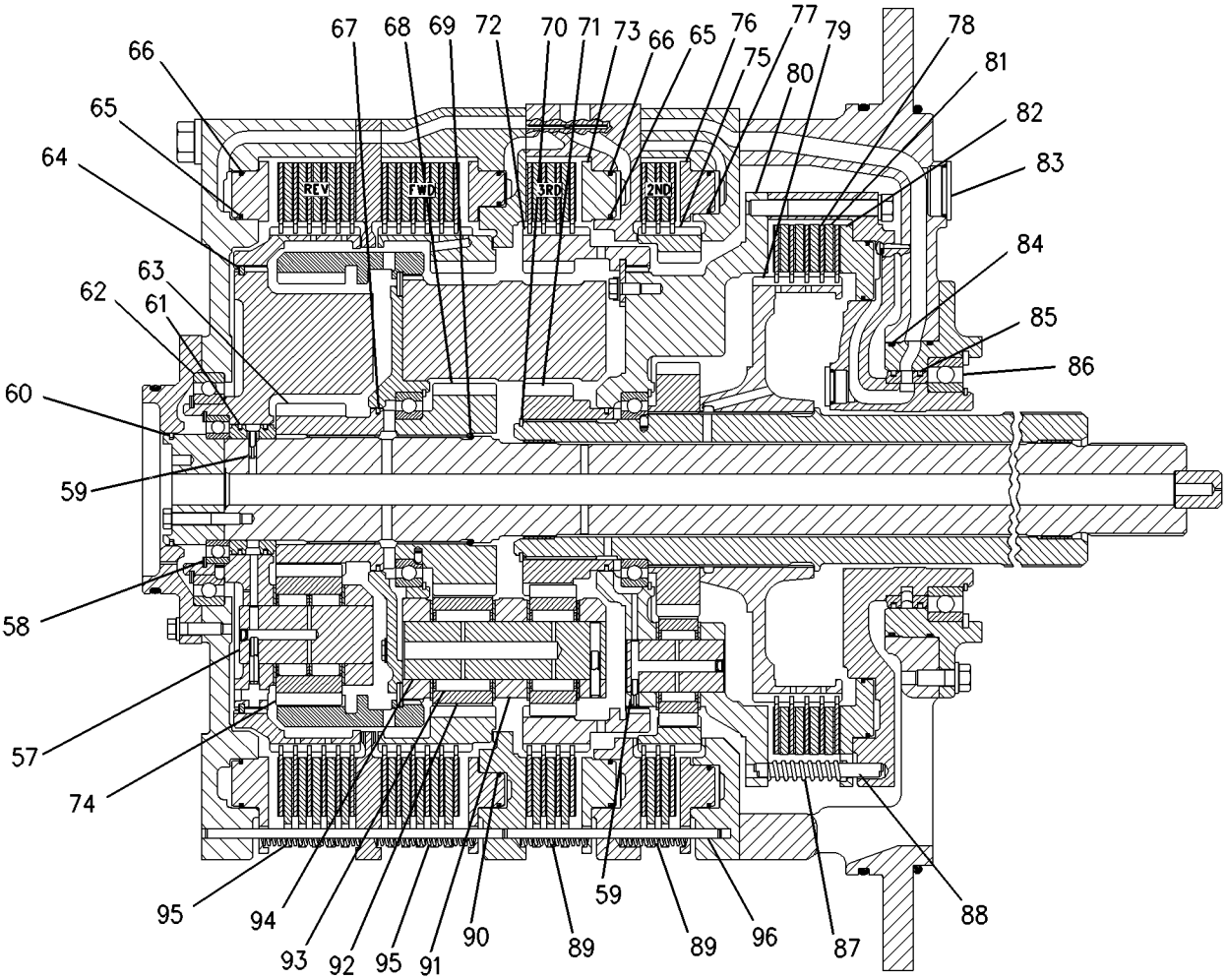

GRAPHIC #3 **<END>** g00857843

POWER TRAIN

112-9167 POWER TRAIN AR

S/N: 7PZ1-UP

PART OF 155-5550 GENERAL AR

SMCS-3000, 4000 **i01988723**

NOTE	PART NUMBER	QTY	PART NAME 1 2 3 4 5 6 (PRODUCT LEVEL)	SEE PAGE
Y	*134-6035*	1	AXLE GP-POWER TRAIN	401
YR	**118-9628**	2	CLUTCH & BRAKE GP-STEERING	623
Y	*115-7412*	1	CONTROL & MTG GP-TRANSMISSION	280
Y	*158-8077*	1	CONTROL & MTG GP-POWER TRAIN	278
Y	*115-7411*	1	CONTROL GP-BRAKE	404
Y	*125-6511*	1	COUPLING GP-PUMP	411
Y	*176-1236*	2	FINAL DRIVE GP	418
Y	*127-7480*	1	LINES GP-POWER TRAIN OIL	432
Y	*127-7486*	1	MOUNTING GP-TRANSMISSION	442
Y	*127-7479*	1	SHAFT GP-DRIVE	461
YR	*121-0030*	1	TORQUE CONVERTER GP	467
Y	*116-9491*	1	TRANSMISSION AR	469
Y	*115-7414*	1	VALVE & MTG GP-STEER & BRAKE	642
			S/N: 7PZ1-406	
Y	*202-7400*	1	VALVE & MTG GP-STEER & BRAKE	643
			S/N: 7PZ407-UP	

R-REMFG PART MAY BE AVAILABLE
Y-SEPARATE ILLUSTRATION

<END>

126-5013 PUMP GP-GEAR–TORQUE CONVERTER SCAVENGE–TRANSMISSION SCAVENGE

S/N: 7PZ1-UP

PART OF 142-5000 PUMP GP-GEAR

SMCS-3066, 3115, 5073 **i01988722**

NOTE	REF NO	GRAPHIC REF	PART NUMBER	QTY	PART NAME 1 2 3 4 5 6 (PRODUCT LEVEL)	SEE PAGE
	1	1	**126-5855**	1	BODY AS-OIL PUMP (TRANSMISSION SCAVENGE)	
	2	1	**9M-4370**	2	BEARING	
	3	1	**126-8540**	1	GEAR AS-OIL PUMP (8 TEETH)	
	4	1	**126-8539**	1	GEAR AS-OIL PUMP (8 TEETH)	
	5	1	**6Y-0192**	1	BODY AS-OIL PUMP (CONVERTER SCAVENGE)	
		1	**8M-8489**	2	DOWEL	
	6	1	**9M-4370**	2	BEARING	
	7	1	**0L-1352**	2	BOLT (3/8-16X3.25 IN)	
	8	1	**3S-0004**	6	WASHER (0.406X0.728X0.09 IN THK)	
	9	1	**1B-8736**	1	KEY-WOODRUFF	
	10	1	**3S-4327**	1	COVER-OIL PUMP	
	11	1	**8M-5007**	1	SEAL-O-RING	
	12	1	**3P-0747**	2	GEAR (12 TEETH)	
	13	1	**129-1609**	1	SEAL-O-RING	
	14	1	**0S-1619**	4	BOLT (3/8-16X3 IN)	
	15	1	**9S-4191**	1	PLUG	
	16	1	**3J-1907**	1	SEAL-O-RING	

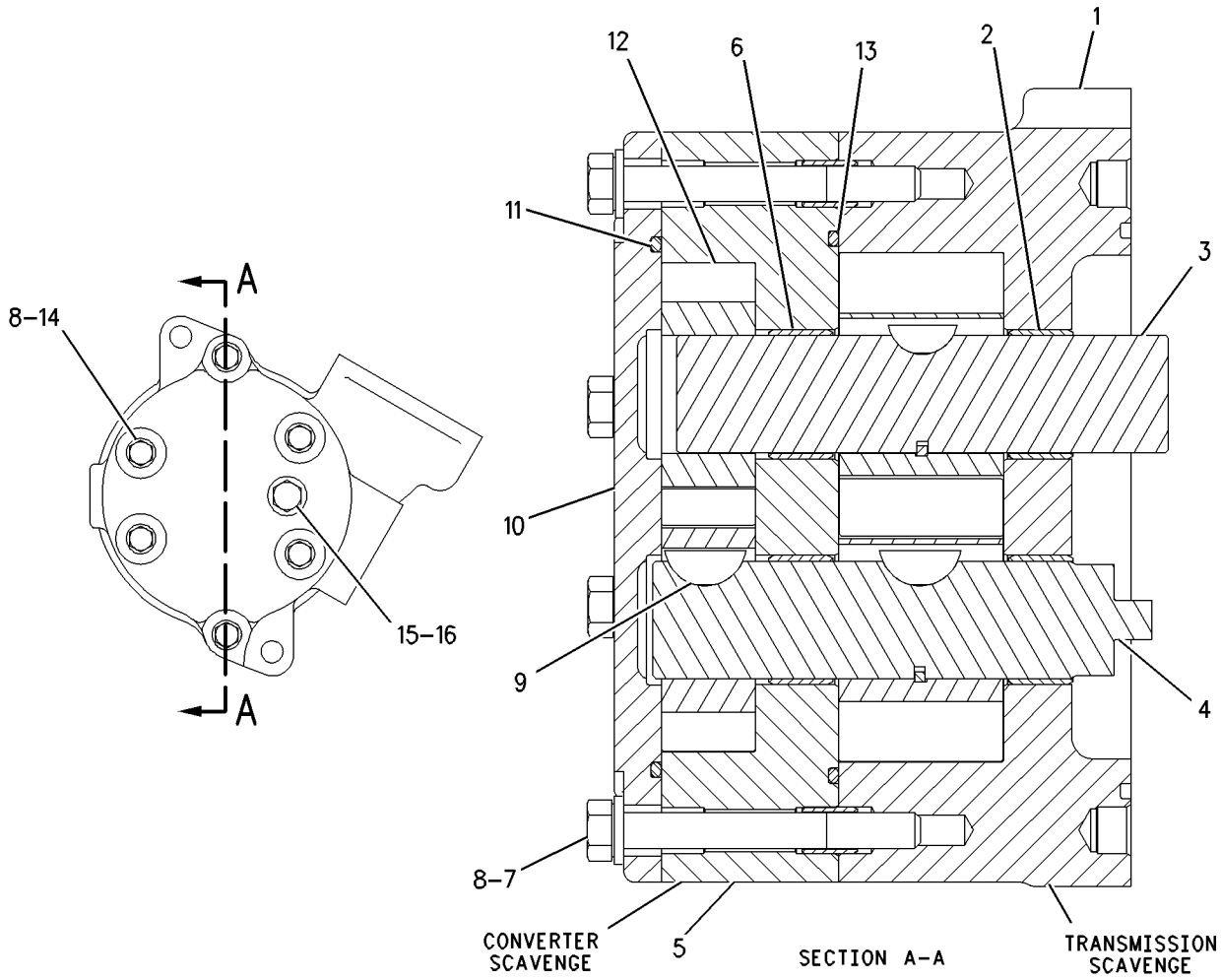

GRAPHIC #1

<END>

g00666324

142-5000 PUMP GP-GEAR–TORQUE CONVERTER–TRANSMISSION

S/N: 7PZ1-UP

5 SECTION

PART OF 127-7480 LINES GP-POWER TRAIN OIL

SMCS-3066, 3115, 5073 **i01629802**

NOTE	REF NO	GRAPHIC REF	PART NUMBER	QTY	PART NAME 1 2 3 4 5 6 (PRODUCT LEVEL)	SEE PAGE
Y	1	1	**126-5013**	1	PUMP GP-GEAR	454
	2	1	**1A-1460**	2	BOLT (1/2-13X2 IN)	
	3	1	**5P-8245**	2	WASHER-HARD (13.5X25.5X3MM THK)	
	4	1	**1P-4578**	4	FLANGE-HALF	
Y	5	1	**142-5001**	1	PUMP GP-GEAR	457
	6	1	**0T-0772**	8	BOLT (7/16-14X1.5 IN)	
	7	1	**5P-8244**	8	WASHER (12X22.5X2.5MM THK)	
	8	1	**7G-2248**	1	CAGE-BEARING	
	9	1	**6L-4784**	4	BOLT-12 POINT HEAD (5/16-18X1.75 IN)	
	10	1	**9M-1974**	4	WASHER-HARD (8.8X16X2MM THK)	
	11	1	**3T-5355**	1	FLANGE	
	12	1	**5H-4279**	1	PLUG-CUP	
	13	1	**111-4919**	1	SEAL-LIP TYPE	
	14	1	**1B-5675**	1	BALL BEARING AS	
	15	1	**6V-1196**	1	SEAL-O-RING	
	16	1	**2M-3974**	1	RING-RETAINING	
	17	1	**129-1610**	1	SEAL-O-RING	
	18	1	**0S-1588**	4	BOLT (3/8-16X1.25 IN)	
	19	1	**5M-2894**	4	WASHER-HARD (10.2X18.5X2.5MM THK)	
	20	1	**1P-4577**	2	FLANGE-HALF	
	21	1	**1P-4582**	2	FLANGE-HALF	
	22	1	**8T-8919**	4	BOLT (1/2-13X1.75 IN)	
	23	1	**8T-4223**	4	WASHER-HARD (13.5X25.5X3MM THK)	

Y-SEPARATE ILLUSTRATION

142-5000 PUMP GP-GEAR *(contd.)* **i01629802**

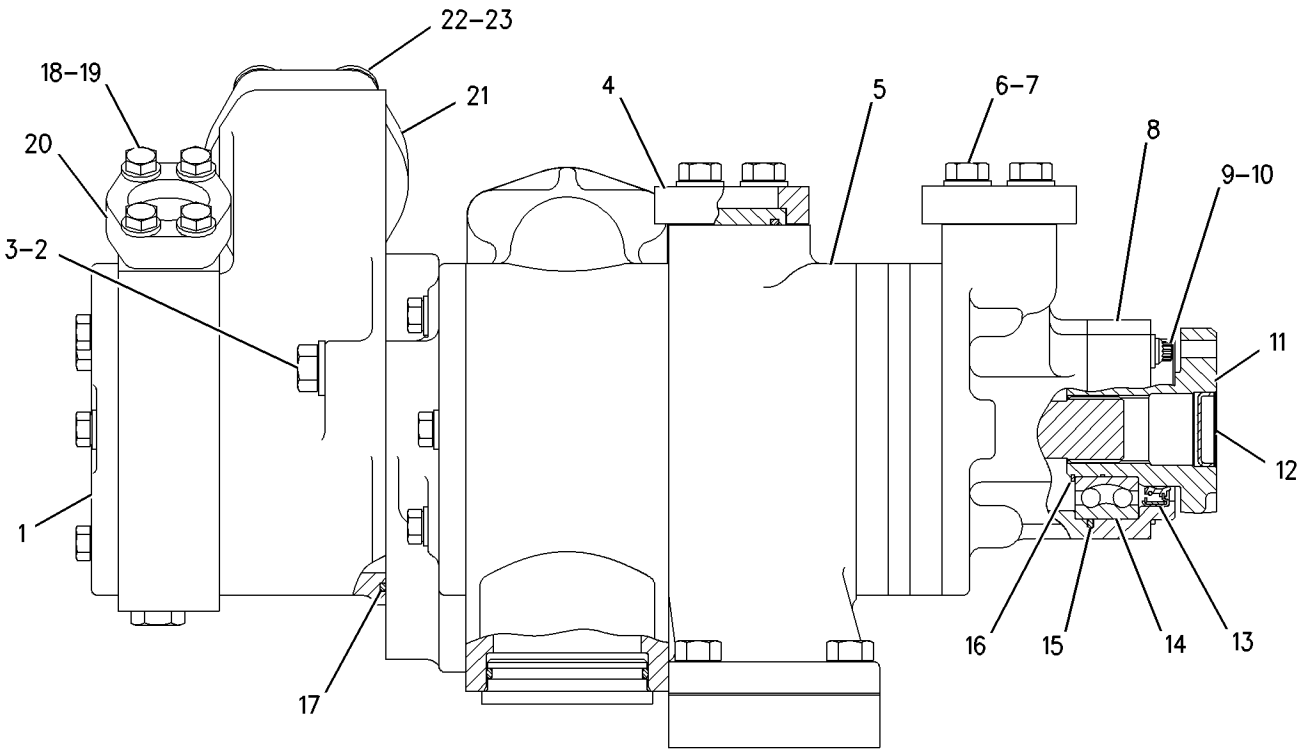

GRAPHIC #1 **<END>** g00846763

142-5001 PUMP GP-GEAR—BRAKE COOLING—TORQUE CONVERTER CHARGING—TRANSMISSION CHARGING

S/N: 7PZ1-UP

3 SECTION

PART OF 142-5000 PUMP GP-GEAR

SMCS-3066, 3115, 5073 **i01988730**

NOTE	REF NO	GRAPHIC REF	PART NUMBER	QTY	PART NAME 1 2 3 4 5 6 (PRODUCT LEVEL)	SEE PAGE
	1	1	**125-4605**	1	COVER AS	
	2	1	**1H-0974**	2	DOWEL	
	3	1	**1M-3780**	2	BEARING-SLEEVE	
	4	1	**142-4996**	1	BODY AS (BRAKE COOLING)	
		1	**6P-3223**	6	DAMPER-BOLT	
		1	**8M-8489**	2	DOWEL	
	5	1	**5M-3320**	2	BEARING-SLEEVE	
	6	1	**129-7202**	1	BODY AS (CONVERTER CHARGING)	
		1	**8M-8489**	2	DOWEL	
	7	1	**1M-3909**	2	BEARING-SLEEVE	
	8	1	**9W-3273**	1	SPACER	
	9	1	**130-7558**	2	BODY AS (TRANSMISSION CHARGING)	
					(EACH INCLUDES)	
		1	**9M-4388**	2	DOWEL	
	10	1	**130-8206**	1	COVER AS	
	11	1	**131-0167**	2	BEARING-SLEEVE	
	12	1	**142-5002**	1	GEAR AS-OIL PUMP (8 TEETH)	
	13	1	**1B-8705**	2	KEY-WOODRUFF	
	14	1	**9G-1499**	4	GEAR (8 TEETH)	
	15	1	**142-5004**	1	GEAR AS-OIL PUMP (8 TEETH)	
	16	1	**130-0084**	2	GEAR (8 TEETH)	
	17	1	**7L-7524**	6	BOLT (3/8-16X10.25IN)	
	18	1	**3S-0004**	6	WASHER (0.406X0.728X0.09 IN THK)	
	19	1	**129-1609**	6	SEAL-O-RING	
	20	1	**2B-9373**	1	KEY-WOODRUFF	
	21	1	**129-1653**	2	SEAL-O-RING	

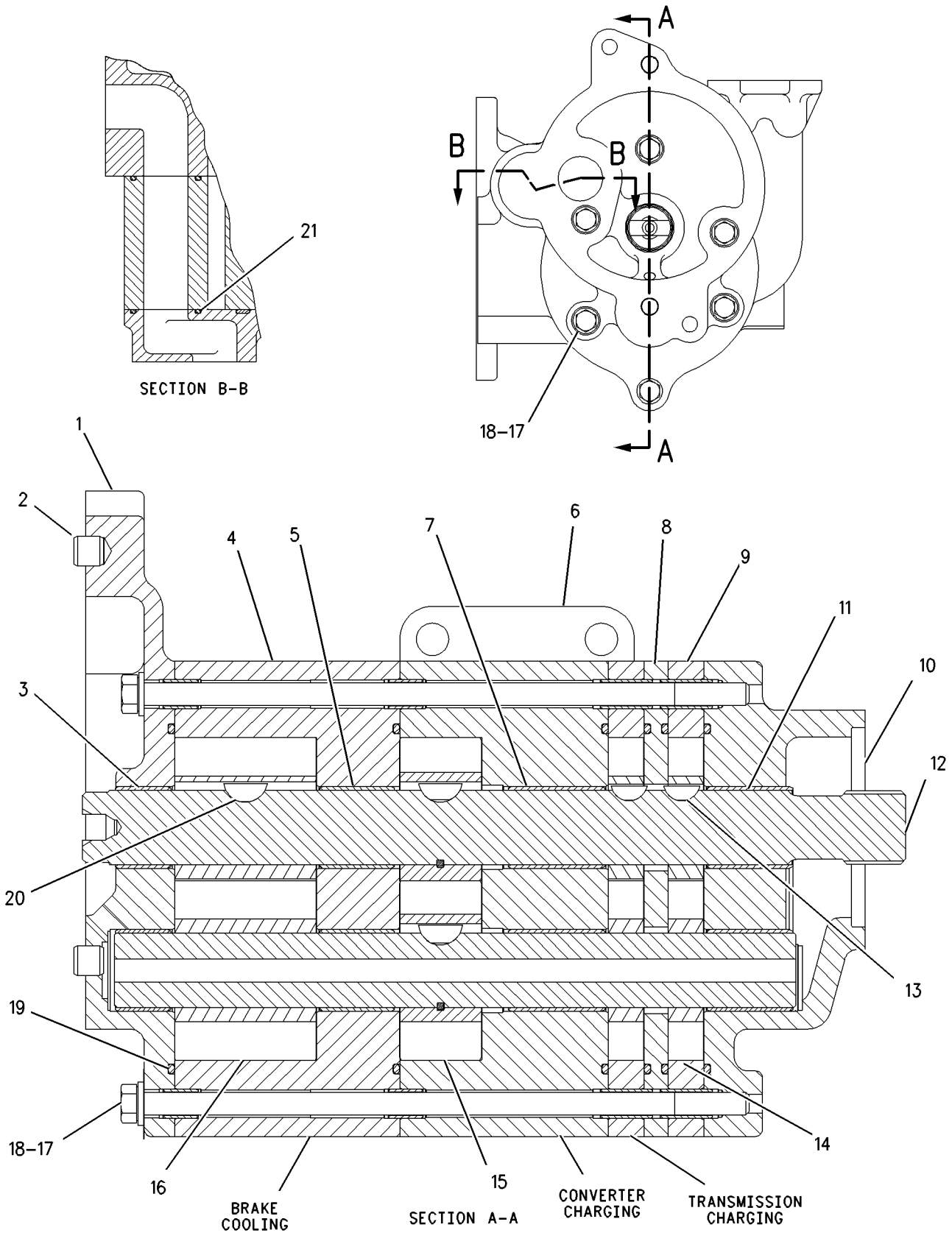

GRAPHIC #1 **<END>** g00666327

173-7721 SEAL-ROPE

S/N: 7PZ1-UP

PROVIDES REPLACEMENT KEVLAR ROPE SEAL FOR PACKING-SEAL TYPE FINAL DRIVE DUO-CONE SEAL GUARDS

FIELD INSTALLATION

SMCS-4052 **i01233657**

NOTE	PART NUMBER	QTY	PART NAME 1 2 3 4 5 6 (PRODUCT LEVEL)	SEE PAGE
			(NO SERVICED PARTS)	

<END>

136-6968 SEGMENT GP-SPROCKET

S/N: 7PZ1-UP

PART OF 176-1236 FINAL DRIVE GP

SMCS-4155 **i01978013**

NOTE	REF NO	GRAPHIC REF	PART NUMBER	QTY	PART NAME 1 2 3 4 5 6 (PRODUCT LEVEL)	SEE PAGE
	1	1	**231-9484**	1	SEGMENT-SPROCKET	
	2	1	**231-9486**	3	SEGMENT-SPROCKET	
	3	1	**3S-1356**	32	NUT-FULL (1-1/8-12 THD)	
	4	1	**3S-1349**	32	WASHER-HARD (31X52.5X6MM THK)	
	5	1	**7T-1243**	32	BOLT (1 1/8-12X4.13 IN)	

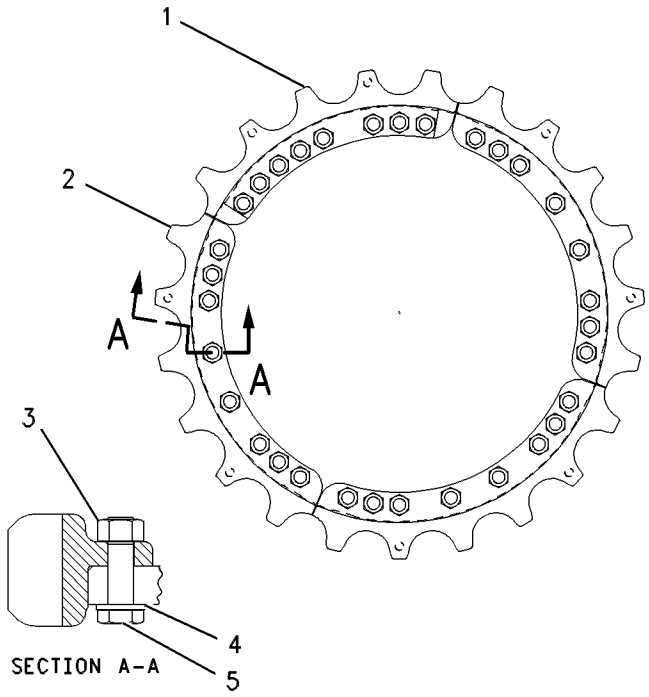

GRAPHIC #1 **<END>** g00474152

POWER TRAIN

127-7479 SHAFT GP-DRIVE

S/N: 7PZ1-UP

PART OF 112-9167 POWER TRAIN AR

SMCS-3253 **i01853336**

NOTE	REF NO	GRAPHIC REF	PART NUMBER	QTY	PART NAME 1 2 3 4 5 6 (PRODUCT LEVEL)	SEE PAGE
	1	1	**0S-2318**	8	BOLT (5/8-18X3.25 IN)	
	2	1	**2D-6642**	1	BALL	
	3	1	**3P-2574**	1	RACE & ROLLER AS	
Y	4	1	**3T-1448**	1	UNIVERSAL JOINT GP	472
	5	1	**5P-7457**	1	SEAL-LIP	
	6	1	**5P-8904**	1	RACE-BEARING INNER	
	7	1	**8T-9383**	2	BOLT (1/2-13X0.75 IN)	
	8	1	**8B-6561**	4	SPACER (7/32IDX7/8ODX2-9/16THK)	
	9	1	**9K-2215**	1	RING	
	10	1	**9P-8339**	1	CAGE-BEARING	
	11	1	**9P-8340**	1	COVER-BEARING	
	12	1	**125-3664**	1	YOKE-UNIVERSAL JOINT	
	13	1	**132-2138**	1	GUARD AS	
		1	**1F-0750**	6	NUT-WELD (3/8-16 THD)	
	14	1	**219-1802**	1	BRACKET AS	
		1	**7C-8246**	4	SPACER (10.5X20X24MM THK)	
	15	1	**142-0748**	1	GUARD AS	
		1	**5C-3162**	1	BLOCK	
		1	**7T-1099**	1	LINK	
	16	1	**1S-4974**	1	SEAL-O-RING	
	17	1	**4L-6454**	6	BOLT (3/8-16X1 IN)	
	18	1	**5P-1075**	10	WASHER-HARD (10.2X22.5X3MM THK)	
	19	1	**5S-4554**	1	SEAL-O-RING	
	20	1	**5S-7383**	3	BOLT (3/8-16X1.75 IN)	
	21	1	**8M-8281**	1	SEAL-O-RING	
	22	1	**8T-4223**	2	WASHER-HARD (13.5X25.5X3MM THK)	
	23	1	**8T-4896**	7	WASHER-HARD (10.2X18.5X2.5MM THK)	
	24	1	**8T-7008**	4	BOLT (3/8-16X3 IN)	
	25	1	**8T-8915**	4	BOLT (3/8-16X3.25 IN)	
	26	1	**5T-4568**	1	PLATE	

Y-SEPARATE ILLUSTRATION

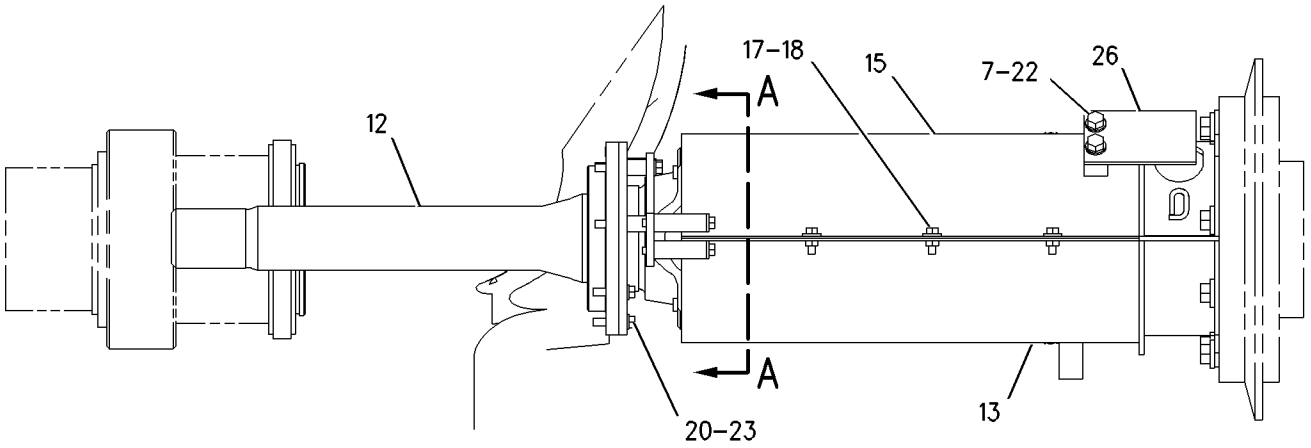

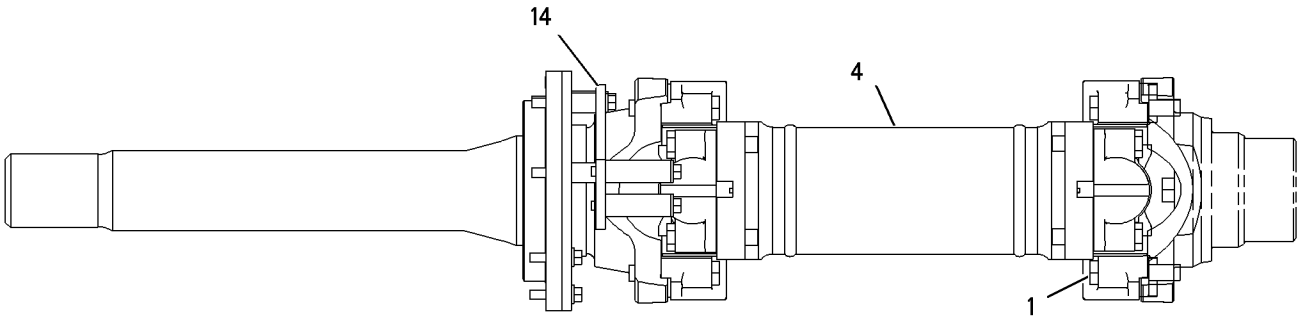

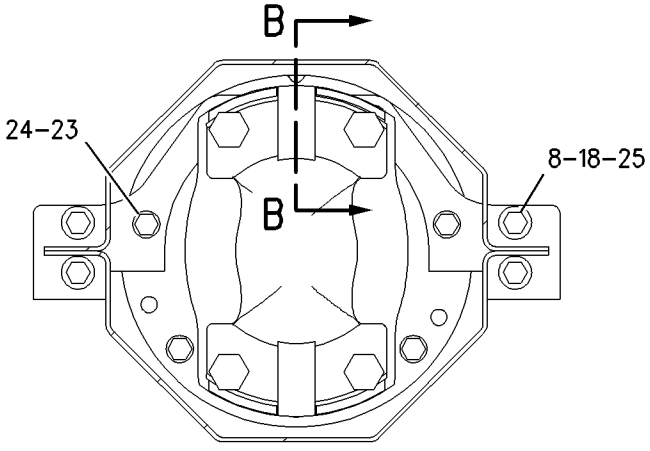

SECTION A-A

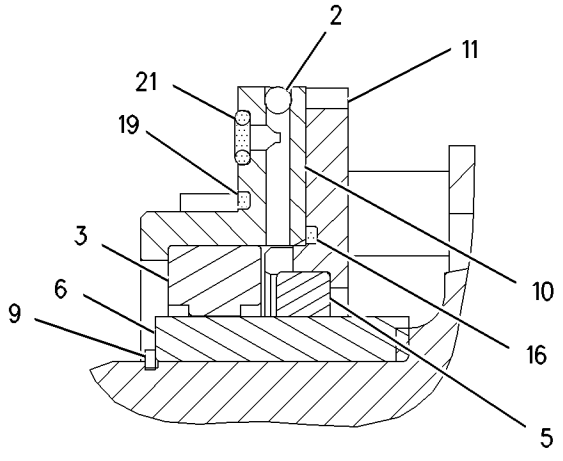

SECTION B-B

GRAPHIC #1 **<END>** g01007332

POWER TRAIN

121-0028 TORQUE CONVERTER GP

S/N: 4BT1-UP

PART OF 121-0029 TORQUE CONVERTER GP

SMCS-3101 **i01421453**

NOTE	REF NO	GRAPHIC REF	PART NUMBER	QTY	PART NAME 1 2 3 4 5 6 (PRODUCT LEVEL)	SEE PAGE
	1	1	**6Y-8006**	1	IMPELLER-CONVERTER	
	2	1	**6P-8317**	1	FLANGE AS-DRIVE	
		1	**3J-7354**	2	SEAL-O-RING (8.92MM ID)	
		1	**8M-3405**	2	DOWEL	
		1	**9S-4182**	2	PLUG-O-RING	
	3	1	**2P-1823**	1	CUP-ROLLER BEARING	
	4	1	**8P-3572**	1	SLEEVE-WEAR	
	5	1	**5H-8985**	1	PIN-SPRING	
	6	1	**1B-2886**	12	BOLT (1/2-13X3.75 IN)	
	7	1	**118-2111**	1	SUPPORT-STATOR	
	8	1	**7B-3235**	10	BOLT (1/2-13X1.375 IN)	
	9	1	**2M-0849**	54	WASHER-HARD (13.5X25.5X5MM THK)	
	10	1	**7G-2954**	1	CARRIER-STATOR	
	11	1	**2K-9062**	5	PIN-SPRING	
	12	1	**9P-4483**	1	PLATE-THRUST	
	13	1	**7G-9922**	1	RING-SEAL	
	14	1	**9P-9519**	1	CARRIER-RING	
I	15	1	**2P-1824**	1	CONE-ROLLER BEARING	
	16	1	**1A-1460**	24	BOLT (1/2-13X2 IN)	
	17	1	**143-0738**	1	STATOR-TORQUE CONVERTER	
	18	1	**1T-0241**	1	SETSCREW	
	19	1	**1T-0242**	1	LOCKWASHER-BEARING	
	20	1	**6Y-2438**	1	HOUSING	
	21	1	**0S-1594**	6	BOLT (3/8-16X1 IN)	
	22	1	**5M-2894**	6	WASHER-HARD (10.2X18.5X2.5MM THK)	
	23	1	**6P-8316**	1	HUB AS	
		1	**4D-8148**	4	DOWEL	
	24	1	**135-1707**	1	RETAINER-BEARING	
	25	1	**6G-6275**	1	RING-SEAL	
	26	1	**9P-8344**	1	CARRIER-RING	
	27	1	**3L-1824**	1	BALL BEARING	
	28	1	**5P-5580**	2	RING-RETAINING	
	29	1	**0S-1585**	20	BOLT (1/2-13X1.50 IN)	
	30	1	**121-0024**	1	FLANGE AS-OUTPUT	
		1	**6P-8319**	2	BEARING-SLEEVE	
	31	1	**8P-5696**	1	TURBINE-CONVERTER	
	32	1	**1T-0229**	1	LOCKNUT-BEARING	
	33	1	**6P-8285**	1	HUB-IMPELLER	

I-SEE HOSE FABRICATION GUIDE

121-0028 TORQUE CONVERTER GP *(contd.)* i01421453

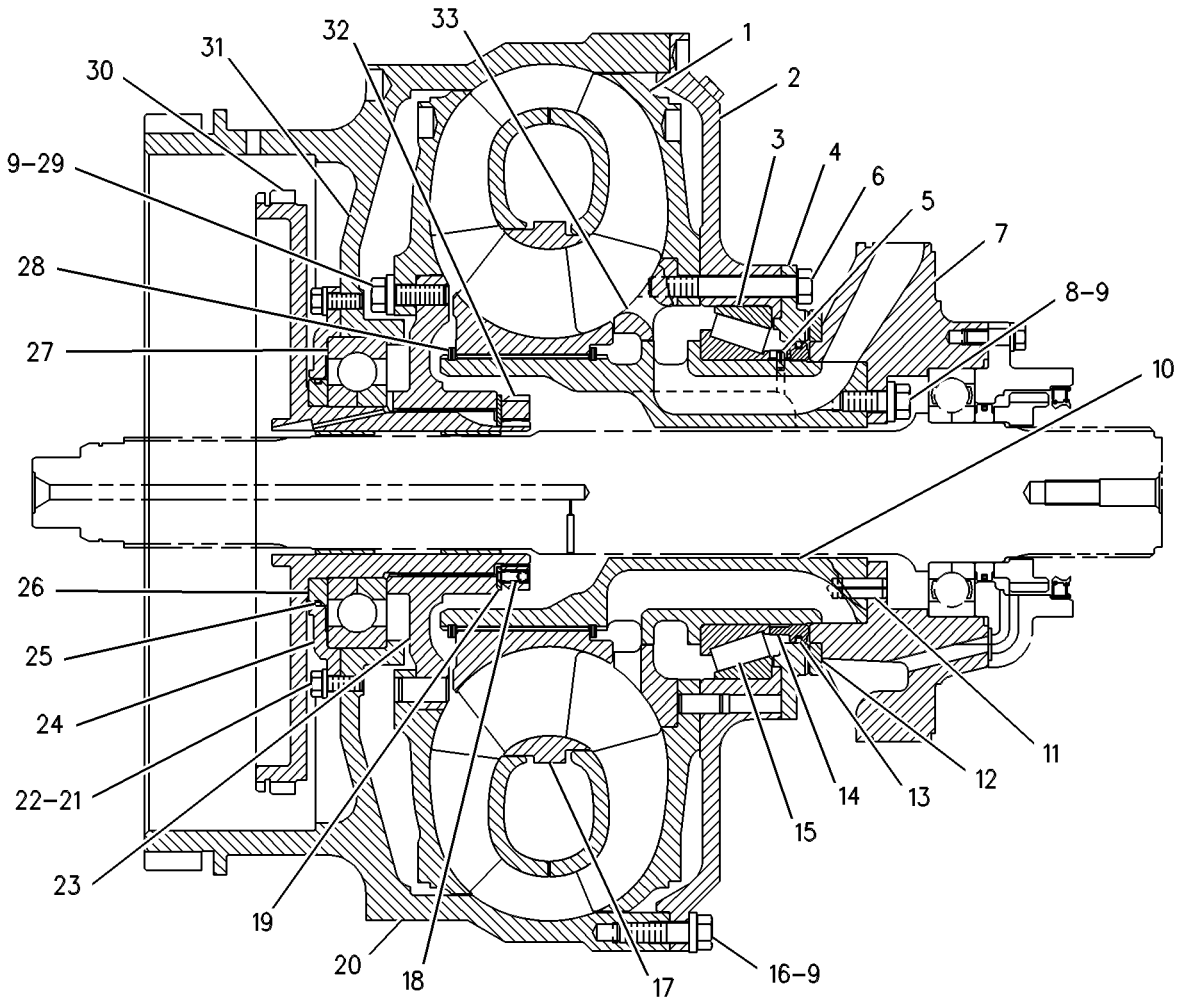

GRAPHIC #1 **<END>** g00272666

121-0029 TORQUE CONVERTER GP

S/N: 4BT1-UP

PART OF 121-0030 TORQUE CONVERTER GP

SMCS-3101 **i01707360**

NOTE	REF NO	GRAPHIC REF	PART NUMBER	QTY	PART NAME 1 2 3 4 5 6 (PRODUCT LEVEL)	SEE PAGE
Y	1	1	**121-0028**	1	TORQUE CONVERTER GP	463
	2	1	**7G-2952**	1	CARRIER-PLANETARY	
	3	1	**6P-8315**	1	RING-SNAP	
	4	1	**5H-8985**	2	PIN-SPRING	
	5	1	**8E-8316**	6	DISC-THRUST	
	6	1	**121-0027**	3	GEAR-PLANET (28 TEETH)	
	7	1	**3S-8073**	1	RING-RETAINING	
	8	1	**8P-6809**	1	SPACER	
	9	1	**6P-8621**	3	SHAFT AS	
					(EACH INCLUDES)	
		1	**2A-3746**	1	PLUG-CUP	
	10	1	**1S-9110**	3	ROLLER AS	
	11	1	**3S-2708**	3	PIN-SPRING	
	12	1	**121-0025**	1	GEAR-RING (90 TEETH)	
	13	1	**5K-4627**	1	RING-RETAINING	
	14	1	**4M-5227**	1	BALL BEARING	
	15	1	**150-7154**	1	CARRIER-SEAL	
	16	1	**1T-0310**	1	RING-METAL SEAL	
	17	1	**1S-4974**	1	SEAL-O-RING	
	18	1	**8M-5260**	1	SEAL-O-RING	
	19	1	**118-2110**	1	RETAINER-BEARING	
	20	1	**0S-1588**	6	BOLT (3/8-16X1.25 IN)	
	21	1	**5M-2894**	6	WASHER-HARD (10.2X18.5X2.5MM THK)	
	22	1	**118-2108**	1	SHAFT-OUTPUT	
	23	1	**5P-5405**	1	RACE-BEARING INNER	

Y-SEPARATE ILLUSTRATION

121-0029 TORQUE CONVERTER GP *(contd.)* i01707360

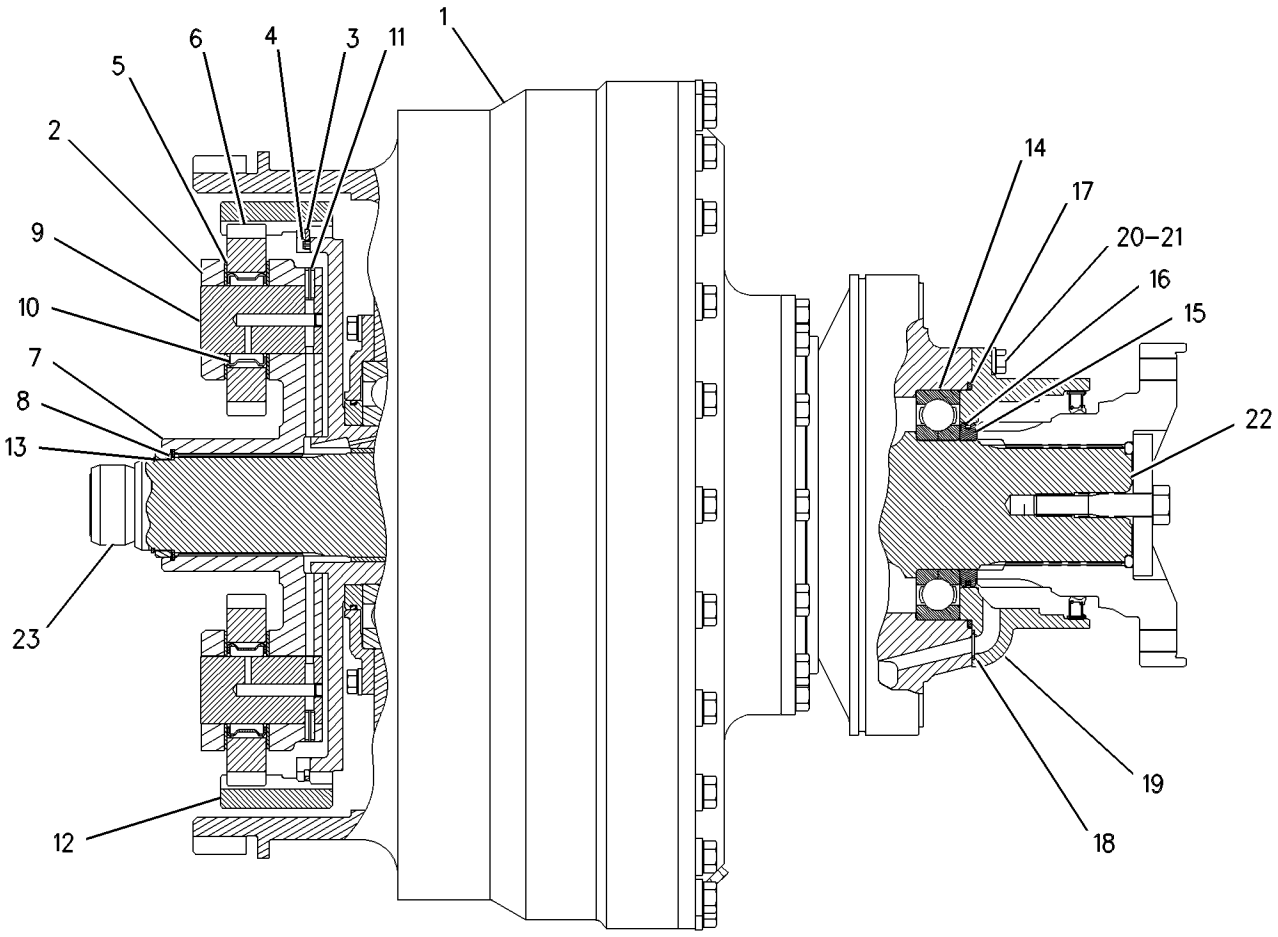

GRAPHIC #1 **<END>** g00287938

121-0030 TORQUE CONVERTER GP*R

S/N: 7PZ1-UP

PART OF 112-9167 POWER TRAIN AR

SMCS-3101 **i01988739**

NOTE	REF NO	GRAPHIC REF	PART NUMBER	QTY	PART NAME 1 2 3 4 5 6 (PRODUCT LEVEL)	SEE PAGE
Y	1	1	**121-0029**	1	TORQUE CONVERTER GP	465
	2	1	**6T-1432**	1	COVER-TORQUE CONVERTER	
	3	1	**5P-9035**	2	SEAL-O-RING	
	4	1	**173-7715**	1	SEAL-LIP TYPE	
	5	1	**118-2109**	1	YOKE	
	6	1	**3P-1669**	1	RETAINER (SHAFT)	
	7	1	**138-1208**	1	ORIFICE	
	8	1	**1D-4585**	1	BOLT (5/8-11X3.25 IN)	
	9	1	**9S-4183**	1	PLUG	
	10	1	**3D-2824**	1	SEAL-O-RING	
	11	1	**1M-0556**	1	SEAL-O-RING	
	12	1	**0S-1589**	11	BOLT (5/8-11X1.75 IN)	
	13	1	**2S-7593**	11	WASHER-HARD (17X35X5MM THK)	
	14	1	**6L-9965**	1	SEAL-O-RING	
Y	15	1	**106-4150**	1	DRAIN GP-ECOLOGY	412
	16	1	**8T-2501**	4	BOLT (3/8-16X2 IN)	
	17	1	**2B-0858**	1	PLUG-PIPE	
	18	1	**8S-9130**	1	SCREEN-SUCTION (TORQUE CONVERTER)	
	19	1	**8M-4433**	2	SEAL-O-RING	
	20	1	**8M-4988**	1	SEAL-O-RING	
	21	1	**8S-9008**	1	SLEEVE	
	22	1	**8S-9009**	1	ELBOW	
	23	1	**4L-6454**	2	BOLT (3/8-16X1 IN)	
	24	1	**8T-4896**	2	WASHER-HARD (10.2X18.5X2.5MM THK)	
	25	1	**9L-2662**	1	GASKET	
	26	1	**2K-5254**	1	BEARING-OUTER	
	27	1	**4M-8910**	1	RING-RETAINING	
	28	1	**121-0026**	1	GEAR-SUN (30 TEETH)	
	29	1	**6P-8309**	1	RING-RETAINING	
	30	1	**7T-4083**	1	RING	
	31	1	**9H-6832**	1	SEAL-O-RING	
	32	1	**5P-2566**	16	BOLT (1/2-13X1.5 IN)	
	33	1	**8T-4223**	16	WASHER-HARD (13.5X25.5X3MM THK)	

Y-SEPARATE ILLUSTRATION

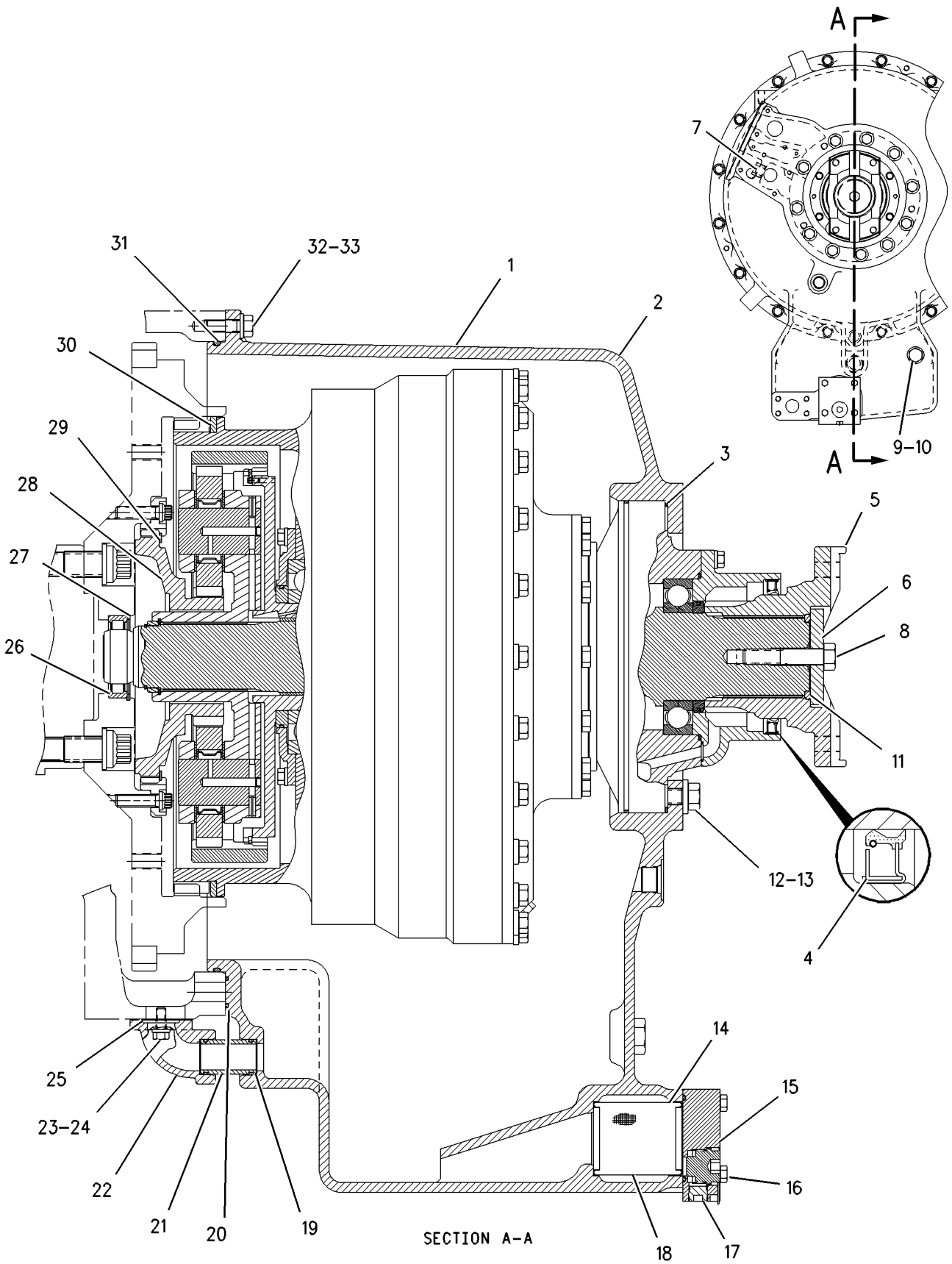

GRAPHIC #1 **<END>** g00664781

116-9491 TRANSMISSION AR

S/N: 1SY1-UP

PART OF 112-9167 POWER TRAIN AR

SMCS-3030 **i01988745**

NOTE	PART NUMBER	QTY	PART NAME 1 2 3 4 5 6 (PRODUCT LEVEL)	SEE PAGE
Y	**116-9492**	1	GEAR GP-BEVEL & TRANSFER	422
			S/N: 1SY1-1146	
Y	**183-2272**	1	GEAR GP-BEVEL & TRANSFER	426
			S/N: 1SY1147-UP	
YR	**116-9505**	1	TRANSMISSION AR	470
			S/N: 1SY1-1157	
YR	**194-3805**	1	TRANSMISSION AR	471
			S/N: 1SY1158-UP	

R-REMFG PART MAY BE AVAILABLE
Y-SEPARATE ILLUSTRATION

<END>

116-9505 TRANSMISSION AR

S/N: 1SY1-1157

PART OF 116-9491 TRANSMISSION AR

SMCS-3030 **i00997134**

NOTE	REF NO	GRAPHIC REF	PART NUMBER	QTY	PART NAME 1 2 3 4 5 6 (PRODUCT LEVEL)	SEE PAGE
Y	1	1	*116-4623*	1	PLANETARY GP-TRANSMISSION	443
Y	2	1	*116-5920*	1	CASE & PARTS GP-TRANSMISSION	402
Y	3	1	*145-6480*	1	CONTROL GP-TRANSMISSION	408
Y	4	1	*117-1258*	1	COVER GP-SHIPPING	960

Y-SEPARATE ILLUSTRATION

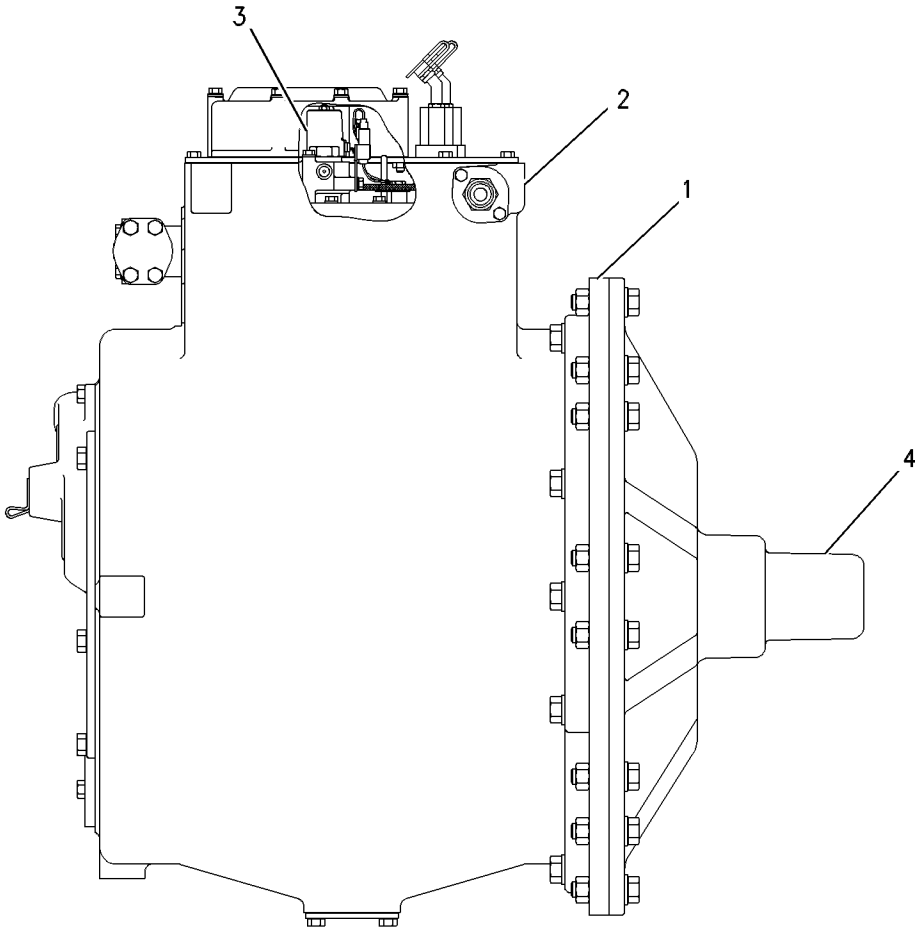

GRAPHIC #1 **<END>** g00510079

194-3805 TRANSMISSION AR*R

S/N: 1SY1158-UP

PART OF 116-9491 TRANSMISSION AR

SMCS-3030 **i01988748**

NOTE	REF NO	GRAPHIC REF	PART NUMBER	QTY	PART NAME 1 2 3 4 5 6 (PRODUCT LEVEL)	SEE PAGE
Y	1	1	*194-3806*	1	PLANETARY GP-TRANSMISSION	448
Y	2	1	*116-5920*	1	CASE & PARTS GP-TRANSMISSION	402
Y	3	1	*145-6480*	1	CONTROL GP-TRANSMISSION	408
Y	4	1	*117-1258*	1	COVER GP-SHIPPING	960

Y-SEPARATE ILLUSTRATION

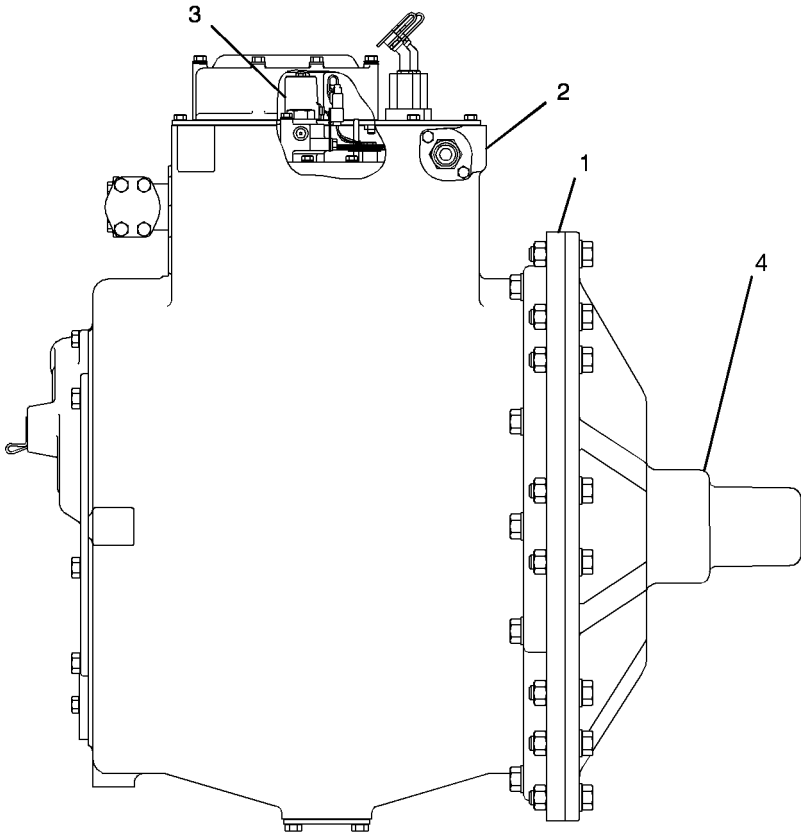

GRAPHIC #1

<END>

g01029970

3T-1448 UNIVERSAL JOINT GP

S/N: 7PZ1-UP

PART OF 127-7479 SHAFT GP-DRIVE

SMCS-3251, 3253 **i01692382**

NOTE	REF NO	GRAPHIC REF	PART NUMBER	QTY	PART NAME 1 2 3 4 5 6 (PRODUCT LEVEL)	SEE PAGE
C	1	1	**106-0933**	2	SPIDER & BEARING GP	
	2	1	**3T-1449**	1	TUBE-UNIVERSAL JOINT	
C	3	1	**0S-2318**	8	BOLT (5/8-18X3.25 IN)	

C-CHANGE FROM PREVIOUS TYPE

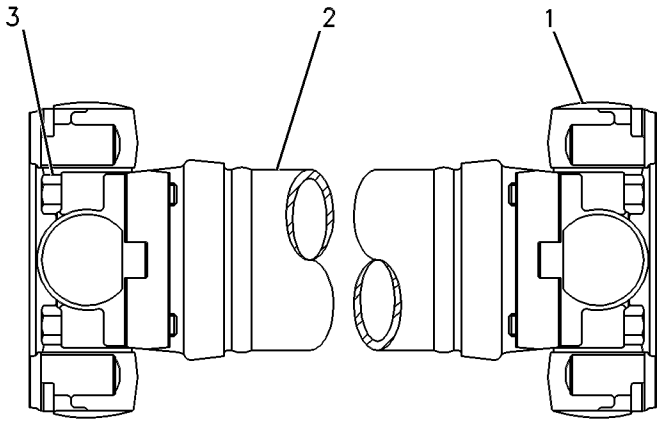

GRAPHIC #1 **<END>** g00255077

155-2639 VALVE GP-CONTROL—TRANSMISSION

S/N: 1SY1-1184

PART OF 145-6480 CONTROL GP-TRANSMISSION

SMCS-3167 **i01707361**

NOTE	REF NO	GRAPHIC REF	PART NUMBER	QTY	PART NAME 1 2 3 4 5 6 (PRODUCT LEVEL)	SEE PAGE
Y	1	1	**8E-6398**	1	VALVE GP-SELECTOR (TRANSMISSION)	481
	2	1	**8E-4320**	1	PLATE	
Y	3	1	**145-6478**	1	VALVE GP-SELECTOR & PRESS CONT	482
	4	1	**155-2641**	1	MANIFOLD-TOP	
	5	1	**8E-4387**	1	MANIFOLD	
	6	1	**8E-7841**	1	CLIP AS-CONNECTING	
	7	1	**2B-2695**	3	BOLT (5/16-18X0.875 IN)	
	8	1	**9M-1974**	34	WASHER-HARD (8.8X16X2MM THK)	
	9	1	**1D-4540**	10	BOLT (5/16-18X2.75 IN)	
	10	1	**5L-1761**	21	BOLT (5/16-18X5.5 IN)	
	11	1	**9S-8007**	12	PLUG (3/8-24 THD)	
	12	1	**7J-0204**	13	SEAL-O-RING	
Y	13	1	**3E-3748**	5	VALVE GP-SOLENOID	484
	14	1	**104-6728**	1	HARNESS AS-TRANSMISSION (CLUTCH SOLENOIDS)	
	15	1	**8E-7842**	1	CLIP AS-CONNECTING	
	16	1	**6V-3965**	3	FITTING AS	
	17	1	**0S-1588**	4	BOLT (3/8-16X1.25 IN)	
	18	1	**3J-1907**	3	SEAL-O-RING	
	19	1	**1L-5081**	4	SPACER (0.41X0.75X0.56 IN THK)	
	20	1	**5M-2894**	4	WASHER-HARD (10.2X18.5X2.5MM THK)	
	21	1	**5S-0003**	1	NUT (5/16-18 THD)	
	22	1	**8M-2772**	4	CLIP	
	23	1	**1P-7404**	1	EYEBOLT	
	24	1	**1N-5999**	1	PLUG	
	25	1	**6Y-0789**	1	PLUG	
	26	1	**3D-2824**	1	SEAL-O-RING	
	27	1	**3P-0647**	1	SEAL-O-RING	

Y-SEPARATE ILLUSTRATION

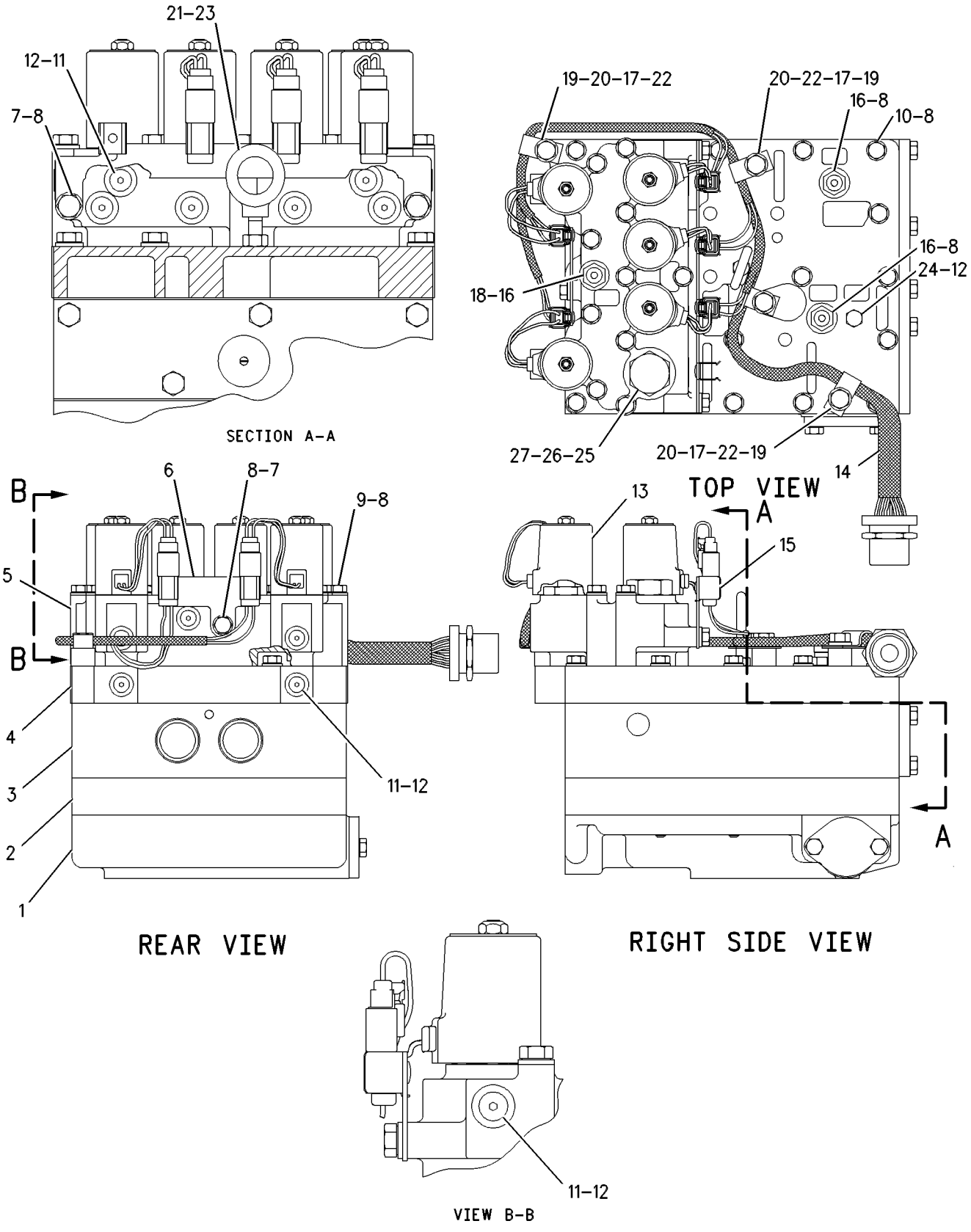

GRAPHIC #1 **<END>** g00458990

155-2639 VALVE GP-CONTROL—TRANSMISSION

S/N: 1SY1185-UP

PART OF 145-6480 CONTROL GP-TRANSMISSION

SMCS-3167 **i01604040**

NOTE	REF NO	GRAPHIC REF	PART NUMBER	QTY	PART NAME 1 2 3 4 5 6 (PRODUCT LEVEL)	SEE PAGE
Y	1	1	**8E-6398**	1	VALVE GP-SELECTOR (TRANSMISSION)	481
	2	1	**8E-4320**	1	PLATE	
Y	3	1	**145-6478**	1	VALVE GP-SELECTOR & PRESS CONT	482
	4	1	**155-2641**	1	MANIFOLD-TOP	
	5	1	**8E-4387**	1	MANIFOLD	
	6	1	**8E-7841**	1	CLIP AS-CONNECTING	
	7	1	**2B-2695**	3	BOLT (5/16-18X0.875 IN)	
	8	1	**9M-1974**	34	WASHER-HARD (8.8X16X2MM THK)	
	9	1	**1D-4540**	10	BOLT (5/16-18X2.75 IN)	
	10	1	**5L-1761**	21	BOLT (5/16-18X5.5 IN)	
	11	1	**9S-8007**	12	PLUG-O-RING	
	12	1	**7J-0204**	13	SEAL-O-RING	
CY	13	1	**147-5399**	5	VALVE GP-SOLENOID	487
	14	1	**206-5048**	1	HARNESS AS-TRANSMISSION (CLUTCH SOLENOIDS)	
	15	1	**8E-7842**	1	CLIP AS-CONNECTING	
	16	1	**6V-3965**	3	FITTING AS	
	17	1	**0S-1588**	4	BOLT (3/8-16X1.25 IN)	
	18	1	**3J-1907**	3	SEAL-O-RING	
	19	1	**1L-5081**	4	SPACER (0.41X0.75X0.56 IN THK)	
	20	1	**5M-2894**	4	WASHER-HARD (10.2X18.5X2.5MM THK)	
	21	1	**5S-0003**	1	NUT (5/16-18 THD)	
	22	1	**8M-2772**	2	CLIP	
	23	1	**1P-7404**	1	EYEBOLT	
	24	1	**1N-5999**	1	PLUG	
	25	1	**6Y-0789**	1	PLUG	
	26	1	**3D-2824**	1	SEAL-O-RING	
	27	1	**3P-0647**	1	SEAL-O-RING	

C-CHANGE FROM PREVIOUS TYPE
Y-SEPARATE ILLUSTRATION

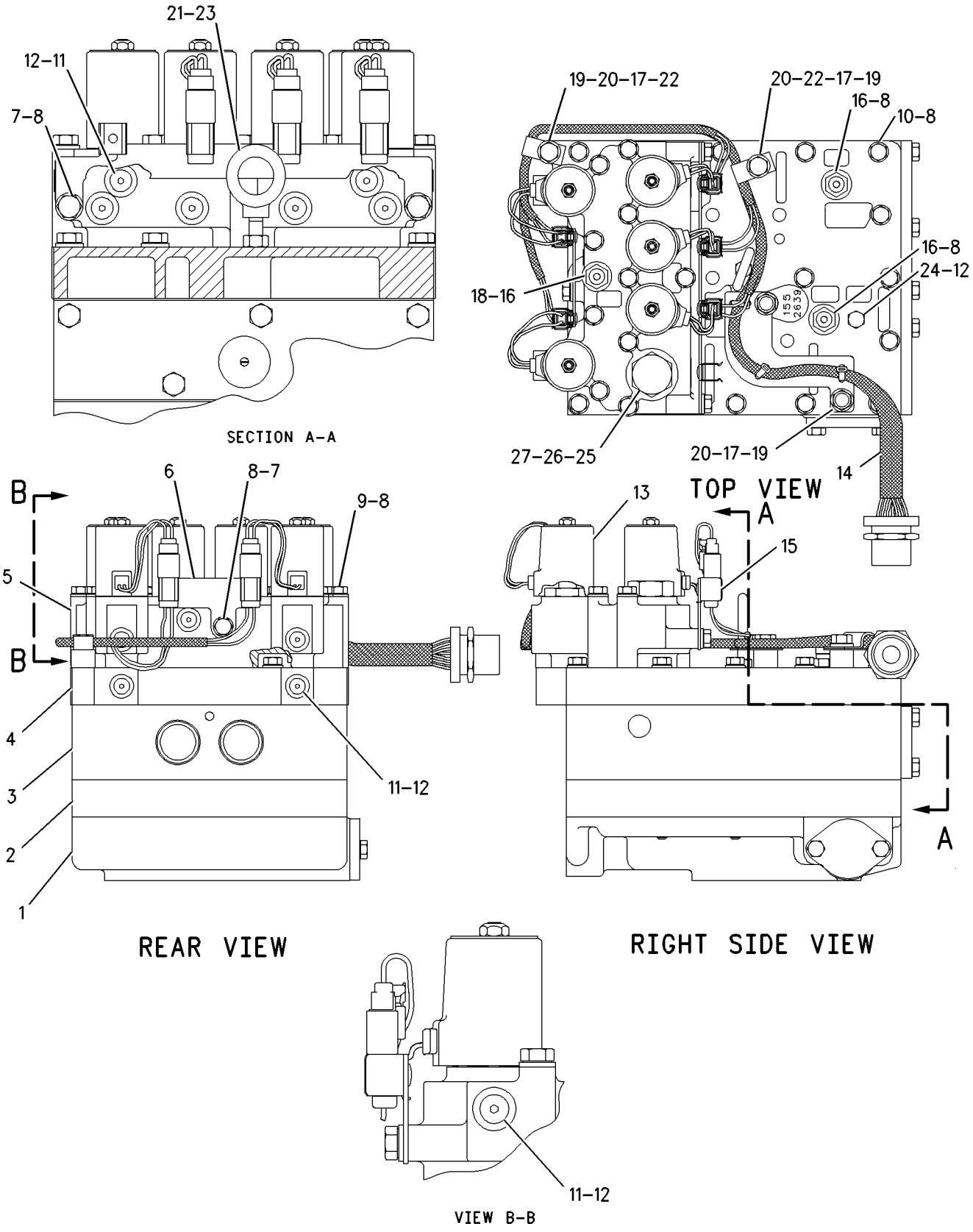

GRAPHIC #1 **<END>** g00837443

119-6114 VALVE GP-FLUSHING—ROTATING FAN MOTOR

S/N: 7PZ1-UP

PART OF 171-3065 ROTATING GP-MOTOR

SMCS-5066 **i00591895**

NOTE	REF NO	GRAPHIC REF	PART NUMBER	QTY	PART NAME 1 2 3 4 5 6 (PRODUCT LEVEL)	SEE PAGE
	1	1	**119-6109**	1	PLATE	
	2	1	**6E-4100**	1	PIN-FLUSHING	
	3	1	**119-6110**	2	RETAINER	
	4	1	**6E-4102**	2	SPRING	
	5	1	**119-6112**	2	PIN	
	6	1	**119-6113**	2	BUSHING	

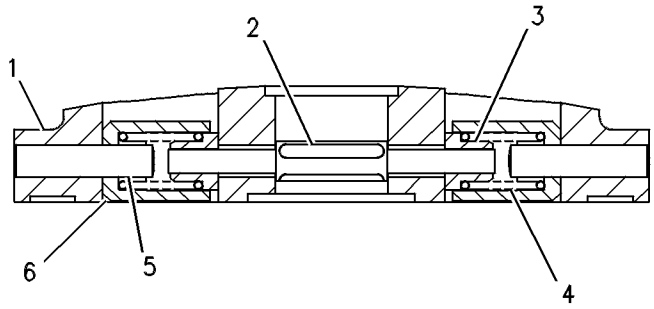

GRAPHIC #1 **<END>** g00246170

112-5326 VALVE GP-PRIORITY—BRAKE—STEERING

S/N: 7PZ1-UP

PART OF 127-7480 LINES GP-POWER TRAIN OIL

SMCS-3180 **i01988737**

NOTE	REF NO	GRAPHIC REF	PART NUMBER	QTY	PART NAME 1 2 3 4 5 6 (PRODUCT LEVEL)	SEE PAGE
	1	1	**120-6858**	1	BODY AS-VALVE	
		1	**2D-6642**	2	BALL	
	2	1	**6V-0852**	1	CAP-DUST	
	3	1	**1P-9699**	1	STOP	
	4	1	**2M-7041**	1	SLUG	
	5	1	**8M-4446**	1	SEAL-O-RING	
B	6	1	**5M-9624**	6	SHIM (0.25MM THK)	
	7	1	**8M-5249**	1	SEAL-O-RING	
	8	1	**2S-9750**	1	COVER	
	9	1	**0S-1594**	2	BOLT (3/8-16X1 IN)	
	10	1	**5M-2894**	2	WASHER-HARD (10.2X18.5X2.5MM THK)	
	11	1	**7T-8556**	1	SPRING	
	12	1	**6V-0484**	1	ADAPTER-O-RING	
	13	1	**3J-1907**	2	SEAL-O-RING	
	14	1	**6V-3965**	1	FITTING (QUICK DISCONNECT)	
	15	1	**8H-9513**	1	DOWEL	
	16	1	**5S-4437**	1	SPOOL AS	
	17	1	**4B-9880**	1	BALL	
	18	1	**3D-8317**	1	RING-RETAINING	
	19	1	**8M-1013**	1	RETAINER	
	20	1	**4M-2381**	1	SPRING	

B-USE AS REQUIRED

112-5326 VALVE GP-PRIORITY *(contd.)* **i01988737**

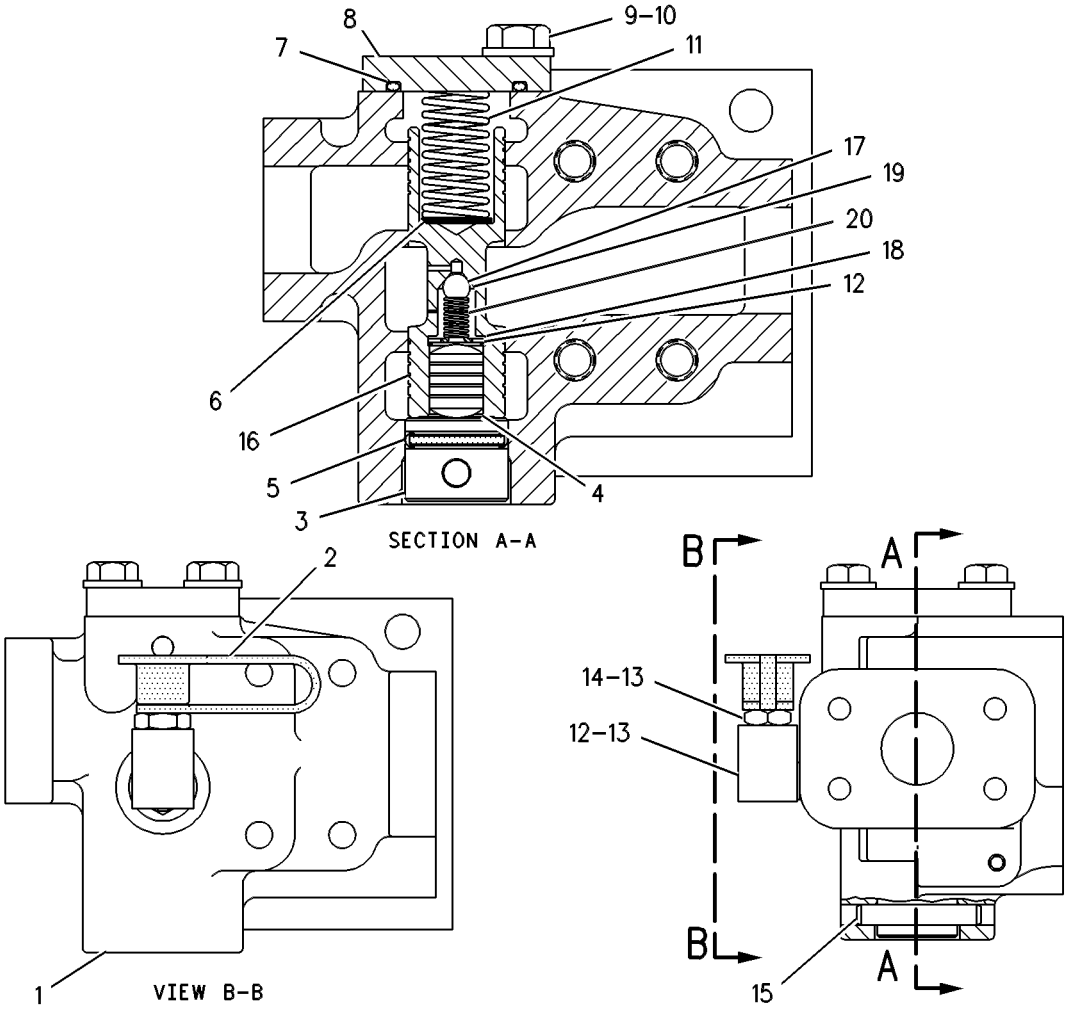

GRAPHIC #1 **<END>** g00264908

8E-9727 VALVE GP-RELIEF–TORQUE CONVERTER

S/N: 7PZ1-UP

PART OF 127-7480 LINES GP-POWER TRAIN OIL

SMCS-3133, 3182 **i01988742**

NOTE	REF NO	GRAPHIC REF	PART NUMBER	QTY	PART NAME 1 2 3 4 5 6 (PRODUCT LEVEL)	SEE PAGE
	1	1	**4M-8239**	2	COVER	
	2	1	**8M-4986**	2	SEAL-O-RING	
	3	1	**2P-4538**	1	SPOOL AS-RELIEF	
	4	1	**5M-9548**	1	SPRING	
	5	1	**1L-3162**	1	RING-RETAINING	
		1	**8M-2537**	1	RETAINER	
	6	1	**9M-4313**	1	POPPET	
	7	1	**6V-3965**	1	FITTING (QUICK DISCONNECT)	
		1	**3J-1907**	1	SEAL-O-RING	
	8	1	**2P-5711**	1	SPRING	
B	9	1	**5M-9623**	3	SHIM (0.9MM THK)	
B		1	**5M-9624**	1	SHIM (0.25MM THK)	
	10	1	**0S-1594**	4	BOLT (3/8-16X1 IN)	
		1	**5M-2894**	4	WASHER-HARD (10.2X18.5X2.5MM THK)	
	11	1	**6V-0852**	1	CAP-DUST	

B-USE AS REQUIRED

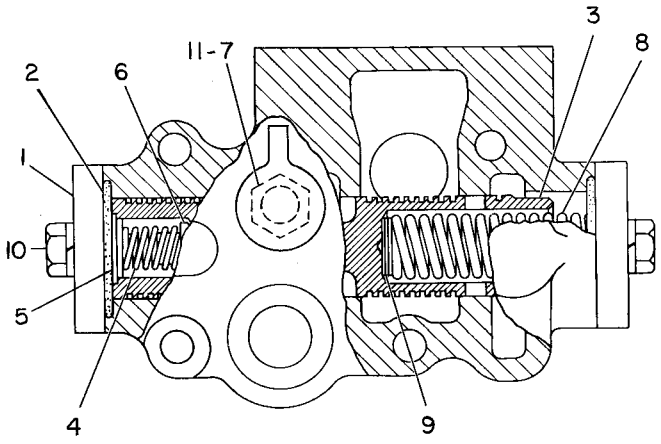

GRAPHIC #1 **<END>** g00082116

8E-6398 VALVE GP-SELECTOR–TRANSMISSION

S/N: 1SY1-UP

PART OF 155-2639 VALVE GP-CONTROL

SMCS-3157, 3158 **i01692384**

NOTE	REF NO	GRAPHIC REF	PART NUMBER	QTY	PART NAME 1 2 3 4 5 6 (PRODUCT LEVEL)	SEE PAGE
	1	1	**8E-6255**	1	MANIFOLD-BOTTOM	
	2	1	**2S-4872**	1	STOP	
	3	1	**6Y-0725**	1	SPOOL-SELECTOR	
	4	1	**6Y-0726**	2	RETAINER	
	5	1	**6I-9519**	1	SPRING	
	6	1	**6Y-0729**	1	STOP	
	7	1	**7S-6997**	1	COVER	
	8	1	**2B-2695**	2	BOLT (5/16-18X0.875 IN)	
	9	1	**5P-6261**	1	RING-RETAINING	
	10	1	**8H-9189**	1	DOWEL	
	11	1	**6J-2419**	1	SEAL-O-RING	

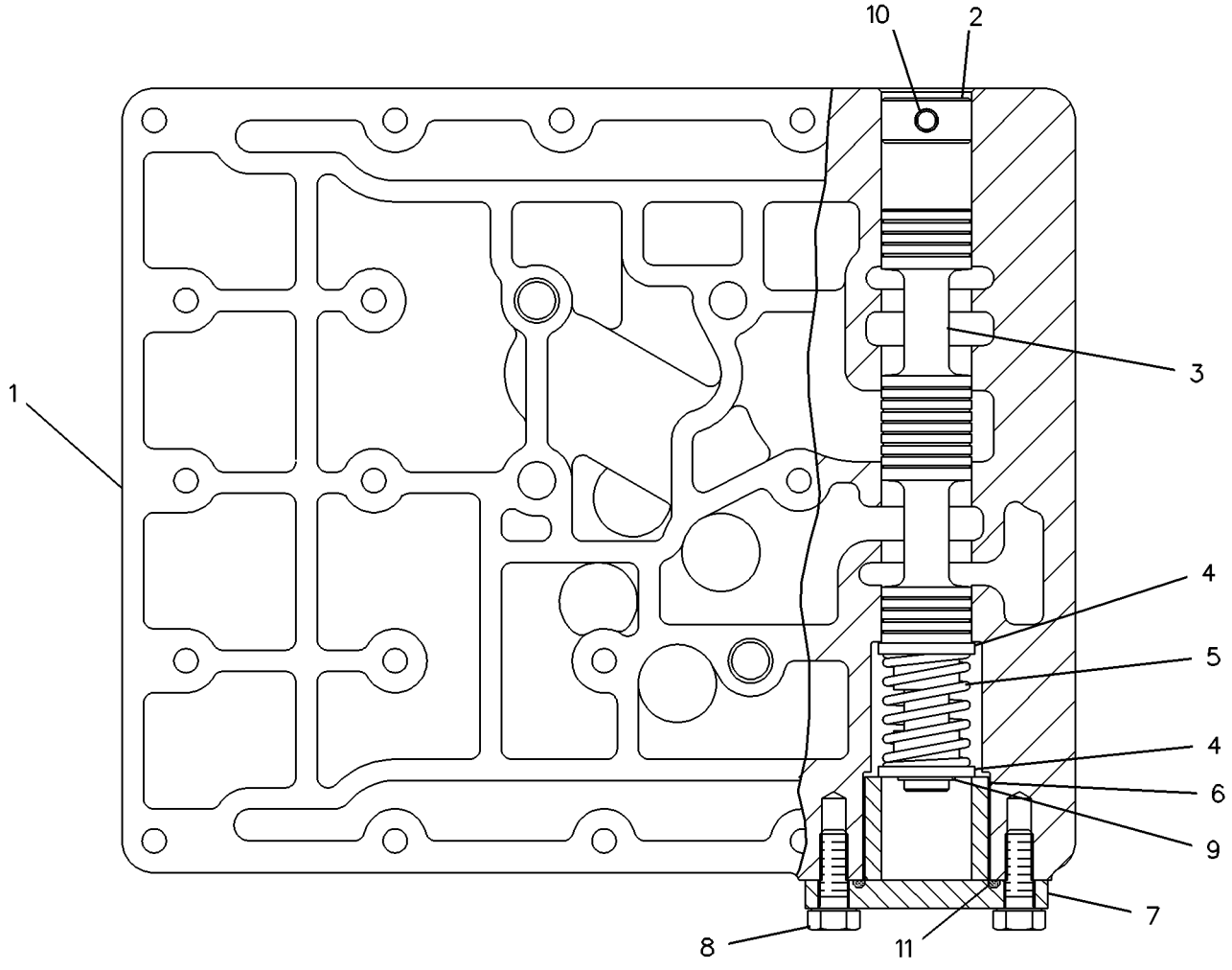

GRAPHIC #1 **<END>** g00119290

145-6478 VALVE GP-SELECTOR & PRESS CONT

S/N: 1SY1-UP

PART OF 155-2639 VALVE GP-CONTROL

SMCS-3083 **i01692386**

NOTE	REF NO	GRAPHIC REF	PART NUMBER	QTY	PART NAME 1 2 3 4 5 6 (PRODUCT LEVEL)	SEE PAGE
	1	1	**8P-9296**	2	ORIFICE-PLUG	
	2	1	**6Y-0728**	1	COVER	
	3	1	**2B-2695**	5	BOLT (5/16-18X0.875 IN)	
	4	1	**9W-9830**	1	ORIFICE-SCREEN	
	5	1	**6P-4978**	1	SPRING	
	6	1	**5H-8853**	1	SEAL-O-RING	
	7	1	**116-7474**	1	STOP	
	8	1	**9W-5567**	1	SPOOL AS-RELIEF	
		1	**3D-8317**	1	RING-RETAINING	
		1	**4B-9880**	1	BALL	
		1	**4M-2381**	1	SPRING	
		1	**8M-1013**	1	RETAINER	
	9	1	**9W-5568**	1	SLUG	
	10	1	**6Y-0744**	1	STOP	
	11	1	**7G-4842**	1	SPRING	
	12	1	**9P-3041**	1	SPRING	
	13	1	**6Y-0726**	4	RETAINER	
	14	1	**6I-9519**	2	SPRING	
	15	1	**6Y-0727**	2	STOP	
	16	1	**4J-0521**	2	SEAL-O-RING	
	17	1	**118-0287**	1	SPRING	
	18	1	**6F-6673**	2	SEAL-O-RING	
	19	1	**2H-3429**	1	RING-RETAINING	
B	20	1	**5M-9622**	1	SHIM (1.6MM THK)	
B	21	1	**5M-9623**	1	SHIM (0.9MM THK)	
B	22	1	**5M-9624**	3	SHIM (0.25MM THK)	
	23	1	**6P-9785**	1	SPRING	
	24	1	**3P-8485**	1	RING-RETAINING	
	25	1	**6P-9786**	1	RETAINER	
	26	1	**6P-9784**	1	SPRING	
	27	1	**6P-9783**	1	SPRING	
	28	1	**6P-4939**	1	PISTON-LOAD	
	29	1	**2S-4872**	1	STOP	
	30	1	**5P-6261**	2	RING-RETAINING	
	31	1	**116-7472**	1	PLUNGER	
	32	1	**5S-7816**	1	SLUG	
	33	1	**2S-0696**	2	DOWEL	

B-USE AS REQUIRED

145-6478 VALVE GP-SELECTOR & PRESS CONT *(contd.)* i01692386

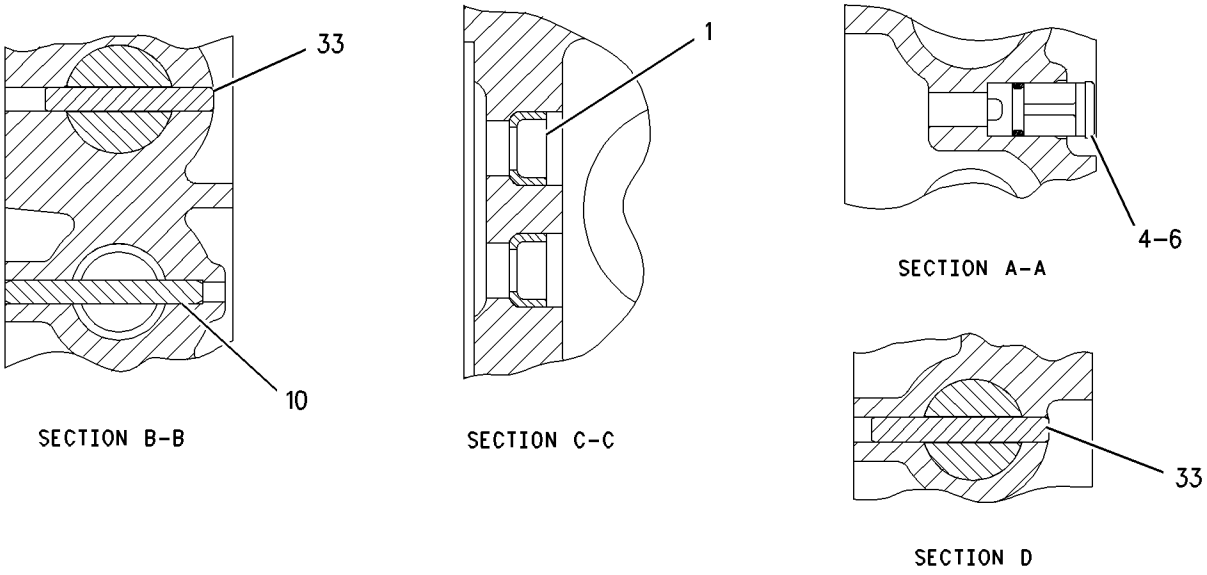

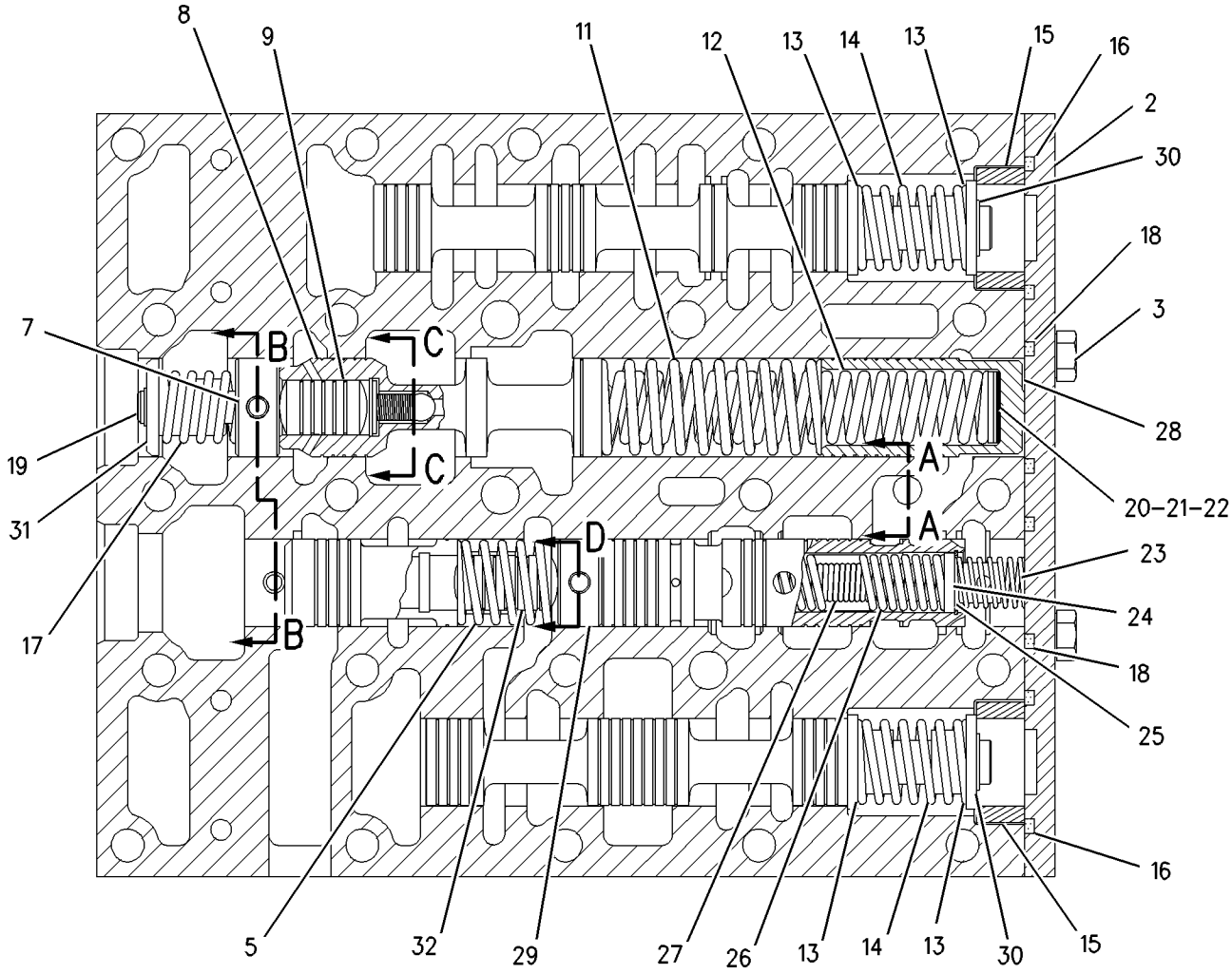

GRAPHIC #1 **<END>** g00664437

3E-3748 VALVE GP-SOLENOID–TRANSMISSION CLUTCH

S/N: 1SY1-1184
12 VOLT DC
PART OF 155-2639 VALVE GP-CONTROL

SMCS-4282, 5479 **i01988735**

NOTE	REF NO	GRAPHIC REF	PART NUMBER	QTY	PART NAME 1 2 3 4 5 6 (PRODUCT LEVEL)	SEE PAGE
	1	1	**3E-3747**	1	COIL AS	
	2	1	**1S-9593**	2	STRAP-CABLE	
	3	1	**3E-3361**	1	PLUG AS-CONNECTOR (2 PIN)	
		1	**8T-8730**	2	SOCKET-CONNECTOR	
		1	**3E-3362**	1	WEDGE-PLUG LOCK (2 PIN)	
	4	1	**104-5970**	1	LOCKNUT (1/4-20 THD)	
	5	1	**4B-4276**	1	WASHER (7X16X1.6MM THK)	
	6	1	**7X-1121**	1	CARTRIDGE AS	
					AVAILABLE REPAIR KIT(S):	
			100-4083	1	KIT-SEAL (SOLENOID VALVE)	
					(INCLUDES O-RING SEALS & BACKUP RING)	

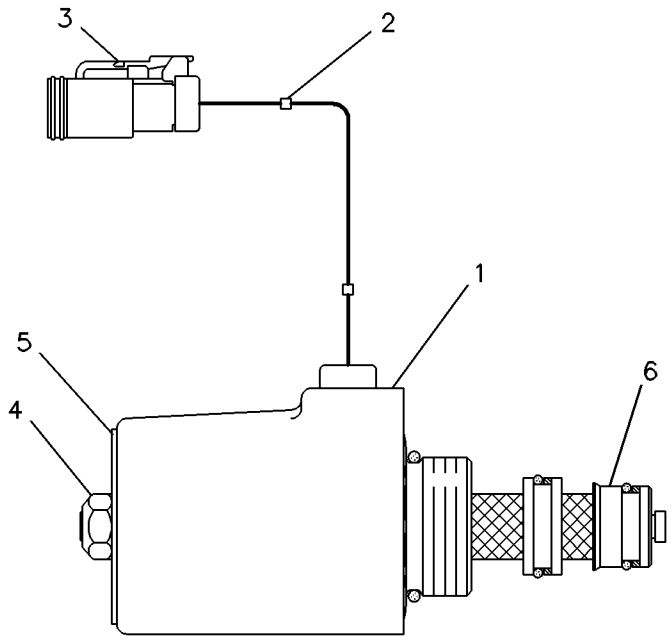

GRAPHIC #1 **<END>** g00083412

121-4030 VALVE GP-SOLENOID—RH, LH STEERING CLUTCH, BRAKE

S/N: 7PZ1-406

PART OF 137-8795 MANIFOLD & VALVE GP

SMCS-4282, 4804, 5479 **i01988740**

NOTE	REF NO	GRAPHIC REF	PART NUMBER	QTY	PART NAME 1 2 3 4 5 6 (PRODUCT LEVEL)	SEE PAGE
	1	1	**176-0394**	1	NUT-LOCKING (5/8-11 THD)	
	2	1	**3S-2093**	1	STRAP-CABLE	
	3	1	**122-4974**	1	SPACER	
	4	1	**156-6173**	1	COIL AS	
	5	1	**1S-9593**	2	STRAP-CABLE	
	6	1	**102-8802**	1	KIT-RECEPTACLE (2-PIN)	
					(INCLUDES RECEPTACLE AS & WEDGE)	
	7	1	**3E-3365**	1	WEDGE-RECEPTACLE LOCK (2 PIN)	
	8	1	**8T-8729**	2	PIN-CONNECTOR	
	9	1	**121-4035**	1	CARTRIDGE AS	
	10	1	**5P-7538**	1	BALL	
	11	1	**8L-2746**	1	SEAL-O-RING	
	12	1	**6V-4589**	1	SEAL-O-RING	

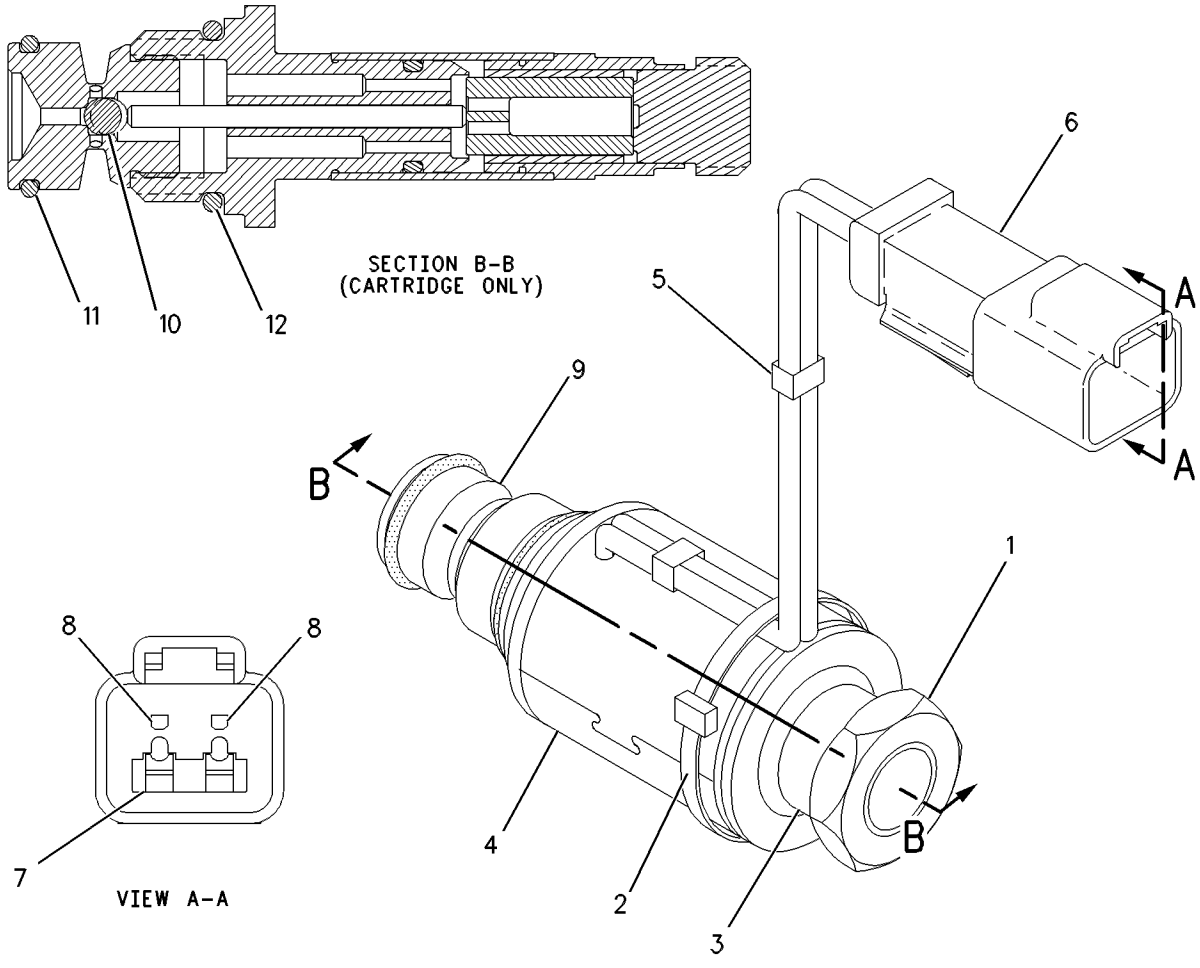

GRAPHIC #1 **<END>** g00645215

133-2250 VALVE GP-SOLENOID–PARKING, SECONDARY BRAKE

S/N: 7PZ1-406
24 VOLT
PART OF 133-3246 MANIFOLD & VALVE GP
FIELD REPLACEMENT ORDER 172-2392–PAGE 488

SMCS-4282, 4804, 5479 **i01988741**

NOTE	REF NO	GRAPHIC REF	PART NUMBER	QTY	PART NAME 1 2 3 4 5 6 (PRODUCT LEVEL)	SEE PAGE
	1	1	**3J-9196**	1	NUT-JAM (1/2-20 THD)	
	2	1	**107-2066**	1	CARTRIDGE AS	
		1	**7T-1342**	1	KIT-HARDWARE (SOLENOID VALVE)	
					(INCLUDES RING & SEALS)	
	3	1	**133-2249**	1	COIL AS	
		1	**1S-9593**	2	STRAP-CABLE	
		1	**8T-8729**	2	PIN-CONNECTOR	
		1	**8T-8737**	2	PLUG-SEAL	
		1	**102-8804**	1	KIT-RECEPTACLE (4-PIN)	
					(INCLUDES RECEPTACLE AS & WEDGE)	

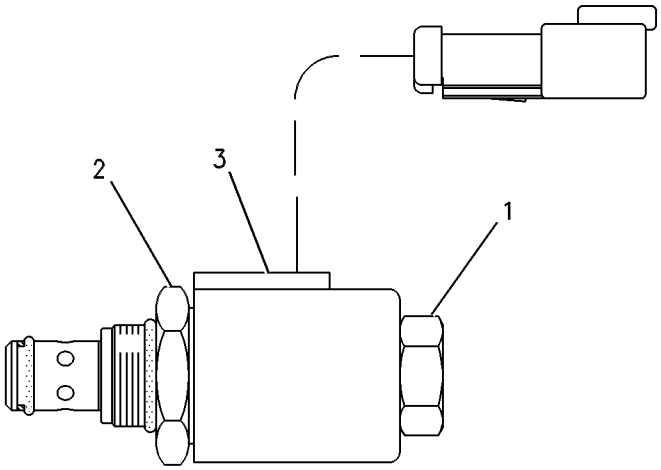

GRAPHIC #1 **<END>** g00257872

147-5399 VALVE GP-SOLENOID–TRANSMISSION CLUTCH

S/N: 1SY1185-UP
12 VOLT DC
PART OF 155-2639 VALVE GP-CONTROL

SMCS-4282, 5479 **i01988731**

NOTE	REF NO	GRAPHIC REF	PART NUMBER	QTY	PART NAME 1 2 3 4 5 6 (PRODUCT LEVEL)	SEE PAGE
	1	1	**107-8611**	1	CARTRIDGE AS	
		1	**111-0343**	1	LOCKNUT (5/16-18 THD)	
		1	**149-5628**	1	WASHER (8.3X38.1X1.2MM THK)	
	2	1	*118-8182*	1	COIL AS	
		1	**1S-9593**	2	STRAP-CABLE	
		1	**3E-3362**	1	WEDGE-PLUG LOCK (2 PIN)	
		1	**155-2270**	1	KIT-CONNECTING PLUG (2-PIN)	
					(INCLUDES PLUG AS AND WEDGE)	
	3	1	**149-5628**	1	WASHER (8.3X38.1X1.2MM THK)	
	4	1	**111-0343**	1	LOCKNUT (5/16-18 THD)	

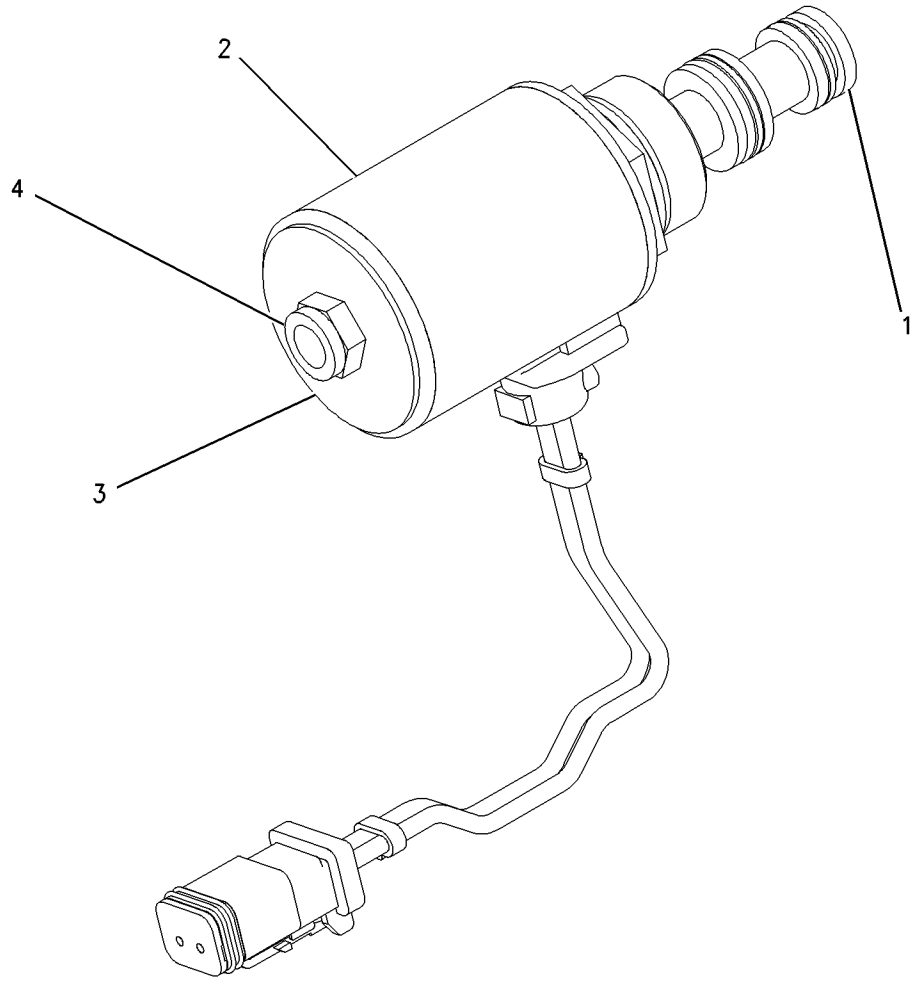

GRAPHIC #1 **<END>** g00747733

172-2392 VALVE GP-SOLENOID—RH, LH STEERING CLUTCH, BRAKE

S/N: 7PZ407-UP
24 VOLT
PART OF 175-4972 MANIFOLD & VALVE GP
FIELD REPLACEMENT FOR 133-2250—PAGE 486

SMCS-4282, 4804, 5479 **i01988732**

NOTE	REF NO	GRAPHIC REF	PART NUMBER	QTY	PART NAME 1 2 3 4 5 6 (PRODUCT LEVEL)	SEE PAGE
	1	1	**156-5970**	1	NUT (1/2-20-2B THD)	
	2	1	**133-2249**	1	COIL AS	
		1	**1S-9593**	2	STRAP-CABLE	
		1	**8T-8729**	2	PIN-CONNECTOR	
		1	**8T-8737**	2	PLUG-SEAL	
		1	**102-8804**	1	KIT-RECEPTACLE (4-PIN)	
					(INCLUDES RECEPTACLE AS & WEDGE)	
	3	1	**172-2391**	1	SPOOL AS	
		1	**156-5970**	1	NUT (1/2-20-2B THD)	
					AVAILABLE REPAIR KIT(S):	
			189-1839	1	KIT-SEAL (SOLENOID VALVE)	
					(INCLUDES SEALS & RING-BACK UP)	

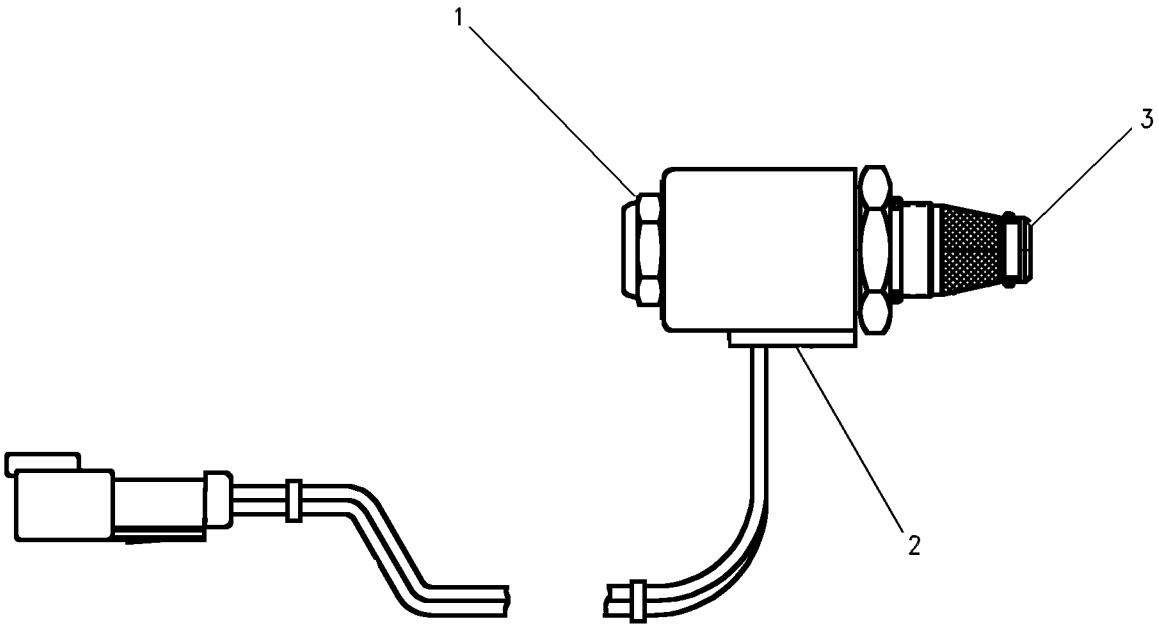

GRAPHIC #1 **<END>** g00653409

174-4909 VALVE GP-SOLENOID–RH, LH STEERING CLUTCH, BRAKE

S/N: 7PZ407-UP

PART OF 164-6093 MANIFOLD & VALVE GP

SMCS-4282, 4804, 5479 **i01563514**

NOTE	REF NO	GRAPHIC REF	PART NUMBER	QTY	PART NAME 1 2 3 4 5 6 (PRODUCT LEVEL)	SEE PAGE
	1	1	**145-1144**	1	COIL AS	
	2	1	**164-2108**	1	WASHER (13.03X25.4X2.38MM THK)	
	3	1	**167-9524**	1	NUT-SELF LOCKING (1/2-28 THD)	
	4	1	**8L-2746**	1	SEAL-O-RING	
	5	1	**6V-4589**	1	SEAL-O-RING	

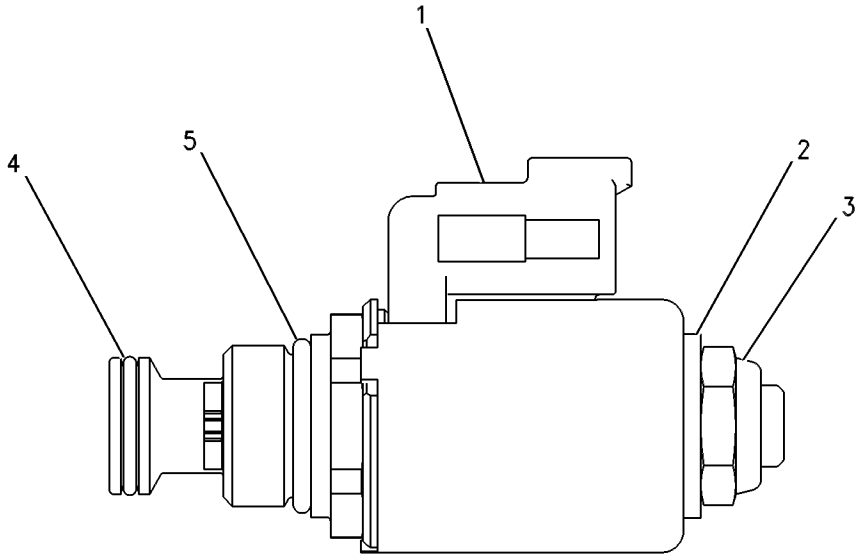

GRAPHIC #1 **<END>** g00638363

137-8796 VALVE GP-TRANSMISSION CONTROL

S/N: 7PZ1-406

PART OF 133-3255 VALVE GP-STEERING & BRAKE CONT

SMCS-3073 **i01988802**

NOTE	REF NO	GRAPHIC REF	PART NUMBER	QTY	PART NAME 1 2 3 4 5 6 (PRODUCT LEVEL)	SEE PAGE
	1	1	**8T-4224**	3	WASHER-HARD (8.8X16X2MM THK)	
	2	1	**108-4429**	4	PISTON-LOAD	
	3	1	**133-3248**	2	VALVE-CHECK	
	4	1	**108-4430**	4	SPRING	
	5	1	**9S-8008**	4	PLUG (1-1/16X12-2A THD)	
	6	1	**3D-2824**	4	SEAL-O-RING	
	7	1	**108-4432**	4	SPRING (30.5MM OD)	
	8	1	**108-4431**	4	SPRING (18.8MM OD)	
	9	1	**108-4433**	1	PLATE-END	
	10	1	**6J-2419**	4	SEAL-O-RING	
M	11	1	**8T-7547**	3	BOLT (M8X1.25X30MM)	
	12	1	**6V-0852**	4	CAP-DUST	
	13	1	**6V-3965**	4	FITTING (QUICK DISCONNECT)	
	14	1	**3J-1907**	4	SEAL-O-RING	
	15	1	**5P-1404**	2	ADAPTER-O-RING	
	16	1	**2M-9780**	2	SEAL-O-RING	
M	17	1	**7X-2537**	3	BOLT (M8X1.25X35MM)	

M-METRIC PART

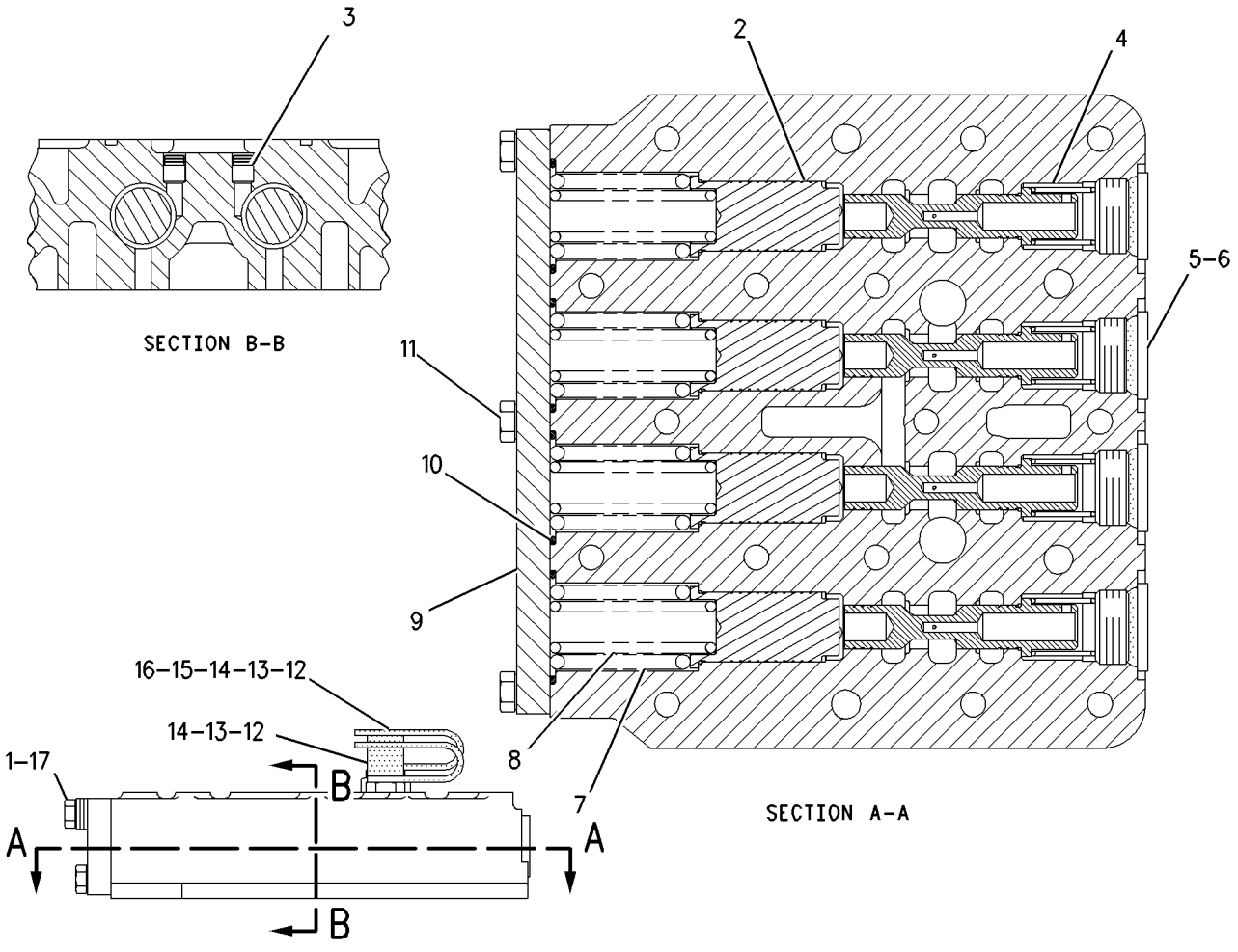

GRAPHIC #1 **<END>** g00683390

201-7270 VALVE GP-TRANSMISSION CONTROL

S/N: 7PZ407-UP

PART OF 201-7272 VALVE GP-STEERING & BRAKE CONT

SMCS-3073 **i01961390**

NOTE	REF NO	GRAPHIC REF	PART NUMBER	QTY	PART NAME 1 2 3 4 5 6 (PRODUCT LEVEL)	SEE PAGE
	1	1	**188-7067**	4	SPRING	
	2	1	**188-7068**	4	RETAINER	
	3	1	**188-7069**	4	PISTON-LOAD	
	4	1	**108-4430**	4	SPRING	
	5	1	**108-4433**	1	PLATE-END	
	6	1	**148-8409**	4	PLUG AS	
		1	**3D-2824**	1	SEAL-O-RING	
M	7	1	**7X-2537**	3	BOLT (M8X1.25X35MM)	
M	8	1	**8T-7547**	3	BOLT (M8X1.25X30MM)	
	12	1	**148-8410**	2	PLUG AS	
		1	**2M-9780**	1	SEAL-O-RING	
	13	1	**6J-2419**	4	SEAL-O-RING	
	14	1	**148-8407**	2	PLUG GP	
		1	**3J-1907**	1	SEAL-O-RING	
	15	1	**8T-4224**	3	WASHER-HARD (8.8X16X2MM THK)	

M-METRIC PART

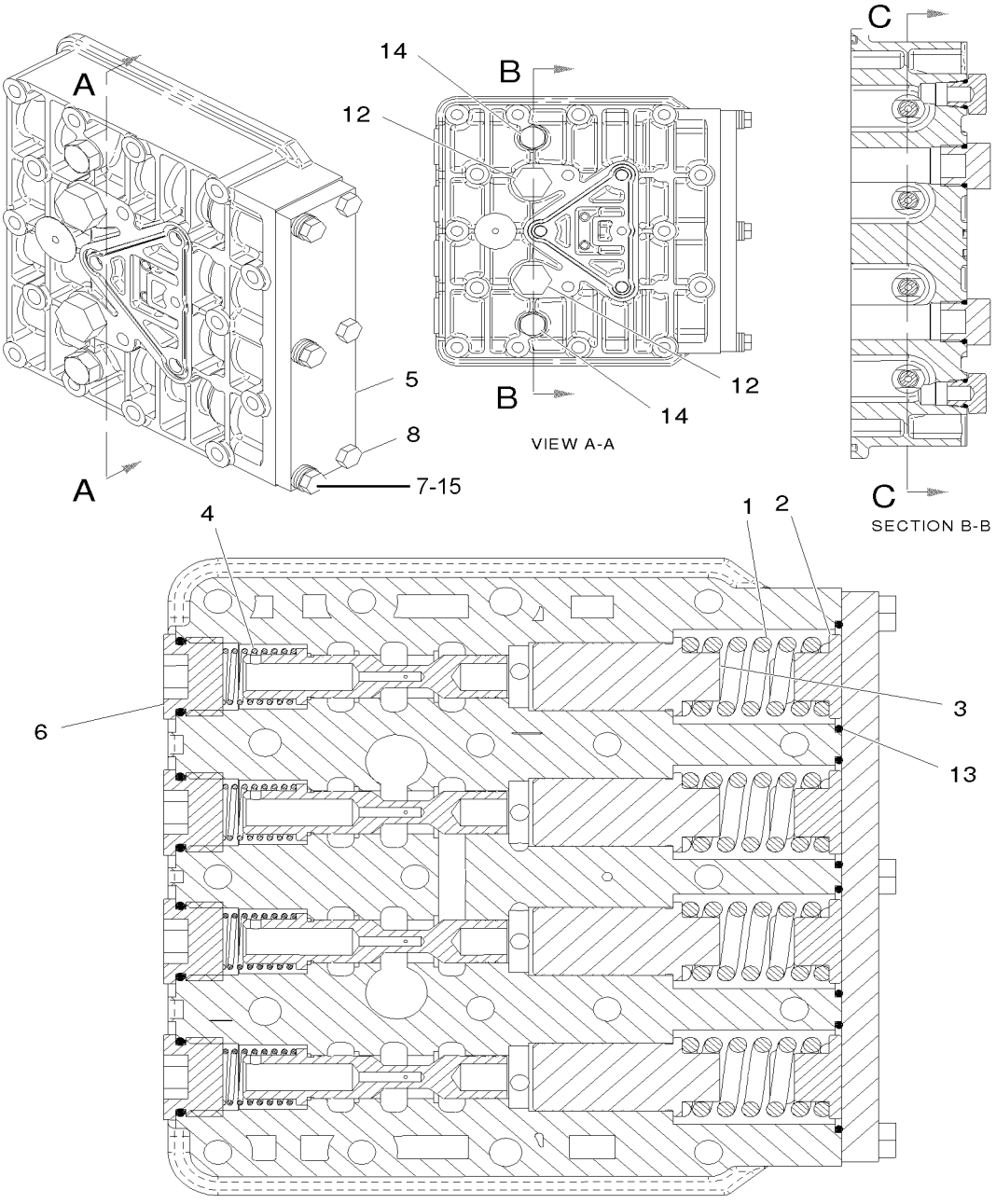

GRAPHIC #1

<END>

g01019057

FRAME AND BODY

158-4227 CASE & FRAME GP

S/N: 7PZ1-UP

PART OF 155-5552 CHASSIS AR

SMCS-7051 **i01989526**

NOTE	REF NO	GRAPHIC REF	PART NUMBER	QTY	PART NAME 1 2 3 4 5 6 (PRODUCT LEVEL)	SEE PAGE
	1	1	**3B-8489**	2	FITTING-GREASE	
	2	1	**3T-8458**	4	BEARING-SLEEVE	
	3	1	**3T-8459**	4	BEARING-SLEEVE	
	4	1	**4T-9751**	4	BEARING-SLEEVE	
	5	1	**7T-9014**	4	BEARING-SLEEVE	
	6	1	**8E-5026**	1	DOWEL	
	7	1	**8P-0389**	2	BEARING-SLEEVE	
	8	1	**8P-8929**	2	BUSHING-TERMINAL	
	9	1	**9J-4782**	2	PROTECTOR	
	10	1	**106-8186**	1	VALVE-DRAIN (CASE)(TRANSMISSION)	
	11	1	**106-8187**	1	PLUG (DRAIN) (CASE)(TRANSMISSION)	
	12	1	**9S-4182**	2	PLUG	
	13	1	**5M-6214**	2	PLUG-PIPE	
	14	1	**6F-0711**	1	SEAL-O-RING	
	15	1	**158-4228**	1	CASE & FRAME AS	
	15A	1	**102-8610**	8	HINGE AS	
	15B	1	**136-2662**	1	TRUNNION	
	16	1	**6Y-5812**	4	BEARING-SLEEVE	

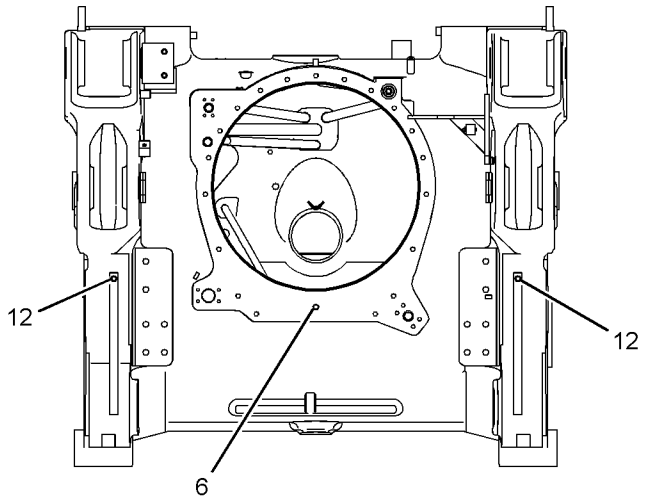

REAR VIEW

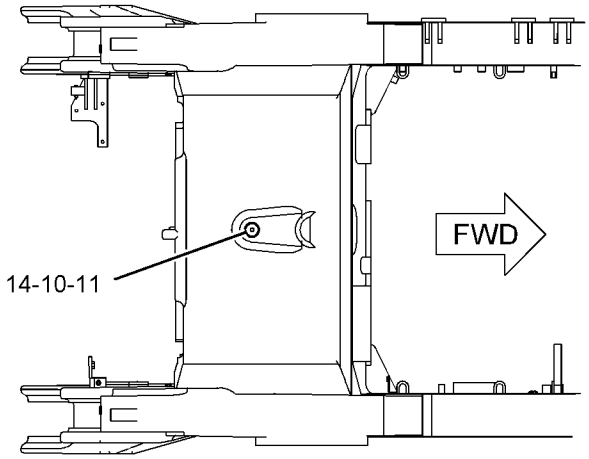

BOTTOM VIEW

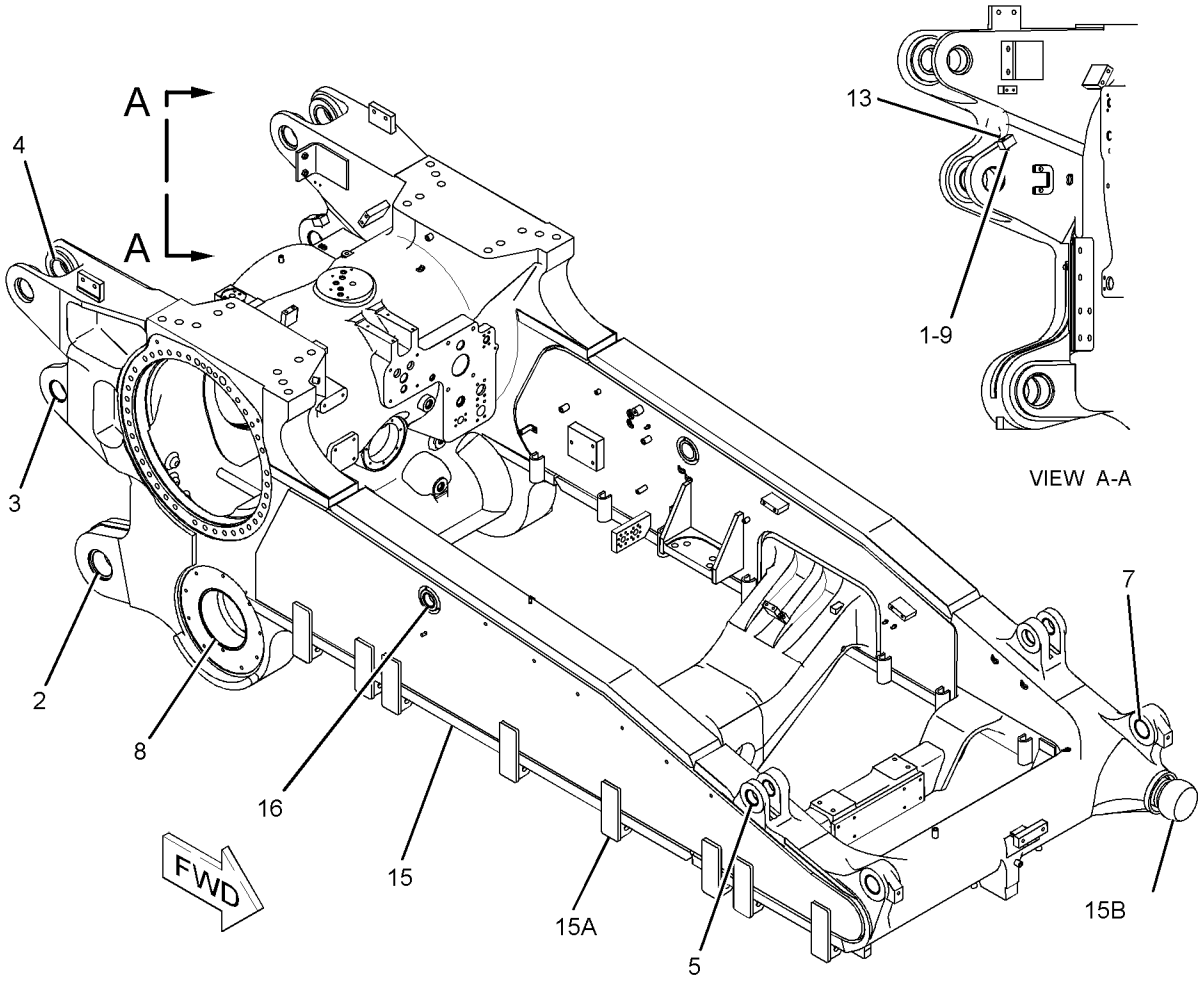

GRAPHIC #1 **<END>** g01027713

9U-9276 COUNTERWEIGHT GP

S/N: 7PZ1-UP
5160 KG (11,352 LBS.)
AN ATTACHMENT

SMCS-7056 **i00594833**

NOTE	REF NO	GRAPHIC REF	PART NUMBER	QTY	PART NAME 1 2 3 4 5 6 (PRODUCT LEVEL)	SEE PAGE
	1	1	**107-5668**	1	PLATE	
	2	1	**107-5667**	1	PLATE AS	
	3	1	**6V-5728**	8	STUD-TAPERLOCK	
		1	**3S-6162**	8	WASHER-HARD (6MM THK)	
		1	**9S-8216**	8	NUT-FULL (1-1/2-6 THD)	

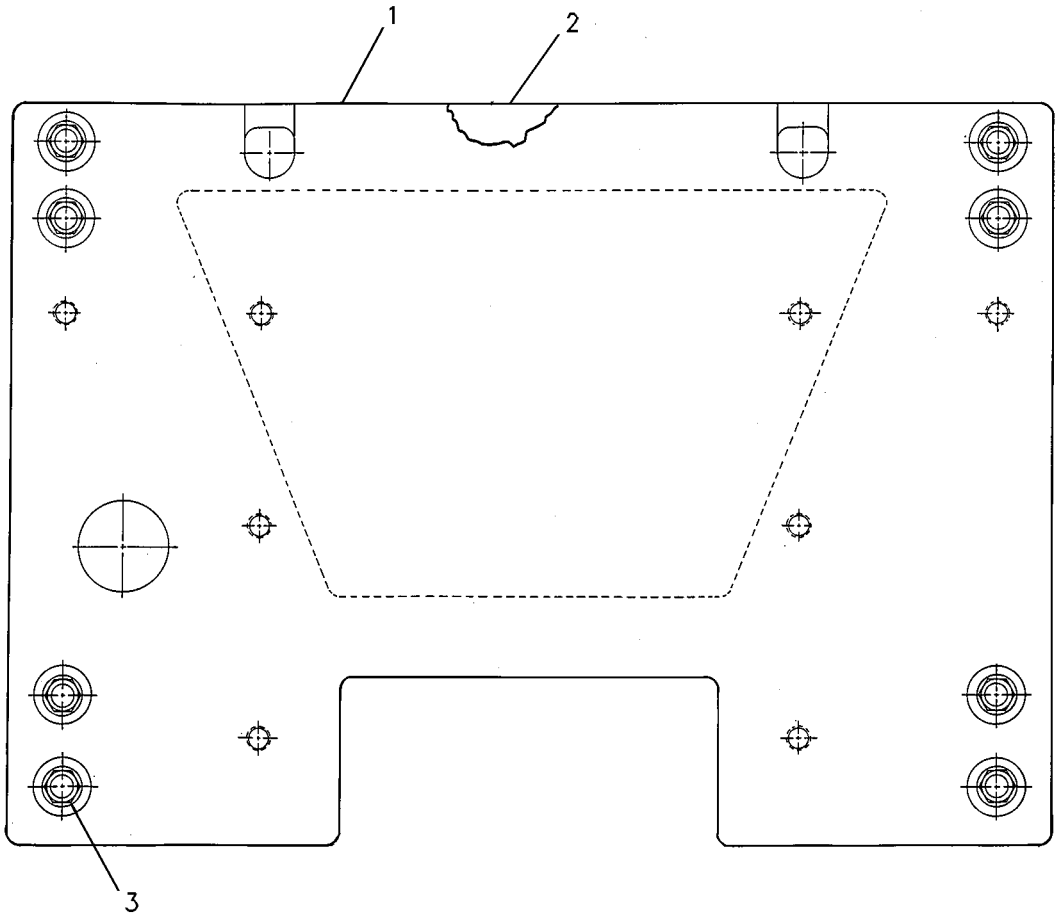

GRAPHIC #1 **<END>** g00231161

143-1233 COUNTERWEIGHT GP-REAR

S/N: 7PZ1-UP

FOR USE WITH MACHINES EQUIPPED WITH TRANSMISSION GUARD WITHOUT DRAWBAR HITCH AN ATTACHMENT

SMCS-7056 **i01692398**

NOTE	REF NO	GRAPHIC REF	PART NUMBER	QTY	PART NAME 1 2 3 4 5 6 (PRODUCT LEVEL)	SEE PAGE
	1	1	**4T-2805**	2	PIN AS	
	2	1	**7T-7305**	4	PLATE	
	3	1	**8W-9506**	2	SPACER (90.5X140X3MM THK)	
	4	1	**9J-6691**	2	PIN AS	
	5	1	**9W-5556**	12	SPACER (120X250X3MM THK)	
	6	1	**126-0186**	8	PLATE	
	7	1	**132-0055**	2	PIN AS	
	8	1	**8C-6913**	20	WASHER-HARD (24X41.5X4MM THK)	
	9	1	**144-0342**	1	COUNTERWEIGHT AS	
	10	1	**2J-1227**	4	RETAINER	
	11	1	**144-0344**	8	COUNTERWEIGHT	
	12	1	**144-0345**	2	ROD	
	13	1	**144-6394**	2	LINK AS	
	14	1	**6K-0545**	2	LOCKNUT	
	15	1	**7X-0365**	8	BOLT (3/4-10X1.5 IN)	
	16	1	**7X-0379**	4	BOLT (7/8-9X1.50 IN)	
	17	1	**7X-0388**	2	BOLT (7/8-9X4.5 IN)	
	18	1	**7X-0389**	16	BOLT (7/8-9X4.75 IN)	
	19	1	**7X-0405**	8	BOLT (1-8X2.75 IN)	

143-1233 **COUNTERWEIGHT GP-REAR** *(contd.)* **i01692398**

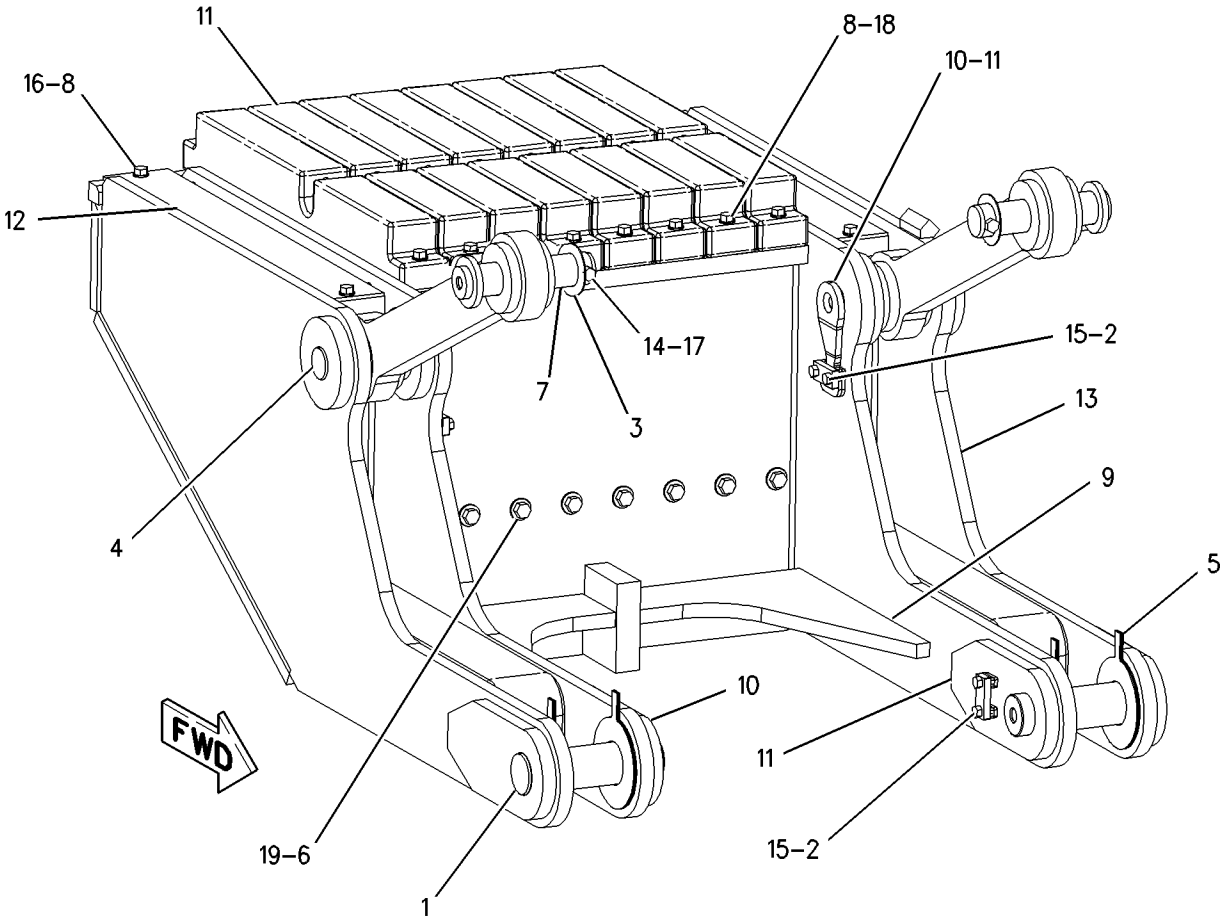

GRAPHIC #1 **<END>** g00745621

159-7221 ENCLOSURE GP-ENGINE

S/N: 7PZ1-615
AN ATTACHMENT

SMCS-7263 **i01444623**

NOTE	REF NO	GRAPHIC REF	PART NUMBER	QTY	PART NAME 1 2 3 4 5 6 (PRODUCT LEVEL)	SEE PAGE
	1	1	**159-8131**	1	DOOR AS-LH	
	2	1	**159-8130**	1	DOOR AS-RH	
					(EACH DOOR AS INCLUDES)	
		1	**1F-0748**	4	NUT-WELD (1/2-13 THD)	
		1	**6Y-2399**	1	HINGE	
	3	1	**107-9659**	1	POST AS-LH	
	4	1	**107-9658**	1	POST AS-RH	
					(EACH POST AS INCLUDES)	
	5	1	**1F-0748**	3	NUT-WELD (1/2-13 THD)	
	6	1	**5P-1076**	30	WASHER-HARD (13.5X30X4MM THK)	
	7	1	**5P-2566**	12	BOLT (1/2-13X1.5 IN)	
	8	1	**9P-8663**	12	SPACER (13MM THK)	
	9	1	**107-9661**	1	SCREEN AS-LH	
	10	1	**107-9660**	1	SCREEN AS-RH	
	11	1	**6Y-2413**	1	COVER AS (LH)	
	12	1	**196-7594**	1	COVER AS (RH)	
					(EACH COVER AS INCLUDES)	
	13	1	**196-7592**	1	HINGE AS	
	14	1	**6Y-2412**	1	PLATE AS (RH)	
	15	1	**6Y-2410**	1	PLATE AS (LH)	
					(EACH PLATE AS INCLUDES)	
		1	**1F-0750**	4	NUT-WELD (3/8-16 THD)	
	16	1	**1F-0748**	2	NUT-WELD (1/2-13 THD)	
	17	1	**6H-3956**	4	PIN	
	18	1	**6B-0533**	4	SPRING	
	19	1	**035-2017**	16	SCREW-BUTTON HEAD (3/8-16X1 IN)	
	20	1	**5P-1075**	16	WASHER-HARD (10.2X22.5X3MM THK)	
	21	1	**161-0832**	4	HANDLE AS	
	22	1	**6Y-2601**	2	PLATE	
	23	1	**172-4277**	8	GUIDE AS	
					(EACH INCLUDES)	
	24	1	**1F-0750**	2	NUT-WELD (3/8-16 THD)	
	25	1	**4B-4278**	2	WASHER (10.2X20.5X1.6MM THK)	
	26	1	**4M-7470**	2	GROMMET	
	27	1	**3V-9399**	2	ROD AS	
					(EACH INCLUDES)	
	28	1	**4B-4278**	2	WASHER (10.2X20.5X1.6MM THK)	
	29	1	**5C-6565**	18	BOLT (1/2-13X1.25 IN)	
	30	1	**4H-7728**	2	LUG	
	31	1	**9S-2075**	4	SPACER	
	32	1	**3B-4605**	2	COTTER	
	33	1	**4H-2558**	2	GROMMET	

QUANTITIES SHOWN ARE THOSE REQUIRED FOR BOTH LH AND RH SIDES

159-7221 **ENCLOSURE GP-ENGINE** ***(contd.)*** **i01444623**

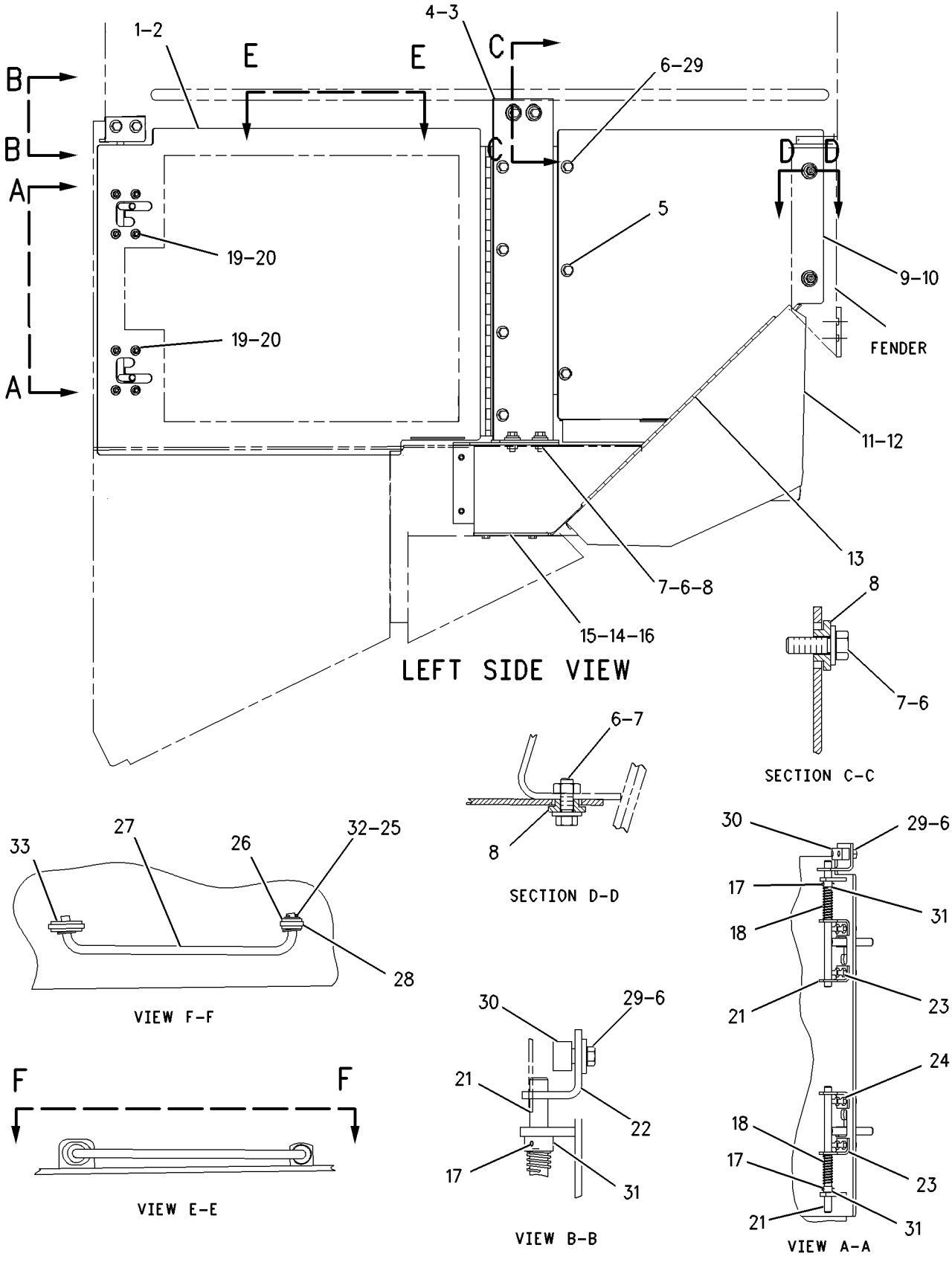

GRAPHIC #1 **<END>** g00696826

FRAME AND BODY

159-7221 ENCLOSURE GP-ENGINE

S/N: 7PZ616-681

PART OF 155-5552 CHASSIS AR

SMCS-7263 **i01853691**

NOTE	REF NO	GRAPHIC REF	PART NUMBER	QTY	PART NAME 1 2 3 4 5 6 (PRODUCT LEVEL)	SEE PAGE
	1	1	**159-8131**	1	DOOR AS (LH)	
	2	1	**159-8130**	1	DOOR AS (RH)	
					(EACH DOOR AS INCLUDES)	
		1	**1F-0748**	4	NUT-WELD (1/2-13 THD)	
		1	**6Y-2399**	1	HINGE	
	3	1	**107-9659**	1	POST AS-LH	
	4	1	**107-9658**	1	POST AS-RH	
					(EACH POST AS INCLUDES)	
	5	1	**1F-0748**	3	NUT-WELD (1/2-13 THD)	
	6	1	**5P-1076**	30	WASHER-HARD (13.5X30X4MM THK)	
	7	1	**5P-2566**	12	BOLT (1/2-13X1.5 IN)	
	8	1	**9P-8663**	12	SPACER (13.8X38X13MM THK)	
	9	1	**107-9661**	1	SCREEN AS-LH	
	10	1	**107-9660**	1	SCREEN AS-RH	
	11	1	**3V-9399**	2	ROD AS	
					(EACH INCLUDES)	
	11A	1	**4B-4278**	2	WASHER (10.2X20.5X1.6MM THK)	
	12	1	**5C-6565**	18	BOLT (1/2-13X1.125 IN)	
	13	1	**4H-7728**	2	LUG	
	14	1	**9S-2075**	4	SPACER (.50 IN THK)	
	15	1	**3B-4605**	2	PIN-COTTER	
	16	1	**4H-2558**	2	GROMMET	
	17	1	**6H-3956**	4	PIN	
	18	1	**6B-0533**	4	SPRING	
	19	1	**035-2017**	16	SCREW-BUTTON HEAD (3/8-16X1 IN)	
	20	1	**5P-1075**	16	WASHER-HARD (10.2X22.5X3MM THK)	
	21	1	**161-0832**	4	HANDLE AS	
	22	1	**6Y-2601**	2	PLATE	
	23	1	**172-4277**	8	GUIDE AS	
					(EACH INCLUDES)	
	24	1	**1F-0750**	2	NUT-WELD (3/8-16 THD)	
	25	1	**4B-4278**	2	WASHER (10.2X20.5X1.6MM THK)	
	26	1	**4M-7470**	2	GROMMET	

159-7221 **ENCLOSURE GP-ENGINE** ***(contd.)*** **i01853691**

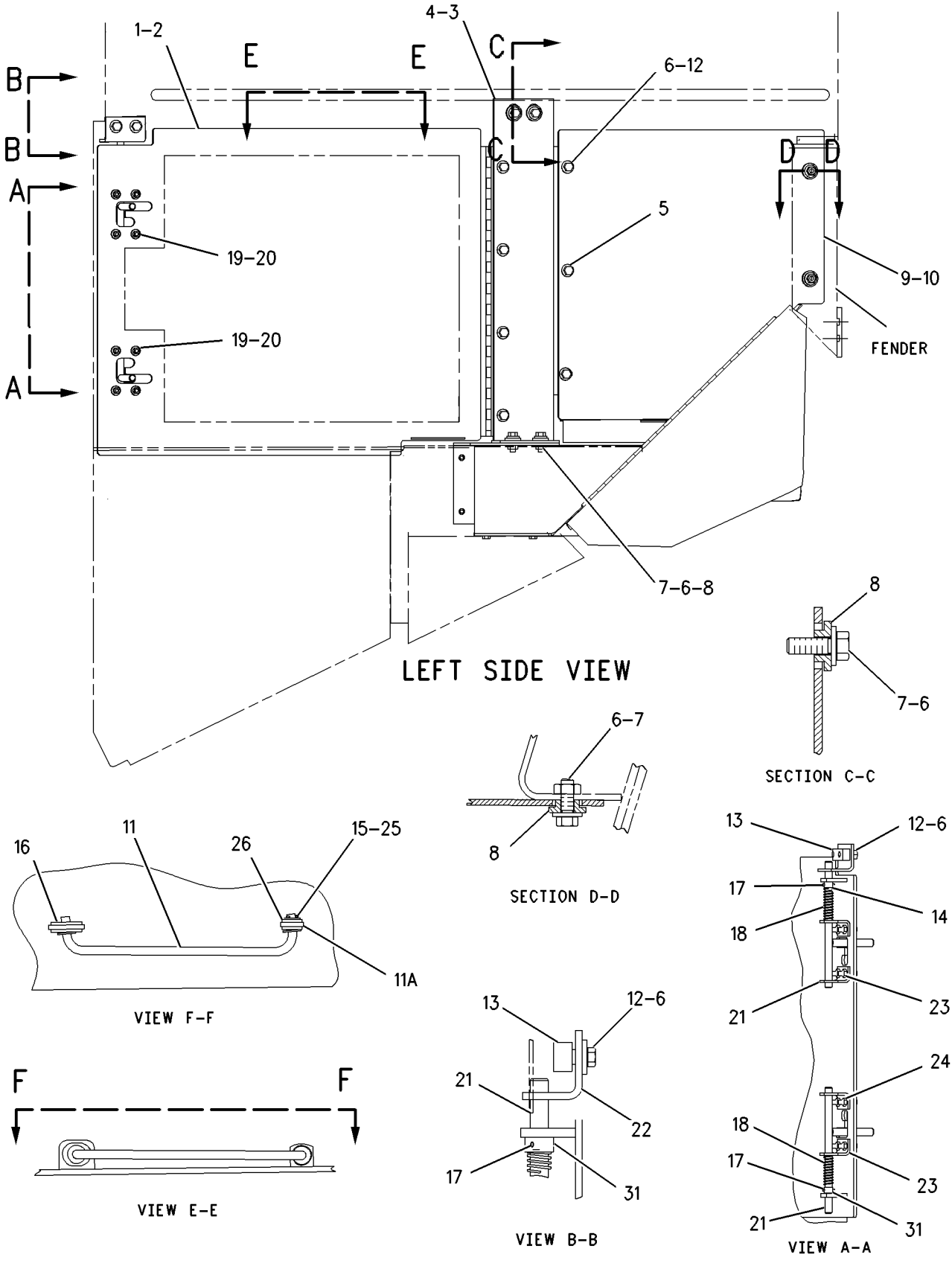

GRAPHIC #1 **<END>** g00945108

159-7221 ENCLOSURE GP-ENGINE

S/N: 7PZ682-UP

PART OF 155-5552 CHASSIS AR

SMCS-7263 **i01963970**

NOTE	REF NO	GRAPHIC REF	PART NUMBER	QTY	PART NAME 1 2 3 4 5 6 (PRODUCT LEVEL)	SEE PAGE
	1	1	**3B-4605**	2	PIN-COTTER	
	2	1	**3V-9399**	2	ROD AS	
					(EACH INCLUDES)	
		1	**4B-4278**	2	WASHER (10.2X20.5X1.6MM THK)	
	3	1	**4B-4278**	2	WASHER (10.2X20.5X1.6MM THK)	
	4	1	**4H-7728**	2	LUG	
	5	1	**6B-0533**	4	SPRING	
	6	1	**6Y-2601**	2	PLATE	
	7	1	**9P-8663**	12	SPACER (13.8X38X13MM THK)	
	8	1	**9S-2075**	4	SPACER	
	9	1	**107-9658**	1	POST AS-RH	
					(EACH POST AS INCLUDES)	
		1	**1F-0748**	3	NUT-WELD (1/2-13 THD)	
	10	1	**107-9659**	1	POST AS-LH	
	11	1	**107-9660**	1	SCREEN AS-RH	
	12	1	**107-9661**	1	SCREEN AS-LH	
	13	1	**161-0832**	4	HANDLE AS	
	14	1	**172-4277**	8	GUIDE AS	
					(EACH INCLUDES)	
		1	**1F-0750**	2	NUT-WELD (3/8-16THD)	
	15	1	**215-2554**	1	DOOR AS (LH)	
	16	1	**215-2556**	1	DOOR AS (RH)	
					(EACH DOOR AS INCLUDES)	
		1	**1F-0748**	4	NUT-WELD (1/2-13 THD)	
		1	**6Y-2399**	1	HINGE	
	17	1	**035-2017**	16	SCREW-BUTTON HEAD (3/8-16X1 IN)	
	18	1	**4H-2558**	2	GROMMET	
	19	1	**4M-7470**	2	GROMMET	
	20	1	**5C-6565**	18	BOLT (1/2-13X1.125 IN)	
	21	1	**5P-1075**	16	WASHER-HARD (10.2X22.5X3MM THK)	
	22	1	**5P-1076**	30	WASHER-HARD (13.5X30X4MM THK)	
	23	1	**5P-2566**	12	BOLT (1/2-13X1.5 IN)	
	24	1	**6H-3956**	4	PIN	

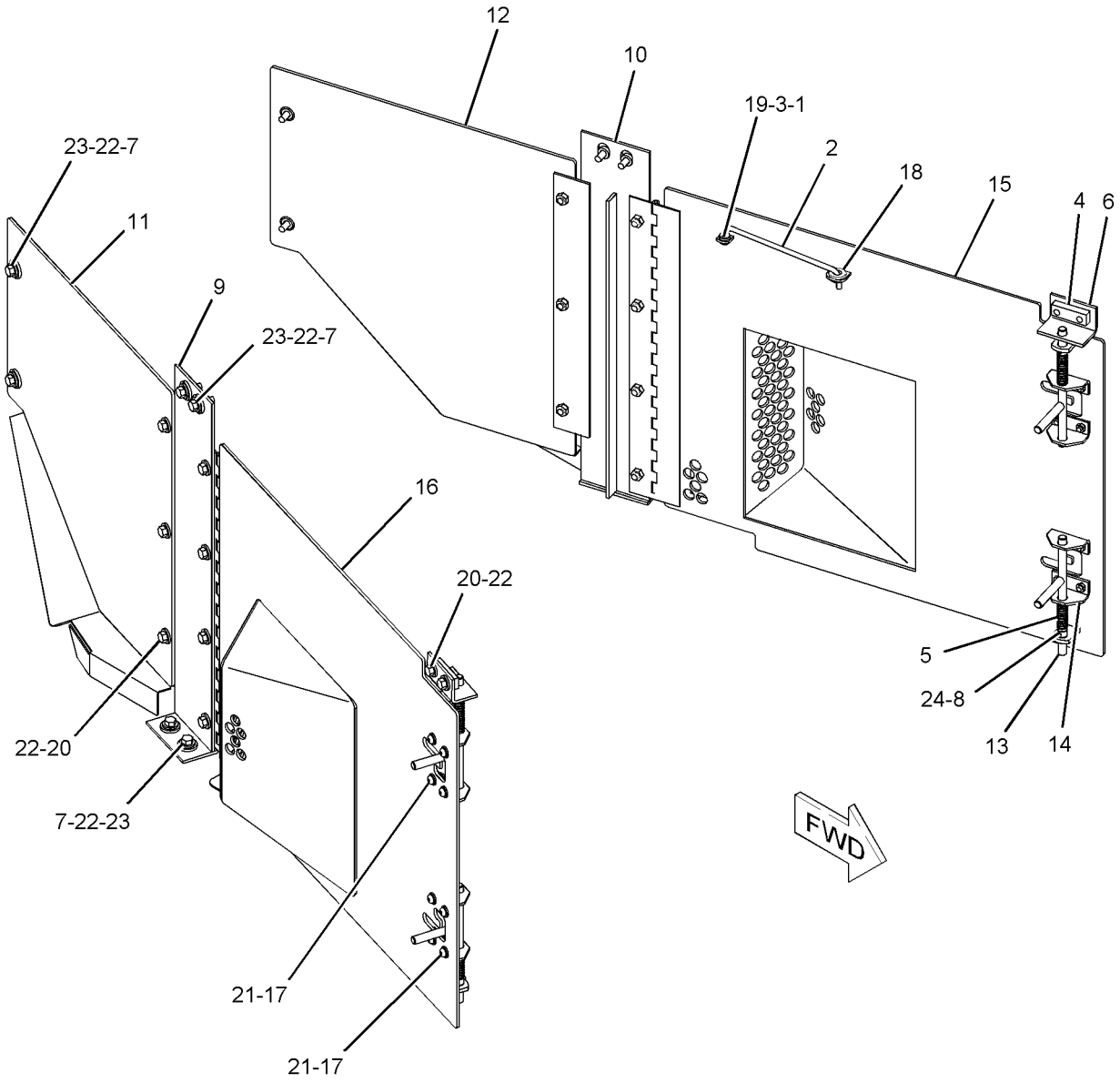

GRAPHIC #1 **<END>** g01025926

159-3793 ENCLOSURE GP-FENDER

S/N: 7PZ1-357

PART OF 155-5552 CHASSIS AR

SMCS-7267 **i01988795**

NOTE	REF NO	GRAPHIC REF	PART NUMBER	QTY	PART NAME 1 2 3 4 5 6 (PRODUCT LEVEL)	SEE PAGE
	1	1	**4H-1641**	1	PIN-SPRING	
	2	1	**8E-7561**	1	KNOB AS	
		1	**8T-7566**	1	PIN-SPRING	
		1	**7S-2042**	1	STUD	
	3	1	**9S-8230**	1	PLATE AS	
		1	**1F-0750**	1	NUT-WELD (3/8-16THD)	
	4	1	**159-3794**	1	PLATE	
	5	1	**159-3795**	1	PLATE	
	6	1	**191-1815**	1	COVER AS	
		1	**3P-3604**	4	STUD-WELD (1/4-20X.620 IN OAL)	
		1	**1F-0750**	1	NUT-WELD (3/8-16THD)	
		1	**4F-9101**	4	LUG (1/4-20 THD)	
		1	**7T-1099**	4	LINK	
		1	**8D-3508**	1	BOSS (3/8-16X1 IN THD)	
	7	1	**8V-4422**	1	HINGE	
	8	1	**5M-3062**	4	BOLT (3/8-16X0.75 IN)	
	9	1	**5P-1075**	5	WASHER-HARD (10.2X22.5X3MM THK)	
	10	1	**5P-1076**	4	WASHER-HARD (13.5X30X4MM THK)	
	11	1	**5P-8502**	1	PADLOCK GP (FENDER ENCLOSURE)	
		1	**5P-8500**	1	KEY	
		1	**8Y-6364**	1	SLEEVE	
	12	1	**5C-6565**	4	BOLT (1/2-13X1.125 IN)	

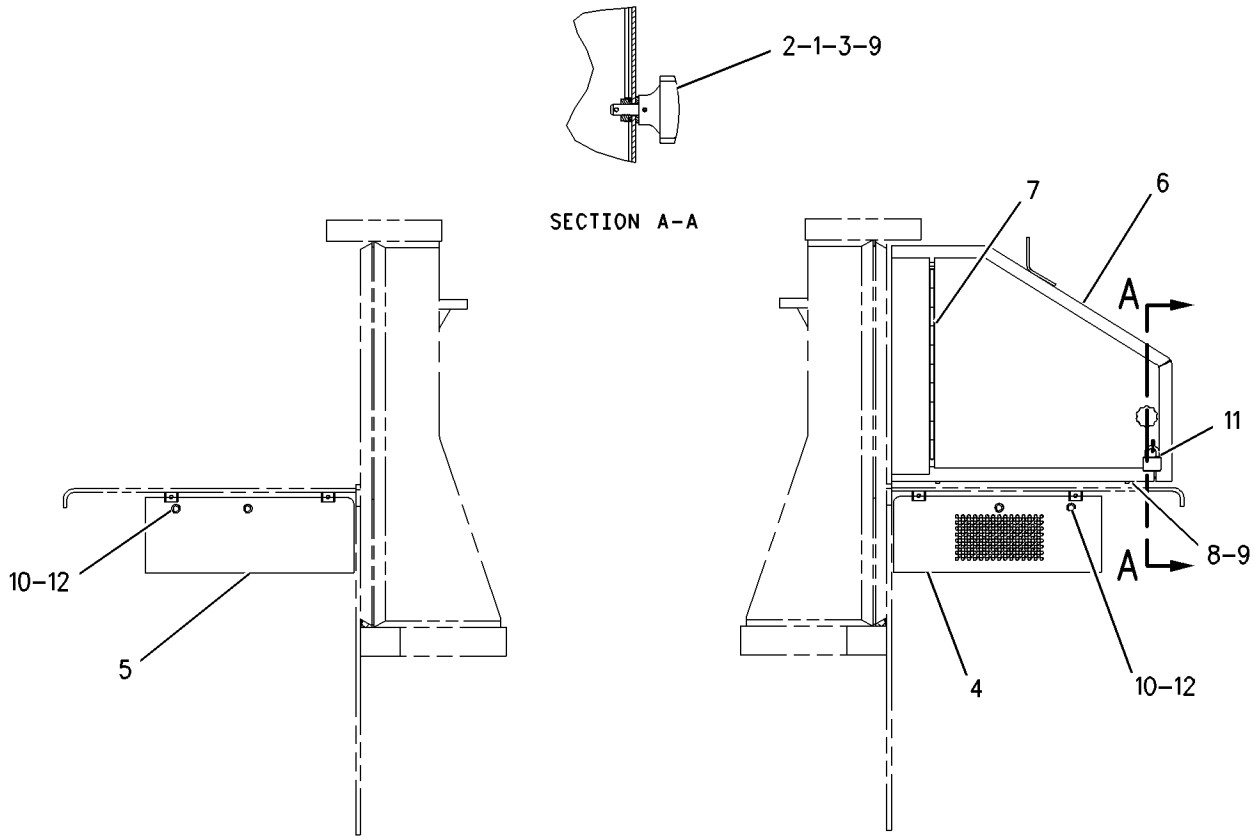

GRAPHIC #1 **<END>** g00752200

159-3793 ENCLOSURE GP-FENDER

S/N: 7PZ358-753

PART OF 155-5552 CHASSIS AR

SMCS-7267 **i01988794**

NOTE	REF NO	GRAPHIC REF	PART NUMBER	QTY	PART NAME 1 2 3 4 5 6 (PRODUCT LEVEL)	SEE PAGE
	1	1	**4H-1641**	1	PIN-SPRING	
	2	1	**8E-7561**	1	KNOB AS	
		1	**8T-7566**	1	PIN-SPRING	
		1	**7S-2042**	1	STUD	
	3	1	**9S-8230**	1	PLATE AS	
		1	**1F-0750**	1	NUT-WELD (3/8-16THD)	
	4	1	**159-3794**	1	PLATE	
	5	1	**159-3795**	1	PLATE	
	6	1	**5P-8502**	1	PADLOCK GP (FENDER ENCLOSURE)	
		1	**5P-8500**	1	KEY	
		1	**8Y-6364**	1	SLEEVE	
C	7	1	**5C-6565**	4	BOLT (1/2-13X1.125 IN)	
	8	1	**5M-3062**	4	BOLT (3/8-16X0.75 IN)	
C	9	1	**5P-1075**	1	WASHER-HARD (10.2X22.5X3MM THK)	
C	10	1	**5P-1076**	4	WASHER-HARD (13.5X30X4MM THK)	
C	11	1	**191-1815**	1	COVER AS	
	11A	1	**8V-4422**	1	HINGE	
	11B	1	**1F-0750**	1	NUT-WELD (3/8-16THD)	
	11C	1	**3P-3604**	4	STUD-WELD (1/4-20X.620 IN OAL)	
	11D	1	**4F-9101**	1	LUG (1/4-20 THD)	
	11E	1	**7T-1099**	4	LINK	
	11F	1	**8D-3508**	1	BOSS (3/8-16X1 IN THD)	

C-CHANGE FROM PREVIOUS TYPE

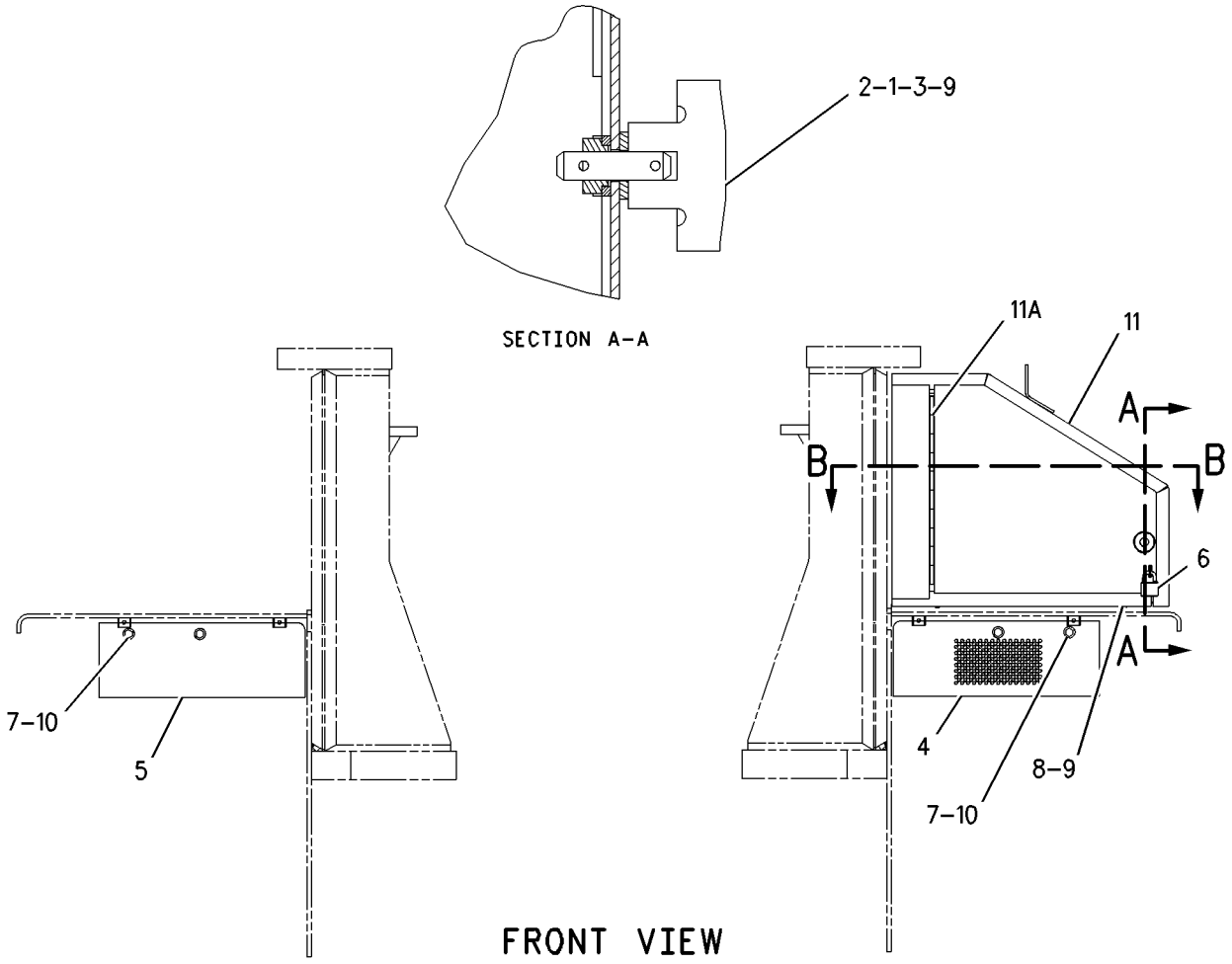

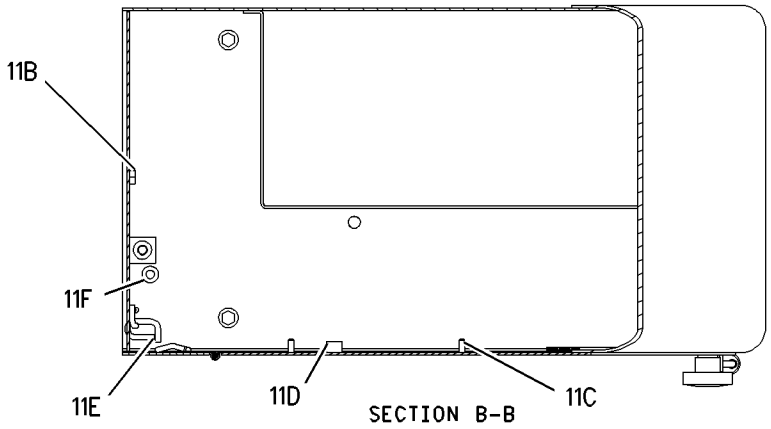

GRAPHIC #1 **<END>** g00800107

159-3793 ENCLOSURE GP-FENDER

S/N: 7PZ754-UP

PART OF 155-5552 CHASSIS AR

SMCS-7267 **i01988796**

NOTE	REF NO	GRAPHIC REF	PART NUMBER	QTY	PART NAME 1 2 3 4 5 6 (PRODUCT LEVEL)	SEE PAGE
	1	1	**3W-3110**	2	LOCK PIN	
	2	1	**5P-8502**	1	PADLOCK GP (FENDER ENCLOSURE)	
		1	**8Y-6364**	1	SLEEVE	
		1	**5P-8500**	1	KEY	
	3	1	**8E-7561**	1	KNOB AS (OIL RENEWAL SYSTEM COVER)	
		1	**7S-2042**	1	STUD	
		1	**8T-7566**	1	PIN-SPRING	
	4	1	**9M-3835**	1	LATCH-RUBBER	
	5	1	**9S-8230**	1	PLATE AS	
		1	**1F-0750**	1	NUT-WELD (3/8-16THD)	
	6	1	**159-3794**	1	PLATE	
	7	1	**159-3795**	1	PLATE	
	8	1	**238-9976**	1	ENCLOSURE AS	
	9	1	**238-9977**	1	COVER AS	
	10	1	**239-1168**	1	LINK	
	11	1	**0S-1621**	2	BOLT (1/2-13X1 IN)	
	12	1	**132-7551**	4	SPACER (11X19X6MM THK)	
	13	1	**2H-3855**	2	BOLT (1/2-13X0.875 IN)	
	14	1	**2M-5795**	1	PIN-CLEVIS	
	15	1	**4H-1641**	1	PIN-SPRING	
	16	1	**5C-6565**	4	BOLT (1/2-13X1.125 IN)	
	17	1	**5P-1075**	1	WASHER-HARD (10.2X22.5X3MM THK)	
	18	1	**5P-1076**	4	WASHER-HARD (13.5X30X4MM THK)	
	19	1	**5P-8245**	4	WASHER-HARD (13.5X25.5X3MM THK)	
	20	1	**5V-1496**	1	RETAINER	
	21	1	**8T-4222**	4	WASHER-PLATED (11X32X2.5MM THK)	
	22	1	**8T-4896**	4	WASHER-HARD (10.2X18.5X2.5MM THK)	
	23	1	**9B-7237**	4	BOLT (3/8-16X1.25 IN)	

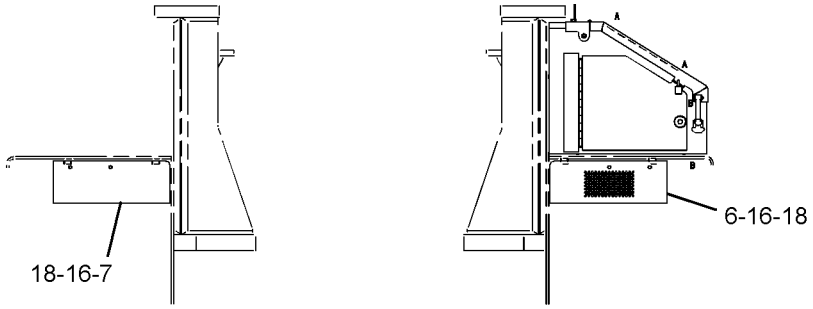

FRONT VIEW

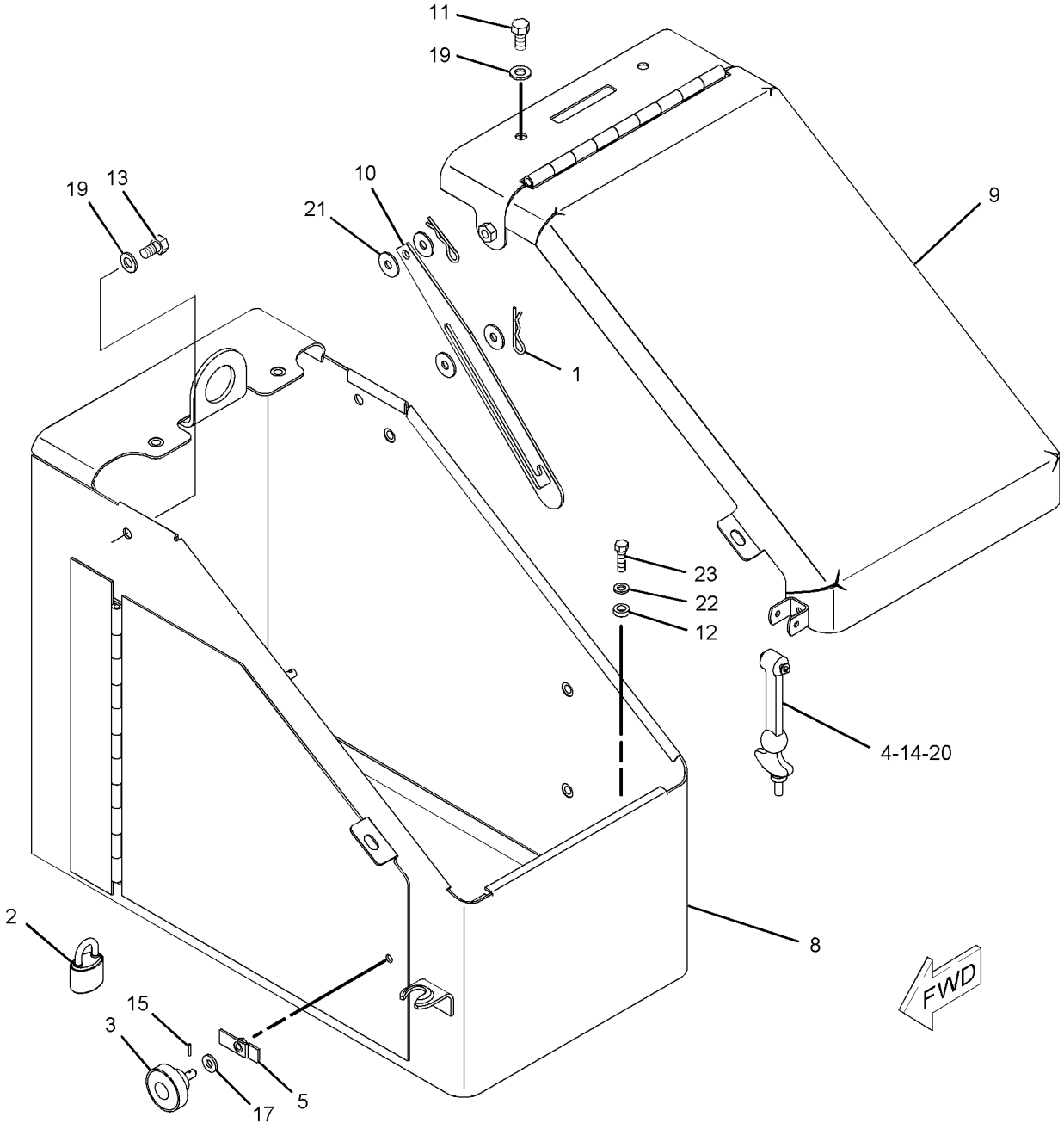

GRAPHIC #1 **<END>** g01026873

237-0140 ENCLOSURE GP-FENDER–OIL RENEWAL SYSTEM

S/N: 7PZ754-UP
PART OF 237-0138 PLATFORM AR
AN ATTACHMENT

SMCS-7267 **i01980462**

NOTE	REF NO	GRAPHIC REF	PART NUMBER	QTY	PART NAME 1 2 3 4 5 6 (PRODUCT LEVEL)	SEE PAGE
	1	1	**239-6339**	1	ENCLOSURE AS	
	2	1	**239-6342**	1	COVER AS	

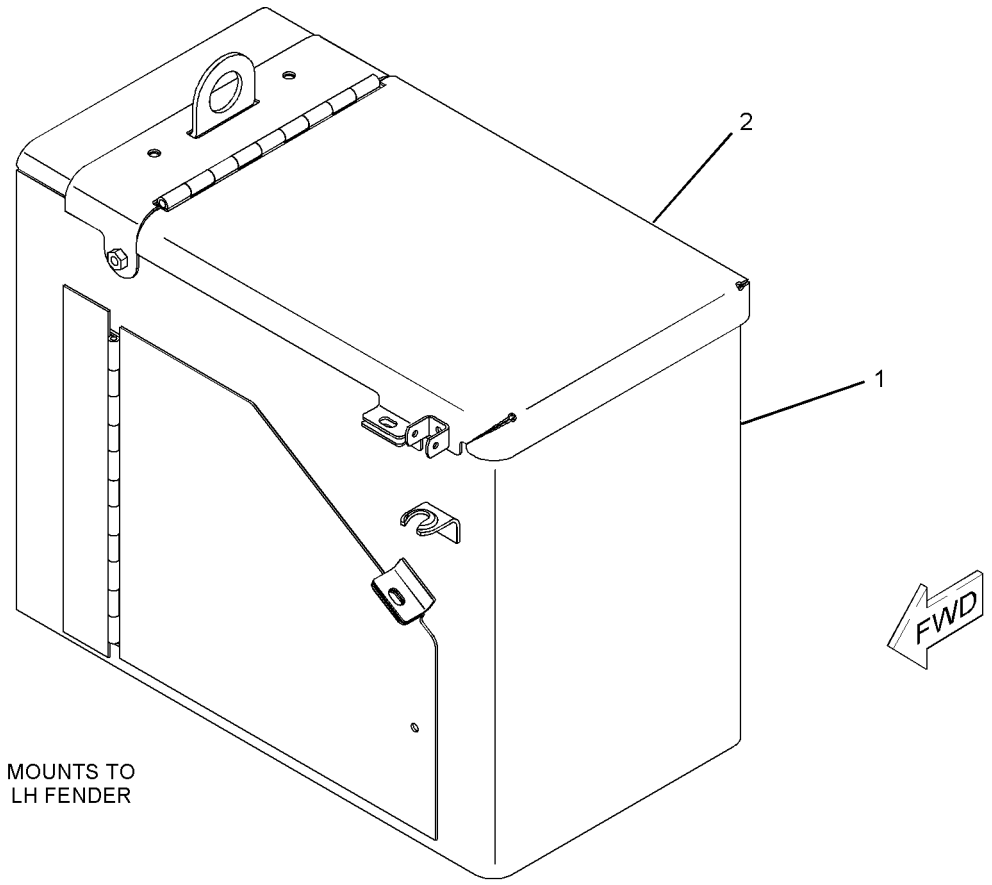

GRAPHIC #1 **<END>** g01027449

FRAME AND BODY

157-3513 FENDER GP

S/N: 7PZ1-UP
PART OF 155-5552 CHASSIS AR
TYPE 1

SMCS-7252 **i01988797**

NOTE	REF NO	GRAPHIC REF	PART NUMBER	QTY	PART NAME 1 2 3 4 5 6 (PRODUCT LEVEL)	SEE PAGE
	1	1	**2G-6228**	2	STRIP	
	2	2	**3T-3564**	1	DECK AS	
	3	2	**3T-3569**	1	DECK AS	
					(EACH DECK AS INCLUDES)	
	4	2	**1F-0750**	11	NUT-WELD (3/8-16THD)	
	5	1	**5P-8502**	2	PADLOCK GP (FENDER)	
					(EACH INCLUDES)	
		1	**5P-8500**	1	KEY	
		1	**8Y-6364**	1	SLEEVE	
	6	1	**6T-0666**	2	BAFFLE	
	7	2	**6T-8595**	2	PLATE AS	
					(EACH INCLUDES)	
	8	2	**1F-0750**	2	NUT-WELD (3/8-16THD)	
	9	2	**7T-1099**	1	LINK	
	10	2	**1F-0748**	2	NUT-WELD (1/2-13 THD)	
	11	1	**9U-9289**	1	PLATE AS	
	12	1	**1F-0748**	1	NUT-WELD (1/2-13 THD)	
	13	1	**1F-0750**	5	NUT-WELD (3/8-16THD)	
	14	1	**4K-9097**	4	NUT-WELD	
	15	1	**7T-1099**	3	LINK	
	16	1	**141-1206**	1	PLATE AS	
		1	**8F-9836**	2	BOSS-THREADED (3/8-16X.75 IN)	
	17	1	**1F-0748**	3	NUT-WELD (1/2-13 THD)	
	18	1	**4K-9097**	2	NUT-WELD	
	19	1	**8P-2813**	1	BOSS (3/8-16 THD)	
	20	1	**9F-6445**	2	NUT-WELD (1/4-24 THD)	
	21	1	**162-8679**	2	PLATE	
	22	1	**169-4620**	1	BEAM AS	
		1	**1F-0748**	13	NUT-WELD (1/2-13 THD)	
		1	**1F-0750**	1	NUT-WELD (3/8-16THD)	
		1	**7T-1099**	17	LINK	
	23	1	**6Y-5812**	2	BEARING-SLEEVE	
	24	2	**2J-3118**	8	BOLT-LOCKING (3/8-16X1.25 IN)	
	25	1	**2M-0849**	8	WASHER-HARD (13.5X25.5X5MM THK)	
	26	2	**2M-5795**	4	PIN-CLEVIS	
	27	2	**3T-2977**	2	PLATE	
	28	2	**3T-3566**	1	PLATE	
	29	2	**3T-3571**	1	PLATE	
	30	1	**5M-3062**	6	BOLT (3/8-16X0.75 IN)	
	31	1,2	**5P-1075**	16	WASHER-HARD (10.2X22.5X3MM THK)	
	32	1	**5P-1076**	24	WASHER-HARD (13.5X30X4MM THK)	
	33	1	**5P-2228**	9	BOLT (1/2-13X1 IN)	
	34	2	**5P-2566**	4	BOLT (1/2-13X1.5 IN)	
	35	2	**5V-1496**	4	RETAINER	
	36	2	**6J-0488**	17	SCREW-BUTTON HEAD (3/8-16X0.875 IN)	
	37	2	**6V-1193**	40	SCREW-HEX SOCKET (3/8-16X.625 IN)	
	38	1	**7X-0346**	16	BOLT (5/8-11X2 IN)	
	39	1	**7X-0369**	24	BOLT (3/4-10X3.25 IN)	
	40	1	**7X-0448**	16	NUT (5/8-11 THD)	
	41	1	**7X-0555**	2	WASHER-HARD (20X65X5MM THK)	
	42	1	**7X-0607**	4	WASHER-HARD (20X55X8.0MM THK)	
	43	1	**7X-0618**	8	WASHER-HARD (13.5X40X5MM THK)	
	44	1	**8C-3185**	2	BOLT-12 POINT HEAD (3/4-10 X 7IN)	
	45	1	**8T-4122**	32	WASHER-HARD (17X32X3.5MM THK)	
	46	2	**8T-4222**	8	WASHER-PLATED (11X32X2.5MM THK)	

157-3513 **FENDER GP** ***(contd.)*** **i01988797**

NOTE	REF NO	GRAPHIC REF	PART NUMBER	QTY	PART NAME 1 2 3 4 5 6 (PRODUCT LEVEL)	SEE PAGE
	47	2	**8T-4223**	4	WASHER-HARD (13.5X25.5X3MM THK)	
	48	1	**8T-4896**	6	WASHER-HARD (10.2X18.5X2.5MM THK)	
	49	1	**8T-4994**	26	WASHER-HARD (20X36.5X3.5MM THK)	
	50	1	**8T-8917**	23	BOLT (1/2-13X1.25 IN)	
	51	1	**8T-9399**	4	BOLT (3/4-10X2.25 IN)	
E	52	1	**8C-7340**		SEAL (163CM)	
	53	2	**3W-3110**	4	LOCK PIN	
	54	1	**8E-5013**	1	PLATE AS	
	55	2	**9M-3835**	4	LATCH-RUBBER	
	56	1	**9N-4622**	2	PIN	
	57	1	**9U-9292**	1	PLATE AS	
	58	1	**1F-0748**	1	NUT-WELD (1/2-13 THD)	
	59	1	**1F-0750**	3	NUT-WELD (3/8-16THD)	
	60	2	**9W-0352**	2	LINK	
	61	2	**9W-6958**	2	HANDHOLD (GRAB)	
	62	1	**113-5898**	1	PLATE AS	
	63	1	**1F-0748**	9	NUT-WELD (1/2-13 THD)	
	64	1	**7T-1099**	3	LINK	
	65	2	**157-3514**	1	FENDER AS-RH	
		2	**5H-9394**	2	BOSS (3/8-16X1.0 IN)	
		2	**7J-7778**	2	LUG (1/2-13 THD)	
		2	**7K-2271**	2	BOSS	
		2	**8P-0612**	2	BRACKET	
		2	**8T-5912**	4	NUT-WELD	
		2	**1F-0750**	1	NUT-WELD (3/8-16THD)	
		2	**1F-0748**	2	NUT-WELD (1/2-13 THD)	
	66	2	**3P-5327**	1	HINGE	
	67	1	**8T-5911**	3	NUT-WELD (1/2X13 THD)	
	68	2	**7T-1099**	14	LINK	
	69	2	**157-3517**	1	COVER AS	
	70	2	**9M-3838**	2	BRACKET	
	71	2	**1F-0750**	9	NUT-WELD (3/8-16THD)	
	72	2	**157-3515**	1	FENDER AS-LH	
		2	**1F-0748**	2	NUT-WELD (1/2-13 THD)	
		2	**1F-0750**	9	NUT-WELD (3/8-16THD)	
		2	**8J-4916**	2	BOSS (3/8-16 THD)	
		2	**8P-0612**	2	BRACKET	
		2	**8T-5911**	3	NUT-WELD (1/2X13 THD)	
	73	2	**3P-5327**	1	HINGE	
	74	2	**7T-1099**	19	LINK	
	75	2	**8T-5912**	13	NUT-WELD	
	76	2	**157-3519**	1	COVER AS	
	77	2	**9M-3838**	2	BRACKET	
	78	2	**1F-0750**	9	NUT-WELD (3/8-16THD)	
	79	2	**157-3531**	2	PLATE	
	80	2	**157-3532**	1	PLATE	
	81	1	**1K-6870**	2	LOCKNUT (3/4-10 THD)	
	82	1	**189-2309**	2	STEP	
	83	1	**4L-9337**	8	BOLT (3/8-16X1.5 IN)	

E-ORDER BY THE CENTIMETER

REFER TO ALL ILLUSTRATIONS OF
THIS GROUP FOR AUXILIARY VIEWS

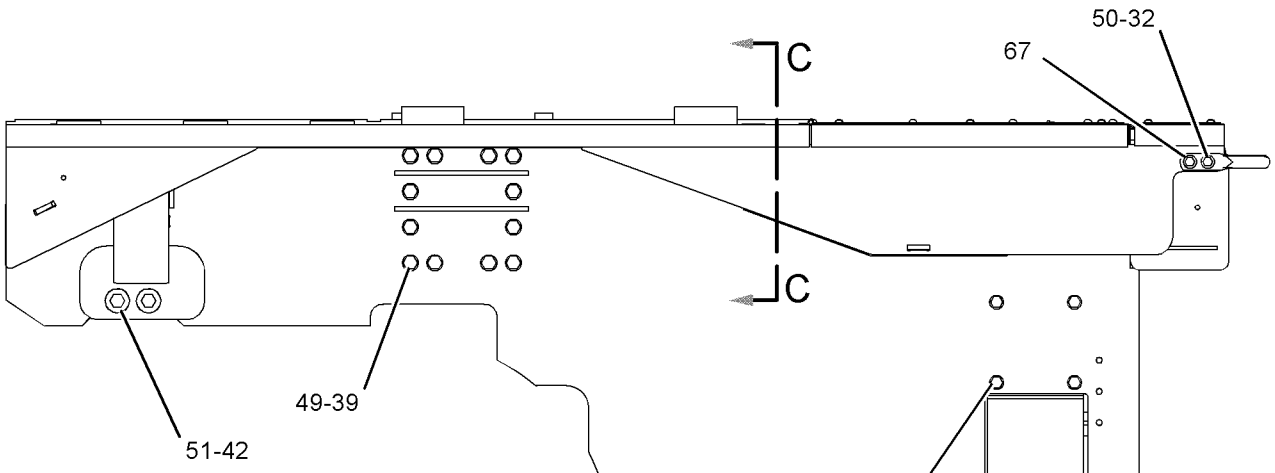

RIGHT SIDE VIEW

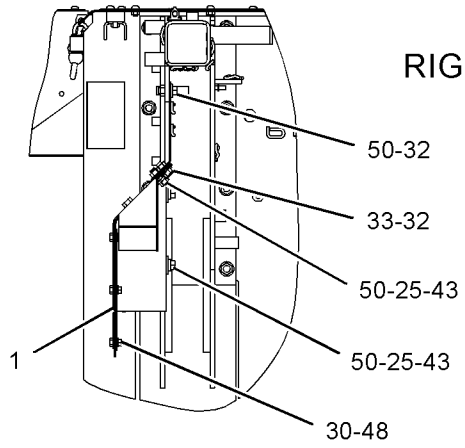

SECTION F-F

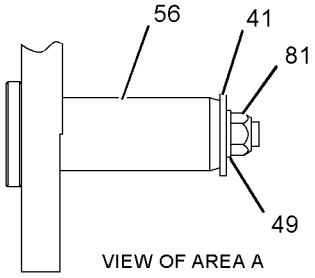

VIEW OF AREA A

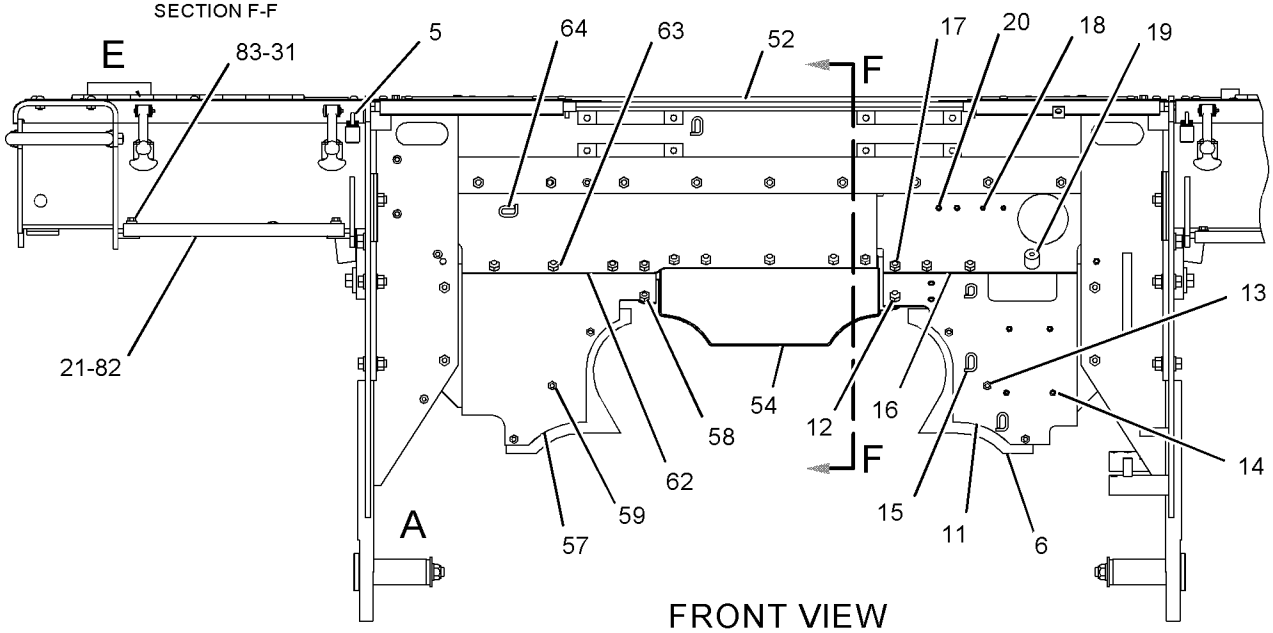

FRONT VIEW

GRAPHIC #1

g01009548

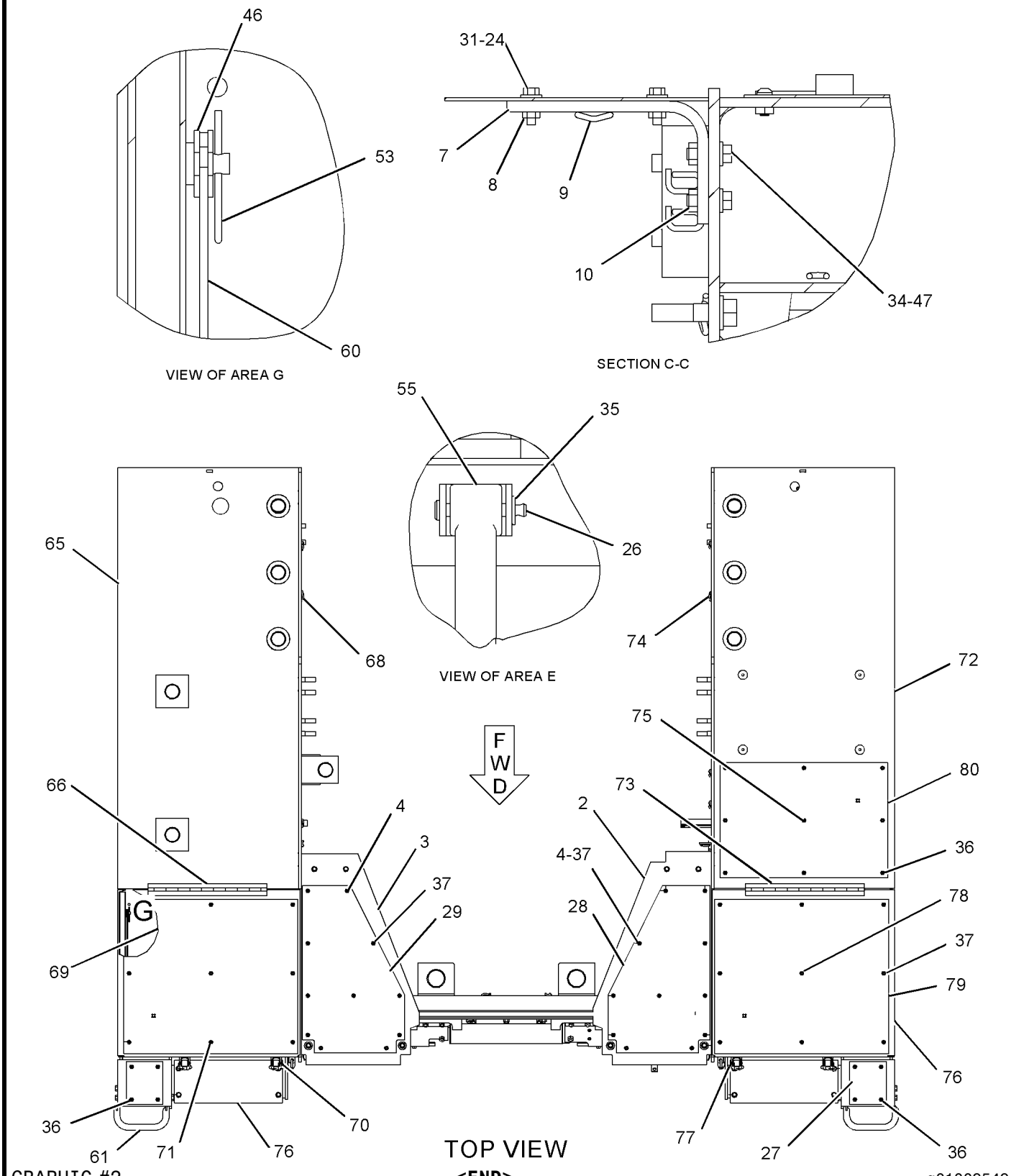

GRAPHIC #2

<END>

g01009549

FRAME AND BODY

157-3513 FENDER GP

S/N: 7PZ1-UP
PART OF 155-5552 CHASSIS AR
TYPE 2

SMCS-7252 **i02029596**

NOTE	REF NO	GRAPHIC REF	PART NUMBER	QTY	PART NAME 1 2 3 4 5 6 (PRODUCT LEVEL)	SEE PAGE
	1	1	**2G-6228**	2	STRIP	
	2	1	**3T-3564**	1	DECK AS	
	3	1	**3T-3569**	1	DECK AS	
					(EACH DECK AS INCLUDES)	
		1	**1F-0750**	11	NUT-WELD (3/8-16-THD)	
	4	1	**3W-3110**	4	LOCK PIN	
	5	1	**5P-8502**	2	PADLOCK GP (FENDER)	
					(EACH INCLUDES)	
		1	**5P-8500**	1	KEY	
		1	**8Y-6364**	1	SLEEVE	
	6	1	**6T-0666**	2	BAFFLE	
	7	1	**6T-8595**	2	PLATE AS	
					(EACH INCLUDES)	
		1	**1F-0750**	2	NUT-WELD (3/8-16-THD)	
		1	**7T-1099**	1	LINK	
		1	**1F-0748**	2	NUT-WELD (1/2-13-THD)	
	8	1	**8E-5013**	1	PLATE AS	
	9	1	**9M-3835**	4	LATCH-RUBBER	
	10	1	**9N-4622**	2	PIN	
	11	1	**9U-9289**	1	PLATE AS	
		1	**1F-0748**	1	NUT-WELD (1/2-13-THD)	
		1	**1F-0750**	5	NUT-WELD (3/8-16-THD)	
		1	**4K-9097**	4	NUT-WELD (5/16-18-THD)	
		1	**7T-1099**	3	LINK	
	12	1	**9U-9292**	1	PLATE AS	
		1	**1F-0748**	1	NUT-WELD (1/2-13-THD)	
		1	**1F-0750**	3	NUT-WELD (3/8-16-THD)	
	13	1	**9W-0352**	2	LINK	
	14	1	**9W-6958**	2	HANDHOLD (GRAB)	
	15	1	**113-5898**	1	PLATE AS	
		1	**1F-0748**	9	NUT-WELD (1/2-13-THD)	
		1	**7T-1099**	3	LINK	
	16	1	**141-1206**	1	PLATE AS	
		1	**8F-9836**	2	BOSS-THREADED (3/8-16X.75-IN)	
		1	**1F-0748**	3	NUT-WELD (1/2-13-THD)	
		1	**4K-9097**	2	NUT-WELD (5/16-18-THD)	
		1	**8P-2813**	1	BOSS (3/8-16-THD)	
		1	**9F-6445**	2	NUT-WELD (1/4-24-THD)	
	17	1	**162-8679**	2	PLATE	
	18	1	**169-4620**	1	BEAM AS	
		1	**1F-0748**	13	NUT-WELD (1/2-13-THD)	
		1	**1F-0750**	1	NUT-WELD (3/8-16-THD)	
		1	**7T-1099**	17	LINK	
		1	**6Y-5812**	2	BEARING-SLEEVE	
	19	1	**189-2309**	2	STEP	
Y	20	1	**229-8204**	1	FENDER GP (RH)	519
Y	21	1	**229-8203**	1	FENDER GP (LH)	518
	22	1	**1K-6870**	2	LOCKNUT (3/4-10-THD)	
	23	1	**2J-3118**	8	BOLT-LOCKING (3/8-16X1.25-IN)	
	24	1	**2M-0849**	8	WASHER-HARD (13.5X25.5X5-MM THK)	
	25	1	**2M-5795**	4	PIN-CLEVIS	
	26	1	**3T-3566**	1	PLATE	
	27	1	**3T-3571**	1	PLATE	
	28	1	**4L-9337**	8	BOLT (3/8-16X1.5-IN)	
	29	1	**5M-3062**	6	BOLT (3/8-16X0.75-IN)	

157-3513 **FENDER GP** ***(contd.)*** **i02029596**

NOTE	REF NO	GRAPHIC REF	PART NUMBER	QTY	PART NAME 1 2 3 4 5 6 (PRODUCT LEVEL)	SEE PAGE
	30	1	**5P-1075**	16	WASHER-HARD (10.2X22.5X3-MM THK)	
	31	1	**5P-1076**	24	WASHER-HARD (13.5X30X4-MM THK)	
	32	1	**5P-2228**	9	BOLT (1/2-13X1-IN)	
	33	1	**5P-2566**	4	BOLT (1/2-13X1.5-IN)	
	34	1	**5V-1496**	4	RETAINER	
	35	1	**6V-1193**	22	SCREW-HEX SOCKET (3/8-16X.625-IN)	
	36	1	**7X-0346**	16	BOLT (5/8-11X2-IN)	
	37	1	**7X-0369**	24	BOLT (3/4-10X3.25-IN)	
	38	1	**7X-0448**	16	NUT (5/8-11-THD)	
	39	1	**7X-0555**	2	WASHER-HARD (20X65X5-MM THK)	
	40	1	**7X-0607**	4	WASHER-HARD (20X55X8.0-MM THK)	
	41	1	**7X-0618**	8	WASHER-HARD (13.5X40X5-MM THK)	
	42	1	**8C-3185**	2	BOLT-12 POINT HEAD (3/4-10X7-IN)	
	43	1	**8T-4122**	32	WASHER-HARD (17X32X3.5-MM THK)	
	44	1	**8T-4222**	8	WASHER-PLATED (11X32X2.5-MM THK)	
	45	1	**8T-4223**	4	WASHER-HARD (13.5X25.5X3-MM THK)	
	46	1	**8T-4896**	6	WASHER-HARD (10.2X18.5X2.5-MM THK)	
	47	1	**8T-4994**	26	WASHER-HARD (20X36.5X3.5-MM THK)	
	48	1	**8T-8917**	23	BOLT (1/2-13X1.25-IN)	
	49	1	**8T-9399**	4	BOLT (3/4-10X2.25-IN)	
BE	50	1	**8C-7340**		SEAL	

B-USE AS REQUIRED
E-ORDER BY THE CENTIMETER
Y-SEPARATE ILLUSTRATION

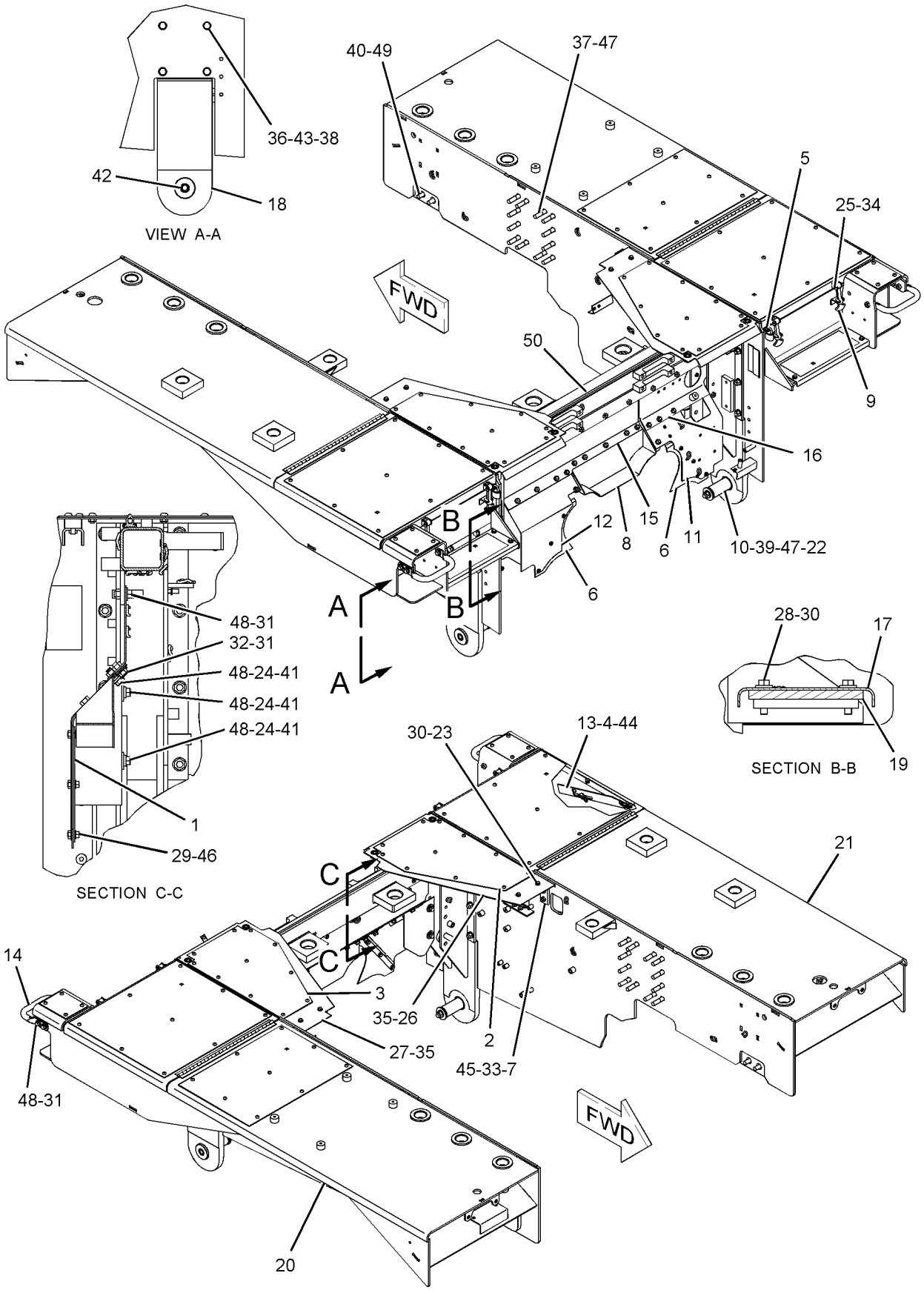

GRAPHIC #1 **<END>** g01029971

229-8203 FENDER GP

S/N: 7PZ1-UP

PART OF 157-3513 FENDER GP

SMCS-7252 **i01964076**

NOTE	REF NO	GRAPHIC REF	PART NUMBER	QTY	PART NAME 1 2 3 4 5 6 (PRODUCT LEVEL)	SEE PAGE
	1	1	**157-3515**	1	FENDER AS-LH	
	1A	1	**157-3519**	1	COVER AS	
	2	1	**157-3531**	1	PLATE	
	3	1	**157-3532**	1	PLATE	
	4	1	**3T-2977**	1	PLATE	
	5	1	**6J-0488**	13	SCREW-BUTTON HEAD (3/8-16X0.875 IN)	
	6	1	**6V-1193**	9	SCREW-HEX SOCKET (3/8-16X.625 IN)	

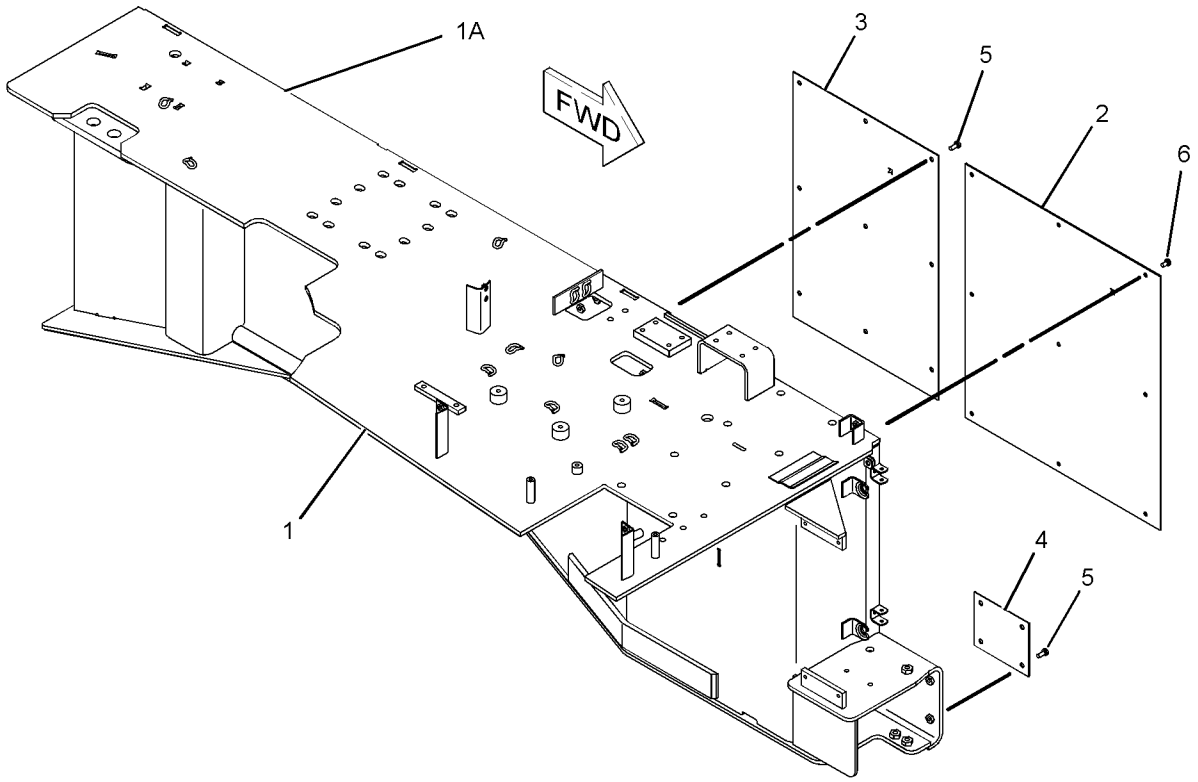

GRAPHIC #1 **<END>** g01026988

FRAME AND BODY

229-8204 FENDER GP

S/N: 7PZ1-UP

PART OF 157-3513 FENDER GP

SMCS-7252 **i01964078**

NOTE	REF NO	GRAPHIC REF	PART NUMBER	QTY	PART NAME 1 2 3 4 5 6 (PRODUCT LEVEL)	SEE PAGE
	1	1	**157-3514**	1	FENDER AS-RH	
	1A	1	**157-3517**	1	COVER AS	
	2	1	**157-3531**	1	PLATE	
	3	1	**3T-2977**	1	PLATE	
	4	1	**6J-0488**	4	SCREW-BUTTON HEAD (3/8-16X0.875 IN)	
	5	1	**6V-1193**	9	SCREW-HEX SOCKET (3/8-16X.625 IN)	

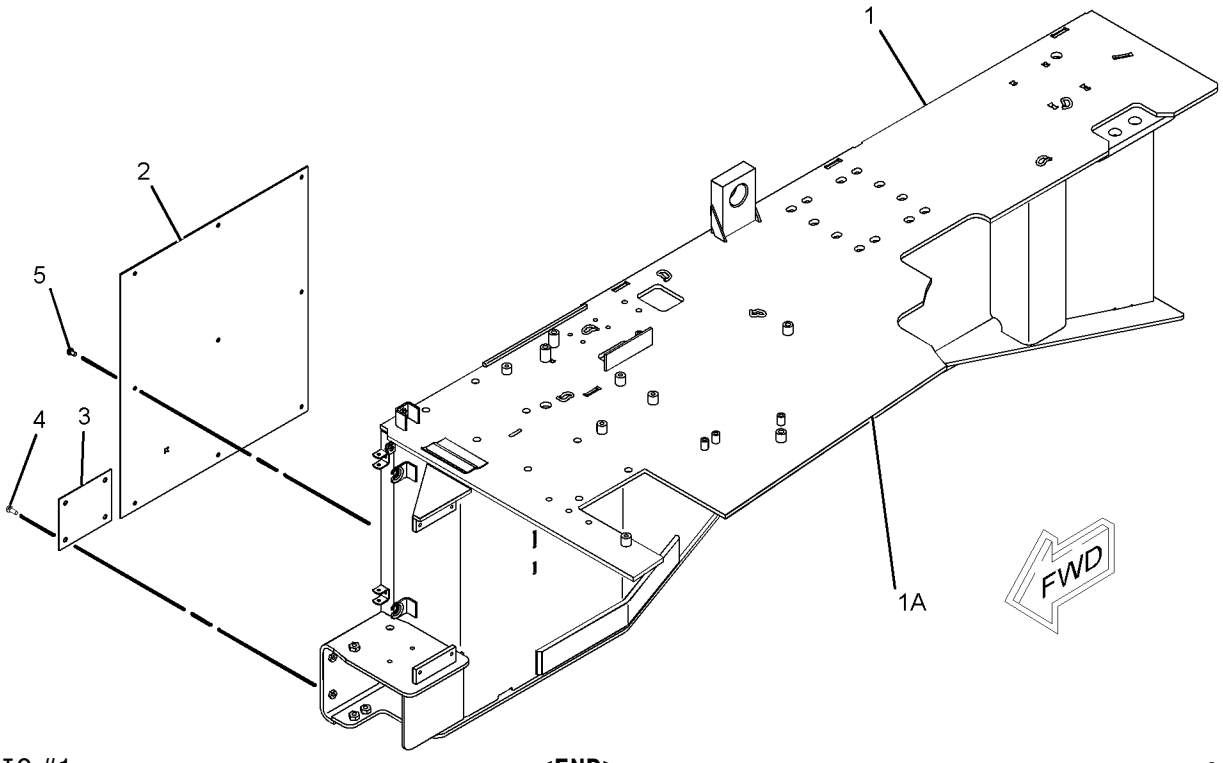

GRAPHIC #1 **<END>** g01026977

127-8051 GUARD GP-BOTTOM–FRAME

S/N: 7PZ1-UP

PART OF 155-5552 CHASSIS AR

SMCS-7153 **i01692399**

NOTE	REF NO	GRAPHIC REF	PART NUMBER	QTY	PART NAME 1 2 3 4 5 6 (PRODUCT LEVEL)	SEE PAGE
	1	1	**3B-5317**	8	PIN-COTTER	
	2	1	**3T-1177**	1	GUARD AS	
		1	**6V-8190**	1	NUT (1-8 THD)	
		1	**1F-0748**	4	NUT-WELD (1/2-13 THD)	
	3	1	**6P-8829**	14	RETAINER	
	4	1	**6T-5941**	8	PIN-SECONDARY BAR	
	5	1	**7G-6495**	3	COVER	
	6	1	**103-1517**	1	GUARD AS	
		1	**6V-8190**	1	NUT (1-8 THD)	
		1	**8T-5911**	4	NUT-WELD (1/2-13 THD)	
		1	**8T-5912**	1	NUT-WELD (3/8-16 THD)	
	7	1	**130-2545**	1	GUARD AS	
		1	**6V-8190**	1	NUT (1-8 THD)	
		1	**8T-5911**	4	NUT-WELD (1/2-13 THD)	
		1	**8T-5912**	2	NUT-WELD (3/8-16 THD)	
	8	1	**130-2547**	1	GUARD AS	
		1	**6V-8190**	1	NUT (1-8 THD)	
		1	**8T-5911**	4	NUT-WELD (1/2-13 THD)	
	9	1	**7X-0549**	18	WASHER-HARD (28X52.5X8MM THK)	
	10	1	**8T-5361**	8	WASHER-HARD (28X49X5MM THK)	
	11	1	**6V-8190**	14	NUT (1-8 THD)	
	12	1	**7X-0413**	8	BOLT (1-8X7 IN)	
	13	1	**7X-0415**	6	BOLT (1-8X8 IN)	
	14	1	**8T-8927**	4	BOLT (1-8X3.75 IN)	
	15	1	**9B-7237**	3	BOLT (3/8-16X1.25 IN)	
B	16	1	**7X-0419**	2	BOLT (1-8X10 IN)	

B-USE AS REQUIRED

127-8051 **GUARD GP-BOTTOM** ***(contd.)*** **i01692399**

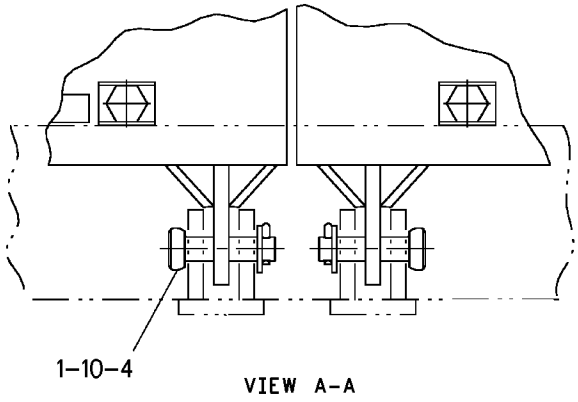

VIEW A-A

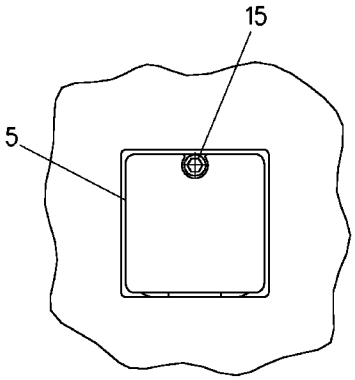

VIEW B-B

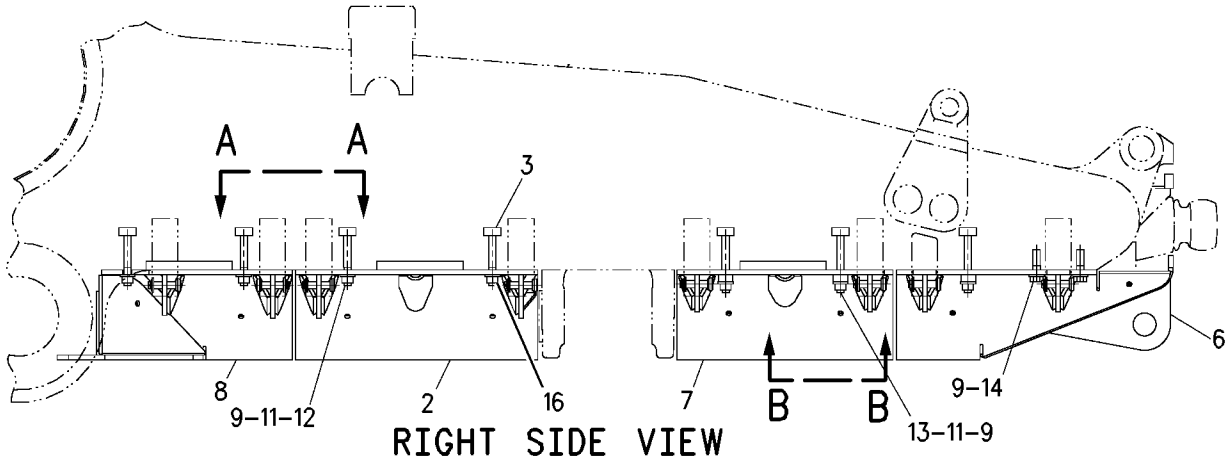

RIGHT SIDE VIEW

GRAPHIC #1

<END>

g00760037

139-2003 GUARD GP-IDLER

S/N: 7PZ1-294
FOR USE WITH 175-6807—PAGE 594
AN ATTACHMENT

SMCS-4159 **i01024465**

NOTE	REF NO	GRAPHIC REF	PART NUMBER	QTY	PART NAME 1 2 3 4 5 6 (PRODUCT LEVEL)	SEE PAGE
	1	1	**139-2011**	4	PLATE	
	2	1	**139-2015**	4	GUARD AS	
	3	1	**139-2016**	2	GUARD AS-REAR	
	4	1	**139-2019**	2	GUARD AS	
C	5	1	**7X-0345**	12	BOLT (5/8-11X1.75IN)	
C	6	1	**8T-4122**	24	WASHER (3.5MM THK)	
C	7	1	**8T-6871**	12	BOLT (5/8-11X2.50IN)	

C-CHANGE FROM PREVIOUS TYPE

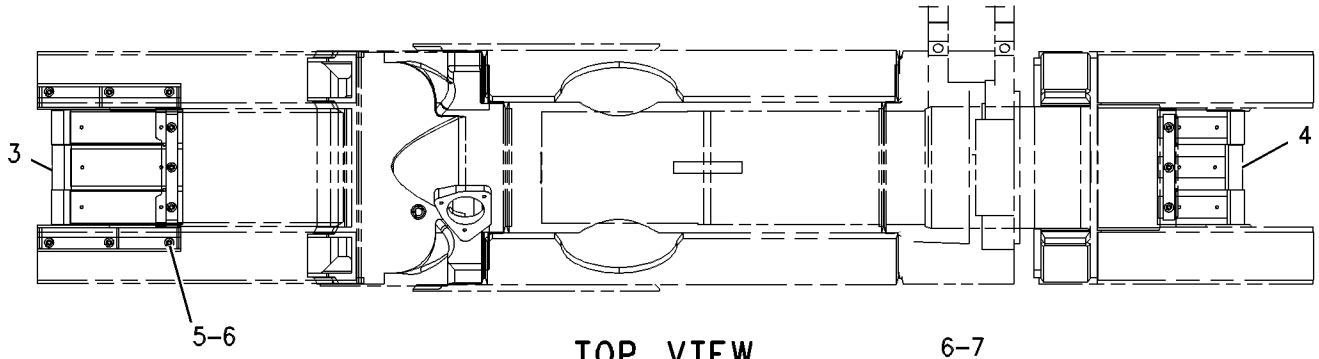

TOP VIEW

FWD

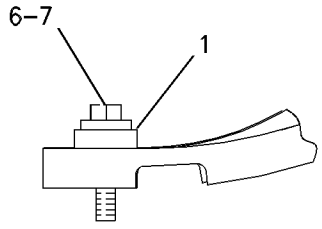

VIEW OF AREA A

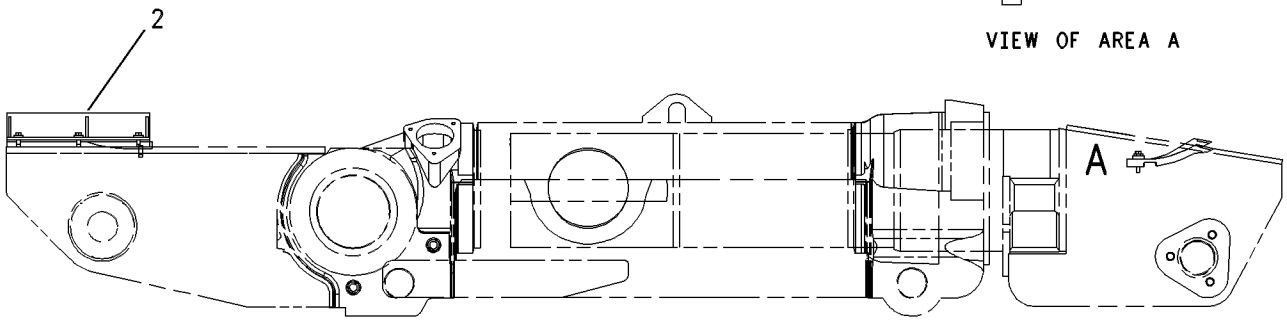

RIGHT SIDE VIEW

GRAPHIC #1 **<END>** g00524609

139-2003 GUARD GP-IDLER

S/N: 7PZ295-386
FOR USE WITH 175-6807—PAGE 594
AN ATTACHMENT

SMCS-4159 **i01281881**

NOTE	REF NO	GRAPHIC REF	PART NUMBER	QTY	PART NAME 1 2 3 4 5 6 (PRODUCT LEVEL)	SEE PAGE
	1	1	**139-2011**	4	PLATE	
	2	1	**139-2015**	4	GUARD AS	
	3	1	**139-2016**	2	GUARD AS-REAR	
	4	1	**139-2019**	2	GUARD AS	
	5	1	**7X-0345**	12	BOLT (5/8-11X1.75 IN)	
	6	1	**8T-4122**	24	WASHER (3.5MM THK)	
	7	1	**8T-6871**	12	BOLT (5/8-11X2.50 IN)	
C	8	1	**138-0576**	1	FRAME AS-ROLLER (REAR)(RH)	
C	9	1	**138-0577**	1	FRAME AS-ROLLER (REAR)(LH)	

C-CHANGE FROM PREVIOUS TYPE

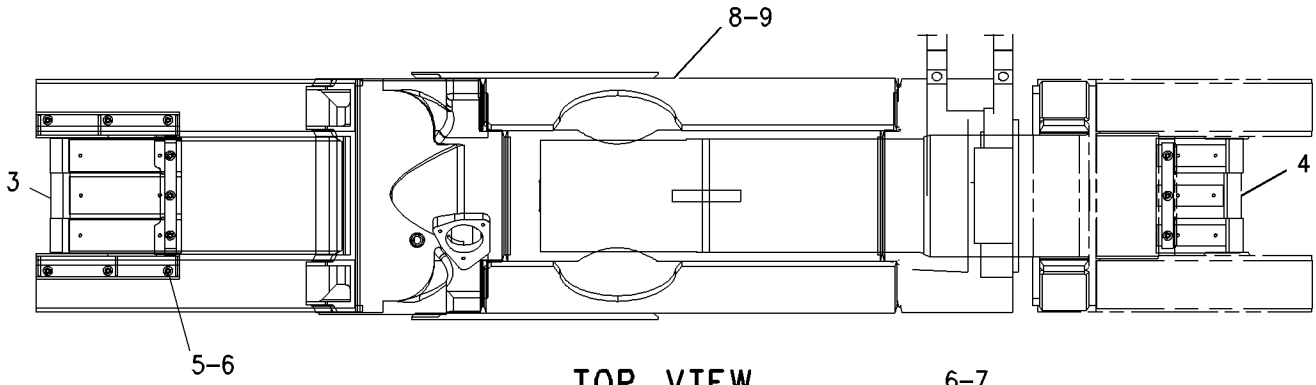

TOP VIEW

FWD

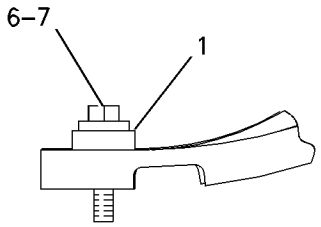

VIEW OF AREA A

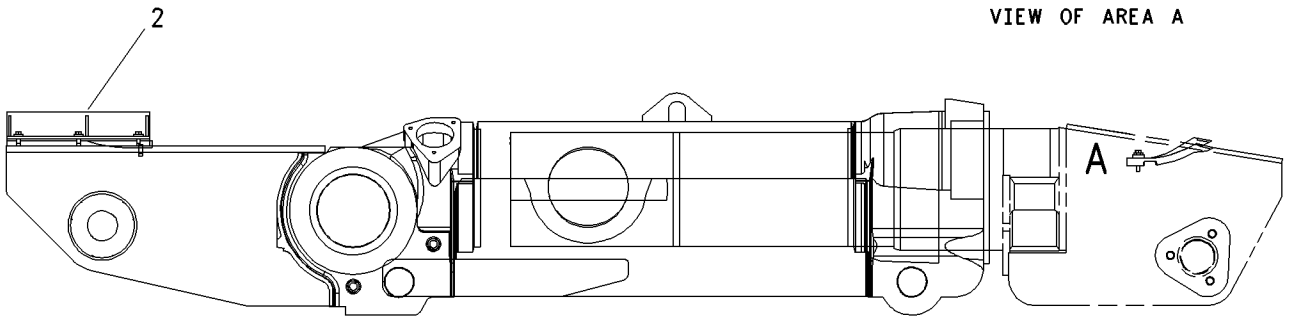

RIGHT SIDE VIEW

GRAPHIC #1 **<END>** g00690460

FRAME AND BODY

139-2003 GUARD GP-IDLER

S/N: 7PZ387-UP
FOR USE WITH 175-6807—PAGE 594
AN ATTACHMENT

SMCS-4159 **i01452437**

NOTE	REF NO	GRAPHIC REF	PART NUMBER	QTY	PART NAME 1 2 3 4 5 6 (PRODUCT LEVEL)	SEE PAGE
	1	1	**139-2011**	4	PLATE	
	2	1	**139-2015**	4	GUARD AS	
	3	1	**139-2016**	2	GUARD AS-REAR	
	4	1	**139-2019**	2	GUARD AS	
	5	1	**7X-0345**	12	BOLT (5/8-11X1.75 IN)	
C	6	1	**7X-0350**	6	BOLT (5/8-11X3.50 IN)	
	7	1	**8T-4122**	24	WASHER-HARD (17X32X3.5MM THK)	
C	8	1	**8T-6871**	6	BOLT (5/8-11X2.50 IN)	

C-CHANGE FROM PREVIOUS TYPE

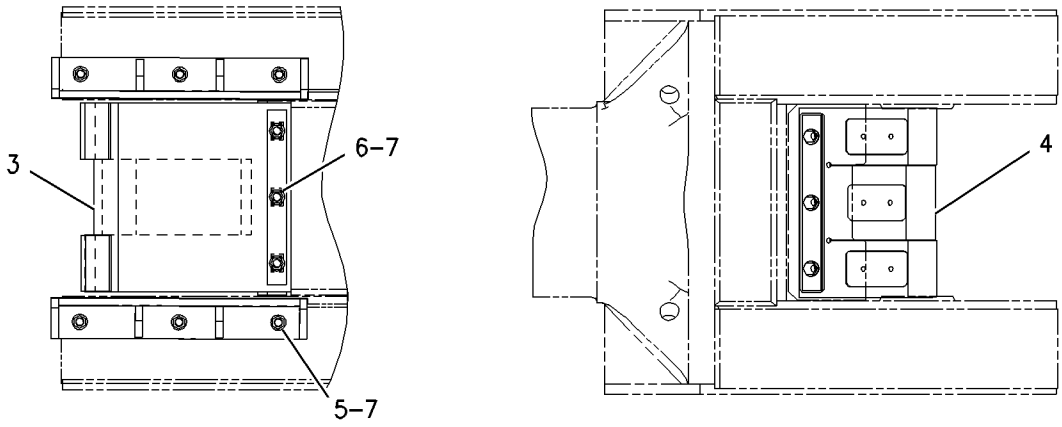

TOP VIEW

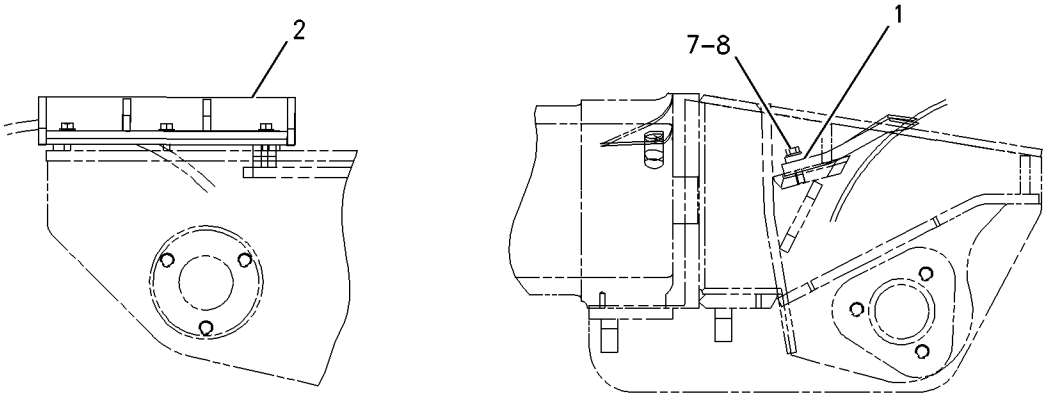

FRONT VIEW

GRAPHIC #1 **<END>** g00797655

FRAME AND BODY

157-1988 GUARD GP-RADIATOR

S/N: 7PZ1-614

PART OF 155-5552 CHASSIS AR

SMCS-7155 **i01617576**

NOTE	REF NO	GRAPHIC REF	PART NUMBER	QTY	PART NAME 1 2 3 4 5 6 (PRODUCT LEVEL)	SEE PAGE
	1	1	**7P-1579**	4	SPACER (28X40X19MM THK)	
	2	1	**3B-4615**	4	PIN-COTTER	
	3	1	**4J-7083**	2	GASKET	
	4	1	**6T-0446**	1	PLATE AS	
	5	1	**6T-0449**	1	PLATE AS	
	6	1	**6T-6079**	2	WASHER (20X100X12MM THK)	
	7	1	**7G-3977**	1	STEP AS	
		1	**1F-0748**	4	NUT-WELD (1/2-13 THD)	
	8	1	**8T-8917**	12	BOLT (1/2-13X1.25 IN)	
	9	1	**7G-3979**	1	HANDHOLD AS	
	10	1	**7G-3980**	1	HANDHOLD AS	
	11	1	**7K-6413**	2	FLANGE	
	12	1	**127-9189**	2	PIN	
	13	1	**130-6822**	1	DOOR AS-RH	
	14	1	**130-6823**	1	DOOR AS-LH	
	15	1	**130-6827**	2	PLATE	
	16	1	**130-6828**	2	PIN	
	17	1	**163-5589**	1	SUPPORT AS	
		1	**1F-0750**	4	NUT-WELD (3/8-16 THD)	
		1	**8D-1807**	4	STUD	
	18	1	**157-0669**	2	ROD AS	
					(EACH INCLUDES)	
		1	**5P-1075**	1	WASHER-HARD (10.2X22.5X3MM THK)	
	19	1	**157-1989**	1	GUARD AS	
		1	**2H-8124**	2	LUG	
		1	**6D-0618**	1	BAR	
		1	**9D-9416**	2	BLOCK	
	20	1	**3P-6431**	2	BEARING-SLEEVE (77.3MM OD)	
	21	1	**9J-2606**	2	BEARING (SLEEVE) (129MM WIDE)	
	22	1	**9J-2607**	2	BEARING (SLEEVE) (102MM WIDE)	
	23	1	**8F-9836**	25	BOSS-THREADED (3/8-16X.75 IN)	
	24	1	**1F-0750**	8	NUT-WELD (3/8-16 THD)	
	25	1	**7T-1099**	15	LINK	
	26	1	**4D-9376**	12	BOSS (3/8-16 THD)	
	27	1	**7X-0515**	6	WASHER-HARD (17X35X5MM THK)	
	28	1	**8T-4994**	12	WASHER-HARD (20X36.5X3.5MM THK)	
	29	1	**8T-9398**	4	BOLT (3/4-10X1.75 IN)	
	30	1	**7G-3978**	1	HANDHOLD	
	31	1	**5C-6565**	4	BOLT (1/2-13X1.125 IN)	
	32	1	**5M-6214**	4	PLUG-PIPE (1/2-27 THD)	
	33	1	**5P-1076**	16	WASHER-HARD (13.5X30X4MM THK)	
	34	1	**7X-0343**	6	BOLT (5/8-11X1.25 IN)	
	35	1	**7X-0345**	4	BOLT (5/8-11X1.75 IN)	
	36	1	**7X-0366**	12	BOLT (3/4-10X2 IN)	
	37	1	**4L-6454**	2	BOLT (3/8-16X1 IN)	
	38	1	**8T-4896**	2	WASHER-HARD (10.2X18.5X2.5MM THK)	
	39	1	**183-6767**	1	PLATE AS	
	40	1	**8T-0232**	2	PLUG	

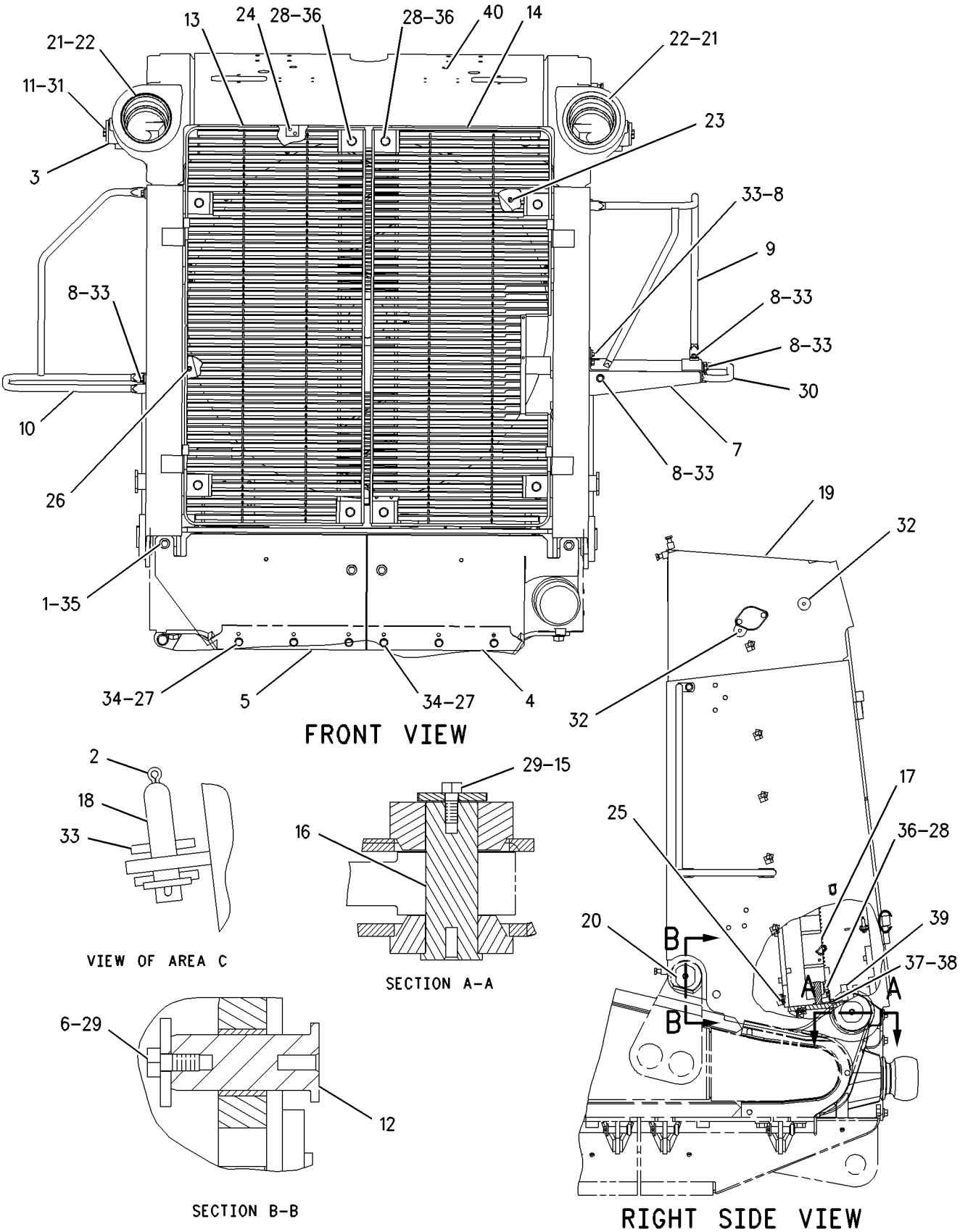

GRAPHIC #1 **<END>** g00853222

FRAME AND BODY

157-1988 GUARD GP-RADIATOR

S/N: 7PZ615-UP

PART OF 155-5552 CHASSIS AR

SMCS-7155 **i01983167**

NOTE	REF NO	GRAPHIC REF	PART NUMBER	QTY	PART NAME 1 2 3 4 5 6 (PRODUCT LEVEL)	SEE PAGE
	1	1	**7P-1579**	4	SPACER (28X40X19MM THK)	
	2	1	**3B-4615**	4	PIN-COTTER	
	3	1	**4J-7083**	2	GASKET	
	4	1	**6J-0488**	4	SCREW-BUTTON HEAD (3/8-16X0.875 IN)	
	5	1	**6T-0446**	1	PLATE AS	
	6	1	**6T-0449**	1	PLATE AS	
	7	1	**6T-6079**	2	WASHER (20X100X12MM THK)	
	8	1	**7K-6413**	2	FLANGE	
	9	1	**8T-0232**	2	PLUG	
	10	1	**110-5975**	1	STEP AS	
	11	1	**110-6030**	1	PLATE	
	12	1	**110-6031**	12	HANDLE AS	
	13	1	**127-9189**	2	PIN	
	14	1	**130-6822**	1	DOOR AS	
	15	1	**130-6823**	1	DOOR AS	
	16	1	**130-6827**	2	PLATE	
	17	1	**130-6828**	2	PIN	
	18	1	**157-0669**	2	ROD AS	
					(EACH INCLUDES)	
		1	**5P-1075**	1	WASHER-HARD (10.2X22.5X3MM THK)	
	19	1	**157-1989**	1	GUARD AS	
	19A	1	**9J-2606**	2	BEARING (SLEEVE)	
	19B	1	**9J-2607**	2	BEARING (SLEEVE)	
	19C	1	**3P-6431**	2	BEARING-SLEEVE	
	20	1	**163-5589**	1	SUPPORT AS	
		1	**1F-0750**	4	NUT-WELD (3/8-16THD)	
		1	**8D-1807**	4	STUD	
	21	1	**183-6767**	1	PLATE AS	
	22	1	**4L-6454**	2	BOLT (3/8-16X1 IN)	
	23	1	**5C-6565**	4	BOLT (1/2-13X1.125 IN)	
	24	1	**5M-6214**	4	PLUG-PIPE	
	25	1	**5P-1076**	12	WASHER-HARD (13.5X30X4MM THK)	
	26	1	**7X-0343**	6	BOLT (5/8-11X1.25 IN)	
	27	1	**7X-0345**	4	BOLT (5/8-11X1.75 IN)	
	28	1	**7X-0366**	12	BOLT (3/4-10X2 IN)	
	29	1	**7X-0515**	6	WASHER-HARD (17X35X5MM THK)	
	30	1	**8T-4835**	8	BOLT (1/2-13X2 IN)	
	31	1	**8T-4896**	2	WASHER-HARD (10.2X18.5X2.5MM THK)	
	32	1	**8T-4994**	12	WASHER-HARD (20X36.5X3.5MM THK)	
	33	1	**8T-9398**	4	BOLT (3/4-10X1.75 IN)	

157-1988 **GUARD GP-RADIATOR** *(contd.)* **i01983167**

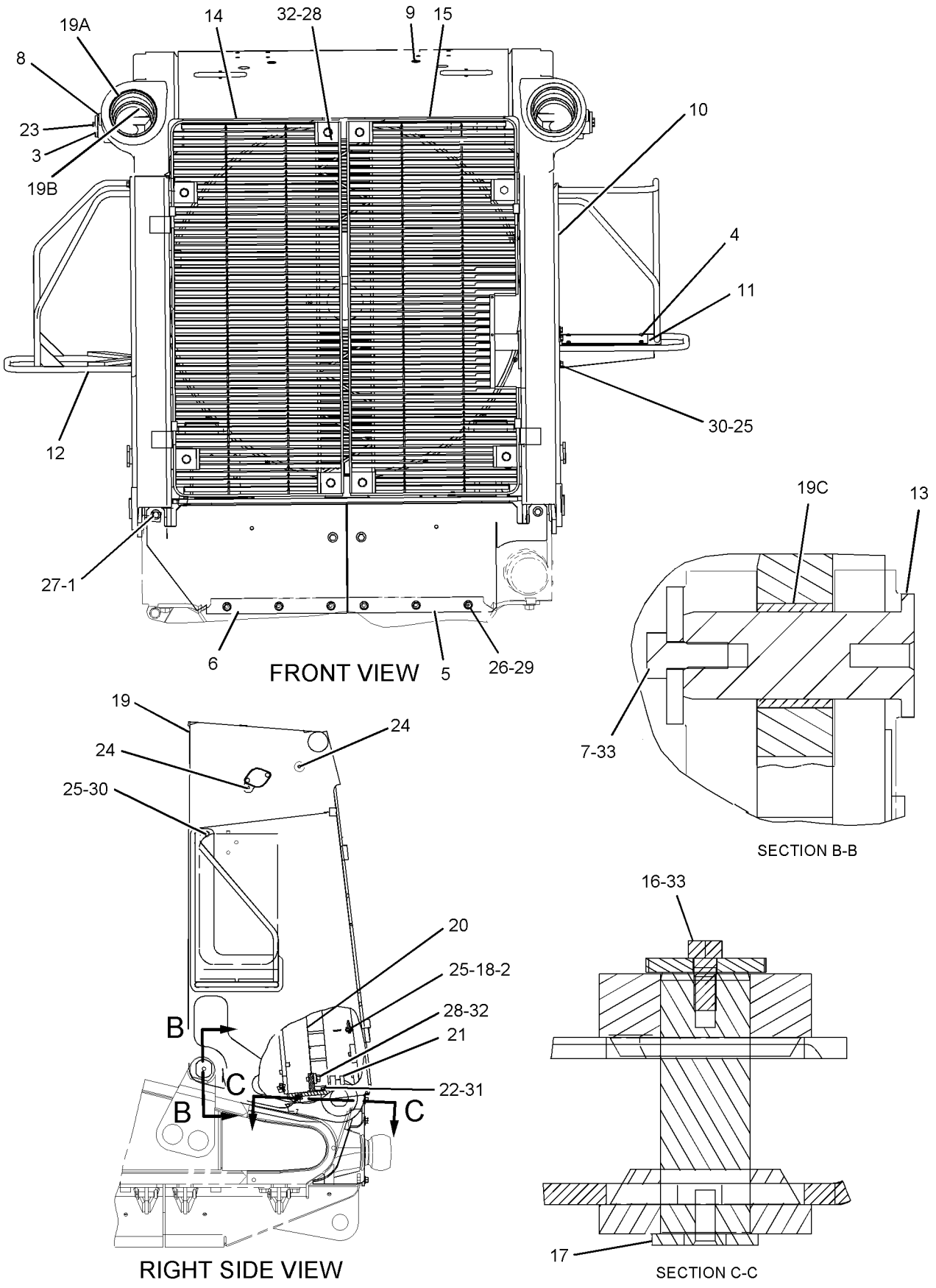

GRAPHIC #1 **<END>** g01027996

6I-8062 GUARD GP-ROCK–BLADE

S/N: 8PP1-UP
PART OF 136-2750 BLADE AS-SEMI-UNIVERSAL
AN ATTACHMENT

SMCS-7182 **i00796434**

NOTE	REF NO	GRAPHIC REF	PART NUMBER	QTY	PART NAME 1 2 3 4 5 6 (PRODUCT LEVEL)	SEE PAGE
	1	1	**6I-8067**	1	GUARD AS-RH	
	2	1	**6I-8071**	1	GUARD AS-LH	
	3	1	**9W-8845**	2	PLATE	
	4	1	**8E-9671**	1	GUARD AS-CENTER	

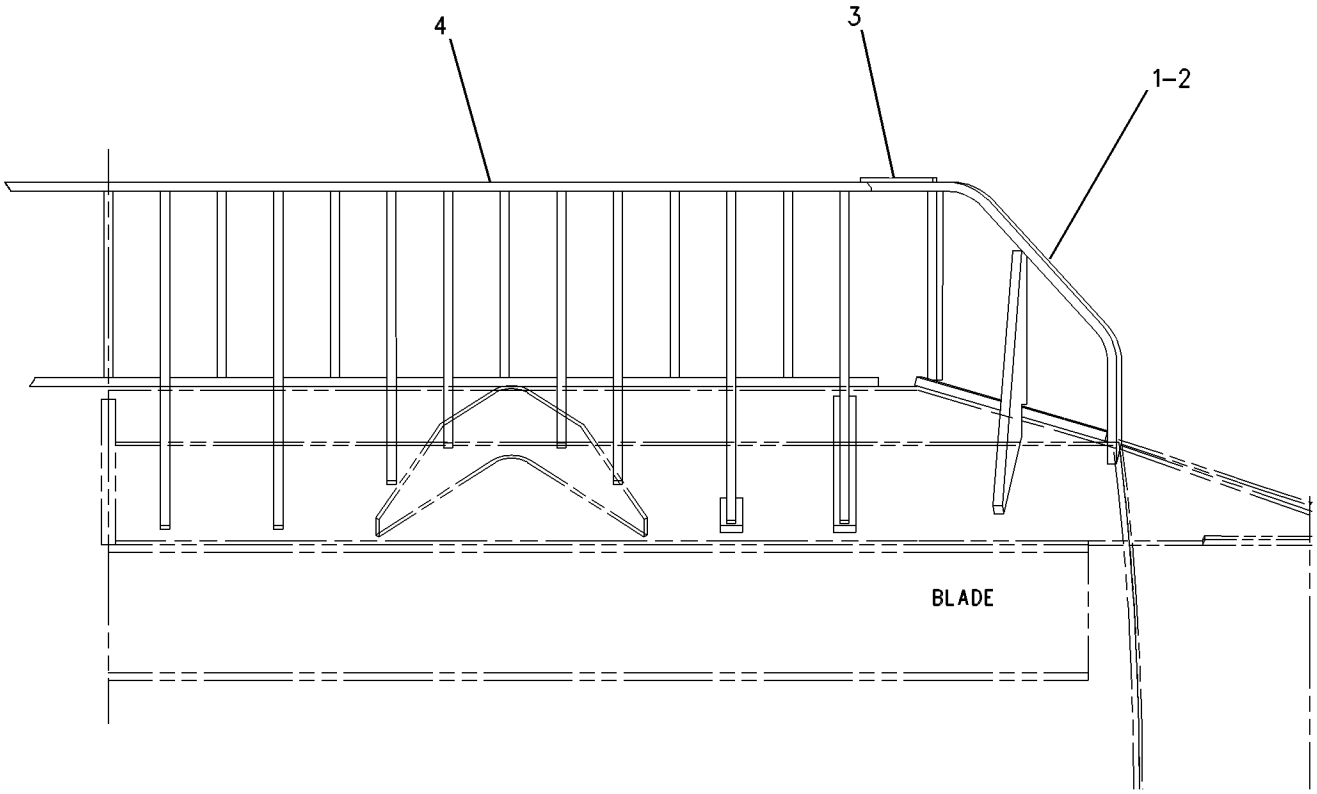

REAR VIEW

GRAPHIC #1 **<END>** g00376595

8E-9670 GUARD GP-ROCK–BLADE

S/N: 8RP1-UP
PART OF 130-3432 BLADE AS-UNIVERSAL
AN ATTACHMENT

SMCS-7182 **i00594686**

NOTE	REF NO	GRAPHIC REF	PART NUMBER	QTY	PART NAME 1 2 3 4 5 6 (PRODUCT LEVEL)	SEE PAGE
	1	1	**8E-9671**	1	GUARD AS-CENTER	
	2	1	**9W-8444**	2	PLATE	
	3	1	**8E-9678**	1	GUARD AS-RH	
		1	**8E-9686**	1	GUARD AS-LH	

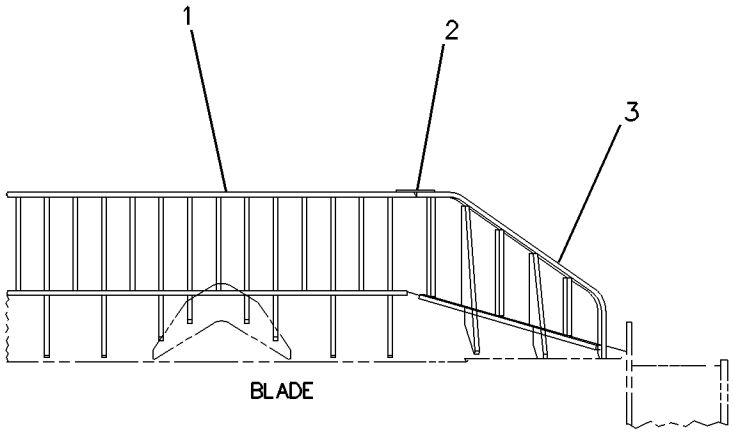

REAR VIEW

GRAPHIC #1 **<END>** g00218414

FRAME AND BODY

132-3553 GUARD GP-TRANSMISSION

S/N: 7PZ1-UP

CANNOT BE USED WITH MACHINES OUTFITTED WITH REAR MOUNTED EQUIPMENT AN ATTACHMENT

SMCS-7153 **i00734026**

NOTE	REF NO	GRAPHIC REF	PART NUMBER	QTY	PART NAME 1 2 3 4 5 6 (PRODUCT LEVEL)	SEE PAGE
	1	1	**3T-9810**	1	COVER AS	
	2	1	**5V-8884**	1	COVER	
	3	1	**6T-0136**	1	PLATE	
	4	1	**6T-0139**	2	PLATE	
	5	1	**6T-0141**	2	PIN	
	6	1	**7M-2360**	4	WASHER	
	7	1	**7T-7305**	2	PLATE	
	8	1	**8E-9289**	1	LATCH	
	9	1	**9G-1935**	1	PIN AS-DRAWBAR	
	10	1	**9J-2290**	2	PIN AS	
	11	1	**132-3554**	1	GUARD AS-TRANSMISSION	
		1	**5H-8803**	2	SUPPORT-PIN	
		1	**8J-7236**	8	NUT-WELD (3/4-10 THD)	
	12	1	**132-3555**	1	COVER AS	
	13	1	**3K-2889**	1	LOCKNUT (5/8-11 THD)	
	14	1	**5M-3062**	2	BOLT (3/8-16X.750IN)	
	15	1	**7X-0347**	1	BOLT (5/8-11X2.25IN)	
	16	1	**7X-0365**	8	BOLT (3/4-10X1.50IN)	
	17	1	**7X-0366**	8	BOLT (3/4-10X2IN)	
	18	1	**8T-4223**	2	WASHER-HARD (3MM THK)	
	19	1	**8T-4994**	14	WASHER (5MM THK)	
	20	1	**8T-8919**	2	BOLT (1/2-13X1.75IN)	
	21	1	**8T-8924**	6	BOLT (3/4-10X2.50IN)	
	22	1	**9F-2247**	2	PLUG-PIPE	

132-3553 **GUARD GP-TRANSMISSION** *(contd.)* **i00734026**

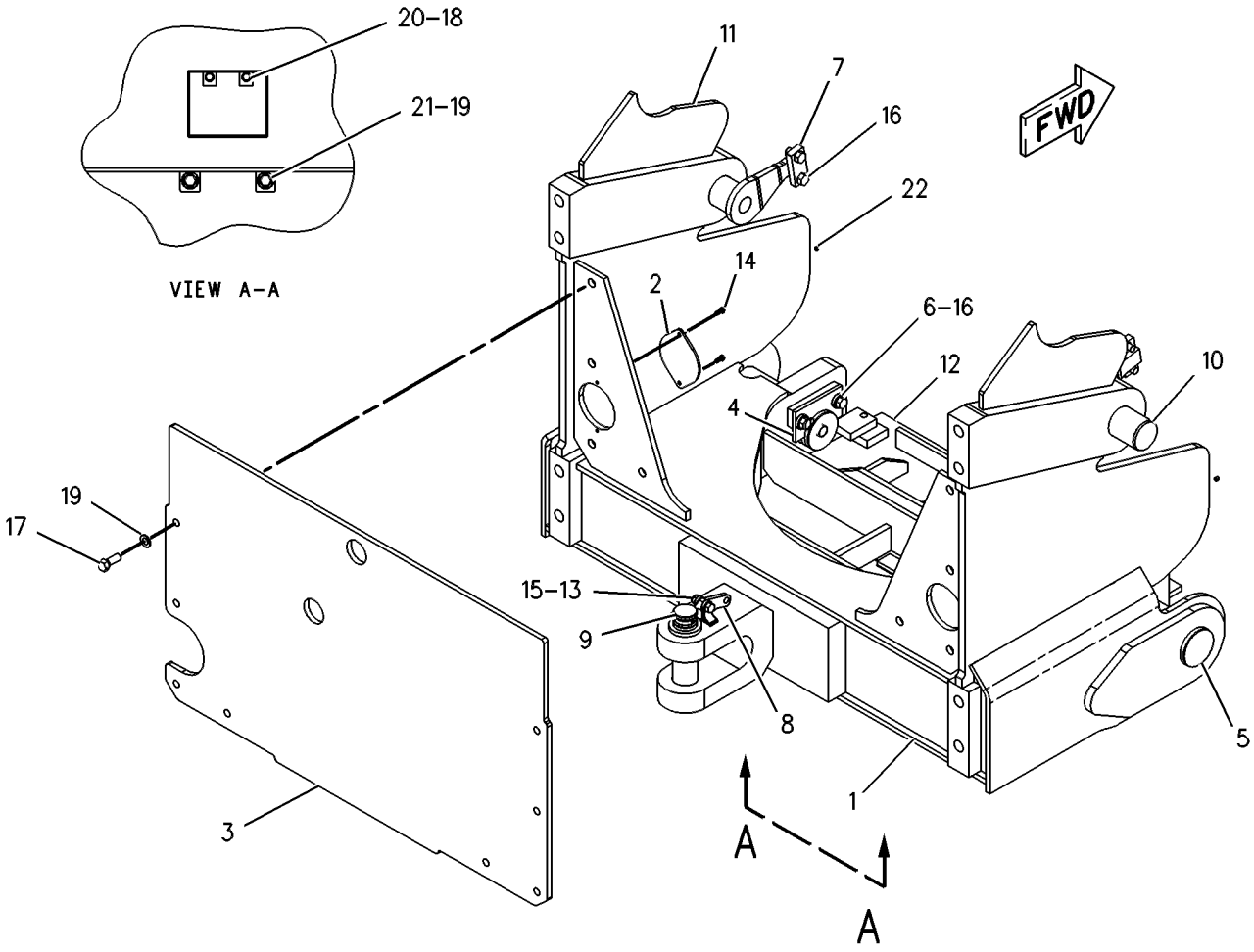

GRAPHIC #1 **<END>** g00273813

145-0900 GUARD GP-TRANSMISSION

S/N: 7CP1-UP; 7DP1-UP; 7ZP1-UP; 7PZ1-UP
PART OF 127-1031, 130-6458, 161-2420 RIPPER AR
AN ATTACHMENT

SMCS-7153 **i01423491**

NOTE	REF NO	GRAPHIC REF	PART NUMBER	QTY	PART NAME 1 2 3 4 5 6 (PRODUCT LEVEL)	SEE PAGE
C	1	1	**151-4004**	1	COVER AS	
C	2	1	**8T-8919**	2	BOLT (1/2-13X1.75 IN)	
	3	1	**144-8321**	1	GUARD AS	
		1	**1F-0748**	5	NUT-WELD (1/2-13 THD)	
		1	**9V-8427**	1	BAR	
C	4	1	**8T-4223**	4	WASHER-HARD (13.5X25.5X3MM THK)	
	5	1	**8T-5361**	12	WASHER-HARD (28X49X5MM THK)	
	6	1	**7X-0406**	12	BOLT (1-8X3 IN)	

C-CHANGE FROM PREVIOUS TYPE

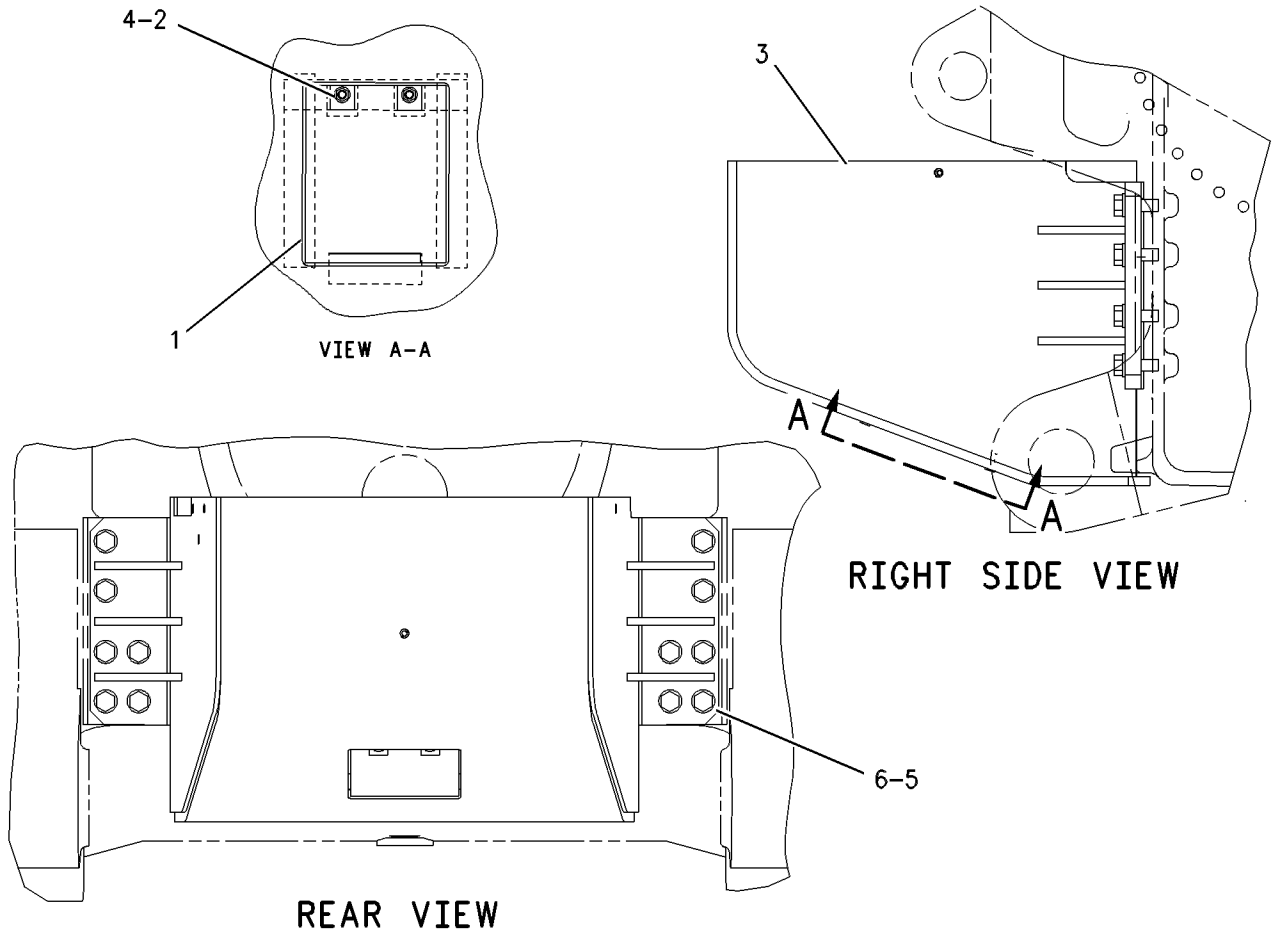

GRAPHIC #1 **<END>** g00334587

FRAME AND BODY

147-4459 HOOD & GUARD GP

S/N: 7PZ1-387

PART OF 155-5552 CHASSIS AR

SMCS-7251 **i01988818**

NOTE	REF NO	GRAPHIC REF	PART NUMBER	QTY	PART NAME 1 2 3 4 5 6 (PRODUCT LEVEL)	SEE PAGE
	1	1	**132-6746**	1	HOOD AS	
		1	**2S-2110**	2	BRACKET	
		1	**7T-1099**	5	LINK	
		1	**9G-0558**	4	STRIP	
	2	1	**7G-9913**	1	DOOR	
		1	**1K-8850**	1	SPRING	
		1	**4K-8501**	2	CLIP	
		1	**9B-2052**	1	HINGE	
	3	1	**6Y-2387**	1	PLATE AS	
		1	**5M-9498**	2	GUIDE	
		1	**9P-9548**	1	PIN (FRONT)	
		1	**9P-9549**	1	PIN (REAR)	
	4	1	**6Y-2385**	1	PLATE AS	
		1	**5M-9498**	2	GUIDE	
		1	**9P-9548**	1	PIN (FRONT)	
		1	**9P-9549**	1	PIN (REAR)	
	5	1	**9W-7899**	2	PLATE	
	6	1	**8T-4223**	10	WASHER-HARD (13.5X25.5X3MM THK)	
	7	1	**6T-6941**	1	COVER AS	
	8	1	**6T-6943**	1	COVER AS	
	9	1	**5P-8502**	2	PADLOCK GP (HOOD)	
					(EACH INCLUDES)	
		1	**5P-8500**	1	KEY	
		1	**8Y-6364**	1	SLEEVE	
	10	1	**5C-6565**	4	BOLT (1/2-13X1.125 IN)	
	11	1	**2M-6096**	2	HANDLE	
	12	1	**6T-6945**	2	HINGE AS	
					(EACH INCLUDES)	
		1	**1F-0750**	3	NUT-WELD (3/8-16THD)	
	13	1	**5P-7705**	8	PLUG-BUTTON	
	14	1	**8T-9393**	12	BOLT (5/8-11X1.5 IN)	
	15	1	**8T-4122**	26	WASHER-HARD (17X32X3.5MM THK)	
	16	1	**3T-2120**	2	PLATE AS	
					(EACH INCLUDES)	
		1	**1F-0748**	3	NUT-WELD (1/2-13 THD)	
	17	1	**4V-1541**	2	COLLAR	
	18	1	**6H-3956**	2	PIN	
	19	1	**8C-4436**	6	BOLT (1/2-13X1.375 IN)	
	20	1	**5C-6266**	6	BOLT (5/8-11X1 IN)	
	21	1	**7X-0345**	8	BOLT (5/8-11X1.75 IN)	
	22	1	**6B-0533**	2	SPRING	
	23	1	**5S-7379**	20	BOLT (3/8-16X0.875 IN)	
	24	1	**8T-4896**	13	WASHER-HARD (10.2X18.5X2.5MM THK)	
	25	1	**7X-0370**	2	BOLT (3/4-10X3.50 IN)	
	26	1	**8T-4994**	2	WASHER-HARD (20X36.5X3.5MM THK)	
	27	1	**2G-0493**	2	WASHER-RETAINING (20X82.55X11MM THK)	
	28	1	**173-4640**	1	SUPPORT AS	
	29	1	**173-4641**	1	SUPPORT AS	
					(EACH SUPPORT AS INCLUDES)	
		1	**3T-6191**	1	PAD	
		1	**6S-9470**	1	PLATE	
		1	**6T-8426**	1	PAD	
		1	**033-9412**	9	RIVET	
	30	1	**9M-3835**	2	LATCH-RUBBER	
	31	1	**6V-9197**	2	LOCK PIN	
	32	1	**2M-5795**	2	PIN-CLEVIS	

147-4459 **HOOD & GUARD GP** *(contd.)* **i01988818**

NOTE	REF NO	GRAPHIC REF	PART NUMBER	QTY	PART NAME 1 2 3 4 5 6 (PRODUCT LEVEL)	SEE PAGE
	33	1	**4H-1641**	2	PIN-SPRING	
	34	1	**9S-8230**	2	PLATE AS	
					(EACH INCLUDES)	
		1	**1F-0750**	1	NUT-WELD (3/8-16THD)	
	35	1	**8E-7561**	2	KNOB AS	
					(EACH INCLUDES)	
		1	**7S-2042**	1	STUD	
		1	**8T-7566**	1	PIN-SPRING	
	36	1	**5P-1075**	8	WASHER-HARD (10.2X22.5X3MM THK)	
	37	1	**6Y-2389**	2	SUPPORT AS	
					(EACH INCLUDES)	
		1	**1F-0750**	4	NUT-WELD (3/8-16THD)	
		1	**8T-5911**	4	NUT-WELD (1/2X13 THD)	
	38	1	**8T-2502**	1	BOLT (3/8-16X1.125 IN)	
	39	1	**147-4460**	1	PLATE AS	
		1	**1F-0750**	3	NUT-WELD (3/8-16THD)	
	40	1	**6Y-2394**	1	PLATE AS	
		1	**1F-0750**	4	NUT-WELD (3/8-16THD)	
	41	1	**6Y-2392**	1	PLATE AS	
		1	**1F-0750**	4	NUT-WELD (3/8-16THD)	
	42	1	**147-4461**	1	PLATE AS	
		1	**1F-0750**	4	NUT-WELD (3/8-16THD)	
		1	**9P-9549**	1	PIN (REAR)	
	43	1	**110-2729**	1	DOOR AS	
		1	**2V-9923**	2	SPACER (.50X.75X1.06IN THK)	
	44	1	**6T-1698**	4	MOUNTING	

147-4459 **HOOD & GUARD GP** *(contd.)* **i01988818**

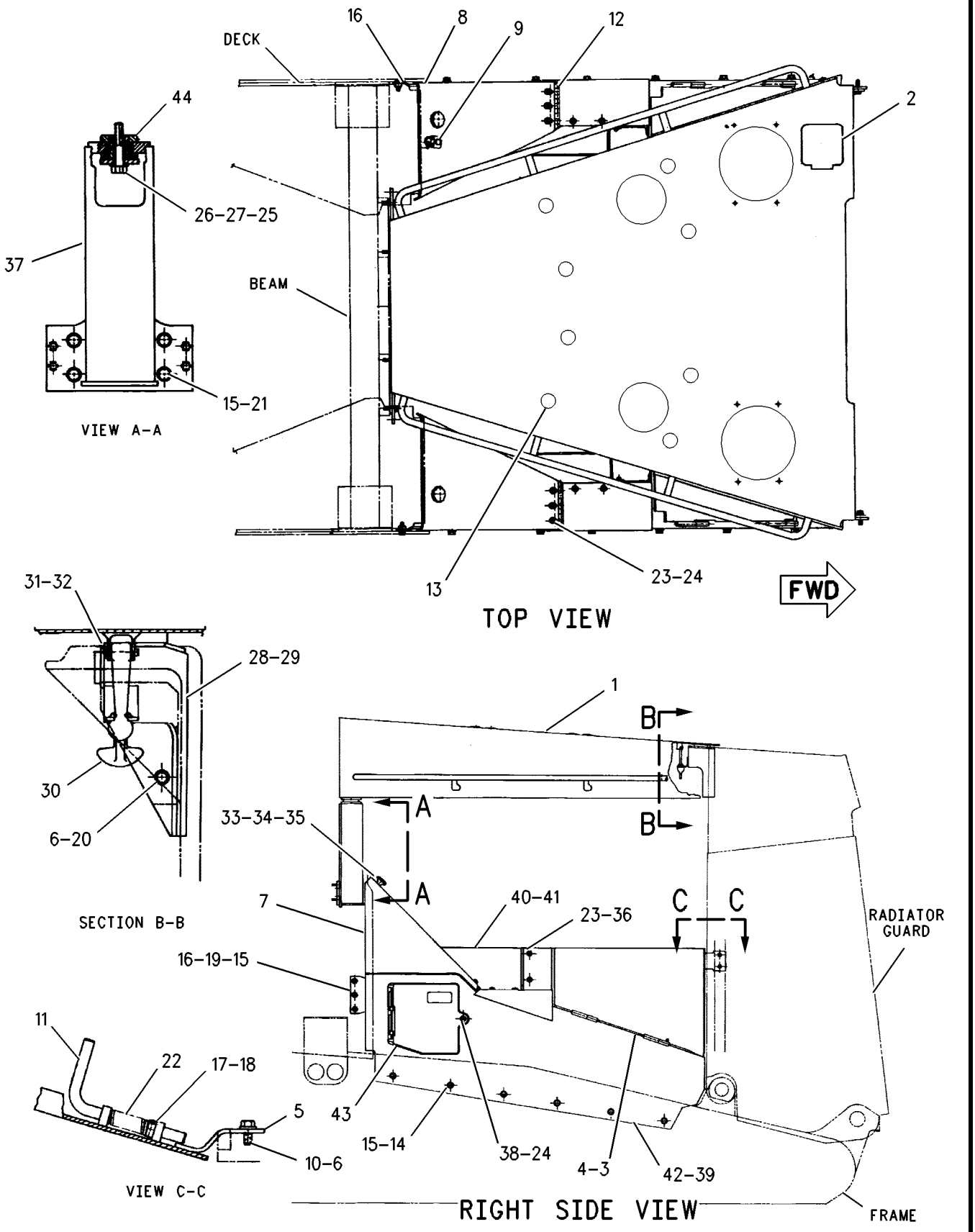

GRAPHIC #1 **<END>** g00639530

FRAME AND BODY

195-9536 HOOD & GUARD GP

S/N: 7PZ388-UP

PART OF 155-5552 CHASSIS AR

SMCS-7251 **i01988793**

NOTE	REF NO	GRAPHIC REF	PART NUMBER	QTY	PART NAME 1 2 3 4 5 6 (PRODUCT LEVEL)	SEE PAGE
	1	1	**2G-0493**	2	WASHER-RETAINING (20X82.55X11MM THK)	
	2	1	**2M-6096**	2	HANDLE	
	3	1	**3T-2120**	2	PLATE AS	
					(EACH INCLUDES)	
		1	**1F-0748**	3	NUT-WELD (1/2-13 THD)	
	4	1	**4V-1541**	2	COLLAR	
	5	1	**5P-7705**	8	PLUG-BUTTON	
	6	1	**5P-8502**	1	PADLOCK GP (HOOD)	
		1	**5P-8500**	1	KEY	
		1	**8Y-6364**	1	SLEEVE	
	7	1	**6B-0533**	2	SPRING	
	8	1	**6T-1698**	4	MOUNTING	
	9	1	**6Y-2413**	1	COVER AS	
		1	**3T-9476**	1	HINGE	
	10	1	**6V-9197**	2	LOCK PIN	
	11	1	**6Y-2387**	1	PLATE AS	
		1	**5M-9498**	2	GUIDE	
		1	**9P-9548**	1	PIN (FRONT)	
		1	**9P-9549**	1	PIN (REAR)	
	12	1	**6Y-2389**	2	SUPPORT AS	
					(EACH INCLUDES)	
		1	**1F-0750**	4	NUT-WELD (3/8-16THD)	
		1	**8T-5911**	4	NUT-WELD (1/2X13 THD)	
	13	1	**6Y-2410**	1	PLATE AS	
		1	**1F-0748**	2	NUT-WELD (1/2-13 THD)	
		1	**1F-0750**	4	NUT-WELD (3/8-16THD)	
	14	1	**6Y-2412**	1	PLATE AS	
		1	**1F-0748**	2	NUT-WELD (1/2-13 THD)	
		1	**1F-0750**	4	NUT-WELD (3/8-16THD)	
	15	1	**8E-7561**	2	KNOB AS	
					(EACH INCLUDES)	
		1	**7S-2042**	1	STUD	
		1	**8T-7566**	1	PIN-SPRING	
	16	1	**9M-3835**	2	LATCH-RUBBER	
	17	1	**9S-8230**	2	PLATE AS	
					(EACH INCLUDES)	
		1	**1F-0750**	1	NUT-WELD (3/8-16THD)	
	18	1	**9W-7899**	2	PLATE	
	19	1	**8T-9393**	12	BOLT (5/8-11X1.5 IN)	
	20	1	**173-4640**	1	SUPPORT AS	
		1	**3T-6191**	1	PAD (FIVE HOLES)	
		1	**6S-9470**	1	PLATE	
		1	**6T-8426**	1	PAD (FOUR HOLES)	
		1	**033-9412**	9	RIVET	
	21	1	**173-4641**	1	SUPPORT AS	
		1	**3T-6191**	1	PAD (FIVE HOLES)	
		1	**6S-9470**	1	PLATE	
		1	**6T-8426**	1	PAD (FOUR HOLES)	
		1	**033-9412**	9	RIVET	
	22	1	**195-3024**	1	PLATE AS	
	23	1	**195-3026**	1	PLATE AS	
		1	**1F-0750**	4	NUT-WELD (3/8-16THD)	
		1	**9P-9549**	2	PIN (REAR)	
		1	**9W-5449**	1	BAR	
		1	**110-2727**	1	PLATE	
		1	**110-2729**	1	DOOR AS	

195-9536 **HOOD & GUARD GP** *(contd.)* **i01988793**

NOTE	REF NO	GRAPHIC REF	PART NUMBER	QTY	PART NAME 1 2 3 4 5 6 (PRODUCT LEVEL)	SEE PAGE
		1	**2V-9923**	2	SPACER (.50X.75X1.06IN THK)	
		1	**9W-5449**	1	BAR	
	24	1	**195-3028**	1	PLATE AS	
	25	1	**195-3031**	1	PLATE AS	
		1	**1F-0750**	3	NUT-WELD (3/8-16THD)	
		1	**195-3015**	1	STEP	
	26	1	**195-3496**	1	PLATE AS	
		1	**5M-9498**	2	GUIDE	
		1	**9P-9548**	1	PIN (FRONT)	
		1	**9P-9549**	1	PIN (REAR)	
	27	1	**196-7594**	1	COVER AS	
		1	**196-7592**	1	HINGE AS	
	28	1	**196-7601**	2	HINGE AS	
					(EACH INCLUDES)	
		1	**1F-0750**	3	NUT-WELD (3/8-16THD)	
	29	1	**2M-5795**	2	PIN-CLEVIS	
	30	1	**4H-1641**	2	PIN-SPRING	
	31	1	**5C-6266**	6	BOLT (5/8-11X1 IN)	
	32	1	**5C-6565**	4	BOLT (1/2-13X1.125 IN)	
	33	1	**5P-1075**	8	WASHER-HARD (10.2X22.5X3MM THK)	
	34	1	**5S-7379**	20	BOLT (3/8-16X0.875 IN)	
	35	1	**6H-3956**	2	PIN	
	36	1	**7X-0345**	8	BOLT (5/8-11X1.75 IN)	
	37	1	**7X-0370**	2	BOLT (3/4-10X3.50 IN)	
	38	1	**8C-4436**	6	BOLT (1/2-13X1.375 IN)	
	39	1	**8T-2502**	1	BOLT (3/8-16X1.125 IN)	
	40	1	**8T-4122**	26	WASHER-HARD (17X32X3.5MM THK)	
	41	1	**8T-4223**	10	WASHER-HARD (13.5X25.5X3MM THK)	
	42	1	**8T-4896**	13	WASHER-HARD (10.2X18.5X2.5MM THK)	
	43	1	**8T-4994**	2	WASHER-HARD (20X36.5X3.5MM THK)	
	44	1	**132-6746**	1	HOOD AS	
	44A	2	**1K-8850**	1	SPRING	
	44B	2	**2S-2110**	2	BRACKET	
	44C	2	**2S-7593**	4	WASHER-HARD (17X35X5MM THK)	
	44D	2	**9G-0641**	4	SPACER	
	44E	2	**4K-8501**	2	CLIP	
	44F	1	**7G-9913**	1	DOOR	
	44G	2	**7T-1099**	5	LINK	
	44H	2	**8J-7236**	4	NUT-WELD	
	44I	1	**9B-2052**	1	HINGE	
	44J	2	**9G-0558**	4	STRIP	

195-9536 **HOOD & GUARD GP** *(contd.)* **i01988793**

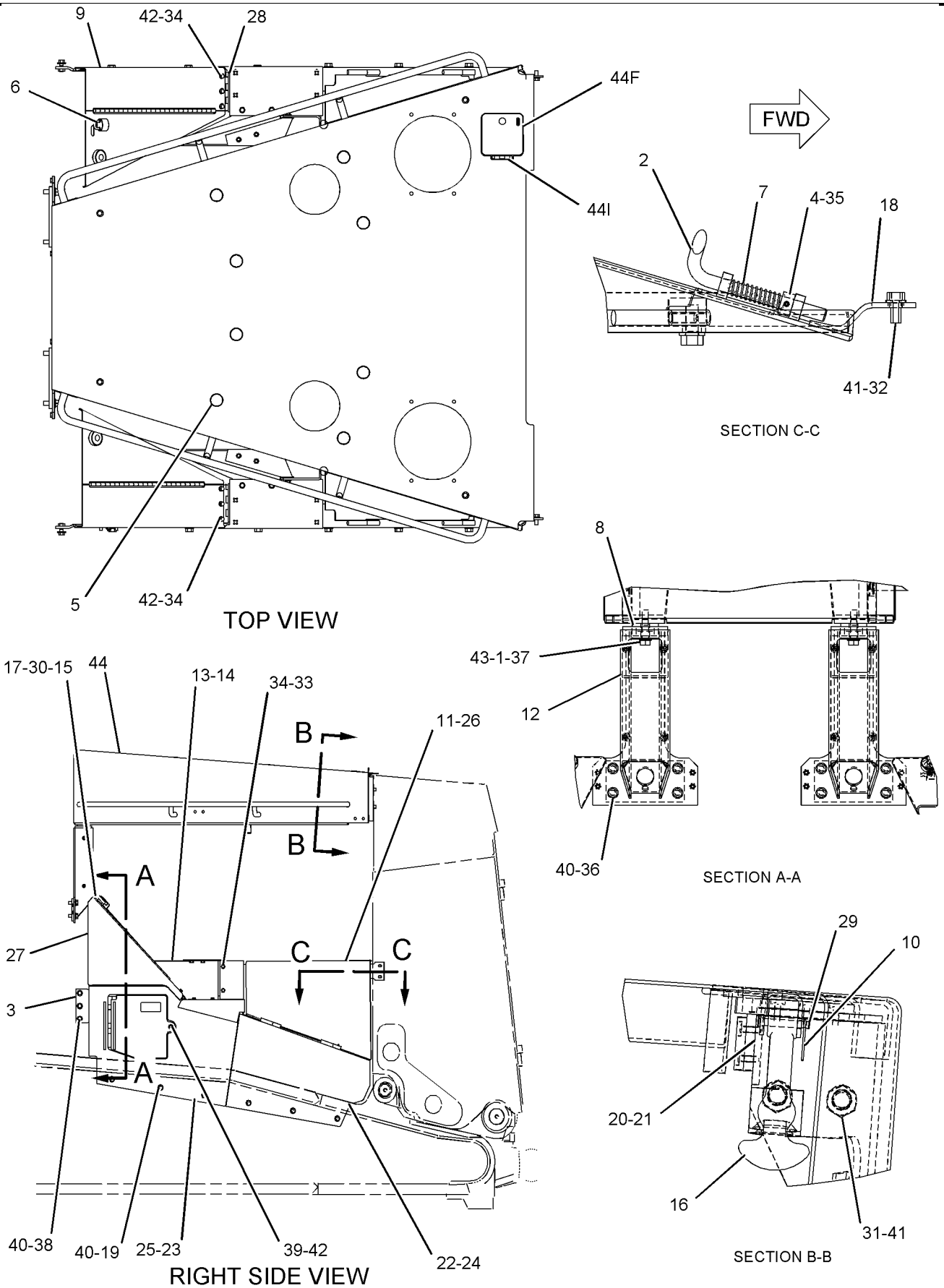

GRAPHIC #1 g01012386

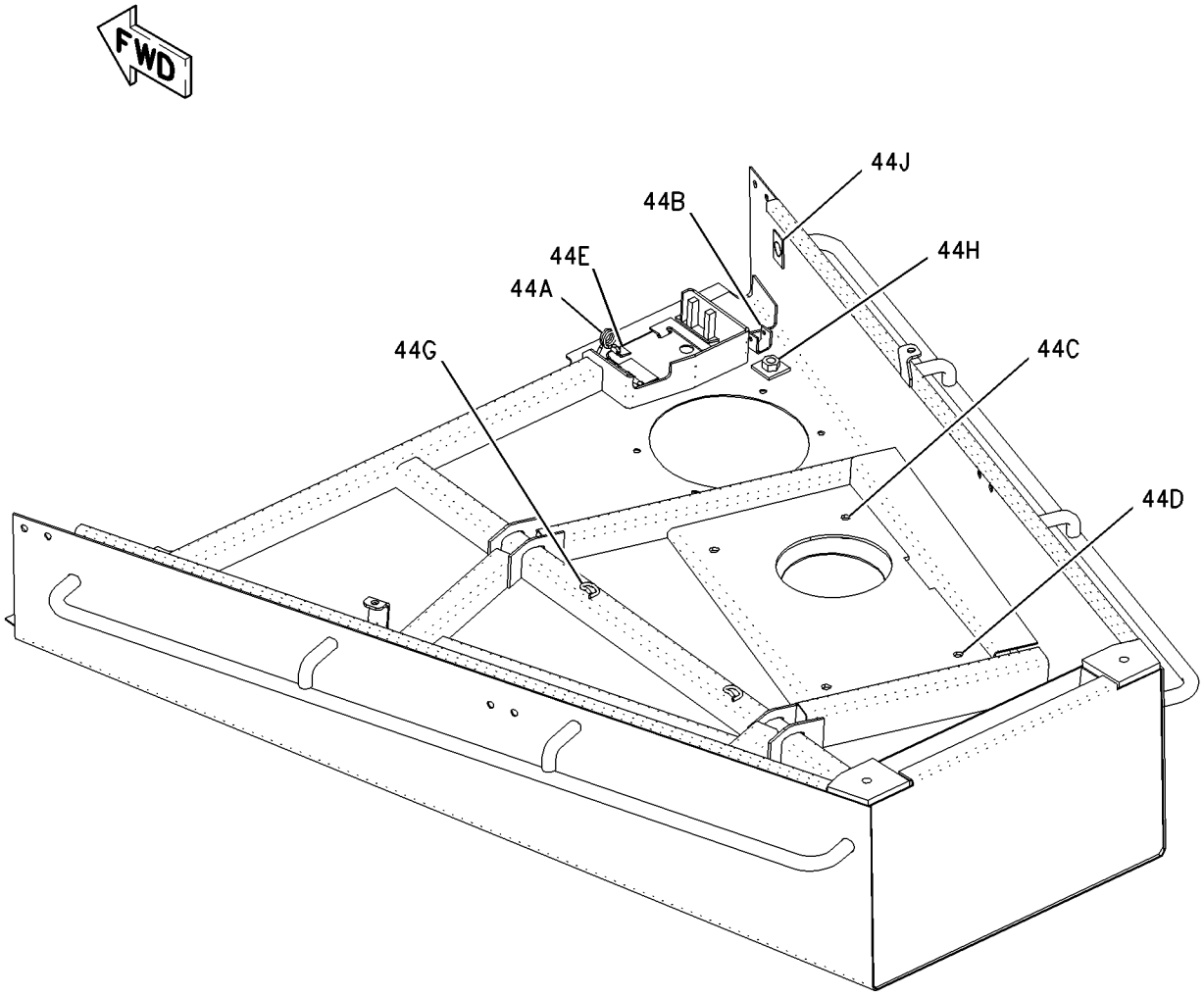

GRAPHIC #2 **<END>** g00802604

236-5823 SEAL SET–TRACK

S/N: 7PZ1-UP

FIELD INSTALLATION

SMCS-7555 **i02026163**

NOTE	PART NUMBER	QTY	PART NAME 1 2 3 4 5 6 (PRODUCT LEVEL)	SEE PAGE
	236-5821	82	SEAL AS	

<END>

MEMORANDA

UNDERCARRIAGE

141-7522 BAR GP-EQUALIZER

S/N: 7PZ1-563

PART OF 139-7697 UNDERCARRIAGE AR

SMCS-7206 **i01988800**

NOTE	REF NO	GRAPHIC REF	PART NUMBER	QTY	PART NAME 1 2 3 4 5 6 (PRODUCT LEVEL)	SEE PAGE
	1	1	**7F-6112**	1	BOLT (1 1/4-12X3 IN)	
	2	1	**7X-0533**	9	WASHER-HARD (34X55X6MM THK)	
	3	1	**9P-6911**	1	PLATE	
	4	1	**8P-8827**	1	PIN	
	5	1	**3T-7794**	1	SPACER (143.3X208X12MM THK)	
	6	1	**3T-7793**	1	SPACER (143.8X216X12MM THK)	
	7	1	**2H-3745**	2	BOLT (1-14X2.75 IN)	
	8	1	**8T-5361**	2	WASHER-HARD (28X49X5MM THK)	
	9	1	**5C-6565**	12	BOLT (1/2-13X1.125 IN)	
	10	1	**8T-4223**	12	WASHER-HARD (13.5X25.5X3MM THK)	
	11	1	**3J-4278**	4	SPACER (13.5X22.2X6.5)	
	12	1	**1K-9415**	4	BOLT (1 1/8-7X11 IN)	
	13	1	**3K-9770**	4	NUT-FULL (1 1/4X7 THD)	
	14	1	**5F-1678**	2	SEAL-O-RING	
	15	1	**9W-7800**	2	PAD AS	
	16	1	**9W-7599**	2	PAD AS	
					(EACH PAD AS INCLUDES)	
		1	**1F-0748**	4	NUT-WELD (1/2-13 THD)	
	17	1	**131-1574**	2	SPACER (83.5X100X5MM THK)	
	18	1	**5P-5296**	2	RING-RETAINING	
	19	1	**3B-8489**	2	FITTING-GREASE	
	20	1	**3T-7792**	2	PIN	
	21	1	**7X-0590**	4	WASHER-HARD (13.5X44.5X6MM THK)	
	22	1	**2F-5326**	8	SETSCREW (3/8-16X.37 IN)	
	23	1	**133-5631**	2	PLUG	
	24	1	**143-3332**	1	BAR AS-EQUALIZER	
	25	1	**5P-7151**	4	RING-RETAINING	
	26	1	**8P-8796**	1	SEAL AS	
	27	1	**8P-8797**	1	SEAL AS	
	28	1	**194-8128**	4	SEAL-AS	
	29	1	**159-9311**	2	BEARING	
	30	1	**129-4487**	2	BEARING-SLEEVE	
	31	1	**3J-7354**	2	SEAL-O-RING	
	32	1	**7X-0323**	4	BOLT	
	33	1	**9S-8002**	2	PLUG	

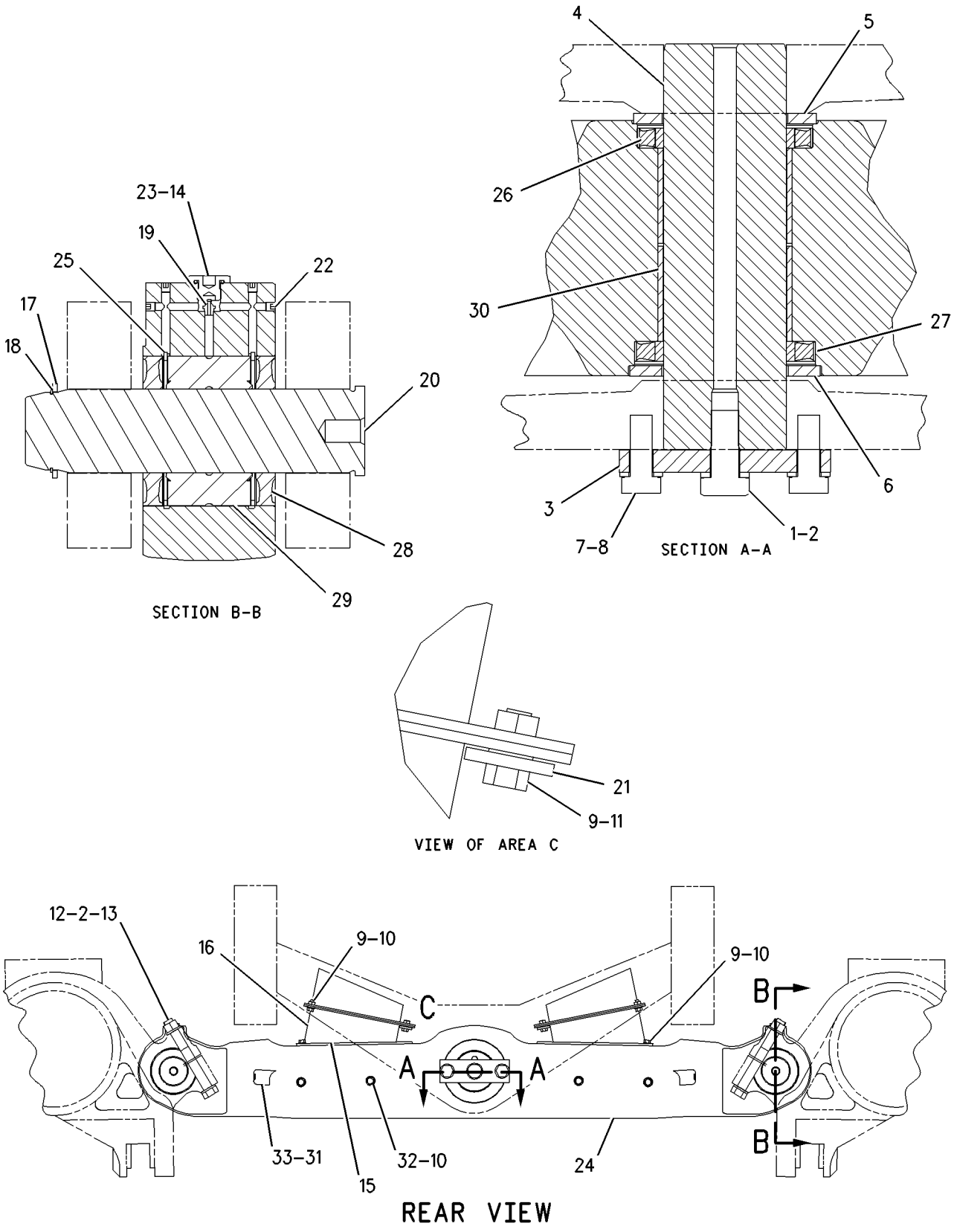

GRAPHIC #1 **<END>** g00843826

UNDERCARRIAGE

141-7522 BAR GP-EQUALIZER

S/N: 7PZ564-700

PART OF 139-7697 UNDERCARRIAGE AR

SMCS-7206 **i01697791**

NOTE	REF NO	GRAPHIC REF	PART NUMBER	QTY	PART NAME 1 2 3 4 5 6 (PRODUCT LEVEL)	SEE PAGE
	1	1	**7F-6112**	1	BOLT (1 1/4-12X3 IN)	
	2	1	**7X-0533**	9	WASHER-HARD (34X55X6MM THK)	
	3	1	**209-3186**	1	MANIFOLD	
	4	1	**8P-8827**	1	PIN	
	5	1	**3T-7794**	1	SPACER (143.3X208X12MM THK)	
	6	1	**3T-7793**	1	SPACER (143.8X216X12MM THK)	
	7	1	**2H-3745**	2	BOLT (1-14X2.75 IN)	
	8	1	**8T-5361**	2	WASHER-HARD (28X49X5MM THK)	
	9	1	**5C-6565**	12	BOLT (1/2-13X1.125 IN)	
	10	1	**8T-4223**	8	WASHER-HARD (13.5X25.5X3MM THK)	
	11	1	**3J-4278**	4	SPACER (13.5X22.2X6.5)	
	12	1	**1K-9415**	4	BOLT (1 1/8-7X11 IN)	
	13	1	**3K-9770**	4	NUT-FULL (1 1/4X7 THD)	
	14	1	**5F-1678**	2	SEAL-O-RING	
	15	1	**9W-7800**	2	PAD AS	
	16	1	**9W-7599**	2	PAD AS	
					(EACH PAD AS INCLUDES)	
		1	**1F-0748**	4	NUT-WELD (1/2-13 THD)	
	17	1	**131-1574**	2	SPACER (83.5X100X5MM THK)	
	18	1	**5P-5296**	2	RING-RETAINING	
	19	1	**3B-8489**	2	FITTING-GREASE	
	20	1	**3T-7792**	2	PIN	
	21	1	**7X-0590**	4	WASHER-HARD (13.5X44.5X6MM THK)	
	22	1	**2F-5326**	8	SETSCREW (3/8-16X.37 IN)	
	23	1	**133-5631**	2	PLUG	
	24	1	**143-3332**	1	BAR AS-EQUALIZER	
	25	1	**5P-7151**	4	RING-RETAINING	
	26	1	**8P-8796**	1	SEAL AS	
	27	1	**8P-8797**	1	SEAL AS	
	28	1	**194-8128**	4	SEAL-AS	
	29	1	**159-9311**	2	BEARING	
	30	1	**129-4487**	2	BEARING-SLEEVE	

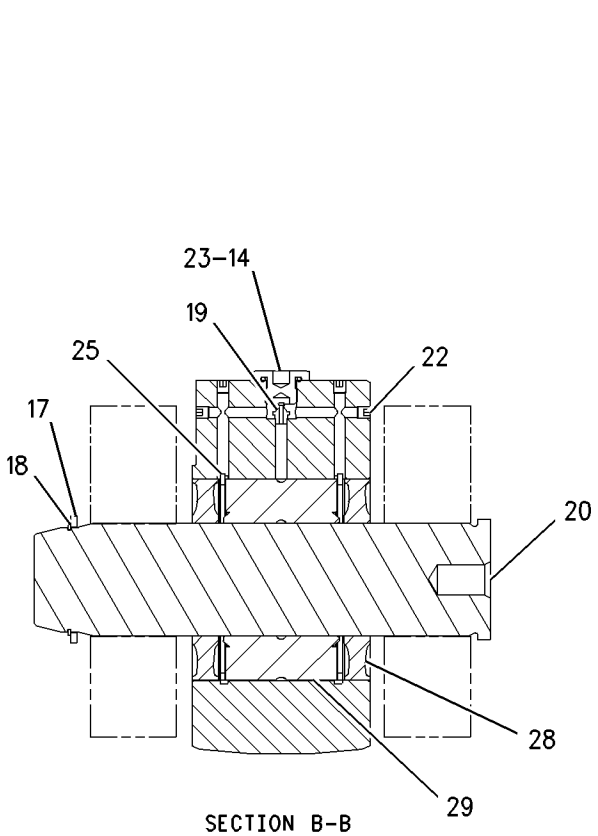

SECTION B-B

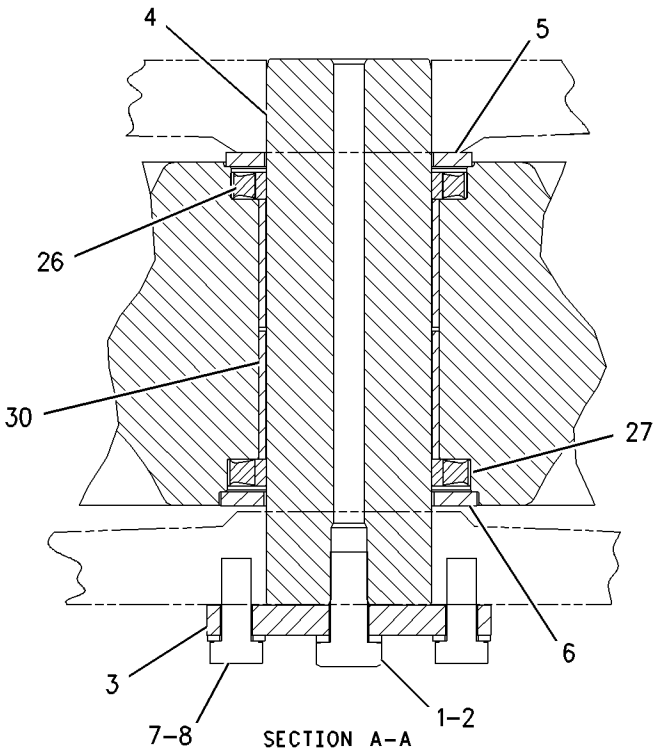

SECTION A-A

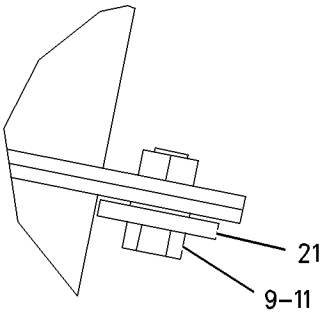

VIEW OF AREA C

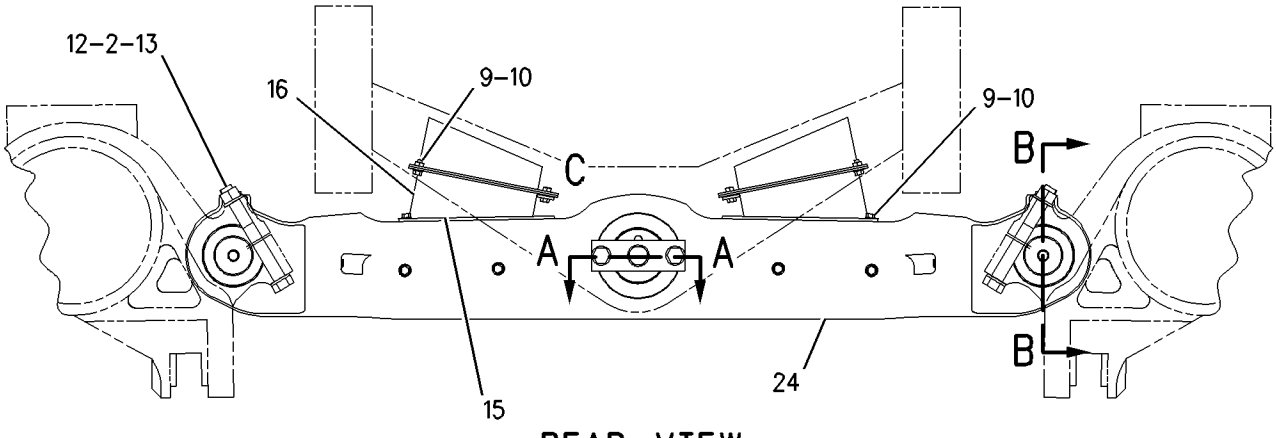

REAR VIEW

GRAPHIC #1 **<END>** g00876374

UNDERCARRIAGE

141-7522 BAR GP-EQUALIZER

S/N: 7PZ701-UP

PART OF 139-7697 UNDERCARRIAGE AR

SMCS-7206 **i01962165**

NOTE	REF NO	GRAPHIC REF	PART NUMBER	QTY	PART NAME 1 2 3 4 5 6 (PRODUCT LEVEL)	SEE PAGE
	1	1	**1K-9415**	4	BOLT (1 1/8-7X11 IN)	
C	2	1	**3J-4278**	8	SPACER (13.5X22.2X6.5)	
	3	1	**3T-7792**	2	PIN	
	4	1	**3T-7793**	1	SPACER (143.8X216X12MM THK)	
	5	1	**3T-7794**	1	SPACER (143.3X208X12MM THK)	
	6	1	**7F-6112**	1	BOLT (1 1/4-12X3 IN)	
	7	1	**8P-8827**	1	PIN	
	8	1	**131-1574**	2	SPACER (83.5X100X5MM THK)	
CY	9	1	**207-2684**	1	BAR GP-EQUALIZER	549
	10	1	**209-3186**	1	MANIFOLD	
C	11	1	**213-6184**	2	PAD AS	
C	12	1	**213-6185**	2	PAD AS	
C	13	1	**213-6186**	2	PAD AS	
	14	1	**2H-3745**	2	BOLT (1-14X2.75 IN)	
	15	1	**3K-9770**	4	NUT-FULL (1 1/4X7 THD)	
	16	1	**5P-5296**	2	RING-RETAINING	
C	17	1	**6V-8188**	16	NUT (1/2-13 THD)	
	18	1	**7X-0533**	9	WASHER-HARD (34X55X6MM THK)	
C	19	1	**7X-0590**	8	WASHER-HARD (13.5X44.5X6MM THK)	
C	20	1	**8T-4223**	28	WASHER-HARD (13.5X25.5X3MM THK)	
	21	1	**8T-5361**	2	WASHER-HARD (28X49X5MM THK)	
C	22	1	**8T-8917**	20	BOLT (1/2-13X1.25 IN)	

C-CHANGE FROM PREVIOUS TYPE
Y-SEPARATE ILLUSTRATION

141-7522 **BAR GP-EQUALIZER** ***(contd.)*** **i01962165**

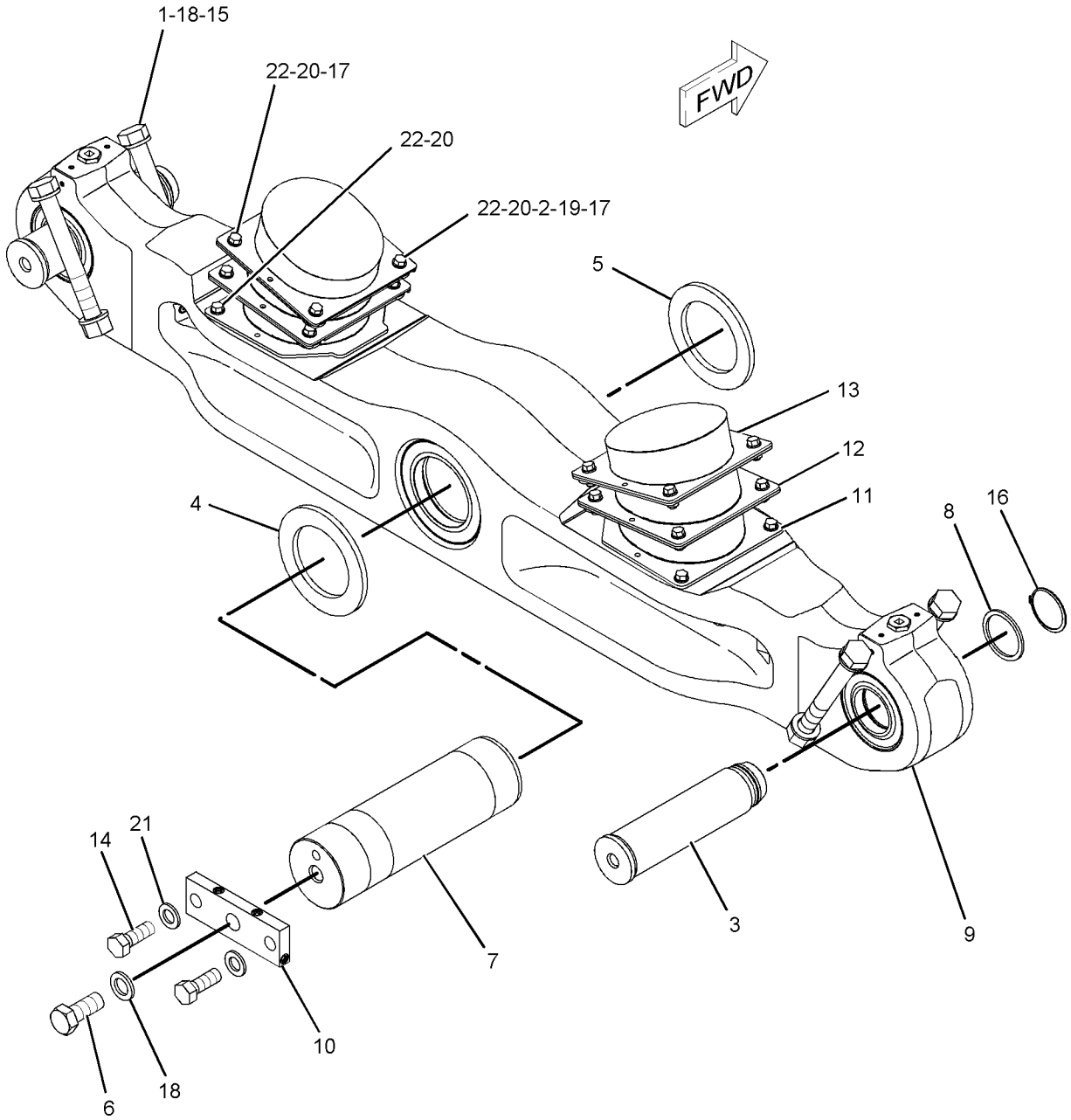

GRAPHIC #1 **<END>** g01025384

207-2684 BAR GP-EQUALIZER

S/N: 7PZ701-UP
PART OF 141-7522 BAR GP-EQUALIZER
FIELD REPLACEMENT FOR 143-3332 EQUALIZER BAR AS

SMCS-7206 **i01988792**

NOTE	REF NO	GRAPHIC REF	PART NUMBER	QTY	PART NAME 1 2 3 4 5 6 (PRODUCT LEVEL)	SEE PAGE
	1	1	**3B-8489**	2	FITTING-GREASE	
	2	1	**5P-7151**	4	RING-RETAINING	
	3	1	**8P-8796**	1	SEAL AS	
	4	1	**8P-8797**	1	SEAL AS	
	5	1	**129-4487**	2	BEARING-SLEEVE	
	6	1	**133-5631**	2	PLUG	
	7	1	*143-3331*	1	EQUALIZER BAR	
	8	1	**159-9311**	2	BEARING	
	9	1	**194-8128**	4	SEAL-AS	
	10	1	**2F-5326**	8	SETSCREW (3/8-16X.37 IN)	
	11	1	**3J-7354**	2	SEAL-O-RING	
	12	1	**5F-1678**	2	SEAL-O-RING	
	13	1	**7X-0323**	4	BOLT	
	14	1	**8T-4223**	4	WASHER-HARD (13.5X25.5X3MM THK)	
	15	1	**9S-8002**	2	PLUG	

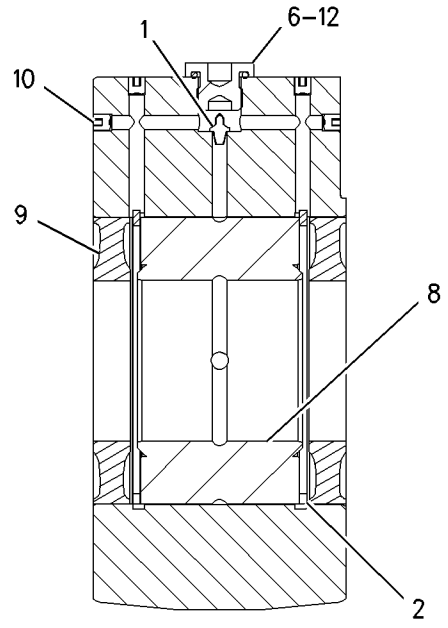

SECTION B-B

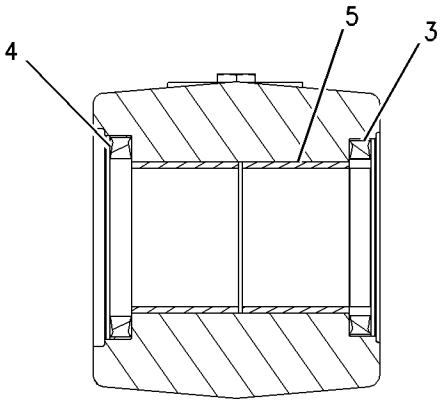

SECTION A–A

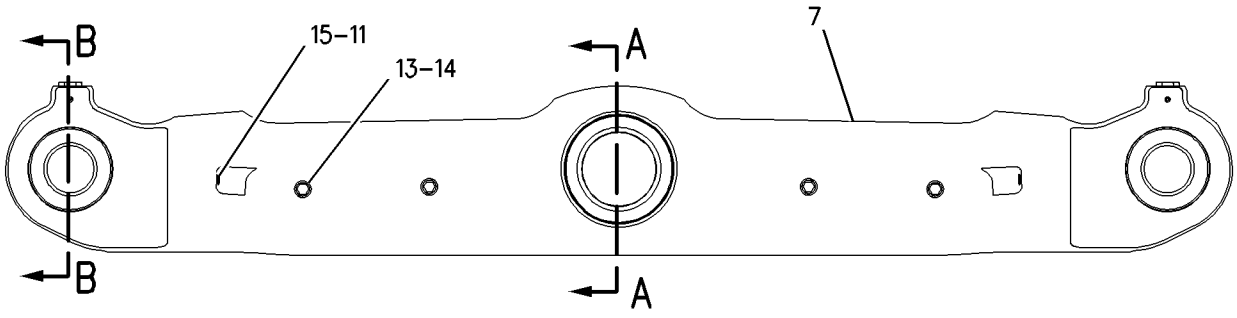

GRAPHIC #1 **<END>** g00843895

129-4032 CAP GP-TRACK IDLER

S/N: 7PZ1-UP

PART OF 139-7697, 179-2518, 179-2519 UNDERCARRIAGE AR

SMCS-4159 **i01565083**

NOTE	REF NO	GRAPHIC REF	PART NUMBER	QTY	PART NAME 1 2 3 4 5 6 (PRODUCT LEVEL)	SEE PAGE
	1	1	**129-4030**	1	CAP AS-TRACK IDLER	
	1A	1	**1T-0068**	1	PIN-SPRING	
	2	1	**7D-5238**	3	WASHER (37.5X62X6MM THK)	
	3	1	**8T-5881**	3	BOLT (1-3/8-6X8 IN)	

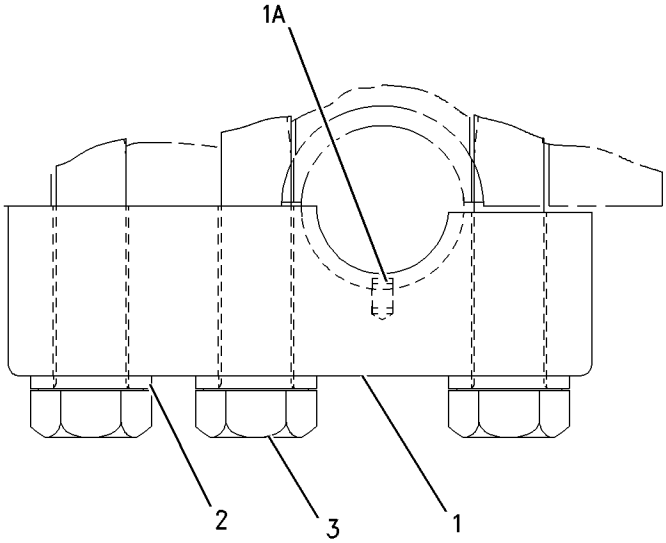

GRAPHIC #1 **<END>** g00813344

129-4033 CAP GP-TRACK IDLER

S/N: 7PZ1-UP

PART OF 139-7697, 179-2518, 179-2519 UNDERCARRIAGE AR

SMCS-4159 **i01565103**

NOTE	REF NO	GRAPHIC REF	PART NUMBER	QTY	PART NAME 1 2 3 4 5 6 (PRODUCT LEVEL)	SEE PAGE
	1	1	**129-4031**	1	CAP AS-TRACK IDLER	
	1A	1	**1T-0068**	1	PIN-SPRING	
	2	1	**7D-5238**	3	WASHER (37.5X62X6MM THK)	
	3	1	**8T-5881**	3	BOLT (1-3/8-6X8 IN)	

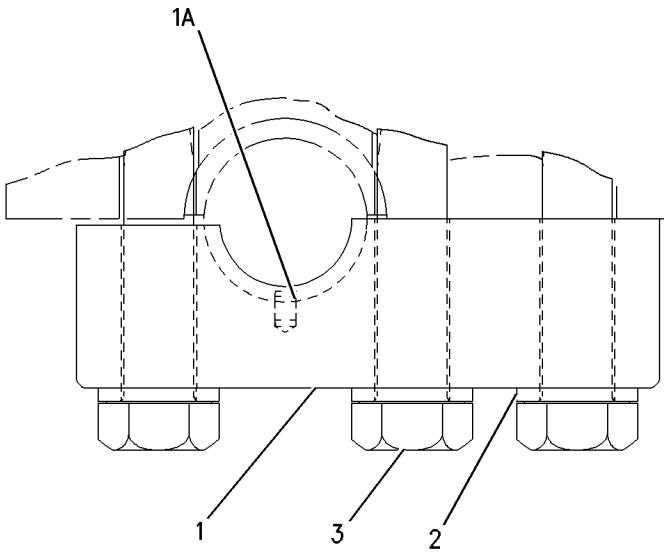

GRAPHIC #1 **<END>** g00813348

9W-7266 CAP GP-TRACK ROLLER

S/N: 7PZ1-UP
PART OF 139-7720 ROLLER AR-TRACK CARRIER, 139-7697, 179-2518, 179-2519
UNDERCARRIAGE AR
ALSO AN ATTACHMENT

SMCS-4180 **i01743954**

NOTE	REF NO	GRAPHIC REF	PART NUMBER	QTY	PART NAME 1 2 3 4 5 6 (PRODUCT LEVEL)	SEE PAGE
	1	1	**213-1745**	1	CAP AS	
	2	1	**1T-0068**	1	PIN-SPRING	
	3	1	**9W-7269**	2	BOLT (1-1/4-7X4.88 IN)	
	4	1	**4K-0684**	2	WASHER-HARD (34X55X6MM THK)	

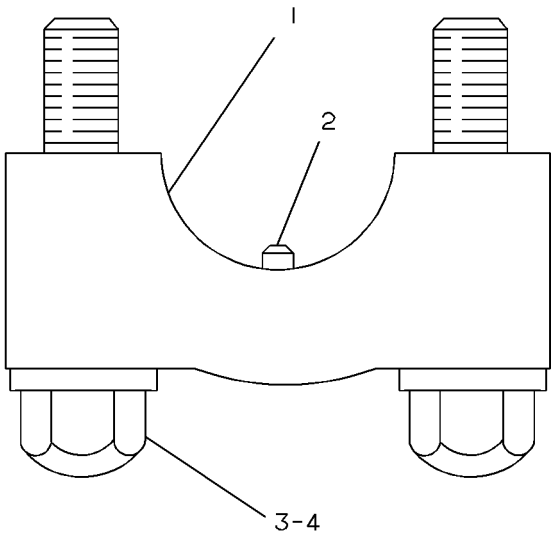

GRAPHIC #1 **<END>** g00189359

UNDERCARRIAGE

139-7698 FRAME GP-TELESCOPING RECOIL

S/N: 7PZ1-294

PART OF 139-7697 UNDERCARRIAGE AR

SMCS-4151 **i01988805**

NOTE	REF NO	GRAPHIC REF	PART NUMBER	QTY	PART NAME 1 2 3 4 5 6 (PRODUCT LEVEL)	SEE PAGE
	1	1	**138-0576**	1	FRAME AS-ROLLER (REAR)(RH)	
		1	**138-0577**	1	FRAME AS-ROLLER (REAR)(LH)	
	2	1	**7X-0399**	12	BOLT (1-8X1.25 IN)	
		1	**8T-5361**	12	WASHER-HARD (28X49X5MM THK)	
	3	1	**7T-8330**	2	COVER	
		1	**3S-1223**	2	SEAL-O-RING	
	4	1	**5P-9891**	2	PLATE-WARNING (HIGH PRESSURE CYLINDER)	
	5	1	**4B-4158**	8	SCREW-DRIVE (3/16X0.25 IN)	
	6	1	**8C-4436**	6	BOLT (1/2-13X1.375 IN)	
		1	**8T-4223**	6	WASHER-HARD (13.5X25.5X3MM THK)	
C	7	1	**176-2551**	2	FRAME AS-FRONT	
					(EACH INCLUDES)	
		1	**4B-4158**	4	SCREW-DRIVE (3/16X0.25 IN)	
		1	**6V-0709**	1	PLATE-WARNING (RECOIL SPRING)	
C		1	**7X-0345**	5	BOLT (5/8-11X1.75 IN)	
C		1	**8T-4122**	5	WASHER-HARD (17X32X3.5MM THK)	
		1	**138-9907**	1	SLEEVE-WEAR	
		1	**162-8438**	1	COVER	
	8	1	**8T-9399**	32	BOLT (3/4-10X2.25 IN)	
		1	**8T-4994**	32	WASHER-HARD (20X36.5X3.5MM THK)	
	9	1	**1J-2890**	4	SEAL-O-RING	
	10	1	**7T-1331**	4	GUIDE AS	
	11	1	**6V-9480**	4	FILM-WARNING (GUIDE)	
	12	1	**8P-4693**	4	COVER	
	13	1	**3T-7494**	2	BEARING	
	14	1	**7X-2627**	2	RING-RETAINING	
	15	1	**9X-4590**	2	SEAL AS	
	16	1	**7X-2628**	2	RING-RETAINING	
	17	1	**9G-7516**	48	PLUG	
	18	2	**134-2202**	1	SHAFT-PIVOT	
	19	2	**7X-0351**	18	BOLT (5/8-11X3.75 IN)	
	20	2	**8T-4122**	36	WASHER-HARD (17X32X3.5MM THK)	
	21	2	**5P-9217**	2	SEAL-O-RING	
	22	2	**3T-9055**	2	RING-THRUST	
	23	2	**2M-1309**	2	SEAL-O-RING	
	24	2	**134-2203**	2	PLATE-THRUST	
	25	2	**6Y-6583**	2	COVER	
	26	2	**134-4814**	2	PLATE-THRUST	
	27	2	**9S-4185**	2	PLUG	
		2	**3K-0360**	2	SEAL-O-RING	
	28	2	**6F-4718**	2	SEAL-O-RING	
	29	2	**1D-4639**	24	BOLT (1-8X4 IN)	
	30	2	**5P-4256**	2	RING-RETAINING	
	31	2	**4T-2069**	6	PLUG-DRAIN (TELESCOPING RECOIL FRAME)	
		2	**2H-3932**	6	SEAL-O-RING	
	32	2	**7X-0347**	18	BOLT (5/8-11X2.25 IN)	
	33	2	**7T-0194**	2	RETAINER	
	34	2	**8T-1115**	2	SEAL-PIVOT SHAFT	
	35	2	**7T-0192**	2	RETAINER	
	36	2	**7T-3479**	2	PLATE-THRUST	
	37	2	**8F-9960**	2	SEAL-O-RING	
	38	2	**6T-4176**	2	BEARING-SLEEVE	
	39	2	**6T-4177**	2	BEARING-SLEEVE	

QUANTITIES SHOWN ARE THOSE REQUIRED FOR BOTH LH AND RH SIDES
C-CHANGE FROM PREVIOUS TYPE

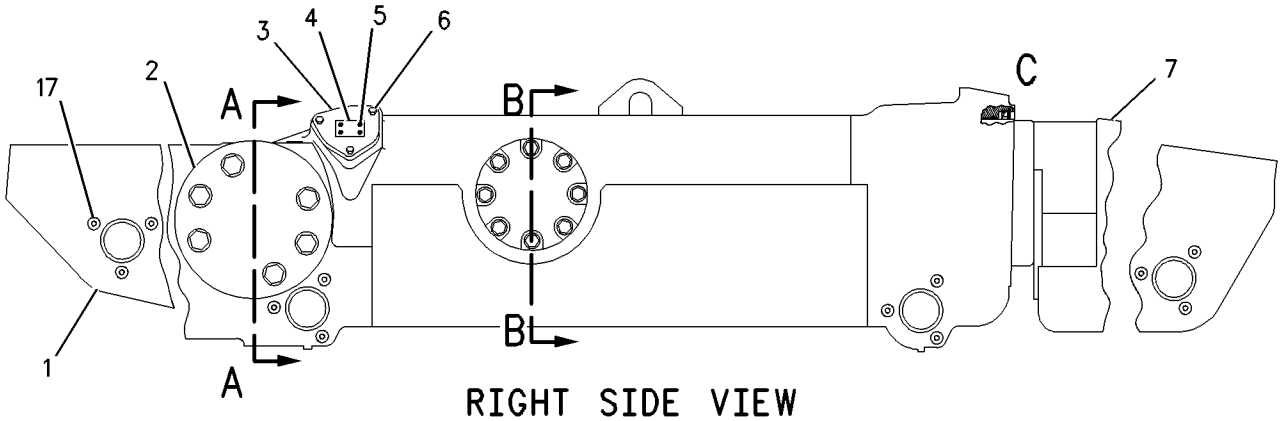

RIGHT SIDE VIEW

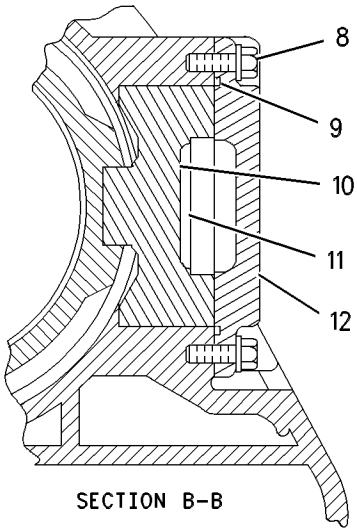

SECTION B-B

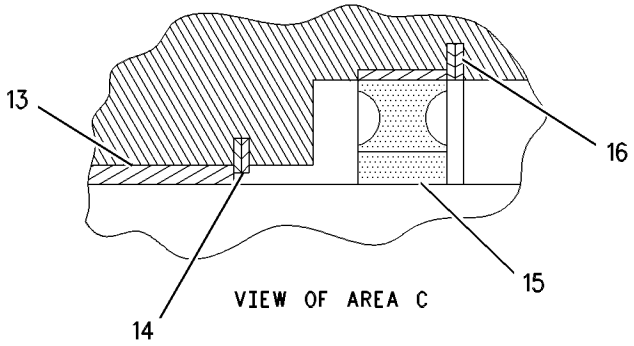

VIEW OF AREA C

REFER TO ALL ILLUSTRATIONS OF THIS GROUP FOR AUXILIARY VIEWS

GRAPHIC #1

g00362742

139-7698 **FRAME GP-TELESCOPING RECOIL** ***(contd.)*** **i01988805**

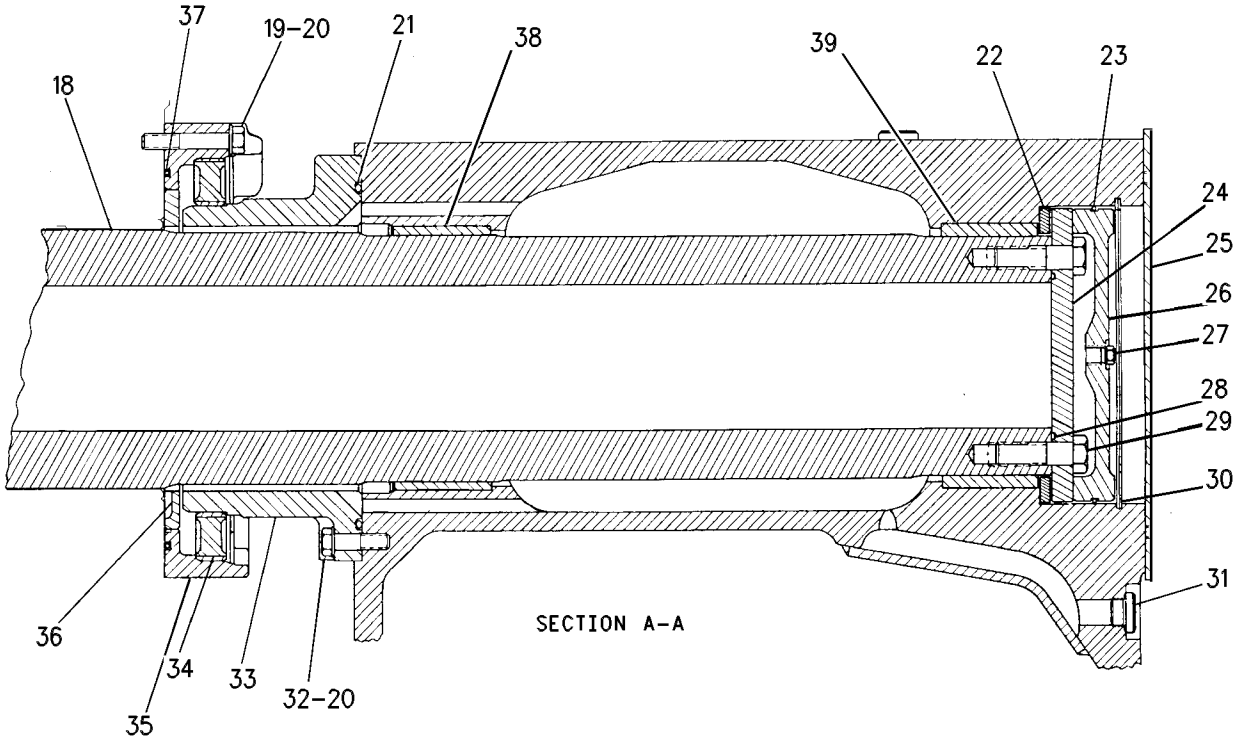

GRAPHIC #2 **<END>** g00362743

UNDERCARRIAGE

139-7698 FRAME GP-TELESCOPING RECOIL

S/N: 7PZ295-386

PART OF 139-7697 UNDERCARRIAGE AR

SMCS-4151 **i01988808**

NOTE	REF NO	GRAPHIC REF	PART NUMBER	QTY	PART NAME 1 2 3 4 5 6 (PRODUCT LEVEL)	SEE PAGE
C	1	1	**175-6802**	1	FRAME AS-ROLLER (RH)	
C		1	**175-6803**	1	FRAME AS-ROLLER (LH)	
	2	1	**7X-0399**	12	BOLT (1-8X1.25 IN)	
		1	**8T-5361**	12	WASHER-HARD (28X49X5MM THK)	
	3	1	**7T-8330**	2	COVER	
		1	**3S-1223**	2	SEAL-O-RING	
	4	1	**5P-9891**	2	PLATE-WARNING (HIGH PRESSURE CYLINDER)	
	5	1	**4B-4158**	8	SCREW-DRIVE (3/16X0.25 IN)	
	6	1	**8C-4436**	6	BOLT (1/2-13X1.375 IN)	
		1	**8T-4223**	6	WASHER-HARD (13.5X25.5X3MM THK)	
	7	1	**176-2551**	2	FRAME AS-FRONT	
					(EACH INCLUDES)	
		1	**4B-4158**	4	SCREW-DRIVE (3/16X0.25 IN)	
		1	**6V-0709**	1	PLATE-WARNING (RECOIL SPRING)	
		1	**7X-0345**	5	BOLT (5/8-11X1.75 IN)	
		1	**8T-4122**	5	WASHER-HARD (17X32X3.5MM THK)	
		1	**138-9907**	1	SLEEVE-WEAR	
		1	**162-8438**	1	COVER	
	8	1	**8T-9399**	32	BOLT (3/4-10X2.25 IN)	
		1	**8T-4994**	32	WASHER-HARD (20X36.5X3.5MM THK)	
	9	1	**1J-2890**	4	SEAL-O-RING	
	10	1	**7T-1331**	4	GUIDE AS	
	11	1	**6V-9480**	4	FILM-WARNING (GUIDE)	
	12	1	**8P-4693**	4	COVER	
	13	1	**3T-7494**	2	BEARING	
	14	1	**7X-2627**	2	RING-RETAINING	
	15	1	**9X-4590**	2	SEAL AS	
	16	1	**7X-2628**	2	RING-RETAINING	
	17	1	**9G-7516**	48	PLUG	
	18	2	**134-2202**	1	SHAFT-PIVOT	
	19	2	**7X-0351**	18	BOLT (5/8-11X3.75 IN)	
	20	2	**8T-4122**	36	WASHER-HARD (17X32X3.5MM THK)	
	21	2	**5P-9217**	2	SEAL-O-RING	
	22	2	**3T-9055**	2	RING-THRUST	
	23	2	**2M-1309**	2	SEAL-O-RING	
	24	2	**134-2203**	2	PLATE-THRUST	
	25	2	**6Y-6583**	2	COVER	
	26	2	**134-4814**	2	PLATE-THRUST	
	27	2	**9S-4185**	2	PLUG	
		2	**3K-0360**	2	SEAL-O-RING	
	28	2	**6F-4718**	2	SEAL-O-RING	
	29	2	**1D-4639**	24	BOLT (1-8X4 IN)	
	30	2	**5P-4256**	2	RING-RETAINING	
	31	2	**4T-2069**	6	PLUG-DRAIN (TELESCOPING RECOIL FRAME)	
		2	**2H-3932**	6	SEAL-O-RING	
	32	2	**7X-0347**	18	BOLT (5/8-11X2.25 IN)	
	33	2	**7T-0194**	2	RETAINER	
	34	2	**8T-1115**	2	SEAL-PIVOT SHAFT	
	35	2	**7T-0192**	2	RETAINER	
	36	2	**7T-3479**	2	PLATE-THRUST	
	37	2	**8F-9960**	2	SEAL-O-RING	
	38	2	**6T-4176**	2	BEARING-SLEEVE	
	39	2	**6T-4177**	2	BEARING-SLEEVE	

C-CHANGE FROM PREVIOUS TYPE

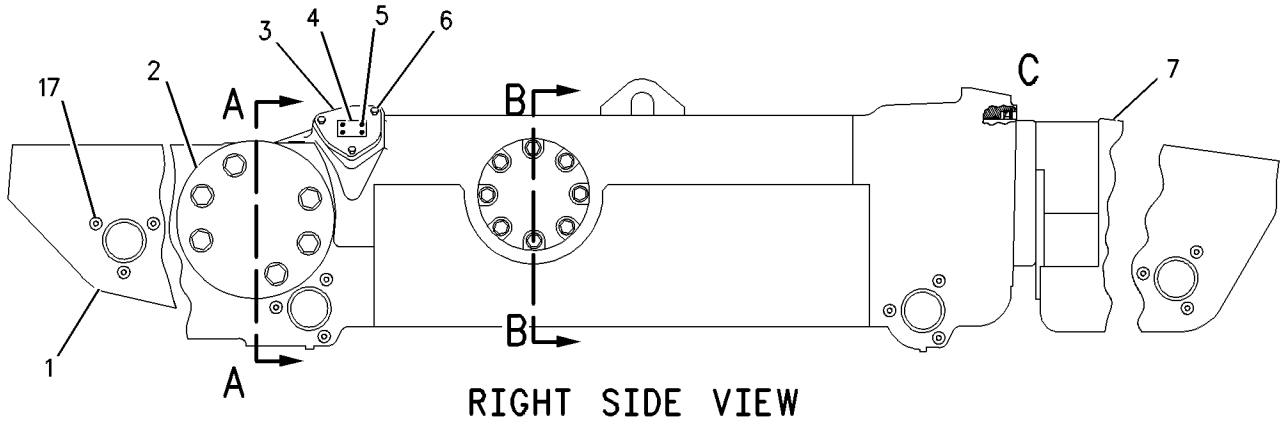

RIGHT SIDE VIEW

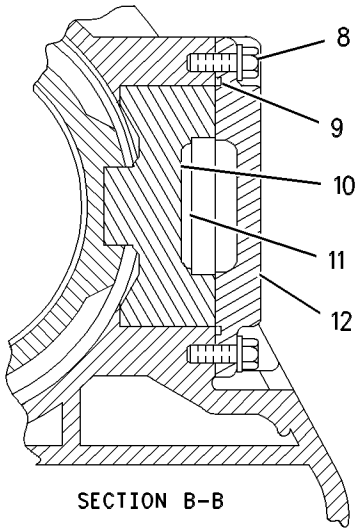

SECTION B-B

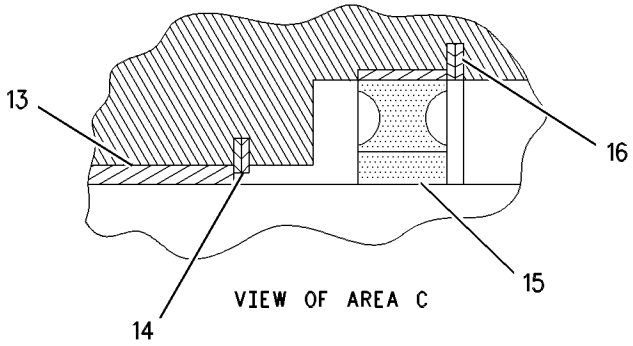

VIEW OF AREA C

REFER TO ALL ILLUSTRATIONS OF THIS GROUP FOR AUXILIARY VIEWS

GRAPHIC #1

g00362742

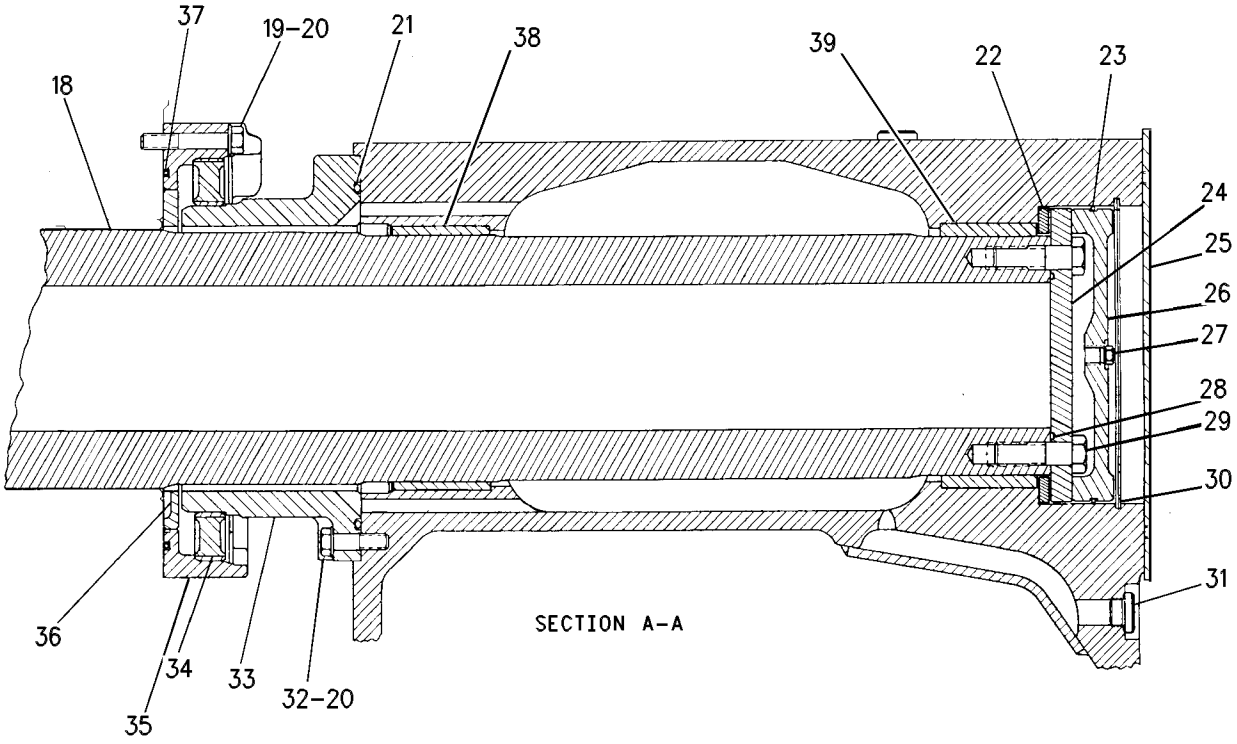

GRAPHIC #2 **<END>** g00362743

139-7698 FRAME GP-TELESCOPING RECOIL

S/N: 7PZ387-696

PART OF 139-7697 UNDERCARRIAGE AR

SMCS-4151 **i01988806**

NOTE	REF NO	GRAPHIC REF	PART NUMBER	QTY	PART NAME 1 2 3 4 5 6 (PRODUCT LEVEL)	SEE PAGE
	1	2	**3T-9055**	2	RING-THRUST	
	2	1	**4B-4158**	8	SCREW-DRIVE (3/16X0.25 IN)	
	3	2	**4T-2069**	6	PLUG-DRAIN (TELESCOPING RECOIL FRAME)	
	4	1	**5P-9891**	2	PLATE-WARNING (HIGH PRESSURE CYLINDER)	
	5	1	**7T-1331**	4	GUIDE AS	
					(EACH INCLUDES)	
	6	1	**6V-9480**	1	FILM-WARNING (GUIDE)	
	7	1	**6Y-6583**	2	COVER	
	8	1	**9X-4590**	2	SEAL AS	
					(EACH INCLUDES)	
		1	**8T-5071**	1	GUARD-SEAL	
	9	1	**7T-8330**	2	COVER	
	10	1	**8P-4693**	4	COVER	
	11	1	**9G-7516**	48	PLUG	
	12	2	**134-2202**	1	SHAFT-PIVOT	
	13	2	**134-2203**	2	PLATE-THRUST	
	14	2	**134-4814**	2	PLATE-THRUST	
C	15	1	**138-0576**	1	FRAME AS-ROLLER (REAR)(RH)	
C	16	1	**138-0577**	1	FRAME AS-ROLLER (REAR)(LH)	
C	17	1	**180-3473**	2	FRAME AS-FRONT	
					(EACH INCLUDES)	
		1	**4B-4158**	4	SCREW-DRIVE (3/16X0.25 IN)	
		1	**6V-0709**	1	PLATE-WARNING (RECOIL SPRING)	
		1	**7X-0343**	3	BOLT (5/8-11X1.25 IN)	
		1	**8T-4122**	3	WASHER-HARD (17X32X3.5MM THK)	
		1	**138-9907**	1	SLEEVE-WEAR	
	18	2	**1D-4639**	24	BOLT (1-8X4 IN)	
	19	1	**1J-2890**	4	SEAL-O-RING	
	20	2	**2H-3932**	6	SEAL-O-RING	
	21	2	**2M-1309**	2	SEAL-O-RING	
	22	2	**3K-0360**	2	SEAL-O-RING	
	23	1	**3S-1223**	2	SEAL-O-RING	
	24	1	**3T-7494**	2	BEARING	
	25	2	**5P-4256**	2	RING-RETAINING	
	26	2	**5P-9217**	2	SEAL-O-RING	
	27	2	**6F-4718**	2	SEAL-O-RING	
	28	2	**6T-4176**	2	BEARING-SLEEVE	
	29	2	**6T-4177**	2	BEARING-SLEEVE	
	30	2	**7X-0347**	18	BOLT (5/8-11X2.25 IN)	
	31	2	**7X-0351**	18	BOLT (5/8-11X3.75 IN)	
	32	1	**7X-0399**	12	BOLT (1-8X1.25 IN)	
	33	1	**7X-2627**	2	RING-RETAINING	
	34	1	**7X-2628**	2	RING-RETAINING	
	35	1	**8C-4436**	6	BOLT (1/2-13X1.375 IN)	
	36	2	**8F-9960**	2	SEAL-O-RING	
	37	2	**8T-4122**	36	WASHER-HARD (17X32X3.5MM THK)	
	38	1	**8T-4223**	6	WASHER-HARD (13.5X25.5X3MM THK)	
	39	1	**8T-4994**	32	WASHER-HARD (20X36.5X3.5MM THK)	
	40	1	**8T-5361**	12	WASHER-HARD (28X49X5MM THK)	
	41	1	**8T-9399**	32	BOLT (3/4-10X2.25 IN)	
	42	2	**9S-4185**	2	PLUG	
	43	2	*203-2448*	2	RETAINER AS	
					(EACH INCLUDES)	
		2	**7T-0192**	1	RETAINER	
		2	**7T-3479**	1	PLATE-THRUST	
		2	**8T-1115**	1	SEAL-PIVOT SHAFT	

139-7698 **FRAME GP-TELESCOPING RECOIL** *(contd.)* **i01988806**

NOTE	REF NO	GRAPHIC REF	PART NUMBER	QTY	PART NAME 1 2 3 4 5 6 (PRODUCT LEVEL)	SEE PAGE
		2	**203-2447**	1	RETAINER	
C-CHANGE FROM PREVIOUS TYPE						

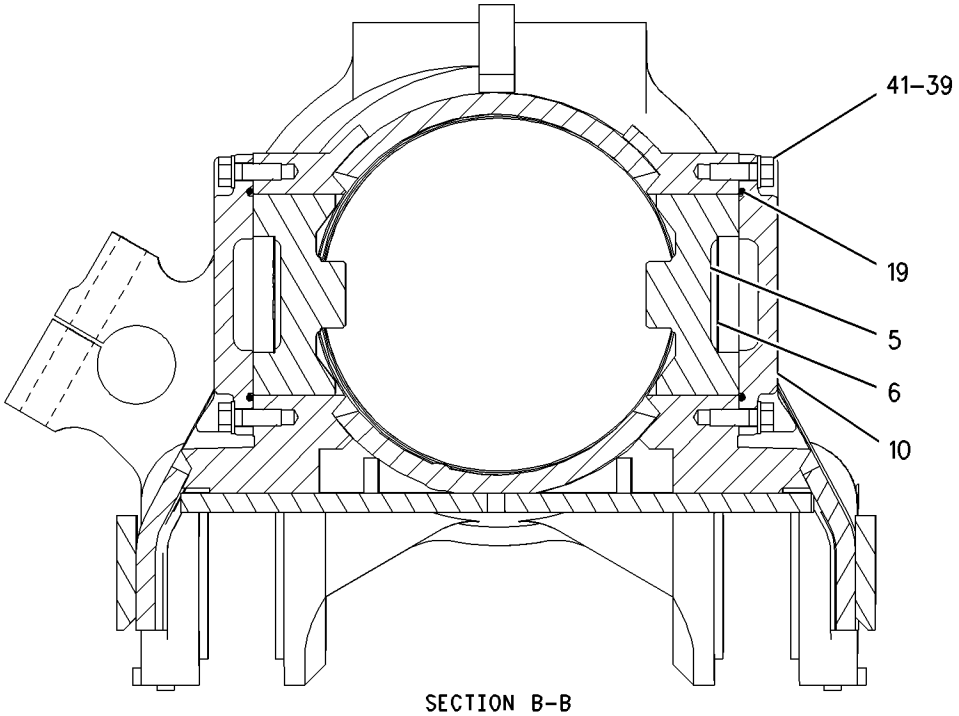

SECTION B–B

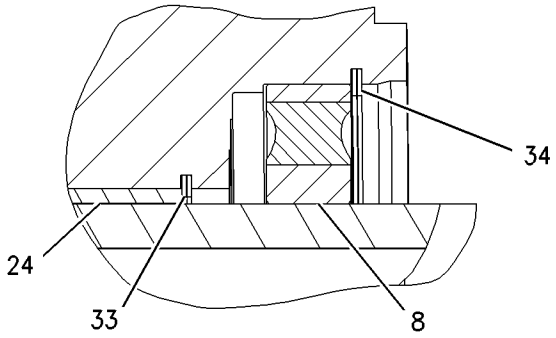

VIEW OF AREA A

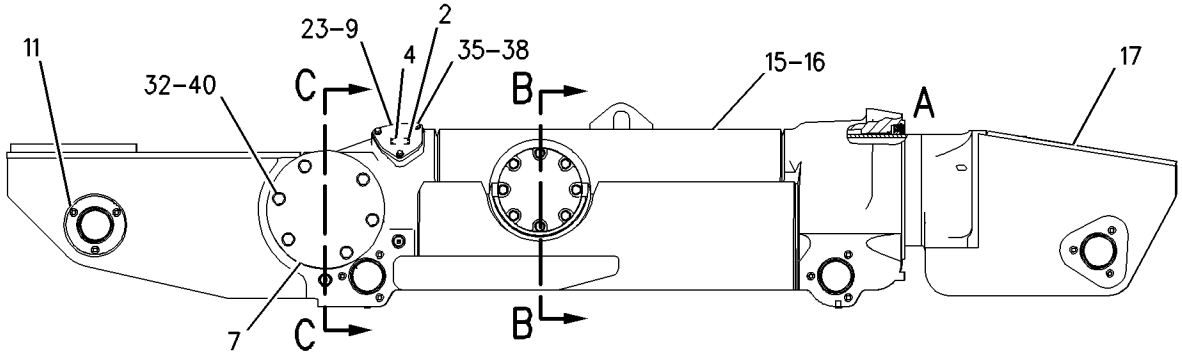

REFER TO ALL ILLUSTRATIONS OF
THIS GROUP FOR AUXILIARY VIEWS

GRAPHIC #1

g00813438

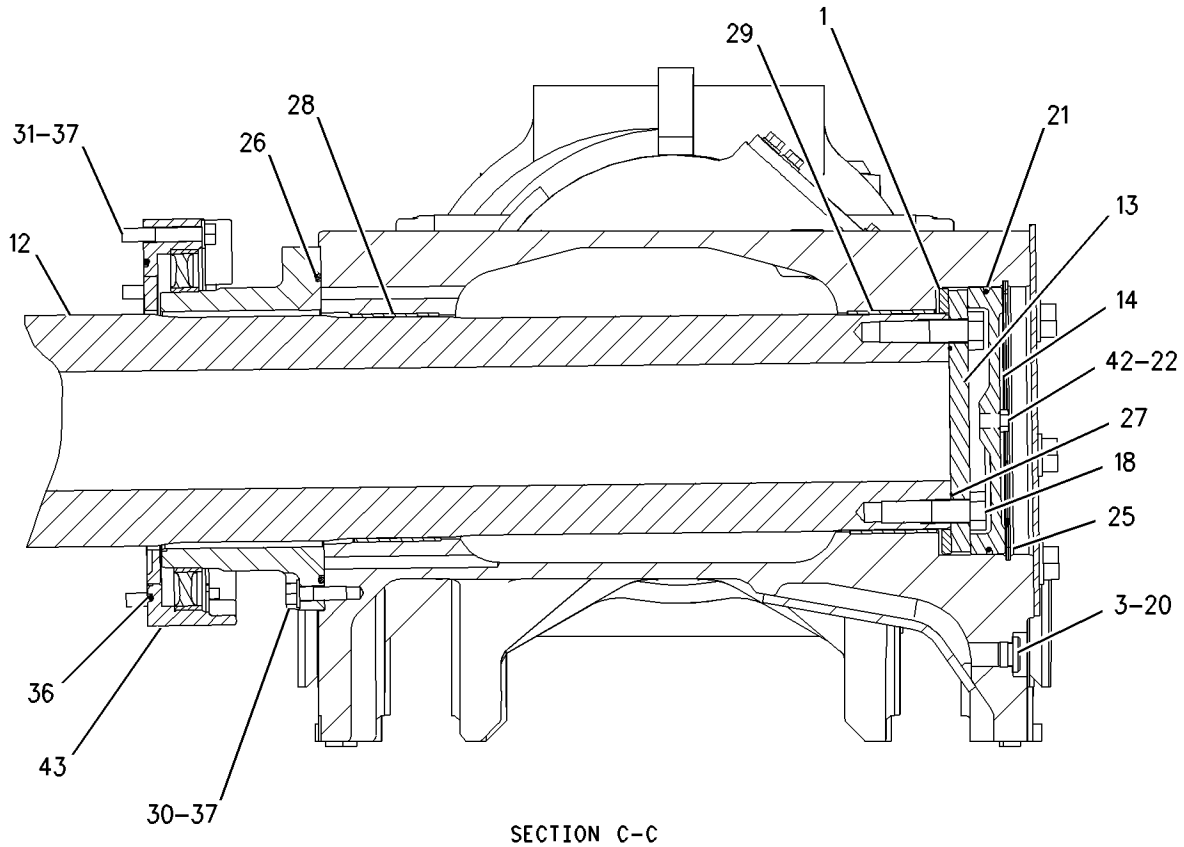

SECTION C-C

GRAPHIC #2 **<END>** g00866118

139-7698 FRAME GP-TELESCOPING RECOIL

S/N: 7PZ697-UP

PART OF 139-7697 UNDERCARRIAGE AR

SMCS-4151 **i01988807**

NOTE	REF NO	GRAPHIC REF	PART NUMBER	QTY	PART NAME 1 2 3 4 5 6 (PRODUCT LEVEL)	SEE PAGE
	1	1	**1D-4639**	24	BOLT (1-8X4 IN)	
	2	1	**3T-9055**	2	RING-THRUST	
	3	1	**4B-4158**	8	SCREW-DRIVE (3/16X0.25 IN)	
	4	1	**4T-2069**	6	PLUG-DRAIN (TELESCOPING RECOIL FRAME)	
	5	1	**5P-9891**	2	PLATE-WARNING (HIGH PRESSURE CYLINDER)	
	6	1	**7T-1331**	4	GUIDE AS	
					(EACH INCLUDES)	
	7	1	**6V-9480**	1	FILM-WARNING (GUIDE)	
	8	1	**6Y-6583**	2	COVER	
	9	1	**7T-8330**	2	COVER	
	10	1	**8P-4693**	4	COVER	
	11	1	**9G-7516**	48	PLUG	
	12	1	**9X-4590**	2	SEAL AS	
					(EACH INCLUDES)	
		1	**8T-5071**	1	GUARD-SEAL	
C	13	1	**106-7400**	1	FRAME AS-TRACK ROLLER (RH) (REAR)	
	13A	1	**7X-0342**	9	BOLT (5/8-11X0.74 IN)	
	13B	1	**7X-0399**	6	BOLT (1-8X1.25 IN)	
	13C	1	**7X-0407**	6	BOLT (1-8X3.25 IN)	
	13D	1	**8T-4122**	9	WASHER-HARD (17X32X3.5MM THK)	
	13E	1	**139-2010**	1	BAR	
	13F	1	**139-2022**	2	BAR	
	13G	1	**165-5312**	2	PLATE	
	13H	1	**203-2446**	2	BAR	
C	14	1	**106-7401**	1	FRAME AS-TRACK ROLLER (LH) (REAR)	
	14A	1	**7X-0342**	9	BOLT (5/8-11X0.74 IN)	
	14B	1	**7X-0399**	6	BOLT (1-8X1.25 IN)	
	14C	1	**7X-0407**	6	BOLT (1-8X3.25 IN)	
	14D	1	**8T-4122**	9	WASHER-HARD (17X32X3.5MM THK)	
	14E	1	**139-2010**	1	BAR	
	14F	1	**139-2022**	2	BAR	
	14G	1	**165-5312**	2	PLATE	
	14H	1	**203-2446**	2	BAR	
	15	1	**134-2202**	1	SHAFT-PIVOT	
	16	1	**134-2203**	2	PLATE-THRUST	
	17	1	**134-4814**	2	PLATE-THRUST	
	18	1	**180-3473**	2	FRAME AS-FRONT	
					(EACH INCLUDES)	
		1	**4B-4158**	4	SCREW-DRIVE (3/16X0.25 IN)	
		1	**6V-0709**	1	PLATE-WARNING (RECOIL SPRING)	
		1	**138-9907**	1	SLEEVE-WEAR	
	19	1	*203-2448*	2	RETAINER AS	
					(EACH INCLUDES)	
		1	**7T-0192**	1	RETAINER	
		1	**7T-3479**	1	PLATE-THRUST	
		1	**8T-1115**	1	SEAL-PIVOT SHAFT	
		1	**203-2447**	1	RETAINER	
	20	1	**1J-2890**	4	SEAL-O-RING	
	21	1	**2H-3932**	6	SEAL-O-RING	
	22	1	**2M-1309**	2	SEAL-O-RING	
	23	1	**3K-0360**	2	SEAL-O-RING	
	24	1	**3S-1223**	2	SEAL-O-RING	
	25	1	**3T-7494**	2	BEARING	
	26	1	**5P-4256**	2	RING-RETAINING	
	27	1	**5P-9217**	2	SEAL-O-RING	
	28	1	**6F-4718**	2	SEAL-O-RING	

139-7698 **FRAME GP-TELESCOPING RECOIL** *(contd.)* **i01988807**

NOTE	REF NO	GRAPHIC REF	PART NUMBER	QTY	PART NAME 1 2 3 4 5 6 (PRODUCT LEVEL)	SEE PAGE
	29	1	**6T-4176**	2	BEARING-SLEEVE	
	30	1	**6T-4177**	2	BEARING-SLEEVE	
	31	1	**7X-0347**	18	BOLT (5/8-11X2.25 IN)	
	32	1	**7X-0351**	18	BOLT (5/8-11X3.75 IN)	
	33	1	**7X-0399**	12	BOLT (1-8X1.25 IN)	
	34	1	**7X-2627**	2	RING-RETAINING	
	35	1	**7X-2628**	2	RING-RETAINING	
	36	1	**8C-4436**	6	BOLT (1/2-13X1.375 IN)	
	37	1	**8F-9960**	2	SEAL-O-RING	
	38	1	**8T-4122**	36	WASHER-HARD (17X32X3.5MM THK)	
	39	1	**8T-4223**	6	WASHER-HARD (13.5X25.5X3MM THK)	
	40	1	**8T-4994**	32	WASHER-HARD (20X36.5X3.5MM THK)	
	41	1	**8T-5361**	12	WASHER-HARD (28X49X5MM THK)	
	42	1	**8T-9399**	32	BOLT (3/4-10X2.25 IN)	
	43	1	**9S-4185**	2	PLUG	

C-CHANGE FROM PREVIOUS TYPE

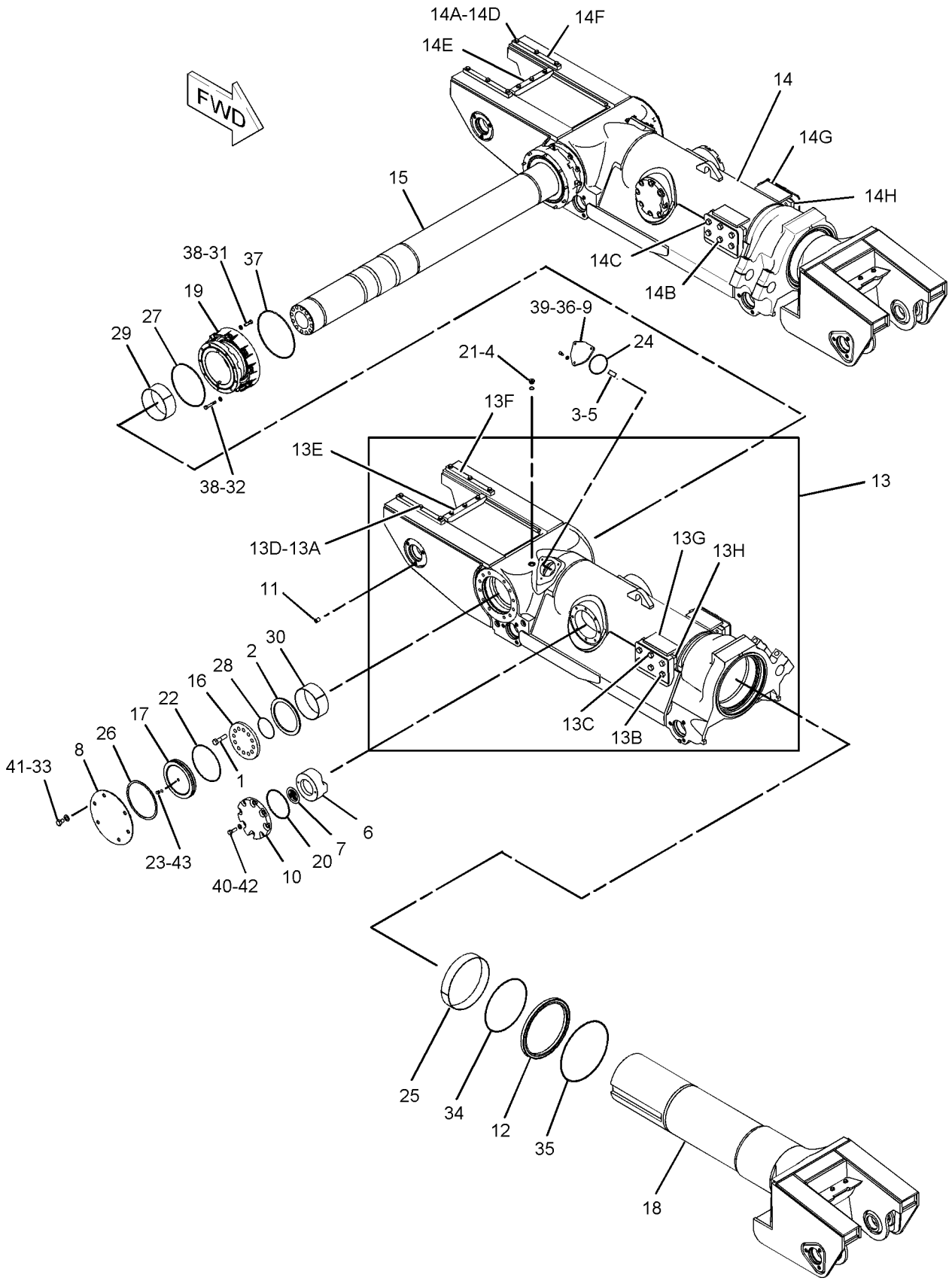

GRAPHIC #1 **<END>** g01025340

179-2514 FRAME GP-TELESCOPING RECOIL–RH

S/N: 7PZ1-UP

PART OF 179-2518 UNDERCARRIAGE AR

TYPE 1

SMCS-4151 **i01988831**

NOTE	REF NO	GRAPHIC REF	PART NUMBER	QTY	PART NAME 1 2 3 4 5 6 (PRODUCT LEVEL)	SEE PAGE
	1	1	**138-0576**	1	FRAME AS-ROLLER (REAR)(RH)	
	2	1	**7X-0399**	6	BOLT (1-8X1.25 IN)	
		1	**8T-5361**	6	WASHER-HARD (28X49X5MM THK)	
	3	1	**7T-8330**	1	COVER	
		1	**3S-1223**	1	SEAL-O-RING	
	4	1	**5P-9891**	1	PLATE-WARNING (HIGH PRESSURE CYLINDER)	
	5	1	**4B-4158**	4	SCREW-DRIVE (3/16X0.25 IN)	
	6	1	**8C-4436**	3	BOLT (1/2-13X1.375 IN)	
		1	**8T-4223**	3	WASHER-HARD (13.5X25.5X3MM THK)	
	7	1	**176-2551**	1	FRAME AS-FRONT	
		1	**4B-4158**	4	SCREW-DRIVE (3/16X0.25 IN)	
		1	**6V-0709**	1	PLATE-WARNING (RECOIL SPRING)	
		1	**7X-0345**	5	BOLT (5/8-11X1.75 IN)	
		1	**8T-4122**	5	WASHER-HARD (17X32X3.5MM THK)	
		1	**138-9907**	1	SLEEVE-WEAR	
		1	**162-8438**	1	COVER	
	8	1	**8T-9399**	16	BOLT (3/4-10X2.25 IN)	
		1	**8T-4994**	16	WASHER-HARD (20X36.5X3.5MM THK)	
	9	1	**1J-2890**	2	SEAL-O-RING	
	10	1	**7T-1331**	2	GUIDE AS	
	11	1	**6V-9480**	2	FILM-WARNING (GUIDE)	
	12	1	**8P-4693**	2	COVER	
	13	1	**3T-7494**	1	BEARING	
	14	1	**7X-2627**	1	RING-RETAINING	
	15	1	**9X-4590**	1	SEAL AS	
	16	1	**7X-2628**	1	RING-RETAINING	
	17	1	**9G-7516**	24	PLUG	
	18	2	**6T-4177**	1	BEARING-SLEEVE	
	19	2	**7X-0351**	9	BOLT (5/8-11X3.75 IN)	
	20	2	**8T-4122**	18	WASHER-HARD (17X32X3.5MM THK)	
	21	2	**5P-9217**	1	SEAL-O-RING	
	22	2	**6T-4176**	1	BEARING-SLEEVE	
	23	2	**8F-9960**	1	SEAL-O-RING	
	24	2	**7X-0347**	9	BOLT (5/8-11X2.25 IN)	
	25	2	**6Y-6583**	1	COVER	
	26	2	**4T-2069**	3	PLUG-DRAIN (TELESCOPING RECOIL FRAME)	
		2	**2H-3932**	3	SEAL-O-RING	

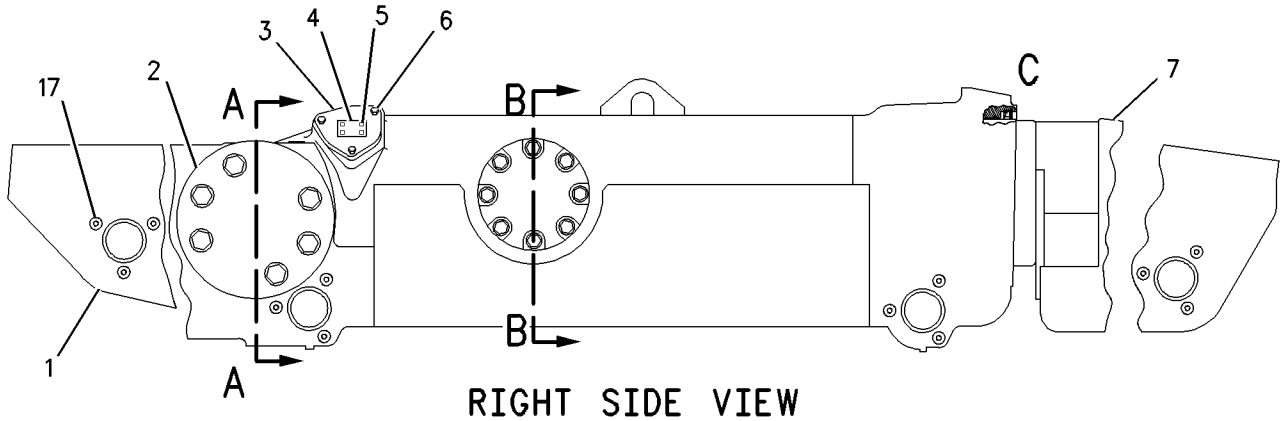

RIGHT SIDE VIEW

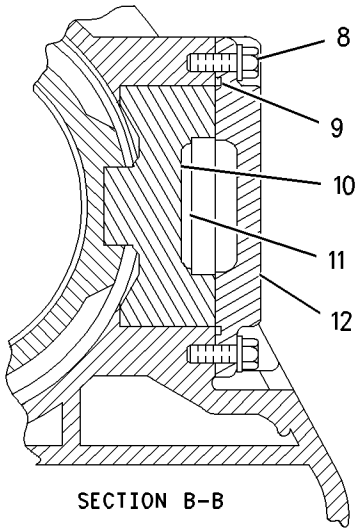

SECTION B-B

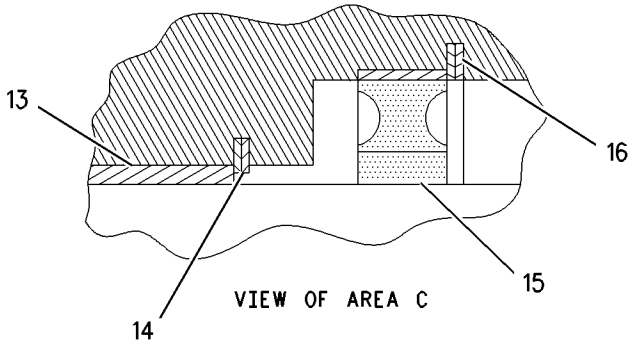

VIEW OF AREA C

REFER TO ALL ILLUSTRATIONS OF THIS GROUP FOR AUXILIARY VIEWS

GRAPHIC #1

g00655533

179-2514 **FRAME GP-TELESCOPING RECOIL** *(contd.)* **i01988831**

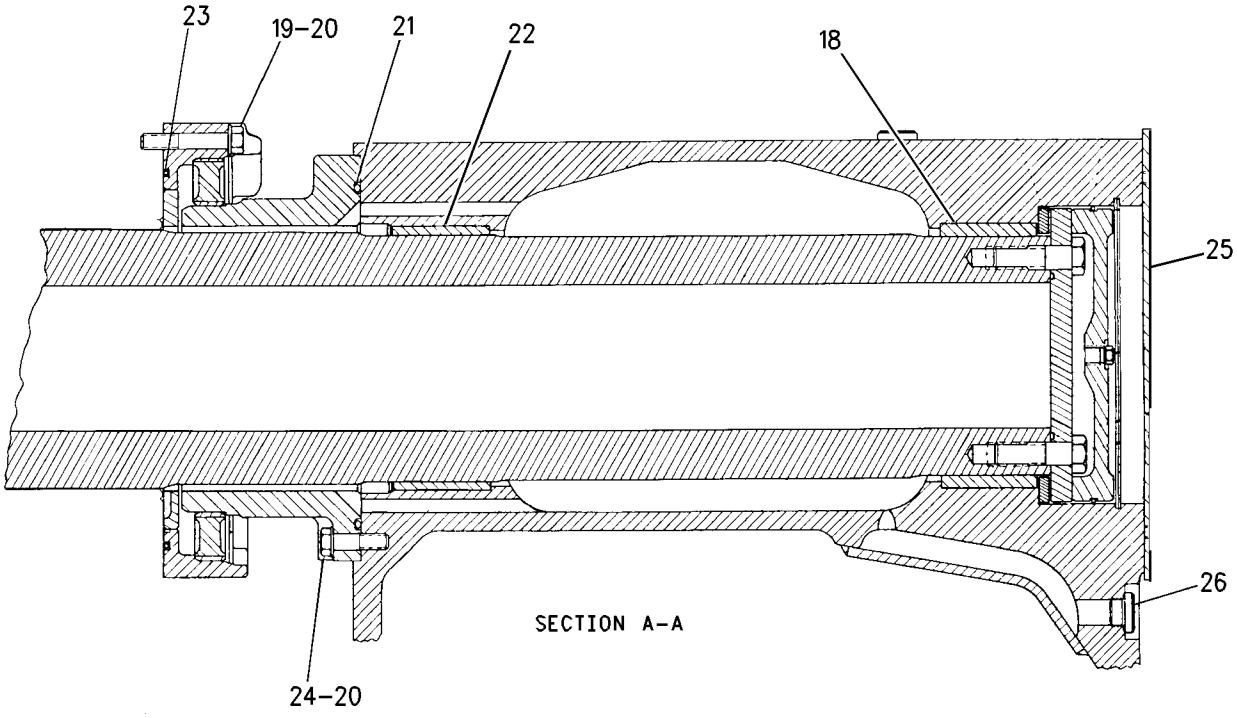

GRAPHIC #2 **<END>** g00655538

179-2514 FRAME GP-TELESCOPING RECOIL–RH

S/N: 7PZ1-UP

PART OF 179-2518 UNDERCARRIAGE AR

TYPE 2

SMCS-4151 **i01988832**

NOTE	REF NO	GRAPHIC REF	PART NUMBER	QTY	PART NAME 1 2 3 4 5 6 (PRODUCT LEVEL)	SEE PAGE
	1	1	**138-0576**	1	FRAME AS-ROLLER (REAR)(RH)	
	2	1	**7X-0399**	6	BOLT (1-8X1.25 IN)	
		1	**8T-5361**	6	WASHER-HARD (28X49X5MM THK)	
	3	1	**7T-8330**	1	COVER	
		1	**3S-1223**	1	SEAL-O-RING	
	4	1	**5P-9891**	1	PLATE-WARNING (HIGH PRESSURE CYLINDER)	
	5	1	**4B-4158**	4	SCREW-DRIVE (3/16X0.25 IN)	
	6	1	**8C-4436**	3	BOLT (1/2-13X1.375 IN)	
		1	**8T-4223**	3	WASHER-HARD (13.5X25.5X3MM THK)	
	7	1	**180-3473**	1	FRAME AS-FRONT	
		1	**4B-4158**	4	SCREW-DRIVE (3/16X0.25 IN)	
		1	**6V-0709**	1	PLATE-WARNING (RECOIL SPRING)	
		1	**7X-0345**	5	BOLT (5/8-11X1.75 IN)	
		1	**8T-4122**	5	WASHER-HARD (17X32X3.5MM THK)	
		1	**138-9907**	1	SLEEVE-WEAR	
	8	1	**8T-9399**	16	BOLT (3/4-10X2.25 IN)	
		1	**8T-4994**	16	WASHER-HARD (20X36.5X3.5MM THK)	
	9	1	**1J-2890**	2	SEAL-O-RING	
	10	1	**7T-1331**	2	GUIDE AS	
	11	1	**6V-9480**	2	FILM-WARNING (GUIDE)	
	12	1	**8P-4693**	2	COVER	
	13	1	**3T-7494**	1	BEARING	
	14	1	**7X-2627**	1	RING-RETAINING	
	15	1	**9X-4590**	1	SEAL AS	
	16	1	**7X-2628**	1	RING-RETAINING	
	17	1	**9G-7516**	24	PLUG	
	18	2	**6T-4177**	1	BEARING-SLEEVE	
	19	2	**7X-0351**	9	BOLT (5/8-11X3.75 IN)	
	20	2	**8T-4122**	18	WASHER-HARD (17X32X3.5MM THK)	
	21	2	**5P-9217**	1	SEAL-O-RING	
	22	2	**6T-4176**	1	BEARING-SLEEVE	
	23	2	**8F-9960**	1	SEAL-O-RING	
	24	2	**7X-0347**	9	BOLT (5/8-11X2.25 IN)	
	25	2	**6Y-6583**	1	COVER	
	26	2	**4T-2069**	3	PLUG-DRAIN (TELESCOPING RECOIL FRAME)	
		2	**2H-3932**	3	SEAL-O-RING	
	27	2	**203-2447**	1	RETAINER	
	28	2	**8T-1115**	1	SEAL-PIVOT SHAFT	
	29	2	**7T-0192**	1	RETAINER	
	30	2	**7T-3479**	1	PLATE-THRUST	

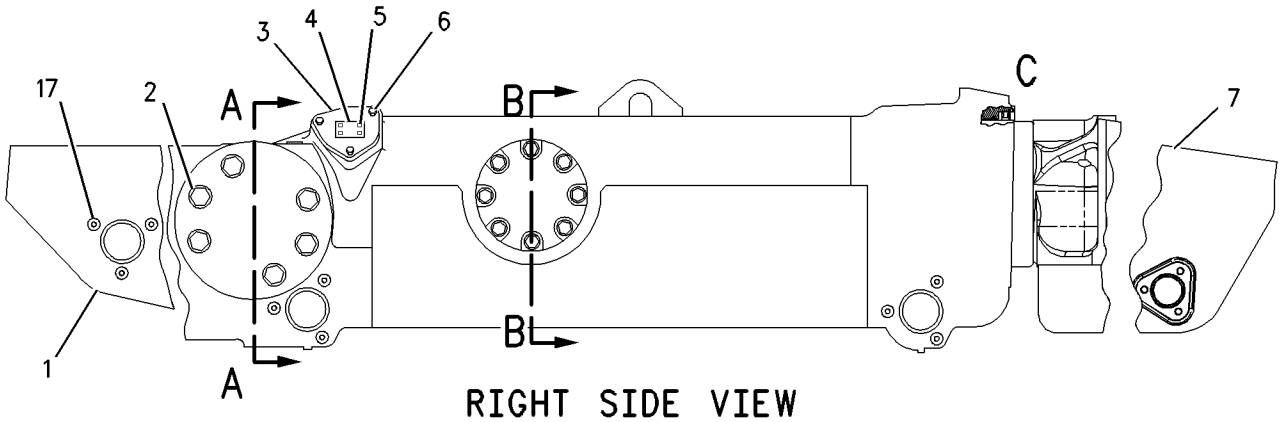

RIGHT SIDE VIEW

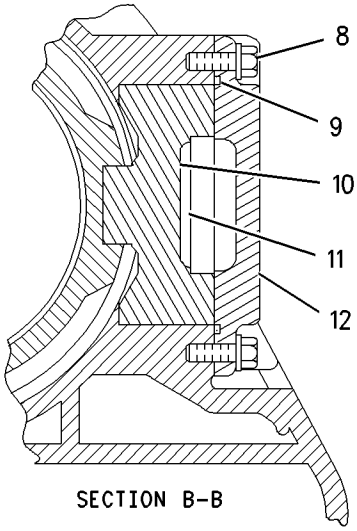

SECTION B-B

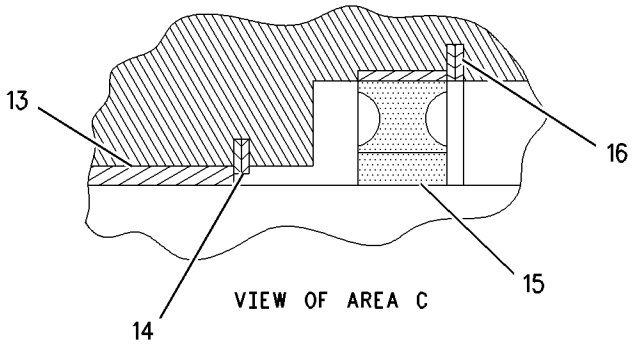

VIEW OF AREA C

REFER TO ALL ILLUSTRATIONS OF THIS GROUP FOR AUXILIARY VIEWS

GRAPHIC #1

g00790323

179-2514 **FRAME GP-TELESCOPING RECOIL** *(contd.)* **i01988832**

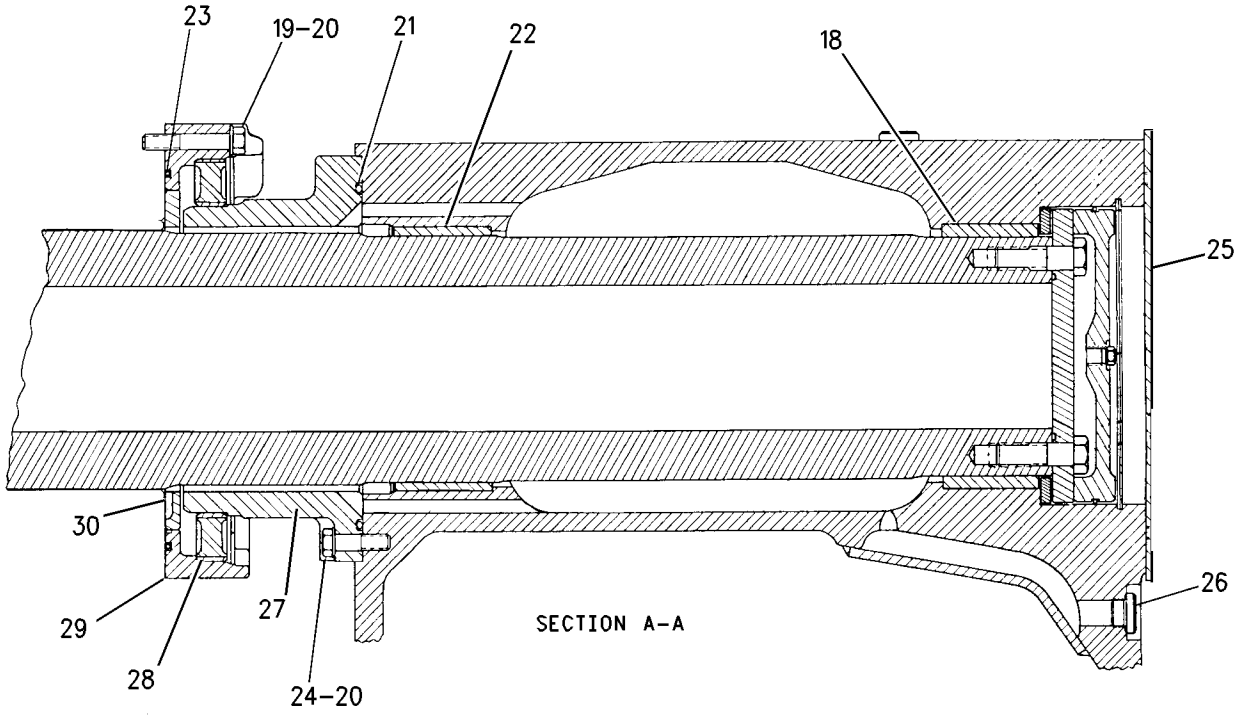

GRAPHIC #2 **<END>** g00790342

179-2515 FRAME GP-TELESCOPING RECOIL—LH

S/N: 7PZ1-UP

PART OF 179-2519 UNDERCARRIAGE AR

TYPE 1

SMCS-4151 **i01988829**

NOTE	REF NO	GRAPHIC REF	PART NUMBER	QTY	PART NAME 1 2 3 4 5 6 (PRODUCT LEVEL)	SEE PAGE
	1	1	**138-0577**	1	FRAME AS-ROLLER (REAR)(LH)	
	2	1	**7X-0399**	6	BOLT (1-8X1.25 IN)	
		1	**8T-5361**	6	WASHER-HARD (28X49X5MM THK)	
	3	1	**7T-8330**	1	COVER	
		1	**3S-1223**	1	SEAL-O-RING	
	4	1	**5P-9891**	1	PLATE-WARNING (HIGH PRESSURE CYLINDER)	
	5	1	**4B-4158**	4	SCREW-DRIVE (3/16X0.25 IN)	
	6	1	**8C-4436**	3	BOLT (1/2-13X1.375 IN)	
		1	**8T-4223**	3	WASHER-HARD (13.5X25.5X3MM THK)	
	7	1	**176-2551**	1	FRAME AS-FRONT	
		1	**4B-4158**	4	SCREW-DRIVE (3/16X0.25 IN)	
		1	**6V-0709**	1	PLATE-WARNING (RECOIL SPRING)	
		1	**7X-0345**	5	BOLT (5/8-11X1.75 IN)	
		1	**8T-4122**	5	WASHER-HARD (17X32X3.5MM THK)	
		1	**138-9907**	1	SLEEVE-WEAR	
		1	**162-8438**	1	COVER	
	8	1	**8T-9399**	16	BOLT (3/4-10X2.25 IN)	
		1	**8T-4994**	16	WASHER-HARD (20X36.5X3.5MM THK)	
	9	1	**1J-2890**	2	SEAL-O-RING	
	10	1	**7T-1331**	2	GUIDE AS	
	11	1	**6V-9480**	2	FILM-WARNING (GUIDE)	
	12	1	**8P-4693**	2	COVER	
	13	1	**3T-7494**	1	BEARING	
	14	1	**7X-2627**	1	RING-RETAINING	
	15	1	**9X-4590**	1	SEAL AS	
	16	1	**7X-2628**	1	RING-RETAINING	
	17	1	**9G-7516**	24	PLUG	
	18	2	**6T-4177**	1	BEARING-SLEEVE	
	19	2	**7X-0351**	9	BOLT (5/8-11X3.75 IN)	
	20	2	**8T-4122**	18	WASHER-HARD (17X32X3.5MM THK)	
	21	2	**5P-9217**	1	SEAL-O-RING	
	22	2	**6T-4176**	1	BEARING-SLEEVE	
	23	2	**8F-9960**	1	SEAL-O-RING	
	24	2	**7X-0347**	9	BOLT (5/8-11X2.25 IN)	
	25	2	**6Y-6583**	1	COVER	
	26	2	**4T-2069**	3	PLUG-DRAIN (TELESCOPING RECOIL FRAME)	
		2	**2H-3932**	3	SEAL-O-RING	

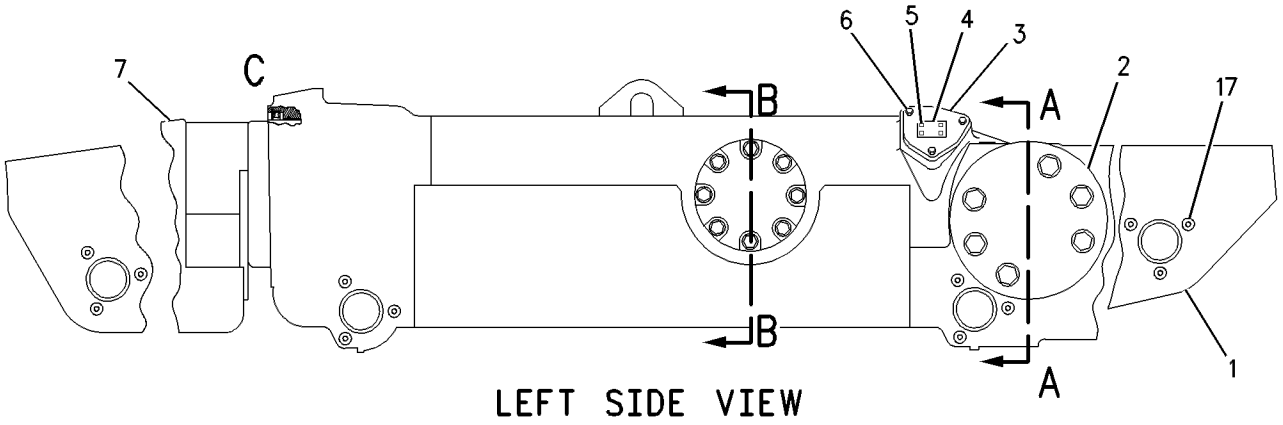

LEFT SIDE VIEW

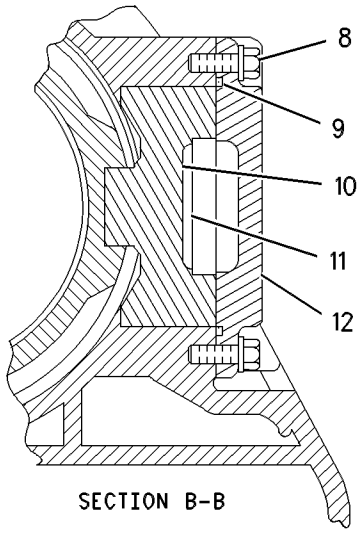

SECTION B-B

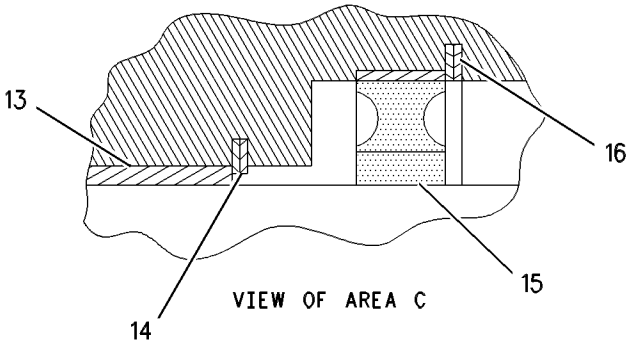

VIEW OF AREA C

REFER TO ALL ILLUSTRATIONS OF
THIS GROUP FOR AUXILIARY VIEWS

GRAPHIC #1 g00655590

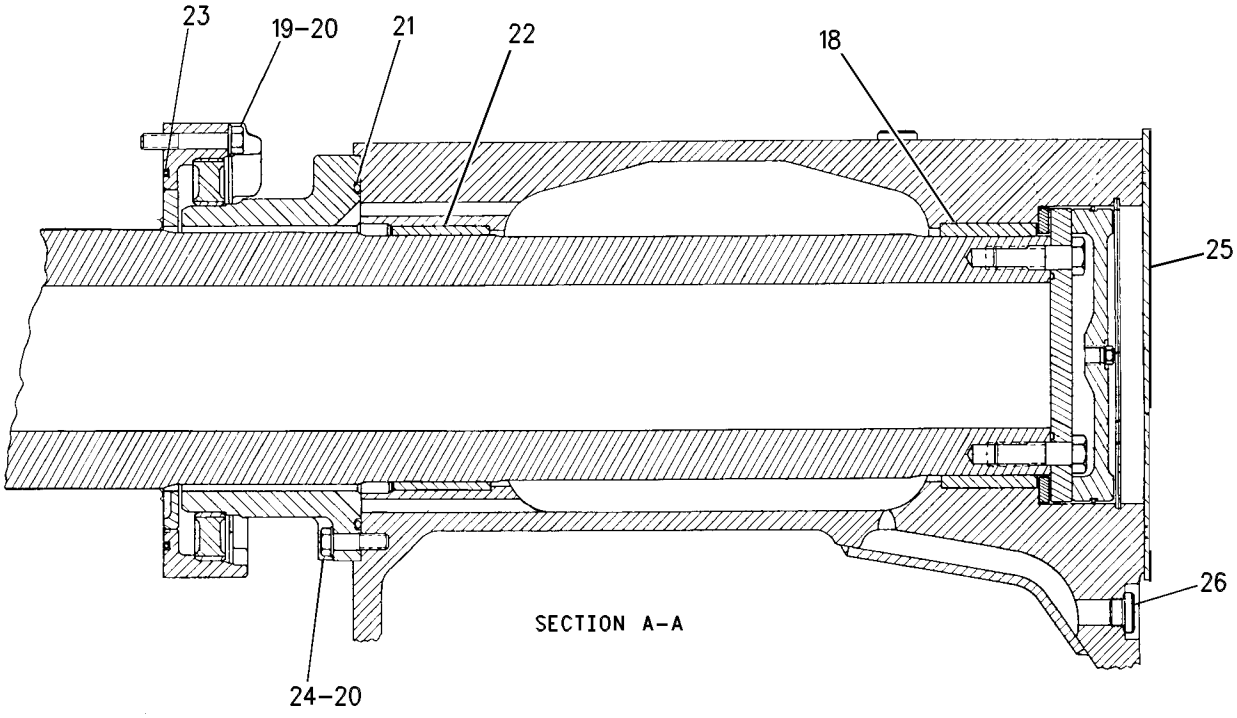

GRAPHIC #2 **<END>** g00655668

179-2515 FRAME GP-TELESCOPING RECOIL–LH

S/N: 7PZ1-UP

PART OF 179-2519 UNDERCARRIAGE AR

TYPE 2

SMCS-4151 **i01988830**

NOTE	REF NO	GRAPHIC REF	PART NUMBER	QTY	PART NAME 1 2 3 4 5 6 (PRODUCT LEVEL)	SEE PAGE
	1	1	**138-0577**	1	FRAME AS-ROLLER (REAR)(LH)	
	2	1	**7X-0399**	6	BOLT (1-8X1.25 IN)	
		1	**8T-5361**	6	WASHER-HARD (28X49X5MM THK)	
	3	1	**7T-8330**	1	COVER	
		1	**3S-1223**	1	SEAL-O-RING	
	4	1	**5P-9891**	1	PLATE-WARNING (HIGH PRESSURE CYLINDER)	
	5	1	**4B-4158**	4	SCREW-DRIVE (3/16X0.25 IN)	
	6	1	**8C-4436**	3	BOLT (1/2-13X1.375 IN)	
		1	**8T-4223**	3	WASHER-HARD (13.5X25.5X3MM THK)	
C	7	1	**180-3473**	1	FRAME AS-FRONT	
		1	**4B-4158**	4	SCREW-DRIVE (3/16X0.25 IN)	
		1	**6V-0709**	1	PLATE-WARNING (RECOIL SPRING)	
		1	**7X-0345**	5	BOLT (5/8-11X1.75 IN)	
		1	**8T-4122**	5	WASHER-HARD (17X32X3.5MM THK)	
		1	**138-9907**	1	SLEEVE-WEAR	
	8	1	**8T-9399**	16	BOLT (3/4-10X2.25 IN)	
		1	**8T-4994**	16	WASHER-HARD (20X36.5X3.5MM THK)	
	9	1	**1J-2890**	2	SEAL-O-RING	
	10	1	**7T-1331**	2	GUIDE AS	
	11	1	**6V-9480**	2	FILM-WARNING (GUIDE)	
	12	1	**8P-4693**	2	COVER	
	13	1	**3T-7494**	1	BEARING	
	14	1	**7X-2627**	1	RING-RETAINING	
	15	1	**9X-4590**	1	SEAL AS	
	16	1	**7X-2628**	1	RING-RETAINING	
	17	1	**9G-7516**	24	PLUG	
	18	2	**6T-4177**	1	BEARING-SLEEVE	
	19	2	**7X-0351**	9	BOLT (5/8-11X3.75 IN)	
	20	2	**8T-4122**	18	WASHER-HARD (17X32X3.5MM THK)	
	21	2	**5P-9217**	1	SEAL-O-RING	
	22	2	**6T-4176**	1	BEARING-SLEEVE	
	23	2	**8F-9960**	1	SEAL-O-RING	
	24	2	**7X-0347**	9	BOLT (5/8-11X2.25 IN)	
	25	2	**6Y-6583**	1	COVER	
	26	2	**4T-2069**	3	PLUG-DRAIN (TELESCOPING RECOIL FRAME)	
		2	**2H-3932**	3	SEAL-O-RING	
	27	2	**203-2448**	1	RETAINER AS	
	28	2	**8T-1115**	1	SEAL-PIVOT SHAFT	
	29	2	**7T-0192**	1	RETAINER	
	30	2	**7T-3479**	1	PLATE-THRUST	

C-CHANGE FROM PREVIOUS TYPE

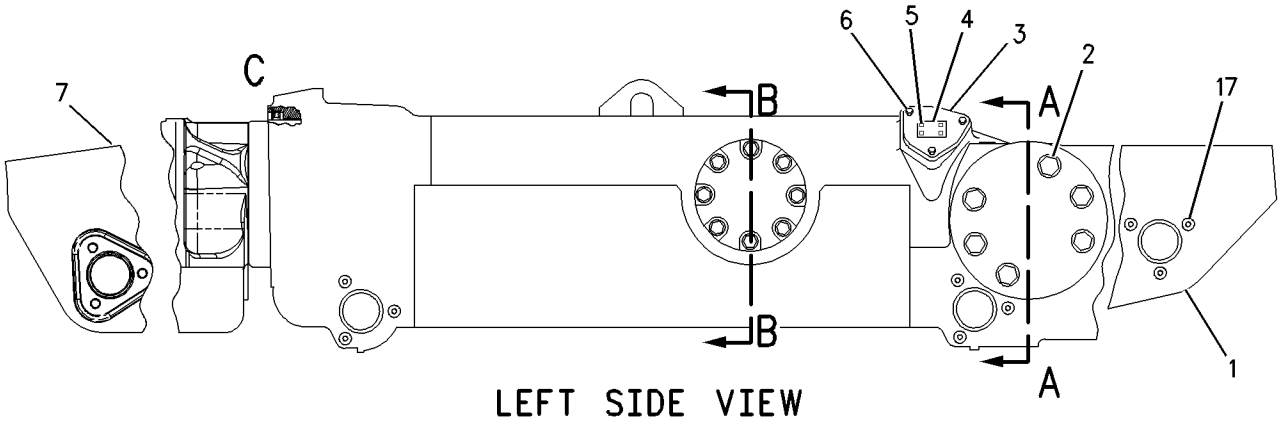

LEFT SIDE VIEW

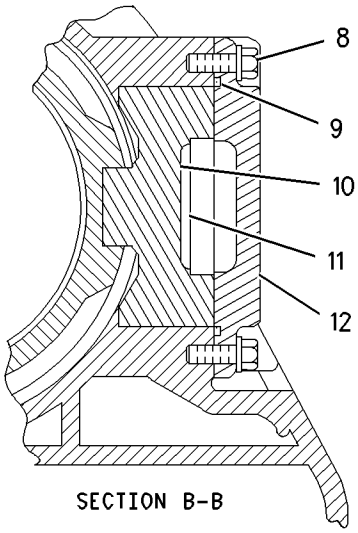

SECTION B-B

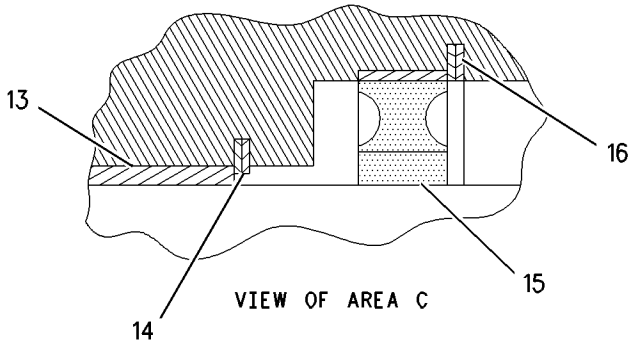

VIEW OF AREA C

REFER TO ALL ILLUSTRATIONS OF
THIS GROUP FOR AUXILIARY VIEWS

GRAPHIC #1 g00790351

179-2515 **FRAME GP-TELESCOPING RECOIL** *(contd.)* **i01988830**

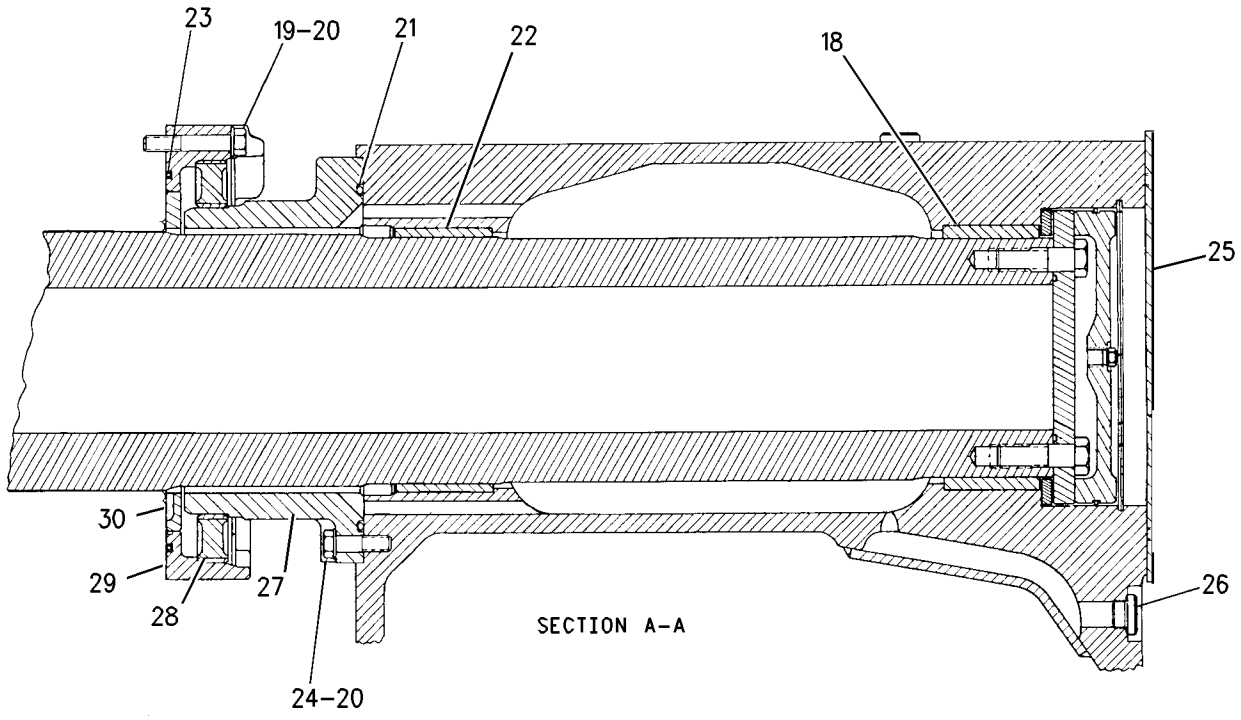

GRAPHIC #2 **<END>** g00790363

156-0313 IDLER GP-TRACK

S/N: 7PZ1-386
PART OF 139-7697, 179-2516, 179-2517 UNDERCARRIAGE AR
FIELD REPLACEMENT ORDER 187-1484—PAGE 579

SMCS-4159 **i01988834**

NOTE	REF NO	GRAPHIC REF	PART NUMBER	QTY	PART NAME 1 2 3 4 5 6 (PRODUCT LEVEL)	SEE PAGE
	1	1	**2K-2939**	2	SEAL-O-RING	
	2	1	**3K-0715**	2	SEAL-O-RING	
	3	1	**6Y-0473**	1	PLUG-CLEAR	
		1	**9G-1368**	1	STOP-RUBBER	
	4	1	**148-3730**	1	IDLER & BEARING AS	
		1	**148-3540**	2	BEARING-SLEEVE	
	5	1	**155-9879**	2	SEAL GP-DUO-CONE	
					(EACH INCLUDES)	
		1	**160-6631**	2	RING-TORIC	
	6	1	**156-4653**	2	COLLAR-SEAL	
	7	1	**156-5351**	1	SHAFT-TRACK IDLER	
	8	1	**156-8357**	2	RETAINER AS	
					(EACH INCLUDES)	
		1	**2A-3348**	4	DOWEL	
		1	**8P-4782**	1	WASHER-THRUST	
	9	1	**5P-8247**	24	WASHER-HARD (17X32X3.5MM THK)	
	10	1	**7B-1115**	24	BOLT (5/8-11X1.625 IN)	

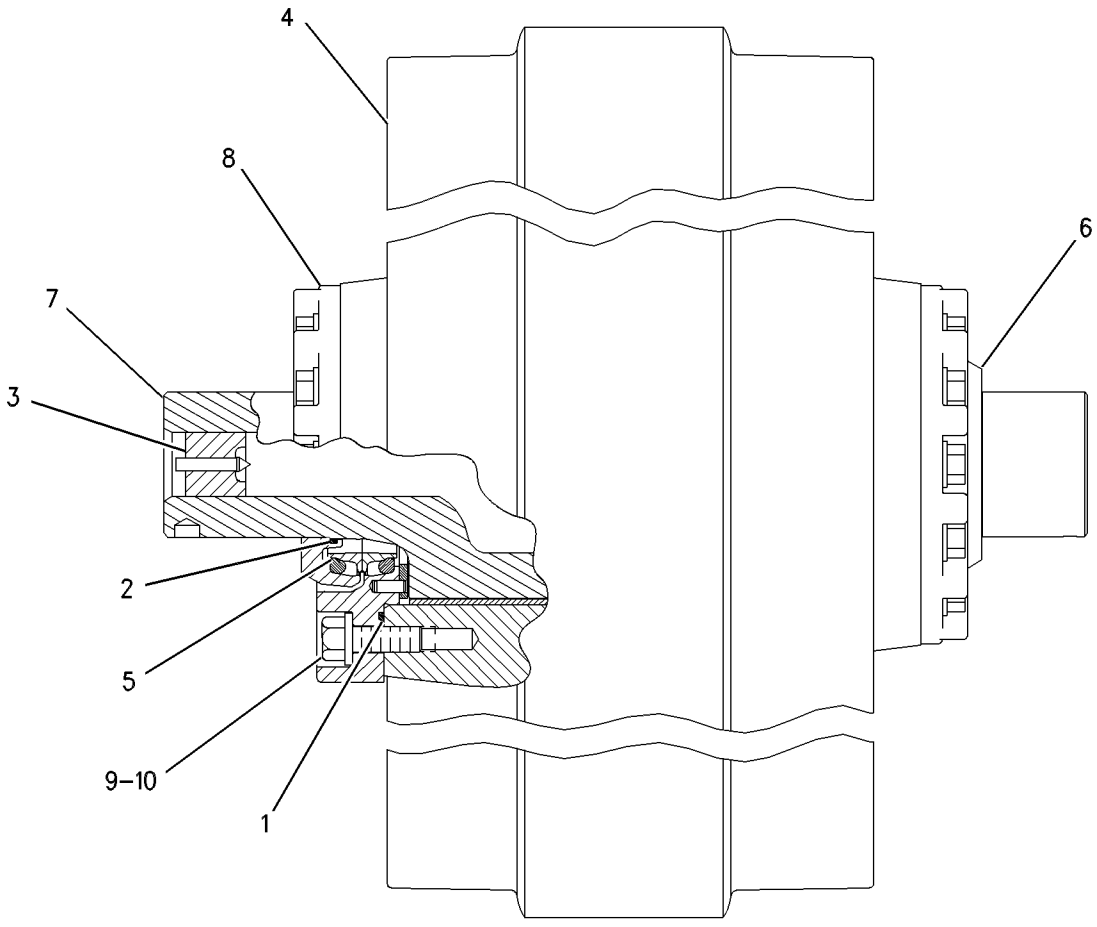

GRAPHIC #1 **<END>** g00519785

187-1484 IDLER GP-TRACK

S/N: 7PZ387-UP

PART OF 139-7697, 179-2516, 179-2517 UNDERCARRIAGE AR

FIELD REPLACEMENT FOR 156-0313—PAGE 578

SMCS-4159 **i01444559**

NOTE	REF NO	GRAPHIC REF	PART NUMBER	QTY	PART NAME 1 2 3 4 5 6 (PRODUCT LEVEL)	SEE PAGE
	1	1	**2K-2939**	2	SEAL-O-RING	
	2	1	**3K-0715**	2	SEAL-O-RING	
	3	1	**6Y-0473**	1	PLUG-CLEAR	
		1	**9G-1368**	1	STOP-RUBBER	
	4	1	**155-9879**	2	SEAL GP-DUO-CONE	
					(EACH INCLUDES)	
		1	**160-6631**	2	RING-TORIC	
	5	1	**156-4653**	2	COLLAR-SEAL	
	6	1	**156-5351**	1	SHAFT-TRACK IDLER	
	7	1	**187-1011**	1	IDLER & BEARING AS	
		1	**148-3540**	2	BEARING-SLEEVE	
	8	1	**188-1452**	2	RETAINER AS	
					(EACH INCLUDES)	
		1	**2A-3348**	4	DOWEL	
		1	**8P-4782**	1	WASHER-THRUST	
	9	1	**7B-1115**	24	BOLT (5/8-11X1.625 IN)	
	10	1	**5P-8247**	24	WASHER-HARD (17X32X3.5MM THK)	

QUANTITIES SHOWN ARE THOSE REQUIRED FOR BOTH LH AND RH SIDES

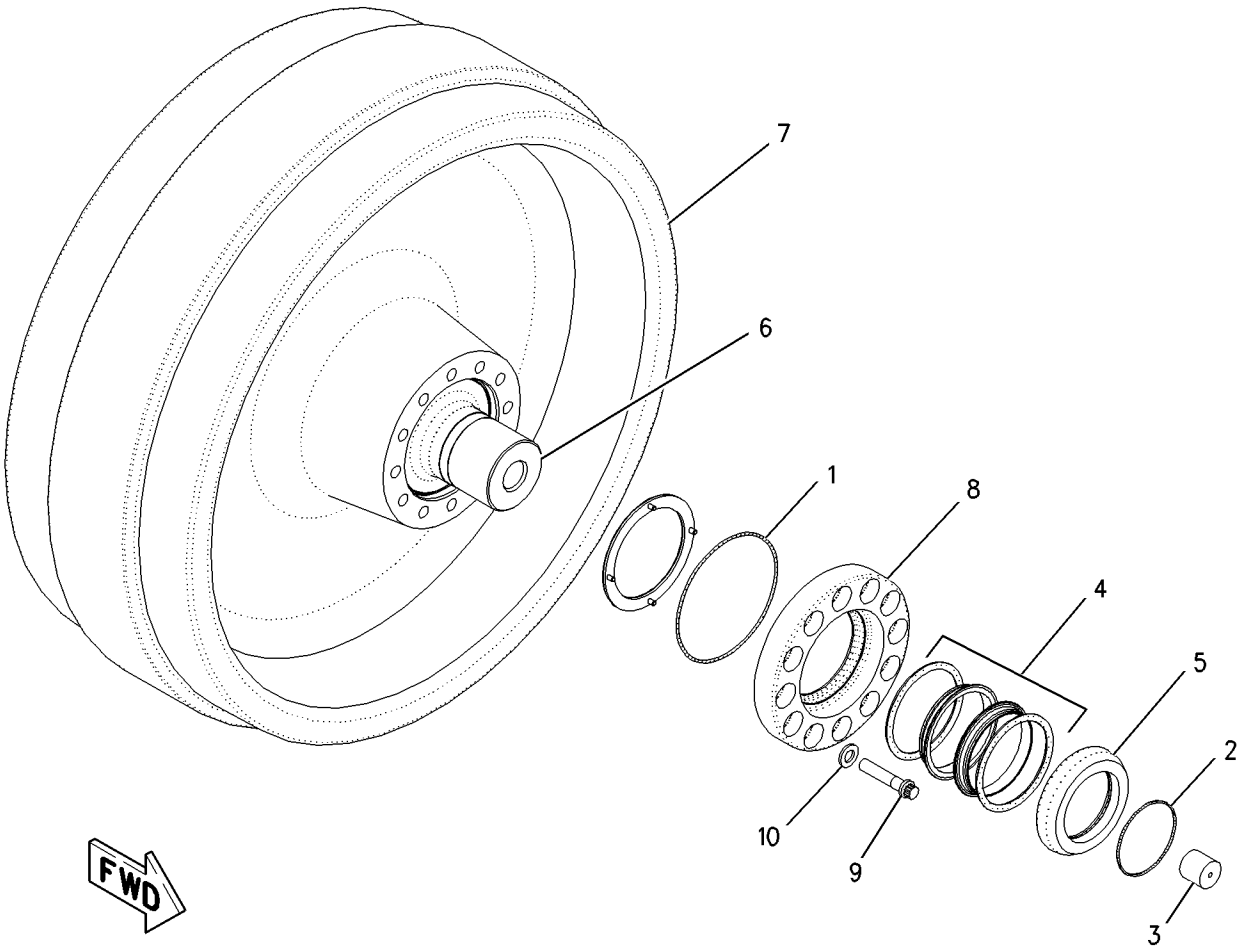

GRAPHIC #1 **<END>** g00798194

161-9854 LINK AS-TRACK

S/N: 7PZ1-UP
SEALED & LUBRICATED, POSITIVE PIN RETENTION
PART OF 143-1278, 143-1279, 143-1280 TRACK GP
ALSO AN ATTACHMENT

SMCS-4169, 4171 **i01829244**

NOTE	REF NO	GRAPHIC REF	PART NUMBER	QTY	PART NAME 1 2 3 4 5 6 (PRODUCT LEVEL)	SEE PAGE
	1	1	**161-9853**	41	BUSHING-TRACK	
	2	1	**6T-8053**	1	LINK-MASTER-RH (BUSHING END)	
	3	1	**6T-8049**	40	LINK-TRACK (RH)	
	4	1	**161-7546**	82	SEAL AS	
	5	1	**9W-9625**	82	RING-THRUST	
	6	1	**6T-8054**	1	LINK-MASTER-LH (BUSHING END)	
	7	1	**7G-4332**	41	STOPPER	
		1	**6Y-0473**	41	PLUG-CLEAR	
	8	1	**6Y-0472**	82	RING-RETAINING	
	9	1	**126-5343**	41	PIN-TRACK	
	10	1	**6T-8052**	1	LINK-MASTER-LH (PIN END)	
	11	1	**6T-8050**	40	LINK-TRACK (LH)	
	12	1	**6T-8051**	1	LINK-MASTER-RH (PIN END)	
	13	1	**6T-8520**	2	BOLT-MASTER TRACK (1 3/8-12X7.2 IN)	
	14	1	**6T-8521**	2	BOLT-MASTER TRACK (1 3/8-12X6.0 IN)	

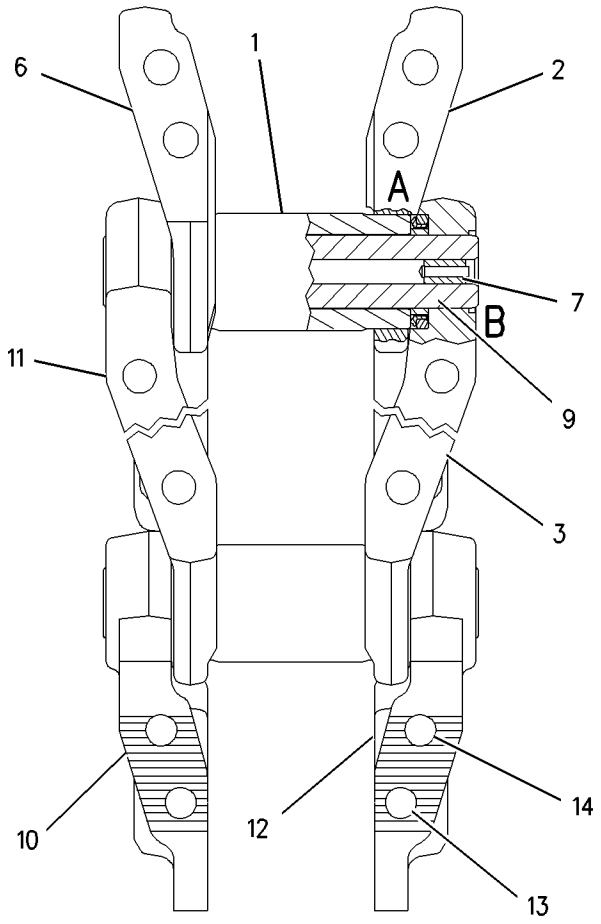

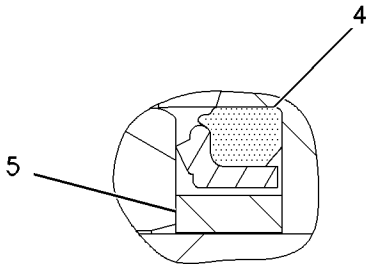

VIEW OF AREA A

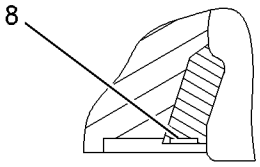

VIEW OF AREA B

GRAPHIC #1 **<END>** g00929353

UNDERCARRIAGE

183-9331 LINK AS-TRACK

S/N: 7PZ1-508
SEALED & LUBRICATED, POSITIVE PIN RETENTION
PART OF 143-1278, 143-1279, 143-1280 TRACK GP
ALSO AN ATTACHMENT

SMCS-4169, 4171 **i01829259**

NOTE	REF NO	GRAPHIC REF	PART NUMBER	QTY	PART NAME 1 2 3 4 5 6 (PRODUCT LEVEL)	SEE PAGE
	1	1	**183-9330**	41	BUSHING-TRACK	
	2	1	**6T-8053**	1	LINK-MASTER-RH (BUSHING END)	
	3	1	**6T-8049**	40	LINK-TRACK (RH)	
	4	1	**161-7546**	82	SEAL AS	
	5	1	**9W-9625**	82	RING-THRUST	
	6	1	**6T-8054**	1	LINK-MASTER-LH (BUSHING END)	
	7	1	**7G-4332**	41	STOPPER	
		1	**6Y-0473**	41	PLUG-CLEAR	
	8	1	**6Y-0472**	82	RING-RETAINING	
	9	1	**126-5343**	41	PIN-TRACK	
	10	1	**6T-8052**	1	LINK-MASTER-LH (PIN END)	
	11	1	**6T-8050**	40	LINK-TRACK (LH)	
	12	1	**6T-8051**	1	LINK-MASTER-RH (PIN END)	
	13	1	**6T-8520**	2	BOLT-MASTER TRACK (1 3/8-12X7.2 IN)	
	14	1	**6T-8521**	2	BOLT-MASTER TRACK (1 3/8-12X6.0 IN)	

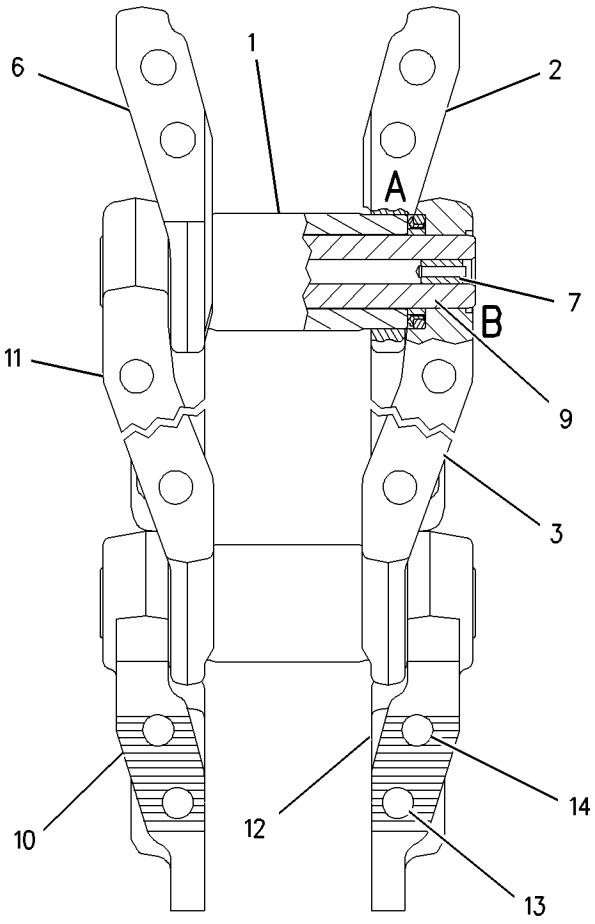

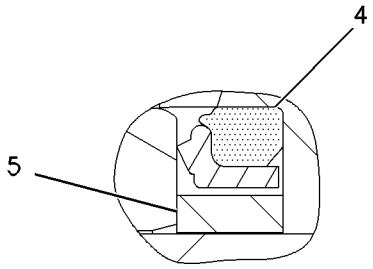

VIEW OF AREA A

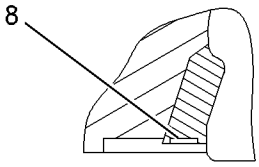

VIEW OF AREA B

GRAPHIC #1 **<END>** g00929353

207-6162 LINK AS-TRACK

S/N: 7PZ509-UP
SEALED & LUBRICATED, POSITIVE PIN RETENTION
PART OF 143-1278, 143-1279, 143-1280 TRACK GP
ALSO AN ATTACHMENT

SMCS-4169, 4171 **i01660310**

NOTE	REF NO	GRAPHIC REF	PART NUMBER	QTY	PART NAME 1 2 3 4 5 6 (PRODUCT LEVEL)	SEE PAGE
	1	1	**202-0908**	41	BUSHING-TRACK	
	2	1	**6T-8053**	1	LINK-MASTER-RH (BUSHING END)	
	3	1	**6T-8049**	40	LINK-TRACK (RH)	
	4	1	**161-7546**	82	SEAL AS	
	5	1	**9W-9625**	82	RING-THRUST	
	6	1	**6T-8054**	1	LINK-MASTER-LH (BUSHING END)	
	7	1	**7G-4332**	41	STOPPER	
		1	**6Y-0473**	41	PLUG-CLEAR	
	8	1	**6Y-0472**	82	RING-RETAINING	
	9	1	**126-5343**	41	PIN-TRACK	
	10	1	**6T-8052**	1	LINK-MASTER-LH (PIN END)	
	11	1	**6T-8050**	40	LINK-TRACK (LH)	
	12	1	**6T-8051**	1	LINK-MASTER-RH (PIN END)	
	13	1	**6T-8520**	2	BOLT-MASTER TRACK (1 3/8-12X7.2 IN)	
	14	1	**6T-8521**	2	BOLT-MASTER TRACK (1 3/8-12X6.0 IN)	

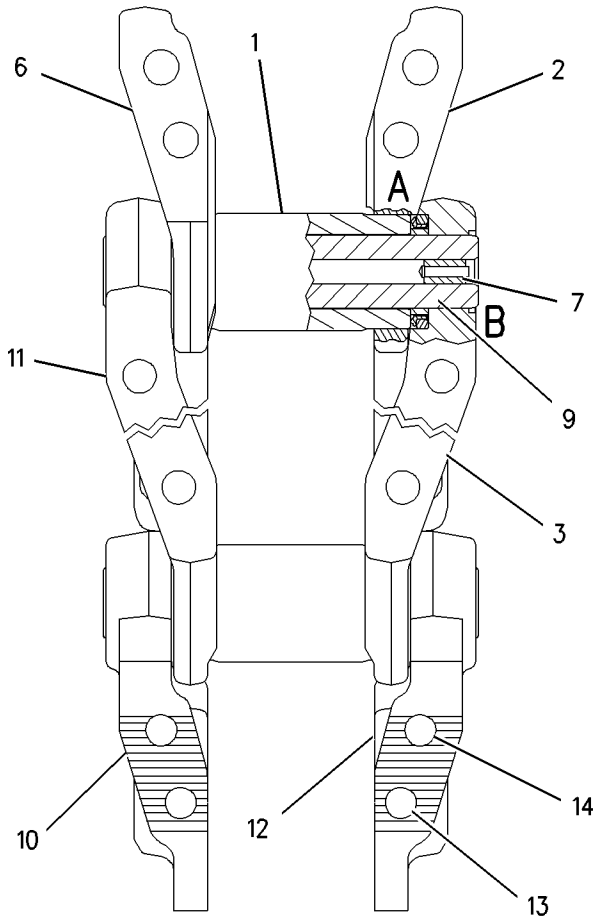

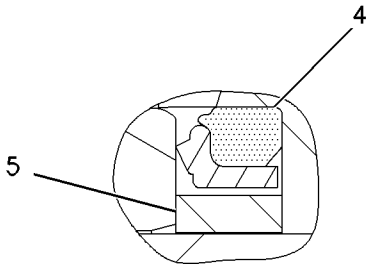

VIEW OF AREA A

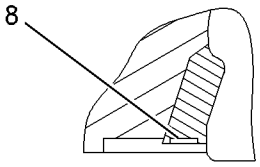

VIEW OF AREA B

GRAPHIC #1 **<END>** g00929353

215-7494 LINK AS-TRACK

S/N: 7PZ675-UP
SEALED & LUBRICATED, POSITIVE PIN RETENTION, SLEEVE BEARING
PART OF 215-7495, 215-7496, 215-7497 TRACK GP
ALSO AN ATTACHMENT

SMCS-4169, 4171 **i01829163**

NOTE	REF NO	GRAPHIC REF	PART NUMBER	QTY	PART NAME 1 2 3 4 5 6 (PRODUCT LEVEL)	SEE PAGE
	1	1	**215-7493**	41	BUSHING-TRACK	
	2	1	**6T-8053**	1	LINK-MASTER-RH (BUSHING END)	
	3	1	**6T-8049**	40	LINK-TRACK (RH)	
	4	1	**161-7546**	82	SEAL AS	
	5	1	**9W-9625**	82	RING-THRUST	
	6	1	**6T-8054**	1	LINK-MASTER-LH (BUSHING END)	
	7	1	**7G-4332**	41	STOPPER	
		1	**6Y-0473**	41	PLUG-CLEAR	
	8	1	**6Y-0472**	82	RING-RETAINING	
	9	1	**126-5343**	41	PIN-TRACK	
	10	1	**6T-8052**	1	LINK-MASTER-LH (PIN END)	
	11	1	**6T-8050**	40	LINK-TRACK (LH)	
	12	1	**6T-8051**	1	LINK-MASTER-RH (PIN END)	
	13	1	**215-7492**	82	BEARING-SLEEVE	
	14	1	**6T-8520**	2	BOLT-MASTER TRACK (1 3/8-12X7.2 IN)	
	15	1	**6T-8521**	2	BOLT-MASTER TRACK (1 3/8-12X6.0 IN)	

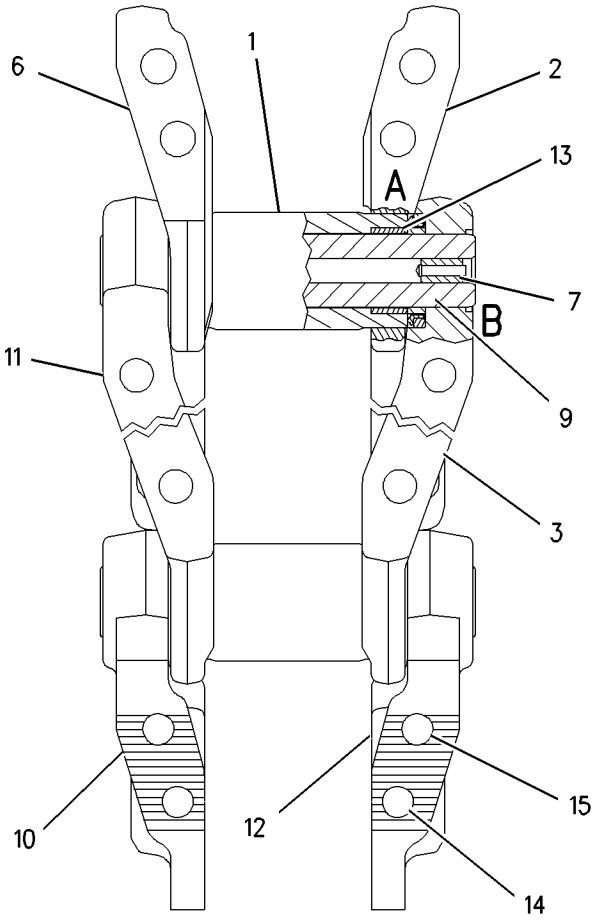

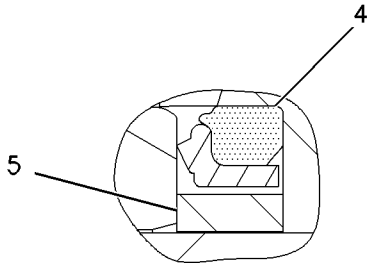

VIEW OF AREA A

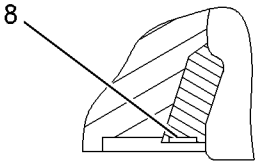

VIEW OF AREA B

GRAPHIC #1 **<END>** g00929384

215-7678 LINK AS-TRACK

S/N: 7PZ1-UP
SEALED & LUBRICATED, POSITIVE PIN RETENTION, TALL LINK, SLEEVE BEARING
PART OF 216-0891 TRACK GP
AN ATTACHMENT

SMCS-4169, 4171 **i01974377**

NOTE	REF NO	GRAPHIC REF	PART NUMBER	QTY	PART NAME 1 2 3 4 5 6 (PRODUCT LEVEL)	SEE PAGE
	1	1	**215-7493**	41	BUSHING-TRACK	
	2	1	**231-4607**	1	LINK-TRACK MASTER (BUSHING END, RH)	
	3	1	**200-6325**	40	LINK-TRACK (RH)	
	4	1	**161-7546**	82	SEAL AS	
	5	1	**9W-9625**	82	RING-THRUST	
	6	1	**231-4608**	1	LINK-TRACK MASTER (BUSHING END, LH)	
	7	1	*6Y-0454*	41	STOP AS	
					(EACH INCLUDES)	
		1	**7G-4332**	1	STOPPER	
		1	**6Y-0473**	1	PLUG-CLEAR	
	8	1	**6Y-0472**	82	RING-RETAINING	
	9	1	**126-5343**	41	PIN-TRACK	
	10	1	**231-4606**	1	LINK-TRACK MASTER (PIN END, LH)	
	11	1	**200-6326**	40	LINK-TRACK (LH)	
	12	1	**231-4605**	1	LINK-TRACK MASTER (PIN END, RH)	
	13	1	**215-7492**	82	BEARING-SLEEVE	

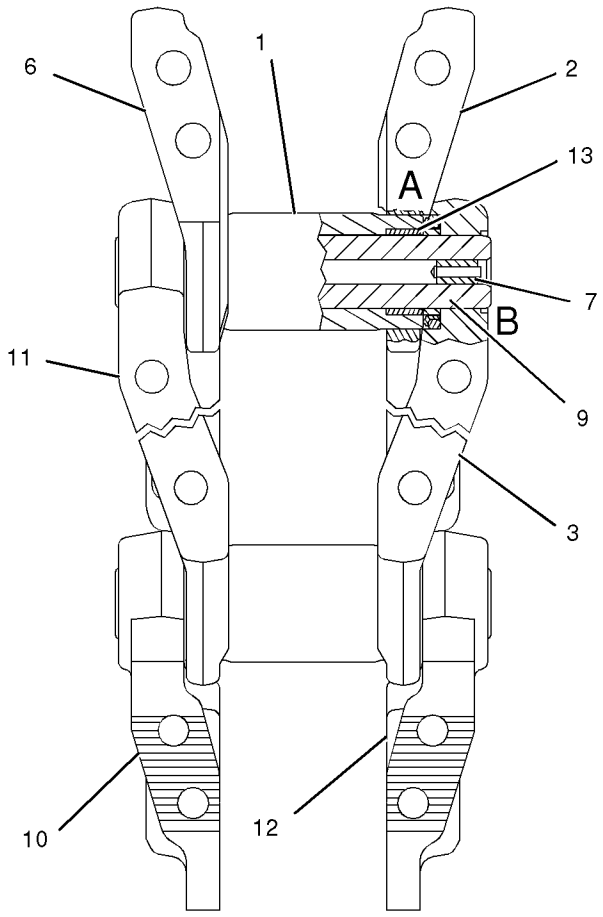

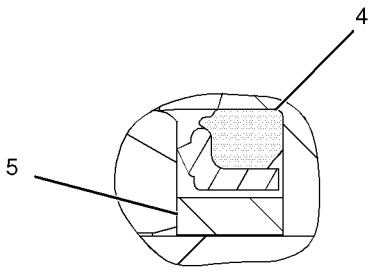

VIEW OF AREA A

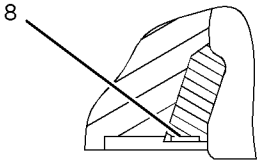

VIEW OF AREA B

GRAPHIC #1 **<END>** g01026547

225-3772 LINK AS-TRACK

S/N: 7PZ1-UP

SEALED AND LUBRICATED, POSITIVE PIN RETENTION, SLEAVE BEARING, STAINLESS STEEL

FIELD INSTALLATION

SMCS-4169, 4171 **i01980245**

NOTE	REF NO	GRAPHIC REF	PART NUMBER	QTY	PART NAME 1 2 3 4 5 6 (PRODUCT LEVEL)	SEE PAGE
	1	1	**215-7493**	41	BUSHING-TRACK	
	2	1	**229-3527**	1	LINK-TRACK MASTER (BUSHING END, RH)	
	3	1	**120-8999**	40	LINK-TRACK (RH)	
	4	1	**161-7546**	82	SEAL AS	
	5	1	**9W-9625**	82	RING-THRUST	
	6	1	**229-3528**	1	LINK-TRACK MASTER (BUSHING END, LH)	
	7	1	*6Y-0454*	41	STOP AS	
		1	**6Y-0473**	1	PLUG-CLEAR	
		1	**7G-4332**	1	STOPPER	
	8	1	**6Y-0472**	82	RING-RETAINING	
	9	1	**126-5343**	41	PIN-TRACK	
	10	1	**229-3526**	1	LINK-TRACK MASTER (PIN END, LH)	
	11	1	**120-9000**	40	LINK-TRACK (LH)	
	12	1	**229-3525**	1	LINK-TRACK MASTER (PIN END, RH)	
	13	1	**215-7492**	82	BEARING-SLEEVE	

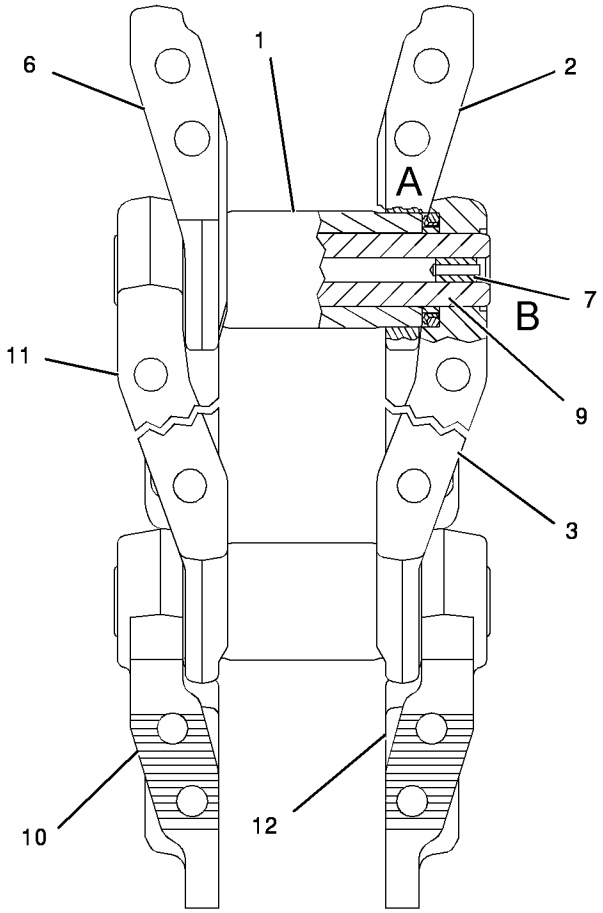

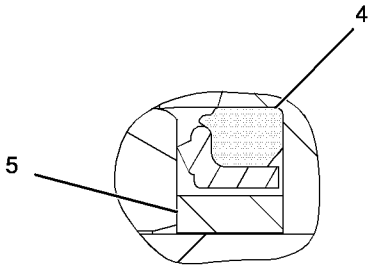

VIEW OF AREA A

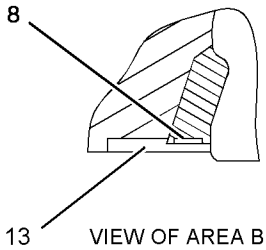

VIEW OF AREA B

GRAPHIC #1 **<END>** g01026743

UNDERCARRIAGE

210-4729 LUBRICATION GP-EQUALIZER BAR

S/N: 7PZ564-UP

PART OF 155-5552 CHASSIS AR

SMCS-7206 **i01964185**

NOTE	REF NO	GRAPHIC REF	PART NUMBER	QTY	PART NAME 1 2 3 4 5 6 (PRODUCT LEVEL)	SEE PAGE
	1	1	**2V-9923**	4	SPACER (.50X.75X1.06IN THK)	
M	2	1	**5C-9553**	4	BOLT (M6X1X16MM)	
	3	1	**5L-2952**	1	CAP AS-OIL FILLER (LUBRICATION TANK)	
		1	**6L-2609**	1	SEAL-RUBBER	
	4	1	**210-4730**	1	PLATE	
	5	1	**210-4731**	1	PLATE	
I	6	1	**210-4732**	1	HOSE AS	
	7	1	**210-4733**	2	HOSE AS	
I	8	1	**210-4734**	1	HOSE AS	
	9	1	**210-4735**	1	PLATE	
	10	1	**210-8580**	1	TANK AS-LUBRICATION	
		1	**2T-2305**	2	ELBOW	
		1	**6W-5698**	1	GROMMET	
		1	**198-7711**	1	BREATHER (LUBRICATION TANK)	
	11	1	*148-8316*	2	CONNECTOR AS	
					(EACH INCLUDES)	
		1	**6V-8647**	1	CONNECTOR	
		1	**3J-7354**	1	SEAL-O-RING	
		1	**4J-5477**	1	SEAL-O-RING	
	12	1	*148-8326*	2	CONNECTOR GP	
					(EACH INCLUDES)	
		1	**6V-9872**	1	CONNECTOR	
		1	**3J-7354**	1	SEAL-O-RING	
		1	**6V-8397**	1	SEAL-O-RING	
	13	1	*148-8371*	1	ELBOW AS	
		1	**8C-8988**	1	ELBOW	
		1	**6V-8397**	1	SEAL-O-RING	
	14	1	*150-4042*	2	CONNECTOR AS	
					(EACH INCLUDES)	
		1	**6V-9010**	1	CONNECTOR-PORT	
		1	**3J-7354**	1	SEAL-O-RING	
		1	**4J-5477**	1	SEAL-O-RING	
	15	1	**3D-0472**	4	STUD-TAPERLOCK	
	16	1	**4D-7733**	6	CLIP	
	17	1	**4I-9521**	2	BAND-HOSE (L1-RED)	
	18	1	**4I-9525**	2	BAND-HOSE (R1-ORANGE)	
	19	1	**5M-3062**	9	BOLT (3/8-16X0.75 IN)	
	20	1	**6S-5993**	4	CLIP	
	21	1	**6V-8188**	4	NUT (1/2-13 THD)	
	22	1	**6V-8397**	2	SEAL-O-RING	
	23	1	**8T-4223**	4	WASHER-HARD (13.5X25.5X3MM THK)	
	24	1	**8T-4896**	9	WASHER-HARD (10.2X18.5X2.5MM THK)	
	25	1	**9X-8256**	4	WASHER (6.6X12X2MM THK)	

I-REFER TO HYDRAULIC INFORMATION SYSTEM
M-METRIC PART

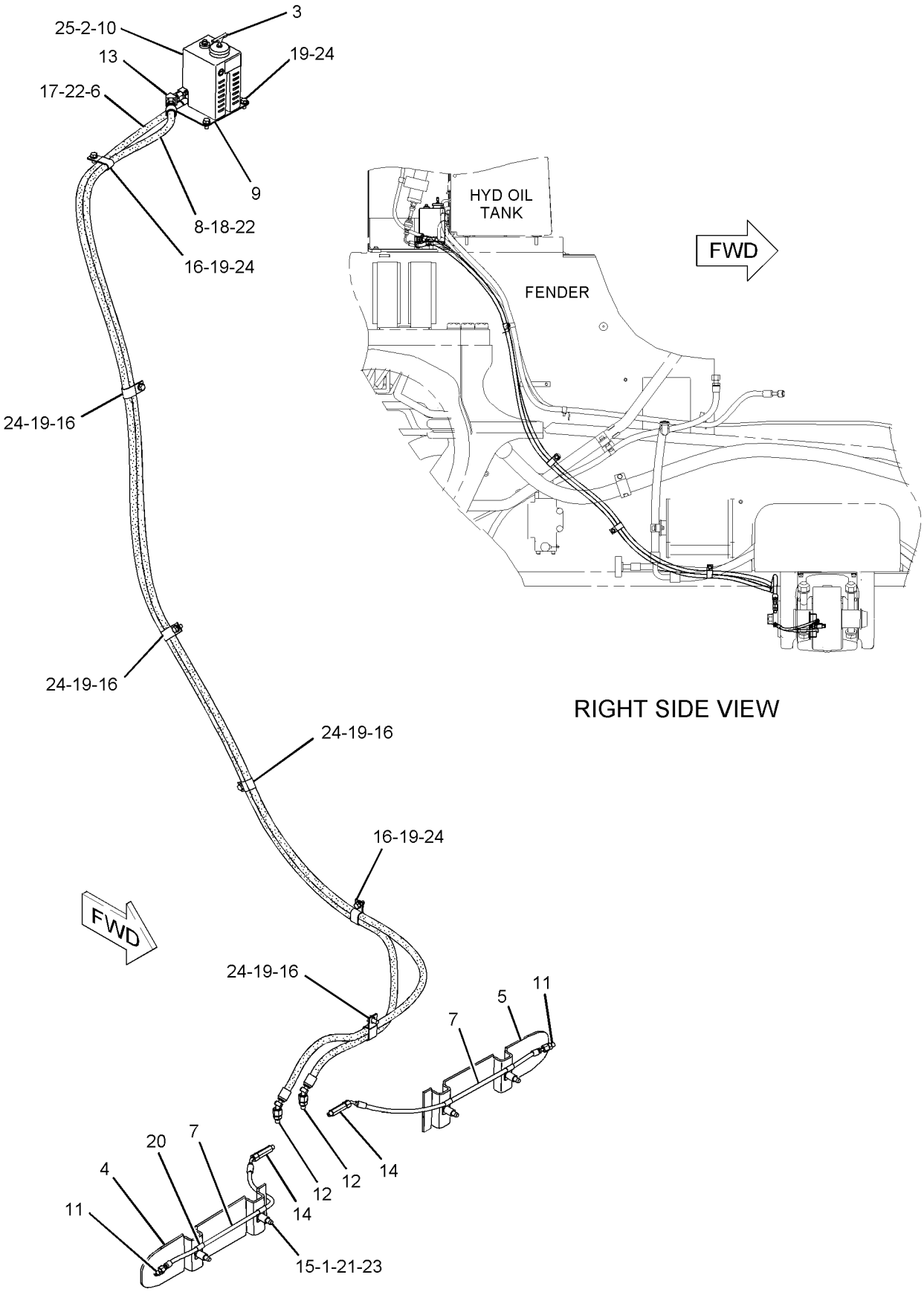

GRAPHIC #1 **<END>** g01026404

9W-1699 LUBRICATION GP-PIVOT SHAFT

S/N: 7PZ1-UP

PART OF 155-5552 CHASSIS AR

SMCS-3286 **i01988837**

NOTE	REF NO	GRAPHIC REF	PART NUMBER	QTY	PART NAME 1 2 3 4 5 6 (PRODUCT LEVEL)	SEE PAGE
	1	1	**6V-9004**	1	ELBOW	
	2	1	**3D-2824**	2	SEAL-O-RING	
	3	1	**6V-9746**	2	SEAL-O-RING	
I	4	1	**9W-1698**	1	HOSE AS	
	5	1	**8T-7529**	2	CLIP	
	6	1	**8T-4223**	4	WASHER-HARD (13.5X25.5X3MM THK)	
	7	1	**5P-2228**	2	BOLT (1/2-13X1 IN)	
	8	1	**6V-9877**	1	ELBOW	
E	9	1	**5P-0739**		HOSE (46CM)	
	10	1	**5P-4566**	1	ELBOW	
B	11	1	**9W-1694**	3	PAD	
	12	1	**9W-1693**	1	SUPPORT AS	
		1	**2R-1694**	2	SPACER	
	13	1	**9U-9409**	1	TANK (PIVOT SHAFT OIL)	
	14	1	**8T-8917**	2	BOLT (1/2-13X1.25 IN)	
	15	1	**9W-1697**	1	PLATE AS	
	16	1	**9M-5732**	1	RIVET-POP	
		1	**4B-4274**	1	WASHER (5.5X13X1.2MM THK)	
	17	1	**4L-6454**	2	BOLT (3/8-16X1 IN)	
		1	**5P-1075**	2	WASHER-HARD (10.2X22.5X3MM THK)	
	18	1	**9W-1695**	1	PAD	
	19	1	**9W-8277**	1	CAP AS-OIL LEVEL (PILOT SHAFT LUBRICATION BOTTLE)	
	20	1	**3K-0360**	1	SEAL-O-RING	
	21	1	**5P-7175**	1	FITTING-STRAIGHT	

B-USE AS REQUIRED
E-ORDER BY THE CENTIMETER
I-REFER TO HYDRAULIC INFORMATION SYSTEM

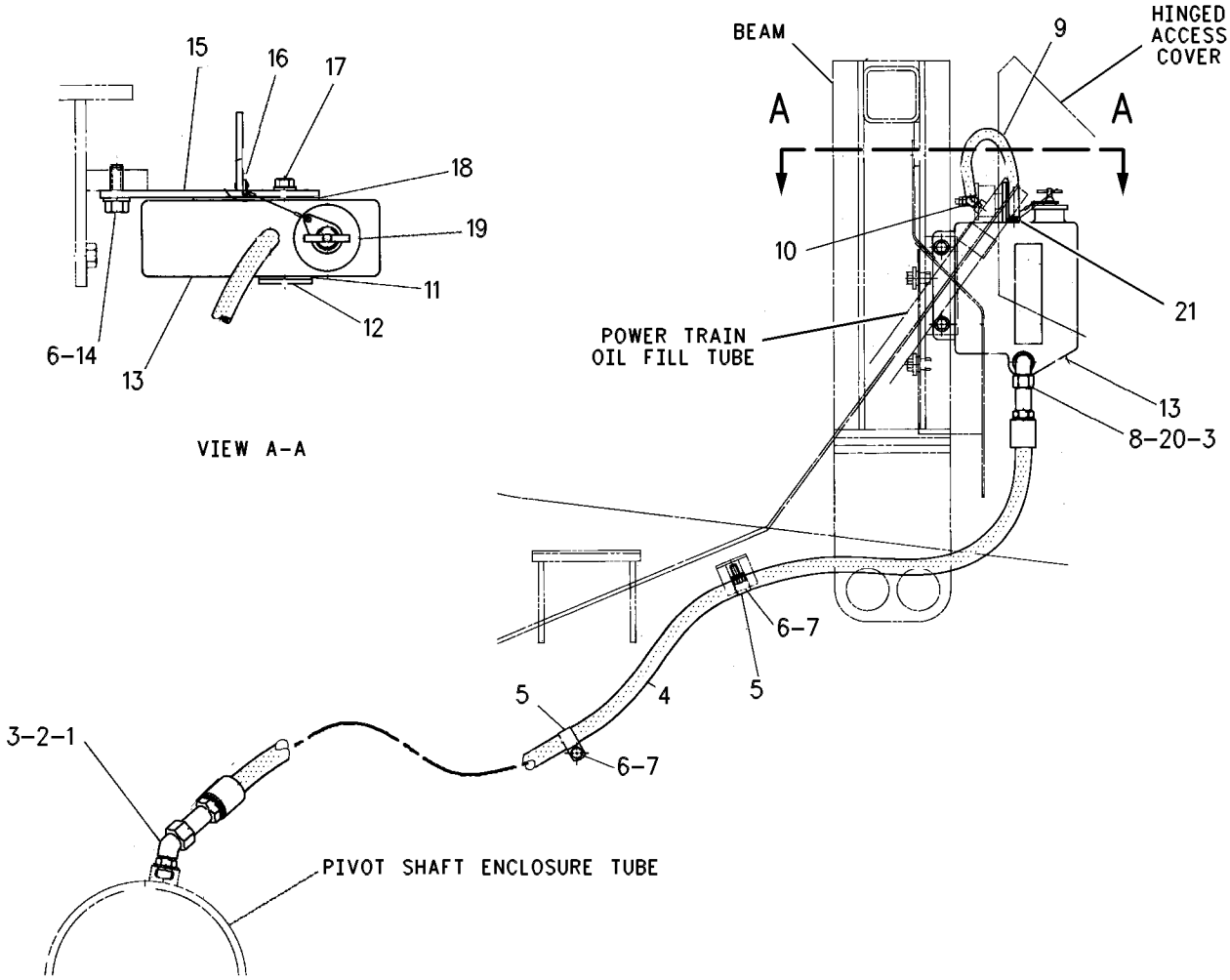

GRAPHIC #1 **<END>** g00461447

9W-9626 RING AS-TRACK LINK

S/N: 7PZ1-UP

TO REPLACE THRUST WASHERS IN LINK AS FIELD INSTALLATION

SMCS-4169 **i01037902**

NOTE	REF NO	GRAPHIC REF	PART NUMBER	QTY	PART NAME 1 2 3 4 5 6 (PRODUCT LEVEL)	SEE PAGE
	1	1	**9W-9625**	1	RING-THRUST	

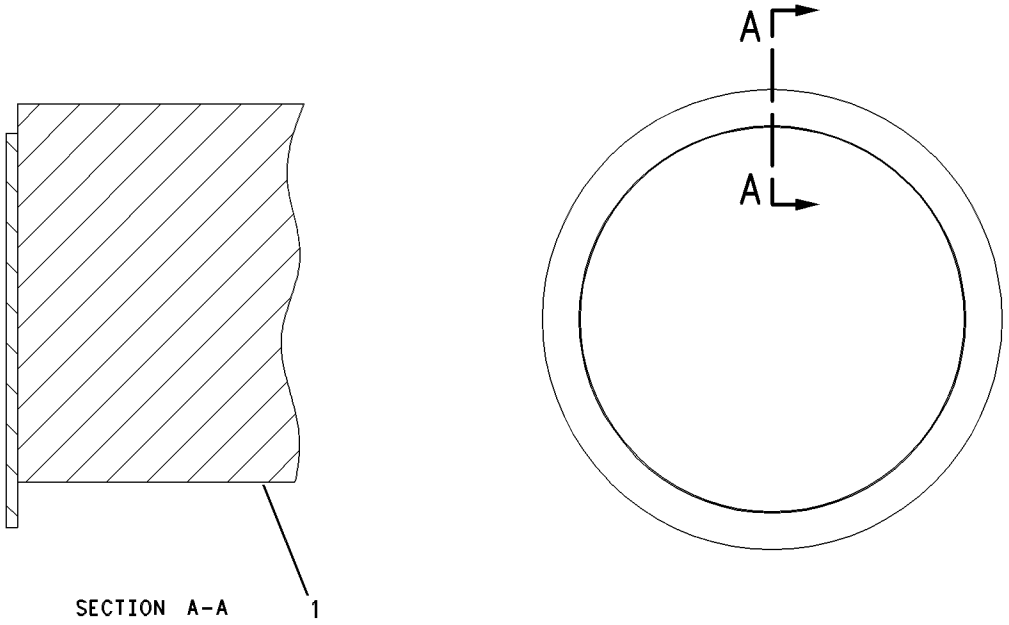

GRAPHIC #1 **<END>** g00533280

139-7720 ROLLER AR-TRACK CARRIER

S/N: 7PZ1-696
FOR USE WITH 139-2003—PAGE 522
AN ATTACHMENT
TYPE 1

SMCS-4154 **i01692400**

NOTE	REF NO	GRAPHIC REF	PART NUMBER	QTY	PART NAME 1 2 3 4 5 6 (PRODUCT LEVEL)	SEE PAGE
CY	1	1	**6I-9717**	2	ROLLER GP-TRACK-SINGLE FLANGE	598
	2	1	**9W-7267**	4	CAP AS-TRACK ROLLER	
					(EACH INCLUDES)	
		1	**1T-0068**	1	PIN-SPRING	
	3	1	**9W-7268**	4	CAP	
	4	1	**175-6804**	1	FRAME AS-ROLLER (RH)	
	5	1	**175-6805**	1	FRAME AS-ROLLER (LH)	
	6	1	**187-3304**	2	PLATE AS	
	7	1	**187-3305**	2	PLATE AS	
	8	1	**7X-0405**	16	BOLT (1-8X2.75 IN)	
	9	1	**7X-0434**	8	BOLT (1-1/4-7X8 IN)	
	10	1	**7X-0533**	8	WASHER-HARD (34X55X6MM THK)	
	11	1	**8T-5361**	16	WASHER-HARD (28X49X5MM THK)	

C-CHANGE FROM PREVIOUS TYPE
Y-SEPARATE ILLUSTRATION

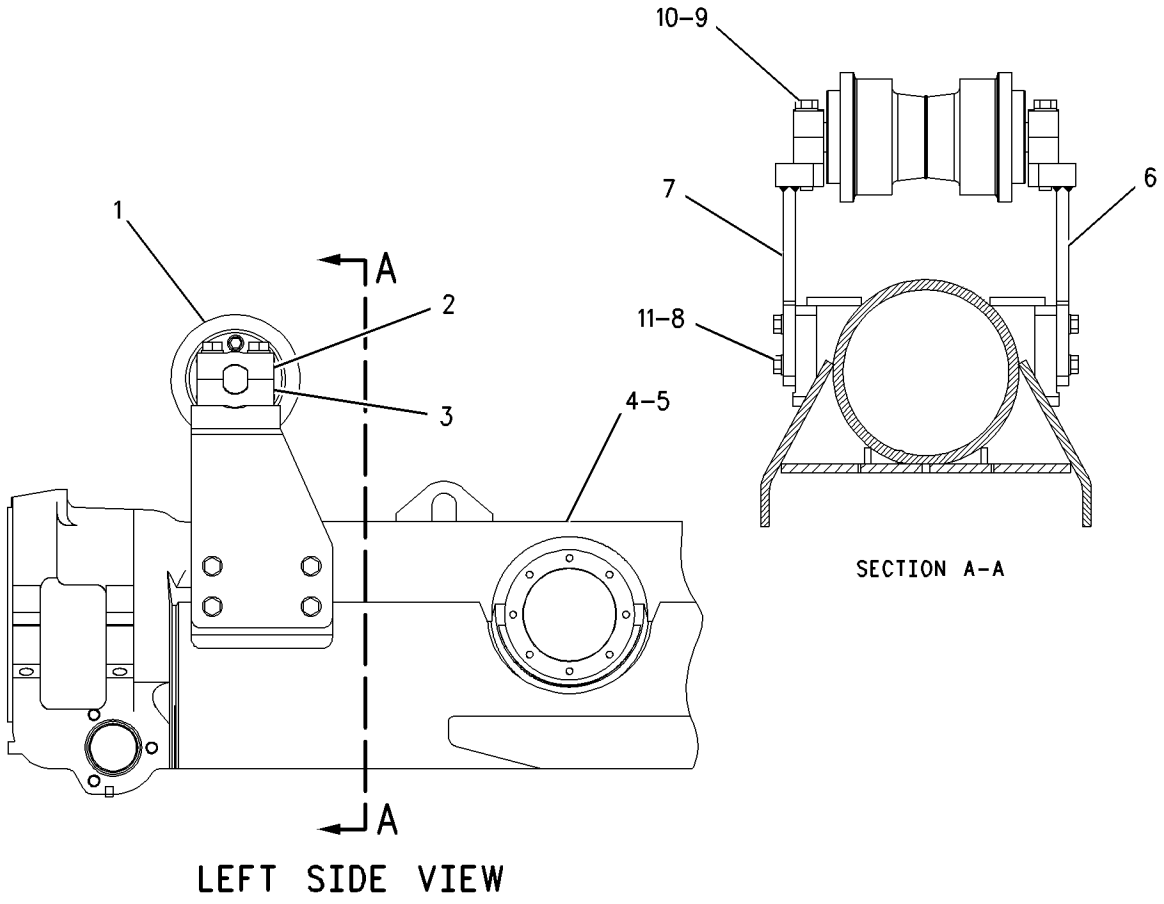

GRAPHIC #1 **<END>** g00673189

139-7720 ROLLER AR-TRACK CARRIER

S/N: 7PZ1-696
FOR USE WITH 139-2003—PAGE 522
AN ATTACHMENT
TYPE 2

SMCS-4154 **i01613005**

NOTE	REF NO	GRAPHIC REF	PART NUMBER	QTY	PART NAME 1 2 3 4 5 6 (PRODUCT LEVEL)	SEE PAGE
CY	1	1	**184-6305**	2	ROLLER GP-TRACK-SINGLE FLANGE	599
	2	1	**9W-7267**	4	CAP AS-TRACK ROLLER	
					(EACH INCLUDES)	
		1	**1T-0068**	1	PIN-SPRING	
	3	1	**9W-7268**	4	CAP	
C	4	1	**139-7721**	1	FRAME AS-RH	
C	5	1	**139-7722**	1	FRAME AS-LH	
	6	1	**203-2444**	2	PLATE AS	
	7	1	**203-2445**	2	PLATE AS	
	8	1	**7X-0405**	12	BOLT (1-8X2.75 IN)	
	9	1	**7X-0434**	8	BOLT (1-1/4-7X8 IN)	
	10	1	**7X-0533**	8	WASHER-HARD (34X55X6MM THK)	
	11	1	**8T-5361**	24	WASHER-HARD (28X49X5MM THK)	
	12	1	**203-2446**	4	BAR	
	13	1	**7X-0412**	12	BOLT (1-8X4.75 IN)	

C-CHANGE FROM PREVIOUS TYPE
Y-SEPARATE ILLUSTRATION

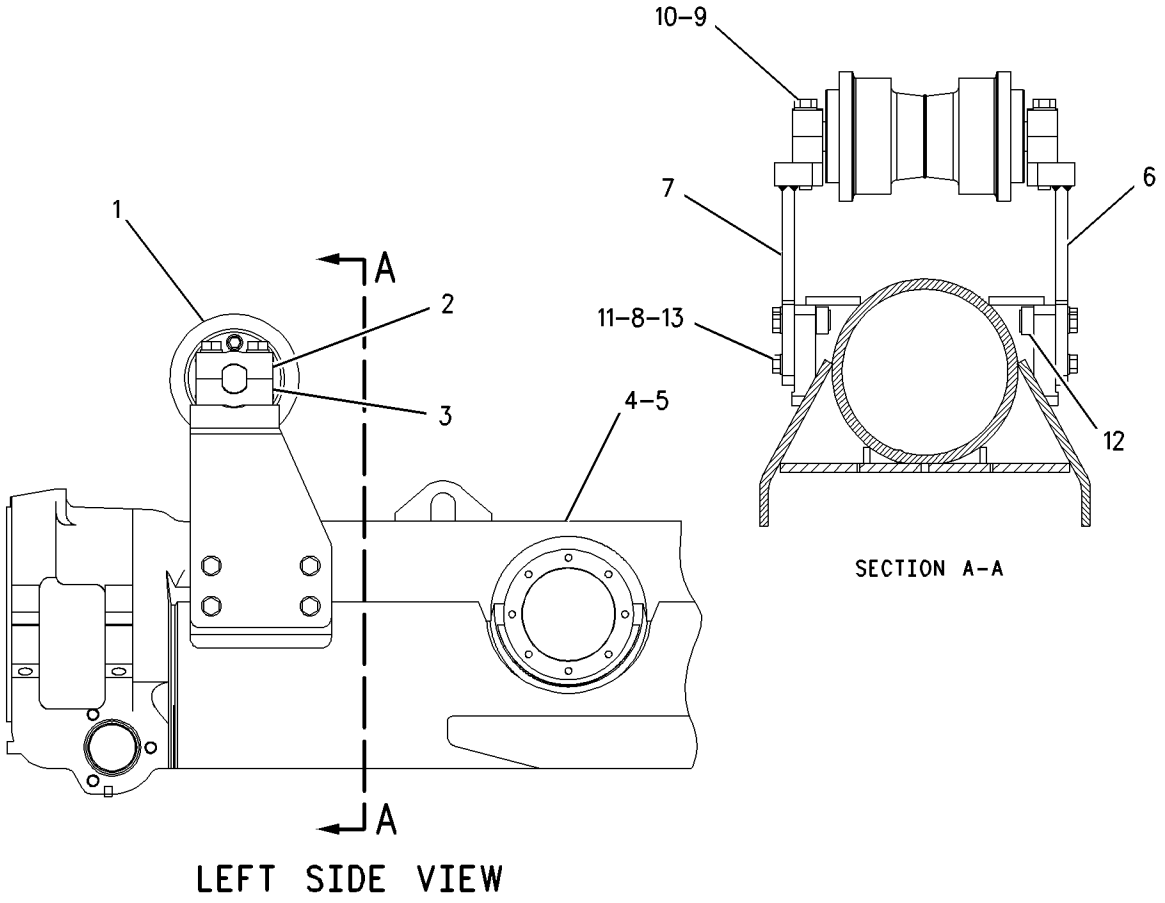

GRAPHIC #1 **<END>** g00837299

139-7720 ROLLER AR-TRACK CARRIER

S/N: 7PZ697-UP
FOR USE WITH 139-2003—PAGE 522
AN ATTACHMENT

SMCS-4154 **i01967617**

NOTE	REF NO	GRAPHIC REF	PART NUMBER	QTY	PART NAME 1 2 3 4 5 6 (PRODUCT LEVEL)	SEE PAGE
CY	1	1	*9W-7266*	4	CAP GP-TRACK ROLLER	552
Y	2	1	**184-6305**	2	ROLLER GP-TRACK-SINGLE FLANGE	599
C	3	1	**224-5918**	4	BLOCK	
C	4	1	**224-5919**	2	PLATE	
	5	1	**7X-0405**	12	BOLT (1-8X2.75 IN)	
C	6	1	**7X-0408**	16	BOLT (1-8X3.5 IN)	
	7	1	**7X-0412**	12	BOLT (1-8X4.75 IN)	
C	8	1	**8T-5361**	40	WASHER-HARD (28X49X5MM THK)	

C-CHANGE FROM PREVIOUS TYPE
Y-SEPARATE ILLUSTRATION

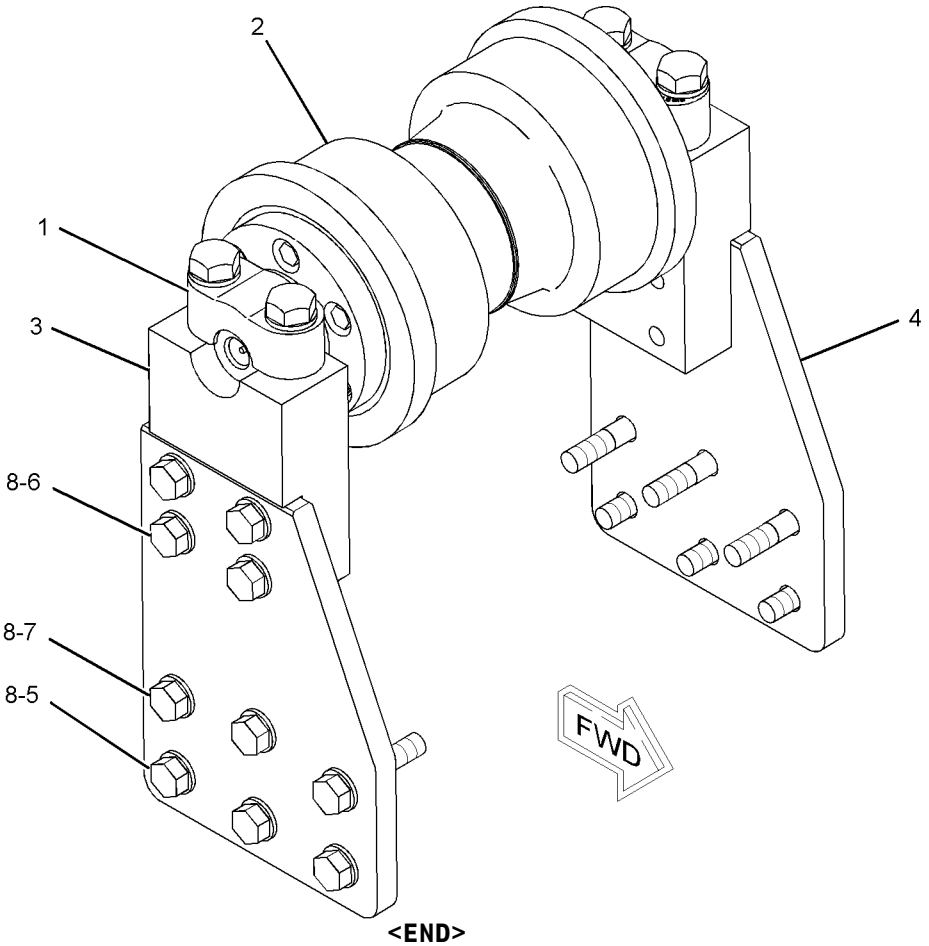

GRAPHIC #1 **<END>** g01025356

175-6807 ROLLER AR-TRACK CARRIER

S/N: 7PZ1-404
GUARD READY
FOR USE WITH 139-2003—PAGE 522
AN ATTACHMENT
TYPE 1

SMCS-4154 **i01563628**

NOTE	REF NO	GRAPHIC REF	PART NUMBER	QTY	PART NAME 1 2 3 4 5 6 (PRODUCT LEVEL)	SEE PAGE
Y	1	1	**6I-9717**	2	ROLLER GP-TRACK-SINGLE FLANGE	598
	2	1	**9W-7267**	4	CAP AS-TRACK ROLLER	
					(EACH INCLUDES)	
		1	**1T-0068**	1	PIN-SPRING	
	3	1	**9W-7268**	4	CAP	
	4	1	**139-7721**	1	FRAME AS-RH	
	5	1	**139-7722**	1	FRAME AS-LH	
	6	1	**187-3304**	2	PLATE AS	
	7	1	**187-3305**	2	PLATE AS	
	8	1	**7X-0405**	16	BOLT (1-8X2.75 IN)	
	9	1	**7X-0434**	8	BOLT (1-1/4-7X8-1/2 IN)	
	10	1	**7X-0533**	8	WASHER-HARD (34X55X6MM THK)	
	11	1	**8T-5361**	16	WASHER-HARD (28X49X5MM THK)	

Y-SEPARATE ILLUSTRATION

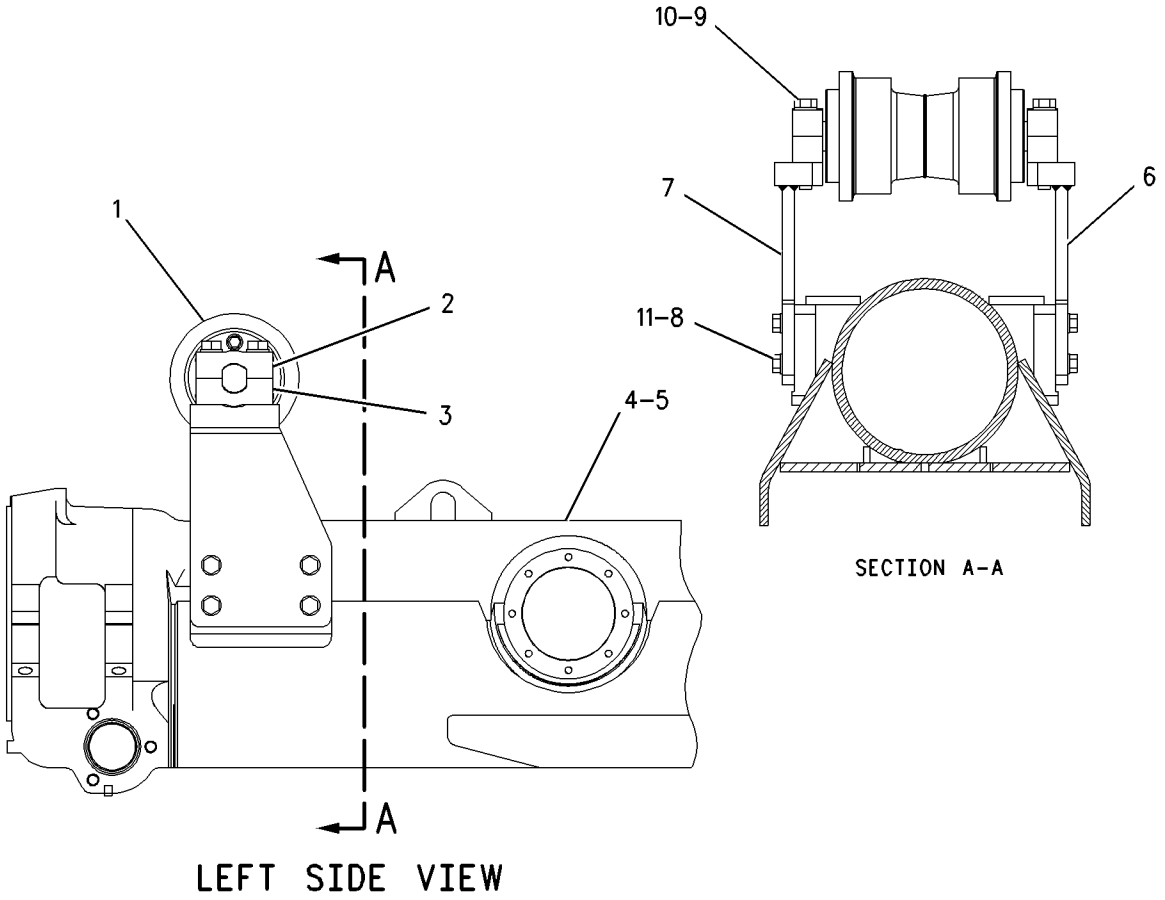

GRAPHIC #1 **<END>** g00673189

175-6807 ROLLER AR-TRACK CARRIER

S/N: 7PZ1-404
GUARD READY
FOR USE WITH 139-2003—PAGE 522
AN ATTACHMENT
TYPE 2

SMCS-4154 **i01563632**

NOTE	REF NO	GRAPHIC REF	PART NUMBER	QTY	PART NAME 1 2 3 4 5 6 (PRODUCT LEVEL)	SEE PAGE
CY	1	1	**184-6305**	2	ROLLER GP-TRACK-SINGLE FLANGE	599
	2	1	**9W-7267**	4	CAP AS-TRACK ROLLER	
					(EACH INCLUDES)	
		1	**1T-0068**	1	PIN-SPRING	
	3	1	**9W-7268**	4	CAP	
	4	1	**139-7721**	1	FRAME AS-RH	
	5	1	**139-7722**	1	FRAME AS-LH	
	6	1	**187-3304**	2	PLATE AS	
	7	1	**187-3305**	2	PLATE AS	
	8	1	**7X-0405**	16	BOLT (1-8X2.75 IN)	
	9	1	**7X-0434**	8	BOLT (1-1/4-7X8-1/2 IN)	
	10	1	**7X-0533**	8	WASHER-HARD (34X55X6MM THK)	
	11	1	**8T-5361**	16	WASHER-HARD (28X49X5MM THK)	

C-CHANGE FROM PREVIOUS TYPE
Y-SEPARATE ILLUSTRATION

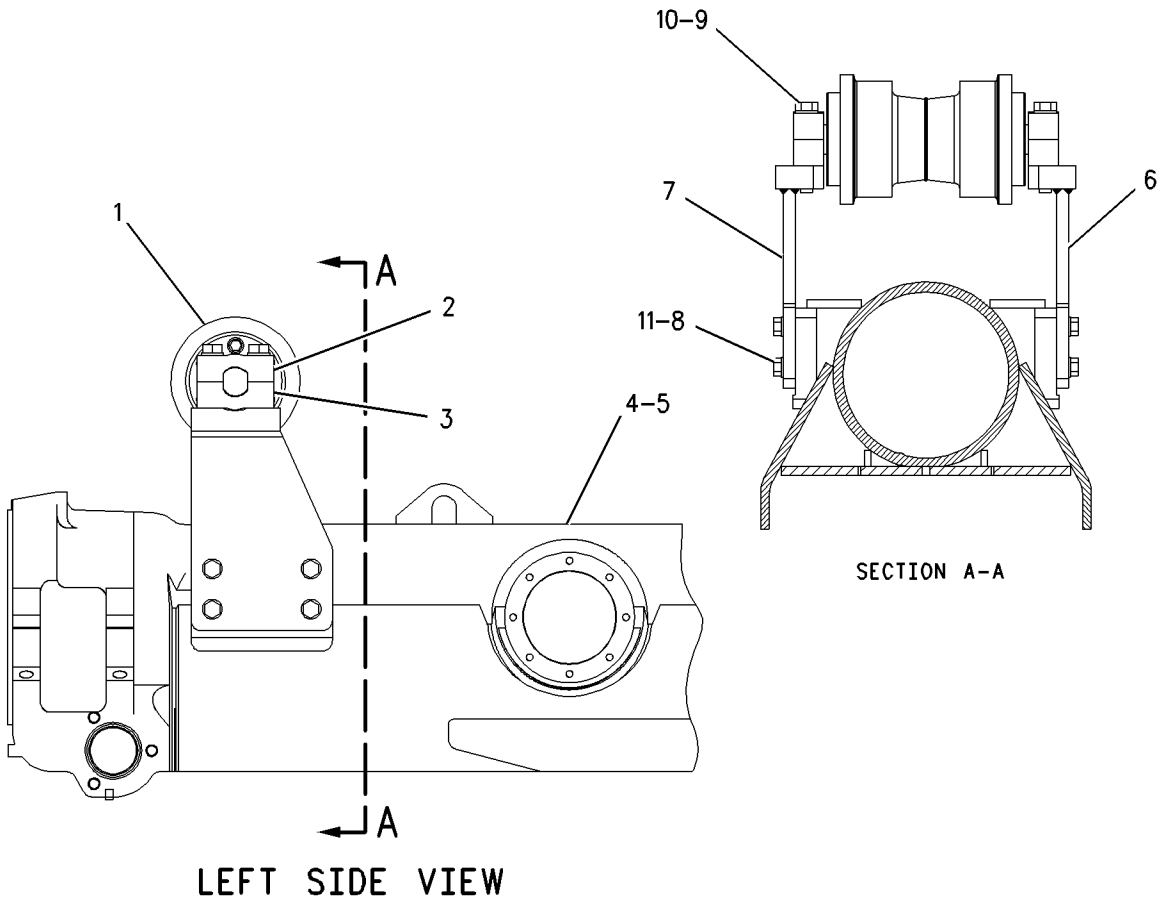

GRAPHIC #1 **<END>** g00673189

6I-9718 ROLLER GP-TRACK-DOUBLE FLANGE

S/N: 7PZ1-UP

PART OF 139-7697 UNDERCARRIAGE AR

SMCS-4180 **i01563636**

NOTE	REF NO	GRAPHIC REF	PART NUMBER	QTY	PART NAME 1 2 3 4 5 6 (PRODUCT LEVEL)	SEE PAGE
	1	1	**6I-9716**	1	ROLLER & BEARING AS	
		1	**9W-4194**	2	BEARING-SLEEVE	
	2	1	**146-3583**	1	SHAFT-TRACK ROLLER	
	3	1	**6T-5246**	2	STABILIZER-SEAL	
	4	1	**8E-6644**	2	WASHER-THRUST (102X142.5X4.52MM THK)	
	5	1	**8F-8733**	2	SEAL-O-RING	
	6	1	**7T-0157**	2	SEAL GP-DUO-CONE	
					(EACH INCLUDES)	
		1	**6V-2698**	1	SEAL-O-RING	
		1	**8H-2262**	1	RING-TORIC	
	7	1	**5P-8247**	12	WASHER-HARD (17X32X3.5MM THK)	
	8	1	**0S-1589**	12	BOLT (5/8-11X1.75 IN)	
	9	1	**9G-4872**	1	STOPPER-RUBBER	
		1	**6Y-0473**	1	PLUG-CLEAR	
	10	1	**6I-9710**	2	RETAINER	

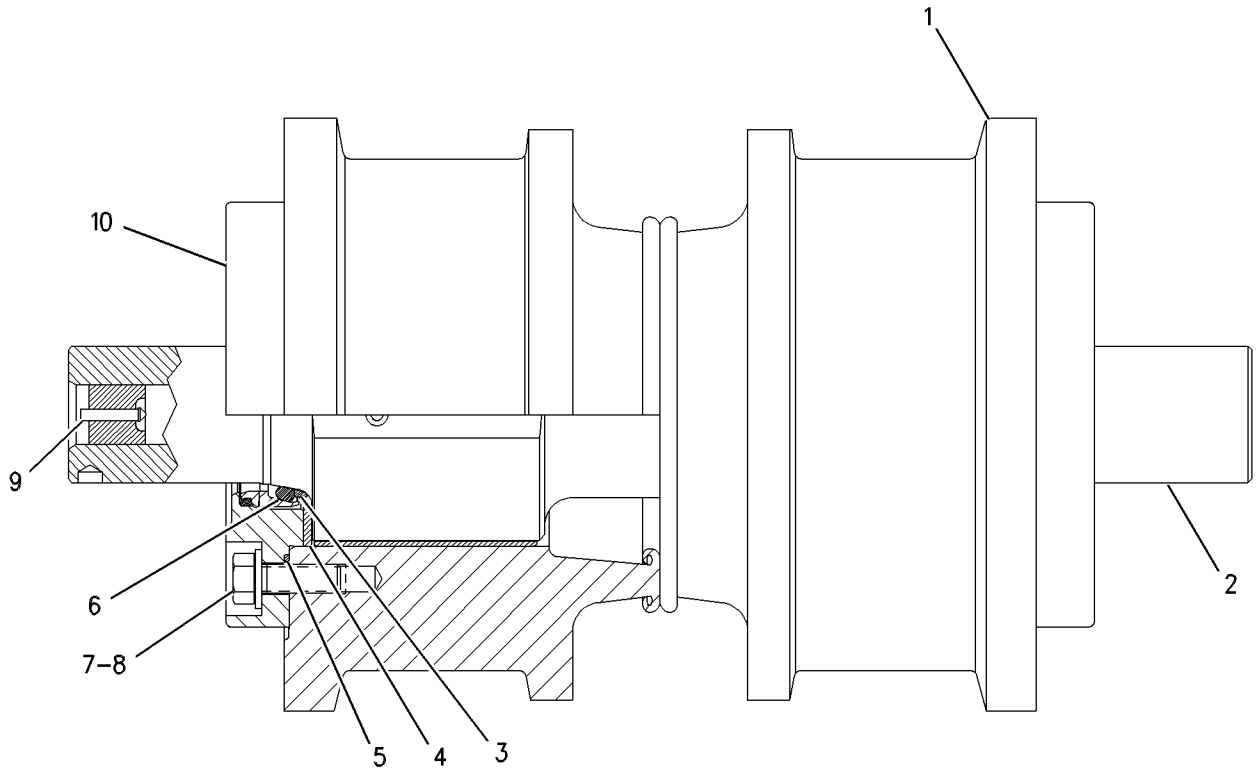

GRAPHIC #1 **<END>** g00653419

184-6306 ROLLER GP-TRACK-DOUBLE FLANGE

S/N: 7PZ1-UP
(IF EQUIPPED)
PART OF 139-7697, 179-2516, 179-2517 UNDERCARRIAGE AR

SMCS-4180 **i01900407**

NOTE	REF NO	GRAPHIC REF	PART NUMBER	QTY	PART NAME 1 2 3 4 5 6 (PRODUCT LEVEL)	SEE PAGE
	1	1	**7R-8872**	2	SEAL-O-RING	
	2	1	**6Y-0473**	1	PLUG-CLEAR	
		1	**9G-4872**	1	STOPPER-RUBBER	
	3	1	**8E-6644**	2	WASHER-THRUST (102X142.5X4.52MM THK)	
	4	1	**8F-8733**	2	SEAL-O-RING	
	5	1	**155-2048**	1	SHAFT-TRACK ROLLER	
	6	1	**162-7864**	2	SEAL GP-DUO-CONE	
					(EACH INCLUDES)	
		1	**162-2168**	2	RING-TORIC	
	7	1	**180-4995**	2	RETAINER	
	8	1	**184-2607**	2	COLLAR-SEAL	
	9	1	**031-1382**	12	BOLT-12 POINT HEAD (5/8-11X2.5 IN)	
	10	1	**186-5318**	1	ROLLER & BEARING AS	
		1	**9W-4194**	2	BEARING-SLEEVE	
	11	1	**5P-8247**	12	WASHER-HARD (17X32X3.5MM THK)	

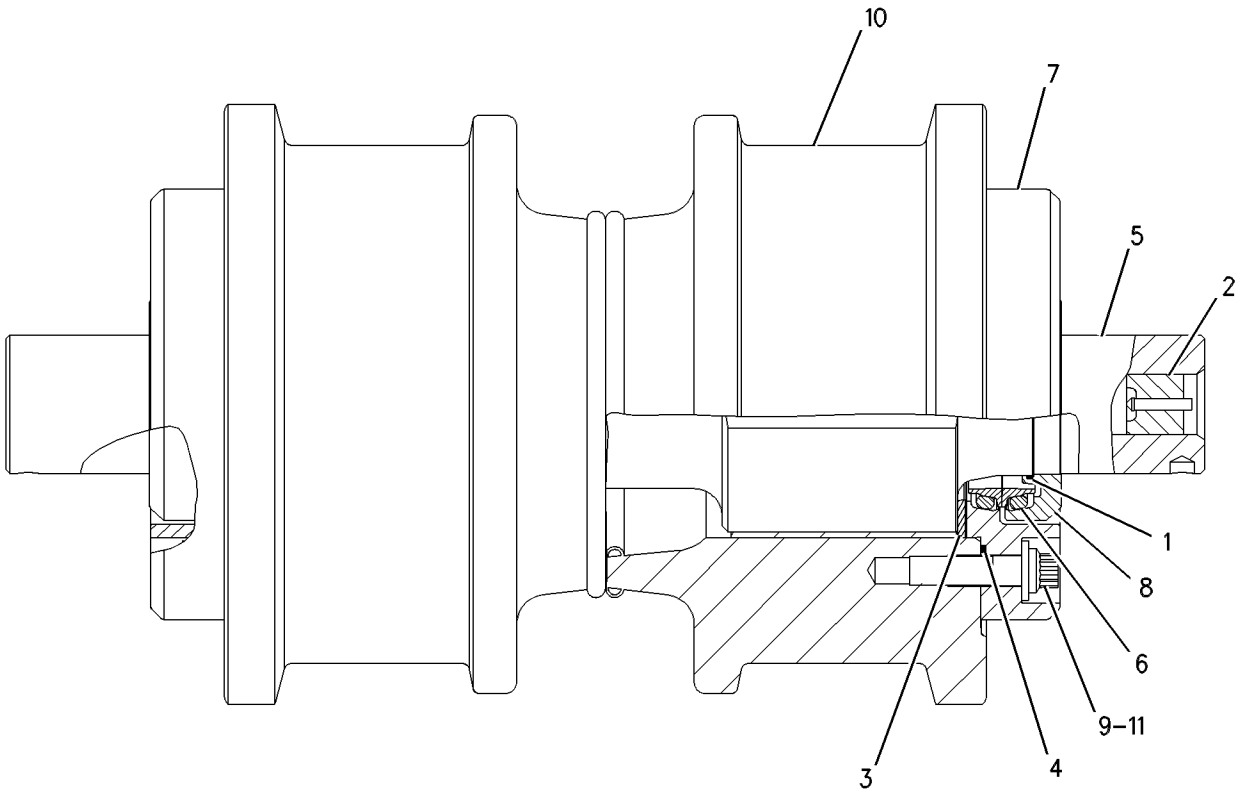

GRAPHIC #1 **<END>** g00989157

6I-9717 ROLLER GP-TRACK-SINGLE FLANGE

S/N: 7PZ1-386

PART OF 139-7720, 175-6807 ROLLER AR-TRACK CARRIER, 139-7697 UNDERCARRIAGE AR
ALSO AN ATTACHMENT

SMCS-4180 **i01563685**

NOTE	REF NO	GRAPHIC REF	PART NUMBER	QTY	PART NAME 1 2 3 4 5 6 (PRODUCT LEVEL)	SEE PAGE
	1	1	**6I-9715**	1	ROLLER & BEARING AS	
		1	**9W-4194**	2	BEARING-SLEEVE	
	2	1	**146-3583**	1	SHAFT-TRACK ROLLER	
	3	1	**6T-5246**	2	STABILIZER-SEAL	
	4	1	**8E-6644**	2	WASHER-THRUST (102X142.5X4.52MM THK)	
	5	1	**8F-8733**	2	SEAL-O-RING	
	6	1	**7T-0157**	2	SEAL GP-DUO-CONE	
					(EACH INCLUDES)	
		1	**6V-2698**	1	SEAL-O-RING	
		1	**8H-2262**	1	RING-TORIC	
	7	1	**5P-8247**	12	WASHER-HARD (17X32X3.5MM THK)	
	8	1	**0S-1589**	12	BOLT (5/8-11X1.75 IN)	
	9	1	**9G-4872**	1	STOPPER-RUBBER	
		1	**6Y-0473**	1	PLUG-CLEAR	
	10	1	**6I-9710**	2	RETAINER	

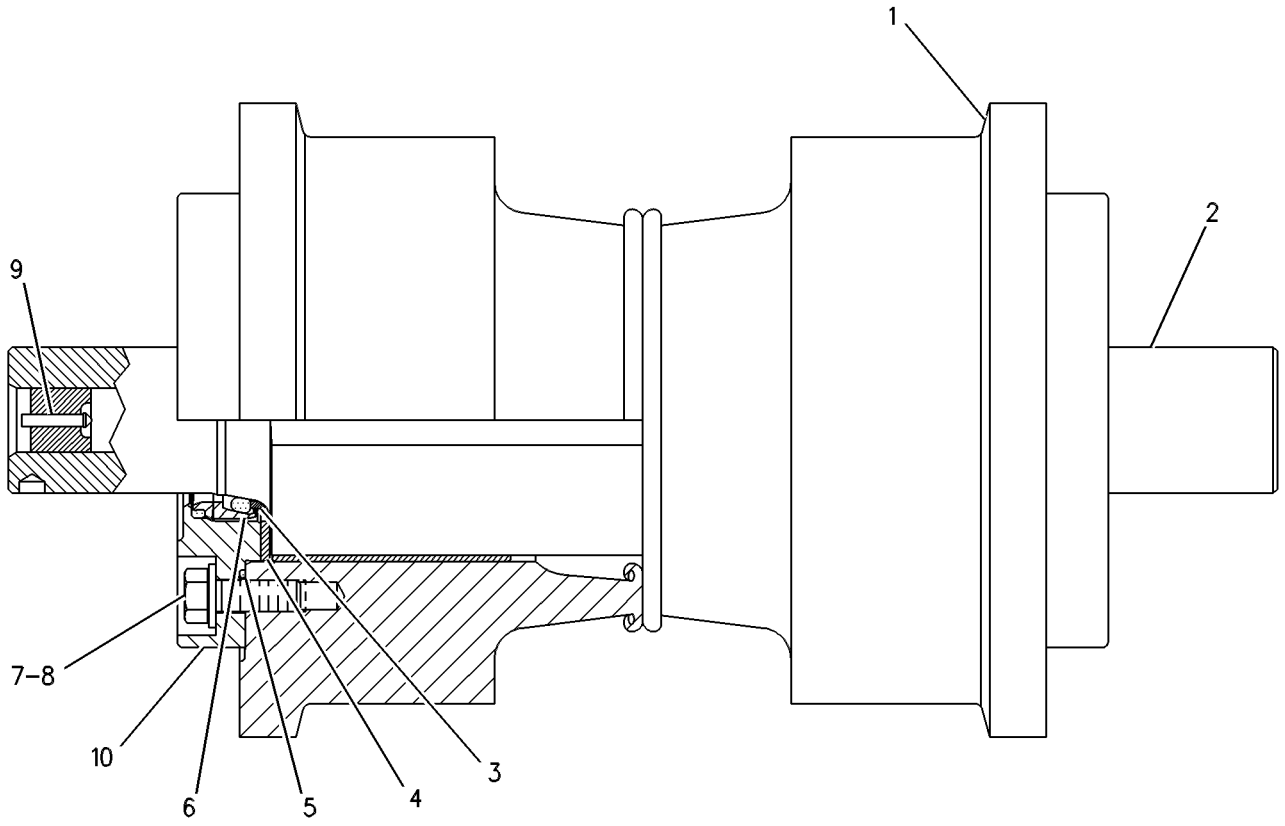

GRAPHIC #1 **<END>** g00257750

184-6305 ROLLER GP-TRACK-SINGLE FLANGE

S/N: 7PZ1-UP

PART OF 139-7720, 175-6807 ROLLER AR-TRACK CARRIER, 139-7697, 179-2516, 179-2517 UNDERCARRIAGE AR

ALSO AN ATTACHMENT

SMCS-4180 **i01900406**

NOTE	REF NO	GRAPHIC REF	PART NUMBER	QTY	PART NAME 1 2 3 4 5 6 (PRODUCT LEVEL)	SEE PAGE
	1	1	**7R-8872**	2	SEAL-O-RING	
	2	1	**6Y-0473**	1	PLUG-CLEAR	
		1	**9G-4872**	1	STOPPER-RUBBER	
	3	1	**8E-6644**	2	WASHER-THRUST (102X142.5X4.52MM THK)	
	4	1	**8F-8733**	2	SEAL-O-RING	
	5	1	**155-2048**	1	SHAFT-TRACK ROLLER	
	6	1	**162-7864**	2	SEAL GP-DUO-CONE	
					(EACH INCLUDES)	
		1	**162-2168**	2	RING-TORIC	
	7	1	**180-4995**	2	RETAINER	
	8	1	**184-2607**	2	COLLAR-SEAL	
	9	1	**186-5319**	1	ROLLER & BEARING AS	
		1	**9W-4194**	2	BEARING-SLEEVE	
	10	1	**031-1382**	12	BOLT-12 POINT HEAD (5/8-11X2.5 IN)	
	11	1	**5P-8247**	12	WASHER-HARD (17X32X3.5MM THK)	

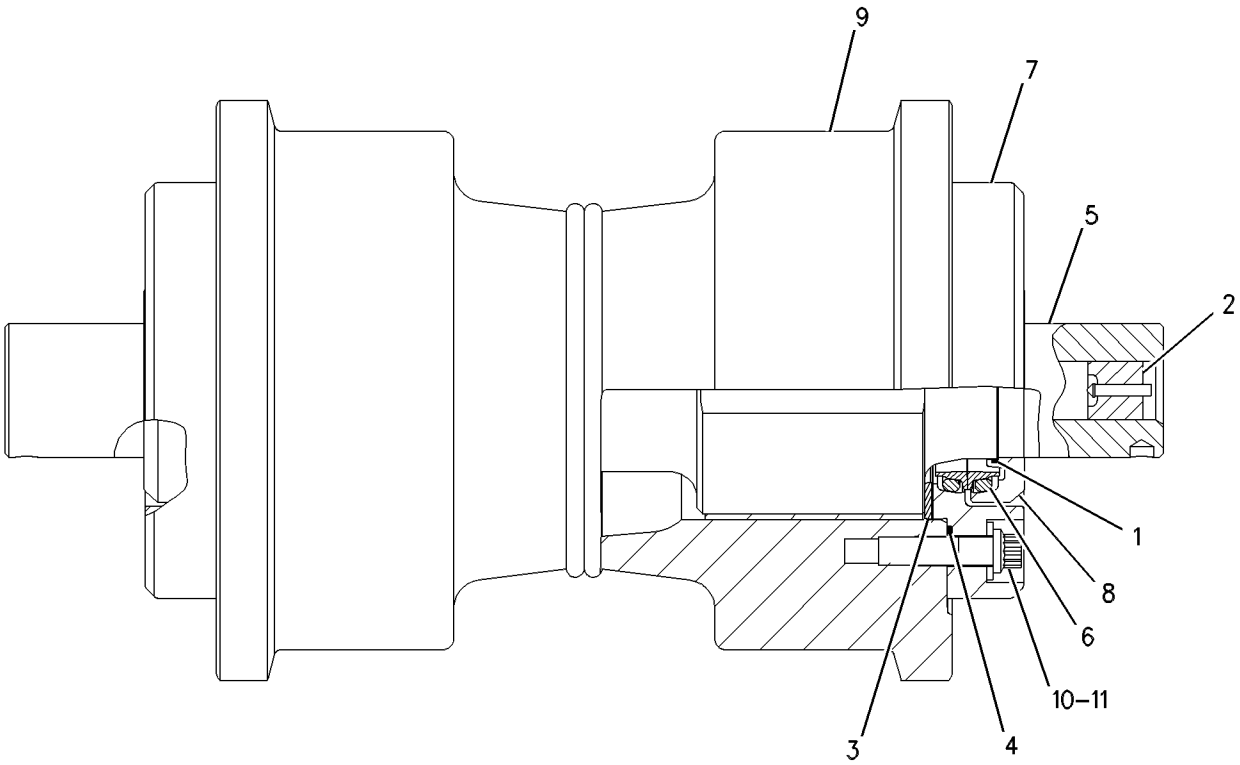

GRAPHIC #1 **<END>** g00663441

UNDERCARRIAGE

161-7548 SEAL GP-TRACK

S/N: 7PZ1-UP

FIELD INSTALLATION

SMCS-4175 **i01232771**

NOTE	PART NUMBER	QTY	PART NAME 1 2 3 4 5 6 (PRODUCT LEVEL)	SEE PAGE
	161-7546	82	SEAL AS	

<END>

UNDERCARRIAGE

196-1363 STOP GP-EQUALIZER BAR

S/N: 7PZ1-UP

FIELD INSTALLATION

SMCS-7206 **i01615135**

NOTE	REF NO	GRAPHIC REF	PART NUMBER	QTY	PART NAME 1 2 3 4 5 6 (PRODUCT LEVEL)	SEE PAGE
	1	1	**1F-1560**	2	SPACER (.53X1X1.5 IN THK)	
	2	1	**194-5047**	2	HINGE AS	
	3	1	**194-5050**	1	PLATE AS	
	4	1	**1A-5822**	2	BOLT (1/2-13X2.75 IN)	
	5	1	**6V-6563**	4	WASHER (13.5X40X5MM THK)	
	6	1	**6V-8188**	2	NUT (1/2-13 THD)	

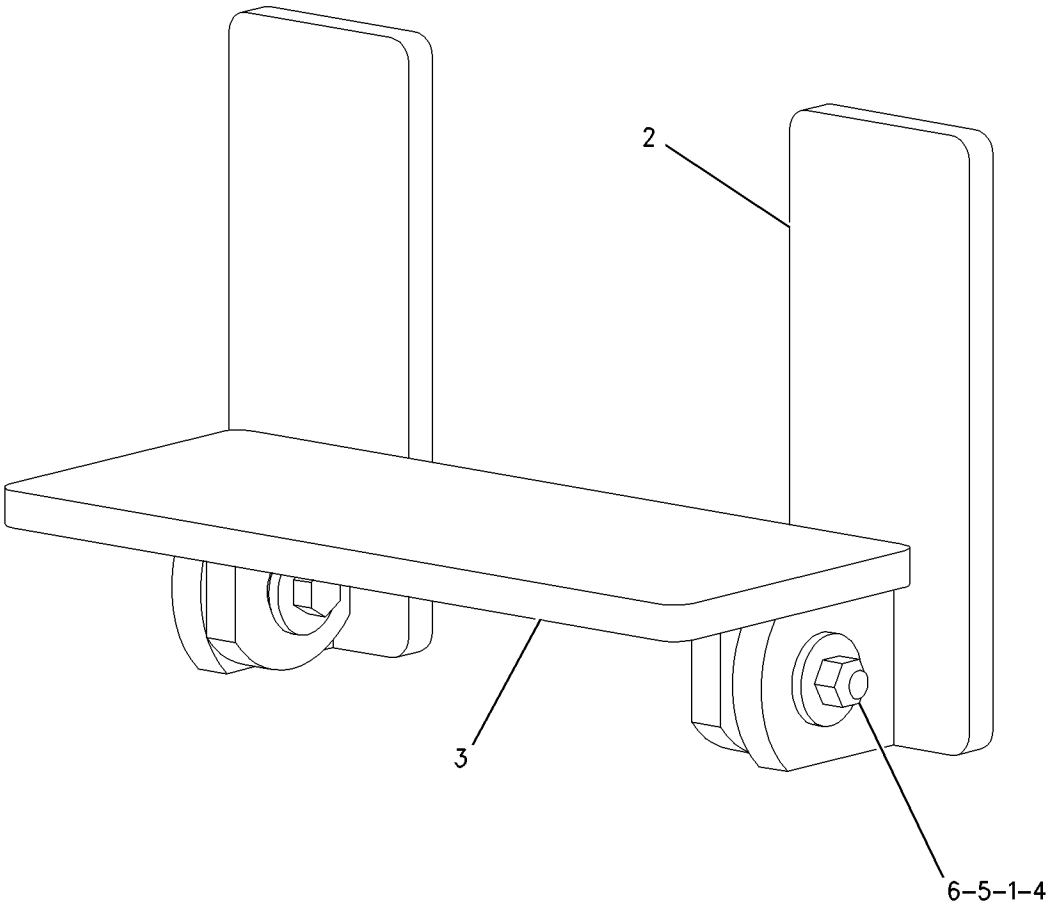

GRAPHIC #1 **<END>** g00849714

UNDERCARRIAGE

139-7709 SUSPENSION GP-BOGIE–RH, LH

S/N: 7PZ1-410

PART OF 139-7697 UNDERCARRIAGE AR

SMCS-7217 **i01429998**

NOTE	REF NO	GRAPHIC REF	PART NUMBER	QTY	PART NAME 1 2 3 4 5 6 (PRODUCT LEVEL)	SEE PAGE
	1	1	**128-7256**	2	BOGIE AS-FRONT	
	2	1	**5P-2228**	64	BOLT (1/2-13X1 IN)	
	3	1	**5P-1076**	64	WASHER-HARD (13.5X30X4MM THK)	
	4	1	**9W-7871**	4	BOGIE AS-MIDDLE	
	5	1	**128-7255**	2	BOGIE AS-REAR	
	6	1	**7T-0084**	16	GUIDE	
	7	1	**8T-8927**	32	BOLT (1-8X3.75 IN)	
	8	1	**8T-5361**	32	WASHER-HARD (28X49X5MM THK)	
	9	1	**9P-9990**	16	RETAINER-GUARD	
	10	1	**3P-2482**	14	PAD AS-RESILIENT	
	11	1	**138-4151**	8	BOGIE-MINOR-RH (TRACK ROLLER FRAME)	
	12	1	**7T-9311**	32	PIN AS-CARTRIDGE	
	13	1	**3T-9075**	8	INSERT	
	14	1	**8S-4756**	48	BOLT (1-14X1.75 IN)	
	15	1	**9P-9993**	16	PLATE-RETAINER	
	16	1	**5P-9957**	16	RING-RETAINING	
	17	1	**138-4152**	8	BOGIE-MINOR-LH (TRACK ROLLER FRAME)	
	18	1	**7T-5959**	2	PAD AS-RESILIENT	

QUANTITIES SHOWN ARE THOSE REQUIRED FOR BOTH LH AND RH SIDES

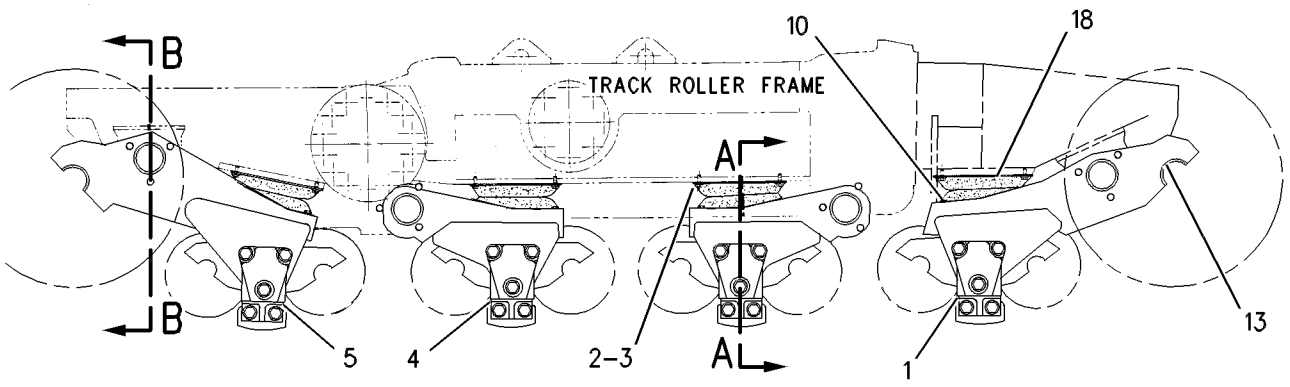

RIGHT SIDE VIEW

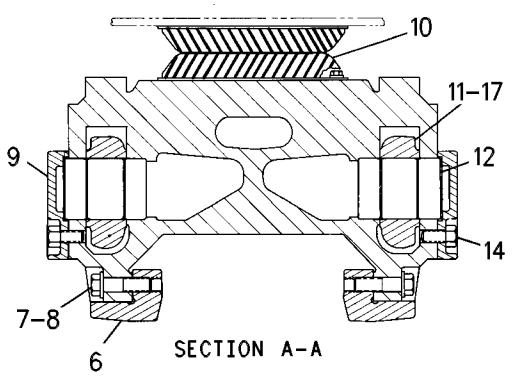

SECTION A-A

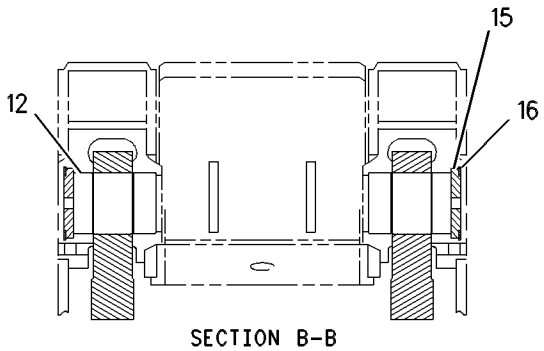

SECTION B-B

GRAPHIC #1 **<END>** g00606772

139-7709 SUSPENSION GP-BOGIE–RH, LH

S/N: 7PZ411-UP

PART OF 139-7697 UNDERCARRIAGE AR

SMCS-7217 **i02023817**

NOTE	REF NO	GRAPHIC REF	PART NUMBER	QTY	PART NAME 1 2 3 4 5 6 (PRODUCT LEVEL)	SEE PAGE
	1	1	**128-7256**	2	BOGIE AS-FRONT	
	2	1	**5P-2228**	64	BOLT (1/2-13X1-IN)	
	3	1	**5P-1076**	64	WASHER-HARD (13.5X30X4-MM THK)	
	4	1	**9W-7871**	4	BOGIE AS-MIDDLE	
	5	1	**128-7255**	2	BOGIE AS-REAR	
C	6	1	**184-4397**	16	GUIDE	
	7	1	**8T-8927**	32	BOLT (1-8X3.75-IN)	
	8	1	**8T-5361**	32	WASHER-HARD (28X49X5-MM THK)	
	9	1	**9P-9990**	16	RETAINER-GUARD	
	10	1	**3P-2482**	16	PAD AS-RESILIENT	
	11	1	**138-4151**	8	BOGIE-MINOR-RH (TRACK ROLLER FRAME)	
	12	1	**7T-9311**	32	PIN AS-CARTRIDGE	
	13	1	**3T-9075**	8	INSERT	
	14	1	**8S-4756**	48	BOLT (1-14X1.75-IN)	
	15	1	**9P-9993**	16	PLATE-RETAINER	
	16	1	**5P-9957**	16	RING-RETAINING	
	17	1	**138-4152**	8	BOGIE-MINOR-LH (TRACK ROLLER FRAME)	

QUANTITIES SHOWN ARE THOSE REQUIRED FOR BOTH LH AND RH SIDES
C-CHANGE FROM PREVIOUS TYPE

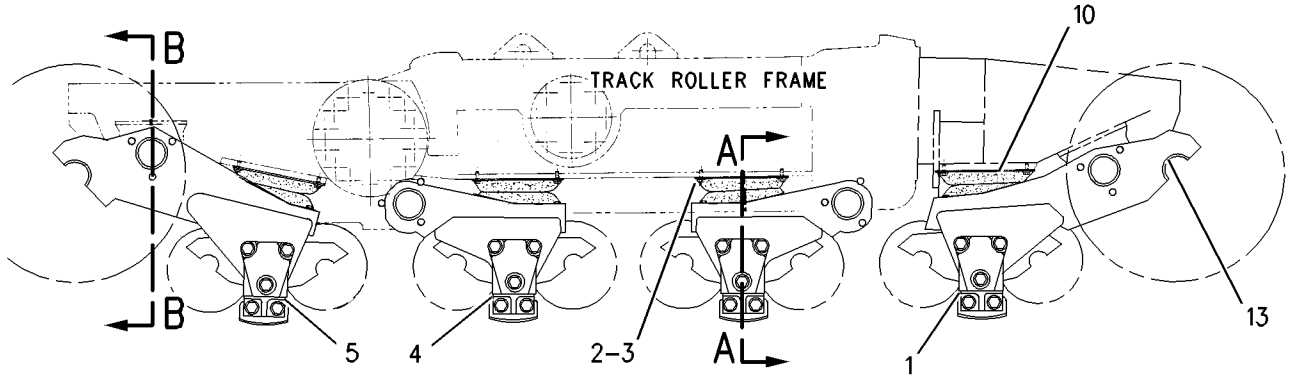

RIGHT SIDE VIEW

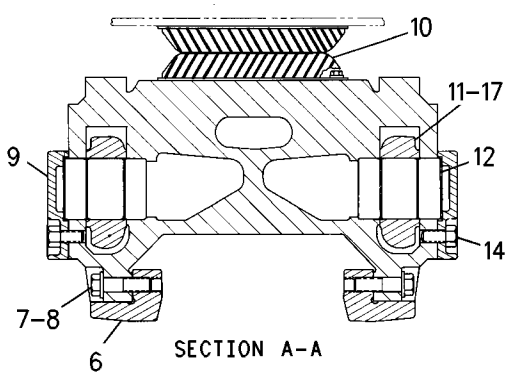

SECTION A-A

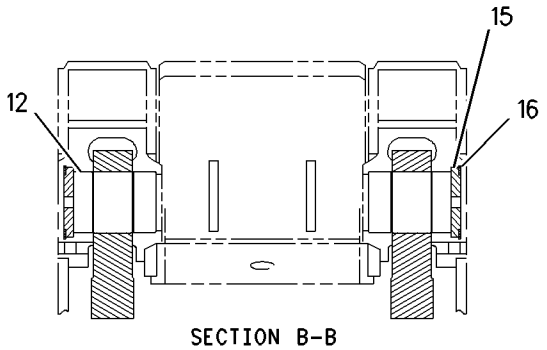

SECTION B-B

GRAPHIC #1 **<END>** g00797791

179-2512 SUSPENSION GP-BOGIE–RH

S/N: 7PZ1-UP
PART OF 179-2518 UNDERCARRIAGE AR
TYPE 1

SMCS-7217 **i01489006**

NOTE	REF NO	GRAPHIC REF	PART NUMBER	QTY	PART NAME 1 2 3 4 5 6 (PRODUCT LEVEL)	SEE PAGE
	1	1	**128-7256**	1	BOGIE AS-FRONT	
	2	1	**5P-2228**	32	BOLT (1/2-13X1 IN)	
	3	1	**5P-1076**	32	WASHER-HARD (13.5X30X4MM THK)	
	4	1	**9W-7871**	2	BOGIE AS-MIDDLE	
	5	1	**128-7255**	1	BOGIE AS-REAR	
	6	1	**184-4397**	8	GUIDE	
	7	1	**8T-8927**	16	BOLT (1-8X3.75 IN)	
	8	1	**8T-5361**	16	WASHER-HARD (28X49X5MM THK)	
	9	1	**9P-9990**	8	RETAINER-GUARD	
	10	1	**3P-2482**	7	PAD AS-RESILIENT	
	11	1	**138-4151**	8	BOGIE-MINOR-RH (TRACK ROLLER FRAME)	
	12	1	**7T-9311**	16	PIN AS-CARTRIDGE	
	13	1	**3T-9075**	4	INSERT	
	14	1	**8S-4756**	24	BOLT (1-14X1.75 IN)	
	15	1	**9P-9993**	8	PLATE-RETAINER	
	16	1	**5P-9957**	8	RING-RETAINING	
	17	1	**7T-5959**	1	PAD AS-RESILIENT	

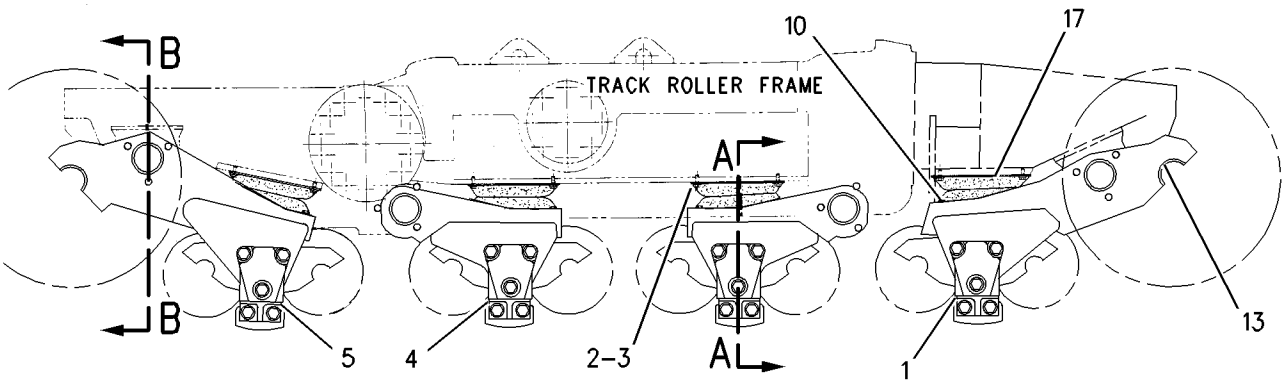

RIGHT SIDE VIEW

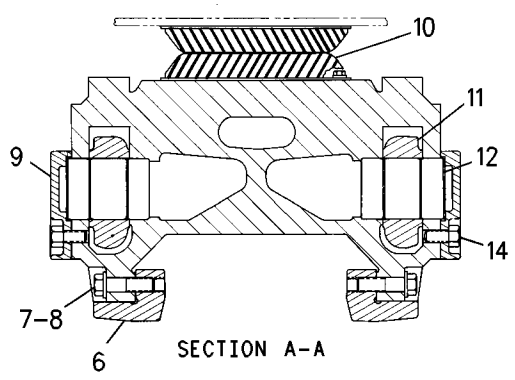

SECTION A-A

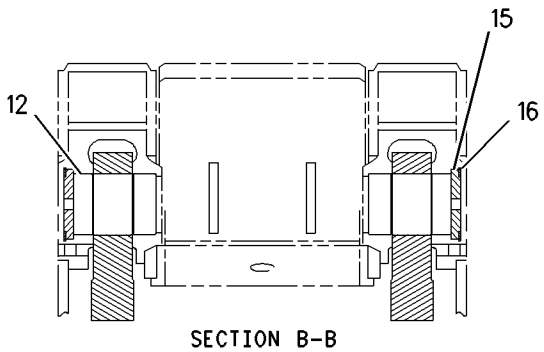

SECTION B-B

GRAPHIC #1 **<END>** g00655394

179-2512 SUSPENSION GP-BOGIE—RH

S/N: 7PZ1-UP

PART OF 179-2518 UNDERCARRIAGE AR

TYPE 2

SMCS-7217 **i01606273**

NOTE	REF NO	GRAPHIC REF	PART NUMBER	QTY	PART NAME 1 2 3 4 5 6 (PRODUCT LEVEL)	SEE PAGE
	1	1	**128-7256**	1	BOGIE AS-FRONT	
	2	1	**5P-2228**	32	BOLT (1/2-13X1 IN)	
	3	1	**5P-1076**	32	WASHER-HARD (13.5X30X4MM THK)	
	4	1	**9W-7871**	2	BOGIE AS-MIDDLE	
	5	1	**128-7255**	1	BOGIE AS-REAR	
	6	1	**184-4397**	8	GUIDE	
	7	1	**8T-8927**	16	BOLT (1-8X3.75 IN)	
	8	1	**8T-5361**	16	WASHER-HARD (28X49X5MM THK)	
	9	1	**9P-9990**	8	RETAINER-GUARD	
C	10	1	**3P-2482**	8	PAD AS-RESILIENT	
	11	1	**138-4151**	8	BOGIE-MINOR-RH (TRACK ROLLER FRAME)	
	12	1	**7T-9311**	16	PIN AS-CARTRIDGE	
					(EACH INCLUDES)	
		1	**6Y-0473**	2	PLUG-CLEAR	
		1	**9G-1368**	2	STOP-RUBBER	
	13	1	**3T-9075**	4	INSERT	
	14	1	**8S-4756**	24	BOLT (1-14X1.75 IN)	
	15	1	**9P-9993**	8	PLATE-RETAINER	
	16	1	**5P-9957**	8	RING-RETAINING	

C-CHANGE FROM PREVIOUS TYPE

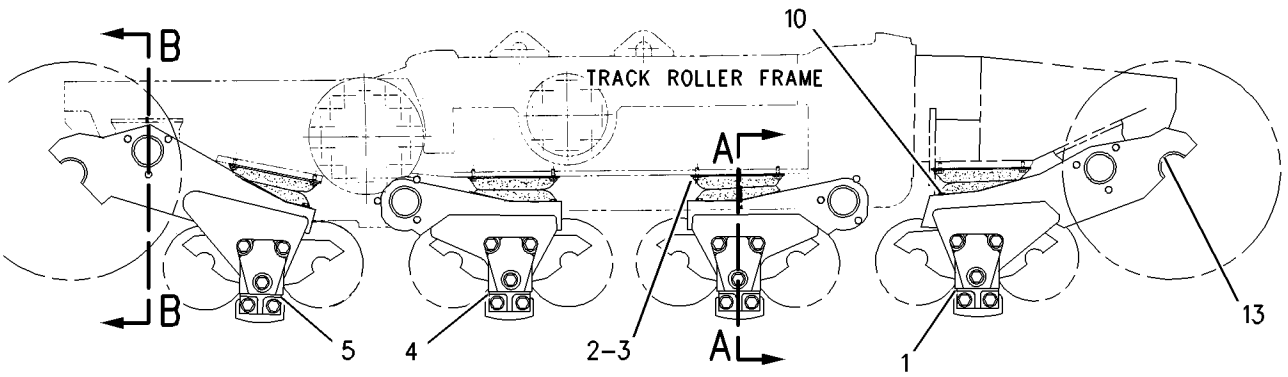

RIGHT SIDE VIEW

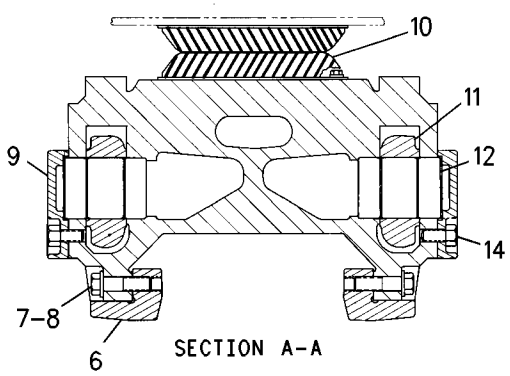

SECTION A-A

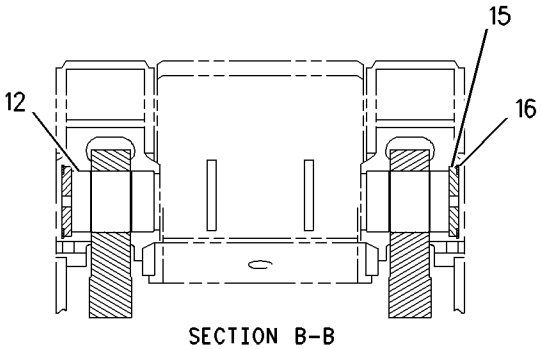

SECTION B-B

GRAPHIC #1 **<END>** g00837441

179-2513 SUSPENSION GP-BOGIE–LH

S/N: 7PZ1-UP
PART OF 179-2519 UNDERCARRIAGE AR
TYPE 1

SMCS-7217 **i01488974**

NOTE	REF NO	GRAPHIC REF	PART NUMBER	QTY	PART NAME 1 2 3 4 5 6 (PRODUCT LEVEL)	SEE PAGE
	1	1	**128-7256**	1	BOGIE AS-FRONT	
	2	1	**5P-2228**	32	BOLT (1/2-13X1 IN)	
	3	1	**5P-1076**	32	WASHER-HARD (13.5X30X4MM THK)	
	4	1	**9W-7871**	2	BOGIE AS-MIDDLE	
	5	1	**128-7255**	1	BOGIE AS-REAR	
	6	1	**184-4397**	8	GUIDE	
	7	1	**8T-8927**	16	BOLT (1-8X3.75 IN)	
	8	1	**8T-5361**	16	WASHER-HARD (28X49X5MM THK)	
	9	1	**9P-9990**	8	RETAINER-GUARD	
	10	1	**3P-2482**	7	PAD AS-RESILIENT	
	11	1	**138-4152**	8	BOGIE-MINOR-LH (TRACK ROLLER FRAME)	
	12	1	**7T-9311**	16	PIN AS-CARTRIDGE	
	13	1	**3T-9075**	4	INSERT	
	14	1	**8S-4756**	24	BOLT (1-14X1.75 IN)	
	15	1	**9P-9993**	8	PLATE-RETAINER	
	16	1	**5P-9957**	8	RING-RETAINING	
	17	1	**7T-5959**	1	PAD AS-RESILIENT	

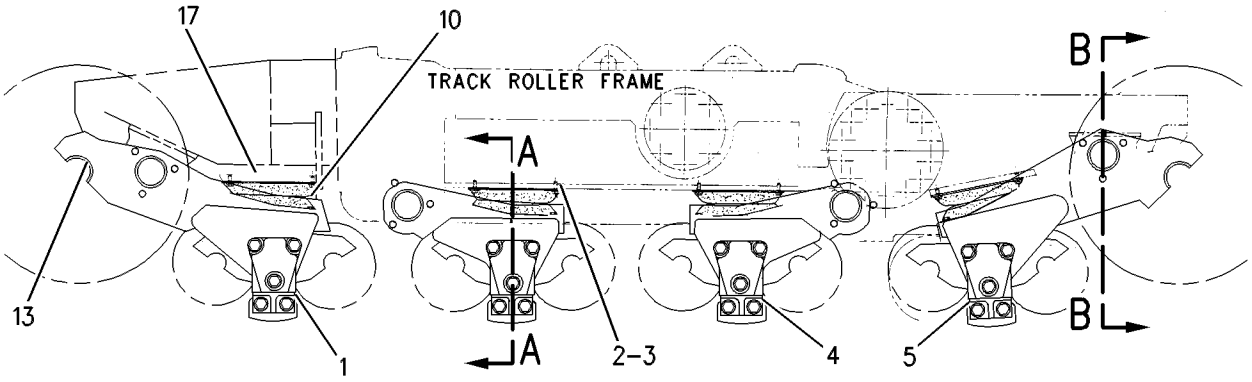

LEFT SIDE VIEW

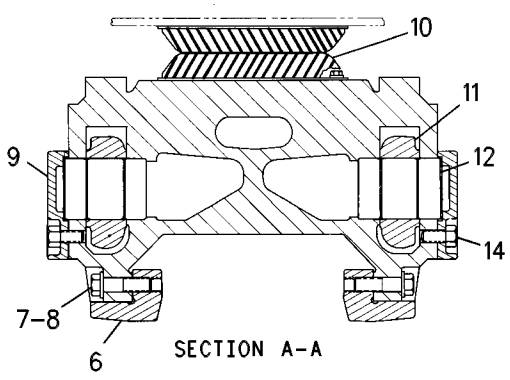

SECTION A-A

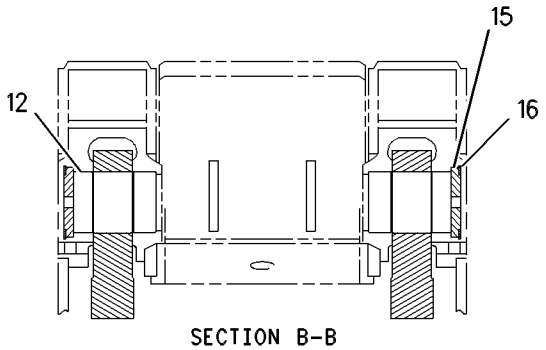

SECTION B-B

GRAPHIC #1 **<END>** g00655415

179-2513 SUSPENSION GP-BOGIE—LH

S/N: 7PZ1-UP
PART OF 179-2519 UNDERCARRIAGE AR
TYPE 2

SMCS-7217 **i01606275**

NOTE	REF NO	GRAPHIC REF	PART NUMBER	QTY	PART NAME 1 2 3 4 5 6 (PRODUCT LEVEL)	SEE PAGE
	1	1	**128-7256**	1	BOGIE AS-FRONT	
	2	1	**5P-2228**	32	BOLT (1/2-13X1 IN)	
	3	1	**5P-1076**	32	WASHER-HARD (13.5X30X4MM THK)	
	4	1	**9W-7871**	2	BOGIE AS-MIDDLE	
	5	1	**128-7255**	1	BOGIE AS-REAR	
	6	1	**184-4397**	8	GUIDE	
	7	1	**8T-8927**	16	BOLT (1-8X3.75 IN)	
	8	1	**8T-5361**	16	WASHER-HARD (28X49X5MM THK)	
	9	1	**9P-9990**	8	RETAINER-GUARD	
C	10	1	**3P-2482**	8	PAD AS-RESILIENT	
	11	1	**138-4152**	8	BOGIE-MINOR-LH (TRACK ROLLER FRAME)	
	12	1	**7T-9311**	16	PIN AS-CARTRIDGE	
					(EACH INCLUDES)	
		1	**6Y-0473**	2	PLUG-CLEAR	
		1	**9G-1368**	2	STOP-RUBBER	
	13	1	**3T-9075**	4	INSERT	
	14	1	**8S-4756**	24	BOLT (1-14X1.75 IN)	
	15	1	**9P-9993**	8	PLATE-RETAINER	
	16	1	**5P-9957**	8	RING-RETAINING	

C-CHANGE FROM PREVIOUS TYPE

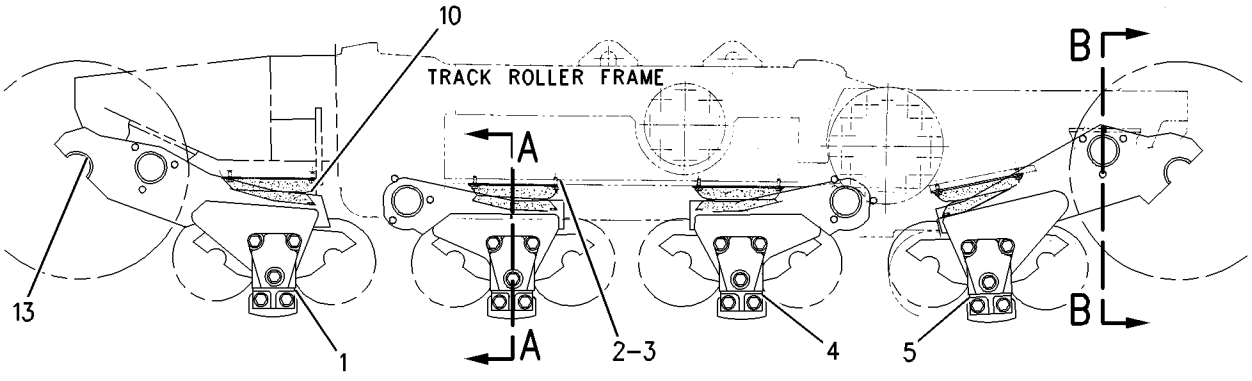

LEFT SIDE VIEW

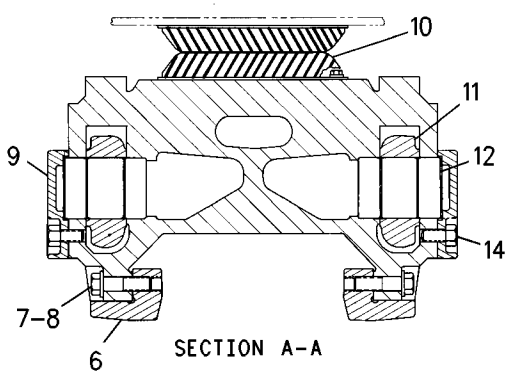

SECTION A-A

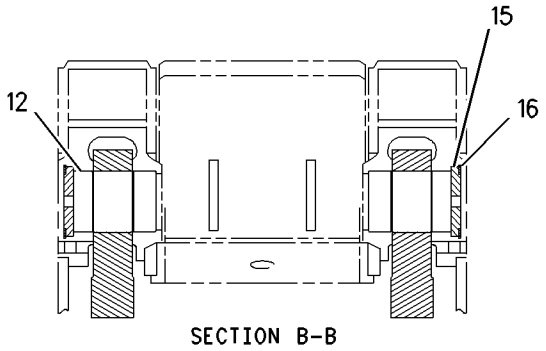

SECTION B-B

GRAPHIC #1 **<END>** g00836533

UNDERCARRIAGE

139-7710 TRACK ADJUSTER & RECOIL GP

S/N: 7PZ1-UP

PART OF 139-7697 UNDERCARRIAGE AR

SMCS-4157, 4158 **i01988836**

NOTE	REF NO	GRAPHIC REF	PART NUMBER	QTY	PART NAME 1 2 3 4 5 6 (PRODUCT LEVEL)	SEE PAGE
	1	1	**1L-5081**	2	SPACER (0.41X0.75X0.56 IN THK)	
	2	1	**1P-7346**	2	WASHER-HARD (10.2X35X6MM THK)	
	3	1	**2S-5925**	2	FITTING-GREASE	
	4	1	**2S-5926**	2	VALVE (RELIEF)	
	5	1	**2S-8939**	2	RING-RETAINING	
	6	1	**3B-1915**	2	BOLT (3/8-16X1.75 IN)	
	7	1	**4J-3342**	4	RING-WEAR	
	8	1	**6P-7577**	4	RING	
	9	1	**6T-9127**	4	STOP	
	10	1	**6T-9176**	2	STOP AS	
	11	1	**7G-8282**	2	CABLE AS	
					(EACH INCLUDES)	
	12	1	**1P-7405**	1	EYEBOLT	
	13	1	**7X-0545**	8	WASHER-HARD (24X40X5MM THK)	
	14	1	**8P-4459**	2	SPRING	
	15	1	**8T-2863**	2	SEAL-U-CUP	
	16	1	**9W-2503**	2	PILOT AS	
					(EACH INCLUDES)	
	17	1	**9W-2500**	1	BEARING-SLEEVE	
	18	1	**140-6681**	2	RETAINER AS	
	19	1	**163-4820**	2	CYLINDER	
	20	1	**6V-8801**	2	NUT (3/8-16 THD)	
	21	1	**7X-0385**	8	BOLT (7/8-9X3.25 IN)	
	22	1	**109-4703**	2	CYLINDER	
	23	1	**7T-5734**	1	ROD	

QUANTITIES SHOWN ARE THOSE REQUIRED FOR BOTH LH AND RH SIDES

139-7710 TRACK ADJUSTER & RECOIL GP *(contd.)* i01988836

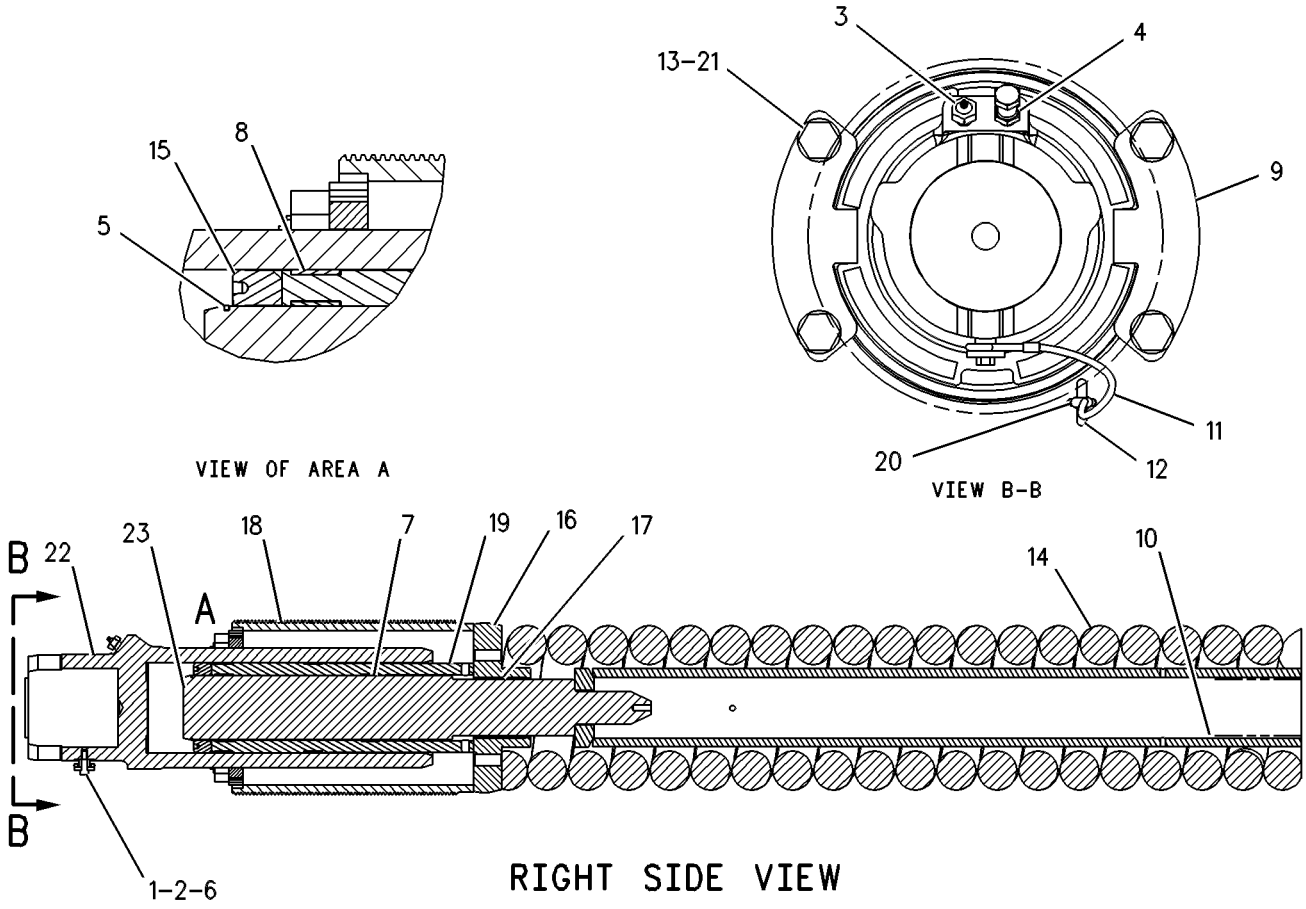

GRAPHIC #1 **<END>** g00330551

179-2511 TRACK ADJUSTER & RECOIL GP

S/N: 7PZ1-UP

PART OF 179-2518, 179-2519 UNDERCARRIAGE AR

SMCS-4157, 4158 **i01988833**

NOTE	REF NO	GRAPHIC REF	PART NUMBER	QTY	PART NAME 1 2 3 4 5 6 (PRODUCT LEVEL)	SEE PAGE
	1	1	**1L-5081**	1	SPACER (0.41X0.75X0.56 IN THK)	
	2	1	**1P-7346**	1	WASHER-HARD (10.2X35X6MM THK)	
	3	1	**2S-5925**	1	FITTING-GREASE	
	4	1	**2S-5926**	1	VALVE (RELIEF)	
	5	1	**2S-8939**	1	RING-RETAINING	
	6	1	**3B-1915**	1	BOLT (3/8-16X1.75 IN)	
	7	1	**4J-3342**	2	RING-WEAR	
	8	1	**6P-7577**	2	RING	
	9	1	**6T-9127**	2	STOP	
	10	1	**6T-9176**	1	STOP AS	
	11	1	**7G-8282**	1	CABLE AS	
	12	1	**1P-7405**	1	EYEBOLT	
	13	1	**7X-0545**	4	WASHER-HARD (24X40X5MM THK)	
	14	1	**8P-4459**	1	SPRING	
	15	1	**8T-2863**	1	SEAL-U-CUP	
	16	1	**9W-2503**	1	PILOT AS	
	17	1	**9W-2500**	1	BEARING-SLEEVE	
	18	1	**140-6681**	1	RETAINER AS	
	19	1	**163-4820**	1	CYLINDER	
	20	1	**6V-8801**	1	NUT (3/8-16 THD)	
	21	1	**7X-0385**	4	BOLT (7/8-9X3.25 IN)	
	22	1	**109-4703**	1	CYLINDER	
	23	1	**7T-5734**	1	ROD	

179-2511 **TRACK ADJUSTER & RECOIL GP** ***(contd.)*** **i01988833**

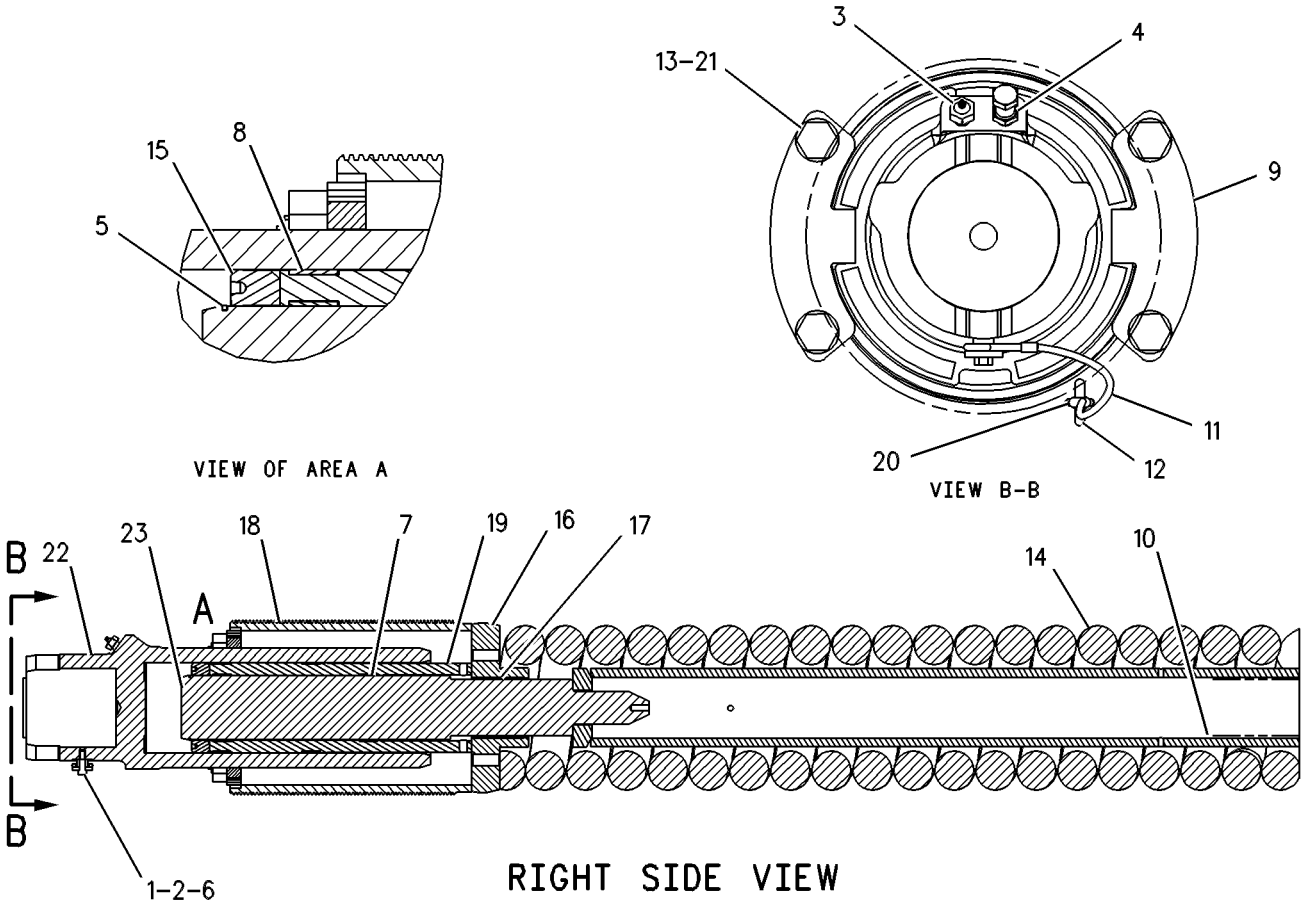

GRAPHIC #1 **<END>** g00330551

143-1278 TRACK GP—2 REQUIRED

S/N: 7PZ1-674
710MM (28 IN.) GROUSER SHOE.
SEALED & LUBRICATED-EXTREME SERVICE, POSITIVE PIN RETENTION
PART OF 139-7697 UNDERCARRIAGE AR

SMCS-4170 **i01988835**

NOTE	PART NUMBER	QTY	PART NAME 1 2 3 4 5 6 (PRODUCT LEVEL)	SEE PAGE
Y	**161-9854**	1	LINK AS-TRACK	580
			S/N: 7PZ1-321	
Y	**183-9331**	1	LINK AS-TRACK	581
			S/N: 7PZ322-508	
Y	**207-6162**	1	LINK AS-TRACK	582
			S/N: 7PZ509-674	
	6T-8521	2	BOLT-MASTER TRACK (1 3/8-12X6.0 IN)	
	6T-8520	2	BOLT-MASTER TRACK (1 3/8-12X7.2 IN)	
	6T-8853	160	BOLT-TRACK (1 3/8-12X4.3 IN)	
	3T-6292	160	NUT-TRACK (1 3/8-12 THD)	
	153-4874	40	SHOE-TRACK	
	153-4875	1	SHOE-TRACK MASTER	

Y-SEPARATE ILLUSTRATION

<END>

143-1279 TRACK GP—2 REQUIRED

S/N: 7PZ1-674
810MM (32 IN.) GROUSER SHOE.
SEALED & LUBRICATED,EXTREME SERVICE, POSITIVE PIN RETENTION
REPLACED BY 215-7496—PAGE 616
AN ATTACHMENT

SMCS-4170 **i01660508**

NOTE	PART NUMBER	QTY	PART NAME 1 2 3 4 5 6 (PRODUCT LEVEL)	SEE PAGE
Y	**183-9331**	1	LINK AS-TRACK	581
			—OR—	
Y	**207-6162**	1	LINK AS-TRACK	582
	3T-6292	160	NUT-TRACK (1 3/8-12 THD)	
	6T-8520	2	BOLT-MASTER TRACK (1 3/8-12X7.2 IN)	
	6T-8521	2	BOLT-MASTER TRACK (1 3/8-12X6.0 IN)	
	6T-8853	160	BOLT-TRACK (1 3/8-12X4.3 IN)	
	153-4876	40	SHOE-TRACK	
	153-4878	1	SHOE-TRACK MASTER	

Y-SEPARATE ILLUSTRATION

<END>

143-1280 TRACK GP–2 REQUIRED

S/N: 7PZ1-674
915MM (36 IN.) GROUSER SHOE.
SEALED & LUBRICATED,EXTREME SERVICE, POSITIVE PIN RETENTION
REPLACED BY 215-7497–PAGE 616
AN ATTACHMENT

SMCS-4170 **i01660509**

NOTE	PART NUMBER	QTY	PART NAME 1 2 3 4 5 6 (PRODUCT LEVEL)	SEE PAGE
Y	**183-9331**	1	LINK AS-TRACK	581
			–OR–	
Y	**207-6162**	1	LINK AS-TRACK	582
	3T-6292	160	NUT-TRACK (1 3/8-12 THD)	
	6T-8520	2	BOLT-MASTER TRACK (1 3/8-12X7.2 IN)	
	6T-8521	2	BOLT-MASTER TRACK (1 3/8-12X6.0 IN)	
	6T-8853	160	BOLT-TRACK (1 3/8-12X4.3 IN)	
	153-4962	1	SHOE-TRACK MASTER	
	153-4963	40	SHOE-TRACK	

Y-SEPARATE ILLUSTRATION

<END>

215-7495 TRACK GP–2 REQUIRED

S/N: 7PZ675-UP
710MM (28 IN) GROUSER SHOES.
EXTREME SERVICE-SEALED AND LUBRICATED-POSITIVE PIN RETENTION
PART OF 139-7697 UNDERCARRIAGE AR
ALSO AN ATTACHMENT

SMCS-4170 **i01669556**

NOTE	PART NUMBER	QTY	PART NAME 1 2 3 4 5 6 (PRODUCT LEVEL)	SEE PAGE
Y	**215-7494**	1	LINK AS-TRACK	583
	6T-8520	2	BOLT-MASTER TRACK (1 3/8-12X7.2 IN)	
	6T-8521	2	BOLT-MASTER TRACK (1 3/8-12X6.0 IN)	
	6T-8853	160	BOLT-TRACK (1 3/8-12X4.3 IN)	
	3T-6292	160	NUT-TRACK (1 3/8-12 THD)	
	153-4874	40	SHOE-TRACK	
	153-4875	1	SHOE-TRACK MASTER	

Y-SEPARATE ILLUSTRATION

<END>

215-7496 TRACK GP–2 REQUIRED

S/N: 7PZ1-UP
810MM (31.8 IN)GROUSER SHOES.
EXTREME SERVICE-SEALED AND LUBRICATED-POSITIVE PIN RETENTION
AN ATTACHMENT

SMCS-4170 **i01669537**

NOTE	PART NUMBER	QTY	PART NAME 1 2 3 4 5 6 (PRODUCT LEVEL)	SEE PAGE
Y	**215-7494**	1	LINK AS-TRACK	583
	6T-8520	2	BOLT-MASTER TRACK (1 3/8-12X7.2 IN)	
	6T-8521	2	BOLT-MASTER TRACK (1 3/8-12X6.0 IN)	
	6T-8853	160	BOLT-TRACK (1 3/8-12X4.3 IN)	
	3T-6292	160	NUT-TRACK (1 3/8-12 THD)	
	153-4876	40	SHOE-TRACK	
	153-4878	1	SHOE-TRACK MASTER	
Y-SEPARATE ILLUSTRATION				

<END>

215-7497 TRACK GP–2 REQUIRED

S/N: 7PZ1-UP
915MM (36 IN)GROUSER SHOE.
SEALED AND LUBRICATED-EXTREME SERVICE-POSITIVE PIN RETENTION
AN ATTACHMENT

SMCS-4170 **i01669523**

NOTE	PART NUMBER	QTY	PART NAME 1 2 3 4 5 6 (PRODUCT LEVEL)	SEE PAGE
Y	**215-7494**	1	LINK AS-TRACK	583
	6T-8520	2	BOLT-MASTER TRACK (1 3/8-12X7.2 IN)	
	6T-8521	2	BOLT-MASTER TRACK (1 3/8-12X6.0 IN)	
	6T-8853	160	BOLT-TRACK (1 3/8-12X4.3 IN)	
	3T-6292	160	NUT-TRACK (1 3/8-12 THD)	
	153-4963	40	SHOE-TRACK	
	153-4962	1	SHOE-TRACK MASTER	
Y-SEPARATE ILLUSTRATION				

<END>

216-0891 TRACK GP–2 REQUIRED

S/N: 7PZ1-UP
915MM (36 IN)GROUSER SHOE.
SEALED AND LUBRICATED-EXTREME SERVICE-POSITIVE PIN RETENTION
AN ATTACHMENT

SMCS-4170 **i01669777**

NOTE	PART NUMBER	QTY	PART NAME 1 2 3 4 5 6 (PRODUCT LEVEL)	SEE PAGE
Y	**215-7678**	1	LINK AS-TRACK	584
	6T-8520	2	BOLT-MASTER TRACK (1 3/8-12X7.2 IN)	
	6T-8521	2	BOLT-MASTER TRACK (1 3/8-12X6.0 IN)	
	6T-8853	160	BOLT-TRACK (1 3/8-12X4.3 IN)	
	3T-6292	160	NUT-TRACK (1 3/8-12 THD)	
	153-4963	40	SHOE-TRACK	
	153-4962	1	SHOE-TRACK MASTER	
Y-SEPARATE ILLUSTRATION				

<END>

139-7697 UNDERCARRIAGE AR

S/N: 7PZ1-UP
PART OF 155-5550 GENERAL AR

SMCS-4150 **i01961893**

NOTE	PART NUMBER	QTY	PART NAME 1 2 3 4 5 6 (PRODUCT LEVEL)	SEE PAGE
Y	*129-4032*	4	CAP GP-TRACK IDLER	550
Y	*129-4033*	4	CAP GP-TRACK IDLER	551
Y	*9W-7266*	32	CAP GP-TRACK ROLLER	552
Y	*141-7522*	1	BAR GP-EQUALIZER	543
Y	*139-7698*	1	FRAME GP-TELESCOPING RECOIL	553
Y	**156-0313**	4	IDLER GP-TRACK	578
			S/N: 7PZ1-386	
Y	**187-1484**	4	IDLER GP-TRACK	579
			S/N: 7PZ387-UP	
Y	**6I-9718**	8	ROLLER GP-TRACK-DOUBLE FLANGE	596
			–OR–	
Y	**184-6306**	8	ROLLER GP-TRACK-DOUBLE FLANGE	597
			(IF EQUIPPED)	
Y	**6I-9717**	8	ROLLER GP-TRACK-SINGLE FLANGE	598
			–OR–	
Y	**184-6305**	8	ROLLER GP-TRACK-SINGLE FLANGE	599
			(IF EQUIPPED)	
Y	*139-7709*	1	SUSPENSION GP-BOGIE	602
Y	**139-7710**	1	TRACK ADJUSTER & RECOIL GP	610
Y	*143-1278*	2	TRACK GP	614
			S/N: 7PZ1-674	
Y	**215-7495**	2	TRACK GP	615
			S/N: 7PZ675-UP	
Y-SEPARATE ILLUSTRATION				

<END>

179-2516 UNDERCARRIAGE AR—RH

S/N: 7PZ1-UP
FOR USE WITH 141-7522—PAGE 543
FIELD INSTALLATION

SMCS-4150 **i01444558**

NOTE	PART NUMBER	QTY	PART NAME 1 2 3 4 5 6 (PRODUCT LEVEL)	SEE PAGE
Y	**156-0313**	2	IDLER GP-TRACK	578
			—OR—	
Y	**187-1484**	2	IDLER GP-TRACK	579
Y	**6I-9718**	4	ROLLER GP-TRACK-DOUBLE FLANGE	596
			—OR—	
Y	**184-6306**	4	ROLLER GP-TRACK-DOUBLE FLANGE	597
Y	**6I-9717**	4	ROLLER GP-TRACK-SINGLE FLANGE	598
			—OR—	
Y	**184-6305**	4	ROLLER GP-TRACK-SINGLE FLANGE	599
Y	**179-2518**	1	UNDERCARRIAGE AR	619
Y-SEPARATE ILLUSTRATION				

<END>

179-2517 UNDERCARRIAGE AR—LH

S/N: 7PZ1-UP
FOR USE WITH 141-7522—PAGE 543
FIELD INSTALLATION

SMCS-4150 **i01444560**

NOTE	PART NUMBER	QTY	PART NAME 1 2 3 4 5 6 (PRODUCT LEVEL)	SEE PAGE
Y	**156-0313**	2	IDLER GP-TRACK	578
			—OR—	
Y	**187-1484**	2	IDLER GP-TRACK	579
Y	**6I-9718**	4	ROLLER GP-TRACK-DOUBLE FLANGE	596
			—OR—	
Y	**184-6306**	4	ROLLER GP-TRACK-DOUBLE FLANGE	597
Y	**6I-9717**	4	ROLLER GP-TRACK-SINGLE FLANGE	598
			—OR—	
Y	**184-6305**	4	ROLLER GP-TRACK-SINGLE FLANGE	599
Y	**179-2519**	1	UNDERCARRIAGE AR	619
Y-SEPARATE ILLUSTRATION				

<END>

179-2518 UNDERCARRIAGE AR—RH

S/N: 7PZ1-UP

PART OF 179-2516 UNDERCARRIAGE AR

SMCS-4150 **i01224897**

NOTE	PART NUMBER	QTY	PART NAME 1 2 3 4 5 6 (PRODUCT LEVEL)	SEE PAGE
Y	*129-4032*	2	CAP GP-TRACK IDLER	550
Y	*129-4033*	2	CAP GP-TRACK IDLER	551
Y	*9W-7266*	16	CAP GP-TRACK ROLLER	552
Y	*179-2514*	1	FRAME GP-TELESCOPING RECOIL	566
Y	*179-2512*	1	SUSPENSION GP-BOGIE	604
Y	*179-2511*	1	TRACK ADJUSTER & RECOIL GP	612

Y-SEPARATE ILLUSTRATION

<END>

179-2519 UNDERCARRIAGE AR—LH

S/N: 7PZ1-UP

PART OF 179-2517 UNDERCARRIAGE AR

SMCS-4150 **i01224945**

NOTE	PART NUMBER	QTY	PART NAME 1 2 3 4 5 6 (PRODUCT LEVEL)	SEE PAGE
Y	*129-4032*	2	CAP GP-TRACK IDLER	550
Y	*129-4033*	2	CAP GP-TRACK IDLER	551
Y	*9W-7266*	16	CAP GP-TRACK ROLLER	552
Y	*179-2515*	1	FRAME GP-TELESCOPING RECOIL	572
Y	*179-2513*	1	SUSPENSION GP-BOGIE	607
Y	*179-2511*	1	TRACK ADJUSTER & RECOIL GP	612

Y-SEPARATE ILLUSTRATION

<END>

124-2354 ADJUSTER GP-STEER & TMSN CONT

S/N: 7PZ1-UP

ELECTRIC

PART OF 124-2356 CONTROL GP-STEERING & TMSN

SMCS-4135 **i01989510**

NOTE	REF NO	GRAPHIC REF	PART NUMBER	QTY	PART NAME 1 2 3 4 5 6 (PRODUCT LEVEL)	SEE PAGE
	1	1	**8F-7702**	4	SEAL-LIP TYPE	
	2	1	**8T-1172**	4	SEAL-LIP TYPE	
M	3	1	**8T-2658**	1	LOCKNUT (M3X0.5 THD)	
	4	1	**8T-5410**	4	SEAL-LIP TYPE	
M	5	1	**8T-9006**	1	BOLT-SOCKET HEAD (M3X.5X20MM)	
	6	1	**9X-6772**	4	STRAP-CABLE	
	7	1	**110-7880**	1	SWITCH AS (ROCKER) (CONSOLE RAISE/LOWER)	
		1	**3E-3362**	1	WEDGE-PLUG LOCK (2 PIN)	
		1	**3E-3365**	1	WEDGE-RECEPTACLE LOCK (2 PIN)	
		1	**186-3735**	2	PIN-CONNECTOR	
		1	**186-3736**	2	SOCKET-CONNECTOR	
		1	**102-8802**	1	KIT-RECEPTACLE (2-PIN)	
					(INCLUDES WEDGE & RECEPTACLE AS)	
		1	**155-2270**	1	KIT-CONNECTING PLUG (2-PIN)	
					(INCLUDES WEDGE, PLUG AS & INTERFACE SEAL)	
	8	1	**149-4889**	1	ACTUATOR AS	
		1	**3E-3362**	1	WEDGE-PLUG LOCK (2 PIN)	
		1	**186-3736**	2	SOCKET-CONNECTOR	
		1	**155-2270**	1	KIT-CONNECTING PLUG (2-PIN)	
					(INCLUDES WEDGE, PLUG AS & INTERFACE SEAL)	
	9	1	**122-4268**	1	BRACKET AS	
M		1	**8T-3612**	1	NUT-WELD (M8X1.25 THD)	
	10	1	**122-4270**	1	BRACKET AS	
M		1	**5C-7261**	4	NUT (M8X1.25 THD)	
	10A	1	**122-6046**	1	MOUNT	
	11	1	**122-4271**	1	KNOB (ARMREST ADJUSTMENT)	
	12	1	**127-7494**	1	PLATE AS	
M		1	**8T-3490**	1	NUT-WELD (M10X1.5 THD)	
M	12A	1	**6V-9632**	2	NUT-WELD (M6X1 THD)	
	12B	1	**122-6049**	1	MOUNT	
	13	1	**122-6826**	1	PLATE AS	
M		1	**8T-3612**	2	NUT-WELD (M8X1.25 THD)	
M	13A	1	**6V-9632**	2	NUT-WELD (M6X1 THD)	
M	13B	1	**8T-3490**	1	NUT-WELD (M10X1.5 THD)	
	14	1	**122-6824**	1	PLATE	
	15	1	**122-6825**	1	SPACER	
	16	1	**8T-4205**	2	WASHER-HARD (7.2X14.5X2MM THK)	
	17	1	**124-0799**	1	SPRING	
	18	1	**7X-7729**	4	WASHER (11X25X3MM THK)	
	19	1	**130-0701**	1	SHAFT	
	20	1	**130-1985**	1	SLEEVE	
E	21	1	**130-7975**		SLEEVE-BRASS (4 CM)	
	22	1	**130-9989**	4	SLEEVE	
	23	1	**130-9990**	2	SLEEVE	
	24	1	**132-3581**	2	BEARING AS	
	25	1	**133-0155**	1	SHAFT	
	26	1	**133-6595**	1	BRACKET AS	
M		1	**8T-3490**	2	NUT-WELD (M10X1.5 THD)	
	27	1	**133-6974**	1	BRACKET AS	
M		1	**8T-3490**	2	NUT-WELD (M10X1.5 THD)	
	28	1	**133-7212**	1	PLATE	
	29	1	**133-7214**	1	SHAFT	
	30	1	**133-7230**	1	SHAFT	
	31	1	**133-7231**	1	PLATE	
	32	1	**5P-4116**	1	WASHER-HARD (8.8X20.5X2MM THK)	

124-2354 ADJUSTER GP-STEER & TMSN CONT *(contd.)* i01989510

NOTE	REF NO	GRAPHIC REF	PART NUMBER	QTY	PART NAME 1 2 3 4 5 6 (PRODUCT LEVEL)	SEE PAGE
M	33	1	**6V-2317**	1	BOLT (M8X1.25X30MM)	
	34	1	**8T-9368**	1	BOLT (1/4-20X2.25 IN)	
	35	1	**8T-4121**	6	WASHER-HARD (11X21X2.5MM THK)	
M	36	1	**8T-4133**	8	NUT (M10X1.5 THD)	
M	37	1	**8T-4136**	6	BOLT (M10X1.5X25MM)	
M	38	1	**8T-4189**	1	BOLT (M8X1.25X20MM)	
M	39	1	**8T-4195**	4	BOLT (M10X1.5X30MM)	
	40	1	**8T-4224**	3	WASHER-HARD (8.8X16X2MM THK)	
M	41	1	**8T-4908**	1	BOLT (M8X1.25X25MM)	
	42	1	**8T-7934**	12	WASHER-HARD (11X21X5MM THK)	
	43	1	**2D-6235**	2	LOCKNUT (1/4-20 THD)	
	44	1	**8T-9367**	1	BOLT (1/4-20X2 IN)	

E-ORDER BY THE CENTIMETER
M-METRIC PART

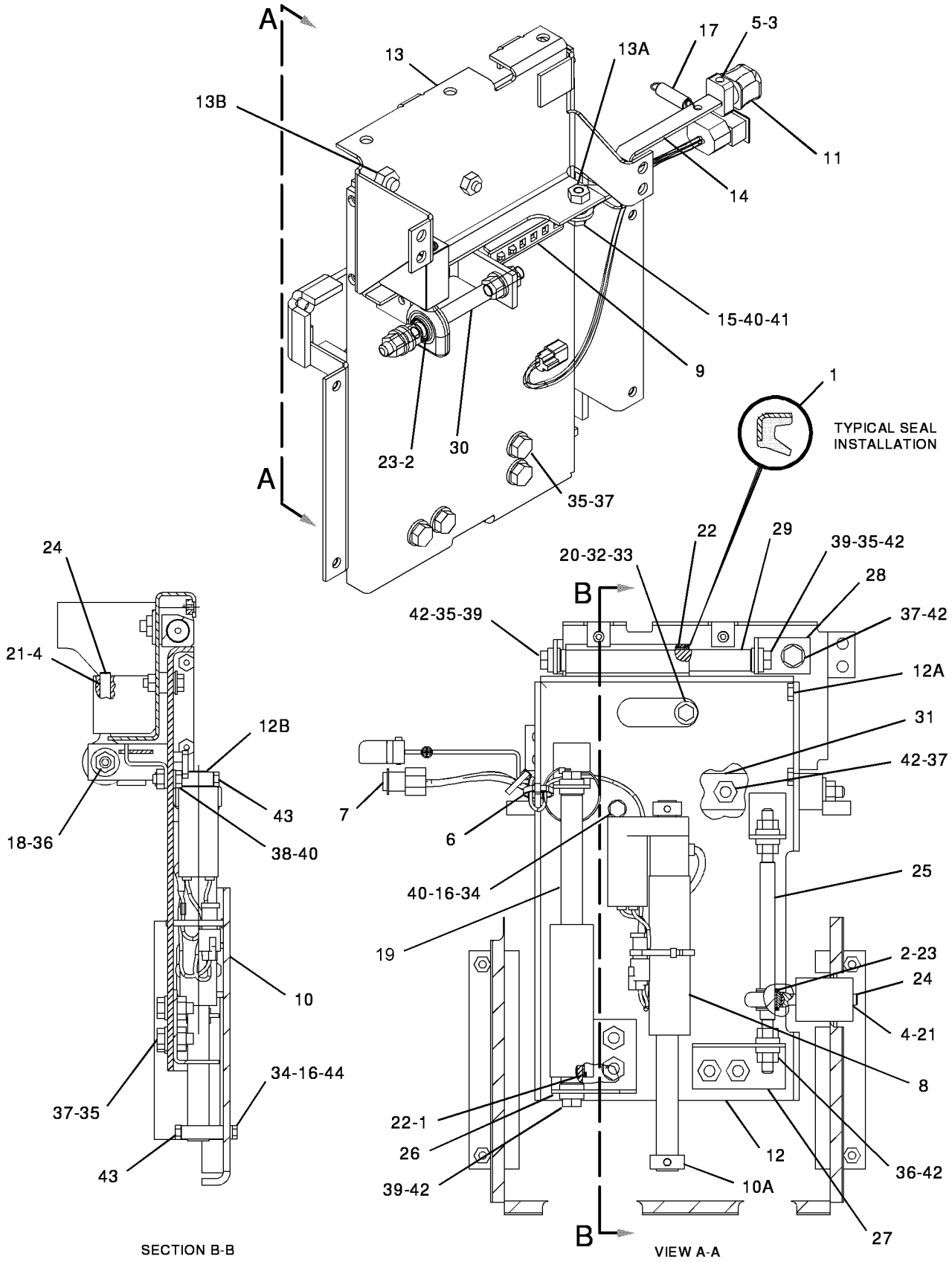

GRAPHIC #1

<END>

g01030023

STEERING AND BRAKING SYSTEM

118-9628 CLUTCH & BRAKE GP-STEERING*R

S/N: 7PZ1-UP

PART OF 112-9167 POWER TRAIN AR

SMCS-4101, 4109 **i01707376**

NOTE	REF NO	GRAPHIC REF	PART NUMBER	QTY	PART NAME 1 2 3 4 5 6 (PRODUCT LEVEL)	SEE PAGE
	1	1	**1H-8134**	2	RING-RETAINING	
	2	1	**5P-5846**	1	SEAL-O-RING	
	3	1	**4F-2129**	1	BALL BEARING	
	4	1	**5P-4057**	1	SEAL-O-RING	
	5	1	**5P-5297**	1	RING-RETAINING	
	6	1	**173-0594**	2	CUP	
	7	1	**173-0593**	2	CONE	
	8	1	**7G-1186**	1	RING-SEAL EXTENSION	
	9	1	**8M-4433**	2	SEAL-O-RING	
	10	1	**8P-8357**	1	RING-SEAL	
	11	1	**8P-9558**	10	DISC-FRICTION	
	12	1	**8P-9568**	1	RING-SEAL	
	13	1	**9S-8006**	3	PLUG	
	14	1	**121-0667**	1	HOUSING-BRAKE	
	15	1	**121-0668**	1	RETAINER	
	16	1	**121-0669**	7	DISC-FRICTION	
	17	1	**121-0670**	7	PLATE-SEPARATOR	
	18	1	**121-0671**	1	RETAINER	
	19	1	**121-0672**	1	HUB-OUTPUT	
	20	1	**121-0674**	3	RING-SEAL	
	21	1	**121-0675**	1	HUB-STEERING CLUTCH	
	22	1	**121-0676**	1	RETAINER	
	23	1	**121-0677**	9	PLATE-CLUTCH	
	24	1	**121-0678**	1	PISTON	
	25	1	**121-0679**	1	PISTON-CLUTCH	
	26	1	**121-0680**	1	HUB-INPUT	
	27	1	**121-0681**	1	PLATE	
	28	1	**121-0682**	1	SPOOL	
	29	1	**121-0683**	1	WASHER-SPRING	
	30	1	**121-0684**	1	PLATE	
	31	1	**121-0685**	1	SLEEVE	
	32	1	**121-0686**	1	RING-SEAL	
	33	1	**121-0687**	1	PLATE	
	34	1	**121-0688**	1	RING	
	35	1	**140-8016**	1	RING-RETAINING	
	36	1	**0S-1585**	17	BOLT (1/2-13X1.50 IN)	
	37	1	**1B-2886**	2	BOLT (1/2-13X3.75 IN)	
	38	1	**1B-4367**	2	BOLT (5/8-11X3 IN)	
	39	1	**2M-9780**	3	SEAL-O-RING	
	40	1	**5P-8245**	41	WASHER-HARD (13.5X25.5X3MM THK)	
	41	1	**5P-8247**	2	WASHER-HARD (17X32X3.5MM THK)	
	42	1	**9X-7295**	1	SEAL-O-RING	
	43	1	**9X-8873**	10	BOLT (1/2-13X2.25 IN)	
					—OR—	
		1	**2B-0947**	10	BOLT (1/2-13X2.25 IN)	
	44	1	**5P-8210**	2	SEAL-O-RING	
	45	1	**0S-1587**	12	BOLT (1/2-13X1.75 IN)	

118-9628 CLUTCH & BRAKE GP-STEERING *(contd.)* i01707376

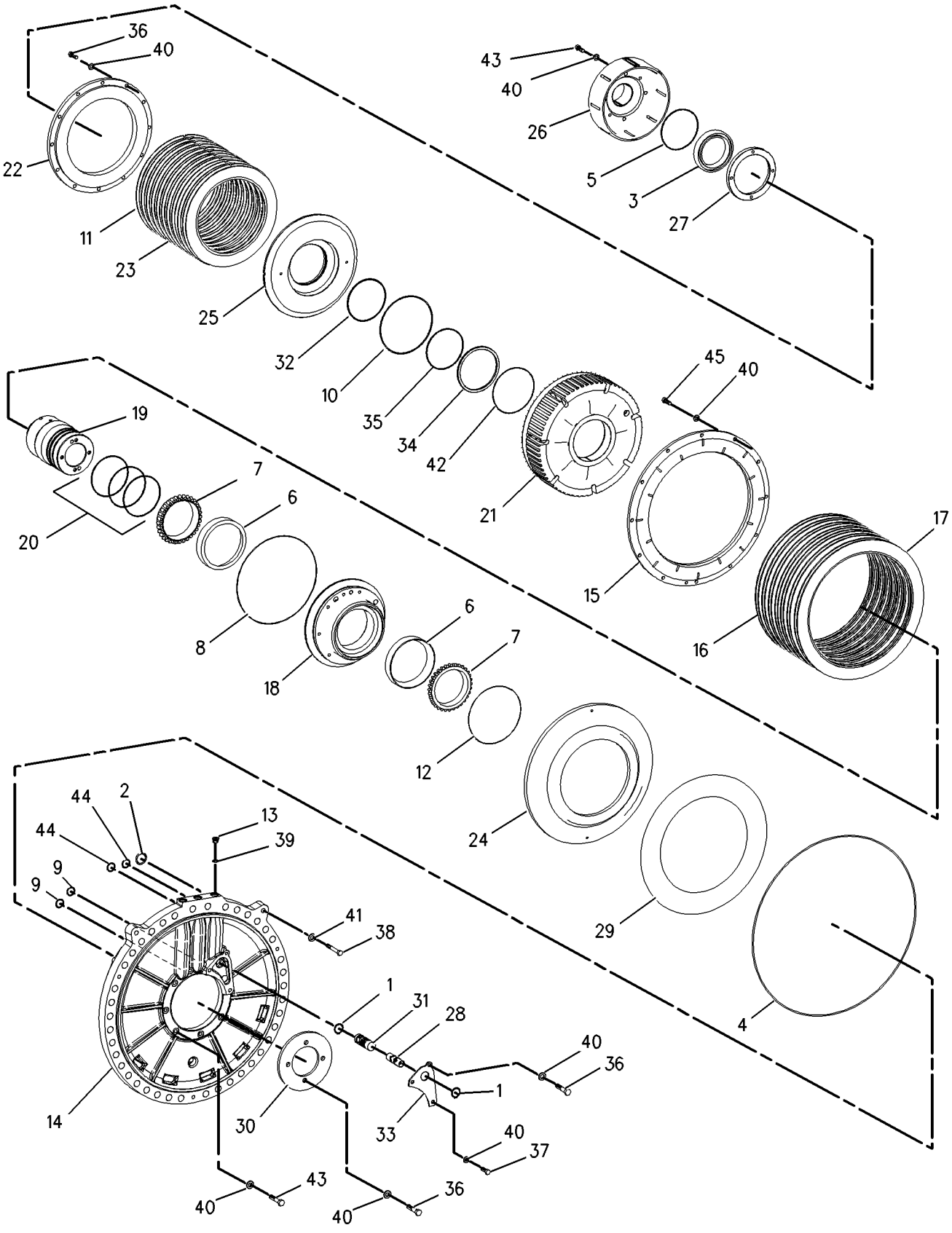

GRAPHIC #1 **<END>** g00627410

STEERING AND BRAKING SYSTEM

123-6446 CONTROL GP-PARKING BRAKE

S/N: 7PZ1-UP

PART OF 122-1512 CONTROL GP-STEERING & TMSN

SMCS-4269, 4284 **i01988817**

NOTE	REF NO	GRAPHIC REF	PART NUMBER	QTY	PART NAME 1 2 3 4 5 6 (PRODUCT LEVEL)	SEE PAGE
	1	1	**6V-8118**	2	SCREW-SOCKET HEAD (6/32X0.625 IN)	
M	2	1	**9X-2546**	3	BOLT (M6X1X20MM)	
	3	1	**9X-6772**	1	STRAP-CABLE	
	4	1	**137-4830**	1	SPRING	
	5	1	**123-0912**	1	LOCK AS-CYLINDER	
J		1	**226-0291**	1	LOCK AS	
		1	**226-0328**	1	CAM-LOCK	
	6	1	**214-9184**	1	HOUSING AS	
	6A	1	**214-9183**	1	FILM (PARKING BRAKE)	
	7	1	**118-0639**	1	SWITCH AS-ROCKER (PARKING BRAKE)	
		1	**8T-8729**	12	PIN-CONNECTOR	
		1	**102-8801**	1	KIT-RECEPTACLE (12-PIN)	
					(INCLUDES RECEPTACLE AS & WEDGE)	
		1	**3E-5180**	1	WEDGE-RECEPTACLE LOCK (12-PIN)	

J-REQUIRES 5P8500 KEY
M-METRIC PART

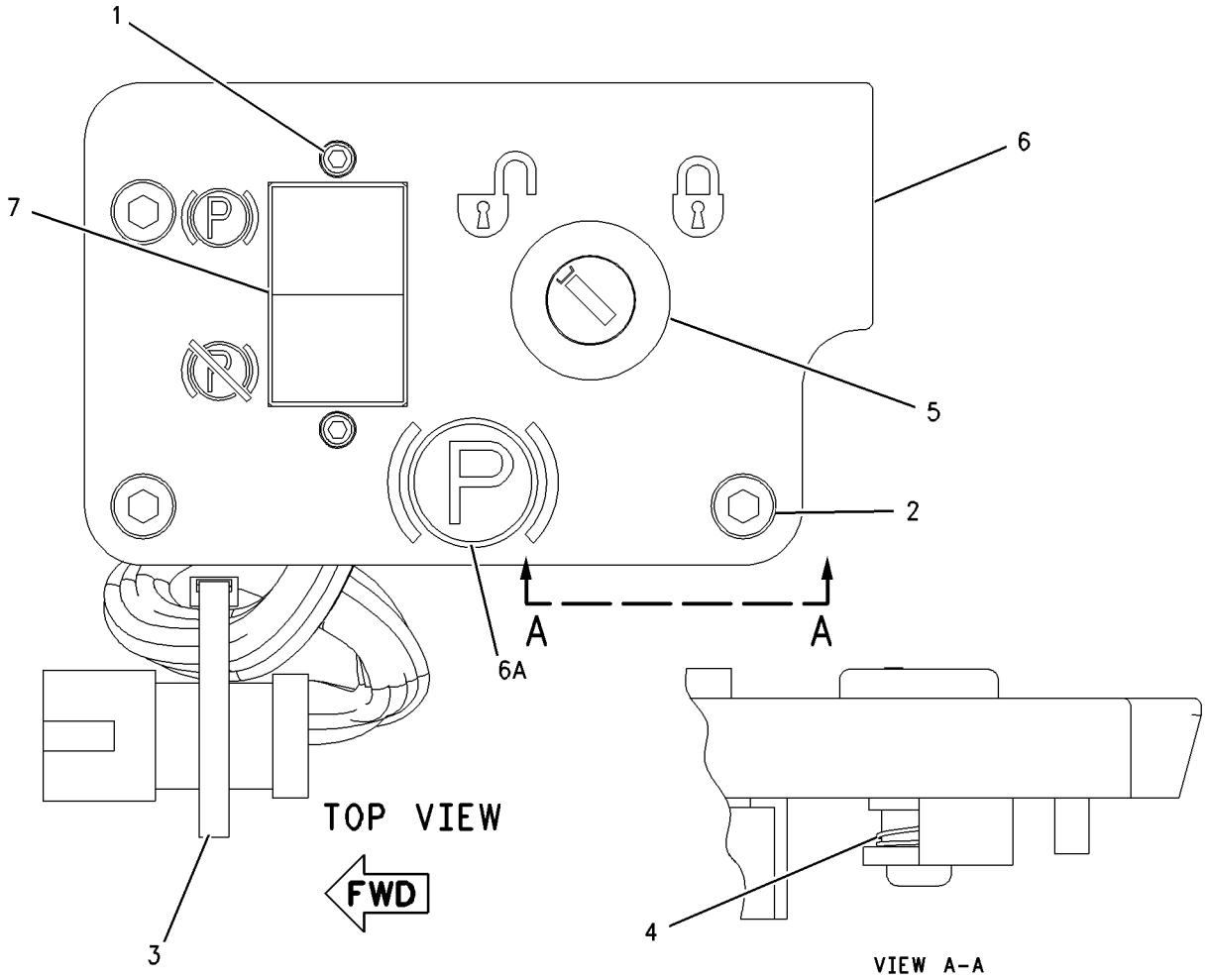

GRAPHIC #1 **<END>** g00862385

STEERING AND BRAKING SYSTEM

122-1512 CONTROL GP-STEERING & TMSN

S/N: 7PZ1-UP

PART OF 124-2356 CONTROL GP-STEERING & TMSN

TYPE 1

SMCS-4122 **i01988854**

NOTE	REF NO	GRAPHIC REF	PART NUMBER	QTY	PART NAME 1 2 3 4 5 6 (PRODUCT LEVEL)	SEE PAGE
	1	1	**1W-6448**	2	DOWEL	
	2	1	**4B-1270**	1	SCREW-MACHINE (8-32X0.75 IN)	
	3	1	**8T-0328**	1	WASHER-HARD (5.5X10X1MM THK)	
Y	4	1	**147-1680**	2	SENSOR GP-POSITION (ROTARY) (STEER POSITION)	330
M	5	1	**9X-6615**	6	BOLT (M5X.8X30MM)	
C	6	1	**9X-6772**	6	STRAP-CABLE	
M	7	1	**9X-8902**	3	BOLT-SOCKET HEAD (M3X0.5X8MM)	
	8	1	**103-6262**	2	SCREW-MACHINE (4-40X.63 IN)	
	9	1	**159-7352**	1	PLATE AS	
M		1	**6V-9632**	4	NUT-WELD (M6X1 THD)	
M		1	**8T-3612**	5	NUT-WELD (M8X1.25 THD)	
Y	10	1	**122-7372**	1	GEAR GP-STEERING	633
	11	1	**123-3295**	1	PLATE	
	12	1	**123-3296**	1	GASKET	
	13	1	**123-3826**	1	HANDLE AS	
	14	1	**123-6377**	1	SWITCH AS-LIMIT (REVERSE)	
	15	1	**123-6392**	1	CUSHION AS	
M		1	**8T-3490**	4	NUT-WELD (M10X1.5 THD)	
Y	16	1	*123-6446*	1	CONTROL GP-PARKING BRAKE	625
	17	1	**123-9812**	1	HANDLE AS	
Y	18	1	**125-0583**	1	SUPPORT GP-CONTROL	641
Y	19	1	*125-9664*	1	GEAR GP-STEERING	635
	20	1	**126-2487**	1	PLATE	
Y	21	1	**127-2945**	1	DETENT GP	632
	22	1	**133-8468**	1	HARNESS AS (FTC)	
CY	23	1	**161-8979**	1	SENSOR GP-POSITION	332
M	24	1	**135-8581**	1	BOLT-SOCKET HEAD (M6X1.0X30MM)	
C	25	1	**3K-7942**	1	CLAMP	
C	26	1	**6V-0894**	3	SEAL-O-RING	
M	27	1	**7X-7888**	2	BOLT (M6X1X90MM)	
	28	1	**8M-2771**	1	CLIP	
M	29	1	**8T-0267**	1	BOLT-SOCKET HEAD (M6X1X12MM)	
C	30	1	**8T-4121**	1	WASHER-HARD (11X21X2.5MM THK)	
M	31	1	**8T-4137**	4	BOLT (M10X1.5X20MM)	
M	32	1	**8T-4138**	2	BOLT (M6X1X20MM)	
	33	1	**9X-8256**	4	WASHER (6.6X12X2MM THK)	
	34	1	**159-7351**	2	CLIP	

C-CHANGE FROM PREVIOUS TYPE
M-METRIC PART
Y-SEPARATE ILLUSTRATION

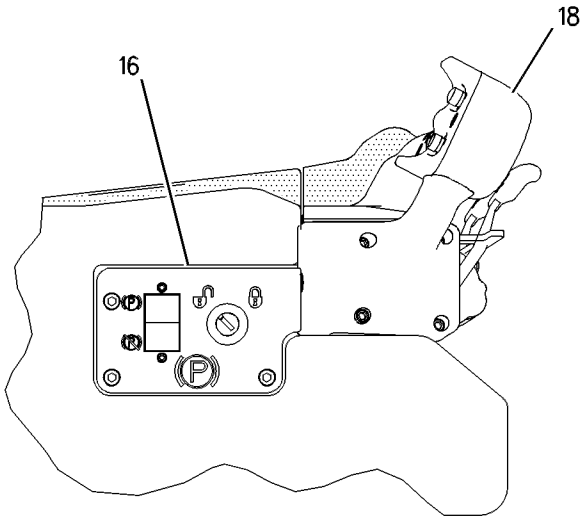

RIGHT SIDE VIEW

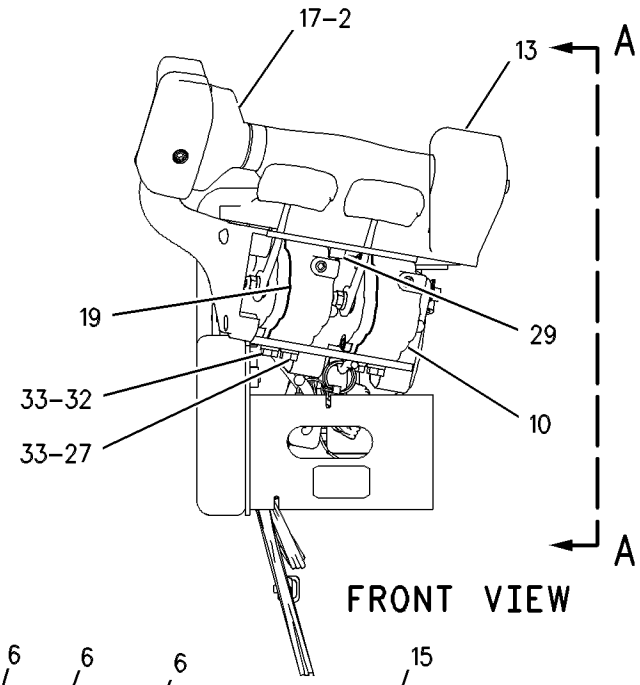

FRONT VIEW

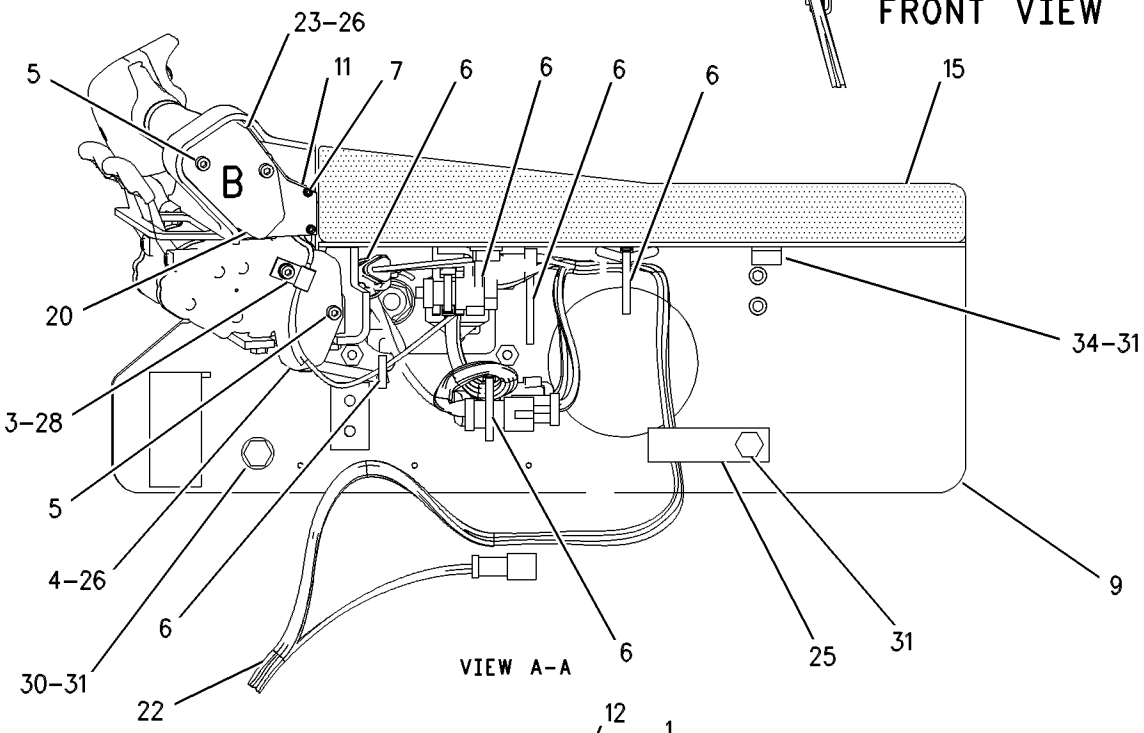

VIEW A-A

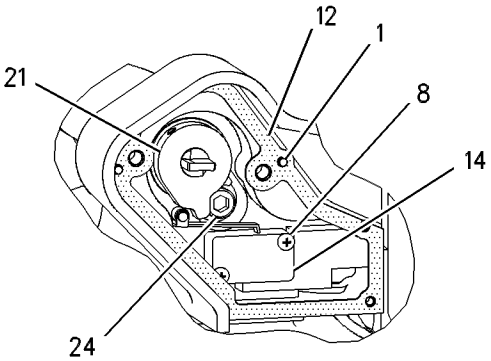

VIEW OF AREA B
(WITH PLATE AND CONTROL GP REMOVED)

GRAPHIC #1 **<END>** g00628116

STEERING AND BRAKING SYSTEM

122-1512 CONTROL GP-STEERING & TMSN

S/N: 7PZ1-UP

PART OF 124-2356 CONTROL GP-STEERING & TMSN

TYPE 2

SMCS-4122 **i01843793**

NOTE	REF NO	GRAPHIC REF	PART NUMBER	QTY	PART NAME 1 2 3 4 5 6 (PRODUCT LEVEL)	SEE PAGE
	1	1	**1W-6448**	2	DOWEL	
	2	1	**4B-1270**	1	SCREW-MACHINE (8-32X0.75 IN)	
	3	1	**8T-0328**	1	WASHER-HARD (5.5X10X1MM THK)	
CY	4	1	**214-4863**	2	SENSOR GP-POSITION (ROTARY) (RH & LH TURN)	335
M	5	1	**9X-6615**	6	BOLT (M5X.8X30MM)	
	6	1	**9X-6772**	6	STRAP-CABLE	
M	7	1	**9X-8902**	3	BOLT-SOCKET HEAD (M3X0.5X8MM)	
	8	1	**103-6262**	2	SCREW-MACHINE (4-40X.63 IN)	
	9	1	**159-7352**	1	PLATE AS	
M		1	**6V-9632**	4	NUT-WELD (M6X1 THD)	
M		1	**8T-3612**	5	NUT-WELD (M8X1.25 THD)	
Y	10	1	**122-7372**	1	GEAR GP-STEERING	633
	11	1	**123-3295**	1	PLATE	
	12	1	**123-3296**	1	GASKET	
	13	1	**123-3826**	1	HANDLE AS	
	14	1	**123-6377**	1	SWITCH AS-LIMIT (REVERSE)	
	15	1	**123-6392**	1	CUSHION AS	
M		1	**8T-3490**	4	NUT-WELD (M10X1.5 THD)	
Y	16	1	*123-6446*	1	CONTROL GP-PARKING BRAKE	625
	17	1	**123-9812**	1	HANDLE AS (FORWARD/REVERSE)	
Y	18	1	**125-0583**	1	SUPPORT GP-CONTROL	641
Y	19	1	*125-9664*	1	GEAR GP-STEERING	635
	20	1	**126-2487**	1	PLATE	
Y	21	1	**127-2945**	1	DETENT GP	632
	22	1	**133-8468**	1	HARNESS AS (FTC)	
		1	**102-8802**	1	KIT-RECEPTACLE (2 PIN)	
		1	**102-8801**	1	KIT-RECEPTACLE (12 PIN)	
					(INCLUDES RECEPTACLE AS & WEDGE)	
		1	**155-2260**	3	KIT-CONNECTING PLUG (3 PIN)	
		1	**155-2274**	2	KIT-CONNECTING PLUG (6 PIN)	
		1	**155-2255**	1	KIT-CONNECTING PLUG (12 PIN)	
					(INCLUDES PLUG AS & WEDGE)	
		1	**110-6845**	1	PLUG AS-CONNECTOR (40 PIN)	
		1	**110-6844**	1	SEAL	
		1	**110-6846**	1	PLUG AS-CONNECTOR (40 PIN)	
		1	**110-6844**	1	SEAL	
		1	**8T-8737**	20	PLUG-SEAL	
		1	**110-6848**	1	PLUG AS-CONNECTOR (40 PIN)	
		1	**110-6844**	1	SEAL	
CY	23	1	**214-4862**	1	SENSOR GP-POSITION (SPRINGLESS) (FORWARD/REVERSE)	334
M	24	1	**135-8581**	1	BOLT-SOCKET HEAD (M6X1.0X30MM)	
	25	1	**3K-7942**	1	CLAMP	
	26	1	**6V-0894**	3	SEAL-O-RING	
M	27	1	**7X-7888**	2	BOLT (M6X1X90MM)	
	28	1	**8M-2771**	1	CLIP	
M	29	1	**8T-0267**	1	BOLT-SOCKET HEAD (M6X1X12MM)	
	30	1	**8T-4121**	1	WASHER-HARD (11X21X2.5MM THK)	
M	31	1	**8T-4137**	4	BOLT (M10X1.5X20MM)	
M	32	1	**8T-4138**	2	BOLT (M6X1X20MM)	
	33	1	**9X-8256**	4	WASHER (6.6X12X2MM THK)	
	34	1	**159-7351**	2	CLIP	

C-CHANGE FROM PREVIOUS TYPE
M-METRIC PART
Y-SEPARATE ILLUSTRATION

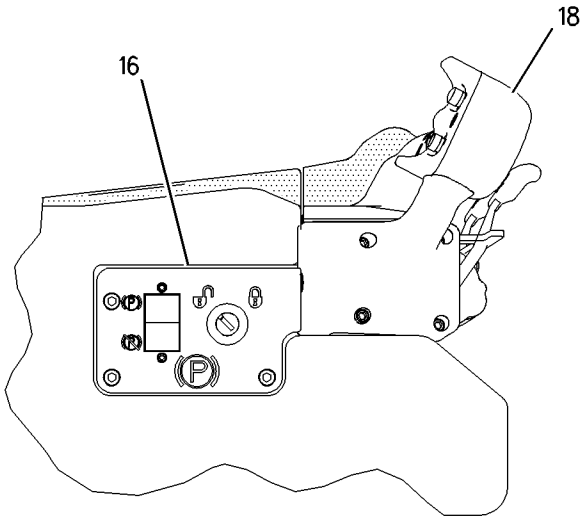

RIGHT SIDE VIEW

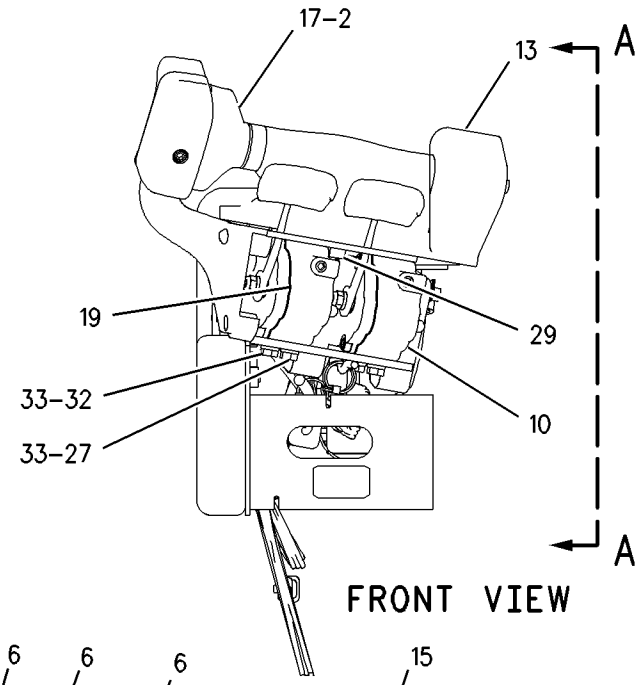

FRONT VIEW

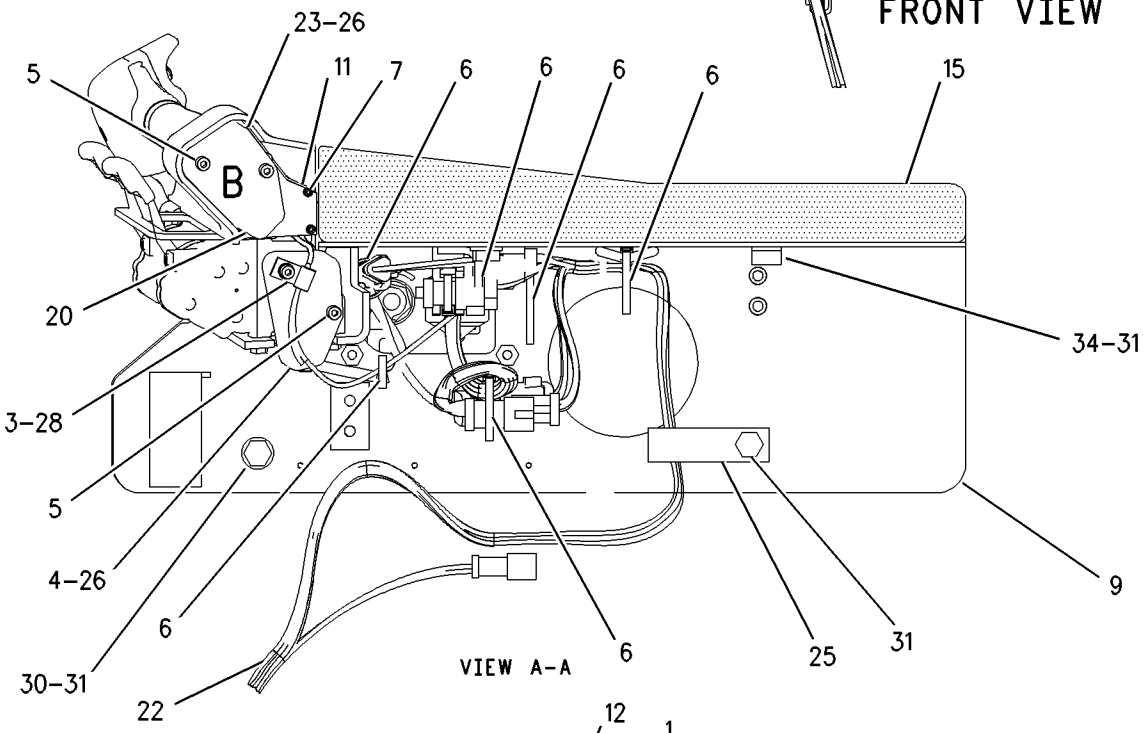

VIEW A-A

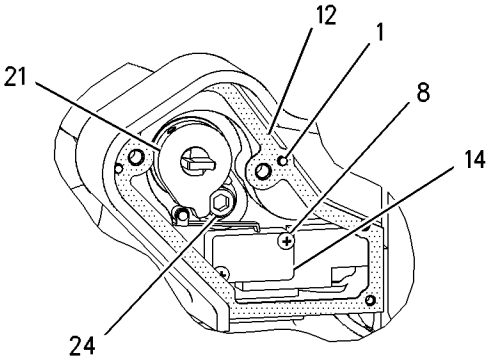

VIEW OF AREA B
(WITH PLATE AND CONTROL GP REMOVED)

GRAPHIC #1 **<END>** g01006986

124-2356 CONTROL GP-STEERING & TMSN

S/N: 7PZ1-UP

PART OF 115-7412 CONTROL & MTG GP-TRANSMISSION

SMCS-4122 **i01423796**

NOTE	REF NO	GRAPHIC REF	PART NUMBER	QTY	PART NAME 1 2 3 4 5 6 (PRODUCT LEVEL)	SEE PAGE
B	1	1	**9X-6772**	3	STRAP-CABLE	
Y	2	1	*122-1512*	1	CONTROL GP-STEERING & TMSN	626
	3	1	**122-8026**	1	PLATE	
	4	1	**123-3283**	1	PLATE AS	
M		1	**6V-9632**	2	NUT-WELD (M6X1 THD)	
	5	1	**123-9176**	1	COVER	
Y	6	1	*124-2354*	1	ADJUSTER GP-STEER & TMSN CONT	620
	7	1	**143-0013**	1	BELLOWS AS	
	8	1	**4P-7581**	2	CLIP	
M	9	1	**5C-9553**	2	BOLT (M6X1X16MM)	
	10	1	**5P-4116**	2	WASHER-HARD (8.8X20.5X2MM THK)	
M	11	1	**8T-4200**	9	BOLT (M8X1.25X16MM)	
	12	1	**8T-4224**	7	WASHER-HARD (8.8X16X2MM THK)	
M	13	1	**9X-2043**	5	SCREW-TRUSS HEAD (M6X1X14MM)	
	14	1	**9X-8256**	2	WASHER (6.6X12X2MM THK)	
B	15	1	**4P-7581**	1	CLIP	
B	16	1	**9X-6772**	1	STRAP-CABLE	

B-USE AS REQUIRED
M-METRIC PART
Y-SEPARATE ILLUSTRATION

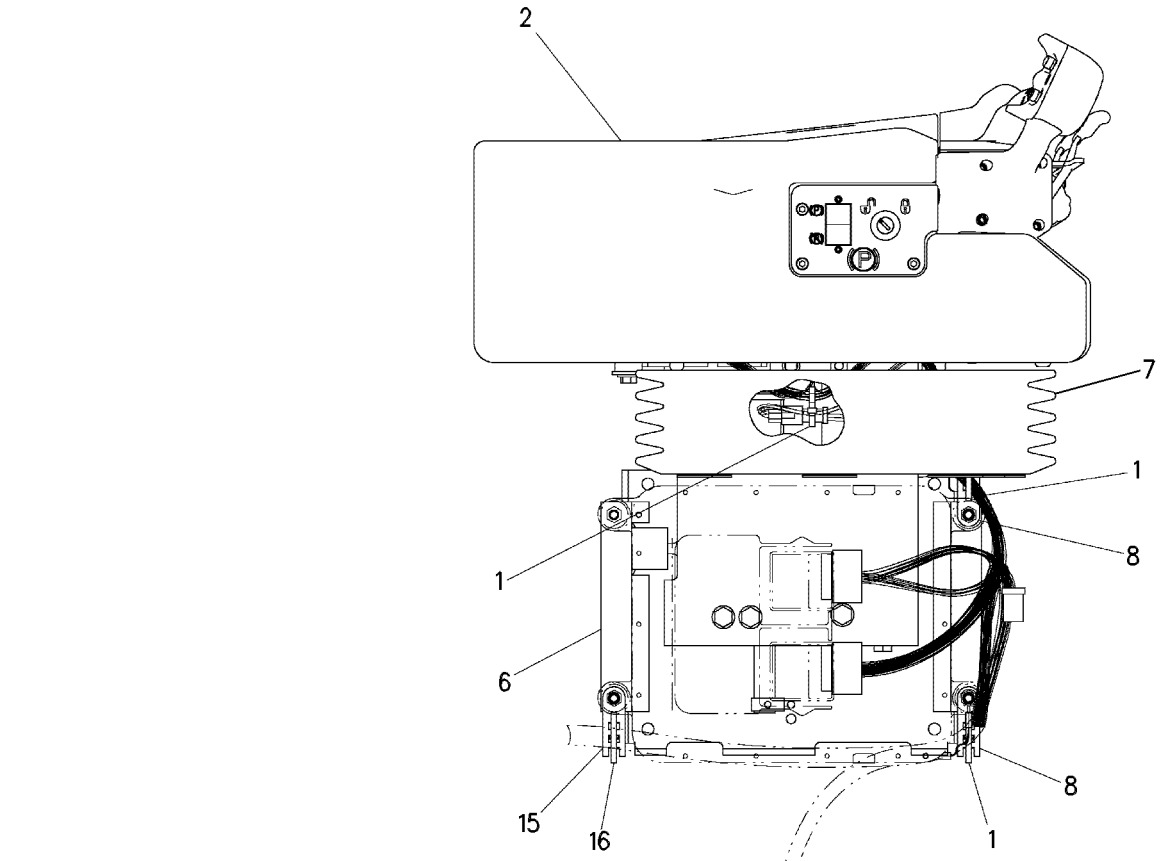

RIGHT SIDE VIEW

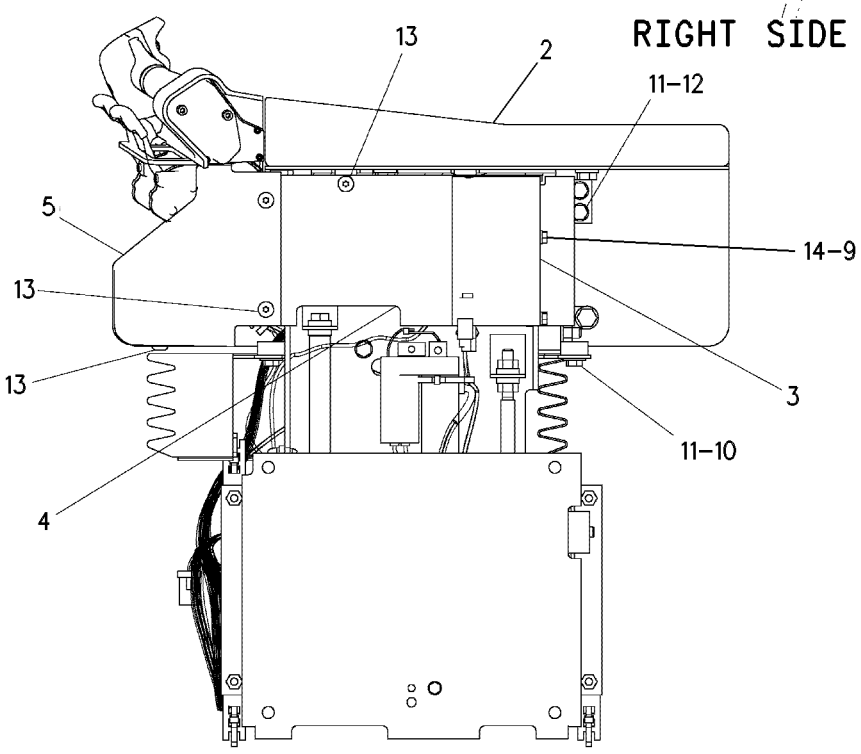

LEFT SIDE VIEW

GRAPHIC #1 **<END>** g00272535

127-2945 DETENT GP–STEERING

S/N: 7PZ1-UP

PART OF 122-1512 CONTROL GP-STEERING & TMSN

i00745829

NOTE	REF NO	GRAPHIC REF	PART NUMBER	QTY	PART NAME 1 2 3 4 5 6 (PRODUCT LEVEL)	SEE PAGE
Z	1	1		4	BALL	
Z	2	1		1	DOWEL	
Z	3	1		1	PIN-SPRING	
Z	4	1		1	DETENT	
Z	5	1		1	BEARING	
Z	6	1		1	SHAFT	
Z	7	1		4	SPRING	

Z-NOT SERVICED SEPARATELY

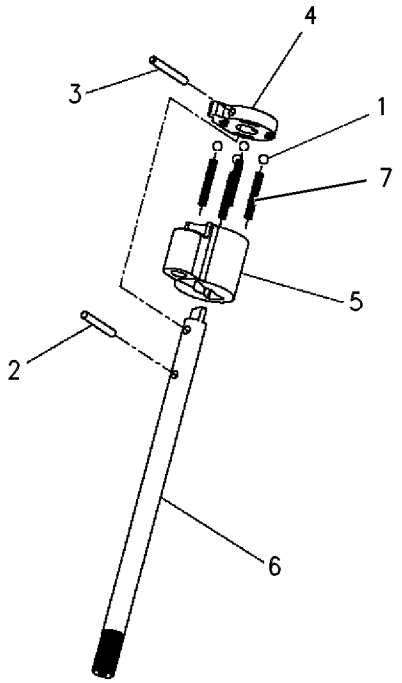

GRAPHIC #1

<END>

g00333449

122-7372 GEAR GP-STEERING

S/N: 7PZ1-UP

PART OF 122-1512 CONTROL GP-STEERING & TMSN

FIELD REPLACEMENT FOR 125-9664—PAGE 635

SMCS-4301 **i01745189**

NOTE	REF NO	GRAPHIC REF	PART NUMBER	QTY	PART NAME 1 2 3 4 5 6 (PRODUCT LEVEL)	SEE PAGE
Z	1	1		1	PLUG-PIPE	
Z	2	1		2	SEAL-LIP	
M	3	1	**129-3178**	1	LOCKNUT (M6X1 THD)	
Z	4	1		1	SETSCREW	
Z	5	1		3	BOLT-SOCKET HEAD (M3X0.5X12MM)	
Z	6	1		1	GEAR AS (40 TEETH)	
Z	7	1		1	GEAR AS (100 TEETH)	
Z	8	1		1	SLEEVE	
Z	9	1		1	SPRING-TORSION	
Z	10	1		1	SPRING-TORSION	
Z	11	1		1	PLATE	
Z	12	1		1	GASKET	
Z	13	1		1	HOUSING AS	
Z	14	1		1	COVER AS	
	15	1	**124-3702**	1	LEVER AS	
		1	**2K-8467**	1	PIN-SPRING	
M	16	1	**125-3298**	4	BOLT-SOCKET HEAD	
	17	1	**9X-8256**	1	WASHER (6.6X12X2MM THK)	

M-METRIC PART
Z-NOT SERVICED SEPARATELY

122-7372 GEAR GP-STEERING *(contd.)* i01745189

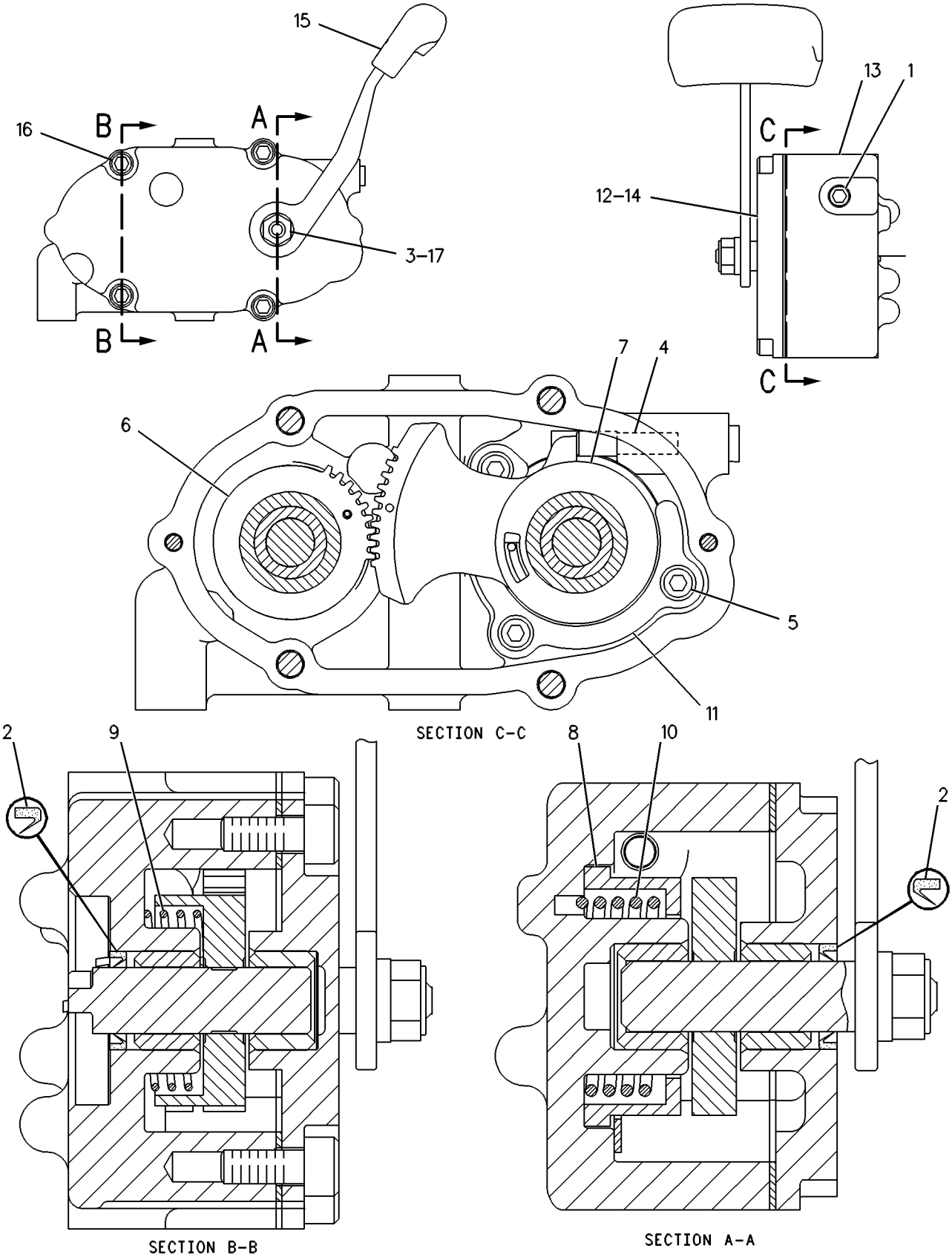

GRAPHIC #1 **<END>** g00252547

125-9664 GEAR GP-STEERING

S/N: 7PZ1-UP

PART OF 122-1512 CONTROL GP-STEERING & TMSN

FIELD REPLACEMENT ORDER 122-7372—PAGE 633, 4-125-3299 BOLT-SOCKET HEAD

SMCS-4301 **i01745193**

NOTE	REF NO	GRAPHIC REF	PART NUMBER	QTY	PART NAME 1 2 3 4 5 6 (PRODUCT LEVEL)	SEE PAGE
Z	1	1		1	PLUG-PIPE	
Z	2	1		2	SEAL-LIP	
M	3	1	**129-3178**	1	LOCKNUT (M6X1 THD)	
Z	4	1		1	SETSCREW	
Z	5	1		3	BOLT-SOCKET HEAD (M3X0.5X12MM)	
Z	6	1		1	GEAR AS (40 TEETH)	
Z	7	1		1	GEAR AS (100 TEETH)	
Z	8	1		1	SLEEVE	
Z	9	1		1	SPRING-TORSION	
Z	10	1		1	SPRING-TORSION	
Z	11	1		1	PLATE	
Z	12	1		1	GASKET	
Z	13	1		1	HOUSING AS	
Z	14	1		1	COVER AS	
	15	1	**124-3702**	1	LEVER AS	
		1	**2K-8467**	1	PIN-SPRING	
M	16	1	**125-3299**	4	BOLT-SOCKET HEAD (M5X0.8X25MM)	
	17	1	**9X-8256**	1	WASHER (6.6X12X2MM THK)	

M-METRIC PART
Z-NOT SERVICED SEPARATELY

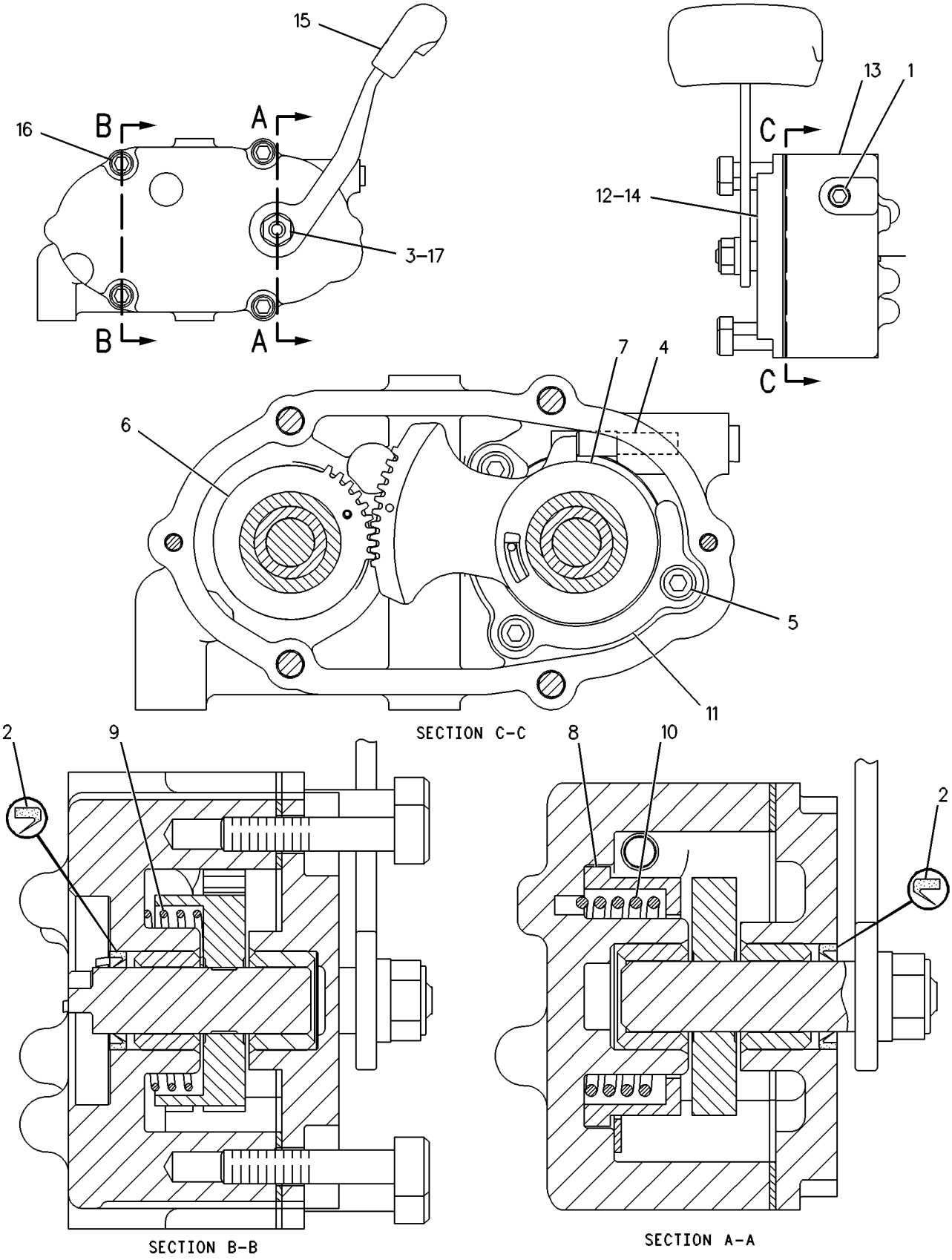

GRAPHIC #1 **<END>** g00252542

133-3246 MANIFOLD & VALVE GP—PARKING, SECONDARY BRAKE

S/N: 7PZ1-406

PART OF 133-3255 VALVE GP-STEERING & BRAKE CONT

SMCS-3206, 5479 **i01232208**

NOTE	REF NO	GRAPHIC REF	PART NUMBER	QTY	PART NAME 1 2 3 4 5 6 (PRODUCT LEVEL)	SEE PAGE
	1	1	**132-9455**	1	MANIFOLD	
Y	2	1	**133-2250**	2	VALVE GP-SOLENOID (24 VOLT)	486

Y-SEPARATE ILLUSTRATION

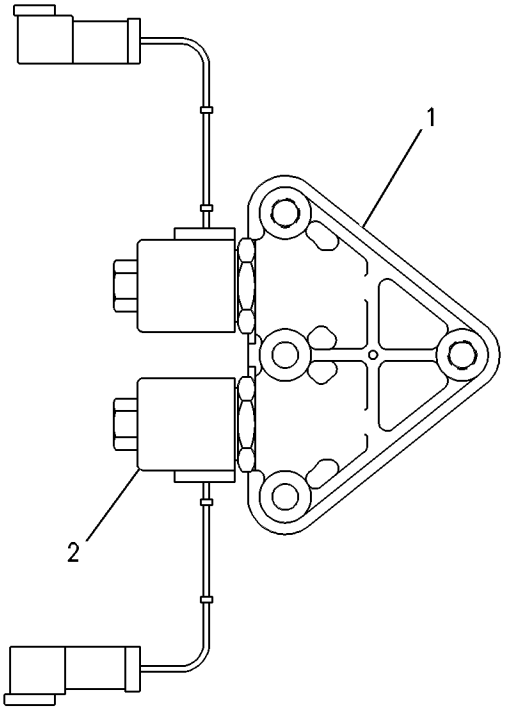

GRAPHIC #1 **<END>** g00257857

137-8795 MANIFOLD & VALVE GP–RH, LH STEERING CLUTCH, BRAKE

S/N: 7PZ1-406

PART OF 133-3255 VALVE GP-STEERING & BRAKE CONT

SMCS-3206, 5479 **i01742987**

NOTE	REF NO	GRAPHIC REF	PART NUMBER	QTY	PART NAME 1 2 3 4 5 6 (PRODUCT LEVEL)	SEE PAGE
	1	1	**111-3199**	1	MANIFOLD	
Y	2	1	**121-4030**	4	VALVE GP-SOLENOID	485
	3	1	**137-8794**	2	SPOOL AS	
					(EACH INCLUDES)	
	4	1	**5L-4758**	1	SEAL-O-RING	
	5	1	**137-8793**	1	SPRING	
	6	1	**3D-7943**	1	RING-RETAINING	
	7	1	**1P-1744**	2	DOWEL	

Y-SEPARATE ILLUSTRATION

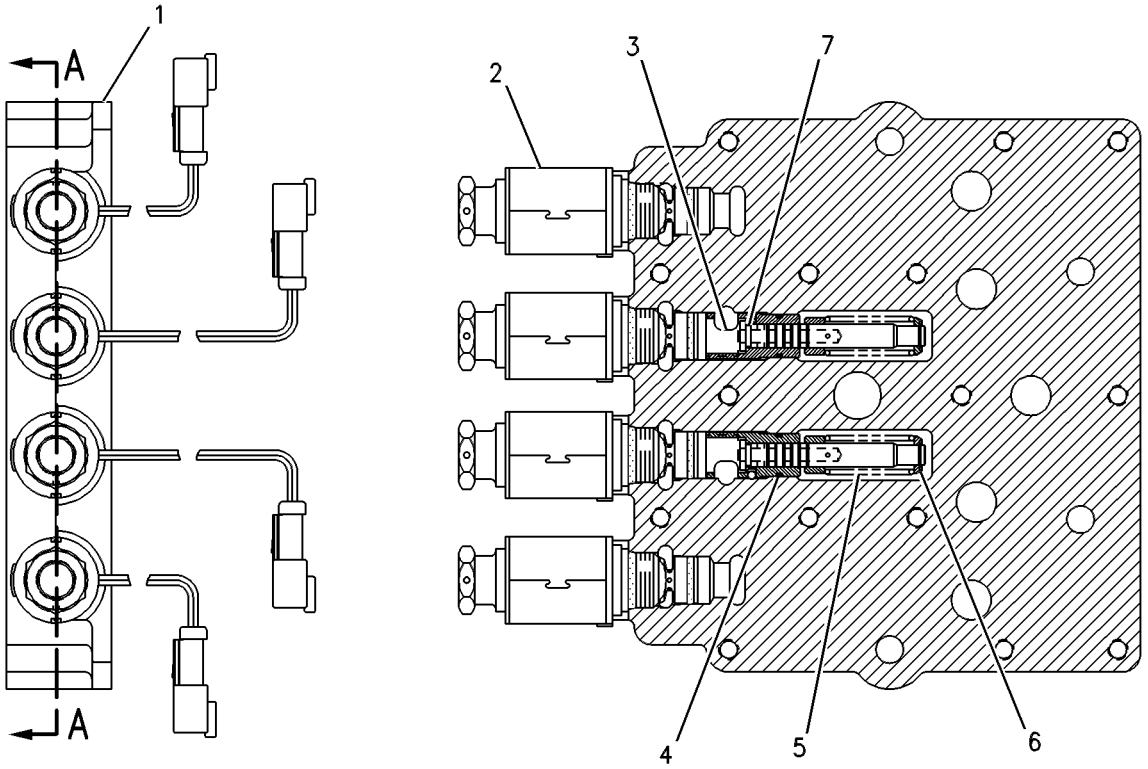

SECTION A-A

GRAPHIC #1 **<END>** g00262745

164-6093 MANIFOLD & VALVE GP–RH, LH STEERING CLUTCH, BRAKE

S/N: 7PZ407-UP

PART OF 201-7272 VALVE GP-STEERING & BRAKE CONT

SMCS-3206, 5479 **i01576803**

NOTE	REF NO	GRAPHIC REF	PART NUMBER	QTY	PART NAME 1 2 3 4 5 6 (PRODUCT LEVEL)	SEE PAGE
	1	1	**137-8794**	2	SPOOL AS	
					(EACH INCLUDES)	
	2	1	**3D-7943**	1	RING-RETAINING	
	3	1	**5L-4758**	1	SEAL-O-RING	
	4	1	**137-8793**	1	SPRING	
	5	1	**111-3199**	1	MANIFOLD	
Y	6	1	**174-4909**	4	VALVE GP-SOLENOID	489
	7	1	**1P-1744**	2	DOWEL	

Y-SEPARATE ILLUSTRATION

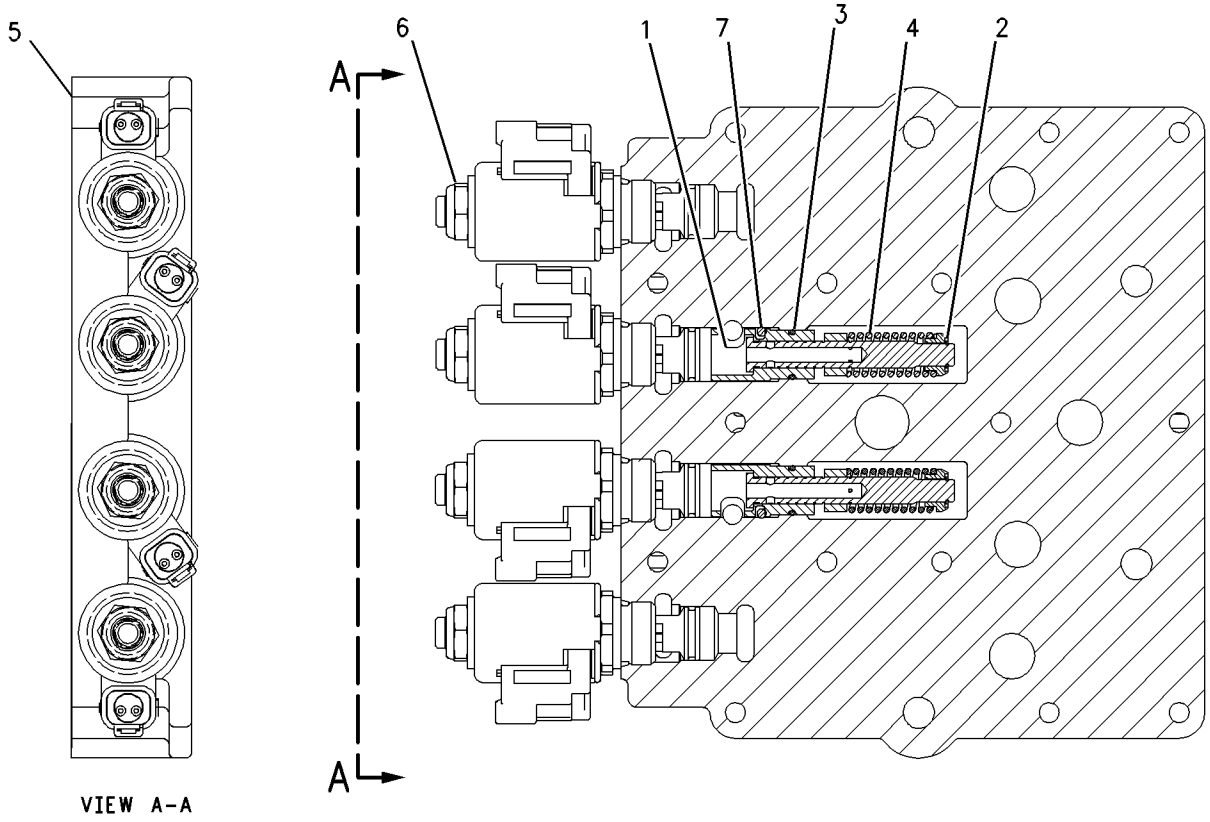

VIEW A-A

GRAPHIC #1 **<END>** g00753145

175-4972 MANIFOLD & VALVE GP–RH, LH STEERING CLUTCH, BRAKE

S/N: 7PZ407-UP

PART OF 201-7272 VALVE GP-STEERING & BRAKE CONT

SMCS-3206, 5479 **i01914396**

NOTE	REF NO	GRAPHIC REF	PART NUMBER	QTY	PART NAME 1 2 3 4 5 6 (PRODUCT LEVEL)	SEE PAGE
	1	1	**132-9455**	1	MANIFOLD	
Y	2	1	*172-2392*	2	VALVE GP-SOLENOID (PARKING & SECONDARY BRAKE)	488

Y-SEPARATE ILLUSTRATION

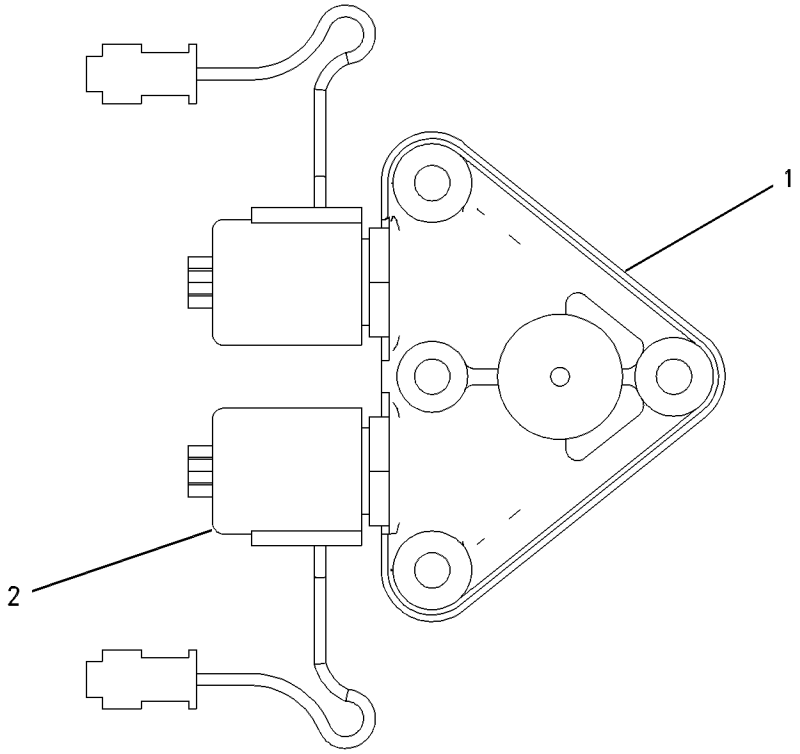

GRAPHIC #1 **<END>** g00653425

125-0583 SUPPORT GP-CONTROL–UPSHIFT, DOWNSHIFT

S/N: 7PZ1-UP

PART OF 122-1512 CONTROL GP-STEERING & TMSN

SMCS-4122 **i01988855**

NOTE	REF NO	GRAPHIC REF	PART NUMBER	QTY	PART NAME 1 2 3 4 5 6 (PRODUCT LEVEL)	SEE PAGE
M	1	1	**9X-8902**	1	BOLT-SOCKET HEAD (M3X0.5X8MM)	
	2	1	**5P-8907**	1	SEAL-O-RING	
	3	1	**125-0582**	1	COVER AS	
M	4	1	**125-3298**	1	BOLT-SOCKET HEAD (M5X.8X12MM)	
	5	1	**125-8826**	1	COVER	
	6	1	**131-0447**	2	NUT (15/32-32THD)	
	7	1	**132-7419**	1	SWITCH AS-PUSH BUTTON (DOWNSHIFT)	
		1	**144-0331**	1	CAP-PUSH BUTTON	
	8	1	**132-7450**	1	SWITCH AS-PUSH BUTTON (UPSHIFT)	
		1	**144-0331**	1	CAP-PUSH BUTTON	
	9	1	**151-9275**	1	KIT-RECEPTACLE (6 PIN)	
					(INCLUDES RECEPTACLE AS & WEDGE)	
	10	1	**8T-8729**	6	PIN-CONNECTOR	
	11	1	**3E-3383**	1	WEDGE-RECEPTACLE LOCK (6-PIN)	
BD	12	1	**6V-2689**		TUBE-HEAT SHRINK	

B-USE AS REQUIRED
D-ORDER BY THE METER
M-METRIC PART

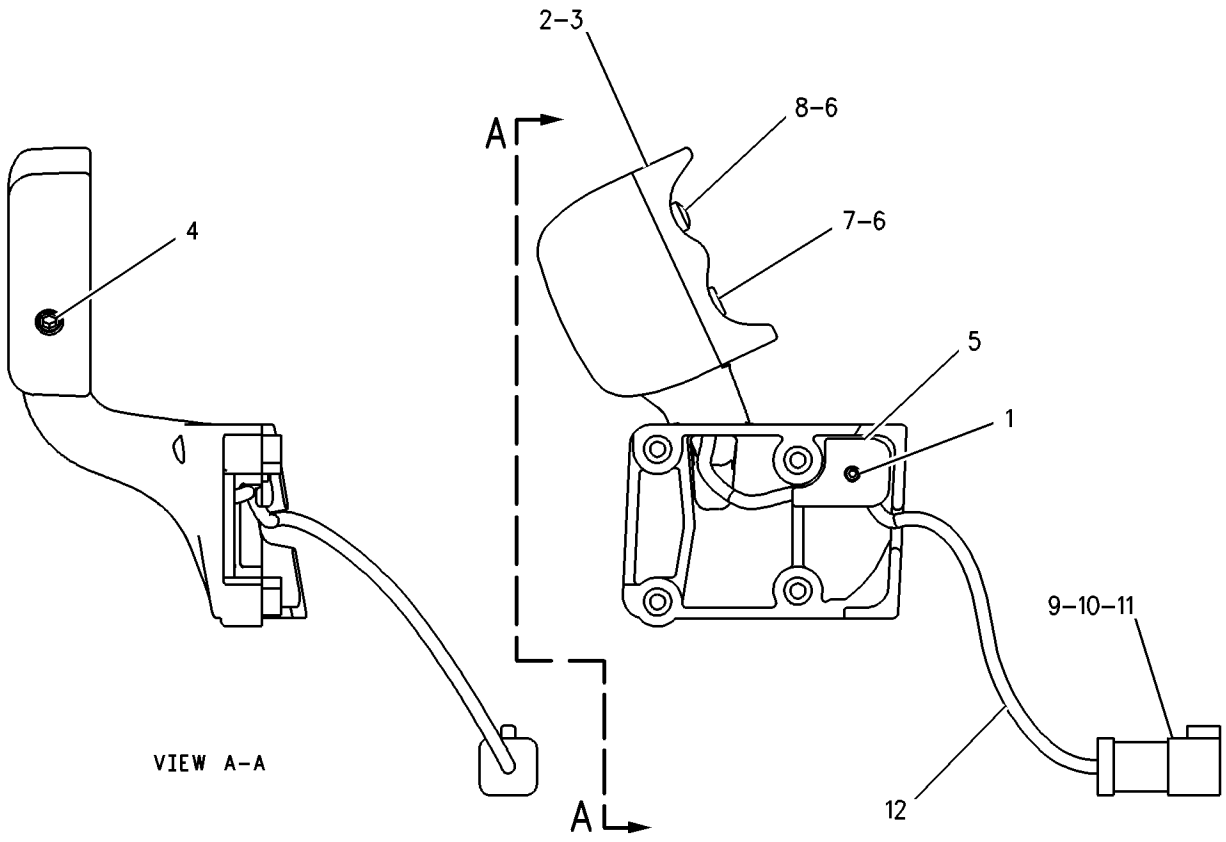

GRAPHIC #1 **<END>** g00629711

115-7414 VALVE & MTG GP-STEER & BRAKE

S/N: 7PZ1-406

PART OF 112-9167 POWER TRAIN AR

SMCS-4120 **i01565051**

NOTE	REF NO	GRAPHIC REF	PART NUMBER	QTY	PART NAME 1 2 3 4 5 6 (PRODUCT LEVEL)	SEE PAGE
Y	1	1	**133-3255**	1	VALVE GP-TRANSMISSION CONTROL	644
	2	1	**1A-5183**	4	BOLT (3/8-16X4.75 IN)	
	3	1	**9S-1018**	8	WASHER (9.73X19.05X.84MM THK)	
	4	1	**3S-0004**	4	WASHER (0.406X0.728X0.09 IN THK)	
	5	1	**8M-4438**	4	SEAL-O-RING	
	6	1	**8M-5254**	6	SEAL-O-RING	
	7	1	**114-3926**	1	PLATE	
	8	1	**9X-6772**	4	STRAP-CABLE	

Y-SEPARATE ILLUSTRATION

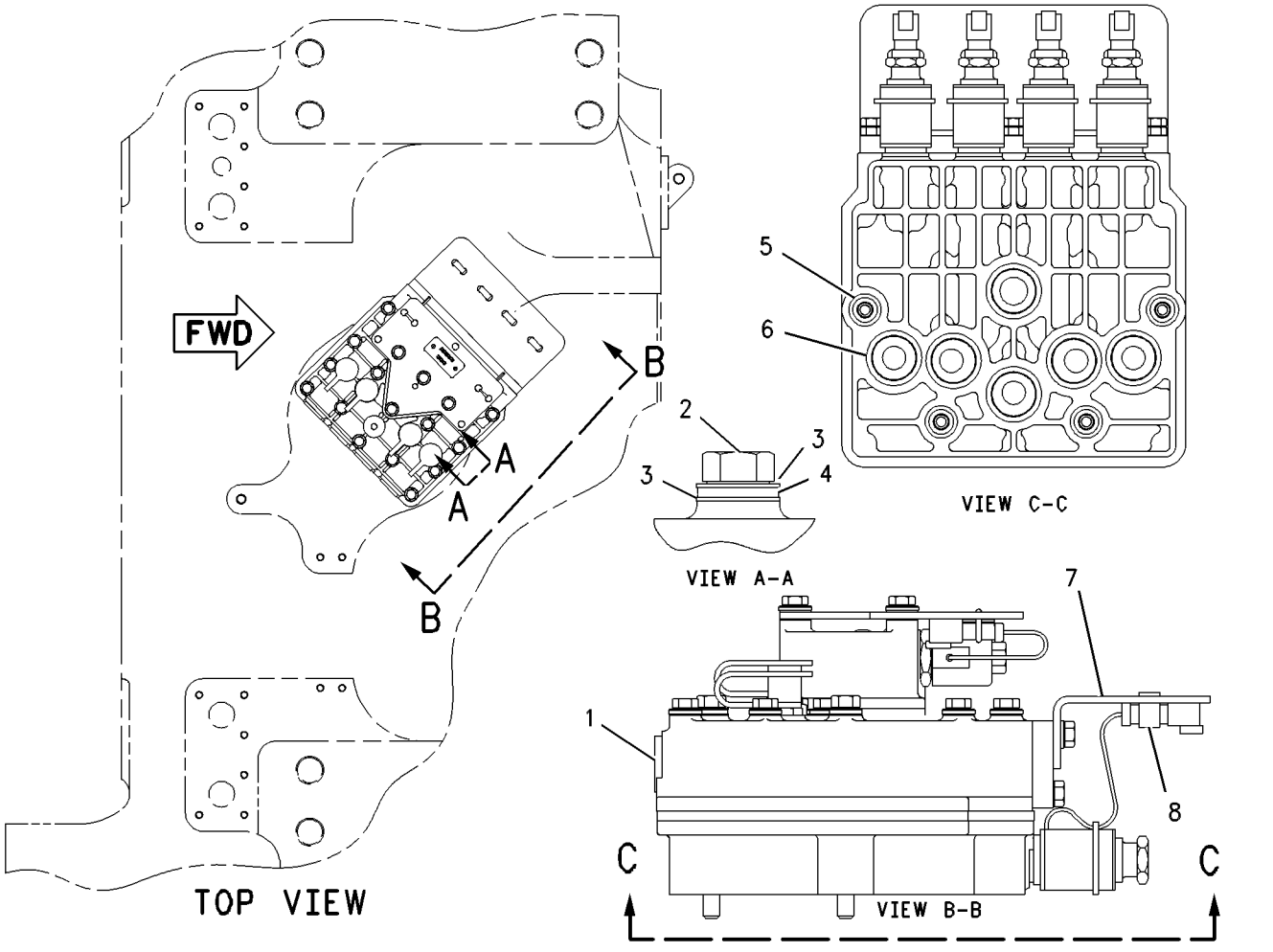

GRAPHIC #1 **<END>** g00344461

STEERING AND BRAKING SYSTEM

202-7400 VALVE & MTG GP-STEER & BRAKE

S/N: 7PZ407-UP

PART OF 112-9167 POWER TRAIN AR

SMCS-4120 **i01988856**

NOTE	REF NO	GRAPHIC REF	PART NUMBER	QTY	PART NAME 1 2 3 4 5 6 (PRODUCT LEVEL)	SEE PAGE
	1	1	**3S-0004**	4	WASHER (0.406X0.728X0.09 IN THK)	
	2	1	**8M-5254**	6	SEAL-O-RING	
	3	1	**9S-1018**	8	WASHER (9.73X19.05X.84MM THK)	
	4	1	**114-3926**	1	PLATE	
Y	5	1	**201-7272**	1	VALVE GP-STEERING & BRAKE CONT	646
	6	1	**1A-5183**	4	BOLT (3/8-16X4.75 IN)	
	7	1	**8M-4438**	4	SEAL-O-RING	
	8	1	**2M-9780**	2	SEAL-O-RING	
	9	1	**3J-1907**	4	SEAL-O-RING	
	10	1	**5P-1404**	2	ADAPTER-O-RING	
	11	1	**6V-0852**	4	CAP-DUST	
	12	1	**6V-3965**	4	FITTING (QUICK DISCONNECT)	

Y-SEPARATE ILLUSTRATION

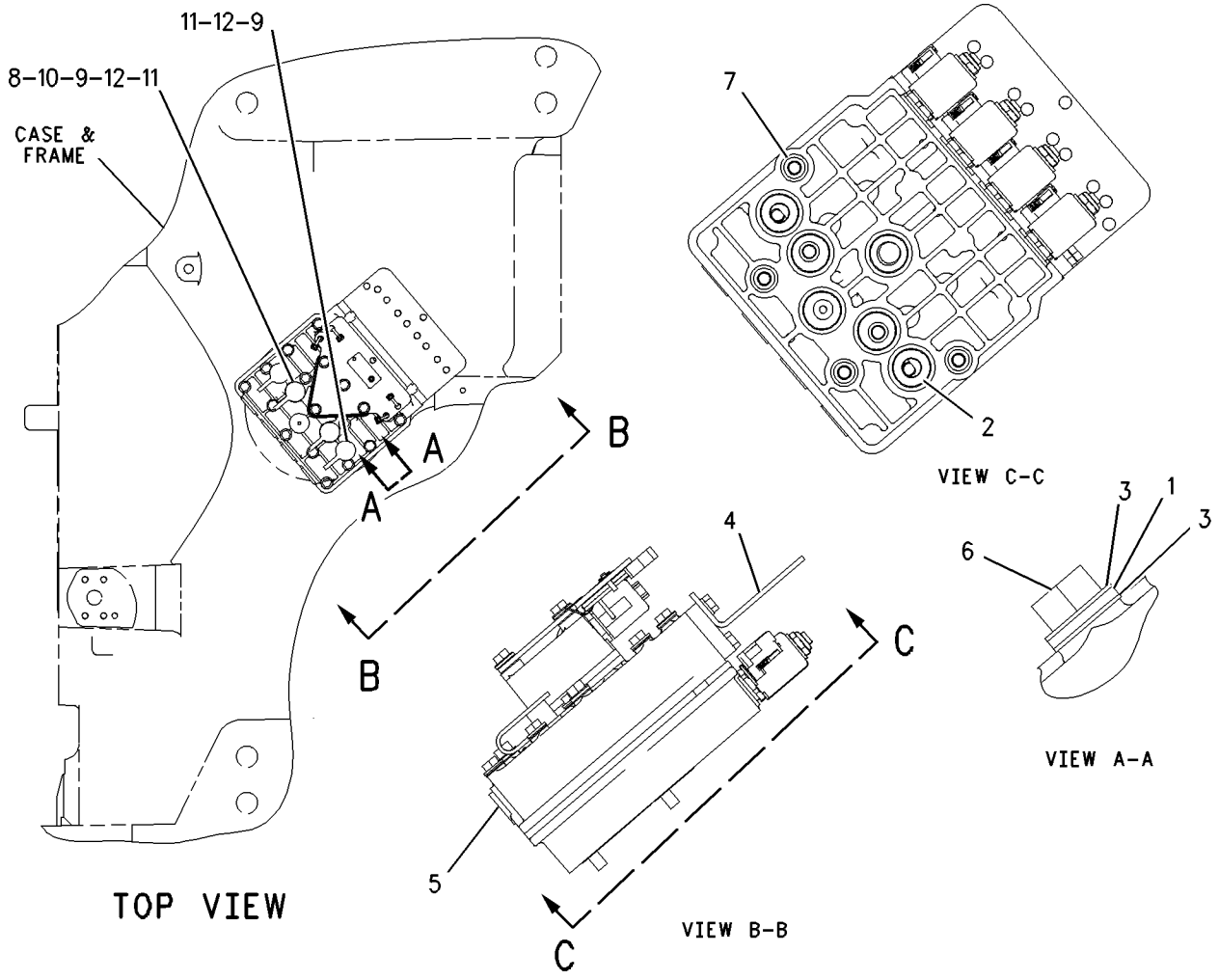

GRAPHIC #1

<END>

g00840700

133-3255 VALVE GP-TRANSMISSION CONTROL

S/N: 7PZ1-406

PART OF 115-7414 VALVE & MTG GP-STEER & BRAKE

SMCS-4120 **i01442340**

NOTE	REF NO	GRAPHIC REF	PART NUMBER	QTY	PART NAME 1 2 3 4 5 6 (PRODUCT LEVEL)	SEE PAGE
Y	1	1	*137-8795*	1	MANIFOLD & VALVE GP	638
	2	1	**108-4434**	1	PLATE-SEPARATOR	
Y	3	1	*137-8796*	1	VALVE GP-TRANSMISSION CONTROL	490
	4	1	**132-9899**	1	PLATE	
Y	5	1	*133-3246*	1	MANIFOLD & VALVE GP	637
	6	1	**132-9900**	1	PLATE	
	7	1	**185-3503**	2	SEAL-O-RING	
	8	1	**176-0259**	2	PLUG	
M	9	1	**8T-3647**	11	BOLT (M8X1.25X80MM)	
	10	1	**3S-2093**	8	STRAP-CABLE	
	11	1	**9P-9150**	36	WASHER (8.25X18X.84MM THK)	
	12	1	**185-3502**	2	SEAL-O-RING	
	13	1	**9L-9068**	4	DOWEL	
	14	1	**1T-0738**	16	WASHER (8.4X19X1.83MM THK)	
M	15	1	**8T-4177**	2	BOLT (M8X1.25X90MM)	
M	16	1	**7X-2541**	3	BOLT (M8X1.25X140MM)	
	17	1	**176-0258**	2	PLUG	
	18	1	**4J-7533**	4	SEAL-O-RING	

M-METRIC PART
Y-SEPARATE ILLUSTRATION

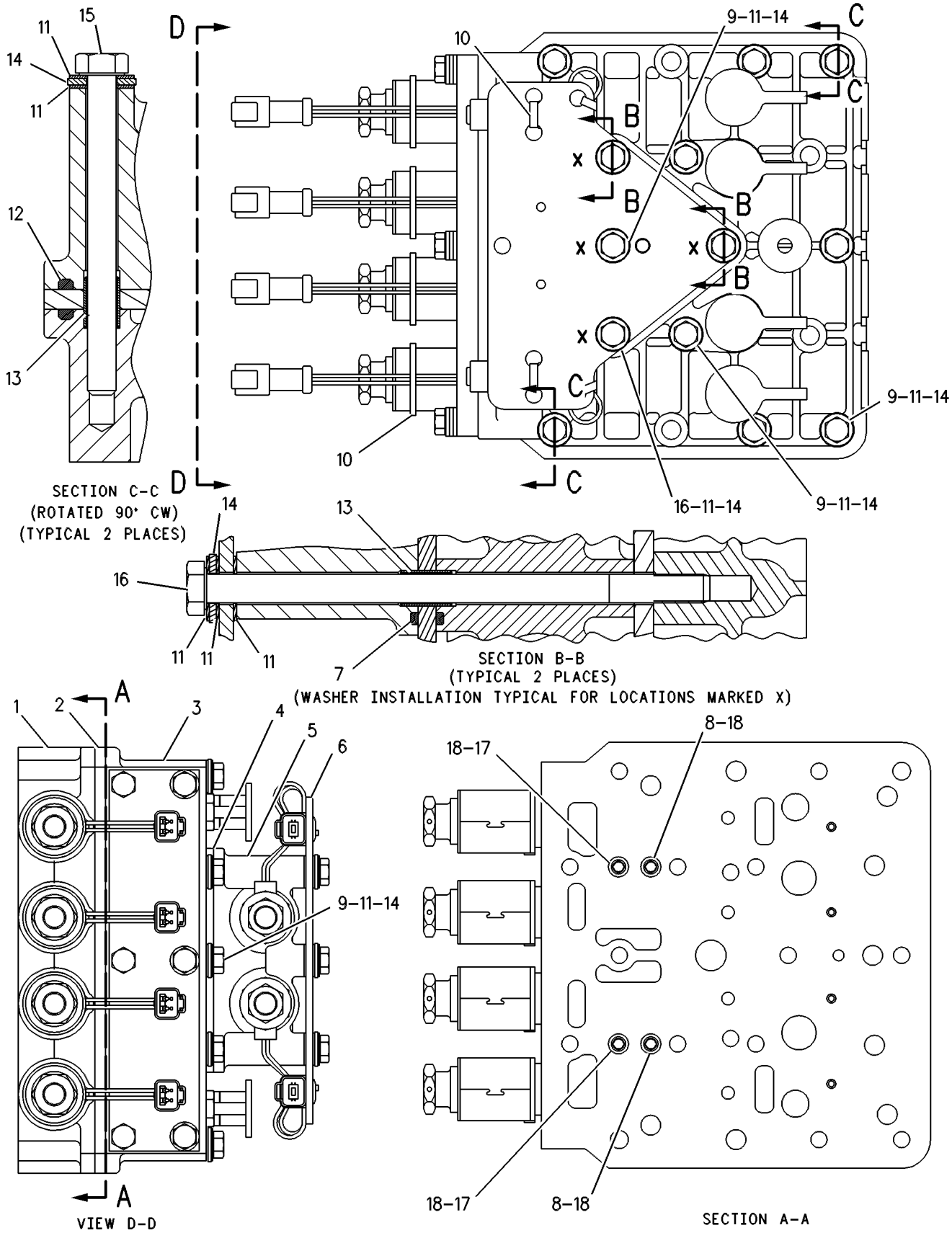

GRAPHIC #1 **<END>** g00330560

201-7272 VALVE GP-TRANSMISSION CONTROL

S/N: 7PZ407-UP

PART OF 202-7400 VALVE & MTG GP-STEER & BRAKE

SMCS-4120 **i01551733**

NOTE	REF NO	GRAPHIC REF	PART NUMBER	QTY	PART NAME 1 2 3 4 5 6 (PRODUCT LEVEL)	SEE PAGE
	1	1	**9P-9150**	36	WASHER (8.25X18X.84MM THK)	
Y	2	1	**164-6093**	1	MANIFOLD & VALVE GP	639
	3	1	**176-0258**	2	PLUG	
	4	1	**108-4434**	1	PLATE-SEPARATOR	
	5	1	**132-9899**	1	PLATE	
	6	1	**132-9900**	1	PLATE	
Y	7	1	*175-4972*	1	MANIFOLD & VALVE GP	640
Y	8	1	*201-7270*	1	VALVE GP-TRANSMISSION CONTROL	491
	9	1	**1T-0738**	16	WASHER (8.4X19X1.83MM THK)	
	10	1	**3S-2093**	4	STRAP-CABLE	
	11	1	**185-3503**	2	SEAL-O-RING	
	12	1	**4J-7533**	4	SEAL-O-RING	
	13	1	**185-3502**	2	SEAL-O-RING	
	14	1	**176-0259**	2	PLUG	
M	15	1	**7X-2541**	3	BOLT (M8X1.25X140MM)	
M	16	1	**8T-3647**	11	BOLT (M8X1.25X80MM)	
M	17	1	**8T-4177**	2	BOLT (M8X1.25X90MM)	
	18	1	**9L-9068**	4	DOWEL	

M-METRIC PART
Y-SEPARATE ILLUSTRATION

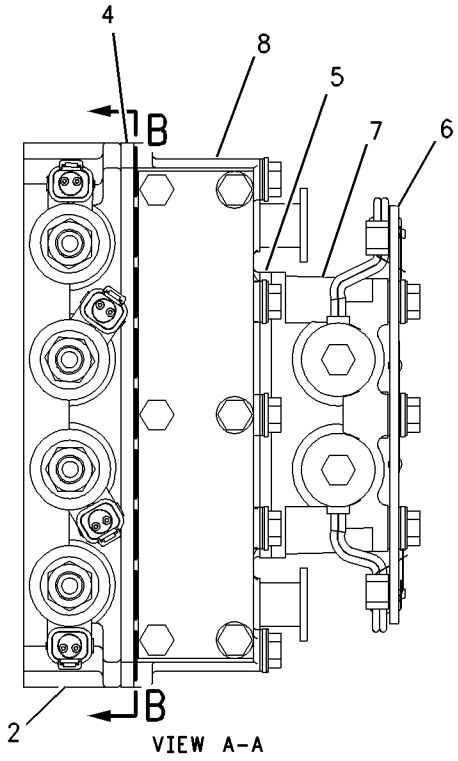

VIEW A-A

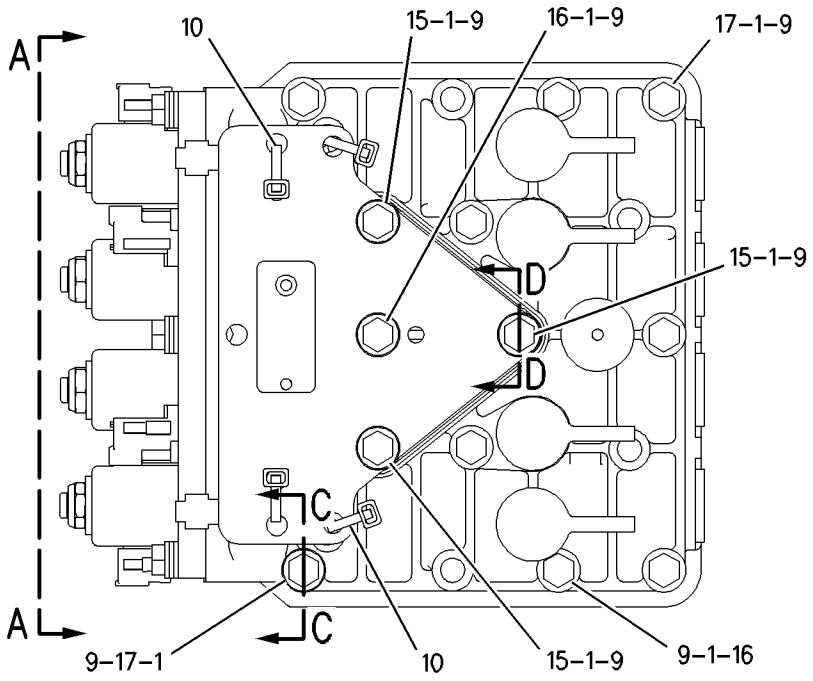

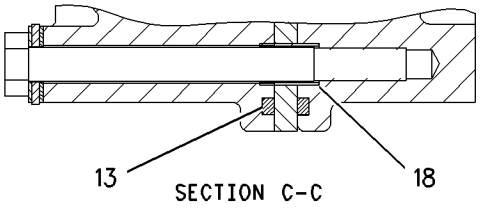

SECTION C-C

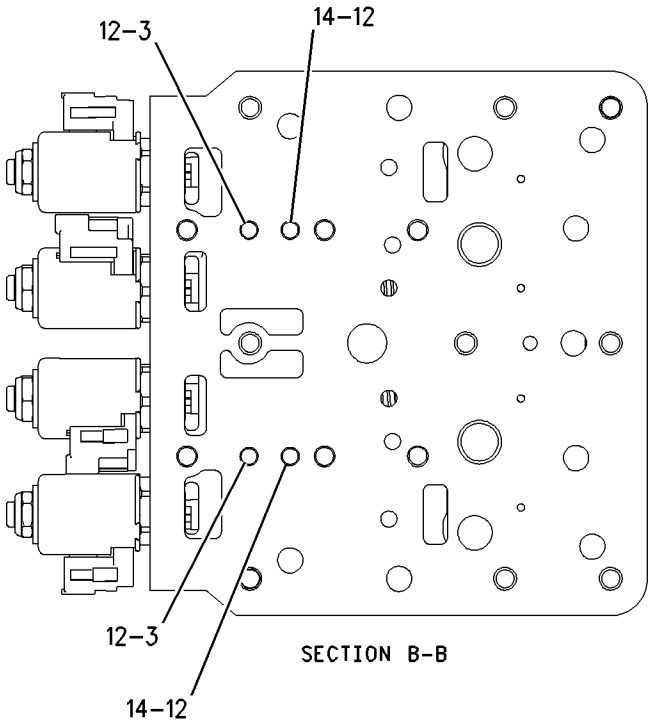

SECTION B-B

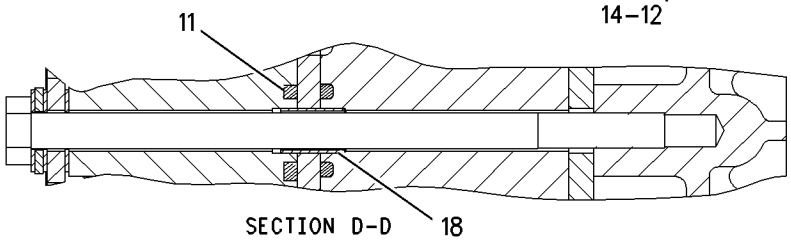

SECTION D-D

GRAPHIC #1 **<END>** g00769056

113-1050 ACCUMULATOR GP-HYDRAULIC—PILOT OIL

S/N: 7PZ1-UP
CHARGED
PART OF 173-1553 LINES GP-PUMP
FIELD REPLACEMENT ORDER 157-5544—PAGE 648

SMCS-5077 **i01925452**

NOTE	PART NUMBER	QTY	PART NAME 1 2 3 4 5 6 (PRODUCT LEVEL)	SEE PAGE
	170-0503	1	FILM (PLATE-NAME)	
	183-7600	1	PISTON	
	158-2336	1	VALVE-GAS	
			AVAILABLE REPAIR KIT(S):	
	160-0496	1	KIT-ACCUMULATOR SERVICE	
			(INCLUDES SEALS)	

<END>

157-5544 ACCUMULATOR GP-HYDRAULIC—UNCHARGED

S/N: 7PZ1-UP
FIELD REPLACEMENT FOR 113-1050—PAGE 648

SMCS-5077 **i01925508**

NOTE	PART NUMBER	QTY	PART NAME 1 2 3 4 5 6 (PRODUCT LEVEL)	SEE PAGE
			(NO SERVICED PARTS)	

<END>

9T-4945 BYPASS GP-FILTER–HYDRAULIC TANK

S/N: 7PZ1-UP

PART OF 163-0575 TANK & FILTER GP-HYDRAULIC

SMCS-5093 **i01988857**

NOTE	REF NO	GRAPHIC REF	PART NUMBER	QTY	PART NAME 1 2 3 4 5 6 (PRODUCT LEVEL)	SEE PAGE
	1	1	**3G-3273**	1	SPRING	
	2	1	**9T-1958**	1	HOUSING-BYPASS	
	3	1	**8M-0776**	3	RIVET-POP	
	4	1	**6H-3956**	1	PIN	
	5	1	**9T-4852**	1	COVER	
	6	1	**9S-8010**	1	PLUG	
		1	**2S-4078**	1	SEAL-O-RING	
	7	1	**9T-1959**	1	RETAINER AS	
	8	1	**034-3557**	1	BOLT-LOCKING (3/8-16X1.125 IN)	
	9	1	**7J-2983**	1	SPRING	
	10	1	**7J-2994**	2	RETAINER	
	11	1	**7J-2987**	1	PLATE-VALVE	
	12	1	**7J-2988**	1	SHAFT	
	13	1	**5P-8245**	1	WASHER-HARD (13.5X25.5X3MM THK)	
	14	1	**4V-6698**	1	SPACER (10MM ID X 16MM THK)	
	15	1	**9S-8002**	1	PLUG	
	16	1	**3J-7354**	1	SEAL-O-RING	

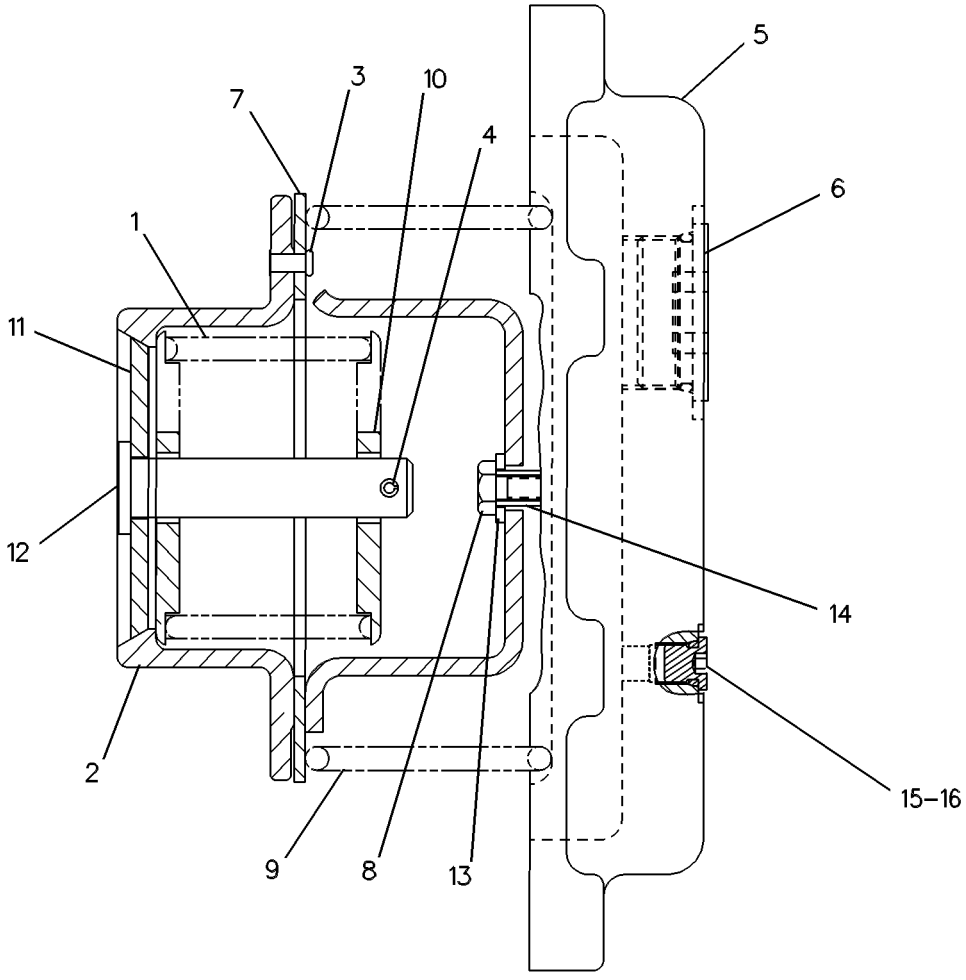

GRAPHIC #1 **<END>** g00275607

HYDRAULIC SYSTEM

232-3780 CONTROL & MOUNTING GP

S/N: 7PZ686-UP

PART OF 194-3684 CONTROL & MTG GP-IMPLEMENT

FIELD REPLACEMENT FOR 177-4980—PAGE 657

SMCS-5050 **i02029725**

NOTE	REF NO	GRAPHIC REF	PART NUMBER	QTY	PART NAME 1 2 3 4 5 6 (PRODUCT LEVEL)	SEE PAGE
Y	1	1	**180-9899**	1	CONTROL GP-JOYSTICK (BLADE)	661
	2	1	*188-1082*	1	BASE AS	
M	2A	1	**6V-9671**	4	SCREW-MACHINE (M3X0.5X12-MM)	
	2B	1	**8C-9660**	4	WASHER (4.6X7.9X0.8-MM THK)	
	2C	1	**175-1529**	1	BOOT	
	2D	1	**205-2941**	4	SCREW-FLAT HEAD (M5X.08X2.8-MM)	
	3	1	**189-2305**	2	DETENT GP-CONTROL (IMPLEMENT)	
M	4	1	**192-4658**	4	SCREW-PAN HEAD (M4X.7X20-MM)	
M	5	1	**193-4476**	8	SCREW-PAN HEAD (M4X.7X35-MM)	
Y	6	1	**230-6266**	1	SENSOR GP-POSITION (LIFT BLADE)	336
Y	7	1	**230-6267**	1	SENSOR GP-POSITION (TILT BLADE)	337
	8	1	**151-4977**	12	WASHER (4.445X9.525X1.0922-MM THK)	
	9	1	**175-3265**	1	SCREW (8-16X0.63-IN)	
	10	1	**2K-4898**	1	CLAMP-TUBE	
	11	1	**4B-9808**	2	SETSCREW (1/4-20X0.5-IN)	
	12	1	**174-3091**	1	KIT-RECEPTACLE (12-PIN)	
					(INCLUDES RECEPTACLE AS & WEDGE)	
	13	1	**8T-8729**	11	PIN-CONNECTOR	
	14	1	**8T-8737**	1	PLUG-SEAL	
	16	1	**208-6081**	1	SLEEVE	

M-METRIC PART
Y-SEPARATE ILLUSTRATION

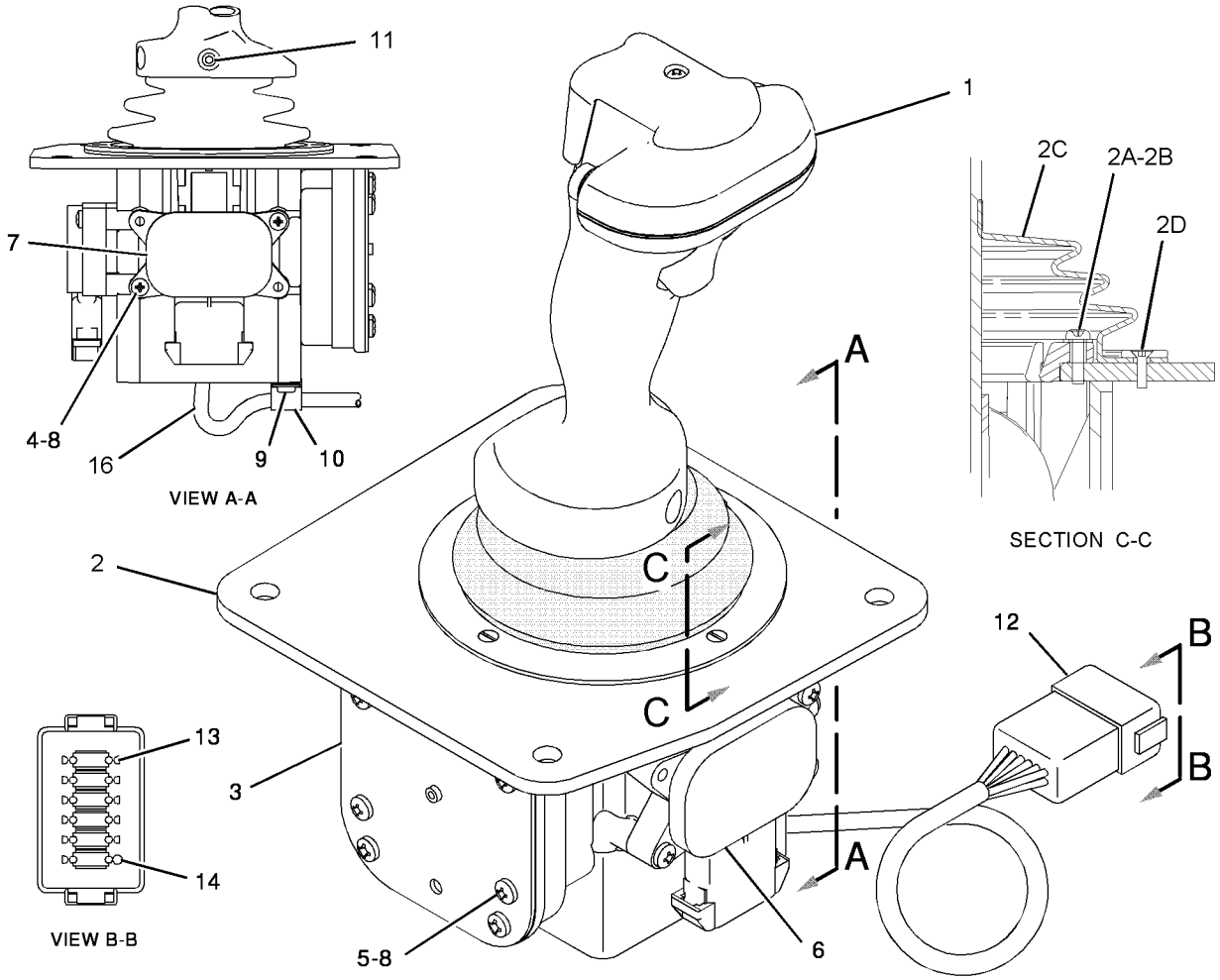

GRAPHIC #1 **<END>** g01016217

HYDRAULIC SYSTEM

155-5553 CONTROL AR-HYDRAULIC

S/N: 7PZ1-UP

PART OF 155-5550 GENERAL AR

SMCS-5050, 5057, 5170, 5357 **i01988877**

NOTE	PART NUMBER	QTY	PART NAME 1 2 3 4 5 6 (PRODUCT LEVEL)	SEE PAGE
Y	*173-3263*	1	CONTROL & MTG GP-ELECTRONIC	275
Y	*174-3119*	1	CONTROL & MTG GP-IMPLEMENT	1020
			S/N: 7PZ1-563	
Y	*194-3684*	1	CONTROL & MTG GP-IMPLEMENT	1022
			S/N: 7PZ564-UP	
Y	*131-2101*	1	LINES GP-LIFT CYLINDER	753
Y	*173-1553*	1	LINES GP-PUMP	763
Y	*158-8042*	1	LINES GP-TILT CYLINDER	814
Y	**6E-5294**	1	PUMP GP-GEAR	830
			S/N: 7PZ1-651	
Y	**227-9383**	1	PUMP GP-GEAR	832
			S/N: 7PZ652-UP	
Y	**172-6977**	1	VALVE GP-CONTROL	865
			S/N: 7PZ407-519	
Y	**204-5575**	1	VALVE GP-CONTROL	871
			S/N: 7PZ520-UP	
Y	**151-0241**	1	VALVE GP-TILT CONTROL	914
			S/N: 7PZ1-675	
Y	**225-2321**	1	VALVE GP-TILT CONTROL	915
			S/N: 7PZ676-UP	
Y	**145-6054**	1	VALVE GP-PILOT	883
			S/N: 7PZ1-406	
Y	**135-9446**	1	VALVE GP-PILOT	879
			S/N: 7PZ407-651	
Y	**173-3204**	1	VALVE GP-PILOT	884
			S/N: 7PZ652-UP	
	153-6280	1	PLUG AS	
	102-8805	1	KIT-RECEPTACLE (6-PIN)	
			(INCLUDES RECEPTACLE AS & WEDGE)	
	9G-3695	3	PLUG (GROMMET SEALING)	

Y-SEPARATE ILLUSTRATION

<END>

HYDRAULIC SYSTEM

158-8044 CONTROL AR-HYDRAULIC—SINGLE TILT

S/N: 7PZ1-UP
AN ATTACHMENT

SMCS-5050, 5057, 5170, 5357 **i01988879**

NOTE	PART NUMBER	QTY	PART NAME 1 2 3 4 5 6 (PRODUCT LEVEL)	SEE PAGE
Y	**180-2867**	1	CONTROL & MTG GP-IMPLEMENT	1021
			S/N: 7PZ1-563	
Y	**199-4194**	1	CONTROL & MTG GP-IMPLEMENT	1024
			S/N: 7PZ564-UP	
Y	**158-8043**	1	LINES GP-TILT CYLINDER	818
	102-2913	1	FILM-INSTRUCTION (DOZER CONTROL)	
			(ON RH AIR DUCT)	

Y-SEPARATE ILLUSTRATION

<END>

173-1552 CONTROL AR-HYDRAULIC—RIPPER

S/N: 7PZ1-UP
AN ATTACHMENT

SMCS-5050, 5057, 5170, 5357 **i01981219**

NOTE	PART NUMBER	QTY	PART NAME 1 2 3 4 5 6 (PRODUCT LEVEL)	SEE PAGE
Y	*135-0356*	1	CONTROL & MTG GP-IMPLEMENT	1019
Y	*173-1551*	1	LINES GP-RIPPER	798
Y	**237-7654**	1	VALVE GP-CONTROL (IMPLEMENT)	876
			S/N: 7PZ735-UP	
Y	**177-1407**	1	VALVE GP-CONTROL	869
			S/N: 7PZ407-734	
Y	**135-9446**	1	VALVE GP-PILOT	879
			S/N: 7PZ1-406	

Y-SEPARATE ILLUSTRATION

<END>

188-1079 CONTROL GP-HANDLE–BLADE

S/N: 7PZ564-UP
PART OF 185-8734, 232-3779 CONTROL GP-JOYSTICK
AN ATTACHMENT

SMCS-5063, 5705 **i01499097**

NOTE	REF NO	GRAPHIC REF	PART NUMBER	QTY	PART NAME 1 2 3 4 5 6 (PRODUCT LEVEL)	SEE PAGE
Z	1	1		1	HANDGRIP AS	

Z-NOT SERVICED SEPARATELY

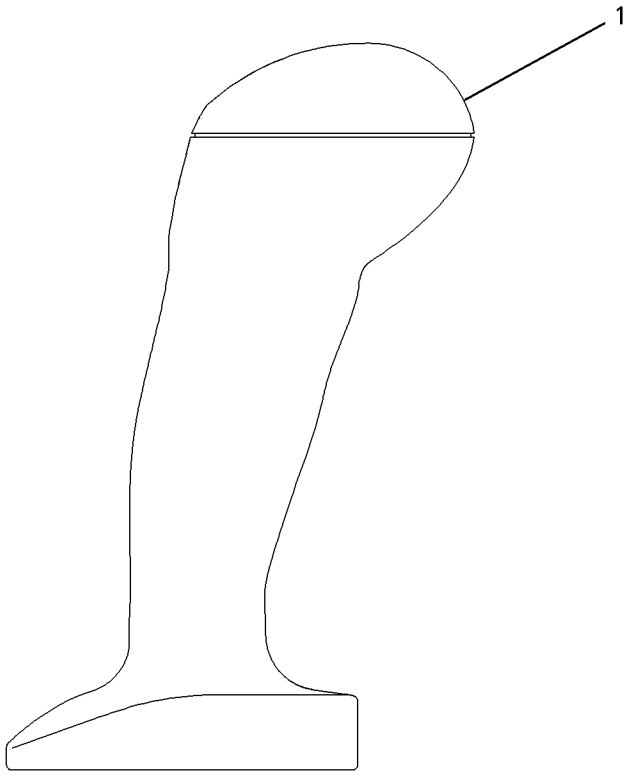

GRAPHIC #1 **<END>** g00721034

183-3208 CONTROL GP-HYDRAULIC–RIPPER

S/N: 7PZ1-UP

PART OF 135-0356 CONTROL & MTG GP-IMPLEMENT

AN ATTACHMENT

SMCS-5063 **i02005703**

NOTE	REF NO	GRAPHIC REF	PART NUMBER	QTY	PART NAME 1 2 3 4 5 6 (PRODUCT LEVEL)	SEE PAGE
BE	1	1	**7X-3159**		TUBE-HEAT SHRINK	
BD	2	1	**8T-5677**		SLEEVE	
	3	1	**3E-3368**	1	WEDGE-PLUG LOCK	
	4	1	**3K-4897**	2	PIN-SPRING	
	5	1	**4B-1270**	2	SCREW-MACHINE (8-32X0.75 IN)	
	6	1	**4B-4158**	4	SCREW-DRIVE (3/16X0.25 IN)	
	7	1	**8T-5410**	2	SEAL-LIP TYPE	
M	8	1	**8T-6699**	4	BOLT-SOCKET HEAD (M5X.8X35MM)	
	9	1	**112-0858**	4	BEARING	
	11	1	**137-5815**	1	HANDLE (RIPPER CONTROL)	
	12	1	**137-5816**	1	LEVER-FINGER (RIPPER CONTROL) (TILT)	
	16	1	**142-2526**	2	PLATE	
	17	1	**142-2527**	2	GASKET	
	19	1	**144-0326**	1	SWITCH AS-PUSH BUTTON (RIPPER AUTO STOW)	
		1	**144-0331**	1	CAP-PUSH BUTTON	
	20	1	**245-3856**	2	SPRING	
	21	1	**183-6726**	1	PLATE-RIPPER	
B	22	1	**195-7869**	1	SHIM (0.15MM THK)	
B	23	1	**195-7870**	1	SHIM (0.51MM THK)	
B	24	1	**195-7871**	1	SHIM (0.25MM THK)	
B	25	1	**195-7872**	1	SHIM (.41MM THK)	
	26	1	**219-2390**	1	SENSOR GP-POSITION (RIPPER TILT)	
		1	**102-8803**	1	KIT-RECEPTACLE (3-PIN)	
					(INCLUDES RECEPTACLE AS & WEDGE)	
		1	**3E-3371**	1	WEDGE-RECEPTACLE LOCK (3-PIN)	
		1	**186-3735**	3	PIN-CONNECTOR	
BE		1	**9X-1813**		SLEEVE	
BE		1	**8C-7584**		WIRE-ELECTRICAL	
		1	**8T-8886**	1	SEAL-LIP TYPE	
	27	1	**219-2391**	1	SENSOR GP-POSITION (RIPPER RAISE & LOWER)	
		1	**102-8804**	1	KIT-RECEPTACLE (4-PIN)	
					(INCLUDES RECEPTACLE AS & WEDGE)	
		1	**3E-3377**	1	WEDGE-RECEPTACLE LOCK (4-PIN)	
		1	**186-3735**	3	PIN-CONNECTOR	
		1	**9G-3695**	1	PLUG (GROMMET SEALING)	
BE		1	**8C-7584**		WIRE-ELECTRICAL	
		1	**8T-8886**	1	SEAL-LIP TYPE	
	28	1	**1W-6448**	4	DOWEL	
	29	1	**2L-5894**	4	PIN-SPRING	
	30	1	**155-2260**	1	KIT-CONNECTING PLUG (3-PIN)	
					(INCLUDES PLUG AS & WEDGE)	
	31	1	**5S-7383**	3	BOLT (3/8-16X1.75 IN)	
	32	1	**6V-0894**	2	SEAL-O-RING	
	33	1	**8T-0328**	4	WASHER-HARD (5.5X10X1MM THK)	
	34	1	**8T-4121**	3	WASHER-HARD (11X21X2.5MM THK)	
	35	1	**186-3736**	3	SOCKET-CONNECTOR	

B-USE AS REQUIRED
D-ORDER BY THE METER
E-ORDER BY THE CENTIMETER
M-METRIC PART

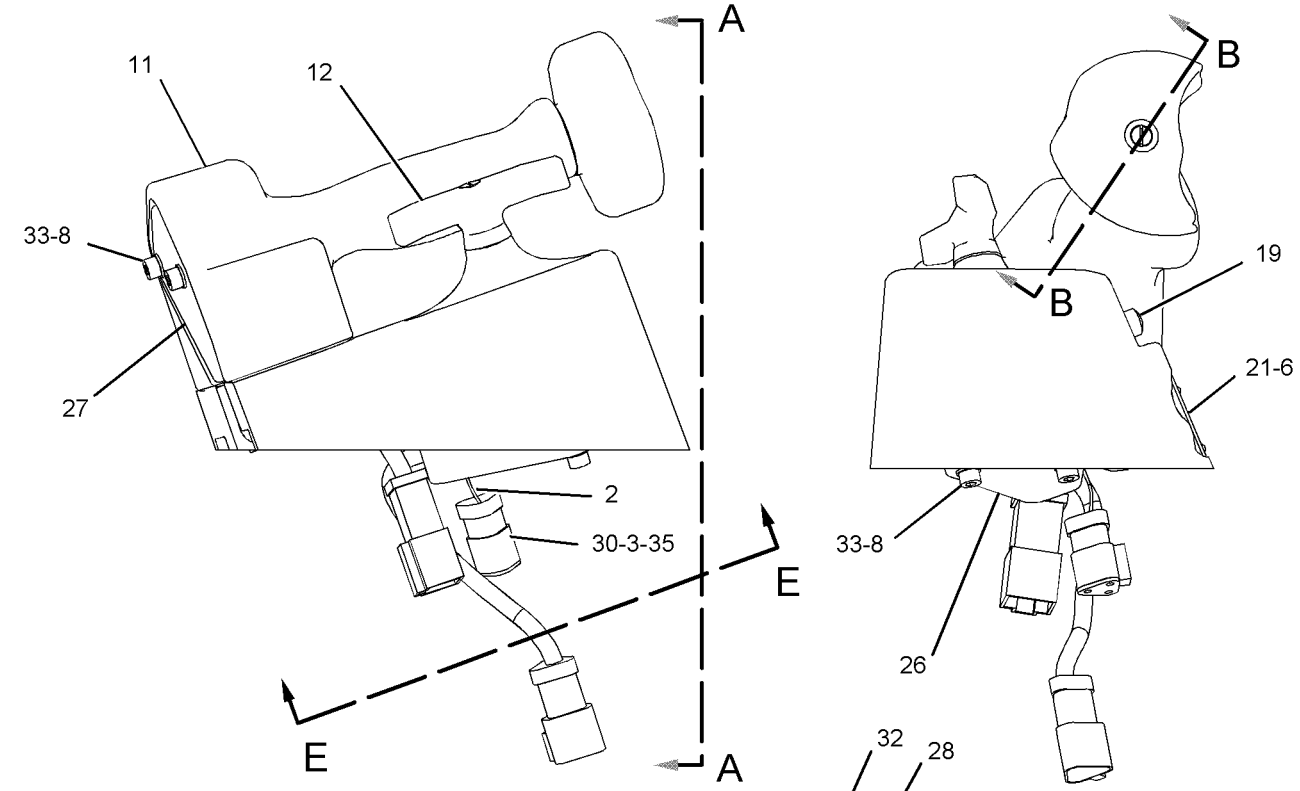

VIEW A-A

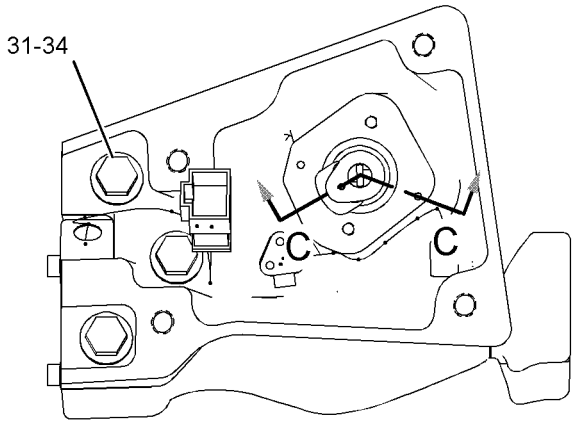

VIEW E-E
(PLATE, GASKET, AND SEAL REMOVED)

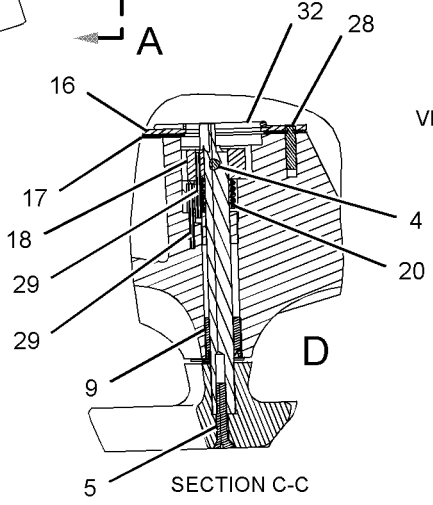

SECTION C-C

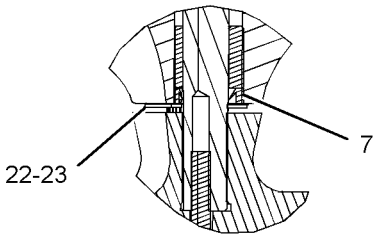

VIEW OF AREA D

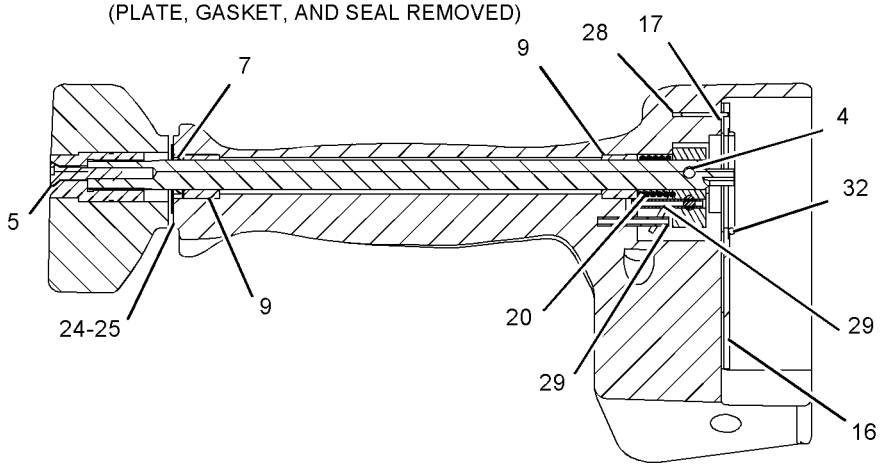

SECTION B-B

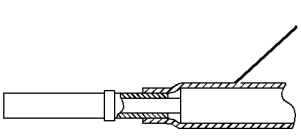

SECTION VIEW OF SOCKET

GRAPHIC #1 **<END>** g01037156

177-4980 CONTROL GP-JOYSTICK–BLADE

S/N: 7PZ564-648

PART OF 194-3684 CONTROL & MTG GP-IMPLEMENT

FIELD REPLACEMENT ORDER 232-3780–PAGE 650

SMCS-5063 **i01988876**

NOTE	REF NO	GRAPHIC REF	PART NUMBER	QTY	PART NAME 1 2 3 4 5 6 (PRODUCT LEVEL)	SEE PAGE
Y	1	1	*180-9899*	1	CONTROL GP-JOYSTICK	661
	2	1	**188-1082**	1	BASE AS	
	3	1	**189-2305**	2	DETENT GP-CONTROL (IMPLEMENT)	
Y	4	1	**196-9565**	1	SENSOR GP-POSITION	333
Y	5	1	**196-9566**	1	SENSOR GP-POSITION	333
	6	1	**175-3265**	1	SCREW (8-16X0.63 IN)	
M	7	1	**192-4658**	4	SCREW-PAN HEAD (M4X.7X20MM)	
M	8	1	**8T-7500**	8	SCREW-MACHINE (M4X.7X35MM)	
	9	1	**2K-4898**	1	CLAMP-TUBE	
	10	1	**4B-9808**	2	SETSCREW (1/4-20X0.5 IN)	
	11	1	**174-3091**	1	KIT-RECEPTACLE (12 PIN)	
					(INCLUDES RECEPTACLE AS & WEDGE)	
	12	1	**8T-8729**	11	PIN-CONNECTOR	
	13	1	**8T-8737**	1	PLUG-SEAL	
	14	1	**3E-5180**	1	WEDGE-RECEPTACLE LOCK (12-PIN)	
	15	1	**3B-4501**	8	LOCKWASHER	
	16	1	**151-4977**	4	WASHER (4.445X9.525X1.0922MM THK)	
E	17	1	**208-6081**		SLEEVE (25CM)	

E-ORDER BY THE CENTIMETER
M-METRIC PART
Y-SEPARATE ILLUSTRATION

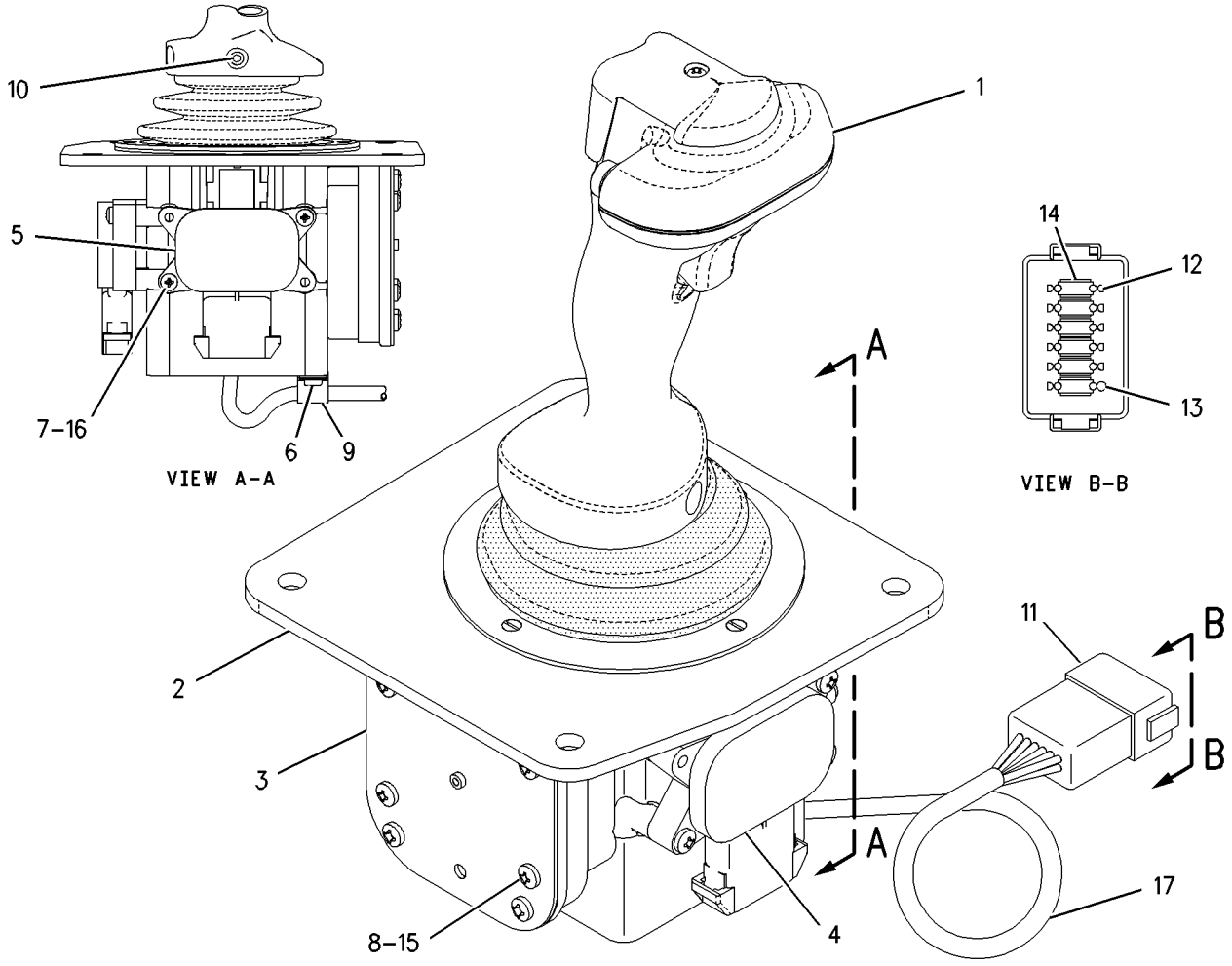

GRAPHIC #1 **<END>** g00849181

177-4980 CONTROL GP-JOYSTICK–BLADE

S/N: 7PZ649-685

PART OF 194-3684 CONTROL & MTG GP-IMPLEMENT

FIELD REPLACEMENT ORDER 232-3780–PAGE 650

SMCS-5063 **i01989515**

NOTE	REF NO	GRAPHIC REF	PART NUMBER	QTY	PART NAME 1 2 3 4 5 6 (PRODUCT LEVEL)	SEE PAGE
Y	1	1	**180-9899**	1	CONTROL GP-JOYSTICK	661
	2	1	*188-1082*	1	BASE AS	
M	2A	1	**6V-9671**	4	SCREW-MACHINE (M3X0.5X12MM)	
	2B	1	**8C-9660**	1	WASHER (4.6X7.9X0.8MM THK)	
	2C	1	**175-1529**	1	BOOT	
	2D	1	**205-2941**	4	SCREW-FLAT HEAD (M5X.08X2.8MM)	
	3	1	**189-2305**	2	DETENT GP-CONTROL (IMPLEMENT)	
M	4	1	**192-4658**	4	SCREW-PAN HEAD (M4X.7X20MM)	
CM	5	1	**193-4476**	8	SCREW-PAN HEAD (M4X.7X35MM)	
Y	6	1	**196-9565**	1	SENSOR GP-POSITION (LIFT BLADE)	333
Y	7	1	**196-9566**	1	SENSOR GP-POSITION (TILT BLADE)	333
C	8	1	**151-4977**	12	WASHER (4.445X9.525X1.0922MM THK)	
	9	1	**175-3265**	1	SCREW (8-16X0.63 IN)	
	10	1	**2K-4898**	1	CLAMP-TUBE	
	11	1	**4B-9808**	2	SETSCREW (1/4-20X0.5 IN)	
	12	1	**174-3091**	1	KIT-RECEPTACLE (12 PIN)	
					(INCLUDES RECEPTACLE AS & WEDGE)	
	13	1	**8T-8729**	11	PIN-CONNECTOR	
	14	1	**8T-8737**	1	PLUG-SEAL	
	16	1	**208-6081**	1	SLEEVE	

C-CHANGE FROM PREVIOUS TYPE
M-METRIC PART
Y-SEPARATE ILLUSTRATION

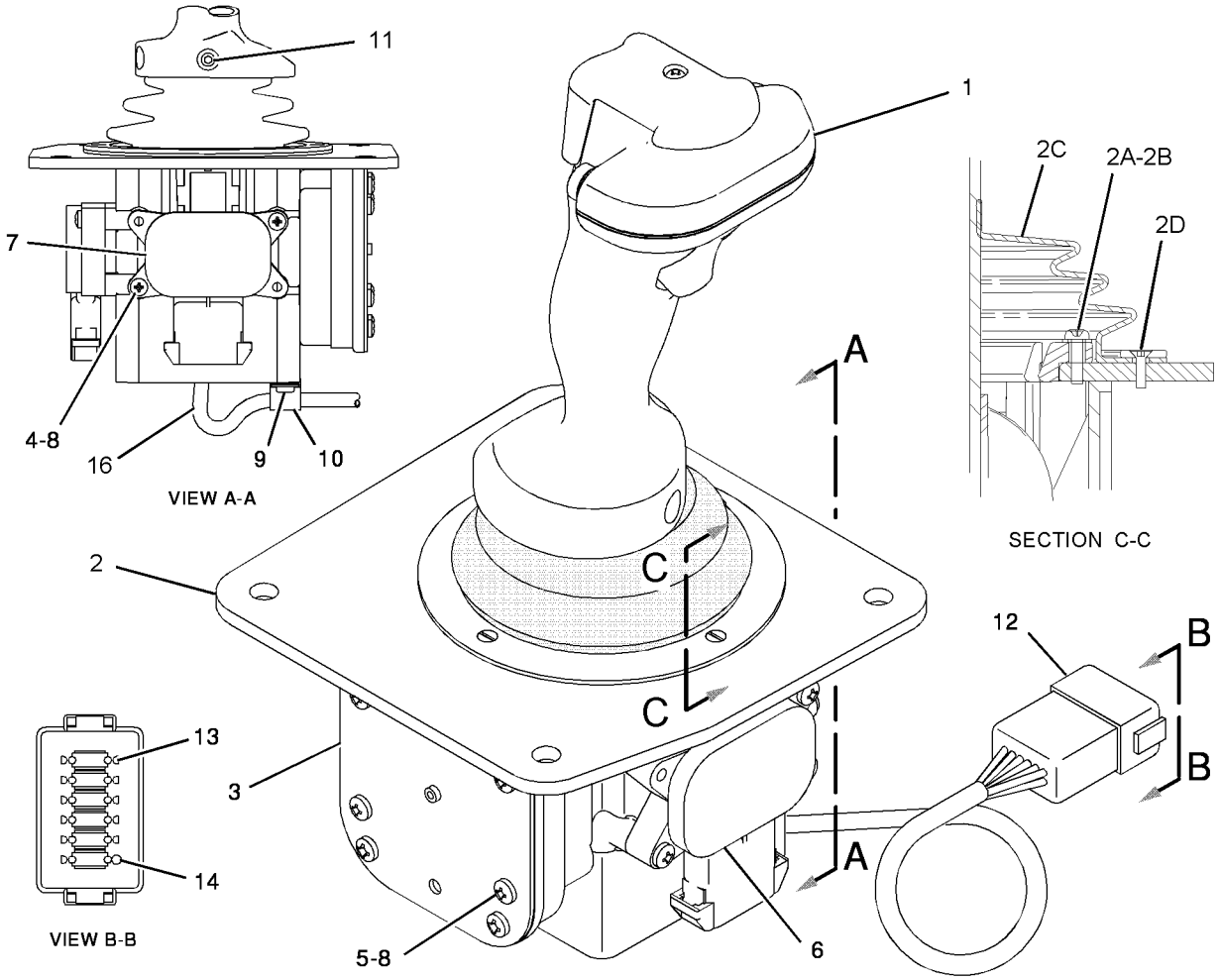

GRAPHIC #1 **<END>** g01016217

180-9899 CONTROL GP-JOYSTICK–BLADE

S/N: 7PZ564-UP

PART OF 232-3780 CONTROL & MOUNTING GP, 177-4980 CONTROL GP-JOYSTICK

SMCS-5063 **i01437363**

NOTE	REF NO	GRAPHIC REF	PART NUMBER	QTY	PART NAME 1 2 3 4 5 6 (PRODUCT LEVEL)	SEE PAGE
	1	1	**162-8376**	1	CONTROL GP-OPERATOR HAND	
	2	1	**144-0331**	3	CAP-PUSHBUTTON	
	3	1	**164-6964**	1	HOUSING AS	
		1	**179-7376**	1	SWITCH AS-PUSH (AUTO BLADE MODE)	
		1	**196-1804**	1	SEAL-O-RING	
	4	1	**179-7376**	1	SWITCH AS-PUSH (BLADE PITCH)	
	5	1	**9B-1117**	2	LOCKWASHER	
	6	1	**175-4170**	2	SCREW-PAN HEAD (NO6X1.625 IN)	
	7	1	**162-8387**	1	LEVER	
	8	1	**162-8389**	1	PLATE	
BD	9	1	**6V-1614**		TUBE-HEAT SHRINK	
	10	1	**208-6081**	1	SLEEVE	
BE	11	1	**218-7136**		SLEEVE	

B-USE AS REQUIRED
D-ORDER BY THE METER
E-ORDER BY THE CENTIMETER

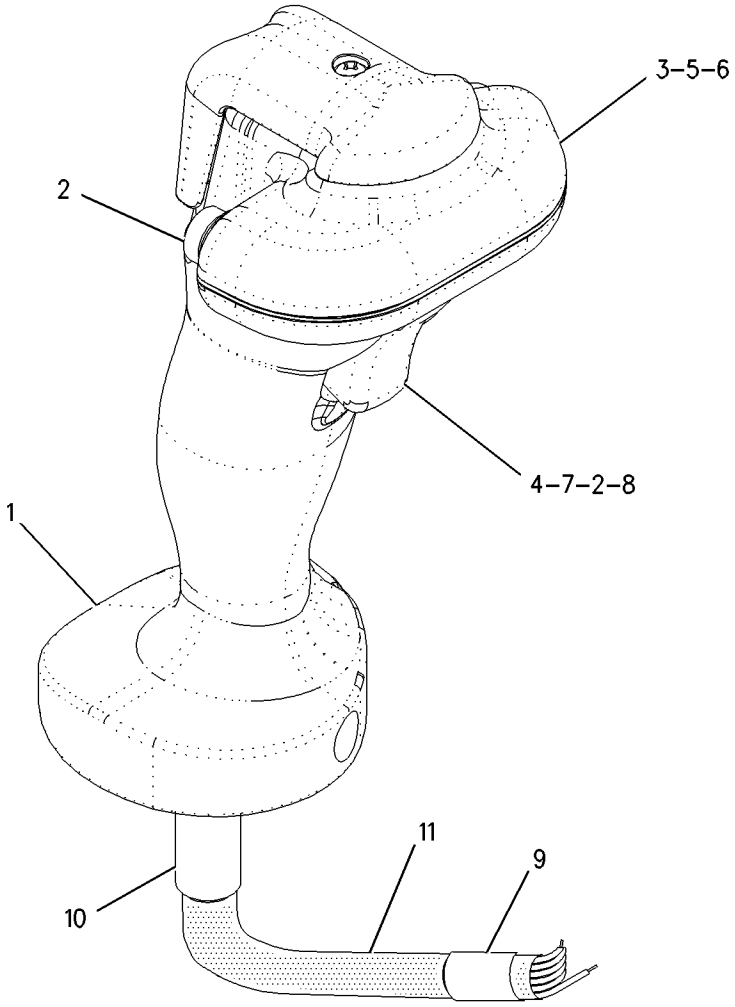

GRAPHIC #1 **<END>** g00816189

185-8734 CONTROL GP-JOYSTICK–BLADE

S/N: 7PZ564-685
PART OF 199-4194 CONTROL & MTG GP-IMPLEMENT
OPTIONAL FIELD REPLACEMENT ORDER 232-3779–PAGE 664
AN ATTACHMENT
TYPE 1

SMCS-5063 **i01988874**

NOTE	REF NO	GRAPHIC REF	PART NUMBER	QTY	PART NAME 1 2 3 4 5 6 (PRODUCT LEVEL)	SEE PAGE
Y	1	1	*188-1079*	1	CONTROL GP-HANDLE	654
	2	1	**188-1082**	1	BASE AS	
	3	1	**189-2305**	2	DETENT GP-CONTROL (IMPLEMENT)	
Y	4	1	**196-9565**	1	SENSOR GP-POSITION	333
Y	5	1	**196-9566**	1	SENSOR GP-POSITION	333
M	6	1	**192-4658**	4	SCREW-PAN HEAD (M4X.7X20MM)	
M	7	1	**8T-7500**	8	SCREW-MACHINE (M4X.7X35MM)	
	8	1	**4B-9808**	2	SETSCREW (1/4-20X0.5 IN)	
	9	1	**151-4977**	4	WASHER (4.445X9.525X1.0922MM THK)	
	10	1	**3B-4501**	8	LOCKWASHER	

M-METRIC PART
Y-SEPARATE ILLUSTRATION

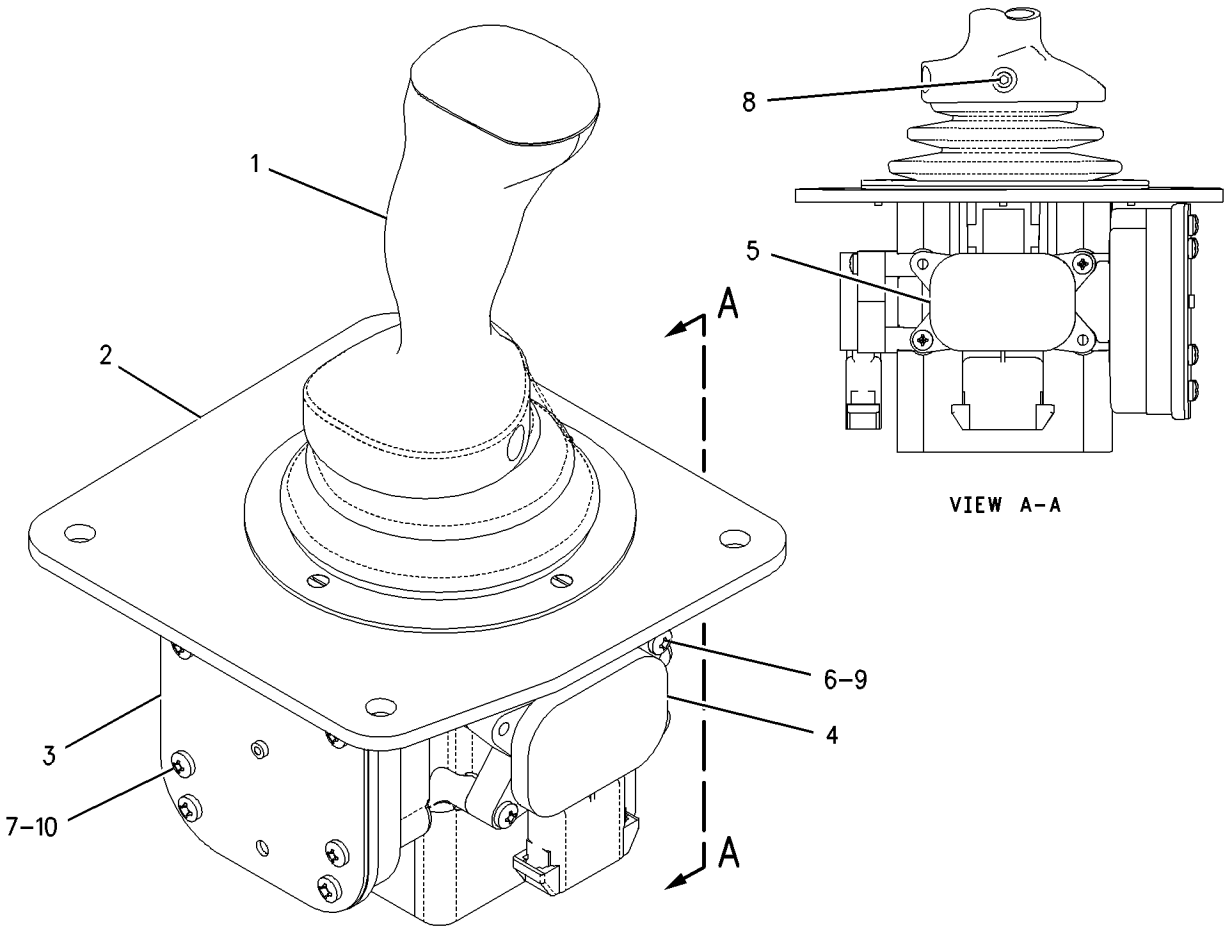

GRAPHIC #1 **<END>** g00849123

185-8734 CONTROL GP-JOYSTICK–BLADE

S/N: 7PZ564-685
PART OF 199-4194 CONTROL & MTG GP-IMPLEMENT
OPTIONAL FIELD REPLACEMENT ORDER 232-3779–PAGE 664
AN ATTACHMENT
TYPE 2

SMCS-5063 **i01988875**

NOTE	REF NO	GRAPHIC REF	PART NUMBER	QTY	PART NAME 1 2 3 4 5 6 (PRODUCT LEVEL)	SEE PAGE
Y	1	1	**188-1079**	1	CONTROL GP-HANDLE	654
J	2	1	*188-1082*	1	BASE AS	
M		1	**6V-9671**	4	SCREW-MACHINE (M3X0.5X12MM)	
		1	**8C-9660**	4	WASHER (4.6X7.9X0.8MM THK)	
		1	**175-1529**	1	BOOT	
	3	1	**189-2305**	2	DETENT GP-CONTROL (IMPLEMENT)	
					(EACH INCLUDES)	
		1	**033-9139**	1	RING-RETAINING	
		1	**107-1964**	4	SCREW-PAN HEAD (6-19X0.5 IN)	
M	4	1	**193-4476**	8	SCREW-PAN HEAD (M4X.7X35MM)	
Y	5	1	**196-9565**	1	SENSOR GP-POSITION (BLADE TILT)	333
Y	6	1	**196-9566**	1	SENSOR GP-POSITION (BLADE LIFT)	333
	7	1	**151-4977**	12	WASHER (4.445X9.525X1.0922MM THK)	
M	8	1	**192-4658**	4	SCREW-PAN HEAD (M4X.7X20MM)	
	9	1	**4B-9808**	2	SETSCREW (1/4-20X0.5 IN)	

J-NOT SERVICED SEPERATELY
M-METRIC PART
Y-SEPARATE ILLUSTRATION

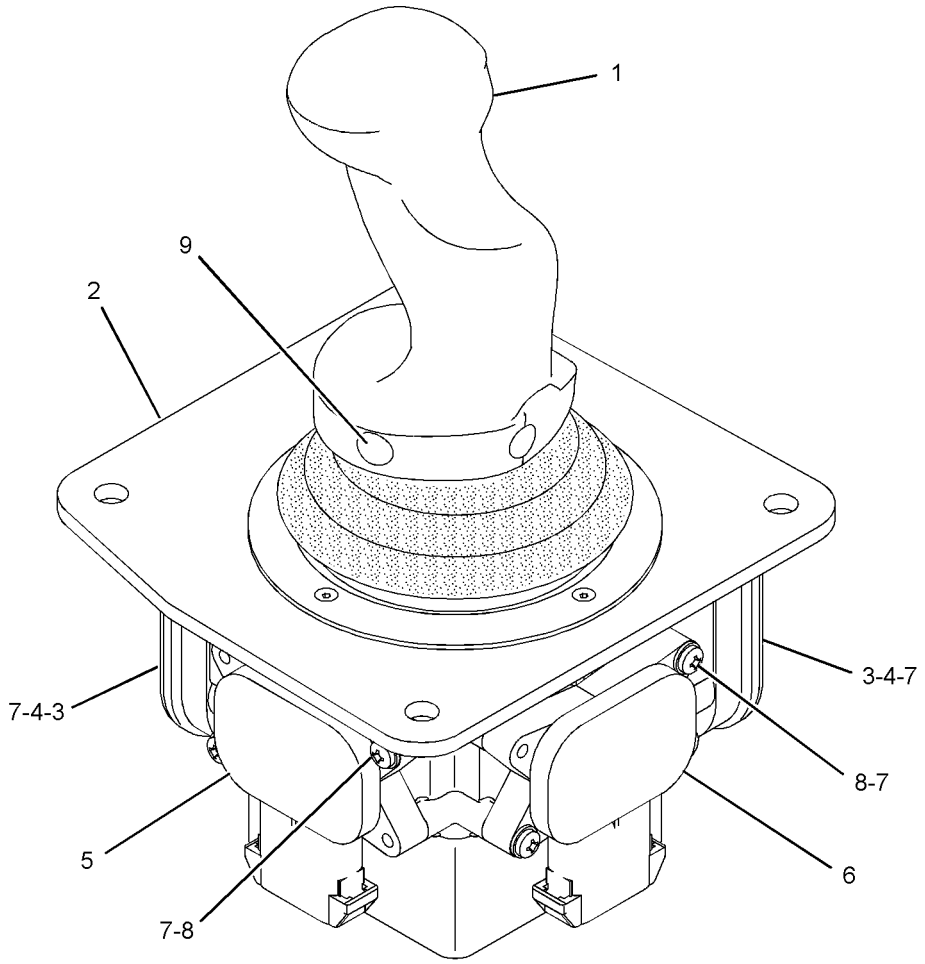

GRAPHIC #1 **<END>** g01027009

232-3779 CONTROL GP-JOYSTICK–BLADE

S/N: 7PZ564-UP
PART OF 199-4194 CONTROL & MTG GP-IMPLEMENT
FIELD REPLACEMENT FOR 185-8734–PAGE 662
AN ATTACHMENT

SMCS-5063 **i01988873**

NOTE	REF NO	GRAPHIC REF	PART NUMBER	QTY	PART NAME 1 2 3 4 5 6 (PRODUCT LEVEL)	SEE PAGE
Y	1	1	**188-1079**	1	CONTROL GP-HANDLE	654
J	2	1	*188-1082*	1	BASE AS	
M		1	**6V-9671**	4	SCREW-MACHINE (M3X0.5X12MM)	
		1	**8C-9660**	4	WASHER (4.6X7.9X0.8MM THK)	
		1	**175-1529**	1	BOOT	
	3	1	**189-2305**	2	DETENT GP-CONTROL (IMPLEMENT)	
					(EACH INCLUDES)	
		1	**033-9139**	1	RING-RETAINING	
		1	**107-1964**	4	SCREW-PAN HEAD (6-19X0.5 IN)	
M	4	1	**193-4476**	8	SCREW-PAN HEAD (M4X.7X35MM)	
Y	5	1	**230-6267**	1	SENSOR GP-POSITION	337
Y	6	1	**230-6266**	1	SENSOR GP-POSITION	336
	7	1	**151-4977**	12	WASHER (4.445X9.525X1.0922MM THK)	
M	8	1	**192-4658**	4	SCREW-PAN HEAD (M4X.7X20MM)	
	9	1	**4B-9808**	2	SETSCREW (1/4-20X0.5 IN)	

J-NOT SERVICED SEPERATELY
M-METRIC PART
Y-SEPARATE ILLUSTRATION

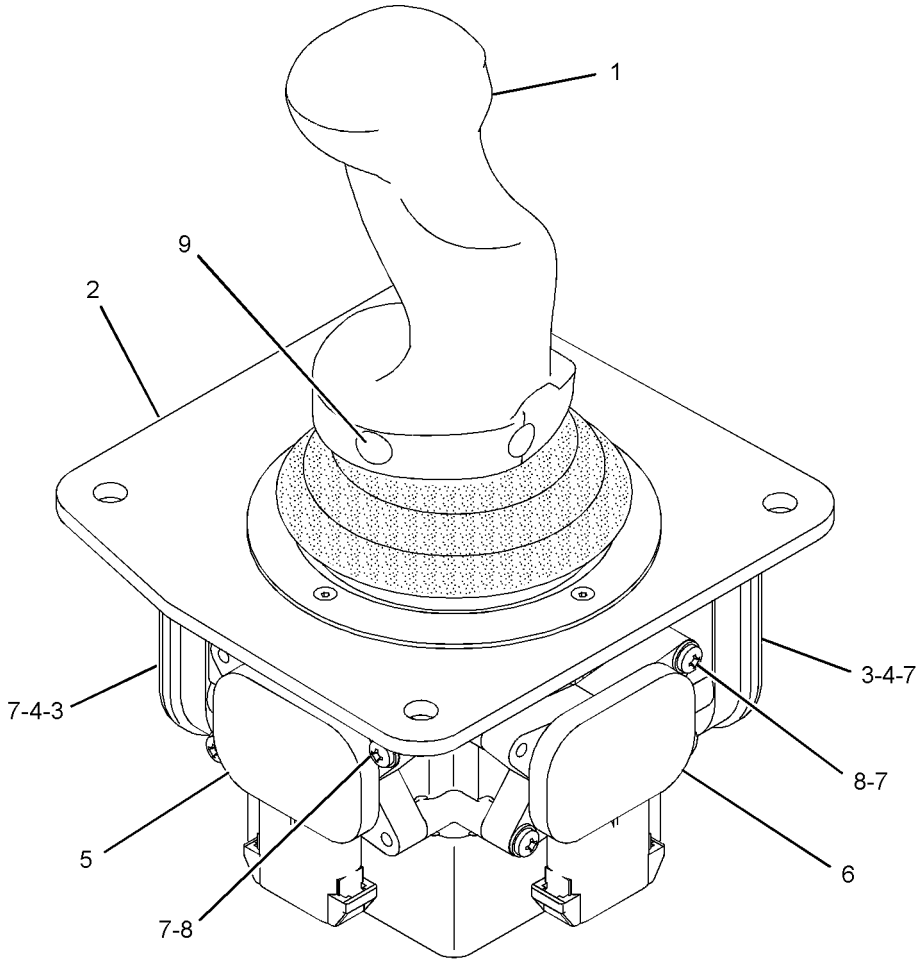

GRAPHIC #1 **<END>** g01027009

7N-9182 COOLER GP-HYDRAULIC OIL

S/N: 2GR1180-UP

PART OF 155-5556 ENGINE AR

SMCS-1374, 5071 **i00587180**

NOTE	REF NO	GRAPHIC REF	PART NUMBER	QTY	PART NAME 1 2 3 4 5 6 (PRODUCT LEVEL)	SEE PAGE
	1	1	**9M-8546**	2	GASKET	
YR	2	1	**4W-5363**	1	CORE GP-OIL COOLER	113

R-REMFG PART MAY BE AVAILABLE
Y-SEPARATE ILLUSTRATION

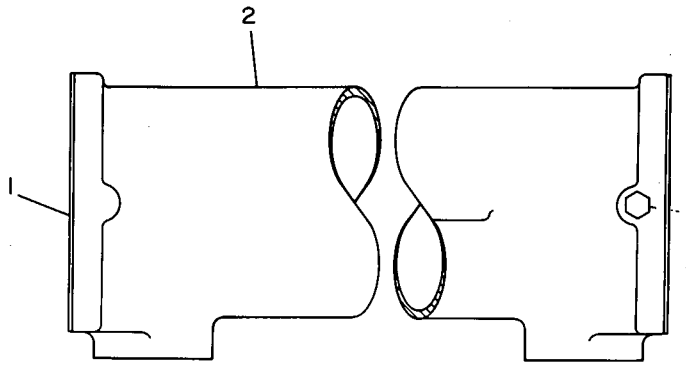

GRAPHIC #1 **<END>** g00081958

202-4328 CYLINDER & SENSOR GP-LIFT–RH

S/N: 7PZ1-UP
PART OF 201-4075 CYLINDER & VALVE GP-LIFT
AN ATTACHMENT

SMCS-5102 **i01967960**

NOTE	REF NO	GRAPHIC REF	PART NUMBER	QTY	PART NAME 1 2 3 4 5 6 (PRODUCT LEVEL)	SEE PAGE
Y	1	1	**198-6485**	1	CYLINDER GP-BULLDOZER LIFT (RH)	686
	2	1	**219-4714**	1	SENSOR GP-POSITION (LIFT CYLINDER)	
	3	1	**226-9822**	1	BRACKET AS	
	4	1	**7X-0307**	4	BOLT (7/16-14X.750 IN)	
	5	1	**8T-5360**	4	WASHER (12X22.5X2.5MM THK)	

Y-SEPARATE ILLUSTRATION

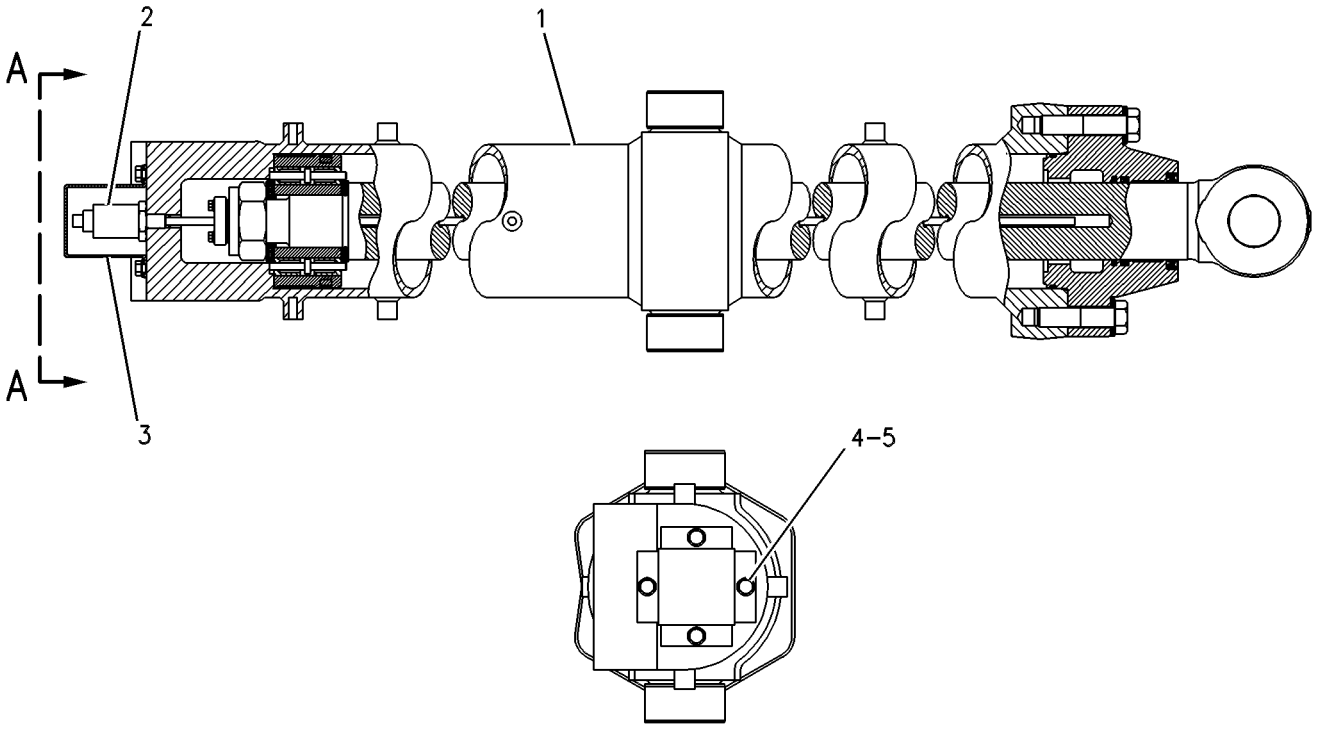

VIEW A–A

GRAPHIC #1 **<END>** g00330549

9W-8579 CYLINDER & VALVE GP-BULLDOZER—RH LIFT

S/N: 8PP1-UP; 8RP1-UP; 7PZ1-UP
PART OF 119-4267, 119-4268 BULLDOZER AR-SEMI-UNIVERSAL
AN ATTACHMENT

SMCS-5102 **i01988893**

NOTE	REF NO	GRAPHIC REF	PART NUMBER	QTY	PART NAME 1 2 3 4 5 6 (PRODUCT LEVEL)	SEE PAGE
Y	1	1	**4T-2728**	1	CYLINDER GP-BULLDOZER LIFT (RH)	680
C	2	1	**0S-1585**	2	BOLT (1/2-13X1.50 IN)	
C	3	1	**5P-8245**	21	WASHER-HARD (13.5X25.5X3MM THK)	
	4	1	**0S-1595**	2	BOLT (1/2-13X1.25 IN)	
	5	1	**0L-1329**	4	BOLT (1/2-13X3 IN)	
	6	1	**7S-8920**	2	CLIP (SLOT)	
	7	1	**7S-8921**	2	CLIP (TAB)	
	8	1	**9W-8730**	1	MANIFOLD	
	9	1	**1B-2886**	3	BOLT (1/2-13X3.75 IN)	
	10	1	**7T-0750**	1	ELBOW	
Y	11	1	**9T-5653**	1	VALVE GP-QUICK-DROP	896
	12	1	**1A-1460**	12	BOLT (1/2-13X2 IN)	
	13	1	**1P-3707**	1	SEAL-RECTANGULAR	
	14	1	**7T-0749**	1	TUBE AS	
		1	**6V-0423**	1	PLUG	
	15	1	**1P-3704**	2	SEAL-RECTANGULAR	
	16	1	**1P-5767**	4	FLANGE-HALF	
	17	1	**1P-5762**	2	FLANGE-HALF	
	18	1	**9S-1366**	2	BOLT (1/2-13X2.5 IN)	
	19	1	**1P-3705**	3	SEAL-RECTANGULAR	

C-CHANGE FROM PREVIOUS TYPE
Y-SEPARATE ILLUSTRATION

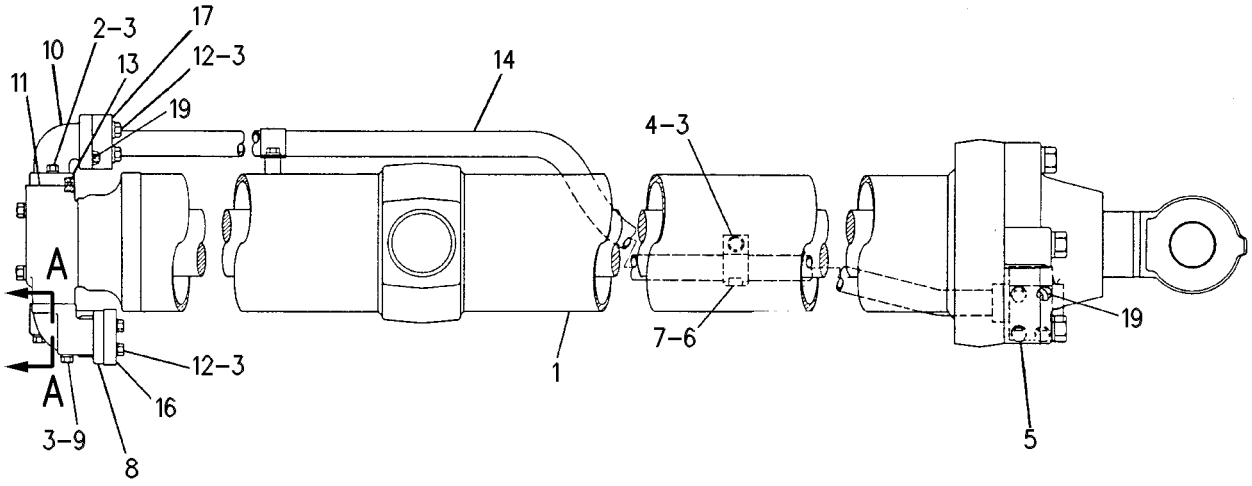

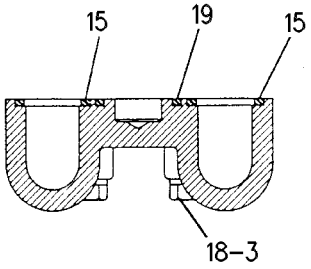

SECTION A–A

GRAPHIC #1 **<END>** g00272490

9W-8580 CYLINDER & VALVE GP-BULLDOZER—LH LIFT

S/N: 8PP1-UP; 8RP1-UP; 7PZ1-UP
PART OF 119-4267, 119-4268 BULLDOZER AR-SEMI-UNIVERSAL
REPLACED BY 201-3218—PAGE 673
AN ATTACHMENT

SMCS-5102 **i01564148**

NOTE	REF NO	GRAPHIC REF	PART NUMBER	QTY	PART NAME 1 2 3 4 5 6 (PRODUCT LEVEL)	SEE PAGE
Y	1	1	**4T-2727**	1	CYLINDER GP-BULLDOZER LIFT	678
C	2	1	**0S-1585**	2	BOLT (1/2-13X1.50 IN)	
C	3	1	**5P-8245**	21	WASHER-HARD (13.5X25.5X3MM THK)	
	4	1	**0S-1595**	2	BOLT (1/2-13X1.25 IN)	
	5	1	**0L-1329**	4	BOLT (1/2-13X3 IN)	
	6	1	**7S-8920**	2	CLIP (SLOT)	
	7	1	**7S-8921**	2	CLIP (TAB)	
	8	1	**9W-8730**	1	MANIFOLD	
	9	1	**1B-2886**	3	BOLT (1/2-13X3.75 IN)	
	10	1	**7T-0750**	1	ELBOW	
Y	11	1	**9T-5653**	1	VALVE GP-QUICK-DROP	896
	12	1	**1A-1460**	12	BOLT (1/2-13X2 IN)	
	13	1	**1P-3707**	1	SEAL-RECTANGULAR	
	14	1	**7T-0751**	1	TUBE AS	
		1	**6V-0423**	1	PLUG	
	15	1	**1P-3704**	2	SEAL-RECTANGULAR	
	16	1	**1P-5767**	4	FLANGE-HALF	
	17	1	**1P-5762**	2	FLANGE-HALF	
	18	1	**9S-1366**	2	BOLT (1/2-13X2.5 IN)	
	19	1	**1P-3705**	3	SEAL-RECTANGULAR	

C-CHANGE FROM PREVIOUS TYPE
Y-SEPARATE ILLUSTRATION

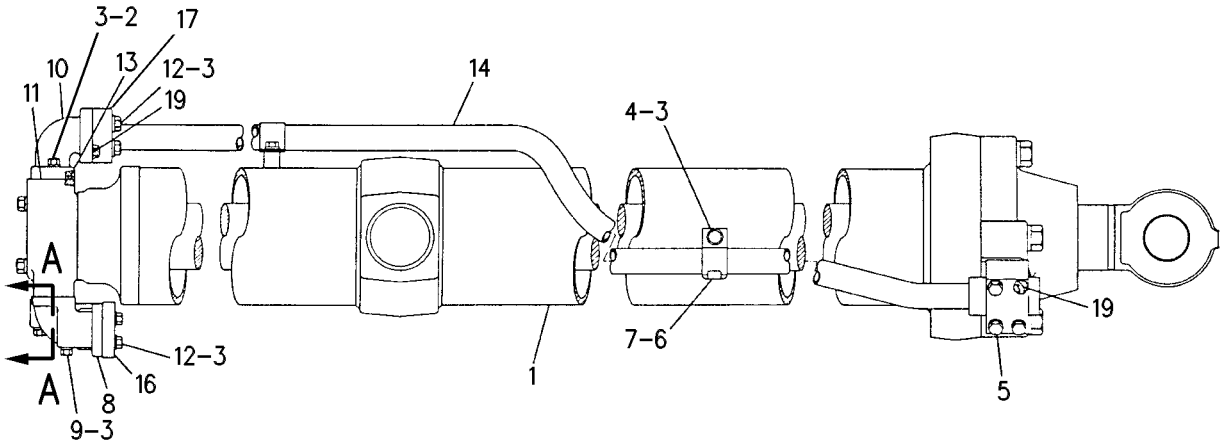

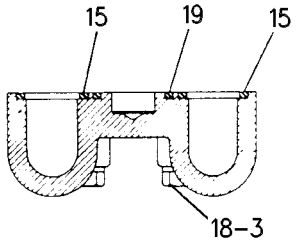

SECTION A-A

GRAPHIC #1 **<END>** g00272514

HYDRAULIC SYSTEM

201-3215 CYLINDER & VALVE GP-LIFT–RH

S/N: 8PP1-UP; 8RP1-UP; 7PZ1-UP
PART OF 199-8241, 226-5919 BULLDOZER AR-SEMI-UNIVERSAL, 199-8240, 226-5918 BULLDOZER AR-UNIVERSAL
FOR USE WITH 198-7341–PAGE 826 AN ATTACHMENT

SMCS-5102, 5110 **i01551569**

NOTE	REF NO	GRAPHIC REF	PART NUMBER	QTY	PART NAME 1 2 3 4 5 6 (PRODUCT LEVEL)	SEE PAGE
	1	1	**7T-0750**	1	ELBOW	
Y	2	1	**9T-5653**	1	VALVE GP-QUICK-DROP	896
	3	1	**9W-8730**	1	MANIFOLD	
Y	4	1	**198-6482**	1	CYLINDER GP-BULLDOZER LIFT	682
	5	1	**201-3217**	1	TUBE AS	
	6	1	**0L-1329**	4	BOLT (1/2-13X3 IN)	
	7	1	**0S-1585**	2	BOLT (1/2-13X1.50 IN)	
	8	1	**0S-1595**	2	BOLT (1/2-13X1.25 IN)	
	9	1	**1A-1460**	12	BOLT (1/2-13X2 IN)	
	10	1	**1B-2886**	3	BOLT (1/2-13X3.75 IN)	
	11	1	**1P-3704**	2	SEAL-RECTANGULAR	
	12	1	**1P-3705**	3	SEAL-RECTANGULAR	
	13	1	**1P-3707**	1	SEAL-RECTANGULAR	
	14	1	**1P-5762**	2	FLANGE-HALF	
	15	1	**1P-5767**	4	FLANGE-HALF	
	16	1	**5P-8245**	21	WASHER-HARD (13.5X25.5X3MM THK)	
	17	1	**7S-8920**	2	CLIP (SLOT)	
	18	1	**7S-8921**	2	CLIP (TAB)	
	19	1	**9S-1366**	2	BOLT (1/2-13X2.5 IN)	

Y-SEPARATE ILLUSTRATION

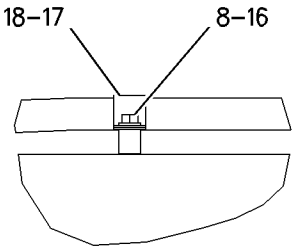

SECTION B-B

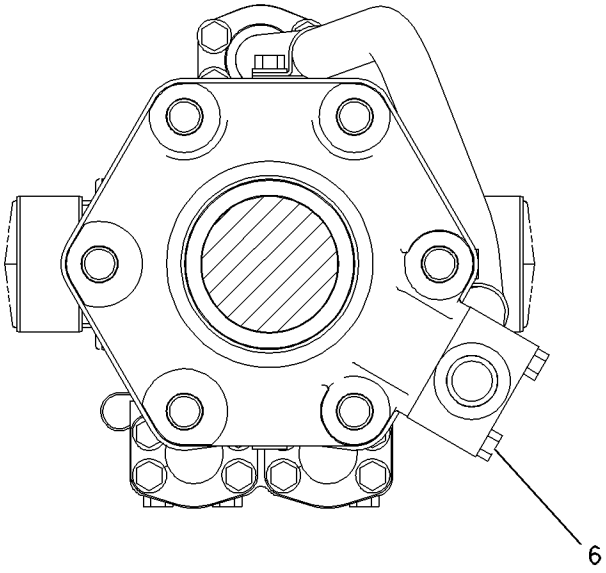

SECTION C-C

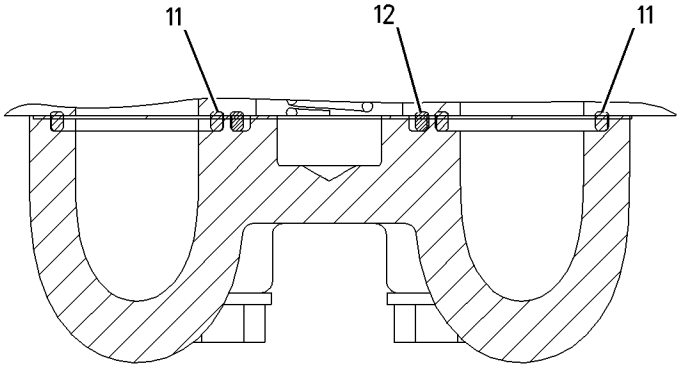

SECTION A-A

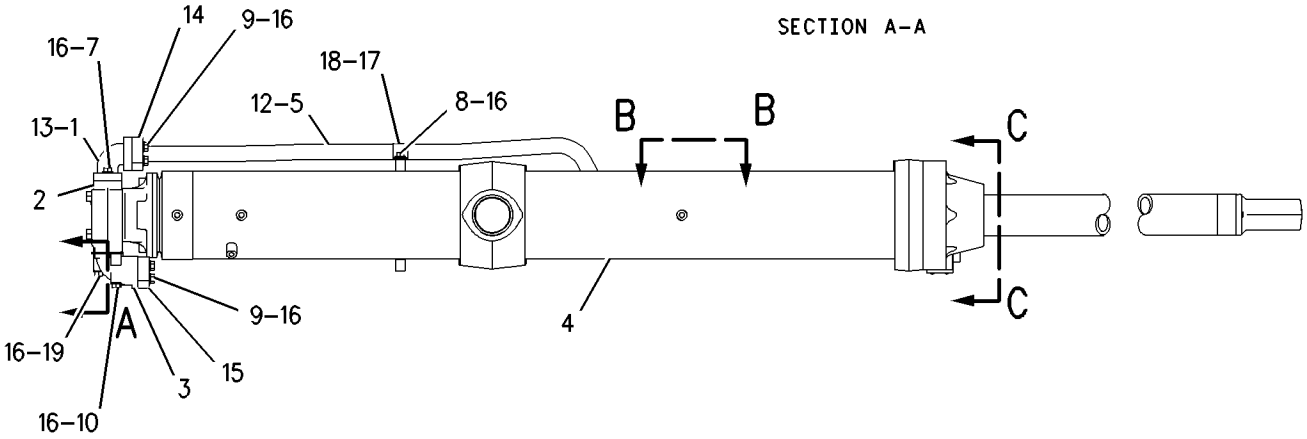

GRAPHIC #1 **<END>** g00808791

201-3218 CYLINDER & VALVE GP-LIFT–LH

S/N: 8PP1-UP; 8RP1-UP; 7PZ1-UP
PART OF 199-8241, 226-5919 BULLDOZER AR-SEMI-UNIVERSAL, 199-8240, 226-5918 BULLDOZER AR-UNIVERSAL
FOR USE WITH 198-7341–PAGE 826 AN ATTACHMENT

SMCS-5102, 5110 **i01551587**

NOTE	REF NO	GRAPHIC REF	PART NUMBER	QTY	PART NAME 1 2 3 4 5 6 (PRODUCT LEVEL)	SEE PAGE
	1	1	**7T-0750**	1	ELBOW	
Y	2	1	**9T-5653**	1	VALVE GP-QUICK-DROP	896
	3	1	**9W-8730**	1	MANIFOLD	
Y	4	1	**198-6483**	1	CYLINDER GP-BULLDOZER LIFT	684
	5	1	**201-3225**	1	TUBE AS	
	6	1	**0L-1329**	4	BOLT (1/2-13X3 IN)	
	7	1	**0S-1585**	2	BOLT (1/2-13X1.50 IN)	
	8	1	**0S-1595**	2	BOLT (1/2-13X1.25 IN)	
	9	1	**1A-1460**	12	BOLT (1/2-13X2 IN)	
	10	1	**1B-2886**	3	BOLT (1/2-13X3.75 IN)	
	11	1	**1P-3704**	2	SEAL-RECTANGULAR	
	12	1	**1P-3705**	3	SEAL-RECTANGULAR	
	13	1	**1P-3707**	1	SEAL-RECTANGULAR	
	14	1	**1P-5762**	2	FLANGE-HALF	
	15	1	**1P-5767**	4	FLANGE-HALF	
	16	1	**5P-8245**	21	WASHER-HARD (13.5X25.5X3MM THK)	
	17	1	**7S-8920**	2	CLIP (SLOT)	
	18	1	**7S-8921**	2	CLIP (TAB)	
	19	1	**9S-1366**	2	BOLT (1/2-13X2.5 IN)	

Y-SEPARATE ILLUSTRATION

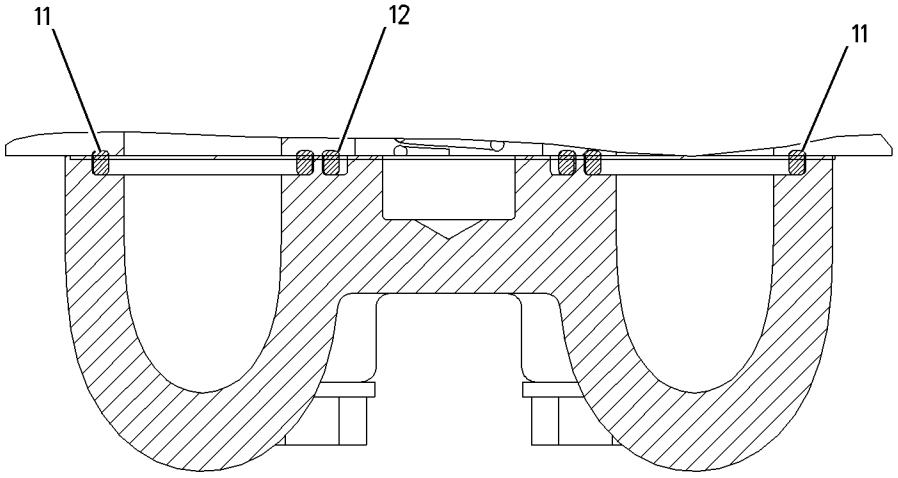

SECTION A-A

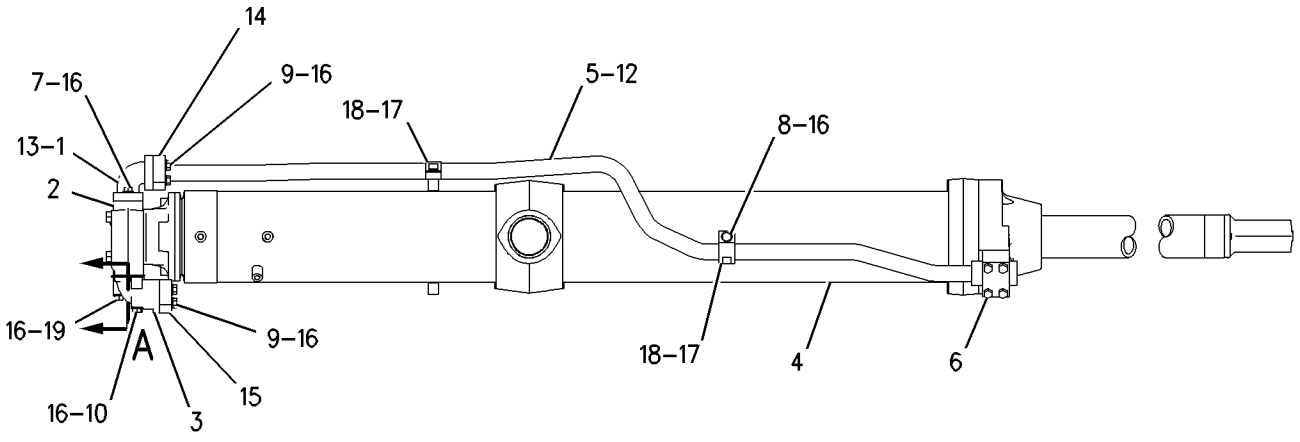

GRAPHIC #1 **<END>** g00808509

HYDRAULIC SYSTEM

201-4075 CYLINDER & VALVE GP-LIFT–RH

S/N: 7PZ1-UP
AN ATTACHMENT

SMCS-5102, 5110 **i01967961**

NOTE	REF NO	GRAPHIC REF	PART NUMBER	QTY	PART NAME 1 2 3 4 5 6 (PRODUCT LEVEL)	SEE PAGE
	1	1	**143-9464**	1	MANIFOLD	
	2	1	**143-9467**	1	TUBE AS	
	3	1	**201-4077**	1	TUBE AS	
Y	4	1	*202-4328*	1	CYLINDER & SENSOR GP-LIFT	666
	5	1	**1P-3705**	3	SEAL-RECTANGULAR	
	6	1	**1P-3707**	1	SEAL-RECTANGULAR	
	7	1	**1P-5762**	2	FLANGE-HALF	
	8	1	**1P-5767**	4	FLANGE-HALF	
	9	1	**6V-4432**	4	BOLT (1/2-13X4 IN)	
	10	1	**7S-8920**	2	CLIP (SLOT)	
	11	1	**7S-8921**	2	CLIP (TAB)	
	12	1	**7X-0310**	4	BOLT (7/16-14X2 IN)	
	13	1	**7X-0326**	4	BOLT (1/2-13X3 IN)	
	14	1	**8T-4223**	18	WASHER-HARD (13.5X25.5X3MM THK)	
	15	1	**8T-4835**	12	BOLT (1/2-13X2 IN)	
	16	1	**8T-5360**	4	WASHER (12X22.5X2.5MM THK)	
	17	1	**8T-8917**	2	BOLT (1/2-13X1.25 IN)	

Y-SEPARATE ILLUSTRATION

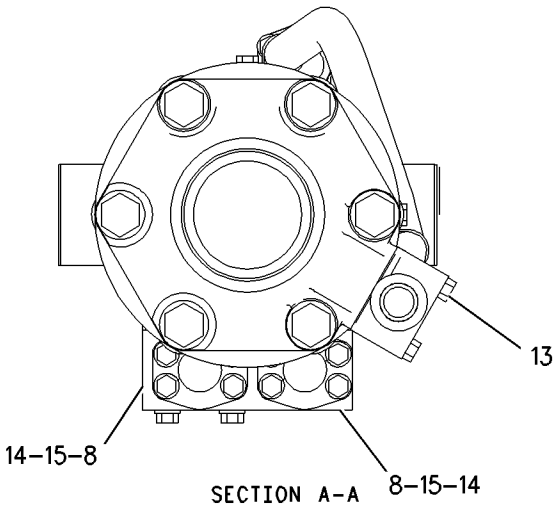

SECTION A-A

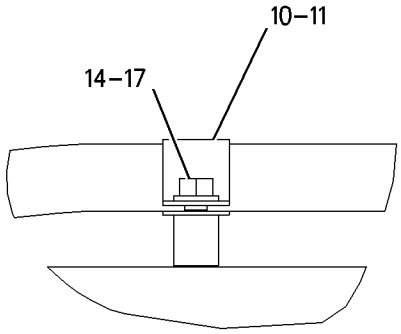

SECTION B-B

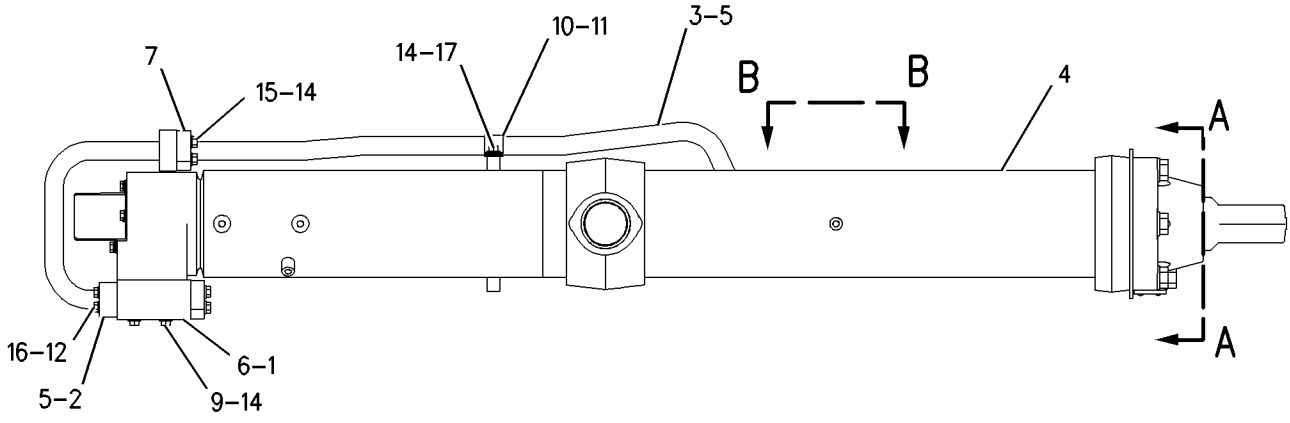

GRAPHIC #1 **<END>** g00808143

HYDRAULIC SYSTEM

224-0829 CYLINDER & VALVE GP-LIFT–LH

S/N: 7PZ1-UP
AN ATTACHMENT

SMCS-5102, 5110 **i01847799**

NOTE	REF NO	GRAPHIC REF	PART NUMBER	QTY	PART NAME 1 2 3 4 5 6 (PRODUCT LEVEL)	SEE PAGE
	1	1	**143-9464**	1	MANIFOLD	
	2	1	**143-9467**	1	TUBE AS	
Y	3	1	**198-6486**	1	CYLINDER GP-BULLDOZER LIFT	688
	4	1	**201-4078**	1	TUBE AS	
	5	1	**1P-3705**	3	SEAL-RECTANGULAR	
	6	1	**1P-3707**	1	SEAL-RECTANGULAR	
	7	1	**1P-5762**	2	FLANGE-HALF	
	8	1	**1P-5767**	4	FLANGE-HALF	
	9	1	**6V-4432**	4	BOLT (1/2-13X4 IN)	
	10	1	**7S-8920**	2	CLIP (SLOT)	
	11	1	**7S-8921**	2	CLIP (TAB)	
	12	1	**7X-0310**	4	BOLT (7/16-14X2 IN)	
	13	1	**7X-0326**	4	BOLT (1/2-13X3 IN)	
	14	1	**8T-4223**	18	WASHER-HARD (13.5X25.5X3MM THK)	
	15	1	**8T-4835**	12	BOLT (1/2-13X2 IN)	
	16	1	**8T-5360**	4	WASHER (12X22.5X2.5MM THK)	
	17	1	**8T-8917**	2	BOLT (1/2-13X1.25 IN)	

Y-SEPARATE ILLUSTRATION

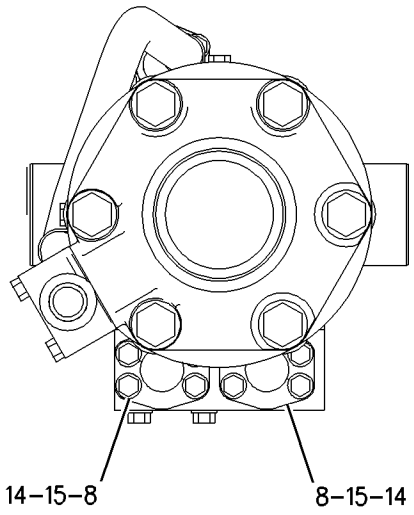

SECTION A-A

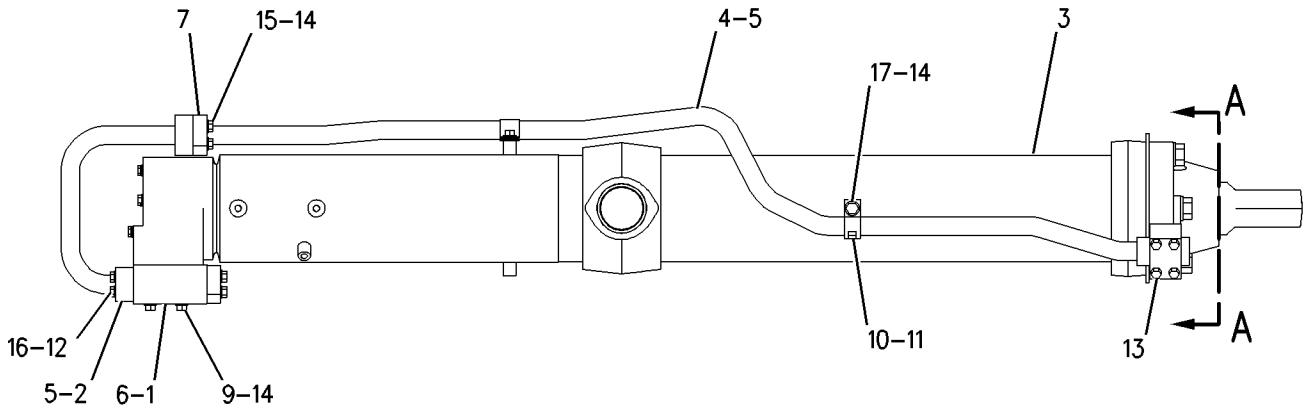

GRAPHIC #1 **<END>** g00934695

119-4283 CYLINDER AR-TILT—SINGLE TILT

S/N: 7PZ1-UP

FOR USE WITH 158-8044—PAGE 653

AN ATTACHMENT

SMCS-5104 **i01988888**

NOTE	PART NUMBER	QTY	PART NAME 1 2 3 4 5 6 (PRODUCT LEVEL)	SEE PAGE
Y	**4T-9716**	1	BRACE GP-BULLDOZER	920
Y	**1U-2711**	1	CYLINDER GP-TILT	711
Y	*152-7795*	1	LINES GP-TILT CYLINDER	812

Y-SEPARATE ILLUSTRATION

<END>

4T-2727 CYLINDER GP-BULLDOZER LIFT–LH

S/N: 8PP1-UP; 8RP1-UP; 7PZ1-UP
177.8MM (7 IN.) BORE X 1759.5MM (69.27 IN.) STROKE
PART OF 9W-8580 CYLINDER & VALVE GP-BULLDOZER
AN ATTACHMENT

SMCS-5102 **i01565251**

NOTE	REF NO	GRAPHIC REF	PART NUMBER	QTY	PART NAME 1 2 3 4 5 6 (PRODUCT LEVEL)	SEE PAGE
	1	1	**5J-3488**	1	LOCKNUT	
	2	1	**9J-0523**	1	WASHER (57.53X107.2X9.52MM THK)	
	3	1	**110-5010**	1	PISTON AS	
	4	1	**9J-0521**	4	INSERT	
	5	1	**9J-0520**	2	PLUNGER	
C	6	1	**9X-7406**	1	SEAL-U-CUP	
	7	1	**8J-1665**	1	SEAL-O-RING	
C	8	1	**162-7210**	1	RING-BACKUP	
C	9	1	**162-7757**	1	HEAD	
	10	1	**5P-8250**	6	WASHER (28X49X5MM THK)	
	11	1	**1D-4641**	2	BOLT (1-8X4.5 IN)	
R	12	1	**6E-3914**	1	ROD AS	
	13	1	**1J-2192**	1	BUSHING	
C	14	1	**167-2216**	1	SEAL AS-BUFFER	
	15	1	**8T-1789**	1	SEAL AS	
	16	1	**9J-0711**	1	RING-WEAR	
	17	1	**8T-7538**	1	RING-WEAR	
	18	1	**6E-3917**	1	WASHER (70.23X107.2X9.52MM THK)	
	19	1	**8T-8380**	1	SEAL-HEAD	
R	20	1	**9J-0513**	1	CYLINDER AS-LIFT	
	21	1	**5J-1193**	2	BEARING-SLEEVE	
	22	1	**1D-4639**	4	BOLT (1-8X4 IN)	
C	23	1	**167-2482**	1	SEAL-WIPER	

C-CHANGE FROM PREVIOUS TYPE
R-REMFG PART MAY BE AVAILABLE

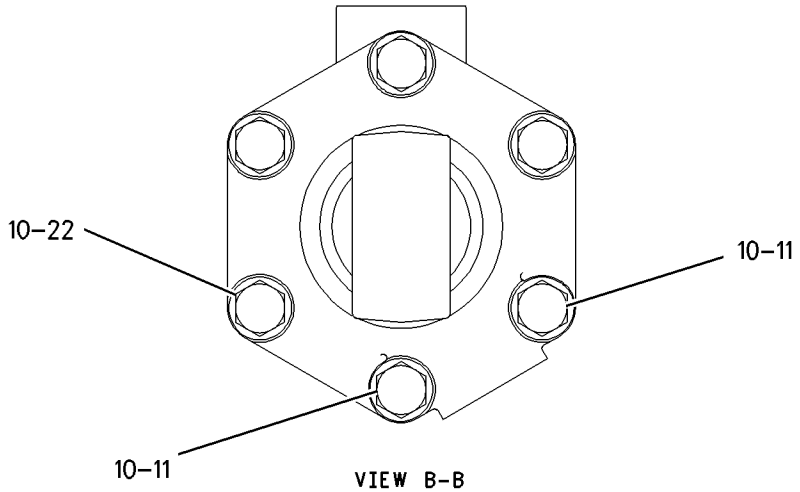

VIEW B-B

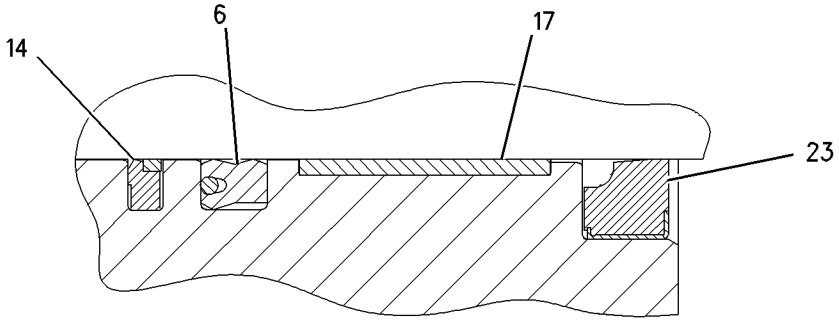

VIEW OF AREA A

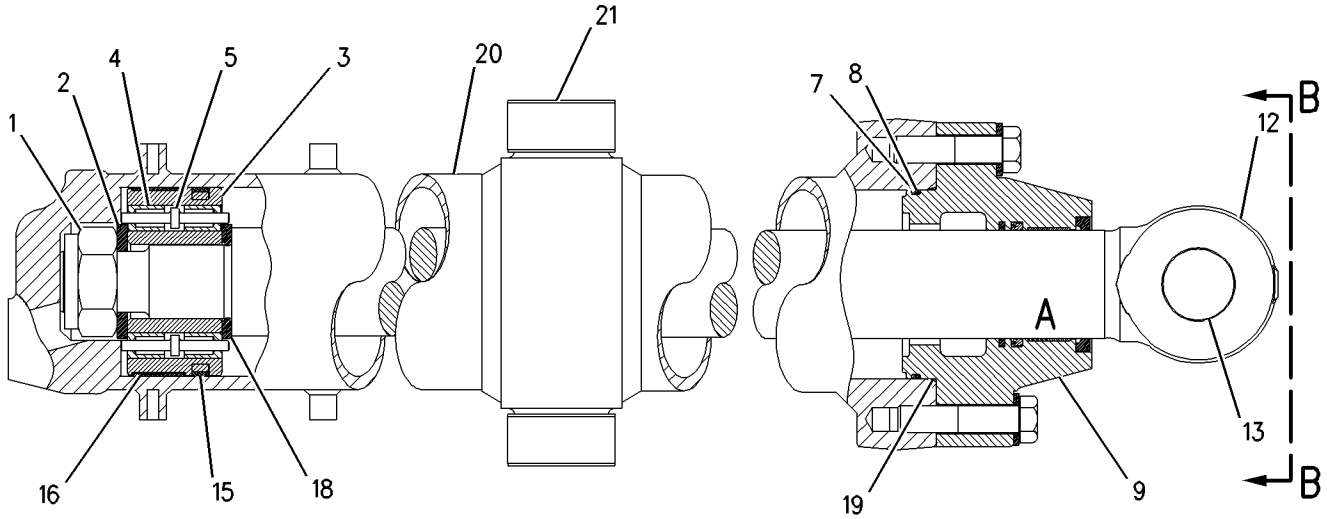

GRAPHIC #1 **<END>** g00813467

4T-2728 CYLINDER GP-BULLDOZER LIFT–RH

S/N: 8PP1-UP; 8RP1-UP; 7PZ1-UP
177.8MM (7 IN.) BORE X 1759.5MM (69.27 IN.) STROKE
PART OF 9W-8579 CYLINDER & VALVE GP-BULLDOZER
AN ATTACHMENT

SMCS-5102 **i01565279**

NOTE	REF NO	GRAPHIC REF	PART NUMBER	QTY	PART NAME 1 2 3 4 5 6 (PRODUCT LEVEL)	SEE PAGE
	1	1	**5J-3488**	1	LOCKNUT	
	2	1	**9J-0523**	1	WASHER (57.53X107.2X9.52MM THK)	
	3	1	**110-5010**	1	PISTON AS	
	4	1	**9J-0521**	4	INSERT	
	5	1	**9J-0520**	2	PLUNGER	
C	6	1	**9X-7406**	1	SEAL-U-CUP	
	7	1	**8J-1665**	1	SEAL-O-RING	
C	8	1	**162-7210**	1	RING-BACKUP	
C	9	1	**162-7757**	1	HEAD	
	10	1	**5P-8250**	6	WASHER (28X49X5MM THK)	
	11	1	**1D-4641**	2	BOLT (1-8X4.5 IN)	
R	12	1	**6E-3914**	1	ROD AS	
	13	1	**1J-2192**	1	BUSHING	
C	14	1	**167-2216**	1	SEAL AS-BUFFER	
	15	1	**8T-1789**	1	SEAL AS	
	16	1	**9J-0711**	1	RING-WEAR	
	17	1	**8T-7538**	1	RING-WEAR	
	18	1	**6E-3917**	1	WASHER (70.23X107.2X9.52MM THK)	
	19	1	**8T-8380**	1	SEAL-HEAD	
R	20	1	**9J-0513**	1	CYLINDER AS-LIFT	
	21	1	**5J-1193**	2	BEARING-SLEEVE	
	22	1	**1D-4639**	4	BOLT (1-8X4 IN)	
C	23	1	**167-2482**	1	SEAL-WIPER	

C-CHANGE FROM PREVIOUS TYPE
R-REMFG PART MAY BE AVAILABLE

4T-2728 CYLINDER GP-BULLDOZER LIFT *(contd.)* i01565279

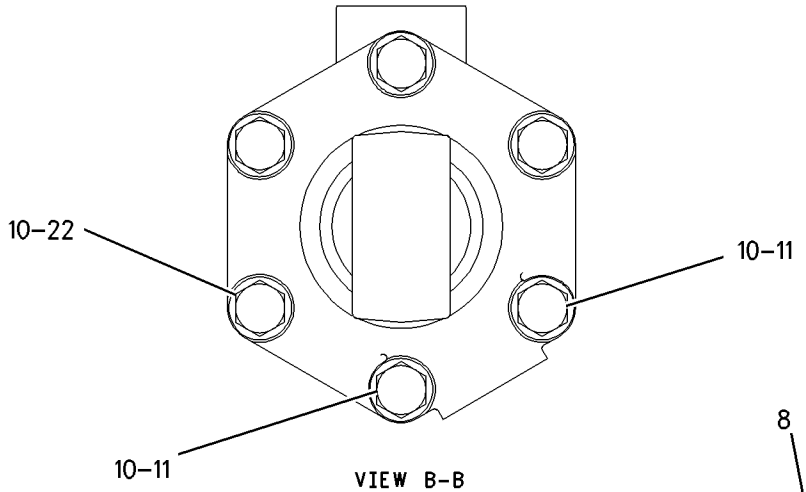

VIEW B-B

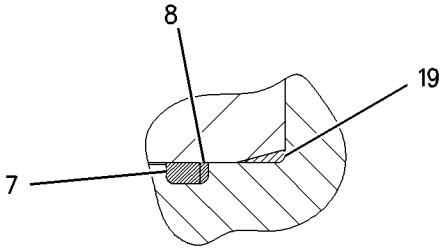

VIEW OF AREA C

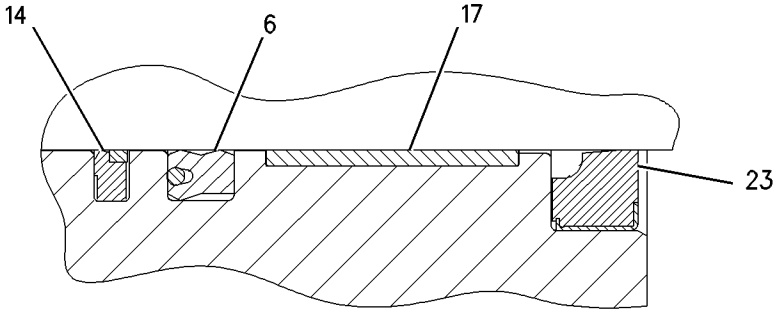

VIEW OF AREA A

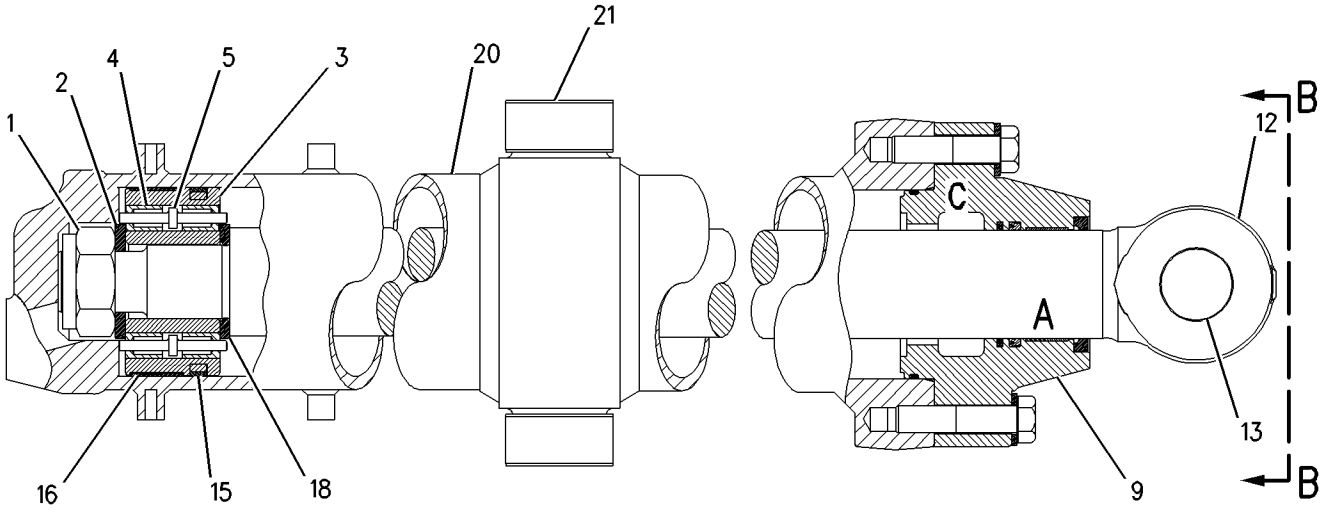

GRAPHIC #1 **<END>** g00813491

HYDRAULIC SYSTEM

198-6482 CYLINDER GP-BULLDOZER LIFT–RH

S/N: 8PP1-UP; 8RP1-UP; 7PZ1-UP
177.8MM (7 IN)BORE X 1759.5MM (69.27IN)STROKE
PART OF 201-3215 CYLINDER & VALVE GP-LIFT
AN ATTACHMENT

SMCS-5102 **i01906631**

NOTE	REF NO	GRAPHIC REF	PART NUMBER	QTY	PART NAME 1 2 3 4 5 6 (PRODUCT LEVEL)	SEE PAGE
R	1	1	**6E-3914**	1	ROD AS	
		1	**1J-2192**	1	BUSHING	
	2	1	**162-7757**	1	HEAD	
	3	1	**198-6484**	1	CYLINDER AS	
	3A	1	**200-3926**	2	BEARING-SLEEVE	
	3B	1	**1S-8241**	10	BOSS	
	4	1	**110-5010**	1	PISTON AS	
		1	**9J-0520**	2	PLUNGER	
		1	**9J-0521**	4	INSERT	
	5	1	**162-7210**	1	RING-BACKUP	
	6	1	**167-2216**	1	SEAL AS-BUFFER	
	7	1	**225-3287**	1	SEAL-WIPER	
	8	1	**1D-4641**	2	BOLT (1-8X4.5 IN)	
	9	1	**5J-3488**	1	LOCKNUT (2 1/4-12-2B THD)	
	10	1	**5P-8250**	6	WASHER (28X49X5MM THK)	
	11	1	**6E-3917**	1	WASHER (70.23X107.2X9.52MM THK)	
	12	1	**8J-1665**	1	SEAL-O-RING	
	13	1	**8T-1789**	1	SEAL AS	
	14	1	**8T-7538**	1	RING-WEAR (101.6MM ID)	
	15	1	**9J-0523**	1	WASHER (57.53X107.2X9.52MM THK)	
	16	1	**9J-0711**	1	RING-WEAR	
	17	1	**9X-7406**	1	SEAL-U-CUP	
	18	1	**9X-8896**	4	BOLT (1-8X4 IN)	
	19	1	**8T-8380**	1	SEAL-HEAD	

R-REMFG PART MAY BE AVAILABLE

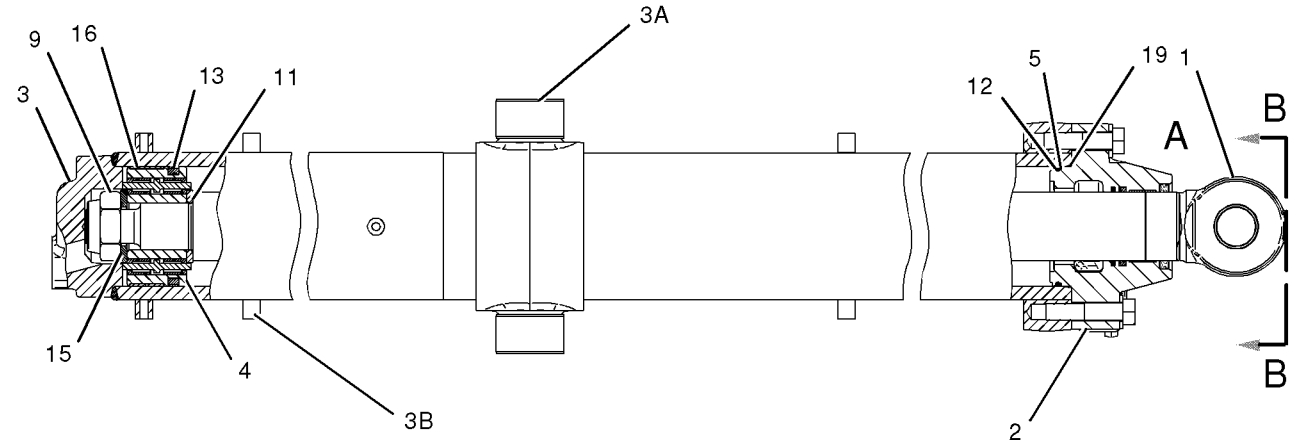

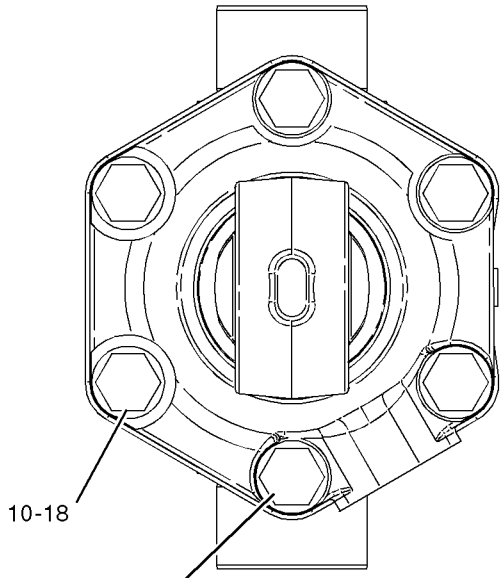

VIEW B-B

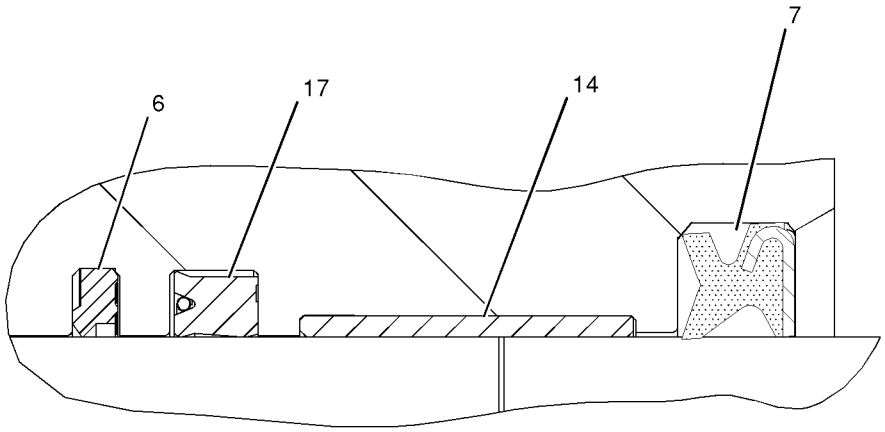

VIEW OF AREA A

GRAPHIC #1

<END>

g01012297

198-6483 CYLINDER GP-BULLDOZER LIFT–LH

S/N: 8PP1-UP; 8RP1-UP; 7PZ1-UP
177.8MM (7 IN) BORE X 1759.5MM (69.27 IN) STROKE
PART OF 201-3218 CYLINDER & VALVE GP-LIFT
AN ATTACHMENT

SMCS-5102 **i01906633**

NOTE	REF NO	GRAPHIC REF	PART NUMBER	QTY	PART NAME 1 2 3 4 5 6 (PRODUCT LEVEL)	SEE PAGE
R	1	1	**6E-3914**	1	ROD AS	
		1	**1J-2192**	1	BUSHING	
	2	1	**162-7757**	1	HEAD	
	3	1	**198-6484**	1	CYLINDER AS	
	3A	1	**200-3926**	2	BEARING-SLEEVE	
	3B	1	**1S-8241**	10	BOSS	
	4	1	**110-5010**	1	PISTON AS	
		1	**9J-0520**	2	PLUNGER	
		1	**9J-0521**	4	INSERT	
	5	1	**162-7210**	1	RING-BACKUP	
	6	1	**167-2216**	1	SEAL AS-BUFFER	
	7	1	**225-3287**	1	SEAL-WIPER	
	8	1	**1D-4641**	2	BOLT (1-8X4.5 IN)	
	9	1	**5J-3488**	1	LOCKNUT (2 1/4-12-2B THD)	
	10	1	**5P-8250**	6	WASHER (28X49X5MM THK)	
	11	1	**6E-3917**	1	WASHER (70.23X107.2X9.52MM THK)	
	12	1	**8J-1665**	1	SEAL-O-RING	
	13	1	**8T-1789**	1	SEAL AS	
	14	1	**8T-7538**	1	RING-WEAR (101.6MM ID)	
	15	1	**9J-0523**	1	WASHER (57.53X107.2X9.52MM THK)	
	16	1	**9J-0711**	1	RING-WEAR	
	17	1	**9X-7406**	1	SEAL-U-CUP	
	18	1	**9X-8896**	4	BOLT (1-8X4 IN)	
	19	1	**8T-8380**	1	SEAL-HEAD	

R-REMFG PART MAY BE AVAILABLE

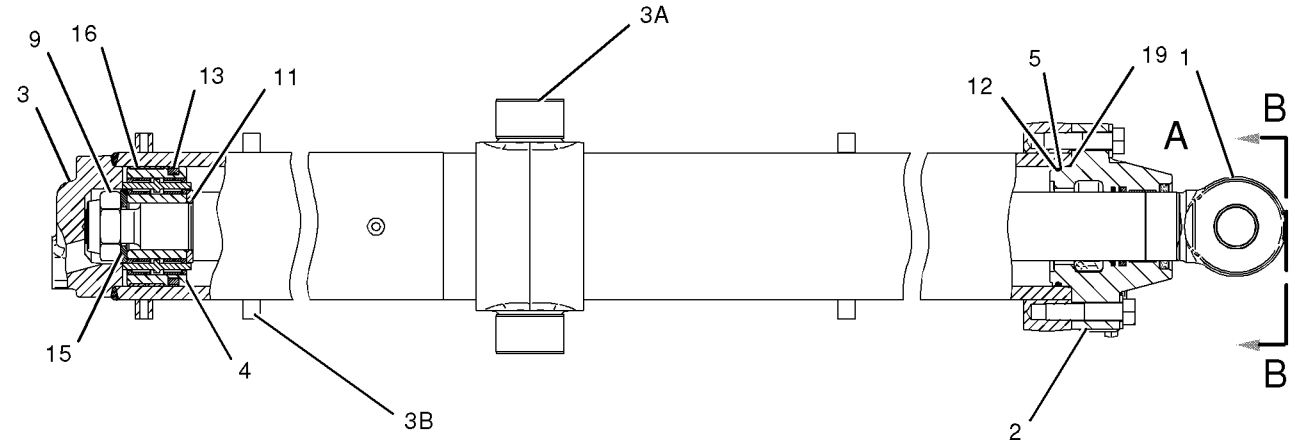

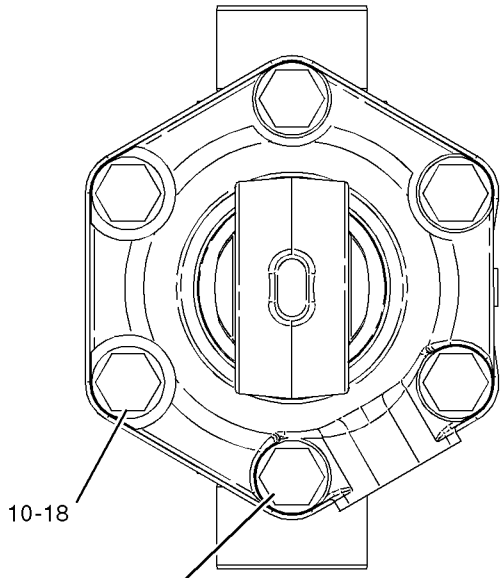

VIEW B-B

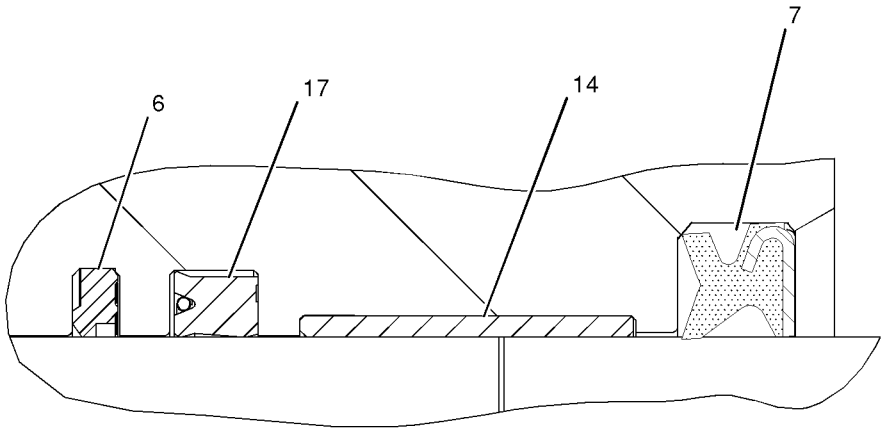

VIEW OF AREA A

GRAPHIC #1

<END>

g01012297

HYDRAULIC SYSTEM

198-6485 CYLINDER GP-BULLDOZER LIFT–RH

S/N: 7PZ1-UP
177.8MM (7 IN)BORE X 1759.5MM (69.27 IN) STROKE
PART OF 202-4328 CYLINDER & SENSOR GP-LIFT
AN ATTACHMENT

SMCS-5102 **i01988883**

NOTE	REF NO	GRAPHIC REF	PART NUMBER	QTY	PART NAME 1 2 3 4 5 6 (PRODUCT LEVEL)	SEE PAGE
	1	1	**162-7757**	1	HEAD	
	2	1	**198-6488**	1	CYLINDER AS	
	2A	1	**7K-3673**	4	BOSS	
	2B	1	**200-3926**	2	BEARING-SLEEVE	
	2C	1	**1S-8241**	6	BOSS	
	3	1	**110-5010**	1	PISTON AS	
		1	**9J-0520**	2	PLUNGER	
		1	**9J-0521**	4	INSERT	
	4	1	**126-5509**	1	ROD AS	
		1	**1J-2192**	1	BUSHING	
	5	1	**128-5011**	2	SCREW	
	6	1	**128-5012**	2	WASHER	
	7	1	**162-7210**	1	RING-BACKUP	
	8	1	**167-2216**	1	SEAL AS-BUFFER	
	9	1	**225-3287**	1	SEAL-WIPER	
	10	1	**180-4836**	1	MAGNET AS (LIFT CYLINDER)	
	11	1	**1D-4641**	2	BOLT (1-8X4.5 IN)	
	12	1	**5J-3488**	1	LOCKNUT (2 1/4-12-2B THD) (2 1/4-12 THD)	
	13	1	**5P-8250**	6	WASHER (28X49X5MM THK)	
	14	1	**6E-3917**	1	WASHER (70.23X107.2X9.52MM THK)	
	15	1	**8J-1665**	1	SEAL-O-RING	
	16	1	**8T-1789**	1	SEAL AS	
	17	1	**8T-7538**	1	RING-WEAR (101.6MM ID)	
	18	1	**9J-0523**	1	WASHER (57.53X107.2X9.52MM THK)	
	19	1	**9J-0711**	1	RING-WEAR	
	20	1	**9X-7406**	1	SEAL-U-CUP	
	21	1	**9X-8896**	4	BOLT (1-8X4 IN)	
	22	1	**8T-8380**	1	SEAL-HEAD	

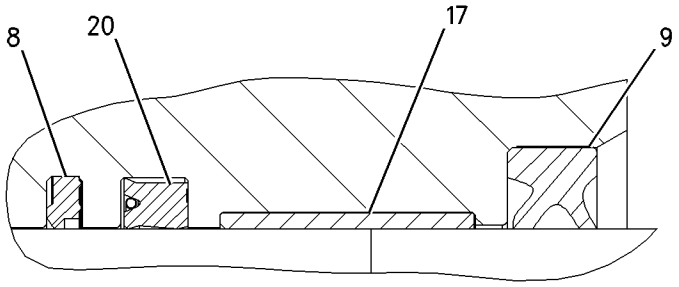

VIEW OF AREA A

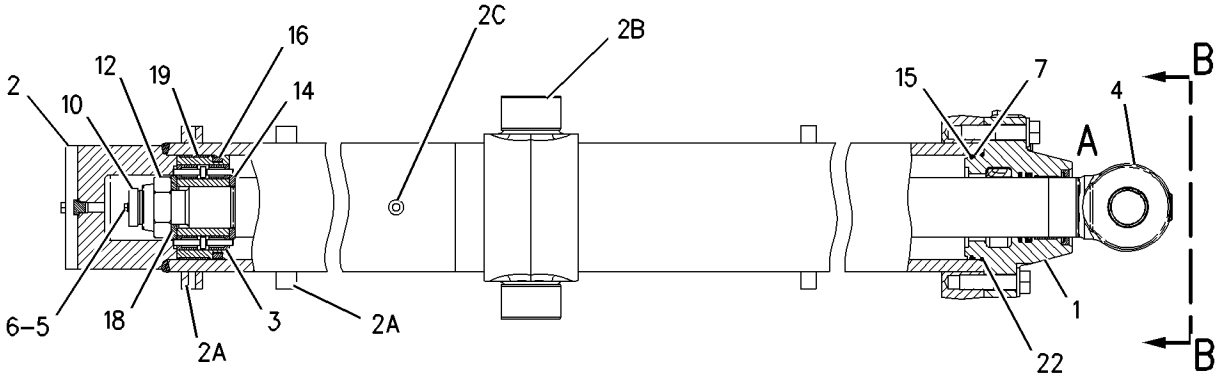

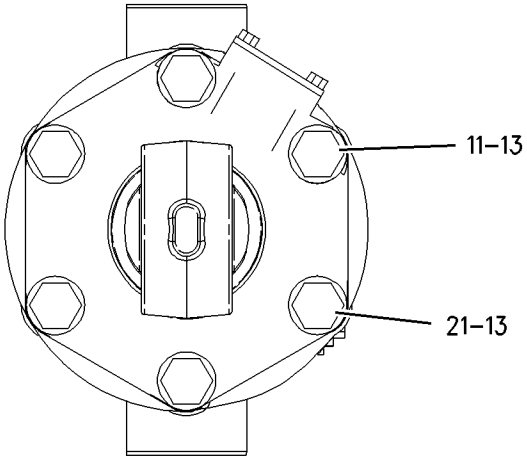

SECTION B-B

GRAPHIC #1 **<END>** g00843522

HYDRAULIC SYSTEM

198-6486 CYLINDER GP-BULLDOZER LIFT—LH

S/N: 7PZ1-UP
177.8MM (7 IN) BORE X 1759.5MM (69.27IN) STROKE
PART OF 224-0829 CYLINDER & VALVE GP-LIFT
AN ATTACHMENT

SMCS-5102 **i01988882**

NOTE	REF NO	GRAPHIC REF	PART NUMBER	QTY	PART NAME 1 2 3 4 5 6 (PRODUCT LEVEL)	SEE PAGE
	1	1	**162-7757**	1	HEAD	
	2	1	**198-6488**	1	CYLINDER AS	
	2A	1	**7K-3673**	4	BOSS	
	2B	1	**200-3926**	2	BEARING-SLEEVE	
	2C	1	**1S-8241**	6	BOSS	
	3	1	**110-5010**	1	PISTON AS	
		1	**9J-0520**	2	PLUNGER	
		1	**9J-0521**	4	INSERT	
	4	1	**126-5509**	1	ROD AS	
		1	**1J-2192**	1	BUSHING	
	5	1	**128-5011**	2	SCREW	
	6	1	**128-5012**	2	WASHER	
	7	1	**162-7210**	1	RING-BACKUP	
	8	1	**167-2216**	1	SEAL AS-BUFFER	
	9	1	**225-3287**	1	SEAL-WIPER	
	10	1	**180-4836**	1	MAGNET AS (LIFT CYLINDER)	
	11	1	**1D-4641**	2	BOLT (1-8X4.5 IN)	
	12	1	**5J-3488**	1	LOCKNUT (2 1/4-12-2B THD)	
	13	1	**5P-8250**	6	WASHER (28X49X5MM THK)	
	14	1	**6E-3917**	1	WASHER (70.23X107.2X9.52MM THK)	
	15	1	**8J-1665**	1	SEAL-O-RING	
	16	1	**8T-1789**	1	SEAL AS	
	17	1	**8T-7538**	1	RING-WEAR (101.6MM ID)	
	18	1	**9J-0523**	1	WASHER (57.53X107.2X9.52MM THK)	
	19	1	**9J-0711**	1	RING-WEAR	
	20	1	**9X-7406**	1	SEAL-U-CUP	
	21	1	**9X-8896**	4	BOLT (1-8X4 IN)	
	22	1	**8T-8380**	1	SEAL-HEAD	

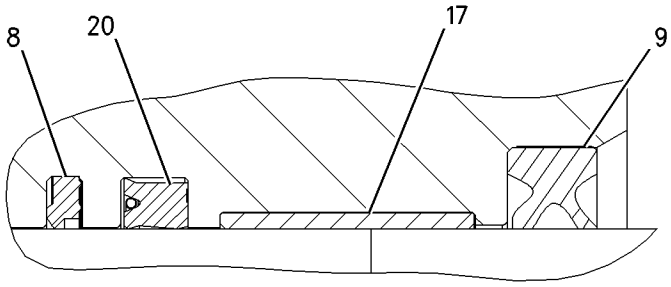

VIEW OF AREA A

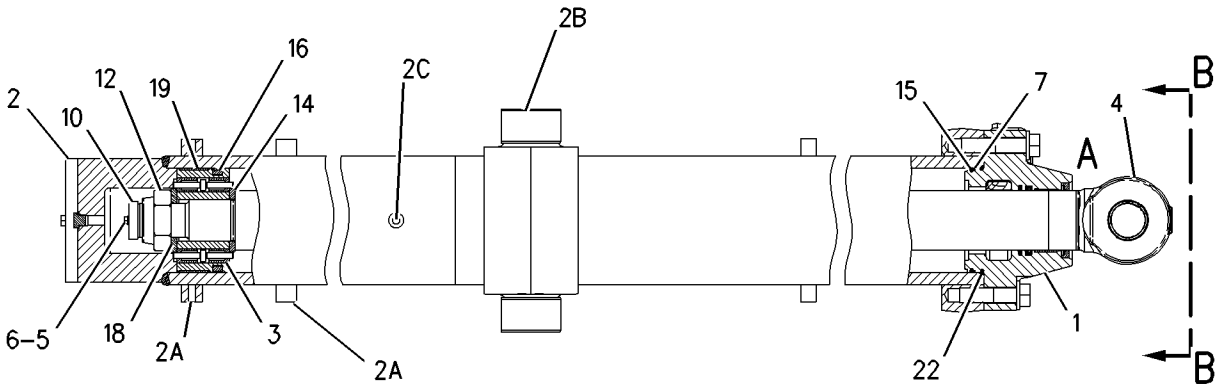

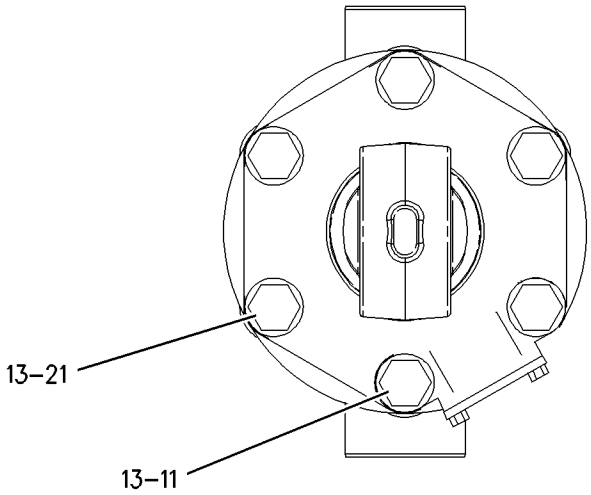

SECTION B-B

GRAPHIC #1 **<END>** g00858367

9T-3715 CYLINDER GP-TILT–RH

S/N: 8PP1-UP; 8RP1-UP
266.7MM (10.5 IN.) BORE X 285.8MM (11.2 IN.) STROKE
PART OF 119-4269 PUSH ARM GP-STABILIZER
AN ATTACHMENT

SMCS-5104 **i01989507**

NOTE	REF NO	GRAPHIC REF	PART NUMBER	QTY	PART NAME 1 2 3 4 5 6 (PRODUCT LEVEL)	SEE PAGE
R	1	1	**9T-3717**	1	CYLINDER AS-RH	
	1A	1	**152-7554**	1	BEARING-SELF-ALIGNING	
	1B	1	**8J-8905**	2	RING-LOCK	
	2	1	**3B-8489**	2	FITTING-GREASE	
	3	1	**7X-4756**	1	SEAL	
	4	1	**9J-1159**	1	RING-WEAR (260.3MM ID)	
	5	1	**8T-1796**	1	SEAL AS	
CY	6	1	**164-6427**	1	PISTON & VALVE GP	829
	7	1	**8L-9241**	1	SEAL-O-RING	
C	8	1	**157-7244**	1	RING-BACKUP	
C	9	1	**167-2216**	1	SEAL AS-BUFFER	
	10	1	**167-2331**	1	SEAL-U-CUP	
C	11	1	**225-3287**	1	SEAL-WIPER	
R	12	1	**112-4055**	1	ROD AS	
	12A	1	**152-7554**	1	BEARING-SELF-ALIGNING	
	12B	1	**8J-8905**	2	RING-LOCK	
	13	1	**4K-0684**	8	WASHER-HARD (34X55X6MM THK)	
	14	1	**3R-2300**	8	BOLT (1 1/4-7X4.5 IN)	
C	15	1	**164-6497**	1	HEAD	
	16	1	**4T-2576**	1	WASHER (82.93X146X11.94MM THK)	
	17	1	**7J-9250**	1	LOCKNUT (3-1/4X12THD)	
	18	1	**8T-7538**	1	RING-WEAR (101.6MM ID)	

C-CHANGE FROM PREVIOUS TYPE
R-REMFG PART MAY BE AVAILABLE
Y-SEPARATE ILLUSTRATION

9T-3715 CYLINDER GP-TILT ***(contd.)*** **i01989507**

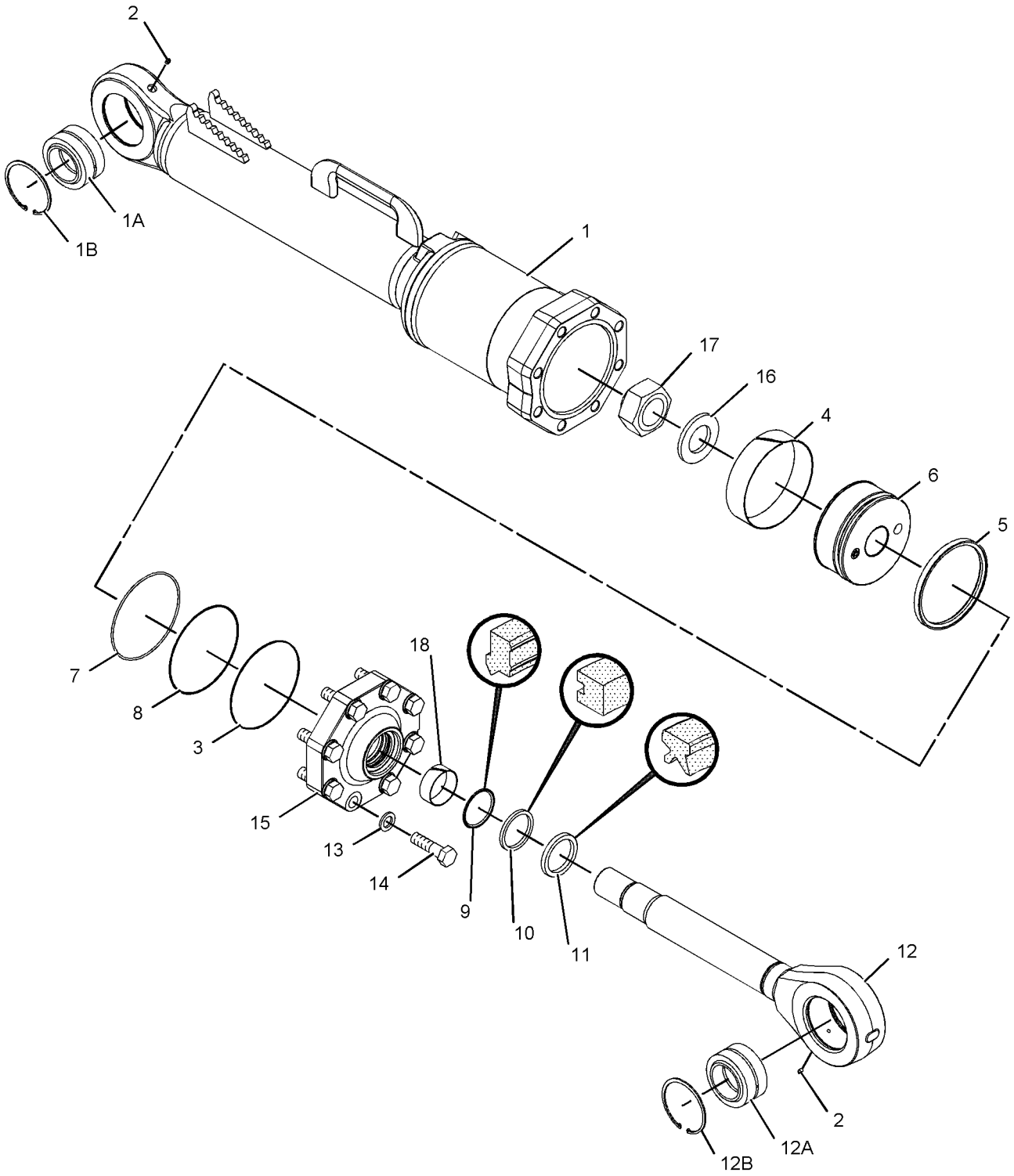

GRAPHIC #1 **<END>** g01029443

9T-3716 CYLINDER GP-TILT–LH

S/N: 8PP1-UP; 8RP1-UP
266.7MM (10.5 IN.) BORE X 285.8MM (11.2 IN.) STROKE
PART OF 119-4269 PUSH ARM GP-STABILIZER
AN ATTACHMENT

SMCS-5104 **i01974638**

NOTE	REF NO	GRAPHIC REF	PART NUMBER	QTY	PART NAME 1 2 3 4 5 6 (PRODUCT LEVEL)	SEE PAGE
R	1	1	**9T-3718**	1	CYLINDER AS-LH	
	1A	1	**152-7554**	1	BEARING-SELF-ALIGNING	
	1B	1	**8J-8905**	2	RING-LOCK	
	2	1	**3B-8489**	2	FITTING-GREASE	
	3	1	**7X-4756**	1	SEAL	
	4	1	**9J-1159**	1	RING-WEAR (260.3MM ID)	
	5	1	**8T-1796**	1	SEAL AS	
CY	6	1	**164-6427**	1	PISTON & VALVE GP	829
	7	1	**8L-9241**	1	SEAL-O-RING	
C	8	1	**157-7244**	1	RING-BACKUP	
C	9	1	**167-2216**	1	SEAL AS-BUFFER	
	10	1	**167-2331**	1	SEAL-U-CUP	
C	11	1	**225-3287**	1	SEAL-WIPER	
R	12	1	**112-4055**	1	ROD AS	
	12A	1	**152-7554**	1	BEARING-SELF-ALIGNING	
	12B	1	**8J-8905**	2	RING-LOCK	
	13	1	**4K-0684**	8	WASHER-HARD (34X55X6MM THK)	
	14	1	**3R-2300**	8	BOLT (1 1/4-7X4.5 IN)	
C	15	1	**164-6497**	1	HEAD	
	16	1	**4T-2576**	1	WASHER (82.93X146X11.94MM THK)	
	17	1	**7J-9250**	1	LOCKNUT (3-1/4X12THD)	
	18	1	**8T-7538**	1	RING-WEAR (101.6MM ID)	

C-CHANGE FROM PREVIOUS TYPE
R-REMFG PART MAY BE AVAILABLE
Y-SEPARATE ILLUSTRATION

9T-3716 CYLINDER GP-TILT *(contd.)* **i01974638**

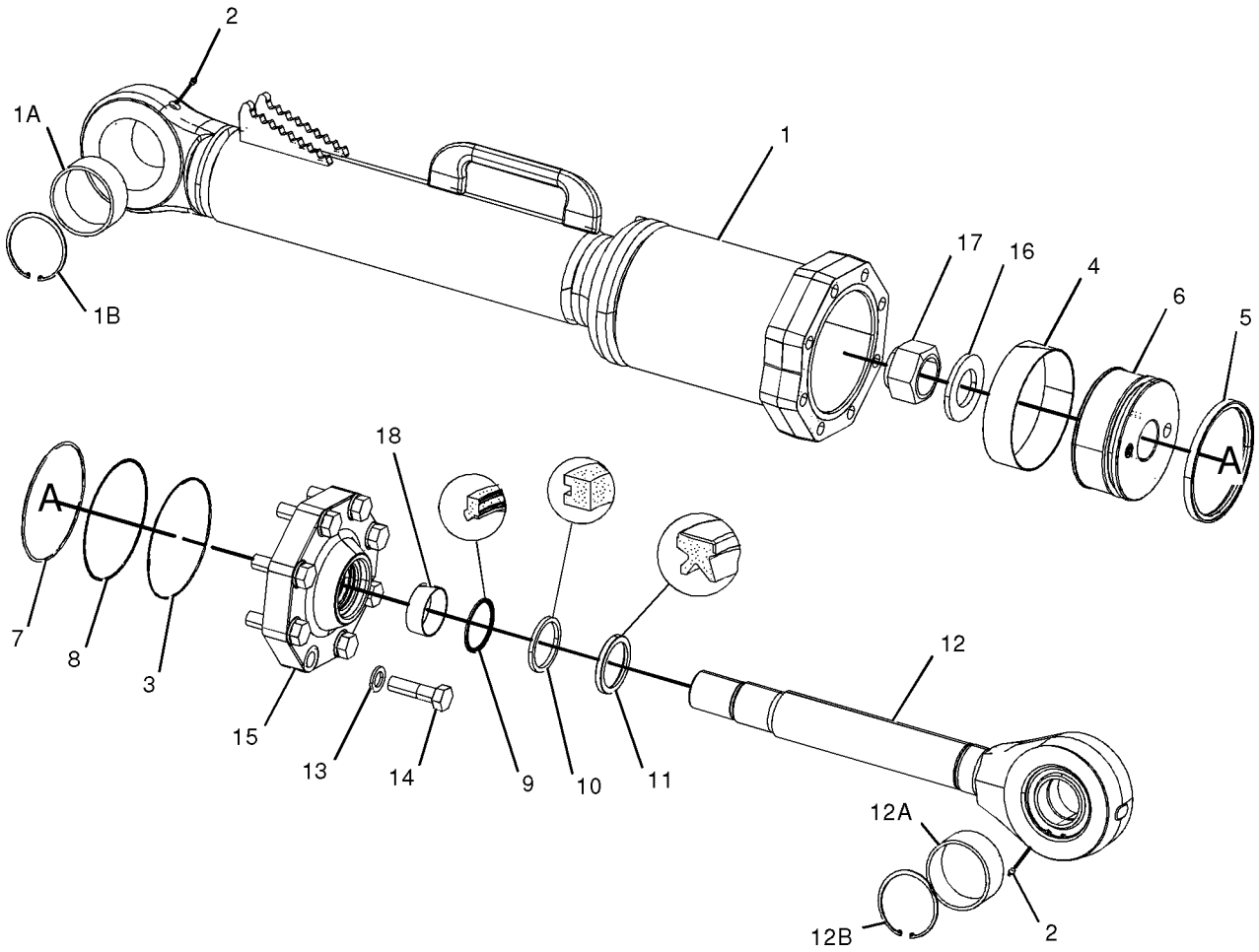

GRAPHIC #1 **<END>** g01030381

HYDRAULIC SYSTEM

101-8581 CYLINDER GP-RIPPER–RH

S/N: 5MP1-UP; 7CP1-UP; 7DP1-UP
254MM (10 IN.) BORE X 613MM (24.1 IN.) STROKE
PART OF 127-1031, 130-6458, 130-6462 RIPPER AR
AN ATTACHMENT
TYPE 1

SMCS-5352, 5356 **i01988891**

NOTE	REF NO	GRAPHIC REF	PART NUMBER	QTY	PART NAME 1 2 3 4 5 6 (PRODUCT LEVEL)	SEE PAGE
	1	1	**3B-8489**	2	FITTING-GREASE	
	2	1	**3G-3903**	1	WASHER (70.23X140X11.94MM THK)	
J	3	1	**8C-3843**	1	RING-WEAR	
J	4	1	**8T-6746**	1	RING-WEAR	
	5	1	**4J-6888**	1	LOCKNUT (2 3/4-12 THD)	
J	6	1	**8C-5219**	1	SEAL-LIP TYPE	
R	7	1	**9T-5819**	1	HEAD	
R	8	1	**102-0691**	1	ROD AS	
	9	1	**9J-1175**	2	BEARING-SLEEVE	
	10	1	**4J-4955**	1	SPACER (3X100X5MM THK)	
R	11	1	**102-0519**	1	CYLINDER AS-RH	
	12	1	**9J-1175**	2	BEARING-SLEEVE	
		1	**4J-4955**	1	SPACER (3X100X5MM THK)	
J	13	1	**5P-2235**	1	SEAL-O-RING	
J	14	1	**1U-3307**	1	RING-BACKUP	
J	15	1	**8C-9127**	1	SEAL AS	
	16	1	**3R-2300**	8	BOLT (1 1/4-7X4.5 IN)	
		1	**4K-0684**	8	WASHER-HARD (34X55X6MM THK)	
J	17	1	**5J-8350**	1	SEAL-U-CUP	
Y	18	1	**102-0693**	1	PISTON & VALVE GP	828
	19	1	**2H-3755**	4	BOLT (5/16-18X0.62 IN)	
		1	**7S-6369**	4	WASHER (.344X.75X.188 IN THK)	
	20	1	**1P-4577**	4	FLANGE-HALF	
	21	1	**5S-7382**	8	BOLT (3/8-16X1.375 IN)	
	22	1	**8T-4896**	8	WASHER-HARD (10.2X18.5X2.5MM THK)	
					AVAILABLE REPAIR KIT(S):	
J			**132-4919**	1	KIT-SEAL (RIPPER CYLINDER)	
					(INCLUDES HEAD SEAL, O-RING SEAL, PISTON SEAL AS AND PARTS MARKED J)	

J-KIT MARKED J INCLUDES PARTS MARKED J
R-REMFG PART MAY BE AVAILABLE
Y-SEPARATE ILLUSTRATION

101-8581 CYLINDER GP-RIPPER *(contd.)* i01988891

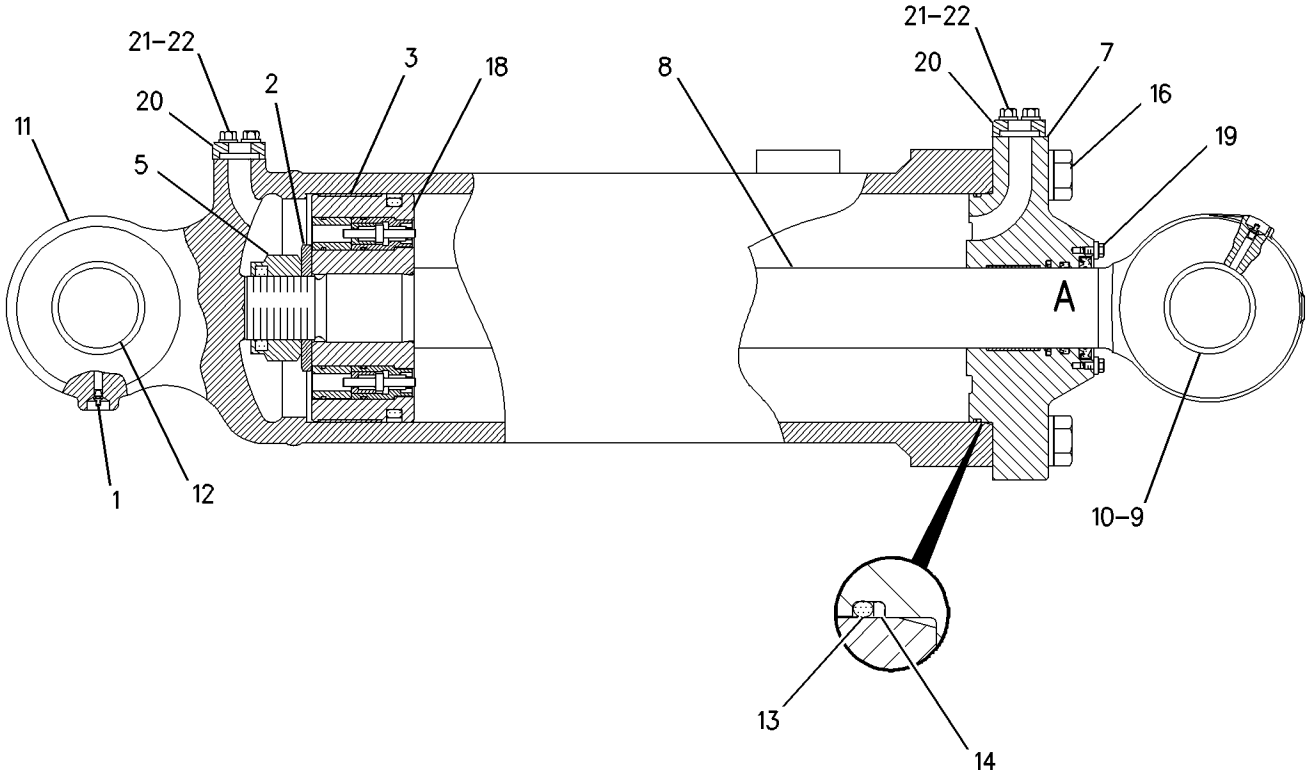

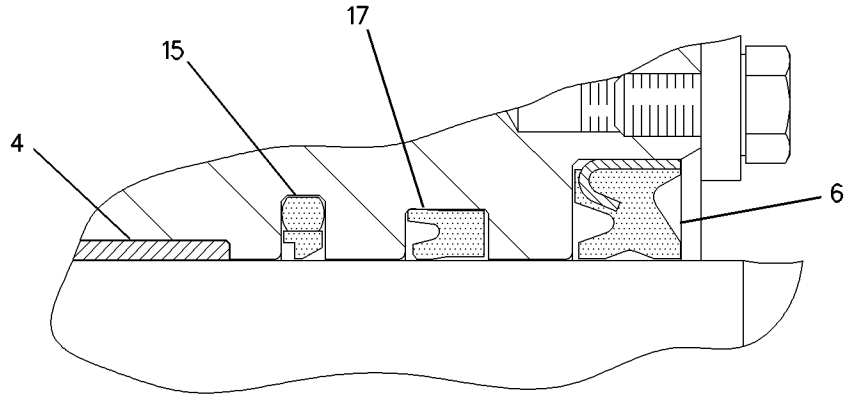

VIEW OF AREA A

GRAPHIC #1 **<END>** g00665141

101-8581 CYLINDER GP-RIPPER–RH

S/N: 5MP1-UP; 7CP1-UP; 7DP1-UP
254MM (10 IN.) BORE X 613MM (24.1 IN.) STROKE
PART OF 127-1031, 130-6458, 130-6462 RIPPER AR
AN ATTACHMENT
TYPE 2

SMCS-5352, 5356 **i01988892**

NOTE	REF NO	GRAPHIC REF	PART NUMBER	QTY	PART NAME 1 2 3 4 5 6 (PRODUCT LEVEL)	SEE PAGE
	1	1	**3B-8489**	2	FITTING-GREASE	
	2	1	**3G-3903**	1	WASHER (70.23X140X11.94MM THK)	
	3	1	**8C-3843**	1	RING-WEAR	
	4	1	**8T-6746**	1	RING-WEAR	
	5	1	**4J-6888**	1	LOCKNUT (2 3/4-12 THD)	
C	6	1	**225-3286**	1	SEAL-WIPER	
R	7	1	**9T-5819**	1	HEAD	
R	8	1	**102-0691**	1	ROD AS	
	9	1	**9J-1175**	2	BEARING-SLEEVE	
	10	1	**4J-4955**	1	SPACER (3X100X5MM THK)	
R	11	1	**102-0519**	1	CYLINDER AS-RH	
	12	1	**2V-0481**	1	BLOCK	
	13	1	**5P-2235**	1	SEAL-O-RING	
	14	1	**1U-3307**	1	RING-BACKUP	
	15	1	**167-2211**	1	SEAL AS-BUFFER	
	16	1	**3R-2300**	8	BOLT (1 1/4-7X4.5 IN)	
		1	**4K-0684**	8	WASHER-HARD (34X55X6MM THK)	
	17	1	**167-2324**	1	SEAL-U-CUP	
Y	18	1	**102-0693**	1	PISTON & VALVE GP (PISTON GP CYLINDER)	828
	19	1	**8T-4896**	8	WASHER-HARD (10.2X18.5X2.5MM THK)	
	20	1	**1P-4577**	4	FLANGE-HALF	
	21	1	**5S-7382**	8	BOLT (3/8-16X1.375 IN)	

C-CHANGE FROM PREVIOUS TYPE
R-REMFG PART MAY BE AVAILABLE
Y-SEPARATE ILLUSTRATION

101-8581 CYLINDER GP-RIPPER *(contd.)* i01988892

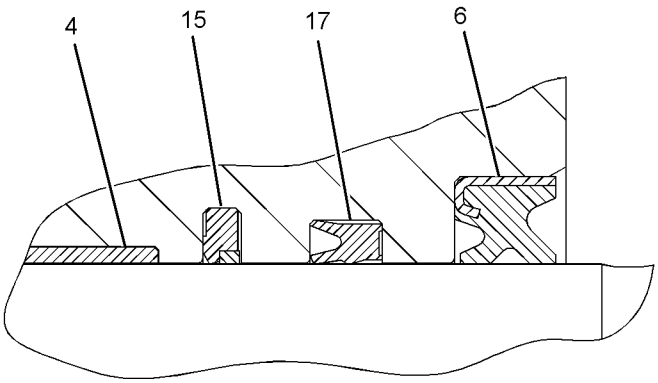

VIEW OF AREA A

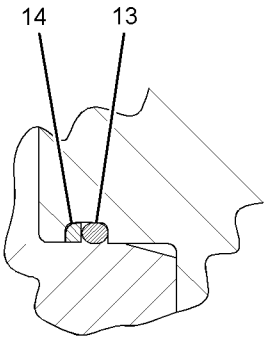

VIEW OF AREA B

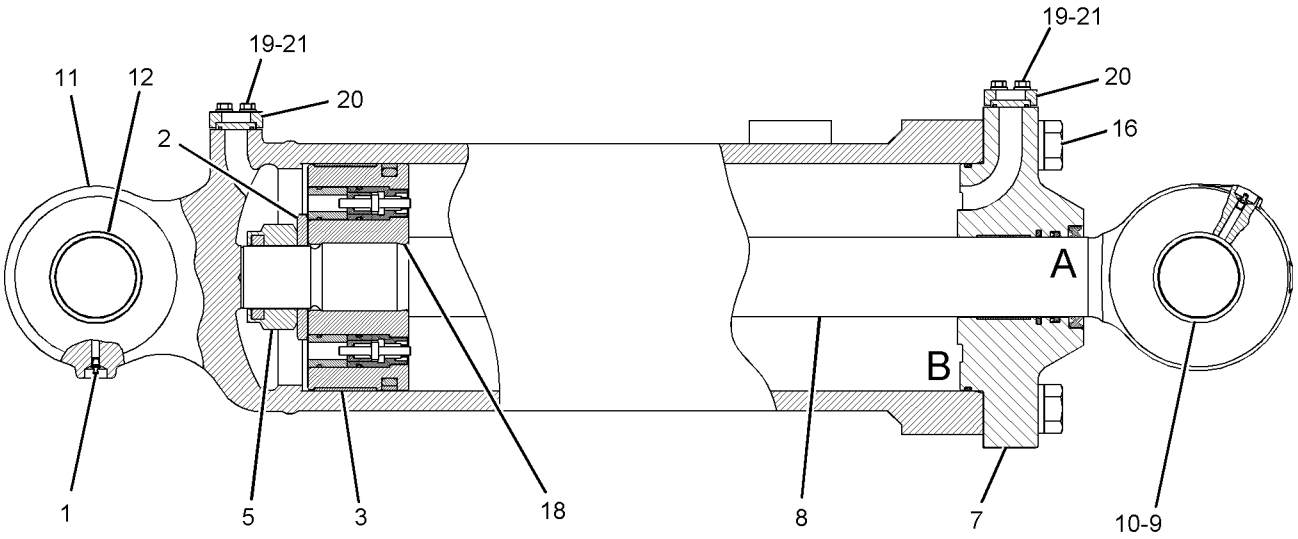

GRAPHIC #1 **<END>** g01025014

101-8614 CYLINDER GP-RIPPER–LH

S/N: 5MP1-UP; 7CP1-UP; 7DP1-UP
254MM (10 IN.) BORE X 613MM (24.1 IN.) STROKE
PART OF 127-1031, 130-6458, 130-6462 RIPPER AR
AN ATTACHMENT
TYPE 1

SMCS-5352, 5356 **i01988889**

NOTE	REF NO	GRAPHIC REF	PART NUMBER	QTY	PART NAME 1 2 3 4 5 6 (PRODUCT LEVEL)	SEE PAGE
	1	1	**3B-8489**	2	FITTING-GREASE	
	2	1	**3G-3903**	1	WASHER (70.23X140X11.94MM THK)	
J	3	1	**8C-3843**	1	RING-WEAR	
J	4	1	**8T-6746**	1	RING-WEAR	
	5	1	**4J-6888**	1	LOCKNUT (2 3/4-12 THD)	
J	6	1	**8C-5219**	1	SEAL-LIP TYPE	
R	7	1	**9T-5819**	1	HEAD	
R	8	1	**102-0691**	1	ROD AS	
	9	1	**9J-1175**	2	BEARING-SLEEVE	
	10	1	**4J-4955**	1	SPACER (3X100X5MM THK)	
R	11	1	**102-0520**	1	CYLINDER AS-LH	
	12	1	**9J-1175**	2	BEARING-SLEEVE	
		1	**4J-4955**	1	SPACER (3X100X5MM THK)	
J	13	1	**5P-2235**	1	SEAL-O-RING	
J	14	1	**1U-3307**	1	RING-BACKUP	
J	15	1	**8C-9127**	1	SEAL AS	
	16	1	**3R-2300**	8	BOLT (1 1/4-7X4.5 IN)	
		1	**4K-0684**	8	WASHER-HARD (34X55X6MM THK)	
J	17	1	**5J-8350**	1	SEAL-U-CUP	
Y	18	1	**102-0693**	1	PISTON & VALVE GP	828
	19	1	**2H-3755**	4	BOLT (5/16-18X0.62 IN)	
		1	**7S-6369**	4	WASHER (.344X.75X.188 IN THK)	
	20	1	**1P-4577**	4	FLANGE-HALF	
	21	1	**5S-7382**	8	BOLT (3/8-16X1.375 IN)	
	22	1	**8T-4896**	8	WASHER-HARD (10.2X18.5X2.5MM THK)	
					AVAILABLE REPAIR KIT(S):	
J			**132-4919**	1	KIT-SEAL (RIPPER CYLINDER)	
					(INCLUDES HEAD SEAL, O-RING SEAL, PISTON SEAL AS AND PARTS MARKED J)	

J-KIT MARKED J SERVICES PARTS MARKED J
R-REMFG PART MAY BE AVAILABLE
Y-SEPARATE ILLUSTRATION

101-8614 CYLINDER GP-RIPPER *(contd.)* i01988889

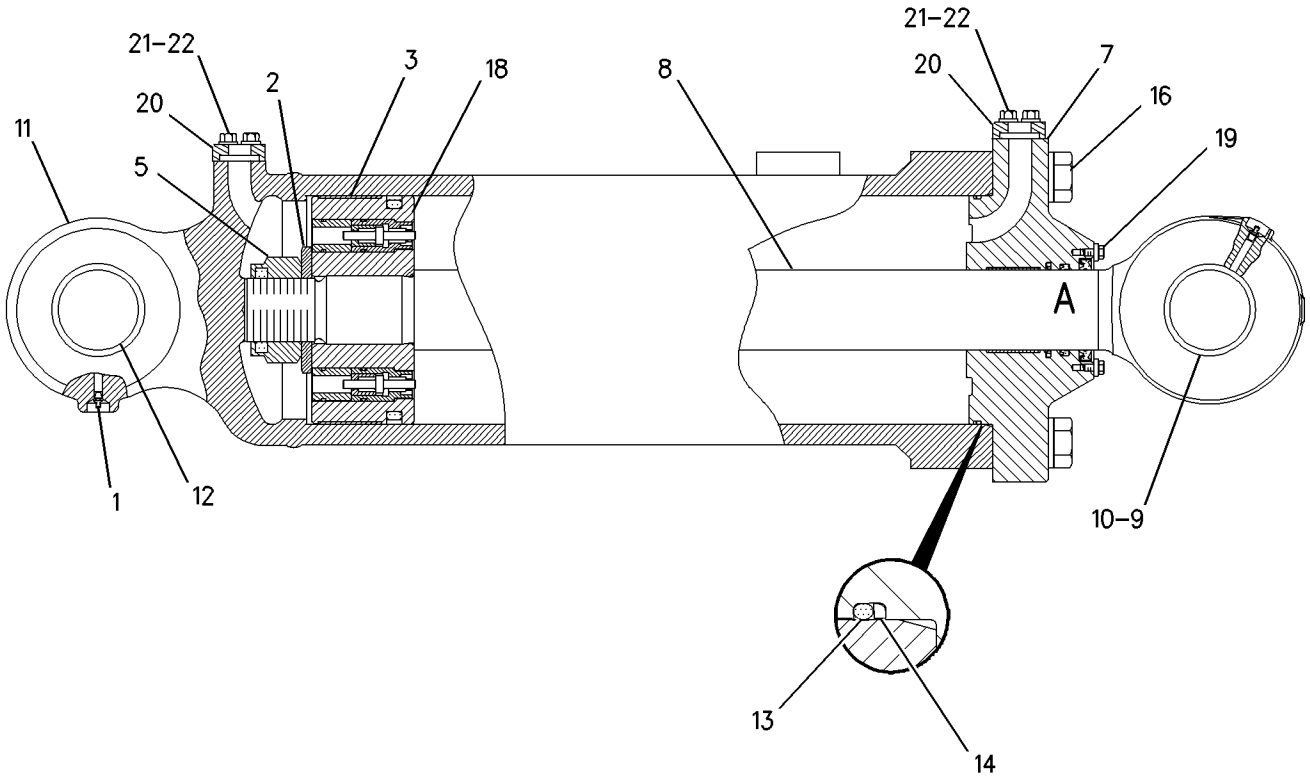

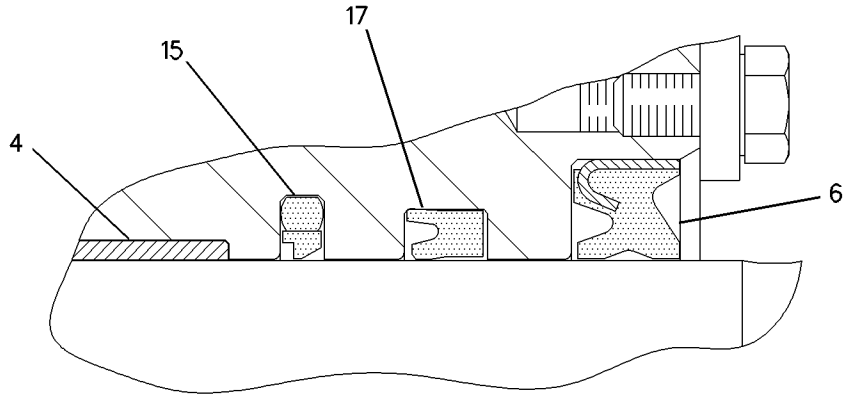

VIEW OF AREA A

GRAPHIC #1 **<END>** g00665062

101-8614 CYLINDER GP-RIPPER–LH

S/N: 5MP1-UP; 7CP1-UP; 7DP1-UP
254MM (10 IN.) BORE X 613MM (24.1 IN.) STROKE
PART OF 127-1031, 130-6458, 130-6462 RIPPER AR
AN ATTACHMENT
TYPE 2

SMCS-5352, 5356 **i01988890**

NOTE	REF NO	GRAPHIC REF	PART NUMBER	QTY	PART NAME 1 2 3 4 5 6 (PRODUCT LEVEL)	SEE PAGE
	1	1	**3B-8489**	2	FITTING-GREASE	
	2	1	**3G-3903**	1	WASHER (70.23X140X11.94MM THK)	
	3	1	**8C-3843**	1	RING-WEAR	
	4	1	**8T-6746**	1	RING-WEAR	
	5	1	**4J-6888**	1	LOCKNUT (2 3/4-12 THD)	
C	6	1	**225-3286**	1	SEAL-WIPER	
R	7	1	**9T-5819**	1	HEAD	
R	8	1	**102-0691**	1	ROD AS	
	9	1	**9J-1175**	2	BEARING-SLEEVE	
	10	1	**4J-4955**	1	SPACER (3X100X5MM THK)	
R	11	1	**102-0520**	1	CYLINDER AS-LH	
	12	1	**2V-0481**	1	BLOCK	
	13	1	**5P-2235**	1	SEAL-O-RING	
	14	1	**1U-3307**	1	RING-BACKUP	
C	15	1	**167-2211**	1	SEAL AS-BUFFER	
	16	1	**3R-2300**	8	BOLT (1 1/4-7X4.5 IN)	
		1	**4K-0684**	8	WASHER-HARD (34X55X6MM THK)	
C	17	1	**167-2324**	1	SEAL-U-CUP	
Y	18	1	**102-0693**	1	PISTON & VALVE GP	828
	19	1	**8T-4896**	8	WASHER-HARD (10.2X18.5X2.5MM THK)	
	20	1	**1P-4577**	4	FLANGE-HALF	
	21	1	**5S-7382**	8	BOLT (3/8-16X1.375 IN)	

C-CHANGE FROM PREVIOUS TYPE
R-REMFG PART MAY BE AVAILABLE
Y-SEPARATE ILLUSTRATION

101-8614 CYLINDER GP-RIPPER *(contd.)* i01988890

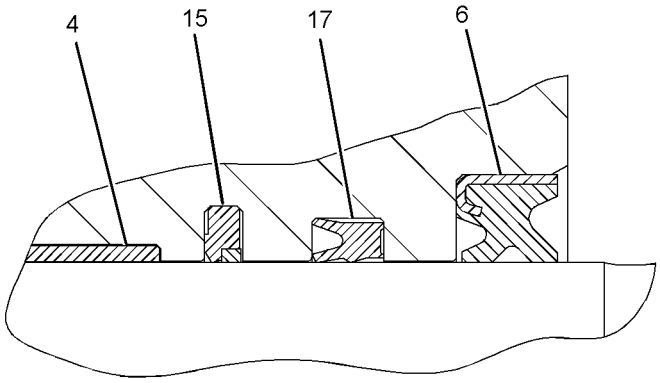

VIEW OF AREA A

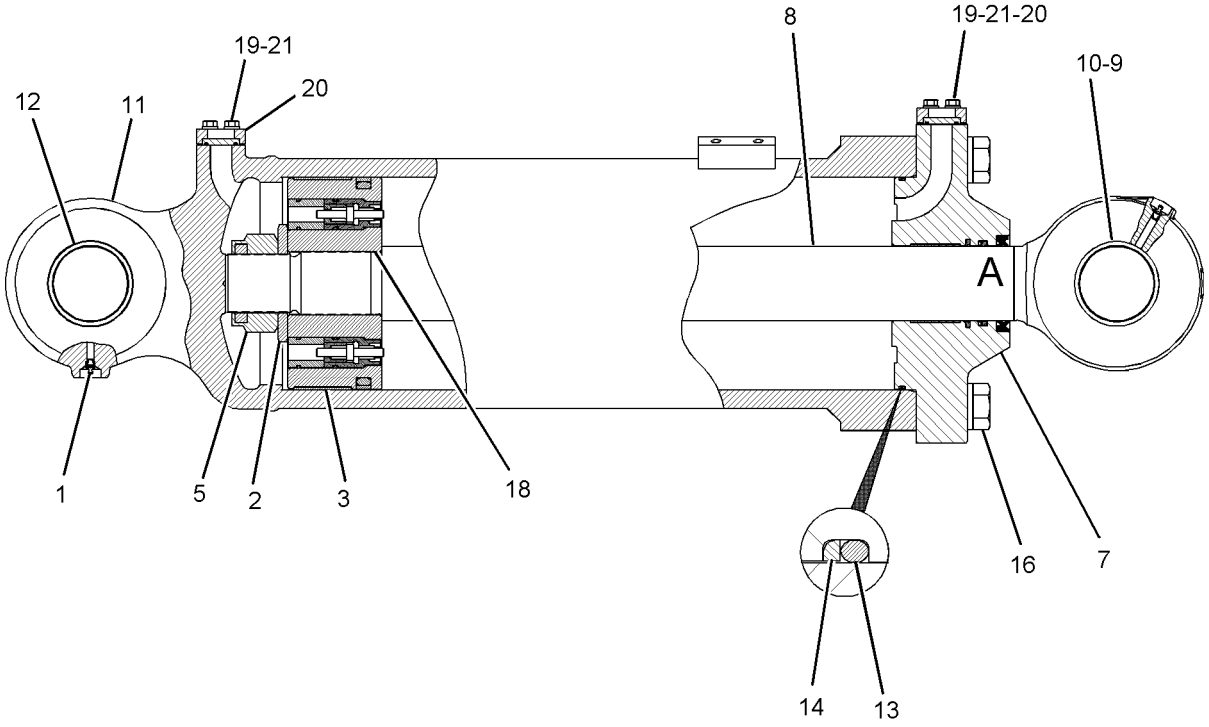

GRAPHIC #1 **<END>** g01025035

161-6615 CYLINDER GP-RIPPER–RH

S/N: 7ZP1-UP
254 MM (10 IN) BORE X 613 MM (24.1 IN) STROKE
PART OF 161-2420 RIPPER AR
AN ATTACHMENT
TYPE 1

SMCS-5352, 5356 **i01988887**

NOTE	REF NO	GRAPHIC REF	PART NUMBER	QTY	PART NAME 1 2 3 4 5 6 (PRODUCT LEVEL)	SEE PAGE
R	1	1	**102-0519**	1	CYLINDER AS-RH	
		1	**2V-0481**	1	BLOCK	
		1	**4J-4955**	1	SPACER (3X100X5MM THK)	
		1	**9J-1175**	2	BEARING-SLEEVE	
	2	1	**4J-6888**	1	LOCKNUT (2 3/4-12 THD)	
	3	1	**3G-3903**	1	WASHER (70.23X140X11.94MM THK)	
	4	1	**8C-3843**	1	RING-WEAR	
Y	5	1	**102-0693**	1	PISTON & VALVE GP	828
R	6	1	**102-0691**	1	ROD AS	
		1	**4J-4955**	1	SPACER (3X100X5MM THK)	
		1	**9J-1175**	2	BEARING-SLEEVE	
	7	1	**5P-2235**	1	SEAL-O-RING	
	8	1	**1U-3307**	1	RING-BACKUP	
R	9	1	**9T-5819**	1	HEAD	
	10	1	**8T-6746**	1	RING-WEAR	
	11	1	**8C-9127**	1	SEAL AS	
	12	1	**5J-8350**	1	SEAL-U-CUP	
	13	1	**3B-8489**	2	FITTING-GREASE	
	14	1	**8C-5219**	1	SEAL-LIP TYPE	
	15	1	**3R-2300**	8	BOLT (1 1/4-7X4.5 IN)	
	16	1	**4K-0684**	8	WASHER-HARD (34X55X6MM THK)	
	17	1	**2H-3755**	4	BOLT (5/16-18X0.62 IN)	
	18	1	**7S-6369**	4	WASHER (.344X.75X.188 IN THK)	
	19	1	**1P-4577**	4	FLANGE-HALF	
	20	1	**5S-7382**	8	BOLT (3/8-16X1.375 IN)	
	21	1	**8T-4896**	8	WASHER-HARD (10.2X18.5X2.5MM THK)	

R-REMFG PART MAY BE AVAILABLE
Y-SEPARATE ILLUSTRATION

161-6615 CYLINDER GP-RIPPER *(contd.)* i01988887

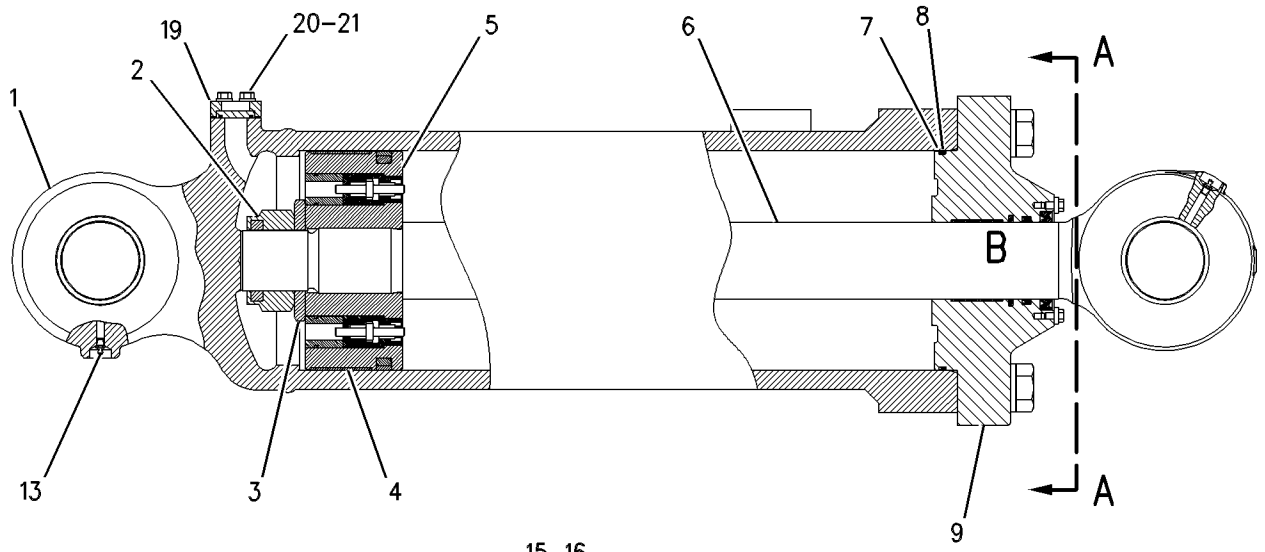

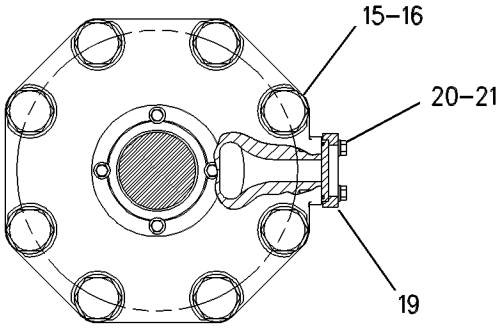

SECTION A-A

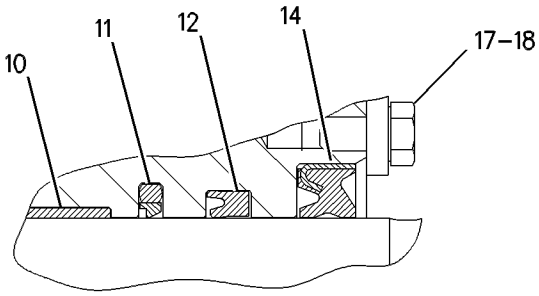

DETAIL B

GRAPHIC #1 **<END>** g00514976

HYDRAULIC SYSTEM

161-6615 CYLINDER GP-RIPPER–RH

S/N: 7ZP1-UP
254 MM (10 IN) BORE X 613 MM (24.1 IN) STROKE
PART OF 161-2420 RIPPER AR
AN ATTACHMENT
TYPE 2

SMCS-5352, 5356 **i01988894**

NOTE	REF NO	GRAPHIC REF	PART NUMBER	QTY	PART NAME 1 2 3 4 5 6 (PRODUCT LEVEL)	SEE PAGE
R	1	1	**102-0519**	1	CYLINDER AS-RH	
		1	**4J-4955**	1	SPACER (3X100X5MM THK)	
		1	**9J-1175**	2	BEARING-SLEEVE	
		1	**2V-0481**	1	BLOCK	
	2	1	**4J-6888**	1	LOCKNUT (2 3/4-12 THD)	
	3	1	**3G-3903**	1	WASHER (70.23X140X11.94MM THK)	
	4	1	**8C-3843**	1	RING-WEAR	
Y	5	1	**102-0693**	1	PISTON & VALVE GP	828
R	6	1	**102-0691**	1	ROD AS	
		1	**4J-4955**	1	SPACER (3X100X5MM THK)	
		1	**9J-1175**	2	BEARING-SLEEVE	
	7	1	**5P-2235**	1	SEAL-O-RING	
	8	1	**1U-3307**	1	RING-BACKUP	
R	9	1	**9T-5819**	1	HEAD	
	10	1	**8T-6746**	1	RING-WEAR	
C	11	1	**167-2211**	1	SEAL AS-BUFFER	
C	12	1	**167-2324**	1	SEAL-U-CUP	
	13	1	**3B-8489**	2	FITTING-GREASE	
C	14	1	**225-3286**	1	SEAL-WIPER	
	15	1	**3R-2300**	8	BOLT (1 1/4-7X4.5 IN)	
	16	1	**4K-0684**	8	WASHER-HARD (34X55X6MM THK)	
	17	1	**1P-4577**	4	FLANGE-HALF	
	18	1	**5S-7382**	8	BOLT (3/8-16X1.375 IN)	
	19	1	**8T-4896**	8	WASHER-HARD (10.2X18.5X2.5MM THK)	

C-CHANGE FROM PREVIOUS TYPE
R-REMFG PART MAY BE AVAILABLE
Y-SEPARATE ILLUSTRATION

161-6615 CYLINDER GP-RIPPER *(contd.)* i01988894

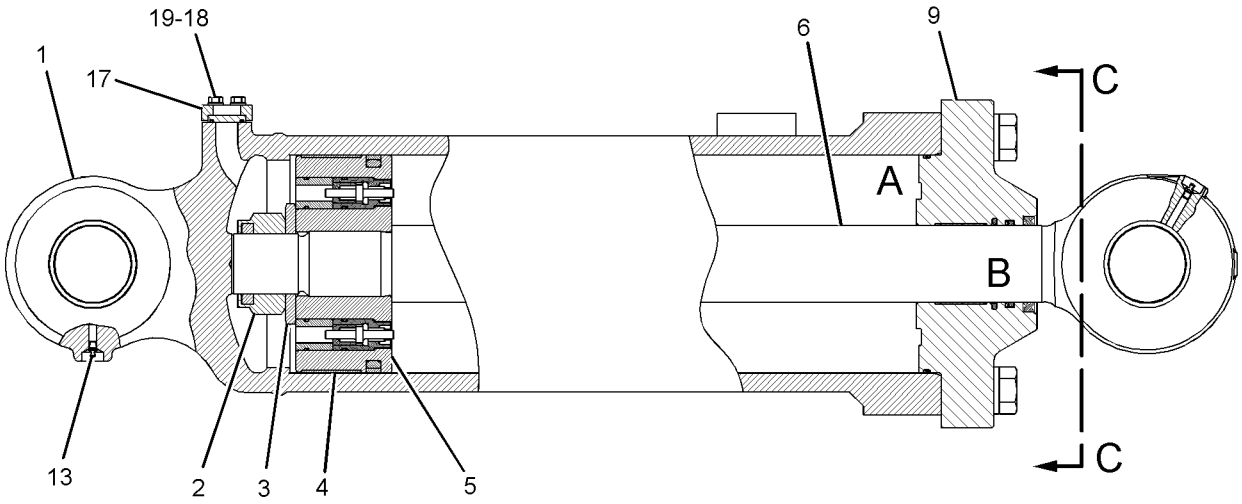

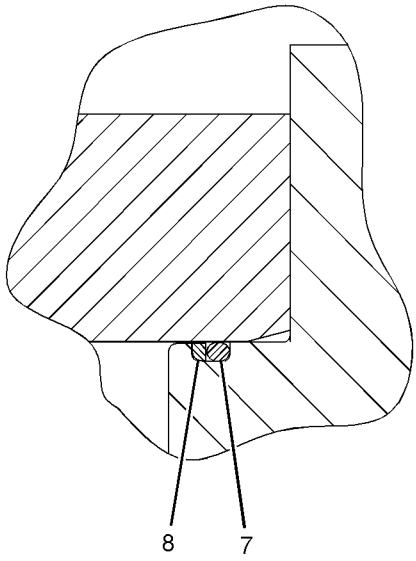

VIEW OF AREA A

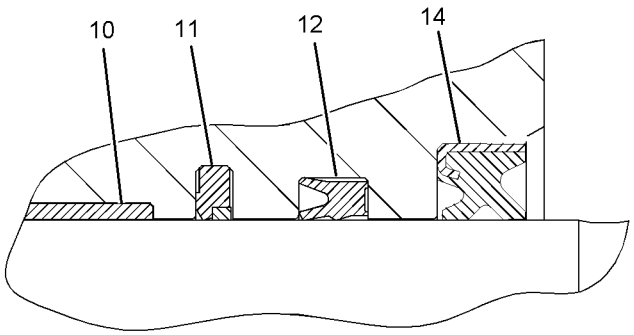

VIEW OF AREA B

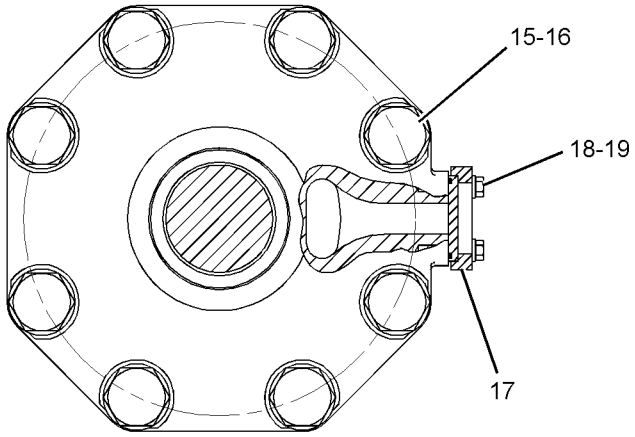

VIEW OF AREA C

GRAPHIC #1 **<END>** g01026016

HYDRAULIC SYSTEM

161-6616 CYLINDER GP-RIPPER–LH

S/N: 7ZP1-UP
254 MM (10 IN) X 613 MM (24.1 IN) STROKE
PART OF 161-2420 RIPPER AR
AN ATTACHMENT
TYPE 1

SMCS-5352, 5356 **i01988884**

NOTE	REF NO	GRAPHIC REF	PART NUMBER	QTY	PART NAME 1 2 3 4 5 6 (PRODUCT LEVEL)	SEE PAGE
R	1	1	**102-0520**	1	CYLINDER AS-LH	
		1	**2V-0481**	1	BLOCK	
		1	**4J-4955**	1	SPACER (3X100X5MM THK)	
		1	**9J-1175**	2	BEARING-SLEEVE	
	2	1	**4J-6888**	1	LOCKNUT (2 3/4-12 THD)	
	3	1	**3G-3903**	1	WASHER (70.23X140X11.94MM THK)	
	4	1	**8C-3843**	1	RING-WEAR	
Y	5	1	**102-0693**	1	PISTON & VALVE GP	828
R	6	1	**102-0691**	1	ROD AS	
		1	**4J-4955**	1	SPACER (3X100X5MM THK)	
		1	**9J-1175**	2	BEARING-SLEEVE	
	7	1	**5P-2235**	1	SEAL-O-RING	
	8	1	**1U-3307**	1	RING-BACKUP	
R	9	1	**9T-5819**	1	HEAD	
	10	1	**8T-6746**	1	RING-WEAR	
	11	1	**8C-9127**	1	SEAL AS	
	12	1	**5J-8350**	1	SEAL-U-CUP	
	13	1	**3B-8489**	2	FITTING-GREASE	
	14	1	**8C-5219**	1	SEAL-LIP TYPE	
	15	1	**3R-2300**	8	BOLT (1 1/4-7X4.5 IN)	
	16	1	**4K-0684**	8	WASHER-HARD (34X55X6MM THK)	
	17	1	**2H-3755**	4	BOLT (5/16-18X0.62 IN)	
	18	1	**7S-6369**	4	WASHER (.344X.75X.188 IN THK)	
	19	1	**1P-4577**	4	FLANGE-HALF	
	20	1	**5S-7382**	8	BOLT (3/8-16X1.375 IN)	
	21	1	**8T-4896**	8	WASHER-HARD (10.2X18.5X2.5MM THK)	

R-REMFG PART MAY BE AVAILABLE
Y-SEPARATE ILLUSTRATION

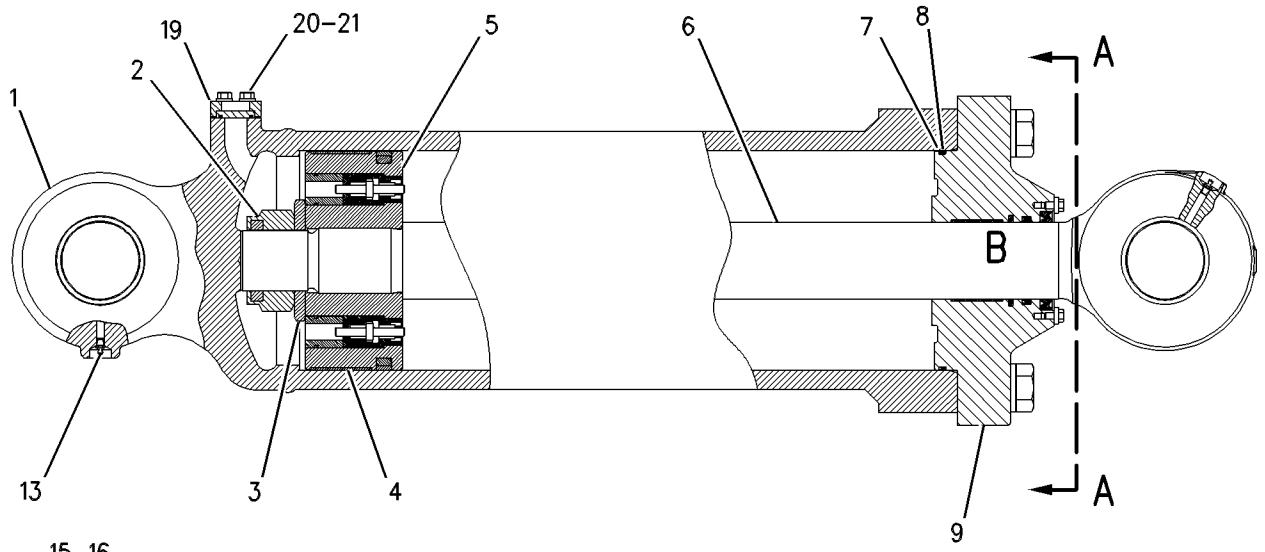

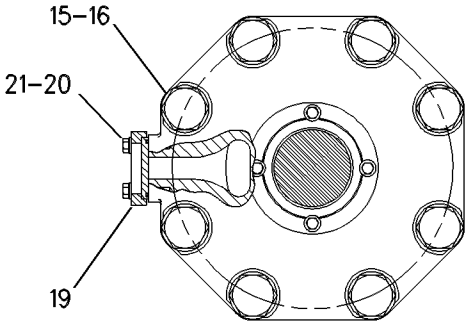

SECTION A-A

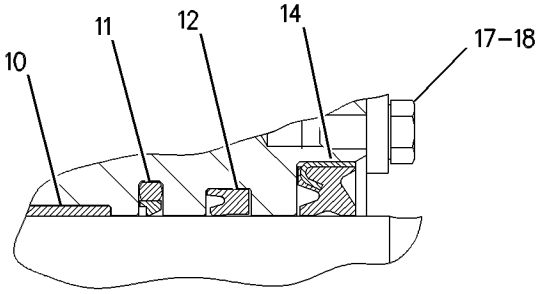

DETAIL B

GRAPHIC #1 **<END>** g00514986

HYDRAULIC SYSTEM

161-6616 CYLINDER GP-RIPPER–LH

S/N: 7ZP1-UP
254 MM (10 IN) X 613 MM (24.1 IN) STROKE
PART OF 161-2420 RIPPER AR
AN ATTACHMENT
TYPE 2

SMCS-5352, 5356 **i01988885**

NOTE	REF NO	GRAPHIC REF	PART NUMBER	QTY	PART NAME 1 2 3 4 5 6 (PRODUCT LEVEL)	SEE PAGE
R	1	1	**102-0520**	1	CYLINDER AS-LH	
		1	**2V-0481**	1	BLOCK	
		1	**4J-4955**	1	SPACER (3X100X5MM THK)	
		1	**9J-1175**	2	BEARING-SLEEVE	
	2	1	**4J-6888**	1	LOCKNUT (2 3/4-12 THD)	
	3	1	**3G-3903**	1	WASHER (70.23X140X11.94MM THK)	
	4	1	**8C-3843**	1	RING-WEAR	
Y	5	1	**102-0693**	1	PISTON & VALVE GP	828
R	6	1	**102-0691**	1	ROD AS	
		1	**4J-4955**	1	SPACER (3X100X5MM THK)	
		1	**9J-1175**	2	BEARING-SLEEVE	
	7	1	**5P-2235**	1	SEAL-O-RING	
	8	1	**1U-3307**	1	RING-BACKUP	
R	9	1	**9T-5819**	1	HEAD	
	10	1	**8T-6746**	1	RING-WEAR	
	11	1	**167-2211**	1	SEAL AS-BUFFER	
	12	1	**167-2324**	1	SEAL-U-CUP	
	13	1	**3B-8489**	2	FITTING-GREASE	
	14	1	**225-3286**	1	SEAL-WIPER	
	15	1	**3R-2300**	8	BOLT (1 1/4-7X4.5 IN)	
	16	1	**4K-0684**	8	WASHER-HARD (34X55X6MM THK)	
	17	1	**1P-4577**	4	FLANGE-HALF	
	18	1	**5S-7382**	8	BOLT (3/8-16X1.375 IN)	
	19	1	**8T-4896**	8	WASHER-HARD (10.2X18.5X2.5MM THK)	

R-REMFG PART MAY BE AVAILABLE
Y-SEPARATE ILLUSTRATION

161-6616 **CYLINDER GP-RIPPER** *(contd.)* **i01988885**

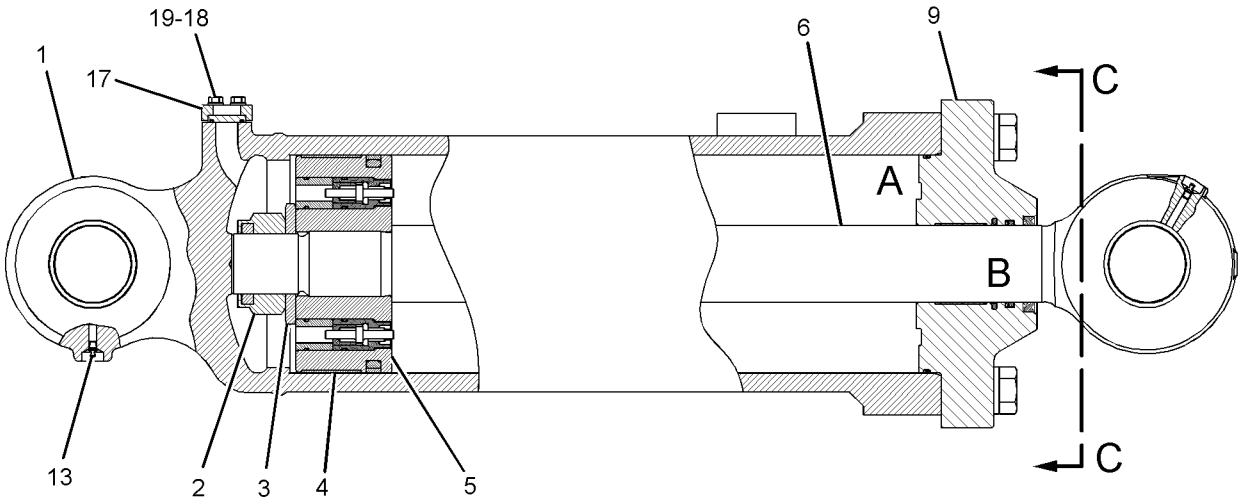

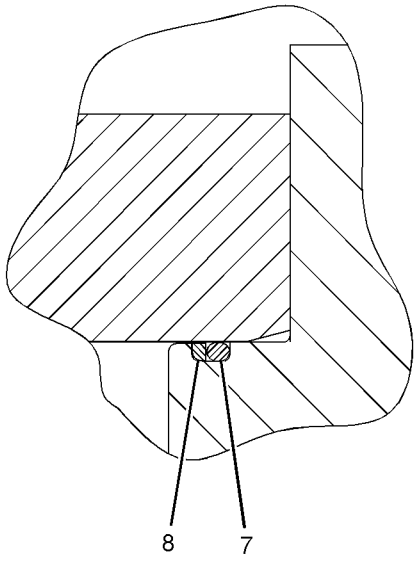

VIEW OF AREA A

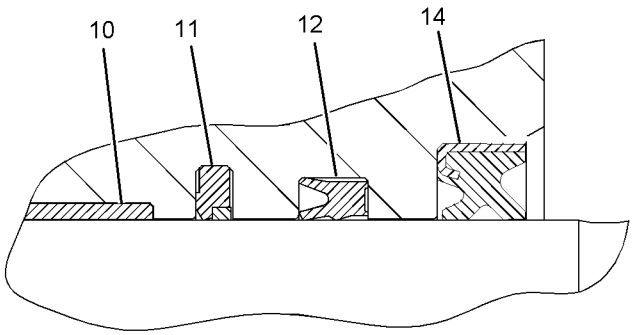

VIEW OF AREA B

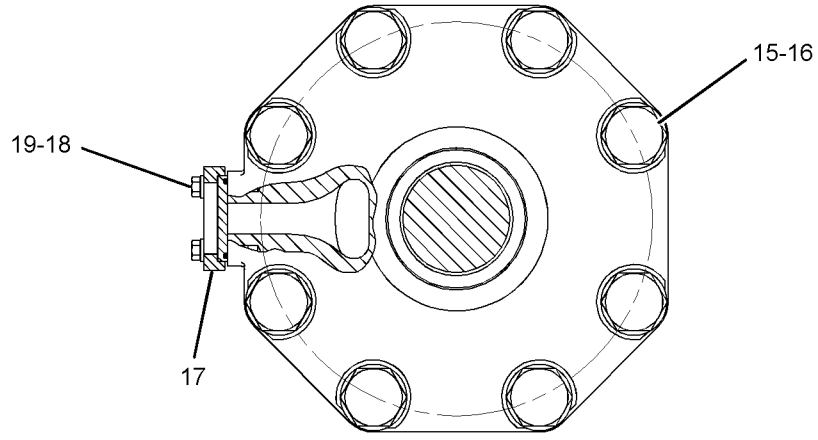

VIEW OF AREA C

GRAPHIC #1

<END>

g01026033

6E-3113 CYLINDER GP-RIPPER PIN PULLER

S/N: 7YP1-UP; 7ZP1-UP; 7PZ1-UP
101.6MM (4 IN) BORE X 138.5MM (5.5 IN) STROKE
PART OF 130-5356 PULLER AR-PIN, 150-5414, 4Z-8842 PULLER GP-PIN
AN ATTACHMENT

SMCS-5354 **i02024570**

NOTE	REF NO	GRAPHIC REF	PART NUMBER	QTY	PART NAME 1 2 3 4 5 6 (PRODUCT LEVEL)	SEE PAGE
M	1	1	**173-9779**	1	BOLT (M24X3.0X80-MM)	
	2	1	**6J-2797**	1	RING-WEAR	
	3	1	**5J-5402**	1	SEAL AS	
	4	1	**9T-3493**	1	PISTON	
	5	1	**6V-8237**	1	WASHER (26X44X4-MM THK)	
	6	1	**4T-6907**	1	RING-WEAR	
	7	1	**6E-3980**	1	ROD AS	
	8	1	**231-3539**	1	SEAL-WIPER	
	9	1	**167-2300**	1	SEAL-U-CUP	
	10	1	**167-2190**	1	SEAL AS-BUFFER	
	11	1	**2K-6830**	1	RING-BACKUP	
	12	1	**175-7900**	1	SEAL-O-RING	
	13	1	**6E-4976**	1	HEAD	
	14	1	**6E-3976**	1	CYLINDER AS	

M-METRIC PART

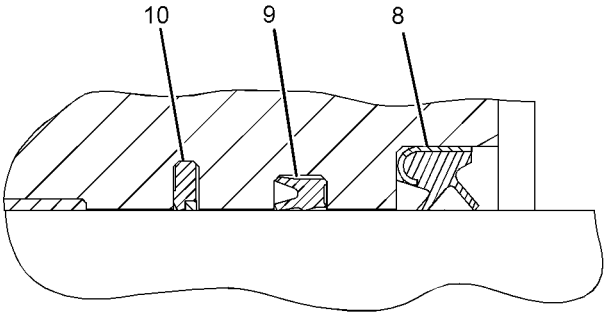

VIEW OF AREA A

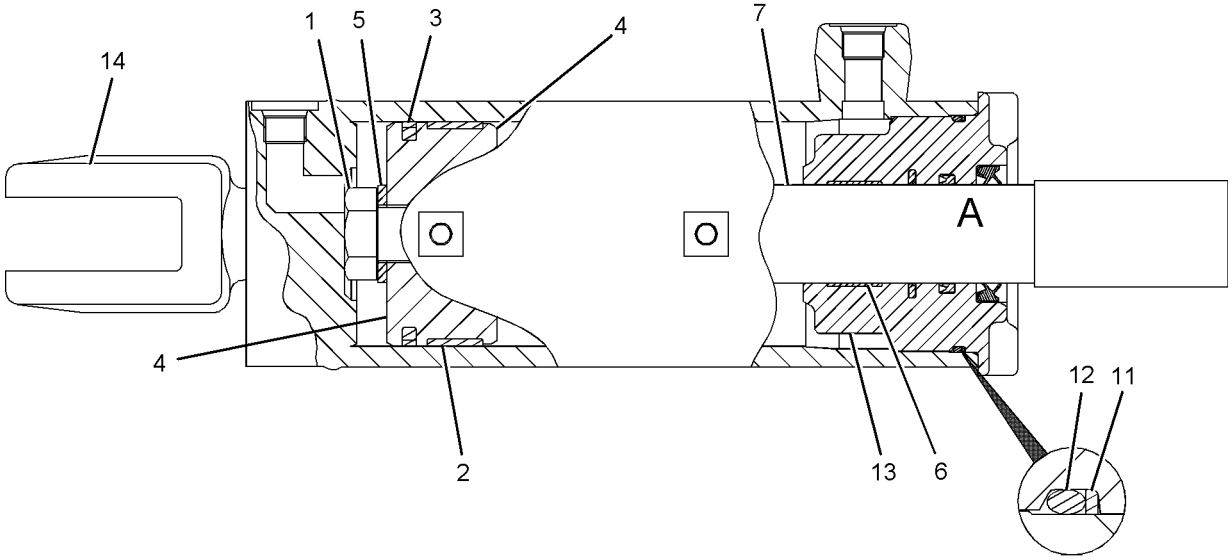

GRAPHIC #1 **<END>** g01016887

1U-2711 CYLINDER GP-TILT—SINGLE TILT

S/N: 7PZ1-UP
266.7MM (10.5 IN.) BORE X 286.5MM (11.28 IN.) STROKE
PART OF 119-4283 CYLINDER AR-TILT
AN ATTACHMENT

SMCS-5356 **i01989504**

NOTE	REF NO	GRAPHIC REF	PART NUMBER	QTY	PART NAME 1 2 3 4 5 6 (PRODUCT LEVEL)	SEE PAGE
C	1	1	**164-6497**	1	HEAD	
	2	1	**106-4568**	1	PISTON	
R	3	1	**112-4055**	1	ROD AS	
		1	**8J-8905**	2	RING-LOCK	
		1	**152-7554**	1	BEARING-SELF-ALIGNING	
C	4	1	**167-2216**	1	SEAL AS-BUFFER	
C	5	1	**225-3287**	1	SEAL-WIPER	
C	6	1	**157-7244**	1	RING-BACKUP	
R	7	1	**1U-1783**	1	CYLINDER AS	
		1	**1U-2532**	2	BAR	
		1	**1U-3658**	1	HANDLE	
		1	**3G-7961**	1	LUG	
		1	**8J-8905**	2	RING-LOCK	
		1	**152-7554**	1	BEARING-SELF-ALIGNING	
	8	1	**3B-8489**	2	FITTING-GREASE	
	9	1	**3R-2300**	8	BOLT (1 1/4-7X4.5 IN)	
	10	1	**4K-0684**	8	WASHER-HARD (34X55X6MM THK)	
	11	1	**4T-2576**	1	WASHER (82.93X146X11.94MM THK)	
C	12	1	**167-2331**	1	SEAL-U-CUP	
	13	1	**7J-9250**	1	LOCKNUT (3-1/4X12THD)	
	14	1	**7X-4756**	1	SEAL	
	15	1	**8L-9241**	1	SEAL-O-RING	
	16	1	**8T-1796**	1	SEAL AS	
	17	1	**8T-7538**	1	RING-WEAR (101.6MM ID)	
	18	1	**9J-1159**	1	RING-WEAR (260.3MM ID)	

C-CHANGE FROM PREVIOUS TYPE
R-REMFG PART MAY BE AVAILABLE

1U-2711 CYLINDER GP-TILT ***(contd.)*** **i01989504**

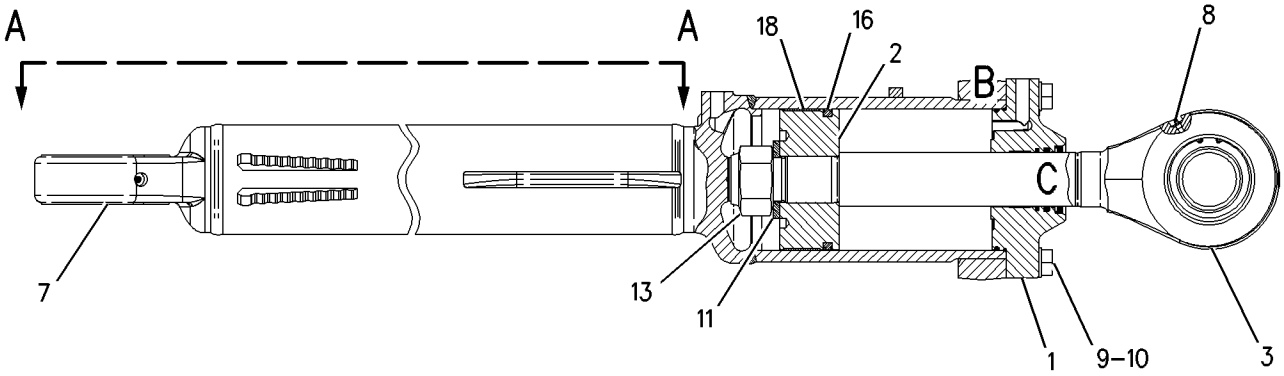

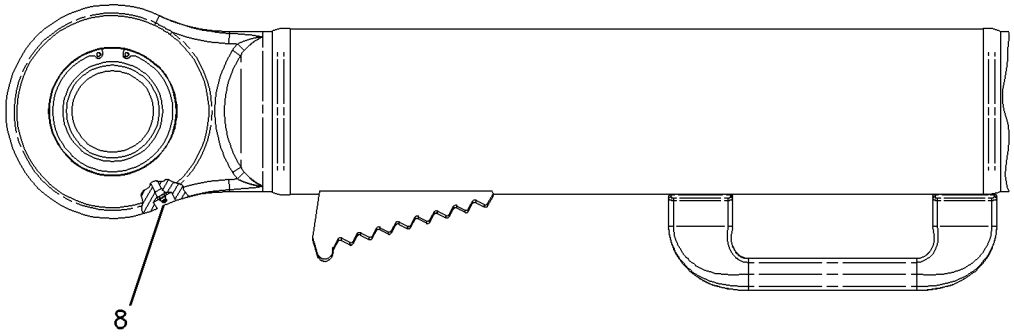

VIEW A-A

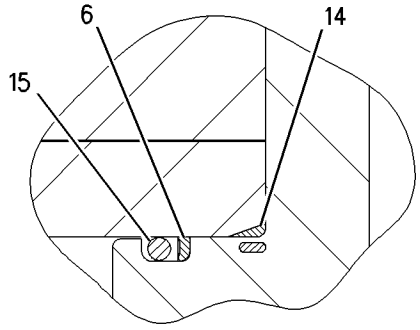

VIEW OF AREA B

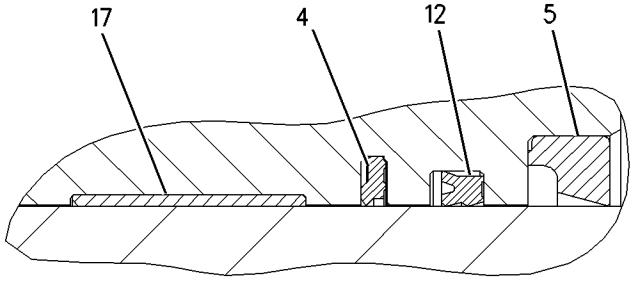

VIEW OF AREA C

GRAPHIC #1 **<END>** g00736698

130-3263 CYLINDER GP-RIPPER TILT–RH

S/N: 5MP1-UP; 7CP1-UP; 7DP1-UP
196.85MM (7.75 IN.) BORE X 830MM (32.7 IN.) STROKE
PART OF 127-1031, 130-6458, 130-6462 RIPPER AR
AN ATTACHMENT
TYPE 1

SMCS-5356 **i01988901**

NOTE	REF NO	GRAPHIC REF	PART NUMBER	QTY	PART NAME 1 2 3 4 5 6 (PRODUCT LEVEL)	SEE PAGE
R	1	1	**130-3261**	1	CYLINDER AS-RH	
		1	**4J-4955**	1	SPACER (3X100X5MM THK)	
		1	**9J-1175**	1	BEARING-SLEEVE	
	2	1	**4J-6888**	1	LOCKNUT (2 3/4-12 THD)	
	3	1	**6E-5660**	2	WASHER (71X120X8MM THK)	
J	4	1	**9J-5037**	1	RING-WEAR	
J	5	1	**8T-1792**	1	SEAL AS	
	6	1	**6E-5701**	1	PISTON	
J	7	1	**5K-1787**	1	SEAL-O-RING	
J	8	1	**8J-0548**	1	RING-BACKUP	
J	9	1	**8C-4892**	1	SEAL-HEAD	
	10	1	**6E-5702**	1	HEAD	
R	11	1	**130-3262**	1	ROD AS	
		1	**4J-4955**	1	SPACER (3X100X5MM THK)	
		1	**9J-1175**	2	BEARING-SLEEVE	
	12	1	**9X-8897**	2	BOLT (1-8X.42 IN)	
	13	1	**8H-5772**	6	BOLT (1-8X3.75 IN)	
	14	1	**5P-8250**	8	WASHER (28X49X5MM THK)	
	15	1	**2H-3755**	4	BOLT (5/16-18X0.62 IN)	
	16	1	**7S-6369**	4	WASHER (.344X.75X.188 IN THK)	
J	17	1	**8C-9135**	1	SEAL-LIP TYPE	
J	18	1	**5J-8375**	1	SEAL-U-CUP	
J	19	1	**8C-9128**	1	SEAL AS	
J	20	1	**8T-3330**	1	RING-WEAR	
	21	1	**1P-4577**	4	FLANGE-HALF	
	22	1	**5S-7382**	8	BOLT (3/8-16X1.375 IN)	
	23	1	**8T-4896**	8	WASHER-HARD (10.2X18.5X2.5MM THK)	
	24	1	**3B-8489**	2	FITTING-GREASE	
					AVAILABLE REPAIR KIT(S):	
J			**132-4997**	1	KIT-SEAL (RIPPER TILT CYLINDER)	

J-KIT MARKED J INCLUDES PARTS MARKED J
R-REMFG PART MAY BE AVAILABLE

130-3263 CYLINDER GP-RIPPER TILT *(contd.)* i01988901

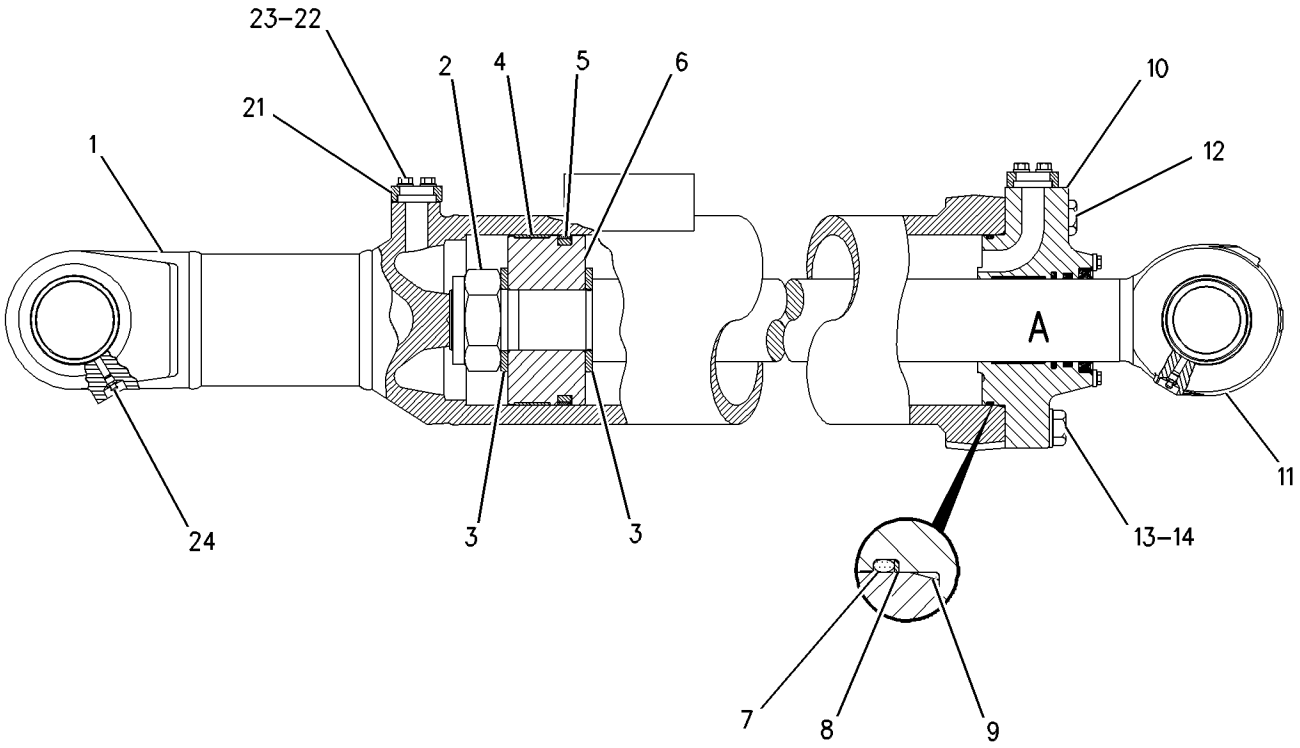

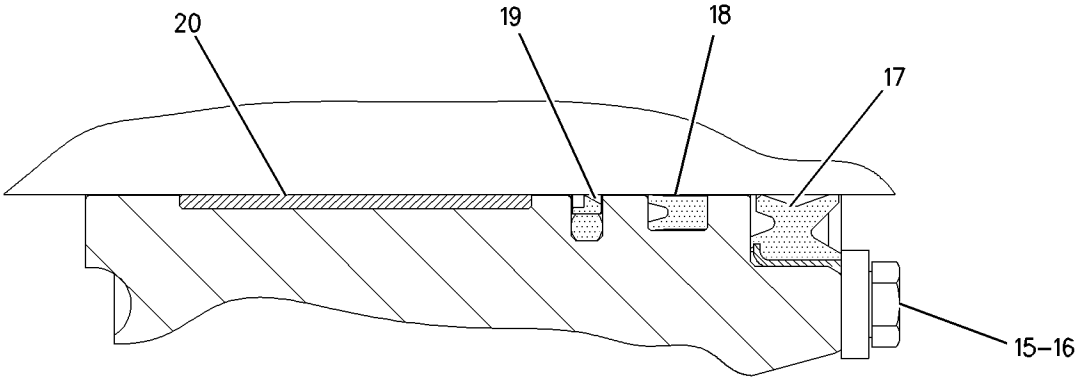

VIEW OF AREA A

GRAPHIC #1 **<END>** g00665074

130-3263 CYLINDER GP-RIPPER TILT–RH

S/N: 5MP1-UP; 7CP1-UP; 7DP1-UP
196.85MM (7.75 IN.) BORE X 830MM (32.7 IN.) STROKE
PART OF 127-1031, 130-6458, 130-6462 RIPPER AR
AN ATTACHMENT
TYPE 2

SMCS-5356 **i01988902**

NOTE	REF NO	GRAPHIC REF	PART NUMBER	QTY	PART NAME 1 2 3 4 5 6 (PRODUCT LEVEL)	SEE PAGE
R	1	1	**130-3261**	1	CYLINDER AS-RH	
	2	1	**4J-6888**	1	LOCKNUT (2 3/4-12 THD)	
	3	1	**6E-5660**	2	WASHER (71X120X8MM THK)	
	4	1	**9J-5037**	1	RING-WEAR	
	5	1	**8T-1792**	1	SEAL AS	
	6	1	**6E-5701**	1	PISTON	
	7	1	**5K-1787**	1	SEAL-O-RING	
	8	1	**8J-0548**	1	RING-BACKUP	
	9	1	**8C-4892**	1	SEAL-HEAD	
	10	1	**6E-5702**	1	HEAD	
R	11	1	**130-3262**	1	ROD AS	
		1	**4J-4955**	1	SPACER (3X100X5MM THK)	
		1	**9J-1175**	2	BEARING-SLEEVE	
	12	1	**9X-8897**	2	BOLT (1-8X.42 IN)	
	13	1	**8H-5772**	6	BOLT (1-8X3.75 IN)	
	14	1	**5P-8250**	8	WASHER (28X49X5MM THK)	
	15	1	**8T-4896**	8	WASHER-HARD (10.2X18.5X2.5MM THK)	
	16	1	**3B-8489**	2	FITTING-GREASE	
C	17	1	**227-1149**	1	SEAL-WIPER	
C	18	1	**167-2328**	1	SEAL-U-CUP	
C	19	1	**167-2214**	1	SEAL AS-BUFFER	
	20	1	**8T-3330**	1	RING-WEAR	
	21	1	**1P-4577**	4	FLANGE-HALF	
	22	1	**5S-7382**	8	BOLT (3/8-16X1.375 IN)	

C-CHANGE FROM PREVIOUS TYPE
R-REMFG PART MAY BE AVAILABLE

130-3263 CYLINDER GP-RIPPER TILT *(contd.)* i01988902

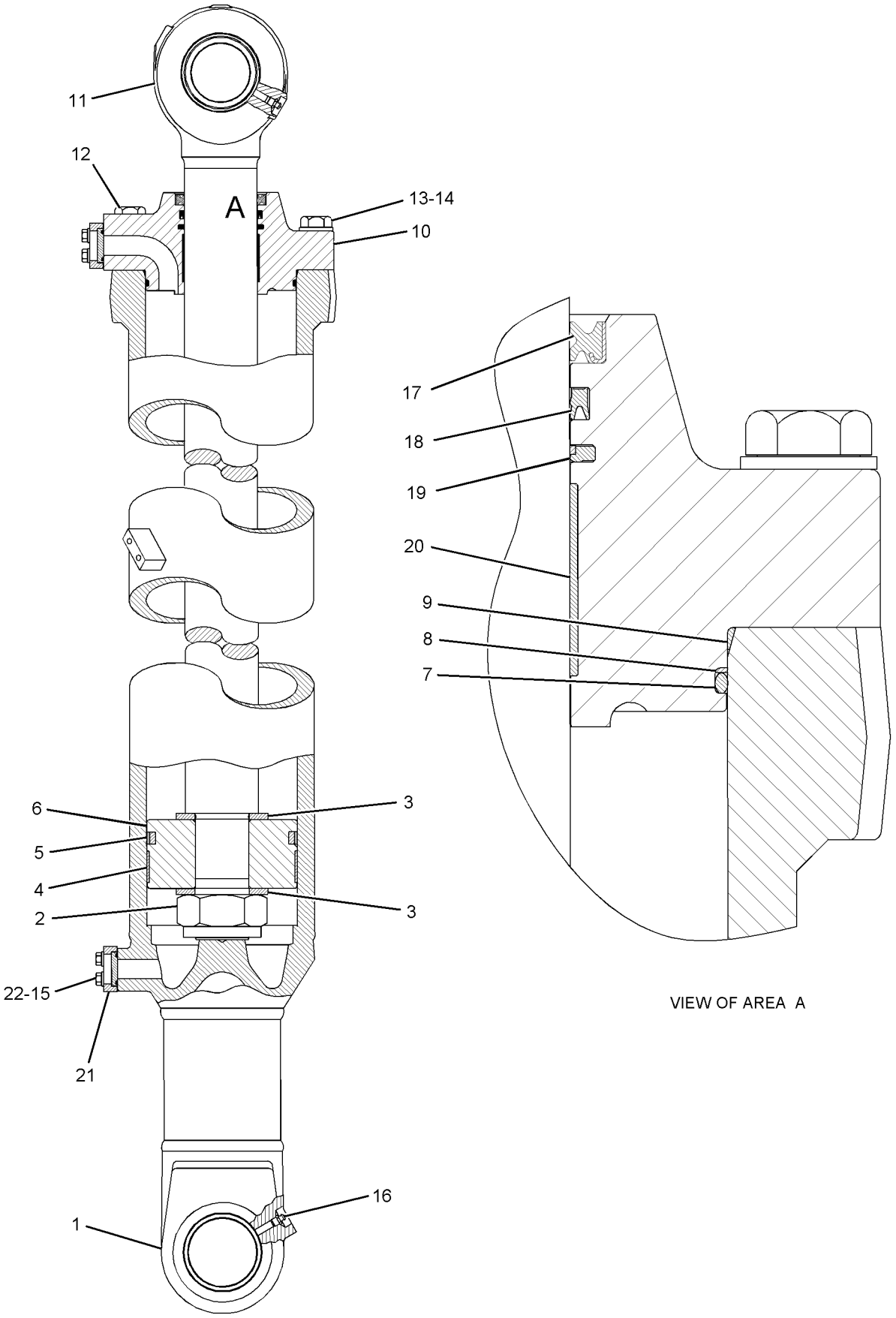

GRAPHIC #1 **<END>** g01025071

130-6381 CYLINDER GP-RIPPER TILT–LH

S/N: 5MP1-UP; 7CP1-UP; 7DP1-UP
196.85MM (7.75 IN.) BORE X 830MM (32.7 IN.) STROKE
PART OF 127-1031, 130-6458, 130-6462 RIPPER AR
AN ATTACHMENT
TYPE 1

SMCS-5356 **i01988903**

NOTE	REF NO	GRAPHIC REF	PART NUMBER	QTY	PART NAME 1 2 3 4 5 6 (PRODUCT LEVEL)	SEE PAGE
R	1	1	**130-6382**	1	CYLINDER AS-LH	
		1	**4J-4955**	1	SPACER (3X100X5MM THK)	
		1	**9J-1175**	2	BEARING-SLEEVE	
	2	1	**4J-6888**	1	LOCKNUT (2 3/4-12 THD)	
	3	1	**6E-5660**	2	WASHER (71X120X8MM THK)	
J	4	1	**9J-5037**	1	RING-WEAR	
J	5	1	**8T-1792**	1	SEAL AS	
	6	1	**6E-5701**	1	PISTON	
J	7	1	**5K-1787**	1	SEAL-O-RING	
J	8	1	**8J-0548**	1	RING-BACKUP	
J	9	1	**8C-4892**	1	SEAL-HEAD	
	10	1	**6E-5702**	1	HEAD	
R	11	1	**130-3262**	1	ROD AS	
		1	**4J-4955**	1	SPACER (3X100X5MM THK)	
		1	**9J-1175**	2	BEARING-SLEEVE	
	12	1	**9X-8897**	2	BOLT (1-8X.42 IN)	
	13	1	**8H-5772**	6	BOLT (1-8X3.75 IN)	
	14	1	**5P-8250**	8	WASHER (28X49X5MM THK)	
	15	1	**2H-3755**	4	BOLT (5/16-18X0.62 IN)	
	16	1	**7S-6369**	4	WASHER (.344X.75X.188 IN THK)	
J	17	1	**8C-9135**	1	SEAL-LIP TYPE	
J	18	1	**5J-8375**	1	SEAL-U-CUP	
J	19	1	**8C-9128**	1	SEAL AS	
J	20	1	**8T-3330**	1	RING-WEAR	
	21	1	**1P-4577**	4	FLANGE-HALF	
	22	1	**5S-7382**	8	BOLT (3/8-16X1.375 IN)	
	23	1	**8T-4896**	8	WASHER-HARD (10.2X18.5X2.5MM THK)	
	24	1	**3B-8489**	2	FITTING-GREASE	
					AVAILABLE REPAIR KIT(S):	
J			**132-4997**	1	KIT-SEAL (RIPPER TILT CYLINDER)	

J-KIT MARKED J INCLUDES PARTS MARKED J
R-REMFG PART MAY BE AVAILABLE

130-6381 CYLINDER GP-RIPPER TILT *(contd.)* i01988903

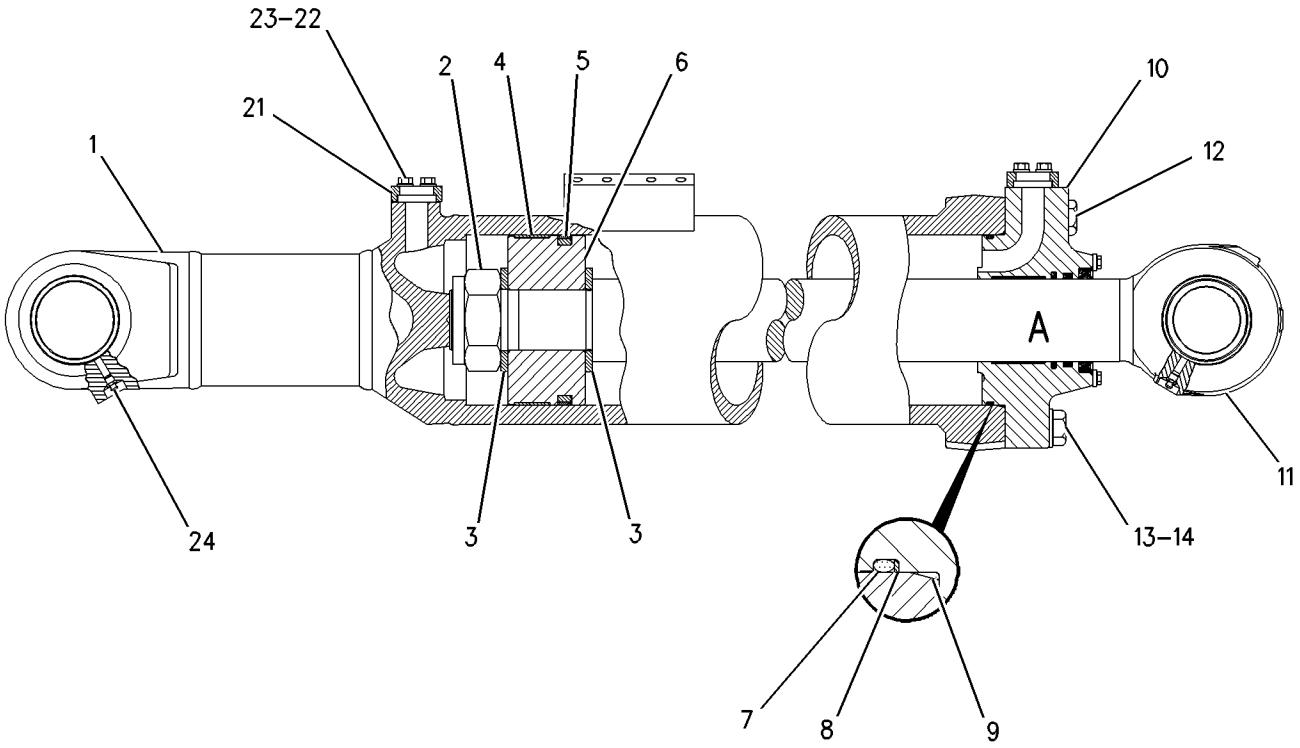

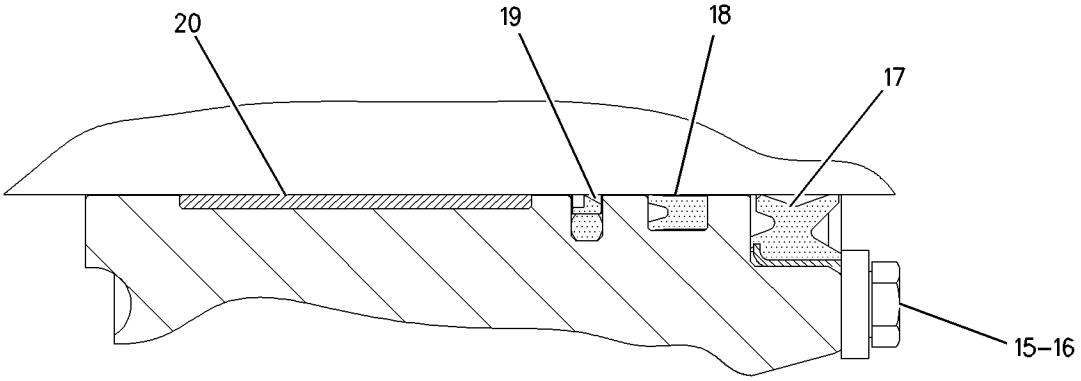

VIEW OF AREA A

GRAPHIC #1 **<END>** g00665069

130-6381 CYLINDER GP-RIPPER TILT–LH

S/N: 5MP1-UP; 7CP1-UP; 7DP1-UP
196.85MM (7.75 IN.) BORE X 830MM (32.7 IN.) STROKE
PART OF 127-1031, 130-6458, 130-6462 RIPPER AR
AN ATTACHMENT
TYPE 2

SMCS-5356 **i01988904**

NOTE	REF NO	GRAPHIC REF	PART NUMBER	QTY	PART NAME 1 2 3 4 5 6 (PRODUCT LEVEL)	SEE PAGE
R	1	1	**130-6382**	1	CYLINDER AS-LH	
	2	1	**4J-6888**	1	LOCKNUT (2 3/4-12 THD)	
	3	1	**6E-5660**	2	WASHER (71X120X8MM THK)	
	4	1	**9J-5037**	1	RING-WEAR	
	5	1	**8T-1792**	1	SEAL AS	
	6	1	**6E-5701**	1	PISTON	
	7	1	**5K-1787**	1	SEAL-O-RING	
	8	1	**8J-0548**	1	RING-BACKUP	
	9	1	**8C-4892**	1	SEAL-HEAD	
	10	1	**6E-5702**	1	HEAD	
R	11	1	**130-3262**	1	ROD AS	
		1	**4J-4955**	1	SPACER (3X100X5MM THK)	
		1	**9J-1175**	2	BEARING-SLEEVE	
	12	1	**9X-8897**	2	BOLT (1-8X.42 IN)	
	13	1	**8H-5772**	6	BOLT (1-8X3.75 IN)	
	14	1	**5P-8250**	8	WASHER (28X49X5MM THK)	
	15	1	**8T-4896**	8	WASHER-HARD (10.2X18.5X2.5MM THK)	
	16	1	**3B-8489**	2	FITTING-GREASE	
C	17	1	**227-1149**	1	SEAL-WIPER	
	18	1	**167-2328**	1	SEAL-U-CUP	
	19	1	**167-2214**	1	SEAL AS-BUFFER	
	20	1	**8T-3330**	1	RING-WEAR	
	21	1	**1P-4577**	4	FLANGE-HALF	
	22	1	**5S-7382**	8	BOLT (3/8-16X1.375 IN)	

C-CHANGE FROM PREVIOUS TYPE
R-REMFG PART MAY BE AVAILABLE

130-6381 CYLINDER GP-RIPPER TILT *(contd.)* i01988904

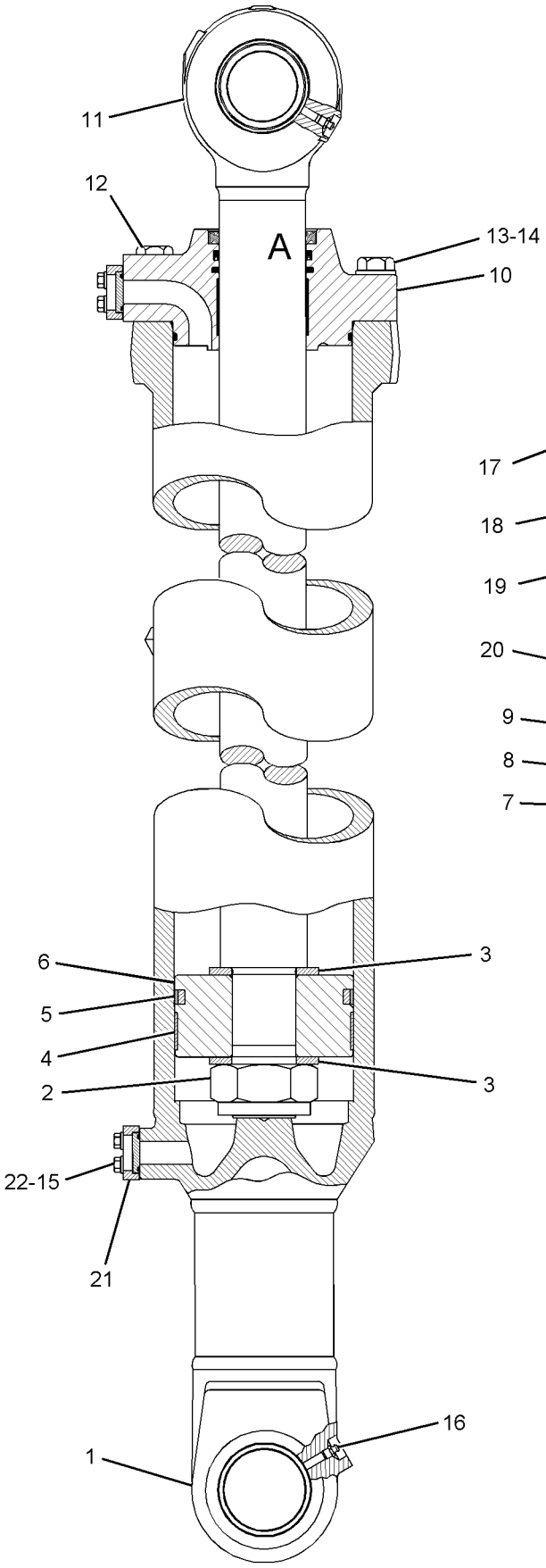

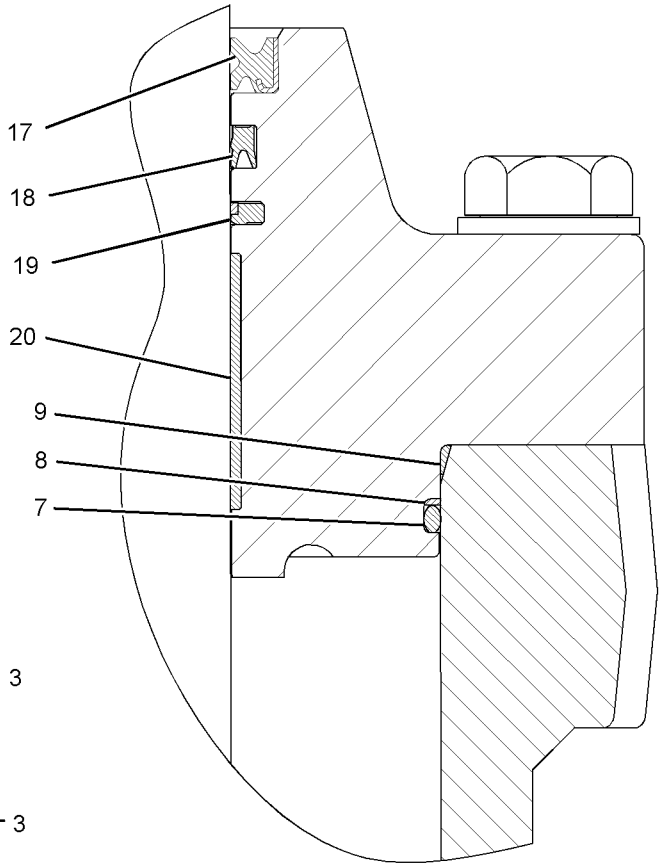

VIEW OF AREA A

GRAPHIC #1 **<END>** g01025143

161-7562 CYLINDER GP-RIPPER TILT–RH

S/N: 7ZP1-UP
220MM (8.7 IN.) BORE X 1298MM (51.1 IN.) STROKE. LEACH PAD
PART OF 161-2420 RIPPER AR
AN ATTACHMENT

SMCS-5356 **i01989521**

NOTE	REF NO	GRAPHIC REF	PART NUMBER	QTY	PART NAME 1 2 3 4 5 6 (PRODUCT LEVEL)	SEE PAGE
R	1	1	**161-7568**	1	CYLINDER AS	
		1	**4Z-6094**	1	BLOCK	
		1	**4J-4955**	1	SPACER (3X100X5MM THK)	
		1	**9J-1175**	2	BEARING-SLEEVE	
	2	1	**4J-6888**	1	LOCKNUT (2 3/4-12 THD)	
	3	1	**6E-5660**	2	WASHER (71X120X8MM THK)	
	4	1	**6E-0496**	1	RING-WEAR	
	5	1	**192-1425**	1	SEAL AS	
	6	1	**161-7567**	1	PISTON	
	7	1	**9M-5894**	1	SEAL-O-RING	
	8	1	**108-0122**	1	RING-BACKUP	
	9	1	**161-7564**	1	HEAD	
	10	1	**161-7565**	1	ROD AS	
		1	**4J-4955**	1	SPACER (3X100X5MM THK)	
		1	**9J-1175**	2	BEARING-SLEEVE	
	11	1	**8H-5772**	7	BOLT (1-8X3.75 IN)	
	12	1	**5P-8250**	9	WASHER (28X49X5MM THK)	
	13	1	**225-3289**	1	SEAL-WIPER	
	14	1	**167-2336**	1	SEAL-U-CUP	
	15	1	**167-2220**	1	SEAL AS-BUFFER	
	16	1	**9X-3579**	1	RING-WEAR	
	17	1	**3B-8489**	2	FITTING-GREASE	
	18	1	**192-2048**	2	RING-BACKUP	
	19	1	**1D-4643**	2	BOLT (1-8X5.50 IN)	

R-REMFG PART MAY BE AVAILABLE

161-7562 CYLINDER GP-RIPPER TILT *(contd.)* i01989521

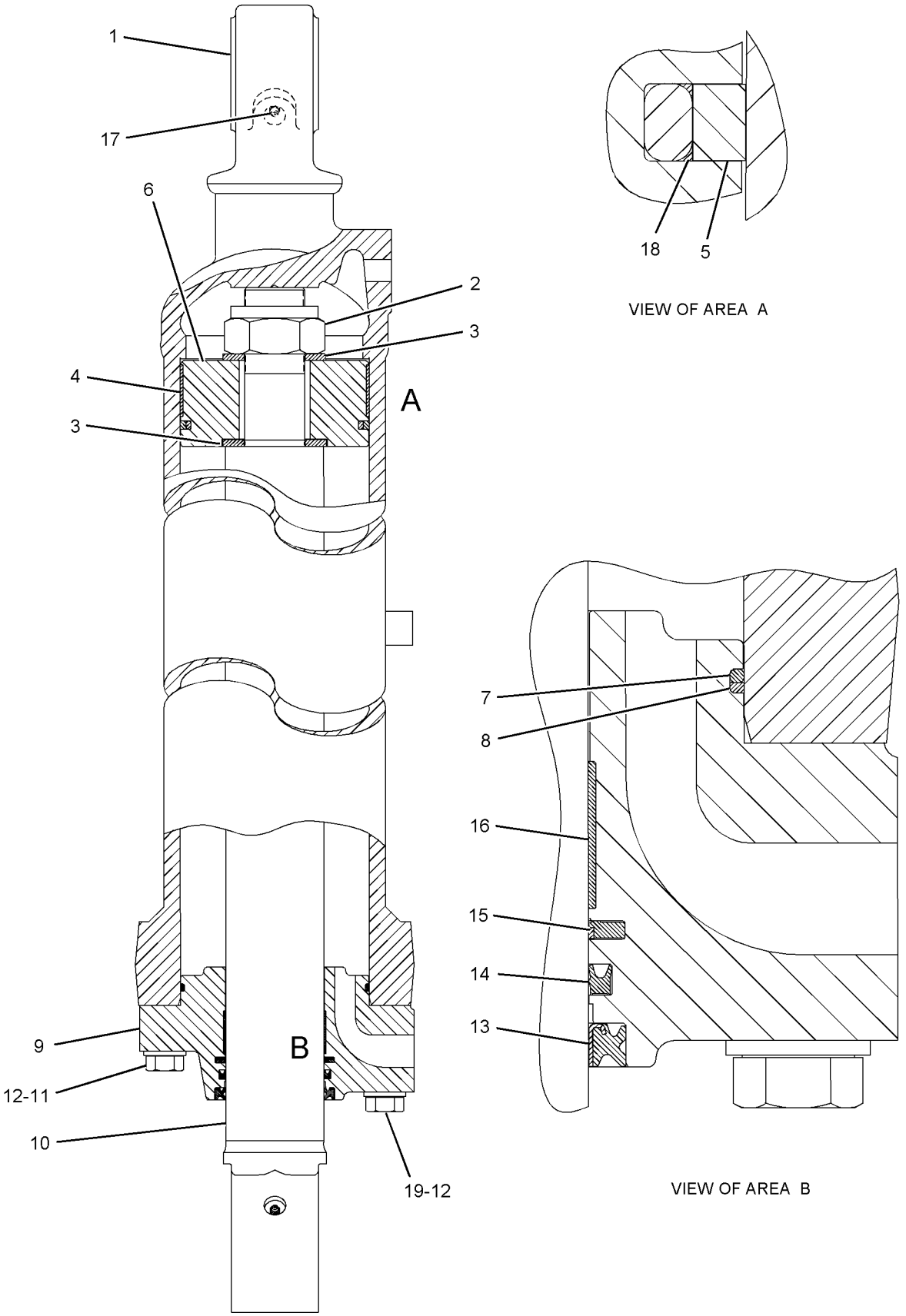

GRAPHIC #1 **<END>** g01028078

161-7563 CYLINDER GP-RIPPER TILT–LH

S/N: 7ZP1-UP
220MM (8.7 IN) BORE X 1298MM (51.1 IN.) STROKE. LEACH PAD
PART OF 161-2420 RIPPER AR
AN ATTACHMENT

SMCS-5356 **i01989520**

NOTE	REF NO	GRAPHIC REF	PART NUMBER	QTY	PART NAME 1 2 3 4 5 6 (PRODUCT LEVEL)	SEE PAGE
R	1	1	**161-7569**	1	CYLINDER AS (LH)	
		1	**4J-4955**	1	SPACER (3X100X5MM THK)	
		1	**9J-1175**	2	BEARING-SLEEVE	
		1	**9V-8427**	2	BAR	
		1	**4Z-6094**	1	BLOCK	
	2	1	**4J-6888**	1	LOCKNUT (2 3/4-12 THD)	
	3	1	**6E-5660**	2	WASHER (71X120X8MM THK)	
	4	1	**6E-0496**	1	RING-WEAR	
	5	1	**192-1425**	1	SEAL AS	
	6	1	**161-7567**	1	PISTON	
	7	1	**9M-5894**	1	SEAL-O-RING	
	8	1	**108-0122**	1	RING-BACKUP	
	9	1	**161-7564**	1	HEAD	
	10	1	**161-7565**	1	ROD AS	
		1	**4J-4955**	1	SPACER (3X100X5MM THK)	
		1	**9J-1175**	2	BEARING-SLEEVE	
	11	1	**8H-5772**	7	BOLT (1-8X3.75 IN)	
	12	1	**5P-8250**	9	WASHER (28X49X5MM THK)	
	13	1	**225-3289**	1	SEAL-WIPER	
	14	1	**167-2336**	1	SEAL-U-CUP	
	15	1	**167-2220**	1	SEAL AS-BUFFER	
	16	1	**9X-3579**	1	RING-WEAR	
	17	1	**3B-8489**	2	FITTING-GREASE	
	18	1	**1D-4643**	2	BOLT (1-8X5.50 IN)	

R-REMFG PART MAY BE AVAILABLE

161-7563 CYLINDER GP-RIPPER TILT *(contd.)* i01989520

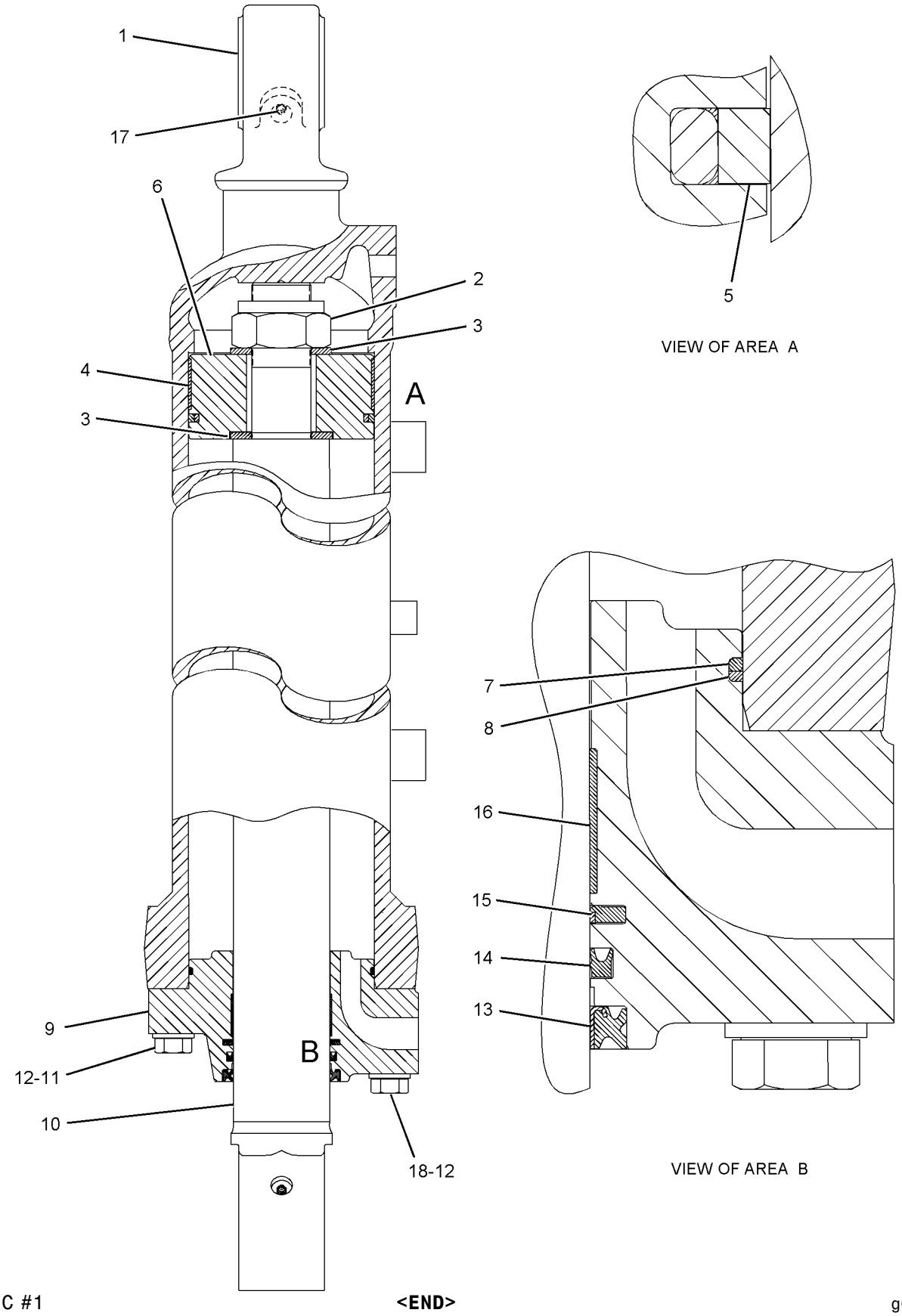

GRAPHIC #1 **<END>** g01028037

133-1281 FILTER GP-OIL–TRANSMISSION

S/N: 7PZ1-UP

PART OF 173-1553 LINES GP-PUMP

SMCS-5068 **i01707383**

NOTE	REF NO	GRAPHIC REF	PART NUMBER	QTY	PART NAME 1 2 3 4 5 6 (PRODUCT LEVEL)	SEE PAGE
	1	1	**133-1278**	1	HOUSING AS-OIL FILTER	
	2	1	**9S-4191**	2	PLUG	
	3	1	**3J-1907**	2	SEAL-O-RING	
	4	1	**3S-8652**	1	SPRING	
	5	1	**133-1288**	1	RETAINER	
	6	1	**8M-6393**	1	RING-RETAINING	
	7	1	**132-8875**	1	FILTER ELEMENT AS-OIL (FAN RETURN)	
	8	1	**2S-8439**	1	SEAL-O-RING	
	9	1	**6T-9222**	1	SPOOL	
	10	1	**133-2199**	1	SPRING	
	11	1	**139-7590**	1	BASE-TMSN OIL FILTER	

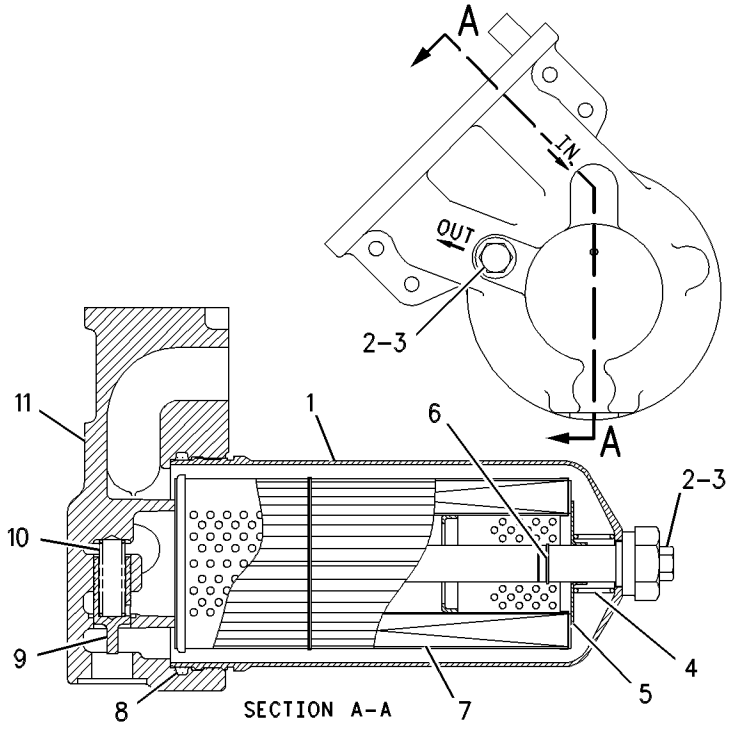

GRAPHIC #1 **<END>** g00280711

155-6061 FILTER GP-OIL–PILOT SUPPLY

S/N: 7PZ1-UP

PART OF 173-1553 LINES GP-PUMP

SMCS-5068 **i01781644**

NOTE	REF NO	GRAPHIC REF	PART NUMBER	QTY	PART NAME 1 2 3 4 5 6 (PRODUCT LEVEL)	SEE PAGE
	1	1	**134-0964**	1	FILTER ELEMENT-HYDRAULIC (BRAKE ACTUATION OIL)	
	2	1	**3J-1907**	1	SEAL-O-RING	
	3	1	**6R-0365**	1	SEAL-O-RING	
	4	1	**136-7032**	1	HOUSING-HYDRAULIC OIL FILTER	
	5	1	**3K-0360**	1	SEAL-O-RING	
	6	1	**9S-4185**	1	PLUG	
	7	1	**156-1382**	1	SWITCH AS (DIFFERENTIAL PRESSURE)	
		1	**102-8802**	1	KIT-RECEPTACLE (2 PIN)	
					(INCLUDES RECEPTACLE AS & WEDGE)	
		1	**3E-3365**	1	WEDGE-RECEPTACLE LOCK (2 PIN)	
		1	**8T-8729**	2	PIN-CONNECTOR	
E		1	**9X-1813**		SLEEVE (14CM)	
	8	1	**5F-9144**	1	SEAL-O-RING	

E-ORDER BY THE CENTIMETER

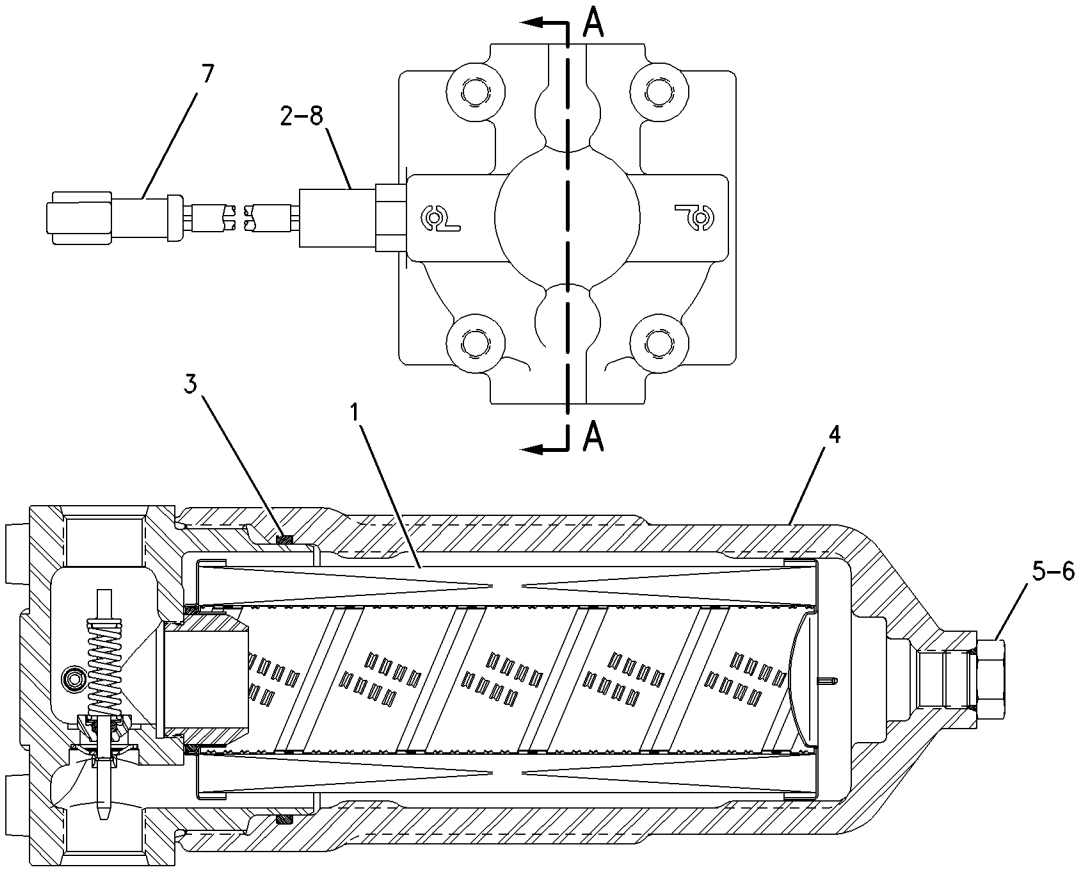

SECTION A-A

GRAPHIC #1 **<END>** g00865259

HYDRAULIC SYSTEM

172-5596 LINES GP-HYDRAULIC FAN

S/N: 7PZ1-499

PART OF 155-5552 CHASSIS AR

SMCS-1386, 1387, 5057 **i01988910**

NOTE	REF NO	GRAPHIC REF	PART NUMBER	QTY	PART NAME 1 2 3 4 5 6 (PRODUCT LEVEL)	SEE PAGE
	1	2	**1W-2860**	1	BRACKET	
	2	1	**3T-2023**	1	MANIFOLD	
I	3	1	**3T-6847**	1	HOSE AS	
	4	2	**3W-2647**	1	SPACER (13.5X30X10MM THK)	
	5	1	**5G-6504**	1	LUG	
	6	1	**5P-8502**	1	PADLOCK GP (HYDRAULIC FAN LINES)	
		1	**5P-8500**	1	KEY	
		1	**8Y-6364**	1	SLEEVE	
	7	3	**6G-3432**	1	ADAPTER (HEX)	
	8	2	**6T-4676**	1	BRACKET	
	9	1	**6T-6079**	3	WASHER (20X100X12MM THK)	
	10	1	**6T-6080**	6	MOUNTING	
	11	3	**6V-0852**	1	CAP-DUST	
	12	3	**6V-1625**	2	TEE-O-RING	
	13	3	**6V-3965**	2	FITTING (QUICK DISCONNECT)	
	14	2	**7G-1578**	2	GROMMET	
	15	1	**7N-1277**	2	BRACKET AS	
					(EACH INCLUDES)	
		1	**1F-0750**	1	NUT-WELD (3/8-16THD)	
	16	2	**7W-5425**	1	TUBE AS	
	17	2	**8C-3446**	1	VALVE AS-FLUID SAMPLING	
	18	2,3	**8C-3451**	2	CAP-DUST	
	19	2	**8C-6712**	1	ELBOW	
	20	2	**9W-0875**	1	PLATE AS	
		2	**1F-0748**	1	NUT-WELD (1/2-13 THD)	
I	21	1	**9W-6372**	1	HOSE AS	
	22	2	**9W-7892**	1	SUPPORT AS	
		2	**1F-0750**	1	NUT-WELD (3/8-16THD)	
		2	**6J-0499**	1	LUG (1/2-13 THD)	
	23	2	**9W-7893**	1	SUPPORT AS	
		2	**7J-7778**	1	LUG (1/2-13 THD)	
	24	2	**9W-7894**	1	TUBE AS	
Y	25	1	*105-2470*	1	VALVE GP-MAKEUP	878
I	26	1	**107-0040**	1	HOSE AS	
	27	3	**107-0586**	1	ELBOW	
	28	2	**108-4721**	1	SPACER	
I	29	1	**133-1854**	1	HOSE AS	
I	30	3	**133-1856**	1	HOSE AS	
I	31	1	**133-1857**	1	HOSE AS	
I	32	1	**133-3869**	1	HOSE AS	
	33	3	**133-4283**	1	SPACER	
I	34	1	**133-8133**	1	HOSE AS	
Y	35	1	**136-9411**	1	VALVE & MTG GP-HYDRAULIC FAN	859
I	36	3	**138-6793**	1	HOSE AS	
I	37	3	**138-6794**	1	HOSE AS	
	38	3	**138-9751**	1	PLATE	
I	39	1	**140-7732**	1	HOSE AS	
	40	3	*148-8313*	2	ADAPTER GP	
					(EACH INCLUDES)	
		3	**3K-0360**	1	SEAL-O-RING	
		3	**5P-6944**	1	ADAPTER	
	41	3	*148-8317*	2	CONNECTOR GP	
					(EACH INCLUDES)	
		3	**3D-2824**	1	SEAL-O-RING	
		3	**5K-9090**	1	SEAL-O-RING	
		3	**6V-8714**	2	CONNECTOR	

172-5596 LINES GP-HYDRAULIC FAN *(contd.)* i01988910

NOTE	REF NO	GRAPHIC REF	PART NUMBER	QTY	PART NAME 1 2 3 4 5 6 (PRODUCT LEVEL)	SEE PAGE
	42	3	*148-8319*	2	CONNECTOR GP	
					(EACH INCLUDES)	
		3	**2M-9780**	1	SEAL-O-RING	
		3	**6V-8397**	1	SEAL-O-RING	
		3	**6V-8715**	2	CONNECTOR	
	43	3	*148-8336*	1	CONNECTOR AS	
		3	**3J-1907**	1	SEAL-O-RING	
		3	**6V-8397**	1	SEAL-O-RING	
		3	**6V-8636**	1	CONNECTOR	
	44	1	*148-8354*	1	ELBOW GP	
		1	**3K-0360**	1	SEAL-O-RING	
		1	**6V-8398**	1	SEAL-O-RING	
		1	**6V-9002**	1	ELBOW	
	45	3	*148-8372*	1	ELBOW GP	
		3	**2M-9780**	1	SEAL-O-RING	
		3	**6V-8397**	1	SEAL-O-RING	
		3	**6V-8721**	1	ELBOW	
	46	1,3	*148-8378*	3	ELBOW AS	
					(EACH INCLUDES)	
		1,3	**3J-1907**	1	SEAL-O-RING	
		1,3	**6V-8397**	1	SEAL-O-RING	
		1,3	**6V-8724**	1	ELBOW	
	47	2	*148-8428*	1	TEE GP	
		2	**3K-0360**	1	SEAL-O-RING	
		2	**6V-8398**	1	SEAL-O-RING	
		2	**6V-8782**	1	TEE-FACE SEAL	
	48	1	*148-8433*	1	TEE GP	
		1	**6V-8397**	1	SEAL-O-RING	
		1	**6V-9836**	1	TEE-SWIVEL	
	49	3	*148-8444*	1	TEE GP	
		3	**6V-8398**	1	SEAL-O-RING	
		3	**6V-9837**	1	TEE-SWIVEL	
	50	3	*153-6245*	1	ELBOW GP	
		3	**2M-9780**	1	SEAL-O-RING	
		3	**6V-8398**	1	SEAL-O-RING	
		3	**136-6811**	1	ELBOW	
	51	1	*153-6255*	1	ELBOW GP	
		1	**2M-9780**	1	SEAL-O-RING	
		1	**6V-8397**	1	SEAL-O-RING	
		1	**8C-3324**	1	ELBOW	
I	52	1	**154-7150**	1	HOSE AS	
	53	1	**158-8902**	1	BRACKET AS	
	54	3	*164-5572*	1	UNION AS	
		3	**6V-8398**	2	SEAL-O-RING	
		3	**6V-8731**	1	UNION-FACE SEAL	
	55	3	**171-7088**	1	TUBE AS	
I	56	1	**172-5276**	1	HOSE AS	
	57	3	**172-6047**	2	TUBE AS	
	58	1	*148-8358*	1	ELBOW AS	
		1	**2M-9780**	1	SEAL-O-RING	
		1	**6V-8398**	1	SEAL-O-RING	
		1	**6V-8624**	1	ELBOW	
	59	3	**1P-3703**	2	SEAL-RECTANGULAR	
	60	2	**1P-3704**	2	SEAL-RECTANGULAR	
	61	3	**1P-4577**	2	FLANGE-HALF	
	62	1,2	**1P-4578**	4	FLANGE-HALF	
	63	1,2,3	**1P-4579**	6	FLANGE-HALF	
	64	1,3	**1P-4582**	6	FLANGE-HALF	
	65	2	**1P-5761**	4	FLANGE-HALF	

172-5596 LINES GP-HYDRAULIC FAN *(contd.)* i01988910

NOTE	REF NO	GRAPHIC REF	PART NUMBER	QTY	PART NAME 1 2 3 4 5 6 (PRODUCT LEVEL)	SEE PAGE
	66	1	**2J-2668**	1	COVER	
	67	2	**2M-9780**	6	SEAL-O-RING	
	68	2,3	**3J-1907**	12	SEAL-O-RING	
	69	2,3	**3J-7354**	2	SEAL-O-RING	
	70	2	**4D-7388**	1	CLIP	
	71	3	**4J-0520**	3	SEAL-O-RING	
	72	1,2	**4J-0522**	4	SEAL-O-RING	
	73	1	**4J-0524**	3	SEAL-O-RING	
	74	1,2	**4J-0527**	6	SEAL-O-RING	
	75	3	**4J-5573**	2	SEAL-O-RING	
	76	1,2,3	**4L-6454**	11	BOLT (3/8-16X1 IN)	
	77	3	**4L-9337**	4	BOLT (3/8-16X1.5 IN)	
	78	2	**5C-6565**	2	BOLT (1/2-13X1.125 IN)	
	79	1	**5H-4020**	1	COVER	
	80	3	**5K-9090**	2	SEAL-O-RING	
	81	3	**5P-1075**	2	WASHER-HARD (10.2X22.5X3MM THK)	
	82	2	**5P-1404**	1	ADAPTER-O-RING	
	83	2	**5P-2228**	10	BOLT (1/2-13X1 IN)	
	84	1,2	**5P-2566**	15	BOLT (1/2-13X1.5 IN)	
	85	1,2,3	**5P-7464**	7	CLIP (SLOT)	
	86	1,2,3	**5P-7465**	7	CLIP (TAB)	
	87	1	**5S-7383**	2	BOLT (3/8-16X1.75 IN)	
	88	3	**6D-4636**	1	CLIP	
	89	3	**6V-7359**	2	GROMMET	
	90	2	**6V-8188**	1	NUT (1/2-13 THD)	
	91	2	**6V-8260**	1	SEAL-O-RING	
	92	3	**6V-9746**	2	SEAL-O-RING	
	93	1	**7X-0308**	4	BOLT (7/16-14X1.375 IN)	
	94	2	**7X-0310**	4	BOLT (7/16-14X2 IN)	
	95	2	**7X-0316**	4	BOLT (7/16-14X3.5 IN)	
	96	2	**7X-0318**	4	BOLT (7/16-14X4 IN)	
	97	2	**7X-0332**	5	BOLT (1/2-13X4.5 IN)	
	98	1	**7X-0334**	4	BOLT (1/2-13X5 IN)	
	99	3	**7X-0340**	8	BOLT (1/2-13X6.5 IN)	
	100	1	**7X-0372**	3	BOLT (3/4X10X4.25 IN)	
	101	2	**7X-0507**	8	WASHER-HARD (12X22.5X5MM THK)	
	102	2,3	**8C-4436**	8	BOLT (1/2-13X1.375 IN)	
	103	1,2	**8J-8197**	10	CLIP	
	104	3	**8L-3837**	4	BOLT-SOCKET HEAD	
	105	2	**8S-0023**	2	CLIP (SLOT)	
	106	2	**8S-0024**	2	CLIP (TAB)	
	107	3	**8T-2353**	1	ADAPTER	
	108	3	**8T-2501**	9	BOLT (3/8-16X2 IN)	
	109	1,2	**8T-2502**	1	BOLT (3/8-16X1.125 IN)	
	110	2	**8T-2602**	1	CLIP (TAB)	
	111	2	**8T-2603**	1	CLIP (SLOT)	
	112	1,2,3	**8T-4223**	57	WASHER-HARD (13.5X25.5X3MM THK)	
	113	1,2,3	**8T-4896**	23	WASHER-HARD (10.2X18.5X2.5MM THK)	
	114	1,2	**8T-4897**	2	WASHER (10.2X35X6MM THK)	
	115	1	**8T-4994**	3	WASHER-HARD (20X36.5X3.5MM THK)	
	116	1,2	**8T-5360**	8	WASHER (12X22.5X2.5MM THK)	
	117	1,2	**8T-8917**	4	BOLT (1/2-13X1.25 IN)	
	118	3	**1S-0994**	1	CLIP	

I-REFER TO HYDRAULIC INFORMATION SYSTEM
Y-SEPARATE ILLUSTRATION

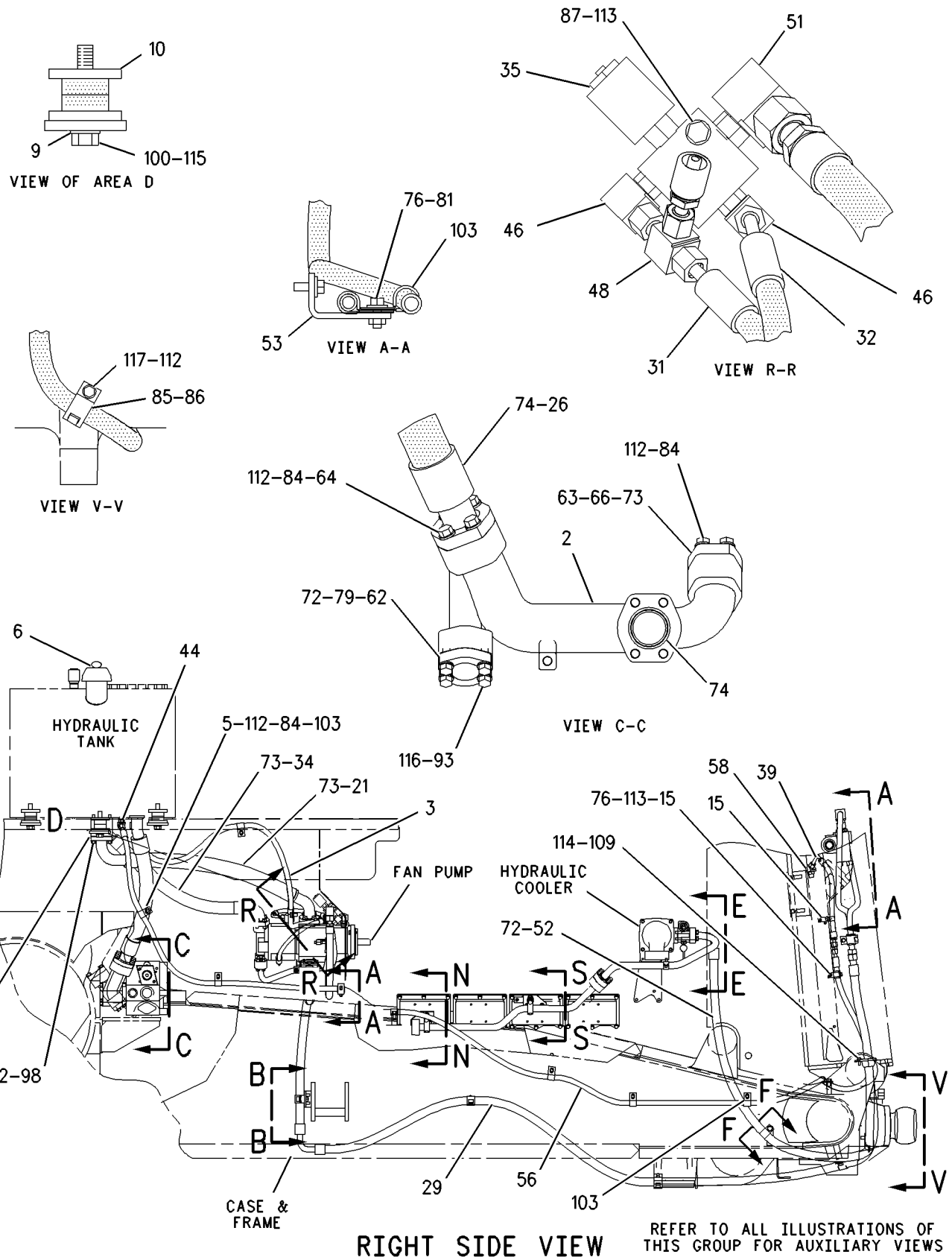

GRAPHIC #1

g00692567

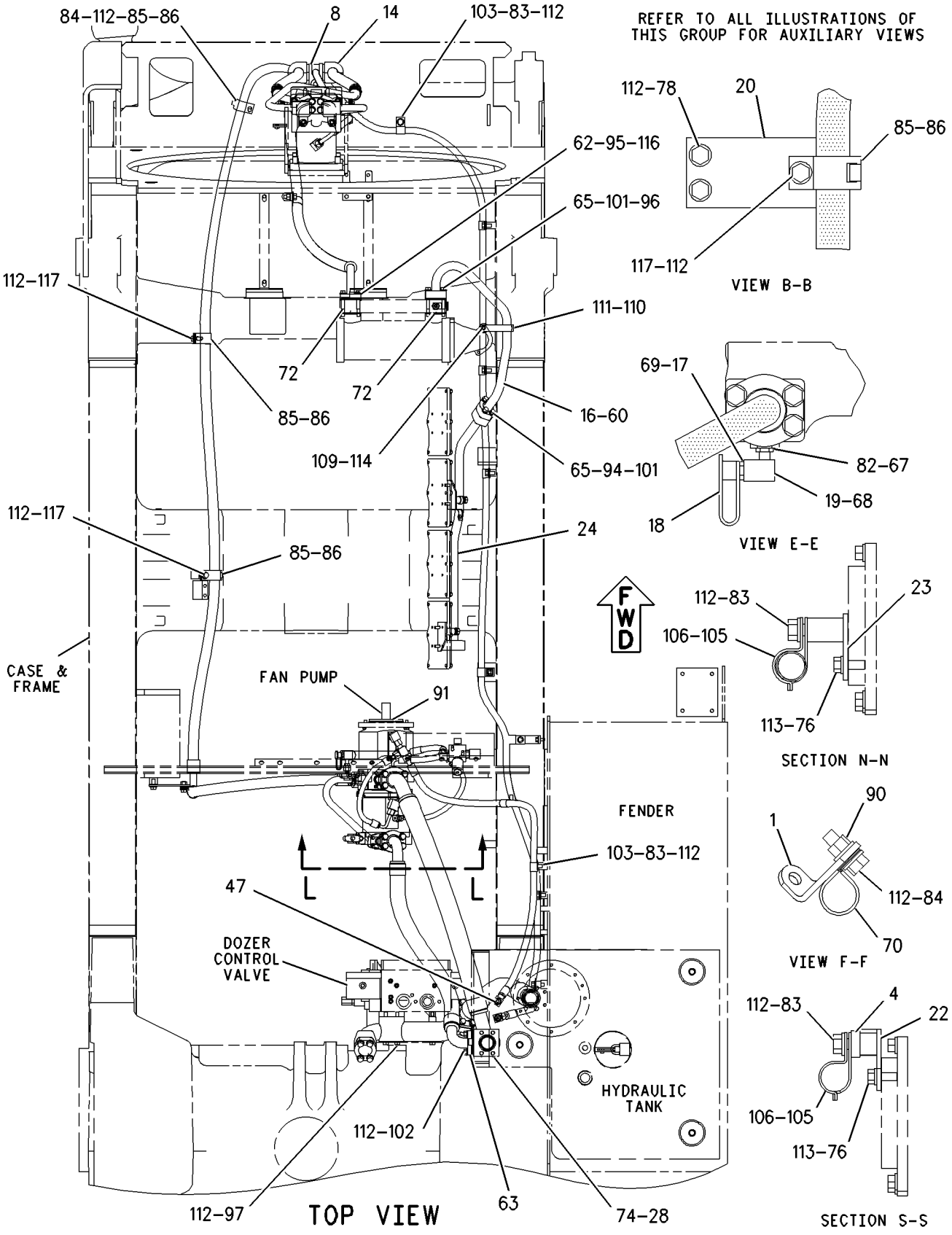

GRAPHIC #2

g00657449

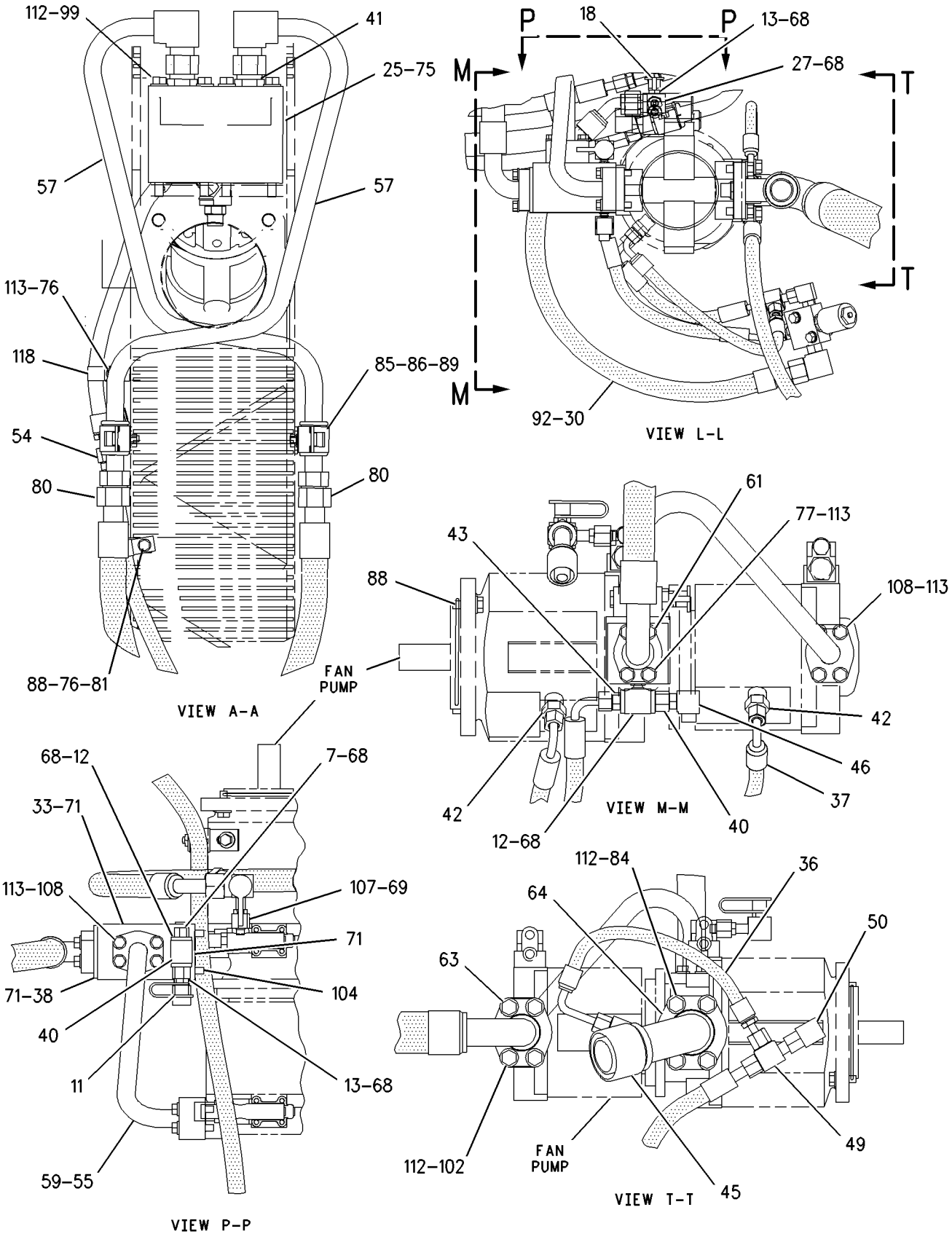

GRAPHIC #3 **<END>** g00692568

HYDRAULIC SYSTEM

172-5596 LINES GP-HYDRAULIC FAN

S/N: 7PZ500-598

PART OF 155-5552 CHASSIS AR

SMCS-1386, 1387, 5057 **i01988908**

NOTE	REF NO	GRAPHIC REF	PART NUMBER	QTY	PART NAME 1 2 3 4 5 6 (PRODUCT LEVEL)	SEE PAGE
	1	2	**1W-2860**	1	BRACKET	
	2	1	**3T-2023**	1	MANIFOLD	
I	3	1	**3T-6847**	1	HOSE AS	
	4	2	**3W-2647**	1	SPACER (13.5X30X10MM THK)	
	5	1	**5G-6504**	1	LUG	
	6	1	**5P-8502**	1	PADLOCK GP (HYDRAULIC FAN LINES)	
		1	**5P-8500**	1	KEY	
		1	**8Y-6364**	1	SLEEVE	
	7	3	**6G-3432**	1	ADAPTER (HEX)	
	8	2	**6T-4676**	1	BRACKET	
	9	1	**6T-6079**	3	WASHER (20X100X12MM THK)	
	10	1	**6T-6080**	6	MOUNTING	
	11	3	**6V-0852**	1	CAP-DUST	
	12	3	**6V-1625**	2	TEE-O-RING	
	13	3	**6V-3965**	2	FITTING (QUICK DISCONNECT)	
	14	2	**7G-1578**	2	GROMMET	
	15	1	**7N-1277**	2	BRACKET AS	
	16	2	**7W-5425**	1	TUBE AS	
	17	2	**8C-3446**	1	VALVE AS-FLUID SAMPLING	
	18	2,3	**8C-3451**	2	CAP-DUST	
	19	2	**8C-6712**	1	ELBOW	
	20	2	**9W-0875**	1	PLATE AS	
I	21	1	**9W-6372**	1	HOSE AS	
	22	2	**9W-7892**	1	SUPPORT AS	
		2	**6J-0499**	1	LUG (1/2-13 THD)	
	23	2	**9W-7893**	1	SUPPORT AS	
		2	**7J-7778**	1	LUG (1/2-13 THD)	
	24	2	**9W-7894**	1	TUBE AS	
Y	25	3	*105-2470*	1	VALVE GP-MAKEUP	878
I	26	1	**107-0040**	1	HOSE AS	
	27	3	**107-0586**	1	ELBOW	
	28	2	**108-4721**	1	SPACER	
I	29	1	**133-1854**	1	HOSE AS	
I	30	3	**133-1856**	1	HOSE AS	
I	31	1	**133-1857**	1	HOSE AS	
I	32	1	**133-3869**	1	HOSE AS	
	33	3	**133-4283**	1	SPACER	
I	34	1	**133-8133**	1	HOSE AS	
CY	35	1	**189-8628**	1	VALVE & MTG GP-HYDRAULIC FAN	860
I	36	3	**138-6793**	1	HOSE AS	
I	37	3	**138-6794**	1	HOSE AS	
	38	3	**138-9751**	1	PLATE	
I	39	1	**140-7732**	1	HOSE AS	
	40	3	*148-8313*	2	ADAPTER GP	
					(EACH INCLUDES)	
		3	**3K-0360**	1	SEAL-O-RING	
		3	**5P-6944**	1	ADAPTER	
	41	3	*148-8317*	2	CONNECTOR GP	
					(EACH INCLUDES)	
		3	**3D-2824**	1	SEAL-O-RING	
		3	**5K-9090**	1	SEAL-O-RING	
		3	**6V-8714**	2	CONNECTOR	
	42	3	*148-8319*	2	CONNECTOR GP	
					(EACH INCLUDES)	
		3	**2M-9780**	1	SEAL-O-RING	
		3	**6V-8397**	1	SEAL-O-RING	

172-5596 LINES GP-HYDRAULIC FAN *(contd.)* i01988908

NOTE	REF NO	GRAPHIC REF	PART NUMBER	QTY	PART NAME 1 2 3 4 5 6 (PRODUCT LEVEL)	SEE PAGE
		3	**6V-8715**	2	CONNECTOR	
	43	3	*148-8336*	1	CONNECTOR AS	
		3	**3J-1907**	1	SEAL-O-RING	
		3	**6V-8397**	1	SEAL-O-RING	
		3	**6V-8636**	1	CONNECTOR	
	44	1	*148-8354*	1	ELBOW GP	
		1	**3K-0360**	1	SEAL-O-RING	
		1	**6V-8398**	1	SEAL-O-RING	
		1	**6V-9002**	1	ELBOW	
	45	3	*148-8372*	1	ELBOW GP	
		3	**2M-9780**	1	SEAL-O-RING	
		3	**6V-8397**	1	SEAL-O-RING	
		3	**6V-8721**	1	ELBOW	
	46	1,3	*148-8378*	3	ELBOW AS	
					(EACH INCLUDES)	
		1,3	**3J-1907**	1	SEAL-O-RING	
		1,3	**6V-8397**	1	SEAL-O-RING	
		1,3	**6V-8724**	1	ELBOW	
	47	2	*148-8428*	1	TEE GP	
		2	**3K-0360**	1	SEAL-O-RING	
		2	**6V-8398**	1	SEAL-O-RING	
		2	**6V-8782**	1	TEE-FACE SEAL	
	48	1	*148-8433*	1	TEE GP	
		1	**6V-8397**	1	SEAL-O-RING	
		1	**6V-9836**	1	TEE-SWIVEL	
	49	3	*148-8444*	1	TEE GP	
		3	**6V-8398**	1	SEAL-O-RING	
		3	**6V-9837**	1	TEE-SWIVEL	
	50	3	*153-6245*	1	ELBOW GP	
		3	**2M-9780**	1	SEAL-O-RING	
		3	**6V-8398**	1	SEAL-O-RING	
		3	**136-6811**	1	ELBOW	
	51	1	*153-6255*	1	ELBOW GP	
		1	**2M-9780**	1	SEAL-O-RING	
		1	**6V-8397**	1	SEAL-O-RING	
		1	**8C-3324**	1	ELBOW	
I	52	1	**154-7150**	1	HOSE AS	
	53	1	**158-8902**	1	BRACKET AS	
	54	3	*164-5572*	1	UNION AS	
		3	**6V-8398**	2	SEAL-O-RING	
		3	**6V-8731**	1	UNION-FACE SEAL	
	55	3	**171-7088**	1	TUBE AS	
I	56	1	**172-5276**	1	HOSE AS	
	57	3	**172-6047**	2	TUBE AS	
	58	1	*148-8358*	1	ELBOW AS	
		1	**2M-9780**	1	SEAL-O-RING	
		1	**6V-8398**	1	SEAL-O-RING	
		1	**6V-8624**	1	ELBOW	
	59	3	**1P-3703**	2	SEAL-RECTANGULAR	
	60	2	**1P-3704**	2	SEAL-RECTANGULAR	
	61	3	**1P-4577**	2	FLANGE-HALF	
	62	1,2	**1P-4578**	4	FLANGE-HALF	
	63	1,2,3	**1P-4579**	6	FLANGE-HALF	
	64	1,3	**1P-4582**	6	FLANGE-HALF	
	65	2	**1P-5761**	4	FLANGE-HALF	
	66	1	**2J-2668**	1	COVER	
	67	2	**2M-9780**	1	SEAL-O-RING	
	68	2,3	**3J-1907**	7	SEAL-O-RING	
	69	2,3	**3J-7354**	2	SEAL-O-RING	

172-5596 LINES GP-HYDRAULIC FAN *(contd.)* i01988908

NOTE	REF NO	GRAPHIC REF	PART NUMBER	QTY	PART NAME 1 2 3 4 5 6 (PRODUCT LEVEL)	SEE PAGE
	70	2	**4D-7388**	1	CLIP	
	71	3	**4J-0520**	3	SEAL-O-RING	
	72	1,2	**4J-0522**	4	SEAL-O-RING	
	73	1	**4J-0524**	3	SEAL-O-RING	
	74	1,2	**4J-0527**	6	SEAL-O-RING	
	75	3	**4J-5573**	2	SEAL-O-RING	
	76	1,2,3	**4L-6454**	11	BOLT (3/8-16X1 IN)	
	77	3	**4L-9337**	4	BOLT (3/8-16X1.5 IN)	
	78	2	**5C-6565**	2	BOLT (1/2-13X1.125 IN)	
	79	1	**5H-4020**	1	COVER	
	80	3	**5K-9090**	2	SEAL-O-RING	
	81	1,3	**5P-1075**	2	WASHER-HARD (10.2X22.5X3MM THK)	
	82	2	**5P-1404**	1	ADAPTER-O-RING	
	83	2	**5P-2228**	10	BOLT (1/2-13X1 IN)	
	84	1,2,3	**5P-2566**	15	BOLT (1/2-13X1.5 IN)	
	85	1,2,3	**5P-7464**	7	CLIP (SLOT)	
	86	1,2,3	**5P-7465**	7	CLIP (TAB)	
	87	1	**5S-7383**	2	BOLT (3/8-16X1.75 IN)	
	88	3	**6D-4636**	1	CLIP	
	89	3	**6V-7359**	2	GROMMET	
	90	2	**6V-8188**	1	NUT (1/2-13 THD)	
	91	2	**6V-8260**	1	SEAL-O-RING	
	92	3	**6V-9746**	1	SEAL-O-RING	
	93	1	**7X-0308**	4	BOLT (7/16-14X1.375 IN)	
	94	2	**7X-0310**	4	BOLT (7/16-14X2 IN)	
	95	2	**7X-0316**	4	BOLT (7/16-14X3.5 IN)	
	96	2	**7X-0318**	4	BOLT (7/16-14X4 IN)	
	97	2	**7X-0332**	5	BOLT (1/2-13X4.5 IN)	
	98	1	**7X-0334**	4	BOLT (1/2-13X5 IN)	
	99	3	**7X-0340**	8	BOLT (1/2-13X6.5 IN)	
	100	1	**7X-0372**	3	BOLT (3/4X10X4.25 IN)	
	101	2	**7X-0507**	8	WASHER-HARD (12X22.5X5MM THK)	
	102	2,3	**8C-4436**	8	BOLT (1/2-13X1.375 IN)	
	103	1,2	**8J-8197**	10	CLIP	
	104	3	**8L-3837**	4	BOLT-SOCKET HEAD	
	105	2	**8S-0023**	2	CLIP (SLOT)	
	106	2	**8S-0024**	2	CLIP (TAB)	
	107	3	**8T-2353**	1	ADAPTER	
	108	3	**8T-2501**	9	BOLT (3/8-16X2 IN)	
	109	1,2	**8T-2502**	1	BOLT (3/8-16X1.125 IN)	
	110	2	**8T-2602**	1	CLIP (TAB)	
	111	2	**8T-2603**	1	CLIP (SLOT)	
	112	1,2,3	**8T-4223**	57	WASHER-HARD (13.5X25.5X3MM THK)	
	113	1,2,3	**8T-4896**	23	WASHER-HARD (10.2X18.5X2.5MM THK)	
	114	1,2	**8T-4897**	2	WASHER (10.2X35X6MM THK)	
	115	1	**8T-4994**	3	WASHER-HARD (20X36.5X3.5MM THK)	
	116	1,2	**8T-5360**	8	WASHER (12X22.5X2.5MM THK)	
	117	1,2	**8T-8917**	4	BOLT (1/2-13X1.25 IN)	
	118	3	**1S-0994**	1	CLIP	

C-CHANGE FROM PREVIOUS TYPE
I-REFER TO HYDRAULIC INFORMATION SYSTEM
Y-SEPARATE ILLUSTRATION

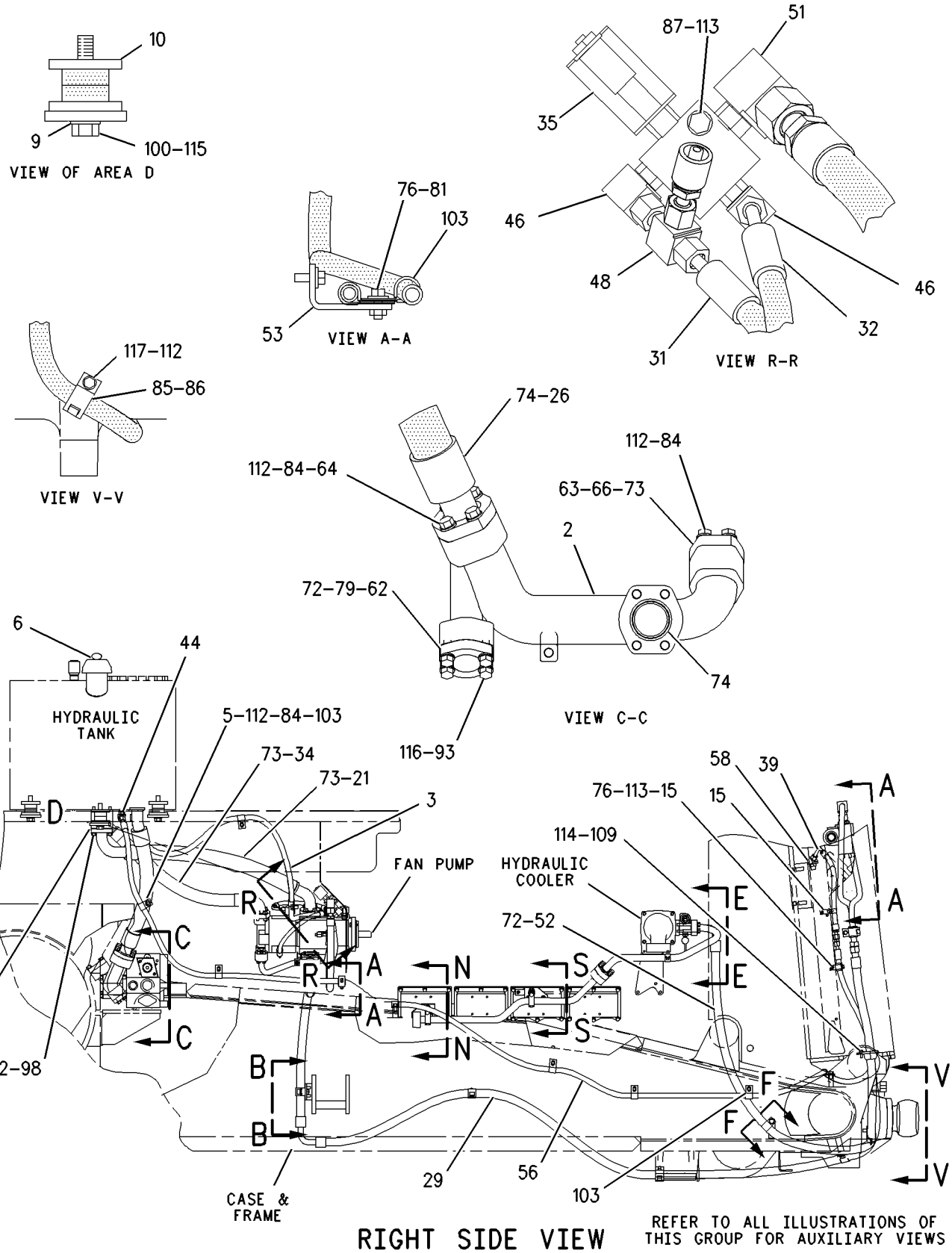

GRAPHIC #1

g00922893

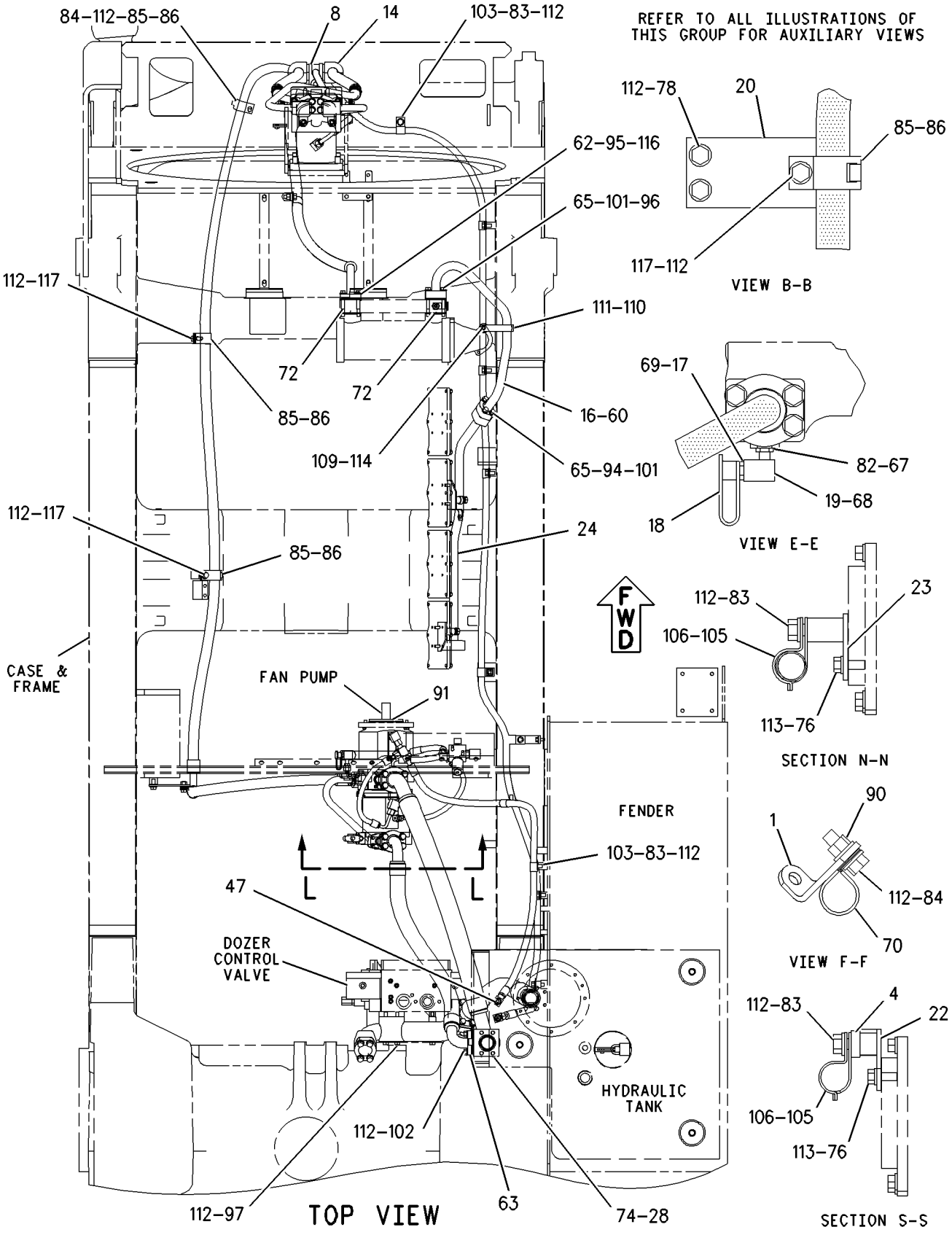

GRAPHIC #2

g00657449

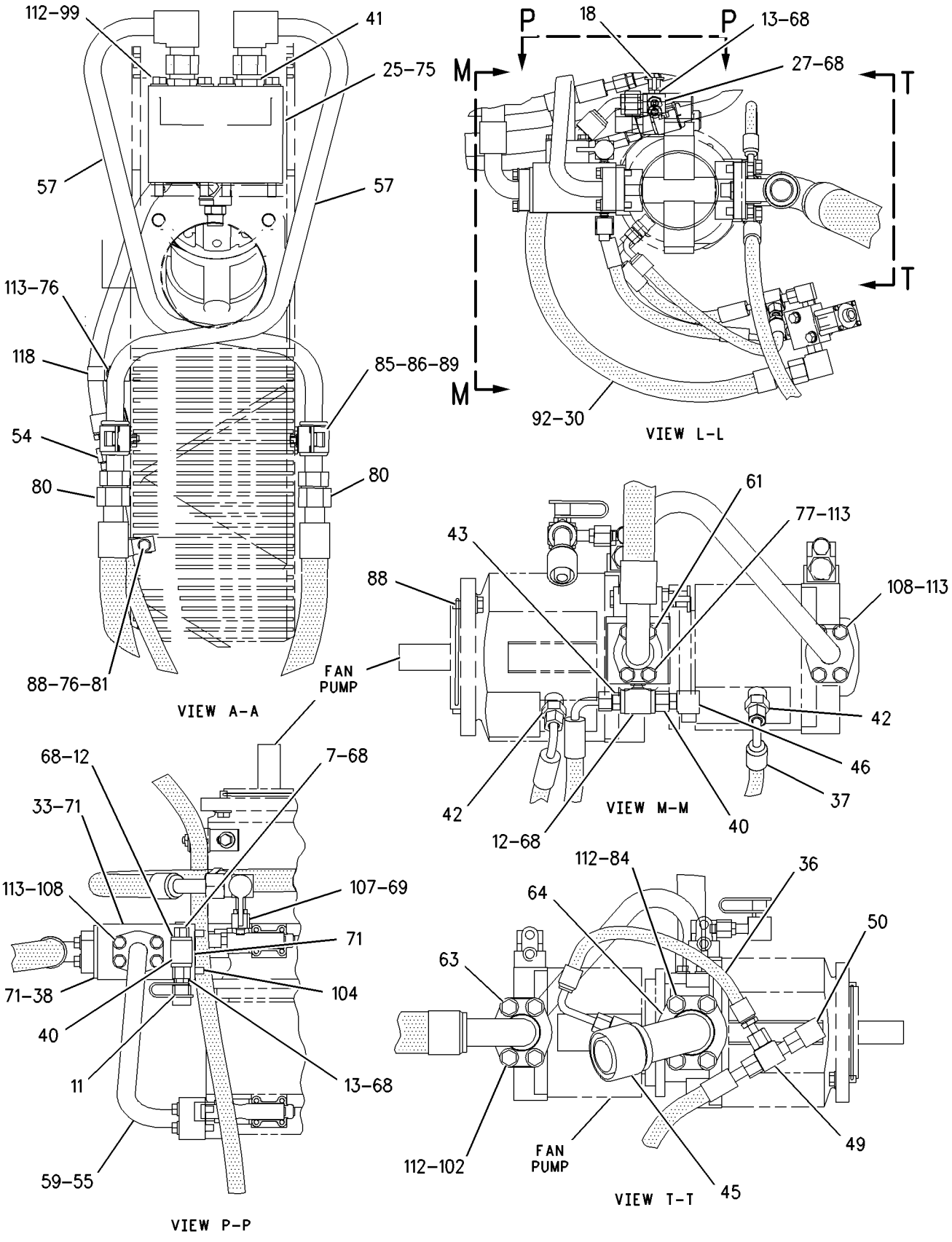

GRAPHIC #3 **<END>** g00922903

HYDRAULIC SYSTEM

172-5596 LINES GP-HYDRAULIC FAN

S/N: 7PZ599-651

PART OF 155-5552 CHASSIS AR

SMCS-1386, 1387, 5057 **i01796566**

NOTE	REF NO	GRAPHIC REF	PART NUMBER	QTY	PART NAME 1 2 3 4 5 6 (PRODUCT LEVEL)	SEE PAGE
	1	1	**1W-2860**	1	BRACKET	
I	2	1	**3T-6847**	1	HOSE AS	
B	3	1	**3W-2647**	1	SPACER (13.5X30X10-MM THK)	
	4	1	**5G-6504**	1	LUG	
	5	1	**5P-8502**	1	PADLOCK GP (HYDRAULIC TANK)	
		1	**5P-8500**	1	KEY	
		1	**8Y-6364**	1	SLEEVE	
	6	1	**6G-3432**	1	ADAPTER (HEX)	
	7	1	**6T-4676**	1	BRACKET	
	8	1	**6T-6079**	3	WASHER (20X100X12-MM THK)	
	9	1	**6T-6080**	6	MOUNTING	
	10	1	**6V-0852**	1	CAP-DUST	
	11	1	**6V-1625**	2	TEE-O-RING	
	12	1	**6V-3965**	2	FITTING (QUICK DISCONNECT)	
	13	1	**7G-1578**	2	GROMMET	
	14	1	**7N-1277**	2	BRACKET AS	
					(EACH INCLUDES)	
		1	**1F-0750**	1	NUT-WELD (3/8-16-THD)	
	15	1	**7W-5425**	1	TUBE AS	
	16	1	**8C-3446**	1	VALVE AS-FLUID SAMPLING	
	17	1	**8C-3451**	2	CAP-DUST	
	18	1	**9W-0875**	1	PLATE AS	
		1	**1F-0748**	1	NUT-WELD (1/2-13-THD)	
I	19	1	**9W-6372**	1	HOSE AS	
	20	1	**9W-7892**	1	SUPPORT AS	
		1	**1F-0750**	1	NUT-WELD (3/8-16-THD)	
		1	**6J-0499**	1	LUG (1/2-13-THD)	
	21	1	**9W-7893**	1	SUPPORT AS	
		1	**7J-7778**	1	LUG (1/2-13-THD)	
	22	1	**9W-7894**	1	TUBE AS	
Y	23	1	*105-2470*	1	VALVE GP-MAKEUP (ANTI-CAVITATION HYD FLUID)	878
I	24	1	**107-0040**	1	HOSE AS	
	25	1	**107-0586**	1	ELBOW	
	26	1	**108-4721**	1	SPACER	
I	27	1	**133-1854**	1	HOSE AS	
I	28	1	**133-1856**	1	HOSE AS	
I	29	1	**133-1857**	1	HOSE AS	
I	30	1	**133-3869**	1	HOSE AS	
	31	1	**133-4283**	1	SPACER	
I	32	1	**133-8133**	1	HOSE AS	
I	33	1	**138-6793**	1	HOSE AS	
I	34	1	**138-6794**	1	HOSE AS	
	35	1	**138-9751**	1	PLATE	
I	36	1	**140-7732**	1	HOSE AS	
	37	1	*148-8313*	2	ADAPTER GP	
					(EACH INCLUDES)	
		1	**3K-0360**	1	SEAL-O-RING	
		1	**5P-6944**	1	ADAPTER	
	38	1	*148-8317*	2	CONNECTOR GP	
					(EACH INCLUDES)	
		1	**3D-2824**	1	SEAL-O-RING	
		1	**5K-9090**	1	SEAL-O-RING	
		1	**6V-8714**	1	CONNECTOR	
	39	1	*148-8319*	2	CONNECTOR GP	
					(EACH INCLUDES)	
		1	**2M-9780**	1	SEAL-O-RING	

172-5596 LINES GP-HYDRAULIC FAN *(contd.)* i01796566

NOTE	REF NO	GRAPHIC REF	PART NUMBER	QTY	PART NAME 1 2 3 4 5 6 (PRODUCT LEVEL)	SEE PAGE
		1	**6V-8397**	1	SEAL-O-RING	
		1	**6V-8715**	1	CONNECTOR	
	40	1	*148-8336*	1	CONNECTOR AS	
		1	**3J-1907**	1	SEAL-O-RING	
		1	**6V-8397**	1	SEAL-O-RING	
		1	**6V-8636**	1	CONNECTOR	
	41	1	*148-8354*	1	ELBOW GP	
		1	**3K-0360**	1	SEAL-O-RING	
		1	**6V-8398**	1	SEAL-O-RING	
		1	**6V-9002**	1	ELBOW	
	42	1	*148-8372*	1	ELBOW GP	
		1	**2M-9780**	1	SEAL-O-RING	
		1	**6V-8397**	1	SEAL-O-RING	
		1	**6V-8721**	1	ELBOW	
	43	1	*148-8378*	3	ELBOW AS	
					(EACH INCLUDES)	
		1	**3J-1907**	1	SEAL-O-RING	
		1	**6V-8397**	1	SEAL-O-RING	
		1	**6V-8724**	1	ELBOW	
	44	1	*148-8428*	1	TEE GP	
		1	**3K-0360**	1	SEAL-O-RING	
		1	**6V-8398**	1	SEAL-O-RING	
		1	**6V-8782**	1	TEE-FACE SEAL	
	45	1	*148-8433*	1	TEE GP	
		1	**6V-8397**	2	SEAL-O-RING	
		1	**6V-9836**	1	TEE-SWIVEL	
	46	1	*148-8444*	1	TEE GP	
		1	**6V-8398**	2	SEAL-O-RING	
		1	**6V-9837**	1	TEE-SWIVEL	
	47	1	*153-6245*	1	ELBOW GP	
		1	**2M-9780**	1	SEAL-O-RING	
		1	**6V-8398**	1	SEAL-O-RING	
		1	**136-6811**	1	ELBOW	
	48	1	*153-6255*	1	ELBOW GP	
		1	**3J-1907**	1	SEAL-O-RING	
		1	**6V-8397**	1	SEAL-O-RING	
		1	**8C-3324**	1	ELBOW	
I	49	1	**154-7150**	1	HOSE AS	
	50	1	**158-8902**	1	BRACKET AS	
		1	**1F-0750**	1	NUT-WELD (3/8-16-THD)	
	51	1	*164-5572*	1	UNION AS	
		1	**6V-8398**	2	SEAL-O-RING	
		1	**6V-8731**	1	UNION-FACE SEAL	
	52	1	**171-7088**	1	TUBE AS	
I	53	1	**172-5276**	1	HOSE AS	
	54	1	**172-6047**	2	TUBE AS	
C	55	1	**175-3920**	1	MANIFOLD	
Y	56	1	**189-8628**	1	VALVE & MTG GP-HYDRAULIC FAN (HYDRAULIC FAN)	860
	57	1	*148-8358*	1	ELBOW AS	
		1	**2M-9780**	1	SEAL-O-RING	
		1	**6V-8398**	1	SEAL-O-RING	
		1	**6V-8624**	1	ELBOW	
	58	1	**1P-3703**	2	SEAL-RECTANGULAR	
	59	1	**1P-3704**	2	SEAL-RECTANGULAR	
	60	1	**1P-4577**	2	FLANGE-HALF	
	61	1	**1P-4578**	2	FLANGE-HALF	
C	62	1	**1P-4579**	8	FLANGE-HALF	
	63	1	**1P-4582**	6	FLANGE-HALF	
	64	1	**1P-5761**	4	FLANGE-HALF	

172-5596 LINES GP-HYDRAULIC FAN *(contd.)* i01796566

NOTE	REF NO	GRAPHIC REF	PART NUMBER	QTY	PART NAME 1 2 3 4 5 6 (PRODUCT LEVEL)	SEE PAGE
	65	1	**1S-0994**	1	CLIP	
C	66	1	**2J-2668**	2	COVER	
	67	1	**2M-9780**	1	SEAL-O-RING	
	68	1	**3J-1907**	7	SEAL-O-RING	
	69	1,1	**3J-7354**	2	SEAL-O-RING	
	70	1	**4D-7388**	1	CLIP	
	71	1	**4J-0520**	3	SEAL-O-RING	
C	72	1	**4J-0522**	3	SEAL-O-RING	
C	73	1	**4J-0524**	4	SEAL-O-RING	
	74	1	**4J-0527**	6	SEAL-O-RING	
	75	1	**4J-5573**	2	SEAL-O-RING	
	76	1	**4L-6454**	11	BOLT (3/8-16X1-IN)	
	77	1	**4L-9337**	4	BOLT (3/8-16X1.5-IN)	
	78	1	**5C-6565**	2	BOLT (1/2-13X1.125-IN)	
	79	1	**5K-9090**	2	SEAL-O-RING	
	80	1	**5P-1075**	2	WASHER-HARD (10.2X22.5X3-MM THK)	
	81	1	**5P-1404**	1	ADAPTER-O-RING	
	82	1	**5P-2228**	10	BOLT (1/2-13X1-IN)	
	83	1	**5P-2566**	15	BOLT (1/2-13X1.5-IN)	
	84	1	**5P-7464**	7	CLIP (SLOT)	
	85	1	**5P-7465**	7	CLIP (TAB)	
	86	1	**5S-7383**	2	BOLT (3/8-16X1.75-IN)	
	87	1	**6D-4636**	1	CLIP	
	88	1	**6V-7359**	2	GROMMET	
	89	1	**6V-8188**	1	NUT (1/2-13-THD)	
	90	1	**6V-8260**	1	SEAL-O-RING	
	91	1	**6V-9746**	1	SEAL-O-RING	
	92	1	**7X-0310**	4	BOLT (7/16-14X2-IN)	
	93	1	**7X-0316**	4	BOLT (7/16-14X3.5-IN)	
	94	1	**7X-0318**	4	BOLT (7/16-14X4-IN)	
	95	1	**7X-0332**	5	BOLT (1/2-13X4.5-IN)	
	96	1	**7X-0334**	4	BOLT (1/2-13X5-IN)	
	97	1	**7X-0340**	8	BOLT (1/2-13X6.5-IN)	
	98	1	**7X-0372**	3	BOLT (3/4X10X4.25-IN)	
	99	1	**7X-0507**	8	WASHER-HARD (12X22.5X5-MM THK)	
	100	1	**8C-4436**	8	BOLT (1/2-13X1.375-IN)	
	101	1	**8C-6712**	1	ELBOW	
	102	1	**8J-8197**	10	CLIP	
	103	1	**8L-3837**	4	BOLT-SOCKET HEAD	
	104	1	**8S-0023**	2	CLIP (SLOT)	
	105	1	**8S-0024**	2	CLIP (TAB)	
	106	1	**8T-2353**	1	ADAPTER	
	107	1	**8T-2501**	9	BOLT (3/8-16X2-IN)	
	108	1	**8T-2502**	1	BOLT (3/8-16X1.125-IN)	
	109	1	**8T-2602**	1	CLIP (TAB)	
	110	1	**8T-2603**	1	CLIP (SLOT)	
C	111	1	**8T-4223**	61	WASHER-HARD (13.5X25.5X3-MM THK)	
	112	1	**8T-4896**	23	WASHER-HARD (10.2X18.5X2.5-MM THK)	
	113	1	**8T-4897**	2	WASHER (10.2X35X6-MM THK)	
	114	1	**8T-4994**	3	WASHER-HARD (20X36.5X3.5-MM THK)	
C	115	1	**8T-5360**	4	WASHER (12X22.5X2.5-MM THK)	
	116	1	**8T-8917**	4	BOLT (1/2-13X1.25-IN)	
C	117	1	**8T-8919**	4	BOLT (1/2-13X1.75-IN)	

B-USE AS REQUIRED
C-CHANGE FROM PREVIOUS TYPE
I-REFER TO HYDRAULIC INFORMATION SYSTEM
Y-SEPARATE ILLUSTRATION

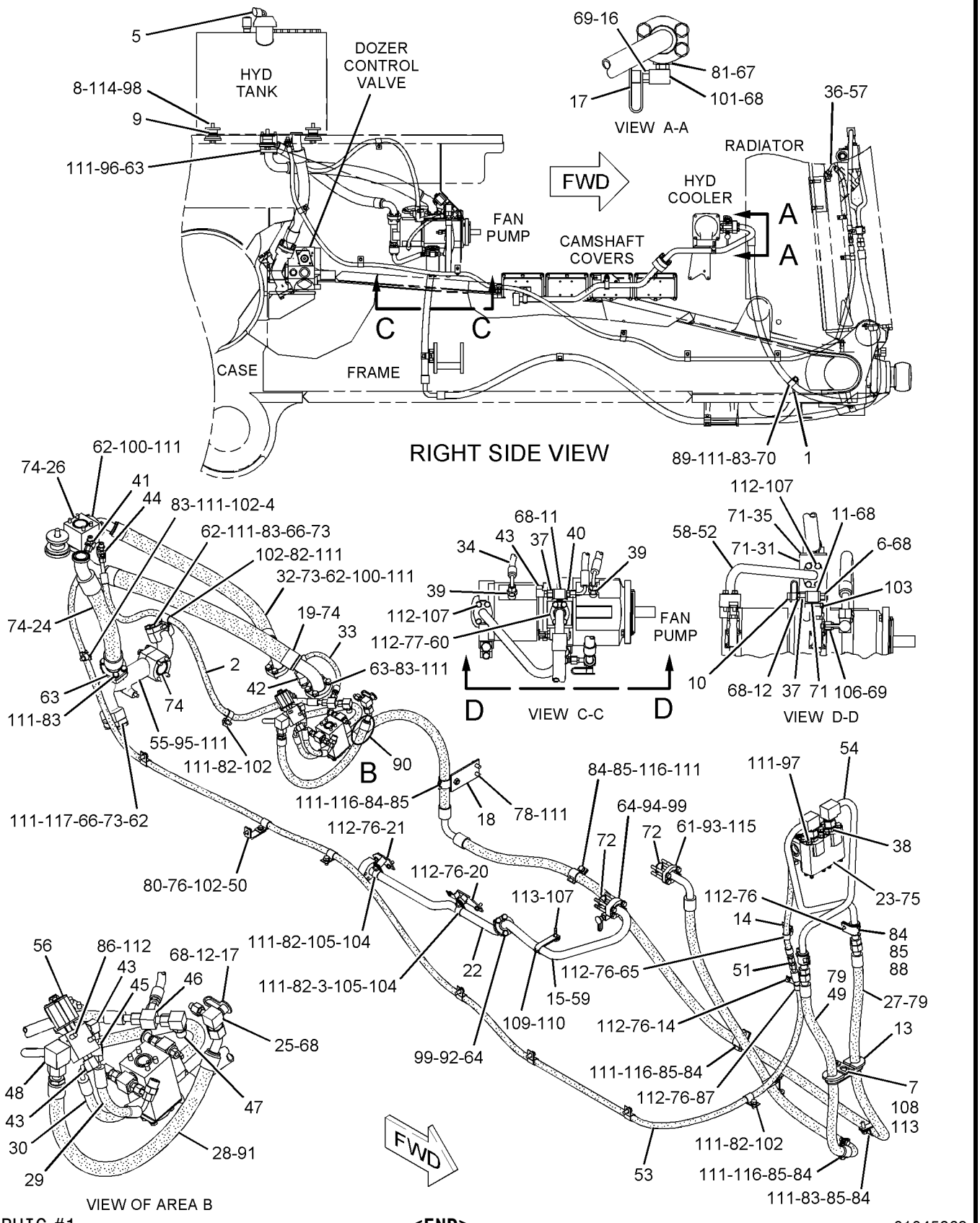

GRAPHIC #1 **<END>** g01045269

HYDRAULIC SYSTEM

172-5596 LINES GP-HYDRAULIC FAN

S/N: 7PZ652-UP

PART OF 155-5552 CHASSIS AR

SMCS-1386, 1387, 5057 **i01988909**

NOTE	REF NO	GRAPHIC REF	PART NUMBER	QTY	PART NAME 1 2 3 4 5 6 (PRODUCT LEVEL)	SEE PAGE
	1	1	**1W-2860**	1	BRACKET	
I	2	1	**3T-6847**	1	HOSE AS	
	3	1	**3W-2647**	1	SPACER (13.5X30X10MM THK)	
	4	1	**5G-6504**	1	LUG	
CI	5	2	**5G-8290**	1	HOSE AS	
	6	1	**5P-8502**	1	PADLOCK GP (HYDRAULIC FAN LINES)	
		1	**5P-8500**	1	KEY	
		1	**8Y-6364**	1	SLEEVE	
	7	2	**6G-3432**	1	ADAPTER (HEX)	
	8	1	**6T-4676**	1	BRACKET	
	9	1	**6T-6079**	3	WASHER (20X100X12MM THK)	
	10	1	**6T-6080**	6	MOUNTING	
C	11	2	**6V-3965**	1	FITTING (QUICK DISCONNECT)	
C	12	1	**7G-1578**	2	GROMMET	
	13	1	**7N-1277**	2	BRACKET AS	
					(EACH INCLUDES)	
		1	**1F-0750**	1	NUT-WELD (3/8-16THD)	
	14	1	**7W-5425**	1	TUBE AS	
	15	1	**8C-3446**	1	VALVE AS-FLUID SAMPLING (HYDRAULIC FLUID)	
		1	**1F-0750**	1	NUT-WELD (3/8-16THD)	
	16	1,2	**8C-3451**	2	CAP-DUST	
	17	1	**8C-6712**	1	ELBOW	
C	18	2	**9J-3866**	1	ADAPTER	
	19	1	**9W-0875**	1	PLATE AS	
		1	**1F-0748**	1	NUT-WELD (1/2-13 THD)	
I	20	1	**9W-6372**	1	HOSE AS	
	21	1	**9W-7892**	1	SUPPORT AS	
		1	**1F-0750**	1	NUT-WELD (3/8-16THD)	
		1	**6J-0499**	1	LUG (1/2-13 THD)	
	22	1	**9W-7893**	1	SUPPORT AS	
		1	**1F-0750**	1	NUT-WELD (3/8-16THD)	
		1	**7J-7778**	1	LUG (1/2-13 THD)	
	23	1	**9W-7894**	1	TUBE AS	
Y	24	2	*105-2470*	1	VALVE GP-MAKEUP (ANTI CAVITATION-HYD FLUID)	878
I	25	1	**107-0040**	1	HOSE AS	
	26	2	**107-0586**	1	ELBOW	
	27	1	**108-4721**	1	SPACER	
C	28	2	**116-7209**	4	BOLT-SOCKET HEAD (3/8-16X4.25IN)	
I	29	1	**133-1854**	1	HOSE AS	
I	30	2	**133-1856**	1	HOSE AS	
I	31	1	**133-1857**	1	HOSE AS	
I	32	1	**133-8133**	1	HOSE AS	
I	33	2	**138-6793**	1	HOSE AS	
I	34	2	**138-6794**	1	HOSE AS	
I	35	1	**140-7732**	1	HOSE AS	
	36	2	*148-8317*	2	CONNECTOR GP	
					(EACH INCLUDES)	
		2	**3D-2824**	1	SEAL-O-RING	
		2	**5K-9090**	1	SEAL-O-RING	
		2	**6V-8714**	2	CONNECTOR	
	37	2	*148-8319*	2	CONNECTOR GP	
					(EACH INCLUDES)	
		2	**2M-9780**	1	SEAL-O-RING	
		2	**6V-8397**	1	SEAL-O-RING	
		2	**6V-8715**	2	CONNECTOR	
C	38	2	*148-8372*	1	ELBOW GP	

172-5596 LINES GP-HYDRAULIC FAN *(contd.)* i01988909

NOTE	REF NO	GRAPHIC REF	PART NUMBER	QTY	PART NAME 1 2 3 4 5 6 (PRODUCT LEVEL)	SEE PAGE
		2	**2M-9780**	1	SEAL-O-RING	
		2	**6V-8398**	1	SEAL-O-RING	
		2	**6V-8721**	1	ELBOW	
	39	1	*148-8433*	1	TEE GP	
		1	**6V-8397**	1	SEAL-O-RING	
		1	**6V-9836**	1	TEE-SWIVEL	
C	40	2	*148-8444*	1	TEE GP	
		2	**6V-8398**	1	SEAL-O-RING	
		2	**6V-9837**	1	TEE-SWIVEL	
	41	2	*153-6245*	1	ELBOW GP	
		2	**2M-9780**	1	SEAL-O-RING	
		2	**6V-8398**	1	SEAL-O-RING	
		2	**136-6811**	1	ELBOW	
	42	1	*153-6255*	1	ELBOW GP	
		1	**3J-1907**	1	SEAL-O-RING	
		1	**6V-9746**	1	SEAL-O-RING	
		1	**8C-3324**	1	ELBOW	
CI	43	1	**154-7150**	1	HOSE AS	
	44	1	**158-8902**	1	BRACKET AS	
		1	**1F-0750**	1	NUT-WELD (3/8-16THD)	
I	45	1	**172-5276**	1	HOSE AS	
	46	2	**172-6047**	2	TUBE AS	
	47	1	**175-3920**	1	MANIFOLD	
Y	48	1	**189-8628**	1	VALVE & MTG GP-HYDRAULIC FAN	860
C	49	2	**213-5202**	1	TUBE AS	
CI	50	1	**214-4159**	1	HOSE AS	
CY	51	2	**226-6537**	1	MANIFOLD GP-CONTROL	821
C	52	2	*148-8318*	1	CONNECTOR GP	
		2	**3K-0360**	1	SEAL-O-RING	
		2	**6V-8397**	1	SEAL-O-RING	
		2	**6V-8634**	1	CONNECTOR	
	53	2	**148-8326**	1	CONNECTOR GP	
		2	**3J-7354**	1	SEAL-O-RING	
		2	**6V-8397**	1	SEAL-O-RING	
		2	**6V-9872**	1	CONNECTOR	
	54	1	*148-8354*	1	ELBOW GP	
		1	**3K-0360**	1	SEAL-O-RING	
		1	**6V-8398**	1	SEAL-O-RING	
		1	**6V-9002**	1	ELBOW	
	55	1	*148-8358*	1	ELBOW AS	
		1	**2M-9780**	1	SEAL-O-RING	
		1	**6V-8398**	1	SEAL-O-RING	
		1	**6V-8624**	1	ELBOW	
	56	1,2	*148-8378*	3	ELBOW AS	
					(EACH INCLUDES)	
		1,2	**3J-1907**	1	SEAL-O-RING	
		1,2	**6V-8397**	1	SEAL-O-RING	
		1,2	**6V-8724**	1	ELBOW	
	57	1	*148-8428*	1	TEE GP	
		1	**3K-0360**	1	SEAL-O-RING	
		1	**6V-8398**	1	SEAL-O-RING	
		1	**6V-8782**	1	TEE-FACE SEAL	
	58	1	*164-5572*	1	UNION AS	
		1	**6V-8398**	2	SEAL-O-RING	
		1	**6V-8731**	1	UNION-FACE SEAL	
C	59	2	**1P-3703**	3	SEAL-RECTANGULAR	
	60	1	**1P-3704**	2	SEAL-RECTANGULAR	
	61	2	**1P-4577**	2	FLANGE-HALF	
	62	1	**1P-4578**	2	FLANGE-HALF	

172-5596 LINES GP-HYDRAULIC FAN *(contd.)* i01988909

NOTE	REF NO	GRAPHIC REF	PART NUMBER	QTY	PART NAME 1 2 3 4 5 6 (PRODUCT LEVEL)	SEE PAGE
	63	1,2	**1P-4579**	8	FLANGE-HALF	
	64	1,2	**1P-4582**	6	FLANGE-HALF	
	65	1	**1P-5761**	4	FLANGE-HALF	
	66	2	**1S-0994**	1	CLIP	
	67	1	**2J-2668**	2	COVER	
	68	1	**2M-9780**	1	SEAL-O-RING	
C	69	1,2	**3J-1907**	4	SEAL-O-RING	
	70	1,2	**3J-7354**	2	SEAL-O-RING	
	71	1	**4D-7388**	1	CLIP	
C	72	2	**4J-0520**	2	SEAL-O-RING	
	73	1	**4J-0522**	3	SEAL-O-RING	
C	74	1	**4J-0524**	4	SEAL-O-RING	
	75	1	**4J-0527**	6	SEAL-O-RING	
	76	2	**4J-5573**	2	SEAL-O-RING	
	77	1,2	**4L-6454**	11	BOLT (3/8-16X1 IN)	
	78	2	**4L-9337**	4	BOLT (3/8-16X1.5 IN)	
	79	1	**5C-6565**	2	BOLT (1/2-13X1.125 IN)	
	80	2	**5K-9090**	2	SEAL-O-RING	
	81	1	**5P-1075**	2	WASHER-HARD (10.2X22.5X3MM THK)	
	82	1	**5P-1404**	1	ADAPTER-O-RING	
	83	1	**5P-2228**	10	BOLT (1/2-13X1 IN)	
	84	1,2	**5P-2566**	15	BOLT (1/2-13X1.5 IN)	
	85	1,2	**5P-7464**	7	CLIP (SLOT)	
	86	1,2	**5P-7465**	7	CLIP (TAB)	
	87	1	**5S-7383**	2	BOLT (3/8-16X1.75 IN)	
	88	2	**6D-4636**	1	CLIP	
	89	2	**6V-7359**	2	GROMMET	
	90	1	**6V-8188**	1	NUT (1/2-13 THD)	
	91	1	**6V-8260**	1	SEAL-O-RING	
	92	2	**6V-9746**	1	SEAL-O-RING	
C	93	2	**7X-0290**	4	BOLT (3/8-16X3.50 IN)	
	94	1	**7X-0310**	4	BOLT (7/16-14X2 IN)	
	95	1	**7X-0316**	4	BOLT (7/16-14X3.5 IN)	
	96	1	**7X-0318**	4	BOLT (7/16-14X4 IN)	
	97	1	**7X-0332**	5	BOLT (1/2-13X4.5 IN)	
	98	1	**7X-0334**	4	BOLT (1/2-13X5 IN)	
	99	2	**7X-0340**	8	BOLT (1/2-13X6.5 IN)	
	100	1	**7X-0372**	3	BOLT (3/4X10X4.25 IN)	
	101	1	**7X-0507**	8	WASHER-HARD (12X22.5X5MM THK)	
	102	2	**8C-4436**	8	BOLT (1/2-13X1.375 IN)	
	103	1	**8J-8197**	10	CLIP	
C	104	1	**8S-0023**	2	CLIP (SLOT)	
	105	1	**8S-0024**	2	CLIP (TAB)	
	106	2	**8T-2353**	1	ADAPTER	
C	107	1,2	**8T-2501**	5	BOLT (3/8-16X2 IN)	
	108	1	**8T-2502**	1	BOLT (3/8-16X1.125 IN)	
	109	1	**8T-2602**	1	CLIP (TAB)	
	110	1	**8T-2603**	1	CLIP (SLOT)	
	111	1,2	**8T-4223**	61	WASHER-HARD (13.5X25.5X3MM THK)	
	112	1,2	**8T-4896**	23	WASHER-HARD (10.2X18.5X2.5MM THK)	
	113	1	**8T-4897**	2	WASHER (10.2X35X6MM THK)	
	114	1	**8T-4994**	3	WASHER-HARD (20X36.5X3.5MM THK)	
	115	1	**8T-5360**	4	WASHER (12X22.5X2.5MM THK)	
	116	1	**8T-8917**	4	BOLT (1/2-13X1.25 IN)	
	117	1	**8T-8919**	4	BOLT (1/2-13X1.75 IN)	

C-CHANGE FROM PREVIOUS TYPE
I-REFER TO HYDRAULIC INFORMATION SYSTEM
Y-SEPARATE ILLUSTRATION

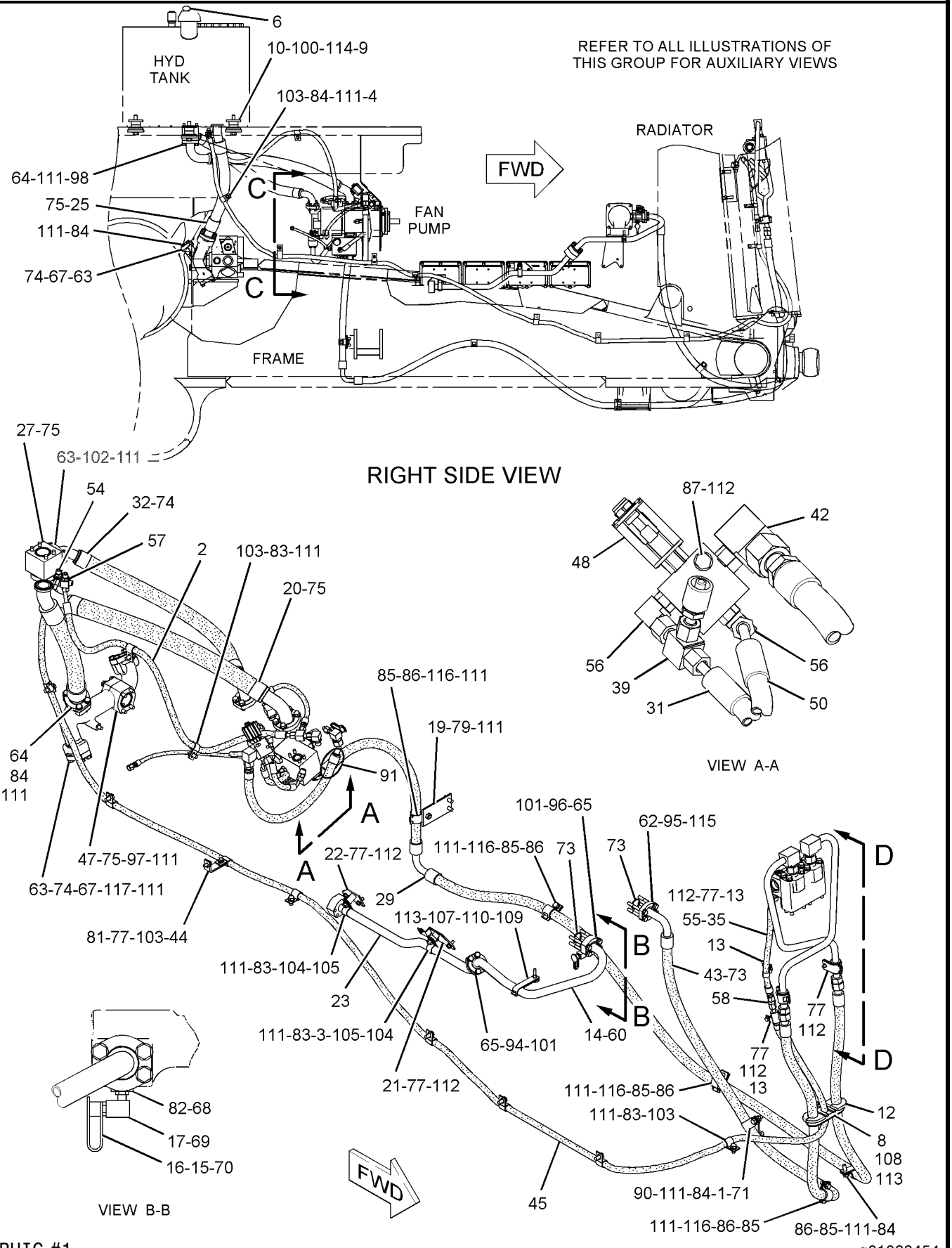

GRAPHIC #1

g01028454

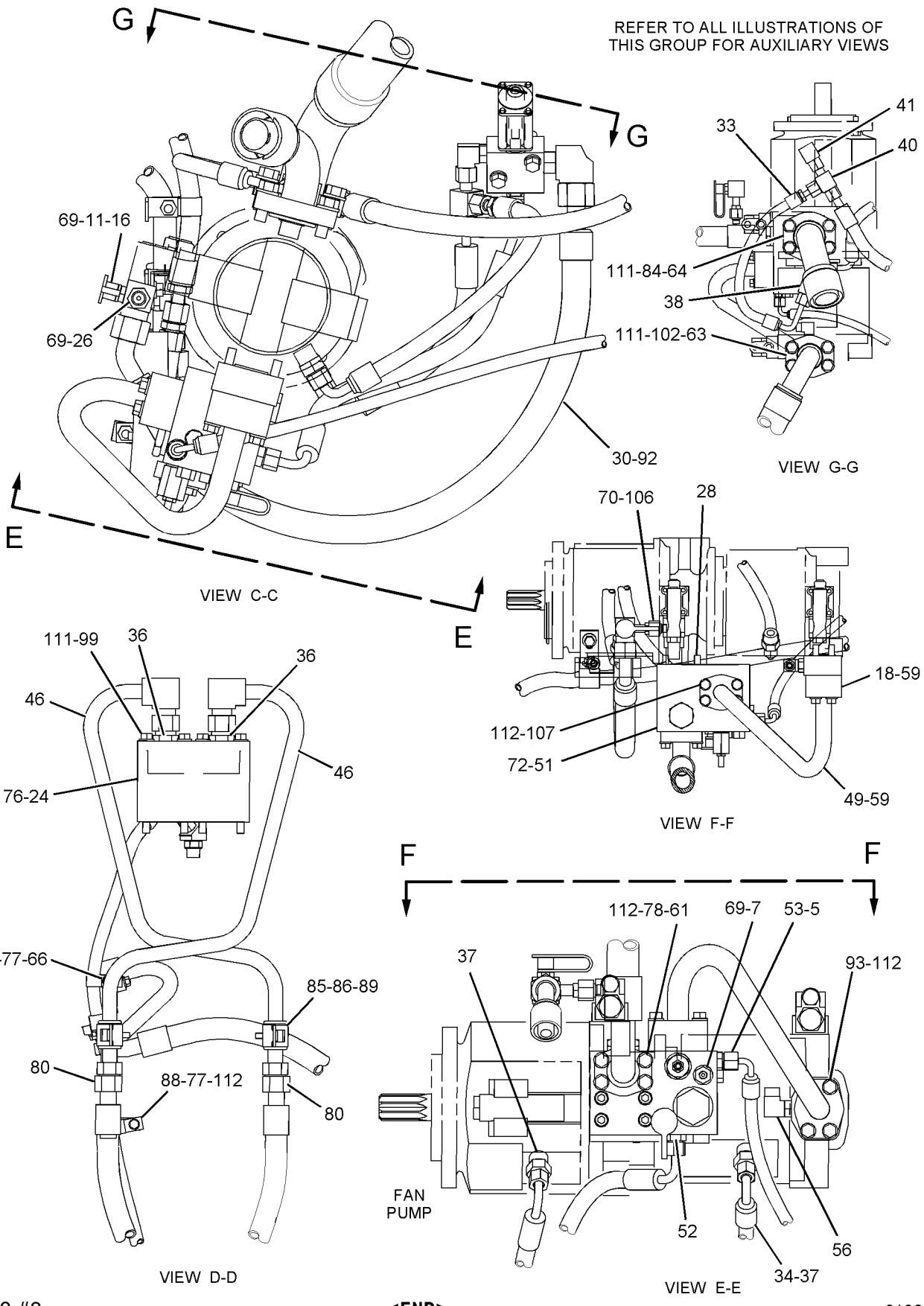

GRAPHIC #2 **<END>** g01028455

HYDRAULIC SYSTEM

227-3002 LINES GP-HYDRAULIC FAN–COLD WEATHER BYPASS

S/N: 7PZ652-UP
AN ATTACHMENT

SMCS-1386, 1387, 5057 **i01968382**

NOTE	REF NO	GRAPHIC REF	PART NUMBER	QTY	PART NAME 1 2 3 4 5 6 (PRODUCT LEVEL)	SEE PAGE
	1	1	**7K-1181**	4	STRAP-CABLE	
Y	2	1	**149-2610**	1	VALVE GP-SOLENOID (BYPASS ON/OFF)	907
	3	1	**226-0913**	1	WIRE AS	
	4	1	**227-5719**	1	BRACKET	
I	5	1	**228-9650**	1	HOSE AS	
I	6	1	**228-9651**	1	HOSE AS	
I	7	1	**228-9652**	1	HOSE AS	
	8	1	**142-0038**	1	ELBOW	
	9	1	*148-8330*	1	CONNECTOR AS	
		1	**5K-9090**	1	SEAL-O-RING	
		1	**7M-8485**	1	SEAL-O-RING	
		1	**8T-0198**	1	CONNECTOR	
	10	1	*148-8352*	1	ELBOW GP	
		1	**5K-9090**	1	SEAL-O-RING	
		1	**6V-9854**	1	ELBOW (SWIVEL)	
	11	1	**154-7159**	1	TEE	
	12	1	**4J-0522**	2	SEAL-O-RING	
	13	1	**5K-9090**	4	SEAL-O-RING	
	14	1	**6V-9172**	1	NUT (1 7/16-12 THD)	

I-REFER TO HYDRAULIC INFORMATION SYSTEM
Y-SEPARATE ILLUSTRATION

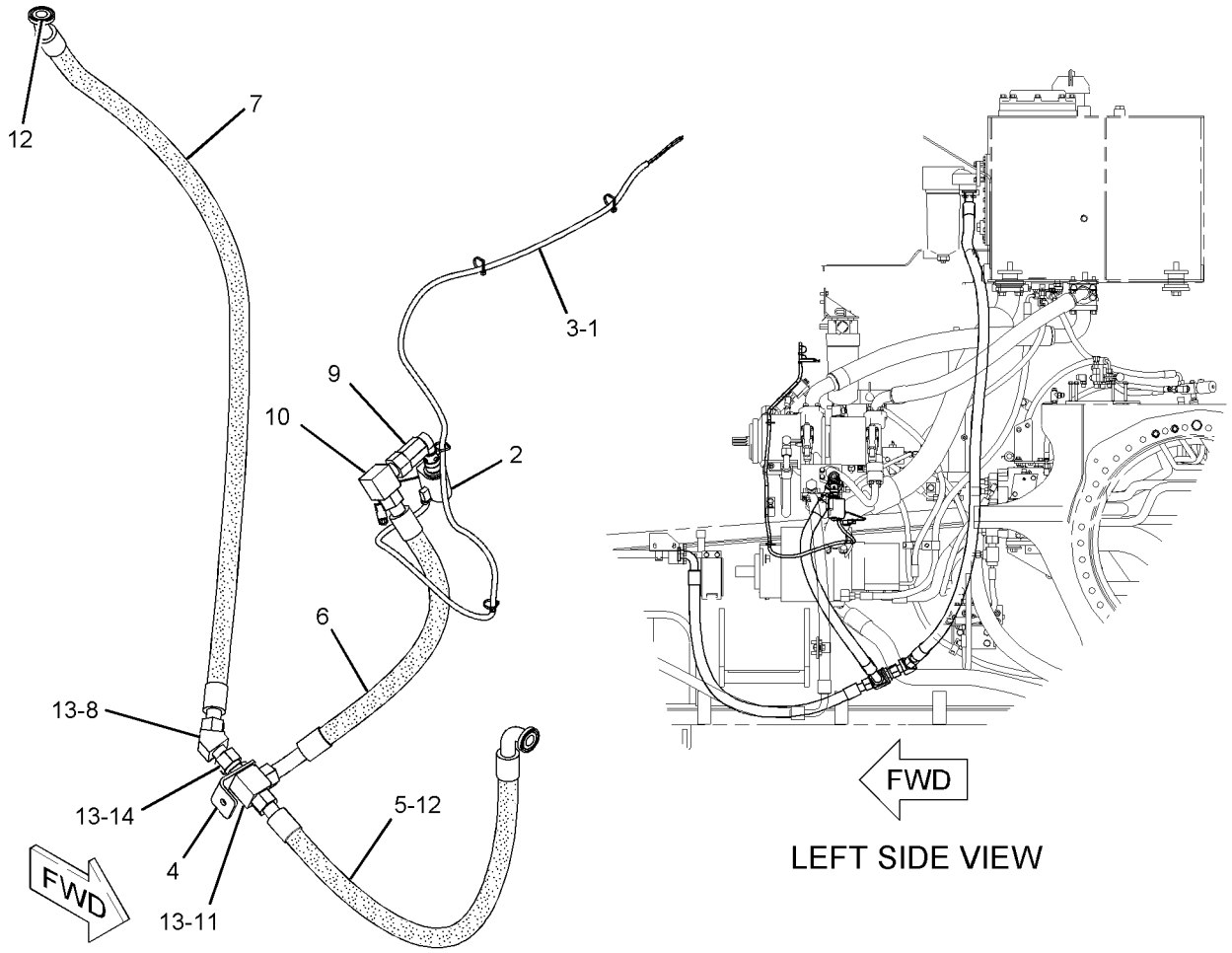

GRAPHIC #1 **<END>** g01026510

HYDRAULIC SYSTEM

120-9016 LINES GP-LIFT CYLINDER

S/N: 8PP1-UP; 8RP1-UP; 7PZ1-UP
PART OF 119-4267, 119-4268, 199-8241 BULLDOZER AR-SEMI-UNIVERSAL, 199-8240 BULLDOZER AR-UNIVERSAL
FOR USE WITH BULLDOZER LIFT CYLINDERS
AN ATTACHMENT
TYPE 1

SMCS-5057, 5102 **i02023826**

NOTE	REF NO	GRAPHIC REF	PART NUMBER	QTY	PART NAME 1 2 3 4 5 6 (PRODUCT LEVEL)	SEE PAGE
	1	1	**9W-8065**	2	PLATE	
	2	1	**115-1250**	2	BRACKET AS	
					(EACH INCLUDES)	
		1	**7T-1099**	2	LINK	
I	3	1	**9W-8729**	4	HOSE AS	
	4	1	**4P-7428**	10	CLIP	
C	5	1	**151-4854**	2	HARNESS AS-FRONT LIGHTING (LIFT CYLINDER)	
					(EACH INCLUDES)	
		1	**102-8802**	1	KIT-RECEPTACLE (2-PIN)	
					(INCLUDES RECEPTACLE AS & WEDGE)	
		1	**155-2270**	1	KIT-CONNECTING PLUG (2-PIN)	
					(INCLUDES PLUG AS & WEDGE)	
	6	1	**5P-8522**	2	GROMMET	
	7	1	**5P-2228**	4	BOLT (1/2-13X1-IN)	
	8	1	**8T-4223**	12	WASHER-HARD (13.5X25.5X3-MM THK)	
	9	1	**5C-6565**	8	BOLT (1/2-13X1.125-IN)	
	10	1	**7X-0272**	8	BOLT (7/16-14X.875-IN)	
	11	1	**8T-5360**	8	WASHER (12X22.5X2.5-MM THK)	
	12	1	**1P-3704**	8	SEAL-RECTANGULAR	
CY	13	1	*125-2001*	2	LIGHTING GP-FLOOD	315
	14	1	**9X-6772**	12	STRAP-CABLE	

C-CHANGE FROM PREVIOUS TYPE
I-REFER TO HYDRAULIC INFORMATION SYSTEM
Y-SEPARATE ILLUSTRATION

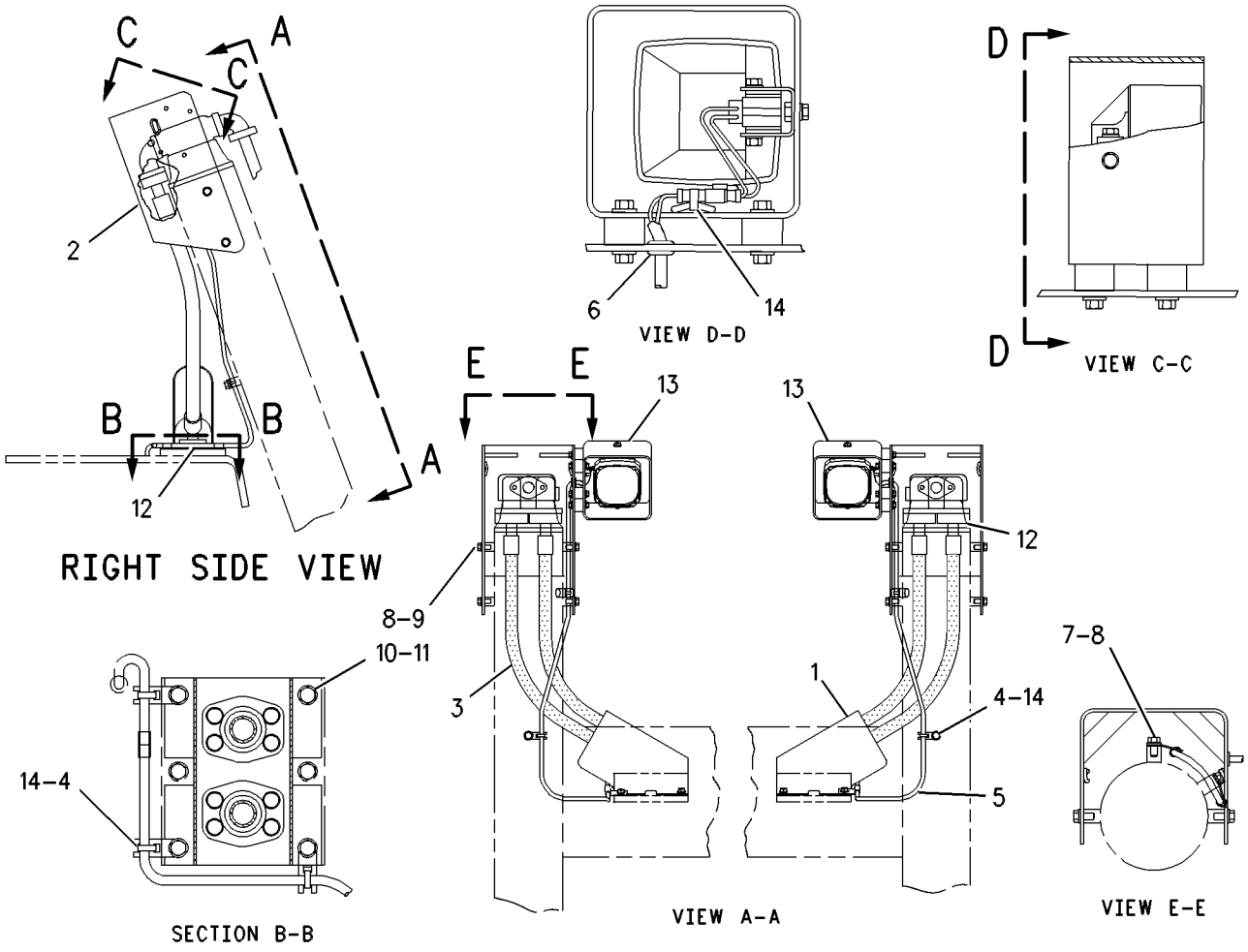

GRAPHIC #1 **<END>** g00369272

HYDRAULIC SYSTEM

120-9016 LINES GP-LIFT CYLINDER

S/N: 8PP1-UP; 8RP1-UP; 7PZ1-UP
PART OF 199-8241, 226-5919 BULLDOZER AR-SEMI-UNIVERSAL, 199-8240, 226-5918 BULLDOZER AR-UNIVERSAL
FOR USE WITH BULLDOZER LIFT CYLINDERS
AN ATTACHMENT
TYPE 2

SMCS-5057, 5102 **i02023825**

NOTE	REF NO	GRAPHIC REF	PART NUMBER	QTY	PART NAME 1 2 3 4 5 6 (PRODUCT LEVEL)	SEE PAGE
	1	1	**9W-8065**	2	PLATE	
	2	1	**217-0242**	2	BRACKET AS	
					(EACH INCLUDES)	
		1	**7T-1099**	2	LINK	
I	3	1	**9W-8729**	4	HOSE AS	
	4	1	**4P-7428**	10	CLIP	
C	5	1	**151-4854**	2	HARNESS AS-FRONT LIGHTING (LIFT CYLINDER)	
					(EACH INCLUDES)	
		1	**102-8802**	1	KIT-RECEPTACLE (2-PIN)	
					(INCLUDES RECEPTACLE AS & WEDGE)	
		1	**155-2270**	1	KIT-CONNECTING PLUG (2-PIN)	
					(INCLUDES PLUG AS & WEDGE)	
	6	1	**5P-8522**	2	GROMMET	
	7	1	**5P-2228**	4	BOLT (1/2-13X1-IN)	
	8	1	**8T-4223**	12	WASHER-HARD (13.5X25.5X3-MM THK)	
	9	1	**9X-6772**	12	STRAP-CABLE	
	10	1	**7X-0272**	8	BOLT (7/16-14X.875-IN)	
	11	1	**8T-5360**	8	WASHER (12X22.5X2.5-MM THK)	
	12	1	**1P-3704**	8	SEAL-RECTANGULAR	
CY	13	1	*125-2001*	2	LIGHTING GP-FLOOD	315
	14	1	**8C-4436**	8	BOLT (1/2-13X1.375-IN)	

C-CHANGE FROM PREVIOUS TYPE
I-REFER TO HYDRAULIC INFORMATION SYSTEM
Y-SEPARATE ILLUSTRATION

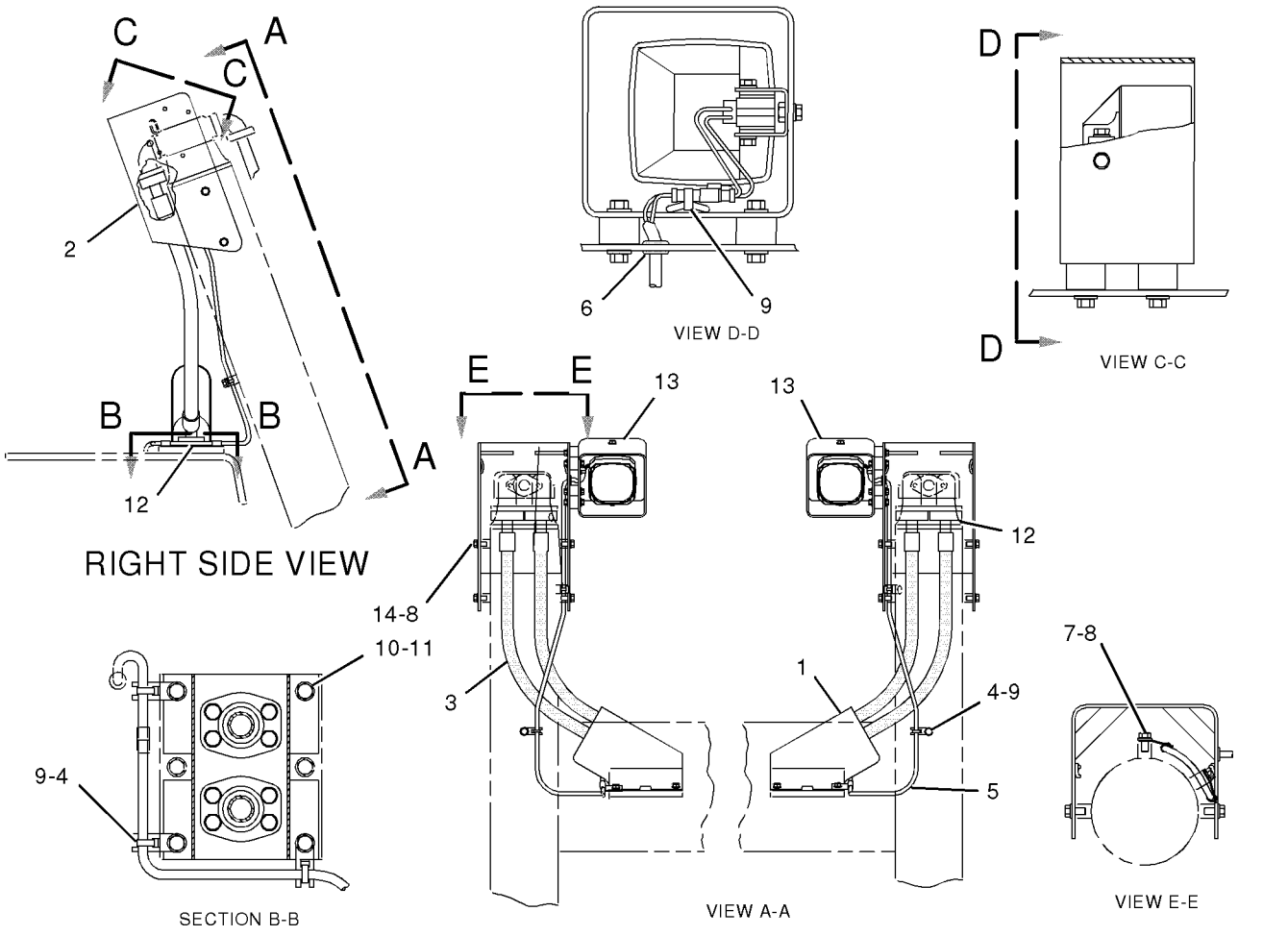

GRAPHIC #1 **<END>** g01021744

HYDRAULIC SYSTEM

131-2101 LINES GP-LIFT CYLINDER

S/N: 7PZ1-651

PART OF 155-5553 CONTROL AR-HYDRAULIC

SMCS-5057, 5102 **i01452449**

NOTE	REF NO	GRAPHIC REF	PART NUMBER	QTY	PART NAME 1 2 3 4 5 6 (PRODUCT LEVEL)	SEE PAGE
I	1	2	**134-8344**	1	HOSE AS	
	2	1	**6T-2962**	2	ADAPTER	
I	3	2	**7I-5222**	1	HOSE AS	
I	4	1	**7T-3983**	1	HOSE AS	
I	5	1	**8E-9733**	1	HOSE AS	
	6	1	**9G-8140**	2	SPACER (10.5X25X15MM THK)	
I	7	1	**9R-1183**	1	HOSE AS	
	8	1	**9W-8723**	2	SPACER	
I	9	2	**104-9028**	1	HOSE AS	
	10	2	**126-0814**	2	FITTING AS	
Y	11	1	**132-5077**	1	VALVE GP-SHUTTLE	900
I	12	1	**141-6716**	1	HOSE AS	
	13	1,2	*148-8336*	9	CONNECTOR GP	
					(EACH INCLUDES)	
		1,2	**3J-1907**	1	SEAL-O-RING	
		1,2	**6V-8397**	1	SEAL-O-RING	
		1,2	**6V-8636**	1	CONNECTOR	
	14	1	*148-8353*	1	ELBOW GP	
		1	**3J-1907**	1	SEAL-O-RING	
		1	**6V-8397**	1	SEAL-O-RING	
		1	**6V-9001**	1	ELBOW	
	15	1	*148-8357*	2	ELBOW GP	
					(EACH INCLUDES)	
		1	**5K-9090**	1	SEAL-O-RING	
		1	**7M-8485**	1	SEAL-O-RING	
		1	**6V-9008**	1	ELBOW	
	16	1	*148-8378*	3	ELBOW GP	
					(EACH INCLUDES)	
		1	**3J-1907**	1	SEAL-O-RING	
		1	**6V-8397**	1	SEAL-O-RING	
		1	**6V-8724**	1	ELBOW	
	17	1	*148-8425*	2	TEE AS-ORFS	
					(EACH INCLUDES)	
		1	**5K-9090**	1	SEAL-O-RING	
		1	**8T-4834**	1	TEE-SWIVEL ORIFICE	
	18	1,2	*148-8435*	3	TEE GP	
					(EACH INCLUDES)	
		1,2	**3J-1907**	1	SEAL-O-RING	
		1,2	**6V-8397**	2	SEAL-O-RING	
		1,2	**6V-8781**	1	TEE-FACE SEAL	
I	19	1	**170-7538**	1	HOSE AS	
I	20	1	**156-6147**	1	HOSE AS	
	21	1	**156-7423**	1	BRACKET AS	
		1	**1F-0750**	2	NUT-WELD (3/8-16 THD)	
	22	2	**162-5239**	1	MANIFOLD AS	
	23	2	**8J-1752**	1	PLUNGER	
		2	**6J-3134**	1	SEAL-O-RING	
	24	2	**2M-9780**	1	SEAL-O-RING	
		2	**8J-1751**	1	PLUG	
	25	2	**4B-9783**	1	BALL	
I	26	2	**135-9956**	1	HOSE AS	
I	27	2	**135-9957**	1	HOSE AS	
	28	1	*148-8433*	1	TEE GP	
		1	**6V-8397**	2	SEAL-O-RING	
		1	**6V-9836**	1	TEE-SWIVEL	
	29	1,2	**1P-3704**	12	SEAL-RECTANGULAR	

131-2101 LINES GP-LIFT CYLINDER *(contd.)* i01452449

NOTE	REF NO	GRAPHIC REF	PART NUMBER	QTY	PART NAME 1 2 3 4 5 6 (PRODUCT LEVEL)	SEE PAGE
	30	1,2	**1P-3705**	8	SEAL-RECTANGULAR	
	31	1,2	**1P-5767**	24	FLANGE-HALF	
	32	1	**4L-6454**	2	BOLT (3/8-16X1 IN)	
	33	1	**4L-6459**	2	BOLT (3/8-16X2.5 IN)	
	34	1	**4L-9337**	4	BOLT (3/8-16X1.5 IN)	
	35	2	*150-3036*	1	ELBOW GP	
		2	**3J-1907**	1	SEAL-O-RING	
		2	**6V-8397**	1	SEAL-O-RING	
		2	**8T-1905**	1	ELBOW	
	36	1	**5P-0048**	4	COVER	
	37	2	**5P-7468**	2	CLIP (SLOT)	
	38	1	**8C-4436**	3	BOLT (1/2-13X1.375 IN)	
	39	1	**8T-7529**	1	CLIP	
	40	2	**5P-7469**	2	CLIP (TAB)	
	41	1	**5P-8077**	4	FLANGE-HALF	
	42	1	**5S-7383**	2	BOLT (3/8-16X1.75 IN)	
	43	1	**6V-1572**	2	CLIP (SLOT)	
	44	1	**6V-1573**	2	CLIP (TAB)	
	45	1	**6V-1574**	2	GROMMET	
	46	1	**6V-1575**	4	CLIP (SLOT)	
	47	1	**6V-1576**	4	CLIP (TAB)	
	48	1	**6V-1577**	2	GROMMET	
	49	1	**6V-1877**	2	GROMMET	
I	50	2	**134-8345**	1	HOSE AS	
	51	1	**7S-3912**	1	CLIP (TAB)	
	52	1	**7S-3913**	1	CLIP (SLOT)	
	53	2	**7X-0290**	2	BOLT (3/8-16X3.50 IN)	
	54	1	**7X-0326**	8	BOLT (1/2-13X3 IN)	
	55	1	**8T-2502**	2	BOLT (3/8-16X1.125 IN)	
	56	1	**8T-4122**	8	WASHER-HARD (17X32X3.5MM THK)	
	57	1,2	**8T-4223**	63	WASHER-HARD (13.5X25.5X3MM THK)	
	58	1,2	**8T-4835**	40	BOLT (1/2-13X2 IN)	
	59	1,2	**8T-4896**	14	WASHER-HARD (10.2X18.5X2.5MM THK)	
	60	1	**8T-6871**	8	BOLT (5/8-11X2.50 IN)	
	61	1,2	**8T-8917**	7	BOLT (1/2-13X1.25 IN)	
	62	2	**8T-8919**	4	BOLT (1/2-13X1.75 IN)	
	63	1	**8T-9396**	8	BOLT (5/8-11X3.25 IN)	
	64	1	**6V-8188**	1	NUT (1/2-13 THD)	
I	65	2	**9W-3287**	1	HOSE AS	
	66	2	**9W-8064**	2	PLATE	
	67	1	**9W-8717**	1	TEE	
I	68	2	**134-8343**	1	HOSE AS	
I	69	1	**199-4268**	1	HOSE AS	

I-SEE HOSE FABRICATION GUIDE
Y-SEPARATE ILLUSTRATION

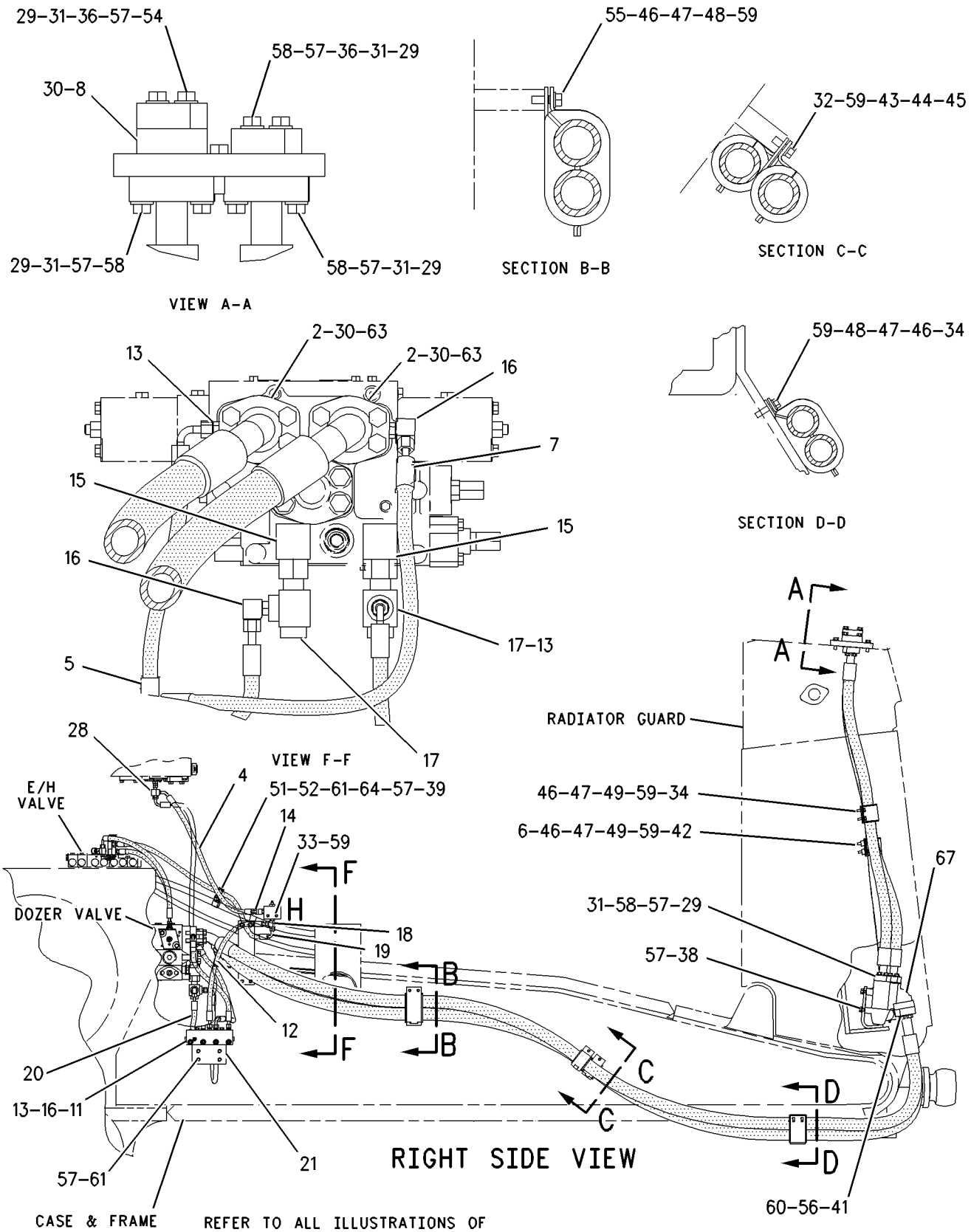

GRAPHIC #1 g00798187

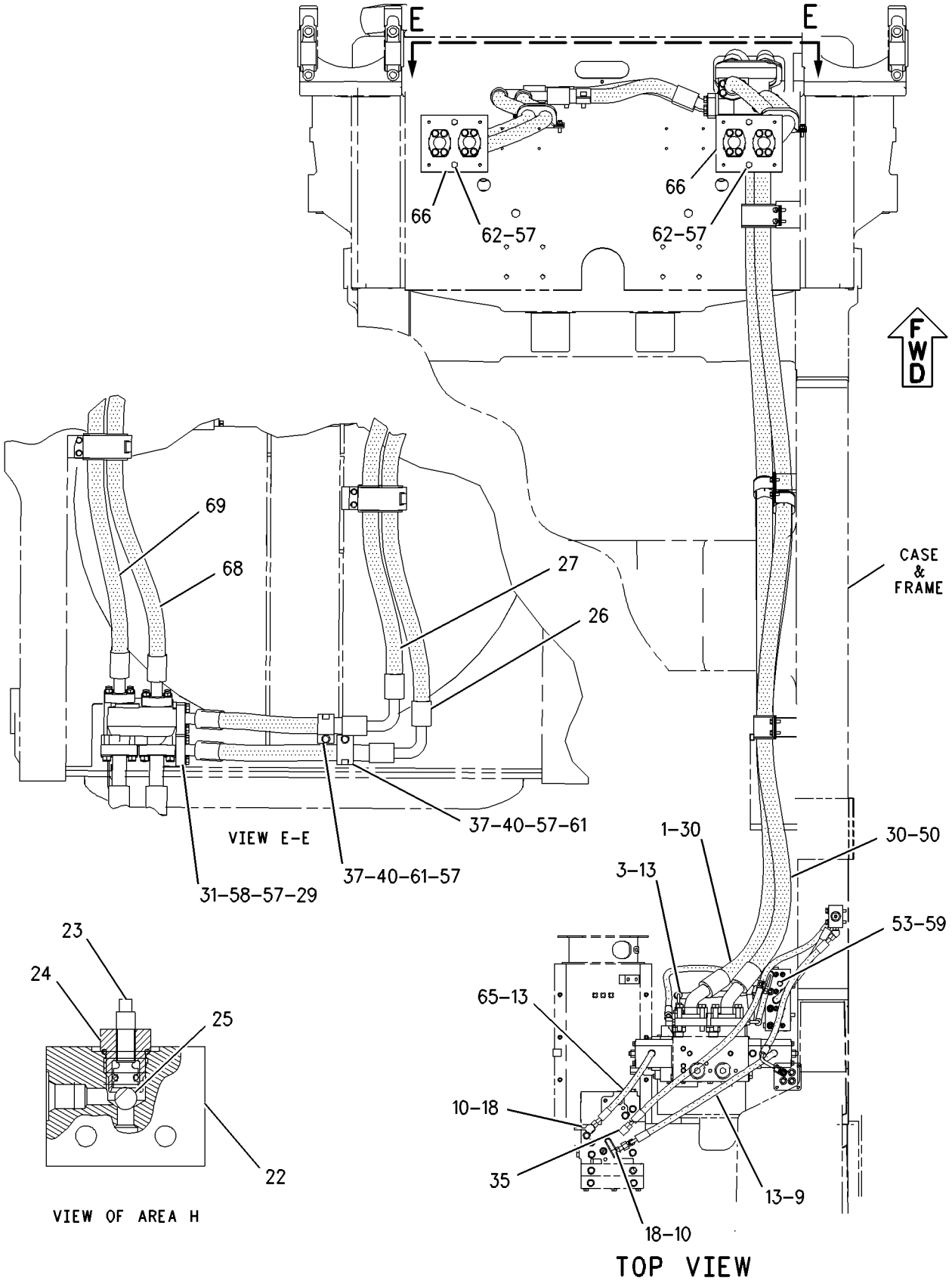

GRAPHIC #2 **<END>** g00798186

HYDRAULIC SYSTEM

131-2101 LINES GP-LIFT CYLINDER

S/N: 7PZ652-UP

PART OF 155-5553 CONTROL AR-HYDRAULIC

SMCS-5057, 5102 **i01988905**

NOTE	REF NO	GRAPHIC REF	PART NUMBER	QTY	PART NAME 1 2 3 4 5 6 (PRODUCT LEVEL)	SEE PAGE
CI	1	1	**1G-7806**	1	HOSE AS	
	2	1	**6T-2962**	2	ADAPTER	
	3	1	**6V-0852**	2	CAP-DUST	
I	4	1	**7I-5222**	1	HOSE AS	
I	5	1	**8E-9733**	1	HOSE AS	
	6	1	**9G-8140**	2	SPACER (10.5X25X15MM THK)	
	7	1	**9W-8723**	2	SPACER	
I	8	1	**104-9028**	1	HOSE AS	
Y	9	1	**132-5077**	1	VALVE GP-SHUTTLE	900
I	10	1	**134-8343**	1	HOSE AS	
I	11	1	**141-6716**	1	HOSE AS	
	12	1	*148-8336*	9	CONNECTOR AS	
					(EACH INCLUDES)	
		1	**3J-1907**	1	SEAL-O-RING	
		1	**6V-8397**	1	SEAL-O-RING	
		1	**6V-8636**	1	CONNECTOR	
	13	1	*148-8357*	2	ELBOW GP	
					(EACH INCLUDES)	
		1	**5K-9090**	1	SEAL-O-RING	
		1	**7M-8485**	1	SEAL-O-RING	
		1	**6V-9008**	1	ELBOW	
	14	1	*148-8378*	3	ELBOW AS	
					(EACH INCLUDES)	
		1	**3J-1907**	1	SEAL-O-RING	
		1	**6V-8397**	1	SEAL-O-RING	
		1	**6V-8724**	1	ELBOW	
	15	1	*148-8425*	2	TEE AS	
					(EACH INCLUDES)	
		1	**5K-9090**	1	SEAL-O-RING	
		1	**8T-4834**	1	TEE-SWIVEL ORIFICE	
	16	1	**150-4027**	1	TEE GP	
		1	**3E-2310**	1	TEE	
		1	**3J-1907**	1	SEAL-O-RING	
		1	**6V-8397**	1	SEAL-O-RING	
	17	1	**156-7423**	1	BRACKET AS	
		1	**1F-0750**	2	NUT-WELD (3/8-16THD)	
	18	1	**162-5239**	1	MANIFOLD AS	
	18A	1	**8J-1752**	1	PLUNGER	
	18B	1	**6J-3134**	1	SEAL-O-RING	
	18C	1	**2M-9780**	1	SEAL-O-RING	
	18D	1	**8J-1751**	1	PLUG	
	18E	1	**4B-9783**	1	BALL	
	19	1	*168-1968*	1	TEE AS	
		1	**3J-1907**	1	SEAL-O-RING	
		1	**6V-8397**	1	SEAL-O-RING	
		1	**126-6872**	1	TEE	
I	20	1	**170-7538**	1	HOSE AS	
I	21	1	**199-4268**	1	HOSE AS	
CI	22	1	**230-3470**	1	HOSE AS	
I	23	1	**230-4057**	1	HOSE AS	
I	24	1	**134-8344**	1	HOSE AS	
I	25	1	**134-8345**	1	HOSE AS	
I	26	1	**135-9956**	1	HOSE AS	
I	27	1	**135-9957**	1	HOSE AS	
C	28	1	*148-8367*	1	ELBOW GP	
		1	**6V-9850**	1	ELBOW (SWIVEL)	

131-2101 LINES GP-LIFT CYLINDER *(contd.)* i01988905

NOTE	REF NO	GRAPHIC REF	PART NUMBER	QTY	PART NAME 1 2 3 4 5 6 (PRODUCT LEVEL)	SEE PAGE
		1	**6V-8397**	1	SEAL-O-RING	
	29	1	*148-8433*	1	TEE GP	
		1	**6V-8397**	2	SEAL-O-RING	
		1	**6V-9836**	1	TEE-SWIVEL	
C	30	1	*148-8435*	2	TEE AS	
					(EACH INCLUDES)	
		1	**3J-1907**	1	SEAL-O-RING	
		1	**6V-8397**	2	SEAL-O-RING	
		1	**6V-8781**	1	TEE-FACE SEAL	
	31	1	*150-3036*	1	ELBOW GP	
		1	**3J-1907**	1	SEAL-O-RING	
		1	**6V-8397**	1	SEAL-O-RING	
		1	**8T-1905**	1	ELBOW	
C	32	1	*164-5567*	2	FITTING AS	
					(EACH INCLUDES)	
		1	**3J-1907**	1	SEAL-O-RING	
		1	**6V-3965**	1	FITTING (QUICK DISCONNECT)	
	33	1	**1P-3704**	12	SEAL-RECTANGULAR	
	34	1	**1P-3705**	8	SEAL-RECTANGULAR	
	35	1	**1P-5767**	24	FLANGE-HALF	
	36	1	**4L-6454**	2	BOLT (3/8-16X1 IN)	
	37	1	**4L-6459**	2	BOLT (3/8-16X2.5 IN)	
	38	1	**4L-9337**	4	BOLT (3/8-16X1.5 IN)	
	39	1	**5P-0048**	4	COVER	
	40	1	**5P-7468**	2	CLIP (SLOT)	
	41	1	**5P-7469**	2	CLIP (TAB)	
	42	1	**5P-8077**	4	FLANGE-HALF	
	43	1	**5S-7383**	2	BOLT (3/8-16X1.75 IN)	
	44	1	**6V-1572**	2	CLIP (SLOT)	
	45	1	**6V-1573**	2	CLIP (TAB)	
	46	1	**6V-1574**	2	GROMMET	
	47	1	**6V-1575**	4	CLIP (SLOT)	
	48	1	**6V-1576**	4	CLIP (TAB)	
	49	1	**6V-1577**	2	GROMMET	
	50	1	**6V-1877**	2	GROMMET	
	51	1	**6V-8188**	1	NUT (1/2-13 THD)	
	52	1	**7S-3912**	1	CLIP (TAB)	
	53	1	**7S-3913**	1	CLIP (SLOT)	
	54	1	**7X-0290**	2	BOLT (3/8-16X3.50 IN)	
	55	1	**7X-0326**	8	BOLT (1/2-13X3 IN)	
	56	1	**8C-4436**	3	BOLT (1/2-13X1.375 IN)	
	57	1	**8T-2502**	2	BOLT (3/8-16X1.125 IN)	
	58	1	**8T-4122**	8	WASHER-HARD (17X32X3.5MM THK)	
	59	1	**8T-4223**	63	WASHER-HARD (13.5X25.5X3MM THK)	
	60	1	**8T-4835**	40	BOLT (1/2-13X2 IN)	
	61	1	**8T-4896**	14	WASHER-HARD (10.2X18.5X2.5MM THK)	
	62	1	**8T-6871**	8	BOLT (5/8-11X2.50 IN)	
	63	1	**8T-7529**	1	CLIP	
	64	1	**8T-8917**	7	BOLT (1/2-13X1.25 IN)	
	65	1	**8T-8919**	4	BOLT (1/2-13X1.75 IN)	
	66	1	**8T-9396**	8	BOLT (5/8-11X3.25 IN)	
I	67	1	**9W-3287**	1	HOSE AS	
	68	1	**9W-8064**	2	PLATE	
	69	1	**9W-8717**	1	TEE	

C-CHANGE FROM PREVIOUS TYPE
I-REFER TO HYDRAULIC INFORMATION SYSTEM
Y-SEPARATE ILLUSTRATION

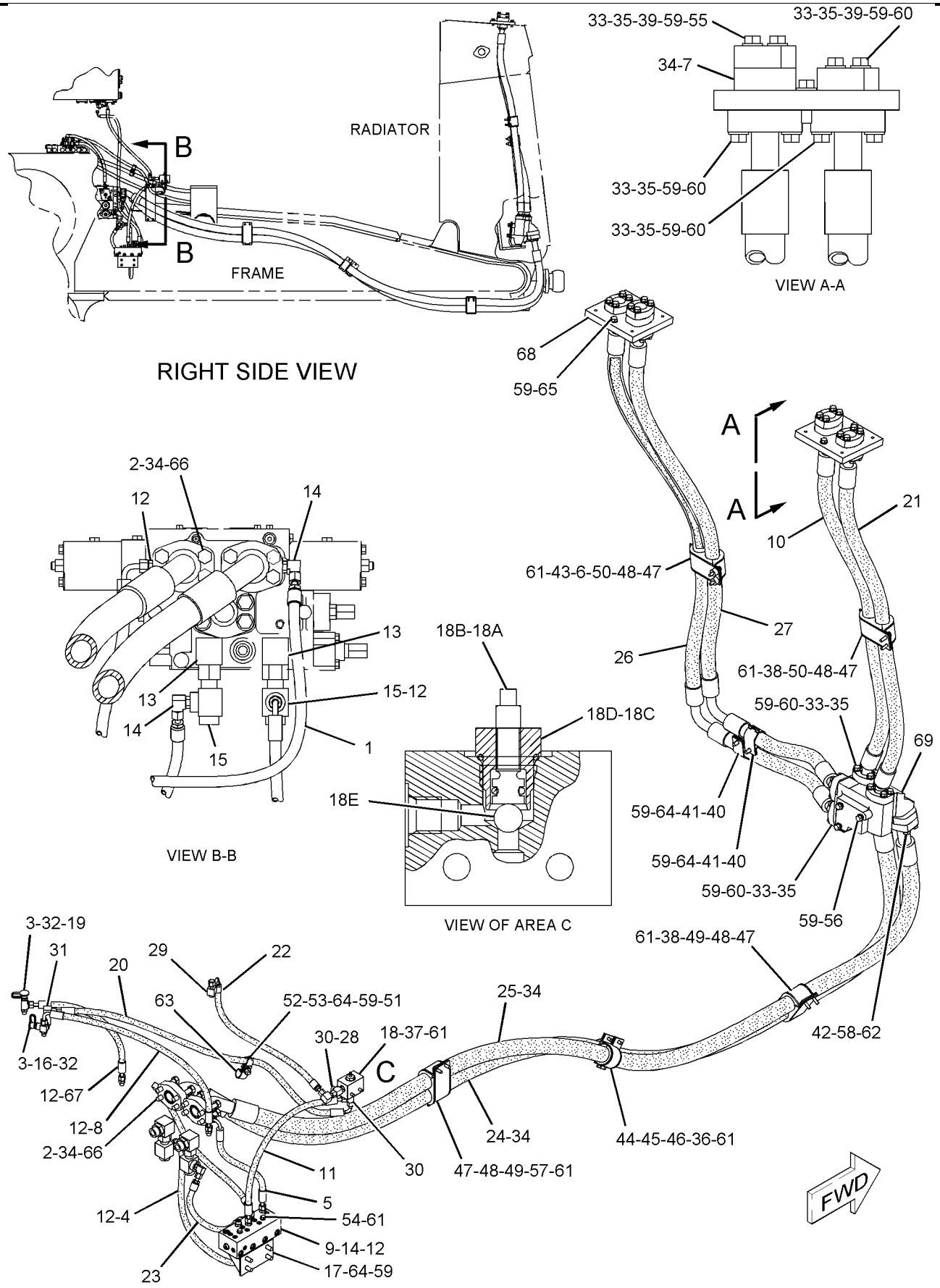

GRAPHIC #1 **<END>** g01014842

HYDRAULIC SYSTEM

141-8657 LINES GP-PIN PULLER CYLINDER

S/N: 7PZ1-UP
PART OF 130-5356 PULLER AR-PIN
AN ATTACHMENT

SMCS-5057, 5354 **i01707401**

NOTE	REF NO	GRAPHIC REF	PART NUMBER	QTY	PART NAME 1 2 3 4 5 6 (PRODUCT LEVEL)	SEE PAGE
I	1	1	**141-7213**	2	HOSE AS	
	2	1	**3G-8047**	4	GROMMET	
	3	1	**3G-8054**	4	CLIP (TAB)	
	4	1	**3G-8057**	4	CLIP (SLOT)	
	5	1	**3J-1907**	2	SEAL-O-RING	
	6	1	**3K-0360**	2	SEAL-O-RING	
	7	1	**5P-1075**	8	WASHER-HARD (10.2X22.5X3MM THK)	
	8	1	**6V-8398**	4	SEAL-O-RING	
	9	1	**6V-8639**	2	CONNECTOR	
	10	1	**6V-9873**	1	CONNECTOR-SEAL	
	11	1	**8T-5050**	1	CONNECTOR	
	12	1	**9B-7237**	8	BOLT (3/8-16X1.25 IN)	

I-SEE HOSE FABRICATION GUIDE

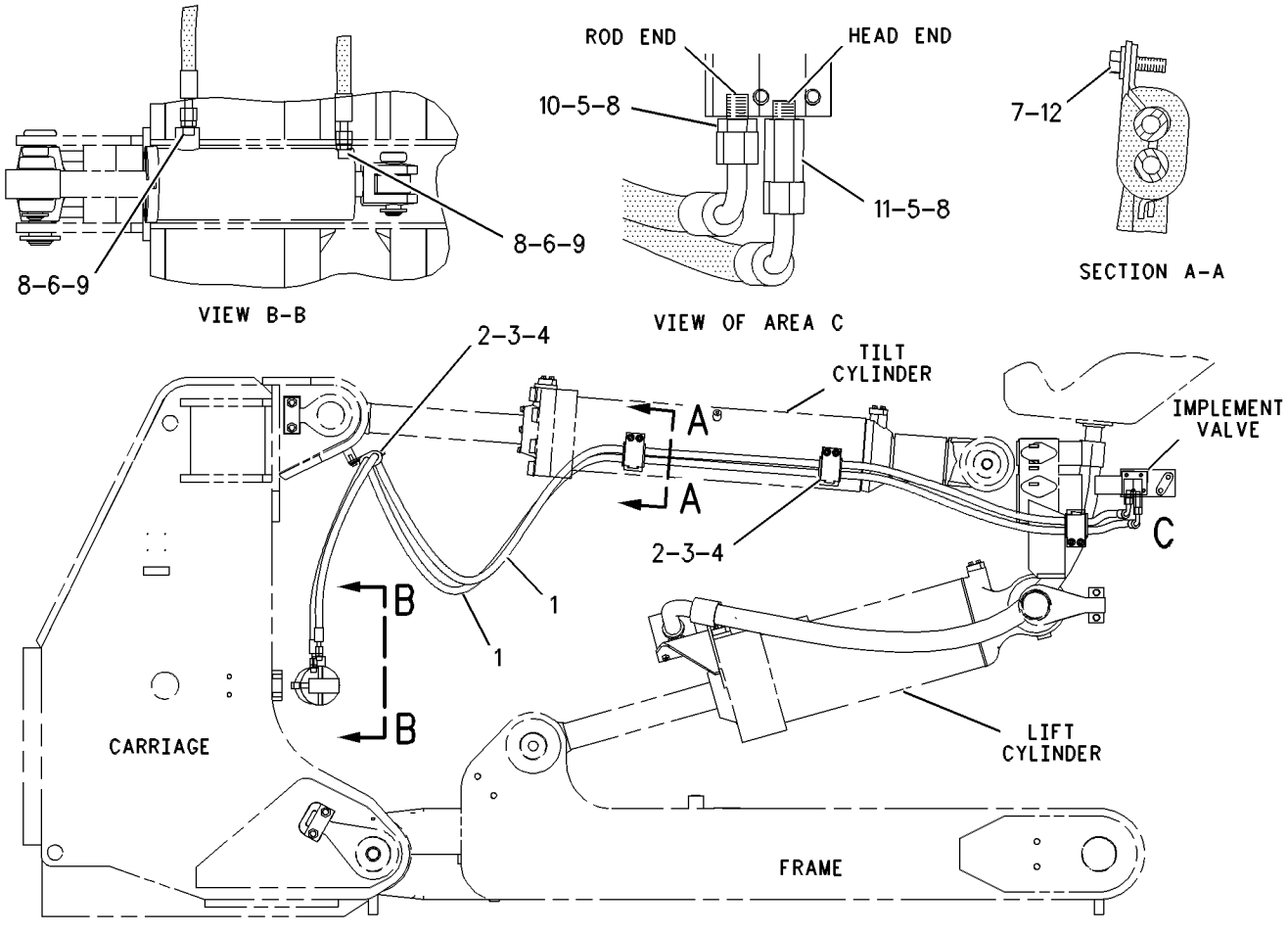

RIGHT SIDE VIEW

GRAPHIC #1 **<END>** g00363492

HYDRAULIC SYSTEM

149-4922 LINES GP-PIN PULLER CYLINDER

S/N: 7YP1-UP
PART OF 149-4919 RIPPER AR
AN ATTACHMENT

SMCS-5057, 5354 **i01988906**

NOTE	REF NO	GRAPHIC REF	PART NUMBER	QTY	PART NAME 1 2 3 4 5 6 (PRODUCT LEVEL)	SEE PAGE
I	1	1	**152-5505**	2	HOSE AS	
	2	1	**3G-8047**	3	GROMMET	
	3	1	**3G-8054**	3	CLIP (TAB)	
	4	1	**3G-8057**	3	CLIP (SLOT)	
	5	1	**3J-1907**	2	SEAL-O-RING	
	6	1	**3K-0360**	2	SEAL-O-RING	
	7	1	**5P-1075**	6	WASHER-HARD (10.2X22.5X3MM THK)	
	8	1	**6V-8398**	4	SEAL-O-RING	
	9	1	**6V-8639**	2	CONNECTOR	
	10	1	**6V-9873**	1	CONNECTOR	
	11	1	**8T-5050**	1	CONNECTOR	
	12	1	**9B-7237**	6	BOLT (3/8-16X1.25 IN)	

I-REFER TO HYDRAULIC INFORMATION SYSTEM

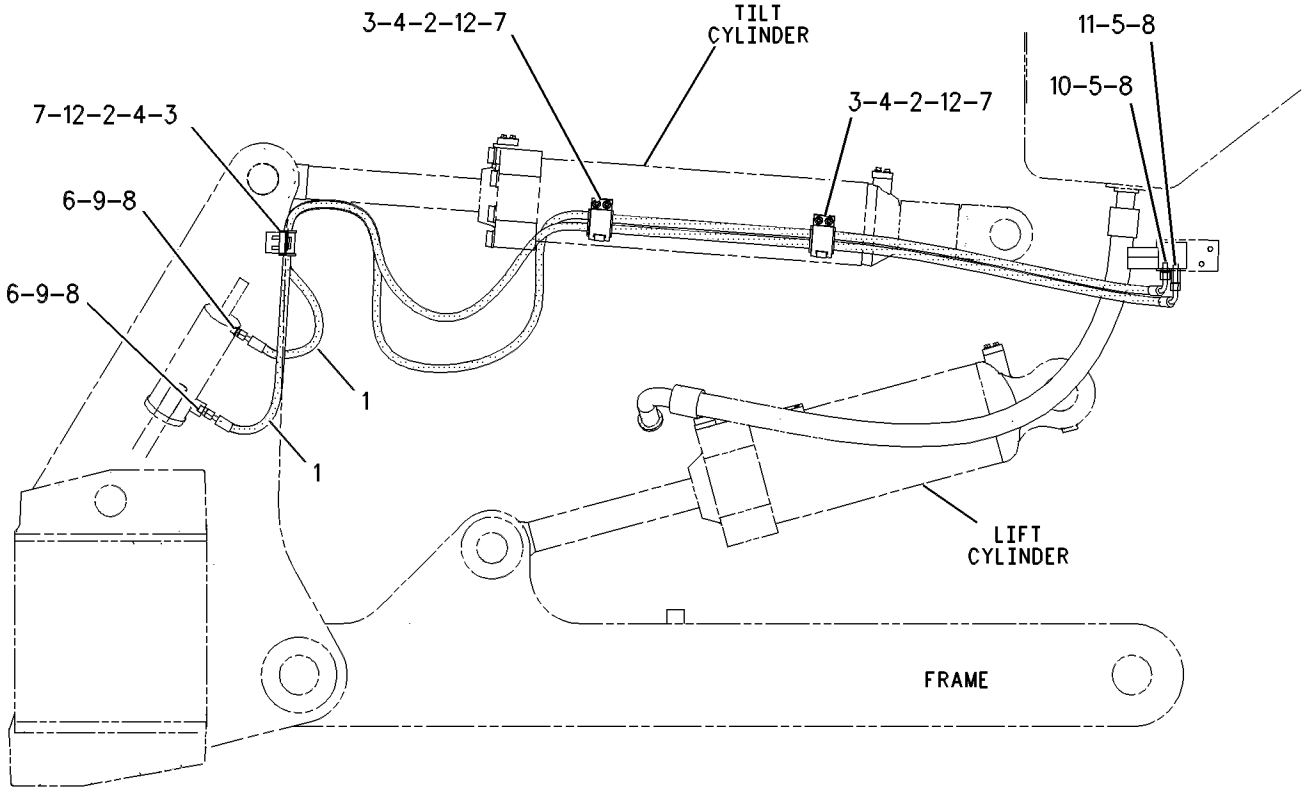

RIGHT SIDE VIEW

GRAPHIC #1 **<END>** g00576521

HYDRAULIC SYSTEM

163-0814 LINES GP-PIN PULLER CYLINDER

S/N: 7ZP1-UP
PART OF 163-0813 PULLER AR-PIN
AN ATTACHMENT

SMCS-5057, 5354 **i01988907**

NOTE	REF NO	GRAPHIC REF	PART NUMBER	QTY	PART NAME 1 2 3 4 5 6 (PRODUCT LEVEL)	SEE PAGE
I	1	1	**163-0826**	1	HOSE AS	
I	2	1	**163-0827**	1	HOSE AS	
	3	1	**3G-8047**	3	GROMMET	
	4	1	**3G-8054**	3	CLIP (TAB)	
	5	1	**3G-8057**	3	CLIP (SLOT)	
	6	1	**3J-1907**	2	SEAL-O-RING	
	7	1	**3K-0360**	2	SEAL-O-RING	
	8	1	**5P-1075**	6	WASHER-HARD (10.2X22.5X3MM THK)	
	9	1	**6V-8398**	4	SEAL-O-RING	
	10	1	**6V-8639**	2	CONNECTOR	
	11	1	**6V-9873**	2	CONNECTOR	
	12	1	**9B-7237**	6	BOLT (3/8-16X1.25 IN)	

I-REFER TO HYDRAULIC INFORMATION SYSTEM

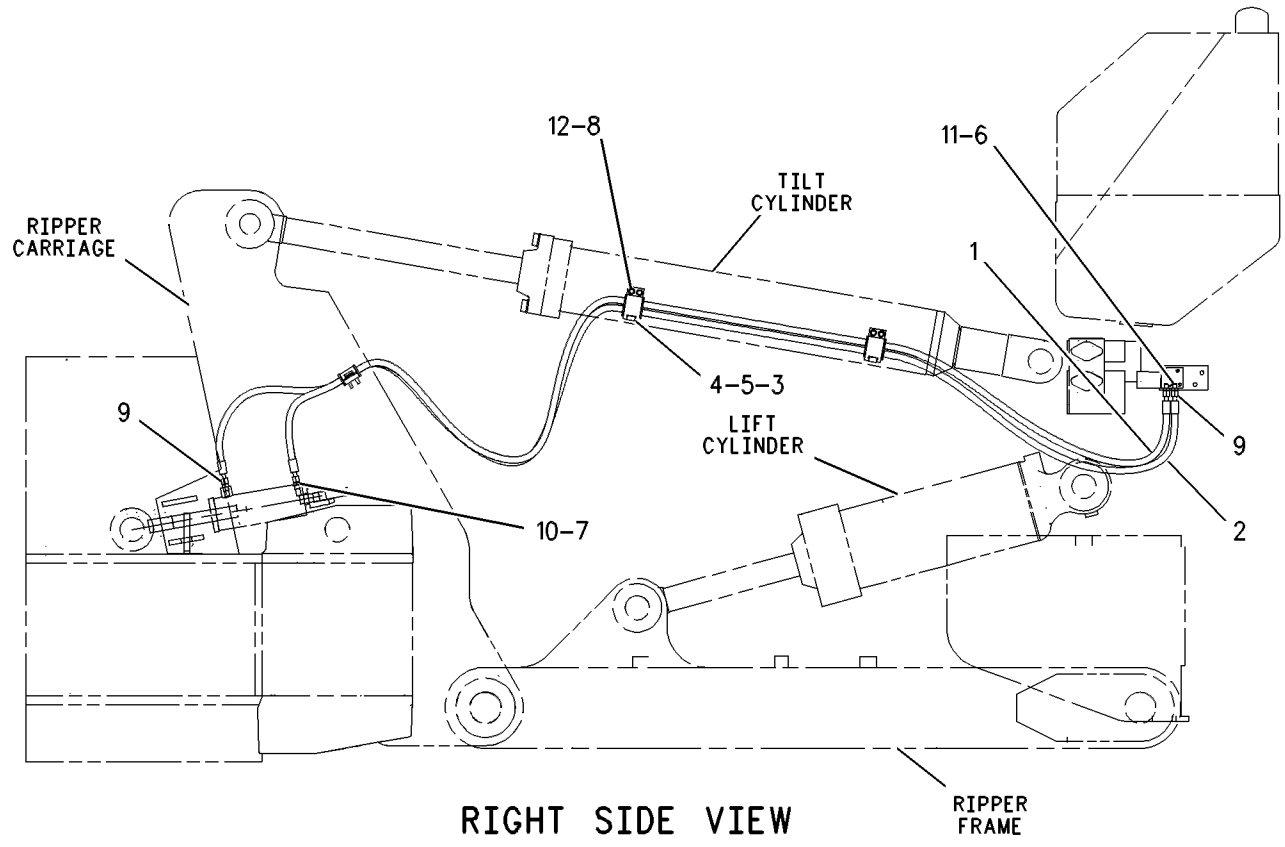

RIGHT SIDE VIEW

GRAPHIC #1 **<END>** g00519486

HYDRAULIC SYSTEM

173-1553 LINES GP-PUMP

S/N: 7PZ1-564

PART OF 155-5553 CONTROL AR-HYDRAULIC

SMCS-5057 **i01988933**

NOTE	REF NO	GRAPHIC REF	PART NUMBER	QTY	PART NAME 1 2 3 4 5 6 (PRODUCT LEVEL)	SEE PAGE
	1	2	**6V-0852**	1	CAP-DUST	
	2	1,2	**6V-3965**	3	FITTING (QUICK DISCONNECT)	
	3	1,2	**7G-8839**	5	SPACER (13.5X57X6MM THK)	
	4	1,2	**7T-8331**	4	MOUNTING	
	5	1	**7V-8532**	1	SPACER	
	6	1	**8C-3451**	2	CAP-DUST	
	7	1	**8D-0983**	2	MOUNTING	
	8	1	**8D-7185**	2	WASHER (11.9X38.1X3MM THK)	
	9	2	**8T-3491**	1	ELBOW	
I	10	1	**8W-0225**	1	HOSE AS	
I	11	1	**9R-1183**	1	HOSE AS	
Y	12	1	**9T-3096**	1	VALVE GP-CHECK (HYDRAULIC OIL FILTER)	864
I	13	1	**9U-8509**	1	HOSE AS	
	14	1	**9W-1651**	1	PLATE AS	
		1	**8G-0863**	1	BLOCK	
	15	1	**9W-1653**	1	BRACKET	
	16	1	**9W-1654**	1	PLATE AS	
	17	1	**9X-2614**	2	CONNECTOR	
	18	2	**9X-8402**	1	CLIP	
Y	19	2	*113-1050*	1	ACCUMULATOR GP-HYDRAULIC (PILOT OIL)	648
I	20	1	**130-9456**	1	HOSE AS	
I	21	1	**130-9457**	1	HOSE AS	
Y	22	2	*133-1281*	1	FILTER GP-OIL	725
I	23	1	**136-4224**	1	HOSE AS	
	24	1	**137-6497**	1	PLATE AS	
		1	**8D-3508**	2	BOSS (3/8-16X1 IN THD)	
	25	1	**8T-9389**	1	BOLT (1/2-13X2.75 IN)	
I	26	1	**141-9610**	1	HOSE AS	
	27	2	**143-7707**	1	PLATE AS	
	28	1	*148-8330*	1	CONNECTOR AS	
		1	**5K-9090**	1	SEAL-O-RING	
		1	**7M-8485**	1	SEAL-O-RING	
		1	**8T-0198**	1	CONNECTOR	
	29	1	*148-8336*	2	CONNECTOR AS	
					(EACH INCLUDES)	
		1	**3J-1907**	1	SEAL-O-RING	
		1	**6V-8397**	1	SEAL-O-RING	
		1	**6V-8636**	1	CONNECTOR	
	30	2	*148-8345*	1	CONNECTOR GP	
		2	**2M-9780**	1	SEAL-O-RING	
		2	**6V-8398**	1	SEAL-O-RING	
		2	**6V-8638**	1	CONNECTOR	
	31	1	*148-8353*	1	ELBOW GP	
		1	**3J-1907**	1	SEAL-O-RING	
		1	**6V-8397**	1	SEAL-O-RING	
		1	**6V-9001**	1	ELBOW	
	32	1	*148-8363*	1	ELBOW GP	
		1	**3K-0360**	1	SEAL-O-RING	
		1	**6V-8397**	1	SEAL-O-RING	
		1	**6V-9876**	1	ELBOW	
	33	1	*148-8367*	1	ELBOW GP	
		2	**6V-8397**	1	SEAL-O-RING	
		2	**6V-9850**	1	ELBOW (SWIVEL)	
	34	2	*148-8370*	1	ELBOW GP	
		2	**6V-8398**	1	SEAL-O-RING	
		2	**6V-9851**	1	ELBOW	

173-1553 **LINES GP-PUMP** ***(contd.)*** **i01988933**

NOTE	REF NO	GRAPHIC REF	PART NUMBER	QTY	PART NAME 1 2 3 4 5 6 (PRODUCT LEVEL)	SEE PAGE
	35	1,2	*148-8378*	5	ELBOW AS	
					(EACH INCLUDES)	
		1,2	**3J-1907**	1	SEAL-O-RING	
		1,2	**6V-8397**	1	SEAL-O-RING	
		1,2	**6V-8724**	1	ELBOW	
	36	1	*148-8435*	1	TEE AS	
		1	**3J-1907**	1	SEAL-O-RING	
		1	**6V-8397**	2	SEAL-O-RING	
		1	**6V-8781**	1	TEE-FACE SEAL	
	37	2	*148-8443*	1	TEE GP	
		2	**3J-1907**	1	SEAL-O-RING	
		2	**6V-8397**	1	SEAL-O-RING	
		2	**7X-2459**	1	TEE-O-RING	
	38	2	**149-1333**	1	TEE	
I	39	2	**149-7153**	1	HOSE AS	
	40	2	**6V-0683**	1	GROMMET	
	41	1	**150-3065**	1	ADAPTER GP	
		1	**3J-1907**	1	SEAL-O-RING	
		1	**6V-0484**	1	ADAPTER-O-RING	
Y	42	1	**152-8340**	1	VALVE GP-SOLENOID (24 VOLT)	909
	43	2	*153-6253*	1	TEE AS	
		2	**3K-0360**	1	SEAL-O-RING	
		2	**6V-8397**	2	SEAL-O-RING	
		2	**081-5604**	1	TEE-STRAIGHT BRANCH	
	44	1	**154-6165**	1	VALVE-CHECK	
	45	2	**9B-7237**	5	BOLT (3/8-16X1.25 IN)	
I	46	1	**154-8544**	1	HOSE AS	
Y	47	1	**155-6061**	1	FILTER GP-OIL (BRAKE ACTUATION)	726
	48	2	**155-9587**	1	TUBE AS	
	49	1	**156-7389**	1	BRACKET AS	
I	50	2	**156-9628**	1	HOSE AS	
I	51	1	**157-5549**	1	HOSE AS	
I	52	2	**157-5551**	1	HOSE AS	
	53	1	**157-5555**	1	PLATE	
	54	1	**157-5558**	1	MANIFOLD	
	55	2	**158-8902**	1	BRACKET AS	
		2	**1F-0750**	1	NUT-WELD (3/8-16THD)	
I	56	1	**173-6115**	1	HOSE AS	
I	57	1	**173-6117**	1	HOSE AS	
I	58	1	**173-6733**	1	HOSE AS	
I	59	1	**175-3581**	1	HOSE AS	
	60	2	**131-8201**	2	CLIP (SLOT)	
	61	2	**131-8202**	2	CLIP (TAB)	
	62	1	*148-8318*	1	CONNECTOR GP	
		1	**3K-0360**	1	SEAL-O-RING	
		1	**6V-8397**	1	SEAL-O-RING	
		1	**6V-8634**	1	CONNECTOR	
	63	2	*148-8433*	1	TEE GP	
		2	**6V-8397**	2	SEAL-O-RING	
		2	**6V-9836**	1	TEE-SWIVEL	
	64	2	*150-3028*	1	ELBOW AS	
		2	**3D-2824**	1	SEAL-O-RING	
		2	**6V-8397**	1	SEAL-O-RING	
		2	**6V-9343**	1	ELBOW	
	65	1,2	**1P-3705**	6	SEAL-RECTANGULAR	
	66	1,2	**1P-4578**	8	FLANGE-HALF	
	67	2	**1P-4585**	2	FLANGE-HALF	
	68	2	**1S-0996**	1	CLIP	
	69	1	**2H-6338**	2	SEAL-O-RING	

173-1553 **LINES GP-PUMP** ***(contd.)*** **i01988933**

NOTE	REF NO	GRAPHIC REF	PART NUMBER	QTY	PART NAME 1 2 3 4 5 6 (PRODUCT LEVEL)	SEE PAGE
	70	2	**2P-8421**	1	ADAPTER-O-RING	
	71	1,2	**3D-2824**	5	SEAL-O-RING	
	72	1,2	**3J-1907**	7	SEAL-O-RING	
	73	1	**3K-0360**	1	SEAL-O-RING	
	74	1,2	**4J-0522**	5	SEAL-O-RING	
	75	1,2	**4L-6454**	6	BOLT (3/8-16X1 IN)	
	76	2	**4L-9337**	2	BOLT (3/8-16X1.5 IN)	
	77	2	**5K-9090**	1	SEAL-O-RING	
	78	1	**5P-0049**	1	COVER	
	79	1,2	**5P-1075**	6	WASHER-HARD (10.2X22.5X3MM THK)	
	80	2	**5P-2424**	3	BOLT (1/2-13X2.25 IN)	
	81	1	**5P-6944**	1	ADAPTER	
	82	2	**5P-7464**	2	CLIP (SLOT)	
	83	2	**5P-7465**	2	CLIP (TAB)	
	84	1,2	**5P-8077**	8	FLANGE-HALF	
	85	1,2	**5S-7379**	5	BOLT (3/8-16X0.875 IN)	
	86	2	**8T-2502**	4	BOLT (3/8-16X1.125 IN)	
	87	2	**9S-4191**	1	PLUG	
	88	2	**6V-1722**	1	ADAPTER-O-RING	
	89	2	**6V-8188**	2	NUT (1/2-13 THD)	
	90	1	**6V-8260**	1	SEAL-O-RING	
	91	1,2	**6V-8397**	4	SEAL-O-RING	
	92	1	**6V-8398**	1	SEAL-O-RING	
	93	2	**7S-3912**	2	CLIP (TAB)	
	94	2	**7S-3913**	2	CLIP (SLOT)	
	95	1	**7T-9745**	1	MANIFOLD-VALVE	
	96	2	**7X-0290**	4	BOLT (3/8-16X3.50 IN)	
	97	1	**7X-0308**	4	BOLT (7/16-14X1.375 IN)	
	98	1	**5P-7463**	1	CLIP (TAB)	
	99	1	**7X-0313**	4	BOLT (7/16-14X2.75 IN)	
	100	2	**7X-0346**	4	BOLT (5/8-11X2 IN)	
	101	2	**7X-0362**	4	BOLT (5/8-11X7 IN)	
	102	2	**7X-0448**	2	NUT (5/8-11 THD)	
	103	2	**8C-4436**	2	BOLT (1/2-13X1.375 IN)	
	104	1	**8F-6437**	2	WASHER (13.5X50.8X4.76MM THK)	
	105	1	**8J-8197**	1	CLIP	
	106	1	**8T-2501**	4	BOLT (3/8-16X2 IN)	
	107	1,2	**8T-4121**	12	WASHER-HARD (11X21X2.5MM THK)	
	108	1,2	**8T-4122**	22	WASHER-HARD (17X32X3.5MM THK)	
M	109	1	**8T-4137**	4	BOLT (M10X1.5X20MM)	
M	110	2	**8T-4196**	8	BOLT (M10X1.5X35MM)	
	111	1,2	**8T-4223**	13	WASHER-HARD (13.5X25.5X3MM THK)	
	112	1,2	**8T-4896**	24	WASHER-HARD (10.2X18.5X2.5MM THK)	
	113	1	**8T-5360**	8	WASHER (12X22.5X2.5MM THK)	
	114	2	**8T-6684**	1	ELBOW	
	115	1,2	**8T-6871**	12	BOLT (5/8-11X2.50 IN)	
	116	2	**8T-8917**	7	BOLT (1/2-13X1.25 IN)	
	117	1	**8T-8919**	2	BOLT (1/2-13X1.75 IN)	
	118	2	**141-9607**	1	PLATE AS	
	119	2	**1F-0750**	4	NUT-WELD (3/8-16THD)	
		2	**5H-9394**	1	BOSS (3/8-16X1.0 IN)	
	121	1	**154-8080**	1	PLATE AS	
	122	1	**1F-0750**	2	NUT-WELD (3/8-16THD)	
	123	1	**1F-0748**	2	NUT-WELD (1/2-13 THD)	
	124	1	**6T-9387**	1	PLATE AS	
		1	**6J-1323**	1	LUG (1/2-13 THD)	
	125	1	**6J-4313**	1	LUG (71.5MM LG)	
	126	1	**5P-7462**	1	CLIP (SLOT)	

I-REFER TO HYDRAULIC INFORMATION SYSTEM
M-METRIC PART
Y-SEPARATE ILLUSTRATION

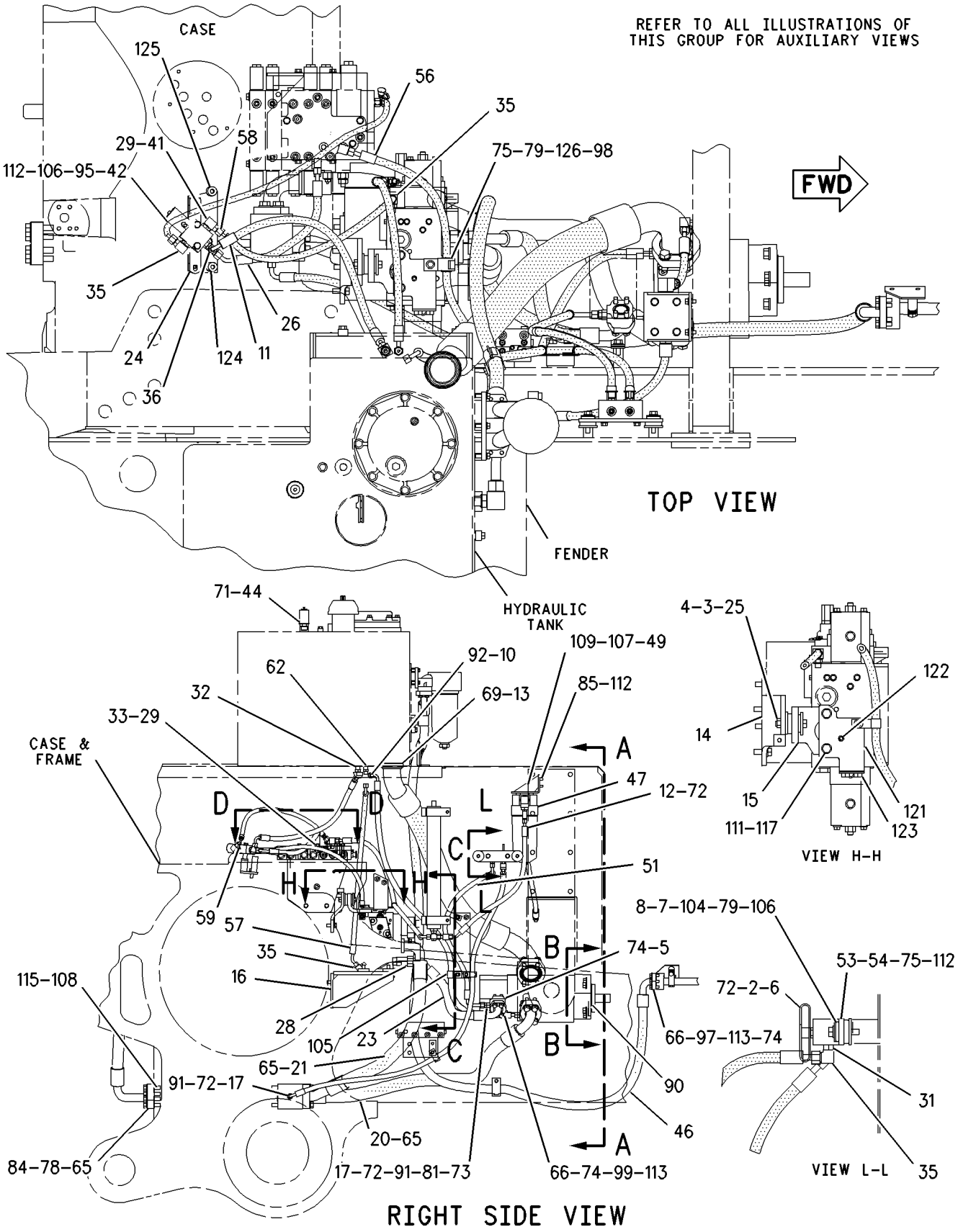

GRAPHIC #1 g00773696

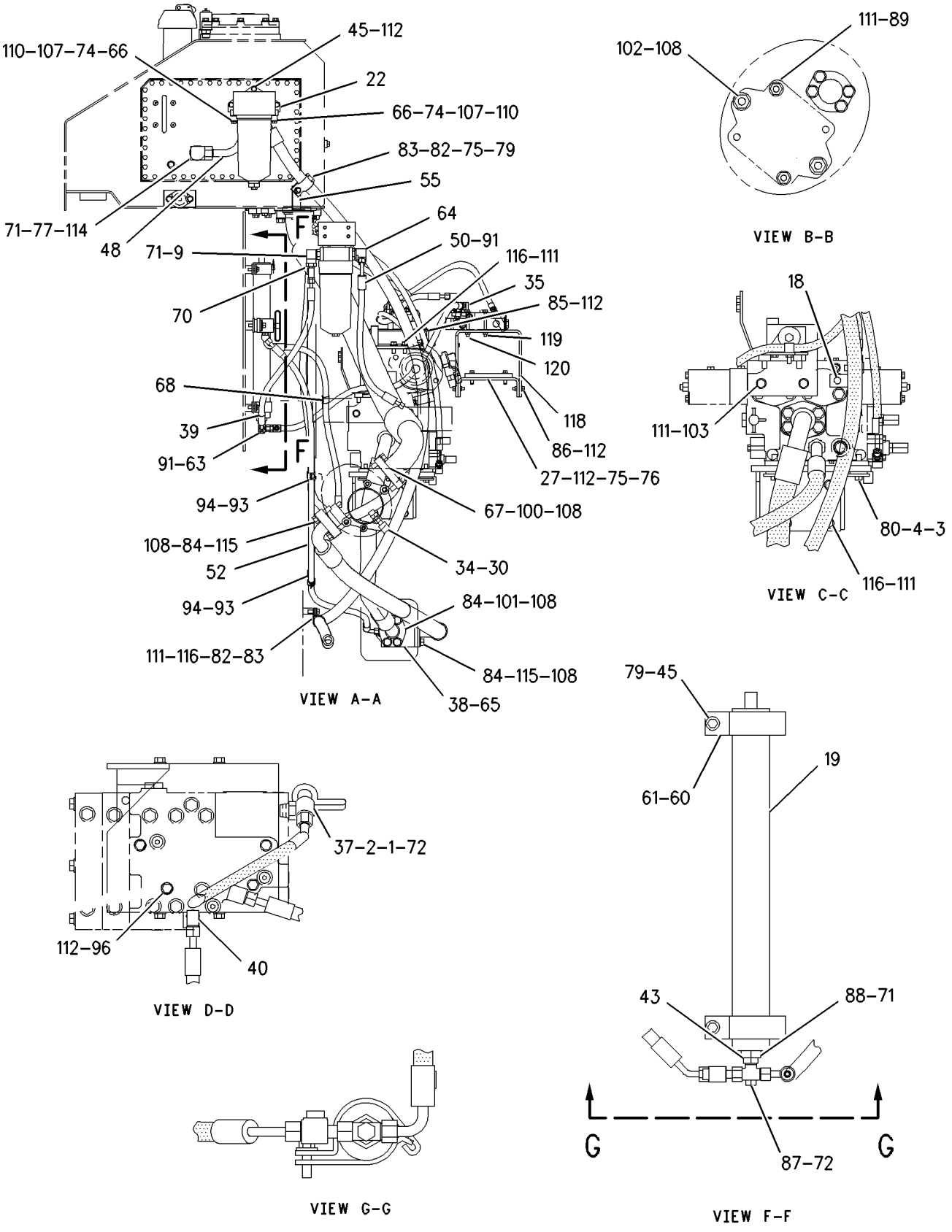

GRAPHIC #2 **<END>** g00837948

HYDRAULIC SYSTEM

173-1553 LINES GP-PUMP

S/N: 7PZ565-647

PART OF 155-5553 CONTROL AR-HYDRAULIC

SMCS-5057 **i01988913**

NOTE	REF NO	GRAPHIC REF	PART NUMBER	QTY	PART NAME 1 2 3 4 5 6 (PRODUCT LEVEL)	SEE PAGE
	1	2	**6V-0852**	1	CAP-DUST	
	2	1,2	**6V-3965**	3	FITTING (QUICK DISCONNECT) (IMPLEMENT PUMP)	
	3	1,2	**7G-8839**	5	SPACER (13.5X57X6MM THK)	
	4	1,2	**7T-8331**	4	MOUNTING	
	5	1	**7V-8532**	1	SPACER	
	6	1	**8C-3451**	2	CAP-DUST	
	7	1	**8D-0983**	2	MOUNTING	
	8	1	**8D-7185**	2	WASHER (11.9X38.1X3MM THK)	
	9	2	**8T-3491**	1	ELBOW	
I	10	1	**8W-0225**	1	HOSE AS	
I	11	1	**9R-1183**	1	HOSE AS	
Y	12	1	**9T-3096**	1	VALVE GP-CHECK (HYDRAULIC OIL FILTER)	864
I	13	1	**9U-8509**	1	HOSE AS	
	14	1	**9W-1651**	1	PLATE AS	
		1	**8G-0863**	1	BLOCK	
	15	1	**9W-1653**	1	BRACKET	
	16	1	**9W-1654**	1	PLATE AS	
	17	1	**9X-2614**	2	CONNECTOR	
	18	2	**9X-8402**	1	CLIP	
Y	19	2	**113-1050**	1	ACCUMULATOR GP-HYDRAULIC (PILOT OIL)	648
		2	**158-2336**	1	VALVE-GAS	
I	20	1	**130-9456**	1	HOSE AS	
I	21	1	**130-9457**	1	HOSE AS	
Y	22	2	*133-1281*	1	FILTER GP-OIL	725
I	23	1	**136-4224**	1	HOSE AS	
	24	1	**137-6497**	1	PLATE AS	
		1	**8D-3508**	2	BOSS (3/8-16X1 IN THD)	
	25	1	**8T-9389**	1	BOLT (1/2-13X2.75 IN)	
I	26	1	**141-9610**	1	HOSE AS	
C	27	2	**208-4585**	1	PLATE AS	
	28	1	*148-8330*	1	CONNECTOR AS	
		1	**5K-9090**	1	SEAL-O-RING	
		1	**7M-8485**	1	SEAL-O-RING	
		1	**8T-0198**	1	CONNECTOR	
	29	1	*148-8336*	2	CONNECTOR AS	
					(EACH INCLUDES)	
		1	**3J-1907**	1	SEAL-O-RING	
		1	**6V-8397**	1	SEAL-O-RING	
		1	**6V-8636**	1	CONNECTOR	
	30	2	*148-8345*	1	CONNECTOR GP	
		2	**2M-9780**	1	SEAL-O-RING	
		2	**6V-8398**	1	SEAL-O-RING	
		2	**6V-8638**	1	CONNECTOR	
	31	1	*148-8353*	1	ELBOW GP	
		1	**3J-1907**	1	SEAL-O-RING	
		1	**6V-8397**	1	SEAL-O-RING	
		1	**6V-9001**	1	ELBOW	
	32	1	*148-8363*	1	ELBOW GP	
		1	**3K-0360**	1	SEAL-O-RING	
		1	**6V-8397**	1	SEAL-O-RING	
		1	**6V-9876**	1	ELBOW	
	33	1	*148-8367*	1	ELBOW GP	
		1	**6V-8397**	1	SEAL-O-RING	
		1	**6V-9850**	1	ELBOW (SWIVEL)	
	34	2	*148-8370*	1	ELBOW GP	
		2	**6V-8398**	1	SEAL-O-RING	

173-1553 **LINES GP-PUMP** ***(contd.)*** **i01988913**

NOTE	REF NO	GRAPHIC REF	PART NUMBER	QTY	PART NAME 1 2 3 4 5 6 (PRODUCT LEVEL)	SEE PAGE
		2	**6V-9851**	1	ELBOW	
	35	1,2	*148-8378*	5	ELBOW AS	
					(EACH INCLUDES)	
		1,2	**3J-1907**	1	SEAL-O-RING	
		1,2	**6V-8397**	1	SEAL-O-RING	
		1,2	**6V-8724**	1	ELBOW	
	36	1	*148-8435*	1	TEE AS	
		1	**3J-1907**	1	SEAL-O-RING	
		1	**6V-8397**	2	SEAL-O-RING	
		1	**6V-8781**	1	TEE-FACE SEAL	
	37	2	*148-8443*	1	TEE GP	
		2	**3J-1907**	1	SEAL-O-RING	
		2	**6V-8397**	1	SEAL-O-RING	
		2	**7X-2459**	1	TEE-O-RING	
	38	2	**149-1333**	1	TEE	
I	39	2	**149-7153**	1	HOSE AS	
	40	2	**6V-0683**	1	GROMMET	
	41	1	**150-3065**	1	ADAPTER GP	
		1	**3J-1907**	1	SEAL-O-RING	
		1	**6V-0484**	1	ADAPTER-O-RING	
Y	42	1	**152-8340**	1	VALVE GP-SOLENOID (24 VOLT)	909
	43	2	*153-6253*	1	TEE AS	
		2	**3K-0360**	1	SEAL-O-RING	
		2	**6V-8397**	2	SEAL-O-RING	
		2	**081-5604**	1	TEE-STRAIGHT BRANCH	
	44	1	**154-6165**	1	VALVE-CHECK	
	45	2	**9B-7237**	5	BOLT (3/8-16X1.25 IN)	
I	46	1	**154-8544**	1	HOSE AS	
Y	47	1	**155-6061**	1	FILTER GP-OIL	726
	48	2	**155-9587**	1	TUBE AS	
	49	1	**156-7389**	1	BRACKET AS	
I	50	2	**156-9628**	1	HOSE AS	
I	51	1	**157-5549**	1	HOSE AS	
I	52	2	**157-5551**	1	HOSE AS	
	53	1	**157-5555**	1	PLATE	
	54	1	**157-5558**	1	MANIFOLD	
	55	2	**158-8902**	1	BRACKET AS	
		2	**1F-0750**	1	NUT-WELD (3/8-16THD)	
I	56	1	**173-6115**	1	HOSE AS	
I	57	1	**173-6117**	1	HOSE AS	
I	58	1	**173-6733**	1	HOSE AS	
I	59	1	**175-3581**	1	HOSE AS	
	60	2	**131-8201**	2	CLIP (SLOT)	
	61	2	**131-8202**	2	CLIP (TAB)	
	62	1	*148-8318*	1	CONNECTOR GP	
		1	**3K-0360**	1	SEAL-O-RING	
		1	**6V-8397**	1	SEAL-O-RING	
		1	**6V-8634**	1	CONNECTOR	
	63	2	*148-8433*	1	TEE GP	
		2	**6V-8397**	2	SEAL-O-RING	
		2	**6V-9836**	1	TEE-SWIVEL	
	64	2	*150-3028*	1	ELBOW AS	
		2	**3D-2824**	1	SEAL-O-RING	
		2	**6V-8397**	1	SEAL-O-RING	
		2	**6V-9343**	1	ELBOW	
	65	1,2	**1P-3705**	6	SEAL-RECTANGULAR	
	66	1,2	**1P-4578**	8	FLANGE-HALF	
	67	2	**1P-4585**	2	FLANGE-HALF	
	68	2	**1S-0996**	1	CLIP	

173-1553 **LINES GP-PUMP** ***(contd.)*** **i01988913**

NOTE	REF NO	GRAPHIC REF	PART NUMBER	QTY	PART NAME 1 2 3 4 5 6 (PRODUCT LEVEL)	SEE PAGE
	69	1	**2H-6338**	2	SEAL-O-RING	
	70	2	**2P-8421**	1	ADAPTER-O-RING	
	71	1,2	**3D-2824**	5	SEAL-O-RING	
	72	1,2	**3J-1907**	7	SEAL-O-RING	
	73	1	**3K-0360**	1	SEAL-O-RING	
	74	1,2	**4J-0522**	5	SEAL-O-RING	
	75	1,2	**4L-6454**	8	BOLT (3/8-16X1 IN)	
	77	2	**5K-9090**	1	SEAL-O-RING	
	78	1	**5P-0049**	1	COVER	
	79	1,2	**5P-1075**	6	WASHER-HARD (10.2X22.5X3MM THK)	
	80	2	**5P-2424**	3	BOLT (1/2-13X2.25 IN)	
	81	1	**5P-6944**	1	ADAPTER	
	82	2	**5P-7464**	2	CLIP (SLOT)	
	83	2	**5P-7465**	2	CLIP (TAB)	
	84	1,2	**5P-8077**	8	FLANGE-HALF	
	85	1,2	**5S-7379**	5	BOLT (3/8-16X0.875 IN)	
	86	2	**8T-2502**	4	BOLT (3/8-16X1.125 IN)	
	87	2	**9S-4191**	1	PLUG	
	88	2	**6V-1722**	1	ADAPTER-O-RING	
	89	2	**6V-8188**	2	NUT (1/2-13 THD)	
	90	1	**6V-8260**	1	SEAL-O-RING	
	91	1,2	**6V-8397**	4	SEAL-O-RING	
	92	1	**6V-8398**	1	SEAL-O-RING	
	93	2	**7S-3912**	2	CLIP (TAB)	
	94	2	**7S-3913**	2	CLIP (SLOT)	
	95	1	**7T-9745**	1	MANIFOLD-VALVE	
	96	2	**7X-0290**	4	BOLT (3/8-16X3.50 IN)	
	97	1	**7X-0308**	4	BOLT (7/16-14X1.375 IN)	
	98	1	**5P-7463**	1	CLIP (TAB)	
	99	1	**7X-0313**	4	BOLT (7/16-14X2.75 IN)	
	100	2	**7X-0346**	4	BOLT (5/8-11X2 IN)	
	101	2	**7X-0362**	4	BOLT (5/8-11X7 IN)	
	102	2	**7X-0448**	2	NUT (5/8-11 THD)	
	103	2	**8C-4436**	2	BOLT (1/2-13X1.375 IN)	
	104	1	**8F-6437**	2	WASHER (13.5X50.8X4.76MM THK)	
	105	1	**8J-8197**	1	CLIP	
	106	1	**8T-2501**	4	BOLT (3/8-16X2 IN)	
	107	1,2	**8T-4121**	12	WASHER-HARD (11X21X2.5MM THK)	
	108	1,2	**8T-4122**	22	WASHER-HARD (17X32X3.5MM THK)	
M	109	1	**8T-4137**	4	BOLT (M10X1.5X20MM)	
M	110	2	**8T-4196**	8	BOLT (M10X1.5X35MM)	
	111	1,2	**8T-4223**	13	WASHER-HARD (13.5X25.5X3MM THK)	
	112	1,2	**8T-4896**	24	WASHER-HARD (10.2X18.5X2.5MM THK)	
	113	1	**8T-5360**	8	WASHER (12X22.5X2.5MM THK)	
	114	2	**8T-6684**	1	ELBOW	
	115	1,2	**8T-6871**	12	BOLT (5/8-11X2.50 IN)	
	116	2	**8T-8917**	7	BOLT (1/2-13X1.25 IN)	
	117	1	**8T-8919**	2	BOLT (1/2-13X1.75 IN)	
	118	2	**141-9607**	1	PLATE AS	
	119	2	**1F-0750**	4	NUT-WELD (3/8-16THD)	
	120	2	**5H-9394**	1	BOSS (3/8-16X1.0 IN)	
	121	1	**154-8080**	1	PLATE AS	
	122	1	**1F-0750**	2	NUT-WELD (3/8-16THD)	
	123	1	**1F-0748**	2	NUT-WELD (1/2-13 THD)	
	124	1	**6T-9387**	1	PLATE AS	
		1	**6J-1323**	1	LUG (1/2-13 THD)	
	125	1	**6J-4313**	1	LUG (71.5MM LG)	
	126	1	**5P-7462**	1	CLIP (SLOT)	

C-CHANGE FROM PREVIOUS TYPE
I-REFER TO HYDRAULIC INFORMATION SYSTEM
M-METRIC PART
Y-SEPARATE ILLUSTRATION

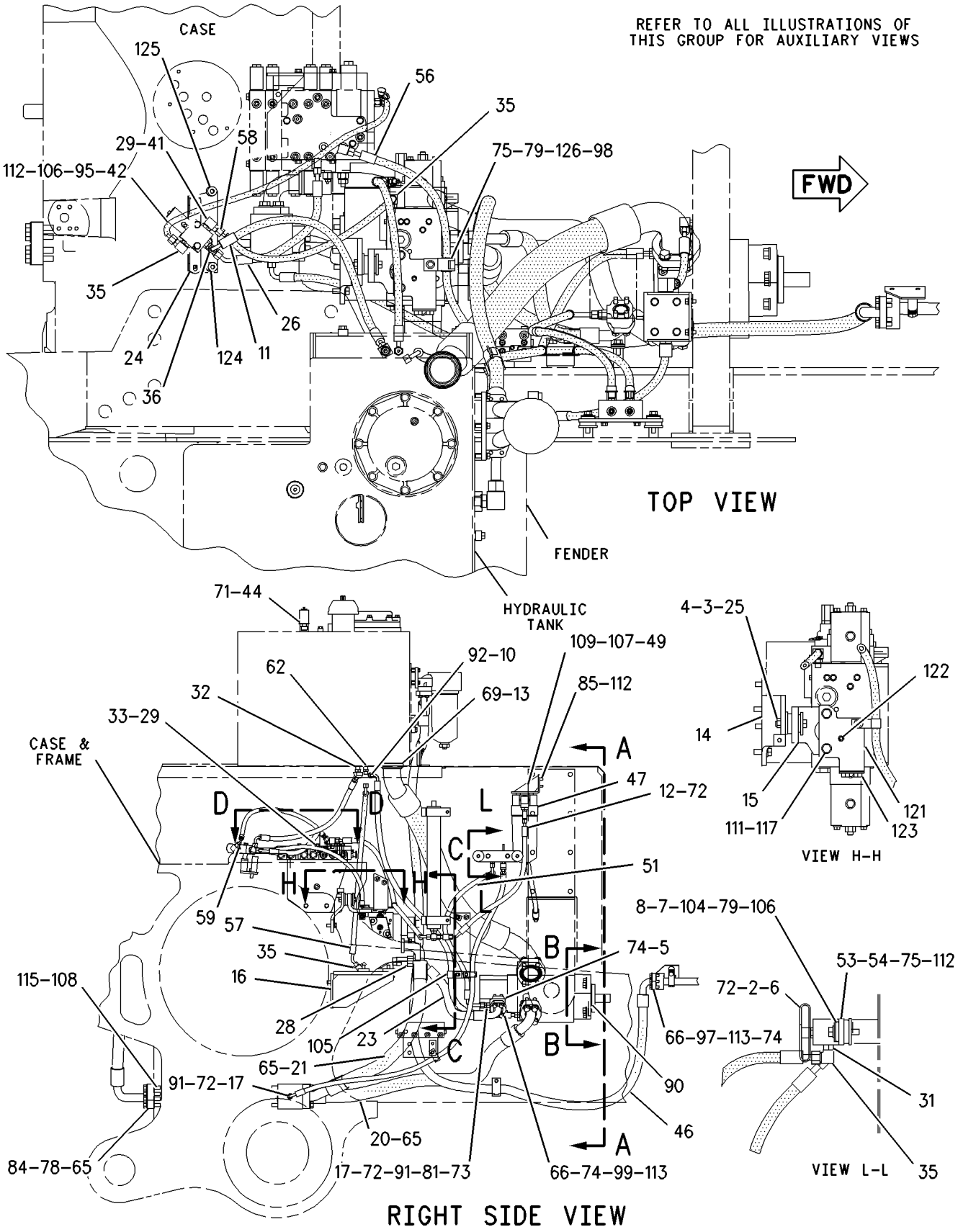

GRAPHIC #1 g00773696

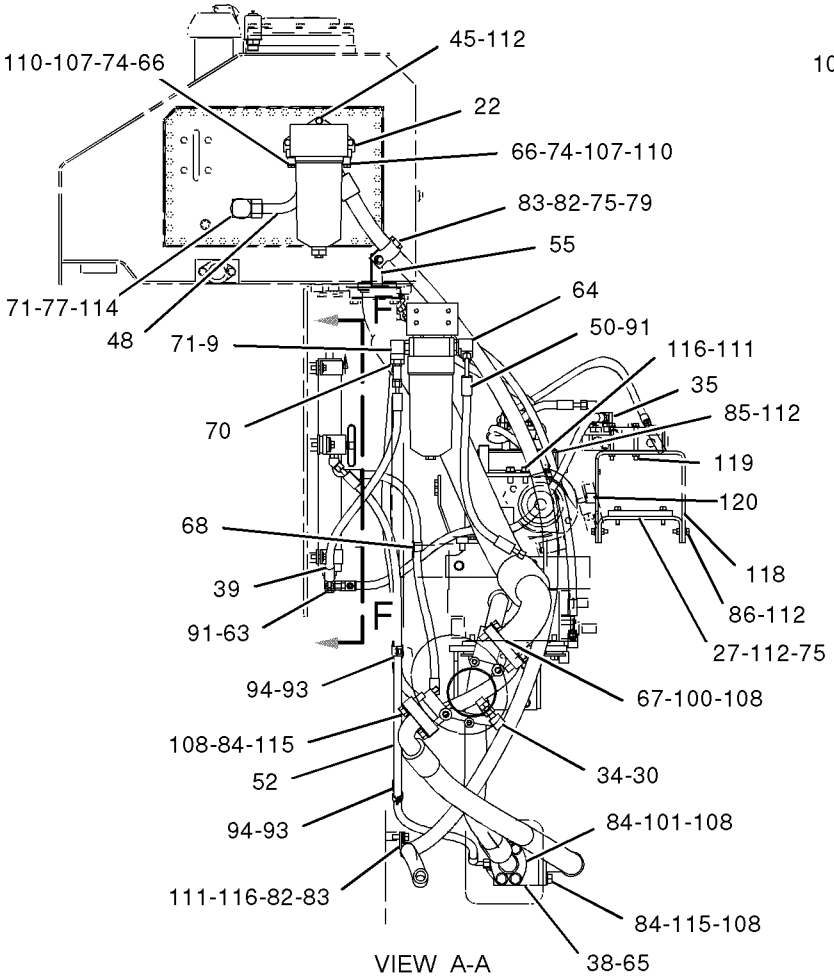

VIEW A-A

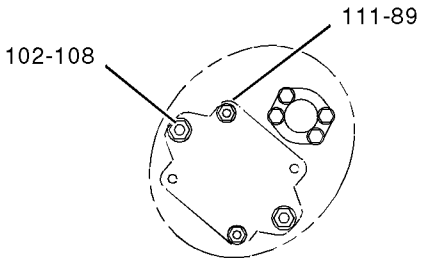

VIEW B-B

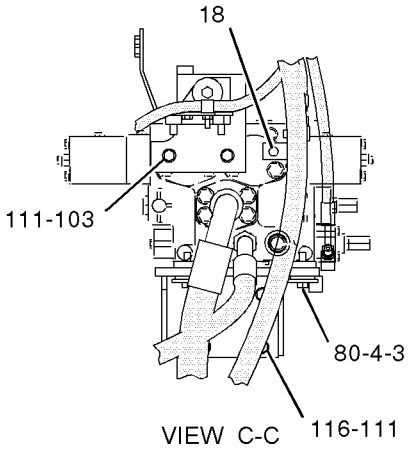

VIEW C-C

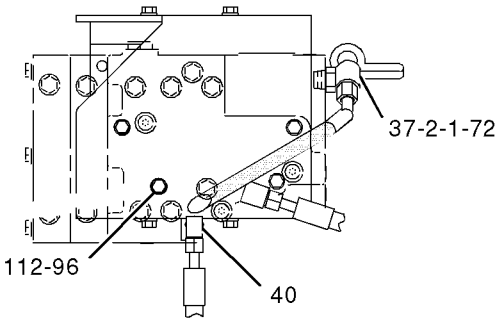

VIEW D-D

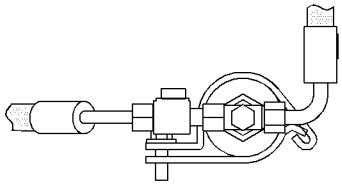

VIEW G-G

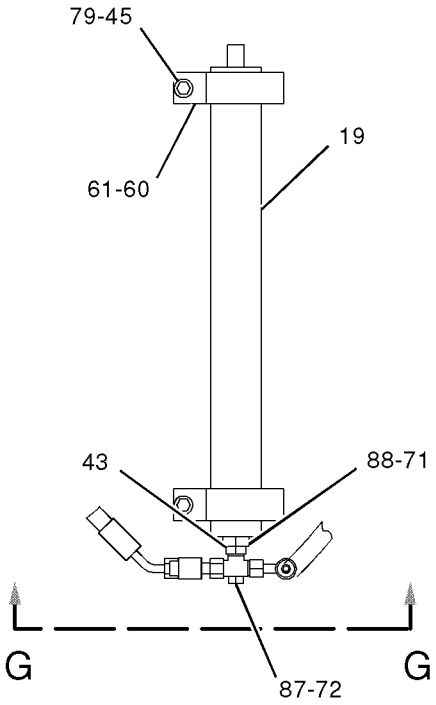

VIEW F-F

GRAPHIC #2 **<END>** g01027174

HYDRAULIC SYSTEM

173-1553 LINES GP-PUMP

S/N: 7PZ648-659, 661-664

PART OF 155-5553 CONTROL AR-HYDRAULIC

SMCS-5057 **i01988911**

NOTE	REF NO	GRAPHIC REF	PART NUMBER	QTY	PART NAME 1 2 3 4 5 6 (PRODUCT LEVEL)	SEE PAGE
C	1	1,2	**6V-0852**	3	CAP-DUST	
	2	1,2	**6V-3965**	3	FITTING (QUICK DISCONNECT) (IMPLEMENT PUMP)	
	3	1,2	**7G-8839**	5	SPACER (13.5X57X6MM THK)	
	4	1,2	**7T-8331**	4	MOUNTING	
	5	2	**7V-8532**	1	SPACER	
	6	2	**8D-0983**	2	MOUNTING	
	7	2	**8D-7185**	2	WASHER (11.9X38.1X3MM THK)	
I	8	1	**8W-0225**	1	HOSE AS	
Y	9	2	**9T-3096**	1	VALVE GP-CHECK (HYDRAULIC OIL FILTER)	864
	10	1	**9W-1651**	1	PLATE AS	
	11	1	**9W-1653**	1	BRACKET	
	12	1	**9W-1654**	1	PLATE AS	
	13	1,2	**9X-2614**	2	CONNECTOR	
	14	1	**9X-8402**	1	CLIP	
Y	15	1	**113-1050**	1	ACCUMULATOR GP-HYDRAULIC (PILOT OIL)	648
I	16	1	**130-9456**	1	HOSE AS	
I	17	1	**130-9457**	1	HOSE AS	
Y	18	1	*133-1281*	1	FILTER GP-OIL (HYDRAULIC)	725
	19	2	**137-6497**	1	PLATE AS	
	20	2	**141-9607**	1	PLATE AS	
I	21	2	**141-9610**	1	HOSE AS	
	22	1	*148-8330*	1	CONNECTOR AS	
		1	**5K-9090**	1	SEAL-O-RING	
		1	**7M-8485**	1	SEAL-O-RING	
		1	**8T-0198**	1	CONNECTOR	
	23	1	*148-8345*	1	CONNECTOR GP	
		1	**2M-9780**	1	SEAL-O-RING	
		1	**6V-8398**	1	SEAL-O-RING	
		1	**6V-8638**	1	CONNECTOR	
	24	2	*148-8353*	1	ELBOW GP	
		2	**3J-1907**	1	SEAL-O-RING	
		2	**6V-8397**	1	SEAL-O-RING	
		2	**6V-9001**	1	ELBOW	
	25	1	*148-8370*	1	ELBOW GP	
		1	**6V-8398**	1	SEAL-O-RING	
		1	**6V-9851**	1	ELBOW	
	26	1,2	*148-8378*	5	ELBOW AS	
					(EACH INCLUDES)	
		1,2	**3J-1907**	1	SEAL-O-RING	
		1,2	**6V-8397**	1	SEAL-O-RING	
		1,2	**6V-8724**	1	ELBOW	
	27	2	*148-8435*	1	TEE AS	
		2	**3J-1907**	1	SEAL-O-RING	
		2	**6V-8397**	2	SEAL-O-RING	
		2	**6V-8781**	1	TEE-FACE SEAL	
	28	1	*148-8443*	1	TEE GP	
		1	**3J-1907**	1	SEAL-O-RING	
		1	**6V-8397**	1	SEAL-O-RING	
		1	**7X-2459**	1	TEE-O-RING	
	29	1	**149-1333**	1	TEE	
I	30	2	**149-7153**	1	HOSE AS	
	31	2	*150-3065*	1	ADAPTER GP	
		2	**3J-1907**	1	SEAL-O-RING	
		2	**6V-0484**	1	ADAPTER-O-RING	
Y	32	2	**152-8340**	1	VALVE GP-SOLENOID (24 VOLT)	909
	33	1	**154-6165**	1	VALVE-CHECK	

173-1553 **LINES GP-PUMP** ***(contd.)*** **i01988911**

NOTE	REF NO	GRAPHIC REF	PART NUMBER	QTY	PART NAME 1 2 3 4 5 6 (PRODUCT LEVEL)	SEE PAGE
	34	1	**154-8080**	1	PLATE AS	
I	35	1	**154-8544**	1	HOSE AS	
Y	36	1	**155-6061**	1	FILTER GP-OIL (HYDRAULIC)	726
	37	2	**155-9587**	1	TUBE AS	
	38	1	**156-7389**	1	BRACKET AS	
I	39	1	**156-9628**	1	HOSE AS	
I	40	1	**157-5551**	1	HOSE AS	
	41	2	**157-5555**	1	PLATE	
	42	2	**157-5558**	1	MANIFOLD	
	43	1	**158-8902**	1	BRACKET AS	
		1	**1F-0750**	1	NUT-WELD (3/8-16THD)	
	44	2	*167-1795*	1	ELBOW AS	
		2	**3D-2824**	1	SEAL-O-RING	
		2	**8T-3491**	1	ELBOW	
I	45	1	**173-6117**	1	HOSE AS	
I	46	2	**173-6733**	1	HOSE AS	
I	47	1	**175-3581**	1	HOSE AS	
	48	2	**208-4585**	1	PLATE AS	
I	49	1	**218-2830**	1	HOSE AS	
	50	1	**221-0293**	1	HOSE AS	
C	51	1	**228-7430**	1	HOSE AS	
C	52	1	**228-7431**	1	HOSE AS	
C	53	1	**228-7432**	1	HOSE AS	
	54	1	**131-8201**	2	CLIP (SLOT)	
	55	1	**131-8202**	2	CLIP (TAB)	
	56	2	*148-8313*	1	ADAPTER GP	
		2	**3K-0360**	1	SEAL-O-RING	
		2	**5P-6944**		ADAPTER	
	57	1	*148-8318*	2	CONNECTOR GP	
		1	**3K-0360**	1	SEAL-O-RING	
		1	**6V-8397**	1	SEAL-O-RING	
		1	**6V-8634**	1	CONNECTOR	
	58	1,2	*148-8336*	2	CONNECTOR AS	
					(EACH INCLUDES)	
		1,2	**3J-1907**	1	SEAL-O-RING	
		1,2	**6V-8397**	1	SEAL-O-RING	
		1,2	**6V-8636**	1	CONNECTOR	
	59	2	*148-8362*	1	ELBOW GP	
		2	**3D-2824**	1	SEAL-O-RING	
		2	**5K-9090**	1	SEAL-O-RING	
		2	**8T-6684**	1	ELBOW	
	60	1	*148-8367*	1	ELBOW GP	
		1	**6V-8397**	1	SEAL-O-RING	
		1	**6V-9850**	1	ELBOW (SWIVEL)	
	61	1,2	*148-8433*	2	TEE GP	
		1,2	**6V-8397**	2	SEAL-O-RING	
		1,2	**6V-9836**	1	TEE-SWIVEL	
	62	1	*150-3028*	1	ELBOW AS	
		1	**3D-2824**	1	SEAL-O-RING	
		1	**6V-8397**	1	SEAL-O-RING	
		1	**6V-9343**	1	ELBOW	
C	63	1	*155-7321*	1	ADAPTER GP	
		1	**3D-2824**	1	SEAL-O-RING	
		1	**6V-1722**	1	ADAPTER-O-RING	
	64	1,2	**1P-3705**	6	SEAL-RECTANGULAR	
	65	1,2	**1P-4578**	8	FLANGE-HALF	
	66	1	**1P-4578**	2	FLANGE-HALF	
	67	2	**1S-0996**	1	CLIP	
C	68	1	*206-5121*	1	TEE AS	

173-1553 LINES GP-PUMP *(contd.)* i01988911

NOTE	REF NO	GRAPHIC REF	PART NUMBER	QTY	PART NAME 1 2 3 4 5 6 (PRODUCT LEVEL)	SEE PAGE
		1	**3K-0360**	1	SEAL-O-RING	
		1	**6V-8397**	2	SEAL-O-RING	
		1	**206-5119**	1	TEE	
	69	1	**2H-6338**	2	SEAL-O-RING	
	70	2	**2P-8421**	1	ADAPTER-O-RING	
	71	1	**3D-2824**	1	SEAL-O-RING	
C	72	1,2	**3J-1907**	6	SEAL-O-RING	
	73	1,2	**4J-0522**	5	SEAL-O-RING	
	74	1,2	**4L-6454**	8	BOLT (3/8-16X1 IN)	
	75	2	**5P-0049**	1	COVER	
	76	1,2	**5P-1075**	6	WASHER-HARD (10.2X22.5X3MM THK)	
	77	2	**5P-2424**	3	BOLT (1/2-13X2.25 IN)	
	78	1	**5P-7462**	1	CLIP (SLOT)	
	79	1	**5P-7463**	1	CLIP (TAB)	
	80	1	**5P-7464**	2	CLIP (SLOT)	
	81	1	**5P-7465**	2	CLIP (TAB)	
	82	1,2	**5P-8077**	8	FLANGE-HALF	
	83	1,2	**5S-7379**	5	BOLT (3/8-16X0.875 IN)	
	84	2	**6T-9387**	1	PLATE AS	
	85	1	**6V-0683**	1	GROMMET	
	86	1	**6V-8188**	2	NUT (1/2-13 THD)	
	87	1	**6V-8260**	1	SEAL-O-RING	
	88	1,2	**6V-8397**	4	SEAL-O-RING	
	89	1	**6V-9829**	1	CAP AS	
	90	2	**7S-3912**	2	CLIP (TAB)	
	91	2	**7S-3913**	2	CLIP (SLOT)	
	92	2	**7T-9745**	1	MANIFOLD-VALVE	
	93	1	**7X-0290**	4	BOLT (3/8-16X3.50 IN)	
	94	1	**7X-0308**	4	BOLT (7/16-14X1.375 IN)	
	95	2	**7X-0313**	4	BOLT (7/16-14X2.75 IN)	
	96	1	**7X-0346**	4	BOLT (5/8-11X2 IN)	
	97	1	**7X-0362**	4	BOLT (5/8-11X7 IN)	
	98	1	**7X-0448**	2	NUT (5/8-11 THD)	
	99	2	**8C-4436**	2	BOLT (1/2-13X1.375 IN)	
	100	2	**8F-6437**	2	WASHER (13.5X50.8X4.76MM THK)	
	101	1	**8J-8197**	1	CLIP	
	102	2	**8T-2501**	4	BOLT (3/8-16X2 IN)	
	103	2	**8T-2502**	4	BOLT (3/8-16X1.125 IN)	
	104	1	**8T-4121**	12	WASHER-HARD (11X21X2.5MM THK)	
	105	1,2	**8T-4122**	22	WASHER-HARD (17X32X3.5MM THK)	
M	106	1	**8T-4137**	4	BOLT (M10X1.5X20MM)	
M	107	1	**8T-4196**	8	BOLT (M10X1.5X35MM)	
	108	1,2	**8T-4223**	13	WASHER-HARD (13.5X25.5X3MM THK)	
	109	1,2	**8T-4896**	24	WASHER-HARD (10.2X18.5X2.5MM THK)	
	110	1,2	**8T-5360**	8	WASHER (12X22.5X2.5MM THK)	
	111	1,2	**8T-6871**	12	BOLT (5/8-11X2.50 IN)	
	112	1,2	**8T-8917**	7	BOLT (1/2-13X1.25 IN)	
	113	1	**8T-8919**	2	BOLT (1/2-13X1.75 IN)	
	114	1	**8T-9389**	1	BOLT (1/2-13X2.75 IN)	
	115	1	**9B-7237**	5	BOLT (3/8-16X1.25 IN)	

C-CHANGE FROM PREVIOUS TYPE
I-REFER TO HYDRAULIC INFORMATION SYSTEM
M-METRIC PART
Y-SEPARATE ILLUSTRATION

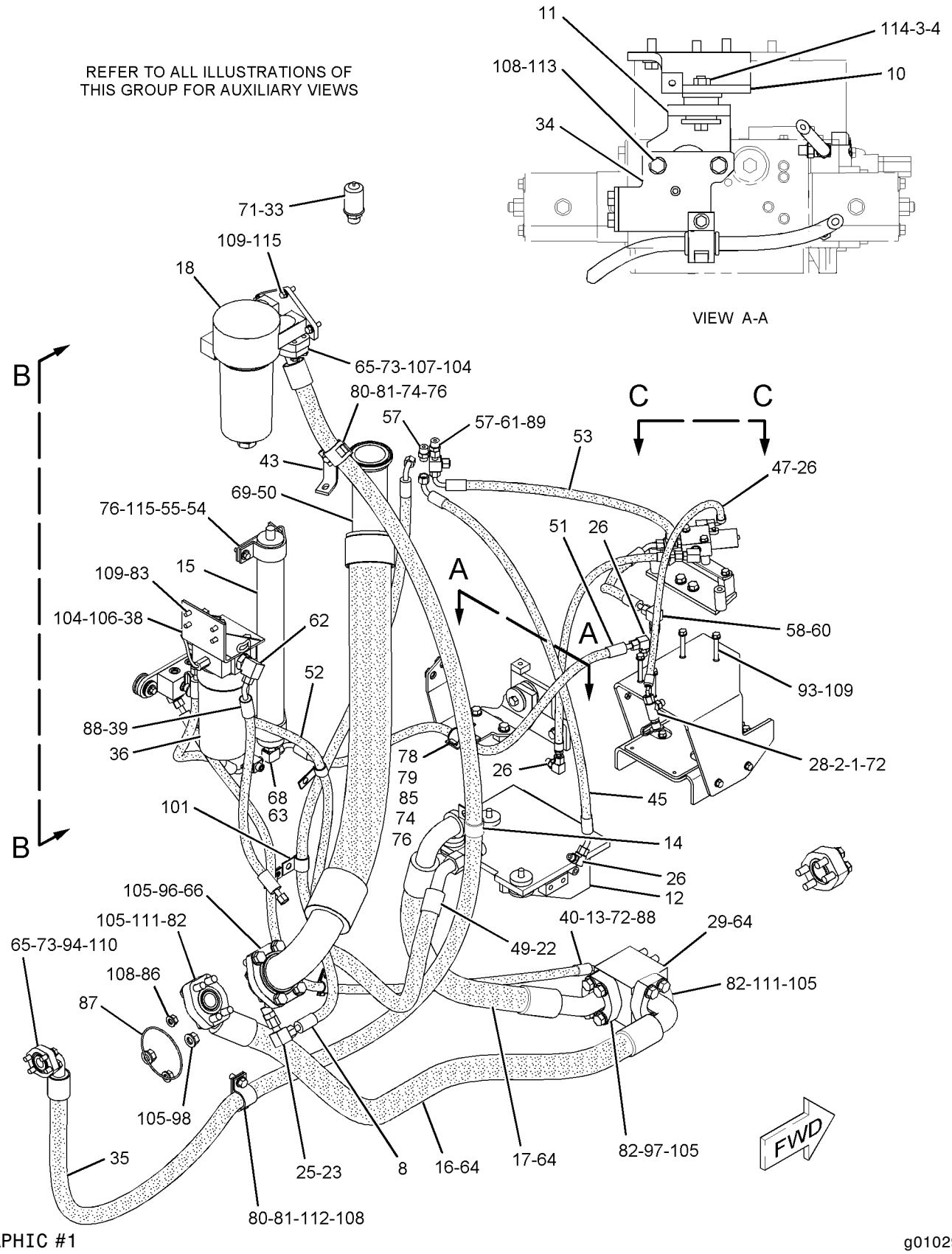

GRAPHIC #1

g01029148

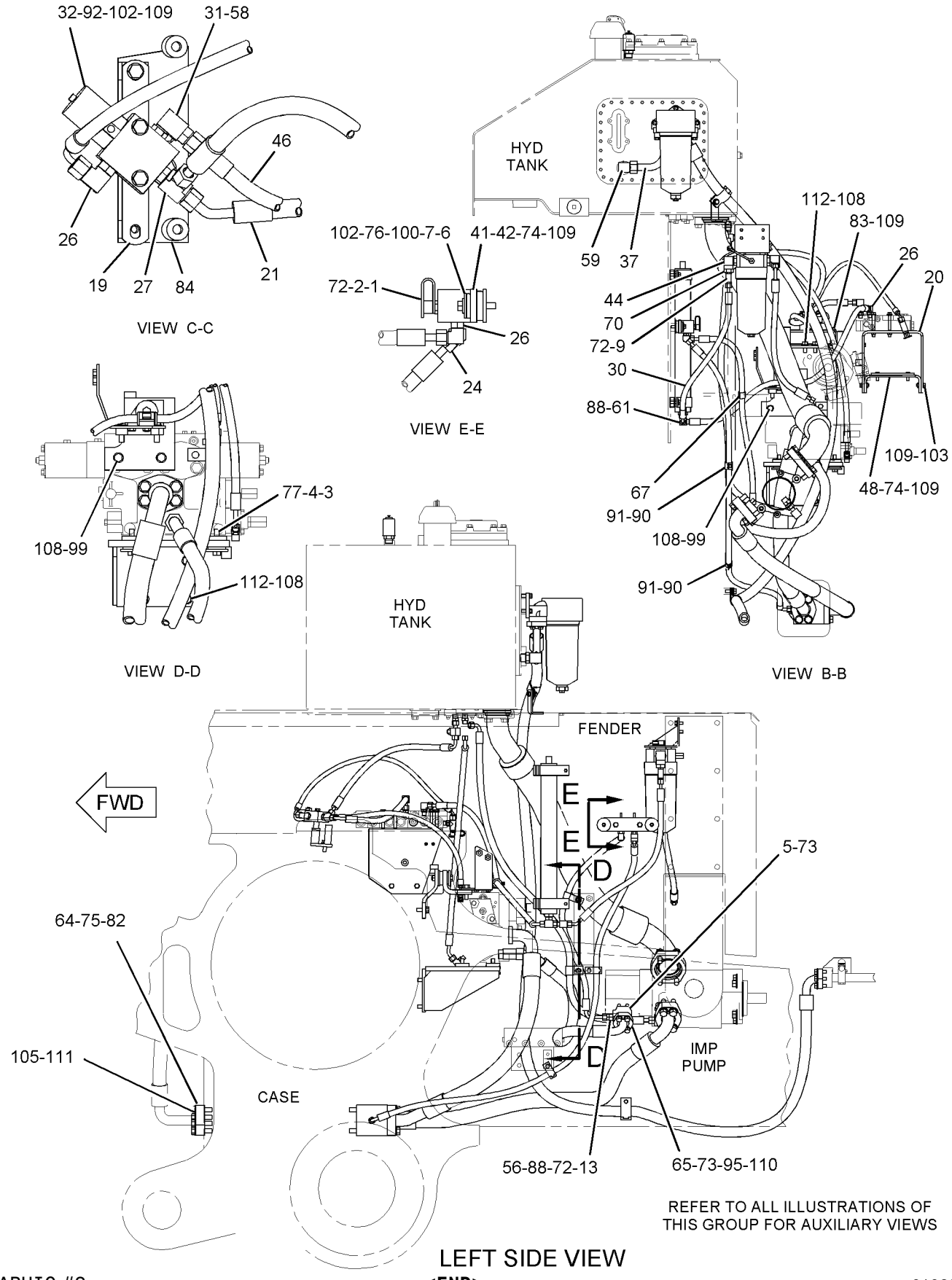

GRAPHIC #2

<END>

g01029149

HYDRAULIC SYSTEM

173-1553 LINES GP-PUMP

S/N: 7PZ660-664

PART OF 155-5553 CONTROL AR-HYDRAULIC

SMCS-5057 **i01925773**

NOTE	PART NUMBER	QTY	PART NAME 1 2 3 4 5 6 (PRODUCT LEVEL)	SEE PAGE
Y	**113-1050**	1	ACCUMULATOR GP-HYDRAULIC (PILOT OIL)	648
Y	*133-1281*	1	FILTER GP-OIL (HYDRAULIC)	725
Y	**155-6061**	1	FILTER GP-OIL (HYDRAULIC)	726
CY	**221-3406**	2	SENSOR GP-PRESSURE	345
Y	**9T-3096**	1	VALVE GP-CHECK (HYDRAULIC OIL FILTER)	864
Y	**152-8340**	1	VALVE GP-SOLENOID (24-VOLT)	909
	135-2755	1	ADAPTER	
	150-3065	1	ADAPTER GP	
	3J-1907	1	SEAL-O-RING	
	6V-0484	1	ADAPTER-O-RING	
	148-8313	1	ADAPTER GP	
	3K-0360	1	SEAL-O-RING	
	5P-6944		ADAPTER	
	155-7321	1	ADAPTER GP	
	3D-2824	1	SEAL-O-RING	
	6V-1722	1	ADAPTER-O-RING	
	2P-8421	1	ADAPTER-O-RING	
C	**4L-6454**	6	BOLT (3/8-16X1-IN)	
	5P-2424	3	BOLT (1/2-13X2.25-IN)	
	5S-7379	5	BOLT (3/8-16X0.875-IN)	
	7X-0290	4	BOLT (3/8-16X3.50-IN)	
	7X-0308	4	BOLT (7/16-14X1.375-IN)	
	7X-0313	4	BOLT (7/16-14X2.75-IN)	
	7X-0346	4	BOLT (5/8-11X2-IN)	
	7X-0362	4	BOLT (5/8-11X7-IN)	
	8C-4436	2	BOLT (1/2-13X1.375-IN)	
C	**8T-2501**	2	BOLT (3/8-16X2-IN)	
	8T-2502	4	BOLT (3/8-16X1.125-IN)	
M	**8T-4137**	4	BOLT (M10X1.5X20-MM)	
M	**8T-4196**	8	BOLT (M10X1.5X35-MM)	
	8T-6871	12	BOLT (5/8-11X2.50-IN)	
	8T-8917	7	BOLT (1/2-13X1.25-IN)	
	8T-8919	2	BOLT (1/2-13X1.75-IN)	
	8T-9389	1	BOLT (1/2-13X2.75-IN)	
	9B-7237	5	BOLT (3/8-16X1.25-IN)	
	9W-1653	1	BRACKET	
	156-7389	1	BRACKET AS	
	158-8902	1	BRACKET AS	
	1F-0750	1	NUT-WELD (3/8-16-THD)	
	6V-9829	1	CAP AS	
C	**6V-0852**	2	CAP-DUST	
	9X-8402	1	CLIP	
	131-8201	2	CLIP (SLOT)	
	131-8202	2	CLIP (TAB)	
	5P-7462	1	CLIP (SLOT)	
	5P-7463	1	CLIP (TAB)	
	5P-7464	2	CLIP (SLOT)	
	5P-7465	2	CLIP (TAB)	
	8J-8197	1	CLIP	
C	**6V-8636**	1	CONNECTOR	
C	**9X-2614**	1	CONNECTOR	
	148-8330	1	CONNECTOR AS	
	5K-9090	1	SEAL-O-RING	
	7M-8485	1	SEAL-O-RING	
	8T-0198	1	CONNECTOR	

173-1553 **LINES GP-PUMP** ***(contd.)*** **i01925773**

NOTE	PART NUMBER	QTY	PART NAME 1 2 3 4 5 6 (PRODUCT LEVEL)	SEE PAGE
	148-8336	2	CONNECTOR AS	
			(EACH INCLUDES)	
	3J-1907	1	SEAL-O-RING	
	6V-8397	1	SEAL-O-RING	
	6V-8636	1	CONNECTOR	
	148-8345	1	CONNECTOR GP	
	2M-9780	1	SEAL-O-RING	
	6V-8398	1	SEAL-O-RING	
	6V-8638	1	CONNECTOR	
	148-8318	1	CONNECTOR GP	
	3K-0360	1	SEAL-O-RING	
	6V-8397	1	SEAL-O-RING	
	6V-8634	1	CONNECTOR	
	5P-0049	1	COVER	
C	*148-8378*	4	ELBOW AS	
			(EACH INCLUDES)	
	3J-1907	1	SEAL-O-RING	
	6V-8397	1	SEAL-O-RING	
	6V-8724	1	ELBOW	
	167-1795	1	ELBOW AS	
	3D-2824	1	SEAL-O-RING	
	8T-3491	1	ELBOW	
	150-3028	1	ELBOW AS	
	3D-2824	1	SEAL-O-RING	
	6V-8397	1	SEAL-O-RING	
	6V-9343	1	ELBOW	
	148-8370	1	ELBOW GP	
	6V-8398	1	SEAL-O-RING	
	6V-9851	1	ELBOW	
	148-8362	1	ELBOW GP	
	3D-2824	1	SEAL-O-RING	
	5K-9090	1	SEAL-O-RING	
	8T-6684	1	ELBOW	
	148-8367	1	ELBOW GP	
	6V-8397	1	SEAL-O-RING	
	6V-9850	1	ELBOW (SWIVEL)	
C	**6V-3965**	2	FITTING (QUICK DISCONNECT) (IMPLEMENT PUMP)	
C	**126-0814**	1	FITTING AS	
	1P-4578	8	FLANGE-HALF	
	5P-8077	8	FLANGE-HALF	
	6V-0683	1	GROMMET	
I	**8W-0225**	1	HOSE AS	
I	**130-9456**	1	HOSE AS	
I	**130-9457**	1	HOSE AS	
I	**141-9610**	1	HOSE AS	
I	**149-7153**	1	HOSE AS	
I	**154-8544**	1	HOSE AS	
I	**156-9628**	1	HOSE AS	
I	**173-6117**	1	HOSE AS	
I	**173-6733**	1	HOSE AS	
I	**175-3581**	1	HOSE AS	
I	**218-2830**	1	HOSE AS	
	221-0293	1	HOSE AS	
	228-7430	1	HOSE AS	
	228-7432	1	HOSE AS	
	7T-9745	1	MANIFOLD-VALVE	
	7T-8331	4	MOUNTING	
	6V-8188	2	NUT (1/2-13-THD)	
	7X-0448	2	NUT (5/8-11-THD)	

173-1553 **LINES GP-PUMP** ***(contd.)*** **i01925773**

NOTE	PART NUMBER	QTY	PART NAME 1 2 3 4 5 6 (PRODUCT LEVEL)	SEE PAGE
	9W-1651	1	PLATE AS	
	9W-1654	1	PLATE AS	
	137-6497	1	PLATE AS	
	141-9607	1	PLATE AS	
	154-8080	1	PLATE AS	
	208-4585	1	PLATE AS	
	6T-9387	1	PLATE AS	
C	**9S-4191**	1	PLUG	
C	**3J-1907**	8	SEAL-O-RING	
	2H-6338	2	SEAL-O-RING	
	3D-2824	1	SEAL-O-RING	
	4J-0522	4	SEAL-O-RING	
	6V-8260	1	SEAL-O-RING	
C	**6V-8397**	5	SEAL-O-RING	
	1P-3705	6	SEAL-RECTANGULAR	
	7G-8839	5	SPACER (13.5X57X6-MM THK)	
	149-1333	1	TEE	
C	**123-2511**	1	TEE	
	148-8452	1	TEE AS	
	148-8435	1	TEE AS	
	3J-1907	1	SEAL-O-RING	
	6V-8397	2	SEAL-O-RING	
	6V-8781	1	TEE-FACE SEAL	
	206-5121	1	TEE AS	
	3K-0360	1	SEAL-O-RING	
	6V-8397	2	SEAL-O-RING	
	206-5119	1	TEE	
	148-8443	3	TEE GP	
			(EACH INCLUDES)	
	3J-1907	1	SEAL-O-RING	
	6V-8397	1	SEAL-O-RING	
	7X-2459	1	TEE-O-RING	
	148-8433	2	TEE GP	
			(EACH INCLUDES)	
	6V-8397	2	SEAL-O-RING	
	6V-9836	1	TEE-SWIVEL	
	155-9587	1	TUBE AS	
	154-6165	1	VALVE-CHECK	
	8T-5360	8	WASHER (12X22.5X2.5-MM THK)	
C	**5P-1075**	4	WASHER-HARD (10.2X22.5X3-MM THK)	
	8T-4121	12	WASHER-HARD (11X21X2.5-MM THK)	
	8T-4122	22	WASHER-HARD (17X32X3.5-MM THK)	
	8T-4223	13	WASHER-HARD (13.5X25.5X3-MM THK)	
C	**8T-4896**	22	WASHER-HARD (10.2X18.5X2.5-MM THK)	

C-CHANGE FROM PREVIOUS TYPE
I-REFER TO HYDRAULIC INFORMATION SYSTEM
M-METRIC PART
Y-SEPARATE ILLUSTRATION

<END>

HYDRAULIC SYSTEM

173-1553 LINES GP-PUMP

S/N: 7PZ665-731

PART OF 155-5553 CONTROL AR-HYDRAULIC

SMCS-5057 **i01925786**

NOTE	REF NO	GRAPHIC REF	PART NUMBER	QTY	PART NAME 1 2 3 4 5 6 (PRODUCT LEVEL)	SEE PAGE
C	1	1,2	**6V-0852**	3	CAP-DUST	
	2	1,2	**6V-3965**	3	FITTING (QUICK DISCONNECT) (IMPLEMENT PUMP)	
	3	1,2	**7G-8839**	5	SPACER (13.5X57X6MM THK)	
	4	1,2	**7T-8331**	4	MOUNTING	
	5	2	**7V-8532**	1	SPACER	
	6	2	**8D-0983**	2	MOUNTING	
	7	2	**8D-7185**	2	WASHER (11.9X38.1X3MM THK)	
I	8	1	**8W-0225**	1	HOSE AS	
Y	9	2	**9T-3096**	1	VALVE GP-CHECK (HYDRAULIC OIL FILTER)	864
	10	1	**9W-1651**	1	PLATE AS	
	11	1	**9W-1653**	1	BRACKET	
	12	1	**9W-1654**	1	PLATE AS	
	13	1,2	**9X-2614**	2	CONNECTOR	
	14	1	**9X-8402**	1	CLIP	
Y	15	1	**113-1050**	1	ACCUMULATOR GP-HYDRAULIC (PILOT OIL)	648
I	16	1	**130-9456**	1	HOSE AS	
I	17	1	**130-9457**	1	HOSE AS	
Y	18	1	*133-1281*	1	FILTER GP-OIL (HYDRAULIC)	725
	19	2	**137-6497**	1	PLATE AS	
	20	2	**141-9607**	1	PLATE AS	
I	21	2	**141-9610**	1	HOSE AS	
	22	1	*148-8330*	1	CONNECTOR AS	
		1	**5K-9090**	1	SEAL-O-RING	
		1	**7M-8485**	1	SEAL-O-RING	
		1	**8T-0198**	1	CONNECTOR	
	23	1	*148-8345*	1	CONNECTOR GP	
		1	**2M-9780**	1	SEAL-O-RING	
		1	**6V-8398**	1	SEAL-O-RING	
		1	**6V-8638**	1	CONNECTOR	
	24	2	*148-8353*	1	ELBOW GP	
		2	**3J-1907**	1	SEAL-O-RING	
		2	**6V-8397**	1	SEAL-O-RING	
		2	**6V-9001**	1	ELBOW	
	25	1	*148-8370*	1	ELBOW GP	
		1	**6V-8398**	1	SEAL-O-RING	
		1	**6V-9851**	1	ELBOW	
	26	1,2	*148-8378*	5	ELBOW AS	
					(EACH INCLUDES)	
		1,2	**3J-1907**	1	SEAL-O-RING	
		1,2	**6V-8397**	1	SEAL-O-RING	
		1,2	**6V-8724**	1	ELBOW	
	27	2	*148-8435*	1	TEE AS	
		2	**3J-1907**	1	SEAL-O-RING	
		2	**6V-8397**	2	SEAL-O-RING	
		2	**6V-8781**	1	TEE-FACE SEAL	
	28	1	*148-8443*	1	TEE GP	
		1	**3J-1907**	1	SEAL-O-RING	
		1	**6V-8397**	1	SEAL-O-RING	
		1	**7X-2459**	1	TEE-O-RING	
	29	1	**149-1333**	1	TEE	
I	30	2	**149-7153**	1	HOSE AS	
	31	2	*150-3065*	1	ADAPTER GP	
		2	**3J-1907**	1	SEAL-O-RING	
		2	**6V-0484**	1	ADAPTER-O-RING	
Y	32	2	**152-8340**	1	VALVE GP-SOLENOID (24 VOLT)	909
	33	1	**154-6165**	1	VALVE-CHECK	

173-1553 **LINES GP-PUMP** ***(contd.)*** **i01925786**

NOTE	REF NO	GRAPHIC REF	PART NUMBER	QTY	PART NAME 1 2 3 4 5 6 (PRODUCT LEVEL)	SEE PAGE
	34	1	**154-8080**	1	PLATE AS	
I	35	1	**154-8544**	1	HOSE AS	
Y	36	1	**155-6061**	1	FILTER GP-OIL (HYDRAULIC)	726
	37	2	**155-9587**	1	TUBE AS	
	38	1	**156-7389**	1	BRACKET AS	
I	39	1	**156-9628**	1	HOSE AS	
I	40	1	**157-5551**	1	HOSE AS	
	41	2	**157-5555**	1	PLATE	
	42	2	**157-5558**	1	MANIFOLD	
	43	1	**158-8902**	1	BRACKET AS	
		1	**1F-0750**	1	NUT-WELD (3/8-16THD)	
	44	2	*167-1795*	1	ELBOW AS	
		2	**3D-2824**	1	SEAL-O-RING	
		2	**8T-3491**	1	ELBOW	
I	45	1	**173-6117**	1	HOSE AS	
I	46	2	**173-6733**	1	HOSE AS	
I	47	1	**175-3581**	1	HOSE AS	
	48	2	**208-4585**	1	PLATE AS	
I	49	1	**218-2830**	1	HOSE AS	
	50	1	**221-0293**	1	HOSE AS	
C	51	1	**228-7430**	1	HOSE AS	
C	52	1	**228-7431**	1	HOSE AS	
C	53	1	**228-7432**	1	HOSE AS	
	54	1	**131-8201**	2	CLIP (SLOT)	
	55	1	**131-8202**	2	CLIP (TAB)	
	56	2	*148-8313*	1	ADAPTER GP	
		2	**3K-0360**	1	SEAL-O-RING	
		2	**5P-6944**		ADAPTER	
	57	1	*148-8318*	2	CONNECTOR GP	
		1	**3K-0360**	1	SEAL-O-RING	
		1	**6V-8397**	1	SEAL-O-RING	
		1	**6V-8634**	1	CONNECTOR	
	58	1,2	*148-8336*	2	CONNECTOR AS	
					(EACH INCLUDES)	
		1,2	**3J-1907**	1	SEAL-O-RING	
		1,2	**6V-8397**	1	SEAL-O-RING	
		1,2	**6V-8636**	1	CONNECTOR	
	59	2	*148-8362*	1	ELBOW GP	
		2	**3D-2824**	1	SEAL-O-RING	
		2	**5K-9090**	1	SEAL-O-RING	
		2	**8T-6684**	1	ELBOW	
	60	1	*148-8367*	1	ELBOW GP	
		1	**6V-8397**	1	SEAL-O-RING	
		1	**6V-9850**	1	ELBOW (SWIVEL)	
	61	1,2	*148-8433*	2	TEE GP	
		1,2	**6V-8397**	2	SEAL-O-RING	
		1,2	**6V-9836**	1	TEE-SWIVEL	
	62	1	*150-3028*	1	ELBOW AS	
		1	**3D-2824**	1	SEAL-O-RING	
		1	**6V-8397**	1	SEAL-O-RING	
		1	**6V-9343**	1	ELBOW	
C	63	1	*155-7321*	1	ADAPTER GP	
		1	**3D-2824**	1	SEAL-O-RING	
		1	**6V-1722**	1	ADAPTER-O-RING	
	64	1,2	**1P-3705**	6	SEAL-RECTANGULAR	
	65	1,2	**1P-4578**	8	FLANGE-HALF	
	66	1	**1P-4578**	2	FLANGE-HALF	
	67	2	**1S-0996**	1	CLIP	
C	68	1	*206-5121*	1	TEE AS	

173-1553 **LINES GP-PUMP** ***(contd.)*** **i01925786**

NOTE	REF NO	GRAPHIC REF	PART NUMBER	QTY	PART NAME 1 2 3 4 5 6 (PRODUCT LEVEL)	SEE PAGE
		1	**3K-0360**	1	SEAL-O-RING	
		1	**6V-8397**	2	SEAL-O-RING	
		1	**206-5119**	1	TEE	
	69	1	**2H-6338**	2	SEAL-O-RING	
	70	2	**2P-8421**	1	ADAPTER-O-RING	
	71	1	**3D-2824**	1	SEAL-O-RING	
C	72	1,2	**3J-1907**	6	SEAL-O-RING	
	73	1,2	**4J-0522**	5	SEAL-O-RING	
	74	1,2	**4L-6454**	8	BOLT (3/8-16X1 IN)	
	75	2	**5P-0049**	1	COVER	
	76	1,2	**5P-1075**	6	WASHER-HARD (10.2X22.5X3MM THK)	
	77	2	**5P-2424**	3	BOLT (1/2-13X2.25 IN)	
	78	1	**5P-7462**	1	CLIP (SLOT)	
	79	1	**5P-7463**	1	CLIP (TAB)	
	80	1	**5P-7464**	2	CLIP (SLOT)	
	81	1	**5P-7465**	2	CLIP (TAB)	
	82	1,2	**5P-8077**	8	FLANGE-HALF	
	83	1,2	**5S-7379**	5	BOLT (3/8-16X0.875 IN)	
	84	2	**6T-9387**	1	PLATE AS	
	85	1	**6V-0683**	1	GROMMET	
	86	1	**6V-8188**	2	NUT (1/2-13 THD)	
	87	1	**6V-8260**	1	SEAL-O-RING	
	88	1,2	**6V-8397**	4	SEAL-O-RING	
	89	1	**6V-9829**	1	CAP AS	
	90	2	**7S-3912**	2	CLIP (TAB)	
	91	2	**7S-3913**	2	CLIP (SLOT)	
	92	2	**7T-9745**	1	MANIFOLD-VALVE	
	93	1	**7X-0290**	4	BOLT (3/8-16X3.50 IN)	
	94	1	**7X-0308**	4	BOLT (7/16-14X1.375 IN)	
	95	2	**7X-0313**	4	BOLT (7/16-14X2.75 IN)	
	96	1	**7X-0346**	4	BOLT (5/8-11X2 IN)	
	97	1	**7X-0362**	4	BOLT (5/8-11X7 IN)	
	98	1	**7X-0448**	2	NUT (5/8-11 THD)	
	99	2	**8C-4436**	2	BOLT (1/2-13X1.375 IN)	
	100	2	**8F-6437**	2	WASHER (13.5X50.8X4.76MM THK)	
	101	1	**8J-8197**	1	CLIP	
	102	2	**8T-2501**	4	BOLT (3/8-16X2 IN)	
	103	2	**8T-2502**	4	BOLT (3/8-16X1.125 IN)	
	104	1	**8T-4121**	12	WASHER-HARD (11X21X2.5MM THK)	
	105	1,2	**8T-4122**	22	WASHER-HARD (17X32X3.5MM THK)	
M	106	1	**8T-4137**	4	BOLT (M10X1.5X20MM)	
M	107	1	**8T-4196**	8	BOLT (M10X1.5X35MM)	
	108	1,2	**8T-4223**	13	WASHER-HARD (13.5X25.5X3MM THK)	
	109	1,2	**8T-4896**	24	WASHER-HARD (10.2X18.5X2.5MM THK)	
	110	1,2	**8T-5360**	8	WASHER (12X22.5X2.5MM THK)	
	111	1,2	**8T-6871**	12	BOLT (5/8-11X2.50 IN)	
	112	1,2	**8T-8917**	7	BOLT (1/2-13X1.25 IN)	
	113	1	**8T-8919**	2	BOLT (1/2-13X1.75 IN)	
	114	1	**8T-9389**	1	BOLT (1/2-13X2.75 IN)	
	115	1	**9B-7237**	5	BOLT (3/8-16X1.25 IN)	

C-CHANGE FROM PREVIOUS TYPE
I-REFER TO HYDRAULIC INFORMATION SYSTEM
M-METRIC PART
Y-SEPARATE ILLUSTRATION

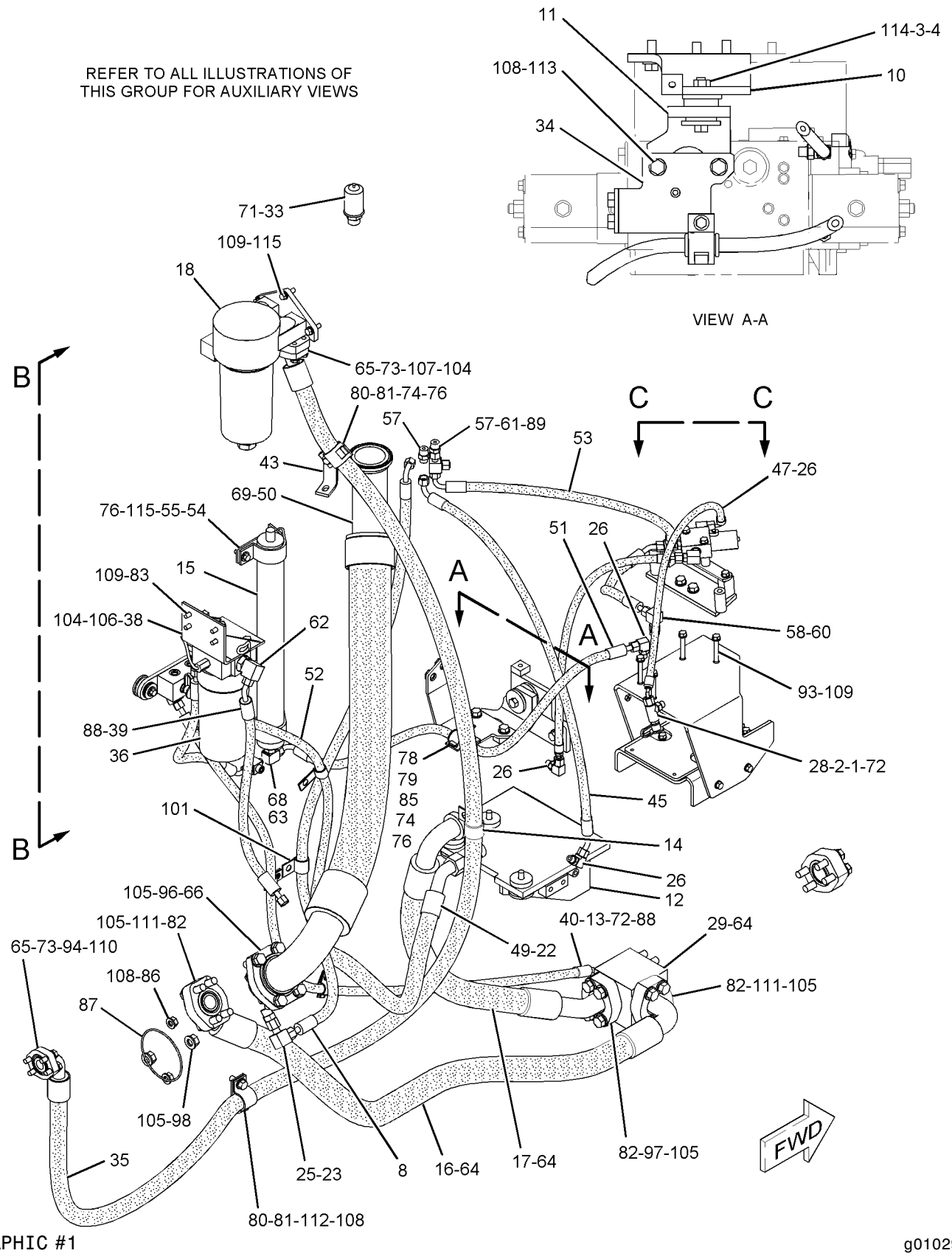

GRAPHIC #1

g01029148

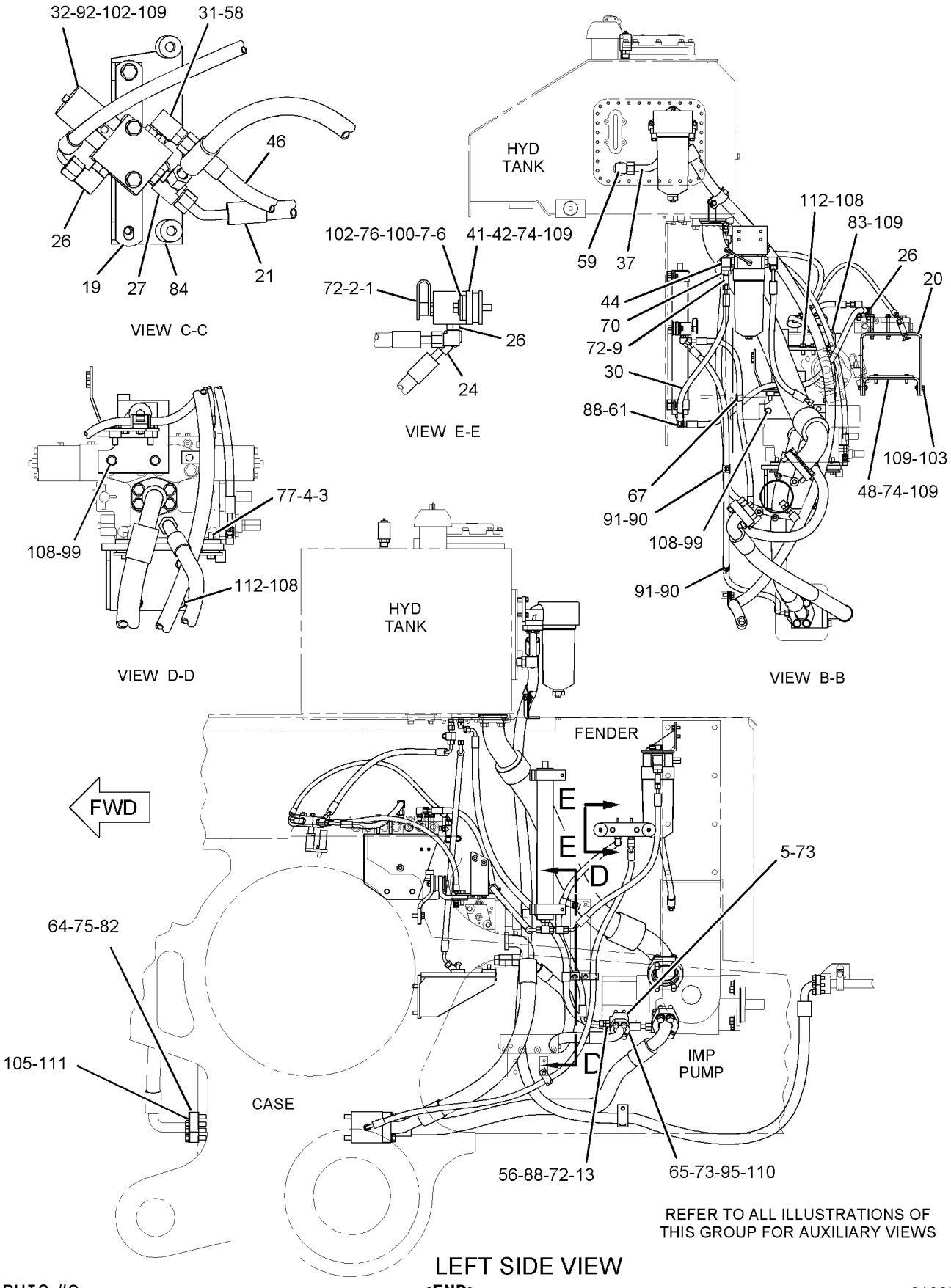

GRAPHIC #2

<END>

g01029149

HYDRAULIC SYSTEM

173-1553 LINES GP-PUMP

S/N: 7PZ732-UP

PART OF 155-5553 CONTROL AR-HYDRAULIC

SMCS-5057 **i02018731**

NOTE	REF NO	GRAPHIC REF	PART NUMBER	QTY	PART NAME 1 2 3 4 5 6 (PRODUCT LEVEL)	SEE PAGE
C	1	2	**6V-0852**	1	CAP-DUST	
C	2	2	**6V-3965**	1	FITTING (QUICK DISCONNECT)	
	3	1,2	**7G-8839**	5	SPACER (13.5X57X6-MM THK)	
	4	1,2	**7T-8331**	4	MOUNTING	
I	5	2	**8W-0225**	1	HOSE AS	
Y	6	1	**9T-3096**	1	VALVE GP-CHECK (HYDRAULIC OIL FILTER)	864
	7	2	**9W-1651**	1	PLATE AS	
	8	2	**9W-1653**	1	BRACKET	
	9	1	**9W-1654**	1	PLATE AS	
	10	2	**9X-8402**	1	CLIP	
Y	11	2	**113-1050**	1	ACCUMULATOR GP-HYDRAULIC (PILOT OIL)	648
C	12	1	**126-0814**	2	FITTING AS	
					(EACH INCLUDES)	
		1	**6V-0852**	1	CAP-DUST	
I	13	2	**130-9456**	1	HOSE AS	
I	14	2	**130-9457**	1	HOSE AS	
Y	15	2	*133-1281*	1	FILTER GP-OIL (TRANSMISSION)	725
C	16	2	**135-2755**	1	ADAPTER	
	17	2	**137-6497**	1	PLATE AS	
	18	2	**141-9607**	1	PLATE AS	
I	19	2	**141-9610**	1	HOSE AS	
	20	2	*148-8330*	1	CONNECTOR AS	
		2	**5K-9090**	1	SEAL-O-RING	
		2	**7M-8485**	1	SEAL-O-RING	
		2	**8T-0198**	1	CONNECTOR	
	21	2	*148-8345*	1	CONNECTOR GP	
		2	**2M-9780**	1	SEAL-O-RING	
		2	**6V-8398**	1	SEAL-O-RING	
		2	**6V-8638**	1	CONNECTOR	
	22	2	*148-8370*	1	ELBOW GP	
		2	**6V-8398**	1	SEAL-O-RING	
		2	**6V-9851**	1	ELBOW	
C	23	2	*148-8378*	4	ELBOW AS	
					(EACH INCLUDES)	
		2	**3J-1907**	1	SEAL-O-RING	
		2	**6V-8397**	1	SEAL-O-RING	
		2	**6V-8724**	1	ELBOW	
	24	2	*148-8435*	1	TEE AS	
		2	**3J-1907**	1	SEAL-O-RING	
		2	**6V-8397**	2	SEAL-O-RING	
		2	**6V-8781**	1	TEE-FACE SEAL	
	25	2	*148-8443*	3	TEE GP	
					(EACH INCLUDES)	
		2	**3J-1907**	1	SEAL-O-RING	
		2	**6V-8397**	1	SEAL-O-RING	
		2	**7X-2459**	1	TEE-O-RING	
	26	2	**149-1333**	1	TEE	
I	27	2	**149-7153**	1	HOSE AS	
	28	2	*150-3065*	1	ADAPTER GP	
		2	**3J-1907**	1	SEAL-O-RING	
		2	**6V-0484**	1	ADAPTER-O-RING	
Y	29	2	**152-8340**	1	VALVE GP-SOLENOID (24-VOLT)	909
	30	2	**154-6165**	1	VALVE-CHECK (HYDRAULIC TANK RELIEF)	
	31	2	**154-8080**	1	PLATE AS	
I	32	2	**154-8544**	1	HOSE AS	
Y	33	1	**155-6061**	1	FILTER GP-OIL (PILOT SUPPLY)	726

173-1553 **LINES GP-PUMP** ***(contd.)*** **i02018731**

NOTE	REF NO	GRAPHIC REF	PART NUMBER	QTY	PART NAME 1 2 3 4 5 6 (PRODUCT LEVEL)	SEE PAGE
	34	1	**155-9587**	1	TUBE AS	
	35	2	**156-7389**	1	BRACKET AS	
I	36	2	**156-9628**	1	HOSE AS	
	37	2	**158-8902**	1	BRACKET AS	
		2	**1F-0750**	1	NUT-WELD (3/8-16-THD)	
	38	1	*167-1795*	1	ELBOW AS	
		1	**3D-2824**	1	SEAL-O-RING	
		1	**8T-3491**	1	ELBOW	
I	39	2	**173-6117**	1	HOSE AS	
I	40	2	**173-6733**	1	HOSE AS	
I	41	2	**175-3581**	1	HOSE AS	
	42	2	**208-4585**	1	PLATE AS	
I	43	2	**218-2830**	1	HOSE AS	
	44	2	**221-0293**	1	HOSE AS	
	45	2	**228-7430**	1	HOSE AS	
	46	2	**228-7432**	1	HOSE AS	
C	47	2	**238-4768**	1	BRACKET	
	48	2	**131-8201**	2	CLIP (SLOT)	
	49	2	**131-8202**	2	CLIP (TAB)	
C	50	2	*148-8318*	1	CONNECTOR GP	
		2	**3K-0360**	1	SEAL-O-RING	
		2	**6V-8397**	1	SEAL-O-RING	
		2	**6V-8634**	1	CONNECTOR	
	51	2	*148-8336*	2	CONNECTOR AS	
					(EACH INCLUDES)	
		2	**3J-1907**	1	SEAL-O-RING	
		2	**6V-8397**	1	SEAL-O-RING	
		2	**6V-8636**	1	CONNECTOR	
	52	1	*148-8362*	1	ELBOW GP	
		1	**3D-2824**	1	SEAL-O-RING	
		1	**5K-9090**	1	SEAL-O-RING	
		1	**8T-6684**	1	ELBOW	
	53	2	*148-8367*	1	ELBOW GP	
		2	**6V-8397**	1	SEAL-O-RING	
		2	**6V-9850**	1	ELBOW (SWIVEL)	
C	54	1	*148-8377*	2	ELBOW GP	
					(EACH INCLUDES)	
		1	**6V-8397**	2	SEAL-O-RING	
		1	**6V-8980**	1	ELBOW	
C	55	1	*148-8407*	1	PLUG GP	
		1	**3J-1907**	1	SEAL-O-RING	
		1	**9S-4191**	1	PLUG	
C	56	2	*148-8433*	2	TEE GP	
					(EACH INCLUDES)	
		2	**6V-8397**	2	SEAL-O-RING	
		2	**6V-9836**	1	TEE-SWIVEL	
C	57	2	*148-8452*	1	TEE AS	
		2	**6V-8397**	1	SEAL-O-RING	
		2	**6V-8398**	2	SEAL-O-RING	
		2	**8T-2363**	1	TEE-UNION	
	58	2	*150-3028*	1	ELBOW AS	
		2	**3D-2824**	1	SEAL-O-RING	
		2	**6V-8397**	1	SEAL-O-RING	
		2	**6V-9343**	1	ELBOW	
	59	2	*155-7321*	1	ADAPTER GP	
		2	**3D-2824**	1	SEAL-O-RING	
		2	**6V-1722**	1	ADAPTER-O-RING	
	60	2	**1P-3705**	6	SEAL-RECTANGULAR	
	61	1,2	**1P-4578**	8	FLANGE-HALF	

173-1553 **LINES GP-PUMP** ***(contd.)*** **i02018731**

NOTE	REF NO	GRAPHIC REF	PART NUMBER	QTY	PART NAME 1 2 3 4 5 6 (PRODUCT LEVEL)	SEE PAGE
	62	2	**1P-4585**	2	FLANGE-HALF	
	63	2	*206-5121*	1	TEE AS	
		2	**3K-0360**	1	SEAL-O-RING	
		2	**6V-8397**	2	SEAL-O-RING	
		2	**206-5119**	1	TEE	
CI	64	2	**238-5471**	2	HOSE AS	
	65	2	**2H-6338**	2	SEAL-O-RING	
	66	1,2	**2P-8421**	1	ADAPTER-O-RING	
	67	2	**3D-2824**	1	SEAL-O-RING	
C	68	1,2	**3J-1907**	2	SEAL-O-RING	
C	69	1,2	**4J-0522**	4	SEAL-O-RING	
	70	2	**4L-6454**	8	BOLT (3/8-16X1-IN)	
	71	2	**5P-0049**	1	COVER	
C	72	2	**5P-1075**	4	WASHER-HARD (10.2X22.5X3-MM THK)	
	73	1	**5P-2424**	3	BOLT (1/2-13X2.25-IN)	
	74	2	**5P-7462**	1	CLIP (SLOT)	
	75	2	**5P-7463**	1	CLIP (TAB)	
	76	2	**5P-7464**	2	CLIP (SLOT)	
	77	2	**5P-7465**	2	CLIP (TAB)	
	78	2	**5P-8077**	8	FLANGE-HALF	
	79	2	**5S-7379**	5	BOLT (3/8-16X0.875-IN)	
	80	2	**6T-9387**	1	PLATE AS	
	81	2	**6V-0683**	1	GROMMET	
	82	2	**6V-8188**	2	NUT (1/2-13-THD)	
	83	2	**6V-8260**	1	SEAL-O-RING	
C	84	1,2	**6V-8397**	2	SEAL-O-RING	
C	85	2	**6V-8398**	1	SEAL-O-RING	
C	86	1	**6V-9168**	2	NUT (11/16-16-THD)	
	87	2	**6V-9829**	1	CAP AS	
	88	2	**7T-9745**	1	MANIFOLD-VALVE	
	89	2	**7X-0290**	4	BOLT (3/8-16X3.50-IN)	
	90	2	**7X-0308**	4	BOLT (7/16-14X1.375-IN)	
	91	2	**7X-0346**	4	BOLT (5/8-11X2-IN)	
	92	2	**7X-0362**	4	BOLT (5/8-11X7-IN)	
	93	2	**7X-0448**	2	NUT (5/8-11-THD)	
	94	1	**8C-4436**	2	BOLT (1/2-13X1.375-IN)	
	95	2	**8J-8197**	1	CLIP	
C	96	2	**8T-2501**	2	BOLT (3/8-16X2-IN)	
	97	2	**8T-2502**	4	BOLT (3/8-16X1.125-IN)	
	98	1,2	**8T-4121**	12	WASHER-HARD (11X21X2.5-MM THK)	
	99	2	**8T-4122**	22	WASHER-HARD (17X32X3.5-MM THK)	
M	100	2	**8T-4137**	4	BOLT (M10X1.5X20-MM)	
M	101	1,2	**8T-4196**	8	BOLT (M10X1.5X35-MM)	
	102	1,2	**8T-4223**	13	WASHER-HARD (13.5X25.5X3-MM THK)	
	103	2	**8T-4896**	24	WASHER-HARD (10.2X18.5X2.5-MM THK)	
	104	1,2	**8T-5360**	8	WASHER (12X22.5X2.5-MM THK)	
	105	2	**8T-6871**	12	BOLT (5/8-11X2.50-IN)	
C	106	1	**8T-8916**	4	BOLT (7/16-14X1.5-IN)	
	107	1,2	**8T-8917**	7	BOLT (1/2-13X1.25-IN)	
	108	2	**8T-8919**	2	BOLT (1/2-13X1.75-IN)	
	109	2	**8T-9389**	1	BOLT (1/2-13X2.75-IN)	
	110	2	**9B-7237**	5	BOLT (3/8-16X1.25-IN)	
C	111	1	**9X-8268**	4	WASHER (17.5X30X3.5-MM THK)	

C-CHANGE FROM PREVIOUS TYPE
I-REFER TO HYDRAULIC INFORMATION SYSTEM
M-METRIC PART
Y-SEPARATE ILLUSTRATION

REFER TO ALL ILLUSTRATIONS OF
THIS GROUP FOR AUXILIARY VIEWS

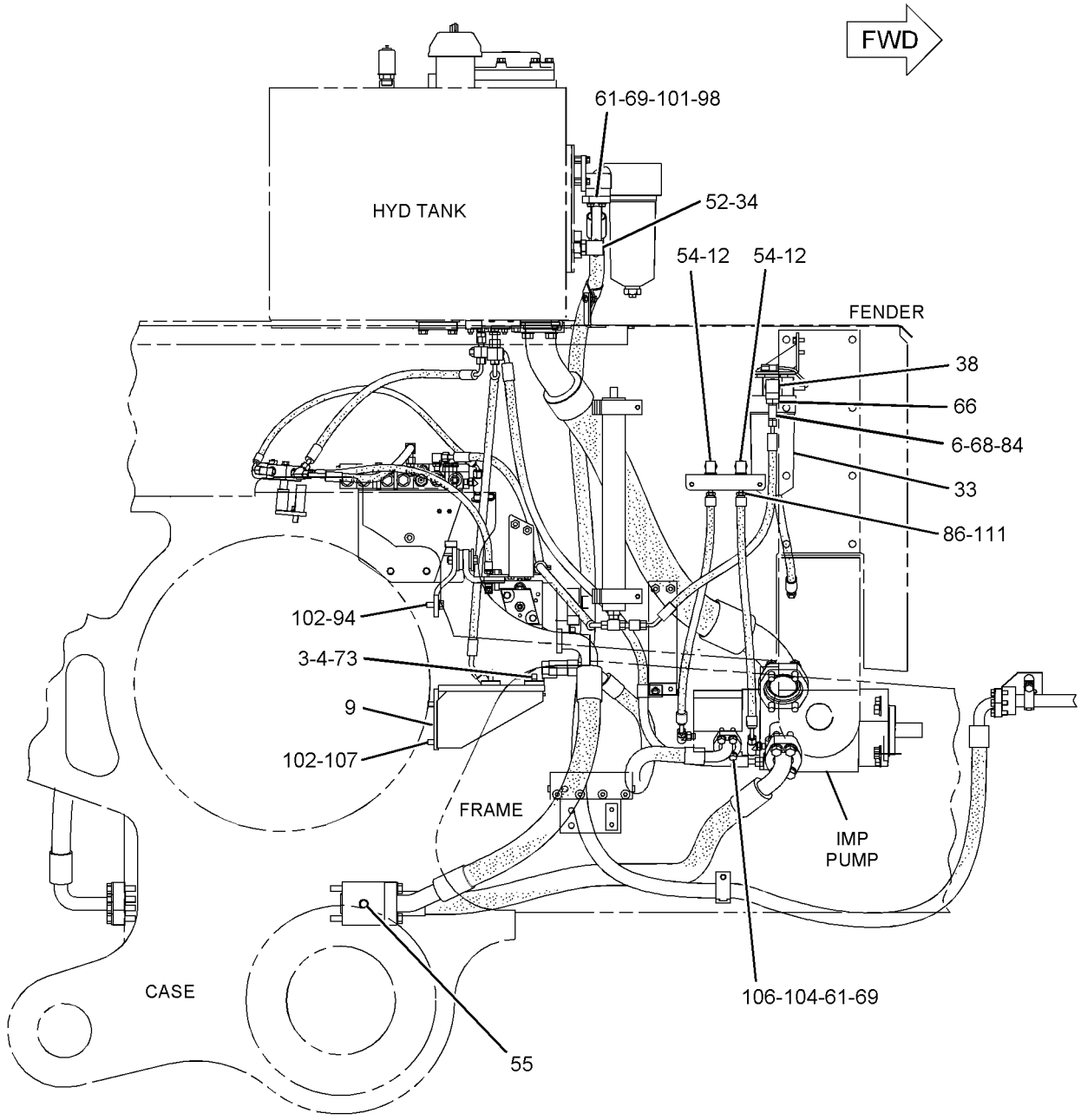

RIGHT SIDE VIEW

GRAPHIC #1

g01044440

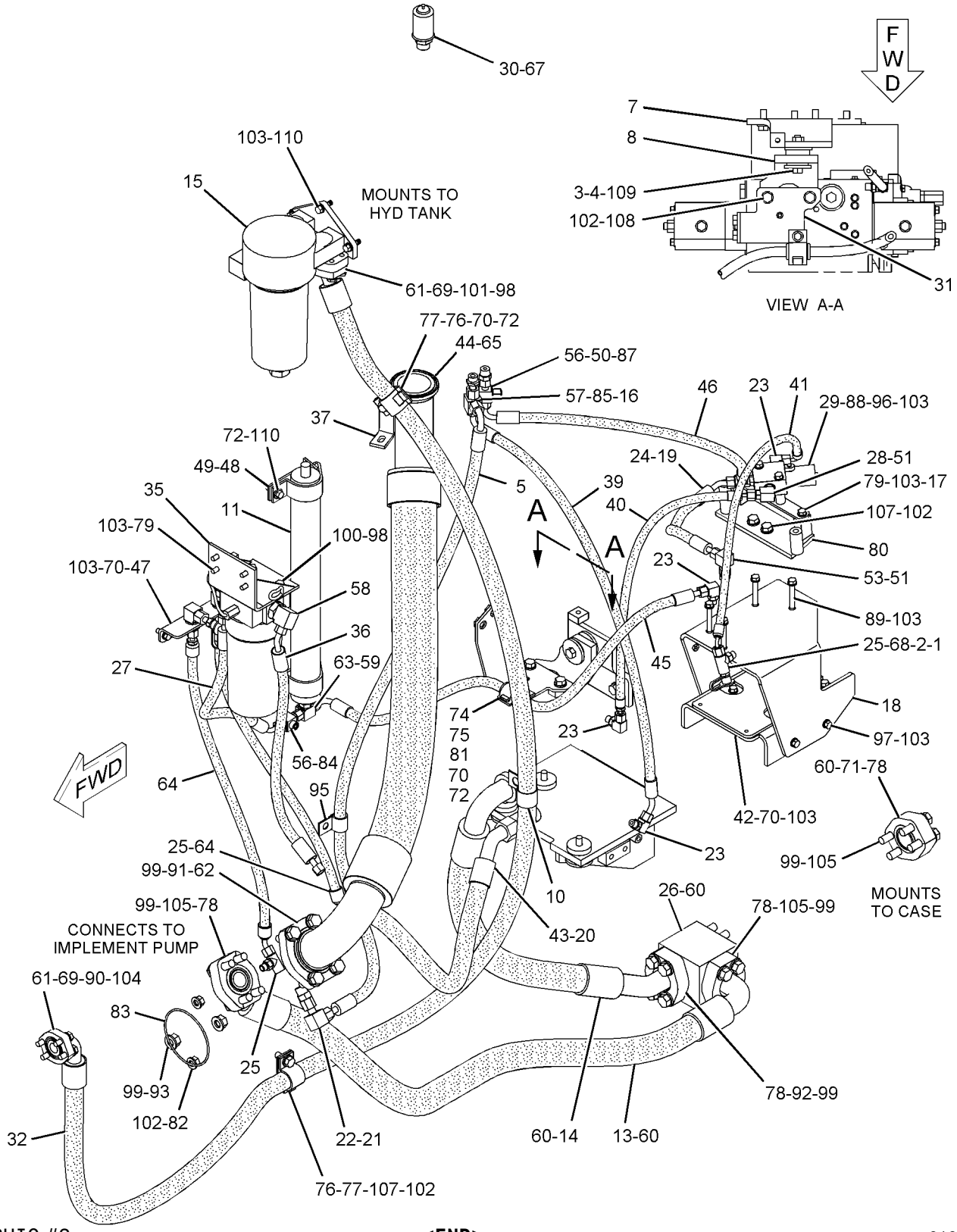

GRAPHIC #2 **<END>** g01044441

HYDRAULIC SYSTEM

163-4090 LINES GP-RELIEF—DUAL TILT

S/N: 7PZ1-UP
PART OF 164-4810 VALVE AR-RELIEF
AN ATTACHMENT

SMCS-5057 **i01989516**

NOTE	REF NO	GRAPHIC REF	PART NUMBER	QTY	PART NAME 1 2 3 4 5 6 (PRODUCT LEVEL)	SEE PAGE
	1	1	**163-4091**	2	PLATE	
	2	1	**6V-8625**	5	ELBOW	
	3	1	**8T-4896**	20	WASHER-HARD (10.2X18.5X2.5MM THK)	
	4	1	**6V-8639**	1	CONNECTOR	
	5	1	**3K-0360**	10	SEAL-O-RING	
	6	1	**6V-8398**	8	SEAL-O-RING	
I	7	1	**163-4096**	1	HOSE AS	
	8	1	**8T-9101**	16	BOLT (3/8-16X2.75 IN)	
I	9	1	**163-4095**	2	HOSE AS	
I	10	1	**163-4094**	1	HOSE AS	
I	11	1	**163-4098**	1	HOSE AS	
	12	1	**6V-8397**	3	SEAL-O-RING	
	13	1	**163-4093**	1	PLATE	
	14	1	**9S-4185**	1	PLUG	
	15	1	**6V-8634**	1	CONNECTOR	
	16	1	**6E-6285**	4	VALVE GP-RELIEF (DUAL TILT LINES)	
					(EACH INCLUDES)	
		1	**4K-1388**	1	SEAL-O-RING	
		1	**5K-9090**	1	SEAL-O-RING	
		1	**6E-0358**	1	RING-BACKUP	
	17	1	**6V-9843**	1	TEE-SWIVEL	
	18	1	**6V-9002**	1	ELBOW	
	19	1	**3J-1907**	1	SEAL-O-RING	
	20	1	**6V-9009**	1	ELBOW	
	21	1	**9X-2297**	1	CONNECTOR	
	22	1	**8T-7008**	4	BOLT (3/8-16X3 IN)	

I-REFER TO HYDRAULIC INFORMATION SYSTEM

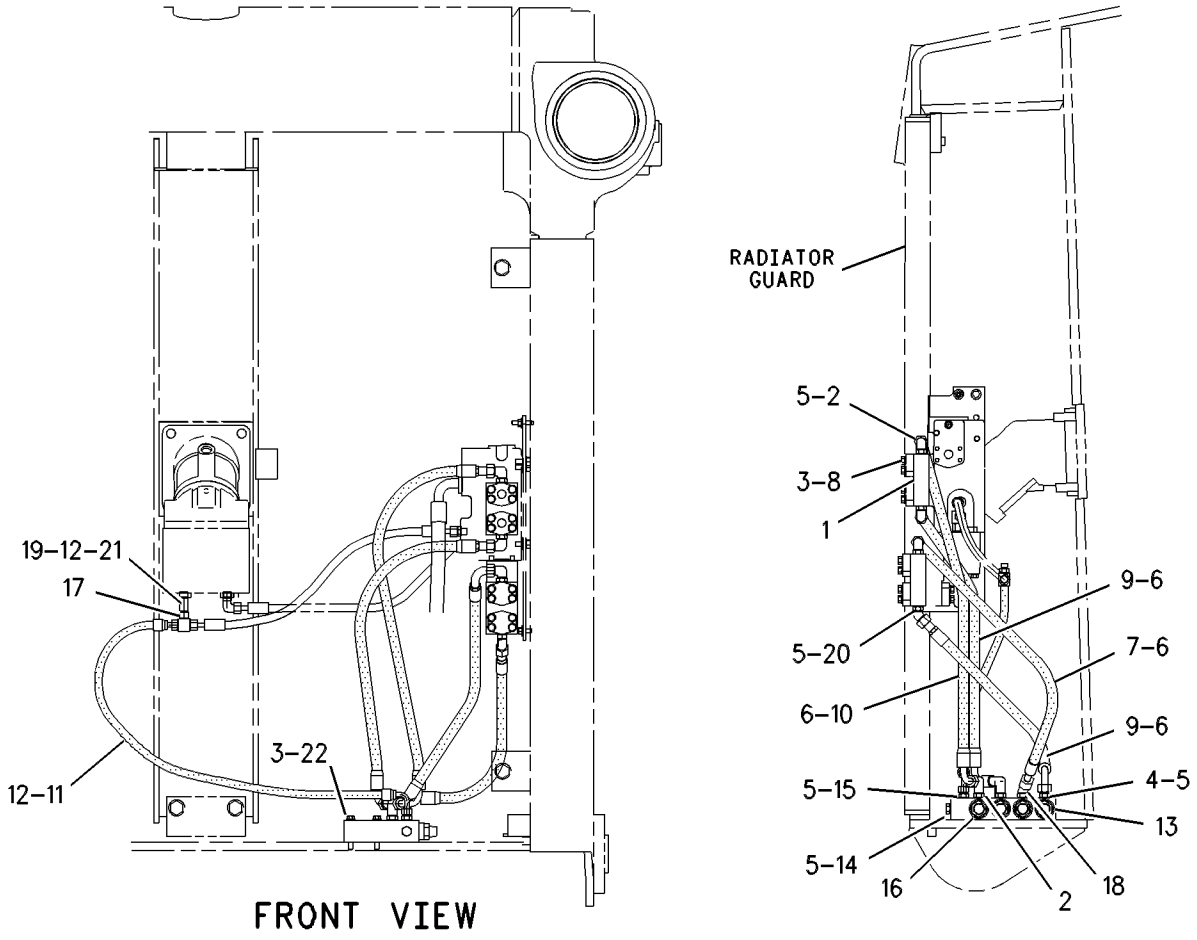

GRAPHIC #1 **<END>** g00583755

HYDRAULIC SYSTEM

141-8376 LINES GP-RIPPER

S/N: 5MP1-UP; 7CP1-UP; 7DP1-UP
PART OF 127-1031, 130-6458, 130-6462 RIPPER AR
AN ATTACHMENT

SMCS-5057, 5352, 5356 **i01425613**

NOTE	REF NO	GRAPHIC REF	PART NUMBER	QTY	PART NAME 1 2 3 4 5 6 (PRODUCT LEVEL)	SEE PAGE
	1	1	**9M-0164**	8	CLAMP-HOSE	
	2	1	**139-2455**	2	SHIELD-RH	
	3	1	**139-2456**	2	SHIELD-LH	
I	4	1	**141-7225**	2	HOSE AS	
I	5	1	**141-7226**	2	HOSE AS	
I	6	1	**141-7228**	2	HOSE AS	
I	7	1	**141-7230**	2	HOSE AS	
	8	1	**147-6626**	8	SHIELD	
	9	1	**151-5203**	4	GROMMET	
	10	1	**4J-0520**	16	SEAL-O-RING (32.92MM ID)	
	11	1	**4L-9337**	8	BOLT (3/8-16X1.5 IN)	
	12	1	**153-8462**	2	CLIP (SLOT)	
	13	1	**153-8463**	2	CLIP (TAB)	
	14	1	**5P-8444**	2	GROMMET	
	15	1	**8T-4896**	4	WASHER-HARD (10.2X18.5X2.5MM THK)	
	16	1	**4L-6454**	4	BOLT (3/8-16X1 IN)	

I-SEE HOSE FABRICATION GUIDE

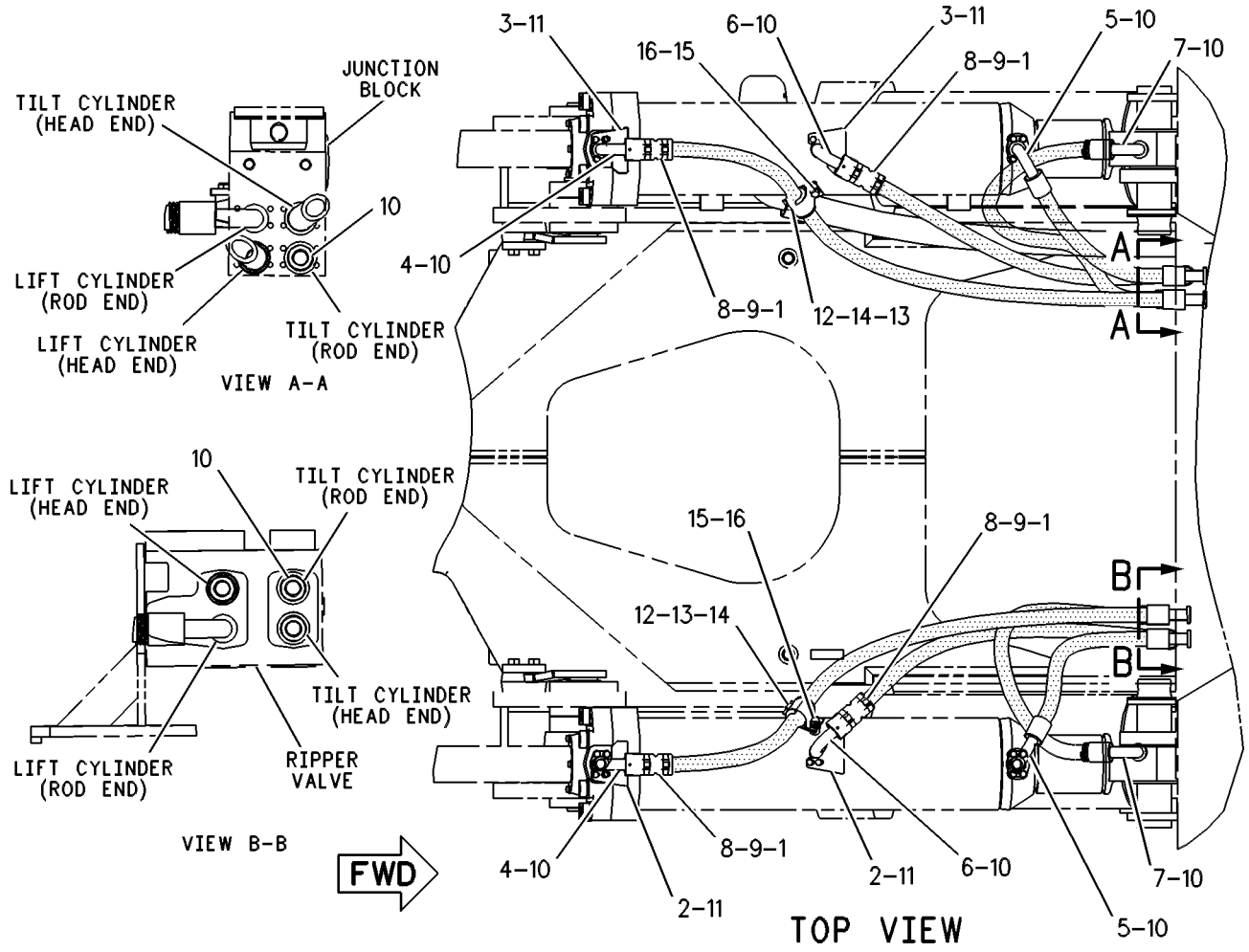

GRAPHIC #1 **<END>** g00291201

HYDRAULIC SYSTEM

161-2411 LINES GP-RIPPER

S/N: 7ZP1-UP
PART OF 161-2420 RIPPER AR
AN ATTACHMENT

SMCS-5057, 5352, 5356 **i01563730**

NOTE	REF NO	GRAPHIC REF	PART NUMBER	QTY	PART NAME 1 2 3 4 5 6 (PRODUCT LEVEL)	SEE PAGE
	1	1	**4Z-9334**	2	PLATE	
	2	1	**9M-0164**	8	CLAMP-HOSE	
	3	1	**139-2455**	2	SHIELD-RH	
	4	1	**139-2456**	2	SHIELD-LH	
I	5	1	**141-7230**	2	HOSE AS	
	6	1	**147-6626**	8	SHIELD	
	7	1	**151-5203**	4	GROMMET	
I	8	1	**163-0122**	2	HOSE AS	
I	9	1	**163-0123**	2	HOSE AS	
I	10	1	**163-0124**	2	HOSE AS	
	11	1	**4J-0520**	16	SEAL-O-RING	
	12	1	**4L-9337**	8	BOLT (3/8-16X1.5 IN)	
	13	1	**5P-1076**	8	WASHER-HARD (13.5X30X4MM THK)	
	14	1	**5P-7468**	4	CLIP (SLOT)	
	15	1	**5P-7469**	4	CLIP (TAB)	
	16	1	**5P-8444**	4	GROMMET	
	17	1	**6V-8188**	4	NUT (1/2-13 THD)	
	18	1	**8C-4436**	4	BOLT (1/2-13X1.375 IN)	
	19	1	**8T-9389**	4	BOLT (1/2-13X2.75 IN)	

I-SEE HOSE FABRICATION GUIDE

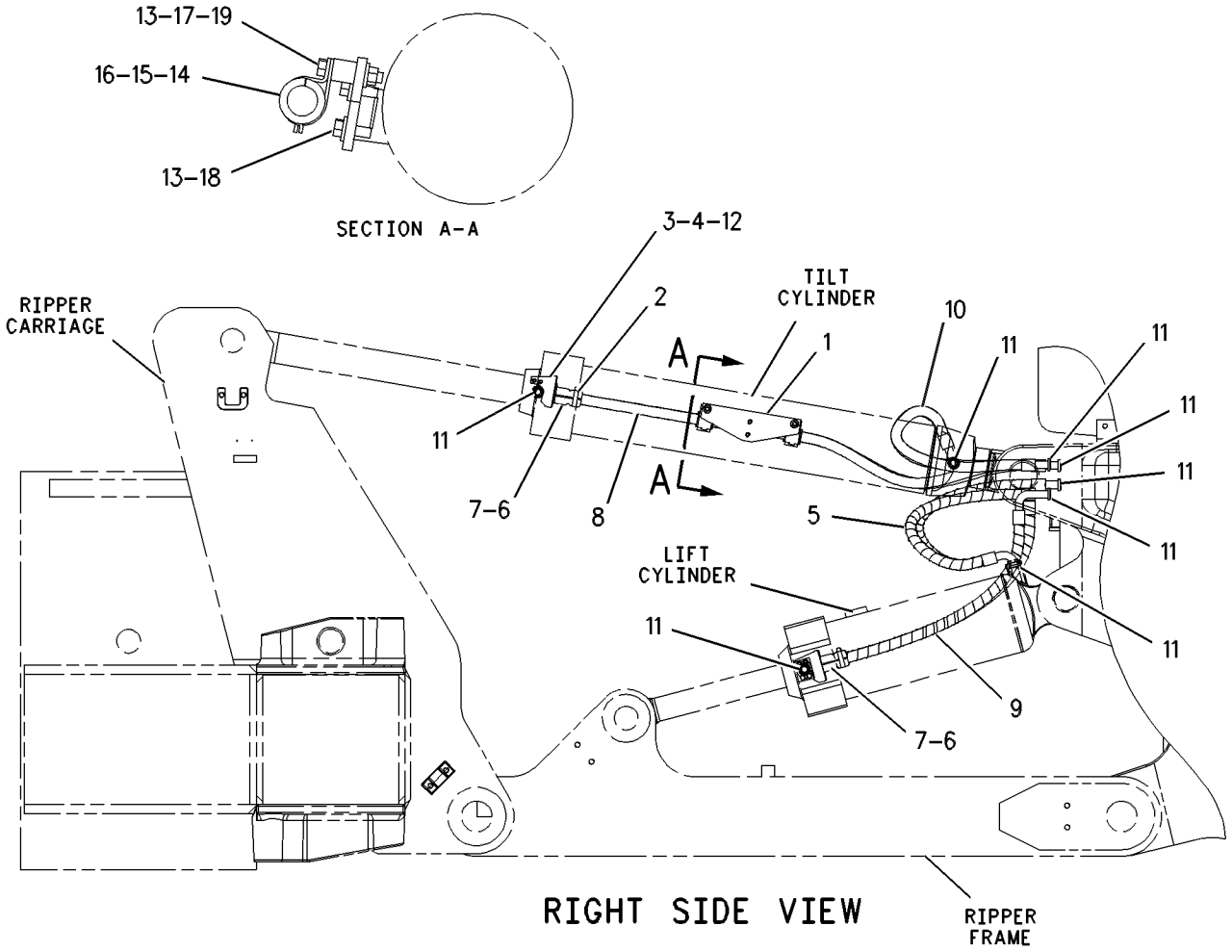

GRAPHIC #1 **<END>** g00519490

HYDRAULIC SYSTEM

173-1551 LINES GP-RIPPER

S/N: 7PZ1-651
PART OF 173-1552 CONTROL AR-HYDRAULIC
AN ATTACHMENT

SMCS-5057, 5352, 5356 **i01988915**

NOTE	REF NO	GRAPHIC REF	PART NUMBER	QTY	PART NAME 1 2 3 4 5 6 (PRODUCT LEVEL)	SEE PAGE
	1	1	**3W-2647**	1	SPACER (13.5X30X10MM THK)	
	2	1	**6V-0852**	1	CAP-DUST	
	3	1	**6V-3965**	1	FITTING (QUICK DISCONNECT)	
	4	1	**8J-5914**	1	PLUG	
	5	1	**126-0814**	4	FITTING AS	
I	6	1	**130-7066**	1	HOSE AS	
I	7	1	**134-6631**	2	HOSE AS	
I	8	1	**134-6632**	2	HOSE AS	
	9	1	*148-8336*	2	CONNECTOR AS	
					(EACH INCLUDES)	
		1	**3J-1907**	1	SEAL-O-RING	
		1	**6V-8397**	1	SEAL-O-RING	
		1	**6V-8636**	1	CONNECTOR	
	10	1	*148-8378*	6	ELBOW AS	
					(EACH INCLUDES)	
		1	**3J-1907**	1	SEAL-O-RING	
		1	**6V-8397**	1	SEAL-O-RING	
		1	**6V-8724**	1	ELBOW	
	11	1	*148-8435*	4	TEE AS	
					(EACH INCLUDES)	
		1	**3J-1907**	1	SEAL-O-RING	
		1	**6V-8397**	2	SEAL-O-RING	
		1	**6V-8781**	1	TEE-FACE SEAL	
I	12	1	**173-6588**	1	HOSE AS	
I	13	1	**136-3920**	1	HOSE AS	
I	14	1	**136-3921**	1	HOSE AS	
I	15	1	**136-3923**	1	HOSE AS	
I	16	1	**136-3924**	1	HOSE AS	
	17	1	**1B-4971**	3	SPACER (.4062X1X1 IN THK)	
	18	1	**1P-3704**	2	SEAL-RECTANGULAR	
	19	1	**1P-4577**	16	FLANGE-HALF	
	20	1	**1P-5767**	2	FLANGE-HALF	
	21	1	**7S-1912**	3	CLIP	
	22	1	**2S-4078**	1	SEAL-O-RING	
	23	1	**3G-6342**	1	BLOCK	
	24	1	**3T-9486**	1	GROMMET	
	25	1	**4J-0520**	12	SEAL-O-RING	
	26	1	**4J-0522**	1	SEAL-O-RING	
	27	1	**4J-0524**	1	SEAL-O-RING	
	28	1	**5C-6565**	2	BOLT (1/2-13X1.125 IN)	
	29	1	**5H-4019**	4	COVER	
	30	1	**5S-7379**	1	BOLT (3/8-16X0.875 IN)	
	31	1	**5P-7466**	2	CLIP (SLOT)	
	32	1	**5P-7467**	2	CLIP (TAB)	
	33	1	**6Y-4585**	1	MANIFOLD	
	34	1	**7S-3912**	2	CLIP (TAB)	
	35	1	**7S-3913**	2	CLIP (SLOT)	
	36	1	**7X-0316**	4	BOLT (7/16-14X3.5 IN)	
	37	1	**8C-4436**	1	BOLT (1/2-13X1.375 IN)	
	38	1	**8T-4122**	2	WASHER-HARD (17X32X3.5MM THK)	
	39	1	**8T-4223**	8	WASHER-HARD (13.5X25.5X3MM THK)	
	40	1	**8T-4835**	4	BOLT (1/2-13X2 IN)	
	41	1	**8T-4896**	35	WASHER-HARD (10.2X18.5X2.5MM THK)	
	42	1	**8T-5360**	4	WASHER (12X22.5X2.5MM THK)	
	43	1	**8T-6871**	2	BOLT (5/8-11X2.50 IN)	

173-1551 **LINES GP-RIPPER** *(contd.)* **i01988915**

NOTE	REF NO	GRAPHIC REF	PART NUMBER	QTY	PART NAME 1 2 3 4 5 6 (PRODUCT LEVEL)	SEE PAGE
	44	1	**8T-9377**	3	BOLT (3/8-16X2.25 IN)	
	45	1	**9B-7237**	32	BOLT (3/8-16X1.25 IN)	
I	46	1	**9U-9572**	1	HOSE AS	
	47	1	**8T-8919**	1	BOLT (1/2-13X1.75 IN)	
I	48	1	**185-6379**	1	HOSE AS	
	49	1	**5P-1075**	1	WASHER-HARD (10.2X22.5X3MM THK)	

I-REFER TO HYDRAULIC INFORMATION SYSTEM

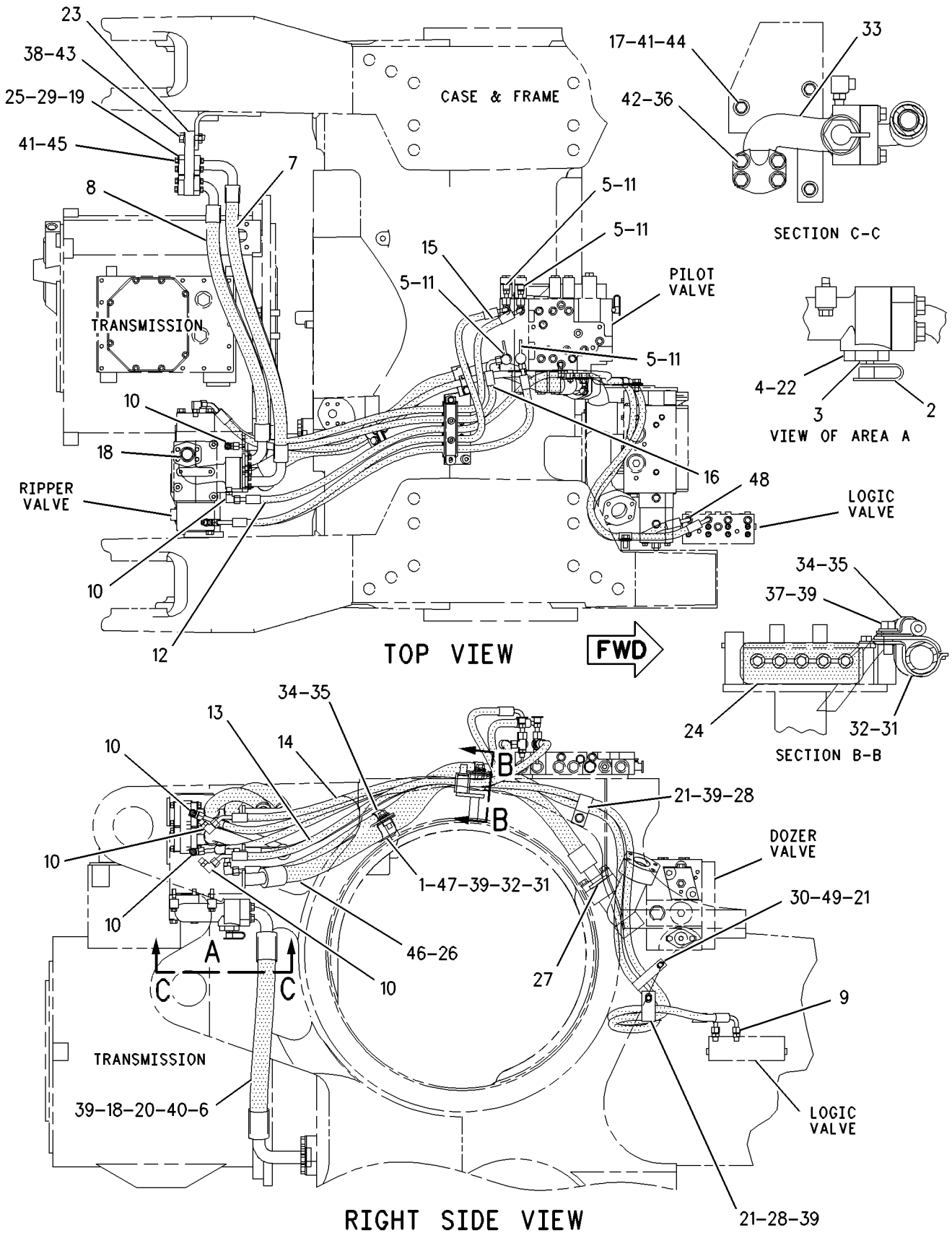

GRAPHIC #1 **<END>** g00672991

HYDRAULIC SYSTEM

173-1551 LINES GP-RIPPER

S/N: 7PZ652-721
PART OF 173-1552 CONTROL AR-HYDRAULIC
AN ATTACHMENT

SMCS-5057, 5352, 5356 **i01979903**

NOTE	REF NO	GRAPHIC REF	PART NUMBER	QTY	PART NAME 1 2 3 4 5 6 (PRODUCT LEVEL)	SEE PAGE
	1	1	**3W-2647**	1	SPACER (13.5X30X10MM THK)	
	2	1	**6V-0852**	5	CAP-DUST (RIPPER PILOT VALVE)	
	3	1	**8J-5914**	1	PLUG	
I	4	1	**130-7066**	1	HOSE AS	
I	5	1	**134-6631**	2	HOSE AS	
I	6	1	**134-6632**	2	HOSE AS	
	7	1	*148-8336*	2	CONNECTOR AS	
					(EACH INCLUDES)	
		1	**3J-1907**	2	SEAL-O-RING	
		1	**6V-8397**	1	SEAL-O-RING	
		1	**6V-8636**	1	CONNECTOR	
	8	1	*148-8378*	6	ELBOW AS	
					(EACH INCLUDES)	
		1	**3J-1907**	1	SEAL-O-RING	
		1	**6V-8397**	1	SEAL-O-RING	
		1	**6V-8724**	1	ELBOW	
	9	1	*150-4027*	2	TEE GP	
					(EACH INCLUDES)	
		1	**3E-2310**	1	TEE	
		1	**3J-1907**	1	SEAL-O-RING	
		1	**6V-8397**	1	SEAL-O-RING	
	10	1	*168-1968*	2	TEE AS	
					(EACH INCLUDES)	
		1	**3J-1907**	1	SEAL-O-RING	
		1	**6V-8397**	1	SEAL-O-RING	
		1	**126-6872**	1	TEE	
I	11	1	**173-6588**	1	HOSE AS	
I	12	1	**185-6379**	1	HOSE AS	
I	13	1	**136-3920**	1	HOSE AS	
I	14	1	**136-3921**	1	HOSE AS	
I	15	1	**136-3923**	1	HOSE AS	
I	16	1	**136-3924**	1	HOSE AS	
	17	1	*164-5567*	5	FITTING AS	
					(EACH INCLUDES)	
		1	**3J-1907**	1	SEAL-O-RING	
		1	**6V-3965**	1	FITTING (QUICK DISCONNECT)	
	18	1	**1B-4971**	3	SPACER (.4062X1X1 IN THK)	
	19	1	**1P-3704**	2	SEAL-RECTANGULAR	
	20	1	**1P-4577**	16	FLANGE-HALF	
	21	1	**1P-5767**	2	FLANGE-HALF	
	22	1	**2S-4078**	1	SEAL-O-RING	
	23	1	**3G-6342**	1	BLOCK	
	24	1	**3T-9486**	1	GROMMET	
	25	1	**4J-0520**	12	SEAL-O-RING	
	26	1	**4J-0522**	1	SEAL-O-RING	
	27	1	**4J-0524**	1	SEAL-O-RING	
	28	1	**5C-6565**	2	BOLT (1/2-13X1.125 IN)	
	29	1	**5H-4019**	4	COVER	
	30	1	**5P-1075**	1	WASHER-HARD (10.2X22.5X3MM THK)	
	31	1	**5P-7466**	2	CLIP (SLOT)	
	32	1	**5P-7467**	2	CLIP (TAB)	
	33	1	**5S-7379**	1	BOLT (3/8-16X0.875 IN)	
	34	1	**6Y-4585**	1	MANIFOLD	
	35	1	**7S-1912**	3	CLIP	
	36	1	**7S-3912**	2	CLIP (TAB)	

173-1551 **LINES GP-RIPPER** *(contd.)* **i01979903**

NOTE	REF NO	GRAPHIC REF	PART NUMBER	QTY	PART NAME 1 2 3 4 5 6 (PRODUCT LEVEL)	SEE PAGE
	37	1	**7S-3913**	2	CLIP (SLOT)	
	38	1	**7X-0316**	4	BOLT (7/16-14X3.5 IN)	
	39	1	**8C-4436**	1	BOLT (1/2-13X1.375 IN)	
	40	1	**8T-4122**	2	WASHER-HARD (17X32X3.5MM THK)	
	41	1	**8T-4223**	8	WASHER-HARD (13.5X25.5X3MM THK)	
	42	1	**8T-4835**	4	BOLT (1/2-13X2 IN)	
	43	1	**8T-4896**	35	WASHER-HARD (10.2X18.5X2.5MM THK)	
	44	1	**8T-5360**	4	WASHER (12X22.5X2.5MM THK)	
	45	1	**8T-6871**	2	BOLT (5/8-11X2.50 IN)	
	46	1	**8T-8919**	1	BOLT (1/2-13X1.75 IN)	
	47	1	**8T-9377**	3	BOLT (3/8-16X2.25 IN)	
	48	1	**9B-7237**	32	BOLT (3/8-16X1.25 IN)	
I	49	1	**9U-9572**	1	HOSE AS	

I-REFER TO HYDRAULIC INFORMATION SYSTEM

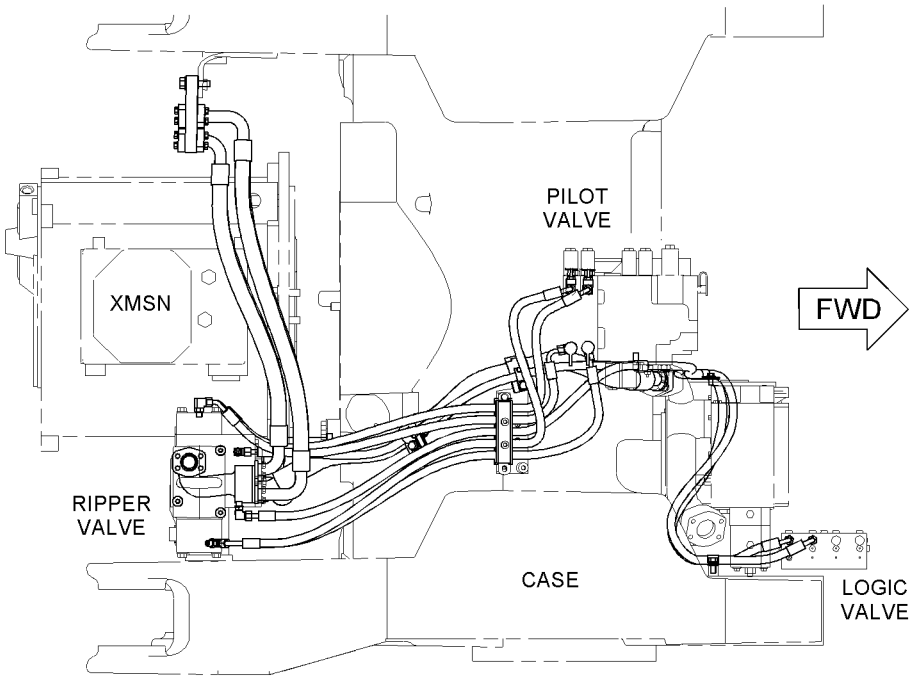

TOP VIEW

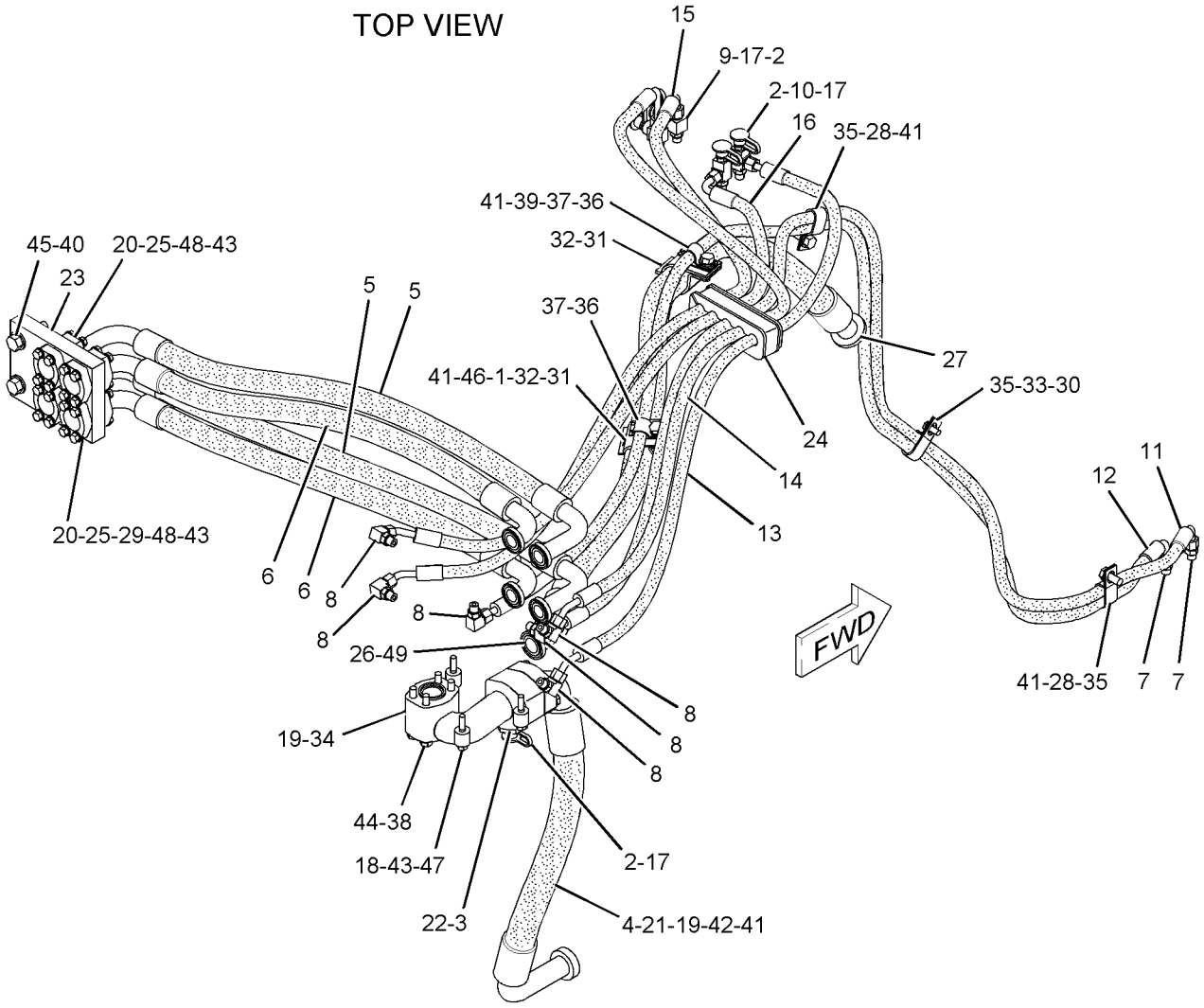

GRAPHIC #1 **<END>** g01028644

HYDRAULIC SYSTEM

173-1551 LINES GP-RIPPER

S/N: 7PZ722-734
PART OF 173-1552 CONTROL AR-HYDRAULIC
AN ATTACHMENT

SMCS-5057, 5352, 5356 **i01986026**

NOTE	REF NO	GRAPHIC REF	PART NUMBER	QTY	PART NAME 1 2 3 4 5 6 (PRODUCT LEVEL)	SEE PAGE
	1	1	**3W-2647**	1	SPACER (13.5X30X10MM THK)	
	2	1	**6V-0852**	4	CAP-DUST (RIPPER PILOT VALVE)	
	3	1	**112-9252**	3	SPACER (13X25X22.14MM THK)	
I	4	1	**134-6631**	2	HOSE AS	
I	5	1	**134-6632**	2	HOSE AS	
	6	1	*148-8336*	2	CONNECTOR AS	
					(EACH INCLUDES)	
		1	**6V-8636**	1	CONNECTOR	
		1	**3J-1907**	2	SEAL-O-RING	
		1	**6V-8397**	1	SEAL-O-RING	
	7	1	*148-8378*	6	ELBOW AS	
					(EACH INCLUDES)	
		1	**6V-8724**	1	ELBOW	
		1	**3J-1907**	1	SEAL-O-RING	
		1	**6V-8397**	1	SEAL-O-RING	
	8	1	*150-4027*	2	TEE GP	
					(EACH INCLUDES)	
		1	**3E-2310**	1	TEE	
		1	**3J-1907**	1	SEAL-O-RING	
		1	**6V-8397**	1	SEAL-O-RING	
	9	1	*168-1968*	2	TEE AS	
					(EACH INCLUDES)	
		1	**126-6872**	1	TEE	
		1	**3J-1907**	1	SEAL-O-RING	
		1	**6V-8397**	1	SEAL-O-RING	
I	10	1	**173-6588**	1	HOSE AS	
I	11	1	**185-6379**	1	HOSE AS	
I	12	1	**238-9126**	1	HOSE AS	
I	13	1	**136-3920**	1	HOSE AS	
I	14	1	**136-3921**	1	HOSE AS	
I	15	1	**136-3923**	1	HOSE AS	
I	16	1	**136-3924**	1	HOSE AS	
	17	1	*164-5567*	4	FITTING AS	
					(EACH INCLUDES)	
		1	**6V-3965**	1	FITTING (QUICK DISCONNECT)	
		1	**3J-1907**	1	SEAL-O-RING	
	18	1	**1P-4577**	16	FLANGE-HALF	
	19	1	**3G-6342**	1	BLOCK	
	20	1	**3T-9486**	1	GROMMET	
	21	1	**4J-0520**	12	SEAL-O-RING	
	22	1	**4J-0522**	2	SEAL-O-RING	
	23	1	**4J-0524**	1	SEAL-O-RING	
	24	1	**5C-6565**	2	BOLT (1/2-13X1.125 IN)	
	25	1	**5H-4019**	4	COVER	
	26	1	**5P-1075**	1	WASHER-HARD (10.2X22.5X3MM THK)	
	27	1	**5P-7466**	2	CLIP (SLOT)	
	28	1	**5P-7467**	2	CLIP (TAB)	
	29	1	**5S-7379**	1	BOLT (3/8-16X0.875 IN)	
	30	1	**7S-1912**	3	CLIP	
	31	1	**7S-3912**	2	CLIP (TAB)	
	32	1	**7S-3913**	2	CLIP (SLOT)	
	33	1	**7X-0310**	3	BOLT (7/16-14X2 IN)	
	34	1	**8C-4436**	1	BOLT (1/2-13X1.375 IN)	
	35	1	**8T-4122**	2	WASHER-HARD (17X32X3.5MM THK)	
	36	1	**8T-4223**	4	WASHER-HARD (13.5X25.5X3MM THK)	

173-1551 **LINES GP-RIPPER** *(contd.)* **i01986026**

NOTE	REF NO	GRAPHIC REF	PART NUMBER	QTY	PART NAME 1 2 3 4 5 6 (PRODUCT LEVEL)	SEE PAGE
	37	1	**8T-4896**	32	WASHER-HARD (10.2X18.5X2.5MM THK)	
	38	1	**8T-5360**	3	WASHER (12X22.5X2.5MM THK)	
	39	1	**8T-6871**	2	BOLT (5/8-11X2.50 IN)	
	40	1	**8T-8919**	1	BOLT (1/2-13X1.75 IN)	
	41	1	**9B-7237**	32	BOLT (3/8-16X1.25 IN)	
I	42	1	**9U-9572**	1	HOSE AS	

I-REFER TO HYDRAULIC INFORMATION SYSTEM

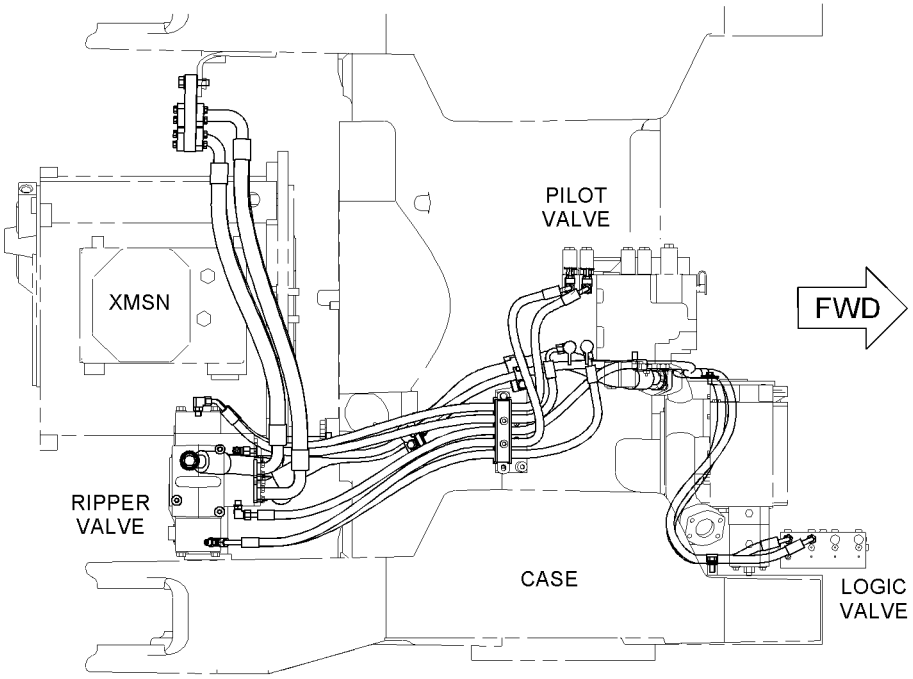

TOP VIEW

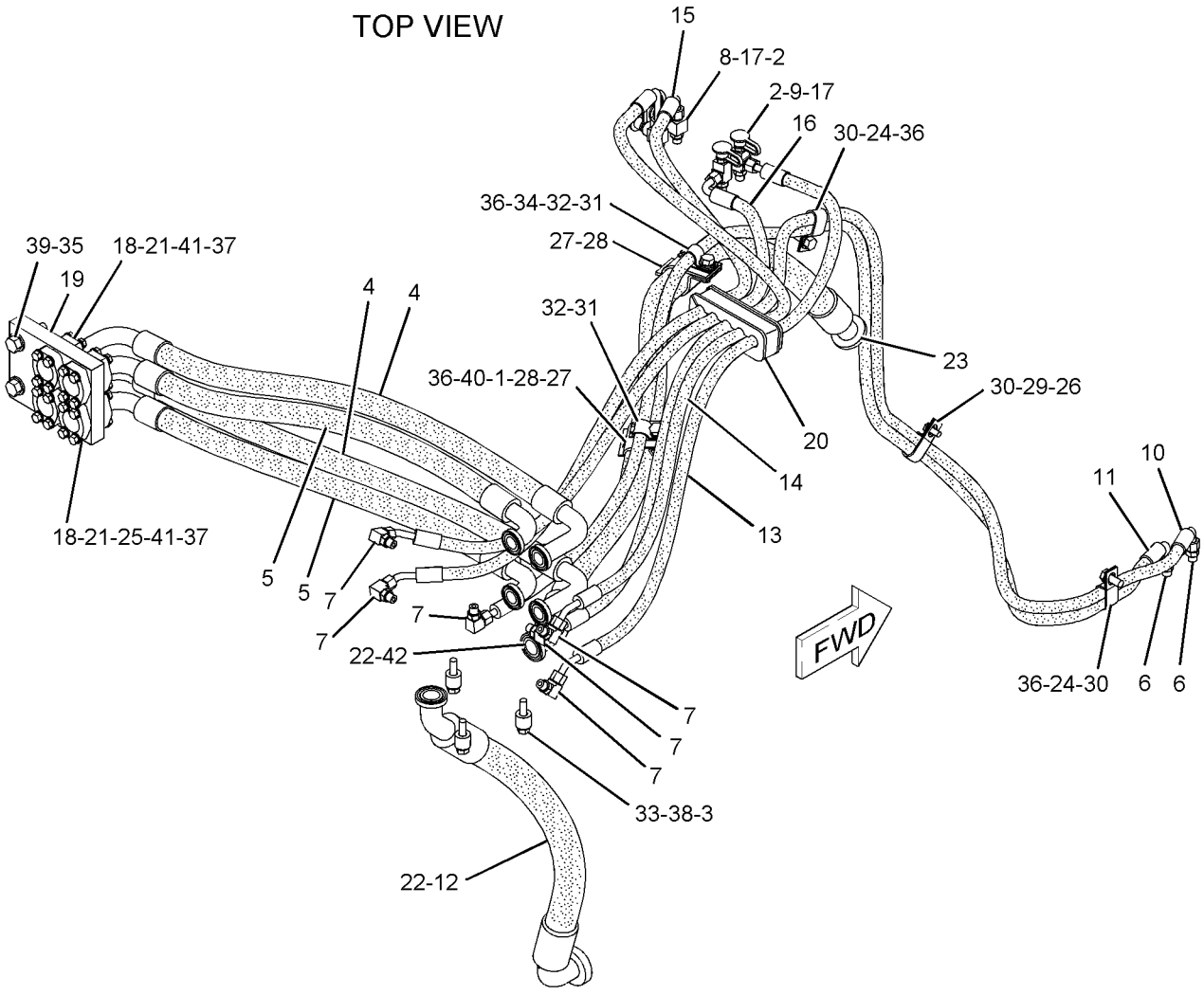

GRAPHIC #1

<END>

g01029581

HYDRAULIC SYSTEM

173-1551 LINES GP-RIPPER

S/N: 7PZ735-UP
PART OF 173-1552 CONTROL AR-HYDRAULIC
AN ATTACHMENT

SMCS-5057, 5352, 5356 **i01986092**

NOTE	REF NO	GRAPHIC REF	PART NUMBER	QTY	PART NAME 1 2 3 4 5 6 (PRODUCT LEVEL)	SEE PAGE
	1	1	**3W-2647**	1	SPACER (13.5X30X10MM THK)	
	2	1	**6V-0852**	4	CAP-DUST (RIPPER PILOT VALVE)	
	3	1	**112-9252**	3	SPACER (13X25X22.14MM THK)	
I	4	1	**134-6631**	2	HOSE AS	
I	5	1	**134-6632**	2	HOSE AS	
	6	1	*148-8336*	2	CONNECTOR AS	
					(EACH INCLUDES)	
		1	**6V-8636**	1	CONNECTOR	
		1	**3J-1907**	2	SEAL-O-RING	
		1	**6V-8397**	1	SEAL-O-RING	
	7	1	*148-8378*	6	ELBOW AS	
					(EACH INCLUDES)	
		1	**6V-8724**	1	ELBOW	
		1	**3J-1907**	1	SEAL-O-RING	
		1	**6V-8397**	1	SEAL-O-RING	
	8	1	*150-4027*	2	TEE GP	
					(EACH INCLUDES)	
		1	**3E-2310**	1	TEE	
		1	**3J-1907**	1	SEAL-O-RING	
		1	**6V-8397**	1	SEAL-O-RING	
	9	1	*168-1968*	2	TEE AS	
					(EACH INCLUDES)	
		1	**126-6872**	1	TEE	
		1	**3J-1907**	1	SEAL-O-RING	
		1	**6V-8397**	1	SEAL-O-RING	
I	10	1	**173-6588**	1	HOSE AS	
I	11	1	**185-6379**	1	HOSE AS	
I	12	1	**238-9126**	1	HOSE AS	
I	13	1	**136-3920**	1	HOSE AS	
I	14	1	**136-3921**	1	HOSE AS	
I	15	1	**136-3923**	1	HOSE AS	
I	16	1	**136-3924**	1	HOSE AS	
	17	1	*164-5567*	4	FITTING AS	
					(EACH INCLUDES)	
		1	**6V-3965**	1	FITTING (QUICK DISCONNECT)	
		1	**3J-1907**	1	SEAL-O-RING	
	18	1	**1P-4577**	16	FLANGE-HALF	
	19	1	**3G-6342**	1	BLOCK	
	20	1	**3T-9486**	1	GROMMET	
	21	1	**4J-0520**	12	SEAL-O-RING	
	22	1	**4J-0522**	2	SEAL-O-RING	
	23	1	**4J-0524**	1	SEAL-O-RING	
	24	1	**5C-6565**	2	BOLT (1/2-13X1.125 IN)	
	25	1	**5H-4019**	4	COVER	
	26	1	**5P-1075**	1	WASHER-HARD (10.2X22.5X3MM THK)	
	27	1	**5P-7466**	2	CLIP (SLOT)	
	28	1	**5P-7467**	2	CLIP (TAB)	
	29	1	**5S-7379**	1	BOLT (3/8-16X0.875 IN)	
	30	1	**7S-1912**	3	CLIP	
	31	1	**7S-3912**	2	CLIP (TAB)	
	32	1	**7S-3913**	2	CLIP (SLOT)	
	33	1	**7X-0310**	3	BOLT (7/16-14X2 IN)	
	34	1	**8C-4436**	1	BOLT (1/2-13X1.375 IN)	
	35	1	**8T-4122**	2	WASHER-HARD (17X32X3.5MM THK)	
	36	1	**8T-4223**	4	WASHER-HARD (13.5X25.5X3MM THK)	

173-1551 **LINES GP-RIPPER** *(contd.)* **i01986092**

NOTE	REF NO	GRAPHIC REF	PART NUMBER	QTY	PART NAME 1 2 3 4 5 6 (PRODUCT LEVEL)	SEE PAGE
	37	1	**8T-4896**	32	WASHER-HARD (10.2X18.5X2.5MM THK)	
	38	1	**8T-5360**	3	WASHER (12X22.5X2.5MM THK)	
	39	1	**8T-6871**	2	BOLT (5/8-11X2.50 IN)	
	40	1	**8T-8919**	1	BOLT (1/2-13X1.75 IN)	
	41	1	**9B-7237**	32	BOLT (3/8-16X1.25 IN)	
I	42	1	**9U-9572**	1	HOSE AS	
	43	1	**1P-3705**	1	SEAL-RECTANGULAR	

I-REFER TO HYDRAULIC INFORMATION SYSTEM

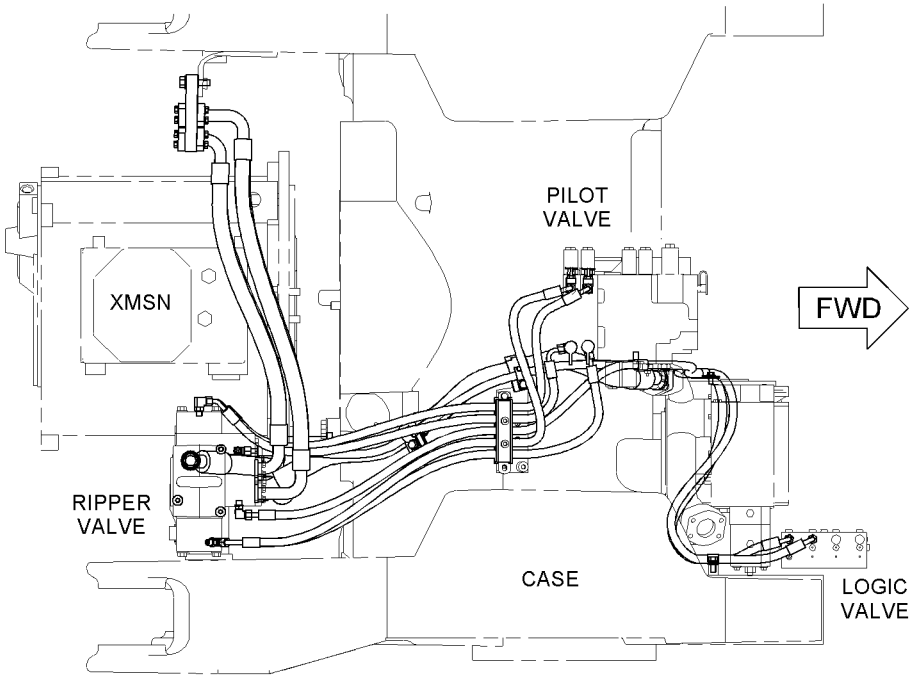

TOP VIEW

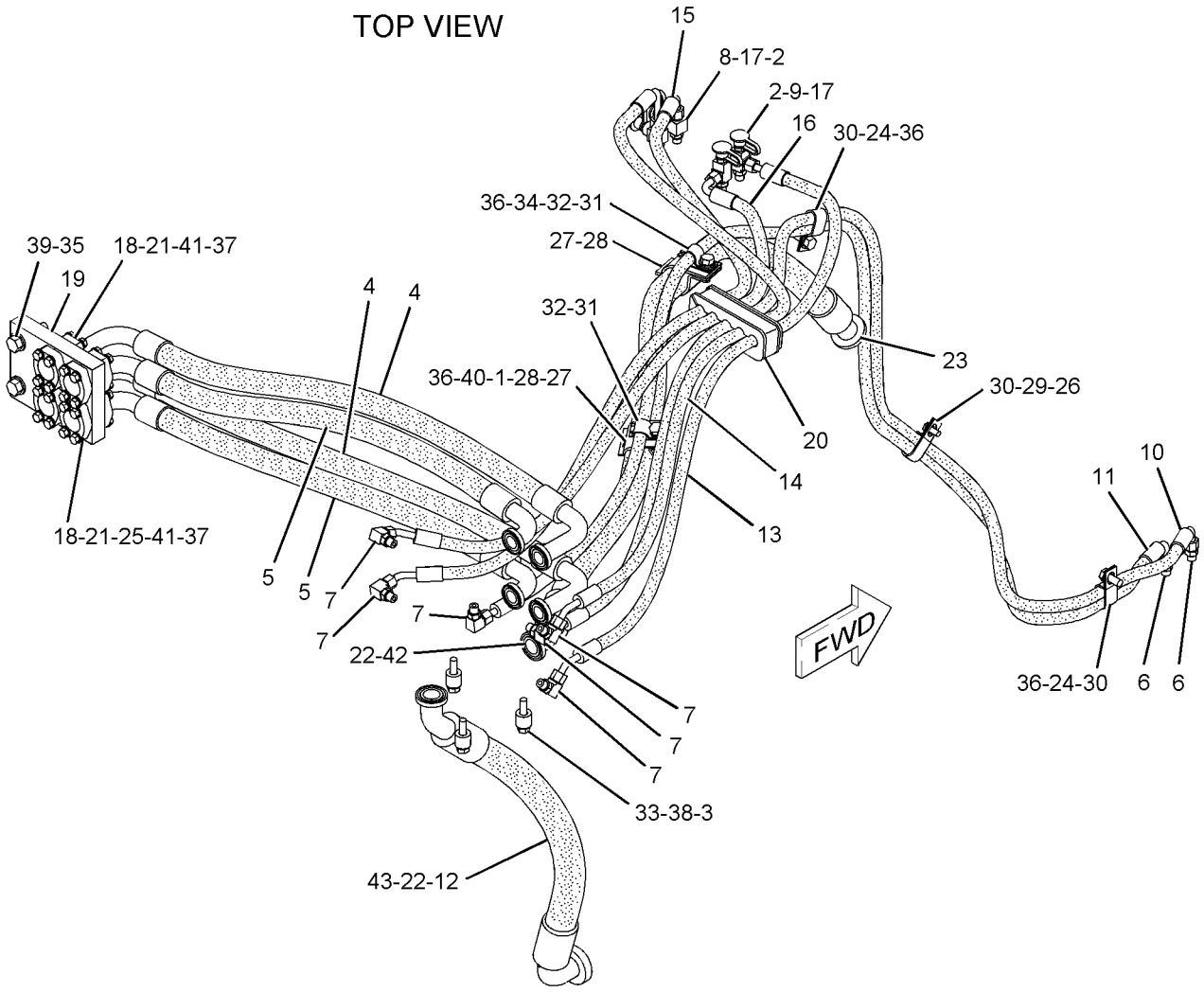

GRAPHIC #1

<END>

g01029602

HYDRAULIC SYSTEM

119-4277 LINES GP-TILT CYLINDER—DUAL

S/N: 8PP1-UP; 8RP1-UP

PART OF 119-4267, 119-4268, 119-4282, 199-8241, 226-5919 BULLDOZER AR-SEMI-UNIVERSAL, 119-4281, 199-8240, 226-5918 BULLDOZER AR-UNIVERSAL AN ATTACHMENT

SMCS-5057, 5104 **i01895601**

NOTE	REF NO	GRAPHIC REF	PART NUMBER	QTY	PART NAME 1 2 3 4 5 6 (PRODUCT LEVEL)	SEE PAGE
	1	1	**3G-6251**	1	GUARD AS (RH)	
	2	1	**3G-6623**	1	TUBE AS (RH)	
	3	1	**4T-0301**	2	PLATE-CONNECTOR	
	4	1	**4T-3981**	6	CLIP	
	5	1	**5H-2095**	16	CLAMP-TUBE	
	6	1	**7D-4108**	2	CLAMP	
	7	1	**8J-3146**	2	CLAMP	
	8	1	**9W-3357**	4	TUBE AS	
I	9	1	**9W-4041**	2	HOSE AS	
	10	1	**9B-7237**	64	BOLT (3/8-16X1.25 IN)	
I	11	1	**9W-4042**	2	HOSE AS	
	12	1	**8T-9398**	8	BOLT (3/4-10X1.75 IN)	
I	13	1	**9W-4043**	1	HOSE AS	
I	14	1	**9W-4044**	1	HOSE AS	
	15	1	**9W-5570**	1	TUBE AS-LH	
	16	1	**9W-5571**	1	GUARD AS	
	17	1	**131-4326**	2	GUARD	
	18	1	**131-4328**	2	GUARD AS	
	19	1	**131-4329**	1	TUBE AS	
	20	1	**131-4330**	1	TUBE AS	
	21	1	**131-4331**	1	TUBE AS	
	22	1	**131-4332**	1	TUBE AS	
I	23	1	**147-9434**	1	HOSE AS	
I	24	1	**148-5373**	1	HOSE AS	
I	25	1	**148-5374**	1	HOSE AS	
I	26	1	**148-5375**	1	HOSE AS	
	27	1	**193-9159**	4	GUARD	
	28	1	**068-6405**	8	WASHER (6.0MM THK)	
	29	1	**1P-4576**	24	FLANGE-HALF	
	30	1	**1P-4577**	8	FLANGE-HALF	
	31	1	**4J-0519**	4	SEAL-O-RING	
	32	1	**4J-0520**	6	SEAL-O-RING	
	33	1	**4J-5267**	16	SEAL-O-RING	
	34	1	**4L-6454**	4	BOLT (3/8-16X1 IN)	
	35	1	**5M-3062**	16	BOLT (3/8-16X0.75 IN)	
	36	1	**5P-2228**	6	BOLT (1/2-13X1 IN)	
	37	1	**5S-7379**	12	BOLT (3/8-16X0.875 IN)	
	38	1	**6V-8801**	8	NUT (3/8-16 THD)	
	39	1	**7X-0365**	12	BOLT (3/4-10X1.5 IN)	
	40	1	**7X-0380**	4	BOLT (7/8-9X1.75IN)	
	41	1	**7X-0383**	4	BOLT (7/8-9X2.75 IN)	
	42	1	**7X-0384**	8	BOLT (7/8-9X3IN)	
	43	1	**8C-6913**	8	WASHER-HARD (24X41.5X4MM THK)	
	44	1	**8T-2501**	4	BOLT (3/8-16X2 IN)	
	45	1	**8T-4223**	6	WASHER-HARD (13.5X25.5X3MM THK)	
	46	1	**8T-4896**	108	WASHER-HARD (10.2X18.5X2.5MM THK)	
	47	1	**8T-4994**	20	WASHER-HARD (20X36.5X3.5MM THK)	
	48	1	**8T-7008**	8	BOLT (3/8-16X3 IN)	

I-SEE HOSE FABRICATION GUIDE

119-4277 LINES GP-TILT CYLINDER *(contd.)* i01895601

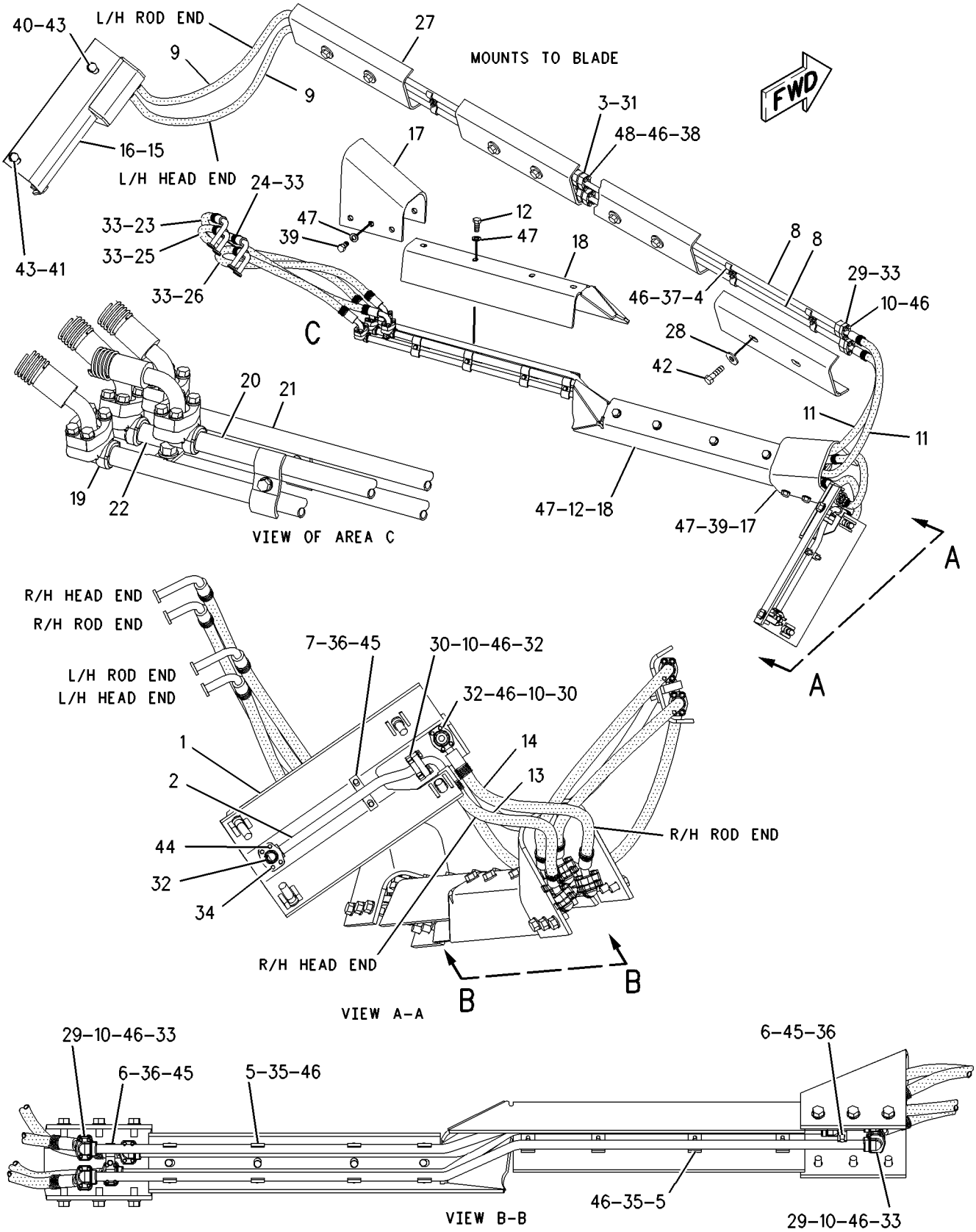

GRAPHIC #1 **<END>** g00986376

HYDRAULIC SYSTEM

152-7795 LINES GP-TILT CYLINDER–BLADE

S/N: 7PZ1-UP

PART OF 119-4283 CYLINDER AR-TILT

AN ATTACHMENT

SMCS-5057, 5104 **i01563740**

NOTE	REF NO	GRAPHIC REF	PART NUMBER	QTY	PART NAME 1 2 3 4 5 6 (PRODUCT LEVEL)	SEE PAGE
	1	1	**3G-6251**	1	GUARD AS	
	2	1	**3G-6623**	1	TUBE AS	
	3	1	**5H-2095**	16	CLAMP-TUBE	
	4	1	**7D-4108**	2	CLAMP	
	5	1	**8J-3146**	1	CLAMP	
I	6	1	**9W-4043**	1	HOSE AS	
I	7	1	**9W-4044**	1	HOSE AS	
	8	1	**131-4326**	2	GUARD	
	9	1	**131-4328**	2	GUARD AS	
	10	1	**131-4329**	1	TUBE AS	
	11	1	**131-4332**	1	TUBE AS	
I	12	1	**147-9434**	1	HOSE AS	
I	13	1	**148-5374**	1	HOSE AS	
	14	1	**1P-4576**	8	FLANGE	
	15	1	**1P-4577**	4	FLANGE-HALF	
	16	1	**4J-0520**	3	SEAL-O-RING	
	17	1	**4J-5267**	6	SEAL-O-RING	
	18	1	**4L-6454**	2	BOLT (3/8-16X1 IN)	
	19	1	**5M-3062**	16	BOLT (3/8-16X0.75 IN)	
	20	1	**5P-2228**	4	BOLT (1/2-13X1 IN)	
	21	1	**7X-0365**	12	BOLT (3/4-10X1.5 IN)	
	22	1	**7X-0380**	2	BOLT (7/8-9X1.75IN)	
	23	1	**7X-0383**	2	BOLT (7/8-9X2.75IN)	
	24	1	**8C-6913**	4	WASHER-HARD (24X41.5X4MM THK)	
	25	1	**8T-2501**	2	BOLT (3/8-16X2 IN)	
	26	1	**8T-4223**	4	WASHER-HARD (13.5X25.5X3MM THK)	
	27	1	**8T-4896**	40	WASHER-HARD (10.2X18.5X2.5MM THK)	
	28	1	**8T-4994**	20	WASHER-HARD (20X36.5X3.5MM THK)	
	29	1	**8T-9398**	8	BOLT (3/4-10X1.75 IN)	
	30	1	**9B-7237**	24	BOLT (3/8-16X1.25 IN)	

I-SEE HOSE FABRICATION GUIDE

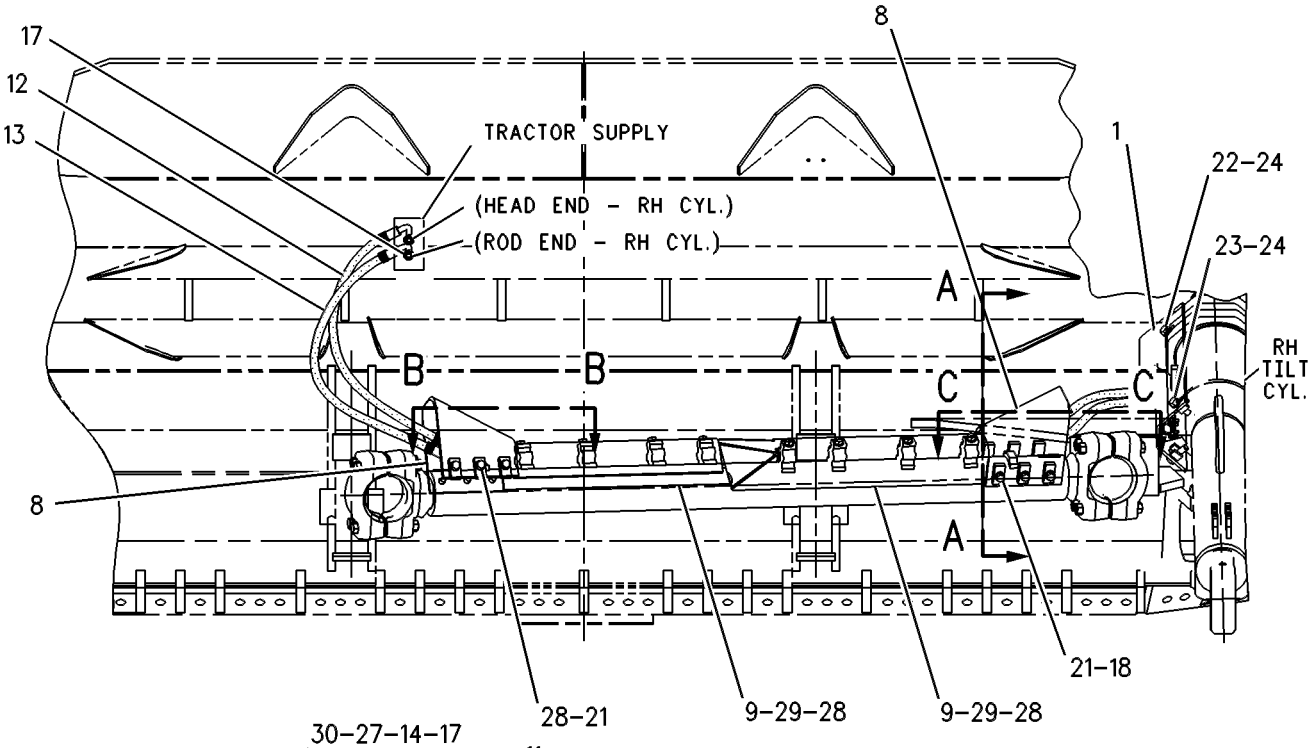

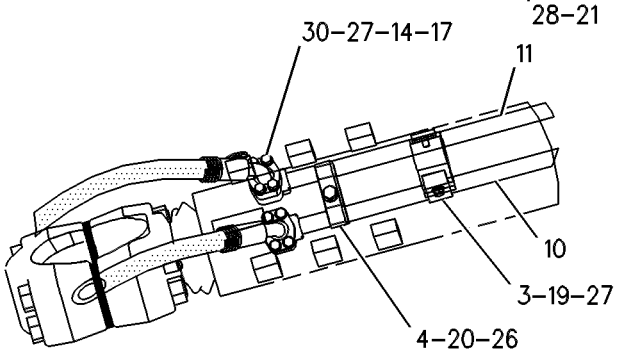

SECTION B-B

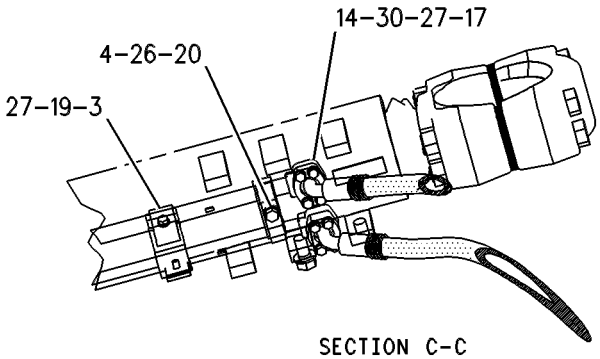

SECTION C-C

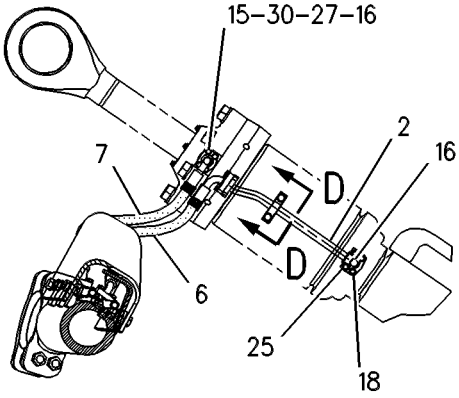

SECTION A-A

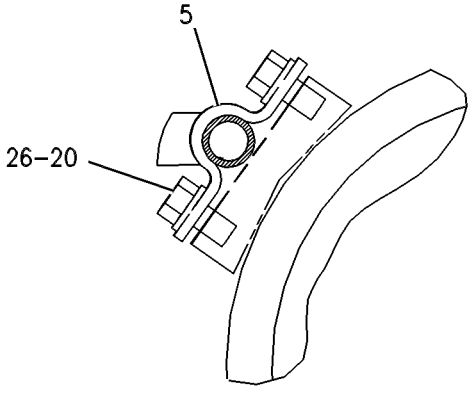

SECTION D-D

GRAPHIC #1 **<END>** g00427522

HYDRAULIC SYSTEM

158-8042 LINES GP-TILT CYLINDER—CHASSIS

S/N: 7PZ1-UP

PART OF 155-5553 CONTROL AR-HYDRAULIC

SMCS-5057, 5104 **i01582702**

NOTE	REF NO	GRAPHIC REF	PART NUMBER	QTY	PART NAME 1 2 3 4 5 6 (PRODUCT LEVEL)	SEE PAGE
I	1	2	**5T-9686**	1	HOSE AS	
	2	1	**7G-5984**	1	CLIP (TAB)	
	3	1	**7G-5985**	1	CLIP (SLOT)	
	4	2	**5S-7383**	3	BOLT (3/8-16X1.75 IN)	
	5	2	**8E-7112**	1	ELBOW	
	6	1	**8N-6867**	1	BRACKET	
	7	1,2	**126-0814**	2	FITTING AS	
I	8	1	**133-6523**	1	HOSE AS	
I	9	1	**133-6524**	1	HOSE AS	
I	10	1	**138-1424**	1	HOSE AS	
I	11	1	**148-7214**	2	HOSE AS	
	12	1	*148-8353*	2	ELBOW GP	
					(EACH INCLUDES)	
		1	**3J-1907**	1	SEAL-O-RING	
		1	**6V-8397**	1	SEAL-O-RING	
		2	**6V-9001**	2	ELBOW	
	13	2	*148-8378*	1	ELBOW GP	
		2	**3J-1907**	1	SEAL-O-RING	
		2	**6V-8397**	1	SEAL-O-RING	
		2	**6V-8724**	1	ELBOW	
I	14	2	**159-3305**	1	HOSE AS	
I	15	2	**171-4581**	1	HOSE AS	
	16	2	*148-8336*	2	CONNECTOR GP	
					(EACH INCLUDES)	
		2	**6V-8636**	1	CONNECTOR	
		2	**3J-1907**	1	SEAL-O-RING	
		2	**6V-8397**	1	SEAL-O-RING	
	17	1,2	*148-8435*	2	TEE GP	
					(EACH INCLUDES)	
		1,2	**3J-1907**	1	SEAL-O-RING	
		1,2	**6V-8397**	2	SEAL-O-RING	
		1,2	**6V-8781**	1	TEE-FACE SEAL	
	18	2	**7C-8246**	4	SPACER (10.5X20X24MM THK)	
	19	1	**1P-3703**	2	SEAL-RECTANGULAR	
	20	2	**1P-4576**	6	FLANGE	
	21	1	**1P-4577**	4	FLANGE-HALF	
	22	1	**1P-5766**	4	FLANGE-HALF	
	23	2	**5P-4295**	8	CLIP	
	24	1	**4J-0520**	3	SEAL-O-RING	
	25	2	**4J-5267**	4	SEAL-O-RING	
	26	2	**5H-4018**	2	COVER	
	27	1	**5K-9090**	2	SEAL-O-RING	
	28	2	**5M-3062**	3	BOLT (3/8-16X0.75 IN)	
	29	2	**5P-1075**	7	WASHER-HARD (10.2X22.5X3MM THK)	
	30	2	**5P-7466**	2	CLIP (SLOT)	
	31	2	**5P-7467**	2	CLIP (TAB)	
	32	2	**5P-8112**	2	GROMMET	
	33	2	**7X-0308**	2	BOLT (7/16-14X1.375 IN)	
	34	1	**5S-7382**	8	BOLT (3/8-16X1.375 IN)	
	35	1	**6V-8188**	1	NUT (1/2-13 THD)	
	36	1	**6V-8397**	1	SEAL-O-RING	
	37	2	**6V-8801**	1	NUT (3/8-16 THD)	
B	38	1	**7G-3832**	3	GROMMET	
	39	1	**7G-3833**	3	CLIP (TAB)	
	40	1	**7G-3834**	3	CLIP (SLOT)	
B	41	1	**7G-5986**	1	GROMMET	

158-8042 LINES GP-TILT CYLINDER *(contd.)* i01582702

NOTE	REF NO	GRAPHIC REF	PART NUMBER	QTY	PART NAME 1 2 3 4 5 6 (PRODUCT LEVEL)	SEE PAGE
	42	1	**8C-6877**	8	BOLT (7/16-14X1.75 IN)	
	43	1,2	**8T-4223**	14	WASHER-HARD (13.5X25.5X3MM THK)	
	44	1,2	**8T-4896**	24	WASHER-HARD (10.2X18.5X2.5MM THK)	
	45	1,2	**8T-5360**	11	WASHER (12X22.5X2.5MM THK)	
	46	1,2	**8T-8917**	12	BOLT (1/2-13X1.25 IN)	
	47	2	**8T-9379**	4	BOLT (3/8-16X4.25 IN)	
	48	2	**8T-9380**	1	BOLT (7/16-14X1 IN)	
	49	2	**9B-7237**	12	BOLT (3/8-16X1.25 IN)	
	50	2	**185-6973**	1	PLATE AS	
	51	2	**3M-0496**	1	STUD-TAPERLOCK	
	52	1	**5P-2228**	1	BOLT (1/2-13X1 IN)	
	53	1	**7S-3912**	1	CLIP (TAB)	
	54	1	**7S-3913**	1	CLIP (SLOT)	
	55	2	**164-6819**	2	SPACER (12.5X20X7MM THK)	
	56	1	*148-8367*	1	ELBOW GP	
		1	**6V-8397**	1	SEAL-O-RING	
		1	**6V-9850**	1	ELBOW-SWIVEL	

B-USE AS REQUIRED
I-SEE HOSE FABRICATION GUIDE

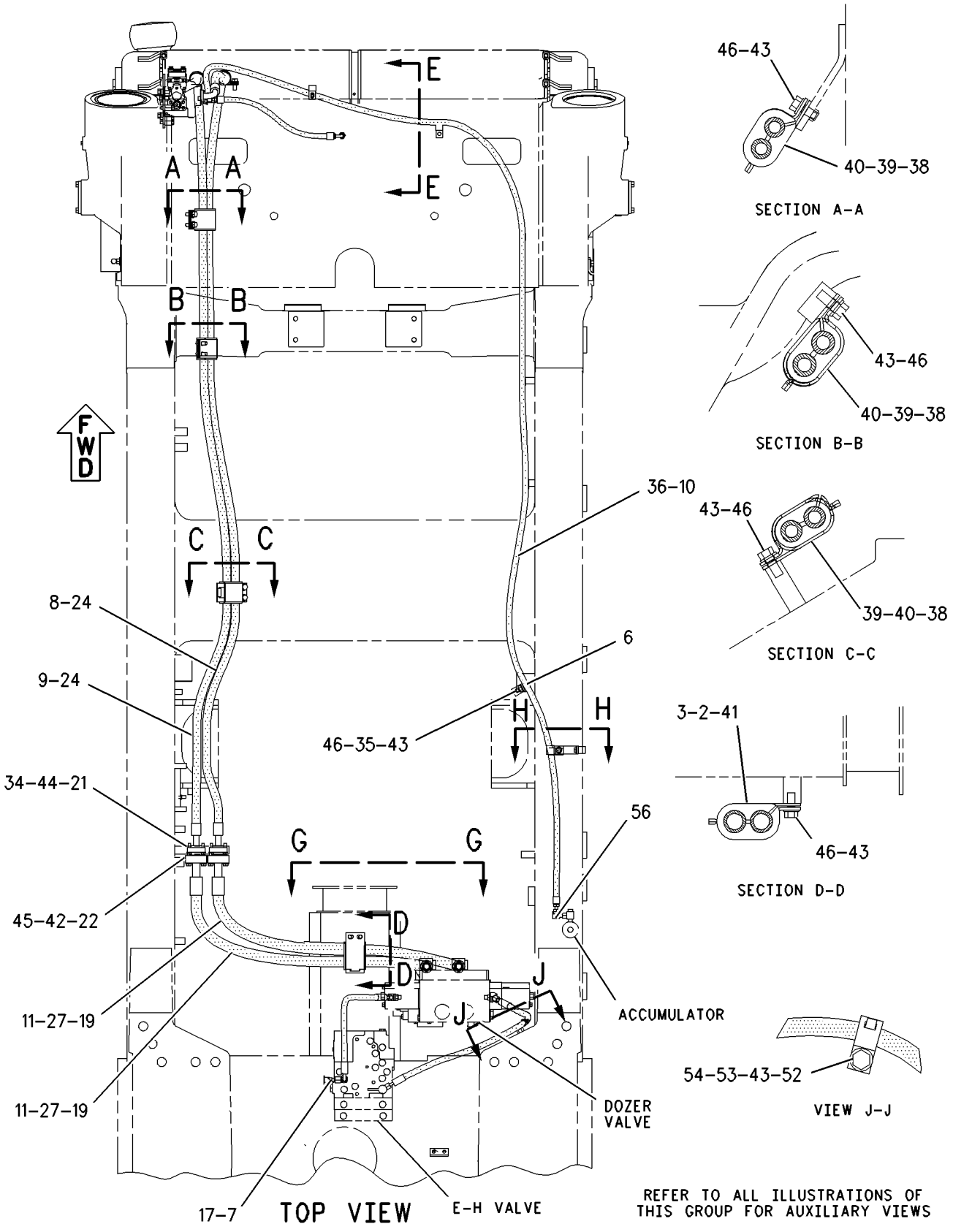

GRAPHIC #1 g00838017

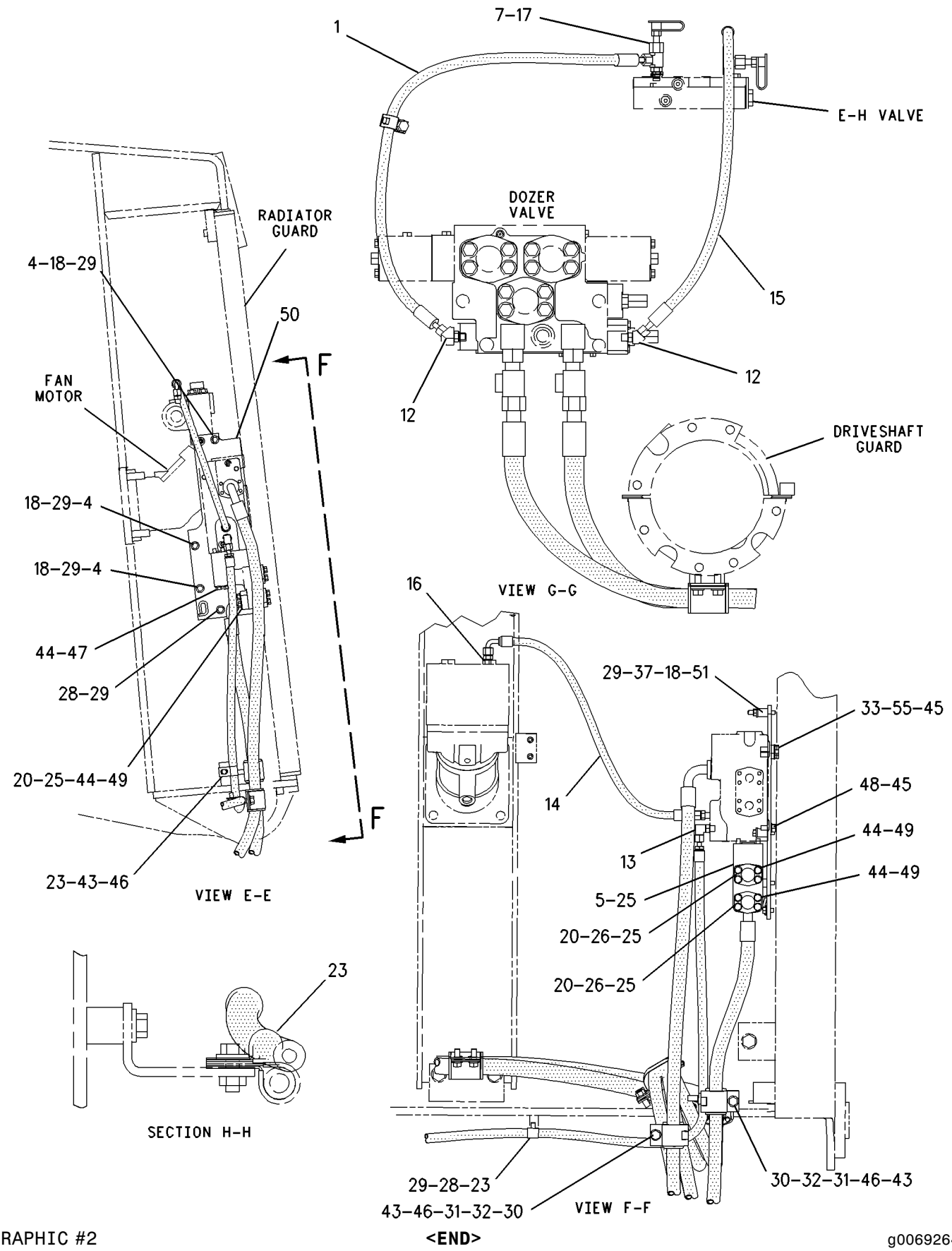

GRAPHIC #2

<END>

g00692640

HYDRAULIC SYSTEM

158-8043 LINES GP-TILT CYLINDER–CHASSIS

S/N: 7PZ1-UP

PART OF 158-8044 CONTROL AR-HYDRAULIC

AN ATTACHMENT

SMCS-5057, 5104 **i01515831**

NOTE	REF NO	GRAPHIC REF	PART NUMBER	QTY	PART NAME 1 2 3 4 5 6 (PRODUCT LEVEL)	SEE PAGE
I	1	2	**5T-9686**	1	HOSE AS	
	2	2	**6Y-3567**	1	ELBOW	
	3	2	**6Y-3568**	1	COVER	
	4	1	**7G-5984**	1	CLIP (TAB)	
	5	1	**7G-5985**	1	CLIP (SLOT)	
	6	1,2	**126-0814**	2	FITTING AS	
I	7	1	**133-6524**	1	HOSE AS	
I	8	1	**133-6525**	1	HOSE AS	
I	9	1	**148-7214**	2	HOSE AS	
	10	2	*148-8353*	2	ELBOW GP	
					(EACH INCLUDES)	
		2	**3J-1907**	1	SEAL-O-RING	
		2	**6V-8397**	1	SEAL-O-RING	
		2	**6V-9001**	1	ELBOW	
I	11	2	**171-4581**	1	HOSE AS	
	12	2	**186-2771**	1	PLATE AS	
		2	**1F-0750**	3	NUT-WELD (3/8-16 THD)	
	13	1,2	*148-8435*	2	TEE GP	
					(EACH INCLUDES)	
		1,2	**3J-1907**	1	SEAL-O-RING	
		1,2	**6V-8397**	2	SEAL-O-RING	
		1,2	**6V-8781**	1	TEE-FACE SEAL	
	14	1	**1P-3703**	2	SEAL-RECTANGULAR	
	15	2	**1P-4576**	6	FLANGE	
	16	2	**1P-4577**	6	FLANGE-HALF	
	17	1	**1P-5766**	4	FLANGE-HALF	
	18	1	**4J-0520**	3	SEAL-O-RING	
	19	2	**4J-5267**	3	SEAL-O-RING	
	20	2	**5H-4018**	2	COVER	
	21	1	**5K-9090**	2	SEAL-O-RING	
	22	2	**5M-3062**	6	BOLT (3/8-16X0.75 IN)	
	23	2	**5P-1075**	4	WASHER-HARD (10.2X22.5X3MM THK)	
	24	1	**5P-2228**	1	BOLT (1/2-13X1 IN)	
	25	2	**5P-7466**	2	CLIP (SLOT)	
	26	2	**5P-7467**	2	CLIP (TAB)	
	27	2	**5P-8112**	2	GROMMET	
	28	1,2	**5S-7382**	20	BOLT (3/8-16X1.375 IN)	
	29	1	**7G-3832**	3	GROMMET	
	30	1	**7G-3833**	3	CLIP (TAB)	
	31	1	**7G-3834**	3	CLIP (SLOT)	
	32	1	**7G-5986**	1	GROMMET	
	33	1	**7S-3912**	1	CLIP (TAB)	
	34	1	**7S-3913**	1	CLIP (SLOT)	
	35	1	**8C-6877**	8	BOLT (7/16-14X1.75 IN)	
	36	2	**8T-4121**	2	WASHER-HARD (11X21X2.5MM THK)	
	37	1,2	**8T-4223**	11	WASHER-HARD (13.5X25.5X3MM THK)	
	38	1,2	**8T-4896**	26	WASHER-HARD (10.2X18.5X2.5MM THK)	
	39	1	**8T-5360**	8	WASHER (12X22.5X2.5MM THK)	
	40	2	**8T-8915**	2	BOLT (3/8-16X3.25 IN)	
	41	1,2	**8T-8917**	10	BOLT (1/2-13X1.25 IN)	
	42	2	**9B-7237**	4	BOLT (3/8-16X1.25 IN)	
	43	1	**6V-9829**	1	CAP AS	
		1	**6V-8553**	1	NUT-FACE SEAL	

I-SEE HOSE FABRICATION GUIDE

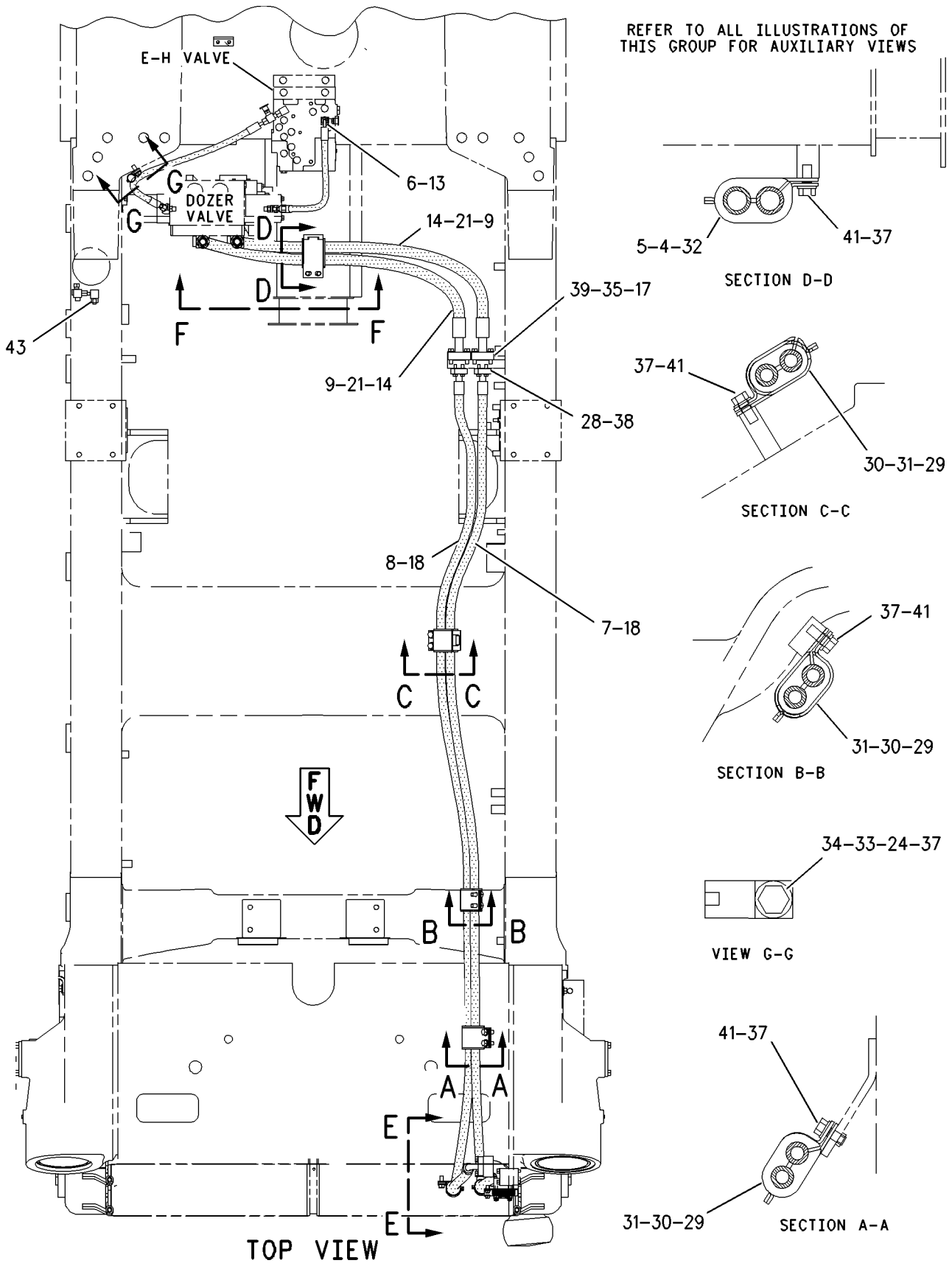

GRAPHIC #1 g00800595

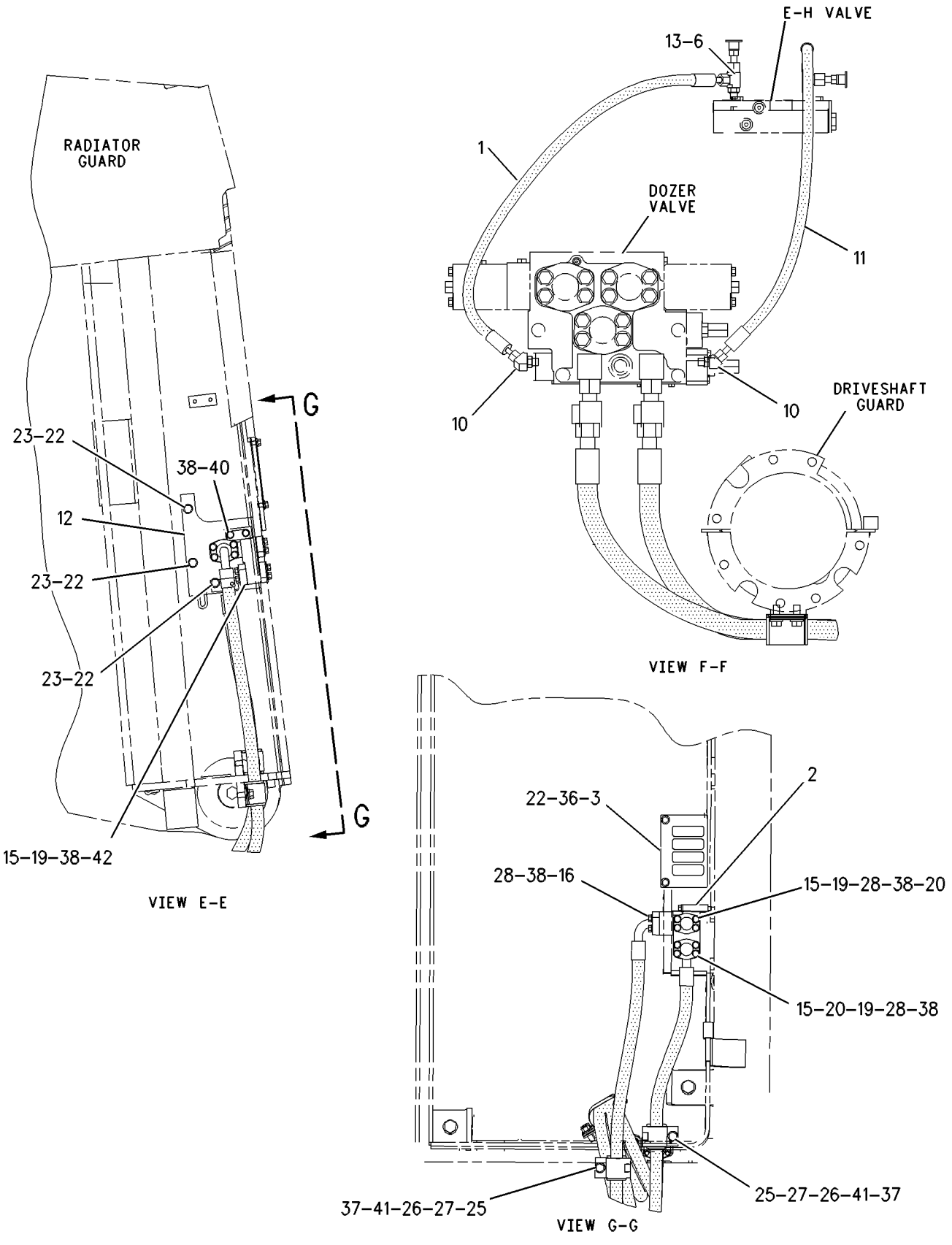

GRAPHIC #2 **<END>** g00663750

226-6537 MANIFOLD GP-CONTROL–HYDRAULIC FAN

S/N: 7PZ652-UP

PART OF 172-5596 LINES GP-HYDRAULIC FAN

SMCS-5264 **i01953091**

NOTE	REF NO	GRAPHIC REF	PART NUMBER	QTY	PART NAME 1 2 3 4 5 6 (PRODUCT LEVEL)	SEE PAGE
	1	1	**4J-0520**	1	SEAL-O-RING	
Y	2	1	**128-2780**	1	VALVE GP-CHECK (HYDRAULIC FLUID)	864
Y	3	1	**220-4551**	1	VALVE GP-SEQUENCE (HYDRAULIC FLUID FLOW)	897
	4	1	**6V-3965**	2	FITTING (QUICK DISCONNECT)	
	5	1	**6V-0852**	2	CAP-DUST	
	6	1	**3J-1907**	2	SEAL-O-RING	
	7	1	**9S-4191**	1	PLUG	
	8	1	**9S-4181**	2	PLUG	
	9	1	**7M-8485**	2	SEAL-O-RING	

Y-SEPARATE ILLUSTRATION

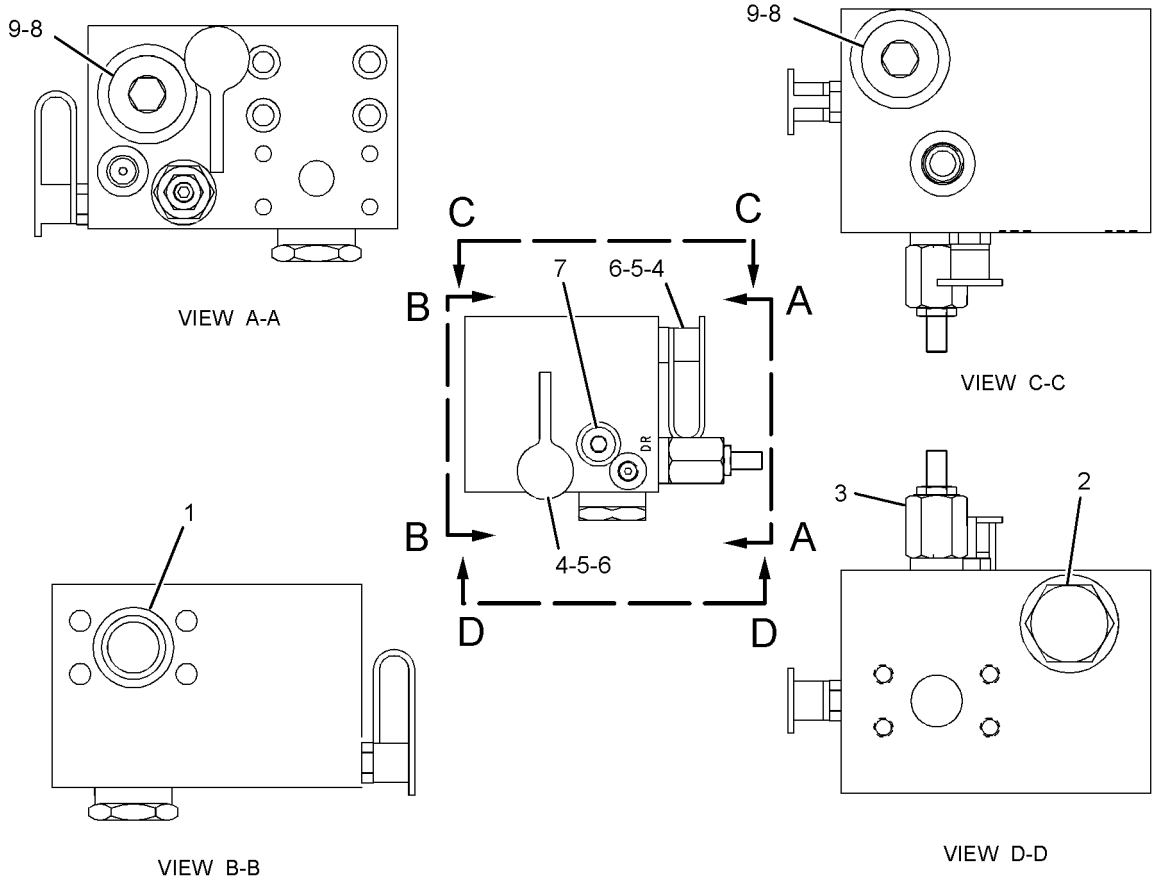

GRAPHIC #1 **<END>** g01026478

127-4490 MOTOR GP-FAN

S/N: 7PZ1-288

PART OF 155-5557 INSTALLATION AR-ENGINE

SMCS-1386 **i01988900**

NOTE	REF NO	GRAPHIC REF	PART NUMBER	QTY	PART NAME 1 2 3 4 5 6 (PRODUCT LEVEL)	SEE PAGE
CYR	1	1	**159-7161**	1	MOTOR GP-PISTON	824
	2	1	**2M-9780**	1	SEAL-O-RING	
	3	1	**6V-8182**	4	NUT (3/4-10 THD)	
	4	1	**8T-4994**	4	WASHER-HARD (20X36.5X3.5MM THK)	
	5	1	**9S-8006**	1	PLUG	

C-CHANGE FROM PREVIOUS TYPE
R-REMFG PART MAY BE AVAILABLE
Y-SEPARATE ILLUSTRATION

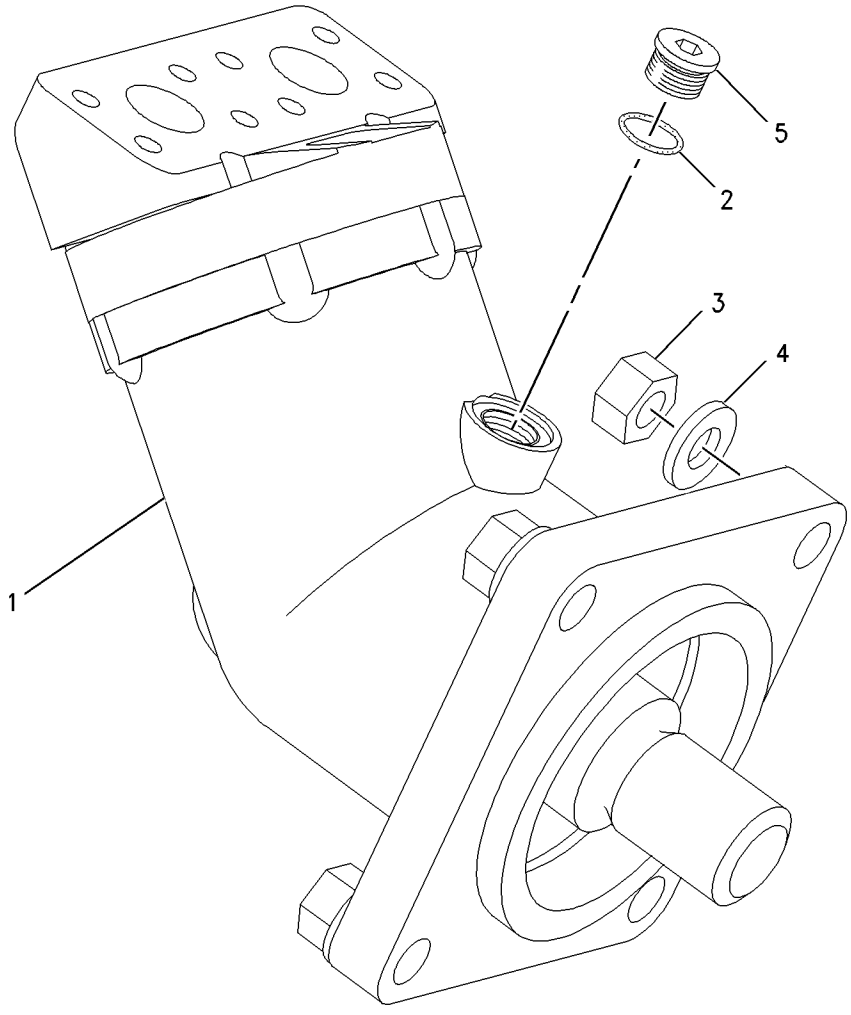

GRAPHIC #1 **<END>** g00747510

HYDRAULIC SYSTEM

176-7002 MOTOR GP-FAN

S/N: 7PZ289-UP

PART OF 155-5557 INSTALLATION AR-ENGINE

SMCS-1386 **i01988953**

NOTE	REF NO	GRAPHIC REF	PART NUMBER	QTY	PART NAME 1 2 3 4 5 6 (PRODUCT LEVEL)	SEE PAGE
YR	1	1	**159-7161**	1	MOTOR GP-PISTON	824
	2	1	**2M-9780**	1	SEAL-O-RING	
	3	1	**6V-8182**	4	NUT (3/4-10 THD)	
	4	1	**8T-4994**	4	WASHER-HARD (20X36.5X3.5MM THK)	
	5	1	**9S-8006**	1	PLUG	

R-REMFG PART MAY BE AVAILABLE
Y-SEPARATE ILLUSTRATION

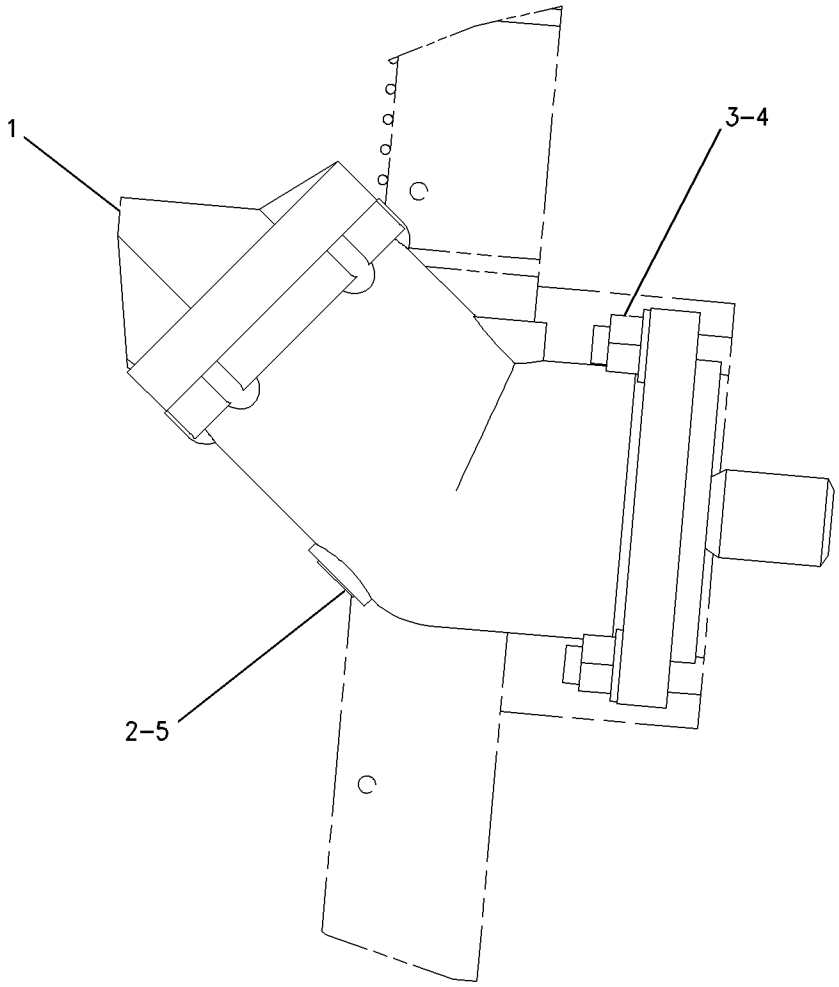

GRAPHIC #1 **<END>** g00683535

159-7161 MOTOR GP-PISTON–FAN*R

S/N: 7PZ1-UP

PART OF 127-4490, 176-7002 MOTOR GP-FAN

SMCS-5058 **i01707402**

NOTE	REF NO	GRAPHIC REF	PART NUMBER	QTY	PART NAME 1 2 3 4 5 6 (PRODUCT LEVEL)	SEE PAGE
Y	1	1	**171-3065**	1	ROTATING GP-MOTOR	843
	2	1	**9S-8006**	1	PLUG	
	3	1	**2M-9780**	1	SEAL-O-RING	
	4	1	**9T-1641**	1	HOUSING	
	5	1	**6V-1197**	1	SEAL-O-RING	
	6	1	**8T-4231**	1	DOWEL	
M	7	1	**8T-3957**	6	BOLT-HEX SOCKET (M12X1.75X30MM)	
	8	1	**119-6121**	1	HEAD	

M-METRIC PART
Y-SEPARATE ILLUSTRATION

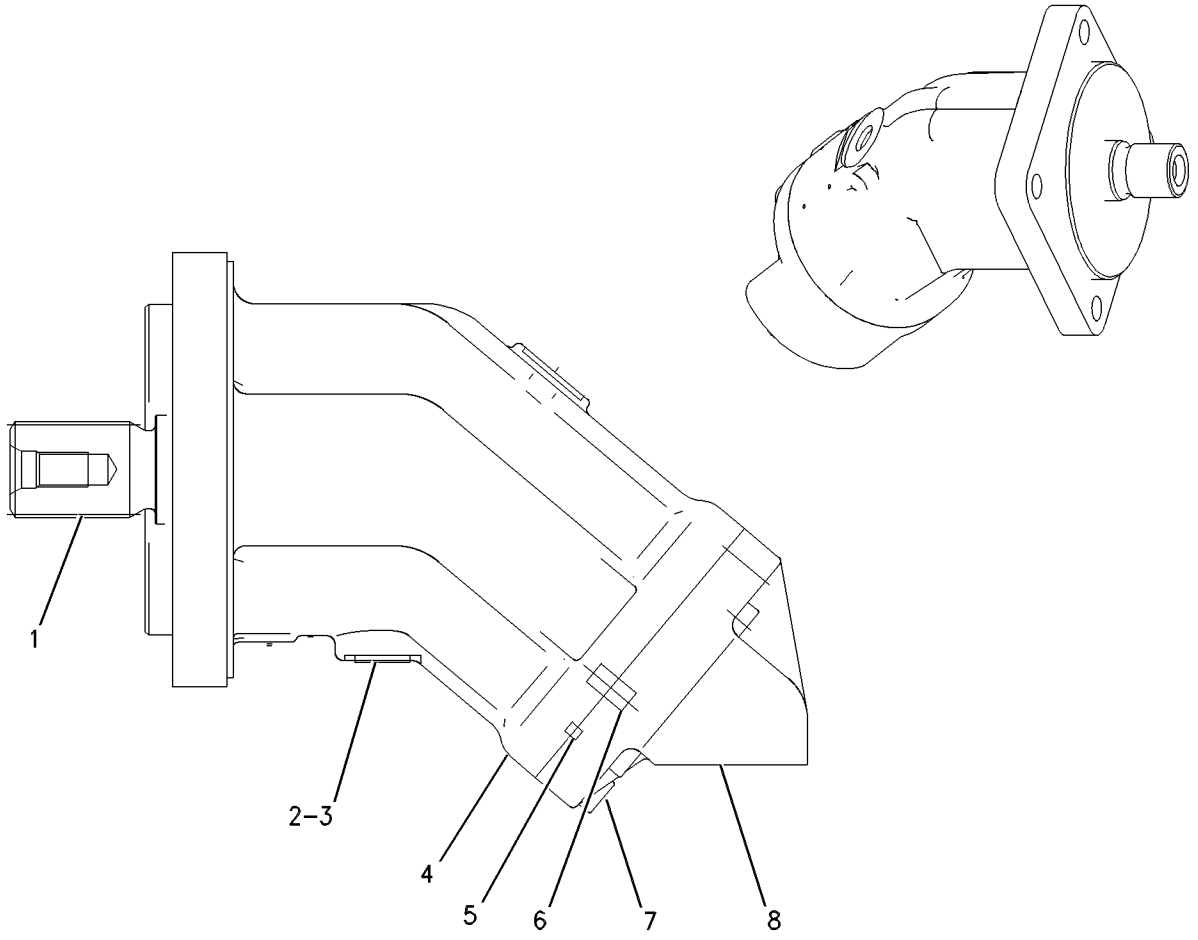

GRAPHIC #1 **<END>** g00605328

7T-7575 MOUNTING GP-CYLINDER–LIFT

S/N: 8PP1-UP; 8RP1-UP; 7PZ1-UP
PART OF 119-4267, 119-4268 BULLDOZER AR-SEMI-UNIVERSAL
AN ATTACHMENT

SMCS-7562 **i01988946**

NOTE	REF NO	GRAPHIC REF	PART NUMBER	QTY	PART NAME 1 2 3 4 5 6 (PRODUCT LEVEL)	SEE PAGE
C	1	1	**7X-0394**	8	BOLT (7/8-9X7 IN)	
	2	1	**7X-0525**	8	WASHER-HARD (24X41.5X6MM THK)	
	4	1	**9J-6001**	4	CAP AS	
					(EACH INCLUDES)	
	4A	1	**9J-5942**	1	BEARING-SLEEVE	
C	5	1	**231-6574**	2	YOKE	
	6	1	**5P-9609**	2	SEAL-LIP TYPE	
	7	1	**5J-5365**	2	PIN	
	8	1	**3B-8489**	4	FITTING-GREASE	

QUANTITIES SHOWN ARE THOSE REQUIRED FOR BOTH LH AND RH SIDES
C-CHANGE FROM PREVIOUS TYPE

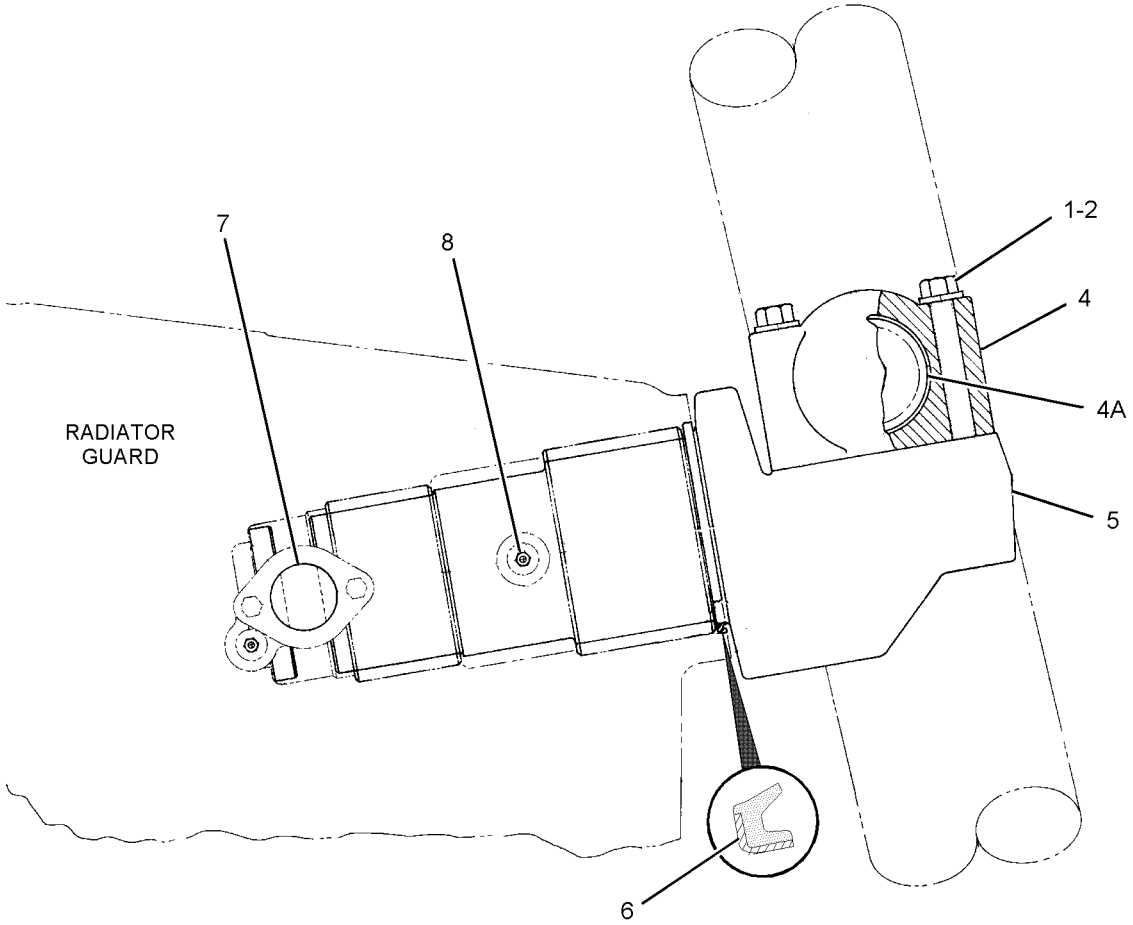

GRAPHIC #1 **<END>** g01025407

198-7341 MOUNTING GP-CYLINDER

S/N: 8PP1-UP; 8RP1-UP; 7PZ1-UP
PART OF 199-8241 BULLDOZER AR-SEMI-UNIVERSAL, 199-8240 BULLDOZER AR-UNIVERSAL
FOR USE WITH 201-3218—PAGE 673, 201-3215—PAGE 671
AN ATTACHMENT

SMCS-7562 **i01606431**

NOTE	REF NO	GRAPHIC REF	PART NUMBER	QTY	PART NAME 1 2 3 4 5 6 (PRODUCT LEVEL)	SEE PAGE
	1	1	**3B-8489**	2	FITTING-GREASE	
	2	1	**5J-5365**	2	PIN	
	3	1	**197-6689**	2	YOKE	
	4	1	**198-7366**	4	CAP AS	
					(EACH INCLUDES)	
		1	**198-7343**	1	BEARING-SLEEVE	
	5	1	**5P-9609**	2	SEAL-LIP TYPE	
M	6	1	**7X-2578**	8	BOLT (M24X3X200-MM)	
	7	1	**8T-4167**	8	WASHER-HARD (26X44X4-MM THK)	

QUANTITIES SHOWN ARE THOSE REQUIRED FOR BOTH LH AND RH SIDES
M-METRIC PART

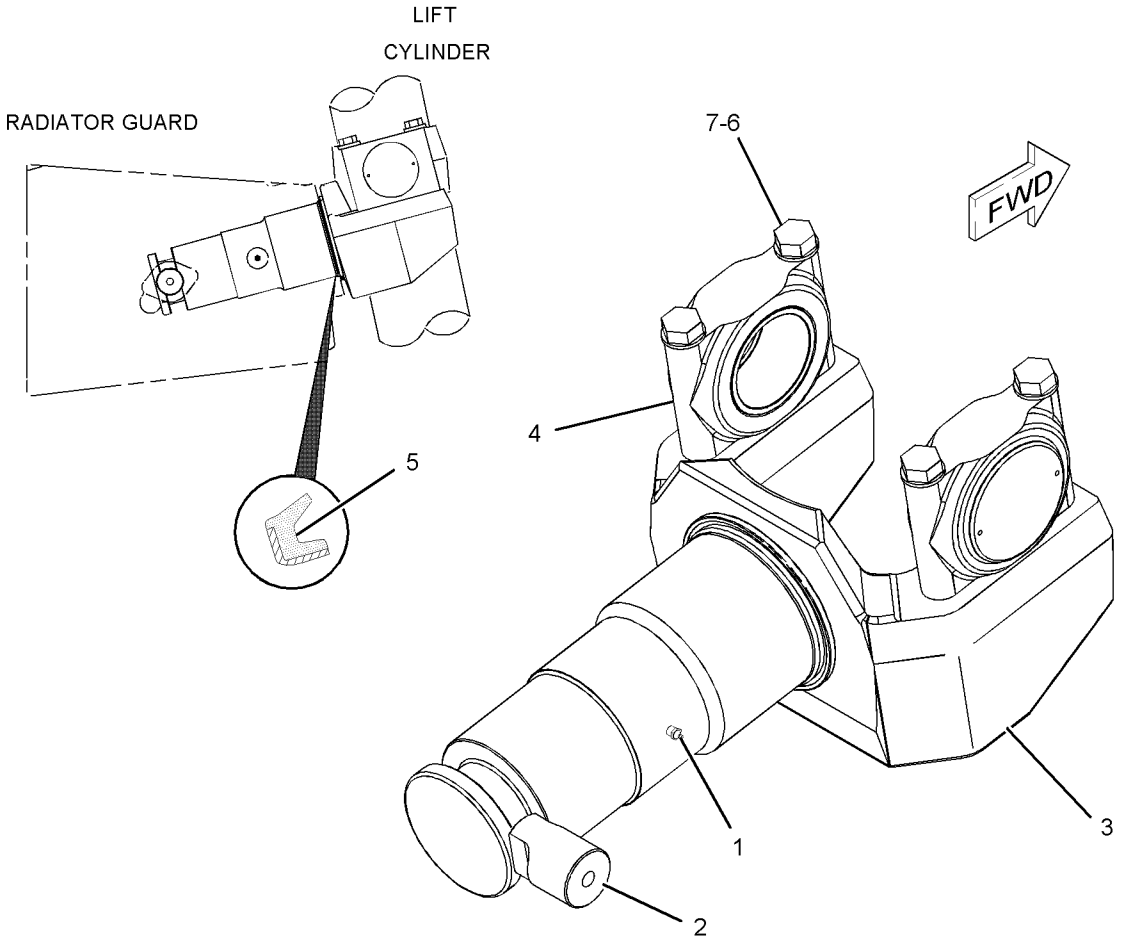

GRAPHIC #1 **<END>** g00849187

226-0311 MOUNTING GP-CYLINDER–LIFT

S/N: 8PP1-UP; 8RP1-UP; 7PZ1-UP
PART OF 226-5919 BULLDOZER AR-SEMI-UNIVERSAL, 226-5918 BULLDOZER AR-UNIVERSAL
FOR USE WITH 201-3218–PAGE 673, 201-3215–PAGE 671
AN ATTACHMENT

SMCS-7562 **i01988959**

NOTE	REF NO	GRAPHIC REF	PART NUMBER	QTY	PART NAME 1 2 3 4 5 6 (PRODUCT LEVEL)	SEE PAGE
	1	1	**3B-8489**	2	FITTING-GREASE	
	2	1	**5J-5365**	2	PIN	
	3	1	**198-7366**	4	CAP AS	
					(EACH INCLUDES)	
		1	**198-7343**	1	BEARING-SLEEVE	
	4	1	**231-6573**	2	YOKE	
	5	1	**5P-9609**	2	SEAL-LIP TYPE	
M	6	1	**7X-2578**	8	BOLT (M24X3X200MM)	
	7	1	**8T-4167**	8	WASHER-HARD (26X44X4MM THK)	

QUANTITIES SHOWN ARE THOSE REQUIRED FOR BOTH LH AND RH SIDES
M-METRIC PART

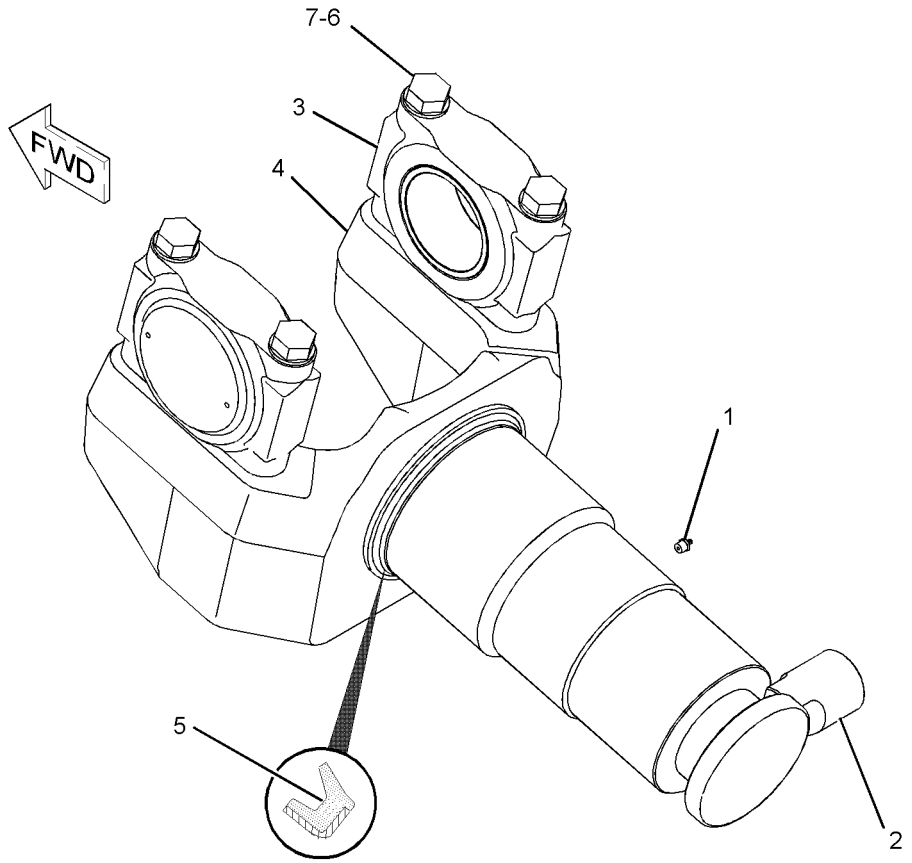

GRAPHIC #1 **<END>** g01026451

102-0693 PISTON & VALVE GP–RIPPER

S/N: 5MP1-UP; 7CP1-UP; 7DP1-UP; 7ZP1-UP
PART OF 101-8581, 101-8614, 161-6615, 161-6616 CYLINDER GP-RIPPER
AN ATTACHMENT

SMCS-5064 **i01425676**

NOTE	REF NO	GRAPHIC REF	PART NUMBER	QTY	PART NAME 1 2 3 4 5 6 (PRODUCT LEVEL)	SEE PAGE
	1	1	**8T-1794**	1	SEAL AS	
	2	1	**6E-1443**	2	INSERT	
	3	1	**2H-3932**	4	SEAL-O-RING (28.17MM ID)	
	4	1	**1J-8568**	2	PLUNGER	
	5	1	**6E-1444**	2	SPACER	
	6	1	**1J-8569**	2	INSERT-PISTON	
	7	1	**3K-8692**	4	RING-BACKUP	

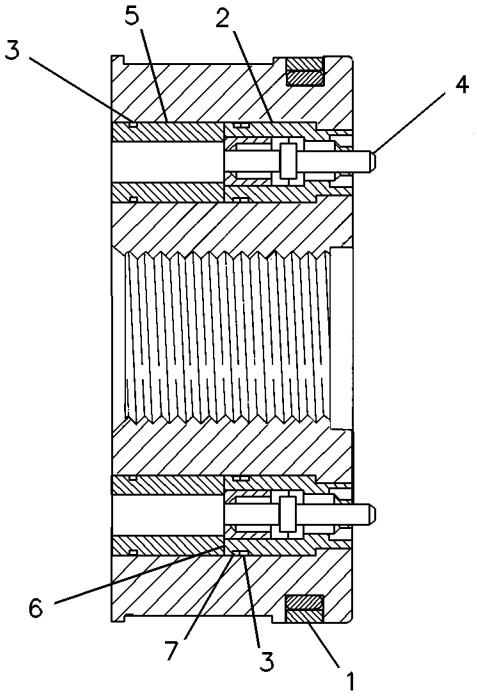

GRAPHIC #1 **<END>** g00231424

164-6427 PISTON & VALVE GP

S/N: 8PP1-UP; 8RP1-UP
PART OF 9T-3715, 9T-3716 CYLINDER GP-BULLDOZER TILT
AN ATTACHMENT

SMCS-5064 **i02024020**

NOTE	REF NO	GRAPHIC REF	PART NUMBER	QTY	PART NAME 1 2 3 4 5 6 (PRODUCT LEVEL)	SEE PAGE
	1	1	**1J-8569**	2	INSERT-PISTON	
	2	1	**4T-2578**	1	SPACER	
	3	1	**6E-1443**	2	INSERT	
	4	1	**6E-1444**	1	SPACER	
	5	1	**105-3668**	1	PISTON	
	6	1	**164-6426**	2	PLUNGER	
	7	1	**2H-3932**	3	SEAL-O-RING	
	8	1	**3K-8692**	4	RING-BACKUP	

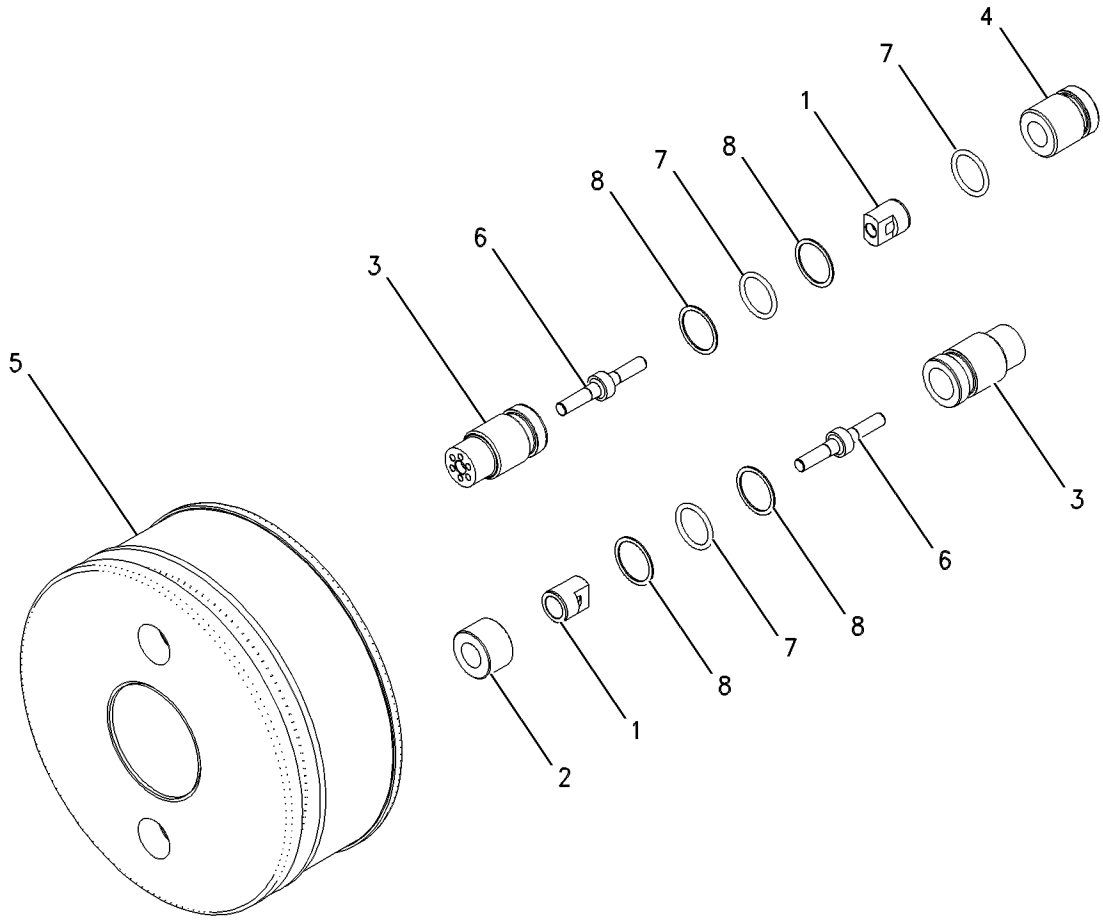

GRAPHIC #1 **<END>** g00582901

6E-5294 PUMP GP-GEAR–IMPLEMENT

S/N: 7PZ1-651

PART OF 155-5553 CONTROL AR-HYDRAULIC

FIELD REPLACEMENT ORDER 227-9383–PAGE 832, 221-0293 HOSE AS

SMCS-5073 **i01988945**

NOTE	REF NO	GRAPHIC REF	PART NUMBER	QTY	PART NAME 1 2 3 4 5 6 (PRODUCT LEVEL)	SEE PAGE
	1	1	**9T-6905**	1	SHAFT	
	2	1	**3G-1797**	2	SEAL-LIP TYPE	
	3	1	**4D-1736**	1	RING-RETAINING	
	4	1	**9T-6906**	1	GEAR-IDLER	
	5	1	**9T-6907**	1	FLANGE AS-RH	
	6	1	**9T-7034**	4	BUSHING-TERMINAL	
	7	1	**9T-2654**	4	DOWEL	
	8	1	**9T-6908**	2	PLATE-PRESSURE	
	9	1	**9T-6909**	1	PLATE-GEAR	
	10	1	**6B-6682**	8	NUT-FULL (3/4-16 THD)	
	11	1	**5H-1504**	8	WASHER-HARD (20X33.5X5MM THK)	
	12	1	**7M-4298**	8	STUD	
	13	1	**2L-0041**	8	BOLT (1/2-13X2.25 IN)	
	14	1	**5S-2256**	4	BOLT (1/2-13X1.75 IN)	
	15	1	**9J-4688**	1	COUPLING	
	16	1	**6E-2943**	1	PLUG	
	17	1	**9T-6910**	1	PLATE AS-BEARING	
	18	1	**6E-5536**	1	PLATE AS (CONNECTOR)	
	19	1	**9T-6912**	1	BODY AS	
	20	1	**4T-9300**	4	BUSHING-TERMINAL	
	21	1	**4T-9176**	1	GEAR	
	22	1	**9T-6913**	1	SHAFT-DRIVE	
	23	1	**4T-9425**	1	PLATE-ISOLATION	
	24	1	**4T-8729**	2	PLATE-PRESSURE	
	25	1	**4T-9426**	1	PLATE-ISOLATION	
	26	1	**6J-2386**	4	DOWEL	
					AVAILABLE REPAIR KIT(S):	
			9T-6916	1	KIT-SEAL (GEAR PUMP)	
					(INCLUDES SEALS & RINGS)	
			9T-6914	1	KIT-SECTION (FRONT) (GEAR PUMP)	
			9T-6915	1	KIT-SECTION (REAR) (GEAR PUMP)	

6E-5294 PUMP GP-GEAR *(contd.)* **i01988945**

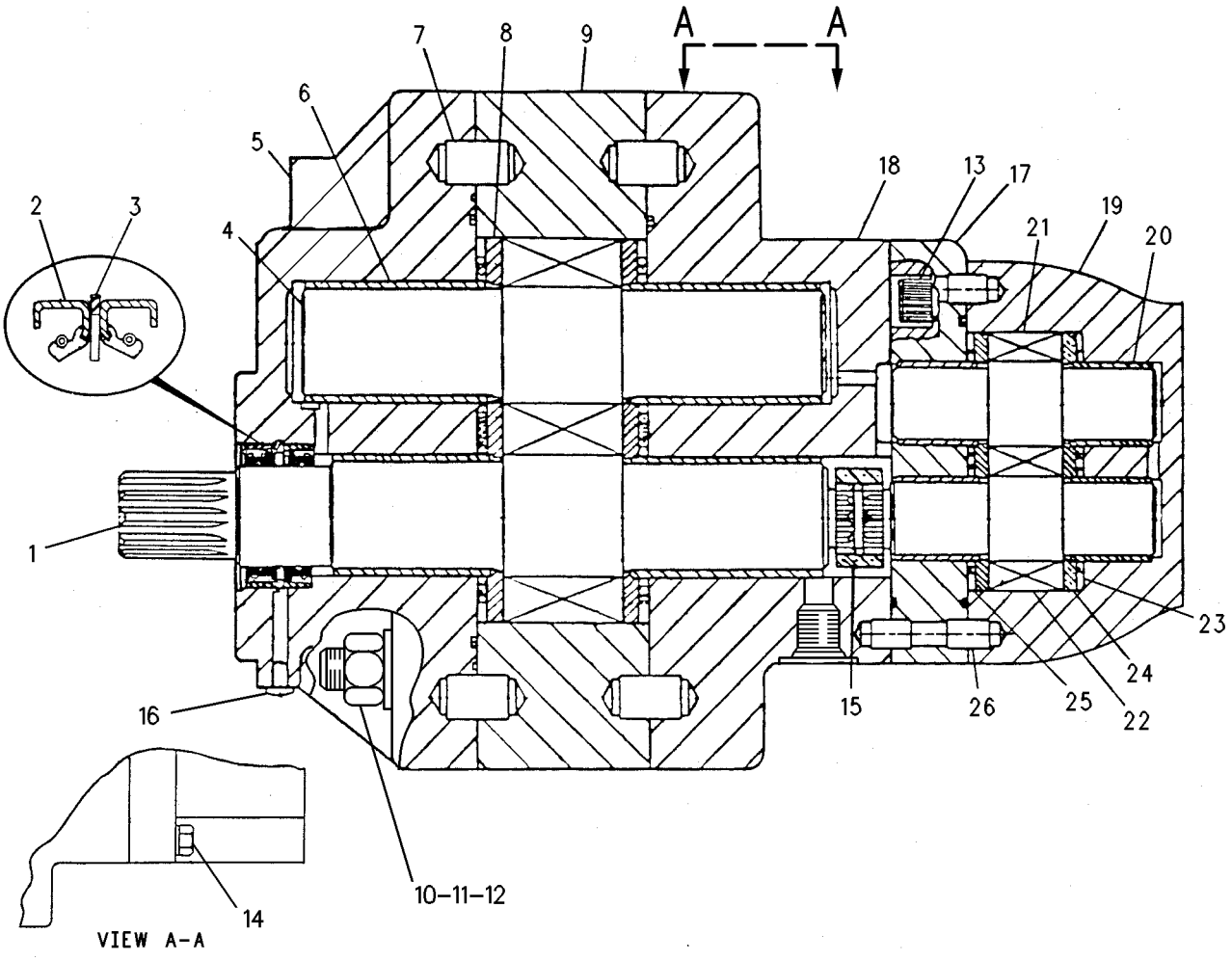

GRAPHIC #1 **<END>** g00234454

HYDRAULIC SYSTEM

227-9383 PUMP GP-GEAR—IMPLEMENT

S/N: 7PZ652-UP

PART OF 155-5553 CONTROL AR-HYDRAULIC

FIELD REPLACEMENT FOR 6E-5294—PAGE 830

SMCS-5073 **i01952690**

NOTE	REF NO	GRAPHIC REF	PART NUMBER	QTY	PART NAME 1 2 3 4 5 6 (PRODUCT LEVEL)	SEE PAGE
	1	1	**9T-6909**	1	PLATE-GEAR	
	2	1	**231-9532**	1	BODY AS	
	3	1	**231-9533**	1	PLATE AS	
	4	1	**9T-6907**	1	FLANGE AS-RH	
	5	1	**9T-6910**	1	PLATE AS-BEARING	
	6	1	**9T-6905**	1	SHAFT	
	7	1	**9T-6913**	1	SHAFT-DRIVE	
	8	1	**9T-6906**	1	GEAR-IDLER	
	9	1	**4T-9176**	1	GEAR	
	10	1	**120-0241**	2	PLATE-PRESSURE	
	11	1	**4T-8729**	2	PLATE-PRESSURE	
	12	1	**4T-9425**	1	PLATE-ISOLATION	
	13	1	**4T-9426**	1	PLATE-ISOLATION	
	14	1	**077-4652**	2	RING-RETAINING	
J	15	1	**215-7636**	2	SEAL	
J	16	1	**4D-1736**	1	RING-RETAINING	
	17	1	**9T-2654**	4	DOWEL	
	18	1	**6J-2386**	4	DOWEL	
J	19	1	**6E-2943**	1	PLUG	
	20	1	**9S-8004**	2	PLUG	
	21	1	**9J-4688**	1	COUPLING	
	22	1	**7M-4298**	8	STUD	
	23	1	**5S-2256**	4	BOLT (1/2-13X1.75 IN)	
	24	1	**2L-0041**	8	BOLT (1/2-13X2.25 IN)	
	25	1	**5H-1504**	8	WASHER-HARD (20X33.5X5MM THK)	
	26	1	**6B-6682**	8	NUT-FULL (3/4-16 THD)	
					AVAILABLE REPAIR KIT(S):	
J			**231-9531**	1	KIT-SEAL	

J-KIT MARKED J INCLUDES PARTS MARKED J

227-9383 PUMP GP-GEAR ***(contd.)*** **i01952690**

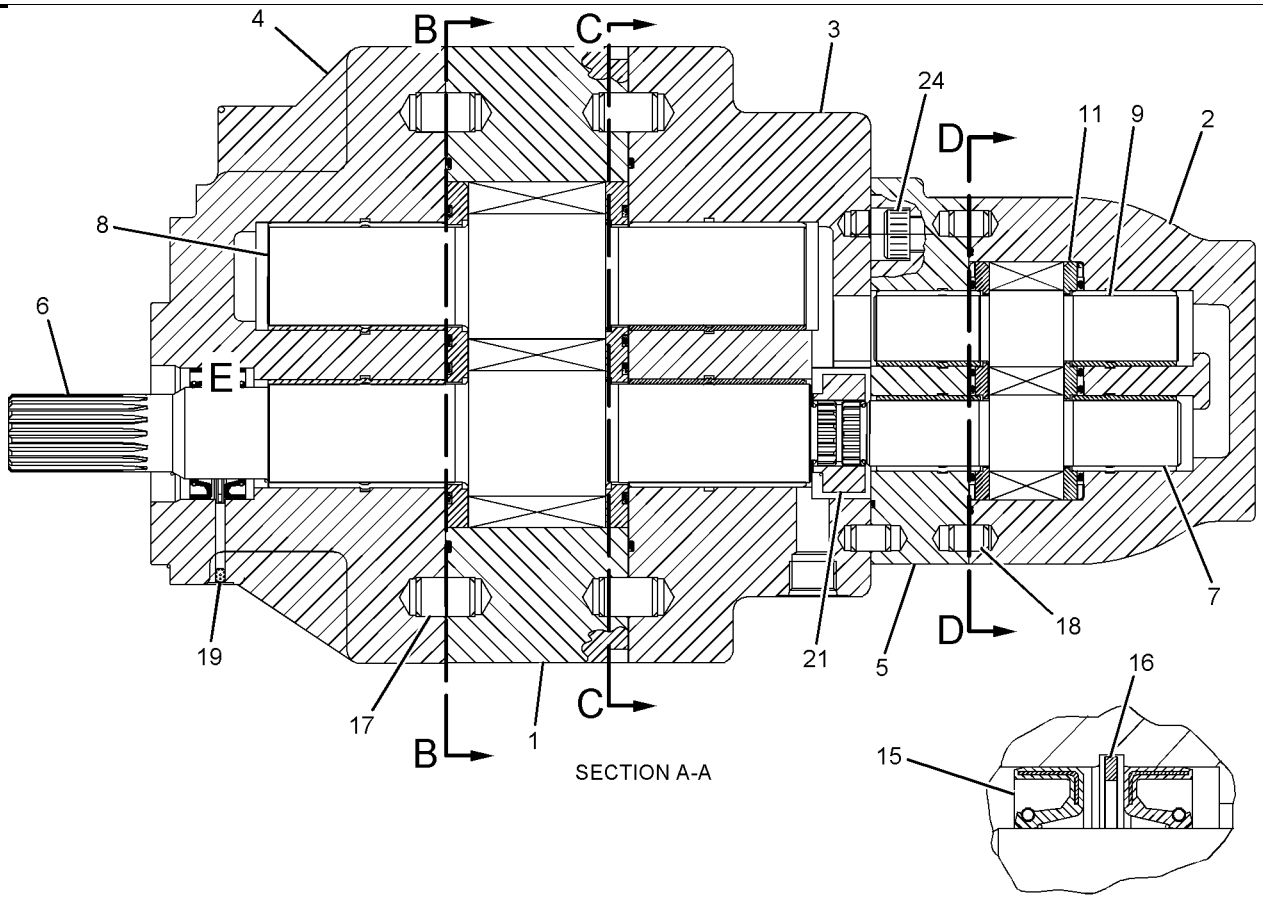

SECTION A-A

VIEW OF AREA E

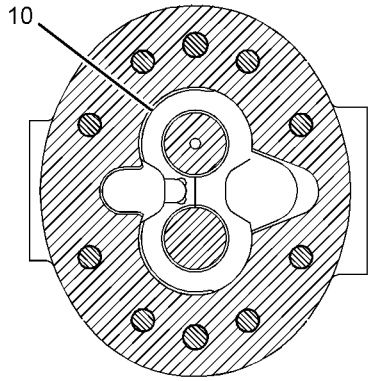

SECTION C-C

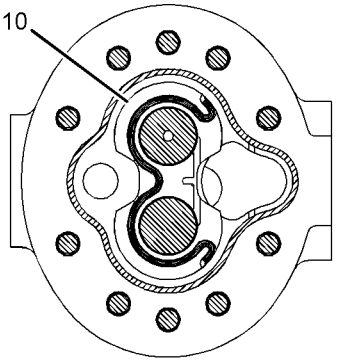

SECTION B-B

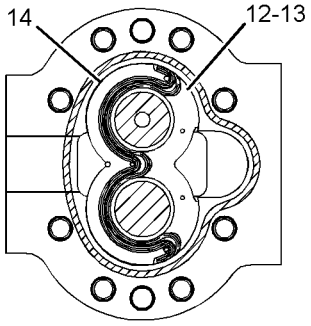

SECTION D-D

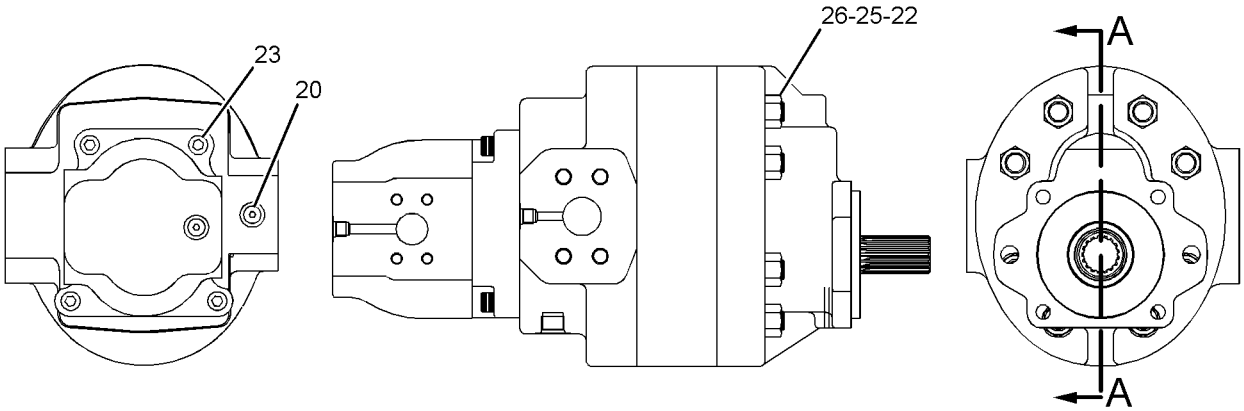

GRAPHIC #1 **<END>** g01029669

172-5636 PUMP GP-PISTON—REAR HYDRAULIC FAN

S/N: 7PZ1-UP

PART OF 172-5638 PUMP GP-PISTON

TYPE 1

SMCS-5070 **i01988950**

NOTE	REF NO	GRAPHIC REF	PART NUMBER	QTY	PART NAME 1 2 3 4 5 6 (PRODUCT LEVEL)	SEE PAGE
	1	1	**8C-3110**	1	RING-RETAINING	
	2	1	**138-4691**	2	BEARING-CRADLE	
	3	1	**138-4692**	1	HOUSING-PUMP	
Y	4	1	**138-4693**	1	ROTATING GP-PUMP	846
	5	1	**3E-6749**	4	SEAL-O-RING	
M	6	1	**8T-0273**	4	BOLT-SOCKET HEAD (M12X1.75X40MM)	
	7	1	**6V-4636**	1	CUP-BEARING (ROLLER BEARING)	
	8	1	**203-9163**	1	CONE-BEARING (ROLLER BEARING)	
M	9	1	**135-8854**	2	PLUG	
B	10	1	**127-9483**	1	SHIM (PRE-LOAD)	
	11	1	**9X-7391**	1	SEAL-O-RING	
	12	1	**138-4695**	1	CYLINDER-BIAS	
	13	1	**138-4696**	1	SPRING-BIAS	
	14	1	**138-4697**	1	PLUNGER-BIAS	
	15	1	**9S-8006**	1	PLUG	
	16	1	**2M-9780**	1	SEAL-O-RING	
	17	1	**168-7872**	1	SHAFT-PUMP	
	18	1	**203-8609**	1	CUP-BEARING	
	19	1	**105-3035**	1	CONE-BEARING	
	20	1	**127-9471**	1	SEAL-PUMP SHAFT	
	21	1	**138-4698**	1	SWASHPLATE AS	
	22	1	**138-4699**	1	PISTON-CONTROL	
	23	1	**138-4700**	1	GUIDE-PISTON	
	24	1	**138-4701**	1	HEAD-PUMP	
	25	1	**136-8423**	1	PLUG-BREAK OFF	
	26	1	**138-4703**	1	SPACER-BEARING (38.5X45X3MM THK)	
	27	1	**145-9361**	1	SPACER	
	28	1	**127-9487**	1	PIN-DOWEL	
FY		1	**118-2874**	1	VALVE GP-PUMP CONTROL (PRESSURE, FLOW COMPENSATOR)	891

B-USE AS REQUIRED
F-NOT SHOWN
M-METRIC PART
Y-SEPARATE ILLUSTRATION

172-5636 PUMP GP-PISTON ***(contd.)*** **i01988950**

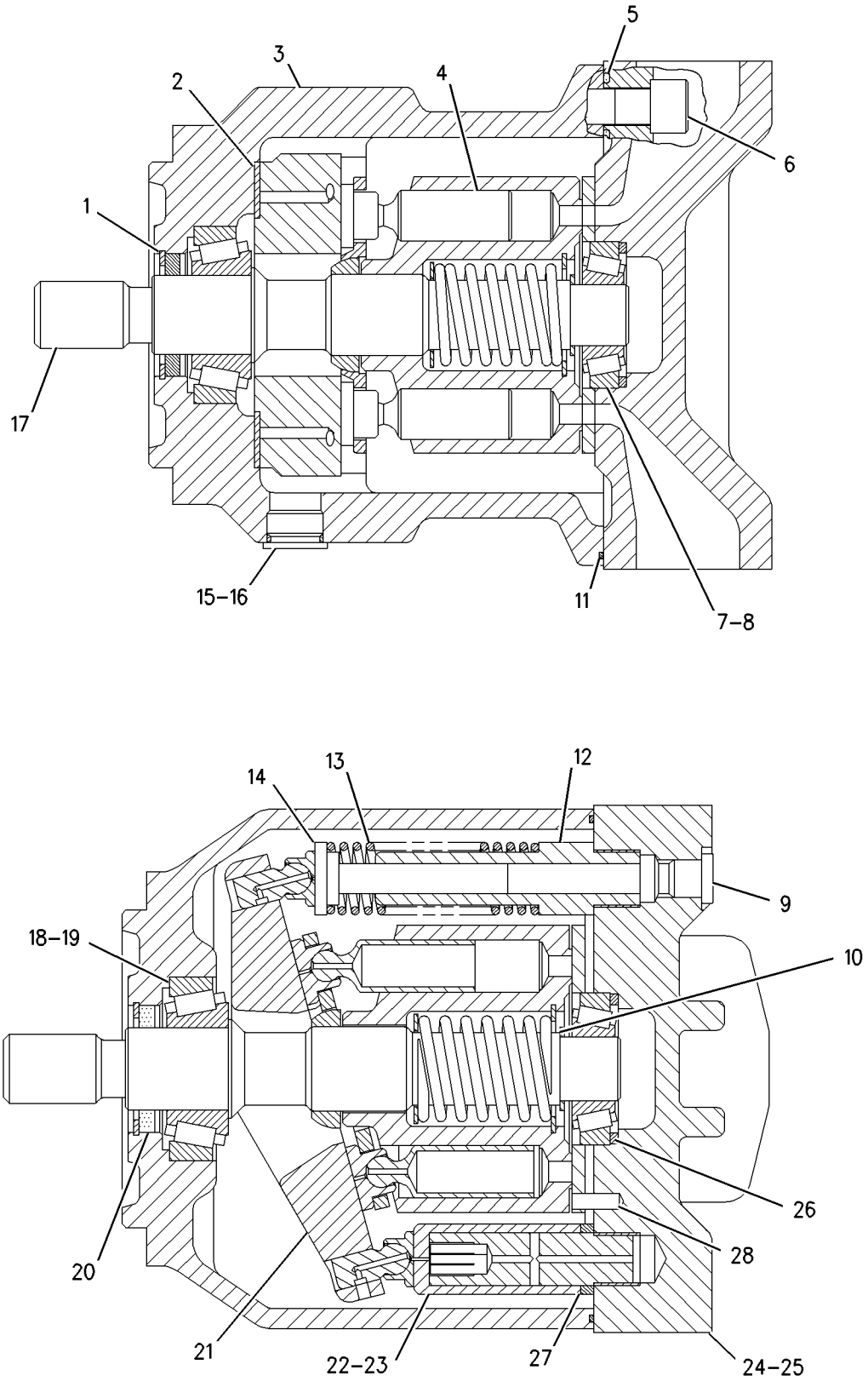

GRAPHIC #1 **<END>** g00805330

HYDRAULIC SYSTEM

172-5636 PUMP GP-PISTON—REAR HYDRAULIC FAN

S/N: 7PZ1-UP

PART OF 172-5638 PUMP GP-PISTON

TYPE 2

SMCS-5070 **i02023863**

NOTE	REF NO	GRAPHIC REF	PART NUMBER	QTY	PART NAME 1 2 3 4 5 6 (PRODUCT LEVEL)	SEE PAGE
	1	1	**8C-3110**	1	RING-RETAINING	
	2	1	**138-4691**	2	BEARING-CRADLE	
	3	1	**138-4692**	1	HOUSING-PUMP	
Y	4	1	**138-4693**	1	ROTATING GP-PUMP	846
	5	1	**3E-6749**	4	SEAL-O-RING	
M	6	1	**8T-0273**	4	BOLT-SOCKET HEAD (M12X1.75X40-MM)	
	7	1	**6V-4636**	1	CUP-BEARING (ROLLER BEARING)	
	8	1	**203-9163**	1	CONE-BEARING (ROLLER BEARING)	
M	9	1	**135-8854**	2	PLUG	
B	10	1	**127-9483**	1	SHIM (PRE-LOAD)	
	11	1	**9X-7391**	1	SEAL-O-RING	
	12	1	**138-4695**	1	CYLINDER-BIAS	
	13	1	**138-4696**	1	SPRING-BIAS	
	14	1	**138-4697**	1	PLUNGER-BIAS	
	15	1	**9S-8006**	1	PLUG	
	16	1	**2M-9780**	1	SEAL-O-RING	
	17	1	**168-7872**	1	SHAFT-PUMP	
	18	1	**203-8609**	1	CUP-BEARING	
	19	1	**105-3035**	1	CONE-BEARING	
	20	1	**127-9471**	1	SEAL-PUMP SHAFT	
	21	1	**138-4698**	1	SWASHPLATE AS	
	22	1	**138-4699**	1	PISTON-CONTROL	
	23	1	**138-4700**	1	GUIDE-PISTON	
	24	1	**138-4701**	1	HEAD-PUMP	
	25	1	**136-8423**	1	PLUG-BREAK OFF	
	26	1	**138-4703**	1	SPACER-BEARING (38.5X45X3-MM THK)	
	27	1	**145-9361**	1	SPACER	
	28	1	**127-9487**	1	PIN-DOWEL	
CFY		1	**193-3182**	1	VALVE GP-PUMP CONTROL (PRESSURE, FLOW COMPENSATOR)	894

B-USE AS REQUIRED
C-CHANGE FROM PREVIOUS TYPE
F-NOT SHOWN
M-METRIC PART
Y-SEPARATE ILLUSTRATION

172-5636 PUMP GP-PISTON ***(contd.)*** **i02023863**

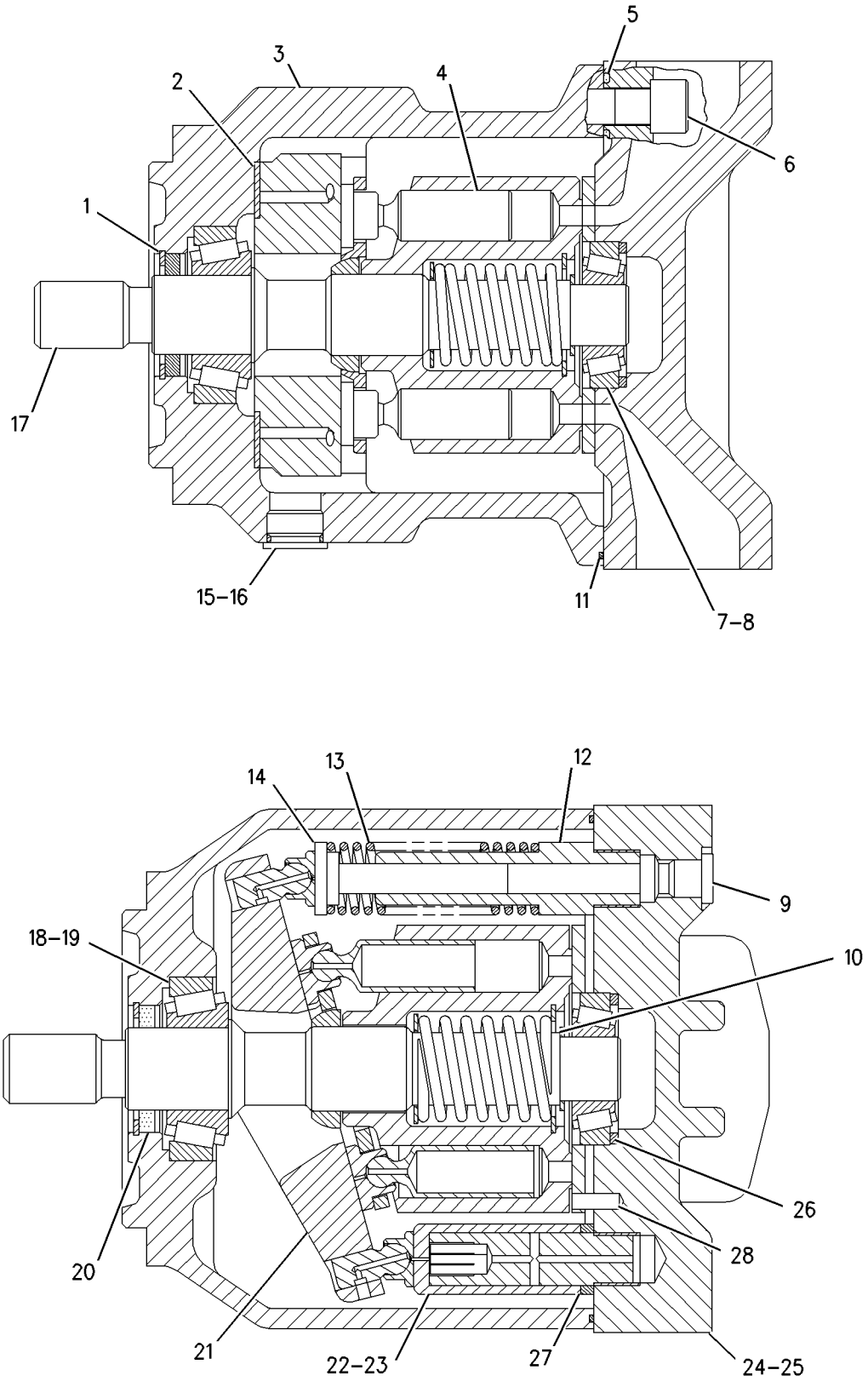

GRAPHIC #1 **<END>** g00805330

HYDRAULIC SYSTEM

172-5637 PUMP GP-PISTON—FRONT HYDRAULIC FAN

S/N: 7PZ1-UP

PART OF 172-5638 PUMP GP-PISTON

TYPE 1

SMCS-5070 **i01563929**

NOTE	REF NO	GRAPHIC REF	PART NUMBER	QTY	PART NAME 1 2 3 4 5 6 (PRODUCT LEVEL)	SEE PAGE
	1	1	**6E-3343**	1	RING	
	2	1	**6E-4003**	2	BEARING	
	3	1	**6E-3995**	1	HOUSING	
Y	4	1	**6E-6160**	1	ROTATING GP-PUMP	845
	5	1	**3E-6769**	4	SEAL-O-RING	
M	6	1	**095-9805**	4	BOLT-SOCKET HEAD	
	7	1	**1P-6872**	1	CUP-ROLLER BEARING	
	8	1	**8C-7110**	1	CONE-ROLLER BEARING	
	9	1	**105-2146**	2	PLUG	
	10	1	**6E-4000**	1	SPACER (25.5X35X3MM THK)	
	11	1	**3E-6770**	1	SEAL-O-RING	
	12	1	**6E-6175**	1	CYLINDER	
	13	1	**6E-6176**	1	SPRING	
	14	1	**6E-6174**	1	PLUNGER	
	15	1	**9S-8006**	1	PLUG	
	16	1	**2M-9780**	1	SEAL-O-RING	
	17	1	**138-4350**	1	SHAFT-PUMP	
	18	1	**8J-0412**	1	CUP-ROLLER BEARING	
	19	1	**3P-1210**	1	CONE-ROLLER BEARING	
	20	1	**6E-4004**	1	SEAL-SHAFT	
	21	1	**136-3715**	1	SWASHPLATE AS	
	22	1	**6E-6172**	1	PISTON	
	23	1	**6E-6173**	1	GUIDE	
	24	1	**138-4346**	1	HEAD-PUMP	
	25	1	**136-8423**	1	PLUG-BREAK OFF	
	26	1	**083-4419**	1	PIN	
	27	1	**6E-3999**	1	SPACER (49X57X3MM THK)	
FY		1	*6E-6170*	1	VALVE GP-PRESS & FLOW CMPNSTR	889

F-NOT SHOWN
M-METRIC PART
Y-SEPARATE ILLUSTRATION

172-5637 PUMP GP-PISTON *(contd.)* **i01563929**

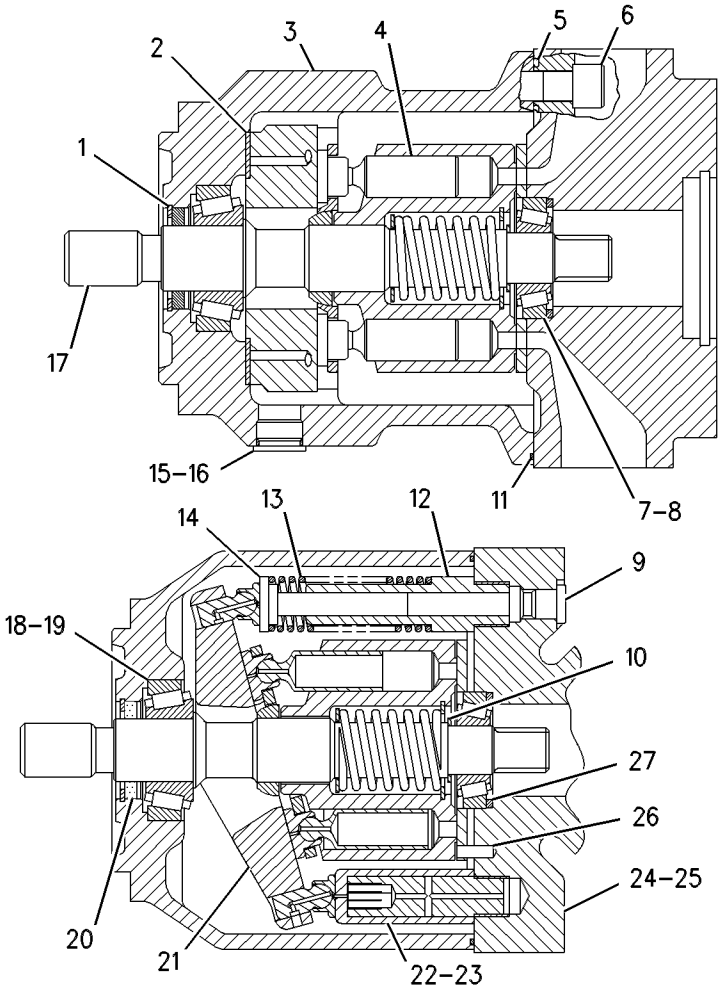

GRAPHIC #1 **<END>** g00286737

HYDRAULIC SYSTEM

172-5637 PUMP GP-PISTON—FRONT HYDRAULIC FAN*R

S/N: 7PZ1-UP

PART OF 172-5638 PUMP GP-PISTON

TYPE 2

SMCS-5070 **i02024186**

NOTE	REF NO	GRAPHIC REF	PART NUMBER	QTY	PART NAME 1 2 3 4 5 6 (PRODUCT LEVEL)	SEE PAGE
	1	1	**180-6213**	1	RING-RETAINING	
	2	1	**6E-4003**	2	BEARING	
	3	1	**6E-3995**	1	HOUSING	
Y	4	1	**6E-6160**	1	ROTATING GP-PUMP	845
	5	1	**3E-6769**	4	SEAL-O-RING	
M	6	1	**095-9805**	4	BOLT-SOCKET HEAD (M14X2X40-MM)	
	7	1	**1P-6872**	1	CUP-BEARING	
	8	1	**8C-7110**	1	CONE-BEARING	
	9	1	**105-2146**	2	PLUG	
	10	1	**6E-4000**	1	SPACER (25.5X35X3-MM THK)	
	11	1	**3E-6770**	1	SEAL-O-RING	
	12	1	**6E-6175**	1	CYLINDER	
	13	1	**6E-6176**	1	SPRING	
	14	1	**6E-6174**	1	PLUNGER	
	15	1	**9S-8006**	1	PLUG	
	16	1	**2M-9780**	1	SEAL-O-RING	
	17	1	**138-4350**	1	SHAFT-PUMP	
	18	1	**8J-0412**	1	CUP-BEARING	
	19	1	**3P-1210**	1	CONE-BEARING	
	20	1	**6E-4004**	1	SEAL-SHAFT	
	21	1	**136-3715**	1	SWASHPLATE AS	
	22	1	**6E-6172**	1	PISTON	
	23	1	**6E-6173**	1	GUIDE	
	24	1	**138-4346**	1	HEAD-PUMP	
	25	1	**136-8423**	1	PLUG-BREAK OFF	
	26	1	**083-4419**	1	PIN	
	27	1	**6E-3999**	1	SPACER (49X57X3-MM THK)	
C	28	1	**138-4351**	1	COUPLING-SHAFT	
C	29	1	**6V-1320**	1	SEAL-O-RING	
C	30	1	**8T-4223**	2	WASHER-HARD (13.5X25.5X3-MM THK)	
CM	31	1	**6V-8200**	2	BOLT-HEX SOCKET (M12X1.75X35-MM)	
CY	32	1	**135-6616**	1	VALVE GP-PUMP CONTROL (PRESSURE, FLOW COMPENSATOR)	893

C-CHANGE FROM PREVIOUS TYPE
M-METRIC PART
Y-SEPARATE ILLUSTRATION

172-5637 PUMP GP-PISTON ***(contd.)*** **i02024186**

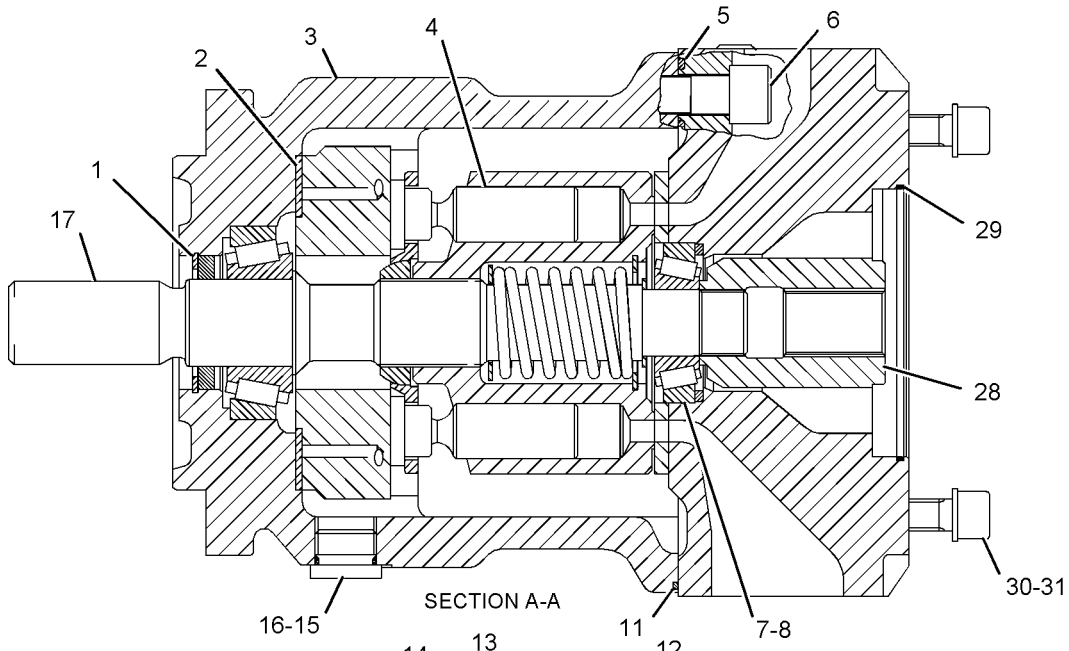

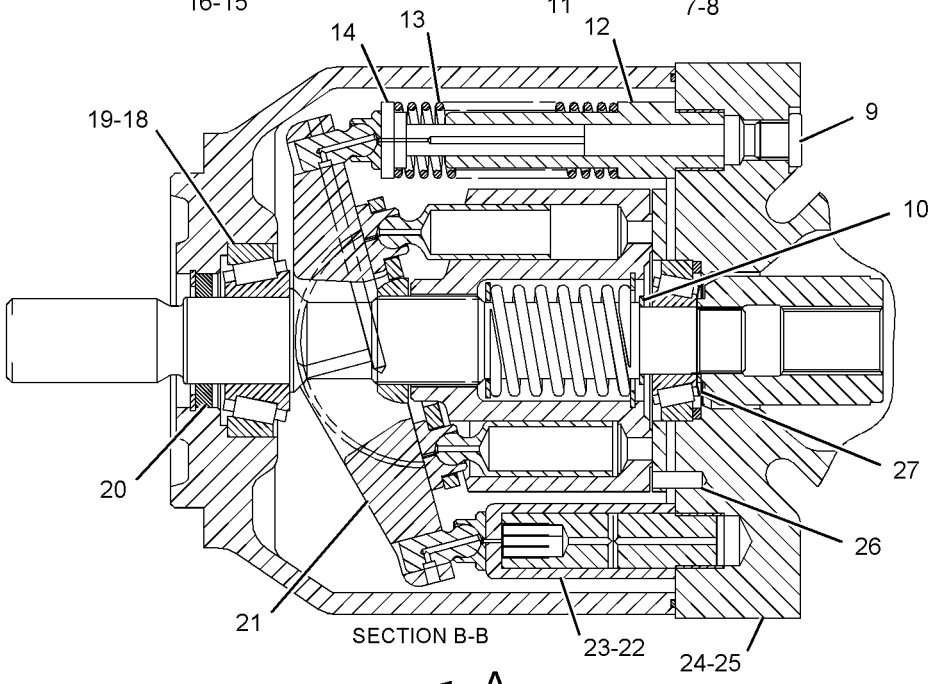

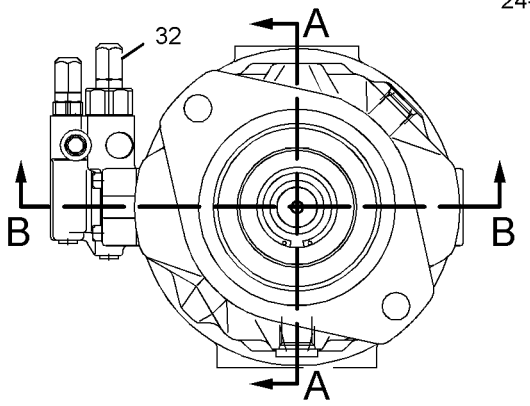

GRAPHIC #1

<END>

g01045319

172-5638 PUMP GP-PISTON–HYDRAULIC FAN

S/N: 7PZ1-UP

PART OF 155-5557 INSTALLATION AR-ENGINE

SMCS-5070 **i01988951**

NOTE	REF NO	GRAPHIC REF	PART NUMBER	QTY	PART NAME 1 2 3 4 5 6 (PRODUCT LEVEL)	SEE PAGE
YR	1	1	**172-5637**	1	PUMP GP-PISTON (FRONT)	838
Y	2	1	**172-5636**	1	PUMP GP-PISTON (REAR)	834
	3	1	**138-4351**	1	COUPLING-SHAFT	
	4	1	**6V-1320**	1	SEAL-O-RING	
	5	1	**8T-4223**	2	WASHER-HARD (13.5X25.5X3MM THK)	
M	6	1	**6V-8200**	2	BOLT-HEX SOCKET (M12X1.75X35MM)	

M-METRIC PART
R-REMFG PART MAY BE AVAILABLE
Y-SEPARATE ILLUSTRATION

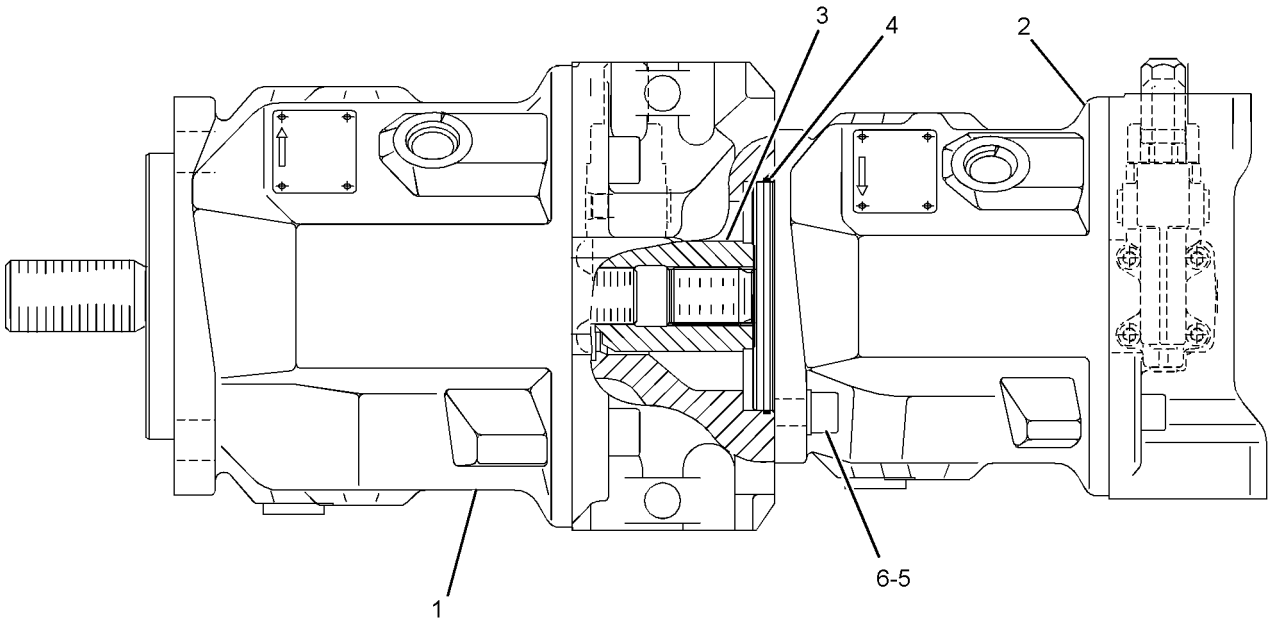

GRAPHIC #1 **<END>** g01022164

171-3065 ROTATING GP-MOTOR—FAN

S/N: 7PZ1-UP

PART OF 159-7161 MOTOR GP-PISTON

SMCS-5058 **i01988949**

NOTE	REF NO	GRAPHIC REF	PART NUMBER	QTY	PART NAME 1 2 3 4 5 6 (PRODUCT LEVEL)	SEE PAGE
	1	1	**171-3066**	1	SHAFT-MOTOR	
	2	1	**123-5748**	1	SEAL-SHAFT	
	3	1	**9T-1637**	1	COVER-FRONT	
	4	1	**3E-4334**	1	RING-RETAINING	
	5	1	**5D-5958**	1	SEAL-O-RING (117.07X124.13X3.53MM THK)	
B	6	1	**9T-1579**	1	SHIM (0.3MM THK)	
B	7	1	**9T-1576**	2	SHIM (0.1MM THK)	
M	8	1	**113-4420**	7	SCREW (M6X20MM)	
	9	1	**6E-4096**	1	BARREL	
	10	1	**171-3054**	1	PIN-CENTER	
	11	1	**171-3061**	1	SPRING	
B	12	1	**171-3055**	1	SHIM (4.0MM THK)	
B	13	1	**171-3057**	1	SHIM (3.9MM THK)	
B	14	1	**171-3058**	1	SHIM (3.8MM THK)	
B	15	1	**171-3059**	1	SHIM (3.7MM THK)	
B	16	1	**171-3060**	1	SHIM (3.6MM THK)	
	17	1	**6E-4098**	1	DISC	
Y	18	1	**119-6114**	1	VALVE GP-FLUSHING	477
	19	1	**165-6970**	7	PISTON AS	
					(EACH INCLUDES)	
		1	**6E-4626**	2	RING	
	20	1	**9T-1642**	1	PLATE-RETAINING	
	21	1	**171-5989**	1	KIT-BEARING (ROTATING MOTOR)	

B-USE AS REQUIRED
M-METRIC PART
Y-SEPARATE ILLUSTRATION

171-3065 ROTATING GP-MOTOR *(contd.)* **i01988949**

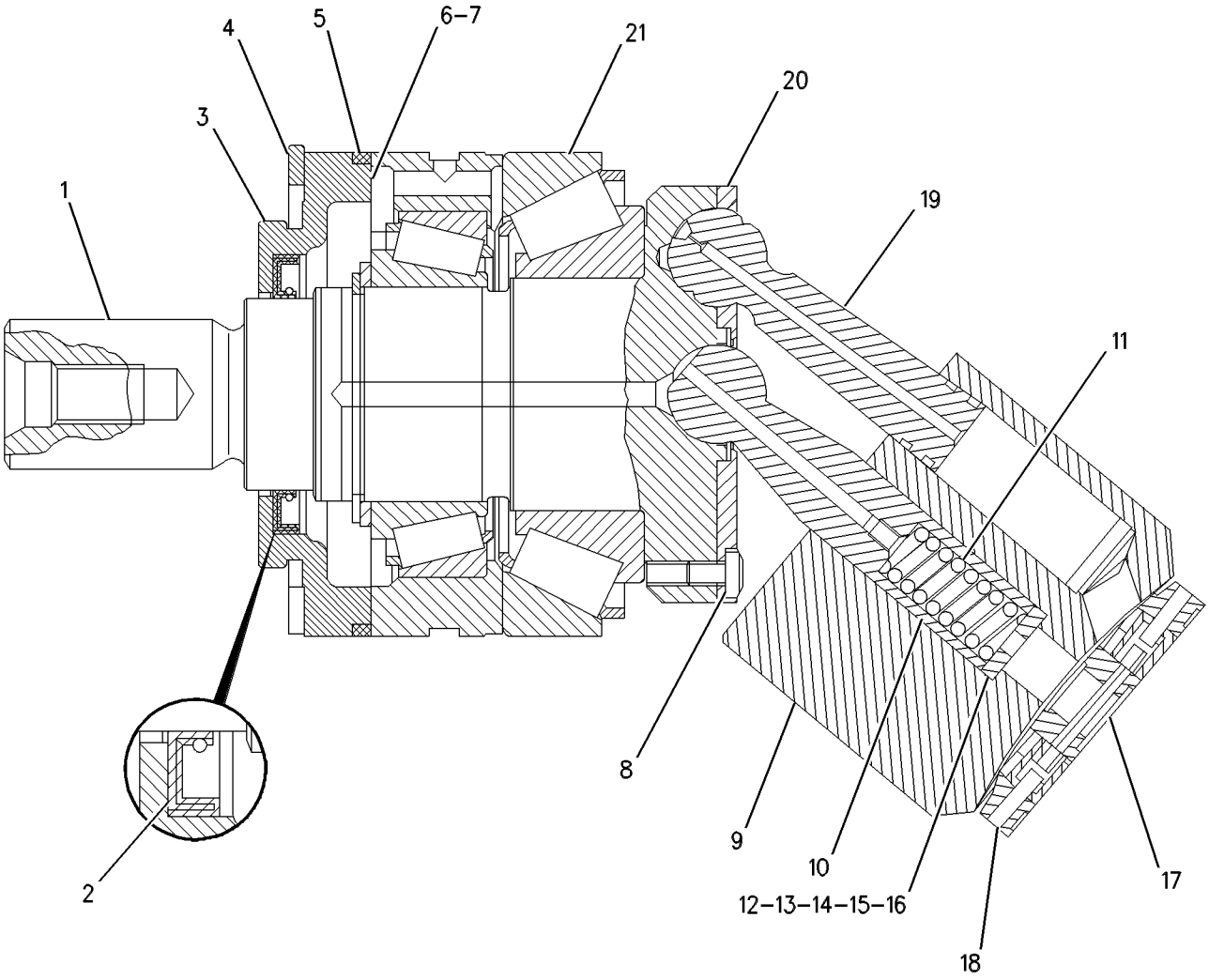

GRAPHIC #1 **<END>** g00604987

6E-6160 ROTATING GP-PUMP—FRONT HYDRAULIC FAN

S/N: 7PZ1-UP

PART OF 172-5637 PUMP GP-PISTON

SMCS-5070 **i01977868**

NOTE	REF NO	GRAPHIC REF	PART NUMBER	QTY	PART NAME 1 2 3 4 5 6 (PRODUCT LEVEL)	SEE PAGE
	1	1	**6E-6151**	9	PISTON AS	
	2	1	**6E-6154**	1	PLATE-RETRACTION	
	3	1	**6E-6155**	1	BEARING	
	4	1	**6E-4007**	1	BARREL	
	5	1	**6E-3341**	1	SEAT-SPRING	
	6	1	**6E-4009**	1	SPRING	
	7	1	**6E-6158**	1	RING	
	8	1	**6E-6153**	1	PLATE-PORT	
	9	1	**6E-6157**	3	PIN	

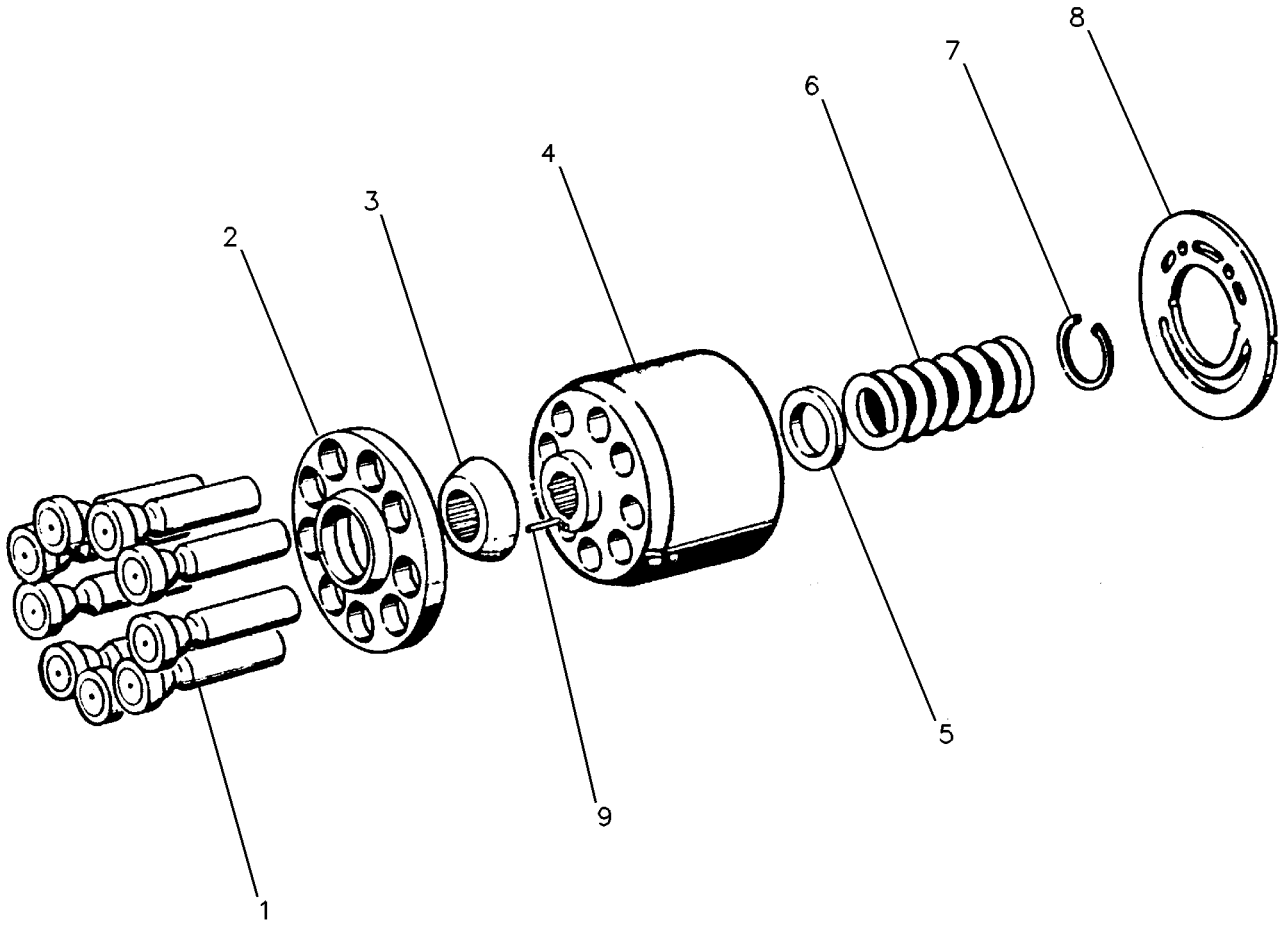

GRAPHIC #1 **<END>** g00119332

138-4693 ROTATING GP-PUMP–REAR HYDRAULIC FAN

S/N: 7PZ1-UP

PART OF 172-5636 PUMP GP-PISTON

FIELD REPLACEMENT ORDER 168-7868–PAGE 847

SMCS-5070 **i01692416**

NOTE	REF NO	GRAPHIC REF	PART NUMBER	QTY	PART NAME 1 2 3 4 5 6 (PRODUCT LEVEL)	SEE PAGE
	1	1	**138-8172**	9	PISTON AS	
	2	1	**138-8174**	1	PLATE-RETRACTION	
	3	1	**138-8175**	1	BEARING-SPHERICAL	
	4	1	**128-7069**	1	BARREL	
	5	1	**138-8177**	1	SPACER-SPRING	
	6	1	**128-7073**	1	SPRING	
	7	1	**096-0015**	1	RING-RETAINING	
	8	1	**138-8173**	1	PLATE-VALVE	
	9	1	**138-8176**	3	PIN-PRESSURE	

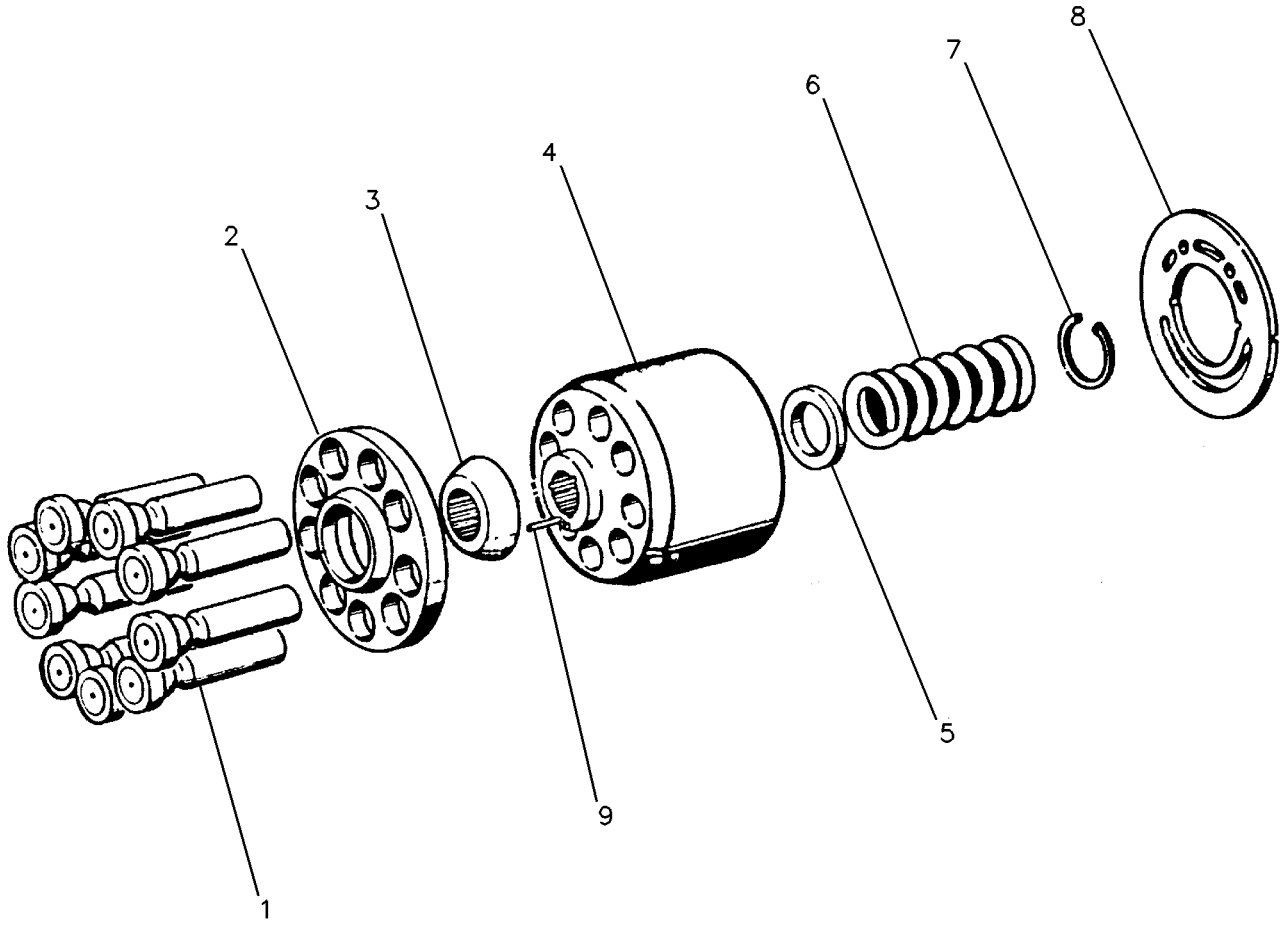

GRAPHIC #1 **<END>** g00119332

168-7868 ROTATING GP-PUMP

S/N: 7PZ1-UP

FIELD REPLACEMENT FOR 138-4693—PAGE 846

SMCS-5070 **i01452388**

NOTE	REF NO	GRAPHIC REF	PART NUMBER	QTY	PART NAME 1 2 3 4 5 6 (PRODUCT LEVEL)	SEE PAGE
	1	1	**138-8175**	1	BEARING-SPHERICAL	
	2	1	**168-7940**	3	PIN	
	3	1	**096-0015**	1	RING-RETAINING	
	4	1	**128-7069**	1	BARREL	
	5	1	**168-7941**	1	SPRING	
	6	1	**168-7942**	1	WASHER	
	7	1	**168-7943**	9	PISTON AS	
	8	1	**168-7944**	1	PLATE-RETRACTION	
	9	1	**138-8173**	1	PLATE-VALVE	

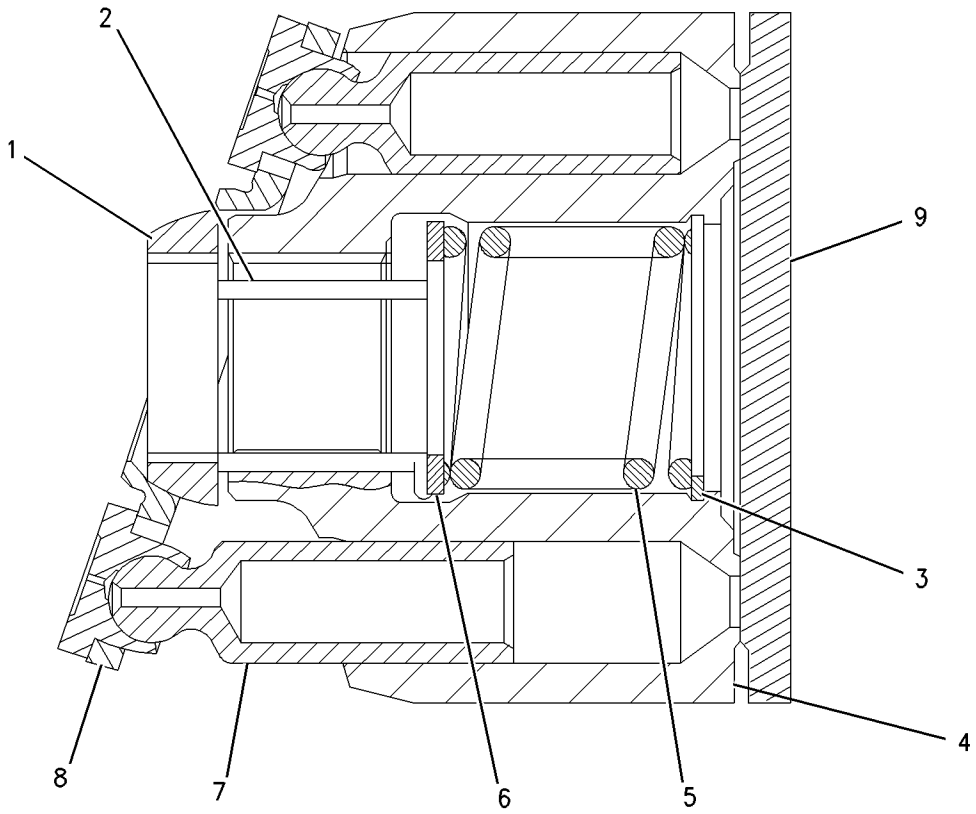

GRAPHIC #1 **<END>** g00760776

HYDRAULIC SYSTEM

163-0575 TANK & FILTER GP-HYDRAULIC

S/N: 7PZ1-UP

PART OF 155-5552 CHASSIS AR

SMCS-5056, 5068 **i01989519**

NOTE	REF NO	GRAPHIC REF	PART NUMBER	QTY	PART NAME 1 2 3 4 5 6 (PRODUCT LEVEL)	SEE PAGE
	1	1	**3D-6678**	1	STRAINER AS (HYDRAULIC TANK FILL)	
	2	1	**4J-3754**	1	CAP-FILLER (HYDRAULIC TANK)	
	3	1	**4J-3815**	1	GASKET	
	4	1	**4J-3816**	1	PLATE	
	5	1	**5D-1901**	1	WASHER (4.19X4.95X0.105 IN THK)	
	6	2	**6J-1080**	1	GROMMET	
	7	2	**6J-1081**	1	GLASS-SIGHT	
	8	1	**7B-2805**	1	RING-LOCK	
	9	2	**9J-8243**	1	RETAINER	
	10	1	**9M-7394**	1	LEVER	
	11	1	**9M-8808**	1	SPRING	
	12	1	**9T-4946**	1	SCREEN AS (HYDRAULIC TANK)	
	13	2	**152-0930**	1	BLOCK	
	14	1	**163-0576**	1	TANK AS-HYDRAULIC	
	15	1	**167-2009**	2	FILTER ELEMENT AS-OIL (HYDRAULIC)	
	16	1	**214-2341**	1	GASKET	
	17	1	**217-7321**	1	COVER AS (HYDRAULIC TANK)	
		1	**8F-9836**	3	BOSS-THREADED (3/8-16X.75 IN)	
	18	1	**030-8535**	36	BOLT-LOCKING (3/8-16X0.875 IN)	
	19	2	**030-8538**	4	BOLT (1/2-13X1.25 IN)	
	20	2	**035-2017**	4	SCREW-BUTTON HEAD (3/8-16X1 IN)	
	21	1	**106-8186**	1	VALVE-DRAIN (HYDRAULIC TANK)	
	22	1	**106-8187**	1	PLUG (DRAIN) (HYDRAULIC TANK)	
	23	2	**141-2244**	1	PLATE	
	24	2	**1D-4703**	8	BOLT (7/16-14X2.5 IN)	
	25	1	**1L-5072**	1	DOWEL	
	26	1	**1M-8649**	1	RING-RETAINING	
	27	2	**1P-4582**	4	FLANGE-HALF	
	28	2	**1P-4585**	2	FLANGE-HALF	
	29	1	**1P-9005**	1	SEAL-O-RING	
	30	2	**1T-0720**	2	BOLT-12 POINT HEAD (3/8-16X1.25 IN)	
	31	1	**3J-1907**	2	SEAL-O-RING	
	32	2	**4M-6425**	2	BOLT (5/16-18X1 IN)	
	33	1	**5D-1902**	1	COVER-HYDRAULIC CAP (HYDRAULIC TANK FILL)	
	34	2	**5H-4081**	1	SEAL-O-RING	
	35	2	**5H-6005**	4	SEAL-O-RING	
	36	2	**5P-2566**	4	BOLT (1/2-13X1.5 IN)	
	37	1	**5P-3092**	1	SEAL-O-RING	
	38	2	**5P-8244**	8	WASHER (12X22.5X2.5MM THK)	
	39	2	**5P-8245**	4	WASHER-HARD (13.5X25.5X3MM THK)	
	40	2	**5P-8247**	4	WASHER-HARD (17X32X3.5MM THK)	
	41	2	**6E-2372**	1	TUBE AS	
	42	2	**6E-2442**	1	TUBE AS	
	43	1	**6F-0711**	1	SEAL-O-RING	
	44	1	**6F-8146**	1	SEAL-O-RING	
	45	2	**7X-0346**	4	BOLT (5/8-11X2 IN)	
	46	2	**8F-6230**	1	SEAL-O-RING	
	47	2	**8H-7521**	2	SEAL-O-RING	
	48	1	**8T-2275**	1	BALL	
	49	2	**8T-4224**	2	WASHER-HARD (8.8X16X2MM THK)	
	50	2	**8T-4835**	4	BOLT (1/2-13X2 IN)	
	51	2	**8T-7971**	4	WASHER-HARD (13.5X25.5X5MM THK)	
	52	1	**9S-4191**	2	PLUG (HYDRAULIC TANK)	
	53	2	**9S-8752**	4	NUT-FULL (3/8-16 THD)	
Y	54	2	**9T-4945**	1	BYPASS GP-FILTER	649
	55	2	**9T-6680**	1	SCREEN (HYDRAULIC TANK)	

163-0575 TANK & FILTER GP-HYDRAULIC *(contd.)* i01989519

NOTE	REF NO	GRAPHIC REF	PART NUMBER	QTY	PART NAME 1 2 3 4 5 6 (PRODUCT LEVEL)	SEE PAGE
	56	1	**9T-8029**	1	BASE	
Y-SEPARATE ILLUSTRATION						

REFER TO ALL ILLUSTRATIONS OF THIS GROUP FOR AUXILIARY VIEWS

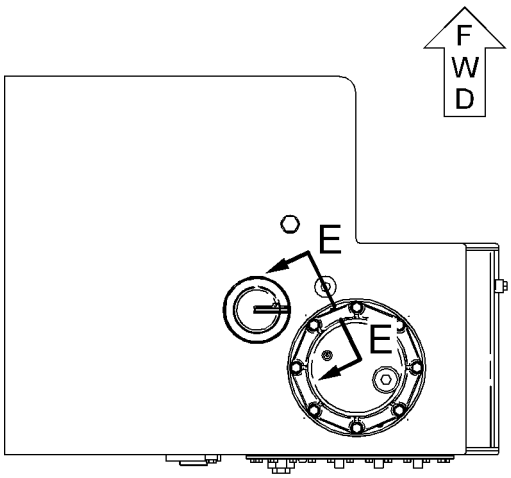

TOP VIEW

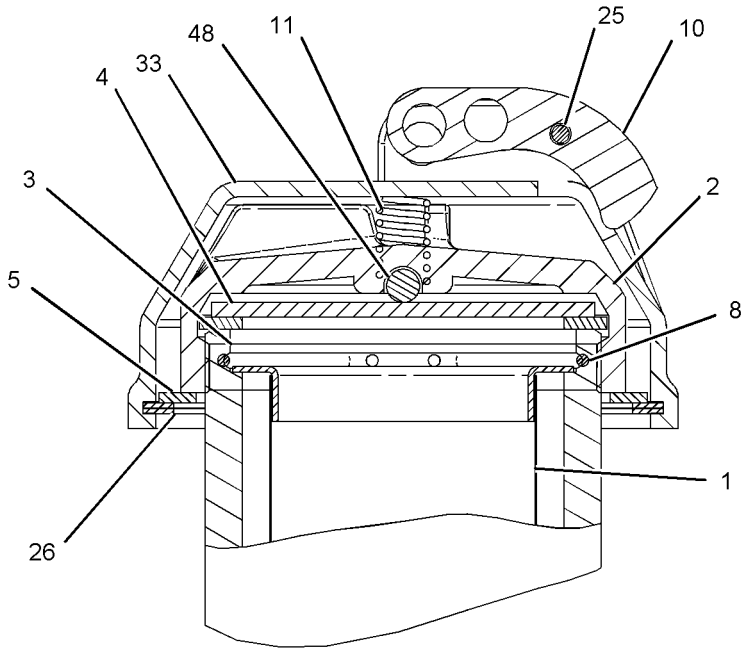

VIEW OF AREA A

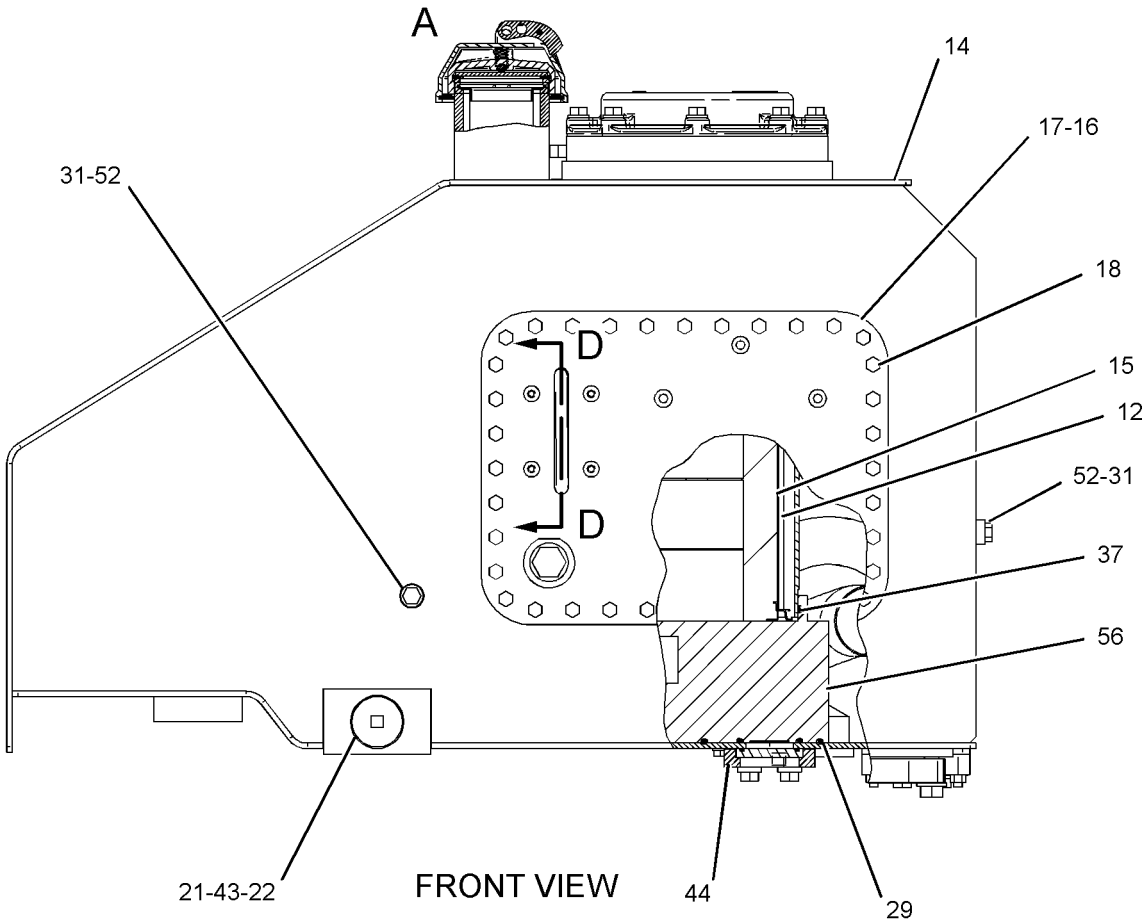

FRONT VIEW

GRAPHIC #1

g01009938

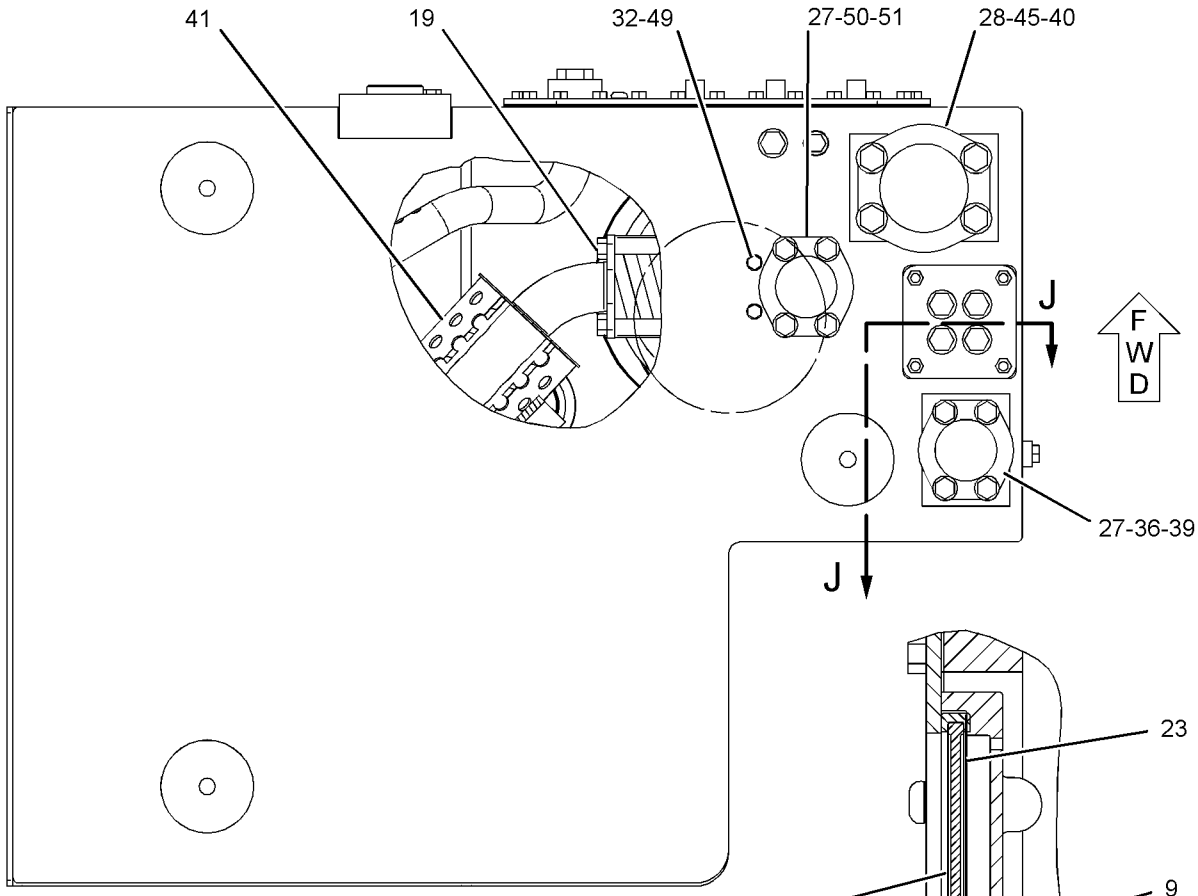

BOTTOM VIEW

SECTION D-D

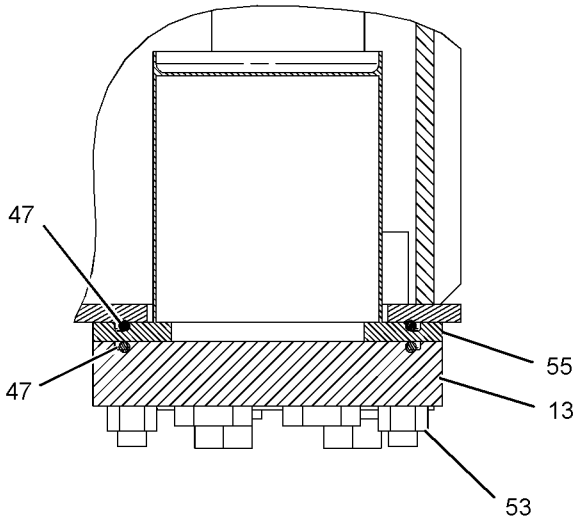

SECTION J-J

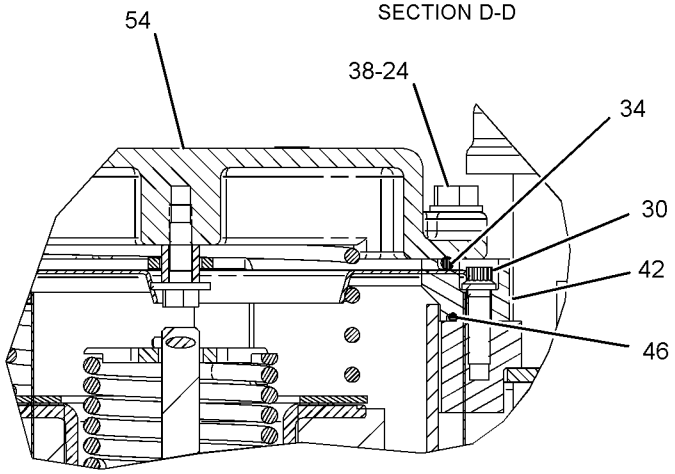

SECTION E-E

GRAPHIC #2 **<END>** g01010056

HYDRAULIC SYSTEM

220-0195 TANK & LINES GP-EXPANSION

S/N: 7PZ1-UP
PART OF 174-7862 SUPPRESSION AR-SOUND
AN ATTACHMENT

SMCS-1354 **i01753912**

NOTE	REF NO	GRAPHIC REF	PART NUMBER	QTY	PART NAME 1 2 3 4 5 6 (PRODUCT LEVEL)	SEE PAGE
	1	1	*148-8327*	1	CONNECTOR AS	
		1	**3D-2824**	1	SEAL-O-RING	
		1	**6V-8637**	1	CONNECTOR-SEAL	
		1	**6V-9746**	1	SEAL-O-RING	
	2	1	*172-5277*	1	TEE AS	
		1	**3D-2824**	1	SEAL-O-RING	
		1	**6V-9746**	1	SEAL-O-RING	
		1	**8T-8901**	1	TEE-O-RING PORT	
	3	1	**220-0199**	1	BRACKET	
I	4	1	**220-0202**	1	HOSE AS	
	5	1	**220-0812**	1	VALVE-BREAKER RELIEF	
	6	1	**221-5500**	1	TANK GP-EXPANSION (AIR)	
	7	1	**3D-2824**	1	SEAL-O-RING	
	8	1	**4L-6454**	8	BOLT (3/8-16X1 IN)	
	9	1	**8T-4896**	8	WASHER-HARD (10.2X18.5X2.5MM THK)	

I-SEE HOSE FABRICATION GUIDE

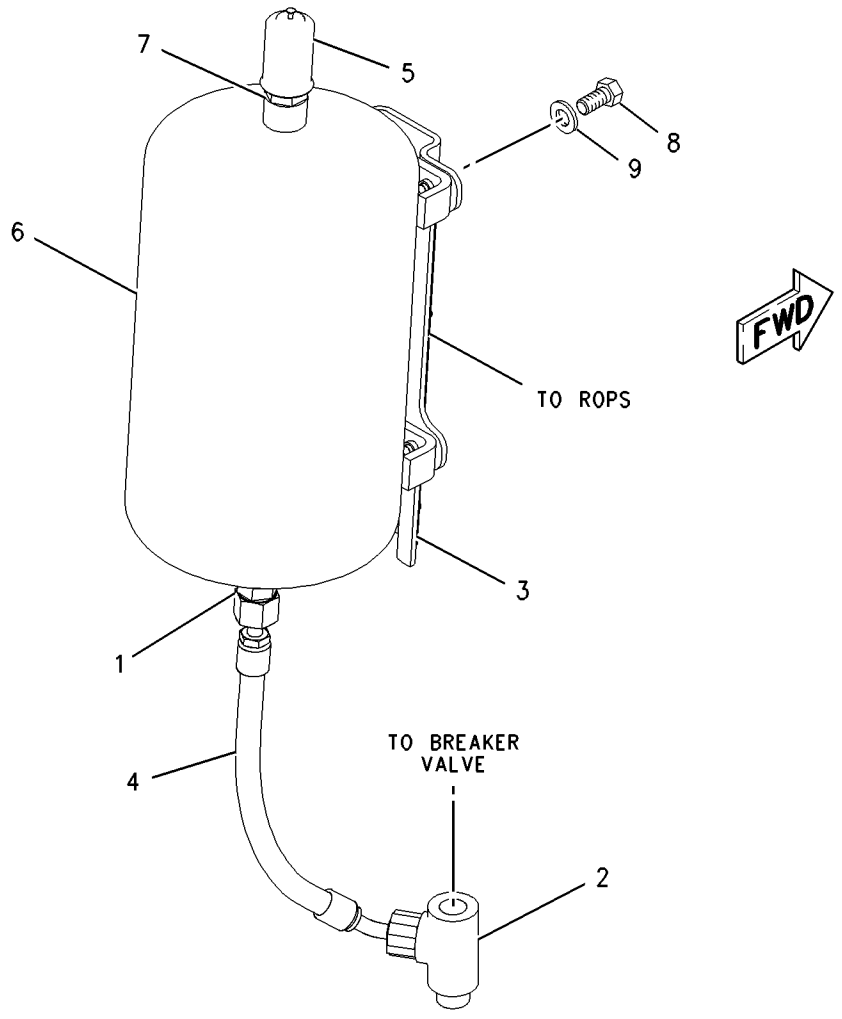

GRAPHIC #1 **<END>** g01001456

HYDRAULIC SYSTEM

183-3720 VALVE & LINES GP-PIN PULLER

S/N: 7PZ1-427
RIPPER PIN PULLER
FOR USE WITH MACHINE EQUIPPED WITH RIPPER
AN ATTACHMENT

SMCS-5051, 5057 **i01988955**

NOTE	REF NO	GRAPHIC REF	PART NUMBER	QTY	PART NAME 1 2 3 4 5 6 (PRODUCT LEVEL)	SEE PAGE
	1	1	**4P-7428**	1	CLIP	
	2	1	**3J-1907**	6	SEAL-O-RING	
	3	1	**3K-0360**	1	SEAL-O-RING	
	4	1	**4P-7581**	1	CLIP	
Y	5	1	*106-7483*	1	VALVE & MTG GP-CONTROL	857
	6	1	**146-0240**	1	SWITCH GP-TOGGLE (RIPPER PIN PULLER)	
		1	**102-8803**	1	KIT-RECEPTACLE (3-PIN)	
					(INCLUDES RECEPTACLE AS & WEDGE)	
		1	**3E-3371**	1	WEDGE-RECEPTACLE LOCK (3 PIN)	
		1	**6T-3631**	2	NUT-HEX (15/32-32 THD)	
		1	**6T-3632**	1	LOCKWASHER	
		1	**6T-3633**	1	RING-LOCKING	
		1	**8T-8729**	3	PIN-CONNECTOR	
	7	1	**6V-1625**	1	TEE-O-RING	
	8	1	**6V-8397**	4	SEAL-O-RING	
	9	1	**6V-8724**	3	ELBOW	
	10	1	**8T-0076**	1	CONNECTOR	
	11	1	**8T-4223**	2	WASHER-HARD (13.5X25.5X3MM THK)	
	12	1	**8T-4896**	5	WASHER-HARD (10.2X18.5X2.5MM THK)	
I	13	1	**8W-4008**	1	HOSE AS	
I	14	1	**6T-2421**	1	HOSE AS	
	15	1	**9S-4191**	2	PLUG	
	16	1	**9X-6772**	1	STRAP-CABLE	
	17	1	**116-1314**	1	PLATE AS	
		1	**1F-0750**	4	NUT-WELD (3/8-16THD)	
	18	1	**8T-7008**	4	BOLT (3/8-16X3 IN)	
	19	1	**8T-8917**	2	BOLT (1/2-13X1.25 IN)	
	20	1	**9M-8406**	1	CLIP	
	21	1	**5S-7379**	1	BOLT (3/8-16X0.875 IN)	
	22	1	**137-3936**	1	FILM-INSTRUCTION (RIPPER PIN PULLER SWITCH)	

I-REFER TO HYDRAULIC INFORMATION SYSTEM
Y-SEPARATE ILLUSTRATION

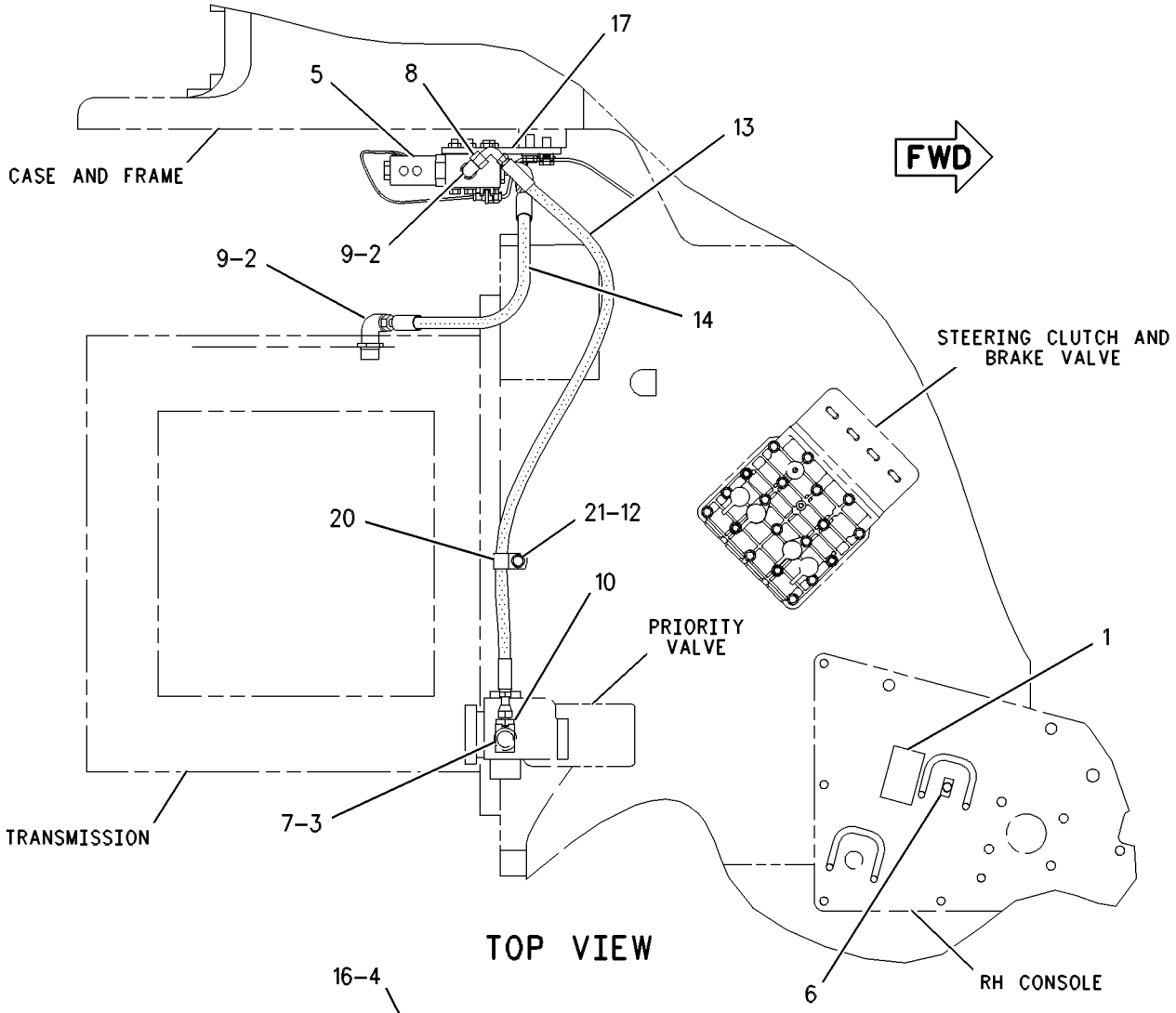

TOP VIEW

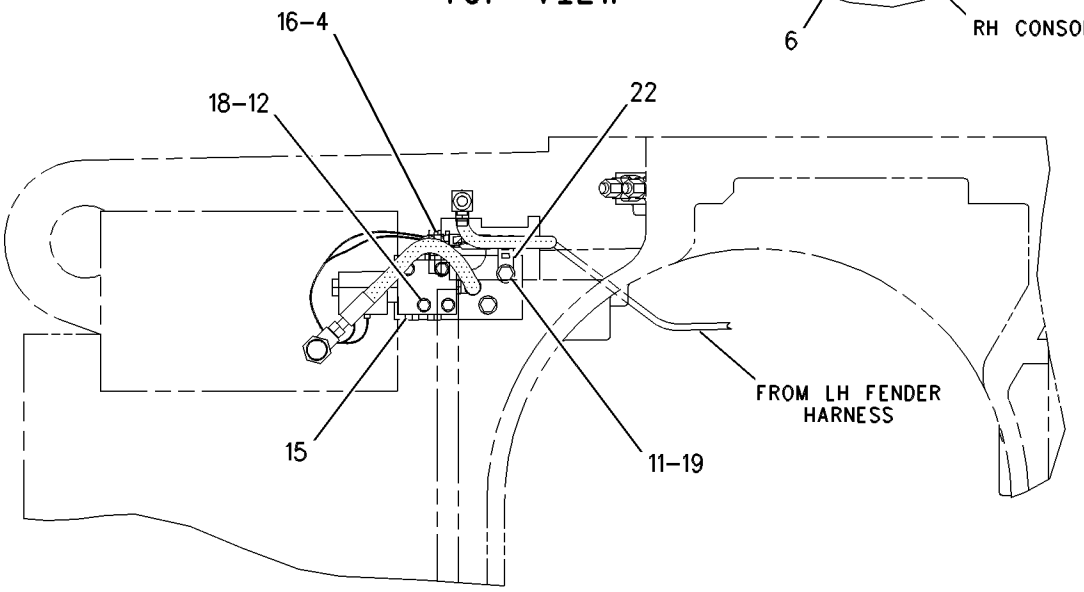

RIGHT SIDE VIEW

GRAPHIC #1 **<END>** g00379633

183-3720 VALVE & LINES GP-PIN PULLER

S/N: 7PZ428-UP
RIPPER PIN PULLER
FOR USE WITH MACHINE EQUIPPED WITH RIPPER
AN ATTACHMENT

SMCS-5051, 5057 **i01988956**

NOTE	REF NO	GRAPHIC REF	PART NUMBER	QTY	PART NAME 1 2 3 4 5 6 (PRODUCT LEVEL)	SEE PAGE
	1	1	**4P-7428**	1	CLIP	
	2	1	**3J-1907**	6	SEAL-O-RING	
	3	1	**3K-0360**	1	SEAL-O-RING	
	4	1	**4P-7581**	1	CLIP	
CY	5	1	*188-6140*	1	VALVE & MTG GP-CONTROL	858
	6	1	**146-0240**	1	SWITCH GP-TOGGLE (RIPPER PIN PULLER)	
		1	**102-8803**	1	KIT-RECEPTACLE (3-PIN)	
					(INCLUDES RECEPTACLE AS & WEDGE)	
		1	**3E-3371**	1	WEDGE-RECEPTACLE LOCK (3 PIN)	
		1	**6T-3631**	2	NUT-HEX (15/32-32 THD)	
		1	**6T-3632**	1	LOCKWASHER	
		1	**6T-3633**	1	RING-LOCKING	
		1	**8T-8729**	3	PIN-CONNECTOR	
	7	1	**6V-1625**	1	TEE-O-RING	
	8	1	**6V-8397**	4	SEAL-O-RING	
	9	1	**6V-8724**	3	ELBOW	
	10	1	**8T-0076**	1	CONNECTOR	
	11	1	**8T-4223**	2	WASHER-HARD (13.5X25.5X3MM THK)	
	12	1	**8T-4896**	5	WASHER-HARD (10.2X18.5X2.5MM THK)	
I	13	1	**8W-4008**	1	HOSE AS	
I	14	1	**6T-2421**	1	HOSE AS	
	15	1	**9S-4191**	2	PLUG	
	16	1	**9X-6772**	1	STRAP-CABLE	
	17	1	**116-1314**	1	PLATE AS	
		1	**1F-0750**	4	NUT-WELD (3/8-16THD)	
C	18	1	**7X-0290**	4	BOLT (3/8-16X3.50 IN)	
	19	1	**8T-8917**	2	BOLT (1/2-13X1.25 IN)	
	20	1	**9M-8406**	1	CLIP	
	21	1	**5S-7379**	1	BOLT (3/8-16X0.875 IN)	
	22	1	**137-3936**	1	FILM-INSTRUCTION (RIPPER PIN PULLER SWITCH)	

C-CHANGE FROM PREVIOUS TYPE
I-REFER TO HYDRAULIC INFORMATION SYSTEM
Y-SEPARATE ILLUSTRATION

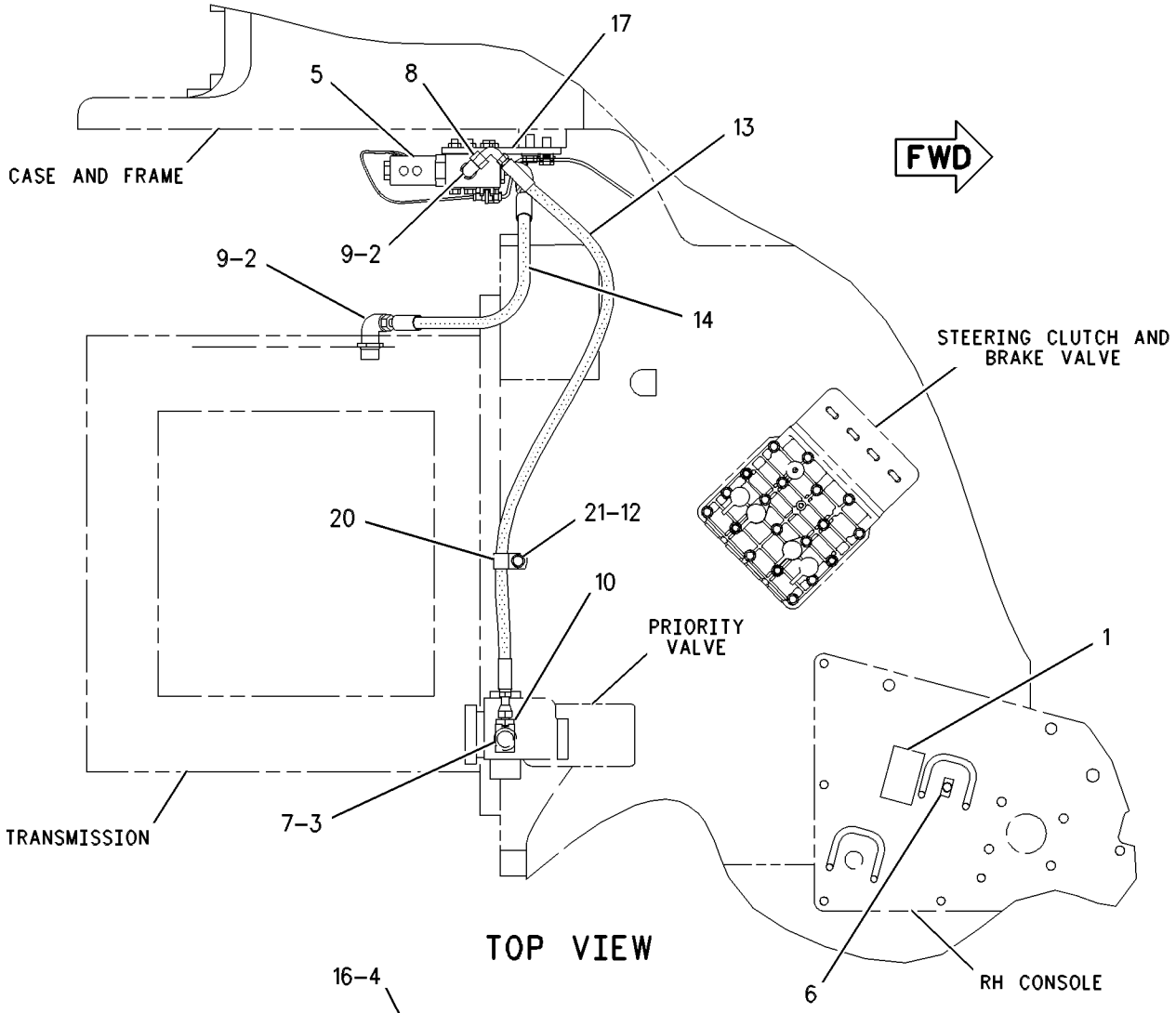

TOP VIEW

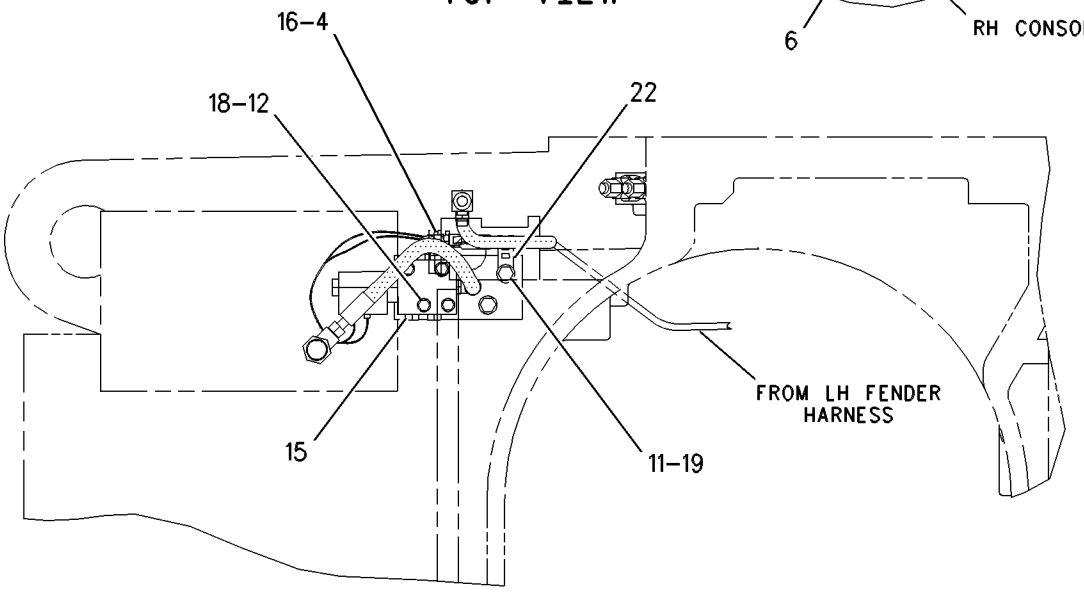

RIGHT SIDE VIEW

GRAPHIC #1 **<END>** g00379633

106-7483 VALVE & MTG GP-CONTROL–RIPPER PIN

S/N: 7PZ1-427

PART OF 183-3720 VALVE & LINES GP-PIN PULLER

AN ATTACHMENT

SMCS-5051 **i01168455**

NOTE	REF NO	GRAPHIC REF	PART NUMBER	QTY	PART NAME 1 2 3 4 5 6 (PRODUCT LEVEL)	SEE PAGE
	1	1	**6T-9559**	1	MANIFOLD	
Y	2	1	**3E-8575**	1	VALVE GP-SOLENOID	901

Y-SEPARATE ILLUSTRATION

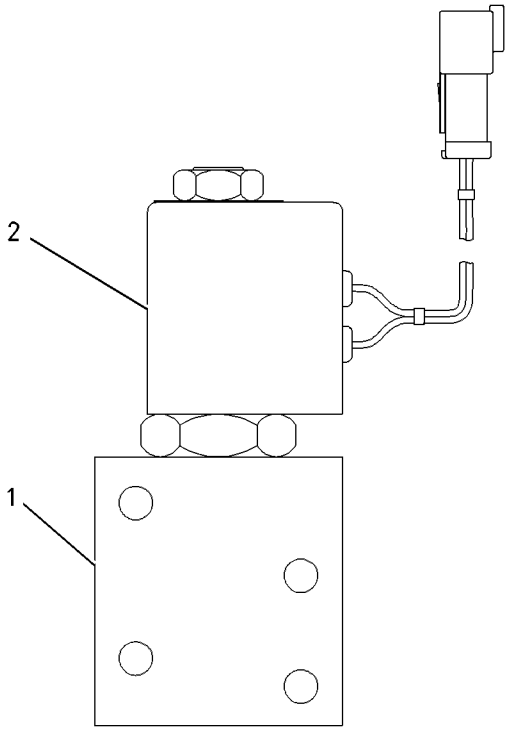

GRAPHIC #1 **<END>** g00623067

188-6140 VALVE & MTG GP-CONTROL–RIPPER PIN

S/N: 7PZ1-UP
PART OF 183-3720 VALVE & LINES GP-PIN PULLER
AN ATTACHMENT

SMCS-5051 **i01458524**

NOTE	REF NO	GRAPHIC REF	PART NUMBER	QTY	PART NAME 1 2 3 4 5 6 (PRODUCT LEVEL)	SEE PAGE
Y	1	1	**3E-8575**	1	VALVE GP-SOLENOID	901
	2	1	**188-6141**	1	MANIFOLD AS	
	2A	1	**3J-1907**	1	SEAL-O-RING	
	2B	1	**9S-8004**	1	PLUG	
	2C	1	**200-2964**	1	ORIFICE AS	
	2D	1	**4J-7533**	1	SEAL-O-RING	

Y-SEPARATE ILLUSTRATION

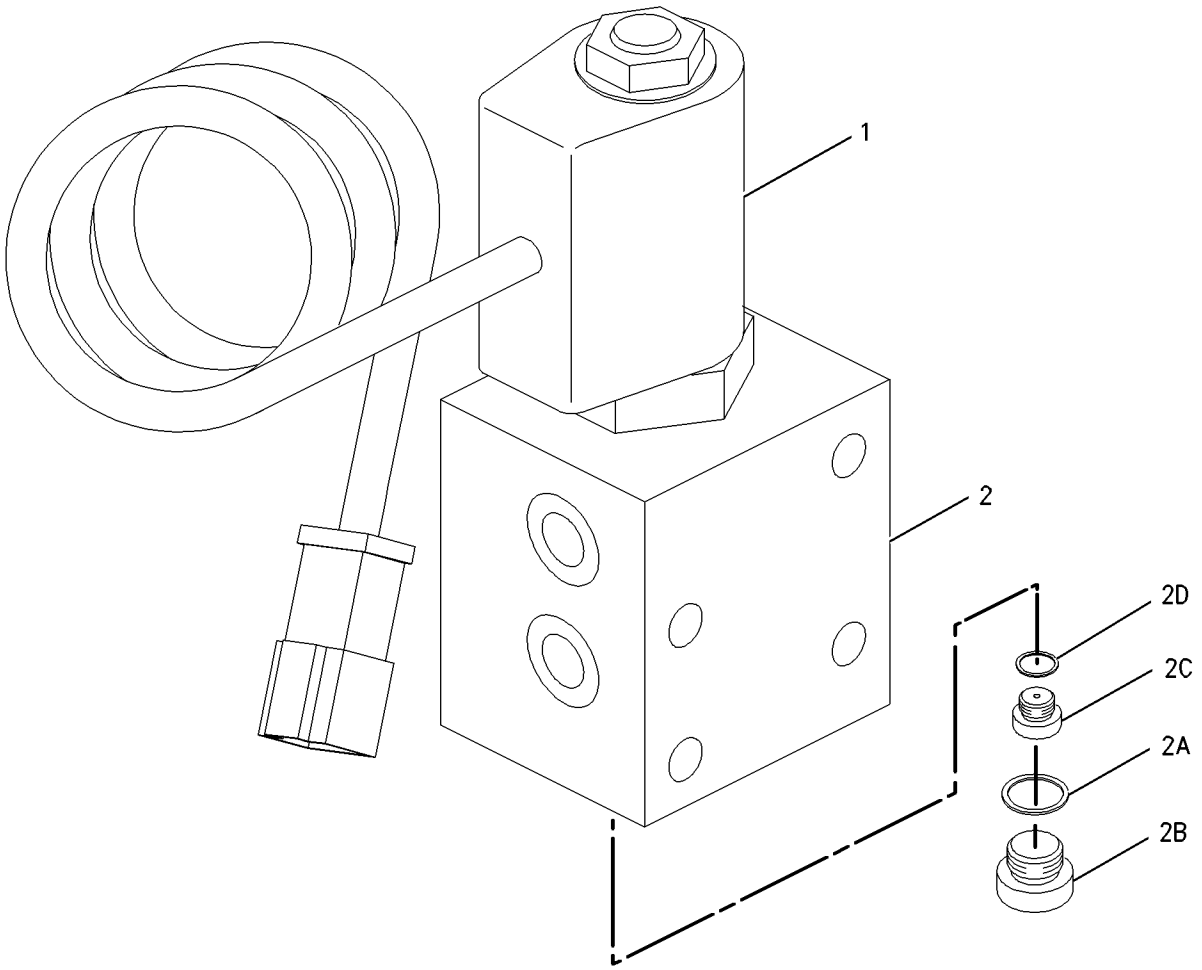

GRAPHIC #1 **<END>** g00764266

HYDRAULIC SYSTEM

136-9411 VALVE & MTG GP-HYDRAULIC FAN

S/N: 7PZ1-499

PART OF 172-5596 LINES GP-HYDRAULIC FAN

SMCS-1387 **i01988947**

NOTE	REF NO	GRAPHIC REF	PART NUMBER	QTY	PART NAME 1 2 3 4 5 6 (PRODUCT LEVEL)	SEE PAGE
Y	1	1	**136-9412**	1	VALVE GP-SOLENOID	906
	2	1	**3E-3584**	1	MANIFOLD	
					AVAILABLE REPAIR KIT(S):	
			100-4318	1	KIT-SEAL (SOLENOID VALVE)	
					(INCLUDES SEALS & RINGS)	

Y-SEPARATE ILLUSTRATION

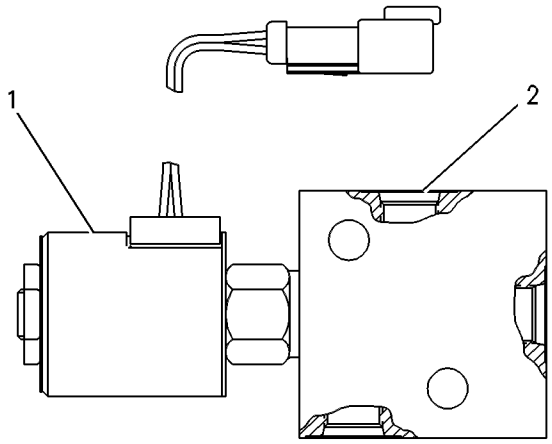

GRAPHIC #1 **<END>** g00086958

HYDRAULIC SYSTEM

189-8628 VALVE & MTG GP-HYDRAULIC FAN

S/N: 7PZ500-UP

PART OF 172-5596 LINES GP-HYDRAULIC FAN

SMCS-1387 **i01988958**

NOTE	REF NO	GRAPHIC REF	PART NUMBER	QTY	PART NAME 1 2 3 4 5 6 (PRODUCT LEVEL)	SEE PAGE
	1	1	**3E-3584**	1	MANIFOLD	
Y	2	1	**189-8627**	1	VALVE GP-SOLENOID	911
					AVAILABLE REPAIR KIT(S):	
			100-4318	1	KIT-SEAL (SOLENOID VALVE)	
					(INCLUDES SEALS & RINGS)	

Y-SEPARATE ILLUSTRATION

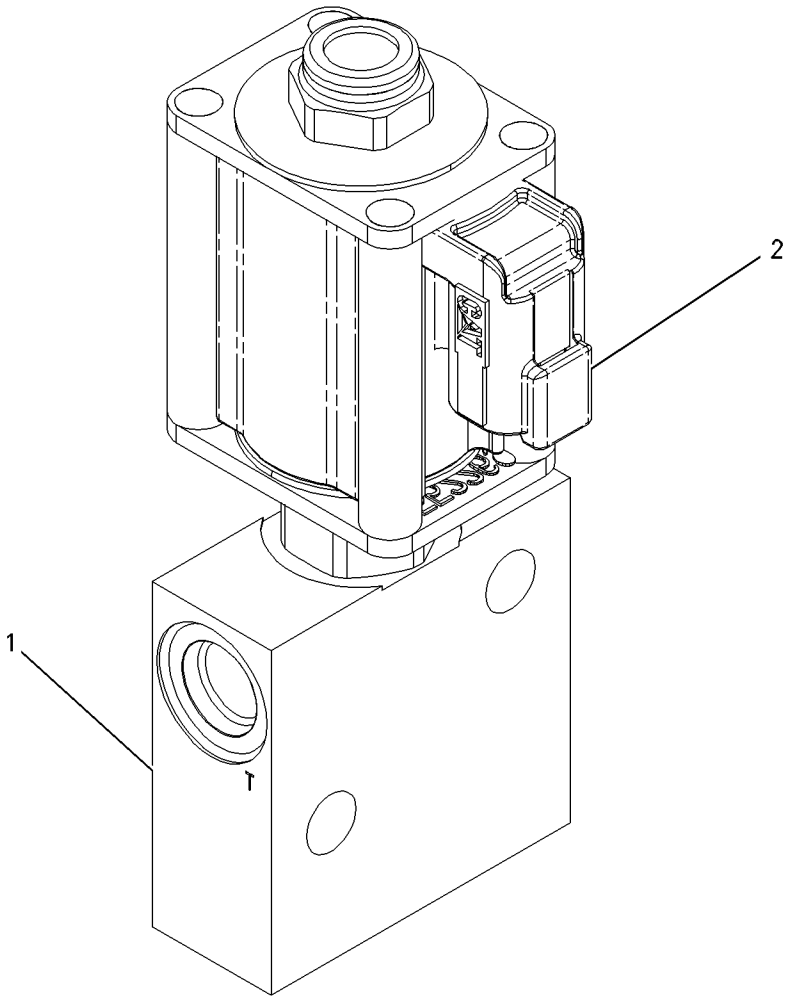

GRAPHIC #1 **<END>** g00849755

164-4810 VALVE AR-RELIEF—DUAL TILT

S/N: 7PZ1-UP

FOR USE WITH MACHINES EQUIPPED WITH DUAL TILT CYLINDER LINES AN ATTACHMENT

SMCS-5069 **i01290428**

NOTE	PART NUMBER	QTY	PART NAME 1 2 3 4 5 6 (PRODUCT LEVEL)	SEE PAGE
Y	*163-4090*	1	LINES GP-RELIEF (DUAL TILT)	793
	163-4100	1	DOOR AS-LH	

Y-SEPARATE ILLUSTRATION

<END>

2G-9000 VALVE AS-TANK–FAST FILL FUEL

S/N: 7PZ1-UP
PART OF 102-9881 ADAPTER GP-FAST FILL FUEL
AN ATTACHMENT

SMCS-1279, 5076 **i01884458**

NOTE	REF NO	GRAPHIC REF	PART NUMBER	QTY	PART NAME 1 2 3 4 5 6 (PRODUCT LEVEL)	SEE PAGE
Z	1	1		1	PLUNGER	
Z	2	1		1	RING-RETAINING	
Z	3	1		1	SPRING	

Z-NOT SERVICED SEPARATELY

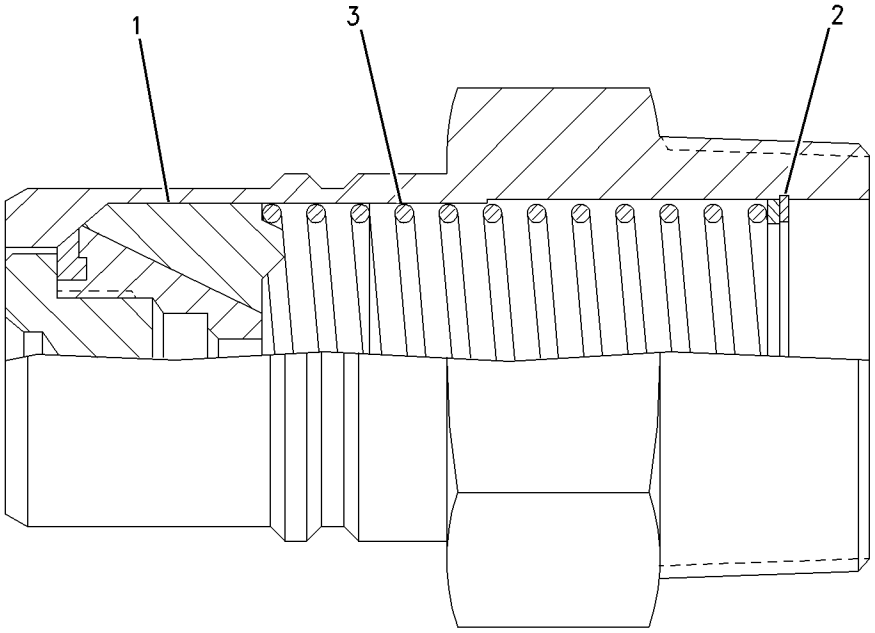

GRAPHIC #1 **<END>** g00735689

4T-0884 VALVE GP-BYPASS–HYDRAULIC OIL COOLER

S/N: 7PZ1-UP

PART OF 155-5557 INSTALLATION AR-ENGINE

SMCS-5076 **i01564170**

NOTE	REF NO	GRAPHIC REF	PART NUMBER	QTY	PART NAME 1 2 3 4 5 6 (PRODUCT LEVEL)	SEE PAGE
	1	1	**9T-2032**	1	BODY	
B	2	1	**2F-3012**	10	SHIM (.127MM THK)	
B		1	**0T-0883**	3	WASHER (.5312X1X.065 IN THK)	
	3	1	**3G-5649**	1	PLUG	
		1	**7M-8485**	1	SEAL-O-RING	
	4	1	**4J-4790**	1	SPRING	
	5	1	**3G-5650**	1	VALVE	
	6	1	**9S-8006**	2	PLUG	
		1	**2M-9780**	2	SEAL-O-RING	

B-USE AS REQUIRED

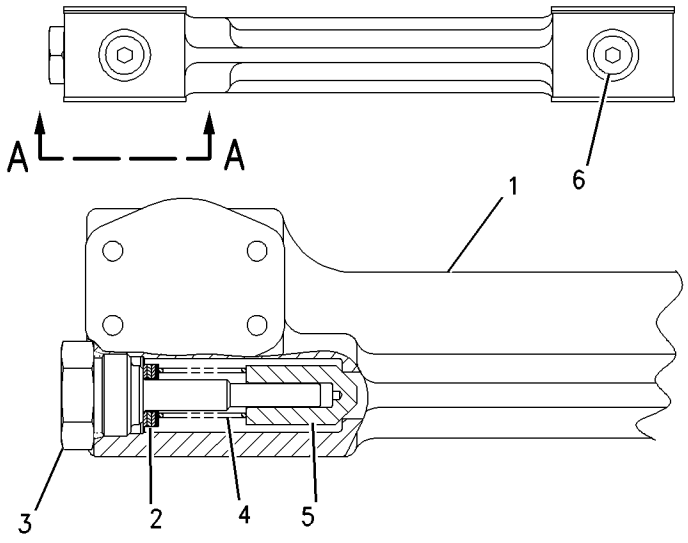

VIEW A–A

GRAPHIC #1 **<END>** g00683867

9T-3096 VALVE GP-CHECK—HYDRAULIC OIL FILTER

S/N: 7PZ1-UP

PART OF 173-1553 LINES GP-PUMP

SMCS-5067 **i01877497**

NOTE	PART NUMBER	QTY	PART NAME 1 2 3 4 5 6 (PRODUCT LEVEL)	SEE PAGE
	201-3434	1	VALVE GP-CHECK (PARK BRAKE RELEASE)	
			—OR—	
	200-4002	1	VALVE GP-CHECK (PARK BRAKE RELEASE)	
	3J-1907	1	SEAL-O-RING	

<END>

128-2780 VALVE GP-CHECK—HYDRAULIC FAN

S/N: 7PZ652-UP

PART OF 226-6537 MANIFOLD GP-CONTROL

SMCS-5067 **i01909643**

NOTE	PART NUMBER	QTY	PART NAME 1 2 3 4 5 6 (PRODUCT LEVEL)	SEE PAGE
	128-2779	2	KIT-SEAL	

<END>

HYDRAULIC SYSTEM

172-6977 VALVE GP-CONTROL—BULLDOZER

S/N: 7PZ1-519

PART OF 155-5553 CONTROL AR-HYDRAULIC

SMCS-5051 **i01988952**

NOTE	REF NO	GRAPHIC REF	PART NUMBER	QTY	PART NAME 1 2 3 4 5 6 (PRODUCT LEVEL)	SEE PAGE
	1	1,2	**9S-4191**	5	PLUG	
	2	1,2	**3J-1907**	7	SEAL-O-RING	
	3	2	**3B-4730**	1	SPRING	
	4	2	**9S-8004**	2	PLUG	
	5	1,2	**3G-8163**	2	SCREW-ADJUSTMENT	
	6	1,2	**3F-4479**	2	PIN-SPRING	
	7	2	**172-5745**	1	HOUSING	
	8	1,2	**6J-2561**	2	VALVE-RELIEF POPPET	
B	9	1,2	**152-5559**	8	SHIM (.95MM THK)	
	10	1,2	**4J-0523**	2	SEAL-O-RING	
	11	2	**008-2103**	1	SEAL-O-RING	
	12	2	**9J-7271**	1	SEAT	
	13	2	**9J-5499**	1	SPRING	
	14	2	**9S-4180**	11	PLUG	
	15	2	**4J-7533**	16	SEAL-O-RING	
	16	2	**9J-1709**	1	PLUG	
	17	2	**3D-2824**	1	SEAL-O-RING	
	18	2	**2N-7029**	1	SPRING-CONTROL PIN	
	19	2	**9T-8685**	1	VALVE	
	20	2	**8J-4437**	1	SPRING	
	21	1	**9J-1722**	2	RETAINER	
	22	1	**8T-4896**	4	WASHER-HARD (10.2X18.5X2.5MM THK)	
	23	2	**6J-3134**	2	SEAL-O-RING	
	24	1,2	**1U-1799**	2	PLUG	
	25	1,2	**2M-9780**	2	SEAL-O-RING	
	26	1,2	**3G-8164**	2	NUT (3/8-24 THD)	
	27	1,2	**3G-8165**	2	NUT (5/8-18 THD)	
	28	2	**9S-8001**	5	PLUG	
	29	2	**9B-7237**	2	BOLT (3/8-16X1.25 IN)	
	30	2	**4L-9337**	4	BOLT (3/8-16X1.5 IN)	
	31	2	**151-8098**	1	HOUSING	
	32	2	**8F-6711**	1	SEAL-O-RING	
	33	2	**8T-6871**	2	BOLT (5/8-11X2.50 IN)	
	34	1	**9S-8005**	1	PLUG	
	35	2	**8T-4122**	12	WASHER-HARD (17X32X3.5MM THK)	
	36	2	**7X-0347**	12	BOLT (5/8-11X2.25 IN)	
	37	2	**5P-8077**	6	FLANGE-HALF	
	38	2	**9S-4188**	1	PLUG	
	39	2	**4K-1388**	1	SEAL-O-RING	
	40	1	**9J-1716**	2	COVER	
	41	1	**8J-8621**	2	SPRING	
	42	1	**9F-2167**	2	SCREW-PURGE	
	43	1	**5N-9016**	4	SHIM (.25 MM THK)	
	44	1	**2J-6089**	1	SPRING	
	45	1	**4J-0522**	2	SEAL-O-RING	
	46	1	**155-7505**	1	SEAT	
	47	1	**9J-8752**	1	SPRING	
	48	1	**9T-5982**	1	VALVE	
	49	1	**8M-1679**	1	SPRING	
	50	1	**5P-7684**	1	PLUG	
	51	1	**6K-6307**	1	SEAL-O-RING	
	52	1	**178-2311**	1	SPRING	
	53	1	**178-2312**	1	SPRING	
	54	1	**178-2313**	1	SPRING	
	55	1	**178-2314**	1	SPRING	
	56	1	**179-7273**	1	RETAINER	

172-6977 **VALVE GP-CONTROL** ***(contd.)*** **i01988952**

NOTE	REF NO	GRAPHIC REF	PART NUMBER	QTY	PART NAME 1 2 3 4 5 6 (PRODUCT LEVEL)	SEE PAGE
	57	1	**179-7274**	1	RETAINER	
	58	1	**1H-5728**	3	SEAL-O-RING	
	59	1	**131-0515**	1	PISTON	
	60	1	**126-9012**	1	HOUSING	
	61	1	**179-7275**	1	RETAINER	
	62	1	**179-7276**	1	RETAINER	
	63	1	**180-7145**	1	HOUSING	
	64	2	**9S-8010**	2	PLUG	
	65	2	**2S-4078**	2	SEAL-O-RING	
	66	2	**7F-1585**	2	SPRING-SHUTOFF	
	67	2	**9T-8684**	2	VALVE	
	68	1	**3K-0360**	1	SEAL-O-RING	
	69	1,2	**9T-5734**	4	SPACER (1.2MM THK)	
	70	1	**1U-2164**	1	SPACER (40.50MM THK)	
Y	71	1	**4T-4073**	1	VALVE GP-SHUTTLE	899
	72	1	**7X-0300**	2	BOLT (3/8-16X6.5 IN)	
	73	1	**7X-0297**	2	BOLT (3/8-16X5.75 IN)	
B	74	1,2	**152-7041**	15	SHIM (.25MM THK)	
	75	1	**180-7146**	1	HOUSING	
	76	1	**180-7154**	6	SHIM (1.0MM THK)	
	77	2	**7X-0515**	2	WASHER-HARD (17X35X5MM THK)	
Z	78	1		1	STEM	
Z	79	1		1	SPOOL-DUMP	
Z	80	1		1	STEM-VALVE	
Z	81	2		1	BODY-VALVE	
Z	82	2		1	STEM	
Z	83	2		1	SPOOL-DUMP	

B-USE AS REQUIRED
Y-SEPARATE ILLUSTRATION
Z-NOT SERVICED SEPARATELY

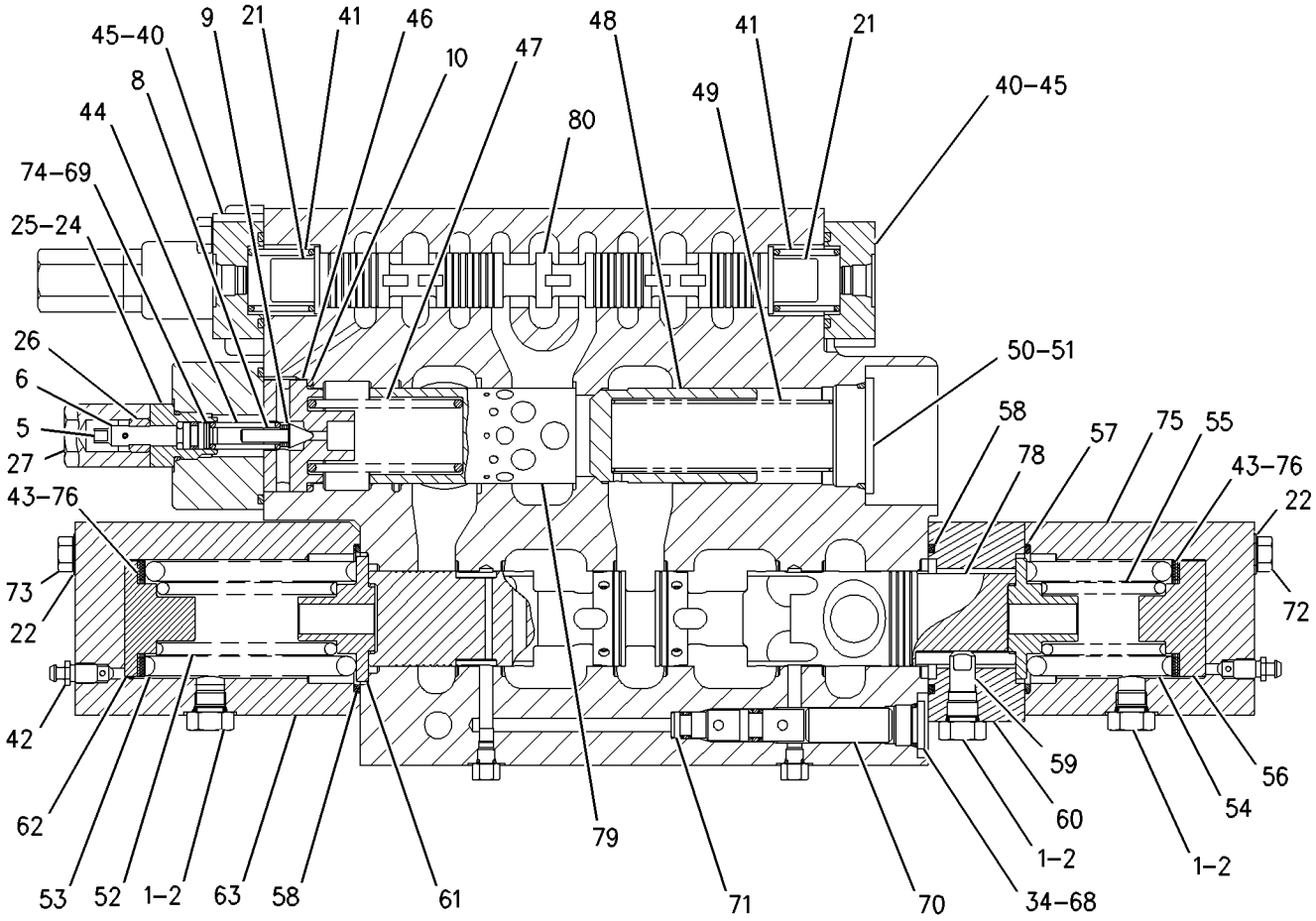

SECTION F-F

GRAPHIC #1

g00718839

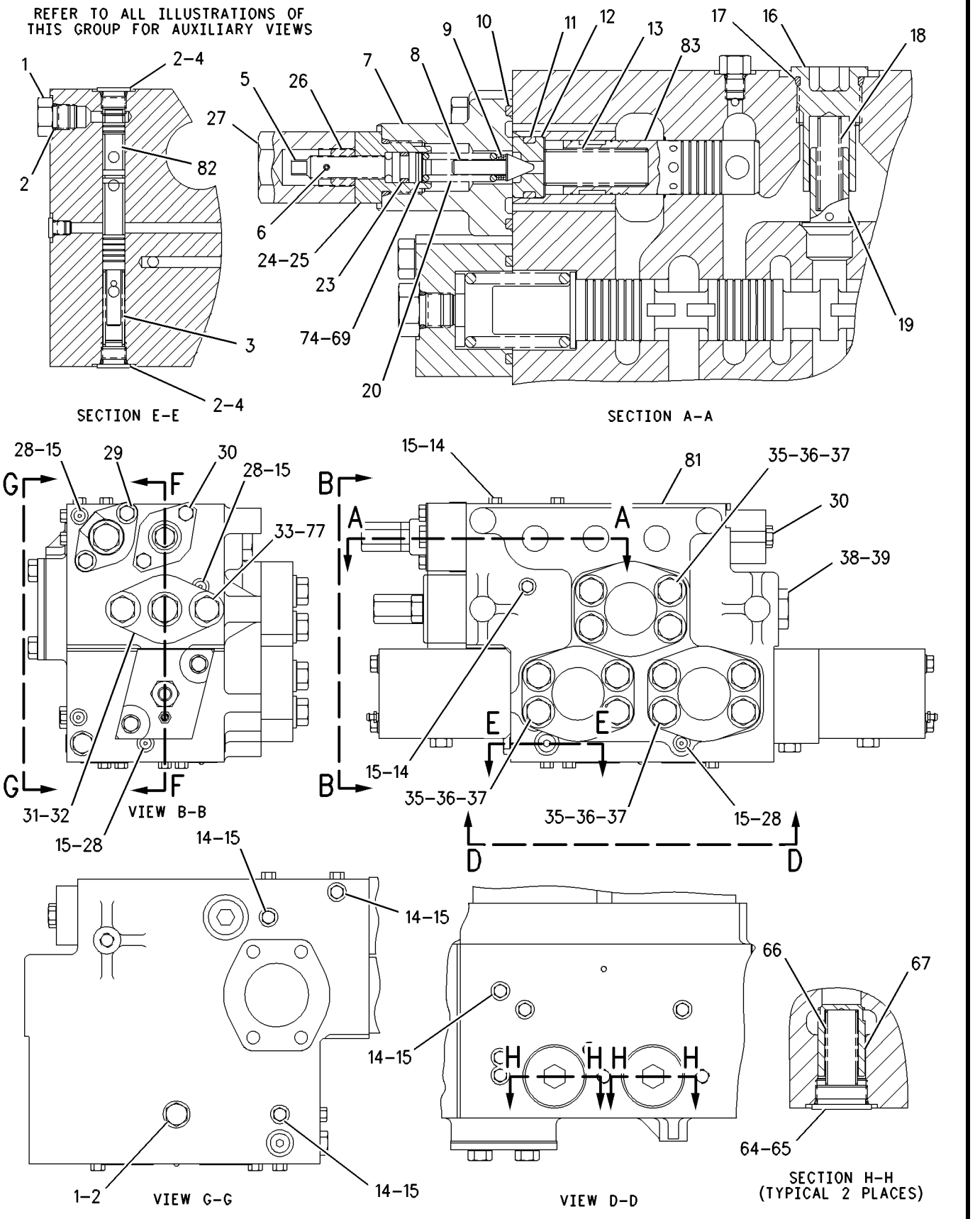

GRAPHIC #2 **<END>** g00718919

HYDRAULIC SYSTEM

177-1407 VALVE GP-CONTROL–RIPPER

S/N: 7PZ1-734
PART OF 173-1552 CONTROL AR-HYDRAULIC
AN ATTACHMENT

SMCS-5051 **i01988954**

NOTE	REF NO	GRAPHIC REF	PART NUMBER	QTY	PART NAME 1 2 3 4 5 6 (PRODUCT LEVEL)	SEE PAGE
	1	1	**1P-4577**	16	FLANGE-HALF	
	2	1	**1P-4578**	6	FLANGE-HALF	
	3	1	**2S-4078**	1	SEAL-O-RING	
	4	1	**3G-3475**	2	SPRING	
	5	1	**3G-8710**	2	PLUG	
	6	1	**4J-0522**	1	SEAL-O-RING	
	7	1	**4J-0525**	2	SEAL-O-RING	
	8	1	**4J-0526**	2	SEAL-O-RING	
	9	1	**4T-2620**	2	SPRING	
	10	1	**5H-4020**	1	COVER	
	11	1	**5S-7379**	2	BOLT (3/8-16X0.875 IN)	
	12	1	**5S-7382**	32	BOLT (3/8-16X1.375 IN)	
	13	1	**6E-4343**	2	VALVE	
	14	1	**6E-4432**	4	RETAINER	
	15	1	**6E-4492**	2	HOUSING	
	16	1	**6V-4432**	4	BOLT (1/2-13X4 IN)	
	17	1	**7M-8485**	2	SEAL-O-RING	
	18	1	**7X-0308**	12	BOLT (7/16-14X1.375 IN)	
	19	1	**7X-0326**	4	BOLT (1/2-13X3 IN)	
	20	1	**8M-7145**	2	WASHER (10.2X28.5X5MM THK)	
	21	1	**8T-4223**	8	WASHER-HARD (13.5X25.5X3MM THK)	
	22	1	**8T-4896**	32	WASHER-HARD (10.2X18.5X2.5MM THK)	
	23	1	**8T-5360**	12	WASHER (12X22.5X2.5MM THK)	
	24	1	**9T-8206**	1	VALVE	
	25	1	**9T-8207**	1	PLUG	
	26	1	**9T-8208**	1	SPRING	
	27	1	**9T-8210**	2	HOUSING	
	28	1	**164-4540**	1	VALVE GP-DIVERTER (COLD WEATHER CLIMATE ONLY)	
		1	**2M-9780**	1	SEAL-O-RING	
		1	**095-1751**	2	SEAL-O-RING	
		1	**169-1216**	1	TUBE AS	
					-OR-	
		1	**184-1192**	1	PLUG AS	
		1	**2M-9780**	1	SEAL-O-RING	
		1	**6V-3505**	1	RING-BACKUP	
		1	**095-1751**	1	SEAL-O-RING	

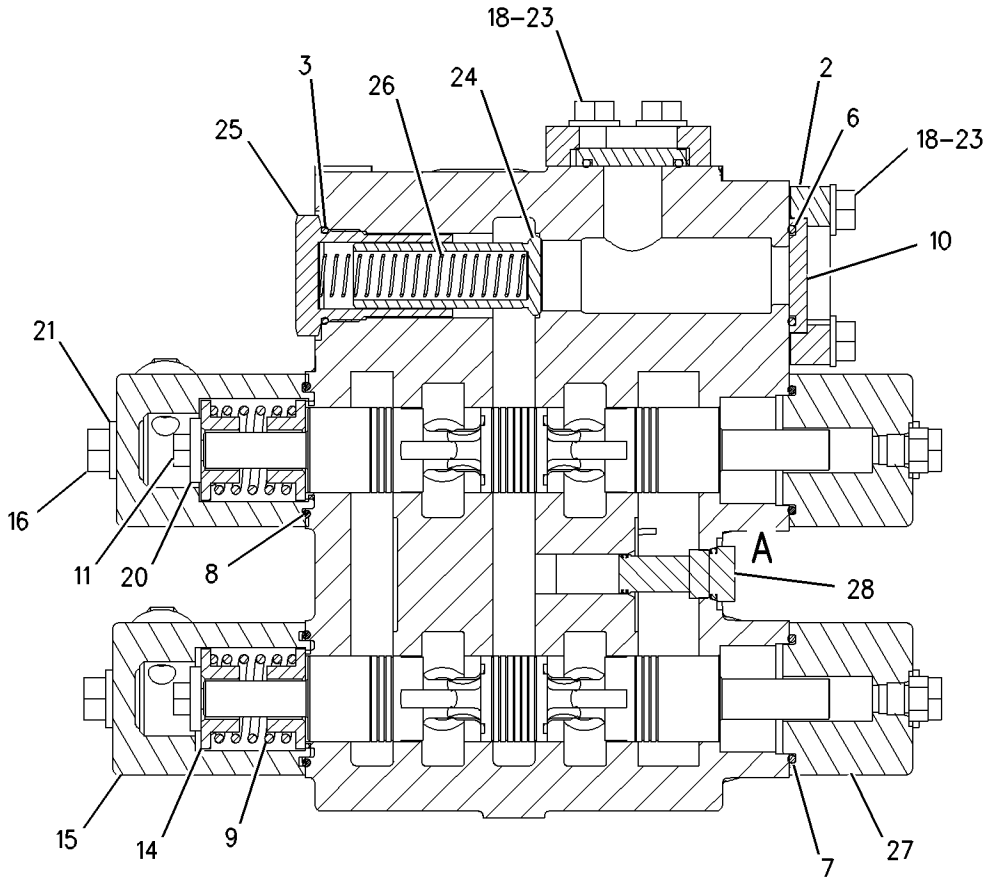

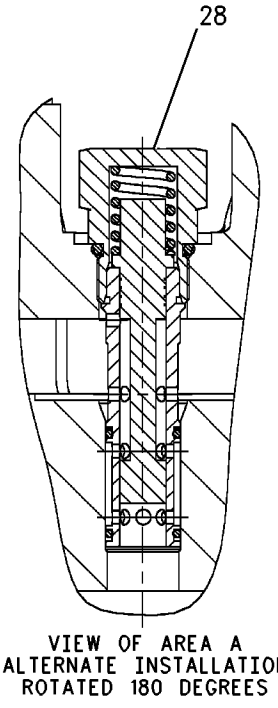

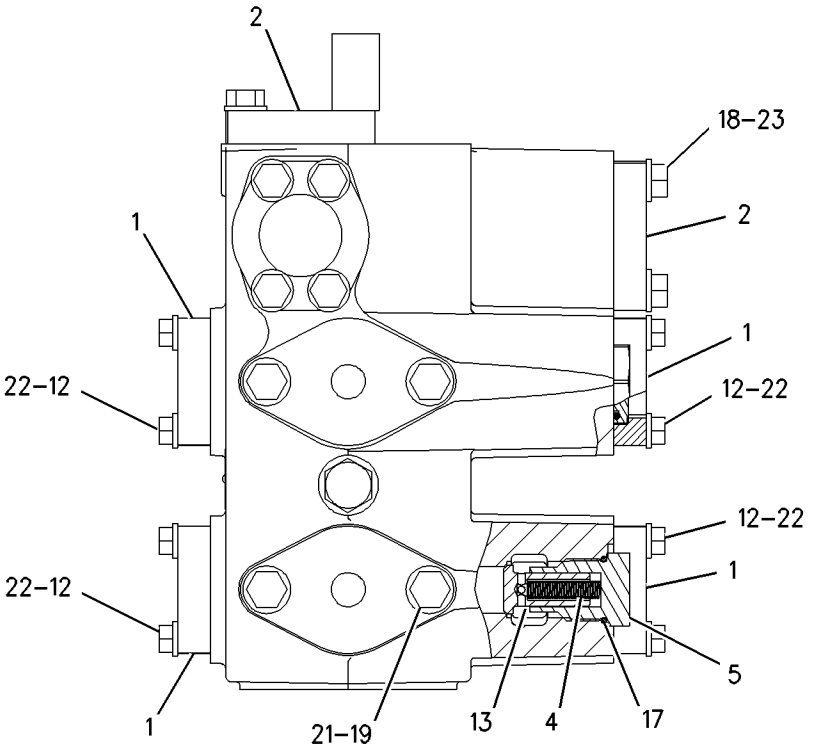

GRAPHIC #1 **<END>** g00752796

204-5575 VALVE GP-CONTROL—BULLDOZER

S/N: 7PZ520-UP

PART OF 155-5553 CONTROL AR-HYDRAULIC

SMCS-5051 **i01989019**

NOTE	REF NO	GRAPHIC REF	PART NUMBER	QTY	PART NAME 1 2 3 4 5 6 (PRODUCT LEVEL)	SEE PAGE
	1	2	**1U-1799**	2	PLUG	
	2	2	**1U-2164**	1	SPACER (40.50MM THK)	
	3	2	**2J-6089**	1	SPRING	
	4	2	**2N-7029**	1	SPRING-CONTROL PIN	
	5	1	**3B-4730**	1	SPRING	
	6	2	**3G-8163**	2	SCREW-ADJUSTMENT	
	7	2	**3G-8164**	2	NUT (3/8-24 THD)	
	8	2	**3G-8165**	2	NUT (5/8-18 THD)	
B	10	2	**5N-9016**	4	SHIM (.25 MM THK)	
	11	2	**6J-2561**	2	VALVE-RELIEF POPPET (LIFT)	
	12	1	**7F-1585**	2	SPRING-SHUTOFF	
	13	2	**8J-4437**	1	SPRING	
	14	2	**8J-8621**	2	SPRING	
	15	2	**8M-1679**	1	SPRING	
	16	2	**9F-2167**	2	SCREW-PURGE	
	17	1	**9J-1709**	1	PLUG	
	18	2	**9J-1716**	2	COVER	
	19	2	**9J-1722**	2	RETAINER	
	20	2	**9J-5499**	1	SPRING	
	24	2	**9J-7271**	1	SEAT	
	25	2	**9J-8752**	1	SPRING	
	26	2	**9T-5982**	1	VALVE (LIFT RELIEF)	
	27	1	**9T-8684**	2	VALVE (LIFT CYLINDER)	
	28	2	**9T-8685**	1	VALVE (TILT CYLINDER)	
	30	1	**151-8098**	1	HOUSING	
B	31	2	**152-5559**	8	SHIM (.95MM THK)	
B	32	2	**152-7041**	15	SHIM (.25MM THK)	
	33	2	**155-7505**	1	SEAT	
	35	2	**172-5745**	1	HOUSING	
	36	2	**178-2311**	1	SPRING	
	37	2	**178-2312**	1	SPRING	
	38	2	**178-2313**	1	SPRING	
	39	2	**178-2314**	1	SPRING	
	40	2	**180-7154**	6	SHIM (1.0MM THK)	
	41	2	**197-5035**	1	PISTON	
	42	2	**204-5116**	1	HOUSING	
	43	2	**204-5117**	1	RETAINER	
	44	2	**204-5118**	1	HOUSING	
	45	2	**204-5119**	1	RETAINER	
	46	2	**204-5120**	1	RETAINER	
	47	2	**204-5121**	1	RETAINER	
	49	1	*222-4737*	11	PLUG AS	
					(EACH INCLUDES)	
		1	**4J-7533**	1	SEAL-O-RING	
		1	**9S-4180**	1	PLUG	
	51	2	**241-2631**	1	HOUSING	
	52	2	**008-2103**	1	SEAL-O-RING	
	53	2	*148-8395*	1	PLUG AS	
		2	**3K-0360**	1	SEAL-O-RING	
		2	**9S-8005**	1	PLUG	
	54	1,2	*148-8407*	4	PLUG GP	
					(EACH INCLUDES)	
		1,2	**9S-4191**	1	PLUG	
		1,2	**3J-1907**	1	SEAL-O-RING	
	55	1	**162-0177**	2	PLUG AS	
	56	1	**173-3993**	5	PLUG AS	

204-5575 VALVE GP-CONTROL *(contd.)* i01989019

NOTE	REF NO	GRAPHIC REF	PART NUMBER	QTY	PART NAME 1 2 3 4 5 6 (PRODUCT LEVEL)	SEE PAGE
	57	1	*183-7262*	2	PLUG AS	
					(EACH INCLUDES)	
		1	**2S-4078**	1	SEAL-O-RING	
		1	**9S-8010**	1	PLUG	
	58	2	**1H-5728**	1	SEAL-O-RING	
	59	1	*207-7899*	1	PLUG AS	
		1	**4K-1388**	1	SEAL-O-RING	
		1	**9S-4188**	1	PLUG	
	60	2	**2M-9780**	2	SEAL-O-RING	
	61	1	**3D-2824**	1	SEAL-O-RING	
	62	2	**3F-4479**	2	PIN-SPRING	
	63	2	**3J-1907**	1	SEAL-O-RING	
	64	2	**4J-0522**	2	SEAL-O-RING	
	65	2	**4J-0523**	2	SEAL-O-RING	
	66	1	**4L-9337**	4	BOLT (3/8-16X1.5 IN)	
Y	67	2	**4T-4073**	1	VALVE GP-SHUTTLE	899
	68	2	**5H-8848**	2	SEAL-O-RING	
	69	2	**5P-7684**	1	PLUG	
	70	1	**5P-8077**	6	FLANGE-HALF	
	71	2	**6J-3134**	2	SEAL-O-RING	
	72	2	**6K-6307**	1	SEAL-O-RING	
	73	2	**7X-0297**	2	BOLT (3/8-16X5.75 IN)	
	74	2	**7X-0300**	2	BOLT (3/8-16X6.5 IN)	
	75	1	**7X-0347**	12	BOLT (5/8-11X2.25 IN)	
	76	1	**7X-0515**	2	WASHER-HARD (17X35X5MM THK)	
	77	1	**8F-6711**	1	SEAL-O-RING	
	78	1	**8T-4122**	12	WASHER-HARD (17X32X3.5MM THK)	
	79	2	**8T-4896**	4	WASHER-HARD (10.2X18.5X2.5MM THK)	
	80	1	**8T-6871**	2	BOLT (5/8-11X2.50 IN)	
	81	1	**9B-7237**	2	BOLT (3/8-16X1.25 IN)	
	82	2	**9T-5734**	4	SPACER (1.2MM THK)	

B-USE AS REQUIRED
Y-SEPARATE ILLUSTRATION

REFER TO ALL ILLUSTRATIONS OF THIS GROUP FOR AUXILIARY VIEWS

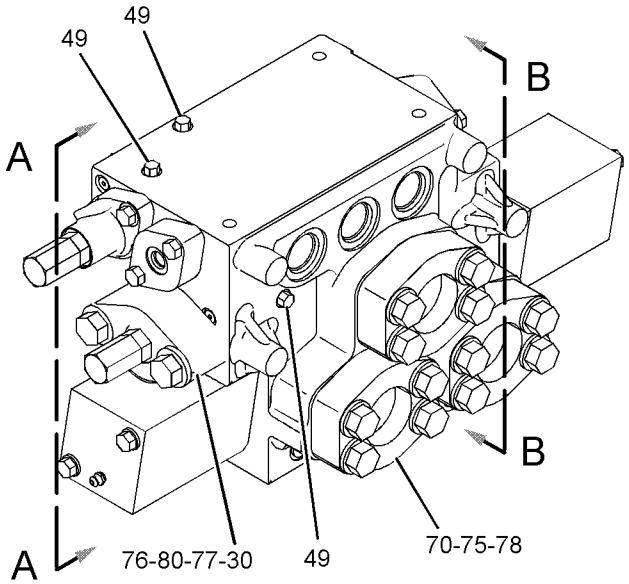

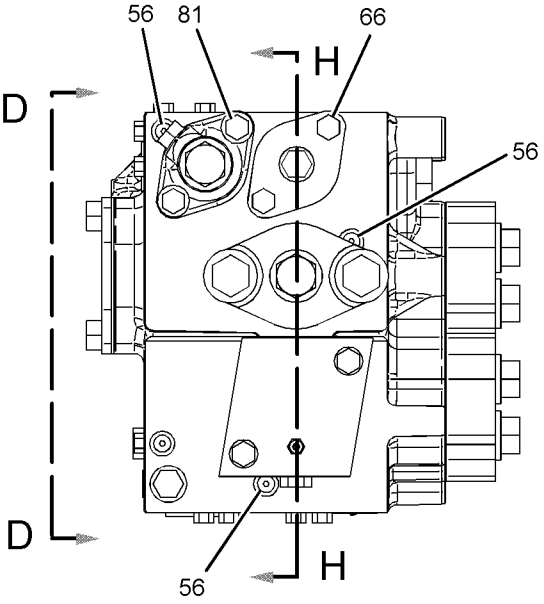

VIEW A-A

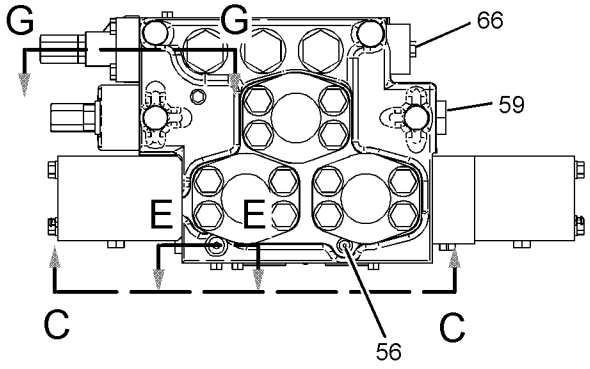

VIEW B-B

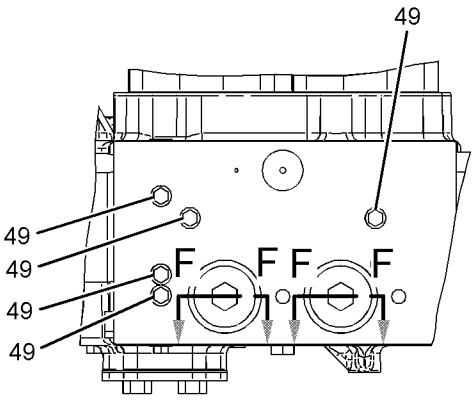

VIEW C-C

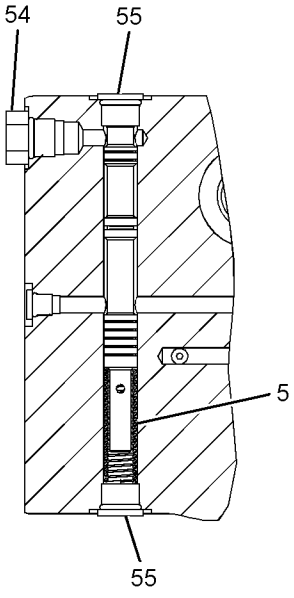

SECTION E-E

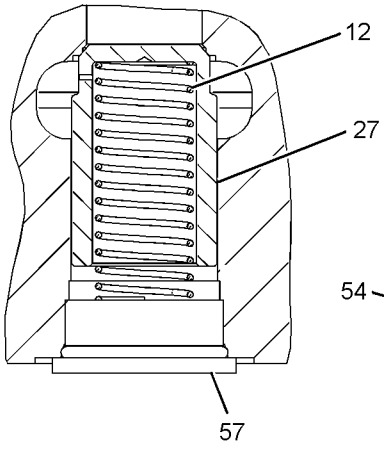

SECTION F-F

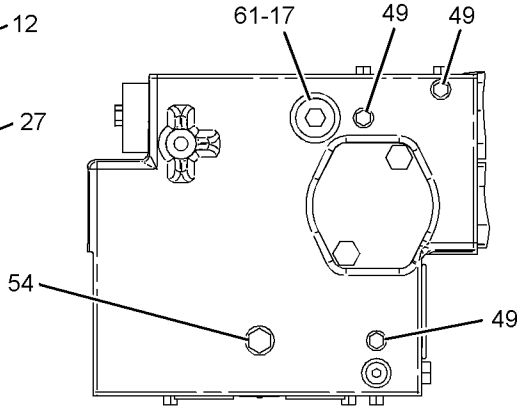

VIEW D-D

GRAPHIC #1

g01026306

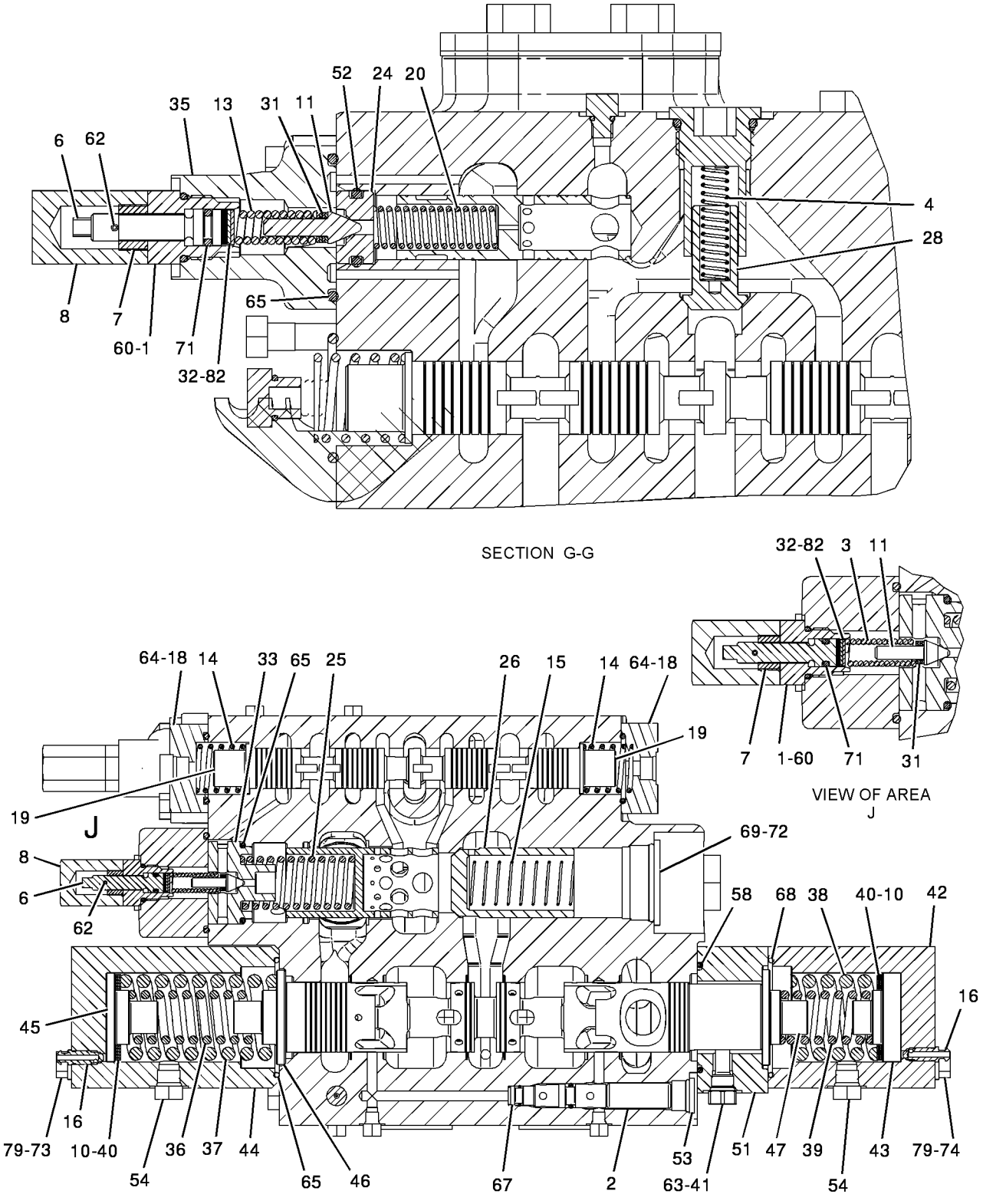

GRAPHIC #2

<END>

g01026307

212-6024 VALVE GP-CONTROL–PILOT ON, OFF

S/N: 7PZ1-UP

PART OF 135-9446, 145-6054, 173-3204 VALVE GP-PILOT

ALSO AN ATTACHMENT

SMCS-5051 **i01614404**

NOTE	REF NO	GRAPHIC REF	PART NUMBER	QTY	PART NAME 1 2 3 4 5 6 (PRODUCT LEVEL)	SEE PAGE
	1	1	**2M-9780**	1	SEAL-O-RING	
	2	1	**5P-2199**	1	RING-BACKUP	
	3	1	**6E-0410**	1	SEAL-O-RING	
	4	1	**6V-3505**	1	RING-BACKUP	
	5	1	**8C-3132**	1	SEAL-O-RING	

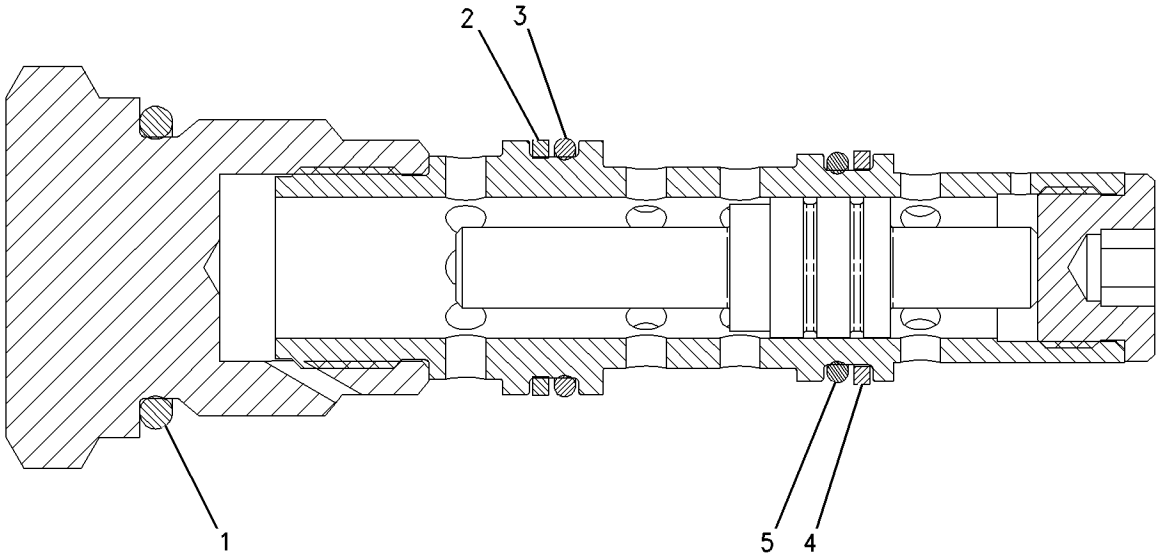

GRAPHIC #1 **<END>** g00843244

HYDRAULIC SYSTEM

237-7654 VALVE GP-CONTROL—IMPLEMENT

S/N: 7PZ735-UP

PART OF 173-1552 CONTROL AR-HYDRAULIC

AN ATTACHMENT

SMCS-5051 **i02029220**

NOTE	REF NO	GRAPHIC REF	PART NUMBER	QTY	PART NAME 1 2 3 4 5 6 (PRODUCT LEVEL)	SEE PAGE
	3	1	*184-1192*	1	PLUG AS	
	3A	1	**2M-9780**	1	SEAL-O-RING	
	3B	1	**6V-3505**	1	RING-BACKUP	
	3C	1	**095-1751**	1	SEAL-O-RING	
	6	1	**1P-4577**	16	FLANGE-HALF	
	7	1	**1P-4578**	6	FLANGE-HALF	
	8	1	**2S-4078**	1	SEAL-O-RING	
	9	1	**3G-3475**	2	SPRING	
	10	1	**3G-8710**	2	PLUG	
	11	1	**4J-0522**	1	SEAL-O-RING	
	12	1	**4J-0525**	2	SEAL-O-RING	
	13	1	**4J-0526**	2	SEAL-O-RING	
	14	1	**4T-2620**	2	SPRING	
	15	1	**5H-4020**	1	COVER	
	16	1	**5S-7379**	2	BOLT (3/8-16X0.875-IN)	
	17	1	**5S-7382**	32	BOLT (3/8-16X1.375-IN)	
	18	1	**6E-4343**	2	VALVE (TIP CYLINDER)	
	19	1	**6E-4432**	4	RETAINER	
	20	1	**6E-4492**	2	HOUSING	
	21	1	**6V-4432**	4	BOLT (1/2-13X4-IN)	
	22	1	**7M-8485**	2	SEAL-O-RING	
	23	1	**7X-0308**	12	BOLT (7/16-14X1.375-IN)	
	24	1	**7X-0326**	4	BOLT (1/2-13X3-IN)	
	25	1	**8M-7145**	2	WASHER (10.2X28.5X5-MM THK)	
	26	1	**8T-4223**	8	WASHER-HARD (13.5X25.5X3-MM THK)	
	27	1	**8T-4896**	32	WASHER-HARD (10.2X18.5X2.5-MM THK)	
	28	1	**8T-5360**	12	WASHER (12X22.5X2.5-MM THK)	
	29	1	**9T-8206**	1	VALVE	
	30	1	**9T-8207**	1	PLUG	
	31	1	**9T-8208**	1	SPRING	
	32	1	**9T-8210**	2	HOUSING	

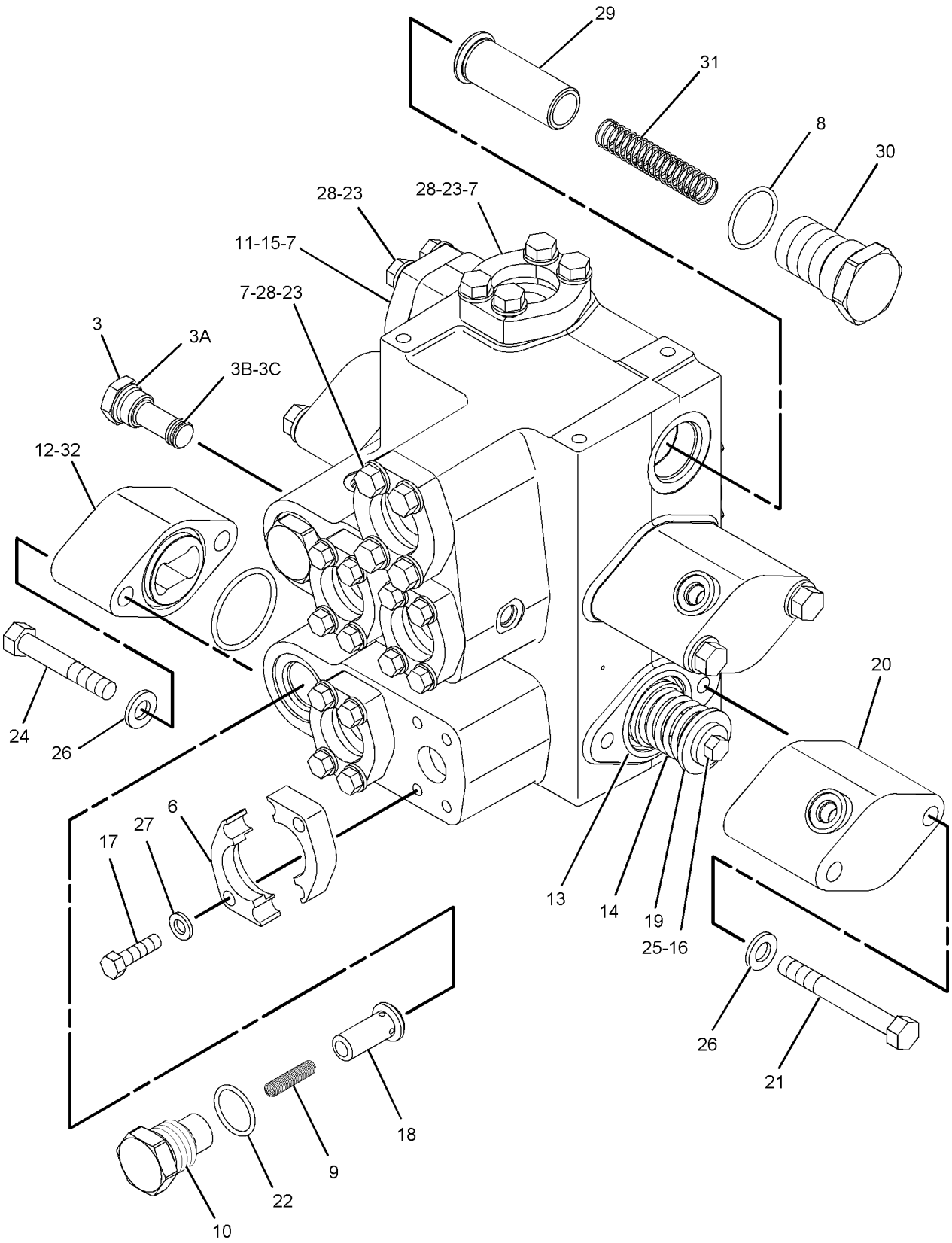

GRAPHIC #1 **<END>** g01027444

105-2470 VALVE GP-MAKEUP—HYDRAULIC FAN

S/N: 7PZ1-UP

PART OF 172-5596 LINES GP-HYDRAULIC FAN

SMCS-5080 **i01564398**

NOTE	REF NO	GRAPHIC REF	PART NUMBER	QTY	PART NAME 1 2 3 4 5 6 (PRODUCT LEVEL)	SEE PAGE
	1	1	**101-0729**	1	BODY	
	2	1	**1U-0323**	1	PLUG AS	
		1	**1U-0322**	1	BEARING-SLEEVE	
		1	**3G-2683**	1	PLUG	
	3	1	**2S-4078**	1	SEAL-O-RING	
	4	1	**7S-8491**	1	SPRING	
	5	1	**7J-7423**	1	VALVE	
	6	1	**9S-4191**	1	PLUG-STRAIGHT THREAD	
	7	1	**3J-1907**	1	SEAL-O-RING	

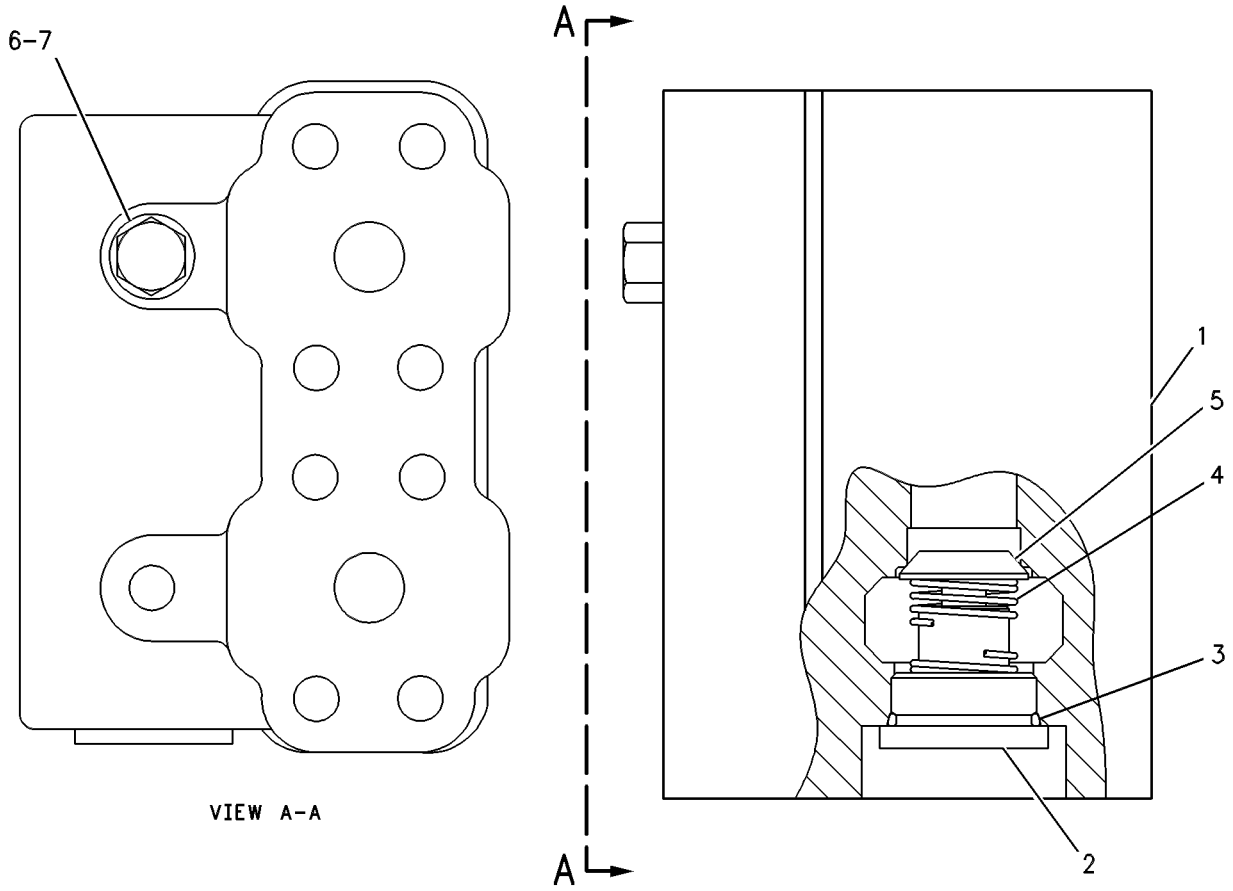

GRAPHIC #1 **<END>** g00122331

135-9446 VALVE GP-PILOT–IMPLEMENT

S/N: 7PZ407-602
PART OF 155-5553, 173-1552 CONTROL AR-HYDRAULIC
ALSO AN ATTACHMENT

SMCS-5059 **i01989013**

NOTE	REF NO	GRAPHIC REF	PART NUMBER	QTY	PART NAME 1 2 3 4 5 6 (PRODUCT LEVEL)	SEE PAGE
Y	1	1	**212-6024**	1	VALVE GP-CONTROL	875
Y	2	1	**114-1266**	1	VALVE GP-PRESSURE REDUCING	886
CY	3	1	**114-1267**	1	VALVE GP-PRESSURE REDUCING	887
Y	4	1	**124-3052**	8	VALVE GP-SOLENOID	904
	5	1	**9S-4191**	13	PLUG	
	6	1	**3J-1907**	26	SEAL-O-RING	
	7	1	**9S-8004**	12	PLUG	
	8	1	**125-6786**	1	PLUG	
CY	9	1	**152-6761**	1	VALVE GP-SOLENOID	908
	10	1	**6V-0852**	1	CAP-DUST	
	11	1	**2M-9780**	1	SEAL-O-RING	
	12	1	**4M-8303**	6	SEAL-O-RING	
M	13	1	**8T-4198**	3	BOLT (M10X1.5X100MM)	
	14	1	**8T-4121**	3	WASHER-HARD (11X21X2.5MM THK)	
	15	1	**6V-3965**	1	FITTING (QUICK DISCONNECT)	
	16	1	**033-6043**	1	SEAL-O-RING	

C-CHANGE FROM PREVIOUS TYPE
M-METRIC PART
Y-SEPARATE ILLUSTRATION

135-9446 VALVE GP-PILOT *(contd.)* i01989013

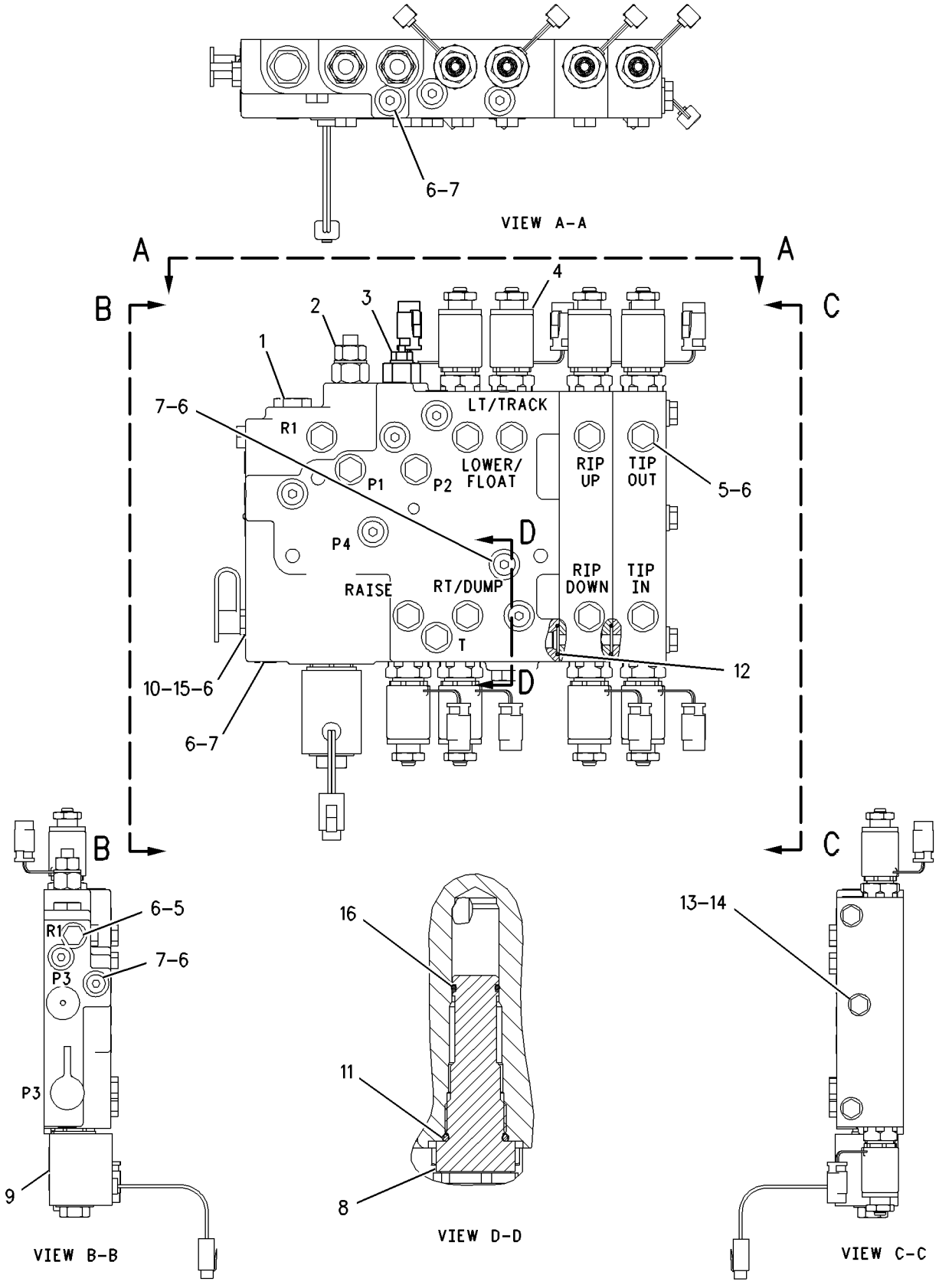

GRAPHIC #1 **<END>** g00857958

HYDRAULIC SYSTEM

135-9446 VALVE GP-PILOT–IMPLEMENT

S/N: 7PZ603-651

PART OF 155-5553 CONTROL AR-HYDRAULIC

SMCS-5059 **i01989522**

NOTE	REF NO	GRAPHIC REF	PART NUMBER	QTY	PART NAME 1 2 3 4 5 6 (PRODUCT LEVEL)	SEE PAGE
Y	1	1	**212-6024**	1	VALVE GP-CONTROL	875
Y	2	1	**114-1266**	1	VALVE GP-PRESSURE REDUCING	886
Y	3	1	**114-1267**	1	VALVE GP-PRESSURE REDUCING	887
Y	4	1	**124-3052**	8	VALVE GP-SOLENOID	904
	5	1	**9S-4191**	13	PLUG	
	6	1	**3J-1907**	26	SEAL-O-RING	
	7	1	**9S-8004**	12	PLUG	
	8	1	**125-6786**	1	PLUG	
CY	9	1	**203-4157**	1	VALVE GP-SOLENOID	912
	10	1	**6V-0852**	1	CAP-DUST	
	11	1	**2M-9780**	1	SEAL-O-RING	
	12	1	**4M-8303**	6	SEAL-O-RING	
M	13	1	**8T-4198**	3	BOLT (M10X1.5X100MM)	
	14	1	**8T-4121**	3	WASHER-HARD (11X21X2.5MM THK)	
	15	1	**6V-3965**	1	FITTING (QUICK DISCONNECT)	
	16	1	**033-6043**	1	SEAL-O-RING	

C-CHANGE FROM PREVIOUS TYPE
M-METRIC PART
Y-SEPARATE ILLUSTRATION

135-9446 VALVE GP-PILOT *(contd.)* i01989522

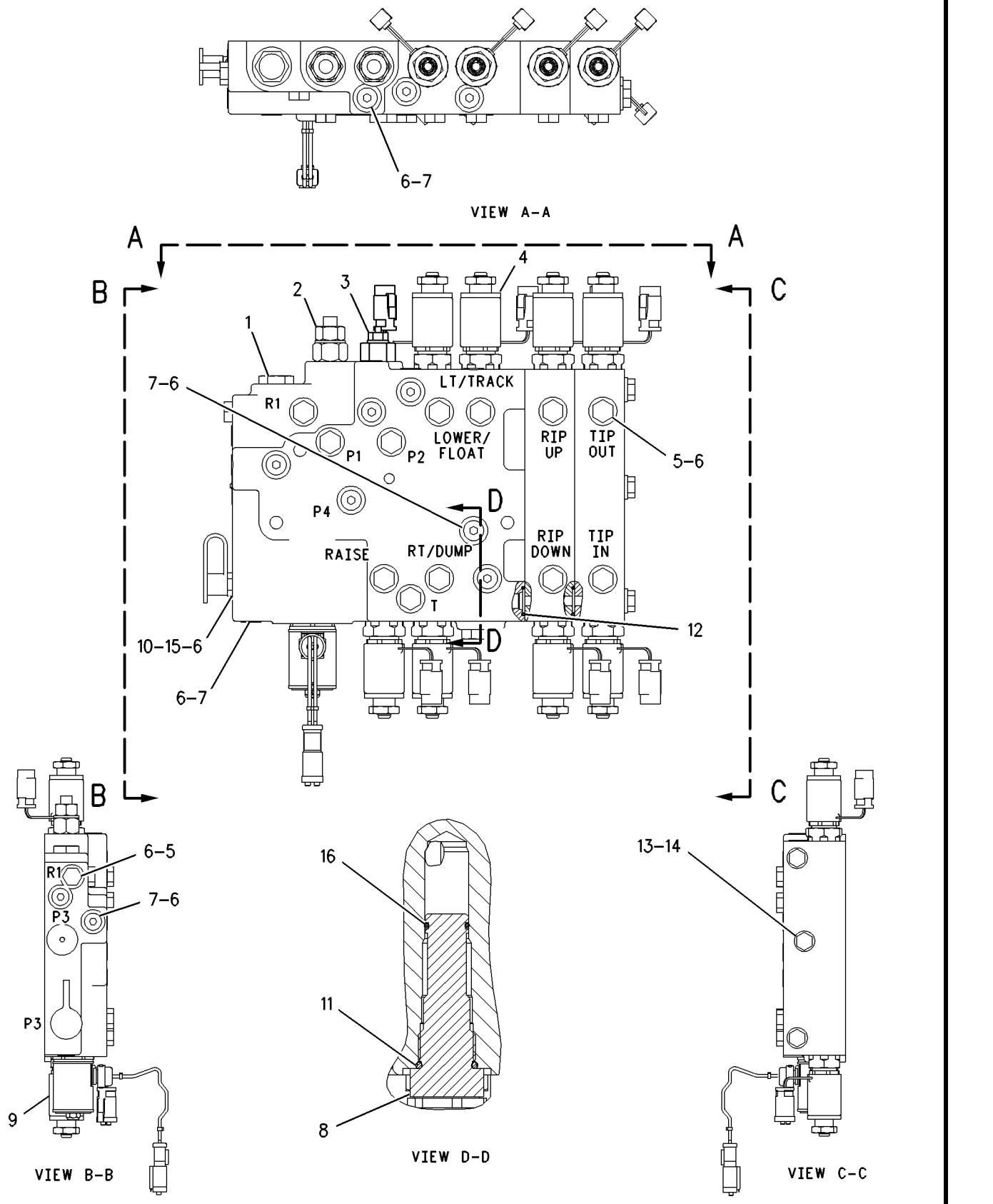

GRAPHIC #1 **<END>** g01007785

145-6054 VALVE GP-PILOT–IMPLEMENT

S/N: 7PZ1-406

PART OF 155-5553 CONTROL AR-HYDRAULIC

SMCS-5059 **i01989014**

NOTE	REF NO	GRAPHIC REF	PART NUMBER	QTY	PART NAME 1 2 3 4 5 6 (PRODUCT LEVEL)	SEE PAGE
Y	1	1	**212-6024**	1	VALVE GP-CONTROL	875
Y	2	1	**114-1266**	1	VALVE GP-PRESSURE REDUCING	886
Y	3	1	**114-1267**	1	VALVE GP-PRESSURE REDUCING	887
Y	4	1	**124-3052**	4	VALVE GP-SOLENOID	904
	5	1	**9S-4191**	9	PLUG	
	6	1	**3J-1907**	25	SEAL-O-RING	
	7	1	**9S-8004**	15	PLUG	
	8	1	**125-6786**	1	PLUG	
Y	9	1	**152-6761**	1	VALVE GP-SOLENOID	908
	10	1	**113-0283**	1	BODY	
	11	1	**2M-9780**	1	SEAL-O-RING	
	12	1	**033-6043**	1	SEAL-O-RING	
	13	1	**6V-3965**	1	FITTING (QUICK DISCONNECT)	
	14	1	**6V-0852**	1	CAP-DUST	

Y-SEPARATE ILLUSTRATION

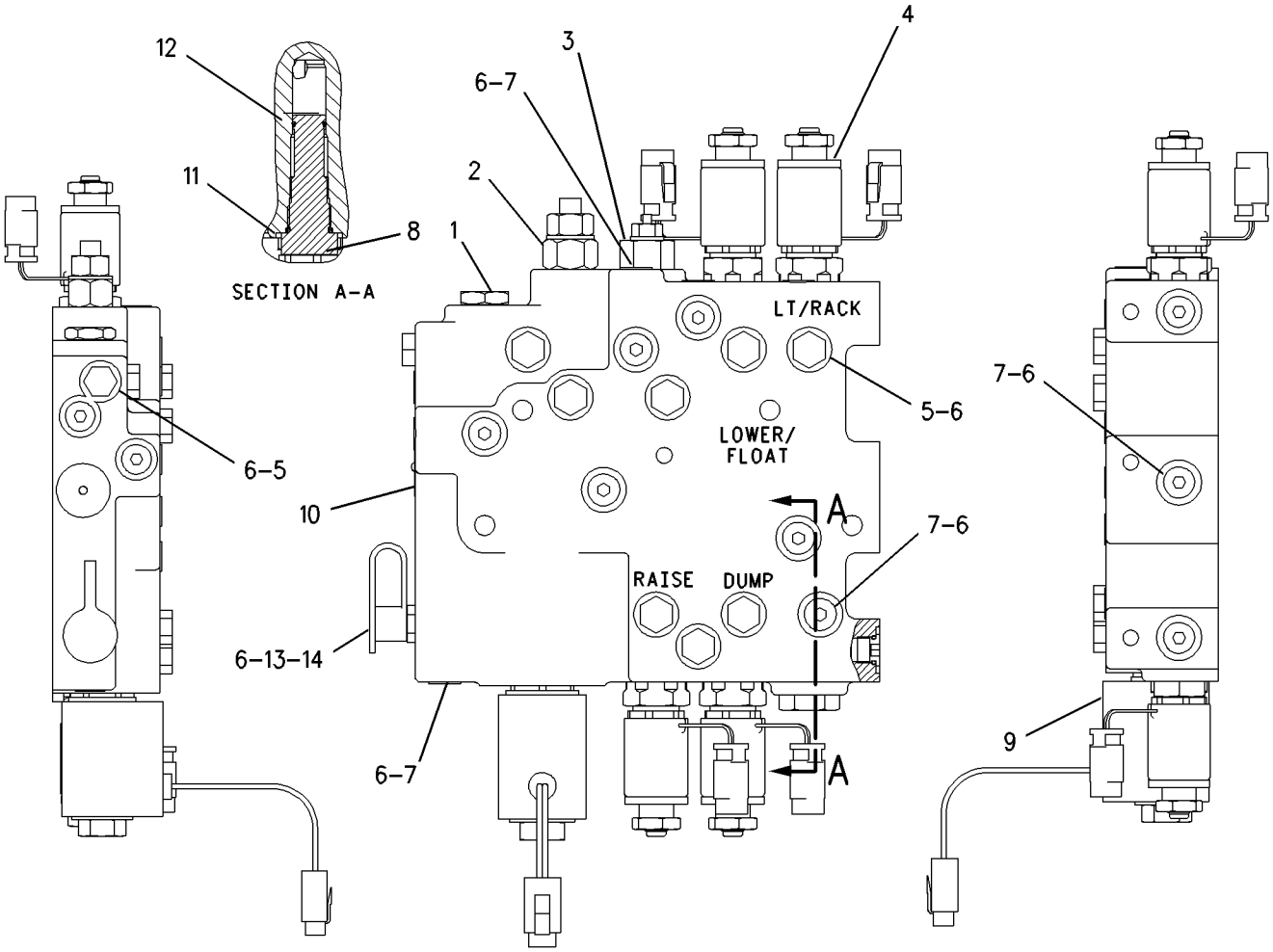

GRAPHIC #1 **<END>** g00843331

173-3204 VALVE GP-PILOT–IMPLEMENT

S/N: 7PZ652-UP

PART OF 155-5553 CONTROL AR-HYDRAULIC

SMCS-5059 **i01989024**

NOTE	REF NO	GRAPHIC REF	PART NUMBER	QTY	PART NAME 1 2 3 4 5 6 (PRODUCT LEVEL)	SEE PAGE
	1	1	**3J-1907**	26	SEAL-O-RING	
	2	1	**2M-9780**	1	SEAL-O-RING	
Y	3	1	**174-4916**	8	VALVE GP-SOLENOID	910
	4	1	**4M-8303**	6	SEAL-O-RING	
Y	5	1	**212-6024**	1	VALVE GP-CONTROL	875
	6	1	**6V-0852**	1	CAP-DUST	
	7	1	**6V-3965**	1	FITTING (QUICK DISCONNECT)	
	8	1	**8T-4121**	3	WASHER-HARD (11X21X2.5MM THK)	
M	9	1	**8T-4198**	3	BOLT (M10X1.5X100MM)	
	10	1	**9S-4191**	13	PLUG	
	11	1	**9S-8004**	12	PLUG	
	12	1	**033-6043**	1	SEAL-O-RING	
Y	13	1	**114-1267**	1	VALVE GP-PRESSURE REDUCING	887
Y	14	1	**217-2713**	1	VALVE GP-PRESSURE REDUCING	888
Y	15	1	**203-4157**	1	VALVE GP-SOLENOID	912
	16	1	**125-6786**	1	PLUG	

M-METRIC PART
Y-SEPARATE ILLUSTRATION

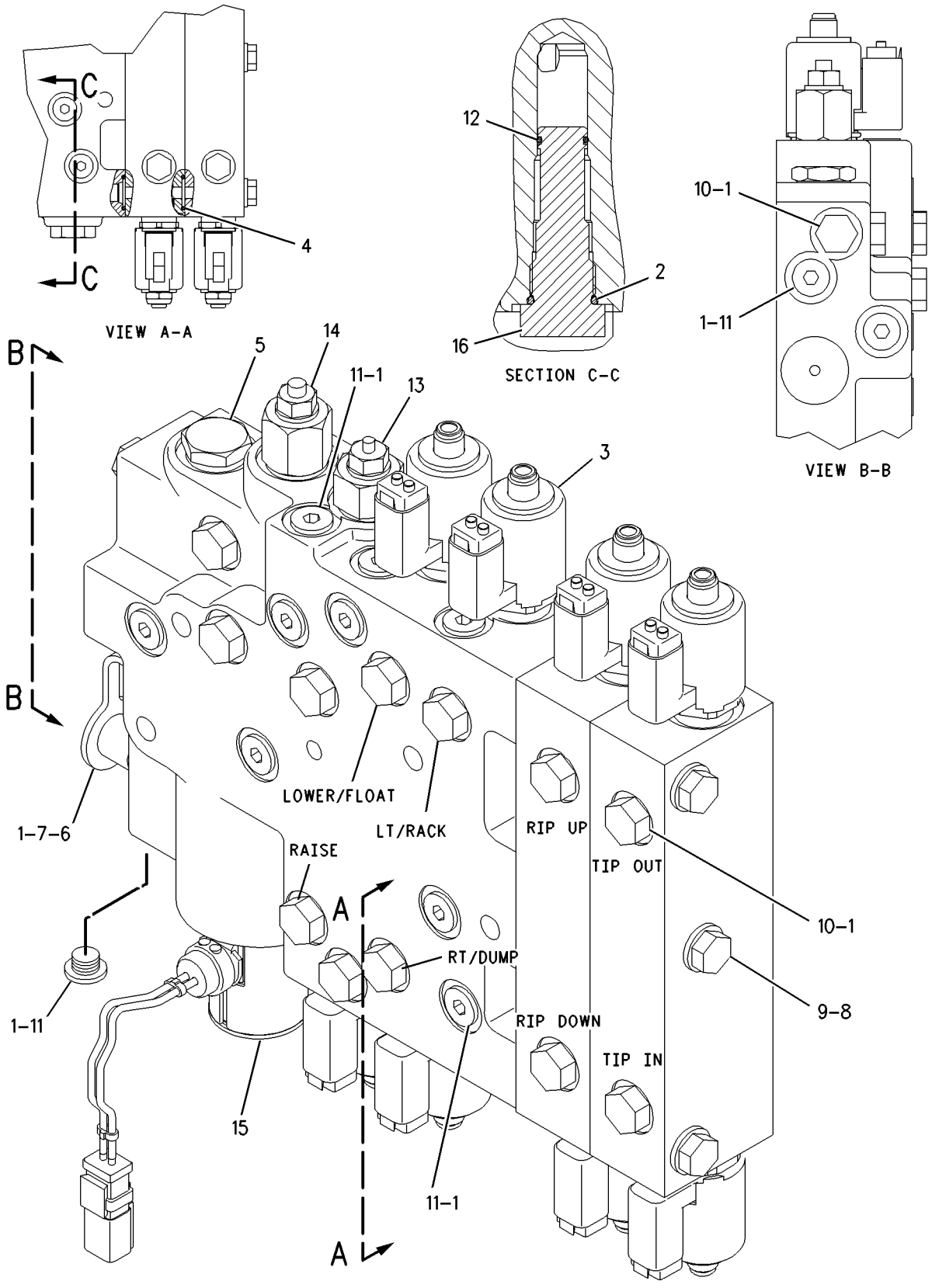

GRAPHIC #1 **<END>** g00926111

114-1266 VALVE GP-PRESSURE REDUCING–IMPLEMENT

S/N: 7PZ1-651
PART OF 135-9446, 145-6054 VALVE GP-PILOT
ALSO AN ATTACHMENT

SMCS-5117 **i01464052**

NOTE	REF NO	GRAPHIC REF	PART NUMBER	QTY	PART NAME 1 2 3 4 5 6 (PRODUCT LEVEL)	SEE PAGE
	1	1	**2M-9780**	1	SEAL-O-RING	
	2	1	**6V-3505**	1	RING-BACKUP	
	3	1	**8C-3132**	1	SEAL-O-RING	
	4	1	**6E-0410**	1	SEAL-O-RING	
	5	1	**5P-2199**	1	RING-BACKUP	

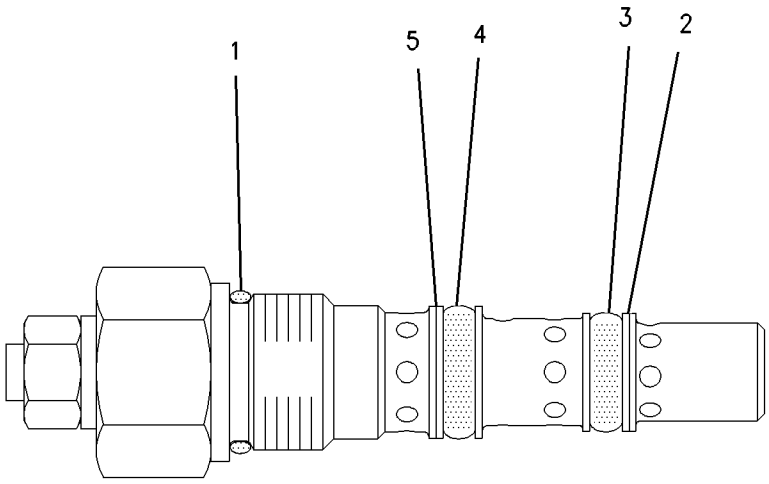

GRAPHIC #1 **<END>** g00765123

114-1267 VALVE GP-PRESSURE REDUCING–IMPLEMENT

S/N: 7PZ1-UP

PART OF 135-9446, 145-6054, 173-3204 VALVE GP-PILOT

ALSO AN ATTACHMENT

SMCS-5117 **i01464060**

NOTE	REF NO	GRAPHIC REF	PART NUMBER	QTY	PART NAME 1 2 3 4 5 6 (PRODUCT LEVEL)	SEE PAGE
	1	1	**2M-9780**	1	SEAL-O-RING	
	2	1	**6V-3505**	1	RING-BACKUP	
	3	1	**8C-3132**	1	SEAL-O-RING	
	4	1	**6E-0410**	1	SEAL-O-RING	
	5	1	**5P-2199**	1	RING-BACKUP	

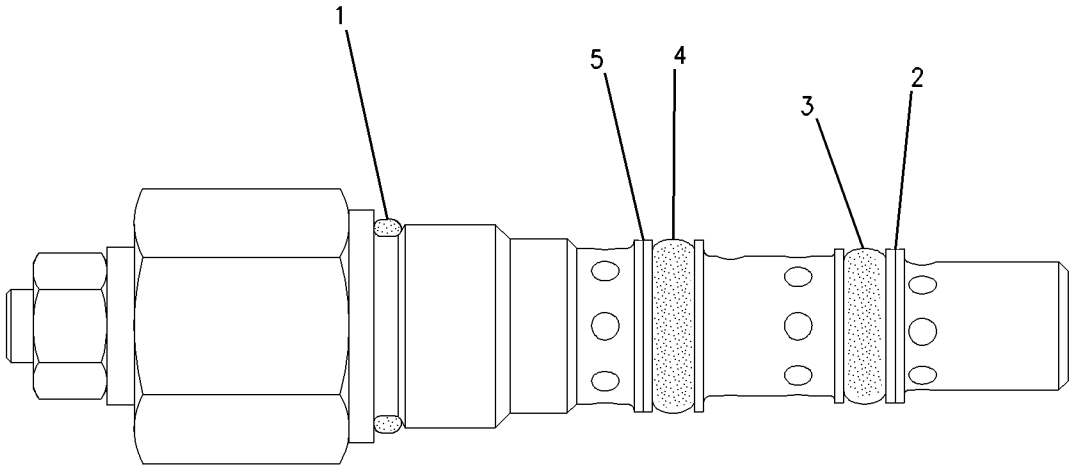

GRAPHIC #1 **<END>** g00765132

217-2713 VALVE GP-PRESSURE REDUCING–DOZER LIFT

S/N: 7PZ652-UP

PART OF 173-3204 VALVE GP-PILOT

SMCS-5117 **i01691080**

NOTE	REF NO	GRAPHIC REF	PART NUMBER	QTY	PART NAME 1 2 3 4 5 6 (PRODUCT LEVEL)	SEE PAGE
	1	1	**2M-9780**	1	SEAL-O-RING	
	2	1	**6V-3505**	1	RING-BACKUP	
	3	1	**8C-3132**	1	SEAL-O-RING	
	4	1	**6E-0410**	1	SEAL-O-RING	
	5	1	**5P-2199**	1	RING-BACKUP	

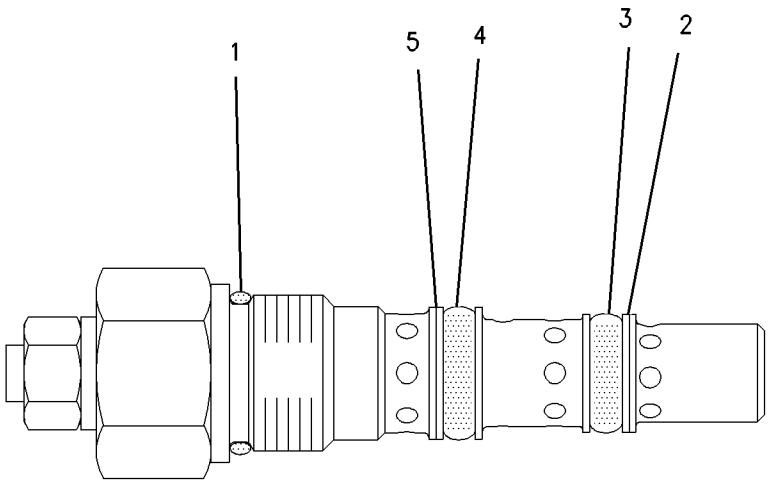

GRAPHIC #1 **<END>** g00765123

6E-6170 VALVE GP-PRESS & FLOW CMPNSTR–

FRONT HYDRAULIC FAN

S/N: 7PZ1-UP

PART OF 172-5637 PUMP GP-PISTON

SMCS-5455 **i01659770**

NOTE	REF NO	GRAPHIC REF	PART NUMBER	QTY	PART NAME 1 2 3 4 5 6 (PRODUCT LEVEL)	SEE PAGE
	1	1	**6E-6527**	2	PLUG	
	2	1	**6E-6528**	6	SEAL	
Z	3	1		1	BODY	
	4	1	**9X-7680**	3	SEAL-O-RING	
C	5	1	**5P-9262**	1	SEAL-O-RING	
C	6	1	**105-2145**	1	VALVE-ORIFICE	
Z	7	1		2	STEM-VALVE	
	8	1	**6E-3269**	1	RETAINER-SPRING	
	9	1	**6E-3276**	1	SPRING (OUTER)	
	10	1	**6E-3273**	1	SEAT	
	11	1	**6V-8352**	1	SEAL-O-RING	
	12	1	**6E-6536**	1	PLUG	
M	13	1	**6E-6537**	2	SCREW-ADJUSTMENT (M8X1X28MM)	
M	14	1	**6E-6538**	2	NUT-ADJUSTMENT (M8X1 THD)	
M	15	1	**6E-6539**	2	NUT-CAP (M8X1 THD)	
	16	1	**6E-6540**	1	PLUG	
	17	1	**033-6043**	1	SEAL-O-RING	
	18	1	**6E-3272**	1	SEAT	
	19	1	**6E-3274**	1	SPRING	
	20	1	**6E-3275**	1	SPRING	
	21	1	**6E-3268**	1	RETAINER-SPRING	
	22	1	**9S-8002**	1	PLUG	
	23	1	**3J-7354**	1	SEAL-O-RING	
M	24	1	**096-3218**	1	SETSCREW-SOCKET (M4X0.4X6MM)	
M	25	1	**8T-8442**	4	BOLT-SOCKET HEAD (M6X1X30MM)	
	26	1	**193-1036**	1	SPRING (INNER)	

C-CHANGE FROM PREVIOUS TYPE
M-METRIC PART
Z-NOT SERVICED SEPARATELY

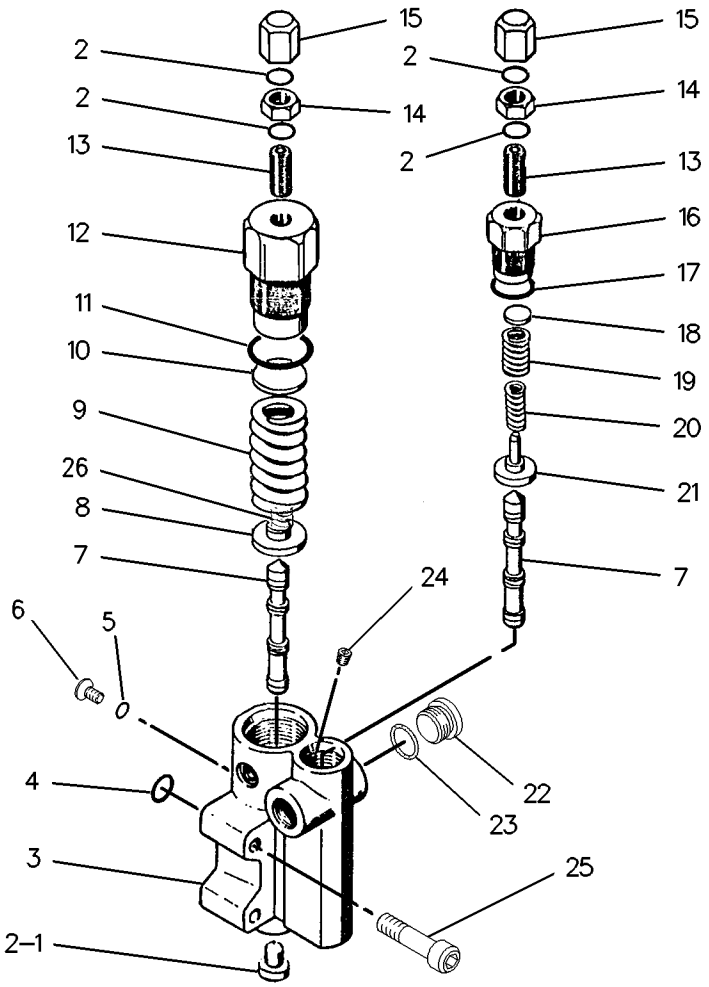

GRAPHIC #1 **<END>** g00873490

118-2874 VALVE GP-PUMP CONTROL–REAR HYDRAULIC FAN

S/N: 7PZ1-UP

PART OF 172-5636 PUMP GP-PISTON

SMCS-5455 **i02024022**

NOTE	REF NO	GRAPHIC REF	PART NUMBER	QTY	PART NAME 1 2 3 4 5 6 (PRODUCT LEVEL)	SEE PAGE
	1	1	**6E-6528**	6	SEAL	
	2	1	**6E-6527**	2	PLUG	
	3	1	**6E-3268**	1	RETAINER-SPRING	
	4	1	**6E-3275**	1	SPRING	
	5	1	**6E-3274**	1	SPRING	
	6	1	**033-6043**	1	SEAL-O-RING	
	7	1	**6E-3272**	1	SEAT	
	8	1	**6E-6540**	1	PLUG	
M	9	1	**6E-6538**	2	NUT-ADJUSTMENT (M8X1-THD)	
M	10	1	**6E-6537**	2	SCREW-ADJUSTMENT (M8X1X28-MM)	
M	11	1	**6E-6539**	2	NUT-CAP (M8X1-THD)	
	12	1	**6E-3273**	1	SEAT	
	13	1	**6E-6536**	1	PLUG	
	14	1	**6V-8352**	1	SEAL-O-RING	
	15	1	**6E-6545**	1	PLUG	
	16	1	**5P-9262**	1	SEAL-O-RING	
	17	1	**193-1036**	1	SPRING	
	18	1	**6E-3276**	1	SPRING	
	19	1	**6E-3269**	1	RETAINER-SPRING	
	20	1	**201-0780**	1	ORIFICE	
	21	1	**105-2145**	1	VALVE-ORIFICE	
	22	1	**9X-7680**	3	SEAL-O-RING	
	23	1	**9S-8002**	1	PLUG	
	24	1	**3J-7354**	1	SEAL-O-RING	
M	25	1	**8T-8442**	4	BOLT-SOCKET HEAD (M6X1X30-MM)	

M-METRIC PART

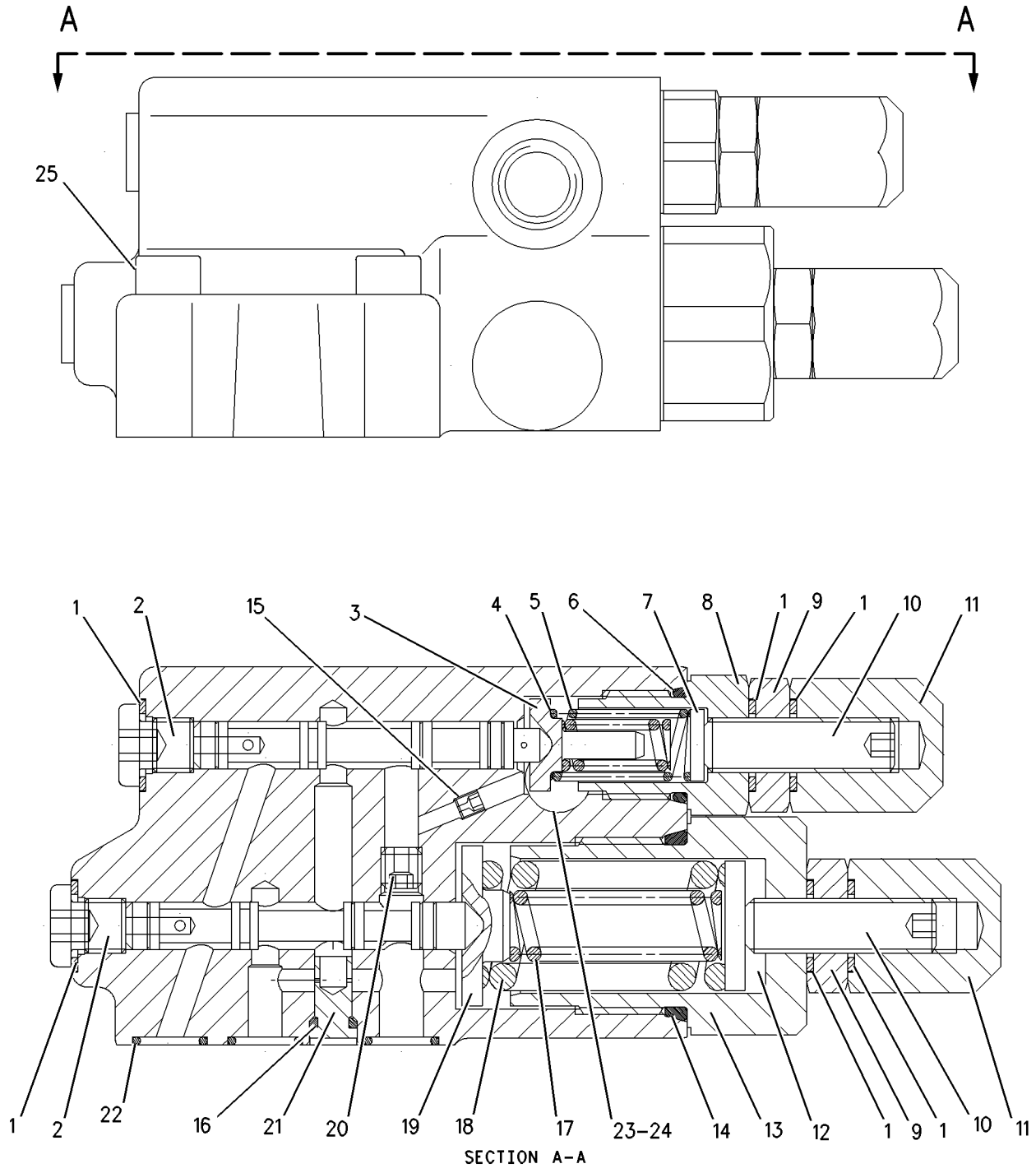

SECTION A-A

GRAPHIC #1 **<END>** g00784373

135-6616 VALVE GP-PUMP CONTROL–FRONT HYDRAULIC FAN

S/N: 7PZ1-UP

PART OF 172-5637 PUMP GP-PISTON

SMCS-5455 **i01536108**

NOTE	REF NO	GRAPHIC REF	PART NUMBER	QTY	PART NAME 1 2 3 4 5 6 (PRODUCT LEVEL)	SEE PAGE
	1	1	**6E-6528**	6	SEAL (9.3MM ID)	
	2	1	**6E-6527**	2	PLUG	
	3	1	**6E-3268**	1	RETAINER-SPRING	
	4	1	**6E-3275**	1	SPRING	
	5	1	**6E-3274**	1	SPRING	
	6	1	**033-6043**	1	SEAL-O-RING	
	7	1	**6E-3272**	1	SEAT	
	8	1	**6E-6540**	1	PLUG	
	9	1	**6E-6538**	2	NUT-ADJUSTMENT (M8X1 THD)	
	10	1	**6E-6537**	2	SCREW-ADJUSTMENT (M8X1X28MM)	
	11	1	**6E-6539**	2	NUT-CAP (M8X1 THD)	
	12	1	**6E-3273**	1	SEAT	
	13	1	**6E-6536**	1	PLUG	
	14	1	**6V-8352**	1	SEAL-O-RING	
	15	1	**193-1036**	1	SPRING	
	16	1	**6E-3276**	1	SPRING	
	17	1	**6E-3269**	1	RETAINER-SPRING	
	18	1	**105-2145**	1	VALVE-ORIFICE	
	19	1	**5P-9262**	1	SEAL-O-RING	

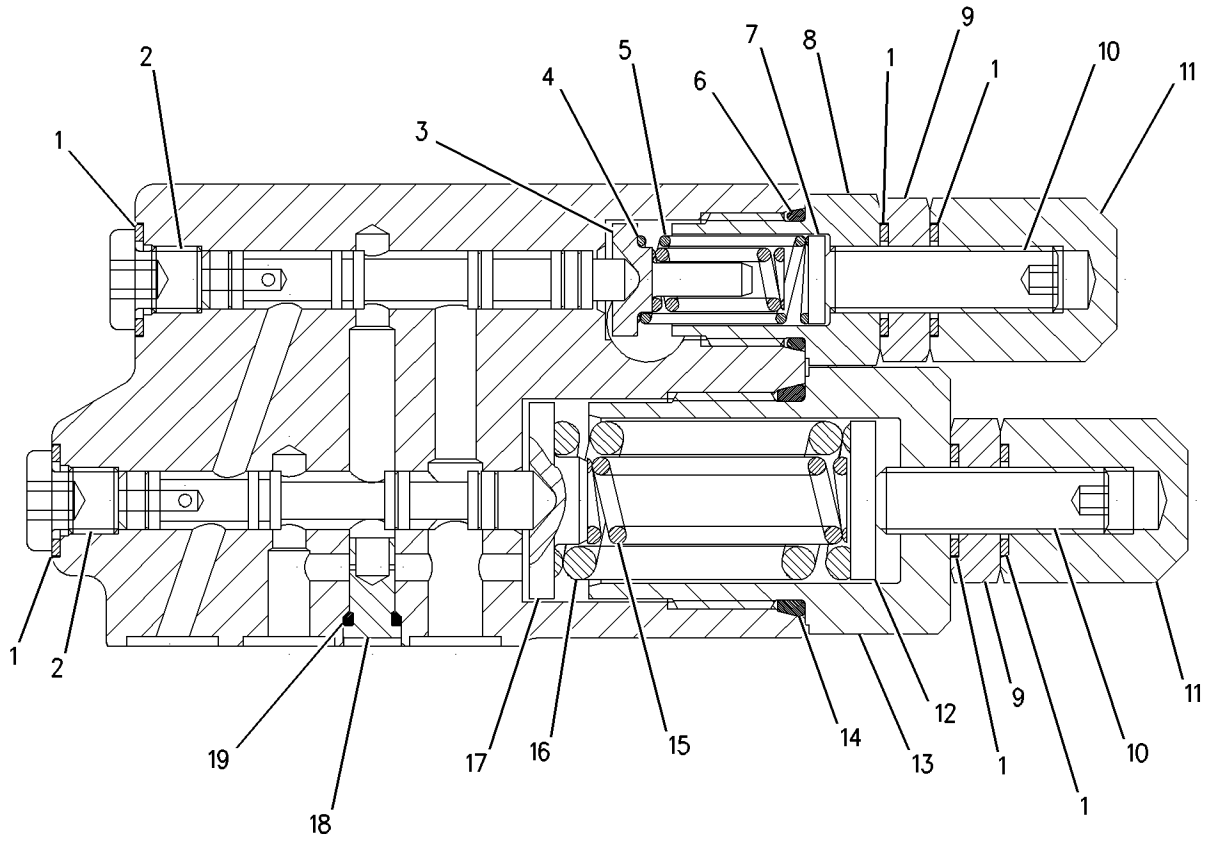

GRAPHIC #1 **<END>** g00798223

HYDRAULIC SYSTEM

193-3182 VALVE GP-PUMP CONTROL—REAR HYDRAULIC FAN

S/N: 7PZ1-UP

PART OF 172-5636 PUMP GP-PISTON

SMCS-5455 **i01877537**

NOTE	REF NO	GRAPHIC REF	PART NUMBER	QTY	PART NAME 1 2 3 4 5 6 (PRODUCT LEVEL)	SEE PAGE
	1	1	**6E-6528**	6	SEAL	
	2	1	**6E-6527**	2	PLUG	
	3	1	**6E-3268**	1	RETAINER-SPRING	
	4	1	**6E-3275**	1	SPRING	
	5	1	**6E-3274**	1	SPRING	
	6	1	**033-6043**	1	SEAL-O-RING	
	7	1	**6E-3272**	1	SEAT	
	8	1	**6E-6540**	1	PLUG	
M	9	1	**6E-6538**	2	NUT-ADJUSTMENT (M8X1 THD)	
M	10	1	**6E-6537**	2	SCREW-ADJUSTMENT (M8X1X28MM)	
M	11	1	**6E-6539**	2	NUT-CAP (M8X1 THD)	
	12	1	**6E-3273**	1	SEAT	
	13	1	**6E-6536**	1	PLUG	
	14	1	**6V-8352**	1	SEAL-O-RING	
	15	1	**9S-8002**	2	PLUG	
	16	1	**3J-7354**	2	SEAL-O-RING	
	17	1	**193-1036**	1	SPRING	
	18	1	**6E-3276**	1	SPRING	
	19	1	**6E-3269**	1	RETAINER-SPRING	
	20	1	**6E-6545**	1	PLUG	
	21	1	**105-2145**	1	VALVE-ORIFICE	
	22	1	**5P-9262**	1	SEAL-O-RING	

M-METRIC PART

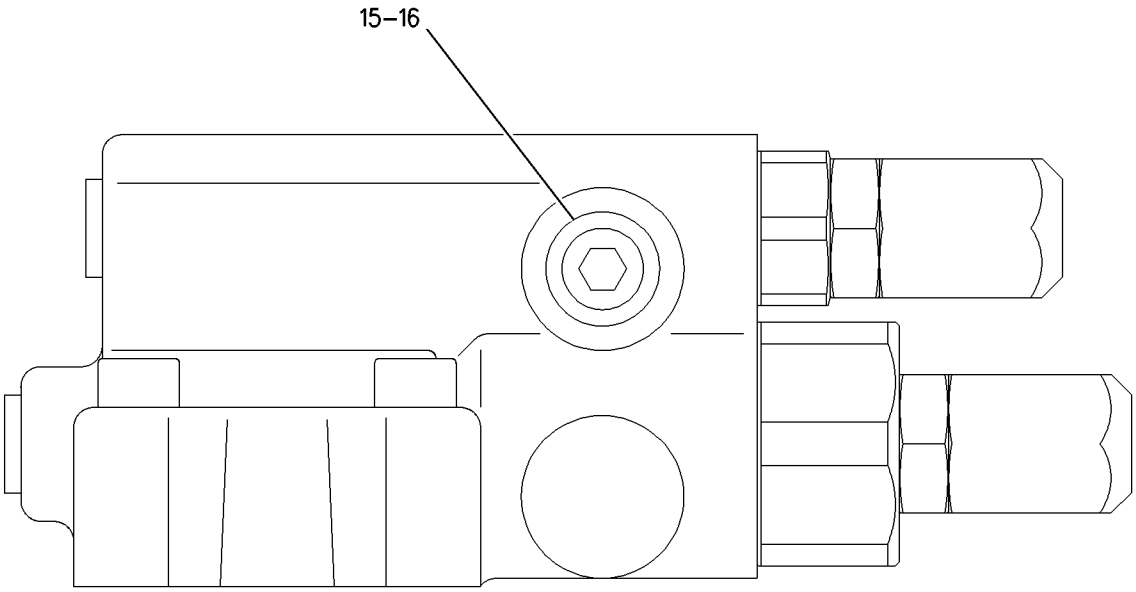

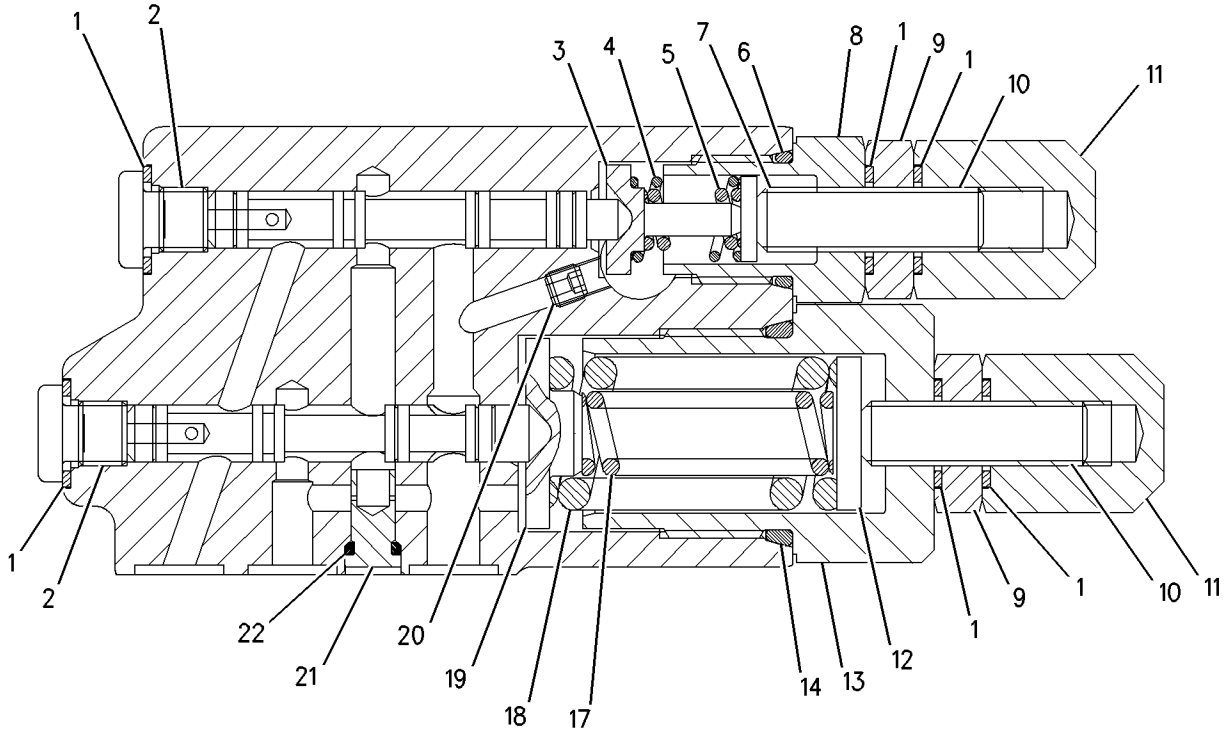

GRAPHIC #1 **<END>** g00804113

9T-5653 VALVE GP-QUICK-DROP–BULLDOZER

S/N: 8PP1-UP; 8RP1-UP; 7PZ1-UP
PART OF 9W-8579, 9W-8580 CYLINDER & VALVE GP-BULLDOZER, 201-3215, 201-3218 CYLINDER & VALVE GP-LIFT AN ATTACHMENT

SMCS-5110 **i01574795**

NOTE	REF NO	GRAPHIC REF	PART NUMBER	QTY	PART NAME 1 2 3 4 5 6 (PRODUCT LEVEL)	SEE PAGE
	1	1	**7X-0352**	2	BOLT (5/8-11X4 IN)	
		1	**8T-4122**	2	WASHER-HARD (17X32X3.5MM THK)	
	2	1	**4J-7101**	1	SLEEVE	
	3	1	**6B-0863**	1	WASHER (16.7X25.4X1.6MM THK)	
	4	1	**7M-1297**	1	SPRING	
	5	1	**7F-8268**	1	SEAL-O-RING	

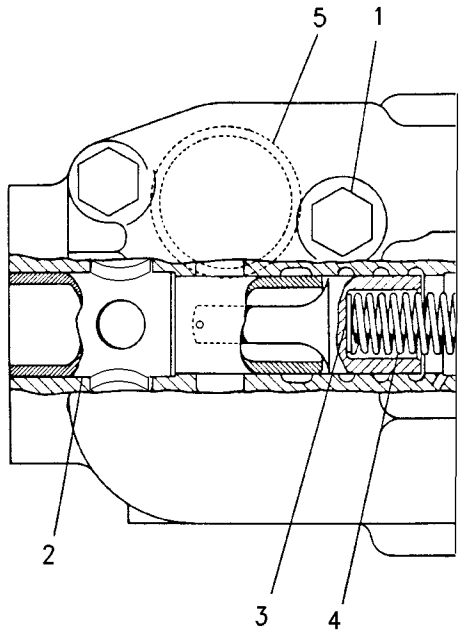

GRAPHIC #1 **<END>** g00818392

220-4551 VALVE GP-SEQUENCE—HYDRAULIC FAN FLUID FLOW

S/N: 7PZ652-UP

PART OF 226-6537 MANIFOLD GP-CONTROL

SMCS-5051 **i01928074**

NOTE	REF NO	GRAPHIC REF	PART NUMBER	QTY	PART NAME 1 2 3 4 5 6 (PRODUCT LEVEL)	SEE PAGE
	1	1	**2M-9780**	1	SEAL-O-RING	
	2	1	**6V-5142**	1	SEAL-O-RING	
	3	1	**095-1751**	1	SEAL-O-RING	
	4	1	**169-1616**	2	RING-BACKUP	
	5	1	**169-1617**	2	RING-BACKUP	
					AVAILABLE REPAIR KIT(S):	
			200-6283	1	KIT-SEAL (SEQUENCE VALVE)	
					(INCLUDES SEAL-O-RINGS & BACKUP RINGS)	

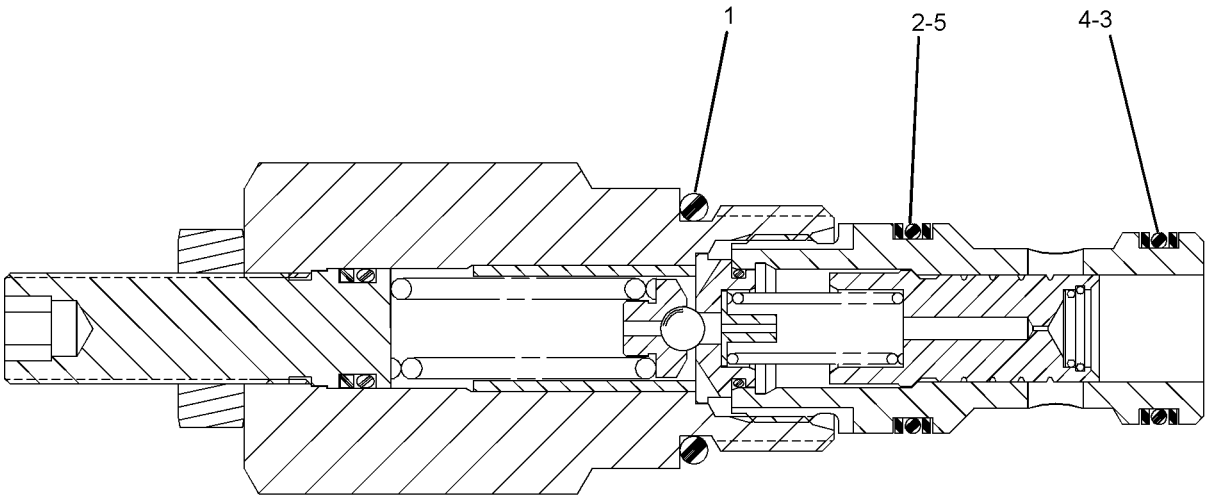

GRAPHIC #1 **<END>** g01044456

4T-1860 VALVE GP-SHUTTLE–BALL RESOLVER

S/N: 7PZ1-UP

PART OF 132-5077 VALVE GP-SHUTTLE

SMCS-5079 **i01624620**

NOTE	REF NO	GRAPHIC REF	PART NUMBER	QTY	PART NAME 1 2 3 4 5 6 (PRODUCT LEVEL)	SEE PAGE
Z	1	1		1	SEAT	
	2	1	**1M-6718**	1	BALL	
Z	3	1		1	VALVE	
	4	1	**8C-3085**	1	SEAL-O-RING	
	5	1	**6V-5586**	1	SEAL-O-RING	
	6	1	**3J-1907**	1	SEAL-O-RING	
	7	1	**4T-5070**	2	RING-BACKUP	
	8	1	**4T-5071**	2	RING-BACKUP	

Z-NOT SERVICED SEPARATELY

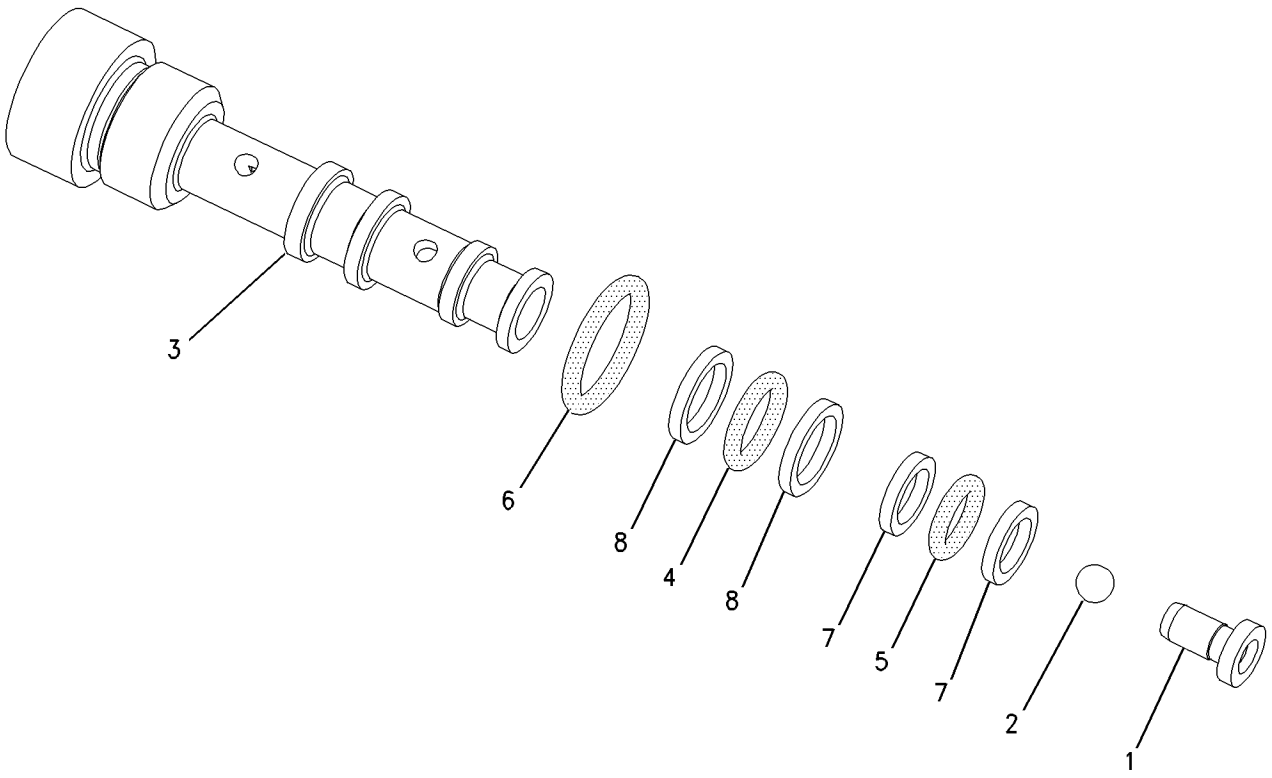

GRAPHIC #1 **<END>** g00775006

4T-4073 VALVE GP-SHUTTLE–BALL RESOLVER

S/N: 7PZ1-UP

PART OF 172-6977, 204-5575 VALVE GP-CONTROL

SMCS-5079 **i01564592**

NOTE	REF NO	GRAPHIC REF	PART NUMBER	QTY	PART NAME 1 2 3 4 5 6 (PRODUCT LEVEL)	SEE PAGE
	1	1	**033-6039**	1	SEAL-O-RING	
	2	1	**8L-2777**	1	SEAL-O-RING	
	3	1	**6E-0382**	2	RING-BACKUP	
	4	1	**6E-0381**	2	RING-BACKUP	

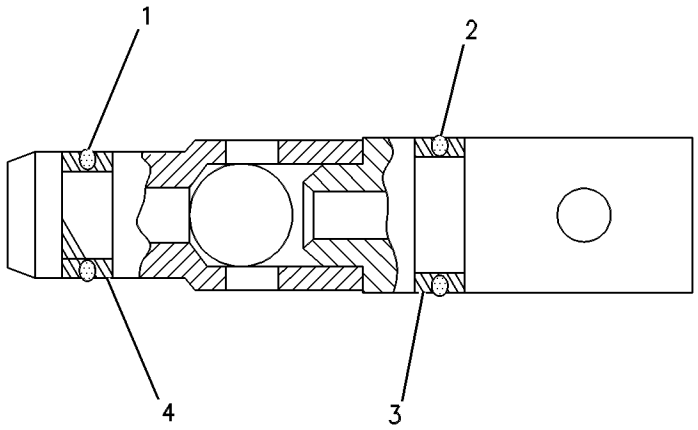

GRAPHIC #1 **<END>** g00279740

132-5077 VALVE GP-SHUTTLE–DOZER LIFT

S/N: 7PZ1-UP

PART OF 131-2101 LINES GP-LIFT CYLINDER

SMCS-5079 **i01564833**

NOTE	REF NO	GRAPHIC REF	PART NUMBER	QTY	PART NAME 1 2 3 4 5 6 (PRODUCT LEVEL)	SEE PAGE
	1	1	**132-5076**	1	MANIFOLD	
Y	2	1	**4T-1860**	7	VALVE GP-SHUTTLE (BALL RESOLVER)	898
	3	1	**9S-8001**	12	PLUG	
	4	1	**4J-7533**	12	SEAL-O-RING	

Y-SEPARATE ILLUSTRATION

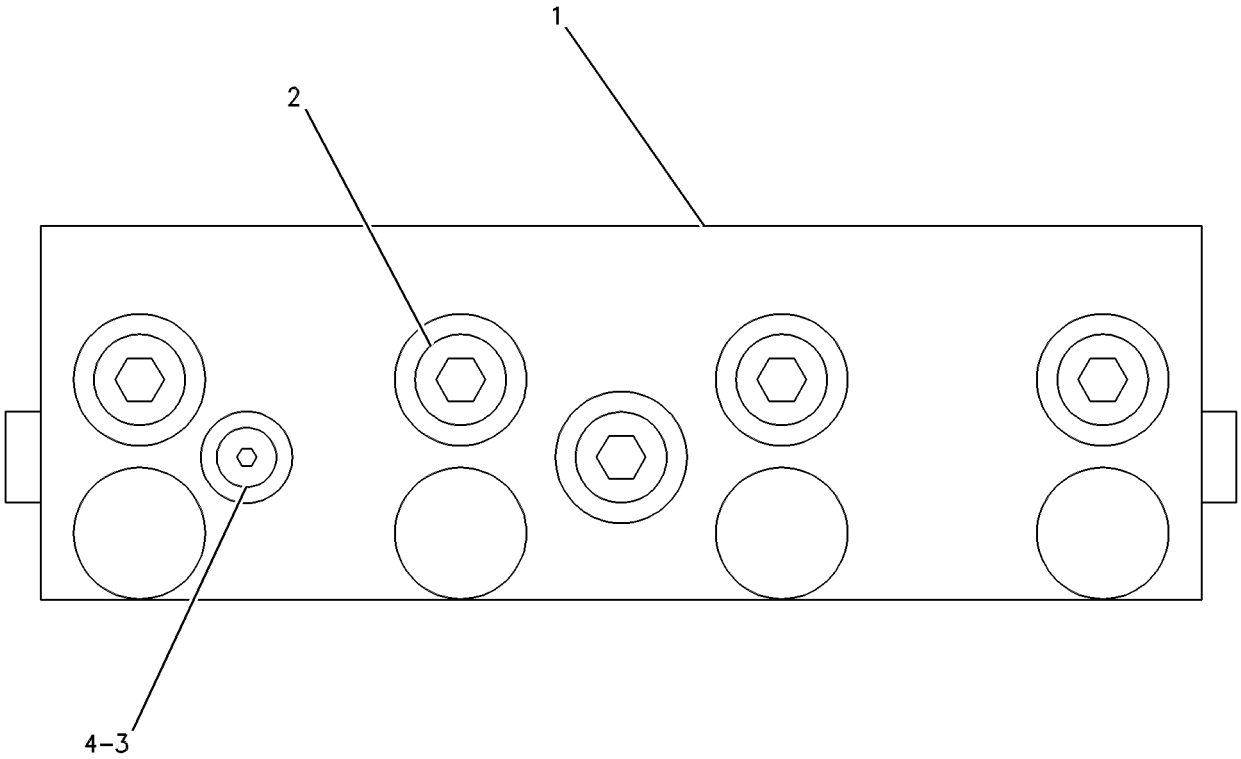

GRAPHIC #1 **<END>** g00259250

3E-8575 VALVE GP-SOLENOID—RIPPER PIN

S/N: 7PZ1-UP
PART OF 106-7483, 188-6140 VALVE & MTG GP-CONTROL
AN ATTACHMENT

SMCS-5479 **i01896778**

NOTE	REF NO	GRAPHIC REF	PART NUMBER	QTY	PART NAME 1 2 3 4 5 6 (PRODUCT LEVEL)	SEE PAGE
	1	1	**6T-3382**	1	CARTRIDGE AS	
	2	1	**160-5843**	1	WASHER-IDENTIFICATION (16.8X38.1X.5MM THK)	
	3	1	**157-2284**	1	LOCKNUT-SPECIAL (5/8-18 THD)	
	4	1	**160-5844**	1	WASHER-SPRING (16.3X31.5X1.85MM THK)	
	5	1	**3E-8581**	1	COIL AS	
	6	1	**102-8804**	1	KIT-RECEPTACLE (4 PIN)	
					(INCLUDES RECEPTACLE AS & WEDGE)	
	7	1	**8T-8729**	4	PIN-CONNECTOR	
	8	1	**1S-9593**	2	STRAP-CABLE	
	9	1	**3E-3377**	1	WEDGE-RECEPTACLE LOCK	
					AVAILABLE REPAIR KIT(S):	
			126-5948	1	KIT-SEAL (SOLENOID VALVE)	
					(INCLUDES SEAL-O-RINGS & RING-BACKUPS)	

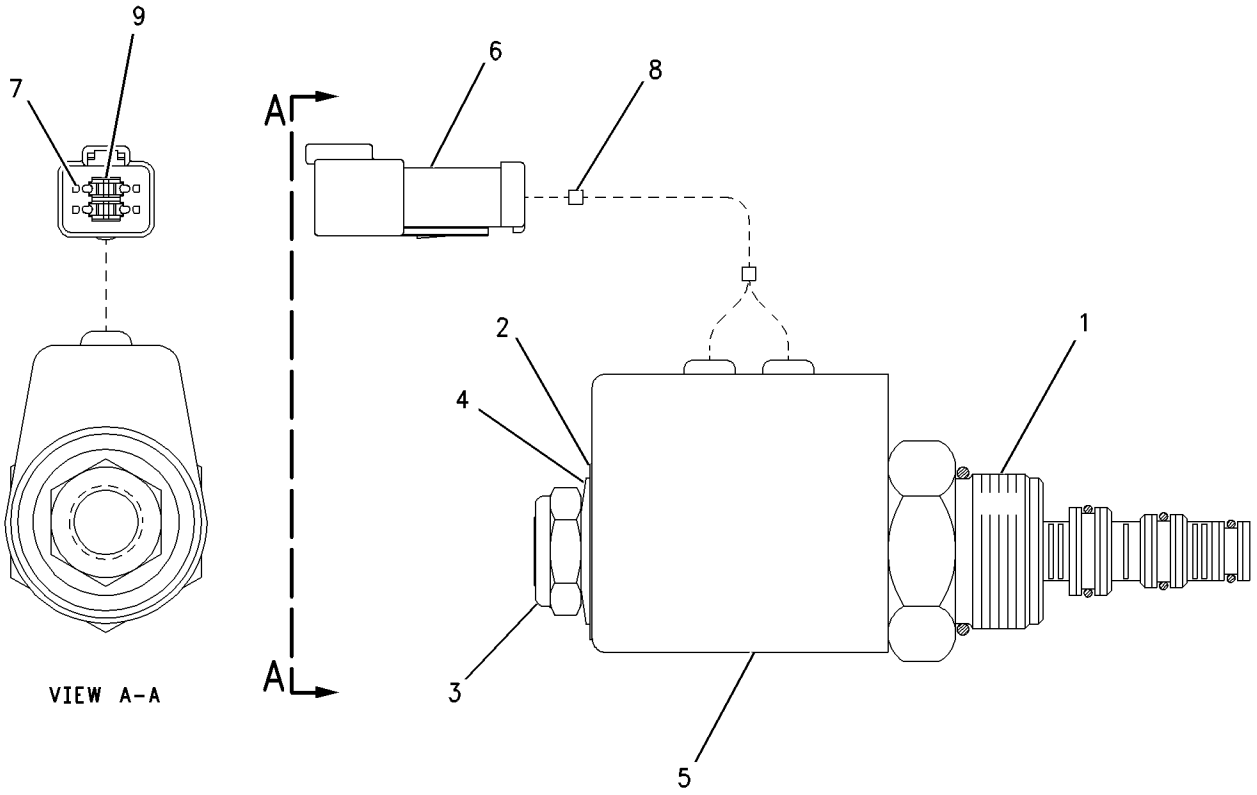

GRAPHIC #1 **<END>** g00623320

3E-9205 VALVE GP-SOLENOID–BULLDOZER TILT

S/N: 7PZ1-UP
24 VOLT
PART OF 151-0241 VALVE GP-TILT CONTROL
TYPE 1

SMCS-5479 **i01989009**

NOTE	REF NO	GRAPHIC REF	PART NUMBER	QTY	PART NAME 1 2 3 4 5 6 (PRODUCT LEVEL)	SEE PAGE
	1	1	**6T-9244**	1	CARTRIDGE AS	
	2	1	**3E-8581**	1	COIL AS	
	3	1	**102-8804**	1	KIT-RECEPTACLE (4-PIN)	
					(INCLUDES RECEPTACLE AS & WEDGE)	
		1	**3E-3377**	1	WEDGE-RECEPTACLE LOCK (4-PIN)	
		1	**8T-8729**	4	PIN-CONNECTOR	
	4	1	**1S-9593**	2	STRAP-CABLE	
	5	1	**157-2284**	1	LOCKNUT-SPECIAL (5/8-18 THD)	
	6	1	**160-5843**	1	WASHER-IDENTIFICATION (16.8X38.1X.5MM THK)	
	7	1	**160-5844**	1	WASHER-SPRING (16.3X31.5X1.85MM THK)	
					AVAILABLE REPAIR KIT(S):	
			6T-3381	1	KIT-SEAL (SOLENOID VALVE)	
					(INCLUDES SEAL-O-RINGS & RING-BACKUPS)	

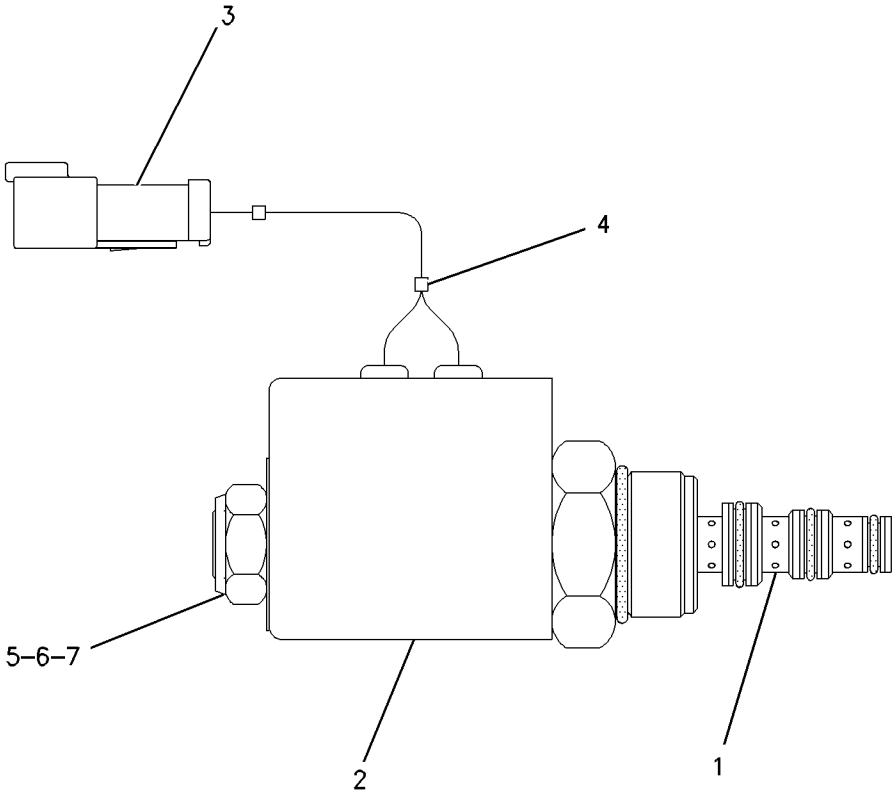

GRAPHIC #1 **<END>** g00657410

3E-9205 VALVE GP-SOLENOID–BULLDOZER TILT

S/N: 7PZ1-UP
24 VOLT
PART OF 151-0241, 225-2321 VALVE GP-TILT CONTROL
TYPE 2

SMCS-5479 **i01862138**

NOTE	REF NO	GRAPHIC REF	PART NUMBER	QTY	PART NAME 1 2 3 4 5 6 (PRODUCT LEVEL)	SEE PAGE
	1	1	**6T-9244**	1	CARTRIDGE AS	
	2	1	**3E-8581**	1	COIL AS	
	3	1	**102-8804**	1	KIT-RECEPTACLE (4 PIN)	
					(INCLUDES RECEPTACLE AS & WEDGE)	
		1	**3E-3377**	1	WEDGE-RECEPTACLE LOCK	
		1	**186-3735**	4	PIN-CONNECTOR	
	4	1	**1S-9593**	2	STRAP-CABLE	
	5	1	**157-2284**	1	LOCKNUT-SPECIAL (5/8-18 THD)	
	6	1	**160-5843**	1	WASHER-IDENTIFICATION (16.8X38.1X.5MM THK)	
	7	1	**160-5844**	1	WASHER-SPRING (16.3X31.5X1.85MM THK)	
					AVAILABLE REPAIR KIT(S):	
			126-5948	1	KIT-SEAL (SOLENOID VALVE)	
					(INCLUDES SEAL-O-RINGS & RING-BACKUPS)	

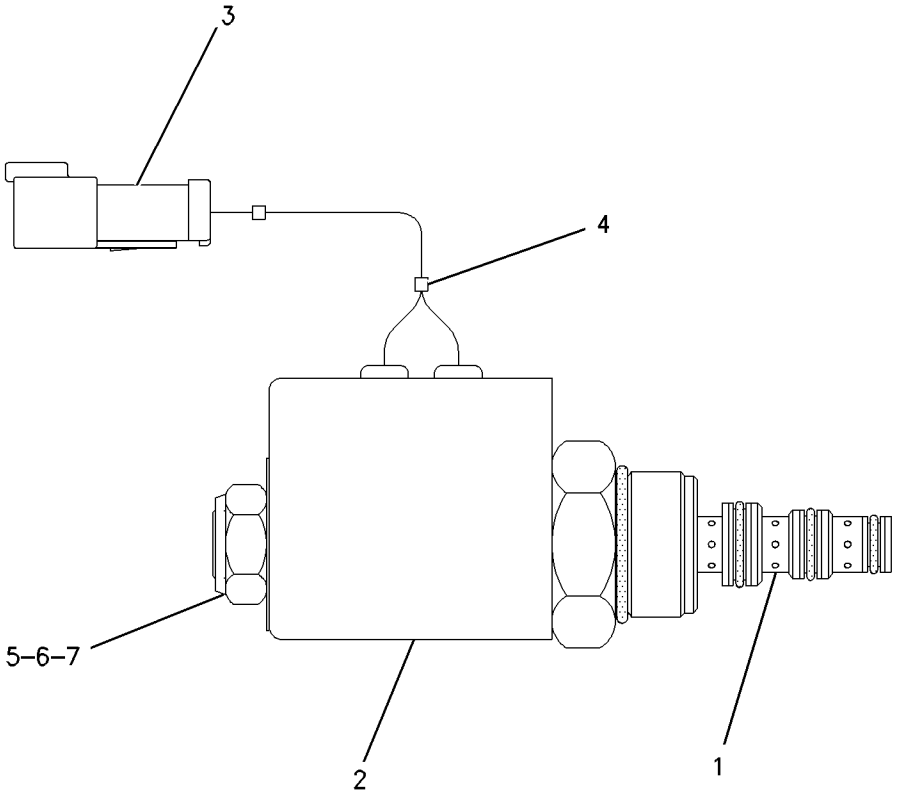

GRAPHIC #1 **<END>** g00657410

124-3052 VALVE GP-SOLENOID—IMPLEMENT

S/N: 7PZ1-651
24 VOLTS DC
PART OF 135-9446, 145-6054 VALVE GP-PILOT
FIELD REPLACEMENT ORDER 1-179-4964 WIRE AS, 207-6809—PAGE 913, 174-4916—PAGE 910
ALSO AN ATTACHMENT

SMCS-5479 **i01989011**

NOTE	REF NO	GRAPHIC REF	PART NUMBER	QTY	PART NAME 1 2 3 4 5 6 (PRODUCT LEVEL)	SEE PAGE
J	1	1	**6V-4589**	1	SEAL-O-RING	
J	2	1	**8L-2746**	1	SEAL-O-RING	
J	3	1	**033-6043**	1	SEAL-O-RING	
	4	1	**5P-7538**	1	BALL	
	5	1	**8L-2779**	1	SEAL-O-RING	
	6	1	**8L-2786**	1	SEAL-O-RING	
	7	1	**156-6173**	1	COIL AS	
		1	**1S-9593**	2	STRAP-CABLE	
		1	**3E-3365**	1	WEDGE-RECEPTACLE LOCK (2 PIN)	
		1	**102-8802**	1	KIT-RECEPTACLE (2-PIN)	
					(INCLUDES RECEPTACLE AS & WEDGE)	
		1	**8T-8729**	2	PIN-CONNECTOR	
	8	1	**122-4974**	1	SPACER	
	9	1	**176-0394**	1	NUT-LOCKING (5/8-11 THD)	
					AVAILABLE REPAIR KIT(S):	
J			**108-2148**	1	KIT-SEAL (SOLENOID VALVE)	
					(INCLUDES SEALS)	

J-KIT MARKED J INCLUDES PART(S) MARKED J

124-3052 VALVE GP-SOLENOID *(contd.)* **i01989011**

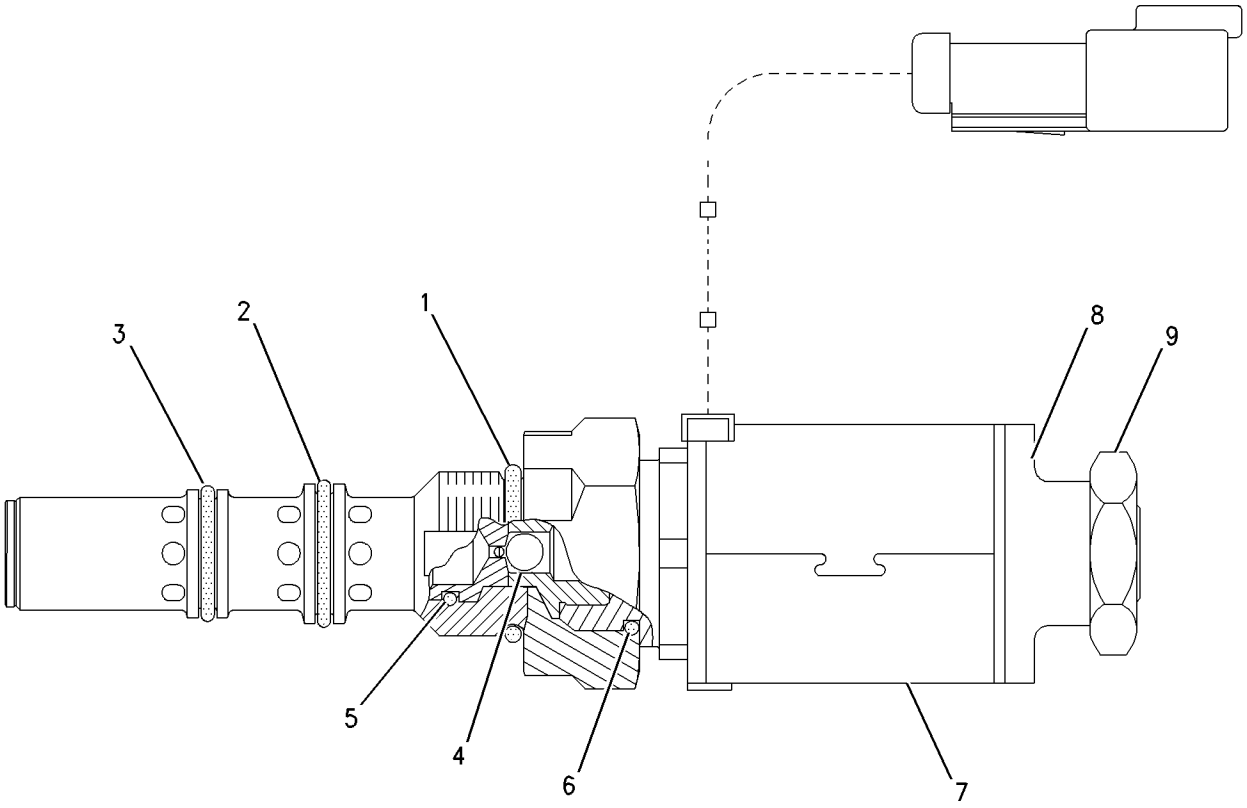

GRAPHIC #1 **<END>** g00735217

136-9412 VALVE GP-SOLENOID—HYDRAULIC FAN

S/N: 7PZ1-499

PART OF 136-9411 VALVE & MTG GP-HYDRAULIC FAN

SMCS-5479 **i01989036**

NOTE	REF NO	GRAPHIC REF	PART NUMBER	QTY	PART NAME 1 2 3 4 5 6 (PRODUCT LEVEL)	SEE PAGE
	1	1	**127-0271**	1	COIL AS	
		1	**1S-9593**	2	STRAP-CABLE	
J		1	**3E-3365**	1	WEDGE-RECEPTACLE LOCK (2 PIN)	
		1	**8T-8729**	2	PIN-CONNECTOR	
J		1	**102-8802**	1	KIT-RECEPTACLE (2-PIN)	
					(INCLUDES RECEPTACLE AS & WEDGE)	
	2	1	**8C-6711**	1	NUT-RETAINER (1/2-20 THD)	

J-KIT MARKED J INCLUDES PART MARKED J

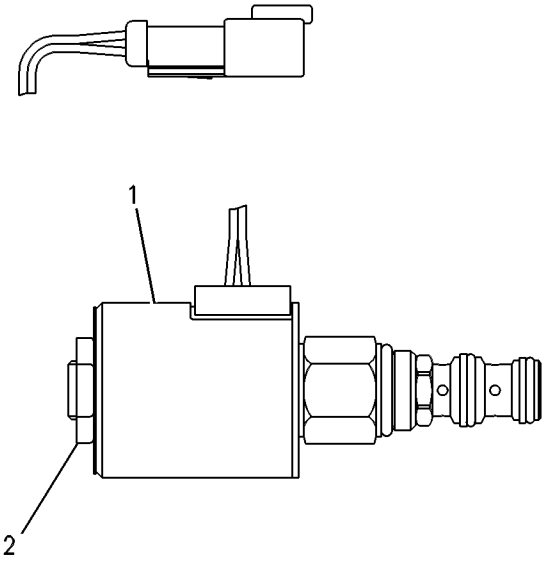

GRAPHIC #1 **<END>** g00464625

149-2610 VALVE GP-SOLENOID–HYDRAULIC FAN BYPASS ON, OFF

S/N: 7PZ652-UP
24 VOLT
PART OF 227-3002 LINES GP-HYDRAULIC FAN
AN ATTACHMENT

SMCS-5479 **i01989037**

NOTE	REF NO	GRAPHIC REF	PART NUMBER	QTY	PART NAME 1 2 3 4 5 6 (PRODUCT LEVEL)	SEE PAGE
	1	1	**149-2611**	1	CARTRIDGE AS	
		1	**8C-9987**	1	WASHER (8.3X28X2.5MM THK)	
	2	1	**111-0343**	1	LOCKNUT (5/16-18 THD)	
	3	1	**189-0189**	1	COIL AS	
		1	**1S-9593**	2	STRAP-CABLE	
		1	**3E-3365**	1	WEDGE-RECEPTACLE LOCK (2 PIN)	
		1	**8T-8729**	2	PIN-CONNECTOR	
		1	**102-8802**	2	KIT-RECEPTACLE (2-PIN)	
					(EACH INCLUDES RECEPTACLE AS & WEDGE)	
	4	1	**8C-9987**	1	WASHER (8.3X28X2.5MM THK)	
		1	**111-0343**	1	LOCKNUT (5/16-18 THD)	
					AVAILABLE REPAIR KIT(S):	
			3G-8175	1	KIT-SEAL (SOLENOID VALVE)	
					(INCLUDES O-RINGS & BACK-UP RINGS)	

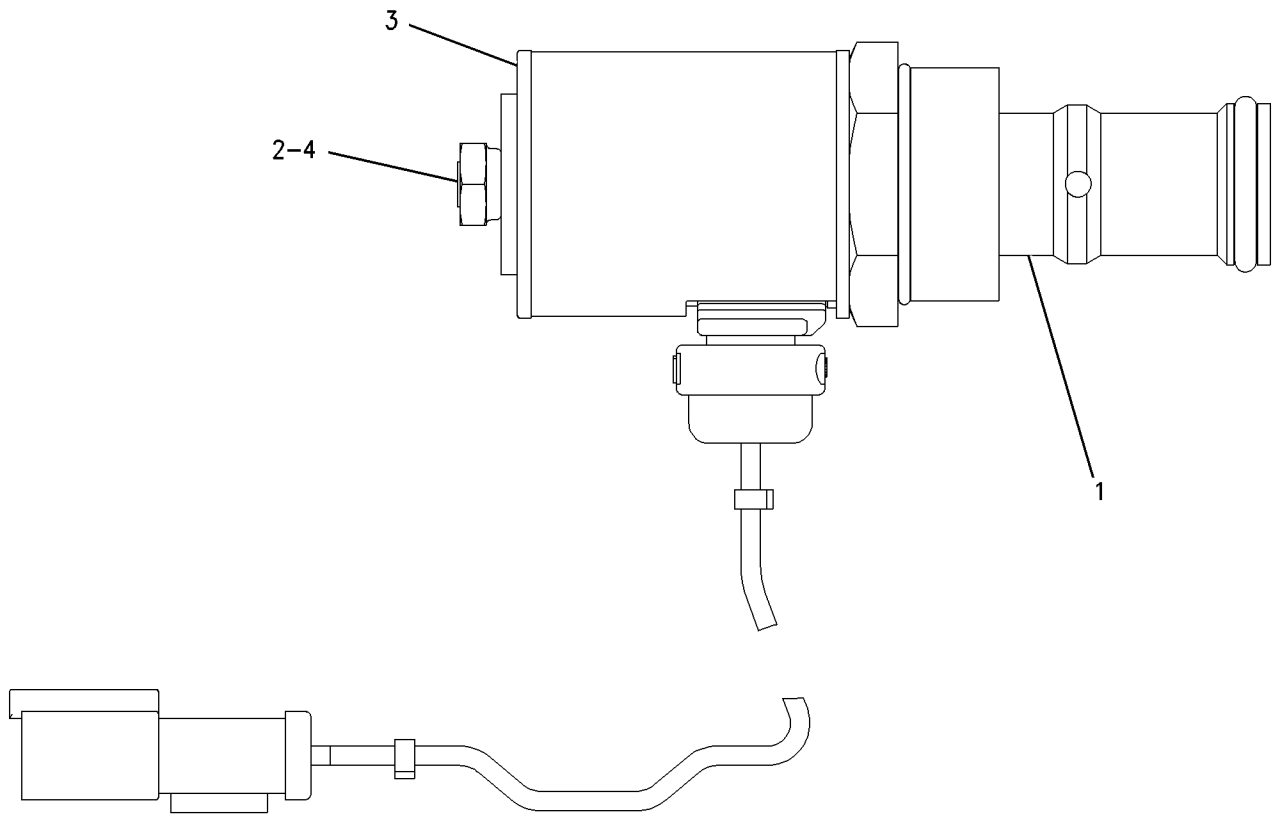

GRAPHIC #1 **<END>** g00835681

152-6761 VALVE GP-SOLENOID–IMPLEMENT LOCKOUT

S/N: 7PZ1-UP
PART OF 135-9446, 145-6054 VALVE GP-PILOT
FIELD REPLACEMENT ORDER 203-4157–PAGE 912
ALSO AN ATTACHMENT AND FIELD INSTALLATION

SMCS-5479 **i01989015**

NOTE	REF NO	GRAPHIC REF	PART NUMBER	QTY	PART NAME 1 2 3 4 5 6 (PRODUCT LEVEL)	SEE PAGE
	1	1	**152-6760**	1	CARTRIDGE AS	
	1A	1	**8C-9987**	1	WASHER (8.3X28X2.5MM THK)	
	1B	1	**111-0343**	1	LOCKNUT (5/16-18 THD)	
	2	1	**189-0189**	1	COIL AS	
		1	**1S-9593**	2	STRAP-CABLE	
		1	**102-8802**	1	KIT-RECEPTACLE (2-PIN) (COIL AS)	
					(INCLUDES RECEPTACLE AS & WEDGE)	
		1	**186-3735**	2	PIN-CONNECTOR	
		1	**3E-3365**	1	WEDGE-RECEPTACLE LOCK (2 PIN)	
					AVAILABLE REPAIR KIT(S):	
			3G-8175	1	KIT-SEAL (SOLENOID VALVE)	
					(INCLUDES O-RINGS & BACK-UP RING)	

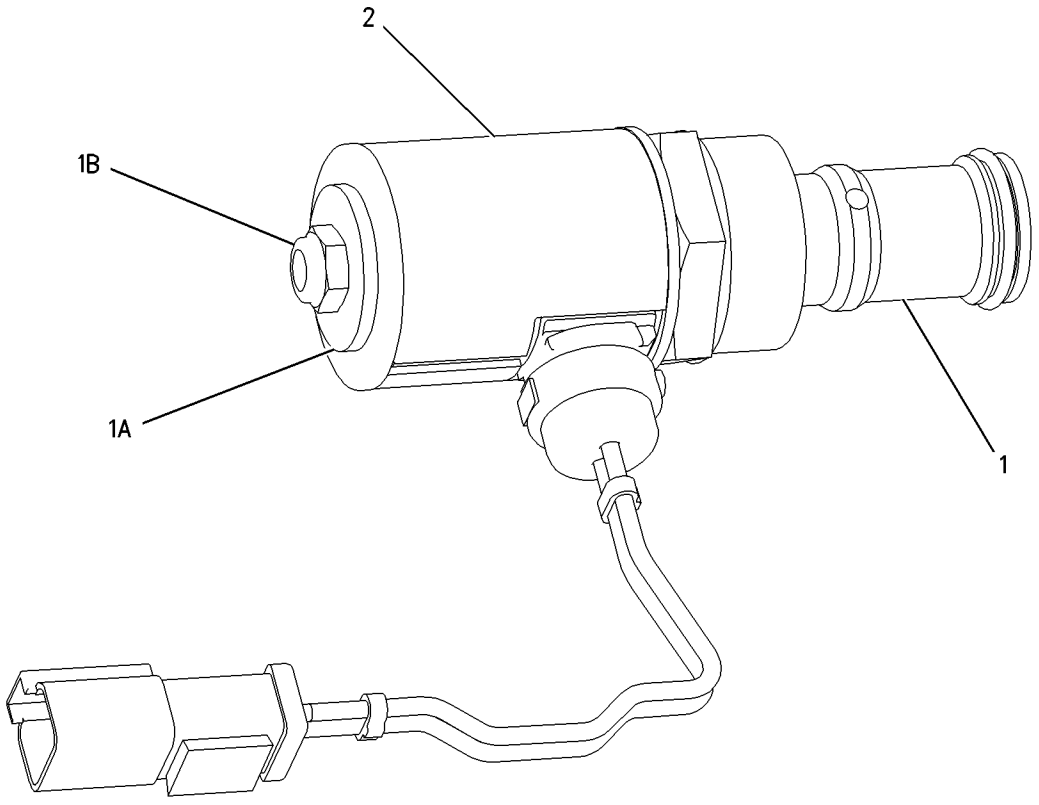

GRAPHIC #1 **<END>** g00832156

152-8340 VALVE GP-SOLENOID–PRESSURE COMPENSATION OVERRIDE

S/N: 7PZ1-UP
24 VOLT
PART OF 173-1553 LINES GP-PUMP

SMCS-5479 **i01995401**

NOTE	REF NO	GRAPHIC REF	PART NUMBER	QTY	PART NAME 1 2 3 4 5 6 (PRODUCT LEVEL)	SEE PAGE
	1	1	**8C-9987**	1	WASHER (8.3X28X2.5MM THK)	
	2	1	**111-0343**	1	LOCKNUT (5/16-18 THD)	
J	3	1	**152-8338**	1	CARTRIDGE AS	
					(INCLUDES WASHER, LOCKNUT, SEAL KIT)	
	4	1	**189-0189**	1	COIL AS	
					–OR–	
	5	1	**227-4398**	1	COIL AS	
					(EACH COIL ASSEMBLY INCLUDES)	
	5A	1	**186-3735**	2	PIN-CONNECTOR	
	5B	1	**3E-3365**	1	WEDGE-RECEPTACLE LOCK (2-PIN)	
	5C	1	**102-8802**	1	KIT-RECEPTACLE (2-PIN)	
					(INCLUDES RECEPTACLE AS & WEDGE)	
	5D	1	**1S-9593**	2	STRAP-CABLE	
					AVAILABLE REPAIR KIT(S):	
J			**197-7701**	1	KIT-SEAL (CARTRIDGE ASSEMBLY)	
					(INCLUDES SEALS AND RINGS)	

J-KIT MARKED J SERVICES PART MARKED J

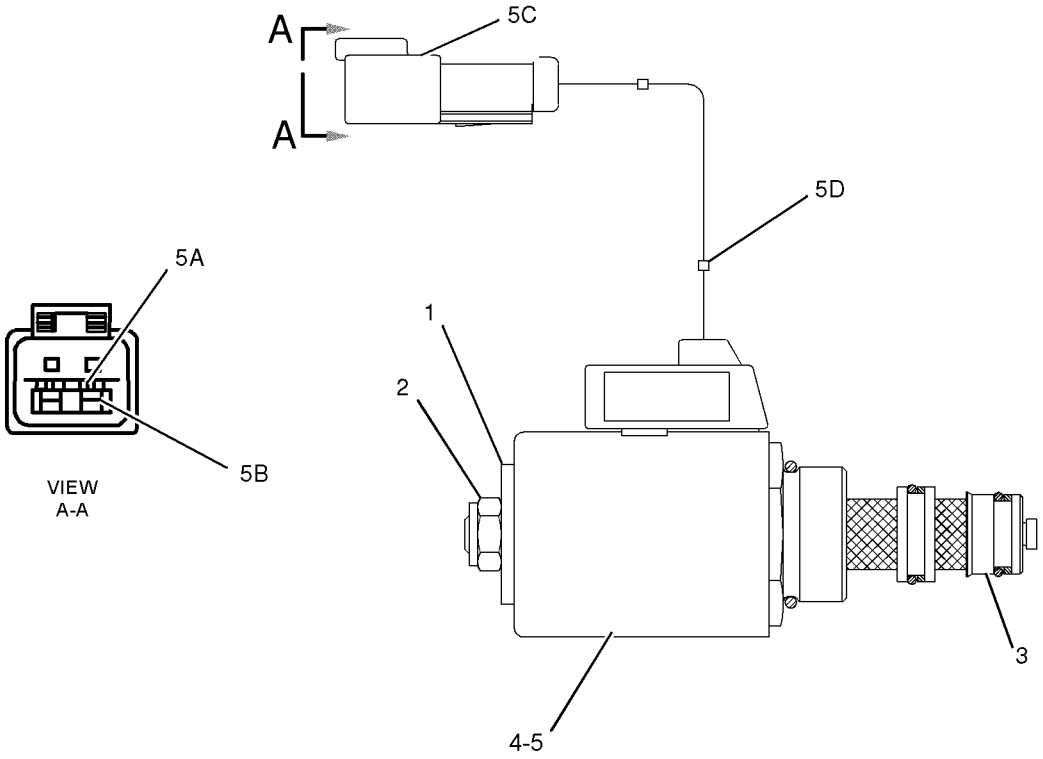

GRAPHIC #1 **<END>** g01033167

174-4916 VALVE GP-SOLENOID—IMPLEMENT

S/N: 7PZ652-UP
PART OF 173-3204 VALVE GP-PILOT
FIELD REPLACEMENT FOR 124-3052—PAGE 904
ALSO FIELD INSTALLATION

SMCS-5479 **i01989023**

NOTE	REF NO	GRAPHIC REF	PART NUMBER	QTY	PART NAME 1 2 3 4 5 6 (PRODUCT LEVEL)	SEE PAGE
	1	1	**145-1144**	1	COIL AS	
	2	1	**164-2108**	1	WASHER (13.03X25.4X2.38MM THK)	
	3	1	**218-2373**	1	NUT (1/2-28)	
	4	1	**174-4917**	1	SPOOL AS-VALVE	
					AVAILABLE REPAIR KIT(S):	
			108-2148	1	KIT-SEAL (SOLENOID VALVE)	
					(INCLUDES SEAL-O-RINGS)	

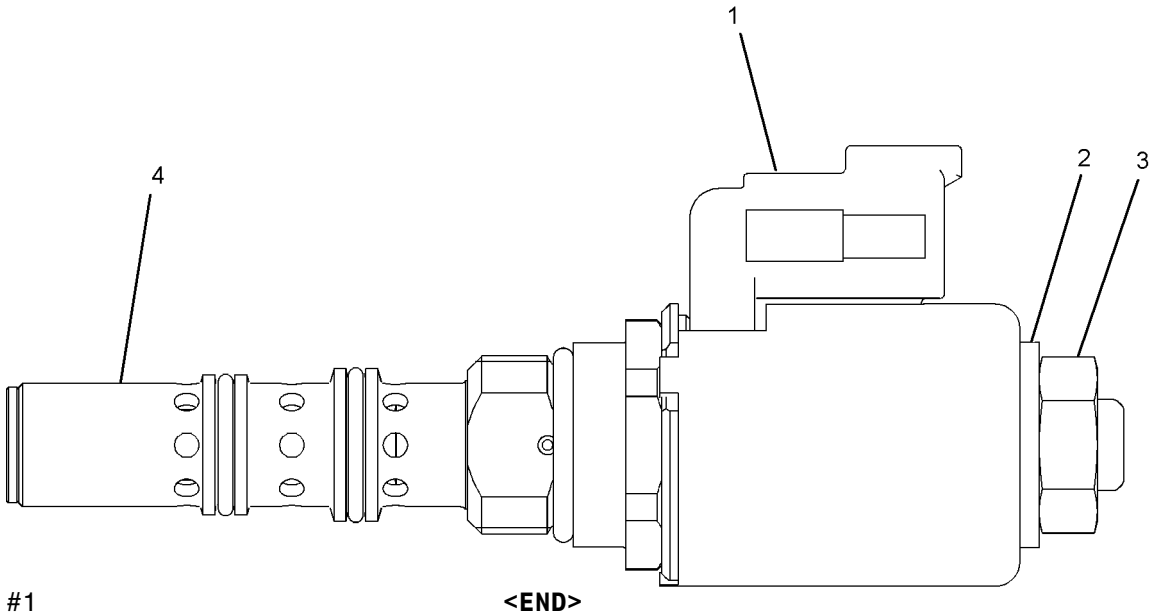

GRAPHIC #1 **<END>** g01026141

189-8627 VALVE GP-SOLENOID–FAN DEMAND VALVE

S/N: 7PZ500-UP

PART OF 189-8628 VALVE & MTG GP-HYDRAULIC FAN

SMCS-5479 **i01614982**

NOTE	REF NO	GRAPHIC REF	PART NUMBER	QTY	PART NAME 1 2 3 4 5 6 (PRODUCT LEVEL)	SEE PAGE
	1	1	**146-3728**	1	WASHER-SPRING	
	2	1	**148-2350**	1	COIL AS	
	3	1	**154-4133**	1	CARTRIDGE AS	
	4	1	**189-8624**	1	ADAPTER AS	

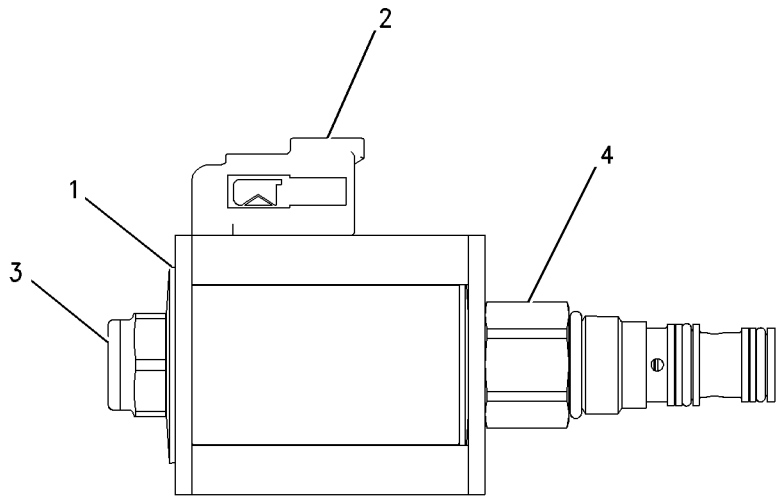

GRAPHIC #1 **<END>** g00849217

203-4157 VALVE GP-SOLENOID—HYDRAULIC LOCKOUT

S/N: 7PZ603-UP

PART OF 135-9446, 173-3204 VALVE GP-PILOT

FIELD REPLACEMENT FOR 152-6761—PAGE 908

SMCS-5479 **i01989020**

NOTE	REF NO	GRAPHIC REF	PART NUMBER	QTY	PART NAME 1 2 3 4 5 6 (PRODUCT LEVEL)	SEE PAGE
	1	1	**111-0343**	1	LOCKNUT (5/16-18 THD)	
	2	1	**8C-9987**	1	WASHER (8.3X28X2.5MM THK)	
	3	1	**189-0189**	1	COIL AS	
		1	**1S-9593**	2	STRAP-CABLE	
		1	**102-8802**	1	KIT-RECEPTACLE (2-PIN)	
					(INCLUDES RECEPTACLE AS & WEDGE)	
		1	**3E-3365**	1	WEDGE-RECEPTACLE LOCK (2 PIN)	
		1	**186-3735**	2	PIN-CONNECTOR	
	4	1	**152-6760**	1	CARTRIDGE AS	
		1	**8C-9987**	1	WASHER (8.3X28X2.5MM THK)	
		1	**111-0343**	1	LOCKNUT (5/16-18 THD)	
					AVAILABLE REPAIR KIT(S):	
			3G-8175	1	KIT-SEAL (SOLENOID VALVE)	
					(INCLUDES SEAL-O-RINGS AND RING-BACKUP)	

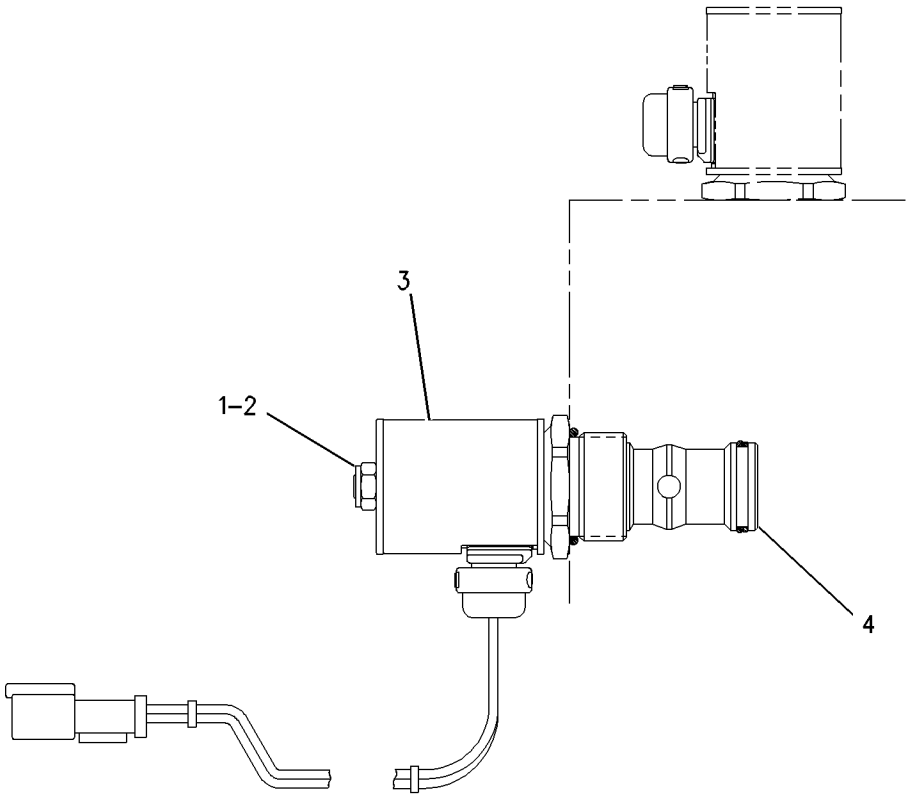

GRAPHIC #1 **<END>** g00805789

207-6809 VALVE GP-SOLENOID–IMPLEMENT

S/N: 7PZ1-UP

FIELD REPLACEMENT FOR 124-3052–PAGE 904

FIELD INSTALLATION

SMCS-5479 **i01829003**

NOTE	REF NO	GRAPHIC REF	PART NUMBER	QTY	PART NAME 1 2 3 4 5 6 (PRODUCT LEVEL)	SEE PAGE
	1	1	**145-1144**	1	COIL AS	
	2	1	**164-2108**	1	WASHER (13.03X25.4X2.38MM THK)	
	3	1	**218-2373**	1	NUT (1/2-28)	
	4	1	**207-6810**	1	SPOOL AS-VALVE	
					AVAILABLE REPAIR KIT(S):	
			108-2148	1	KIT-SEAL	
					(INCLUDES SEAL-O-RINGS)	

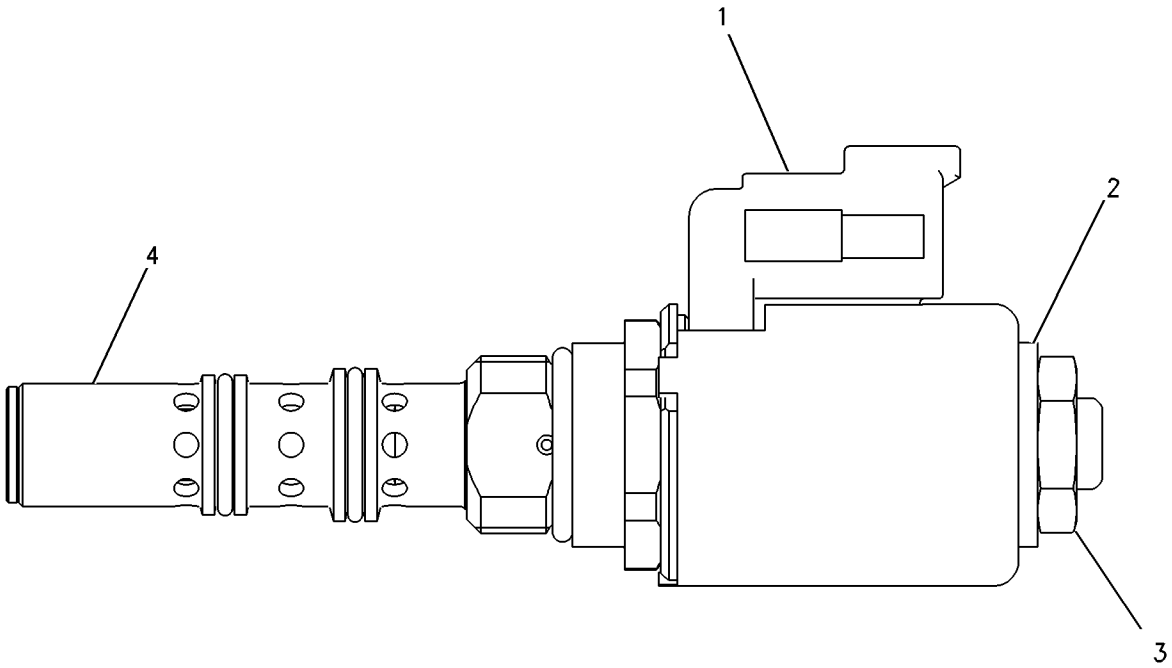

GRAPHIC #1 **<END>** g00931330

HYDRAULIC SYSTEM

151-0241 VALVE GP-TILT CONTROL

S/N: 7PZ1-675

PART OF 155-5553 CONTROL AR-HYDRAULIC

SMCS-5051 **i01988948**

NOTE	REF NO	GRAPHIC REF	PART NUMBER	QTY	PART NAME 1 2 3 4 5 6 (PRODUCT LEVEL)	SEE PAGE
	1	1	**9S-8004**	1	PLUG	
	2	1	**150-7683**	1	RETAINER	
	3	1	**150-7684**	1	COVER	
	4	1	**9S-8001**	4	PLUG	
	5	1	**9S-4191**	2	PLUG	
	6	1	**095-1609**	1	SEAL-O-RING	
	7	1	**9J-1722**	1	RETAINER	
	8	1	**1P-4576**	6	FLANGE-HALF	
	9	1	**1P-4577**	2	FLANGE-HALF	
	10	1	**3J-1907**	3	SEAL-O-RING	
	11	1	**4J-0522**	1	SEAL-O-RING	
	12	1	**4J-7533**	4	SEAL-O-RING	
	13	1	**5P-0076**	4	BOLT-12 POINT HEAD (3/8-16X1.50 IN)	
	14	1	**5S-7382**	16	BOLT (3/8-16X1.375 IN)	
Y	15	1	**3E-9205**	1	VALVE GP-SOLENOID	902
	16	1	**8J-8621**	2	SPRING	
	17	1	**8T-4896**	16	WASHER-HARD (10.2X18.5X2.5MM THK)	
	18	1	**9J-1716**	1	COVER	

Y-SEPARATE ILLUSTRATION

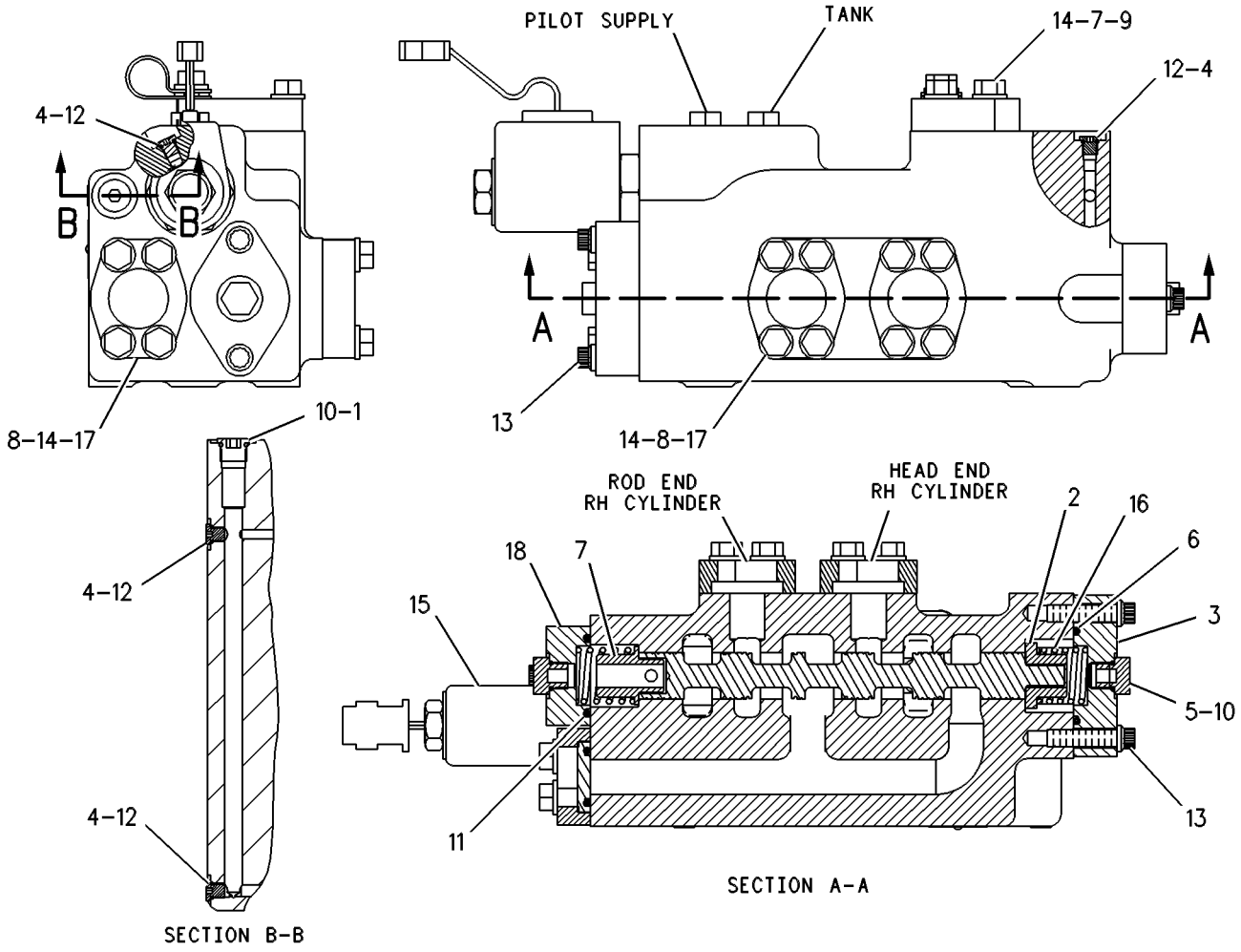

GRAPHIC #1 **<END>** g00445968

225-2321 VALVE GP-TILT CONTROL

S/N: 7PZ676-UP

PART OF 155-5553 CONTROL AR-HYDRAULIC

SMCS-5051 **i01953074**

NOTE	REF NO	GRAPHIC REF	PART NUMBER	QTY	PART NAME 1 2 3 4 5 6 (PRODUCT LEVEL)	SEE PAGE
Y	1	1	**3E-9205**	1	VALVE GP-SOLENOID	902
	4	1	**8J-8621**	2	SPRING	
	5	1	**9J-1722**	1	RETAINER	
	7	1	**223-4443**	2	COVER	
	8	1	**223-4445**	1	RETAINER	
	10	1	**1P-4576**	6	FLANGE-HALF	
	11	1	**1P-4577**	2	FLANGE-HALF	
	12	1	**3J-1907**	1	SEAL-O-RING	
	13	1	**3V-2431**	4	WASHER (10.2X16.0X2.0MM THK)	
	14	1	**4J-0522**	2	SEAL-O-RING	
	15	1	**4J-7533**	4	SEAL-O-RING	
	16	1	**5P-0076**	4	BOLT-12 POINT HEAD (3/8-16X1.50 IN)	
	17	1	**5S-7382**	16	BOLT (3/8-16X1.375 IN)	
	18	1	**8T-4896**	16	WASHER-HARD (10.2X18.5X2.5MM THK)	
	19	1	**9S-8001**	4	PLUG	
	20	1	**9S-8004**	1	PLUG	

Y-SEPARATE ILLUSTRATION

225-2321 VALVE GP-TILT CONTROL *(contd.)* i01953074

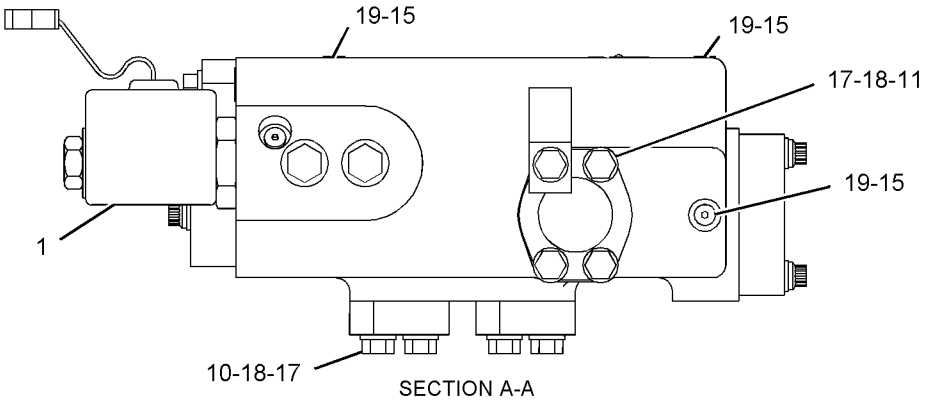

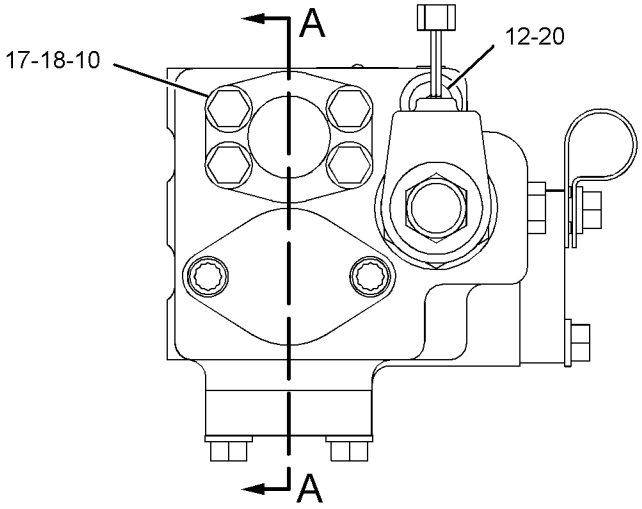

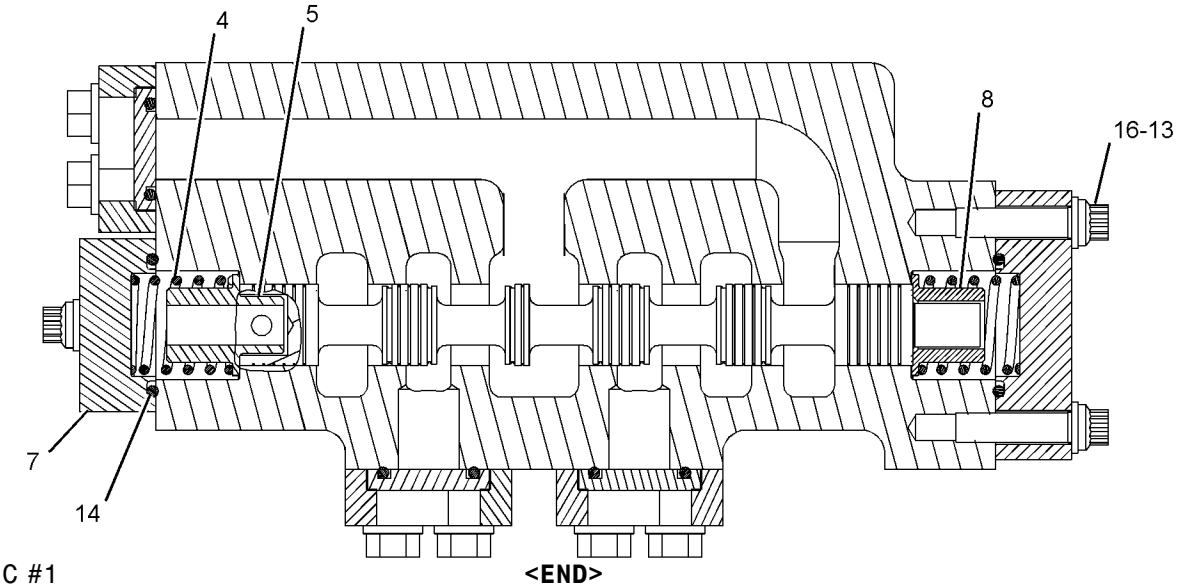

GRAPHIC #1

<END>

g01026217

149-4921 BEAM AS–RIPPER

S/N: 7YP1-UP
PART OF 149-4920 RIPPER GP
AN ATTACHMENT

SMCS-5350 **i01095576**

NOTE	REF NO	GRAPHIC REF	PART NUMBER	QTY	PART NAME 1 2 3 4 5 6 (PRODUCT LEVEL)	SEE PAGE
	1	1	**4Z-8840**	2	BRACKET	
	2	1	**4Z-8846**	1	GUIDE AS	
	3	1	**4Z-9220**	1	BRACKET	
	4	1	**5M-8627**	1	BLOCK	
	5	1	**9V-8427**	1	BAR	
	6	1	**130-6461**	1	BEAM AS	
	7	1	**2J-1227**	2	RETAINER	
	8	1	**3G-1877**	2	RETAINER	
	9	1	**3G-5340**	3	BLOCK	
	10	1	**3G-5341**	3	BLOCK	
	11	1	**8P-9770**	1	PLATE	

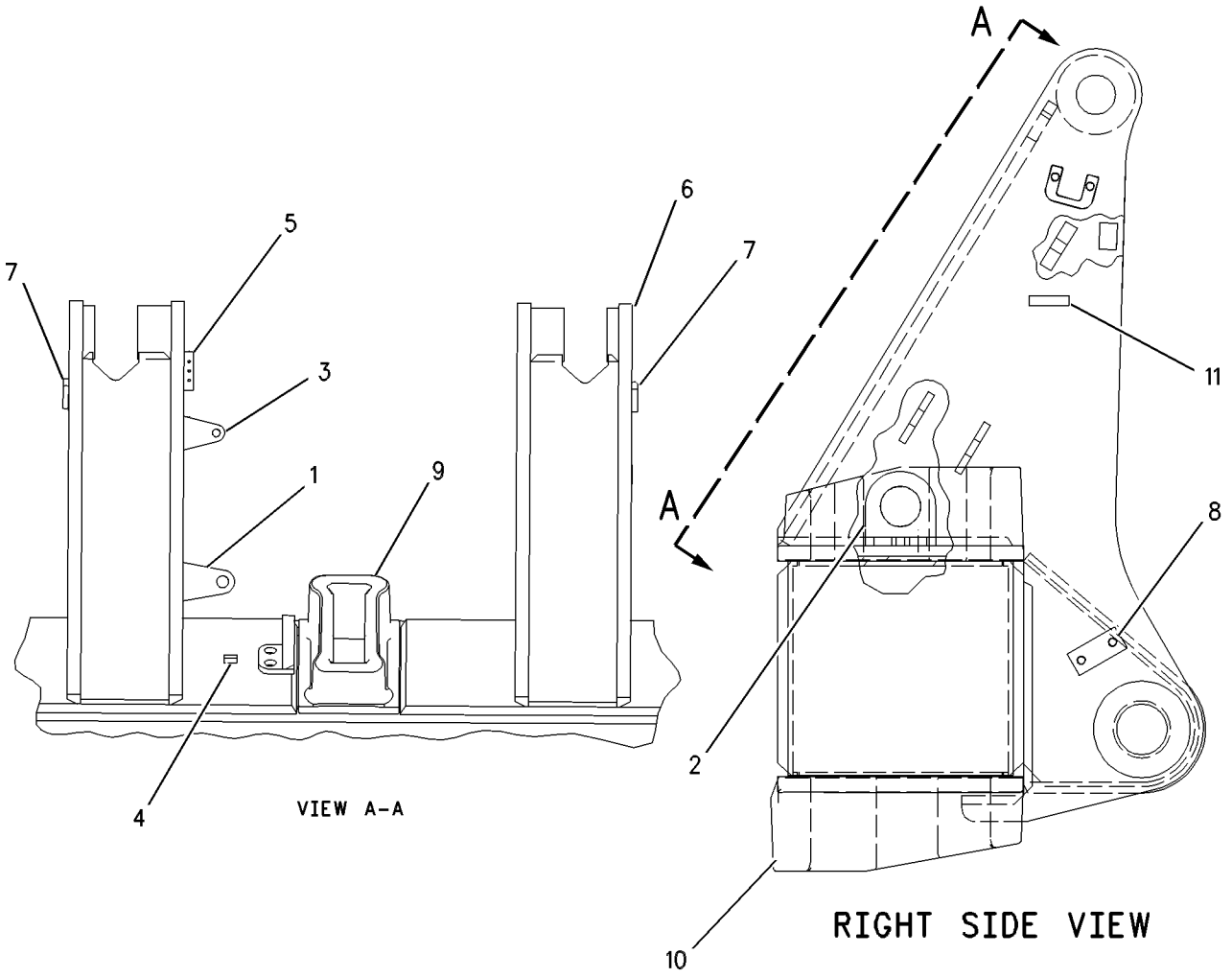

GRAPHIC #1 **<END>** g00575150

IMPLEMENTS

7T-9328 BLOCK GP-PUSH

S/N: 7PZ1-UP
PART OF 130-5361 BLOCK GP-PUSH
AN ATTACHMENT

SMCS-6062 **i00587035**

NOTE	REF NO	GRAPHIC REF	PART NUMBER	QTY	PART NAME 1 2 3 4 5 6 (PRODUCT LEVEL)	SEE PAGE
					(INDIVIDUAL PARTS ARE NOT SERVICED SEPARATELY)	

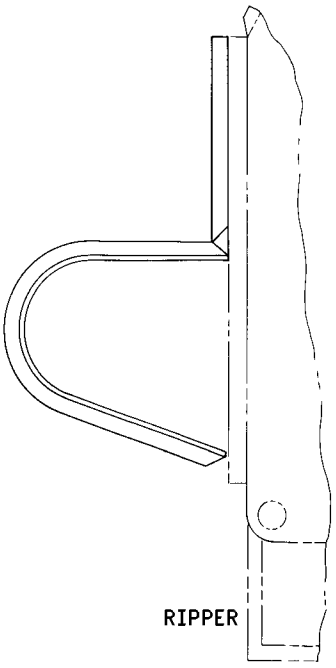

GRAPHIC #1 **<END>** g00234472

130-5361 BLOCK GP-PUSH

S/N: 7PZ1-UP
AN ATTACHMENT

SMCS-6062 **i01024782**

NOTE	PART NUMBER	QTY	PART NAME 1 2 3 4 5 6 (PRODUCT LEVEL)	SEE PAGE
Y	**7T-9328**	1	BLOCK GP-PUSH	918
	130-5351	1	CARRIAGE AS	
	2J-1227	2	RETAINER	
	3J-6035	2	RETAINER	
	8P-9770	1	PLATE	
	9V-8427	2	BAR	

Y-SEPARATE ILLUSTRATION

<END>

4T-9716 BRACE GP-BULLDOZER

S/N: 7PZ1-UP
PART OF 119-4283 CYLINDER AR-TILT
AN ATTACHMENT

SMCS-6074 **i01989010**

NOTE	REF NO	GRAPHIC REF	PART NUMBER	QTY	PART NAME 1 2 3 4 5 6 (PRODUCT LEVEL)	SEE PAGE
	1	1	**8J-8905**	1	RING-LOCK	
	2	1	**7X-0403**	1	BOLT (1-8X2.25 IN)	
	3	1	**9K-7340**	1	SPACER	
	4	1	**9J-2365**	1	RETAINER	
	5	1	**7X-0380**	2	BOLT (7/8-9X1.75IN)	
	6	1	**9J-2366**	1	PIN	
	7	1	**4T-9708**	1	LINK	
C	8	1	**6V-3249**	1	BEARING	
	9	1	**4T-9715**	1	BRACE AS	
	10	1	**1U-2532**	2	BAR	
	11	1	**1U-3658**	1	HANDLE	
C	12	1	**3B-8489**	1	FITTING-GREASE	

C-CHANGE FROM PREVIOUS TYPE

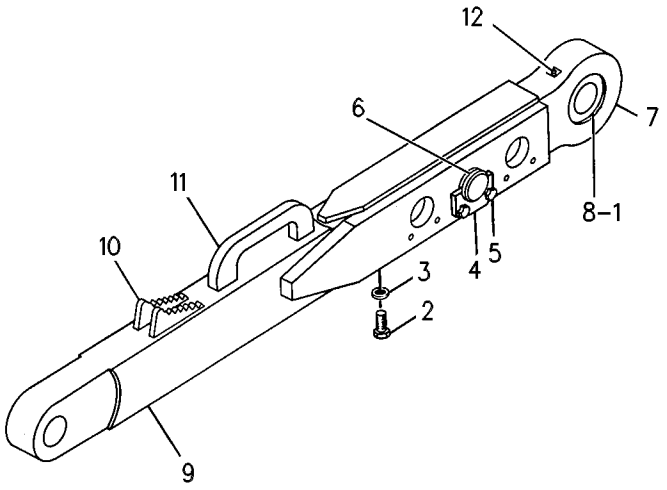

GRAPHIC #1 **<END>** g00258047

119-4267 BULLDOZER AR-SEMI-UNIVERSAL

S/N: 8RP1-UP
ABRASION APPLICATION
AN ATTACHMENT

SMCS-6050, 6078 **i01290556**

NOTE	PART NUMBER	QTY	PART NAME 1 2 3 4 5 6 (PRODUCT LEVEL)	SEE PAGE
Y	*119-4275*	1	BLADE GP-UNIVERSAL	959
Y	*120-9016*	1	LINES GP-LIFT CYLINDER	749
Y	*119-4277*	1	LINES GP-TILT CYLINDER	810
Y	*7T-7575*	1	MOUNTING GP-CYLINDER	825
Y	*5P-4017*	1	PLATE & FILM GP	1172
Y	*119-4269*	1	PUSH ARM GP-STABILIZER	942
Y	*119-4297*	1	TRUNNION GP-BULLDOZER	945
Y	*9W-8580*	1	CYLINDER & VALVE GP-BULLDOZER (LH)	669
Y	*9W-8579*	1	CYLINDER & VALVE GP-BULLDOZER (RH)	667

Y-SEPARATE ILLUSTRATION

<END>

119-4268 BULLDOZER AR-SEMI-UNIVERSAL

S/N: 8PP1-UP
ABRASION APPLICATION
AN ATTACHMENT

SMCS-6050, 6078 **i01290559**

NOTE	PART NUMBER	QTY	PART NAME 1 2 3 4 5 6 (PRODUCT LEVEL)	SEE PAGE
Y	*119-4276*	1	BLADE GP-SEMI-UNIVERSAL	957
Y	*120-9016*	1	LINES GP-LIFT CYLINDER	749
Y	*119-4277*	1	LINES GP-TILT CYLINDER	810
Y	*7T-7575*	1	MOUNTING GP-CYLINDER	825
Y	*5P-4017*	1	PLATE & FILM GP	1172
Y	*119-4269*	1	PUSH ARM GP-STABILIZER	942
Y	*119-4297*	1	TRUNNION GP-BULLDOZER	945
Y	*9W-8580*	1	CYLINDER & VALVE GP-BULLDOZER (LH)	669
Y	*9W-8579*	1	CYLINDER & VALVE GP-BULLDOZER (RH)	667

Y-SEPARATE ILLUSTRATION

<END>

IMPLEMENTS

119-4282 BULLDOZER AR-SEMI-UNIVERSAL

S/N: 8PP1-UP
ABRASION APPLICATION
AN ATTACHMENT

SMCS-6050, 6078 **i01290774**

NOTE	PART NUMBER	QTY	PART NAME 1 2 3 4 5 6 (PRODUCT LEVEL)	SEE PAGE
Y	*119-4276*	1	BLADE GP-SEMI-UNIVERSAL	957
Y	*119-4277*	1	LINES GP-TILT CYLINDER (DUAL)	810
Y	*5P-4017*	1	PLATE & FILM GP	1172
Y	*119-4269*	1	PUSH ARM GP-STABILIZER	942
Y	*119-4297*	1	TRUNNION GP-BULLDOZER	945

Y-SEPARATE ILLUSTRATION

<END>

199-8241 BULLDOZER AR-SEMI-UNIVERSAL

S/N: 8PP1-UP
ABRASION APPLICATION
AN ATTACHMENT

SMCS-6050, 6078 **i01989021**

NOTE	REF NO	GRAPHIC REF	PART NUMBER	QTY	PART NAME 1 2 3 4 5 6 (PRODUCT LEVEL)	SEE PAGE
Y	1	1	*119-4269*	1	PUSH ARM GP-STABILIZER	942
Y	2	1	*119-4276*	1	BLADE GP-SEMI-UNIVERSAL	957
Y	3	1	*119-4277*	1	LINES GP-TILT CYLINDER	810
Y	4	1	*119-4297*	1	TRUNNION GP-BULLDOZER	945
Y	5	1	*198-7341*	1	MOUNTING GP-CYLINDER	826
Y	6	1	*201-3215*	1	CYLINDER & VALVE GP-LIFT (RH)	671
Y	7	1	*201-3218*	1	CYLINDER & VALVE GP-LIFT (LH)	673
FY		1	*120-9016*	1	LINES GP-LIFT CYLINDER	749
FY		1	*5P-4017*	1	PLATE & FILM GP	1172

F-NOT SHOWN
Y-SEPARATE ILLUSTRATION

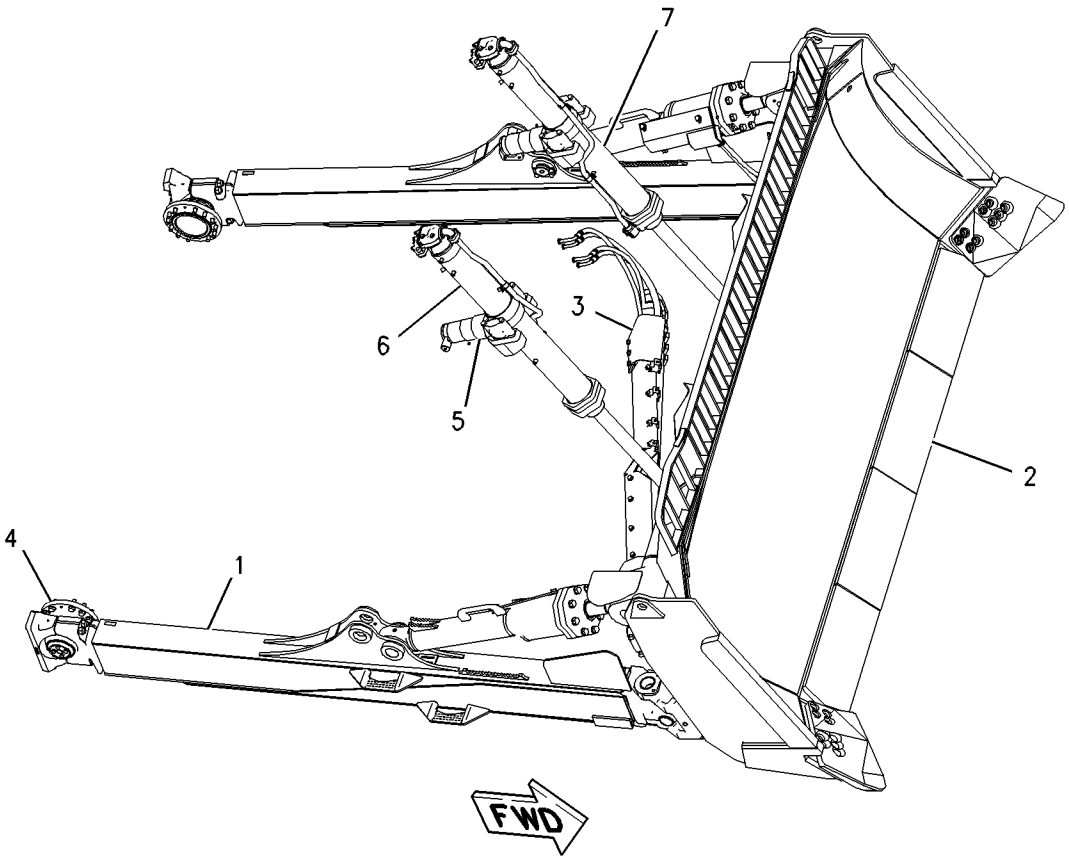

GRAPHIC #1 **<END>** g00836915

226-5919 BULLDOZER AR-SEMI-UNIVERSAL

S/N: 8PP1-UP
ABRASION APPLICATION
AN ATTACHMENT

SMCS-6050, 6078 **i01967537**

NOTE	REF NO	GRAPHIC REF	PART NUMBER	QTY	PART NAME 1 2 3 4 5 6 (PRODUCT LEVEL)	SEE PAGE
Y	1	1	*119-4269*	1	PUSH ARM GP-STABILIZER	942
Y	2	1	*119-4276*	1	BLADE GP-SEMI-UNIVERSAL	957
Y	3	1	*119-4277*	1	LINES GP-TILT CYLINDER	810
Y	4	1	*119-4297*	1	TRUNNION GP-BULLDOZER	945
Y	5	1	*120-9016*	1	LINES GP-LIFT CYLINDER	749
Y	6	1	*201-3215*	1	CYLINDER & VALVE GP-LIFT (RH)	671
Y	7	1	*201-3218*	1	CYLINDER & VALVE GP-LIFT (LH)	673
Y	8	1	*226-0311*	1	MOUNTING GP-CYLINDER	827
FY		1	*5P-4017*	1	PLATE & FILM GP	1172

F-NOT SHOWN
Y-SEPARATE ILLUSTRATION

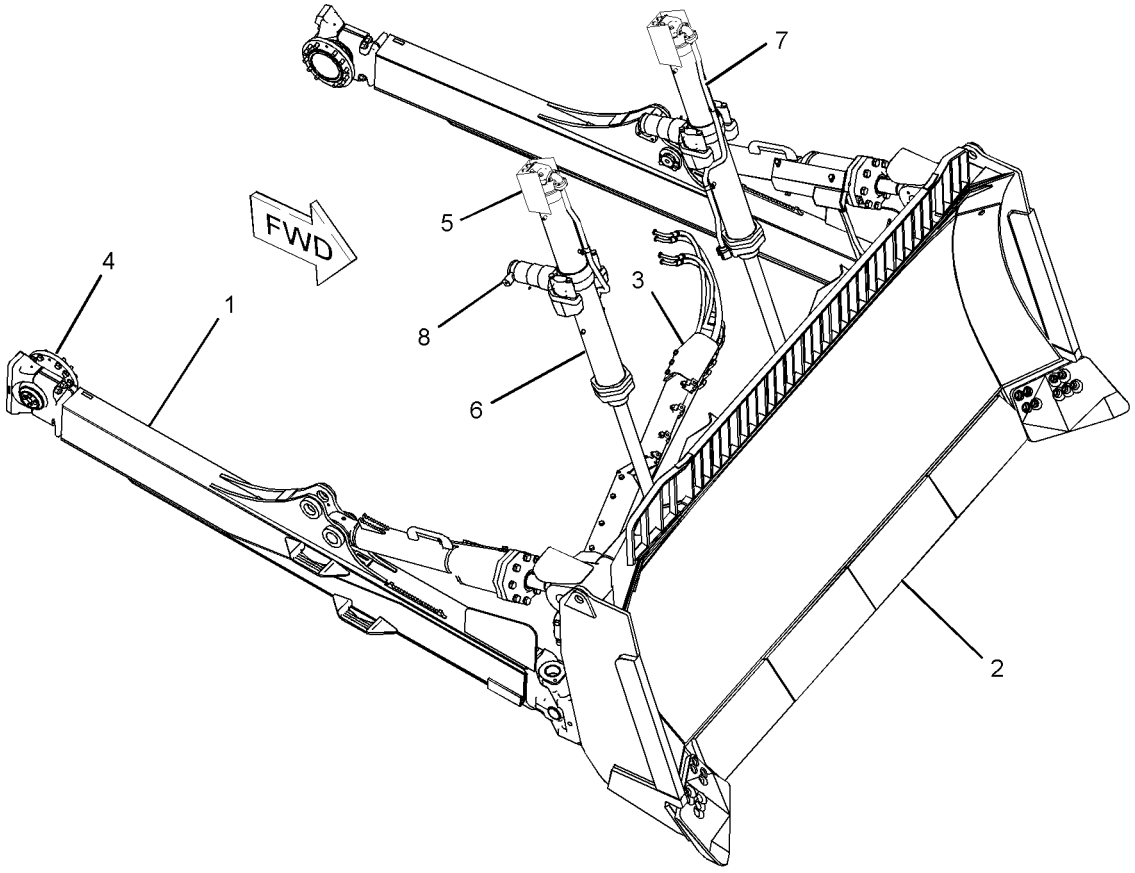

GRAPHIC #1 **<END>** g01029941

IMPLEMENTS

119-4281 BULLDOZER AR-UNIVERSAL

S/N: 8RP1-UP
ABRASION APPLICATION
AN ATTACHMENT

SMCS-6050, 6053 **i01290773**

NOTE	PART NUMBER	QTY	PART NAME 1 2 3 4 5 6 (PRODUCT LEVEL)	SEE PAGE
Y	*119-4275*	1	BLADE GP-UNIVERSAL	959
Y	*119-4277*	1	LINES GP-TILT CYLINDER (DUAL)	810
Y	*5P-4017*	1	PLATE & FILM GP	1172
Y	*119-4269*	1	PUSH ARM GP-STABILIZER	942
Y	*119-4297*	1	TRUNNION GP-BULLDOZER	945

Y-SEPARATE ILLUSTRATION

<END>

IMPLEMENTS

199-8240 BULLDOZER AR-UNIVERSAL

S/N: 8RP1-UP
ABRASION APPLICATION
AN ATTACHMENT

SMCS-6050, 6053 **i01989022**

NOTE	REF NO	GRAPHIC REF	PART NUMBER	QTY	PART NAME 1 2 3 4 5 6 (PRODUCT LEVEL)	SEE PAGE
Y	1	1	*119-4269*	1	PUSH ARM GP-STABILIZER	942
Y	2	1	*119-4275*	1	BLADE GP-UNIVERSAL	959
Y	3	1	*119-4277*	1	LINES GP-TILT CYLINDER	810
Y	4	1	*119-4297*	1	TRUNNION GP-BULLDOZER	945
Y	5	1	*198-7341*	1	MOUNTING GP-CYLINDER	826
Y	6	1	*201-3215*	1	CYLINDER & VALVE GP-LIFT (RH)	671
Y	7	1	*201-3218*	1	CYLINDER & VALVE GP-LIFT (LH)	673
FY		1	*120-9016*	1	LINES GP-LIFT CYLINDER	749
FY		1	*5P-4017*	1	PLATE & FILM GP	1172

F-NOT SHOWN
Y-SEPARATE ILLUSTRATION

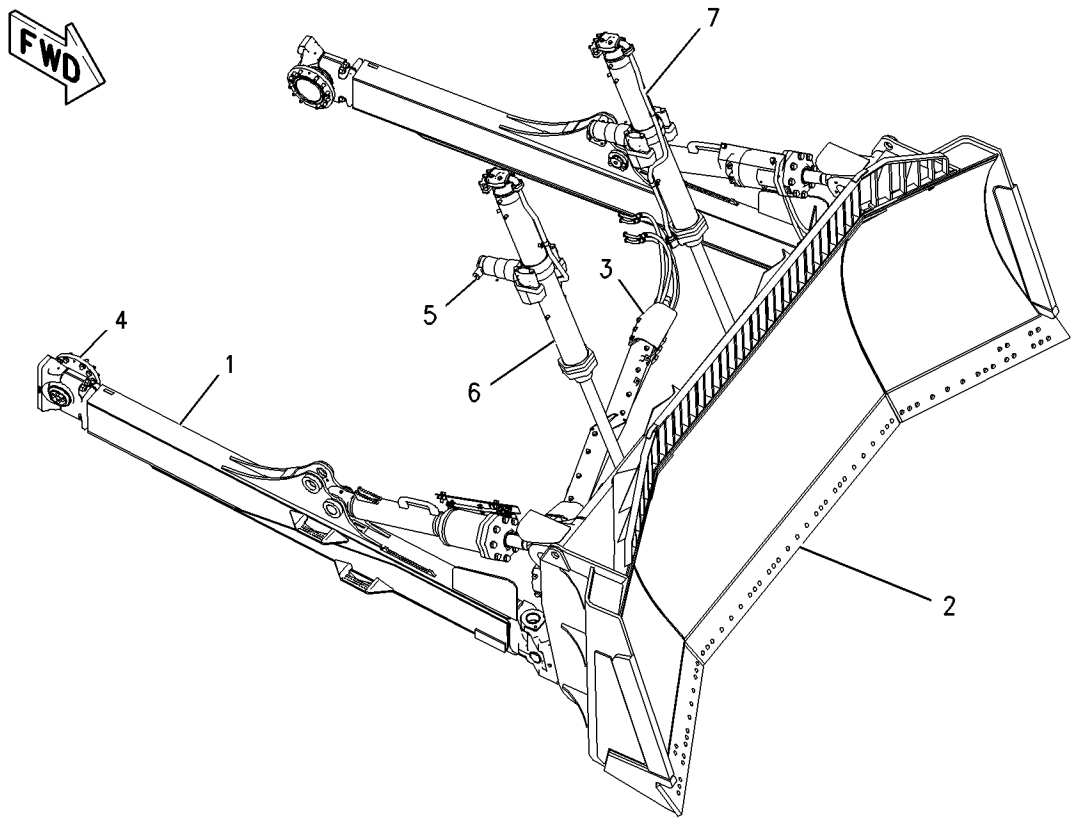

GRAPHIC #1 **<END>** g00808534

IMPLEMENTS

226-5918 BULLDOZER AR-UNIVERSAL

S/N: 8RP1-UP
ABRASION APPLICATION
AN ATTACHMENT

SMCS-6050, 6053 **i01967528**

NOTE	REF NO	GRAPHIC REF	PART NUMBER	QTY	PART NAME 1 2 3 4 5 6 (PRODUCT LEVEL)	SEE PAGE
Y	1	1	*119-4269*	1	PUSH ARM GP-STABILIZER	942
Y	2	1	*119-4275*	1	BLADE GP-UNIVERSAL	959
Y	3	1	*119-4277*	1	LINES GP-TILT CYLINDER	810
Y	4	1	*119-4297*	1	TRUNNION GP-BULLDOZER	945
Y	5	1	*120-9016*	1	LINES GP-LIFT CYLINDER	749
Y	6	1	*201-3215*	1	CYLINDER & VALVE GP-LIFT (RH)	671
Y	7	1	*201-3218*	1	CYLINDER & VALVE GP-LIFT (LH)	673
Y	8	1	*226-0311*	1	MOUNTING GP-CYLINDER	827
FY		1	*5P-4017*	1	PLATE & FILM GP	1172

F-NOT SHOWN
Y-SEPARATE ILLUSTRATION

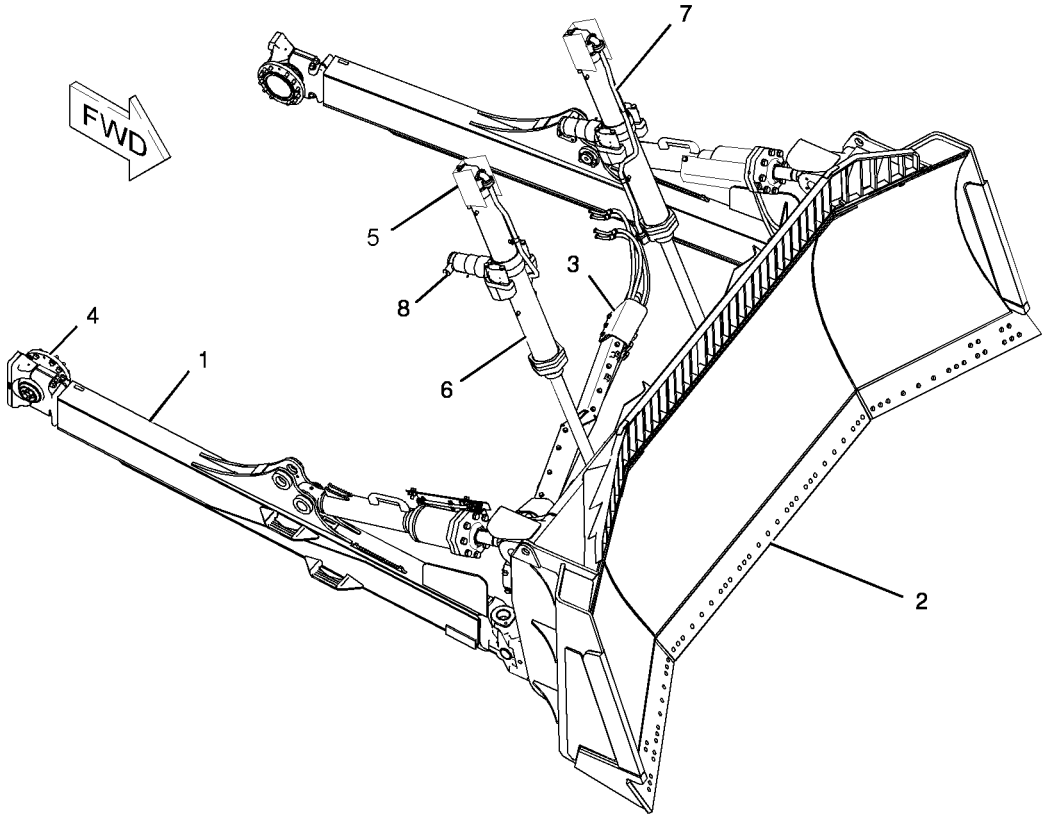

GRAPHIC #1 **<END>** g01021980

154-1709 KIT-OVERPACK–BULLDOZER

S/N: 7PZ1-UP

PROVIDES ADDITIONAL ASSEMBLY PARTS FOR ANY D11 BULLDOZER AN ATTACHMENT

SMCS-6050 **i01989017**

NOTE	PART NUMBER	QTY	PART NAME 1 2 3 4 5 6 (PRODUCT LEVEL)	SEE PAGE
	0L-1329	6	BOLT (1/2-13X3 IN)	
	0S-1585	6	BOLT (1/2-13X1.50 IN)	
	1A-1460	12	BOLT (1/2-13X2 IN)	
	1B-2886	6	BOLT (1/2-13X3.75 IN)	
	4L-6454	4	BOLT (3/8-16X1 IN)	
	5C-6565	6	BOLT (1/2-13X1.125 IN)	
	5M-3062	12	BOLT (3/8-16X0.75 IN)	
	5P-2228	12	BOLT (1/2-13X1 IN)	
	5P-8335	4	BOLT (1-1/4-12X15 IN)	
	5S-7379	9	BOLT (3/8-16X0.875 IN)	
	7X-0272	6	BOLT (7/16-14X.875 IN)	
	7X-0365	12	BOLT (3/4-10X1.5 IN)	
	7X-0380	6	BOLT (7/8-9X1.75IN)	
	7X-0381	12	BOLT (7/8-9X2 IN)	
	7X-0383	4	BOLT (7/8-9X2.75 IN)	
	7X-0394	6	BOLT (7/8-9X7 IN)	
	7X-0406	12	BOLT (1-8X3 IN)	
	7X-0418	6	BOLT (1-8X9.5 IN)	
	8T-2501	4	BOLT (3/8-16X2 IN)	
	8T-7008	6	BOLT (3/8-16X3 IN)	
	8T-8917	6	BOLT (1/2-13X1.25 IN)	
	8T-9398	6	BOLT (3/4-10X1.75 IN)	
	9B-7237	24	BOLT (3/8-16X1.25 IN)	
	9S-1366	4	BOLT (1/2-13X2.5 IN)	
	7X-0384	4	BOLT (7/8-9X3IN)	
	7D-4108	2	CLAMP	
	8J-3146	2	CLAMP	
	5H-2095	12	CLAMP-TUBE	
	4P-7428	10	CLIP	
	4T-3981	6	CLIP	
	7S-8920	4	CLIP (SLOT)	
	7S-8921	4	CLIP (TAB)	
	3B-8489	4	FITTING-GREASE	
	1P-4576	12	FLANGE-HALF	
	1P-4577	6	FLANGE-HALF	
	1P-5762	4	FLANGE-HALF	
	1P-5767	6	FLANGE-HALF	
	5P-8522	2	GROMMET	
	9W-4361	6	MOUNT	
	6V-8190	6	NUT (1-8 THD)	
	6V-8801	12	NUT (3/8-16 THD)	
	7H-7539	6	NUT-FULL (1-1/4-12 THD)	
	5J-5365	2	PIN	
	4T-0301	2	PLATE-CONNECTOR	
	6J-5986	4	RETAINER	
	9J-2365	6	RETAINER	
	130-3435	2	RETAINER	
	147-5968	2	RETAINER	
	4J-0519	4	SEAL-O-RING	
	4J-0520	6	SEAL-O-RING	
	4J-5267	12	SEAL-O-RING	
	1P-3704	9	SEAL-RECTANGULAR	
	1P-3705	4	SEAL-RECTANGULAR	
	1P-3707	2	SEAL-RECTANGULAR	
	3G-0053	15	SHIM (0.8MM THK)	

154-1709 **KIT-OVERPACK** ***(contd.)*** **i01989017**

NOTE	PART NUMBER	QTY	PART NAME 1 2 3 4 5 6 (PRODUCT LEVEL)	SEE PAGE
	3G-9401	15	SHIM (0.8MM THK)	
	3G-5336	4	SPACER	
	9X-6772	9	STRAP-CABLE	
	068-6405	4	WASHER (26X63.5X6MM THK)	
	8T-5360	6	WASHER (12X22.5X2.5MM THK)	
	5P-8245	15	WASHER-HARD (13.5X25.5X3MM THK)	
	8T-4994	16	WASHER-HARD (20X36.5X3.5MM THK)	
	5P-1075	12	WASHER-HARD (10.2X22.5X3MM THK)	
	7X-0525	6	WASHER-HARD (24X41.5X6MM THK)	
	8C-6913	6	WASHER-HARD (24X41.5X4MM THK)	
	8T-4223	12	WASHER-HARD (13.5X25.5X3MM THK)	
	8T-4896	31	WASHER-HARD (10.2X18.5X2.5MM THK)	

<END>

IMPLEMENTS

154-1710 KIT-OVERPACK–RIPPER

S/N: 7PZ1-UP

PROVIDES ADDITIONAL ASSEMBLY PARTS FOR ANY D11 RIPPER AN ATTACHMENT

SMCS-6050 **i01499266**

NOTE	PART NUMBER	QTY	PART NAME 1 2 3 4 5 6 (PRODUCT LEVEL)	SEE PAGE
	4L-9337	6	BOLT (3/8-16X1.5 IN)	
	7X-0293	3	BOLT (3/8-16X4.75 IN)	
	7X-0345	6	BOLT (5/8-11X1.75 IN)	
	7X-0365	12	BOLT (3/4-10X1.5 IN)	
	7X-0388	2	BOLT (7/8-9X4.50IN)	
	7X-0406	9	BOLT (1-8X3 IN)	
	8T-8917	2	BOLT (1/2-13X1.25 IN)	
	8T-8919	6	BOLT (1/2-13X1.75 IN)	
	9B-7237	6	BOLT (3/8-16X1.25 IN)	
	6K-0138	4	BOLT-LOCKING (5/8-11X1.25 IN)	
	9M-0164	6	CLAMP-HOSE	
	3G-8054	3	CLIP (TAB)	
	3G-8057	3	CLIP (SLOT)	
	4P-7581	1	CLIP	
	5P-7468	2	CLIP (SLOT)	
	5P-7469	2	CLIP (TAB)	
	8T-5050	1	CONNECTOR	
	6V-8639	2	CONNECTOR	
	6V-9873	1	CONNECTOR-SEAL	
	3G-8047	3	GROMMET	
	5P-8444	2	GROMMET (37X56X62MM THK)	
	151-5203	4	GROMMET (38.1X51.5X25MM THK)	
	130-6366	2	LINK	
	6K-0545	2	LOCKNUT	
	9W-4361	4	MOUNT	
	6V-8801	6	NUT (3/8-16 THD)	
	7T-4501	1	PIN	
	7T-4502	1	PIN	
	8E-8914	2	PIN	
	125-9215	1	PIN	
	7T-7305	8	PLATE	
	6K-3630	1	RING	
	7J-4169	2	RING-SNAP	
	5P-2672	6	SEAL-LIP	
	7K-9211	12	SEAL-LIP	
	3J-1907	2	SEAL-O-RING	
	3K-0360	2	SEAL-O-RING	
	4J-0520	12	SEAL-O-RING	
	6V-8398	4	SEAL-O-RING	
	147-6626	6	SHIELD	
	139-2456	2	SHIELD-LH	
	139-2455	2	SHIELD-RH	
	8W-9506	2	SPACER (90.5X140X3MM THK)	
	9U-8404	6	SPACER (89.4X180X35MM THK)	
	9W-5556	12	SPACER (120X250X3MM THK)	
	9X-6772	2	STRAP-CABLE	
	7X-0515	8	WASHER-HARD (17X35X5MM THK)	
	8T-4167	2	WASHER-HARD (26X44X4MM THK)	
	8T-5361	9	WASHER-HARD (28X49X5MM THK)	
	5P-1075	12	WASHER-HARD (10.2X22.5X3MM THK)	
	7X-0537	1	WASHER-HARD (40.5X67X6MM THK)	
	8T-4223	6	WASHER-HARD (13.5X25.5X3MM THK)	

<END>

160-0982 LINES GP-GREASE–RIPPER

S/N: 5MP1-UP; 7CP1-UP; 7DP1-UP; 7ZP1-UP
PART OF 127-1031, 130-6458, 130-6462, 161-2420 RIPPER AR
AN ATTACHMENT

SMCS-7510 **i01989018**

NOTE	REF NO	GRAPHIC REF	PART NUMBER	QTY	PART NAME 1 2 3 4 5 6 (PRODUCT LEVEL)	SEE PAGE
	1	1	**3S-2093**	2	STRAP-CABLE	
	2	1	**8C-6865**	2	CONNECTOR	
I	3	1	**160-4188**	1	HOSE AS	
I	4	1	**160-4189**	1	HOSE AS	
	5	1	**170-4760**	2	PLATE	
	6	1	**3J-7354**	2	SEAL-O-RING	
	7	1	**4D-9517**	2	CLIP	
	8	1	**4J-5477**	4	SEAL-O-RING	
	9	1	**5M-3062**	2	BOLT (3/8-16X0.75 IN)	
	10	1	**6V-8628**	1	ELBOW	
	11	1	**6V-9000**	2	ELBOW	
	12	1	**7X-0408**	4	BOLT (1-8X3.5 IN)	
	13	1	**8T-4896**	2	WASHER-HARD (10.2X18.5X2.5MM THK)	

I-REFER TO HYDRAULIC INFORMATION SYSTEM

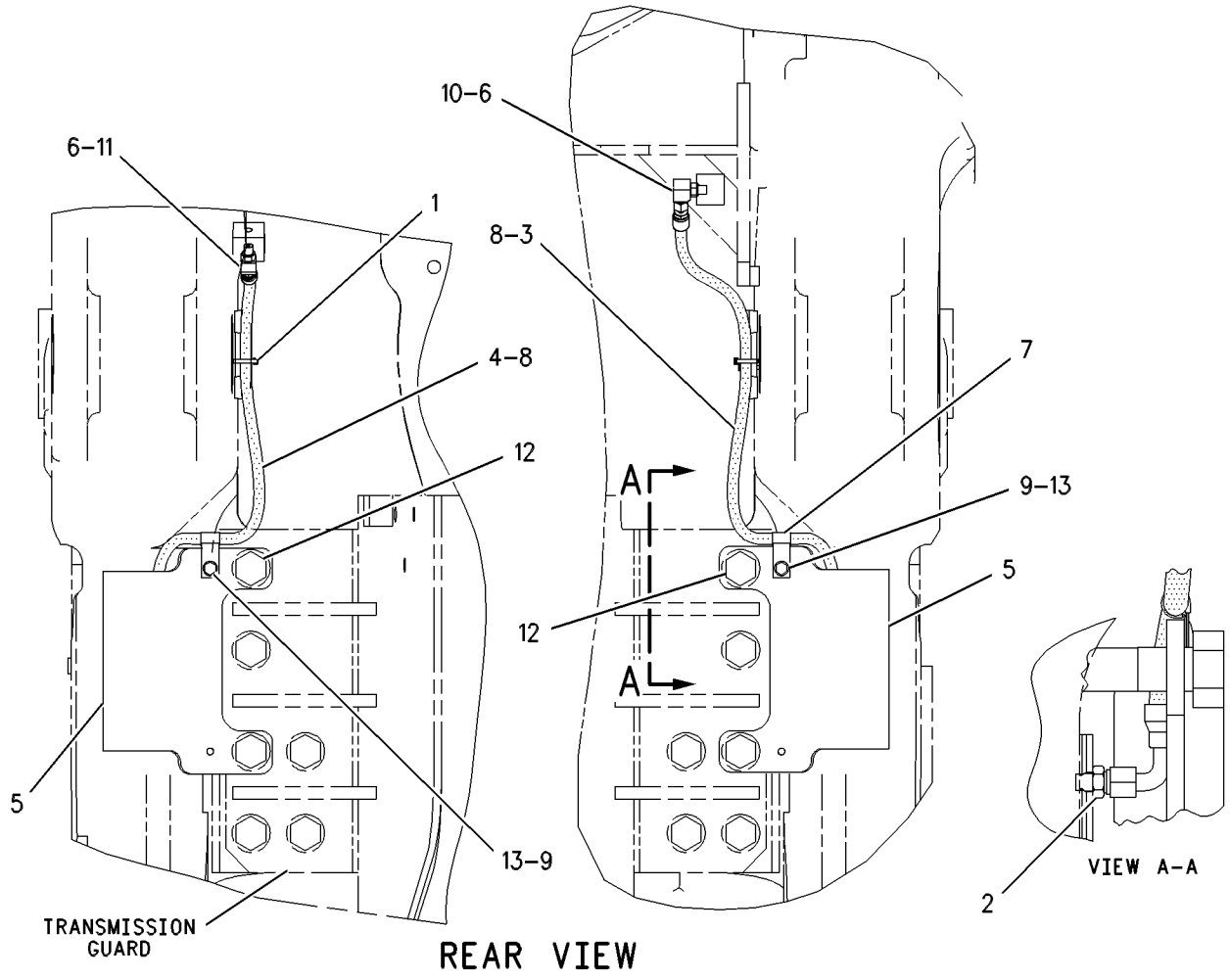

GRAPHIC #1 **<END>** g00575428

119-4272 LINK GP-STABILIZER

S/N: 8PP1-UP; 8RP1-UP
PART OF 119-4269 PUSH ARM GP-STABILIZER
AN ATTACHMENT

SMCS-6071, 7203 **i01024714**

NOTE	REF NO	GRAPHIC REF	PART NUMBER	QTY	PART NAME 1 2 3 4 5 6 (PRODUCT LEVEL)	SEE PAGE
B	1	1	**3G-9401**	52	SHIM (.8MM THK)	
	2	1	**7T-4971**	2	CAP-BEARING	
	3	1	**7X-0418**	8	BOLT (1-8X9.5IN)	
	4	1	**6V-8190**	1	NUT (1-8 THD)	
	5	1	**8E-9679**	1	LINK AS	
	6	1	**8P-9770**	2	PLATE	
	7	1	**9J-2587**	2	BEARING AS	
					(EACH INCLUDES)	
		1	**4T-5255**	1	CAP-BEARING	
	8	1	**113-7433**	8	PLATE	

B-USE AS REQUIRED

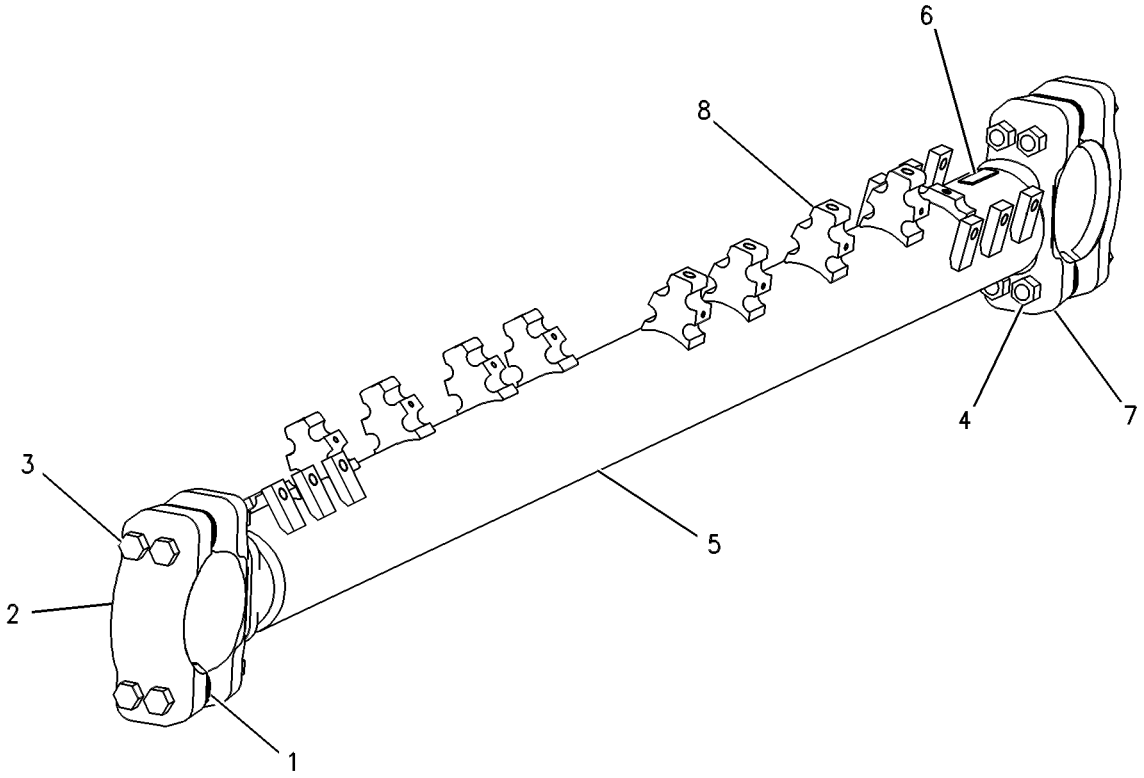

GRAPHIC #1 **<END>** g00272441

136-3980 PLATE GP-PUSH–BLADE

S/N: 7PZ1-UP
PART OF 136-2756 BLADE AS-SEMI-UNIVERSAL
AN ATTACHMENT

SMCS-6077 **i00755144**

NOTE	REF NO	GRAPHIC REF	PART NUMBER	QTY	PART NAME 1 2 3 4 5 6 (PRODUCT LEVEL)	SEE PAGE
	1	1	**4T-5308**	1	PLATE-PUSH	

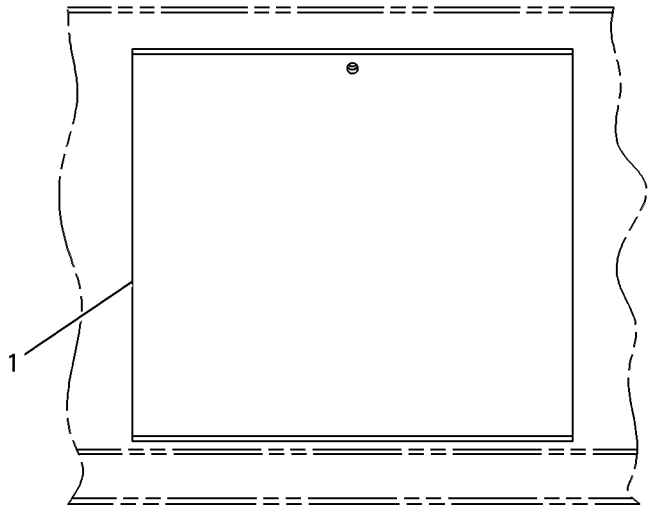

FRONT VIEW

GRAPHIC #1 **<END>** g00272550

130-5356 PULLER AR-PIN—RIPPER

S/N: 7PZ1-UP
AN ATTACHMENT

SMCS-5353, 5354 **i00947043**

NOTE	PART NUMBER	QTY	PART NAME 1 2 3 4 5 6 (PRODUCT LEVEL)	SEE PAGE
Y	**6E-3113**	1	CYLINDER GP-RIPPER PIN PULLER	710
Y	*141-8657*	1	LINES GP-PIN PULLER CYLINDER	760
Y	*130-5357*	1	PULLER GP-PIN	936

Y-SEPARATE ILLUSTRATION

<END>

163-0813 PULLER AR-PIN—RIPPER

S/N: 7ZP1-UP
MULTI-SHANK LEACH PAD RIPPER
PART OF 161-2420 RIPPER AR
AN ATTACHMENT

SMCS-5353, 5354 **i01000649**

NOTE	PART NUMBER	QTY	PART NAME 1 2 3 4 5 6 (PRODUCT LEVEL)	SEE PAGE
Y	*163-0814*	1	LINES GP-PIN PULLER CYLINDER	762
Y	*150-5414*	1	PULLER GP-PIN	937

Y-SEPARATE ILLUSTRATION

<END>

4Z-8842 PULLER GP-PIN–RIPPER

S/N: 7YP1-UP
PART OF 149-4919 RIPPER AR
AN ATTACHMENT

SMCS-5353, 5354 **i01564852**

NOTE	REF NO	GRAPHIC REF	PART NUMBER	QTY	PART NAME 1 2 3 4 5 6 (PRODUCT LEVEL)	SEE PAGE
	1	1	**4Z-8843**	1	PIN	
	2	1	**8E-8914**	2	PIN	
	3	1	**6K-0138**	4	BOLT-LOCKING (5/8-11X1.25 IN)	
	4	1	**7X-0515**	4	WASHER-HARD (17X35X5MM THK)	
	5	1	**4Z-9219**	1	LEVER	
	6	1	**7T-4502**	1	PIN	
	7	1	**7X-0537**	1	WASHER-HARD (40.5X67X6MM THK)	
	8	1	**6K-3630**	1	RING	
	9	1	**7T-4501**	2	PIN	
	10	1	**8T-4167**	2	WASHER-HARD (26X44X4MM THK)	
	11	1	**7J-4169**	2	RING-SNAP	
Y	12	1	**6E-3113**	1	CYLINDER GP-RIPPER PIN PULLER	710
	13	1	**9J-4523**	2	LINK	

Y-SEPARATE ILLUSTRATION

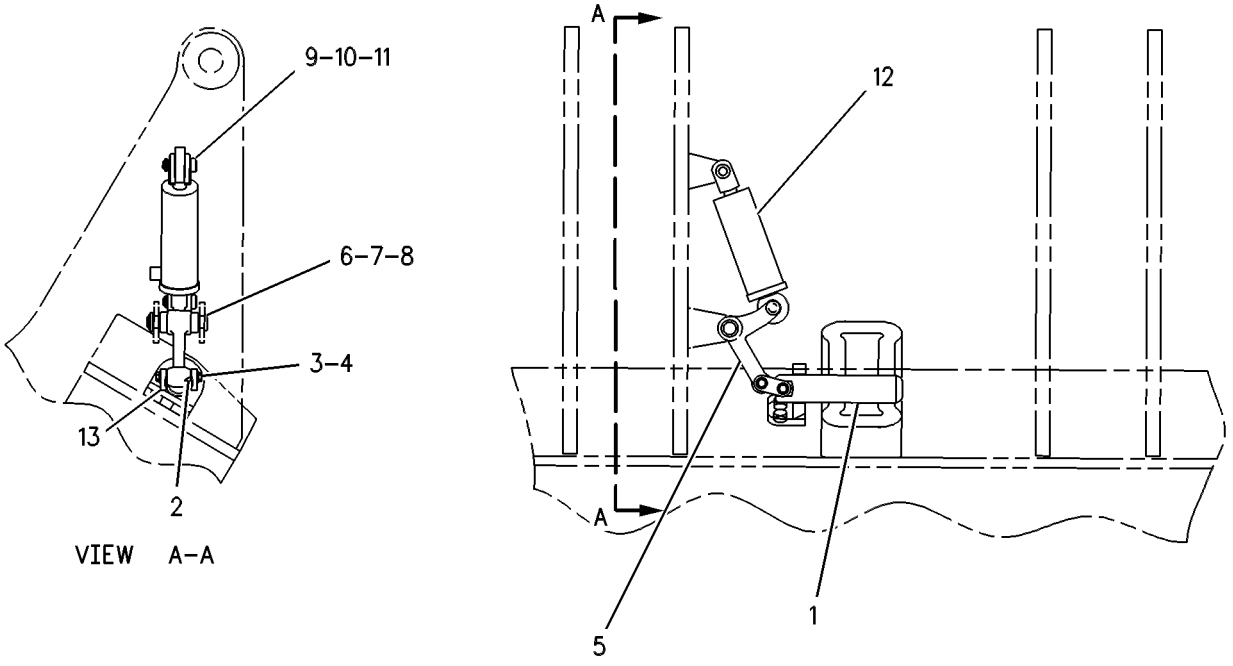

GRAPHIC #1 **<END>** g00284114

130-5357 PULLER GP-PIN–RIPPER

S/N: 7PZ1-UP
PART OF 130-5356 PULLER AR-PIN
AN ATTACHMENT

SMCS-5353, 5354 **i01426481**

NOTE	REF NO	GRAPHIC REF	PART NUMBER	QTY	PART NAME 1 2 3 4 5 6 (PRODUCT LEVEL)	SEE PAGE
	1	1	**6K-3630**	1	RING	
	2	1	**7J-4169**	2	RING-SNAP	
	3	1	**7T-4501**	1	PIN	
	4	1	**7T-4502**	1	PIN	
	5	1	**8E-8914**	2	PIN	
	6	1	**9U-8405**	1	LEVER	
	7	1	**125-9215**	1	PIN	
	8	1	**130-5348**	1	PIN	
	9	1	**130-5358**	1	BRACKET AS	
	10	1	**130-6366**	2	LINK	
	11	1	**6K-0138**	4	BOLT-LOCKING (5/8-11X1.25 IN)	
	12	1	**7X-0345**	6	BOLT (5/8-11X1.75 IN)	
	13	1	**7X-0515**	10	WASHER-HARD (17X35X5MM THK)	
	14	1	**7X-0537**	1	WASHER-HARD (40.5X67X6MM THK)	
	15	1	**8T-4167**	2	WASHER-HARD (26X44X4MM THK)	

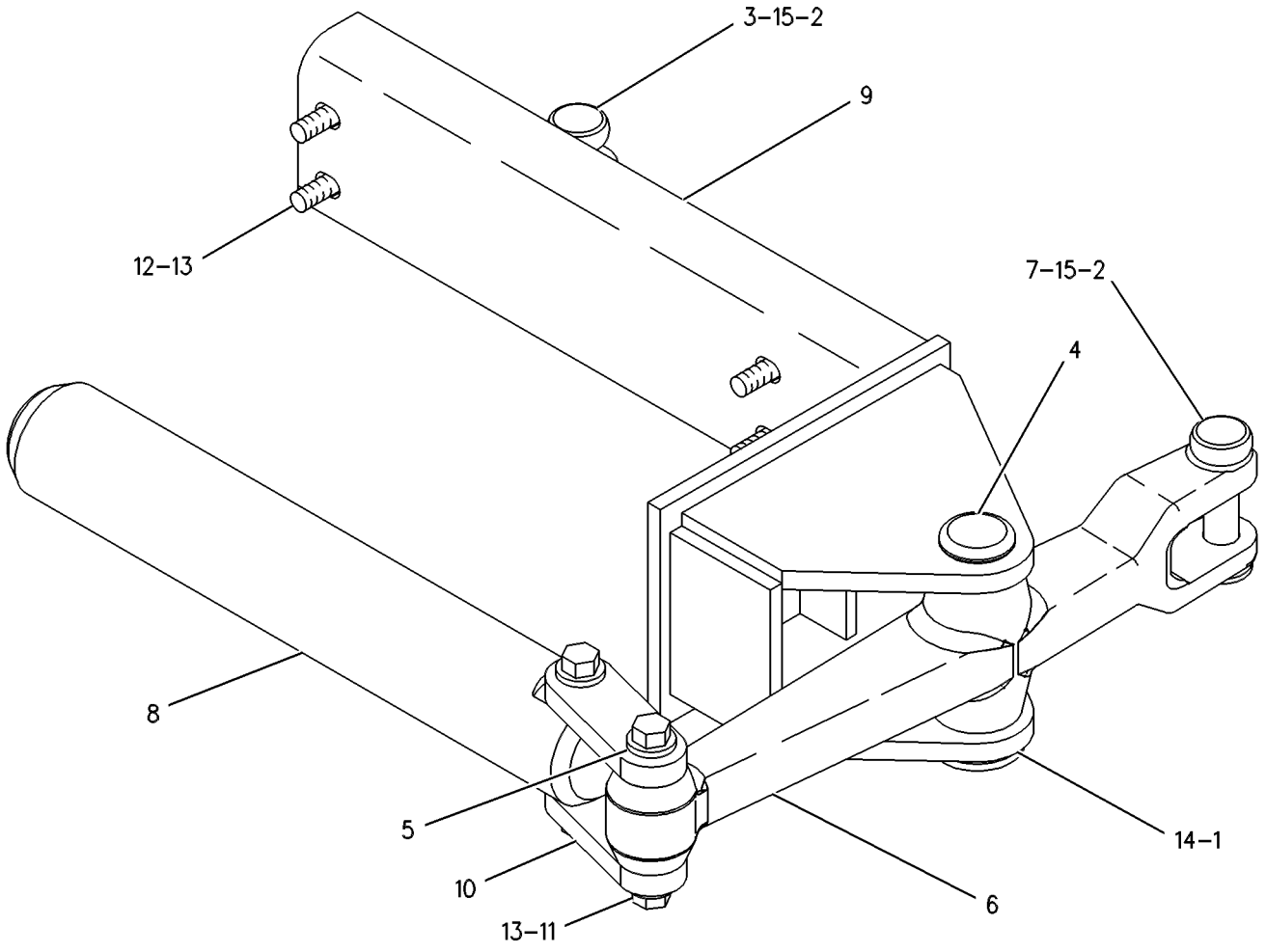

GRAPHIC #1 **<END>** g00272446

150-5414 PULLER GP-PIN–RIPPER

S/N: 7ZP1-UP
REQUIRES PIN PULLER HYDRAULIC CONTROLS
PART OF 163-0813 PULLER AR-PIN
AN ATTACHMENT

SMCS-5353, 5354 **i01564857**

NOTE	REF NO	GRAPHIC REF	PART NUMBER	QTY	PART NAME 1 2 3 4 5 6 (PRODUCT LEVEL)	SEE PAGE
	1	1	**4Z-9219**	1	LEVER	
Y	2	1	**6E-3113**	1	CYLINDER GP-RIPPER PIN PULLER	710
	3	1	**7T-4500**	1	PIN	
	4	1	**7T-4501**	2	PIN	
	5	1	**7T-4502**	1	PIN	
	6	1	**150-5415**	1	PIN	
	7	1	**150-5416**	1	LINK	
	8	1	**150-5417**	2	PLATE-RETAINER	
	9	1	**6K-3630**	1	RING	
	10	1	**7J-4169**	3	RING-SNAP	
	11	1	**7X-0537**	1	WASHER-HARD (40.5X67X6MM THK)	
	12	1	**8T-4121**	4	WASHER-HARD (11X21X2.5MM THK)	
	13	1	**8T-4167**	3	WASHER-HARD (26X44X4MM THK)	
M	14	1	**8T-4196**	4	BOLT (M10X1.5X35MM)	

M-METRIC PART
Y-SEPARATE ILLUSTRATION

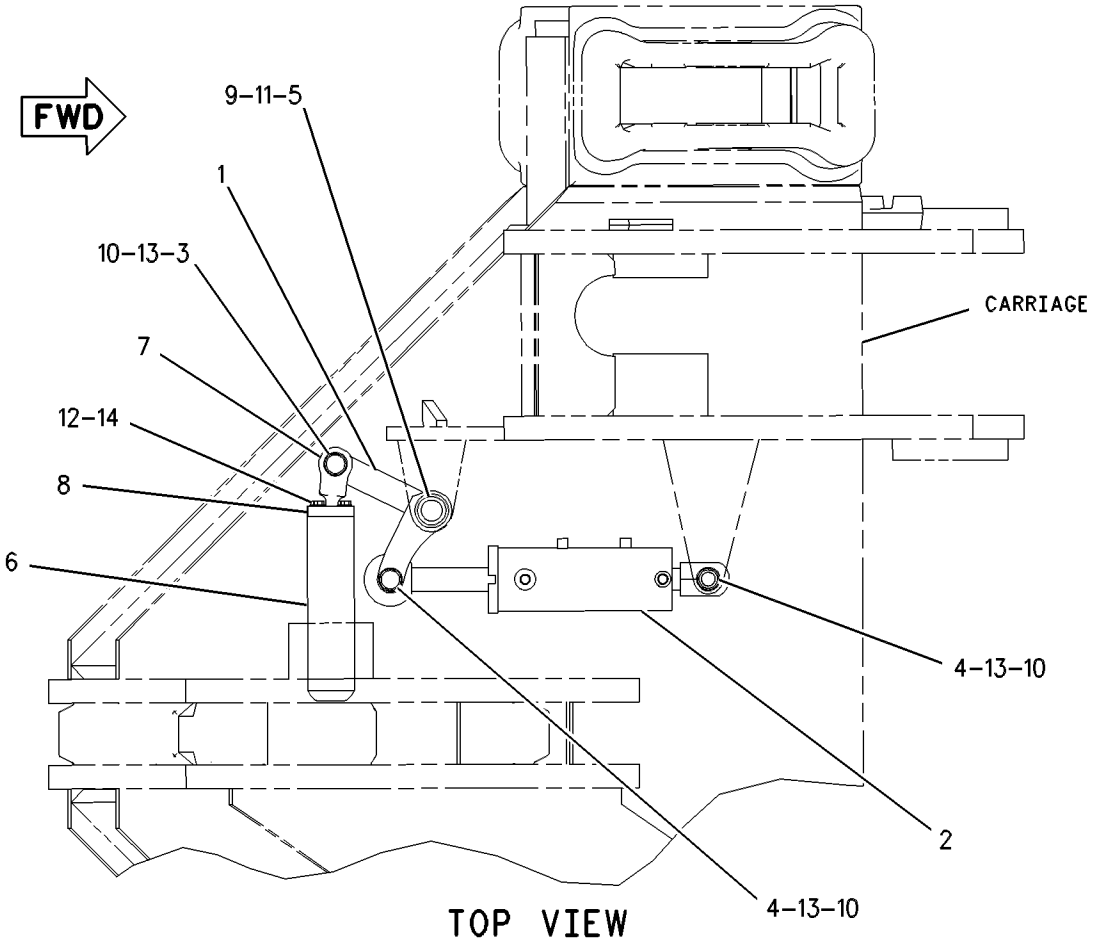

GRAPHIC #1 **<END>** g00437963

119-4270 PUSH ARM GP–RH

S/N: 8PP1-UP; 8RP1-UP
PART OF 119-4269 PUSH ARM GP-STABILIZER
AN ATTACHMENT

SMCS-6061 **i01989057**

NOTE	REF NO	GRAPHIC REF	PART NUMBER	QTY	PART NAME 1 2 3 4 5 6 (PRODUCT LEVEL)	SEE PAGE
	1	1	**5P-8335**	4	BOLT (1-1/4-12X15 IN)	
B	2	1	**3G-0053**	26	SHIM (0.8MM THK)	
	3	1	**7H-7539**	4	NUT-FULL (1-1/4-12 THD)	
	4	1	**123-4011**	1	CAP-BEARING	
	5	1	**126-4200**	1	ARM AS	
	6	1	**1U-1513**	1	PLATE	
	7	1	**1U-2533**	1	BAR	
	8	1	**7T-5140**	2	STEP	
	9	1	**8P-9770**	1	PLATE	
	10	1	**126-4199**	1	BEARING AS	
		1	**104-4741**	1	BEARING	
	11	1	**128-2718**	1	BRACKET AS-RH	
	12	1	**9D-1024**	1	PLATE	
	13	1	**148-6786**	1	BRACKET AS	
	14	1	**145-8737**	2	BEARING-SLEEVE	
	15	1	**1U-3611**	1	GUSSET	

B-USE AS REQUIRED

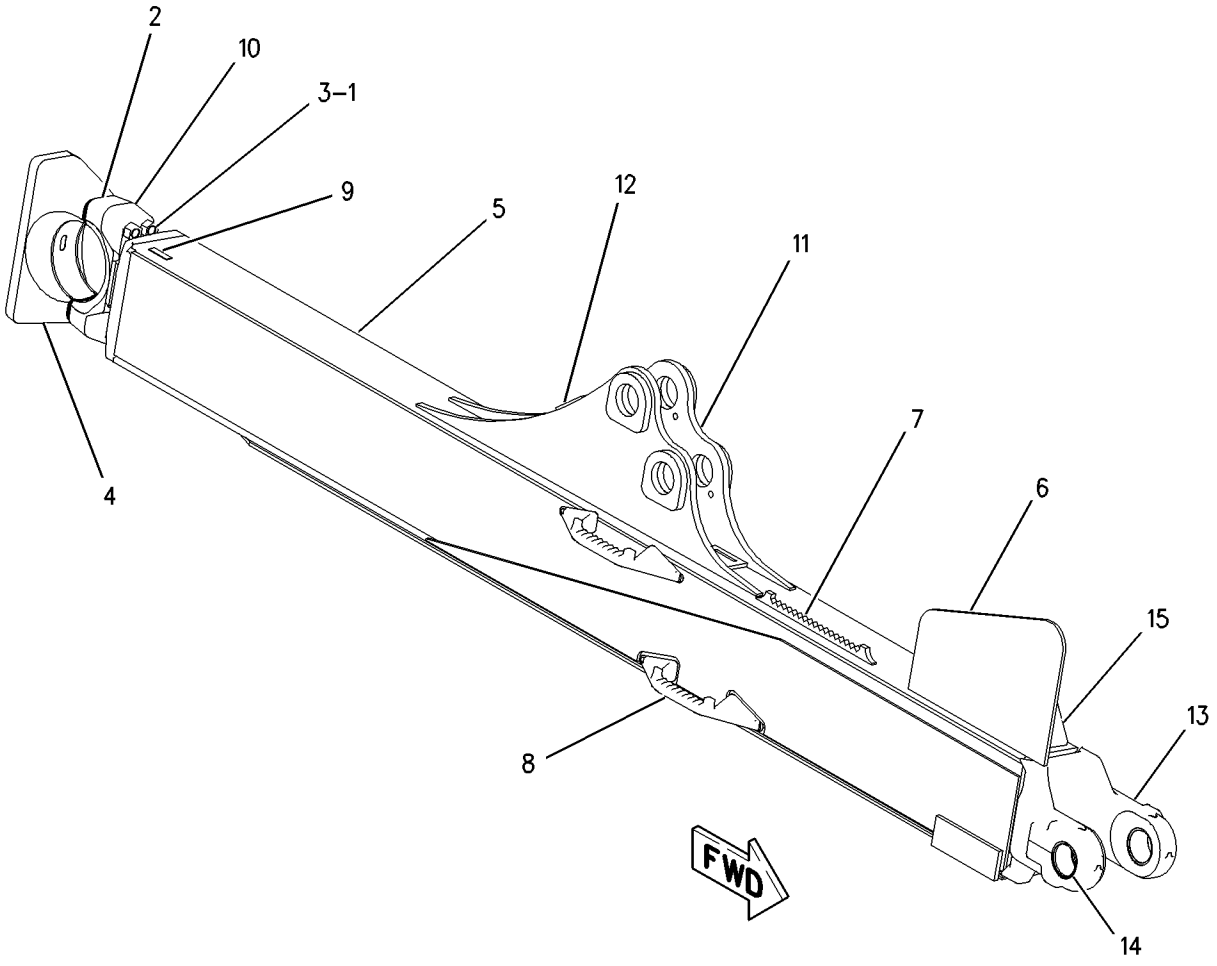

GRAPHIC #1 **<END>** g00745397

119-4271 PUSH ARM GP–LH

S/N: 8PP1-UP; 8RP1-UP
PART OF 119-4269 PUSH ARM GP-STABILIZER
AN ATTACHMENT

SMCS-6061 **i01989058**

NOTE	REF NO	GRAPHIC REF	PART NUMBER	QTY	PART NAME 1 2 3 4 5 6 (PRODUCT LEVEL)	SEE PAGE
	1	1	**5P-8335**	4	BOLT (1-1/4-12X15 IN)	
B	2	1	**3G-0053**	26	SHIM (0.8MM THK)	
	3	1	**7H-7539**	4	NUT-FULL (1-1/4-12 THD)	
	4	1	**123-4011**	1	CAP-BEARING	
	5	1	**126-4201**	1	ARM AS	
	6	1	**1U-1513**	1	PLATE	
	7	1	**1U-2533**	1	BAR	
	8	1	**7T-5140**	2	STEP	
	9	1	**8P-9770**	1	PLATE	
	10	1	**126-4199**	1	BEARING AS	
		1	**104-4741**	1	BEARING	
	11	1	**128-2719**	1	BRACKET AS-LH	
	12	1	**9D-1024**	1	PLATE	
	13	1	**148-6786**	1	BRACKET AS	
	14	1	**145-8737**	2	BEARING-SLEEVE	
	15	1	**1U-3611**	1	GUSSET	

B-USE AS REQUIRED

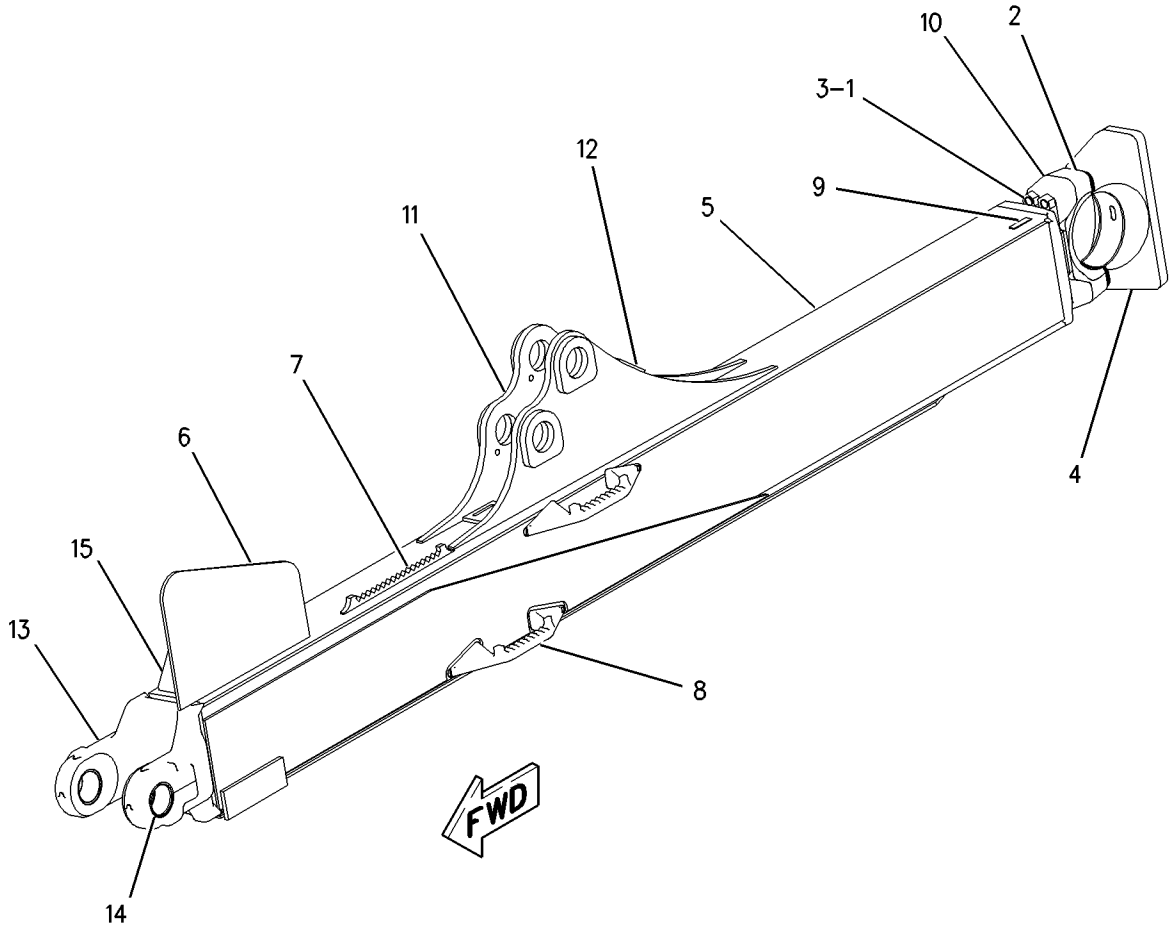

GRAPHIC #1 **<END>** g00745422

178-7277 PUSH ARM GP–RH

S/N: 8PP1-UP; 8RP1-UP
PART OF 119-4269 PUSH ARM GP-STABILIZER
AN ATTACHMENT

SMCS-6061 **i01989066**

NOTE	REF NO	GRAPHIC REF	PART NUMBER	QTY	PART NAME 1 2 3 4 5 6 (PRODUCT LEVEL)	SEE PAGE
	1	1	**5P-8335**	4	BOLT (1-1/4-12X15 IN)	
B	2	1	**3G-0053**	26	SHIM (0.8MM THK)	
	3	1	**123-4011**	1	CAP-BEARING	
	4	1	**7H-7539**	4	NUT-FULL (1-1/4-12 THD)	
	5	1	**178-7276**	1	ARM AS	
	5A	1	**8P-9770**	1	PLATE	
	5B	1	**1U-2533**	1	BAR	
	5C	1	**1U-1513**	1	PLATE	
	5D	1	**1U-3611**	2	GUSSET	
	5E	1	**128-2718**	1	BRACKET AS-RH	
	5F	1	**148-6786**	1	BRACKET AS	
	5G	1	**145-8737**	2	BEARING-SLEEVE	
	5H	1	**166-4113**	2	STEP	
	5I	1	**175-0035**	1	BEARING	

B-USE AS REQUIRED

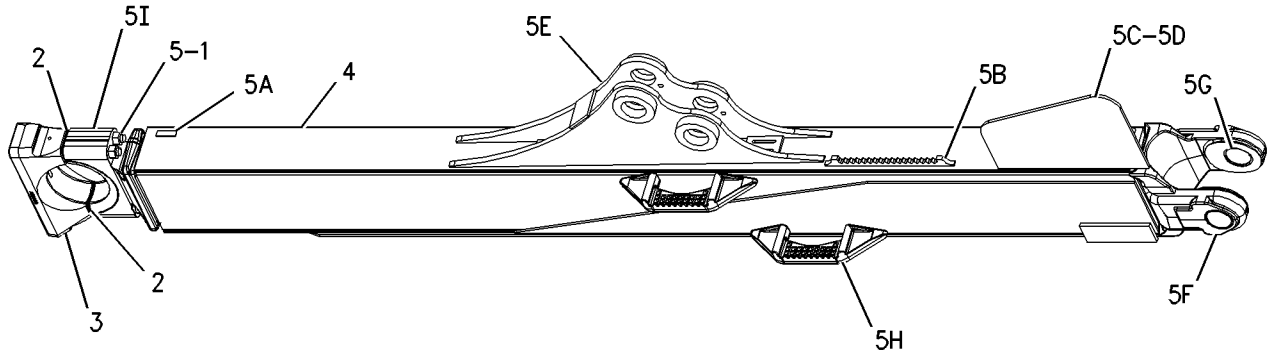

GRAPHIC #1 **<END>** g00802676

178-7279 PUSH ARM GP–LH

S/N: 8PP1-UP; 8RP1-UP
PART OF 119-4269 PUSH ARM GP-STABILIZER
AN ATTACHMENT

SMCS-6061 **i01989064**

NOTE	REF NO	GRAPHIC REF	PART NUMBER	QTY	PART NAME 1 2 3 4 5 6 (PRODUCT LEVEL)	SEE PAGE
	1	1	**5P-8335**	4	BOLT (1-1/4-12X15 IN)	
B	2	1	**3G-0053**	26	SHIM (0.8MM THK)	
	3	1	**123-4011**	1	CAP-BEARING	
	4	1	**7H-7539**	4	NUT-FULL (1-1/4-12 THD)	
	5	1	**178-7278**	1	ARM AS	
	5A	1	**8P-9770**	1	PLATE	
	5B	1	**1U-2533**	1	BAR	
	5C	1	**1U-1513**	1	PLATE	
	5D	1	**1U-3611**	2	GUSSET	
	5E	1	**128-2719**	1	BRACKET AS-LH	
	5F	1	**148-6786**	1	BRACKET AS	
	5G	1	**145-8737**	2	BEARING-SLEEVE	
	5H	1	**166-4113**	2	STEP	
	5I	1	**175-0035**	1	BEARING	

B-USE AS REQUIRED

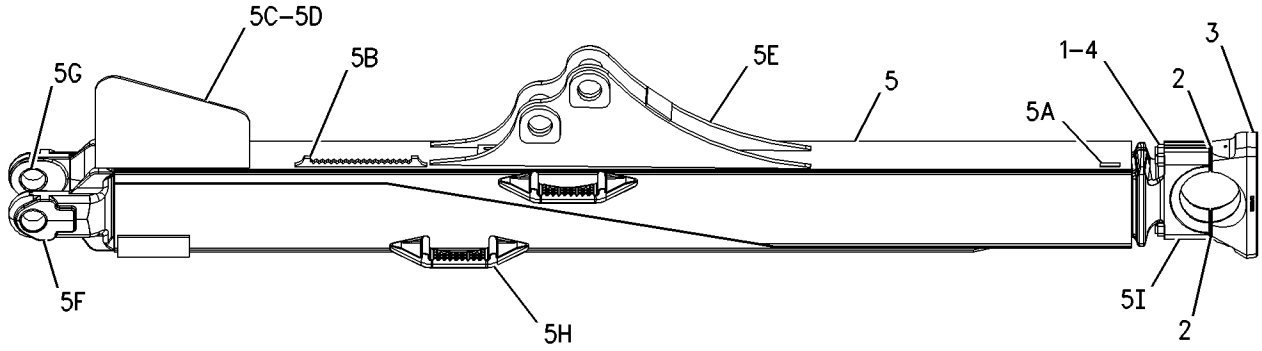

GRAPHIC #1 **<END>** g00802685

119-4269 PUSH ARM GP-STABILIZER

S/N: 8PP1-UP; 8RP1-UP
PART OF 119-4267, 119-4268, 119-4282, 199-8241, 226-5919 BULLDOZER AR-SEMI-UNIVERSAL, 119-4281, 199-8240, 226-5918 BULLDOZER AR-UNIVERSAL AN ATTACHMENT
TYPE 1

SMCS-6061 **i01989056**

NOTE	REF NO	GRAPHIC REF	PART NUMBER	QTY	PART NAME 1 2 3 4 5 6 (PRODUCT LEVEL)	SEE PAGE
	1	1	**9J-2365**	2	RETAINER	
	2	1	**9J-2366**	2	PIN	
Y	3	1	**9T-3715**	1	CYLINDER GP-TILT (RH)	690
Y	4	1	**9T-3716**	1	CYLINDER GP-TILT (LH)	692
Y	5	1	*119-4272*	1	LINK GP-STABILIZER	932
	6	1	**130-3434**	2	PIN	
	7	1	**142-2075**	6	SPACER (105.1X215.9X3MM THK)	
	8	1	**147-5968**	2	RETAINER	
CY	9	1	*178-7277*	1	PUSH ARM GP (RH)	940
CY	10	1	*178-7279*	1	PUSH ARM GP (LH)	941
	11	1	**7X-0381**	10	BOLT (7/8-9X2 IN)	

C-CHANGE FROM PREVIOUS TYPE
Y-SEPARATE ILLUSTRATION

119-4269 **PUSH ARM GP-STABILIZER** ***(contd.)*** **i01989056**

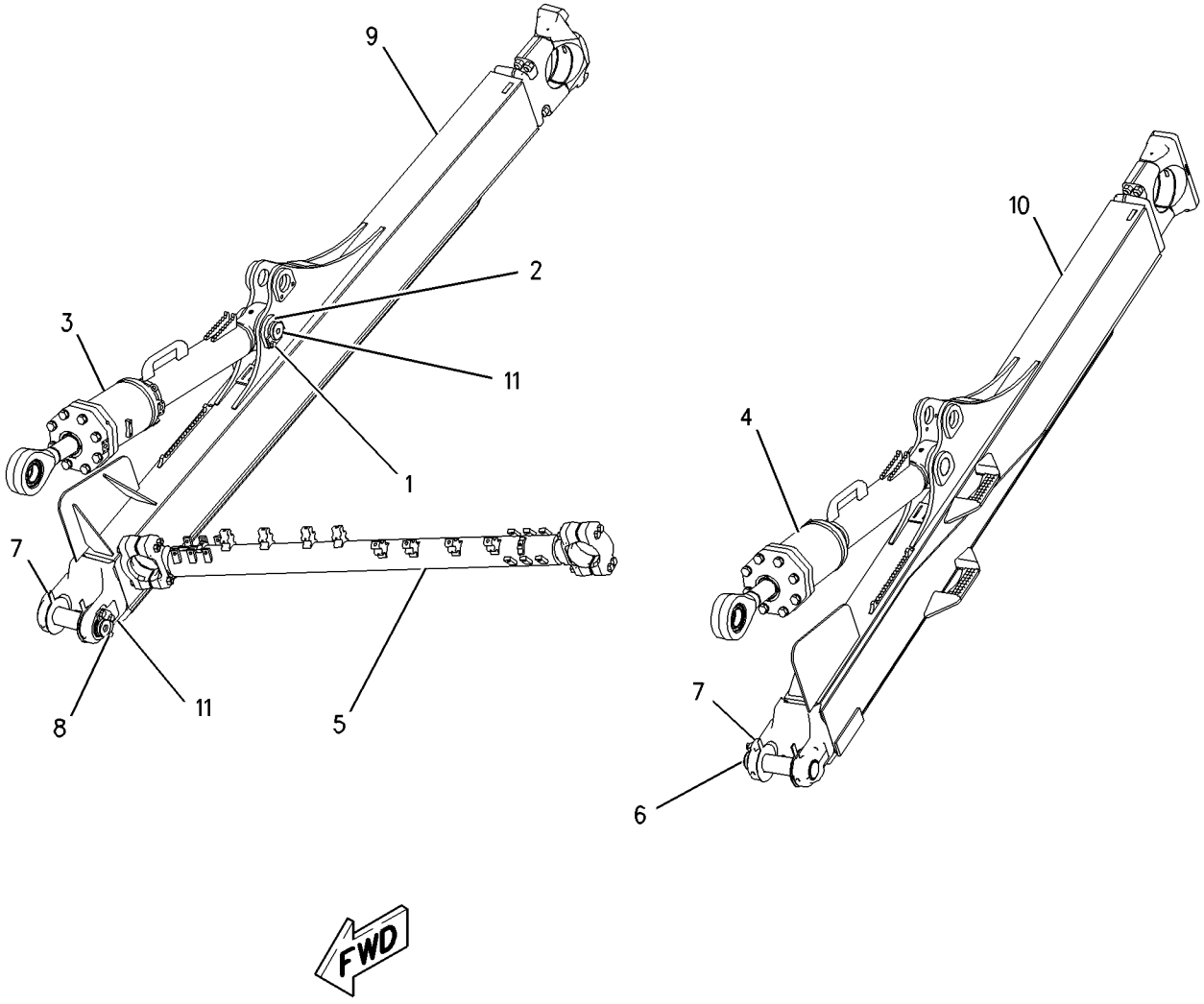

GRAPHIC #1 **<END>** g00796348

119-4269 PUSH ARM GP-STABILIZER

S/N: 8PP1-UP; 8RP1-UP
PART OF 119-4267, 119-4268, 119-4282 BULLDOZER AR-SEMI-UNIVERSAL, 119-4281 BULLDOZER AR-UNIVERSAL
AN ATTACHMENT
TYPE 2

SMCS-6061 **i01989055**

NOTE	PART NUMBER	QTY	PART NAME 1 2 3 4 5 6 (PRODUCT LEVEL)	SEE PAGE
Y	**9T-3715**	1	CYLINDER GP-TILT (RH)	690
Y	**9T-3716**	1	CYLINDER GP-TILT (LH)	692
Y	*119-4272*	1	LINK GP-STABILIZER	932
Y	*119-4271*	1	PUSH ARM GP (LH)	939
Y	*119-4270*	1	PUSH ARM GP (RH)	938
	7X-0381	10	BOLT (7/8-9X2 IN)	
	9J-2366	2	PIN	
	130-3434	2	PIN	
	9J-2365	2	RETAINER	
	147-5968	2	RETAINER	
	142-2075	6	SPACER (105.1X215.9X3MM THK)	

Y-SEPARATE ILLUSTRATION

<END>

119-4297 TRUNNION GP-BULLDOZER

S/N: 8PP1-UP; 8RP1-UP; 7PZ1-UP
PART OF 119-4267, 119-4268, 119-4282, 199-8241, 226-5919 BULLDOZER AR-SEMI-UNIVERSAL, 119-4281, 199-8240, 226-5918 BULLDOZER AR-UNIVERSAL AN ATTACHMENT

SMCS-6069 **i01661692**

NOTE	REF NO	GRAPHIC REF	PART NUMBER	QTY	PART NAME 1 2 3 4 5 6 (PRODUCT LEVEL)	SEE PAGE
	1	1	**209-7714**	2	TRUNNION AS	
					(EACH INCLUDES)	
		1	**7X-0368**	4	BOLT (3/4-10X3 IN)	
		1	**106-9037**	1	RETAINER	
		1	**197-5943**	1	BEARING-SPHERICAL SLEEVE	
	2	1	**7X-0406**	24	BOLT (1-8X3 IN)	

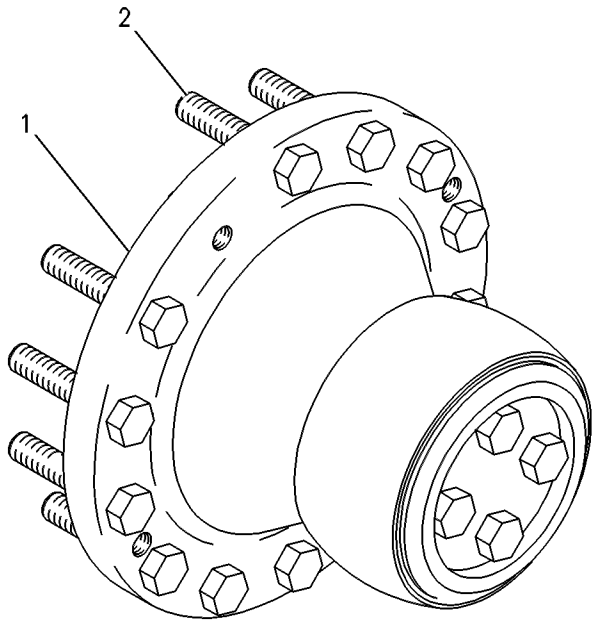

GRAPHIC #1 **<END>** g00272480

109-9040 BIT GP-END

S/N: 7PZ1-UP
GENERAL DUTY-UTILITY
FOR USE WITH 119-4268—PAGE 921, 119-4282—PAGE 922, 119-4267—PAGE 921, 119-4281—PAGE 925
AN ATTACHMENT

SMCS-6804 **i00594867**

NOTE	PART NUMBER	QTY	PART NAME 1 2 3 4 5 6 (PRODUCT LEVEL)	SEE PAGE
	8E-9786	1	BIT-END-LH	
	8E-9785	1	BIT-END-RH	

<END>

109-9041 BIT GP-END

S/N: 7PZ1-UP
EXTENDED WEAR LIFE-UTILITY
FOR USE WITH 119-4268—PAGE 921, 119-4282—PAGE 922, 119-4267—PAGE 921, 119-4281—PAGE 925
AN ATTACHMENT

SMCS-6804 **i00594871**

NOTE	PART NUMBER	QTY	PART NAME 1 2 3 4 5 6 (PRODUCT LEVEL)	SEE PAGE
	8E-9748	1	BIT-END-LH	
	8E-9749	1	BIT-END-RH	

<END>

WORK TOOLS

223-8127 BIT-END—RH

S/N: 7PZ1-UP

FIELD INSTALLATION

SMCS-6804 **i02025466**

NOTE	REF NO	GRAPHIC REF	PART NUMBER	QTY	PART NAME 1 2 3 4 5 6 (PRODUCT LEVEL)	SEE PAGE
					(NO SERVICED PARTS)	

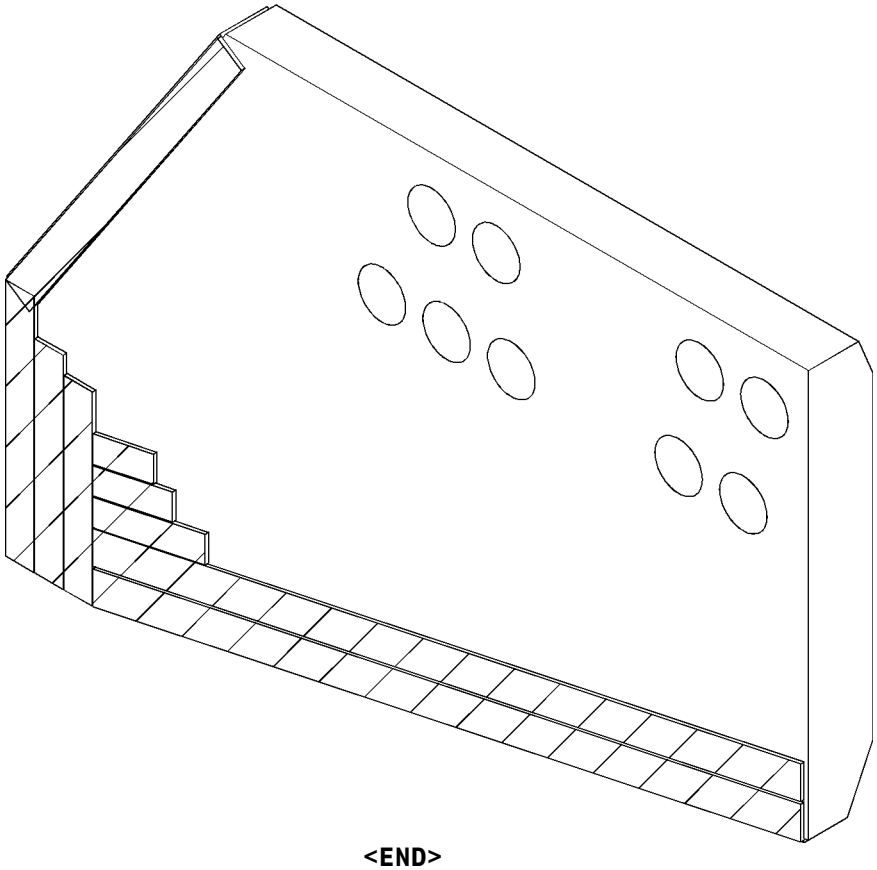

GRAPHIC #1 **<END>** g01045826

WORK TOOLS

223-8128 BIT-END—LH

S/N: 7PZ1-UP

FIELD INSTALLATION

SMCS-6804 **i02025472**

NOTE	REF NO	GRAPHIC REF	PART NUMBER	QTY	PART NAME 1 2 3 4 5 6 (PRODUCT LEVEL)	SEE PAGE
					(NO SERVICED PARTS)	

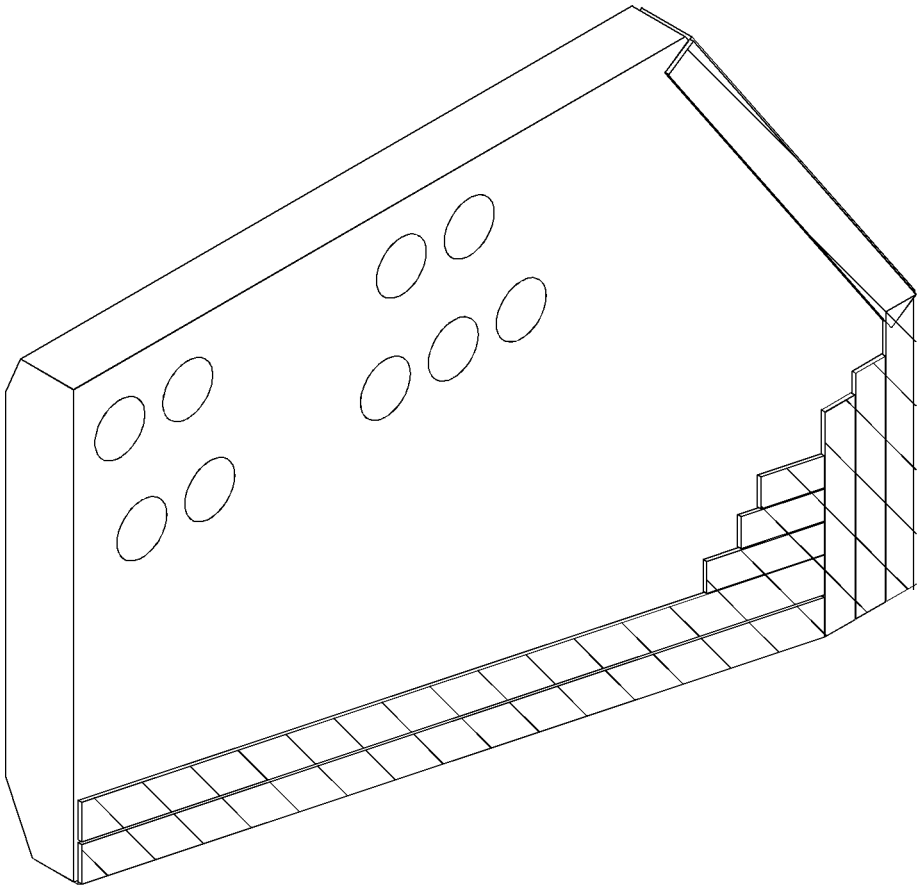

GRAPHIC #1 **<END>** g01045828

130-3431 BLADE & EDGE GP

S/N: 8RP1-UP
ABRASION APPLICATION
PART OF 119-4275 BLADE GP-UNIVERSAL
AN ATTACHMENT

SMCS-6060 **i00756243**

NOTE	PART NUMBER	QTY	PART NAME 1 2 3 4 5 6 (PRODUCT LEVEL)	SEE PAGE
Y	*9W-7605*	1	EDGE GP-BIT & CUTTING	964
Y	*130-3432*	1	BLADE AS-UNIVERSAL	953
Y-SEPARATE ILLUSTRATION				

<END>

136-2749 BLADE & EDGE GP

S/N: 8PP1-UP
ABRASION APPLICATION
PART OF 119-4276 BLADE GP-SEMI-UNIVERSAL
AN ATTACHMENT

SMCS-6060 **i00756387**

NOTE	PART NUMBER	QTY	PART NAME 1 2 3 4 5 6 (PRODUCT LEVEL)	SEE PAGE
Y	*9W-7604*	1	EDGE GP-BIT & CUTTING	963
Y	*136-2750*	1	BLADE AS-SEMI-UNIVERSAL	950
Y-SEPARATE ILLUSTRATION				

<END>

136-2755 BLADE & EDGE GP

S/N: 7PZ1-UP
SEMI-UNIVERSAL
AN ATTACHMENT

SMCS-6060 **i00755069**

NOTE	PART NUMBER	QTY	PART NAME 1 2 3 4 5 6 (PRODUCT LEVEL)	SEE PAGE
Y	*4T-3670*	1	EDGE GP-BIT & CUTTING	961
Y	*136-2756*	1	BLADE AS-SEMI-UNIVERSAL	953
Y-SEPARATE ILLUSTRATION				

<END>

136-3028 BLADE & EDGE GP

S/N: 7PZ1-UP
AN ATTACHMENT

SMCS-6060 **i00808605**

NOTE	PART NUMBER	QTY	PART NAME 1 2 3 4 5 6 (PRODUCT LEVEL)	SEE PAGE
Y	*4T-3703*	1	EDGE GP-BIT & CUTTING	962
Y	*136-3029*	1	BLADE AS-UNIVERSAL	956
Y-SEPARATE ILLUSTRATION				

<END>

136-2750 BLADE AS-SEMI-UNIVERSAL

S/N: 8PP1-UP

PART OF 136-2749 BLADE & EDGE GP

AN ATTACHMENT

SMCS-6060 **i00756390**

NOTE	PART NUMBER	QTY	PART NAME 1 2 3 4 5 6 (PRODUCT LEVEL)	SEE PAGE
Y	**136-2751**	1	BLADE AS-SEMI-UNIVERSAL	951
Y	*6I-8062*	1	GUARD GP-ROCK	529
Y	*136-3983*	1	PLATE GP-WEAR	976

Y-SEPARATE ILLUSTRATION

<END>

136-2751 BLADE AS-SEMI-UNIVERSAL

S/N: 8PP1-UP; 7PZ1-UP
PART OF 136-2750, 136-2756 BLADE AS-SEMI-UNIVERSAL
AN ATTACHMENT

SMCS-6060 **i01969419**

NOTE	REF NO	GRAPHIC REF	PART NUMBER	QTY	PART NAME 1 2 3 4 5 6 (PRODUCT LEVEL)	SEE PAGE
	1	1	**107-8533**	2	GUARD AS	
	2	1	**129-5081**	6	BLOCK	
	3	1	**4T-3643**	1	CHANNEL	
	4	1	**6Y-3233**	2	DEFLECTOR	
	5	1	**8P-9770**	1	PLATE	
	6	1	**128-5142**	1	TRUNNION AS	
	7	1	**130-3437**	1	BRACKET AS-RH	
	8	1	**130-3438**	1	BRACKET AS-LH	
					(EACH BRACKET AS INCLUDES)	
	9	1	**145-8737**	2	BEARING-SLEEVE	
	12	1	**128-5140**	2	BRACKET AS	

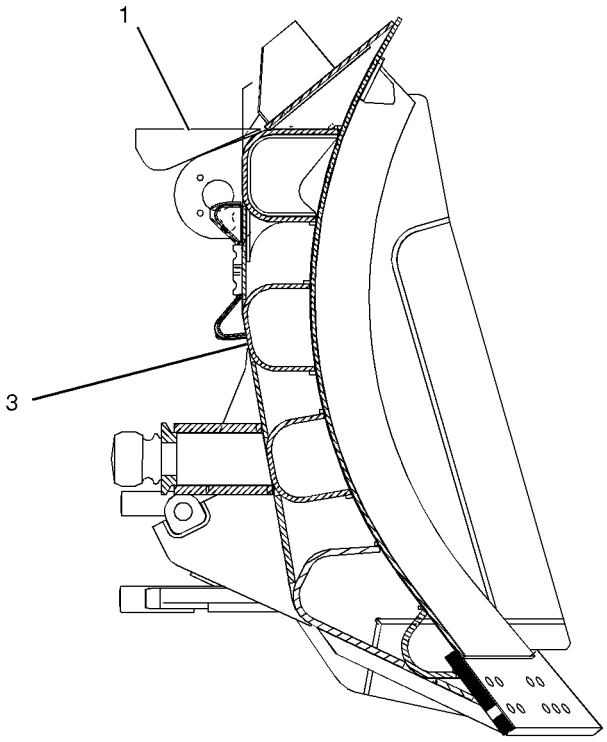

SECTION A-A

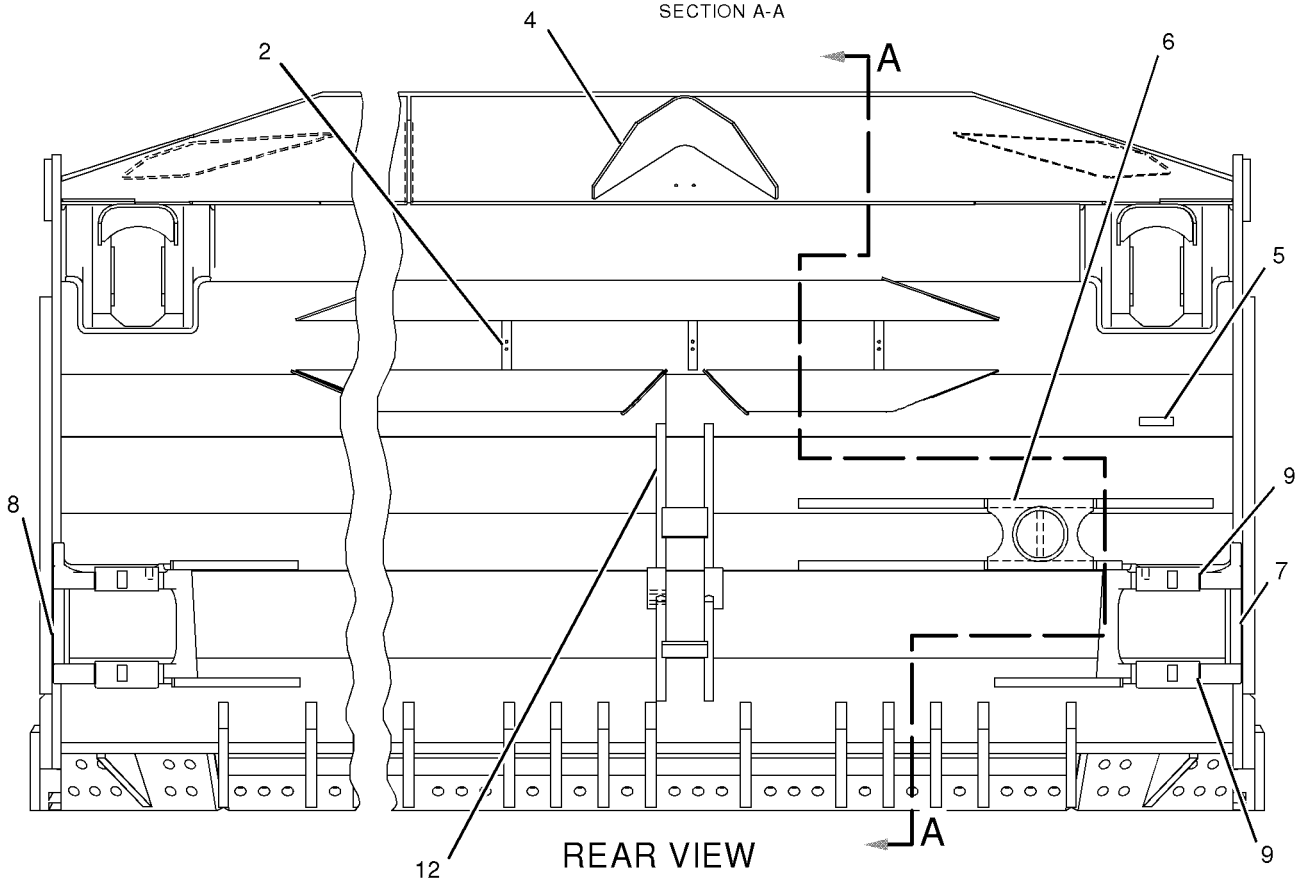

REAR VIEW

GRAPHIC #1

<END>

g01022487

136-2756 BLADE AS-SEMI-UNIVERSAL

S/N: 7PZ1-UP
SEMI-UNIVERSAL
PART OF 136-2755 BLADE & EDGE GP
AN ATTACHMENT

SMCS-6060 **i00755115**

NOTE	PART NUMBER	QTY	PART NAME 1 2 3 4 5 6 (PRODUCT LEVEL)	SEE PAGE
Y	**136-2751**	1	BLADE AS-SEMI-UNIVERSAL	951
Y	*136-3980*	1	PLATE GP-PUSH	933

Y-SEPARATE ILLUSTRATION

<END>

130-3432 BLADE AS-UNIVERSAL

S/N: 8RP1-UP
PART OF 130-3431 BLADE & EDGE GP
AN ATTACHMENT

SMCS-6053, 6060 **i00756245**

NOTE	PART NUMBER	QTY	PART NAME 1 2 3 4 5 6 (PRODUCT LEVEL)	SEE PAGE
Y	**130-3433**	1	BLADE AS-UNIVERSAL	954
Y	*8E-9670*	1	GUARD GP-ROCK	530
Y	*126-8340*	1	PLATE GP-WEAR	975

Y-SEPARATE ILLUSTRATION

<END>

130-3433 BLADE AS-UNIVERSAL

S/N: 8RP1-UP; 7PZ1-UP
PART OF 130-3432, 136-3029 BLADE AS-UNIVERSAL
AN ATTACHMENT

SMCS-6053, 6060 **i01582504**

NOTE	REF NO	GRAPHIC REF	PART NUMBER	QTY	PART NAME 1 2 3 4 5 6 (PRODUCT LEVEL)	SEE PAGE
	1	1	**107-8533**	2	GUARD AS	
	2	1	**1U-3619**	1	BRACKET-RH	
		1	**1U-3620**	1	BRACKET-LH	
	3	1	**4T-3643**	1	CHANNEL	
	4	1	**6Y-3233**	2	DEFLECTOR	
	5	1	**8P-9770**	1	PLATE	
	6	1	**128-5142**	1	TRUNNION AS	
	7	1	**128-5140**	2	BRACKET AS	
	8	1	**129-5081**	6	BLOCK	
	9	1	**130-3437**	1	BRACKET AS-RH	
	10	1	**130-3438**	1	BRACKET AS-LH	
					(EACH BRACKET AS INCLUDES)	
		1	**145-8737**	2	BEARING-SLEEVE	
	11	1	**193-9158**	8	BOSS	

130-3433 BLADE AS-UNIVERSAL *(contd.)* **i01582504**

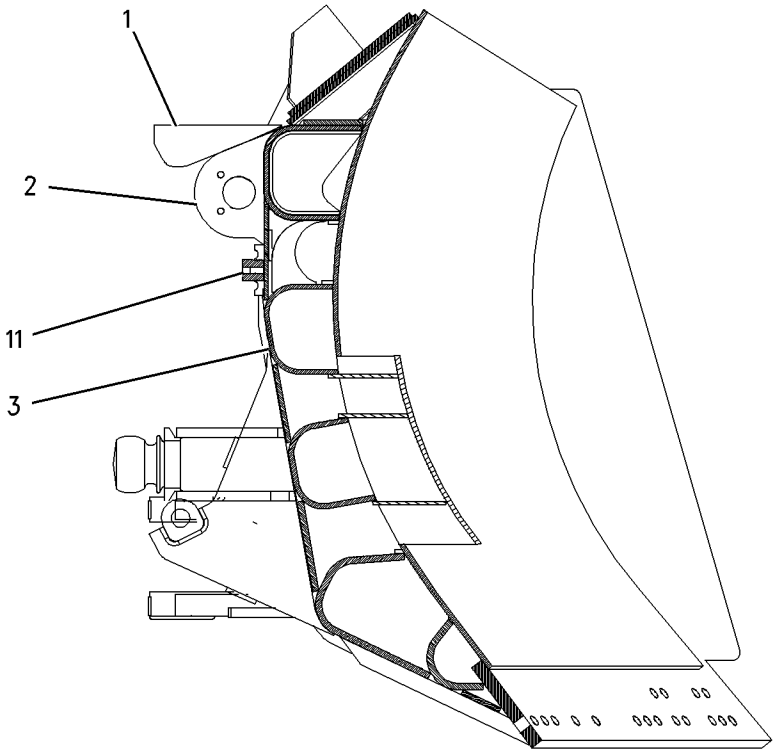

SECTION A-A

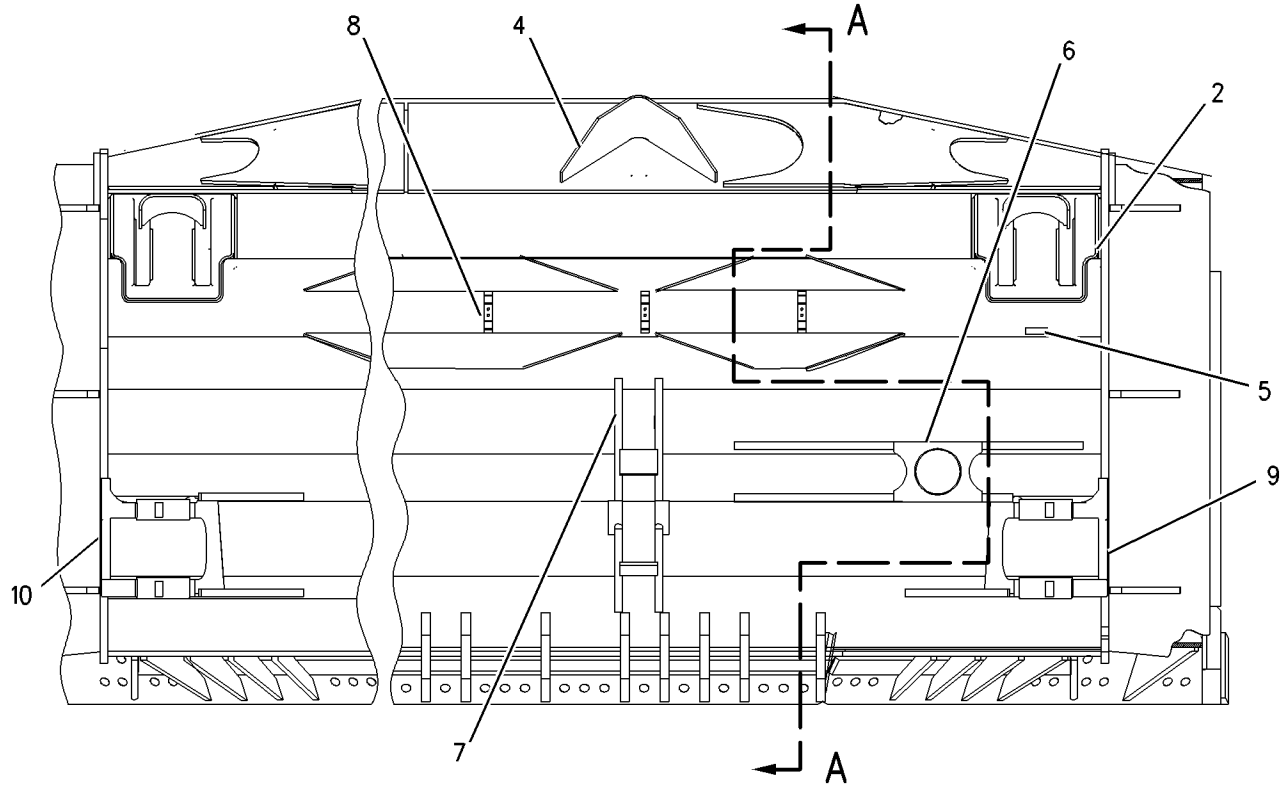

GRAPHIC #1 **<END>** g00835205

136-3029 BLADE AS-UNIVERSAL

S/N: 7PZ1-UP
UNIVERSAL
PART OF 136-3028 BLADE & EDGE GP
AN ATTACHMENT

SMCS-6053, 6060 **i01989067**

NOTE	PART NUMBER	QTY	PART NAME 1 2 3 4 5 6 (PRODUCT LEVEL)	SEE PAGE
Y	**130-3433**	1	BLADE AS-UNIVERSAL	954
	122-3316	1	PLATE AS	

Y-SEPARATE ILLUSTRATION

<END>

WORK TOOLS

119-4276 BLADE GP-SEMI-UNIVERSAL

S/N: 8PP1-UP

PART OF 119-4268, 119-4282, 199-8241, 226-5919 BULLDOZER AR-SEMI-UNIVERSAL

AN ATTACHMENT

SMCS-6060, 6078 **i01989059**

NOTE	REF NO	GRAPHIC REF	PART NUMBER	QTY	PART NAME 1 2 3 4 5 6 (PRODUCT LEVEL)	SEE PAGE
	1	1	**9W-2939**	2	PIN	
	2	1	**6J-5986**	4	RETAINER	
	3	1	**8T-8917**	8	BOLT (1/2-13X1.25 IN)	
	4	1	**4T-3797**	2	CONNECTOR	
	5	1	**6J-5985**	2	PIN	
	6	1	**9J-2593**	2	PIN	
	7	1	**7X-0381**	8	BOLT (7/8-9X2 IN)	
	8	1	**9J-2365**	2	RETAINER	
	9	1	**3G-5336**	4	SPACER	
	10	1	**130-3434**	2	PIN	
	11	1	**130-3436**	2	CONNECTOR AS	
					(EACH INCLUDES)	
		1	**145-8737**	4	BEARING-SLEEVE	
Y	12	1	*136-2749*	1	BLADE & EDGE GP	949
B	13	1	**142-2075**	6	SPACER (105.1X215.9X3MM THK)	
					USE ONLY ONE SPACER PER SIDE OF EACH CONNECTOR AS MINIMUM AND THREE SPACERS PER PIN JOINT MAXIMUM	
	14	1	**130-3435**	2	RETAINER	

B-USE AS REQUIRED
Y-SEPARATE ILLUSTRATION

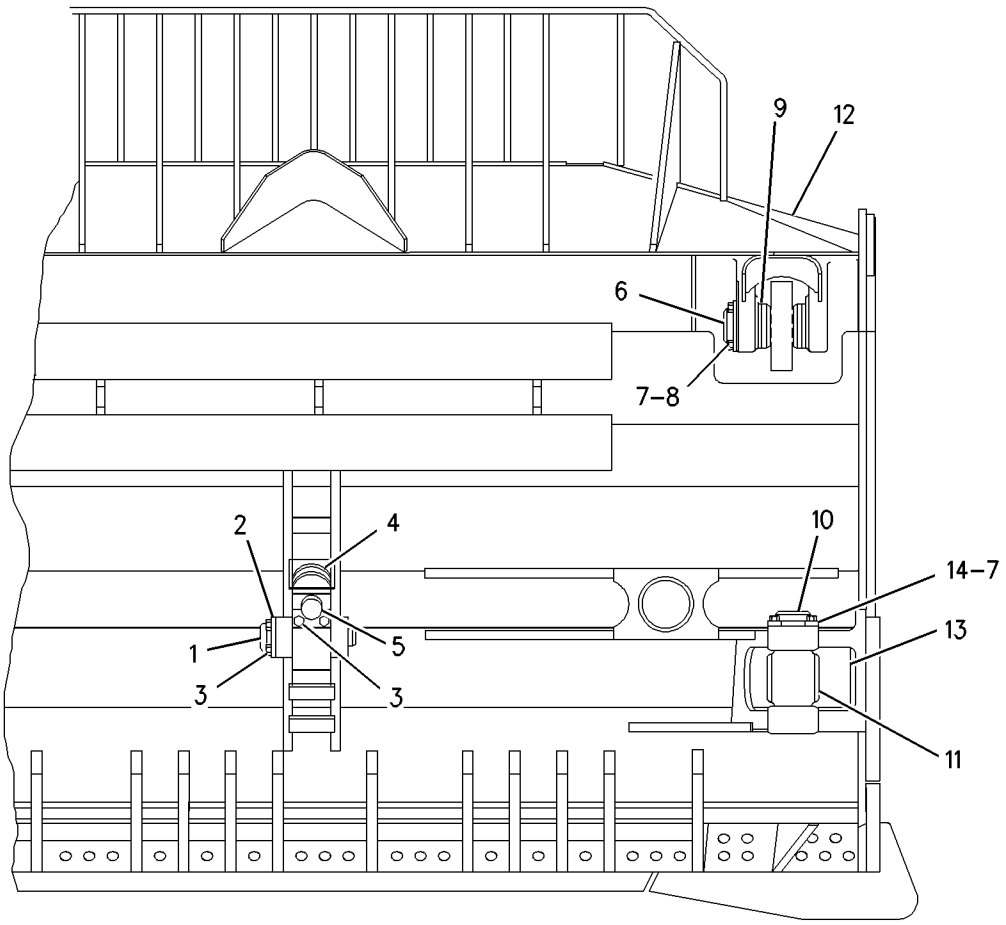

REAR VIEW

GRAPHIC #1 **<END>** g00924546

WORK TOOLS

119-4275 BLADE GP-UNIVERSAL

S/N: 8RP1-UP

PART OF 119-4267 BULLDOZER AR-SEMI-UNIVERSAL, 119-4281, 199-8240, 226-5918 BULLDOZER AR-UNIVERSAL

AN ATTACHMENT

SMCS-6053, 6060 **i02024025**

NOTE	PART NUMBER	QTY	PART NAME 1 2 3 4 5 6 (PRODUCT LEVEL)	SEE PAGE
Y	*130-3431*	1	BLADE & EDGE GP	949
	7X-0381	8	BOLT (7/8-9X2-IN)	
	8T-8917	8	BOLT (1/2-13X1.25-IN)	
	4T-3797	2	CONNECTOR	
	130-3436	2	CONNECTOR AS	
			(EACH INCLUDES)	
	145-8737	4	BEARING-SLEEVE	
	6J-5985	2	PIN	
	9J-2593	2	PIN	
	9W-2939	2	PIN	
	130-3434	2	PIN	
	130-3435	2	RETAINER	
	6J-5986	4	RETAINER	
	9J-2365	2	RETAINER	
	3G-5336	4	SPACER	
	142-2075	6	SPACER (105.1X215.9X3-MM THK)	
			(USE ONLY ONE SPACER PER SIDE OF EACH CONNECTOR AS MINIMUM AND THREE SPACERS PER PIN JOINT MAXIMUM)	

Y-SEPARATE ILLUSTRATION

<END>

117-1258 COVER GP-SHIPPING—TRANSMISSION

S/N: 1SY1-UP

PART OF 116-9505, 194-3805 TRANSMISSION AR

SMCS-5163 **i01421262**

NOTE	REF NO	GRAPHIC REF	PART NUMBER	QTY	PART NAME 1 2 3 4 5 6 (PRODUCT LEVEL)	SEE PAGE
	1	1	**183-2296**	1	COVER-SHIPPING	
	2	1	**9X-8886**	15	BOLT (3/4-10X2.75 IN)	
	3	1	**5P-8248**	15	WASHER-HARD (20X36.5X3.5MM THK)	
	4	1	**2J-3506**	15	NUT-FULL (3/4-10 THD)	
	5	1	**7J-0401**	1	COVER	
	6	1	**7H-1495**	1	GASKET	
	7	1	**0S-1621**	4	BOLT (1/2-13X1 IN)	
	8	1	**1S-3725**	2	COVER	
	9	1	**8E-7366**	2	GASKET	
	10	1	**0T-0318**	8	BOLT (7/16-14X1 IN)	
	11	1	**4F-7391**	1	SEAL-O-RING (32.92MM ID)	

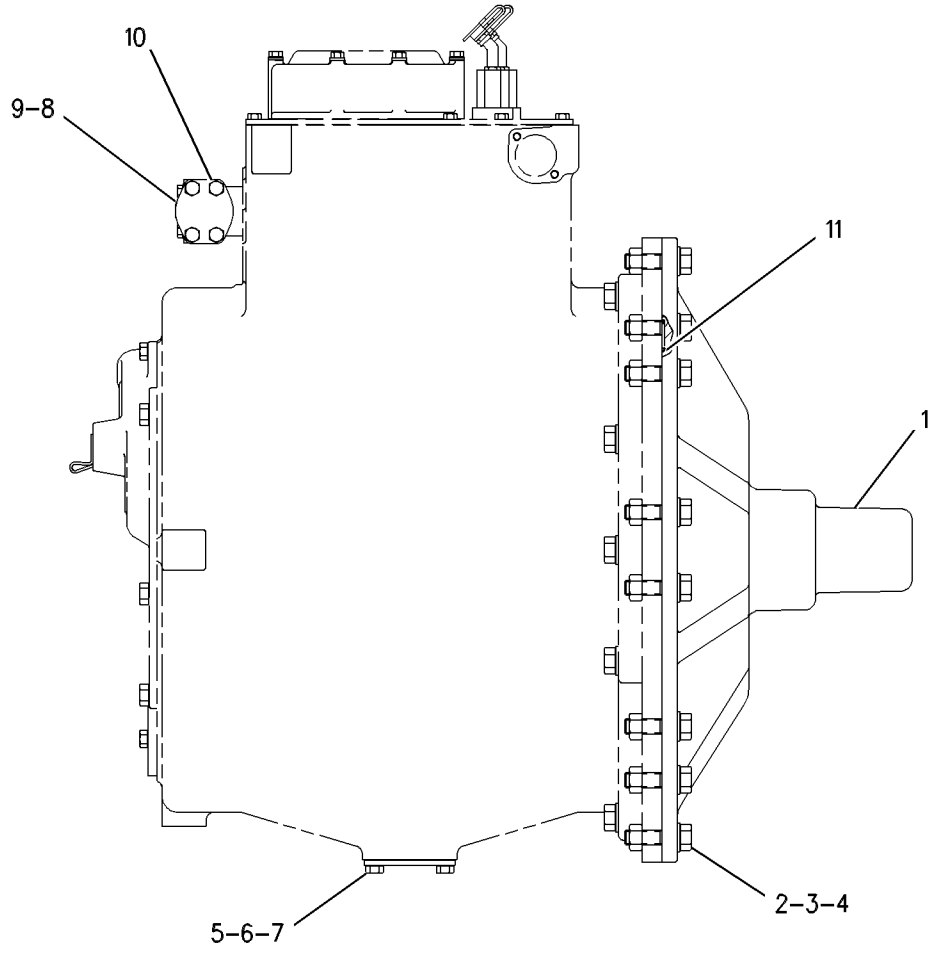

GRAPHIC #1 **<END>** g00655469

WORK TOOLS

4T-3670 EDGE GP-BIT & CUTTING

S/N: 7PZ1-UP
PART OF 136-2755 BLADE & EDGE GP
FOR USE WITH 119-4268–PAGE 921, 119-4282–PAGE 922
AN ATTACHMENT

SMCS-6801, 6804 **i00587393**

NOTE	REF NO	GRAPHIC REF	PART NUMBER	QTY	PART NAME 1 2 3 4 5 6 (PRODUCT LEVEL)	SEE PAGE
	1	1	**8E-4543**	1	BIT-END-RH	
	2	1	**8E-4544**	1	BIT-END-LH	
	3	1	**9W-2425**	2	EDGE-CUTTING	
	4	1	**5P-8823**	54	BOLT-PLOW (1-1/4-7X105MM)	
		1	**4K-0684**	54	WASHER-HARD (6MM THK)	
		1	**3K-9770**	54	NUT-FULL (1-1/4-7 THD)	
	5	1	**9W-2426**	2	EDGE-CUTTING	

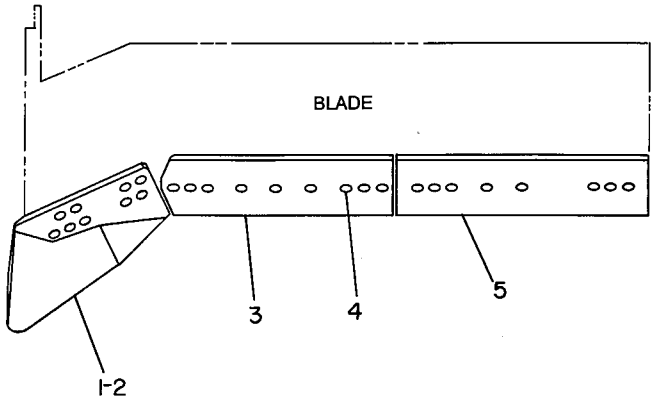

GRAPHIC #1 **<END>** g00176032

4T-3703 EDGE GP-BIT & CUTTING

S/N: 7PZ1-UP
PART OF 136-3028 BLADE & EDGE GP
FOR USE WITH 119-4267—PAGE 921, 119-4281—PAGE 925
AN ATTACHMENT

SMCS-6801, 6804 **i00587254**

NOTE	REF NO	GRAPHIC REF	PART NUMBER	QTY	PART NAME 1 2 3 4 5 6 (PRODUCT LEVEL)	SEE PAGE
	1	1	**8E-4543**	1	BIT-END-RH	
	2	1	**8E-4544**	1	BIT-END-LH	
	3	1	**9W-2425**	2	EDGE-CUTTING	
	4	1	**5P-8823**	63	BOLT-PLOW (1-1/4-7X105MM)	
		1	**4K-0684**	63	WASHER-HARD (6MM THK)	
		1	**3K-9770**	63	NUT-FULL (1-1/4-7 THD)	
	5	1	**9W-2424**	2	EDGE-CUTTING	
	6	1	**9W-2426**	1	EDGE-CUTTING	

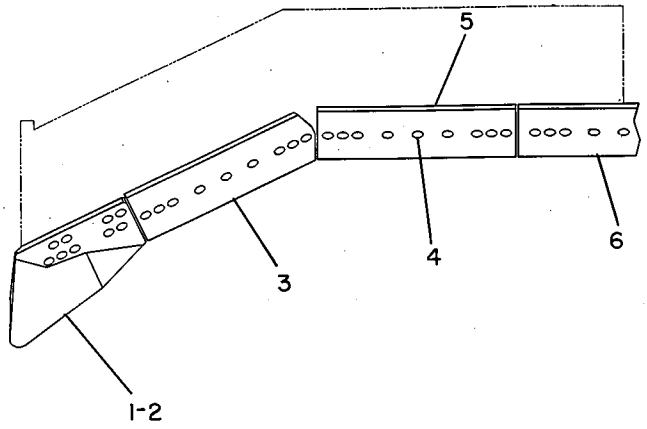

GRAPHIC #1 **<END>** g00175635

9W-7604 EDGE GP-BIT & CUTTING

S/N: 8PP1-UP; 7PZ1-UP
S BLADE
PART OF 136-2749 BLADE & EDGE GP
AN ATTACHMENT

SMCS-6801, 6804 **i00596439**

NOTE	REF NO	GRAPHIC REF	PART NUMBER	QTY	PART NAME 1 2 3 4 5 6 (PRODUCT LEVEL)	SEE PAGE
	1	1	**8E-4545**	1	BIT-END-RH	
	2	1	**8E-4546**	1	BIT-END-LH	
	3	1	**9W-4494**	2	EDGE-CUTTING	
	4	1	**5P-8823**	54	BOLT-PLOW (1-1/4-7X105MM)	
		1	**4K-0684**	54	WASHER-HARD (6MM THK)	
		1	**3K-9770**	54	NUT-FULL (1-1/4-7 THD)	
	5	1	**9W-4495**	2	EDGE-CUTTING	

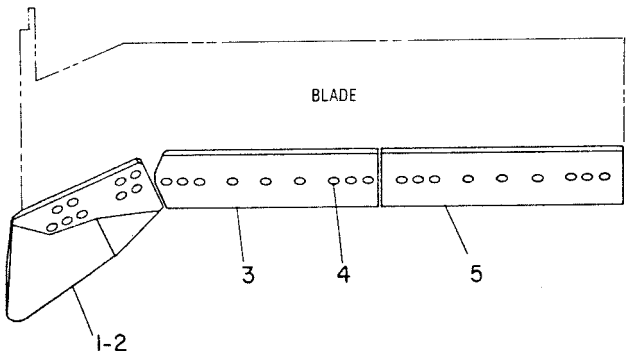

FRONT VIEW

GRAPHIC #1 **<END>** g00192140

9W-7605 EDGE GP-BIT & CUTTING

S/N: 8RP1-UP; 7PZ1-UP
U BLADE
PART OF 130-3431 BLADE & EDGE GP
AN ATTACHMENT

SMCS-6801, 6804 **i00596490**

NOTE	REF NO	GRAPHIC REF	PART NUMBER	QTY	PART NAME 1 2 3 4 5 6 (PRODUCT LEVEL)	SEE PAGE
	1	1	**8E-4545**	1	BIT-END-RH	
	2	1	**8E-4546**	1	BIT-END-LH	
	3	1	**9W-4494**	2	EDGE-CUTTING	
	4	1	**5P-8823**	63	BOLT-PLOW (1-1/4-7X105MM)	
		1	**4K-0684**	63	WASHER-HARD (6MM THK)	
		1	**3K-9770**	63	NUT-FULL (1-1/4-7 THD)	
	5	1	**9W-4493**	2	EDGE-CUTTING	
	6	1	**9W-4495**	1	EDGE-CUTTING	

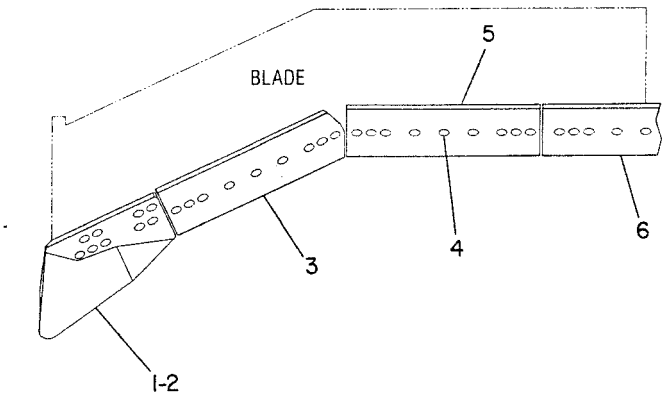

FRONT VIEW

GRAPHIC #1 **<END>** g00192141

WORK TOOLS

107-3501 EDGE GP-BIT & CUTTING

S/N: 7PZ1-UP
HEAVY DUTY-MINING
FOR USE WITH 119-4268—PAGE 921, 119-4282—PAGE 922
AN ATTACHMENT

SMCS-6801, 6804 **i00892116**

NOTE	PART NUMBER	QTY	PART NAME 1 2 3 4 5 6 (PRODUCT LEVEL)	SEE PAGE
	107-3522	1	BIT AS-END-LH	
	107-3521	1	BIT AS-END-RH	
	5P-8823	44	BOLT-PLOW (1 1/4-7X105MM)	
	107-3523	1	EDGE-CUTTING	
	3K-9770	44	NUT-FULL (1-1/4-7 THD)	

<END>

135-9599 EDGE GP-BIT & CUTTING

S/N: 7PZ1-UP
EXTENDED WEAR LIFE
FOR USE WITH 119-4268—PAGE 921, 119-4282—PAGE 922
AN ATTACHMENT

SMCS-6801, 6804 **i01290553**

NOTE	PART NUMBER	QTY	PART NAME 1 2 3 4 5 6 (PRODUCT LEVEL)	SEE PAGE
	8E-4546	1	BIT-END	
	8E-4545	1	BIT-END	
	5P-8823	54	BOLT-PLOW (1 1/4-7X4.13IN)	
	135-9578	2	EDGE-CUTTING	
	135-9577	2	EDGE-CUTTING	
	3K-9770	54	NUT-FULL (1-1/4-7 THD)	
	4K-0684	54	WASHER-HARD (6MM THK)	

<END>

208-5182 EDGE GP-BIT & CUTTING

S/N: 7PZ1-UP
FIELD INSTALLATION

SMCS-6801, 6804 **i01797778**

NOTE	PART NUMBER	QTY	PART NAME 1 2 3 4 5 6 (PRODUCT LEVEL)	SEE PAGE
	195-7171	1	BIT-END (RH)	
	195-7172	1	BIT-END (LH)	
	5P-8823	63	BOLT-PLOW (1 1/4-7X4.13-IN)	
	195-9173	2	EDGE-CUTTING	
	195-9174	1	EDGE-CUTTING (RH)	
	195-9175	1	EDGE-CUTTING	
	201-1231	1	EDGE-CUTTING (LH)	
	3K-9770	63	NUT-FULL (1 1/4X7-THD)	
	4K-0684	63	WASHER-HARD (34X55X6-MM THK)	

<END>

109-9046 EDGE GP-CUTTING

S/N: 7PZ1-UP
HEAVY DUTY-MINING
FOR USE WITH 119-4267—PAGE 921, 119-4281—PAGE 925
AN ATTACHMENT

SMCS-6801 **i01023480**

NOTE	PART NUMBER	QTY	PART NAME 1 2 3 4 5 6 (PRODUCT LEVEL)	SEE PAGE
	5P-8823	45	BOLT-PLOW (1 1/4-7X4.13IN)	
	109-9047	2	EDGE AS	
	109-9050	1	EDGE-CUTTING	
	3K-9770	45	NUT-FULL (1-1/4-7 THD)	

<END>

WORK TOOLS

195-7187 EDGE-CUTTING

S/N: 7PZ1-UP

FIELD INSTALLATION

SMCS-6801 **i02025822**

NOTE	REF NO	GRAPHIC REF	PART NUMBER	QTY	PART NAME 1 2 3 4 5 6 (PRODUCT LEVEL)	SEE PAGE
					(NO SERVICED PARTS)	

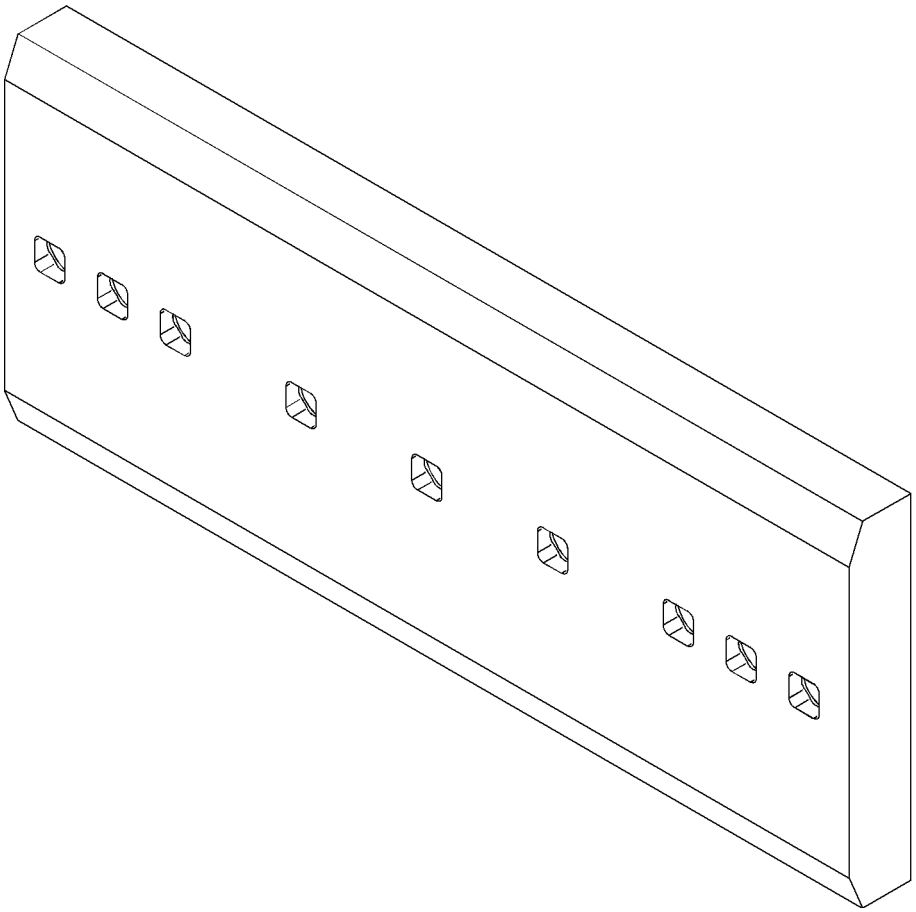

GRAPHIC #1 **<END>** g01045835

WORK TOOLS

229-7052 EDGE-CUTTING

S/N: 7PZ1-UP

FIELD INSTALLATION

SMCS-6801 **i02025796**

NOTE	REF NO	GRAPHIC REF	PART NUMBER	QTY	PART NAME 1 2 3 4 5 6 (PRODUCT LEVEL)	SEE PAGE
					(NO SERVICED PARTS)	

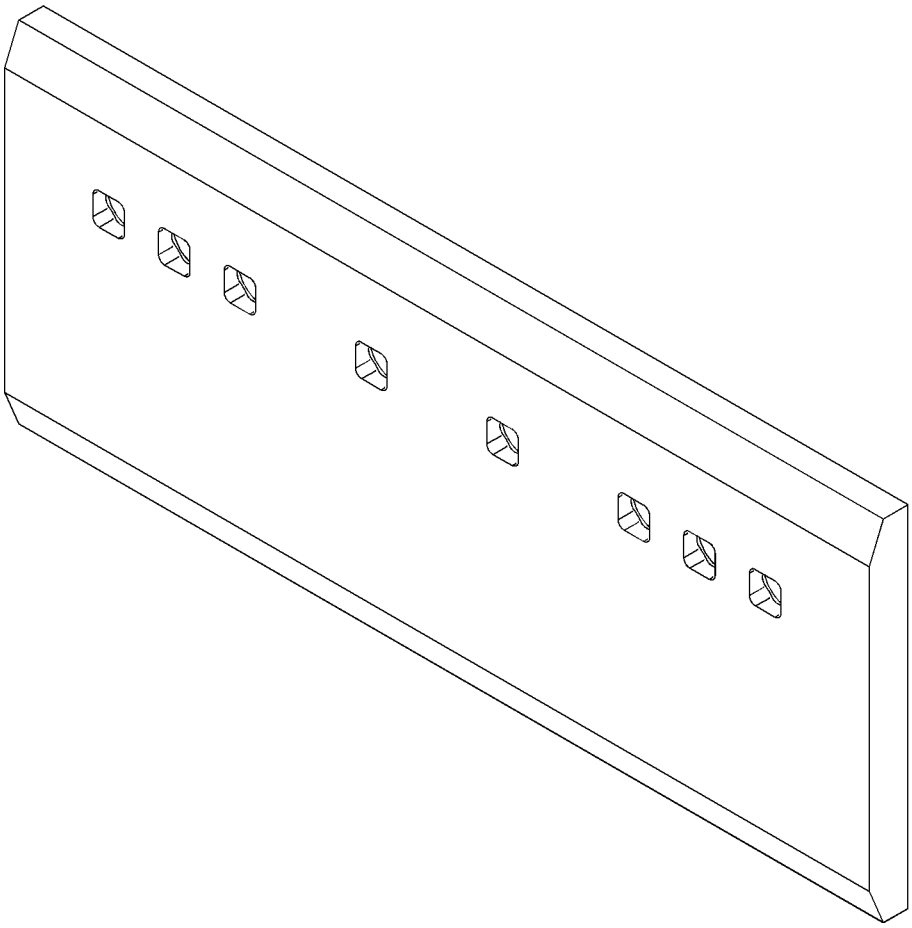

GRAPHIC #1 **<END>** g01045837

WORK TOOLS

127-1032 FRAME GP-RIPPER—SINGLE SHANK

S/N: 5MP1-UP; 7CP1-UP
PART OF 127-1031, 130-6462 RIPPER AR
AN ATTACHMENT

SMCS-6314, 7067 **i01989061**

NOTE	REF NO	GRAPHIC REF	PART NUMBER	QTY	PART NAME 1 2 3 4 5 6 (PRODUCT LEVEL)	SEE PAGE
	1	1	**4T-2805**	4	PIN AS	
	2	1	**5P-2672**	8	SEAL-LIP TYPE	
B	3	1	**8W-9506**	10	SPACER (90.5X140X3MM THK)	
	4	1	**7K-9211**	16	SEAL-LIP TYPE	
	5	1	**9J-2290**	2	PIN AS	
	6	1	**7T-7305**	10	PLATE	
	7	1	**7X-0365**	20	BOLT (3/4-10X1.5 IN)	
	8	1	**9U-8404**	4	SPACER (89.4X180X35MM THK)	
B	9	1	**9W-5556**	24	SPACER (120X250X3MM THK)	
	10	1	**105-5448**	2	PIN AS	
	11	1	**7X-0388**	2	BOLT (7/8-9X4.5 IN)	
	12	1	**130-5355**	2	PIN AS	
	13	1	**132-0055**	2	PIN AS	
	14	1	**6K-0545**	2	LOCKNUT (7/8X19 THD)	
	15	1	**145-2875**	1	FRAME & BEARING AS	
	15A	1	**2J-1227**	2	RETAINER	
	15B	1	**3J-6035**	2	RETAINER	
	15C	1	**4S-1722**	2	BOSS	
	15D	1	**3B-8489**	2	FITTING-GREASE	
	15E	1	**9J-1914**	4	BEARING-SLEEVE	

B-USE AS REQUIRED

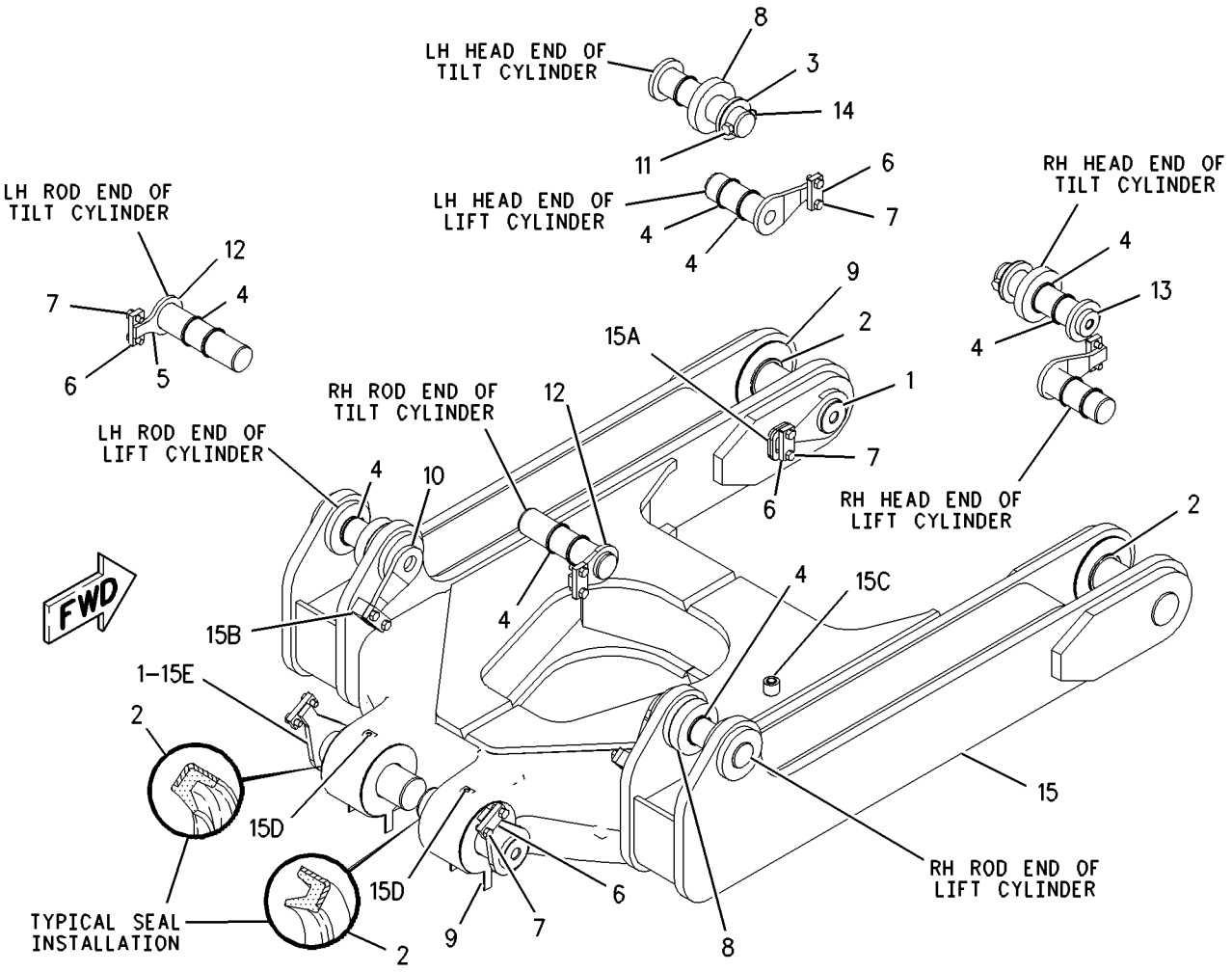

GRAPHIC #1 **<END>** g00879009

130-6459 FRAME GP-RIPPER—MULTI-SHANK

S/N: 7DP1-UP
PART OF 130-6458 RIPPER AR
AN ATTACHMENT

SMCS-6314, 7067 **i01989063**

NOTE	REF NO	GRAPHIC REF	PART NUMBER	QTY	PART NAME 1 2 3 4 5 6 (PRODUCT LEVEL)	SEE PAGE
	1	1	**4T-2805**	2	PIN AS	
	2	1	**4T-8901**	2	PIN AS	
	3	1	**5P-2672**	8	SEAL-LIP TYPE	
	4	1	**5P-9899**	2	PLUG-PROTECTION	
	5	1	**6J-8422**	2	PIN AS	
	6	1	**7K-9211**	16	SEAL-LIP TYPE	
	7	1	**7T-7222**	2	PIN AS	
	8	1	**7T-7305**	10	PLATE	
	9	1	**9U-8404**	6	SPACER (89.4X180X35MM THK)	
B	10	1	**9W-5556**	18	SPACER (120X250X3MM THK)	
	11	1	**105-5448**	2	PIN AS	
	12	1	**128-6816**	1	FRAME AS	
		1	**3B-8489**	2	FITTING-GREASE (RIPPER FRAME)	
		1	**128-6121**	4	BEARING-SLEEVE	
		1	**2J-1227**	2	RETAINER	
		1	**3J-6035**	2	RETAINER	
		1	**4S-1722**	2	BOSS	
		1	**8P-9770**	1	PLATE	
	13	1	**132-0055**	2	PIN AS	
	14	1	**6K-0545**	2	LOCKNUT (7/8X19 THD)	
	15	1	**7X-0365**	20	BOLT (3/4-10X1.5 IN)	
	16	1	**7X-0388**	2	BOLT (7/8-9X4.5 IN)	
B	17	1	**8W-9506**	10	SPACER (90.5X140X3MM THK)	

B-USE AS REQUIRED

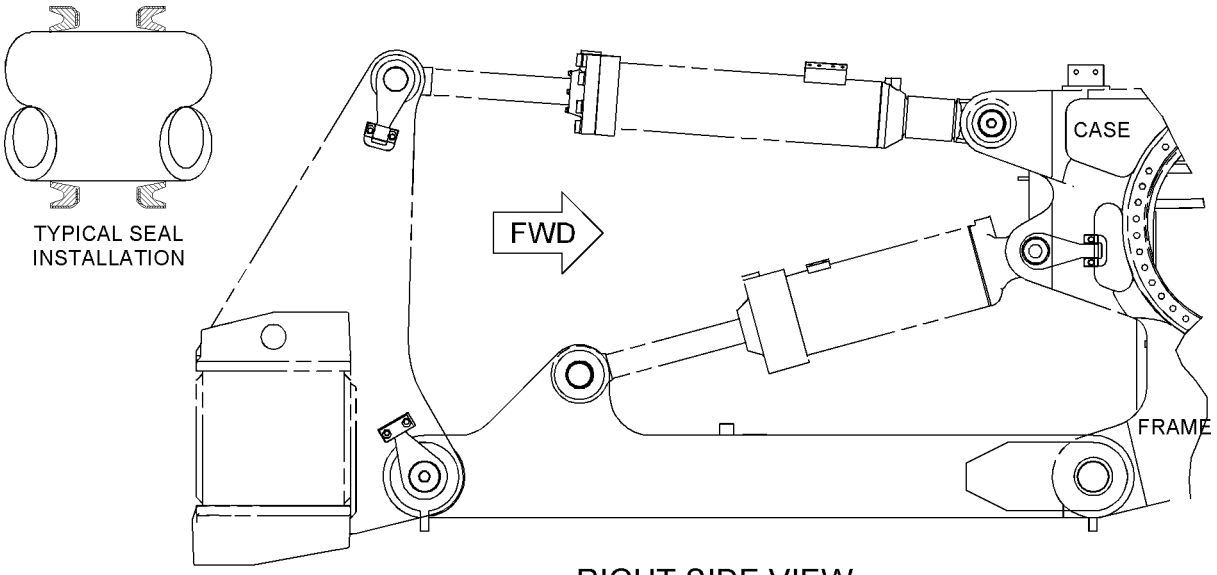

RIGHT SIDE VIEW

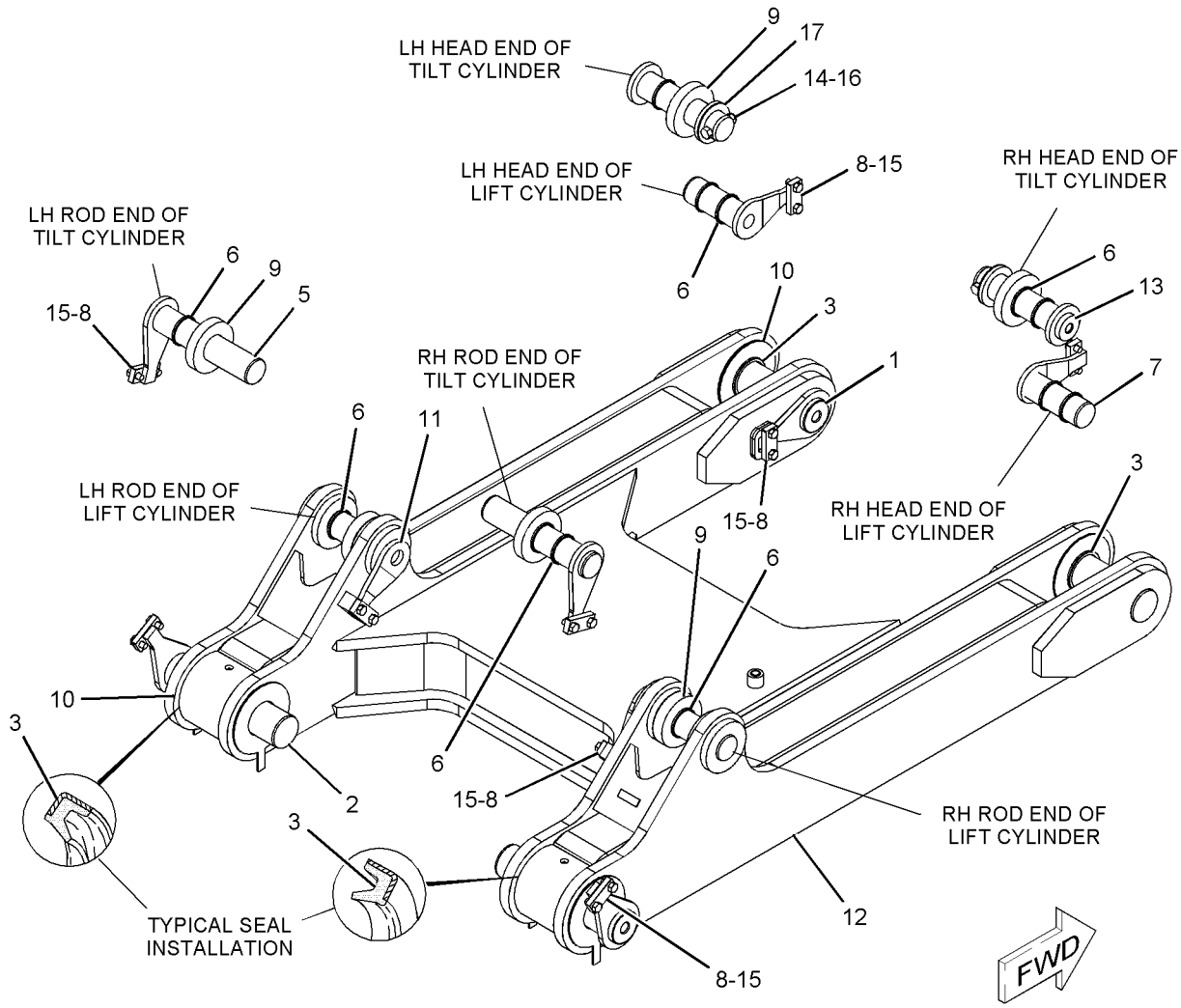

GRAPHIC #1 **<END>** g01025153

WORK TOOLS

161-2419 FRAME GP-RIPPER—MULTI-SHANK

S/N: 7ZP1-UP
PART OF 161-2420 RIPPER AR
AN ATTACHMENT

SMCS-6314, 7067 **i01989528**

NOTE	REF NO	GRAPHIC REF	PART NUMBER	QTY	PART NAME 1 2 3 4 5 6 (PRODUCT LEVEL)	SEE PAGE
	1	1	**4T-2805**	2	PIN AS	
	2	1	**4T-8901**	2	PIN AS	
	3	1	**5P-2672**	8	SEAL-LIP TYPE	
	4	1	**7X-0388**	2	BOLT (7/8-9X4.5 IN)	
	5	1	**6J-8422**	2	PIN AS	
	6	1	**7K-9211**	16	SEAL-LIP TYPE	
	7	1	**9J-2290**	2	PIN AS	
	8	1	**7T-7305**	10	PLATE	
	9	1	**9U-8404**	6	SPACER (89.4X180X35MM THK)	
B	10	1	**9W-5556**	18	SPACER (120X250X3MM THK)	
	11	1	**105-5448**	2	PIN AS	
	12	1	**132-0055**	2	PIN AS	
	13	1	**6K-0545**	2	LOCKNUT (7/8X19 THD)	
	14	1	**7X-0365**	20	BOLT (3/4-10X1.5 IN)	
	15	1	**8W-9506**	2	SPACER (90.5X140X3MM THK)	
	16	1	**161-4495**	1	FRAME AS	
	17	1	**3J-6035**	2	RETAINER	
	18	1	**4S-1722**	2	BOSS	
	19	1	**128-6121**	4	BEARING-SLEEVE	
	20	1	**3B-8489**	2	FITTING-GREASE	
	21	1	**2J-1227**	2	RETAINER	

B-USE AS REQUIRED

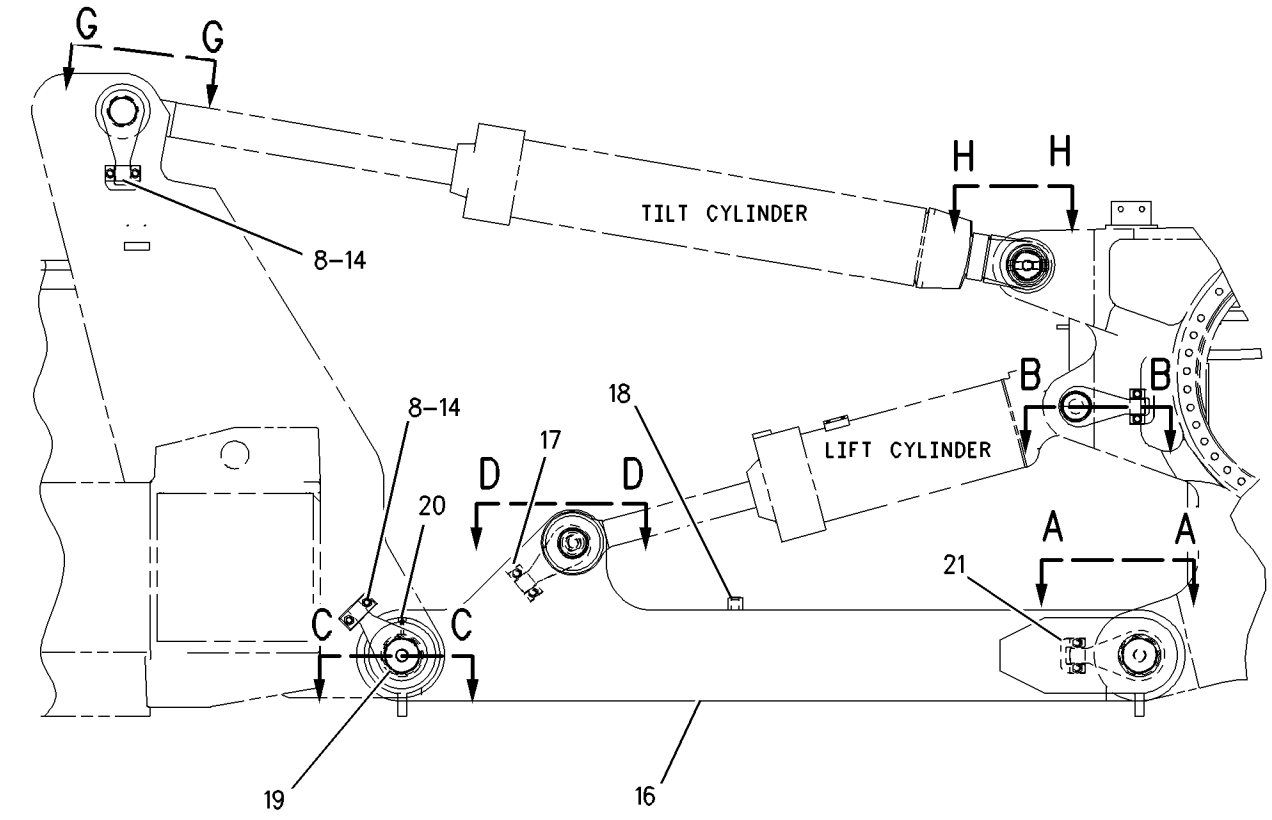

RIGHT SIDE VIEW

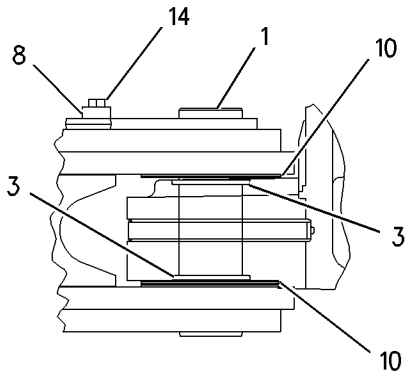

VIEW A-A

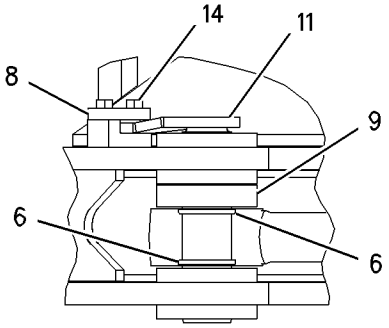

VIEW D-D

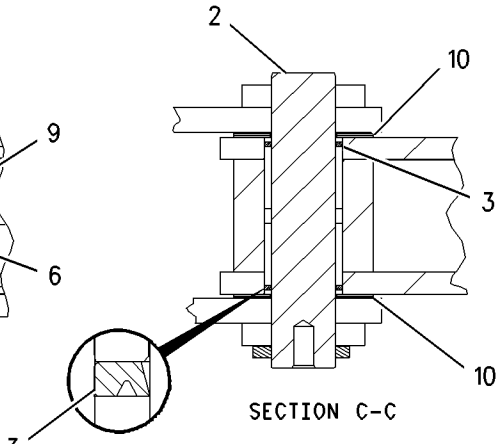

SECTION C-C

TYPICAL SEAL INTALLATION

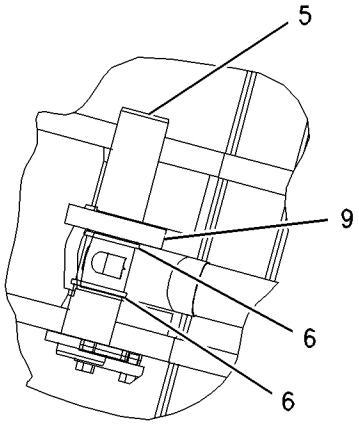

VIEW G-G

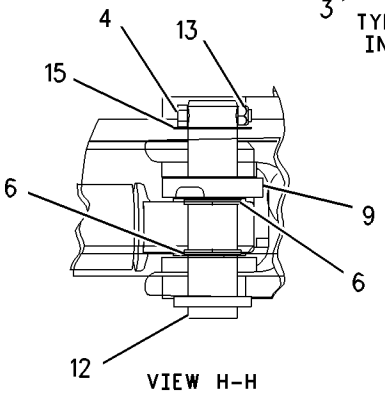

VIEW H-H

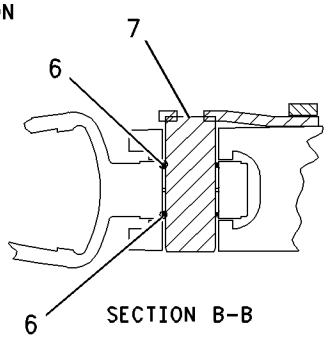

SECTION B-B

GRAPHIC #1 **<END>** g00778267

WORK TOOLS

126-8340 PLATE GP-WEAR—BLADE

S/N: 8RP1-UP
PART OF 130-3432 BLADE AS-UNIVERSAL
AN ATTACHMENT

SMCS-6820 **i01024737**

NOTE	REF NO	GRAPHIC REF	PART NUMBER	QTY	PART NAME 1 2 3 4 5 6 (PRODUCT LEVEL)	SEE PAGE
	1	1	**126-8343**	1	PLATE-WEAR	
	2	1	**126-8342**	1	PLATE-WEAR-LH	
	3	1	**126-8341**	1	PLATE-WEAR-RH	

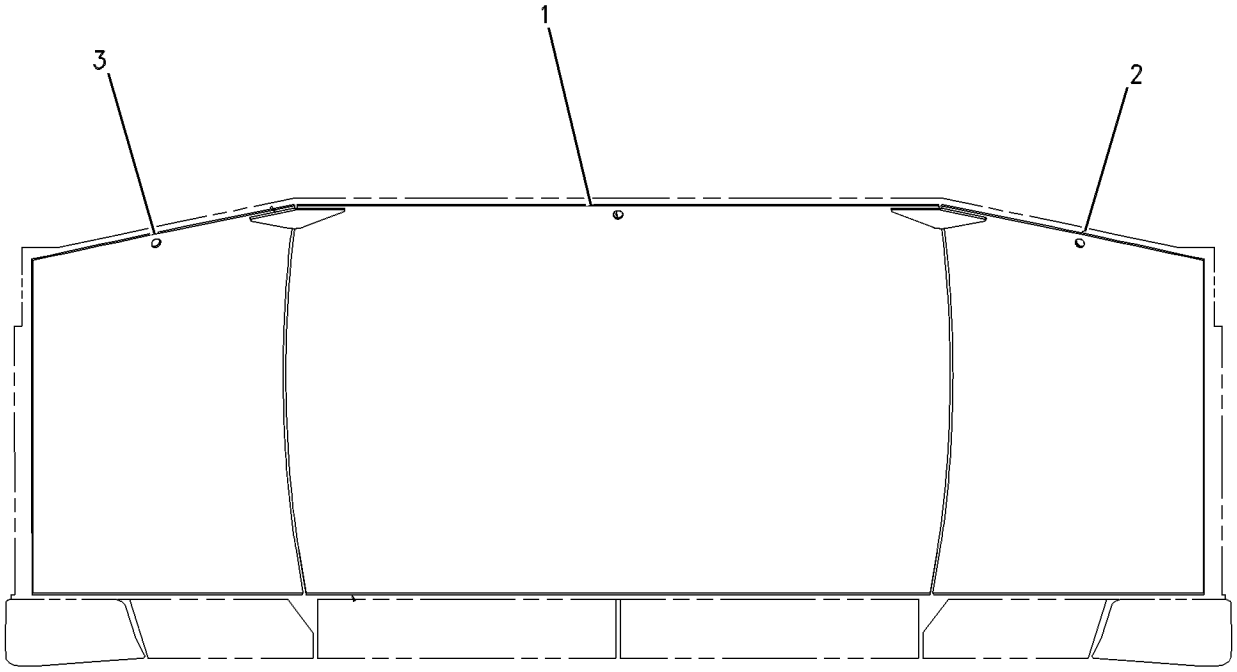

FRONT VIEW

GRAPHIC #1 **<END>** g00526751

136-3983 PLATE GP-WEAR–BLADE

S/N: 8PP1-UP
PART OF 136-2750 BLADE AS-SEMI-UNIVERSAL
AN ATTACHMENT

SMCS-6820 **i00997518**

NOTE	REF NO	GRAPHIC REF	PART NUMBER	QTY	PART NAME 1 2 3 4 5 6 (PRODUCT LEVEL)	SEE PAGE
	1	1	**136-3984**	1	PLATE-WEAR (RH)	
	2	1	**136-3986**	1	PLATE-WEAR	
	3	1	**136-3985**	1	PLATE-WEAR (LH)	

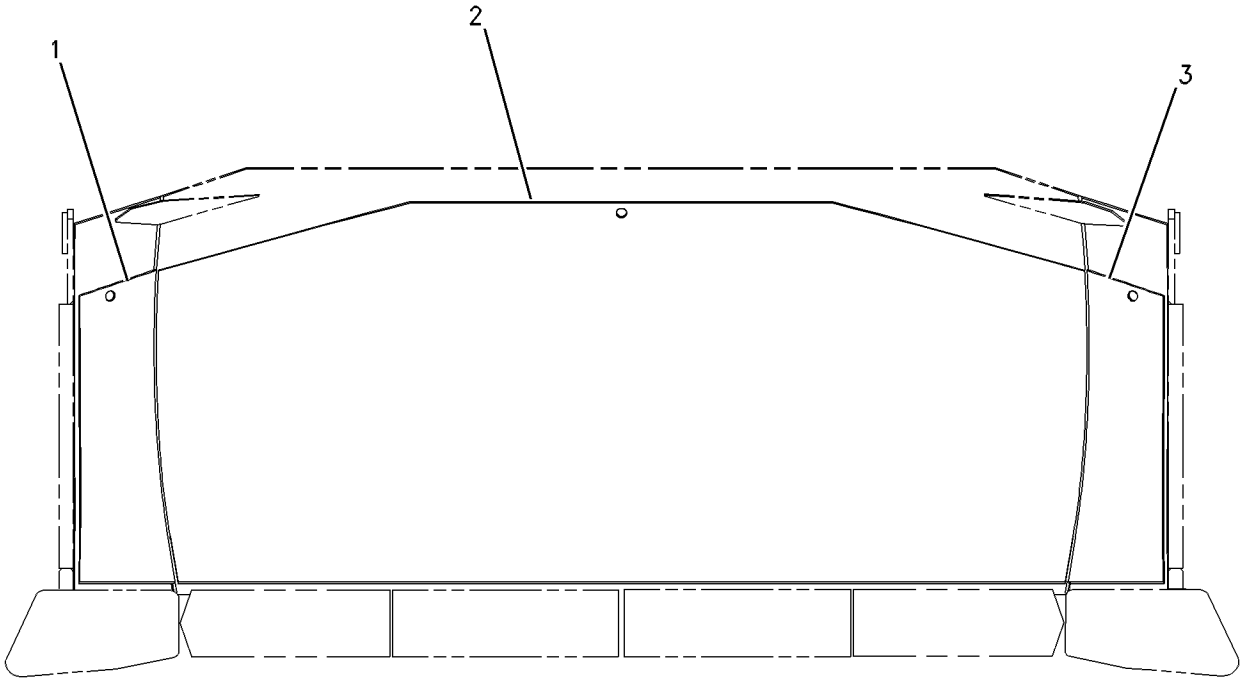

FRONT VIEW

GRAPHIC #1 **<END>** g00510522

WORK TOOLS

127-1031 RIPPER AR–SINGLE SHANK

S/N: 7CP1-UP
AN ATTACHMENT

SMCS-6310 **i01989060**

NOTE	REF NO	GRAPHIC REF	PART NUMBER	QTY	PART NAME 1 2 3 4 5 6 (PRODUCT LEVEL)	SEE PAGE
Y	1	1	**101-8581**	1	CYLINDER GP-RIPPER (RH)	694
Y	2	1	**101-8614**	1	CYLINDER GP-RIPPER (LH)	698
Y	3	1	**130-3263**	1	CYLINDER GP-RIPPER TILT (RH)	713
Y	4	1	**130-6381**	1	CYLINDER GP-RIPPER TILT (LH)	717
Y	5	1	*127-1032*	1	FRAME GP-RIPPER	969
Y	6	1	*145-0900*	1	GUARD GP-TRANSMISSION	533
Y	7	1	*131-2141*	1	LIGHTING GP-RIPPER	325
Y	8	1	*160-0982*	1	LINES GP-GREASE	931
Y	9	1	*141-8376*	1	LINES GP-RIPPER	795
Y	10	1	*130-5349*	1	RIPPER GP	982
FY		1	*5P-1807*	1	PLATE & FILM GP	1172

F-NOT SHOWN
Y-SEPARATE ILLUSTRATION

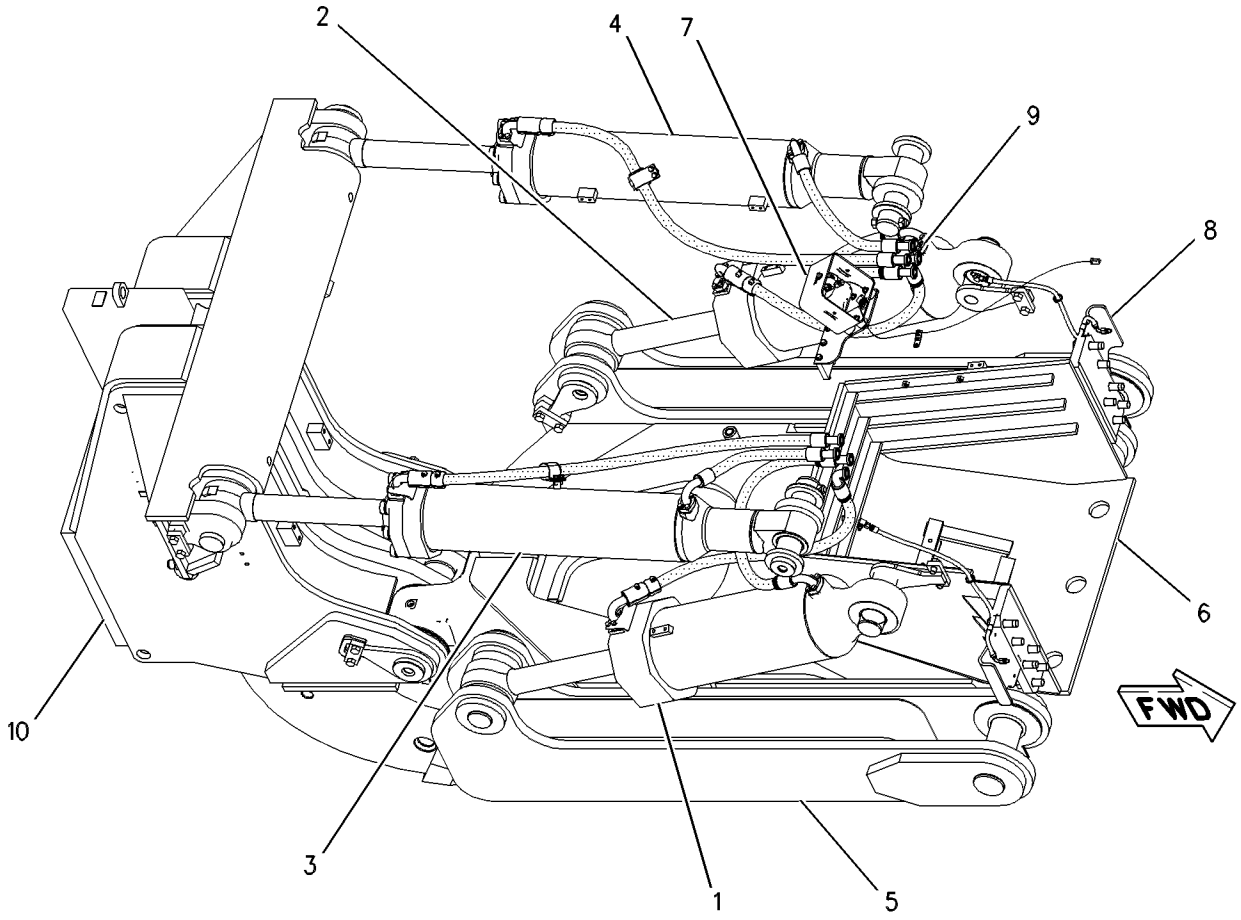

GRAPHIC #1 **<END>** g00658778

130-6458 RIPPER AR—MULTI-SHANK

S/N: 7DP1-UP

AN ATTACHMENT

SMCS-6310 **i01989062**

NOTE	REF NO	GRAPHIC REF	PART NUMBER	QTY	PART NAME 1 2 3 4 5 6 (PRODUCT LEVEL)	SEE PAGE
Y	1	1	**101-8581**	1	CYLINDER GP-RIPPER (RH)	694
Y	2	1	**101-8614**	1	CYLINDER GP-RIPPER (LH)	698
Y	3	1	**130-3263**	1	CYLINDER GP-RIPPER TILT (RH)	713
Y	4	1	**130-6381**	1	CYLINDER GP-RIPPER TILT (LH)	717
Y	5	1	*130-6459*	1	FRAME GP-RIPPER (MULTI-SHANK)	971
Y	6	1	*130-6460*	1	RIPPER GP	983
Y	7	1	*131-2141*	1	LIGHTING GP-RIPPER	325
Y	8	1	*141-8376*	1	LINES GP-RIPPER	795
Y	9	1	*145-0900*	1	GUARD GP-TRANSMISSION	533
CY	10	1	*160-0982*	1	LINES GP-GREASE	931
FY			*5P-1807*	1	PLATE & FILM GP	1172

C-CHANGE FROM PREVIOUS TYPE
F-NOT SHOWN
Y-SEPARATE ILLUSTRATION

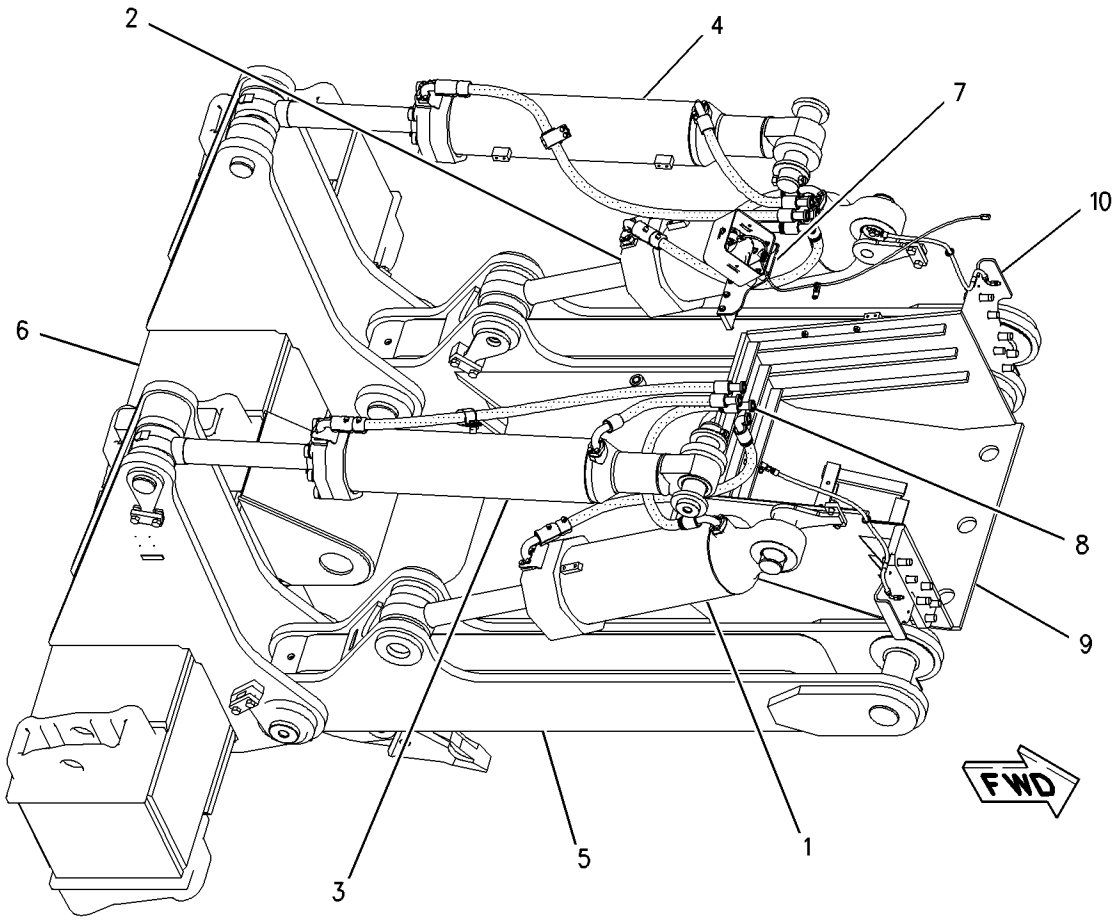

GRAPHIC #1 **<END>** g00663710

WORK TOOLS

130-6462 RIPPER AR—SINGLE SHANK

S/N: 5MP1-UP
AN ATTACHMENT

SMCS-6310 **i02029224**

NOTE	REF NO	GRAPHIC REF	PART NUMBER	QTY	PART NAME 1 2 3 4 5 6 (PRODUCT LEVEL)	SEE PAGE
Y	1	1	**101-8581**	1	CYLINDER GP-RIPPER (RH)	694
Y	2	1	**101-8614**	1	CYLINDER GP-RIPPER (LH)	698
Y	3	1	*127-1032*	1	FRAME GP-RIPPER	969
Y	4	1	**130-3263**	1	CYLINDER GP-RIPPER TILT (RH)	713
Y	5	1	**130-6381**	1	CYLINDER GP-RIPPER TILT (LH)	717
Y	6	1	*130-6463*	1	RIPPER GP	984
Y	7	1	*131-2141*	1	LIGHTING GP-RIPPER	325
Y	8	1	*141-8376*	1	LINES GP-RIPPER	795
CY	9	1	*160-0982*	1	LINES GP-GREASE	931
FY		1	*5P-1807*	1	PLATE & FILM GP	1172

C-CHANGE FROM PREVIOUS TYPE
F-NOT SHOWN
Y-SEPARATE ILLUSTRATION

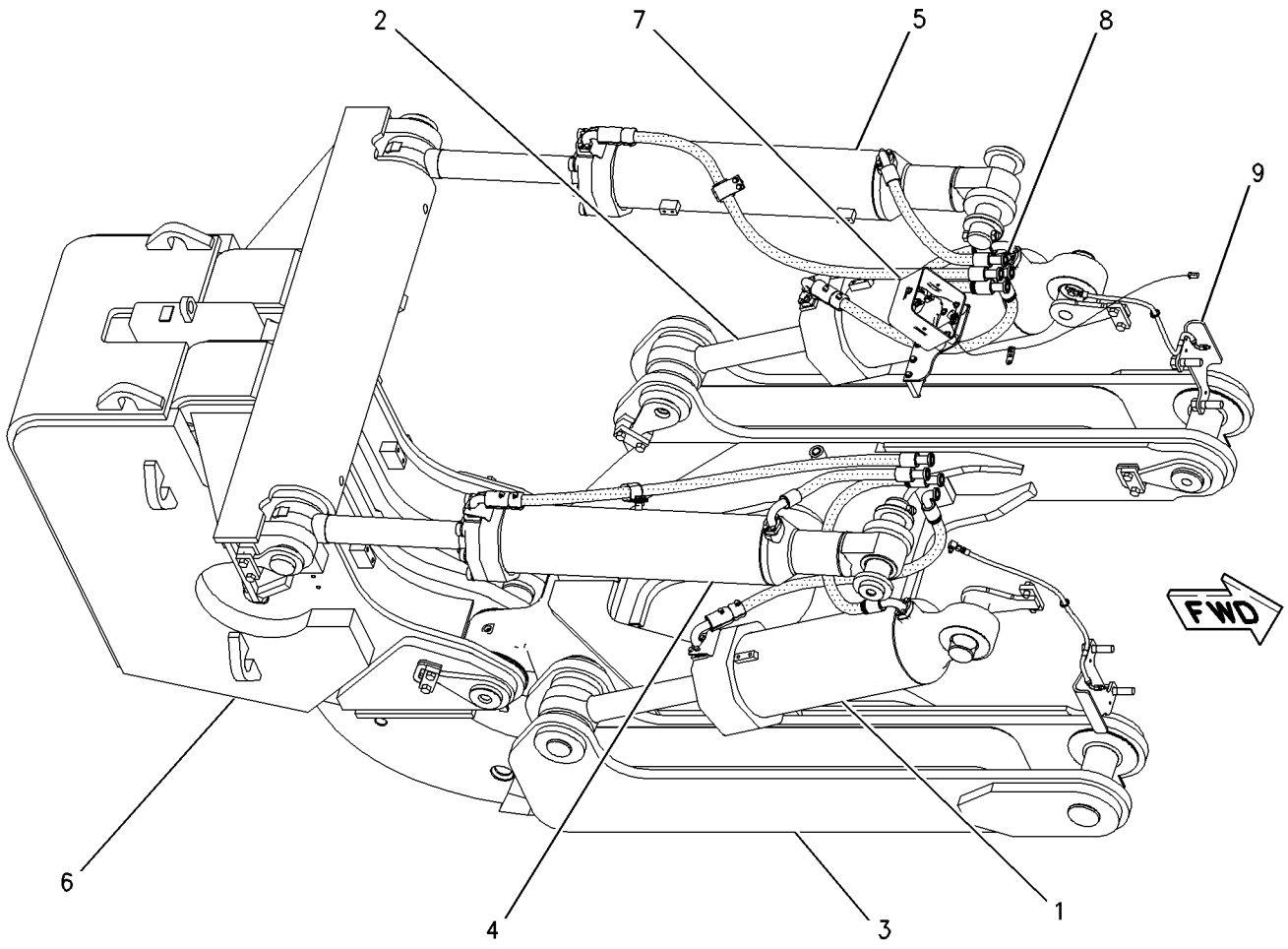

GRAPHIC #1 **<END>** g00662652

149-4919 RIPPER AR—MULTI-SHANK

S/N: 7YP1-UP
MULTI-SHANK WITH DEEP SHANK & PIN PULLER
FOR USE WITH 130-6458—PAGE 978
AN ATTACHMENT

SMCS-6310 **i01232372**

NOTE	REF NO	GRAPHIC REF	PART NUMBER	QTY	PART NAME 1 2 3 4 5 6 (PRODUCT LEVEL)	SEE PAGE
Y	1	1	*4Z-8842*	1	PULLER GP-PIN	935
Y	2	1	*149-4920*	1	RIPPER GP	985
Y	3	1	*149-4922*	1	LINES GP-PIN PULLER CYLINDER	761
F		1	**122-8611**	1	FILM-INSTRUCTION	

F-NOT SHOWN
Y-SEPARATE ILLUSTRATION

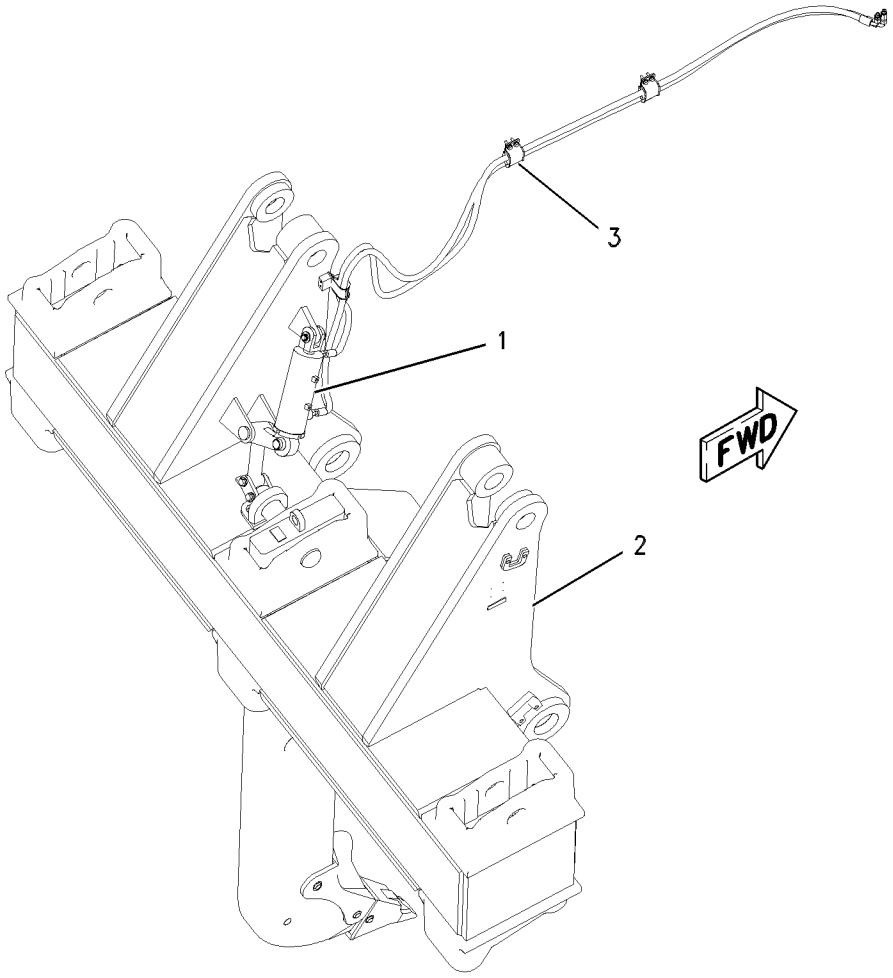

GRAPHIC #1 **<END>** g00659538

161-2420 RIPPER AR–MULTI-SHANK

S/N: 7ZP1-UP

DEEP RIP MULTI-SHANK WITH LEACH PAD RIPPER & PIN PILLER

AN ATTACHMENT

SMCS-6310 **i01092199**

NOTE	PART NUMBER	QTY	PART NAME 1 2 3 4 5 6 (PRODUCT LEVEL)	SEE PAGE
Y	**161-6615**	1	CYLINDER GP-RIPPER (RH)	702
Y	**161-6616**	1	CYLINDER GP-RIPPER (LH)	706
Y	**161-7562**	1	CYLINDER GP-RIPPER TILT (RH)	721
Y	**161-7563**	1	CYLINDER GP-RIPPER TILT (LH)	723
Y	*161-2419*	1	FRAME GP-RIPPER	973
Y	*145-0900*	1	GUARD GP-TRANSMISSION	533
Y	*131-2141*	1	LIGHTING GP-RIPPER	325
Y	*160-0982*	1	LINES GP-GREASE	931
Y	*161-2411*	1	LINES GP-RIPPER	796
Y	*5P-1807*	1	PLATE & FILM GP	1172
Y	*163-0813*	1	PULLER AR-PIN	934
Y	*161-2418*	1	RIPPER GP	986

Y-SEPARATE ILLUSTRATION

<END>

130-5349 RIPPER GP–SINGLE SHANK

S/N: 7CP1-UP
PART OF 127-1031 RIPPER AR
AN ATTACHMENT

SMCS-6310, 6325 **i01239779**

NOTE	REF NO	GRAPHIC REF	PART NUMBER	QTY	PART NAME 1 2 3 4 5 6 (PRODUCT LEVEL)	SEE PAGE
Y	1	1	**8E-1467**	1	TOOTH GP-RIPPER	989
	2	1	**102-9062**	2	PIN AS-G.E.T.	
					(EACH INCLUDES)	
		1	**102-9073**	1	SPRING	
	3	1	**109-2690**	1	PIN-G.E.T.	
	4	1	**130-5351**	1	CARRIAGE AS	
	5	1	**8P-9770**	1	PLATE	
	6	1	**2J-1227**	2	RETAINER	
	7	1	**3J-6035**	2	RETAINER	
	8	1	**9V-8427**	1	BAR	

Y-SEPARATE ILLUSTRATION

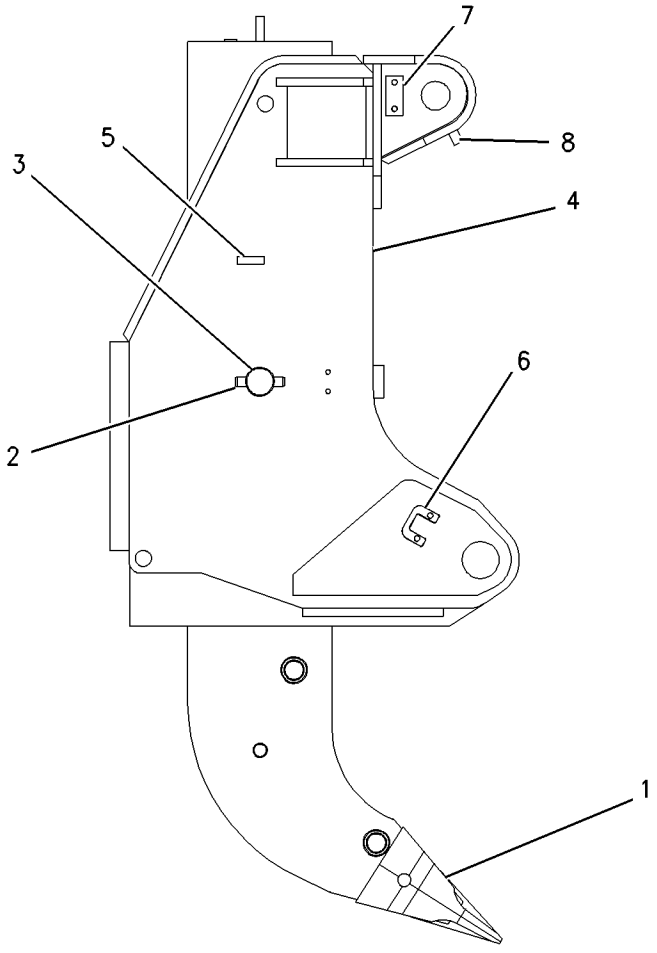

RIGHT SIDE VIEW

GRAPHIC #1

<END>

g00664958

130-6460 RIPPER GP—MULTI-SHANK

S/N: 7DP1-UP
PART OF 130-6458 RIPPER AR
AN ATTACHMENT

SMCS-6310, 6325 **i01024748**

NOTE	REF NO	GRAPHIC REF	PART NUMBER	QTY	PART NAME 1 2 3 4 5 6 (PRODUCT LEVEL)	SEE PAGE
Y	1	1	*6Y-5615*	1	TOOTH GP-RIPPER	988
	2	1	**130-6461**	1	BEAM AS	
		1	**3G-1877**	2	RETAINER	
		1	**3G-5340**	3	BLOCK	
		1	**3G-5341**	3	BLOCK	
	3	1	**2J-1227**	2	RETAINER	
	4	1	**8P-9770**	1	PLATE	

Y-SEPARATE ILLUSTRATION

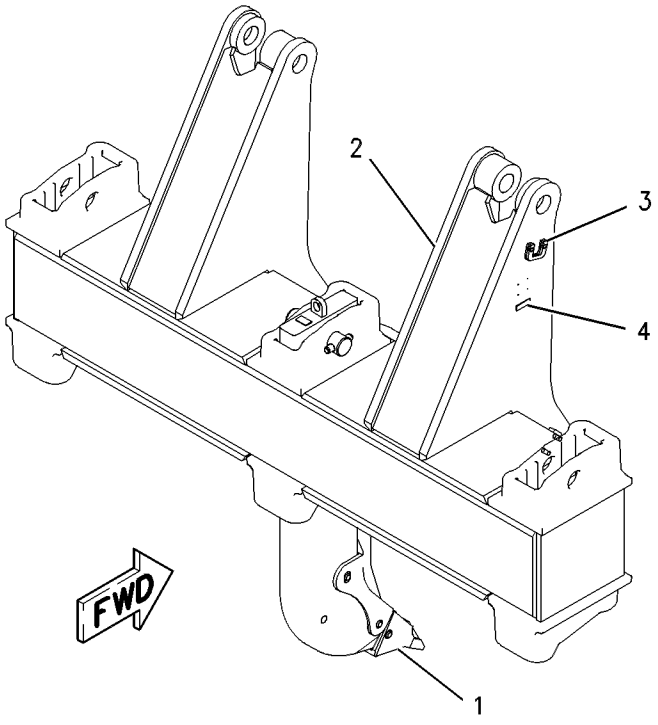

GRAPHIC #1 **<END>** g00526757

WORK TOOLS

130-6463 RIPPER GP—SINGLE SHANK

S/N: 5MP1-UP
PART OF 130-6462 RIPPER AR
AN ATTACHMENT

SMCS-6310, 6325 **i01238499**

NOTE	REF NO	GRAPHIC REF	PART NUMBER	QTY	PART NAME 1 2 3 4 5 6 (PRODUCT LEVEL)	SEE PAGE
Y	1	1	**8E-1467**	1	TOOTH GP-RIPPER	989
	2	1	**102-9062**	2	PIN AS-G.E.T.	
					(EACH INCLUDES)	
		1	**102-9073**	1	SPRING	
	3	1	**109-2690**	1	PIN-G.E.T.	
	4	1	**130-6464**	1	CARRIAGE AS	

Y-SEPARATE ILLUSTRATION

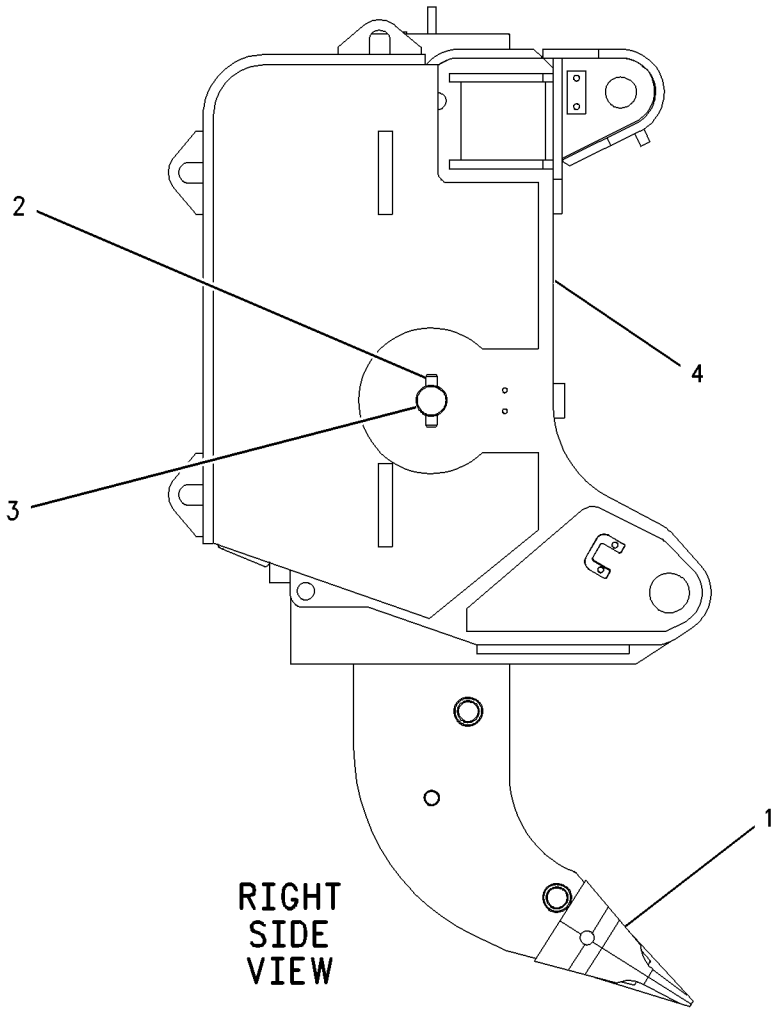

GRAPHIC #1 **<END>** g00662657

149-4920 RIPPER GP—MULTI-SHANK

S/N: 7YP1-UP
DEEP RIP MULTISHANK WITH PIN PULLER
PART OF 149-4919 RIPPER AR
AN ATTACHMENT

SMCS-6310, 6325 **i01232408**

NOTE	REF NO	GRAPHIC REF	PART NUMBER	QTY	PART NAME 1 2 3 4 5 6 (PRODUCT LEVEL)	SEE PAGE
Y	1	1	*4Z-8848*	1	TOOTH GP-RIPPER	987
Y	2	1	*149-4921*	1	BEAM AS	917

Y-SEPARATE ILLUSTRATION

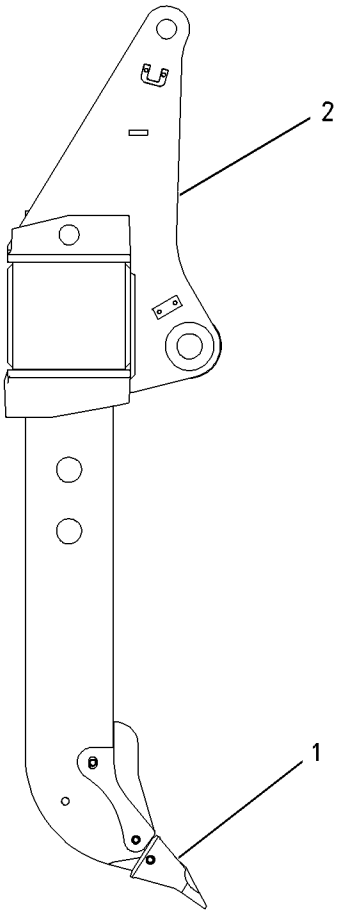

RIGHT SIDE VIEW

GRAPHIC #1 **<END>** g00659534

161-2418 RIPPER GP—MULTI-SHANK

S/N: 7ZP1-UP
PART OF 161-2420 RIPPER AR
AN ATTACHMENT

SMCS-6310, 6325 **i01000607**

NOTE	REF NO	GRAPHIC REF	PART NUMBER	QTY	PART NAME 1 2 3 4 5 6 (PRODUCT LEVEL)	SEE PAGE
Y	1	1	*150-8988*	2	TOOTH GP-RIPPER	991
Y	2	1	*150-8989*	1	TOOTH GP-RIPPER	991
	3	1	**161-2415**	1	CARRIAGE AS	
	4	1	**2J-1227**	2	RETAINER	
	5	1	**3G-1877**	2	RETAINER	
	6	1	**4Z-8840**	2	BRACKET	
	7	1	**4Z-9339**	1	PLATE	
	8	1	**9V-8427**	1	BAR	

Y-SEPARATE ILLUSTRATION

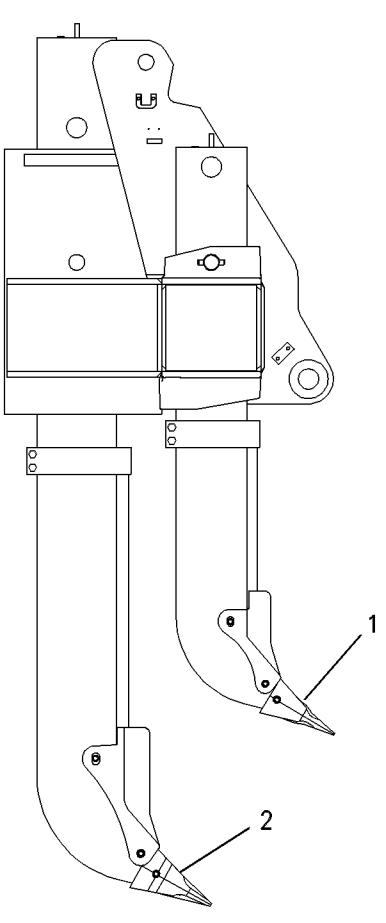

RIGHT SIDE VIEW

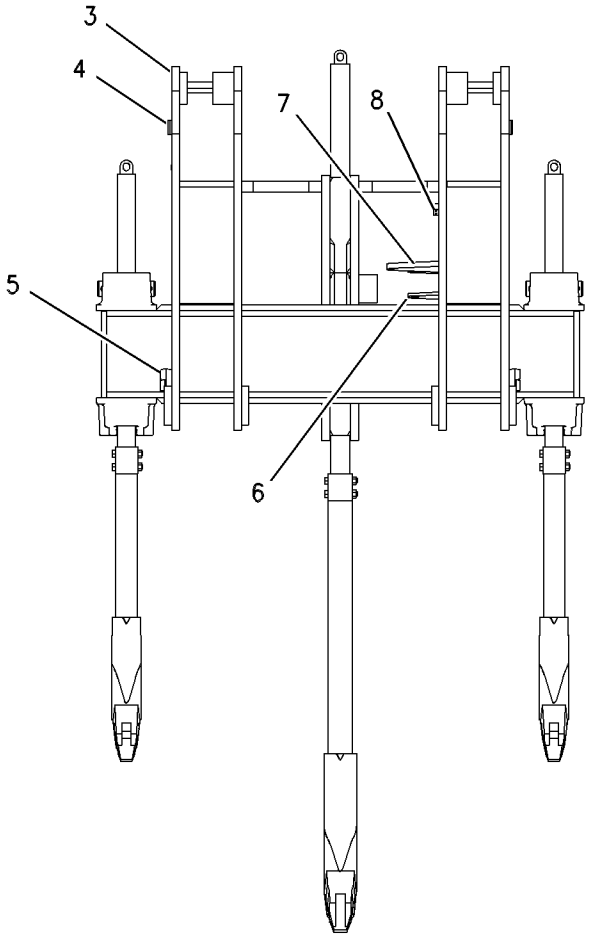

FRONT VIEW

GRAPHIC #1 **<END>** g00519555

4Z-8848 TOOTH GP-RIPPER—MULTI-SHANK

S/N: 7YP1-UP
PART OF 149-4920 RIPPER GP
AN ATTACHMENT

SMCS-6808, 6810 **i01095406**

NOTE	REF NO	GRAPHIC REF	PART NUMBER	QTY	PART NAME 1 2 3 4 5 6 (PRODUCT LEVEL)	SEE PAGE
	1	1	**6Y-8960**	1	PROTECTOR	
	2	1	**6Y-1204**	3	PIN-G.E.T.	
	3	1	**4T-5501**	1	TIP-RIPPER	
	4	1	**4Z-8849**	1	SHANK AS	
	5	1	**3G-5596**	1	LUG	
	6	1	**6Y-1202**	3	RETAINER AS	
					(EACH INCLUDES)	
	7	1	**7M-9107**	1	LOCKRING	

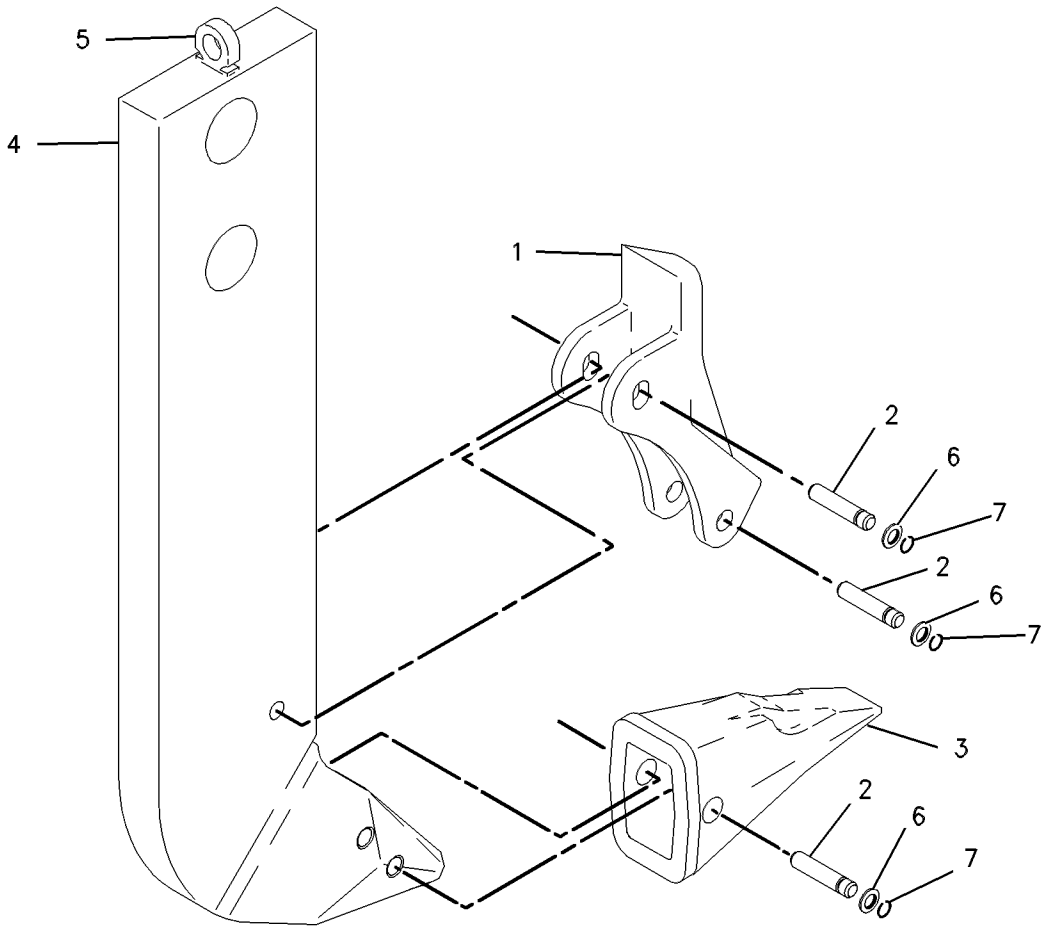

GRAPHIC #1 **<END>** g00575056

6Y-5615 TOOTH GP-RIPPER—MULTI-SHANK

S/N: 7DP1-UP; 7PZ1-UP
PART OF 130-6460 RIPPER GP
FOR USE WITH 130-6458—PAGE 978
AN ATTACHMENT

SMCS-6808, 6810 **i01707693**

NOTE	REF NO	GRAPHIC REF	PART NUMBER	QTY	PART NAME 1 2 3 4 5 6 (PRODUCT LEVEL)	SEE PAGE
	1	1	**3G-6509**	1	PIN	
	2	1	**6Y-8960**	1	PROTECTOR	
	3	1	**4T-5501**	1	TIP-RIPPER	
C	4	1	**6Y-1204**	3	PIN-G.E.T.	
C	5	1	**8E-8413**	1	SHANK AS-RIPPER	
	6	1	**3G-5596**	1	LUG	
C	7	1	**6Y-1202**	3	RETAINER AS	
					(EACH INCLUDES)	
		1	**7M-9107**	1	RING-LOCK	
C	8	1	**102-9062**	2	PIN AS-G.E.T.	
					(EACH INCLUDES)	
		1	**102-9073**	1	SPRING	

C-CHANGE FROM PREVIOUS TYPE

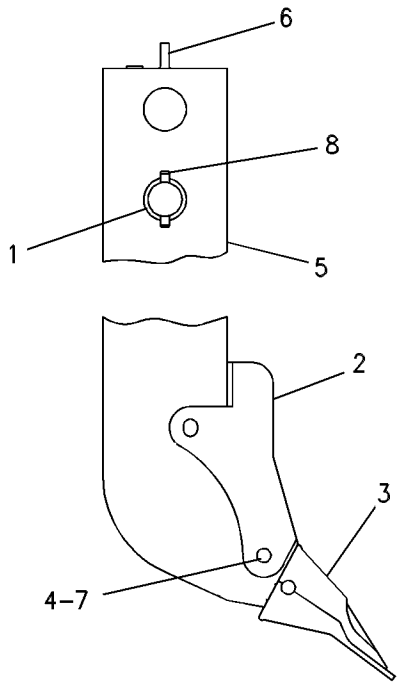

GRAPHIC #1 **<END>** g00258144

8E-1467 TOOTH GP-RIPPER—SINGLE SHANK

S/N: 5MP1-UP; 7CP1-UP
PART OF 130-5349, 130-6463 RIPPER GP
AN ATTACHMENT

SMCS-6808, 6810 **i01707694**

NOTE	REF NO	GRAPHIC REF	PART NUMBER	QTY	PART NAME 1 2 3 4 5 6 (PRODUCT LEVEL)	SEE PAGE
	1	1	**104-9277**	1	SHANK AS-RIPPER	
	2	1	**3G-5596**	1	LUG	
	3	1	**9N-4621**	1	PROTECTOR	
	4	1	**9W-4551**	1	TIP-RIPPER	
	5	1	**6Y-1205**	3	RETAINER AS	
					(EACH INCLUDES)	
		1	**5H-4907**	1	RING-RETAINING	
	6	1	**9N-4245**	3	PIN-G.E.T.	

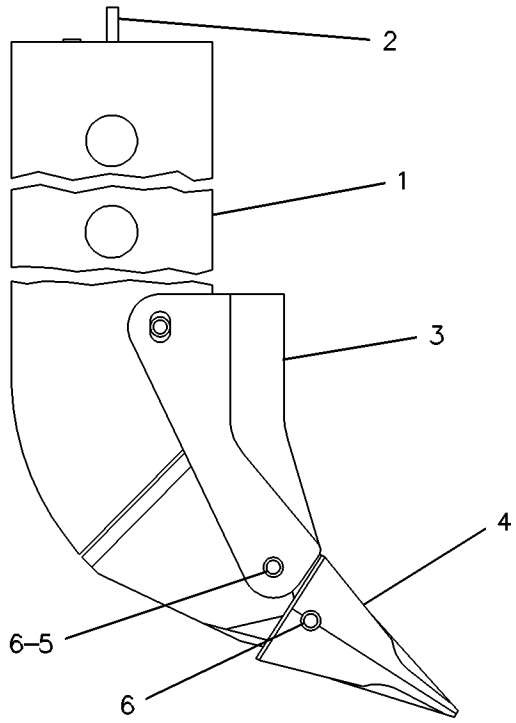

GRAPHIC #1 **<END>** g00214896

8E-7464 TOOTH GP-RIPPER—SINGLE SHANK

S/N: 7PZ1-UP
DEEP RIP
FOR USE WITH 127-1031—PAGE 977
AN ATTACHMENT

SMCS-6808, 6810 **i01707722**

NOTE	REF NO	GRAPHIC REF	PART NUMBER	QTY	PART NAME 1 2 3 4 5 6 (PRODUCT LEVEL)	SEE PAGE
	1	1	**104-9275**	1	SHANK AS-RIPPER	
	2	1	**3G-5596**	1	LUG	
	3	1	**9N-4621**	1	PROTECTOR	
	4	1	**9W-4551**	1	TIP-RIPPER	
	5	1	**6Y-1205**	3	RETAINER AS	
					(EACH INCLUDES)	
		1	**5H-4907**	1	RING-RETAINING	
		1	**9N-4245**	3	PIN-G.E.T.	

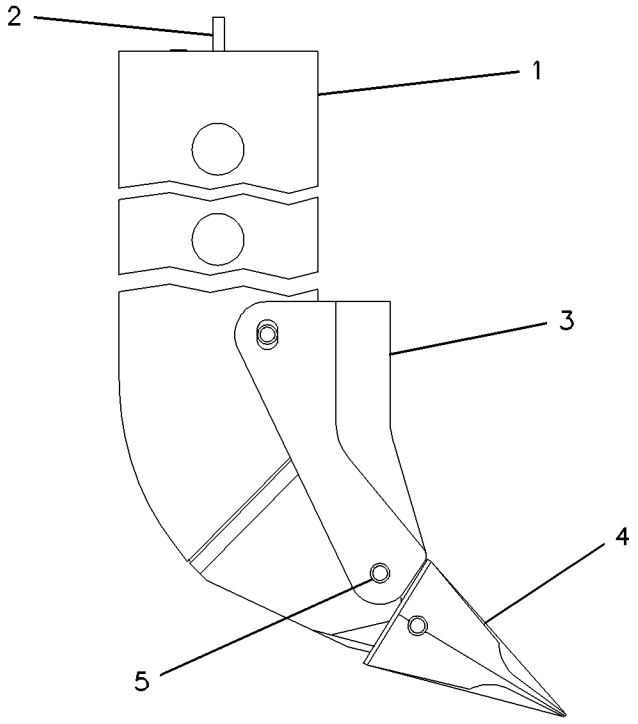

GRAPHIC #1 **<END>** g00218936

WORK TOOLS

150-8988 TOOTH GP-RIPPER—MULTI-SHANK

S/N: 7ZP1-UP
WITH EXTENDED RIPPER PROTECTOR
PART OF 161-2418 RIPPER GP
AN ATTACHMENT

SMCS-6808, 6810 **i00876230**

NOTE	PART NUMBER	QTY	PART NAME 1 2 3 4 5 6 (PRODUCT LEVEL)	SEE PAGE
	109-9071	1	BAR-PROTECTOR	
	9F-6936	2	BOLT (1-8X6IN)	
	109-9067	1	CLAMP-PROTECTOR	
	2J-3507	2	NUT-FULL (1-8 THD)	
	3G-6509	1	PIN	
	102-9062	2	PIN AS-G.E.T.	
			(EACH INCLUDES)	
	102-9073	1	SPRING	
	6Y-1204	3	PIN-G.E.T.	
	109-9062	1	PROTECTOR	
	6Y-1202	3	RETAINER AS	
			(EACH INCLUDES)	
	7M-9107	1	LOCKRING	
	4Z-9314	1	SHANK AS-RIPPER	
	3G-5596	1	LUG	
	132-1003	2	SPACER (95MM WIDE)	
	4T-4502	1	TIP-RIPPER	

<END>

150-8989 TOOTH GP-RIPPER—MULTI-SHANK

S/N: 7ZP1-UP
WITH EXTENDED RIPPER PROTECTOR
PART OF 161-2418 RIPPER GP
AN ATTACHMENT

SMCS-6808, 6810 **i00856252**

NOTE	PART NUMBER	QTY	PART NAME 1 2 3 4 5 6 (PRODUCT LEVEL)	SEE PAGE
	109-9076	1	BAR-PROTECTOR	
	5B-5473	2	BOLT (1-8X6.5IN)	
	109-9072	1	CLAMP-PROTECTOR	
	2J-3507	2	NUT-FULL (1-8 THD)	
	9N-4245	3	PIN-G.E.T.	
	109-9063	1	PROTECTOR	
	6Y-1205	3	RETAINER AS	
			(EACH INCLUDES)	
	5H-4907	1	RING-RETAINING	
	4Z-9312	1	SHANK AS-RIPPER	
	3G-5596	1	LUG	
	132-1004	2	SPACER (105MM WIDE)	
	9W-4551	1	TIP-RIPPER	

<END>

OPERATOR STATION

173-1028 ADJUSTER GP-SEAT

S/N: 7PZ392-UP
PART OF 180-7304, 180-7306 SEAT GP
ALSO AN ATTACHMENT
TYPE 1

SMCS-7321 **i01635944**

NOTE	REF NO	GRAPHIC REF	PART NUMBER	QTY	PART NAME 1 2 3 4 5 6 (PRODUCT LEVEL)	SEE PAGE
	1	1	**4V-8256**	4	SPRING	
	2	1	**117-4486**	1	ANCHOR	
	3	1	**117-4492**	1	ROD	
	4	1	**132-0338**	2	WASHER-PLASTIC (13X31.7X.8MM THK)	
	5	1	**136-1544**	1	LATCH AS-LH	
	6	1	**143-1288**	1	LOCKNUT-FLANGE (3/8-16 THD)	
	7	1	**156-5545**	1	LATCH AS-RH	
	8	1	**164-4531**	1	ROD	
	9	1	**9M-1974**	1	WASHER-HARD (8.8X16X2MM THK)	
	10	1	**170-1114**	1	HANDLE (SLIDE ADJUSTMENT)	
	11	1	**170-1115**	1	HANDLE (TILT ADJUSTMENT)	
	12	1	**172-4001**	1	BRACKET	
	13	1	**1D-4675**	1	BOLT-CARRIAGE (3/8-16X0.75 IN)	
	14	1	**2K-4973**	2	LOCKNUT (3/8-16 THD)	
	15	1	**7L-8170**	1	NUT-FULL (5/16-18 THD)	
	16	1	**7X-0608**	2	WASHER-HARD (10.2X16X2.0MM THK)	
	17	1	**170-1112**	1	PLATE AS	

173-1028 ADJUSTER GP-SEAT ***(contd.)*** **i01635944**

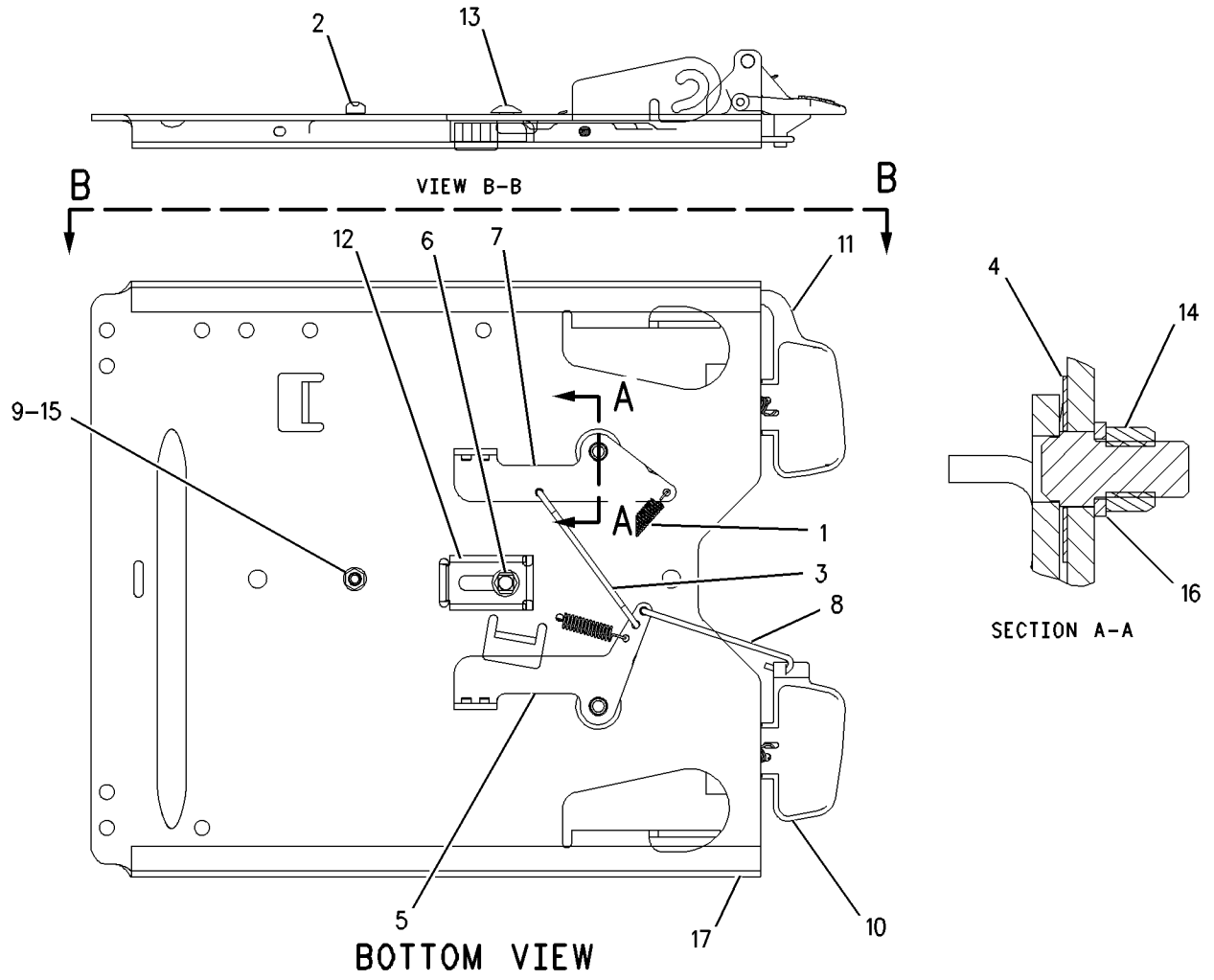

GRAPHIC #1 **<END>** g00686297

173-1028 ADJUSTER GP-SEAT

S/N: 7PZ392-UP
PART OF 180-7304, 180-7306 SEAT GP
ALSO AN ATTACHMENT
TYPE 2

SMCS-7321 **i02011756**

NOTE	REF NO	GRAPHIC REF	PART NUMBER	QTY	PART NAME 1 2 3 4 5 6 (PRODUCT LEVEL)	SEE PAGE
	1	1	**4V-8256**	4	SPRING	
	2	1	**117-4492**	1	ROD	
	3	1	**136-1544**	1	LATCH AS-LH	
	4	1	**156-5545**	1	LATCH AS-RH	
	5	1	**164-4531**	1	ROD	
	6	1	**170-1112**	1	PLATE AS	
	7	1	**170-1114**	1	HANDLE (SLIDE ADJUSTMENT)	
	8	1	**170-1115**	1	HANDLE (TILT ADJUSTMENT)	
	9	1	**132-0338**	2	WASHER-PLASTIC (13X31.7X.8MM THK)	
	10	1	**2K-4973**	2	LOCKNUT (3/8-16 THD)	
	11	1	**7X-0608**	2	WASHER-HARD (10.2X16X2.0MM THK)	

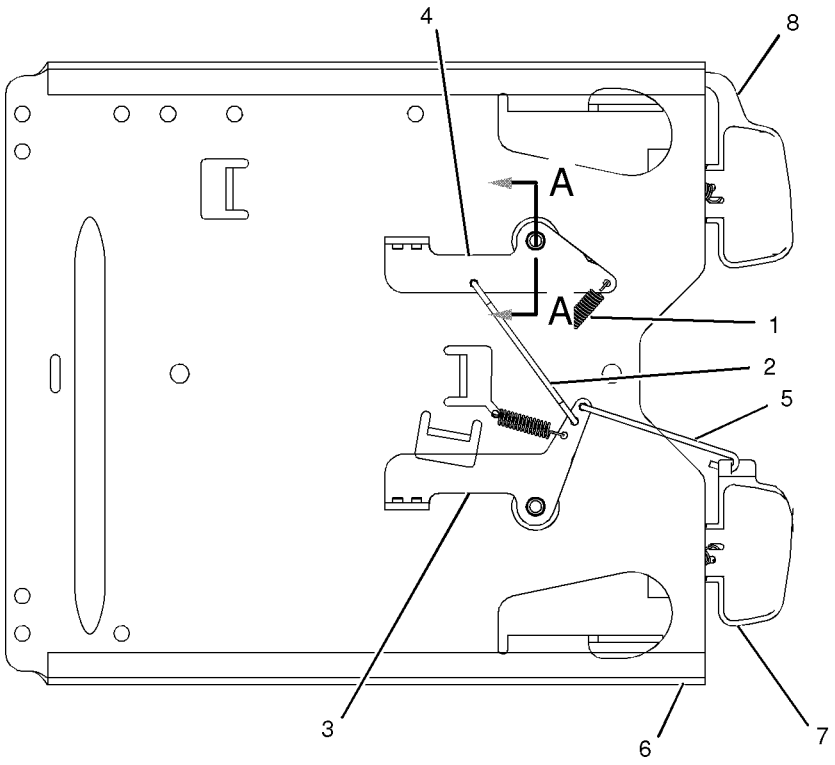

BOTTOM VIEW

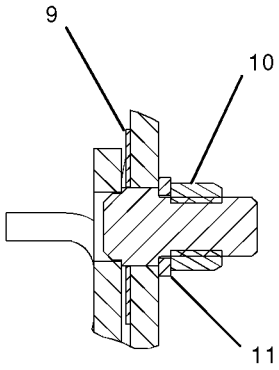

SECTION A-A

GRAPHIC #1 **<END>** g01040300

OPERATOR STATION

237-3970 AIR COMPRESSOR GP-SEAT

S/N: 7PZ615-UP
PART OF 191-2933 SUSPENSION GP-SEAT
FIELD REPLACEMENT ORDER 214-0783–PAGE 1054
AN ATTACHMENT

SMCS-731S, 7324 **i02012095**

NOTE	REF NO	GRAPHIC REF	PART NUMBER	QTY	PART NAME 1 2 3 4 5 6 (PRODUCT LEVEL)	SEE PAGE
					(NO SERVICED PARTS)	

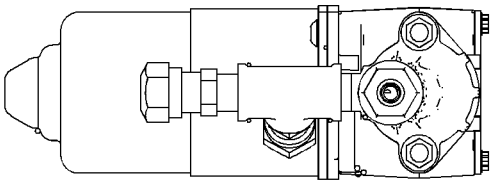

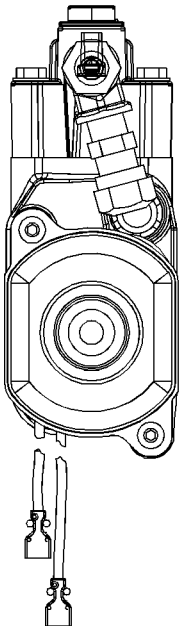

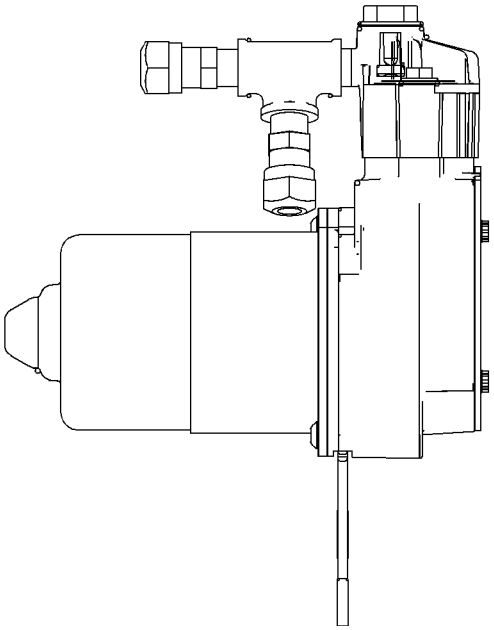

GRAPHIC #1

<END>

g01040576

OPERATOR STATION

145-8006 AIR CONDITIONER AR

S/N: 7PZ1-UP
R134A REFRIGERANT
REPLACED BY 208-9099—PAGE 996
AN ATTACHMENT

SMCS-7320 **i01989068**

NOTE	PART NUMBER	QTY	PART NAME 1 2 3 4 5 6 (PRODUCT LEVEL)	SEE PAGE
Y	*127-9138*	1	AIR CONDITIONER GP	997
Y	*141-7105*	1	COMPRESSOR GP-REFRIGERANT	1016
Y	*4W-1319*	1	CONDENSER GP-REFRIGERANT	1018
Y	*145-8734*	1	LINES GP-AIR CONDITIONER	1057
	110-6393	1	PLATE-INSTRUCTION (AIR CONDITIONER)	
			(ON LH SIDE OF DASH WHERE IT CAN BE SEEN THROUGH CAB DOOR)	
Y-SEPARATE ILLUSTRATION				

<END>

208-9099 AIR CONDITIONER AR

S/N: 7PZ1-UP
R134A REFRIGERANT
AN ATTACHMENT

SMCS-7320 **i01615017**

NOTE	PART NUMBER	QTY	PART NAME 1 2 3 4 5 6 (PRODUCT LEVEL)	SEE PAGE
Y	**127-9138**	1	AIR CONDITIONER GP	997
Y	*141-7105*	1	COMPRESSOR GP-REFRIGERANT	1016
Y	*4W-1319*	1	CONDENSER GP-REFRIGERANT	1018
Y	*145-8734*	1	LINES GP-AIR CONDITIONER	1057
	110-6393	1	PLATE-INSTRUCTION (AIR CONDITIONER)	
			INSTALL ON LH SIDE OF DASH SO IT CAN BE SEEN THROUGH CAB DOOR	
Y-SEPARATE ILLUSTRATION				

<END>

OPERATOR STATION

127-9138 AIR CONDITIONER GP

S/N: 7PZ1-UP
ELECTRONIC WATER VALVE
PART OF 145-8006, 208-9099 AIR CONDITIONER AR
AN ATTACHMENT

SMCS-7320 **i01989512**

NOTE	REF NO	GRAPHIC REF	PART NUMBER	QTY	PART NAME 1 2 3 4 5 6 (PRODUCT LEVEL)	SEE PAGE
E	1	1	**136-1953**		HOSE (47.5CM)	
E	2	1	**136-1953**		HOSE (30.5CM)	
	3	1	**3B-4501**	2	LOCKWASHER	
	4	1	**3E-0400**	2	BLOWER AS	
	5	1	**3E-5464**	1	SWITCH AS-TEMPERATURE (A/C)	
	6	1	**3E-6392**	1	MOTOR AS-FAN (A/C)	
		1	**3E-3365**	1	WEDGE-RECEPTACLE LOCK (2 PIN)	
		1	**8T-8729**	2	PIN-CONNECTOR	
		1	**102-8802**	1	KIT-RECEPTACLE (2-PIN)	
					(INCLUDES RECEPTACLE AS & WEDGE)	
		1	**9X-9013**	1	KIT-BRUSH (A/C FAN MOTOR)	
					(INCLUDES BRUSH AS & PLUG)	
C	7	1	**3S-2093**	4	STRAP-CABLE	
M	8	1	**5C-9553**	31	BOLT (M6X1X16MM)	
	9	1	**5P-4115**	14	WASHER-HARD (7.2X19X2MM THK)	
	10	1	**5P-6670**	1	FILM-INSTRUCTION (WATER IN/WATER OUT) (A/C)	
	11	1	**6V-1668**	2	WASHER (6.5X29.1X3MM THK)	
E	12	1	**136-1953**		HOSE (8CM)	
	13	1	**6T-6708**	2	WASHER (7X28.6X4.1MM THK)	
	14	1	**4P-7581**	1	CLIP	
	15	1	**8C-3756**	1	FILM-IDENTIFICATION (GROUP & SEQUENCE NO.) (A/C)	
	16	1	**8C-4586**	2	CLAMP	
M	17	1	**8C-8451**	1	BOLT (M6X1X40MM)	
	18	1	**8P-5141**	2	PLATE-ORIFICE	
	19	1	**9X-2488**	6	CLAMP-HOSE	
	20	1	**8T-4205**	32	WASHER-HARD (7.2X14.5X2MM THK)	
	21	1	**8T-6631**	2	SCREW-MACHINE (8-32X0.5 IN)	
C	22	1	**125-9740**	1	RESISTOR	
	23	1	**5V-1474**	4	SCREW-FORMING (10-16X0.625 IN)	
M	24	1	**9X-8498**	1	BOLT (M6X1.0X180MM)	
	25	1	**091-8792**	2	CLIP	
	26	1	**149-8218**	1	CONTROL AS-BOARD	
		1	**8T-8737**	2	PLUG-SEAL	
		1	**9W-0844**	5	SOCKET-CONNECTION	
		1	**9W-0852**	5	PIN-CONNECTOR	
		1	**102-8810**	1	KIT-CONNECTING PLUG (6-PIN)	
					(INCLUDES PLUG AS, WEDGE & SEAL-INTERFACE)	
		1	**102-8805**	1	KIT-RECEPTACLE (6-PIN)	
					(INCLUDES RECEPTACLE AS & WEDGE)	
M	27	1	**129-3178**	16	LOCKNUT (M6X1 THD)	
	28	1	**149-8199**	1	VALVE AS-WATER	
		1	**102-8805**	1	KIT-RECEPTACLE (6-PIN)	
					(INCLUDES RECEPTACLE AS & WEDGE)	
	29	1	**130-9214**	1	GASKET	
	30	1	**130-9215**	1	GASKET	
	31	1	**130-9216**	1	GASKET	
	32	1	**130-9218**	1	GASKET	
	33	1	**130-9219**	1	GASKET	
	34	1	**130-9220**	1	GASKET	
	35	1	**130-9221**	1	GASKET	
C	36	1	**172-9291**	1	HARNESS AS (A/C BLOWER MOTOR)	
C	37	1	**172-9292**	1	HARNESS AS (A/C WATER VALVE CONTROL)	
	38	1	**130-9224**	1	COIL AS-HEATER	
	39	1	**130-9225**	1	COIL AS-EVAPORATOR	

127-9138 AIR CONDITIONER GP *(contd.)* i01989512

NOTE	REF NO	GRAPHIC REF	PART NUMBER	QTY	PART NAME 1 2 3 4 5 6 (PRODUCT LEVEL)	SEE PAGE
	40	1	**130-9226**	1	BRACKET	
	41	1	**130-9227**	1	COVER	
	42	1	**130-9228**	1	CASE AS	
		1	**6T-6686**	2	PIN	
M		1	**6V-9632**	15	NUT-WELD (M6X1 THD)	
		1	**7T-1099**	1	LINK	
	43	1	**130-9233**	1	HOUSING AS	
M		1	**6V-9632**	2	NUT-WELD (M6X1 THD)	
	44	1	**130-9234**	1	PAN AS-HEATER	
	45	1	**131-0545**	1	PLATE AS	
	46	1	**131-2441**	1	COVER	
	47	1	**131-5354**	1	TUBE AS	
	48	1	**132-3871**	1	GASKET	
BD	49	1	**5P-5673**		SEAL	
BD	50	1	**5P-5969**		SEAL	
	51	1	**132-5793**	4	SCREW-WASHER HD (4-40X0.25 IN)	

B-USE AS REQUIRED
C-CHANGE FROM PREVIOUS TYPE
D-ORDER BY THE METER
E-ORDER BY THE CENTIMETER
M-METRIC PART

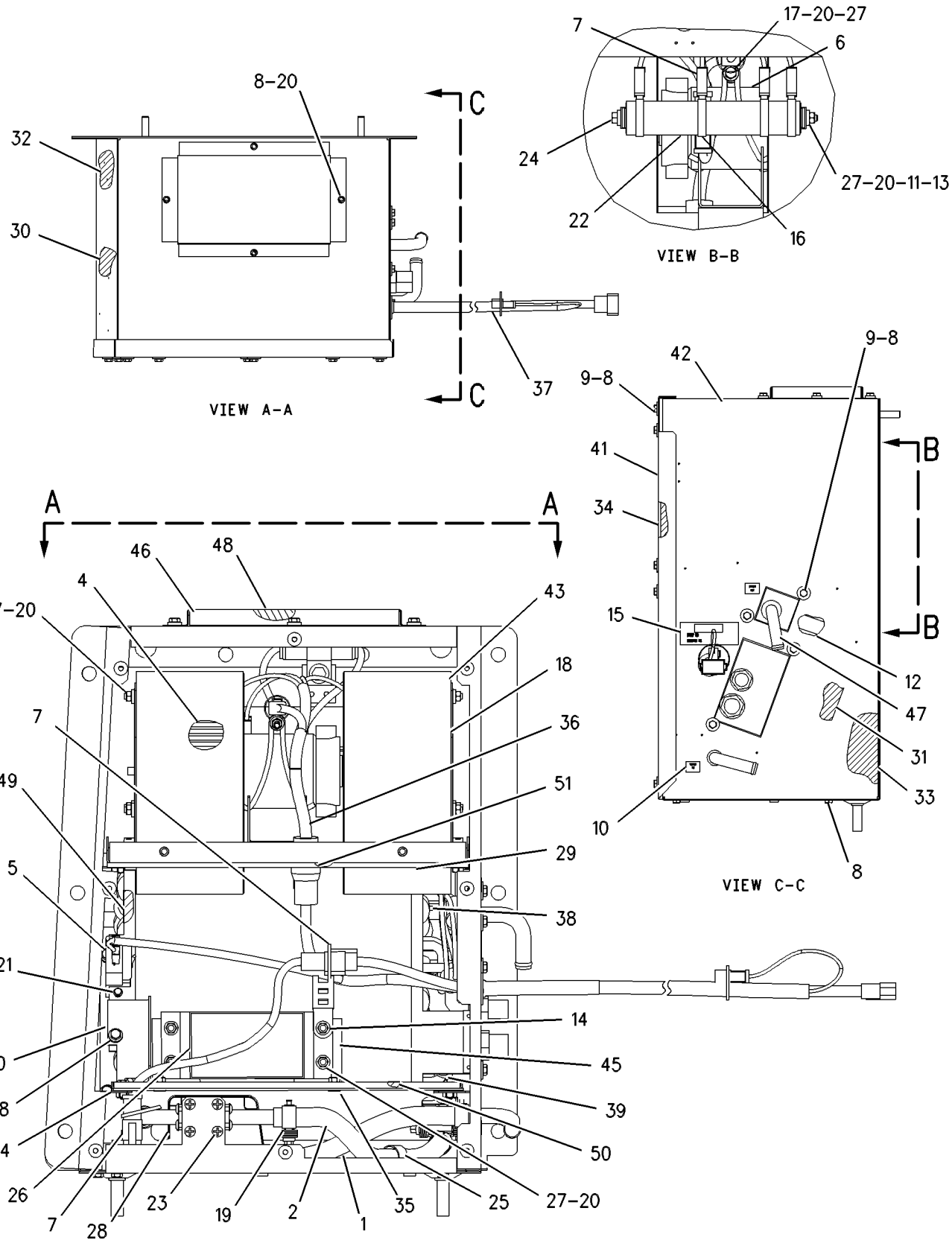

GRAPHIC #1 **<END>** g00653685

OPERATOR STATION

127-9138 AIR CONDITIONER GP

S/N: 7PZ718-UP

ELECTRONIC WATER VALVE

PART OF 145-8006, 208-9099 AIR CONDITIONER AR, 237-9334 AIR CONDITIONER GP

ALSO AN ATTACHMENT

SMCS-7320 **i01834430**

NOTE	REF NO	GRAPHIC REF	PART NUMBER	QTY	PART NAME 1 2 3 4 5 6 (PRODUCT LEVEL)	SEE PAGE
BD	1	1	**5P-5908**		SEAL	
	2	1	**3B-4501**	2	LOCKWASHER	
	3	1	**3E-0400**	2	WHEEL-BLOWER	
	4	1	**3E-5464**	1	SWITCH AS-THERMOSTAT (A/C)	
	5	1	**3S-2093**	5	STRAP-CABLE	
M	6	1	**5C-9553**	31	BOLT (M6X1X16MM)	
	7	1	**5P-4115**	14	WASHER-HARD (7.2X19X2MM THK)	
	8	1	**5P-6670**	1	FILM-INSTRUCTION (WATER IN/WATER OUT) (A/C)	
	9	1	**5V-1474**	4	SCREW-FORMING (10-16X0.625 IN)	
	10	1	**6T-6708**	2	WASHER (7X28.6X4.1MM THK)	
	11	1	**6V-1668**	2	WASHER (6.5X29.1X3MM THK)	
	12	1	**8C-3756**	1	FILM-IDENTIFICATION (GROUP & SEQUENCE NO.) (A/C)	
	13	1	**8C-4586**	2	CLAMP	
	14	1	**8P-5141**	2	PLATE-ORIFICE	
C	15	1	**8T-4205**	32	WASHER-HARD (7.2X14.5X2MM THK)	
	16	1	**8T-6631**	2	SCREW-MACHINE (8-32X0.5 IN)	
	17	1	**9X-2488**	6	CLAMP-HOSE	
M	18	1	**9X-8498**	1	BOLT (M6X1.0X180MM)	
	19	1	**091-8792**	2	CLIP	
	20	1	**125-9740**	1	RESISTOR	
M	21	1	**129-3178**	16	LOCKNUT (M6X1 THD)	
	22	1	**130-9214**	1	GASKET	
	23	1	**130-9215**	1	GASKET	
	24	1	**130-9216**	1	GASKET	
	25	1	**130-9218**	1	GASKET	
	26	1	**130-9219**	1	GASKET	
	27	1	**130-9220**	1	GASKET	
	28	1	**130-9221**	1	GASKET	
	29	1	**130-9224**	1	COIL AS-HEATER	
	30	1	**130-9225**	1	COIL AS-EVAPORATOR	
		1	**2H-3922**	1	LOCKWASHER	
		1	**2H-3923**	1	LOCKWASHER	
		1	**7F-2050**	1	LOCKNUT (3/4-16 THD)	
		1	**7F-2060**	1	LOCKNUT (7/8-14 THD)	
	31	1	**130-9226**	1	BRACKET	
	32	1	**130-9227**	1	COVER	
	33	1	**130-9228**	1	CASE AS	
		1	**6T-6686**	2	PIN	
M		1	**6V-9632**	15	NUT-WELD (M6X1 THD)	
		1	**7T-1099**	1	LINK	
	34	1	**130-9233**	1	HOUSING AS	
M		1	**6V-9632**	2	NUT-WELD (M6X1 THD)	
	35	1	**130-9234**	1	PAN AS-HEATER	
M		1	**6V-9632**	1	NUT-WELD (M6X1 THD)	
	36	1	**131-0545**	1	PLATE AS	
M		1	**6V-9632**	1	NUT-WELD (M6X1 THD)	
	37	1	**131-2441**	1	COVER	
	38	1	**131-5354**	1	TUBE AS	
	39	1	**132-3871**	1	GASKET	
	40	1	**132-5793**	4	SCREW-WASHER HD (4-40X0.25 IN)	
	41	1	**149-8218**	1	CONTROL AS-BOARD	
	42	1	**172-9291**	1	HARNESS AS (A/C BLOWER MOTOR)	
	43	1	**172-9292**	1	HARNESS AS (A/C WATER VALVE CONTROL)	
	44	1	**174-1494**	1	MOTOR GP-ELECTRIC (27 VOLT) (A/C)	

127-9138 AIR CONDITIONER GP *(contd.)* i01834430

NOTE	REF NO	GRAPHIC REF	PART NUMBER	QTY	PART NAME 1 2 3 4 5 6 (PRODUCT LEVEL)	SEE PAGE
		1	**3E-3365**	1	WEDGE-RECEPTACLE LOCK (2 PIN)	
		1	**9W-0852**	2	PIN-CONNECTOR	
		1	**102-8802**	1	KIT-RECEPTACLE (2 PIN)	
					(INCLUDES RECEPTACLE AS & WEDGE)	
	45	1	**210-7291**	1	VALVE AS (WATER)	
		1	**8T-8737**	1	PLUG-SEAL	
		1	**9W-0852**	5	PIN-CONNECTOR	
		1	**102-8805**	1	KIT-RECEPTACLE (6 PIN)	
					(INCLUDES RECEPTACLE AS & WEDGE)	
	46	1	**4P-7581**	1	CLIP	
M	47	1	**6V-7728**	1	BOLT (M6X1.0X45MM)	
E	48	1	**136-1953**		HOSE (30CM)	
E	49	1	**136-1953**		HOSE (47CM)	
E	50	1	**136-1953**		HOSE (8CM)	
M	51	1	**8T-4189**	1	BOLT (M8X1.25X20MM)	
	52	1	**4S-1962**	1	CLIP	
M	53	1	**3T-0852**	1	LOCKNUT (M8)	
	54	1	**133-6036**	1	RECTIFIER AS	
	55	1	**5P-4116**	2	WASHER-HARD (8.8X20.5X2MM THK)	
BD	56	1	**5P-5673**		SEAL	
BD	57	1	**5P-5939**		SEAL	

B-USE AS REQUIRED
C-CHANGE FROM PREVIOUS TYPE
D-ORDER BY THE METER
E-ORDER BY THE CENTIMETER
M-METRIC PART

127-9138 AIR CONDITIONER GP *(contd.)* i01834430

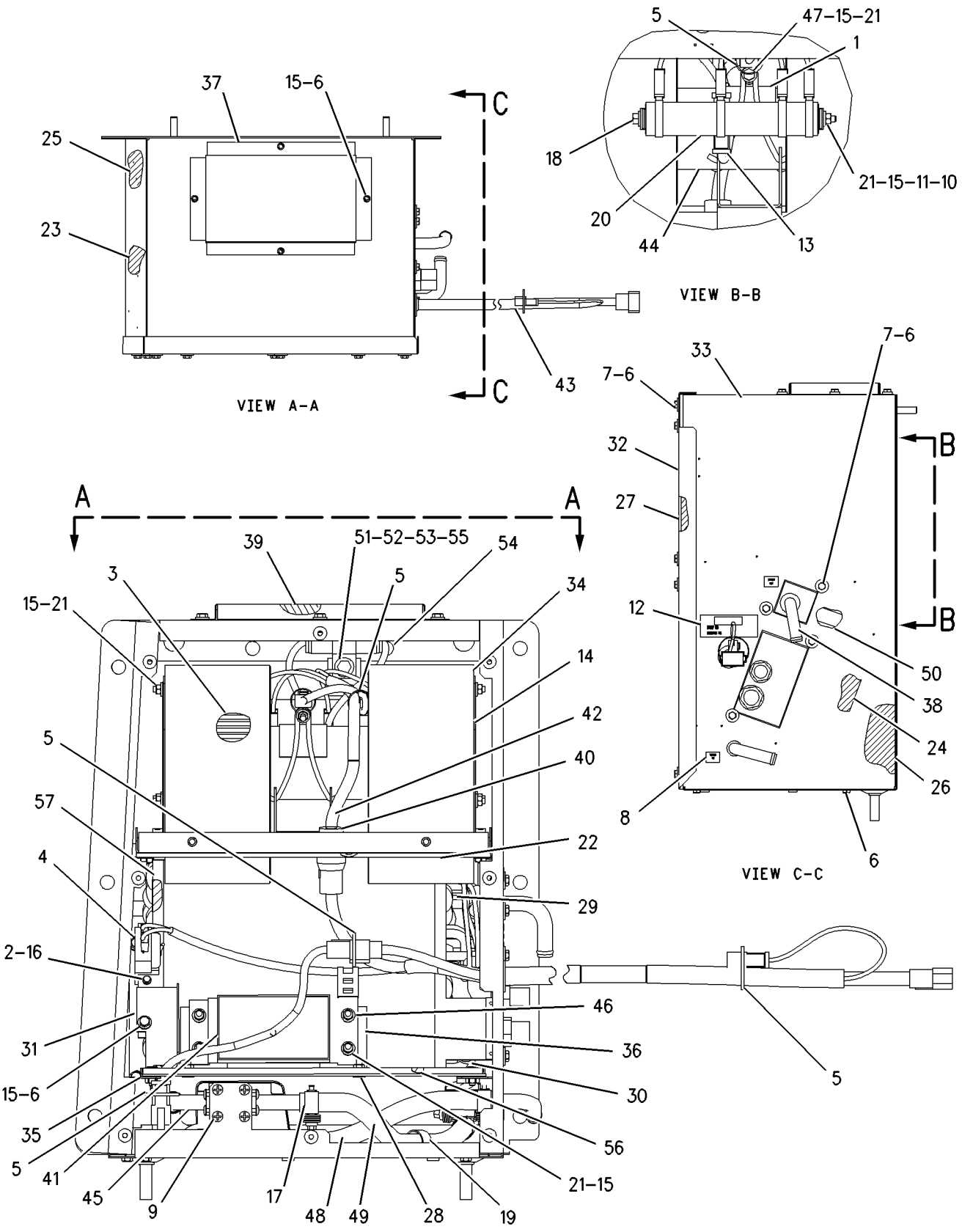

GRAPHIC #1 **<END>** g00862509

OPERATOR STATION

237-9334 AIR CONDITIONER GP

S/N: 7PZ718-UP

PART OF 157-3738 CAB AR

SMCS-7320 **i01989513**

NOTE	REF NO	GRAPHIC REF	PART NUMBER	QTY	PART NAME 1 2 3 4 5 6 (PRODUCT LEVEL)	SEE PAGE
	1	1	**2P-4339**	1	NUT-JAM (7/16-20 THD)	
	2	1	**5P-5454**	1	ASHTRAY	
	3	1	**5P-5824**	1	HOLDER-ASH TRAY	
	4	1	**6T-6329**	1	BEZEL-ROCKER SWITCH	
	5	1	**6V-8927**	2	BOLT-SOCKET HEAD (6-32X0.5 IN)	
	6	1	**7T-1890**	1	FILTER-AIR (CAB) (STANDARD)	
	7	1	**8E-1356**	2	KNOB AS (DOOR)	
					(EACH INCLUDES)	
		1	**8T-7566**	1	PIN-SPRING	
	8	1	**8E-3250**	1	GASKET	
	9	1	**8E-5959**	1	SEAL	
	10	1	**8E-5975**	1	GASKET	
	11	1	**8E-9253**	1	GASKET	
	12	1	**8T-7566**	2	PIN-SPRING	
	13	1	**8Y-6388**	8	LOUVER AS	
	14	1	**107-0266**	1	FILTER-CAB AIR (STANDARD)	
	15	1	**110-6109**	2	KNOB-CONTROL (FAN SPEED & TEMP CONTROL)	
	16	1	**114-5985**	1	PLATE AS	
		1	**2R-2376**	2	WASHER (7X16X.8MM THK)	
		1	**6P-6926**	2	SCREW-KNURLED	
	17	1	**116-2589**	1	PLATE	
	18	1	**116-2590**	1	SEAL	
	19	1	**116-3119**	1	PLATE	
	20	1	**127-4540**	1	POTENTIOMETER AS	
		1	**3S-2093**	1	STRAP-CABLE	
		1	**9W-0852**	3	PIN-CONNECTOR	
		1	**102-8803**	1	KIT-RECEPTACLE (3-PIN)	
					(INCLUDES RECEPTACLE AS & WEDGE)	
Y	21	1	**127-9138**	1	AIR CONDITIONER GP	997
	22	1	**130-4846**	1	WIRE AS	
	23	1	**133-5082**	1	DUCT-AIR	
	24	1	**134-3992**	1	DOOR AS	
	25	1	**134-3993**	2	PLATE AS	
	26	1	**144-3579**	1	DUCT-AIR	
	27	1	**156-8180**	1	FILM-PANEL (TEMPERATURE CONTROL)	
	28	1	**157-1361**	1	SWITCH AS (ROTARY) (FAN SPEED CONTROL)	
		1	**3E-3383**	1	WEDGE-RECEPTACLE LOCK (6-PIN)	
		1	**9W-0852**	6	PIN-CONNECTOR	
		1	**102-8805**	1	KIT-RECEPTACLE (6-PIN)	
					(INCLUDES RECEPTACLE AS & WEDGE)	
	29	1	**030-8535**	3	BOLT-LOCKING (3/8-16X0.875 IN)	
	30	1	**104-2091**	16	SCREW-FLAT HEAD (6-20X0.5 IN)	
	31	1	**1M-4543**	1	GROMMET	
	32	1	**2H-3920**	1	LOCKWASHER	
	33	1	**4L-6454**	8	BOLT (3/8-16X1 IN)	
	34	1	**5P-1075**	6	WASHER-HARD (10.2X22.5X3MM THK)	
	35	1	**6B-2882**	5	SPACER (.406X.75X.312 IN THK)	
	36	1	**6J-0488**	3	SCREW-BUTTON HEAD (3/8-16X0.875 IN)	
	37	1	**6K-4936**	5	BOLT-LOCKING (3/8-16X0.625 IN)	
	38	1	**6T-3990**	1	SWITCH AS-ROCKER (AIR CONDITIONER ON/OFF)	
	39	1	**6V-3884**	2	SCREW-HEX SOCKET (1/4-20X0.5 IN)	
	40	1	**7X-0575**	2	WASHER-HARD (10.2X22.5X5MM THK)	
	41	1	**7X-0772**	8	WASHER-HARD (10.2X25.5X2.5MM THK)	
M	42	1	**8T-4171**	3	BOLT (M6X1X12MM)	
	43	1	**9X-8256**	3	WASHER (6.6X12X2MM THK)	
D	44	1	**5P-5643**		SEAL	

NOTE	REF NO	GRAPHIC REF	PART NUMBER	QTY	PART NAME 1 2 3 4 5 6 (PRODUCT LEVEL)	SEE PAGE
D	45		**5P-5755**		SEAL	

D-ORDER BY THE METER
M-METRIC PART
Y-SEPARATE ILLUSTRATION

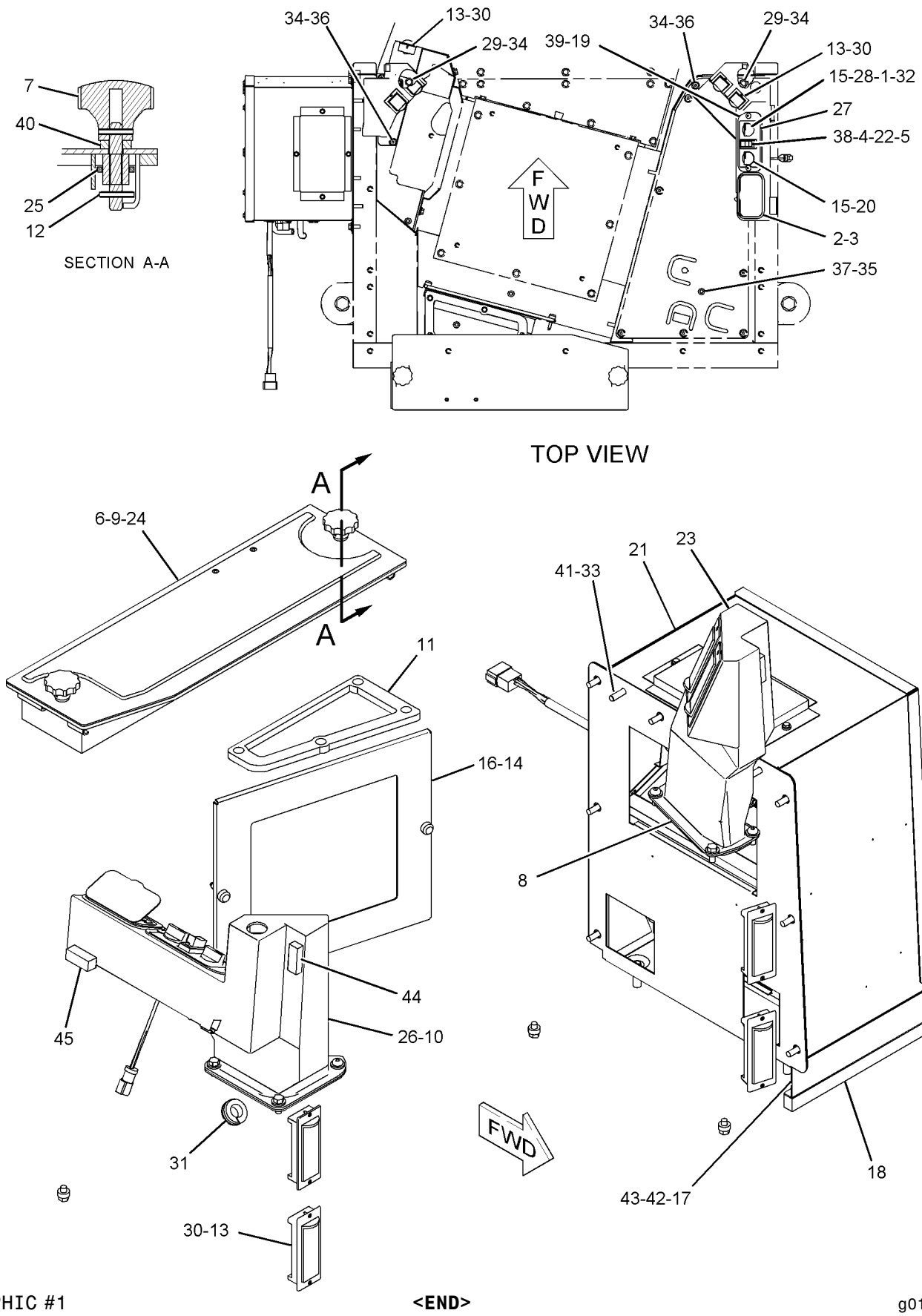

GRAPHIC #1 **<END>** g01026683

OPERATOR STATION

157-3738 CAB AR

S/N: 7PZ1-UP
PART OF 155-5552 CHASSIS AR

SMCS-7301 **i01963653**

NOTE	PART NUMBER	QTY	PART NAME 1 2 3 4 5 6 (PRODUCT LEVEL)	SEE PAGE
Y	*102-3456*	1	TANK GP-WINDOW WASHER	1137
			S/N: 7PZ1-357	
Y	*186-5899*	1	TANK GP-WINDOW WASHER	1140
			S/N: 7PZ358-UP	
Y	*157-4817*	1	CAB AR	1006
Y	*157-2151*	1	HEATER GP-CAB	1039
			S/N: 7PZ1-717	
Y	*237-9334*	1	AIR CONDITIONER GP	1003
			S/N: 7PZ718-UP	
Y	*130-6177*	1	LINES GP-HEATER	1064
Y	*117-1852*	1	MOUNTING GP-CAB	1075
Y	*4W-1319*	1	CONDENSER GP-REFRIGERANT	1018
			S/N: 7PZ718-UP	
Y	*145-8734*	1	LINES GP-AIR CONDITIONER	1057
			S/N: 7PZ718-UP	

Y-SEPARATE ILLUSTRATION

<END>

157-4817 CAB AR

S/N: 7PZ1-UP
PART OF 157-3738, 201-0704 CAB AR
ALSO AN ATTACHMENT

SMCS-7301 **i01083926**

NOTE	PART NUMBER	QTY	PART NAME 1 2 3 4 5 6 (PRODUCT LEVEL)	SEE PAGE
Y	*157-3737*	1	CAB GP	1011
Y	*8E-3284*	1	INSTALLATION GP-RADIO	1048
Y	*8E-3270*	1	LINER GP-CAB	1056
Y	*6Y-3712*	1	MIRROR GP-REAR VIEW	1067
Y	*157-3736*	1	WASHER GP-WINDOW	1141
Y	*157-3735*	1	WIPER GP-WINDOW	1162

Y-SEPARATE ILLUSTRATION

<END>

OPERATOR STATION

197-7504 CAB AR

S/N: 7PZ1-UP

AN ATTACHMENT

SMCS-7301 **i01967625**

NOTE	REF NO	GRAPHIC REF	PART NUMBER	QTY	PART NAME 1 2 3 4 5 6 (PRODUCT LEVEL)	SEE PAGE
	1	1	**232-1307**	1	COVER	
	2	1	**232-1306**	1	PLATE AS	
		1	**9F-6445**	2	NUT-WELD (1/4-24 THD)	
	3	1	**8T-4224**	8	WASHER-HARD (8.8X16X2MM THK)	
	4	1	**5K-0906**	8	BOLT (5/16-18X0.63 IN)	
Y	5	1	**3E-7835**	2	FAN GP-DEFROSTER	1031
	6	1	**7K-1181**	1	STRAP-CABLE	
	7	1	**1Q-3800**	1	WIRE AS	
Y	8	1	*201-0704*	1	CAB AR	1009
	9	1	**9D-3768**	1	GROMMET	

Y-SEPARATE ILLUSTRATION

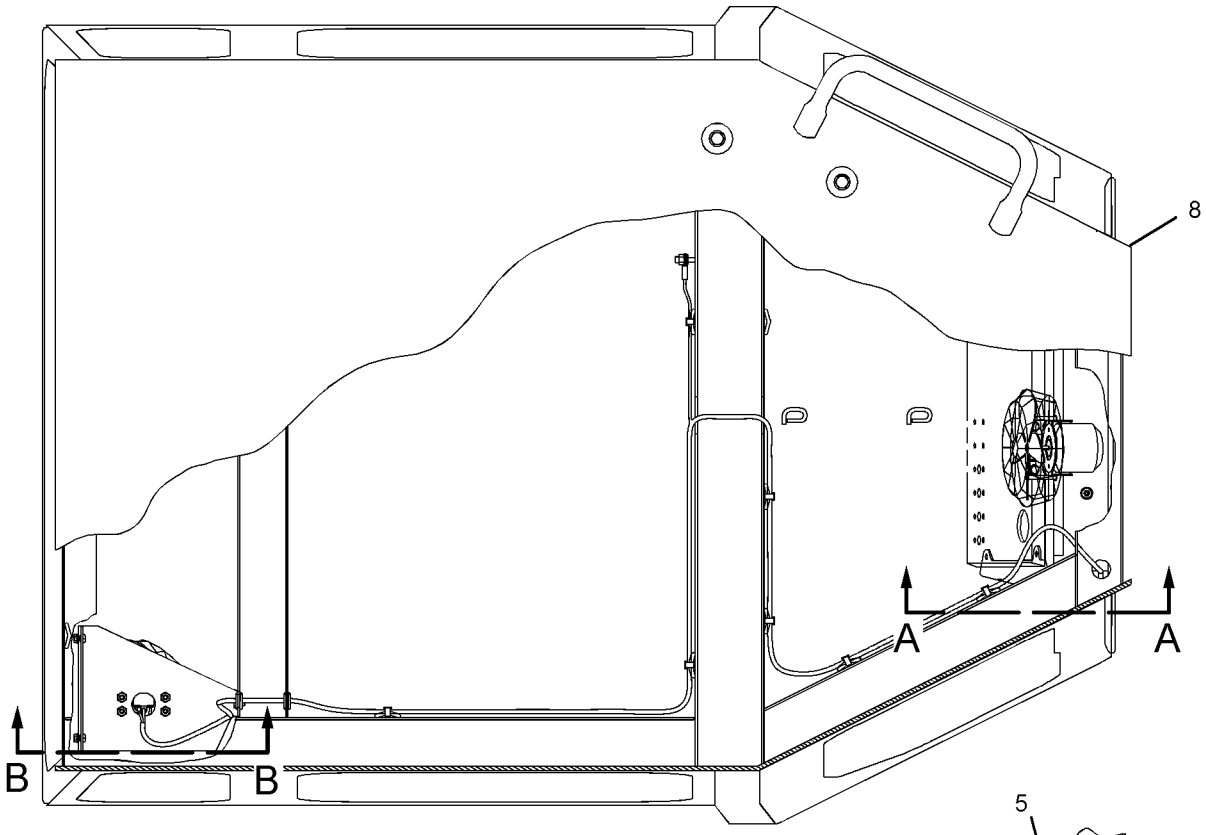

TOP VIEW

FWD

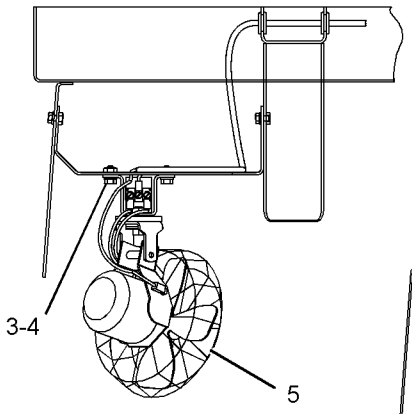

VIEW B-B

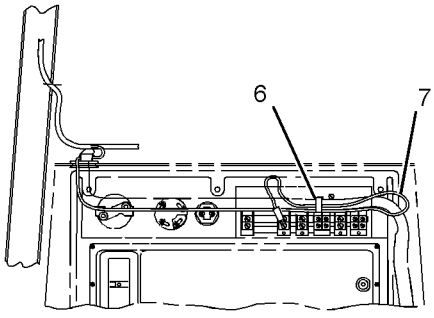

VIEW C-C

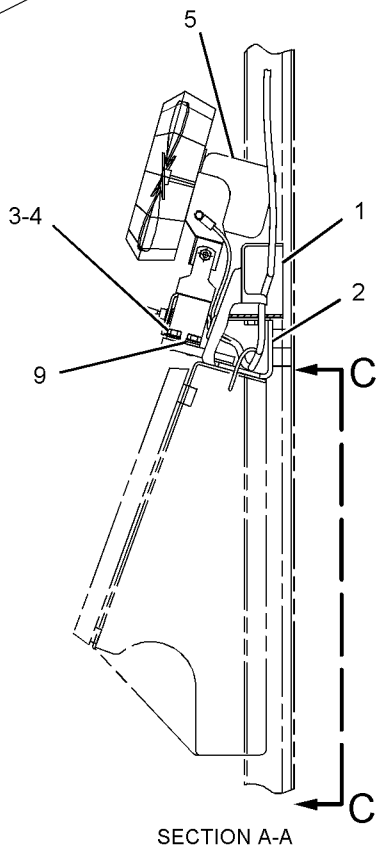

SECTION A-A

GRAPHIC #1 **<END>** g01021796

OPERATOR STATION

201-0704 CAB AR

S/N: 7PZ1-UP
PART OF 197-7504 CAB AR
AN ATTACHMENT

SMCS-7301 **i01606647**

NOTE	REF NO	GRAPHIC REF	PART NUMBER	QTY	PART NAME 1 2 3 4 5 6 (PRODUCT LEVEL)	SEE PAGE
	1	1	**1Q-3760**	1	BRACKET AS	
		1	**4K-9097**	4	NUT-WELD (5/16-18 THD)	
		1	**9F-6445**	2	NUT-WELD (1/4-20 THD)	
	2	1	**9D-3768**	2	GROMMET	
	3	1	**1Q-3765**	1	HARNESS AS	
	4	1	**7K-1181**	7	STRAP-CABLE	
	5	1	**8T-4205**	3	WASHER-HARD (7.2X14.5X2MM THK)	
	6	1	**5S-7349**	3	BOLT (1/4-20X0.5 IN)	
Y	7	1	**157-4817**	1	CAB AR	1006
	8	1	**188-2901**	1	GLASS (FRONT)	
	9	1	**208-1686**	1	GLASS (DOOR LH)	
	10	1	**188-2903**	2	GLASS (SIDE)	
	11	1	**188-2904**	2	GLASS (SIDE)	
	12	1	**208-1691**	1	GLASS (REAR LG)	
	13	1	**191-9292**	2	SHIM (22.2X56.7X0.05MM THK)	
	14	1	**208-1687**	1	GLASS (DOOR RH)	

Y-SEPARATE ILLUSTRATION

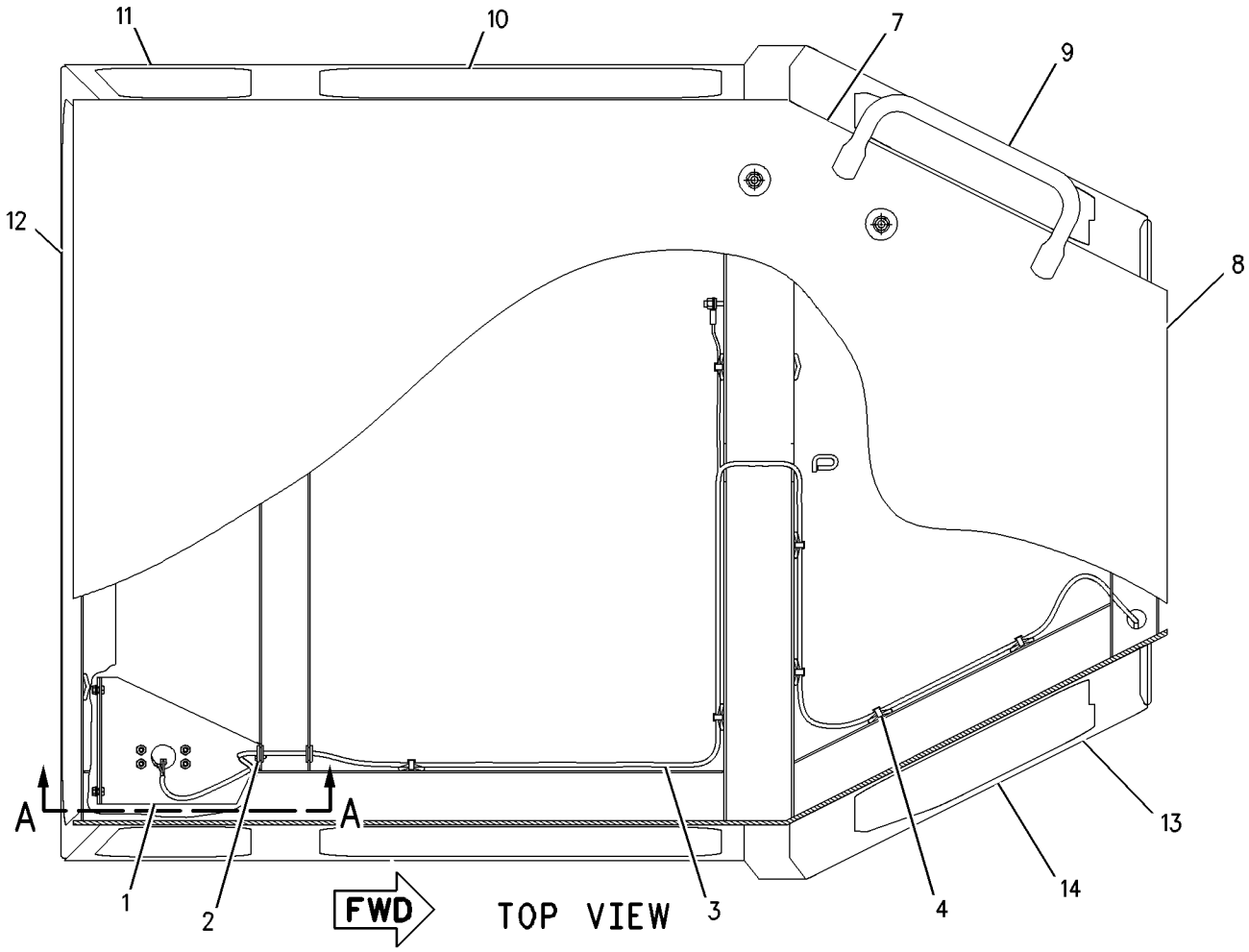

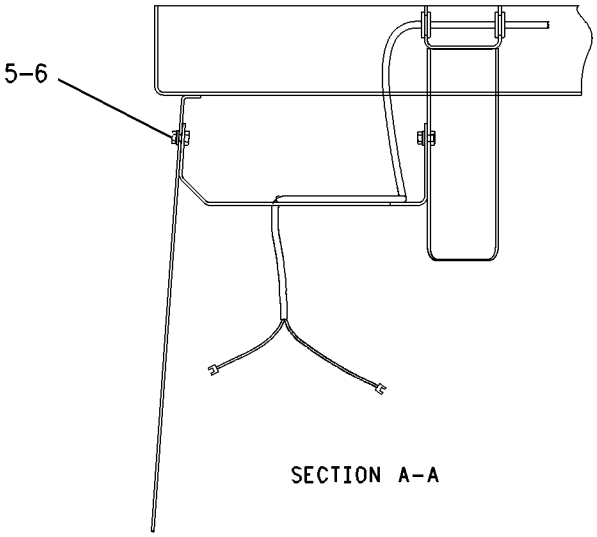

GRAPHIC #1 **<END>** g00838849

OPERATOR STATION

157-3737 CAB GP

S/N: 7PZ1-UP
PART OF 157-4817 CAB AR
ALSO AN ATTACHMENT

SMCS-7301 **i02024029**

NOTE	REF NO	GRAPHIC REF	PART NUMBER	QTY	PART NAME 1 2 3 4 5 6 (PRODUCT LEVEL)	SEE PAGE
Y	1	2	**3E-6389**	1	LAMP GP-DOME (24-VOLT, WITH SWITCH)	306
	2	1	**3H-6660**	4	PIN-SPRING	
	3	1	**5P-7803**	2	PLUG-BUTTON	
	4	2	**6V-2331**	2	HANDLE AS	
	5	2	**6V-2375**	2	HANDLE AS-INSIDE	
	6	2	**6V-3260**	8	BOLT-SOCKET HEAD (1/4-20X0.75-IN)	
	7	2	**6V-7190**	2	LEVER AS	
					(EACH INCLUDES)	
		2	**6V-8129**	2	SETSCREW-SOCKET	
	8	2	**6V-7636**	4	PIN AS-SPRING	
	9	2	**6V-8073**	2	LINK-CONNECTING	
	10	2	**6V-8928**	1	HOOK-COAT	
	11	1	**6Y-3682**	2	HANDHOLD	
	12	1	**6Y-3732**	1	BRACKET (RH)	
	13	1	**7G-2454**	1	GLASS (TINTED) (CAB-FRONT-FIXED)	
	14	1	**7T-0601**	2	GLASS (TINTED) (CAB DOORS-FIXED)	
	15	1	**8C-3442**	2	SPRING-COIL	
	16	1	**8E-2685**	1	BRACKET (LH)	
Y	17	1	**8E-5113**	1	WINDOW AS-SLIDING (RH)	1144
Y	18	1	**8E-5114**	1	WINDOW AS-SLIDING (LH)	1144
	19	1	**8E-5922**	2	LATCH	
	20	2	**8E-5926**	1	BRACKET AS (LH)	
	21	1	**8E-5931**	2	ROD	
	22	2	**8E-5932**	1	DOOR AS (RH)	
	23	2	**8E-5933**	1	DOOR AS (LH)	
					(EACH DOOR AS INCLUDES)	
		2	**7B-2564**	2	LUG	
		2	**7G-7630**	1	PLATE	
		2	**7T-0597**	1	HINGE	
		2	**9F-6445**	2	NUT-WELD (1/4-24-THD)	
		2	**9G-5742**	2	BOSS (3/8-16-THD)	
B	24	2	**8T-0318**	10	SHIM (0.8-MM THK)	
	25	2	**8T-1979**	1	LINKAGE AS (LH)	
	26	2	**8T-1980**	1	LINKAGE AS (RH)	
					(EACH LINKAGE AS INCLUDES)	
J		2	**5P-8503**	1	LOCK AS-CYLINDER	
		2	**8T-8914**	1	SEAL-LINKAGE	
	28	2	**8T-3848**	2	STRIKER AS-LATCH	
					(EACH INCLUDES)	
		2	**6V-4270**	1	LOCKWASHER	
	29	2	**8T-9048**	1	LATCH AS-DOOR (LH)	
	30	2	**8T-9049**	1	LATCH AS-DOOR (RH)	
Y	31	1	**8Y-6456**	1	WINDOW GP-CAB (REAR-SLIDING)	1156
	32	1	**9M-5884**	2	BUMPER	
	33	1	**9P-0575**	2	GLASS (TINTED) (CAB-SIDE-FIXED)	
	34	1	**9X-3994**	2	PLUG	
	35	2	**101-9397**	1	COVER (LH)	
	36	2	**101-9398**	1	COVER (RH)	
	37	2	**157-3739**	1	CAB AS	
		2	**1F-0748**	6	NUT-WELD (1/2-13-THD)	
		2	**9F-6445**	28	NUT-WELD (1/4-24-THD)	
	39	2	**214-4100**	1	BRACKET AS	
	40	2	**2D-6235**	8	LOCKNUT (1/4-20-THD)	
	41	1	**3K-6235**	2	SEAL-LIP TYPE	
	42	2	**4L-6454**	22	BOLT (3/8-16X1-IN)	

157-3737 CAB GP *(contd.)* i02024029

NOTE	REF NO	GRAPHIC REF	PART NUMBER	QTY	PART NAME 1 2 3 4 5 6 (PRODUCT LEVEL)	SEE PAGE
	43	2	**4M-5282**	8	BOLT (1/4-20X1.50-IN)	
	44	2	**4V-6981**	1	SCREW-BUTTON HEAD (1/4-20X0.75-IN)	
	45	1	**5M-8500**	2	KNOB (DOOR OPEN RELEASE)	
	46	2	**5P-1075**	16	WASHER-HARD (10.2X22.5X3-MM THK)	
	47	1	**5P-2228**	4	BOLT (1/2-13X1-IN)	
	48	2	**6V-3884**	4	SCREW-HEX SOCKET (1/4-20X0.5-IN)	
	49	1	**7X-7729**	4	WASHER (11X25X3-MM THK)	
	50	1	**8T-2501**	4	BOLT (3/8-16X2-IN)	
	51	2	**8T-2561**	6	WASHER-HARD (10.5X28.5X5-MM THK)	
	52	1	**8T-4223**	4	WASHER-HARD (13.5X25.5X3-MM THK)	
	53	2	**9D-3767**	2	PLUG-BUTTON	
	55	2	**9S-2437**	3	SCREW-TAPPING (10-24X19.05-MM)	
BD	56	2	**5P-7211**		SEAL	
BD	57	1	**5P-6605**		SEAL	
BD	58	2	**153-2681**		SEAL	

B-USE AS REQUIRED
D-ORDER BY THE METER
J-LOCK AS INCLUDES 5P-8500 KEY
Y-SEPARATE ILLUSTRATION

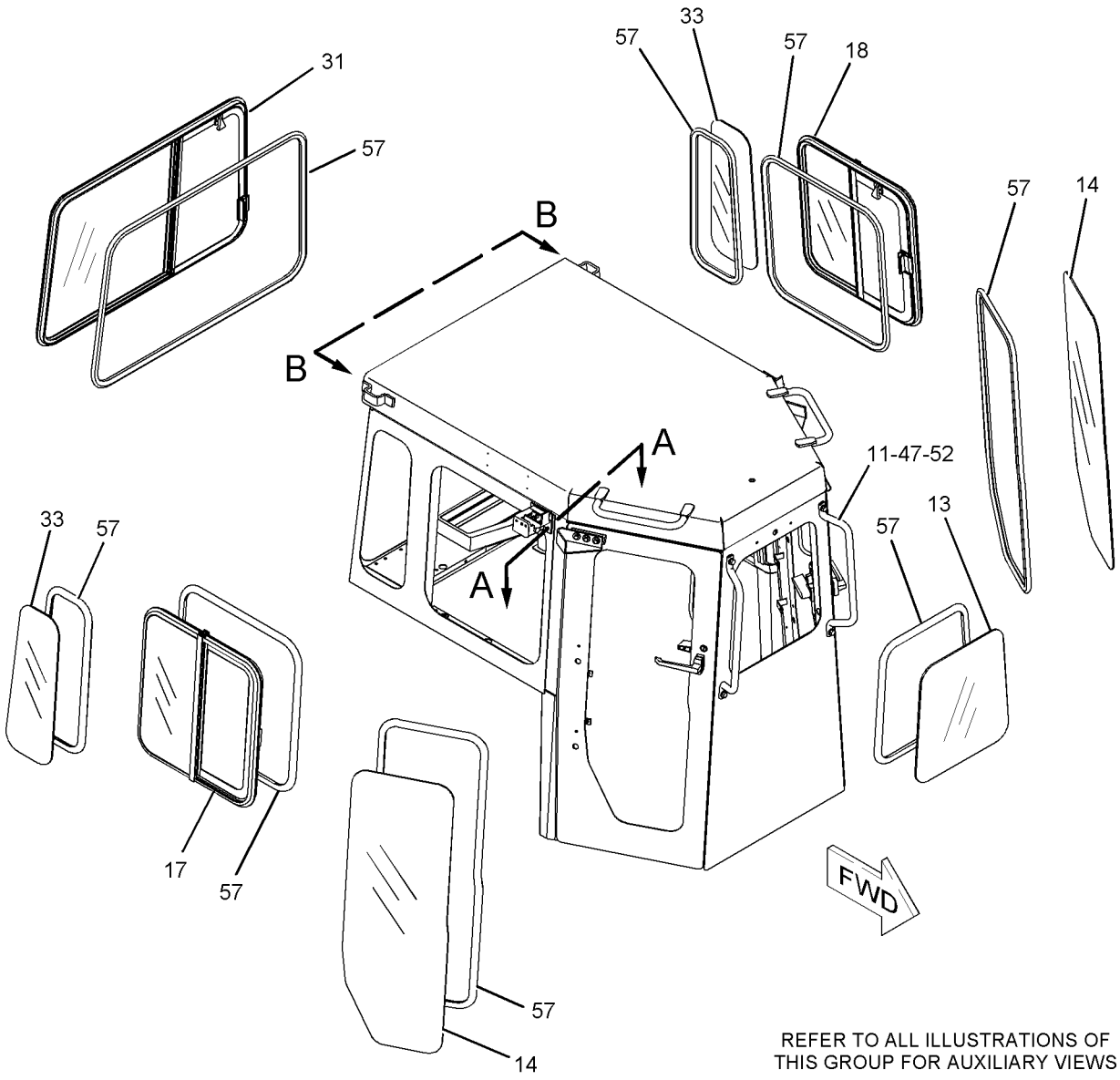

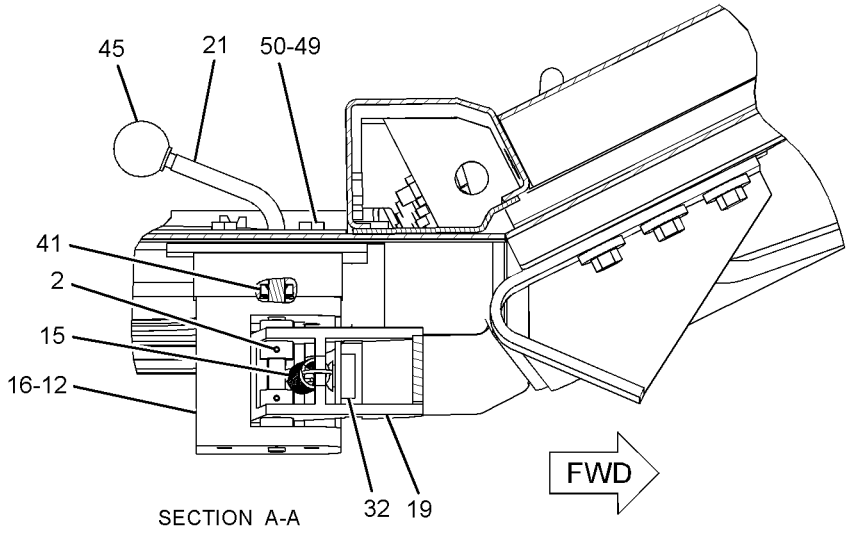

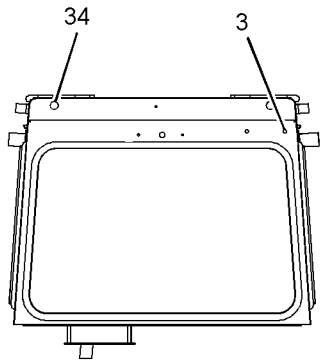

GRAPHIC #1

g01025848

OPERATOR STATION

157-3737 CAB GP *(contd.)* **i02024029**

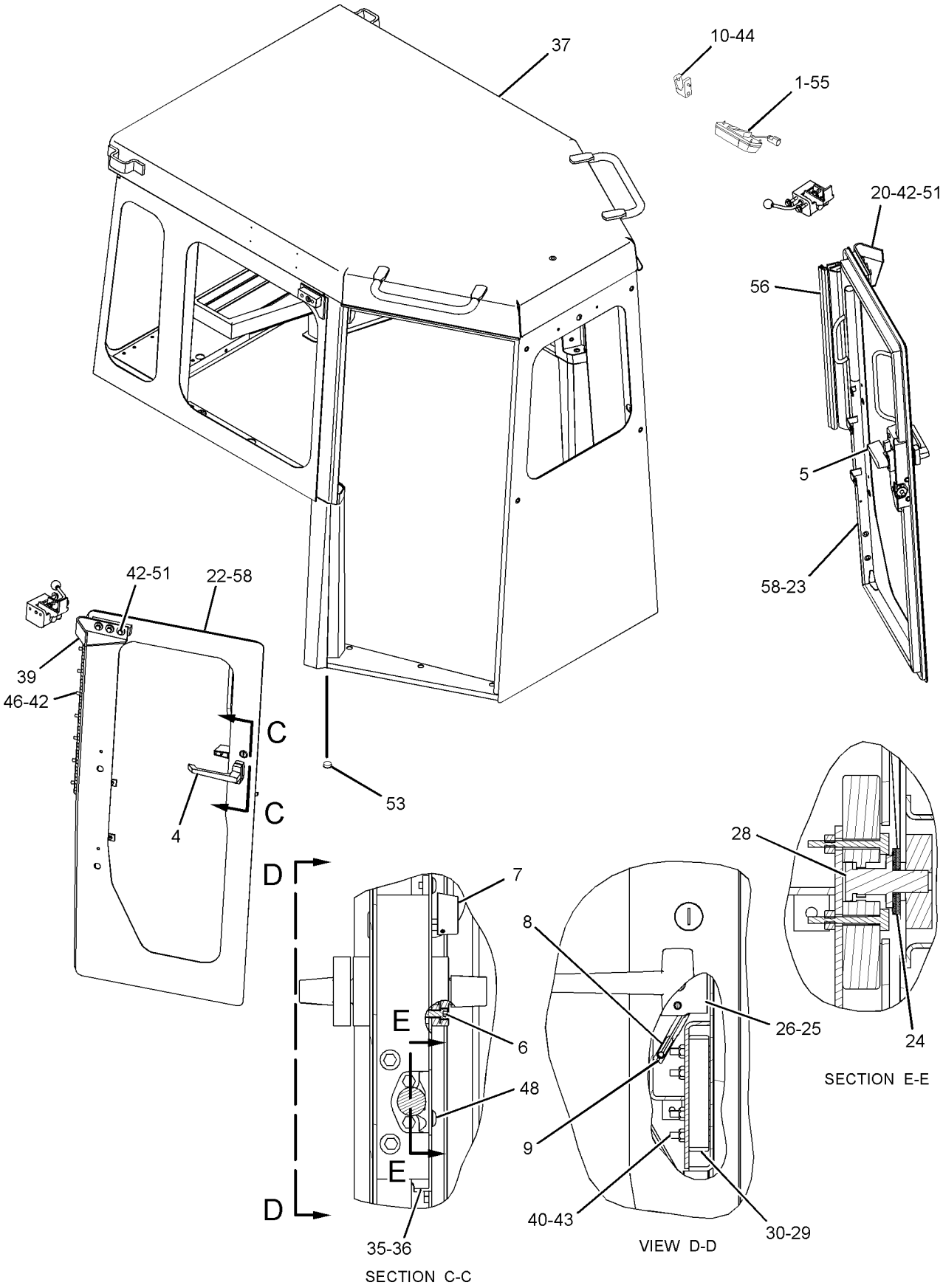

GRAPHIC #2

<END>

g01025849

3E-1906 COMPRESSOR GP-REFRIGERANT

S/N: 2GR4544-UP; 7PZ1-UP
PART OF 141-7105 COMPRESSOR GP-REFRIGERANT
ALSO AN ATTACHMENT

SMCS-1802 **i01989081**

NOTE	REF NO	GRAPHIC REF	PART NUMBER	QTY	PART NAME 1 2 3 4 5 6 (PRODUCT LEVEL)	SEE PAGE
C	1	1	**7T-4532**	1	PLUG AS	
C	2	1	**9X-7385**	2	SEAL-O-RING	
	3	1	**114-3469**	1	VALVE GP-RELIEF (REFRIGERANT COMPRESSOR)	
		1	**9X-7378**	1	SEAL-O-RING	
	4	1	**102-8802**	1	KIT-RECEPTACLE (2-PIN)	
					(INCLUDES RECEPTACLE AS & WEDGE)	

C-CHANGE FROM PREVIOUS TYPE

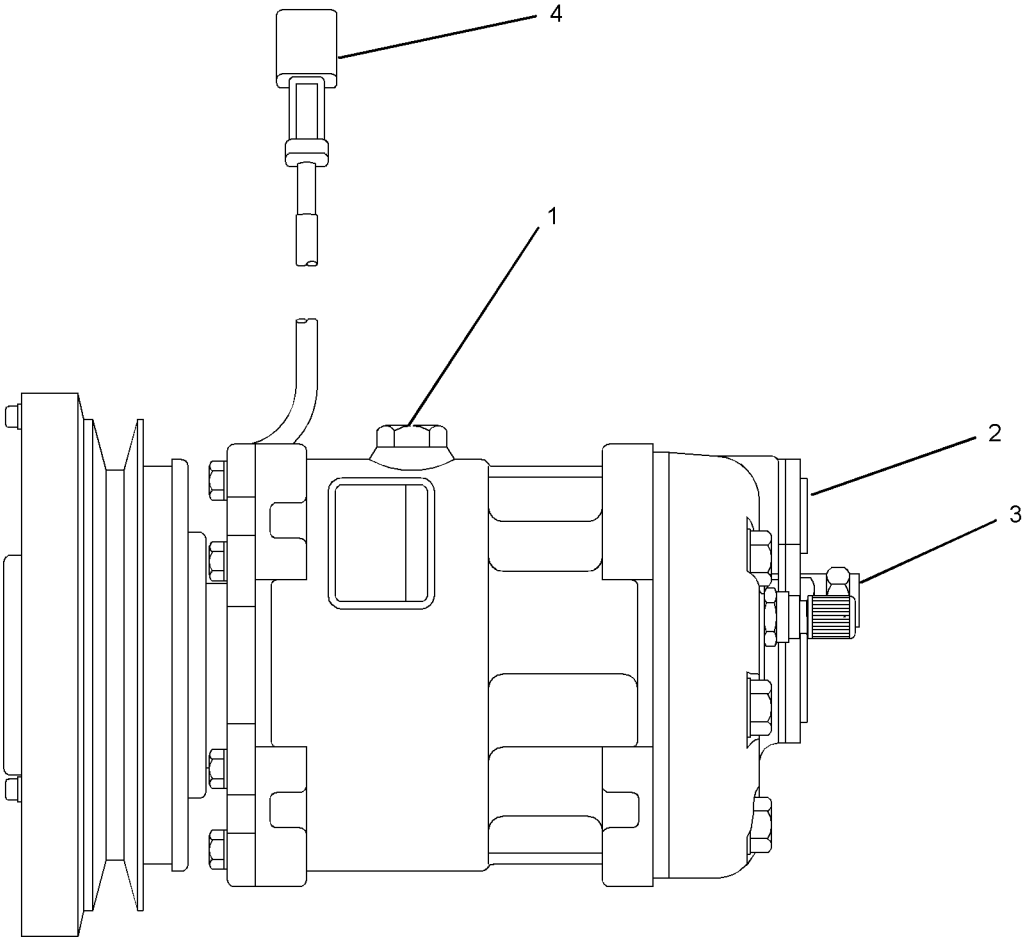

GRAPHIC #1 **<END>** g01008728

OPERATOR STATION

141-7105 COMPRESSOR GP-REFRIGERANT

S/N: 2GR4544-UP; 7PZ1-UP

PART OF 145-8006, 208-9099 AIR CONDITIONER AR, 155-5556 ENGINE AR

ALSO AN ATTACHMENT

SMCS-1802 **i01834528**

NOTE	REF NO	GRAPHIC REF	PART NUMBER	QTY	PART NAME 1 2 3 4 5 6 (PRODUCT LEVEL)	SEE PAGE
	1	1	**1P-9744**	1	V-BELT (REFRIGERANT COMPRESSOR)	
Y	2	1	**3E-1906**	1	COMPRESSOR GP-REFRIGERANT	1015
	3	1	**4S-5780**	1	ROD	
	4	1	**5G-6504**	2	LUG	
	5	1	**8S-5383**	1	BLOCK	
	6	1	**105-4283**	1	SUPPORT	
	7	1	**105-4284**	1	PLATE	
	8	1	**105-4285**	1	PLATE	
	9	1	**184-3240**	1	GUARD AS	
	10	1	**4L-9337**	5	BOLT (3/8-16X1.5 IN)	
	11	1	**5P-2566**	4	BOLT (1/2-13X1.5 IN)	
	12	1	**6V-8188**	2	NUT (1/2-13 THD)	
	13	1	**6V-8801**	5	NUT (3/8-16 THD)	
	14	1	**7X-0338**	1	BOLT (1/2-13X6 IN)	
	15	1	**7X-0345**	1	BOLT (5/8-11X1.75 IN)	
	16	1	**7X-0448**	2	NUT (5/8-11 THD)	
	17	1	**8T-4122**	3	WASHER-HARD (17X32X3.5MM THK)	
	18	1	**8T-4223**	8	WASHER-HARD (13.5X25.5X3MM THK)	
	19	1	**8T-4896**	10	WASHER-HARD (10.2X18.5X2.5MM THK)	
	20	1	**8T-8920**	1	BOLT (1/2-13X3.25 IN)	

Y-SEPARATE ILLUSTRATION

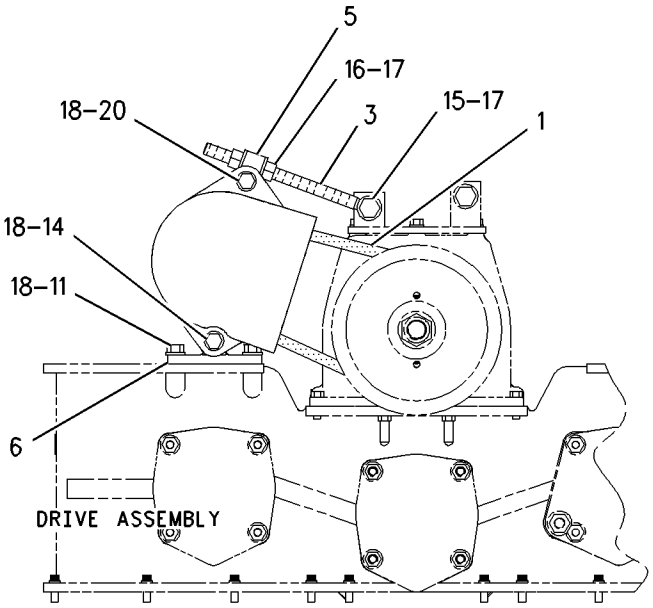

REAR VIEW

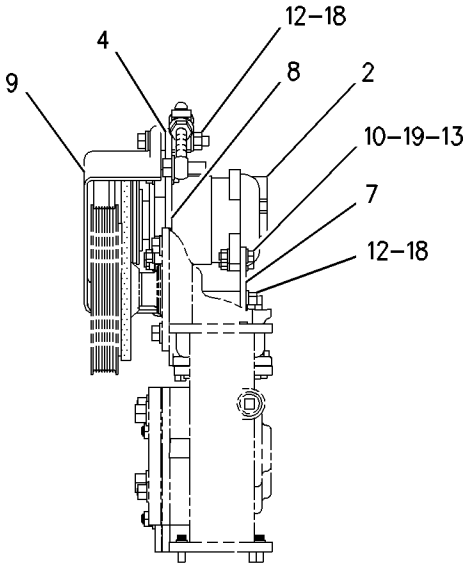

RIGHT SIDE VIEW

GRAPHIC #1 **<END>** g00799276

4W-1319 CONDENSER GP-REFRIGERANT

S/N: 7PZ718-UP

PART OF 145-8006, 208-9099 AIR CONDITIONER AR, 157-3738 CAB AR

ALSO AN ATTACHMENT

SMCS-1805 **i01426655**

NOTE	REF NO	GRAPHIC REF	PART NUMBER	QTY	PART NAME 1 2 3 4 5 6 (PRODUCT LEVEL)	SEE PAGE
	1	1	**7W-5112**	1	CONDENSER	
	2	1	**5M-3062**	8	BOLT (3/8-16X.75 IN)	
	3	1	**8T-4896**	18	WASHER-HARD (10.2X18.5X2.5MM THK)	
	4	1	**5S-7379**	10	BOLT (3/8-16X0.875 IN)	
	5	1	**7W-5371**	2	PLATE	
	6	1	**6V-8801**	4	NUT (3/8-16 THD)	
	7	1	**8T-2561**	12	WASHER-HARD (10.5X28.5X5MM THK)	
	8	1	**7W-6597**	2	BRACKET	
	9	1	**6N-8744**	4	MOUNT	
	10	1	**5S-7383**	4	BOLT (3/8-16X1.75 IN)	

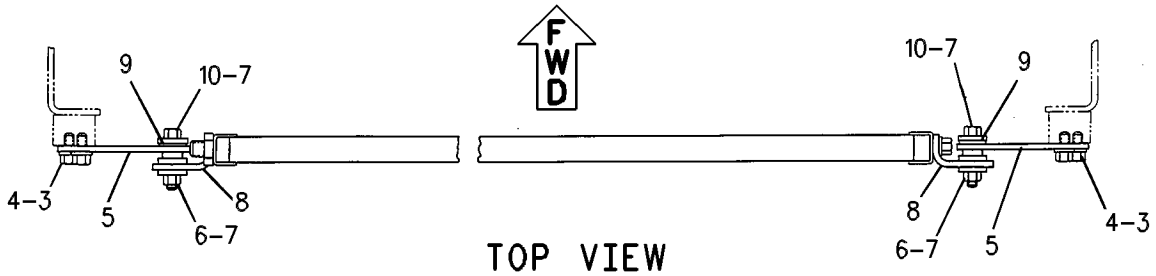

TOP VIEW

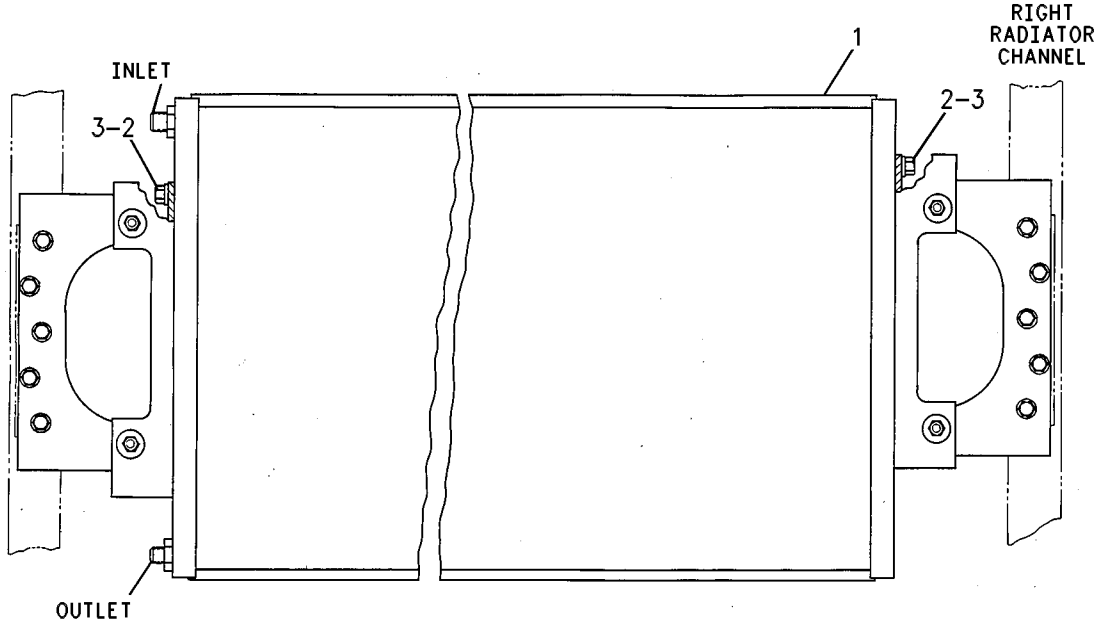

REAR VIEW

GRAPHIC #1 **<END>** g00527026

OPERATOR STATION

135-0356 CONTROL & MTG GP-IMPLEMENT–RIPPER

S/N: 7PZ1-UP
PART OF 173-1552 CONTROL AR-HYDRAULIC
AN ATTACHMENT

SMCS-5100 **i01989084**

NOTE	REF NO	GRAPHIC REF	PART NUMBER	QTY	PART NAME 1 2 3 4 5 6 (PRODUCT LEVEL)	SEE PAGE
Y	1	1	**183-3208**	1	CONTROL GP-HYDRAULIC (RIPPER)	655
	2	1	**8T-4896**	4	WASHER-HARD (10.2X18.5X2.5MM THK)	
	3	1	**137-3927**	1	FILM-INSTRUCTION (RIPPER CONTROLS)	
	4	1	**137-3928**	1	FILM-INSTRUCTION (RIPPER CONTROLS)	
	5	1	**8T-2502**	4	BOLT (3/8-16X1.125 IN)	

Y-SEPARATE ILLUSTRATION

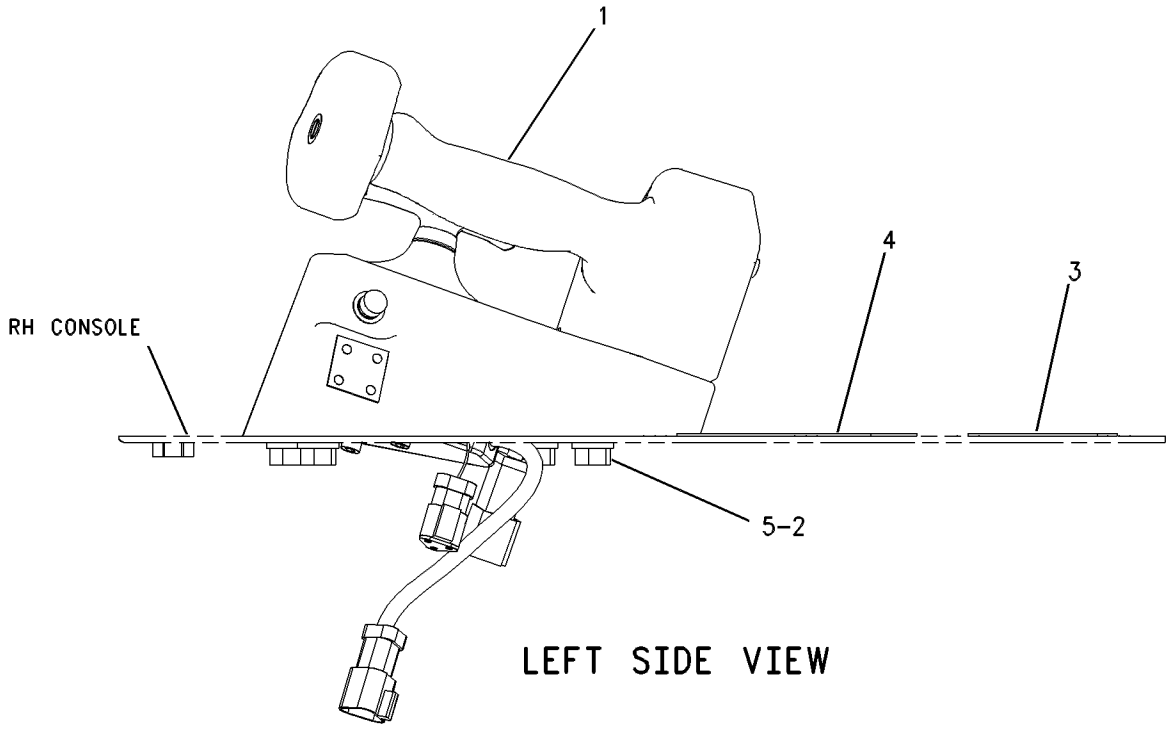

LEFT SIDE VIEW

GRAPHIC #1 **<END>** g00662835

OPERATOR STATION

174-3119 CONTROL & MTG GP-IMPLEMENT–BLADE

S/N: 7PZ1-563

PART OF 155-5553 CONTROL AR-HYDRAULIC

SMCS-5100 **i01515988**

NOTE	REF NO	GRAPHIC REF	PART NUMBER	QTY	PART NAME 1 2 3 4 5 6 (PRODUCT LEVEL)	SEE PAGE
	1	1	**137-5640**	1	BASE-MOUNTING	
	2	1	**158-2286**	1	COVER	
	3	1	**167-3848**	1	CONTROL & MTG GP-JOYSTICK	
	4	1	**035-2017**	4	SCREW-BUTTON HEAD (3/8-16X1 IN)	
	5	1	**5P-1075**	8	WASHER-HARD (10.2X22.5X3MM THK)	
	6	1	**6J-0488**	4	SCREW-BUTTON HEAD (3/8-16X0.875 IN)	
	7	1	**6V-8801**	4	NUT (3/8-16 THD)	
	8	1	**7U-4890**	4	SCREW	
	9	1	**8T-4205**	4	WASHER-HARD (7.2X14.5X2MM THK)	
	10	1	**8T-4896**	4	WASHER-HARD (10.2X18.5X2.5MM THK)	
	11	1	**199-6766**	1	CONNECTOR AS	

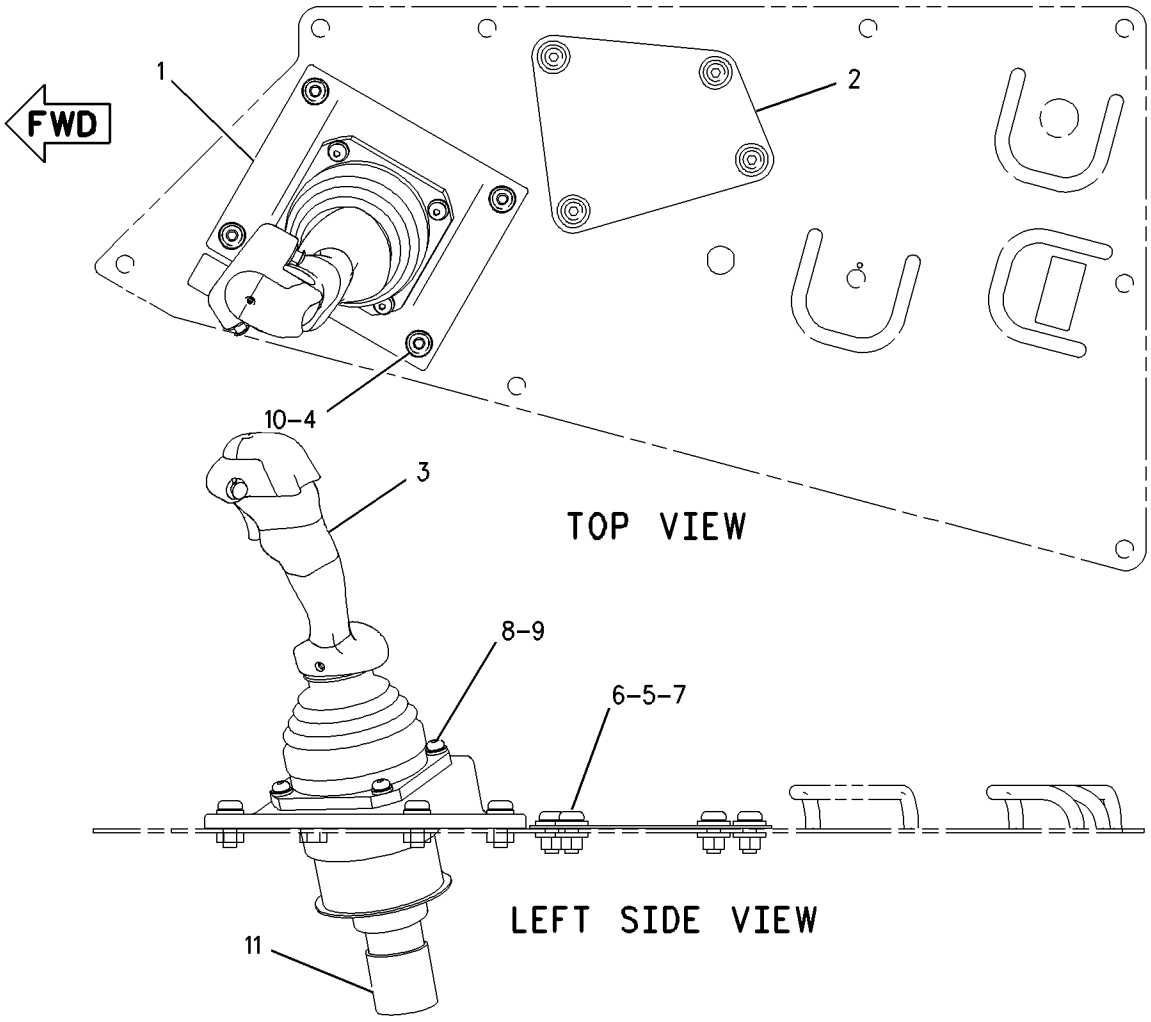

GRAPHIC #1 **<END>** g00799290

OPERATOR STATION

180-2867 CONTROL & MTG GP-IMPLEMENT–BLADE

S/N: 7PZ1-563
12/24 VOLTS. ELECTRONIC
PART OF 158-8044 CONTROL AR-HYDRAULIC
AN ATTACHMENT

SMCS-5100 **i01232668**

NOTE	REF NO	GRAPHIC REF	PART NUMBER	QTY	PART NAME 1 2 3 4 5 6 (PRODUCT LEVEL)	SEE PAGE
	1	1	**180-4236**	1	HANDHOLD AS	
	2	1	**4B-9808**	2	SETSCREW	

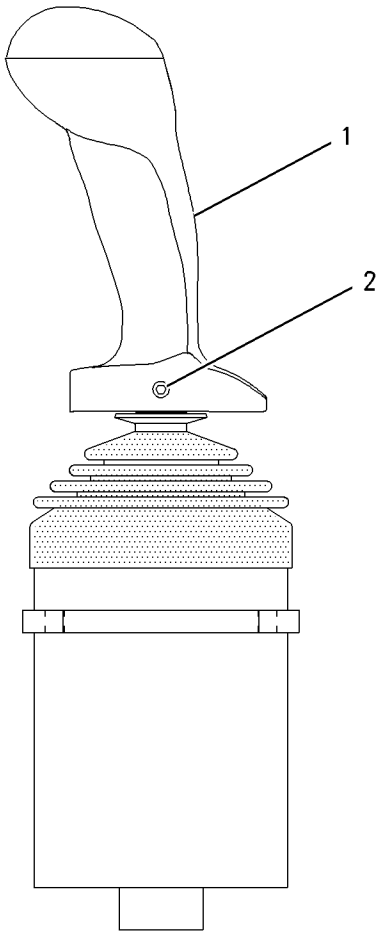

GRAPHIC #1 **<END>** g00663737

OPERATOR STATION

194-3684 CONTROL & MTG GP-IMPLEMENT–BLADE

S/N: 7PZ564-685

PART OF 155-5553 CONTROL AR-HYDRAULIC

SMCS-5100 **i01437324**

NOTE	REF NO	GRAPHIC REF	PART NUMBER	QTY	PART NAME 1 2 3 4 5 6 (PRODUCT LEVEL)	SEE PAGE
	1	1	**158-2286**	1	COVER	
Y	2	1	*177-4980*	1	CONTROL GP-JOYSTICK	657
	3	1	**188-7095**	1	BASE-MOUNTING	
M	4	1	**127-2170**	4	SCREW-TRUSS HEAD (M8X1.25X20MM)	
	5	1	**5P-1075**	8	WASHER-HARD (10.2X22.5X3MM THK)	
	6	1	**6J-0488**	4	SCREW-BUTTON HEAD (3/8-16X0.875 IN)	
	7	1	**6V-8801**	4	NUT (3/8-16 THD)	
	8	1	**8T-4121**	4	WASHER-HARD (11X21X2.5MM THK)	
M	9	1	**8T-4136**	4	BOLT (M10X1.5X25MM)	

M-METRIC PART
Y-SEPARATE ILLUSTRATION

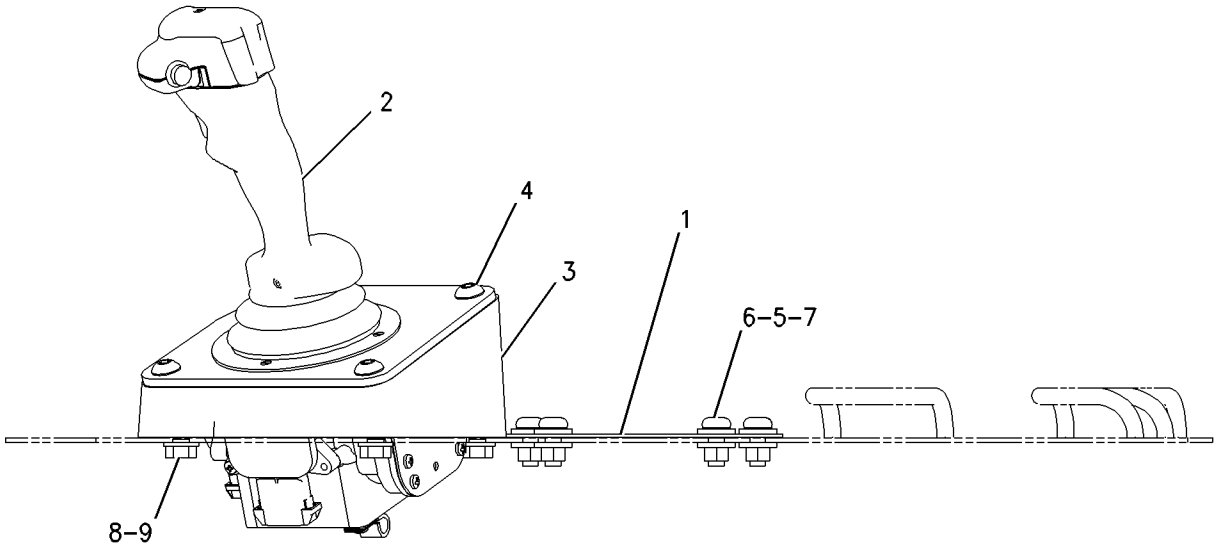

GRAPHIC #1 **<END>** g00812757

OPERATOR STATION

194-3684 CONTROL & MTG GP-IMPLEMENT—BLADE

S/N: 7PZ686-UP

PART OF 155-5553 CONTROL AR-HYDRAULIC

SMCS-5100 **i01964538**

NOTE	REF NO	GRAPHIC REF	PART NUMBER	QTY	PART NAME 1 2 3 4 5 6 (PRODUCT LEVEL)	SEE PAGE
	1	1	**158-2286**	1	COVER	
CY	2	1	**232-3780**	1	CONTROL & MOUNTING GP (IMPLEMENT)	650
	3	1	**188-7095**	1	BASE-MOUNTING	
M	4	1	**127-2170**	4	SCREW-TRUSS HEAD (M8X1.25X20MM)	
	5	1	**5P-1075**	8	WASHER-HARD (10.2X22.5X3MM THK)	
	6	1	**6J-0488**	4	SCREW-BUTTON HEAD (3/8-16X0.875 IN)	
	7	1	**6V-8801**	4	NUT (3/8-16 THD)	
	8	1	**8T-4121**	4	WASHER-HARD (11X21X2.5MM THK)	
M	9	1	**8T-4136**	4	BOLT (M10X1.5X25MM)	

C-CHANGE FROM PREVIOUS TYPE
M-METRIC PART
Y-SEPARATE ILLUSTRATION

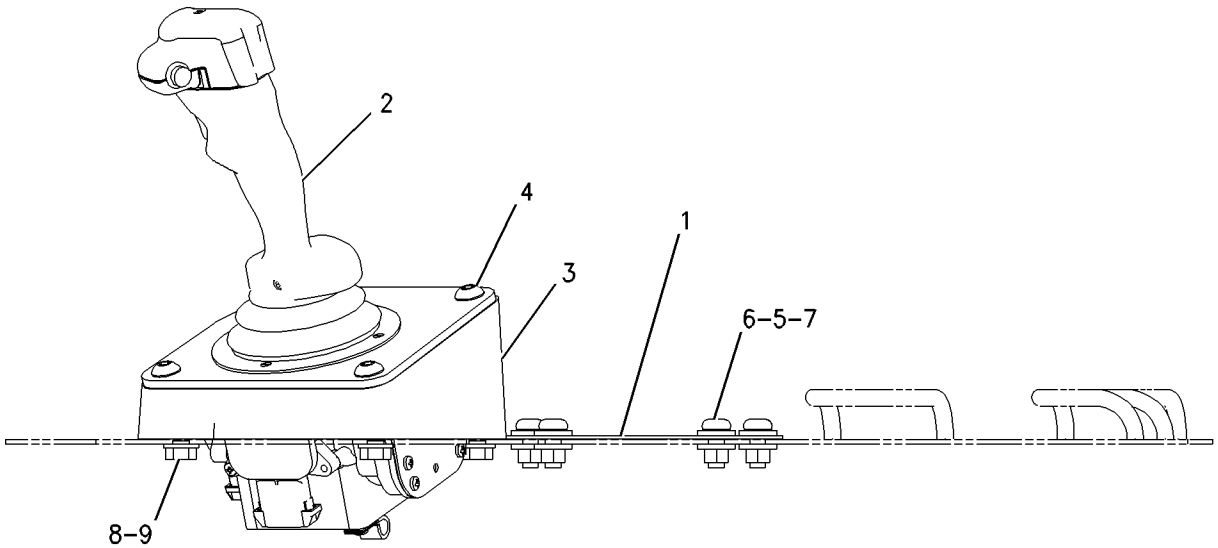

GRAPHIC #1 **<END>** g00812757

OPERATOR STATION

199-4194 CONTROL & MTG GP-IMPLEMENT–BLADE

S/N: 7PZ564-685
SINGLE TILT DOZER CONTROL
PART OF 158-8044 CONTROL AR-HYDRAULIC
AN ATTACHMENT

SMCS-5100 **i01446931**

NOTE	REF NO	GRAPHIC REF	PART NUMBER	QTY	PART NAME 1 2 3 4 5 6 (PRODUCT LEVEL)	SEE PAGE
	1	1	**158-2286**	1	COVER	
Y	2	1	**185-8734**	1	CONTROL GP-JOYSTICK	662
	3	1	**188-7095**	1	BASE-MOUNTING	
M	4	1	**127-2170**	4	SCREW-TRUSS HEAD (M8X1.25X20MM)	
	5	1	**5P-1075**	8	WASHER-HARD (10.2X22.5X3MM THK)	
	6	1	**6J-0488**	4	SCREW-BUTTON HEAD (3/8-16X0.875 IN)	
	7	1	**6V-8801**	4	NUT (3/8-16 THD)	
	8	1	**8T-4121**	4	WASHER-HARD (11X21X2.5MM THK)	
M	9	1	**8T-4136**	4	BOLT (M10X1.5X25MM)	

M-METRIC PART
Y-SEPARATE ILLUSTRATION

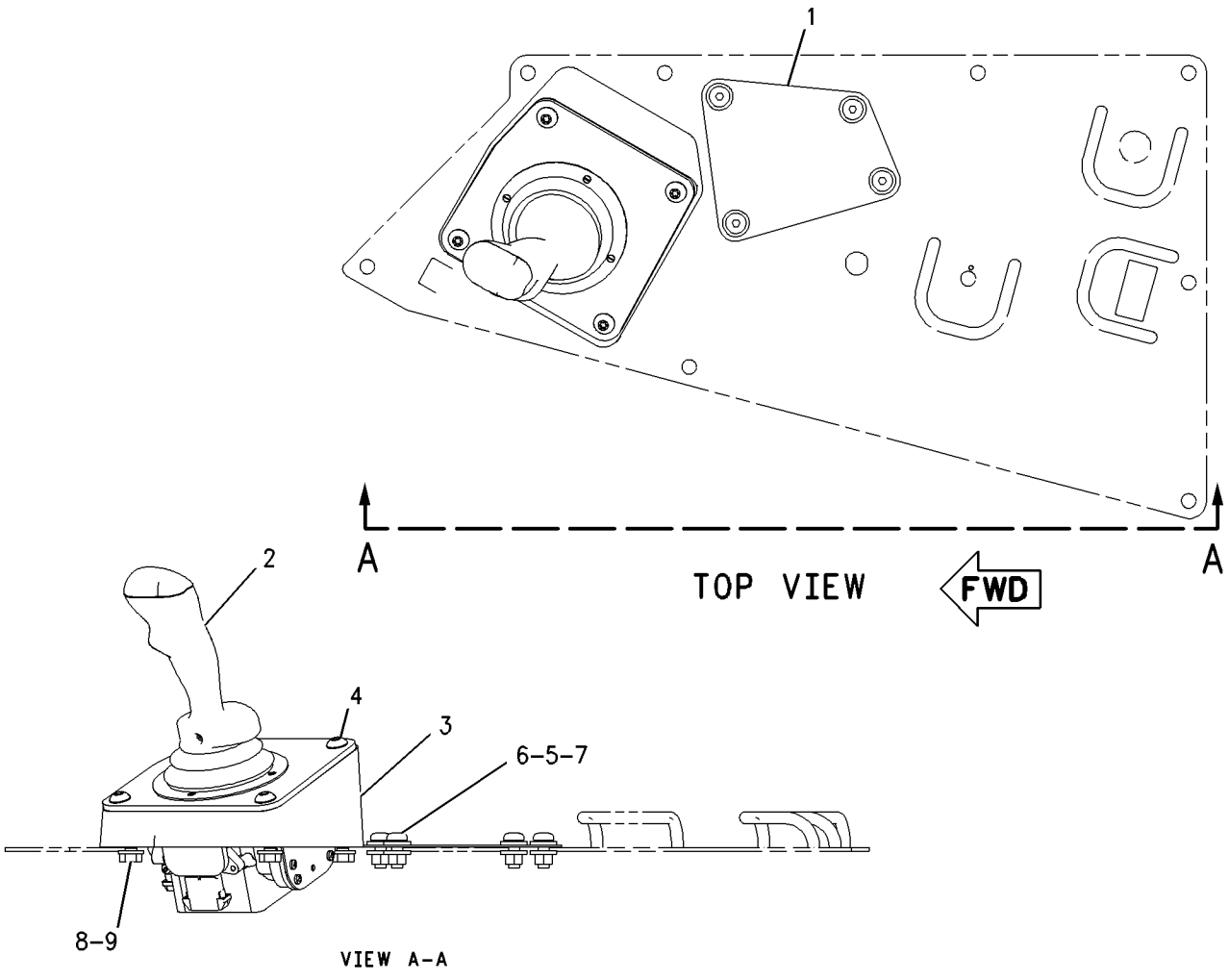

GRAPHIC #1 **<END>** g00757607

199-4194 CONTROL & MTG GP-IMPLEMENT–BLADE

S/N: 7PZ686-UP
SINGLE TILT DOZER CONTROL
PART OF 158-8044 CONTROL AR-HYDRAULIC
AN ATTACHMENT

SMCS-5100 **i01972904**

NOTE	REF NO	GRAPHIC REF	PART NUMBER	QTY	PART NAME 1 2 3 4 5 6 (PRODUCT LEVEL)	SEE PAGE
	1	1	**158-2286**	1	COVER	
	2	1	**188-7095**	1	BASE-MOUNTING	
Y	3	1	**232-3779**	1	CONTROL GP-JOYSTICK (IMPLEMENT)	664
M	4	1	**127-2170**	4	SCREW-TRUSS HEAD (M8X1.25X20MM)	
	5	1	**5P-1075**	8	WASHER-HARD (10.2X22.5X3MM THK)	
	6	1	**6J-0488**	4	SCREW-BUTTON HEAD (3/8-16X0.875 IN)	
	7	1	**6V-8801**	4	NUT (3/8-16 THD)	
	8	1	**8T-4121**	4	WASHER-HARD (11X21X2.5MM THK)	
M	9	1	**8T-4136**	4	BOLT (M10X1.5X25MM)	

M-METRIC PART
Y-SEPARATE ILLUSTRATION

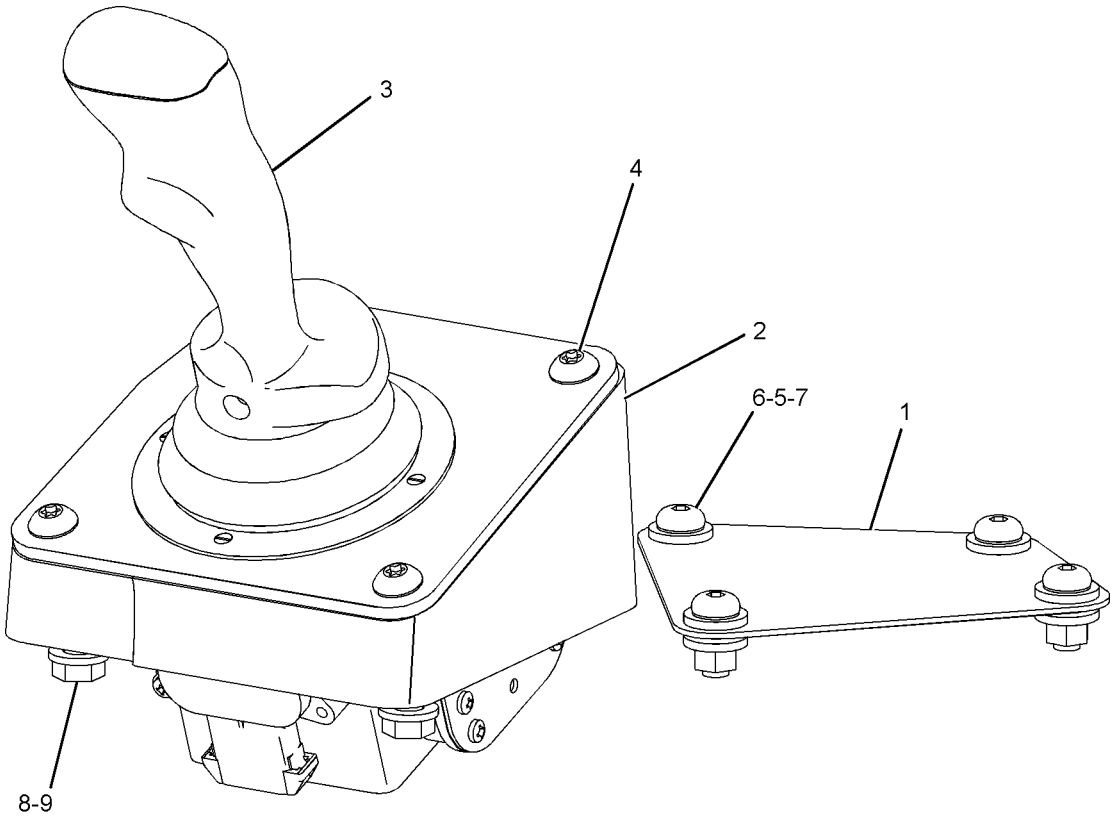

GRAPHIC #1 **<END>** g01026284

OPERATOR STATION

125-3401 CONTROL GP-DISPLAY ELECTRONIC–

INDICATOR STRIP

S/N: 7PZ1-UP

LIGHT EMITTING DIODE DISPLAY

PART OF 157-5913 INSTRUMENT GP

SMCS-7603 **i01673928**

NOTE	REF NO	GRAPHIC REF	PART NUMBER	QTY	PART NAME 1 2 3 4 5 6 (PRODUCT LEVEL)	SEE PAGE
Z	1	1		1	BOARD AS	
	2	1	**102-8804**	1	KIT-RECEPTACLE (4 PIN)	
					(INCLUDES RECEPTACLE AS & WEDGE)	
	3	1	**3E-3377**	1	WEDGE-RECEPTACLE LOCK	
	4	1	**8T-8729**	4	PIN-CONNECTOR	
	5	1	**8L-8413**	1	STRAP-CABLE	

Z-NOT SERVICED SEPARATELY

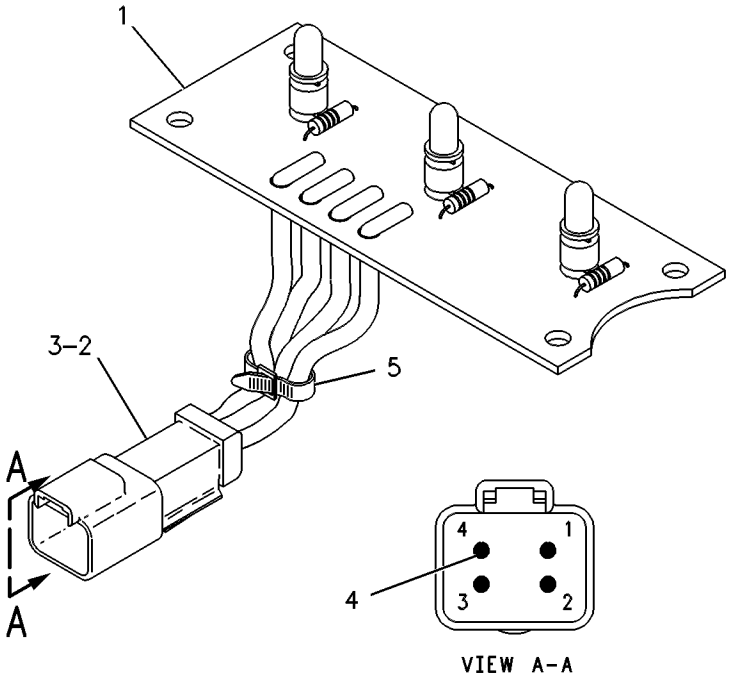

VIEW A–A

GRAPHIC #1 **<END>** g00252614

149-6470 CONTROL GP-DISPLAY ELECTRONIC–
OPERATOR FUNCTION STATUS IND
S/N: 7PZ1-UP

PART OF 165-5018, 183-2076 CONTROL GP-ELECTRONIC

SMCS-7603 **i01836426**

NOTE	REF NO	GRAPHIC REF	PART NUMBER	QTY	PART NAME 1 2 3 4 5 6 (PRODUCT LEVEL)	SEE PAGE
	1	1	**8L-8413**	1	STRAP-CABLE	
	2	1	**102-8810**	1	KIT-CONNECTING PLUG (6 PINS)	
					(INCLUDES PLUG AS, WEDGE & SEAL INTERFACE)	
	3	1	**3E-3380**	1	WEDGE-PLUG LOCK	
		1	**102-8815**	1	SEAL	
	4	1	**8T-8730**	6	SOCKET-CONNECTOR	

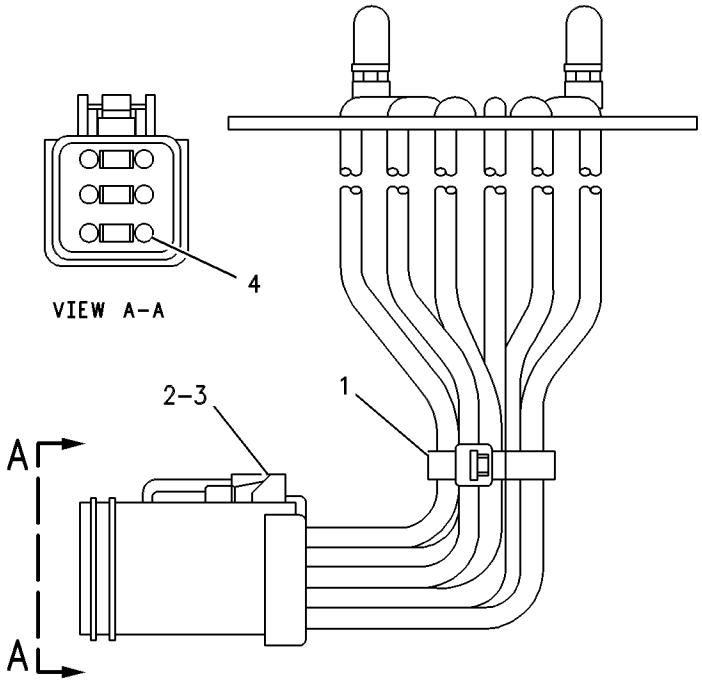

GRAPHIC #1 **<END>** g00329749

OPERATOR STATION

103-5526 CONTROL GP-MONITOR SYS DIMMER

S/N: 7PZ1-UP

PART OF 156-9937 WIRING GP-PLATFORM

SMCS-7490 **i01707696**

NOTE	REF NO	GRAPHIC REF	PART NUMBER	QTY	PART NAME 1 2 3 4 5 6 (PRODUCT LEVEL)	SEE PAGE
	1	1	**5P-9132**	2	SCREW-WASHER HEAD (HEX) (6-32X.19 IN)	
J	2	1	**3E-3383**	1	WEDGE-RECEPTACLE LOCK	
	3	1	**186-3735**	6	PIN-CONNECTOR	
					AVAILABLE REPAIR KIT(S):	
J			**102-8805**	1	KIT-RECEPTACLE (6 PIN)	
					(INCLUDES RECEPTACLE AS & PART MARKED J)	

J-KIT MARKED J INCLUDES PART MARKED J

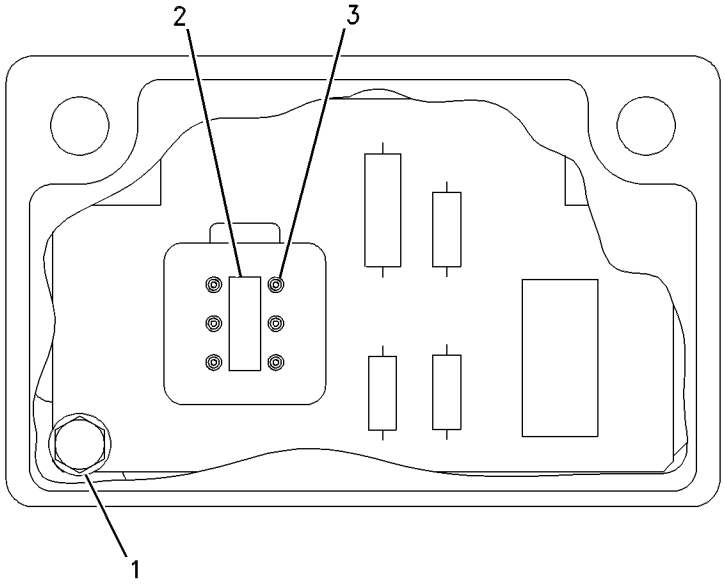

GRAPHIC #1 **<END>** g00316579

OPERATOR STATION

8Y-5874 EXTENSION GP-BACKREST—CLOTH

S/N: 7PZ1-391
PART OF 125-6224 SEAT GP, 8Y-6138 SEAT GP-SUSPENSION
ALSO AN ATTACHMENT

SMCS-7312 **i01696160**

NOTE	REF NO	GRAPHIC REF	PART NUMBER	QTY	PART NAME 1 2 3 4 5 6 (PRODUCT LEVEL)	SEE PAGE
	1	1	**8Y-5877**	1	PAN AS-EXTENSION	
J	2	1	**8Y-5947**	2	FASTENER	
JZ	3	1		1	CUSHION AS	
					AVAILABLE REPAIR KIT(S):	
J			**8Y-5943**	1	KIT-CUSHION (BACKREST EXTENSION)	
					(INCLUDES CUSHION AS & FASTENER)	

J-KIT MARKED J SERVICES PART(S) MARKED J
Z-NOT SERVICED SEPARATELY

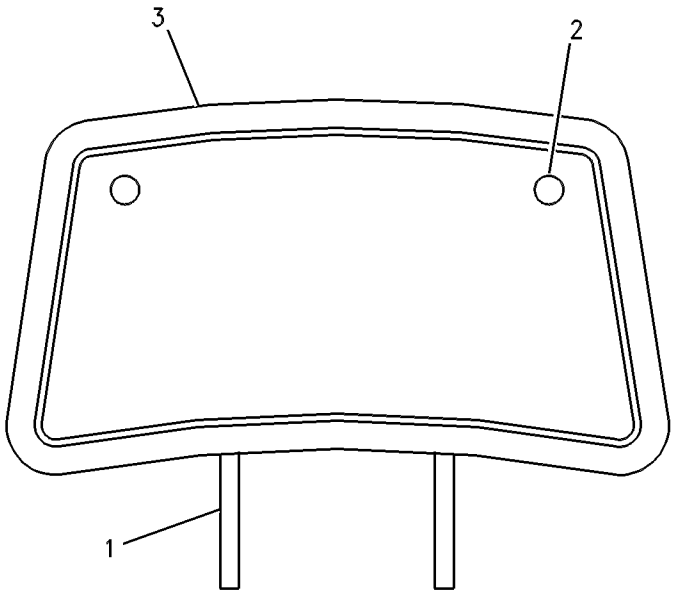

GRAPHIC #1 **<END>** g00524121

OPERATOR STATION

8Y-5959 EXTENSION GP-BACKREST—VINYL

S/N: 7PZ1-UP
PART OF 8Y-6179 SEAT GP-SUSPENSION
AN ATTACHMENT

SMCS-7312 **i01395711**

NOTE	REF NO	GRAPHIC REF	PART NUMBER	QTY	PART NAME 1 2 3 4 5 6 (PRODUCT LEVEL)	SEE PAGE
	1	1	**8Y-5877**	1	PAN AS-EXTENSION	
J	2	1	**8Y-5947**	2	FASTENER	
JZ	3	1		1	CUSHION AS	
					AVAILABLE REPAIR KIT(S):	
J			**8Y-5960**	1	KIT-CUSHION (VINYL BACK REST)	

J-KIT MARKED J INCLUDES PARTS MARKED J
Z-NOT SERVICED SEPARATELY

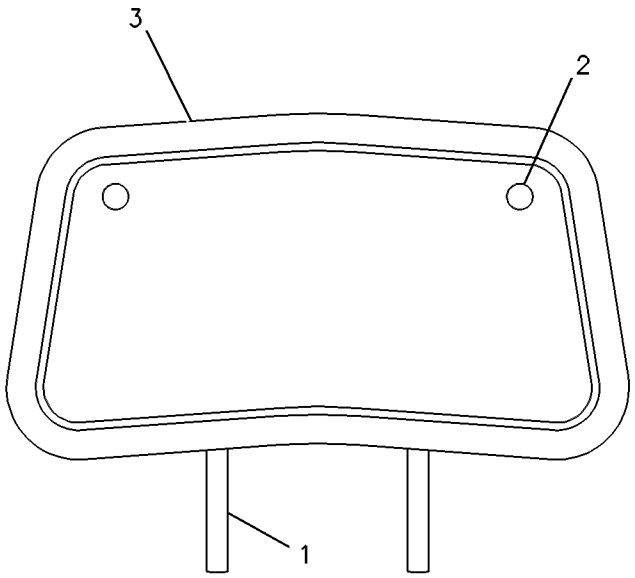

GRAPHIC #1 **<END>** g00326278

OPERATOR STATION

3E-7835 FAN GP-DEFROSTER

S/N: 7PZ1-UP
PART OF 197-7504 CAB AR
AN ATTACHMENT

SMCS-7316 **i01989505**

NOTE	REF NO	GRAPHIC REF	PART NUMBER	QTY	PART NAME 1 2 3 4 5 6 (PRODUCT LEVEL)	SEE PAGE
	1	1	**2L-8075**	2	TERMINAL	
	2	1	**7H-4543**	1	SCREW-TAPPING (NO10X.375 IN)	
	3	1	**1V-6652**	1	SWITCH GP-TOGGLE (DEFROSTER FAN CONTROL)	
	4	1	**6T-3631**	2	NUT-HEX (15/32-32 THD)	
	5	1	**6T-3632**	1	LOCKWASHER	
		1	**6T-3633**	1	RING-LOCKING	
	6	1	**6V-8374**	3	SCREW-MACHINE (6-32X0.25 IN)	
		1	**3L-8187**	3	LOCKWASHER	
	7	1	**6N-6984**	1	MOUNT	
	8	1	**1M-1230**	2	NUT & LOCK AS	
	9	1	**4B-4274**	2	WASHER (5.5X13X1.2MM THK)	
	10	1	**9B-7237**	1	BOLT (3/8-16X1.25 IN)	
	11	1	**3E-7838**	1	BRACKET AS	
	12	1	**4B-4276**	1	WASHER (7X16X1.6MM THK)	
	13	1	**6T-9255**	1	PLATE	
	14	1	**6T-9256**	2	WASHER (7.14X12.7X1.6MM THK)	
	15	1	**6T-8943**	1	PLATE	
	16	1	**8T-4222**	1	WASHER-PLATED (11X32X2.5MM THK)	
	17	1	**2D-6235**	3	LOCKNUT (1/4-20 THD)	
	18	1	**7L-8316**	1	SETSCREW-SOCKET (10-32X.25IN)	
	19	1	**8T-9368**	1	BOLT (1/4-20X2.25 IN)	
	20	1	**3D-8748**	1	FAN AS	
	21	1	**3E-7839**	1	BRACKET AS	
	22	1	**3E-7837**	1	BASE AS	
		1	**9F-2978**	1	NUT-WELD (3/8-16 THD)	
	23	1	**3D-8749**	1	GUARD	
	24	1	**174-1503**	1	MOTOR AS-ELECTRIC (DEFROSTER FAN)	
	25	1	**2L-8075**	2	TERMINAL (FOR NO. 8 SCREW)	
	26	1	**2L-8076**	1	TERMINAL-RING (FOR NO. 10 SCREW)	
	27	1	**7X-0264**	1	BOLT (1/4-20X2.50 IN)	

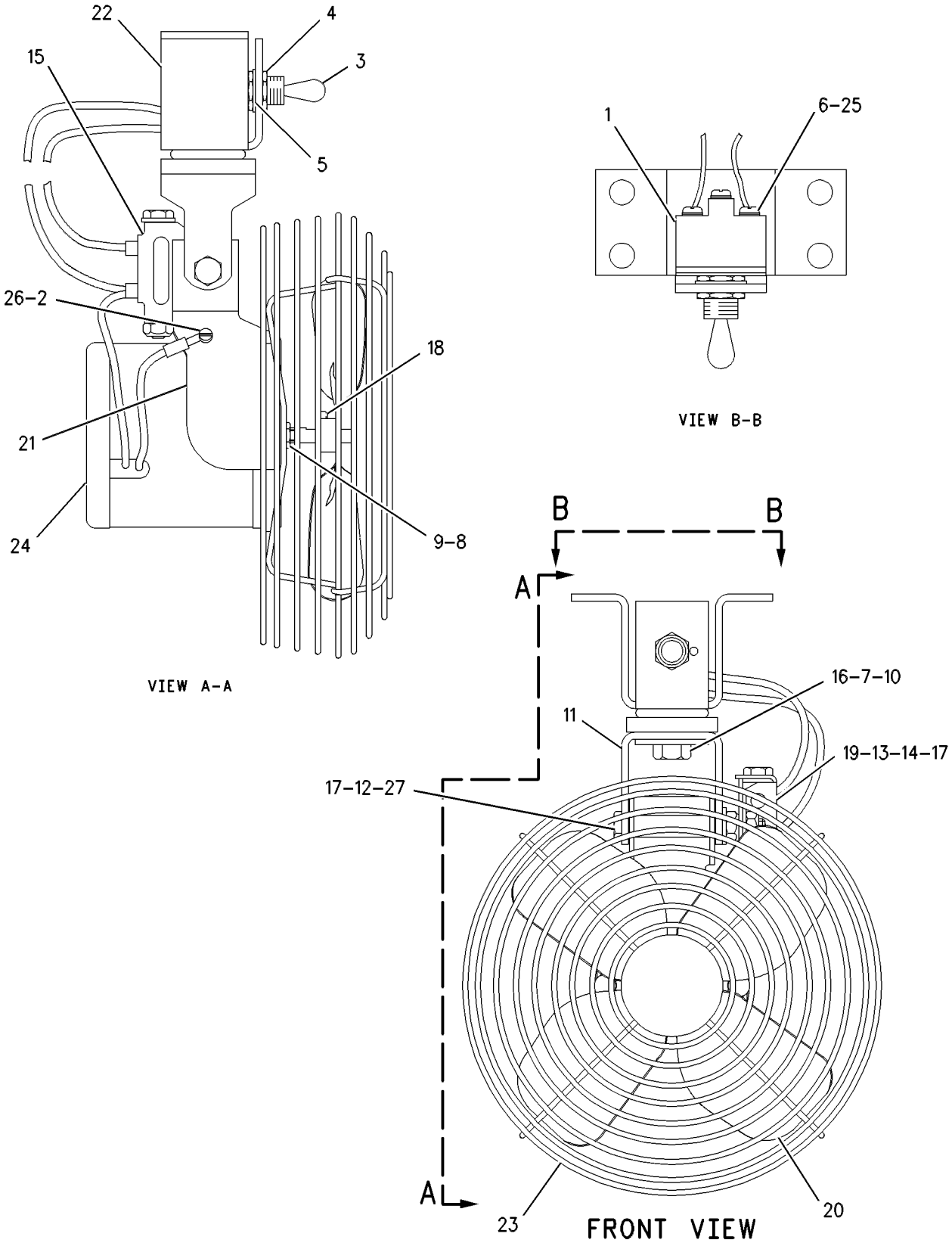

GRAPHIC #1

<END>

g00537615

OPERATOR STATION

127-9136 HEATER GP-CAB

S/N: 7PZ1-476

ELECTRONIC WATER VALVE

PART OF 157-2151 HEATER GP-CAB

SMCS-7304 **i02029833**

NOTE	REF NO	GRAPHIC REF	PART NUMBER	QTY	PART NAME 1 2 3 4 5 6 (PRODUCT LEVEL)	SEE PAGE
	1	1	**3E-0400**	2	BLOWER AS	
J	2	1	**3E-6392**	1	MOTOR AS-FAN	
		1	**3E-3365**	1	WEDGE-RECEPTACLE LOCK (2-PIN)	
		1	**8T-8729**	2	PIN-CONNECTOR	
		1	**102-8802**	1	KIT-RECEPTACLE (2-PIN)	
					(INCLUDES RECEPTACLE AS & WEDGE)	
	3	1	**3S-2093**	4	STRAP-CABLE	
M	4	1	**5C-9553**	29	BOLT (M6X1X16-MM)	
	5	1	**5P-4115**	14	WASHER-HARD (7.2X19X2-MM THK)	
	6	1	**5P-6670**	1	FILM-INSTRUCTION (WATER IN, WATER OUT) (HEATER)	
	7	1	**6V-1668**	2	WASHER (6.5X29.1X3-MM THK)	
E	8	1	**136-1953**		HOSE (8CM)	
	9	1	**8C-3756**	1	FILM-IDENTIFICATION (GROUP, SEQUENCE NO.) (HEATER)	
	10	1	**8C-4586**	2	CLAMP	
M	11	1	**8C-8451**	1	BOLT (M6X1X40-MM)	
	12	1	**8P-5141**	2	PLATE-ORIFICE	
	13	1	**9X-2488**	6	CLAMP-HOSE	
	14	1	**8T-4205**	30	WASHER-HARD (7.2X14.5X2-MM THK)	
C	15	1	**125-9740**	1	RESISTOR	
	16	1	**5V-1474**	4	SCREW-FORMING (10-16X0.625-IN)	
M	17	1	**9X-8498**	1	BOLT (M6X1.0X180-MM)	
	18	1	**091-8792**	2	CLIP	
	19	1	**149-8218**	1	CONTROL AS-BOARD	
		1	**8T-8737**	2	PLUG-SEAL	
		1	**9W-0844**	5	SOCKET-CONNECTION	
		1	**9W-0852**	5	PIN-CONNECTOR	
		1	**102-8810**	1	KIT-CONNECTING PLUG (6-PIN)	
					(INCLUDES PLUG AS & WEDGE)	
		1	**102-8805**	1	KIT-RECEPTACLE (6-PIN)	
					(INCLUDES RECEPTACLE AS & WEDGE)	
M	20	1	**129-3178**	16	LOCKNUT (M6X1-THD)	
	21	1	**149-8199**	1	VALVE AS-WATER	
		1	**102-8805**	1	KIT-RECEPTACLE (6-PIN)	
					(INCLUDES RECEPTACLE AS & WEDGE)	
	22	1	**130-9214**	1	GASKET	
	23	1	**130-9215**	1	GASKET	
	24	1	**130-9216**	1	GASKET	
	25	1	**130-9218**	1	GASKET	
	26	1	**130-9219**	1	GASKET	
	27	1	**130-9220**	1	GASKET	
	28	1	**130-9221**	1	GASKET	
C	29	1	**172-9291**	1	HARNESS AS (BLOWER MOTOR)	
C	30	1	**172-9292**	1	HARNESS AS (FAN SPEED SWITCH)	
	31	1	**130-9224**	1	COIL AS-HEATER	
	32	1	**130-9227**	1	COVER	
	33	1	**130-9228**	1	CASE AS	
		1	**6T-6686**	2	PIN	
M		1	**6V-9632**	15	NUT-WELD (M6X1-THD)	
		1	**7T-1099**	1	LINK	
	34	1	**130-9233**	1	HOUSING AS	
M		1	**6V-9632**	2	NUT-WELD (M6X1-THD)	
	35	1	**130-9234**	1	PAN AS-HEATER	
	36	1	**130-9235**	1	DOOR AS	
	37	1	**131-0545**	1	PLATE AS	

127-9136 **HEATER GP-CAB** ***(contd.)*** **i02029833**

NOTE	REF NO	GRAPHIC REF	PART NUMBER	QTY	PART NAME 1 2 3 4 5 6 (PRODUCT LEVEL)	SEE PAGE
	38	1	**131-2441**	1	COVER	
	39	1	**131-5354**	1	TUBE AS	
	40	1	**132-3871**	1	GASKET	
BD	41	1	**5P-5969**		SEAL	
	42	1	**4P-7581**	1	CLIP	
E	43	1	**136-1953**		HOSE (30.5CM)	
E	44	1	**136-1953**		HOSE (47.5CM)	
L	45	1	**133-6036**	1	RECTIFIER AS	
		1	**1S-9593**	4	STRAP-CABLE	
		1	**3E-3362**	1	WEDGE-PLUG LOCK (2-PIN)	
		1	**102-8802**	1	KIT-RECEPTACLE (2-PIN)	
					(INCLUDES RECEPTACLE AS & WEDGE)	
		1	**3E-3365**	1	WEDGE-RECEPTACLE LOCK (2-PIN)	
		1	**8T-8729**	2	PIN-CONNECTOR	
		1	**8T-8730**	2	SOCKET-CONNECTOR	
		1	**102-8807**	1	KIT-CONNECTING PLUG (2-PIN)	
					(INCLUDES PLUG AS & WEDGE)	
M	46	1	**3T-0852**	1	LOCKNUT (M8X1.25-THD)	
	47	1	**4S-1962**	1	CLIP	
	48	1	**5P-4116**	2	WASHER-HARD (8.8X20.5X2-MM THK)	
M	49	1	**8T-4189**	1	BOLT (M8X1.25X20-MM)	
	50	1	**132-5793**	4	SCREW-WASHER HD (4-40X0.25-IN)	
					AVAILABLE REPAIR KIT(S):	
J			**9X-9013**	1	KIT-BRUSH (HEATER FAN MOTOR)	
					(INCLUDES BRUSH AS & PLUG)	
L			**133-6107**	1	KIT-HARDWARE (RECTIFIER)	
					(INCLUDES INSULATOR, LOCKWASHER, NUT, WASHER, & SOLDERLUG)	

B-USE AS REQUIRED
C-CHANGE FROM PREVIOUS TYPE
D-ORDER BY THE METER
E-ORDER BY THE CENTIMETER
J-KIT MARKED J AVAILABLE FOR PART MARKED J
L-KIT MARKED L AVAILABLE FOR PART MARKED L
M-METRIC PART

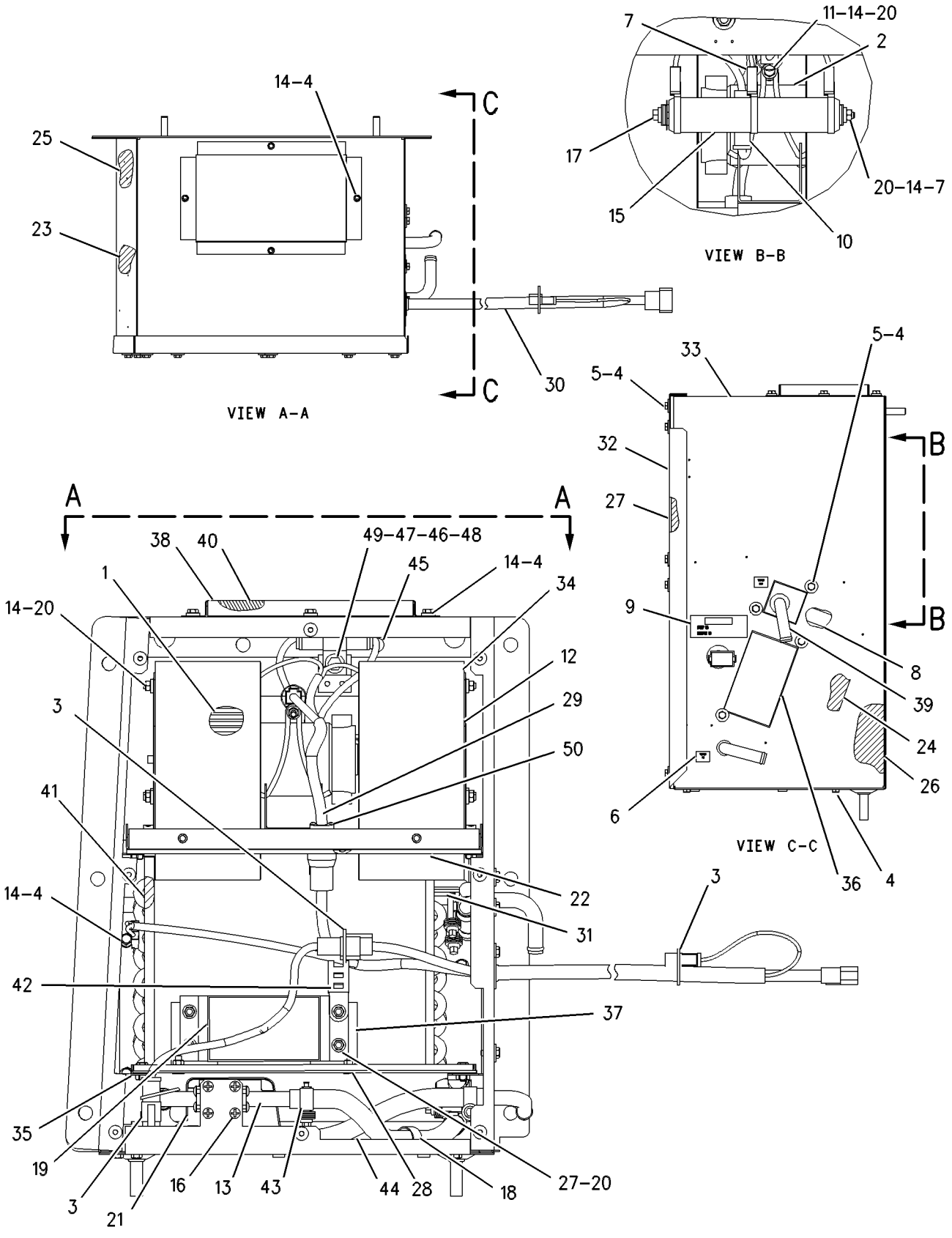

GRAPHIC #1 **<END>** g00643298

OPERATOR STATION

127-9136 HEATER GP-CAB

S/N: 7PZ477-UP

ELECTRONIC WATER VALVE

PART OF 157-2151 HEATER GP-CAB

SMCS-7304 **i01989083**

NOTE	REF NO	GRAPHIC REF	PART NUMBER	QTY	PART NAME 1 2 3 4 5 6 (PRODUCT LEVEL)	SEE PAGE
	1	1	**3E-0400**	2	BLOWER AS	
C	2	1	**3S-2093**	5	STRAP-CABLE	
M	3	1	**5C-9553**	29	BOLT (M6X1X16MM)	
	4	1	**5P-4115**	14	WASHER-HARD (7.2X19X2MM THK)	
	5	1	**5P-6670**	1	FILM-INSTRUCTION (WATER IN/WATER OUT) (HEATER)	
	6	1	**6T-6708**	2	WASHER (7X28.6X4.1MM THK)	
	7	1	**6V-1668**	2	WASHER (6.5X29.1X3MM THK)	
	8	1	**8C-3756**	1	FILM-IDENTIFICATION (GROUP & SEQUENCE NO.) (HEATER)	
	9	1	**8C-4586**	2	CLAMP	
	10	1	**8P-5141**	2	PLATE-ORIFICE	
	11	1	**8T-4205**	30	WASHER-HARD (7.2X14.5X2MM THK)	
	12	1	**9X-2488**	6	CLAMP-HOSE	
M	13	1	**9X-8498**	1	BOLT (M6X1.0X180MM)	
	14	1	**091-8792**	2	CLIP	
	15	1	**125-9740**	1	RESISTOR	
M	16	1	**129-3178**	16	LOCKNUT (M6X1 THD)	
	17	1	**130-9214**	1	GASKET	
	18	1	**130-9215**	1	GASKET	
	19	1	**130-9216**	1	GASKET	
	20	1	**130-9218**	1	GASKET	
	21	1	**130-9219**	1	GASKET	
	22	1	**130-9220**	1	GASKET	
	23	1	**130-9221**	1	GASKET	
	24	1	**130-9224**	1	COIL AS-HEATER	
	25	1	**130-9227**	1	COVER	
	26	1	**130-9228**	1	CASE AS	
		1	**6T-6686**	2	PIN	
M		1	**6V-9632**	15	NUT-WELD (M6X1 THD)	
		1	**7T-1099**	1	LINK	
	27	1	**130-9233**	1	HOUSING AS	
M		1	**6V-9632**	2	NUT-WELD (M6X1 THD)	
	28	1	**130-9234**	1	PAN AS-HEATER	
	29	1	**130-9235**	1	DOOR AS	
	30	1	**131-0545**	1	PLATE AS	
	31	1	**131-2441**	1	COVER	
	32	1	**131-5354**	1	TUBE AS	
	33	1	**132-3871**	1	GASKET	
	34	1	**132-5793**	4	SCREW-WASHER HD (4-40X0.25 IN)	
C	35	1	**210-7291**	1	VALVE AS (WATER)	
		1	**8T-8737**	1	PLUG-SEAL	
		1	**9W-0852**	5	PIN-CONNECTOR	
		1	**102-8805**	1	KIT-RECEPTACLE (6-PIN)	
					(INCLUDES RECEPTACLE AS & WEDGE)	
	36	1	**172-9291**	1	HARNESS AS (BLOWER MOTOR)	
	37	1	**172-9292**	1	HARNESS AS (FAN SPEED SWITCH)	
C	38	1	**174-1494**	1	MOTOR GP-ELECTRIC (27 VOLT) (HEATER)	
		1	**3E-3365**	1	WEDGE-RECEPTACLE LOCK (2 PIN)	
		1	**9W-0852**	2	PIN-CONNECTOR	
		1	**102-8802**	1	KIT-RECEPTACLE (2-PIN)	
					(INCLUDES RECEPTACLE AS & WEDGE)	
BD	39	1	**5P-5908**		SEAL	
	40	1	**149-8218**	1	CONTROL AS-BOARD	
C	41	1	**5V-1474**	4	SCREW-FORMING (10-16X0.625 IN)	
	42	1	**4P-7581**	1	CLIP	

127-9136 **HEATER GP-CAB** ***(contd.)*** **i01989083**

NOTE	REF NO	GRAPHIC REF	PART NUMBER	QTY	PART NAME 1 2 3 4 5 6 (PRODUCT LEVEL)	SEE PAGE
CM	43	1	**6V-7728**	1	BOLT (M6X1.0X45MM)	
E	44	1	**136-1953**		HOSE (30CM)	
E	45	1	**136-1953**		HOSE (47CM)	
E	46	1	**136-1953**		HOSE (8CM)	
M	47	1	**8T-4189**	1	BOLT (M8X1.25X20MM)	
	48	1	**4S-1962**	1	CLIP	
M	49	1	**3T-0852**	1	LOCKNUT (M8X1.25 THD)	
	50	1	**133-6036**	1	RECTIFIER AS	
	51	1	**5P-4116**	2	WASHER-HARD (8.8X20.5X2MM THK)	
	52	1	**5P-5969**	1	SEAL	

B-USE AS REQUIRED
C-CHANGE FROM PREVIOUS TYPE
D-ORDER BY THE METER
E-ORDER BY THE CENTIMETER
M-METRIC PART

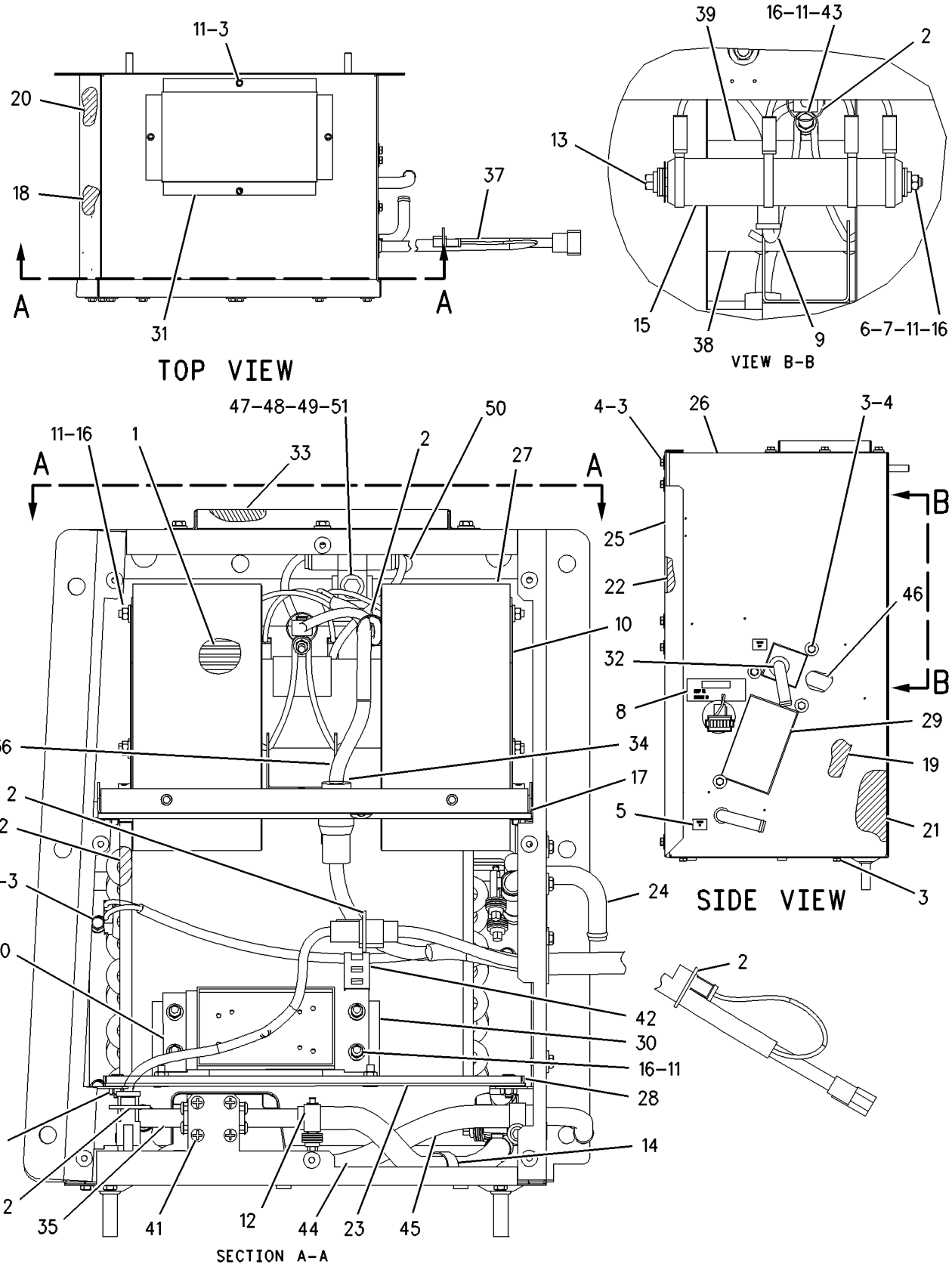

GRAPHIC #1 **<END>** g00876183

OPERATOR STATION

157-2151 HEATER GP-CAB

S/N: 7PZ1-717

PART OF 157-3738 CAB AR

SMCS-7304 **i01665081**

NOTE	REF NO	GRAPHIC REF	PART NUMBER	QTY	PART NAME 1 2 3 4 5 6 (PRODUCT LEVEL)	SEE PAGE
	1	1	**6J-0488**	3	SCREW-BUTTON HEAD (3/8-16X0.875 IN)	
	2	1	**5P-1075**	6	WASHER-HARD (10.2X22.5X3MM THK)	
	3	1	**144-3579**	1	DUCT-AIR	
	4	1	**8E-5975**	1	GASKET	
	5	1	**5P-5824**	1	HOLDER-ASH TRAY	
	6	1	**5P-5454**	1	ASHTRAY	
	7	1	**6K-4936**	5	BOLT-LOCKING (3/8-16X0.625 IN)	
	8	1	**6B-2882**	5	SPACER (.406X.75X.312 IN THK)	
	9	1	**7T-1890**	1	FILTER-AIR (CAB) (STANDARD)	
					—OR—	
A		1	**175-2832**	1	FILTER-AIR (CAB) (ODOR REDUCTION)	
					—OR—	
A		1	**175-2839**	1	FILTER-AIR (CAB) (HIGH EFFICIENCY)	
	10	1	**134-3992**	1	DOOR AS	
		1	**9F-6445**	2	NUT-WELD (1/4-20 THD)	
	11	1	**8E-1356**	2	KNOB AS	
					(EACH INCLUDES)	
		1	**8T-7566**	1	PIN-SPRING	
	12	1	**8E-5959**	1	SEAL	
	13	1	**8E-9253**	1	GASKET	
	14	1	**156-8180**	1	FILM-PANEL (AIR CONDITIONER & BLOWER)	
	15	1	**4L-6454**	8	BOLT (3/8-16X1 IN)	
	16	1	**7X-0772**	8	WASHER-HARD (10.2X25.5X2.5MM THK)	
	17	1	**133-5082**	1	DUCT-AIR	
	18	1	**8E-3250**	1	GASKET	
	19	1	**114-5985**	1	PLATE AS	
		1	**2R-2376**	2	WASHER (7X16X.8MM THK)	
		1	**6P-6926**	2	SCREW-KNURLED	
	20	1	**107-0266**	1	FILTER-CAB AIR (STANDARD)	
					—OR—	
A		1	**175-2841**	1	FILTER-AIR (CAB) (HIGH EFFICIENCY)	
	21	1	**6V-3884**	2	SCREW-HEX SOCKET (1/4-20X0.5 IN)	
	22	1	**116-3119**	1	PLATE	
	23	1	**2P-4339**	1	NUT-JAM (7/16-20 THD)	
	24	1	**157-1361**	1	SWITCH AS (BLOWER SPEED)	
		1	**9W-0852**	6	PIN-CONNECTOR	
		1	**102-8805**	1	KIT-RECEPTACLE (6 PIN)	
					(INCLUDES RECEPTACLE AS & WEDGE)	
	25	1	**110-6109**	1	KNOB-CONTROL (BLOWER SPEED)	
	26	1	**6T-3990**	1	SWITCH AS-ROCKER (AIR CONDITIONER ON/OFF)	
		1	**3L-8187**	2	LOCKWASHER	
		1	**6V-8374**	2	SCREW-MACHINE (6-32X0.25 IN)	
	27	1	**6V-8927**	2	BOLT-SOCKET HEAD (6-32X0.5 IN)	
	28	1	**6T-6329**	1	BEZEL-ROCKER SWITCH	
	29	1	**127-4540**	1	POTENTIOMETER AS (CAB TEMPERATURE CONTROL)	
		1	**102-8803**	1	KIT-RECEPTACLE (3 PIN)	
					(INCLUDES RECEPTACLE AS & WEDGE)	
		1	**3S-2093**	1	STRAP-CABLE	
		1	**9W-0852**	3	PIN-CONNECTOR	
	30	1	**030-8535**	3	BOLT-LOCKING (3/8-16X0.875 IN)	
	31	1	**130-4846**	1	WIRE AS	
Y	32	1	*127-9136*	1	HEATER GP-CAB	1033
M	33	1	**8T-4171**	3	BOLT (M6X1X12MM)	
	34	1	**9X-8256**	3	WASHER (6.6X12X2MM THK)	
	35	1	**2H-3920**	1	LOCKWASHER	
	36	1	**8T-7566**	2	PIN-SPRING	

157-2151 **HEATER GP-CAB** ***(contd.)*** **i01665081**

NOTE	REF NO	GRAPHIC REF	PART NUMBER	QTY	PART NAME 1 2 3 4 5 6 (PRODUCT LEVEL)	SEE PAGE
	37	1	**7X-0575**	2	WASHER-HARD (10.2X22.5X5MM THK)	
	38	1	**134-3993**	2	PLATE AS	
	39	1	**8Y-6388**	8	LOUVER AS	
	40	1	**104-2091**	16	SCREW-FLAT HEAD (6-20X0.5 IN)	
BD	41	1	**5P-5643**		SEAL	
BD	42	1	**5P-5755**		SEAL	
	43	1	**1M-4543**	1	GROMMET	
	44	1	**110-6109**	1	KNOB-CONTROL (CAB TEMPERATURE)	
	45	1	**116-2590**	1	SEAL	
	46	1	**116-2589**	1	PLATE	

A-NOT PART OF THIS GROUP
B-USE AS REQUIRED
D-ORDER BY THE METER
M-METRIC PART
Y-SEPARATE ILLUSTRATION

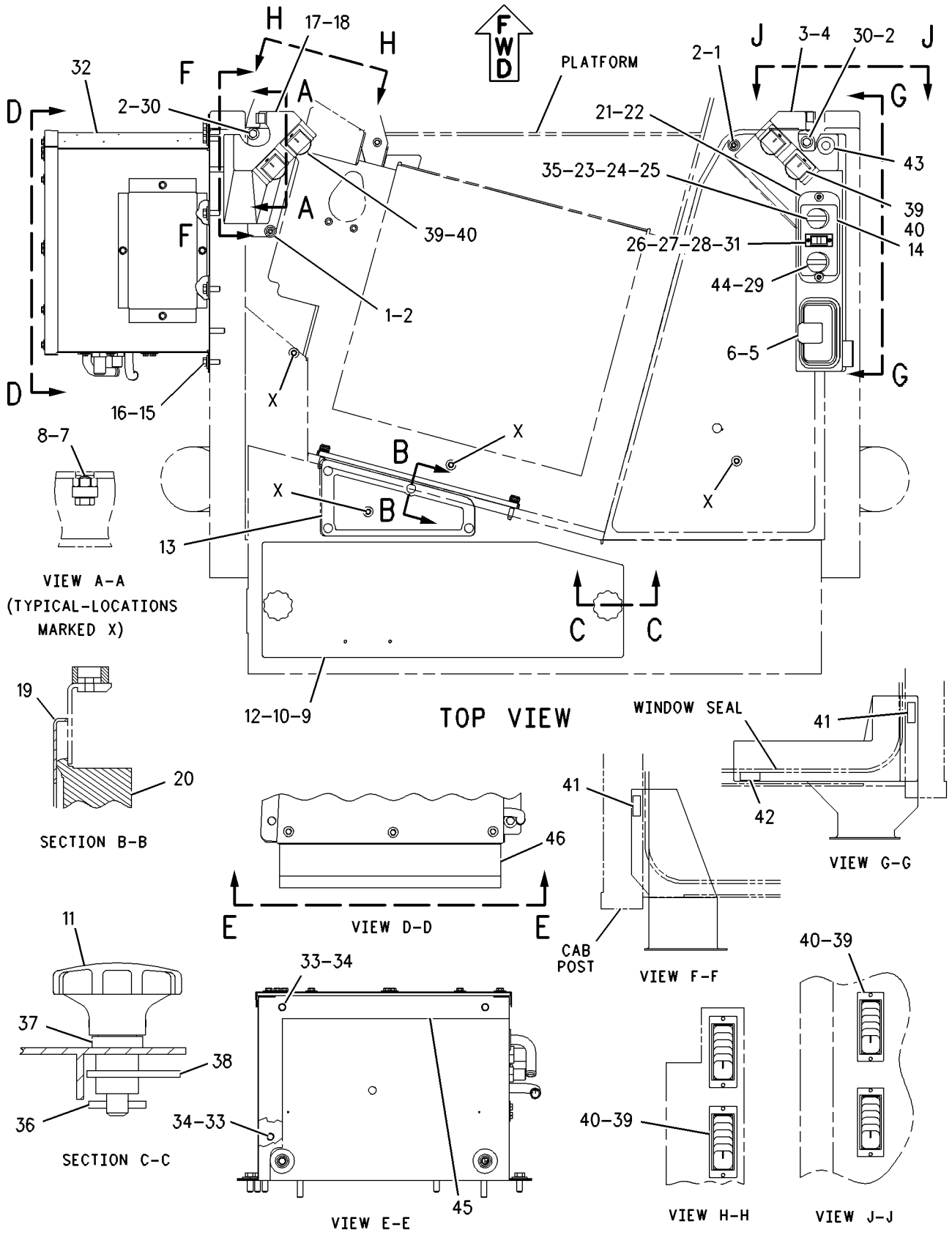

GRAPHIC #1 **<END>** g00861610

OPERATOR STATION

108-4582 HOUSING GP-SEAT SUSPENSION

S/N: 7PZ1-391

PART OF 108-4082 SUSPENSION GP-SEAT

ALSO AN ATTACHMENT

SMCS-7321 **i01989141**

NOTE	REF NO	GRAPHIC REF	PART NUMBER	QTY	PART NAME 1 2 3 4 5 6 (PRODUCT LEVEL)	SEE PAGE
	1	1	**161-5967**	1	SHAFT	
	2	1	**8Y-6066**	1	SPRING	
	3	1	**8Y-6069**	1	ADJUSTER AS	
	4	1	**8Y-6068**	1	NUT (3/8 X 16 THD)	
	5	1	**8Y-6029**	1	HOUSING AS-UPPER	
	6	1	**8Y-6047**	2	PIN	
	7	1	**2M-7819**	4	RING-RETAINING	
	8	1	**8Y-6041**	1	ARM AS	
	9	1	**8Y-6045**	1	CAM	
	10	1	**8Y-6046**	1	PIN	
	11	1	**8S-7803**	4	RING-RETAINING	
	12	1	**131-4242**	1	BOLT (3/8-16X5.18 IN)	
	13	1	**7M-7219**	1	BEARING-THRUST	
		1	**4N-2927**	2	RACE-THRUST BEARING	
	14	1	**3D-2975**	2	RING-RETAINING	
	15	1	**095-0878**	1	PIN-SPRING	
	16	1	**9X-8918**	3	SCREW-FLAT HEAD (8-32X0.50 IN)	
	17	1	**5P-8445**	4	RING-RETAINING	
	18	1	**4B-5059**	6	WASHER (29.5X15X2.5MM THK)	
	19	1	**8Y-6060**	2	ROLLER	
	20	1	**1Y-7927**	1	PIN	
	21	1	**7V-5191**	2	SPACER (28X10X7.1MM THK)	
	22	1	**5D-4822**	2	RING-RETAINING	
	23	1	**8Y-6062**	1	LINK-ACTUATOR	
	24	1	**8Y-6063**	1	LINK-ACTUATOR	
	25	1	**5V-0770**	2	BOLT-CARRIAGE	
		1	**2D-6235**	2	LOCKNUT (1/4-20 THD)	
	26	1	**8Y-6064**	2	ROLLER-SLIDER	
	27	1	**131-5167**	1	KNOB AS-ADJUSTMENT	
	28	1	**8Y-6067**	1	SPACER (10.54MM THK)	
	29	1	**8L-8413**	2	STRAP-CABLE	
LZ	30	1		1	KNOB-HEIGHT	
LZ	31	1		1	KNOB-HEIGHT	
JZ	32	1		3	BUMPER	
PZ	33	1		2	BUSHING-GUIDE	
PZ	34	1		2	SPRING	
PZ	35	1		2	ROD	
PZ	36	1		2	SPACER	
QZ	37	1		2	SPRING	
QZ	38	1		2	BUSHING	
SZ	39	1		1	PIN	
SZ	40	1		1	FOLLOWER-CAM	
TZ	41	1		1	GUIDE	
TZ	42	1		1	TAPE-INDICATOR	
UZ	43	1		1	FOLLOWER-CAM	
UZ	44	1		1	PIN	
VZ	45	1		1	ROLLER AS	
VZ	46	1		2	ROLLER AS	
					AVAILABLE REPAIR KIT(S):	
J			**100-5179**	1	KIT-BUMPER (WEIGHT ADJUSTMENT) (SUSPENSION SEAT)	
L			**8Y-5945**	1	KIT-SUSPENSION KNOB (HEIGHT ADJUSTMENT) (SUSPENSION SEAT)	
P			**8Y-6860**	1	KIT-SPRING (HEIGHT ADJUSTMENT) (SUSPENSION SEAT)	

108-4582 HOUSING GP-SEAT SUSPENSION *(contd.)* i01989141

NOTE	REF NO	GRAPHIC REF	PART NUMBER	QTY	PART NAME 1 2 3 4 5 6 (PRODUCT LEVEL)	SEE PAGE
Q			**8Y-6859**	1	KIT-SPRING (SUSPENSION SEAT)	
S			**108-4086**	1	KIT-FOLLOWER (SUSPENSION SEAT)	
T			**100-3224**	1	KIT-INDICATOR (WEIGHT ADJUSTMENT) (SUSPENSION SEAT)	
U			**108-4087**	1	KIT-FOLLOWER (SUSPENSION SEAT)	
V			**108-4103**	1	KIT-BEARING (SUSPENSION SEAT)	

J-KIT MARKED J INCLUDES PART MARKED J
L-KIT MARKED L INCLUDES PARTS MARKED L
P-KIT MARKED P INCLUDES PARTS MARKED P
Q-KIT MARKED Q INCLUDES PARTS MARKED Q
S-KIT MARKED S INCLUDES PARTS MARKED S
T-KIT MARKED T INCLUDES PARTS MARKED T
U-KIT MARKED U INCLUDES PARTS MARKED U
V-KIT MARKED V INCLUDES PARTS MARKED V
Z-NOT SERVICED SEPARATELY

108-4582 HOUSING GP-SEAT SUSPENSION *(contd.)* i01989141

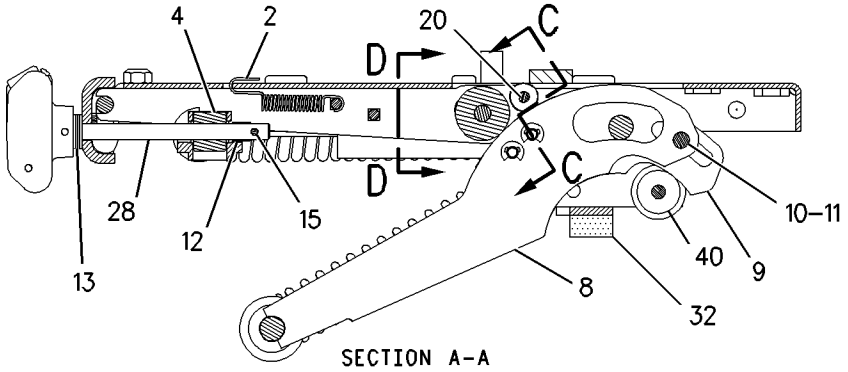

SECTION A-A

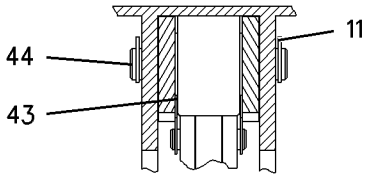

SECTION D-D

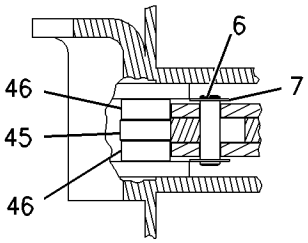

SECTION C-C

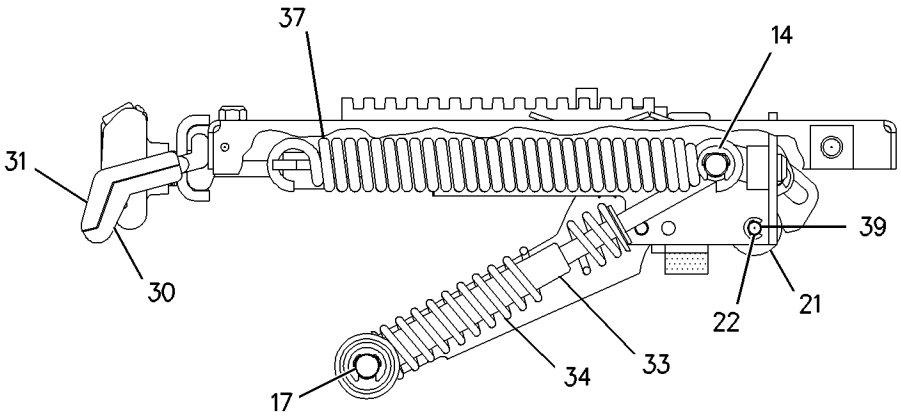

VIEW B-B

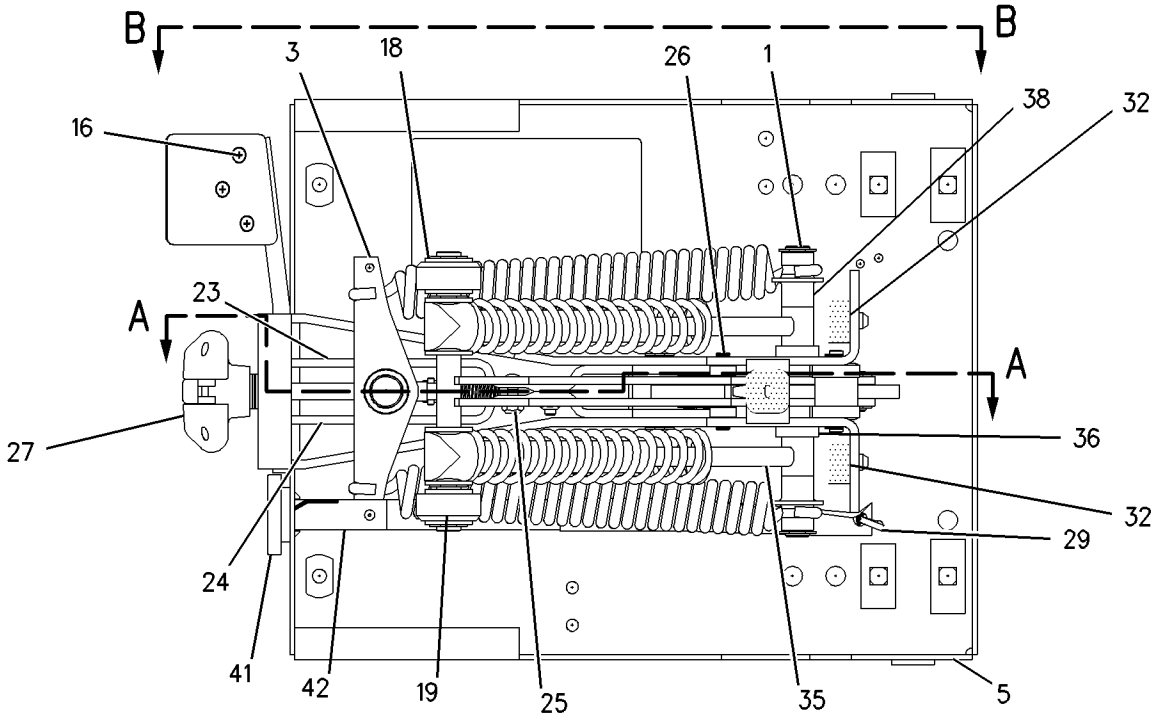

BOTTOM VIEW

GRAPHIC #1 **<END>** g00692106

OPERATOR STATION

174-2231 HOUSING GP-SEAT SUSPENSION

S/N: 7PZ392-UP
PART OF 160-7165 SUSPENSION GP-SEAT
ALSO AN ATTACHMENT

SMCS-7321 **i01903068**

NOTE	REF NO	GRAPHIC REF	PART NUMBER	QTY	PART NAME 1 2 3 4 5 6 (PRODUCT LEVEL)	SEE PAGE
	1	1	**1Y-7927**	1	PIN	
	2	1	**2D-6235**	2	LOCKNUT (1/4-20 THD)	
	3	1	**2M-7819**	4	RING-RETAINING	
	4	1	**3D-2975**	2	RING-RETAINING	
	5	1	**4B-5059**	6	WASHER (29.5X15X2.5MM THK)	
	6	1	**4N-2927**	2	RACE-THRUST BEARING	
	7	1	**5D-4822**	2	RING-RETAINING	
	8	1	**5P-8445**	4	RING-RETAINING	
	9	1	**5V-0770**	2	BOLT-CARRIAGE	
	10	1	**7M-7219**	1	BEARING-THRUST	
	11	1	**7V-5191**	2	SPACER (28X10X7.1MM THK)	
	12	1	**8L-8413**	2	STRAP-CABLE	
	13	1	**8S-7803**	4	RING-RETAINING	
	14	1	**8Y-6041**	1	ARM AS	
	15	1	**8Y-6045**	1	CAM	
	16	1	**8Y-6046**	1	PIN	
	17	1	**8Y-6047**	2	PIN	
	18	1	**8Y-6060**	2	ROLLER	
	19	1	**8Y-6062**	1	LINK-ACTUATOR-RH	
	20	1	**8Y-6063**	1	LINK-ACTUATOR-LH	
	21	1	**8Y-6064**	2	ROLLER-SLIDER	
	22	1	**8Y-6066**	1	SPRING	
	23	1	**8Y-6067**	1	SPACER (10.54MM THK)	
	24	1	**8Y-6068**	1	NUT (3/8 X 16 THD)	
	25	1	**8Y-6069**	1	ADJUSTER AS	
	26	1	**9X-8918**	3	SCREW-FLAT HEAD (8-32X0.50 IN)	
	27	1	**095-0878**	1	PIN-SPRING	
	28	1	**131-4242**	1	BOLT (3/8-16X5.18 IN)	
	29	1	**131-5167**	1	KNOB AS-WEIGHT	
	30	1	**161-5967**	1	SHAFT	
	31	1	**174-2237**	1	HOUSING AS-UPPER	
JZ	32	1		1	KNOB-HEIGHT (SUSPENSION SEAT)	
JZ	33	1		1	KNOB-HEIGHT (SUSPENSION SEAT)	
LZ	34	1		2	SPRING	
LZ	35	1		2	BUSHING	
VZ	36	1		2	SPRING	
VZ	37	1		2	SPACER	
VZ	38	1		2	BUSHING-GUIDE	
VZ	39	1		2	ROD	
PZ	40	1		1	TAPE-INDICATOR	
PZ	41	1		1	GUIDE	
SZ	42	1		1	PIN	
SZ	43	1		1	FOLLOWER-CAM	
TZ	44	1		1	PIN	
TZ	45	1		1	FOLLOWER-CAM	
UZ	46	1		2	ROLLER AS	
UZ	47	1		1	ROLLER AS	
QZ	48	1		3	BUMPER	
					AVAILABLE REPAIR KIT(S):	
J			**8Y-5945**	1	KIT-SUSPENSION KNOB (HEIGHT ADJUSTMENT) (SUSPENSION SEAT)	
L			**8Y-6859**	1	KIT-SPRING (SUSPENSION SEAT)	
V			**8Y-6860**	1	KIT-SPRING (HEIGHT ADJUSTMENT) (SUSPENSION SEAT)	

174-2231 **HOUSING GP-SEAT SUSPENSION** *(contd.)* **i01903068**

NOTE	REF NO	GRAPHIC REF	PART NUMBER	QTY	PART NAME 1 2 3 4 5 6 (PRODUCT LEVEL)	SEE PAGE
P			**100-3224**	1	KIT-INDICATOR (WEIGHT ADJUSTMENT) (SUSPENSION SEAT)	
Q			**100-5179**	1	KIT-BUMPER (WEIGHT ADJUSTMENT) (SUSPENSION SEAT)	
S			**108-4086**	1	KIT-FOLLOWER (SUSPENSION SEAT)	
T			**108-4087**	1	KIT-FOLLOWER (SUSPENSION SEAT)	
U			**108-4103**	1	KIT-BEARING (SUSPENSION SEAT)	

J-KIT MARKED J INCLUDES PARTS MARKED J
L-KIT MARKED L INCLUDES PARTS MARKED L AND RETAINING RING
P-KIT MARKED P INCLUDES PARTS MARKED P AND CABLE STRAP
Q-KIT MARKED Q INCLUDES PARTS MARKED Q
S-KIT MARKED S INCLUDES PARTS MARKED S
T-KIT MARKED T INCLUDES PARTS MARKED T
U-KIT MARKED U INCLUDES PARTS MARKED U
V-KIT MARKED V INCLUDES PARTS MARKED V
Z-NOT SERVICED SEPARATELY

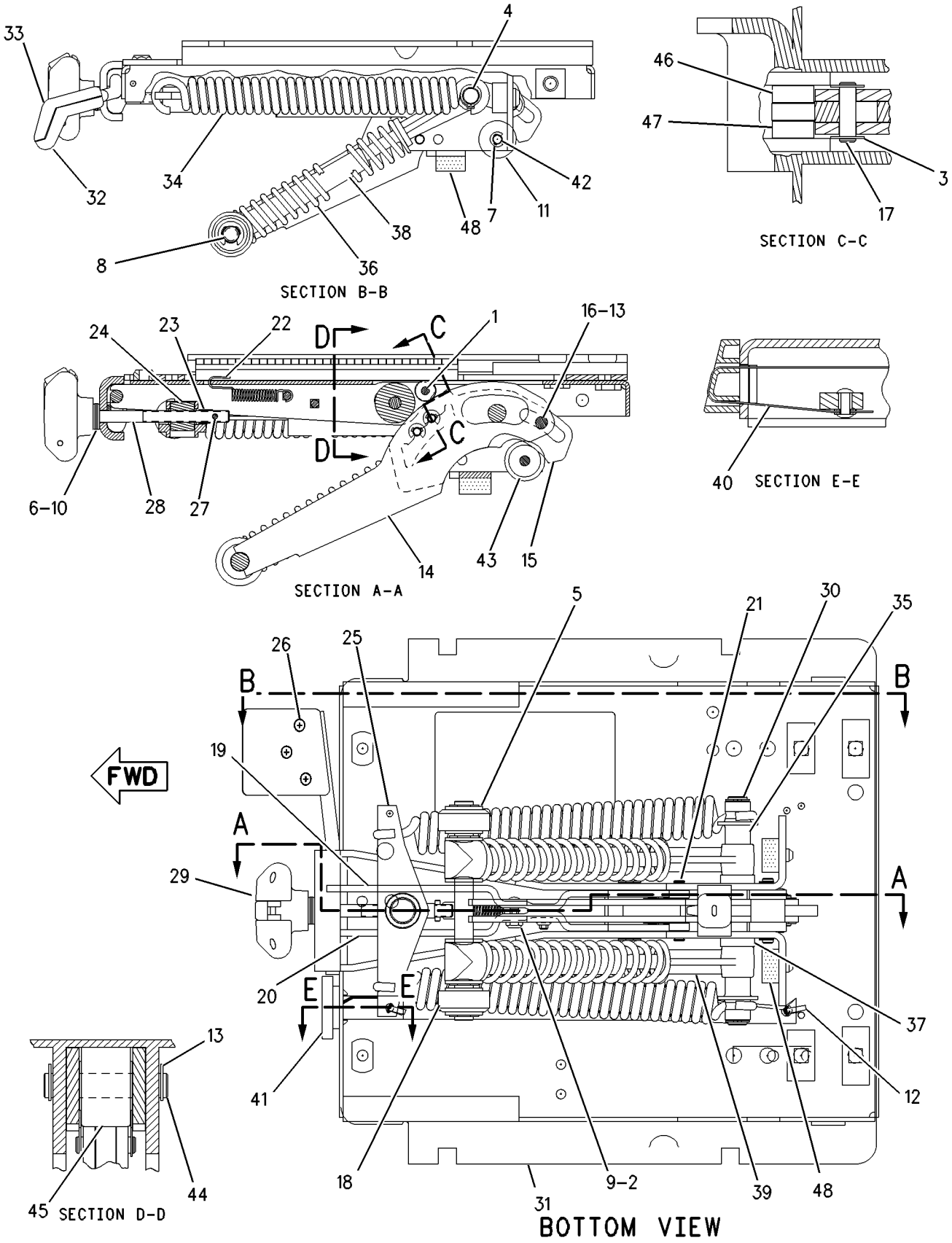

GRAPHIC #1 **<END>** g00608620

OPERATOR STATION

8E-3284 INSTALLATION GP-RADIO

S/N: 7PZ1-UP
PART OF 157-4817 CAB AR
ALSO AN ATTACHMENT

SMCS-7338 **i01665087**

NOTE	REF NO	GRAPHIC REF	PART NUMBER	QTY	PART NAME 1 2 3 4 5 6 (PRODUCT LEVEL)	SEE PAGE
	1	1	**8E-9654**	1	PLATE AS	
		1	**9V-7451**	1	NUT-WELD (1/4-20 THD)	
	2	1	**4N-9915**	3	GROMMET AS	
	3	1	**6V-7646**	3	WASHER-HARD (7.2X25X2MM THK)	
	4	1	**0S-1616**	3	BOLT (1/4-20X1 IN)	
	5	1	**8E-9656**	1	BRACKET	
	6	1	**6V-8969**	1	SCREW-BUTTON HEAD	
	7	1	**9W-3073**	1	CABLE AS-COAXIAL	
	8	1	**217-8433**	1	FILM-NOTICE (RADIO)	
	9	1	**8K-1433**	1	GROMMET	
	10	1	**3E-4356**	3	WASHER-HARD (30X17.5X6MM THK)	
	11	1	**168-8772**	2	SPEAKER AS	
	12	1	**4B-2047**	8	NUT (10-24 THD)	
		1	**2N-3480**	8	SCREW-MACHINE (10-24X0.75 IN)	
	13	1	**8E-1118**	1	ANTENNA AS	

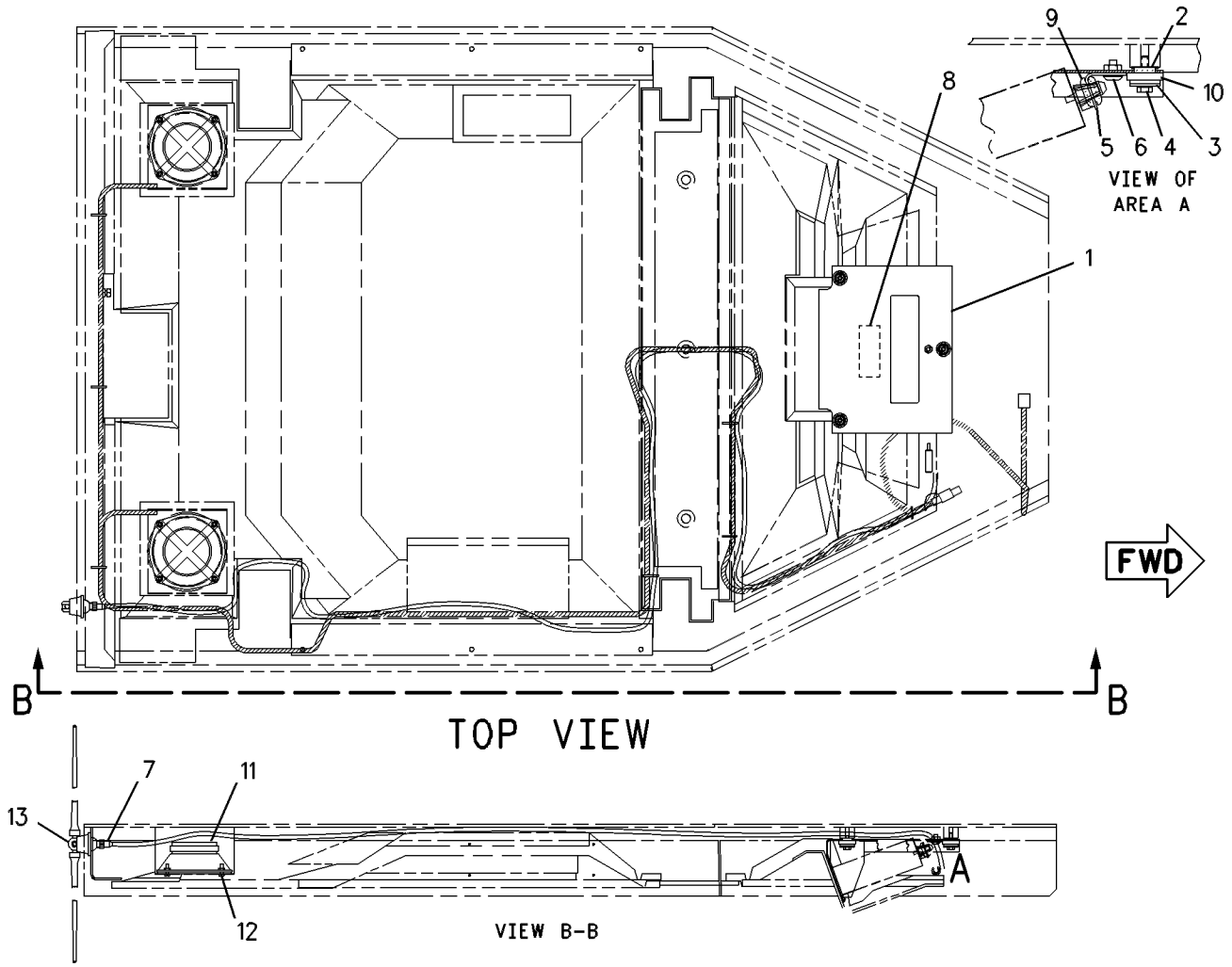

GRAPHIC #1 **<END>** g00328993

OPERATOR STATION

157-5913 INSTRUMENT GP

S/N: 7PZ1-602

PART OF 155-5552 CHASSIS AR

SMCS-7450, 7451 **i02029222**

NOTE	REF NO	GRAPHIC REF	PART NUMBER	QTY	PART NAME 1 2 3 4 5 6 (PRODUCT LEVEL)	SEE PAGE
	1	1	**3E-9865**	4	LOCKNUT (1/4-20-THD)	
	2	1	**3T-0304**	1	BASE-INDICATOR LIGHT	
	3	1	**6I-8921**	1	FRAME AS	
	4	1	**1V-8442**	6	NUT (1/4-20-THD)	
	5	1	**6V-3884**	7	SCREW-HEX SOCKET (1/4-20X0.5-IN)	
	6	1	**6Y-5094**	1	CABLE	
	7	1	**7N-1996**	1	LAMP (24-VOLT) (ACTION INDICATOR)	
	8	1	**8B-4338**	4	SCREW-TAPPING (6-20X.375-IN)	
	9	1	**8C-5608**	4	SPACER (6.5X9.5X25.4-MM THK)	
	10	1	**8E-2514**	1	HINGE	
	11	1	**9X-0438**	1	CONTROL AS-ELECTRONIC (DASH LIGHT)	
	12	1	**197-5110**	1	FILM-PANEL (ACTION INDICATOR)	
	13	1	**9X-9896**	8	MOUNT (ISOLATION)	
	14	1	**100-5568**	1	BEZEL	
Y	15	1	**166-6928**	1	MODULE GP-QUAD GAUGE	1072
M	16	1	**105-3480**	4	BOLT-HEX SOCKET (M5X0.8X16-MM)	
	17	1	**106-4454**	1	PLATE	
	18	1	**107-1964**	8	SCREW-PAN HEAD (6-19X0.5-IN)	
	19	1	**197-5111**	1	FILM-PANEL (INSTRUMENT)	
	20	1	**116-7880**	3	BRACKET	
Y	21	1	**125-3401**	1	CONTROL GP-DISPLAY ELECTRONIC	1026
	22	1	**164-9933**	1	FILM-PANEL (INSTRUMENT)	
	23	1	**133-9405**	1	SWITCH AS-PUSH BUTTON (AUTO DOWNSHIFT)	
		1	**8T-8729**	3	PIN-CONNECTOR	
		1	**102-8803**	1	KIT-RECEPTACLE (3-PIN)	
					(INCLUDES RECEPTACLE AS & WEDGE)	
		1	**3E-3371**	1	WEDGE-RECEPTACLE LOCK (3-PIN)	
	24	1	**6F-0253**	1	LOCKWASHER (16.6X26.9X1.2-MM THK)	
	25	1	**3K-0835**	1	NUT (5/8-24-THD)	
	26	1	**138-8886**	3	BOLT-SOCKET HEAD	
Y	27	1	**149-2357**	1	MODULE GP-MESSAGE CENTER (VIDS)	1068
	28	1	**156-8192**	1	FILM-PANEL (INSTRUMENT)	
	29	1	**156-9421**	1	DASH AS	
	30	1	**2D-6327**	4	SCREW-MACHINE	
	31	1	**4P-7581**	3	CLIP	
	32	1	**4P-8134**	2	CLIP	
	33	1	**5P-0537**	3	WASHER-HARD (7.2X14.5X2-MM THK)	
	34	1	**5P-2675**	4	BOLT (1/4-20X1.75-IN)	
	35	1	**5P-4115**	17	WASHER-HARD (7.2X19X2-MM THK)	
	36	1	**5S-7349**	2	BOLT (1/4-20X0.5-IN)	
M	37	1	**6V-7357**	3	BOLT (M6X1.0X25-MM)	
M	38	1	**8T-4138**	3	BOLT (M6X1X20-MM)	
M	39	1	**8T-4171**	6	BOLT (M6X1X12-MM)	
	40	1	**8T-4205**	9	WASHER-HARD (7.2X14.5X2-MM THK)	
	41	1	**6T-7058**	1	LENS-RED (ACTION INDICATOR)	
	42	1	**2F-7306**	4	SCREW-MACHINE (6-32X.25-IN)	
Y	43	1	**137-7616**	1	MODULE GP-SPEEDOMETER & TACH	1073

M-METRIC PART
Y-SEPARATE ILLUSTRATION

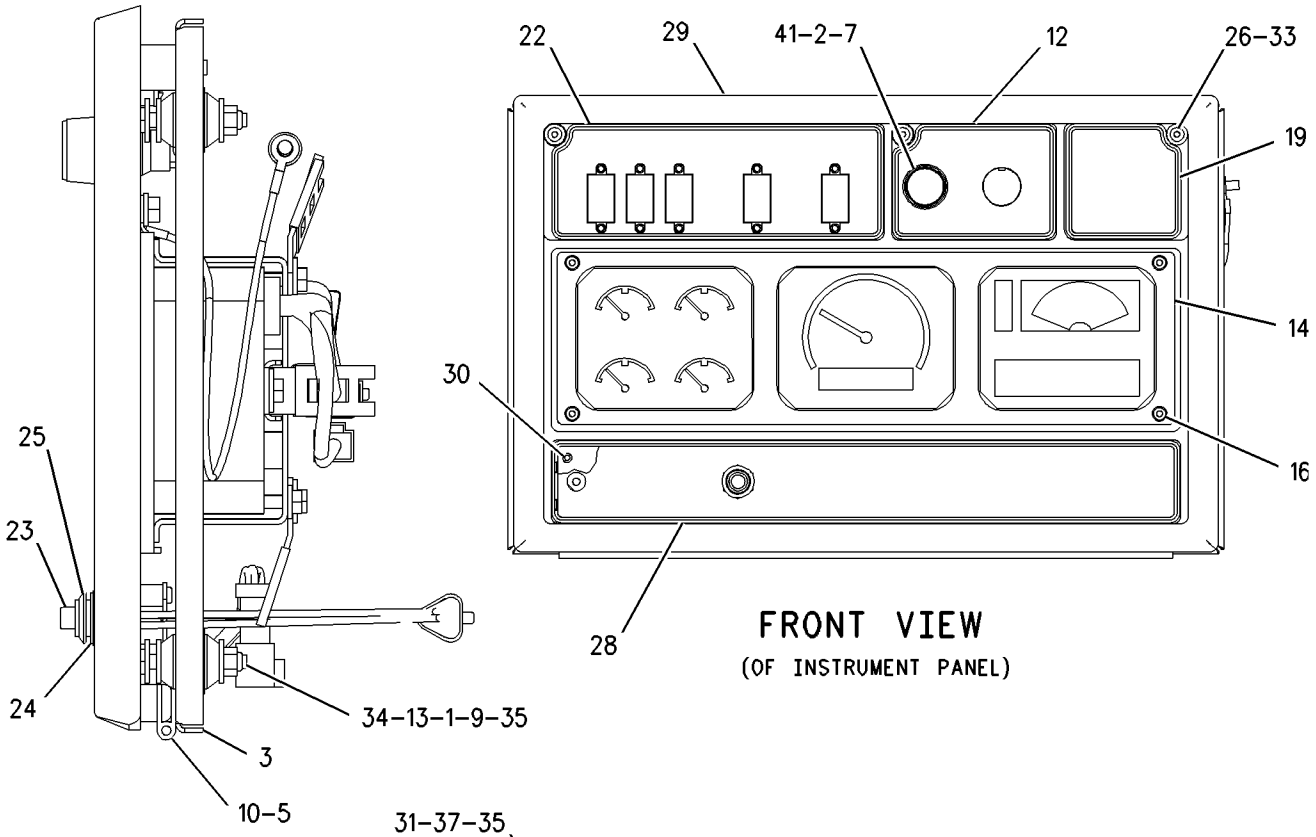

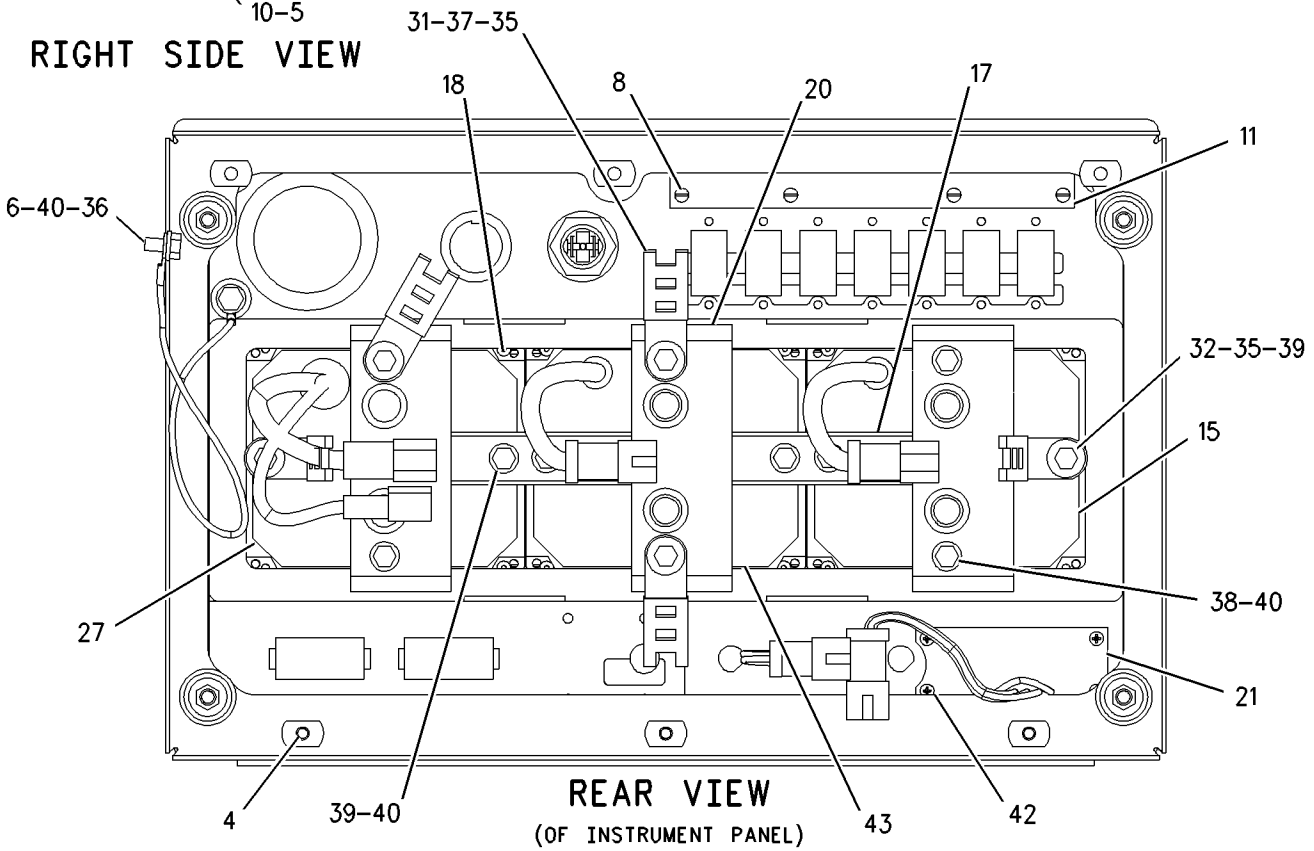

GRAPHIC #1

<END>

g00800601

OPERATOR STATION

157-5913 INSTRUMENT GP

S/N: 7PZ603-UP

PART OF 155-5552 CHASSIS AR

SMCS-7450, 7451 **i02029221**

NOTE	REF NO	GRAPHIC REF	PART NUMBER	QTY	PART NAME 1 2 3 4 5 6 (PRODUCT LEVEL)	SEE PAGE
	1	1	**3E-9865**	4	LOCKNUT (1/4-20-THD)	
	2	1	**3T-0304**	1	BASE-INDICATOR LIGHT	
	3	1	**6I-8921**	1	FRAME AS	
	4	1	**1V-8442**	6	NUT (1/4-20-THD)	
	5	1	**6V-3884**	7	SCREW-HEX SOCKET (1/4-20X0.5-IN)	
	6	1	**6Y-5094**	1	CABLE	
	7	1	**7N-1996**	1	LAMP (24-VOLT) (ACTION INDICATOR)	
	8	1	**8B-4338**	4	SCREW-TAPPING (6-20X.375-IN)	
	9	1	**8C-5608**	4	SPACER (6.5X9.5X25.4-MM THK)	
	10	1	**8E-2514**	1	HINGE	
	11	1	**9X-0438**	1	CONTROL AS-ELECTRONIC (DASH LIGHT)	
	12	1	**197-5110**	1	FILM-PANEL (ACTION INDICATOR)	
	13	1	**9X-9896**	8	MOUNT (ISOLATION)	
	14	1	**100-5568**	1	BEZEL	
Y	15	1	**166-6928**	1	MODULE GP-QUAD GAUGE	1072
M	16	1	**105-3480**	4	BOLT-HEX SOCKET (M5X0.8X16-MM)	
	17	1	**106-4454**	1	PLATE	
	18	1	**107-1964**	8	SCREW-PAN HEAD (6-19X0.5-IN)	
	19	1	**197-5111**	1	FILM-PANEL (INSTRUMENT)	
	20	1	**116-7880**	3	BRACKET	
Y	21	1	**125-3401**	1	CONTROL GP-DISPLAY ELECTRONIC	1026
	22	1	**164-9933**	1	FILM-PANEL (INSTRUMENT)	
	23	1	**133-9405**	1	SWITCH AS-PUSH BUTTON (AUTO DOWNSHIFT)	
		1	**8T-8729**	3	PIN-CONNECTOR	
		1	**102-8803**	1	KIT-RECEPTACLE (3-PIN)	
					(INCLUDES RECEPTACLE AS & WEDGE)	
		1	**3E-3371**	1	WEDGE-RECEPTACLE LOCK (3-PIN)	
	24	1	**6F-0253**	1	LOCKWASHER (16.6X26.9X1.2-MM THK)	
	25	1	**3K-0835**	1	NUT (5/8-24-THD)	
	26	1	**138-8886**	3	BOLT-SOCKET HEAD	
CY	27	1	**179-1730**	1	MODULE GP-MESSAGE CENTER (VIDS)	1069
	28	1	**156-8192**	1	FILM-PANEL (INSTRUMENT)	
	29	1	**156-9421**	1	DASH AS	
	30	1	**2D-6327**	4	SCREW-MACHINE	
	31	1	**4P-7581**	3	CLIP	
	32	1	**4P-8134**	2	CLIP	
	33	1	**5P-0537**	3	WASHER-HARD (7.2X14.5X2-MM THK)	
	34	1	**5P-2675**	4	BOLT (1/4-20X1.75-IN)	
	35	1	**5P-4115**	17	WASHER-HARD (7.2X19X2-MM THK)	
	36	1	**5S-7349**	2	BOLT (1/4-20X0.5-IN)	
M	37	1	**6V-7357**	3	BOLT (M6X1.0X25-MM)	
M	38	1	**8T-4138**	3	BOLT (M6X1X20-MM)	
M	39	1	**8T-4171**	6	BOLT (M6X1X12-MM)	
	40	1	**8T-4205**	9	WASHER-HARD (7.2X14.5X2-MM THK)	
	41	1	**6T-7058**	1	LENS-RED (ACTION INDICATOR)	
	42	1	**2F-7306**	4	SCREW-MACHINE (6-32X.25-IN)	
Y	43	1	**137-7616**	1	MODULE GP-SPEEDOMETER & TACH	1073

C-CHANGE FROM PREVIOUS TYPE
M-METRIC PART
Y-SEPARATE ILLUSTRATION

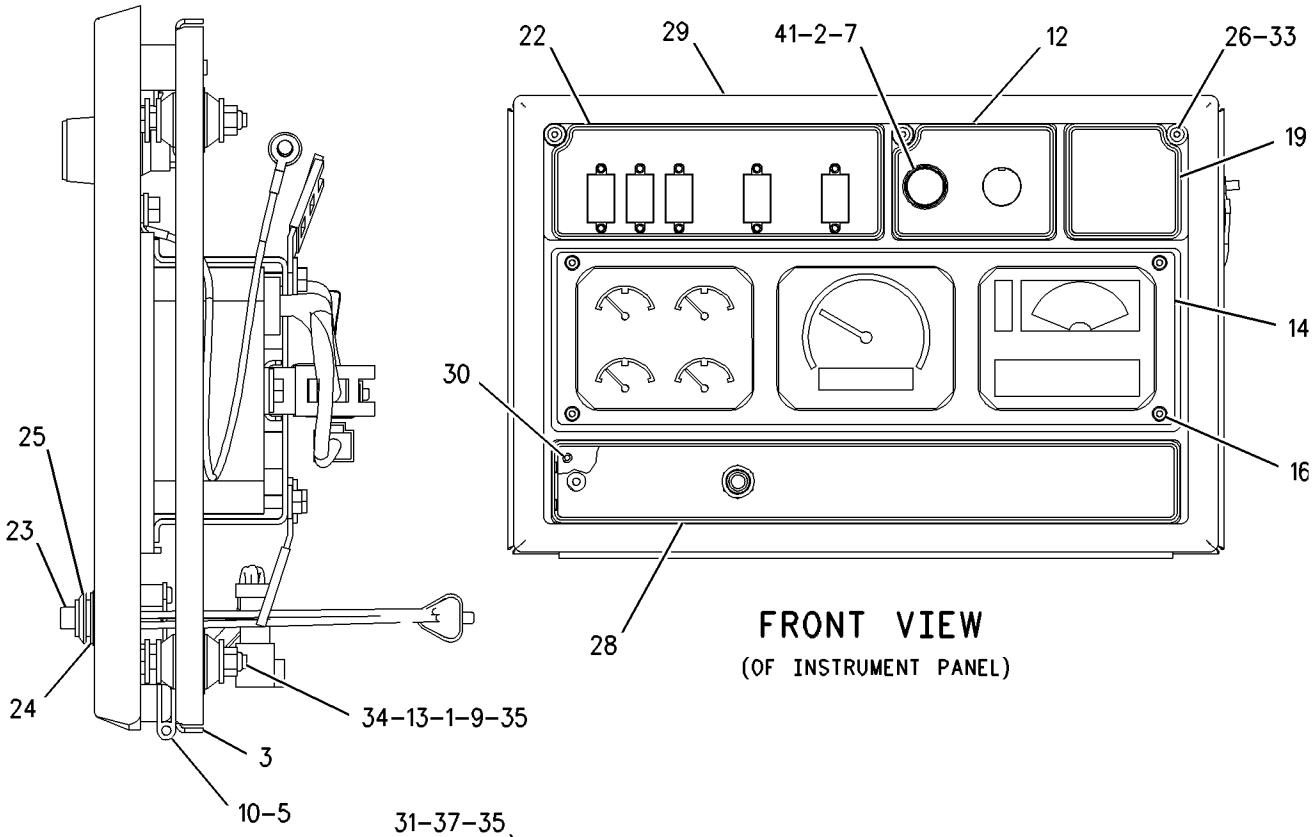

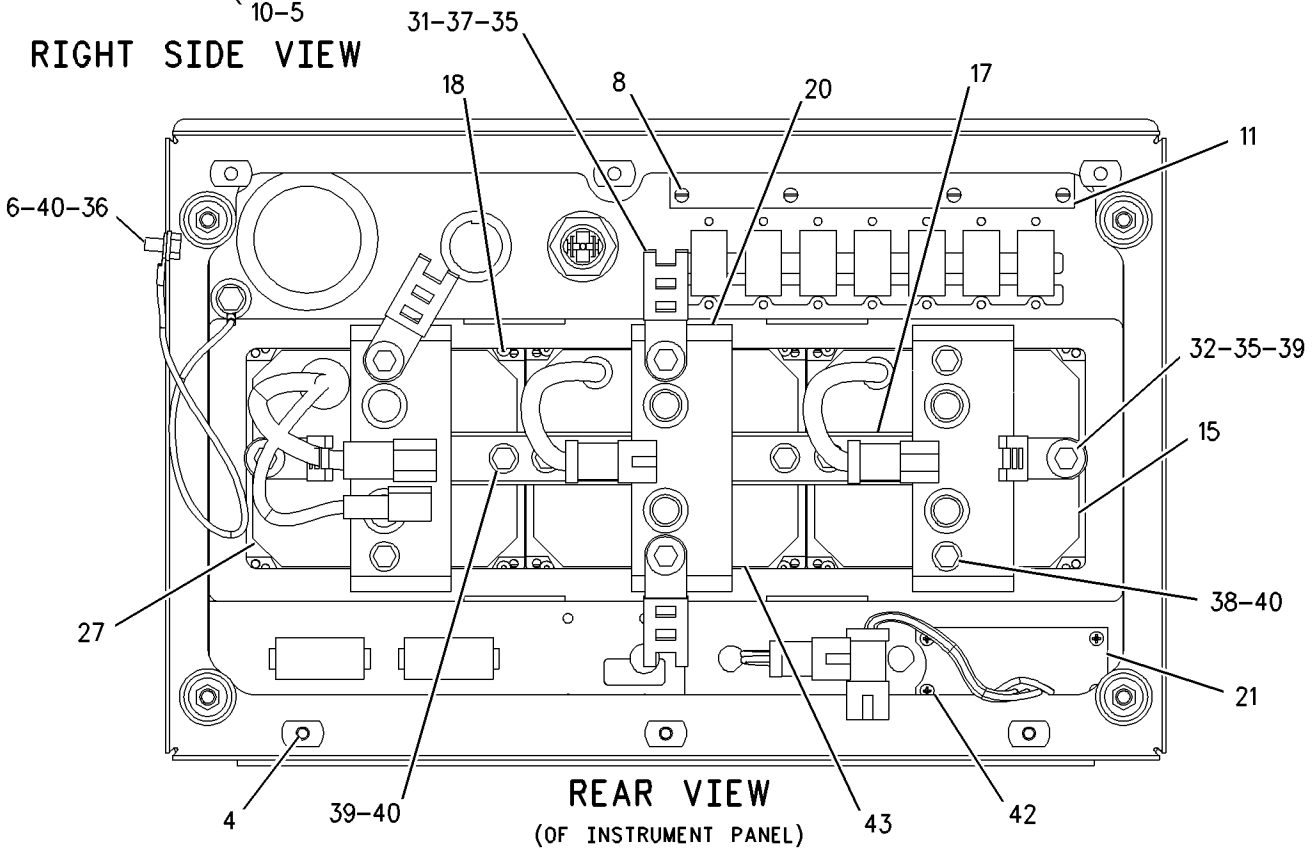

GRAPHIC #1

<END>

g00800601

178-7070 KIT-REBUILD—FINGER TIP CONTROL GEARBOX

S/N: 7PZ1-UP

FIELD INSTALLATION

SMCS-4343 **i01218680**

NOTE	PART NUMBER	QTY	PART NAME 1 2 3 4 5 6 (PRODUCT LEVEL)	SEE PAGE
			(INCLUDES 1 O-RING SEAL, 2 LIP-TYPE SEALS, 1 WASHER, 4 BEARINGS, 2 GEAR ASSEMBLIES,	
			2 TORSION SPRINGS, 1 GASKET AND 1 LOCKNUT)	
			<END>	

OPERATOR STATION

214-0783 KIT-SEAT AIR COMPRESSOR

S/N: 7PZ615-UP

PROVIDES OPTIONAL FIELD REPLACEMENT AIR COMPRESSOR

FIELD REPLACEMENT FOR 237-3970—PAGE 995

SMCS-731K, 7324 **i02012101**

NOTE	REF NO	GRAPHIC REF	PART NUMBER	QTY	PART NAME 1 2 3 4 5 6 (PRODUCT LEVEL)	SEE PAGE
	1	1	**5P-4423**	1	ELBOW	
	2	1	**5P-4432**	1	ELBOW-AIR BRAKE	
	3	1	**175-5058**	1	MOUNT	
	4	1	**186-5107**	3	SCREW (NO 8 X 1.25 IN)	
	5	1	**214-0784**	1	COMPRESSOR AS	
AEF			**211-5358**		CONDUIT (100CM)	
ADF			**5P-6010**		TUBE (1M)	

A-NOT PART OF THIS GROUP
D-ORDER BY THE METER
E-ORDER BY THE CENTIMETER
F-NOT SHOWN

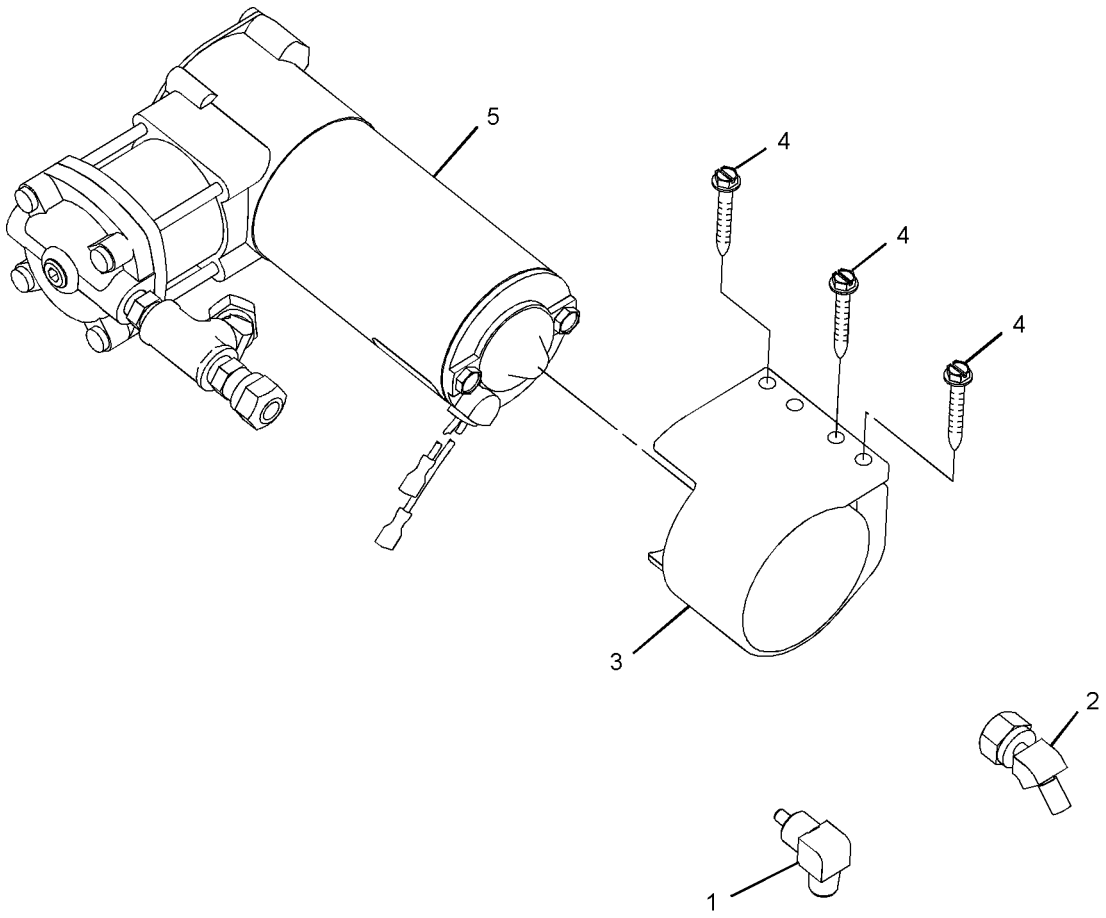

GRAPHIC #1 **<END>** g01040572

OPERATOR STATION

197-2715 KIT-WINDOW–GLASS

S/N: 7PZ1-UP

40 PSI ULTRA STRENGTH GLASS. LARGE REAR WINDOW

FIELD INSTALLATION

SMCS-7310 **i01667043**

NOTE	PART NUMBER	QTY	PART NAME 1 2 3 4 5 6 (PRODUCT LEVEL)	SEE PAGE
		1	GLASS (FRONT)	
		2	GLASS (SIDE)	
		2	GLASS (SIDE) (LH)	
		1	GLASS (DOOR) (LH)	
		1	GLASS (DOOR) (RH)	
		1	GLASS (REAR) (LG)	
		2	SHIM (22.2X56.7X0.05MM THK)	
			(INDIVIDUAL PARTS ARE NOT SERVICED SEPARATELY)	
			(SEE FORM SEHS9824-04)	

<END>

OPERATOR STATION

8E-3270 LINER GP-CAB

S/N: 7PZ1-UP
PART OF 157-4817 CAB AR
ALSO AN ATTACHMENT

SMCS-7329 **i01963899**

NOTE	REF NO	GRAPHIC REF	PART NUMBER	QTY	PART NAME 1 2 3 4 5 6 (PRODUCT LEVEL)	SEE PAGE
	1	1	**8E-3271**	1	LINER-REAR	
	2	1	**8E-3272**	1	LINER-FRONT	
	3	1	**8E-3278**	1	COVER AS	
	4	1	**228-7563**	1	COVER	
	5	1	**8E-3273**	2	PLATE	
	6	1	**8E-3274**	1	PLATE AS	
		1	**8E-3276**	3	SPACER (7.5X15X5MM THK)	
	7	1	**8E-3277**	1	COVER	
	8	1	**5S-7379**	2	BOLT (3/8-16X0.875 IN)	
	9	1	**5P-1075**	2	WASHER-HARD (10.2X22.5X3MM THK)	
	10	1	**4V-6981**	5	SCREW-BUTTON HEAD (1/4-20X0.75 IN)	
	11	1	**6V-3884**	18	SCREW-HEX SOCKET (1/4-20X0.5 IN)	
	12	1	**6I-9534**	1	COVER (RH DOOR)	
	13	1	**6I-9535**	1	COVER (LH DOOR)	
	14	1	**102-0288**	2	PLATE	
	15	1	**008-9792**	2	SCREW-WASHER HEAD (1/4-20X.5 IN)	
	16	1	**8T-4205**	2	WASHER-HARD (7.2X14.5X2MM THK)	
	17	1	**6Y-5113**	1	BRACKET	

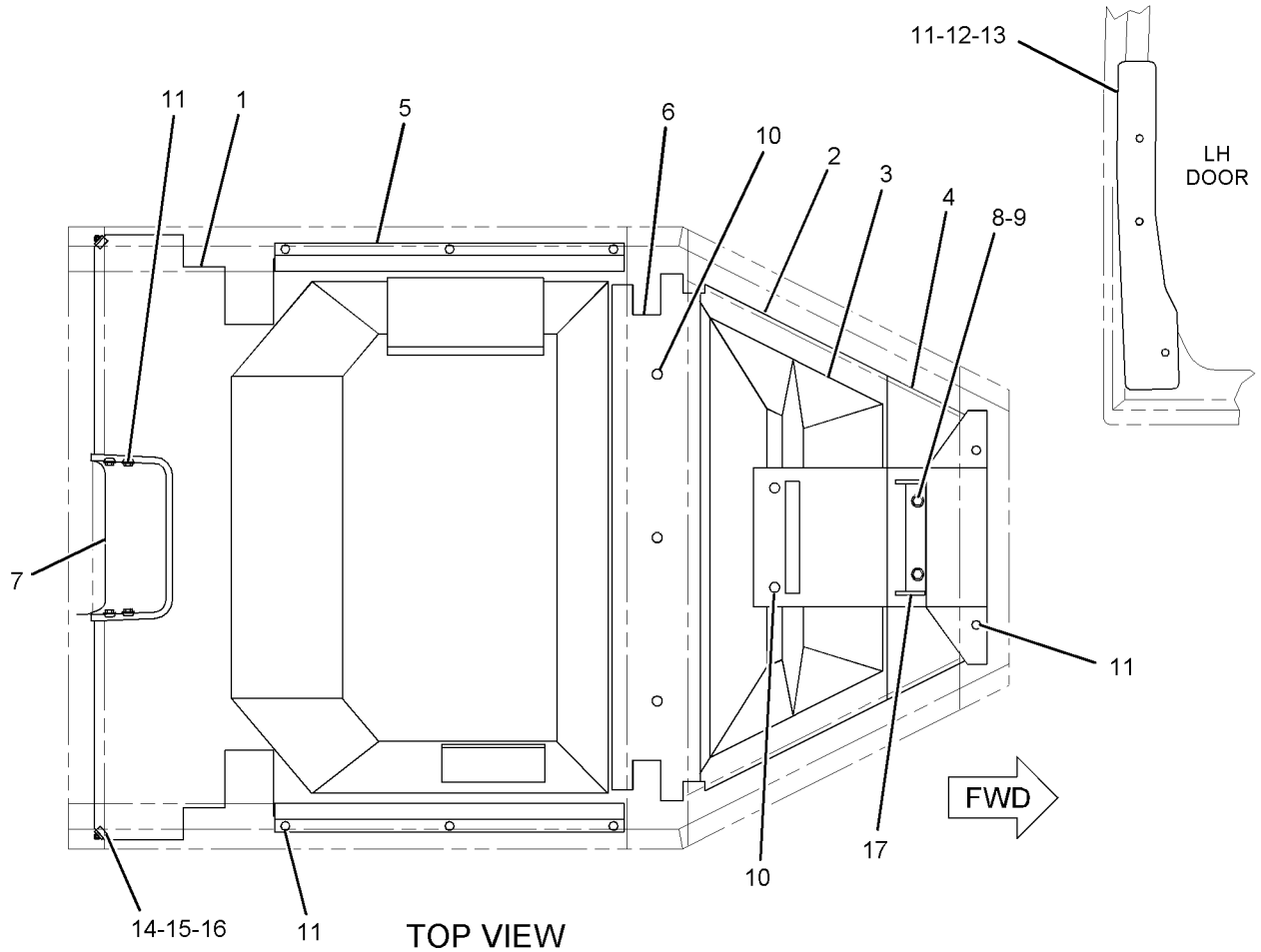

GRAPHIC #1 **<END>** g01025409

OPERATOR STATION

145-8734 LINES GP-AIR CONDITIONER

S/N: 7PZ718-753

PART OF 145-8006, 208-9099 AIR CONDITIONER AR, 157-3738 CAB AR

ALSO AN ATTACHMENT

SMCS-1808 **i02029223**

NOTE	REF NO	GRAPHIC REF	PART NUMBER	QTY	PART NAME 1 2 3 4 5 6 (PRODUCT LEVEL)	SEE PAGE
	1	2	**1P-6356**	1	PLATE	
	2	2	**175-7162**	1	RECEIVER-DRYER GP (AIR CONDITIONER)	
	3	1	**5D-1026**	2	CLAMP-HOSE	
	4	2	**7K-1181**	8	STRAP-CABLE	
	5	1	**9L-6331**	1	BRACKET	
I	6	1	**102-9948**	1	HOSE AS	
I	7	1	**102-9949**	1	HOSE AS	
	8	2	**103-6100**	2	COUPLER AS-QUICK	
	9	2	**114-5333**	1	SWITCH AS-PRESSURE (A/C HIGH)	
		2	**102-8802**	1	KIT-RECEPTACLE (2-PIN)	
					(INCLUDES RECEPTACLE AS & WEDGE)	
		2	**3E-3365**	1	WEDGE-RECEPTACLE LOCK (2-PIN)	
		2	**8T-8729**	2	PIN-CONNECTOR	
	10	2	**116-6202**	2	BOOT	
I	11	1	**130-6182**	1	HOSE AS	
	12	2	**149-6371**	1	SWITCH AS-PRESSURE (A/C LOW)	
		2	**102-8802**	1	KIT-RECEPTACLE (2-PIN)	
					(INCLUDES RECEPTACLE AS & WEDGE)	
		2	**3E-3365**	1	WEDGE-RECEPTACLE LOCK (2-PIN)	
		2	**8T-8729**	2	PIN-CONNECTOR	
	13	2	**169-7443**	1	TIMER AS-ON DELAY (24-VOLT) (A/C)	
		2	**102-8804**	1	KIT-RECEPTACLE (4-PIN)	
					(INCLUDES RECEPTACLE AS & WEDGE)	
		2	**3E-3377**	1	WEDGE-RECEPTACLE LOCK (4-PIN)	
		2	**8T-8729**	4	PIN-CONNECTOR	
	14	1	**170-0235**	1	ACCUMULATOR-REFRIGERANT	
	15	2	**170-5293**	1	HARNESS AS-HEATER & AIR COND	
I	16	2	**205-1985**	1	HOSE AS	
I	17	1	**205-1986**	1	HOSE AS	
	18	1	**206-7110**	1	BRACKET AS	
		1	**1F-5339**	1	LUG (3/8-16-THD)	
	19	1	**207-4253**	1	PLATE	
	20	1	**207-4285**	2	U-BOLT	
	21	1	**109-1633**	1	CLIP (SLOT)	
	22	1	**109-1634**	1	CLIP (TAB)	
	23	2	**172-0986**	1	FITTING AS-AIR CONDITIONER	
		2	**3E-4051**	1	CAP AS (AIR CONDITIONER) (LOW SIDE)	
		2	**3E-4057**	1	VALVE AS (AIR CONDITIONER)	
		2	**172-4880**	1	CAP-SEAL (AIR CONDITIONER)	
		2	**180-7180**	1	CORE-VALVE	
		2	**180-7181**	1	BODY-VALVE	
	24	1	**1S-1015**	1	CLIP	
	25	1	**2K-4973**	4	LOCKNUT (3/8-16-THD)	
	26	1	**2Y-1834**	1	CLIP	
	27	2	**3E-4053**	1	FITTING AS-AIR CONDITIONER	
		2	**3E-4052**	1	CAP AS (AIR CONDITIONER) (HIGH SIDE)	
		2	**3E-4058**	1	VALVE AS (AIR CONDITIONER)	
C	28	1	**4D-7733**	5	CLIP	
	29	1	**4D-7735**	1	CLIP	
	30	1,2	**4L-6454**	13	BOLT (3/8-16X1-IN)	
	31	2	**4L-9337**	2	BOLT (3/8-16X1.5-IN)	
	32	2	**4P-7581**	4	CLIP	
	33	2	**4P-8134**	3	CLIP	
	34	1,2	**5P-1075**	7	WASHER-HARD (10.2X22.5X3-MM THK)	
	35	1	**5S-7383**	1	BOLT (3/8-16X1.75-IN)	

145-8734 LINES GP-AIR CONDITIONER *(contd.)* i02029223

NOTE	REF NO	GRAPHIC REF	PART NUMBER	QTY	PART NAME 1 2 3 4 5 6 (PRODUCT LEVEL)	SEE PAGE
	36	1	**6D-4247**	3	CLIP	
	37	1,2	**6V-8801**	4	NUT (3/8-16-THD)	
	38	2	**7S-1912**	1	CLIP	
	39	1	**8M-2773**	1	CLIP	
	40	1,2	**8T-4896**	19	WASHER-HARD (10.2X18.5X2.5-MM THK)	
M	41	2	**8T-6466**	1	BOLT (M10X1.50X60-MM)	
	42	1	**9B-7237**	1	BOLT (3/8-16X1.25-IN)	
	43	2	**9X-7378**	1	SEAL-O-RING	
	44	1	**9X-7380**	3	SEAL-O-RING	
	45	1	**9X-7381**	3	SEAL-O-RING	
	46	1,2	**9X-7382**	2	SEAL-O-RING	
	47	1	**9X-7383**	2	SEAL-O-RING	
	48	2	**9X-7385**	2	SEAL-O-RING	
	49	1	**5S-7379**	1	BOLT (3/8-16X0.875-IN)	
D	50	1	**5P-6129**		TUBE (2M)	

C-CHANGE FROM PREVIOUS TYPE
D-ORDER BY THE METER
I-REFER TO HYDRAULIC INFORMATION SYSTEM
M-METRIC PART

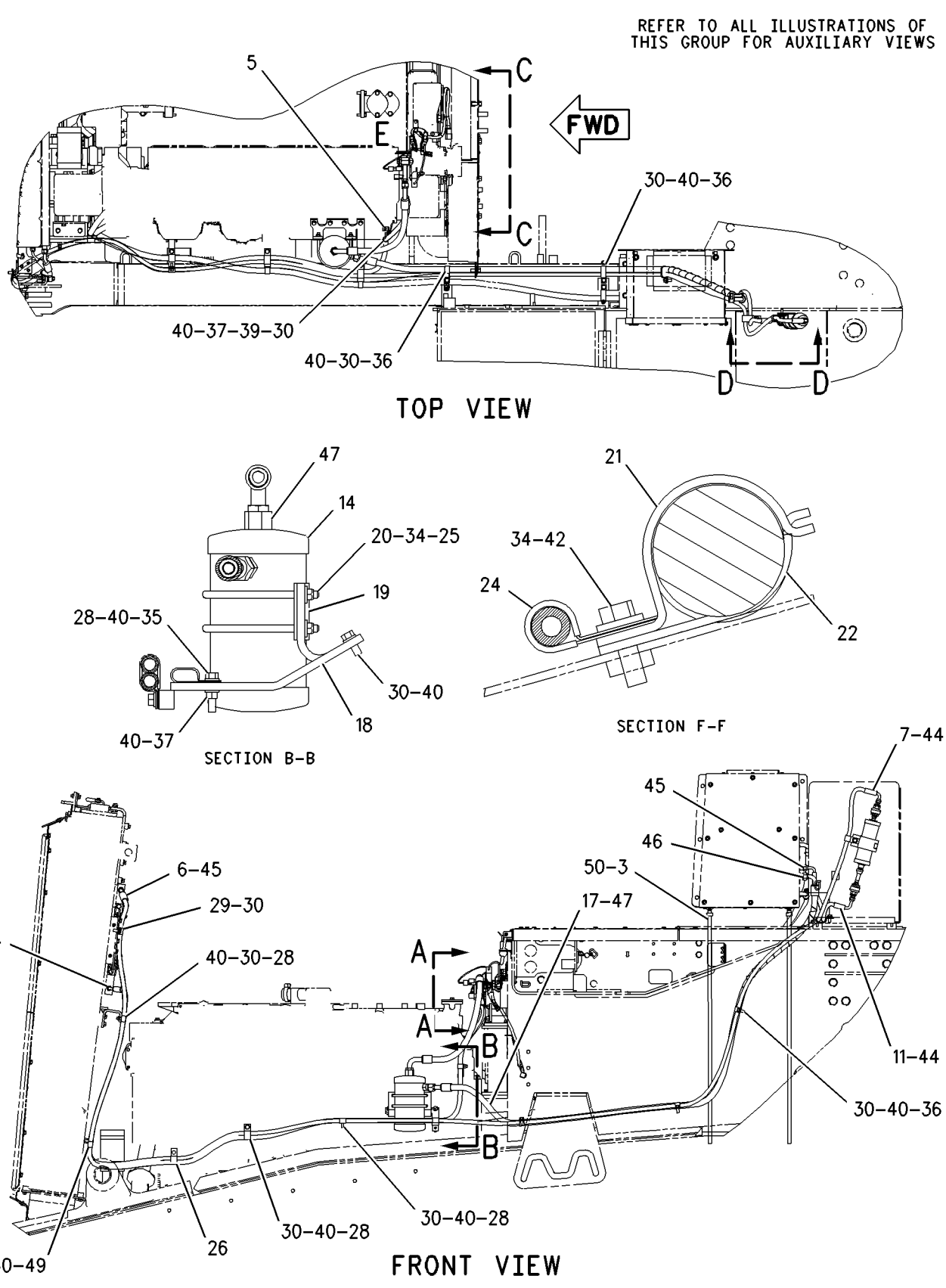

GRAPHIC #1 g00879027

REFER TO ALL ILLUSTRATIONS OF
THIS GROUP FOR AUXILIARY VIEWS

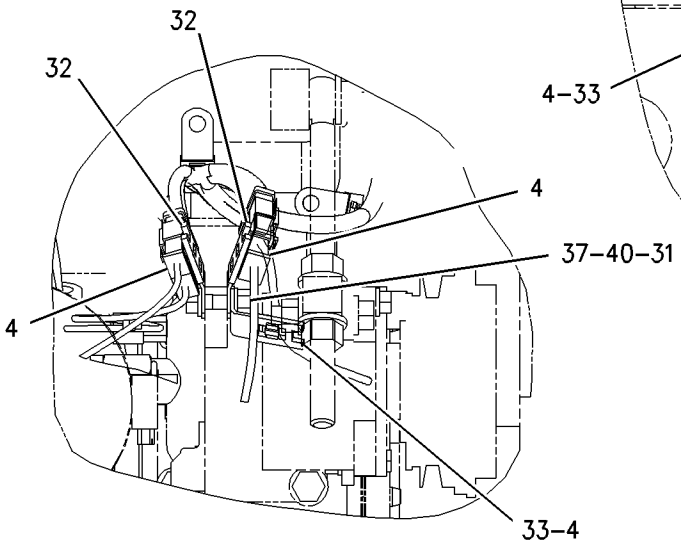

VIEW OF AREA E

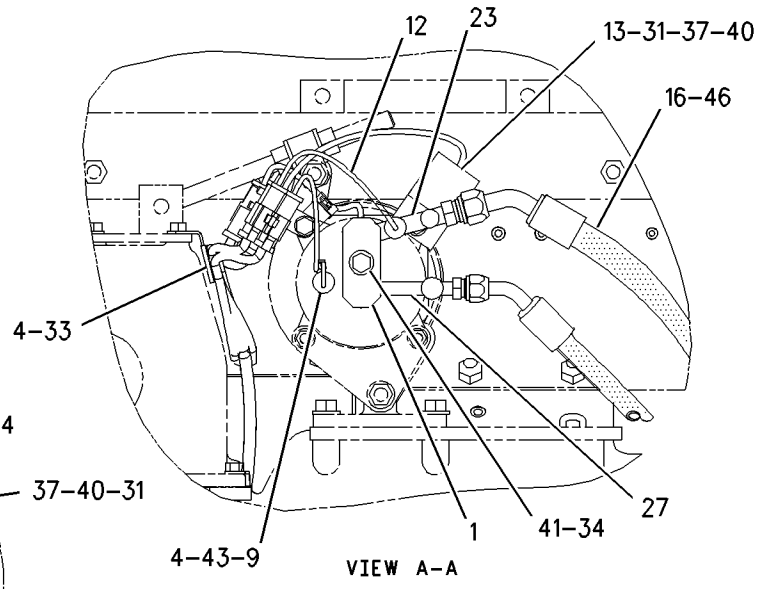

VIEW A-A

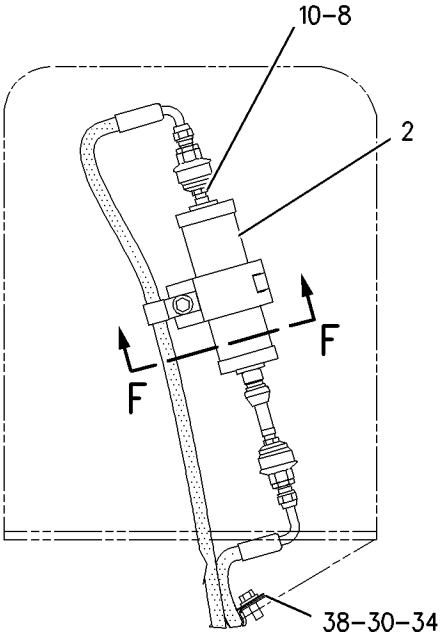

VIEW D-D

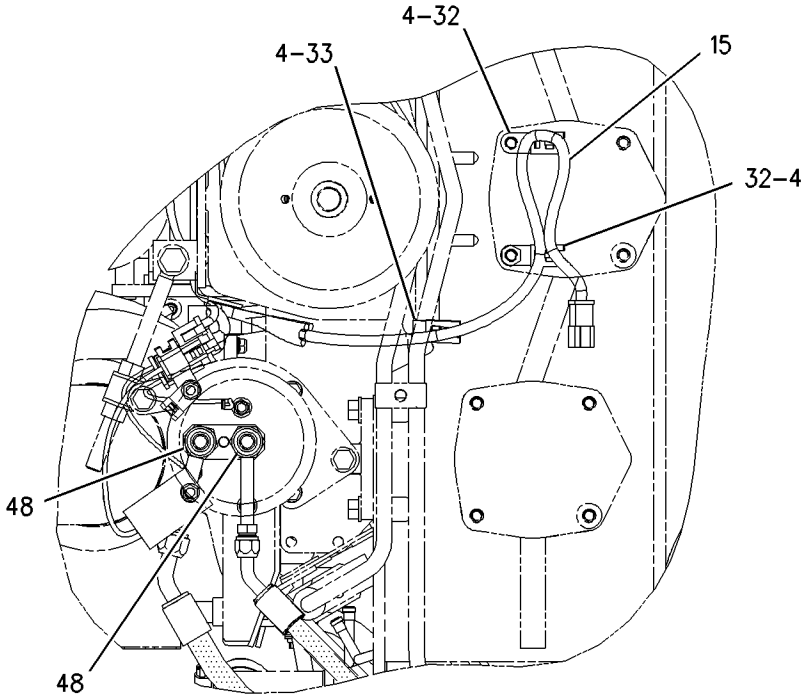

VIEW C-C

GRAPHIC #2 **<END>** g00863085

OPERATOR STATION

145-8734 LINES GP-AIR CONDITIONER

S/N: 7PZ754-UP

PART OF 157-3738 CAB AR

SMCS-1808 **i01989153**

NOTE	REF NO	GRAPHIC REF	PART NUMBER	QTY	PART NAME 1 2 3 4 5 6 (PRODUCT LEVEL)	SEE PAGE
	1	1	**1P-6356**	1	PLATE	
	2	1	**175-7162**	1	RECEIVER-DRYER GP (AIR CONDITIONER)	
	3	1	**5D-1026**	2	CLAMP-HOSE	
	4	1	**7K-1181**	8	STRAP-CABLE	
	5	1	**9L-6331**	1	BRACKET	
I	6	1	**102-9948**	1	HOSE AS	
I	7	1	**102-9949**	1	HOSE AS	
	8	1	**103-6100**	2	COUPLER AS-QUICK (REFRIGERANT)	
	9	1	**114-5333**	1	SWITCH AS-PRESSURE (A/C HIGH)	
BE		1	**9X-1386**		SLEEVE	
		1	**102-8802**	1	KIT-RECEPTACLE (2-PIN)	
					(INCLUDES RECEPTACLE AS & WEDGE)	
	10	1	**116-6202**	2	BOOT	
I	11	1	**130-6182**	1	HOSE AS	
	12	1	**149-6371**	1	SWITCH AS-PRESSURE (A/C LOW)	
		1	**102-8802**	1	KIT-RECEPTACLE (2-PIN)	
					(INCLUDES RECEPTACLE AS & WEDGE)	
	13	1	**169-7443**	1	TIMER AS-ON DELAY (24 VOLT) (A/C)	
		1	**102-8804**	1	KIT-RECEPTACLE (4-PIN)	
					(INCLUDES RECEPTACLE AS & WEDGE)	
	14	1	**170-0235**	1	ACCUMULATOR-REFRIGERANT	
	15	1	**170-5293**	1	HARNESS AS-HEATER & AIR COND	
		1	**102-8805**	1	KIT-RECEPTACLE (6-PIN)	
					(INCLUDES RECEPTACLE AS & WEDGE)	
		1	**8T-8737**	2	PLUG-SEAL	
		1	**155-2270**	3	KIT-CONNECTING PLUG (2-PIN)	
		1	**155-2271**	1	KIT-CONNECTING PLUG (4-PIN)	
					(EACH INCLUDES PLUG AS & WEDGE)	
	16	1	**207-4253**	1	PLATE	
	17	1	**207-4285**	2	U-BOLT	
	18	1	**241-1735**	1	HOSE AS	
I	19	1	**241-1736**	1	HOSE AS	
	20	1	**241-1742**	1	BRACKET AS	
		1	**1F-5339**	1	LUG (3/8-16 THD)	
	21	1	**109-1633**	1	CLIP (SLOT)	
	22	1	**109-1634**	1	CLIP (TAB)	
	23	1	**172-0986**	1	FITTING AS-AIR CONDITIONER	
		1	**3E-4051**	1	CAP AS (AIR CONDITIONER) (LOW SIDE)	
		1	**3E-4057**	1	VALVE AS (AIR CONDITIONER) (LOW SIDE)	
		1	**172-4880**	1	CAP-SEAL (AIR CONDITIONER)	
		1	**180-7180**	1	CORE-VALVE	
		1	**180-7181**	1	BODY-VALVE (LOW SIDE SWITCH PORT)	
	24	1	**1S-1015**	1	CLIP	
	25	1	**2K-4973**	4	LOCKNUT (3/8-16 THD)	
	26	1	**2Y-1834**	1	CLIP	
	27	1	**3E-4053**	1	FITTING AS-AIR CONDITIONER	
		1	**3E-4052**	1	CAP AS (AIR CONDITIONER) (HIGH SIDE)	
		1	**3E-4058**	1	VALVE AS (AIR CONDITIONER) (HIGH SIDE)	
	28	1	**4D-7733**	5	CLIP	
	29	1	**4D-7735**	1	CLIP	
	30	1	**4K-8302**	1	CLIP	
	31	1	**4L-6454**	13	BOLT (3/8-16X1 IN)	
	32	1	**4L-9337**	2	BOLT (3/8-16X1.5 IN)	
	33	1	**4P-7581**	4	CLIP	
	34	1	**4P-8134**	3	CLIP	
	35	1	**5P-1075**	7	WASHER-HARD (10.2X22.5X3MM THK)	

145-8734 LINES GP-AIR CONDITIONER *(contd.)* i01989153

NOTE	REF NO	GRAPHIC REF	PART NUMBER	QTY	PART NAME 1 2 3 4 5 6 (PRODUCT LEVEL)	SEE PAGE
	36	1	**5S-7383**	1	BOLT (3/8-16X1.75 IN)	
	37	1	**6D-4247**	2	CLIP	
	38	1	**6V-8801**	4	NUT (3/8-16 THD)	
	39	1	**7S-1912**	1	CLIP	
	40	1	**8M-2773**	1	CLIP	
	41	1	**8T-4896**	19	WASHER-HARD (10.2X18.5X2.5MM THK)	
M	42	1	**8T-6466**	1	BOLT (M10X1.50X60MM)	
	43	1	**9B-7237**	1	BOLT (3/8-16X1.25 IN)	
	44	1	**9X-7378**	1	SEAL-O-RING	
	45	1	**9X-7380**	2	SEAL-O-RING	
	46	1	**9X-7381**	2	SEAL-O-RING	
	47	1	**9X-7382**	2	SEAL-O-RING	
	48	1	**9X-7383**	2	SEAL-O-RING	
	49	1	**9X-7385**	2	SEAL-O-RING	
	50	1	**5S-7379**	1	BOLT (3/8-16X0.875 IN)	
BD	51	1	**5P-6129**		TUBE	

B-USE AS REQUIRED
D-ORDER BY THE METER
E-ORDER BY THE CENTIMETER
I-REFER TO HYDRAULIC INFORMATION SYSTEM
M-METRIC PART

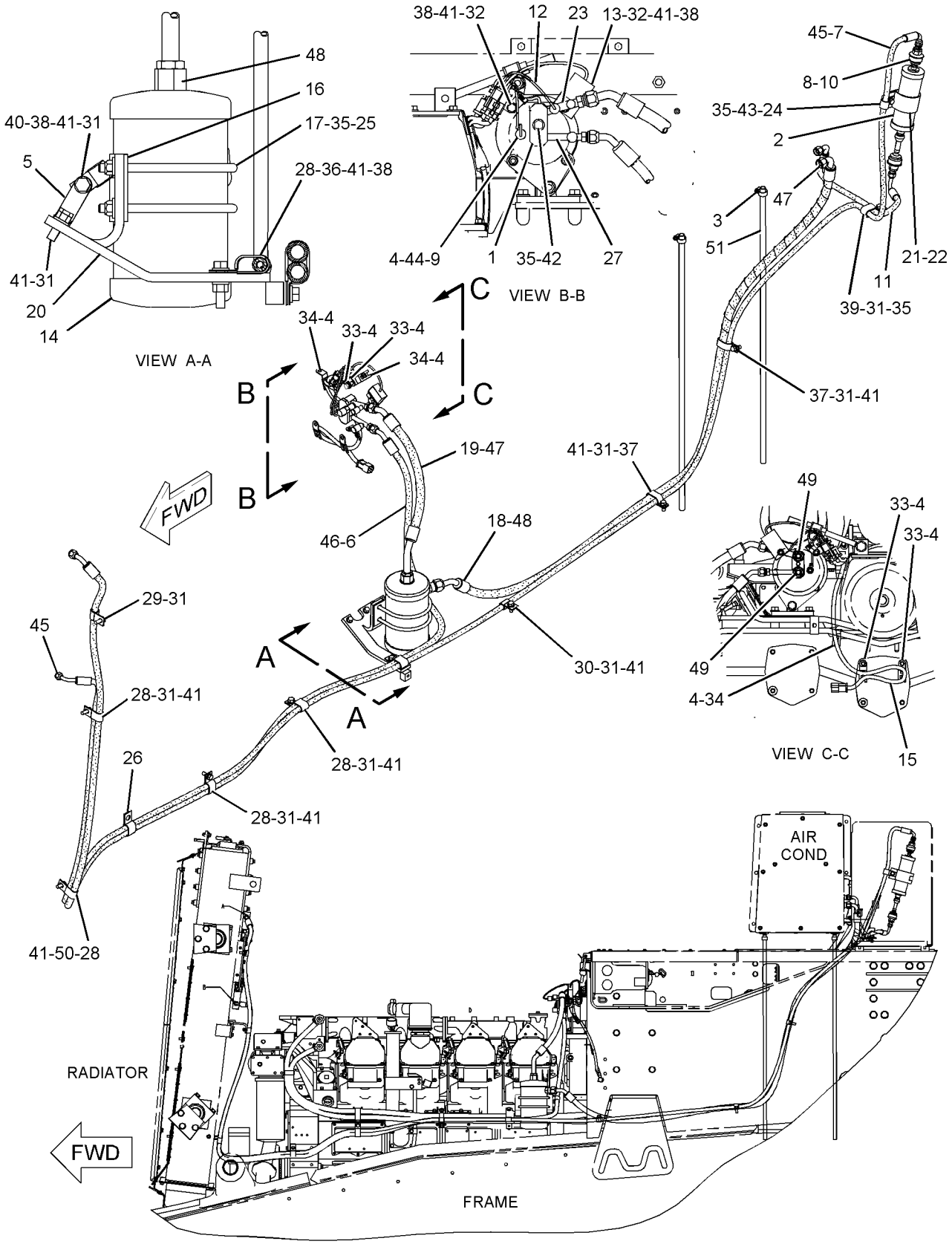

LEFT SIDE VIEW

GRAPHIC #1 **<END>** g01026789

OPERATOR STATION

130-6177 LINES GP-HEATER

S/N: 7PZ1-640

PART OF 157-3738 CAB AR

SMCS-7304 **i01989157**

NOTE	REF NO	GRAPHIC REF	PART NUMBER	QTY	PART NAME 1 2 3 4 5 6 (PRODUCT LEVEL)	SEE PAGE
C	1	1	**4F-0186**	1	NIPPLE-PIPE	
C	2	1	**9X-8250**	1	CLIP	
C	3	1	**7X-0495**	1	ADAPTER	
	4	1	**130-6187**	2	HOSE	
C	5	1	**5S-7379**	2	BOLT (3/8-16X0.875 IN)	
	6	1	**9W-2636**	3	BRACKET AS	
					(EACH INCLUDES)	
		1	**1F-0750**	1	NUT-WELD (3/8-16THD)	
		1	**1F-5339**	1	LUG (3/8-16 THD)	
	7	1	**4L-6454**	3	BOLT (3/8-16X1 IN)	
	8	1	**5P-1075**	3	WASHER-HARD (10.2X22.5X3MM THK)	
C	9	1	**003-9514**	2	COUPLING-PIPE	
C	10	1	**8T-4896**	6	WASHER-HARD (10.2X18.5X2.5MM THK)	
	11	1	**005-7889**	2	VALVE AS	
	12	1	**5D-1026**	4	CLAMP-HOSE	
C	13	1	**6D-4247**	5	CLIP	
	14	1	**9B-7237**	3	BOLT (3/8-16X1.25 IN)	
C	15	1	**8T-9377**	1	BOLT (3/8-16X2.25 IN)	
C	16	1	**4S-1962**	2	CLIP	
C	17	1	**2S-3770**	1	SPACER (11X19X33.5MM THK)	

C-CHANGE FROM PREVIOUS TYPE

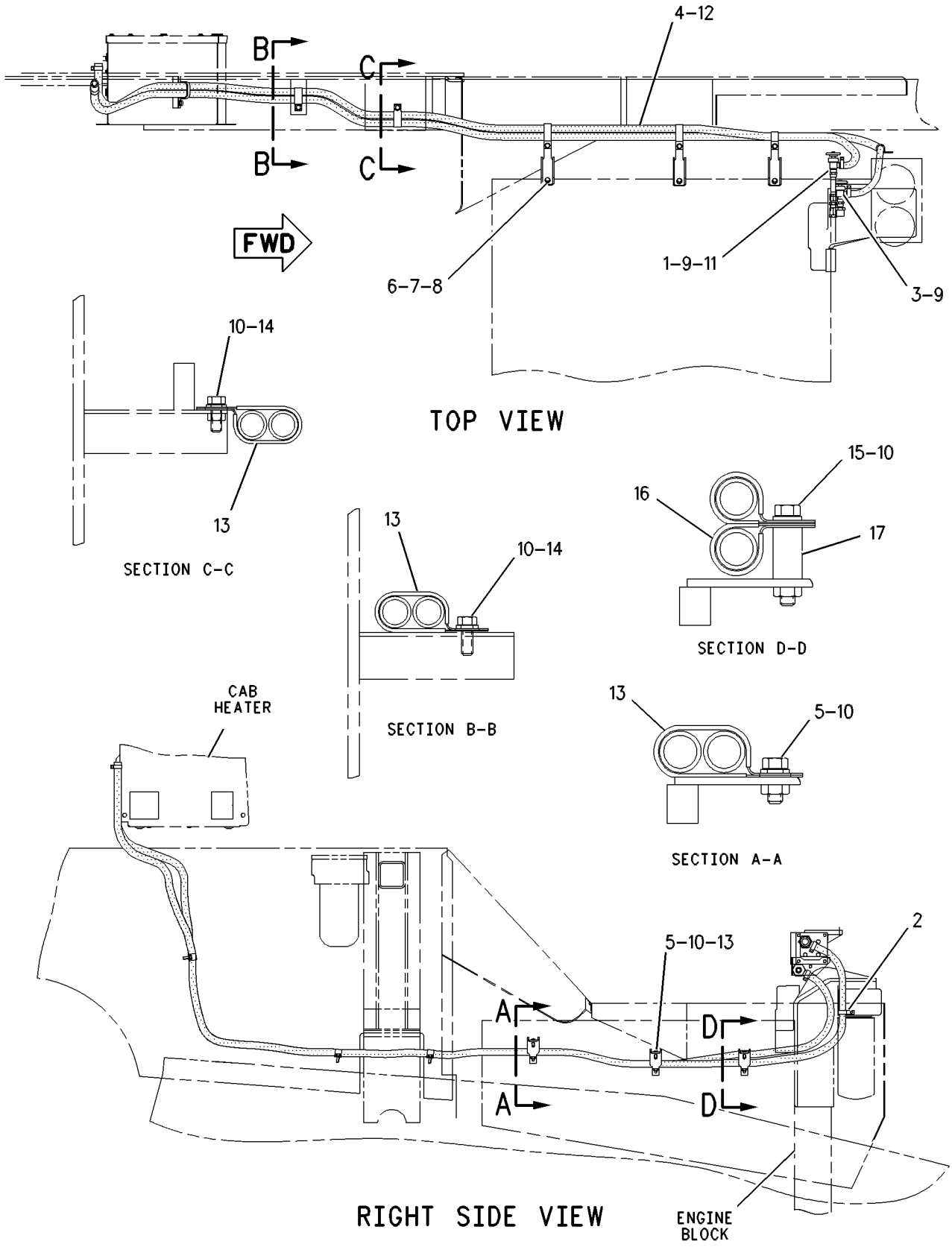

GRAPHIC #1 **<END>** g00659601

OPERATOR STATION

130-6177 LINES GP-HEATER

S/N: 7PZ641-UP

PART OF 157-3738 CAB AR

SMCS-7304 **i01989156**

NOTE	REF NO	GRAPHIC REF	PART NUMBER	QTY	PART NAME 1 2 3 4 5 6 (PRODUCT LEVEL)	SEE PAGE
	1	1	**2S-3770**	1	SPACER (11X19X33.5MM THK)	
C	2	1	**9W-2636**	2	BRACKET AS	
					(EACH INCLUDES)	
		1	**1F-0750**	1	NUT-WELD (3/8-16THD)	
		1	**1F-5339**	1	LUG (3/8-16 THD)	
	3	1	**130-6187**	2	HOSE	
C	4	1	**159-1503**	4	CLAMP-HOSE	
C	5	1	**4L-6454**	4	BOLT (3/8-16X1 IN)	
C	6	1	**4L-6459**	1	BOLT (3/8-16X2.5 IN)	
	7	1	**4S-1962**	2	CLIP	
C	8	1	**5P-1075**	2	WASHER-HARD (10.2X22.5X3MM THK)	
C	9	1	**6D-4247**	6	CLIP	
	10	1	**8T-4896**	6	WASHER-HARD (10.2X18.5X2.5MM THK)	
	11	1	**8T-9377**	1	BOLT (3/8-16X2.25 IN)	
	12	1	**9B-7237**	3	BOLT (3/8-16X1.25 IN)	

C-CHANGE FROM PREVIOUS TYPE

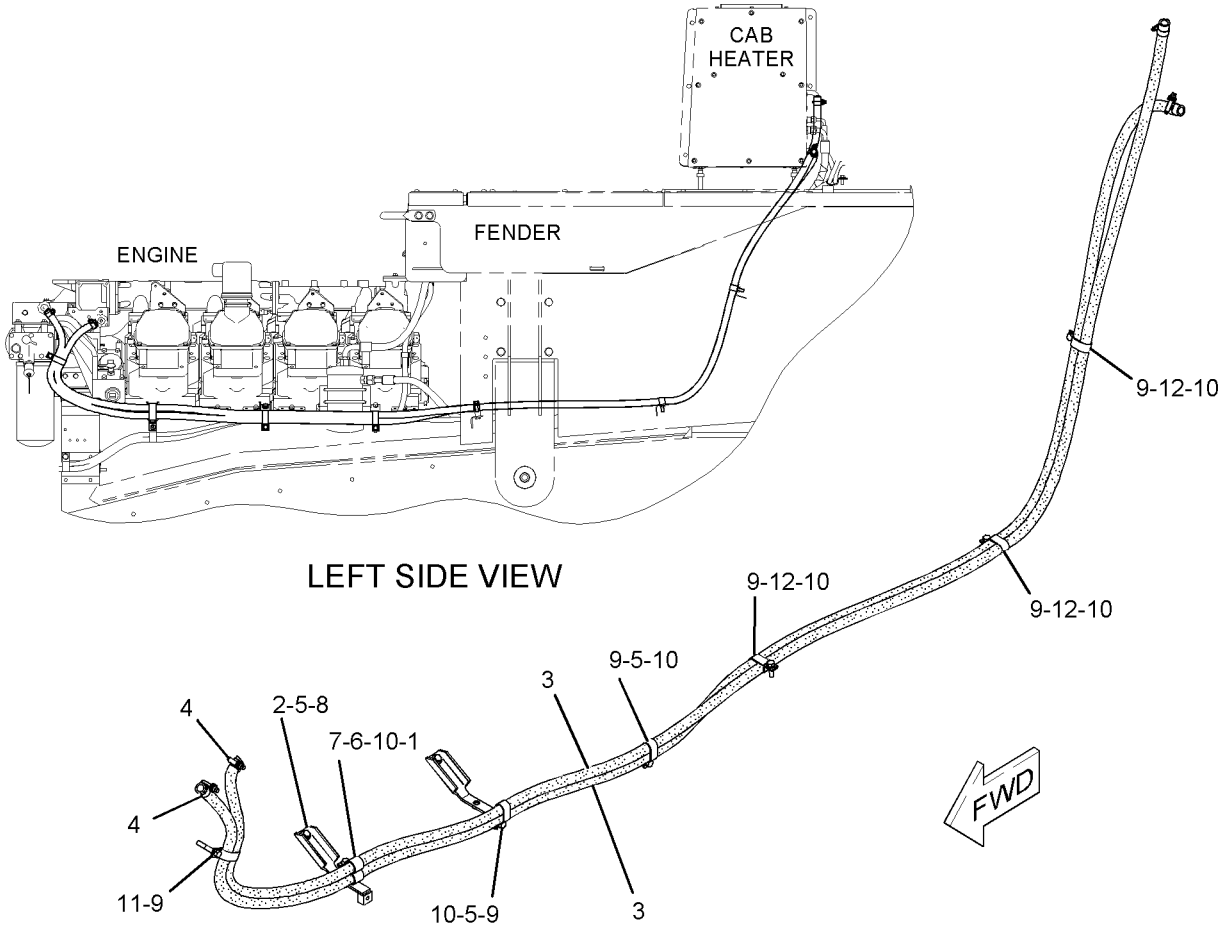

GRAPHIC #1 **<END>** g01025117

OPERATOR STATION

6Y-3712 MIRROR GP-REAR VIEW

S/N: 7PZ1-UP
PART OF 157-4817 CAB AR
ALSO AN ATTACHMENT

SMCS-7319 **i01989126**

NOTE	REF NO	GRAPHIC REF	PART NUMBER	QTY	PART NAME 1 2 3 4 5 6 (PRODUCT LEVEL)	SEE PAGE
	1	1	**9P-9388**	1	KNOB (MIRROR ADJUSTMENT)	
	2	1	**5P-6874**	1	MIRROR (REAR VIEW)	
	3	1	**5K-9179**	1	BOLT-ROUND HEAD (3/8-16X11 IN)	

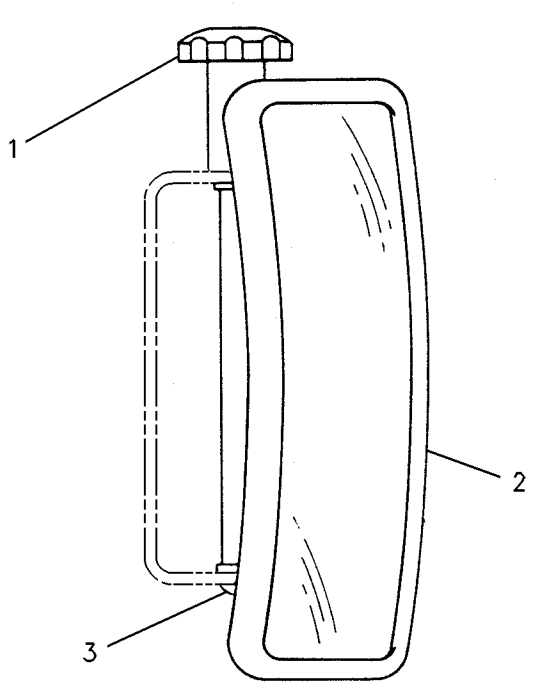

GRAPHIC #1 **<END>** g00230747

OPERATOR STATION

149-2357 MODULE GP-MESSAGE CENTER

S/N: 7PZ1-602

PART OF 157-5913 INSTRUMENT GP

SMCS-7601 **i01660359**

NOTE	REF NO	GRAPHIC REF	PART NUMBER	QTY	PART NAME 1 2 3 4 5 6 (PRODUCT LEVEL)	SEE PAGE
J	1	1	**102-8805**	1	KIT-RECEPTACLE (6 PIN)	
					(INCLUDES RECEPTACLE AS & WEDGE)	
	2	1	**8T-8729**	8	PIN-CONNECTOR	
J	3	1	**3E-3383**	1	WEDGE-RECEPTACLE LOCK	
L	4	1	**102-8802**	1	KIT-RECEPTACLE (2 PIN)	
					(INCLUDES RECEPTACLE AS & WEDGE)	
L	5	1	**3E-3365**	1	WEDGE-RECEPTACLE LOCK (2 PIN)	

J-KIT MARKED J INCLUDES PART MARKED J
L-KIT MARKED L INCLUDES PART MARKED L

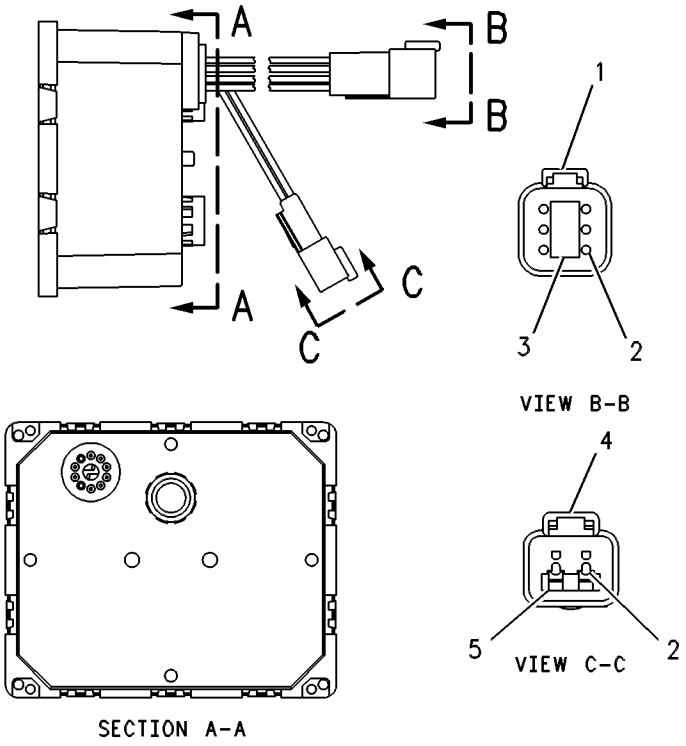

GRAPHIC #1 **<END>** g00330556

OPERATOR STATION

179-1730 MODULE GP-MESSAGE CENTER

S/N: 7PZ603-UP

PART OF 157-5913 INSTRUMENT GP

SMCS-7601 **i01700597**

NOTE	PART NUMBER	QTY	PART NAME 1 2 3 4 5 6 (PRODUCT LEVEL)	SEE PAGE
	186-1681	1	CONTROL AS-ELECTRONIC	
	102-8802	1	KIT-RECEPTACLE (2 PIN)	
			(INCLUDES RECEPTACLE AS & WEDGE)	
	102-8805	1	KIT-RECEPTACLE (6 PIN)	
			(INCLUDES RECEPTACLE AS & WEDGE)	

<END>

OPERATOR STATION

183-2009 MODULE GP-MONITOR KEYPAD

S/N: 7PZ1-UP
(INTERNATIONAL VERSION)
PART OF 183-2076 CONTROL GP-ELECTRONIC

SMCS-7490 **i01290941**

NOTE	REF NO	GRAPHIC REF	PART NUMBER	QTY	PART NAME 1 2 3 4 5 6 (PRODUCT LEVEL)	SEE PAGE
	1	1	**178-3951**	1	FILM-KEYPAD	
	2	1	**102-8804**	1	KIT-RECEPTACLE (4 PIN)	
					(INCLUDES RECEPTACLE AS & WEDGE)	
	3	1	**8T-8729**	3	PIN-CONNECTOR	
	4	1	**8T-8737**	1	PLUG-SEAL	
	5	1	**3E-3377**	1	WEDGE-RECEPTACLE LOCK	

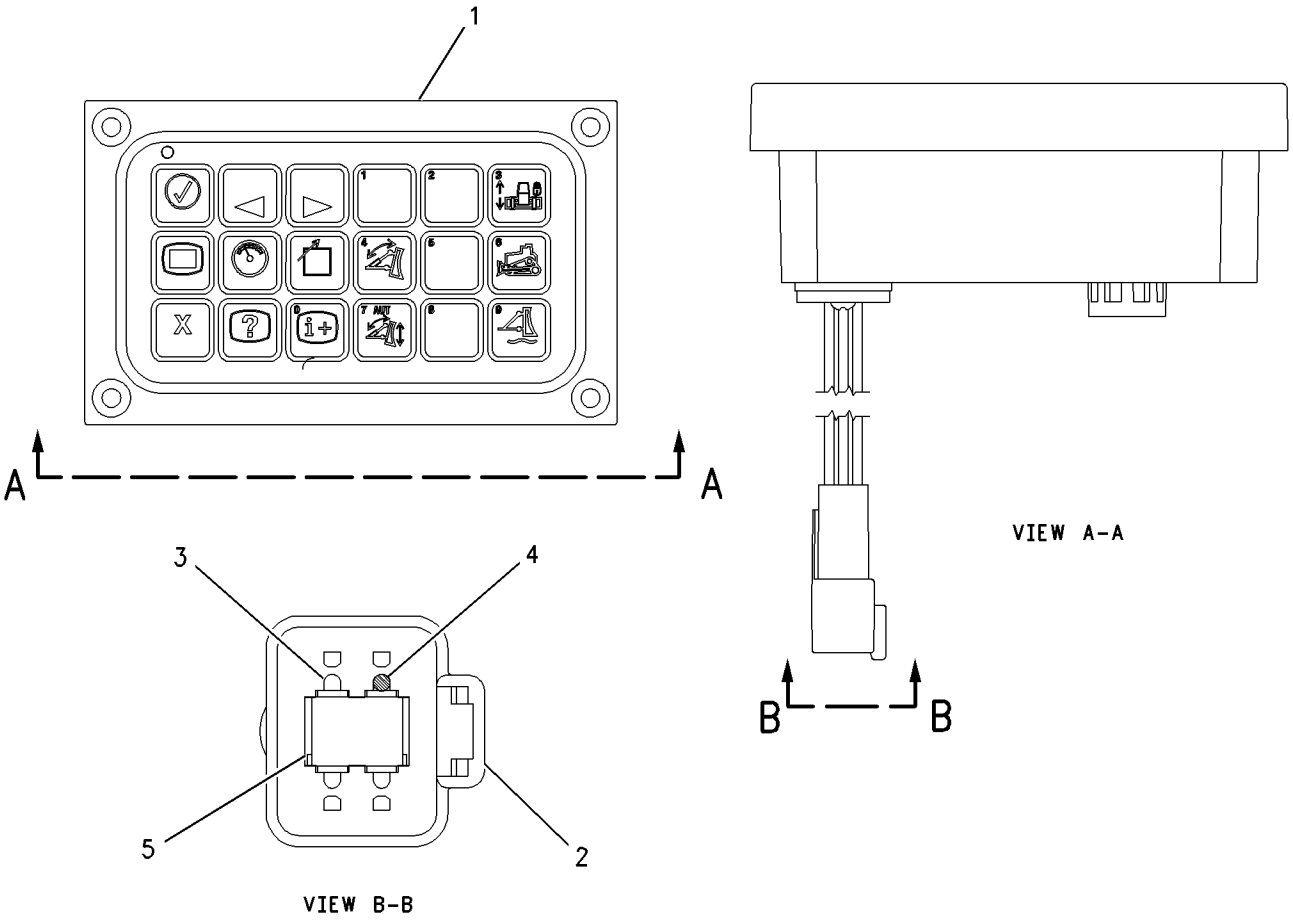

GRAPHIC #1 **<END>** g00664936

OPERATOR STATION

225-9217 MODULE GP-MONITOR KEYPAD

S/N: 7PZ1-UP
AUTOCARRY
PART OF 165-5018, 183-2076 CONTROL GP-ELECTRONIC

SMCS-7490 **i01831055**

NOTE	REF NO	GRAPHIC REF	PART NUMBER	QTY	PART NAME 1 2 3 4 5 6 (PRODUCT LEVEL)	SEE PAGE
	1	1	**225-6343**	1	FILM (AUTOCARRY KEYPAD)	
	2	1	**102-8804**	1	KIT-RECEPTACLE (4 PIN)	
					(INCLUDES RECEPTACLE AS & WEDGE)	
	3	1	**186-3735**	3	PIN-CONNECTOR	
	4	1	**8T-8737**	1	PLUG-SEAL	
	5	1	**3E-3377**	1	WEDGE-RECEPTACLE LOCK	

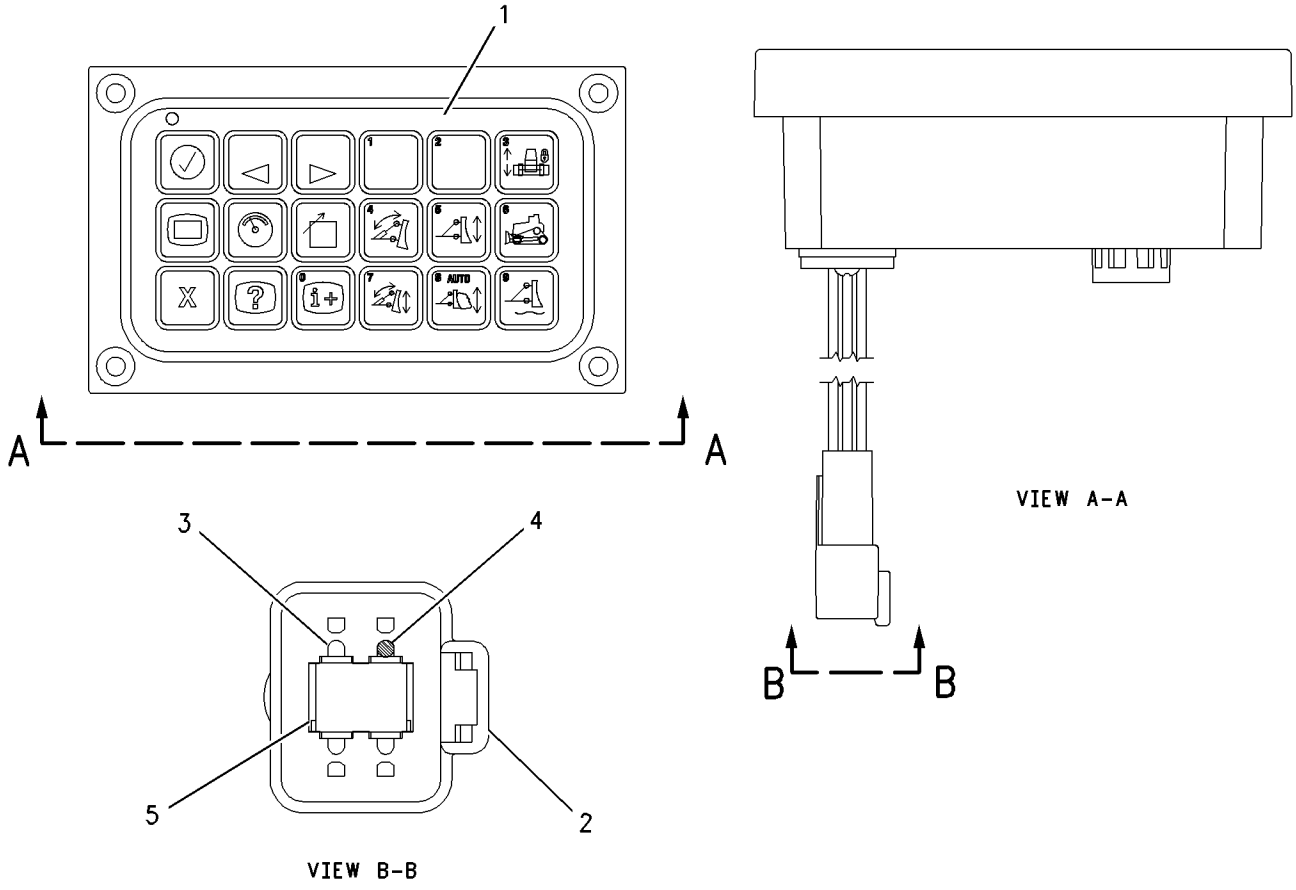

GRAPHIC #1 **<END>** g00934704

OPERATOR STATION

166-6928 MODULE GP-QUAD GAUGE

S/N: 7PZ1-UP

PART OF 157-5913 INSTRUMENT GP

SMCS-7450, 7451, 7490 **i02023668**

NOTE	REF NO	GRAPHIC REF	PART NUMBER	QTY	PART NAME 1 2 3 4 5 6 (PRODUCT LEVEL)	SEE PAGE
	1	1	**102-8805**	1	KIT-RECEPTACLE (6-PIN)	
					(INCLUDES RECEPTACLE AS & WEDGE)	
	2	1	**8T-8729**	6	PIN-CONNECTOR	

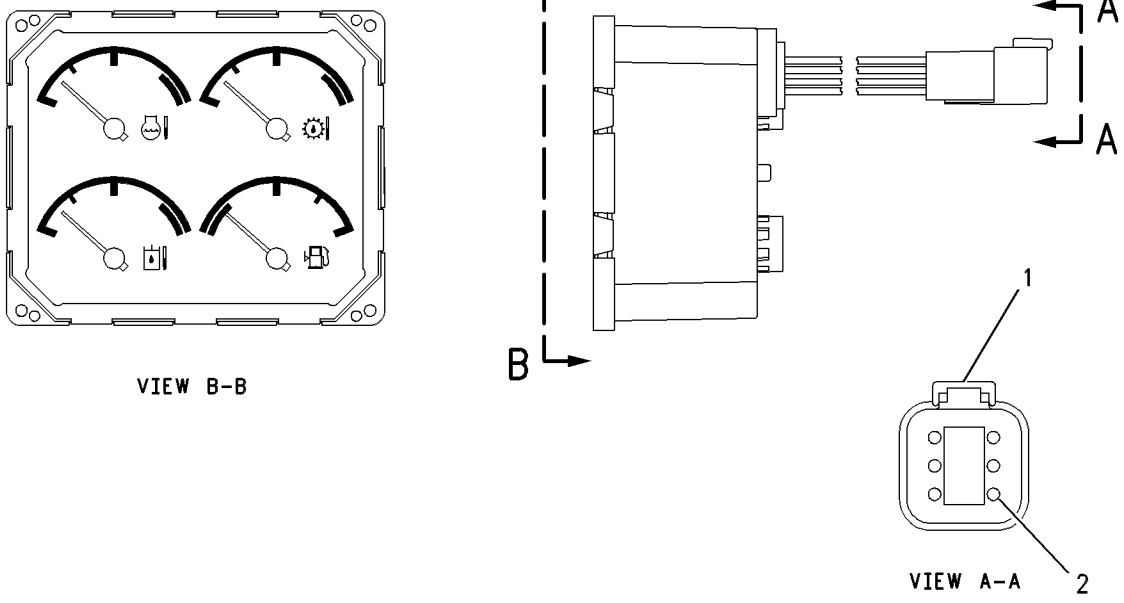

GRAPHIC #1 **<END>** g00587276

OPERATOR STATION

137-7616 MODULE GP-SPEEDOMETER & TACH

S/N: 7PZ1-UP

PART OF 157-5913 INSTRUMENT GP

SMCS-7462, 7463 **i01290943**

NOTE	REF NO	GRAPHIC REF	PART NUMBER	QTY	PART NAME 1 2 3 4 5 6 (PRODUCT LEVEL)	SEE PAGE
	1	1	**102-8805**	1	KIT-RECEPTACLE (6 PIN)	
					(INCLUDES RECEPTACLE AS & WEDGE)	
	2	1	**8T-8729**	6	PIN-CONNECTOR	
	3	1	**3E-3383**	1	WEDGE-RECEPTACLE LOCK	

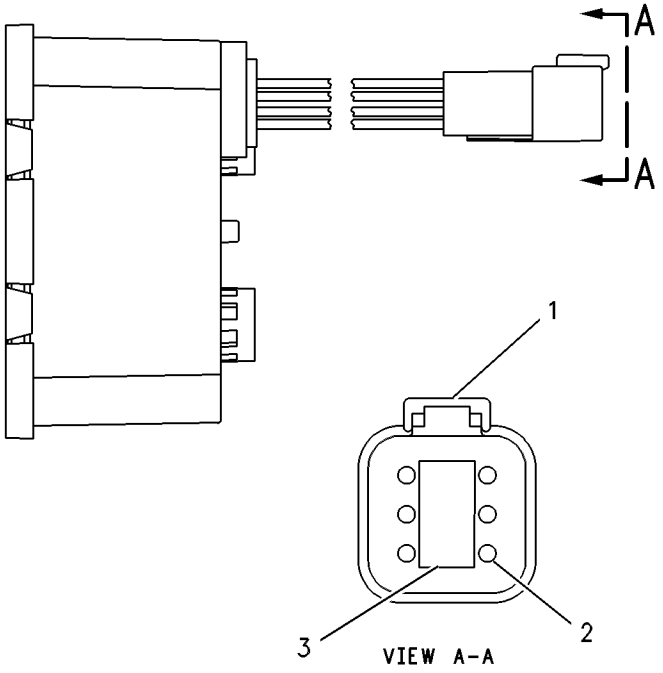

GRAPHIC #1 **<END>** g00257820

147-7976 MOTOR GP-WINDOW WIPER–FRONT

S/N: 7PZ1-UP
24 VOLT
PART OF 157-3735 WIPER GP-WINDOW
ALSO AN ATTACHMENT

SMCS-7305 **i01173629**

NOTE	REF NO	GRAPHIC REF	PART NUMBER	QTY	PART NAME 1 2 3 4 5 6 (PRODUCT LEVEL)	SEE PAGE
M	1	1	**5C-7261**	1	NUT (M8X1.25 THD)	
	2	1	**3F-9556**	1	LOCKWASHER (8.4MM ID)	
	3	1	**102-8805**	1	KIT-RECEPTACLE (6 PIN)	
					(INCLUDES RECEPTACLE AS AND WEDGE)	
	4	1	**9G-3695**	1	PLUG-SEAL	
	5	1	**8T-8729**	5	PIN-CONNECTOR	

M-METRIC PART

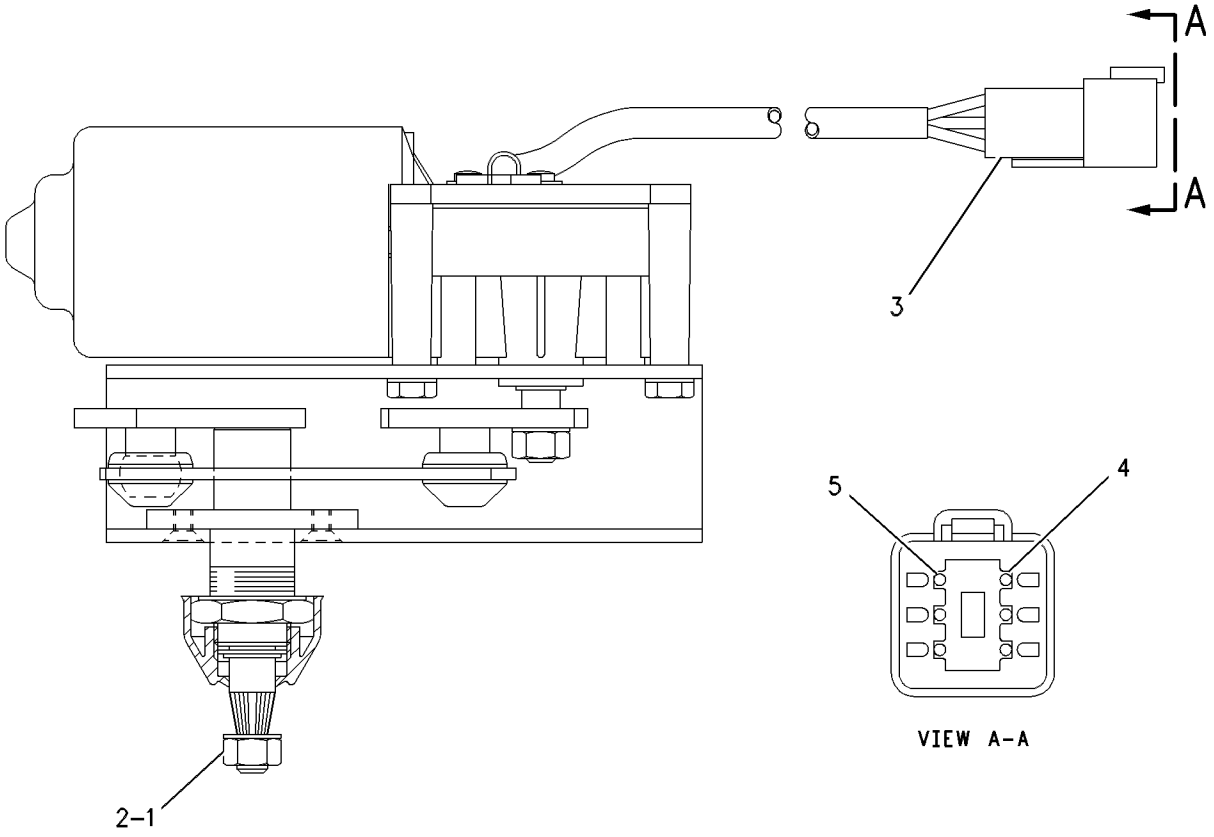

GRAPHIC #1 **<END>** g00462703

OPERATOR STATION

117-1852 MOUNTING GP-CAB

S/N: 7PZ1-UP

PART OF 157-3738 CAB AR

SMCS-7266, 7301 **i01692468**

NOTE	REF NO	GRAPHIC REF	PART NUMBER	QTY	PART NAME 1 2 3 4 5 6 (PRODUCT LEVEL)	SEE PAGE
	1	1	**121-9258**	1	FLOOR MAT-UPPER	
BD	2	1	**5P-7513**		SEAL	
	3	1	**154-3079**	1	STRAP	
	4	1	**5S-7379**	12	BOLT (3/8-16X0.875 IN)	
	5	1	**7X-0772**	6	WASHER-HARD (10.2X25.5X2.5MM THK)	
	6	1	**5P-1075**	8	WASHER-HARD (10.2X22.5X3MM THK)	
	7	1	**121-9259**	1	FLOOR MAT-LOWER	
	8	1	**111-7090**	1	LINER	
	9	1	**9P-2262**	1	SEAL	
	10	1	**7G-1785**	1	PLATE AS	
		1	**1F-0750**	3	NUT-WELD (3/8-16 THD)	
	11	1	**7G-1786**	1	PLATE AS	
		1	**1F-0750**	3	NUT-WELD (3/8-16 THD)	
	12	1	**7G-1744**	1	PLATE	
	13	1	**8E-6834**	1	PLATE AS	
		1	**9F-6445**	2	NUT-WELD (1/4-20 THD)	
	14	1	**8E-6877**	1	COVER	
	15	1	**6V-3884**	10	SCREW-HEX SOCKET (1/4-20X0.5 IN)	
	16	1	**9X-2038**	4	WASHER (7X19X2MM THK)	
	17	1	**3E-6918**	3	BOLT (1/2-13X1 IN)	
	18	1	**7X-0618**	6	WASHER-HARD (13.5X40X5MM THK)	
	19	1	**9X-2508**	3	BOLT-12 POINT HEAD (1/2-13X1.25 IN)	
	20	1	**3E-6919**	11	BOLT (1/2-13X2.25 IN)	
	21	1	**7X-3392**	22	WASHER-HARD (13.5X22.5X3MM THK)	
	22	1	**3E-6920**	4	BOLT (1/2-13X3 IN)	
	23	1	**105-3380**	1	COVER	
	24	1	**8E-7238**	1	COVER	
	25	1	**124-6838**	1	COVER	
	26	1	**8E-7235**	1	TRAY	
	27	1	**8E-7236**	1	COVER	
	28	1	**8E-7237**	1	COVER	
	29	1	**6Y-0206**	6	RETAINER	
	30	1	**8T-1572**	17	SCREW-HEX SOCKET (1/4-20X1 IN)	
	31	1	**7G-4824**	2	STRAP	
	32	1	**8E-7791**	2	STRAP	
BD	33	1	**5P-5755**		SEAL	
	34	1	**7G-4823**	1	STRAP	
	35	1	**9B-7237**	5	BOLT (3/8-16X1.25 IN)	
		1	**9P-4898**	5	SPACER (12.7X19.05X19MM THK)	
	36	1	**7K-3222**	9	WASHER (10.3X44.4X2MM THK)	
	37	1	**3K-6060**	4	LOCKNUT (3/8-16 THD)	
	38	1	**8E-9595**	1	LINER	
	39	1	**8E-9592**	1	PLATE AS	
		1	**1F-0748**	4	NUT-WELD (1/2-13 THD)	
		1	**8J-9383**	4	STUD-WELD (3/8-16X1.75 IN OAL)	
	40	1	**111-7091**	1	LINER	
	41	1	**8E-7239**	1	COVER	
	42	1	**8T-2502**	2	BOLT (3/8-16X1.125 IN)	
	43	1	**135-1823**	1	HOLDER	

B-USE AS REQUIRED
D-ORDER BY THE METER

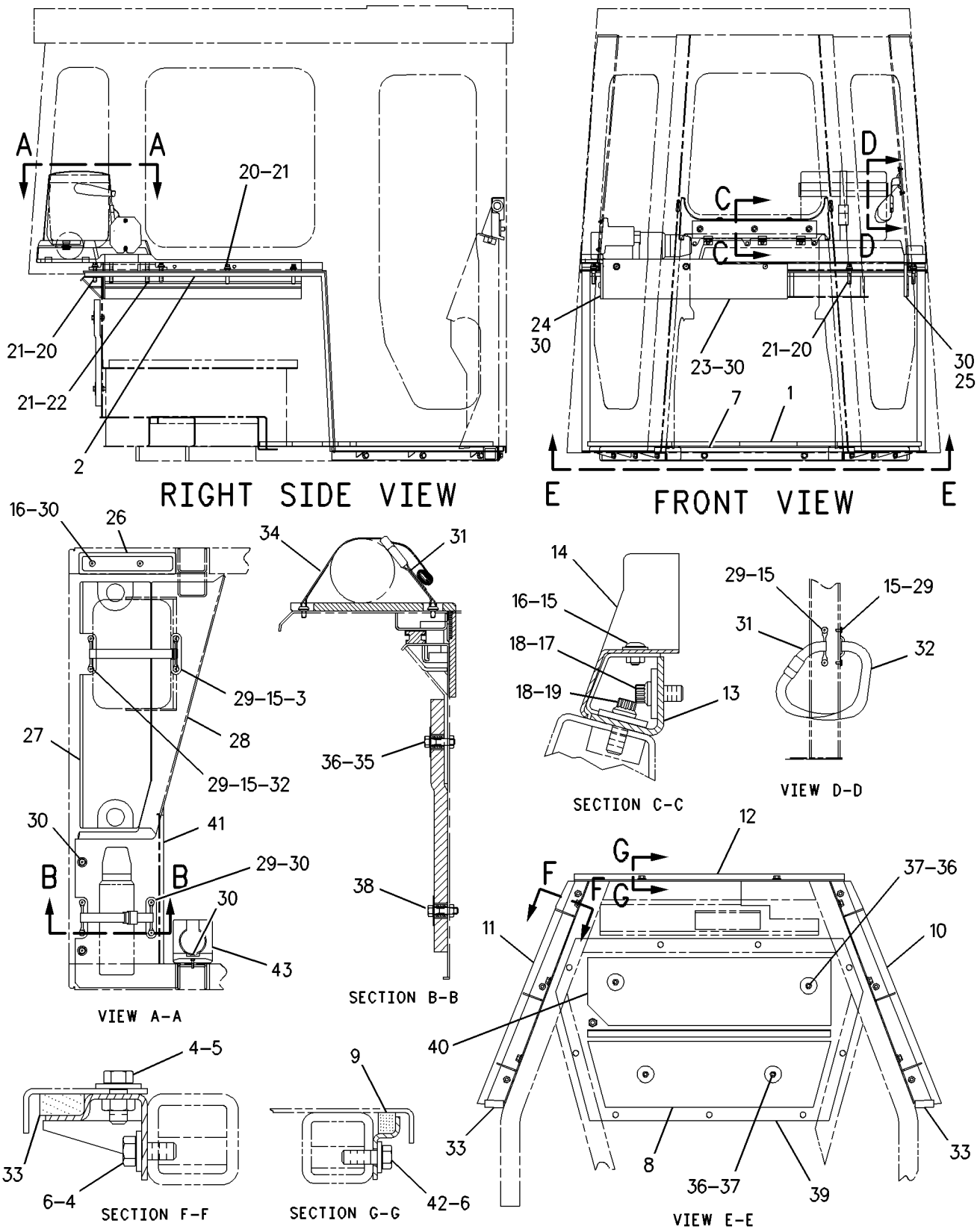

GRAPHIC #1 **<END>** g00748985

OPERATOR STATION

9U-9552 MOUNTING GP-RADIO

S/N: 7PZ1-UP

FIELD INSTALLATION

SMCS-7338 **i01989138**

NOTE	PART NUMBER	QTY	PART NAME 1 2 3 4 5 6 (PRODUCT LEVEL)	SEE PAGE
	3E-6601	1	FILM-NOTICE (RADIO)	
	3E-8362	1	FILM-NOTICE (RADIO)	
	6V-8185	2	NUT (1/4-20 THD)	
	8E-4836	1	PLATE	
	6V-8969	3	SCREW-BUTTON HEAD	

<END>

OPERATOR STATION

173-9170 MOUNTING GP-ROPS

S/N: 7PZ1-UP

PART OF 155-5552 CHASSIS AR

SMCS-7266 **i01981275**

NOTE	REF NO	GRAPHIC REF	PART NUMBER	QTY	PART NAME 1 2 3 4 5 6 (PRODUCT LEVEL)	SEE PAGE
	1	1	**6V-8953**	20	BOLT (1-1/2-6 THD)	
		1	**3S-6162**	20	WASHER-HARD (40.5X67X6MM THK)	
	2	1	**173-9169**	1	SUPPORT AS (RH)	
	3	1	**173-9168**	1	SUPPORT AS (LH)	

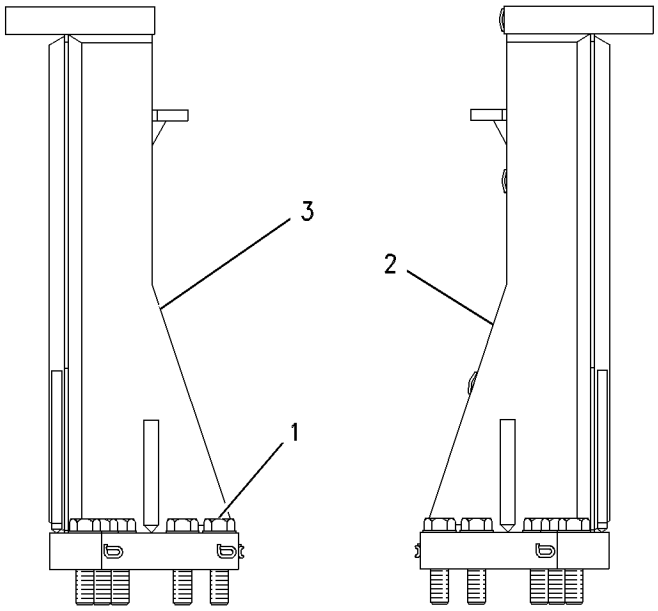

FRONT VIEW

GRAPHIC #1 **<END>** g00581238

OPERATOR STATION

108-8421 PAN GP-BACKREST–CONTOUR SEAT

S/N: 7PZ1-391
LUMBAR
PART OF 8Y-5976, 8Y-5986 SEAT GP
ALSO AN ATTACHMENT

SMCS-7312 **i01818937**

NOTE	REF NO	GRAPHIC REF	PART NUMBER	QTY	PART NAME 1 2 3 4 5 6 (PRODUCT LEVEL)	SEE PAGE
	1	1	**9M-5733**	2	RIVET-POP (4.78MM DIA)	
	2	1	**8Y-6006**	1	LID AS	
	3	1	**8Y-6010**	1	LANYARD	
	4	1	**4S-8287**	8	RIVET-POP (6MM DIA)	
	5	1	**8Y-5972**	1	LATCH	
	6	1	**108-8423**	1	SHAFT AS-LUMBAR	
	7	1	**3E-4336**	1	STUD-BALL	
	8	1	**3E-4335**	1	CLIP	
	9	1	**2F-7306**	1	SCREW-MACHINE (6-32X.25 IN)	
	10	1	**8F-1462**	1	WASHER-PLATED	
E	11	1	**3E-6575**		SEAL (76CM)	
	12	1	**108-8424**	1	PAN-LUMBAR	
	13	1	**8Y-5903**	2	CAM	
	14	1	**3E-4362**	2	PIN-SPRING	

E-ORDER BY THE CENTIMETER

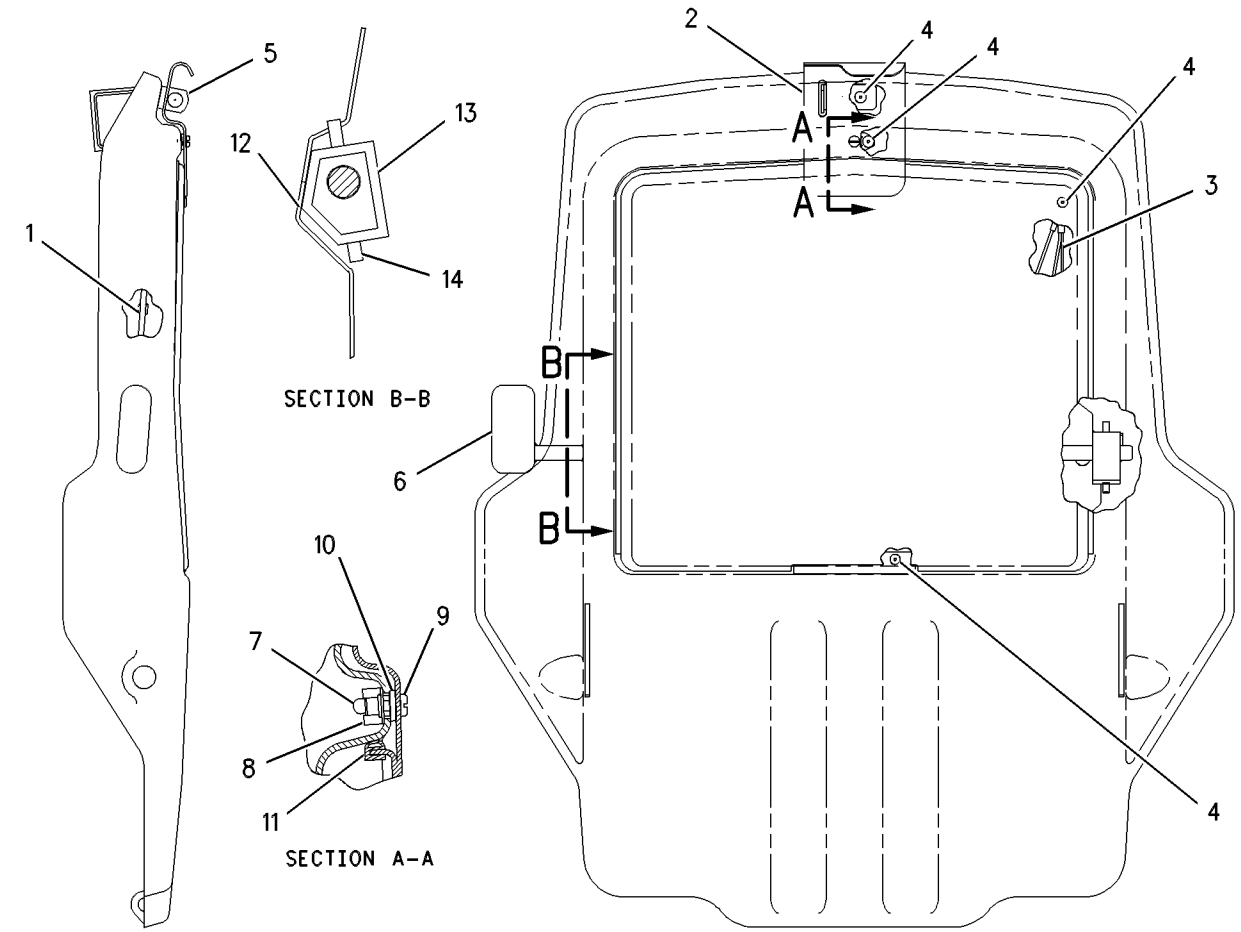

GRAPHIC #1 **<END>** g00383446

OPERATOR STATION

178-0605 PAN GP-BACKREST–VINYL

S/N: 7PZ392-UP

PART OF 180-7305, 180-7307 PAN GP-BACKREST

ALSO AN ATTACHMENT

SMCS-7312 **i01508995**

NOTE	REF NO	GRAPHIC REF	PART NUMBER	QTY	PART NAME 1 2 3 4 5 6 (PRODUCT LEVEL)	SEE PAGE
	1	1	**4K-9429**	8	RIVET-POP	
	2	1	**5P-7957**	1	LANYARD	
	3	1	**136-1543**	1	PLATE AS-LUMBAR	
	4	1	**173-2052**	1	RETAINER	
	5	1	**178-7907**	1	HOLDER	
	6	1	**177-4930**	1	PAN AS-BACK	

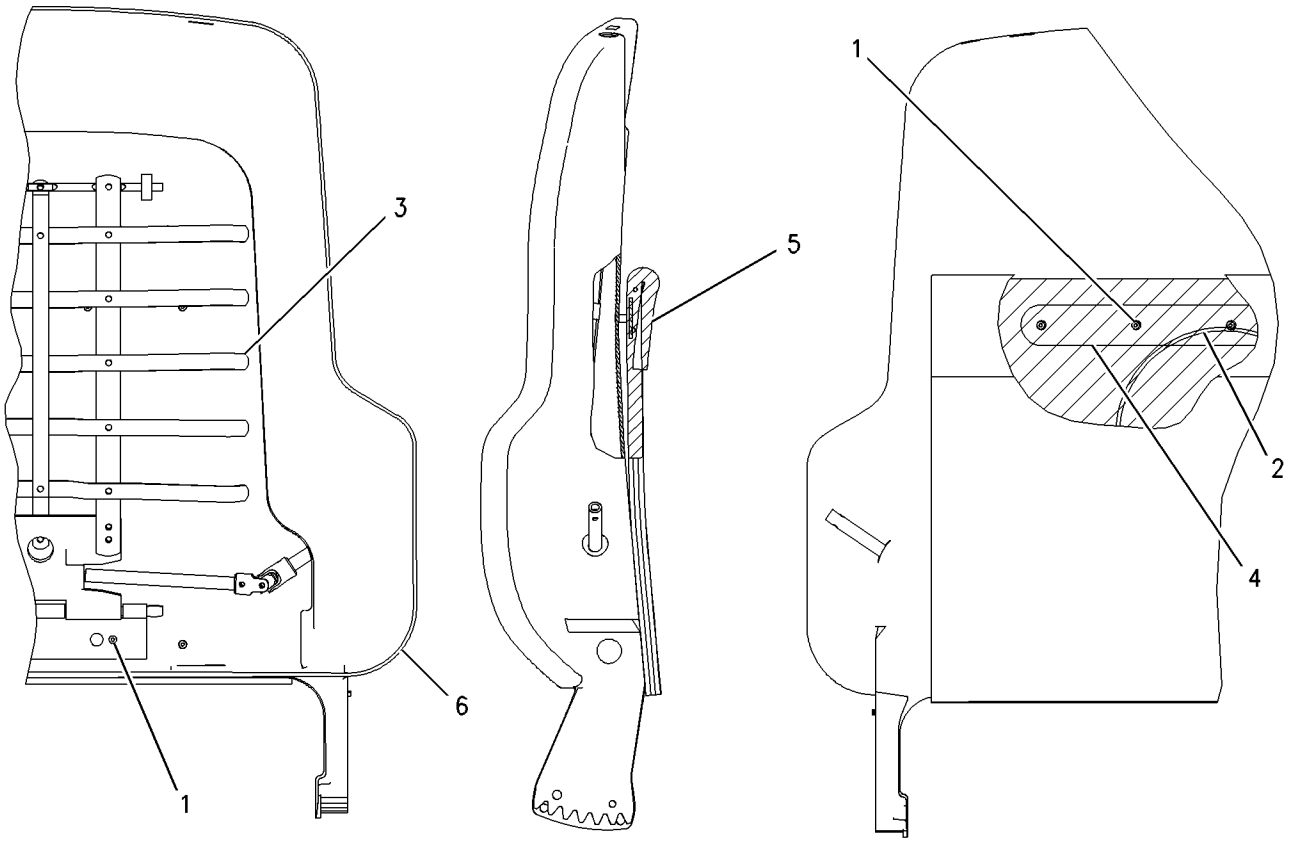

GRAPHIC #1 **<END>** g00716497

OPERATOR STATION

180-7305 PAN GP-BACKREST—VINYL

S/N: 7PZ1-UP
PART OF 180-7304 SEAT GP
AN ATTACHMENT

SMCS-7312 **i01653940**

NOTE	REF NO	GRAPHIC REF	PART NUMBER	QTY	PART NAME 1 2 3 4 5 6 (PRODUCT LEVEL)	SEE PAGE
	1	1	**164-4883**	1	KNOB-LUMBAR	
	2	1	**169-0697**	1	CUSHION AS	
		1	**184-2300**	1	FILM (SEAT CUSHION IDENTIFICATION)	
Y	3	1	*178-0605*	1	PAN GP-BACKREST	1080
	4	1	**8T-7566**	1	PIN-SPRING	

Y-SEPARATE ILLUSTRATION

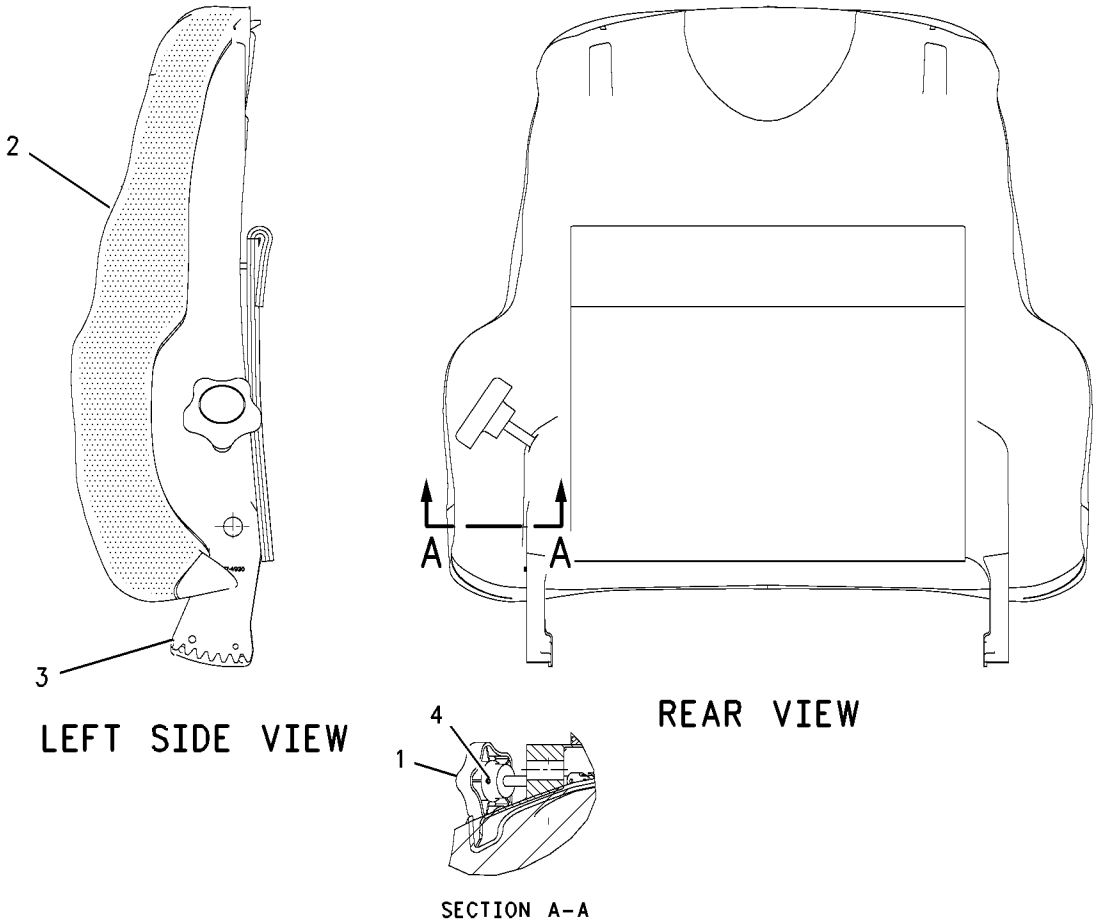

LEFT SIDE VIEW

REAR VIEW

SECTION A-A

GRAPHIC #1 **<END>** g00678939

OPERATOR STATION

180-7307 PAN GP-BACKREST–VINYL

S/N: 7PZ392-UP
BROWN
PART OF 180-7306 SEAT GP
ALSO AN ATTACHMENT

SMCS-7312 **i01989514**

NOTE	REF NO	GRAPHIC REF	PART NUMBER	QTY	PART NAME 1 2 3 4 5 6 (PRODUCT LEVEL)	SEE PAGE
	1	1	**164-4883**	1	KNOB-LUMBAR	
	2	1	**169-1024**	1	CUSHION AS-BACK	
		1	**184-2300**	1	FILM (SEAT CUSHION IDENTIFICATION)	
Y	3	1	*178-0605*	1	PAN GP-BACKREST	1080
	4	1	**8T-7566**	1	PIN-SPRING	

Y-SEPARATE ILLUSTRATION

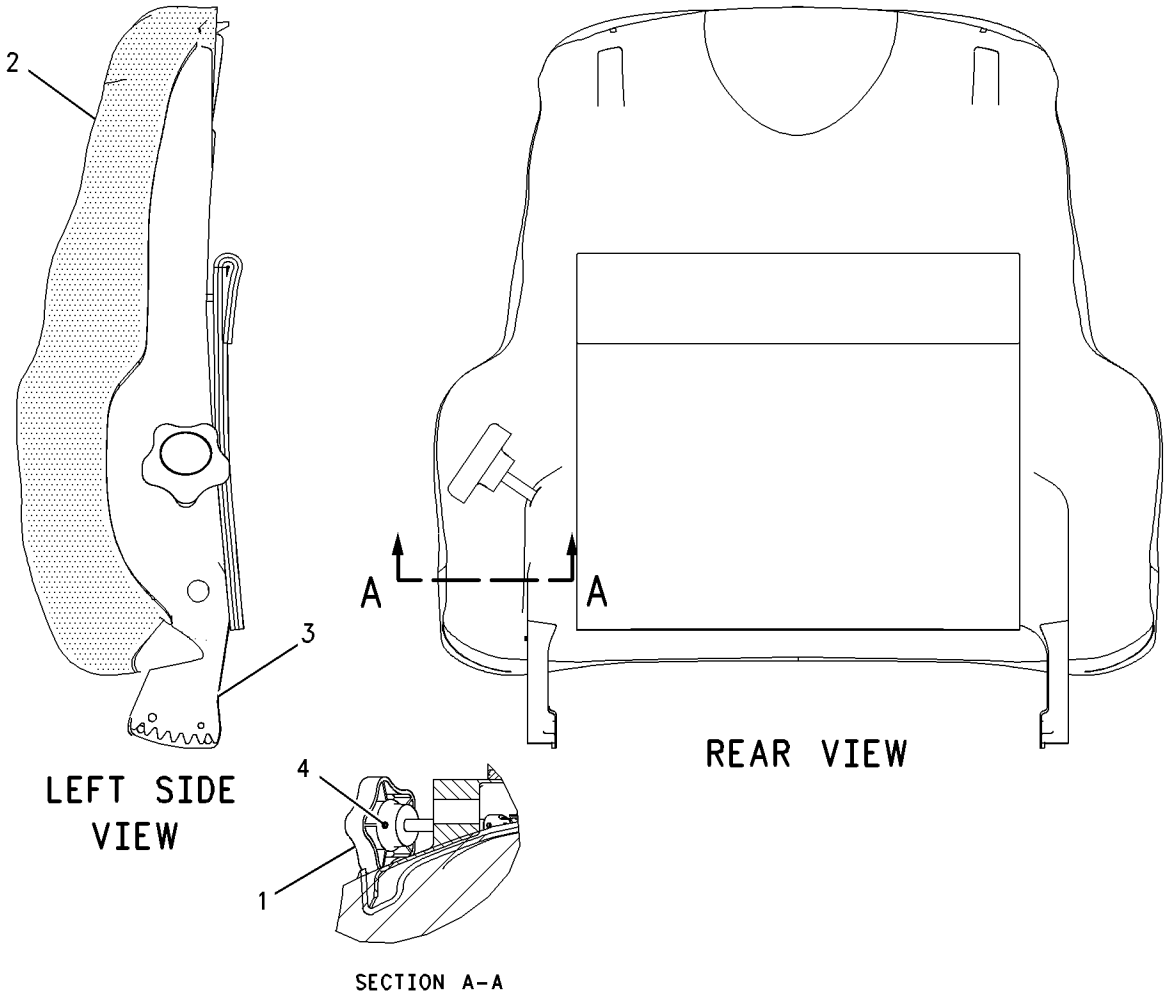

GRAPHIC #1 **<END>** g00687153

OPERATOR STATION

8Y-5992 PAN GP-SEAT

S/N: 7PZ1-391
PART OF 8Y-5976, 8Y-5986 SEAT GP
ALSO AN ATTACHMENT

SMCS-7312 **i01696104**

NOTE	REF NO	GRAPHIC REF	PART NUMBER	QTY	PART NAME 1 2 3 4 5 6 (PRODUCT LEVEL)	SEE PAGE
	1	1	**8Y-5892**	1	PAN AS-SEAT (BOTTOM)	
JL	2	1	**3K-4897**	4	PIN-SPRING	
N	3	1	**9M-5733**	1	RIVET-POP (4.78MM DIA)	
N	4	1	**6V-2456**	2	RING-RETAINING	
JZ	5	1		1	ROD AS (SEAT)	
JLZ	6	1		2	SPRING	
LZ	7	1		1	ROD AS (BACK)	
LZ	8	1		1	BUSHING-TERMINAL	
NZ	9	1		1	BRACKET	
NZ	10	1		1	CABLE AS	
NZ	11	1		1	PIN	
NZ	12	1		1	ADJUSTER AS	
					AVAILABLE REPAIR KIT(S):	
J			**8Y-5995**	1	KIT-SEAT TILT (SEAT PAN)	
					(INCLUDES ADDITIONAL PARTS)	
L			**8Y-5998**	1	KIT-BACK TILT (SEAT PAN)	
					(INCLUDES ADDITIONAL PARTS)	
N			**8Y-5999**	1	KIT-ADJUSTER (SEAT PAN)	

J-KIT MARKED J INCLUDES PART(S) MARKED J
L-KIT MARKED L INCLUDES PART(S) MARKED L
N-KIT MARKED N INCLUDES PART(S) MARKED N
Z-NOT SERVICED SEPARATELY

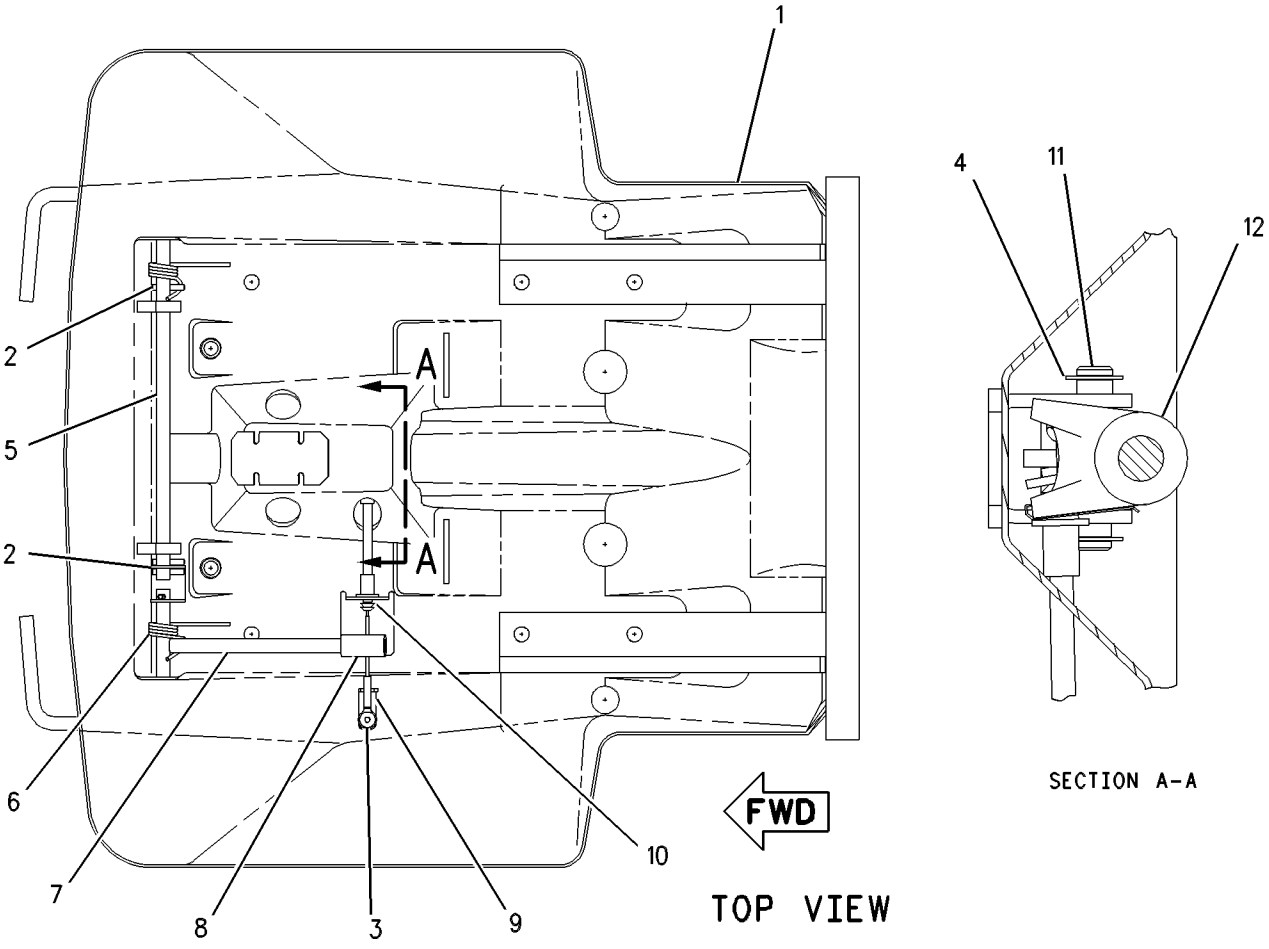

GRAPHIC #1 **<END>** g00527029

OPERATOR STATION

237-0138 PLATFORM AR

S/N: 7PZ754-UP

AN ATTACHMENT

SMCS-7253 **i01980350**

NOTE	PART NUMBER	QTY	PART NAME 1 2 3 4 5 6 (PRODUCT LEVEL)	SEE PAGE
Y	*237-0140*	1	ENCLOSURE GP-FENDER	510
Y	*237-0139*	1	PLATFORM GP	1086
Y	*239-2146*	1	STEP GP	1122
Y	*202-0503*	1	TANK GP-FUEL	238

Y-SEPARATE ILLUSTRATION

<END>

OPERATOR STATION

237-0139 PLATFORM GP

S/N: 7PZ754-UP
PART OF 237-0138 PLATFORM AR
AN ATTACHMENT

SMCS-7253, 7254 **i01980423**

NOTE	REF NO	GRAPHIC REF	PART NUMBER	QTY	PART NAME 1 2 3 4 5 6 (PRODUCT LEVEL)	SEE PAGE
	1	1	**5R-1238**	12	CLAMP	
	2	1	**9M-3835**	1	LATCH-RUBBER	
	3	1	**239-2118**	1	GRATE AS	
	4	1	**239-2119**	1	HINGE	
	5	1	**239-2120**	1	BRACKET AS	
	6	1	**239-2122**	1	BRACKET AS	
	7	1	**239-2124**	1	GRATE AS	
	8	1	**239-2125**	1	GRATE AS	
	9	1	**239-2126**	1	FRAME AS (PLATFORM)	
	10	1	**239-2132**	1	FRAME AS (PLATFORM)	
	11	1	**239-2135**	3	HANDHOLD AS	
	12	1	**239-2139**	1	HANDHOLD AS	
	13	1	**239-2142**	1	BRACKET AS	
	14	1	**240-8201**	1	GUARD AS (STEP)	
	15	1	**1T-0720**	28	BOLT-12 POINT HEAD (3/8-16X1.25 IN)	
	16	1	**1T-0765**	18	BOLT (3/8-16X1 IN)	
	17	1	**2M-5795**	1	PIN-CLEVIS	
	18	1	**3S-1307**	1	BOLT-12 POINT HEAD (3/8-16X2 IN)	
	19	1	**5P-0076**	1	BOLT-12 POINT HEAD (3/8-16X1.50 IN)	
	20	1	**5P-2566**	6	BOLT (1/2-13X1.5 IN)	
	21	1	**5P-7468**	16	CLIP (SLOT)	
	22	1	**5P-7469**	16	CLIP (TAB)	
	23	1	**5P-8444**	16	GROMMET	
	24	1	**5V-1496**	1	RETAINER	
	25	1	**6V-8188**	6	NUT (1/2-13 THD)	
	26	1	**8T-4223**	34	WASHER-HARD (13.5X25.5X3MM THK)	
	27	1	**8T-4896**	28	WASHER-HARD (10.2X18.5X2.5MM THK)	
	28	1	**8T-8917**	22	BOLT (1/2-13X1.25 IN)	

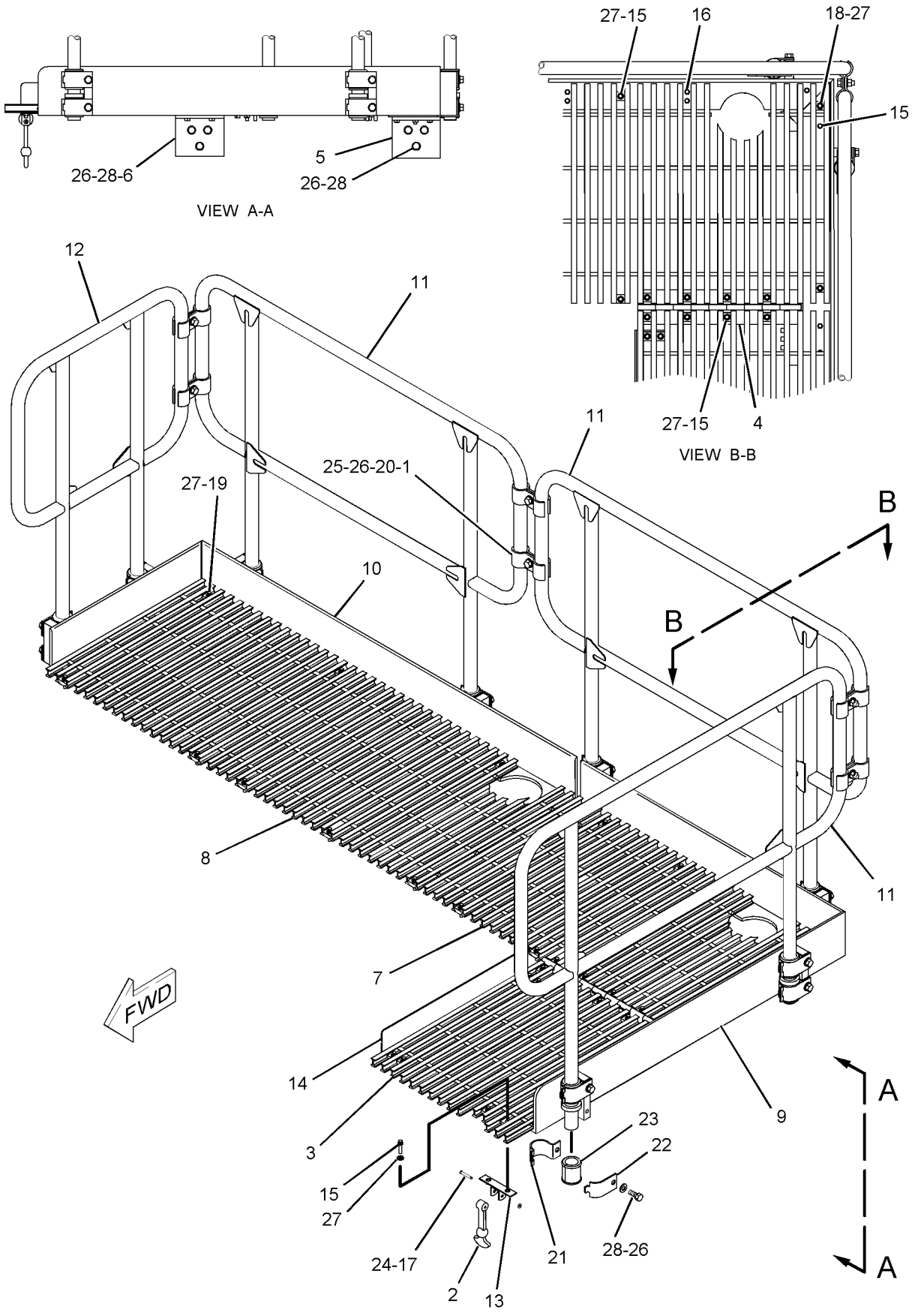

GRAPHIC #1 **<END>** g01027628

OPERATOR STATION

136-9138 PLATFORM GP-CAB

S/N: 7PZ1-563

PART OF 155-5552 CHASSIS AR

SMCS-7253 **i01440905**

NOTE	REF NO	GRAPHIC REF	PART NUMBER	QTY	PART NAME 1 2 3 4 5 6 (PRODUCT LEVEL)	SEE PAGE
	1	1	**3E-4898**	4	SLEEVE	
	2	1	**3T-6280**	1	PLATE AS	
	3	1	**3T-6281**	1	SEAL	
	4	1	**6V-1950**	2	PLUG-BUTTON	
	5	1	**7G-6723**	1	COVER	
	6	1	**7G-6724**	1	GASKET	
	7	1	**189-9809**	1	PLATE	
	8	1	**7T-0135**	1	SEAL	
	9	1	**189-9810**	1	PLATE AS	
		1	**6G-2914**	1	LATCH	
		1	**9N-1995**	2	RIVET-POP	
		1	**189-9816**	1	HINGE	
		1	**1F-0750**	6	NUT-WELD (3/8-16 THD)	
	10	1	**7T-0138**	1	GASKET	
	11	1	**7V-8087**	1	PLUG-BUTTON	
	12	1	**8E-5978**	1	GASKET	
	13	1	**9P-1444**	2	SUPPORT AS-FOOT	
	14	1	**9P-6571**	1	PLUG	
	15	1	**9W-9027**	4	PLATE	
	16	1	**117-8131**	8	MOUNT	
	17	1	**125-4992**	1	COVER	
	18	1	**136-9137**	1	COVER AS	
		1	**7T-1099**	5	LINK	
		1	**1F-0750**	4	NUT-WELD (3/8-16 THD)	
	19	1	**136-9595**	1	MODULE AS-OPERATOR	
	20	1	**5M-3062**	38	BOLT (3/8-16X0.75 IN)	
	21	1	**5P-1075**	46	WASHER-HARD (10.2X22.5X3MM THK)	
	22	1	**5P-1076**	4	WASHER-HARD (13.5X30X4MM THK)	
	23	1	**5P-2228**	4	BOLT (1/2-13X1 IN)	
	24	1	**6J-0488**	8	SCREW-BUTTON HEAD (3/8-16X0.875 IN)	
	25	1	**7X-0392**	2	BOLT (7/8-9X6 IN)	
	26	1	**7X-0572**	2	WASHER-HARD (24X44.5X6MM THK)	
	27	1	**7X-0582**	2	WASHER-HARD (20X44.5X6MM THK)	
	28	1	**8T-9312**	2	BOLT (3/4-10X6 IN)	

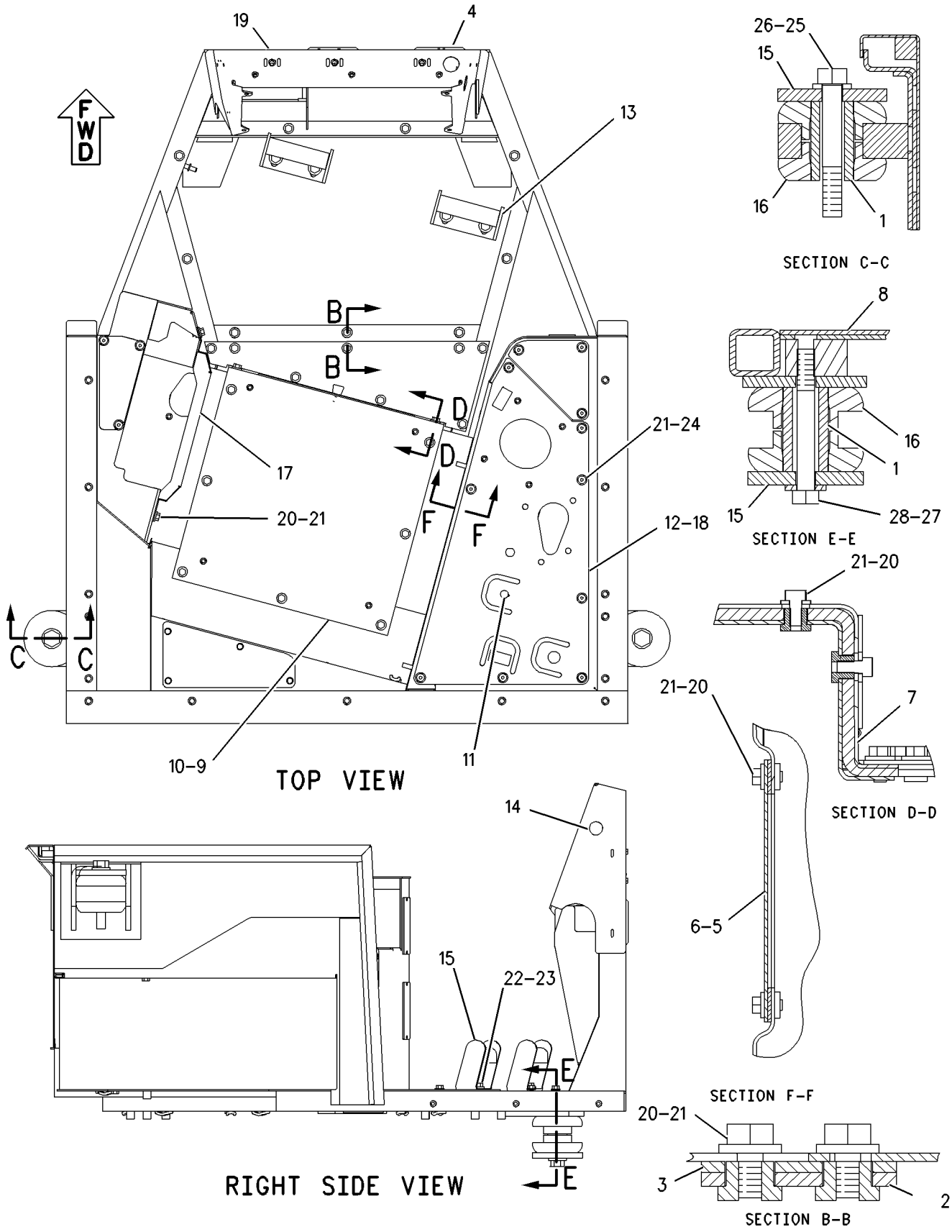

GRAPHIC #1 **<END>** g00798301

OPERATOR STATION

204-2643 PLATFORM GP-CAB

S/N: 7PZ564-UP

PART OF 155-5552 CHASSIS AR

SMCS-7253 **i01502414**

NOTE	REF NO	GRAPHIC REF	PART NUMBER	QTY	PART NAME 1 2 3 4 5 6 (PRODUCT LEVEL)	SEE PAGE
	1	1	**3E-4898**	4	SLEEVE	
	2	1	**3T-6280**	1	PLATE AS	
	3	1	**3T-6281**	1	SEAL	
	4	1	**6V-1950**	2	PLUG-BUTTON	
	5	1	**7G-6723**	1	COVER	
	6	1	**7G-6724**	1	GASKET	
	7	1	**189-9809**	1	PLATE	
	8	1	**7T-0135**	1	SEAL	
	9	1	**189-9810**	1	PLATE AS	
		1	**6G-2914**	1	LATCH	
		1	**9N-1995**	2	RIVET-POP	
		1	**189-9816**	1	HINGE	
		1	**1F-0750**	6	NUT-WELD (3/8-16 THD)	
	10	1	**7T-0138**	1	GASKET	
	11	1	**7V-8087**	1	PLUG-BUTTON	
	12	1	**8E-5978**	1	GASKET	
	13	1	**9P-1444**	2	SUPPORT AS-FOOT	
	14	1	**9P-6571**	1	PLUG	
	15	1	**9W-9027**	4	PLATE	
	16	1	**117-8131**	8	MOUNT	
	17	1	**125-4992**	1	COVER	
	18	1	**188-7097**	1	COVER AS	
	19	1	**136-9595**	1	MODULE AS-OPERATOR	
	20	1	**5M-3062**	38	BOLT (3/8-16X0.75 IN)	
	21	1	**5P-1075**	46	WASHER-HARD (10.2X22.5X3MM THK)	
	22	1	**5P-1076**	4	WASHER-HARD (13.5X30X4MM THK)	
	23	1	**5P-2228**	4	BOLT (1/2-13X1 IN)	
	24	1	**6J-0488**	8	SCREW-BUTTON HEAD (3/8-16X0.875 IN)	
	25	1	**7X-0392**	2	BOLT (7/8-9X6 IN)	
	26	1	**7X-0572**	2	WASHER-HARD (24X44.5X6MM THK)	
	27	1	**7X-0582**	2	WASHER-HARD (20X44.5X6MM THK)	
	28	1	**8T-9312**	2	BOLT (3/4-10X6 IN)	

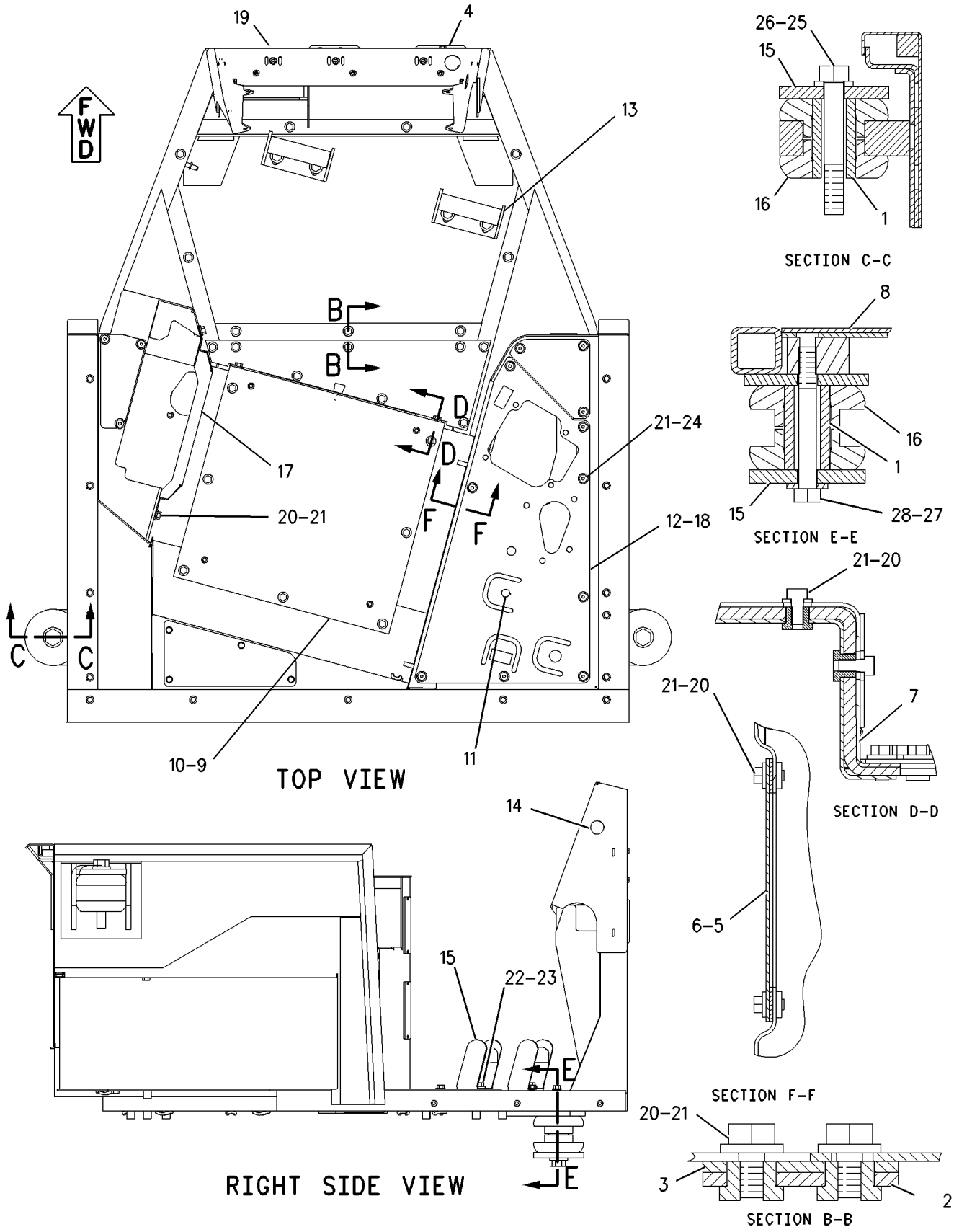

GRAPHIC #1 **<END>** g00817082

OPERATOR STATION

177-4935 RECLINER GP-SEAT

S/N: 7PZ392-UP
PART OF 180-7306 SEAT GP
ALSO AN ATTACHMENT

SMCS-7312 **i01682915**

NOTE	REF NO	GRAPHIC REF	PART NUMBER	QTY	PART NAME 1 2 3 4 5 6 (PRODUCT LEVEL)	SEE PAGE
	1	1	**217-7933**	1	LATCH	
	2	1	**164-4146**	1	SPRING	
	3	1	**177-1860**	1	GEAR (14 TEETH) (LOCK)	
	4	1	**177-1862**	1	BRACKET	
	5	1	**178-0607**	1	SHAFT AS	
	5A	1	**2K-9111**	2	PIN-SPRING	
	5B	1	**9M-6803**	2	DOWEL	
	5C	1	**170-8590**	1	SPRING	
	6	1	**178-0608**	1	BRACKET AS	
	7	1	**178-0609**	1	BRACKET AS	
	8	1	**031-0214**	1	BOLT-LOCKING (1/4-20X0.5 IN)	
	9	1	**101-2867**	1	WASHER-HARD (7.2X25X2MM THK)	
	10	1	**4M-6425**	1	BOLT (5/16-18X1 IN)	
	11	1	**5S-7383**	1	BOLT (3/8-16X1.75 IN)	
	12	1	**8T-4224**	1	WASHER-HARD (8.8X16X2MM THK)	

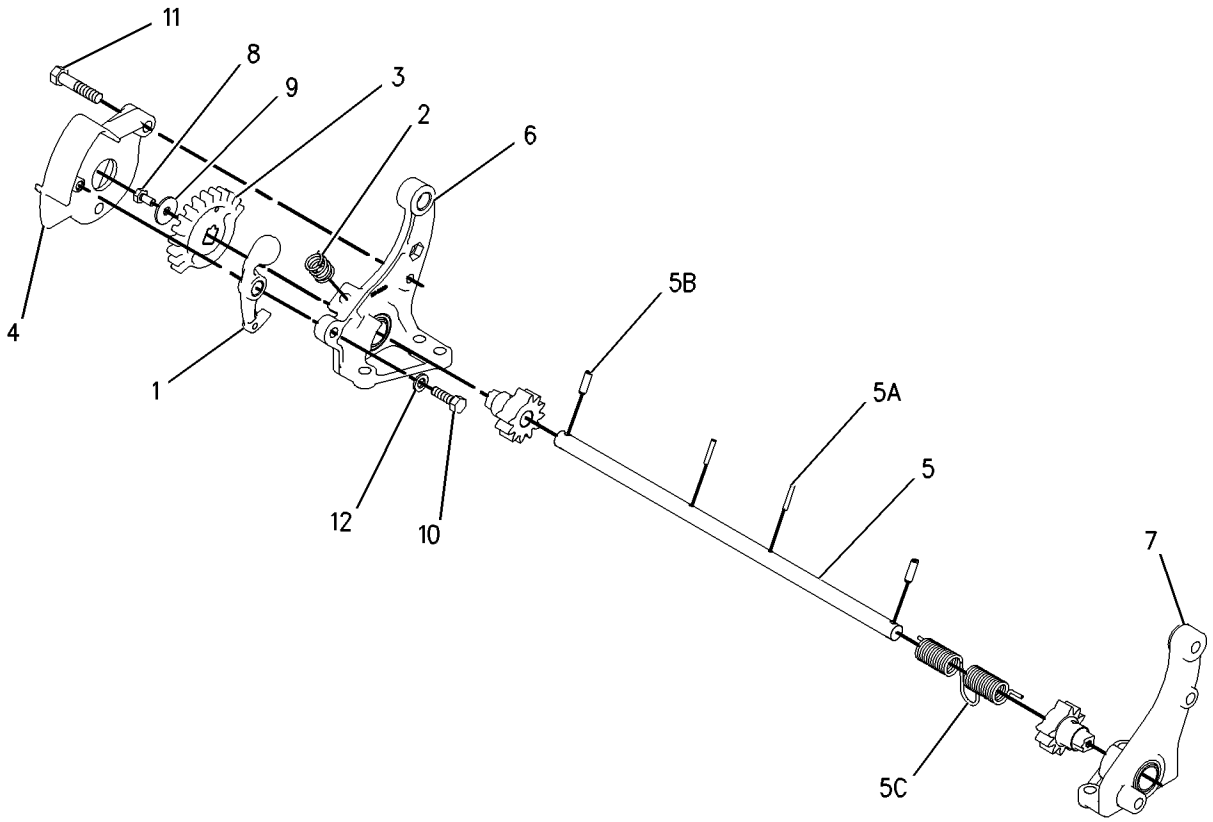

GRAPHIC #1 **<END>** g00673022

OPERATOR STATION

210-2270 RECLINER GP-SEAT

S/N: 7PZ1-UP
PART OF 180-7304 SEAT GP
AN ATTACHMENT

SMCS-7312 **i02011757**

NOTE	REF NO	GRAPHIC REF	PART NUMBER	QTY	PART NAME 1 2 3 4 5 6 (PRODUCT LEVEL)	SEE PAGE
	1	1	**177-1862**	1	BRACKET	
	2	1	**210-2262**	1	BRACKET AS	
	3	1	**210-2263**	1	BRACKET AS	
	4	1	**210-2266**	1	GEAR (14 TEETH)	
	5	1	**210-2268**	1	SHAFT AS	
	6	1	**217-7933**	1	LATCH	
	7	1	**236-5197**	1	SPRING	
	8	1	**031-0214**	1	BOLT-LOCKING (1/4-20X0.5 IN)	
	9	1	**101-2867**	1	WASHER-HARD (7.2X25X2MM THK)	
	10	1	**4M-6425**	1	BOLT (5/16-18X1 IN)	
	11	1	**5M-2894**	1	WASHER-HARD (10.2X18.5X2.5MM THK)	
	12	1	**5S-7383**	1	BOLT (3/8-16X1.75 IN)	
	13	1	**8T-4224**	1	WASHER-HARD (8.8X16X2MM THK)	

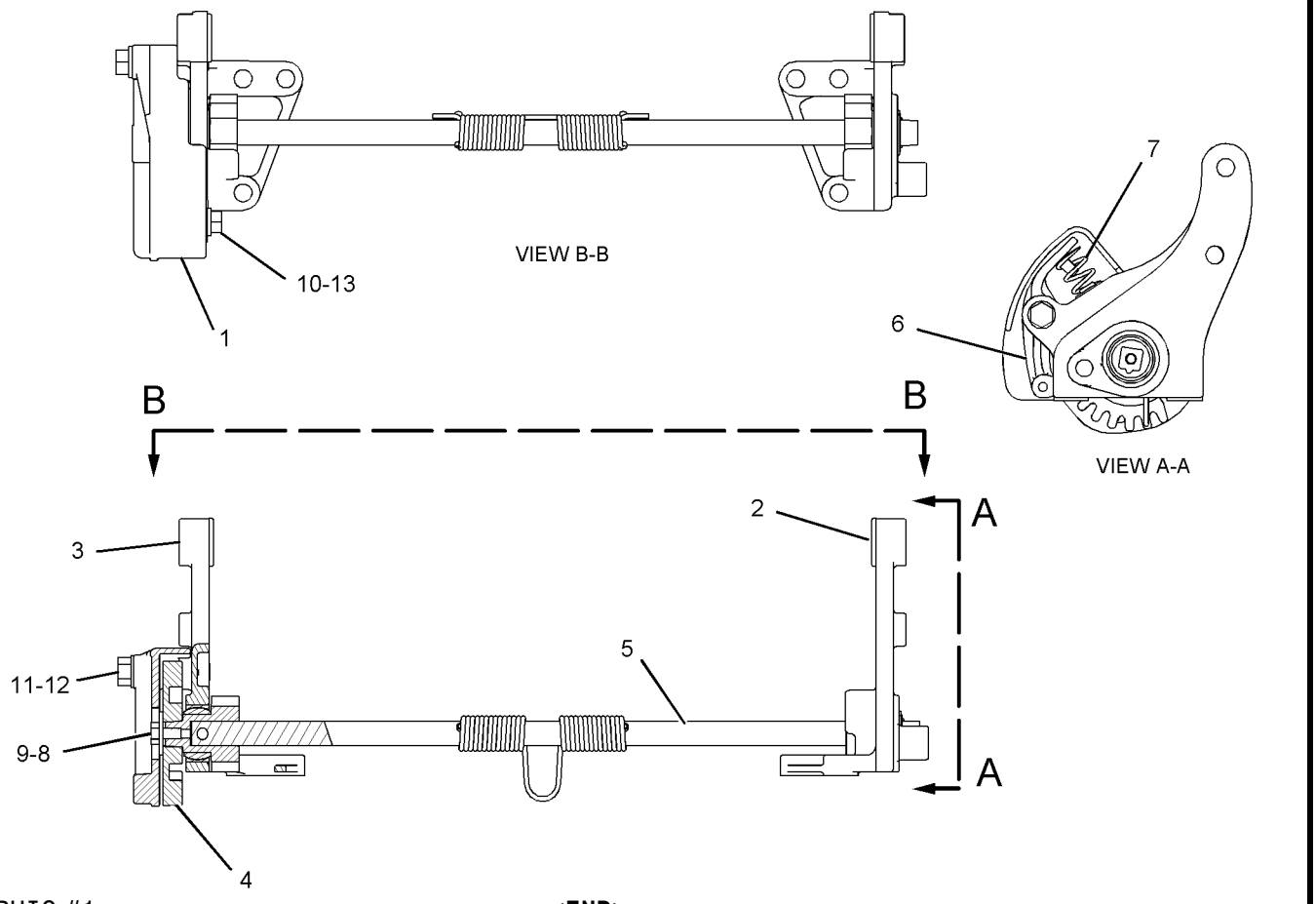

GRAPHIC #1 **<END>** g01040293

OPERATOR STATION

167-7953 ROPS GP

S/N: 7PZ1-UP

PART OF 155-5552 CHASSIS AR

SMCS-7177, 7301 **i01564924**

NOTE	REF NO	GRAPHIC REF	PART NUMBER	QTY	PART NAME 1 2 3 4 5 6 (PRODUCT LEVEL)	SEE PAGE
	1	1	**9U-9956**	1	HANDHOLD-RH	
	2	1	**9U-9957**	1	HANDHOLD-LH	
	3	1	**134-6714**	1	ROPS AS	
	4	1	**5C-6565**	4	BOLT (1/2-13X1.25 IN)	
	5	1	**5P-1076**	4	WASHER-HARD (13.5X30X4MM THK)	
	6	1	**7X-0428**	16	BOLT (1 1/4-7X4 IN)	
	7	1	**7X-0533**	16	WASHER-HARD (34X55X6MM THK)	

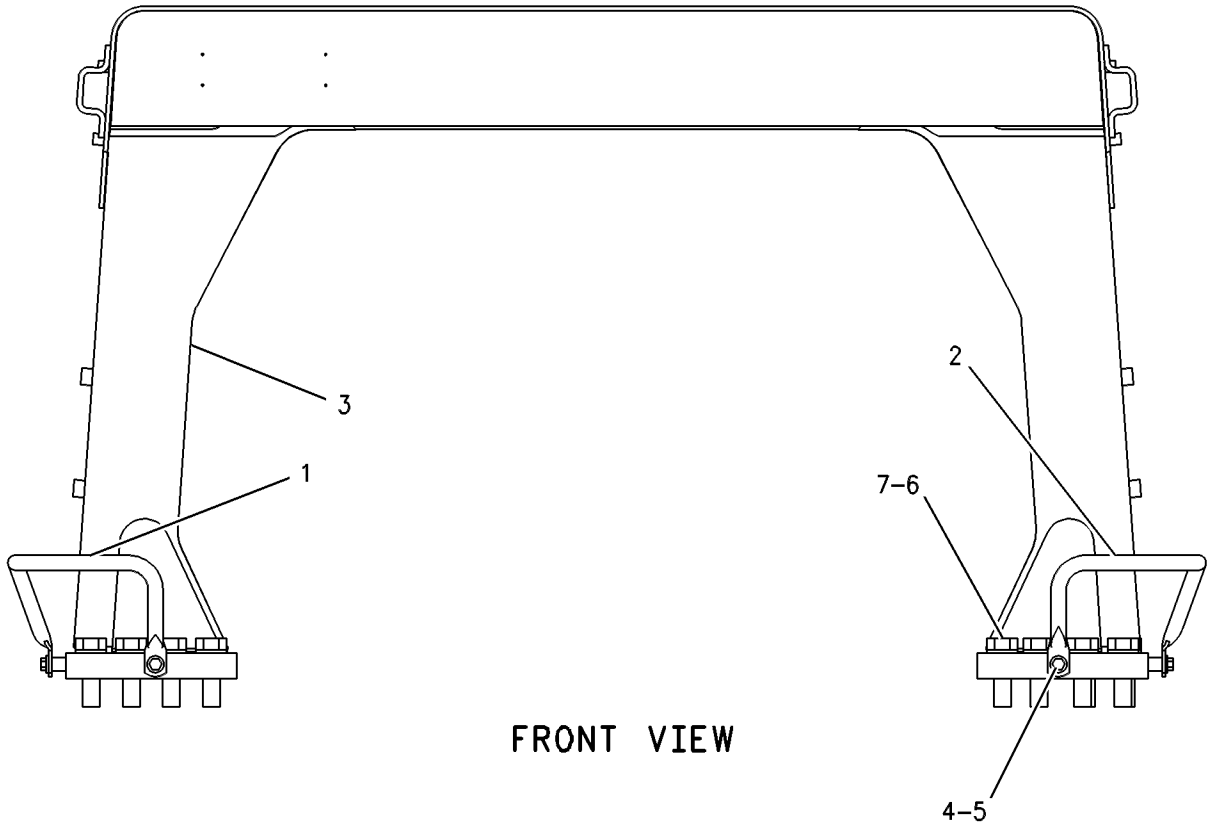

FRONT VIEW

GRAPHIC #1 **<END>** g00654634

OPERATOR STATION

8E-9546 SEAT AR

S/N: 7PZ1-UP
VINYL
AN ATTACHMENT

SMCS-7312 **i00947058**

NOTE	PART NUMBER	QTY	PART NAME 1 2 3 4 5 6 (PRODUCT LEVEL)	SEE PAGE
Y	**8Y-6179**	1	SEAT GP-SUSPENSION	1113
Y-SEPARATE ILLUSTRATION				

<END>

164-9429 SEAT AR

S/N: 7PZ1-UP
VINYL
AN ATTACHMENT

SMCS-7312 **i01445950**

NOTE	PART NUMBER	QTY	PART NAME 1 2 3 4 5 6 (PRODUCT LEVEL)	SEE PAGE
Y	*159-2950*	1	SEAT GP-SUSPENSION	1118
Y-SEPARATE ILLUSTRATION				

<END>

OPERATOR STATION

156-1148 SEAT BELT GP–RETRACTABLE

S/N: 7PZ1-391

PART OF 125-6224 SEAT GP, 8Y-6138, 8Y-6179 SEAT GP-SUSPENSION

ALSO AN ATTACHMENT

SMCS-7327 **i01674134**

NOTE	REF NO	GRAPHIC REF	PART NUMBER	QTY	PART NAME 1 2 3 4 5 6 (PRODUCT LEVEL)	SEE PAGE
	1	1	**1L-9080**	1	BOLT (7/16-20X1.5 IN)	
	2	1	**8T-5360**	1	WASHER (12X22.5X2.5MM THK)	
	3	1	**1A-4350**	1	BOLT (7/16-20X1.75 IN)	
	4	1	**4D-6432**	1	LOCKNUT (7/16-20 THD)	

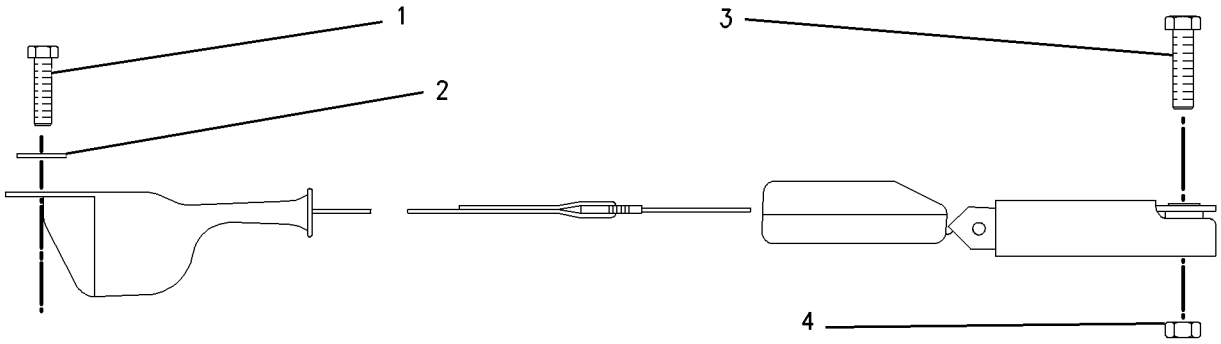

GRAPHIC #1 **<END>** g00760019

OPERATOR STATION

8Y-5976 SEAT GP—VINYL

S/N: 7PZ1-UP
LUMBAR
PART OF 8Y-6179 SEAT GP-SUSPENSION
AN ATTACHMENT

SMCS-7312 **i01989129**

NOTE	REF NO	GRAPHIC REF	PART NUMBER	QTY	PART NAME 1 2 3 4 5 6 (PRODUCT LEVEL)	SEE PAGE
JN	1	1	**8Y-5947**	4	FASTENER	
Y	2	1	*8Y-5992*	1	PAN GP-SEAT	1083
L	3	1	**113-0899**	10	SCREW-FLAT HEAD (6-20X0.5 IN)	
J	4	1	**9L-7469**	2	LOCK PIN	
	5	1	**7B-7525**	2	BOLT-SOCKET HEAD (7/16-14X1.25 IN)	
	6	1	**2K-4973**	6	LOCKNUT (3/8-16 THD)	
	7	1	**8Y-5929**	1	PLATE AS-SLIDE	
		1	**4K-9097**	6	NUT-WELD	
	8	1	**8Y-5930**	1	BAR AS	
	9	1	**8Y-5931**	1	BAR AS	
	10	1	**8S-7803**	2	RING-RETAINING	
	11	1	**8Y-5932**	1	LATCH AS	
	12	1	**8Y-5936**	1	SPRING	
	13	1	**095-0878**	1	PIN-SPRING	
	14	1	**8Y-5981**	2	BUSHING-BACKREST	
	15	1	**8Y-5928**	2	SPRING	
	16	1	**2B-2695**	4	BOLT (5/16-18X0.875 IN)	
	17	1	**8Y-5937**	1	BRACKET AS-RH	
	18	1	**8Y-5938**	1	BRACKET AS-LH	
	19	1	**7U-4898**	6	SCREW (3/8-16X0.75 IN)	
	20	1	**1C-0569**	2	BOLT (5/16-18X0.5 IN)	
	21	1	**095-1314**	1	PIN-CLEVIS	
	22	1	**9L-7469**	2	LOCK PIN	
	23	1	**8Y-6834**	1	SPRING	
	24	1	**8Y-6833**	1	SPRING	
CY	25	1	**108-8421**	1	PAN GP-BACKREST	1079
B	26	1	**061-8803**	4	SHIM (1.52MM THK)	
C	27	1	**108-8425**	1	CUSHION AS-BACK	
	28	1	**8Y-6051**	2	SPACER (11.19X14.21X14.24MM THK)	
LZ	29	1		1	KNOB-SEAT TILT (LOWER)	
LZ	30	1		1	KNOB-SEAT TILT (UPPER)	
LZ	31	1		1	KNOB-SLIDE (UPPER)	
LZ	32	1		1	KNOB-SLIDE (LOWER)	
LZ	33	1		1	KNOB-BACK TILT (UPPER)	
LZ	34	1		1	KNOB-BACK TILT (LOWER)	
NZ	35	1		1	CUSHION AS-SEAT	
JZ	36	1		1	PAN AS	
					AVAILABLE REPAIR KIT(S):	
J			**8Y-6933**	1	KIT-TILT PAN (SEAT)	
L			**112-4577**	1	KIT-SEAT KNOB (SEAT)	
N			**8Y-5957**	1	KIT-SEAT CUSHION (VINYL) (SEAT)	

B-USE AS REQUIRED
C-CHANGE FROM PREVIOUS TYPE
J-KIT MARKED J INCLUDES PARTS MARKED J
L-KIT MARKED L INCLUDES PARTS MARKED L
N-KIT MARKED N INCLUDES PARTS MARKED N
Y-SEPARATE ILLUSTRATION
Z-NOT SERVICED SEPARATELY

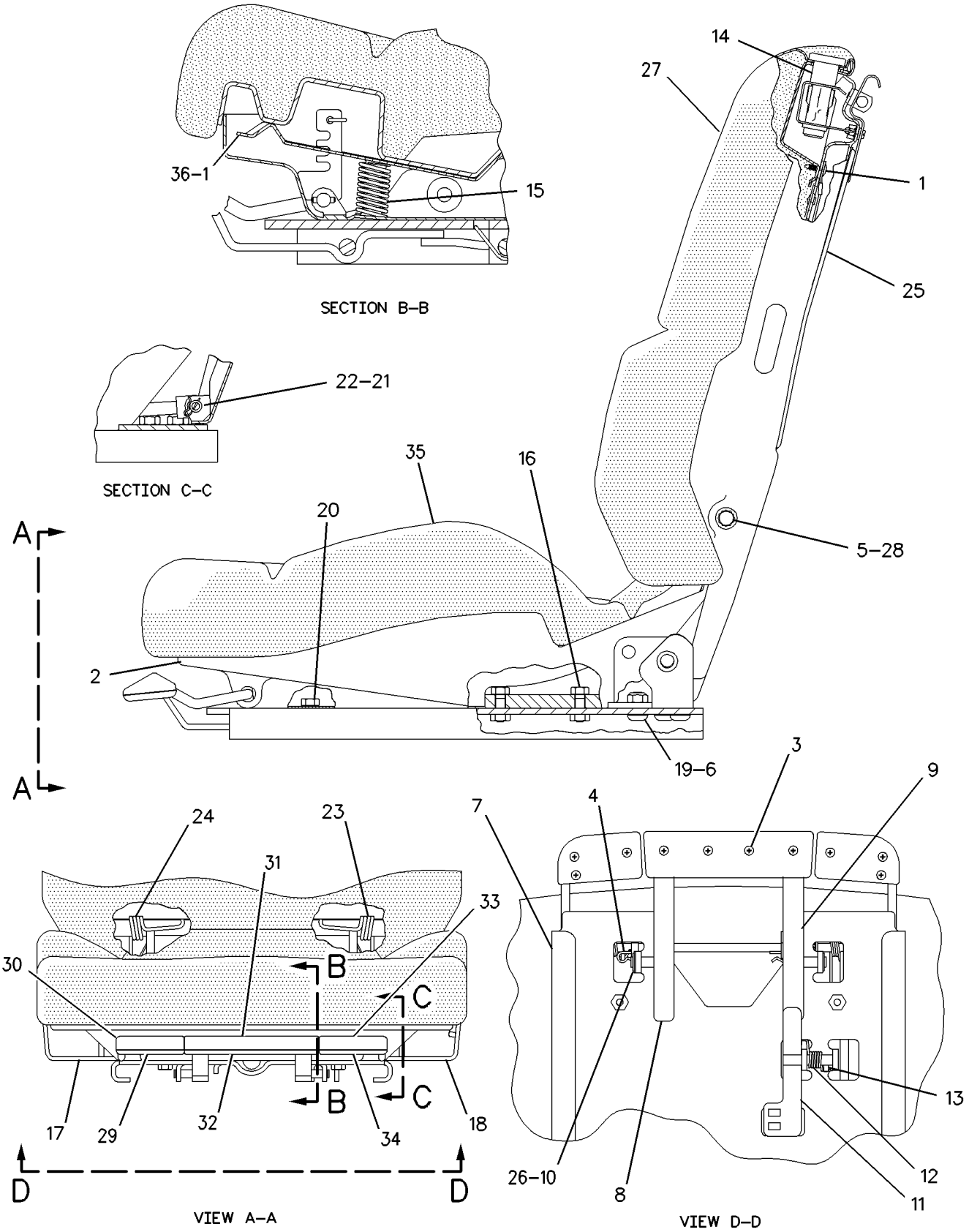

GRAPHIC #1 **<END>** g00920214

OPERATOR STATION

8Y-5986 SEAT GP

S/N: 7PZ1-391
FABRIC/LUMBAR
PART OF 125-6224 SEAT GP, 8Y-6138 SEAT GP-SUSPENSION
ALSO AN ATTACHMENT

SMCS-7312 **i01717641**

NOTE	REF NO	GRAPHIC REF	PART NUMBER	QTY	PART NAME 1 2 3 4 5 6 (PRODUCT LEVEL)	SEE PAGE
JN	1	1	**8Y-5947**	4	FASTENER	
Y	2	1	*8Y-5992*	1	PAN GP-SEAT	1083
L	3	1	**113-0899**	10	SCREW-FLAT HEAD (6-20X0.5 IN)	
J	4	1	**9L-7469**	3	LOCK PIN	
	5	1	**7B-7525**	2	BOLT-SOCKET HEAD (7/16-14X1.25 IN)	
	6	1	**2K-4973**	6	LOCKNUT (3/8-16 THD)	
	7	1	**8Y-5929**	1	PLATE AS-SLIDE	
		1	**4K-9097**	6	NUT-WELD (5/16-18 THD)	
	8	1	**8Y-5930**	1	BAR AS-SLIDE	
	9	1	**8Y-5931**	1	BAR AS-LATCH	
	10	1	**8S-7803**	2	RING-RETAINING	
	11	1	**8Y-5932**	1	LATCH AS	
	12	1	**8Y-5936**	1	SPRING	
	13	1	**095-0878**	1	PIN-SPRING	
	14	1	**8Y-5981**	2	BUSHING-BACKREST	
	15	1	**8Y-5928**	2	SPRING	
	16	1	**2B-2695**	4	BOLT (5/16-18X0.875 IN)	
	17	1	**8Y-5937**	1	BRACKET AS-RH	
	18	1	**8Y-5938**	1	BRACKET AS-LH	
	19	1	**7U-4898**	6	SCREW (3/8-16X0.75 IN)	
	20	1	**1C-0569**	2	BOLT (5/16-18X0.5 IN)	
	21	1	**095-1314**	1	PIN-CLEVIS	
	23	1	**8Y-6834**	1	SPRING	
	24	1	**8Y-6833**	1	SPRING	
CY	25	1	**108-8421**	1	PAN GP-BACKREST	1079
B	26	1	**061-8803**	4	SHIM (1.52MM THK)	
C	27	1	**108-8426**	1	CUSHION AS-BACK	
	28	1	**8Y-6051**	2	SPACER (11.19X14.21X14.24MM THK)	
LZ	29	1		1	KNOB-SEAT TILT	
LZ	30	1		1	KNOB-SEAT TILT	
LZ	31	1		1	KNOB-SLIDE	
LZ	32	1		1	KNOB-SLIDE	
LZ	33	1		1	KNOB-BACK TILT	
LZ	34	1		1	KNOB-BACK TILT	
NZ	35	1		1	CUSHION AS-SEAT	
JZ	36	1		1	PAN AS	
					AVAILABLE REPAIR KIT(S):	
J			**8Y-6933**	1	KIT-TILT PAN (SUSPENSION SEAT)	
L			**112-4577**	1	KIT-SEAT KNOB (SUSPENSION SEAT)	
N			**8Y-5891**	1	KIT-SEAT CUSHION (SUSPENSION SEAT)	

B-USE AS REQUIRED
C-CHANGE FROM PREVIOUS TYPE
J-KIT MARKED J SERVICES PARTS MARKED J
L-KIT MARKED L SERVICES PARTS MARKED L
N-KIT MARKED N SERVICES PARTS MARKED N
Y-SEPARATE ILLUSTRATION
Z-NOT SERVICED SEPARATELY

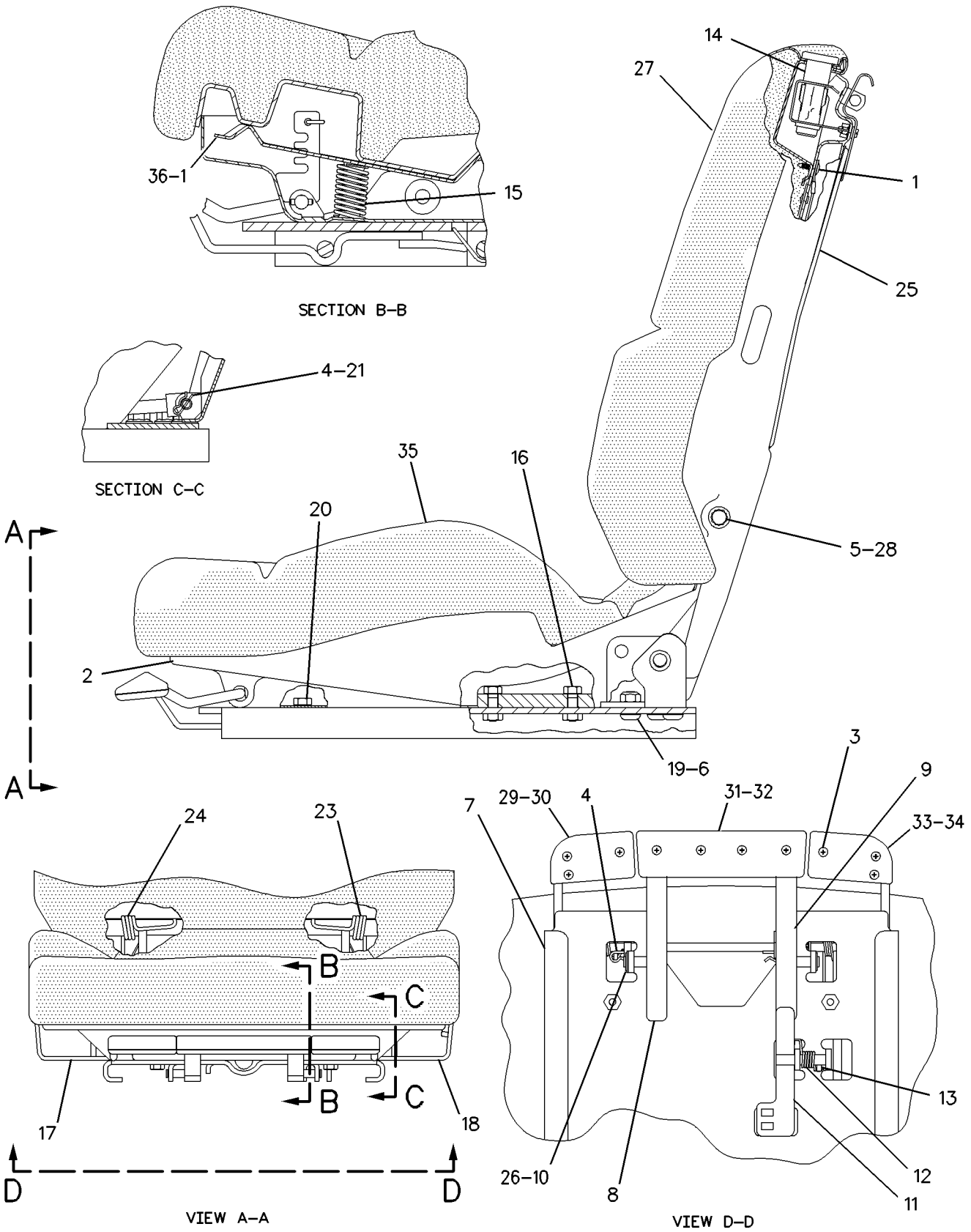

GRAPHIC #1 **<END>** g00883253

125-6224 SEAT GP

S/N: 7PZ1-UP
PART OF 131-8422 SEAT GP-SUSPENSION
AN ATTACHMENT

SMCS-7312 **i01989155**

NOTE	REF NO	GRAPHIC REF	PART NUMBER	QTY	PART NAME 1 2 3 4 5 6 (PRODUCT LEVEL)	SEE PAGE
Y	1	1	**8Y-5874**	1	EXTENSION GP-BACKREST	1029
Y	2	1	**8Y-5986**	1	SEAT GP	1099
CY	3	1	**156-1148**	1	SEAT BELT GP	1096

C-CHANGE FROM PREVIOUS TYPE
Y-SEPARATE ILLUSTRATION

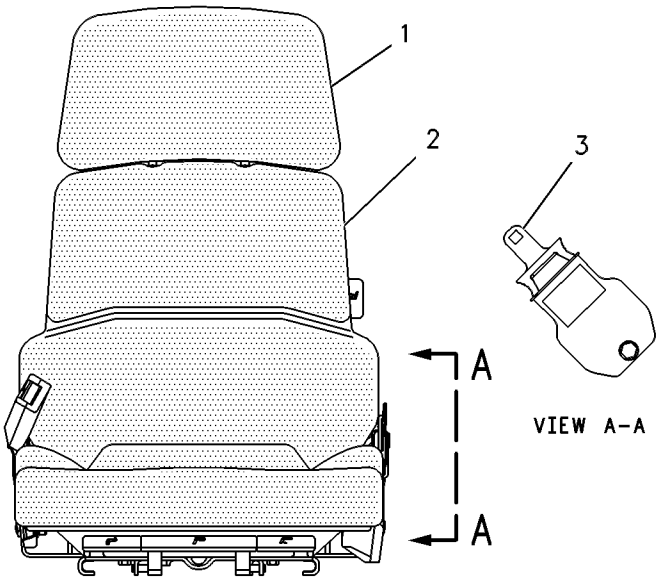

FRONT VIEW

GRAPHIC #1 **<END>** g00268035

OPERATOR STATION

137-7368 SEAT GP

S/N: 7PZ1-391

PART OF 155-5552 CHASSIS AR

SMCS-7312 **i01989161**

NOTE	REF NO	GRAPHIC REF	PART NUMBER	QTY	PART NAME 1 2 3 4 5 6 (PRODUCT LEVEL)	SEE PAGE
Y	1	1	**8Y-6138**	1	SEAT GP-SUSPENSION (LUMBAR)	1112
	2	1	**138-1015**	1	CUSHION AS-RH	
	3	1	**137-7369**	1	CUSHION AS	
	4	1	**138-1025**	1	PLATE	
	5	1	**7X-0469**	2	BOLT (3/8-24X0.88 IN)	
	6	1	**7X-0603**	4	WASHER-HARD (9.9X35X2.5MM THK)	
	7	1	**5M-3062**	4	BOLT (3/8-16X0.75 IN)	
	8	1	**5P-1075**	6	WASHER-HARD (10.2X22.5X3MM THK)	
M	9	1	**9X-2045**	2	SCREW-TRUSS HEAD (M6X1X20MM)	
	10	1	**9X-2038**	2	WASHER (7X19X2MM THK)	
	11	1	**6D-6812**	2	KNOB AS	
	12	1	**153-8498**	1	SCREW-FLAT HEAD (5/16-18X0.75 IN)	

M-METRIC PART
Y-SEPARATE ILLUSTRATION

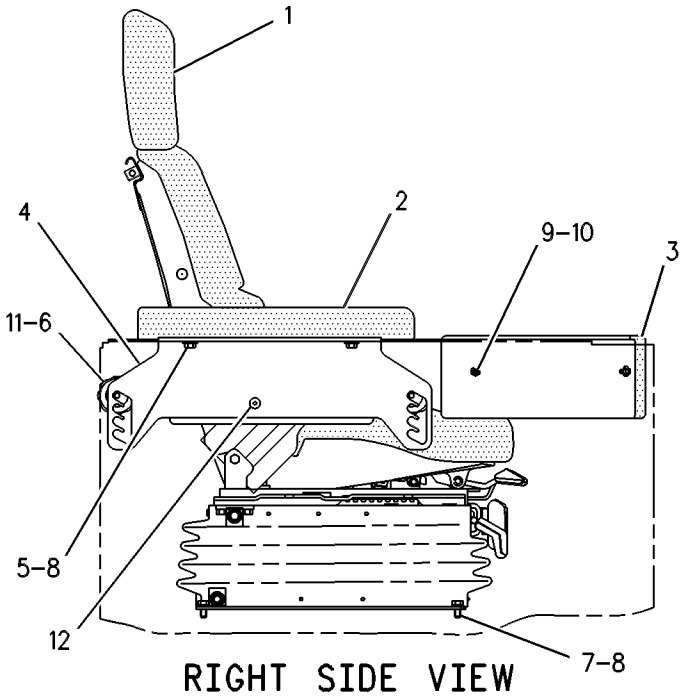

RIGHT SIDE VIEW

GRAPHIC #1 **<END>** g00285424

OPERATOR STATION

156-7418 SEAT GP

S/N: 7PZ392-UP

PART OF 155-5552 CHASSIS AR

SMCS-7312 **i01777397**

NOTE	REF NO	GRAPHIC REF	PART NUMBER	QTY	PART NAME 1 2 3 4 5 6 (PRODUCT LEVEL)	SEE PAGE
Y	1	1	*159-2951*	1	SEAT GP-SUSPENSION	1119
	2	1	**138-1015**	1	CUSHION AS-RH	
	3	1	**137-7369**	1	CUSHION AS	
	4	1	**138-1025**	1	PLATE	
	5	1	**7X-0469**	2	BOLT (3/8-24X0.88 IN)	
	6	1	**7X-0603**	4	WASHER-HARD (9.9X35X2.5MM THK)	
	7	1	**5P-8167**	4	BOLT (3/8-16X0.625 IN)	
	8	1	**5P-1075**	6	WASHER-HARD (10.2X22.5X3MM THK)	
M	9	1	**9X-2045**	2	SCREW-TRUSS HEAD (M6X1X20MM)	
	10	1	**9X-2038**	2	WASHER (7X19X2MM THK)	
	11	1	**6D-6812**	2	KNOB AS	
	12	1	**153-8498**	1	SCREW-FLAT HEAD (5/16-18X0.75 IN)	

M-METRIC PART
Y-SEPARATE ILLUSTRATION

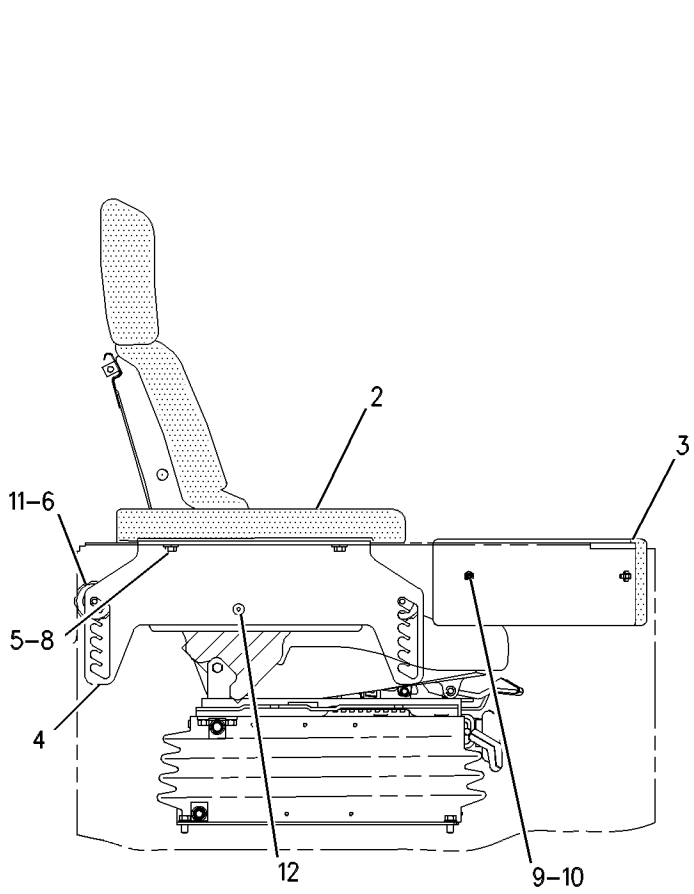

RIGHT SIDE VIEW

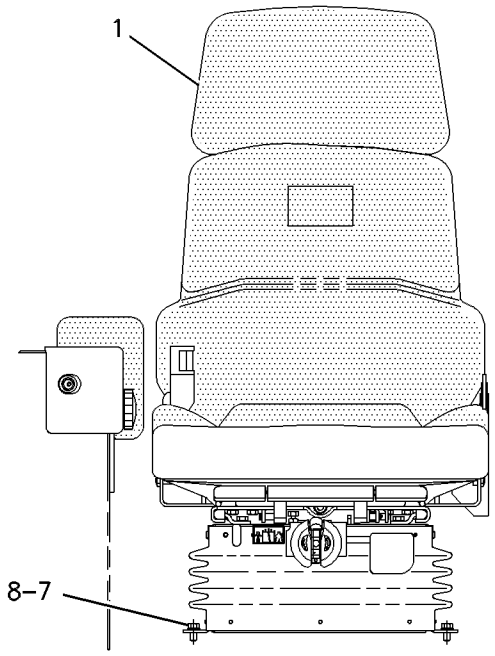

FRONT VIEW

GRAPHIC #1 **<END>** g00445003

OPERATOR STATION

180-7304 SEAT GP

S/N: 7PZ1-UP
PART OF 184-6011 SEAT GP
AN ATTACHMENT

SMCS-7312 **i01998035**

NOTE	REF NO	GRAPHIC REF	PART NUMBER	QTY	PART NAME 1 2 3 4 5 6 (PRODUCT LEVEL)	SEE PAGE
	1	1	**143-1288**	8	LOCKNUT-FLANGE (3/8-16 THD)	
	2	1	**171-1230**	6	SCREW-BUTTON HEAD (3/8-16X1 IN)	
	3	1	**171-6682**	1	BAR	
	4	1	**172-2416**	2	PIN	
Y	5	1	*173-1028*	1	ADJUSTER GP-SEAT	992
	6	1	**173-3283**	1	PAN AS	
		1	**169-1026**	1	CUSHION AS	
		1	**6K-3273**	5	RIVET-POP	
	7	1	**177-1863**	2	BOLT-PIVOT (3/8-16X2.89 IN)	
Y	8	1	*180-7305*	1	PAN GP-BACKREST (VINYL)	1081
	9	1	**184-2298**	1	ROD	
	10	1	**184-2299**	4	WASHER (7X25.4X2.54MM THK)	
Y	11	1	*210-2270*	1	RECLINER GP-SEAT	1093
	12	1	**095-0843**	2	PIN-COTTER	
	13	1	**5V-1496**	2	RETAINER	
	14	1	**6V-7646**	2	WASHER-HARD (7.2X25X2MM THK)	
	15	1	**8T-0328**	1	WASHER-HARD (5.5X10X1MM THK)	
	16	1	**8T-4205**	1	WASHER-HARD (7.2X14.5X2MM THK)	
	17	1	**8Y-6277**	2	SPACER (10.5X28.6X10MM THK)	

Y-SEPARATE ILLUSTRATION

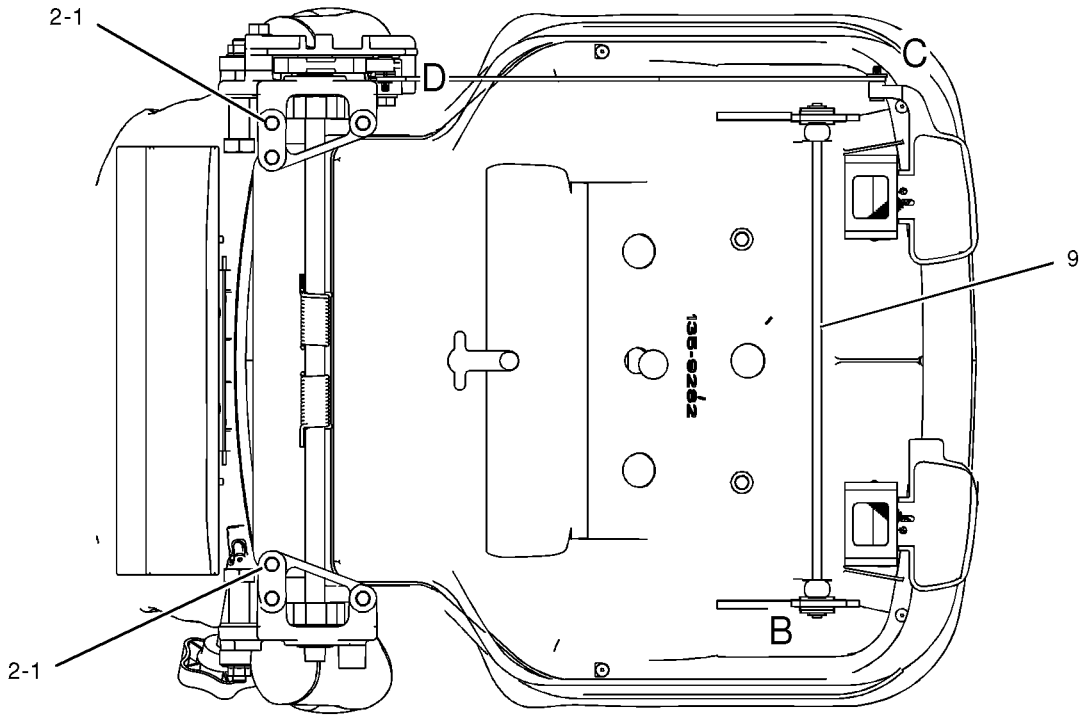

SECTION A-A

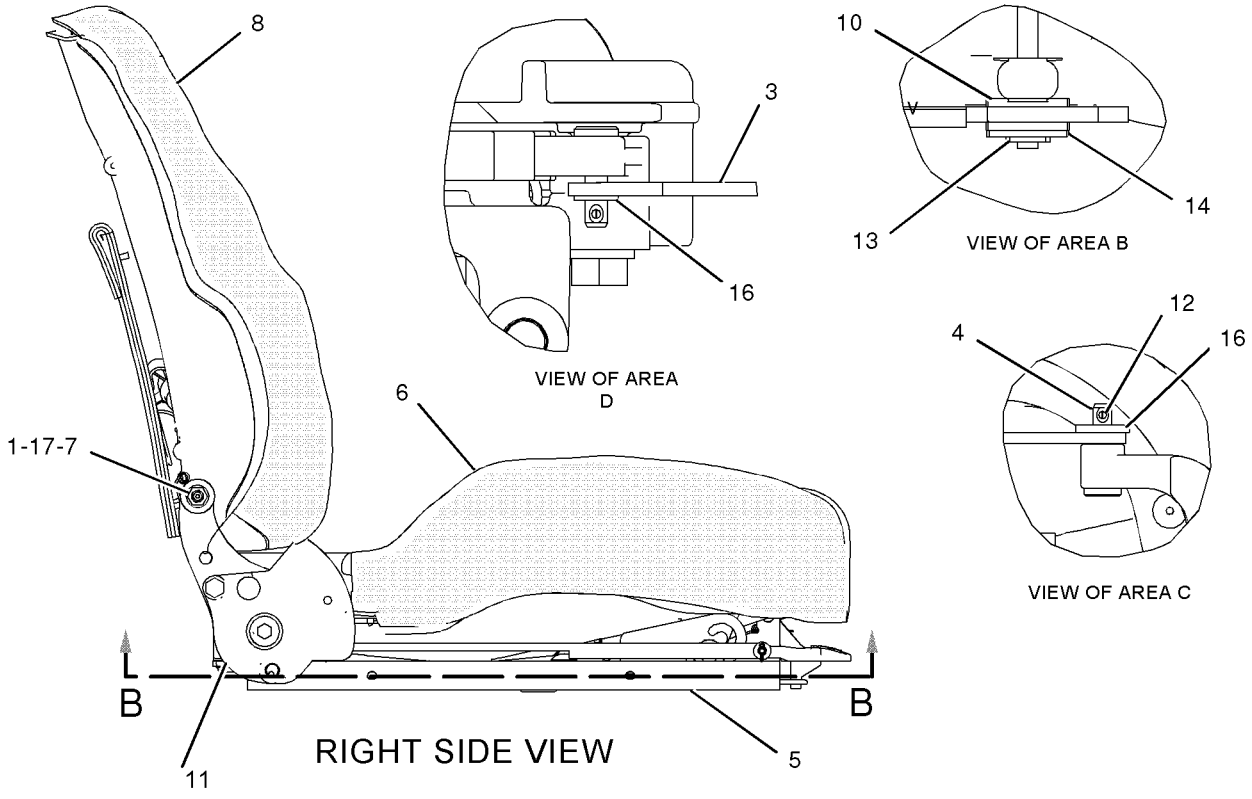

GRAPHIC #1 **<END>** g01037175

OPERATOR STATION

180-7306 SEAT GP

S/N: 7PZ1-UP
FABRIC
PART OF 184-6012 SEAT GP
AN ATTACHMENT

SMCS-7312 **i01989144**

NOTE	REF NO	GRAPHIC REF	PART NUMBER	QTY	PART NAME 1 2 3 4 5 6 (PRODUCT LEVEL)	SEE PAGE
	1	1	**172-6581**	1	PAN AS	
		1	**169-1025**	1	CUSHION AS	
	1A	1	**6K-3273**	5	RIVET-POP	
	2	1	**143-1288**	8	LOCKNUT-FLANGE (3/8-16 THD)	
	3	1	**171-1230**	6	SCREW-BUTTON HEAD (3/8-16X1 IN)	
	4	1	**171-6682**	1	BAR	
	5	1	**172-2416**	2	PIN	
Y	6	1	*173-1028*	1	ADJUSTER GP-SEAT	992
	7	1	**177-1863**	2	BOLT-PIVOT (3/8-16X2.89 IN)	
Y	8	1	*177-4935*	1	RECLINER GP-SEAT	1092
Y	9	1	**180-7307**	1	PAN GP-BACKREST	1082
	10	1	**184-2298**	1	ROD	
	11	1	**184-2299**	4	WASHER (7X25.4X2.54MM THK)	
	12	1	**095-0843**	2	PIN-COTTER	
	13	1	**5P-0537**	2	WASHER-HARD (7.2X14.5X2MM THK)	
	14	1	**5V-1496**	2	RETAINER	
	15	1	**6V-7646**	2	WASHER-HARD (7.2X25X2MM THK)	
	16	1	**8T-0328**	1	WASHER-HARD (5.5X10X1MM THK)	
	17	1	**8T-4205**	1	WASHER-HARD (7.2X14.5X2MM THK)	
	18	1	**8Y-6277**	2	SPACER (10.5X28.6X10MM THK)	

Y-SEPARATE ILLUSTRATION

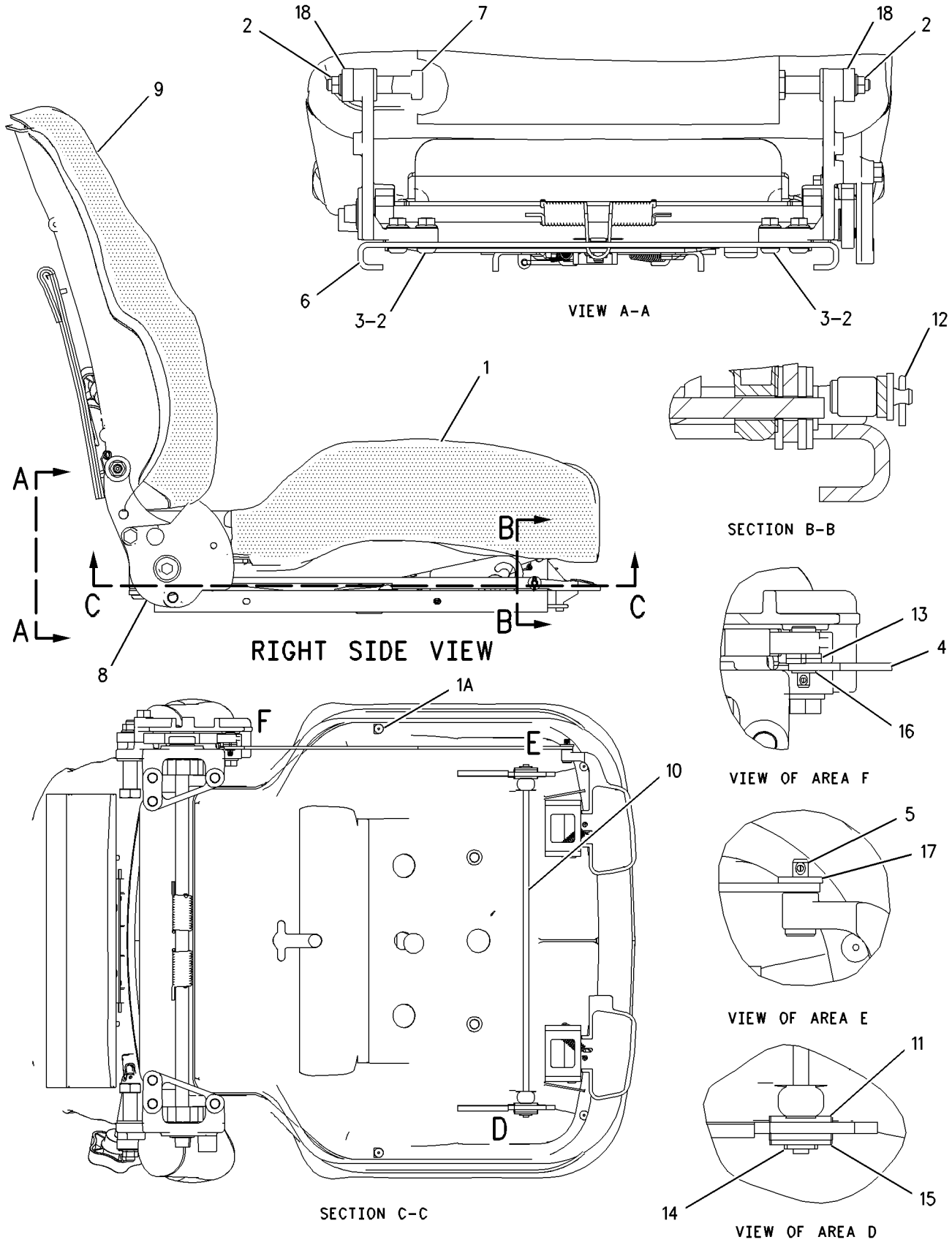

GRAPHIC #1 **<END>** g00682910

OPERATOR STATION

180-7306 SEAT GP

S/N: 7PZ392-UP
FABRIC
PART OF 184-6012 SEAT GP
ALSO AN ATTACHMENT

SMCS-7312 **i01989160**

NOTE	REF NO	GRAPHIC REF	PART NUMBER	QTY	PART NAME 1 2 3 4 5 6 (PRODUCT LEVEL)	SEE PAGE
	1	1	**172-6581**	1	PAN AS	
		1	**169-1025**	1	CUSHION AS	
	1A	1	**6K-3273**	5	RIVET-POP	
	2	1	**143-1288**	8	LOCKNUT-FLANGE (3/8-16 THD)	
	3	1	**171-1230**	6	SCREW-BUTTON HEAD (3/8-16X1 IN)	
	4	1	**171-6682**	1	BAR	
	5	1	**172-2416**	2	PIN	
Y	6	1	*173-1028*	1	ADJUSTER GP-SEAT	992
	7	1	**177-1863**	2	BOLT-PIVOT (3/8-16X2.89 IN)	
Y	8	1	*177-4935*	1	RECLINER GP-SEAT	1092
Y	9	1	**180-7307**	1	PAN GP-BACKREST	1082
	10	1	**184-2298**	1	ROD	
	11	1	**184-2299**	4	WASHER (7X25.4X2.54MM THK)	
	12	1	**095-0843**	2	PIN-COTTER	
	13	1	**8Y-6277**	2	SPACER (10.5X28.6X10MM THK)	
	14	1	**5V-1496**	2	RETAINER	
	15	1	**6V-7646**	2	WASHER-HARD (7.2X25X2MM THK)	
	16	1	**8T-0328**	1	WASHER-HARD (5.5X10X1MM THK)	
	17	1	**8T-4205**	1	WASHER-HARD (7.2X14.5X2MM THK)	

Y-SEPARATE ILLUSTRATION

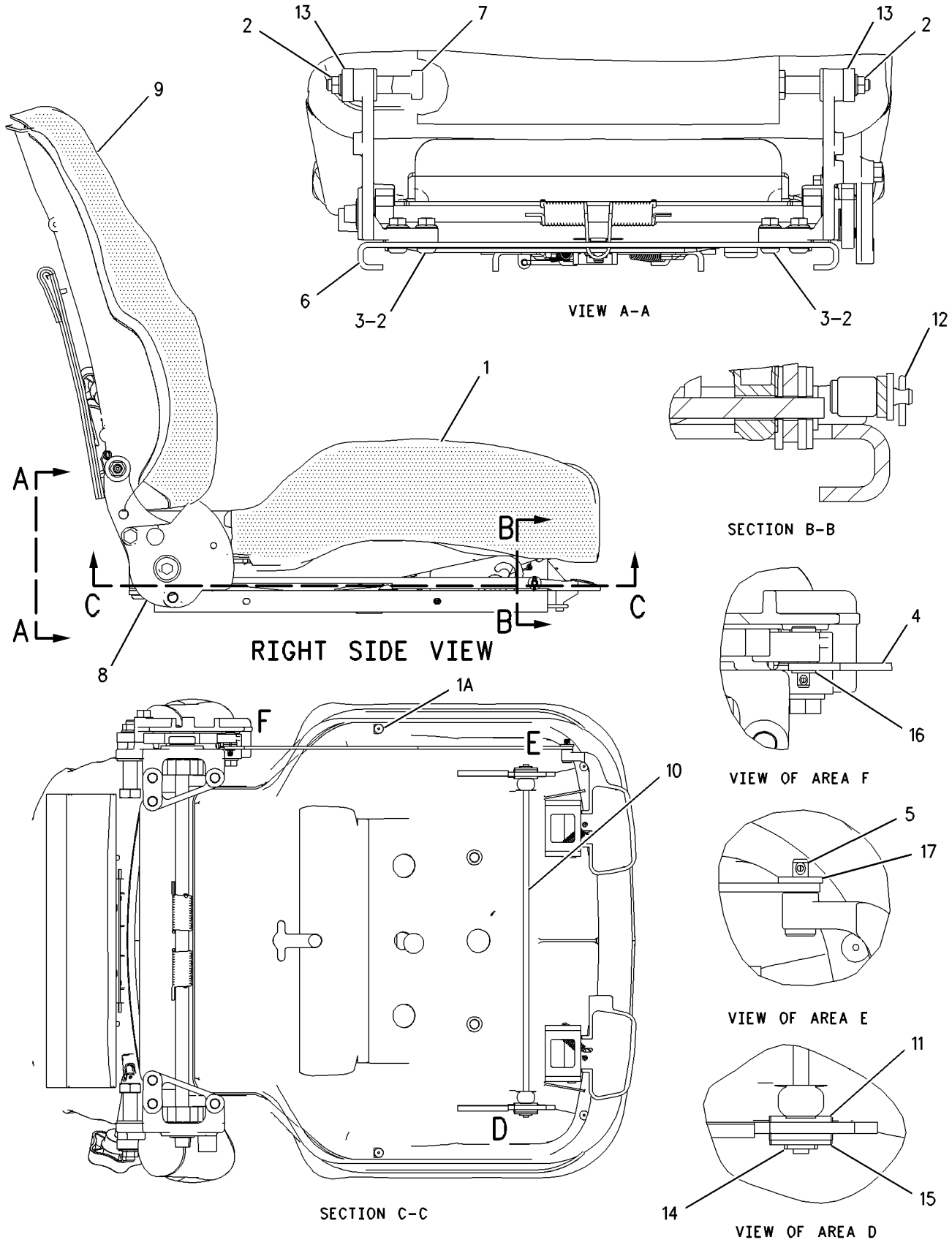

GRAPHIC #1 **<END>** g00756257

OPERATOR STATION

184-6011 SEAT GP

S/N: 7PZ1-UP
PART OF 159-2950 SEAT GP-SUSPENSION
AN ATTACHMENT

SMCS-7312 **i01989143**

NOTE	REF NO	GRAPHIC REF	PART NUMBER	QTY	PART NAME 1 2 3 4 5 6 (PRODUCT LEVEL)	SEE PAGE
	1	1	**173-3083**	1	EXTENSION GP-BACKREST (VINYL)	
		1	**117-4491**	1	ROD	
	2	1	**177-4937**	1	SPACER (11.7X19.8X20.3MM THK)	
	3	1	**205-6388**	1	BOLT (7/16-20X44.45MM)	
	4	1	**0T-0244**	1	BOLT (7/16-20X1.25 IN)	
Y	5	1	**180-7304**	1	SEAT GP (VINYL)	1104
	6	1	**222-0345**	1	SEAT BELT GP (RETRACTABLE)	

Y-SEPARATE ILLUSTRATION

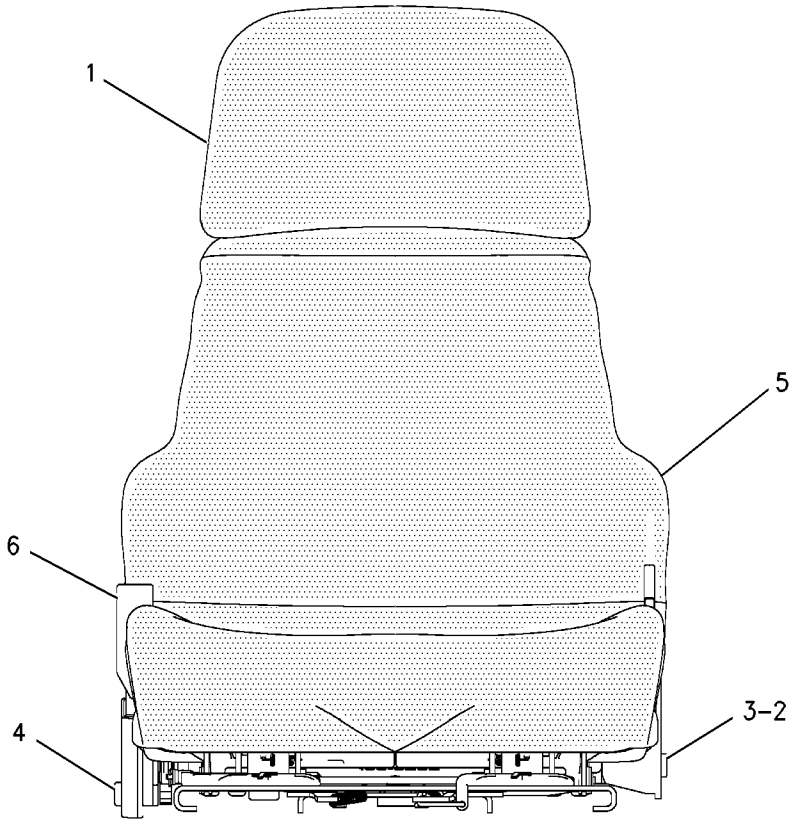

FRONT VIEW

GRAPHIC #1 **<END>** g00683843

OPERATOR STATION

184-6012 SEAT GP

S/N: 7PZ392-UP

PART OF 159-2951, 159-2952, 220-8634 SEAT GP-SUSPENSION

ALSO AN ATTACHMENT

SMCS-7312 **i01972876**

NOTE	REF NO	GRAPHIC REF	PART NUMBER	QTY	PART NAME 1 2 3 4 5 6 (PRODUCT LEVEL)	SEE PAGE
	1	1	**173-3084**	1	EXTENSION GP-BACKREST (CLOTH)	
		1	**117-4491**	1	ROD	
	2	1	**177-4937**	1	SPACER (11.7X19.8X20.3MM THK)	
	3	1	**205-6388**	1	BOLT (7/16-20X44.45MM)	
	4	1	**0T-0244**	1	BOLT (7/16-20X1.25 IN)	
Y	5	1	**180-7306**	1	SEAT GP	1106
	6	1	**222-0345**	1	SEAT BELT GP (RETRACTABLE)	

Y-SEPARATE ILLUSTRATION

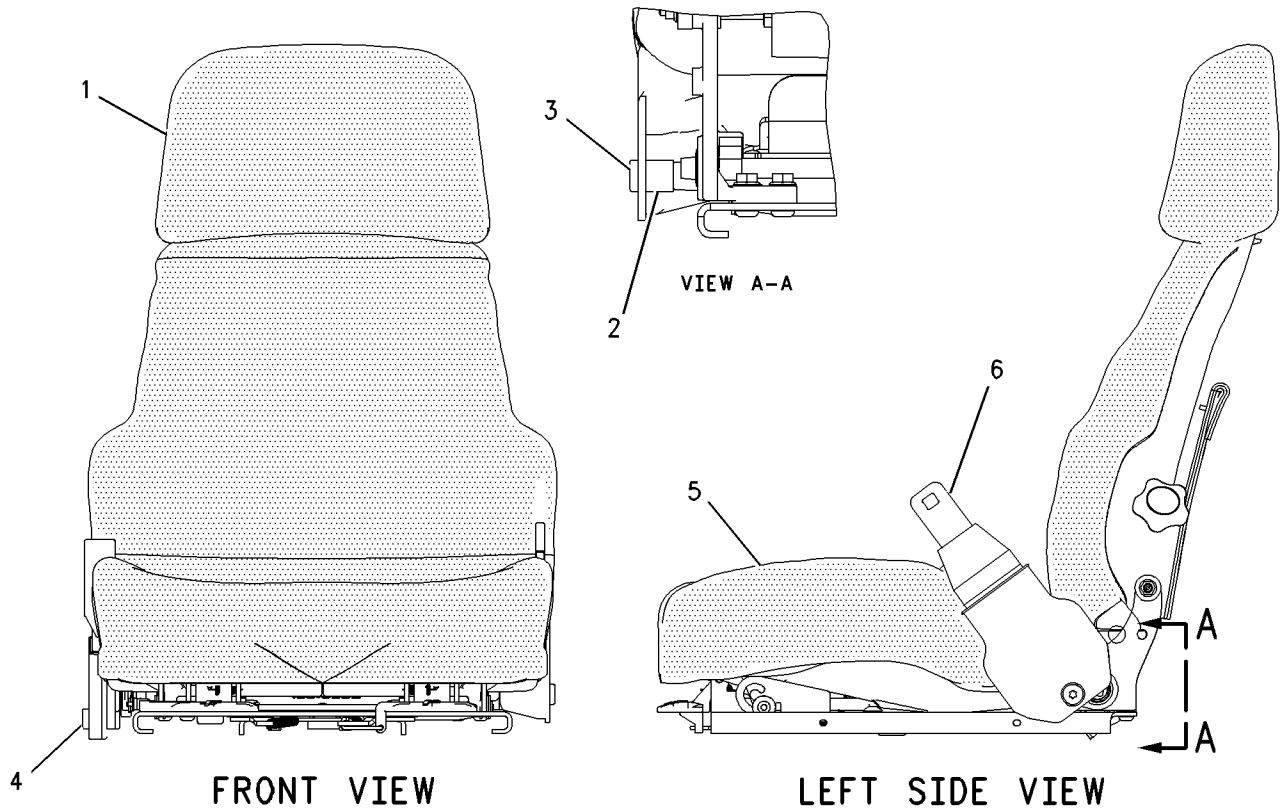

GRAPHIC #1 **<END>** g00682472

OPERATOR STATION

8Y-6138 SEAT GP-SUSPENSION

S/N: 7PZ1-391
FABRIC, LUMBAR
PART OF 137-7368 SEAT GP

SMCS-7321, 7324, 7336 **i01989180**

NOTE	REF NO	GRAPHIC REF	PART NUMBER	QTY	PART NAME 1 2 3 4 5 6 (PRODUCT LEVEL)	SEE PAGE
Y	1	1	**8Y-5874**	1	EXTENSION GP-BACKREST	1029
Y	2	1	**8Y-5986**	1	SEAT GP	1099
Y	3	1	**108-4082**	1	SUSPENSION GP-SEAT	1125
CY	4	1	**156-1148**	1	SEAT BELT GP	1096
JZ	5	1		4	BLOCK-SLIDER	
J	6	1	**4F-4879**	1	BOLT (3/8-16X.5 IN)	
					AVAILABLE REPAIR KIT(S):	
J			**149-4745**	1	KIT-SLIDER BLOCK (SUSPENSION SEAT)	

C-CHANGE FROM PREVIOUS TYPE
J-KIT MARKED J INCLUDES PARTS MARKED J
Y-SEPARATE ILLUSTRATION
Z-NOT SERVICED SEPARATELY

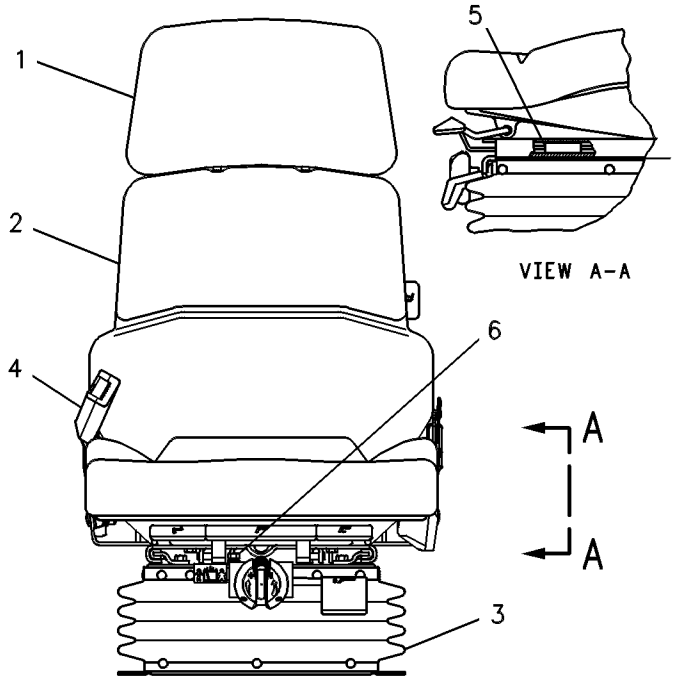

GRAPHIC #1 **<END>** g00128658

8Y-6179 SEAT GP-SUSPENSION

S/N: 7PZ1-UP
VINYL
PART OF 8E-9546 SEAT AR
AN ATTACHMENT

SMCS-7321, 7324, 7336 **i01989131**

NOTE	REF NO	GRAPHIC REF	PART NUMBER	QTY	PART NAME 1 2 3 4 5 6 (PRODUCT LEVEL)	SEE PAGE
Y	1	1	**8Y-5959**	1	EXTENSION GP-BACKREST (VINYL)	1030
Y	2	1	**8Y-5976**	1	SEAT GP (VINYL)(LUMBAR)	1097
Y	3	1	**108-4082**	1	SUSPENSION GP-SEAT	1125
YC	4	1	**156-1148**	1	SEAT BELT GP	1096
JZ	5	1		4	BLOCK-SLIDER	
J	6	1	**4F-4879**	1	BOLT (3/8-16X.5 IN)	
					AVAILABLE REPAIR KIT(S):	
J			**149-4745**	1	KIT-SLIDER BLOCK (SUSPENSION SEAT)	

C-CHANGE FROM PREVIOUS TYPE
J-KIT MARKED J INCLUDES PARTS MARKED J
Y-SEPARATE ILLUSTRATION
Z-NOT SERVICED SEPARATELY

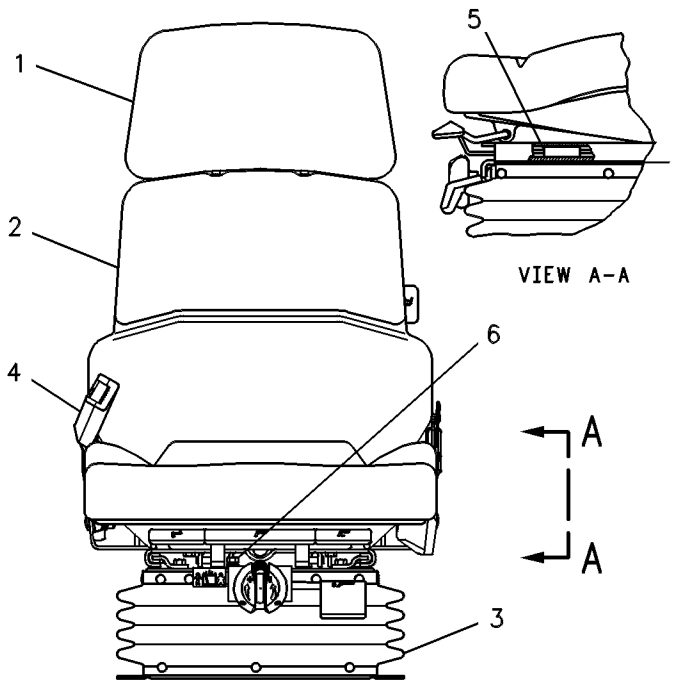

GRAPHIC #1 **<END>** g00128658

OPERATOR STATION

131-4426 SEAT GP-SUSPENSION

S/N: 7PZ1-UP
FABRIC
FOR USE WITH MACHINES EQUIPPED WITH CABS
AN ATTACHMENT

SMCS-7321, 7324, 7336 **i00684209**

NOTE	REF NO	GRAPHIC REF	PART NUMBER	QTY	PART NAME 1 2 3 4 5 6 (PRODUCT LEVEL)	SEE PAGE
Y	1	1	*131-8422*	1	SEAT GP-SUSPENSION	1115

Y-SEPARATE ILLUSTRATION

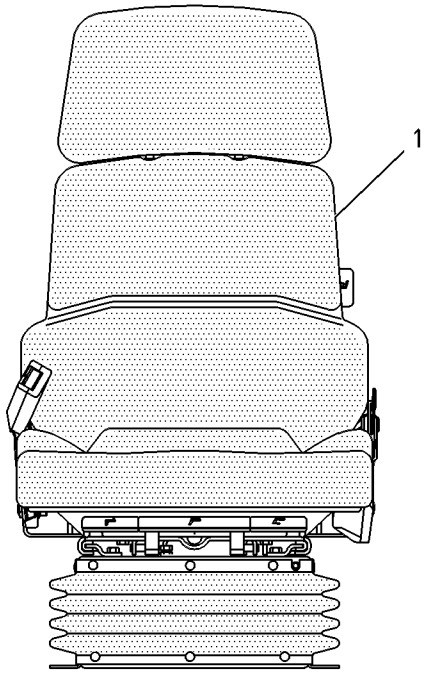

FRONT VIEW

GRAPHIC #1

<END>

g00258344

OPERATOR STATION

131-8422 SEAT GP-SUSPENSION

S/N: 7PZ1-UP
PART OF 131-4426 SEAT GP-SUSPENSION
AN ATTACHMENT

SMCS-7321, 7324, 7336 **i01989158**

NOTE	REF NO	GRAPHIC REF	PART NUMBER	QTY	PART NAME 1 2 3 4 5 6 (PRODUCT LEVEL)	SEE PAGE
Y	1	1	**125-6224**	1	SEAT GP (LUMBAR)	1101
Y	2	1	**149-2404**	1	SUSPENSION GP-SEAT	1127
J	3	1	**4F-4879**	1	BOLT (3/8-16X.5 IN)	
JZ	4	1		4	BLOCK-SLIDER	
JZ	5	1		4	SETSCREW (1/4-20 THD)	
					AVAILABLE REPAIR KIT(S):	
CJ			**166-7225**	1	KIT-SLIDER BLOCK (SUSPENSION SEAT)	

C-CHANGE FROM PREVIOUS TYPE
J-REPAIR KIT MARKED J INCLUDES PARTS MARKED J
Y-SEPARATE ILLUSTRATION
Z-NOT SERVICED SEPARATELY

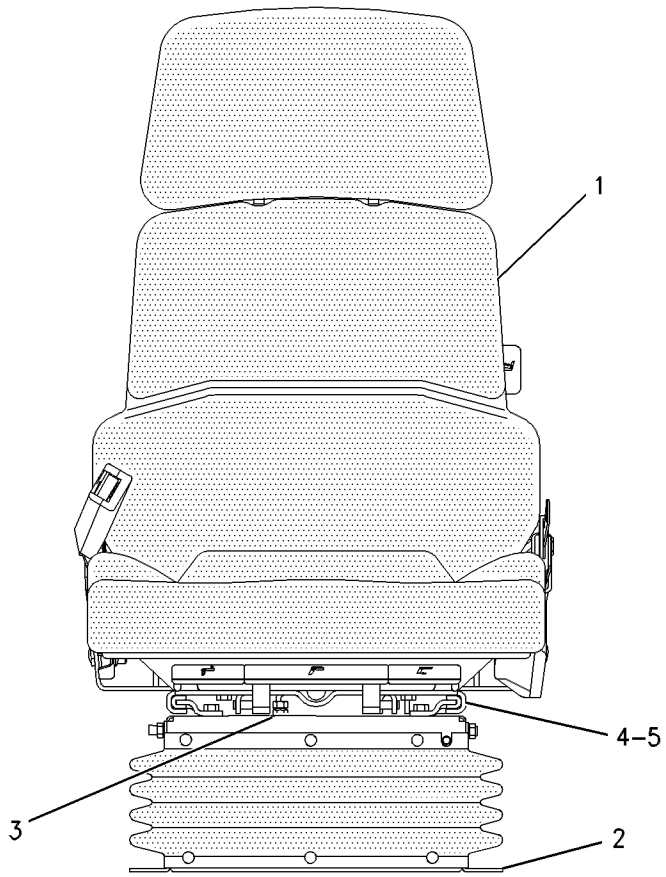

FRONT VIEW

GRAPHIC #1 **<END>** g00659499

OPERATOR STATION

156-7419 SEAT GP-SUSPENSION

S/N: 7PZ1-614
FOR USE WITH MACHINES EQUIPPED WITH CAB
AN ATTACHMENT

SMCS-7321, 7324, 7336 **i00860115**

NOTE	REF NO	GRAPHIC REF	PART NUMBER	QTY	PART NAME 1 2 3 4 5 6 (PRODUCT LEVEL)	SEE PAGE
Y	1	1	**159-2952**	1	SEAT GP-SUSPENSION	1120

Y-SEPARATE ILLUSTRATION

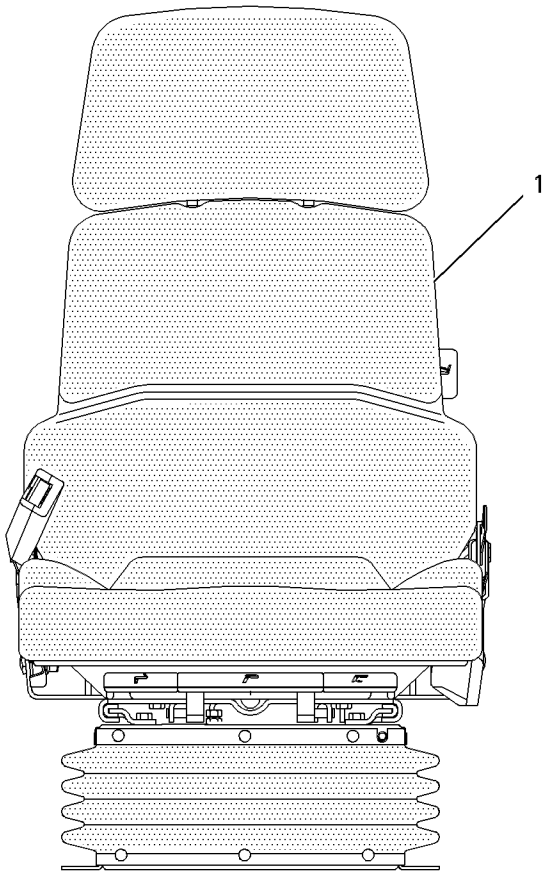

FRONT VIEW

GRAPHIC #1 **<END>** g00444688

OPERATOR STATION

156-7419 SEAT GP-SUSPENSION

S/N: 7PZ615-UP
FOR USE WITH MACHINES EQUIPPED WITH CAB
AN ATTACHMENT

SMCS-7321, 7324, 7336 **i01837075**

NOTE	REF NO	GRAPHIC REF	PART NUMBER	QTY	PART NAME 1 2 3 4 5 6 (PRODUCT LEVEL)	SEE PAGE
Y	1	1	**220-8634**	1	SEAT GP-SUSPENSION	1121

Y-SEPARATE ILLUSTRATION

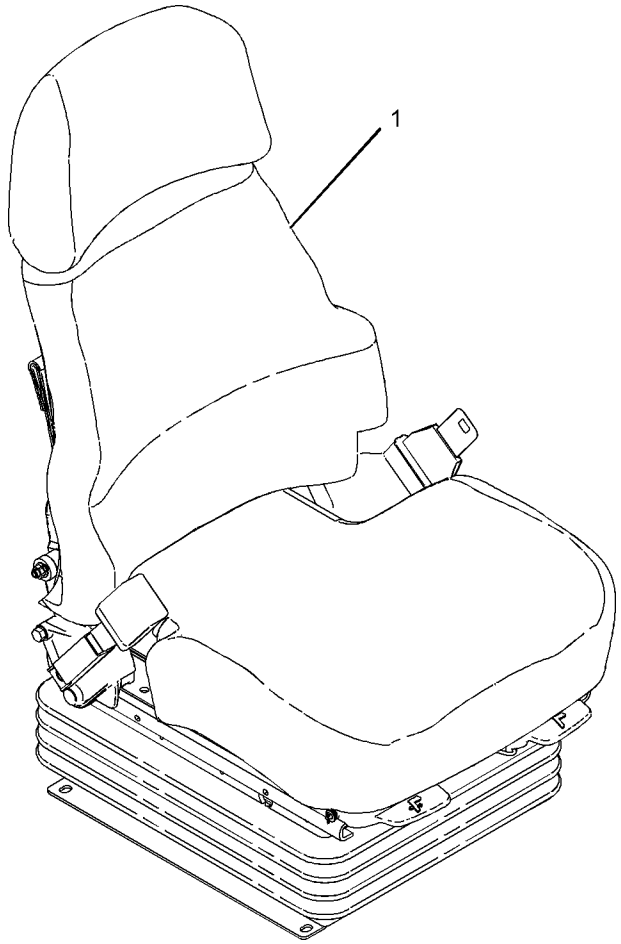

GRAPHIC #1 **<END>** g01009469

OPERATOR STATION

159-2950 SEAT GP-SUSPENSION

S/N: 7PZ1-UP
VINYL
PART OF 164-9429 SEAT AR
AN ATTACHMENT

SMCS-7321, 7324, 7336 **i01969002**

NOTE	REF NO	GRAPHIC REF	PART NUMBER	QTY	PART NAME 1 2 3 4 5 6 (PRODUCT LEVEL)	SEE PAGE
Y	1	1	**160-7165**	1	SUSPENSION GP-SEAT	1130
Y	2	1	**184-6011**	1	SEAT GP (VINYL)	1110
J	3	1	**161-9289**	4	BLOCK-SLIDER	
J	4	1	**4F-4879**	1	BOLT (3/8-16X.5 IN)	
J	5	1	**203-7703**	2	WASHER-HARD (10.2X22.22X2.38MM THK)	
J	6	1	**173-5787**	4	SETSCREW (1/4-20 THD)	
					AVAILABLE REPAIR KIT(S):	
J			**173-7035**	1	KIT-SLIDER BLOCK (SUSPENSION SEAT)	

J-KIT MARKED J SERVICES PART(S) MARKED J
Y-SEPARATE ILLUSTRATION

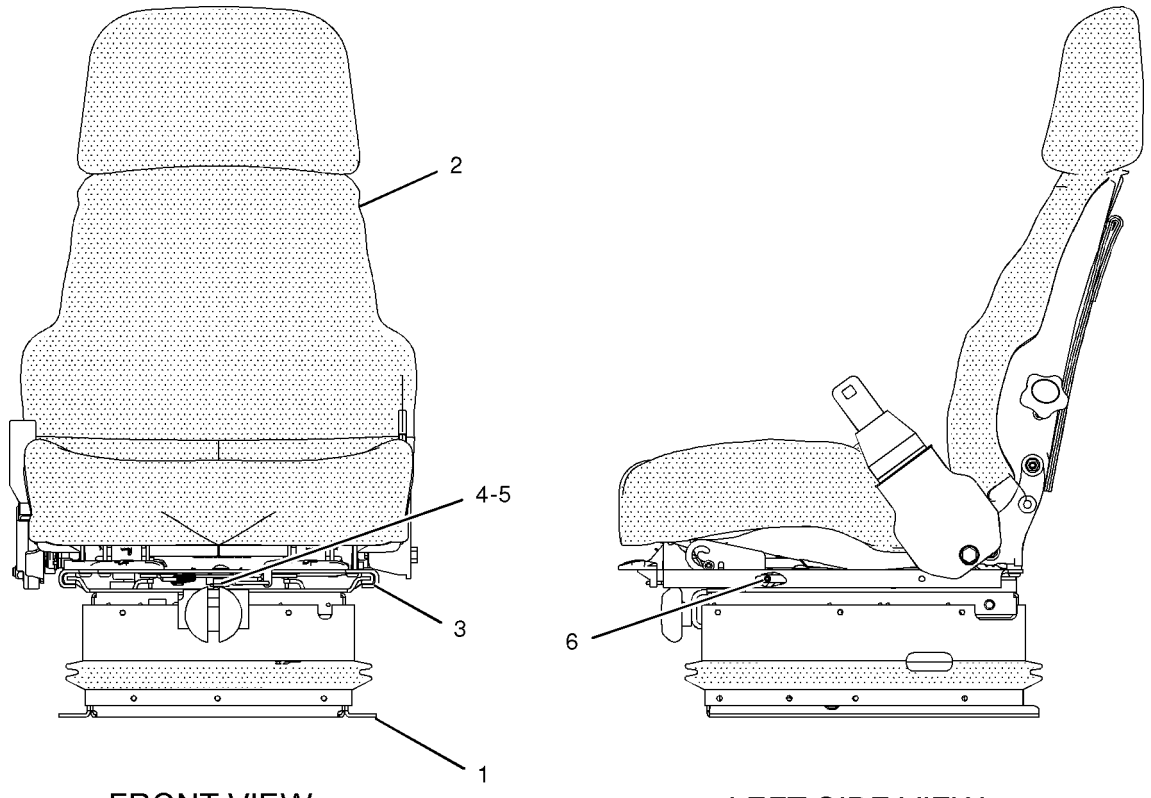

FRONT VIEW LEFT SIDE VIEW

GRAPHIC #1 **<END>** g01023474

OPERATOR STATION

159-2951 SEAT GP-SUSPENSION

S/N: 7PZ392-UP

FABRIC

PART OF 156-7418 SEAT GP

SMCS-7321, 7324, 7336 **i01989146**

NOTE	REF NO	GRAPHIC REF	PART NUMBER	QTY	PART NAME 1 2 3 4 5 6 (PRODUCT LEVEL)	SEE PAGE
Y	1	1	**160-7165**	1	SUSPENSION GP-SEAT	1130
Y	2	1	*184-6012*	1	SEAT GP	1111
JZ	3	1		4	BLOCK-SLIDER	
J	4	1	**4F-4879**	1	BOLT (3/8-16X.5 IN)	
J		1	**203-7703**	2	WASHER-HARD (10.2X22.22X2.38MM THK)	
J	5	1	**173-5787**	4	SETSCREW (1/4-20 THD)	
					AVAILABLE REPAIR KIT(S):	
J			**173-7035**	1	KIT-SLIDER BLOCK (SUSPENSION SEAT)	

J-KIT MARKED J INCLUDES PARTS MARKED J
Y-SEPARATE ILLUSTRATION
Z-NOT SERVICED SEPARATELY

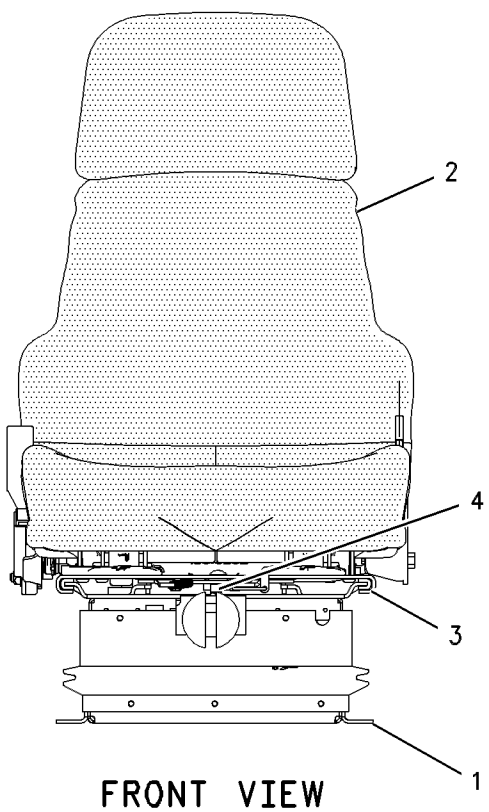

FRONT VIEW

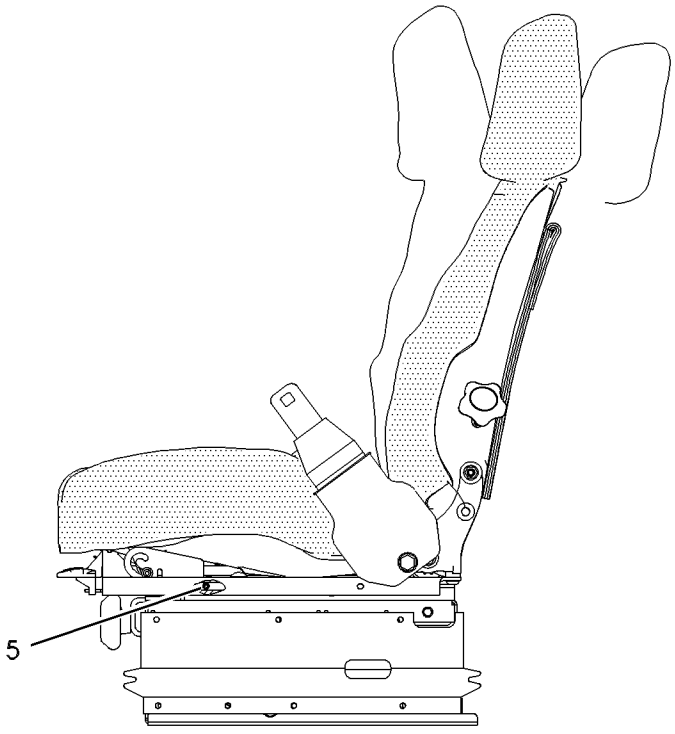

LEFT SIDE VIEW

GRAPHIC #1 **<END>** g00610923

OPERATOR STATION

159-2952 SEAT GP-SUSPENSION

S/N: 7PZ1-614
FABRIC
PART OF 156-7419 SEAT GP-SUSPENSION
AN ATTACHMENT

SMCS-7321, 7324, 7336 **i01989145**

NOTE	REF NO	GRAPHIC REF	PART NUMBER	QTY	PART NAME 1 2 3 4 5 6 (PRODUCT LEVEL)	SEE PAGE
Y	1	1	**161-7539**	1	SUSPENSION GP-SEAT (AIR)	1132
JZ	2	1		4	BLOCK-SLIDER	
J	3	1	**173-5787**	4	SETSCREW (1/4-20 THD)	
Y	4	1	**184-6012**	1	SEAT GP	1111
J	5	1	**4F-4879**	1	BOLT (3/8-16X.5 IN)	
J	6	1	**203-7703**	2	WASHER-HARD (10.2X22.22X2.38MM THK)	
					AVAILABLE REPAIR KIT(S):	
J			**173-7035**	1	KIT-SLIDER BLOCK (SUSPENSION SEAT)	

J-KIT MARKED J INCLUDES PARTS MARKED J
Y-SEPARATE ILLUSTRATION
Z-NOT SERVICED SEPARATELY

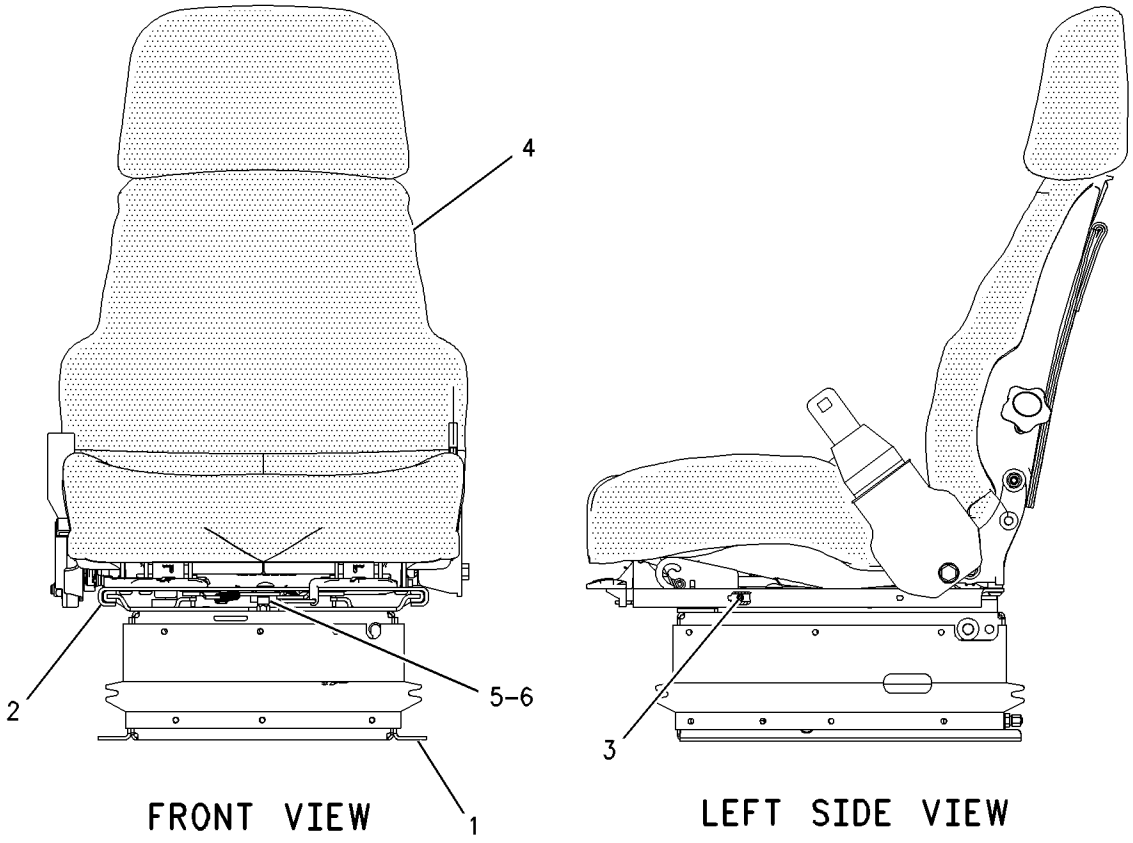

GRAPHIC #1 **<END>** g00827877

OPERATOR STATION

220-8634 SEAT GP-SUSPENSION

S/N: 7PZ615-UP
PART OF 156-7419 SEAT GP-SUSPENSION
AN ATTACHMENT

SMCS-7321, 7324, 7336 **i01989189**

NOTE	REF NO	GRAPHIC REF	PART NUMBER	QTY	PART NAME 1 2 3 4 5 6 (PRODUCT LEVEL)	SEE PAGE
JZ	1	1		4	BLOCK-SLIDER	
J	2	1	**173-5787**	4	SETSCREW (1/4-20 THD)	
Y	3	1	**184-6012**	1	SEAT GP	1111
Y	4	1	**191-2933**	1	SUSPENSION GP-SEAT	1134
J	5	1	**203-7703**	2	WASHER-HARD (10.2X22.22X2.38MM THK)	
J	6	1	**4F-4879**	1	BOLT (3/8-16X.5 IN)	
					AVAILABLE REPAIR KIT(S):	
J			**173-7035**	1	KIT-SLIDER BLOCK (SUSPENSION SEAT)	

J-KIT MARKED J INCLUDES PARTS MARKED J
Y-SEPARATE ILLUSTRATION
Z-NOT SERVICED SEPARATELY

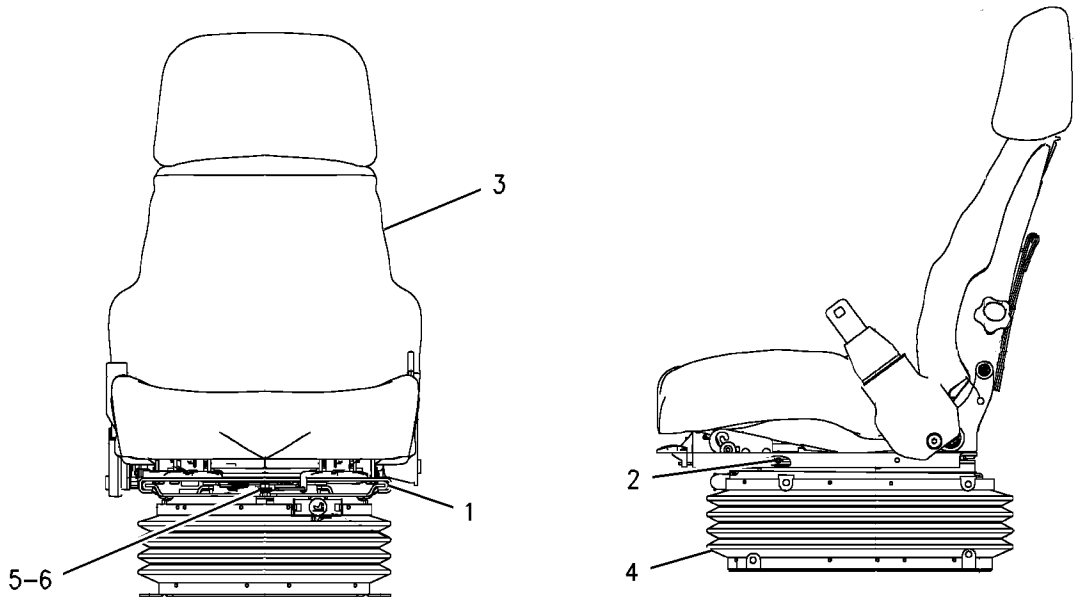

GRAPHIC #1 **<END>** g00909437

OPERATOR STATION

239-2146 STEP GP

S/N: 7PZ754-UP
PART OF 237-0138 PLATFORM AR
AN ATTACHMENT

SMCS-7254 **i01980463**

NOTE	REF NO	GRAPHIC REF	PART NUMBER	QTY	PART NAME 1 2 3 4 5 6 (PRODUCT LEVEL)	SEE PAGE
	1	1	**9M-3835**	1	LATCH-RUBBER	
	2	1	**239-2147**	1	SUPPORT AS (SIDE)	
	3	1	**239-2148**	1	SUPPORT AS	
	4	1	**239-2150**	1	PLATE AS	
	5	1	**239-2278**	1	FRAME AS	
	6	1	**239-2279**	1	GRATE AS	
	7	1	**240-0318**	1	LATCH AS	
	8	1	**240-8954**	1	PLATE	
	9	1	**005-8160**	4	BOLT-12 POINT HEAD	
	10	1	**1T-0720**	2	BOLT-12 POINT HEAD (3/8-16X1.25 IN)	
	11	1	**1T-0765**	4	BOLT (3/8-16X1 IN)	
	12	1	**2M-5795**	1	PIN-CLEVIS	
	13	1	**3K-6060**	1	LOCKNUT (3/8-16 THD)	
	14	1	**4L-6454**	4	BOLT (3/8-16X1 IN)	
	15	1	**5P-1075**	2	WASHER-HARD (10.2X22.5X3MM THK)	
	16	1	**5V-1496**	1	RETAINER	
	17	1	**6J-0488**	11	SCREW-BUTTON HEAD (3/8-16X0.875 IN)	
	18	1	**6V-7191**	1	BOLT (3/8-16 THD)	
	19	1	**8T-4223**	3	WASHER-HARD (13.5X25.5X3MM THK)	
	20	1	**8T-4896**	10	WASHER-HARD (10.2X18.5X2.5MM THK)	
	21	1	**8T-8917**	3	BOLT (1/2-13X1.25 IN)	

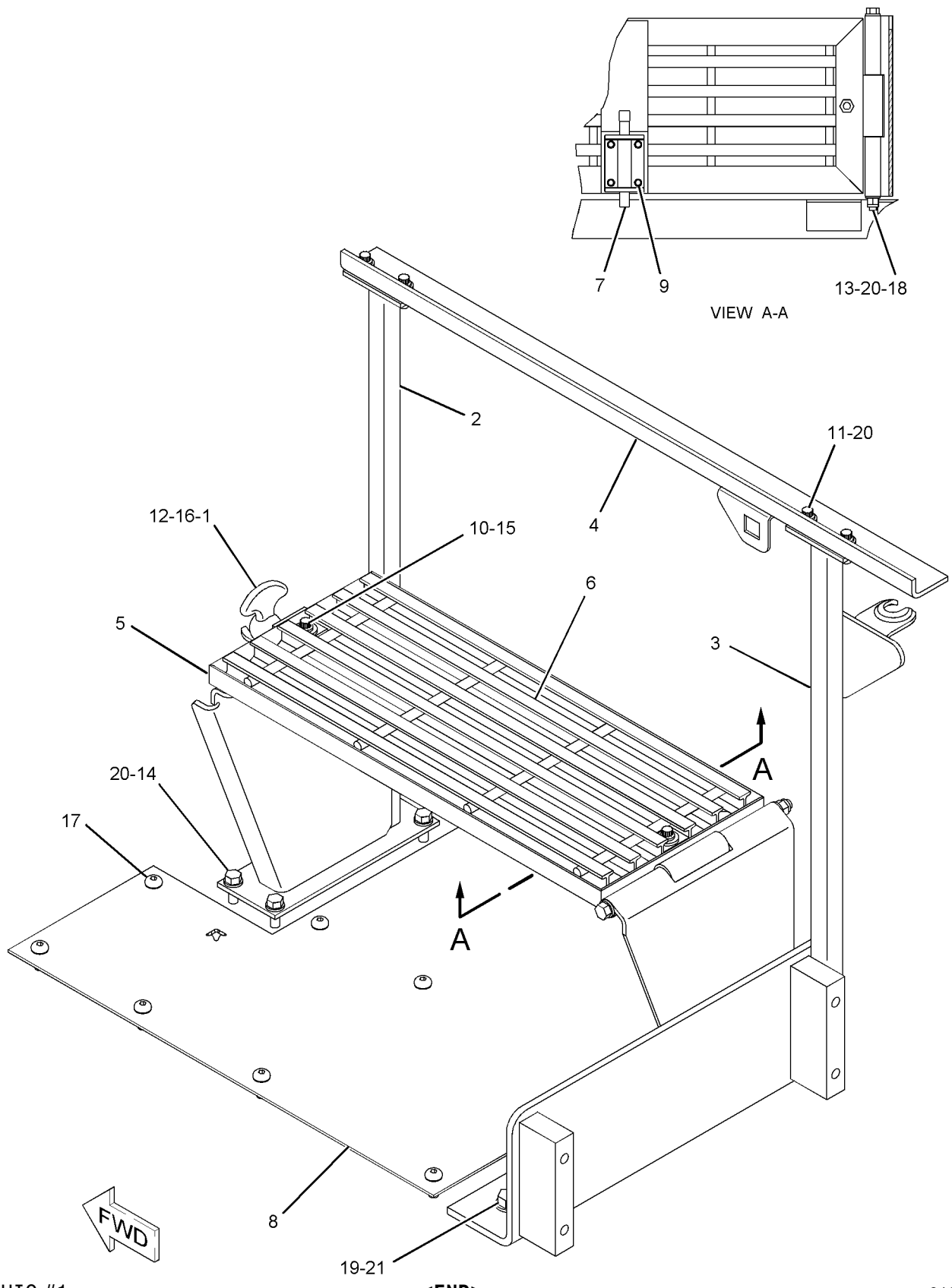

GRAPHIC #1 **<END>** g01027401

OPERATOR STATION

174-7862 SUPPRESSION AR-SOUND

S/N: 7PZ1-UP
EEC
AN ATTACHMENT

SMCS-7329, 7330 **i01983263**

NOTE	PART NUMBER	QTY	PART NAME 1 2 3 4 5 6 (PRODUCT LEVEL)	SEE PAGE
Y	*220-0195*	1	TANK & LINES GP-EXPANSION	852

Y-SEPARATE ILLUSTRATION

<END>

OPERATOR STATION

108-4082 SUSPENSION GP-SEAT—SHOCK ABSORBER

S/N: 7PZ1-391
PART OF 8Y-6138, 8Y-6179 SEAT GP-SUSPENSION
ALSO AN ATTACHMENT

SMCS-7324 **i01989140**

NOTE	REF NO	GRAPHIC REF	PART NUMBER	QTY	PART NAME 1 2 3 4 5 6 (PRODUCT LEVEL)	SEE PAGE
	1	1	**8Y-6022**	1	PLATE-SLIDE	
	2	1	**8Y-6023**	1	PLATE-SLIDE	
	3	1	**5M-3062**	2	BOLT (3/8-16X0.75 IN)	
	4	1	**5P-1075**	4	WASHER-HARD (10.2X22.5X3MM THK)	
	5	1	**2K-4973**	6	LOCKNUT (3/8-16 THD)	
	6	1	**1D-4677**	4	BOLT-ROUND HEAD (3/8-16X1 IN)	
	7	1	**8Y-6014**	1	HOUSING AS-LOWER	
	8	1	**8Y-6012**	1	ARM AS-SUSPENSION	
J	9	1	**101-0003**	20	FASTENER	
Y	10	1	**108-4582**	1	HOUSING GP-SEAT SUSPENSION	1042
J	11	1	**166-6781**	6	FASTENER	
	12	1	**8Y-5965**	1	ABSORBER AS-SHOCK	
	13	1	**5V-1497**	1	RETAINER	
	14	1	**4V-7884**	2	BEARING	
	15	1	**4V-8577**	4	BEARING	
	16	1	**8Y-6024**	2	SHAFT AS	
J	17	1	**163-1146**	3	FASTENER	
	18	1	**145-0326**	1	FILM-INSTRUCTION (SEAT ADJUSTMENT)	
	19	1	**197-7689**	3	FASTENER	
					AVAILABLE REPAIR KIT(S):	
			101-4194	1	KIT-BELT TETHER (SUSPENSION SEAT)	
					(INCLUDES 2 BELTS)	
			101-4195	1	KIT-SUSPENSION ROLLER (SUSPENSION SEAT)	
					(INCLUDES 4 ROLLERS)	
J			**8Y-5944**	1	KIT-SUSPENSION BOOT (SUSPENSION SEAT)	
					(INCLUDES BOOT & 2 RETAINERS)	

J-KIT MARKED J INCLUDES PARTS MARKED J
Y-SEPARATE ILLUSTRATION

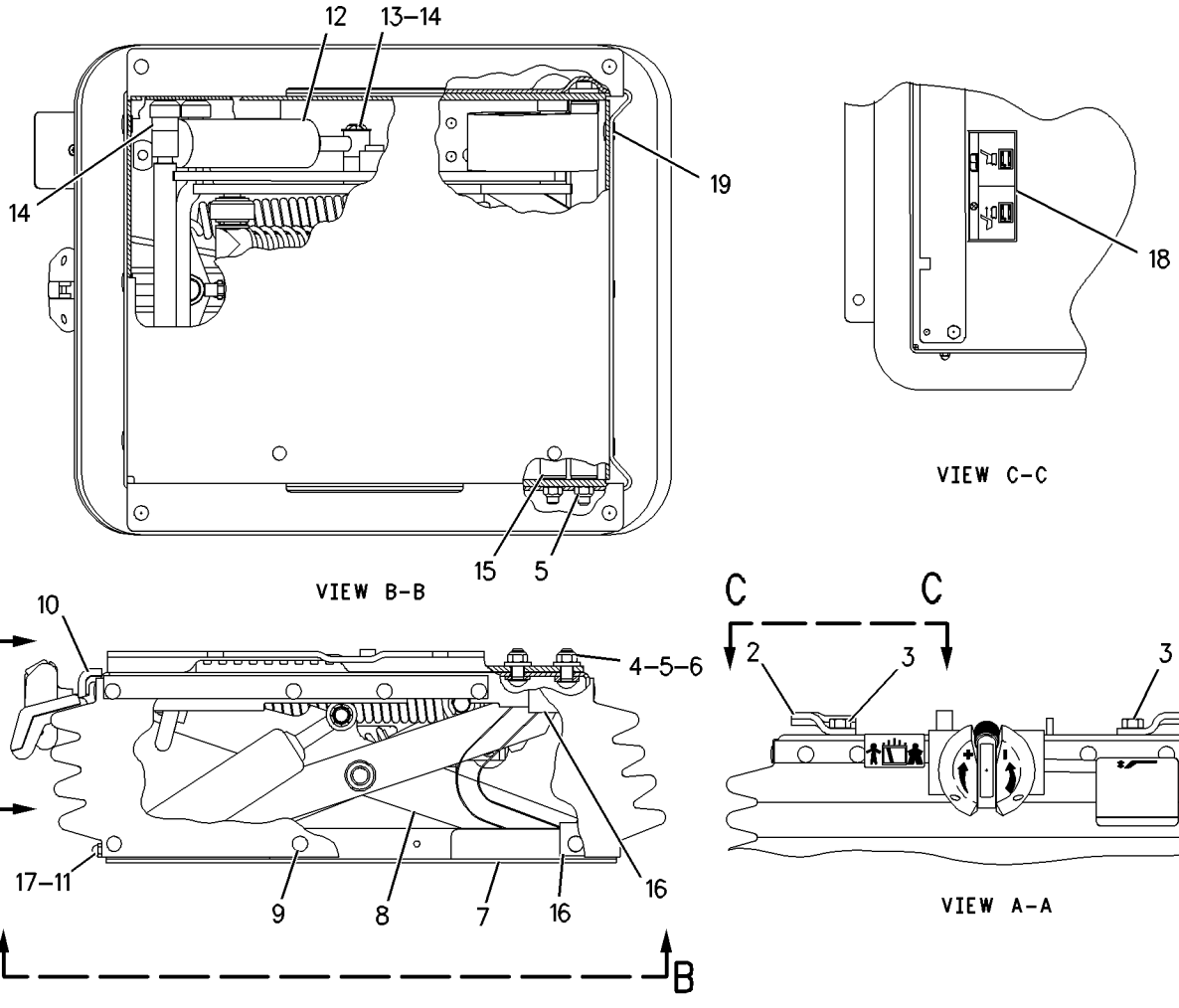

GRAPHIC #1 **<END>** g00790940

OPERATOR STATION

149-2404 SUSPENSION GP-SEAT—AIR

S/N: 7PZ1-UP
24 VOLTS
PART OF 131-8422 SEAT GP-SUSPENSION
AN ATTACHMENT

SMCS-7324 **i01989159**

NOTE	REF NO	GRAPHIC REF	PART NUMBER	QTY	PART NAME 1 2 3 4 5 6 (PRODUCT LEVEL)	SEE PAGE
	1	1	**6K-0806**	1	STRAP-CABLE	
	2	1	**102-6317**	4	BUMPER	
	3	2	**8Y-6917**	1	BOOT	
	4	1,2	**123-8157**	2	SHAFT	
	5	1,2	**2K-4973**	3	LOCKNUT (3/8-16 THD)	
	6	2	**4V-8556**	1	BOLT (3/8-16X2.34 IN)	
	7	2	**166-7401**	1	HOUSING AS (LOWER)	
M		2	**8T-3490**	4	NUT-WELD (M10X1.5 THD)	
	8	1	**5P-8167**	1	BOLT (3/8-16X0.625 IN)	
	9	2	**8M-3267**	1	SCREW-HEX SOCKET (3/8-16X0.75 IN)	
	10	1	**8T-2501**	2	BOLT (3/8-16X2 IN)	
	11	1	**166-7221**	1	HOUSING AS (UPPER)	
	12	1	**123-9131**	1	ABSORBER AS-SHOCK	
	13	1,2	**1B-4430**	4	NUT-JAM (1/2-20 THD)	
	14	1,2	**3J-4818**	4	LOCKWASHER	
B	15	1	**160-7765**	1	WASHER (16.26X22.23X1.97MM THK)	
B	16	1	**160-7766**	3	WASHER (16.26X22.23X0.51MM THK)	
B	17	1	**160-7767**	8	WASHER (3.68X12.57X0.51MM THK)	
	18	1	**4V-7884**	2	BEARING	
	19	1	**128-0686**	2	SPACER (9.78X15.88X27.8MM THK)	
	20	1	**8L-8413**	5	STRAP-CABLE	
	21	2	**124-7128**	1	BUSHING-RELIEF	
BE	22	2	**147-6541**		TUBE	
	23	1	**148-3749**	1	SCISSORS AS	
	24	1	**9M-0164**	1	CLAMP-HOSE	
	25	2	**147-6523**	1	COMPRESSOR	
	26	1	**145-0326**	1	FILM-INSTRUCTION (SEAT ADJUSTMENT)	
	27	2	**147-4549**	2	FITTING-ELBOW	
	28	2	**147-6522**	1	SPRING	
	29	2	**102-8802**	1	KIT-RECEPTACLE (2-PIN)	
					(INCLUDES RECEPTACLE AS & WEDGE)	
PZ	30	1		2	TETHER	
JZ	31	2		30	CLIP	
LZ	32	1		4	ROLLER	
LZ	33	1		4	BEARING	
NZ	34	2		1	HARNESS	
NZ	35	2		1	RING-LOCK	
NZ	36	2		1	LOCKWASHER	
NZ	37	2		1	NUT	
					AVAILABLE REPAIR KIT(S):	
J			**8Y-6928**	1	KIT-FASTENER (SUSPENSION SEAT)	
L			**123-9128**	1	KIT-ROLLER (SUSPENSION SEAT)	
					(INCLUDES TIE WRAP)	
N			**123-8266**	1	KIT-WIRING HARNESS (AIR SUSPENSION SEAT) (SUSPENSION SEAT)	
					(INCLUDES 5-TIE WRAPS)	
P			**128-0613**	1	KIT-TETHER (SUSPENSION SEAT)	

B-USE AS REQUIRED
E-ORDER BY THE CENTIMETER
J-KIT(S) MARKED J SERVICES PART(S) MARKED J
L-KIT(S) MARKED L SERVICES PART(S) MARKED L
M-METRIC PART
N-KIT(S) MARKED N SERVICES PART(S) MARKED N
P-KIT(S) MARKED P SERVICES PART(S) MARKED P
Z-NOT SERVICED SEPARATELY

149-2404 SUSPENSION GP-SEAT *(contd.)* i01989159

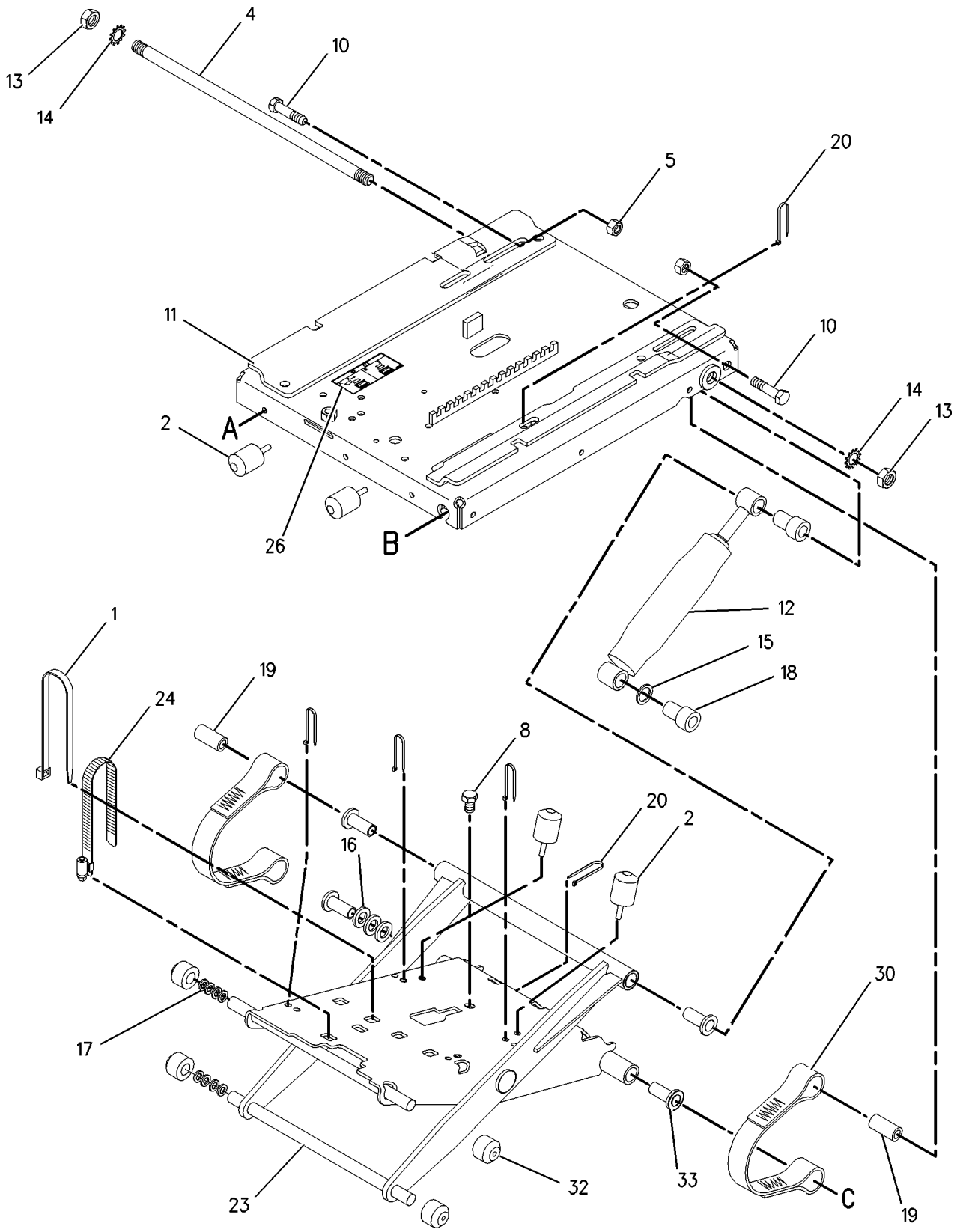

GRAPHIC #1 g00649641

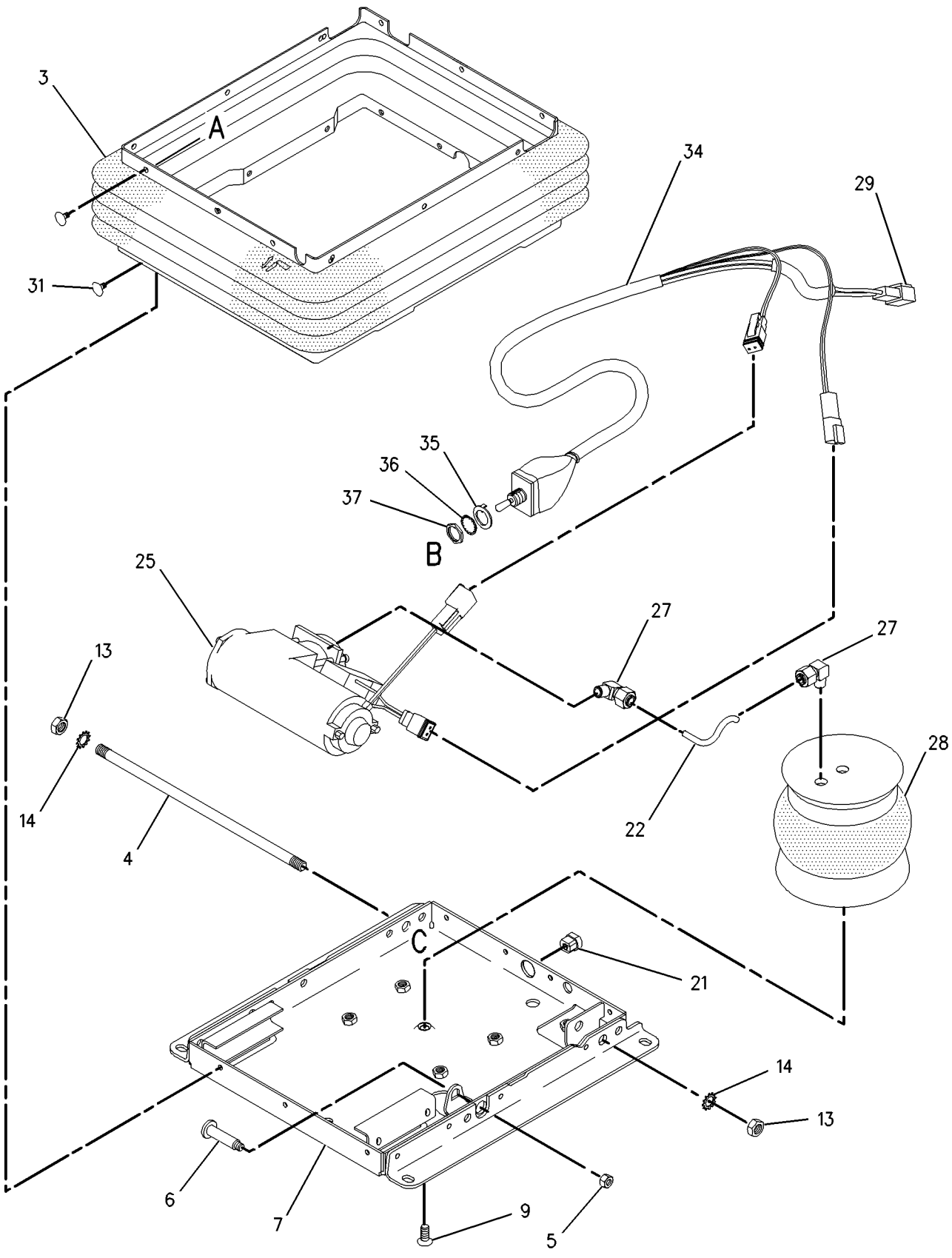

GRAPHIC #2 **<END>** g00799959

OPERATOR STATION

160-7165 SUSPENSION GP-SEAT—SHOCK ABSORBER

S/N: 7PZ1-392

PART OF 159-2950, 159-2951 SEAT GP-SUSPENSION

ALSO AN ATTACHMENT

SMCS-7324 **i01897618**

NOTE	REF NO	GRAPHIC REF	PART NUMBER	QTY	PART NAME 1 2 3 4 5 6 (PRODUCT LEVEL)	SEE PAGE
	1	1	**2K-4973**	2	LOCKNUT (3/8-16 THD)	
	2	1	**4V-7884**	2	BEARING	
	3	1	**4V-8577**	4	BEARING	
	4	1	**5V-1497**	1	RETAINER	
	5	1	**8Y-5965**	1	ABSORBER AS-SHOCK	
	6	1	**8Y-6012**	1	ARM AS-SUSPENSION	
	7	1	**8Y-6014**	1	HOUSING AS-LOWER	
	8	1	**8Y-6024**	2	SHAFT AS	
J	9	1	**101-0003**	20	FASTENER	
J	10	1	**166-6781**	3	FASTENER (15.9MM OD)	
J		1	**197-7689**	3	FASTENER (5.9MM OD)	
J	11	1	**163-1146**	3	FASTENER	
	12	1	**145-0326**	1	FILM-INSTRUCTION (SEAT ADJUSTMENT)	
	13	1	**169-7380**	1	BOLT-SOCKET HEAD (3/8-16X0.375 IN)	
Y	14	1	**174-2231**	1	HOUSING GP-SEAT SUSPENSION	1045
	15	1	**197-7689**	3	FASTENER	
					AVAILABLE REPAIR KIT(S):	
J			**8Y-5944**	1	KIT-SUSPENSION BOOT (SUSPENSION SEAT)	
					(INCLUDES BOOT, RETAINER, FASTENERS & PARTS MARKED J)	
			101-4194	1	KIT-BELT TETHER (SUSPENSION SEAT)	
			101-4195	1	KIT-SUSPENSION ROLLER (SUSPENSION SEAT)	

J-KIT MARKED J SERVICES PART(S) MARKED J
Y-SEPARATE ILLUSTRATION

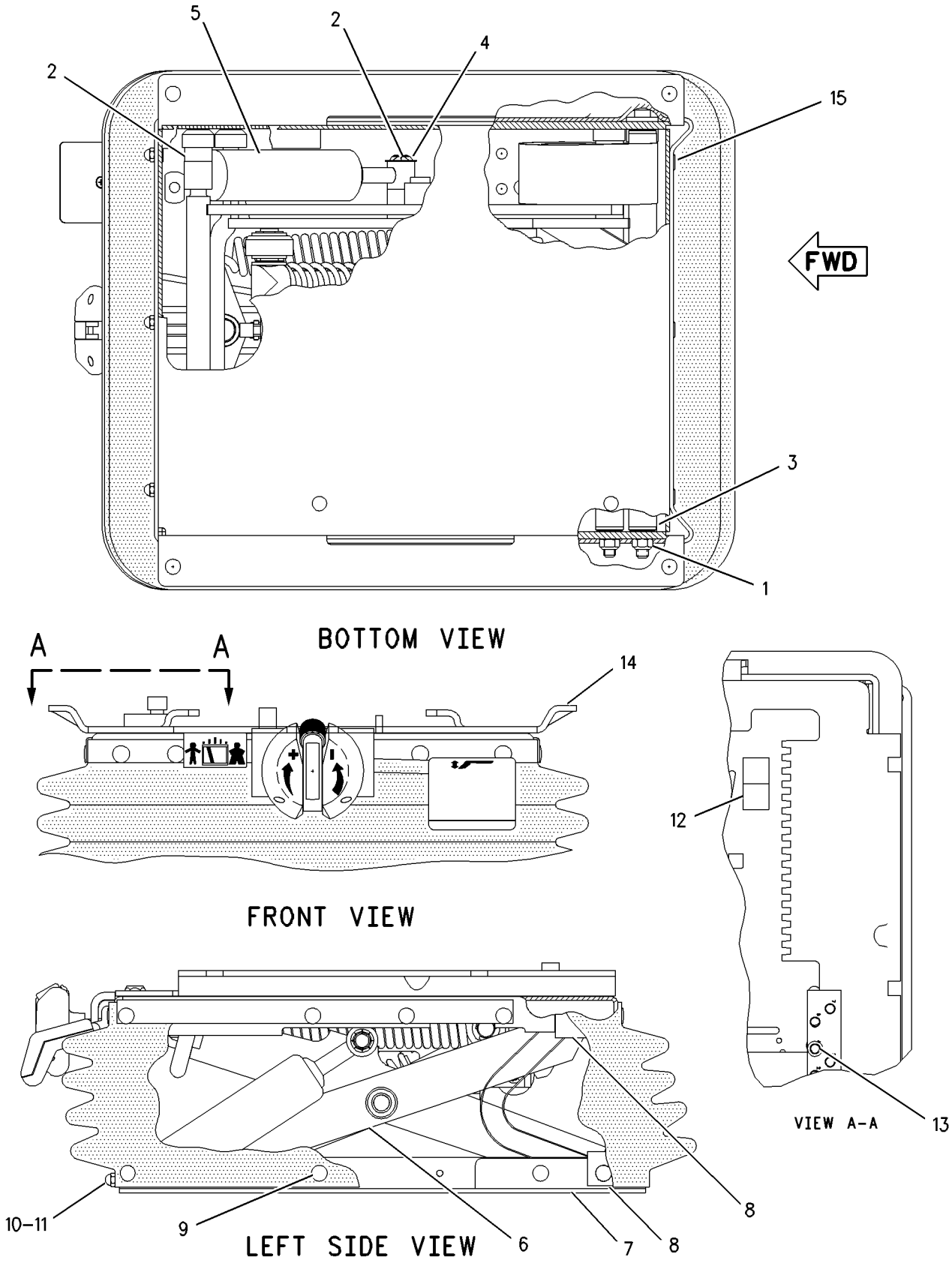

GRAPHIC #1 **<END>** g00801013

OPERATOR STATION

161-7539 SUSPENSION GP-SEAT—AIR

S/N: 7PZ1-614
24 VOLT
PART OF 159-2952 SEAT GP-SUSPENSION
AN ATTACHMENT

SMCS-7324 **i01897622**

NOTE	REF NO	GRAPHIC REF	PART NUMBER	QTY	PART NAME 1 2 3 4 5 6 (PRODUCT LEVEL)	SEE PAGE
	1	1	**1B-4430**	4	NUT-JAM (1/2-20 THD)	
	2	1	**3J-4818**	4	LOCKWASHER	
	3	1	**4V-7884**	2	BEARING	
	4	1	**4V-8556**	1	BOLT (3/8-16X2.34 IN)	
	5	1	**6K-0806**	1	STRAP-CABLE	
	6	1	**8L-8413**	5	STRAP-CABLE	
	7	1	**8Y-6917**	1	BOOT	
	8	1	**166-7401**	1	HOUSING AS	
	9	1	**9M-0164**	1	CLAMP-HOSE	
	10	1	**102-6317**	4	BUMPER	
	11	1	**123-8157**	2	SHAFT	
	12	1	**123-9131**	1	ABSORBER AS-SHOCK	
	13	1	**124-7128**	1	BUSHING-RELIEF	
	14	1	**128-0686**	2	SPACER (9.78X15.88X27.8MM THK)	
	15	1	**147-4549**	2	FITTING-ELBOW	
	16	1	**147-6522**	1	SPRING	
	17	1	**147-6523**	1	COMPRESSOR	
	18	1	**148-3749**	1	SCISSORS AS	
	19	1	**160-7765**	1	WASHER (16.26X22.23X1.97MM THK)	
B	20	1	**160-7766**	3	WASHER (16.26X22.23X0.51MM THK)	
B	21	1	**160-7767**	8	WASHER (3.68X12.57X0.51MM THK)	
	22	1	**164-5951**	1	HOUSING AS	
		1	**2K-4973**	1	LOCKNUT (3/8-16 THD)	
	23	1	**2K-4973**	3	LOCKNUT (3/8-16 THD)	
	24	1	**5P-8167**	1	BOLT (3/8-16X0.625 IN)	
	25	1	**8M-3267**	1	SCREW-HEX SOCKET (3/8-16X0.75 IN)	
	26	1	**8T-2501**	2	BOLT (3/8-16X2 IN)	
BE	27	1	**147-6541**		TUBE	
	28	1	**128-0613**	1	KIT-TETHER (SUSPENSION SEAT)	
					(INCLUDES 2 TETHERS)	
JZ	29	1		27	CLIP	
LZ	30	1		4	ROLLER	
LZ	31	1		4	BEARING	
PZ	32	1		1	HARNESS	
PZ	33	1		1	NUT	
PZ		1		1	WASHER (0.38X0.88X0.02 IN THK)	
PZ		1		1	WASHER	
	34	1	**169-7380**	1	BOLT-SOCKET HEAD (3/8-16X0.375 IN)	
	35	1	**145-0326**	1	FILM-INSTRUCTION (SEAT ADJUSTMENT)	
					AVAILABLE REPAIR KIT(S):	
J			**8Y-6928**	1	KIT-FASTENER (SUSPENSION SEAT)	
L			**123-9128**	1	KIT-ROLLER (SUSPENSION SEAT)	
					(INCLUDES TIE WRAP)	
P			**123-8266**	1	KIT-WIRING HARNESS (AIR SUSPENSION SEAT)	
					(INCLUDES TIE WRAPS)	

B-USE AS REQUIRED
E-ORDER BY THE CENTIMETER
J-REPAIR KIT MARKED J INCLUDES PART(S) MARKED J
L-REPAIR KIT MARKED L INCLUDES PART(S) MARKED L
P-REPAIR KIT MARKED P INCLUDES PART(S) MARKED P
Z-NOT SERVICED SEPARATELY

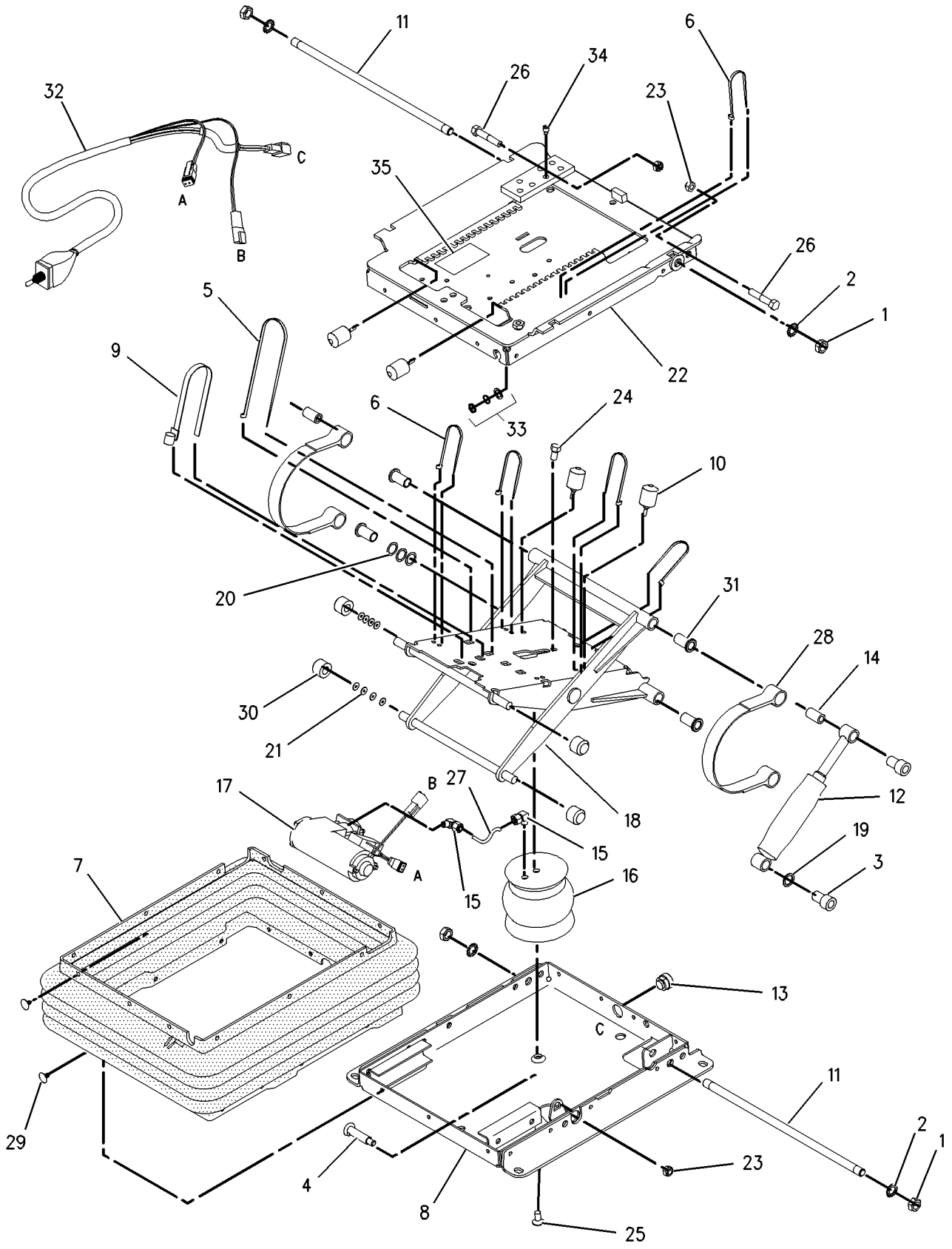

GRAPHIC #1 **<END>** g00835357

OPERATOR STATION

191-2933 SUSPENSION GP-SEAT—AIR

S/N: 7PZ615-UP
PART OF 220-8634 SEAT GP-SUSPENSION
AN ATTACHMENT

SMCS-7324 **i02012076**

NOTE	REF NO	GRAPHIC REF	PART NUMBER	QTY	PART NAME 1 2 3 4 5 6 (PRODUCT LEVEL)	SEE PAGE
	1	1	**3P-9900**	5	WASHER (10.5X30X3MM THK)	
	2	1	**4B-4278**	2	WASHER (10.2X20.5X1.6MM THK)	
	3	1	**4V-8577**	12	BEARING	
	4	1	**8L-8413**	1	STRAP-CABLE	
	5	1	**145-0326**	1	FILM-INSTRUCTION (SEAT ADJUSTMENT)	
	6	1	**164-1234**	1	PLATE	
	7	1	**164-1270**	33	FASTENER	
	8	1	**169-7380**	1	BOLT-SOCKET HEAD (3/8-16X0.375 IN)	
	9	1	**186-5107**	2	SCREW (NO 8 X 1.25 IN)	
	10	1	**192-7752**	4	SHAFT AS	
	11	1	**192-7755**	1	HOUSING AS	
	12	1	**192-7760**	1	SHAFT	
	13	1	**192-7767**	1	SCISSORS AS	
	14	1	**192-7783**	1	TOGGLE AS	
	15	1	**192-7787**	1	TOGGLE AS	
	16	1	**192-7790**	1	HOUSING AS	
	17	1	**192-7795**	1	BOOT	
	18	1	**192-7805**	1	HARNESS AS-VALVE (AIR COMPRESSOR)	
		1	**102-8802**	1	KIT-RECEPTACLE (2-PIN)	
	19	1	**192-7810**	1	SPRING AS-AIR	
		1	**5P-4423**	1	ELBOW	
		1	**163-1135**	1	SPRING	
	20	1	**192-7812**	1	BOLT-SHOULDER	
	21	1	**192-7820**	3	BUMPER	
	22	1	**192-7822**	1	SHAFT	
	23	1	**237-3943**	1	BRACKET	
Y	24	1	**237-3970**	1	AIR COMPRESSOR GP-SEAT	995
	25	1	**1H-8296**	1	SCREW-MACHINE	
	26	1	**2K-4973**	8	LOCKNUT (3/8-16 THD)	
	27	1	**3J-4818**	1	LOCKWASHER	
M	28	1	**5C-2890**	3	NUT (M6X1 THD)	
	29	1	**8T-9371**	1	BOLT (3/8-16X0.5 IN)	
E	30	1	**211-5358**		CONDUIT (100CM)	
D	31	1	**5P-6010**		TUBE (1M)	
					AVAILABLE REPAIR KIT(S):	
			192-7799	1	KIT-AIR VALVE (SUSPENSION SEAT)	
					(INCLUDES KNOB AS, NUT, VALVE, LOCKWASHER AND FITTING)	
			192-7848	1	KIT-SHOCK ABSORBER (SUSPENSION SEAT)	
					(INCLUDES LOCKNUT, LOCKWASHER, SHOCK ABSORBER, BEARING, WASHER, AND BOLTS)	
			211-9294	1	KIT-TETHER (SUSPENSION SEAT)	

D-ORDER BY THE METER
E-ORDER BY THE CENTIMETER
M-METRIC PART
Y-SEPARATE ILLUSTRATION

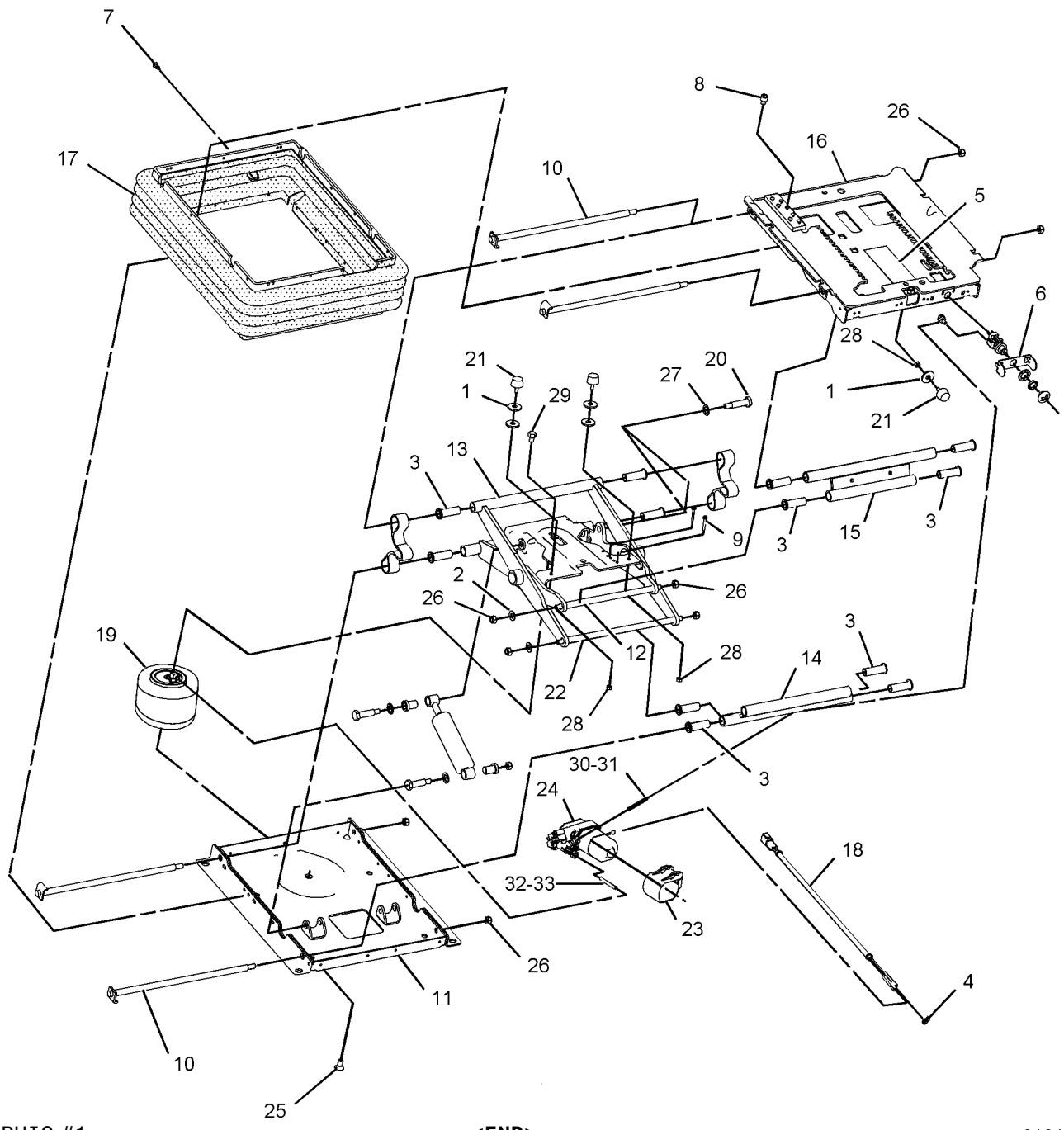

GRAPHIC #1 **<END>** g01011847

OPERATOR STATION

8E-7302 TANK GP-WINDOW WASHER

S/N: 7PZ1-357

PART OF 102-3456 TANK GP-WINDOW WASHER

SMCS-7306 **i01834563**

NOTE	REF NO	GRAPHIC REF	PART NUMBER	QTY	PART NAME 1 2 3 4 5 6 (PRODUCT LEVEL)	SEE PAGE
	1	1	**8E-8292**	1	CAP-VENTED (WINDOW WASHER TANK)	
	2	1	**8E-7301**	1	BOTTLE	
	3	1	**7T-8891**	4	PUMP AS-WASHER (WINDOW)	
	4	1	**8E-8293**	4	GROMMET	

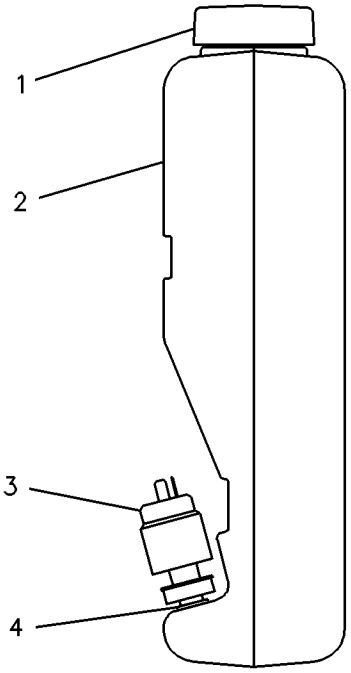

GRAPHIC #1 **<END>** g00230732

OPERATOR STATION

102-3456 TANK GP-WINDOW WASHER

S/N: 7PZ1-357

PART OF 157-3738 CAB AR

SMCS-7306 **i01989139**

NOTE	REF NO	GRAPHIC REF	PART NUMBER	QTY	PART NAME 1 2 3 4 5 6 (PRODUCT LEVEL)	SEE PAGE
Y	1	1	**8E-7302**	1	TANK GP-WINDOW WASHER	1136
D	2	1	**5P-5992**		HOSE (.63M EACH)	
	3	1	**8T-9364**	4	BOLT (1/4-20X0.625 IN)	
		1	**8T-4205**	4	WASHER-HARD (7.2X14.5X2MM THK)	
	4	1	**7Y-3281**	4	GROMMET	
	5	1	**8E-6887**	1	PLATE	
	6	1	**8E-7792**	1	STRAP	
	7	1	**8E-7793**	1	STRAP	
	8	1	**9U-9014**	1	HARNESS AS-PUMP (WINDOW WASHER)	
	9	1	**7K-1181**	2	STRAP-CABLE	
BD	10	1	**8T-6936**		SEAL	
	11	1	**8T-5383**	4	VALVE AS-CHECK (WIPER/WASHER SYSTEM)	
B	12	1	**7K-1181**	1	STRAP-CABLE	

B-USE AS REQUIRED
D-ORDER BY THE METER
Y-SEPARATE ILLUSTRATION

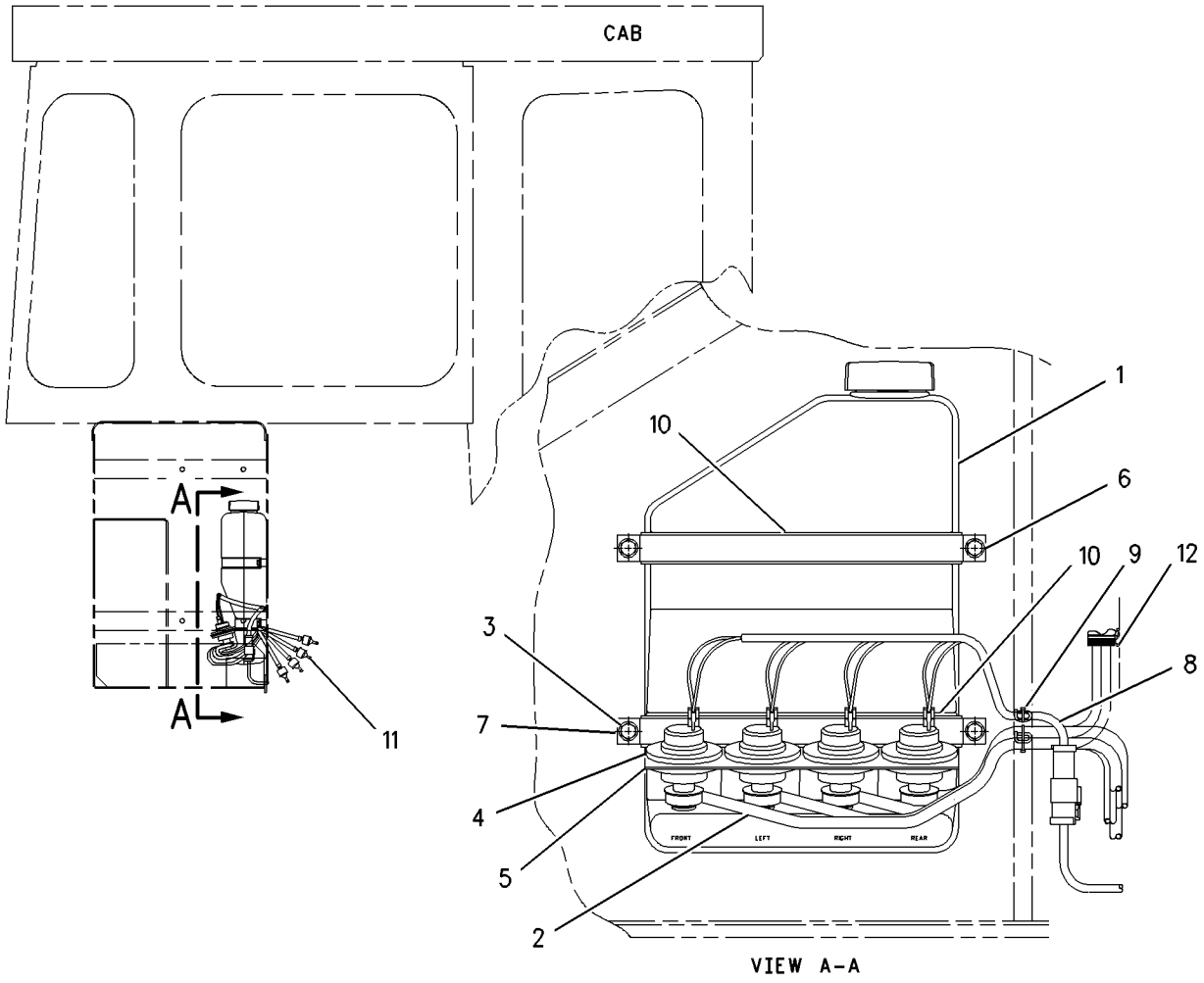

GRAPHIC #1 **<END>** g00879036

OPERATOR STATION

169-9649 TANK GP-WINDOW WASHER

S/N: 7PZ358-UP

PART OF 186-5899 TANK GP-WINDOW WASHER

SMCS-7306 **i01834570**

NOTE	REF NO	GRAPHIC REF	PART NUMBER	QTY	PART NAME 1 2 3 4 5 6 (PRODUCT LEVEL)	SEE PAGE
	1	1	**169-9650**	1	TANK-WASHER	
	2	1	**8E-8292**	1	CAP-VENTED (WINDOW WASHER TANK)	
E	3	1	**144-0195**		HOSE (61CM EACH)	
	4	1	**186-4857**	1	HARNESS AS (WINDOW WASHER PUMP)	
BD	5	1	**6V-5817**		CONDUIT-FLEXIBLE	
	6	1	**7T-8891**	4	PUMP AS-WASHER	
B	7	1	**3S-2093**	6	STRAP-CABLE	
E	8	1	**144-0195**		HOSE (15CM EACH)	
E	9	1	**144-0195**		HOSE (57CM EACH)	

B-USE AS REQUIRED
D-ORDER BY THE METER
E-ORDER BY THE CENTIMETER

169-9649 TANK GP-WINDOW WASHER *(contd.)* i01834570

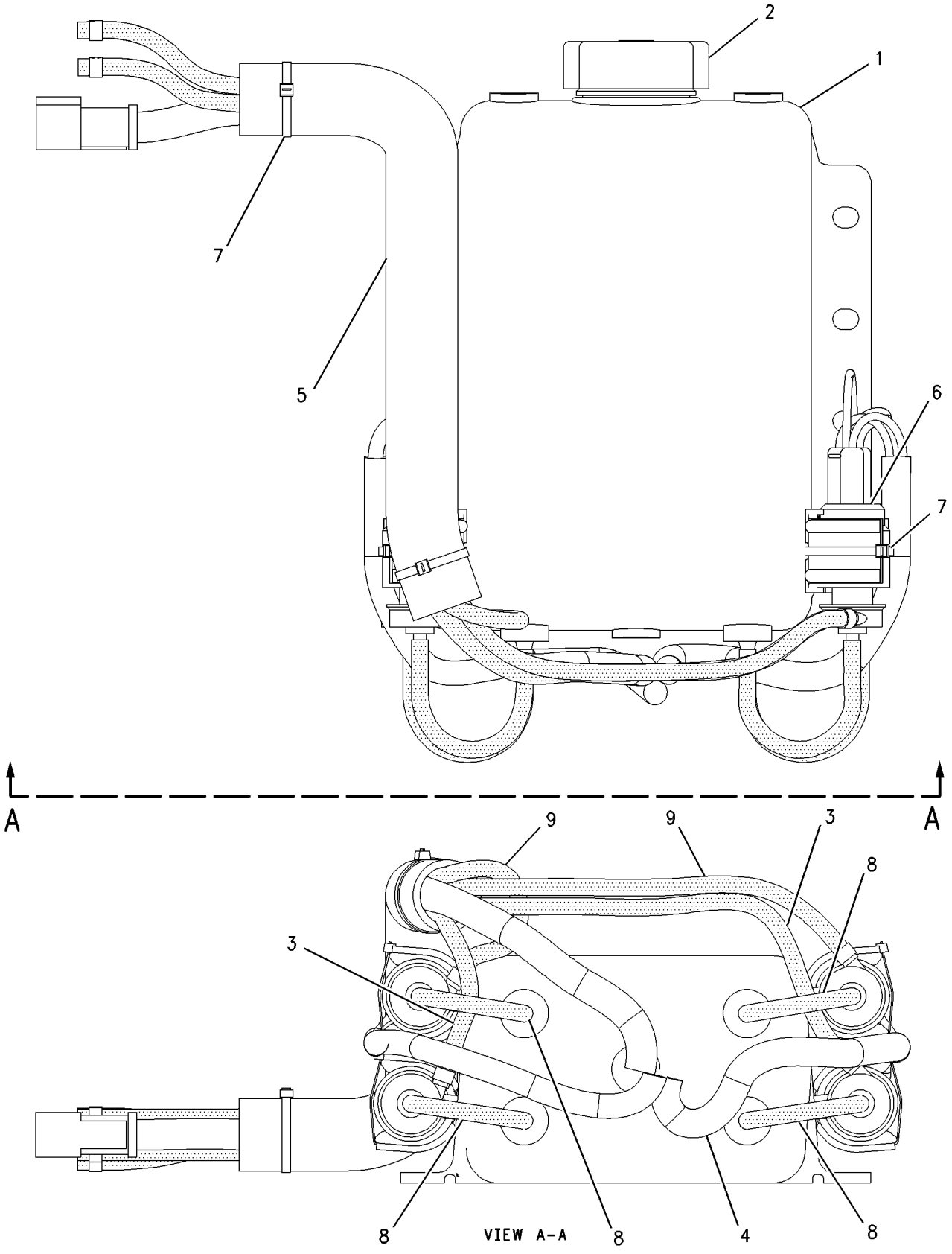

GRAPHIC #1 **<END>** g00824992

OPERATOR STATION

186-5899 TANK GP-WINDOW WASHER

S/N: 7PZ358-UP

PART OF 157-3738 CAB AR

SMCS-7306 **i01989142**

NOTE	REF NO	GRAPHIC REF	PART NUMBER	QTY	PART NAME 1 2 3 4 5 6 (PRODUCT LEVEL)	SEE PAGE
	1	1	**8T-9364**	1	BOLT (1/4-20X0.625 IN)	
	2	1	**8T-5383**	4	VALVE AS-CHECK (WIPER/WASHER SYSTEM)	
	3	1	**9X-6772**	5	STRAP-CABLE	
Y	4	1	**169-9649**	1	TANK GP-WINDOW WASHER	1138
	5	1	**156-6175**	1	CLIP	
	6	1	**3E-9865**	4	LOCKNUT (1/4-20 THD)	
	7	1	**8T-4205**	4	WASHER-HARD (7.2X14.5X2MM THK)	

Y-SEPARATE ILLUSTRATION

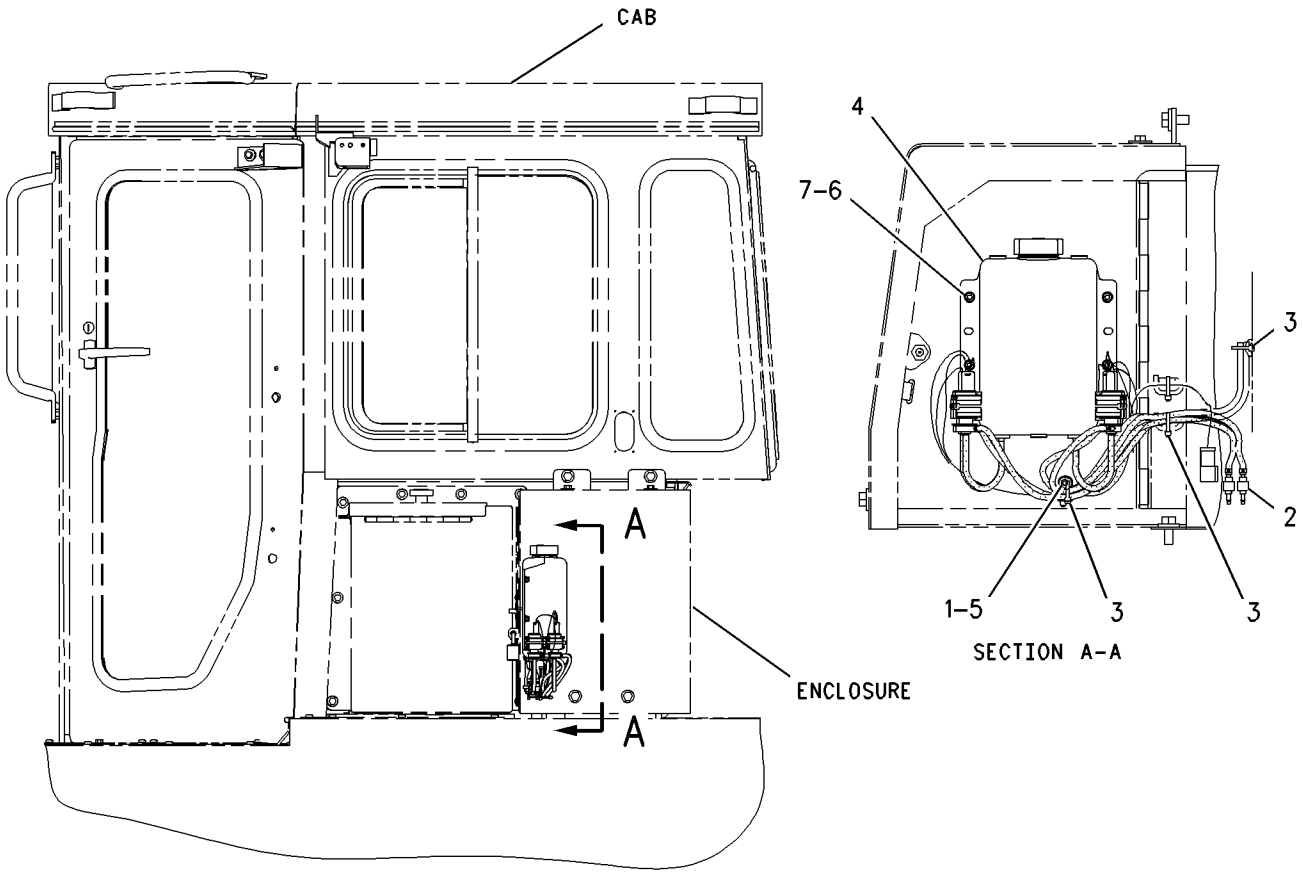

LEFT SIDE VIEW

GRAPHIC #1 **<END>** g00688043

OPERATOR STATION

157-3736 WASHER GP-WINDOW

S/N: 7PZ1-UP
PART OF 157-4817 CAB AR
ALSO AN ATTACHMENT

SMCS-7306 **i01834572**

NOTE	REF NO	GRAPHIC REF	PART NUMBER	QTY	PART NAME 1 2 3 4 5 6 (PRODUCT LEVEL)	SEE PAGE
	1	1	**157-5129**	1	HARNESS AS (CAB ROOF)	
	2	1	**9U-9048**	1	HARNESS AS-RADIO	
E	3	1	**144-0195**		HOSE (405CM)	
	4	1	**9D-3768**	8	GROMMET	
E	5	1	**7X-7702**		CONDUIT-FLEXIBLE (122CM)	
	6	1,2	**8T-5400**	6	CONNECTOR	
M	7	1,2	**6V-6889**	6	NUT (M8X1.25 THD)	
	8	1	**6V-8801**	1	NUT (3/8-16 THD)	
	9	1,2	**2P-4337**	4	SCREW-TAPPING	
	10	1	**5S-7349**	2	BOLT (1/4-20X0.5 IN)	
	11	2	**9N-1995**	4	RIVET-POP	
BD	12	1,2	**5P-7086**		TRIM	
	13	1	**8E-2589**	2	CLIP	
	14	1,2	**4P-7581**	2	CLIP	
	15	1,2	**6K-9632**	2	TEE	
	16	2	**102-8803**	1	KIT-RECEPTACLE (3 PIN)	
					(INCLUDES RECEPTACLE AS & WEDGE)	
	17	2	**8E-6856**	1	COVER	
B	18	1	**8L-8413**	28	STRAP-CABLE	
	19	1,2	**8T-4205**	6	WASHER-HARD (7.2X14.5X2MM THK)	
	20	1	**8T-4896**	1	WASHER-HARD (10.2X18.5X2.5MM THK)	
	21	2	**2D-0388**	2	GROMMET	
E	22	2	**144-0195**		HOSE (422CM)	
	23	1,2	**4P-8134**	2	CLIP	
E	24	1,2	**144-0195**		HOSE (480CM)	
E	25	1,2	**144-0195**		HOSE (290CM EACH)	
E	26	1,2	**144-0195**		HOSE (160CM EACH)	
	27	1,2	**8T-8737**	3	PLUG-SEAL	
	28	2	**3E-3371**	1	WEDGE-RECEPTACLE LOCK (3 PIN)	

B-USE AS REQUIRED
D-ORDER BY THE METER
E-ORDER BY THE CENTIMETER
M-METRIC PART

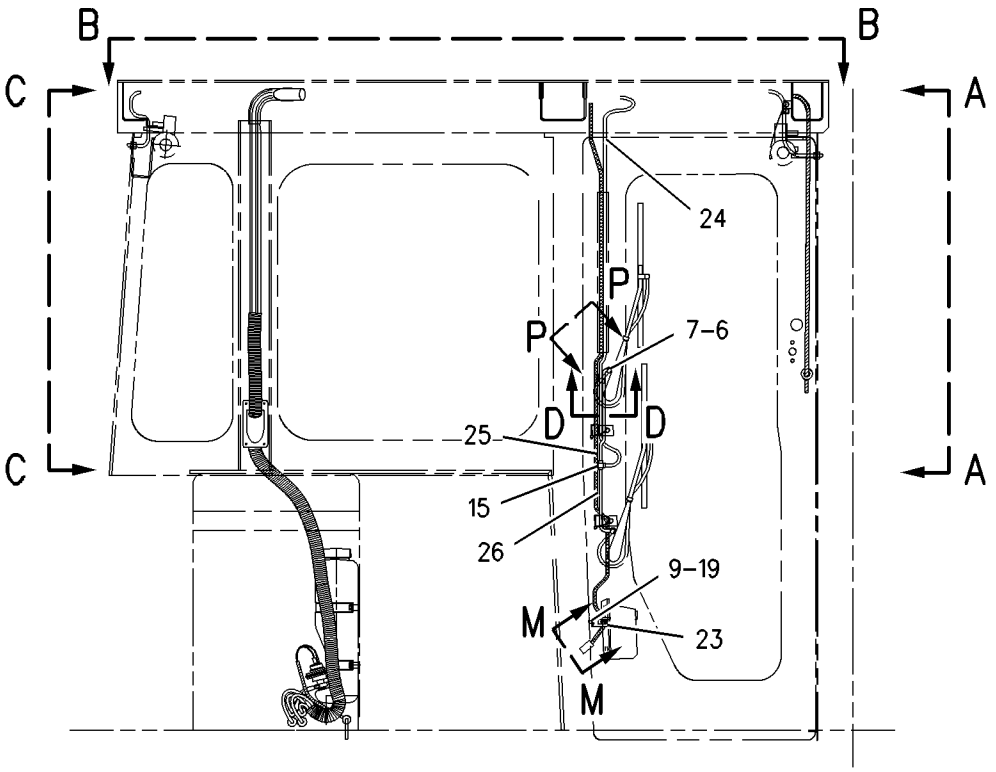

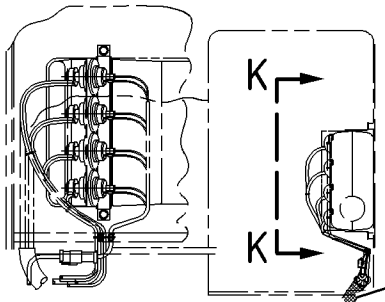

VIEW K-K

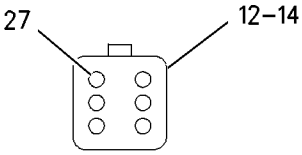

VIEW M-M

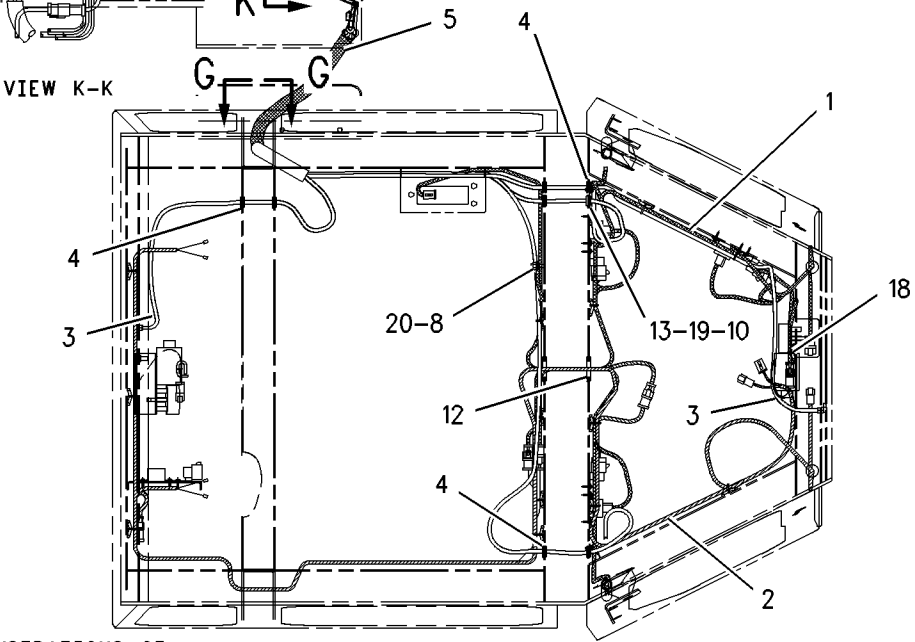

REFER TO ALL ILLUSTRATIONS OF THIS GROUP FOR AUXILIARY VIEWS

GRAPHIC #1 g00862542

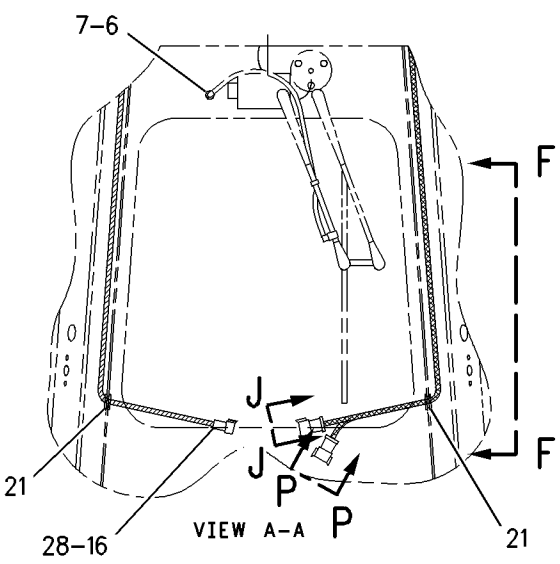

VIEW A-A

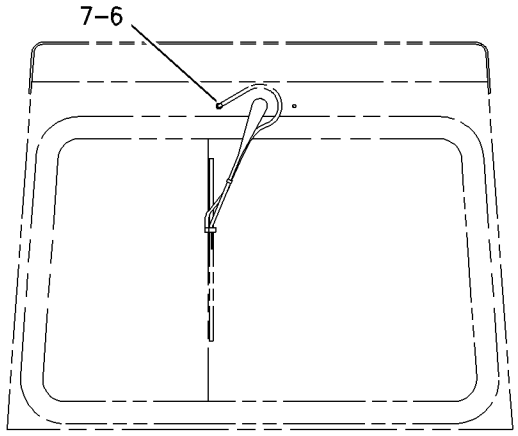

VIEW C-C

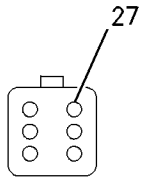

VIEW N-N

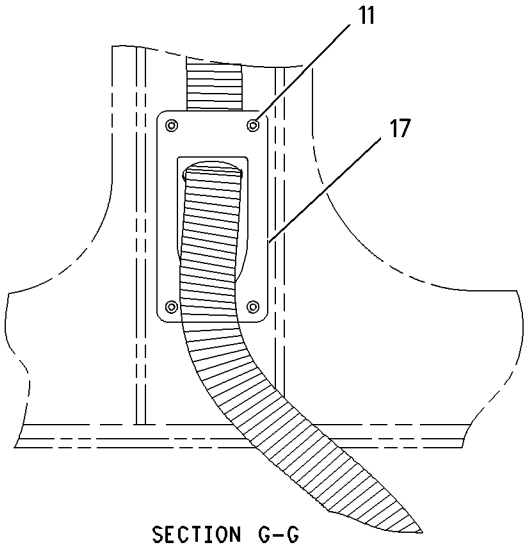

SECTION G-G

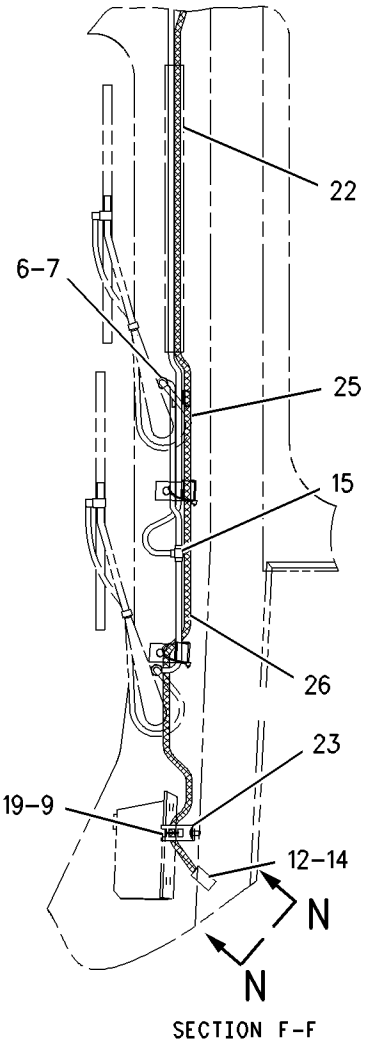

SECTION F-F

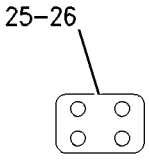

VIEW P-P

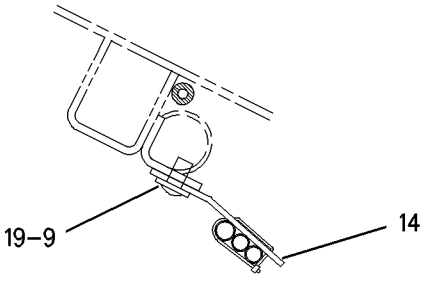

SECTION D-D

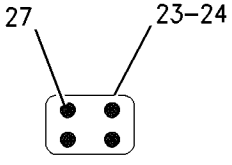

VIEW J-J

GRAPHIC #2 **<END>** g00862541

8E-5113 WINDOW AS-SLIDING—RH

S/N: 7PZ1-UP
PART OF 157-3737 CAB GP
ALSO AN ATTACHMENT

SMCS-7310 **i02029225**

NOTE	PART NUMBER	QTY	PART NAME 1 2 3 4 5 6 (PRODUCT LEVEL)	SEE PAGE
Y	*6T-8402*	1	WINDOW GP-CAB (RH) (RH)(SLIDING)	1145
			—OR—	
Y	*8E-3446*	1	WINDOW GP-CAB (RH) (RH)(SLIDING)	1151

Y-SEPARATE ILLUSTRATION

<END>

8E-5114 WINDOW AS-SLIDING—LH

S/N: 7PZ1-UP
PART OF 157-3737 CAB GP
ALSO AN ATTACHMENT

SMCS-7310 **i02029226**

NOTE	PART NUMBER	QTY	PART NAME 1 2 3 4 5 6 (PRODUCT LEVEL)	SEE PAGE
Y	*6T-8403*	1	WINDOW GP-CAB (LH) (LH)(SLIDING)	1146
			—OR—	
Y	*8E-3447*	1	WINDOW GP-CAB (LH) (LH)(SLIDING)	1152

Y-SEPARATE ILLUSTRATION

<END>

6T-8402 WINDOW GP-CAB—RH SLIDING

S/N: 7PZ1-UP
PART OF 8E-5113 WINDOW AS-SLIDING
ALSO AN ATTACHMENT

SMCS-7310 **i01989124**

NOTE	REF NO	GRAPHIC REF	PART NUMBER	QTY	PART NAME 1 2 3 4 5 6 (PRODUCT LEVEL)	SEE PAGE
Y	1	1	**7T-1068**	1	WINDOW GP-CAB (RH)	1147
	2	1	**7T-1330**	1	GLASS (TINTED)(RH-CAB)	
D	3	1	**5P-5680**		SEAL (1.14M)	
DB	4	1	**8T-0687**		FILLER	
D	5	1	**5P-5680**		SEAL (.66M)	
D	6	1	**6V-5833**		SEAL (.64M)	
E	7	1	**8Y-6839**		SEAL (64CM)	

B-USE AS REQUIRED
D-ORDER BY THE METER
E-ORDER BY THE CENTIMETER
Y-SEPARATE ILLUSTRATION

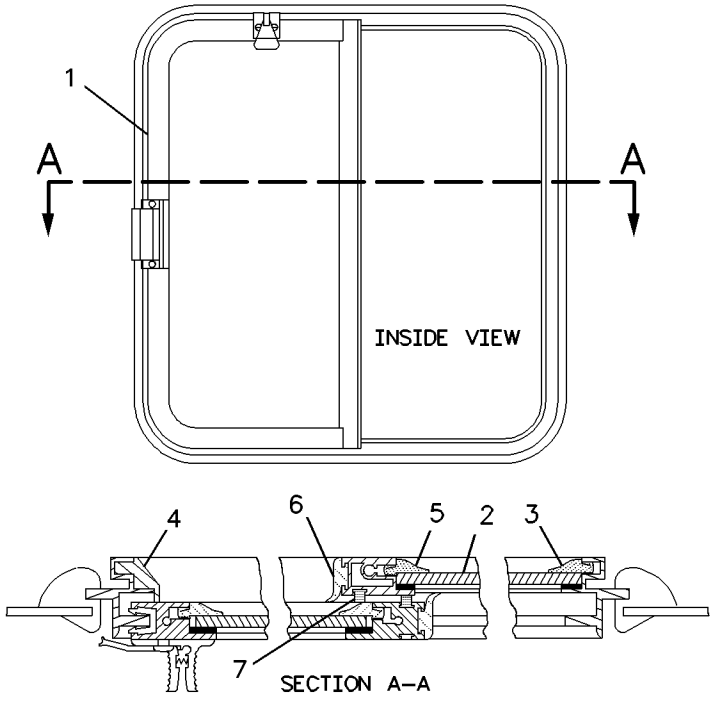

GRAPHIC #1 **<END>** g00844619

OPERATOR STATION

6T-8403 WINDOW GP-CAB—LH SLIDING

S/N: 7PZ1-UP
PART OF 8E-5114 WINDOW AS-SLIDING
ALSO AN ATTACHMENT

SMCS-7310 **i01989125**

NOTE	REF NO	GRAPHIC REF	PART NUMBER	QTY	PART NAME 1 2 3 4 5 6 (PRODUCT LEVEL)	SEE PAGE
BD	1	1	**5P-5680**		SEAL	
BD	2	1	**8T-0687**		FILLER	
BD	3	1	**6V-5833**		SEAL	
Y	4	1	**7T-1069**	1	WINDOW GP-CAB (LH)	1149
BE	5	1	**8Y-6839**		SEAL	
	6	1	**7T-1330**	1	GLASS (TINTED)(LH-CAB)	

B-USE AS REQUIRED
D-ORDER BY THE METER
E-ORDER BY THE CENTIMETER
Y-SEPARATE ILLUSTRATION

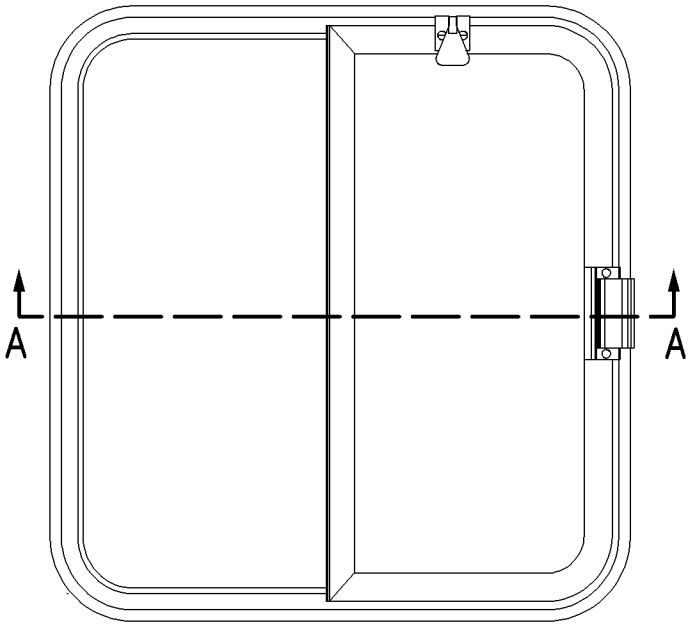

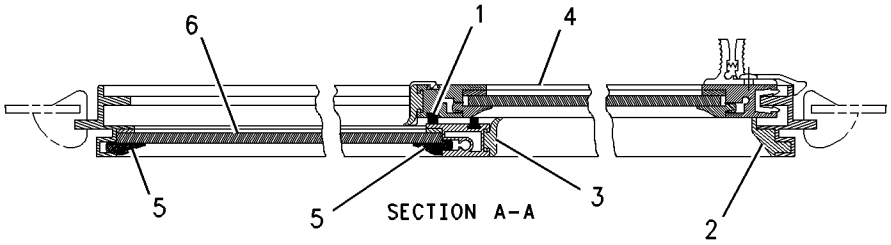

GRAPHIC #1 **<END>** g00842070

OPERATOR STATION

7T-1068 WINDOW GP-CAB—RH

S/N: 7PZ1-UP
PART OF 6T-8402 WINDOW GP-CAB
ALSO AN ATTACHMENT
TYPE 1

SMCS-7310 **i01834646**

NOTE	REF NO	GRAPHIC REF	PART NUMBER	QTY	PART NAME 1 2 3 4 5 6 (PRODUCT LEVEL)	SEE PAGE
	1	1	**3T-1121**	1	LOCK AS	
	2	1	**2H-6622**	2	SCREW-MACHINE	
	3	1	**9P-7860**	1	LOCK AS	
	4	1	**9P-7859**	2	SCREW	
BD	5	1	**5P-5680**		SEAL (.61M)	
EB	6	1	**9X-6268**		TAPE	
BD	7	1	**6V-5833**		SEAL (.64M)	
BD	8	1	**5P-8918**		SEAL (1.2M)	
BD	9	1	**8Y-6448**	1	GLASS	
BE	10	1	**8Y-6839**		SEAL (64CM)	
BD	11	1	**5P-5680**		SEAL (1.1M)	
	12	1	**124-9774**	1	SLIDE	
	13	1	**117-5677**	1	SLIDE	

B-USE AS REQUIRED
D-ORDER BY THE METER
E-ORDER BY THE CENTIMETER

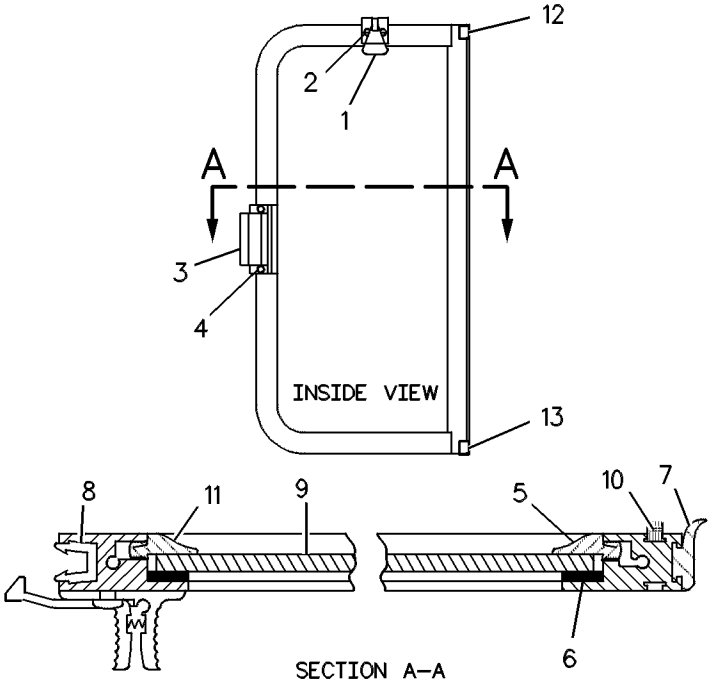

GRAPHIC #1 **<END>** g00257169

7T-1068 WINDOW GP-CAB—RH

S/N: 7PZ1-UP
PART OF 6T-8402 WINDOW GP-CAB
ALSO AN ATTACHMENT
TYPE 2

SMCS-7310 **i01612444**

NOTE	REF NO	GRAPHIC REF	PART NUMBER	QTY	PART NAME 1 2 3 4 5 6 (PRODUCT LEVEL)	SEE PAGE
	1	1	**3T-1121**	1	LOCK AS	
	2	1	**2H-6622**	2	SCREW-MACHINE	
	3	1	**9P-7860**	1	LOCK AS	
	4	1	**9P-7859**	2	SCREW	
BD	5	1	**5P-5680**		SEAL	
BD	6	1	**6V-5833**		SEAL	
BD	7	1	**5P-8918**		SEAL	
BD	8	1	**8Y-6448**	1	GLASS	
BE	9	1	**8Y-6839**		SEAL	

B-USE AS REQUIRED
D-ORDER BY THE METER
E-ORDER BY THE CENTIMETER

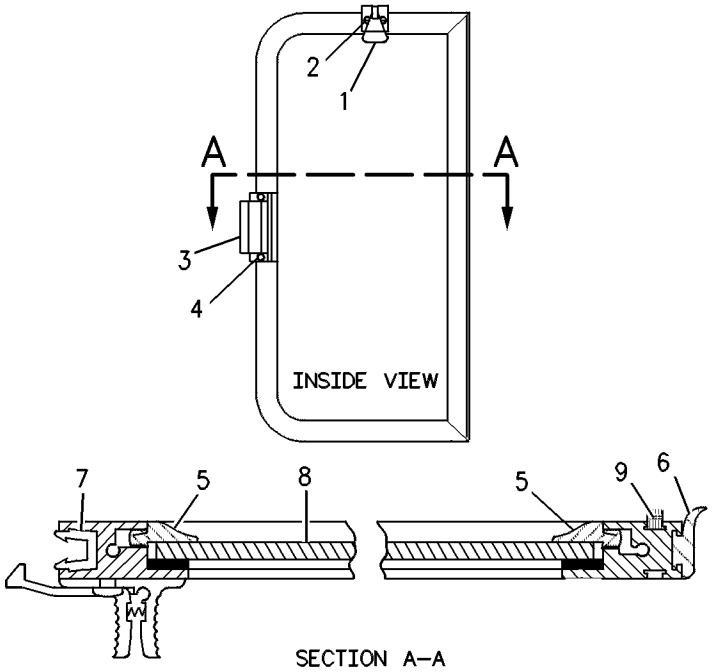

SECTION A—A

GRAPHIC #1 **<END>** g00834657

OPERATOR STATION

7T-1069 WINDOW GP-CAB—LH

S/N: 7PZ1-UP
PART OF 6T-8403 WINDOW GP-CAB
ALSO AN ATTACHMENT
TYPE 1

SMCS-7310 **i01834655**

NOTE	REF NO	GRAPHIC REF	PART NUMBER	QTY	PART NAME 1 2 3 4 5 6 (PRODUCT LEVEL)	SEE PAGE
	1	1	**3T-1121**	1	LOCK AS	
	2	1	**2H-6622**	2	SCREW-MACHINE	
	3	1	**9P-7860**	1	LOCK AS	
	4	1	**9P-7859**	2	SCREW	
D	5	1	**5P-5680**		SEAL (.61M)	
EB	6	1	**9X-6268**		TAPE	
D	7	1	**6V-5833**		SEAL (.64M)	
D	8	1	**5P-8918**		SEAL (1.2M)	
	9	1	**8Y-6448**	1	GLASS	
E	10	1	**8Y-6839**		SEAL (64CM)	
D	11	1	**5P-5680**		SEAL (1.1M)	
	12	1	**124-9774**	1	SLIDE	
	13	1	**117-5677**	1	SLIDE	

B-USE AS REQUIRED
D-ORDER BY THE METER
E-ORDER BY THE CENTIMETER

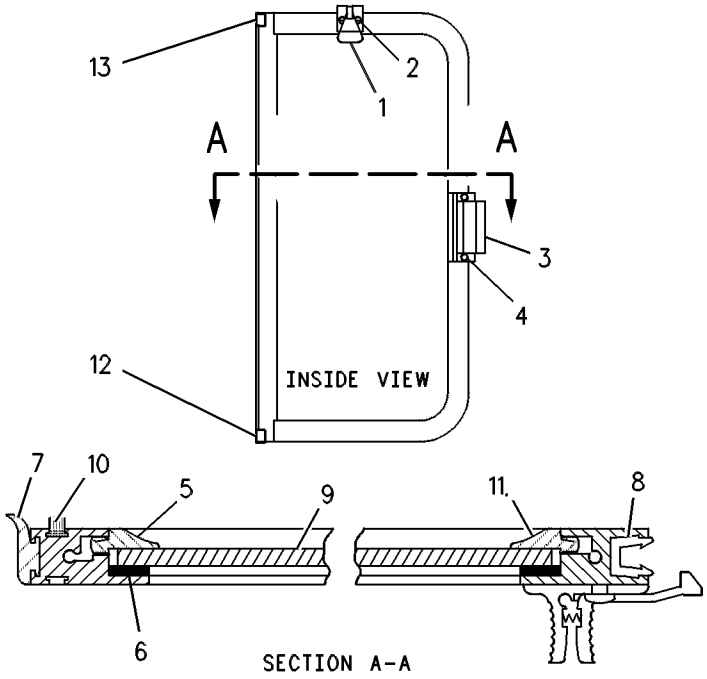

GRAPHIC #1 **<END>** g00326280

7T-1069 WINDOW GP-CAB—LH

S/N: 7PZ1-UP
PART OF 6T-8403 WINDOW GP-CAB
ALSO AN ATTACHMENT
TYPE 2

SMCS-7310 **i01612493**

NOTE	REF NO	GRAPHIC REF	PART NUMBER	QTY	PART NAME 1 2 3 4 5 6 (PRODUCT LEVEL)	SEE PAGE
	1	1	**3T-1121**	1	LOCK AS	
	2	1	**2H-6622**	2	SCREW-MACHINE	
	3	1	**9P-7860**	1	LOCK AS	
	4	1	**9P-7859**	2	SCREW	
BD	5	1	**5P-5680**		SEAL	
BD	6	1	**6V-5833**		SEAL	
BD	7	1	**5P-8918**		SEAL	
	8	1	**8Y-6448**	1	GLASS	
BE	9	1	**8Y-6839**		SEAL	

B-USE AS REQUIRED
D-ORDER BY THE METER
E-ORDER BY THE CENTIMETER

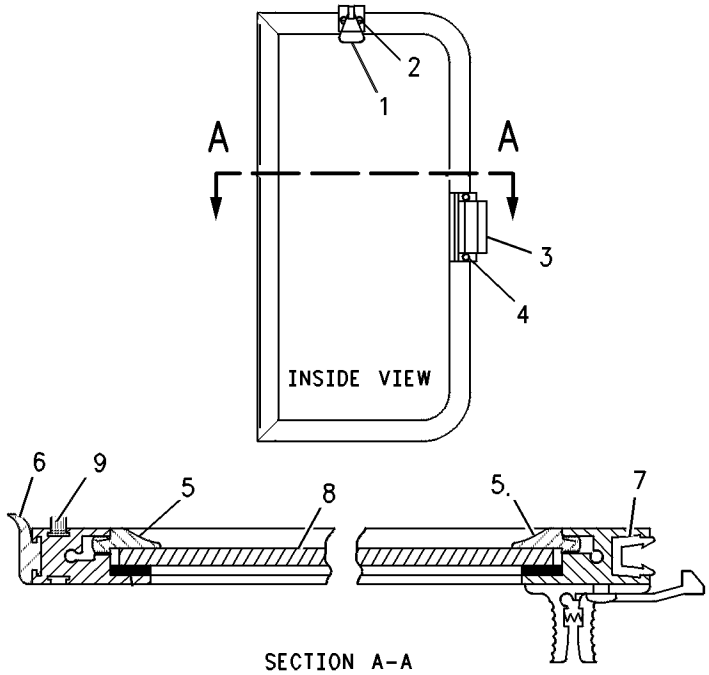

SECTION A-A

GRAPHIC #1 **<END>** g00834641

OPERATOR STATION

8E-3446 WINDOW GP-CAB—RH SLIDING

S/N: 7PZ1-UP
PART OF 8E-5113 WINDOW AS-SLIDING
ALSO AN ATTACHMENT

SMCS-7310 **i01989127**

NOTE	REF NO	GRAPHIC REF	PART NUMBER	QTY	PART NAME 1 2 3 4 5 6 (PRODUCT LEVEL)	SEE PAGE
BE	1	1	**8Y-6423**		SEAL	
BE	2	1	**8Y-6459**		TAPE-BUTYL	
	3	1	**8Y-6430**	1	SEAL-WINDOW	
Y	4	1	**8Y-6433**	1	WINDOW GP-CAB (RH)	1155
	5	1	**8Y-6462**	1	KIT-LEAF SPRING (CAB WINDOW)	
					(INCLUDES SPRING AS & RIVET)	
	6	1	**8Y-6432**	1	GLASS-FIXED-RH (TINTED)	
BE	7	1	**8Y-6424**		SEAL	
BE	8	1	**8Y-6910**		WEATHERSTRIP	

B-USE AS REQUIRED
E-ORDER BY THE CENTIMETER
Y-SEPARATE ILLUSTRATION

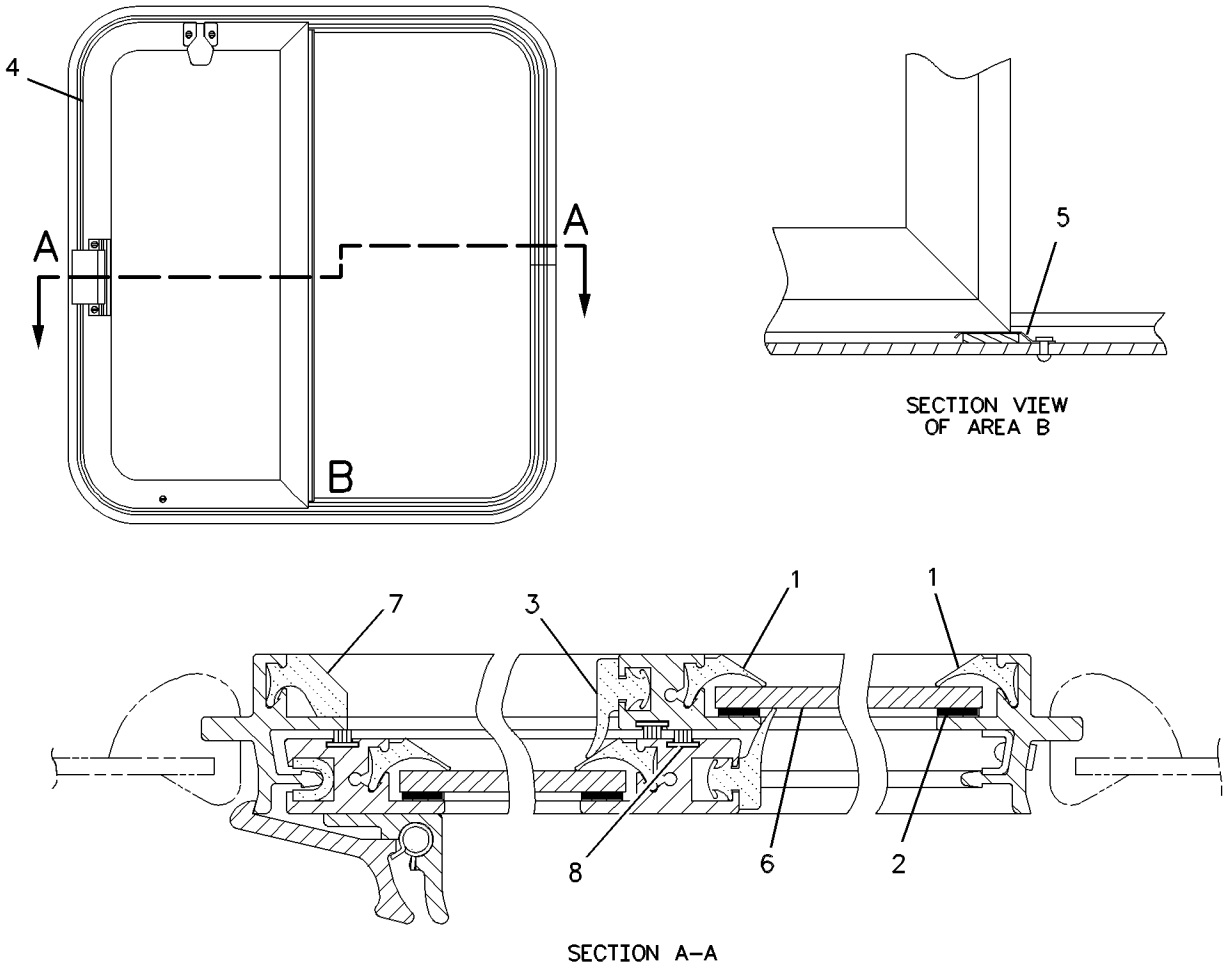

GRAPHIC #1 **<END>** g00544799

OPERATOR STATION

8E-3447 WINDOW GP-CAB—LH SLIDING

S/N: 7PZ1-UP
PART OF 8E-5114 WINDOW AS-SLIDING
ALSO AN ATTACHMENT

SMCS-7310 **i01989128**

NOTE	REF NO	GRAPHIC REF	PART NUMBER	QTY	PART NAME 1 2 3 4 5 6 (PRODUCT LEVEL)	SEE PAGE
BE	1	1	**8Y-6423**		SEAL	
BE	2	1	**8Y-6459**		TAPE-BUTYL	
	3	1	**8Y-6430**	1	SEAL-WINDOW	
Y	4	1	**8Y-6420**	1	WINDOW GP-CAB (LH)	1153
	5	1	**8Y-6462**	1	KIT-LEAF SPRING (CAB WINDOW)	
					(INCLUDES SPRING AS & RIVET)	
	6	1	**8Y-6419**	1	GLASS-FIXED-LH (TINTED)	
BE	7	1	**8Y-6424**		SEAL	
BE	8	1	**8Y-6910**		WEATHERSTRIP	

B-USE AS REQUIRED
E-ORDER BY THE CENTIMETER
Y-SEPARATE ILLUSTRATION

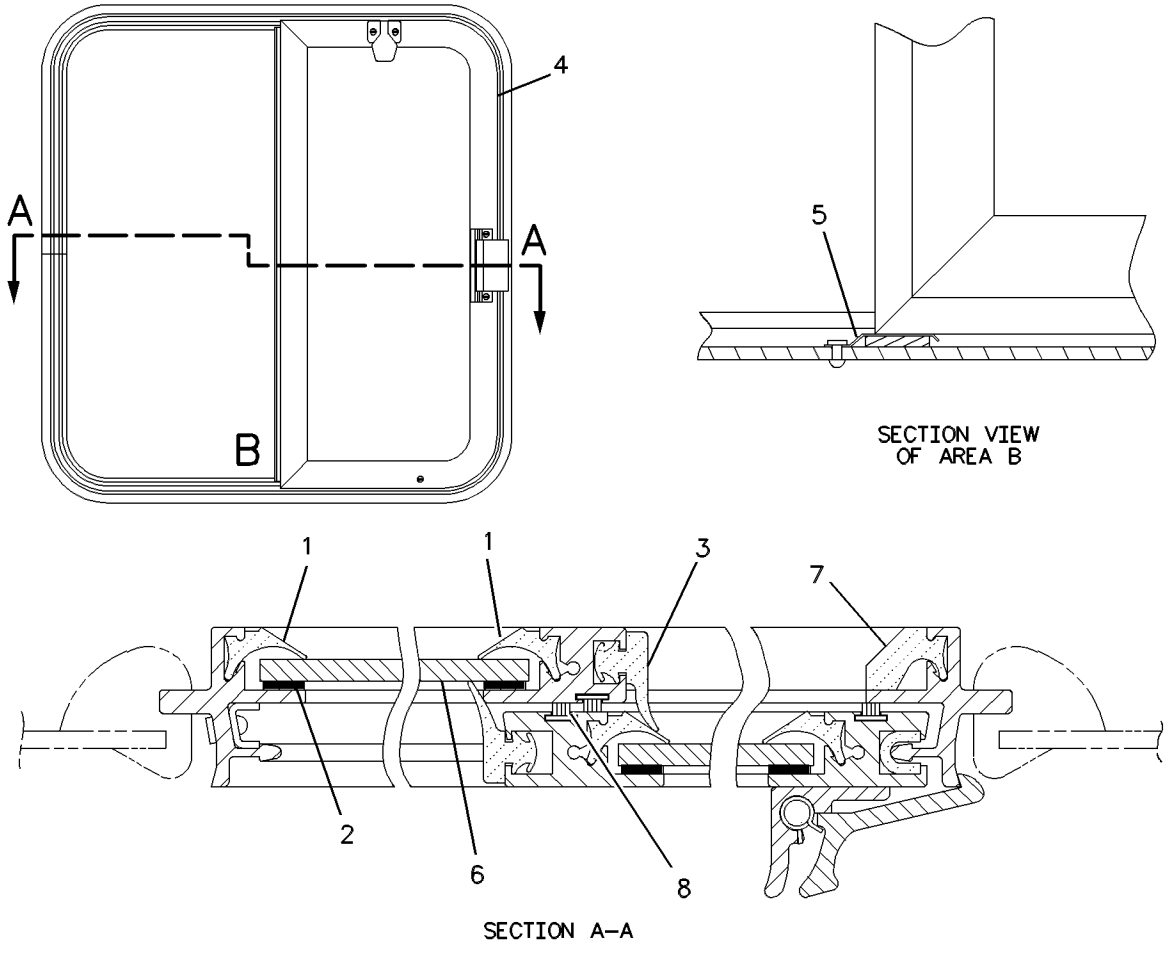

GRAPHIC #1 **<END>** g00544804

OPERATOR STATION

8Y-6420 WINDOW GP-CAB—LH

S/N: 7PZ1-UP
PART OF 8E-3447 WINDOW GP-CAB
ALSO AN ATTACHMENT

SMCS-7310 **i01989132**

NOTE	REF NO	GRAPHIC REF	PART NUMBER	QTY	PART NAME 1 2 3 4 5 6 (PRODUCT LEVEL)	SEE PAGE
	1	1	**8Y-6454**	1	KIT-CATCH (CAB WINDOW)	
					(INCLUDES CATCH AS & 2 SCREWS)	
M	2	1	**084-4111**	2	SCREW-PAN HEAD	
	3	1	**8Y-6455**	1	KIT-CATCH (CAB WINDOW)	
					(INCLUDES CATCH AS & 2 SCREWS)	
M	4	1	**8T-4777**	2	SCREW-MACHINE (M5X0.8X12MM)	
	5	1	**8Y-6460**	1	KIT-RUNNER GUIDE (CAB WINDOW)	
					(INCLUDES GUIDE & SCREW)	
	6	1	**3S-9557**	2	SCREW-PAN HEAD (4-40X0.5 IN)	
	7	1	**8Y-6461**	1	KIT-RUNNER GUIDE (CAB WINDOW)	
					(INCLUDES GUIDE & SCREW)	
M	8	1	**6V-2312**	2	SCREW-MACHINE (M6X1X25MM)	
BE	9	1	**8Y-6423**		SEAL	
	10	1	**8Y-6430**	1	SEAL-WINDOW	
BE	11	1	**8Y-6459**		TAPE-BUTYL	
	12	1	**8Y-6422**	1	GLASS-SLIDER (LH) (TINTED) (CAB)	
BE	13	1	**8Y-6910**		WEATHERSTRIP	

B-USE AS REQUIRED
E-ORDER BY THE CENTIMETER
M-METRIC PART

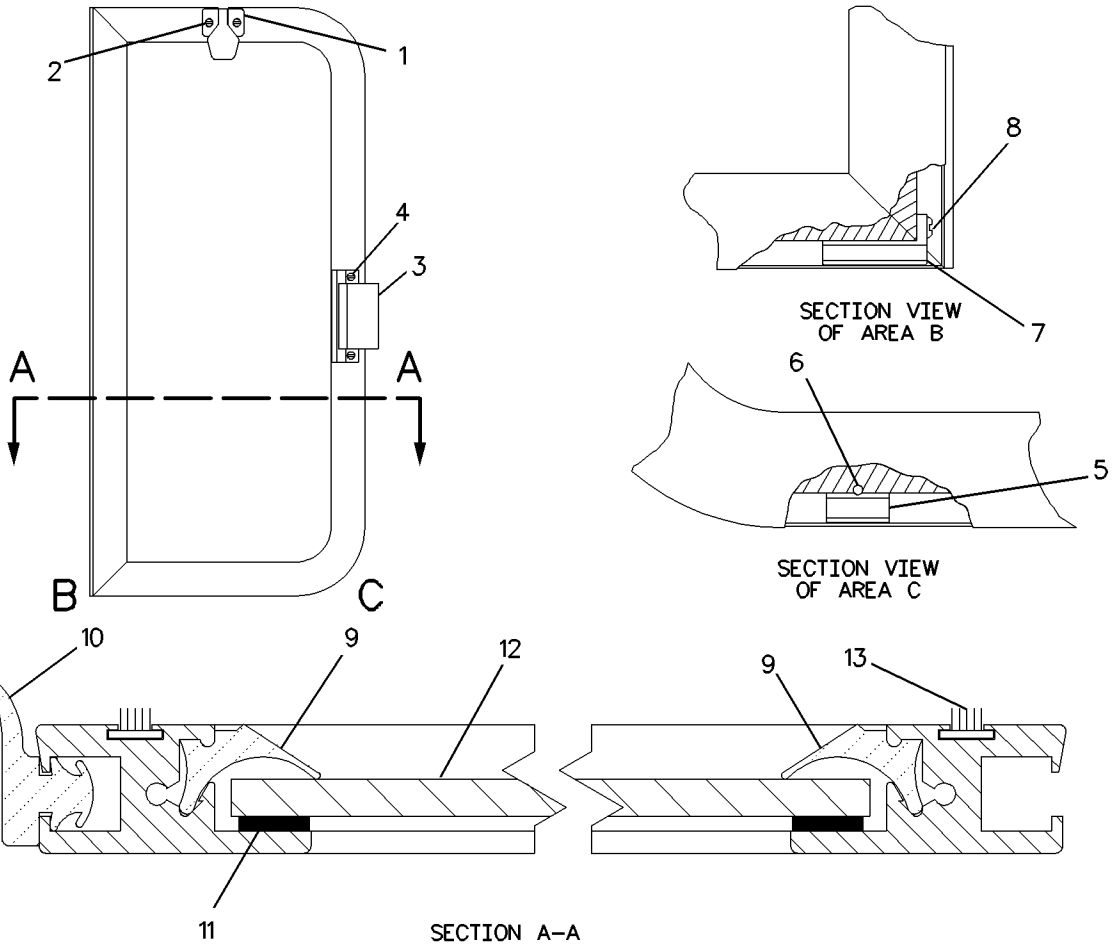

GRAPHIC #1 **<END>** g00864814

8Y-6433 WINDOW GP-CAB–RH

S/N: 7PZ1-UP
PART OF 8E-3446 WINDOW GP-CAB
ALSO AN ATTACHMENT

SMCS-7310 **i01989133**

NOTE	REF NO	GRAPHIC REF	PART NUMBER	QTY	PART NAME 1 2 3 4 5 6 (PRODUCT LEVEL)	SEE PAGE
	1	1	**8Y-6454**	1	KIT-CATCH (CAB WINDOW)	
					(INCLUDES CATCH AS & 2 SCREWS)	
M	2	1	**084-4111**	2	SCREW-PAN HEAD	
	3	1	**8Y-6455**	1	KIT-CATCH (CAB WINDOW)	
					(INCLUDES CATCH AS & 2 SCREWS)	
M	4	1	**8T-4777**	2	SCREW-MACHINE (M5X0.8X12MM)	
	5	1	**8Y-6460**	1	KIT-RUNNER GUIDE (CAB WINDOW)	
					(INCLUDES GUIDE & SCREW)	
M	6	1	**6V-2312**	2	SCREW-MACHINE (M6X1X25MM)	
	7	1	**8Y-6461**	1	KIT-RUNNER GUIDE (CAB WINDOW)	
					(INCLUDES GUIDE & SCREW)	
BE	8	1	**8Y-6423**		SEAL	
	9	1	**8Y-6430**	1	SEAL-WINDOW	
BE	10	1	**8Y-6459**		TAPE-BUTYL	
BE	11	1	**8Y-6423**		SEAL	
	12	1	**8Y-6431**	1	GLASS-SLIDER-RH (TINTED) (CAB)	
BE	13	1	**8Y-6910**		WEATHERSTRIP	

B-USE AS REQUIRED
E-ORDER BY THE CENTIMETER
M-METRIC PART

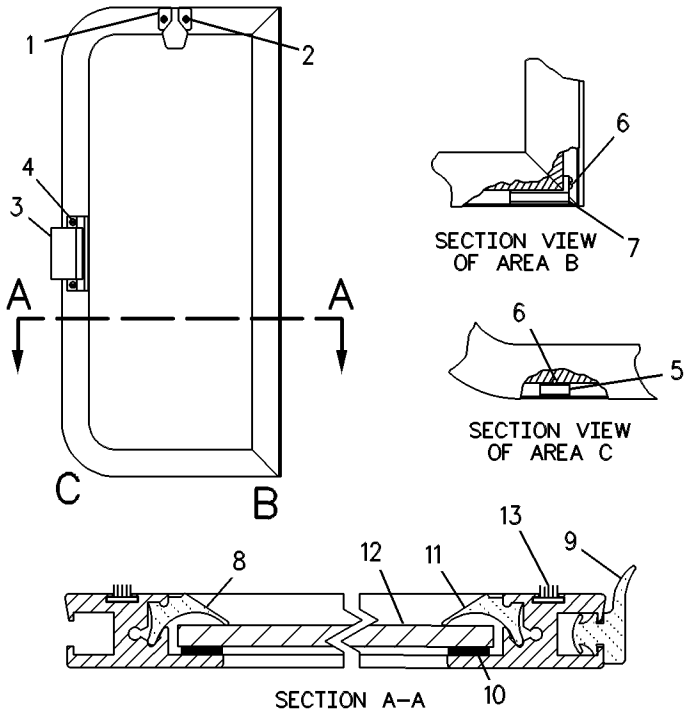

GRAPHIC #1 **<END>** g00326281

8Y-6456 WINDOW GP-CAB—REAR SLIDING

S/N: 7PZ1-UP
PART OF 157-3737 CAB GP
ALSO AN ATTACHMENT
TYPE 1

SMCS-7310 **i01989135**

NOTE	REF NO	GRAPHIC REF	PART NUMBER	QTY	PART NAME 1 2 3 4 5 6 (PRODUCT LEVEL)	SEE PAGE
Y	1	1	**8Y-6826**	1	WINDOW GP-CAB (REAR)	1158
	2	1	**8Y-6828**	1	GLASS (TINTED)(CAB-REAR)	
BD	3	1	**5P-5680**		SEAL	
EB	4	1	**9X-6268**		TAPE	
BD	5	1	**6V-5833**		SEAL	
DB	6	1	**8T-0687**		FILLER	
BE	7	1	**8Y-6839**		SEAL	
BD	8	1	**5P-5680**		SEAL	

B-USE AS REQUIRED
D-ORDER BY THE METER
E-ORDER BY THE CENTIMETER
Y-SEPARATE ILLUSTRATION

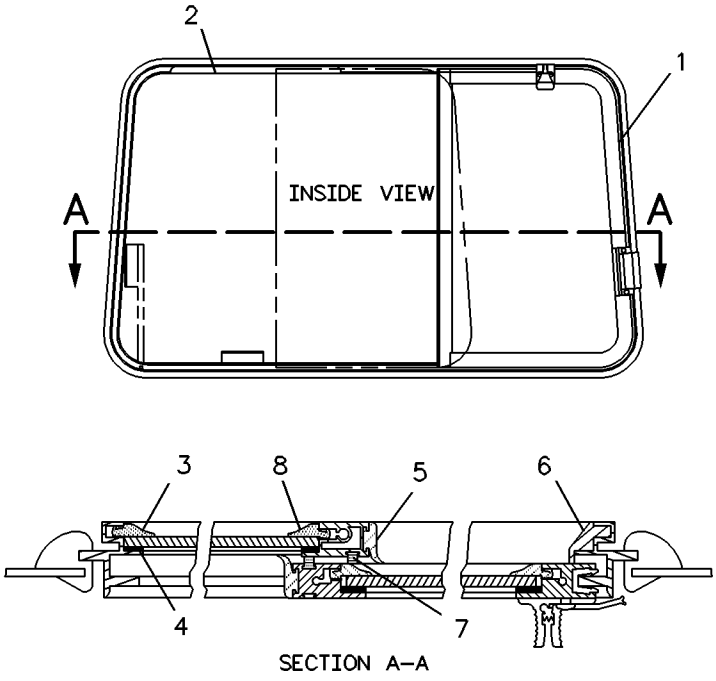

GRAPHIC #1 **<END>** g00222722

8Y-6456 WINDOW GP-CAB—REAR SLIDING

S/N: 7PZ1-UP
PART OF 157-3737 CAB GP
ALSO AN ATTACHMENT
TYPE 2

SMCS-7310 **i01989134**

NOTE	REF NO	GRAPHIC REF	PART NUMBER	QTY	PART NAME 1 2 3 4 5 6 (PRODUCT LEVEL)	SEE PAGE
Y	1	1	**8Y-6826**	1	WINDOW GP-CAB (REAR)	1158
BD	2	1	**5P-5680**		SEAL	
	3	1	**8Y-6828**	1	GLASS (TINTED)(CAB-REAR)	
BD	4	1	**6V-5833**		SEAL	
DB	5	1	**8T-0687**		FILLER	
BE	6	1	**8Y-6839**		SEAL	

B-USE AS REQUIRED
D-ORDER BY THE METER
E-ORDER BY THE CENTIMETER
Y-SEPARATE ILLUSTRATION

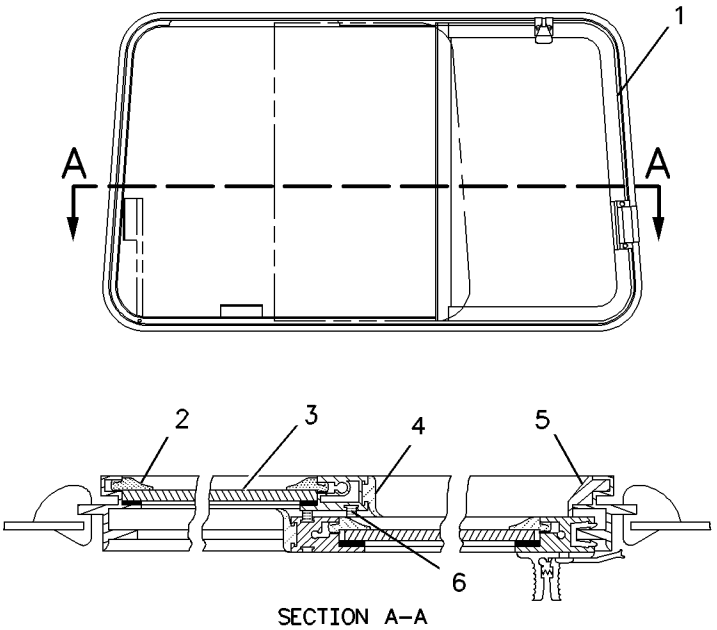

SECTION A-A

GRAPHIC #1 **<END>** g00834678

OPERATOR STATION

8Y-6826 WINDOW GP-CAB–REAR

S/N: 7PZ1-UP
PART OF 8Y-6456 WINDOW GP-CAB
ALSO AN ATTACHMENT
TYPE 1

SMCS-7310 **i01989136**

NOTE	REF NO	GRAPHIC REF	PART NUMBER	QTY	PART NAME 1 2 3 4 5 6 (PRODUCT LEVEL)	SEE PAGE
	1	1	**3T-1121**	1	LOCK AS	
	2	1	**2H-6622**	2	SCREW-MACHINE	
	3	1	**9P-7860**	1	LOCK AS	
	4	1	**9P-7859**	2	SCREW	
BD	5	1	**5P-5680**		SEAL	
EB	6	1	**9X-6268**		TAPE	
BD	7	1	**6V-5833**		SEAL	
BD	8	1	**5P-8918**		SEAL	
	9	1	**8Y-6827**	1	GLASS (TINTED)(CAB-REAR)	
BE	10	1	**8Y-6839**		SEAL	
BD	11	1	**5P-5680**		SEAL	
	12	1	**117-5676**	1	SLIDE	
	13	1	**124-9775**	1	SLIDE	

B-USE AS REQUIRED
D-ORDER BY THE METER
E-ORDER BY THE CENTIMETER

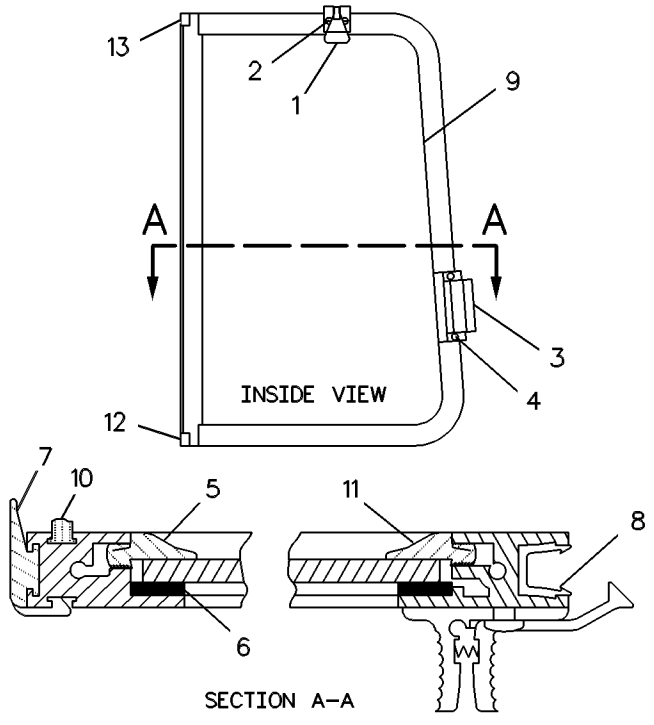

GRAPHIC #1 **<END>** g00330571

8Y-6826 WINDOW GP-CAB—REAR

S/N: 7PZ1-UP
PART OF 8Y-6456 WINDOW GP-CAB
ALSO AN ATTACHMENT
TYPE 2

SMCS-7310 **i01989137**

NOTE	REF NO	GRAPHIC REF	PART NUMBER	QTY	PART NAME 1 2 3 4 5 6 (PRODUCT LEVEL)	SEE PAGE
	1	1	**3T-1121**	1	LOCK AS	
	2	1	**2H-6622**	2	SCREW-MACHINE	
	3	1	**9P-7860**	1	LOCK AS	
	4	1	**9P-7859**	2	SCREW	
BD	5	1	**5P-5680**		SEAL	
BD	6	1	**6V-5833**		SEAL	
BD	7	1	**5P-8918**		SEAL	
	8	1	**8Y-6827**	1	GLASS (TINTED)(CAB-REAR)	
BE	9	1	**8Y-6839**		SEAL	

B-USE AS REQUIRED
D-ORDER BY THE METER
E-ORDER BY THE CENTIMETER

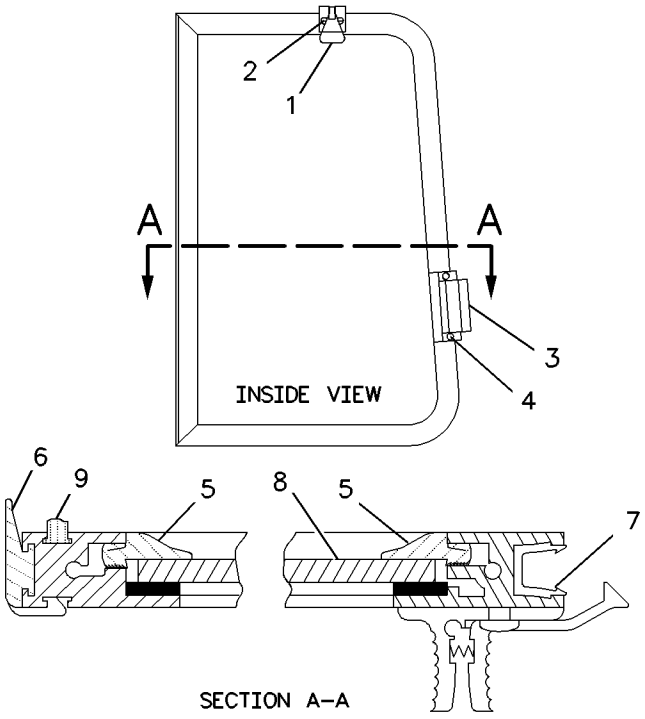

GRAPHIC #1 **<END>** g00834647

3E-9177 WIPER GP-WINDOW

S/N: 7PZ1-UP
24 VOLT
PART OF 157-3735 WIPER GP-WINDOW
FIELD REPLACEMENT ORDER 147-7976–PAGE 1074
ALSO AN ATTACHMENT

SMCS-7305 **i01980353**

NOTE	REF NO	GRAPHIC REF	PART NUMBER	QTY	PART NAME 1 2 3 4 5 6 (PRODUCT LEVEL)	SEE PAGE
M	1	1	**5C-9553**	3	BOLT (M6X1X16MM)	
	2	1	**5P-0537**	3	WASHER-HARD (7.2X14.5X2MM THK)	
	3	1	**3T-7086**	1	CRANK AS	
M	4	1	**6V-6889**	2	NUT (M8X1.25 THD)	
	5	1	**6V-6888**	1	WASHER-SPRING (8.31X15.54X1.07MM THK)	
	6	1	**6V-6208**	1	LINK-CONNECTING	
M	7	1	**3C-1884**	4	SCREW-MACHINE (M5X0.8 BG THD)	
	8	1	**6V-6206**	1	SHAFT AS-DRIVE	
M	9	1	**6V-6213**	1	NUT (M20X1 THD)	
	10	1	**6V-6214**	1	WASHER (20.15X29.6X1MM THK)	
	11	1	**6V-6209**	1	CAP-WIPER	
	12	1	**6A-9718**	1	WASHER (8.1X12.5X1MM THK)	
	13	1	**3T-7059**	1	BRACKET	
	14	1	**135-0611**	1	MOTOR GP-WINDOW WIPER	
	14A	1	**8T-8737**	1	PLUG-SEAL	
	14B	1	**186-3735**	5	PIN-CONNECTOR	
	14C	1	**102-8805**	1	KIT-RECEPTACLE (6-PIN)	
					(INCLUDES RECEPTACLE AS & WEDGE)	

M-METRIC PART

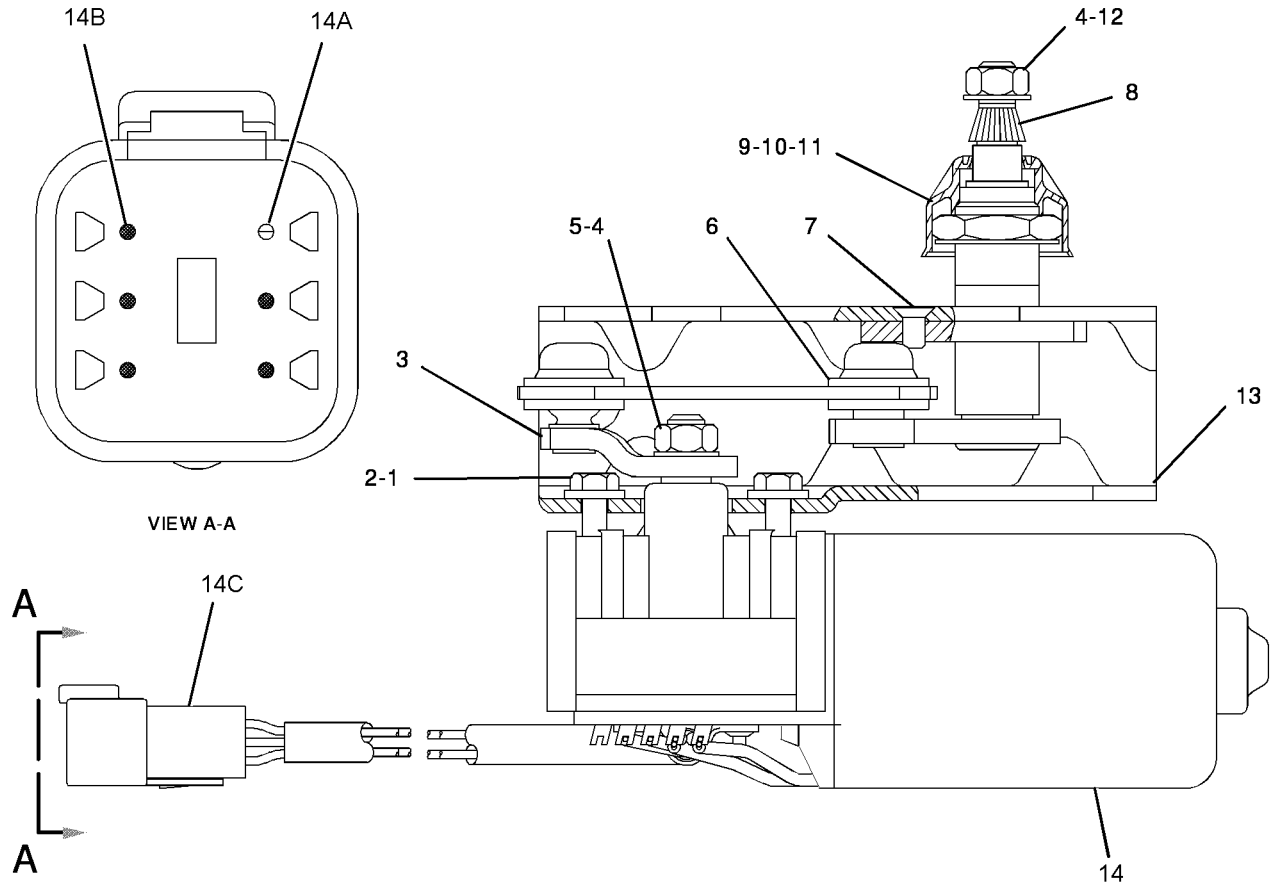

GRAPHIC #1 **<END>** g01026890

OPERATOR STATION

102-3001 WIPER GP-WINDOW–REAR

S/N: 7PZ1-UP
24 VOLT
PART OF 157-3735 WIPER GP-WINDOW
ALSO AN ATTACHMENT

SMCS-7305 **i01446868**

NOTE	REF NO	GRAPHIC REF	PART NUMBER	QTY	PART NAME 1 2 3 4 5 6 (PRODUCT LEVEL)	SEE PAGE
	1	1	**3T-7059**	1	BRACKET	
M	2	1	**5C-9553**	3	BOLT (M6X1X16MM)	
	3	1	**3T-7086**	1	CRANK AS	
M	4	1	**6V-6889**	2	NUT (M8X1.25 THD)	
	5	1	**6V-6888**	1	WASHER-SPRING	
	6	1	**6V-6218**	1	LINK-CONNECTING	
M	7	1	**3C-1884**	4	SCREW-MACHINE (M5X0.8 BG THD)	
	8	1	**6V-6215**	1	SHAFT AS-DRIVE	
	9	1	**6V-6209**	1	CAP	
M	10	1	**6V-6213**	1	NUT (M20X1 THD)	
	11	1	**6V-6214**	1	WASHER (20.15X29.6X1MM THK)	
	12	1	**6A-9718**	1	WASHER (8.1X12.5X1MM THK)	
	13	1	**5P-0537**	3	WASHER-HARD (7.2X14.5X2MM THK)	
	14	1	**3E-6388**	1	MOTOR AS-WINDOW WIPER	
		1	**102-8805**	2	KIT-RECEPTACLE (6 PIN)	
					(EACH INCLUDES RECEPTACLE AS & WEDGE)	
		1	**3E-3383**	1	WEDGE-RECEPTACLE LOCK	
		1	**8T-8729**	5	PIN-CONNECTOR	
		1	**8T-8737**	1	PLUG-SEAL	

M-METRIC PART

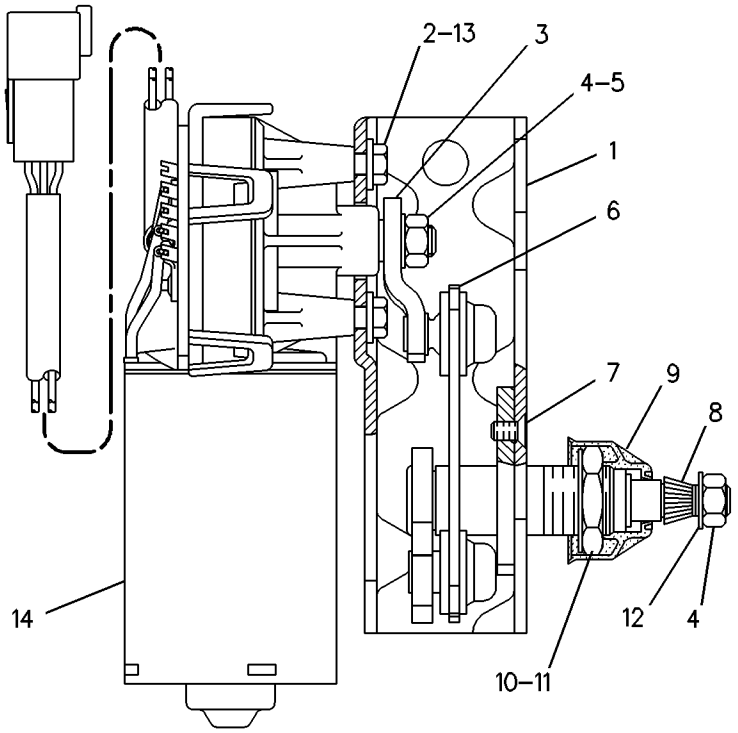

GRAPHIC #1 **<END>** g00234142

OPERATOR STATION

157-3735 WIPER GP-WINDOW

S/N: 7PZ1-UP
PART OF 157-4817 CAB AR
ALSO AN ATTACHMENT
TYPE 1

SMCS-7305 **i01989207**

NOTE	REF NO	GRAPHIC REF	PART NUMBER	QTY	PART NAME 1 2 3 4 5 6 (PRODUCT LEVEL)	SEE PAGE
Y	1	1	*102-3001*	1	WIPER GP-WINDOW (REAR)	1161
	2	2	**6V-3960**	1	BOLT (1/4-28X0.875 IN)	
	3	2	**6N-7523**	1	WASHER (6.48X11.9X1.57MM THK)	
	4	2	**8T-1739**	2	WASHER-HARD (21X40X3.5MM THK)	
	5	1	**8T-2174**	4	GASKET-SPACER	
	6	2	**145-8741**	1	ARM AS-WIPER (FRONT WINDOW)	
	7	2	**6V-5851**	1	BLADE AS-WIPER (FRONT WINDOW)	
	8	1	**6T-0303**	2	DRIVE AS	
	9	2	**8E-2593**	1	CONSOLE-SWITCH (WINDOW WIPER)	
	10	2	**6V-8969**	3	SCREW-BUTTON HEAD	
	11	2	**157-5127**	1	HARNESS AS-SWITCH (WIPER)	
		2	**102-8802**	1	KIT-RECEPTACLE (2-PIN)	
		2	**102-8806**	1	KIT-RECEPTACLE (8-PIN)	
					(EACH INCLUDES RECEPTACLE AS & WEDGE)	
		2	**102-8800**	1	KIT-CONNECTING PLUG (12-PIN)	
		2	**155-2274**	3	KIT-CONNECTING PLUG (6-PIN)	
					(EACH INCLUDES PLUG AS & WEDGE)	
	12	1	**6V-6212**	2	SHAFT AS-DRIVE	
	13	1	**6T-0302**	2	LINK AS	
	14	2	**155-2701**	4	SWITCH AS (FRONT,REAR,RH & LH DOOR)	
					(EACH INCLUDES)	
		2	**2H-3920**	1	LOCKWASHER	
		2	**3E-3383**	1	WEDGE-RECEPTACLE LOCK (6-PIN)	
		2	**6V-8369**	1	NUT (7/16-28 THD)	
		2	**110-7889**	1	KNOB (WIPER-WASHER SWITCH)	
		2	**186-3735**	6	PIN-CONNECTOR	
		2	**014-0816**	1	SETSCREW (8-32X.5 IN)	
		2	**102-8805**	1	KIT-RECEPTACLE (6-PIN)	
					(INCLUDES RECEPTACLE AS & WEDGE)	
	15	2	**7X-7763**	1	FILM-INSTRUCTION (WINDOW WIPER/WASHER)	
Y	16	2	*6V-6561*	1	WIPER PIVOT GP	1169
Y	17	1	**3E-9177**	1	WIPER GP-WINDOW (FRONT)	1160
	18	2	**5P-4115**	1	WASHER-HARD (7.2X19X2MM THK)	
	19	2	**7X-3182**	1	BOLT (1/4-28X0.5 IN)	
	20	2	**5C-8811**	1	BLADE AS-WIPER (REAR WINDOW)	
	21	2	**8Y-6343**	1	ARM AS-WIPER (REAR)	
		2	**136-3193**	1	NOZZLE AS-WASHER	
	22	1	**6V-6211**	2	SHAFT AS-DRIVE	
J	23	1	**6V-5849**	4	BLADE AS-WIPER (RH & LH DOOR)	
	24	1	**135-0611**	2	MOTOR GP-WINDOW WIPER (DOOR WIPERS)	
	25	1	**6V-6214**	4	WASHER (20.15X29.6X1MM THK)	
	26	1	**7T-1078**	1	LINK AS-LH	
M	27	1	**6V-6213**	4	NUT (M20X1 THD)	
	28	1	**145-8740**	2	ARM AS-WIPER (LH DOOR)	
					(EACH INCLUDES)	
		1	**136-3193**	1	NOZZLE AS-WASHER	
	29	1	**145-8739**	2	ARM AS-WIPER (RH DOOR)	
					(EACH INCLUDES)	
		1	**136-3192**	1	NOZZLE AS-WASHER	
	30	1	**6A-9718**	4	WASHER (8.1X12.5X1MM THK)	
M	31	1	**6V-6889**	6	NUT (M8X1.25 THD)	
	32	1	**233-7135**	2	BRACKET AS	
					(EACH INCLUDES)	
		1	**9F-6445**	1	NUT-WELD (1/4-24 THD)	

157-3735 **WIPER GP-WINDOW** ***(contd.)*** **i01989207**

NOTE	REF NO	GRAPHIC REF	PART NUMBER	QTY	PART NAME 1 2 3 4 5 6 (PRODUCT LEVEL)	SEE PAGE
M	33	1	**5C-9553**	6	BOLT (M6X1X16MM)	
	34	1	**6V-6888**	2	WASHER-SPRING (8.31X15.54X1.07MM THK)	
	35	1	**5S-7379**	4	BOLT (3/8-16X0.875 IN)	
	36	1	**5P-1075**	4	WASHER-HARD (10.2X22.5X3MM THK)	
	37	1	**6V-6209**	4	CAP-WIPER (MOTORS)(DOORS)	
	38	2	**157-5128**	1	HARNESS AS-SWITCH (REAR WIPER)	
		2	**3E-5519**	1	PLUG AS-CONNECTOR (5 PIN)	
		2	**155-2269**	1	PLUG AS-CONNECTOR (2-PIN)	
		2	**155-2260**	1	KIT-CONNECTING PLUG (3-PIN)	
		2	**155-2274**	2	KIT-CONNECTING PLUG (6-PIN)	
					(EACH INCLUDES PLUG AS & WEDGE)	
	39	2	**8T-5360**	4	WASHER (12X22.5X2.5MM THK)	
	40	1	**6V-8801**	1	NUT (3/8-16 THD)	
	41	1	**8T-4896**	1	WASHER-HARD (10.2X18.5X2.5MM THK)	
	42	1	**7T-4761**	1	LINK AS-RH	
	43	2	**9X-1138**	1	CONTROL AS-ELECTRONIC	
	44	2	**8B-4338**	5	SCREW-TAPPING (6-20X.375 IN)	
	45	1	**5P-8394**	12	SCREW-MACHINE (8-32X.75IN)	
	46	1	**163-6088**	4	MODULE AS	
	47	1	**4B-4274**	12	WASHER (5.5X13X1.2MM THK)	
	48	1	**3E-5239**	4	RELAY AS (24-VOLT) (PRESSURIZER)	
					AVAILABLE REPAIR KIT(S):	
J			**8C-5060**	1	KIT-WIPER BLADE (WINDOW)	
					(INCLUDES 2 REFILL BLADES)	

J-KIT MARKED J AVAILABLE FOR PARTS MARKED J
M-METRIC PART
Y-SEPARATE ILLUSTRATION

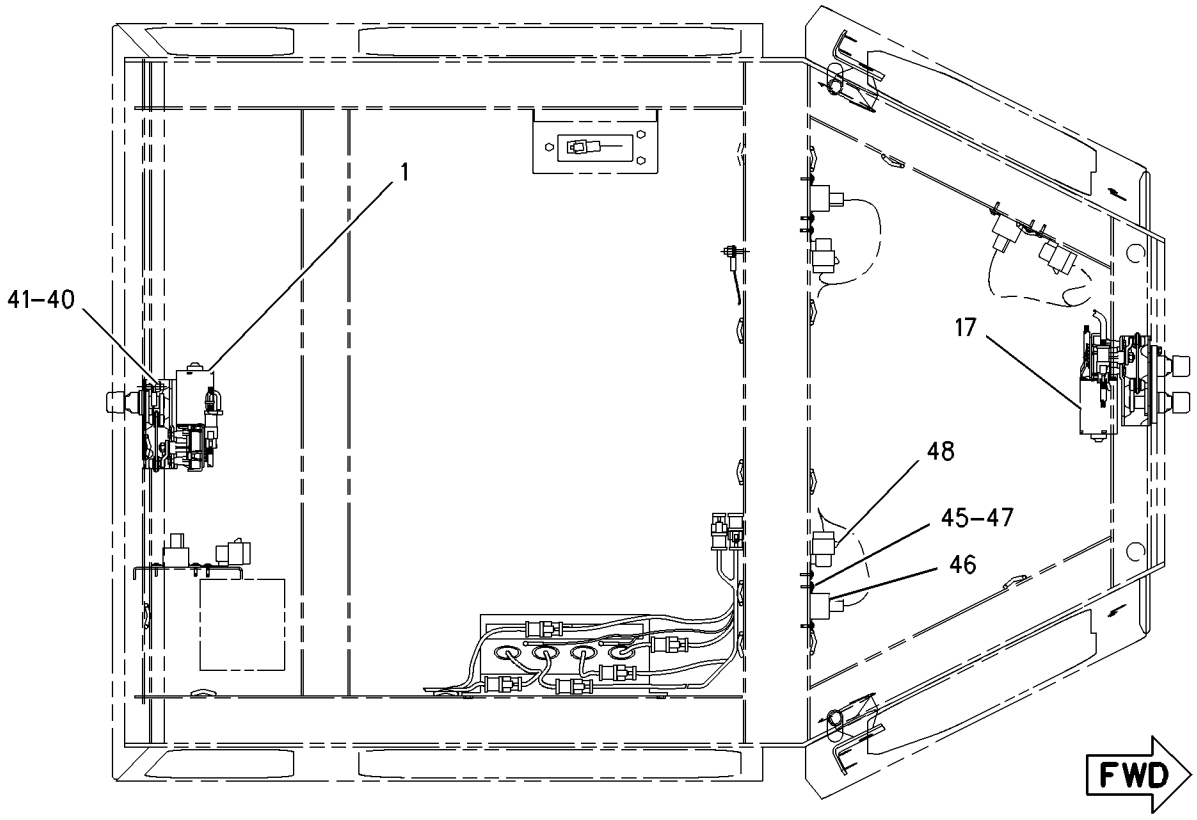

TOP VIEW

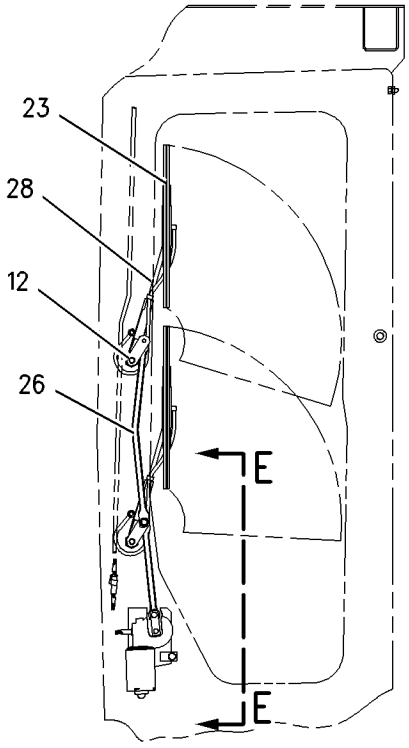

LH DOOR

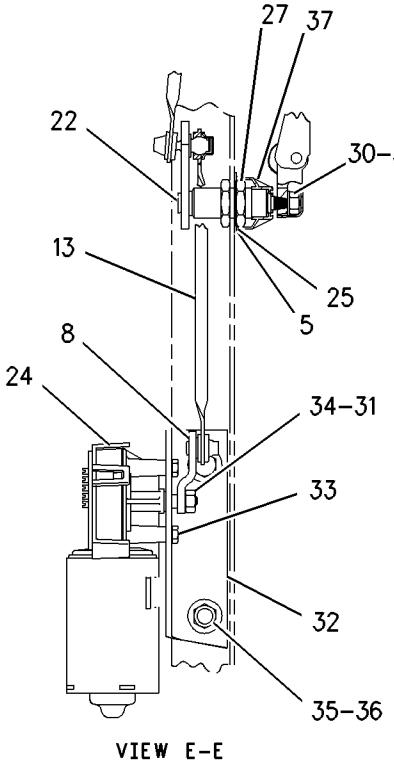

VIEW E-E

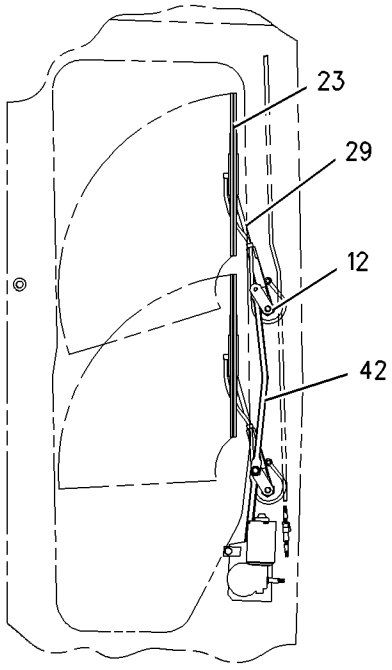

RH DOOR

GRAPHIC #1 g00937256

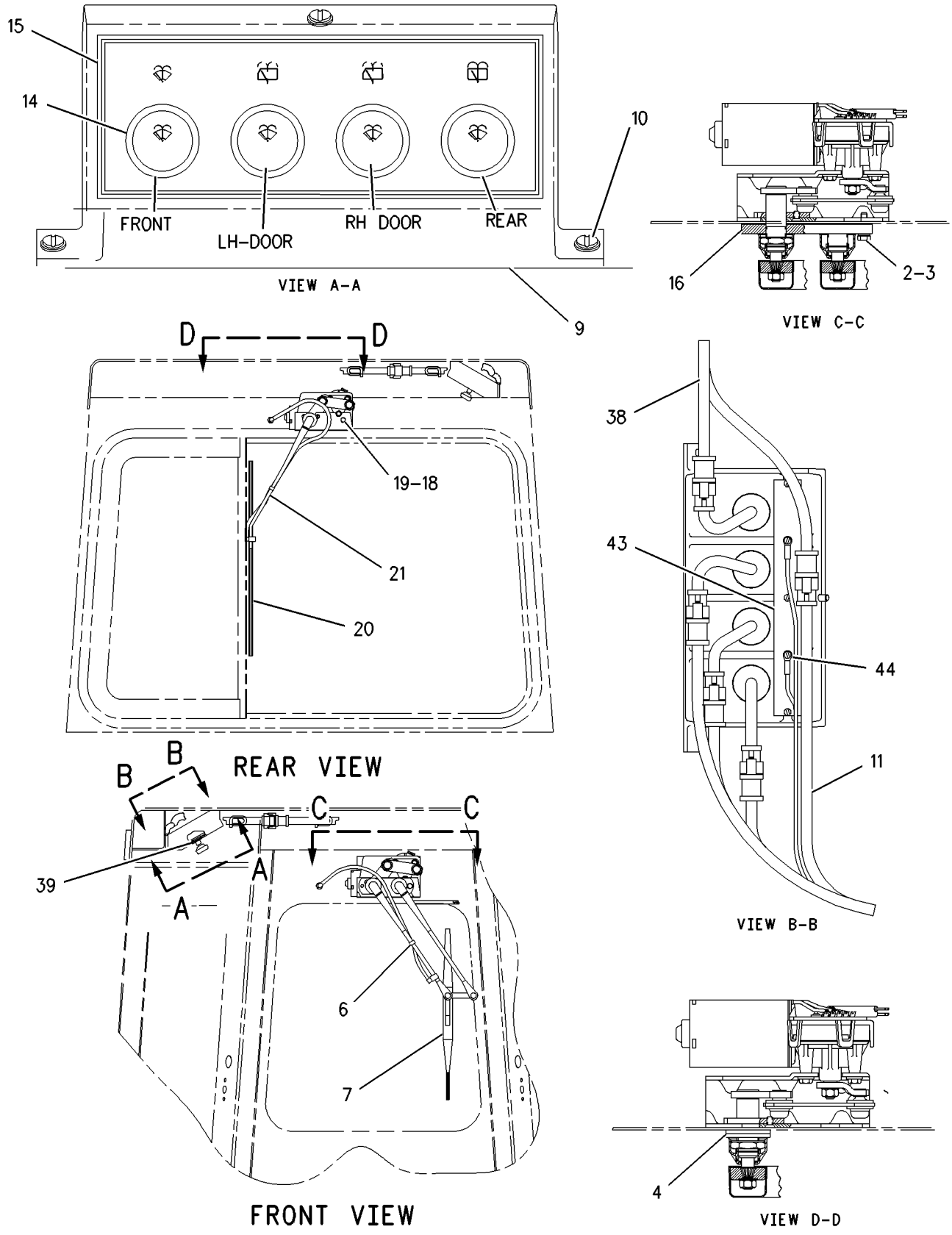

GRAPHIC #2 **<END>** g00817723

OPERATOR STATION

157-3735 WIPER GP-WINDOW

S/N: 7PZ1-UP
PART OF 157-4817 CAB AR
ALSO AN ATTACHMENT
TYPE 2

SMCS-7305 **i01989525**

NOTE	REF NO	GRAPHIC REF	PART NUMBER	QTY	PART NAME 1 2 3 4 5 6 (PRODUCT LEVEL)	SEE PAGE
Y	1	1	*102-3001*	1	WIPER GP-WINDOW (REAR)	1161
	2	1	**6V-3960**	1	BOLT (1/4-28X0.875 IN)	
	3	1	**6N-7523**	1	WASHER (6.48X11.9X1.57MM THK)	
	4	1	**8T-1739**	2	WASHER-HARD (21X40X3.5MM THK)	
	5	1	**145-8741**	1	ARM AS-WIPER (FRONT WINDOW)	
	6	1	**6V-5851**	1	BLADE AS-WIPER (FRONT WINDOW)	
	7	1	**6T-0303**	2	DRIVE AS	
	8	1	**8E-2593**	1	CONSOLE-SWITCH (WINDOW WIPER)	
	9	1	**6V-8969**	3	SCREW-BUTTON HEAD	
	10	1	**157-5127**	1	HARNESS AS-SWITCH (WIPER)	
		1	**102-8802**	1	KIT-RECEPTACLE (2-PIN)	
		1	**102-8806**	1	KIT-RECEPTACLE (8-PIN)	
					(EACH INCLUDES RECEPTACLE AS & WEDGE)	
		1	**102-8800**	1	KIT-CONNECTING PLUG (12-PIN)	
		1	**155-2274**	3	KIT-CONNECTING PLUG (6-PIN)	
					(EACH INCLUDES PLUG AS & WEDGE)	
	11	1	**6V-6212**	2	SHAFT AS-DRIVE	
	12	1	**6T-0302**	2	LINK AS	
	13	1	**155-2701**	4	SWITCH AS (FRONT,REAR,RH & LH DOOR)	
					(EACH INCLUDES)	
		1	**2H-3920**	1	LOCKWASHER	
		1	**3E-3383**	1	WEDGE-RECEPTACLE LOCK (6-PIN)	
		1	**6V-8369**	1	NUT (7/16-28 THD)	
		1	**110-7889**	1	KNOB (WIPER-WASHER SWITCH)	
		1	**186-3735**	6	PIN-CONNECTOR	
		1	**014-0816**	1	SETSCREW (8-32X.5 IN)	
		1	**102-8805**	1	KIT-RECEPTACLE (6-PIN)	
					(INCLUDES RECEPTACLE AS & WEDGE)	
	14	1	**7X-7763**	1	FILM-INSTRUCTION (WINDOW WIPER/WASHER)	
Y	15	1	*6V-6561*	1	WIPER PIVOT GP	1169
Y	16	1	**147-7976**	1	MOTOR GP-WINDOW WIPER (FRONT)	1074
	17	1	**5P-4115**	1	WASHER-HARD (7.2X19X2MM THK)	
	18	1	**7X-3182**	1	BOLT (1/4-28X0.5 IN)	
	19	1	**5C-8811**	1	BLADE AS-WIPER (REAR WINDOW)	
	20	1	**8Y-6343**	1	ARM AS-WIPER (REAR)	
		1	**136-3193**	1	NOZZLE AS-WASHER	
	21	1	**6V-6211**	2	SHAFT AS-DRIVE	
J	22	1	**6V-5849**	4	BLADE AS-WIPER (RH & LH DOOR)	
	23	1	**135-0611**	2	MOTOR GP-WINDOW WIPER (DOOR WIPERS)	
	24	1	**6V-6214**	4	WASHER (20.15X29.6X1MM THK)	
	25	1	**7T-1078**	1	LINK AS-LH	
M	26	1	**6V-6213**	4	NUT (M20X1 THD)	
	27	1	**145-8740**	2	ARM AS-WIPER (LH DOOR)	
					(EACH INCLUDES)	
		1	**136-3193**	1	NOZZLE AS-WASHER	
	28	1	**145-8739**	2	ARM AS-WIPER (RH DOOR)	
					(EACH INCLUDES)	
		1	**136-3192**	1	NOZZLE AS-WASHER	
	29	1	**6A-9718**	4	WASHER (8.1X12.5X1MM THK)	
M	30	1	**6V-6889**	6	NUT (M8X1.25 THD)	
	31	1	**233-7135**	2	BRACKET AS	
					(EACH INCLUDES)	
		1	**9F-6445**	1	NUT-WELD (1/4-24 THD)	
M	32	1	**5C-9553**	6	BOLT (M6X1X16MM)	

157-3735 **WIPER GP-WINDOW** ***(contd.)*** **i01989525**

NOTE	REF NO	GRAPHIC REF	PART NUMBER	QTY	PART NAME 1 2 3 4 5 6 (PRODUCT LEVEL)	SEE PAGE
	33	1	**6V-6888**	2	WASHER-SPRING (8.31X15.54X1.07MM THK)	
	34	1	**5S-7379**	4	BOLT (3/8-16X0.875 IN)	
	35	1	**5P-1075**	4	WASHER-HARD (10.2X22.5X3MM THK)	
	36	1	**6V-6209**	4	CAP-WIPER (MOTORS)(DOORS)	
	37	1	**157-5128**	1	HARNESS AS-SWITCH (REAR WIPER)	
		1	**3E-5519**	1	PLUG AS-CONNECTOR (5 PIN)	
		1	**155-2269**	1	PLUG AS-CONNECTOR (2-PIN)	
		1	**155-2260**	1	KIT-CONNECTING PLUG (3-PIN)	
		1	**155-2274**	2	KIT-CONNECTING PLUG (6-PIN)	
					(EACH INCLUDES PLUG AS & WEDGE)	
	38	1	**8T-5360**	4	WASHER (12X22.5X2.5MM THK)	
	39	1	**6V-8801**	1	NUT (3/8-16 THD)	
	40	1	**8T-4896**	1	WASHER-HARD (10.2X18.5X2.5MM THK)	
	41	1	**7T-4761**	1	LINK AS-RH	
	42	1	**9X-1138**	1	CONTROL AS-ELECTRONIC	
	43	1	**8B-4338**	5	SCREW-TAPPING (6-20X.375 IN)	
	44	1	**5P-8394**	12	SCREW-MACHINE (8-32X.75IN)	
	45	1	**163-6088**	4	MODULE AS	
	46	1	**4B-4274**	12	WASHER (5.5X13X1.2MM THK)	
	47	1	**3E-5239**	4	RELAY AS (24-VOLT) (PRESSURIZER)	
					AVAILABLE REPAIR KIT(S):	
J			**8C-5060**	1	KIT-WIPER BLADE (WINDOW)	
					(INCLUDES 2 REFILL BLADES)	

J-KIT MARKED J AVAILABLE FOR PARTS MARKED J
M-METRIC PART
Y-SEPARATE ILLUSTRATION

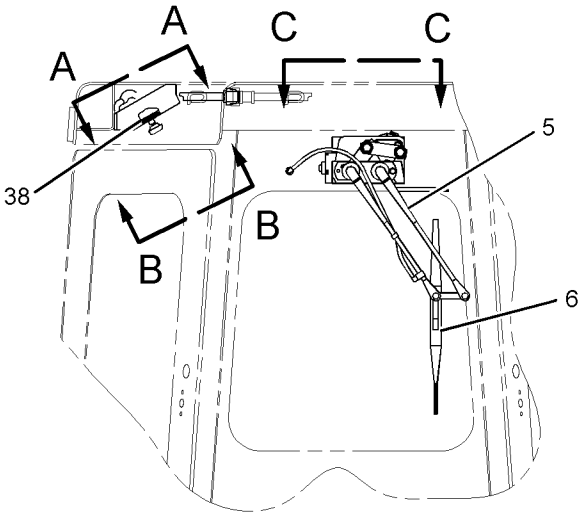

FRONT VIEW

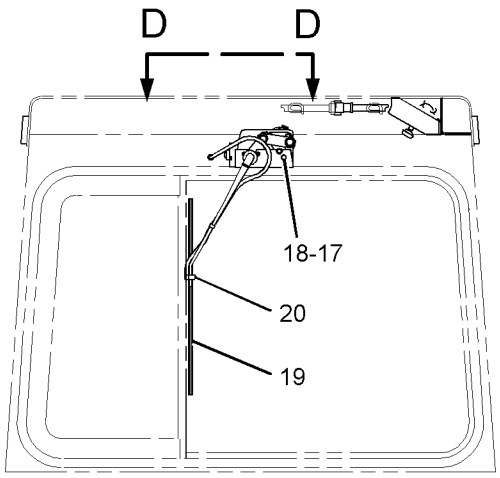

REAR VIEW

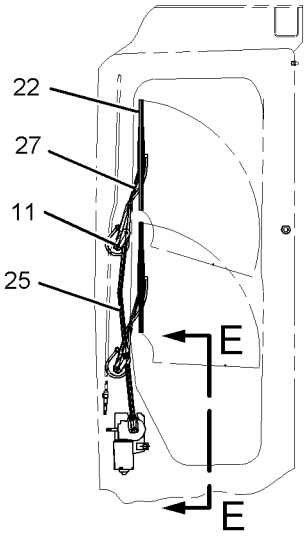

LH DOOR

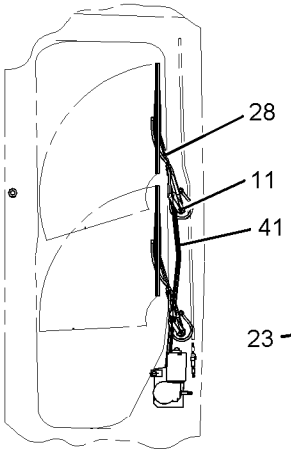

RH DOOR

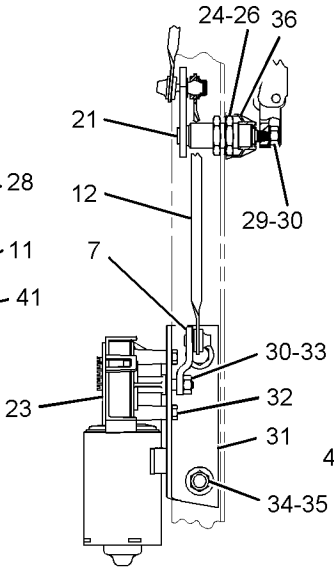

VIEW E-E

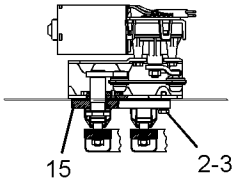

VIEW C-C

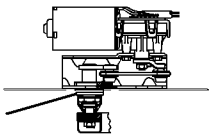

VIEW D-D

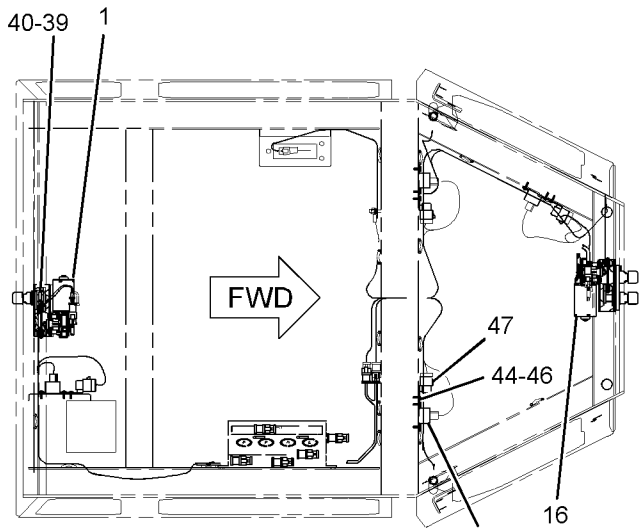

TOP VIEW

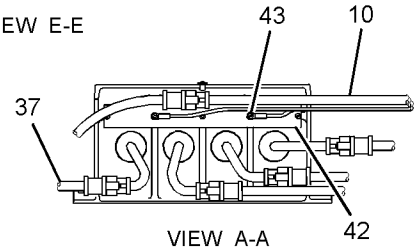

VIEW A-A

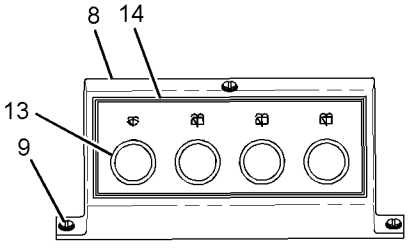

VIEW B-B

GRAPHIC #1

<END>

g01025704

6V-6561 WIPER PIVOT GP–REAR WINDOW

S/N: 7PZ1-UP
PART OF 157-3735 WIPER GP-WINDOW
ALSO AN ATTACHMENT

SMCS-7305 **i01011513**

NOTE	REF NO	GRAPHIC REF	PART NUMBER	QTY	PART NAME 1 2 3 4 5 6 (PRODUCT LEVEL)	SEE PAGE
	1	1	**6V-6207**	1	SHAFT AS-PIVOT	
	2	1	**6V-6209**	1	CAP	
M	3	1	**6V-6889**	1	NUT (M8X1.25 THD)	
	4	1	**6A-9718**	1	WASHER	
	5	1	**6V-6210**	1	GASKET-SHAFT	

M-METRIC PART

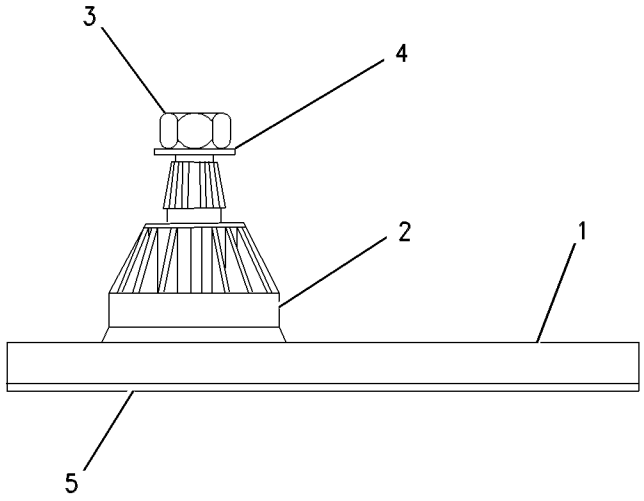

GRAPHIC #1 **<END>** g00316575

SERVICE EQUIPMENT AND SUPPLIES

159-4701 FILM GP—MACHINE

S/N: 7PZ1-UP

PART OF 159-4699 PLATE & FILM GP

SMCS-7000 **i01096176**

NOTE	REF NO	GRAPHIC REF	PART NUMBER	QTY	PART NAME 1 2 3 4 5 6 (PRODUCT LEVEL)	SEE PAGE
	1	1	**132-8475**	2	FILM-STRIPE	
	2	1	**3E-9736**	1	FILM-STRIPE	
	3	1	**3E-9731**	1	FILM-STRIPE (CAT)	
	4	1	**3E-9732**	1	FILM-STRIPE (CAT)	
	5	1	**9X-5736**	1	FILM-STRIPE (CATERPILLAR)	
	6	1	**3E-9737**	1	FILM-STRIPE (CATERPILLAR)	
	7	1	**173-1638**	1	FILM-STRIPE	
	8	1	**173-1641**	1	FILM-STRIPE	
	9	1	**173-1640**	1	FILM-STRIPE	
	10	1	**173-1642**	1	FILM-STRIPE	
	11	1	**3E-9733**	1	FILM-STRIPE	
	12	1	**173-1639**	1	FILM-STRIPE	

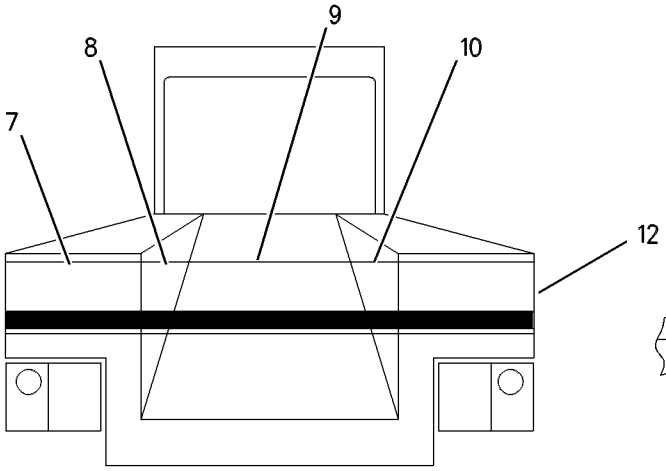

REAR VIEW

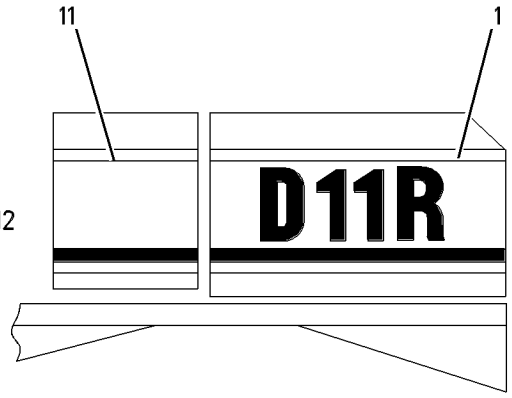

LEFT SIDE VIEW
(REAR)

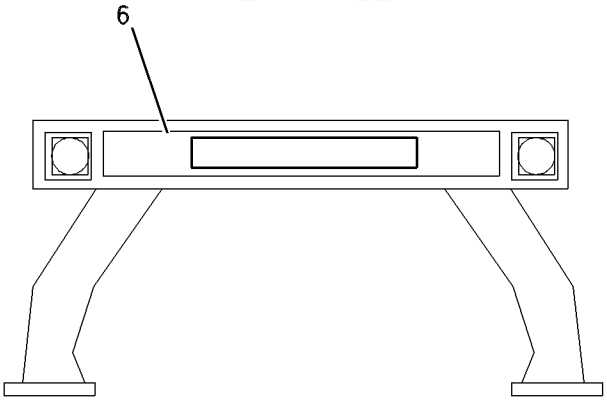

REAR VIEW
(ROPS)

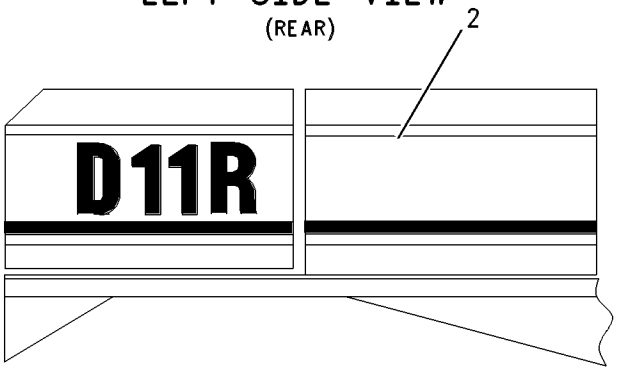

RIGHT SIDE VIEW
(REAR)

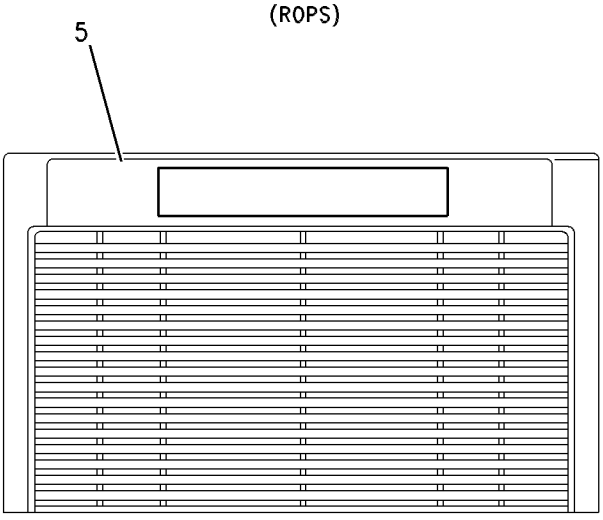

FRONT VIEW

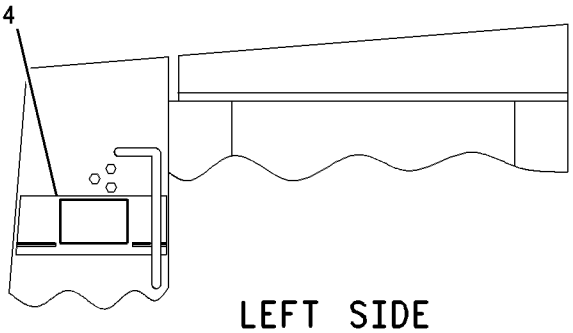

LEFT SIDE VIEW
(FRONT)

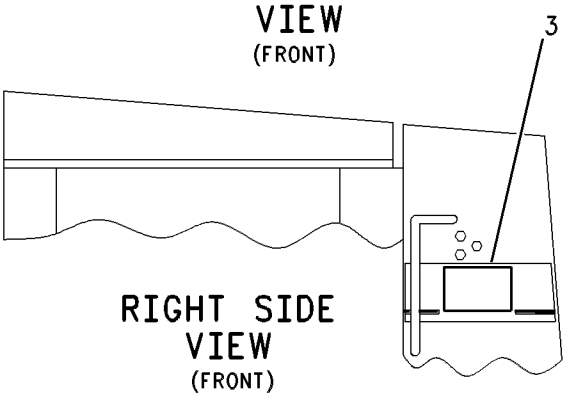

RIGHT SIDE VIEW
(FRONT)

GRAPHIC #1 **<END>** g00576252

5P-1807 PLATE & FILM GP–RIPPER

S/N: 5MP1-UP; 7CP1-UP; 7DP1-UP; 7ZP1-UP
PART OF 127-1031, 130-6458, 130-6462, 161-2420 RIPPER AR
AN ATTACHMENT

SMCS-7557, 7563 **i02024047**

NOTE	PART NUMBER	QTY	PART NAME 1 2 3 4 5 6 (PRODUCT LEVEL)	SEE PAGE
	5P-1327	1	PLATE-SERIAL NUMBER	
			ON RIGHT HAND OF RIGHT	
			TOWER ASSEMBLY	
	4B-5158	2	SCREW-MACHINE (5/16-18X15.88-MM)	

<END>

5P-4017 PLATE & FILM GP–BULLDOZER

S/N: 8PP1-UP; 8RP1-UP
PART OF 119-4267, 119-4268, 119-4282, 199-8241, 226-5919 BULLDOZER AR-SEMI-UNIVERSAL, 119-4281, 199-8240, 226-5918 BULLDOZER AR-UNIVERSAL
AN ATTACHMENT

SMCS-7557, 7563 **i02024046**

NOTE	PART NUMBER	QTY	PART NAME 1 2 3 4 5 6 (PRODUCT LEVEL)	SEE PAGE
	8T-7371	1	PLATE-SERIAL NUMBER	
			ON BACK OF MOLDBOARD, NEAR THE TOP, AT THE RIGHT HAND END	
	4B-4158	2	SCREW-DRIVE (3/16X0.25-IN)	

<END>

159-4699 PLATE & FILM GP–MACHINE

S/N: 7PZ1-UP
PART OF 155-5552 CHASSIS AR

SMCS-7557, 7563 **i01963949**

NOTE	PART NUMBER	QTY	PART NAME 1 2 3 4 5 6 (PRODUCT LEVEL)	SEE PAGE
Y	*159-4701*	1	FILM GP	1170
A	**3N-3790**	1	PLATE-SERIAL NUMBER (ENGINE)	
			ON LEFT HAND SIDE OF BLOCK	
	9X-1883	1	PLATE-INFORMATION (SERVICE NUMBERS)	
			ON LH SIDE OF DASH	
	110-6393	1	PLATE-INSTRUCTION (AIR CONDITIONER)	
			ON LH SIDE OF DASH TO BE SEEN THROUGH CAB DOOR	
	5P-9466	1	PLATE-WARNING (READ OPERATION MANUAL)	
			ON VERTICAL WALL LH SIDE OF OPERATOR PLATFORM	
	9N-1995	12	RIVET-POP	
	9F-6656	1	RING-RETAINING	
			ON TOP OF PTO FILLER CAP CHAIN	
	4B-4158	12	SCREW-DRIVE (3/16X0.25 IN)	
	1P-2807	4	FILM (LIFT EYE LOCATION)	
			W/O RIPPER-ON TRACK ROLLER FRAME BETWEEN FRONT IDLER & FRONT ROLLER AND BETWEEN REAR IDLER & REAR ROLLER	
			WITH RIPPER-ON TRACK ROLLER FRAME BETWEEN FRONT IDLER & FRONT ROLLER AND ON REAR RIPPER FRAME	
	4P-6464	2	FILM-INFORMATION (AIR CLEANER)	
			ON TOP OF EACH AIR CLEANER	

159-4699 **PLATE & FILM GP** ***(contd.)*** **i01963949**

NOTE	PART NUMBER	QTY	PART NAME 1 2 3 4 5 6 (PRODUCT LEVEL)	SEE PAGE
	5P-9884	1	FILM (HYDRAULIC OIL)	
			ON TOP OF HYDRAULIC TANK ADJACENT TO FILLER SPOUT	
	215-9802	2	FILM-WARNING (JUMPER CABLE CONNECTION)	
			ON UNDERSIDE OF BATTERY COMPARTMENT COVERS	
	6V-7620	2	FILM-IDENTIFICATION (ENG OIL FILTER)	
			ON SPIN-ON ENGINE OIL FILTERS	
	7X-7644	8	FILM (TIE DOWN)	
			1-ON FRONT TOWING EYE	
			6-ON TRACK ROLLER FRAMES FRONT & REAR MAJOR CARTRIDGE PINS CENTERED BETWEEN FRONT & REAR IDLERS	
			1-FOR MACHINES WITH RETRIEVAL HITCH OR RIPPER AT REAR ON RETRIEVAL HITCH OR RIPPER FRAME	
	8C-3221	1	FILM-OIL LEVEL (TRANSMISSION)	
			ON PLATE NEXT TO POWER TRAIN OIL DIPSTICK	
	8T-4999	1	FILM-INSTRUCTION (BATTERY DISCONNECT)	
			UNDER DISCONNECT SWITCH	
	9Y-4294	3	FILM-WARNING (FUEL INJECTOR)	
			1-ON RIGHT HAND ENGINE VALVE COVER OVER #1 CYLINDER 1- ON FRONT ELECTRONIC CONTROL	
			MODULE AT FRONT RH CORNER OF ENGINE	
			1-ON LH ENGINE VALVE COVER OVER #2 CYLINDER	
	106-7408	1	FILM-INFORMATION (ENGINE OIL)	
			ON ENGINE OIL FILL CAP	
	211-1808	1	FILM (IDENTIFICATION)	
			ON FRONT OF EQUALIZER BAR LUBRICATION RESERVOIR BOTTLE	
	134-7258	1	FILM-IDENTIFICATION (EXTENDED LIFE COOLANT)	
			ON INSIDE OF DOOR TO RADIATOR FILL	
	137-3929	1	FILM-INSTRUCTION (DOZER OPERATON)	
			ON RH COVER	
	137-3933	1	FILM-IDENTIFICATION (LOCK/UNLOCK)	
			ALIGN FILM TO IMPLEMENT DEACTIVATION ON RH CONSOLE IN THE CAB	
	137-3957	1	FILM-INSTRUCTION (RIPPER CONTROL)	
			ON RH COVER	
	137-3958	1	FILM-INSTRUCTION (AUTO BLADE PITCH ANGLE)	
			ON RH CONSOLE COVER	
	190-5386	2	FILM-REFLECTOR (RED)	
			ON REAR LH & RH SIDE OF MACHINE ON FILM STRIPE	
	3E-2378	1	FILM-INSTRUCTION (PIVOT SHAFT LUBRICATION)	
			ON FRONT OF PIVOT SHAFT LUBRICATION RESERVOIR BOTTLE	

A-NOT PART OF THIS GROUP
Y-SEPARATE ILLUSTRATION

<END>

MEMORANDA

PART NUMBER INDEX

Part	Page
0	
0L-1026	39
0L-1143	69
	85
	86
	91
	124
	134
0L-1329	182
	667
	669
	671
	673
	928
0L-1351	6
	9
	50
	105
	138
	187
	223
	386
	390
	394
	402
0L-1352	454
0L-2070	71
	73
	75
	89
	119
	121
	124
	131
	223
	443
	448
0S-0484	106
0S-0509	8
	9
	56
	57
	174
	176
	223
	356
	385
	389
	393
	443
	448
0S-1571	80
	82
	86
	117
	119
	121
	124
	215
	223
0S-1585	104
	117
	119
	121
	124
	182
	463
	623
	667
	669
	671
	673
	928
0S-1587	55
	60
	106
	623
0S-1588	12
	39
	45
	60
	79
	85
	86
	89
	91
	119
	121
	134
	139
	143
	176
	215
	223
	356
	385
	389
	393
	455
	465
	473
	475
0S-1589	58
	467
	596
	598
0S-1590	48
	69
	71
	73
	75
	89
	91
	104
	105
	174
	176
	422
	426
0S-1591	11
	60
	80
	82
	86
	105
	164
	174
	176
	186
	215
	298
	386
	390
	394
	443
	448
0S-1592	43
0S-1594	11
	12
	43
	48
	58
	60
	80
	82
	86
	89
	91
	110
	111
	119
	121
	124
	127
	129
	134
	136
	174
	176
	187
	215
	223
	298
	385
	389
	393
	443
	448
	463
	478
	480
0S-1595	21
	23
	26
	52
	53
	402
	667
	669
	671
	673
0S-1608	60
	80
	82
	89
	91
	134
	402
0S-1615	69
	71
	73
	75
0S-1616	1048
0S-1617	134
0S-1618	136
	139
	143
	144
	148
0S-1619	174
	454
0S-1620	386
	390
	394
0S-1621	107
	127
	129
	385
	389
	393
	402
	508
	960
0S-2318	461
	472
0T-0055	11
	43
	48
	79
	89
	91
	215
0T-0065	60
	127
	129
	402
0T-0102	21
	23
	64
	390
	394
0T-0200	422
	426
0T-0244	1110
	1111
0T-0318	960
0T-0772	455
0T-0883	863
1	
1A-1460	41
	52
	86
	119
	121
	124
	455
	463
	667
	669
	671
	673
	928
1A-2029	8
	10
	14

► **PRIMARY REFERENCE**

PART NUMBER INDEX

Part	Page
	21
	23
	26
	45
	86
	110
	111
	117
	134
	277
	298
	385
	389
	393
1A-4350	1096
1A-5183	112
	642
	643
1A-5822	601
1A-5964	80
	82
	86
	87
	119
	121
	124
1A-9066	119
	121
	124
1A-9579	15
	78
1B-2524	444
	449
1B-2578	100
	213
	376
	377
1B-2790	21
	23
	64
	229
1B-2886	463
	623
	667
	669
	671
	673
	928
1B-4218	55
1B-4367	50
	623
1B-4430	1127
	1132
1B-4971	798
	801
1B-5170	199
	201
	203
1B-5675	455
1B-7182	136
1B-8705	457
1B-8706	213
1B-8714	404
	406
1B-8736	454
1B-9575	277
1C-0569	1097
	1099
1C-2251	119
	121
	124
1D-4539	221
	222
1D-4540	473
	475
1D-4566	68
1D-4569	443
	448
1D-4574	41
	52
	53
	58
1D-4585	467
1D-4593	55
1D-4597	46
	52
	53
1D-4608	67
1D-4637	67
1D-4639	553
	556
	559
	563
	678
	680
1D-4641	678
	680
	682
	684
	686
	688
1D-4643	418
	721
	723
1D-4675	992
1D-4677	1125
1D-4703	848
1D-4706	117
	127
	129
1D-5117	271
1F-0748	199
	205
	219
	432
	437
	498
	500
	502
	511
	512
	515
	520
	525
	533
	534
	537
	543
	545
	727
	739
	743
	765
	771
	1011
	1075
1F-0750	127
	129
	154
	157
	160
	184
	213
	223
	277
	315
	316
	318
	356
	402
	431
	433
	437
	461
	498
	500
	502
	504
	506
	508
	511
	512
	515
	525
	527
	534
	535
	537
	538
	727
	739
	740
	743
	744
	753
	757
	764
	765
	770
	771
	776
	780
	784
	789
	818
	853
	855
	1064
	1066
1F-1560	601
1F-5339	1057
	1061
	1064
	1066
1F-7958	39
	41
	58
1G-7806	757
1H-0974	457
1H-1023	359
	362
	365
	368
1H-2629	359
	362
	365
	368
1H-3244	242
	244
	383
1H-3338	375
1H-5728	402
	866
	872
1H-8128	205
	207
	209
	211
	237
	239
1H-8134	623
1H-8278	146
1H-8296	1134
1H-9696	230
	231
1J-2192	678
	680
	682
	684
	686
	688
1J-2890	553
	556
	559
	563
	566
	569
	572
	575
1J-8568	828
1J-8569	828
	829
1J-8930	442
1J-9671	205
	207
	209
	211
1K-5888	96
1K-6870	512
	515
1K-6872	404
	406
	434
	438
1K-8850	534
	538
1K-9415	543

► **PRIMARY REFERENCE**

PART NUMBER INDEX

Part	Page	Part	Page	Part	Page	Part	Page
	545	1N-4637	104	1P-4576	810		209
	547	1N-5410	444		812		211
1L-3162	480		449		814		432
1L-3769	215	1N-5999	139		818		433
1L-5072	848		143		914		438
1L-5081	473		473		915		455
	475		475		928		728
	610	1P-1367	80	1P-4577	455		734
	612		82		694		740
1L-5316	144	1P-1744	638		696		745
	148		639		698		848
1L-9080	1096	1P-2807	1172		700	1P-4585	764
1M-0556	467	1P-3703	728		702		770
1M-1230	1031		734		704		790
1M-1462	154		740		706		848
	157		744		708	1P-5761	728
	160		814		713		734
1M-3780	457		818		715		740
1M-3909	457	1P-3704	667		717		745
1M-4543	281		669		719	1P-5762	667
	283		671		728		669
	285		673		734		671
	1003		728		740		673
	1040		734		744		675
1M-6119	246		740		798		676
	247		744		801		928
	248		749		804	1P-5764	86
	256		751		807	1P-5766	814
	257		753		810		818
	259		758		812	1P-5767	667
	263		798		814		669
	264		801		818		671
	265		928		869		673
	266	1P-3705	667		876		675
1M-6120	246		669		914		676
	247		671		915		754
	248		673		928		758
	256		675	1P-4578	432		798
	257		676		433		801
	259		754		438		928
	263		758		455	1P-6356	1057
	264		764		728		1061
	266		770		734	1P-6872	838
1M-6573	422		776		740		840
	427		782		744	1P-7346	610
1M-6718	898		784		764		612
1M-8649	848		789		770	1P-7404	473
1M-9653	422		808		776		475
	426		928		781	1P-7405	610
1M-9968	359	1P-3707	667		784		612
	362		669		789	1P-7625	223
	366		671		869	1P-9005	848
	369		673		876	1P-9328	154
1M-9971	360		675	1P-4579	432		157
	363		676		433		160
1N-2914	12		928		438	1P-9699	478
1N-3193	105	1P-3708	432		728	1P-9744	1016
1N-3239	105		438		734	1Q-1592	313
1N-3240	4	1P-3709	86		740		318
	▶105	1P-3958	443		745		323
1N-3243	105		448	1P-4582	199	1Q-3760	1009
1N-3333	86	1P-4278	150		201	1Q-3765	1009
1N-3873	86		154		203	1Q-3800	1007
1N-4636	230		157		205	1R-0755	215
	231		160		207	1S-0004	96

▶ **PRIMARY REFERENCE**

PART NUMBER INDEX

Part	Page
	98
	100
1S-0994	107
	266
	729
	735
	741
	745
1S-0996	764
	770
	776
	784
1S-1015	132
	250
	259
	1057
	1061
1S-1150	174
	176
1S-3725	960
1S-3888	415
	418
1S-4915	246
	247
	248
	249
	256
	257
	258
	259
	263
	264
	265
	266
	398
1S-4974	461
	465
1S-7106	80
	82
1S-7251	247
	248
	256
	258
	259
	263
	265
	266
	358
1S-7252	246
	248
	256
	257
	258
	263
	264
	265
1S-7446	359
	362
	365
	368
1S-8241	682
	684
	686
	688
1S-8480	445
	450
1S-9110	443
	448
	465
1S-9292	422
1S-9593	399
	484
	485
	486
	487
	488
	901
	902
	903
	904
	906
	907
	908
	909
	912
	1034
1T-0068	550
	551
	552
	591
	592
	594
	595
1T-0229	463
1T-0241	463
1T-0242	463
1T-0310	465
1T-0720	60
	174
	176
	356
	848
	1086
	1122
1T-0738	644
	646
1T-0765	39
	43
	432
	438
	1086
	1122
1T-0766	443
	448
1T-0808	443
	448
1U-0322	878
1U-0323	878
1U-1513	938
	939
	940
	941
1U-1783	711
1U-1799	865
	871
1U-2164	866
	871
1U-2532	711
	920
1U-2533	938
	939
	940
	941
1U-2711	677
	►711
1U-3307	694
	696
	698
	700
	702
	704
	706
	708
1U-3611	938
	939
	940
	941
1U-3619	954
1U-3620	954
1U-3658	711
	920
1V-6341	41
1V-6652	1031
1V-8442	1049
	1051
1W-0417	3
	►85
1W-0419	3
	►79
1W-0714	3
	►80
	►82
1W-0717	4
	►86
1W-0725	5
	►172
	►173
1W-0726	5
	►182
1W-1115	170
1W-2750	80
	82
1W-2860	727
	733
	739
	743
1W-2976	172
1W-3508	5
	►170
1W-4003	232
	234
1W-4005	232
	234
1W-4006	232
	234
1W-4007	232
	234
1W-4008	232
	234
1W-4009	232
	234
1W-4010	232
	234
1W-4121	232
	234
1W-4655	232
	234
1W-4736	39
1W-5499	178
1W-6005	104
	106
1W-6363	4
	►358
1W-6448	626
	628
	655
1W-6694	172
	173
1W-6935	232
	234
1W-6936	232
	234
1W-7559	215
1W-7990	89
	91
1W-8129	94
	215
1W-8160	5
	►77
1W-8545	136
1W-9745	164
	167
1W-9747	164
	167
1Y-7927	1042
	1045

2

Part	Page
2A-1162	139
2A-3348	578
	579
2A-3746	444
	449
	465
2A-4429	35
	37
2A-4639	60
	117
	174
	176
2A-5220	55
2B-0858	404
	406
	433
	438
	467
2B-0947	623
2B-2694	89
	91
	223
	277
2B-2695	43
	60
	80
	82
	385
	389
	393

► **PRIMARY REFERENCE**

PART NUMBER INDEX

Part	Page
	473
	475
	481
	482
	1097
	1099
2B-9373	457
2D-0388	1141
2D-4534	205
	207
	209
	211
2D-6235	79
	382
	621
	1011
	1031
	1042
	1045
2D-6327	1049
	1051
2D-6392	359
	362
	365
	368
2D-6642	461
	478
2D-7325	154
	157
	160
2D-8154	39
2D-8426	41
2F-3012	863
2F-5326	543
	545
	549
2F-6678	359
	362
	366
	369
2F-7306	1049
	1051
	1079
2G-0493	534
	537
2G-5538	67
2G-6228	511
	515
2G-9000	201
	►862
2H-2615	287
	290
2H-3429	215
	360
	363
	365
	368
	482
2H-3745	67
	543
	545
	547
2H-3755	694
	698
	702
	706
	713
	717
2H-3855	508
2H-3920	1003
	1039
	1162
	1166
2H-3922	372
	397
	1000
2H-3923	1000
2H-3931	412
2H-3932	553
	556
	559
	563
	566
	569
	572
	575
	828
	829
2H-6338	764
	771
	777
	782
	785
	790
2H-6622	1147
	1148
	1149
	1150
	1158
	1159
2H-8124	525
2H-9445	443
	448
2J-1227	496
	917
	919
	969
	971
	973
	982
	983
	986
2J-2668	729
	734
	741
	745
2J-3118	511
	515
2J-3506	960
2J-3507	991
2J-6089	865
	871
2J-6274	39
2J-6356	213
	404
	406
2J-8163	359
	362
	365
	368
2K-2939	422
	426
	578
	579
2K-4472	413
2K-4821	242
2K-4898	650
	657
	659
2K-4973	164
	167
	170
	992
	994
	1057
	1061
	1097
	1099
	1125
	1127
	1130
	1132
	1134
2K-5254	467
2K-6830	710
2K-7471	58
	422
	426
2K-7979	213
2K-8198	215
2K-8467	633
	635
2K-9062	463
2K-9111	1092
2L-0041	830
	832
2L-5894	655
2L-6679	359
	362
	366
	369
2L-8075	1031
2L-8076	1031
2M-0849	38
	463
	511
	515
2M-1309	553
	556
	559
	563
2M-3974	455
2M-4453	141
	142
2M-5795	508
	511
	515
	534
	538
	1086
	1122
2M-6096	534
	537
2M-7041	478
2M-7819	1042
	1045
2M-9780	60
	80
	82
	98
	100
	107
	219
	385
	389
	393
	402
	490
	491
	623
	643
	728
	729
	733
	734
	739
	740
	741
	743
	744
	745
	753
	757
	763
	769
	775
	781
	783
	788
	822
	823
	824
	834
	836
	838
	840
	863
	865
	869
	872
	875
	876
	879
	881
	883
	884
	886
	887
	888
	897
2N-0931	127
	129
2N-1117	127
	129
2N-2765	174
	176
	192
	193
	194
2N-2766	180

► **PRIMARY REFERENCE**

PART NUMBER INDEX

Part	Page	Part	Page	Part	Page	Part	Page
	193		801		148		825
	194		866	2W-9723	144		826
2N-3162	213		869	2W-9724	144		827
	404		872	2Y-1834	248		920
	406		876		259		928
2N-3480	1048		878		266		969
2N-5842	69	2S-4872	481		1057		971
	73		482		1061		973
2N-7029	865	2S-5925	610			3C-1884	1160
	871		612				1161
2P-1286	96	2S-5926	610	**3**		3D-0472	586
2P-1296	223		612			3D-2824	60
2P-1823	463	2S-7593	467	3B-0551	132		96
2P-1824	463		538	3B-0623	28		107
2P-2204	134	2S-8439	725	3B-0645	28		132
2P-2975	248	2S-8939	610	3B-1915	12		144
	256		612		87		148
	263	2S-9750	478		89		219
2P-3538	432	2T-2305	586		91		249
	438	2V-0481	696		112		259
2P-4005	80		700		119		266
	82		702		121		371
2P-4304	80		704		124		413
	82		706		134		433
2P-4337	1141		708		146		438
2P-4339	1003	2V-2043	96		147		443
	1039	2V-3216	385		187		448
2P-4538	480	2V-4387	89		215		467
2P-5711	480		91		610		473
2P-7636	89	2V-9923	535		612		475
	91		538	3B-2968	67		490
2P-8130	134		586	3B-4501	397		491
2P-8421	249	2W-0752	12		657		588
	259		79		662		727
	266		89		997		733
	765		91		1000		739
	771		94	3B-4605	498		743
	777	2W-1053	86		500		764
	780	2W-1080	172		502		765
	785		173	3B-4615	525		770
	790	2W-1568	174		527		771
2P-8511	298		176	3B-4730	865		776
2R-1694	588	2W-1635	86		871		777
2R-2376	1003	2W-1969	86	3B-5317	520		780
	1039	2W-2258	215	3B-8489	493		781
2S-0115	443	2W-2288	16		543		782
	448		17		545		784
2S-0696	482		18		549		785
2S-2110	534	2W-2662	35		690		789
	538	2W-2895	48		692		790
2S-2760	104	2W-2940	21		694		852
2S-3770	1064		23		696		865
	1066		25		698		872
2S-4078	249		26		700	3D-2975	1042
	259	2W-3146	136		702		1045
	266	2W-5285	14		704	3D-3295	415
	413	2W-5476	104		706		418
	415	2W-6619	104		708	3D-6678	848
	418	2W-6727	106		711	3D-7943	638
	432	2W-6965	172		713		639
	438		173		715	3D-8317	478
	444	2W-7226	86		717		482
	449	2W-7622	132		719	3D-8439	41
	649	2W-7628	12		721	3D-8748	1031
	798	2W-7777	144		723	3D-8749	1031

► **PRIMARY REFERENCE**

PART NUMBER INDEX

Part	Page
3E-0154	98
	▶374
3E-0400	997
	1000
	1033
	1036
3E-1906	▶1015
	1016
3E-2310	757
	801
	804
	807
3E-2378	1173
3E-3361	484
3E-3362	484
	487
	620
	1034
3E-3365	98
	240
	249
	256
	258
	263
	265
	347
	348
	354
	371
	381
	385
	389
	397
	399
	485
	620
	726
	904
	906
	907
	908
	909
	912
	997
	1001
	1033
	1034
	1036
	1057
	1068
3E-3368	339
	340
	341
	342
	343
	344
	346
	655
3E-3371	306
	327
	331
	332
	334
	335
	349
	350
	386
	390
	393
	394
	655
	853
	855
	1049
	1051
	1141
3E-3377	329
	655
	901
	902
	903
	1026
	1057
	1070
	1071
3E-3380	1027
3E-3383	399
	641
	1003
	1028
	1068
	1073
	1161
	1162
	1166
3E-3584	859
	860
3E-3747	484
3E-3748	473
	▶484
3E-4051	1057
	1061
3E-4052	1057
	1061
3E-4053	1057
	1061
3E-4057	1057
	1061
3E-4058	1057
	1061
3E-4334	843
3E-4335	1079
3E-4336	1079
3E-4352	134
	187
3E-4356	1048
3E-4362	1079
3E-4371	443
	448
3E-4875	411
3E-4876	411
3E-4880	411
3E-4898	1088
	1090
3E-5180	625
	657
3E-5239	305
	354
	1163
	1167
3E-5458	244
3E-5464	997
	1000
3E-5519	1163
	1167
3E-6328	▶240
	397
3E-6388	1161
3E-6389	▶306
	1011
3E-6392	997
	1033
3E-6575	1079
3E-6601	1077
3E-6749	834
	836
3E-6769	838
	840
3E-6770	838
	840
3E-6918	1075
3E-6919	1075
3E-6920	1075
3E-7430	127
3E-7753	246
	256
	263
3E-7768	360
	363
	365
	368
3E-7771	359
	362
3E-7835	1007
	▶1031
3E-7837	1031
3E-7838	1031
3E-7839	1031
3E-8026	432
	433
	438
3E-8027	432
	433
	438
3E-8362	1077
3E-8575	857
	858
	▶901
3E-8581	901
	902
	903
3E-8646	295
3E-8825	397
	399
3E-9044	399
3E-9177	▶1160
	1162
3E-9205	▶902
	▶903
	914
	915
3E-9350	249
	256
	263
3E-9731	1170
3E-9732	1170
3E-9733	238
	1170
3E-9736	238
	1170
3E-9737	1170
3E-9865	1049
	1051
	1140
3F-0379	359
	362
	365
	368
3F-1358	139
3F-3442	443
	448
3F-4479	865
	872
3F-5792	39
	41
	45
3F-6795	39
	41
	45
	52
	53
3F-6808	52
	53
3F-9556	242
	1074
3G-0053	928
	938
	939
	940
	941
3G-1797	830
3G-1877	917
	983
	986
3G-2683	878
3G-3273	649
3G-3475	869
	876
3G-3903	694
	696
	698
	700
	702
	704
	706
	708
3G-5336	929
	957
	959
3G-5340	917
	983
3G-5341	917
	983
3G-5596	987
	988
	989
	990
	991
3G-5649	863
3G-5650	863

▶ **PRIMARY REFERENCE**

PART NUMBER INDEX

Part	Page
3G-6251	810
	812
3G-6342	798
	801
	804
	807
3G-6509	988
	991
3G-6623	810
	812
3G-7961	711
3G-8047	760
	761
	762
	930
3G-8054	760
	761
	762
	930
3G-8057	760
	761
	762
	930
3G-8163	865
	871
3G-8164	865
	871
3G-8165	865
	871
3G-8175	907
	908
	912
3G-8710	869
	876
3G-9401	929
	932
3H-3243	230
	231
3H-3385	415
	418
3H-6660	1011
3H-7654	60
	386
	390
	394
3J-1907	86
	94
	109
	111
	139
	143
	157
	215
	247
	259
	266
	402
	413
	422
	426
	432
	433
	438
	454
	473
	475
	478
	480
	490
	491
	643
	725
	726
	728
	729
	734
	740
	741
	744
	745
	753
	754
	757
	758
	760
	761
	762
	763
	764
	765
	769
	770
	771
	775
	776
	777
	780
	781
	782
	783
	784
	785
	788
	789
	790
	793
	798
	801
	804
	807
	814
	818
	821
	848
	853
	855
	858
	864
	865
	871
	872
	878
	879
	881
	883
	884
	898
	914
	915
	930
3J-4278	543
	545
	547
3J-4818	1127
	1132
	1134
3J-6035	919
	969
	971
	973
	982
3J-7354	28
	80
	82
	94
	109
	119
	121
	124
	154
	157
	160
	413
	433
	438
	463
	543
	549
	586
	649
	729
	734
	741
	744
	745
	889
	891
	894
	931
3J-9196	69
	71
	73
	75
	486
3K-0360	52
	53
	98
	100
	107
	119
	132
	134
	154
	157
	160
	174
	176
	215
	249
	259
	266
	385
	389
	393
	432
3K-0715	578
	579
3K-0835	1049
	1051
3K-2559	444
	449
3K-2889	531
3K-4897	655
	1083
3K-6060	246
	259
	266
	271
	1075
	1122
3K-6235	1011
3K-6905	386
	390
	394
3K-7942	626
	628
3K-8692	828
	829
3K-9770	543
	545
	547

► **PRIMARY REFERENCE**

PART NUMBER INDEX

Part	Page	Part	Page	Part	Page	Part	Page
	961		449		263		537
	962	3P-7564	443		264	3T-2662	382
	963		448		265	3T-2977	511
	964	3P-7566	444		266		518
	965		449		274		519
	966	3P-7570	443		275	3T-3159	398
3L-1824	463		448		399	3T-3278	398
3L-3380	359	3P-7575	444		485	3T-3418	359
	362		449		644		362
	365	3P-7576	445		646	3T-3422	359
	368	3P-7584	444		931		362
3L-8187	397	3P-7586	444		997		365
	399		449		1000		368
	1031	3P-7601	444		1003	3T-3423	359
	1039		449		1033		362
3M-0496	815	3P-7612	444		1036		366
3N-3763	360		449		1039		369
	363	3P-7739	402		1138	3T-3424	359
	366	3P-7832	443	3S-2708	444		362
	369		448		449		366
3N-3790	1172	3P-8485	482		465		369
3P-0647	473	3P-9900	1134	3S-3074	415	3T-3434	360
	475	3R-2300	690		418		363
3P-0655	86		692	3S-4327	454		365
3P-0657	105		694	3S-6049	247		368
3P-0747	454		696		256	3T-3564	511
3P-0764	98		698		259		515
	100		700		263	3T-3566	511
3P-1210	838		702		266		515
	840		704	3S-6050	247	3T-3569	511
3P-1669	467		706		248		515
3P-1896	10		708		257	3T-3571	511
3P-2482	602		711		259		515
	603	3R-5387	138		264	3T-3980	432
	604	3R-8801	359		265		437
	605		362	3S-6162	495	3T-4014	433
	607		365		1078		437
	608		368	3S-8035	444	3T-4709	359
3P-2564	422	3S-0004	402		449		362
	426		454	3S-8073	465		366
3P-2574	461		457	3S-8652	725		369
3P-2582	422		642	3S-8665	98	3T-4710	359
	426		643		100		362
3P-3604	504	3S-0036	443	3S-9557	382		366
	506		448		1153		369
3P-3839	399	3S-1223	553	3S-9643	116	3T-4711	362
3P-4165	434		556	3T-0304	1049	3T-5355	455
	437		559		1051	3T-6191	534
3P-5327	512		563	3T-0449	152		537
3P-6061	141		566	3T-0852	1001	3T-6280	1088
	142		569		1034		1090
3P-6349	415		572		1037	3T-6281	1088
	418		575	3T-1121	1147		1090
3P-6375	415	3S-1307	48		1148	3T-6292	614
	418		50		1149		615
3P-6431	525		1086		1150		616
	527	3S-1349	460		1158		617
3P-7006	444	3S-1356	460		1159	3T-6354	244
3P-7149	444	3S-2093	246	3T-1177	520	3T-6366	443
	449		247	3T-1448	461		448
3P-7447	444		248		▶472	3T-6847	727
	449		256	3T-1449	472		733
3P-7558	443		257	3T-2023	727		739
	448		258		733		743
3P-7563	444		259	3T-2120	534	3T-6868	433

▶ **PRIMARY REFERENCE**

PART NUMBER INDEX

Part	Page
	437
3T-6870	433
	437
3T-6871	433
	437
3T-6874	433
	437
3T-7059	1160
	1161
3T-7086	1160
	1161
3T-7494	553
	556
	559
	563
	566
	569
	572
	575
3T-7792	543
	545
	547
3T-7793	543
	545
	547
3T-7794	543
	545
	547
3T-8458	493
3T-8459	493
3T-8876	422
	426
3T-9055	553
	556
	559
	563
3T-9075	602
	603
	604
	605
	607
	608
3T-9476	537
3T-9486	798
	801
	804
	807
3T-9494	359
	360
	362
	363
	365
	369
3T-9524	359
	362
	365
	368
3T-9525	359
	362
	366
	369
3T-9549	249
	256
	263
3T-9810	531
3V-2431	915
3V-9399	498
	500
	502
3W-2647	98
	100
	727
	733
	739
	743
	798
	801
	804
	807
3W-3110	508
	512
	515
4	
4B-0831	223
4B-1270	626
	628
	655
4B-2047	244
	1048
4B-2049	360
	363
	365
	368
4B-3140	86
4B-3388	48
4B-3609	213
4B-3611	213
4B-4043	141
	142
	402
4B-4158	553
	556
	559
	563
	566
	569
	572
	575
	655
	1172
4B-4161	8
4B-4274	588
	1031
	1163
	1167
4B-4276	484
	1031
4B-4278	498
	500
	502
	1134
4B-4281	385
	389
	393
4B-4674	152
4B-5059	1042
	1045
4B-5158	1172
4B-7739	433
	437
4B-8407	11
	52
	53
4B-9782	148
	444
	449
4B-9783	753
	757
4B-9808	650
	657
	659
	662
	663
	664
	1021
4B-9880	478
	482
4D-1326	100
	376
4D-1736	830
	832
4D-6432	1096
4D-6763	432
	437
4D-7388	729
	735
	741
	745
4D-7733	586
	1057
	1061
4D-7735	1057
	1061
4D-8148	444
	449
	463
4D-9376	525
4D-9517	154
	157
	160
	931
4F-0186	132
	138
	1064
4F-0411	110
	111
4F-2129	623
4F-2294	378
4F-3765	60
4F-4879	1112
	1113
	1115
	1118
	1119
	1120
	1121
4F-7387	141
	142
4F-7391	960
4F-9101	504
	506
4F-9351	105
4H-1641	504
	506
	508
	535
	538
4H-2558	498
	500
	502
4H-6141	427
4H-7728	498
	500
	502
4H-7925	444
	449
4H-7993	119
	121
	124
	132
4I-4655	94
4I-9521	586
4I-9525	586
4J-0519	810
	928
4J-0520	729
	735
	741
	745
	795
	796
	798
	801
	804
	807
	810
	812
	814
	818
	821
	928
	930
4J-0521	482
4J-0522	729
	735
	741
	745
	748
	765
	771
	777
	782
	785
	790
	798
	801
	804
	807
	865
	869
	872
	876
	914
	915
4J-0523	865
	872
4J-0524	729

► **PRIMARY REFERENCE**

PART NUMBER INDEX

Part	Page	Part	Page	Part	Page	Part	Page
	735		717		203		758
	741		719		205		765
	745		721		207		795
	798		723		209		796
	801	4J-7083	525		211		865
	804		527		237		872
	807	4J-7101	896		239		930
4J-0525	869	4J-7533	644		246		1016
	876		646		259		1057
4J-0526	869		858		266		1061
	876		865		275	4M-1708	444
4J-0527	199		871		302		449
	201		900		303	4M-1815	366
	203		914		313		369
	205		915		318	4M-1827	360
	207	4K-0367	39		323		363
	209		41		434		365
	211		58		438		368
	729	4K-0684	552		461	4M-1828	359
	735		690		467		362
	741		692		525		365
	745		694		527		368
4J-3342	610		696		588	4M-1829	359
	612		698		729		362
4J-3754	848		700		735		365
4J-3815	848		702		741		368
4J-3816	848		704		745	4M-1831	359
4J-4790	863		706		754		362
4J-4955	694		708		758		365
	696		711		765		368
	698		961		771	4M-1853	360
	700		962		777		363
	702		963		780		365
	704		964		785		368
	706		965		790	4M-1854	360
	708	4K-1388	402		795		363
	713		793		810		365
	715		865		812		368
	717		872		852	4M-1896	360
	719	4K-5175	60		928		363
	721	4K-8302	1061		1003		366
	723	4K-8501	534		1011		369
4J-5267	810		538		1039	4M-2381	478
	812	4K-9097	511		1057		482
	814		515		1061	4M-3248	104
	818		1009		1064		106
	928		1097		1066	4M-5227	465
4J-5477	94		1099		1122	4M-5281	98
	109	4K-9429	1080	4L-6459	754		100
	586	4L-2729	359		758		399
	931		363		1066	4M-5282	1012
4J-5573	729	4L-4644	110	4L-6499	100	4M-5317	98
	735		111		376		100
	741	4L-4986	413	4L-7124	365	4M-5397	443
	745	4L-6454	132		368		448
4J-6888	694		150	4L-8606	112	4M-6425	848
	696		154	4L-9337	139		1092
	698		157		150		1093
	700		160		512	4M-7470	498
	702		170		515		500
	704		171		729		502
	706		183		735	4M-8239	480
	708		184		741	4M-8303	879
	713		199		745		881
	715		201		754		884

► **PRIMARY REFERENCE**

PART NUMBER INDEX

Part	Page	Part	Page	Part	Page	Part	Page
4M-8910	467		326		448	4T-9425	830
4N-0683	21		327		449		832
	23		385	4S-8541	423	4T-9426	830
	26		389		426		832
4N-0933	11		393		444	4T-9708	920
4N-0996	60		630		449	4T-9715	920
4N-1320	117		853	4T-0301	810	4T-9716	677
4N-2927	1042		855		928		▶920
	1045		930	4T-0884	5	4T-9751	493
4N-3808	412		997		▶863	4V-1541	534
4N-3841	385		1001	4T-1860	▶898		537
	389		1034		900	4V-6698	649
	393		1036	4T-2069	553	4V-6981	1012
4N-5834	144		1049		556		1056
	148		1051		559	4V-7884	1125
4N-8227	301		1057		563		1127
4N-9915	1048		1061		566		1130
4P-0692	85		1141		569		1132
	89	4P-7582	247		572	4V-8256	992
	91		259		575		994
	223		266	4T-2576	690	4V-8556	1127
4P-0693	223	4P-7680	180		692		1132
4P-0707	134	4P-7850	94		711	4V-8577	1125
4P-0947	248	4P-8134	98	4T-2578	829		1130
	259		100	4T-2620	869		1134
	266		250		876	4W-0077	67
4P-1654	136		259	4T-2727	669	4W-0226	174
4P-2535	86		266		▶678		176
4P-3550	45		274	4T-2728	667	4W-0530	119
4P-3896	136		275		▶680		121
4P-4342	223		302	4T-2805	496		124
4P-4343	223		303		969		131
4P-4460	89		326		971	4W-0531	119
	91		327		973		121
4P-4642	56		380	4T-3643	951		124
	57		385		954		131
4P-4917	105		389	4T-3670	949	4W-1319	996
4P-5426	3		393		▶961		1006
	▶55		399	4T-3703	949		▶1018
4P-5460	50		1049		▶962	4W-1555	67
4P-5500	105		1051	4T-3797	957	4W-1556	67
4P-5540	4		1057		959	4W-1557	67
	▶117		1061	4T-3981	810	4W-1558	67
4P-6464	1172		1141		928	4W-1807	223
4P-7048	117	4S-1722	969	4T-4073	866	4W-3027	78
4P-7428	250		971		872	4W-3034	78
	259		973		▶899	4W-3100	127
	266	4S-1962	1001	4T-4502	991		129
	323		1034	4T-5070	898	4W-3846	223
	385		1037	4T-5071	898	4W-3847	223
	389		1064	4T-5255	932	4W-3863	223
	393		1066	4T-5308	933	4W-3864	139
	749	4S-4455	96	4T-5501	987		143
	751	4S-5780	58		988	4W-4586	50
	853		1016	4T-6907	710	4W-4813	19
	855	4S-5882	103	4T-8338	385		20
	928		119		389		21
4P-7429	259		121		393		23
	266		124	4T-8729	830		26
	389	4S-5898	174		832	4W-4998	6
	393		176	4T-8901	971	4W-5363	▶113
4P-7581	246	4S-7907	85		973		665
	259	4S-8287	1079	4T-9176	830	4W-5461	134
	266	4S-8537	443		832	4W-5463	134
	325		444	4T-9300	830	4W-5596	86

▶ **PRIMARY REFERENCE**

PART NUMBER INDEX

Part	Page	Part	Page	Part	Page	Part	Page
	171		504	5F-4899	86		680
	183		506	5F-7054	415		682
	184		508		418		684
4W-5597	86		525	5F-9144	726		686
4W-5893	3		527	5F-9657	21		688
	▶112		534		23	5J-5314	360
4W-6664	8		538		25		363
	9		543		26		365
4W-8921	105		545	5F-9757	399		368
4W-9571	60		729	5G-6504	132	5J-5365	825
4W-9977	195		735		409		826
	196		741		410		827
	197		745		727		928
4Z-6094	721		749		733	5J-5402	710
	723		798		739	5J-6796	432
4Z-8840	917		801		743		437
	986		804		1016	5J-8350	694
4Z-8842	▶935		807	5G-8290	743		698
	980		928	5H-1504	830		702
4Z-8843	935		1094		832		706
4Z-8846	917	5C-7261	620	5H-2095	810	5J-8375	713
4Z-8848	985		1074		812		717
	▶987	5C-8811	1162		928	5K-0906	1007
4Z-8849	987		1166	5H-4018	814	5K-1787	713
4Z-9219	935	5C-9553	586		818		715
	937		630	5H-4019	798		717
4Z-9220	917		997		801		719
4Z-9312	991		1000		804	5K-4627	465
4Z-9314	991		1033		807	5K-8652	248
4Z-9334	796		1036	5H-4020	729		256
4Z-9339	986		1160		735		263
			1161		869	5K-9090	96
			1163		876		98
5			1166	5H-4081	848		100
		5D-0353	404	5H-4279	455		298
5A-4252	249		406	5H-4907	989		727
	256	5D-1026	219		990		729
	263		1057		991		733
5B-0213	31		1061	5H-6005	848		735
	33		1064	5H-6734	146		739
5B-2638	85	5D-1901	848		147		741
	86	5D-1902	848		199		743
5B-4399	119	5D-3954	41		201		745
	121	5D-4822	1042		203		748
	124		1045		205		753
5B-5473	991	5D-5957	174		207		757
5B-5821	8	5D-5958	843		209		763
	9	5D-6176	402		211		765
5B-7890	31	5D-6428	422		237		769
	33		426		239		771
5C-2890	375		443	5H-8038	215		775
	1134		448	5H-8803	531		776
5C-3162	461	5D-7635	318	5H-8848	131		780
5C-6266	248		323		872		781
	259	5D-9514	41	5H-8853	482		783
	266		52	5H-8985	463		784
	534		53		465		788
	538	5F-0304	11	5H-9394	432		789
5C-6565	131		415		437		793
	219		418		512		814
	409	5F-1678	543		765		818
	410		545		771	5K-9179	1067
	498		549	5J-1193	678	5L-1410	433
	500	5F-3106	141		680		437
	502		142	5J-3488	678	5L-1761	230

▶ **PRIMARY REFERENCE**

PART NUMBER INDEX

Part	Page	Part	Page	Part	Page	Part	Page
	231		393		448		264
	473		402	5M-8500	1012		265
	475		408	5M-8627	917		358
5L-2952	586		443	5M-9498	534	5P-0760	249
5L-4758	638		448		537		258
	639		455		538		265
5L-5032	443		463	5M-9548	480	5P-0761	246
	448		465	5M-9622	482		247
5L-7200	397		473	5M-9623	480		248
5M-2894	8		475		482		256
	9		478	5M-9624	478		258
	10		480		480		259
	11		1093		482		263
	12	5M-3034	360	5N-2126	380		265
	14		363	5N-9016	865		266
	21		365		871	5P-0764	152
	23		368	5P-0048	754	5P-0840	10
	26	5M-3038	433		758		21
	31		438	5P-0049	765		23
	33	5M-3062	152		771		26
	39		154		777		43
	43		157		781	5P-1075	56
	45		160		785		57
	48		164		790		96
	58		186	5P-0076	914		98
	64		246		915		100
	69		259		1086		114
	71		266	5P-0537	69		115
	73		272		71		132
	75		273		73		150
	79		274		75		152
	85		280		229		154
	86		302		1049		157
	87		303		1051		160
	89		312		1106		170
	91		313		1160		213
	94		315		1161		249
	104		316	5P-0597	78		259
	105		326		84		266
	110		327		170		271
	111		354	5P-0598	354		272
	117		399	5P-0695	246		273
	119		431		247		312
	121		504		248		313
	124		506		249		315
	127		511		256		316
	129		515		257		318
	131		531		258		323
	134		586		259		325
	136		810		263		399
	138		812		264		404
	139		814		265		406
	143		818		266		461
	174		928		398		498
	176		931		399		500
	178		1018	5P-0739	588		502
	180		1088	5P-0744	249		504
	187		1090		256		506
	215		1102		263		508
	223		1125	5P-0747	246		511
	277	5M-3320	457		248		516
	298	5M-6214	493		256		525
	356		525		257		527
	385		527		258		535
	389	5M-7925	443		263		538

► **PRIMARY REFERENCE**

PART NUMBER INDEX

Part	Page	Part	Page	Part	Page	Part	Page
	588		796	5P-2235	694	5P-3092	848
	729		1088		696	5P-3345	178
	735		1090		698		180
	741		1094		700	5P-3418	244
	745	5P-1251	154		702	5P-3419	244
	760		157		704	5P-3426	386
	761		160		706		390
	762	5P-1262	132		708		394
	765	5P-1265	127	5P-2424	250	5P-3875	180
	771		129		259	5P-3961	178
	777	5P-1327	1172		266		180
	782	5P-1404	86		765	5P-4017	921
	785		402		771		922
	790		490		777		923
	799		643		780		924
	801		729		785		925
	804		735		790		926
	807		741	5P-2545	422		927
	814		745		426		▶1172
	818	5P-1465	154	5P-2546	41	5P-4043	423
	929		157		45	5P-4057	415
	930		160	5P-2566	132		418
	1003	5P-1669	444		205		442
	1012		449		207		623
	1020	5P-1670	443		209	5P-4115	997
	1022		448		211		1000
	1023	5P-1695	219		219		1033
	1024	5P-1702	415		271		1036
	1025		418		432		1049
	1039	5P-1807	977		434		1051
	1056		978		438		1162
	1057		979		467		1166
	1061		981		498	5P-4116	620
	1064		▶1172		500		630
	1066	5P-2199	875		502		1001
	1075		886		511		1034
	1088		887		516		1037
	1090		888		729	5P-4143	422
	1102	5P-2228	219		735		426
	1103		246		741	5P-4254	422
	1122		259		745		426
	1125		266		848	5P-4256	553
	1163		511		1016		556
	1167		516		1086		559
5P-1076	131		588	5P-2618	205		563
	271		602		207	5P-4295	223
	318		603		209		814
	409		604		211	5P-4423	1054
	410		605	5P-2645	119		1134
	498		607		121	5P-4432	1054
	500		608		124	5P-4566	588
	502		729	5P-2672	930	5P-4626	52
	504		735		969		53
	506		741		971	5P-4869	164
	508		745		973		186
	511		749	5P-2675	1049	5P-4892	86
	516		751		1051	5P-4900	89
	525		810	5P-2755	178		91
	527		812	5P-2937	154	5P-5296	543
	602		815		157		545
	603		818		160		547
	604		928	5P-2955	312	5P-5297	623
	605		1012		313	5P-5405	465
	607		1088		315	5P-5454	1003
	608		1090		316		1039

▶ **PRIMARY REFERENCE**

PART NUMBER INDEX

Part	Page
5P-5528	386
	390
	394
5P-5580	463
5P-5623	399
5P-5643	1003
	1040
5P-5673	998
	1001
5P-5677	381
	382
	399
5P-5680	1145
	1146
	1147
	1148
	1149
	1150
	1156
	1157
	1158
	1159
5P-5755	1004
	1040
	1075
5P-5824	1003
	1039
5P-5846	86
	623
5P-5855	47
5P-5901	397
5P-5908	1000
	1036
5P-5939	1001
5P-5969	281
	283
	285
	998
	1034
	1037
5P-5992	1137
5P-6010	1054
	1134
5P-6025	249
	256
	263
5P-6129	1058
	1062
5P-6241	423
	427
5P-6261	481
	482
5P-6264	399
5P-6298	359
	366
	369
5P-6410	152
5P-6605	1012
5P-6651	444
	449
5P-6670	997
	1000
	1033
	1036
5P-6726	443
	448
5P-6727	443
	448
5P-6874	1067
5P-6944	727
	733
	739
	765
	771
	776
	780
	784
5P-7086	1141
5P-7151	543
	545
	549
5P-7175	588
5P-7211	1012
5P-7457	461
5P-7462	765
	771
	777
	780
	785
	790
5P-7463	765
	771
	777
	780
	785
	790
5P-7464	432
	438
	729
	735
	741
	745
	765
	771
	777
	780
	785
	790
5P-7465	432
	438
	729
	735
	741
	745
	765
	771
	777
	780
	785
	790
5P-7466	434
	438
	798
	801
	804
	807
	814
	818
5P-7467	434
	438
	798
	801
	804
	807
	814
	818
5P-7468	432
	438
	754
	758
	796
	930
	1086
5P-7469	432
	438
	754
	758
	796
	930
	1086
5P-7513	1075
5P-7530	69
	71
	73
	75
5P-7538	485
	904
5P-7684	865
	872
5P-7701	60
5P-7705	534
	537
5P-7803	1011
5P-7817	86
5P-7854	132
5P-7957	1080
5P-7958	1
5P-7989	415
	418
5P-8068	60
5P-8077	754
	758
	765
	771
	777
	781
	785
	790
	865
	872
5P-8112	814
	818
5P-8167	1103
	1127
	1132
5P-8210	21
	23
	26
	623
5P-8244	455
	848
5P-8245	21
	23
	26
	39
	41
	43
	45
	48
	52
	53
	58
	68
	86
	103
	117
	119
	121
	124
	127
	129
	182
	385
	389
	393
	422
	426
	443
	448
	455
	508
	623
	649
	667
	669
	671
	673
	848
	929
5P-8246	68
5P-8247	39
	41
	43
	52
	53
	58
	141
	142
	242
	422
	578
	579
	596
	597
	598
	599
	623
	848
5P-8248	50
	67
	402
	422
	426
	960
5P-8249	19
	20
5P-8250	38
	58
	67
	678

► **PRIMARY REFERENCE**

PART NUMBER INDEX

Part	Page	Part	Page	Part	Page	Part	Page
	680	5P-8823	961		475		708
	682		962	5S-0581	144		713
	684		963	5S-2256	830		715
	686		964		832		717
	688		965	5S-4437	478		719
	713		966	5S-4554	461		814
	715	5P-8839	47	5S-5880	443		818
	717	5P-8904	461		448		869
	719	5P-8907	641	5S-7349	242		876
	721	5P-8918	1147		244		914
	723		1148		354		915
5P-8335	928		1149		434	5S-7383	114
	938		1150		438		115
	939		1158		1009		164
	940		1159		1049		167
	941	5P-8940	174		1051		411
5P-8394	1163		176		1141		461
	1167	5P-9035	467	5S-7379	67		655
5P-8444	795	5P-9085	394		84		729
	796	5P-9132	1028		114		735
	930	5P-9217	553		115		741
	1086		556		152		745
5P-8445	1042		559		164		754
	1045		563		167		758
5P-8500	1		566		247		814
	79		569		434		1018
	85		572		438		1057
	219		575		534		1062
	236	5P-9262	889		538		1092
	238		891		765		1093
	504		893		771	5S-7816	482
	506		894		777	5T-4568	461
	508	5P-9466	1172		780	5T-8645	199
	511	5P-9609	825		785		201
	515		826		790		203
	534		827		798	5T-9686	814
	537	5P-9617	434		801		818
	727		438		804	5V-0770	1042
	733	5P-9658	412		807		1045
	739	5P-9884	1173		810	5V-1474	997
	743	5P-9890	89		853		1000
5P-8502	79		91		855		1033
	85	5P-9891	553		869		1036
	219		556		876	5V-1496	508
	236		559		928		511
	238		563		1018		516
	504		566		1056		1086
	506		569		1058		1104
	508		572		1062		1106
	511		575		1064		1108
	515	5P-9899	971		1075		1122
	534	5P-9957	602		1163	5V-1497	1125
	537		603		1167		1130
	727		604	5S-7382	150	5V-8884	531
	733		605		152		
	739		607		164		
	743		608		167		
5P-8503	1011	5R-1238	1086		318		
5P-8522	312	5R-7136	43		694	6A-9718	1160
	313		48		696		1161
	318	5R-7137	41		698		1162
	322		43		700		1166
	749		48		702		1169
	751	5S-0003	224		704	6B-0533	498
	928		473		706		500

6

► **PRIMARY REFERENCE**

PART NUMBER INDEX

Part	Page	Part	Page	Part	Page	Part	Page
	502		891		719		559
	534		893	6E-5702	713		563
	537		894		715	6F-6673	482
6B-0863	896	6E-3274	889		717	6F-7012	280
6B-1557	408		891		719	6F-7045	372
6B-2882	1003		893	6E-6151	845	6F-7062	60
	1039		894	6E-6153	845	6F-7172	144
6B-4594	152	6E-3275	889	6E-6154	845	6F-8146	848
6B-5072	86		891	6E-6155	845	6G-2914	1088
6B-6682	830		893	6E-6157	845		1090
	832		894	6E-6158	845	6G-3432	249
6B-7469	124	6E-3276	889	6E-6160	838		256
6B-9081	298		891		840		263
6B-9202	86		893		▶845		727
6C-3680	249		894	6E-6170	838		733
	257	6E-3341	845		▶889		739
	264	6E-3343	838	6E-6172	838		743
6D-0618	525	6E-3914	678		840	6G-6275	463
6D-4246	138		680	6E-6173	838	6G-7803	199
6D-4247	1058		682		840		201
	1062		684	6E-6174	838		203
	1064	6E-3917	678		840	6H-1717	45
	1066		680	6E-6175	838	6H-3956	498
6D-4636	729		682		840		500
	735		684	6E-6176	838		502
	741		686		840		534
	745		688	6E-6285	793		538
6D-5801	302	6E-3976	710	6E-6527	889		649
6D-6812	1102	6E-3980	710		891	6H-6698	119
	1103	6E-3995	838		893		121
6D-9157	413		840		894	6I-0723	60
6E-0358	793	6E-3999	838	6E-6528	889	6I-0724	60
6E-0381	899		840		891	6I-0804	89
6E-0382	899	6E-4000	838		893		91
6E-0410	875		840		894	6I-0805	89
	886	6E-4003	838	6E-6536	889		91
	887		840		891	6I-0809	89
	888	6E-4004	838		893		91
6E-0496	721		840		894	6I-0810	89
	723	6E-4007	845	6E-6537	889		91
6E-1443	828	6E-4009	845		891	6I-1418	274
	829	6E-4096	843		893		277
6E-1444	828	6E-4098	843		894		278
	829	6E-4100	477	6E-6538	889		279
6E-2372	848	6E-4102	477		891		305
6E-2442	848	6E-4343	869		893	6I-1792	4
6E-2943	830		876		894		▶187
	832	6E-4432	869	6E-6539	889	6I-2431	150
6E-3113	▶710		876		891	6I-2435	150
	934	6E-4492	869		893	6I-4468	3
	935		876		894		▶215
	937	6E-4626	843	6E-6540	889	6I-4950	116
6E-3268	889	6E-4976	710		891	6I-8062	▶529
	891	6E-5294	652		893		950
	893		▶830		894	6I-8067	529
	894	6E-5536	830	6E-6545	891	6I-8071	529
6E-3269	889	6E-5660	713		894	6I-8361	213
	891		715	6F-0155	444	6I-8363	213
	893		717		449	6I-8921	1049
	894		719	6F-0253	1049		1051
6E-3272	889		721		1051	6I-9455	▶298
	891		723	6F-0711	493	6I-9456	298
	893	6E-5701	713		848	6I-9457	298
	894		715	6F-4718	553	6I-9458	298
6E-3273	889		717		556	6I-9459	298

▶ **PRIMARY REFERENCE**

PART NUMBER INDEX

Part	Page	Part	Page	Part	Page	Part	Page
6I-9519	481	6J-5986	928		368	6T-0666	511
	482		957	6N-3826	359		515
6I-9534	1056		959		362	6T-1120	366
6I-9535	1056	6J-8422	971		365		369
6I-9710	596		973		368	6T-1432	467
	598	6K-0138	930	6N-6984	1031	6T-1698	535
6I-9715	598		935	6N-7523	1162		537
6I-9716	596		936		1166	6T-2203	423
6I-9717	591	6K-0545	496	6N-8744	1018		427
	594		930	6P-3223	457	6T-2421	853
	▶598		969	6P-4939	482		855
	617		971	6P-4977	408	6T-2424	152
	618		973	6P-4978	482	6T-2962	753
6I-9718	▶596	6K-0806	1127	6P-6641	399		757
	617		1132	6P-6926	1003	6T-3381	902
	618	6K-3273	1104		1039	6T-3382	901
6I-9790	444		1106	6P-7577	610	6T-3631	853
	449		1108		612		855
6J-0488	511	6K-3630	930	6P-8285	463		1031
	518		935	6P-8309	467	6T-3632	853
	519		936	6P-8315	465		855
	527		937	6P-8316	463		1031
	1003	6K-3771	43	6P-8317	463	6T-3633	853
	1020		48	6P-8319	463		855
	1022	6K-4936	1003	6P-8621	465		1031
	1023		1039	6P-8829	520	6T-3642	382
	1024	6K-4947	223	6P-9783	482	6T-3643	382
	1025		298	6P-9784	482	6T-3764	301
	1039	6K-4948	224	6P-9785	482		303
	1088		298	6P-9786	482	6T-3990	397
	1090	6K-5535	89	6R-0365	726		1003
	1122		91	6S-5993	586		1039
6J-0499	727	6K-5536	89	6S-9470	534	6T-4176	553
	733		91		537		556
	739	6K-6164	105	6T-0136	531		559
	743	6K-6167	105	6T-0139	531		564
6J-0934	174	6K-6307	865	6T-0141	531		566
	176		872	6T-0258	433		569
6J-1080	848	6K-8178	224		437		572
6J-1081	848	6K-9549	96	6T-0302	1162		575
6J-1323	765	6K-9550	96		1166	6T-4177	553
	771	6K-9632	1141	6T-0303	1162		556
6J-2245	69	6L-2479	223		1166		559
	71	6L-2609	586	6T-0362	360		564
	73	6L-3005	192		363		566
	75		193	6T-0363	359		569
6J-2386	830		194		362		572
	832	6L-3616	427		366		575
6J-2419	481	6L-4784	455		369	6T-4676	727
	490	6L-5568	154	6T-0371	359		733
	491		157		362		739
6J-2561	865		160		366		743
	871	6L-7655	39		369	6T-5246	596
6J-2680	119	6L-9965	467	6T-0372	359		598
	121	6N-0412	302		362	6T-5265	248
	124	6N-1127	215		366		256
6J-2797	710	6N-1604	300		369		263
6J-3134	753		301	6T-0446	525	6T-5268	247
	757	6N-2206	79		527	6T-5269	248
	865	6N-2656	98	6T-0449	525		256
	872	6N-2985	433		527		263
6J-4313	765		437	6T-0609	415	6T-5376	432
	771	6N-3279	360		418		437
6J-5985	957		363	6T-0611	415	6T-5765	114
	959		365		418		115

▶ **PRIMARY REFERENCE**

PART NUMBER INDEX

Part	Page	Part	Page	Part	Page	Part	Page
6T-5814	397	6T-8520	580	6V-0852	87	6V-1614	661
6T-5941	520		581		402	6V-1625	727
6T-6066	399		582		432		733
6T-6079	236		583		433		739
	238		614		437		853
	525		615		478		855
	527		616		480	6V-1668	997
	727		617		490		1000
	733	6T-8521	580		643		1033
	739		581		727		1036
	743		582		733	6V-1722	765
6T-6080	236		583		739		771
	238		614		757		776
	727		615		763		780
	733		616		769		784
	739		617		775		789
	743	6T-8595	511		780	6V-1748	399
6T-6329	1003		515		783	6V-1877	754
	1039	6T-8853	614		788		758
6T-6618	433		615		798	6V-1950	1088
	437		616		801		1090
6T-6686	998		617		804	6V-1970	1
	1000	6T-8943	1031		807	6V-2312	1153
	1033	6T-9127	610		821		1155
	1036		612		879	6V-2317	621
6T-6708	997	6T-9176	610		881	6V-2331	1011
	1000		612		883	6V-2375	1011
	1036	6T-9222	725		884	6V-2455	385
6T-6941	534	6T-9244	902	6V-0871	215	6V-2456	1083
6T-6943	534		903	6V-0889	358	6V-2492	154
6T-6945	534	6T-9255	1031		▶362		157
6T-7058	397	6T-9256	1031	6V-0894	404		160
	1049	6T-9387	765		406	6V-2686	199
	1051		771		626		205
6T-7774	219		777		628		211
6T-8049	580		782		655	6V-2689	399
	581		785	6V-0895	232		641
	582		790		234	6V-2698	596
	583	6T-9559	857	6V-0973	60		598
6T-8050	580	6V-0314	427	6V-1179	287	6V-2722	248
	581	6V-0423	667		290		256
	582		669	6V-1193	511		263
	583	6V-0484	478		516		270
6T-8051	580		764		518	6V-3249	920
	581		770		519	6V-3260	1011
	582		775	6V-1196	455	6V-3298	415
	583		780	6V-1197	824		418
6T-8052	580		783	6V-1320	840	6V-3348	10
	581		788		842		21
	582	6V-0505	150	6V-1322	359		23
	583	6V-0513	▶359		362		25
6T-8053	580	6V-0683	764		365		26
	581		770		368		43
	582		777	6V-1572	754		48
	583		781		758	6V-3505	869
6T-8054	580		785	6V-1573	754		875
	581		790		758		876
	582	6V-0709	553	6V-1574	754		886
	583		556		758		887
6T-8402	1144		559	6V-1575	754		888
	▶1145		563		758	6V-3537	21
6T-8403	1144		566	6V-1576	754		23
	▶1146		569		758		64
6T-8426	534		572	6V-1577	754	6V-3774	4
	537		575		758	6V-3835	432

▶ **PRIMARY REFERENCE**

PART NUMBER INDEX

Part	Page	Part	Page	Part	Page	Part	Page
	438		82	6V-6228	7		1077
6V-3884	281		86	6V-6458	443	6V-8186	378
	283		223		448	6V-8187	244
	285		326	6V-6561	1162	6V-8188	77
	1003		327		1166		359
	1012		385		▶1169		362
	1039		389	6V-6563	601		365
	1049		393	6V-6609	117		368
	1051		413		134		409
	1056	6V-5049	113		394		410
	1075		223	6V-6654	423		547
6V-3908	86	6V-5051	246		426		586
6V-3917	174		259	6V-6703	287		601
	176		266		290		729
6V-3922	385	6V-5066	117		291		735
	389	6V-5101	60		294		741
	393		174	6V-6716	248		745
6V-3960	1162		176		249		754
	1166	6V-5102	432		257		758
6V-3965	402		438		264		765
	432	6V-5103	172	6V-6782	152		771
	433	6V-5142	897	6V-6783	152		777
	437	6V-5167	60	6V-6809	127		781
	473	6V-5586	898		129		785
	475	6V-5645	382	6V-6888	1160		790
	478	6V-5661	47		1161		796
	480	6V-5728	495		1163		814
	490	6V-5817	1138		1167		1016
	643	6V-5833	1145	6V-6889	1141		1086
	727		1146		1160	6V-8189	242
	733		1147		1161		312
	739		1148		1162		313
	743		1149		1166		315
	758		1150		1169		316
	763		1156	6V-7190	1011	6V-8190	520
	769		1157	6V-7191	1122		928
	775		1158	6V-7357	1049		932
	781		1159		1051	6V-8200	840
	783	6V-5849	1162	6V-7359	729		842
	788		1166		735	6V-8237	710
	798	6V-5851	1162		741	6V-8245	154
	801		1166		745		157
	804	6V-6206	1160	6V-7607	213		160
	807	6V-6207	1169		404	6V-8260	77
	821	6V-6208	1160		406		729
	879	6V-6209	1160	6V-7620	1173		735
	881		1161	6V-7636	1011		741
	883		1163	6V-7646	1048		745
	884		1167		1104		765
6V-3966	87		1169		1106		771
6V-4270	1011	6V-6210	1169		1108		777
6V-4432	675	6V-6211	1162	6V-7681	103		782
	676		1166	6V-7728	1001		785
	869	6V-6212	1162		1037		790
	876		1166	6V-8073	1011	6V-8287	144
6V-4589	86	6V-6213	1160	6V-8077	402	6V-8352	889
	89		1161	6V-8118	625		891
	91		1162	6V-8129	1011		893
	223		1166	6V-8182	432		894
	485	6V-6214	1160		438	6V-8358	219
	489		1161		822	6V-8362	379
	904		1162		823	6V-8369	1162
6V-4636	834		1166	6V-8183	382		1166
	836	6V-6215	1161	6V-8185	382	6V-8370	397
6V-5048	80	6V-6218	1161		383	6V-8373	366

▶ **PRIMARY REFERENCE**

PART NUMBER INDEX

Part	Page
	369
6V-8374	397
	399
	1031
	1039
6V-8376	382
	404
	406
6V-8378	100
	376
	377
6V-8397	586
	728
	733
	734
	740
	743
	744
	753
	754
	757
	758
	763
	764
	765
	769
	770
	771
	775
	776
	777
	781
	782
	783
	784
	785
	788
	789
	790
	793
	798
	801
	804
	807
	814
	815
	818
	853
	855
6V-8398	132
	432
	434
	438
	728
	734
	740
	744
	760
	761
	762
	763
	765
	769
	771
	775
	781
	783
	788
	789
	790
	793
6V-8553	818
6V-8555	94
6V-8557	98
6V-8624	728
	734
	740
	744
6V-8625	434
	438
	793
6V-8626	107
	219
6V-8627	94
6V-8628	94
	931
6V-8632	98
	100
6V-8634	744
	764
	770
	776
	781
	784
	789
	793
6V-8635	96
	98
	100
6V-8636	728
	734
	740
	753
	757
	763
	769
	776
	780
	781
	784
	789
	798
	801
	804
	807
	814
6V-8637	107
	132
	852
6V-8638	763
	769
	775
	781
	783
	788
6V-8639	132
	432
	438
	760
	761
	762
	793
	930
6V-8641	94
	109
6V-8647	109
	586
6V-8714	96
	727
	733
	739
	743
6V-8715	728
	734
	740
	743
6V-8721	728
	734
	740
	744
6V-8724	728
	734
	740
	744
	753
	757
	764
	770
	775
	781
	783
	788
	798
	801
	804
	807
	814
	853
	855
6V-8731	728
	734
	740
	744
6V-8777	132
6V-8781	753
	758
	764
	770
	775
	782
	783
	788
	798
	814
	853
	855
6V-8782	728
	734
	740
	744
6V-8784	132
6V-8801	94
	96
	114
	115
	132
	152
	154
	157
	160
	164
	171
	183
	186
	199
	205
	211
	249
	259
	266
	271
	274
	275
	280
	312
	313
	315
	318
	399
	434
	438
	610
	612
	810
	814
	928
	930
	1016
	1018
	1020
	1022
	1023
	1024
	1025
	1058
	1062
	1141
	1163
	1167
6V-8927	397
	1003
	1039
6V-8928	1011
6V-8937	94
6V-8953	1078
6V-8969	1048
	1077
	1162
	1166
6V-8980	789
6V-9000	94
	931
6V-9001	753
	763
	769
	775
	783
	814
	818
6V-9002	433

► **PRIMARY REFERENCE**

PART NUMBER INDEX

Part	Page
	438
	728
	734
	740
	744
	793
6V-9004	219
	434
	438
	588
6V-9008	753
	757
6V-9009	793
6V-9010	586
6V-9027	136
	163
6V-9028	249
	259
	266
6V-9168	790
6V-9172	748
6V-9189	305
6V-9197	534
	537
6V-9273	199
	201
	203
6V-9343	764
	770
	776
	781
	784
	789
6V-9480	553
	556
	559
	563
	566
	569
	572
	575
6V-9632	620
	626
	628
	630
	998
	1000
	1033
	1036
6V-9671	650
	659
	663
	664
6V-9746	107
	132
	219
	298
	433
	438
	588
	729
	735
	741
	744
	745
	852
6V-9769	136
6V-9829	777
	780
	785
	790
	818
6V-9831	94
6V-9833	96
	98
	100
6V-9836	728
	734
	740
	744
	753
	758
	764
	770
	776
	782
	784
	789
6V-9837	728
	734
	740
	744
6V-9838	94
6V-9840	96
	98
	100
6V-9843	793
6V-9850	757
	763
	769
	776
	781
	784
	789
	815
6V-9851	763
	770
	775
	781
	783
	788
6V-9854	748
6V-9872	586
	744
6V-9873	760
	761
	762
	930
6V-9876	763
	769
6V-9877	132
	588
6W-5698	586
6Y-0091	199
	205
	211
6Y-0192	454
6Y-0206	1075
6Y-0454	584
	585
6Y-0472	580
	581
	582
	583
	584
	585
6Y-0473	578
	579
	580
	581
	582
	583
	584
	585
	596
	597
	598
	599
	605
	608
6Y-0677	199
	205
6Y-0725	481
6Y-0726	481
	482
6Y-0727	482
6Y-0728	482
6Y-0729	481
6Y-0744	482
6Y-0789	473
	475
6Y-1202	987
	988
	991
6Y-1204	987
	988
	991
6Y-1205	989
	990
	991
6Y-1237	152
6Y-1241	152
6Y-1365	443
6Y-2130	411
6Y-2385	534
6Y-2387	534
	537
6Y-2389	535
	537
6Y-2392	535
6Y-2394	535
6Y-2399	498
	500
	502
6Y-2410	498
	537
6Y-2412	498
	537
6Y-2413	498
	537
6Y-2438	463
6Y-2601	498
	500
	502
6Y-3233	951
	954
6Y-3567	818
6Y-3568	818
6Y-3682	1011
6Y-3712	1006
	▶1067
6Y-3732	1011
6Y-4585	798
	801
6Y-4736	423
	426
6Y-5094	1049
	1051
6Y-5113	1056
6Y-5615	983
	▶988
6Y-5812	493
	511
	515
6Y-5874	443
6Y-5875	443
6Y-5877	444
	449
6Y-5951	444
6Y-6583	553
	556
	559
	563
	566
	569
	572
	575
6Y-7260	443
	448
6Y-7261	444
	449
6Y-7269	443
	448
6Y-7270	444
	449
6Y-8006	463
6Y-8116	444
6Y-8122	443
	448
6Y-8123	443
	448
6Y-8960	987
	988
7	
7B-1115	578
	579
7B-1251	247
	259
	266
7B-2564	1011
7B-2742	229
7B-2805	848
7B-3235	38
	58
	413
	443
	448

▶ **PRIMARY REFERENCE**

PART NUMBER INDEX

Part	Page
	463
7B-7525	1097
	1099
7C-0190	169
7C-2870	232
	234
7C-3258	43
	48
7C-3260	43
	48
7C-3722	21
	23
7C-4060	79
7C-4171	89
	91
7C-5694	79
7C-6209	16
	17
	18
7C-7677	223
7C-7678	223
7C-7909	174
	176
7C-7910	174
	176
7C-8199	174
	176
7C-8246	48
	461
	814
7C-8397	223
7C-8398	223
7C-8399	223
7C-8401	223
7C-8402	223
7C-9217	86
7C-9597	119
	121
	124
	131
7C-9770	164
7D-1728	356
7D-4108	810
	812
	928
7D-5238	550
	551
7D-6922	383
7D-6954	86
7D-7233	154
	157
	160
7E-0275	43
	48
7E-0527	223
7E-0595	85
7E-0854	38
7E-2580	227
	228
7E-2631	60
7E-5324	50
7E-5326	386
	390
	394
7E-5335	89
	91
7E-5343	223
7E-5344	223
7E-6016	110
	111
	386
	390
	394
7E-6017	110
	111
7E-6103	4
	►60
7E-6362	45
7E-6508	69
	71
	73
	75
7E-6611	45
7E-6612	3
	►45
7E-6615	45
7E-6617	58
7E-6619	39
7E-6620	3
	►39
7E-6623	58
7E-6830	380
7E-6872	3
	►56
7E-9081	3
	►78
7E-9085	223
7F-0560	270
7F-1585	866
	871
7F-1866	104
7F-2050	119
	134
	138
	1000
7F-2060	1000
7F-3488	359
	362
	365
	368
7F-3491	359
	362
	365
	368
7F-3525	359
	362
	366
	369
7F-6112	543
	545
	547
7F-8268	896
7F-8698	227
	228
7F-9090	80
	82
	215
7G-1060	246
	259
	266
7G-1186	623
7G-1578	727
	733
	739
	743
7G-1744	1075
7G-1785	1075
7G-1786	1075
7G-2248	455
7G-2454	1011
7G-2952	465
7G-2954	463
7G-3467	443
	448
7G-3469	444
	449
7G-3470	443
	448
7G-3832	814
	818
7G-3833	814
	818
7G-3834	814
	818
7G-3977	525
7G-3978	525
7G-3979	525
7G-3980	525
7G-4332	580
	581
	582
	583
	584
	585
7G-4823	1075
7G-4824	1075
7G-4842	482
7G-4998	413
7G-5186	152
7G-5984	814
	818
7G-5985	814
	818
7G-5986	814
	818
7G-6495	520
7G-6713	80
	82
7G-6723	1088
	1090
7G-6724	1088
	1090
7G-7014	77
7G-7630	1011
7G-7684	213
7G-7745	444
7G-8282	610
	612
7G-8420	404
	406
7G-8478	144
	148
7G-8839	763
	769
	775
	782
	783
	788
7G-9913	534
	538
7G-9922	463
7H-1495	960
7H-4543	1031
7H-7539	928
	938
	939
	940
	941
7H-9678	215
7I-5222	753
	757
7J-0204	139
	143
	249
	259
	266
	473
	475
7J-0401	960
7J-2983	649
7J-2987	649
7J-2988	649
7J-2994	649
7J-4169	930
	935
	936
	937
7J-7423	878
7J-7778	512
	727
	733
	739
	743
7J-8673	250
	256
	263
7J-8902	358
7J-9018	404
	406
7J-9108	94
	98
	100
	101
	107
	219
	298
7J-9250	690
	692
	711
7K-1181	107
	246
	259
	266
	302
	303
	305
	318
	323
	399
	748

► **PRIMARY REFERENCE**

PART NUMBER INDEX

Part	Page	Part	Page	Part	Page	Part	Page
	1007		432		53	7N-5395	60
	1009		438	7N-2049	21	7N-5413	86
	1057		748		23	7N-5416	86
	1061		753		26	7N-5417	60
	1137		757	7N-2326	56	7N-5418	60
7K-2271	512		763		57	7N-5449	104
7K-3222	1075		769	7N-2328	56	7N-5487	227
7K-3673	686		775		57		228
	688		780	7N-2405	62	7N-5641	21
7K-6413	525		783		64		23
	527		788	7N-2597	58		25
7K-9211	930		821	7N-2865	41		26
	969		863	7N-2909	41	7N-5874	43
	971		869	7N-2910	41	7N-5876	397
	973		876	7N-3005	41	7N-6426	117
7L-2894	359	7M-8651	359	7N-3006	41	7N-6494	358
	362		362	7N-3007	39	7N-6806	223
	365	7M-9107	987	7N-3011	39	7N-6983	6
	368		988		41	7N-7539	43
7L-3195	174		991		45	7N-7559	89
	176	7M-9918	195	7N-3049	55		91
7L-6326	215		196	7N-3218	9	7N-7697	87
7L-6443	178		197	7N-3297	136	7N-7878	134
	180	7N-0060	246	7N-3298	12	7N-8374	43
7L-7524	457		260	7N-3368	110	7N-8525	39
7L-8170	992		267		111		41
7L-8316	1031	7N-0719	248		136		45
7M-0324	359		256	7N-3864	152	7N-8527	106
	362		263	7N-4319	11	7N-8715	4
	365		▶372	7N-4320	11		▶103
	368	7N-1277	727	7N-4758	139	7N-9182	3
7M-0325	359		733		143		▶665
	362		739		144	7N-9943	306
	365		743		148	7P-1579	525
	368	7N-1447	132	7N-4782	69		527
7M-0326	359	7N-1448	132		71	7P-4190	404
	362	7N-1464	132		73		406
	365	7N-1628	215		75	7R-8872	597
	368	7N-1639	152	7N-4927	116		599
7M-0327	359	7N-1863	4	7N-4930	110	7S-1912	798
	362		▶68	7N-4939	117		801
7M-1297	413	7N-1902	29	7N-4940	117		804
	896		35	7N-4945	12		807
7M-1674	167	7N-1961	31		117		1058
	190		33	7N-4951	10		1062
	191	7N-1996	397	7N-4952	10	7S-2042	504
7M-1808	87		1049	7N-5049	104		506
7M-2360	531		1051	7N-5057	104		508
7M-4298	830	7N-2003	16	7N-5080	174		535
	832		17		176		537
7M-4672	215		18	7N-5087	174	7S-3004	422
7M-5130	443	7N-2043	62		176		426
	448		64	7N-5094	89	7S-3912	754
7M-7219	1042		104		91		758
	1045	7N-2044	21	7N-5239	48		765
7M-8480	443		23	7N-5245	48		771
	448		26	7N-5246	48		777
7M-8485	60	7N-2046	19	7N-5263	48		785
	96	7N-2047	21	7N-5274	247		798
	98		23		248		801
	100		26		257		804
	107		39		258		807
	154		43		264		815
	157		48		265		818
	160		52	7N-5279	43	7S-3913	754

▶ **PRIMARY REFERENCE**

PART NUMBER INDEX

Part	Page
	758
	765
	771
	777
	785
	798
	802
	804
	807
	815
	818
7S-5003	170
7S-6369	694
	698
	702
	706
	713
	717
7S-6997	481
7S-8491	878
7S-8554	402
7S-8817	164
	186
7S-8920	667
	669
	671
	673
	675
	676
	928
7S-8921	667
	669
	671
	673
	675
	676
	928
7S-9323	215
7T-0020	306
7T-0084	602
7T-0135	1088
	1090
7T-0138	1088
	1090
7T-0157	596
	598
7T-0192	553
	556
	559
	563
	569
	575
7T-0194	553
	556
7T-0266	154
	157
	160
7T-0597	1011
7T-0601	1011
7T-0749	667
7T-0750	667
	669
	671
	673
7T-0751	669
7T-0905	404
	406
7T-1068	1145
	▶1147
	▶1148
7T-1069	1146
	▶1149
	▶1150
7T-1078	1162
	1166
7T-1099	249
	257
	258
	264
	265
	312
	313
	318
	323
	461
	504
	506
	511
	512
	515
	525
	534
	538
	749
	751
	998
	1000
	1033
	1036
	1088
7T-1243	460
7T-1330	1145
	1146
7T-1331	553
	556
	559
	563
	566
	569
	572
	575
7T-1342	486
7T-1890	1003
	1039
7T-2035	132
7T-2413	199
	201
	203
7T-3479	553
	556
	559
	563
	569
	575
7T-3983	753
7T-4083	467
7T-4500	937
7T-4501	930
	935
	936
	937
7T-4502	930
	935
	936
	937
7T-4532	1015
7T-4761	1163
	1167
7T-4971	932
7T-5140	938
	939
7T-5734	610
	612
7T-5959	602
	604
	607
7T-6799	379
7T-6823	152
7T-7222	971
7T-7305	496
	531
	930
	969
	971
	973
7T-7575	▶825
	921
7T-7693	219
7T-8121	422
7T-8328	219
7T-8330	553
	556
	559
	563
	566
	569
	572
	575
7T-8331	763
	769
	775
	781
	783
	788
7T-8556	478
7T-8891	1136
	1138
7T-9014	493
7T-9123	360
	363
	366
	369
7T-9311	602
	603
	604
	605
	607
	608
7T-9328	▶918
	919
7T-9515	397
7T-9745	765
	771
	777
	781
	785
	790
7U-4890	1020
7U-4898	1097
	1099
7V-5191	1042
	1045
7V-8087	1088
	1090
7V-8532	763
	769
	775
	783
7W-0050	104
7W-0051	104
7W-0053	103
	▶104
7W-0059	106
7W-0888	215
7W-1208	170
7W-1855	119
	121
	124
7W-1856	86
7W-1928	112
7W-2122	223
7W-2378	3
	▶14
7W-2478	170
	171
	183
	184
7W-3145	174
7W-3535	119
	121
	124
7W-3540	127
	129
7W-3541	117
7W-3543	119
	121
	124
7W-3556	232
	234
7W-3659	182
7W-3660	182
7W-4379	86
7W-5112	1018
7W-5300	298
7W-5371	1018
7W-5425	727
	733
	739
	743
7W-5524	170
7W-5994	60
7W-6492	60
	139
	143
	385
	389
	393
7W-6597	1018
7W-8145	178
	180

▶ **PRIMARY REFERENCE**

PART NUMBER INDEX

Part	Page
7W-8154	►300
7W-8155	►301
7X-0264	1031
7X-0272	749
	751
	928
7X-0288	298
	404
	406
7X-0289	150
	154
	157
	160
	434
	438
7X-0290	170
	432
	439
	745
	754
	758
	765
	771
	777
	780
	785
	790
	855
7X-0291	248
	259
	266
7X-0292	434
	439
7X-0293	325
	930
7X-0297	866
	872
7X-0300	866
	872
7X-0303	434
	439
7X-0307	666
7X-0308	432
	434
	439
	729
	735
	765
	771
	777
	780
	785
	790
	814
	869
	876
7X-0310	675
	676
	729
	735
	741
	745
	804
	807
7X-0313	765
	771
	777
	780
	785
	930
	936
	1016
7X-0316	729
	735
	741
	745
	798
	802
7X-0317	434
	439
7X-0318	729
	735
	741
	745
7X-0323	543
	549
7X-0325	154
	157
	160
7X-0326	675
	676
	754
	758
	869
	876
7X-0331	432
	439
7X-0332	432
	439
	729
	735
	741
	745
7X-0334	729
	735
	741
	745
7X-0337	132
7X-0338	1016
7X-0339	201
	203
	207
	209
7X-0340	199
	205
	729
	735
	741
	745
7X-0342	563
7X-0343	525
	527
	559
7X-0345	522
	523
	524
	525
	527
	534
	538
	553
	556
	566
7X-0346	114
	115
	511
	516
	765
	771
	777
	780
	785
	790
	848
7X-0347	531
	553
	556
	559
	564
	566
	569
	572
	575
	865
	872
7X-0349	152
7X-0350	418
	524
7X-0351	553
	556
	559
	564
	566
	569
	572
	575
7X-0352	896
7X-0362	765
	771
	777
	780
	785
	790
7X-0365	496
	531
	810
	812
	928
	930
	969
	971
	973
7X-0366	525
	527
	531
7X-0368	945
7X-0369	442
	511
	516
7X-0370	534
	538
7X-0372	729
	735
	741
	745
	771
	777
	780
	785
	790
	848
7X-0379	496
7X-0380	810
	812
	920
	928
7X-0381	928
	942
	944
	957
	959
7X-0383	810
	812
	928
7X-0384	810
	928
7X-0385	610
	612
7X-0388	496
	930
	969
	971
	973
7X-0389	496
7X-0392	1088
	1090
7X-0394	825
	928
7X-0399	211
	553
	556
	559
	563
	564
	566
	569
	572
	575
	896
7X-0403	920
7X-0405	496
	591
	592
	593
	594
	595
7X-0406	533
	928
	930
	945
7X-0407	563
7X-0408	415
	418
	593
	931
7X-0412	592
	593
7X-0413	520
7X-0415	520
7X-0418	928
	932
7X-0419	520
7X-0428	1094
7X-0434	591

► **PRIMARY REFERENCE**

PART NUMBER INDEX

Part	Page
	592
	594
	595
7X-0445	199
	205
7X-0448	511
	516
	765
	771
	777
	781
	785
	790
	1016
7X-0469	1102
	1103
7X-0495	1064
7X-0507	729
	735
	741
	745
7X-0515	525
	527
	866
	872
	930
	935
	936
7X-0525	825
	929
7X-0533	199
	205
	543
	545
	547
	591
	592
	594
	595
	1094
7X-0537	930
	935
	936
	937
7X-0545	610
	612
7X-0549	520
7X-0555	511
	516
7X-0562	359
	362
	365
	368
7X-0572	1088
	1090
7X-0575	150
	1003
	1040
7X-0576	415
	418
7X-0582	236
	238
	313
	318
	323
	1088
	1090
7X-0590	543
	545
	547
7X-0603	1102
	1103
7X-0607	511
	516
7X-0608	382
	992
	994
7X-0618	511
	516
	1075
7X-0620	100
	376
	377
7X-0772	1003
	1039
	1075
7X-0818	274
	278
	279
7X-1062	354
	356
7X-1121	484
7X-1387	174
	176
7X-2459	764
	770
	775
	782
	783
	788
7X-2533	310
	311
7X-2537	490
	491
7X-2541	644
	646
7X-2578	826
	827
7X-2627	553
	556
	559
	564
	566
	569
	572
	575
7X-2628	553
	556
	559
	564
	566
	569
	572
	575
7X-2634	166
	169
7X-3159	655
7X-3178	213
7X-3182	1162
	1166
7X-3373	360
	363
	365
	368
7X-3392	1075
7X-4756	690
	692
	711
7X-4805	21
	23
	26
7X-4810	60
7X-6315	287
	290
	291
	292
	293
	294
	304
7X-7644	1173
7X-7700	237
	239
7X-7702	1141
7X-7729	620
	1012
7X-7730	86
7X-7731	21
	23
	25
	26
	39
7X-7732	12
7X-7763	1162
	1166
7X-7888	626
	628
7X-7925	19
	20
7X-7958	154
	157
	160
7Y-3281	1137
7Y-7256	281
	283
	285

PART NUMBER INDEX

Part	Page	Part	Page	Part	Page	Part	Page
	754	8C-8550	422		1039	8E-7235	1075
	758		426	8E-3270	1006	8E-7236	1075
	765	8C-8842	442		▶1056	8E-7237	1075
	771	8C-8988	586	8E-3271	1056	8E-7238	1075
	777	8C-9127	694	8E-3272	1056	8E-7239	1075
	780		698	8E-3273	1056	8E-7249	402
	785		702	8E-3274	1056	8E-7253	402
	790		706	8E-3276	1056	8E-7301	1136
	796	8C-9128	713	8E-3277	1056	8E-7302	▶1136
	798		717	8E-3278	1056		1137
	802	8C-9135	713	8E-3284	1006	8E-7366	960
	804		717		▶1048	8E-7464	▶990
	807	8C-9660	360	8E-3446	1144	8E-7561	504
8C-4586	997		363		▶1151		506
	1000		365	8E-3447	1144		508
	1033		368		▶1152		535
	1036		650	8E-4320	473		537
8C-4892	713		659		475	8E-7791	1075
	715		663	8E-4387	473	8E-7792	1137
	717		664		475	8E-7793	1137
	719	8C-9987	907	8E-4543	961	8E-7841	473
8C-5060	1163		908		962		475
	1167		909	8E-4544	961	8E-7842	473
8C-5219	694		912		962		475
	698	8D-0983	763	8E-4545	963	8E-8292	1136
	702		769		964		1138
	706		775		965	8E-8293	1136
8C-5224	442		783	8E-4546	963	8E-8310	443
8C-5236	139	8D-1807	525		964		448
	143		527		965	8E-8316	443
	144	8D-3508	504	8E-4836	1077		448
	148		506	8E-4928	402		465
8C-5608	213		763	8E-4929	402	8E-8413	988
	310		769	8E-5013	512	8E-8862	▶199
	311	8D-7185	763		515	8E-8914	930
	1049		769	8E-5026	493		935
	1051		775	8E-5113	1011		936
8C-5917	246		783		▶1144	8E-9253	1003
	256	8D-7942	69	8E-5114	1011		1039
	263		71		▶1144	8E-9289	531
8C-6354	382		73	8E-5170	411	8E-9546	▶1095
8C-6358	270		75	8E-5922	1011	8E-9592	1075
8C-6711	906	8D-9671	247	8E-5926	1011	8E-9595	1075
8C-6712	727	8D-9947	96	8E-5931	1011	8E-9654	1048
	733	8E-0618	401	8E-5932	1011	8E-9656	1048
	741	8E-0985	444	8E-5933	1011	8E-9670	▶530
	743		449	8E-5959	1003		953
8C-6865	931	8E-1118	1048		1039	8E-9671	529
8C-6871	132	8E-1356	1003	8E-5975	1003		530
8C-6875	298		1039		1039	8E-9678	530
8C-6877	815	8E-1467	982	8E-5978	1088	8E-9679	932
	818		984		1090	8E-9686	530
8C-6913	496		▶989	8E-6255	481	8E-9727	432
	810	8E-1717	402	8E-6398	473		437
	812	8E-2514	1049		475		▶480
	929		1051		▶481	8E-9733	753
8C-7110	838	8E-2589	1141	8E-6644	596		757
	840	8E-2593	1162		597	8E-9748	946
8C-7340	512		1166		598	8E-9749	946
	516	8E-2685	1011		599	8E-9785	946
8C-7584	655	8E-3234	199	8E-6834	1075	8E-9786	946
8C-8418	287		205	8E-6856	1141	8F-1434	100
	290		211	8E-6877	1075		244
8C-8451	997	8E-3241	316	8E-6887	1137		360
	1033	8E-3250	1003	8E-7112	814		363

▶ **PRIMARY REFERENCE**

PART NUMBER INDEX

Part	Page
	365
	368
	376
	377
8F-1462	1079
8F-5340	404
	406
8F-6230	444
	449
	848
8F-6437	765
	771
	777
	785
8F-6711	865
	872
8F-7702	620
8F-8178	232
	234
8F-8733	596
	597
	598
	599
8F-9836	511
	515
	525
	848
8F-9960	553
	556
	559
	564
	566
	569
	572
	575
8G-0863	763
	769
8H-2262	596
	598
8H-2778	215
8H-5303	372
8H-5306	372
8H-5772	713
	715
	717
	719
	721
	723
8H-7202	215
8H-7521	848
8H-9189	481
8H-9513	478
8J-0412	838
	840
8J-0548	713
	715
	717
	719
8J-1665	678
	680
	682
	684
	686
	688
8J-1751	753
8J-1752	753
	757
8J-3146	810
	812
	928
8J-4437	865
	871
8J-4916	512
8J-5914	798
	801
8J-7236	531
	538
8J-8197	219
	729
	735
	741
	745
	765
	771
	777
	780
	785
	790
8J-8621	865
	871
	914
	915
8J-8905	690
	692
	711
	920
8J-9383	1075
8K-1433	1048
8K-5443	427
8L-2746	485
	489
	904
8L-2777	899
8L-2779	904
8L-2786	89
	91
	223
	327
	346
	385
	389
	393
	904
8L-3837	729
	735
	741
8L-5449	274
	275
8L-5922	408
8L-8137	84
8L-8413	1026
	1027
	1042
	1045
	1127
	1132
	1134
	1141
8L-9241	690
	692
	711
8M-0505	134
	154
	157
	160
8M-0547	224
8M-0755	134
8M-0776	649
8M-1013	478
	482
8M-1679	865
	871
8M-2530	6
	50
8M-2537	480
8M-2770	154
	157
	160
8M-2771	626
	628
8M-2772	356
	473
	475
8M-2773	1058
	1062
8M-3175	60
8M-3267	1127
	1132
8M-3405	463
8M-4390	433
	434
	439
8M-4432	408
8M-4433	467
	623
8M-4438	642
	643
8M-4443	433
	439
8M-4446	478
8M-4447	423
	427
8M-4986	402
	423
	427
	433
	434
	439
8M-4987	434
	439
8M-4988	467
8M-4992	402
	433
	439
8M-5007	454
8M-5010	433
	439
8M-5127	433
	439
8M-5249	478
8M-5253	39
8M-5254	433
	439
8M-5260	465
8M-5661	423
	427
	433
	434
	439
	442
8M-6393	725
8M-7145	869
	876
8M-8157	402
	433
	439
8M-8281	461
8M-8489	454
	457
8M-9024	86
	119
	121
	124
8M-9124	176
8M-9321	139
	143
8N-0386	117
8N-0788	134
8N-0869	247
	249
	256
	258
	263
	265
8N-0896	47
8N-1287	68
8N-1725	247
	256
	259
	263
	266
8N-2001	80
8N-2729	172
	173
8N-2730	172
	173
8N-2757	39
8N-2802	39
8N-2929	86
8N-3653	215
8N-4387	7
8N-4401	174
	176
8N-4524	136
8N-4707	19
8N-6151	4
	▶230
	▶231
8N-6423	146
	147
8N-6867	814
8N-7174	3
	▶48
8N-7182	3
	▶38
8N-7197	69

▶ **PRIMARY REFERENCE**

PART NUMBER INDEX

Part	Page
	71
	73
	75
8N-7257	152
8N-7296	62
8N-7574	77
8N-7639	136
8N-7641	117
8N-8039	41
8N-8041	41
8N-8056	21
	23
	26
8N-8089	110
	111
	117
8N-8114	5
	▶67
8N-8161	3
	▶41
8N-8210	43
8N-8460	139
8N-8718	127
	129
8N-9164	105
	▶106
8N-9528	136
8N-9885	14
	277
8N-9992	12
8N-9993	12
	94
8P-0389	493
8P-0612	512
8P-0618	402
8P-2813	511
	515
8P-3133	444
	449
8P-3572	463
8P-4459	610
	612
8P-4693	553
	556
	559
	563
	566
	569
	572
	575
8P-4782	578
	579
8P-5141	997
	1000
	1033
	1036
8P-5696	463
8P-5839	443
8P-6292	444
	449
8P-6809	465
8P-7236	443
	448
8P-7242	444
	449
8P-7243	443
	448
8P-7244	444
	449
8P-8357	623
8P-8796	543
	545
	549
8P-8797	543
	545
	549
8P-8827	543
	545
	547
8P-8929	493
8P-9296	482
8P-9558	623
8P-9568	623
8P-9569	443
	448
8P-9770	917
	919
	932
	938
	939
	940
	941
	951
	954
	971
	982
	983
8S-0023	250
	259
	729
	735
	741
	745
8S-0024	249
	259
	729
	735
	741
	745
8S-0948	91
	247
8S-2331	50
8S-2634	248
	256
	263
8S-4710	232
	234
8S-4734	68
8S-4756	602
	603
	604
	605
	607
	608
8S-4757	38
8S-5383	58
	1016
8S-7803	1042
	1045
	1097
	1099
8S-8158	287
	290
8S-9008	467
8S-9009	467
8S-9130	467
8S-9191	89
	91
	112
8T-0076	853
	855
8T-0099	21
	23
	26
8T-0122	192
	193
	194
8T-0151	248
	259
	266
8T-0193	173
	174
	176
8T-0198	748
	763
	769
	775
	780
	783
	788
8T-0232	525
	527
8T-0267	626
	628
8T-0273	834
	836
8T-0318	1011
8T-0328	244
	360
	363
	365
	368
	404
	406
	626
	628
	655
	1104
	1106
	1108
8T-0687	1145
	1146
	1156
	1157
8T-1115	553
	556
	559
	563
	569
	575
8T-1172	620
8T-1572	1075
8T-1739	1162
	1166
8T-1789	678
	680
	682
	684
	686
	688
8T-1792	713
	715
	717
	719
8T-1794	828
8T-1796	690
	692
	711
8T-1885	134
8T-1886	134
8T-1887	224
	298
8T-1888	224
	298
8T-1905	754
	758
8T-1919	119
	121
	124
	131
8T-1979	1011
8T-1980	1011
8T-2153	39
	41
	45
	48
8T-2174	1162
8T-2225	246
	247
	248
	249
	256
	257
	258
	259
	263
	264
	265
	266
	338
	398
	399
8T-2230	77
8T-2275	848
8T-2353	729
	735
	741
	745
8T-2363	789
8T-2501	107
	247
	260
	266
	411
	467
	729
	735
	741
	745
	765

▶ **PRIMARY REFERENCE**

PART NUMBER INDEX

Part	Page
	771
	777
	780
	785
	790
	810
	812
	928
	1012
	1127
	1132
8T-2502	114
	115
	150
	154
	157
	160
	213
	246
	260
	266
	298
	316
	326
	327
	434
	439
	535
	538
	729
	735
	741
	745
	754
	758
	765
	771
	777
	780
	785
	790
	1019
	1075
8T-2561	139
	1012
	1018
8T-2602	729
	735
	741
	745
8T-2603	729
	735
	741
	745
8T-2658	620
8T-2863	610
	612
8T-2928	19
	20
	21
	23
	26
8T-2929	19
	20
	21
	23
	26
8T-3279	415
	418
8T-3330	713
	715
	717
	719
8T-3490	620
	626
	628
	1127
8T-3491	219
	763
	769
	776
	781
	784
	789
8T-3510	203
	209
8T-3518	270
8T-3519	270
8T-3569	119
	138
8T-3612	274
	620
	626
	628
8T-3647	275
	644
	646
8T-3848	1011
8T-3957	824
8T-4121	621
	626
	628
	655
	765
	771
	777
	782
	785
	790
	818
	879
	881
	884
	937
	1022
	1023
	1024
	1025
8T-4122	152
	249
	260
	266
	418
	511
	516
	522
	523
	524
	534
	538
	553
	556
	559
	563
	564
	566
	569
	572
	575
	754
	758
	765
	771
	777
	782
	785
	790
	798
	802
	804
	807
	865
	872
	896
	1016
8T-4133	621
8T-4136	621
	1022
	1023
	1024
	1025
8T-4137	260
	266
	626
	628
	765
	771
	777
	780
	785
	790
8T-4138	626
	628
	1049
	1051
8T-4139	318
8T-4167	404
	406
	826
	827
	930
	935
	936
	937
8T-4171	1003
	1039
	1049
	1051
8T-4177	644
	646
8T-4189	621
	1001
	1034
	1037
8T-4191	399
8T-4195	621
8T-4196	765
	771
	777
	780
	785
	790
	937
8T-4198	879
	881
	884
8T-4200	630
8T-4205	98
	101
	213
	242
	244
	354
	359
	362
	365
	368
	382
	399
	434
	439
	620
	997
	1000
	1009
	1020
	1033
	1036
	1049
	1051
	1056
	1104
	1106
	1108
	1137
	1140
	1141
8T-4222	508
	511
	516
	1031
8T-4223	98
	101
	107
	132
	152
	154
	157
	160
	199
	201
	203
	205
	207
	209
	211
	219
	247
	250
	260

► **PRIMARY REFERENCE**

PART NUMBER INDEX

Part	Page	Part	Page	Part	Page	Part	Page
	267		929		205		805
	323		930		207		808
	358		1012		209		810
	404		1016		211		812
	406		1086		237		815
	409		1122		239		818
	410	8T-4224	242		249		852
	415		274		260		853
	418		275		267		855
	433		278		274		865
	434		279		275		869
	439		312		280		872
	455		313		298		876
	461		315		302		914
	467		316		303		915
	512		354		326		929
	516		490		327		931
	531		491		354		1016
	533		621		356		1018
	534		630		399		1019
	538		848		404		1020
	543		1007		406		1058
	545		1092		411		1062
	547		1093		431		1064
	549	8T-4231	824		433		1066
	553	8T-4777	1153		434		1086
	556		1155		439		1122
	559	8T-4834	753		461		1141
	564		757		467		1163
	566	8T-4835	154		508		1167
	569		157		512	8T-4897	729
	572		160		516		735
	575		409		525		741
	586		410		527		745
	588		433		534	8T-4908	621
	675		439		538	8T-4984	132
	676		527		586	8T-4985	152
	729		675		694	8T-4987	152
	735		676		696	8T-4994	433
	741		754		698		439
	745		758		700		442
	749		798		702		512
	751		802		704		516
	754		848		706		525
	758	8T-4896	67		708		527
	765		84		713		531
	771		107		715		534
	777		114		717		538
	782		115		719		553
	785		132		729		556
	790		150		735		559
	798		152		741		564
	802		154		745		566
	804		157		754		569
	807		160		758		572
	810		164		765		575
	812		167		771		729
	815		170		777		735
	818		171		782		741
	840		183		785		745
	842		184		790		810
	853		186		793		812
	855		199		795		822
	869		201		798		823
	876		203		802		929

► **PRIMARY REFERENCE**

PART NUMBER INDEX

Part	Page
8T-4999	1173
8T-5050	760
	761
	930
8T-5071	559
	563
8T-5360	433
	434
	439
	666
	675
	676
	729
	735
	741
	745
	749
	751
	765
	771
	777
	782
	785
	790
	798
	802
	805
	808
	815
	818
	869
	876
	929
	1096
	1163
	1167
8T-5361	520
	533
	543
	545
	547
	553
	556
	559
	564
	566
	569
	572
	575
	591
	592
	593
	594
	595
	602
	603
	604
	605
	607
	608
	930
8T-5383	1137
	1140
8T-5391	354
8T-5400	1141
8T-5410	620
	655
8T-5677	655
8T-5881	550
	551
8T-5911	512
	520
	535
	537
8T-5912	512
	520
8T-6466	1058
	1062
8T-6631	997
	1000
8T-6638	219
8T-6684	765
	771
	776
	781
	784
	789
8T-6699	655
8T-6746	694
	696
	698
	700
	702
	704
	706
	708
8T-6757	30
	39
	43
8T-6758	55
	117
8T-6759	29
	35
	37
	43
8T-6761	12
	60
	117
8T-6762	21
	23
	25
	26
	55
	86
	110
	117
	136
	174
	176
8T-6763	21
	23
	25
	26
	52
	53
8T-6764	139
	143
	174
	176
	385
	389
	393
8T-6765	11
	52
	53
	55
	86
	110
	117
	127
	129
	144
	148
8T-6767	119
	385
	389
	393
8T-6868	310
	311
8T-6869	275
8T-6870	274
8T-6871	522
	523
	524
	754
	758
	765
	771
	777
	780
	785
	790
	798
	802
	805
	808
	865
	872
8T-6936	1137
8T-7008	170
	461
	793
	810
	853
	928
8T-7371	1172
8T-7500	657
	662
8T-7529	98
	100
	132
	219
	588
	754
	758
8T-7538	678
	680
	682
	684
	686
	688
	690
	692
	711
8T-7547	490
8T-7566	504
	506
	508
	535
	537
	1003
	1039
	1081
	1082
8T-7583	422
	426
8T-7934	621
8T-7971	848
8T-8380	678
	680
	682
	684
	686
	688
8T-8442	889
	891
8T-8729	98
	249
	256
	263
	306
	327
	329
	330
	331
	332
	348
	350
	354
	385
	386
	389
	390
	393
	397
	399
	485
	486
	488
	625
	641
	650
	657
	659
	726
	853
	855
	901
	902
	904
	906
	907
	997
	1026
	1033
	1034
	1049
	1051
	1057

► **PRIMARY REFERENCE**

PART NUMBER INDEX

Part	Page	Part	Page	Part	Page	Part	Page
	1068		815		399		506
	1070		818		621	8W-0225	763
	1072		853	8T-9368	621		769
	1073		855		1031		775
	1074		928	8T-9371	1134		781
	1161		930	8T-9375	96		783
8T-8730	338		957	8T-9377	96		788
	340		959		132	8W-0234	432
	484		1086		799		437
	1027		1122		802	8W-4008	853
	1034	8T-8919	107		1064		855
8T-8731	338		132		1066	8W-9506	496
8T-8737	323		199	8T-9379	94		930
	399		201		815		969
	486		203	8T-9380	815		971
	488		205	8T-9383	60		973
	628		207		358	8Y-5874	▶1029
	650		209		461		1101
	657		211	8T-9384	248		1112
	659		404		260	8Y-5877	1029
	997		406		267		1030
	1001		409		323	8Y-5891	1099
	1033		410	8T-9389	763	8Y-5892	1083
	1036		433		769	8Y-5903	1079
	1061		439		777	8Y-5928	1097
	1070		455		780		1099
	1071		531		785	8Y-5929	1097
	1141		533		790		1099
	1160		741		796	8Y-5930	1097
	1161		745	8T-9393	534		1099
8T-8886	655		754		537	8Y-5931	1097
8T-8901	852		758	8T-9396	754		1099
8T-8914	1011		765		758	8Y-5932	1097
8T-8915	94		771	8T-9397	313		1099
	461		777		318	8Y-5936	1097
	818		780		323		1099
8T-8916	790		785	8T-9398	525	8Y-5937	1097
8T-8917	98		790		527		1099
	101		799		810	8Y-5938	1097
	152		802		812		1099
	219		805		928	8Y-5943	1029
	415		808	8T-9399	512	8Y-5944	1125
	418		930		516		1130
	433	8T-8920	152		553	8Y-5945	1042
	434		1016		556		1045
	439	8T-8924	531		559	8Y-5947	1029
	512	8T-8927	520		564		1030
	516		602		566		1097
	525		603		569		1099
	547		604		572	8Y-5957	1097
	588		605		575	8Y-5959	▶1030
	675		607	8T-9636	295		1113
	676		608	8T-9655	274	8Y-5960	1030
	729	8T-9006	620		275	8Y-5965	1125
	735	8T-9048	1011		277		1130
	741	8T-9049	1011		278	8Y-5972	1079
	745	8T-9101	793		279	8Y-5976	▶1097
	754	8T-9311	236		305		1113
	758		238	8T-9757	246	8Y-5981	1097
	765	8T-9312	1088		256		1099
	771		1090		263	8Y-5986	▶1099
	777	8T-9364	1137	8V-0622	246		1101
	780		1140		256		1112
	785	8T-9367	98		263	8Y-5992	▶1083
	790		101	8V-4422	504		1097

▶ **PRIMARY REFERENCE**

PART NUMBER INDEX

Part	Page
	1099
8Y-5995	1083
8Y-5998	1083
8Y-5999	1083
8Y-6006	1079
8Y-6010	1079
8Y-6012	1125
	1130
8Y-6014	1125
	1130
8Y-6022	1125
8Y-6023	1125
8Y-6024	1125
	1130
8Y-6029	1042
8Y-6041	1042
	1045
8Y-6045	1042
	1045
8Y-6046	1042
	1045
8Y-6047	1042
	1045
8Y-6051	1097
	1099
8Y-6060	1042
	1045
8Y-6062	1042
	1045
8Y-6063	1042
	1045
8Y-6064	1042
	1045
8Y-6066	1042
	1045
8Y-6067	1042
	1045
8Y-6068	1042
	1045
8Y-6069	1042
	1045
8Y-6138	1102
	▶1112
8Y-6179	1095
	▶1113
8Y-6277	1104
	1106
	1108
8Y-6343	1162
	1166
8Y-6364	79
	85
	219
	236
	504
	506
	508
	511
	515
	534
	537
	727
	733
	739
	743
8Y-6388	1003
	1040
8Y-6419	1152
8Y-6420	1152
	▶1153
8Y-6422	1153
8Y-6423	1151
	1152
	1153
	1155
8Y-6424	1151
	1152
	1153
	1155
8Y-6430	1151
	1152
	1153
	1155
8Y-6431	1155
8Y-6432	1151
8Y-6433	1151
	▶1155
8Y-6448	1147
	1148
	1149
	1150
8Y-6454	1153
	1155
8Y-6455	1153
	1155
8Y-6456	1011
	▶1156
	▶1157
8Y-6459	1151
	1152
	1153
	1155
8Y-6460	1153
	1155
8Y-6461	1153
	1155
8Y-6462	1151
	1152
8Y-6826	1156
	1157
	▶1158
	▶1159
8Y-6827	1158
	1159
8Y-6828	1156
	1157
8Y-6833	1097
	1099
8Y-6834	1097
	1099
8Y-6839	1145
	1146
	1147
	1148
	1149
	1150
	1156
	1157
	1158
	1159
8Y-6859	1043
	1045
8Y-6860	1042
	1045
8Y-6910	1151
	1152
	1153
	1155
8Y-6917	1127
	1132
8Y-6928	1127
	1132
8Y-6933	1097
	1099
9B-1117	661
9B-2052	534
	538
9B-4179	132
9B-7233	379
	382
	404
	406
9B-7237	94
	98
	101
	132
	150
	170
	184
	213
	246
	260
	271
	318
	404
	406
	433
	439
	508
	520
	760
	761
	762
	764
	770
	777
	780
	785
	790
	799
	802
	805
	808
	810
	812
	815
	818
	865
	872
	928
	930
	1031
	1058
9D-0630	199
	201
	203
	205
	207
	209
	211
9D-1024	938
	939
9D-3767	1012
9D-3768	322
	1007
	1009
	1141
9D-4439	274
	275
9D-9416	525
9F-2167	865
	871
9F-2247	531
9F-2773	127
	129
9F-2978	433
	437
	1031
9F-5599	359
	362
	366
	369
9F-5644	372
	377
	382
9F-6445	98
	100
	281
	283
	511
	515
	1007
	1009
	1011
	1039
	1075
	1162
	1166
9F-6656	1172
9F-6936	991
9F-7707	69
	71
	73
	75
9G-0003	246
	256
	263
9G-0004	246
	256
	263
9G-0371	201
	203
	207
	209

9

▶ **PRIMARY REFERENCE**

PART NUMBER INDEX

Part	Page
9G-0558	534
	538
9G-0641	538
9G-0647	443
	448
9G-0772	213
9G-1368	578
	579
	605
	608
9G-1499	457
9G-1935	531
9G-3695	249
	256
	263
	323
	397
	398
	652
	655
	1074
9G-4101	359
	362
9G-4328	91
9G-4872	596
	597
	598
	599
9G-5127	107
9G-5209	404
	406
9G-5211	404
	406
9G-5212	404
	406
9G-5213	404
	406
9G-5742	1011
9G-6655	300
	302
9G-6770	366
	369
9G-7516	553
	556
	559
	563
	566
	569
	572
	575
9G-7641	▶379
	397
9G-8140	150
	753
	757
9G-8909	246
	248
	256
	257
	258
	263
	264
	265
9G-9295	422
	426
9G-9557	444
	449
9G-9603	443
9G-9981	433
	437
9H-3757	359
	362
	365
	368
9H-5537	444
	449
9H-6687	132
9H-6832	467
9H-8260	46
	55
9J-0513	678
	680
9J-0520	678
	680
	682
	684
	686
	688
9J-0521	678
	680
	682
	684
	686
	688
9J-0523	678
	680
	682
	684
	686
	688
9J-0711	678
	680
	682
	684
	686
	688
9J-1159	690
	692
	711
9J-1175	694
	696
	698
	700
	702
	704
	706
	708
	713
	715
	717
	719
	721
	723
9J-1709	865
	871
9J-1716	865
	871
	914
9J-1722	865
	871
	914
	915
9J-1914	969
9J-2290	531
	969
	973
9J-2365	920
	928
	942
	944
	957
	959
9J-2366	920
	942
	944
9J-2587	932
9J-2593	957
	959
9J-2606	525
	527
9J-2607	525
	527
9J-3866	743
9J-4523	935
9J-4688	830
	832
9J-4782	493
9J-5037	713
	715
	717
	719
9J-5499	865
	871
9J-5942	825
9J-6001	825
9J-6691	496
9J-7271	865
	871
9J-8243	848
9J-8752	865
	871
9K-2215	461
9K-7340	920
9L-2295	178
	180
9L-2662	467
9L-4234	11
9L-6331	1057
	1061
9L-6770	242
	244
9L-7469	1097
	1099
9L-7712	69
	73
9L-9068	644
	646
9L-9132	89
	91
	119
	121
	124
	127
	129
	224
9M-0164	795
	796
	930
	1127
	1132
9M-1974	15
	21
	23
	43
	48
	60
	64
	78
	80
	82
	136
	139
	143
	144
	148
	224
	229
	277
	385
	389
	393
	455
	473
	475
	992
9M-2151	146
	147
	164
	167
9M-2342	215
9M-2828	418
9M-3116	132
9M-3695	166
	169
9M-3786	139
	143
9M-3835	508
	512
	515
	534
	537
	1086
	1122
9M-3838	512
9M-4313	480
9M-4370	454
9M-4388	457
9M-4584	224
9M-5731	404
	406
9M-5732	588
9M-5733	1079
	1083
9M-5884	1011
9M-5894	721
	723
9M-6267	402
9M-6803	1092
9M-7394	848
9M-7606	359

▶ **PRIMARY REFERENCE**

PART NUMBER INDEX

Part	Page
	362
	365
	368
9M-7609	359
	362
	365
	368
9M-8406	853
	855
9M-8546	665
9M-8808	848
9M-9647	402
9M-9729	432
	439
9N-0869	89
	91
	221
	222
	274
	275
	277
	278
	279
	305
9N-0943	244
9N-1995	1088
	1090
	1141
	1172
9N-2038	195
	196
	197
9N-4053	223
9N-4245	989
	990
	991
9N-4621	989
	990
9N-4622	512
	515
9N-5253	300
9P-0214	433
	437
9P-0575	1011
9P-1444	1088
	1090
9P-2262	1075
9P-3041	482
9P-4483	463
9P-4898	1075
9P-5925	432
	437
9P-6571	272
	273
	1088
	1090
9P-6911	543
9P-7121	238
	239
9P-7859	1147
	1148
	1149
	1150
	1158
	1159
9P-7860	1147
	1148
	1149
	1150
	1158
	1159
9P-8339	461
9P-8340	461
9P-8344	463
9P-8663	498
	500
	502
9P-9150	644
	646
9P-9388	1067
9P-9519	463
9P-9548	534
	537
	538
9P-9549	534
	535
	537
	538
9P-9990	602
	603
	604
	605
	607
	608
9P-9993	602
	603
	604
	605
	607
	608
9R-1183	753
	763
	769
9S-1018	402
	642
	643
9S-1354	69
	71
	73
	75
9S-1366	58
	667
	669
	671
	673
	928
9S-1367	422
	426
9S-2075	498
	500
	502
9S-2302	244
9S-2390	244
9S-2437	1012
9S-2544	359
	362
	365
	368
9S-4180	865
	871
9S-4181	60
	432
	437
	821
9S-4182	80
	82
	86
	119
	121
	124
	136
	163
	224
	413
	463
	493
9S-4183	60
	413
	433
	438
	467
9S-4185	52
	53
	117
	174
	176
	215
	553
	556
	559
	564
	726
	793
9S-4188	865
	872
9S-4190	60
	80
	82
	107
9S-4191	21
	23
	25
	26
	86
	111
	113
	139
	143
	215
	224
	402
	413
	422
	426
	454
	725
	765
	771
	782
	789
	821
	848
	853
	855
	865
	871
	878
	879
	881
	883
	884
	914
9S-6465	404
	406
9S-8001	865
	900
	914
	915
9S-8002	28
	543
	549
	649
	889
	891
	894
9S-8004	832
	858
	865
	879
	881
	883
	884
	914
	915
9S-8005	215
	865
	871
9S-8006	623
	822
	823
	824
	834
	836
	838
	840
	863
9S-8007	473
	475
9S-8008	443
	448
	490
9S-8010	413
	432
	437
	444
	449
	649
	866
	872
9S-8216	495
9S-8230	504
	506
	508
	535
	537
9S-8752	80
	82
	85
	86
	89

► **PRIMARY REFERENCE**

PART NUMBER INDEX

Part	Page
	91
	110
	111
	119
	121
	124
	134
	146
	147
	187
	215
	224
	385
	389
	393
	848
9S-9271	80
	82
9S-9272	80
	82
9T-1576	843
9T-1579	843
9T-1637	843
9T-1641	824
9T-1642	843
9T-1958	649
9T-1959	649
9T-2032	863
9T-2654	830
	832
9T-3096	763
	769
	775
	780
	783
	788
	▶864
9T-3493	710
9T-3715	▶690
	942
	944
9T-3716	▶692
	942
	944
9T-3717	690
9T-3718	692
9T-4852	649
9T-4945	▶649
	848
9T-4946	848
9T-5653	667
	669
	671
	673
	▶896
9T-5734	866
	872
9T-5819	694
	696
	698
	700
	702
	704
	706
	708
9T-5982	865
	871
9T-6680	848
9T-6905	830
	832
9T-6906	830
	832
9T-6907	830
	832
9T-6908	830
9T-6909	830
	832
9T-6910	830
	832
9T-6912	830
9T-6913	830
	832
9T-6914	830
9T-6915	830
9T-6916	830
9T-7034	830
9T-8029	849
9T-8206	869
	876
9T-8207	869
	876
9T-8208	869
	876
9T-8210	869
	876
9T-8684	866
	871
9T-8685	865
	871
9U-8404	930
	969
	971
	973
9U-8405	936
9U-8509	763
	769
9U-9014	1137
9U-9048	1141
9U-9276	▶495
9U-9289	511
	515
9U-9292	512
	515
9U-9409	588
9U-9498	443
	448
9U-9552	▶1077
9U-9572	799
	802
	805
	808
9U-9956	1094
9U-9957	1094
9V-7451	1048
9V-8427	533
	723
	917
	919
	982
	986
9W-0352	512
	515
9W-0742	247
	256
	263
	▶270
9W-0844	997
	1033
9W-0852	997
	1001
	1003
	1033
	1036
	1039
9W-0875	727
	733
	739
	743
9W-1441	383
9W-1442	383
9W-1446	383
9W-1547	415
	418
9W-1651	763
	769
	775
	782
	783
	788
9W-1653	763
	769
	775
	780
	783
	788
9W-1654	763
	769
	775
	782
	783
	788
9W-1693	588
9W-1694	588
9W-1695	588
9W-1697	588
9W-1698	588
9W-1699	1
	▶588
9W-2424	962
9W-2425	961
	962
9W-2426	961
	962
9W-2500	610
	612
9W-2503	610
	612
9W-2636	1064
	1066
9W-2939	957
	959
9W-3073	1048
9W-3273	457
9W-3287	754
	758
9W-3357	810
9W-4041	810
9W-4042	810
9W-4043	810
	812
9W-4044	810
	812
9W-4194	596
	597
	598
	599
9W-4361	312
	313
	315
	318
	928
	930
9W-4493	964
9W-4494	963
	964
9W-4495	963
	964
9W-4551	989
	990
	991
9W-5215	119
9W-5449	537
	538
9W-5556	496
	930
	969
	971
	973
9W-5567	482
9W-5568	482
9W-5570	810
9W-5571	810
9W-6372	727
	733
	739
	743
9W-6825	215
9W-6958	512
	515
9W-7266	▶552
	593
	617
	619
9W-7267	591
	592
	594
	595
9W-7268	591
	592
	594
	595
9W-7269	552
9W-7599	543
	545
9W-7604	949
	▶963
9W-7605	949
	▶964
9W-7800	543
	545

▶ **PRIMARY REFERENCE**

PART NUMBER INDEX

Part	Page
9W-7871	602
	603
	604
	605
	607
	608
9W-7892	727
	733
	739
	743
9W-7893	727
	733
	739
	743
9W-7894	727
	733
	739
	743
9W-7899	534
	537
9W-8064	754
	758
9W-8065	749
	751
9W-8277	588
9W-8444	530
9W-8579	▶667
	921
9W-8580	▶669
	921
9W-8717	754
	758
9W-8723	753
	757
9W-8729	749
	751
9W-8730	667
	669
	671
	673
9W-8845	529
9W-9027	1088
	1090
9W-9099	444
	449
9W-9100	444
	449
9W-9472	247
	256
	263
9W-9625	580
	581
	582
	583
	584
	585
	590
9W-9626	▶590
9W-9830	482
9X-0199	397
9X-0262	326
	327
	385
	389
	393
9X-0263	385
	389
	393
9X-0352	69
	71
	73
	75
9X-0438	1049
	1051
9X-0941	271
9X-1138	1163
	1167
9X-1386	347
	350
	385
	389
	1061
9X-1813	258
	265
	305
	329
	338
	339
	341
	342
	344
	346
	348
	349
	371
	375
	381
	385
	389
	393
	394
	399
	655
	726
9X-1883	1172
9X-2038	1075
	1102
	1103
9X-2043	630
9X-2045	1102
	1103
9X-2205	237
	239
9X-2297	793
9X-2398	298
9X-2488	997
	1000
	1033
	1036
9X-2498	295
	399
9X-2508	1075
9X-2546	625
9X-2614	763
	769
	775
	780
	783
9X-3401	258
	265
	397
9X-3402	342
9X-3463	307
	308
	309
9X-3579	721
	723
9X-3994	1011
9X-4590	553
	556
	559
	563
	566
	569
	572
	575
9X-5736	1170
9X-6165	310
	311
9X-6258	382
9X-6259	281
	283
	285
9X-6268	1147
	1149
	1156
	1158
9X-6281	404
	406
9X-6458	119
	121
	124
	134
	187
	224
9X-6615	626
	628
9X-6772	98
	100
	295
	312
	313
	322
	325
	326
	327
	354
	380
	385
	389
	393
	399
	620
	625
	626
	628
	630
	642
	749
	751
	853
	855
	929
	930
	1140
9X-7138	354
9X-7295	623
9X-7371	43
9X-7378	1015
	1058
	1062
9X-7380	1058
	1062
9X-7381	1058
	1062
9X-7382	1058
	1062
9X-7383	1058
	1062
9X-7385	1015
	1058
	1062
9X-7391	834
	836
9X-7406	678
	680
	682
	684
	686
	688
9X-7438	68
9X-7680	889
	891
9X-7735	218
	228
9X-8250	1064
9X-8256	586
	626
	628
	630
	633
	635
	1003
	1039
9X-8268	790
9X-8402	763
	769
	775
	780
	783
	788
9X-8498	997
	1000
	1033
	1036
9X-8600	199
	201
	203
	237
	239
9X-8872	12
9X-8873	53
	623
9X-8879	43
	48
9X-8881	422
9X-8885	402
	422
	426
9X-8886	960

▶ **PRIMARY REFERENCE**

PART NUMBER INDEX

Part	Page
9X-8887	50
9X-8896	682
	684
	686
	688
9X-8897	713
	715
	717
	719
9X-8902	626
	628
	641
9X-8918	1042
	1045
9X-9013	997
	1034
9X-9730	246
	260
	267
9X-9825	358
9X-9896	310
	311
	1049
	1051
9Y-0047	89
	91
	221
	222
9Y-0635	31
	33
9Y-0677	84
9Y-0876	84
9Y-4090	136
9Y-4294	1173
9Y-5814	89
	91
9Y-7208	47
9Y-7209	47
9Y-7211	3
	►47
9Y-8386	39
9Y-8387	80
	82
9Y-8388	80
	82
9Y-8389	229
9Y-9175	20
9Y-9236	107
	154
	157
	160

0

Part	Page
001-9440	385
	389
	393
003-9514	132
	138
	434
	438
	1064
004-7626	138
005-7889	138
005-8160	1122
008-2103	865
	871
008-9792	1056
012-0380	375
014-0816	1162
	1166
022-0234	203
	209
030-3978	119
	160
030-7335	415
	418
030-7943	119
030-7947	157
030-7949	223
030-7962	119
030-7982	223
030-8535	848
	1003
	1039
030-8538	848
031-0214	1092
	1093
031-1382	597
	599
031-4136	89
	91
032-3174	105
033-6031	78
033-6039	899
033-6042	21
	23
	25
	26
033-6043	879
	881
	883
	884
	889
	891
	893
	894
	904
033-6783	219
033-8755	382
033-9139	663
	664
033-9412	534
	537
034-3557	408
	649
034-3665	250
	256
	263
035-0425	249
	256
	263
035-2017	498
	500
	502
	848
	1020
036-9821	359
036-9823	359
	362
	365
	368
039-6937	79
045-4065	360
	363
	366
	369
053-4679	106
061-6717	298
061-8803	1097
	1099
061-9456	86
068-4174	223
068-4209	382
068-6405	810
	929
072-4568	434
	438
077-4652	832
081-5604	764
	770
083-4419	838
	840
084-4111	1153
	1155
091-0081	223
091-8792	997
	1000
	1033
	1036
095-0843	1104
	1106
	1108
095-0878	1042
	1045
	1097
	1099
095-1314	1097
	1099
095-1609	914
095-1751	869
	876
	897
095-9805	838
	840
096-0015	846
	847
096-3218	889
096-5962	404
	406
096-6166	281
	283
	285

1

Part	Page
100-3224	1043
	1046
100-3237	89
	362
	365
	368
100-3724	58
100-3725	58
100-3877	69
	71
	73
	75
100-3878	69
	71
	73
	75
100-3879	69
	71
	73
	75
100-3880	69
	71
	73
	75
100-3905	4
	►69
100-4083	484
100-4318	859
	860
100-5179	1042
	1046
100-5568	1049
	1051
100-6531	244
100-8033	170
100-8075	86
100-8077	380
100-8780	4
	►227
	►228
101-0003	1125
	1130
101-0336	3
	►16
	►17
101-0729	878
101-0827	3
	►21
	►23
101-0829	4
	►62
101-0830	3
	►31
	►33
101-0831	3
	►15
101-0833	3
	►6
101-0852	291
	294
101-1171	►19
	21
	23
	26
101-1177	35
101-1180	35
101-1198	21
	23

► **PRIMARY REFERENCE**

PART NUMBER INDEX

Part	Page
	26
101-1361	3
	▶50
101-1364	50
101-1365	6
	50
101-1367	50
101-1368	50
101-1369	50
101-1370	50
101-1377	50
101-1378	50
101-2867	1092
	1093
101-4194	1125
	1130
101-4195	1125
	1130
101-4197	15
101-4199	78
101-8581	▶694
	▶696
	977
	978
	979
101-8614	▶698
	▶700
	977
	978
	979
101-8909	199
	201
	203
101-9043	6
101-9397	1011
101-9398	1011
102-0288	1056
102-0519	694
	696
	702
	704
102-0520	698
	700
	706
	708
102-0691	694
	696
	698
	700
	702
	704
	706
	708
102-0693	694
	696
	698
	700
	702
	704
	706
	708
	▶828
102-2240	385
	386
	389
	390
	393
	394
102-2913	653
102-3001	▶1161
	1162
	1166
102-3456	1006
	▶1137
102-4087	287
	290
102-4367	▶183
	▶184
102-4395	▶322
102-6317	1127
	1132
102-8610	493
102-8634	55
102-8800	1162
	1166
102-8801	246
	248
	257
	264
	265
	397
	398
	625
	628
102-8802	98
	100
	107
	240
	246
	247
	248
	249
	256
	257
	258
	259
	263
	264
	265
	266
	305
	313
	318
	323
	347
	348
	354
	371
	375
	381
	385
	389
	393
	397
	399
	406
	485
	620
	628
	726
	749
	751
	904
	906
	907
	908
	909
	912
	997
	1001
	1015
	1033
	1034
	1036
	1057
	1061
	1068
	1069
	1127
	1134
	1162
	1166
102-8803	100
	246
	247
	248
	257
	264
	305
	306
	327
	330
	331
	332
	334
	335
	349
	350
	386
	390
	393
	394
	398
	399
	655
	853
	855
	1003
	1039
	1049
	1051
	1141
102-8804	248
	257
	264
	329
	397
	398
	486
	488
	655
	901
	902
	903
	1026
	1057
	1061
	1070
	1071
102-8805	100
	246
	248
	257
	258
	264
	265
	285
	397
	399
	652
	997
	1001
	1003
	1028
	1033
	1036
	1039
	1061
	1068
	1069
	1072
	1073
	1074
	1160
	1161
	1162
	1166
102-8806	248
	250
	257
	258
	264
	399
	1162
	1166
102-8807	398
	1034
102-8810	997
	1027
	1033
102-8813	346
102-8815	1027
102-9062	982
	984
	988
	991
102-9073	982
	984
	988
	991
102-9881	▶201
102-9882	▶203
102-9948	1057
	1061
102-9949	1057
	1061
103-0892	152
103-1517	520
103-5526	397
	▶1028

▶ **PRIMARY REFERENCE**

PART NUMBER INDEX

Part	Page
103-6100	1057
	1061
103-6262	626
	628
104-2091	1003
	1040
104-4741	938
	939
104-4767	11
	52
	53
104-4768	11
104-4776	3
	▶11
104-5970	484
104-6728	473
104-6729	408
104-6730	408
104-8636	248
	256
	263
104-9028	753
	757
104-9275	990
104-9277	989
105-0253	16
105-0254	16
105-0255	16
105-0256	16
105-0257	16
105-1515	213
105-2145	889
	891
	893
	894
105-2146	838
	840
105-2470	727
	733
	739
	743
	▶878
105-3035	834
	836
105-3380	1075
105-3480	1049
	1051
105-3668	829
105-4283	1016
105-4284	1016
105-4285	1016
105-5448	969
	971
	973
105-9149	399
105-9152	98
	100
106-0933	472
106-2778	▶20
	25
106-3385	4
106-3973	169
106-4150	▶412
	467
106-4454	1049
	1051
106-4568	711
106-4572	150
106-4582	3
	▶8
	▶9
106-5472	404
	406
106-7400	563
106-7401	563
106-7408	1173
106-7483	853
	▶857
106-7598	52
	53
106-7600	3
	▶52
	▶53
106-8186	493
	848
106-8187	493
	848
106-9037	945
107-0040	727
	733
	739
	743
107-0266	1003
	1039
107-0335	219
107-0586	727
	733
	739
	743
107-1964	663
	664
	1049
	1051
107-2066	486
107-3501	▶965
107-3521	965
107-3522	965
107-3523	965
107-3758	163
107-5667	495
107-5668	495
107-7330	62
	64
107-7331	62
	64
107-7332	62
	64
107-7333	62
	64
107-7334	62
	64
107-7335	62
	64
107-7495	171
	183
	184
107-8533	951
	954
107-8611	487
107-8618	327
107-8719	394
	178
	180
107-8748	39
107-8749	39
107-9658	498
	500
	502
107-9659	498
	500
	502
107-9660	498
	500
	502
107-9661	498
	500
	502
108-0122	721
	723
108-1434	89
	91
	223
108-2148	904
	910
	913
108-4082	1112
	1113
	▶1125
108-4086	1043
	1046
108-4087	1043
	1046
108-4103	1043
	1046
108-4429	490
108-4430	490
	491
108-4431	490
108-4432	490
108-4433	490
	491
108-4434	644
	646
108-4582	▶1042
	1125
108-4721	727
	733
	739
	743
108-8421	▶1079
	1097
	1099
108-8423	1079
108-8424	1079
108-8425	1097
108-8426	1099
109-1633	1057
	1061
109-1634	1057
	1061
109-1645	248
	249
	257
	264
109-2332	86
109-2690	982
	984
109-4703	610
	612
109-5721	45
109-5735	249
	257
	264
109-6550	154
	157
109-7411	174
	176
109-8082	4
	▶89
	▶91
109-9040	▶946
109-9041	▶946
109-9046	▶966
109-9047	966
109-9050	966
109-9062	991
109-9063	991
109-9067	991
109-9071	991
109-9072	991
109-9076	991
110-2652	415
	418
110-2653	415
	418
110-2727	537
110-2729	535
	537
110-2741	85
110-2760	277
110-5010	678
	680
	682
	684
	686
	688
110-5975	527
110-5991	358
110-6030	527
110-6031	527
110-6109	1003
	1039
	1040
110-6393	996
	1172
110-6844	628
110-6845	397
	398
	628
110-6846	247
	248
	398
	628
110-6847	247
110-6848	628
110-6991	31
	33
110-6994	21
	23

▶ **PRIMARY REFERENCE**

PART NUMBER INDEX

Part	Page	Part	Page	Part	Page	Part	Page
	26	112-6041	191		180	116-9491	453
110-7880	620	112-6042	190	115-0555	178		▶469
110-7889	1162	112-6053	134		180	116-9492	▶422
	1166	112-6054	134	115-0556	178		469
110-8318	96	112-7686	404		180	116-9493	422
110-8319	96		406	115-0557	178	116-9494	422
110-8771	178	112-9167	2		180		426
	180		▶453	115-0761	444	116-9495	422
110-8772	178	112-9252	804		449		426
	180		807	115-0763	444	116-9496	422
110-8826	96	112-9802	422		449	116-9500	422
110-8827	96	113-0283	883	115-0764	444		426
110-9517	174	113-0580	247		449	116-9501	422
	176		248	115-0767	444		426
111-0343	487		398		449	116-9502	422
	907	113-0581	397	115-1250	749		426
	908		398	115-1615	305	116-9504	422
	909	113-0582	398	115-1888	313		426
	912	113-0899	1097		318	116-9505	469
111-1349	104		1099		323		▶470
111-3199	638	113-1050	▶648	115-3069	386	117-0067	385
	639		763		390		389
111-3820	86		769		394		393
111-4376	166		775	115-3503	▶25	117-0069	385
111-4402	246		780	115-3525	195		389
	257		783		196		393
	264		788		197	117-0078	4
111-4919	455	113-4316	249	115-7411	▶404		▶223
111-6119	80		257		▶406	117-0610	365
	82		264		453		368
111-7090	1075	113-4420	843	115-7412	▶280	117-1258	470
111-7091	1075	113-5898	512		453		471
111-7093	84		515	115-7414	453		▶960
111-8314	312	113-7433	932		▶642	117-1852	1006
	313	113-8172	178	115-8109	305		▶1075
	315		180	116-0118	326	117-4486	992
	316	113-8188	134		327	117-4491	1110
111-8411	287	113-8189	178		385		1111
	290		180		389	117-4492	992
111-9862	365	113-8432	66		393		994
	368	114-1266	879	116-1314	853	117-5676	1158
111-9864	365		881		855	117-5677	1147
	368		883	116-2589	1003		1149
111-9866	366		▶886		1040	117-8131	1088
	369	114-1267	879	116-2590	1003		1090
112-0858	655		881		1040	117-9308	8
112-1574	432		883	116-3119	1003	117-9315	69
	438		884		1039		71
112-3591	174		▶887	116-3253	21		73
	176	114-2368	312		23		75
112-3597	232	114-3107	▶323	116-4501	397	117-9758	404
	234	114-3469	1015	116-4502	397		406
112-4055	690	114-3926	642	116-4503	397	118-0287	482
	692		643	116-4623	▶443	118-0639	625
	711	114-5333	1057		470	118-1655	62
112-4387	277		1061	116-5920	▶402		64
112-4550	327	114-5477	223		470	118-2108	465
	394	114-5985	1003		471	118-2109	467
112-4577	1097		1039	116-6202	1057	118-2110	465
	1099	114-9363	313		1061	118-2111	463
112-5326	432	114-9365	313	116-7209	743	118-2874	834
	437		323	116-7472	482		▶891
	▶478	115-0553	178	116-7474	482	118-4728	134
112-6039	164		180	116-7880	1049		223
	167	115-0554	178		1051	118-6365	248

▶ **PRIMARY REFERENCE**

PART NUMBER INDEX

Part	Page
	257
	264
118-7226	247
	257
	264
	▶349
118-8182	487
118-8454	356
118-9628	453
	▶623
119-0838	7
119-0839	7
119-3373	422
119-3376	423
	427
119-3378	423
	426
119-3379	444
	449
119-3380	422
	426
119-3381	422
	426
119-3711	422
	426
119-3851	422
	426
119-4130	422
119-4131	422
119-4132	422
	426
119-4133	422
	426
119-4135	422
	426
119-4136	422
	426
119-4137	422
	426
119-4139	422
	426
119-4140	422
	426
119-4267	▶921
119-4268	▶921
119-4269	921
	922
	923
	924
	925
	926
	927
	▶942
	▶944
119-4270	▶938
	944
119-4271	▶939
	944
119-4272	▶932
	942
	944
119-4275	921
	925
	926
	927
119-4276	921
119-4277	▶810
	921
	922
	923
	924
	▶957
119-4281	▶925
119-4282	▶922
119-4283	▶677
119-4297	921
	922
	923
	924
	925
	926
	927
	▶945
119-6109	477
119-6110	477
119-6112	477
119-6113	477
119-6114	▶477
	843
119-6121	824
119-6288	3
	▶12
119-6308	150
119-6355	45
120-0241	832
120-4339	7
120-4897	292
120-6858	478
120-7412	7
120-7413	▶7
	69
	71
	73
	75
120-8999	585
120-9000	585
120-9016	▶749
	▶751
	921
	923
	924
	926
	927
120-9027	310
	311
121-0024	463
121-0025	465
121-0026	467
121-0027	465
121-0028	▶463
	465
121-0029	▶465
	467
121-0030	453
	▶467
121-0667	623
121-0668	623
121-0669	623
121-0670	623
121-0671	623
121-0672	623
121-0674	623
121-0675	623
121-0676	623
121-0677	623
121-0678	623
121-0679	623
121-0680	623
121-0681	623
121-0682	623
121-0683	623
121-0684	623
121-0685	623
121-0686	623
121-0687	623
121-0688	623
121-2844	385
	389
	393
121-4030	▶485
	638
121-4035	485
121-5731	4
	▶178
	▶180
121-5736	192
	193
	194
121-5746	409
	410
121-9258	1075
121-9259	1075
122-1512	▶626
	▶628
	630
122-2738	397
122-3316	956
122-4268	620
122-4270	620
122-4271	620
122-4974	485
	904
122-6046	620
122-6049	620
122-6824	620
122-6825	620
122-6826	620
122-7372	626
	628
	▶633
122-8026	630
122-8611	980
122-8856	136
123-0912	625
123-2511	782
123-3283	630
123-3295	626
	628
123-3296	626
	628
123-3826	626
	628
123-4011	938
	939
	940
	941
123-4268	62
123-4271	73
123-5150	98
	100
123-5748	843
123-6377	626
	628
123-6392	626
	628
123-6446	▶625
	626
	628
123-6449	248
	257
	264
	▶381
123-6853	5
	▶164
123-6854	164
	▶166
123-6855	166
123-6856	166
123-6857	164
	186
123-6858	164
	186
123-6922	164
	186
123-6982	174
	176
123-6983	174
	176
123-8157	1127
	1132
123-8266	1127
	1132
123-8686	▶365
123-8689	98
	100
	▶368
123-8773	354
123-9128	1127
	1132
123-9131	1127
	1132
123-9176	630
123-9294	281
	283
	285
123-9773	366
	369
123-9776	366
	369
123-9812	626
	628
124-0289	385
	389

▶ **PRIMARY REFERENCE**

PART NUMBER INDEX

Part	Page
	393
124-0503	415
	418
124-0504	415
	418
124-0799	620
124-2354	▶620
	630
124-2356	280
	▶630
124-2377	415
	418
124-2463	205
	207
	209
	211
124-3052	879
	881
	883
	▶904
124-3702	633
	635
124-5142	112
124-5514	192
	193
	194
124-6704	354
124-6838	1075
124-7128	1127
	1132
124-8957	249
	257
	264
124-9325	247
	257
	264
	▶329
124-9437	232
124-9774	1147
	1149
124-9775	1158
125-0473	98
	101
125-0582	641
125-0583	626
	628
	▶641
125-1302	▶375
	382
125-2000	325
125-2001	▶315
	322
	323
	325
	749
	751
125-2782	62
125-3298	633
	641
125-3299	635
125-3401	▶1026
	1049
	1051
125-3664	461
125-3942	422
125-4490	397
125-4605	457
125-4992	1088
	1090
125-6224	▶1101
	1115
125-6511	▶411
	453
125-6533	359
	362
	365
	368
125-6535	360
	363
	366
	369
125-6536	360
	363
	365
	368
125-6537	365
	368
125-6786	879
	881
	883
	884
125-7875	382
125-8826	641
125-9215	930
	936
125-9664	626
	628
	▶635
125-9740	997
	1000
	1033
	1036
125-9751	50
126-0186	496
126-0814	753
	781
	788
	798
	814
	818
126-2487	626
	628
126-4199	938
	939
126-4200	938
126-4201	939
126-5013	▶454
	455
126-5343	580
	581
	582
	583
	584
	585
126-5509	686
	688
126-5512	432
	437
126-5855	454
126-5948	901
	903
126-6059	409
126-6872	757
	801
	804
	807
126-7574	287
	290
126-8340	953
	▶975
126-8341	975
126-8342	975
126-8343	975
126-8539	454
126-8540	454
126-9012	866
127-0271	906
127-1031	▶977
127-1032	▶969
	977
	979
127-2170	1022
	1023
	1024
	1025
127-2176	136
127-2945	626
	628
	▶632
127-4451	3
	▶110
127-4487	5
	▶409
	▶410
127-4490	5
	▶822
127-4496	4
	5
	▶326
127-4540	1003
	1039
127-5400	43
	48
127-5404	8
	9
127-7479	453
	▶461
127-7480	▶432
	▶437
	453
127-7486	▶442
	453
127-7494	620
127-8051	1
	▶520
127-8112	174
	176
127-8113	174
	176
127-8269	178
	180
127-9136	▶1033
	▶1036
	1039
127-9138	996
	▶997
	▶1000
	1003
127-9189	525
	527
127-9444	1
	▶431
127-9471	834
	836
127-9483	834
	836
127-9487	834
	836
128-0613	1127
	1132
128-0686	1127
	1132
128-2718	938
	940
128-2719	939
	941
128-2779	864
128-2780	821
	▶864
128-4845	16
	17
	18
128-5011	686
	688
128-5012	686
	688
128-5140	951
	954
128-5142	951
	954
128-5994	8
128-6121	971
	973
128-6157	382
128-6816	971
128-7069	846
	847
128-7073	846
128-7255	602
	603
	604
	605
	607
	608
128-7256	602
	603
	604
	605
	607
	608
128-8405	382
129-1609	454
	457
129-1610	455
129-1653	457
129-3178	281
	283
	285
	305

▶ **PRIMARY REFERENCE**

PART NUMBER INDEX

Part	Page
	633
	635
	997
	1000
	1033
	1036
129-3180	310
	311
129-4030	550
129-4031	551
129-4032	▶550
	617
	619
129-4033	▶551
	617
	619
129-4181	69
	73
129-4487	543
	545
	549
129-5081	951
	954
129-6628	▶346
	385
	389
	393
129-7202	457
129-9466	114
	115
129-9472	132
129-9476	39
129-9478	5
	▶84
129-9481	84
129-9485	152
129-9495	152
129-9519	138
129-9541	189
129-9547	178
	180
130-0084	457
130-0701	620
130-1985	620
130-2545	520
130-2547	520
130-2607	28
130-2608	28
130-3261	713
	715
130-3262	713
	715
	717
	719
130-3263	▶713
	▶715
	977
	978
	979
130-3281	▶185
130-3374	170
130-3395	432
	437
130-3396	433
	437
130-3397	433
	437
130-3398	432
	437
130-3399	432
	437
130-3431	▶949
	959
130-3432	949
	▶953
130-3433	953
	▶954
	956
130-3434	942
	944
	957
	959
130-3435	928
	957
	959
130-3436	957
	959
130-3437	951
	954
130-3438	951
	954
130-4846	1003
	1039
130-5348	936
130-5349	977
	▶982
130-5351	919
	982
130-5355	969
130-5356	▶934
130-5357	934
	▶936
130-5358	936
130-5361	▶919
130-6177	1006
	▶1064
	▶1066
130-6182	1057
	1061
130-6187	1064
	1066
130-6254	431
130-6366	930
	936
130-6381	▶717
	▶719
	977
	978
	979
130-6382	717
	719
130-6458	▶978
130-6459	▶971
	978
130-6460	978
	▶983
130-6461	917
	983
130-6462	▶979
130-6463	979
	▶984
130-6464	984
130-6747	432
	437
130-6822	525
	527
130-6823	525
	527
130-6827	525
	527
130-6828	525
	527
130-7066	798
	801
130-7481	▶287
	288
130-7558	457
130-7903	96
130-7904	96
130-7905	96
130-7924	▶96
130-7975	620
130-8206	457
130-9214	997
	1000
	1033
	1036
130-9215	997
	1000
	1033
	1036
130-9216	997
	1000
	1033
	1036
130-9218	997
	1000
	1033
	1036
130-9219	997
	1000
	1033
	1036
130-9220	997
	1000
	1033
	1036
130-9221	997
	1000
	1033
	1036
130-9224	997
	1000
	1033
	1036
130-9225	997
	1000
130-9226	998
	1000
130-9227	998
	1000
	1033
	1036
130-9228	998
	1000
	1033
130-9233	998
	1000
	1033
	1036
130-9234	998
	1000
	1033
	1036
130-9235	1033
	1036
130-9456	763
	769
	775
	781
	783
	788
130-9457	763
	769
	775
	781
	783
	788
130-9989	620
130-9990	620
131-0167	457
131-0420	31
	33
131-0421	31
	33
131-0447	641
131-0515	866
131-0545	998
	1000
	1033
	1036
131-1574	543
	545
	547
131-2101	652
	▶753
	▶757
131-2141	▶325
	977
	978
	979
	981
131-2441	998
	1000
	1034
	1036
131-3916	399
131-4094	402
131-4242	1042
	1045
131-4326	810
	812
131-4328	810
	812
131-4329	810
	812
131-4330	810
131-4331	810
131-4332	810

▶ **PRIMARY REFERENCE**

PART NUMBER INDEX

Part	Page
	812
131-4426	▶1114
131-5167	1042
	1045
131-5354	998
	1000
	1034
	1036
131-8201	764
	770
	776
	780
	784
	789
131-8202	764
	770
	776
	780
	784
	789
131-8422	1114
	▶1115
132-0055	496
	969
	971
	973
132-0338	992
	994
132-0342	354
132-1003	991
132-1004	991
132-1225	244
132-2138	461
132-3553	▶531
132-3554	531
132-3555	531
132-3581	620
132-3871	998
	1000
	1034
	1036
132-4919	694
	698
132-4997	713
	717
132-5076	900
132-5077	753
	757
	▶900
132-5793	998
	1000
	1034
	1036
132-6260	60
132-6287	248
	257
	264
132-6289	246
	258
	265
132-6290	247
	259
	266
132-6469	69
	71
	73
	75
132-6545	246
	259
	266
132-6746	534
	538
132-7077	404
	406
132-7168	169
132-7419	641
132-7450	641
132-7551	187
	508
132-8475	1170
132-8875	725
132-8876	413
	437
132-8900	277
	▶288
	▶289
132-9455	637
	640
132-9875	402
132-9877	402
132-9899	644
	646
132-9900	644
	646
133-0155	620
133-1278	725
133-1281	▶725
	763
	769
	775
	780
	783
	788
133-1288	725
133-1299	413
133-1301	▶413
	433
	437
133-1321	413
133-1854	727
	733
	739
	743
133-1856	727
	733
	739
	743
133-1857	727
	733
	739
	743
133-2198	413
133-2199	725
133-2249	486
	488
133-2250	▶486
	637
133-3246	▶637
	644
133-3248	490
133-3255	642
	▶644
133-3489	274
	275
133-3869	727
	733
	739
133-4079	8
	9
133-4283	727
	733
	739
133-5082	1003
	1039
133-5631	543
	545
	549
133-5951	4
	▶189
133-5952	189
133-5953	189
133-5954	189
133-5956	152
133-5957	152
133-5999	154
	157
	160
133-6006	150
133-6036	1001
	1034
	1037
133-6107	1034
133-6523	814
133-6524	814
	818
133-6525	818
133-6595	620
133-6934	107
133-6974	620
133-7114	325
133-7212	620
133-7214	620
133-7230	620
133-7231	620
133-8133	727
	733
	739
	743
133-8382	136
133-8468	626
	628
133-9306	29
	30
	35
	37
133-9405	1049
	1051
133-9660	356
134-0964	726
134-0978	1
	▶316
134-2202	553
	556
	559
	563
134-2203	553
	556
	559
	563
134-2252	249
	250
	257
	264
	▶350
134-3992	1003
	1039
134-3993	1003
	1040
134-4126	292
	293
	294
	304
134-4814	553
	556
	559
	563
134-5993	415
	418
134-5994	415
	418
134-5996	415
	418
134-5997	415
	418
134-6030	415
	418
134-6032	415
	418
134-6033	415
	418
134-6035	▶401
	453
134-6036	415
	418
134-6631	798
	801
	804
	807
134-6632	798
	801
	804
	807
134-6714	1094
134-7258	1173
134-8343	754
	757
134-8344	753
	757
134-8345	754
	757
135-0175	136
135-0356	653
	▶1019
135-0611	1160
	1162
	1166
135-1707	463
135-1823	1075
135-2755	780
	788

▶ **PRIMARY REFERENCE**

PART NUMBER INDEX

Part	Page
135-3103	164
	▶190
135-3104	164
	▶191
135-6143	356
135-6616	840
	▶893
135-6987	356
135-7862	356
135-8581	626
	628
135-8854	834
	836
135-9446	652
	653
	▶879
	▶881
135-9577	965
135-9578	965
135-9599	▶965
135-9956	753
	757
135-9957	753
	757
136-1543	1080
136-1544	992
	994
136-1953	997
	1001
	1033
	1034
	1037
136-2662	493
136-2749	▶949
	957
136-2750	949
	▶950
136-2751	950
	▶951
	953
136-2755	▶949
136-2756	949
	▶953
136-3028	▶949
136-3029	949
	▶956
136-3192	1162
	1166
136-3193	1162
	1166
136-3715	838
	840
136-3920	798
	801
	804
	807
136-3921	798
	801
	804
	807
136-3923	798
	801
	804
	807
136-3924	798
	801
	804
	807
136-3980	▶933
	953
136-3983	950
	▶976
136-3984	976
136-3985	976
136-3986	976
136-4224	763
	769
136-6140	281
	283
	285
136-6142	281
	283
	285
136-6302	195
136-6811	728
	734
	740
	744
136-6968	418
	▶460
136-7032	726
136-8423	834
	836
	838
	840
136-9137	1088
136-9138	1
	▶1088
136-9411	727
	▶859
136-9412	859
	▶906
136-9595	1088
	1090
136-9640	69
137-0248	246
	257
	264
137-3587	433
	437
137-3927	1019
137-3928	1019
137-3929	1173
137-3933	1173
137-3936	853
	855
137-3937	397
137-3957	1173
137-3958	1173
137-4344	415
	418
137-4621	433
	437
137-4830	625
137-5640	1020
137-5815	655
137-5816	655
137-6497	763
	769
	775
	782
	783
	788
137-6856	35
137-7368	1
	▶1102
137-7369	1102
	1103
137-7616	1049
	1051
	▶1073
137-8173	127
	129
137-8198	409
	410
137-8199	409
	410
137-8202	154
	157
	160
137-8206	110
	111
137-8212	409
	410
137-8228	150
137-8229	84
137-8239	127
	129
137-8254	60
137-8255	60
137-8284	150
137-8285	150
137-8290	45
137-8476	432
	437
137-8793	638
	639
137-8794	638
	639
137-8795	▶638
	644
137-8796	▶490
	644
138-0427	422
	426
138-0428	422
	427
138-0576	523
	553
	559
	566
	569
138-0577	523
	553
	559
	572
	575
138-1015	1102
	1103
138-1025	1102
	1103
138-1208	467
138-1424	814
138-2515	58
138-3094	340
138-3251	343
	434
	437
138-4151	602
	603
	604
	605
138-4152	602
	603
	607
	608
138-4346	838
	840
138-4350	838
	840
138-4351	840
	842
138-4691	834
	836
138-4692	834
	836
138-4693	834
	836
	▶846
138-4695	834
	836
138-4696	834
	836
138-4697	834
	836
138-4698	834
	836
138-4699	834
	836
138-4700	834
	836
138-4701	834
	836
138-4703	834
	836
138-6793	727
	733
	739
	743
138-6794	727
	733
	739
	743
138-8172	846
138-8173	846
	847
138-8174	846
138-8175	846
	847
138-8176	846
138-8177	846
138-8507	62
138-8886	1049
	1051
138-9162	433
	437
138-9751	727
	733
	739
138-9907	553

▶ **PRIMARY REFERENCE**

PART NUMBER INDEX

Part	Page	Part	Page	Part	Page	Part	Page
	556		743	142-4996	457		23
	559	140-8016	623	142-5000	432		26
	563	140-9597	48		437	144-5695	62
	566	141-0374	107		▶455		64
	569	141-0863	434	142-5001	455	144-6394	496
	572		437		▶457	144-7358	433
	575	141-1206	511	142-5002	457		437
139-2003	▶522		515	142-5004	457	144-8263	43
	▶523	141-2244	848	143-0013	630		48
	▶524	141-4976	305	143-0738	463	144-8321	533
139-2010	563	141-6346	422	143-1233	▶496	145-0326	1125
139-2011	522		426	143-1278	▶614		1127
	523	141-6347	422		617		1130
	524		426	143-1279	▶614		1132
139-2015	522	141-6716	753	143-1280	▶615		1134
	523		757	143-1288	992	145-0487	275
	524	141-7103	60		1104	145-0900	▶533
139-2016	522	141-7105	3		1106		977
	523		996		1108		978
	524		▶1016	143-2466	318		981
139-2019	522	141-7110	80	143-3331	549	145-1144	489
	523		82	143-3332	543		910
	524	141-7213	760		545		913
139-2022	563	141-7225	795	143-3974	281	145-1850	432
139-2455	795	141-7226	795		283		437
	796	141-7228	795		285	145-1851	432
	930	141-7230	795	143-4601	413		437
139-2456	795		796	143-4621	402	145-1852	432
	796	141-7522	▶543	143-4758	415		437
	930		▶545		418	145-2875	969
139-6870	415		▶547	143-7707	763	145-3216	31
	418		617	143-9464	675		▶35
139-6871	415	141-8376	▶795		676	145-6054	652
	418		977	143-9467	675		▶883
139-7590	725		978		676	145-6478	473
139-7697	2		979	143-9484	281		475
	▶617	141-8466	408		283		▶482
139-7698	▶553	141-8657	▶760		285	145-6480	▶408
	▶556		934	143-9666	274		470
	▶559	141-9503	433	144-0195	1138		471
	▶563		437		1141	145-7316	432
	617	141-9607	765	144-0326	655		437
139-7709	▶602		771	144-0331	641	145-8006	▶996
	▶603		775		655	145-8734	996
	617		782		661		1006
139-7710	▶610		783	144-0342	496		▶1057
	617		788	144-0344	496		▶1061
139-7720	▶591	141-9610	763	144-0345	496	145-8737	938
	▶592		769	144-0367	127		939
	▶593		775		129		940
139-7721	592		781	144-0498	434		941
	594		783		437		951
	595		788	144-0500	432		954
139-7722	592	142-0038	748		437		957
	594	142-0748	461	144-0720	62		959
	595	142-2075	942	144-0725	62	145-8739	1162
140-2751	1		944		64		1166
	▶219		957	144-3579	1003	145-8740	1162
140-3108	98		959		1039		1166
	100	142-2526	655	144-5661	385	145-8741	1162
140-6681	610	142-2527	655		389		1166
	612	142-3984	374		393	145-9361	834
140-7732	727		▶376	144-5690	174		836
	733	142-3985	374	144-5691	174	146-0240	853
	739		▶377	144-5692	21		855

▶ **PRIMARY REFERENCE**

PART NUMBER INDEX

Part	Page
146-3583	596
	598
146-3728	911
146-6204	150
146-7383	174
147-0319	▶307
	315
147-0633	366
	369
147-1445	398
147-1680	▶330
	404
	626
147-2013	433
	438
147-2696	443
147-3313	433
147-3745	221
	222
147-4459	1
	▶534
147-4460	535
147-4461	535
147-4549	1127
	1132
147-4711	434
	438
147-5399	475
	▶487
147-5968	928
	942
	944
147-6522	1127
	1132
147-6523	1127
	1132
147-6541	1127
	1132
147-6626	795
	796
	930
147-7976	▶1074
	1166
147-9434	810
	812
148-0330	444
	449
148-0334	397
148-2350	911
148-2712	404
	406
148-2713	404
	406
148-2714	404
	406
148-3540	578
	579
148-3663	404
	406
148-3664	404
	406
148-3730	578
148-3749	1127
	1132
148-5373	810
148-5374	810
	812
148-5375	810
148-6559	444
	449
148-6786	938
	939
	940
	941
148-7214	814
	818
148-8305	438
148-8313	727
	733
	739
	776
	780
	784
148-8316	586
148-8317	96
	727
	733
	739
	743
148-8318	744
	764
	770
	776
	781
	784
	789
148-8319	728
	733
	739
	743
148-8325	94
148-8326	586
	744
148-8327	107
	852
148-8330	748
	763
	769
	775
	780
	783
	788
148-8335	96
	98
	100
148-8336	728
	734
	740
	753
	757
	763
	769
	776
	781
	784
	789
	798
	801
	804
	807
	814
	818
148-8340	438
148-8342	98
	100
148-8345	763
	769
	775
	781
	783
	788
148-8352	748
148-8353	753
	763
	769
	775
	783
	814
148-8354	438
	728
	734
	740
	744
148-8357	753
	757
148-8358	728
	734
	740
	744
	776
	781
	784
148-8362	776
	781
	784
	789
148-8363	763
	769
148-8364	438
148-8367	757
	763
	769
	776
	781
	784
	789
	815
148-8368	94
148-8369	94
148-8370	763
	769
	775
	781
	783
	788
148-8371	586
148-8372	728
	734
	740
	743
148-8377	789
148-8378	728
	734
	740
	744
	753
	757
	764
148-8385	94
148-8390	107
148-8395	871
148-8407	491
	789
	871
148-8408	438
148-8409	491
148-8410	491
148-8411	121
	124
148-8425	753
	757
148-8428	728
	734
148-8429	96
	98
	100
148-8433	728
	734
	740
	744
	753
	758
	764
	770
	775
	782
	783
	788
	798
	814
	818
148-8443	764
	770
	775
	782
	783
	788
148-8444	728
	734
	740
	744
	782
	789

▶ **PRIMARY REFERENCE**

PART NUMBER INDEX

Part	Page
148-9643	444
	449
149-1333	764
	770
	775
	782
	783
	788
149-1981	28
149-1982	29
	30
	35
149-2357	1049
	▶1068
149-2404	1115
	▶1127
149-2408	401
149-2610	748
	▶907
149-2611	907
149-4745	1112
	1113
149-4889	620
149-4919	▶980
149-4920	980
	▶985
149-4921	▶917
	985
149-4922	▶761
	980
149-5462	147
149-5628	487
149-6031	17
	18
149-6032	17
	18
149-6033	17
	18
149-6034	17
	18
149-6035	17
	18
149-6371	1057
	1061
149-6470	281
	283
	285
	▶1027
149-7153	764
	770
	775
	781
	783
	788
149-8199	997
	1033
149-8218	997
	1000
	1033
	1036
149-9818	305
150-1241	432
	438
150-1308	401
150-1310	401
150-1974	150
150-1978	154
	157
	160
150-3028	764
	770
	776
	781
	784
	789
150-3036	754
	758
150-3065	764
	770
	775
	780
	783
	788
150-4027	757
	801
	804
	807
150-4042	586
150-4453	▶218
	227
150-5414	934
	▶937
150-5415	937
150-5416	937
150-5417	937
150-6259	275
150-7154	465
150-7683	914
150-7684	914
150-8988	986
	▶991
150-8989	986
	▶991
151-0241	652
	▶914
151-1396	383
151-1397	383
151-1398	383
151-2682	119
	121
	124
151-3258	422
	426
151-4004	533
151-4854	749
	751
151-4977	650
	657
	659
	662
	663
	664
151-5203	795
	796
	930
151-6320	305
151-8098	865
	871
151-8165	152
151-9270	82
151-9275	641
152-0930	848
152-5505	761
152-5559	865
	871
152-6504	134
152-6505	187
152-6506	187
152-6760	908
	912
152-6761	879
	883
	▶908
152-7041	866
	871
152-7554	690
	692
	711
152-7625	16
	17
152-7795	677
	▶812
152-8338	909
152-8340	764
	770
	775
	780
	783
	788
	▶909
153-0976	313
	323
153-1886	150
153-1887	150
153-2073	▶308
	316
153-2681	1012
153-2838	448
153-4874	614
	615
153-4875	614
	615
153-4876	614
	616
153-4878	614
	616
153-4962	615
	616
	617
153-4963	615
	616
	617
153-6237	438
153-6239	98
	100
153-6245	728
	734
	740
	744
153-6253	764
	770
153-6255	728
	734
	740
	744
153-6280	652
153-6281	246
	257
	264
153-6332	415
	418
153-7474	178
153-8462	795
153-8463	795
153-8498	1102
	1103
153-8916	▶312
154-1612	▶28
	29
	30
	35
	37
154-1618	136
154-1619	136
154-1709	▶928
154-1710	▶930
154-2386	▶171
154-3079	1075
154-3560	187
154-3561	187
154-4133	911
154-6165	764
	770
	775
	782
	783
	788
154-6388	69
	73
154-6389	69
	71
	73
	75
154-6560	201
	203
	207
	209
154-7150	728
	734
	740
	744
154-7159	748
154-8080	765
	771
	776
	782
	784
	788
154-8544	764
	770
	776
	781
	784
	788
155-0499	134
155-0726	56
	57
	382
155-1556	382
155-1996	382
155-1998	382

▶ **PRIMARY REFERENCE**

PART NUMBER INDEX

Part	Page
155-2001	382
155-2048	597
	599
155-2255	247
	248
	257
	258
	264
	265
	398
	628
155-2260	100
	107
	246
	247
	248
	257
	258
	264
	265
	285
	305
	339
	340
	341
	342
	343
	344
	345
	346
	398
	628
	655
	1163
	1167
155-2261	378
155-2265	248
	257
	258
	264
	398
155-2269	247
	248
	1163
	1167
155-2270	69
	100
	107
	109
	246
	257
	258
	259
	265
	266
	305
	313
	318
	323
	378
	398
	487
	620
	749
	751
	1061
155-2271	246
	258
	265
	382
	398
	1061
155-2272	247
	248
	285
155-2274	100
	246
	247
	248
	257
	258
	264
	265
	285
	398
	628
	1162
	1163
	1166
	1167
155-2276	345
155-2639	408
	▶473
	▶475
155-2641	473
	475
155-2701	1162
	1166
155-3549	249
	259
	▶338
155-5550	▶2
155-5552	▶1
	2
155-5553	2
	▶652
155-5555	2
	▶296
155-5556	2
	▶3
155-5557	2
	▶5
155-6061	▶726
	764
	770
	776
	780
	784
	788
155-6400	427
155-7321	776
	780
	784
	789
155-7505	865
	871
155-9587	764
	770
	776
	782
	784
	789
155-9879	578
	579
156-0313	▶578
	617
	618
156-1148	▶1096
	1101
	1112
	1113
156-1382	726
156-2825	444
156-2828	444
156-4653	578
	579
156-5351	578
	579
156-5545	992
	994
156-5903	411
156-5970	488
156-6147	753
156-6155	304
156-6173	485
	904
156-6175	1140
156-7389	764
	770
	776
	780
	784
	789
156-7418	1
	▶1103
156-7419	▶1116
	▶1117
156-7423	753
	757
156-8180	1003
	1039
156-8192	1049
	1051
156-8357	578
156-9421	1049
	1051
156-9628	764
	770
	776
	781
	784
	789
156-9748	221
	222
156-9751	▶221
	223
156-9752	▶222
	223
156-9812	3
	▶43
156-9813	5
	▶154
	▶157
	▶160
156-9814	3
156-9815	4
	▶119
	▶121
	▶124
156-9816	4
	▶385
	▶389
	▶393
156-9817	▶139
	141
156-9819	4
	▶174
156-9820	119
	121
156-9822	111
156-9825	119
	121
	124
156-9833	119
	121
	124
156-9840	4
	▶127
	▶129
156-9841	386
	390
	394
156-9842	5
	▶114
	▶115
156-9843	5
	▶131
156-9844	3
	▶10
156-9845	▶150
	152
156-9846	5
	▶152
156-9849	139
	143
156-9850	4
	▶141
	▶142
156-9936	1
	▶246
	▶256
	▶263
156-9937	1
	▶397
156-9938	▶313
157-0305	▶309
	312
	313
157-0669	525
	527
157-1270	3
157-1361	1003
	1039
157-1988	1
	▶525
	▶527
157-1989	525
	527
157-2151	1006

▶ **PRIMARY REFERENCE**

PART NUMBER INDEX

Part	Page
	▶1039
157-2284	901
	902
	903
157-3513	1
	▶511
	▶515
157-3514	512
	519
157-3515	512
	518
157-3517	512
	519
157-3519	512
	518
157-3531	512
	518
	519
157-3532	512
	518
157-3735	1006
	▶1162
	▶1166
157-3736	1006
	▶1141
157-3737	1006
	▶1011
157-3738	1
	▶1006
157-3739	1011
157-4817	▶1006
	1009
157-5127	1162
	1166
157-5128	1163
	1167
157-5129	1141
157-5544	▶648
157-5549	764
	770
157-5551	764
	770
	776
	784
157-5555	764
	770
	776
	784
157-5558	764
	770
	776
	784
157-5913	1
	▶1049
	▶1051
157-7244	690
	692
	711
158-0248	307
	308
158-0249	309
158-0250	307
	308
	309
158-0252	307
	308
158-2286	1020
	1022
	1023
	1024
	1025
158-2336	648
	769
158-4227	1
	▶493
158-4228	493
158-5031	1
	▶236
	238
158-5032	239
158-6632	397
158-8042	652
	▶814
158-8043	653
	▶818
158-8044	▶653
158-8077	▶278
	▶279
	453
158-8902	728
	734
	740
	744
	764
	770
	776
	780
	784
	789
159-1503	1066
159-1643	107
159-2943	382
159-2950	1095
	▶1118
159-2951	1103
	▶1119
159-2952	1116
	▶1120
159-3305	814
159-3449	397
159-3793	1
	▶504
	▶506
	▶508
159-3794	504
	506
	508
159-3795	504
	506
	508
159-4689	382
159-4696	382
159-4697	382
159-4699	1
	▶1172
159-4701	▶1170
	1172
159-4756	5
	▶132
159-4762	119
	121
	124
159-5200	▶295
159-7161	822
	823
	▶824
159-7221	1
	▶498
	▶500
	▶502
159-7351	626
	628
159-7352	626
	628
159-8047	398
159-8130	498
	500
159-8131	498
	500
159-9311	543
	545
	549
160-0496	648
160-0633	295
160-0634	248
	257
	264
160-0635	247
	257
160-0637	398
160-0638	398
160-0727	152
160-0729	152
160-0731	152
160-0734	114
	115
160-0735	114
	115
160-0737	114
160-0982	▶931
	977
	978
	979
	981
160-1758	278
	▶291
160-2443	213
	▶331
160-4188	931
160-4189	931
160-5843	901
	902
	903
160-5844	901
	902
	903
160-6194	131
160-6631	578
	579
160-7165	1118
	1119
	▶1130
160-7689	398
160-7690	398
160-7765	1127
	1132
160-7766	1127
	1132
160-7767	1127
	1132
160-8761	354
160-8767	354
160-9836	174
161-0832	498
	500
	502
161-2411	▶796
	981
161-2415	986
161-2418	981
	▶986
161-2419	▶973
	981
161-2420	▶981
161-2508	▶29
161-2513	106
161-4495	973
161-5967	1042
	1045
161-6600	246
	257
	264
161-6615	▶702
	▶704
	981
161-6616	▶706
	▶708
	981
161-7539	1120
	▶1132
161-7546	580
	581
	582
	583
	584
	585
	600
161-7548	▶600
161-7562	▶721
	981
161-7563	▶723
	981
161-7564	721
	723
161-7565	721
	723
161-7567	721
	723
161-7568	721
161-7569	723
161-8068	427
161-8979	▶332
	626
161-9289	1118
161-9853	580
161-9854	▶580
	614
161-9926	326
	327

▶ **PRIMARY REFERENCE**

PART NUMBER INDEX

Part	Page
	▶339
	385
	389
	393
161-9929	▶340
	385
161-9931	▶341
	385
	389
162-0177	871
162-2168	597
	599
162-2257	154
	157
	160
162-5239	753
	757
162-7210	678
	680
	682
	684
	686
	688
162-7757	678
	680
	682
	684
	686
	688
162-7864	597
	599
162-8376	661
162-8387	661
162-8389	661
162-8438	553
	556
	566
	572
162-8679	511
	515
163-0122	796
163-0123	796
163-0124	796
163-0263	249
	258
	265
163-0575	1
	▶848
163-0576	848
163-0813	▶934
	981
163-0814	▶762
	934
163-0826	762
163-0827	762
163-1135	1134
163-1146	1125
	1130
163-1201	246
	259
	266
163-1924	▶98
	▶100
163-2600	41
163-4090	▶793
	861
163-4091	793
163-4093	793
163-4094	793
163-4095	793
163-4096	793
163-4098	793
163-4100	861
163-4820	610
	612
163-5455	205
	207
	209
	211
163-5589	525
	527
163-6088	1163
	1167
163-7882	385
	389
	393
164-0241	394
164-1234	1134
164-1270	1134
164-2108	489
	910
	913
164-3417	237
	239
164-4146	1092
164-4531	992
	994
164-4540	869
164-4810	▶861
164-4883	1081
	1082
164-5567	758
	801
	804
	807
164-5572	728
	734
	740
	744
164-5951	1132
164-6093	▶639
	646
164-6426	829
164-6427	690
	692
	▶829
164-6497	690
	692
	711
164-6819	815
164-6964	661
164-7577	248
	259
	266
	▶371
164-7699	131
164-7736	132
164-7737	132
164-7738	132
164-7739	132
164-9429	▶1095
164-9436	249
	258
	265
	▶271
164-9920	415
	418
164-9921	415
	418
164-9933	1049
	1051
164-9980	382
165-5018	272
	▶281
165-5140	3
	▶241
165-5312	563
165-5655	305
165-6970	843
165-7816	131
165-7825	132
165-7827	150
165-7828	152
165-7829	152
165-7830	119
	121
	124
165-7831	139
	143
165-9154	4
	▶229
166-4113	940
	941
166-4374	144
	148
166-4376	144
	148
166-4380	▶144
	146
166-5944	29
	30
	35
166-5945	28
166-6781	1125
	1130
166-6928	1049
	1051
	▶1072
166-7164	382
166-7221	1127
166-7225	1115
166-7401	1127
	1132
166-7731	275
	▶292
	351
166-8417	277
166-8420	178
	180
166-8421	178
	180
167-0138	▶378
	382
167-1709	249
	258
	265
	▶342
167-1795	776
	781
	784
	789
167-1884	315
167-2009	848
167-2190	710
167-2211	696
	700
	704
	708
167-2214	715
	719
167-2216	678
	680
	682
	684
	686
	688
	690
	692
	711
167-2220	721
	723
167-2300	710
167-2324	696
	700
	704
	708
167-2328	715
	719
167-2331	690
	692
	711
167-2336	721
	723
167-2482	678
	680
167-3830	382
167-3848	1020
167-7493	▶382
	398
167-7499	382
167-7953	1
	▶1094
167-9524	489
167-9559	110
	111
167-9569	223
168-0264	382
168-0265	382
168-0267	382
168-0269	383
168-0270	382
168-0275	383
168-1968	757
	801
	804
	807
168-7800	174
	176
	178
	192

▶ **PRIMARY REFERENCE**

PART NUMBER INDEX

Part	Page
168-7868	▶847
168-7872	834
	836
168-7940	847
168-7941	847
168-7942	847
168-7943	847
168-7944	847
168-8772	1048
169-0489	274
	▶293
	352
169-0697	1081
169-1024	1082
169-1025	1106
	1108
169-1026	1104
169-1216	869
169-1616	897
169-1617	897
169-2619	119
	138
169-2887	5
	▶327
169-4253	249
	258
	265
169-4254	398
169-4255	398
169-4256	249
	258
	265
169-4339	139
169-4346	4
	▶134
169-4349	134
169-4357	134
169-4620	511
	515
169-4691	4
	▶146
	▶147
169-4801	4
	▶192
	▶193
	▶194
169-7027	187
169-7028	187
169-7030	187
169-7033	187
169-7055	444
	449
169-7161	187
169-7162	187
169-7380	1130
	1132
	1134
169-7443	1057
	1061
169-8615	230
	▶232
169-8617	232
	234
169-9649	▶1138
	1140
169-9650	1138
170-0235	1057
	1061
170-0503	648
170-1112	992
	994
170-1114	992
	994
170-1115	992
	994
170-1127	385
	389
	393
170-1151	116
170-1152	3
	▶116
170-1155	119
	121
	124
170-1159	127
	129
170-3461	399
170-3715	1
	▶272
	▶273
170-3793	249
	258
	265
	398
170-3795	249
	258
	265
	398
170-4760	931
170-5293	1057
	1061
170-7538	753
	757
170-8590	1092
171-1230	1104
	1106
	1108
171-3054	843
171-3055	843
171-3057	843
171-3058	843
171-3059	843
171-3060	843
171-3061	843
171-3065	824
	▶843
171-3066	843
171-4581	814
	818
171-5349	347
	348
	389
171-5989	843
171-6682	1104
	1106
	1108
171-7088	728
	734
	740
171-8708	▶373
	385
	389
	393
172-0199	4
	▶136
172-0209	3
	▶163
172-0986	1057
	1061
172-2391	488
172-2392	▶488
	640
172-2416	1104
	1106
	1108
172-4001	992
172-4277	498
	500
	502
172-4880	1057
	1061
172-5093	415
	418
172-5276	728
	734
	740
	744
172-5277	852
172-5596	1
	▶727
	▶733
	▶739
	▶743
172-5636	▶834
	▶836
	842
172-5637	▶838
	▶840
	842
172-5638	5
	▶842
172-5745	865
	871
172-6047	728
	734
	740
	744
172-6581	1106
	1108
172-6977	652
	▶865
172-7938	1
	▶213
172-9210	▶205
172-9211	▶207
172-9213	▶209
172-9214	▶211
172-9291	997
	1000
	1033
	1036
172-9292	997
	1000
	1033
	1036
172-9389	279
	▶294
	353
172-9468	205
	207
	209
	211
173-0593	623
173-0594	623
173-1028	▶992
	▶994
	1104
	1106
	1108
173-1551	653
	▶798
	▶801
	▶804
	▶807
173-1552	▶653
173-1553	652
	▶763
	▶769
	▶775
	▶780
	▶783
	▶788
173-1638	238
	1170
173-1639	238
	1170
173-1640	1170
173-1641	1170
173-1642	1170
173-1646	281
	283
	285
173-2052	1080
173-3083	1110
173-3084	1111
173-3204	652
	▶884
173-3262	1
	▶274
173-3263	▶275
	652
173-3283	1104
173-3993	871
173-4640	534
	537
173-4641	534
	537
173-5787	1118
	1119
	1120
	1121
173-6115	764
	770
173-6117	764
	770
	776
	781
	784
	789
173-6588	798

▶ **PRIMARY REFERENCE**

PART NUMBER INDEX

Part	Page
	801
	804
	807
173-6623	399
173-6733	764
	770
	776
	781
	784
	789
173-7035	1118
	1119
	1120
	1121
173-7246	296
173-7247	▶296
173-7459	296
	▶297
173-7715	467
173-7721	▶459
173-9168	1078
173-9169	1078
173-9170	1
	▶1078
173-9779	710
174-0129	249
	258
	265
174-1494	1000
	1036
174-1503	1031
174-1921	98
	100
174-2231	▶1045
	1130
174-2237	1045
174-3091	650
	657
	659
174-3119	652
	▶1020
174-3352	98
	100
174-4895	185
174-4909	▶489
	639
174-4916	884
	▶910
174-4917	910
174-7086	195
174-7087	192
	▶195
174-7862	▶1124
174-7875	246
	258
	265
174-8883	98
	100
174-9338	174
	176
175-0035	940
	941
175-1529	650
	659
	663
	664
175-2832	1039
175-2839	1039
175-2841	1039
175-3265	650
	657
	659
175-3581	764
	770
	776
	781
	784
	789
175-3920	740
	744
175-4170	661
175-4972	▶640
	646
175-5058	1054
175-5213	3
	▶277
175-5228	150
175-5229	150
175-5239	150
175-6802	556
175-6803	556
175-6804	591
175-6805	591
175-6807	▶594
	▶595
175-7162	1057
	1061
175-7900	710
176-0258	644
	646
176-0259	644
	646
176-0394	485
	904
176-1223	▶415
176-1236	▶418
	453
176-2551	553
	556
	566
	572
176-3225	106
176-7002	5
	▶823
176-7503	289
	▶290
176-8191	132
177-0259	127
	129
177-0609	119
	121
	124
177-1407	653
	▶869
177-1860	1092
177-1862	1092
	1093
177-1863	1104
	1106
	1108
177-4930	1080
177-4935	▶1092
	1106
	1108
177-4937	1110
	1111
177-4980	▶657
	▶659
	1022
177-5211	246
	258
	265
178-0605	▶1080
	1081
	1082
178-0607	1092
178-0608	1092
178-0609	1092
178-2311	865
	871
178-2312	865
	871
178-2313	865
	871
178-2314	865
	871
178-3951	1070
178-6360	154
	157
	160
178-6362	154
	157
	160
178-6363	4
	▶380
178-7070	▶1053
178-7276	940
178-7277	▶940
	942
178-7278	941
178-7279	▶941
	942
178-7586	423
	427
178-7907	1080
179-0006	100
179-1730	1051
	▶1069
179-2511	▶612
	619
179-2512	▶604
	▶605
	619
179-2513	▶607
	▶608
	619
179-2514	▶566
	▶569
	619
179-2515	▶572
	▶575
	619
179-2516	▶618
179-2517	▶618
179-2518	618
	▶619
179-2519	618
	▶619
179-6740	98
	100
179-7091	5
	▶354
179-7092	4
	▶356
179-7273	865
179-7274	866
179-7275	866
179-7276	866
179-7376	661
180-0050	398
180-2867	653
	▶1021
180-3473	559
	563
	569
	575
180-4236	1021
180-4836	686
	688
180-4995	597
	599
180-6213	840
180-7145	866
180-7146	866
180-7154	866
	871
180-7180	1057
	1061
180-7181	1057
	1061
180-7304	▶1104
	1110
180-7305	▶1081
	1104
180-7306	▶1106
	▶1108
	1111
180-7307	▶1082
	1106
	1108
180-9340	339
	343
	344
	345
180-9846	▶310
	318
180-9847	▶311
	318
180-9899	650
	657
	659
	▶661
183-2009	283
	▶1070
183-2076	272
	273
	▶283
	▶285
183-2256	426
183-2257	426

▶ **PRIMARY REFERENCE**

PART NUMBER INDEX

Part	Page
183-2258	426
183-2259	426
183-2265	426
183-2272	▶426
	469
183-2296	960
183-2823	229
183-3202	199
	201
	203
183-3208	▶655
	1019
183-3720	▶853
	▶855
183-6726	655
183-6767	525
	527
183-7262	872
183-7600	648
183-9330	581
183-9331	▶581
	614
	615
184-0982	305
184-1192	869
	876
184-2298	1104
	1106
	1108
184-2299	1104
	1106
	1108
184-2300	1081
	1082
184-2443	66
184-2444	4
	▶66
184-2449	69
184-2472	293
	304
184-2607	597
	599
184-3229	89
	91
184-3232	223
184-3238	58
184-3239	4
	▶58
184-3240	1016
184-4397	603
	604
	605
	607
	608
184-6011	▶1110
	1118
184-6012	▶1111
	1119
	1120
	1121
184-6305	592
	593
	595
	▶599
	617
	618
184-6306	▶597
	617
	618
185-2638	242
185-2639	242
185-2644	242
185-2645	242
185-2647	242
185-2648	242
185-2650	242
185-2651	242
185-2653	242
185-2654	242
185-2655	242
185-2658	242
185-3502	644
	646
185-3503	644
	646
185-6379	799
	801
	804
	807
185-6973	815
185-8734	▶662
	▶663
	1024
186-1681	1069
186-2771	818
186-3735	100
	240
	305
	334
	335
	347
	349
	371
	375
	381
	393
	394
	620
	655
	903
	908
	909
	912
	1028
	1071
	1160
	1162
	1166
186-3736	109
	341
	346
	378
	620
	655
186-4857	1138
186-5107	1054
	1134
186-5318	597
186-5319	599
186-5899	1006
	▶1140
187-1011	579
187-1367	444
	449
187-1484	▶579
	617
	618
187-1679	237
	239
187-2034	244
187-3304	591
	594
	595
187-3305	591
	594
	595
187-4606	119
187-5177	398
187-7738	31
	33
187-8039	427
188-0782	427
188-1079	▶654
	662
	663
	664
188-1082	650
	657
	659
	662
	663
	664
188-1452	579
188-2901	1009
188-2903	1009
188-2904	1009
188-4655	444
	449
188-4788	58
188-5095	205
	207
	209
	211
188-6140	855
	▶858
188-6141	858
188-7067	491
188-7068	491
188-7069	491
188-7095	1022
	1023
	1024
	1025
188-7097	1090
188-8849	307
	308
	309
189-0189	907
	908
	909
	912
189-1839	488
189-2305	650
	657
	659
	662
	663
	664
189-2309	512
	515
189-2319	397
189-5746	▶347
	389
	393
189-8624	911
189-8627	860
	▶911
189-8628	733
	740
	744
	▶860
189-9809	1088
	1090
189-9810	1088
	1090
189-9816	1088
	1090
190-5386	1173
190-8921	144
191-1815	504
	506
191-2933	1121
	▶1134
191-4546	448
191-9292	1009
192-1425	721
	723
192-2048	721
192-4658	650
	657
	659
	662
	663
	664
192-5391	▶318
192-5425	160
192-7752	1134
192-7755	1134
192-7760	1134
192-7767	1134
192-7783	1134
192-7787	1134
192-7790	1134
192-7795	1134
192-7799	1134
192-7805	1134
192-7810	1134
192-7812	1134
192-7820	1134
192-7822	1134
192-7848	1134
192-7931	303
192-8746	71
192-8747	71
193-1036	889
	891
	893
	894
193-2550	249
	258

▶ **PRIMARY REFERENCE**

PART NUMBER INDEX

Part	Page
	265
	▶348
193-3182	836
	▶894
193-3282	64
193-3286	56
193-3288	38
193-4476	650
	659
	663
	664
193-8609	449
193-9158	954
193-9159	810
194-3684	652
	▶1022
	▶1023
194-3805	469
	▶471
194-3806	▶448
	471
194-3807	448
194-3809	449
194-3811	449
194-3812	448
194-3814	448
194-3815	449
194-3816	449
194-3819	449
194-3820	448
194-3821	449
194-3822	450
194-4897	37
194-4898	4
	▶57
194-4901	37
194-4902	37
194-5047	601
194-5050	601
194-6724	▶343
	389
	393
194-6725	▶344
	393
194-7034	213
194-8128	543
	545
	549
194-9584	218
	228
195-1928	4
	▶71
195-3015	538
195-3024	537
195-3026	537
195-3028	538
195-3031	538
195-3496	538
195-7171	965
195-7172	965
195-7187	▶967
195-7869	655
195-7870	655
195-7871	655
195-7872	655
195-9173	965
195-9174	965
195-9175	965
195-9536	1
	▶537
196-1363	▶601
196-1804	661
196-4791	69
	73
196-4793	69
	73
196-7592	498
	538
196-7594	498
	538
196-7601	538
196-9200	163
196-9527	17
	18
196-9565	▶333
	657
	659
	662
196-9566	▶333
	657
	659
	662
	663
197-0560	64
197-2715	▶1055
197-3888	66
197-5035	871
197-5110	1049
	1051
197-5111	1049
	1051
197-5346	4
197-5943	945
197-6689	826
197-6995	30
	37
197-6999	35
197-7004	73
	75
197-7006	37
197-7055	37
197-7062	37
197-7063	37
197-7504	▶1007
197-7689	1125
	1130
197-7701	909
197-8820	3
	▶242
198-0230	178
198-5389	305
198-6482	671
	▶682
198-6483	673
	▶684
198-6484	682
	684
198-6485	666
	▶686
198-6486	676
	▶688
198-6488	686
	688
198-7341	▶826
	923
	926
198-7343	826
	827
198-7366	826
	827
198-7711	586
199-2807	415
	418
199-4194	653
	▶1024
	▶1025
199-4268	754
	757
199-6766	1020
199-7891	242
199-8240	▶926
199-8241	▶923
199-8436	242
2	
200-2003	69
	71
	73
	75
200-2964	858
200-3926	682
	684
	686
	688
200-4002	864
200-5125	305
200-6260	305
200-6283	897
200-6325	584
200-6326	584
200-8277	3
	▶244
201-0704	1007
	▶1009
201-0780	891
201-1231	965
201-1277	4
201-3215	▶671
	923
	924
	926
	927
201-3217	671
201-3218	▶673
	923
	924
	926
	927
201-3225	673
201-3434	864
201-4075	▶675
201-4077	675
201-4078	676
201-4257	33
	▶37
201-7270	▶491
	646
201-7272	643
	▶646
202-0502	▶237
	238
202-0503	▶238
	1085
202-0908	582
202-1390	238
202-1391	238
202-1392	238
202-1393	238
202-2699	244
202-2700	244
202-2703	244
202-2707	244
202-2708	244
202-2783	244
202-2784	244
202-2785	244
202-2786	244
202-2787	244
202-4328	▶666
	675
202-7400	453
	▶643
202-8057	413
202-8627	4
202-9709	413
202-9897	244
203-2143	180
203-2163	180
203-2444	592
203-2445	592
203-2446	563
	592
203-2447	560
	563
	569
203-2448	559
	563
	575
203-4157	881
	884
	▶912
203-7703	1118
	1119
	1120
	1121
203-8474	415
	418
203-8609	834
	836
203-9163	834
	836
203-9786	183
204-2643	1
	▶1090
204-4439	236
	▶239
204-5116	871

▶ **PRIMARY REFERENCE**

PART NUMBER INDEX

Part	Page	Part	Page	Part	Page	Part	Page
204-5117	871	207-7899	872	212-8180	148	217-7072	167
204-5118	871	207-8829	96	212-8181	143	217-7073	176
204-5119	871		100	212-8187	148	217-7074	176
204-5120	871	208-1686	1009	213-1745	552	217-7075	176
204-5121	871	208-1687	1009	213-2323	305	217-7086	3
204-5426	31	208-1691	1009	213-4998	310		▶167
	33	208-2362	12		311	217-7087	167
204-5427	31		94	213-5202	744	217-7088	176
	33	208-2363	12	213-6184	547	217-7321	848
204-5447	64	208-2364	15	213-6185	547	217-7933	1092
204-5476	193		78	213-6186	547		1093
	▶196	208-4585	769	213-8188	150	217-8433	1048
204-5480	196		776	214-0783	▶1054	218-0424	297
	197		782	214-0784	1054		353
204-5575	652		784	214-2341	848	218-0425	297
	▶871		789	214-4100	1011		▶353
205-0626	242	208-5182	▶965	214-4159	744	218-2373	910
205-0826	305	208-6081	650	214-4862	▶334		913
205-1985	1057		657		628	218-2830	776
205-1986	1057		659	214-4863	▶335		781
205-2941	650		661		406		784
	659	208-9099	▶996		628		789
205-5779	▶302	209-0381	397	214-6006	3	218-7136	661
205-5781	302	209-0962	37		▶46	219-1802	461
205-6388	1110	209-1742	267	214-6066	64	219-2390	655
	1111	209-3186	545	214-6073	64	219-2391	655
205-7303	▶198		547	214-9183	625	219-4714	666
205-8257	305	209-5218	12	214-9184	625	219-6314	304
206-2926	▶303	209-7714	945	215-1933	310	220-0195	▶852
206-3421	157	210-2262	1093		311		1124
206-5048	475	210-2263	1093	215-2554	502	220-0199	852
206-5119	777	210-2266	1093	215-2556	502	220-0202	852
	782	210-2268	1093	215-3191	94	220-0812	852
	785	210-2270	▶1093	215-7492	583	220-4551	821
	790		1104		584		▶897
206-5121	776	210-2529	35		585	220-8634	1117
	782	210-2541	196	215-7493	583		▶1121
	784	210-2542	35		584	221-0293	776
	790		37		585		781
206-5162	304	210-4729	1	215-7494	▶583		784
206-5165	304		▶586		615		789
206-7110	1057	210-4730	586		616	221-3406	266
207-2684	547	210-4731	586	215-7495	▶615		▶345
	▶549	210-4732	586		617		780
207-4253	1057	210-4733	586	215-7496	▶616	221-5500	852
	1061	210-4734	586	215-7497	▶616	221-7682	250
207-4285	1057	210-4735	586	215-7636	832		258
	1061	210-7291	1001	215-7678	▶584	222-0345	1110
207-5048	184		1036		617		1111
207-5049	184	210-8580	586	215-9802	1173	222-3870	305
207-5262	▶304	211-1808	1173	216-0891	▶617	222-4434	237
	305	211-5358	1054	216-1302	157	222-4737	871
207-6162	▶582		1134	216-2211	176	222-5153	4
	614	211-7826	19	217-0242	318		148
	615	211-9294	1134		751	223-1696	19
207-6809	▶913	212-6024	▶875	217-2713	884	223-4443	915
207-6810	913		879		▶888	223-4445	915
207-6936	415		881	217-5703	199	223-6361	64
	418		883		203	223-6363	4
207-6937	415		884	217-7041	4		▶64
	418	212-8167	142		▶138	223-8127	▶947
207-6938	415		▶143	217-7042	138	223-8128	▶948
	418	212-8175	147	217-7043	138	224-0829	▶676
207-6939	415		▶148	217-7058	124	224-3385	305
	418	212-8178	143	217-7071	167	224-5918	593

▶ **PRIMARY REFERENCE**

PART NUMBER INDEX

Part	Page
224-5919	593
224-9869	4
	▶73
	▶75
225-2321	652
	▶915
225-3286	696
	700
	704
	708
225-3287	682
	684
	686
	688
	690
	692
	711
225-3289	721
	723
225-3772	▶585
225-4259	234
225-4260	231
	▶234
225-6343	1071
225-8513	305
225-9217	281
	285
	▶1071
226-0291	625
226-0311	▶827
	924
	927
226-0328	625
226-0913	748
226-5602	305
226-5918	▶927
226-5919	▶924
226-6537	744
	▶821
226-9822	666
227-1149	715
	719
227-3002	▶748
227-4398	909
227-5719	748
227-9383	652
	▶832
228-0692	167
	▶169
228-7430	776
	781
	784
	789
228-7431	776
	784
228-7432	776
	781
	784
	789
228-7563	1056
228-9650	748
228-9651	748
228-9652	748
229-0190	228
229-1631	62
229-3525	585
229-3526	585
229-3527	585
229-3528	585
229-5490	73
229-5679	438
229-7052	▶968
229-8203	515
	▶518
229-8204	515
	▶519
229-8284	318
229-8285	318
229-8779	318
230-0941	167
230-1050	4
	▶176
230-1053	5
	▶186
230-1060	194
	▶197
230-1061	197
230-2619	69
	71
	75
230-2620	69
	71
	75
230-2621	71
	75
230-2622	71
	75
230-2633	71
	75
230-3152	71
	75
230-3153	71
	75
230-3470	757
230-4057	757
230-5452	157
	160
230-6266	▶336
	650
	664
230-6267	▶337
	650
	664
230-7875	75
230-8173	305
231-1946	318
231-1947	318
231-3539	710
231-4605	584
231-4606	584
231-4607	584
231-4608	584
231-6573	827
231-6574	825
231-9484	460
231-9486	460
231-9531	832
231-9532	832
231-9533	832
232-1306	1007
232-1307	1007
232-3779	▶664
	1025
232-3780	▶650
	1023
232-4571	115
232-9737	304
233-2431	64
233-6020	318
233-7135	1162
	1166
233-8350	167
234-4182	227
	228
234-6939	258
	265
235-0266	94
	▶109
235-0270	94
235-0274	94
235-0275	94
235-2329	107
235-3546	10
	43
	48
235-3548	10
	41
	43
	48
235-5553	258
	265
236-5197	1093
236-5821	541
236-5823	▶541
236-6585	296
	351
236-6586	296
	▶351
237-0131	▶93
237-0132	93
	▶94
237-0133	93
	▶107
237-0138	▶1085
237-0139	1085
	▶1086
237-0140	▶510
	1085
237-3943	1134
237-3970	▶995
	1134
237-5920	▶305
237-7654	653
	▶876
237-7957	3
	▶26
237-9334	▶1003
	1006
238-4768	789
238-5471	790
238-8656	107
238-9126	804
	807
238-9976	508
238-9977	508
239-1168	508
239-2118	1086
239-2119	1086
239-2120	1086
239-2122	1086
239-2124	1086
239-2125	1086
239-2126	1086
239-2132	1086
239-2135	1086
239-2139	1086
239-2142	1086
239-2146	1085
	▶1122
239-2147	1122
239-2148	1122
239-2150	1122
239-2278	1122
239-2279	1122
239-2404	397
239-4214	264
239-6339	510
239-6342	510
239-7918	296
	352
239-7919	296
	▶352
240-0318	1122
240-5920	426
240-5921	426
240-6901	107
240-8201	1086
240-8954	1122
240-9030	107
240-9497	107
241-0221	18
241-0222	3
	▶18
241-1735	1061
241-1736	1061
241-1742	1061
241-2631	871
241-3283	134
242-5328	▶30
242-9228	318
243-5761	410
245-3856	655

▶ **PRIMARY REFERENCE**

MEMORANDA



© 2003 Caterpillar
All Rights Reserved

Printed in U.S.A.