D155A-2 S/N 50001-UP (S6D155-4 Eng. Installed)

D155A-2 S/N 50001-UP

Item	Part Name
	S6D155-4S S/N 52707-UP
10	ENGINE RELATED PARTS AND ELECTRICAL SYSTEM
20	TORQUE CONVERTOR¤TRANSMISSION¤ STEERING AND FINAL DRIVE
30	TRACK
40	CONTROL SYSTEM
50	GUARD
60	WORK EQUIPMENT CONTROL SYSTEM
70	WORK EQUIPMENT
90	MARK PLATE¤ TOOL AND KIT

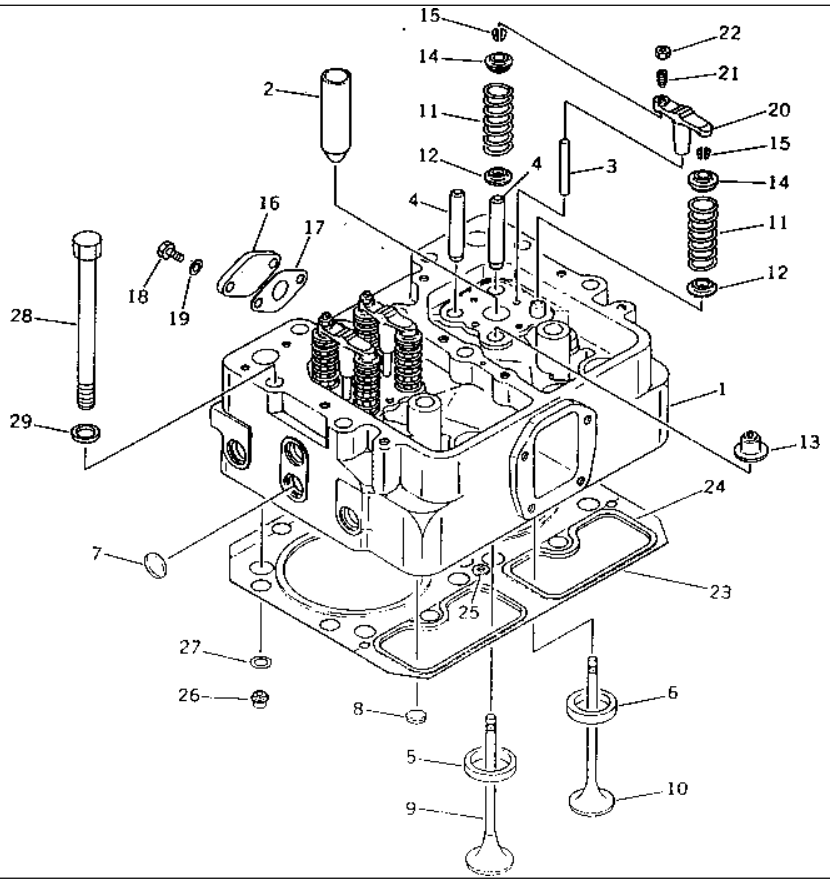

S6D155-4S S/N 52707-UP

CYLINDER HEAD

Item	Part No.	Description	Qty	Options
	6128-11-1012	CYLINDER HEAD ASS'Y	3	SN:52707--
	6128-11-1022	· CYLINDER HEAD ASS'Y	1	SN:52707--
1	☆	· · HEAD,CYLINDER	1	SN:52707--
2	6128-11-1130	· · SLEEVE	2	SN:52707--
3	6127-11-1141	· · GUIDE,CROSSHEAD	4	SN:52707--
4	6127-11-1341	· · GUIDE,VALVE	8	SN:52707--
5	6127-11-1335	· · SEAT,INTAKE VALVE (STD)	4	SN:52707--
	6127-19-1335	· · SEAT¤ 0.25MM,INTAKE VALVE (OS)	4	SN:52707--
	6127-18-1335	· · SEAT¤ 0.50MM,INTAKE VALVE (OS)	4	SN:52707--
	6127-17-1335	· · SEAT¤ 0.75MM,INTAKE VALVE (OS)	4	SN:52707--
	6127-16-1335	· · SEAT¤ 1.00MM,INTAKE VALVE (OS)	4	SN:52707--
6	6127-11-1325	· · SEAT,EXHAUST VALVE (STD)	4	SN:52707--
	6127-19-1325	· · SEAT¤ 0.25MM,EXHAUST VALVE (OS)	4	SN:52707--
	6127-18-1325	· · SEAT¤ 0.50MM,EXHAUST VALVE (OS)	4	SN:52707--
	6127-17-1325	· · SEAT¤ 0.75MM,EXHAUST VALVE (OS)	4	SN:52707--
	6127-16-1325	· · SEAT¤ 1.00MM,EXHAUST VALVE (OS)	4	SN:52707--
7	07046-43016	· · PLUG	13	SN:52707--
8	07046-42516	· · PLUG	2	SN:52707--
9	6127-41-4113	· VALVE,INTAKE	4	SN:52707--
10	6127-41-4214	· VALVE,EXHAUST	4	SN:52707--
11	6127-41-4410	· SPRING,VALVE	8	SN:52707--
12	6127-41-4530	· SEAT,SPRING¤ EXHAUST	4	SN:52707--
13	6127-41-4541	· SEAL,VALVE STEM (K1)	4	SN:52707--
	6127-40-4501	· VALVE COTTER ASS'Y	8	SN:52707--

S6D155-4S S/N 52707-UP
CYLINDER HEAD

Item	Part No.	Description	Qty	Options
14	6127-41-4510	· · SEAT,SPRING	1	SN:52707--
15	6127-41-4522	· · COTTER	2	SN:52707--
16	6127-11-1410	COVER	3	SN:52707--
17	6110-61-6831	GASKET (K1)	3	SN:52707--
18	01010-31030	BOLT	6	SN:52707--
19	01602-01030	WASHER,SPRING	6	SN:52707--
20	6127-41-5614	CROSSHEAD	12	SN:52707--
21	6127-41-5641	SCREW,ADJUST	12	SN:52707--
22	6127-41-5630	NUT	12	SN:52707--
	6127-11-1087	GASKET ASS'Y,HEAD (K1)	3	SN:52707--
23	☆	· GASKET,HEAD	1	SN:52707--
24	6127-11-1827	· · SEAL	2	SN:52707--
25	6127-11-1830	· · GROMMET	1	SN:52707--
26	6127-11-1851	· RETAINER	8	SN:52707--
27	6127-11-1841	· GROMMET	8	SN:52707--
28	6127-11-1612	BOLT	30	SN:52707--
29	6127-11-1620	WASHER	30	SN:52707--

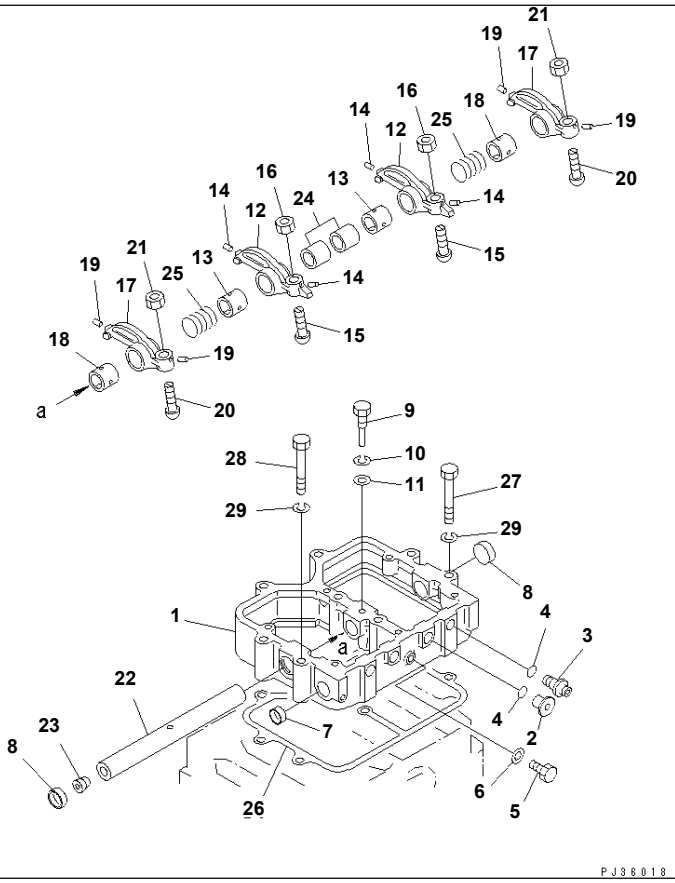

S6D155-4S S/N 52707-UP

ROCKER ARM AND HOUSING

Item	Part No.	Description	Qty	Options
	6127-11-7030	HOUSING ASS'Y	3	SN:52707--
	6127-11-7040	· HOUSING ASS'Y	1	SN:52707--
1	☆	· · HOUSING,ROCKER ARM	1	SN:52707--
2	6127-11-7131	· · CONNECTOR	2	SN:52707--
3	6127-11-7140	· · CONNECTOR	2	SN:52707--
4	07000-02016	· · O-RING (K1)	4	SN:52707--
5	01010-30812	· · BOLT	1	SN:52707--
6	07005-00812	· · GASKET (K1)	1	SN:52707--
7	07046-22816	· · PLUG	2	SN:52707--
8	6127-11-7150	· PLUG	2	SN:52707--
9	6127-11-7412	· STOPPER	1	SN:52707--
10	01602-00825	· WASHER,SPRING	1	SN:52707--
11	01642-20810	· WASHER	1	SN:52707--
	6128-41-5040	· ARM ASS'Y,INTAKE VALVE	2	SN:52707--
	6128-41-5400	· · ARM ASS'Y,INTAKE VALVE	1	SN:52707--
12	6128-41-5412	· · · LEVER,INTAKE VALVE	1	SN:52707--
13	6127-41-5420	· · · BUSHING	1	SN:52707--
14	6162-43-5340	· · · RIVET	2	SN:52707--
15	6127-41-5445	· · SCREW,ADJUST	1	SN:52707--
16	6127-41-5431	· · NUT,LOCK	1	SN:52707--
	6127-41-5050	· ARM ASS'Y,EXHAUST VALVE	2	SN:52707--
	6127-41-5500	· · ARM ASS'Y,EXHAUST VALVE	1	SN:52707--
17	6127-41-5512	· · · LEVER,EXHAUST VALVE	1	SN:52707--
18	6127-41-5420	· · · BUSHING	1	SN:52707--

ROCKER ARM AND HOUSING

Item	Part No.	Description	Qty	Options
19	6162-43-5340	· · · RIVET	2	SN:52707--
20	6127-41-5445	· · SCREW,ADJUST	1	SN:52707--
21	6127-41-5431	· · NUT,LOCK	1	SN:52707--
	6127-41-5021	· ROCKER ARM SHAFT A.	1	SN:52707--
22	6127-41-5212	· · SHAFT	1	SN:52707--
23	07043-00312	· · PLUG	1	SN:52707--
24	6127-41-5540	· COLLAR	2	SN:52707--
25	6127-41-5320	· SPRING	2	SN:52707--
26	6127-11-7811	GASKET (K1)	3	SN:52707--
27	01011-31205	BOLT	22	SN:52707--
28	01011-31210	BOLT	2	SN:52707--
29	01602-01236	WASHER,SPRING	24	SN:52707--

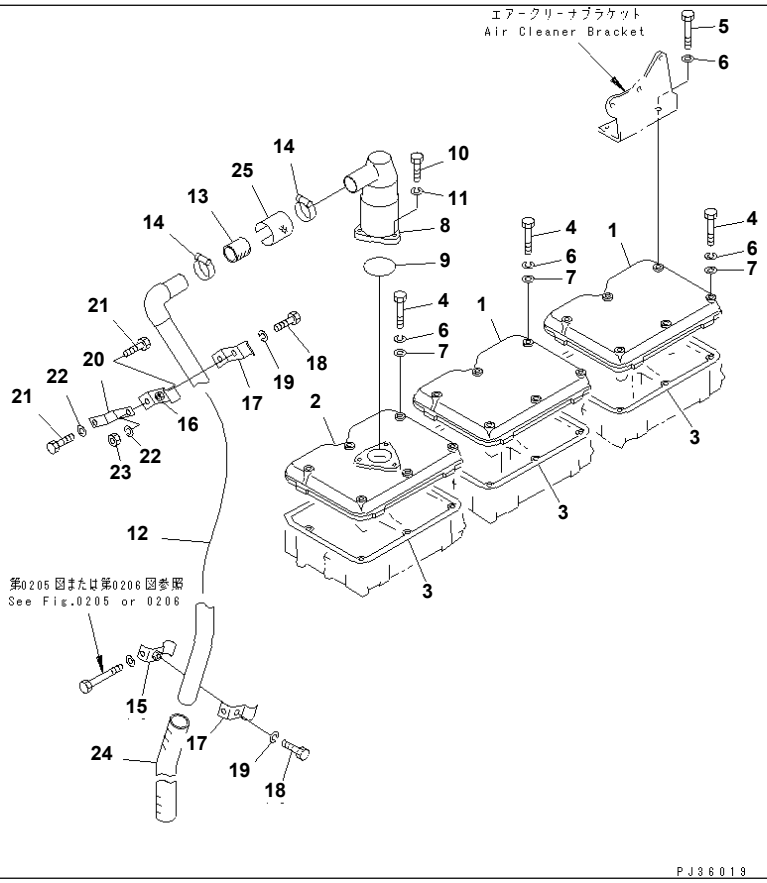

S6D155-4S S/N 52707-UP

ROCKER ARM HOUSING COVER

Item	Part No.	Description	Qty	Options
1	6127-11-8112	COVER,ROCKER ARM HOUSING	2	SN:52707--
2	6127-11-8122	COVER,ROCKER ARM HOUSING	1	SN:52707--
3	6127-11-8812	GASKET (K1)	3	SN:52707--
4	01010-31080	BOLT	16	SN:52707--
5	01010-31085	BOLT	2	SN:52707--
6	01602-01030	WASHER,SPRING	18	SN:52707--
7	01640-21016	WASHER	14	SN:52707--
8	6127-11-8211	BREATHER ASS'Y	1	SN:52707--
9	07000-62070	O-RING (K1)	1	SN:52707--
10	01010-30822	BOLT	3	SN:52707--
11	01602-00825	WASHER,SPRING	3	SN:52707--
12	6128-11-8262	PIPE	1	SN:52707--
13	6127-11-8290	HOSE	1	SN:52707--
14	07281-00549	CLAMP	2	SN:52707--
15	6124-61-6430	CLAMP	1	SN:52707--
16	6127-11-8380	CLAMP	1	SN:52707--
17	6127-61-6440	CLAMP	2	SN:52707--
18	01010-30840	BOLT	2	SN:52707--
19	01602-00825	WASHER,SPRING	2	SN:52707--
20	6128-11-8360	BRACKET	1	SN:52707--
21	01010-31025	BOLT	2	SN:52707--
22	01602-01030	WASHER,SPRING	2	SN:52707--
23	01580-01008	NUT	1	SN:52707--
24	6127-11-8250	HOSE	1	SN:52707--

S6D155-4S S/N 52707-UP
ROCKER ARM HOUSING COVER

Item	Part No.	Description	Qty	Options
25	6127-11-8490	COVER,(FOR SLAG HANDLING)	1	SN:52707--

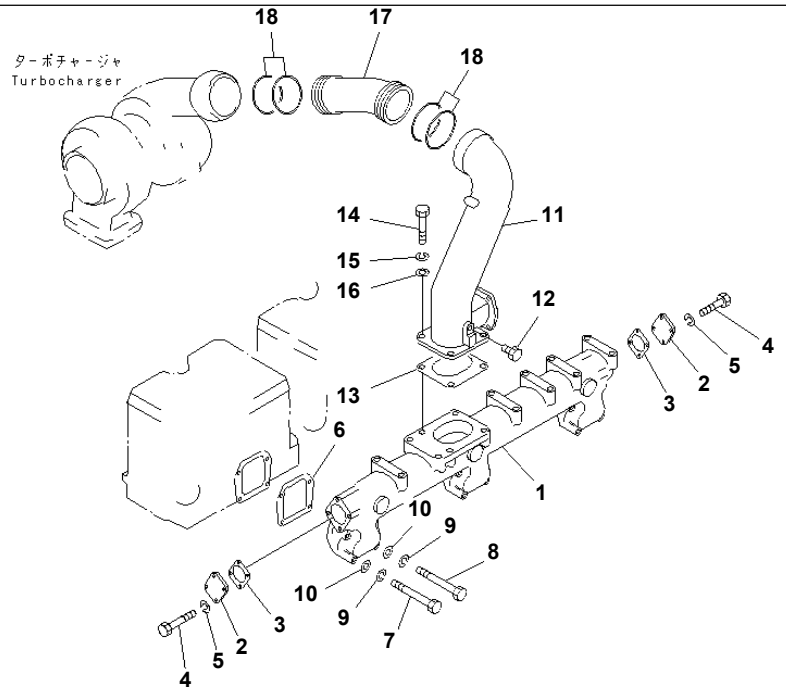

PJ36020

S6D155-4S S/N 52707-UP

AIR INTAKE MANIFOLD AND CONNECTION

Item	Part No.	Description	Qty	Options
1	6128-11-4112	MANIFOLD,AIR INTAKE	1	SN:52707--
2	6685-11-4850	COVER	2	SN:52707--
3	6127-11-4640	GASKET (K1)	2	SN:52707--
4	01010-31025	BOLT	8	SN:52707--
5	01602-01030	WASHER,SPRING	8	SN:52707--
6	6127-11-4820	GASKET (K1)	3	SN:52707--
7	01010-31285	BOLT	11	SN:52707--
8	01010-31290	BOLT	1	SN:52707--
9	01602-01236	WASHER,SPRING	12	SN:52707--
10	01640-21223	WASHER	12	SN:52707--
11	6127-11-4331	PIPE	1	SN:52707--
12	6162-83-4810	PLUG	1	SN:52707--
13	6127-11-4620	GASKET (K1)	1	SN:52707--
14	01010-31445	BOLT	4	SN:52707--
15	01602-01442	WASHER,SPRING	4	SN:52707--
16	01641-21423	WASHER	4	SN:52707--
17	6127-11-4320	JOINT	1	SN:52707--
18	02895-67091	O-RING (K1)	4	SN:52707--

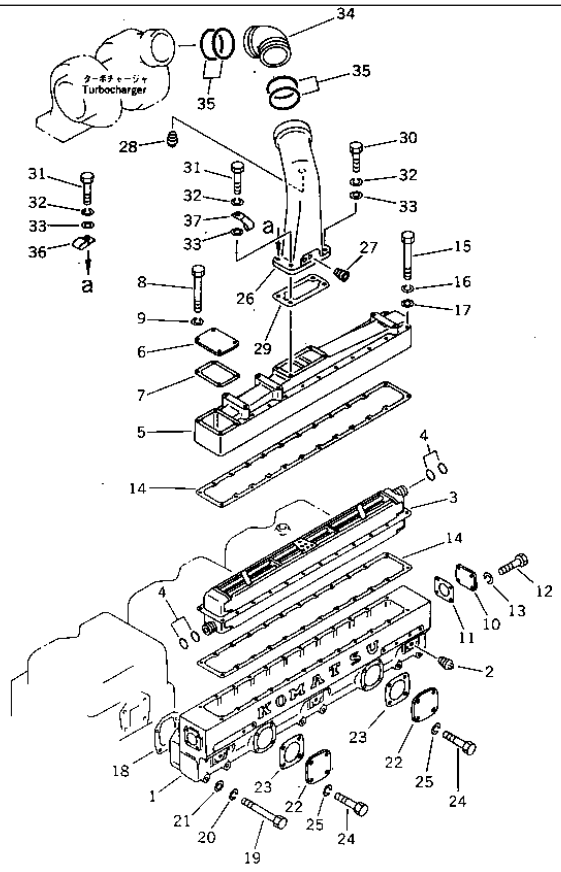

S6D155-4S S/N 52707-UP

AIR INTAKE MANIFOLD AND AFTER COOLER (WITH AFTER COOLER)

Item	Part No.	Description	Qty	Options
	6128-61-6100	AFTER COOLER ASS'Y	1	SN:52707--
1	6128-11-4420	· MANIFOLD,AIR INTAKE	1	SN:52707--
2	07042-00108	· PLUG	1	SN:52707--
3	6128-61-6120	· CORE ASS'Y	1	SN:52707--
4	6710-61-6340	· O-RING	4	SN:52707--
5	6128-11-4650	· COVER	1	SN:52707--
6	6128-61-6390	· PLATE	1	SN:52707--
7	6128-61-6840	· GASKET	1	SN:52707--
8	6128-11-4820	· BOLT	4	SN:52707--
9	01602-00825	· WASHER,SPRING	4	SN:52707--
10	6128-61-6380	· PLATE	1	SN:52707--
11	6128-61-6830	· GASKET	1	SN:52707--
12	01010-30825	· BOLT	4	SN:52707--
13	01602-00825	· WASHER,SPRING	4	SN:52707--
14	6128-11-4720	· GASKET	2	SN:52707--
15	01010-30895	· BOLT	20	SN:52707--
16	01602-00825	· WASHER,SPRING	20	SN:52707--
17	01640-20816	· WASHER	20	SN:52707--
18	6127-11-4820	GASKET	3	SN:52707--
19	01011-31280	BOLT	12	SN:52707--
20	01602-01236	WASHER,SPRING	12	SN:52707--
21	01640-21223	WASHER	12	SN:52707--
22	6128-81-4930	COVER	2	SN:52707--
23	6675-11-4960	GASKET	2	SN:52707--

AIR INTAKE MANIFOLD AND AFTER COOLER (WITH AFTER COOLER)

Item	Part No.	Description	Qty	Options
24	01010-30825	BOLT	8	SN:52707--
25	01602-00825	WASHER,SPRING	8	SN:52707--
26	6128-11-4330	CONNECTOR	1	SN:52707--
27	6610-21-2720	PLUG	1	SN:52707--
28	07042-00108	PLUG	1	SN:52707--
29	6128-11-4730	GASKET	1	SN:52707--
30	01010-30835	BOLT	2	SN:52707--
31	01010-30840	BOLT	2	SN:52707--
32	01602-00825	WASHER,SPRING	4	SN:52707--
33	01641-20812	WASHER	4	SN:52707--
34	6128-11-4320	CONNECTOR	1	SN:52707--
35	02895-67091	O-RING	4	SN:52707--
36	04435-01208	CLIP	1	SN:52707--
37	6124-81-4480	CLAMP	1	SN:52707--

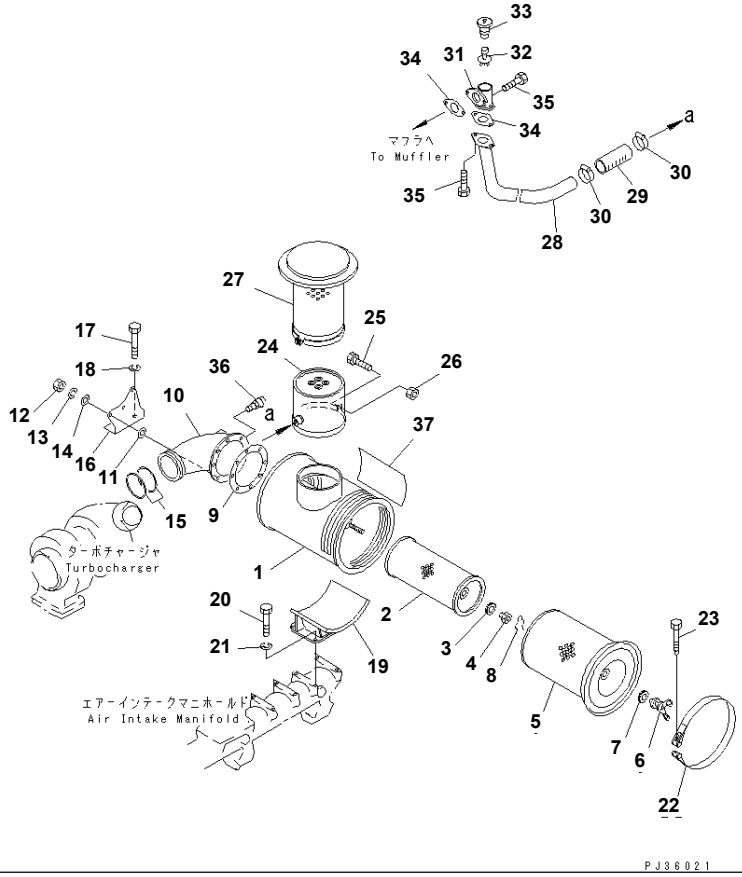

S6D155-4S S/N 52707-UP

AIR CLEANER

Item	Part No.	Description	Qty	Options
	6127-82-7106	AIR CLEANER ASS'Y	1	SN:52707--
1	6127-82-7115	· BODY	1	SN:52707--
	6128-81-7042	· ELEMENT ASS'Y	1	SN:52707--
2	☆	· · ELEMENT,INNER	1	SN:52707--
3	600-181-7511	· · WASHER,SEAL	1	SN:52707--
4	600-181-4370	· · NUT	1	SN:52707--
	600-181-4400	· · ELEMENT ASS'Y,OUTER	1	SN:52707--
5	☆	· · · ELEMENT,OUTER	1	SN:52707--
6	600-181-4420	· · · NUT,WING	1	SN:52707--
7	600-181-4440	· · · GASKET	1	SN:52707--
8	600-181-4430	· · · CLIP	1	SN:52707--
9	6127-81-4821	GASKET (K1)	1	SN:52707--
10	6127-11-4310	CONNECTOR	1	SN:52707--
11	01640-21016	WASHER	3	SN:52707--
12	01580-01008	NUT	8	SN:52707--
13	01602-01030	WASHER,SPRING	8	SN:52707--
14	01640-21016	WASHER	8	SN:52707--
15	02895-67116	O-RING (K1)	2	SN:52707--
16	6127-11-4560	BRACKET	1	SN:52707--
17	(01010-31085)	BOLT	2	SN:52707--
18	(01602-01030)	WASHER,SPRING	2	SN:52707--
19	6127-11-4340	BRACKET	1	SN:52707--
	6127-11-4520	BRACKET,(NOISE SUPPRESSION SPEC.)	1	SN:52707--
20	01010-31435	BOLT	4	SN:52707--

S6D155-4S S/N 52707-UP
AIR CLEANER

Item	Part No.	Description	Qty	Options
21	01602-01442	WASHER,SPRING	4	SN:52707--
22	6127-11-4360	BAND ASS'Y	1	SN:52707--
	6691-21-6550	· PIN	1	SN:52707--
	6691-21-6560	· PIN¤ WITH THREAD	1	SN:52707--
23	6643-11-4641	BOLT	1	SN:52707--
24	600-181-5710	PRE-CLEANER ASS'Y	1	SN:52707--
25	01016-31045	· BOLT	1	SN:52707--
26	01580-01008	· NUT	1	SN:52707--
27	6127-11-4580	HOOD	1	SN:52707--
28	6127-11-5881	PIPE	1	SN:52707--
29	6127-11-5960	HOSE	1	SN:52707--
30	07281-00609	CLAMP	2	SN:52707--
	6128-11-5303	CHECK VALVE ASS'Y	1	SN:52707--
31	☆	· BODY	1	SN:52707--
32	☆	· VALVE,CHECK	1	SN:52707--
33	☆	· COVER	1	SN:52707--
34	6128-11-5610	GASKET (K1)	2	SN:52707--
35	01020-01030	BOLT	4	SN:52707--
36	08670-02001	INDICATOR,DUST	1	SN:52707--
37	09637-00161	PLATE¤ INSTRUCTION	1	SN:52707--

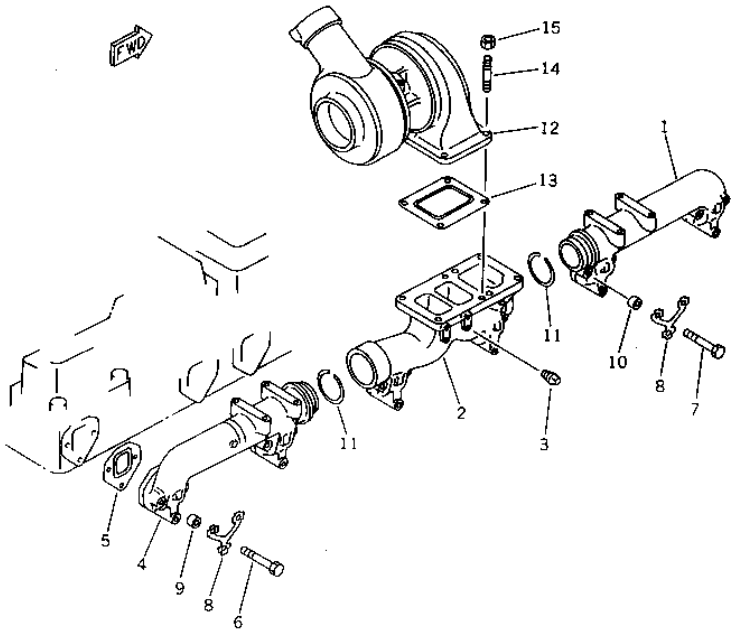

S6D155-4S S/N 52707-UP

EXHAUST MANIFOLD AND TURBOCHARGER

Item	Part No.	Description	Qty	Options
1	6127-11-5113	MANIFOLD,EXHAUST¤ FRONT	1	SN:52707--
2	6127-11-5331	MANIFOLD,EXHAUST¤ CENTER	1	SN:52707--
3	07042-00108	PLUG	2	SN:52707--
4	6127-11-5132	MANIFOLD,EXHAUST¤ REAR	1	SN:52707--
5	6127-11-5810	GASKET (K1)	6	SN:52707--
6	01011-61210	BOLT	12	SN:52707--
7	01011-61225	BOLT	6	SN:52707--
8	6127-11-5190	LOCK (K1)	6	SN:52707--
9	6127-11-5180	SPACER	12	SN:52707--
10	6128-21-6730	SPACER	1	SN:52707--
11	6127-11-5150	RING,SEAL	2	SN:52707--
12	(6502-13-2003)	TURBOCHARGER ASS'Y,(SEE FIG.0155)	1	SN:52707--
13	6127-81-2810	GASKET (K1)	1	SN:52707--
14	6128-11-5240	STUD	4	SN:52707--
15	6127-81-2920	NUT	4	SN:52707--

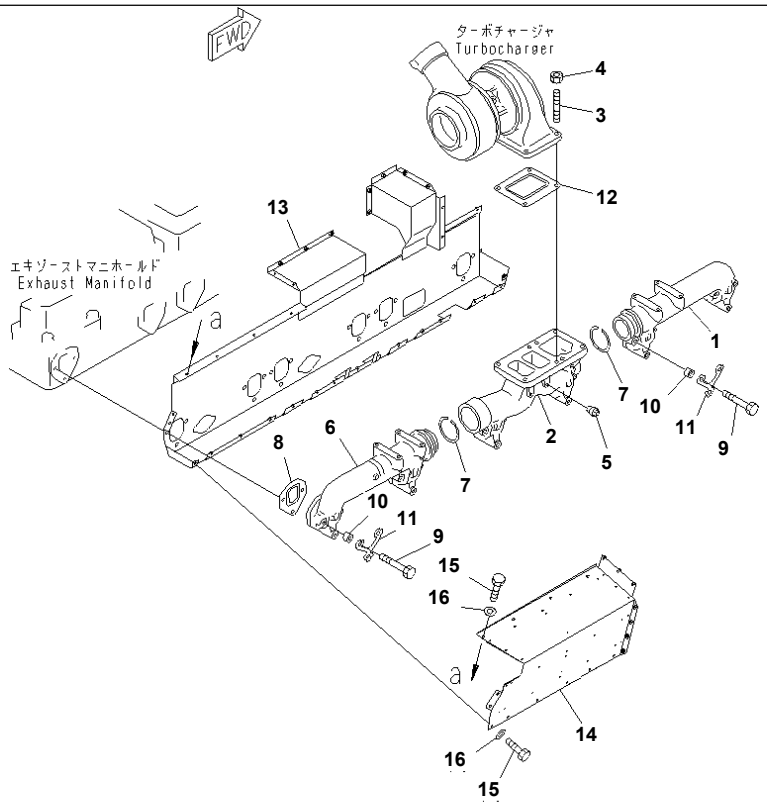

S6D155-4S S/N 52707-UP

EXHAUST MANIFOLD AND TURBOCHARGER (WITH COVER)(#57256-)

Item	Part No.	Description	Qty	Options
1	6127-11-5113	MANIFOLD,EXHAUST¤ FRONT	1	SN:57256--
2	6127-11-5331	MANIFOLD,EXHAUST¤ CENTER	1	SN:57256--
3	6128-11-5240	STUD	4	SN:57256--
4	6127-81-2920	NUT	4	SN:57256--
5	07042-00108	PLUG	2	SN:57256--
6	6127-11-5132	MANIFOLD,EXHAUST¤ REAR	1	SN:57256--
7	6127-11-5150	RING,SEAL	2	SN:57256--
8	6127-11-5810	GASKET (K1)	6	SN:57256--
9	01011-E1210	BOLT	18	SN:57256--
10	6127-11-5180	SPACER	18	SN:57256--
11	6127-11-5190	LOCK (K1)	6	SN:57256--
12	6127-81-2810	GASKET (K1)	1	SN:57256--
13	6127-11-9112	COVER	1	SN:57287--
	□6127-11-9111	COVER	1	SN:57256--57286
14	6127-11-9133	COVER	1	SN:57312--
	□6127-11-9132	COVER	1	SN:57256--57311
15	01010-80610	BOLT	10	SN:57287--
16	01643-30623	WASHER	10	SN:57287--

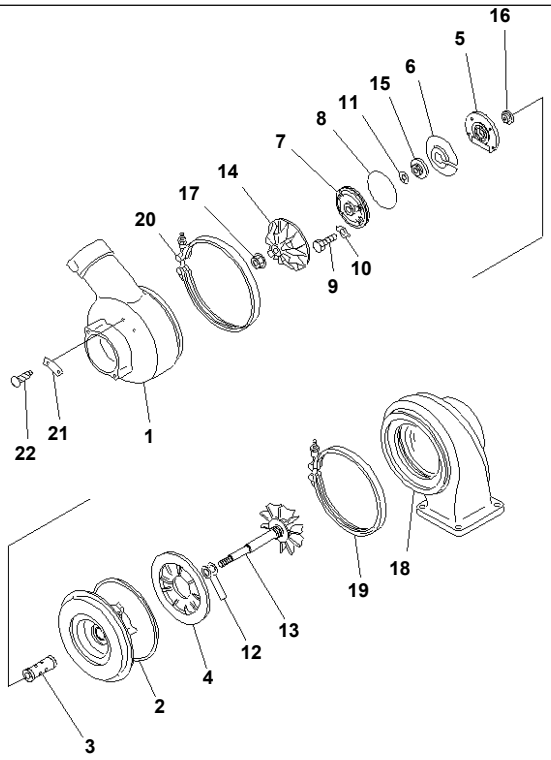

PG3T017

S6D155-4S S/N 52707-UP
TURBOCHARGER

Item	Part No.	Description	Qty	Options
	6502-13-2003	TURBOCHARGER ASS'Y,(KTR130-11F)	1	SN:52707--
1	6502-13-1411	· HOUSING,BLOWER	1	SN:52707--
2	6502-13-1611	· HOUSING,CENTER	1	SN:52707--
3	6502-14-1620	· BEARING,JOURNAL	1	SN:52707--
4	6502-12-1521	· SHIELD	1	SN:52707--
5	6502-12-1631	· BEARING,THRUST	1	SN:52707--
6	6502-12-1662	· COVER	1	SN:52707--
7	6502-12-1640	· INSERT	1	SN:52707--
8	07000-63095	· O-RING	1	SN:52707--
9	01010-30630	· BOLT	4	SN:52707--
10	6501-11-1650	· WASHER,LOCK	4	SN:52707--
11	6502-12-1340	· RING,SEAL	1	SN:52707--
12	6502-14-1340	· RING,SEAL	2	SN:52707--
	6502-13-2201	· ROTOR ASS'Y	1	SN:52707--
13	☆	· · ROTOR,TURBINE	1	SN:52707--
14	☆	· · IMPELLER,BLOWER	1	SN:52707--
15	☆	· · FLINGER	1	SN:52707--
16	☆	· · COLLAR,THRUST	1	SN:52707--
17	6502-12-1352	· · NUT	1	SN:52707--
18	6502-12-1510	· HOUSING,TURBINE	1	SN:52707--
19	6502-12-1713	· V-BAND ASS'Y	1	SN:52707--
20	6502-12-1722	· V-BAND ASS'Y	1	SN:52707--
21	6502-12-1913	· PLATE¤ NAME,(LIMITED SUPPLY)	1	SN:52707--
22	04418-02550	· SCREW	2	SN:52707--

S6D155-4S S/N 52707-UP
TURBOCHARGER

Item	Part No.	Description	Qty	Options
REPLACE THE REPAIR KIT WHEN DISASSEMBLING THE TURBOCHARGER.				
23	6502-14-1300	OVERHAUL KIT	1	SN:52707--
	07000-63095	· O-RING	1	SN:52707--
	6501-11-1650	· WASHER,LOCK	4	SN:52707--
	6502-12-1340	· RING,SEAL	1	SN:52707--
	6502-14-1340	· RING,SEAL	2	SN:52707--

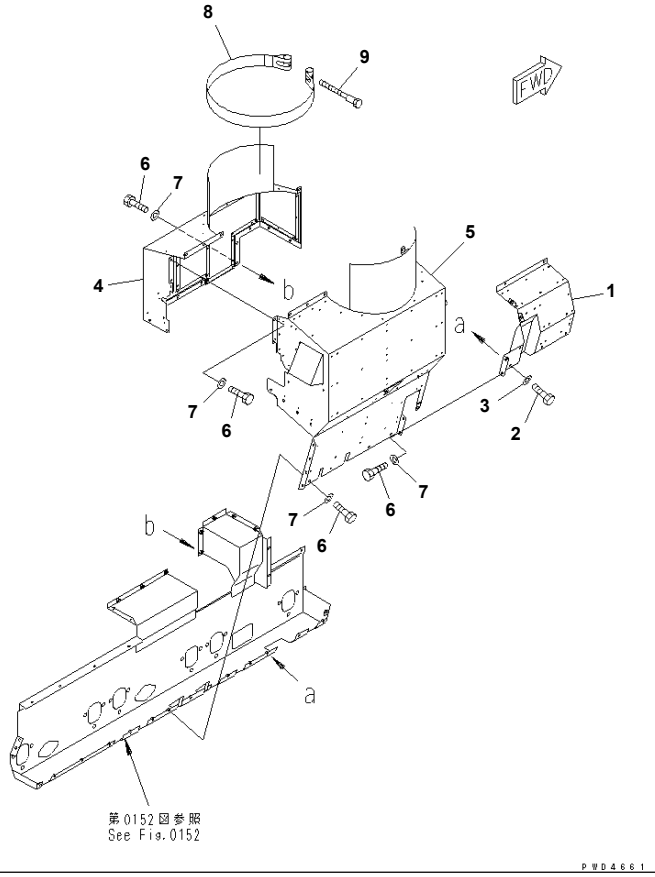

S6D155-4S S/N 52707-UP

HEAT SHIELD(#57256-)

Item	Part No.	Description	Qty	Options
1	6127-11-9122	COVER	1	SN:57287--
	□6127-11-9121	COVER	1	SN:57256--57286
2	01010-80610	BOLT	6	SN:57256--
3	01643-30623	WASHER	6	SN:57256--
4	6127-11-9411	COVER	1	SN:57256--
5	6127-11-9423	COVER	1	SN:57355--
	□6127-11-9422	COVER	1	SN:57287--57354
	□6127-11-9421	COVER	1	SN:57256--57286
6	01010-80610	BOLT	37	SN:57256--
7	01643-30623	WASHER	37	SN:57256--
8	6127-11-9430	BAND	1	SN:57256--
9	6643-11-4641	BOLT	1	SN:57256--

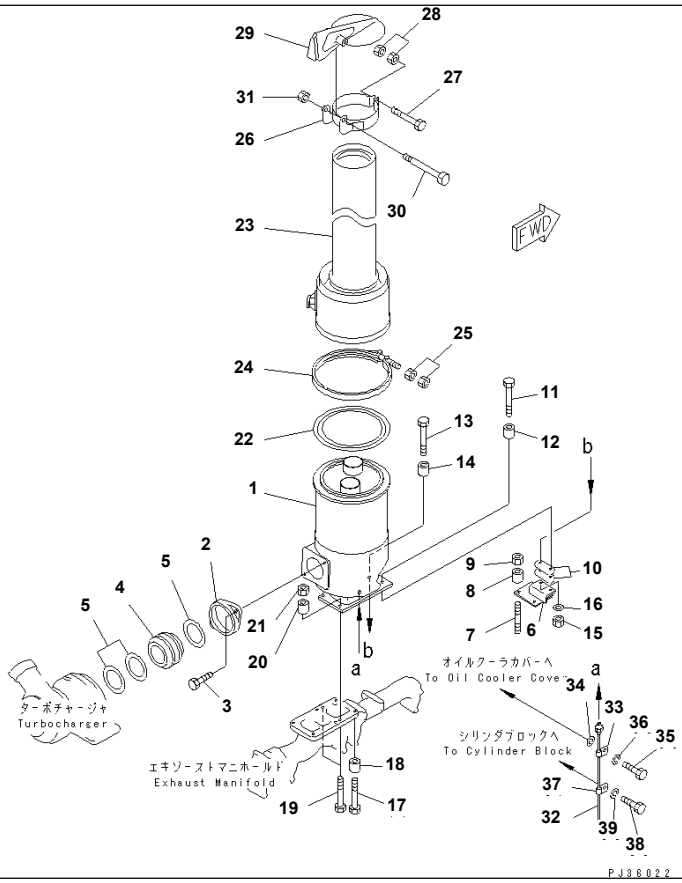

S6D155-4S S/N 52707-UP

MUFFLER

Item	Part No.	Description	Qty	Options
1	6127-11-5721	MUFFLER	1	SN:52707--
2	6127-11-5440	FLANGE	1	SN:52707--
3	01020-01030	BOLT	2	SN:52707--
4	6127-11-5460	JOINT	1	SN:52707--
5	6128-81-2830	RING,SEAL	3	SN:52707--
6	6127-11-5472	BRACKET	1	SN:52707--
7	6128-11-5240	STUD	3	SN:52707--
8	6127-11-5180	SPACER	3	SN:52707--
9	6127-81-2920	NUT	3	SN:52707--
10	6127-11-5480	SHIM¤ 0.1MM (K1)	2	SN:52707--
	6127-11-5490	SHIM¤ 0.3MM (K1)	3	SN:52707--
11	01010-61290	BOLT	1	SN:52707--
12	6127-11-5180	SPACER	1	SN:52707--
13	01050-61260	BOLT	1	SN:52707--
14	6678-51-9520	SPACER	1	SN:52707--
15	01582-01210	NUT	1	SN:52707--
16	01641-01223	WASHER	1	SN:52707--
17	01050-61260	BOLT	1	SN:52707--
18	6678-51-9520	SPACER	1	SN:52707--
19	01050-61270	BOLT	2	SN:52707--
20	6678-51-9520	SPACER	2	SN:52707--
21	01582-01210	NUT	2	SN:52707--
22	6128-11-5481	GASKET (K1)	1	SN:52707--
23	6127-11-5380	PIPE,EXHAUST	1	SN:52707--

S6D155-4S S/N 52707-UP
MUFFLER

Item	Part No.	Description	Qty	Options
24	6128-11-5432	CLAMP	1	SN:52707--
25	6128-11-5491	· NUT	2	SN:52707--
	6128-11-5051	RAIN CAP ASS'Y	1	SN:52707--
26	6128-11-5361	· CLAMP	1	SN:52707--
27	6715-11-5290	· BOLT	2	SN:52707--
28	01580-10605	· NUT	4	SN:52707--
29	6128-11-5351	· CAP	1	SN:52707--
30	6127-11-5561	· BOLT	1	SN:52707--
31	01580-11411	· NUT	1	SN:52707--
32	6127-81-2931	PIPE	1	SN:52707--
33	6991-11-5990	CLAMP	1	SN:52707--
34	01641-21016	WASHER	1	SN:52707--
35	01010-31040	BOLT	1	SN:52707--
36	01602-01030	WASHER,SPRING	1	SN:52707--
37	6130-71-5680	CLIP	1	SN:52707--
38	01010-31225	BOLT	1	SN:52707--
39	01602-01236	WASHER,SPRING	1	SN:52707--

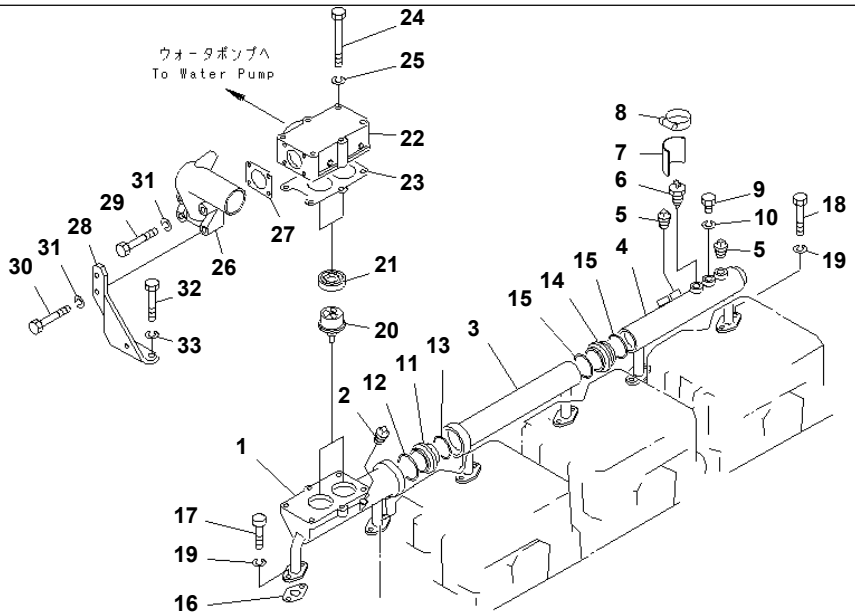

PJ36023

S6D155-4S S/N 52707-UP

WATER MANIFOLD AND THERMOSTAT

Item	Part No.	Description	Qty	Options
1	6127-11-6121	MANIFOLD,WATER¤ FRONT	1	SN:52707--
2	07042-00211	PLUG	1	SN:52707--
3	6128-11-6210	MANIFOLD,WATER¤ CENTER	1	SN:52707--
4	6128-11-6142	MANIFOLD,WATER¤ REAR	1	SN:52707--
5	07042-00415	PLUG	2	SN:52707--
6	600-815-1770	SWITCH,THERMO	1	SN:52707--
7	6128-81-4540	COVER	1	SN:52707--
8	07281-00419	CLAMP	1	SN:52707--
9	07040-11612	PLUG	1	SN:52707--
10	07005-01612	GASKET	1	SN:52707--
11	6128-11-6270	JOINT	1	SN:52707--
12	07000-05075	O-RING (K1)	1	SN:52707--
13	07000-05065	O-RING (K1)	1	SN:52707--
14	6128-11-6280	JOINT	1	SN:52707--
15	07000-05055	O-RING (K1)	2	SN:52707--
16	6128-11-6811	GASKET (K1)	6	SN:52707--
17	01010-31030	BOLT	4	SN:52707--
18	01010-31035	BOLT	8	SN:52707--
19	01602-01030	WASHER,SPRING	12	SN:52707--
20	600-421-6610	THERMOSTAT	2	SN:52707--
21	6162-13-6440	SEAL (K1)	2	SN:52707--
22	6128-11-6410	HOUSING,THERMOSTAT	1	SN:52707--
23	6127-11-6430	GASKET (K1)	1	SN:52707--
24	01011-31000	BOLT	6	SN:52707--

WATER MANIFOLD AND THERMOSTAT

Item	Part No.	Description	Qty	Options
25	01602-01030	WASHER,SPRING	6	SN:52707--
26	6128-11-6470	CONNECTOR	1	SN:52707--
27	6127-11-6470	GASKET (K1)	1	SN:52707--
28	6127-11-6872	BRACKET	1	SN:52707--
29	01010-31080	BOLT	2	SN:52707--
30	01010-31095	BOLT	2	SN:52707--
31	01602-01030	WASHER,SPRING	4	SN:52707--
32	(01011-31210)	BOLT	2	SN:52707--
33	(01602-01236)	WASHER,SPRING	2	SN:52707--

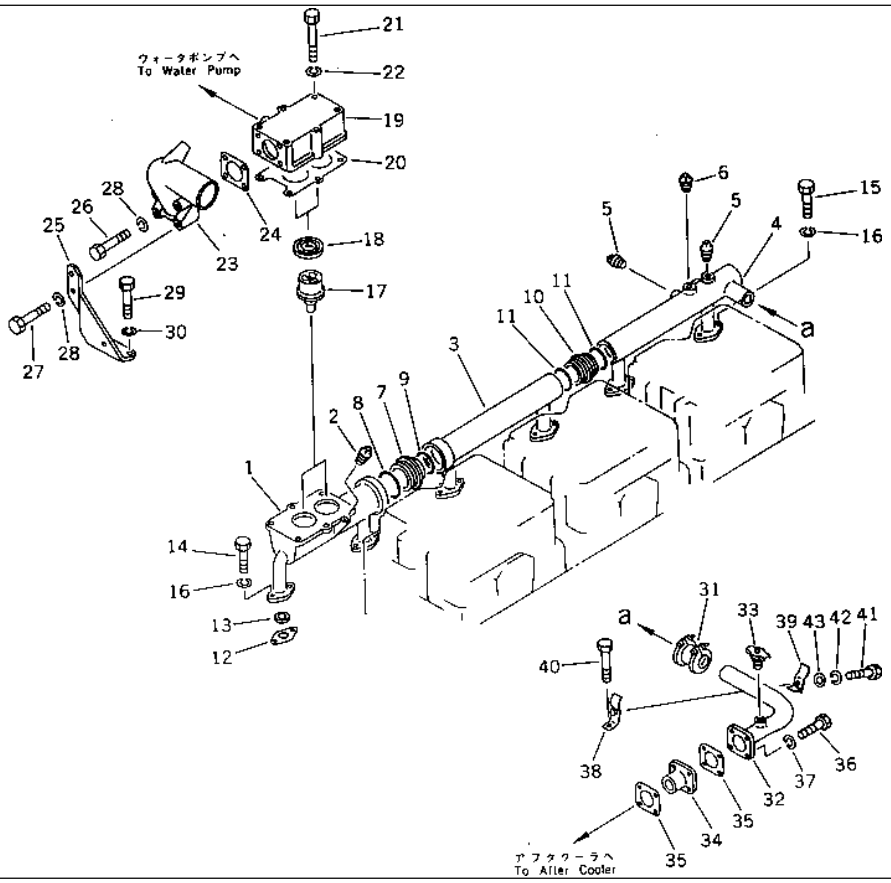

S6D155-4S S/N 52707-UP

WATER MANIFOLD AND THERMOSTAT (WITH AFTER COOLER)

Item	Part No.	Description	Qty	Options
1	6127-11-6121	MANIFOLD,WATER¤ FRONT	1	SN:52707--
2	07042-00211	PLUG	1	SN:52707--
3	6128-11-6210	MANIFOLD,WATER¤ CENTER	1	SN:52707--
4	6128-11-6312	MANIFOLD,WATER¤ REAR	1	SN:52707--
5	07042-00415	PLUG	2	SN:52707--
6	07042-00312	PLUG	1	SN:52707--
7	6128-11-6270	JOINT	1	SN:52707--
8	07000-05075	O-RING	1	SN:52707--
9	07000-05065	O-RING	1	SN:52707--
10	6128-11-6280	JOINT	1	SN:52707--
11	07000-05055	O-RING	2	SN:52707--
	6128-11-6800	GASKET ASS'Y	6	SN:52707--
12	6128-11-6810	· GASKET	1	SN:52707--
13	6128-11-6820	· SEAL,RING	1	SN:52707--
14	01010-31030	BOLT	3	SN:52707--
15	01010-31035	BOLT	9	SN:52707--
16	01602-01030	WASHER,SPRING	12	SN:52707--
17	6127-11-6520	THERMOSTAT	2	SN:52707--
18	6710-11-6451	SEAL	2	SN:52707--
19	6128-11-6410	HOUSING,THERMOSTAT	1	SN:52707--
20	6127-11-6430	GASKET	1	SN:52707--
21	01011-31000	BOLT	6	SN:52707--
22	01602-01030	WASHER,SPRING	6	SN:52707--
23	6128-11-6470	CONNECTOR	1	SN:52707--

WATER MANIFOLD AND THERMOSTAT (WITH AFTER COOLER)

Item	Part No.	Description	Qty	Options
24	6127-11-6470	GASKET	1	SN:52707--
25	6127-11-6872	BRACKET	1	SN:52707--
26	01010-31080	BOLT	2	SN:52707--
27	01010-31095	BOLT	2	SN:52707--
28	01602-01030	WASHER,SPRING	4	SN:52707--
29	(01011-31210)	BOLT	2	SN:52707--
30	(01602-01236)	WASHER,SPRING	2	SN:52707--
31	07332-01200	COUPLING	1	SN:52707--
	07332-51200	· GASKET	2	SN:52707--
32	6128-61-6470	PIPE	1	SN:52707--
33	6600-01-3920	VALVE	1	SN:52707--
34	6128-61-6370	JOINT	1	SN:52707--
35	6128-61-6830	GASKET	2	SN:52707--
36	01010-30840	BOLT	4	SN:52707--
37	01602-00825	WASHER,SPRING	4	SN:52707--
38	6128-61-6580	CLAMP	1	SN:52707--
39	6128-61-6590	CLAMP	1	SN:52707--
40	01011-31210	BOLT	1	SN:52707--
41	01010-31045	BOLT	1	SN:52707--
42	01602-01030	WASHER,SPRING	1	SN:52707--
43	01643-31232	WASHER	1	SN:52707--

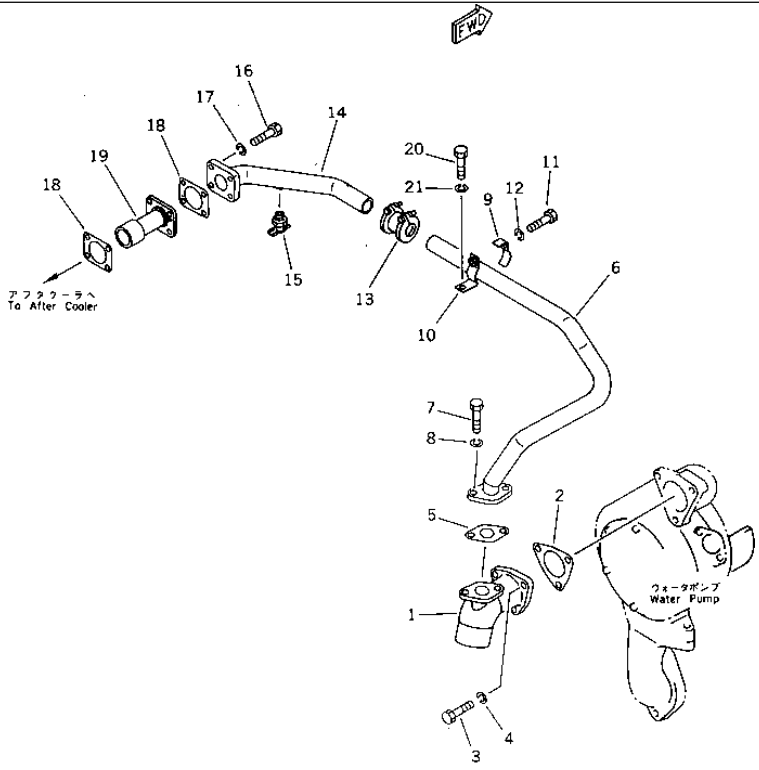

S6D155-4S S/N 52707-UP

WATER PIPING (WITH AFTER COOLER)

Item	Part No.	Description	Qty	Options
1	175-03-34210	CONNECTOR	1	SN:52707--
2	6127-61-6810	GASKET	1	SN:52707--
3	01010-31035	BOLT	3	SN:52707--
4	01602-01030	WASHER,SPRING	3	SN:52707--
5	6127-61-6850	GASKET	1	SN:52707--
6	6128-61-6270	PIPE	1	SN:52707--
7	01010-31030	BOLT	2	SN:52707--
8	01602-01030	WASHER,SPRING	2	SN:52707--
9	6128-61-6551	CLAMP	1	SN:52707--
10	6128-61-6541	CLAMP	1	SN:52707--
11	01010-31045	BOLT	1	SN:52707--
12	01602-01030	WASHER,SPRING	1	SN:52707--
13	07332-01000	COUPLING ASS'Y	1	SN:52707--
	07332-51000	· GASKET	2	SN:52707--
14	6128-61-6221	PIPE	1	SN:52707--
15	6600-01-3920	VALVE	1	SN:52707--
16	01010-30840	BOLT	4	SN:52707--
17	01602-00825	WASHER,SPRING	4	SN:52707--
18	6128-61-6830	GASKET	2	SN:52707--
19	6128-61-6360	JOINT	1	SN:52707--
20	01010-31040	BOLT	1	SN:52707--
21	01602-01030	WASHER,SPRING	1	SN:52707--

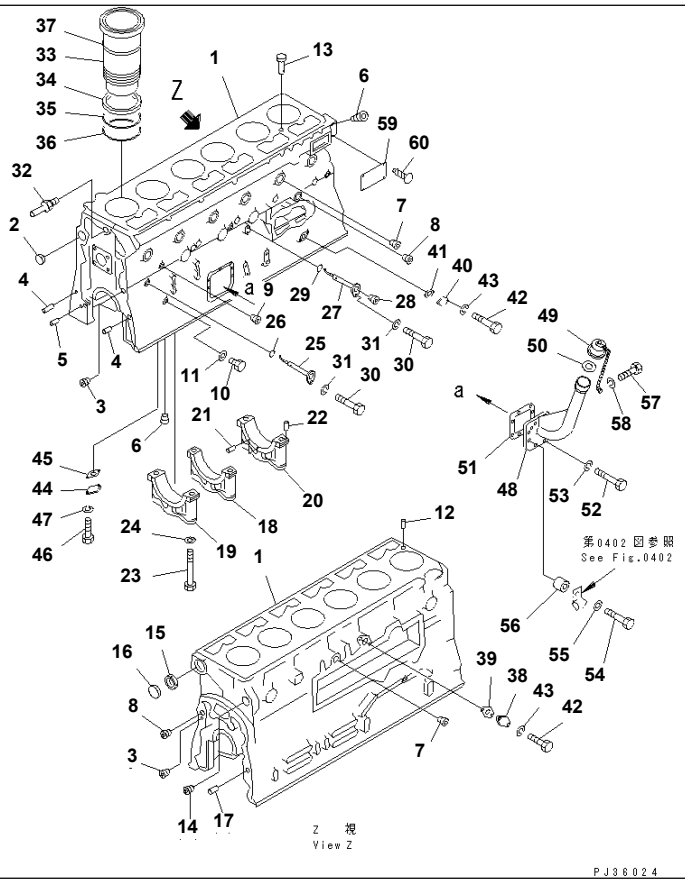

S6D155-4S S/N 52707-UP
CYLINDER BLOCK

Item	Part No.	Description	Qty	Options
	6127-21-1108	CYLINDER BLOCK ASS'Y	1	SN:52707--
1	☆	· BLOCK,CYLINDER	1	SN:52707--
2	07046-15020	· PLUG	1	SN:52707--
3	07043-50415	· PLUG	2	SN:52707--
4	04020-01842	· PIN,DOWEL	2	SN:52707--
5	04020-00820	· PIN,DOWEL	2	SN:52707--
6	6100-21-1130	· PLUG	8	SN:52707--
7	07043-51222	· PLUG	9	SN:52707--
8	07043-51019	· PLUG	2	SN:52707--
9	6110-23-1170	· PLUG	5	SN:52707--
10	07040-11409	· PLUG	1	SN:52707--
11	07005-01412	· GASKET (K2)	1	SN:52707--
12	04020-01024	· PIN,DOWEL	6	SN:52707--
13	6127-21-1130	· ORIFICE	3	SN:52707--
14	07043-51422	· PLUG	1	SN:52707--
15	6127-21-1490	· BUSHING,CAMSHAFT	7	SN:52707--
16	6127-21-1150	· PLUG	1	SN:52707--
17	6127-21-1160	· PIN,DOWEL	2	SN:52707--
18	△6127-29-1210	· CAP,MAIN METAL¤ NO.1¤2¤4¤6¤7	5	SN:52707--
19	△6127-29-1230	· CAP,MAIN METAL¤ NO.3	1	SN:52707--
20	△6127-29-1252	· CAP,MAIN METAL¤ NO.5	1	SN:52707--
21	6127-21-1260	· PIN,DOWEL	2	SN:52707--
22	04020-00616	· PIN,DOWEL	2	SN:52707--
23	6127-21-1710	· BOLT	14	SN:52707--

CYLINDER BLOCK

Item	Part No.	Description	Qty	Options
24	6127-21-1741	· WASHER	14	SN:52707--
	6128-21-1070	NOZZLE ASS'Y,NO.1¤2¤4¤5¤6	5	SN:52707--
25	☆	· NOZZLE	1	SN:52707--
26	07000-62016	· O-RING (K2)	1	SN:52707--
	6127-21-1071	NOZZLE ASS'Y,NO.3	1	SN:52707--
27	☆	· NOZZLE	1	SN:52707--
28	6100-21-1130	· PLUG	1	SN:52707--
29	07000-62016	· O-RING (K2)	1	SN:52707--
30	01010-30818	BOLT	6	SN:52707--
31	01602-00825	WASHER,SPRING	6	SN:52707--
32	6127-21-1170	SPRAY,OIL	1	SN:52707--
33	6128-21-2216	LINER,CYLINDER	6	SN:52707--
34	6127-21-2252	SEAL,CREVICE (K2)	6	SN:52707--
35	6127-21-2221	O-RING,CENTER (K2)	6	SN:52707--
36	6127-21-2241	O-RING,LOWER (K2)	6	SN:52707--
37	6127-29-2230	SHIM¤ 0.18MM	AR	SN:52707--
	6127-28-2230	SHIM¤ 0.20MM	AR	SN:52707--
	6127-27-2230	SHIM¤ 0.23MM	AR	SN:52707--
	6127-26-2230	SHIM¤ 0.51MM	AR	SN:52707--
	6127-25-2230	SHIM¤ 0.79MM	AR	SN:52707--
	6127-24-2230	SHIM¤ 1.57MM	AR	SN:52707--
38	6127-21-6710	COVER	1	SN:52707--
39	6127-21-6720	GASKET (K2)	1	SN:52707--
40	6127-21-6810	FLANGE	1	SN:52707--
41	6127-21-6820	GASKET (K2)	1	SN:52707--
42	01010-31025	BOLT	4	SN:52707--
43	01602-01030	WASHER,SPRING	4	SN:52707--
44	6127-51-6950	COVER	1	SN:52707--
45	6127-51-6920	GASKET (K2)	1	SN:52707--
46	01010-31020	BOLT	2	SN:52707--
47	01602-01030	WASHER,SPRING	2	SN:52707--
48	6127-21-7114	FILLER,OIL	1	SN:52707--
49	6127-21-7401	CAP	1	SN:52707--
50	6128-21-7450	RING,SEAL	1	SN:52707--
51	6127-21-6521	GASKET (K2)	1	SN:52707--
52	01010-30825	BOLT	7	SN:52707--
53	01602-00825	WASHER,SPRING	7	SN:52707--
54	01010-30845	BOLT	1	SN:52707--
55	01640-00816	WASHER	1	SN:52707--
56	6142-82-6550	SPACER	1	SN:52707--
57	01010-31016	BOLT	1	SN:52707--
58	01602-01030	WASHER,SPRING	1	SN:52707--
59	09605-00041	PLATE¤ NAME,(ENGLISH) (LIMITED SUPPLY)	1	SN:52707--
60	04418-03060	SCREW	4	SN:52707--

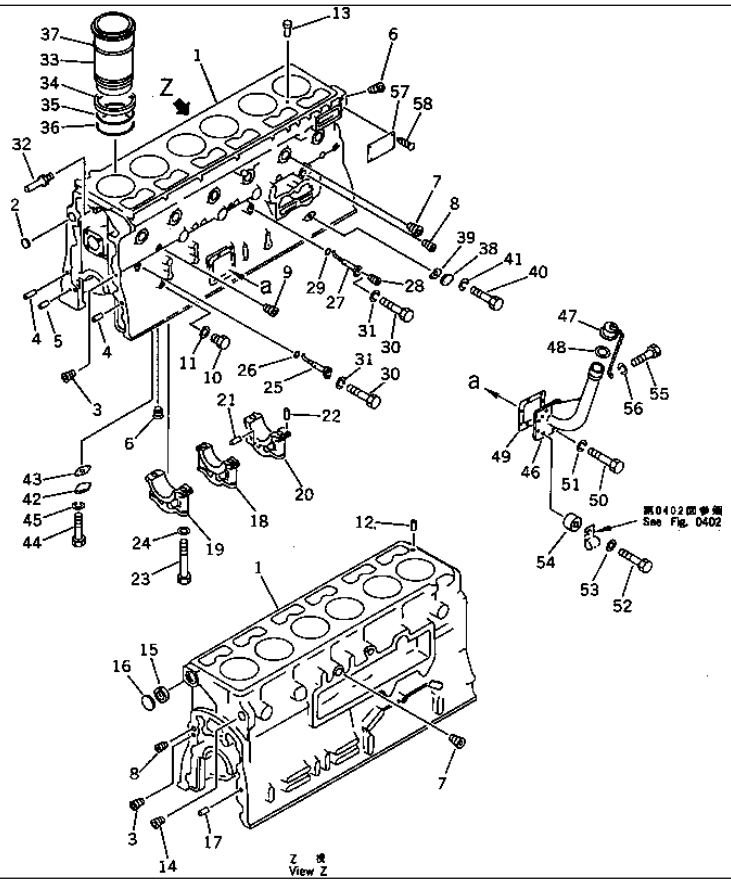

CYLINDER BLOCK (COLD TERRAIN SPEC.)

Item	Part No.	Description	Qty	Options
	6127-21-1108	CYLINDER BLOCK ASS'Y	1	SN:52707--
1	☆	· BLOCK,CYLINDER	1	SN:52707--
2	07046-15020	· PLUG	1	SN:52707--
3	07043-50415	· PLUG	2	SN:52707--
4	04020-01842	· PIN,DOWEL	2	SN:52707--
5	04020-00820	· PIN,DOWEL	2	SN:52707--
6	6100-21-1130	· PLUG	8	SN:52707--
7	07043-51222	· PLUG	9	SN:52707--
8	07043-51019	· PLUG	2	SN:52707--
9	6110-23-1170	· PLUG	5	SN:52707--
10	07040-11409	· PLUG	1	SN:52707--
11	07005-01412	· GASKET (K2)	1	SN:52707--
12	04020-01024	· PIN,DOWEL	6	SN:52707--
13	6127-21-1130	· ORIFICE	3	SN:52707--
14	07043-51422	· PLUG	1	SN:52707--
15	6127-21-1490	· BUSHING,CAMSHAFT	7	SN:52707--
16	6127-21-1150	· PLUG	1	SN:52707--
17	6127-21-1160	· PIN,DOWEL	2	SN:52707--
18	△6127-29-1210	· CAP,MAIN METAL¤ NO.1¤2¤4¤6¤7	5	SN:52707--
19	△6127-29-1230	· CAP,MAIN METAL¤ NO.3	1	SN:52707--
20	△6127-29-1252	· CAP,MAIN METAL¤ NO.5	1	SN:52707--
21	6127-21-1260	· PIN,DOWEL	2	SN:52707--
22	04020-00616	· PIN,DOWEL	2	SN:52707--
23	6127-21-1710	· BOLT	14	SN:52707--

CYLINDER BLOCK (COLD TERRAIN SPEC.)

Item	Part No.	Description	Qty	Options
24	6127-21-1741	· WASHER	14	SN:52707--
	6128-21-1070	NOZZLE ASS'Y,NO.1¤2¤4¤5¤6	5	SN:52707--
25	☆	· NOZZLE	1	SN:52707--
26	07000-62016	· O-RING (K2)	1	SN:52707--
	6127-21-1071	NOZZLE ASS'Y,NO.3	1	SN:52707--
27	☆	· NOZZLE	1	SN:52707--
28	6100-21-1130	· PLUG	1	SN:52707--
29	07000-62016	· O-RING (K2)	1	SN:52707--
30	01010-30818	BOLT	6	SN:52707--
31	01602-00825	WASHER,SPRING	6	SN:52707--
32	6127-21-1170	SPRAY,OIL	1	SN:52707--
33	6128-21-2216	LINER,CYLINDER	6	SN:52707--
34	6127-21-2252	SEAL,CREVICE (K2)	6	SN:52707--
35	6127-21-2221	O-RING,CENTER (K2)	6	SN:52707--
36	6127-21-2241	O-RING,LOWER (K2)	6	SN:52707--
37	6127-29-2230	SHIM¤ 0.18MM	AR	SN:52707--
	6127-28-2230	SHIM¤ 0.20MM	AR	SN:52707--
	6127-27-2230	SHIM¤ 0.23MM	AR	SN:52707--
	6127-26-2230	SHIM¤ 0.51MM	AR	SN:52707--
	6127-25-2230	SHIM¤ 0.79MM	AR	SN:52707--
	6127-24-2230	SHIM¤ 1.57MM	AR	SN:52707--
38	6127-21-6810	FLANGE	1	SN:52707--
39	6127-21-6820	GASKET (K2)	1	SN:52707--
40	01010-31025	BOLT	2	SN:52707--
41	01602-01030	WASHER,SPRING	2	SN:52707--
42	6127-51-6950	COVER	1	SN:52707--
43	6127-51-6920	GASKET (K2)	1	SN:52707--
44	01010-31020	BOLT	2	SN:52707--
45	01602-01030	WASHER,SPRING	2	SN:52707--
46	6127-21-7114	FILLER,OIL	1	SN:52707--
47	6127-21-7401	CAP	1	SN:52707--
48	6128-21-7450	RING,SEAL	1	SN:52707--
49	6127-21-6521	GASKET (K2)	1	SN:52707--
50	01010-30825	BOLT	7	SN:52707--
51	01602-00825	WASHER,SPRING	7	SN:52707--
52	01010-30845	BOLT	1	SN:52707--
53	01640-00816	WASHER	1	SN:52707--
54	6142-82-6550	SPACER	1	SN:52707--
55	01010-31016	BOLT	1	SN:52707--
56	01602-01030	WASHER,SPRING	1	SN:52707--
57	09605-00041	PLATE¤ NAME,(ENGLISH) (LIMITED SUPPLY)	1	SN:52707--
58	04418-03060	SCREW	4	SN:52707--

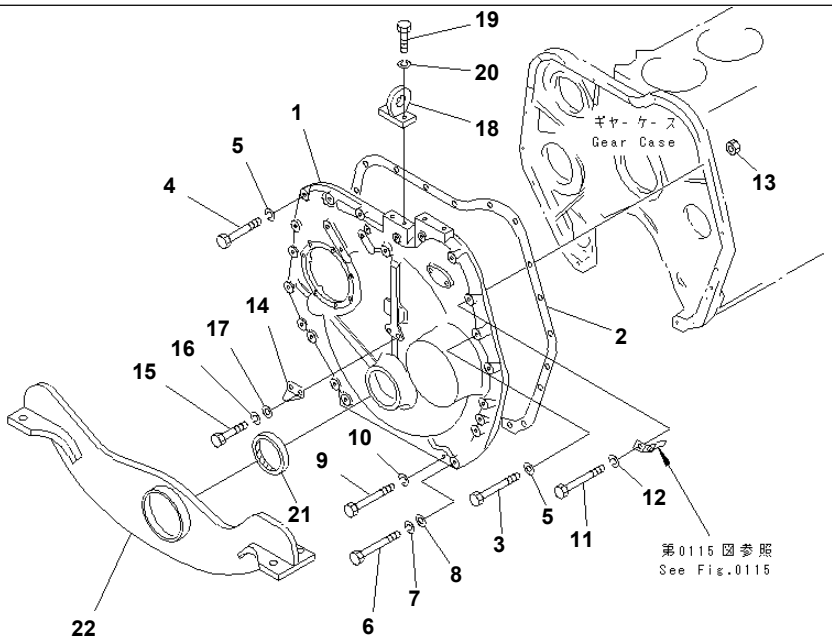

PJ36025

S6D155-4S S/N 52707-UP

GEAR CASE COVER AND FRONT SUPPORT

Item	Part No.	Description	Qty	Options
1	6124-21-3212	COVER,GEAR CASE	1	SN:52707--
2	6128-21-3230	GASKET (K2)	1	SN:52707--
3	01010-31475	BOLT	9	SN:52707--
4	01010-31455	BOLT	4	SN:52707--
5	01602-01442	WASHER,SPRING	13	SN:52707--
6	01010-31475	BOLT	2	SN:52707--
7	01602-01442	WASHER,SPRING	2	SN:52707--
8	01641-21423	WASHER	2	SN:52707--
9	01011-31625	BOLT	2	SN:52707--
10	01602-01648	WASHER,SPRING	2	SN:52707--
11	01010-31480	BOLT	1	SN:52707--
12	01602-01442	WASHER,SPRING	1	SN:52707--
13	01580-01411	NUT	1	SN:52707--
14	6124-21-3310	POINTER	1	SN:52707--
15	01010-30612	BOLT	2	SN:52707--
16	01602-00619	WASHER,SPRING	2	SN:52707--
17	01642-20608	WASHER	2	SN:52707--
18	6127-21-3321	HANGER	1	SN:52707--
19	01010-31440	BOLT	2	SN:52707--
20	01602-01442	WASHER,SPRING	2	SN:52707--
21	6127-21-3510	SEAL¤ FRONT (K2)	1	SN:52707--
22	6127-21-3713	SUPPORT,FRONT	1	SN:52707--

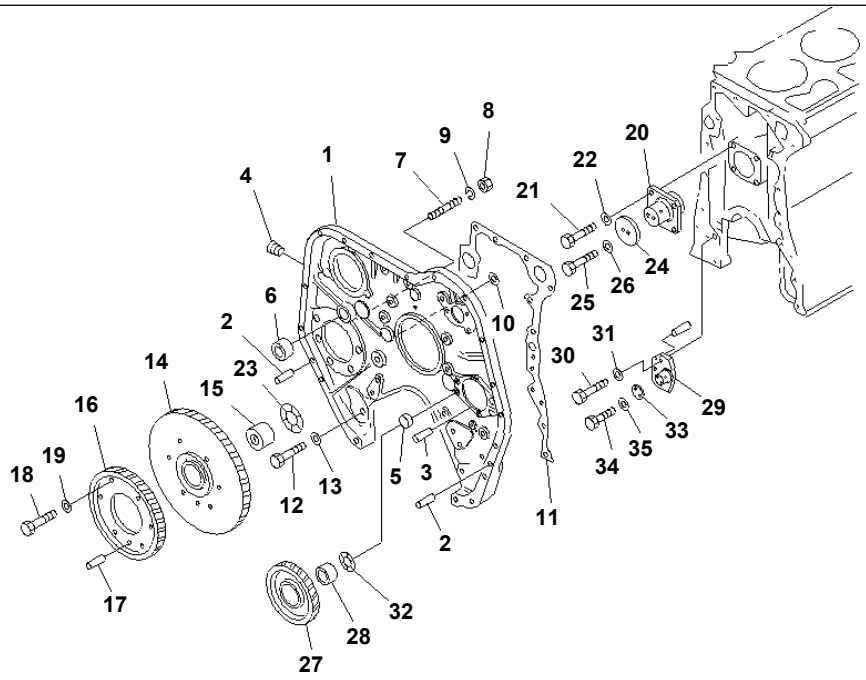

PJ36026

GEAR CASE AND GEAR

Item	Part No.	Description	Qty	Options
	6128-21-3010	GEAR CASE ASS'Y	1	SN:52707--
1	☆	· CASE,GEAR	1	SN:52707--
2	04020-01434	· PIN,DOWEL	2	SN:52707--
3	04020-00616	· PIN,DOWEL	2	SN:52707--
4	6100-21-1130	· PLUG	2	SN:52707--
5	07046-12016	· PLUG	4	SN:52707--
6	6127-21-3131	· BUSHING	1	SN:52707--
7	01140-31022	· STUD,WATER PUMP MOUNTING	6	SN:52707--
8	01582-01008	· NUT	6	SN:52707--
9	01602-01030	· WASHER,SPRING	6	SN:52707--
10	6127-21-3160	· GROMMET (K2)	2	SN:52707--
11	6128-21-3810	GASKET (K2)	1	SN:52707--
12	01010-31650	BOLT	15	SN:52707--
13	01602-01648	WASHER,SPRING	15	SN:52707--
	6127-31-6101	IDLER GEAR ASS'Y	1	SN:52707--
	6127-31-6011	· IDLER GEAR ASS'Y	1	SN:52707--
14	☆	· · GEAR,IDLE	1	SN:52707--
15	6127-31-6121	· · BUSHING	1	SN:52707--
16	6127-31-6141	· GEAR,IDLE	1	SN:52707--
17	04020-00820	· PIN,DOWEL	1	SN:52707--
18	01050-31030	· BOLT	6	SN:52707--
19	01643-31032	· WASHER	6	SN:52707--
20	6127-21-2510	SHAFT	1	SN:52707--
21	01010-31235	BOLT	4	SN:52707--

GEAR CASE AND GEAR

Item	Part No.	Description	Qty	Options
22	01643-31232	WASHER	4	SN:52707--
23	6127-31-6160	BEARING,THRUST	1	SN:52707--
24	6127-21-2521	PLATE,THRUST	1	SN:52707--
25	01050-31030	BOLT	2	SN:52707--
26	01643-31032	WASHER	2	SN:52707--
	6127-31-6021	IDLER GEAR ASS'Y	1	SN:52707--
27	☆	· GEAR,IDLE	1	SN:52707--
28	6127-31-6221	· BUSHING	1	SN:52707--
29	6127-21-2412	SHAFT	1	SN:52707--
30	01010-31040	BOLT	3	SN:52707--
31	01643-51032	WASHER	3	SN:52707--
32	6127-31-6261	BEARING,THRUST	1	SN:52707--
33	6127-21-2421	PLATE,THRUST	1	SN:52707--
34	01050-61025	BOLT	2	SN:52707--
35	01643-51032	WASHER	2	SN:52707--

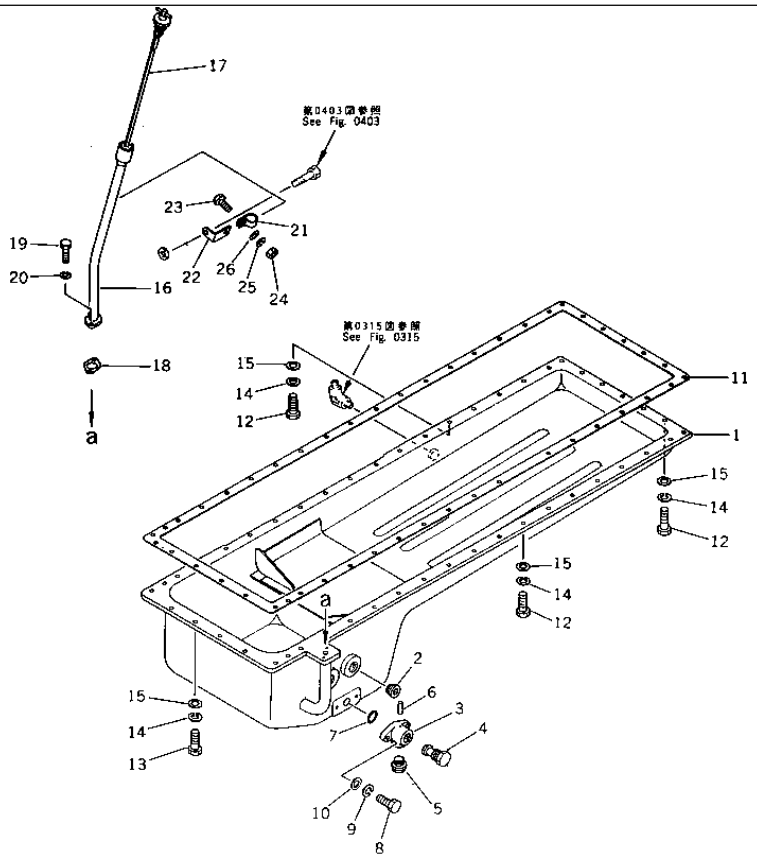

S6D155-4S S/N 52707-UP

OIL PAN

Item	Part No.	Description	Qty	Options
1	6127-21-5251	PAN,OIL	1	SN:52707--
2	02720-21616	PLUG	2	SN:52707--
	6693-22-5600	VALVE ASS'Y	1	SN:52707--
3	☆	· BODY	1	SN:52707--
4	☆	· VALVE	1	SN:52707--
5	07040-02412	· PLUG	1	SN:52707--
6	04020-00514	· PIN	1	SN:52707--
7	07000-63028	O-RING (K2)	1	SN:52707--
8	01010-31025	BOLT	2	SN:52707--
9	01602-01030	WASHER,SPRING	2	SN:52707--
10	01640-21016	WASHER	2	SN:52707--
11	6127-21-5850	GASKET (K2)	1	SN:52707--
12	01010-31035	BOLT	36	SN:52707--
13	01010-31030	BOLT	11	SN:52707--
14	01602-01030	WASHER,SPRING	47	SN:52707--
15	01640-21016	WASHER	47	SN:52707--
16	6127-21-5540	GUIDE	1	SN:52707--
17	6127-21-5303	GAUGE	1	SN:52707--
18	6127-21-5550	GASKET (K2)	1	SN:52707--
19	01010-30825	BOLT	2	SN:52707--
20	01602-00825	WASHER,SPRING	2	SN:52707--
21	6127-21-5450	CLAMP	1	SN:52707--
22	6127-21-5560	STAY	1	SN:52707--
23	01010-30820	BOLT	1	SN:52707--

OIL PAN

Item	Part No.	Description	Qty	Options
24	01580-00806	NUT	1	SN:52707--
25	01602-00825	WASHER,SPRING	1	SN:52707--
26	01641-20812	WASHER	1	SN:52707--

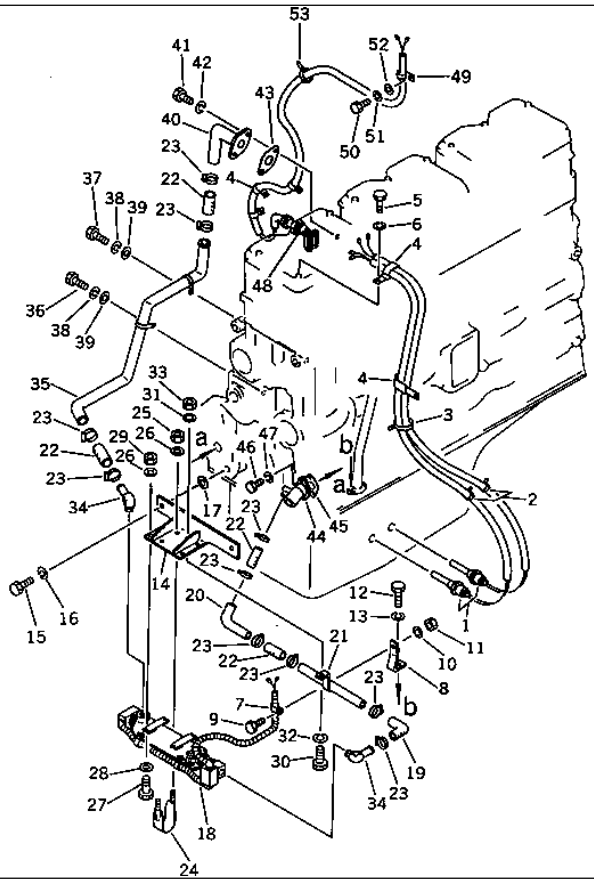

S6D155-4S S/N 52707-UP

HEATER (COLD TERRAIN SPEC.)

Item	Part No.	Description	Qty	Options
1	6631-84-2913	HEATER,OIL PAN	2	SN:52707--
2	600-714-1920	BAND	9	SN:52707--
3	600-714-1950	BAND	1	SN:52707--
4	08036-31214	CLIP	5	SN:52707--
5	01010-31220	BOLT	1	SN:52707--
6	01602-01236	WASHER,SPRING	1	SN:52707--
7	08035-01510	CLIP	1	SN:52707--
8	6130-51-6530	BRACKET	1	SN:52707--
9	01010-31016	BOLT	1	SN:52707--
10	01602-01030	WASHER,SPRING	1	SN:52707--
11	01580-01008	NUT	1	SN:52707--
12	01010-30830	BOLT	1	SN:52707--
13	01602-00825	WASHER,SPRING	1	SN:52707--
14	6127-61-7210	BRACKET	1	SN:52707--
15	01011-31635	BOLT	2	SN:52707--
16	01602-01648	WASHER,SPRING	2	SN:52707--
17	01643-31645	WASHER	2	SN:52707--
18	6127-81-3102	HEATER,COOLANT	1	SN:52707--
19	6050-61-6160	HOSE	1	SN:52707--
20	6127-61-7140	PIPE	1	SN:52707--
21	6127-61-7111	PIPE	1	SN:52707--
22	6631-64-8860	HOSE	4	SN:52707--
23	07281-00419	CLAMP	10	SN:52707--
24	6127-61-7220	CLIP	1	SN:52707--

HEATER (COLD TERRAIN SPEC.)

Item	Part No.	Description	Qty	Options
25	01598-00809	NUT	2	SN:52707--
26	01642-20810	WASHER	6	SN:52707--
27	01010-30830	BOLT	4	SN:52707--
28	01643-30823	WASHER	4	SN:52707--
29	01580-00806	NUT	4	SN:52707--
30	01010-31030	BOLT	1	SN:52707--
31	01642-01016	WASHER	1	SN:52707--
32	01602-01030	WASHER,SPRING	1	SN:52707--
33	01580-01008	NUT	1	SN:52707--
34	6127-61-7250	ELBOW	2	SN:52707--
35	6127-61-7411	PIPE	1	SN:52707--
36	01010-31220	BOLT	1	SN:52707--
37	01010-31230	BOLT	1	SN:52707--
38	01602-01236	WASHER,SPRING	2	SN:52707--
39	01641-21223	WASHER	2	SN:52707--
40	6127-61-7421	PIPE	1	SN:52707--
41	01010-31030	BOLT	2	SN:52707--
42	01602-01030	WASHER,SPRING	2	SN:52707--
43	6127-21-6720	GASKET	1	SN:52707--
44	6127-62-6370	PIPE,WATER	1	SN:52707--
45	6127-62-6340	GASKET	1	SN:52707--
46	01010-31235	BOLT	2	SN:52707--
47	01602-01236	WASHER,SPRING	2	SN:52707--
48	6631-84-2823	HEATER,WATER	1	SN:52707--
49	08036-30814	CLIP	1	SN:52707--
50	01010-31095	BOLT	1	SN:52707--
51	01602-01030	WASHER,SPRING	1	SN:52707--
52	01642-21016	WASHER	1	SN:52707--
53	600-714-1920	BAND	3	SN:52707--

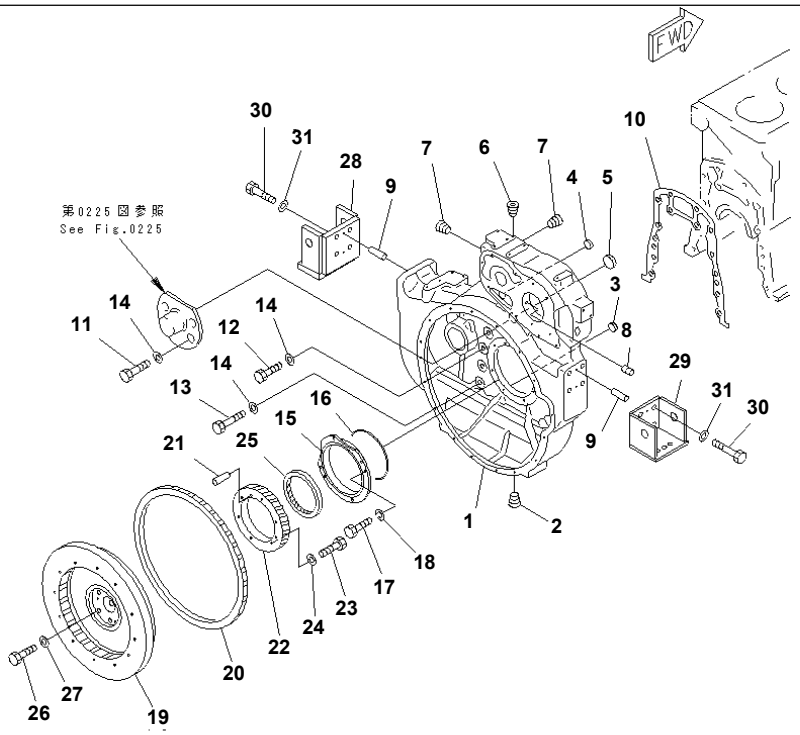

PJ36027

S6D155-4S S/N 52707-UP
FLYWHEEL AND FLYWHEEL HOUSING

Item	Part No.	Description	Qty	Options
	6127-21-4062	HOUSING ASS'Y	1	SN:52707--
1	☆	· HOUSING,FLYWHEEL	1	SN:52707--
2	07042-00415	· PLUG	1	SN:52707--
3	07046-11516	· PLUG	8	SN:52707--
4	07046-12016	· PLUG	6	SN:52707--
5	07046-15520	· PLUG	1	SN:52707--
6	07043-00211	· PLUG	3	SN:52707--
7	6100-21-1130	· PLUG	2	SN:52707--
8	6127-21-4130	· BUSHING	1	SN:52707--
9	04020-01434	· PIN,DOWEL	4	SN:52707--
10	6127-21-4813	GASKET (K2)	1	SN:52707--
11	01010-31845	BOLT	4	SN:52707--
12	01010-31855	BOLT	7	SN:52707--
13	01010-31870	BOLT	3	SN:52707--
14	01643-21845	WASHER	14	SN:52707--
15	6127-21-4210	RETAINER	1	SN:52707--
16	07000-65220	O-RING (K2)	1	SN:52707--
17	01010-31025	BOLT	4	SN:52707--
18	01602-01030	WASHER,SPRING	4	SN:52707--
	6127-31-1050	FLYWHEEL ASS'Y	1	SN:52707--
19	☆	· FLYWHEEL	1	SN:52707--
20	6645-31-1321	· GEAR,RING	1	SN:52707--
21	6127-31-1390	· PIN,DOWEL	1	SN:52707--
22	6127-31-1341	GEAR,CRANK	1	SN:52707--

S6D155-4S S/N 52707-UP

FLYWHEEL AND FLYWHEEL HOUSING

Item	Part No.	Description	Qty	Options
23	01018-01260	BOLT	6	SN:52707--
24	01643-31232	WASHER	6	SN:52707--
25	6128-21-4230	SEAL¤ REAR (K2)	1	SN:52707--
26	6127-31-1370	BOLT	6	SN:52707--
27	6127-11-1620	WASHER	6	SN:52707--
28	6127-21-4711	BRACKET	1	SN:52707--
29	6127-21-4721	BRACKET	1	SN:52707--
30	01010-61845	BOLT	8	SN:52707--
31	01643-21845	WASHER	8	SN:52707--

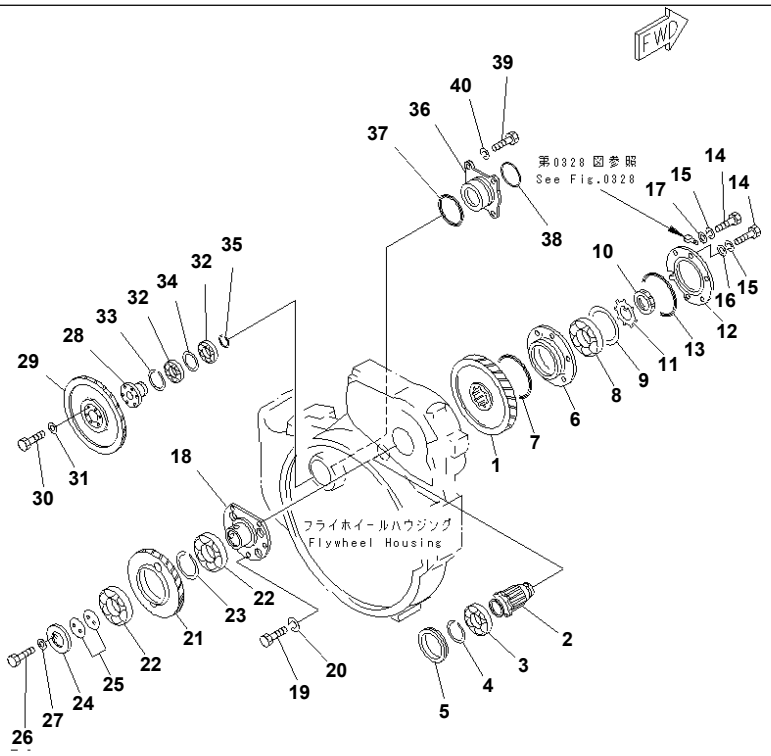

PJ36028

S6D155-4S S/N 52707-UP
POWER TAKE OFF

Item	Part No.	Description	Qty	Options
1	6127-21-4161	GEAR	1	SN:52707--
2	6124-21-4170	SHAFT	1	SN:52707--
3	06000-06214	BEARING,BALL	1	SN:52707--
4	04066-00070	RING,SNAP	1	SN:52707--
5	6124-21-4190	RING,DOWEL	1	SN:52707--
6	6125-21-4120	CASE,BEARING	1	SN:52707--
7	07000-05165	O-RING (K3)	1	SN:52707--
8	06000-06313	BEARING,BALL	1	SN:52707--
9	6124-21-4150	SPACER	1	SN:52707--
10	01530-06214	NUT	1	SN:52707--
11	01658-26223	WASHER (K3)	1	SN:52707--
12	6124-21-4140	COVER	1	SN:52707--
13	07000-05150	O-RING (K3)	1	SN:52707--
14	01010-31030	BOLT	6	SN:52707--
15	01602-01030	WASHER,SPRING	6	SN:52707--
16	01641-21016	WASHER	1	SN:52707--
17	01640-21016	WASHER	1	SN:52707--
18	6127-21-4310	SHAFT,IDLE	1	SN:52707--
19	01010-31230	BOLT	6	SN:52707--
20	01602-01236	WASHER,SPRING	6	SN:52707--
21	6128-21-4321	GEAR,IDLE	1	SN:52707--
22	06002-30217	BEARING	2	SN:52707--
23	04067-00150	RING,SNAP	1	SN:52707--
24	6128-21-4340	RETAINER,BEARING	1	SN:52707--

POWER TAKE OFF

Item	Part No.	Description	Qty	Options
25	6128-21-4600	SHIM ASS'Y (K3)	1	SN:52707--
	6128-21-4630	· SHIM¤ 0.1MM	1	SN:52707--
	6128-21-4620	· SHIM¤ 0.5MM	2	SN:52707--
	6128-21-4610	· SHIM¤ 1.0MM	4	SN:52707--
26	01050-31225	BOLT	2	SN:52707--
27	01643-51232	WASHER	2	SN:52707--
28	6128-21-4510	SHAFT	1	SN:52707--
29	6127-21-4522	GEAR	1	SN:52707--
30	01010-31020	BOLT	6	SN:52707--
31	01643-31032	WASHER	6	SN:52707--
32	06000-06010	BEARING	2	SN:52707--
33	04067-00080	RING,SNAP	1	SN:52707--
34	6128-21-4540	COLLAR	1	SN:52707--
35	04066-00050	RING,SNAP	1	SN:52707--
36	6128-21-4410	CASE,BEARING	1	SN:52707--
37	07000-03110	O-RING (K3)	1	SN:52707--
38	07000-03095	O-RING (K3)	1	SN:52707--
39	01010-31245	BOLT	2	SN:52707--
40	01602-01236	WASHER,SPRING	2	SN:52707--

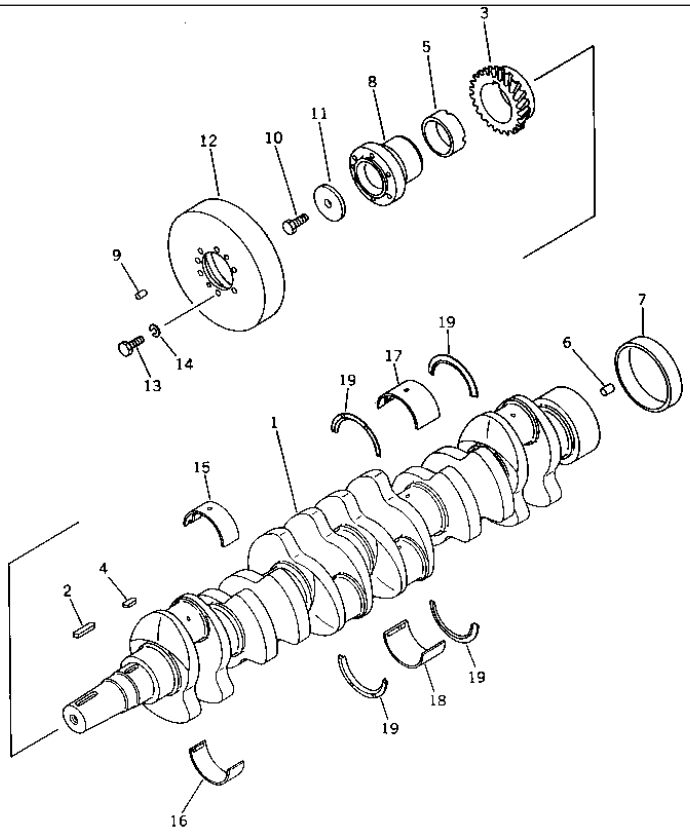

S6D155-4S S/N 52707-UP

CRANKSHAFT

Item	Part No.	Description	Qty	Options
	6127-31-1012	CRANKSHAFT ASS'Y	1	SN:52707--
1	☆	· CRANKSHAFT	1	SN:52707--
2	04000-01570	· KEY	1	SN:52707--
3	6127-31-1120	· GEAR,CRANKSHAFT	1	SN:52707--
4	04000-01540	· KEY	1	SN:52707--
5	6127-31-1190	· SLEEVE	1	SN:52707--
6	04020-01842	· PIN,DOWEL	2	SN:52707--
7	6127-31-1293	· SLEEVE	1	SN:52707--
	6127-31-1021	FLANGE ASS'Y	1	SN:52707--
8	☆	· FLANGE	1	SN:52707--
9	04020-01228	· PIN,DOWEL	1	SN:52707--
10	01050-31845	BOLT	1	SN:52707--
11	6127-31-1440	WASHER	1	SN:52707--
12	6127-31-8101	DAMPER	1	SN:52707--
13	01010-31225	BOLT	6	SN:52707--
14	01602-01236	WASHER,SPRING	6	SN:52707--
STANDARD				
	6127-21-8002	METAL ASS'Y	1	SN:52707--
	6127-21-8071	· MAIN METAL ASS'Y	1	SN:52707--
	6127-21-8011	· · MAIN METAL ASS'Y,NO.1¤2¤4¤6¤7	5	SN:52707--
15	☆	· · · METAL,UPPER	1	SN:52707--
16	☆	· · · METAL,LOWER	1	SN:52707--
	6127-21-8022	· · MAIN METAL ASS'Y,NO.3¤5	2	SN:52707--
17	☆	· · · METAL,UPPER	1	SN:52707--

CRANKSHAFT

Item	Part No.	Description	Qty	Options
18	☆	· · · METAL,LOWER	1	SN:52707--
19	6127-21-8051	· THRUST METAL ASS'Y	1	SN:52707--
	☆	· · METAL,FRONT	2	SN:52707--
	☆	· · METAL,REAR	2	SN:52707--
UNDERSIZE 0.25MM				
	6127-29-8071	MAIN METAL ASS'Y	1	SN:52707--
	6127-29-8011	· MAIN METAL ASS'Y,NO.1¤2¤4¤6¤7	5	SN:52707--
15	☆	· · METAL,UPPER	1	SN:52707--
16	☆	· · METAL,LOWER	1	SN:52707--
	6127-29-8022	· MAIN METAL ASS'Y,NO.3¤5	2	SN:52707--
17	☆	· · METAL,UPPER	1	SN:52707--
18	☆	· · METAL,LOWER	1	SN:52707--
UNDERSIZE 0.50MM				
	6127-28-8071	MAIN METAL ASS'Y	1	SN:52707--
	6127-28-8011	· MAIN METAL ASS'Y,NO.1¤2¤4¤6¤7	5	SN:52707--
15	☆	· · METAL,UPPER	1	SN:52707--
16	☆	· · METAL,LOWER	1	SN:52707--
	6127-28-8022	· MAIN METAL ASS'Y,NO.3¤5	2	SN:52707--
17	☆	· · METAL,UPPER	1	SN:52707--
18	☆	· · METAL,LOWER	1	SN:52707--
UNDERSIZE 0.75MM				
	6127-27-8071	MAIN METAL ASS'Y	1	SN:52707--
	6127-27-8011	· MAIN METAL ASS'Y,NO.1¤2¤4¤6¤7	5	SN:52707--
15	☆	· · METAL,UPPER	1	SN:52707--
16	☆	· · METAL,LOWER	1	SN:52707--
	6127-27-8022	· MAIN METAL ASS'Y,NO.3¤5	2	SN:52707--
17	☆	· · METAL,UPPER	1	SN:52707--
18	☆	· · METAL,LOWER	1	SN:52707--
UNDERSIZE 1.00MM				
	6127-26-8071	MAIN METAL ASS'Y	1	SN:52707--
	6127-26-8011	· MAIN METAL ASS'Y,N0.1¤2¤4¤6¤7	5	SN:52707--
15	☆	· · METAL,UPPER	1	SN:52707--
16	☆	· · METAL,LOWER	1	SN:52707--
	6127-26-8022	· MAIN METAL ASS'Y,NO.3¤5	2	SN:52707--
17	☆	· · METAL,UPPER	1	SN:52707--
18	☆	· · METAL,LOWER	1	SN:52707--
OVERSIZE 0.25MM				
19	6127-29-8051	THRUST METAL ASS'Y	1	SN:52707--
	☆	· METAL,FRONT	2	SN:52707--
	☆	· METAL,REAR	2	SN:52707--
OVERSIZE 0.50MM				
19	6127-28-8051	THRUST METAL ASS'Y	1	SN:52707--
	☆	· METAL,FRONT	2	SN:52707--
	☆	· METAL,REAR	2	SN:52707--
OVERSIZE 0.75MM				
19	6127-27-8051	THRUST METAL ASS'Y	1	SN:52707--
	☆	· METAL,FRONT	2	SN:52707--
	☆	· METAL,REAR	2	SN:52707--
OVERSIZE 1.00MM				
19	6127-26-8051	THRUST METAL ASS'Y	1	SN:52707--
	☆	· METAL,FRONT	2	SN:52707--
	☆	· METAL,REAR	2	SN:52707--

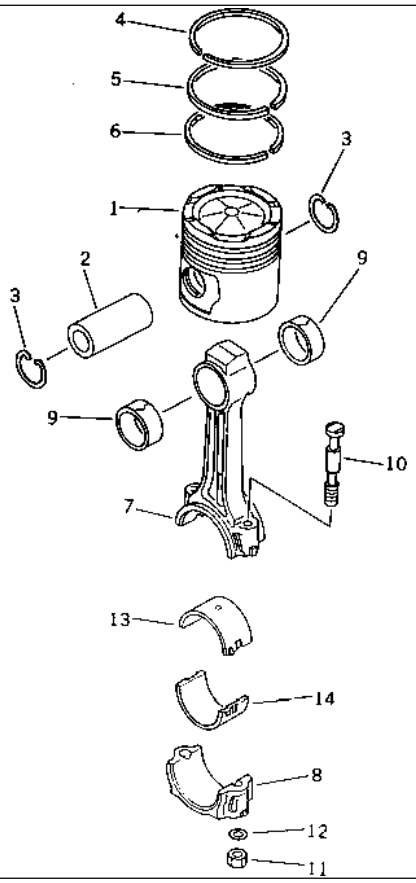

S6D155-4S S/N 52707-UP

PISTON AND CONNECTING ROD

Item	Part No.	Description	Qty	Options
	6127-31-2030	PISTON ASS'Y	6	SN:52707--
1	6127-31-2140	· PISTON	1	SN:52707--
2	6127-31-2410	· PIN,PISTON	1	SN:52707--
3	6120-31-2120	· RING,SNAP	2	SN:52707--
	6128-31-2060	PISTON RING ASS'Y	1	SN:52707--
	6128-31-2070	· PISTON RING ASS'Y	6	SN:52707--
4	☆	· · RING,TOP	1	SN:52707--
5	☆	· · RING,2ND	1	SN:52707--
6	☆	· · RING,OIL	1	SN:52707--
	6127-31-3101	CONNECTING ROD ASS'Y	6	SN:52707--
7	☆	· ROD,CONNECTING	1	SN:52707--
8	☆	· CAP	1	SN:52707--
9	6127-31-3131	· BUSHING	2	SN:52707--
10	6127-31-3314	· BOLT	2	SN:52707--
11	6127-31-3321	· NUT	2	SN:52707--
12	6127-31-3333	· WASHER	2	SN:52707--
STANDARD				
	6127-31-3042	CRANK PIN METAL A.	6	SN:52707--
13	☆	· METAL,UPPER	1	SN:52707--
14	☆	· METAL,LOWER	1	SN:52707--
UNDERSIZE 0.25MM				
	6127-39-3042	CRANK PIN METAL A.	6	SN:52707--
13	☆	· METAL,UPPER	1	SN:52707--
14	☆	· METAL,LOWER	1	SN:52707--

PISTON AND CONNECTING ROD

Item	Part No.	Description	Qty	Options
UNDERSIZE 0.50MM				
	6127-38-3042	CRANK PIN METAL A.	6	SN:52707--
13	☆	· METAL,UPPER	1	SN:52707--
14	☆	· METAL,LOWER	1	SN:52707--
UNDERSIZE 0.75MM				
	6127-37-3042	CRANK PIN METAL A.	6	SN:52707--
13	☆	· METAL,UPPER	1	SN:52707--
14	☆	· METAL,LOWER	1	SN:52707--
UNDERSIZE 1.00MM				
	6127-36-3042	CRANK PIN METAL A.	6	SN:52707--
13	☆	· METAL,UPPER	1	SN:52707--
14	☆	· METAL,LOWER	1	SN:52707--

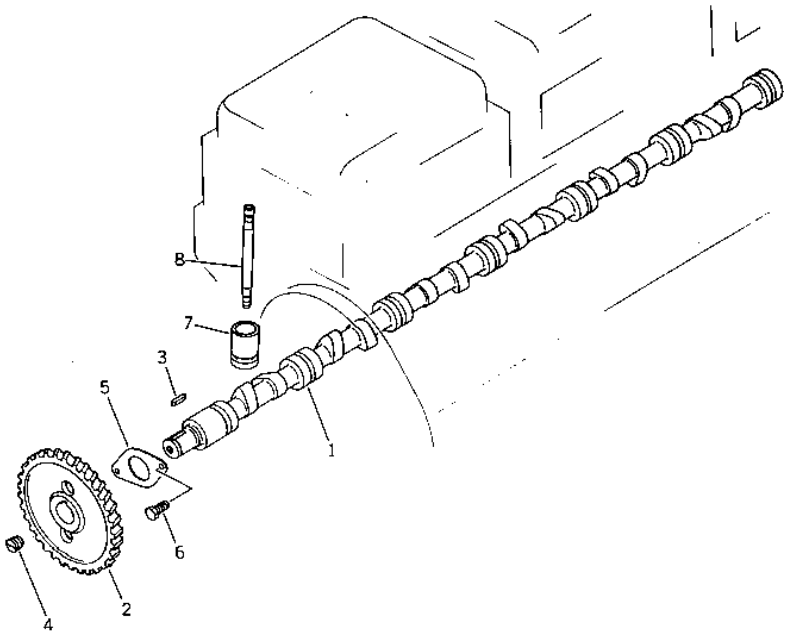

S6D155-4S S/N 52707-UP

CAMSHAFT AND TAPPET

Item	Part No.	Description	Qty	Options
	6127-41-1103	CAMSHAFT ASS'Y	1	SN:52707--
1	6127-41-1220	· CAMSHAFT	1	SN:52707--
2	6127-41-1121	· GEAR,CAMSHAFT	1	SN:52707--
3	04000-01035	· KEY	1	SN:52707--
4	6100-21-1130	· PLUG	1	SN:52707--
5	6127-41-1130	· PLATE,THRUST	1	SN:52707--
6	6127-41-1150	BOLT	2	SN:52707--
7	6127-41-2150	TAPPET	12	SN:52707--
8	6127-41-3113	ROD,PUSH	12	SN:52707--

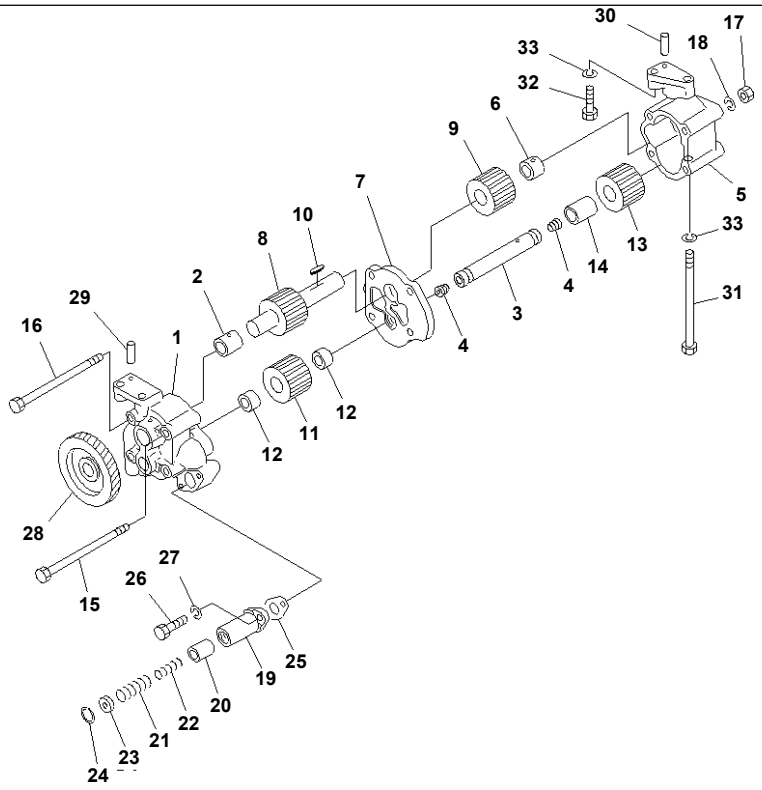

PG36029

S6D155-4S S/N 52707-UP

LUBRICATING OIL PUMP

Item	Part No.	Description	Qty	Options
	6128-52-1013	OIL PUMP ASS'Y	1	SN:52707--
	6128-51-1102	· BODY ASS'Y	1	SN:52707--
1	☆	· · BODY	1	SN:52707--
2	☆	· · BUSHING	1	SN:52707--
3	☆	· · SHAFT	1	SN:52707--
4	6128-51-1180	· · PLUG	2	SN:52707--
	6127-51-1014	· BODY ASS'Y	1	SN:52707--
5	☆	· · BODY	1	SN:52707--
6	☆	· · BUSHING	1	SN:52707--
7	6128-51-1224	· COVER	1	SN:52707--
8	6128-51-1314	· SHAFT,DRIVE	1	SN:52707--
9	6128-51-1411	· GEAR,DRIVE	1	SN:52707--
10	04000-00730	· KEY	1	SN:52707--
	6128-51-1501	· GEAR ASS'Y	1	SN:52707--
11	☆	· · GEAR,DRIVEN	1	SN:52707--
12	☆	· · BUSHING	2	SN:52707--
	6128-51-1400	· GEAR ASS'Y	1	SN:52707--
13	☆	· · GEAR,DRIVE	1	SN:52707--
14	☆	· · BUSHING	1	SN:52707--
15	6127-51-1180	· BOLT	2	SN:52707--
16	6127-51-1190	· BOLT	2	SN:52707--
17	01582-01210	· NUT	4	SN:52707--
18	01602-01236	· WASHER,SPRING	4	SN:52707--
19	6127-51-1613	· CASE	1	SN:52707--

LUBRICATING OIL PUMP

Item	Part No.	Description	Qty	Options
20	6127-51-1623	· VALVE	1	SN:52707--
21	6127-51-1631	· SPRING,VALVE	1	SN:52707--
22	6127-51-1670	· SPRING,VALVE	1	SN:52707--
23	6127-51-1641	· RETAINER	1	SN:52707--
24	6127-51-1650	· RING,SNAP	1	SN:52707--
25	6127-51-1660	· GASKET (K2)	1	SN:52707--
26	01010-31025	· BOLT	2	SN:52707--
27	01602-01030	· WASHER,SPRING	2	SN:52707--
28	6127-51-2122	· GEAR	1	SN:52707--
29	04020-00820	PIN,DOWEL	1	SN:52707--
30	6127-21-1281	PIN,DOWEL	1	SN:52707--
31	6128-51-1240	BOLT	2	SN:52707--
32	01010-31250	BOLT	2	SN:52707--
33	01602-01236	WASHER,SPRING	4	SN:52707--

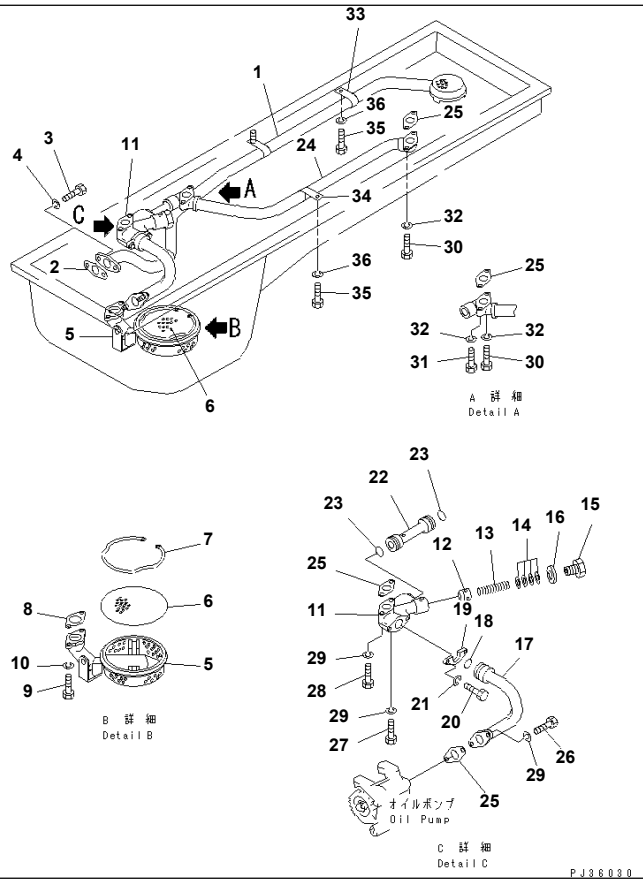

S6D155-4S S/N 52707-UP

OIL STRAINER AND PIPING

Item	Part No.	Description	Qty	Options
1	6127-51-6212	PIPE,SCAVENGING	1	SN:52707--
2	6120-61-6850	GASKET (K2)	1	SN:52707--
3	01010-31025	BOLT	2	SN:52707--
4	01602-01030	WASHER,SPRING	2	SN:52707--
5	6128-51-6310	STRAINER	1	SN:52707--
6	6127-51-6360	PLATE	1	SN:52707--
7	6110-51-6340	RING,SNAP	1	SN:52707--
8	6128-51-6830	GASKET (K2)	1	SN:52707--
9	01010-31035	BOLT	2	SN:52707--
10	01602-01030	WASHER,SPRING	2	SN:52707--
	6127-51-6801	BYPASS VALVE ASS'Y	1	SN:52707--
11	6127-51-6811	· BODY	1	SN:52707--
12	6127-51-6840	· VALVE	1	SN:52707--
13	6127-51-6750	· SPRING	1	SN:52707--
14	6110-51-5550	· SPACER	4	SN:52707--
15	6110-53-5230	· PLUG	1	SN:52707--
16	07003-02733	· GASKET (K2)	1	SN:52707--
17	6127-51-6521	PIPE	1	SN:52707--
18	07000-63030	O-RING (K2)	1	SN:52707--
19	6127-51-6781	STOPPER	1	SN:52707--
20	01010-30614	BOLT	2	SN:52707--
21	01602-00619	WASHER,SPRING	2	SN:52707--
22	6127-51-6741	PIPE	1	SN:52707--
23	07000-23022	O-RING (K2)	2	SN:52707--

S6D155-4S S/N 52707-UP

OIL STRAINER AND PIPING

Item	Part No.	Description	Qty	Options
24	6127-51-6510	PIPE	1	SN:52707--
25	6127-51-1660	GASKET (K2)	4	SN:52707--
26	01010-31035	BOLT	2	SN:52707--
27	01010-31050	BOLT	1	SN:52707--
28	01010-31060	BOLT	1	SN:52707--
29	01602-01030	WASHER,SPRING	4	SN:52707--
30	01010-31025	BOLT	3	SN:52707--
31	01010-31045	BOLT	1	SN:52707--
32	01602-01030	WASHER,SPRING	4	SN:52707--
33	6127-51-6251	CLIP	2	SN:52707--
34	6127-51-6631	CLIP	1	SN:52707--
35	01010-31022	BOLT	3	SN:52707--
36	01602-01030	WASHER,SPRING	3	SN:52707--

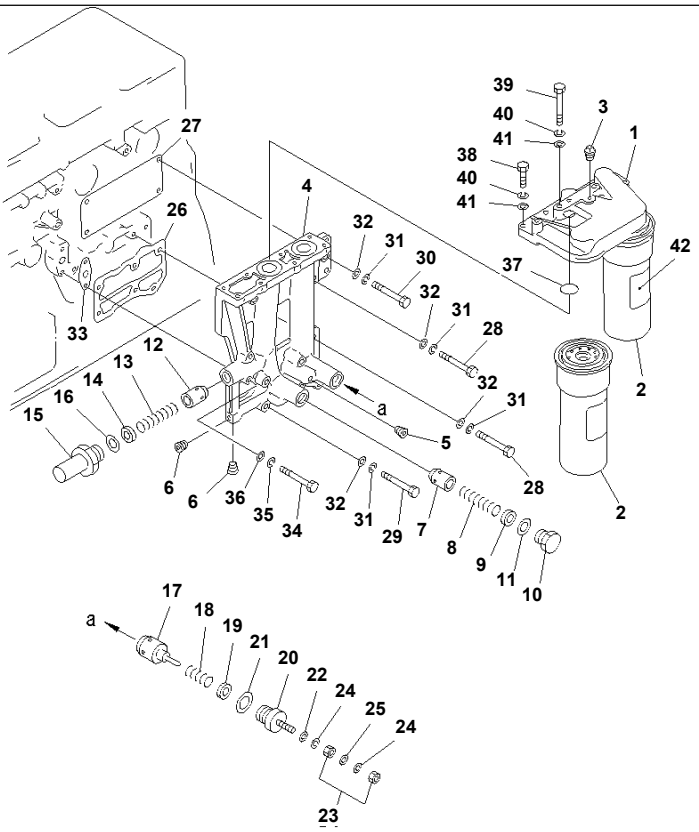

PG33957

S6D155-4S S/N 52707-UP
LUBRICATING OIL FILTER

Item	Part No.	Description	Qty	Options
	6127-51-5403	OIL FILTER ASS'Y	1	SN:52707--
1	6127-51-5413	· COVER	1	SN:52707--
2	600-211-1230	· CARTRIDGE	2	SN:52707--
3	07042-00108	PLUG	1	SN:52707--
	6127-51-5504	BRACKET ASS'Y	1	SN:52707--
4	6127-51-5512	· BRACKET	1	SN:52707--
5	07043-00211	· PLUG	1	SN:52707--
6	07043-00108	· PLUG	2	SN:52707--
7	6127-51-5330	· VALVE,REGULATOR	1	SN:52707--
8	6127-51-5321	· SPRING	1	SN:52707--
9	6121-51-5550	· SPACER	AR	SN:52707--
10	6121-51-5230	· PLUG	1	SN:52707--
11	6127-51-5820	· GASKET	1	SN:52707--
12	6127-51-5520	· VALVE,PISTON COOLING	1	SN:52707--
13	6128-51-5251	· SPRING	1	SN:52707--
14	6121-51-5550	· SPACER	AR	SN:52707--
15	6128-51-5240	· PLUG	1	SN:52707--
16	6127-51-5820	· GASKET	1	SN:52707--
17	600-211-1880	· VALVE,SAFETY	1	SN:52707--
18	600-211-1870	· SPRING	1	SN:52707--
19	6121-51-5550	· SPACER	AR	SN:52707--
20	600-211-1860	· PLUG	1	SN:52707--
21	6127-51-5820	· GASKET	1	SN:52707--
22	6110-51-5580	· GASKET	1	SN:52707--

S6D155-4S S/N 52707-UP
LUBRICATING OIL FILTER

Item	Part No.	Description	Qty	Options
23	01580-20504	· NUT	2	SN:52707--
24	01601-00513	· WASHER,SPRING	2	SN:52707--
25	01641-20508	· WASHER	1	SN:52707--
26	6127-51-5841	GASKET (K2)	1	SN:52707--
27	6127-51-5861	GASKET (K2)	1	SN:52707--
28	01010-31240	BOLT	3	SN:52707--
29	01010-31285	BOLT	5	SN:52707--
30	01010-31280	BOLT	2	SN:52707--
31	01602-01236	WASHER,SPRING	10	SN:52707--
32	01640-21223	WASHER	10	SN:52707--
33	6127-51-5850	GASKET (K2)	1	SN:52707--
34	01010-31070	BOLT	2	SN:52707--
35	01602-01030	WASHER,SPRING	2	SN:52707--
36	01640-21016	WASHER	2	SN:52707--
37	07000-65055	O-RING (K2)	2	SN:52707--
38	01010-31240	BOLT	5	SN:52707--
39	01010-31285	BOLT	3	SN:52707--
40	01602-01236	WASHER,SPRING	8	SN:52707--
41	01640-21223	WASHER	8	SN:52707--
42	600-211-1710	PLATE¤ INSTRUCTION	1	SN:52707--

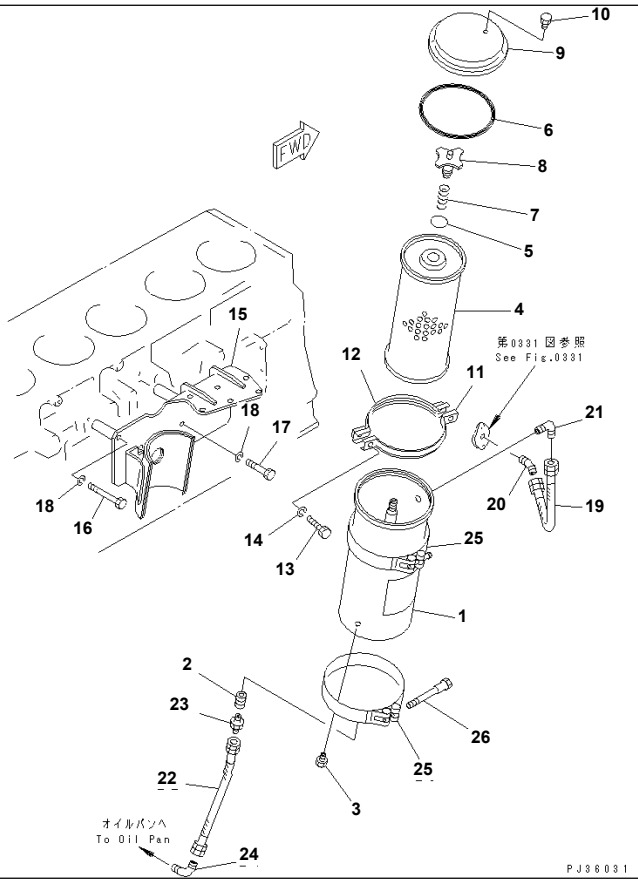

S6D155-4S S/N 52707-UP

BYPASS FILTER

Item	Part No.	Description	Qty	Options
	6128-51-5500	OIL FILTER ASS'Y	1	SN:52707--
	6128-51-5020	· CASE ASS'Y	1	SN:52707--
1	☆	· · CASE	1	SN:52707--
2	6150-51-7640	· · ORIFICE	1	SN:52707--
3	6150-51-4520	· · PLUG	1	SN:52707--
	6128-51-5030	· ELEMENT ASS'Y	1	SN:52707--
4	☆	· · ELEMENT	1	SN:52707--
5	6150-51-7620	· · O-RING	1	SN:52707--
6	02894-07201	· · O-RING	1	SN:52707--
7	6150-51-7630	· SPRING	1	SN:52707--
8	6150-51-7610	· SUPPORT	1	SN:52707--
9	6150-51-7510	· COVER	1	SN:52707--
10	6150-51-4520	· PLUG	1	SN:52707--
11	6150-51-7520	· COUPLING	1	SN:52707--
12	6150-51-7530	· COUPLING	1	SN:52707--
13	02010-50532	· BOLT	2	SN:52707--
14	02310-11020	· WASHER,SPRING	2	SN:52707--
15	6127-51-5911	BRACKET	1	SN:52707--
16	01011-31215	BOLT	2	SN:52707--
17	01010-31275	BOLT	2	SN:52707--
18	01602-01236	WASHER,SPRING	4	SN:52707--
19	07102-20404	HOSE	1	SN:52707--
	6127-51-5980	HOSE,(FOR SLAG HANDLING)	1	SN:52707--
20	6691-51-9951	ELBOW	1	SN:52707--

S6D155-4S S/N 52707-UP
BYPASS FILTER

Item	Part No.	Description	Qty	Options
21	6127-51-5930	ELBOW	1	SN:52707--
22	6691-51-9920	HOSE	1	SN:52707--
	6127-51-5970	HOSE,(FOR SLAG HANDLING)	1	SN:52707--
23	6691-51-9961	NIPPLE	1	SN:52707--
24	6127-51-5930	ELBOW	1	SN:52707--
25	6691-21-6540	BAND	2	SN:52707--
26	6643-11-4641	BOLT	2	SN:52707--

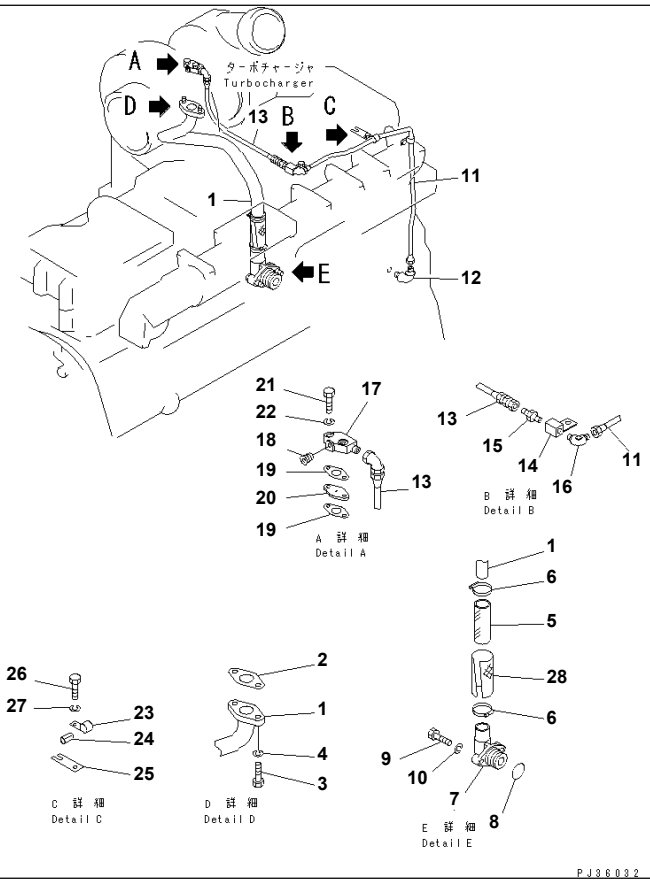

S6D155-4S S/N 52707-UP

TURBOCHARGER LUBRICATING OIL PIPING

Item	Part No.	Description	Qty	Options
1	6127-51-8440	PIPE	1	SN:52707--
2	6127-51-6821	GASKET (K1)	1	SN:52707--
3	01010-31035	BOLT	2	SN:52707--
4	01602-01030	WASHER,SPRING	2	SN:52707--
5	6127-51-8470	HOSE	1	SN:52707--
6	07281-00489	CLAMP	2	SN:52707--
7	6127-51-8450	CONNECTOR	1	SN:52707--
8	07000-63032	O-RING (K2)	1	SN:52707--
9	01010-31050	BOLT	2	SN:52707--
10	01602-01030	WASHER,SPRING	2	SN:52707--
11	6127-51-8321	PIPE,INLET	1	SN:52707--
12	07217-51013	ELBOW	1	SN:52707--
13	6127-51-8310	HOSE,INLET	1	SN:52707--
14	6127-51-8340	JOINT	1	SN:52707--
15	07214-50813	CONNECTOR	1	SN:52707--
16	07217-51013	ELBOW	1	SN:52707--
17	6127-51-8330	FLANGE	1	SN:52707--
18	07043-00108	· PLUG	1	SN:52707--
19	6128-51-8151	GASKET (K1)	2	SN:52707--
20	6125-51-8130	ORIFICE	1	SN:52707--
21	01010-30835	BOLT	2	SN:52707--
22	01602-00825	WASHER,SPRING	2	SN:52707--
23	6127-51-8381	CLAMP	1	SN:52707--
24	6127-51-8390	RUBBER	1	SN:52707--

S6D155-4S S/N 52707-UP

TURBOCHARGER LUBRICATING OIL PIPING

Item	Part No.	Description	Qty	Options
25	6127-51-8371	BRACKET	1	SN:52707--
26	01010-30810	BOLT	1	SN:52707--
27	01602-00825	WASHER,SPRING	1	SN:52707--
28	6127-51-8480	COVER,(FOR SLAG HANDLING)	1	SN:52707--

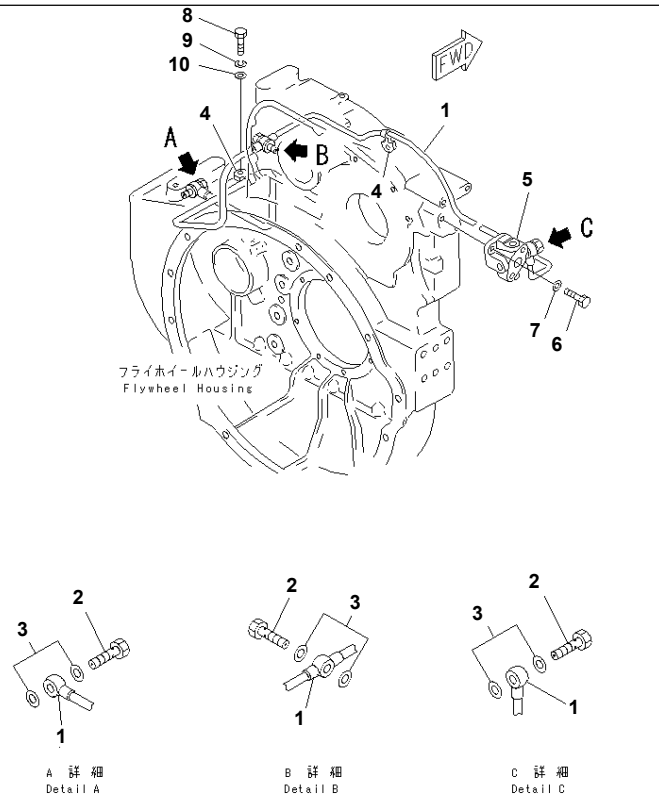

PG36033

S6D155-4S S/N 52707-UP
P.T.O. LUBRICATING OIL PIPING

Item	Part No.	Description	Qty	Options
1	6124-51-9510	PIPE	1	SN:52707--
2	07206-10812	BOLT,JOINT	3	SN:52707--
3	07005-01212	GASKET (K3)	6	SN:52707--
4	6124-51-9521	CLIP	2	SN:52707--
5	6124-51-9560	FLANGE	1	SN:52707--
6	01010-31030	BOLT	2	SN:52707--
7	01643-31032	WASHER	2	SN:52707--
8	01010-31022	BOLT	1	SN:52707--
9	01602-01030	WASHER,SPRING	1	SN:52707--
10	01640-21016	WASHER	1	SN:52707--

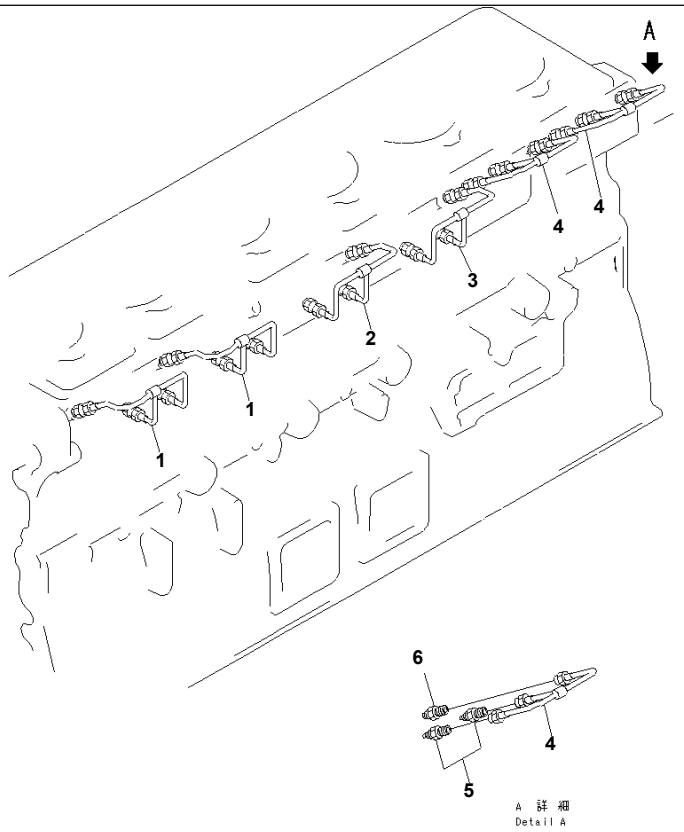

S6D155-4S S/N 52707-UP

CAMSHAFT LUBRICATING OIL PIPING

Item	Part No.	Description	Qty	Options
1	6127-51-7112	PIPE	2	SN:52707--
2	6127-51-7121	PIPE	1	SN:52707--
3	6127-51-7232	PIPE	1	SN:52707--
4	6127-51-7142	PIPE	2	SN:52707--
5	6127-21-1440	NOZZLE	12	SN:52707--
6	07213-50610	CONNECTOR	6	SN:52707--

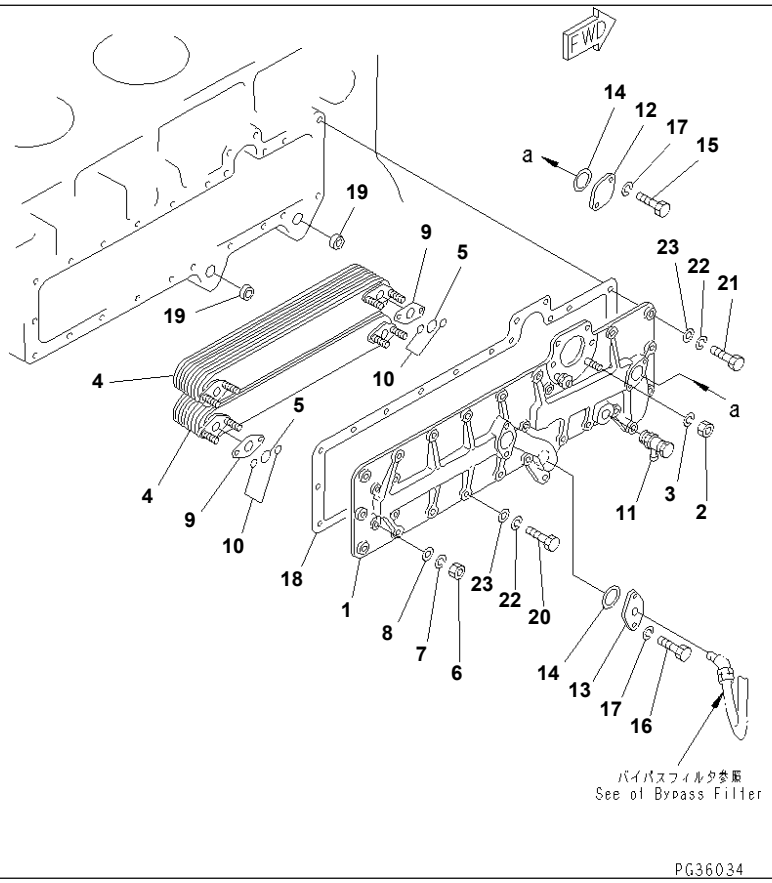

PG36034

S6D155-4S S/N 52707-UP

LUBRICATING OIL COOLER

Item	Part No.	Description	Qty	Options
	6127-61-2104	OIL COOLER ASS'Y	1	SN:52707--
1	6127-61-2113	· BRACKET ASS'Y	1	SN:52707--
2	01580-01008	· · NUT	2	SN:52707--
3	01602-01030	· · WASHER,SPRING	2	SN:52707--
4	600-651-1161	· ELEMENT ASS'Y	2	SN:52707--
5	6127-61-2871	· O-RING	4	SN:52707--
6	01580-11008	· NUT	8	SN:52707--
7	01602-01030	· WASHER,SPRING	8	SN:52707--
8	01641-21016	· WASHER	8	SN:52707--
9	6127-61-2850	· GASKET	4	SN:52707--
10	6127-61-2971	· O-RING	8	SN:52707--
11	6127-61-8411	· VALVE ASS'Y,DRAIN	1	SN:52707--
12	6127-61-2412	· PLATE	1	SN:52707--
13	6127-51-5920	· PLATE	1	SN:52707--
14	6127-61-2420	· GASKET	2	SN:52707--
15	01010-31020	· BOLT	2	SN:52707--
16	01010-31030	· BOLT	2	SN:52707--
17	01602-01030	· WASHER,SPRING	4	SN:52707--
18	6127-61-2131	GASKET (K2)	1	SN:52707--
19	6124-61-2181	GROMMET (K2)	2	SN:52707--
20	01010-31035	BOLT	19	SN:52707--
21	01010-31045	BOLT	3	SN:52707--
22	01602-01030	WASHER,SPRING	22	SN:52707--
23	01642-21016	WASHER	22	SN:52707--

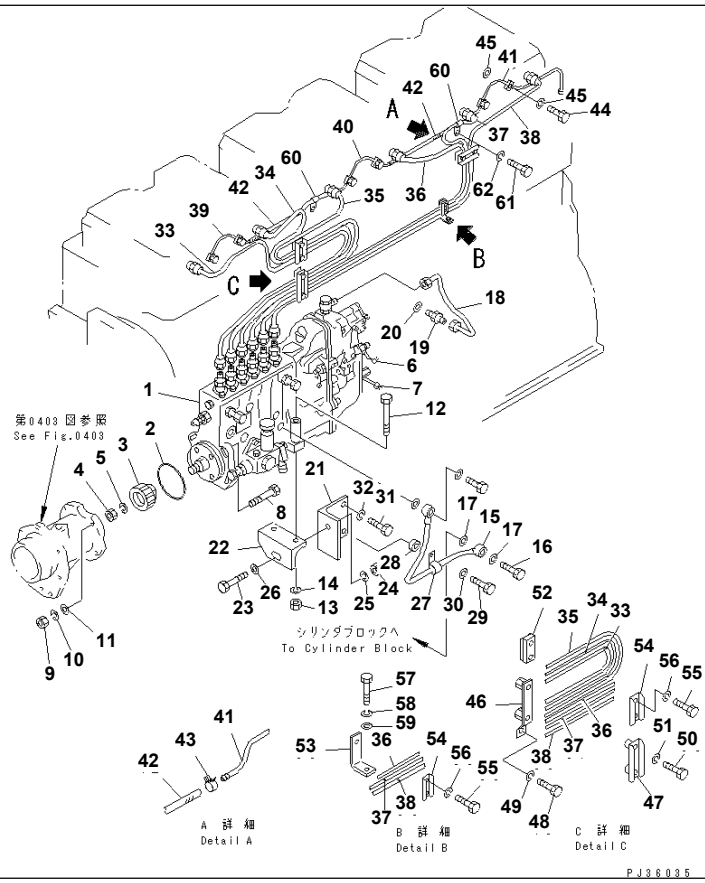

S6D155-4S S/N 52707-UP

FUEL INJECTION PUMP AND PIPING (1/2)

Item	Part No.	Description	Qty	Options
1	(6127-71-1153)	INJECTION PUMP ASS'Y,(SEE FIG.0451A)	1	SN:55380--
	(□6127-71-1152)	INJECTION PUMP ASS'Y,(SEE FIG.0451A)	1	SN:53470--55379
	(◆6127-71-1151)	INJECTION PUMP ASS'Y,(SEE FIG.0451)	1	SN:53465--53469
	(◆6127-71-1150)	INJECTION PUMP ASS'Y,(SEE FIG.0451)	1	SN:52707--53464
2	07000-02090	· O-RING (K2)	1	SN:52707--
3	6128-71-1210	· COUPLING	1	SN:52707--
4	01583-01811	· NUT	1	SN:52707--
5	01602-01854	· WASHER,SPRING	1	SN:52707--
6	☆	· WIRE,SEAL	2	SN:52707--
7	☆	· WIRE,SEAL	1	SN:52707--
8	01050-31055	BOLT	4	SN:52707--
9	01582-01008	NUT	4	SN:52707--
10	01602-01030	WASHER,SPRING	4	SN:52707--
11	01643-31032	WASHER	4	SN:52707--
12	01050-31095	BOLT	2	SN:52707--
13	01582-01008	NUT	2	SN:52707--
14	01602-01030	WASHER,SPRING	2	SN:52707--
15	6127-71-5880	PIPE	1	SN:52707--
16	07206-11014	BOLT,JOINT	1	SN:52707--
17	07005-01412	GASKET (K2)	2	SN:52707--
18	6127-71-5830	PIPE	1	SN:52707--
19	6127-71-5870	NIPPLE	1	SN:52707--
20	07005-01412	GASKET (K2)	1	SN:52707--
21	6127-21-6111	BRACKET	1	SN:52707--

FUEL INJECTION PUMP AND PIPING (1/2)

Item	Part No.	Description	Qty	Options
22	6127-21-6211	BRACKET	1	SN:52707--
23	01050-31645	BOLT	1	SN:52707--
24	01582-01613	NUT	1	SN:52707--
25	01602-01648	WASHER,SPRING	1	SN:52707--
26	01641-21626	WASHER	1	SN:52707--
27	6130-71-5680	CLIP	1	SN:52707--
28	6691-21-6360	SPACER	1	SN:52707--
29	01010-31240	BOLT	1	SN:52707--
30	01643-31232	WASHER	1	SN:52707--
31	01010-31230	BOLT	1	SN:52707--
32	01602-01236	WASHER,SPRING	1	SN:52707--
33	6127-71-5171	PIPE,INJECTION¤ NO.1	1	SN:52707--
34	6127-71-5123	PIPE,INJECTION¤ NO.2	1	SN:52707--
35	6127-71-5133	PIPE,INJECTION¤ NO.3	1	SN:52707--
36	6127-71-5143	PIPE,INJECTION¤ NO.4	1	SN:52707--
37	6127-71-5181	PIPE,INJECTION¤ NO.5	1	SN:52707--
38	6127-71-5191	PIPE,INJECTION¤ NO.6	1	SN:52707--
39	6127-71-5320	PIPE,SPILL	1	SN:52707--
40	6127-71-5330	PIPE,SPILL	1	SN:52707--
41	6128-71-5340	PIPE,SPILL	1	SN:52707--
42	07270-20413	TUBE	2	SN:52707--
43	07285-00085	CLIP	4	SN:52707--
44	6127-11-3152	BOLT,JOINT	6	SN:52707--
45	07005-00812	GASKET (K1)	12	SN:52707--
46	6127-71-5422	CLAMP	1	SN:52707--
47	6127-71-5411	CLAMP	1	SN:52707--
48	01010-31020	BOLT	1	SN:52707--
49	01602-01030	WASHER,SPRING	1	SN:52707--
50	01010-30830	BOLT	2	SN:52707--
51	01602-00825	WASHER,SPRING	2	SN:52707--
52	6127-71-5441	CLAMP	2	SN:52707--
53	6127-71-5470	CLAMP	1	SN:52707--
54	6127-71-5451	CLAMP	3	SN:52707--
55	01010-30830	BOLT	6	SN:52707--
56	01602-00825	WASHER,SPRING	6	SN:52707--
57	01010-31025	BOLT	1	SN:52707--
58	01602-01030	WASHER,SPRING	1	SN:52707--
59	01641-21016	WASHER	1	SN:52707--
60	6127-71-5380	CLAMP	2	SN:52707--
61	01010-30812	BOLT	2	SN:52707--
62	01602-00825	WASHER,SPRING	2	SN:52707--

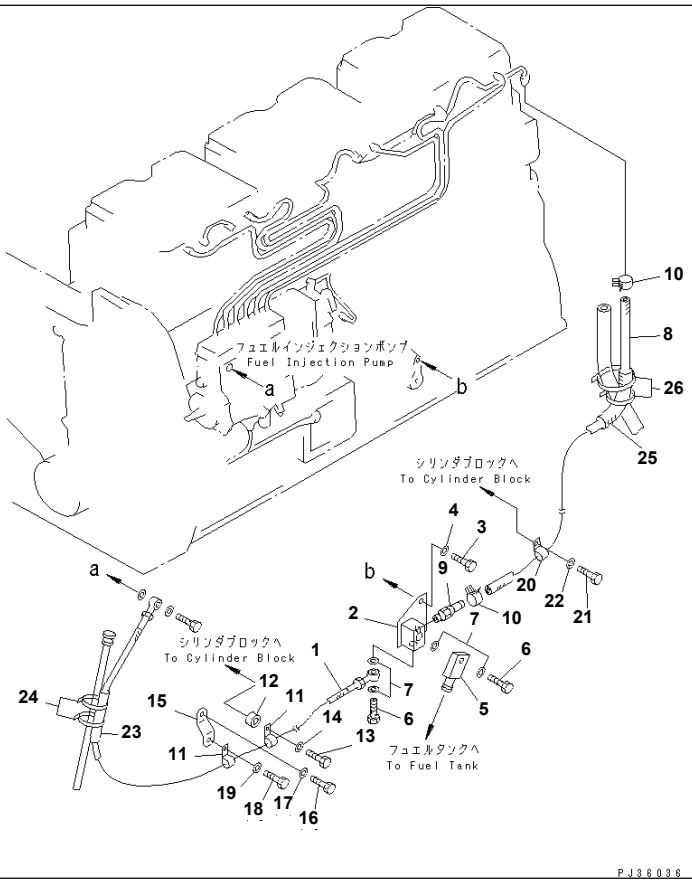

S6D155-4S S/N 52707-UP

FUEL INJECTION PUMP AND PIPING (2/2)

Item	Part No.	Description	Qty	Options
1	6127-71-5650	HOSE,FUEL	1	SN:52707--
	6127-71-5570	HOSE,FUEL (FOR SLAG HANDLING)	1	SN:52707--
2	6127-71-5480	ADAPTER	1	SN:52707--
3	01010-30820	BOLT	2	SN:52707--
4	01643-30823	WASHER	2	SN:52707--
5	6128-71-1932	JOINT	1	SN:52707--
6	07206-31014	BOLT,JOINT	2	SN:52707--
7	07005-01412	GASKET (K2)	4	SN:52707--
8	07270-40410	TUBE,SPILL	1	SN:52707--
	6127-71-5670	TUBE,SPILL (FOR SLAG HANDLING)	1	SN:52707--
9	07209-01040	NIPPLE	1	SN:52707--
	6127-71-5950	NIPPLE,(FOR SLAG HANDLING)	1	SN:52707--
10	07285-00085	CLIP	2	SN:52707--
	07285-00125	CLIP,(FOR SLAG HANDLING)	2	SN:52707--
11	600-050-2810	CLAMP	2	SN:52707--
	6127-61-8170	CLAMP,(FOR SLAG HANDLING)	2	SN:52707--
12	(6142-82-6550)	SPACER	1	SN:52707--
13	(01010-30845)	BOLT	1	SN:52707--
14	(01640-00816)	WASHER	1	SN:52707--
15	6127-71-5760	BRACKET	1	SN:52707--
16	01010-31220	BOLT	1	SN:52707--
17	01640-00816	WASHER	1	SN:52707--
18	01010-30810	BOLT	1	SN:52707--
19	01640-00816	WASHER	1	SN:52707--

FUEL INJECTION PUMP AND PIPING (2/2)

Item	Part No.	Description	Qty	Options
20	08036-10814	CLIP	1	SN:52707--
	6600-01-5570	CLIP,(FOR SLAG HANDLING)	1	SN:52707--
21	01010-31220	BOLT	1	SN:52707--
22	01640-01223	WASHER	1	SN:52707--
23	205-62-72140	COVER	1	SN:52707--
24	08034-00519	BAND	2	SN:52707--
	04059-01650	WIRE,(FOR SLAG HANDLING)	2	SN:52707--
25	07260-20906	HOSE	1	SN:52707--
26	08034-00310	BAND	2	SN:52707--
	04059-01640	WIRE,(FOR SLAG HANDLING)	2	SN:52707--

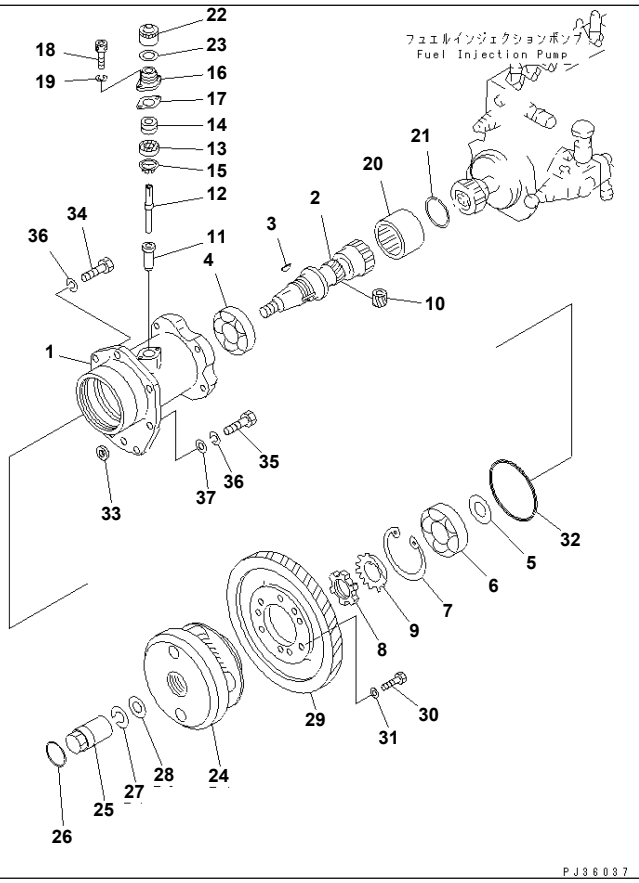

S6D155-4S S/N 52707-UP

FUEL INJECTION PUMP DRIVE

Item	Part No.	Description	Qty	Options
	6127-71-3004	DRIVE ASS'Y,INJECTION PUMP	1	SN:52707--
1	6127-71-3312	· HOUSING	1	SN:52707--
2	6127-71-3115	· SHAFT	1	SN:52707--
3	04010-00516	· KEY	1	SN:52707--
4	06030-06209	· BEARING	1	SN:52707--
5	6127-71-3160	· WASHER	1	SN:52707--
6	06030-06308	· BEARING	1	SN:52707--
7	04065-09030	· RING,SNAP	1	SN:52707--
8	01530-03912	· NUT	1	SN:52707--
9	01658-23923	· WASHER,LOCK (K2)	1	SN:52707--
	6127-71-3202	· DRIVE ASS'Y	1	SN:52707--
10	6110-73-3220	· · GEAR,DRIVE	1	SN:52707--
11	6127-71-3231	· · BUSHING	1	SN:52707--
12	6162-73-1910	· · SHAFT	1	SN:52707--
13	6127-71-3250	· SEAL,OIL (K2)	1	SN:52707--
14	6162-73-1960	· WASHER,FELT (K2)	1	SN:52707--
15	6162-73-1970	· SPACER	1	SN:52707--
16	6162-73-1920	· HOUSING	1	SN:52707--
17	6162-73-1930	· GASKET (K2)	1	SN:52707--
18	6110-73-3511	· SCREW	2	SN:52707--
19	6110-73-3520	· WASHER,SPRING	2	SN:52707--
20	6127-71-3131	COUPLING	1	SN:52707--
21	04067-00050	RING,SNAP	1	SN:52707--
22	6136-81-5291	CAP	1	SN:52707--

S6D155-4S S/N 52707-UP
FUEL INJECTION PUMP DRIVE

Item	Part No.	Description	Qty	Options
23	6130-82-5270	GASKET	1	SN:52707--
24	(6127-71-1132)	AUTOMATIC TIMER A.,(SEE FIG.0495)	1	SN:52707--
25	6127-71-2212	NUT	1	SN:52707--
26	07000-03032	O-RING (K2)	1	SN:52707--
27	01602-02060	WASHER,SPRING	1	SN:52707--
28	01643-32060	WASHER	1	SN:52707--
29	6127-71-3123	GEAR,INJECTION	1	SN:52707--
30	01050-31030	BOLT	6	SN:52707--
31	01643-51032	WASHER	6	SN:52707--
32	07000-03115	O-RING (K2)	1	SN:52707--
33	6127-71-3380	GROMMET (K2)	1	SN:52707--
34	01010-31230	BOLT	6	SN:52707--
35	01010-31235	BOLT	1	SN:52707--
36	01602-01236	WASHER,SPRING	7	SN:52707--
37	01641-21223	WASHER	1	SN:52707--

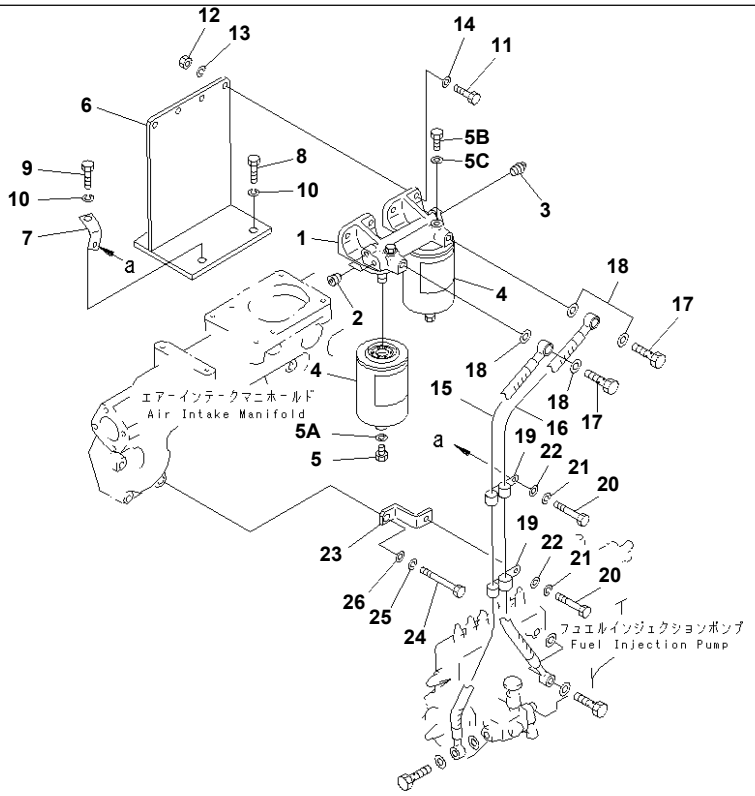

S6D155-4S S/N 52707-UP

FUEL FILTER AND PIPING

Item	Part No.	Description	Qty	Options
	6127-71-6203	FUEL FILTER ASS'Y	1	SN:52707--
	6127-71-6204	FUEL FILTER ASS'Y,(FOR SLAG HANDLING)	1	SN:52707--
1	6127-71-6212	· BRACKET	1	SN:52707--
2	07043-00312	· · PLUG	2	SN:52707--
3	07042-00108	· PLUG,(FOR SHIPPING)	1	SN:52707--
4	600-311-8291	· CARTRIDGE	2	SN:52707--
	600-311-8292	· CARTRIDGE,(FOR SLAG HANDLING)	2	SN:52707--
5	6110-73-6231	· · PLUG	1	SN:52707--
5A	07005-00812	· · GASKET	1	SN:52707--
5B	6110-73-6231	· PLUG	2	SN:52707--
5C	07005-00812	· GASKET	2	SN:52707--
6	6127-71-6812	BRACKET	1	SN:52707--
7	6127-71-5980	BRACKET	1	SN:52707--
8	01010-31440	BOLT	3	SN:52707--
9	01010-31445	BOLT	1	SN:52707--
10	01602-01442	WASHER,SPRING	4	SN:52707--
11	01010-31035	BOLT	4	SN:52707--
12	01580-01008	NUT	4	SN:52707--
13	01602-01030	WASHER,SPRING	4	SN:52707--
14	01640-21016	WASHER	4	SN:52707--
15	07271-11495	HOSE,INLET	1	SN:52707--
	6127-71-5541	HOSE,INLET (FOR SLAG HANDLING)	1	SN:52707--
16	07271-01485	HOSE,OUTLET	1	SN:52707--
	6127-71-5521	HOSE,OUTLET (FOR SLAG HANDLING)	1	SN:52707--

FUEL FILTER AND PIPING

Item	Part No.	Description	Qty	Options
17	07206-11014	BOLT,JOINT	2	SN:52707--
18	07005-01412	GASKET (K2)	4	SN:52707--
19	6128-71-5911	CLIP	2	SN:52707--
	6128-71-5940	CLIP,(FOR SLAG HANDLING)	2	SN:52707--
20	01010-30812	BOLT	2	SN:52707--
21	01602-00825	WASHER,SPRING	2	SN:52707--
22	01642-20810	WASHER	2	SN:52707--
23	6127-71-5970	BRACKET	1	SN:52707--
24	(01010-31290)	BOLT	1	SN:52707--
25	(01602-01236)	WASHER,SPRING	1	SN:52707--
26	(01640-21223)	WASHER	1	SN:52707--

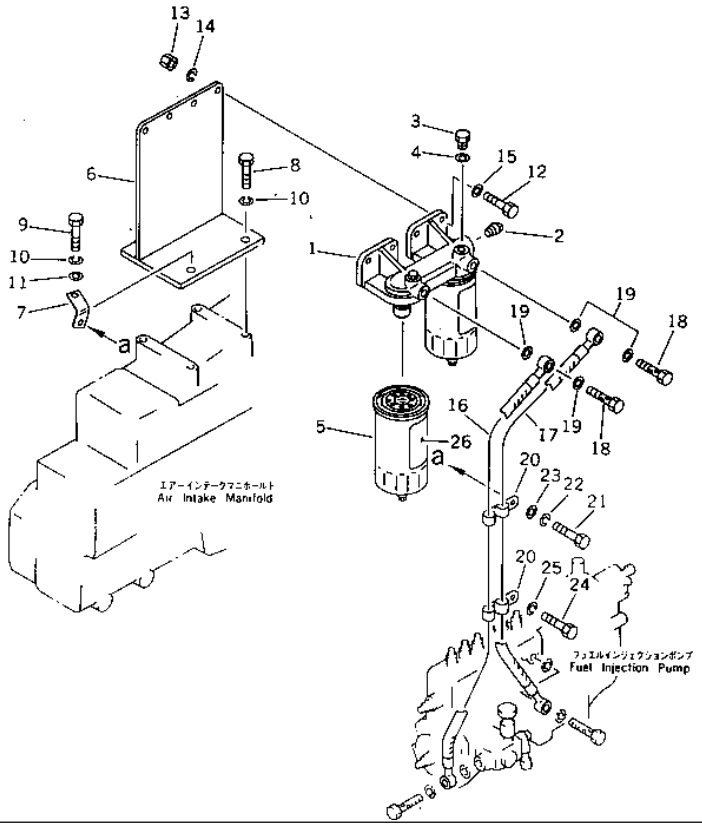

S6D155-4S S/N 52707-UP

FUEL FILTER AND PIPING (WITH AFTER COOLER)

Item	Part No.	Description	Qty	Options
	6127-71-6203	FUEL FILTER ASS'Y	1	SN:52707--
1	6127-71-6212	· BRACKET	1	SN:52707--
2	07043-00312	· · PLUG	2	SN:52707--
3	07042-00108	· PLUG,(FOR SHIPPING)	1	SN:52707--
4	600-311-8291	· CARTRIDGE	2	SN:52707--
5	6110-73-6231	· · PLUG	1	SN:52707--
5A	07005-00812	· · GASKET	1	SN:52707--
5B	6110-73-6231	· PLUG	2	SN:52707--
5C	07005-00812	· GASKET	2	SN:52707--
6	6128-71-6712	BRACKET	1	SN:52707--
7	6127-71-5980	BRACKET	1	SN:52707--
8	01010-31030	BOLT	3	SN:52707--
9	01010-31035	BOLT	1	SN:52707--
10	01602-01030	WASHER,SPRING	4	SN:52707--
11	01640-21016	WASHER	1	SN:52707--
12	01010-31030	BOLT	4	SN:52707--
13	01580-01008	NUT	4	SN:52707--
14	01602-01030	WASHER,SPRING	4	SN:52707--
15	01640-21016	WASHER	4	SN:52707--
16	6128-71-6910	HOSE,INLET	1	SN:52707--
17	07271-01490	HOSE,OUTLET	1	SN:52707--
18	07206-11014	BOLT,JOINT	2	SN:52707--
19	07005-01412	GASKET	4	SN:52707--
20	6128-71-5911	CLIP	2	SN:52707--

FUEL FILTER AND PIPING (WITH AFTER COOLER)

Item	Part No.	Description	Qty	Options
21	01010-30812	BOLT	1	SN:52707--
22	01602-00825	WASHER,SPRING	1	SN:52707--
23	01642-20810	WASHER	1	SN:52707--
24	01010-31020	BOLT	1	SN:52707--
25	01602-01030	WASHER,SPRING	1	SN:52707--
26	600-311-8612	PLATE¤ CAUTION	1	SN:52707--

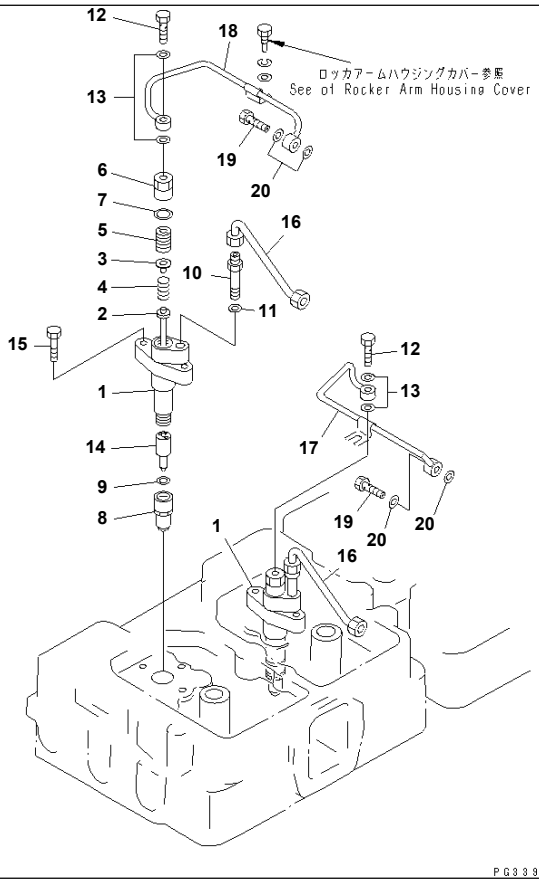

S6D155-4S S/N 52707-UP

FUEL NOZZLE AND SPILL PIPE

Item	Part No.	Description	Qty	Options
	6127-11-3104	NOZZLE HOLDER ASS'Y	6	SN:52707--
1	☆	· HOLDER ASS'Y	1	SN:52707--
THE ZEXEL PART NUMBER IS THAT DK IS REMOVED FROM KOMATSU PART NUMBER LISTED BELOW.				
2	DK150510-0120	· · ROD,PUSH	1	SN:52707--
3	DK150515-6800	· · SEAT,SPRING	1	SN:52707--
4	DK150562-0200	· · SPRING	1	SN:52707--
5	DK150565-0500	· · SCREW,ADJUST	1	SN:52707--
6	DK150567-1000	· · NUT	1	SN:52707--
7	DK029332-2030	· · GASKET	1	SN:52707--
8	DK150639-9600	· · NUT	1	SN:52707--
9	DK029301-0230	· · WASHER	1	SN:52707--
10	DK150643-6200	· · CONNECTOR,INLET	1	SN:52707--
11	DK029300-6210	· · GASKET	1	SN:52707--
12	6127-11-3152	· · BOLT,JOINT	1	SN:52707--
13	07005-00812	· · GASKET (K1)	2	SN:52707--
14	6127-11-3133	· NOZZLE	1	SN:52707--
15	6127-11-3210	BOLT	12	SN:52707--
16	6127-11-2712	PIPE,SUPPLY	6	SN:52707--
17	6127-11-3612	PIPE,SPILL	3	SN:52707--
18	6127-11-3622	PIPE,SPILL	3	SN:52707--
19	6127-11-3152	BOLT,JOINT	6	SN:52707--
20	07005-00812	GASKET (K1)	12	SN:52707--

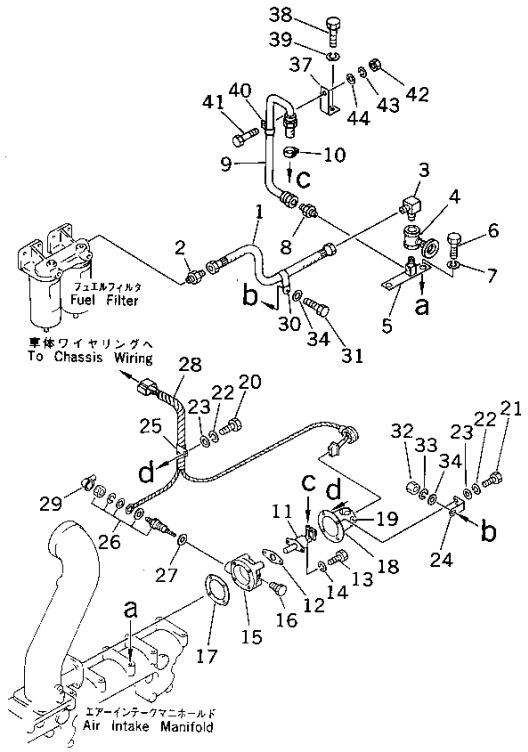

S6D155-4S S/N 52707-UP

AUTO PRIMING SYSTEM

Item	Part No.	Description	Qty	Options
1	6127-81-4771	HOSE	1	SN:52707--
	6127-81-4570	HOSE,(FOR SLAG HANDLING)	1	SN:52707--
2	6128-81-4840	NIPPLE	1	SN:52707--
3	6127-81-4791	ELBOW	1	SN:52707--
4	6128-81-4810	VALVE	1	SN:52707--
5	6127-81-4752	BRACKET	1	SN:52707--
6	01010-31430	BOLT	2	SN:52707--
7	01602-01442	WASHER,SPRING	2	SN:52707--
8	6128-81-4840	NIPPLE	1	SN:52707--
9	6127-81-4880	HOSE	1	SN:52707--
	6127-81-4560	HOSE,(FOR SLAG HANDLING)	1	SN:52707--
10	07281-00137	CLAMP	1	SN:52707--
	07281-00197	CLAMP,(FOR SLAG HANDLING)	1	SN:52707--
11	6128-81-4630	NOZZLE	1	SN:52707--
12	6128-81-4620	GASKET (K1)	1	SN:52707--
13	01010-30612	BOLT	2	SN:52707--
14	01602-20619	WASHER,SPRING	2	SN:52707--
15	6128-81-4911	COVER	1	SN:52707--
16	6162-83-4810	PLUG	1	SN:52707--
17	6675-11-4960	GASKET (K1)	1	SN:52707--
18	6128-81-4831	COVER	1	SN:52707--
19	6128-81-4850	PLATE¤ CAUTION	1	SN:52707--
20	01010-30860	BOLT	3	SN:52707--
21	01010-30865	BOLT	1	SN:52707--

AUTO PRIMING SYSTEM

Item	Part No.	Description	Qty	Options
22	01602-00825	WASHER,SPRING	4	SN:52707--
23	01640-20816	WASHER	4	SN:52707--
24	6127-11-4421	PLATE	1	SN:52707--
25	08036-11210	CLIP	1	SN:52707--
	08036-A1210	CLIP,(FOR SLAG HANDLING)	1	SN:52707--
26	7821-04-1410	GLOW PLUG	1	SN:55444--
	600-815-2180	GLOW PLUG	1	SN:52707--55443
27	600-815-2190	GASKET (K1)	1	SN:52707--
28	600-815-1581	WIRE ASS'Y	1	SN:52707--
	6127-81-4580	WIRE HARNESS,(FOR SLAG HANDLING)	1	SN:52707--
29	140-06-18260	CAP	1	SN:52707--
	08038-10518	CAP,(FOR SLAG HANDLING)	1	SN:52707--
30	6128-81-4780	CLAMP	1	SN:52707--
	6128-81-4710	CLIP,(FOR SLAG HANDLING)	1	SN:52707--
31	01010-30825	BOLT	1	SN:52707--
32	01580-00806	NUT	1	SN:52707--
33	01602-00825	WASHER,SPRING	1	SN:52707--
34	01640-20816	WASHER	2	SN:52707--
35	6128-81-4981	PLATE¤ OPERATING,(NOT SHOWN)	1	SN:52707--
36	6128-82-4980	PLATE¤ CAUTION,(NOT SHOWN)	1	SN:52707--
37	6127-81-4550	BRACKET,(FOR SLAG HANDLING)	1	SN:52707--
38	01010-31425	BOLT,(FOR SLAG HANDLING)	1	SN:52707--
39	01602-01442	WASHER,SPRING (FOR SLAG HANDLING)	1	SN:52707--
40	6127-81-2841	CLAMP,(FOR SLAG HANDLING)	1	SN:52707--
41	01010-30816	BOLT,(FOR SLAG HANDLING)	1	SN:52707--
42	01580-00806	NUT,(FOR SLAG HANDLING)	1	SN:52707--
43	01602-00825	WASHER,SPRING (FOR SLAG HANDLING)	1	SN:52707--
44	01640-20816	WASHER,(FOR SLAG HANDLING)	1	SN:52707--

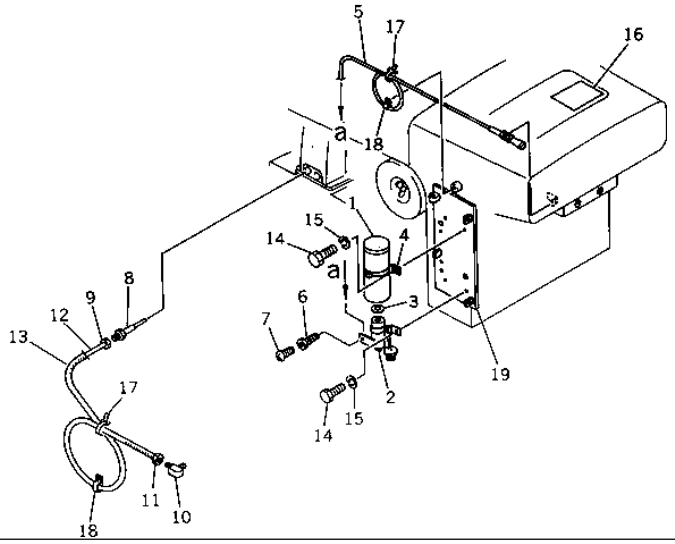

S6D155-4S S/N 52707-UP

ETHER STARTING AID (WITH AFTER COOLER)

Item	Part No.	Description	Qty	Options
1	6127-81-9890	CYLINDER	1	SN:52707--
	6127-81-9821	STARTING KIT	1	SN:52707--
2	6710-81-4201	· VALVE ASS'Y	1	SN:52707--
3	6710-81-4512	· · GASKET	1	SN:52707--
4	6710-81-4271	· CLAMP ASS'Y	1	SN:52707--
5	6710-81-4221	· CABLE,CONTROL	1	SN:52707--
6	6710-81-4381	· WIRE	1	SN:52707--
7	6710-81-4391	· STOPPER	1	SN:52707--
	6710-81-4211	· ATOMIZER ASS'Y	1	SN:52707--
8	6710-81-4431	· · ATOMIZER	1	SN:52707--
9	6710-81-4411	· · NUT,SLEEVE	1	SN:52707--
	6710-81-4261	· ELBOW	1	SN:52707--
10	6710-81-4440	· · ELBOW	1	SN:52707--
11	6710-81-4411	· · NUT,SLEEVE	1	SN:52707--
12	6715-81-4250	· TUBE	1	SN:52707--
13	07823-00426	· TUBE	1	SN:52707--
14	01010-30612	BOLT	4	SN:52707--
15	01602-00619	WASHER,SPRING	4	SN:52707--
16	6127-81-9861	PLATE¤ CAUTION,(ENGLISH)	1	SN:52707--
	6127-81-9851	PLATE¤ CAUTION,(JAPANESE)	1	SN:52707--
17	08034-00414	BAND	2	SN:52707--
18	08036-30614	CLIP	2	SN:52707--
19	175-01-23230	BRACKET	1	SN:52707--

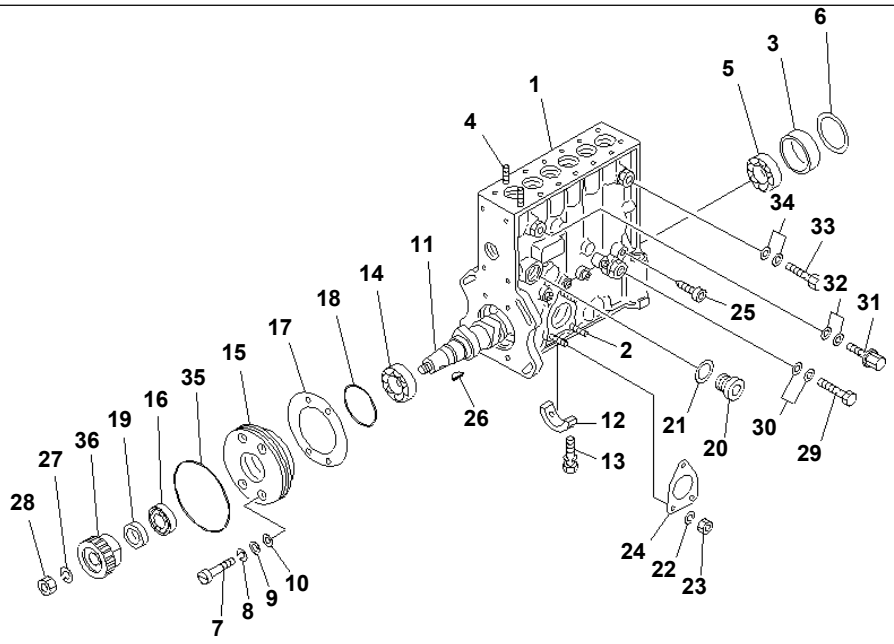

PE3P723

S6D155-4S S/N 52707-UP

FUEL INJECTION PUMP (PUMP) (1/2)(#52707-53469)

Item	Part No.	Description	Qty	Options
	6127-71-1151	INJECTION PUMP ASS'Y	1	SN:53465--53469
	6127-71-1150	INJECTION PUMP ASS'Y	1	SN:52707--53464
THESE ASSEMBLIES CONSIST OF ALL PARTS SHOWN IN FIGS.0451 TO 0481.				
THE ZEXEL PART NUMBER IS THAT DK IS REMOVED FROM KOMATSU PART NUMBER LISTED BELOW.				
	DK106060-7580	· PUMP ASS'Y	1	SN:52707--53469
THIS ASSEMBLY CONSISTS OF ALL PARTS SHOWN IN FIGS.0451 AND 0452.				
1	DK134053-0120	· · HOUSING	1	SN:52707--53469
2	DK029040-6020	· · · STUD	3	SN:52707--53469
3	DK134311-0000	· · · RING	1	SN:52707--53469
4	DK134138-0000	· · · STUD	12	SN:52707--53469
5	DK016650-2230	· · BEARING	1	SN:52707--53469
6	DK134303-0400	· · SHIM¤ 0.60MM	AR	SN:52707--53469
	DK134303-0000	· · SHIM¤ 1.20MM	AR	SN:52707--53469
	DK134303-0100	· · SHIM¤ 1.50MM	AR	SN:52707--53469
	DK134303-0200	· · SHIM¤ 1.80MM	AR	SN:52707--53469
	DK134303-0300	· · SHIM¤ 2.00MM	AR	SN:52707--53469
7	DK029050-6360	· · BOLT	4	SN:52707--53469
8	DK029320-6010	· · WASHER,SPRING	4	SN:52707--53469
9	DK029300-6170	· · SHIM	4	SN:52707--53469
10	DK029340-6120	· · GASKET	4	SN:52707--53469
11	DK134371-5900	· · CAMSHAFT	1	SN:52707--53469
12	DK134306-0100	· · BEARING,CENTER	1	SN:52707--53469
13	DK020106-2040	· · BOLT	2	SN:52707--53469
14	DK016550-2230	· · BEARING	1	SN:52707--53469

FUEL INJECTION PUMP (PUMP) (1/2)(#52707-53469)

Item	Part No.	Description	Qty	Options
15	DK134316-4600	· · COVER	1	SN:52707--53469
16	DK139629-0000	· · SEAL,OIL	1	SN:52707--53469
17	DK134314-0000	· · SHIM¤ 0.10MM	AR	SN:52707--53469
	DK134314-0100	· · SHIM¤ 0.12MM	AR	SN:52707--53469
	DK134314-0200	· · SHIM¤ 0.14MM	AR	SN:52707--53469
	DK134314-0300	· · SHIM¤ 0.16MM	AR	SN:52707--53469
	DK134314-0400	· · SHIM¤ 0.18MM	AR	SN:52707--53469
	DK134314-0500	· · SHIM¤ 0.30MM	AR	SN:52707--53469
	DK134314-0600	· · SHIM¤ 0.50MM	AR	SN:52707--53469
18	DK029635-5010	· · O-RING	1	SN:52707--53469
19	DK134563-0900	· · SLEEVE	1	SN:52707--53469
20	DK134045-0100	· · PLUG	1	SN:52707--53469
21	DK026524-2940	· · GASKET	1	SN:52707--53469
22	DK014110-6440	· · WASHER,SPRING	3	SN:52707--53469
23	DK013020-6040	· · NUT	3	SN:52707--53469
24	DK131041-0500	· · GASKET	1	SN:52707--53469
25	DK134047-0000	· · PLUG	6	SN:52707--53469
26	DK025805-1910	· · KEY	1	SN:52707--53469
27	DK014111-8410	· · WASHER,SPRING	1	SN:52707--53469
28	DK139218-0000	· · NUT	1	SN:52707--53469
29	DK134430-3520	· · BOLT,EYE	1	SN:52707--53469
30	DK029341-4130	· · GASKET	2	SN:52707--53469
31	DK131424-7120	· · VALVE,OVER FLOW	1	SN:52707--53469
32	DK029341-4130	· · GASKET	2	SN:52707--53469
33	DK029731-4680	· · BOLT,EYE	1	SN:52707--53469
34	DK029341-4130	· · GASKET	2	SN:52707--53469
35	DK029639-0020	· · O-RING	1	SN:52707--53469
36	DK134322-0101	· GEAR	1	SN:52707--53469

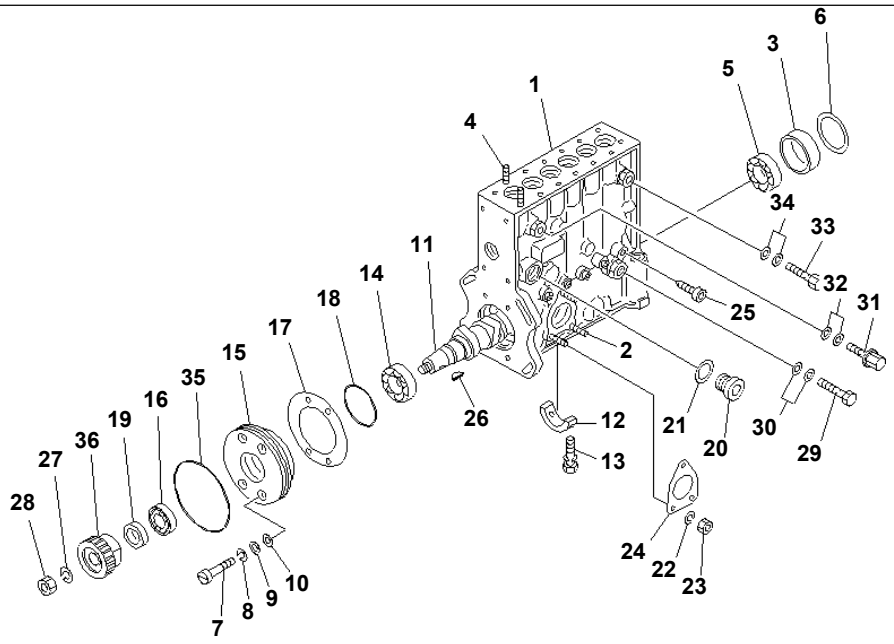

PE3P723

S6D155-4S S/N 52707-UP

FUEL INJECTION PUMP (PUMP) (1/2)(#53470-)

Item	Part No.	Description	Qty	Options
	6127-71-1153	INJECTION PUMP ASS'Y	1	SN:55380--
	6127-71-1152	INJECTION PUMP ASS'Y	1	SN:53470--55379
THESE ASSEMBLIES CONSIST OF ALL PARTS SHOWN IN FIGS.0451A TO 0481A.				
THE ZEXEL PART NUMBER IS THAT DK IS REMOVED FROM KOMATSU PART NUMBER LISTED BELOW.				
	DK106060-7580	· PUMP ASS'Y	1	SN:53470--
THIS ASSEMBLY CONSISTS OF ALL PARTS SHOWN IN FIGS.0451A AND 0451B.				
1	DK134053-0120	· · HOUSING	1	SN:53470--
2	DK029040-6020	· · · STUD	3	SN:53470--
3	DK134311-0000	· · · RING	1	SN:53470--
4	DK134138-0000	· · · STUD	12	SN:53470--
5	DK016650-2230	· · BEARING	1	SN:53470--
6	DK134303-0400	· · SHIM¤ 0.60MM	AR	SN:53470--
	DK134303-0000	· · SHIM¤ 1.20MM	AR	SN:53470--
	DK134303-0100	· · SHIM¤ 1.50MM	AR	SN:53470--
	DK134303-0200	· · SHIM¤ 1.80MM	AR	SN:53470--
	DK134303-0300	· · SHIM¤ 2.00MM	AR	SN:53470--
7	DK029050-6360	· · BOLT	4	SN:53470--
8	DK029320-6010	· · WASHER,SPRING	4	SN:53470--
9	DK029300-6170	· · SHIM	4	SN:53470--
10	DK029340-6120	· · GASKET	4	SN:53470--
11	DK134371-5900	· · CAMSHAFT	1	SN:53470--
12	DK134306-0100	· · BEARING,CENTER	1	SN:53470--
13	DK020106-2040	· · BOLT	2	SN:53470--
14	DK016550-2230	· · BEARING	1	SN:53470--

FUEL INJECTION PUMP (PUMP) (1/2)(#53470-)

Item	Part No.	Description	Qty	Options
15	DK134316-4600	· · COVER	1	SN:53470--
16	DK139629-0000	· · SEAL,OIL	1	SN:53470--
17	DK134314-0000	· · SHIM¤ 0.10MM	AR	SN:53470--
	DK134314-0100	· · SHIM¤ 0.12MM	AR	SN:53470--
	DK134314-0200	· · SHIM¤ 0.14MM	AR	SN:53470--
	DK134314-0300	· · SHIM¤ 0.16MM	AR	SN:53470--
	DK134314-0400	· · SHIM¤ 0.18MM	AR	SN:53470--
	DK134314-0500	· · SHIM¤ 0.30MM	AR	SN:53470--
	DK134314-0600	· · SHIM¤ 0.50MM	AR	SN:53470--
18	DK029635-5010	· · O-RING	1	SN:53470--
19	DK134563-0900	· · SLEEVE	1	SN:53470--
20	DK134045-0100	· · PLUG	1	SN:53470--
21	DK026524-2940	· · GASKET	1	SN:53470--
22	DK014110-6440	· · WASHER,SPRING	3	SN:53470--
23	DK013020-6040	· · NUT	3	SN:53470--
24	DK131041-0500	· · GASKET	1	SN:53470--
25	DK134047-0000	· · PLUG	6	SN:53470--
26	DK025805-1910	· · KEY	1	SN:53470--
27	DK014111-8410	· · WASHER,SPRING	1	SN:53470--
28	DK139218-0000	· · NUT	1	SN:53470--
29	DK134430-3520	· · BOLT,EYE	1	SN:53470--
30	DK029341-4130	· · GASKET	2	SN:53470--
31	DK131424-7120	· · VALVE,OVER FLOW	1	SN:53470--
32	DK029341-4130	· · GASKET	2	SN:53470--
33	DK029731-4680	· · BOLT,EYE	1	SN:53470--
34	DK029341-4130	· · GASKET	2	SN:53470--
35	DK029639-0020	· · O-RING	1	SN:53470--
36	DK134322-0101	· GEAR	1	SN:53470--

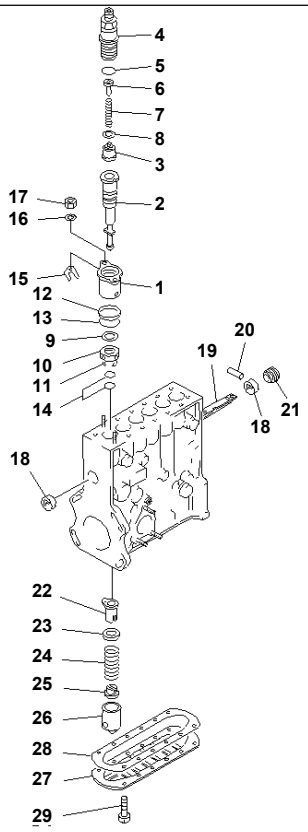

S6D155-4S S/N 52707-UP

FUEL INJECTION PUMP (PUMP) (2/2)(#52707-53469)

Item	Part No.	Description	Qty	Options
	(6127-71-1151)	INJECTION PUMP ASS'Y	1	SN:53465--53469
	(6127-71-1150)	INJECTION PUMP ASS'Y	1	SN:52707--53464
THESE ASSEMBLIES CONSIST OF ALL PARTS SHOWN IN FIGS.0451 TO 0481.				
THE ZEXEL PART NUMBER IS THAT DK IS REMOVED FROM KOMATSU PART NUMBER LISTED BELOW.				
	(DK106060-7580)	· PUMP ASS'Y	1	SN:52707--53469
THIS ASSEMBLY CONSISTS OF ALL PARTS SHOWN IN FIGS.0451 AND 0452.				
	DK134145-5320	· · PLUNGER BLOCK A.	6	SN:52707--53469
1	DK134131-1020	· · · FLANGE	1	SN:52707--53469
2	DK134151-8920	· · · PLUNGER ASS'Y	1	SN:52707--53469
3	DK134110-0020	· · · VALVE,DELIVERY	1	SN:52707--53469
4	DK134116-5100	· · · HOLDER	1	SN:52707--53469
5	DK029632-2070	· · · O-RING	1	SN:52707--53469
6	DK134117-0500	· · · STOPPER	1	SN:52707--53469
7	DK134112-2000	· · · SPRING	1	SN:52707--53469
8	DK134115-0100	· · · GASKET	1	SN:52707--53469
9	DK029302-0140	· · · WASHER	1	SN:52707--53469
10	DK134135-0200	· · · DEFLECTOR	1	SN:52707--53469
11	DK029602-0010	· · · RING,SNAP	1	SN:52707--53469
12	DK134137-0100	· · · RING	1	SN:52707--53469
13	DK029632-9030	· · · O-RING	1	SN:52707--53469
14	DK029631-5020	· · · O-RING	2	SN:52707--53469
15	DK139400-0900	· · SHIM¤ 0.500MM	AR	SN:52707--53469
	DK139400-1000	· · SHIM¤ 0.525MM	AR	SN:52707--53469
	DK139400-1100	· · SHIM¤ 0.550MM	AR	SN:52707--53469

FUEL INJECTION PUMP (PUMP) (2/2)(#52707-53469)

Item	Part No.	Description	Qty	Options
	DK139400-1200	· · SHIM¤ 0.575MM	AR	SN:52707--53469
	DK139400-1300	· · SHIM¤ 0.600MM	AR	SN:52707--53469
	DK139400-1400	· · SHIM¤ 0.625MM	AR	SN:52707--53469
	DK139400-1500	· · SHIM¤ 0.650MM	AR	SN:52707--53469
	DK139400-1600	· · SHIM¤ 0.675MM	AR	SN:52707--53469
	DK139400-1700	· · SHIM¤ 0.700MM	AR	SN:52707--53469
	DK139400-1800	· · SHIM¤ 0.725MM	AR	SN:52707--53469
	DK139400-1900	· · SHIM¤ 0.750MM	AR	SN:52707--53469
	DK139400-2000	· · SHIM¤ 0.775MM	AR	SN:52707--53469
	DK139400-2100	· · SHIM¤ 0.800MM	AR	SN:52707--53469
	DK139400-2200	· · SHIM¤ 0.825MM	AR	SN:52707--53469
	DK139400-2300	· · SHIM¤ 0.850MM	AR	SN:52707--53469
	DK139400-2400	· · SHIM¤ 0.875MM	AR	SN:52707--53469
	DK139400-2500	· · SHIM¤ 0.900MM	AR	SN:52707--53469
	DK139400-2600	· · SHIM¤ 0.925MM	AR	SN:52707--53469
	DK139400-2700	· · SHIM¤ 0.950MM	AR	SN:52707--53469
	DK139400-2800	· · SHIM¤ 0.975MM	AR	SN:52707--53469
	DK139400-2900	· · SHIM¤ 1.000MM	AR	SN:52707--53469
	DK139400-3000	· · SHIM¤ 1.025MM	AR	SN:52707--53469
	DK139400-3100	· · SHIM¤ 1.050MM	AR	SN:52707--53469
	DK139400-3200	· · SHIM¤ 1.075MM	AR	SN:52707--53469
	DK139400-3300	· · SHIM¤ 1.100MM	AR	SN:52707--53469
	DK139400-3400	· · SHIM¤ 1.125MM	AR	SN:52707--53469
	DK139400-3500	· · SHIM¤ 1.150MM	AR	SN:52707--53469
	DK139400-3600	· · SHIM¤ 1.175MM	AR	SN:52707--53469
	DK139400-3700	· · SHIM¤ 1.200MM	AR	SN:52707--53469
	DK139400-3800	· · SHIM¤ 1.225MM	AR	SN:52707--53469
	DK139400-3900	· · SHIM¤ 1.250MM	AR	SN:52707--53469
	DK139400-4000	· · SHIM¤ 1.275MM	AR	SN:52707--53469
	DK139400-4100	· · SHIM¤ 1.300MM	AR	SN:52707--53469
	DK139400-4200	· · SHIM¤ 1.325MM	AR	SN:52707--53469
	DK139400-4300	· · SHIM¤ 1.350MM	AR	SN:52707--53469
	DK139400-4400	· · SHIM¤ 1.375MM	AR	SN:52707--53469
	DK139400-4500	· · SHIM¤ 1.400MM	AR	SN:52707--53469
	DK139400-4600	· · SHIM¤ 1.425MM	AR	SN:52707--53469
	DK139400-4700	· · SHIM¤ 1.450MM	AR	SN:52707--53469
	DK139400-4800	· · SHIM¤ 1.475MM	AR	SN:52707--53469
	DK139400-4900	· · SHIM¤ 1.500MM	AR	SN:52707--53469
	DK139400-5000	· · SHIM¤ 1.525MM	AR	SN:52707--53469
	DK139400-5100	· · SHIM¤ 1.550MM	AR	SN:52707--53469
	DK139400-5200	· · SHIM¤ 1.575MM	AR	SN:52707--53469
	DK139400-5300	· · SHIM¤ 1.600MM	AR	SN:52707--53469
	DK139400-5400	· · SHIM¤ 1.625MM	AR	SN:52707--53469
	DK139400-5500	· · SHIM¤ 1.650MM	AR	SN:52707--53469
	DK139400-5600	· · SHIM¤ 1.675MM	AR	SN:52707--53469
	DK139400-5700	· · SHIM¤ 1.700MM	AR	SN:52707--53469
	DK139400-5800	· · SHIM¤ 1.725MM	AR	SN:52707--53469
	DK139400-5900	· · SHIM¤ 1.750MM	AR	SN:52707--53469
	DK139400-6000	· · SHIM¤ 1.775MM	AR	SN:52707--53469
	DK139400-6100	· · SHIM¤ 1.800MM	AR	SN:52707--53469
	DK139400-6200	· · SHIM¤ 1.825MM	AR	SN:52707--53469
	DK139400-6300	· · SHIM¤ 1.850MM	AR	SN:52707--53469
	DK139400-6400	· · SHIM¤ 1.875MM	AR	SN:52707--53469
	DK139400-6500	· · SHIM¤ 1.900MM	AR	SN:52707--53469
	DK139400-6600	· · SHIM¤ 1.925MM	AR	SN:52707--53469
	DK139400-6700	· · SHIM¤ 1.950MM	AR	SN:52707--53469

FUEL INJECTION PUMP (PUMP) (2/2)(#52707-53469)

Item	Part No.	Description	Qty	Options
	DK139400-6800	· · SHIM¤ 1.975MM	AR	SN:52707--53469
16	DK134132-0300	· · WASHER	12	SN:52707--53469
17	DK013021-0040	· · NUT	12	SN:52707--53469
18	DK134001-0000	· · BUSHING	2	SN:52707--53469
19	DK134256-0000	· · RACK,CONTROL	1	SN:52707--53469
20	DK024030-2030	· · PIN	1	SN:52707--53469
21	DK134222-0000	· · BUSHING	1	SN:52707--53469
22	DK134241-0021	· · SLEEVE,CONTROL	6	SN:52707--53469
23	DK134216-0000	· · SEAT,SPRING	6	SN:52707--53469
24	DK134215-0300	· · SPRING	6	SN:52707--53469
25	DK134217-0000	· · SEAT,SPRING	6	SN:52707--53469
26	DK134200-0020	· · TAPPET ASS'Y	6	SN:52707--53469
27	DK134043-0800	· · COVER	1	SN:52707--53469
28	DK134042-0100	· · GASKET	1	SN:52707--53469
29	DK012206-1640	· · SCREW	12	SN:52707--53469

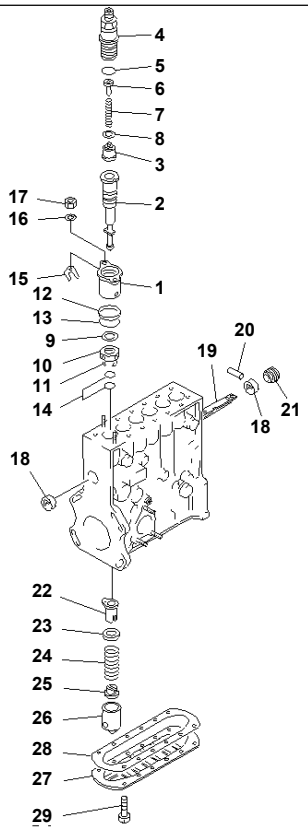

PE3P724

S6D155-4S S/N 52707-UP

FUEL INJECTION PUMP (PUMP) (2/2)(#53470-)

Item	Part No.	Description	Qty	Options
	(6127-71-1153)	INJECTION PUMP ASS'Y	1	SN:55380--
	(6127-71-1152)	INJECTION PUMP ASS'Y	1	SN:53470--55379
THESE ASSEMBLIES CONSIST OF ALL PARTS SHOWN IN FIGS.0451A TO 0481A.				
THE ZEXEL PART NUMBER IS THAT DK IS REMOVED FROM KOMATSU PART NUMBER LISTED BELOW.				
	(DK106060-7580)	· PUMP ASS'Y	1	SN:53470--
THIS ASSEMBLY CONSISTS OF ALL PARTS SHOWN IN FIGS.0451A AND 0451B.				
	DK134145-5320	· · PLUNGER BLOCK A.	6	SN:53470--
1	DK134131-1020	· · · FLANGE	1	SN:53470--
2	DK134151-8920	· · · PLUNGER ASS'Y	1	SN:53470--
3	DK134110-0020	· · · VALVE,DELIVERY	1	SN:53470--
4	DK134116-5100	· · · HOLDER	1	SN:53470--
5	DK029632-2070	· · · O-RING	1	SN:53470--
6	DK134117-0500	· · · STOPPER	1	SN:53470--
7	DK134112-2000	· · · SPRING	1	SN:53470--
8	DK134115-0100	· · · GASKET	1	SN:53470--
9	DK029302-0140	· · · WASHER	1	SN:53470--
10	DK134135-0200	· · · DEFLECTOR	1	SN:53470--
11	DK029602-0010	· · · RING,SNAP	1	SN:53470--
12	DK134137-0100	· · · RING	1	SN:53470--
13	DK029632-9030	· · · O-RING	1	SN:53470--
14	DK029631-5020	· · · O-RING	2	SN:53470--
15	DK139400-0900	· · SHIM¤ 0.500MM	AR	SN:53470--
	DK139400-1000	· · SHIM¤ 0.525MM	AR	SN:53470--
	DK139400-1100	· · SHIM¤ 0.550MM	AR	SN:53470--

FUEL INJECTION PUMP (PUMP) (2/2)(#53470-)

Item	Part No.	Description	Qty	Options
	DK139400-1200	· · SHIM¤ 0.575MM	AR	SN:53470--
	DK139400-1300	· · SHIM¤ 0.600MM	AR	SN:53470--
	DK139400-1400	· · SHIM¤ 0.625MM	AR	SN:53470--
	DK139400-1500	· · SHIM¤ 0.650MM	AR	SN:53470--
	DK139400-1600	· · SHIM¤ 0.675MM	AR	SN:53470--
	DK139400-1700	· · SHIM¤ 0.700MM	AR	SN:53470--
	DK139400-1800	· · SHIM¤ 0.725MM	AR	SN:53470--
	DK139400-1900	· · SHIM¤ 0.750MM	AR	SN:53470--
	DK139400-2000	· · SHIM¤ 0.775MM	AR	SN:53470--
	DK139400-2100	· · SHIM¤ 0.800MM	AR	SN:53470--
	DK139400-2200	· · SHIM¤ 0.825MM	AR	SN:53470--
	DK139400-2300	· · SHIM¤ 0.850MM	AR	SN:53470--
	DK139400-2400	· · SHIM¤ 0.875MM	AR	SN:53470--
	DK139400-2500	· · SHIM¤ 0.900MM	AR	SN:53470--
	DK139400-2600	· · SHIM¤ 0.925MM	AR	SN:53470--
	DK139400-2700	· · SHIM¤ 0.950MM	AR	SN:53470--
	DK139400-2800	· · SHIM¤ 0.975MM	AR	SN:53470--
	DK139400-2900	· · SHIM¤ 1.000MM	AR	SN:53470--
	DK139400-3000	· · SHIM¤ 1.025MM	AR	SN:53470--
	DK139400-3100	· · SHIM¤ 1.050MM	AR	SN:53470--
	DK139400-3200	· · SHIM¤ 1.075MM	AR	SN:53470--
	DK139400-3300	· · SHIM¤ 1.100MM	AR	SN:53470--
	DK139400-3400	· · SHIM¤ 1.125MM	AR	SN:53470--
	DK139400-3500	· · SHIM¤ 1.150MM	AR	SN:53470--
	DK139400-3600	· · SHIM¤ 1.175MM	AR	SN:53470--
	DK139400-3700	· · SHIM¤ 1.200MM	AR	SN:53470--
	DK139400-3800	· · SHIM¤ 1.225MM	AR	SN:53470--
	DK139400-3900	· · SHIM¤ 1.250MM	AR	SN:53470--
	DK139400-4000	· · SHIM¤ 1.275MM	AR	SN:53470--
	DK139400-4100	· · SHIM¤ 1.300MM	AR	SN:53470--
	DK139400-4200	· · SHIM¤ 1.325MM	AR	SN:53470--
	DK139400-4300	· · SHIM¤ 1.350MM	AR	SN:53470--
	DK139400-4400	· · SHIM¤ 1.375MM	AR	SN:53470--
	DK139400-4500	· · SHIM¤ 1.400MM	AR	SN:53470--
	DK139400-4600	· · SHIM¤ 1.425MM	AR	SN:53470--
	DK139400-4700	· · SHIM¤ 1.450MM	AR	SN:53470--
	DK139400-4800	· · SHIM¤ 1.475MM	AR	SN:53470--
	DK139400-4900	· · SHIM¤ 1.500MM	AR	SN:53470--
	DK139400-5000	· · SHIM¤ 1.525MM	AR	SN:53470--
	DK139400-5100	· · SHIM¤ 1.550MM	AR	SN:53470--
	DK139400-5200	· · SHIM¤ 1.575MM	AR	SN:53470--
	DK139400-5300	· · SHIM¤ 1.600MM	AR	SN:53470--
	DK139400-5400	· · SHIM¤ 1.625MM	AR	SN:53470--
	DK139400-5500	· · SHIM¤ 1.650MM	AR	SN:53470--
	DK139400-5600	· · SHIM¤ 1.675MM	AR	SN:53470--
	DK139400-5700	· · SHIM¤ 1.700MM	AR	SN:53470--
	DK139400-5800	· · SHIM¤ 1.725MM	AR	SN:53470--
	DK139400-5900	· · SHIM¤ 1.750MM	AR	SN:53470--
	DK139400-6000	· · SHIM¤ 1.775MM	AR	SN:53470--
	DK139400-6100	· · SHIM¤ 1.800MM	AR	SN:53470--
	DK139400-6200	· · SHIM¤ 1.825MM	AR	SN:53470--
	DK139400-6300	· · SHIM¤ 1.850MM	AR	SN:53470--
	DK139400-6400	· · SHIM¤ 1.875MM	AR	SN:53470--
	DK139400-6500	· · SHIM¤ 1.900MM	AR	SN:53470--
	DK139400-6600	· · SHIM¤ 1.925MM	AR	SN:53470--
	DK139400-6700	· · SHIM¤ 1.950MM	AR	SN:53470--

FUEL INJECTION PUMP (PUMP) (2/2)(#53470-)

Item	Part No.	Description	Qty	Options
	DK139400-6800	· · SHIM¤ 1.975MM	AR	SN:53470--
16	DK134132-0300	· · WASHER	12	SN:53470--
17	DK013021-0040	· · NUT	12	SN:53470--
18	DK134001-0000	· · BUSHING	2	SN:53470--
19	DK134256-0000	· · RACK,CONTROL	1	SN:53470--
20	DK024030-2030	· · PIN	1	SN:53470--
21	DK134222-0000	· · BUSHING	1	SN:53470--
22	DK134241-0021	· · SLEEVE,CONTROL	6	SN:53470--
23	DK134216-0000	· · SEAT,SPRING	6	SN:53470--
24	DK134215-0300	· · SPRING	6	SN:53470--
25	DK134217-0000	· · SEAT,SPRING	6	SN:53470--
26	DK134200-0020	· · TAPPET ASS'Y	6	SN:53470--
27	DK134043-0800	· · COVER	1	SN:53470--
28	DK134042-0100	· · GASKET	1	SN:53470--
29	DK012206-1640	· · SCREW	12	SN:53470--

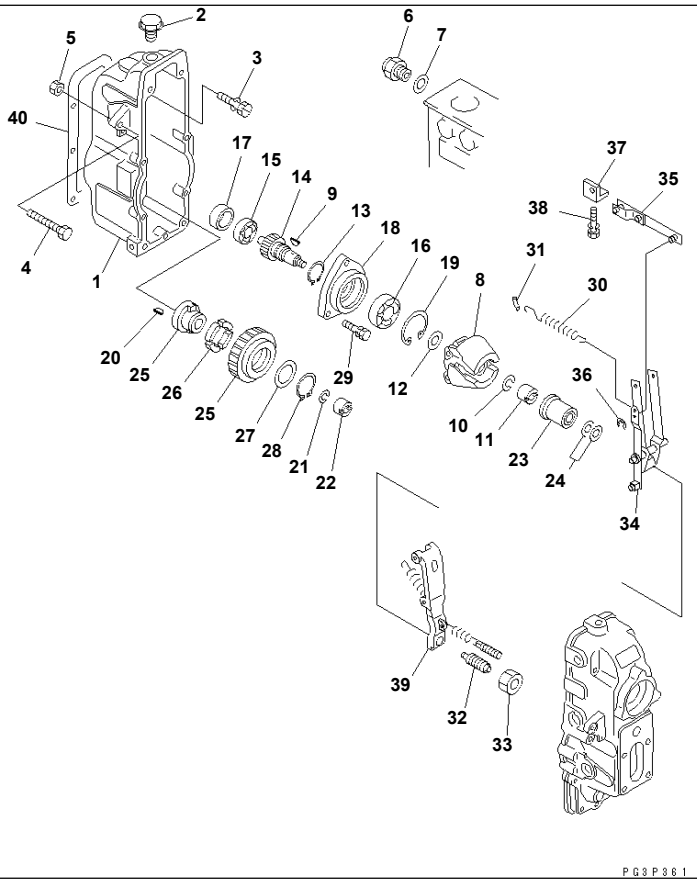

S6D155-4S S/N 52707-UP

FUEL INJECTION PUMP (GOVERNOR) (1/2)(#52707-53469)

Item	Part No.	Description	Qty	Options
	(6127-71-1151)	INJECTION PUMP ASS'Y	1	SN:53465--53469
	(6127-71-1150)	INJECTION PUMP ASS'Y	1	SN:52707--53464
THESE ASSEMBLIES CONSIST OF ALL PARTS SHOWN IN FIGS.0451 TO 0481.				
THE ZEXEL PART NUMBER IS THAT DK IS REMOVED FROM KOMATSU PART NUMBER LISTED BELOW.				
	DK105447-0671	· GOVERNOR ASS'Y	1	SN:53465--53469
	DK105447-0670	· GOVERNOR ASS'Y	1	SN:52707--53464
THESE ASSEMBLIES CONSIST OF ALL PARTS SHOWN IN FIGS.0461 AND 0462.				
1	DK154002-3320	· · HOUSING	1	SN:52707--53469
2	DK154007-1600	· · PLUG	1	SN:52707--53469
3	DK139006-4100	· · BOLT	8	SN:52707--53469
4	DK154010-3900	· · BOLT	1	SN:52707--53469
5	DK154011-0100	· · NUT,LOCK	1	SN:52707--53469
6	DK155404-1700	· · CAP	1	SN:52707--53469
7	DK026524-3040	· · GASKET	1	SN:52707--53469
8	DK154100-9920	· · FLYWEIGHT ASS'Y	1	SN:52707--53469
9	DK025803-1610	· · KEY¤ 16MM	1	SN:52707--53469
10	DK029321-2020	· · WASHER,SPRING	1	SN:52707--53469
11	DK029231-2030	· · NUT	1	SN:52707--53469
12	DK154120-0100	· · WASHER	1	SN:52707--53469
13	DK029602-0020	· · RING,SNAP	1	SN:52707--53469
14	DK154121-0500	· · GEAR	1	SN:52707--53469
15	DK016610-2640	· · BEARING	1	SN:52707--53469
16	DK028102-0010	· · BEARING	1	SN:52707--53469
17	DK154134-0000	· · SPACER	1	SN:52707--53469

FUEL INJECTION PUMP (GOVERNOR) (1/2)(#52707-53469)

Item	Part No.	Description	Qty	Options
18	DK154122-0300	· · COVER	1	SN:52707--53469
19	DK029614-7020	· · RING,SNAP	1	SN:52707--53469
20	DK025803-1610	· · KEY¤ 16MM	1	SN:52707--53469
21	DK029321-2020	· · WASHER,SPRING	1	SN:52707--53469
22	DK029231-2030	· · NUT	1	SN:52707--53469
23	DK154123-1020	· · SLEEVE	1	SN:52707--53469
24	DK029311-0010	· · SHIM¤ 0.20MM	AR	SN:52707--53469
	DK029311-0180	· · SHIM¤ 0.30MM	AR	SN:52707--53469
	DK029311-0190	· · SHIM¤ 0.40MM	AR	SN:52707--53469
	DK139410-0000	· · SHIM¤ 0.50MM	AR	SN:52707--53469
	DK029311-0210	· · SHIM¤ 1.00MM	AR	SN:52707--53469
	DK139410-0100	· · SHIM¤ 1.50MM	AR	SN:52707--53469
	DK139410-3000	· · SHIM¤ 2.00MM	AR	SN:53465--53469
	DK139410-3100	· · SHIM¤ 3.00MM	AR	SN:53465--53469
	DK139410-3200	· · SHIM¤ 4.00MM	AR	SN:53465--53469
25	DK154130-1820	· · GEAR ASS'Y	1	SN:52707--53469
26	DK153251-0100	· · · DAMPER	1	SN:53465--53469
27	DK139329-0000	· · · WASHER	1	SN:53465--53469
28	DK016020-2810	· · · RING,SNAP	1	SN:53465--53469
29	DK020106-2840	· · BOLT	3	SN:52707--53469
30	DK154154-0900	· · SPRING	1	SN:52707--53469
31	DK154156-0100	· · TUBE	2	SN:52707--53469
32	DK154172-5120	· · CAPSULE,SPRING	1	SN:52707--53469
33	DK029201-6010	· · NUT	1	SN:52707--53469
34	DK154211-5420	· · GUIDE LEVER ASS'Y	1	SN:52707--53469
35	DK154230-0220	· · LINK	1	SN:52707--53469
36	DK016010-0540	· · RING,SNAP	1	SN:52707--53469
37	DK154232-0400	· · CONNECTOR	1	SN:52707--53469
38	DK029050-5040	· · SCREW	2	SN:52707--53469
39	DK154236-5721	· · LEVER,TENSION	1	SN:52707--53469
40	DK154350-8700	· · GASKET	1	SN:52707--53469

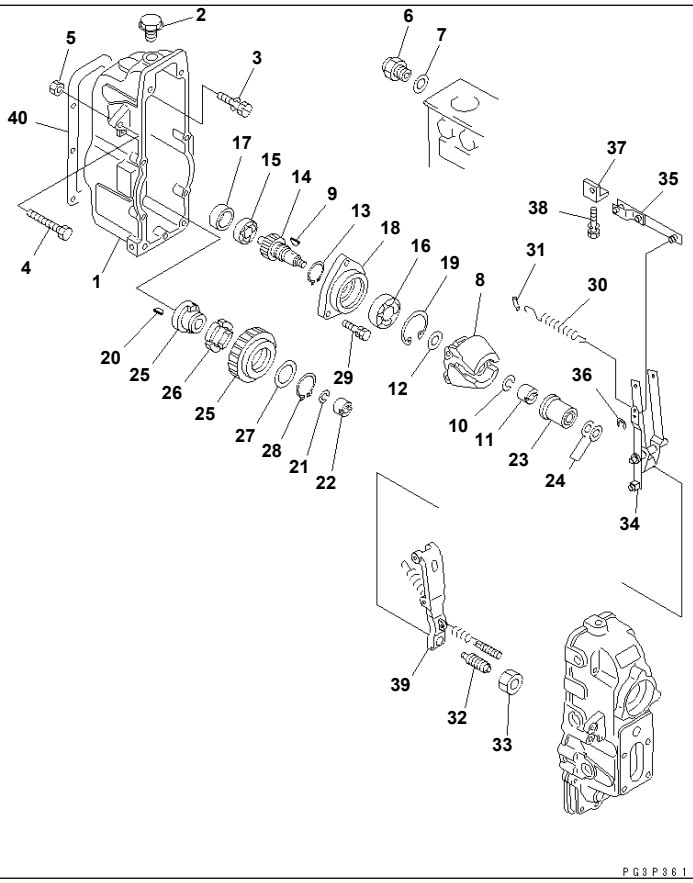

S6D155-4S S/N 52707-UP

FUEL INJECTION PUMP (GOVERNOR) (1/2)(#53470-)

Item	Part No.	Description	Qty	Options
	(6127-71-1153)	INJECTION PUMP ASS'Y	1	SN:55380--
	(6127-71-1152)	INJECTION PUMP ASS'Y	1	SN:53470--55379
THESE ASSEMBLIES CONSIST OF ALL PARTS SHOWN IN FIGS.0451A TO 0481A.				
THE ZEXEL PART NUMBER IS THAT DK IS REMOVED FROM KOMATSU PART NUMBER LISTED BELOW.				
	DK105447-1130	· GOVERNOR ASS'Y	1	SN:55380--
	DK105447-0790	· GOVERNOR ASS'Y	1	SN:53470--55379
THESE ASSEMBLIES CONSIST OF ALL PARTS SHOWN IN FIGS.0461A AND 0462A.				
1	DK154002-3320	· · HOUSING	1	SN:53470--
2	DK154007-1600	· · PLUG	1	SN:53470--
3	DK139006-4100	· · BOLT	8	SN:53470--
4	DK154010-3900	· · BOLT	1	SN:53470--
5	DK154011-0100	· · NUT,LOCK	1	SN:53470--
6	DK155404-1700	· · CAP	1	SN:53470--
7	DK026524-3040	· · GASKET	1	SN:53470--
8	DK154100-9920	· · FLYWEIGHT ASS'Y	1	SN:53470--
9	DK025803-1610	· · KEY¤ 16MM	1	SN:53470--
10	DK029321-2020	· · WASHER,SPRING	1	SN:53470--
11	DK029231-2030	· · NUT	1	SN:53470--
12	DK154120-0100	· · WASHER	1	SN:53470--
13	DK029602-0020	· · RING,SNAP	1	SN:53470--
14	DK154121-0500	· · GEAR	1	SN:53470--
15	DK016610-2640	· · BEARING	1	SN:53470--
16	DK028102-0010	· · BEARING	1	SN:53470--
17	DK154134-0000	· · SPACER	1	SN:53470--

FUEL INJECTION PUMP (GOVERNOR) (1/2)(#53470-)

Item	Part No.	Description	Qty	Options
18	DK154122-0300	· · COVER	1	SN:53470--
19	DK029614-7020	· · RING,SNAP	1	SN:53470--
20	DK025803-1610	· · KEY¤ 16MM	1	SN:53470--
21	DK029321-2020	· · WASHER,SPRING	1	SN:53470--
22	DK029231-2030	· · NUT	1	SN:53470--
23	DK154123-1020	· · SLEEVE	1	SN:53470--
24	DK029311-0010	· · SHIM¤ 0.20MM	AR	SN:53470--
	DK029311-0180	· · SHIM¤ 0.30MM	AR	SN:53470--
	DK029311-0190	· · SHIM¤ 0.40MM	AR	SN:53470--
	DK139410-0000	· · SHIM¤ 0.50MM	AR	SN:53470--
	DK029311-0210	· · SHIM¤ 1.00MM	AR	SN:53470--
	DK139410-0100	· · SHIM¤ 1.50MM	AR	SN:53470--
	DK139410-3000	· · SHIM¤ 2.00MM	AR	SN:53470--
	DK139410-3100	· · SHIM¤ 3.00MM	AR	SN:53470--
	DK139410-3200	· · SHIM¤ 4.00MM	AR	SN:53470--
25	DK154130-1820	· · GEAR ASS'Y	1	SN:53470--
26	DK153251-0100	· · · DAMPER	4	SN:53470--
27	DK139329-0000	· · · WASHER	1	SN:53470--
28	DK016020-2810	· · · RING,SNAP	1	SN:53470--
29	DK020106-2840	· · BOLT	3	SN:53470--
30	DK154154-0900	· · SPRING	1	SN:53470--
31	DK154156-0100	· · TUBE	2	SN:53470--
32	DK154178-9820	· · CAPSULE,SPRING	1	SN:53470--
33	DK029201-6010	· · NUT	1	SN:53470--
34	DK154211-5420	· · GUIDE LEVER ASS'Y	1	SN:53470--
35	DK154230-0220	· · LINK	1	SN:53470--
36	DK016010-0540	· · RING,SNAP	1	SN:53470--
37	DK154232-0400	· · CONNECTOR	1	SN:53470--
38	DK029050-5040	· · SCREW	2	SN:53470--
39	DK154236-5721	· · LEVER,TENSION	1	SN:53470--
40	DK154350-8700	· · GASKET	1	SN:53470--

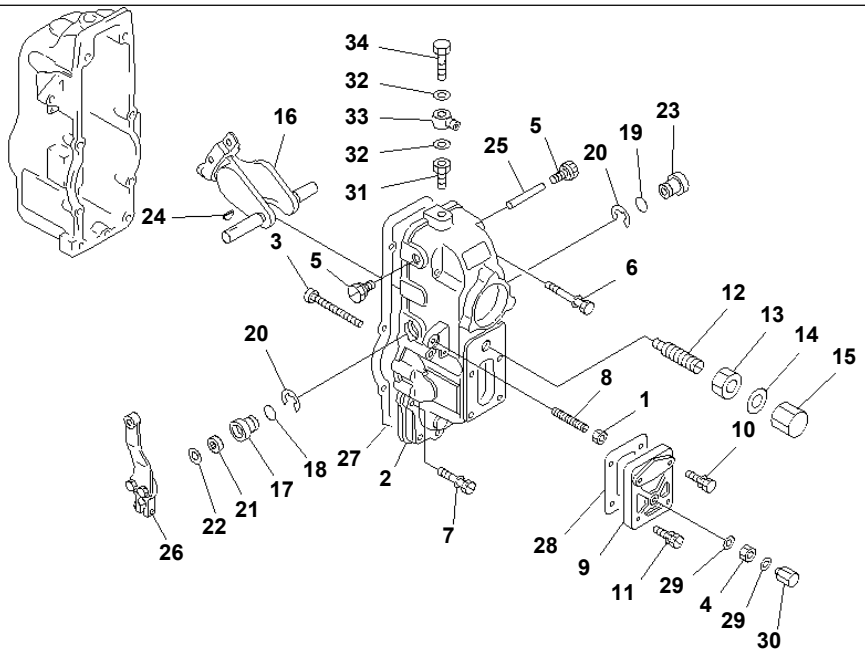

PG3P362

S6D155-4S S/N 52707-UP

FUEL INJECTION PUMP (GOVERNOR) (2/2)(#52707-53469)

Item	Part No.	Description	Qty	Options
	(6127-71-1151)	INJECTION PUMP ASS'Y	1	SN:53465--53469
	(6127-71-1150)	INJECTION PUMP ASS'Y	1	SN:52707--53464
THESE ASSEMBLIES CONSIST OF ALL PARTS SHOWN IN FIGS.0451 TO 0481.				
THE ZEXEL PART NUMBER IS THAT DK IS REMOVED FROM KOMATSU PART NUMBER LISTED BELOW.				
	(DK105447-0671)	· GOVERNOR ASS'Y	1	SN:53465--53469
	(DK105447-0670)	· GOVERNOR ASS'Y	1	SN:52707--53464
THESE ASSEMBLIES CONSIST OF ALL PARTS SHOWN IN FIGS.0461 AND 0462.				
1	DK154011-0100	· · NUT	1	SN:52707--53469
2	DK154520-6320	· · COVER ASS'Y	1	SN:52707--53469
3	DK154031-3000	· · SCREW	1	SN:52707--53469
4	DK139206-0600	· · NUT	1	SN:53465--53469
	DK029240-6010	· · NUT	1	SN:52707--53464
5	DK154036-0300	· · PLUG	2	SN:52707--53469
6	DK020106-5040	· · BOLT	4	SN:52707--53469
7	DK020106-2840	· · BOLT	3	SN:52707--53469
8	DK154010-0600	· · SCREW	1	SN:52707--53469
9	DK154063-0900	· · COVER	1	SN:52707--53469
10	DK029020-6210	· · BOLT	2	SN:52707--53469
11	DK020006-1640	· · BOLT	2	SN:53465--53469
	DK029020-6210	· · BOLT	2	SN:52707--53464
12	DK154158-0620	· · CAPSULE,SPRING	1	SN:52707--53469
13	DK029201-2290	· · NUT	1	SN:52707--53469
14	DK026512-1540	· · GASKET	1	SN:52707--53469
15	DK154159-1200	· · NUT,CAP	1	SN:52707--53469

FUEL INJECTION PUMP (GOVERNOR) (2/2)(#52707-53469)

Item	Part No.	Description	Qty	Options
16	DK154200-4520	· · LEVER,SWIVEL	1	SN:52707--53469
17	DK154204-2100	· · BUSHING	1	SN:52707--53469
18	DK139716-0100	· · O-RING	1	SN:53465--53469
	DK016500-1610	· · O-RING	1	SN:52707--53464
19	DK139716-0100	· · O-RING	1	SN:53465--53469
	DK016500-1610	· · O-RING	1	SN:52707--53464
20	DK016010-1640	· · RING,SNAP	2	SN:52707--53469
21	DK139611-0200	· · SEAL,OIL	1	SN:53465--53469
	DK029621-1060	· · SEAL,OIL	1	SN:52707--53464
22	DK029311-1010	· · SHIM	1	SN:52707--53469
23	DK154204-2200	· · BUSHING	1	SN:52707--53469
24	DK025803-1310	· · KEY¤ 13MM	1	SN:52707--53469
25	DK154237-0200	· · PIN	1	SN:52707--53469
26	DK154345-1520	· · LEVER	1	SN:52707--53469
27	DK154350-9200	· · GASKET	1	SN:52707--53469
28	DK154350-8200	· · GASKET	1	SN:52707--53469
29	DK026506-1040	· · GASKET	2	SN:52707--53469
30	DK154035-1600	· · NUT,CAP	1	SN:52707--53469
31	DK131002-3800	· · ADAPTER	1	SN:52707--53469
32	DK029341-2140	· · GASKET	2	SN:52707--53469
33	DK029711-2350	· · EYE	1	SN:52707--53469
34	DK029731-2240	· · BOLT,JOINT	1	SN:52707--53469

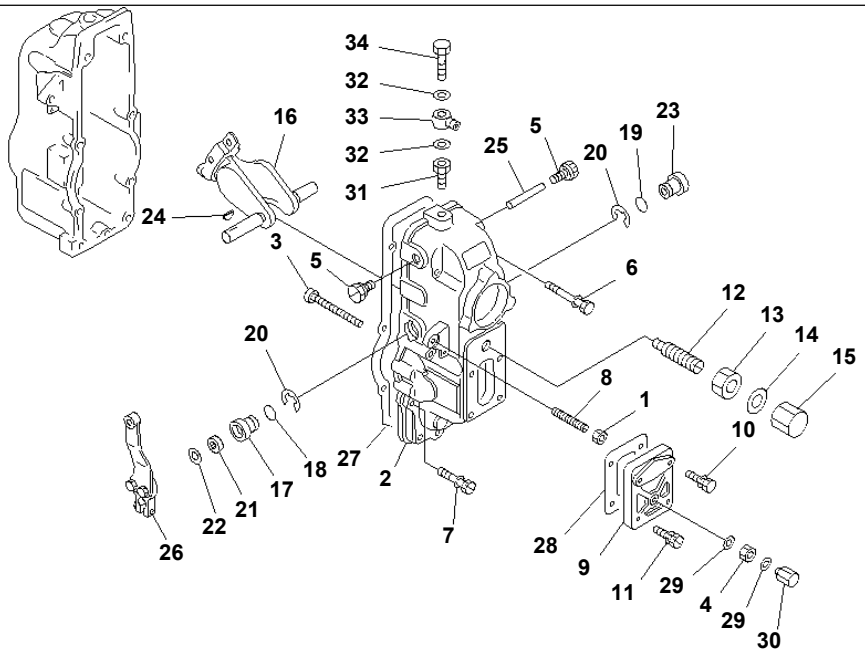

PG3P362

S6D155-4S S/N 52707-UP

FUEL INJECTION PUMP (GOVERNOR) (2/2)(#53470-)

Item	Part No.	Description	Qty	Options
	(6127-71-1153)	INJECTION PUMP ASS'Y	1	SN:55380--
	(6127-71-1152)	INJECTION PUMP ASS'Y	1	SN:53470--55379
THESE ASSEMBLIES CONSIST OF ALL PARTS SHOWN IN FIGS.0451A TO 0481A.				
THE ZEXEL PART NUMBER IS THAT DK IS REMOVED FROM KOMATSU PART NUMBER LISTED BELOW.				
	(DK105447-1130)	· GOVERNOR ASS'Y	1	SN:55380--
	(DK105447-0790)	· GOVERNOR ASS'Y	1	SN:53470--55379
THESE ASSEMBLIES CONSIST OF ALL PARTS SHOWN IN FIGS.0461A AND 0462A.				
1	DK154011-0100	· · NUT	1	SN:53470--
2	DK154520-7220	· · COVER	1	SN:55380--
	DK154520-6320	· · COVER ASS'Y	1	SN:53470--55379
3	DK154031-3000	· · SCREW	1	SN:53470--
4	DK139206-0600	· · NUT	1	SN:53470--
5	DK154036-0300	· · PLUG	2	SN:53470--
6	DK020106-5040	· · BOLT	4	SN:53470--
7	DK020106-2840	· · BOLT	3	SN:53470--
8	DK154010-0600	· · SCREW	1	SN:53470--
9	DK154063-0900	· · COVER	1	SN:53470--
10	DK029020-6210	· · BOLT	2	SN:53470--
11	DK020006-1640	· · BOLT	2	SN:53470--
12	DK154158-0620	· · CAPSULE,SPRING	1	SN:53470--
13	DK029201-2290	· · NUT	1	SN:53470--
14	DK026512-1540	· · GASKET	1	SN:53470--
15	DK154159-1200	· · NUT,CAP	1	SN:53470--
16	DK154200-4520	· · LEVER,SWIVEL	1	SN:53470--

FUEL INJECTION PUMP (GOVERNOR) (2/2)(#53470-)

Item	Part No.	Description	Qty	Options
17	DK154204-4100	· · BUSHING	1	SN:55380--
	DK154204-2100	· · BUSHING	1	SN:53470--55379
18	DK139718-0200	· · O-RING	1	SN:55380--
	DK139716-0100	· · O-RING	1	SN:53470--55379
19	DK139716-0100	· · O-RING	1	SN:53470--
20	DK016010-1640	· · RING,SNAP	2	SN:53470--
21	DK139611-0200	· · SEAL,OIL	1	SN:53470--
22	DK029311-1010	· · SHIM	1	SN:53470--
23	DK154204-2200	· · BUSHING	1	SN:53470--
24	DK025803-1310	· · KEY¤ 13MM	1	SN:53470--
25	DK154237-0200	· · PIN	1	SN:53470--
26	DK154345-1520	· · LEVER	1	SN:53470--
27	DK154350-9200	· · GASKET	1	SN:53470--
28	DK154350-8200	· · GASKET	1	SN:53470--
29	DK026506-1040	· · GASKET	2	SN:53470--
30	DK154035-1600	· · NUT,CAP	1	SN:53470--
31	DK131002-3800	· · ADAPTER	1	SN:53470--
32	DK029341-2140	· · GASKET	2	SN:53470--
33	DK029711-2350	· · EYE	1	SN:53470--
34	DK029731-2240	· · BOLT,JOINT	1	SN:53470--

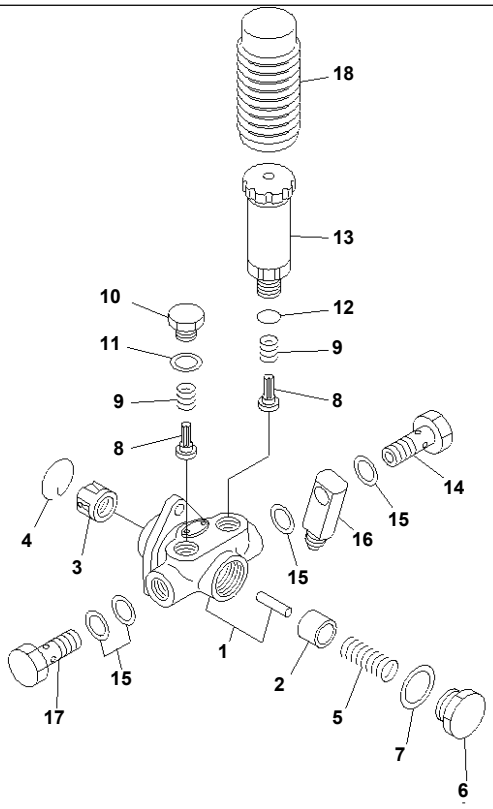

PG3P019

S6D155-4S S/N 52707-UP

FUEL INJECTION PUMP (FEED PUMP)(#52707-53469)

Item	Part No.	Description	Qty	Options
	(6127-71-1151)	INJECTION PUMP ASS'Y	1	SN:53465--53469
	(6127-71-1150)	INJECTION PUMP ASS'Y	1	SN:52707--53464
THESE ASSEMBLIES CONSIST OF ALL PARTS SHOWN IN FIGS.0451 TO 0481.				
THE ZEXEL PART NUMBER IS THAT DK IS REMOVED FROM KOMATSU PART NUMBER LISTED BELOW.				
	DK105207-1390	· FEED PUMP ASS'Y	1	SN:52707--53469
1	DK152004-1620	· · HOUSING,FEED PUMP	1	SN:52707--53469
2	DK152100-1120	· · PISTON	1	SN:52707--53469
3	DK152111-4020	· · TAPPET	1	SN:52707--53469
4	DK152121-0200	· · RING,SNAP	1	SN:52707--53469
5	DK152102-2100	· · SPRING,PISTON	1	SN:52707--53469
6	DK152105-1500	· · PLUG	1	SN:52707--53469
7	DK029332-6030	· · GASKET	1	SN:52707--53469
8	DK152115-0500	· · VALVE	2	SN:52707--53469
9	DK152116-0200	· · SPRING	2	SN:52707--53469
10	DK152117-0400	· · PLUG	1	SN:52707--53469
11	DK029331-6030	· · GASKET	1	SN:52707--53469
12	DK029631-6060	· · O-RING	1	SN:52707--53469
13	DK152200-5320	· · PUMP,PRIMING	1	SN:52707--53469
14	DK152300-3620	· · BOLT,EYE	1	SN:52707--53469
15	DK029341-4130	· · GASKET	4	SN:52707--53469
16	DK029711-4430	· · EYE	1	SN:52707--53469
17	DK029731-4680	· · BOLT,EYE	1	SN:52707--53469
18	DK152320-0100	· · COVER	1	SN:52707--53469

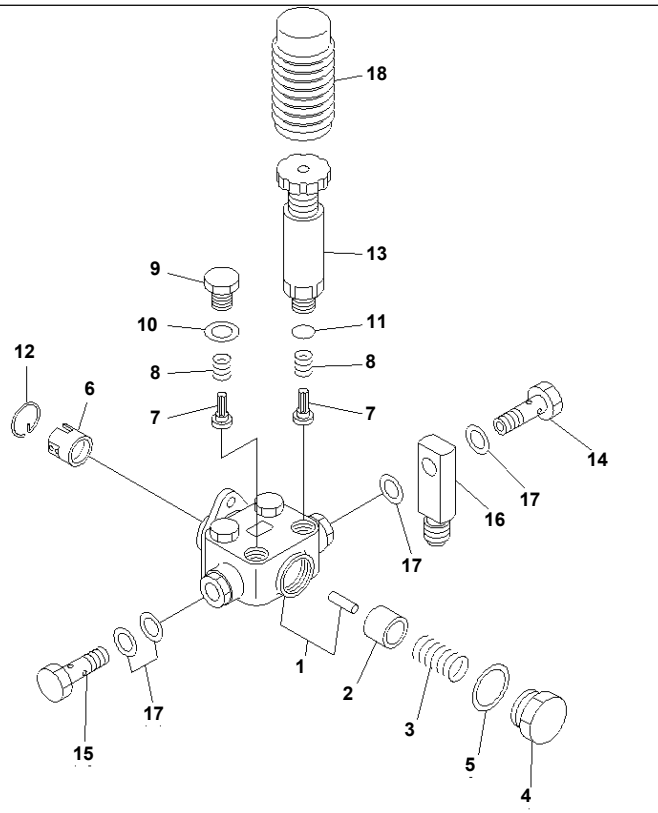

PG3P252

S6D155-4S S/N 52707-UP

FUEL INJECTION PUMP (FEED PUMP)(#53470-)

Item	Part No.	Description	Qty	Options
	(6127-71-1153)	INJECTION PUMP ASS'Y	1	SN:55380--
	(6127-71-1152)	INJECTION PUMP ASS'Y	1	SN:53470--55379
THESE ASSEMBLIES CONSIST OF ALL PARTS SHOWN IN FIGS.0451A TO 0481A.				
THE ZEXEL PART NUMBER IS THAT DK IS REMOVED FROM KOMATSU PART NUMBER LISTED BELOW.				
	DK105237-1700	· FEED PUMP ASS'Y	1	SN:53470--
1	DK152004-1720	· · HOUSING	1	SN:53470--
2	DK152100-1120	· · PISTON	1	SN:53470--
3	DK152102-1600	· · SPRING,PISTON	1	SN:53470--
4	DK152105-1500	· · PLUG	1	SN:53470--
5	DK029332-6030	· · GASKET	1	SN:53470--
6	DK152111-4020	· · TAPPET	1	SN:53470--
7	DK152115-0500	· · VALVE	4	SN:53470--
8	DK152116-0200	· · SPRING	4	SN:53470--
9	DK152117-0400	· · PLUG	3	SN:53470--
10	DK029331-6030	· · GASKET	3	SN:53470--
11	DK029631-6060	· · O-RING	1	SN:53470--
12	DK152121-0400	· · RING,SNAP	1	SN:53470--
13	DK152200-5320	· · PUMP,PRIMING	1	SN:53470--
14	DK152300-3620	· · BOLT,EYE	1	SN:53470--
15	DK029731-4680	· · BOLT,EYE	1	SN:53470--
16	DK029711-4430	· · EYE	1	SN:53470--
17	DK029341-4130	· · GASKET	4	SN:53470--
18	DK152320-0100	· · COVER	1	SN:53470--

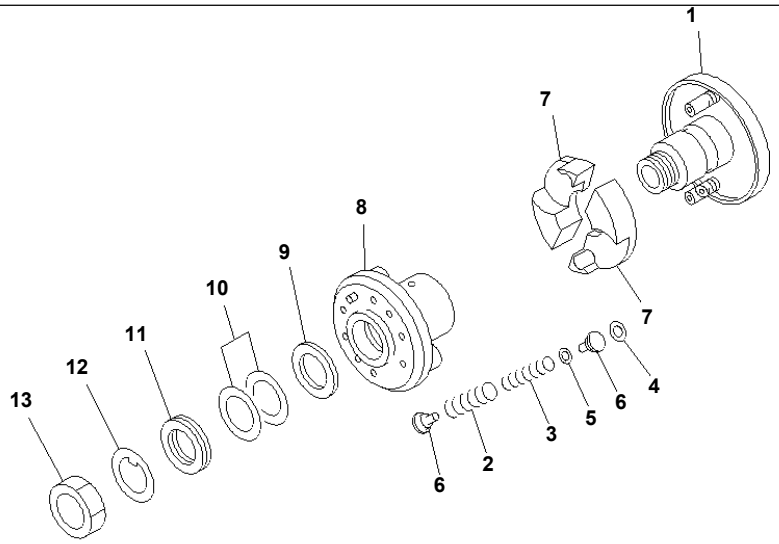

PF3P254

S6D155-4S S/N 52707-UP
AUTOMATIC TIMER

Item	Part No.	Description	Qty	Options
	6127-71-1132	AUTOMATIC TIMER A.	1	SN:52707--
THE ZEXEL PART NUMBER IS THAT DK IS REMOVED FROM KOMATSU PART NUMBER LISTED BELOW.				
1	DK156261-0720	· FLANGE	1	SN:52707--
2	DK156263-0700	· SPRING	2	SN:52707--
3	DK156264-0200	· SPRING	2	SN:52707--
4	DK029310-9030	· SHIM¤ 0.10MM	AR	SN:52707--
	DK139409-0000	· SHIM¤ 0.15MM	AR	SN:52707--
	DK029310-9040	· SHIM¤ 0.20MM	AR	SN:52707--
	DK029310-9010	· SHIM¤ 0.50MM	AR	SN:52707--
	DK029310-9020	· SHIM¤ 1.00MM	AR	SN:52707--
	DK029310-9050	· SHIM¤ 1.50MM	AR	SN:52707--
5	DK029310-6220	· SHIM¤ 0.10MM	AR	SN:52707--
	DK029310-6230	· SHIM¤ 0.20MM	AR	SN:52707--
	DK029310-6240	· SHIM¤ 0.25MM	AR	SN:52707--
	DK029310-6370	· SHIM¤ 0.30MM	AR	SN:52707--
	DK029310-6380	· SHIM¤ 0.40MM	AR	SN:52707--
	DK029310-6390	· SHIM¤ 0.50MM	AR	SN:52707--
	DK029310-6400	· SHIM¤ 0.60MM	AR	SN:52707--
	DK029310-6410	· SHIM¤ 0.70MM	AR	SN:52707--
	DK029310-6420	· SHIM¤ 0.80MM	AR	SN:52707--
	DK029310-6430	· SHIM¤ 0.90MM	AR	SN:52707--
	DK029310-6250	· SHIM¤ 1.00MM	AR	SN:52707--
	DK139406-0500	· SHIM¤ 1.5MM	AR	SN:52707--
	DK139406-0600	· SHIM¤ 2.0MM	AR	SN:52707--

AUTOMATIC TIMER

Item	Part No.	Description	Qty	Options
6	DK156017-0800	· SEAT,SPRING	4	SN:52707--
7	DK156265-0000	· FLYWEIGHT	2	SN:52707--
8	DK156266-2320	· HOLDER,FLYWEIGHT	1	SN:52707--
9	DK156269-0000	· WASHER	1	SN:52707--
10	DK029315-6000	· SHIM¤ 0.10MM	AR	SN:52707--
	DK029315-6010	· SHIM¤ 0.12MM	AR	SN:52707--
	DK029315-6020	· SHIM¤ 0.15MM	AR	SN:52707--
	DK029315-6030	· SHIM¤ 0.20MM	AR	SN:52707--
	DK029315-6040	· SHIM¤ 0.30MM	AR	SN:52707--
11	DK029305-0000	· WASHER	1	SN:52707--
12	DK156270-0300	· PLATE,LOCK	1	SN:52707--
13	DK029205-0000	· NUT	1	SN:52707--

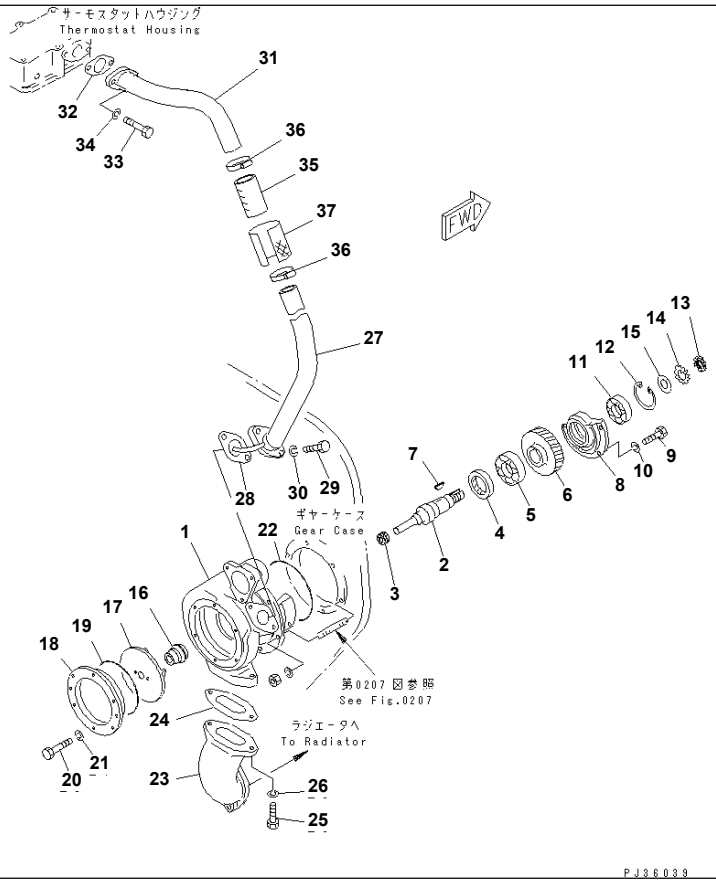

S6D155-4S S/N 52707-UP

WATER PUMP

Item	Part No.	Description	Qty	Options
	6124-61-1004	WATER PUMP ASS'Y	1	SN:52707--
1	☆	· BODY	1	SN:52707--
2	6124-61-1312	· SHAFT	1	SN:52707--
3	6124-61-1320	· V-RING (K6)	1	SN:52707--
4	07012-20042	· SEAL,OIL (K6)	1	SN:52707--
5	06000-06207	· BEARING	1	SN:52707--
6	6127-61-1410	· GEAR,DRIVE	1	SN:52707--
7	04010-00728	· KEY	1	SN:52707--
8	6127-61-1140	· HOUSING,BEARING	1	SN:52707--
9	01010-30820	· BOLT	4	SN:52707--
10	01602-00825	· WASHER,SPRING	4	SN:52707--
11	06030-06206	· BEARING	1	SN:52707--
12	04065-06220	· RING,SNAP	1	SN:52707--
13	01530-02010	· NUT	1	SN:52707--
14	01658-22016	· WASHER (K6)	1	SN:52707--
15	01643-22045	· WASHER	1	SN:52707--
16	6150-61-1520	· SEAL¤ WATER (K6)	1	SN:52707--
17	6124-61-1333	· IMPELLER	1	SN:52707--
18	6124-61-1120	· COVER	1	SN:52707--
19	07000-03135	· O-RING (K6)	1	SN:52707--
20	01010-30616	· BOLT	6	SN:52707--
21	01602-00619	· WASHER,SPRING	6	SN:52707--
22	07000-05140	· O-RING (K6)	1	SN:52707--
23	6124-61-1130	· PIPE,WATER	1	SN:52707--

S6D155-4S S/N 52707-UP
WATER PUMP

Item	Part No.	Description	Qty	Options
24	6124-61-1160	· GASKET (K6)	1	SN:52707--
25	01010-31235	· BOLT	2	SN:52707--
26	01602-01236	· WASHER,SPRING	2	SN:52707--
27	6124-61-6421	PIPE,WATER	1	SN:52707--
28	6127-61-6850	GASKET (K6)	1	SN:52707--
29	01010-31030	BOLT	2	SN:52707--
30	01602-01030	WASHER,SPRING	2	SN:52707--
31	6128-61-6510	PIPE	1	SN:52707--
32	6128-61-6860	GASKET (K1)	1	SN:52707--
33	01010-31030	BOLT	2	SN:52707--
34	01602-01030	WASHER,SPRING	2	SN:52707--
35	6127-61-6421	HOSE	1	SN:52707--
36	07281-00549	CLAMP	2	SN:52707--
37	6127-11-8490	COVER,(FOR SLAG HANDLING)	1	SN:52707--

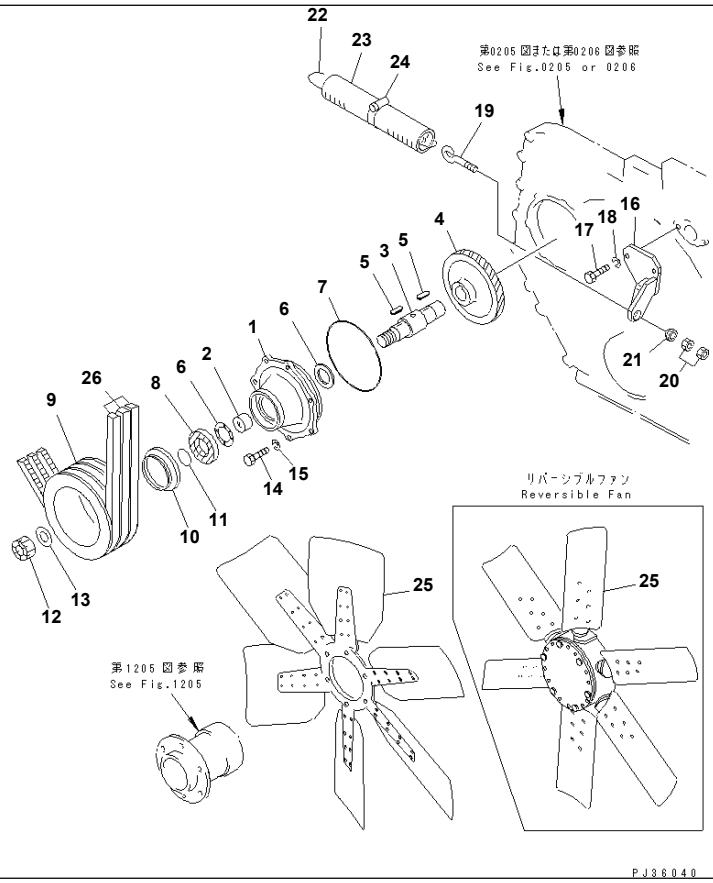

S6D155-4S S/N 52707-UP

COOLING FAN AND ACCESSORY DRIVE

Item	Part No.	Description	Qty	Options
	6128-62-3611	ACCESSORY DRIVE A.	1	SN:52707--
	6127-61-3032	· HOUSING ASS'Y	1	SN:52707--
1	☆	· · HOUSING	1	SN:52707--
2	6127-61-3330	· · BUSHING	1	SN:52707--
	6127-61-3051	· SHAFT ASS'Y	1	SN:52707--
3	☆	· · SHAFT	1	SN:52707--
4	6127-61-3370	· · GEAR	1	SN:52707--
5	04000-01025	· · KEY	2	SN:52707--
6	6127-61-3340	· BEARING,THRUST	2	SN:52707--
7	07000-05185	· O-RING (K2)	1	SN:52707--
8	6127-61-3360	· SEAL,OIL (K2)	1	SN:52707--
	6128-61-3046	· PULLEY ASS'Y	1	SN:52707--
9	6128-61-3531	· · PULLEY	1	SN:52707--
10	6127-61-3410	· · COVER	1	SN:52707--
11	07000-03045	· O-RING (K2)	1	SN:52707--
12	6127-61-3560	· NUT	1	SN:52707--
13	01643-33380	· WASHER	1	SN:52707--
14	01016-31035	BOLT	7	SN:52707--
15	01602-01030	WASHER,SPRING	7	SN:52707--
16	6124-61-3823	BRACKET	1	SN:52707--
17	01010-31035	BOLT	2	SN:52707--
18	01602-01030	WASHER,SPRING	2	SN:52707--
19	6124-61-3810	SCREW,ADJUST	1	SN:52707--
20	01580-01210	NUT	2	SN:52707--

COOLING FAN AND ACCESSORY DRIVE

Item	Part No.	Description	Qty	Options
21	6124-61-3830	WASHER	1	SN:52707--
	6127-61-4700	SPRING ASS'Y	1	SN:52707--
22	6127-61-3680	· ABSORBER,SHOCK	1	SN:52707--
23	6127-61-3690	· HOSE	1	SN:52707--
24	07281-00709	· CLAMP	1	SN:52707--
25	600-643-1120	FAN,COOLING	1	SN:52707--
	600-614-1121	FAN,REVERSIBLE (WITH AFTER COOLER)	1	SN:52707--
26	04122-22564	V-BELT SET	1	SN:52707--
	04122-22562	V-BELT SET,(HIGH SPEED SPEC.)	1	SN:52707--

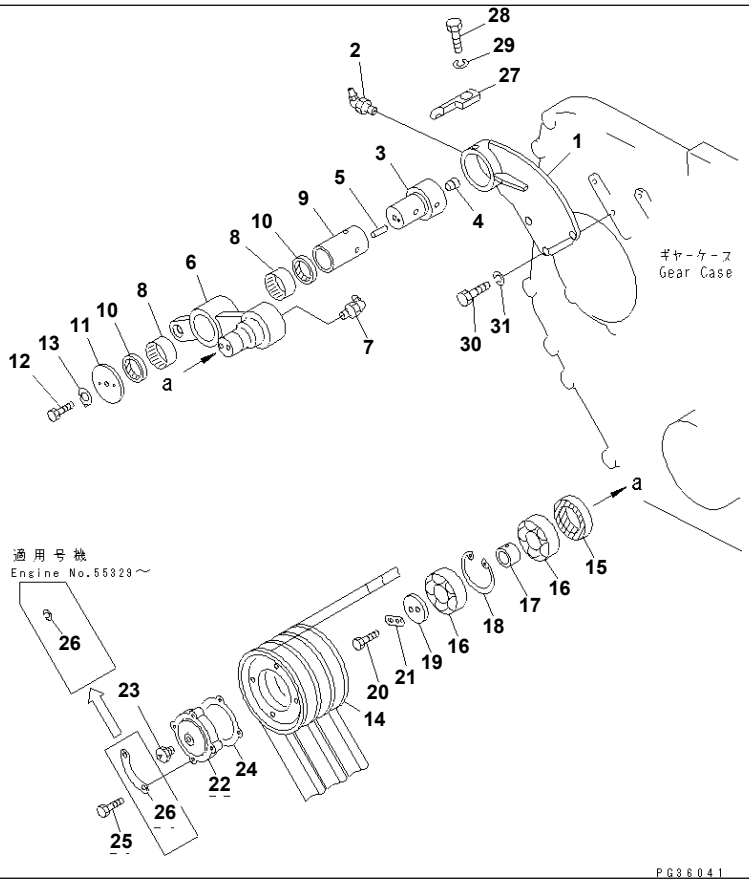

S6D155-4S S/N 52707-UP

TENSION PULLEY

Item	Part No.	Description	Qty	Options
	6127-61-3803	TENSION PULLEY ASS'Y	1	SN:52707--
	6127-61-3071	· BRACKET ASS'Y	1	SN:52707--
1	☆	· · BRACKET	1	SN:52707--
2	07020-00675	· · FITTING,GREASE	1	SN:52707--
3	☆	· · SHAFT	1	SN:52707--
4	07043-50108	· · PLUG	1	SN:52707--
5	04020-00514	· · PIN,DOWEL	1	SN:52707--
	6127-62-3081	· SHAFT ASS'Y	1	SN:52707--
6	☆	· · SHAFT	1	SN:52707--
7	07020-00675	· · FITTING,GREASE	1	SN:52707--
	6127-61-3900	· BEARING ASS'Y	1	SN:52707--
8	6127-61-3910	· · BEARING,NEEDLE	2	SN:52707--
9	6127-61-3920	· · RACE,INNER	1	SN:52707--
10	06122-04504	· SEAL (K2)	2	SN:52707--
11	6124-61-3780	· WASHER	1	SN:52707--
12	01010-30820	· BOLT	1	SN:52707--
13	01653-20808	· WASHER,LOCK (K2)	1	SN:52707--
14	6127-61-3861	· PULLEY	1	SN:52707--
15	6127-61-3770	· SEAL,OIL (K2)	1	SN:52707--
16	06000-06207	· BEARING,BALL	2	SN:52707--
17	6127-61-3850	· SPACER	1	SN:52707--
18	04065-07225	· RING,SNAP	1	SN:52707--
19	6127-61-3780	· WASHER	1	SN:52707--
20	01010-30820	· BOLT	2	SN:52707--

S6D155-4S S/N 52707-UP
TENSION PULLEY

Item	Part No.	Description	Qty	Options
21	6127-61-3790	· LOCK (K2)	1	SN:52707--
	6127-61-3090	· COVER ASS'Y	1	SN:52707--
22	6124-61-3730	· · COVER	1	SN:52707--
23	6127-61-3890	· · VALVE	1	SN:52707--
24	6124-61-3740	· GASKET (K2)	1	SN:52707--
25	01010-30820	· BOLT	4	SN:52707--
26	01602-00825	· WASHER,SPRING	4	SN:52707--
27	6124-61-3841	· PLATE	1	SN:52707--
28	01050-31020	· BOLT	2	SN:52707--
29	01602-01030	· WASHER,SPRING	2	SN:52707--
30	01010-31230	BOLT	3	SN:52707--
31	01602-01236	WASHER,SPRING	3	SN:52707--

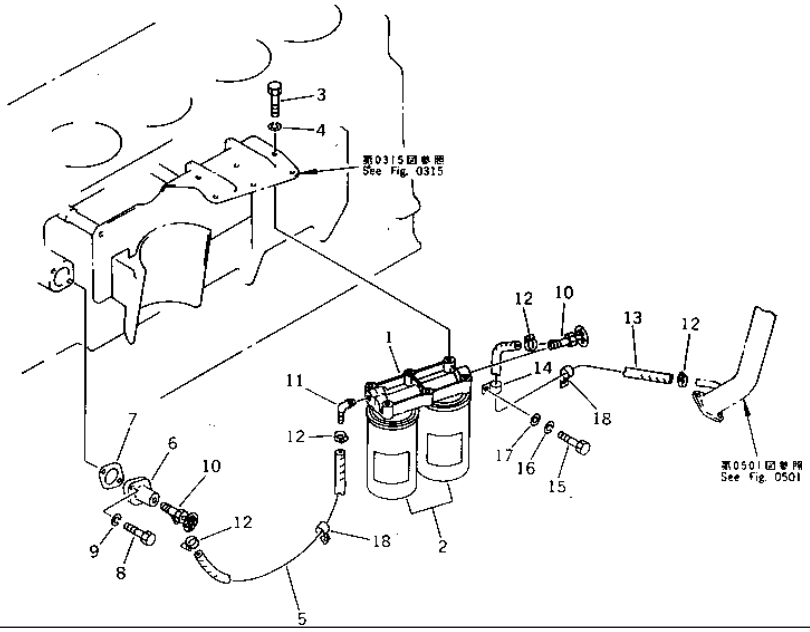

S6D155-4S S/N 52707-UP

CORROSION RESISTOR AND PIPING

Item	Part No.	Description	Qty	Options
	6127-61-8102	RESISTOR ASS'Y,CORROSION	1	SN:52707--
1	6127-61-8110	· HEAD	1	SN:52707--
2	600-411-1020	· CARTRIDGE	2	SN:52707--
3	01010-31030	BOLT	6	SN:52707--
4	01602-01030	WASHER,SPRING	6	SN:52707--
5	07260-20980	HOSE	1	SN:52707--
	6127-61-8160	HOSE,(FOR SLAG HANDLING)	1	SN:52707--
6	6127-61-8181	FLANGE	1	SN:52707--
7	6127-21-6720	GASKET (K2)	1	SN:52707--
8	01010-31030	BOLT	2	SN:52707--
9	01602-01030	WASHER,SPRING	2	SN:52707--
10	6150-61-8410	VALVE,WATER	2	SN:52707--
11	6127-61-8240	CONNECTOR	1	SN:52707--
12	07281-00197	CLAMP	4	SN:52707--
13	07260-20980	HOSE	1	SN:52707--
	6127-61-8160	HOSE,(FOR SLAG HANDLING)	1	SN:52707--
14	6127-61-8190	CLAMP	1	SN:52707--
	6127-61-8140	CLAMP,(FOR SLAG HANDLING)	1	SN:52707--
15	01010-30820	BOLT	1	SN:52707--
16	01602-00825	WASHER,SPRING	1	SN:52707--
17	01640-20816	WASHER	1	SN:52707--
18	6127-61-8190	CLAMP	2	SN:52707--
	6127-61-8170	CLAMP,(FOR SLAG HANDLING)	2	SN:52707--

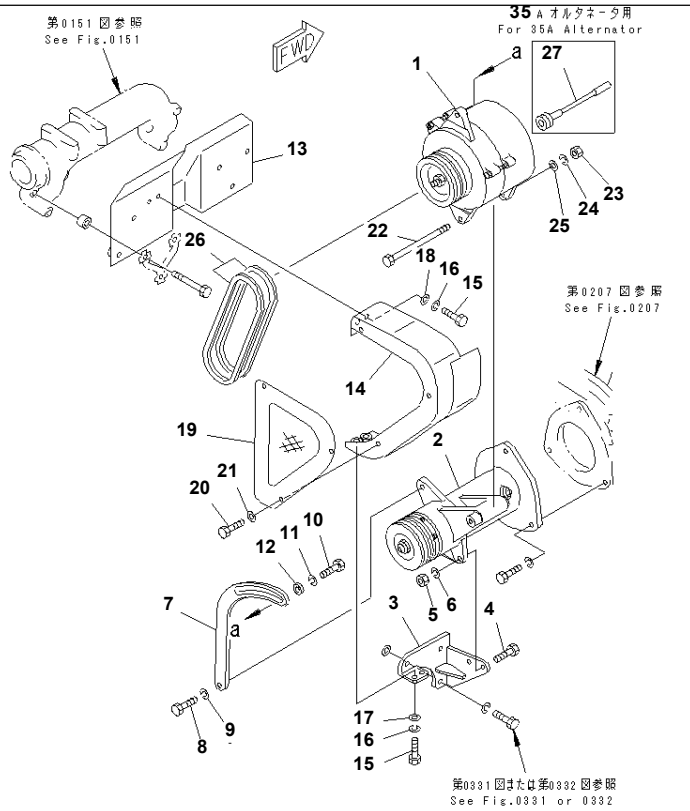

S6D155-4S S/N 52707-UP

ALTERNATOR AND MOUNTING (35A AND 50A)

Item	Part No.	Description	Qty	Options
1	(600-821-8340)	ALTERNATOR A. (35A),(SEE FIG.0641)	1	SN:52707--
	(600-821-8780)	ALTERNATOR A. (50A),(SEE FIG.0642)	1	SN:52707--
2	(6128-21-6901)	POWER TAKE OFF A.,(SEE FIG.0611)	1	SN:52707--
	(6128-21-6801)	POWER TAKE OFF A.,(WITH AFTER COOLER TYPE)	1	SN:52707--
3	6128-21-6670	BRACKET	1	SN:52707--
4	01010-31040	BOLT	2	SN:52707--
5	01580-01008	NUT	2	SN:52707--
6	01602-01030	WASHER,SPRING	2	SN:52707--
7	6128-21-6750	PLATE,ADJUST	1	SN:52707--
8	01010-31225	BOLT	1	SN:52707--
9	01602-01236	WASHER,SPRING	1	SN:52707--
10	01050-31240	BOLT	1	SN:52707--
11	01602-01236	WASHER,SPRING	1	SN:52707--
12	6691-21-6360	SPACER	1	SN:52707--
13	6128-21-6682	SHIELD	1	SN:52707--
14	6128-21-6742	COVER	1	SN:52707--
15	01010-30825	BOLT	4	SN:52707--
16	01602-00825	WASHER,SPRING	4	SN:52707--
17	01641-20812	WASHER	2	SN:52707--
18	01642-20810	WASHER	2	SN:52707--
19	6128-21-6790	COVER	1	SN:52707--
20	01050-31020	BOLT	3	SN:52707--
21	01643-01032	WASHER	3	SN:52707--
22	6128-21-6780	BOLT	1	SN:52707--

ALTERNATOR AND MOUNTING (35A AND 50A)

Item	Part No.	Description	Qty	Options
23	02205-10812	NUT	1	SN:52707--
24	01602-01338	WASHER,SPRING	1	SN:52707--
25	01640-21323	WASHER	1	SN:52707--
26	600-736-9380	V-BELT SET	1	SN:52707--
27	600-815-4440	CABLE,(FOR 35A ALTERNATOR)	1	SN:52707--

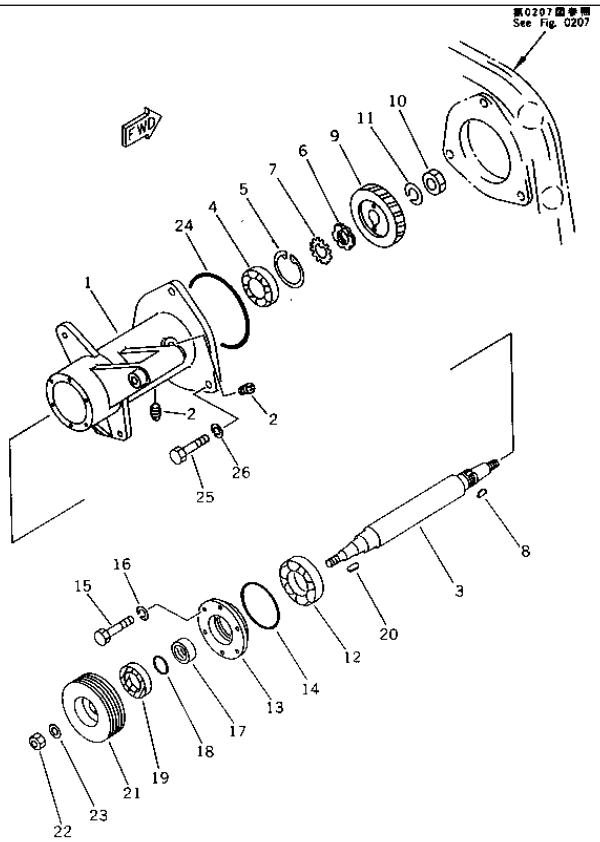

S6D155-4S S/N 52707-UP
ALTERNATOR DRIVE

Item	Part No.	Description	Qty	Options
	6128-21-6901	POWER TAKE OFF A.	1	SN:52707--
	6128-21-6801	POWER TAKE OFF A.,(WITH AFTER COOLER TYPE)	1	SN:52707--
1	6128-21-6910	· HOUSING	1	SN:52707--
2	07042-20211	· PLUG	2	SN:52707--
3	6128-21-6620	· SHAFT	1	SN:52707--
4	06000-06206	· BEARING,BALL	1	SN:52707--
5	04065-06220	· RING,SNAP	1	SN:52707--
6	01530-03010	· NUT,LOCK	1	SN:52707--
7	01658-03018	· WASHER,LOCK	1	SN:52707--
	01658-23018	· WASHER,LOCK (WITH AFTER COOLER TYPE)	1	SN:52707--
8	04010-10519	· KEY	1	SN:52707--
9	6127-81-9512	· GEAR,DRIVE	1	SN:52707--
10	01583-01811	· NUT	1	SN:52707--
11	01602-01854	· WASHER,SPRING	1	SN:52707--
12	06000-06307	· BEARING,BALL	1	SN:52707--
13	6128-21-6631	· COVER	1	SN:52707--
14	07000-42075	· O-RING (K2)	1	SN:52707--
15	01010-30616	· BOLT	6	SN:52707--
16	01602-00619	· WASHER,SPRING	6	SN:52707--
17	6128-21-6650	· COLLAR	1	SN:52707--
18	07000-43025	· O-RING (K2)	1	SN:52707--
19	6128-21-6820	· SEAL,OIL (K2)	1	SN:52707--
20	04000-00518	· KEY	1	SN:52707--
21	6128-21-6761	· PULLEY	1	SN:52707--

S6D155-4S S/N 52707-UP
ALTERNATOR DRIVE

Item	Part No.	Description	Qty	Options
22	01839-01821	· NUT	1	SN:52707--
23	6112-63-1370	· WASHER	1	SN:52707--
24	07000-42140	O-RING (K2)	1	SN:52707--
25	01010-31240	BOLT	3	SN:52707--
26	01602-01236	WASHER,SPRING	3	SN:52707--

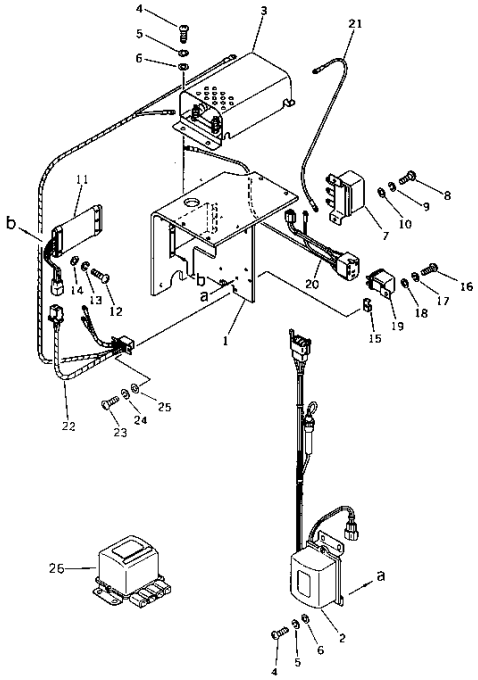

S6D155-4S S/N 52707-UP

A.P.S. CONTROL UNIT AND SAFETY RELAY

Item	Part No.	Description	Qty	Options
	600-815-3501	CONTROLLER UNIT A.,APS	1	SN:52707--
1	6128-81-4510	· BRACKET	1	SN:52707--
2	600-815-3510	· CONTROLLER ASS'Y	1	SN:52707--
3	600-815-3530	· RESISTOR	1	SN:52707--
4	01220-40612	· SCREW	8	SN:52707--
5	01602-00619	· WASHER,SPRING	8	SN:52707--
6	01641-20608	· WASHER	8	SN:52707--
7	600-815-2520	· SWITCH	1	SN:52707--
8	01220-40512	· SCREW	2	SN:52707--
9	01601-00513	· WASHER,SPRING	2	SN:52707--
10	01641-20508	· WASHER	2	SN:52707--
11	600-815-3611	· TIMER	1	SN:52707--
12	01220-60408	· SCREW	5	SN:52707--
13	01601-00410	· WASHER,SPRING	5	SN:52707--
14	01641-20405	· WASHER	5	SN:52707--
15	600-815-3640	· BRACKET	1	SN:52707--
16	01220-40612	· SCREW	1	SN:52707--
17	01602-00619	· WASHER,SPRING	1	SN:52707--
18	01641-20608	· WASHER	1	SN:52707--
19	600-815-2140	· RELAY ASS'Y	1	SN:52707--
20	600-815-3340	· WIRE	1	SN:52707--
21	600-815-3470	· HARNESS	1	SN:52707--
22	600-815-3450	· HARNESS	1	SN:52707--
23	01220-60408	· SCREW	2	SN:52707--

A.P.S. CONTROL UNIT AND SAFETY RELAY

Item	Part No.	Description	Qty	Options
24	01601-00410	· WASHER,SPRING	2	SN:52707--
25	01641-20405	· WASHER	2	SN:52707--
26	600-824-4960	SAFETY RELAY A.,SAFETY	1	SN:52707--
27	6128-81-4991	PLATE¤ OPERATING,(NOT SHOWN)(WITH AFTER COOLER)	1	SN:52707--
28	6128-82-4990	PLATE¤ CAUTION,(NOT SHOWN)(WITH AFTER COOLER)	1	SN:52707--

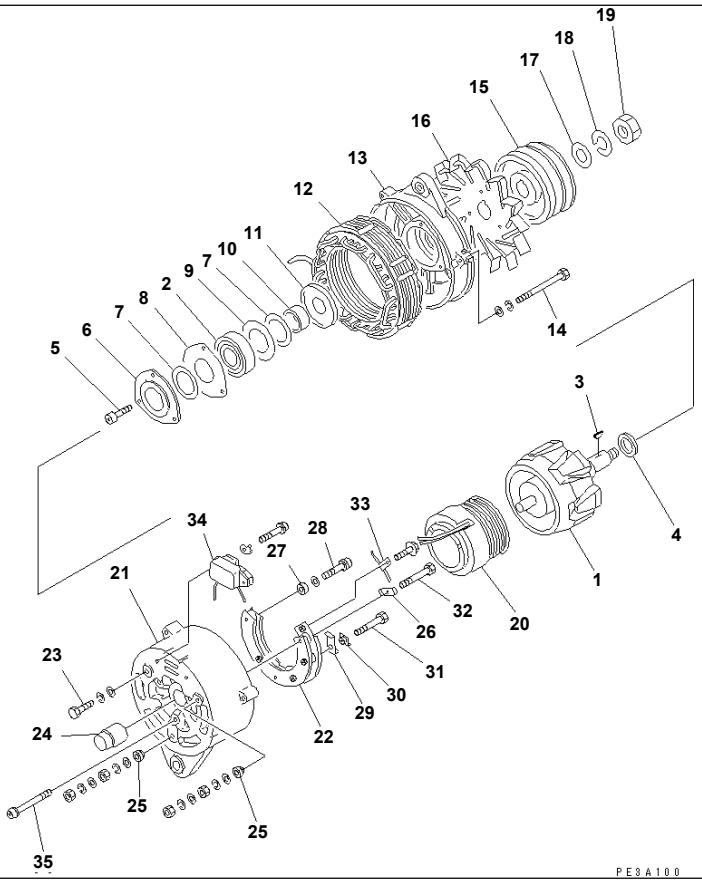

S6D155-4S S/N 52707-UP

ALTERNATOR (35A)

Item	Part No.	Description	Qty	Options
	600-821-8340	ALTERNATOR A. (35A)	1	SN:52707--
THE NIKKO DENKI PART NUMBER IS THAT KD IS REMOVED FROM KOMATSU PART NUMBER LISTED BELOW.				
1	KD1-33100-1270	· ROTOR ASS'Y	1	SN:52707--
2	KD1-0456-63057	· BEARING,BALL¤ FRONT	1	SN:52707--
3	KD1-0416-04160	· KEY	1	SN:52707--
4	KD1-33923-0780	· COLLAR	1	SN:52707--
5	KD1-0055-06162	· SCREW	3	SN:52707--
6	KD0-35926-0060	· RETAINER	1	SN:52707--
7	KD1-33951-0610	· PACKING	2	SN:52707--
8	KD1-33926-0750	· RETAINER	1	SN:52707--
9	KD1-33926-0730	· RETAINER	1	SN:52707--
10	KD1-33923-0810	· COLLAR	1	SN:52707--
11	KD1-33926-0770	· RETAINER	1	SN:52707--
12	KD1-33200-1230	· STATOR ASS'Y	1	SN:52707--
13	KD1-33310-1060	· BRACKET,FRONT	1	SN:52707--
14	KD0-0275-06852	· BOLT	3	SN:52707--
15	KD1-33411-2470	· PULLEY	1	SN:52707--
16	KD1-33421-0510	· FAN	1	SN:52707--
17	DK1-0330-16012	· WASHER	1	SN:52707--
18	DK1-0335-16002	· WASHER,SPRING	1	SN:52707--
19	KD0-0280-16022	· NUT	1	SN:52707--
20	KD0-33120-0220	· FIELD COIL ASS'Y	1	SN:52707--
	KD0-35700-0030	· REAR BRACKET ASS'Y	1	SN:52707--

S6D155-4S S/N 52707-UP
ALTERNATOR (35A)

Item	Part No.	Description	Qty	Options
21	KD0-33710-2870	· · REAR BRACKET ASS'Y	1	SN:52707--
22	KD0-33730-2190	· · RECTIFIER ASS'Y	1	SN:52707--
23	KD0-0080-05102	· · BOLT	1	SN:52707--
24	KD1-09202-0070	· · BEARING,ROLLER¤ REAR	1	SN:52707--
25	KD1-33943-0770	· · BUSHING,INSULATE	2	SN:52707--
26	KD1-33928-0220	· · STOPPER	1	SN:52707--
27	KD1-09102-0010	· · PLATE,INSULATE	1	SN:52707--
28	KD0-0055-05252	· · SCREW	1	SN:52707--
29	KD1-33928-0230	· · STOPPER	1	SN:52707--
30	KD1-33943-0760	· · BUSHING,INSULATE	1	SN:52707--
31	KD0-0080-05502	· · BOLT	1	SN:52707--
32	KD0-0080-05452	· · BOLT	1	SN:52707--
33	KD1-0550-05013	· · PLATE,TERMINAL	1	SN:52707--
34	KD7-44000-0907	· · REGULATOR ASS'Y	1	SN:52707--
35	KD0-0056-05452	· SCREW	3	SN:52707--

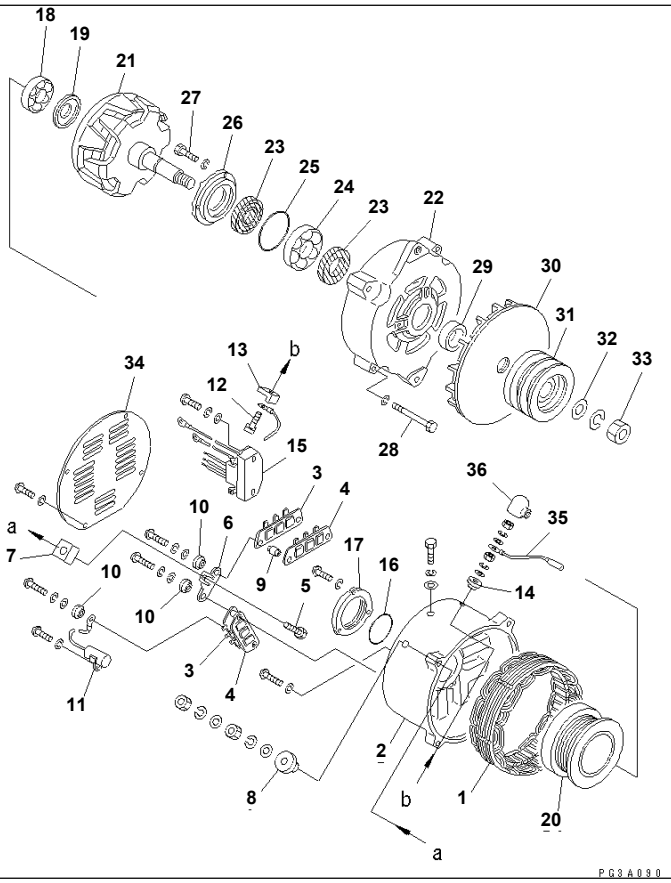

S6D155-4S S/N 52707-UP

ALTERNATOR (50A)

Item	Part No.	Description	Qty	Options
	600-821-8780	ALTERNATOR A. (50A)	1	SN:52707--
THE SAWAFUJI DENKI PART NUMBER IS THAT SD IS REMOVED FROM KOMATSU PART NUMBER LISTED BELOW.				
1	SD1211-35010X0	· STATOR ASS'Y	1	SN:52707--
	SD1230-18802X0	· REAR BRACKET ASS'Y	1	SN:52707--
2	SD2240-19500X0	· · BRACKET	1	SN:52707--
3	SD1235-06400X0	· · HEAT SINK ASS'Y(+)	2	SN:52707--
4	SD1235-06410X0	· · HEAT SINK ASS'Y(-)	2	SN:52707--
5	SD5010-26400X0	· · BOLT	1	SN:52707--
6	SD3220-38800X0	· · SUPPORT	1	SN:52707--
7	SD4215-04000X0	· · INSULATOR	1	SN:52707--
8	SD4041-07500X0	· · BUSHING	1	SN:52707--
9	SD4215-03900X0	· · INSULATOR	4	SN:52707--
10	SD4041-00900X0	· · BUSHING	4	SN:52707--
11	SD6060-11920X0	· · CONDENSER	1	SN:52707--
12	SD8140-0503010	· · BOLT	1	SN:52707--
13	SD4215-01300X0	· · INSULATOR	1	SN:52707--
14	SD4041-05700X0	· · BUSHING	1	SN:52707--
15	SD1510-02910X0	· · REGULATOR ASS'Y	1	SN:52707--
16	SD4142-01000X0	· O-RING	1	SN:52707--
17	SD2202-01401X0	· COVER	1	SN:52707--
18	SD6206-00730X0	· BEARING,BALL	1	SN:52707--
19	SD3409-00300X0	· COVER	1	SN:52707--
20	SD1251-00700X0	· COIL ASS'Y	1	SN:52707--

S6D155-4S S/N 52707-UP
ALTERNATOR (50A)

Item	Part No.	Description	Qty	Options
21	SD1221-15100X0	· ROTOR ASS'Y	1	SN:52707--
	SD1240-07200X0	· FRONT BRACKET ASS'Y	1	SN:52707--
22	SD2242-08600X0	· · BRACKET	1	SN:52707--
23	SD6410-02000X0	· · SEAL,OIL	2	SN:52707--
24	SD6206-00320X0	· · BEARING,BALL	1	SN:52707--
25	SD4142-00900X0	· · O-RING	1	SN:52707--
26	SD2202-02200X0	· · COVER	1	SN:52707--
27	SD5010-21500X0	· · BOLT	3	SN:52707--
28	SD5010-04730X0	· BOLT	4	SN:52707--
29	SD3600-17300X0	· COLLAR	1	SN:52707--
30	SD1982-03200X0	· FAN ASS'Y	1	SN:52707--
31	SD2080-20700X0	· PULLEY,NON HARDENING	1	SN:52707--
32	SD3000-07800X0	· WASHER	1	SN:52707--
33	SD8264-1830010	· NUT	1	SN:52707--
34	SD3002-04600X0	· COVER	1	SN:52707--
35	SD1912-21300X0	· WIRE ASS'Y	1	SN:52707--
36	SD4101-00810X0	· CAP	1	SN:52707--

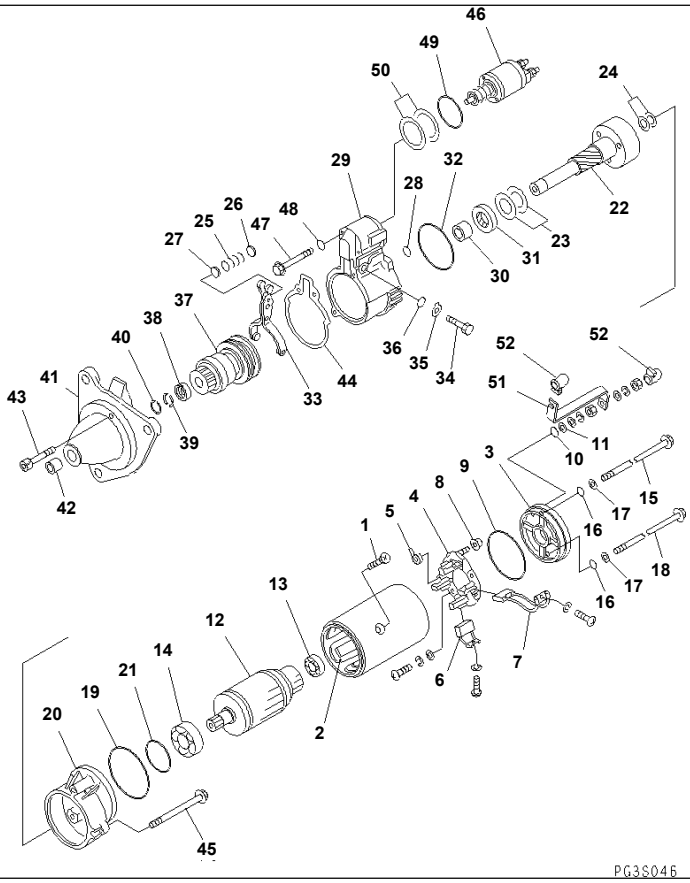

S6D155-4S S/N 52707-UP

STARTING MOTOR (11KW)(#52707-53004)

Item	Part No.	Description	Qty	Options
	600-813-4811	STARTING MOTOR ASS'Y,(11KW)	1	SN:52707--53004
THE SAWAFUJI DENKI PART NUMBER IS THAT SD IS REMOVED FROM KOMATSU PART NUMBER LISTED BELOW.				
1	SD5000-08310	· SCREW	4	SN:52707--53004
2	SD1316-08900	· FIELD COIL ASS'Y	2	SN:52707--53004
	SD1330-0440009	· REAR BRACKET ASS'Y	1	SN:52707--53004
3	SD2240-1900009	· · BRACKET	1	SN:52707--53004
4	SD1331-0341009	· · BRUSH HOLDER A.	1	SN:52707--53004
5	SD5250-02400	· · · SPRING,BRUSH	4	SN:52707--53004
6	SD2660-06800	· · · BRUSH	2	SN:52707--53004
7	SD2660-06810	· · · BRUSH	2	SN:52707--53004
8	SD4041-06000	· · BUSHING	1	SN:52707--53004
9	SD6414-03260	· · O-RING	1	SN:52707--53004
10	SD6414-03240	· · O-RING	1	SN:52707--53004
11	SD4030-05700	· · WASHER	1	SN:52707--53004
12	SD1320-06300	· ARMATURE ASS'Y	1	SN:52707--53004
13	SD6206-00520	· · BEARING,BALL	1	SN:52707--53004
14	SD6206-00550	· · BEARING,BALL	1	SN:52707--53004
15	SD5010-23370	· BOLT	1	SN:52707--53004
16	SD6414-03210	· O-RING	2	SN:52707--53004
17	SD5030-08700	· WASHER	2	SN:52707--53004
18	SD5010-23300	· BOLT	1	SN:52707--53004
19	SD6414-03260	· O-RING	1	SN:52707--53004
20	SD2245-00620	· CASE,GEAR	1	SN:52707--53004

S6D155-4S S/N 52707-UP

STARTING MOTOR (11KW)(#52707-53004)

Item	Part No.	Description	Qty	Options
21	SD6414-03270	· O-RING	1	SN:52707--53004
22	SD2441-01600	· SHAFT	1	SN:52707--53004
23	SD5031-01100	· WASHER	AR	SN:52707--53004
24	SD5031-05300	· WASHER	AR	SN:52707--53004
25	SD5201-08600	· COIL	1	SN:52707--53004
26	SD3000-09800	· PLATE	1	SN:52707--53004
27	SD3000-09900	· PLATE	1	SN:52707--53004
28	SD6414-03280	· O-RING	1	SN:52707--53004
29	SD2244-0582009	· CENTER BRACKET A.	1	SN:52707--53004
30	SD2620-1060009	· · METAL	1	SN:52707--53004
31	SD6410-01000	· · SEAL,OIL	1	SN:52707--53004
32	SD6414-02990	· O-RING	1	SN:52707--53004
33	SD1372-03600	· LEVER ASS'Y	1	SN:52707--53004
34	SD5010-26100	· BOLT	1	SN:52707--53004
35	SD3051-02300	· PLATE,LOCK	1	SN:52707--53004
36	SD6414-02910	· O-RING	1	SN:52707--53004
37	SD1361-04700	· CLUTCH ASS'Y	1	SN:52707--53004
38	SD3661-02000	· STOPPER,PINION	1	SN:52707--53004
39	SD5221-01200	· HOOK	2	SN:52707--53004
40	SD5058-04200	· RING,RETAINING	1	SN:52707--53004
41	SD2046-13600	· CASE,PINION	1	SN:52707--53004
42	SD2620-1050009	· · METAL	1	SN:52707--53004
43	SD5010-26200	· BOLT	1	SN:52707--53004
44	SD4141-22110	· PACKING	1	SN:52707--53004
45	SD5010-23360	· BOLT	3	SN:52707--53004
46	SD1350-1055009	· SWITCH ASS'Y	1	SN:52707--53004
47	SD5010-19020	· BOLT	2	SN:52707--53004
48	SD6414-02920	· O-RING	2	SN:52707--53004
49	SD6414-02900	· O-RING	1	SN:52707--53004
50	SD3001-11600	· PLATE	AR	SN:52707--53004
51	SD2425-16510	· BAR ASS'Y	1	SN:52707--53004
52	SD4101-03000	· CAP	2	SN:52707--53004

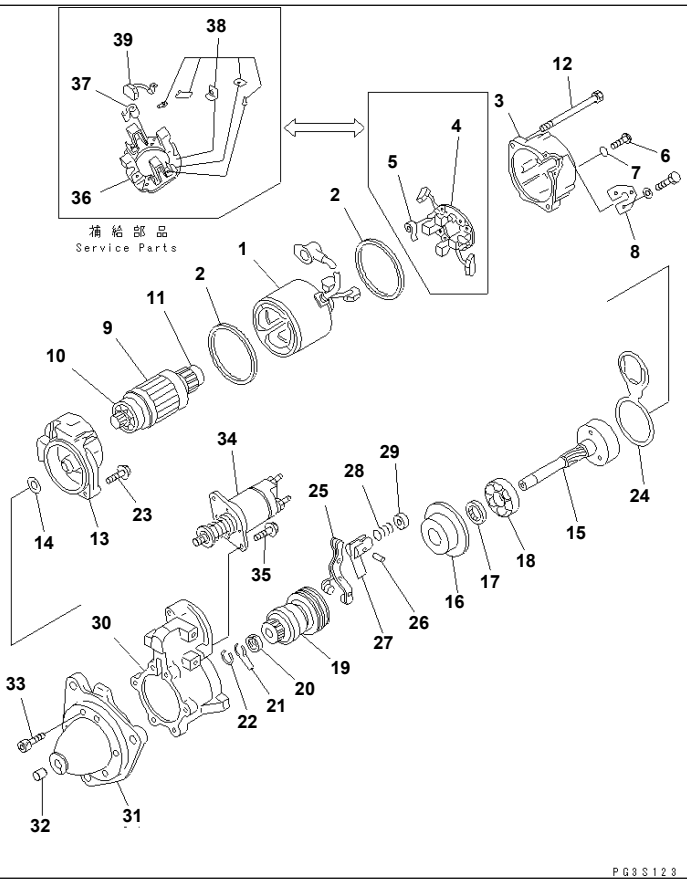

STARTING MOTOR (11KW)(#53005-)

Item	Part No.	Description	Qty	Options
	600-813-4812	STARTING MOTOR ASS'Y,(11KW)	1	SN:53005--
THE SAWAFUJI DENKI PART NUMBER IS THAT SD IS REMOVED FROM KOMATSU PART NUMBER LISTED BELOW.				
1	SD1310-10030X0	· YOKE ASS'Y	1	SN:53005--
2	SD4141-26410X0	· PACKING	2	SN:53005--
3	SD2240-24100X0	· BRACKET,REAR	1	SN:53005--
4	SD1331-04300X0	· BRUSH HOLDER ASS'Y	1	SN:53005--
5	SD5250-02800X0	· · SPRING,BRUSH	4	SN:53005--
6	SD5000-10500X0	· SCREW	2	SN:53005--
7	SD6414-04510X0	· O-RING	2	SN:53005--
8	SD3040-12100X0	· PLATE	1	SN:53005--
9	SD1320-07800X0	· ARMATURE ASS'Y	1	SN:53005--
10	SD6206-01110X0	· · BEARING,BALL	1	SN:53005--
11	SD6206-01120X0	· · BEARING,BALL	1	SN:53005--
12	SD5010-27421X0	· BOLT	2	SN:53005--
13	SD2245-00830X0	· CASE,GEAR	1	SN:53005--
14	SD5031-05700X0	· SHIM	1	SN:53005--
15	SD2441-03200X0	· SHAFT	1	SN:53005--
16	SD2244-06902X0	· HOLDER,CENTER	1	SN:53005--
17	SD6410-01000X0	· SEAL,OIL	1	SN:53005--
18	SD6206-01710X0	· BEARING,BALL	1	SN:53005--
19	SD1361-04700X0	· PINION CLUTCH ASS'Y	1	SN:53005--
20	SD3661-02000X0	· STOPPER,PINION	1	SN:53005--
21	SD5221-01200X0	· HOOK	2	SN:53005--

STARTING MOTOR (11KW)(#53005-)

Item	Part No.	Description	Qty	Options
22	SD5058-04200X0	· RING,RETAINING	1	SN:53005--
23	SD5010-27430X0	· BOLT	1	SN:53005--
24	SD4141-26311X0	· PACKING	1	SN:53005--
25	SD1372-04200X0	· LEVER ASS'Y	1	SN:53005--
26	SD3600-17800X0	· ROD	1	SN:53005--
27	SD4223-05200X0	· HOLDER,LEVER	2	SN:53005--
28	SD5201-10100X0	· COIL,SPRING	1	SN:53005--
29	SD2407-02101X0	· COLLAR	1	SN:53005--
30	SD2244-06850X0	· BRACKET,CENTER	1	SN:53005--
31	SD2046-14301X9	· PINION CASE ASS'Y	1	SN:53005--
32	SD2620-10500X9	· · METAL	1	SN:53005--
33	SD5010-26211X0	· BOLT	6	SN:53005--
34	SD1350-11110X9	· SWITCH ASS'Y,ENGAGE	1	SN:53005--
35	SD5010-27300X0	· BOLT	2	SN:53005--
36	SD1331-04300X9	BRUSH HOLDER ASS'Y,(SERVICE PARTS)	1	SN:53005--
37	SD5250-02800X0	· SPRING,BRUSH	4	SN:53005--
38	SD2660-07400X6	· BRUSH,(FOR 1ST SERVICE ONLY)	1	SN:53005--
39	SD2660-07400X7	· · BRUSH,(FROM 2ND SERVICE)	4	SN:53005--

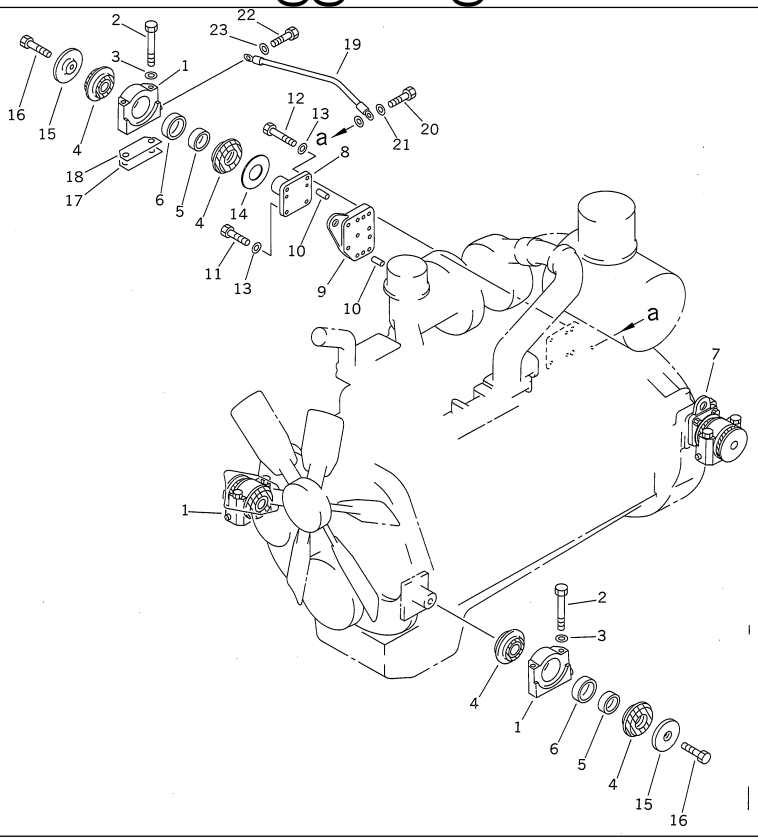

D155A-2 S/N 50001-UP (S6D155-4 Eng. Installed)

ENGINE MOUNT (NOISE SUPPRESSION SPEC. FOR EC)

Item	Part No.	Part Name	Qty	Serial No.
1	175-862-5140	CAP	4	50001-
2	01011-52490	BOLT	8	50001-
3	01643-32460	WASHER	8	50001-
4	195-01-32110	CUSHION	8	50001-
5	195-01-32130	CUSHION	4	50001-
6	195-01-32120	CUSHION	4	50001-
7	175-862-5150	PIN,L.H.	1	50001-
8	175-862-5170	PIN,R.H.	1	50001-
9	175-862-5180	SPACER	1	50001-
10	04020-01434	PIN,DOWEL	6	50001-
11	01010-51850	BOLT	12	50001-
12	01010-51890	BOLT	1	50001-
13	01643-31845	WASHER	13	50001-
14	195-01-31150	SPACER	2	50001-
15	175-862-5160	PLATE	4	50001-
16	01010-51835	BOLT	4	50001-
17	175-862-5220	SHIM¤ 1.0MM	4	50001-
18	175-862-5230	SHIM¤ 0.2MM	20	50001-
19	08028-46030	CABLE	1	50001-
20	01010-51245	BOLT	1	50001-
21	01643-31232	WASHER	2	50001-
22	01010-81220	BOLT	1	50001-
23	01643-31232	WASHER	1	50001-

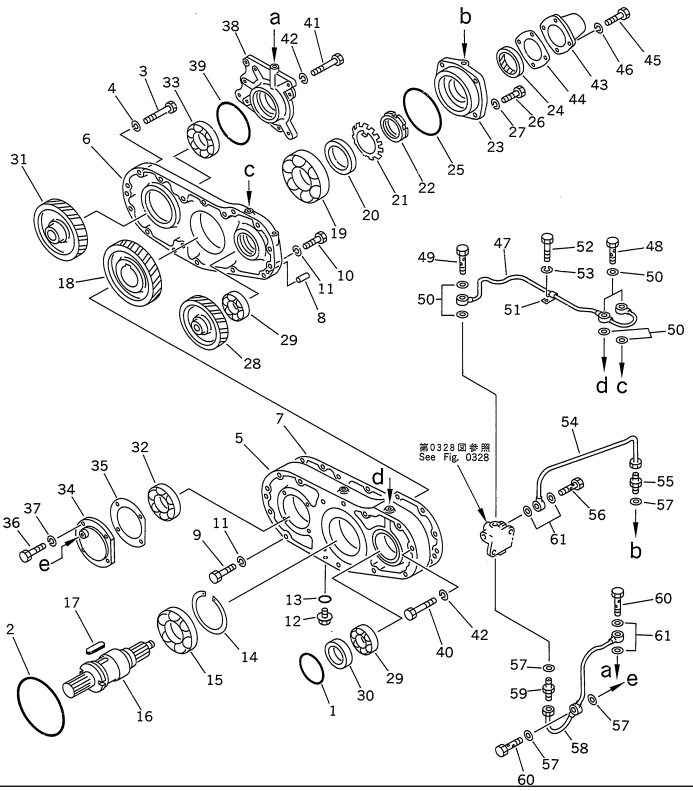

Ref. 1011 **Page 030030**

D155A-2 S/N 50001-UP (S6D155-4 Eng. Installed)
POWER TAKE OFF

Item	Part No.	Part Name	Qty	Serial No.
1	07000-02105	O-RING	1	50001-
2	07000-05195	O-RING	1	50001-
3	01011-51205	BOLT	10	50001-
4	01602-21236	WASHER,SPRING	10	50001-
5	175-38-00074	P.T.O. ASS'Y	1	52126-
	□175-38-00073	P.T.O. ASS'Y	1	50001-52125
	175-38-12110	· CASE	1	50001-
6	175-38-11110	· CASE	1	50001-
7	154-01-12131	· GASKET	1	52126-
	□154-01-12130	· GASKET,CASE	1	50001-52125
8	04020-01024	· PIN,DOWEL	2	50001-
9	01010-51255	· BOLT	2	50001-
10	01010-51250	· BOLT	2	50001-
11	01602-21236	· WASHER,SPRING	4	50001-
12	07044-12412	· PLUG,MAGNETIC	1	50001-
13	07002-02434	· O-RING	1	50001-
14	150-21-22180	· RING,SNAP	1	50001-
15	154-01-12280	· BEARING	1	50001-
16	154-01-12221	· SHAFT	1	50001-
17	04000-02050	· KEY	2	50001-
18	154-01-12230	· GEAR	1	50001-
19	06040-06314	· BEARING	1	50001-
20	154-01-12240	· COLLAR	1	50001-
21	01658-16823	· WASHER,LOCK	1	50001-
22	01530-06814	· NUT	1	50001-
23	154-01-12250	· COVER	1	50001-
24	07012-00060	· SEAL,OIL	1	50001-

POWER TAKE OFF

Item	Part No.	Part Name	Qty	Serial No.
25	07000-05150	· O-RING	1	50001-
26	01010-51230	· BOLT	4	50001-
27	01602-21236	· WASHER,SPRING	4	50001-
28	154-01-12310	· GEAR	1	50001-
29	06040-06209	· BEARING	2	50001-
30	154-01-12320	· RING	1	50001-
31	175-38-11120	· GEAR	1	50001-
32	06040-06212	· BEARING	1	50001-
33	06040-06312	· BEARING	1	50001-
34	154-01-12420	· COVER	1	50001-
35	154-01-12431	· GASKET	1	52126-
	□154-01-12430	· GASKET	1	50001-52125
36	01010-51025	· BOLT	4	50001-
37	01602-21030	· WASHER,SPRING	4	50001-
38	175-38-11130	· CAGE	1	50001-
39	07000-05150	· O-RING	1	50001-
40	01011-51205	· BOLT	3	50001-
41	01010-51275	· BOLT	2	50001-
42	01602-21236	· WASHER,SPRING	5	50001-
43	154-01-12260	· COVER	1	50001-
44	154-01-12271	· GASKET	1	52126-
	□154-01-12270	· GASKET	1	50001-52125
45	01010-51025	· BOLT	4	50001-
46	01602-21030	· WASHER,SPRING	4	50001-
47	154-01-22530	· TUBE	1	50001-
48	6600-01-3860	· BOLT,JOINT	2	50001-
49	07206-20610	· BOLT,JOINT	1	50001-
50	07005-01012	· GASKET	6	50001-
51	08036-10614	· CLIP	2	50001-
52	01010-51220	· BOLT	2	50001-
53	01602-21236	· WASHER,SPRING	2	50001-
54	154-01-22540	· TUBE	1	50001-
55	154-01-12520	· NIPPLE	1	50001-
56	07206-20610	· BOLT,JOINT	1	50001-
57	07005-01012	· GASKET	4	50001-
58	154-01-22550	· TUBE	1	50001-
59	07211-50610	· NIPPLE	1	50001-
60	6600-01-3860	· BOLT,JOINT	2	50001-
61	07005-01012	· GASKET	4	50001-

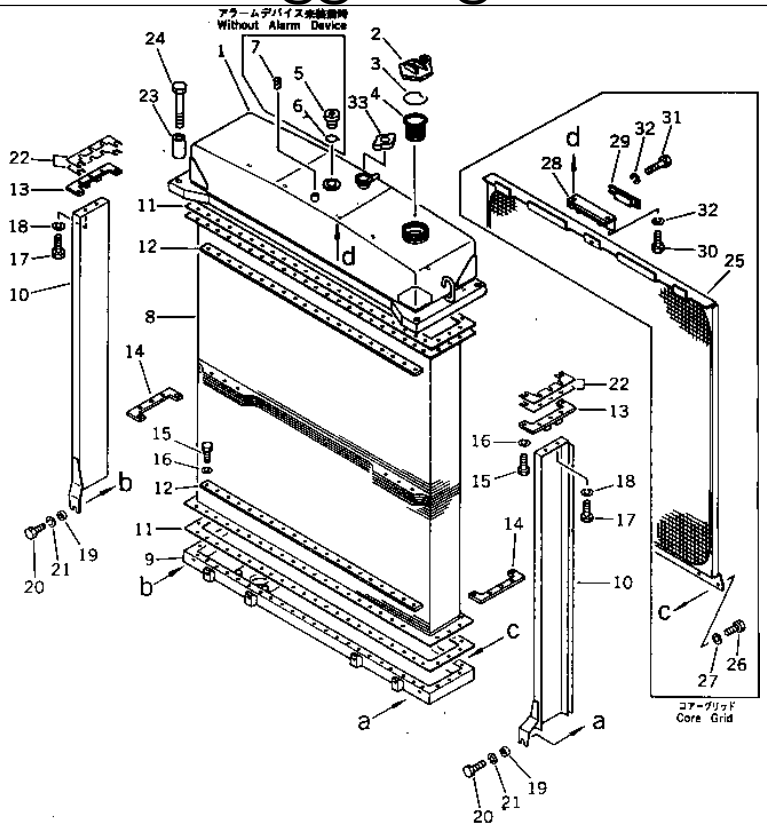

Ref. 1201 **Page 030040**

D155A-2 S/N 50001-UP (S6D155-4 Eng. Installed)
RADIATOR

Item	Part No.	Part Name	Qty	Serial No.
1	175-03-00296	RADIATOR ASS'Y	1	52126-
	□175-03-00295	RADIATOR ASS'Y	1	50001-52125
	175-03-00302	· UPPER TANK ASS'Y	1	50001-
	175-03-32921	· · TANK,UPPER	1	50001-
2	07053-10000	· · CAP,FILLER	1	50001-
	07093-20000	· · CAP,FILLER (FOR VANDALISM)	1	50001-
3	07057-03271	· · RING,SNAP	1	50001-
4	07056-00048	· · STRAINER,FILLER	1	50001-
5	07040-13618	· · PLUG,(WITHOUT ALARM DEVICE)	1	50001-
6	07002-43634	· · O-RING,(WITHOUT ALARM DEVICE)	1	50001-
7	07049-01012	· · PLUG,(WITHOUT ALARM DEVICE)	1	50001-
8	175-03-32262	· CORE	1	50001-
9	175-03-31133	· TANK,LOWER	1	50001-
10	175-03-32930	· PLATE,L.H.	1	50001-
	175-03-32940	· PLATE,R.H.	1	50001-
11	175-03-31563	· GASKET	2	52126-
	□175-03-31153	· PACKING	2	50001-52125
12	175-03-31181	· PLATE	4	50001-
13	175-03-32990	· PLATE	2	50001-
14	175-03-32660	· PLATE	2	50001-
15	01010-51030	· BOLT	100	50001-
16	01602-21030	· WASHER,SPRING	100	50001-
17	01010-51020	· BOLT	4	50001-
18	01602-21030	· WASHER,SPRING	4	50001-
19	195-03-22160	· SEAT	2	50001-
20	01010-51030	· BOLT	2	50001-
21	01602-21030	· WASHER,SPRING	2	50001-

RADIATOR

Item	Part No.	Part Name	Qty	Serial No.
22	195-03-11570	SHIM¤ 1.0MM	8	50001-
23	175-03-32650	COLLAR	4	50001-
24	01011-51835	BOLT	4	50001-
25	175-03-32612	GRID	1	50001-
26	01010-51025	BOLT	7	50001-
27	01643-31032	WASHER	7	50001-
28	175-03-32620	BRACKET	3	50001-
29	198-03-22410	PLATE	3	50001-
30	01010-51020	BOLT	6	50001-
31	01010-51035	BOLT	6	50001-
32	01602-21030	WASHER,SPRING	12	50001-
33	125-03-21210	CAP	1	50001-

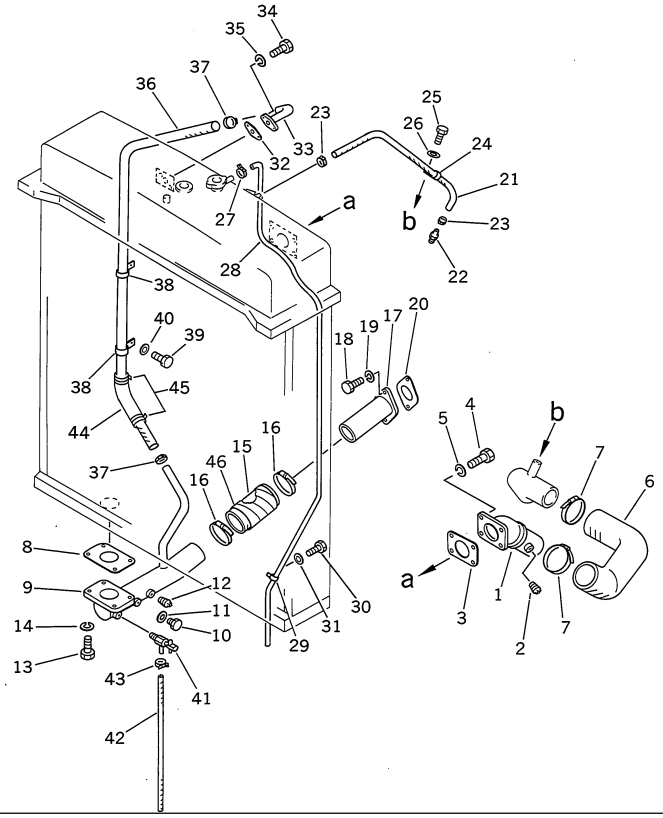

Ref. 1203 **Page 030060**

D155A-2 S/N 50001-UP (S6D155-4 Eng. Installed)
RADIATOR PIPING

Item	Part No.	Part Name	Qty	Serial No.
1	175-03-32117	TUBE,INLET	1	50001-
2	07042-10108	PLUG	1	50001-
3	175-03-32791	GASKET	1	52126-
	□175-03-32790	GASKET	1	50001-52125
4	01010-51230	BOLT	4	50001-
5	01602-21236	WASHER,SPRING	4	50001-
6	175-03-31513	HOSE	1	50001-
7	07281-01029	CLAMP,HOSE	2	50001-
8	195-03-11371	GASKET	1	52126-
	□195-03-11361	GASKET	1	50001-52125
9	175-03-00254	OUTLET TUBE ASS'Y	1	50001-
	☆	· TUBE,OUTLET	1	50001-
10	07040-11612	· PLUG	1	50001-
11	07005-01612	· GASKET	1	50001-
12	07042-00415	· PLUG,TAPER	1	50001-
13	01010-51235	BOLT	4	50001-
14	01602-21236	WASHER,SPRING	4	50001-
15	195-03-13170	HOSE	1	50001-
16	07289-00095	CLAMP	2	52475-
	□20D-09-11130	CLAMP,HOSE	2	50001-52474
17	175-03-32126	TUBE,OUTLET	1	50001-
18	01010-51240	BOLT	2	50001-
19	01602-21236	WASHER,SPRING	2	50001-
20	175-03-32131	GASKET	1	52126-
	□175-03-32130	GASKET	1	50001-52125
21	175-03-32162	HOSE	1	50001-
22	195-03-11530	NIPPLE	1	50001-

RADIATOR PIPING

Item	Part No.	Part Name	Qty	Serial No.
23	07281-00197	CLAMP	2	50001-
24	195-03-11580	CLIP	1	50001-
25	01010-51020	BOLT	1	50001-
26	01643-31032	WASHER	1	50001-
27	07285-00095	CLIP	1	50001-
28	195-03-17880	TUBE,OVERFLOW	1	50001-
29	195-03-11690	CLIP	4	50001-
30	01010-51220	BOLT	3	50001-
31	01643-31232	WASHER	3	50001-
32	195-03-11981	GASKET	1	52126-
	□195-03-11980	GASKET	1	50001-52125
33	175-03-43110	TUBE	1	50001-
34	01010-51030	BOLT	2	50001-
35	01602-21030	WASHER,SPRING	2	50001-
36	195-03-18680	HOSE	1	50001-
37	07281-00419	CLAMP,HOSE	2	50001-
38	195-03-11511	CLIP	2	50001-
39	01010-51220	BOLT	2	50001-
40	01643-31232	WASHER	2	50001-
41	195-03-13241	VALVE,DRAIN	1	50001-
42	175-03-31530	HOSE,DRAIN	1	50001-
	175-803-3150	HOSE,DRAIN (FOR SLAG HANDLING)	1	50001-
43	07285-00180	CLIP	1	50001-
44	205-62-53780	COVER	1	50095-
45	08034-00519	BAND	2	50095-
46	17M-01-23420	TAPE,(FOR SLAG HANDLING)	1	50001-

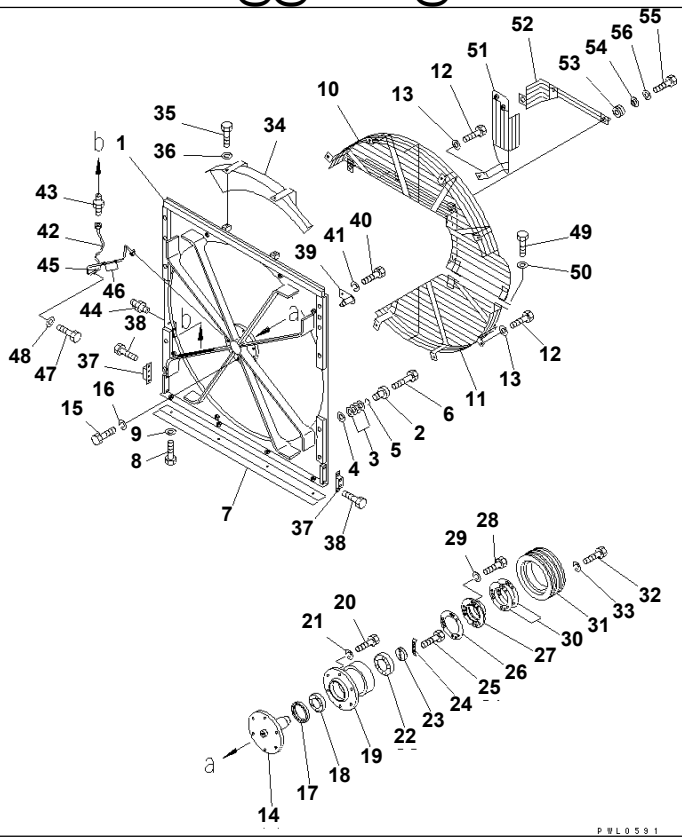

D155A-2 S/N 50001-UP (S6D155-4 Eng. Installed)

RADIATOR FAN GUARD AND PULLEY (SANDY AND DUSTY TERRAIN SPEC.)(#52854-)

Item	Part No.	Part Name	Qty	Serial No.
1	175-03-34411	GUARD	1	52854-
2	175-03-00361	COLLAR ASS'Y	10	52854-
	175-03-32582	· COLLAR	1	52854-
3	175-54-27350	· SPRING	4	52854-
4	154-30-51460	· WASHER	1	52854-
5	175-54-28770	· RING	1	52854-
6	01010-51270	BOLT	10	52854-
7	175-03-32720	PLATE	1	52854-
8	01010-51225	BOLT	4	52854-
9	01643-31232	WASHER	4	52854-
10	175-03-43122	NET (175-03-43122,175-03-43151¤ 175-03-43161)	1	52854-
11	175-03-43131	NET	1	52854-
12	01010-51235	BOLT	8	52854-
13	01643-31232	WASHER	8	52854-
14	175-03-31323	SHAFT	1	52854-
15	01010-51235	BOLT	6	52854-
16	01602-21236	WASHER,SPRING	6	52854-
17	07011-10090	SEAL,OIL	1	52854-
18	06040-06212	BEARING,BALL	1	52854-
19	175-03-31542	DRUM,BEARING	1	52854-
20	01010-51240	BOLT	6	52854-
21	01602-21236	WASHER,SPRING	6	52854-
22	06040-06310	BEARING,BALL	1	52854-
23	195-03-11842	HOLDER	1	52854-

D155A-2 S/N 50001-UP (S6D155-4 Eng. Installed)

RADIATOR FAN GUARD AND PULLEY (SANDY AND DUSTY TERRAIN SPEC.)(#52854-)

Item	Part No.	Part Name	Qty	Serial No.
24	195-03-11851	LOCK,LOCK	1	52854-
25	01010-51030	BOLT	2	52854-
26	195-03-12810	GASKET	1	52854-
27	175-03-34380	COVER	1	52854-
28	01010-51030	BOLT	3	52854-
29	01602-21030	WASHER,SPRING	3	52854-
30	195-03-11880	SHIM¤ 1.0MM	10	52854-
31	175-03-41530	PULLEY	1	52854-
	175-03-32462	PULLEY,(FOR HIGH SPEED FAN)	1	52854-
32	01010-51260	BOLT	6	52854-
33	01602-21236	WASHER,SPRING	6	52854-
34	175-03-31982	COVER	1	52854-
35	01010-51230	BOLT	2	52854-
36	01643-31232	WASHER	2	52854-
37	195-03-13150	CUSHION	2	52854-
38	01010-51020	BOLT	2	52854-
39	175-03-32710	PIN	1	52854-
40	01010-51230	BOLT	1	52854-
41	01602-21236	WASHER,SPRING	1	52854-
42	175-03-34421	TUBE	1	52854-
43	07213-50710	CONNECTOR	1	52854-
44	07020-00000	FITTING,GREASE	1	52854-
45	566-16-11970	CLIP	1	52854-
46	566-16-11970	CLIP	2	52854-
47	01010-50816	BOLT	3	52854-
48	01643-30823	WASHER	3	52854-
49	01010-51225	BOLT	2	52854-
50	01643-31232	WASHER	2	52854-
51	175-03-43151	NET	1	52854-
52	175-03-43161	NET	1	52854-
53	175-03-42140	RUBBER	4	52854-
54	203-54-14330	COLLAR	4	52854-
55	01010-51235	BOLT	4	52854-
56	01643-31232	WASHER	4	52854-

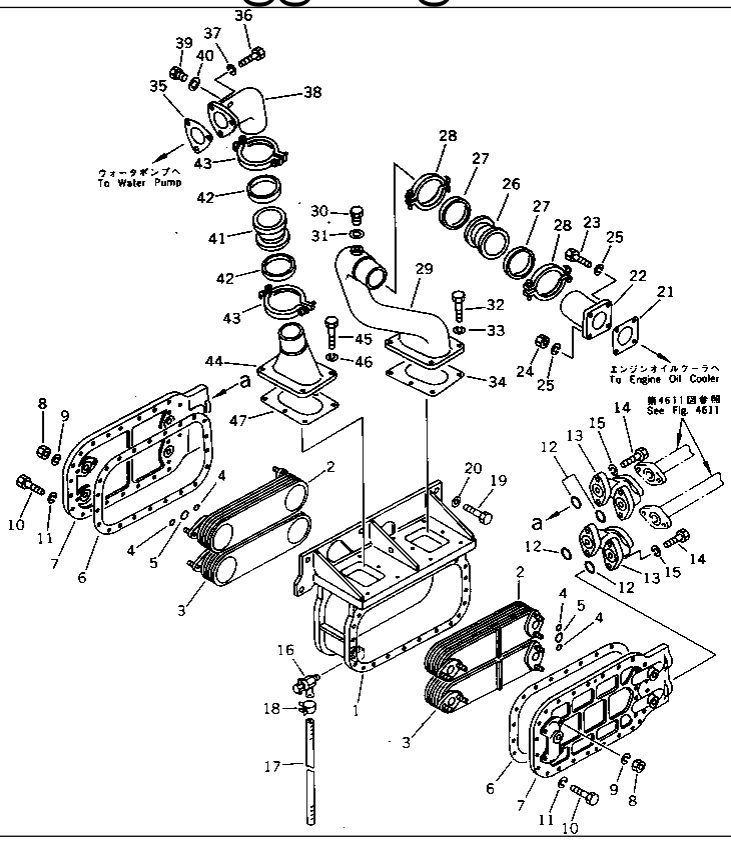

Ref. 1211 **Page 030120**

D155A-2 S/N 50001-UP (S6D155-4 Eng. Installed)
OIL COOLER

Item	Part No.	Part Name	Qty	Serial No.
1	175-03-00400	OIL COOLER ASS'Y	1	52126-
	□175-03-00179	OIL COOLER ASS'Y	1	50001-52125
	195-03-19120	· CASE,OIL COOLER	1	50001-
2	195-03-19130	· COOLER,UPPER	2	50001-
3	195-03-19140	· COOLER,LOWER	2	50001-
4	07000-72014	· O-RING	16	50001-
5	07000-73032	· O-RING	8	50001-
6	195-03-19161	· GASKET	2	52126-
	□195-03-19160	· GASKET	2	50001-52125
7	195-03-19151	· COVER	2	50001-
8	01580-00806	· NUT	16	50001-
9	01602-00825	· WASHER,SPRING	16	50001-
10	01010-31030	· BOLT	48	50001-
11	01602-01030	· WASHER,SPRING	48	50001-
12	07000-03038	O-RING	4	50001-
13	195-03-19110	FLANGE	2	50001-
14	01010-31240	BOLT	8	50001-
15	01602-01236	WASHER,SPRING	8	50001-
16	195-03-13241	VALVE,DRAIN	1	50001-
17	175-03-31530	HOSE,DRAIN	1	50001-
18	07285-00180	CLIP	1	50001-
19	01010-31645	BOLT	5	50001-
20	01643-31645	WASHER	5	50001-
21	195-03-12561	GASKET	1	52126-
	□195-03-12560	GASKET	1	50001-52125
22	175-03-34142	TUBE	1	50001-
23	01010-31040	BOLT	2	50001-

OIL COOLER

Item	Part No.	Part Name	Qty	Serial No.
24	01580-01008	NUT	2	50001-
25	01602-01030	WASHER,SPRING	4	50001-
26	07332-02400	COUPLING	1	50001-
27	07332-52400	· GASKET	2	50001-
28	07332-62400	· CLAMP	2	50001-
29	175-03-00013	TUBE ASS'Y	1	50001-
	175-03-34132	· TUBE	1	50001-
30	07040-11612	· PLUG	1	50001-
31	07005-01612	· GASKET	1	50001-
32	01010-31040	BOLT	4	50001-
33	01602-01030	WASHER,SPRING	4	50001-
34	195-03-12341	GASKET	1	52126-
	□195-03-12340	GASKET	1	50001-52125
35	195-03-12820	GASKET	1	52126-
	□195-03-12321	GASKET	1	50001-52125
36	01010-31035	BOLT	3	50001-
37	01602-01030	WASHER,SPRING	3	50001-
38	175-03-00132	TUBE ASS'Y	1	50001-
	☆	· TUBE	1	50001-
39	07040-11612	· PLUG	1	50001-
40	07005-01612	· GASKET	1	50001-
41	07332-02400	COUPLING	1	50001-
42	07332-52400	· GASKET	2	50001-
43	07332-62400	· CLAMP	2	50001-
44	175-03-34122	TUBE	1	50001-
45	01010-31040	BOLT	4	50001-
46	01602-01030	WASHER,SPRING	4	50001-
47	195-03-12341	GASKET	1	52126-
	□195-03-12340	GASKET	1	50001-52125

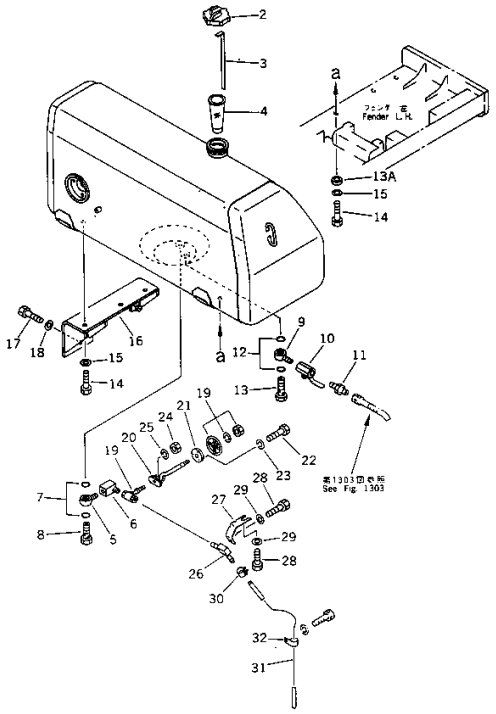

Ref. 1301 **Page 030140**

D155A-2 S/N 50001-UP (S6D155-4 Eng. Installed)
FUEL TANK

Item	Part No.	Part Name	Qty	Serial No.
1	175-04-31262	TANK,FUEL	1	51863-
	□175-04-31261	TANK,FUEL	1	50123-51862
	175-04-31260	TANK,FUEL	1	50001-50122
2	07050-41200	CAP	1	50001-
	07050-00000	CAP,(FOR SLAG HANDLING)	1	50001-
3	175-04-22113	GAUGE,OIL LEVEL	1	50001-
4	07056-18416	STRAINER	1	50001-
5	195-04-11230	JOINT,EYE	1	50001-
6	175-04-21320	ELBOW	1	50001-
7	07000-03035	O-RING	2	50001-
8	195-04-11280	BOLT,JOINT	1	50001-
9	195-04-11230	JOINT,EYE	1	50001-
10	07700-40460	VALVE	1	50001-
11	10T-49-13180	NIPPLE	1	50001-
12	07000-03035	O-RING	2	50001-
13	195-04-11280	BOLT,JOINT	1	50001-
13A	198-79-16550	COLLAR	3	50901-
14	01010-62465	BOLT	3	50001-
15	01643-32460	WASHER	3	50001-
16	175-04-25221	BRACKET	1	50001-
17	01010-52060	BOLT	6	50001-
18	01643-32060	WASHER	6	50001-
19	154-04-12492	VALVE	1	50001-
20	175-04-26181	· JOINT	1	50001-
21	195-04-11480	· GUIDE	1	50001-
22	01010-50616	BOLT	3	50001-
23	01602-20619	WASHER,SPRING	3	50001-

FUEL TANK

Item	Part No.	Part Name	Qty	Serial No.
24	01580-10605	NUT	1	50001-
25	01602-20619	WASHER,SPRING	1	50001-
26	195-04-11431	ELBOW	1	50001-
27	175-04-26210	BRACKET	1	50001-
28	01010-51025	BOLT	2	50001-
29	01643-31032	WASHER	2	50001-
30	07285-00130	CLIP	1	50001-
31	07270-01295	TUBE	1	50001-
	07270-31295	TUBE,(FOR SLAG HANDLING)	1	50001-
32	154-04-11210	CLIP	1	50001-

D155A-2 S/N 50001-UP (S6D155-4 Eng. Installed)
@@14875@

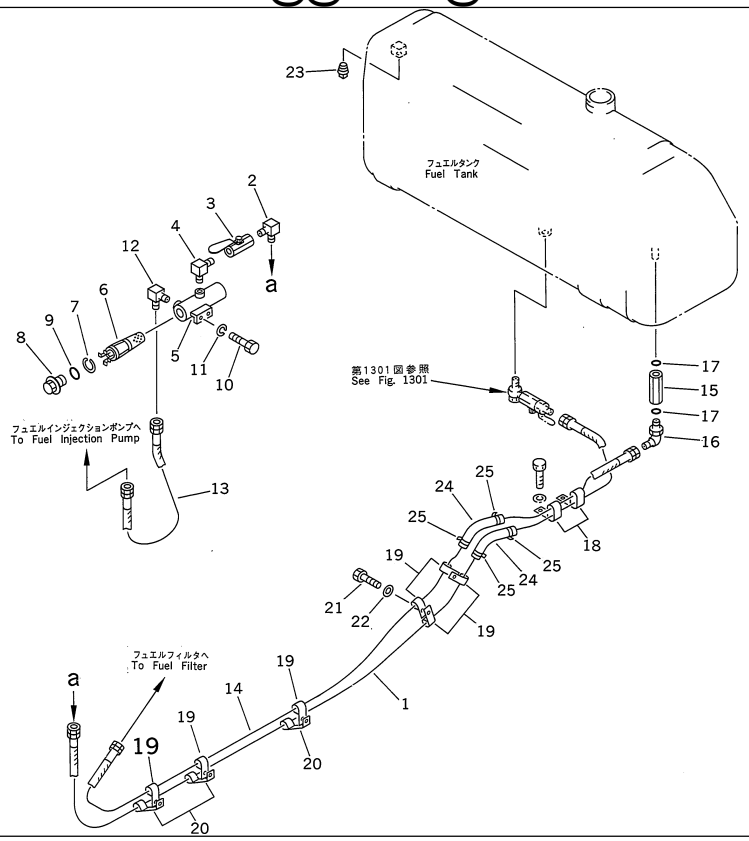

Ref. 1303 **Page 030160**

D155A-2 S/N 50001-UP (S6D155-4 Eng. Installed)
FUEL PIPING

Item	Part No.	Part Name	Qty	Serial No.
1	07102-20438	HOSE	1	50001-
	07103-A0438	HOSE,(JUNGLE SPEC.)	1	50001-
	07103-A0438	HOSE,(FOR SLAG HANDLING)	1	50001-
2	195-04-12280	ELBOW	1	50001-
3	07700-40460	VALVE	1	50001-
4	195-04-11450	ELBOW	1	50001-
5	175-04-00167	STRAINER ASS'Y	1	50001-
	175-04-25340	· CASE	1	50001-
6	175-04-00210	· STRAINER ASS'Y	1	50001-
	07058-00010	· · ELEMENT ASS'Y	1	50001-
	07058-00005	· · · ELEMENT	1	50001-
7	07058-00006	· · · RING	1	50001-
8	07058-00007	· · · PLUG	1	50001-
9	07000-03040	· · O-RING	1	50001-
10	01010-50825	BOLT	2	50001-
11	01602-20825	WASHER,SPRING	2	50001-
12	195-04-12280	ELBOW	1	50001-
13	07102-20404	HOSE	1	50001-
	07103-A0404	HOSE,(JUNGLE SPEC.)	1	50001-
	07103-A0404	HOSE,(FOR SLAG HANDLING)	1	50001-
14	07102-20431	HOSE	1	50001-
	07103-A0431	HOSE,(JUNGLE SPEC.)	1	50001-
	07103-A0431	HOSE,(FOR SLAG HANDLING)	1	50001-
15	205-60-64300	CHECK VALVE ASS'Y	1	50001-
16	07235-10422	ELBOW	1	50001-
17	07002-02034	O-RING	2	50001-
18	154-04-11440	CLAMP	2	50001-

FUEL PIPING

Item	Part No.	Part Name	Qty	Serial No.
18	144-A74-1460	CLIP,(FOR SLAG HANDLING)	2	50001-
19	08035-02510	CLIP	7	50001-
	08035-03012	CLIP,(FOR SLAG HANDLING)	7	50001-
20	156-04-11120	CLIP	3	50001-
	19N-06-11130	CLIP,(FOR SLAG HANDLING)	3	50001-
21	01010-51020	BOLT	5	50001-
22	01643-31032	WASHER	5	50001-
23	07042-30108	PLUG	5	50001-
24	205-62-53780	COVER	2	50001-
25	08034-00519	BAND	4	50001-

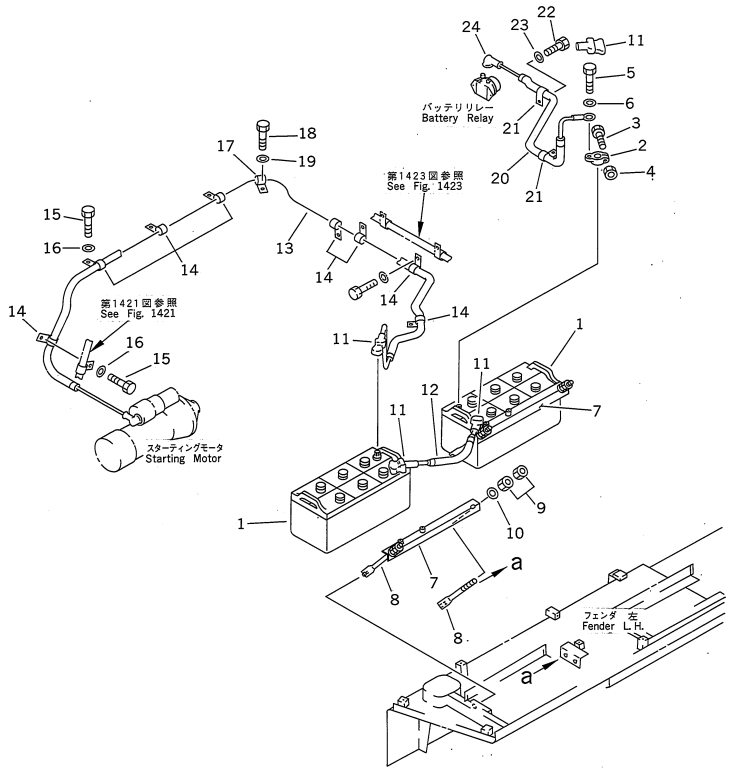

Ref. 1401 **Page 030170**

D155A-2 S/N 50001-UP (S6D155-4 Eng. Installed)
BATTERY

Item	Part No.	Part Name	Qty	Serial No.
1	08000-32220	BATTERY¤ WET	2	50001-
2	08000-00000	TERMINAL¤ (+)	2	50001-
	08000-00001	TERMINAL¤ (-)	2	50001-
3	01010-30830	· BOLT	1	50001-
4	01580-00806	· NUT	1	50001-
5	01050-31018	· BOLT	1	50001-
6	01640-01016	· WASHER	1	50001-
7	195-06-19461	HOLDER	2	50001-
8	175-06-39621	ROD	4	50001-
9	01580-11008	NUT	8	50001-
10	01640-21016	WASHER	4	50001-
11	08038-22511	CAP	4	50001-
12	175-06-61240	CABLE	1	50001-
13	175-06-61260	CABLE,BATTERY	1	50001-
14	08035-03010	CLIP	8	50001-
15	01010-51016	BOLT	7	50001-
16	01643-31032	WASHER	7	50001-
17	08035-03014	CLIP	1	50001-
18	01010-51430	BOLT	1	50001-
19	01643-31445	WASHER	1	50001-
20	175-06-61250	CABLE,BATTERY	1	50001-
21	08035-03010	CLIP	2	50001-
22	01010-51016	BOLT	2	50001-
23	01643-31032	WASHER	2	50001-
24	08038-00035	CAP	1	50001-

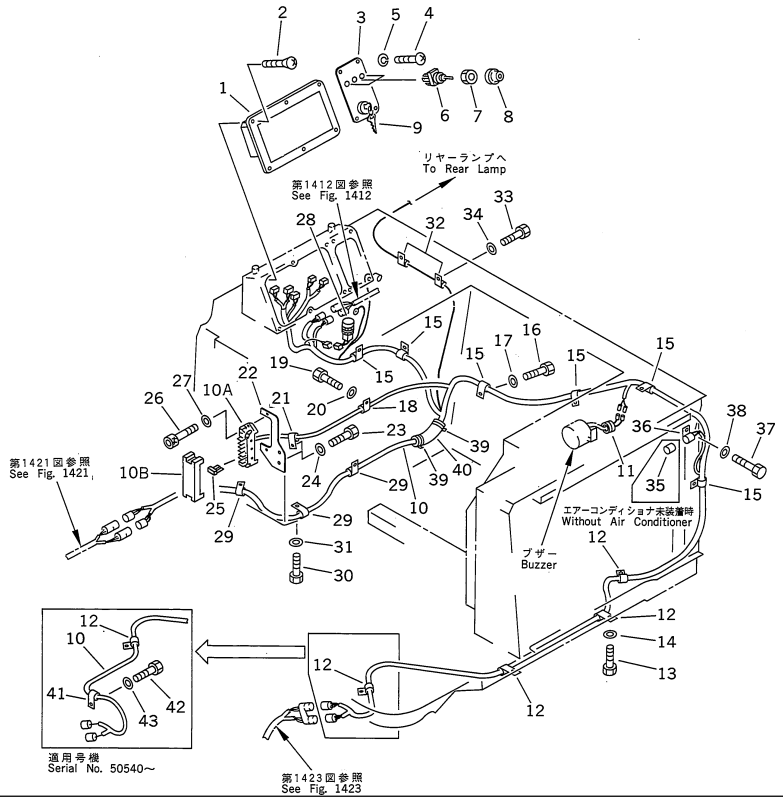

INSTRUMENT PANEL (1/2)

Item	Part No.	Part Name	Qty	Serial No.
1	(7831-63-2000)	PANEL ASS'Y	1	50001-
2	01225-70625	SCREW	6	50001-
3	175-06-61110	PANEL	1	50001-
4	01220-40620	SCREW	4	50001-
5	01602-20619	WASHER,SPRING	4	50001-
6	195-06-25250	SWITCH	3	50001-
7	7808-19-1920	NUT	3	50001-
8	175-06-27250	CAP	3	50001-
9	7830-11-2510	SWITCH,STARTING	1	50001-
10	175-06-61130	WIRING HARNESS	1	50001-
10A	195-Z11-2280	· BODY	1	50001-
10B	195-Z11-2290	· COVER	1	50001-
10	283-06-16160	· TERMINAL	12	50001-
	283-06-16130	· TERMINAL	2	50001-
	205-06-73180	· FUSE¤ 15A	11	50001-
	22W-06-13160	· FUSE¤ 20A	2	50001-
11	144-874-7520	GROMMET	1	50001-
12	08036-91814	CLIP	4	50001-
13	01010-51220	BOLT	4	50001-
14	01643-31232	WASHER	4	50001-
15	08036-01814	CLIP	6	50001-
16	01010-51220	BOLT	6	50001-
17	01643-31232	WASHER	6	50001-
18	08036-01414	CLIP	1	50001-
19	01010-51220	BOLT	1	50001-
20	01643-31232	WASHER	1	50001-
21	08036-01814	CLIP	1	50001-

INSTRUMENT PANEL (1/2)

Item	Part No.	Part Name	Qty	Serial No.
22	154-06-41270	PLATE	1	50001-
23	01010-51225	BOLT	2	50001-
24	01643-31232	WASHER	2	50001-
25	205-06-73180	FUSE¤ 15A	13	50001-
26	01252-30518	BOLT	2	50001-
27	01641-20508	WASHER	2	50001-
28	195-06-41180	SWITCH,HORN	1	50001-
29	08036-01814	CLIP	3	50001-
30	01010-51220	BOLT	3	50001-
31	01643-31232	WASHER	3	50001-
32	08036-00814	CLIP	2	50001-
33	01010-51220	BOLT	2	50001-
34	01643-31232	WASHER	2	50001-
35	207-06-31360	CONNECTOR	1	50001-
36	195-06-41830	CLIP	1	50001-
37	01010-51220	BOLT	1	50001-
38	01643-31232	WASHER	1	50001-
39	08034-00519	BAND	2	50540-
40	205-62-53780	COVER	1	50540-
41	08036-91814	CLIP	1	50540-
42	01010-51020	BOLT	1	50540-
43	01643-31032	WASHER	1	50540-

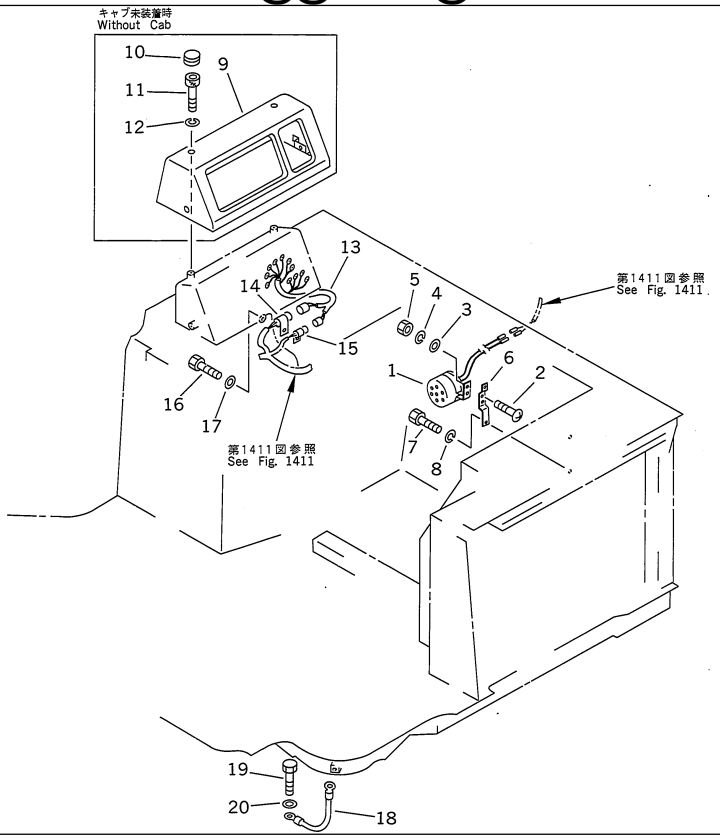

Ref. 1412 **Page 030190**

D155A-2 S/N 50001-UP (S6D155-4 Eng. Installed)
INSTRUMENT PANEL (2/2)

Item	Part No.	Part Name	Qty	Serial No.
1	175-06-61430	BUZZER	1	50412-
	□08166-02480	BUZZER	1	50001-50411
2	01220-40616	· SCREW	2	50001-
3	01640-20610	· WASHER	2	50001-
4	01602-20619	· WASHER,SPRING	2	50001-
5	01580-10605	· NUT	2	50001-
6	195-06-41410	PLATE	1	50001-
7	01010-50616	BOLT	2	50001-
8	01602-20619	WASHER,SPRING	2	50001-
9	195-06-41580	COVER	1	50001-
10	175-06-38570	CAP	4	50001-
11	01252-40616	BOLT	4	50001-
12	01602-20619	WASHER,SPRING	4	50001-
13	175-06-61121	WIRING HARNESS	1	51505-
	175-06-61120	WIRING HARNESS	1	50001-51504
14	195-06-41840	CLIP	1	50001-
15	195-06-41820	CLIP	1	50001-
16	01010-51220	BOLT	1	50001-
17	01643-31232	WASHER	1	50001-
18	08028-45030	CABLE	1	50001-
19	01010-51020	BOLT	2	50001-
20	01643-31032	WASHER	2	50001-

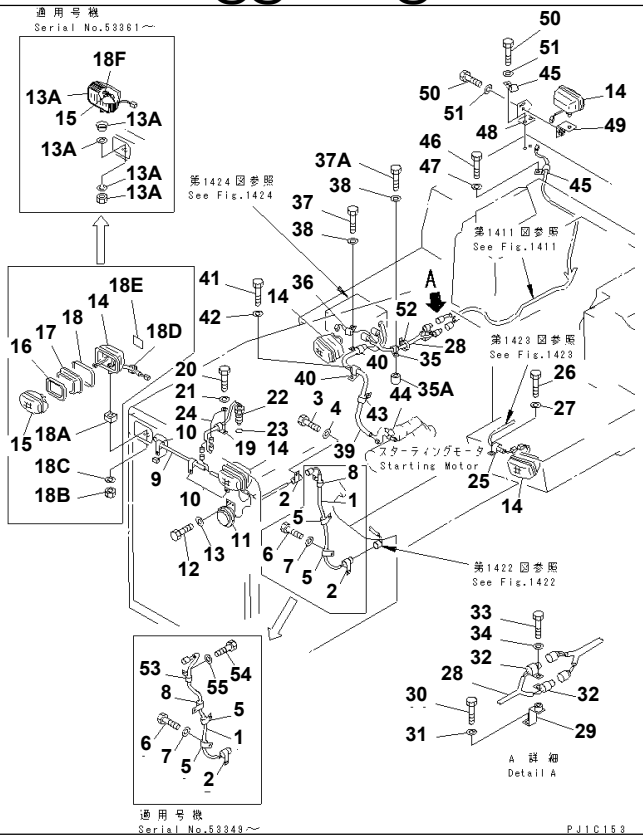

D155A-2 S/N 50001-UP (S6D155-4 Eng. Installed)

ELECTRICAL SYSTEM (1/4)

Item	Part No.	Part Name	Qty	Serial No.
1	175-06-61150	WIRING HARNESS	1	50001-
2	08052-31711	CLIP	2	50001-
3	01010-51016	BOLT	2	50001-
4	01643-31032	WASHER	2	50001-
5	175-06-25160	CLIP	2	50001-
6	01010-51220	BOLT	3	50001-
7	01643-31232	WASHER	3	50001-
8	175-06-25160	CLIP	1	50001-
9	175-06-61160	WIRING HARNESS	1	50001-
10	08036-61014	CLIP	3	50001-
11	17A-06-11710	HORN	1	52468-
	175-06-41110	HORN	1	50001-52467
12	01010-50820	BOLT	2	50001-
13	01643-30823	WASHER	2	50001-
13A	17A-06-17941	LAMP ASS'Y	5	.-
	□17A-06-17940	LAMP ASS'Y	5	53361-.
14	23S-05-28210	LAMP ASS'Y	5	50123-53360
	22W-06-12381	LAMP ASS'Y,WORK	5	50001-50122
	203-06-56160	· HOUSING	1	50123-53360
	22W-06-12280	· HOUSING	1	50001-50122
15	17A-06-17970	· BULB¤ 70W,70W	1	53361-
	22W-06-12170	· BULB	1	50001-53360
16	203-06-56180	· RING	1	50123-53360
	22W-06-12120	· RING	1	50001-50122
17	22W-06-12290	· CUSHION	1	50001-53360
18	203-06-56190	· RING	1	50123-53360
	22W-06-12130	· RING	1	50001-50122

ELECTRICAL SYSTEM (1/4)

Item	Part No.	Part Name	Qty	Serial No.
18A	22W-06-12160	· SEAT	1	50123-53360
18B	01582-11411	· NUT	1	50123-53360
18C	01643-31445	· WASHER	1	50123-53360
18D	09415-01008	· CAP	1	50123-53360
18E	23S-05-28220	· PLATE¤ NAME	1	50123-53360
18F	17A-06-17980	· SLEEVE	1	53361-
19	08036-10814	CLIP	1	50001-
20	01010-51016	BOLT	1	50001-
21	01643-31032	WASHER	1	50001-
22	175-06-41302	SENSOR,WATER LEVEL	1	50001-
23	07002-03634	O-RING	1	50001-
24	175-06-51342	WIRE	1	53320-
	(☒175-06-51340)	WIRE	1	(50001-53319)
25	08035-01508	CLIP	1	50001-
26	01010-51220	BOLT	1	50001-
27	01643-31232	WASHER	1	50001-
28	175-06-61380	WIRING HARNESS	1	50001-
29	175-06-61390	BRACKET	1	50001-
30	01010-51020	BOLT	1	50001-
31	01643-31032	WASHER	1	50001-
32	195-06-41840	CLIP	2	50095-
	□08052-22711	CLIP	2	50001-50094
33	01010-51020	BOLT	1	50001-
34	01643-31032	WASHER	1	50001-
35	08036-21814	CLIP	1	50001-
35A	195-33-11220	SPACER	1	50540-
36	08036-30814	CLIP	1	50001-
37	01010-51016	BOLT	1	50001-
37A	01010-51045	BOLT	1	50540-
	01010-51016	BOLT	2	50001-50539
38	01643-31032	WASHER	2	50001-
39	175-06-61310	WIRING HARNESS	1	50001-
40	08035-02510	CLIP	2	50001-
41	01010-51016	BOLT	1	50001-
42	01643-31032	WASHER	1	50001-
43	08035-02510	CLIP	1	50001-
44	140-06-18260	CAP	1	50001-
45	08036-80814	CLIP	2	50001-
46	01010-51220	BOLT	1	50001-
47	01643-31232	WASHER	1	50001-
48	154-06-41340	BRACKET	1	50001-
49	154-06-41350	BRACKET	1	50001-
50	01010-51235	BOLT	4	50001-
51	01643-31232	WASHER	4	50001-
52	08034-00519	BAND	1	50540-
53	04434-51012	CLIP	1	53349-
54	01010-81220	BOLT	1	53349-
55	01643-31232	WASHER	1	53349-

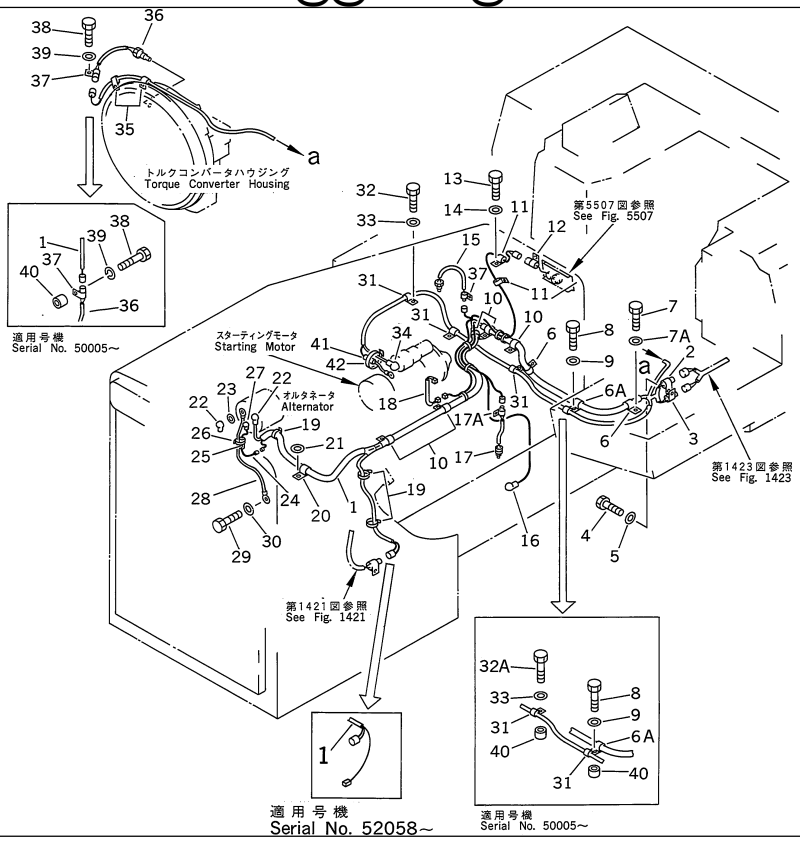

ELECTRICAL SYSTEM (2/4)

Item	Part No.	Part Name	Qty	Serial No.
1	175-06-61141	WIRING HARNESS	1	52058-
	175-06-61140	WIRING HARNESS	1	50001-52057
2	195-06-41840	CLIP	1	50095-
	□08052-22711	CLIP	1	50001-50094
3	195-06-41820	CLIP	1	50095-
	□08052-21911	CLIP	1	50001-50094
4	01010-51020	BOLT	1	50001-
5	01643-31032	WASHER	1	50001-
6	08035-03010	CLIP	2	50001-
6A	08035-03014	CLIP	1	50001-
7	01010-51020	BOLT	2	50001-
7A	01643-31032	WASHER	2	50001-
8	01010-51250	BOLT	1	50005-
	01010-51230	BOLT	1	50001-50004
9	01643-31232	WASHER	1	50001-
10	08035-03010	CLIP	5	50001-
11	08036-00814	CLIP	2	50001-
12	195-06-41820	CLIP	1	50095-
	□08052-01911	CLIP	1	50001-50094
13	01010-51016	BOLT	3	50001-
14	01643-31032	WASHER	3	50001-
15	7861-91-3310	SENSOR,WATER TEMPERATURE	1	50001-
16	140-06-18260	CAP	1	50001-
17	15A-06-11190	SENSOR,ENGINE OIL PRESSURE	1	50001-
17A	08052-31711	CLIP	1	50001-
18	175-06-39180	WIRING HARNESS	1	50001-
19	08034-00519	BAND	4	50001-

ELECTRICAL SYSTEM (2/4)

Item	Part No.	Part Name	Qty	Serial No.
20	175-06-25150	CLIP	1	50001-
21	01641-21423	WASHER	1	50001-
22	08038-02027	CAP	2	50001-
23	154-06-36790	WASHER	2	50001-
24	195-06-25323	WIRING HARNESS	1	50001-
25	198-06-12810	· FUSE	1	50001-
26	08034-00414	BAND	1	50001-
27	140-06-18260	CAP	1	50001-
28	175-06-39760	WIRE	1	50001-
29	01010-51020	BOLT	1	50001-
30	01643-31032	WASHER	1	50001-
31	08035-01514	CLIP	4	50001-
32	01010-51220	BOLT	2	50005-
	01010-51220	BOLT	3	50001-50004
32A	01010-51250	BOLT	1	50005-
33	01643-31232	WASHER	3	50001-
34	154-06-13130	CAP	1	50001-
35	08036-10814	CLIP	2	50001-
36	7861-91-3310	SENSOR,OIL TEMPERATURE	1	50001-
37	195-06-41820	CLIP	2	50095-
	□08052-31711	CLIP	2	50001-50094
38	(01010-51265)	BOLT	1	50005-
	(01010-51240)	BOLT	1	50001-50004
39	(01602-21236)	WASHER	1	50001-
40	195-33-11220	SPACER	3	50005-
41	195-06-25290	CONNECTOR,FUSE	1	50001-
42	08034-00519	BAND	1	50001-

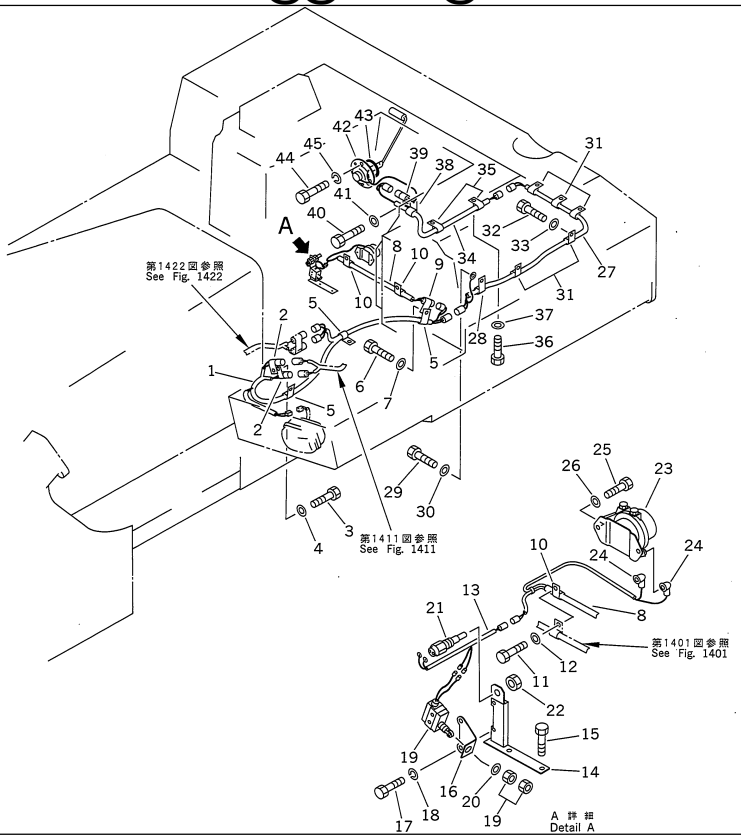

Ref. 1423 **Page 030220**

D155A-2 S/N 50001-UP (S6D155-4 Eng. Installed)
ELECTRICAL SYSTEM (3/4)

Item	Part No.	Part Name	Qty	Serial No.
1	175-06-61170	WIRING HARNESS	1	50001-
2	195-06-41840	CLIP	2	50095-
	□08052-22711	CLIP	2	50001-50094
3	01010-51020	BOLT	1	50001-
4	01643-31032	WASHER	1	50001-
5	08035-03010	CLIP	3	50001-
6	01010-51016	BOLT	3	50001-
7	01643-31032	WASHER	3	50001-
8	175-06-61180	WIRING HARNESS	1	50001-
9	195-06-41830	CLIP	1	50095-
	□08052-32411	CLIP	1	50001-50094
10	08035-02510	CLIP	2	50001-
11	01010-51016	BOLT	2	50001-
12	01643-31032	WASHER	2	50001-
13	175-06-61190	WIRING HARNESS	1	50001-
14	175-06-38561	BRACKET	1	50001-
15	01010-51035	BOLT	2	50001-
16	175-06-38810	BRACKET	1	50001-
17	01010-50820	BOLT	2	50001-
18	01602-20825	WASHER,SPRING	2	50001-
19	195-06-26260	SWITCH,TRANSMISSION	1	50001-
20	01643-31445	WASHER	1	50001-
21	08074-70000	SWITCH,BACK-UP ALARM	1	50001-
22	01583-11811	NUT	1	50001-
23	08088-20000	SWITCH,BATTERY	1	50001-
24	140-06-18260	CAP	2	50001-
25	01010-50820	BOLT	2	50001-

ELECTRICAL SYSTEM (3/4)

Item	Part No.	Part Name	Qty	Serial No.
26	01643-30823	WASHER	2	50001-
27	175-06-61210	WIRING HARNESS	1	50001-
28	08035-01508	CLIP	1	50001-
29	01010-51016	BOLT	1	50001-
30	01643-31032	WASHER	1	50001-
31	08035-01514	CLIP	5	50001-
32	01010-51220	BOLT	5	50001-
33	01643-31232	WASHER	5	50001-
34	175-06-61220	WIRING HARNESS	1	50001-
35	08035-01510	CLIP	2	50001-
36	01010-51016	BOLT	2	50001-
37	01643-31032	WASHER	2	50001-
38	08035-01510	CLIP	1	50001-
39	195-06-41820	CLIP	1	50095-
	□08052-31711	CLIP	1	50001-50094
40	01010-51016	BOLT	1	50001-
41	01643-31032	WASHER	1	50001-
42	7861-99-4700	SENSOR,FUEL	1	50001-
43	07000-02085	O-RING	1	50001-
44	01010-51025	BOLT	4	50001-
45	01602-21030	WASHER,SPRING	4	50001-

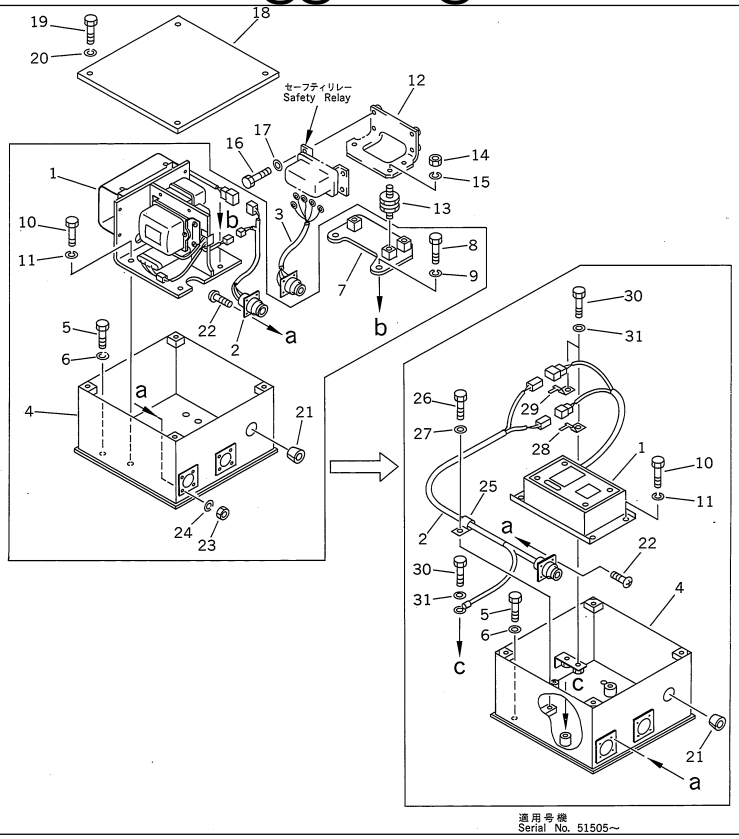

Ref. 1424 **Page 030230**

D155A-2 S/N 50001-UP (S6D155-4 Eng. Installed)
ELECTRICAL SYSTEM (4/4)

Item	Part No.	Part Name	Qty	Serial No.
1	7821-04-1000	CONTROLLER UNIT A.	1	51505-
	7821-04-2000	CONTROLLER UNIT A.,(WITH AFTER COOLER)	1	51505-
	600-815-3501	CONTROLLER UNIT A.	1	50001-51504
2	175-06-61291	WIRING HARNESS	1	51505-
	175-06-61290	WIRING HARNESS	1	50001-51504
3	175-06-61280	WIRING HARNESS	1	50001-
4	175-06-61321	BOX	1	51505-
	175-06-61320	BOX	1	50001-51504
5	01010-51030	BOLT	3	50001-
6	01602-21030	WASHER,SPRING	3	50001-
7	175-06-61340	BRACKET	1	50001-51504
8	01010-51030	BOLT	3	50001-51504
9	01602-21030	WASHER,SPRING	3	50001-51504
10	01010-50820	BOLT	4	51505-
	01010-51025	BOLT	2	50001-51504
11	01602-20825	WASHER,SPRING	4	51505-
	01602-21030	WASHER,SPRING	2	50001-51504
12	175-06-61350	BRACKET	1	50001-
13	154-06-13910	ISOLATOR	3	50001-
14	01582-11008	NUT	3	50001-
15	01602-21030	WASHER,SPRING	3	50001-
16	01010-50616	BOLT	4	50001-
17	01643-30623	WASHER	4	50001-
18	175-06-61330	COVER	1	50001-
19	01010-51020	BOLT	4	50001-
20	01602-21030	WASHER,SPRING	4	50001-
21	175-54-33470	PLUG	1	50001-

ELECTRICAL SYSTEM (4/4)

Item	Part No.	Part Name	Qty	Serial No.
22	01220-40312	SCREW	8	50001-
23	01580-10302	NUT	8	50001-
24	01602-20307	WASHER,SPRING	8	50001-
25	6128-81-4710	CLIP	1	51505-
26	01010-51020	BOLT	1	51505-
27	01643-31032	WASHER	1	51505-
28	08053-00912	CLIP	1	51505-
29	08053-01512	CLIP	1	51505-
30	01010-51020	BOLT	3	51505-
31	01643-31032	WASHER	3	51505-

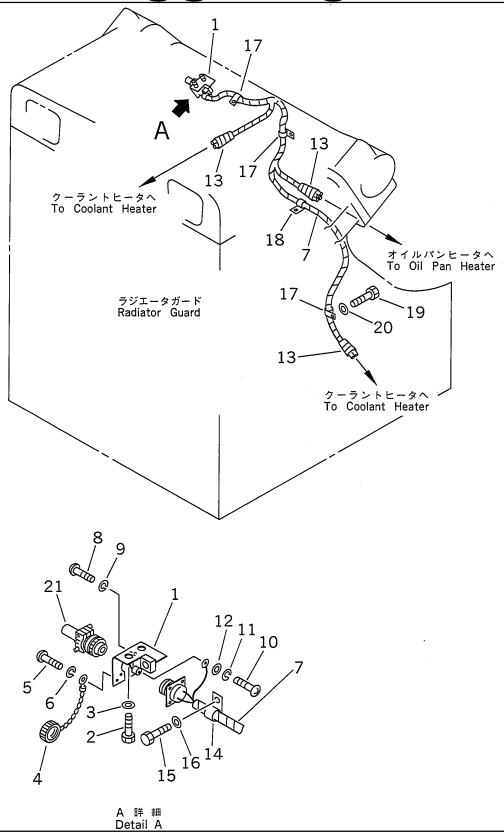

COOLANT AND OIL PAN HEATER (COLD WEATHER (A) SPEC.)

Item	Part No.	Part Name	Qty	Serial No.
1	154-06-42690	BRACKET	1	52465-
	195-06-22810	BRACKET	1	50001-52464
2	01010-51225	BOLT	2	50001-
3	01643-31232	WASHER	2	50001-
4	175-06-39830	CAP	1	50001-
5	01220-40312	SCREW	1	50001-
6	01601-20307	WASHER,SPRING	1	50001-
7	195-06-22821	WIRE ASS'Y	1	50001-
8	01220-40312	SCREW	4	50001-
9	01601-20307	WASHER,SPRING	4	50001-
10	01220-40612	SCREW	1	50001-
11	01602-20619	WASHER,SPRING	1	50001-
12	01641-20608	WASHER	1	50001-
13	175-895-4251	TAPE	1	50001-
14	08036-21814	CLIP	1	50001-
15	01010-51220	BOLT	1	50001-
16	01643-31232	WASHER	1	50001-
17	08036-21814	CLIP	3	50001-
18	08036-81214	CLIP	1	50001-
19	01010-51220	BOLT	5	50001-
20	01643-31232	WASHER	5	50001-
21	175-06-37871	PLUG	1	50001-

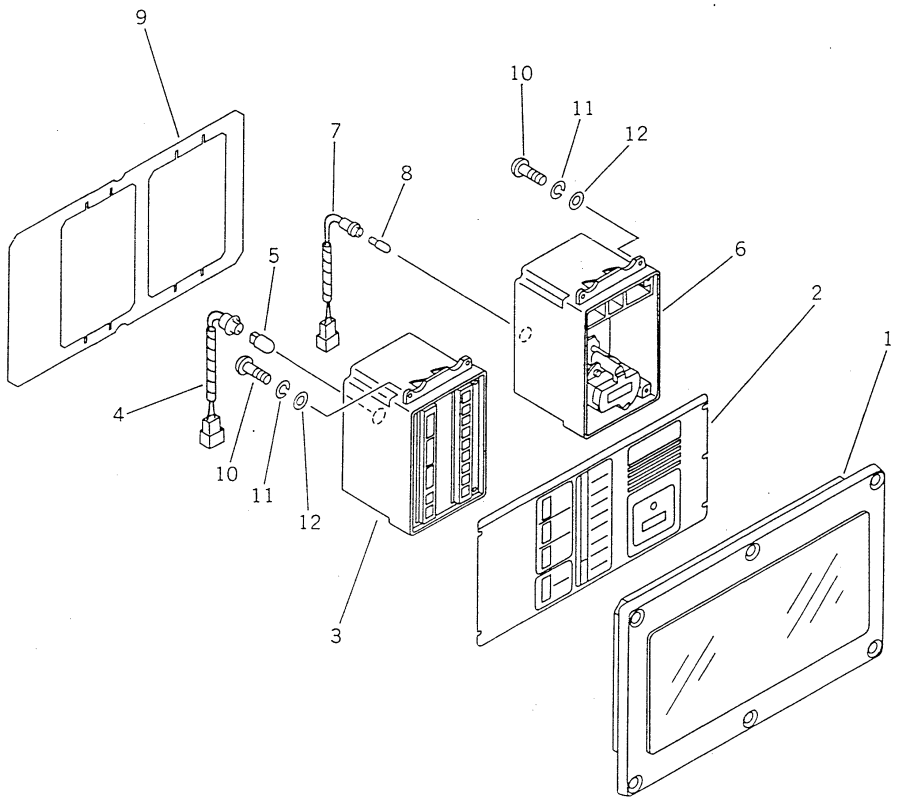

Ref. 1601 **Page 030260**

D155A-2 S/N 50001-UP (S6D155-4 Eng. Installed)
MONITOR PANEL

Item	Part No.	Part Name	Qty	Serial No.
1	7831-63-2000	PANEL ASS'Y	1	50001-
	7831-61-3000	· PANEL	1	50001-
2	7831-63-4110	· PLATE	1	50001-
3	7831-63-6100	· MODULE	1	50001-
4	7831-61-9110	· HOLDER	1	50001-
5	08102-12403	· BULB¤ 3W	1	50001-
6	7831-62-6100	· SERVICE METER	1	50001-
7	7831-62-9110	· HOLDER	1	50001-
8	7815-11-1010	· BULB¤ 1.4W	1	50001-
9	7831-61-1910	· GASKET	1	50001-
10	7861-86-1330	· SCREW	8	50001-
11	01601-00410	· WASHER	8	50001-
12	01641-00405	· WASHER	8	50001-

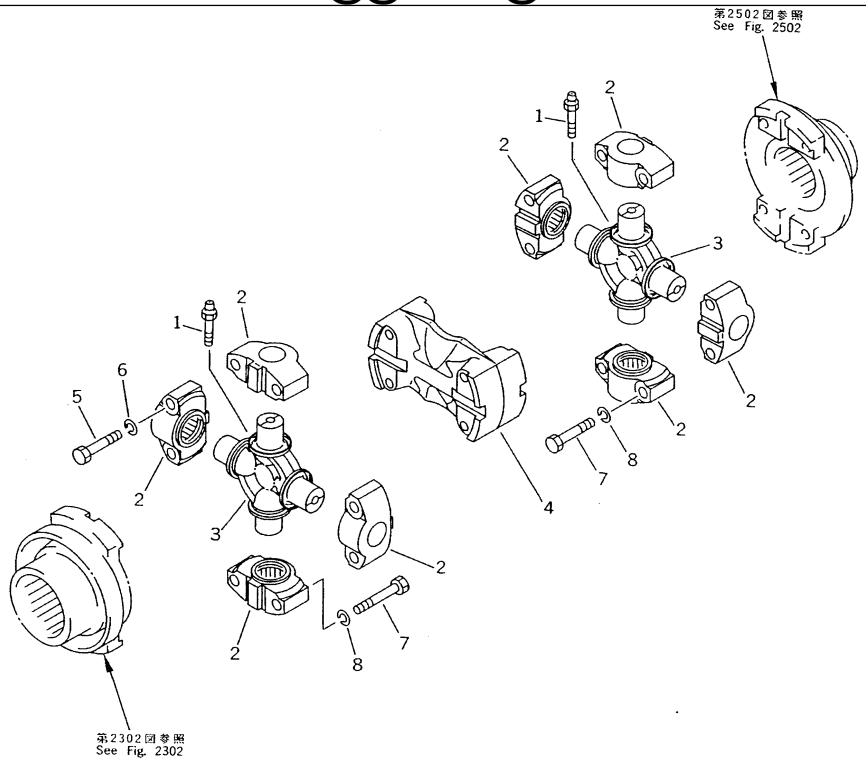

Ref. 2001 **Page 060010**

D155A-2 S/N 50001-UP (S6D155-4 Eng. Installed)
UNIVERSAL JOINT

Item	Part No.	Part Name	Qty	Serial No.
1	175-20-00050	UNIVERSAL JOINT A.	1	50001-
	175-20-00060	· JOINT ASS'Y	2	50001-
	175-20-11140	· · FITTING,GREASE	1	50001-
2	175-20-11110	· · BEARING	4	50001-
3	175-20-11120	· · SPIDER	1	50001-
4	175-20-11130	· PLATE	1	50001-
5	01010-51260	· BOLT	8	50001-
6	01602-21236	· WASHER,SPRING	8	50001-
7	01010-51260	· BOLT	8	50001-
8	01602-21236	· WASHER,SPRING	8	50001-

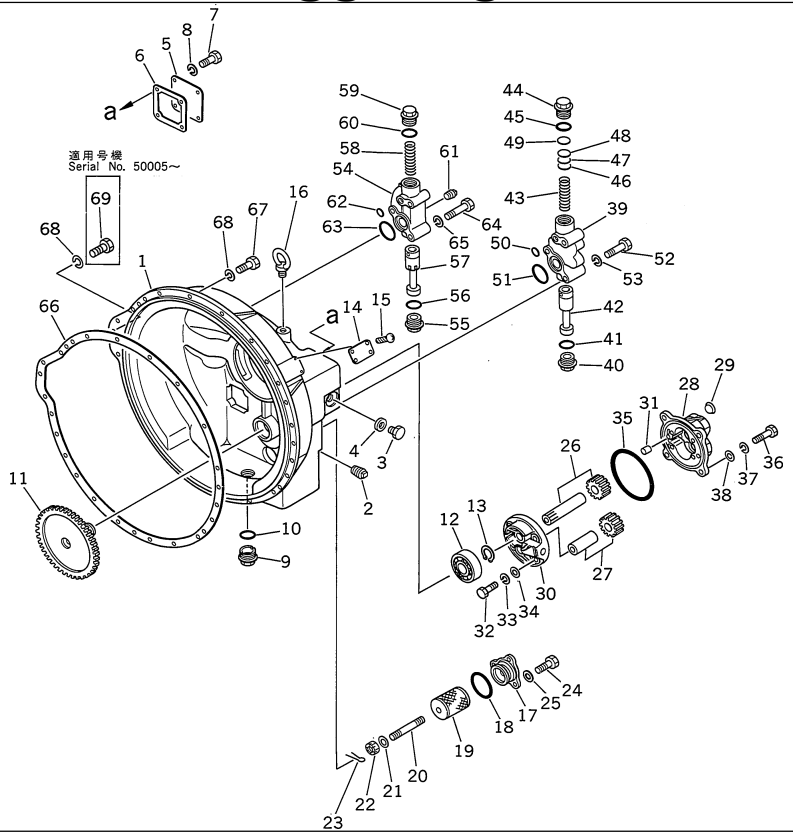

Ref. 2301 **Page 060020**

D155A-2 S/N 50001-UP (S6D155-4 Eng. Installed)
TORQUE CONVERTER (1/2) (TCS43-4E)(#50001-(19852))

Item	Part No.	Part Name	Qty	Serial No.
		SERIAL NO. IN ( ) INDICATES TORQUE CONVERTER SERIAL NO.		
1	(175-13-00300)	TORQUE CONVERTER A.,(TYPE TCS43-4F)	1	(19853)-@
	◆175-13-00200	TORQUE CONVERTER A.,(TYPE TCS43-4E)	1	50001-(19852)
		THIS ASSEMBLY CONSISTS OF ALL PARTS SHOWN IN FIGS.2301 AND 2302.		
1	195-13-13114	· HOUSING	1	50001-(19852)
2	07042-20415	· PLUG,TAPER	3	50001-(19852)
3	175-13-23290	· PLUG	1	50001-(19852)
4	07005-01612	· GASKET (K1)	1	50001-(19852)
5	175-13-23220	· COVER	1	50001-(19852)
6	175-13-23232	· GASKET (K1)	1	50001-(19852)
	(☒175-13-23231)	· GASKET (K1)	1	(50001-(19852))
7	01010-31225	· BOLT	4	50001-(19852)
8	01602-01236	· WASHER,SPRING	4	50001-(19852)
9	07044-13620	· PLUG,MAGNETIC	1	50001-(19852)
10	07002-43634	· O-RING (K1)	1	50001-(19852)
11	175-13-24111	· GEAR	1	50001-(19852)
12	06030-05206	· BEARING	1	50001-(19852)
13	04064-03015	· RING,SNAP	1	50001-(19852)
14	09607-05080	· PLATE¤ NAME,(LIMITED SUPPLY)	1	50001-(19852)
15	04418-03060	· SCREW,TAPPING	4	50001-(19852)
16	04530-11628	· BOLT,EYE	2	50001-(19852)
17	134-13-13400	· FILTER ASS'Y	1	50001-(19852)
	134-13-13410	· · COVER	1	50001-(19852)
18	07000-72070	· · O-RING (K1)	1	50001-(19852)
	□07000-62070	· · O-RING (K1)	1	50001-(19852)
19	195-13-13420	· · FILTER	1	50001-(19852)

D155A-2 S/N 50001-UP (S6D155-4 Eng. Installed)

TORQUE CONVERTER (1/2) (TCS43-4E)(#50001-(19852))

Item	Part No.	Part Name	Qty	Serial No.
20	134-13-13430	· · STUD	1	50001-(19852)
21	01641-20608	· · WASHER	1	50001-(19852)
22	01590-00607	· · NUT	1	50001-(19852)
23	04050-11212	· · PIN,COTTER (K1)	1	50001-(19852)
24	01010-31230	· BOLT	3	50001-(19852)
25	01643-31232	· WASHER	3	50001-(19852)
26	175-13-23500	· PUMP ASS'Y	1	50001-(19852)
	175-13-23510	· · GEAR ASS'Y	1	50001-(19852)
	☆	· · · GEAR	1	50001-(19852)
	☆	· · · SHAFT	1	50001-(19852)
	☆	· · SHAFT	1	50001-(19852)
27	175-13-23520	· · GEAR ASS'Y	1	50001-(19852)
	☆	· · · GEAR	1	50001-(19852)
	☆	· · · SHAFT	1	50001-(19852)
28	175-13-00100	· · CASE ASS'Y	1	50001-(19852)
	☆	· · · CASE,PUMP	1	50001-(19852)
29	01190-01011	· · · HELISERT	2	50001-(19852)
30	175-13-23540	· · COVER	1	50001-(19852)
31	04020-00820	· · PIN,DOWEL	2	50001-(19852)
32	01010-50835	· · BOLT	4	50001-(19852)
33	01602-20825	· · WASHER,SPRING	4	50001-(19852)
34	01641-20812	· · WASHER	4	50001-(19852)
35	07000-72115	· · O-RING (K1)	1	50001-(19852)
	□07000-62115	· · O-RING (K1)	1	50001-(19852)
36	01010-31235	· BOLT	4	50001-(19852)
37	01602-01236	· WASHER	4	50001-(19852)
38	01641-21223	· WASHER	4	50001-(19852)
39	195-13-16100	· RELIEF VALVE ASS'Y	1	50001-(19852)
	195-13-16110	· · BODY,RELIEF VALVE	1	50001-(19852)
40	195-13-16450	· · PLUG	1	50001-(19852)
41	07002-43634	· · O-RING (K1)	1	50001-(19852)
42	195-13-16120	· · SPOOL,RELIEF VALVE	1	50001-(19852)
43	195-13-16131	· · SPRING,RELIEF VALVE	1	50001-(19852)
44	195-13-16141	· · PLUG	1	50001-(19852)
45	07002-43634	· · O-RING (K1)	1	50001-(19852)
46	195-13-16190	· · SHIM¤ 1.0MM	3	50001-(19852)
47	195-13-16210	· · SHIM¤ 0.3MM	3	50001-(19852)
48	195-13-16220	· · SHIM¤ 0.1MM	2	50001-(19852)
49	195-13-16230	· · SPACER	1	50001-(19852)
50	07000-72018	· · O-RING (K1)	1	50001-(19852)
	□07000-62018	· · O-RING (K1)	1	50001-(19852)
51	07000-73045	· · O-RING (K1)	1	50001-(19852)
	□07000-63045	· · O-RING (K1)	1	50001-(19852)
52	01010-31290	· BOLT	3	50001-(19852)
53	01602-01236	· WASHER,SPRING	3	50001-(19852)
54	175-13-26401	· REGULATOR VALVE A.	1	50001-(19852)
	175-13-26410	· · BODY,REGULATOR VALVE	1	50001-(19852)
55	195-13-16450	· · PLUG	1	50001-(19852)
56	07002-43634	· · O-RING (K1)	1	50001-(19852)
57	195-13-16420	· · SPOOL	1	50001-(19852)
58	195-13-16430	· · SPRING,REGULATOR VALVE	1	50001-(19852)
59	195-13-16141	· · PLUG	1	50001-(19852)
60	07002-43634	· · O-RING (K1)	1	50001-(19852)
61	07042-20108	· · PLUG	1	50001-(19852)
62	07000-72018	· · O-RING (K1)	1	50001-(19852)
	□07000-62018	· · O-RING (K1)	1	50001-(19852)
63	07000-73045	· · O-RING (K1)	1	50001-(19852)
	□07000-63045	· · O-RING (K1)	1	50001-(19852)
64	01010-31295	· BOLT	3	50001-(19852)
65	01602-01236	· WASHER,SPRING	3	50001-(19852)
66	175-11-11112	GASKET (K1)	1	50001-(19852)
	(☒175-11-11111)	GASKET (K1)	1	(50001-(19852))

TORQUE CONVERTER (1/2) (TCS43-4E)(#50001-(19852))

Item	Part No.	Part Name	Qty	Serial No.
67	01010-51240	BOLT	22	50005-(19852)
	01010-51240	BOLT	23	50001-50004
68	01602-21236	WASHER,SPRING	23	50001-(19852)
69	01010-51265	BOLT	1	50005-(19852)

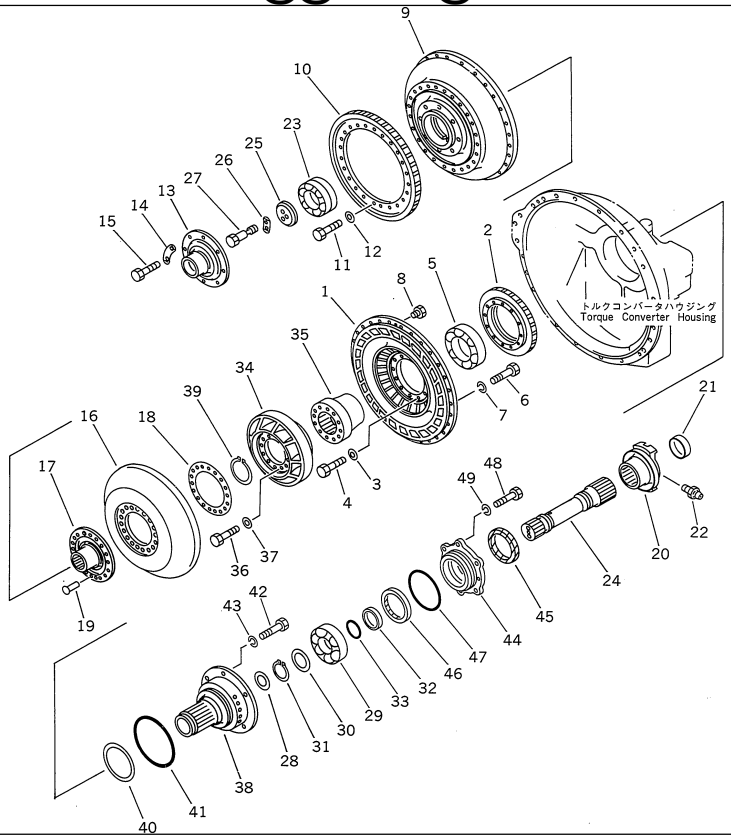

D155A-2 S/N 50001-UP (S6D155-4 Eng. Installed)

TORGUE CONVERTER (2/2) (TCS43-4E)(#50001-(19852))

Item	Part No.	Part Name	Qty	Serial No.
		SERIAL NO. IN ( ) INDICATES TORQUE CONVERTER SERIAL NO.		
1	(175-13-00300)	TORQUE CONVERTER A.,(TYPE TCS43-4F)	1	(19853)-@
	(◆175-13-00200)	TORQUE CONVERTER A.,(TYPE TCS43-4E)	1	50001-(19852)
		THIS ASSEMBLY CONSISTS OF ALL PARTS SHOWN IN FIGS.2301 AND 2302.		
1	175-13-21125	· PUMP	1	50001-(19852)
2	195-13-11143	· GEAR	1	50001-(19852)
3	01643-31032	· WASHER	12	50001-(19852)
4	01010-61045	· BOLT	12	50001-(19852)
5	175-13-21160	· BEARING	1	50001-(19852)
6	01010-61035	· BOLT	30	50001-(19852)
7	01602-01030	· WASHER,SPRING	30	50001-(19852)
8	07040-11209	· PLUG	2	50001-(19852)
9	175-13-00011	· CASE ASS'Y	1	50001-(19852)
	175-13-21213	· · CASE	1	50001-(19852)
10	175-13-21220	· · GEAR	1	50001-(19852)
11	01010-61230	· · BOLT	24	50001-(19852)
12	01643-31232	· · WASHER	24	50001-(19852)
13	175-13-21253	· PILOT	1	50001-(19852)
14	195-13-11261	· PLATE,LOCK (K1)	4	50001-(19852)
15	01010-31230	· BOLT	8	50001-(19852)
16	175-13-21513	· TURBINE ASS'Y	1	50001-(19852)
	☆	· · TURBINE	1	50001-(19852)
17	☆	· · BOSS	1	50001-(19852)
18	☆	· · PLATE	1	50001-(19852)
19	☆	· · RIVET	18	50001-(19852)
20	175-13-21641	· COUPLING ASS'Y	1	50001-(19852)
	☆	· · COUPLING	1	50001-(19852)

D155A-2 S/N 50001-UP (S6D155-4 Eng. Installed)

TORGUE CONVERTER (2/2) (TCS43-4E)(#50001-(19852))

Item	Part No.	Part Name	Qty	Serial No.
21	☆	· · COVER	1	50001-(19852)
22	07020-00001	· FITTING,GREASE	1	50001-(19852)
23	175-13-21240	· BEARING	1	50001-(19852)
24	175-13-21654	· SHAFT	1	50001-(19852)
25	175-13-21692	· HOLDER	1	50001-(19852)
26	175-13-21712	· PLATE,LOCK (K1)	1	50001-(19852)
27	195-13-11810	· BOLT,REAMER	2	50001-(19852)
28	178-13-11720	· RING,SEAL	1	50001-(19852)
29	06040-06313	· BEARING	1	50001-(19852)
30	175-13-21770	· SPACER	1	50001-(19852)
31	04064-06525	· RING,SNAP	1	50001-(19852)
32	175-13-21750	· SEAT	1	50001-(19852)
33	07000-35055	· O-RING (K1)	1	50001-(19852)
34	175-13-22313	· STATOR	1	50001-(19852)
35	175-13-22122	· RACE	1	50001-(19852)
36	01010-31030	· BOLT	12	50001-(19852)
37	01643-31032	· WASHER	12	50001-(19852)
38	175-13-22524	· SHAFT	1	50001-(19852)
39	04064-08530	· RING,SNAP	1	50001-(19852)
40	195-13-12711	· RING,SEAL	1	50001-(19852)
41	07000-75185	· O-RING (K1)	1	50001-(19852)
	07000-65190	· O-RING (K1)	1	50001-(19852)
42	01010-31235	· BOLT	6	50001-(19852)
43	01602-01236	· WASHER,SPRING	6	50001-(19852)
44	175-13-22721	· COVER	1	50001-(19852)
45	175-13-22730	· SEAL (K1)	1	50001-(19852)
46	07011-10080	· SEAL,OIL (K1)	1	50001-(19852)
47	07000-65135	· O-RING (K1)	1	50001-(19852)
48	01010-31230	· BOLT	6	50001-(19852)
49	01602-01236	· WASHER,SPRING	6	50001-(19852)

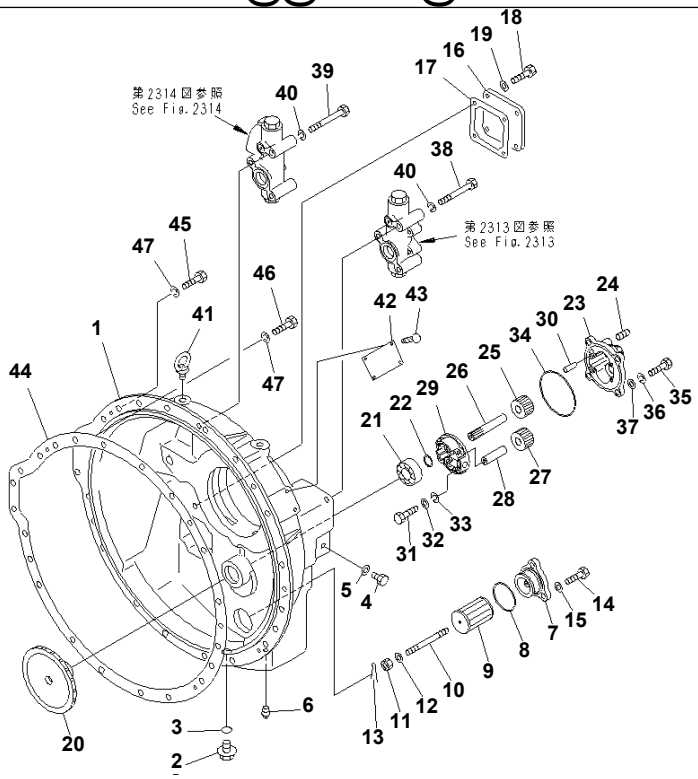

Ref. 2311 **Page 060040**

D155A-2 S/N 50001-UP (S6D155-4 Eng. Installed)
TORQUE CONVERTER (1/4) CASE (TCS43-4F)

Item	Part No.	Part Name	Qty	Serial No.
		SERIAL NO. IN ( ) INDICATES TORQUE CONVERTER SERIAL NO.		
1	175-13-00300	TORQUE CONVERTER A.,(TYPE TCS43-4F)	1	50001-
		THIS ASSEMBLY CONSISTS OF ALL PARTS SHOWN IN FIGS.2311 TO 2314.		
1	195-13-13114	· HOUSING	1	50001-
2	07044-13620	· PLUG	1	50001-
3	07002-43634	· O-RING (K2)	1	50001-
4	175-13-23290	· PLUG	1	50001-
5	07005-01612	· GASKET (K2)	1	50001-
6	07043-70415	· PLUG	3	(3023)-
	□07042-20415	· PLUG	3	50001-(3022)
7	134-13-13400	· FILTER ASS'Y	1	50001-
	134-13-13410	· · COVER	1	50001-
8	07000-72070	· · O-RING (K2)	1	50001-
9	195-13-13420	· · FILTER	1	50001-
10	134-13-13430	· · STUD	1	50001-
11	01590-10607	· · NUT	1	50001-
12	01641-20608	· · WASHER	1	50001-
13	04050-11212	· · PIN,COTTER (K2)	1	50001-
14	01010-81230	· BOLT	3	50001-
15	01643-31232	· WASHER	3	50001-
16	175-13-23220	· COVER	1	50001-
17	175-13-23232	· GASKET (K2)	1	50001-
18	01010-81225	· BOLT	4	50001-
19	01643-31232	· WASHER	4	50001-
20	175-13-24111	· GEAR	1	50001-
21	19M-13-23370	· BEARING,BALL	1	(29877)-
	06030-05206	· BEARING,BALL	1	50001-(29876)

TORQUE CONVERTER (1/4) CASE (TCS43-4F)

Item	Part No.	Part Name	Qty	Serial No.
22	04064-03015	· RING,SNAP	1	50001-
23	175-13-23500	· PUMP ASS'Y	1	50001-
	175-13-23530	· · CASE	1	50001-
24	01190-01011	· · HELISERT	2	50001-
25	175-13-23510	· · GEAR ASS'Y	1	50001-
	☆	· · · GEAR	1	50001-
26	☆	· · · SHAFT	1	50001-
27	175-13-23520	· · GEAR ASS'Y	1	50001-
	☆	· · · GEAR	1	50001-
28	☆	· · · SHAFT	1	50001-
29	175-13-23540	· · COVER	1	50001-
30	04020-00820	· · PIN,DOWEL	2	50001-
31	01010-80835	· · BOLT	4	50001-
32	01602-20825	· · WASHER,SPRING	4	50001-
33	01641-20812	· · WASHER	4	50001-
34	07000-72115	· O-RING (K2)	1	50001-
35	01010-81235	· BOLT	4	50001-
36	01602-21236	· WASHER,SPRING	4	50001-
37	01641-21223	· WASHER	4	50001-
38	01010-81290	· BOLT	3	50001-
39	01010-81295	· BOLT	3	50001-
40	01602-21236	· WASHER,SPRING	6	50001-
41	04530-11628	· BOLT,EYE	2	50001-
42	09607-05080	· PLATE¤ NAME,NAME (LIMITED SUPPLY)	1	50001-
43	04418-13060	· SCREW	4	50001-
44	175-11-11132	GASKET (K2)	1	52126-
	□175-11-11112	GASKET (K2)	1	50001-52125
45	01010-81240	BOLT	22	50001-
46	01010-81265	BOLT	1	50001-
47	01602-21236	WASHER,SPRING	23	50001-

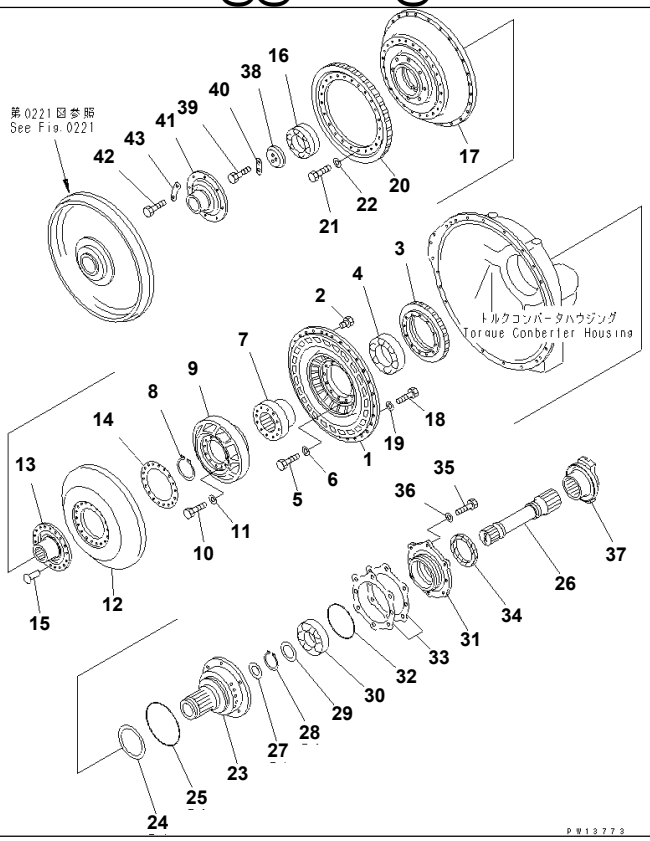

Ref. 2312 Page 060050

D155A-2 S/N 50001-UP (S6D155-4 Eng. Installed)

TORQUE CONVERTER (2/4) TURBINE SHAFT AND STATOR (TCS43-4F)

Item	Part No.	Part Name	Qty	Serial No.
		SERIAL NO. IN ( ) INDICATES TORQUE CONVERTER SERIAL NO.		
1	(175-13-00300)	TORQUE CONVERTER A.,(TYPE TCS43-4F)	1	50001-
		THIS ASSEMBLY CONSISTS OF ALL PARTS SHOWN IN FIGS.2311 TO 2314.		
1	175-13-21125	· PUMP	1	50001-
2	07040-11209	· PLUG	2	50001-
3	195-13-11143	· GEAR	1	50001-
4	175-13-21160	· BEARING,ROLLER	1	50001-
5	01010-81045	· BOLT	12	50001-
6	01643-31032	· WASHER	12	50001-
7	175-13-22122	· RACE	1	50001-
8	04064-08530	· RING,SNAP	1	50001-
9	175-13-22313	· STATOR	1	50001-
10	01010-81030	· BOLT	12	50001-
11	01643-31032	· WASHER	12	50001-
12	175-13-21514	· TURBINE ASS'Y	1	(3704)-
	175-13-21513	· TURBINE ASS'Y	1	50001-(3703)
	☆	· · TURBINE	1	50001-
13	☆	· · BOSS	1	(3704)-
	☆	· · BOSS	1	50001-(3703)
14	☆	· · PLATE	1	50001-
15	☆	· · RIVET	18	50001-
16	175-13-21240	· BEARING,BALL	1	50001-
17	175-13-21213	· CASE	1	50001-
18	01010-81035	· BOLT	30	50001-
19	01643-31032	· WASHER	30	50001-
20	175-13-21220	· GEAR	1	50001-
21	01010-81230	· BOLT	24	50001-

D155A-2 S/N 50001-UP (S6D155-4 Eng. Installed)

TORQUE CONVERTER (2/4) TURBINE SHAFT AND STATOR (TCS43-4F)

Item	Part No.	Part Name	Qty	Serial No.
22	01643-31232	· WASHER	24	50001-
23	15A-13-12520	· SHAFT	1	50001-
24	195-13-12711	· RING,SEAL	1	50001-
25	07000-75185	· O-RING (K2)	1	50001-
26	15A-13-11651	· SHAFT	1	(3682)-
	15A-13-11650	· SHAFT	1	50001-(3680)
27	178-13-11720	· RING,SEAL	1	50001-
28	04064-06525	· RING,SNAP	1	50001-
29	175-13-21770	· SPACER	1	50001-
30	175-13-53360	· BEARING,BALL	1	50001-
31	15A-13-12720	· COVER	1	50001-
32	07000-02140	· O-RING (K2)	1	50001-
33	195-13-05020	· SHIM ASS'Y (K2)	1	50001-
	☆	· · SHIM¤ 0.05MM (K2)	1	50001-
	☆	· · SHIM¤ 0.1MM (K2)	1	50001-
	☆	· · SHIM¤ 0.2MM (K2)	1	50001-
34	07012-50100	· SEAL (K2)	1	50001-
35	01010-81245	· BOLT	6	50001-
36	01643-31232	· WASHER	6	50001-
37	15A-13-11661	· COUPLING	1	(3005)-
	15A-13-11660	· COUPLING	1	50001-(3004)
38	175-13-21692	· HOLDER	1	50001-
39	195-13-11810	· BOLT	2	50001-
40	175-13-21712	· PLATE,LOCK (K2)	1	50001-
41	15A-13-11250	· PILOT	1	50001-
42	01010-81230	· BOLT	8	50001-
43	195-13-11261	· PLATE,LOCK (K2)	4	50001-

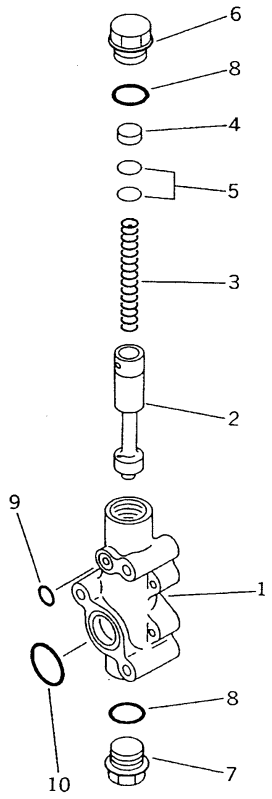

Ref. 2313 **Page 060060**

D155A-2 S/N 50001-UP (S6D155-4 Eng. Installed)
TORQUE CONVERTER (3/4) RELIEF VALVE (TCS43-4F)

Item	Part No.	Part Name	Qty	Serial No.
		SERIAL NO. IN ( ) INDICATES TORQUE CONVERTER SERIAL NO.		
1	(175-13-00300)	TORQUE CONVERTER A.,(TYPE TCS43-4F)	1	50001-
		THIS ASSEMBLY CONSISTS OF ALL PARTS SHOWN IN FIGS.2311 TO 2314.		
1	195-13-00100	· VALVE ASS'Y	1	50001-
	195-13-16110	· · BODY	1	50001-
2	195-13-16120	· · SPOOL	1	50001-
3	195-13-16131	· · SPRING,(L=137.7)	1	50001-
4	195-13-16230	· · SPACER	1	50001-
5	195-13-05010	· · SHIM KIT	1	50001-
	☆	· · · SHIM¤ 0.1MM	2	50001-
	☆	· · · SHIM¤ 0.3MM	3	50001-
	☆	· · · SHIM¤ 1.0MM	3	50001-
6	195-13-16141	· · PLUG	1	50001-
7	195-13-16450	· · PLUG	1	50001-
8	07002-43634	· · O-RING (K2)	2	50001-
9	07000-72018	· O-RING (K2)	1	50001-
10	07000-73045	· O-RING (K2)	1	50001-

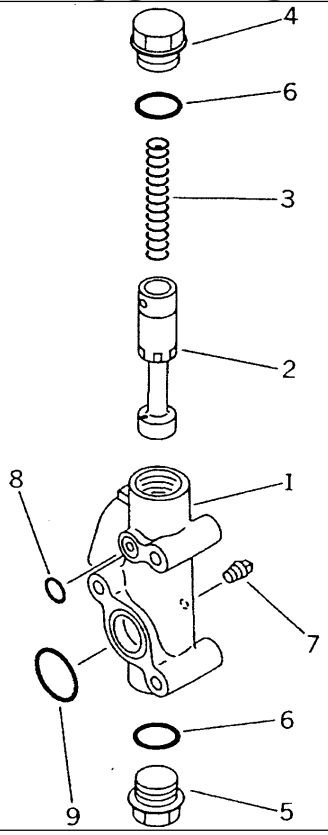

D155A-2 S/N 50001-UP (S6D155-4 Eng. Installed)

TORQUE CONVERTER (4/4) REGULATOR VALVE (TCS43-4F)

Item	Part No.	Part Name	Qty	Serial No.
		SERIAL NO. IN ( ) INDICATES TORQUE CONVERTER SERIAL NO.		
1	(175-13-00300)	TORQUE CONVERTER A.,(TYPE TCS43-4F)	1	50001-
		THIS ASSEMBLY CONSISTS OF ALL PARTS SHOWN IN FIGS.2311 TO 2314.		
1	175-13-00150	· VALVE ASS'Y	1	50001-
	175-13-26410	· · BODY	1	50001-
2	195-13-16420	· · SPOOL	1	50001-
3	195-13-16430	· · SPRING,(L=126.6)	1	50001-
4	195-13-16141	· · PLUG	1	50001-
5	195-13-16450	· · PLUG	1	50001-
6	07002-43634	· · O-RING (K2)	2	50001-
7	07042-20108	· · PLUG	1	50001-
8	07000-72018	· O-RING (K2)	1	50001-
9	07000-73045	· O-RING (K2)	1	50001-

このアセンブリの構成部品は第2501図から第2513図まで含みます。
175-15-01221 :This assembly consists of all parts shown in Figs. 2501 to 2513.

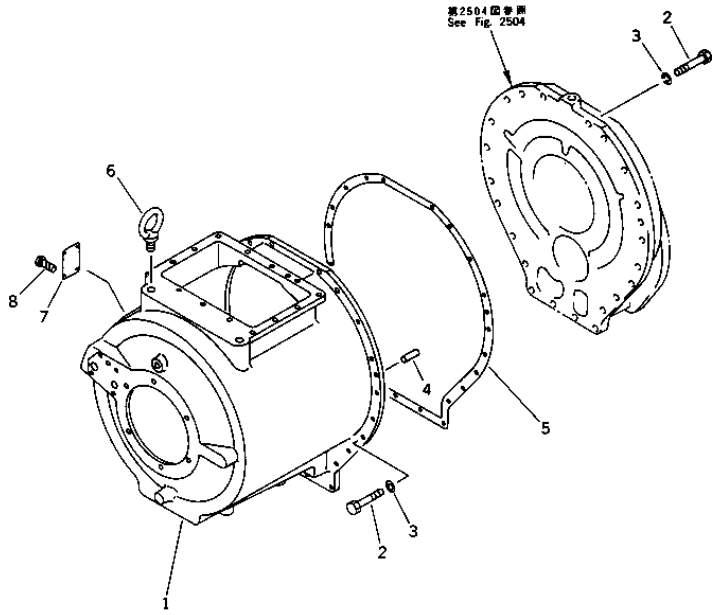

Ref. 2501 **Page 060080**

D155A-2 S/N 50001-UP (S6D155-4 Eng. Installed)
TRANSMISSION (1/4)¤ CASE

Item	Part No.	Part Name	Qty	Serial No.
		SERIAL NO. IN ( ) INDICATES TRANSMISSION SERIAL NO.		
1	175-15-01221	TRANSMISSION ASS'Y	1	(26589)-
	◆175-15-01220	TRANSMISSION ASS'Y	1	50001-(26588)
		THESE ASSEMBLIES CONSIST OF ALL PARTS SHOWN IN FIGS.2501 TO 2513.		
1	175-15-41112	· CASE	1	50001-
2	01010-81240	· BOLT	22	50001-
3	01643-51232	· WASHER,SPRING	22	50001-
4	04020-01228	· PIN,DOWEL	1	50001-
5	175-15-41122	· GASKET (K3)	1	50001-
	(☒175-15-41121)	· GASKET (K3)	1	(50001-(26588))
6	07048-02216	· PLUG	2	50001-
7	09608-05080	· PLATE¤ NAME,(LIMITED SUPPLY)	1	50001-
8	04418-13060	· SCREW	4	50001-
9	04530-02438	BOLT,EYE	2	50001-

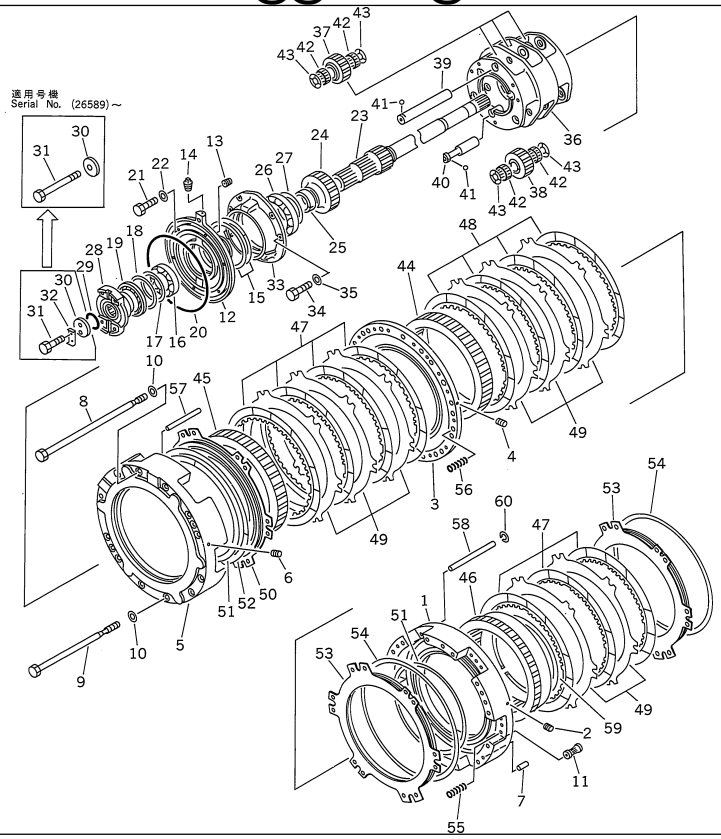

D155A-2 S/N 50001-UP (S6D155-4 Eng. Installed)
TRANSMISSION (2/4)¤ PRANETARY GEAR AND SHAFT (1/2)

Item	Part No.	Part Name	Qty	Serial No.
		SERIAL NO. IN ( ) INDICATES TRANSMISSION SERIAL NO.		
1	(175-15-01221)	TRANSMISSION ASS'Y	1	(26589)-
	(◆175-15-01220)	TRANSMISSION ASS'Y	1	50001-(26588)
		THESE ASSEMBLIES CONSIST OF ALL PARTS SHOWN IN FIGS.2501 TO 2513.		
1	175-15-00261	· HOUSING ASS'Y	1	(26589)-
	175-15-00260	· HOUSING ASS'Y	1	50001-(26588)
	☆	· · HOUSING	1	(26589)-
	☆	· · HOUSING	1	50001-(26588)
2	145-14-11320	· · PLUG	2	50001-
3	175-15-00270	· PLATE ASS'Y	1	50001-
	☆	· · PLATE	1	50001-
4	145-14-11320	· · PLUG	2	50001-
5	175-15-00284	· HOUSING ASS'Y	1	(29848)-
	175-15-00283	· HOUSING ASS'Y	1	(29752)-(29847)
	□175-15-00282	· HOUSING ASS'Y	1	(26589)-(29751)
	175-15-00281	· HOUSING ASS'Y	1	50001-(26588)
	☆	· · HOUSING	1	(29848)-
	☆	· · HOUSING	1	(29752)-(29847)
	☆	· · HOUSING	1	(26589)-(29751)
	☆	· · HOUSING	1	50001-(26588)
6	145-14-11320	· · PLUG	2	50001-
7	04020-01228	· PIN,DOWEL	2	50001-
8	175-15-41192	· BOLT	12	50001-
9	175-15-41292	· BOLT,CLUTCH	2	50001-
10	145-14-11571	· WASHER	14	(29697)-
	145-14-11570	· WASHER	14	50001-(29696)

TRANSMISSION (2/4)¤ PRANETARY GEAR AND SHAFT (1/2)

Item	Part No.	Part Name	Qty	Serial No.
11	569-15-41310	· SLEEVE	14	50001-
12	15A-15-00190	· CAGE ASS'Y	1	(26589)-
	175-15-00291	· CAGE ASS'Y	1	50001-(26588)
	☆	· · CAGE	1	(26589)-
	☆	· · CAGE	1	50001-(26588)
13	195-15-11230	· · PLUG,(D=2)	1	50001-
14	07043-70211	· PLUG,TAPER	1	(29085)-
	07042-70211	· PLUG,TAPER	1	(26589)-(29084)
	◆07042-00211	· PLUG,TAPER	1	50001-(26588)
15	07018-12005	· RING,SEAL	2	(26589)-
	07018-11805	· RING,SEAL	2	50001-(26588)
16	06000-06216	· BEARING,BALL	1	(26589)-
	06000-06016	· BEARING,BALL	1	50001-(26588)
17	15A-15-11240	· SPACER	1	(26589)-
	195-15-11240	· SPACER	1	50001-(26588)
18	04071-00140	· RING,SNAP	1	(26589)-
	170-14-22140	· RING,SNAP	1	50001-(26588)
19	07012-10110	· SEAL,OIL (K3)	1	(26589)-
	07012-00100	· SEAL,OIL (K3)	1	50001-(26588)
20	07000-05290	· O-RING (K3)	1	50001-
21	01010-81235	· BOLT	6	50001-
22	01643-51232	· WASHER,SPRING	6	50001-
23	175-15-42190	· SHAFT	1	(26589)-
	175-15-42112	· SHAFT	1	50001-(26588)
24	175-15-42122	· GEAR	1	50001-
25	15A-15-12140	· SPACER	1	(26589)-
	195-15-12141	· SPACER	1	50001-(26588)
26	06000-06924	· BEARING,BALL	1	50001-
27	130-09-16780	· RING,SNAP	1	50001-
28	15A-15-12150	· COUPLING	1	(26589)-
	175-15-42151	· COUPLING	1	50001-(26588)
29	07000-05055	· O-RING (K3)	1	50001-
30	154-15-42180	· HOLDER,COUPLING	1	(26589)-
	175-15-12160	· HOLDER,COUPLING	1	50001-(26588)
31	01051-51800	· BOLT	1	(26589)-
	01010-31230	· BOLT	2	50001-(26588)
32	175-15-12170	· LOCK,COUPLING	1	50001-(26588)
33	15A-15-12310	· CAGE,BEARING	1	(26589)-
	175-15-42311	· CAGE,BEARING	1	50001-(26588)
34	01010-81230	· BOLT	6	.-
	01010-31230	· BOLT	6	50001-.
35	01643-51232	· WASHER	6	50001-
36	175-15-42322	· CARRIER,PLANETARY	1	50001-
37	175-15-42452	· GEAR,PLANETARY	9	(29752)-
	□175-15-42451	· GEAR,PLANETARY	9	50001-(29751)
38	175-15-42471	· GEAR,PLANETARY	3	50001-
39	175-15-42512	· SHAFT,PLANETARY	3	50001-
40	175-15-42532	· SHAFT,PLANETARY	3	50001-
41	04260-00635	· BALL	6	50001-
42	566-15-19130	· BEARING	24	(28798)-
	09232-05125	· BEARING	24	(26056)-(28797)
	□130-09-41140	· BEARING	24	50001-(26055)
43	09233-15125	· WASHER	24	(26056)-
	□09233-05125	· WASHER	24	50001-(26055)
44	175-15-42610	· GEAR,RING	1	50001-
45	175-15-42620	· GEAR,RING	1	50001-
46	175-15-42632	· GEAR,RING	1	50001-
47	19M-15-12721	· DISC,CLUTCH	7	(26145)-
	□175-15-12716	· DISC,CLUTCH	7	50001-(26144)
48	19M-15-12721	· DISC,CLUTCH	4	50001-
49	175-15-42721	· PLATE,CLUTCH	8	50001-
50	175-15-42831	· PISTON,CLUTCH	1	(26589)-

D155A-2 S/N 50001-UP (S6D155-4 Eng. Installed)

TRANSMISSION (2/4)¤ PRANETARY GEAR AND SHAFT (1/2)

Item	Part No.	Part Name	Qty	Serial No.
50	175-15-42830	· PISTON,CLUTCH	1	50001-(26588)
51	155-15-12820	· RING,SEAL	2	(26589)-
	175-15-12750	· RING,SEAL	2	50001-(26588)
52	154-15-22811	· RING,SEAL	1	(26589)-
	195-15-12820	· RING,SEAL	1	50001-(26588)
53	175-15-42871	· PISTON,CLUTCH	2	(26589)-
	175-15-42870	· PISTON,CLUTCH	2	50001-(26588)
54	175-15-59240	· RING,SEAL	2	(26589)-
	195-15-12740	· RING,SEAL	2	50001-(26588)
55	175-15-42781	· SPRING,(L=66)	12	50001-
56	175-15-42781	· SPRING,(L=66)	12	50001-
57	145-14-12760	· PIN,(D=15¤ L=181.5)	6	50001-
58	175-15-12780	· PIN,(D=15¤ L=172)	6	50001-
59	175-15-42670	· RING,SNAP	1	50001-
60	175-15-42880	· SPRING,WASHER TYPE	78	50001-

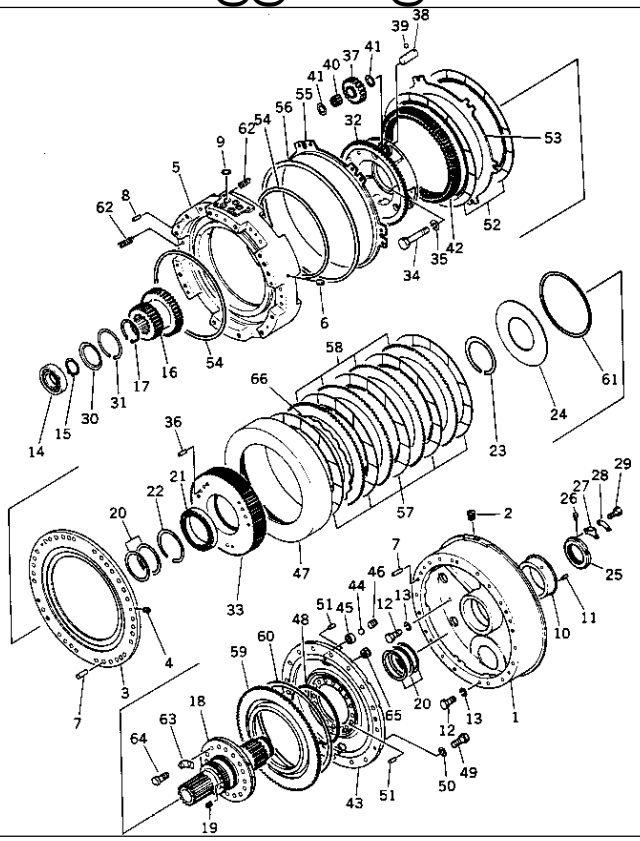

TRANSMISSION (3/4)¤ PRANETARY GEAR AND SHAFT (2/2)

Item	Part No.	Part Name	Qty	Serial No.
		SERIAL NO. IN ( ) INDICATES TRANSMISSION SERIAL NO.		
1	(175-15-01221)	TRANSMISSION ASS'Y	1	(26589)-
	(◆175-15-01220)	TRANSMISSION ASS'Y	1	50001-(26588)
		THESE ASSEMBLIES CONSIST OF ALL PARTS SHOWN IN FIGS.2501 TO 2513.		
1	178-15-00030	· HOUSING ASS'Y,1ST	1	50001-
	☆	· · HOUSING,1ST CLUTCH	1	50001-
2	234-15-12780	· · SCREW	3	50001-
3	175-15-00240	· PLATE ASS'Y,2ND	1	50001-
	☆	· · PLATE	1	50001-
4	145-14-11320	· · PLUG	2	50001-
5	175-15-00251	· HOUSING ASS'Y	1	(26589)-
	175-15-00250	· HOUSING ASS'Y	1	50001-(26588)
	☆	· · HOUSING	1	(26589)-
	☆	· · HOUSING	1	50001-(26588)
6	145-14-11320	· · PLUG	2	50001-
7	175-15-31210	· PIN,DOWEL	4	50001-
8	04020-01228	· PIN,DOWEL	2	50001-
9	07000-73022	· O-RING (K3)	5	50001-
10	175-15-41310	· COLLAR	1	50001-
11	04020-00616	· PIN,DOWEL	1	50001-
12	01010-61435	· BOLT	2	(28791)-
	01010-51435	· BOLT	2	50001-(28790)
13	01602-01442	· WASHER,SPRING	2	50001-
14	06042-00212	· BEARING,ROLLER	1	50001-
15	04064-06020	· RING,SNAP	1	50001-
16	175-15-42131	· GEAR	1	50001-

TRANSMISSION (3/4)¤ PRANETARY GEAR AND SHAFT (2/2)

Item	Part No.	Part Name	Qty	Serial No.
17	04064-08530	· RING,SNAP	1	50001-
18	175-15-00314	· SHAFT ASS'Y	1	(29741)-
	175-15-00313	· SHAFT ASS'Y	1	(26589)-(29740)
	175-15-00312	· SHAFT ASS'Y	1	50001-(26588)
	☆	· · SHAFT	1	(29741)-
	☆	· · SHAFT	1	(26589)-(29740)
	☆	· · SHAFT	1	50001-(26588)
19	145-14-11320	· · PLUG	8	50001-
20	175-15-42850	· RING,SEAL	5	50001-
21	06000-06924	· BEARING,BALL	1	50001-
22	130-09-16780	· RING,SNAP	1	50001-
23	04070-00130	· RING,SNAP	1	50001-
24	175-15-42180	· SPRING	1	50001-
25	234-21-12180	· NUT	1	50001-
26	175-15-42220	· PIN,LOCK	1	50001-
27	234-21-12190	· PLATE,LOCK	1	50001-
28	234-21-12210	· PLATE,LOCK	1	50001-
29	01010-80814	· BOLT	2	50001-
30	175-15-42340	· PLATE	1	50001-
31	130-09-15740	· RING,SNAP	1	50001-
32	175-15-42364	· CARRIER,PLANETARY	1	50001-
33	175-15-42371	· GEAR,1ST	1	50001-
34	01010-61490	· BOLT	6	(28791)-
	01010-51490	· BOLT	6	50001-(28790)
35	01643-31445	· WASHER	6	50001-
36	04020-01228	· PIN,DOWEL	6	50001-
37	175-15-42491	· GEAR	3	50001-
38	175-15-42552	· SHAFT	3	50001-
39	04260-00635	· BALL	3	50001-
40	09232-03838	· BEARING,NEEDLE	3	(26056)-
	□175-15-49410	· BEARING,NEEDLE	3	50001-(26055)
41	09233-13820	· WASHER	6	(26056)-
	□09233-03820	· WASHER	6	50001-(26055)
42	175-15-42650	· GEAR	1	50001-
43	175-15-00332	· HOUSING ASS'Y	1	(29752)-
	□175-15-00332	· HOUSING ASS'Y	1	50001-(29751)
	☆	· · HOUSING,1ST CLUTCH	1	(29752)-
	☆	· · HOUSING,1ST CLUTCH	1	50001-(29751)
44	04260-00952	· · BALL	2	50001-
45	175-15-42971	· · COLLAR	2	50001-
46	234-15-12790	· · SCREW	2	50001-
47	175-15-42421	· DRUM,1ST CLUTCH	1	50001-
48	175-15-42430	· O-RING (K3)	1	50001-
49	01010-81230	· BOLT	12	.-
	01010-31230	· BOLT	12	50001-.
50	01643-51232	· WASHER	12	50001-
51	04020-01228	· PIN,DOWEL	4	50001-
52	19M-15-12721	· DISC,CLUTCH	2	(26145)-
	□175-15-12716	· DISC,CLUTCH	2	50001-(26144)
53	175-15-42721	· PLATE,CLUTCH	1	50001-
54	155-15-12820	· RING,SEAL	2	(26589)-
	175-15-12750	· RING,SEAL	2	50001-(26588)
55	175-15-42871	· PISTON,CLUTCH	1	(26589)-
	175-15-42870	· PISTON,CLUTCH	1	50001-(26588)
56	175-15-59240	· RING,SEAL	1	(26589)-
	195-15-12740	· RING,SEAL	1	50001-(26588)
57	195-15-32710	· DISC	5	(26145)-
	□154-15-12716	· DISC	5	50001-(26144)
58	281-15-12720	· PLATE	4	50001-
59	175-15-42741	· PISTON	1	(26589)-
	175-15-42740	· PISTON	1	50001-(26588)
60	582-15-19240	· RING,SEAL	1	(26589)-

TRANSMISSION (3/4)¤ PRANETARY GEAR AND SHAFT (2/2)

Item	Part No.	Part Name	Qty	Serial No.
60	175-15-42750	· RING,SEAL	1	50001-(26588)
61	154-15-22831	· RING,SEAL	1	(26589)-
	234-15-11220	· RING,SEAL	1	50001-(26588)
62	145-14-12790	· SPRING¤ (L= 59.0),(L=59)	24	50001-
63	175-15-42240	· PLATE,LOCK	8	50001-
64	175-15-42230	· BOLT,REAMER	16	50001-
65	01582-01210	· NUT	16	50001-
66	175-15-42890	· SPRING	5	50001-

このアセンブリの構成部品は第2501図から第2513図まで含みます.
(175-15-01221) : This assembly consists of all parts shown in Figs. 2501 to 2513.

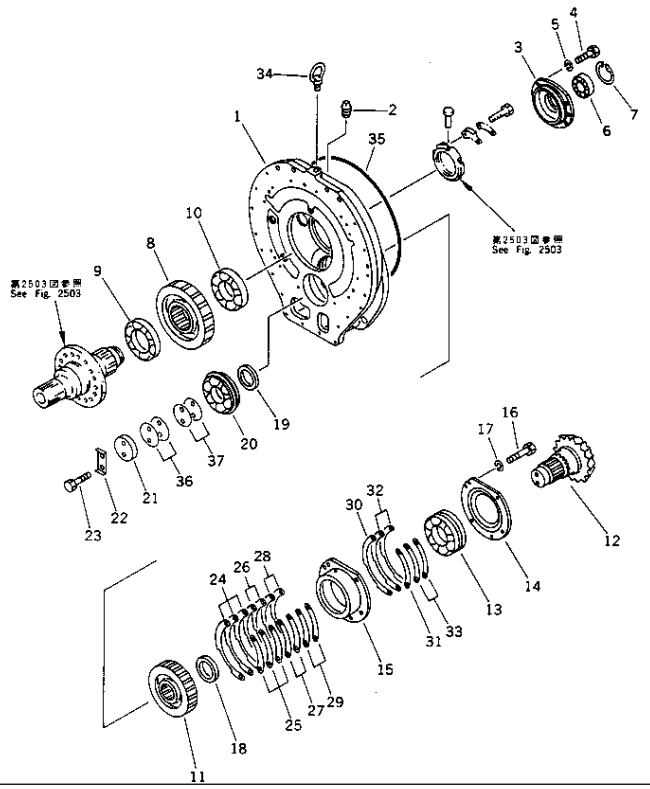

D155A-2 S/N 50001-UP (S6D155-4 Eng. Installed)

TRANSMISSION (4/4)¤ TRANSFER CASE

Item	Part No.	Part Name	Qty	Serial No.
		SERIAL NO. IN ( ) INDICATES TRANSMISSION SERIAL NO.		
1	(175-15-01221)	TRANSMISSION ASS'Y	1	(26589)-
	(◆175-15-01220)	TRANSMISSION ASS'Y	1	50001-(26588)
		THESE ASSEMBLIES CONSIST OF ALL PARTS SHOWN IN FIGS.2501 TO 2513.		
1	175-15-43116	· CASE	1	50001-
2	07042-20211	· · PLUG,TAPER	1	50001-
3	175-15-43152	· CAGE,BEARING	1	50001-
4	01010-81240	· BOLT	5	50001-
5	01643-51232	· WASHER,SPRING	5	50001-
6	06000-22211	· BEARING	1	50001-
7	04065-01030	· RING,SNAP	1	50001-
8	175-15-43212	· GEAR,DRIVE	1	50001-
9	175-15-49340	· BEARING,ROLLER	1	50001-
10	06044-00218	· BEARING,ROLLER	1	(29548)-
	175-15-43270	· BEARING,ROLLER	1	50001-(29547)
11	175-15-43232	· GEAR,DRIVEN	1	50001-
12	175-21-00080	· PINION & GEAR ASS'Y	1	50001-
	☆	· · SHAFT,BEVEL	1	50001-
	☆	· · GEAR,BEVEL	1	50001-
13	178-15-19350	· BEARING	1	50001-
14	178-15-13140	· COVER,BEARING	1	50001-
15	178-15-13260	· CAGE,BEARING	1	50001-
16	01010-81250	· BOLT	4	50001-
17	01643-51232	· WASHER,SPRING	4	50001-
18	178-15-13360	· SPACER	1	50001-
19	178-15-13370	· SPACER	1	50001-

TRANSMISSION (4/4)¤ TRANSFER CASE

Item	Part No.	Part Name	Qty	Serial No.
20	178-15-19330	· BEARING,ROLLER	1	50001-
21	178-15-13620	· HOLDER,BEARING	1	50001-
22	04081-07012	· LOCK,HOLDER	1	50001-
23	01010-61435	· BOLT	2	(28791)-
	01010-51435	· BOLT	2	50001-(28790)
24	175-15-05011	· SHIM KIT (K4)	1	50001-
	☆	· · SHIM¤ 0.2MM (K4)	2	(25743)-
	☆	· · SHIM¤ 0.2MM (K4)	3	50001-(25742)
25	☆	· · SHIM¤ 0.2MM (K4)	2	(25743)-
	☆	· · SHIM¤ 0.2MM (K4)	3	50001-(25742)
26	☆	· · SHIM¤ 0.3MM (K4)	1	(25743)-
	☆	· · SHIM¤ 0.3MM (K4)	2	50001-(25742)
27	☆	· · SHIM¤ 0.3MM (K4)	1	(25743)-
	☆	· · SHIM¤ 0.3MM (K4)	2	50001-(25742)
28	☆	· · SHIM¤ 1.0MM (K4)	1	(25743)-
	☆	· · SHIM¤ 1.0MM (K4)	2	50001-(25742)
29	☆	· · SHIM¤ 1.0MM (K4)	1	(25743)-
	☆	· · SHIM¤ 1.0MM (K4)	2	50001-(25742)
30	175-15-05051	· SHIM KIT (K5)	1	50001-
	☆	· · SHIM¤ 0.2MM (K5)	1	50001-
31	☆	· · SHIM¤ 0.2MM (K5)	1	50001-
32	☆	· · SHIM¤ 0.3MM (K5)	2	50001-
33	☆	· · SHIM¤ 0.3MM (K5)	2	50001-
34	07048-02216	· PLUG	1	50001-
35	07000-05470	· O-RING (K3)	1	50001-
36	178-15-00121	· SHIM ASS'Y	1	50001-
	☆	· · SHIM¤ 0.2MM	3	50001-
37	☆	· · SHIM¤ 0.3MM	3	50001-
38	04530-02438	BOLT,EYE	1	50001-

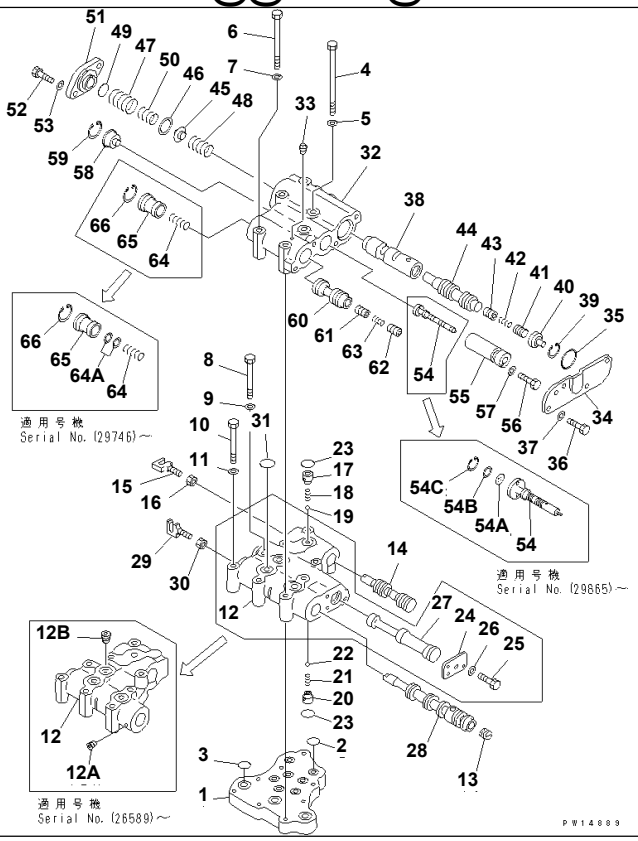

Ref. 2511 **Page 060120**

D155A-2 S/N 50001-UP (S6D155-4 Eng. Installed)
TRANSMISSION VALVE

Item	Part No.	Part Name	Qty	Serial No.
		SERIAL NO. IN ( ) INDICATES TRANSMISSION SERIAL NO.		
1	(175-15-01221)	TRANSMISSION ASS'Y	1	(26589)-
	(◆175-15-01220)	TRANSMISSION ASS'Y	1	50001-(26588)
		THESE ASSEMBLIES CONSIST OF ALL PARTS SHOWN IN FIGS.2501 TO 2513.		
1	15A-15-15003	· VALVE ASS'Y	1	(29746)-
	15A-15-00522	· VALVE ASS'Y	1	(26589)-(29745)
	◆175-15-00442	· VALVE ASS'Y	1	50001-(26588)
	175-15-45110	· · SEAT	1	50001-
2	07000-73022	· · O-RING (K6)	7	50001-
3	07000-73025	· · O-RING (K6)	3	50001-
4	175-15-45180	· · BOLT	3	50001-
5	01643-31032	· · WASHER	3	50001-
6	01011-81035	· · BOLT	3	(26056)-
	◆175-15-45170	· · BOLT	3	50001-(26055)
7	01643-31032	· · WASHER	3	50001-
8	01011-81005	· · BOLT	1	(26056)-
	◆175-15-45160	· · BOLT	1	50001-(26055)
9	01643-31032	· · WASHER	1	50001-
10	01010-81075	· · BOLT	1	50001-
11	01642-31032	· · WASHER	1	50001-
12	175-15-45213	· · BODY,VALVE	1	(26589)-
	175-15-45212	· · BODY,VALVE	1	50001-(26588)
12A	15A-15-16450	· · · PLUG	1	(26589)-
12B	07043-00415	· · · PLUG	1	(26589)-
13	144-15-25210	· · PLUG	1	50001-
14	175-15-45220	· · SPOOL,DIRECTIONAL	1	50001-

TRANSMISSION VALVE

Item	Part No.	Part Name	Qty	Serial No.
15	09363-01053	· · YOKE	1	50001-
16	01586-11008	· · NUT	1	50001-
17	175-15-45260	· · DETENT	1	50001-
18	195-15-15680	· · · SPRING,(L=15.5)	1	50001-
19	04260-00952	· · · BALL,STEEL	1	50001-
20	195-15-15671	· · DETENT	1	50001-
21	195-15-15680	· · · SPRING,(L=15.5)	1	50001-
22	04260-00952	· · · BALL,STEEL	1	50001-
23	07000-73022	· · O-RING (K6)	2	50001-(29745)
24	175-15-45810	· · PLATE	1	50001-(26589)
25	01010-31025	· · BOLT	2	50001-(26589)
26	01643-31032	· · WASHER	2	50001-(26589)
27	154-15-45190	· · SPACER	1	50001-(26589)
28	154-15-45230	· · SPOOL,SPEED	1	50001-
29	09363-01053	· · YOKE	1	50001-
30	01580-11008	· · NUT	1	50001-
31	07000-73022	· · O-RING (K6)	3	50001-
32	155-15-15410	· · BODY,VALVE	1	50001-
33	07042-20108	· · PLUG,TAPER	1	50001-
34	155-15-15850	· · COVER	1	50001-
35	07000-73040	· · O-RING (K6)	1	50001-
36	01010-81025	· · BOLT	4	50001-
37	01643-31032	· · WASHER	4	50001-
38	145-14-43382	· · VALVE,MODULATING	1	50001-
39	130-09-15170	· · RING,SNAP	1	50001-
40	145-14-23180	· · STOPPER	1	50001-
41	175-15-15550	· · VALVE,MODULATING	1	50001-
42	180-14-25560	· · SPRING,(L=35)	1	50001-
43	195-15-15130	· · VALVE,MODULATING	1	50001-
44	145-14-43333	· · VALVE,MODULATING	1	50001-
45	145-14-43340	· · SEAT	1	50001-
46	145-14-33450	· · WASHER	1	50001-
47	145-14-33351	· · SPRING,(L=53)	1	50001-
48	145-14-33430	· · SPRING,(L=42.4)	1	50001-
49	145-14-43370	· · SHIM¤ 0.5MM	6	50001-
50	145-14-33420	· · SPRING,(L=41.5)	1	50001-
51	144-15-25330	· · COVER	1	50001-
52	01010-81025	· · BOLT	2	50001-
53	01643-31032	· · WASHER	2	50001-
54	155-15-15321	· · SPOOL,QUICK RETURN	1	(29865)-
	155-15-15320	· · SPOOL,QUICK RETURN	1	50001-(29864)
54A	714-07-17540	· · · SCREEN	1	(29865)-
54B	714-07-17550	· · · PLATE	1	(29865)-
54C	04065-01210	· · · RING	1	(29865)-
55	155-15-15351	· · SLEEVE	1	50001-
56	155-15-15370	· · BOLT	1	50001-
57	01643-30623	· · WASHER,SPRING	1	50001-
58	155-15-15362	· · STOPPER	1	(29865)-
	155-15-15360	· · STOPPER	1	50001-(29864)
59	04065-03515	· · RING,SNAP	1	50001-
60	175-15-45381	· · VALVE,REDUCING	1	50001-
61	198-15-15760	· · VALVE,REDUCING	1	50001-
62	568-15-15570	· · VALVE,REDUCING	1	50001-
63	180-14-25560	· · SPRING	1	50001-
64	234-15-15230	· · SPRING¤ (L= 52.0)	1	50001-
64A	103-15-15480	· · SHIM¤ 0.5MM	1	(29746)-
	103-15-15510	· · SHIM¤ 0.2MM	1	(29746)-
65	175-15-45390	· · RETAINER	1	50001-
66	04065-03515	· · RING,SNAP	1	50001-

このアセンブリの構成部品は第2501図から第2513図まで含みます.
(175-15-01221) : This assembly consists of all parts shown in Figs. 2501 to 2513.

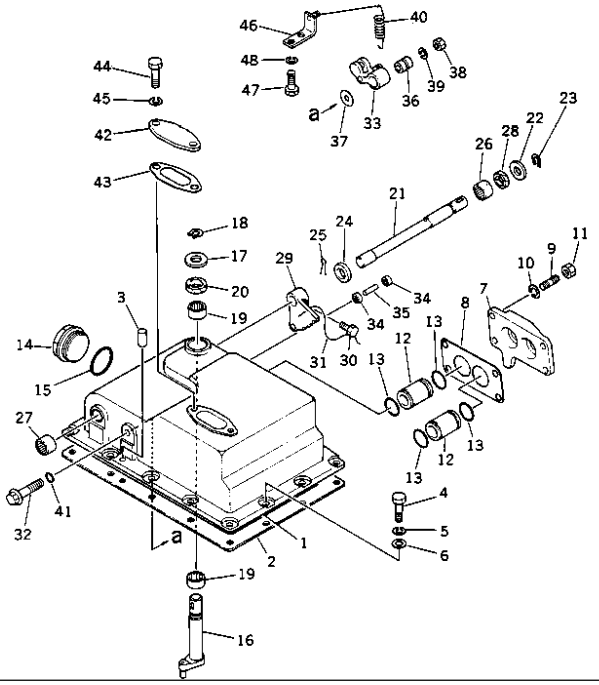

Ref. 2512 **Page 060130**

D155A-2 S/N 50001-UP (S6D155-4 Eng. Installed)
TRANSMISSION VALVE COVER AND LEVER

Item	Part No.	Part Name	Qty	Serial No.
		SERIAL NO. IN ( ) INDICATES TRANSMISSION SERIAL NO.		
1	(175-15-01221)	TRANSMISSION ASS'Y	1	(26589)-
	(◆175-15-01220)	TRANSMISSION ASS'Y	1	50001-(26588)
		THESE ASSEMBLIES CONSIST OF ALL PARTS SHOWN IN FIGS.2501 TO 2513.		
1	175-15-45512	· COVER	1	(29746)-
	175-15-45511	· COVER	1	50001-(29745)
2	154-15-45520	· GASKET (K6)	1	50001-
	(☒175-15-45521)	· GASKET (K6)	1	(50001-(26588))
3	04020-01024	· PIN,DOWEL	2	50001-
4	01010-81025	· BOLT	14	50001-
5	01643-31032	· WASHER	14	(26589)-
	01602-01030	· WASHER,SPRING	14	50001-(26588)
6	01640-21016	· WASHER	14	50001-(26588)
7	175-15-45530	· COVER	1	50001-
8	154-15-45540	· GASKET (K6)	1	50001-
	(☒175-15-45540)	· GASKET (K6)	1	(50001-(26588))
9	01010-81030	· BOLT	4	(29746)-
	01124-51025	· STUD	4	50001-(29745)
10	01643-31032	· WASHER	4	50001-
11	01580-11008	· NUT	4	50001-(29745)
12	175-15-45550	· SLEEVE	2	50001-
13	07000-73028	· O-RING (K6)	4	50001-
14	07040-15223	· PLUG	1	50001-
15	07002-05234	· O-RING (K6)	1	50001-
16	175-15-45560	· LEVER	1	50001-
17	175-15-45570	· WASHER	1	50001-

D155A-2 S/N 50001-UP (S6D155-4 Eng. Installed)

TRANSMISSION VALVE COVER AND LEVER

Item	Part No.	Part Name	Qty	Serial No.
18	04064-01812	· RING,SNAP	1	50001-
19	06120-02016	· BEARING,NEEDLE	2	50001-
20	144-15-29110	· SEAL,OIL (K6)	1	50001-
21	175-15-45610	· SHAFT,LEVER	1	50001-
22	175-15-45570	· WASHER	1	50001-
23	04064-01812	· RING,SNAP	1	50001-
24	175-15-45620	· STOPPER	1	50001-
25	04050-03040	· PIN,COTTER	1	50001-
26	06120-02016	· BEARING,NEEDLE	1	50001-
27	06121-02016	· BEARING,NEEDLE	1	50001-
28	144-15-29110	· SEAL,OIL (K6)	1	50001-
29	175-15-45630	· LEVER	1	50001-
30	125-15-11530	· BOLT	1	50001-
31	04059-01010	· WIRE,LOCK	1	50001-
32	175-15-45650	· BOLT	1	50001-
33	175-15-45690	· LEVER	1	50001-
34	144-15-29121	· BEARING	2	(29081)-
	□144-15-29120	· BEARING	2	50001-(29080)
35	144-15-25691	· PIN	1	(26589)-
	□144-15-25690	· PIN	1	50001-(26588)
36	175-15-45670	· SLEEVE	1	50001-
37	175-15-45660	· WASHER	2	50001-
38	01580-11008	· NUT	1	50001-
39	01643-31032	· WASHER	1	50001-
40	154-15-45710	· SPRING	1	(26589)-
	◆175-15-45710	· SPRING	1	50001-(26588)
41	07002-01223	· O-RING (K6)	1	50001-
42	175-15-45750	· PLATE	1	50001-
43	154-15-45760	· GASKET (K6)	1	50001-
	(☒175-15-45760)	· GASKET (K6)	1	(50001-(26588))
44	01010-81020	· BOLT	2	50001-
45	01643-31032	· WASHER	2	50001-
46	175-15-45780	· BRACKET	1	50001-
47	01010-81020	· BOLT	2	50001-
48	01643-31032	· WASHER	2	50001-

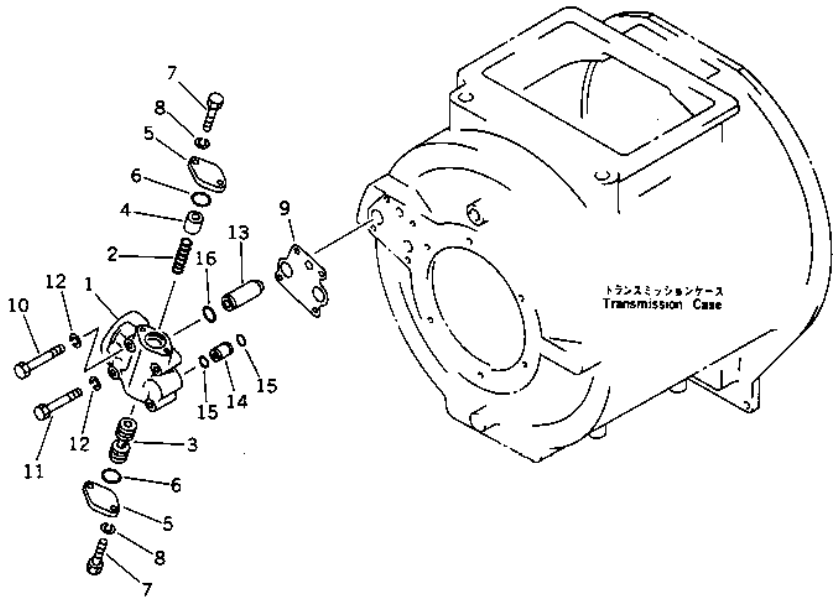

Ref. 2513 **Page 060140**

D155A-2 S/N 50001-UP (S6D155-4 Eng. Installed)
TRANSMISSION REGULATOR VALVE

Item	Part No.	Part Name	Qty	Serial No.
		SERIAL NO. IN ( ) INDICATES TRANSMISSION SERIAL NO.		
1	(175-15-01221)	TRANSMISSION ASS'Y	1	(26589)-
	(◆175-15-01220)	TRANSMISSION ASS'Y	1	50001-(26588)
		THESE ASSEMBLIES CONSIST OF ALL PARTS SHOWN IN FIGS.2501 TO 2513.		
1	175-15-00352	· VALVE ASS'Y	1	50001-
	175-15-14111	· · BODY	1	50001-
2	175-15-14120	· · SPRING,RETURN	1	50001-
3	175-15-14130	· · SPOOL	1	50001-
4	175-15-14141	· · GUIDE,VALVE	1	50001-
5	175-15-14150	· · COVER	2	50001-
6	07000-73032	· · O-RING (K7)	2	50001-
7	01010-80825	· · BOLT	4	50001-
8	01643-30823	· · WASHER	4	50001-
9	175-15-14162	· · GASKET (K7)	1	50001-
	(☒175-15-14161)	· · GASKET (K7)	1	(50001-(26588))
10	01010-81055	· · BOLT	2	50001-
11	01010-81065	· · BOLT	2	50001-
12	01602-21030	· · WASHER,SPRING	4	50001-
13	175-15-44190	· · SLEEVE	1	50001-
14	175-15-44180	· · SLEEVE	1	50001-
15	07000-72018	· · O-RING (K7)	2	50001-
16	07000-73022	· · O-RING (K7)	1	50001-

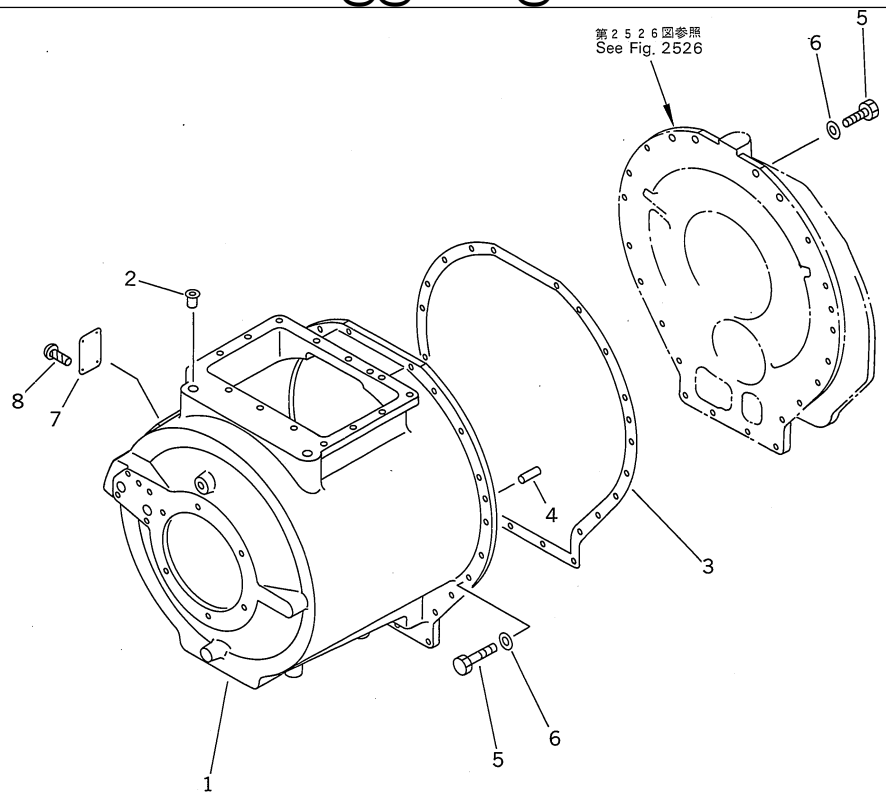

Ref. 2521 **Page 060150**

D155A-2 S/N 50001-UP (S6D155-4 Eng. Installed)
TRANSMISSION (1/6) CASE (NOISE SUPPRESSION SPEC. FOR EC)(#50001-(1059))

Item	Part No.	Part Name	Qty	Serial No.
		SERIAL NO. IN ( ) INDICATES TRANSMISSION SERIAL NO.		
1	(175-15-01221)	TRANSMISSION ASS'Y,(SEE FIG.F2320-51A0)	1	(26589)-@
	◆175-15-00600	TRANSMISSION ASS'Y,TORQFLOW	1	50001-(1059)
		THIS ASSEMBLY CONSISTS OF ALL PARTS SHOWN IN FIGS.2521 TO 2535.		
1	175-15-41112	· CASE	1	50001-(1059)
2	07048-02216	· PLUG	2	50001-(1059)
3	175-15-41122	· GASKET (K8)	1	50001-(1059)
	(☒175-15-41121)	· GASKET (K8)	1	(50001-(1059))
4	04020-01228	· PIN,DOWEL	1	50001-(1059)
5	01010-51240	· BOLT	22	50001-(1059)
6	01643-51232	· WASHER	22	50001-(1059)
7	09608-05080	· PLATE¤ NAME,(LIMITED SUPPLY)	1	50001-(1059)
8	04418-13060	· SCREW	4	50001-(1059)

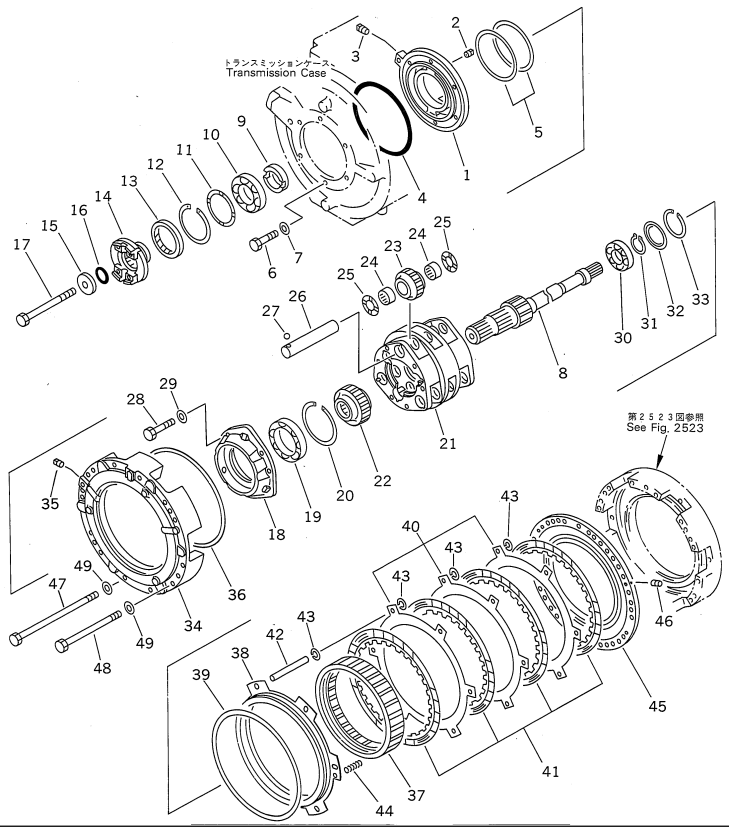

D155A-2 S/N 50001-UP (S6D155-4 Eng. Installed)

TRANSMISSION (2/6) FORWARD CLUTCH (NOISE SUPPRESSION SPEC.FOR EC)(#50001-(1059))

Item	Part No.	Part Name	Qty	Serial No.
		SERIAL NO. IN ( ) INDICATES TRANSMISSION SERIAL NO.		
1	(175-15-01221)	TRANSMISSION ASS'Y,(SEE FIG.F2320-51A0)	1	(26589)-@
	(◆175-15-00600)	TRANSMISSION ASS'Y,TORQFLOW	1	50001-(1059)
		THIS ASSEMBLY CONSISTS OF ALL PARTS SHOWN IN FIGS.2521 TO 2535.		
1	15A-15-00190	· CAGE ASS'Y	1	50001-(1059)
	☆	· · CAGE	1	50001-(1059)
2	195-15-11230	· · PLUG	1	50001-(1059)
3	07042-70211	· · PLUG	1	50001-(1059)
4	07000-05290	· O-RING (K8)	1	50001-(1059)
5	07018-12005	· RING,SEAL	2	50001-(1059)
6	01010-51235	· BOLT	6	50001-(1059)
7	01643-51232	· WASHER	6	50001-(1059)
8	175-15-42190	· SHAFT	1	50001-(1059)
9	15A-15-12140	· SPACER	1	50001-(1059)
10	06000-06216	· BEARING,BALL	1	50001-(1059)
11	15A-15-11240	· SPACER	1	50001-(1059)
12	04071-00140	· RING,SNAP	1	50001-(1059)
13	07012-10110	· SEAL,OIL (K8)	1	50001-(1059)
14	15A-15-12150	· COUPLING	1	50001-(1059)
15	154-15-42180	· HOLDER	1	50001-(1059)
16	07000-05055	· O-RING (K8)	1	50001-(1059)
17	01051-51800	· BOLT	1	50001-(1059)
18	15A-15-12310	· CAGE	1	50001-(1059)
19	06000-06924	· BEARING,BALL	1	50001-(1059)
20	130-09-16780	· RING	1	50001-(1059)
21	175-15-42322	· CARRIER	1	50001-(1059)

D155A-2 S/N 50001-UP (S6D155-4 Eng. Installed)

TRANSMISSION (2/6) FORWARD CLUTCH (NOISE SUPPRESSION SPEC.FOR EC)(#50001-(1059))

Item	Part No.	Part Name	Qty	Serial No.
22	175-15-42122	· GEAR	1	50001-(1059)
23	175-15-42451	· GEAR	3	50001-(1059)
24	09232-05125	· BEARING,NEEDLE	6	50001-(1059)
25	09233-15125	· WASHER	6	(1035)-(1059)
	□09233-05125	· WASHER	6	50001-(1034)
26	175-15-42512	· SHAFT	3	50001-(1059)
27	04260-00635	· BALL	3	50001-(1059)
28	01010-31230	· BOLT	6	50001-(1059)
29	01643-51232	· WASHER	6	50001-(1059)
30	06042-00212	· BEARING,ROLLER	1	50001-(1059)
31	04064-06020	· RING,SNAP	1	50001-(1059)
32	175-15-42340	· PLATE	1	50001-(1059)
33	130-09-15740	· RING,SNAP	1	50001-(1059)
34	175-15-00281	· HOUSING ASS'Y	1	50001-(1059)
	☆	· · HOUSING	1	50001-(1059)
35	145-14-11320	· · PLUG	2	50001-(1059)
36	175-15-12750	· RING,SEAL	1	50001-(1059)
37	175-15-42620	· GEAR,RING	1	50001-(1059)
38	175-15-42830	· PISTON	1	50001-(1059)
39	195-15-12820	· RING,SEAL	1	50001-(1059)
40	175-15-42721	· PLATE	3	50001-(1059)
41	19M-15-12721	· DISC	4	(1039)-(1059)
	□175-15-12716	· DISC	4	50001-(1038)
42	145-14-12760	· PIN	6	50001-(1059)
43	175-15-42880	· SPRING	24	50001-(1059)
44	175-15-42781	· SPRING	12	50001-(1059)
45	175-15-00271	· PLATE ASS'Y	1	50001-(1059)
	☆	· · PLATE	1	50001-(1059)
46	145-14-11320	· · PLUG	2	50001-(1059)
47	175-15-41192	· BOLT	12	50001-(1059)
48	175-15-41292	· BOLT	2	50001-(1059)
49	145-14-11570	· WASHER	14	50001-(1059)

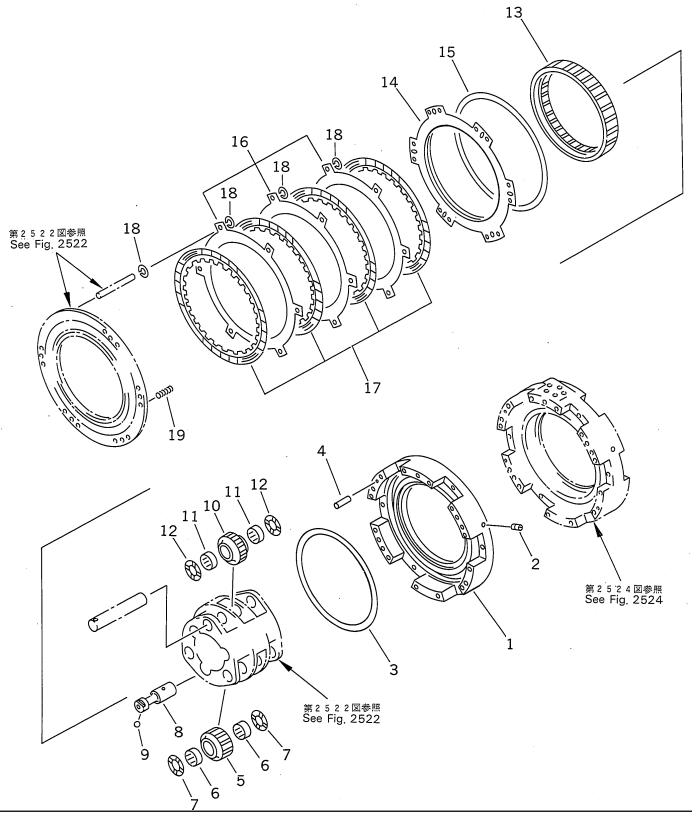

Ref. 2523 **Page 060170**

D155A-2 S/N 50001-UP (S6D155-4 Eng. Installed)
TRANSMISSION (3/6) REVERSE CLUTCH (NOISE SUPPRESSION SPEC.FOR EC)(#50001-(1059))

Item	Part No.	Part Name	Qty	Serial No.
		SERIAL NO. IN ( ) INDICATES TRANSMISSION SERIAL NO.		
1	(175-15-01221)	TRANSMISSION ASS'Y,(SEE FIG.F2320-51A0)	1	(26589)-@
	(◆175-15-00600)	TRANSMISSION ASS'Y,TORQFLOW	1	50001-(1059)
		THIS ASSEMBLY CONSISTS OF ALL PARTS SHOWN IN FIGS.2521 TO 2535.		
1	175-15-00260	· HOUSING ASS'Y	1	50001-(1059)
	☆	· · HOUSING	1	50001-(1059)
2	145-15-11320	· · PLUG	2	50001-(1059)
3	175-15-12750	· RING,SEAL	1	50001-(1059)
4	175-15-31210	· PIN	2	50001-(1059)
5	175-15-42471	· GEAR,SEAL	3	50001-(1059)
6	09232-05125	· BEARING,NEEDLE	6	50001-(1059)
7	09233-05125	· WASHER	6	50001-(1059)
8	175-15-42532	· SHAFT	3	50001-(1059)
9	04260-00635	· BALL	3	50001-(1059)
10	175-15-42451	· GEAR	3	50001-(1059)
11	09232-05125	· BEARING,NEEDLE	6	50001-(1059)
12	09233-05125	· WASHER	6	50001-(1059)
13	175-15-42610	· GEAR,RING	1	50001-(1059)
14	175-15-42870	· PISTON	1	50001-(1059)
15	195-15-12740	· RING,SEAL	1	50001-(1059)
16	175-15-42721	· PLATE	3	50001-(1059)
17	19M-15-12721	· DISC	4	50001-(1059)
18	175-15-42880	· SPRING	24	50001-(1059)
19	175-15-42781	· SPRING	12	50001-(1059)

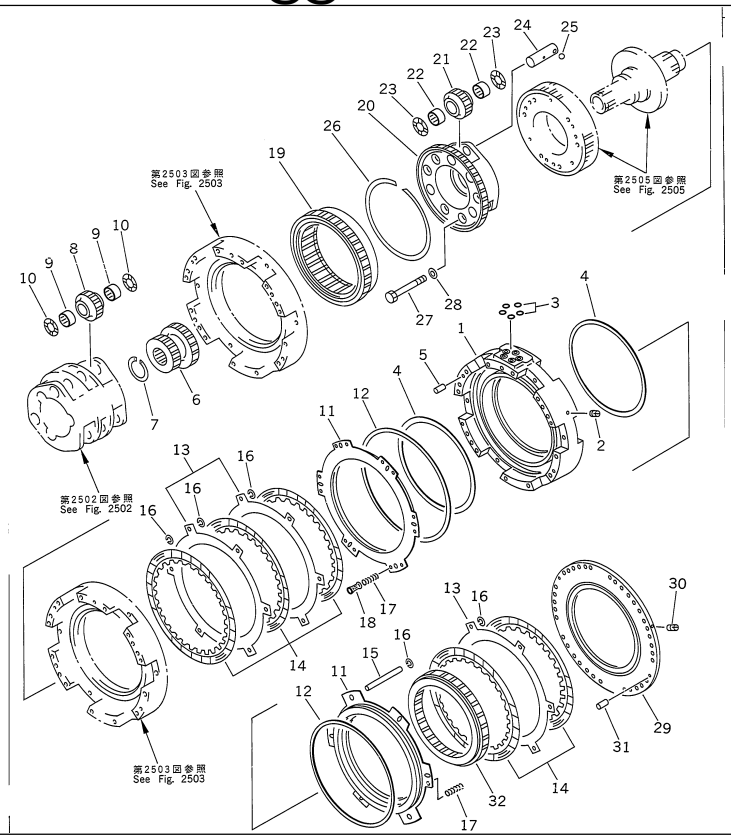

Ref. 2524 **Page 060180**

D155A-2 S/N 50001-UP (S6D155-4 Eng. Installed)

TRANSMISSION (4/6) 2ND AND 3RD CLUTCH (NOISE SUPPRESSION SPEC. FOR EC)(#50001-(1059))

Item	Part No.	Part Name	Qty	Serial No.
		SERIAL NO. IN ( ) INDICATES TRANSMISSION SERIAL NO.		
1	(175-15-01221)	TRANSMISSION ASS'Y,(SEE FIG.F2320-51A0)	1	(26589)-@
	(◆175-15-00600)	TRANSMISSION ASS'Y,TORQFLOW	1	50001-(1059)
		THIS ASSEMBLY CONSISTS OF ALL PARTS SHOWN IN FIGS.2521 TO 2535.		
1	175-15-00250	· HOUSING ASS'Y	1	50001-(1059)
	☆	· · HOUSING	1	50001-(1059)
2	145-14-11320	· PLUG	2	50001-(1059)
3	07000-73022	· O-RING (K8)	5	50001-(1059)
4	175-15-12750	· RING,SEAL	2	50001-(1059)
5	04020-01228	· PIN,DOWEL	2	50001-(1059)
6	175-15-42131	· GEAR	1	50001-(1059)
7	04064-08530	· RING,SNAP	1	50001-(1059)
8	175-15-42451	· GEAR	3	50001-(1059)
9	09232-05125	· BEARING,NEEDLE	6	50001-(1059)
10	09233-15125	· WASHER	6	(1035)-(1059)
	□09233-05125	· WASHER	6	50001-(1034)
11	175-15-42870	· PISTON	2	50001-(1059)
12	195-15-12740	· RING,SEAL	2	50001-(1059)
13	175-15-42721	· PLATE	3	50001-(1059)
14	19M-15-12721	· DISC	5	(1039)-(1059)
	□175-15-12716	· DISC	5	50001-(1038)
15	175-15-12780	· PIN	6	50001-(1059)
16	175-15-42880	· SPRING	30	50001-(1059)
17	145-14-12790	· SPRING¤ (L= 59.0)	24	50001-(1059)
18	569-15-41310	· SLEEVE	14	50001-(1059)
19	175-15-42632	· GEAR,RING	1	50001-(1059)

D155A-2 S/N 50001-UP (S6D155-4 Eng. Installed)

TRANSMISSION (4/6) 2ND AND 3RD CLUTCH (NOISE SUPPRESSION SPEC. FOR EC)(#50001-(1059))

Item	Part No.	Part Name	Qty	Serial No.
20	175-15-42364	· CARRIER	1	50001-(1059)
21	175-15-42491	· GEAR	3	50001-(1059)
22	09232-03838	· BEARING,NEEDLE	3	50001-(1059)
23	09233-13820	· WASHER	6	(1035)-(1059)
	□09233-03820	· WASHER	6	50001-(1034)
24	175-15-42552	· SHAFT	3	50001-(1059)
25	04260-00635	· BALL	3	50001-(1059)
26	175-15-42670	· RING,SNAP	1	50001-(1059)
27	01010-51490	· BOLT	6	50001-(1059)
28	01643-31445	· WASHER	6	50001-(1059)
29	175-15-00240	· PLATE ASS'Y	1	50001-(1059)
	☆	· · PLATE	1	50001-(1059)
30	145-14-11320	· · PLUG	2	50001-(1059)
31	175-15-31210	· PIN	2	50001-(1059)
32	175-15-42650	· GEAR,RING	1	50001-(1059)

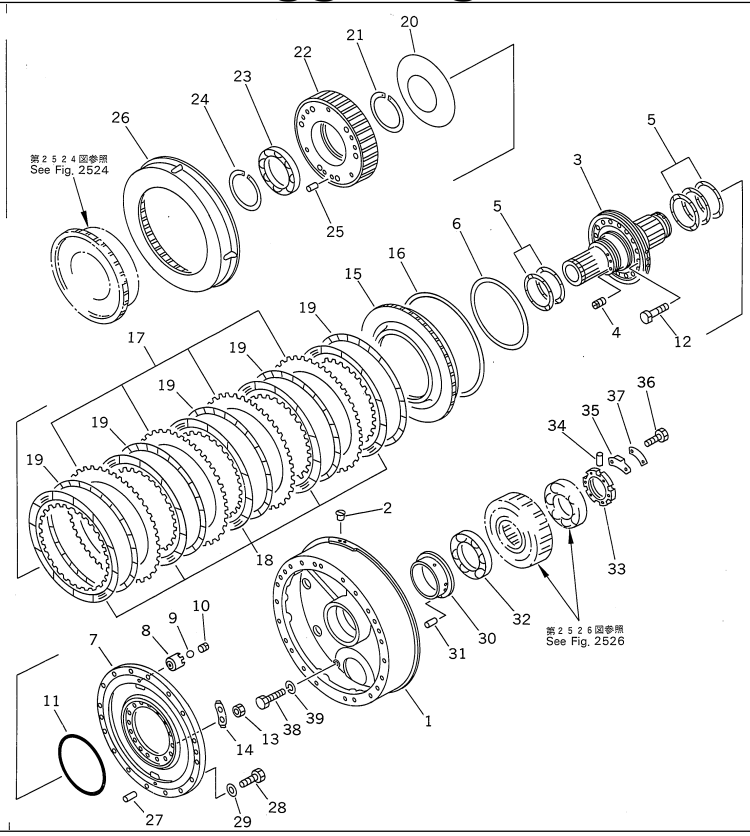

D155A-2 S/N 50001-UP (S6D155-4 Eng. Installed)

TRANSMISSION (5/6) 1ST CLUTCH (NOISE SUPPRESSION SPEC. FOR EC)(#50001-(1059))

Item	Part No.	Part Name	Qty	Serial No.
		SERIAL NO. IN ( ) INDICATES TRANSMISSION SERIAL NO.		
1	(175-15-01221)	TRANSMISSION ASS'Y,(SEE FIG.F2320-51A0)	1	(26589)-@
	(◆175-15-00600)	TRANSMISSION ASS'Y,TORQFLOW	1	50001-(1059)
		THIS ASSEMBLY CONSISTS OF ALL PARTS SHOWN IN FIGS.2521 TO 2535.		
1	178-15-00030	· HOUSING ASS'Y	1	50001-(1059)
	☆	· · HOUSING	1	50001-(1059)
2	234-15-12780	· · SCREW	3	50001-(1059)
3	175-15-00312	· SHAFT ASS'Y	1	50001-(1059)
	☆	· · SHAFT	1	50001-(1059)
4	145-14-11320	· · PLUG	8	50001-(1059)
5	175-15-42850	· RING,SEAL	5	50001-(1059)
6	234-15-11220	· RING,SEAL	1	50001-(1059)
7	175-15-00332	· HOUSING ASS'Y	1	50001-(1059)
	☆	· · HOUSING	1	50001-(1059)
8	175-15-42971	· · COLLAR	2	50001-(1059)
9	04260-00952	· · BALL	2	50001-(1059)
10	234-15-12790	· · SCREW	2	50001-(1059)
11	175-15-42430	· O-RING (K8)	1	50001-(1059)
12	175-15-42230	· BOLT	16	50001-(1059)
13	01582-11210	· NUT	16	50001-(1059)
14	175-15-42240	· PLATE,LOCK (K8)	8	50001-(1059)
15	175-15-42740	· PISTON	1	50001-(1059)
16	175-15-42750	· RING,SEAL	1	50001-(1059)
17	281-15-12720	· PLATE	4	50001-(1059)
18	195-15-32710	· DISC	5	(1039)-(1059)
	□154-15-12716	· DISC	5	50001-(1038)

D155A-2 S/N 50001-UP (S6D155-4 Eng. Installed)

TRANSMISSION (5/6) 1ST CLUTCH (NOISE SUPPRESSION SPEC. FOR EC)(#50001-(1059))

Item	Part No.	Part Name	Qty	Serial No.
19	175-15-42890	· SPRING	5	50001-(1059)
20	175-15-42180	· SPRING	1	50001-(1059)
21	04070-00130	· RING,SNAP	1	50001-(1059)
22	175-15-42371	· GEAR	1	50001-(1059)
23	06000-06924	· BEARING,BALL	1	50001-(1059)
24	130-09-16780	· RING,SNAP	1	50001-(1059)
25	04020-01228	· PIN,DOWEL	6	50001-(1059)
26	175-15-42421	· DRUM	1	50001-(1059)
27	04020-01228	· PIN,DOWEL	4	50001-(1059)
28	01010-51230	· BOLT	12	50001-(1059)
29	01643-51232	· WASHER	12	50001-(1059)
30	175-15-41310	· COLLAR	1	50001-(1059)
31	04020-00616	· PIN,DOWEL	1	50001-(1059)
32	175-15-49340	· BEARING,ROLLER	1	50001-(1059)
33	234-21-12180	· NUT	1	50001-(1059)
34	175-15-42220	· PIN	1	50001-(1059)
35	234-21-12190	· PLATE	1	50001-(1059)
36	01010-50814	· BOLT	2	50001-(1059)
37	234-21-12210	· PLATE,LOCK (K8)	1	50001-(1059)
38	01010-51435	· BOLT	2	50001-(1059)
39	01602-01442	· WASHER,SPRING	2	50001-(1059)

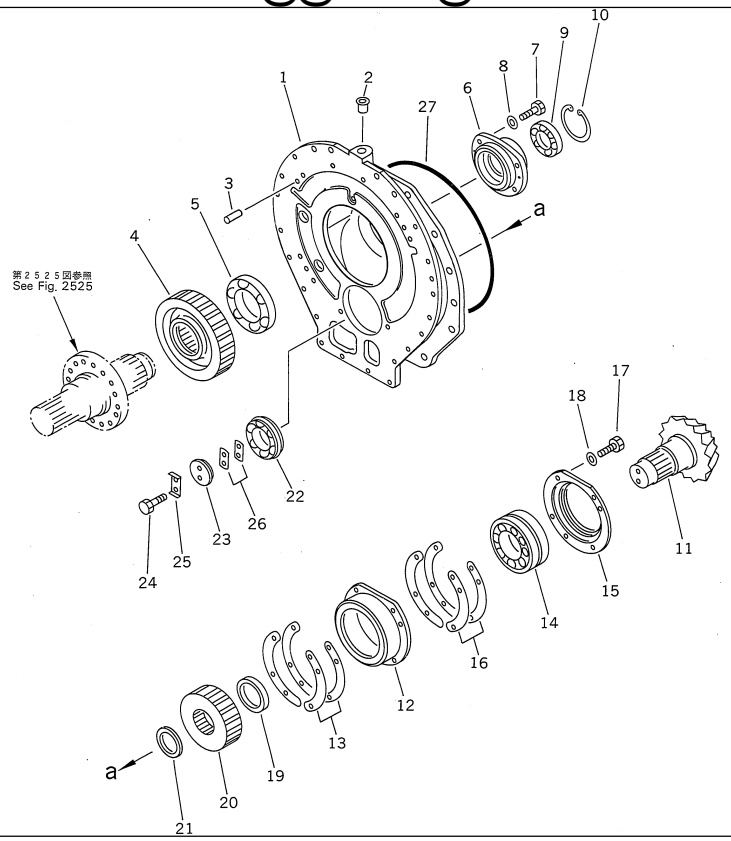

TRANSMISSION (6/6) TRANSFER (NOISE SUPPRESSION SPEC. FOR EC)(#50001-(1059))

Item	Part No.	Part Name	Qty	Serial No.
		SERIAL NO. IN ( ) INDICATES TRANSMISSION SERIAL NO.		
1	(175-15-01221)	TRANSMISSION ASS'Y,(SEE FIG.F2320-51A0)	1	(26589)-@
	(◆175-15-00600)	TRANSMISSION ASS'Y,TORQFLOW	1	50001-(1059)
		THIS ASSEMBLY CONSISTS OF ALL PARTS SHOWN IN FIGS.2521 TO 2535.		
1	175-15-43116	· CASE	1	50001-(1059)
2	07048-02216	· PLUG	1	50001-(1059)
3	04020-01228	· PIN	2	50001-(1059)
4	175-15-43212	· GEAR	1	50001-(1059)
5	175-15-43270	· BEARING,ROLLER	1	50001-(1059)
6	175-15-43152	· CAGE	1	50001-(1059)
7	01010-51240	· BOLT	5	50001-(1059)
8	01643-51232	· WASHER	5	50001-(1059)
9	06000-22211	· BEARING,ROLLER	1	50001-(1059)
10	04065-01030	· RING,SNAP	1	50001-(1059)
11	175-21-00080	· PINION & GEAR ASS'Y	1	50001-(1059)
	☆	· · SHAFT,BEVEL	1	50001-(1059)
	☆	· · GEAR,BEVEL	1	50001-(1059)
12	178-15-13260	· CAGE	1	50001-(1059)
13	175-15-05011	· SHIM KIT (K8)	1	50001-(1059)
	☆	· · SHIM¤ 0.2MM (K8)	3	50001-(1059)
	☆	· · SHIM¤ 0.2MM (K8)	3	50001-(1059)
	☆	· · SHIM¤ 0.3MM (K8)	2	50001-(1059)
	☆	· · SHIM¤ 0.3MM (K8)	2	50001-(1059)
	☆	· · SHIM¤ 1.0MM (K8)	2	50001-(1059)
	☆	· · SHIM¤ 1.0MM (K8)	2	50001-(1059)
14	178-15-19350	· BEARING,ROLLER	1	50001-(1059)

D155A-2 S/N 50001-UP (S6D155-4 Eng. Installed)

TRANSMISSION (6/6) TRANSFER (NOISE SUPPRESSION SPEC. FOR EC)(#50001-(1059))

Item	Part No.	Part Name	Qty	Serial No.
15	178-15-13140	· COVER	1	50001-(1059)
16	175-15-05051	· SHIM KIT (K8)	1	50001-(1059)
	☆	· · SHIM¤ 0.2MM (K8)	1	50001-(1059)
	☆	· · SHIM¤ 0.2MM (K8)	1	50001-(1059)
	☆	· · SHIM¤ 0.3MM (K8)	2	50001-(1059)
	☆	· · SHIM¤ 0.3MM (K8)	2	50001-(1059)
17	01010-51250	· BOLT	4	50001-(1059)
18	01643-51232	· WASHER	4	50001-(1059)
19	178-15-13360	· SPACER	1	50001-(1059)
20	175-15-43232	· GEAR	1	50001-(1059)
21	178-15-13370	· SPACER	1	50001-(1059)
22	178-15-19330	· BEARING,ROLLER	1	50001-(1059)
23	178-15-13620	· HOLDER	1	50001-(1059)
24	01010-51435	· BOLT	2	50001-(1059)
25	04081-07012	· LOCK (K8)	1	50001-(1059)
26	178-15-00121	· SHIM ASS'Y (K8)	1	50001-(1059)
	☆	· · SHIM¤ 0.2MM (K8)	3	50001-(1059)
	☆	· · SHIM¤ 0.3MM (K8)	3	50001-(1059)
27	07000-05470	· O-RING (K8)	1	50001-(1059)

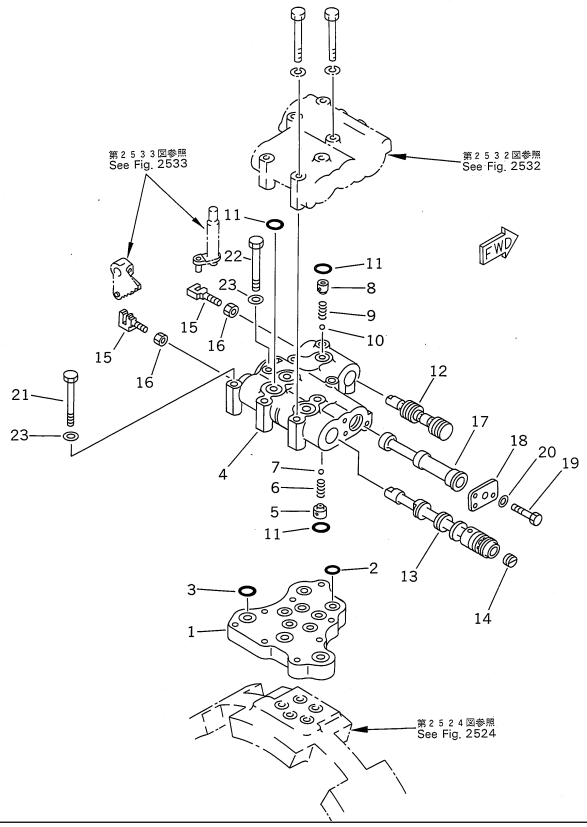

Ref. 2531 **Page 060210**

D155A-2 S/N 50001-UP (S6D155-4 Eng. Installed)

TRANSMISSION VALVE (1/3) (NOISE SUPPRESSION SPEC. FOR EC)(#50001-(1059))

Item	Part No.	Part Name	Qty	Serial No.
		SERIAL NO. IN ( ) INDICATES TRANSMISSION SERIAL NO.		
1	(175-15-01221)	TRANSMISSION ASS'Y,(SEE FIG.F2320-51A0)	1	(26589)-@
	(◆175-15-00600)	TRANSMISSION ASS'Y,TORQFLOW	1	50001-(1059)
		THIS ASSEMBLY CONSISTS OF ALL PARTS SHOWN IN FIGS.2521 TO 2535.		
1	175-15-00442	· VALVE ASS'Y	1	50001-(1059)
		THIS ASSEMBLY CONSISTS OF ALL PARTS SHOWN IN FIGS.2531 AND 2532.		
1	175-15-45110	· · SEAT	1	50001-(1059)
2	07000-73022	· · O-RING (K9)	7	50001-(1059)
3	07000-73025	· · O-RING (K9)	3	50001-(1059)
4	175-15-45212	· · BODY	1	50001-(1059)
5	175-15-45260	· · DETENT	1	50001-(1059)
6	195-15-15680	· · · SPRING	1	50001-(1059)
7	04260-00952	· · · BALL	1	50001-(1059)
8	195-15-15671	· · DETENT	1	50001-(1059)
9	195-15-15680	· · · SPRING	1	50001-(1059)
10	04260-00952	· · · BALL	1	50001-(1059)
11	07000-73022	· · O-RING (K9)	2	50001-(1059)
12	175-15-45220	· · SPOOL	1	50001-(1059)
13	15A-15-00511	· · SPOOL ASS'Y	1	50001-(1059)
	☆	· · · SPOOL	1	50001-(1059)
14	☆	· · · PLUG	1	50001-(1059)
15	09363-01053	· · YOKE	2	50001-(1059)
16	01580-11008	· · NUT	2	50001-(1059)
17	154-15-45190	· · SPACER	1	50001-(1059)
18	175-15-45810	· · PLATE	1	50001-(1059)
19	01010-31025	· · BOLT	2	50001-(1059)

D155A-2 S/N 50001-UP (S6D155-4 Eng. Installed)

TRANSMISSION VALVE (1/3) (NOISE SUPPRESSION SPEC. FOR EC)(#50001-(1059))

Item	Part No.	Part Name	Qty	Serial No.
20	01643-31032	・・WASHER	2	50001-(1059)
21	01010-31075	・・BOLT	1	50001-(1059)
22	01011-51005	・・BOLT	1	(1035)-(1059)
	◆175-15-45160	・・BOLT	1	50001-(1034)
23	01643-31032	・・WASHER	2	50001-(1059)

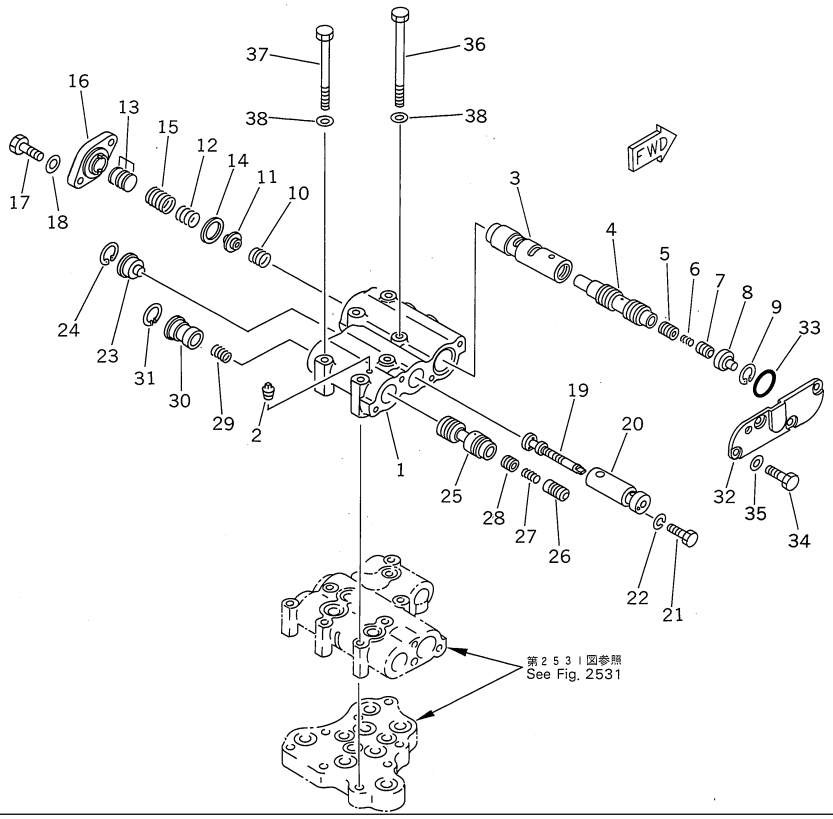

D155A-2 S/N 50001-UP (S6D155-4 Eng. Installed)

TRANSMISSION VALVE (2/3) (NOISE SUPPRESSION SPEC. FOR EC)(#50001-(1059))

Item	Part No.	Part Name	Qty	Serial No.
		SERIAL NO. IN ( ) INDICATES TRANSMISSION SERIAL NO.		
1	(175-15-01221)	TRANSMISSION ASS'Y,(SEE FIG.F2320-51A0)	1	(26589)-@
	(◆175-15-00600)	TRANSMISSION ASS'Y,TORQFLOW	1	50001-(1059)
		THIS ASSEMBLY CONSISTS OF ALL PARTS SHOWN IN FIGS.2521 TO 2535.		
1	(175-15-00442)	· VALVE ASS'Y	1	50001-(1059)
		THIS ASSEMBLY CONSISTS OF ALL PARTS SHOWN IN FIGS.2531 AND 2532.		
1	155-15-15410	· · BODY	1	50001-(1059)
2	07042-20108	· · PLUG	1	50001-(1059)
3	145-14-43382	· · VALVE	1	50001-(1059)
4	145-14-43333	· · VALVE	1	50001-(1059)
5	195-15-15130	· · VALVE	1	50001-(1059)
6	180-14-25560	· · SPRING	1	50001-(1059)
7	175-15-15550	· · VALVE	1	50001-(1059)
8	145-14-23180	· · STOPPER	1	50001-(1059)
9	130-09-15170	· · RING,SNAP	1	50001-(1059)
10	145-14-33430	· · SPRING	1	50001-(1059)
11	145-14-43340	· · SEAT	1	50001-(1059)
12	145-14-33420	· · SPRING	1	50001-(1059)
13	145-14-43370	· · SHIM¤ 0.5MM	3	50001-(1059)
14	145-14-33450	· · WASHER	1	50001-(1059)
15	145-14-33351	· · SPRING	1	50001-(1059)
16	144-15-25330	· · COVER	1	50001-(1059)
17	01010-31025	· · BOLT	2	50001-(1059)
18	01643-31032	· · WASHER	2	50001-(1059)
19	154-15-35320	· · VALVE	1	50001-(1059)
20	155-15-15351	· · SLEEVE	1	50001-(1059)

D155A-2 S/N 50001-UP (S6D155-4 Eng. Installed)

TRANSMISSION VALVE (2/3) (NOISE SUPPRESSION SPEC. FOR EC)(#50001-(1059))

Item	Part No.	Part Name	Qty	Serial No.
21	155-15-15370	· · BOLT	1	50001-(1059)
22	01602-00619	· · WASHER,SPRING	1	50001-(1059)
23	155-15-15360	· · STOPPER	1	50001-(1059)
24	04065-03515	· · RING,SNAP	1	50001-(1059)
25	175-15-45381	· · VALVE	1	50001-(1059)
26	568-15-15570	· · VALVE	1	50001-(1059)
27	180-14-25560	· · SPRING	1	50001-(1059)
28	198-15-15760	· · VALVE	1	50001-(1059)
29	234-15-15230	· · SPRING¤ (L= 52.0)	1	50001-(1059)
30	175-15-45390	· · RETAINER	1	50001-(1059)
31	04065-03515	· · RING	1	50001-(1059)
32	155-15-15850	· · COVER	1	50001-(1059)
33	07000-73040	· · O-RING (K9)	1	50001-(1059)
34	01010-31025	· · BOLT	4	50001-(1059)
35	01643-31032	· · WASHER	4	50001-(1059)
36	01011-51035	· · BOLT	3	(1035)-(1059)
	◆175-15-45170	· · BOLT	3	50001-(1034)
37	175-15-45180	· · BOLT	3	50001-(1059)
38	01643-31032	· · WASHER	6	50001-(1059)

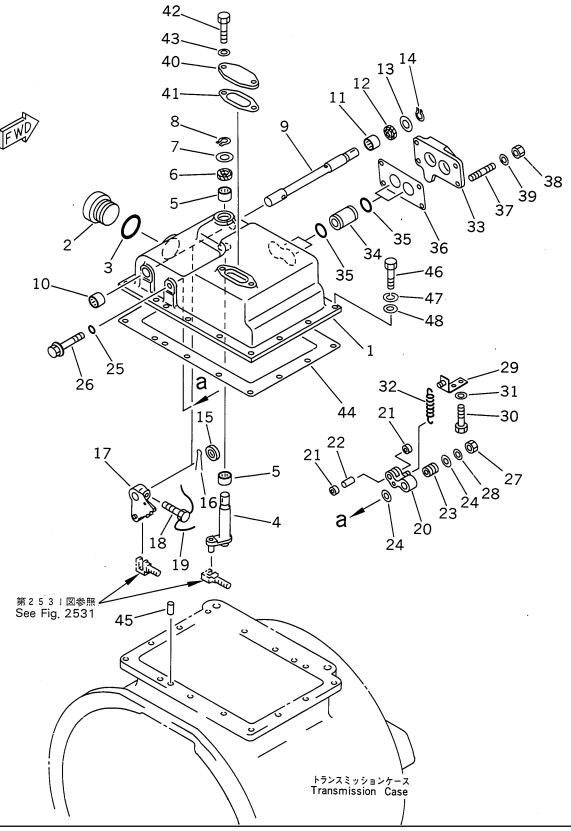

Ref. 2533 **Page 060230**

D155A-2 S/N 50001-UP (S6D155-4 Eng. Installed)

TRANSMISSION VALVE (3/3) (NOISE SUPPRESSION SPEC. FOR EC)(#50001-(1059))

Item	Part No.	Part Name	Qty	Serial No.
		SERIAL NO. IN ( ) INDICATES TRANSMISSION SERIAL NO.		
1	(175-15-01221)	TRANSMISSION ASS'Y,(SEE FIG.F2320-51A0)	1	(26589)-@
	(◆175-15-00600)	TRANSMISSION ASS'Y,TORQFLOW	1	50001-(1059)
		THIS ASSEMBLY CONSISTS OF ALL PARTS SHOWN IN FIGS.2521 TO 2535.		
1	175-15-45511	· COVER	1	50001-(1059)
2	07040-15223	· PLUG	1	50001-(1059)
3	07002-05234	· O-RING (K10)	1	50001-(1059)
4	175-15-45560	· LEVER	1	50001-(1059)
5	06120-02016	· BEARING,NEEDLE	2	50001-(1059)
6	144-15-29110	· SEAL,OIL (K10)	1	50001-(1059)
7	175-15-45570	· WASHER	1	50001-(1059)
8	04064-01812	· RING,SNAP	1	50001-(1059)
9	175-15-45610	· SHAFT	1	50001-(1059)
10	06121-02016	· BEARING,NEEDLE	1	50001-(1059)
11	06120-02016	· BEARING,NEEDLE	1	50001-(1059)
12	144-15-29110	· SEAL,OIL (K10)	1	50001-(1059)
13	175-15-45570	· WASHER	1	50001-(1059)
14	04064-01812	· RING,SNAP	1	50001-(1059)
15	175-15-45620	· STOPPER	1	50001-(1059)
16	04050-03040	· PIN,COTTER (K10)	1	50001-(1059)
17	175-15-45630	· LEVER	1	50001-(1059)
18	125-15-11530	· BOLT	1	50001-(1059)
19	04059-01010	· WIRE (K10)	1	50001-(1059)
20	175-15-45690	· LEVER	1	50001-(1059)
21	144-15-29120	· BEARING	2	50001-(1059)
22	144-15-25690	· PIN	1	50001-(1059)

D155A-2 S/N 50001-UP (S6D155-4 Eng. Installed)

TRANSMISSION VALVE (3/3) (NOISE SUPPRESSION SPEC. FOR EC)(#50001-(1059))

Item	Part No.	Part Name	Qty	Serial No.
23	175-15-45670	· SLEEVE	1	50001-(1059)
24	175-15-45660	· WASHER	2	50001-(1059)
25	07002-01223	· O-RING (K10)	1	50001-(1059)
26	175-15-45650	· BOLT	1	50001-(1059)
27	01580-11008	· NUT	1	50001-(1059)
28	01643-31032	· WASHER	1	50001-(1059)
29	175-15-45780	· BRACKET	1	50001-(1059)
30	01010-51020	· BOLT	2	50001-(1059)
31	01643-31032	· WASHER	2	50001-(1059)
32	175-15-45710	· SPRING	1	50001-(1059)
33	175-15-45530	· COVER	1	50001-(1059)
34	175-15-45550	· SLEEVE	2	50001-(1059)
35	07000-73028	· O-RING (K10)	4	50001-(1059)
36	175-15-45541	· GASKET (K10)	1	50001-(1059)
	(☒175-15-45540)	· GASKET (K10)	1	(50001-(1059))
37	01124-51025	· STUD	4	50001-(1059)
38	01580-11008	· NUT	4	50001-(1059)
39	01643-31032	· WASHER	4	50001-(1059)
40	175-15-45750	· PLATE	1	50001-(1059)
41	175-15-45761	· GASKET (K10)	1	50001-(1059)
	(☒175-15-45760)	· GASKET (K10)	1	(50001-(1059))
42	01010-51020	· BOLT	2	50001-(1059)
43	01643-31032	· WASHER	2	50001-(1059)
44	175-15-45522	· GASKET (K10)	1	50001-(1059)
	(☒175-15-45521)	· GASKET (K10)	1	(50001-(1059))
45	04020-01024	· PIN,DOWEL	2	50001-(1059)
46	01010-51025	· BOLT	14	50001-(1059)
47	01643-31032	· WASHER	14	50001-(1059)
48	01640-21016	· WASHER	14	50001-(1059)

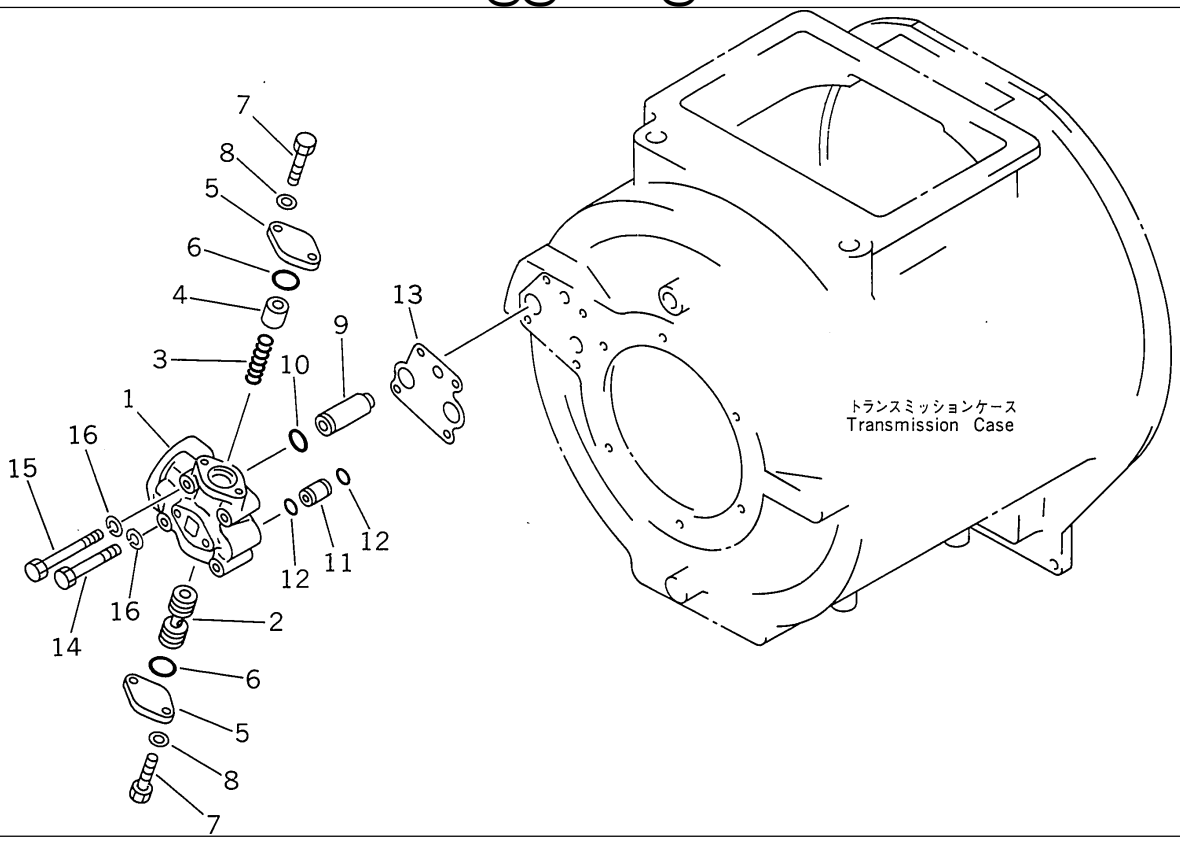

Ref. 2535 **Page 060240**

D155A-2 S/N 50001-UP (S6D155-4 Eng. Installed)
TRANSMISSION LUBRICATION VALVE (NOISE SUPPRESSION SPEC. FOR EC)(#50001-(1059))

Item	Part No.	Part Name	Qty	Serial No.
		SERIAL NO. IN ( ) INDICATES TRANSMISSION SERIAL NO.		
1	(175-15-01221)	TRANSMISSION ASS'Y,(SEE FIG.F2320-51A0)	1	(26589)-@
	(◆175-15-00600)	TRANSMISSION ASS'Y,TORQFLOW	1	50001-(1059)
		THIS ASSEMBLY CONSISTS OF ALL PARTS SHOWN IN FIGS.2521 TO 2535.		
1	175-15-00352	· VALVE ASS'Y	1	50001-(1059)
	175-15-14111	· · BODY	1	50001-(1059)
2	175-15-14130	· · SPOOL	1	50001-(1059)
3	175-15-14120	· · SPRING	1	50001-(1059)
4	175-15-14141	· · GUIDE	1	50001-(1059)
5	175-15-14150	· · COVER	2	50001-(1059)
6	07000-73032	· · O-RING (K11)	2	50001-(1059)
7	01010-50825	· · BOLT	4	50001-(1059)
8	01643-30823	· · WASHER	4	50001-(1059)
9	175-15-44190	· SLEEVE	1	50001-(1059)
10	07000-73022	· O-RING (K11)	1	50001-(1059)
11	175-15-44180	· SLEEVE	1	50001-(1059)
12	07000-72018	· O-RING (K11)	2	50001-(1059)
13	175-15-14162	· GASKET (K11)	1	50001-(1059)
	(☒175-15-14161)	· GASKET (K11)	1	(50001-(1059))
14	01010-51055	· BOLT	2	50001-(1059)
15	01010-51065	· BOLT	2	50001-(1059)
16	01602-21030	· WASHER,SPRING	4	50001-(1059)

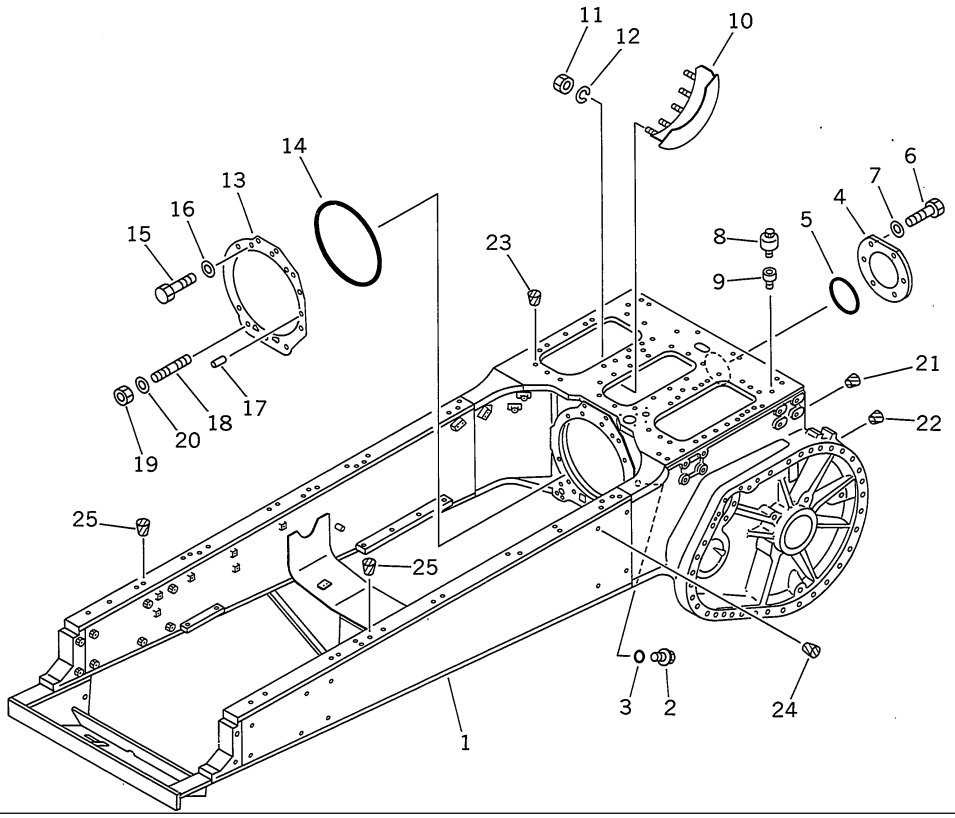

Ref. 2601 **Page 060250**

D155A-2 S/N 50001-UP (S6D155-4 Eng. Installed)
STEERING CASE AND MAIN FRAME

Item	Part No.	Part Name	Qty	Serial No.
1	175-21-47101	FRAME,MAIN	1	51555-
	□175-21-47100	FRAME,MAIN	1	50001-51554
	175-862-1135	FRAME,MAIN (TBG SPEC.)	1	50001-
2	07044-13620	PLUG	1	50001-
3	07002-03634	O-RING	1	50001-
	07002-33634	O-RING,(FOR SLAG HANDLING)	1	50001-
4	175-21-32170	COVER	1	50001-
5	07000-05195	O-RING	1	50001-
6	01010-52040	BOLT	6	50001-
7	01643-32060	WASHER	6	50001-
8	07030-00252	BREATHER	3	50001-
9	170-21-11190	NIPPLE	3	50001-
10	175-21-11181	COVER	1	50001-
11	01580-11210	NUT	3	50001-
12	01602-21236	WASHER,SPRING	3	50001-
13	175-21-32185	GASKET	1	52126-
	□175-21-32135	GASKET	1	50001-52125
14	07000-05470	O-RING	1	50001-
15	01010-52050	BOLT	6	50001-
16	01643-32060	WASHER	6	50001-
17	04020-01842	PIN	1	50001-
18	01120-32050	STUD	5	50001-
19	01582-02016	NUT	5	50001-
20	01643-32060	WASHER	5	50001-
21	07049-02025	PLUG,(WITH RIPPER OR DRAWBAR)	2	50001-
	154-21-11760	BOLT,(FOR SLAG HANDLING)	2	50001-
22	07049-03949	PLUG,(WITH RIPPER)	8	50001-

STEERING CASE AND MAIN FRAME

Item	Part No.	Part Name	Qty	Serial No.
22	175-21-32910	BOLT,(FOR SLAG HANDLING W/RIPPER)	8	50001-
	07049-03949	PLUG,(WITH DRAWBAR)	12	50001-
	175-21-32910	BOLT,(FOR SLAG HANDLING W/DRAWBAR)	12	50001-
23	07049-01620	PLUG	3	50001-
24	07049-03038	PLUG	8	50001-
25	07049-01418	PLUG	4	50001-

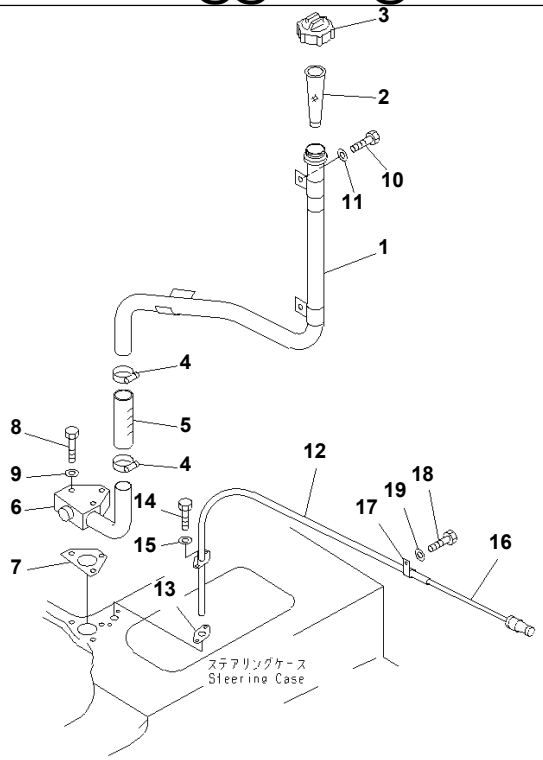

PJ14893

D155A-2 S/N 50001-UP (S6D155-4 Eng. Installed)

OIL FILLER AND LEVEL GAUGE

Item	Part No.	Part Name	Qty	Serial No.
1	175-21-47160	TUBE	1	50001-
2	07056-10045	STRAINER	1	50001-
3	07051-01000	CAP	1	50001-
	07092-00000	CAP,(FOR VANDALISM PROTECTION)	1	50001-
4	207-09-11110	CLAMP,HOSE	2	50001-
5	07260-24111	HOSE	1	50001-
6	175-21-47170	TUBE	1	50001-
7	175-21-47181	GASKET	1	52126-
	□175-21-47180	GASKET	1	50001-52125
8	01010-51275	BOLT	3	50001-
9	01643-31232	WASHER	3	50001-
10	01010-51225	BOLT	1	50001-
11	01643-31232	WASHER	3	50001-
12	175-21-47120	TUBE	1	50001-
13	175-21-47141	GASKET	1	52126-
	□175-21-47140	GASKET	1	50001-52125
14	01010-51230	BOLT	2	50001-
15	01643-31232	WASHER	2	50001-
16	175-21-47130	GAUGE,OIL LEVEL	1	50001-
17	08036-21414	CLIP	1	50001-
18	01010-51220	BOLT	1	50001-
19	01643-31232	WASHER	2	50001-

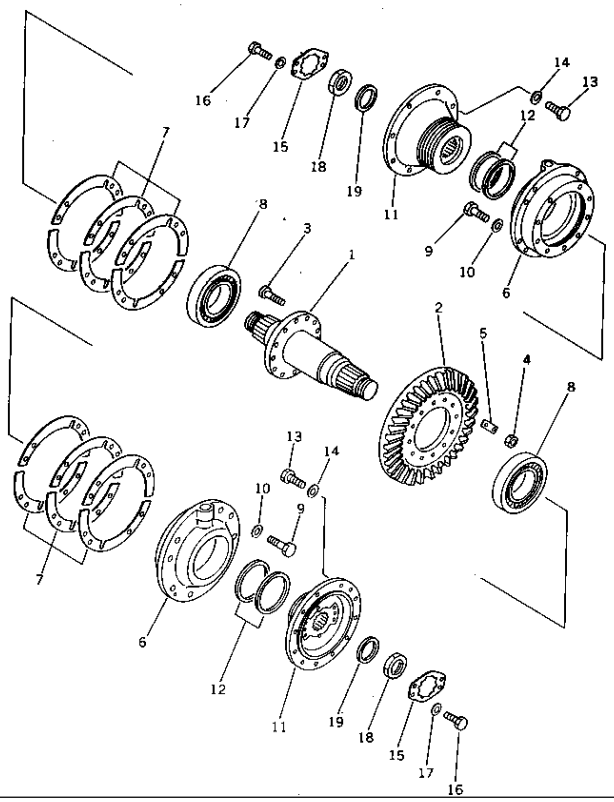

Ref. 2611 **Page 060300**

D155A-2 S/N 50001-UP (S6D155-4 Eng. Installed)
BEVEL GEAR AND SHAFT

Item	Part No.	Part Name	Qty	Serial No.
1	175-21-32113	SHAFT	1	50001-
2	175-21-00080	PINION & GEAR ASS'Y	1	50001-
	☆	· SHAFT,BEVEL	1	50001-
	☆	· GEAR,BEVEL	1	50001-
3	170-21-12170	BOLT,REAMER	12	50001-
4	01580-11613	NUT	12	50001-
5	170-21-12160	PLATE,LOCK	6	50001-
6	175-21-32190	CAGE	2	50001-
7	175-21-00032	SHIM ASS'Y	2	50001-
	☆	· SHIM¤ 0.1MM	10	50001-
	☆	· SHIM¤ 0.2MM	10	50001-
	☆	· SHIM¤ 0.5MM	8	50001-
8	06000-32219	BEARING	2	50001-
9	01010-51440	BOLT	16	50001-
10	01643-31445	WASHER	16	50001-
11	198-21-11490	HUB	2	50001-
12	170-22-11130	RING,SEAL	4	50001-
13	01010-51645	BOLT	24	50001-
14	01643-31645	WASHER	24	50001-
15	198-21-11480	PLATE,LOCK	2	50001-
16	01010-51025	BOLT	4	50001-
17	01643-31032	WASHER	4	50001-
18	170-21-12141	NUT	2	50001-
19	154-21-22211	PACKING	2	50001-

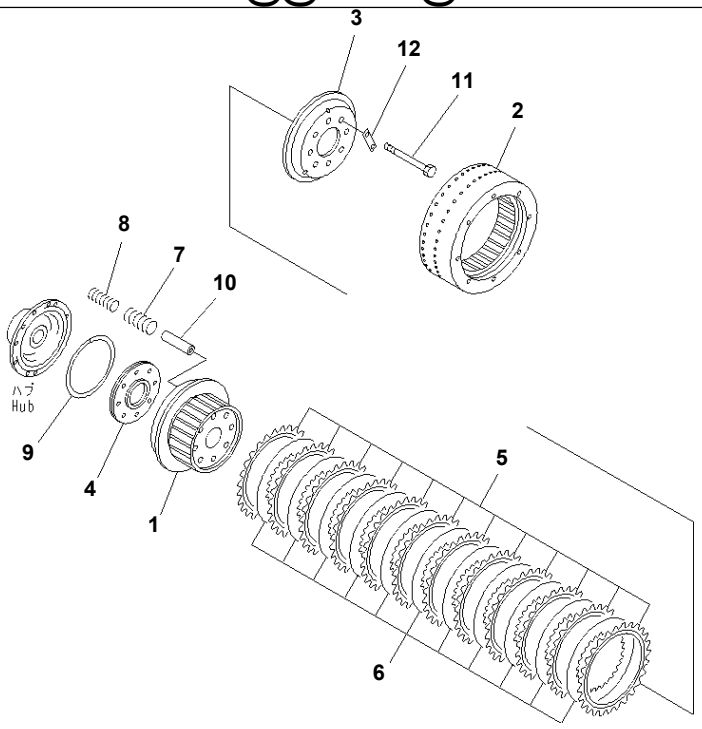

PW14895

Ref. 2621 **Page 060310**

D155A-2 S/N 50001-UP (S6D155-4 Eng. Installed)
STEERING CLUTCH

Item	Part No.	Part Name	Qty	Serial No.
1	175-22-00033	CLUTCH ASS'Y	2	50001-
	175-22-21271	· DRUM,CLUTCH	1	50001-
2	175-22-21281	· DRUM,BRAKE	1	50001-
3	175-22-21131	· PLATE	1	50001-
4	175-22-21141	· PISTON	1	50001-
5	154-22-11230	· DISC	12	50001-
6	175-22-21160	· PLATE	11	50001-
7	175-22-21170	· SPRING,LARGE	8	50001-
8	175-22-21180	· SPRING,SMALL	8	50001-
9	175-22-21190	· RING,SEAL	1	50001-
10	175-22-21231	· SLEEVE	8	50001-
11	175-22-21242	· BOLT	8	50001-
12	175-22-21250	· WASHER,LOCK	4	50001-

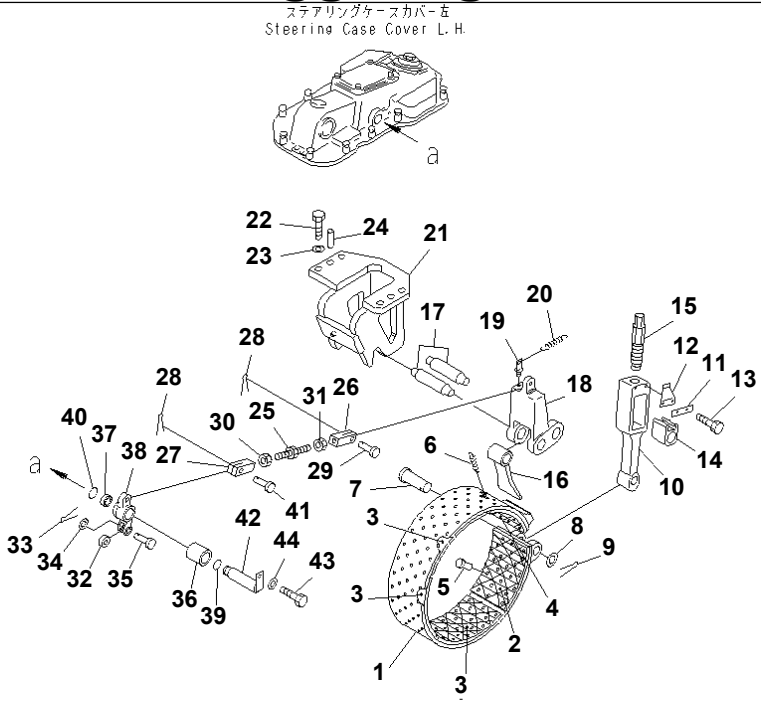

PJ14896

D155A-2 S/N 50001-UP (S6D155-4 Eng. Installed)

BRAKE BAND AND LINKAGE

Item	Part No.	Part Name	Qty	Serial No.
1	175-33-00082	BRAKE BAND ASS'Y,L.H.	1	52126-
	□175-33-00081	BRAKE BAND ASS'Y,L.H.	1	50001-52125
	175-33-00150	BRAKE BAND ASS'Y,L.H. (HEAVY DUTY)	1	50001-
	175-33-00092	BRAKE BAND ASS'Y,R.H.	1	52126-
	□175-33-00091	BRAKE BAND ASS'Y,R.H.	1	50001-52125
	175-33-00160	BRAKE BAND ASS'Y,R.H. (HEAVY DUTY)	1	50001-
	☆	· BAND,BRAKE¤ L.H.	1	50001-
	☆	· BAND,BRAKE¤ R.H.	1	50001-
2	175-33-29310	· LINING,BRAKE (A)	1	52126-
	□175-33-28130	· LINING,BRAKE (A)	1	50001-52125
	175-33-28430	· LINING,BRAKE (A) (HEAVY DUTY)	1	50001-
3	175-33-29320	· LINING,BRAKE (B)	3	52126-
	□175-33-28140	· LINING,BRAKE (B)	3	50001-52125
	175-33-28420	· LINING,BRAKE (B) (HEAVY DUTY)	3	50001-
4	175-33-29330	· LINING,BRAKE (C)	1	52126-
	□175-33-28340	· LINING,BRAKE (C)	1	50001-52125
	175-33-28410	· LINING,BRAKE (C) (HEAVY DUTY)	1	50001-
5	04412-00514	· RIVET	99	50001-
6	100-33-13120	SPRING	2	50001-
7	175-33-24210	PIN	2	50001-
8	175-33-24220	WASHER	2	50001-
9	04050-14050	PIN,COTTER	2	50001-
10	175-33-24231	ROD	2	50001-
11	154-33-11620	PLATE,LOCK	2	50001-
12	154-33-11610	SPRING,LOCK	2	50001-
13	01010-51016	BOLT	4	50001-
14	154-33-11540	BLOCK	2	50001-

D155A-2 S/N 50001-UP (S6D155-4 Eng. Installed)

BRAKE BAND AND LINKAGE

Item	Part No.	Part Name	Qty	Serial No.
15	175-33-24272	BOLT,ADJUSTING	2	50001-
16	175-33-24240	END	2	50001-
17	175-33-24260	PIN	4	50001-
18	175-33-24251	LEVER	2	50001-
19	154-33-11650	SEAT	2	50001-
20	150-33-12171	SPRING	2	50001-
21	175-33-24281	BRACKET,L.H.	1	50001-
	175-33-24291	BRACKET,R.H.	1	50001-
22	01010-52055	BOLT	8	50001-
23	01643-32060	WASHER	8	50001-
24	154-33-11720	PIN,DOWEL	4	50001-
25	175-33-24311	BOLT	2	50001-
26	175-33-24320	YOKE	2	50001-
27	175-33-24330	YOKE	2	50001-
28	04050-04028	PIN,COTTER	4	50001-
29	175-33-24450	PIN	2	50001-
30	01583-01811	NUT	2	50001-
31	175-33-24342	NUT	2	50001-
32	170-33-13330	ROLLER	2	50001-
33	04050-14025	PIN,COTTER	2	50001-
34	01641-11626	WASHER	2	50001-
35	04205-01645	PIN	2	50001-
36	198-43-13220	SPACER	2	50001-
37	154-33-21280	SPACER	2	50001-
38	175-33-24353	LEVER ASS'Y	2	50001-
39	07000-03030	O-RING	2	50001-
40	07000-03025	O-RING	2	50001-
41	175-33-24450	PIN	2	50001-
42	154-33-21262	SHAFT	2	50001-
43	01010-51025	BOLT	2	50001-
44	01602-21030	WASHER,SPRING	2	50001-

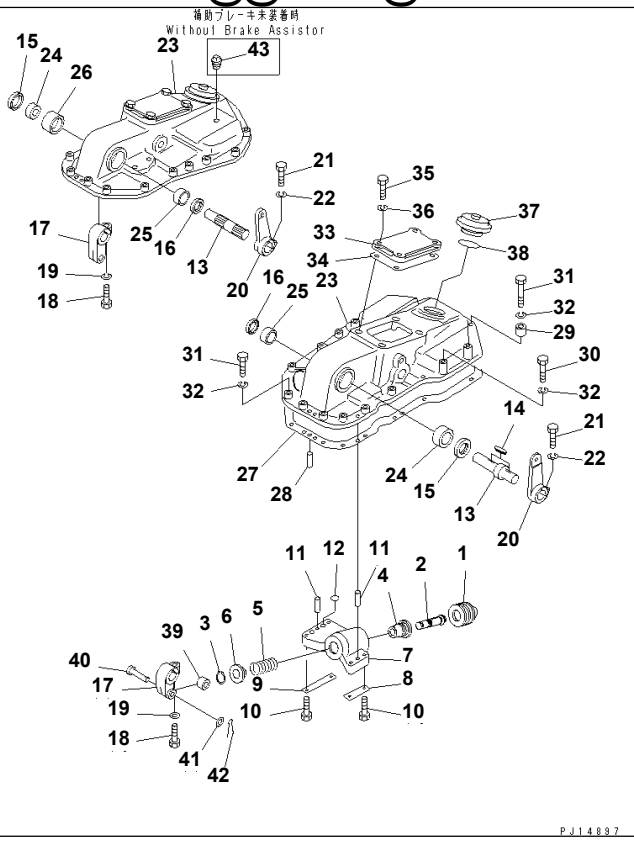

PJ14897

BRAKE BOOSTER

Item	Part No.	Part Name	Qty	Serial No.
1	175-33-28330	PISTON	2	50001-
2	175-33-24441	SPOOL	2	50001-
3	04064-02512	RING,SNAP	2	50001-
4	195-33-14341	BUSHING	2	50001-
5	170-33-13370	SPRING	2	50001-
6	175-33-31310	RETAINER	2	50001-
7	175-33-28310	BODY,L.H.	1	50001-
	175-33-28320	BODY,R.H.	1	50001-
8	154-33-21420	PLATE,LOCK	2	50001-
9	154-33-21430	PLATE,LOCK	2	50001-
10	01010-51255	BOLT	8	50001-
11	04020-01228	PIN,DOWEL	4	50001-
12	07000-02020	O-RING	4	50001-
13	175-33-26130	SHAFT,L.H.	1	50001-
	175-33-32160	SHAFT,R.H.	1	50001-
14	04000-01030	KEY	2	50001-
15	154-33-21340	SEAL,OIL¤ L.H.	1	50001-
	07012-00030	SEAL,OIL¤ R.H.	1	50001-
16	154-33-21350	SEAL,OIL	2	50001-
17	154-33-21150	LEVER,L.H.	1	50001-
	175-33-32170	LEVER,R.H.	1	50001-
18	01010-51235	BOLT	2	50001-
19	01602-21236	WASHER,SPRING	2	50001-
20	175-33-25991	LEVER,L.H.	1	50001-
	175-33-32150	LEVER,R.H.	1	50001-
21	01010-51245	BOLT	2	50001-
22	01602-21236	WASHER	2	50001-

BRAKE BOOSTER

Item	Part No.	Part Name	Qty	Serial No.
23	175-33-00066	HOUSING ASS'Y,L.H.	1	50001-
	175-33-00077	HOUSING ASS'Y,R.H.	1	50001-
	☆	· HOUSING,BRAKE¤ L.H.	1	50001-
	☆	· HOUSING,BRAKE¤ L.H.	1	50001-
24	154-33-21320	· BUSHING,L.H.	1	50001-
	195-33-14280	· BUSHING,R.H.	1	50001-
25	154-33-21330	· BUSHING	1	50001-
26	175-33-32180	· COLLAR,R.H.	1	50001-
27	175-33-24465	GASKET	2	52126-
	□175-33-24415	GASKET	2	50001-52125
28	04020-01228	PIN,DOWEL	4	50001-
29	195-33-11220	SPACER	6	50001-
30	01010-51285	BOLT	4	50001-
31	01010-51265	BOLT	29	50032-
	01010-51265	BOLT	30	50001-50031
32	01602-21236	WASHER,SPRING	33	50032-
	01602-21236	WASHER,SPRING	34	50001-50031
33	175-33-24361	COVER	1	50001-
34	175-33-24591	GASKET	2	52126-
	□175-33-24511	GASKET	2	50001-52125
35	01010-51235	BOLT	8	50001-
36	01602-21236	WASHER,SPRING	8	50001-
37	154-33-21142	CAP	2	50001-
38	07000-02095	O-RING	2	50001-
39	170-33-13330	ROLLER	2	50001-
40	04205-01645	PIN	2	50001-
41	01641-11626	WASHER	2	50001-
42	04050-14025	PIN,COTTER	2	50001-
43	07042-10108	PLUG,(WITHOUT BRAKE ASSISTOR)	1	50001-

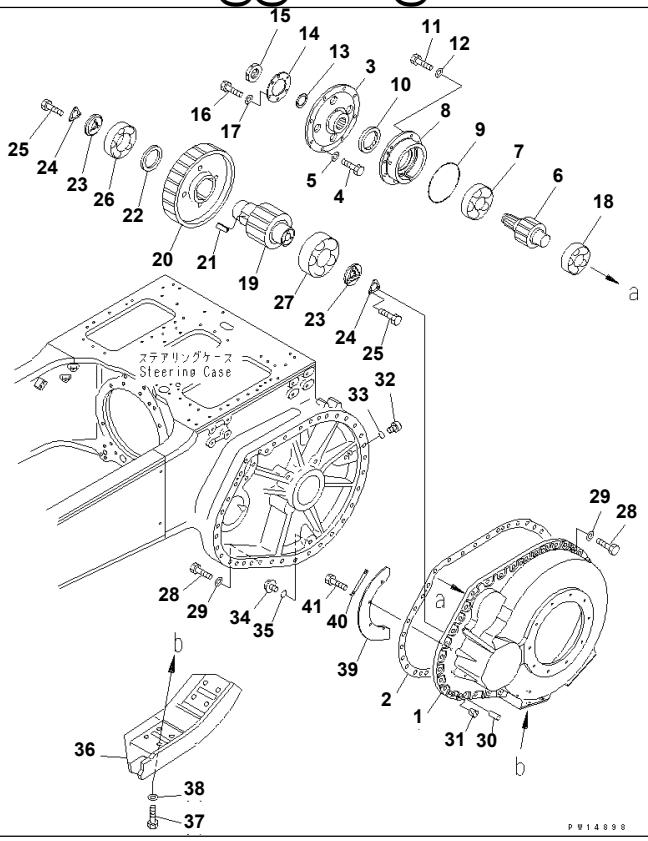

D155A-2 S/N 50001-UP (S6D155-4 Eng. Installed)

FINAL DRIVE CASE

Item	Part No.	Part Name	Qty	Serial No.
1	175-27-32730	CASE,L.H.	1	50001-
	175-27-32740	CASE,R.H.	1	50001-
2	175-27-31472	GASKET	2	52126-
	□175-27-31132	GASKET	2	50001-52125
3	175-27-31463	FLANGE	2	50001-
4	01010-51850	BOLT	16	50001-
5	01643-31845	WASHER	16	50001-
6	175-27-31495	PINION,FIRST	2	50001-
7	170-09-13210	BEARING,ROLLER	2	50001-
8	175-27-31161	CAGE,BEARING	2	50001-
9	07000-05235	O-RING	2	50001-
10	07013-10120	SEAL,OIL	2	50001-
11	01010-31640	BOLT	16	50001-
12	01643-31645	WASHER	16	50001-
13	170-27-11232	SPACER	2	50001-
14	195-27-12620	WASHER,LOCK	2	50001-
15	170-21-12141	NUT	2	50001-
16	01010-51225	BOLT	2	50001-
17	01643-31232	WASHER	2	50001-
18	170-09-13220	BEARING,ROLLER	2	50001-
19	175-27-31233	PINION,SECOND	2	50001-
20	175-27-31255	GEAR,SECOND	2	50001-
21	175-27-31260	KEY	6	50001-
22	175-27-31270	SPACER	2	50001-
23	175-27-31282	HOLDER	4	50001-
24	175-27-32470	WASHER,LOCK	4	50001-
25	01010-51230	BOLT	12	50001-

FINAL DRIVE CASE

Item	Part No.	Part Name	Qty	Serial No.
26	170-09-13230	BEARING,ROLLER	2	50001-
27	170-09-13240	BEARING,ROLLER	2	50001-
28	01010-52055	BOLT	72	50001-
29	01643-32060	WASHER	72	50001-
30	04020-01842	PIN,DOWEL	4	50001-
31	07049-02025	PLUG	4	50001-
32	07040-13618	PLUG,OIL LEVEL	2	50001-
33	07002-03634	O-RING	2	50001-
	07002-33634	O-RING,(FOR SLAG HANDLING)	2	50001-
34	07044-13620	PLUG,DRAIN	2	50001-
35	07002-03634	O-RING	2	50001-
	07002-33634	O-RING,(FOR SLAG HANDLING)	2	50001-
36	175-27-32611	GUARD,L.H.	1	50001-
	175-27-32641	GUARD,R.H.	1	50001-
37	01010-52455	BOLT	16	50001-
38	01643-32460	WASHER	16	50001-
39	175-27-31530	PLATE	2	50001-
40	175-27-31540	LOCK	4	50001-
41	01010-31230	BOLT	8	50001-

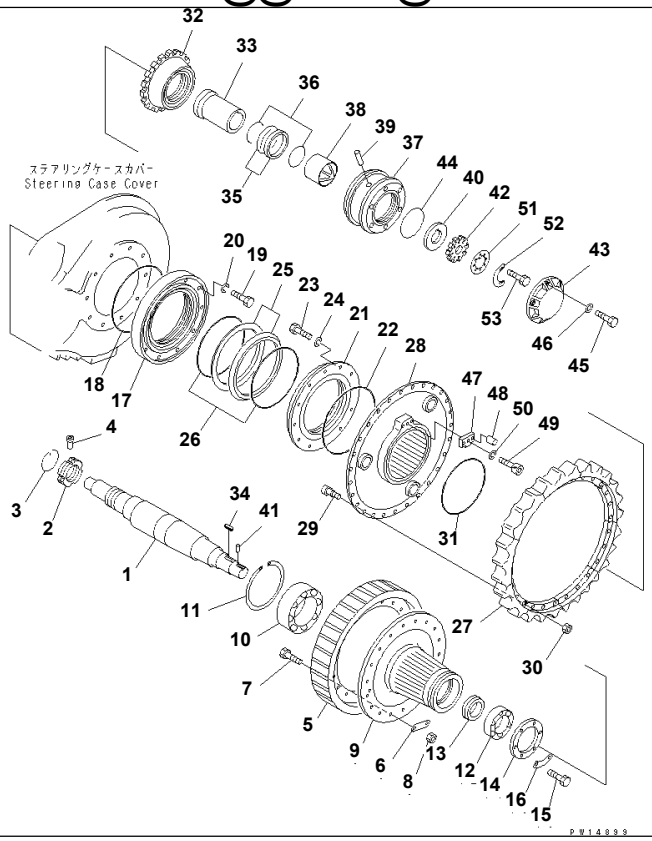

Ref. 2703 **Page 060350**

D155A-2 S/N 50001-UP (S6D155-4 Eng. Installed)

FINAL DRIVE GEAR¤ SHAFT AND SPROCKET

Item	Part No.	Part Name	Qty	Serial No.
1	175-27-31343	SHAFT,SPROCKET	2	50001-
2	170-27-12472	NUT	2	50001-
3	170-27-12480	RING,SNAP	2	50001-
4	09243-01230	PIN	2	50001-
5	175-27-31362	GEAR	2	50001-
6	175-27-31370	PLATE,LOCK	18	50001-
7	175-27-12181	BOLT,REAMER	36	50001-
8	01582-02419	NUT	36	50001-
9	175-27-31384	HUB,SPROCKET	2	50001-
10	06030-23134	BEARING,ROLLER	2	50001-
11	04071-00280	RING,SNAP	2	50001-
12	170-09-13250	BEARING,ROLLER	2	50001-
13	175-27-22131	SPACER	2	50001-
14	175-27-22140	RETAINER	2	50001-
15	01010-31440	BOLT	12	50001-
16	170-27-12210	WASHER,LOCK	6	50001-
17	154-27-12152	COVER	2	50001-
18	07000-05410	O-RING	2	50001-
	07000-35410	O-RING,(FOR SLAG HANDLING)	2	50001-
19	01010-31230	BOLT	20	50001-
20	01602-01236	WASHER,SPRING	20	50001-
21	154-27-12162	COVER	2	50001-
22	07000-05410	O-RING	2	50001-
	07000-35410	O-RING,(FOR SLAG HANDLING)	2	50001-
23	01010-31230	BOLT	20	50001-
24	01602-01236	WASHER,SPRING	20	50001-
25	423-33-00020	FLOATING SEAL ASS'Y	2	50412-

D155A-2 S/N 50001-UP (S6D155-4 Eng. Installed)

FINAL DRIVE GEAR¤ SHAFT AND SPROCKET

Item	Part No.	Part Name	Qty	Serial No.
25	□170-27-00023	FLOATING SEAL ASS'Y	2	50001-50411
	170-27-00053	FLOATING SEAL ASS'Y,(FOR SLAG HANDLING)	2	50001-
	☆	· RING,SEAL	2	50001-
26	☆	· O-RING	2	50412-
	☆	· O-RING	2	50001-50411
	☆	· O-RING,(FOR SLAG HANDLING)	2	50001-
27	17A-27-11630	TOOTH	18	52345-
	□175-27-22325	TOOTH,SPROCKET	18	50001-52344
28	175-27-31394	BOSS,SPROCKET	2	50001-
29	178-27-11150	BOLT	54	50001-
30	01803-02430	NUT	54	50001-
31	07000-15315	O-RING	2	50001-
	07000-35315	O-RING,(FOR SLAG HANDLING)	2	50001-
32	175-27-22150	NUT,SPROCKET	2	50001-
33	175-27-31411	SPACER	2	50001-
34	04000-01580	KEY	2	50001-
35	175-27-00121	FLOATING SEAL ASS'Y	2	50001-
	175-27-00093	FLOATING SEAL ASS'Y,(FOR SLAG HANDLING)	2	50001-
	☆	· RING,SEAL	2	50001-
36	☆	· O-RING	2	50001-
	☆	· O-RING,(FOR SLAG HANDLING)	2	50001-
37	175-27-00082	SUPPORT ASS'Y	2	50001-
	☆	· SUPPORT,SPROCKET	1	50001-
38	175-27-31441	· BUSHING	1	50001-
39	04020-01638	PIN,DOWEL	2	50001-
40	175-27-22255	WASHER	2	50001-
41	175-27-32510	PIN,DOWEL	2	50001-
42	175-27-22272	NUT	2	50001-
43	175-27-22242	COVER	2	50001-
44	07000-05185	O-RING	2	50001-
	07000-35185	O-RING,(FOR SLAG HANDLING)	2	50001-
45	01010-51645	BOLT	12	50001-
46	01643-31645	WASHER	12	50001-
47	175-27-31480	STOPPER,SPROCKET	2	50001-
48	170-27-12250	PIN,DOWEL	4	50001-
49	01252-41635	BOLT	2	50001-
50	01602-01648	WASHER,SPRING	2	50001-
51	175-27-31550	PLATE	2	50001-
52	175-27-31560	LOCK	2	50001-
53	01010-51225	BOLT	4	50001-

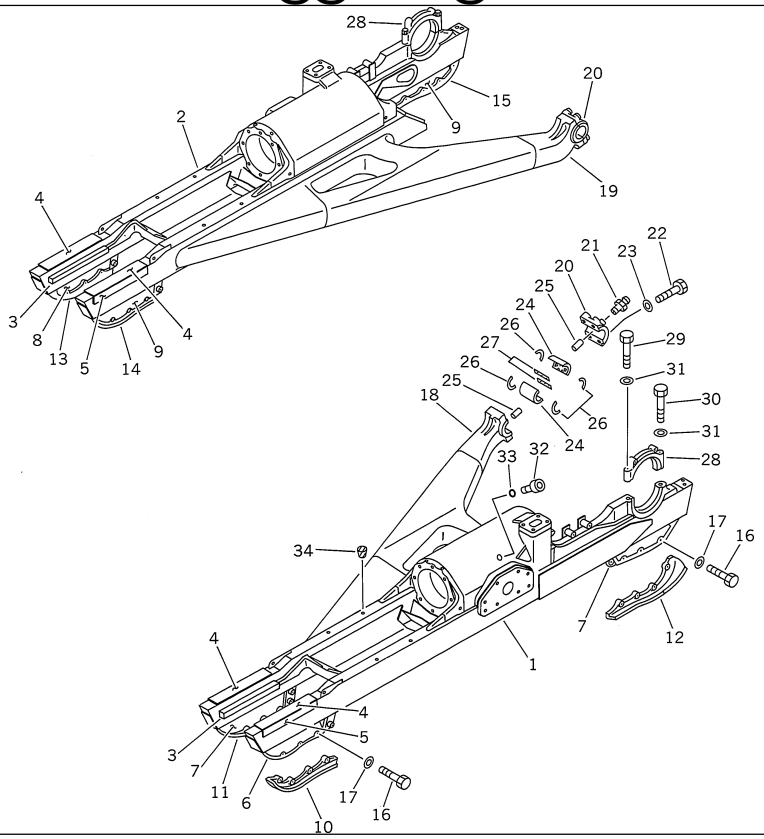

D155A-2 S/N 50001-UP (S6D155-4 Eng. Installed)
TRACK FRAME (FOR HARD ROCK) (FOR SAUDI ARABIA)

Item	Part No.	Part Name	Qty	Serial No.
1	175-30-55110	TRACK FRAME ASS'Y,TRACK¤ L.H.	1	50001-
2	175-30-55120	TRACK FRAME ASS'Y,TRACK¤ R.H.	1	50001-
3	175-30-11272	· PLATE (WELDED)	2	50001-
4	175-30-21333	· PLATE (WELDED)	2	50001-
5	175-30-21342	· PLATE (WELDED)	2	50001-
6	175-30-21353	· GUARD (WELDED)	1	50001-
7	175-30-21363	· GUARD (WELDED)	2	50001-
8	175-30-21363	· GUARD (WELDED)	1	50001-
9	175-30-21353	· GUARD (WELDED)	2	50001-
10	178-30-12161	GUARD	1	50001-
11	178-30-12171	GUARD	1	50001-
12	178-30-12140	GUARD	1	50001-
13	178-30-12171	GUARD	1	50001-
14	178-30-12161	GUARD	1	50001-
15	178-30-12150	PLATE	1	50001-
16	01010-52045	BOLT	24	50001-
17	01643-32060	WASHER	24	50001-
18	175-30-00431	BEARING ASS'Y,L.H.	1	50001-
	175-30-00441	BEARING ASS'Y,R.H.	1	50001-
	☆	· HEAD,BRACE¤ L.H. (WELDED)	1	50001-
19	☆	· HEAD,BRACE¤ R.H. (WELDED)	1	50001-
20	☆	· CAP	1	50001-
21	07020-00000	· FITTING,GREASE	1	50001-
22	01011-52400	· BOLT	4	50001-
23	01643-32460	· WASHER	4	50001-
24	154-30-11810	BUSHING	4	50001-
25	04020-01024	PIN,DOWEL	4	50001-

TRACK FRAME (FOR HARD ROCK) (FOR SAUDI ARABIA)

Item	Part No.	Part Name	Qty	Serial No.
26	154-30-11821	PACKING	8	50001-
27	154-30-11831	PACKING	4	50001-
28	175-30-31530	CAP,SUPPORT¤ L.H.	1	50001-
	175-30-31540	CAP,SUPPORT¤ R.H.	1	50001-
29	01011-83040	BOLT	2	50001-
30	01011-83090	BOLT	2	50001-
31	01643-33080	WASHER	4	50001-
32	07040-13016	PLUG	2	50001-
33	07002-03034	O-RING	2	50001-
34	07049-02430	PLUG	16	50001-

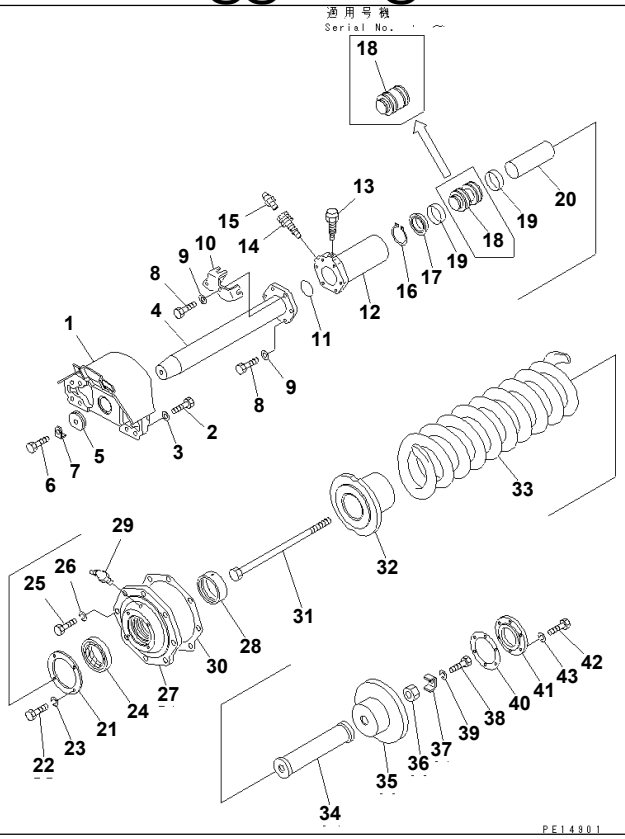

Ref. 3011 **Page 090030**

D155A-2 S/N 50001-UP (S6D155-4 Eng. Installed)
RECOIL SPRING

Item	Part No.	Part Name	Qty	Serial No.
1	176-30-44110	YOKE,IDLER	2	50001-
2	01010-52095	BOLT	16	50001-
3	01643-32060	WASHER	16	50001-
4	175-30-34210	SHAFT	2	50001-
5	195-30-14151	WASHER	2	50001-
6	01010-52460	BOLT	2	50001-
7	195-30-14160	PLATE,LOCK	2	50001-
8	01010-51650	BOLT	12	50001-
9	01643-31645	WASHER	12	50001-
10	175-30-34161	STOPPER,STOPPER	2	50001-
11	07000-15090	O-RING	2	50001-
	07000-55090	O-RING,(FOR SLAG HANDLING)	2	50001-
12	175-30-24223	CYLINDER	2	50001-
13	198-30-14420	PLUG	2	50001-
14	07959-30000	VALVE	2	50001-
15	07020-00000	FITTING,GREASE	2	50001-
16	04064-07525	RING,SNAP	2	50001-
17	175-30-24242	PACKING	2	50001-
18	170-30-14212	PISTON	2	.-
	170-30-14211	PISTON	2	50001-.
19	170-30-14230	RING,PISTON	4	50001-
20	175-30-44231	PIPE	2	50001-
21	175-30-24270	PLATE	2	50001-
22	01010-51225	BOLT	8	50001-
23	01602-21236	WASHER,SPRING	8	50001-
24	07019-00130	SEAL,DUST	2	50001-
25	01010-52460	BOLT	16	50001-

RECOIL SPRING

Item	Part No.	Part Name	Qty	Serial No.
26	01602-22472	WASHER,SPRING	16	50001-
27	175-30-00563	COVER ASS'Y	2	50001-
	☆	· COVER	1	50001-
28	170-30-14221	· BUSHING	1	50001-
29	07020-00675	· FITTING,GREASE	1	50001-
30	175-30-34261	GASKET	2	52126-
	□175-30-34260	GASKET	2	50001-52125
31	175-30-44181	BOLT	2	50001-
32	175-30-44161	PILOT	2	50001-
33	175-30-44250	SPRING,RECOIL	2	50001-
34	175-30-44211	SLEEVE	2	50001-
35	175-30-44171	PILOT	2	50001-
36	01580-03931	NUT	2	50001-
37	175-30-34290	PLATE,LOCK	2	50001-
38	01010-51020	BOLT	2	50001-
39	01643-31032	WASHER,SPRING	2	53349-
	01602-21030	WASHER,SPRING	2	50001-53348
40	170-30-14441	GASKET	2	52126-
	□170-30-14341	GASKET	2	50001-52125
41	175-30-34331	COVER	2	50001-
42	01010-51235	BOLT	12	50001-
43	01602-21236	WASHER,SPRING	12	50001-

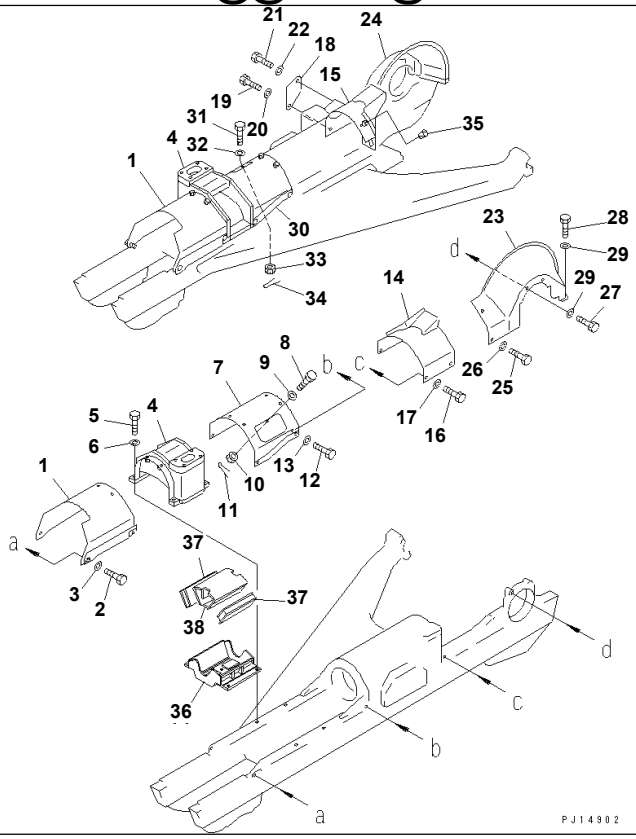

D155A-2 S/N 50001-UP (S6D155-4 Eng. Installed)
TRACK FRAME COVER

Item	Part No.	Part Name	Qty	Serial No.
1	175-30-52120	COVER	2	50001-
2	01010-51635	BOLT	12	50001-
3	01643-31645	WASHER	12	50001-
4	175-30-51140	SUPPORT	2	50001-
5	01010-52080	BOLT	8	50001-
6	01643-32060	WASHER	8	50001-
G-1	(⊙175-30-X1110)	COVER GROUP	1	50001-
		==========		
7	175-30-52110	COVER,L.H.	1	50001-
8	195-09-18141	BOLT	1	50901-
	□195-09-18140	BOLT	1	50001-50900
9	01642-21216	WASHER	1	50001-
10	01590-11215	NUT	1	50001-
11	04050-13025	PIN,COTTER	1	50001-
		==========		
12	01010-51635	BOLT	16	50001-
13	01643-31645	WASHER	16	50001-
14	175-30-52130	COVER,L.H.	1	50001-
15	175-30-52140	COVER,R.H.	1	50001-
16	01010-51640	BOLT	6	50001-
17	01643-31645	WASHER	6	50001-
18	175-30-52220	PLATE	1	50001-
19	01010-51640	BOLT	1	50001-
20	01643-31645	WASHER	1	50001-
21	01010-51435	BOLT	1	50001-
22	01643-31445	WASHER	1	50001-
23	175-30-52150	COVER,L.H.	1	50001-

TRACK FRAME COVER

Item	Part No.	Part Name	Qty	Serial No.
24	175-30-52160	COVER,R.H.	1	50001-
25	01010-51640	BOLT	4	50001-
26	01643-31645	WASHER	4	50001-
27	01010-51630	BOLT	4	50001-
28	01010-51645	BOLT	4	50001-
29	01643-31645	WASHER	8	50001-
G-2	(⊙175-30-X1120)	COVER GROUP	1	50001-
		==========		
30	175-30-52210	COVER,R.H.	1	50001-
31	195-09-18141	BOLT	1	50901-
	□195-09-18140	BOLT	1	50001-50900
32	01642-21216	WASHER	1	50001-
33	01590-11215	NUT	1	50001-
34	04050-13025	PIN,COTTER	1	50001-
		==========		
35	07049-01418	PLUG	1	50001-
36	175-50-32111	SUPPORT	2	50001-
37	170-50-12110	PAD	4	50001-
38	175-50-22131	SEAT	2	50001-

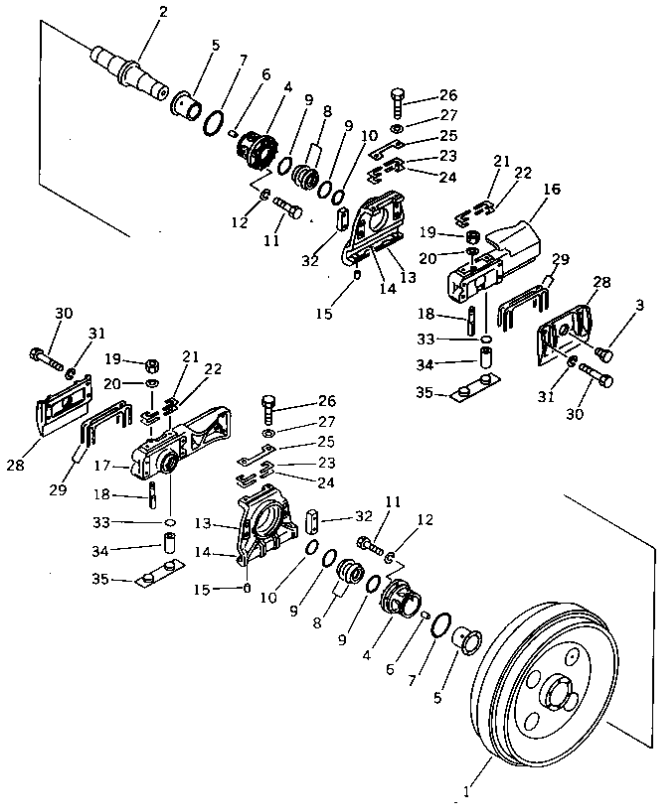

D155A-2 S/N 50001-UP (S6D155-4 Eng. Installed)

IDLER

Item	Part No.	Part Name	Qty	Serial No.
1	175-30-00575	FRONT IDLER ASS'Y	2	50001-
	175-30-00525	FRONT IDLER ASS'Y,(FOR SLAG HANDLING)	2	50001-
	175-30-23114	· IDLER,FRONT	1	50001-
2	175-30-23121	· SHAFT	1	50001-
3	07052-31624	· PLUG	1	50001-
	175-30-36108	· BUSHING ASS'Y	2	50001-
4	☆	· · BUSHING,OUTER	1	50001-
5	☆	· · BUSHING,INNER	1	50001-
6	170-30-91130	· · PIN,DOWEL	2	50001-
7	07000-02130	· O-RING	2	50001-
	07000-32130	· O-RING,(FOR SLAG HANDLING)	2	50001-
8	175-30-00702	· FLOATING SEAL ASS'Y	2	50001-
	170-30-00114	· FLOATING SEAL ASS'Y,(FOR SLAG HANDLING)	2	50001-
	☆	· · SEAL,SEAL	2	50001-
9	☆	· · O-RING	2	50001-
	☆	· · O-RING,(FOR SLAG HANDLING)	2	50001-
10	07000-03068	· O-RING	2	50001-
	07000-33068	· O-RING,(FOR SLAG HANDLING)	2	50001-
11	01010-31235	· BOLT	12	50001-
12	01602-01236	· WASHER,SPRING	12	50001-
13	175-30-33273	· GUIDE ASS'Y	2	50001-
	175-30-33283	· · GUIDE	1	50001-
14	170-30-13343	· · PLATE (WELDED)	1	50001-
15	04022-12025	· · PIN,DOWEL	2	50001-
16	176-30-43111	· SUPPORT,L.H.	1	50001-
17	176-30-43121	· SUPPORT,R.H.	1	50001-
18	175-30-23172	· BOLT	2	50001-

IDLER

Item	Part No.	Part Name	Qty	Serial No.
19	175-30-23180	· NUT	2	50001-
20	01643-31645	· WASHER	2	50001-
21	175-30-05050	· SHIM KIT,(A)	2	50001-
	☆	· · SHIM¤ 1.0MM	4	50001-
22	☆	· · SHIM¤ 2.0MM	2	50001-
23	175-30-05060	· SHIM KIT,(B)	2	50001-
	☆	· · SHIM¤ 1.0MM	8	50001-
24	☆	· · SHIM¤ 2.0MM	4	50001-
25	175-30-33460	· PLATE	2	50001-
26	175-30-33492	· BOLT	4	50001-
27	01643-32060	· WASHER	4	50001-
28	175-30-33215	PLATE	2	50001-
29	175-30-05070	SHIM KIT	2	50001-
	☆	· SHIM¤ 1.0MM	6	50001-
	☆	· SHIM¤ 0.5MM	1	50001-
30	01011-32260	BOLT	8	50001-
31	01602-02268	WASHER,SPRING	8	50001-
32	175-30-33430	SEAT	4	50001-
33	195-30-17960	PLATE,SPRING	8	50001-
34	155-30-13230	SPRING	8	50001-
35	175-30-24131	SEAT,SPRING	4	50001-

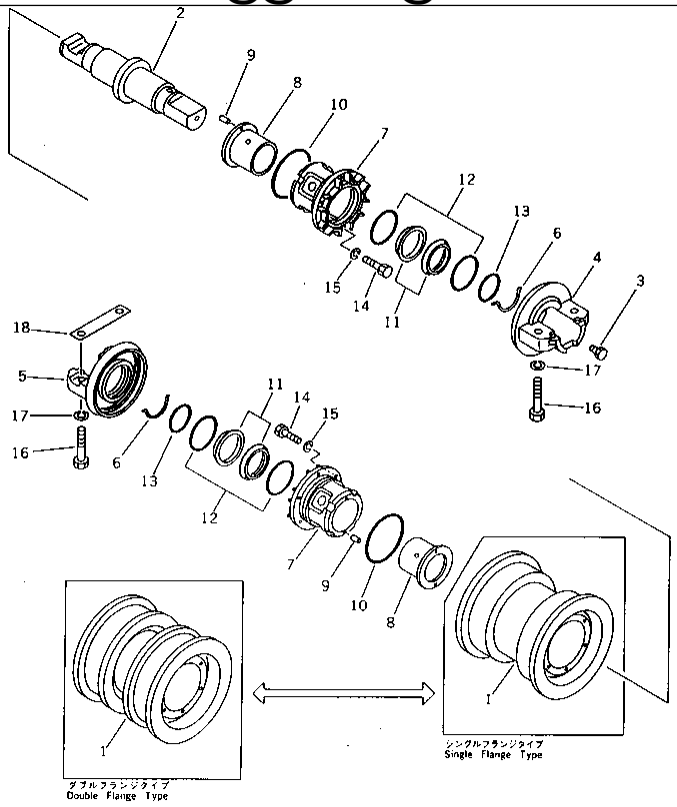

Ref. 3201 **Page 090070**

D155A-2 S/N 50001-UP (S6D155-4 Eng. Installed)

TRACK ROLLER

Item	Part No.	Part Name	Qty	Serial No.
1	175-30-00760	TRACK ROLLER ASS'Y,SINGLE FLANGE	4	50123-
	□175-30-00489	TRACK ROLLER ASS'Y,SINGLE FLANGE	4	50001-50122
	175-30-00770	TRACK ROLLER ASS'Y,DOUBLE FLANGE	10	50123-
	□175-30-00499	TRACK ROLLER ASS'Y,DOUBLE FLANGE	10	50001-50122
	178-30-16114	· ROLLER,SINGLE FLANGE	1	50001-
	178-30-16124	· ROLLER,DOUBLE FLANGE	1	50001-
2	175-30-36130	· SHAFT	1	50001-
3	07052-31624	· PLUG	1	50001-
4	175-30-36210	· COLLAR	1	50001-
5	175-30-36220	· COLLAR	1	50001-
6	175-30-26230	· RING	2	50001-
7	175-30-36108	· BUSHING ASS'Y	2	50001-
	☆	· · BUSHING	1	50001-
8	☆	· · BUSHING	1	50001-
9	170-30-91130	· · PIN,DOWEL	2	50001-
10	07000-02130	· O-RING	2	50001-
11	175-30-00702	· FLOATING SEAL ASS'Y	2	50001-
	☆	· · SEAL,SEAL	2	50001-
12	☆	· · O-RING	2	50001-
13	07000-03068	· O-RING	2	50001-
14	175-30-36340	· BOLT	12	50123-
	□01010-51235	· BOLT	12	50001-50122
15	01602-21236	· WASHER,SPRING	12	50001-
16	01011-62415	BOLT	56	50001-
17	01602-22472	WASHER,SPRING	56	50001-
18	175-30-26241	PLATE,LOCK	14	50001-

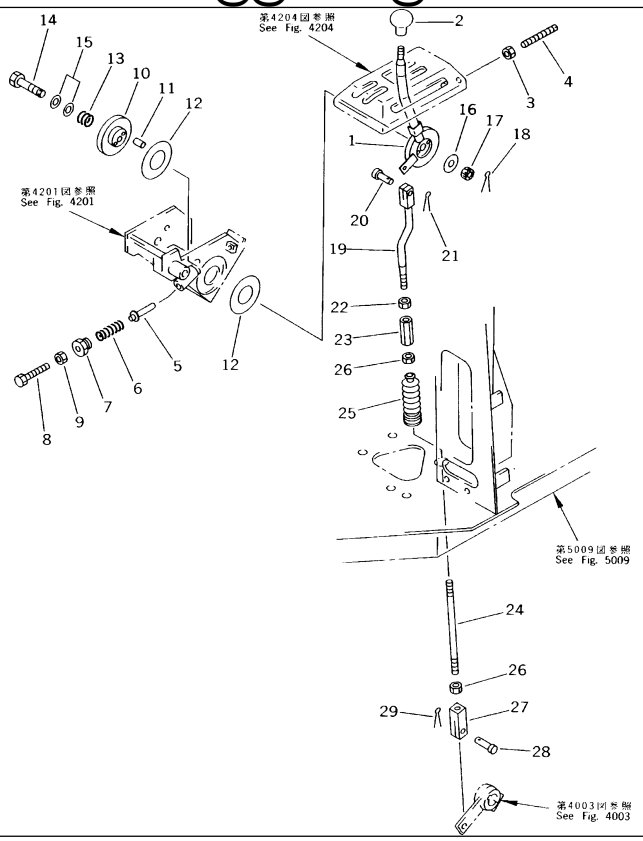

Ref. 4001 **Page 120010**

D155A-2 S/N 50001-UP (S6D155-4 Eng. Installed)
FUEL CONTROL LEVER

Item	Part No.	Part Name	Qty	Serial No.
1	154-43-44110	LEVER	1	50001-
2	09304-01250	KNOB	1	50001-
3	195-43-44220	NUT	1	50001-
4	154-43-44270	SCREW	1	50001-
5	154-43-44261	PIN	1	50001-
6	170-54-11230	SPRING	1	50001-
7	154-43-44250	CAP	1	50001-
8	01016-50860	BOLT	1	50001-
9	01580-10806	NUT	1	50001-
10	154-43-14710	DISC	1	50001-
11	04020-00616	PIN,DOWEL	2	50001-
12	154-43-44280	FACING	2	52126-
	□101-43-11281	FACING	2	50001-52125
13	154-43-14690	SPRING	1	50001-
14	15A-43-11190	BOLT	1	50001-
15	01640-21223	WASHER	2	50001-
16	101-43-11380	COVER	1	50001-
17	01593-11210	NUT	1	50001-
18	04050-13030	PIN,COTTER	1	50001-
19	154-43-44120	ROD	1	50001-
20	04205-10822	PIN	1	50001-
21	04050-12015	PIN,COTTER	1	50001-
22	01508-21006	NUT,L.H. THREAD	1	50001-
23	178-43-12180	BUCKLE,TURN	1	50001-
24	04245-41025	ROD	1	50001-
25	195-43-42280	BELLOWS	1	50001-
26	01582-11008	NUT	2	50001-

FUEL CONTROL LEVER

Item	Part No.	Part Name	Qty	Serial No.
27	198-43-18170	YOKE	1	50001-
28	04205-10822	PIN	1	50001-
29	04050-12015	PIN,COTTER	1	50001-

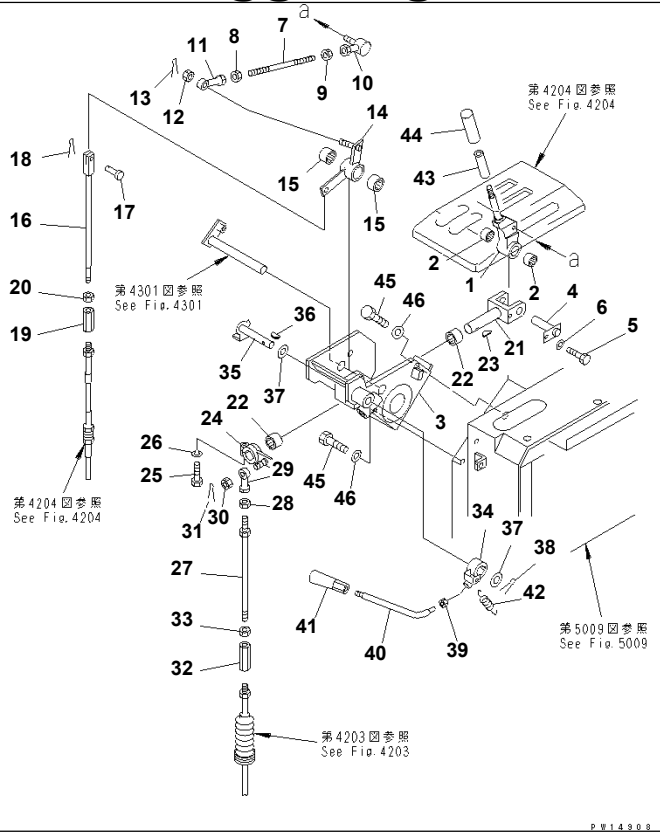

D155A-2 S/N 50001-UP (S6D155-4 Eng. Installed)

TRANSMISSION CONTROL LEVER

Item	Part No.	Part Name	Qty	Serial No.
1	195-43-43150	LEVER	1	50001-
2	195-61-34120	BEARING	2	50001-
3	154-43-43130	BRACKET	1	50001-
4	195-43-43170	PIN	1	50001-
5	01010-50616	BOLT	1	50001-
6	01643-30623	WASHER	1	50001-
7	113-43-11530	ROD	1	50001-
8	01580-10806	NUT	1	50001-
9	01508-40805	NUT	1	50001-
10	04256-50816	JOINT,BALL	1	50001-
11	04250-80847	END,ROD	1	50001-
12	01590-10809	NUT	1	50001-
13	04050-12015	PIN,COTTER	1	50001-
14	154-43-43150	LEVER	1	50001-
15	195-43-43190	BEARING,NEEDLE	2	50001-
16	195-43-41580	ROD	1	50001-
17	04205-10822	PIN	1	50001-
18	04050-12015	PIN,COTTER	1	50001-
19	144-43-51130	JOINT	1	50001-
20	01508-40805	NUT	1	50001-
21	154-43-43210	YOKE	1	50001-
22	195-43-43190	BEARING,NEEDLE	2	50001-
23	04010-00519	KEY	1	50001-
24	154-43-43220	LEVER	1	50001-
25	01010-50830	BOLT	1	50001-
26	01602-20825	WASHER,SPRING	1	50001-
27	04248-31028	ROD	1	50001-

TRANSMISSION CONTROL LEVER

Item	Part No.	Part Name	Qty	Serial No.
28	01582-11008	NUT	1	50001-
29	04250-81056	END,ROD	1	50001-
30	01593-11008	NUT	1	50001-
31	04050-12018	PIN,COTTER	1	50001-
32	178-43-12180	BUCKLE,TURN	1	50001-
33	01508-41006	NUT	1	50001-
34	195-43-43241	LEVER	1	50001-
35	154-43-43260	PIN	1	50001-
36	04010-00519	KEY	1	50001-
37	01640-21626	WASHER	2	50001-
38	04050-14025	PIN,COTTER	1	50001-
39	195-43-43370	NUT	1	50001-
40	195-43-43360	LEVER	1	50001-
41	09305-00800	KNOB	1	50001-
42	195-43-43260	SPRING	1	50001-
43	09361-01460	BUSHING	1	50001-
44	09304-01240	KNOB	1	50001-
45	01010-51225	BOLT	4	50001-
46	01643-31232	WASHER	4	50001-

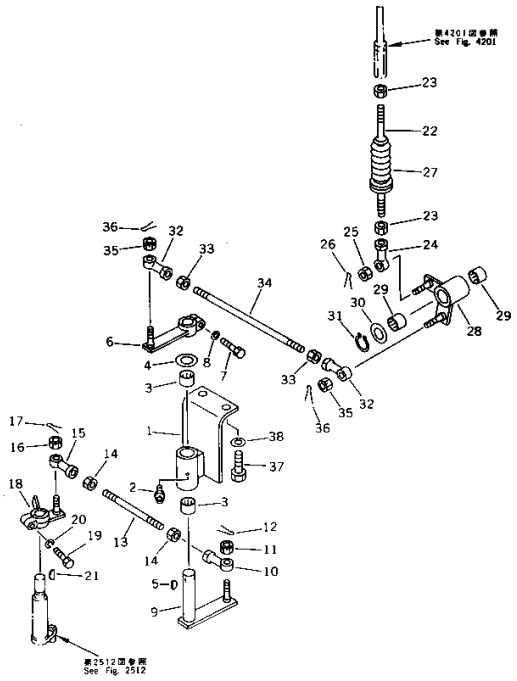

D155A-2 S/N 50001-UP (S6D155-4 Eng. Installed)

TRANSMISSION CONTROL LINKAGE (1/3)

Item	Part No.	Part Name	Qty	Serial No.
1	175-43-54450	BRACKET	1	50001-
2	07020-00675	FITTING,GREASE	1	50001-
3	195-61-41270	BEARING,NEEDLE	2	50001-
4	01640-22032	WASHER	1	50001-
5	04010-00519	KEY	1	50001-
6	175-43-31631	LEVER	1	50001-
7	01010-50830	BOLT	1	50001-
8	01602-20825	WASHER,SPRING	1	50001-
9	175-43-54340	LEVER	1	50001-
10	04250-81056	END,ROD	1	50001-
11	01593-11008	NUT	1	50001-
12	04050-12018	PIN,COTTER	1	50001-
13	04245-41013	ROD	1	50001-
14	01582-11008	NUT	2	50001-
15	04250-81056	END,ROD	1	50001-
16	01593-11008	NUT	1	50001-
17	04050-12018	PIN,COTTER	1	50001-
18	175-43-62120	LEVER	1	51888-
	175-43-41241	LEVER	1	50001-51887
19	01010-50830	BOLT	1	50001-
20	01602-20825	WASHER,SPRING	1	50001-
21	04010-00516	KEY	1	50001-
22	04245-41023	ROD	1	50001-
23	01582-11008	NUT	2	50001-
24	04250-81056	END,ROD	1	50001-
25	01593-11008	NUT	1	50001-
26	04050-12018	PIN,COTTER	1	50001-

TRANSMISSION CONTROL LINKAGE (1/3)

Item	Part No.	Part Name	Qty	Serial No.
27	195-43-42280	BELLOWS	1	50001-
28	175-43-54460	LEVER	1	50001-
29	195-43-43190	BEARING,NEEDLE	2	50001-
30	01643-32060	WASHER	1	50001-
31	04064-02012	RING,SNAP	1	50001-
32	04250-81056	END,ROD	2	50001-
33	01582-11008	NUT	2	50001-
34	04245-41026	ROD	1	50001-
35	01593-11008	NUT	2	50001-
36	04050-12018	PIN,COTTER	2	50001-
37	01010-51225	BOLT	2	50001-
38	01643-31232	WASHER	2	50001-

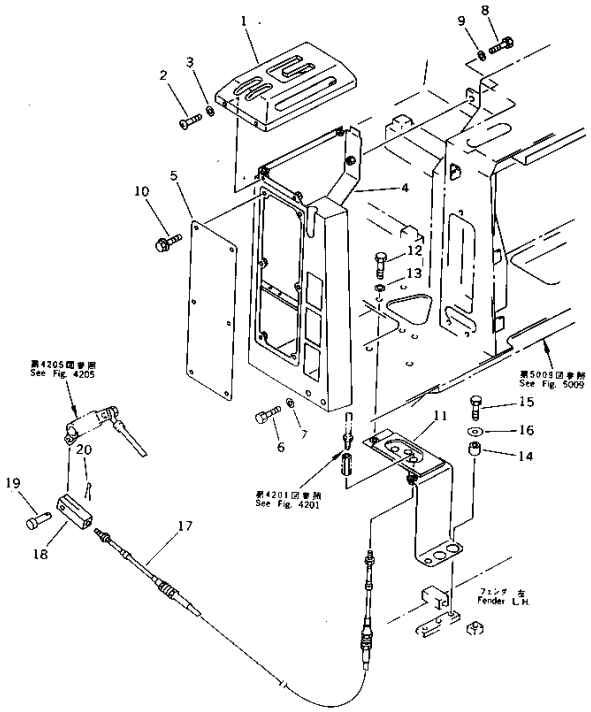

Ref. 4204 **Page 120060**

D155A-2 S/N 50001-UP (S6D155-4 Eng. Installed)
TRANSMISSION CONTROL LINKAGE (2/3)

Item	Part No.	Part Name	Qty	Serial No.
1	154-43-43110	GUIDE	1	50001-
2	01220-40816	SCREW	4	50001-
3	01643-30823	WASHER	4	50001-
4	154-43-43120	COVER	1	50001-
5	154-43-43270	COVER	1	50001-
6	01010-51290	BOLT	2	50001-
7	01643-31232	WASHER	2	50001-
8	01010-51225	BOLT	3	50001-
9	01643-31232	WASHER	3	50001-
10	01439-00814	BOLT	6	52345-
	□195-54-26220	BOLT	6	50001-52344
11	175-43-54351	BRACKET	1	50001-
12	01010-51230	BOLT	3	50001-
13	01643-31232	WASHER	3	50001-
14	175-61-14490	SPACER	2	50001-
15	01010-51240	BOLT	2	50001-
16	175-54-34170	WASHER	2	50001-
17	154-43-43160	CABLE	1	50001-
18	04211-20844	YOKE	1	50001-
19	04205-10822	PIN	1	50001-
20	04050-12015	PIN,COTTER	1	50001-

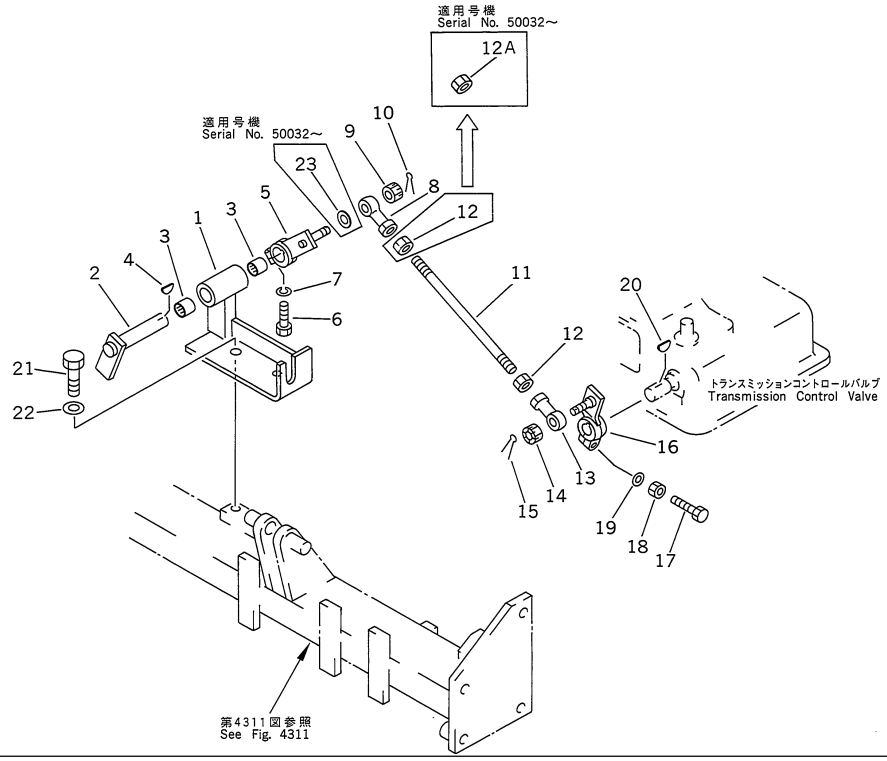

Ref. 4205 **Page 120070**

D155A-2 S/N 50001-UP (S6D155-4 Eng. Installed)
TRANSMISSION CONTROL LINKAGE (3/3)

Item	Part No.	Part Name	Qty	Serial No.
1	175-43-54310	BRACKET	1	50001-
2	175-43-54320	LEVER	1	50001-
3	195-43-43190	BEARING,NEEDLE	2	50001-
4	04010-00519	KEY	1	50001-
5	175-43-54330	LEVER	1	50001-
6	01010-50830	BOLT	1	50001-
7	01602-20825	WASHER,SPRING	1	50001-
8	04250-91056	END,ROD	1	50032-
	04250-81056	END,ROD	1	50001-50031
9	01593-11008	NUT	1	50001-
10	04050-12018	PIN,COTTER	1	50001-
11	04248-31013	ROD	1	50032-
	■04245-41013	ROD (04248-31013,01508-41006¤ 04250-91056,04254-11032)	1	50001-50031
12	01582-11008	NUT	1	50032-
	01582-11008	NUT	2	50001-50031
12A	01508-41006	NUT	1	50032-
13	04250-81056	END,ROD	1	50001-
14	01593-11008	NUT	1	50001-
15	04050-12018	PIN,COTTER	1	50001-
16	175-43-51350	LEVER	1	50001-
17	01016-50850	BOLT	1	50001-
18	01580-10806	NUT	1	50001-
19	01602-20825	WASHER,SPRING	1	50001-
20	04010-00516	KEY	1	50001-
21	01010-51225	BOLT	2	50001-

TRANSMISSION CONTROL LINKAGE (3/3)

Item	Part No.	Part Name	Qty	Serial No.
22	01643-31232	WASHER	2	50001-
23	04254-11032	SPACER	1	50032-

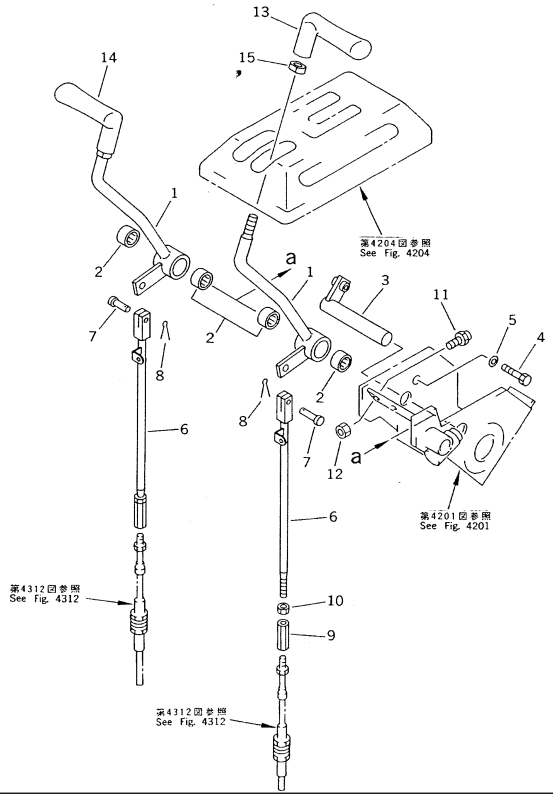

Ref. 4301 **Page 120080**

D155A-2 S/N 50001-UP (S6D155-4 Eng. Installed)
STEERING CONTROL LEVER

Item	Part No.	Part Name	Qty	Serial No.
1	154-43-42110	LEVER,L.H.	1	50265-
	154-43-42170	LEVER,R.H.	1	50265-
	154-43-42110	LEVER	2	50001-50264
2	195-43-43190	BEARING,NEEDLE	4	50001-
3	154-43-42120	SHAFT	1	50001-
4	01010-50816	BOLT	1	50001-
5	01643-30823	WASHER	1	50001-
6	154-43-42160	ROD	2	50001-
7	04205-10822	PIN	2	50001-
8	04050-12015	PIN,COTTER	2	50001-
9	144-43-51130	JOINT	2	50001-
10	01508-20805	NUT	2	50001-
11	195-43-41360	BAMPER	2	50001-
12	01583-11006	NUT	2	50001-
13	195-43-41560	KNOB,L.H.	1	50001-
14	195-43-41570	KNOB,R.H.	1	50001-
15	19M-43-11170	NUT	2	50001-

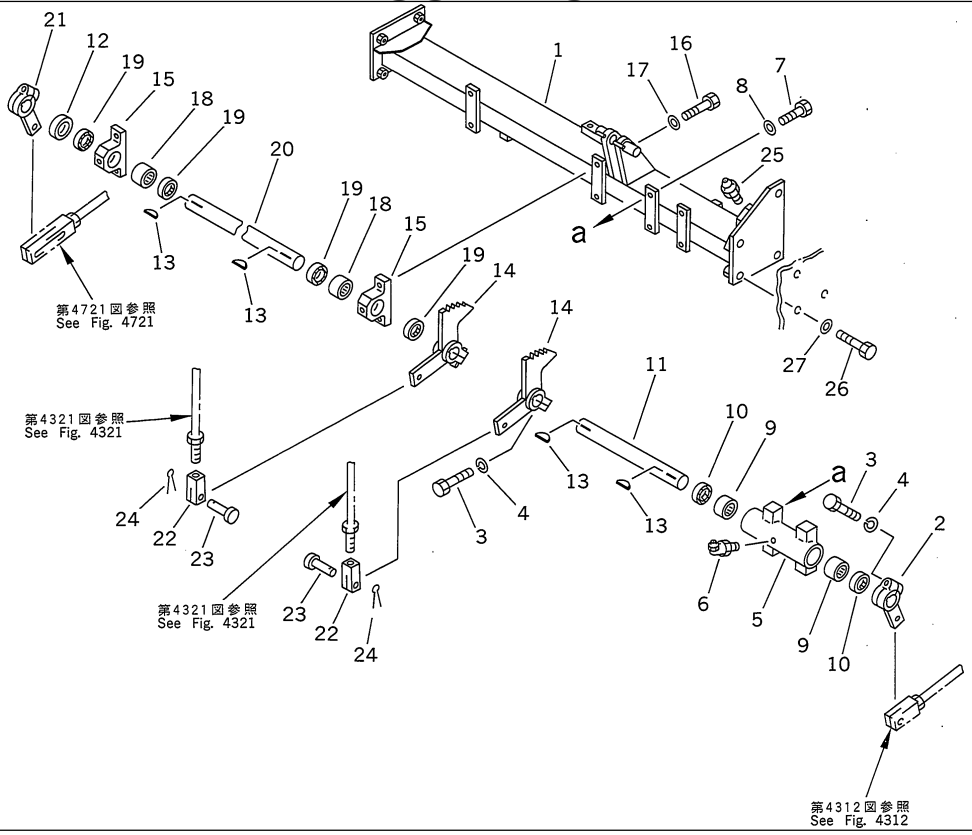

Ref. 4311 **Page 120090**

D155A-2 S/N 50001-UP (S6D155-4 Eng. Installed)

STEERING AND BRAKE LINKAGE (1/2)

Item	Part No.	Part Name	Qty	Serial No.
1	175-43-51310	SUPPORT	1	50001-
2	175-43-52510	LEVER	1	50001-
3	01010-51245	BOLT	4	50001-
4	01602-21236	WASHER,SPRING	4	50001-
5	175-43-52460	BRACKET	1	50001-
6	07020-00675	FITTING,GREASE	1	50001-
7	01010-51235	BOLT	4	50001-
8	01643-31232	WASHER	4	50001-
9	06120-03520	BEARING,NEEDLE	2	50001-
10	06122-03504	SEAL,BEARING	2	50001-
11	175-43-52450	SHAFT	1	50001-
12	195-43-24430	SPACER	1	50001-
13	04010-01032	KEY	4	50001-
14	175-43-52440	LEVER	2	50001-
15	195-43-24391	BRACKET	2	50001-
16	01010-51235	BOLT	4	50001-
17	01643-31232	WASHER	4	50001-
18	06120-03520	BEARING,NEEDLE	2	50001-
19	06122-03504	SEAL,BEARING	4	50001-
20	175-43-52470	SHAFT	1	50001-
21	175-43-52510	LEVER	1	50001-
22	04220-21456	YOKE	2	50001-
23	04205-11438	PIN	2	50001-
24	04050-14028	PIN,COTTER	2	50001-
25	07020-00000	FITTING,GREASE	2	50001-
26	01010-51640	BOLT	8	50001-
27	01643-31645	WASHER	8	50001-

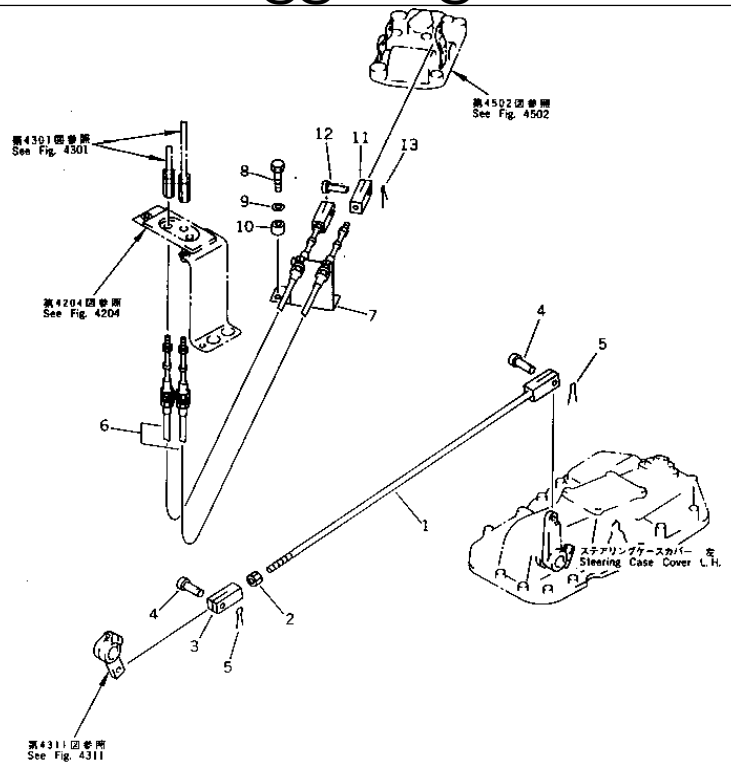

Ref. 4312 **Page 120100**

D155A-2 S/N 50001-UP (S6D155-4 Eng. Installed)
STEERING AND BRAKE LINKAGE (2/2)

Item	Part No.	Part Name	Qty	Serial No.
1	04244-41485	ROD	1	50001-
2	01582-11411	NUT	1	50001-
3	04211-21478	YOKE	1	50001-
4	04205-11438	PIN	2	50001-
5	04050-14022	PIN,COTTER	2	50001-
6	175-43-51320	CABLE	2	50001-
7	175-43-51330	BRACKET	1	50001-
8	01010-51265	BOLT	2	50001-
9	01643-31232	WASHER	2	50001-
10	195-33-11220	SPACER	2	50001-
11	195-43-41410	YOKE	2	50001-
12	04205-11235	PIN	2	50001-
13	04050-13022	PIN,COTTER	2	50001-

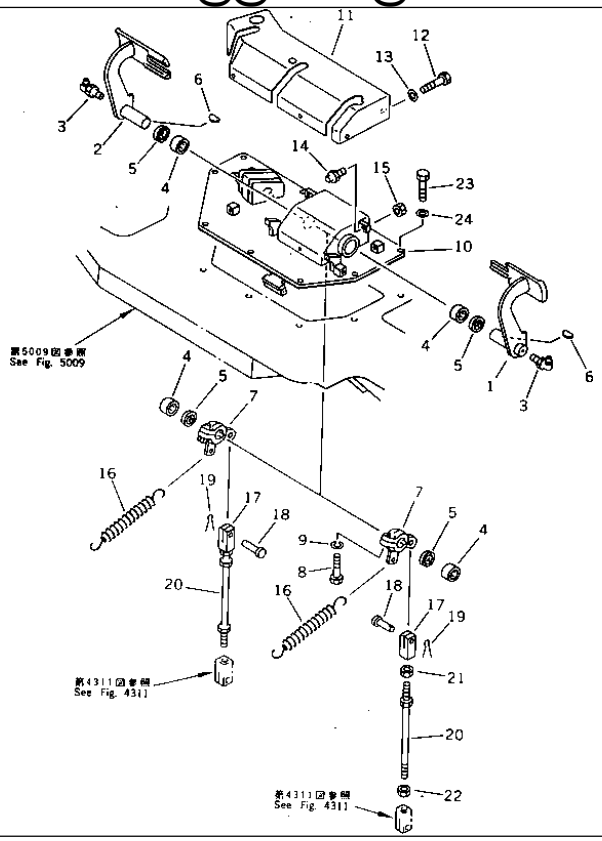

D155A-2 S/N 50001-UP (S6D155-4 Eng. Installed)

BRAKE PEDAL

Item	Part No.	Part Name	Qty	Serial No.
1	175-43-52410	PEDAL,L.H.	1	50001-
2	175-43-52420	PEDAL,R.H.	1	50001-
3	07020-00900	FITTING,GREASE	2	50001-
4	06120-03520	BEARING,NEEDLE	4	50001-
5	06122-03504	SEAL,BEARING	4	50001-
6	04010-01032	KEY	2	50001-
7	175-43-52430	LEVER	2	50001-
8	01010-51245	BOLT	2	50001-
9	01602-21236	WASHER,SPRING	2	50001-
10	15A-43-11141	BRACKET	1	52350-
	15A-43-11140	BRACKET	1	50001-52349
11	154-43-41122	COVER	1	52350-
	154-43-41120	COVER	1	50001-52349
12	01010-51225	BOLT	4	52350-
	01010-51225	BOLT	6	50001-52349
13	01643-31232	WASHER	4	50001-
	01643-31232	WASHER	6	50001-52349
14	09311-41237	BUMPER	2	50001-
15	01580-11210	NUT	2	50001-
16	154-43-41260	SPRING	2	50001-
17	04211-21478	YOKE	2	50001-
18	04205-11438	PIN	2	50001-
19	04050-14028	PIN,COTTER	2	50001-
20	04248-31435	ROD	2	50032-
	04248-31431	ROD	2	50001-50031
21	01582-11411	NUT	2	50001-
22	01508-41408	NUT	2	50001-

BRAKE PEDAL

Item	Part No.	Part Name	Qty	Serial No.
23	01010-51235	BOLT	9	50001-
24	01643-31232	WASHER	9	50001-

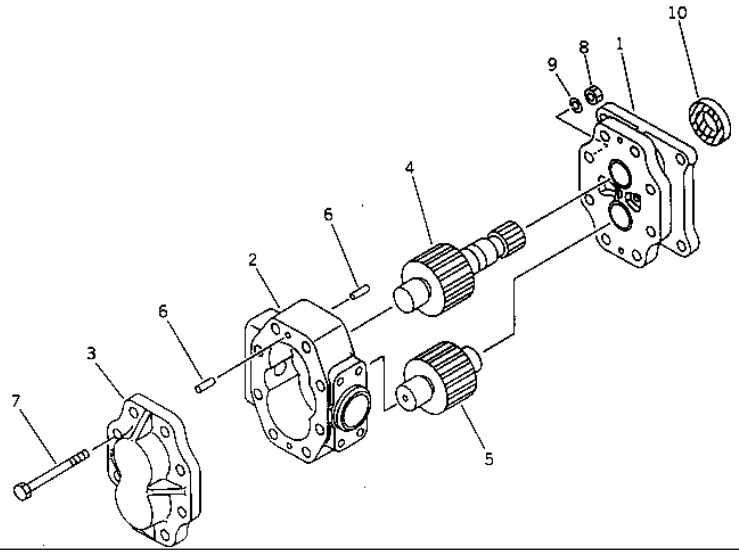

Ref. 4502 **Page 120130**

D155A-2 S/N 50001-UP (S6D155-4 Eng. Installed)
STEERING PUMP (EXCEPT JAPAN)

Item	Part No.	Part Name	Qty	Serial No.
1	07440-72202	PUMP ASS'Y	1	50001-
	07438-72111	· BRACKET	1	50001-
	07438-71150	· · BUSHING	2	50001-
2	07440-71221	· CASE,GEAR	1	50001-
3	07438-71131	· HOUSING ASS'Y	1	50001-
	07438-71150	· · BUSHING	2	50001-
4	07440-71042	· GEAR,DRIVE	1	50001-
5	07440-71052	· GEAR,DRIVEN	1	50001-
6	04020-00820	· PIN,DOWEL	4	50001-
7	01051-51420	· BOLT	8	50001-
8	01582-11411	· NUT	8	50001-
9	01602-21442	· WASHER,SPRING	8	50001-
10	07438-71160	· SEAL,OIL	1	50001-

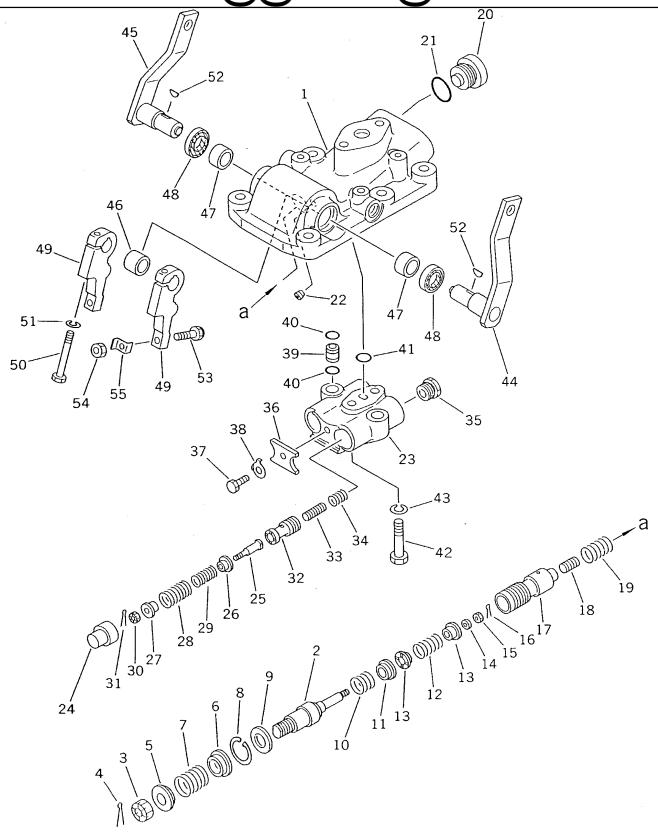

Ref. 4503 **Page 120140**

D155A-2 S/N 50001-UP (S6D155-4 Eng. Installed)
STEERING CONTROL VALVE

Item	Part No.	Part Name	Qty	Serial No.
1	154-40-00082	STEERING VALVE ASS'Y	1	51114-
	□154-40-00081	STEERING VALVE ASS'Y	1	50001-51113
	144-40-22211	· BODY,VALVE	1	50001-
2	195-40-11540	· SHAFT	2	50001-
3	01593-11613	· NUT	2	50001-
4	04050-14025	· PIN,COTTER	2	50001-
5	144-40-22180	· STOPPER	2	50001-
6	144-40-22170	· STOPPER	2	50001-
7	175-40-31230	· SPRING	2	50001-
8	04065-03212	· RING,SNAP	2	50001-
9	195-40-13110	· STOPPER	2	50001-
10	195-40-11550	· SPRING	2	50001-
11	195-40-11560	· STOPPER	2	50001-
12	175-40-31150	· SPRING	2	50001-
13	195-40-11570	· STOPPER	2	50001-
14	144-40-22190	· WASHER	2	50001-
15	01590-10607	· NUT	2	50001-
16	04050-11212	· PIN,COTTER	2	50001-
17	195-40-11531	· VALVE	2	51114-
	□195-40-11530	· VALVE	2	50001-51113
18	702-11-11190	· PISTON	2	50001-
19	175-40-31130	· SPRING	2	50001-
20	175-40-31530	· PLUG	2	50001-
21	07002-03034	· O-RING	2	50001-
22	07043-50108	· PLUG	1	50001-
23	144-40-22230	· BODY,VALVE	1	50001-
24	144-40-22290	· GUIDE	2	50001-

STEERING CONTROL VALVE

Item	Part No.	Part Name	Qty	Serial No.
25	144-40-22260	· SHAFT	2	50001-
26	144-40-22270	· STOPPER	2	50001-
27	144-40-22280	· STOPPER	2	50001-
28	144-40-22340	· SPRING	2	50001-
29	154-40-41130	· SPRING	2	51114-
	□175-40-31560	· SPRING	2	50001-51113
30	01590-10607	· NUT	2	50001-
31	04050-11212	· PIN,COTTER	2	50001-
32	144-40-22311	· VALVE	2	50001-
33	144-40-22320	· PISTON	2	50001-
34	175-40-31410	· SPRING	2	50001-
35	144-40-22250	· PLUG	2	50001-
36	144-40-22330	· PLATE	1	50001-
37	01010-50816	· BOLT	1	50001-
38	01650-20808	· WASHER	1	50001-
39	175-40-31510	· TUBE	2	50001-
40	07000-02011	· O-RING	4	50001-
41	07000-02015	· O-RING	1	50001-
42	01010-51050	· BOLT	2	50001-
43	01602-21030	· WASHER,SPRING	2	50001-
44	154-40-41110	· LEVER,L.H.	1	50001-
45	154-40-41120	· LEVER,R.H.	1	50001-
46	09350-01820	· BUSHING	1	50001-
47	09350-02215	· BUSHING	2	50001-
48	175-40-31270	· SEAL,OIL	2	50001-
49	144-40-22240	· LEVER	2	50001-
50	01010-50860	· BOLT	2	50001-
51	01602-20825	· WASHER,SPRING	2	50001-
52	04010-00416	· KEY	2	50001-
53	144-40-22160	· BOLT	2	50001-
54	01580-10806	· NUT	2	50001-
55	130-21-12330	· LOCK	2	50001-

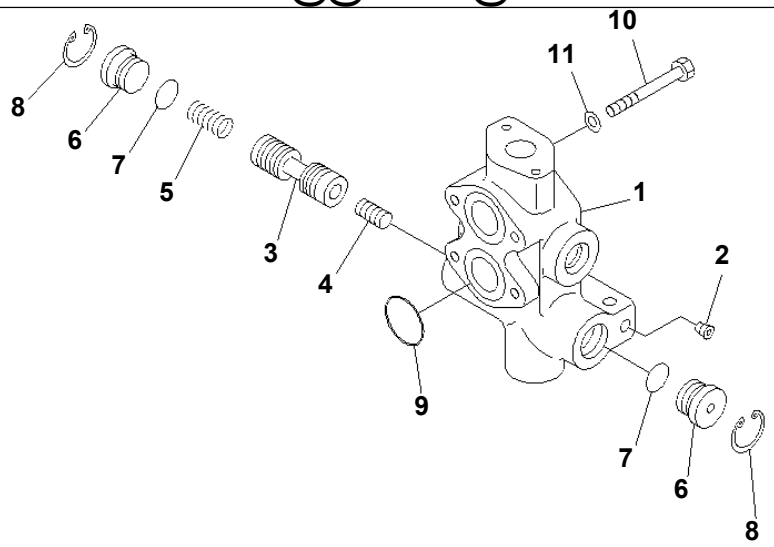

PJB1071

Ref. 4504 **Page 120150**

D155A-2 S/N 50001-UP (S6D155-4 Eng. Installed)
MAIN RELIEF VALVE

Item	Part No.	Part Name	Qty	Serial No.
1	195-49-00090	VALVE ASS'Y	1	50001-
	☆	· HOUSING	1	50001-
2	07043-50108	· PLUG	1	50001-
3	145-14-23710	· VALVE	1	50001-
4	145-14-23720	· PISTON	1	50001-
5	195-40-11431	· SPRING	1	50001-
6	170-33-13530	· STOPPER	2	50001-
7	07000-03025	· O-RING	2	50001-
8	04065-03515	· RING,SNAP	2	50001-
9	07000-03042	O-RING	2	50001-
10	01010-51085	BOLT	4	50001-
11	01602-21030	WASHER,SPRING	4	50001-

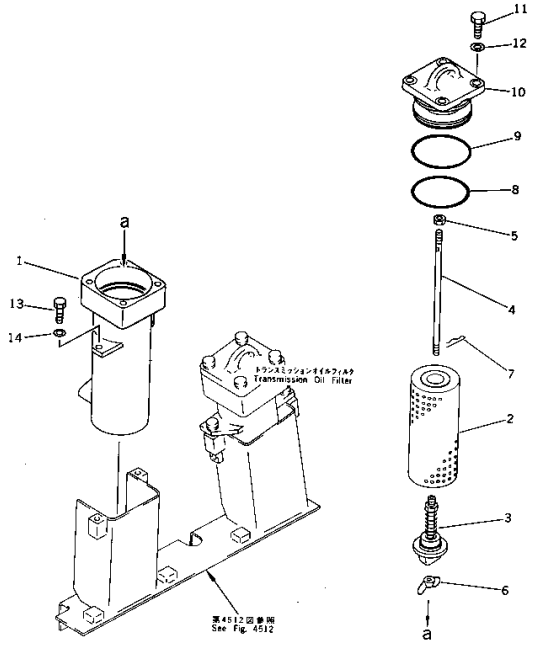

Ref. 4505 **Page 120160**

D155A-2 S/N 50001-UP (S6D155-4 Eng. Installed)
STEERING OIL FILTER

Item	Part No.	Part Name	Qty	Serial No.
G-1	(⊙175-49-X1110)	OIL FILTER GROUP	1	50001-
		==========		
1	175-49-33110	CASE,OIL FILTER	1	50001-
2	175-49-11580	ELEMENT	1	50001-
3	175-49-25530	VALVE ASS'Y	1	50001-
4	175-49-25540	ROD	1	50001-
5	01582-01008	NUT	1	50001-
6	01540-01050	NUT,WING	1	50001-
7	04052-01038	PIN,SNAP	1	50001-
8	07000-02110	O-RING	1	50001-
9	07000-02115	O-RING	1	50001-
10	195-49-13740	COVER	1	50001-
11	01010-51440	BOLT	4	50001-
12	01643-31445	WASHER	4	50001-
		==========		
13	01010-51230	BOLT	2	50001-
14	01643-31232	WASHER	2	50001-

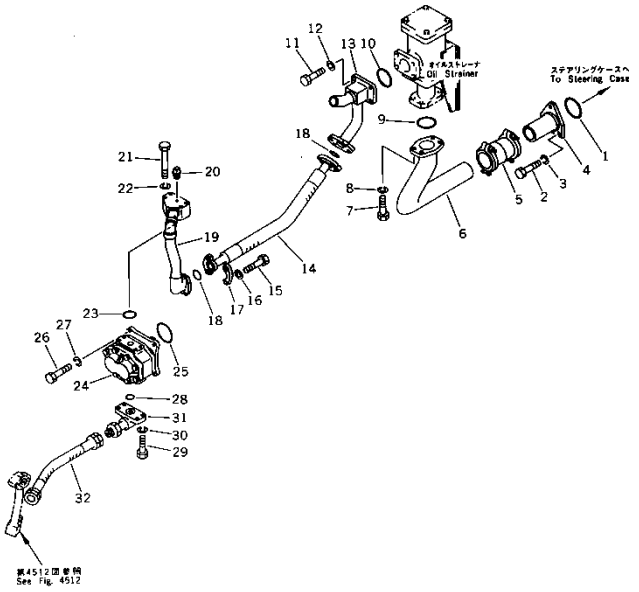

Ref. 4511 **Page 120190**

D155A-2 S/N 50001-UP (S6D155-4 Eng. Installed)
STEERING PIPING (1/3)

Item	Part No.	Part Name	Qty	Serial No.
1	07000-03090	O-RING	1	50001-
2	01010-51030	BOLT	3	50001-
3	01602-21030	WASHER,SPRING	3	50001-
4	175-49-22590	TUBE	1	50001-
5	07332-02400	COUPLING	1	50001-
	07332-52400	· GASKET	2	50001-
	07332-62400	· CLAMP	2	50001-
6	175-49-21112	TUBE	1	50001-
7	01010-51235	BOLT	4	50001-
8	01602-21236	WASHER,SPRING	4	50001-
9	07000-03080	O-RING	1	50001-
10	07000-03082	O-RING	1	50001-
11	01010-51235	BOLT	4	50001-
12	01602-21236	WASHER,SPRING	4	50001-
13	175-49-22113	TUBE	1	50001-
14	07119-01408	HOSE	1	50001-
15	07372-21240	BOLT	8	50001-
16	01643-51232	WASHER	8	50001-
17	07371-31465	FLANGE,SPLIT	4	50001-
18	07000-03048	O-RING	2	50001-
19	175-49-33260	TUBE	1	50001-
20	07042-30108	PLUG	1	50001-
21	01010-51075	BOLT	4	50001-
22	01602-21030	WASHER,SPRING	4	50001-
23	07000-03050	O-RING	1	50001-
24	(07440-72202)	PUMP ASS'Y,STEERING	1	50001-
25	07000-03095	O-RING	1	50001-

STEERING PIPING (1/3)

Item	Part No.	Part Name	Qty	Serial No.
26	01010-51245	BOLT	4	50001-
27	01602-21236	WASHER,SPRING	4	50001-
28	07000-03035	O-RING	1	50001-
29	01010-51240	BOLT	4	50001-
30	01643-31232	WASHER	4	50001-
31	175-49-33130	TUBE	1	50001-
32	175-49-33360	HOSE	1	50358-
	□07102-21004	HOSE	1	50001-50357

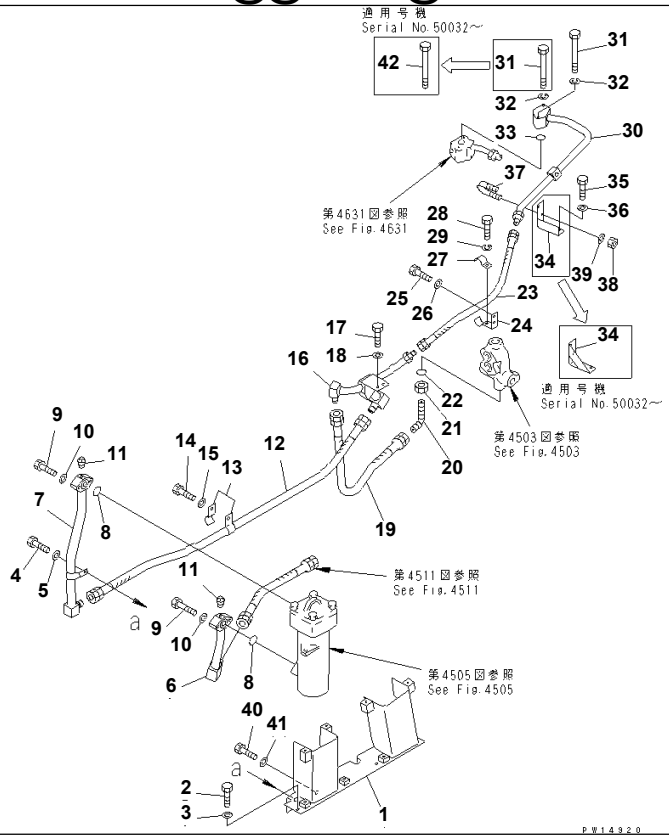

Ref. 4512 **Page 120200**

D155A-2 S/N 50001-UP (S6D155-4 Eng. Installed)
STEERING PIPING (2/3)

Item	Part No.	Part Name	Qty	Serial No.
1	175-49-33120	BRACKET	1	50001-
	175-49-33340	BRACKET,(TBG SPEC.)	1	50001-
2	01010-51245	BOLT	4	50001-
3	01643-31232	WASHER	4	50001-
4	01010-51230	BOLT	1	50001-
5	01643-31232	WASHER	1	50001-
6	175-49-33140	TUBE	1	50001-
7	175-49-33150	TUBE	1	50001-
8	07000-03035	O-RING	2	50001-
9	01010-51060	BOLT	4	50001-
10	01643-31032	WASHER	4	50001-
11	07042-30108	PLUG	2	50001-
12	175-49-33350	HOSE	1	50358-
	□07102-21011	HOSE	1	50001-50357
13	195-49-11870	CLAMP	2	50001-
14	01010-51230	BOLT	1	50001-
15	01643-31232	WASHER	1	50001-
16	175-49-33160	TUBE	1	50001-
17	01010-51225	BOLT	2	50001-
18	01643-31232	WASHER	2	50001-
19	175-49-33360	HOSE	1	50358-
	□07102-21004	HOSE	1	50001-50357
20	07232-21034	ELBOW	1	50001-
21	07239-23320	NUT	1	50001-
22	07002-03334	O-RING	1	50001-
23	175-49-33370	HOSE	1	50358-
	□07102-20608	HOSE	1	50001-50357

STEERING PIPING (2/3)

Item	Part No.	Part Name	Qty	Serial No.
24	175-49-22212	CLAMP	1	50001-
25	01010-51020	BOLT	2	50001-
26	01643-31032	WASHER	2	50001-
27	176-49-41350	CLAMP	1	50001-
28	01010-51230	BOLT	1	50001-
29	01602-21236	WASHER,SPRING	1	50001-
30	175-49-33240	TUBE	1	50001-
31	01011-51020	BOLT	1	50032-
	01011-51020	BOLT	2	50001-50031
32	01602-21030	WASHER,SPRING	2	50001-
33	07000-03028	O-RING	1	50001-
34	175-49-33250	BRACKET	1	50001-
35	01010-51280	BOLT	1	50032-
	01010-51270	BOLT	1	50001-50031
36	01643-31232	WASHER	1	50001-
37	07283-22738	CLIP	1	50001-
38	01599-01011	NUT	2	50001-
39	01643-31032	WASHER	2	50001-
40	01010-51230	BOLT	2	50001-
41	01643-31232	WASHER	2	50001-
42	01011-51025	BOLT	1	50032-

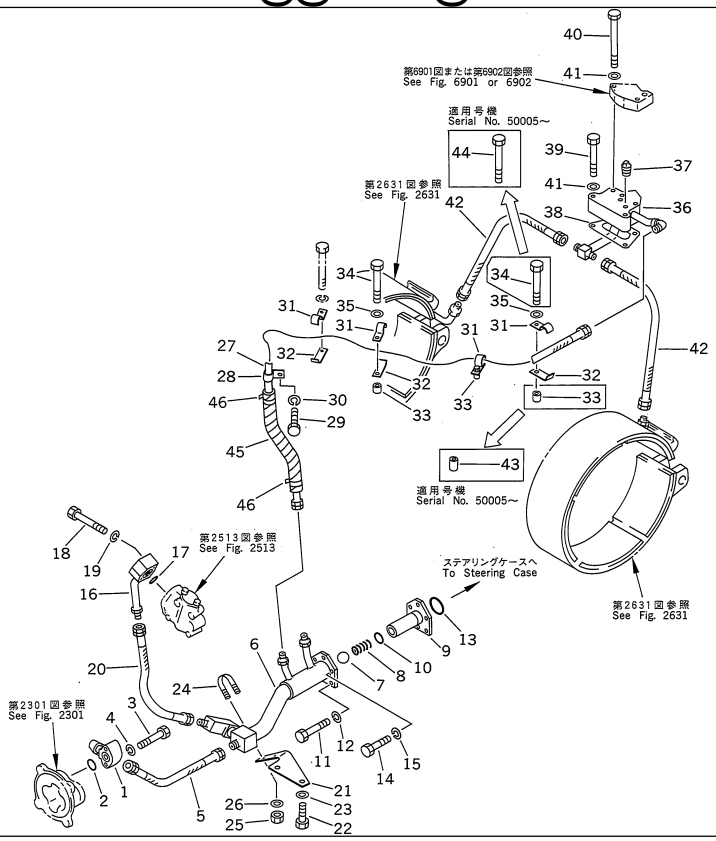

D155A-2 S/N 50001-UP (S6D155-4 Eng. Installed)

STEERING PIPING (3/3)

Item	Part No.	Part Name	Qty	Serial No.
1	175-49-21483	TUBE	1	50001-
2	07000-03028	O-RING	1	50001-
3	01010-51055	BOLT	2	50001-
4	01602-21030	WASHER,SPRING	2	50001-
5	07102-20403	HOSE	1	50001-
	07103-A0403	HOSE,(FOR SLAG HANDLING)	1	50001-
6	175-49-23221	TUBE	1	50001-
7	04260-02540	BALL	1	50001-
8	175-49-23230	SPRING	1	50001-
9	175-49-23211	FLANGE	1	50001-
10	07000-03028	O-RING	1	50001-
11	01010-50620	BOLT	3	50001-
12	01602-20619	WASHER,SPRING	3	50001-
13	07000-03055	O-RING	1	50001-
14	01010-51035	BOLT	3	50001-
15	01602-21030	WASHER,SPRING	3	50001-
16	175-49-21472	TUBE	1	50001-
17	07000-03025	O-RING	1	50001-
18	01010-51060	BOLT	2	50001-
19	01602-21030	WASHER,SPRING	2	50001-
20	07102-20603	HOSE	1	50001-
	07103-A0603	HOSE,(FOR SLAG HANDLING)	1	50001-
21	175-49-21510	BRACKET	1	50001-
22	01010-51230	BOLT	2	50001-
23	01643-31232	WASHER	2	50001-
24	07283-24346	CLIP	1	50001-
25	01599-01011	NUT	2	50001-

STEERING PIPING (3/3)

Item	Part No.	Part Name	Qty	Serial No.
26	01643-31032	WASHER	2	50001-
27	07102-20417	HOSE	1	50001-
28	175-49-23340	CLAMP	1	50001-
29	01010-51020	BOLT	1	50001-
30	01602-21030	WASHER,SPRING	1	50001-
31	195-79-12181	CLIP	4	50001-
32	195-78-22471	CLIP	4	50001-
33	195-33-11220	SPACER	2	50005-
	195-33-11220	SPACER	3	50001-50004
34	01010-51265	BOLT	2	50005-
	01010-51265	BOLT	3	50001-50004
35	01643-31232	WASHER	3	50001-
36	175-49-33320	TUBE	1	50001-
37	07042-10108	PLUG	1	50001-
38	175-49-23411	GASKET	1	52126-
	□175-49-23281	GASKET	1	50001-52125
39	01010-51280	BOLT	2	50001-
40	01011-51215	BOLT	2	50001-
41	01643-31232	WASHER	4	50001-
42	175-49-23380	HOSE	2	50001-
43	20Y-03-11220	COLLAR	1	50005-
44	01010-51275	BOLT	1	50005-
45	17M-01-23420	TAPE,(FOR SLAG HANDLING)	1	50001-
46	198-09-31210	CLAMP,(FOR SLAG HANDLING)	2	50001-

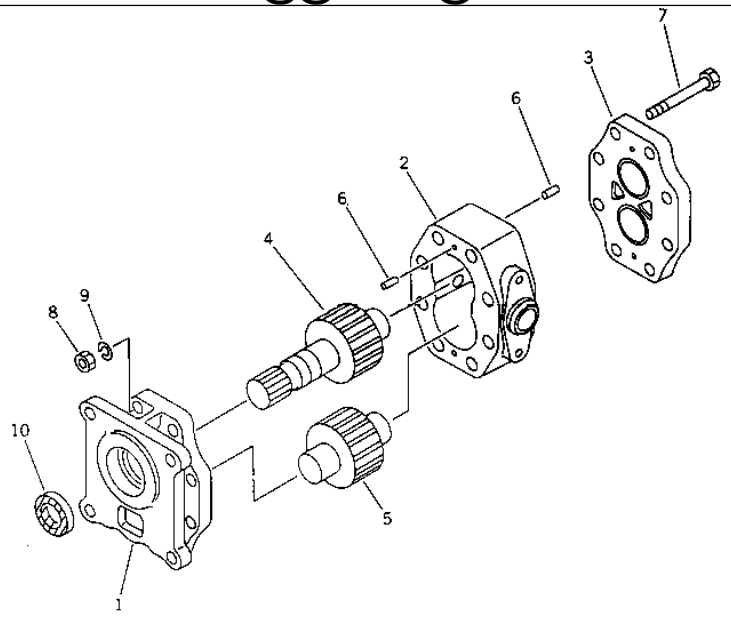

Ref. 4603 **Page 120220**

D155A-2 S/N 50001-UP (S6D155-4 Eng. Installed)
TRANSMISSION PUMP (EXCEPT JAPAN)

Item	Part No.	Part Name	Qty	Serial No.
1	07433-71103	PUMP ASS'Y	1	50001-
	07430-71113	· BRACKET	1	50001-
	07430-71150	· · BUSHING	2	50001-
2	07433-71021	· CASE,GEAR	1	50001-
3	07430-71132	· HOUSING	1	50001-
	07430-71150	· · BUSHING	2	50001-
4	07433-71042	· GEAR,DRIVE	1	50001-
5	07433-71052	· GEAR,DRIVEN	1	50001-
6	04020-00820	· PIN,DOWEL	4	50001-
7	01050-51295	· BOLT	8	50001-
8	01582-11210	· NUT	8	50001-
9	01602-21236	· WASHER,SPRING	8	50001-
10	07430-71160	· SEAL,OIL	1	50001-

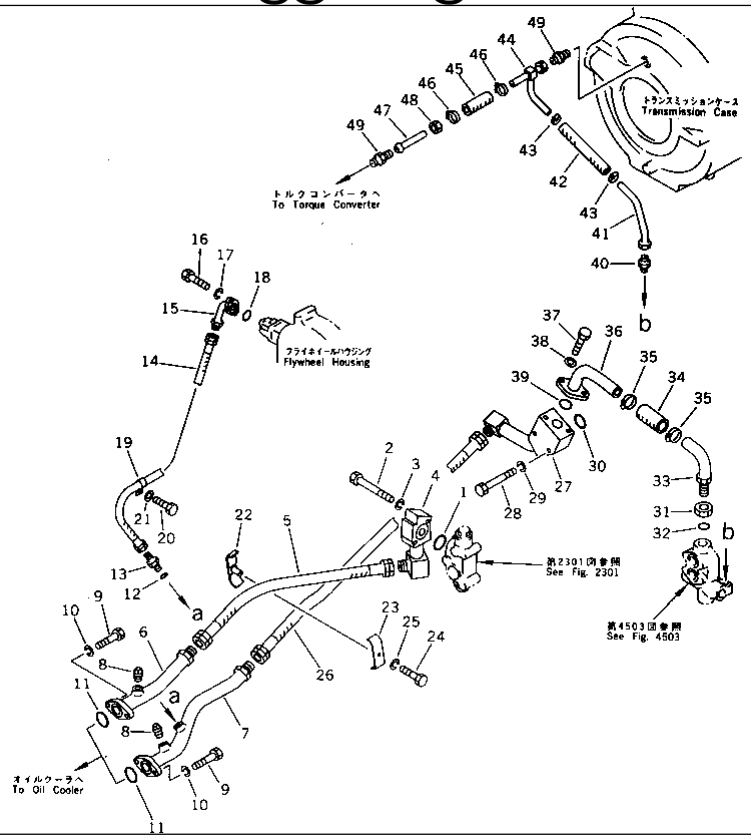

D155A-2 S/N 50001-UP (S6D155-4 Eng. Installed)

TORQUE CONVERTER PIPING

Item	Part No.	Part Name	Qty	Serial No.
1	07000-03042	O-RING	1	50001-
2	01010-51070	BOLT	2	50001-
3	01602-21030	WASHER,SPRING	2	50001-
4	175-49-21384	TUBE	1	50001-
5	07102-21406	HOSE	1	50001-
6	175-49-00265	TUBE ASS'Y,OUTLET	1	50001-
	175-49-00276	TUBE ASS'Y,INLET	1	50001-
	☆	· TUBE,OUTLET	1	50001-
7	☆	· TUBE,INLET	1	50001-
8	07042-10108	· PLUG	2	50001-
9	01010-51040	BOLT	4	50001-
10	01602-21030	WASHER,SPRING	4	50001-
11	07000-03042	O-RING	2	50001-
12	07002-02034	O-RING	1	50001-
13	07230-20422	UNION	1	50167-
	□07230-10422	UNION	1	50001-50166
14	07102-20408	HOSE	1	50001-
15	175-49-22431	TUBE	1	50001-
16	01010-51030	BOLT	2	50001-
17	01602-21030	WASHER,SPRING	2	50001-
18	07000-03028	O-RING	1	50001-
19	08035-02514	CLIP	1	50001-
20	01010-51220	BOLT	1	50001-
21	01643-31232	WASHER	1	50001-
22	175-61-14770	CLAMP	1	50001-
23	175-61-14760	CLAMP	1	50001-
24	01010-51050	BOLT	1	50001-

TORQUE CONVERTER PIPING

Item	Part No.	Part Name	Qty	Serial No.
25	01602-21030	WASHER,SPRING	1	50001-
26	07102-21406	HOSE	1	50001-
27	175-49-21454	TUBE	1	50001-
28	01010-51075	BOLT	2	50001-
29	01602-21030	WASHER,SPRING	2	50001-
30	07000-03040	O-RING	1	50001-
31	07239-13320	NUT	1	50001-
32	07002-03334	O-RING	1	50001-
33	175-49-21434	TUBE	1	50001-
34	07260-03213	HOSE	1	50001-
35	07281-00549	CLAMP	2	50001-
36	175-49-25680	TUBE	1	50001-
37	01010-51035	BOLT	2	50001-
38	01643-31032	WASHER	2	50001-
39	07000-03035	O-RING	1	50001-
40	07213-51013	CONNECTOR	1	50001-
41	175-49-23580	TUBE	1	50001-
42	07260-20922	HOSE	1	50001-
43	07281-00197	CLAMP	2	50001-
44	175-49-23570	TUBE	1	50001-
45	07260-21410	HOSE	1	50001-
46	07281-00259	CLAMP	2	50001-
47	175-49-11911	TUBE	1	50001-
48	07201-51527	NUT	1	50001-
49	07213-51521	CONNECTOR	2	50001-

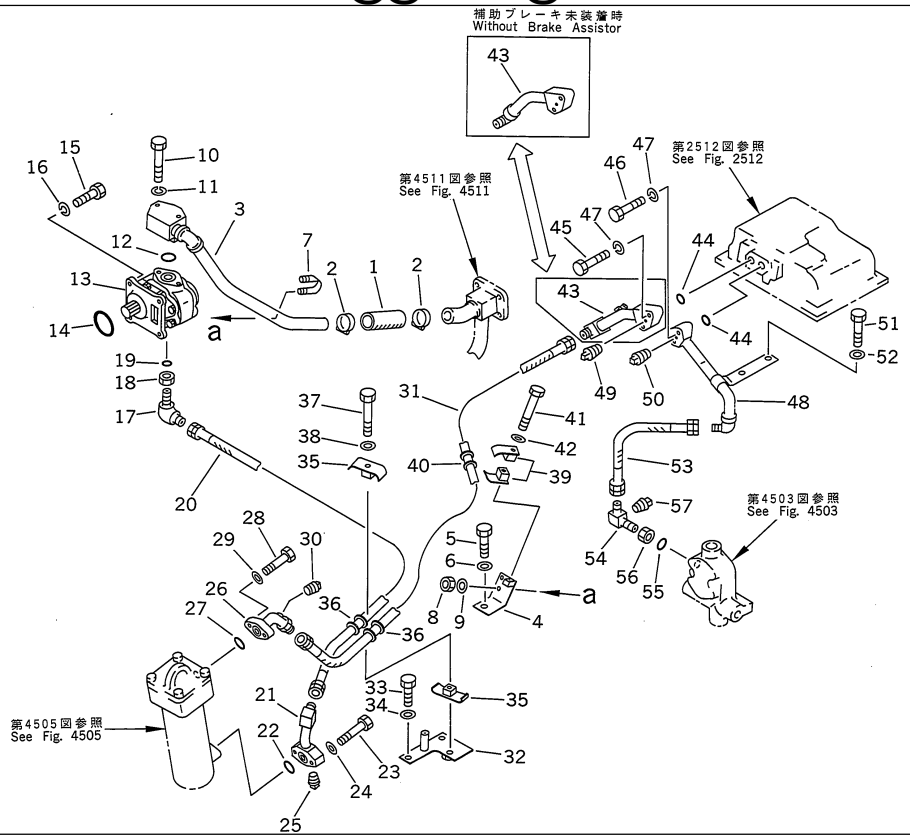

Ref. 4621 **Page 120240**

D155A-2 S/N 50001-UP (S6D155-4 Eng. Installed)
TORQFLOW TRANSMISSION PIPING

Item	Part No.	Part Name	Qty	Serial No.
1	07260-04114	HOSE	1	50001-
2	07281-00609	CLAMP	2	50001-
3	175-49-33310	TUBE	1	50001-
4	175-49-33220	BRACKET	1	50001-
5	01010-51640	BOLT	1	50001-
6	01643-31645	WASHER	1	50001-
7	07283-24354	CLIP	1	50001-
8	01599-01011	NUT	2	50001-
9	01643-31032	WASHER	2	50001-
10	01010-51080	BOLT	2	50001-
11	01602-21030	WASHER,SPRING	2	50001-
12	07000-03032	O-RING	1	50001-
13	(07433-71103)	PUMP ASS'Y,TRANSMISSION	1	50001-
14	(07000-03075)	O-RING	1	50001-
15	(01010-51030)	BOLT	4	50001-
16	(01602-21030)	WASHER,SPRING	4	50001-
17	07232-20628	ELBOW	1	50001-
18	07239-22410	NUT	1	50001-
19	07002-02434	O-RING	1	50001-
20	07102-20607	HOSE	1	50032-
	07102-20608	HOSE	1	50001-50031
21	175-49-33171	TUBE	1	50001-
22	07000-03035	O-RING	1	50001-
23	01010-51060	BOLT	2	50001-
24	01643-31032	WASHER	2	50001-
25	07042-30108	PLUG	1	50001-
26	175-49-33191	TUBE	1	50001-

D155A-2 S/N 50001-UP (S6D155-4 Eng. Installed)
TORQFLOW TRANSMISSION PIPING

Item	Part No.	Part Name	Qty	Serial No.
27	07000-03035	O-RING	1	50001-
28	01010-51035	BOLT	2	50001-
29	01643-31032	WASHER	2	50001-
30	07042-30108	PLUG	1	50001-
31	07102-20614	HOSE	1	50001-
32	175-49-33210	BRACKET	1	50001-
33	01010-51635	BOLT	2	50001-
34	01643-31645	WASHER	2	50001-
35	175-49-33230	CLAMP	2	50001-
36	07095-00628	CUSHION	2	52350-
	198-61-44230	CUSHION	2	50001-52349
37	01010-81275	BOLT	1	50001-
38	01643-31232	WASHER	1	50001-
39	198-61-44190	CLAMP	2	50001-
40	07095-00628	CUSHION	1	52350-
	198-61-44230	CUSHION	1	50001-52349
41	01010-51270	BOLT	1	50001-
42	01643-31232	WASHER	1	50001-
43	175-49-32150	TUBE,(WITH BRAKE ASSISTOR)	1	50001-
	175-49-23862	TUBE,(WITHOUT BRAKE ASSISTOR)	1	50001-
44	07000-03028	O-RING	2	50001-
45	01010-51065	BOLT	2	50001-
46	01010-51055	BOLT	2	50001-
47	01602-21030	WASHER,SPRING	4	50001-
48	15A-49-11210	TUBE	1	50001-
49	07042-10108	PLUG	1	50001-
50	07042-30108	PLUG	1	50001-
51	01010-81040	BOLT	2	50001-
52	01643-31032	WASHER	2	50001-
53	07102-20603	HOSE	1	50001-
54	15A-49-11220	ELBOW	1	50001-
55	07002-03334	O-RING	1	50001-
56	07239-13320	NUT	1	50001-
57	07042-30108	PLUG	1	50001-

D155A-2 S/N 50001-UP (S6D155-4 Eng. Installed)

@@14924@

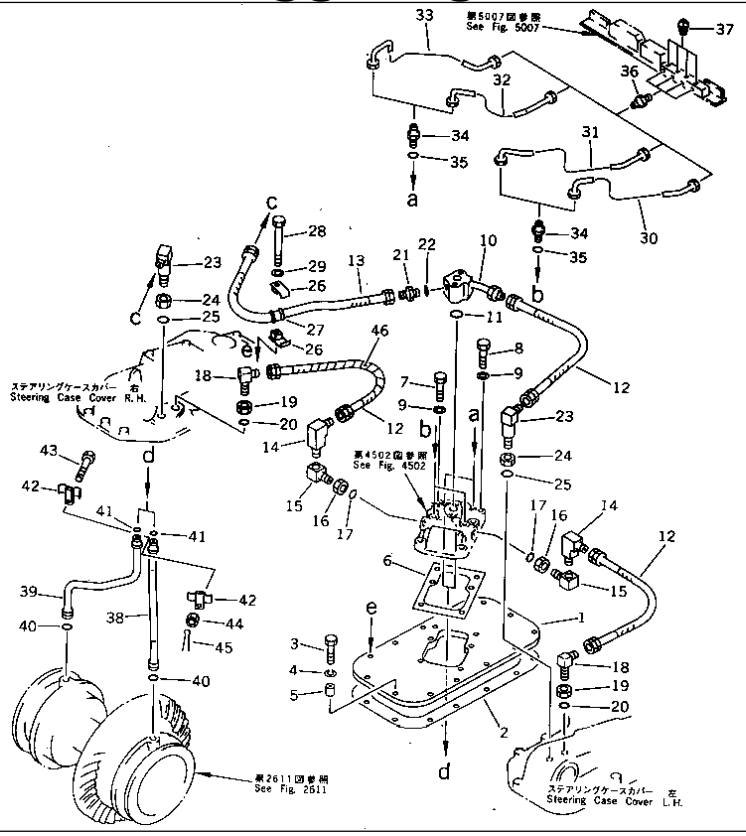

Ref. 4631 **Page 120250**

D155A-2 S/N 50001-UP (S6D155-4 Eng. Installed)

BRAKE PIPING

Item	Part No.	Part Name	Qty	Serial No.
1	175-49-32110	PLATE,(WITH BRAKE ASSISTOR)	1	50001-
	175-49-23460	PLATE,(WITHOUT BRAKE ASSISTOR)	1	50001-
2	175-40-22591	GASKET	1	52126-
	□175-40-22521	GASKET	1	50001-52125
3	01010-51260	BOLT	9	50001-
4	01602-21236	WASHER,SPRING	9	50001-
5	195-33-11220	SPACER	9	50001-
6	144-40-22220	GASKET	1	50001-
7	01010-51240	BOLT	1	50001-
8	01010-51250	BOLT	5	50001-
9	01643-31232	WASHER	6	50001-
10	175-33-23470	TUBE	1	50001-
11	07000-03028	O-RING	1	50001-
12	07102-20303	HOSE	3	50001-
13	07102-20306	HOSE	1	50001-
14	203-62-12330	ELBOW	2	50001-
15	195-49-13830	ELBOW	2	50001-
16	195-49-13840	NUT	2	50001-
17	07002-01623	O-RING	2	50001-
18	07232-20315	ELBOW	2	50001-
19	07239-22009	NUT	2	50001-
20	07002-02034	O-RING	2	50001-
21	07230-20315	UNION	1	50167-
	□07230-10315	UNION	1	50001-50166
22	07002-02034	O-RING	1	50001-
23	175-49-25670	ELBOW	2	50001-
24	07239-22009	NUT	2	50001-

D155A-2 S/N 50001-UP (S6D155-4 Eng. Installed)

BRAKE PIPING

Item	Part No.	Part Name	Qty	Serial No.
25	07002-02034	O-RING	2	50001-
26	175-49-32130	CLAMP	2	50001-
27	07095-00318	CUSHION	1	52350-
	175-49-32140	CUSHION	1	50001-52349
28	01010-51275	BOLT	1	50001-
29	01643-31232	WASHER	1	50001-
30	175-49-25631	TUBE	1	50001-
31	175-49-25641	TUBE	1	50001-
32	175-49-33280	TUBE	1	50001-
33	175-49-33290	TUBE	1	50001-
34	195-49-21361	NIPPLE	4	50001-
35	07002-00823	O-RING	4	50001-
36	07213-50510	CONNECTOR	4	50001-
37	07042-30108	PLUG	4	50001-
38	175-40-22570	TUBE,L.H.	2	50001-
39	175-40-22580	TUBE,R.H.	1	50001-
40	07000-03022	O-RING	2	50001-
41	07000-02018	O-RING	2	50001-
42	175-40-22461	CLAMP	2	50001-
43	01012-51035	BOLT	1	50001-
44	01590-11012	NUT	1	50001-
45	04050-12018	PIN,COTTER	1	50001-
46	175-49-33330	TUBE	1	50001-

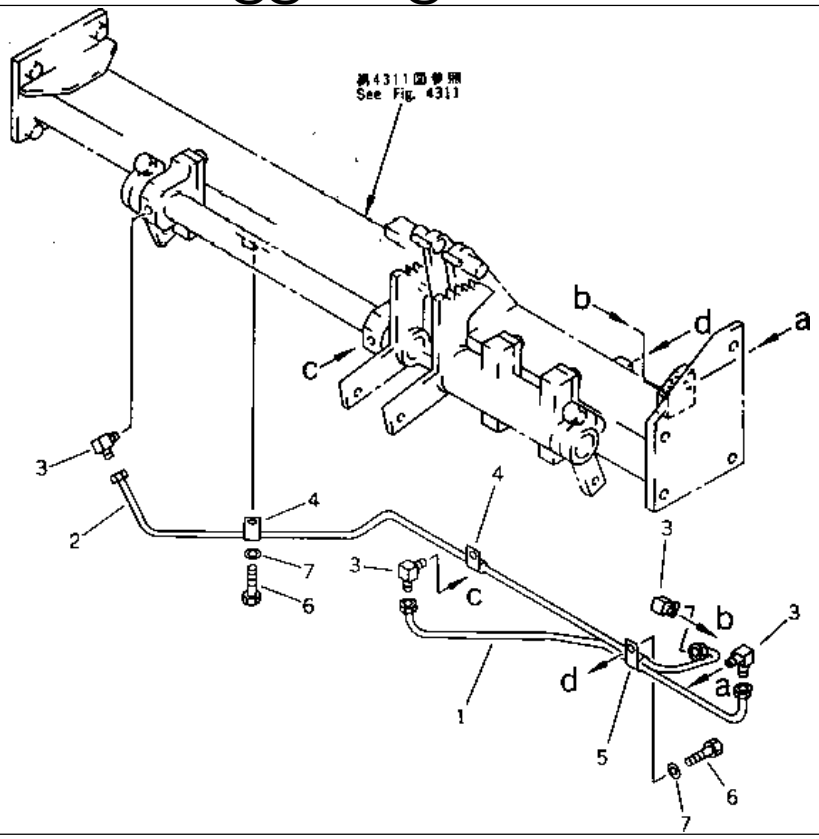

Ref. 4641 **Page 120260**

D155A-2 S/N 50001-UP (S6D155-4 Eng. Installed)
CONCENTRATED PIPING

Item	Part No.	Part Name	Qty	Serial No.
1	175-43-52481	TUBE	1	50001-
2	175-43-52490	TUBE	1	50001-
3	176-43-41350	ELBOW	4	50001-
4	08036-10814	CLIP	2	50001-
5	08036-11214	CLIP	1	50001-
6	01010-51016	BOLT	3	50001-
7	01643-31032	WASHER	3	50001-

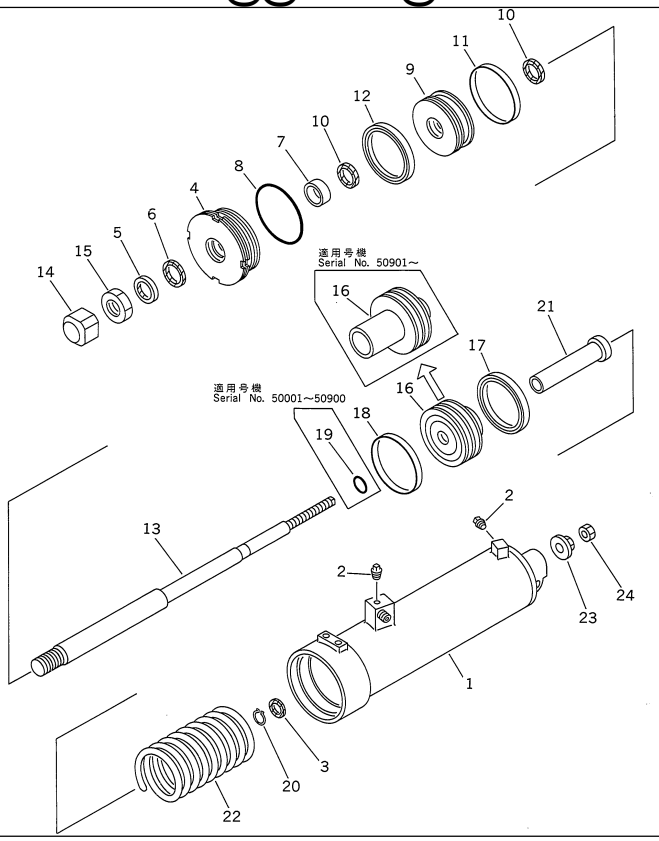

Ref. 4701 **Page 120270**

D155A-2 S/N 50001-UP (S6D155-4 Eng. Installed)
BRAKE CYLINDER (WITH BRAKE ASSISTOR)

Item	Part No.	Part Name	Qty	Serial No.
1	175-33-00130	CYLINDER ASS'Y	1	50001-
	195-33-14360	· CYLINDER	1	50001-
2	07042-20108	· PLUG	2	50001-
3	07006-00022	· PACKING	1	50001-
4	195-33-14380	· HEAD	1	50001-
5	07016-00357	· SEAL,DUST	1	50001-
6	707-51-35210	· PACKING	1	50001-
7	195-33-15150	· BUSHING	1	50001-
8	07000-02115	· O-RING	1	50001-
9	195-33-14390	· PISTON	1	50001-
10	707-51-35210	· PACKING	2	50001-
11	07156-01112	· RING,WEAR	1	50001-
12	707-44-11080	· RING,PISTON	1	50001-
13	195-33-14420	· ROD	1	50001-
14	178-33-13190	· NUT	1	50001-
15	01583-13018	· NUT	1	50001-
16	195-33-14411	· PISTON	1	50901-
	□195-33-14410	PISTON	1	50001-50900
17	707-44-11080	· RING,PISTON	1	50001-
18	07156-01112	· RING,WEAR	1	50001-
19	07000-03025	· O-RING	1	50001-50900
20	04064-02212	· RING,SNAP	1	50001-
21	195-33-14430	· COLLAR	1	50001-
22	195-33-14450	· SPRING	1	50001-
23	195-33-22150	· NUT	1	50001-
24	01580-11411	· NUT	1	50001-

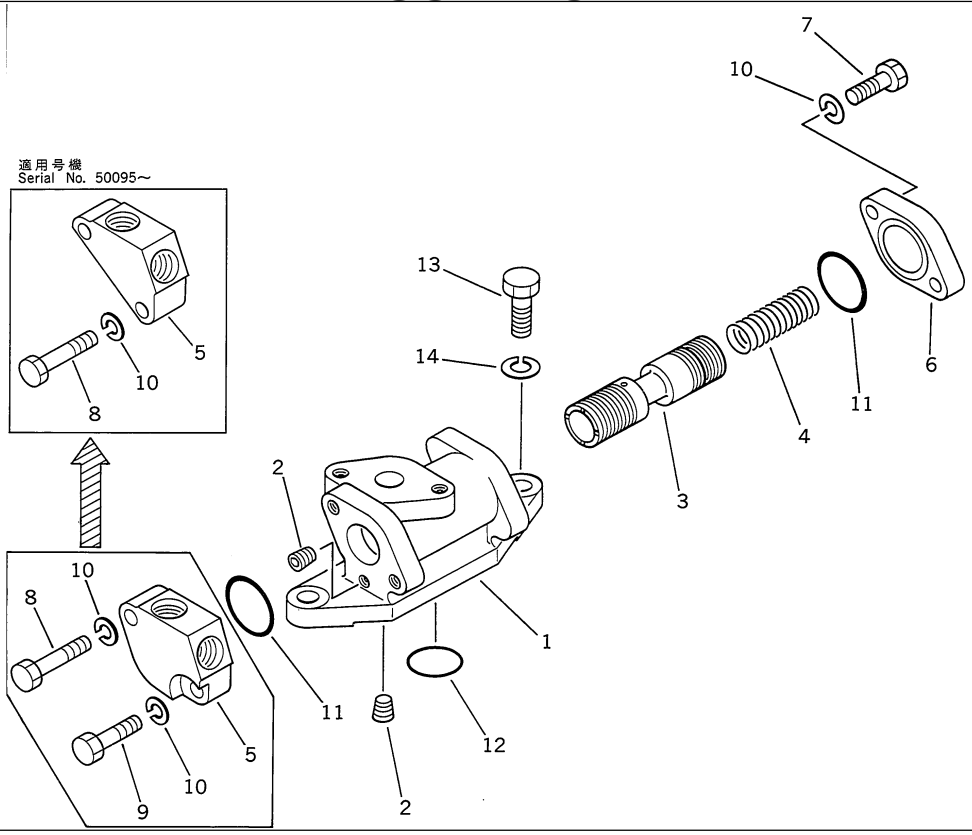

Ref. 4703 **Page 120280**

D155A-2 S/N 50001-UP (S6D155-4 Eng. Installed)

BRAKE AUTOMATIC VALVE (WITH BRAKE ASSISTOR)

Item	Part No.	Part Name	Qty	Serial No.
1	175-33-00120	VALVE ASS'Y	1	50001-
	195-33-14461	· BODY	1	50001-
2	07043-50108	· PLUG	2	50001-
3	195-33-14470	· SPOOL	1	50001-
4	195-33-14480	· SPRING	1	50001-
5	175-33-32241	· FLANGE	1	50001-
6	195-33-14140	· FLANGE	1	50001-
7	01010-51035	· BOLT	2	50001-
8	01010-51050	· BOLT	2	50095-
	01010-51050	· BOLT	1	50001-50094
9	01010-51040	· BOLT	1	50001-50094
10	01602-21030	· WASHER,SPRING	4	50001-
11	07000-03038	· O-RING	2	50001-
12	07000-03025	O-RING	1	50001-
13	01010-31235	BOLT	2	50001-
14	01602-21236	WASHER,SPRING	2	50001-

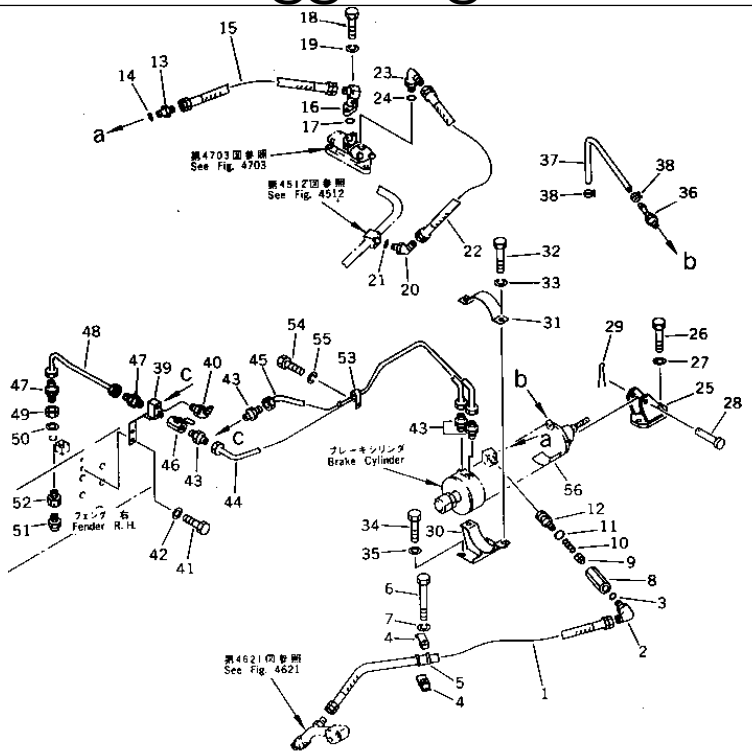

Ref. 4711 **Page 120290**

D155A-2 S/N 50001-UP (S6D155-4 Eng. Installed)
BRAKE PIPING (WITH BRAKE ASSISTOR)

Item	Part No.	Part Name	Qty	Serial No.
1	07102-20308	HOSE	1	50001-
2	07235-10315	ELBOW	1	50001-
3	07002-02034	O-RING	1	50001-
4	175-49-32130	CLAMP	2	50001-
5	07095-00318	CUSHION	1	52350-
	175-49-32140	CUSHION	1	50001-52349
6	01010-51070	BOLT	1	50001-
7	01602-21030	WASHER,SPRING	1	50001-
8	196-33-31200	VALVE ASS'Y	1	50001-
	196-33-31210	· BODY	1	50001-
9	205-60-51390	· POPPET	1	50001-
10	205-60-51410	· SPRING	1	50001-
11	07002-02434	· O-RING	1	50001-
12	196-33-31190	· UNION	1	50001-
13	07230-20422	UNION	1	50167-
	□07230-10422	UNION	1	50001-50166
14	07002-02034	O-RING	1	50001-
15	07102-20403	HOSE	1	50001-
16	175-49-32120	TUBE	1	50001-
17	07000-03025	O-RING	1	50001-
18	01010-51030	BOLT	2	50001-
19	01602-21030	WASHER,SPRING	2	50001-
20	07236-10315	ELBOW	1	50001-
21	07002-02034	O-RING	1	50001-
22	07102-20305	HOSE	1	50001-
23	07235-10315	ELBOW	1	50001-
24	07002-02034	O-RING	1	50001-

D155A-2 S/N 50001-UP (S6D155-4 Eng. Installed)
BRAKE PIPING (WITH BRAKE ASSISTOR)

Item	Part No.	Part Name	Qty	Serial No.
25	175-33-32110	BRACKET	1	50001-
26	01010-51640	BOLT	2	50001-
27	01643-31645	WASHER	2	50001-
28	195-33-15110	PIN	1	50001-
29	04050-14028	PIN,COTTER	1	50001-
30	175-33-32120	BRACKET	1	50001-
31	196-33-31320	PLATE	1	50001-
32	01010-51230	BOLT	2	50001-
33	01602-21236	WASHER,SPRING	2	50001-
34	01010-51275	BOLT	2	50001-
35	01643-31232	WASHER	2	50001-
36	07209-01040	NIPPLE	2	50001-
37	07270-30423	TUBE	1	50001-
38	175-04-25180	CLIP	2	50001-
39	175-33-32230	BRACKET	1	50001-
40	07020-00675	FITTING,GREASE	1	50001-
41	01010-51235	BOLT	2	50001-
42	01643-31232	WASHER,SPRING	2	50001-
43	07213-50813	CONNECTOR	4	50001-
44	175-33-12240	TUBE	1	50001-
45	175-33-12250	TUBE	1	50001-
46	07700-40240	VALVE	1	50001-
47	07213-50813	CONNECTOR	2	50001-
48	175-33-32220	TUBE	1	50001-
49	01583-12012	NUT	1	50001-
50	01643-32060	WASHER	1	50001-
51	07029-00000	VALVE,RELIEF	1	50001-
52	195-49-13350	NIPPLE	1	50001-
53	04435-00808	CLIP	1	50001-
54	01010-50820	BOLT	1	50001-
55	01602-20825	WASHER,SPRING	1	50001-
56	07843-00064	PLATE¤ CAUTION,(JAPANESE)	1	50001-

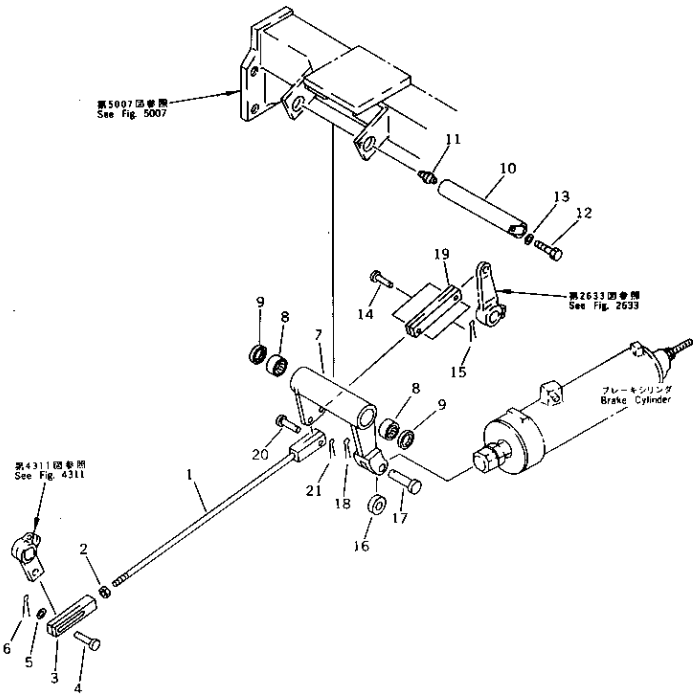

Ref. 4721 **Page 120300**

D155A-2 S/N 50001-UP (S6D155-4 Eng. Installed)
BRAKE LINKAGE (WITH BRAKE ASSISTOR)

Item	Part No.	Part Name	Qty	Serial No.
1	04244-51462	ROD	1	50001-
2	01582-11411	NUT	1	50001-
3	195-43-24290	YOKE	1	50001-
4	04205-11440	PIN	1	50001-
5	01641-21423	WASHER	1	50001-
6	04050-14025	PIN,COTTER	1	50001-
7	175-33-32130	LEVER	1	50001-
8	06120-03520	BEARING,NEEDLE	2	50001-
9	06122-03504	SEAL,BEARING	2	50001-
10	175-33-32140	SHAFT	1	50001-
11	07020-00000	FITTING,GREASE	1	50001-
12	01010-51020	BOLT	1	50001-
13	01602-21030	WASHER,SPRING	1	50001-
14	04205-11438	PIN	2	50001-
15	04050-14022	PIN,COTTER	2	50001-
16	178-33-13260	COLLAR	1	50001-
17	178-33-13250	PIN	1	50001-
18	04050-14028	PIN,COTTER	1	50001-
19	144-43-31370	YOKE	1	50001-
20	(04205-11438)	PIN	1	50001-
21	(04050-14022)	PIN,COTTER	1	50001-

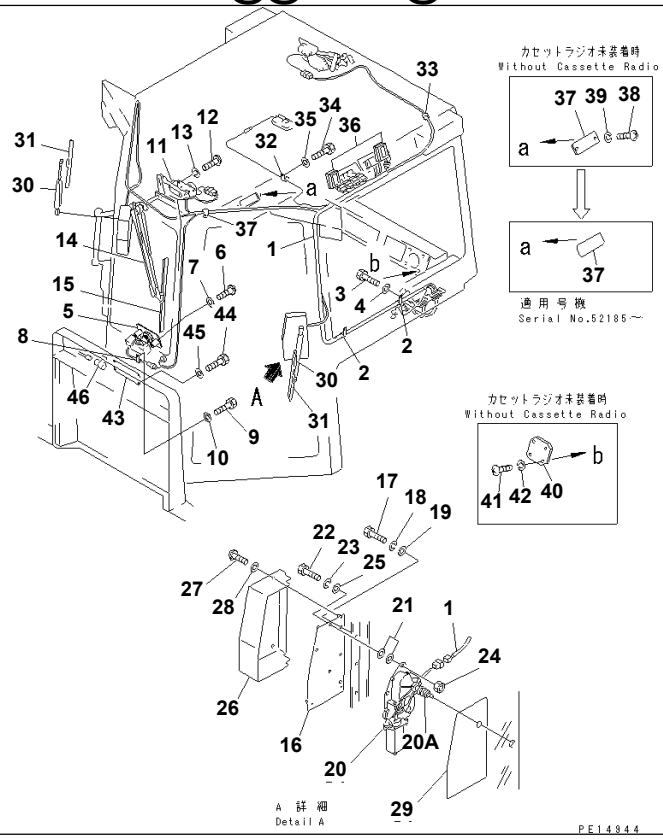

Ref. 5507 Page 150410

D155A-2 S/N 50001-UP (S6D155-4 Eng. Installed)

STEEL CAB (ELECTRICAL PARTS¤ FRONT) (7/9)

Item	Part No.	Part Name	Qty	Serial No.
G-1	(⊙175-911-X220)	WIRING HARNESS GROUP	1	50001-
		==========		
1	(175-911-0040)	STEEL CAB ASS'Y	1	52185-
	(175-911-0021)	STEEL CAB ASS'Y	1	51280-52184
	(□175-911-0020)	STEEL CAB ASS'Y	1	50001-51279
		THESE ASSEMBLIES CONSIST OF ALL PARTS SHOWN IN FIGS.5501 TO 5509.		
1	195-Z11-2810	· WIRING HARNESS	1	50001-
2	08036-21414	· CLIP	2	50001-
3	01010-50810	· BOLT	2	50001-
4	01643-30823	· WASHER	2	50001-
5	195-06-41360	· DISPLAY ASS'Y	1	50001-
	195-06-41350	· · LAMP	1	50001-
	08111-12430	· · · BULB¤ 3W	1	50001-
6	01220-40616	· SCREW	4	50001-
7	01642-00608	· WASHER	4	50001-
8	08036-31210	· CLIP	1	50001-
9	01010-50810	· BOLT	1	50001-
10	01643-30823	· WASHER	1	50001-
11	195-Z11-2420	· MOTOR ASS'Y	1	50001-
12	01220-40616	· SCREW	4	50001-
13	01602-20619	· WASHER,SPRING	4	50001-
14	195-Z11-2450	· ARM,WIPER	1	50001-
15	195-Z11-2470	· BLADE,WIPER	1	50001-
16	195-Z11-2490	· PLATE	2	50001-
17	01010-50825	· BOLT	6	50001-
18	01602-20825	· WASHER,SPRING	6	50001-
19	01643-30823	· WASHER	6	50001-

STEEL CAB (ELECTRICAL PARTS¤ FRONT) (7/9)

Item	Part No.	Part Name	Qty	Serial No.
20	195-Z11-2430	· MOTOR ASS'Y	2	50001-
20A	ND859901-0300	· · GROMMET	1	50001-
21	01643-31032	· WASHER	12	50001-
22	01010-50830	· BOLT	6	50001-
23	01602-20825	· WASHER,SPRING	6	50001-
24	01580-00806	· NUT	6	50001-
25	01643-30823	· WASHER	6	50001-
26	195-Z11-2220	· COVER	2	50001-
27	01220-40512	· SCREW	8	50001-
28	01642-20508	· WASHER	8	50001-
29	195-Z11-2230	· PLATE	2	50001-
30	195-Z11-2440	· ARM,WIPER	2	50001-
31	198-911-3260	· BLADE,WIPER	2	50001-
32	08036-22514	· CLIP	1	50001-
33	08036-21414	· CLIP	2	50001-
34	01010-50810	· BOLT	3	50001-
35	01643-30823	· WASHER	3	50001-
36	195-Z11-2980	· SEAL	2	50001-
37	195-Z11-2951	· COVER	1	52185-
	195-Z11-2950	· COVER	1	50001-52184
38	195-979-7720	· SCREW	2	50001-52184
39	01601-20410	· WASHER,SPRING	2	50001-52184
40	195-Z11-2961	· COVER	2	52185-
	195-Z11-2960	· COVER	2	50001-52184
41	195-979-7720	· SCREW	8	50001-
42	01601-20410	· WASHER,SPRING	8	50001-
		==========		
G-2	(⊙175-911-X260)	COVER GROUP	1	50001-
		==========		
43	154-54-45260	PLATE	1	50001-
44	01010-50620	BOLT	4	50001-
45	01643-30623	WASHER	4	50001-
46	209-06-51640	CONNECTOR	1	50001-
		==========		

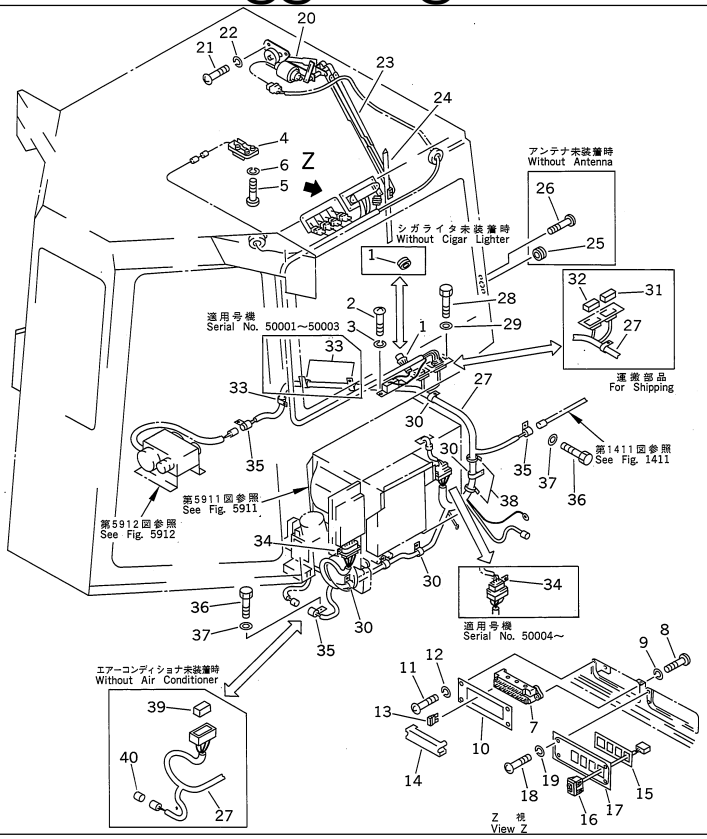

STEEL CAB (ELECTRICAL PARTS¤ REAR) (8/9)

Item	Part No.	Part Name	Qty	Serial No.
G-1	(⊙175-911-X220)	WIRING HARNESS GROUP	1	50001-
		==========		
1	(175-911-0040)	STEEL CAB ASS'Y		52185-
	(175-911-0021)	STEEL CAB ASS'Y	1	51280-52184
	(□175-911-0020)	STEEL CAB ASS'Y	1	50001-51279
		THESE ASSEMBLIES CONSIST OF ALL PARTS SHOWN IN FIGS.5501 TO 5509.		
1	195-822-6151	· LIGHTER	1	50001-
	09415-00706	· CAP,(WITHOUT LIGHTER)	1	50001-
2	195-979-7720	· SCREW	2	50001-
3	01601-20410	· WASHER,SPRING	2	50001-
4	195-Z11-2190	· LAMP,ROOM	1	50001-
	08116-02410	· · BULB¤ 10W	1	50001-
5	195-979-7710	· SCREW	4	50001-
6	01601-20513	· WASHER,SPRING	4	50001-
7	195-Z11-2280	· BODY	1	50001-
8	195-979-7710	· SCREW	2	50001-
9	01601-20513	· WASHER,SPRING	2	50001-
10	195-Z11-2250	· PLATE	1	50001-
11	195-979-7720	· SCREW	4	50001-
12	01601-20410	· WASHER,SPRING	4	50001-
13	283-06-16190	· FUSE¤ 10A	10	50001-
14	195-Z11-2290	· COVER	1	50001-
15	195-Z11-2240	· PLATE	1	50001-
16	195-Z11-2310	· SWITCH,WIPER	4	50001-
17	195-Z11-2270	· PLATE	1	50001-
18	195-979-7720	· SCREW	4	50001-
19	01601-20410	· WASHER,SPRING	4	50001-

D155A-2 S/N 50001-UP (S6D155-4 Eng. Installed)
STEEL CAB (ELECTRICAL PARTS¤ REAR) (8/9)

Item	Part No.	Part Name	Qty	Serial No.
20	195-Z11-2420	· MOTOR ASS'Y	1	50001-
21	01220-40616	· SCREW	4	50001-
22	01602-20619	· WASHER,SPRING	4	50001-
23	195-Z11-2460	· ARM,WIPER	1	50001-
24	195-Z11-2470	· BLADE,WIPER	1	50001-
		==========		
G-2	(⊙175-911-X250)	WIRING HARNESS GROUP	1	50001-
		==========		
25	09415-00706	· CAP,(WITHOUT ANTENA)	1	50001-
26	195-979-7720	· SCREW,(WITHOUT ANTENA)	2	50001-
27	154-Z11-5571	· WIRING HARNESS	1	52058-
	154-Z11-5570	· WIRING HARNESS	1	50001-52057
	175-911-5110	WIRING HARNESS,(FOR BRAKE CAUTION)	1	52945-
28	01010-50620	· BOLT	2	50001-
29	01643-30623	· WASHER	2	50001-
30	08036-01814	· CLIP	4	50001-
31	195-Z11-7130	· CONNECTOR	1	50001-
32	195-Z11-7120	· CONNECTOR	1	50001-
33	08036-01014	· CLIP	1	52058-
	08036-01414	· CLIP	1	50004-52057
	08036-01414	· CLIP	3	50001-50003
34	195-Z11-5360	· CLIP	2	50004-
	195-Z11-5360	· CLIP	1	50001-50003
35	195-06-41830	· CLIP	3	50001-
36	01010-51220	· BOLT	11	50001-
37	01643-31232	· WASHER	11	50001-
38	08034-00519	· BAND	2	50001-
39	195-Z11-2890	CONNECTOR	2	50001-
40	195-Z11-2910	CONNECTOR	2	50001-
		==========		

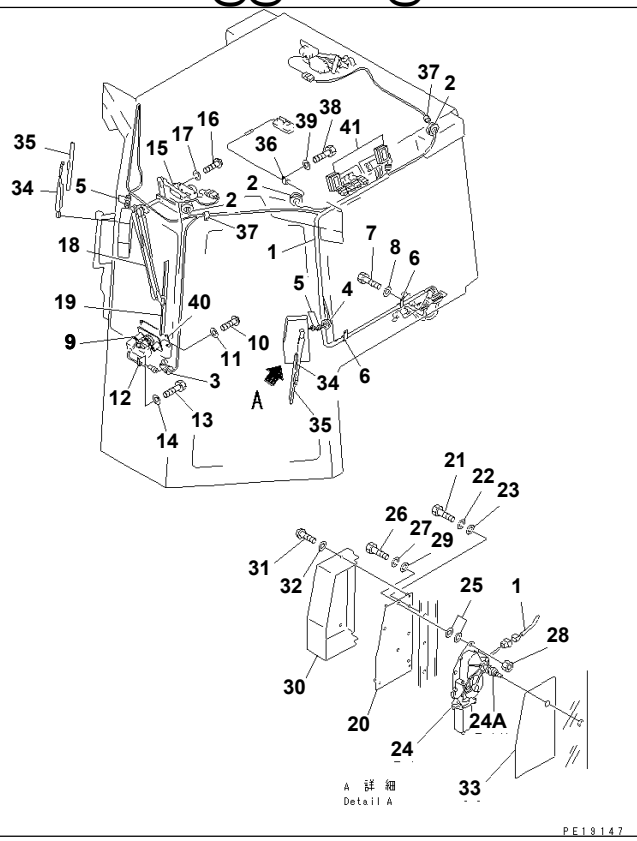

Ref. 5537 Page 150510

STEEL CAB (ELECTRICAL PARTS¤ FRONT) (7/9) (WITH VENTILATOR)(#51280-)

Item	Part No.	Part Name	Qty	Serial No.
1	(175-911-0030)	STEEL CAB ASS'Y	1	51280-
		THIS ASSEMBLY CONSISTS OF ALL PARTS SHOWN IN FIGS.5531 TO 5539.		
1	195-Z11-2810	· WIRING HARNESS	1	51280-
2	08027-05016	· GROMMET	3	51280-
3	08037-01510	· GROMMET	1	51288-
4	08037-02512	· GROMMET	1	51280-
5	08037-01008	· GROMMET	4	51280-
6	08036-21414	· CLIP	2	51280-
7	01010-50810	· BOLT	2	51280-
8	01643-30823	· WASHER	2	51280-
9	195-06-41360	· DISPLAY ASS'Y	1	51280-
	195-06-41350	· · LAMP	1	51280-
	08111-12430	· · · BULB¤ 3W	1	51280-
10	01220-40616	· SCREW	4	51280-
11	01642-00608	· WASHER	4	51280-
12	08036-31210	· CLIP	1	51280-
13	01010-50810	· BOLT	1	51280-
14	01643-30823	· WASHER	1	51280-
15	195-Z11-2420	· MOTOR ASS'Y	1	51280-
16	01220-40616	· SCREW	4	51280-
17	01602-20619	· WASHER,SPRING	4	51280-
18	195-Z11-2450	· ARM,WIPER	1	51280-
19	195-Z11-2470	· BLADE,WIPER	1	51280-
20	195-Z11-2490	· PLATE	2	51280-
21	01010-50825	· BOLT	6	51280-
22	01602-20825	· WASHER,SPRING	6	51280-
23	01643-30823	· WASHER	6	51280-

STEEL CAB (ELECTRICAL PARTS¤ FRONT) (7/9) (WITH VENTILATOR)(#51280-)

Item	Part No.	Part Name	Qty	Serial No.
24	195-Z11-2430	· MOTOR ASS'Y	2	51280-
24A	ND859901-0300	· · GROMMET	1	51280-
25	01643-31032	· WASHER	12	51280-
26	01010-50830	· BOLT	6	51280-
27	01602-20825	· WASHER,SPRING	6	51280-
28	01580-00806	· NUT	6	51280-
29	01643-30823	· WASHER	6	51280-
30	195-Z11-2220	· COVER	2	51280-
31	01220-40512	· SCREW	8	51280-
32	01642-20508	· WASHER	8	51280-
33	195-Z11-2230	· PLATE	2	51280-
34	195-Z11-2440	· ARM,WIPER	2	51280-
35	198-911-3260	· BLADE,WIPER	2	51280-
36	08036-22514	· CLIP	1	51280-
37	08036-21414	· CLIP	2	51280-
38	01010-50810	· BOLT	3	51280-
39	01643-30823	· WASHER	3	51280-
40	154-54-45260	PLATE	1	51280-
41	195-Z11-2980	SEAL	2	51280-

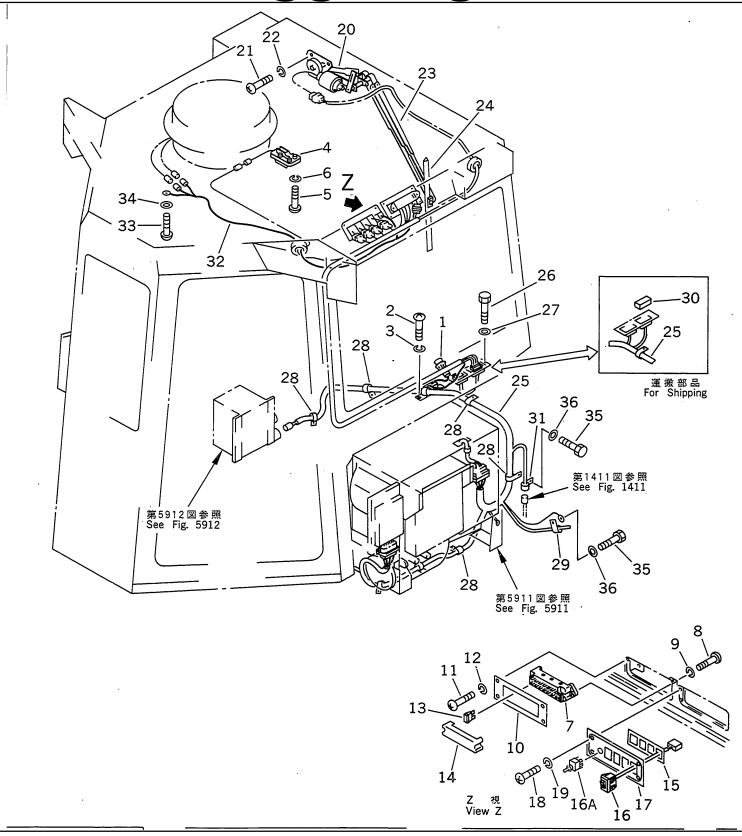

D155A-2 S/N 50001-UP (S6D155-4 Eng. Installed)

STEEL CAB (ELECTRICAL PARTS¤ REAR) (8/9) (WITH VENTILATOR)(#51280-)

Item	Part No.	Part Name	Qty	Serial No.
1	(175-911-0030)	STEEL CAB ASS'Y	1	51280-
		THIS ASSEMBLY CONSISTS OF ALL PARTS SHOWN IN FIGS.5531 TO 5539.		
1	195-822-6151	· LIGHTER	1	51280-
2	195-979-7720	· SCREW	2	51280-
3	01601-20410	· WASHER,SPRING	2	51280-
4	195-Z11-2190	· LAMP,ROOM	1	51280-
	08116-02410	· · BULB¤ 10W	1	51280-
5	195-979-7710	· SCREW	4	51280-
6	01601-20513	· WASHER,SPRING	4	51280-
7	195-Z11-2280	· BODY	1	51280-
8	195-979-7710	· SCREW	2	51280-
9	01601-20513	· WASHER,SPRING	2	51280-
10	195-Z11-2250	· PLATE	1	51280-
11	195-979-7720	· SCREW	4	51280-
12	01601-20410	· WASHER,SPRING	4	51280-
13	283-06-16190	· FUSE¤ 10A	11	51280-
14	195-Z11-2290	· COVER	1	51280-
15	195-Z11-2240	· PLATE	1	51280-
16	195-Z11-2310	· SWITCH,WIPER	4	51280-
16A	195-979-3290	· SWITCH,VENTILATOR	1	51280-
17	195-Z11-3610	· PLATE	1	51280-
18	195-979-7720	· SCREW	4	51280-
19	01601-20410	· WASHER,SPRING	4	51280-
20	195-Z11-2420	· MOTOR ASS'Y	1	51280-
21	01220-40616	· SCREW	4	51280-
22	01602-20619	· WASHER,SPRING	4	51280-
23	195-Z11-2460	· ARM,WIPER	1	51280-

STEEL CAB (ELECTRICAL PARTS¤ REAR) (8/9) (WITH VENTILATOR)(#51280-)

Item	Part No.	Part Name	Qty	Serial No.
24	195-Z11-2470	· BLADE,WIPER	1	51280-
25	154-Z11-5570	· WIRING HARNESS	1	51280-
26	01010-50620	· BOLT	2	51280-
27	01643-30623	· WASHER	2	51280-
28	08036-61814	· CLIP	6	51280-
29	08035-61214	· CLIP	1	51280-
30	195-Z11-7130	· CONNECTOR	1	51280-
31	195-06-41830	· CLIP	1	51280-
32	195-Z11-3590	· WIRE	1	51280-
33	195-979-7810	· SCREW	1	51280-
34	01642-20508	· WASHER,SPRING	1	51280-
35	01010-51220	· BOLT	6	51280-
36	01643-31232	· WASHER	6	51280-

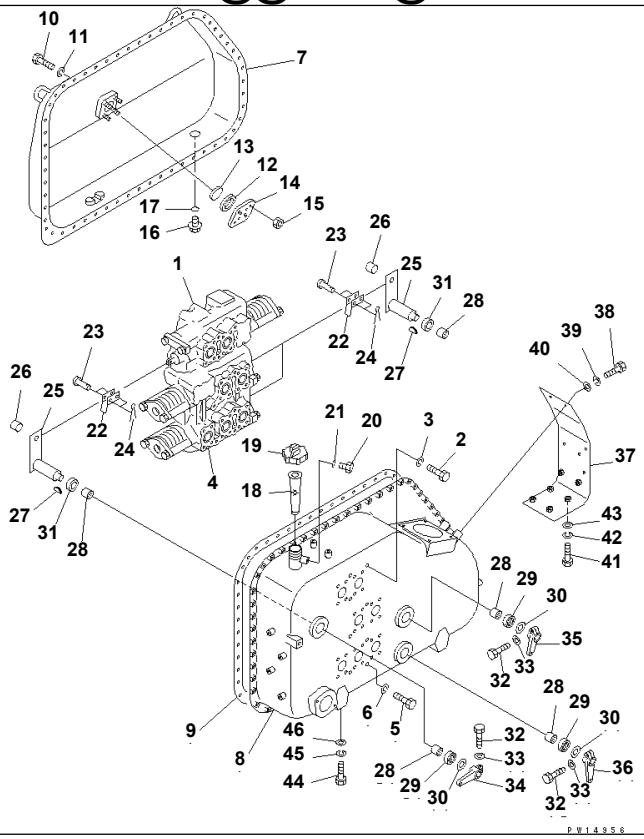

Ref. 6021 **Page 180010**

D155A-2 S/N 50001-UP (S6D155-4 Eng. Installed)
HYDRAULIC TANK (1/2)

Item	Part No.	Part Name	Qty	Serial No.
1	175-60-00204	TANK VALVE ASS'Y	1	52126-
	□175-60-00203	TANK VALVE ASS'Y	1	50001-52125
		THESE ASSEMBLIES CONSIST OF ALL PARTS SHOWN IN FIGS.6021 TO 6035.		
1	701-41-11006	· VALVE ASS'Y,BLADE TILT	1	50001-
2	01010-51230	· BOLT	3	50001-
3	01602-21236	· WASHER,SPRING	3	50001-
4	701-43-24002	· VALVE ASS'Y,BLADE LIFT AND RIPPER	1	50001-
5	01010-51230	· BOLT	4	50001-
6	01602-21236	· WASHER,SPRING	4	50001-
7	175-60-58120	· TANK,HYDRAULIC	1	50001-
8	175-60-58110	· TANK,HYDRAULIC	1	50001-
9	175-60-27133	· GASKET	1	52126-
	□175-60-27132	· GASKET	1	50001-52125
10	01010-51025	· BOLT	55	50001-
11	01602-21030	· WASHER,SPRING	55	50001-
12	07715-11257	· RING	1	50001-
13	07715-00651	· COVER	1	50001-
14	07715-21074	· CASE	1	50001-
15	01598-11011	· NUT	4	50001-
16	07044-13620	· PLUG,DRAIN	1	50001-
17	07002-03634	· O-RING	1	50001-
18	07056-10045	· STRAINER	1	50001-
19	07051-00000	· CAP	1	50001-
	07092-00000	· CAP,(FOR VANDALISM PROTECTION)	1	50001-
	07051-00003	· · GASKET	1	50001-
20	701-30-63130	· PLUG	1	50001-
21	07002-02034	· O-RING	1	50001-

HYDRAULIC TANK (1/2)

Item	Part No.	Part Name	Qty	Serial No.
22	141-60-32170	· YOKE	6	50001-
23	04205-01028	· PIN	6	50001-
24	04050-03015	· PIN,COTTER	6	50001-
25	175-60-29140	· LEVER	3	50001-
26	06600-01008	· · BUSHING	3	50001-
27	04010-00519	· KEY	3	50001-
28	06120-02520	· BEARING	6	50001-
29	154-60-12370	· SEAL	3	50001-
30	01640-22440	· WASHER	3	50001-
31	175-60-29150	· WASHER	3	50001-
32	01010-51040	· BOLT	3	50001-
33	01602-21030	· WASHER,SPRING	3	50001-
34	175-60-29120	· LEVER	1	50001-
35	195-60-13120	· LEVER	1	50001-
36	175-60-27310	· LEVER	1	50001-
37	175-60-27371	· BRACKET	1	50001-
38	01010-51235	· BOLT	4	50001-
39	01602-21236	· WASHER,SPRING	4	50001-
40	01643-31232	· WASHER	4	50001-
41	01010-51440	BOLT	4	50001-
42	01602-21442	WASHER,SPRING	4	50001-
43	01643-31445	WASHER	4	50001-
44	01010-51850	BOLT	5	50001-
45	01602-21854	WASHER,SPRING	5	50001-
46	01643-31845	WASHER	5	50001-

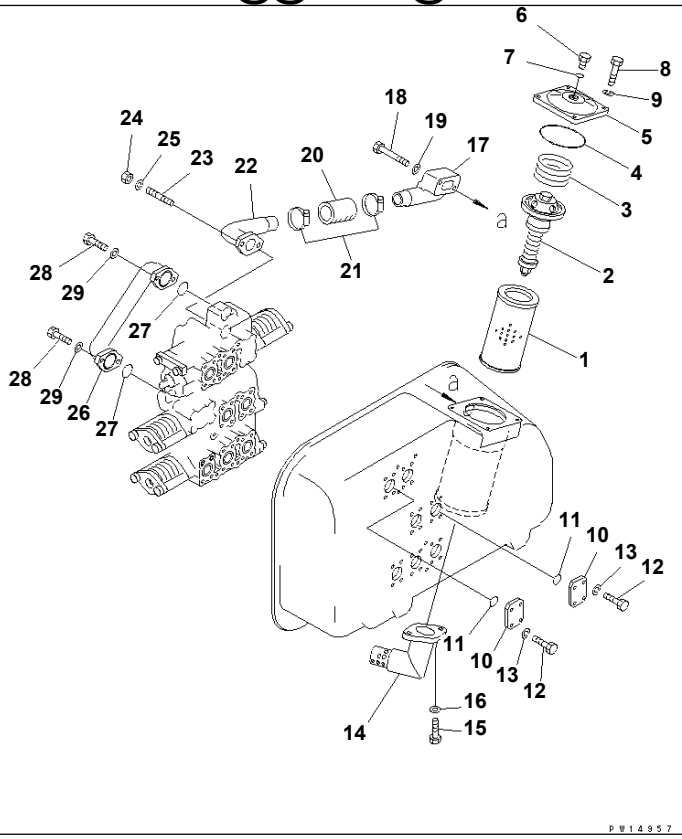

Ref. 6022 **Page 180020**

D155A-2 S/N 50001-UP (S6D155-4 Eng. Installed)
HYDRAULIC TANK (2/2)

Item	Part No.	Part Name	Qty	Serial No.
1	(175-60-00204)	TANK VALVE ASS'Y	1	52126-
	□175-60-00203	TANK VALVE ASS'Y	1	50001-52125
		THESE ASSEMBLIES CONSIST OF ALL PARTS SHOWN IN FIGS.6021 TO 6035.		
1	07063-01100	· ELEMENT,FILTER	1	50001-
2	175-60-27300	· VALVE ASS'Y	1	50001-
3	175-60-27340	· SPRING	1	50001-
4	07000-05150	· O-RING	1	50001-
5	175-60-27171	· COVER	1	50001-
6	154-60-12260	· PLUG	1	50001-
7	07000-02010	· O-RING	1	50001-
8	01010-51235	· BOLT	4	50001-
9	01602-21236	· WASHER,SPRING	4	50001-
10	07378-01460	· FLANGE	4	50001-
11	07000-13048	· O-RING	4	50001-
12	01010-51240	· BOLT	16	50001-
13	01602-21236	· WASHER,SPRING	16	50001-
14	175-60-29130	· BAFFLE	1	50001-
15	01010-31230	· BOLT	2	50001-
16	01643-51232	· WASHER	2	50001-
17	175-60-27262	· TUBE	1	50001-
18	01010-31275	· BOLT	2	50001-
19	01643-51232	· WASHER	2	50001-
20	175-60-29160	· HOSE	1	50001-
21	07281-00709	· CLAMP	2	50001-
22	175-60-27272	· TUBE	1	50001-
23	01144-31435	· STUD	2	50001-
24	01580-01411	· NUT	2	50001-

HYDRAULIC TANK (2/2)

Item	Part No.	Part Name	Qty	Serial No.
25	20D-14-11510	· WASHER	2	50001-
26	175-60-27253	· TUBE	1	50001-
27	07000-13050	· O-RING	2	50001-
28	01010-31445	· BOLT	4	50001-
29	20D-14-11510	· WASHER	4	50001-

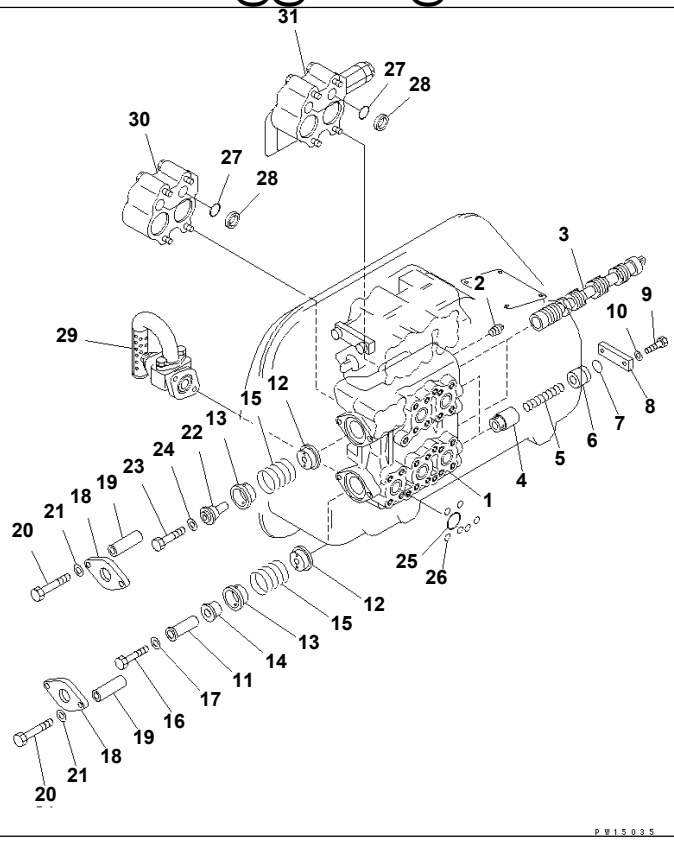

D155A-2 S/N 50001-UP (S6D155-4 Eng. Installed)

BLADE LIFT AND RIPPER CONTROL VALVE (1/2)

Item	Part No.	Part Name	Qty	Serial No.
1	(175-60-00204)	TANK VALVE ASS'Y	1	52126-
	□175-60-00203	TANK VALVE ASS'Y	1	50001-52125
		THESE ASSEMBLIES CONSIST OF ALL PARTS SHOWN IN FIGS.6021 TO 6035.		
1	701-43-24002	· VALVE ASS'Y,BLADE LIFT AND RIPPER	1	50001-
		THIS ASSEMBLY CONSISTS OF ALL PARTS SHOWN IN FIGS.6031 TO 6032.		
1	701-43-41002	· · VALVE BODY ASS'Y	1	50001-
	701-43-00015	· · · BODY SUB ASS'Y	1	50001-
	☆	· · · · BODY	1	50001-
2	07042-00415	· · · · PLUG	2	50001-
3	☆	· · · · SPOOL	2	50001-
4	701-43-31420	· · · VALVE	2	50001-
5	701-53-31130	· · · SPRING	2	50001-
6	701-43-33130	· · · SEAT,SPRING	2	50001-
7	07000-13035	· · · O-RING	2	50001-
8	701-53-31160	· · · PLATE	2	50001-
9	01010-31445	· · · BOLT	4	50001-
10	20D-14-11510	· · · WASHER	4	50001-
11	701-43-31440	· · · COLLAR	1	50001-
12	701-43-31181	· · · SPACER	2	50001-
13	701-43-31191	· · · SPACER	2	50001-
14	701-43-31211	· · · COLLAR	1	50001-
15	701-43-31221	· · · SPRING,RETURN	2	50001-
16	01010-31295	· · · BOLT	1	50001-
17	01643-51232	· · · WASHER	1	50001-
18	701-43-31460	· · · PLATE	2	50001-
19	701-43-31470	· · · COLLAR	4	50001-
20	01011-31215	· · · BOLT	4	50001-

BLADE LIFT AND RIPPER CONTROL VALVE (1/2)

Item	Part No.	Part Name	Qty	Serial No.
21	01643-51232	· · · WASHER	4	50001-
22	701-43-31291	· · · COLLAR	1	50001-
23	01010-31290	· · · BOLT	1	50001-
24	01643-51232	· · · WASHER	1	50001-
25	701-51-31250	· · · O-RING	5	50001-
26	07000-02015	· · · O-RING	25	50001-
27	07000-13035	· · · O-RING	4	50001-
28	701-40-61180	· · · RING	4	50001-
29	(701-40-51002)	· · VALVE ASS'Y,MAIN RELIEF	1	50001-
30	(701-40-61002)	· · VALVE ASS'Y,SUCTION	1	50001-
31	(701-40-62002)	· · VALVE ASS'Y,SAFETY AND SUCTION	1	50001-

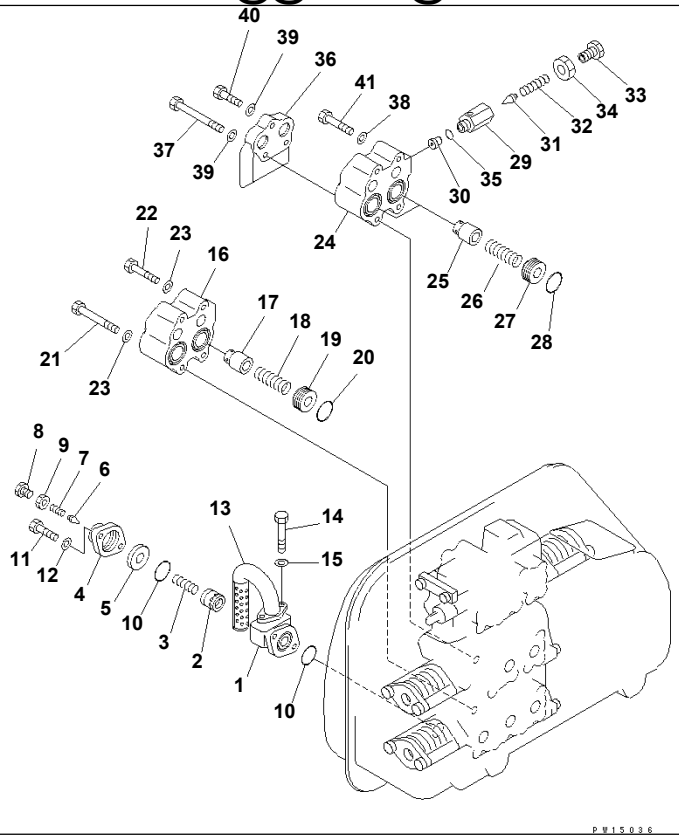

Ref. 6032 Page 180040

D155A-2 S/N 50001-UP (S6D155-4 Eng. Installed)

BLADE LIFT AND RIPPER CONTROL VALVE (2/2)

Item	Part No.	Part Name	Qty	Serial No.
1	(175-60-00204)	TANK VALVE ASS'Y	1	52126-
	□175-60-00203	TANK VALVE ASS'Y	1	50001-52125
		THESE ASSEMBLIES CONSIST OF ALL PARTS SHOWN IN FIGS.6021 TO 6035.		
1	(701-43-24002)	· VALVE ASS'Y,BLADE LIFT AND RIPPER	1	50001-
		THIS ASSEMBLY CONSISTS OF ALL PARTS SHOWN IN FIGS.6031 TO 6032.		
1	701-40-51002	· · VALVE ASS'Y,MAIN RELIEF	1	50001-
	701-40-00011	· · · HOUSING ASS'Y	1	50001-
	☆	· · · · HOUSING	1	50001-
2	☆	· · · · VALVE	1	50001-
3	701-30-51130	· · · SPRING	1	50001-
4	701-40-51130	· · · BODY	1	50001-
5	701-30-51151	· · · SEAT,VALVE	1	50001-
6	701-30-51160	· · · POPPET	1	50001-
7	701-30-51171	· · · SPRING,POPPET	1	50001-
8	701-10-51160	· · · PLUG	1	50001-
9	701-30-51190	· · · NUT,LOCK	1	50001-
10	07000-13048	· · · O-RING	2	50001-
11	01011-31405	· · · BOLT	2	50001-
12	20D-14-11510	· · · WASHER	2	50001-
13	701-40-51160	· · · TUBE	1	50001-
14	01010-31030	· · · BOLT	2	50001-
15	01643-51032	· · · WASHER	2	50001-
16	701-40-61002	· · VALVE ASS'Y,SUCTION	1	50001-
	701-40-61152	· · · HOUSING	1	50001-
17	701-40-61120	· · · VALVE	2	50001-
18	701-50-61131	· · · SPRING	2	50001-
19	701-40-72120	· · · SEAT	2	50001-

BLADE LIFT AND RIPPER CONTROL VALVE (2/2)

Item	Part No.	Part Name	Qty	Serial No.
20	07000-13040	· · · O-RING	2	50001-
21	01011-31420	· · · BOLT	2	50001-
22	01010-31495	· · · BOLT	2	50001-
23	20D-14-11510	· · · WASHER	4	50001-
24	701-40-62002	· · VALVE ASS'Y,SAFETY AND SUCTION	1	50001-
	701-40-62162	· · · HOUSING	1	50001-
25	701-40-61120	· · · VALVE	2	50001-
26	701-50-61131	· · · SPRING	2	50001-
27	701-40-72120	· · · SEAT	2	50001-
28	07000-13040	· · · O-RING	2	50001-
29	701-40-00040	· · · VALVE ASS'Y,SAFETY	1	50001-
	☆	· · · · BODY	1	50001-
30	☆	· · · · SEAT,VALVE	1	50001-
31	☆	· · · · POPPET	1	50001-
32	☆	· · · · SPRING	1	50001-
33	☆	· · · · PLUG	1	50001-
34	☆	· · · · NUT	1	50001-
35	07002-13034	· · · · O-RING	1	50001-
36	701-40-62171	· · · BAFFLE	1	50001-
37	01011-31465	· · · BOLT	2	50001-
38	20D-14-11510	· · · WASHER	2	50001-
39	01643-31445	· · · WASHER	3	50001-
40	01010-31450	· · · BOLT	1	50001-
41	01010-31495	· · · BOLT	2	50001-

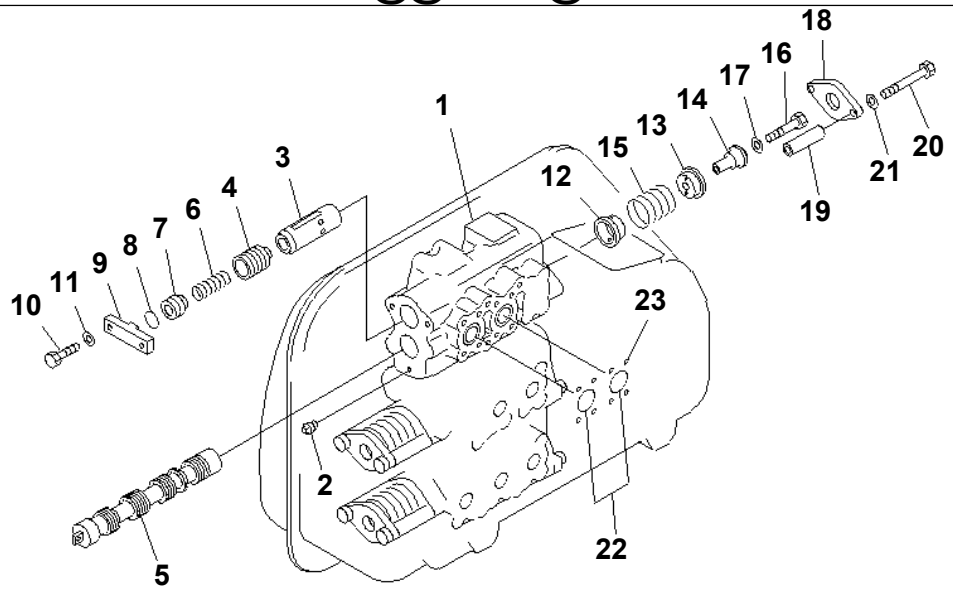

P W 1 5 0 3 7

Ref. 6035 **Page 180050**

D155A-2 S/N 50001-UP (S6D155-4 Eng. Installed)
BLADE TILT CONTROL VALVE

Item	Part No.	Part Name	Qty	Serial No.
1	(175-60-00204)	TANK VALVE ASS'Y	1	52126-
	□175-60-00203	TANK VALVE ASS'Y	1	50001-52125
		THESE ASSEMBLIES CONSIST OF ALL PARTS SHOWN IN FIGS.6021 TO 6035.		
1	701-41-11006	· VALVE ASS'Y,BLADE TILT	1	50001-
	701-41-00016	· · VALVE BODY ASS'Y	1	50001-
	☆	· · · BODY	1	50001-
2	07042-00415	· · · PLUG	1	50001-
3	☆	· · · COLLAR	1	50001-
4	701-41-31130	· · · VALVE	1	50001-
5	☆	· · · SPOOL	1	50001-
6	701-41-31180	· · SPRING	1	50001-
7	701-41-31150	· · SEAT	1	50001-
8	07000-13028	· · O-RING	1	50001-
9	701-51-31172	· · PLATE	1	50001-
10	01010-31450	· · BOLT	2	50001-
11	20D-14-11510	· · WASHER	2	50001-
12	701-43-31181	· · SPACER	1	50001-
13	701-43-31191	· · SPACER	1	50001-
14	701-43-31291	· · COLLAR	1	50001-
15	701-43-31221	· · SPRING	1	50001-
16	01010-31290	· · BOLT	1	50001-
17	01643-51232	· · WASHER	1	50001-
18	701-43-31460	· · PLATE	1	50001-
19	701-43-31470	· · COLLAR	2	50001-
20	01011-31215	· · BOLT	2	50001-
21	01643-51232	· · WASHER	2	50001-
22	701-51-31250	· · O-RING	2	50001-

BLADE TILT CONTROL VALVE

Item	Part No.	Part Name	Qty	Serial No.
23	07000-02015	・・O-RING	11	50001-

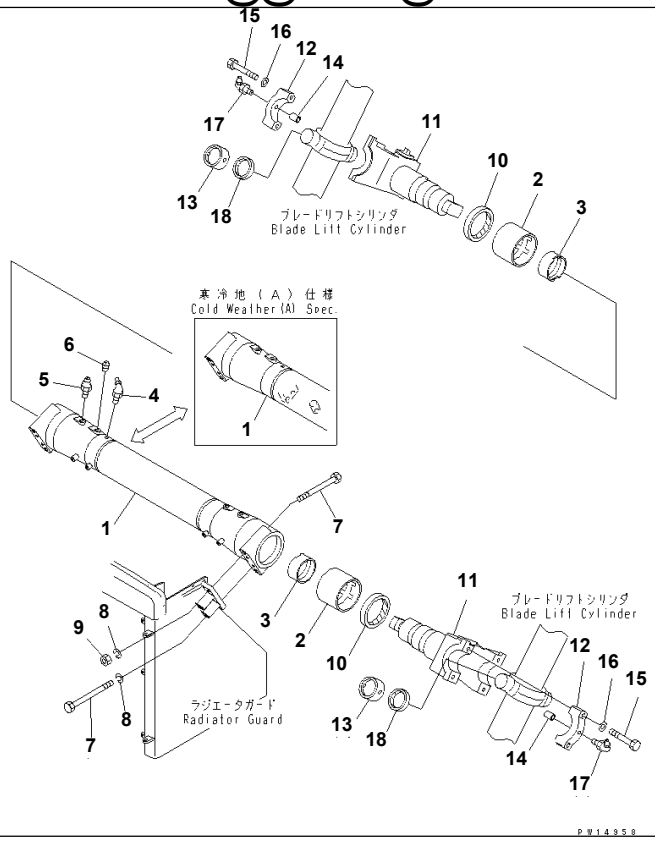

Ref. 6051 Page 180060

D155A-2 S/N 50001-UP (S6D155-4 Eng. Installed)
CYLINDER STAY

Item	Part No.	Part Name	Qty	Serial No.
G-1	(⊙175-61-X1110)	CYLINDER STAY GROUP	1	50001-
		==========		
1	175-61-00018	STAY ASS'Y	1	50001-
	☆	· STAY,CYLINDER	1	50001-
	☆	· STAY,CYLINDER¤ (A)	1	50001-
2	175-61-15450	· BUSHING	2	50001-
3	175-61-15460	· BUSHING	2	50001-
4	07020-00675	FITTING,GREASE	2	50001-
5	07020-00000	FITTING,GREASE	2	50001-
6	07042-70108	PLUG,TAPER	2	50001-
7	175-61-15130	BOLT	8	50001-
8	01602-22783	WASHER,SPRING	8	50001-
9	01580-12722	NUT	4	50001-
10	07145-00125	SEAL,DUST	2	50001-
11	175-61-15410	YOKE	2	50001-
12	175-60-19121	CAP	4	50001-
13	175-61-15201	BUSHING ASS'Y	4	50001-
14	170-70-15190	PIN,DOWEL	4	50001-
15	01010-51890	BOLT	8	50001-
16	01643-31845	WASHER,SPRING	8	50001-
17	07020-00900	FITTING,GREASE	4	50001-
18	07145-00085	SEAL,DUST	4	50001-
		==========		

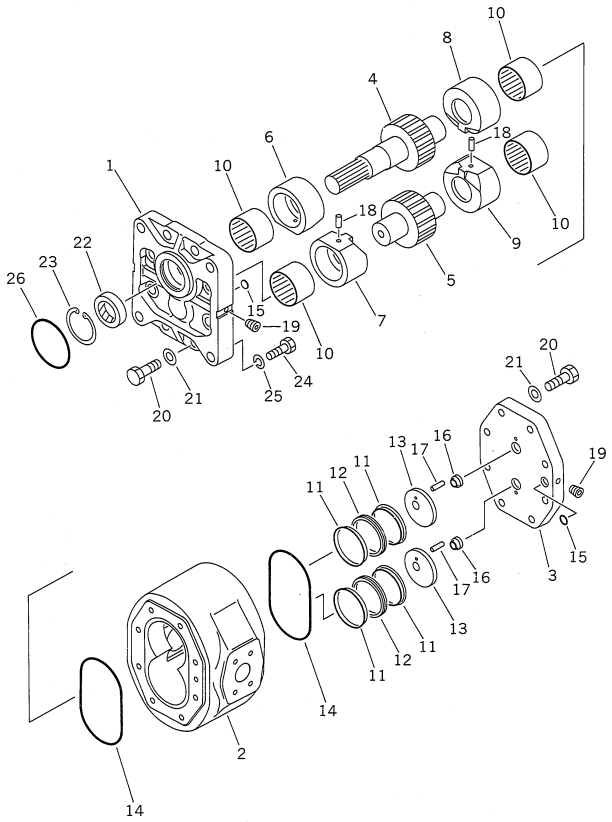

D155A-2 S/N 50001-UP (S6D155-4 Eng. Installed)

WORK EQUIPMENT PUMP (EXCEPT JAPAN)

Item	Part No.	Part Name	Qty	Serial No.
1	07446-66200	PUMP ASS'Y (PAL200)	1	50001-
	(★07445-66611)	· BRACKET	1	50001-
2	(★07446-66220)	· CASE,GEAR	1	50001-
3	(★07442-66030)	· COVER	1	50001-
4	(★07446-66040)	· GEAR,DRIVE	1	50001-
5	(★07446-66050)	· GEAR,DRIVEN	1	50001-
6	(★07445-66760)	· BUSHING	1	50001-
7	(★07445-66860)	· BUSHING	1	50001-
8	(★07445-66770)	· BUSHING	1	50001-
9	(★07445-66870)	· BUSHING	1	50001-
10	(★07445-66181)	· BEARING,NEEDLE	4	50001-
11	07445-66091	· RING,BACK-UP	4	50001-
12	07443-66736	· U-RING	2	50001-
13	07445-66130	· PLATE,SEAL	2	50001-
14	07443-66140	· O-RING,OIL	2	50001-
15	07000-12015	· O-RING	2	50001-
16	07438-66090	· COLLAR	2	50001-
17	705-17-04970	· PLUG	2	50001-
18	07445-66171	· PIN	2	50001-
19	705-17-04970	· PLUG	2	50001-
20	01010-51655	· BOLT	16	50001-
21	01643-51645	· WASHER	16	50001-
22	07443-11163	· SEAL,OIL	1	50001-
23	04065-06525	· RING,SNAP	1	50001-
24	01010-31445	BOLT	4	50001-
25	01602-01442	WASHER,SPRING	4	50001-
26	07000-03092	O-RING	1	50001-

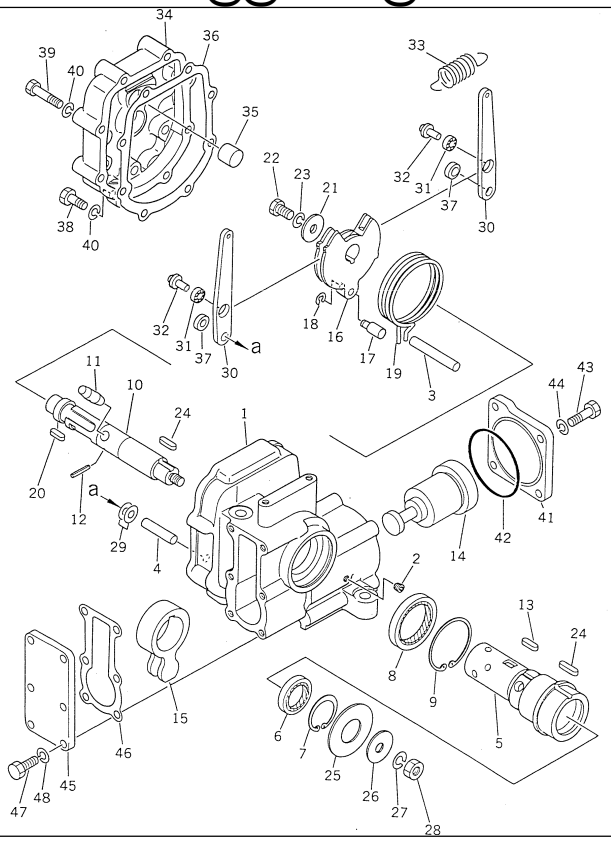

D155A-2 S/N 50001-UP (S6D155-4 Eng. Installed)
BLADE LIFT SERVO VALVE

Item	Part No.	Part Name	Qty	Serial No.
1	702-12-13002	SERVO VALVE ASS'Y	1	52126-
	□702-12-13001	SERVO VALVE ASS'Y	1	50001-52125
	☆	· HOUSING	1	50001-
2	07043-00108	· PLUG	2	50001-
3	702-12-12140	· PIN	1	50001-
4	702-12-12150	· PIN	2	50001-
5	☆	· SLEEVE	1	50001-
6	702-12-12390	· SEAL,OIL	1	50001-
7	04065-04018	· RING,SNAP	1	50001-
8	702-12-12410	· SEAL,OIL	1	50001-
9	04065-06020	· RING,SNAP	1	50001-
10	☆	· ROTOR	1	50001-
11	702-12-12180	· PIN	1	50001-
12	04025-00316	· PIN,SPRING	1	50001-
13	04000-00520	· KEY	1	50001-
14	☆	· PISTON	1	50001-
15	702-12-12210	· LEVER	1	50001-
16	702-12-12221	· DETENT	1	50001-
17	702-12-12230	· PIN	1	50001-
18	702-12-12240	· RING,SNAP	1	50001-
19	702-12-12251	· SPRING	1	50001-
20	04000-00515	· KEY	1	50001-
21	702-12-12420	· WASHER	1	50001-
22	01010-80816	· BOLT	1	50001-
23	01602-20825	· WASHER,SPRING	1	50001-
24	04000-00520	· KEY	2	50001-
25	702-12-12280	· WASHER	1	50001-

D155A-2 S/N 50001-UP (S6D155-4 Eng. Installed)

BLADE LIFT SERVO VALVE

Item	Part No.	Part Name	Qty	Serial No.
26	702-12-12270	· WASHER	1	50001-
27	01580-11008	· NUT	1	50001-
28	01602-21030	· WASHER,SPRING	1	50001-
29	01641-21016	· WASHER	4	50001-
30	702-12-12291	· LEVER	2	50001-
31	702-12-12310	· BEARING	2	50001-
32	702-12-12320	· ROLLER	2	50001-
33	702-12-12331	· SPRING	1	50001-
34	702-12-13120	· COVER	1	50001-
35	702-12-12340	· PIN	1	50001-
36	702-12-13141	· GASKET	1	52126-
	702-12-13140	· GASKET	1	50001-52125
37	702-12-12361	· SPACER	2	50001-
38	01010-80835	· BOLT	2	50001-
39	01010-80845	· BOLT	6	50001-
40	01602-20825	· WASHER,SPRING	8	50001-
41	702-12-13160	· COVER	1	50001-
42	07000-22070	· O-RING	1	50001-
43	01010-80825	· BOLT	4	50001-
44	01602-20825	· WASHER,SPRING	4	50001-
45	702-12-13130	· COVER	1	50001-
46	702-12-13151	· GASKET	1	52126-
	702-12-13150	· GASKET	1	50001-52125
47	01010-80825	· BOLT	6	50001-
48	01602-20825	· WASHER,SPRING	6	50001-

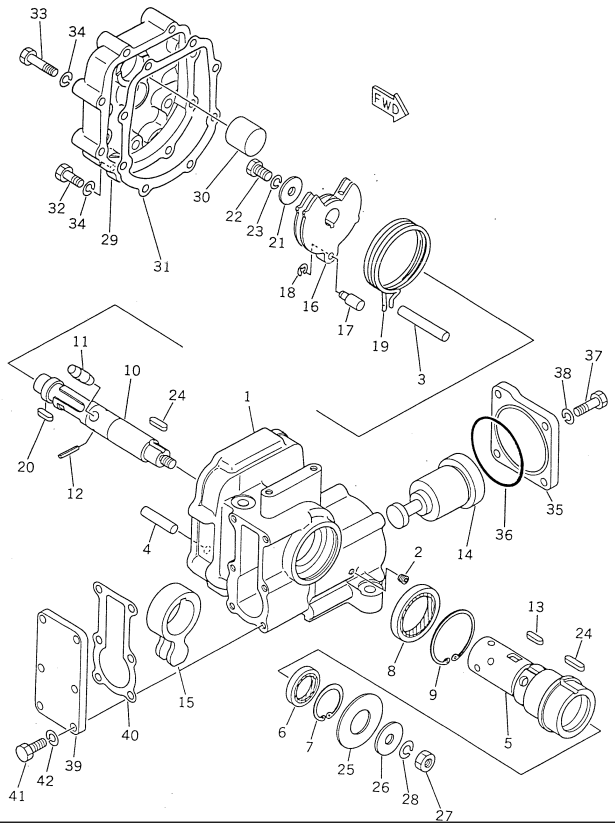

Ref. 6303 **Page 180090**

D155A-2 S/N 50001-UP (S6D155-4 Eng. Installed)
BLADE TILT AND RIPPER SERVO VALVE

Item	Part No.	Part Name	Qty	Serial No.
1	702-12-14001	SERVO VALVE ASS'Y	2	52126-
	□702-12-14000	SERVO VALVE ASS'Y	2	50001-52125
	702-12-13110	· HOUSING	1	50001-
2	07043-00108	· PLUG	2	50001-
3	702-12-12140	· PIN	1	50001-
4	702-12-12150	· PIN	1	50001-
5	☆	· SLEEVE	1	50001-
6	702-12-12390	· SEAL,OIL	1	50001-
7	04065-04018	· RING,SNAP	1	50001-
8	702-12-12410	· SEAL,OIL	1	50001-
9	04065-06020	· RING,SNAP	1	50001-
10	☆	· ROTOR	1	50001-
11	702-12-12180	· PIN	1	50001-
12	04025-00316	· PIN,SPRING	1	50001-
13	04000-00520	· KEY	1	50001-
14	☆	· PISTON	1	50001-
15	702-12-12210	· LEVER	1	50001-
16	702-12-12220	· DETENT	1	50001-
17	702-12-12230	· PIN	1	50001-
18	702-12-12240	· RING,SNAP	1	50001-
19	702-12-12251	· SPRING	1	50001-
20	04000-00515	· KEY	1	50001-
21	702-12-12420	· WASHER	1	50001-
22	01010-80816	· BOLT	1	50001-
23	01602-20825	· WASHER,SPRING	1	50001-
24	04000-00520	· KEY	2	50001-
25	702-12-12280	· WASHER	1	50001-

BLADE TILT AND RIPPER SERVO VALVE

Item	Part No.	Part Name	Qty	Serial No.
26	702-12-12270	· WASHER	1	50001-
27	01580-11008	· NUT	1	50001-
28	01602-21030	· WASHER,SPRING	1	50001-
29	702-12-13220	· COVER	1	50001-
30	702-12-13210	· PIN	1	50001-
31	702-12-13141	· GASKET	1	52126-
	702-12-13140	· GASKET	1	50001-52125
32	01010-80835	· BOLT	2	50001-
33	01010-80845	· BOLT	6	50001-
34	01602-20825	· WASHER,SPRING	8	50001-
35	702-12-13160	· COVER	1	50001-
36	07000-22070	· O-RING	1	50001-
37	01010-80825	· BOLT	4	50001-
38	01602-20825	· WASHER,SPRING	4	50001-
39	702-12-13130	· COVER	1	50001-
40	702-12-13151	· GASKET	1	52126-
	702-12-13150	· GASKET	1	50001-52125
41	01010-80825	· BOLT	6	50001-
42	01602-20825	· WASHER,SPRING	6	50001-

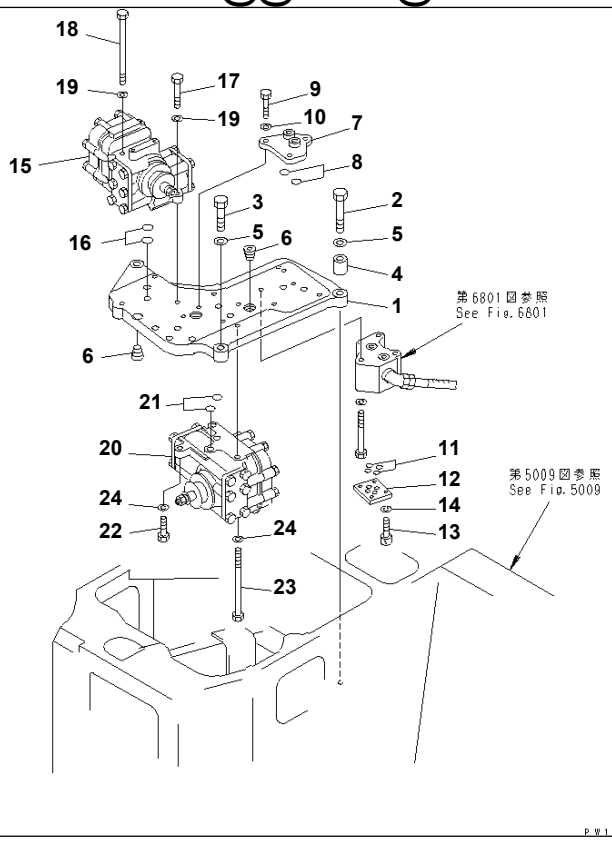

D155A-2 S/N 50001-UP (S6D155-4 Eng. Installed)
VALVE SEAT (FOR VARIABLE TYPE RIPPER)

Item	Part No.	Part Name	Qty	Serial No.
G-1	(⊙175-61-X1130)	BLADE CONTROL GROUP	1	50001-
		==========		
1	175-61-35210	SEAT,VALVE	1	50001-
2	01010-51485	BOLT	2	50001-
3	01010-51450	BOLT	1	50001-
4	198-21-12240	BOSS	2	50001-
5	01643-31445	WASHER	3	50001-
6	07043-50617	PLUG	7	50001-
7	175-61-15520	PLATE	1	50001-
8	07000-03022	O-RING	2	50001-
9	01010-51030	BOLT	3	50001-
10	01602-21030	WASHER	3	50001-
11	07000-11009	O-RING	4	50001-
12	175-78-69540	COVER,(WITHOUT PINPULLER)	1	50001-
13	01252-40520	BOLT	4	50001-
14	01601-20513	WASHER	4	50001-
		==========		
G-2	(⊙175-61-X1140)	SERVO VALVE GROUP	1	50001-
		==========		
15	(702-12-13001)	SERVO VALVE ASS'Y,(FOR BLADE LIFT)	1	50001-
16	07000-03022	O-RING	2	50001-
17	01010-51040	BOLT	2	50001-
18	01011-51040	BOLT	1	50001-
19	01643-31032	WASHER	3	50001-
		==========		
G-3	(⊙175-61-X1150)	SERVO VALVE GROUP	1	50001-
		==========		

D155A-2 S/N 50001-UP (S6D155-4 Eng. Installed)

VALVE SEAT (FOR VARIABLE TYPE RIPPER)

Item	Part No.	Part Name	Qty	Serial No.
20	(702-12-14000)	SERVO VALVE ASS'Y,(FOR BLADE TILT AND RIPPER)	1	50001-
21	07000-03022	O-RING	2	50001-
22	01010-51040	BOLT	2	50001-
23	01011-51040	BOLT	1	50001-
24	01643-31032	WASHER	3	50001-
		==========		

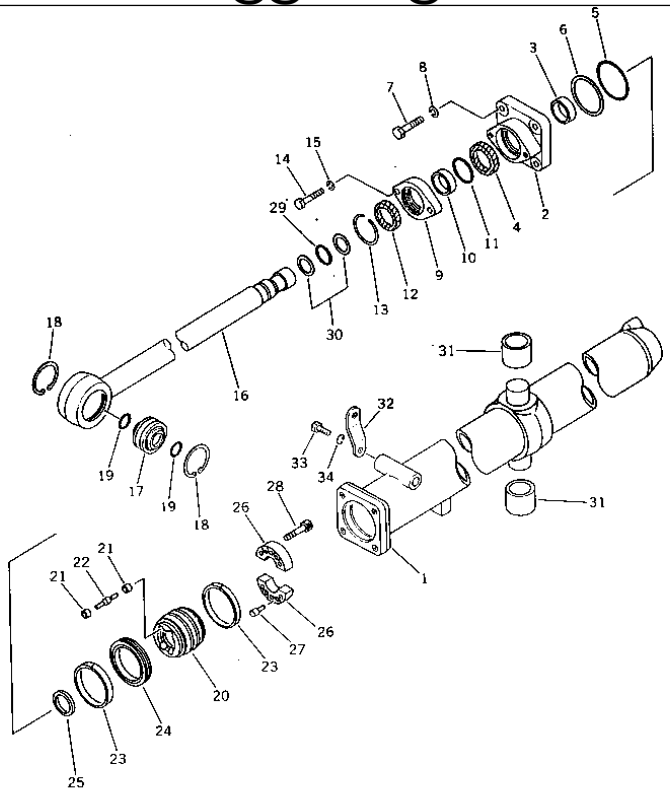

D155A-2 S/N 50001-UP (S6D155-4 Eng. Installed)

BLADE LIFT CYLINDER (1/2)

Item	Part No.	Part Name	Qty	Serial No.
G-1	(⊙175-63-X2111)	CYLINDER GROUP,L.H.	1	50001-
	(⊙175-63-X2121)	CYLINDER GROUP,R.H.	1	50001-
		==========		
1	175-63-02111	CYLINDER ASS'Y	1	50001-
	175-63-22341	· CYLINDER	1	50001-
2	175-63-13131	· HEAD,CYLINDER	1	50001-
3	07177-07530	· BUSHING	1	50001-
4	707-51-75110	· U-PACKING,ROD (KIT)	1	50001-
5	07000-12135	· O-RING (KIT)	1	50001-
6	07146-02136	· RING,BACK-UP (KIT)	1	50001-
7	01010-52470	· BOLT	4	50001-
8	01602-22472	· WASHER,SPRING	4	50001-
9	175-63-13630	· GLAND	1	50001-
10	07177-07515	· BUSHING	1	50001-
11	07000-03095	· O-RING (KIT)	1	50001-
12	144-63-94170	· SEAL,DUST (KIT)	1	50001-
13	07179-00097	· RING,SNAP	1	50001-
14	01010-51655	· BOLT	2	50001-
15	01602-21648	· WASHER,SPRING	2	50001-
16	175-63-22320	· ROD,PISTON	1	50001-
17	07137-05008	· BUSHING	1	50001-
	07137-00060	· · SEAL,DUST	2	50001-
18	04065-01104	· RING	2	50001-
19	07000-03050	· O-RING (KIT)	2	50001-
20	707-91-01450	· PISTON ASS'Y	1	50001-
	☆	· · PISTON	1	50001-
21	☆	· · SEAT	8	50001-

D155A-2 S/N 50001-UP (S6D155-4 Eng. Installed)

BLADE LIFT CYLINDER (1/2)

Item	Part No.	Part Name	Qty	Serial No.
22	☆	· · VALVE	4	50001-
23	707-39-14820	· RING,WEAR (KIT)	2	50001-
24	707-44-14180	· RING,PISTON (KIT)	1	50001-
25	707-40-13051	· RETAINER	1	50001-
26	707-40-14061	· SPACER	2	50001-
27	707-83-10073	· VALVE	4	50001-
28	01252-31235	· BOLT	6	50001-
29	07000-12060	· O-RING (KIT)	1	50001-
30	707-35-52900	· RING,BACK-UP (KIT)	2	50001-
31	175-63-12540	· BUSHING	2	50001-
32	175-63-12370	PLATE	1	50001-
33	01010-51245	BOLT	1	50001-
34	01602-01236	WASHER,SPRING	1	50001-
		==========		

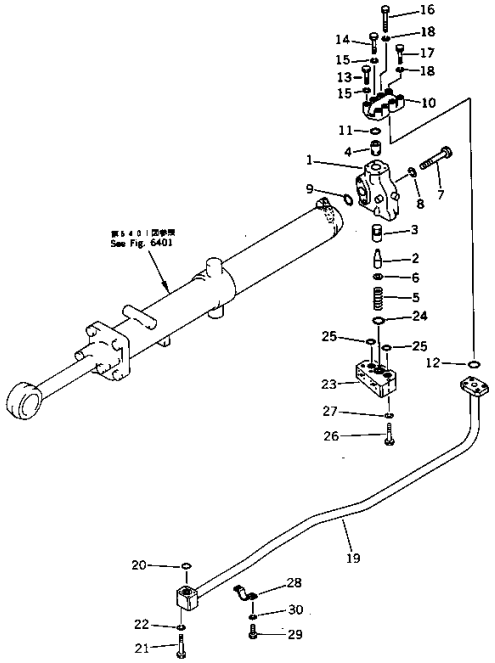

Ref. 6402 **Page 180130**

D155A-2 S/N 50001-UP (S6D155-4 Eng. Installed)
BLADE LIFT CYLINDER (2/2)

Item	Part No.	Part Name	Qty	Serial No.
G-1	(⊙175-63-X2111)	CYLINDER GROUP,L.H.	1	50001-
	(⊙175-63-X2121)	CYLINDER GROUP,R.H.	1	50001-
		==========		
1	195-63-14002	VALVE ASS'Y,QUICK DROP	1	50001-
	195-63-00140	· BODY ASS'Y	1	50001-
	☆	· · BODY	1	50001-
2	☆	· · VALVE	1	50001-
3	☆	· · VALVE	1	50001-
4	195-63-14163	· COLLAR	1	50001-
5	195-63-14180	· SPRING	1	50001-
6	01642-21216	· WASHER	1	50001-
7	01011-51615	· BOLT	2	50001-
8	01602-21648	· WASHER,SPRING	2	50001-
9	07000-12055	O-RING	1	50001-
10	195-63-14130	ELBOW	1	50001-
11	07000-13048	O-RING (KIT)	1	50001-
12	07000-13045	O-RING (KIT)	1	50001-
13	01010-51065	BOLT	2	50001-
14	01010-51075	BOLT	2	50001-
15	01602-21030	WASHER,SPRING	4	50001-
16	01010-51280	BOLT	2	50001-
17	01010-51270	BOLT	2	50001-
18	01602-21236	WASHER,SPRING	4	50001-
19	175-63-13461	TUBE,L.H.	1	50001-
	175-63-13471	TUBE,R.H.	1	50001-
20	07000-13035	O-RING (KIT)	1	50001-
21	01010-51085	BOLT	4	50001-

BLADE LIFT CYLINDER (2/2)

Item	Part No.	Part Name	Qty	Serial No.
22	01602-01030	WASHER,SPRING	4	50001-
23	175-63-13562	BLOCK,L.H.	1	50001-
	175-63-13572	BLOCK,R.H.	1	50001-
24	07000-13045	O-RING (KIT)	1	50001-
25	07000-13038	O-RING	2	50001-
26	01010-51275	BOLT	5	50001-
27	01602-21236	WASHER,SPRING	5	50001-
28	07282-03411	CLAMP	1	50001-
29	01010-51020	BOLT	2	50001-
30	01602-21030	WASHER,SPRING	2	50001-
		==========		
K	707-98-53100	SERVICE KIT	2	50001-

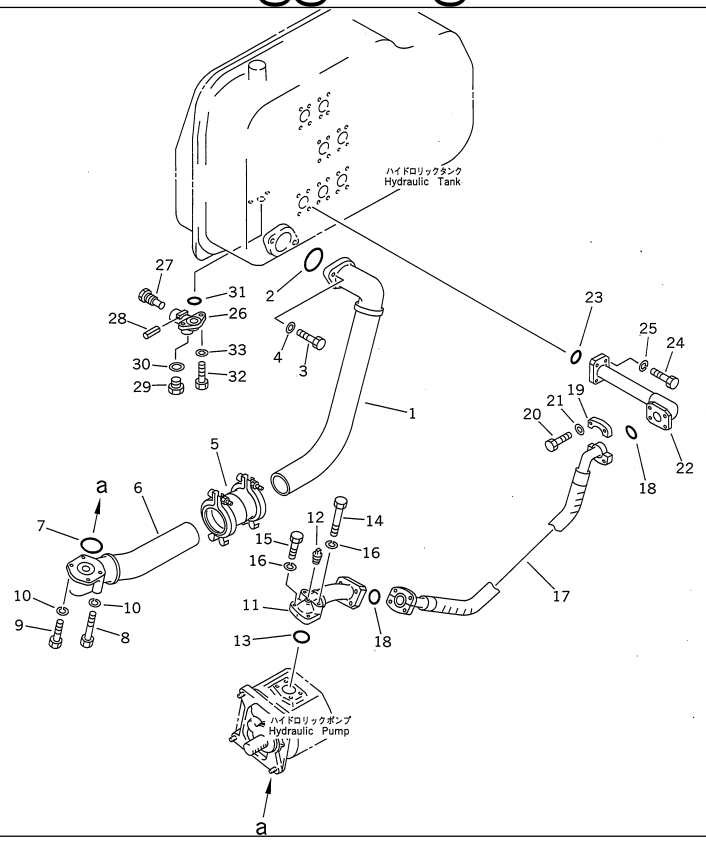

Ref. 6501 **Page 180140**

D155A-2 S/N 50001-UP (S6D155-4 Eng. Installed)
HYDRAULIC PIPING (TANK TO PUMP)

Item	Part No.	Part Name	Qty	Serial No.
1	175-60-26114	TUBE	1	50001-
2	07000-02075	O-RING	1	50001-
3	01010-31455	BOLT	2	50001-
4	01643-31445	WASHER	2	50001-
5	07332-02400	COUPLING	1	50001-
	07332-52400	· GASKET	2	50001-
	07332-62400	· CLAMP	2	50001-
6	175-60-26141	TUBE	1	50001-
7	07000-02070	O-RING	1	50001-
8	01011-31200	BOLT	2	50001-
9	01010-31245	BOLT	2	50001-
10	01602-01236	WASHER,SPRING	4	50001-
11	175-60-00252	TUBE ASS'Y	1	50001-
	☆	· TUBE	1	50001-
12	07042-10108	· PLUG,TAPER	1	50001-
13	07000-13050	O-RING	1	50001-
14	01010-31285	BOLT	2	50001-
15	01010-31255	BOLT	2	50001-
16	01602-01236	WASHER,SPRING	4	50001-
17	07114-01409	HOSE	1	50001-
18	07000-13048	O-RING	2	50001-
19	07371-01465	FLANGE	4	50001-
20	07372-01240	BOLT	8	50001-
21	01643-51232	WASHER	8	50001-
22	175-60-26182	TUBE	1	50001-
23	07000-13048	O-RING	1	50001-
24	01010-31250	BOLT	4	50001-

HYDRAULIC PIPING (TANK TO PUMP)

Item	Part No.	Part Name	Qty	Serial No.
25	01602-01236	WASHER,SPRING	4	50001-
26	155-60-12500	VALVE ASS'Y	1	50001-
	155-60-12510	· BODY	1	50001-
27	155-60-12520	· VALVE	1	50001-
28	04025-00532	· PIN,SPRING	1	50001-
29	07040-12412	· PLUG	1	50001-
30	07005-02416	· GASKET,SEAL	1	50001-
31	07000-03025	O-RING	1	50001-
32	01010-31025	BOLT	2	50001-
33	01602-01030	WASHER,SPRING	2	50001-

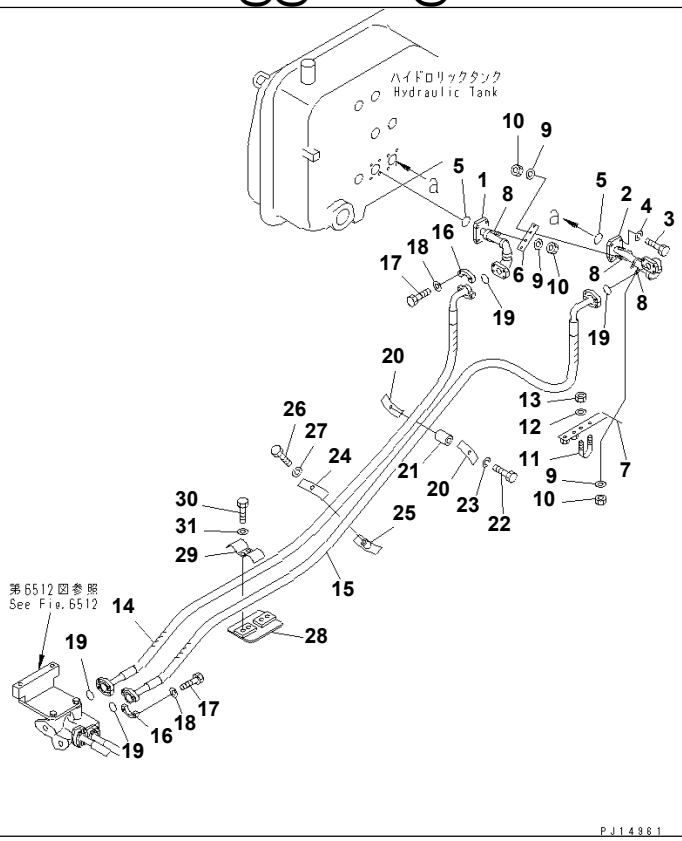

Ref. 6511 **Page 180150**

D155A-2 S/N 50001-UP (S6D155-4 Eng. Installed)
HYDRAULIC PIPING (TAND TO LIFT CYLINDER) (1/3)

Item	Part No.	Part Name	Qty	Serial No.
G-1	(⊙175-61-X1120)	BLADE PIPING GROUP	1	50001-
		==========		
1	175-61-14451	TUBE	1	50001-
2	175-61-15510	TUBE	1	50001-
3	01010-51250	BOLT	8	50005-
	01010-51245	BOLT	8	50001-50004
4	01602-21236	WASHER,SPRING	8	50001-
5	07000-13048	O-RING	2	50001-
6	175-61-17210	PLATE	1	50001-
7	175-61-32340	PLATE	1	50001-
8	07283-23442	CLIP	3	50001-
9	01643-31032	WASHER	6	50001-
10	01599-01011	NUT	6	50001-
11	07283-24346	CLIP	1	50001-
12	01643-31032	WASHER	2	50001-
13	01599-01011	NUT	2	50001-
14	07118-01226	HOSE	1	50001-
	07118-A1226	HOSE,(FOR SLAG HANDLING)	1	50001-
15	07118-01229	HOSE	1	50001-
	07118-A1229	HOSE,(FOR SLAG HANDLING)	1	50001-
16	07371-31255	FLANGE,SPLIT	8	50001-
17	07372-21035	BOLT	16	50001-
18	01643-51032	WASHER	16	50001-
19	07000-13038	O-RING	4	50001-
20	175-61-17230	CLAMP	2	50001-
	175-861-2220	CLAMP,(FOR SLAG HANDLING)	2	50001-
21	175-61-17240	COLLAR	1	50001-

HYDRAULIC PIPING (TAND TO LIFT CYLINDER) (1/3)

Item	Part No.	Part Name	Qty	Serial No.
22	01010-51285	BOLT	1	50001-
	01010-51290	BOLT,(FOR SLAG HANDLING)	1	50001-
23	01643-31232	WASHER	1	50001-
24	175-61-14760	CLAMP	1	50001-
	175-849-2310	CLAMP,(FOR SLAG HANDLING)	1	50001-
25	175-61-14770	CLAMP	1	50001-
	175-849-2290	CLAMP,(FOR SLAG HANDLING)	1	50001-
26	01010-51045	BOLT	1	50001-
	01010-51050	BOLT,(FOR SLAG HANDLING)	1	50001-
27	01602-21030	WASHER,SPRING	1	50001-
28	175-61-17121	CLAMP	1	50001-
29	175-61-14350	CLAMP	1	50001-
	175-861-2230	CLAMP,(FOR SLAG HANDLING)	1	50001-
30	01010-51280	BOLT	2	50001-
	01010-51285	BOLT,(FOR SLAG HANDLING)	2	50001-
31	01602-21236	WASHER,SPRING	2	50001-
		==========		

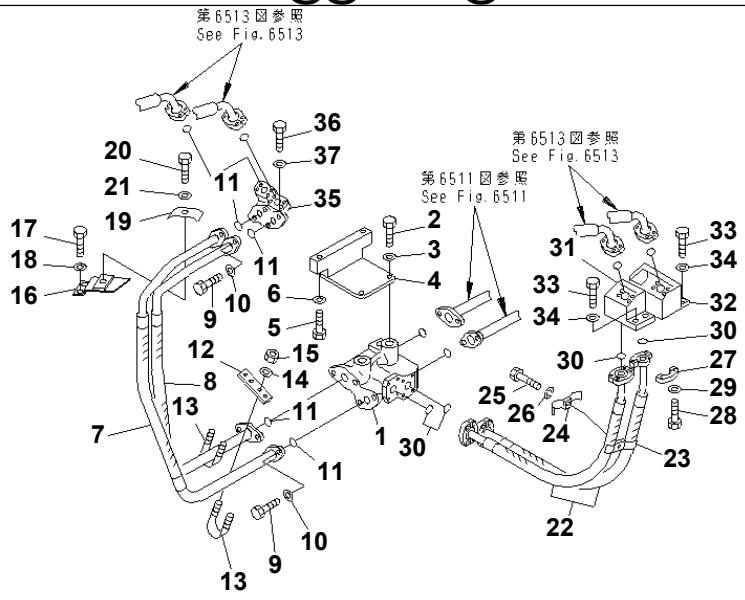

PJ14962

D155A-2 S/N 50001-UP (S6D155-4 Eng. Installed)
HYDRAULIC PIPING (TANK TO LIFT CYLINDER) (2/3)

Item	Part No.	Part Name	Qty	Serial No.
1	175-61-14163	BLOCK	1	50001-
2	01010-51640	BOLT	2	50001-
3	01643-31645	WASHER	2	50001-
4	175-61-14930	BRACKET	1	50001-
5	01010-51675	BOLT	2	50001-
6	01643-31645	WASHER	2	50001-
7	175-61-14672	HOSE	1	50001-
	175-861-2141	HOSE,(JUNGLE SPEC.)	1	50001-
	175-861-2141	HOSE,(FOR SLAG HANDLING)	1	50001-
8	175-61-14682	HOSE	1	50001-
	175-861-2151	HOSE,(JUNGLE SPEC.)	1	50001-
	175-861-2151	HOSE,(FOR SLAG HANDLING)	1	50001-
9	01010-51445	BOLT	8	50001-
10	01643-31445	WASHER	8	50001-
11	07000-13035	O-RING	4	50001-
12	175-61-14730	PLATE	1	50001-
13	07283-23442	CLIP	2	50001-
14	01643-31032	WASHER	4	50001-
15	01599-01011	NUT	4	50001-
16	175-61-14712	BRACKET	1	50001-
17	01010-51240	BOLT	2	50001-
18	01643-31232	WASHER	2	50001-
19	175-61-14721	CLAMP	1	50001-
20	01010-51250	BOLT	1	50001-
21	01643-31232	WASHER	1	50001-
22	07114-01010	HOSE	2	50001-
	07115-A1010	HOSE,(JUNGLE SPEC.)	2	50001-

D155A-2 S/N 50001-UP (S6D155-4 Eng. Installed)

HYDRAULIC PIPING (TANK TO LIFT CYLINDER) (2/3)

Item	Part No.	Part Name	Qty	Serial No.
22	07115-A1010	HOSE,(FOR SLAG HANDLING)	2	50001-
23	195-78-22320	CLAMP	1	50001-
24	195-78-22330	CLAMP	1	50001-
25	01010-51260	BOLT	1	50001-
	01010-51265	BOLT,(FOR SLAG HANDLING)	1	50001-
26	01643-31232	WASHER	1	50001-
27	07371-31049	FLANGE,SPLIT	8	50001-
28	07372-21035	BOLT	16	50001-
29	01643-51032	WASHER,SPRING	16	50001-
30	07000-13032	O-RING	4	50001-
31	175-61-41140	BLOCK	1	50001-
32	175-61-41150	BLOCK	1	50001-
33	01010-51250	BOLT	4	50001-
34	01643-31232	WASHER	4	50001-
35	175-61-14183	BLOCK	1	50001-
36	01010-51260	BOLT	2	50001-
37	01643-31232	WASHER	4	50001-

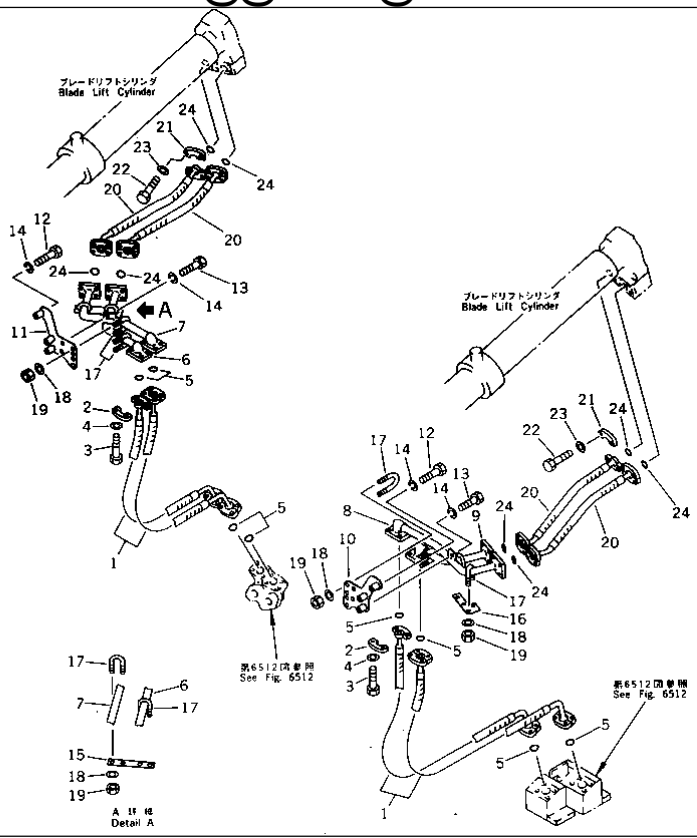

Ref. 6513 **Page 180170**

D155A-2 S/N 50001-UP (S6D155-4 Eng. Installed)
HYDRAULIC PIPING (TANK TO LIFT CYLINDER) (3/3)

Item	Part No.	Part Name	Qty	Serial No.
G-1	(⊙175-61-X1220)	CYLINDER PIPING G.	1	50001-
		==========		
1	07114-01012	HOSE	4	50001-
	07115-A1012	HOSE,(FOR SLAG HANDLING)	4	50001-
2	07371-31049	FLANGE,SPLIT	16	50001-
3	07372-21035	BOLT	32	50001-
4	01643-51032	WASHER	32	50001-
5	07000-13032	O-RING	8	50001-
6	175-61-18340	TUBE	1	50001-
7	175-61-18350	TUBE	1	50001-
8	175-61-18360	TUBE	1	50001-
9	175-61-18370	TUBE	1	50001-
10	175-61-18330	PLATE,L.H.	1	50001-
11	175-61-18380	PLATE,R.H.	1	50001-
12	01010-51260	BOLT	4	50001-
13	01010-51265	BOLT	2	50001-
14	01602-21236	WASHER,SPRING	6	50001-
15	175-61-18290	PLATE,R.H.	1	50001-
16	175-61-18390	PLATE,L.H.	1	50001-
17	07283-23450	CLIP	8	50001-
18	01643-31032	WASHER	16	50001-
19	01599-01011	NUT	16	50001-
20	07114-01006	HOSE	4	50001-
	07115-A1006	HOSE,(FOR SLAG HANDLING)	4	50001-
21	07371-31049	FLANGE,SPLIT	16	50001-
22	07372-21035	BOLT	32	50001-
23	01643-51032	WASHER	32	50001-

HYDRAULIC PIPING (TANK TO LIFT CYLINDER) (3/3)

Item	Part No.	Part Name	Qty	Serial No.
24	07000-13032	O-RING	8	50001-
		==========		

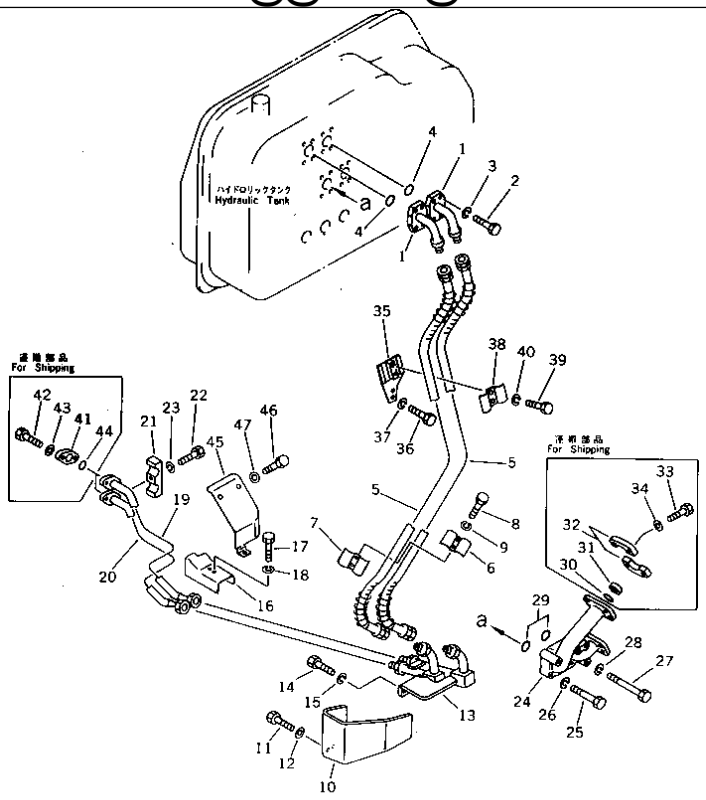

Ref. 6521 **Page 180180**

D155A-2 S/N 50001-UP (S6D155-4 Eng. Installed)
HYDRAULIC PIPING (TANK TO TILT CYLINDER)

Item	Part No.	Part Name	Qty	Serial No.
G-1	(⊙175-61-X1120)	BLADE PIPING GROUP	1	50001-
		==========		
1	175-914-4111	TUBE	2	50001-
2	01010-51250	BOLT	8	50001-
3	01602-21236	WASHER,SPRING	8	50001-
4	07000-13048	O-RING	2	50001-
5	07109-20517	HOSE	2	50001-
	07113-A0517	HOSE,(FOR SLAG HANDLING)	2	50001-
6	175-71-31370	CLAMP	1	50001-
7	175-914-4260	CLAMP	1	50001-
8	01010-51250	BOLT	2	50001-
9	01602-21236	WASHER,SPRING	2	50001-
10	175-61-18162	BRACKET	1	50001-
11	01010-51230	BOLT	2	50001-
12	01643-31232	WASHER	2	50001-
13	175-61-18112	TUBE	1	50001-
14	01010-51230	BOLT	2	50001-
15	01602-21236	WASHER,SPRING	2	50001-
16	175-61-18170	COVER	1	50001-
17	01010-51230	BOLT	2	50001-
18	01602-21236	WASHER,SPRING	2	50001-
19	175-61-34630	TUBE	1	50001-
20	175-61-34640	TUBE	1	50001-
21	175-61-18410	CLAMP	1	50001-
22	01010-51260	BOLT	1	50001-
23	01602-21236	WASHER,SPRING	1	50001-
24	175-78-24411	ELBOW	1	50001-

HYDRAULIC PIPING (TANK TO TILT CYLINDER)

Item	Part No.	Part Name	Qty	Serial No.
25	01010-51270	BOLT	4	50001-
26	01602-21236	WASHER,SPRING	3	50001-
27	01011-51205	BOLT	4	50001-
28	01602-21236	WASHER,SPRING	4	50001-
29	07000-13048	O-RING	2	50001-
30	07000-13048	O-RING	2	50001-
31	07378-11400	HEAD,(FOR SHIPPING)	2	50001-
32	07371-31465	FLANGE,SPLIT	4	50001-
33	07372-21240	BOLT	8	50001-
34	01643-31232	WASHER	8	50001-
35	175-61-15470	BRACKET	1	50001-
36	01010-51255	BOLT	2	50001-
37	01602-21236	WASHER,SPRING	2	50001-
38	175-71-31370	CLAMP	1	50001-
39	01010-51230	BOLT	2	50001-
40	01602-21236	WASHER,SPRING	2	50001-
41	175-61-18180	FLANGE,(FOR SHIPPING)	2	50001-
42	01010-51240	BOLT,(FOR SHIPPING)	4	50001-
43	01602-21236	WASHER,SPRING (FOR SHIPPING)	4	50001-
44	07000-13022	O-RING	2	50001-
45	175-61-18221	COVER	1	50001-
46	01010-51430	BOLT	3	50001-
47	01643-31445	WASHER	3	50001-
		==========		

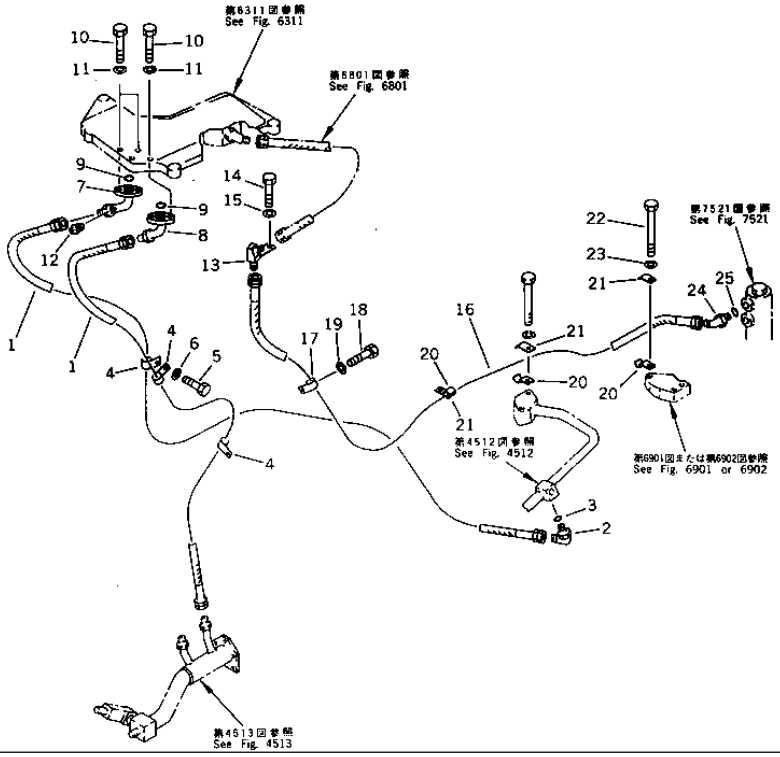

Ref. 6531 **Page 180190**

D155A-2 S/N 50001-UP (S6D155-4 Eng. Installed)
SERVO VALVE PIPNG (FOR BLADE LIFT) (FOR VARIABLE TYPE RIPPER)

Item	Part No.	Part Name	Qty	Serial No.
G-1	(⊙175-61-X1130)	BLADE CONTROL GROUP	1	50001-
		==========		
1	07102-A0415	HOSE	2	57015-
	07102-20415	HOSE	2	50229-57014
	◆07102-20416	HOSE	2	50001-50228
2	07235-10422	ELBOW	1	50001-
3	07002-02034	O-RING	1	50001-
4	08035-02514	CLIP	3	50001-
5	01010-51025	BOLT	1	50001-
6	01643-31032	WASHER	1	50001-
7	175-61-31640	TUBE	1	50001-
8	175-61-31630	TUBE	1	50001-
9	07000-03025	O-RING	2	50001-
10	01010-51045	BOLT	4	50001-
11	01602-21030	WASHER,SPRING	4	50001-
12	07042-30108	PLUG	1	50001-
13	175-78-69530	ELBOW	1	50001-
14	01010-51230	BOLT	2	50001-
15	01643-51232	WASHER	2	50001-
16	07102-20316	HOSE	1	50001-
17	08036-01814	CLIP	1	50001-
18	01010-51016	BOLT	1	50001-
19	01643-31032	WASHER	1	50001-
20	195-79-12181	CLIP	3	50001-
21	195-78-22471	CLIP	3	50001-
22	01011-51215	BOLT	2	50001-
23	01643-51232	WASHER	2	50001-

SERVO VALVE PIPNG (FOR BLADE LIFT) (FOR VARIABLE TYPE RIPPER)

Item	Part No.	Part Name	Qty	Serial No.
24	07236-10315	ELBOW	1	50001-
25	07002-02034	O-RING	1	50001-
		==========		

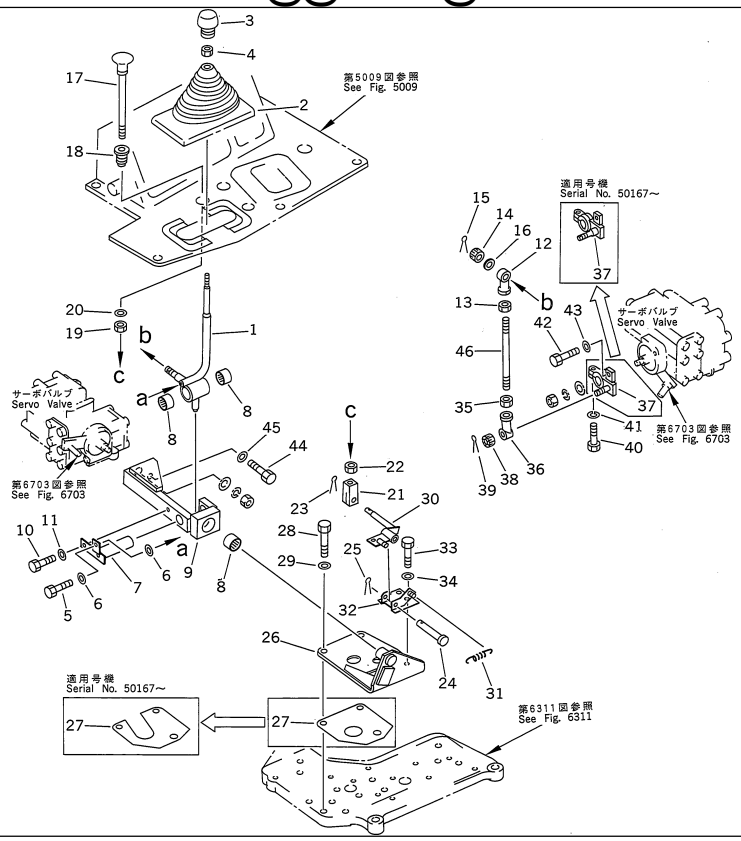

Ref. 6701 **Page 180210**

D155A-2 S/N 50001-UP (S6D155-4 Eng. Installed)
TILT BLADE CONTROL LEVER

Item	Part No.	Part Name	Qty	Serial No.
G-1	(⊙175-61-X1130)	BLADE CONTROL GROUP	1	50001-
		==========		
1	175-61-31521	LEVER	1	50001-
2	175-61-31720	BOOT	1	50001-
3	195-61-45150	KNOB	1	50001-
4	195-43-44220	NUT	1	50001-
5	01010-50820	BOLT	1	50001-
6	01643-30823	WASHER	2	50001-
7	175-61-31730	SHAFT	1	50001-
8	195-61-34140	BEARING,NEEDLE	3	50001-
9	175-61-31650	YOKE	1	50001-
10	01010-50820	BOLT	1	50001-
11	01643-30823	WASHER	1	50001-
12	04250-81265	END	1	50001-
13	01582-11210	NUT	1	50001-
14	01593-11210	NUT	1	50001-
15	04050-13020	PIN,COTTER	1	50001-
16	04254-01232	SPACER	1	50001-
17	175-61-32331	KNOB	1	50001-
18	195-61-45220	BOSS	1	50001-
19	195-61-45230	NUT	1	50001-
20	01640-22232	WASHER	1	50001-
21	04211-20844	YOKE	1	50001-
22	01580-10806	NUT	1	50001-
23	04050-12015	PIN,COTTER	1	50001-
24	22D-09-11170	PIN	1	50001-
25	04050-12015	PIN,COTTER	1	50001-

D155A-2 S/N 50001-UP (S6D155-4 Eng. Installed)

TILT BLADE CONTROL LEVER

Item	Part No.	Part Name	Qty	Serial No.
26	175-61-31660	BRACKET	1	50001-
27	175-61-31710	SHIM	1	50001-
28	01010-51030	BOLT	2	50001-
29	01643-31032	WASHER	2	50001-
30	175-61-31680	LEVER	1	50001-
31	195-61-45290	SPRING	1	50001-
32	175-61-31670	BRACKET	1	50001-
33	01010-51030	BOLT	2	50001-
34	01643-31032	WASHER	2	50001-
35	01582-11210	NUT	1	50005-
	01508-31207	NUT	1	50001-50004
36	04250-81265	END,ROD	1	50005-
	04250-91265	END,ROD	1	50001-50004
37	175-61-31690	LEVER	1	50001-
38	01593-11210	NUT	1	50001-
39	04050-13020	PIN,COTTER	1	50001-
40	01010-50830	BOLT	1	50001-
41	01602-20825	WASHER	1	50001-
42	01010-50825	BOLT	1	50001-
43	01643-30823	WASHER	1	50001-
44	01010-50835	BOLT	1	50001-
45	01643-30823	WASHER	1	50001-
46	04245-41213	ROD	1	50005-
	04248-31213	ROD	1	50001-50004
		==========		

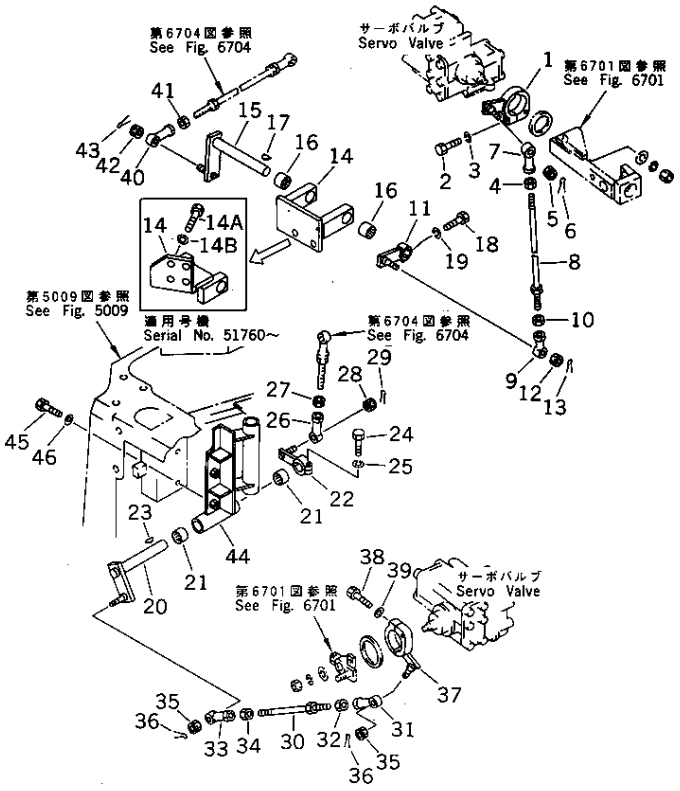

TILT BLADE CONTROL LINKAGE (1/2)

Item	Part No.	Part Name	Qty	Serial No.
G-1	(⊙175-61-X1130)	BLADE CONTROL GROUP	1	50001-
		==========		
1	175-61-31540	LEVER	1	50001-
2	01010-50840	BOLT	1	50001-
3	01602-20825	WASHER	1	50001-
4	01508-31207	NUT	1	50001-
5	01593-11210	NUT	1	50001-
6	04050-13020	PIN,COTTER	1	50001-
7	04250-91265	END,ROD	1	50001-
8	04248-31247	ROD	1	50052-
	04248-31253	ROD	1	50001-50051
9	04250-81265	END,ROD	1	50001-
10	01582-11210	NUT	1	50001-
11	154-45-35270	LEVER	1	50001-
12	01593-11210	NUT	1	50001-
13	04050-13020	PIN,COTTER	1	50001-
14	175-61-31571	BRACKET	1	51760-
	175-61-31570	BRACKET	1	50001-51759
14A	01010-51230	BOLT	4	51760-
14B	01643-31232	WASHER	4	51760-
15	175-61-31560	LEVER	1	50001-
16	195-61-34130	BEARING	2	50001-
17	04010-00519	KEY	1	50001-
18	01010-50830	BOLT	1	50001-
19	01602-20825	WASHER	1	50001-
20	175-61-31590	SHAFT	1	50001-
21	195-61-34130	BEARING	2	50001-

D155A-2 S/N 50001-UP (S6D155-4 Eng. Installed)

TILT BLADE CONTROL LINKAGE (1/2)

Item	Part No.	Part Name	Qty	Serial No.
22	195-61-21290	LEVER	1	50001-
23	04010-00519	KEY	1	50001-
24	01010-50830	BOLT	1	50001-
25	01602-20825	WASHER	1	50001-
26	04250-81265	END,ROD	1	50001-
27	01582-11210	NUT	1	50001-
28	01593-11210	NUT	1	50001-
29	04050-13020	PIN,COTTER	1	50001-
30	04248-31223	ROD	1	50001-
31	04250-81265	END,ROD	1	50001-
32	01582-11210	NUT	1	50001-
33	04250-91265	END,ROD	1	50001-
34	01508-41207	NUT	1	.-
	01508-31207	NUT	1	50001-.
35	01593-11210	NUT	2	50001-
36	04050-13020	PIN,COTTER	2	50001-
37	175-61-31580	LEVER	1	50001-
38	01010-50840	BOLT	1	50001-
39	01602-20825	WASHER	1	50001-
40	04250-81265	END,ROD	1	50001-
41	01582-11210	NUT	1	50001-
42	01593-11210	NUT	1	50001-
43	04050-13020	PIN,COTTER	1	50001-
44	175-61-31611	BRACKET	1	50001-
45	01010-51235	BOLT	2	50001-
46	01643-31232	WASHER	2	50001-
		==========		

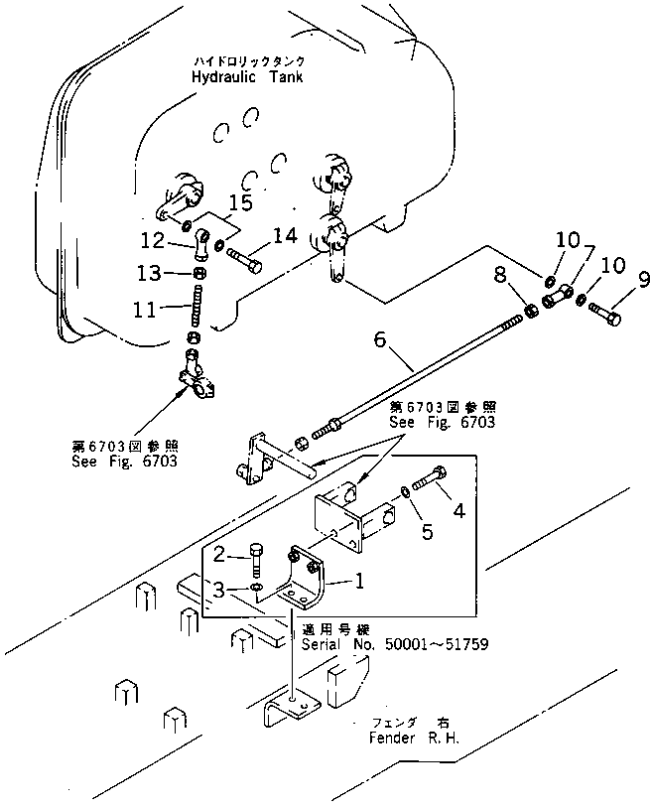

Ref. 6704 **Page 180230**

D155A-2 S/N 50001-UP (S6D155-4 Eng. Installed)

TILT BLADE CONTROL LINKAGE (2/2)

Item	Part No.	Part Name	Qty	Serial No.
G-1	(⊙175-61-X1130)	BLADE CONTROL GROUP,TILT	1	50001-
		==========		
1	175-61-31620	PLATE	1	50001-51759
2	01010-51235	BOLT	2	50001-51759
3	01643-31232	WASHER	2	50001-51759
4	01010-51235	BOLT	2	50032-51759
	01010-51230	BOLT	2	50001-50031
5	01643-31232	WASHER	2	50001-51759
6	04248-31266	ROD	1	50001-
7	04250-91265	END	1	50001-
8	01508-41207	NUT	1	.-
	01508-31207	NUT	1	50001-.
9	01090-51240	BOLT	1	50001-
10	04254-01232	SPACER	2	50001-
11	04245-41208	ROD	1	50001-
12	04250-81265	END	1	50001-
13	01582-11210	NUT	1	50001-
14	01090-51240	BOLT	1	50001-
15	04254-01232	SPACER	2	50001-
		==========		

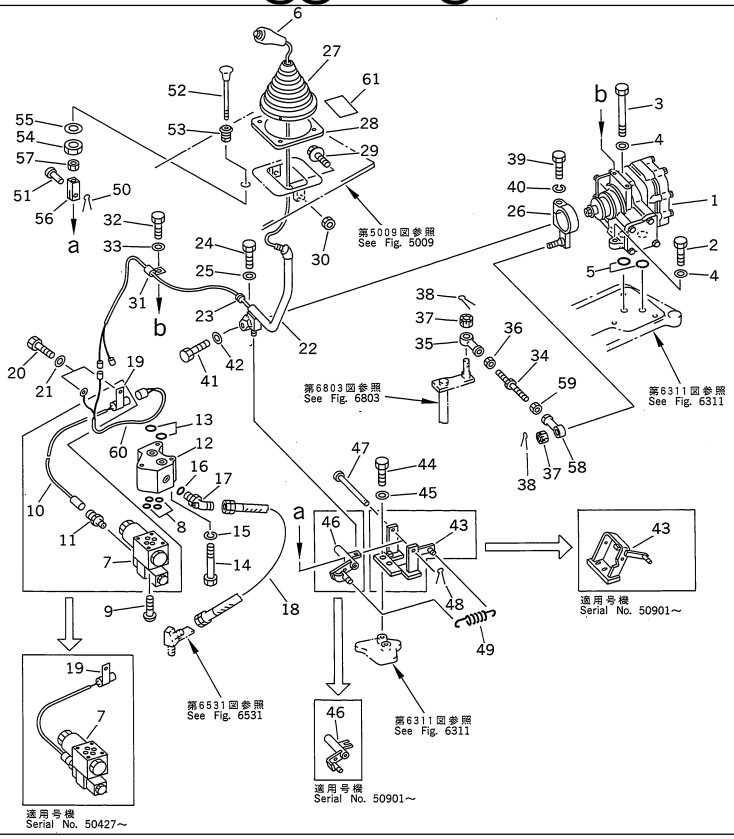

Ref. 6801 **Page 180240**

D155A-2 S/N 50001-UP (S6D155-4 Eng. Installed)
RIPPER CONTROL LEVER (FOR VARIABLE TYPE RIPPER)

Item	Part No.	Part Name	Qty	Serial No.
G-1	(⊙175-61-X1150)	SERVO VALVE GROUP	1	50001-
		==========		
1	702-12-14000	SERVO VALVE ASS'Y	1	50001-
2	01010-51040	BOLT	2	50001-
3	01011-51040	BOLT	1	50001-
4	01643-31032	WASHER	3	50001-
5	07000-03022	O-RING	2	50001-
		==========		
G-2	(⊙175-78-X1850)	KNOB SWITCH GROUP	1	50001-
		==========		
6	175-78-69550	KNOB,SWITCH	1	50001-
		==========		
G-3	(⊙175-78-X1820)	VALVE AND WIRING G.	1	50001-
		==========		
7	175-78-69580	VALVE,SOLENOID	1	50427-
	□209-60-12180	VALVE,SOLENOID	1	50001-50426
8	07000-11009	O-RING	4	50001-
9	01220-40545	SCREW	4	50001-
10	195-79-52120	WIRING HARNESS	1	50001-50426
11	21T-06-12530	CONNECTOR	1	50001-50426
12	175-78-69450	BLOCK	1	50001-
13	07000-03022	O-RING	2	50001-
14	01010-51090	BOLT	3	50001-
15	01602-21030	WASHER,SPRING	3	50001-
16	07002-02034	O-RING	1	50001-
17	07235-50315	ELBOW	1	50001-
18	07102-20304	HOSE	1	50001-

RIPPER CONTROL LEVER (FOR VARIABLE TYPE RIPPER)

Item	Part No.	Part Name	Qty	Serial No.
19	195-06-41820	CLIP	1	50001-
20	01010-51020	BOLT	2	50001-
21	01643-31032	WASHER	2	50001-
		==========		
G-4	(⊙175-78-X1840)	LEVER CONTROL GROUP	1	50001-
		==========		
22	175-78-69460	LEVER	1	50001-
23	111-06-11250	GROMMET	1	50001-
24	01010-50830	BOLT	1	50001-
25	01643-30823	WASHER	1	50001-
26	195-78-42360	LEVER	1	50001-
27	21T-43-13190	BOOT	1	50001-
28	175-78-69560	COVER	1	50001-
29	195-43-41360	BAMPER	2	50001-
30	01583-11006	NUT	2	50001-
31	08036-10810	CLIP	1	50001-
32	01010-50812	BOLT	1	50001-
33	01643-30823	WASHER	1	50001-
34	04248-31211	ROD	1	50001-
35	04250-91265	END,ROD	1	50001-
36	01508-41207	NUT	1	50001-
37	01593-31210	NUT	2	50001-
38	04050-13020	PIN,COTTER	2	50001-
39	01010-50840	BOLT	1	50001-
40	01602-20825	WASHER,SPRING	1	50001-
41	01010-50835	BOLT	1	50001-
42	01643-30823	WASHER	1	50001-
43	175-78-69422	BRACKET	1	50901-
	□175-78-69421	BRACKET	1	50001-50900
44	01010-51025	BOLT	2	50001-
45	01643-31032	WASHER	2	50001-
46	175-78-69431	LEVER	1	50001-
47	175-78-69510	PIN	1	50001-
48	04050-12015	PIN,COTTER	1	50001-
49	195-61-45290	SPRING	1	50001-
50	04050-12015	PIN,COTTER	1	50001-
51	04205-10822	PIN	1	50001-
52	195-61-45210	KNOB	1	50001-
53	195-61-45220	BOSS	1	50001-
54	195-61-45230	NUT	1	50001-
55	01640-22232	WASHER	1	50001-
56	04211-20844	YOKE	1	50001-
57	01580-10806	NUT	1	50001-
58	04250-81265	END,ROD	1	50001-
59	01582-11210	NUT	1	50001-
60	175-78-69570	WIRE	1	50001-
		==========		
61	175-98-41270	PLATE¤ OPERATING,RIPPER	1	50001-

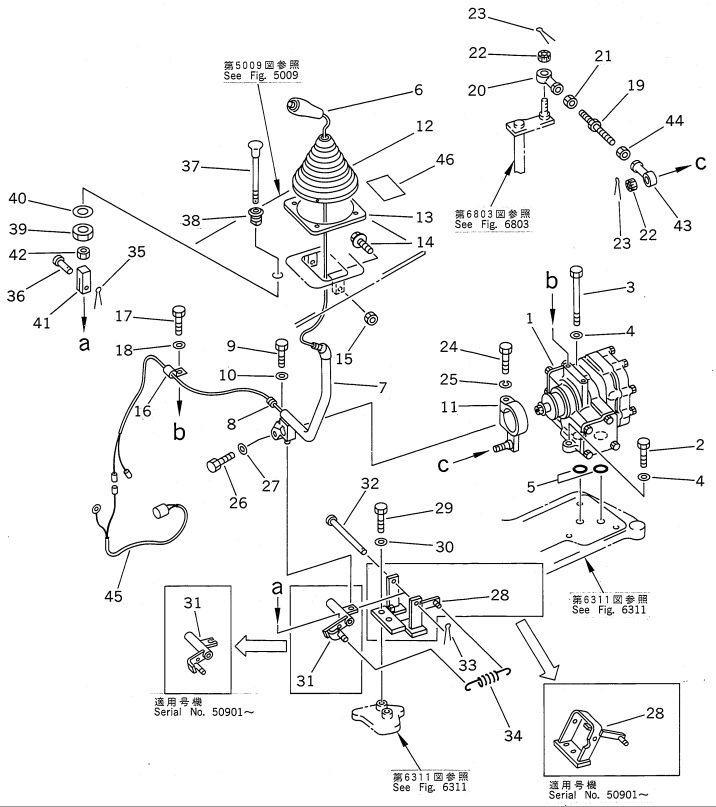

RIPPER CONTROL LEVER (FOR RIGID TYPE RIPPER)

Item	Part No.	Part Name	Qty	Serial No.
G-1	(⊙175-61-X1150)	SERVO VALVE GROUP	1	50001-
		==========		
1	702-12-14000	SERVO VALVE ASS'Y	1	50001-
2	01010-51040	BOLT	2	50001-
3	01011-51040	BOLT	1	50001-
4	01643-31032	WASHER	3	50001-
5	07000-03022	O-RING	2	50001-
		==========		
G-2	(⊙175-78-X1850)	KNOB SWITCH GROUP	1	50001-
		==========		
6	175-78-69550	KNOB,SWITCH	1	50001-
		==========		
G-3	(⊙175-78-X1840)	LEVER CONTROL GROUP	1	50001-
		==========		
7	175-78-69460	LEVER	1	50001-
8	111-06-11250	GROMMET	1	50001-
9	01010-50830	BOLT	1	50001-
10	01643-30823	WASHER	1	50001-
11	195-78-42360	LEVER	1	50001-
12	21T-43-13190	BOOT	1	50001-
13	175-78-69560	COVER	1	50001-
14	195-43-41360	BAMPER	2	50001-
15	01583-11006	NUT	2	50001-
16	08036-10810	CLIP	1	50001-
17	01010-50812	BOLT	1	50001-
18	01643-30823	WASHER	1	50001-
19	04248-31211	ROD	1	50001-

D155A-2 S/N 50001-UP (S6D155-4 Eng. Installed)

RIPPER CONTROL LEVER (FOR RIGID TYPE RIPPER)

Item	Part No.	Part Name	Qty	Serial No.
20	04250-91265	END,ROD	1	50001-
21	01508-41207	NUT	1	50001-
22	01593-31210	NUT	2	50001-
23	04050-13020	PIN,COTTER	2	50001-
24	01010-50840	BOLT	1	50001-
25	01602-20825	WASHER,SPRING	1	50001-
26	01010-50835	BOLT	1	50001-
27	01643-30823	WASHER	1	50001-
28	175-78-69422	BRACKET	1	50901-
	□175-78-69421	BRACKET	1	50001-50900
29	01010-51025	BOLT	2	50001-
30	01643-31032	WASHER	2	50001-
31	175-78-69431	LEVER	1	50001-
32	175-78-69510	PIN	1	50001-
33	04050-12015	PIN,COTTER	1	50001-
34	195-61-45290	SPRING	1	50001-
35	04050-12015	PIN,COTTER	1	50001-
36	04205-10822	PIN	1	50001-
37	195-61-45210	KNOB	1	50001-
38	195-61-45220	BOSS	1	50001-
39	195-61-45230	NUT	1	50001-
40	01640-22232	WASHER	1	50001-
41	04211-20844	YOKE	1	50001-
42	01580-10806	NUT	1	50001-
43	04250-81265	END,ROD	1	50001-
44	01582-11210	NUT	1	50001-
45	175-78-69570	WIRE	1	50001-
		==========		
46	09671-00001	PLATE¤ OPERATING,RIPPER	1	50001-

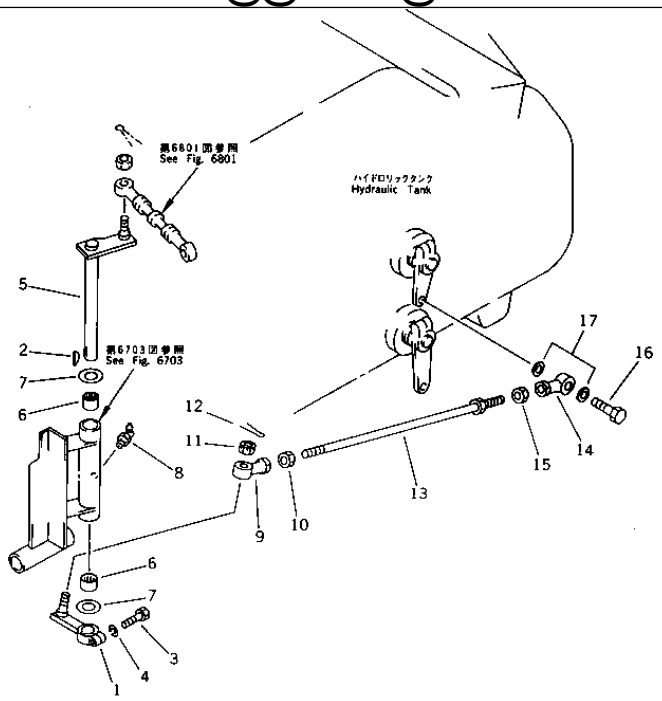

Ref. 6803 **Page 180260**

D155A-2 S/N 50001-UP (S6D155-4 Eng. Installed)
RIPPER CONTROL LINKAGE

Item	Part No.	Part Name	Qty	Serial No.
G-1	(⊙175-61-X1130)	BLADE CONTROL GROUP	1	50001-
		==========		
1	195-78-42310	LEVER	1	50001-
2	04010-00519	KEY	1	50001-
3	01010-50830	BOLT	1	50001-
4	01602-20825	WASHER	1	50001-
5	175-78-69411	SHAFT	1	50001-
6	195-61-41270	BEARING	2	50001-
7	01640-22032	WASHER	2	50001-
8	07020-00900	FITTING,GREASE	1	50001-
9	04250-91265	END,ROD	1	50001-
10	01508-41207	NUT	1	.-
	01508-31207	NUT	1	50001-.
11	01593-11210	NUT	1	50001-
12	04050-13020	PIN,COTTER	1	50001-
13	04248-31249	ROD	1	50001-
14	04250-81265	END,ROD	1	50001-
15	01582-11210	NUT	1	50001-
16	01090-51240	BOLT	1	50001-
17	04254-01232	SPACER	1	50001-
		==========		

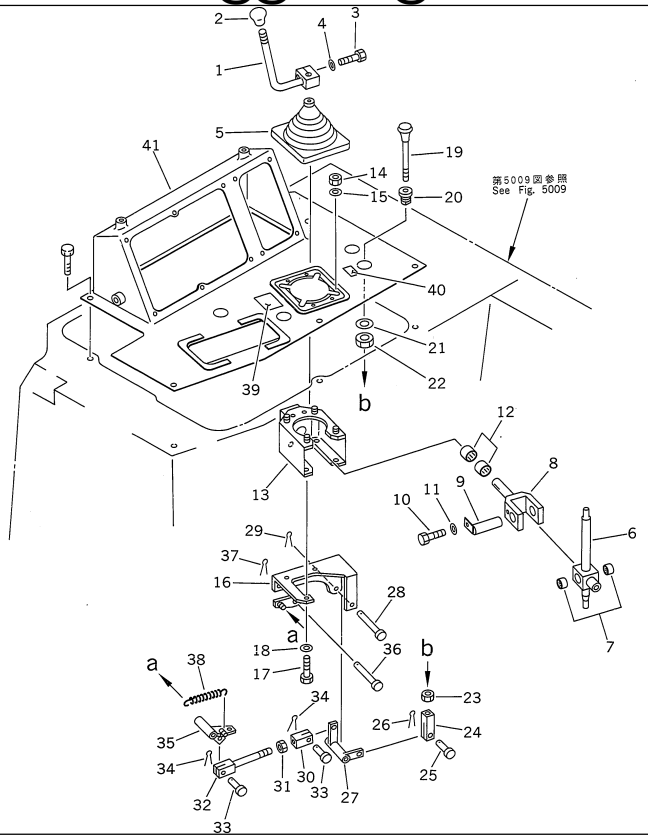

D155A-2 S/N 50001-UP (S6D155-4 Eng. Installed)

TOWING WINCH CONTROL LEVER

Item	Part No.	Part Name	Qty	Serial No.
1	154-916-4460	LEVER	1	50001-
2	09304-01250	KNOB	1	50001-
3	01010-50830	BOLT	1	50001-
4	01643-30823	WASHER	1	50001-
5	195-61-45140	BOOT	1	50001-
6	154-916-4470	LEVER	1	50001-
7	195-61-41270	BEARING,NEEDLE	2	50001-
8	195-61-45180	YOKE	1	50001-
9	195-61-45170	PIN	1	50001-
10	01010-50816	BOLT	1	50001-
11	01643-30823	WASHER	1	50001-
12	195-61-41280	BEARING,NEEDLE	2	50001-
13	195-61-45110	BRACKET	1	50001-
14	01580-10806	NUT	4	50001-
15	01643-30823	WASHER	4	50001-
16	154-78-45120	BRACKET	1	50001-
17	01010-50816	BOLT	3	50001-
18	01643-30823	WASHER	3	50001-
19	195-61-45211	KNOB	1	50001-
20	175-61-31750	BOSS	1	50001-
21	01640-22232	WASHER	1	50001-
22	195-61-45230	NUT	1	50001-
23	01580-10806	NUT	1	50001-
24	04211-20844	YOKE	1	50001-
25	04205-10822	PIN	1	50001-
26	04050-12015	PIN,COTTER	1	50001-
27	154-78-45140	LEVER	1	50001-

D155A-2 S/N 50001-UP (S6D155-4 Eng. Installed)

TOWING WINCH CONTROL LEVER

Item	Part No.	Part Name	Qty	Serial No.
28	195-61-45280	PIN	1	50001-
29	04050-12015	PIN,COTTER	1	50001-
30	04210-20832	YOKE	1	50001-
31	01580-10806	NUT	1	50001-
32	04244-40810	ROD	1	50001-
33	04205-10822	PIN	2	50001-
34	04050-12015	PIN,COTTER	2	50001-
35	154-78-45130	LEVER	1	50001-
36	195-61-45280	PIN	1	50001-
37	04050-12015	PIN,COTTER	1	50001-
38	195-61-45290	SPRING	1	50001-
39	154-98-11360	PLATE¤ OPERATING,ENGLISH	1	50001-
40	195-98-21210	PLATE¤ OPERATING,ENGLISH	1	50001-
41	175-916-8610	BRACKET	1	50001-

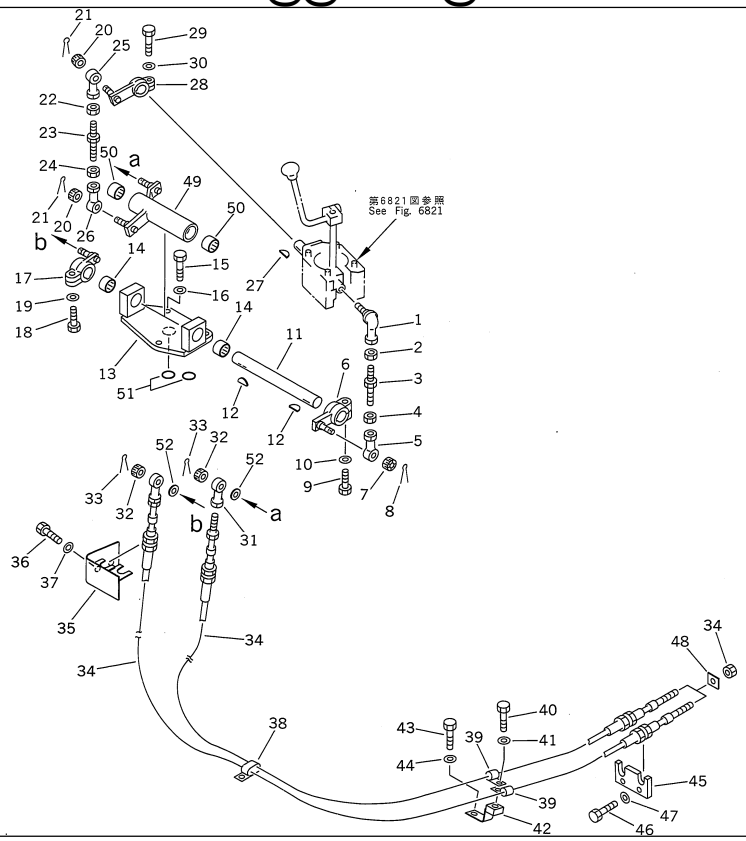

D155A-2 S/N 50001-UP (S6D155-4 Eng. Installed)

TOWING WINCH CONTROL LINKAGE

Item	Part No.	Part Name	Qty	Serial No.
1	195-61-45420	END,BALL	1	50001-
2	01582-11210	NUT	1	50001-
3	175-61-13760	ROD	1	50001-
4	01508-21207	NUT	1	50001-
5	04250-91265	END,ROD	1	50001-
6	154-78-45170	LEVER	1	50001-
7	01593-31210	NUT	1	50001-
8	04050-13020	PIN,COTTER	1	50001-
9	01010-51245	BOLT	1	50001-
10	01643-31232	WASHER	1	50001-
11	175-916-8640	SHAFT	1	50001-
12	04010-00732	KEY	2	50001-
13	175-916-8650	BRACKET	1	50001-
14	195-61-34140	BEARING,NEEDLE	2	50001-
15	01010-51030	BOLT	3	50001-
16	01643-31032	WASHER	3	50001-
17	154-916-4440	LEVER	1	50001-
18	01010-51245	BOLT	1	50001-
19	01643-31232	WASHER	1	50001-
20	01593-11210	NUT	2	50001-
21	04050-13020	PIN,COTTER	2	50001-
22	01582-11210	NUT	1	50001-
23	175-61-13760	ROD	1	50001-
24	01508-21207	NUT	1	50001-
25	04250-81265	END,ROD	1	50001-
26	04250-91265	END,ROD	1	50001-
27	04010-00519	KEY	1	50001-

D155A-2 S/N 50001-UP (S6D155-4 Eng. Installed)

TOWING WINCH CONTROL LINKAGE

Item	Part No.	Part Name	Qty	Serial No.
28	175-916-8620	LEVER	1	50001-
29	01010-50830	BOLT	1	50001-
30	01643-30823	WASHER	1	50001-
31	04250-80847	END,ROD	2	50001-
32	01590-30809	NUT	2	50001-
33	04050-12015	PIN,COTTER	2	50001-
34	205-43-71580	CABLE	2	50001-
35	175-916-8660	BRACKET	1	50001-
36	01010-51025	BOLT	2	50001-
37	01643-31032	WASHER	2	50001-
38	195-01-14450	CLIP	1	50001-
39	21T-72-23260	CLIP	2	50001-
40	01010-51225	BOLT	1	50001-
41	01643-31232	WASHER	1	50001-
42	175-916-8690	BRACKET	1	50001-
43	01010-51240	BOLT	1	50001-
44	01643-31232	WASHER	1	50001-
45	175-916-7530	PLATE	1	50001-
46	01010-51230	BOLT	2	50001-
47	01643-31232	WASHER	2	50001-
48	175-916-8260	SEAT	2	50001-
49	175-916-8630	LEVER	1	50001-
50	195-61-41290	BEARING,NEEDLE	2	50001-
51	07000-03022	O-RING	2	50001-
52	04254-10823	SPACER	2	50001-

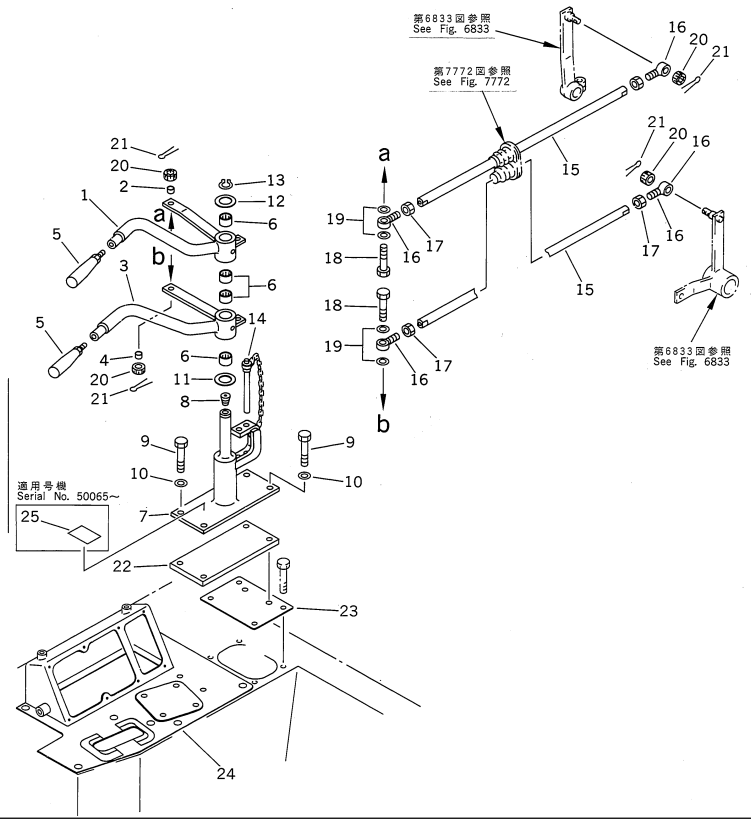

Ref. 6831 **Page 180290**

D155A-2 S/N 50001-UP (S6D155-4 Eng. Installed)
REAR P.C.U. CONTROL LEVER

Item	Part No.	Part Name	Qty	Serial No.
G-1	(⊙175-65-X1000)	REAR P.C.U. GROUP	1	50001-
		==========		
1	154-65-51110	LEVER	1	50001-
2	06600-01210	· BUSHING	1	50001-
3	154-65-51120	LEVER	1	50001-
4	06600-01210	· BUSHING	1	50001-
5	09305-01400	KNOB	2	50001-
6	195-61-41290	BEARING,NEEDLE	4	50001-
7	154-65-51130	BRACKET	1	50001-
8	07043-00108	PLUG	1	50001-
9	01010-51240	BOLT	4	50001-
10	01643-31232	WASHER	4	50001-
11	01640-22540	WASHER	1	50001-
12	01640-22440	WASHER	1	50001-
13	04064-02512	RING,SNAP	1	50001-
14	196-916-1410	PIN	1	50001-
15	175-65-36780	ROD	2	50001-
16	04252-21269	END,ROD	4	50001-
17	01582-11210	NUT	4	50001-
18	01092-51250	BOLT	2	50001-
19	04254-11232	SPACER	4	50001-
20	01593-31210	NUT	4	50001-
21	04050-13020	PIN,COTTER	4	50001-
22	175-65-36750	PLATE	1	50001-
23	175-54-47180	COVER	1	50001-
24	175-54-47170	BRACKET	1	50001-
		==========		

D155A-2 S/N 50001-UP (S6D155-4 Eng. Installed)

REAR P.C.U. CONTROL LEVER

Item	Part No.	Part Name	Qty	Serial No.
25	09672-00056	PLATE¤ OPERATING	1	50065-

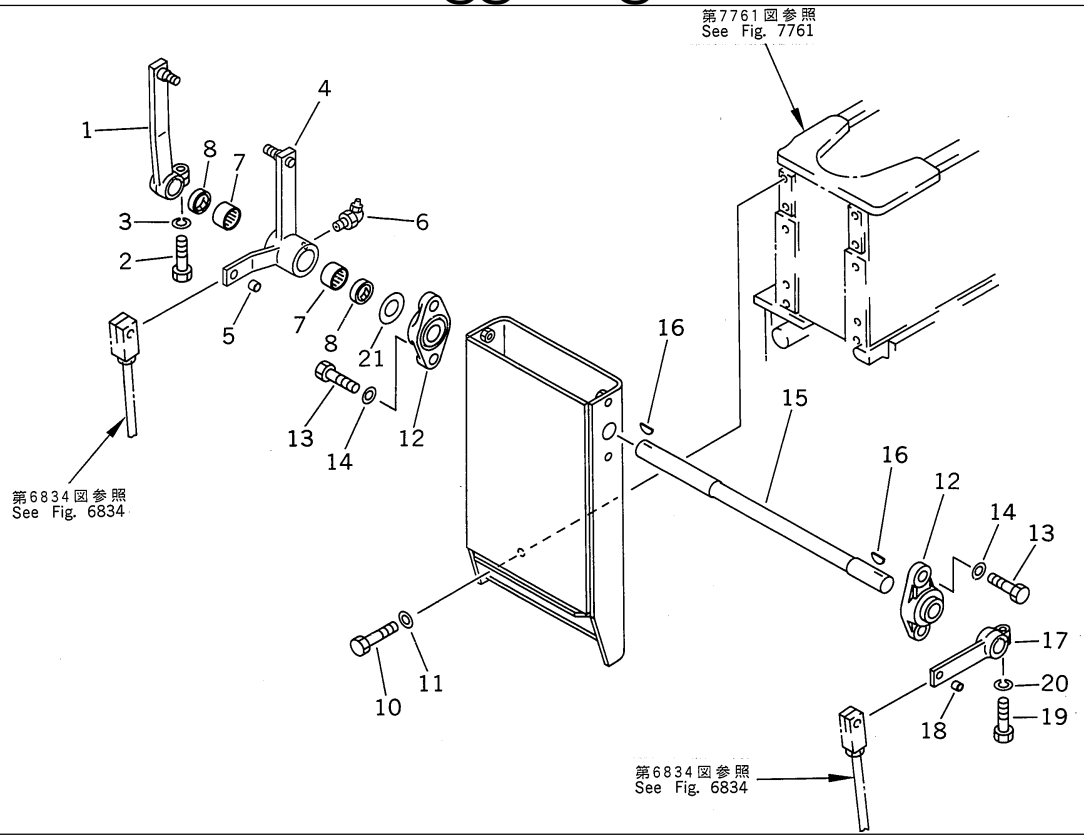

Ref. 6833 **Page 180300**

D155A-2 S/N 50001-UP (S6D155-4 Eng. Installed)
REAR P.C.U. CONTROL LINKAGE (1/2)

Item	Part No.	Part Name	Qty	Serial No.
G-1	(⊙175-65-X1000)	REAR P.C.U. GROUP	1	50001-
		==========		
1	154-65-51160	LEVER	1	50001-
2	01010-51245	BOLT	1	50001-
3	01602-21236	WASHER,SPRING	1	50001-
4	175-65-36720	LEVER	1	50001-
5	06600-01210	· BUSHING	1	50001-
6	07020-00675	FITTING,GREASE	1	50001-
7	06120-03020	BEARING,NEEDLE	2	50001-
8	06122-03004	SEAL,BEARING	2	50001-
9	175-65-36710	BRACKET	1	50001-
10	01010-51435	BOLT	4	50001-
11	01643-31445	WASHER	4	50001-
12	154-65-15682	BEARING UNIT	2	50001-
13	01010-51440	BOLT	4	50001-
14	01643-31445	WASHER	4	50001-
15	175-65-36730	SHAFT	1	50001-
16	04010-00725	KEY	2	50001-
17	154-65-51190	LEVER	1	50001-
18	06600-01210	· BUSHING	1	50001-
19	01010-51245	BOLT	1	50001-
20	01602-21236	WASHER,SPRING	1	50001-
21	01643-23080	WASHER	1	50001-
		==========		

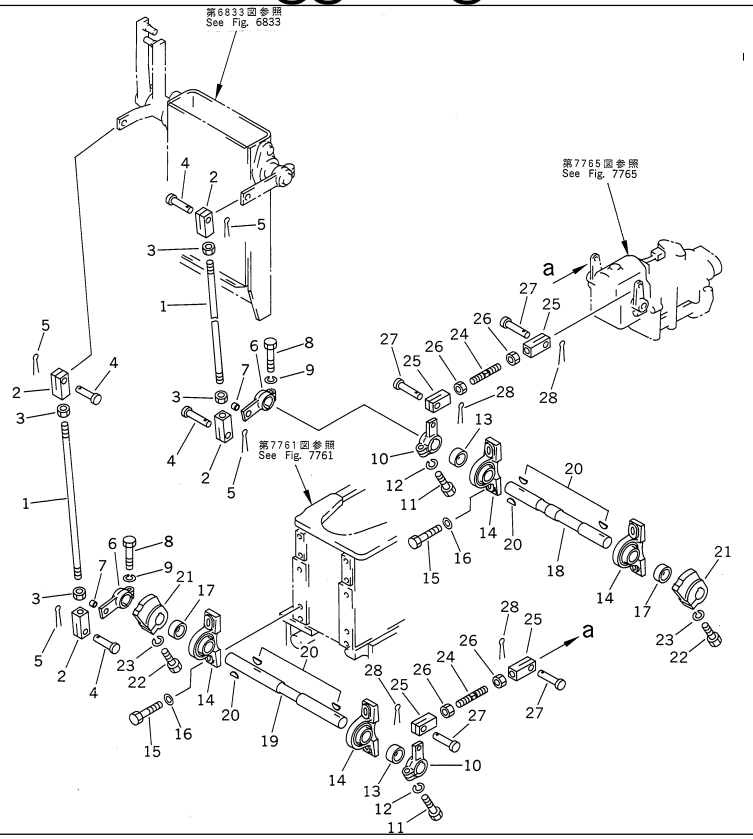

Ref. 6834 **Page 180310**

D155A-2 S/N 50001-UP (S6D155-4 Eng. Installed)
REAR P.C.U. CONTROL LINKAGE (2/2)

Item	Part No.	Part Name	Qty	Serial No.
G-1	(⊙175-65-X1000)	REAR P.C.U. GROUP	1	50001-
		==========		
1	04245-41252	ROD	2	50001-
2	04211-21266	YOKE	4	50001-
3	01582-11210	NUT	4	50001-
4	04205-11235	PIN	4	50001-
5	04050-13020	PIN,COTTER	4	50001-
6	175-65-36570	LEVER	2	50001-
7	195-43-21270	· BUSHING	1	50001-
8	01010-51245	BOLT	2	50001-
9	01602-21236	WASHER,SPRING	2	50001-
10	195-65-36220	LEVER	2	50001-
11	01010-51245	BOLT	2	50001-
12	01602-21236	WASHER,SPRING	2	50001-
13	195-65-36210	SPACER	2	50001-
14	154-65-15712	BEARING UNIT,UNIT	4	50001-
15	01010-51440	BOLT	8	50001-
16	01643-31445	WASHER	8	50001-
17	195-65-36180	SPACER	2	50001-
18	175-65-37410	SHAFT	1	50001-
19	175-65-37421	SHAFT	1	50001-
20	04010-00725	KEY	4	50001-
21	195-65-36170	CAM	2	50001-
22	01010-51245	BOLT	2	50001-
23	01602-21236	WASHER,SPRING	2	50001-
24	195-65-36230	ROD	2	50001-
25	04211-21055	YOKE	4	50001-

REAR P.C.U. CONTROL LINKAGE (2/2)

Item	Part No.	Part Name	Qty	Serial No.
26	01582-11008	NUT	4	50001-
27	04205-11028	PIN	4	50001-
28	04050-13018	PIN,COTTER	4	50001-
		==========		

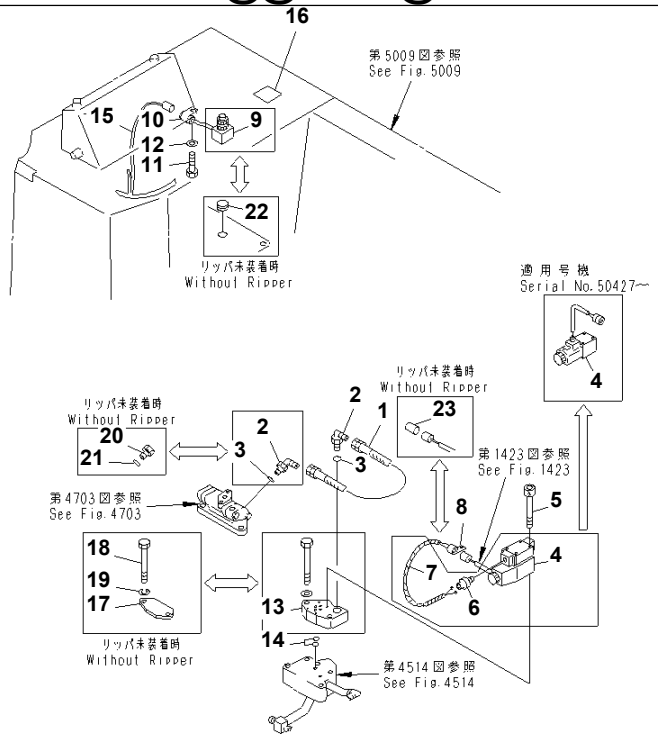

PJ14971

D155A-2 S/N 50001-UP (S6D155-4 Eng. Installed)

PIN PULLER SWITCH AND VALVE (FOR GIANT RIPPER) (WITH BRAKE ASSISTOR)

Item	Part No.	Part Name	Qty	Serial No.
G-1	(⊙175-79-X1400)	PIN PULLER PIPING G.	1	50001-
		==========		
1	07102-20304	HOSE	1	50001-
2	07235-10315	ELBOW	2	50001-
3	07002-02034	O-RING	2	50001-
4	175-78-69580	VALVE	1	50427-
	□209-60-12180	VALVE	1	50001-50426
5	01252-40545	BOLT	4	50001-
6	21T-06-12530	CONNECTOR	1	50001-50426
7	175-06-61410	WIRING HARNESS	1	50001-50426
8	195-06-41820	CLIP	1	50001-
		==========		
G-2	(⊙175-79-X1500)	PIN PULLER SWITCH G.	1	50001-52099
		==========		
9	7830-11-2101	SWITCH ASS'Y	1	50001-
10	195-06-41820	CLIP	1	50001-
11	01010-51020	BOLT	1	50001-
12	01643-31032	WASHER	1	50001-
		==========		
13	175-79-61250	BLOCK	1	50001-
14	07000-01009	O-RING	2	50001-
15	175-06-61130	WIRING HARNESS	1	50001-
16	195-98-21180	PLATE¤ OPERATING,PIN PULLER	1	50001-
17	175-79-61260	PLATE,(WITHOUT GIANT RIPPER)	1	50001-
18	01010-51290	BOLT,(WITHOUT GIANT RIPPER)	2	50001-
19	01602-21236	WASHER,(WITHOUT GIANT RIPPER)	2	50001-

PIN PULLER SWITCH AND VALVE (FOR GIANT RIPPER) (WITH BRAKE ASSISTOR)

Item	Part No.	Part Name	Qty	Serial No.
20	07040-12012	PLUG,(WITHOUT GIANT RIPPER)	1	50001-
21	07002-02034	O-RING,(WITHOUT GIANT RIPPER)	1	50001-
22	09415-01610	CAP,(WITHOUT GIANT RIPPER)	1	50001-
23	195-06-41740	PLUG,(WITHOUT GIANT RIPPER)	1	50001-

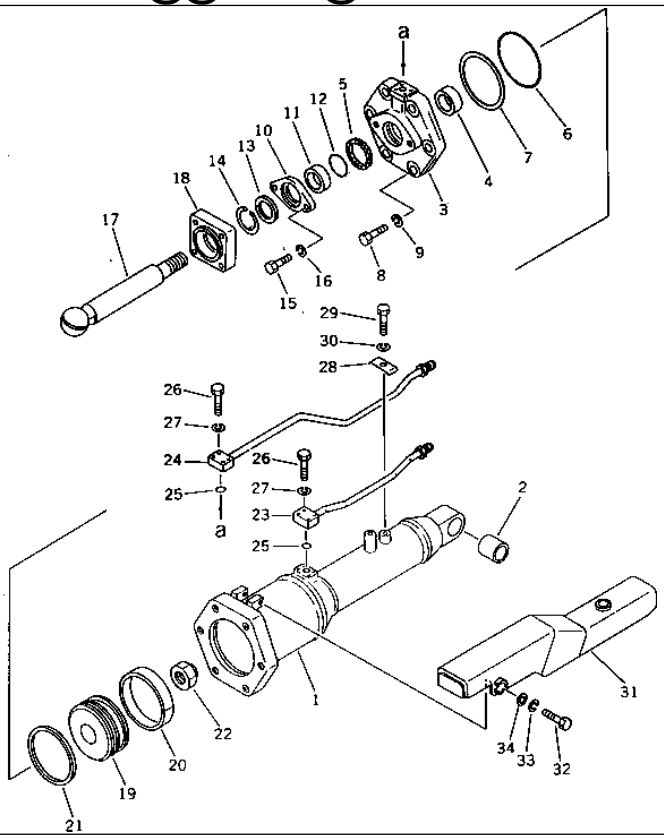

D155A-2 S/N 50001-UP (S6D155-4 Eng. Installed)

BLADE TILT CYLINDER

Item	Part No.	Part Name	Qty	Serial No.
1	175-63-52700	CYLINDER ASS'Y	1	50001-
	175-63-52542	· CYLINDER	1	50001-
2	195-63-52160	· BUSHING,CYLINDER	1	50001-
3	195-63-42133	· HEAD	1	50001-
4	07177-09035	· BUSHING	1	50001-
5	707-51-90110	· U-PACKING,ROD (KIT)	1	50001-
6	07000-15220	· O-RING (KIT)	1	50001-
7	07001-05220	· RING,BACK-UP (KIT)	1	50001-
8	01010-83095	· BOLT	6	50001-
9	01601-23075	· WASHER,SPRING	6	50001-
10	195-63-52470	· GLAND	1	50001-
11	07177-09020	· BUSHING	1	50001-
12	07000-03110	· O-RING (KIT)	1	50001-
13	195-63-94170	· SEAL,DUST (KIT)	1	50001-
14	07179-00113	· RING,SNAP	1	50001-
15	01010-31865	· BOLT	2	50001-
16	01602-21854	· WASHER,SPRING	2	50001-
17	175-63-52422	· ROD,PISTON	1	50001-
18	175-71-11211	· CAP	1	50001-
19	707-36-22550	· PISTON	1	50001-
20	07155-02250	· RING,WEAR (KIT)	1	50001-
21	707-44-22280	· RING,PISTON (KIT)	1	50001-
22	07165-16870	· NUT	1	50001-
23	175-63-52552	· TUBE	1	50001-
24	175-63-52562	· TUBE	1	50001-
25	07000-13035	· O-RING (KIT)	2	50001-
26	01010-51050	· BOLT	8	50001-

BLADE TILT CYLINDER

Item	Part No.	Part Name	Qty	Serial No.
27	01602-21030	· WASHER,SPRING	8	50001-
28	195-63-52871	· CLIP	1	50001-
29	01010-51425	· BOLT	1	50001-
30	01602-21442	· WASHER,SPRING	1	50001-
31	175-63-52572	· COVER	1	50001-
32	01010-51440	· BOLT	3	50001-
33	01602-21442	· WASHER,SPRING	3	50001-
34	01643-31445	· WASHER	3	50001-
K	175-63-05140	CYLINDER KIT	1	50001-

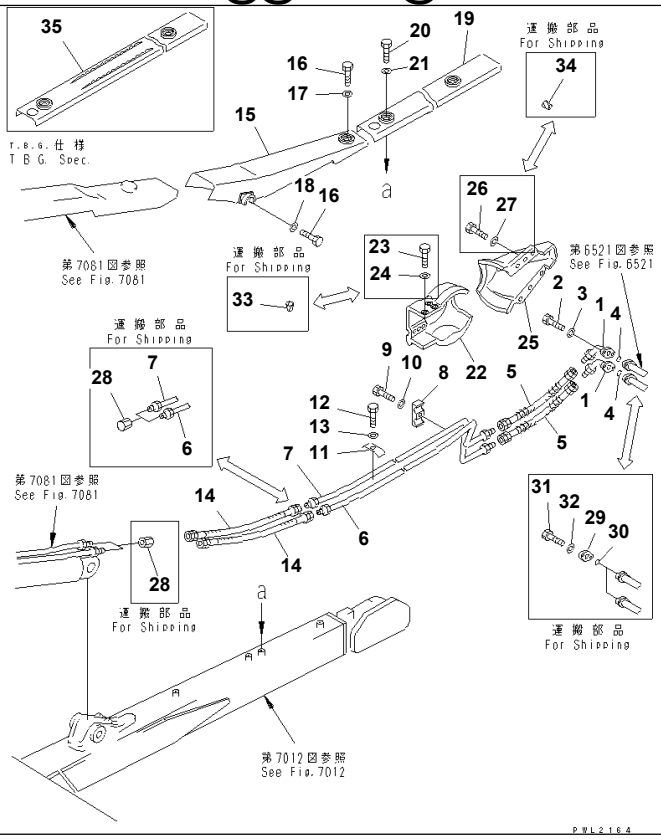

D155A-2 S/N 50001-UP (S6D155-4 Eng. Installed)

BLADE TILT CYLINDER PIPING

Item	Part No.	Part Name	Qty	Serial No.
G-1	(⊙175-71-X1300)	TILT PIPING GROUP	1	50001-
		==========		
1	175-71-31430	TUBE	2	50001-
2	01010-31240	BOLT	4	50001-
3	01643-51232	WASHER	4	50001-
4	07000-13022	O-RING	2	50001-
5	195-71-32330	HOSE	2	50001-
	07113-A0506	HOSE,(FOR SLAG HANDLING)	2	50001-
6	175-71-31441	TUBE	1	50001-
7	175-71-31451	TUBE	1	50001-
8	175-61-18410	CLAMP	1	50001-
9	01010-51255	BOLT	1	50001-
10	01643-31232	WASHER	1	50001-
11	154-71-31410	CLAMP	1	50001-
12	01010-31425	BOLT	1	50001-
13	01643-31445	WASHER	1	50001-
14	07113-00506	HOSE	2	50001-
	07113-A0506	HOSE,(FOR SLAG HANDLING)	2	50001-
15	175-71-31353	COVER	1	50001-
16	01010-51435	BOLT	3	50001-
17	01643-31445	WASHER	2	50001-
18	195-71-32220	WASHER	1	50001-
19	175-71-31342	COVER	1	50001-
20	01010-51435	BOLT	2	50001-
21	195-71-32220	WASHER	2	50001-
22	175-71-31321	COVER	1	50001-
23	01010-52050	BOLT	7	50001-

BLADE TILT CYLINDER PIPING

Item	Part No.	Part Name	Qty	Serial No.
24	01643-32060	WASHER	7	50001-
25	175-71-31331	COVER	1	50001-
26	01010-52050	BOLT	6	50001-
27	01643-32060	WASHER	6	50001-
		==========		
G-2	(⊙175-71-X1400)	BLANK PARTS GROUP	1	50001-
		==========		
28	195-901-2280	NUT	8	50001-
29	175-71-31480	FLANGE	2	50001-
30	07000-13022	O-RING	2	50001-
31	01010-51235	BOLT	4	50001-
32	01643-51232	WASHER	4	50001-
33	07049-02025	PLUG	7	50001-
34	07049-01418	PLUG	6	50001-
		==========		
35	175-71-33210	COVER,(T.B.G. SPEC.)	1	50001-

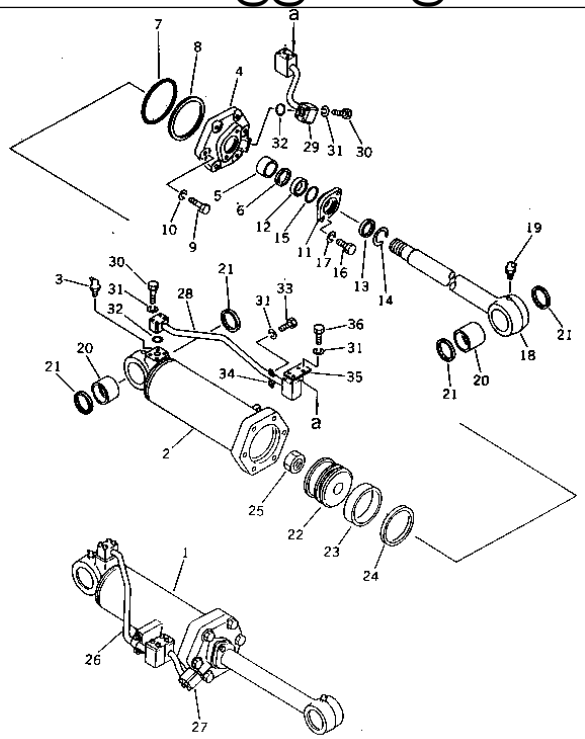

D155A-2 S/N 50001-UP (S6D155-4 Eng. Installed)
RIPPER LIFT CYLINDER

Item	Part No.	Part Name	Qty	Serial No.
1	175-63-42701	CYLINDER ASS'Y,L.H.	1	50001-
	175-63-42801	CYLINDER ASS'Y,R.H.	1	50001-
	175-63-42245	· CYLINDER,L.H.	1	50001-
2	175-63-42345	· CYLINDER,R.H.	1	50001-
3	07020-00675	· FITTING,GREASE	1	50001-
4	195-63-42133	· HEAD,CYLINDER	1	50001-
5	07177-09035	· BUSHING	1	50001-
6	707-51-90110	· U-PACKING,ROD (KIT)	1	50001-
7	07000-15220	· O-RING (KIT)	1	50001-
8	07001-05220	· RING,BACK-UP (KIT)	1	50001-
9	01010-83095	· BOLT	6	50001-
10	01601-23075	· WASHER,SPRING	6	50001-
11	195-63-52470	· GLAND	1	50001-
12	07177-09020	· BUSHING	1	50001-
13	195-63-94170	· SEAL,DUST (KIT)	1	50001-
14	07179-00113	· RING,SNAP	1	50001-
15	07000-03110	· O-RING (KIT)	1	50001-
16	01010-51865	· BOLT	2	50001-
17	01602-21854	· WASHER,SPRING	2	50001-
18	175-63-42221	· ROD,PISTON	1	50001-
19	07020-00900	· FITTING,GREASE	1	50001-
20	07144-11110	· BUSHING	2	50001-
21	07145-00110	· SEAL,DUST (KIT)	4	50001-
22	707-36-22550	· PISTON	1	50001-
23	07155-02250	· RING,WEAR (KIT)	1	50001-
24	707-44-22280	· RING,PISTON (KIT)	1	50001-
25	175-63-52432	· NUT,NYLON	1	50001-

RIPPER LIFT CYLINDER

Item	Part No.	Part Name	Qty	Serial No.
26	175-63-42581	· TUBE,L.H.	1	50001-
27	175-63-42482	· TUBE,L.H.	1	50001-
28	175-63-42591	· TUBE,R.H.	1	50001-
29	175-63-42491	· TUBE,R.H.	1	50001-
30	01010-51080	· BOLT	8	50001-
31	01602-21030	· WASHER,SPRING	14	50001-
32	07000-13038	· O-RING (KIT)	2	50001-
33	01010-51020	· BOLT	2	50001-
34	07282-03411	· CLAMP	1	50001-
35	175-63-42790	· PLATE	1	50001-
36	01010-51025	· BOLT	4	50001-
K	707-99-71420	SERVICE KIT	2	50001-

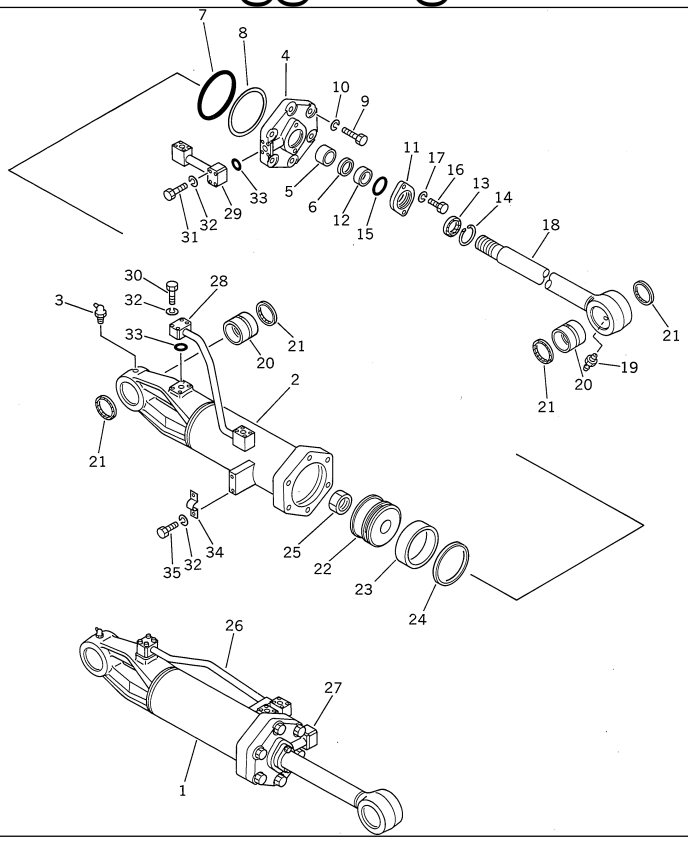

D155A-2 S/N 50001-UP (S6D155-4 Eng. Installed)

RIPPER TILT CYLINDER (FOR VARIABLE TYPE RIPPER)

Item	Part No.	Part Name	Qty	Serial No.
1	175-63-43700	CYLINDER ASS'Y,L.H.	1	50001-
	175-63-43800	CYLINDER ASS'Y,R.H.	1	50001-
	175-63-43142	· CYLINDER,L.H.	1	50001-
2	175-63-43242	· CYLINDER,R.H.	1	50001-
3	07020-00675	· FITTING,GREASE	1	50001-
4	195-63-42133	· HEAD,CYLINDER	1	50001-
5	07177-09035	· BUSHING	1	50001-
6	707-51-90110	· U-PACKING,ROD (KIT)	1	50001-
7	07000-15220	· O-RING (KIT)	1	50001-
8	07001-05220	· RING,BACK-UP (KIT)	1	50001-
9	01010-83095	· BOLT	6	50001-
10	01601-23075	· WASHER,SPRING	6	50001-
11	195-63-52470	· GLAND	1	50001-
12	07177-09020	· BUSHING	1	50001-
13	195-63-94170	· SEAL,DUST (KIT)	1	50001-
14	707-75-90011	· RING,SNAP	1	.-
	□07179-00113	· RING,SNAP	1	50001-.
15	07000-03110	· O-RING (KIT)	1	50001-
16	01010-51865	· BOLT	2	50001-
17	01602-21854	· WASHER,SPRING	2	50001-
18	175-63-43121	· ROD,PISTON	1	50001-
19	07020-00000	· FITTING,GREASE	1	50001-
20	07144-11110	· BUSHING	2	50001-
21	07145-00110	· SEAL,DUST (KIT)	4	50001-
22	707-36-22550	· PISTON	1	50001-
23	07155-02250	· RING,WEAR (KIT)	1	50001-
24	707-44-22280	· RING,PISTON (KIT)	1	50001-

D155A-2 S/N 50001-UP (S6D155-4 Eng. Installed)

RIPPER TILT CYLINDER (FOR VARIABLE TYPE RIPPER)

Item	Part No.	Part Name	Qty	Serial No.
25	175-63-52432	· NUT,NYLON	1	50001-
26	175-63-43171	· TUBE,L.H.	1	50001-
27	175-63-43271	· TUBE,L.H.	1	50001-
28	175-63-43181	· TUBE,R.H.	1	50001-
29	175-63-43281	· TUBE,R.H.	1	50001-
30	01010-51080	· BOLT	4	50001-
31	01010-51065	· BOLT	4	50001-
32	01602-21030	· WASHER,SPRING	10	50001-
33	07000-13038	· O-RING (KIT)	2	50001-
34	07282-03411	· CLAMP	1	50001-
35	01010-51020	· BOLT	2	50001-
K	707-99-71420	SERVICE KIT	2	50001-

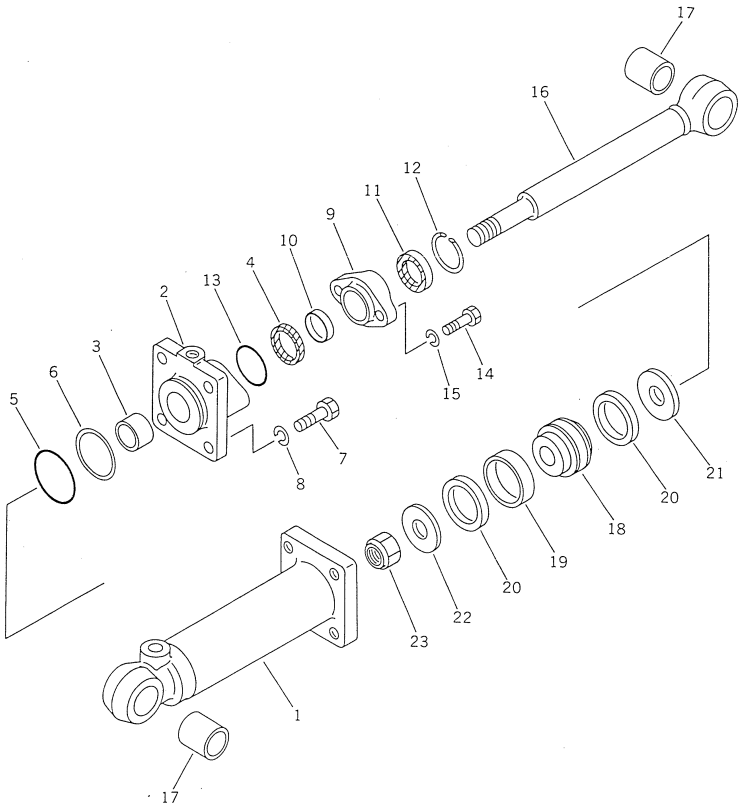

Ref. 7515 **Page 210240**

D155A-2 S/N 50001-UP (S6D155-4 Eng. Installed)
PIN PULLER CYLINDER (FOR GIANT RIPPER)(#50001-52739)

Item	Part No.	Part Name	Qty	Serial No.
1	175-63-49102	CYLINDER ASS'Y,PIN PULLER	1	50001-52739
	175-63-49140	· CYLINDER	1	50001-52739
2	175-63-49130	· HEAD,CYLINDER	1	50001-52739
3	07177-03525	· BUSHING	1	50001-52739
4	707-51-35110	· PACKING (KIT)	1	50001-52739
5	07000-12065	· O-RING (KIT)	1	50001-@
6	07146-02066	· RING,BACK-UP (KIT)	1	50001-@
7	01010-51440	· BOLT	4	50001-52739
8	01602-21442	· WASHER,SPRING	4	50001-52739
9	07178-03535	· GLAND	1	50001-52739
10	07177-03512	· BUSHING	1	50001-52739
11	175-63-75190	· SEAL,DUST (KIT)	1	50001-52739
12	07179-00054	· RING,SNAP	1	50001-52739
13	07000-03050	· O-RING (KIT)	1	50001-52739
14	01010-51240	· BOLT	2	50001-52739
15	01602-21236	· WASHER,SPRING	2	50001-52739
16	175-63-49120	· ROD,PISTON	1	50001-52739
17	175-63-49170	· BUSHING	2	50001-@
18	07150-00724	· PISTON	1	50001-52739
19	07155-00720	· RING,WEAR (KIT)	1	50001-52739
20	707-42-70012	· PACKING (KIT)	2	50001-52739
21	112-63-12560	· RETAINER	1	50001-52739
22	112-63-12570	· RETAINER	1	50001-52739
23	07165-12426	· NUT	1	50001-52739
K	707-99-12420	SERVICE KIT	1	50001-52739

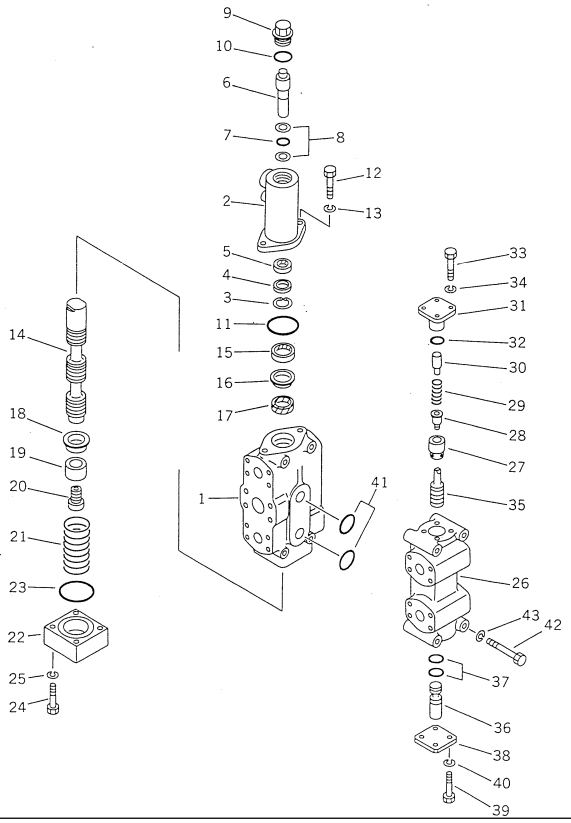

D155A-2 S/N 50001-UP (S6D155-4 Eng. Installed)

RIPPER SELECTOR VALVE

Item	Part No.	Part Name	Qty	Serial No.
1	700-61-13006	VALVE ASS'Y	1	50001-
	700-61-33002	· VALVE ASS'Y	1	50001-
	700-61-33111	· · BODY,VALVE	1	50001-
2	700-61-00041	· · BODY AND PISTON A.	1	50001-
	☆	· · · BODY	1	50001-
3	☆	· · · PISTON	1	50001-
4	700-61-33450	· · RING,SNAP	1	50001-
5	700-61-33440	· · SPACER	1	50001-
6	07016-00226	· · SEAL,DUST	1	50001-
7	07000-02018	· · O-RING	1	50001-
8	07001-02018	· · RING,BACK-UP	2	50001-
9	700-61-33420	· · PLUG	1	50001-
10	07002-03634	· · O-RING	1	50001-
11	07000-02065	· · O-RING	1	50001-
12	01010-81235	· · BOLT	2	50001-
13	01602-21236	· · WASHER,SPRING	2	50001-
14	☆	· · SPOOL	1	50001-
15	07016-00407	· · SEAL,DUST	1	50001-
16	700-52-31310	· · SPACER	1	50001-
17	07006-00040	· · PACKING	1	50001-
18	700-61-33470	· · RETAINER	1	50001-
19	700-61-33510	· · COLLAR	1	50001-
20	700-61-33520	· · PLUG	1	50001-
21	700-61-33481	· · SPRING	1	50001-
22	700-61-33490	· · COVER	1	50001-
23	07000-02070	· · O-RING	1	50001-
24	01010-81060	· · BOLT	4	50001-

RIPPER SELECTOR VALVE

Item	Part No.	Part Name	Qty	Serial No.
25	01602-21030	· · WASHER,SPRING	4	50001-
26	700-61-34002	· VALVE ASS'Y	1	50001-
	700-61-34111	· · BODY,VALVE	1	50001-
27	700-61-34220	· · VALVE,CHECK	1	50001-
28	700-61-34340	· · VALVE,CHECK	1	50001-
29	700-61-34230	· · SPRING	1	50001-
30	700-61-34510	· · STOPPER	1	50001-
31	700-61-34141	· · PLUG	1	50001-
32	07000-13025	· · O-RING	1	50001-
33	01010-81030	· · BOLT	4	50001-
34	01602-21030	· · WASHER,SPRING	4	50001-
35	700-61-34330	· · PISTON,PILOT	1	50001-
36	700-61-34320	· · PLUG	1	50001-
37	07000-12021	· · O-RING	2	50001-
38	700-61-34310	· · PLATE	1	50001-
39	01010-81030	· · BOLT	4	50001-
40	01602-21030	· · WASHER,SPRING	4	50001-
41	07000-13035	· · O-RING	2	50001-
42	01011-81000	· · BOLT	4	50001-
43	01602-21030	· · WASHER,SPRING	4	50001-

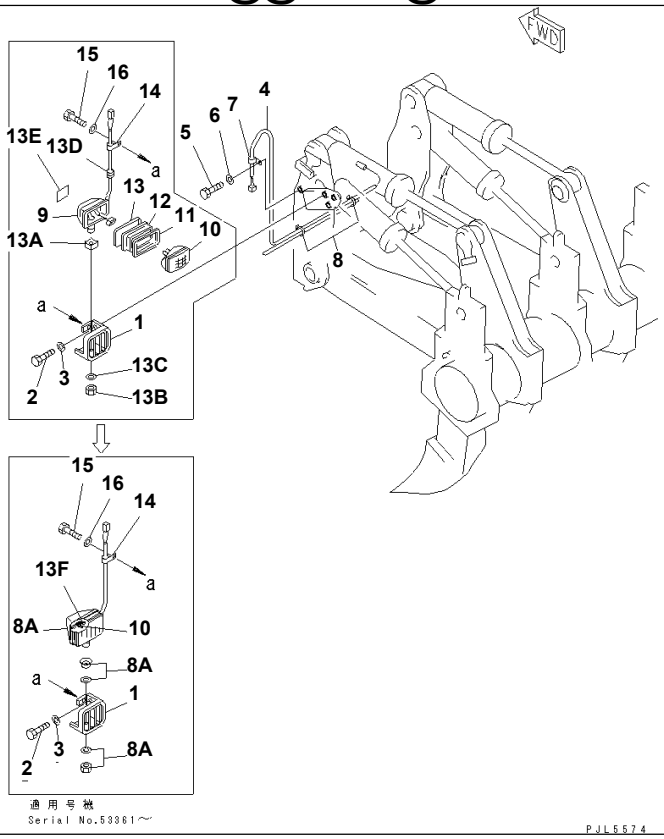

Ref. 7541 Page 210310

D155A-2 S/N 50001-UP (S6D155-4 Eng. Installed)

RIPPER ELECTRICAL SYSTEM

Item	Part No.	Part Name	Qty	Serial No.
G-1	(⊙175-78-X1701)	ELECTRICAL GROUP	1	50123-
	(⊙175-78-X1700)	ELECTRICAL GROUP	1	50001-50122
		==========		
1	195-06-27250	COVER	1	50001-
2	01010-51435	BOLT	3	50001-
3	01643-31445	WASHER	3	50001-
4	175-06-61270	CABLE	1	50001-
5	01010-51020	BOLT	1	50001-
6	01643-31032	WASHER	1	50001-
7	08036-01814	CLIP	1	50001-
8	08034-00414	BAND	2	50001-
8A	17A-06-17941	LAMP ASS'Y	1	.-
	□17A-06-17940	LAMP ASS'Y	1	53361-.
9	23S-05-28210	LAMP ASS'Y	1	50123-53360
	22W-06-12381	LAMP ASS'Y,WORK	1	50001-50122
	203-06-56160	· HOUSING	1	50123-53360
	22W-06-12280	· HOUSING	1	50001-50122
10	17A-06-17970	· BULB¤ 70W,70W	1	53361-
	22W-06-12170	· BULB	1	50001-53360
11	203-06-56180	· RING	1	50123-53360
	22W-06-12120	· RING	1	50001-50122
12	22W-06-12290	· CUSHION	1	50001-53360
13	203-06-56190	· RING	1	50123-53360
	22W-06-12130	· RING	1	50001-50122
13A	22W-06-12160	· SEAT	1	50123-53360
13B	01582-11411	· NUT	1	50123-53360
13C	01643-31445	· WASHER	1	50123-53360

RIPPER ELECTRICAL SYSTEM

Item	Part No.	Part Name	Qty	Serial No.
13D	09415-01008	· CAP	1	50123-53360
13E	23S-05-28220	· PLATE¤ NAME	1	50123-53360
13F	17A-06-17980	· SLEEVE	1	53361-
14	08036-11214	CLIP	1	50001-
15	01010-51020	BOLT	1	50001-
16	01643-31032	WASHER	1	50001-
		==========		

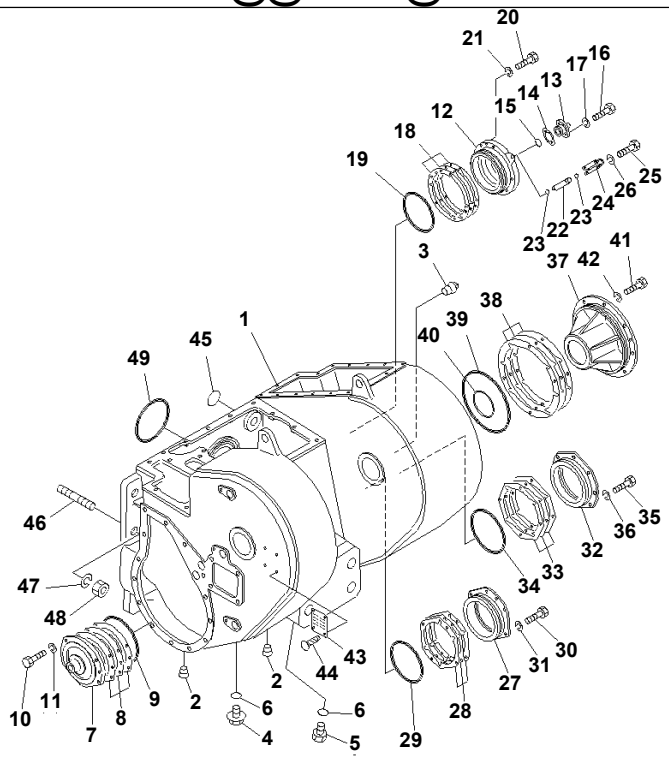

D155A-2 S/N 50001-UP (S6D155-4 Eng. Installed)
TOWING WINCH CASE (1/2)

Item	Part No.	Part Name	Qty	Serial No.
1	175-916-3812	CASE	1	50001-
2	07043-00312	PLUG	3	50001-
3	175-916-8520	PLUG	1	50001-
4	07044-13620	PLUG,DRAIN	1	50001-
5	07041-13612	PLUG	1	50001-
6	07000-03032	O-RING	2	50001-
7	175-916-1280	COVER	1	50001-
8	175-916-0050	SHIM ASS'Y	1	50001-
	☆	· SHIM¤ 0.2MM	10	50001-
	☆	· SHIM¤ 0.3MM	4	50001-
	☆	· SHIM¤ 0.5MM	2	50001-
9	07000-05170	O-RING	1	50001-
10	01010-51435	BOLT	5	50001-
11	01602-21442	WASHER,SPRING	5	50001-
12	175-916-2780	COVER	1	50001-
13	175-916-2810	COVER	1	50001-
14	175-916-0060	SHIM ASS'Y	1	50001-
	☆	· SHIM¤ 0.2MM	12	50001-
	☆	· SHIM¤ 0.3MM	6	50001-
	☆	· SHIM¤ 0.5MM	2	50001-
15	07000-03038	O-RING	1	50001-
16	01010-51235	BOLT	2	50001-
17	01602-21236	WASHER,SPRING	2	50001-
18	175-916-0070	SHIM ASS'Y	1	50001-
	☆	· SHIM¤ 0.2MM	24	50001-
	☆	· SHIM¤ 0.3MM	12	50001-
	☆	· SHIM¤ 0.5MM	4	50001-

TOWING WINCH CASE (1/2)

Item	Part No.	Part Name	Qty	Serial No.
19	07000-05170	O-RING	1	50001-
20	01010-51235	BOLT	7	50001-
21	01602-21236	WASHER,SPRING	7	50001-
22	175-916-2790	PIPE	1	50001-
23	07000-03020	O-RING	2	50001-
24	175-916-2690	GUARD	1	50001-
25	01010-51225	BOLT	4	50001-
26	01602-21236	WASHER,SPRING	4	50001-
27	175-916-1410	COVER	1	50001-
28	175-916-0080	SHIM ASS'Y	1	50001-
	☆	･ SHIM¤ 0.2MM	24	50001-
	☆	･ SHIM¤ 0.3MM	12	50001-
	☆	･ SHIM¤ 0.5MM	4	50001-
29	07000-05170	O-RING	1	50001-
30	01010-51235	BOLT	6	50001-
31	01602-21236	WASHER,SPRING	6	50001-
32	175-916-1480	COVER	1	50001-
33	175-916-0090	SHIM ASS'Y	1	50001-
	☆	･ SHIM¤ 0.2MM	24	50001-
	☆	･ SHIM¤ 0.3MM	12	50001-
	☆	･ SHIM¤ 0.5MM	4	50001-
34	07000-05190	O-RING	1	50001-
35	01010-51235	BOLT	6	50001-
36	01602-21236	WASHER,SPRING	6	50001-
37	175-916-1590	COVER	1	50001-
38	175-916-0130	SHIM ASS'Y	1	50001-
	☆	･ SHIM¤ 0.2MM	24	50001-
	☆	･ SHIM¤ 0.3MM	12	50001-
	☆	･ SHIM¤ 0.5MM	4	50001-
39	07000-05290	O-RING	1	50001-
40	07000-05105	O-RING	1	50001-
41	01010-51440	BOLT	8	50001-
42	01602-21442	WASHER,SPRING	8	50001-
43	09601-00835	PLATE¤ NAME,NAME	1	50001-
44	04418-03060	SCREW	4	50001-
45	07000-03045	O-RING	2	50001-
46	175-912-1390	BOLT	10	50001-
47	01601-03382	WASHER	10	50001-
48	01582-03326	NUT	10	50001-
49	07000-05185	O-RING	1	50001-

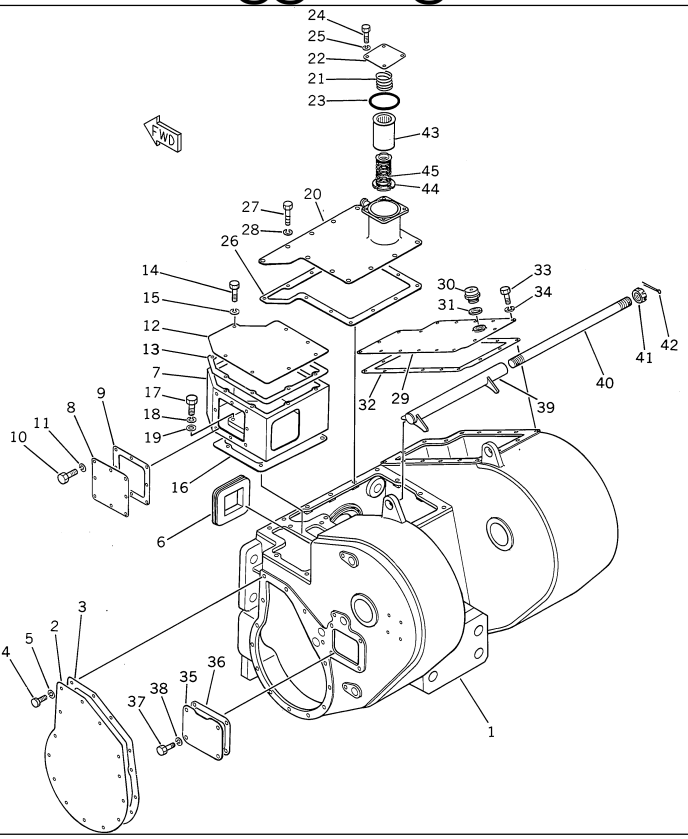

Ref. 7702 **Page 210330**

D155A-2 S/N 50001-UP (S6D155-4 Eng. Installed)
TOWING WINCH CASE (2/2)

Item	Part No.	Part Name	Qty	Serial No.
1	175-916-3812	CASE	1	50001-
2	175-916-3581	COVER	1	50001-
3	175-916-3591	GASKET	1	52126-
	□175-916-3590	GASKET	1	50001-52125
4	01010-51230	BOLT	14	50001-
5	01602-21236	WASHER,SPRING	14	50001-
6	175-916-3650	GROMMET	1	50001-
7	175-916-3611	CASE,CONTROL VALVE	1	50001-
8	175-916-3660	COVER	1	50001-
9	175-916-3591	GASKET	1	52126-
	□175-916-3670	GASKET	1	50001-52125
10	01010-50820	BOLT	8	50001-
11	01602-20825	WASHER,SPRING	8	50001-
12	175-916-3631	COVER	1	50001-
13	175-916-3641	GASKET	1	52126-
	□175-916-3640	GASKET	1	50001-52125
14	01010-51025	BOLT	8	50001-
15	01602-21030	WASHER,SPRING	8	50001-
16	175-916-3621	GASKET	1	52126-
	□175-916-3620	GASKET	1	50001-52125
17	01010-51230	BOLT	8	50001-
18	01602-21236	WASHER,SPRING	8	50001-
19	01640-21223	WASHER	8	50001-
20	175-916-3681	COVER	1	50001-
21	175-916-6650	SPRING,STRAINER	1	50001-
22	175-916-3710	COVER	1	50001-
23	07000-03110	O-RING	1	50001-

TOWING WINCH CASE (2/2)

Item	Part No.	Part Name	Qty	Serial No.
24	01010-51025	BOLT	4	50001-
25	01602-21030	WASHER,SPRING	4	50001-
26	175-916-8551	GASKET	1	52126-
	□175-916-8550	GASKET	1	50001-52125
27	01010-51230	BOLT	13	50001-
28	01602-21236	WASHER,SPRING	13	50001-
29	175-916-3750	COVER	1	50001-
30	07030-03034	BREATHER	1	50001-
31	07003-03036	GASKET	1	50001-
32	175-916-3761	GASKET	1	52126-
	□175-916-3760	GASKET	1	50001-52125
33	01010-51230	BOLT	16	50001-
34	01602-21236	WASHER,SPRING	16	50001-
35	175-916-3561	COVER	1	50001-
36	175-916-3571	GASKET	1	52126-
	□175-916-3570	GASKET	1	50001-52125
37	01010-51230	BOLT	4	50001-
38	01602-21236	WASHER,SPRING	4	50001-
39	175-916-3740	PIPE	1	50001-
40	175-916-3730	ROD	1	50001-
41	01590-33638	NUT	2	50001-
42	04050-16065	PIN,COTTER	2	50001-
43	175-916-0220	STRAINER ASS'Y	1	50001-
	175-916-6610	· SCREEN,UNIT	1	50001-
44	175-916-6621	· MAGNET ASS'Y	1	50001-
45	175-916-6631	· · MAGNET	4	50001-

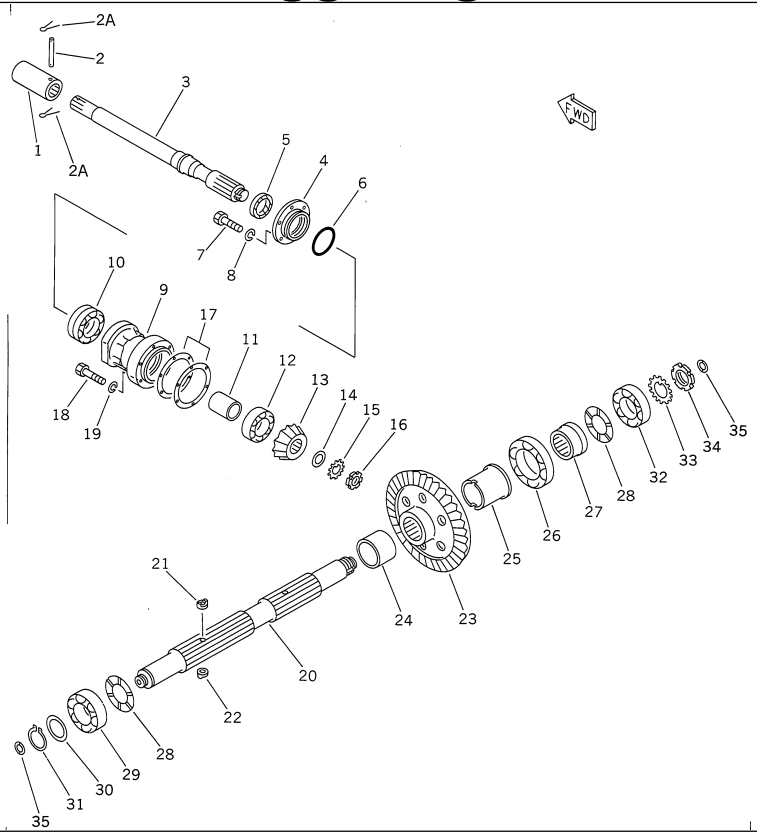

D155A-2 S/N 50001-UP (S6D155-4 Eng. Installed)

INPUT SHAFT AND BEVEL GEAR (FOR TOWING WINCH)

Item	Part No.	Part Name	Qty	Serial No.
1	175-916-1840	COUPLING	1	50001-
2	175-916-1820	PIN	1	50001-
2A	04050-13015	PIN,COTTER	2	50001-
3	175-916-1110	SHAFT	1	50001-
4	175-916-1120	RETAINER	1	50001-
5	07012-10062	SEAL,OIL	1	50001-
6	07000-05100	O-RING	1	50001-
7	01010-31025	BOLT	6	50001-
8	01602-01030	WASHER,SPRING	6	50001-
9	175-916-1130	RETAINER	1	50001-
10	150-09-13170	BEARING	1	50001-
11	175-916-1150	COLLAR	1	50001-
12	06003-02311	BEARING	1	50001-
13	175-916-1160	GEAR,BEVEL	1	50001-
14	175-916-1170	WASHER	1	50001-
15	01656-03618	LOCK	1	50001-
16	01530-03610	NUT	1	50001-
17	150-95-00111	SHIM ASS'Y	1	50001-
	☆	· SHIM¤ 0.1MM	12	50001-
	☆	· SHIM¤ 0.2MM	9	50001-
	☆	· SHIM¤ 1.0MM	2	50001-
18	01010-31065	BOLT	6	50001-
19	01602-01030	WASHER,SPRING	6	50001-
20	175-916-1230	SHAFT	1	50001-
21	175-916-2520	SEAL,3-TEETH	2	50001-
22	175-916-2530	SEAL,2-TEETH	2	50001-
23	175-916-1180	GEAR,BEVEL	1	50001-

D155A-2 S/N 50001-UP (S6D155-4 Eng. Installed)

INPUT SHAFT AND BEVEL GEAR (FOR TOWING WINCH)

Item	Part No.	Part Name	Qty	Serial No.
24	175-916-1190	COLLAR	1	50001-
25	175-916-1210	COLLAR	1	50001-
26	06000-06221	BEARING	1	50001-
27	175-916-1220	COLLAR	1	50001-
28	175-916-2730	SPACER	2	50001-
29	06000-32314	BEARING	1	50001-
30	175-916-1270	WASHER	1	50001-
31	04064-07025	RING,SNAP	1	50001-
32	06000-30314	BEARING	1	50001-
33	01658-06223	WASHER	1	50001-
34	01530-06214	NUT	1	50001-
35	175-916-2770	RING,SEAL	2	50001-

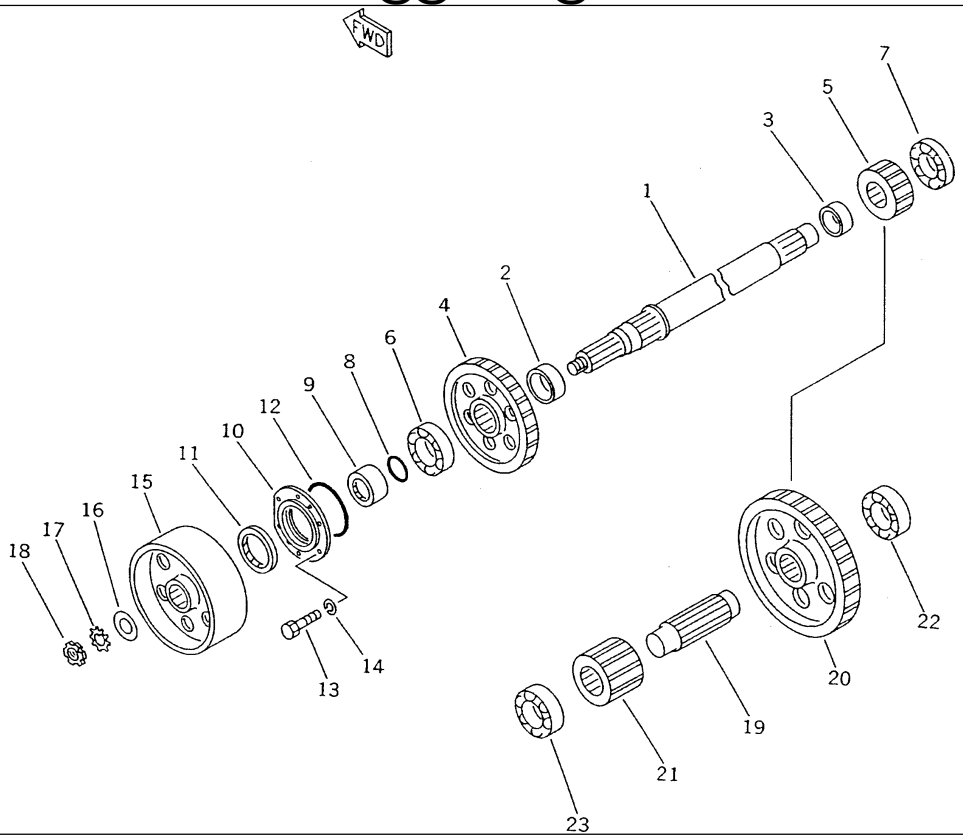

Ref. 7707 **Page 210350**

D155A-2 S/N 50001-UP (S6D155-4 Eng. Installed)

BRAKE DRUM (FOR TOWING WINCH)

Item	Part No.	Part Name	Qty	Serial No.
1	175-916-1370	SHAFT	1	50001-
2	175-916-1360	COLLAR	1	50001-
3	175-916-1380	COLLAR	1	50001-
4	175-916-1350	GEAR	1	50001-
5	175-916-1390	GEAR	1	50001-
6	06000-30316	BEARING	1	50001-
7	06000-32314	BEARING	1	50001-
8	07000-03078	O-RING	1	50001-
9	175-916-1340	COLLAR	1	50001-
10	175-916-1320	RETAINER	1	50001-
11	150-09-11170	SEAL,OIL	1	50001-
12	07000-05160	O-RING	1	50001-
13	01010-31235	BOLT	6	50001-
14	01602-01236	WASHER,SPRING	6	50001-
15	175-916-1310	DRUM	1	50001-
16	175-916-1290	WASHER	1	50001-
17	01656-04823	LOCK	1	50001-
18	01530-04812	NUT	1	50001-
19	175-916-1520	SHAFT	1	50001-
20	175-916-1490	GEAR	1	50001-
21	175-916-1510	GEAR	1	50001-
22	06000-30316	BEARING	1	50001-
23	06000-32316	BEARING	1	50001-

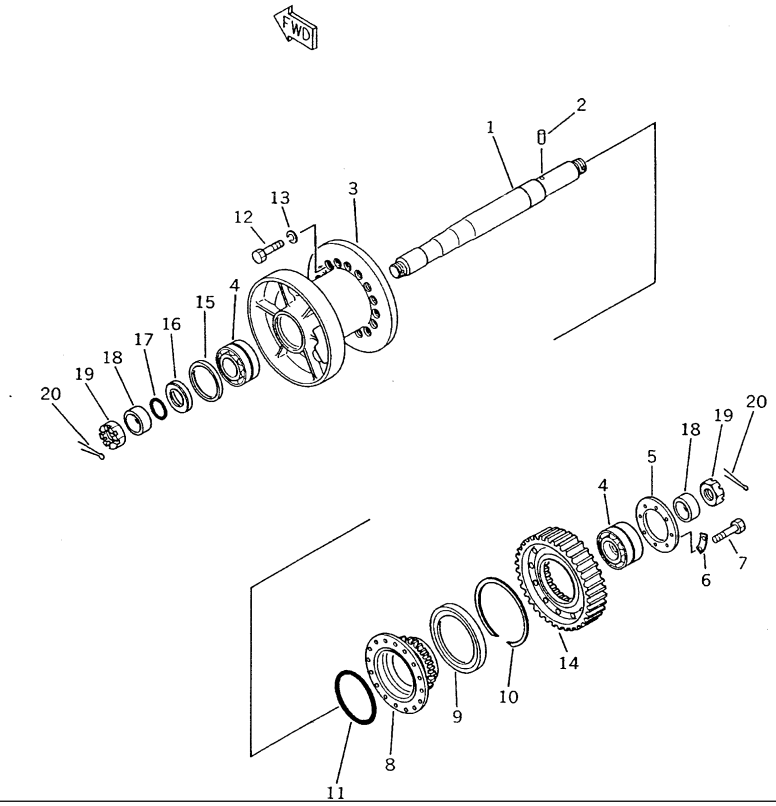

Ref. 7709 **Page 210360**

D155A-2 S/N 50001-UP (S6D155-4 Eng. Installed)
CABLE DRUM (FOR TOWING WINCH)

Item	Part No.	Part Name	Qty	Serial No.
1	175-916-1690	SHAFT	1	50001-
2	150-95-12410	PIN	1	50001-
3	175-916-1621	DRUM	1	50001-
4	150-09-13190	BEARING	2	50001-
5	175-916-1530	PLATE	1	50001-
6	175-916-1540	LOCK	4	50001-
7	01010-31435	BOLT	8	50001-
8	175-916-1610	GEAR,DRUM	1	50001-
9	150-09-11150	SEAL,OIL	1	50001-
10	150-09-15110	RING,SNAP	1	50001-
11	07000-05330	O-RING	1	50001-
12	01090-62055	BOLT	16	50001-
13	01602-02060	WASHER,SPRING	16	50001-
14	175-916-1550	GEAR	1	50001-
15	150-09-11160	SEAL,OIL	1	50001-
16	175-916-1670	COLLAR	1	50001-
17	07000-05105	O-RING	1	50001-
18	175-916-1680	COLLAR	2	50001-
19	175-916-1710	NUT	2	50001-
20	175-916-1720	PIN,COTTER	2	50001-

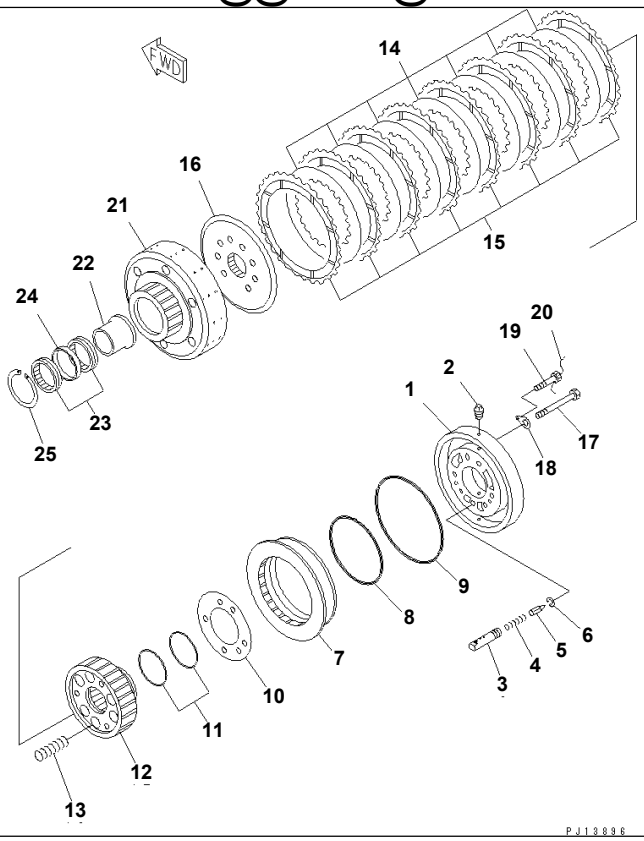

D155A-2 S/N 50001-UP (S6D155-4 Eng. Installed)

CLUTCH DRUM (FOR TOWING WINCH)

Item	Part No.	Part Name	Qty	Serial No.
1	175-916-0105	CLUTCH ASS'Y,L.H.	1	50001-
	175-916-0115	CLUTCH ASS'Y,R.H.	1	50001-
	175-916-2541	· HOUSING	1	50001-
2	07042-10108	· PLUG	2	50001-
3	175-916-2611	· HOUSING	1	50001-
4	175-916-8591	· SPRING	1	50001-
5	175-916-2620	· SPOOL	1	50001-
6	175-916-2640	· RING,SNAP	1	50001-
7	175-916-2560	· PISTON	1	50001-
8	07000-05215	· O-RING	1	50001-
9	07000-15270	· O-RING	1	50001-
10	175-916-8840	· PLATE	1	50001-
11	07000-03098	· O-RING	2	50001-
12	175-916-2851	· DRUM	1	50001-
13	175-916-8580	· SPRING	6	50001-
14	175-916-2570	· DISK	7	50001-
15	175-916-2580	· LINING	8	50001-
16	175-916-2651	· PLATE	1	50001-
17	01091-61630	· BOLT	8	50001-
18	175-916-2511	· PLATE,LOCK	8	50001-
19	01014-31025	· BOLT	4	50001-
20	04059-01080	· WIRE	1	50001-
21	175-916-2941	· GEAR,L.H.	1	50001-
	175-916-2921	· GEAR,R.H.	1	50001-
22	175-916-2930	· LACE	1	50001-
	175-916-2910	· LACE	1	50001-
23	150-09-13200	· BEARING,L.H.	2	50001-

CLUTCH DRUM (FOR TOWING WINCH)

Item	Part No.		Part Name	Qty	Serial No.
23	150-09-13180	·	BEARING,R.H.	2	50001-
24	175-916-2680	·	COLLAR	1	50001-
25	04071-00105	·	RING,SNAP	1	50001-

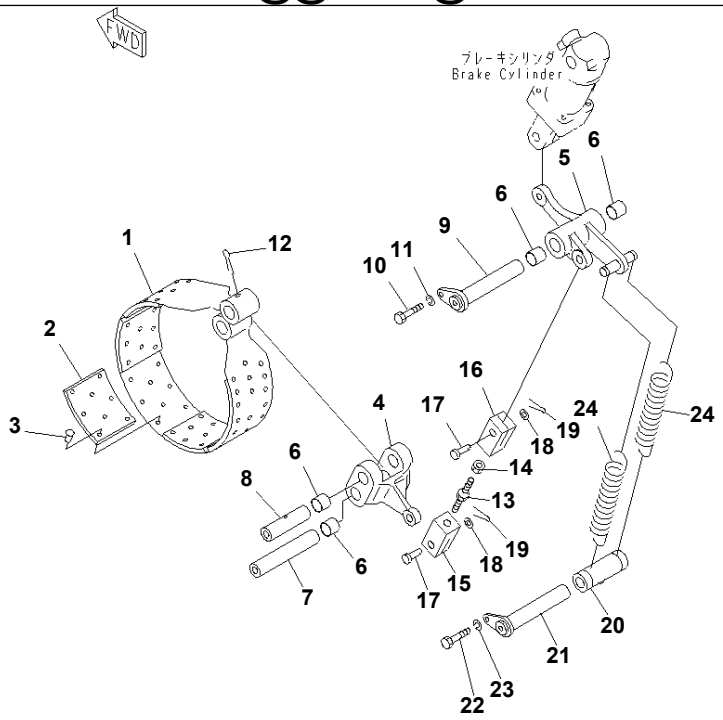

Ref. 7713 Page 210380

D155A-2 S/N 50001-UP (S6D155-4 Eng. Installed)
BRAKE DRUM (FOR TOWING WINCH)

Item	Part No.	Part Name	Qty	Serial No.
1	175-916-3400	BAND ASS'Y	1	52126-
	□175-916-3300	BAND ASS'Y	1	50001-52125
	☆	· BAND,BRAKE	1	50001-
2	175-916-3410	· LINING	6	52126-
	□175-916-3320	· LINING	6	50001-52125
3	04412-00410	· RIVET	48	50001-
4	175-916-3190	LEVER	1	50001-
5	175-916-3110	LEVER	1	50001-
6	175-916-3130	BUSHING	6	50001-
7	175-916-3230	PIN	1	50001-
8	175-916-3210	PIN	1	50001-
9	175-915-3140	PIN	1	50001-
10	01010-31225	BOLT	1	50001-
11	01602-01236	WASHER,SPRING	1	50001-
12	04050-05060	PIN	1	50001-
13	175-916-3170	BOLT	1	50001-
14	01582-02016	NUT	1	50001-
15	175-916-3160	YOKE	1	50001-
16	175-916-3180	YOKE	1	50001-
17	175-916-3150	PIN	2	50001-
18	01640-02232	WASHER	2	50001-
19	04050-04035	PIN,COTTER	2	50001-
20	175-916-3260	COLLAR	1	50001-
21	175-916-3240	PIN	2	50001-
22	01010-31225	BOLT	1	50001-
23	01602-01236	WASHER,SPRING	1	50001-
24	175-916-3251	SPRING	2	50001-

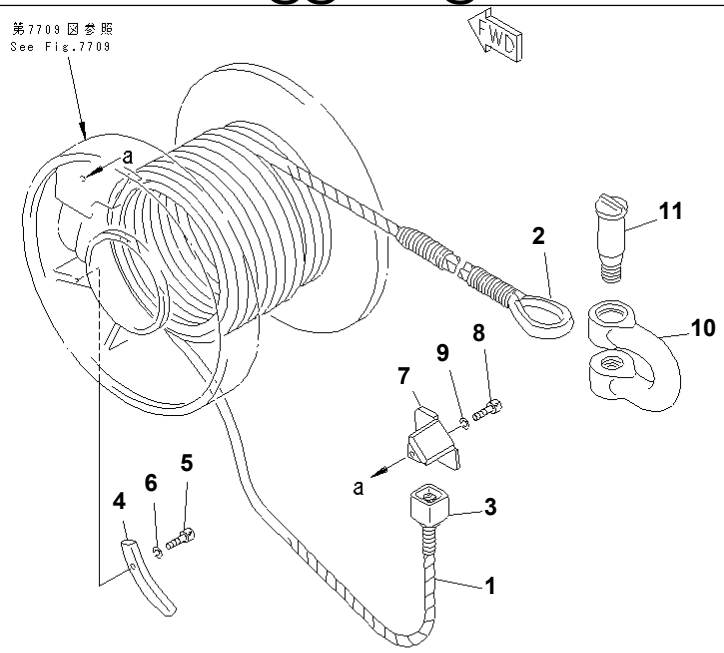

PJ13898

Ref. 7715 **Page 210390**

D155A-2 S/N 50001-UP (S6D155-4 Eng. Installed)
CABLE (FOR TOWING WINCH)

Item	Part No.	Part Name	Qty	Serial No.
1	175-916-1761	ROPE	1	50001-
2	150-95-15650	THIMBLE	1	50001-
3	175-916-1750	WIRE,END	1	50001-
4	175-916-1731	FILLER	1	50001-
5	01252-31050	BOLT	1	50001-
6	01602-01030	WASHER,SPRING	1	50001-
7	175-916-1741	LOCK	1	50001-
8	01252-31080	BOLT	1	50001-
9	01602-01030	WASHER,SPRING	1	50001-
10	144-947-1410	HOOK	1	50001-
11	144-947-1420	PIN	2	50001-

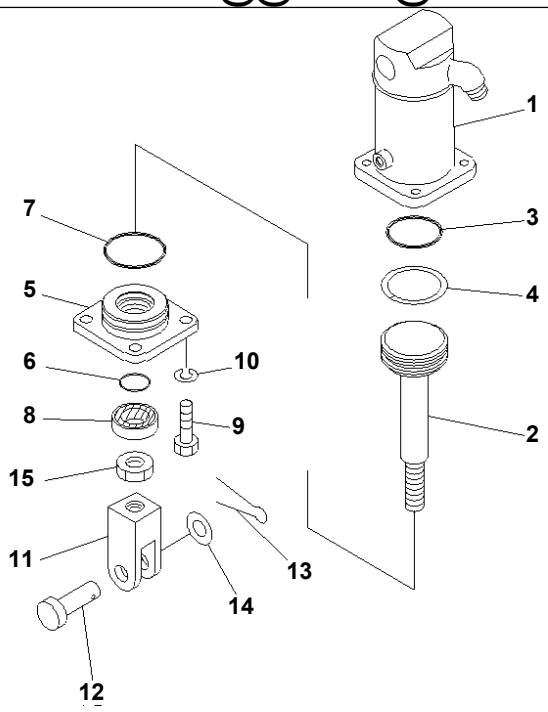

PJ13900

Ref. 7719 **Page 210410**

D155A-2 S/N 50001-UP (S6D155-4 Eng. Installed)
BRAKE CYLINDER (FOR TOWING WINCH)

Item	Part No.	Part Name	Qty	Serial No.
1	175-916-0211	BRAKE CYLINDER ASS'Y	1	50001-
	175-916-5110	· CYLINDER,BRAKE	1	50001-
2	175-916-5130	· PISTON	1	50001-
3	07000-05060	· O-RING	1	50001-
4	07001-05060	· RING,BACK-UP	1	50001-
5	175-916-5140	· HEAD,CYLINDER	1	50001-
6	07000-03030	· O-RING	1	50001-
7	07000-03065	· O-RING	1	50001-
8	07012-00030	· SEAL,OIL	1	50001-
9	01010-31230	· BOLT	4	50001-
10	01602-01236	· WASHER,SPRING	4	50001-
11	175-916-5150	· YOKE	1	50001-
12	175-916-5160	· PIN	1	50001-
13	04050-05030	· PIN,COTTER	1	50001-
14	01640-02032	· WASHER	1	50001-
15	01582-02016	· NUT	1	50001-

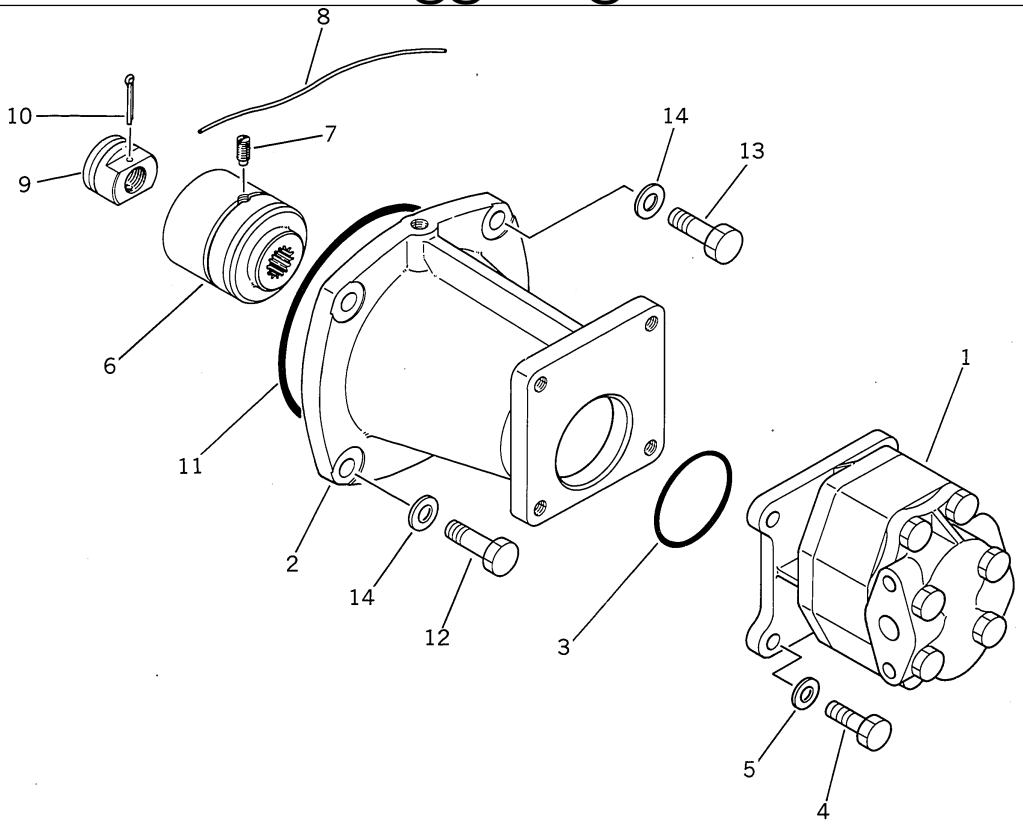

Ref. 7721 **Page 210420**

D155A-2 S/N 50001-UP (S6D155-4 Eng. Installed)
HYDRAULIC PUMP MOUNT (FOR TOWING WINCH)

Item	Part No.	Part Name	Qty	Serial No.
1	(07429-72101)	PUMP ASS'Y (FAR28),(SEE FIG.7728)	1	50001-
2	154-916-2510	BRACKET	1	50001-
3	07000-03065	O-RING	1	50001-
4	01010-51030	BOLT	4	50001-
5	01643-31032	WASHER	4	50001-
6	154-916-2520	COUPLING	1	50001-
7	01322-30820	SCREW,SET	1	50001-
8	04059-01025	WIRE,LOCK	1	50001-
9	154-916-2530	NUT	1	50001-
10	04050-14030	PIN,COTTER	1	50001-
11	07000-05150	O-RING	1	50001-
12	01010-51235	BOLT	2	50001-
13	01010-51240	BOLT	2	50001-
14	01643-31232	WASHER	4	50001-

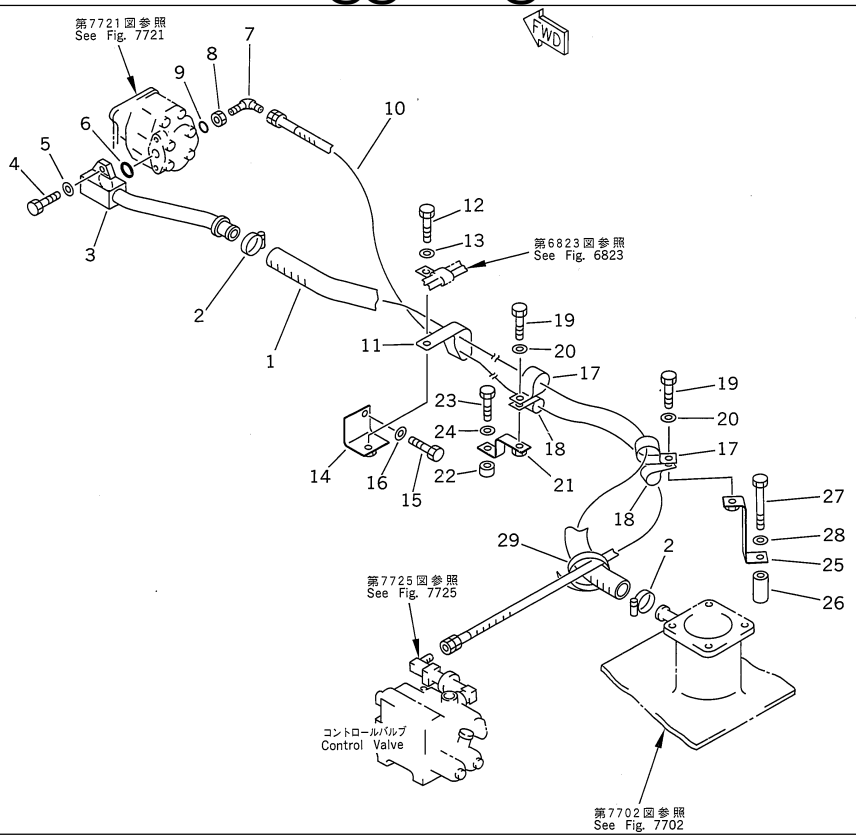

Ref. 7723 **Page 210430**

D155A-2 S/N 50001-UP (S6D155-4 Eng. Installed)
HYDRAULIC PIPING (FOR TOWING WINCH)

Item	Part No.	Part Name	Qty	Serial No.
1	175-916-6410	HOSE	1	50001-
2	07281-00419	CLAMP	2	50001-
3	175-916-6420	TUBE	1	50001-
4	01010-51030	BOLT	2	50001-
5	01643-31032	WASHER	2	50001-
6	07000-03038	O-RING	1	50001-
7	175-916-6150	ELBOW	1	50001-
8	07239-22009	NUT	1	50001-
9	07002-02034	O-RING	1	50001-
10	07102-20520	HOSE	1	50001-
11	175-916-6670	CLIP	1	50001-
12	01010-51225	BOLT	1	50001-
13	01643-31232	WASHER	1	50001-
14	175-916-8670	BRACKET	1	50001-
15	01010-51020	BOLT	1	50001-
16	01643-31032	WASHER	1	50001-
17	581-04-22290	CLIP	2	50001-
18	08036-02514	CLIP	2	50001-
19	01010-51225	BOLT	2	50001-
20	01643-31232	WASHER	2	50001-
21	15A-916-1230	BRACKET	1	50001-
22	198-33-12380	WASHER	1	50001-
23	01010-51250	BOLT	1	50001-
24	01643-31232	WASHER	1	50001-
25	175-916-8680	BRACKET	1	50001-
26	175-40-22540	SPACER	1	50001-
27	01011-51200	BOLT	1	50001-

HYDRAULIC PIPING (FOR TOWING WINCH)

Item	Part No.	Part Name	Qty	Serial No.
28	01643-31232	WASHER	1	50001-
29	08034-00536	BAND	1	50001-

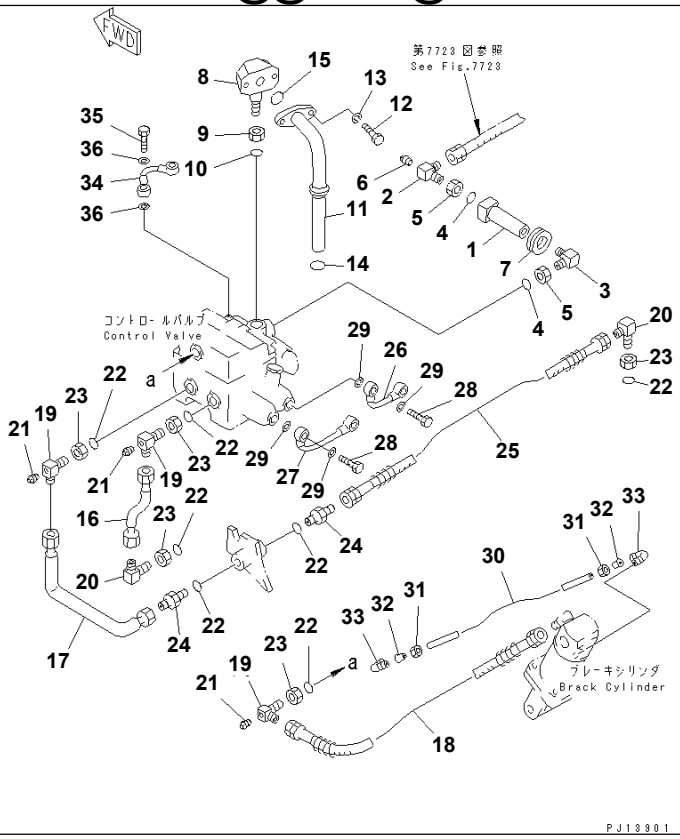

Ref. 7725 **Page 210440**

D155A-2 S/N 50001-UP (S6D155-4 Eng. Installed)

WINCH PIPING (FOR TOWING WINCH)

Item	Part No.	Part Name	Qty	Serial No.
1	175-916-6210	JOINT	1	50001-
2	175-916-6680	ELBOW	1	50001-
3	07232-00522	ELBOW	1	50001-
4	07000-03022	O-RING	2	50001-
5	07239-12410	NUT	2	50001-
6	07042-00108	PLUG	1	50001-
7	175-916-6220	GROMMET	1	50001-
8	175-916-6230	ELBOW	1	50001-
9	07239-12410	NUT	1	50001-
10	07000-03022	O-RING	1	50001-
11	175-916-6240	TUBE	1	50001-
12	01010-31035	BOLT	2	50001-
13	01602-01030	WASHER	2	50001-
14	07000-03032	O-RING	1	50001-
15	07000-03028	O-RING	1	50001-
16	175-916-6260	TUBE	1	50001-
17	175-916-6270	TUBE	1	50001-
18	07103-20404	HOSE	1	50001-
19	07231-10422	ELBOW	3	50001-
20	07232-10422	ELBOW	2	50001-
21	07042-00108	PLUG	3	50001-
22	07002-02034	O-RING	7	50001-
23	07239-12009	NUT	5	50001-
24	07230-10422	UNION	2	50001-
25	07103-20408	HOSE	1	50001-
26	175-916-6280	TUBE	1	50001-
27	175-916-6290	TUBE	1	50001-

WINCH PIPING (FOR TOWING WINCH)

Item	Part No.	Part Name	Qty	Serial No.
28	07206-11216	BOLT	4	50001-
29	07003-01621	GASKET	8	50001-
30	175-916-6310	TUBE	1	50001-
31	175-916-6320	NUT	2	50001-
32	175-916-6330	SLEEVE	2	50001-
33	175-916-6340	ELBOW	2	50001-
34	175-916-6350	TUBE	1	50001-
35	07206-10812	BOLT	2	50001-
36	07003-01217	GASKET	4	50001-

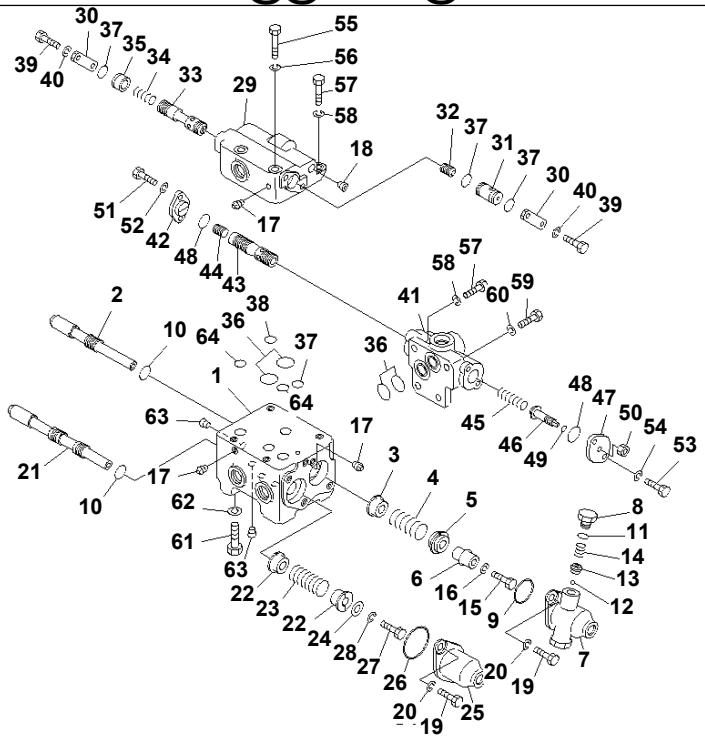

PJ13902

D155A-2 S/N 50001-UP (S6D155-4 Eng. Installed)
CONTROL VALVE (FOR TOWING WINCH)

Item	Part No.	Part Name	Qty	Serial No.
1	144-916-0210	CONTROL VALVE ASS'Y	1	50001-
	☆	· BODY,VALVE	1	50001-
2	175-916-4120	· SPOOL	1	50001-
3	175-916-4130	· COLLAR	1	50001-
4	175-916-4140	· SPRING	1	50001-
5	175-916-4150	· STOPPER	1	50001-
6	175-916-4160	· STOPPER	1	50001-
7	175-916-4170	· COVER	1	50001-
8	175-916-4180	· PLUG	2	50001-
9	07000-03035	· O-RING	1	50001-
10	07000-02020	· O-RING	2	50001-
11	07000-02015	· O-RING	2	50001-
12	130-60-42380	· BALL	2	50001-
13	130-60-42390	· GUIDE	2	50001-
14	140-60-12310	· SPRING	2	50001-
15	01010-30825	· BOLT	1	50001-
16	01602-00825	· WASHER,SPRING	1	50001-
17	07042-00108	· PLUG	3	50001-
18	07043-00415	· PLUG	2	50001-
19	01010-31025	· BOLT	4	50001-
20	01602-01030	· WASHER,SPRING	4	50001-
21	175-916-4190	· SPOOL	1	50001-
22	175-916-4210	· COLLAR	2	50001-
23	175-916-4220	· SPRING	1	50001-
24	175-916-4230	· WASHER	1	50001-
25	175-916-4240	· COVER	1	50001-
26	07000-03048	· O-RING	1	50001-

CONTROL VALVE (FOR TOWING WINCH)

Item	Part No.	Part Name	Qty	Serial No.
27	01010-30816	· BOLT	1	50001-
28	01602-00825	· WASHER,SPRING	1	50001-
29	144-916-5220	· BODY,VALVE	1	50001-
30	175-916-4320	· PLATE	2	50001-
31	175-916-4330	· STOPPER	1	50001-
32	175-916-4340	· PISTON	1	50001-
33	175-916-4350	· VALVE	1	50001-
34	175-916-4360	· SPRING	1	50001-
35	175-916-4370	· STOPPER	1	50001-
36	07000-03025	· O-RING	4	50001-
37	07000-02018	· O-RING	4	50001-
38	07000-02012	· O-RING	1	50001-
39	01010-30820	· BOLT	4	50001-
40	01602-00825	· WASHER,SPRING	4	50001-
41	144-916-5230	· BODY,VALVE	1	50001-
42	175-916-4420	· STOPPER	1	50001-
43	175-916-4430	· VALVE	1	50001-
44	175-916-4440	· PISTON	1	50001-
45	175-916-4450	· SPRING	1	50001-
46	175-916-4460	· BOLT	1	50001-
47	175-916-4470	· STOPPER	1	50001-
48	07000-02020	· O-RING	2	50001-
49	07000-02010	· O-RING	1	50001-
50	01580-00806	· NUT	1	50001-
51	01010-30820	· BOLT	2	50001-
52	01602-00825	· WASHER,SPRING	2	50001-
53	01010-30830	· BOLT	2	50001-
54	01602-00825	· WASHER,SPRING	2	50001-
55	01010-31075	· BOLT	2	50001-
56	01602-01030	· WASHER,SPRING	2	50001-
57	01010-31030	· BOLT	5	50001-
58	01602-11030	· WASHER,SPRING	2	50001-
59	01010-31040	· BOLT	1	50001-
60	01602-01030	· WASHER,SPRING	1	50001-
61	01010-31245	· BOLT	4	50001-
62	01602-01236	· WASHER,SPRING	4	50001-
63	07043-00312	· PLUG	4	50001-
64	07000-02018	· O-RING	3	50001-

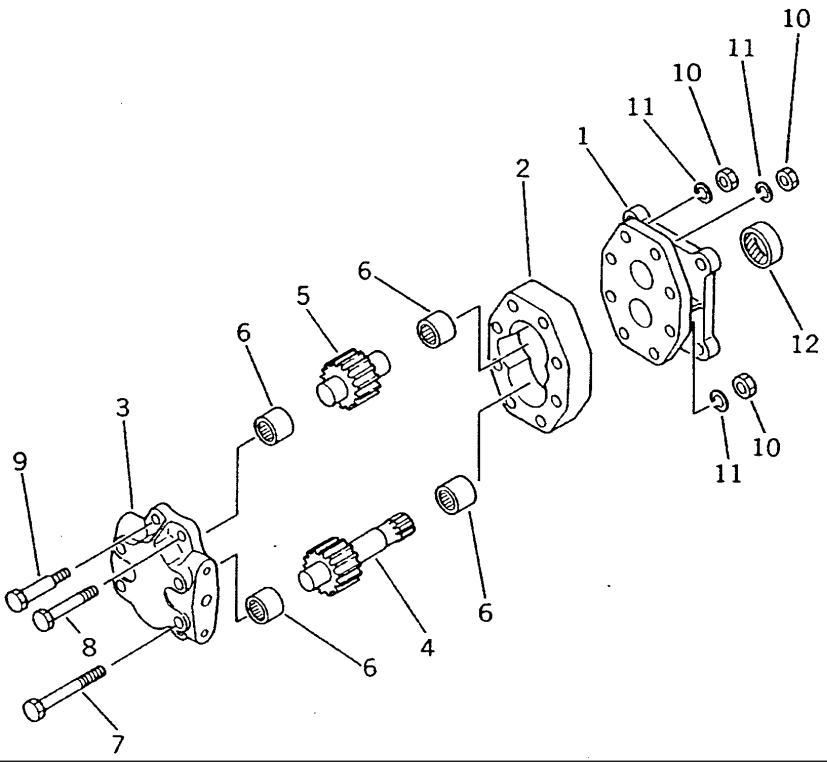

Ref. 7728 **Page 210460**

D155A-2 S/N 50001-UP (S6D155-4 Eng. Installed)
HYDRAULIC PUMP (FOR TOWING WINCH)

Item	Part No.	Part Name	Qty	Serial No.
1	07429-72101	PUMP ASS'Y (FAR28)	1	50001-
	☆	· BRACKET	1	50001-
2	☆	· CASE,GEAR	1	50001-
3	☆	· HOUSING	1	50001-
4	☆	· GEAR,DRIVE	1	50001-
5	☆	· GEAR,DRIVEN	1	50001-
6	(★07426-71061)	· BEARING,NEEDLE	4	50001-
7	(★07426-11090)	· BOLT	4	50001-
8	(★07426-11080)	· BOLT	2	50001-
9	(★07426-11190)	· BOLT,REAMER	2	50001-
10	(★01582-11008)	· NUT	8	50001-
11	(★01602-21030)	· WASHER,SPRING	8	50001-
12	07426-71160	· SEAL,OIL	1	50001-

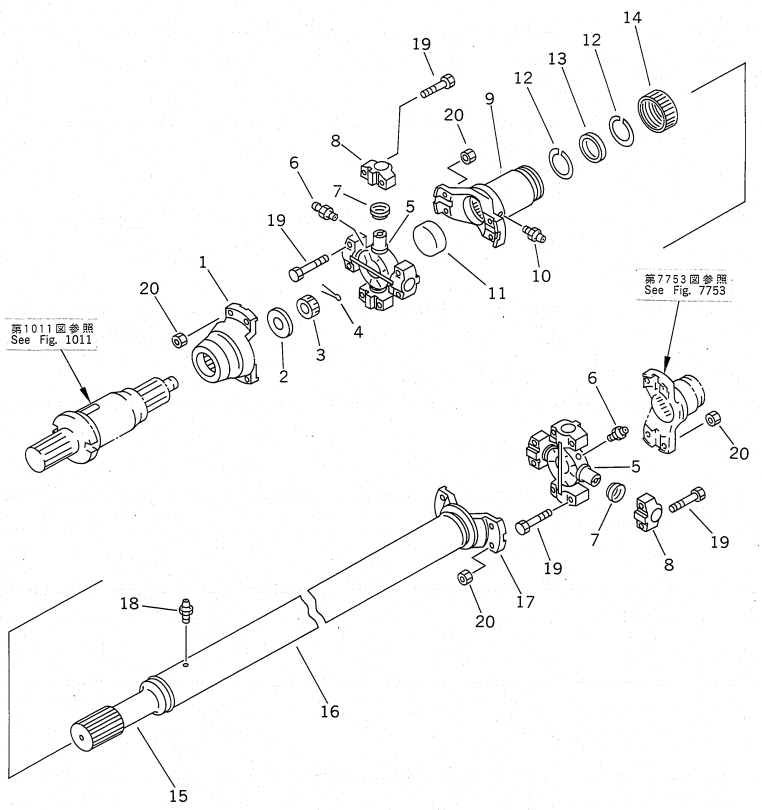

Ref. 7751 **Page 210470**

D155A-2 S/N 50001-UP (S6D155-4 Eng. Installed)
POWER TAKE OFF SHAFT (FOR REAR P.C.U.)

Item	Part No.	Part Name	Qty	Serial No.
G-1	(⊙175-65-X1000)	REAR P.C.U. GROUP	1	50001-
		==========		
1	175-65-00311	SHAFT ASS'Y	1	50001-
	154-67-11144	· COUPLING	1	50001-
2	154-67-11150	· PLATE	1	50001-
3	01593-01813	· NUT	1	50001-
4	04050-04030	· PIN,COTTER	1	50001-
5	145-14-35110	· SPIDER ASS'Y	2	50001-
	☆	· · SPIDER	1	50001-
6	☆	· · FITTING,GREASE	1	50001-
7	☆	· · SEAL,DUST	4	50001-
8	☆	· · BEARING	4	50001-
9	154-67-11192	· COUPLING	1	50001-
10	07020-00000	· FITTING,GREASE	1	50001-
11	175-67-31350	· CUP,DUST	1	50001-
12	175-67-31330	· RETAINER,WASHER	2	50001-
13	175-67-31320	· WASHER,FELT	1	50001-
14	175-67-31340	· CAP,RETAINER	1	50001-
15	175-67-31301	· JOINT ASS'Y	1	50001-
	☆	· · SHAFT	1	50001-
16	☆	· · PIPE	1	50001-
17	☆	· · COUPLING	1	50001-
18	175-67-31361	· FITTING,GREASE	1	50001-
19	154-67-32120	BOLT	16	50001-
20	01580-11008	NUT	16	50001-
		==========		

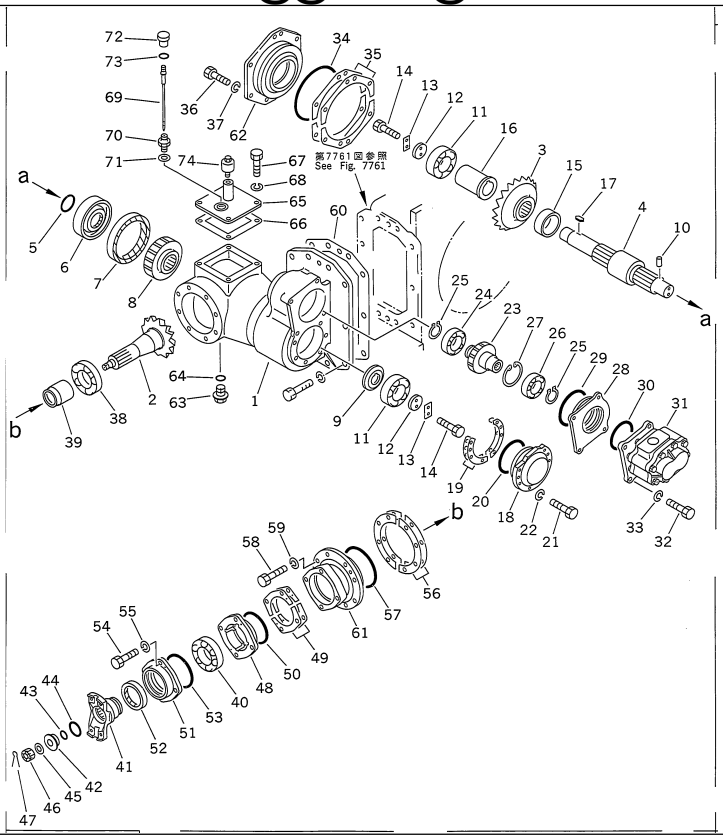

INPUT SHAFT AND HYDRAULIC PUMP (FOR REAR P.C.U.)

Item	Part No.	Part Name	Qty	Serial No.
G-1	(⊙175-65-X1000)	REAR P.C.U. GROUP	1	50001-
		==========		
1	175-65-00325	BODY ASS'Y	1	52126-
	□175-65-00324	BODY ASS'Y	1	50001-52125
		THIS ASSEMBLY CONSISTS OF ALL PARTS SHOWN IN FIGS.7753 TO 7763.		
1	154-65-00642	· BEVEL GEAR ASS'Y	1	52126-
	□154-65-00641	· BEVEL GEAR ASS'Y	1	50001-52125
	154-65-31110	· · CASE,POWER TAKE OFF	1	50001-
2	175-65-31140	· · PINION,GEAR	1	50001-
3	175-65-31150	· · GEAR,BEVEL	1	50001-
4	154-65-31121	· · SHAFT,BEVEL	1	50001-
5	07000-02055	· · O-RING	1	50001-
6	175-65-31171	· · RING	1	50001-
7	170-09-11130	· · SEAL,OIL	1	50001-
8	175-65-31180	· · PINION,GEAR	1	50001-
9	175-65-31190	· · WASHER	1	50001-
10	04020-00514	· · PIN,DOWEL	1	50001-
11	06000-32308	· · BEARING	2	50001-
12	175-65-31210	· · HOLDER	2	50001-
13	04081-04012	· · LOCK,LOCK	2	50001-
14	01010-51025	· · BOLT	4	50001-
15	175-65-31230	· · SPACER	1	50001-
16	175-65-31241	· · SPACER	1	50001-
17	04000-00520	· · KEY	1	50001-
18	175-65-31250	· · CAP	1	50001-
19	175-65-31260	· · SHIM¤ 0.1MM	4	50001-
	175-65-31270	· · SHIM¤ 0.2MM	8	50001-

INPUT SHAFT AND HYDRAULIC PUMP (FOR REAR P.C.U.)

Item	Part No.	Part Name	Qty	Serial No.
19	175-65-31280	· · SHIM¤ 1.0MM	6	50001-
20	07000-05100	· · O-RING	1	50001-
21	01010-51235	· · BOLT	6	50001-
22	01602-21236	· · WASHER,SPRING	6	50001-
23	175-65-31330	· · GEAR	1	50001-
24	06044-00208	· · BEARING	1	50001-
25	04064-04018	· · RING,SNAP	2	50001-
26	06040-06208	· · BEARING	1	50001-
27	04065-08025	· · RING,SNAP	1	50001-
28	175-65-31340	· · RETAINER	1	50001-
29	07000-05100	· · O-RING	1	50001-
30	07000-03082	· · O-RING	1	50001-
31	07437-72101	· · PUMP ASS'Y	1	50001-
32	01010-51240	· · BOLT	4	50001-
33	01602-21236	· · WASHER,SPRING	4	50001-
34	07000-05170	· · O-RING	1	50001-
35	175-65-31290	· · SHIM¤ 0.1MM	4	50001-
	175-65-31310	· · SHIM¤ 0.2MM	8	50001-
	175-65-31320	· · SHIM¤ 1.0MM	6	50001-
36	01010-51235	· · BOLT	6	50001-
37	01602-21236	· · WASHER,SPRING	6	50001-
38	06000-32211	· · BEARING	1	50001-
39	175-65-31351	· · SPACER	1	50001-
40	06000-32209	· · BEARING	1	50001-
41	175-65-31462	· · COUPLING	1	50001-
42	170-65-11120	· · WASHER	1	50001-
43	07000-03022	· · O-RING	1	50001-
44	07000-03040	· · O-RING	1	50001-
45	01640-21626	· · WASHER	1	50001-
46	01593-01612	· · NUT	1	50001-
47	04050-14025	· · PIN,COTTER	1	50001-
48	175-65-31360	· · HOUSING	1	50001-
49	170-65-11720	· · SHIM¤ 0.1MM	4	50001-
	170-65-11730	· · SHIM¤ 0.2MM	8	50001-
	170-65-11740	· · SHIM¤ 1.0MM	4	50001-
50	07000-02095	· · O-RING	1	50001-
51	175-65-31370	· · HOUSING	1	50001-
52	154-67-11350	· · SEAL,OIL	1	50001-
53	07000-02100	· · O-RING	1	50001-
54	01010-51245	· · BOLT	4	50001-
55	01602-21236	· · WASHER,SPRING	4	50001-
56	175-65-31380	· · SHIM¤ 0.1MM	4	50001-
	175-65-31390	· · SHIM¤ 0.2MM	8	50001-
	175-65-31410	· · SHIM¤ 1.0MM	4	50001-
57	07000-05130	· · O-RING	1	50001-
58	01010-51235	· · BOLT	8	50001-
59	01602-21236	· · WASHER,SPRING	8	50001-
60	175-65-31421	· · GASKET	1	52126-
	□175-65-31420	· · GASKET	1	50001-52125
61	175-65-31120	· · HOUSING	1	50001-
62	175-65-31130	· · CAP	1	50001-
63	07044-02412	· · PLUG,DRAIN	1	50001-
64	07000-03022	· · O-RING	1	50001-
65	175-65-31441	· · COVER	1	50001-
66	175-65-31431	· · GASKET	1	52126-
	□175-65-31430	· · GASKET	1	50001-52125
67	01010-51030	· · BOLT	4	50001-
68	01602-21030	· · WASHER,SPRING	4	50001-
69	175-65-31450	· · GAUGE	1	50001-
70	170-65-11570	· · NIPPLE	1	50001-
71	07003-02733	· · GASKET	1	50001-
72	150-14-13180	· · CAP,OIL LEVEL	1	50001-

INPUT SHAFT AND HYDRAULIC PUMP (FOR REAR P.C.U.)

Item	Part No.	Part Name	Qty	Serial No.
73	07000-01009	· · O-RING	1	50001-
74	07030-00252	· · BREATHER	1	50001-
		==========		

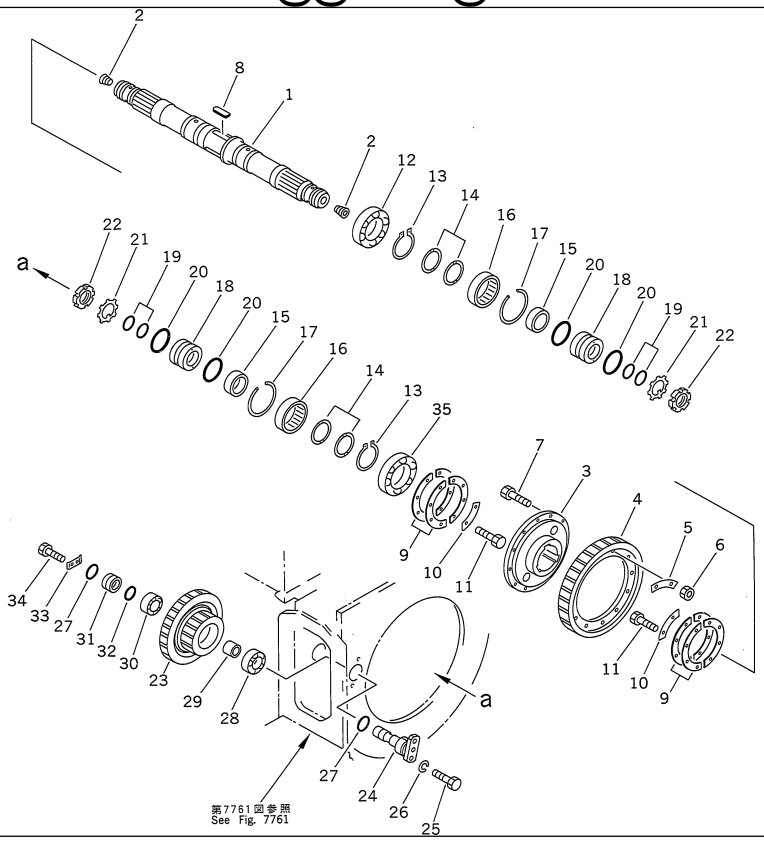

MAIN SHAFT (FOR REAR P.C.U.)

Item	Part No.	Part Name	Qty	Serial No.
G-1	(⊙175-65-X1000)	REAR P.C.U. GROUP	1	50001-
		==========		
1	(175-65-00324)	BODY ASS'Y	1	50001-
		THIS ASSEMBLY CONSISTS OF ALL PARTS SHOWN IN FIGS.7753 TO 7763.		
1	175-65-32140	· SHAFT	1	50001-
2	07043-50312	· PLUG,TAPER	2	50001-
3	175-65-32150	· FLANGE	1	50001-
4	175-65-32160	· GEAR	1	50001-
5	175-65-32180	· PLATE,LOCK	6	50001-
6	01582-11210	· NUT	12	50001-
7	01084-01240	· BOLT,REAMER	12	50001-
8	04000-02485	· KEY	3	50001-
9	175-65-32281	· PLATE	8	50001-
10	175-65-32290	· PLATE,LOCK	8	50001-
11	01010-50820	· BOLT	16	50001-
12	06040-06217	· BEARING	1	50001-
13	04064-08530	· RING,SNAP	2	50001-
14	175-65-32210	· RING,SEAL	4	50001-
15	175-65-32370	· SPACER	2	50001-
16	130-09-13380	· BEARING	2	50001-
17	04071-00120	· RING,SNAP	2	50001-
18	175-65-33130	· SPACER	2	50001-
19	07000-02055	· O-RING	4	50001-
20	07000-02095	· O-RING	4	50001-
21	01658-05823	· WASHER	2	50001-
22	01530-05814	· NUT	2	50001-
23	175-65-32220	· GEAR	1	50001-

D155A-2 S/N 50001-UP (S6D155-4 Eng. Installed)

MAIN SHAFT (FOR REAR P.C.U.)

Item	Part No.	Part Name	Qty	Serial No.
24	175-65-32231	· SHAFT	1	50001-
25	01010-51230	· BOLT	2	50001-
26	01602-21236	· WASHER,SPRING	2	50001-
27	07000-02060	· O-RING	2	50001-
28	170-09-13120	· BEARING	1	50001-
29	175-65-32240	· SPACER	1	50001-
30	170-09-13130	· BEARING	1	50001-
31	175-65-32250	· CAP	1	50001-
32	07000-03040	· O-RING	1	50001-
33	04081-04012	· LOCK,LOCK	1	50001-
34	01010-51025	· BOLT	2	50001-
35	06041-00217	· BEARING	1	50001-
		==========		

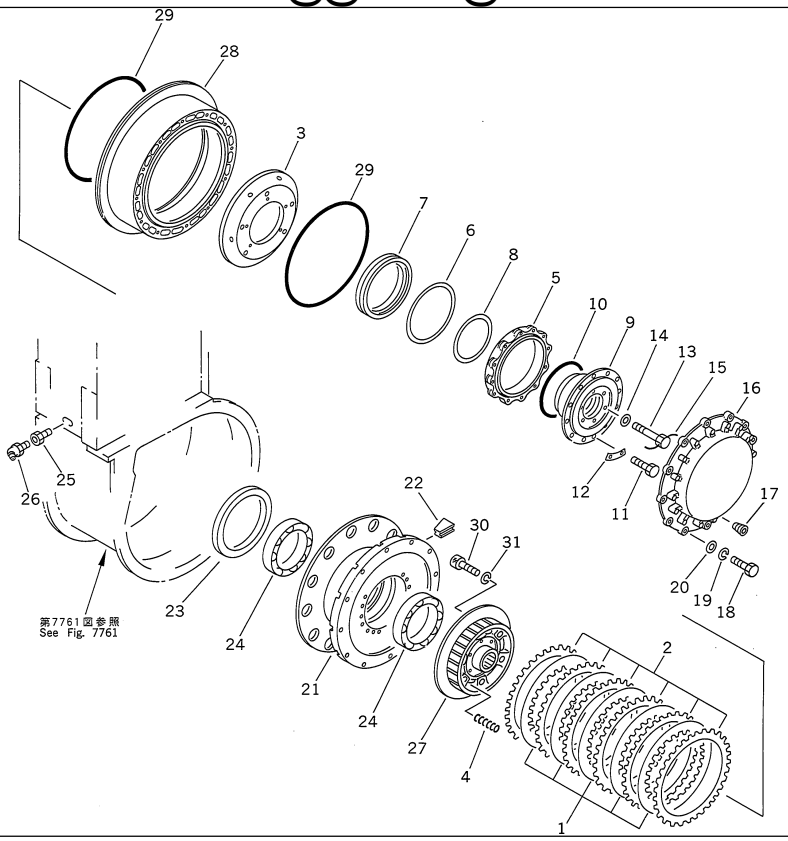

D155A-2 S/N 50001-UP (S6D155-4 Eng. Installed)

CLUTCH AND DRUM (FOR REAR P.C.U.)

Item	Part No.	Part Name	Qty	Serial No.
G-1	(⊙175-65-X1000)	REAR P.C.U. GROUP	1	50001-
		==========		
1	(175-65-00325)	BODY ASS'Y	1	52126-
	(□175-65-00324)	BODY ASS'Y	1	50001-52125
	175-65-33151	· PLATE,DRIVE	10	50001-
2	175-65-33141	· DISC	12	50001-
3	175-65-33170	· PLATE,PRESSURE	2	50001-
4	175-65-33160	· SPRING	12	50001-
5	175-65-33190	· CYLINDER	2	50001-
6	175-65-33220	· RING,SEAL	2	50001-
7	175-65-33240	· PISTON	2	50001-
8	175-65-33230	· RING,SEAL	2	50001-
9	175-65-33181	· SUPPORT	2	50001-
10	170-09-17110	· O-RING	2	50001-
11	01010-51025	· BOLT	24	50001-
12	175-65-33210	· PLATE,LOCK	12	50001-
13	01015-31630	· BOLT	12	50001-
14	01643-31645	· WASHER	12	50001-
15	04059-01680	· WIRE,LOCK	2	50001-
16	175-65-37110	· COVER	2	50001-
17	07043-50108	· PLUG	2	50001-
18	01010-51240	· BOLT	24	50001-
19	01643-31232	· WASHER	24	50001-
20	01602-21236	· WASHER,SPRING	24	50001-
21	175-65-32360	· DRUM,L.H.	1	50001-
	175-65-32310	· DRUM,R.H.	1	50001-
22	170-65-15210	· END	2	50001-

CLUTCH AND DRUM (FOR REAR P.C.U.)

Item	Part No.	Part Name	Qty	Serial No.
23	170-09-11120	· SEAL,OIL	2	50001-
24	130-09-14520	· BEARING	4	50001-
25	175-65-35290	· NIPPLE	2	50001-
26	07020-00675	· FITTING,GREASE	2	50001-
27	175-65-33121	· DRUM	2	50001-
28	175-65-33110	· DRUM	2	50001-
29	170-09-17120	· O-RING	4	50001-
30	01252-31235	· BOLT	24	50001-
31	01602-21236	· WASHER,SPRING	24	50001-
		==========		

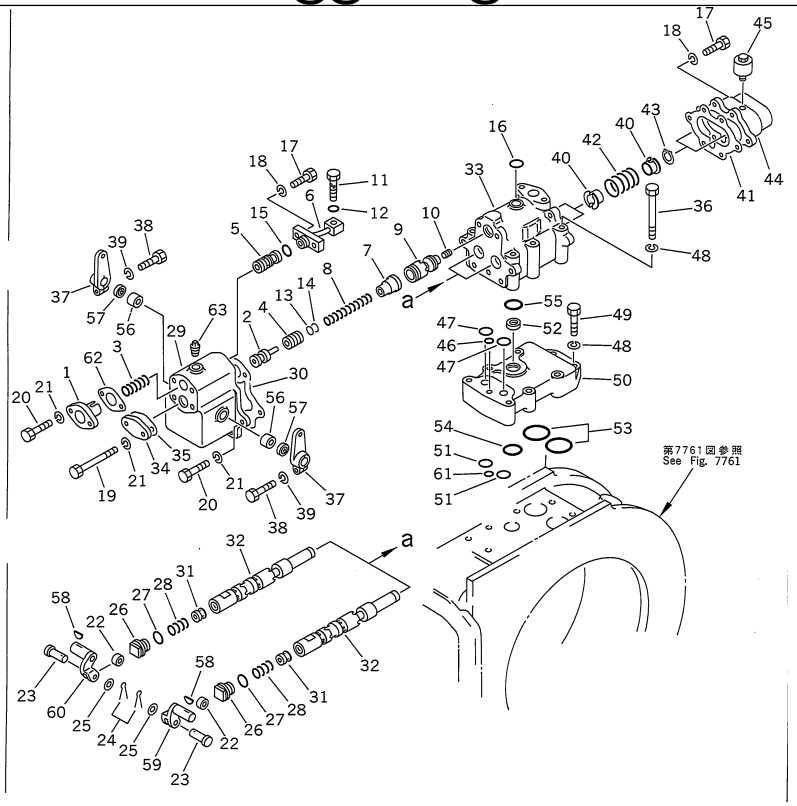

Ref. 7765 **Page 210540**

D155A-2 S/N 50001-UP (S6D155-4 Eng. Installed)
CONTROL VALVE (FOR REAR P.C.U.)

Item	Part No.	Part Name	Qty	Serial No.
G-1	(⊙175-65-X1000)	REAR P.C.U. GROUP	1	50001-
		==========		
1	175-65-00334	CONTROL VALVE ASS'Y	1	52126-
	□175-65-00333	CONTROL VALVE ASS'Y	1	50001-52125
	175-65-38541	· STOPPER	1	50001-
2	175-65-38480	· STOPPER	1	50001-
3	175-65-38621	· SPRING	1	50001-
4	175-65-38451	· VALVE	1	50001-
5	175-65-38560	· SPOOL	1	50001-
6	175-65-38640	· TUBE	1	50001-
7	175-65-38443	· STOPPER	1	50001-
8	175-65-38413	· SPRING	1	50001-
9	175-65-38210	· VALVE	1	50001-
10	175-65-38220	· PISTON	1	50001-
11	154-65-38650	· BOLT,JOINT	1	50001-
12	07000-02011	· O-RING	1	50001-
13	175-65-38470	· SHIM¤ 0.5MM	2	50001-
14	175-65-38460	· SHIM¤ 1.0MM	2	50001-
15	07000-02021	· O-RING	1	50001-
16	07000-02018	· O-RING	1	50001-
17	01010-51030	· BOLT	6	50001-
18	01602-21030	· WASHER,SPRING	6	50001-
19	154-65-38520	· BOLT	2	50001-
20	01010-51030	· BOLT	8	50001-
21	01602-21030	· WASHER,SPRING	10	50001-
22	175-65-38330	· ROLLER	2	50001-
23	04205-11030	· PIN	2	50001-

D155A-2 S/N 50001-UP (S6D155-4 Eng. Installed)
CONTROL VALVE (FOR REAR P.C.U.)

Item	Part No.	Part Name	Qty	Serial No.
24	04050-13015	· PIN,COTTER	2	50001-
25	01641-21016	· WASHER	2	50001-
26	175-65-38151	· RETAINER	2	50001-
27	07000-03020	· O-RING	2	50001-
28	175-65-38140	· SPRING	2	50001-
29	175-65-38510	· VALVE	1	50001-
30	175-65-38421	· GASKET	1	52126-
	□175-65-38261	· GASKET	1	50001-52125
31	175-65-38130	· VALVE	2	50001-
32	175-65-38120	· SPOOL	2	50001-
33	175-65-38112	· BODY,VALVE	1	50001-
34	175-65-38490	· COVER	1	50001-
35	175-65-38570	· GASKET	1	52126-
	□175-65-38530	· GASKET	1	50001-52125
36	154-65-38380	· BOLT	6	50001-
37	175-65-38660	· LEVER	2	50001-
38	01010-50830	· BOLT	2	50001-
39	01602-20825	· WASHER,SPRING	2	50001-
40	175-65-38160	· COLLAR	4	50001-
41	175-65-38182	· GASKET	1	52126-
	□175-65-38180	· GASKET	1	50001-52125
42	175-65-38170	· SPRING	2	50001-
43	04064-02012	· RING,SNAP	2	50001-
44	175-65-38191	· COVER	1	50001-
45	07030-00252	· BREATHER	1	50001-
46	07000-02018	· O-RING	1	50001-
47	07000-03025	· O-RING	2	50001-
48	01602-21236	· WASHER,SPRING	8	50001-
49	01010-51240	· BOLT	2	50001-
50	175-65-38360	· SPACER	1	50001-
51	07000-03025	· O-RING	2	50001-
52	175-65-38370	· ORIFICE	1	50001-
53	07000-03050	· O-RING	2	50001-
54	07000-03040	· O-RING	1	50001-
55	07000-03035	· O-RING	1	50001-
56	175-65-38290	· BEARING	2	50001-
57	06122-02004	· SEAL,BEARING	2	50001-
58	04010-00519	· KEY,WOODRUFF	2	50001-
59	175-65-38680	· LEVER	1	50001-
60	175-65-38670	· LEVER	1	50001-
61	07000-02018	· O-RING	1	50001-
62	175-65-38571	· GASKET	1	52126-
	175-65-38531	· GASKET	1	50001-52125
63	07042-10211	· PLUG	2	50001-
		==========		

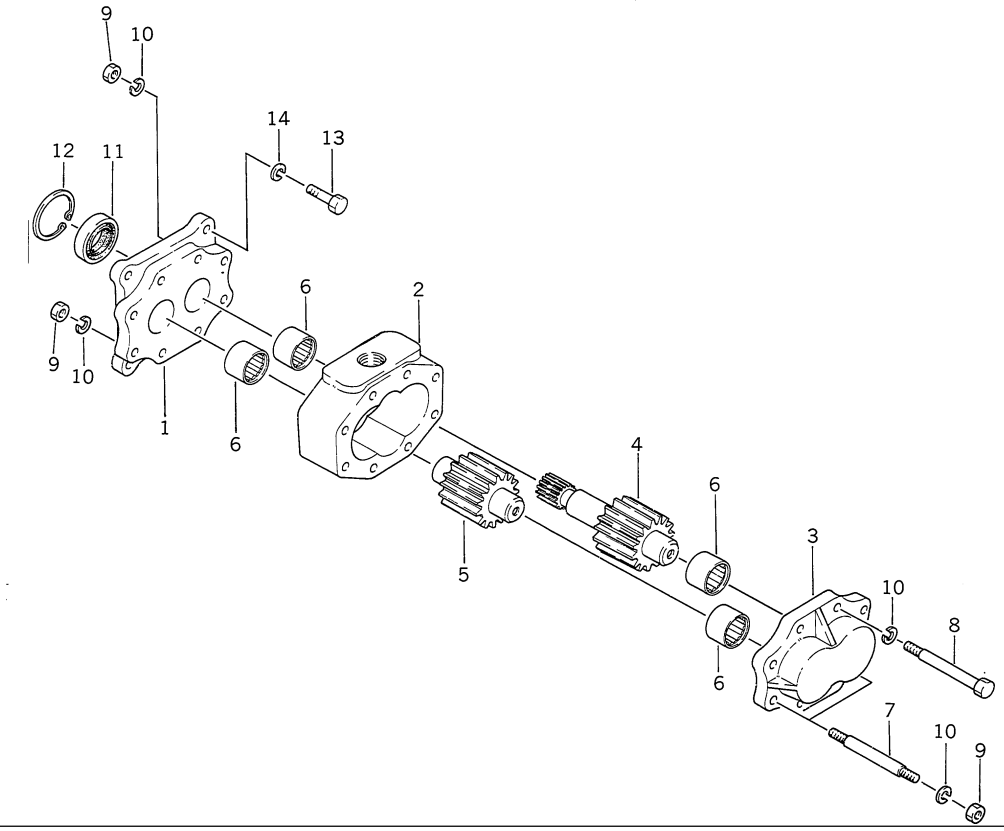

Ref. 7769 **Page 210560**

D155A-2 S/N 50001-UP (S6D155-4 Eng. Installed)
HYDRAULIC PUMP (FOR REAR P.C.U.)

Item	Part No.	Part Name	Qty	Serial No.
G-1	(⊙175-65-X1000)	REAR P.C.U. GROUP	1	50001-
		==========		
1	07437-72101	PUMP ASS'Y,(FAR071-101)	1	50001-
	☆	· BRACKET	1	50001-
2	☆	· CASE,GEAR	1	50001-
3	☆	· HOUSING	1	50001-
4	☆	· GEAR,DRIVE	1	50001-
5	☆	· GEAR,DRIVEN	1	50001-
6	☆	· BEARING,NEEDLE	4	50001-
7	☆	· BOLT,REAMER	2	50001-
8	01051-31205	· BOLT	6	50001-
9	01582-01210	· NUT	10	50001-
10	01602-01236	· WASHER,SPRING	10	50001-
11	07434-71160	· SEAL,OIL	1	50001-
12	04065-05020	· RING,SNAP	1	50001-
13	01010-31240	BOLT	4	50001-
14	01602-01236	WASHER,SPRING	4	50001-
		==========		