JUNHO 2003

PEPB056306

RUTHZIL TRATOR COMERCIAL DE PEÇAS LTDA 11 97083-6812 ROLANDO

PARTS BOOK

D155A-2A

BULLDOZER

SERIAL NUMBERS 57435 and up

KOMATSU

PEPB056306

PARTS BOOK

D155A-2A
Serial No. 57435 and up
ENGINE SA6D140E-2D-7
Engine No. 30037 and up

FOREWORD

When ordering a spare part, specify the part number, part name, and quantity required, and also specify your machine model code, machine serial number, engine serial number and the service meter reading.

This Parts Book describes not only standard items but also optional equipment and attachments. To order a part, please contact your nearest Komatsu distributor.

This Parts Book contains the information and special symbols as follows:

Figure and list	When you open this Parts Book, you will find an illustration on the left page (even-numbered page) for the spare parts group. Each individual part in the group is given an index number. On the right page, the component parts of the group are listed in the order of the index numbers shown on the illustration page. The part number, part name, and applicable machine serial number are given for each part.
FIG. No.	The FIG. No. is the number of the illustration shown on the page. It is not the spare part number. The numbers are not always continuous.
INDEX	This is the same as the index number in the illustration. The parts are listed in index number order.
PART No.	The number given in the PART No. column is the part number for the part shown. It is the code used when ordering that part. It is important that there be no mistake in this code number when ordering.
DESCRIP-TION	This gives the name of part that has the part number listed. The mark "." is put in front of the part name of an assembly part and the item is entered following the assembly. If a part marked with "." is a sub assembly, its components are marked with "..". Example: ELEMENT ASSEMBLY, AIR CLEANER .ELEMENT ASSEMBLY, OUTER ..ELEMENT, OUTER ..NUT, WING ..WASHER
Q'TY (Quantity)	This specifies the number of pieces used for one machine. However, if a part is included in the assembly and/or component, the quantity per such assembly and/or component is specified.
SERIAL No.	Applicable engine serial number is indicated for the engine volume. In the chassis volume, this indicates the machine serial number in which the part is used.
Symbols and codes	Symbols and codes are used in the PART No. and DESCRIPTION columns, and represent the following: □ The part specified in the line above can be used instead of this part.

Symbols and codes (Cont'd)

⊡	This part can be used instead of the part specified in the line immediately above.
◆	This part and the part specified in the line immediately above are interchangeable.
■	The part specified in the DESCRIPTION column can be used instead of this part if it is used as a set.
☒	This shows discontinued part. The part specified in the above line is supplied instead.
▼	This shows a discontinued part. The part specified in the DESCRIPTION column is supplied instead as a set.
☆	This part cannot be supplied as an individual part. It is supplied as an assembly.
★	This part cannot be supplied as an individual part. It is supplied as an assembly. However, it is supplied as an individual part by authorized distributors only.
⊙	This indicates a part group. The part marked with this symbol is not considered a supply part.
====	The parts surrounded by this line are components of the part group specified in the above line.
G-1,G-2	These indicate categories of part groups.
KIT	This indicates kit parts. For kit parts, refer to the service kit tables provided in this Parts Book.
△	This indicates a part supplied as semi-finished. It requires additional work before installation.
PAINT(1)	This indicates parts shipped painted with undercoat.
PAINT(2)	This indicates parts supplied with different colors from the original color of your machine.
(A)	This code indicates special parts for cold weather "A" specification (-30°C) machines.
(B)	This indicates special parts for cold weather "B" specification (-50°C) machines.

AVANT-PROPOS

Lorsque vous passez une commande d'une ou plusieurs pièces détachées, vous êtes prié de spécifier, outre le ou les numéro(s), désignation(s) et quantité(s) des pièces commandée(s), le numéro de carrosserie, le numéro de série du moteur et la lecture du compteur de service du véhicule.
Sur le présent catalogue des pièces figurent non seulement les équipements standard, mais également les équipements et accessoires en option. Si vous désirez un équipement ou une pièce quelconque, vous êtes prié de prendre contact avec le concessionnaire Komatsu le plus proche.

Ce catalogue des pièces se présente de la manière suivante:

Figures et listes	Lorsque vous ouvrez le présent catalogue, vous trouvez: sur la page de gauche (numéro de page pair), les illustrations de toutes les pièces composant l'équipement en question avec les numéros de référence pour chacune des pièces, sur la page de droite (numéro de page impair), la liste des pièces dans l'ordre des numéro de référence des pièces avec indication du numéro des pièces, de la désignation des pièces, de la quantité utilisée et des numéros de série.
FIG. No. (Figure et liste)	Le numéro de figure (FIG. XX) correspond au numéro de la figure représentée sur cette page, mais ne correspond pas au numéro de la pièce détachée. Veuillez noter que les numéros de figure ne se suivent pas systématiquement.
INDEX (Numéros de référence)	Les numéros de référence correspondent aux numéros de référence notés sur la figure et sont énumérés dans l'ordre des numéros de référence.
PART No. (Numéros de pièce)	Les numéros indiqués dans cette colonne correspondent aux numéros des pièces représentées et constituent les codes à spécifier pour toute commande de pièce. Il est important de ne pas faire d'erreur avec ce code au moment de la commande.
DESCRIP-TION (Descript-ion)	Dans cette colonne est indiquée la désignation des différentes pièces. Dans le cas d'un ensemble constitué de pièces, la désignation de chacune de ces pièces est précédée d'un point "." et dans le cas d'un ensemble constitué de sous-ensembles eux-mêmes constitués de pièces, la désignation de chacune de ces pièces est précédée de deux points "..". Exemple: ELEMENT ASSEMBLY, AIR CLEANER .ELEMENT ASSEMBLY, OUTER ..ELEMENT, OUTER ..NUT, WING ..WASHER
Q'TY (Quantité)	Dans cette colonne est indiqué le nombre de pièces nécessaires pour l'équipement en question. S'il s'agit de pièces comprises dans un ensemble et/ou composant, et la quantité indiquée est le nombre de pièces nécessaires pour l'ensemble et/ou le composant en question.
SERIAL No. (Numéros de série)	S'il s'agit d'un élément du moteur, ces numéros sont les numéros de série des moteurs sur lesquels cette pièce est utilisée. S'il s'agit d'un élément de la carrosserie, ces numéros sont les numéros des carrosseries sur lesquelles la pièce en question est utilisée.

Codification

Les codes indiqués dans les colonnes "N° de pièce" et "Description" ont les significations suivantes:

□	Au lieu de la pièce affectée de ce code, il est possible d'utiliser la pièce qui figure juste au-dessus.
⊡	La pièce affectée de ce code peut être utilisée à la place de la pièce figurant juste au-dessus.
◆	La pièce affectée de ce code et la pièce figurant dans la ligne justeau-dessus sont interchangeables
⊠	Au lieu de la pièce affectée de ce code, il est possible d'utiliser la combinaison des pièces indiquées dans la colonne "Description".
■	Les pièces affectées de ce code ne sont plus fournies. Au lieu de cette pièce, c'est la pièce figurant dans la ligne justeau-dessus qui sera fournie.
▼	Les pièces affectées de ce code ne sont plus fournies. Au lieu de cette pièce, c'est la combinaison de pièces figurant dans la colonne "Description" qui sera fournie.
☆	Les pièces affectées de ce code ne seront pas fournies à l'unité mais par jeu de pièces.
★	Les pièces affectées de ce code ne seront pas fournies à l'unité mais par jeu de pièces, sauf dans le cas de certains concessionnaires Komatsu.
⊙	Ce code indique qu'il s'agit d'un groupe de pièces. Les pièces affectées de ce code ne sont pas fournies en tant que pièces détachées.
= = = =	Les pièces ainsi encadrées sont les pièces composantes du groupe de pièces indiqué dans la ligne d'au-dessus.
G-1, G-2	Indique le numéro du groupe de pièces
KIT	Indique qu'il s'agit d'un kit de pièces. Pour les pièces composantes des kits, veuillez vous reporter à la liste des kits de service.
△	Indique qu'il s'agit de pièces fournies à l'état semi-fini. Ces pièces devront être usinées avant l'installation.
PAINT(1)	Indique que sur les pièces fournies est appliquée uniquement une couche primaire.
PAINT(2)	Indique que la couleur de la peinture est différente de celle d'origine.
(A)	Indique qu'il s'agit de pièces pour spécifications artiques A (–30°C)
(B)	Indique qu'il s'agit de pièces pour spécifications artiques B (–50°C)

VORWORT

Bei der Bestellung von Teilen bitte die Teilenummer, die Teilebezeichnung und die Menge des jeweiligen Teils sowie die Modellnummer, die Seriennummer der Maschine, die Seriennummer des Motors und den Stand des Betriebsstundenzählers angeben.

In dieser Ersatzteilliste ist nicht nur das Standardzubehör aufgeführt, sondern auch als Sonderausstattung erhältliche Teile und Einrichtungen.

Bestellungen nimmt Ihr zuständiger Komatsu-Händler entgegen.

Die folgenden Angaben sind in der Ersatzteilliste aufgeführt.

Bild und Liste	Beim Aufschlagen des Ersatzteilkatalogs ist auf der linken Seite (d.h. der Seite mit der geraden Zahl) eine Darstellung der Bauteile der betreffenden Baugruppe zu finden. Jedes Einzelteil der Baugruppe ist mit einer Kennzahl versehen. Auf der rechten Seite (d.h. der Seite mit der ungeraden Zahl) sind die Bauteile der Baugruppe, geordnet nach den auf der linken Seite angegebenen Kennzahlen, aufgeführt. Jedes Einzelteil wird mit Teilenummer, Teilebezeichnung und entsprechender Seriennummer angegeben.
FIG. No. (Bildnummer)	Die Bildnummer entspricht der Nummer des auf der betreffenden Seite stehenden Bilds. Es handelt sich dabei nicht um die Nummer des Lieferteils. Es sei ferner erwähnt, daß die Bilder nicht fortlaufend numeriert sind.
INDEX (Kennzahl)	Dabei handelt es sich um die gleiche Zahl wie die Kennzahl im Bild. Die Teile sind geordnet nach der Kennzahl aufgeführt.
PART No. (Teilenummer)	Die in der Spalte "Teilenummer" aufgeführte Nummer entspricht der Teilenummer für das betreffende Teil. Diese Nummer dient zur Bestellung des Teils. Deshalb bei der Bestellung stets auf die genaue Angabe der Teilenummer achten.
DESCRIPTION (Beschreibung)	Hierunter wird die Bezeichnung des Teils mit der aufgeführten Teilenummer angegeben. Jedes Baugruppen-Bauteil ist mit dem vorangestellten Symbol "." gekennzeichnet und wird hinter der entsprechenden Baugruppe aufgeführt. Handelt es sich bei dem mit "." gekennzeichneten Bauteil um eine Baugruppe, sind die Bauteile dieser Baugruppe mit ".." gekennzeichnet. Beispiel: Element assembly, air cleaner . Element assembly, outer .. Element, outer .. Nut, wing .. Washer
Q'TY (Menge)	Hierunter wird die Anzahl der Bauteile für eine Maschine angegeben. Im Falle einer Baugruppe oder eines Aggregats wird allerdings die Anzahl der Teile pro Baugruppe angegeben.
SERIAL No. (Seriennummer)	Im Ersatzteilkatalog für den Motor versteht man hierunter die Seriennummer des Motors, in den das betreffende Teil eingebaut ist. Im Ersatzteilkatalog für die Maschine versteht man hierunter die Seriennummer der Maschine, in die das entsprechende Teil eingebaut ist.
Kodes	Die in den Spalten "Teile-Nr." und "Beschreibung" verwendeten Kodes haben folgende Bedeutung: □ Anstelle dieses Teils kann das in der vorangegangenen Zeile aufgeführte Teil verwendet werden.

⊡	Dieses Teil kann anstelle des in der vorangegangenen Zeile aufgeführten Teils verwendet werden.
◆	Dieses Teil ist mit dem in der vorangegangenen Zeile aufgeführten Teil austauschbar.
■	Anstelle dieses Teils kann das in der Spalte "Beschreibung" aufgeführte Teil verwendet werden, wenn das Teil zusammen mit anderen Teilen als ein Bauteilsatz verwendet wird.
⊠	Dieses Teil kann nicht mehr geliefert werden. Statt dessen wird das in der vorangegangenen Zeile aufgeführte Teil geliefert.
▼	Dieses Teil kann nicht mehr geliefert werden. Statt dessen wird das in der Spalte "Beschreibung" aufgeführte Teil als ein Bauteilsatz geliefert.
☆	Dieses Teil kann nicht als Einzelteil, sondern nur als Baugruppe geliefert werden.
★	Dieses Teil kann nicht als Einzelteil, sondern nur als Baugruppe geliefert werden. Nur bei bestimmten Händlern kann es als Einzelteil bezogen werden.
⊙	Hierdurch wird ein Aggregat gekennzeichnet. Es wird nicht zu den Lieferteilen gerechnet.
= = = =	Die Teile innerhalb dieser Markierung gehören zu dem oben aufgeführten Aggregat.
G-1, G-2	Hiermit wird die Kategorie eines Aggregats angegeben.
KIT	Hiermit werden Teile gekennzeichnet, die nur als Satz erhältlich sind. Siehe dazu die Tabelle der als Satz gelieferten Ersatzteile.
△	Hiermit werden Teile gekennzeichnet, die in vorbearbeitetem Zustand geliefert werden und für den Einbau nachbearbeitet werden müssen.
PAINT(1)	Hiermit werden Teile gekennzeichnet, die mit Grundierung geliefert werden.
PAINT(2)	Hiermit werden Teile gekennzeichnet, die in unterschiedlichen Farben geliefert werden.
(A)	Hiermit werden Teile gekennzeichnet, die speziell für kalte Witterung (A) (-30°C) ausgelegt sind.
(B)	Hiermit werden Teile gekennzeichnet, die speziell für kalte Witterung (B) (-50°C) ausgelegt sind.

PROLOGO

Cuando tenga que efectuar un pedido de repuestos, se ruega especificar el número, el nombre y la cantidad de piezas requeridas, indicando asimismo el número de modelo, el número de serie del motor y la lectura del contador de servicio.

Esta lista de piezas especifica no solamente accesorios estándar sino también piezas y accesorios opcionales. Para realizar un pedido, sírvase ponerse en contacto con su distribuidor Komatsu más cercano.

La lista de repuestos se compone de los elementos siguientes.

Figura y lista	Al abrir esta lista de repuestos, encontrará en la página izquierda (página de número impar) una ilustración de los componentes del conjunto. La figura de cada componente individual va provista de un número de índice. En la página derecha (página de número par), los componentes del conjunto están listados siguiendo el orden de los números de índice de la página izquierda.
FIG. NO. (Número de figura)	El número de figura es el número indicado en cada una de las respectivas figuras, y no es el número de la pieza. Los números de figura no son siempre continuos.
INDEX (Número de índice)	Coincide con el número de índice de cada figura, y aparecen en la lista en orden numérico.
PART NO. (Número de pieza)	El número indicado en la columna de "Número de piezas" es el número de pieza que aparece en la figura. Es sumamente importante debido a que se utiliza como código al efectuar el pedido de piezas.
DESCRIP-TION (Nombre de las piezas)	Indica la descripción correspondiente a cada número de pieza. Los componentes de un conjunto llevan la marca "." antes del nombre. Por otra parte, cuando se tratan de piezas armadas, llevan la marca ".." antes del nombre Ejemplo: ELEMENT ASSEMBLY, AIR CLEANER .ELEMENT ASSEMBLY, OUTER ..ELEMENT, OUTER ..NUT, WING ..WASHER
Q'ty (Cantidad)	Especifica el número de piezas utilizadas en cada máquina. Sin embargo, para un conjunto o componentes de un grupo de piezas, se especifica el número de piezas por conjunto.
SERIAL NO. (Número de serie)	En el manual de piezas del motor, indica el número de serie del motor en que se utiliza la pieza. En el manual de piezas de la máquina, indica el número de serie del vehículo en que se utiliza esa pieza.

Códigos

Los códigos y números de piezas especificados en las columnas "N°. de pieza" y "Nombre de la pieza" representan lo siguiente:

□	En lugar de esta pieza es posible utilizar la pieza indicada en el renglón de arriba.
⊡	Es posible utilizar esta pieza en lugar de la indicada en el renglón inmediatamente anterior.
◆	Esta pieza y la indicada en el renglón inmediatamente anterior son intercambiables.
■	Es posible utilizar la pieza especificada en la columna "Nombre de las piezas" si se utiliza como un conjunto.
☒	Esta pieza se ha dejado de suministrar. En su lugar, se suministra la pieza indicada en el renglón anterior.
▼	Esta pieza se ha dejado de suministrar. En su lugar, se suministra la pieza especificada en la columna "Nombre de las piezas" como un conjunto.
☆	Esta pieza no se suministra como pieza individual. Se suministra como un conjunto.
★	Esta pieza no se suministra como pieza individual. Se suministra como un conjunto. Sin embargo, es suministrada como pieza individual por ciertos distribuidores.
⊙	Indica grupo de piezas. Las piezas que llevan este código no son suministrables.
====	Las piezas rodeadas por esta línea son componentes del grupo de piezas especificado arriba.
G-1, G-2	Indica la clasificación del grupo de piezas.
KIT	Indica componentes de un juego. Para los componentes de un juego, refiérase a la tabla de los juegos de servicio.
Δ	Indica pieza suministrada como semiterminada. Debe ser reelaborada antes del uso.
PAINT(1)	Indica piezas despachadas con una primera mano de pintura.
PAINT(2)	Indica piezas despachadas con colores diferentes.
(A)	Indica piezas especiales (A) especificadas para climas fríos (-30°C).
(B)	Indica piezas especiales (B) especificadas para climas fríos (-50°C)

INTRODUÇÃO

Ao solicitar uma peça, informe o número, nome e quantidade da peça necessária, bem como o número da carroçaria, número do motor, e leitura do medidor de serviço.

Esta lista de peças não somente especifica os acessórios padrões mas também as peças opcionais e aditamentos. Para pedir uma peça, entre em contato com o revendedor Komatsu mais próximo.

Este livro de peças consiste nos seguintes itens.

Figura e lista	Ao abrir este livro de peças, você encontrará na página esquerda (a página com número par), uma ilustração das peças componentes do conjunto. Cada peça individual no conjunto tem um número de índice. Na página direita (a página com número ímpar), as peças componentes do conjunto são relacionadas na ordem dos números de índice mostrados na página esquerda. Cada peça é designada com um número, nome, e número de série aplicável.
FIG. NO. (Número da figura)	O número da figura é o número da figura mostrada em tal página. Ele não é um número para fornecimento da peça. Do mesmo modo, os números das figuras nem sempre são contínuos.
INDEX (Número de índice)	Este número é igual ao número de índice na figura. As peças são relacionadas na ordem dos números de índice.
PART NO. (Número de peça)	O número designado na coluna "Número da peça" é o número para a peça mostrada. Ele é o código usado para o pedido da peça. É importante que não haja equívoco com respeito a este número ao pedir uma peça.
DESCRIP-TION (Descrição)	Este item descreve o nome da peça que tem o número de peça relacionado. É colocado um "." na frente do nome de um componente de conjunto e o item é introduzido após o conjunto. Se uma peça marcada com "." é um conjunto, seus componentes são marcados com "..". Exemplo: ELEMENT ASSEMBLY, AIR CLEANER .ELEMENT ASSEMBLY, OUTER ..ELEMENT, OUTER ..NUT, WING ..WASHER
Q'ty (Quantidade)	Este item especifica o número de peças usadas para 1 máquina. No entanto, para o conjunto ou componentes de um grupo de peças, o número de peças por conjunto é especificado.
SERIAL NO. (Número de série)	No livro de peças do motor, esse número indica o número de série do motor no qual a peça é usada. No livro de peças da máquina, esse número indica o número de série da máquina na qual a peça é usada.
Códigos	Os códigos e número de peça especificados nas colunas "N.º de peça" e "Descrição" representam o seguinte: □ A peça especificada na linha acima pode ser usada no lugar desta peça.

⊡	Esta peça pode ser usada no lugar da peça especificada na linha imediatamente acima.
◆	Esta peça e a peça especificada na linha imediatamente acima são intercambiáveis.
■	A peça especificada na coluna "Descrição" pode ser usada no lugar desta peça se ela for usada como um jogo.
⊠	Esta peça não é mais fornecida. A peça especificada na linha acima é fornecida em seu lugar.
▼	Esta peça não é mais fornecida. A peça especificada na coluna "Descrição" é fornecida em seu lugar como um jogo.
☆	Esta peça não pode ser fornecida como uma peça individual. Ela é fornecida como um conjunto.
★	Esta peça não pode ser fornecida como uma peça individual. Ela é fornecida como um conjunto. No entanto, ela é fornecida como uma peça individual somente por revendedores específicos.
⊙	Isso indica um grupo de peças. Esta peça não é considerada uma peça de fornecimento.
====	As peças envolvidas por esta linha são componentes do grupo de peças especificado acima.
G-1, G-2	Isso indica a categoria do grupo de peças.
KIT	Isso indica componentes de um kit. Para os componentes de um kit, refira-se à tabela de kits de serviço.
Δ	Isso indica uma peça fornecida como produto semi-acabado. Ela deve ser reformada antes do uso.
PAINT(1)	Isso indica peças embarcadas pintadas com uma primeira mão de fundo.
PAINT(2)	Isso indica peças embarcadas com cores diferentes.
(A)	Isso indica peças especiais para especificação (A) de tempo frio (-30°C).
(B)	Isso indica peças especiais para especificação (B) de tempo frio (-50°C).

الرموز

الرموز وارقام القطع المذكورة في عمود « رقم القطعة » وعمود « الوصف » تمثل كما يلي:

□ القطعة المذكورة في السطر السابق يمكن استعمالها بدلاً من هذه القطعة.

⊡ هذه القطعة يمكن استعمالها بدلاً من القطعة المذكورة في السطر السابق مباشرة.

◆ هذه القطعة والقطعة المذكورة في السطر السابق مباشرة يمكن لكل منهما ان تحل محل الاخرى.

■ القطعة المذكورة في عمود « الوصف » يمكن استعمالها بدلاً من هذه القطعة اذا استخدمت كطقم.

⊠ هذه القطعة توقف توريدها. يتم توريد القطعة المذكورة في السطر السابق بدلاً منها.

▼ هذه القطعة توقف توريدها. يتم توريد القطعة المذكورة في عمود « الوصف » بدلاً منها كطقم.

☆ هذه القطعة لا يمكن توريدها كقطعة منفردة. يتم توريدها كمجموعة.

★ هذه القطعة لا يمكن توريدها كقطعة منفردة. يتم توريدها كمجموعة. على انه يتم توريدها كقطعة منفردة من قبل موزعين معيّنين فقط.

⊙ هذا يشير الى مجموعة قطع.
هذه القطعة لا تعتبر قطعة للتوريد.

==== القطع المحاطة بهذا الخط هي مكونات لمجموعة القطع المذكورة اعلاه.

G-1,G-2 هذا يشير الى فئة مجموعة القطع.

KIT هذا يشير الى مكونات الاطقم التركيبية. بخصوص الاطقم التركيبية، يرجى مراجعة جدول الاطقم التركيبية للخدمة.

△ هذا يشير الى قطعة مورّدة شبه مكتملة التصنيع. تتطلب استكمال تصنيعها قبل الاستعمال.

PAINT(1) هذا يشير الى القطع المشحونة بعد طلائها بطبقة سفلية.

PAINT(2) هذا يشير الى القطع المشحونة بألوان مختلفة.

(A) هذا يشير الى قطع خاصة بمواصفات الطقس البارد من الفئة (A) (-٣٠°م).

(B) هذا يشير الى قطع خاصة بمواصفات الطقس البارد من الفئة (B) (-٥٠°م).

مقدمة

عند طلب القطع، يرجى تحديد رقم القطعة واسم القطعة والكمية المطلوبة من القطعة، مع تحديد رقم الموديل والرقم التسلسلي للمحرك وقراءة عداد الخدمة.

قائمة القطع هذه لا تقتصر على الكماليات القياسية فقط بل تشمل ايضاً القطع والملحقات الاختيارية. لطلب القطع، يرجى الاتصال بأقرب موزع لمنتجات كوماتسو.

قائمة القطع تتضمن البنود التالية.

الشكل والقائمة	عندما تفتح كتاب القطع، ستجد على الصفحة اليسرى (الصفحة ذات الرقم الزوجي) شكلاً توضيحياً للقطع المكونة للمجموعة. كل قطعة في مجموعة المكونات لها رقم فهرس. على الصفحة اليمنى (الصفحة ذات الرقم الفردي) تم إدراج قائمة بالقطع التي تتكون منها المجموعة مرتبة حسب ارقام الفهرس المبيّنة في الصفحة اليسرى. وقد اعطيت كل قطعة من القطع رقم قطعة واسم قطعة ورقم تسلسلي ينطبق عليها.
FIG. No. (رقم الشكل)	رقم الشكل هو الرقم الخاص بالشكل التوضيحي الذي يظهر في تلك الصفحة. وهو ليس رقم القطعة التي يتم توريدها. كما ان ارقام الاشكال ليست دائماً متتابعة.
INDEX (رقم الفهرس)	هذا الرقم هو نفس رقم الفهرس الوارد في الشكل التوضيحي. تدرج القطع في القائمة مرتبة تبعاً لارقام الفهرس.
PART No. (رقم القطعة)	الرقم الوارد في عمود « رقم القطعة » هو رقم القطعة الخاص بالقطعة المبيّنة. وهو الرمز المستخدم لطلب تلك القطعة. ومن الضروري عدم ارتكاب اي خطأ في تحديد هذا الرقم عند طلب القطع.
DESCRIPTION (الوصف)	يعطي اسم القطعة المدرج رقمها في القائمة. توضع العلامة " . " امام اسماء القطع المكونة للمجموعة ويدرج البند بعد المجموعة. اذا كانت القطعة المشار اليها بالعلامة " . " هي نفسها عبارة عن مجموعة مكونات فان كلاً من مكوناتها يشار اليها بالعلامة " .. ". مثال : ELEMENT ASSEMBLY, AIR CLEANER .ELEMENT ASSEMBLY, OUTER .. ELEMENT, OUTER ..NUT, WING ..WASHER
Q'ty (الكمية)	هذا هو عدد القطع المستخدمة لآلية واحدة. أما بالنسبة لمجموعات المكونات ومجموعات القطع فانه يتم تحديد عدد القطع لكل مجموعة.
SERIAL No. (الرقم التسلسلي)	في كتاب قطع المحرك، يشير هذا الرقم الى الرقم التسلسلي للمحرك الذي تستخدم فيه القطعة. في كتاب قطع الآلية، يشير هذا الرقم الى الرقم التسلسلي للآلية التي تستخدم فيها القطعة.

ПРЕДИСЛОВИЕ

При формировании заказа на детали, узлы и агрегаты, кроме их номера детали, наименования и количества, завод-изготовитель просит заказчиков информировать о серийном номере машины и двигателя, для которых делается заказ, а также показании счетчика мото-часов.

В Каталоге приведены не только стандартные агрегаты, но и дополнительные устройства и принадлежности, поставляемые по специальному заказу.
При необходимости приобретении их обратиться к местному дилеру фирмы "Комацу".

Каталог деталей составлен, как ниже изложено:

Рисунки и таблицы деталей	При открытии Каталога на левой странице (чётной) приведен рисунок деталей устройства или агрегата. Каждая деталь обозначена номером позиции. На правой странице (нечётной) приведена таблица деталей, нарисованных на левой странице, с соответствующим номером детали, наименованием, количеством и серийными номерами машины, для которых предназначена данная деталь, в порядке возрастания номеров позиции.
FIG No. (№ рисунка)	Номер рисунка (фиг.) является собственным для данного рисунка и не является номером показанной детали. Номера рисунков (фиг.) могут быть непорядковыми.
INDEX (Указатель)	В указателе приведены номера позиции деталей на рисунке в порядке возрастания цифр.
PART No. (Номер детали)	При заказе на деталь, установленную на рисунке, следует указать номер, приведенный в данной колонне. Именно этот номер определяет каждую деталь.
DESCRIPTION (Наименование детали)	Приведено наименование детали, соответствующей выбранному номеру детали. Точка "." поставлена перед наименованием каждой составной части устройства. Если составная часть состоит из множества деталей, то эти детали обозначаются двумя точками "..". Например: ELEMENT ASSEMBLY, AIR CLEANER . ELEMENT ASSEMBLY, OUTER .. ELEMENT, OUTER .. NUT, WING .. WASHER
Q'TY (Количество)	Указано количество деталей, необходимое на единицу данного устройства. Для деталей составной части устройства, а также для группы деталей указано их количество на единицу составной части или на группу.
SERIAL No. (Серийные номера)	В части двигателя приведены серийные номера двигателей, а в части шасси — серийные номера машин, в которых применена данная деталь.
Условные обозначения	Условные обозначения, применяемые в колоннах "Номер детали" и "Наименование детали", характеризуют следующее: □ Вышеприведенная деталь может заменить настоящую деталь.

Условные обозначения

(Продолжение)

◉	Настоящая деталь может заменить деталь, приведенную на одну строчку выше.
◆	Настоящая деталь и деталь, приведенную на одну строчку выше, имеют взаимозаменяемость.
■	Взамен настоящей детали возможно использовать детали, приведенные в колонне "Наименование детали", в комплекте.
□	Поставка этой детали прекращена. Взамен этой детали поставляется деталь, приведенная на одну строчку выше.
▼	Поставка этой детали прекращена. Взамен этой детали поставляются детали, приведенные в колонне "Наименование детали", в комплекте.
☆	Настоящая деталь поставляется только в комплекте, а не в отдельности.
★	Настоящая деталь поставляется, как правило, только в комплекте, а не в отдельности. Ее можно достать только у отдельных дилеров фирмы "Комацу".
◉	Группа деталей. Детали не подлежат дополнительной поставке.
-------	Детали, ограниченные этой линией, составляют вышеприведенную группу деталей.
G-1, G-2	Обозначения, характеризующие отдельные группы деталей.
KIT	Составляющая комплекта. См. таблицы ремонтных комплектов.
△	Деталь, поставляемая в неготовом виде. Перед употреблением необходимо дополнительно обработать.
PAINT(1)	Детали, отгружаемые в загрунтованном виде.
PAINT(2)	Детали, отгружаемые в окрашенном в другой цвет виде.
(A)	Детали, рассчитанные на холодные районы (-30° C)
(B)	Детали, рассчитанные на особо холодные районы (-50° C)

前　言

订购零件时，请注明需要零件的货号、品名、数量以及使用机器的车辆编号、发动机型号和系列号、工作时数。

此零件明细表上不仅记载有标准装备零件，还记载有选购零件、附件零件。如果您需要订货，请与最近的小松代理店联系。

为了清楚明了，零件手册中有如下规定:

图　　表	打开此零件清单后， 在左侧的页上（偶数页）用图示表示按安装的装置上的零件。在图示上标有各种零件的索引号码。 在右侧的页上（奇数页）按照左侧图示上表示的零件索引号码以表格的形式 表示货号、品名、数量、适用机型。
FIG. No.	图号（FIG.）表示该页图的号码，它不时补充零件用的货号同时，此号码不一定是连续号码。
INDEX	与图的索引号码一致，按索引号码顺序编制为表格形式。
PART No.	此栏所示的货号是图示零件的货号，它是在订货时需要的标明的特定代号，是非常重要的。
DESCRIP-TION	它表示相当于货号的零件名称。 构成组装品的零件，在品名的前面有标记，记载在组装品之后。 另外，如果标记的零件是组装品，在该构成零件的品名前标有 .. 标记。 例如: ELEMENT ASSEMBLY, AIR CLEANER .ELEMENT ASSEMBLY, OUTER ..ELEMENT, OUTER ..NUT, WING ..WASHER
Q'TY	表示 1 台机器中需要使用的该零件数量。 但是，如果是组装零件和零件组的构成零件时，表示其组装件的件数。
SERIAL No.	发动机篇中表示该使用零件的发动机型号，在机体篇中表示该使用零件的车辆号码。
代　　号	货号栏和零件品名栏里的代号如下所示: □　　上一行的零件可取代此行零件来使用。

代　　号（续）

⊡	此行零件可代替紧接着的上一行零件使用。
◆	此行零件可与紧挨着的上一行零件互换使用。
■	如果将此行零件说明栏内的零件配套后，可取代此零件来使用。
⊠	该行零件已停止供应，用上一行的零件代替使用。
▼	此行零件已停止供应，将此行零件说明栏内的零件配套后代替此零件供应。
☆	此行零件拟成套供应，不以单一零件供应。
★	此行零件拟成套供应，不以单一零件供应，但特定代理除外。
⊙	成组零件，一般不考虑成组供应。
====	用这种符号包括的零件是符号上一行指明成组件的零部件。
G-1,G-2	成组零件编号。
KIT	修理包，关于修理包构件详情，请参考技术服务修理包资料。
△	此行零件以半成品的形式供应，使用前必须再加工。
PAINT(1)	只涂底漆装船。
PAINT(2)	和本体不同颜色装船。
(A)	适用寒冷地区。（－30℃）
(B)	适用极寒冷地区。（－50℃）

CONTENTS

FOREWORD		0F- 2
CONTENTS		0C- 1

AA[ENGINE]	FIG NO.	PAGE
CYLINDER HEAD	A1010-A4B3	AA- 2
HEAD COVER(#26084-)	A1110-A4A3	AA- 6
HEAD COVER MOUNTING(#26084-)	A1111-A4A1	AA- 8
AIR INTAKE MANIFOLD AND AFTER COOLER(#30037-)	A1310-A4H7	AA- 10
AFTER COOLER WATER PIPING(#30037-)	A1310-B4H7	AA- 12
AIR CLEANER (WITH HEAT SHIELD) (#30037-)	A1410-A4F3A	AA- 14
AIR CLEANER (WITHOUT HEAT SHIELD) (#30037-)	A1410-A4F4A	AA- 16
EXHAUST MANIFOLD	A1510-A4B9	AA- 18
TURBOCHARGER MOUNTING	A1530-A4D3	AA- 20
TURBOCHARGER MOUNTING (SLAG HANDLING SPEC.) (#28419-)	A1530-A4G8	AA- 22
TURBOCHARGER (INNER PARTS)	A1530-B4D3	AA- 24
TURBOCHARGER (SLAG HANDLING SPEC.) (INNER PARTS) (#28419-)	A1530-B4G8	AA- 26
TURBOCHARGER OIL PIPING	A1530-C4D3	AA- 28
TURBOCHARGER OIL PIPING (SLAG HANDLING SPEC.) (#28419-)	A1530-C4G8	AA- 30
HEAT SHIELD(#27560-)	A1570-A4B7	AA- 32
MUFFLER (WITH HEAT SHIELD) (#30037-)	A1610-A4F2A	AA- 34
MUFFLER (WITHOUT HEAT SHIELD) (#30037-)	A1610-A4F3A	AA- 36
EJECTOR PIPING (WITH HEAT SHIELD) (#30037-)	A1610-B4F2A	AA- 38
EJECTOR PIPING (WITHOUT HEAT SHIELD) (#30037-)	A1610-B4F3A	AA- 40
CYLINDER BLOCK (1/2) (#26660-)	A2010-A4H9A	AA- 42
CYLINDER BLOCK (2/2) (#26660-)	A2010-B4H9A	AA- 44
CYLINDER BLOCK RELATED PARTS(#26660-)	A2011-A4A4	AA- 46
FRONT COVER(#27560-)	A2040-A4H1	AA- 48
FRONT COVER AND BREATHER RELATED PARTS(#26075-)	A2041-A4A5	AA- 50
FRONT COVER AND BREATHER RELATED PARTS (SLAG HANDLING SPEC.) (#28419-)	A2041-A4G8	AA- 52
IDLER GEAR(#26526-)	A2050-A4A3	AA- 54
CAMFOLLOWER COVER	A2060-A4C1	AA- 56
OIL PAN AND SUCTION TUBE	A2110-A4F6	AA- 58
OIL LEVEL GAUGE	A2110-B4F6	AA- 60
FLYWHEEL HOUSING(#27560-)	A2210-A4E4	AA- 62
POWER TAKE OFF(#27560-)	A2210-B4E4	AA- 64
POWER TAKE OFF LUBRICATOR(#27560-)	A2210-C4E4	AA- 66
FLYWHEEL(#27560-)	A2230-A4C6	AA- 68
ENGINE MOUNTING(#27560-)	A2250-A4D5	AA- 70
CRANKSHAFT	A2310-A4A1	AA- 72
DAMPER	A2330-A4A5	AA- 74
PISTON	A2350-A4B2	AA- 76
CRANK PULLEY(#27560-)	A2370-A4E1	AA- 78
CAMSHAFT(#26075-)	A2410-A4A6	AA- 80
ROCKER ARM AND HOUSING(#26075-)	A2411-A4A2	AA- 82
CAMFOLLOWER(#26075-)	A2411-B4A2	AA- 84
FRONT POWER TAKE OFF	A2610-A4B5	AA- 86
FRONT POWER TAKE OFF (WITHOUT FRONT POWER TAKE OFF)	A2610-A4B6	AA- 88
OIL PUMP	A3010-A4A1	AA- 90
OIL ADAPTER	A3110-A4C5	AA- 92
OIL FILTER	A3110-B4C5	AA- 94
OIL COOLER(#22653-)	A3310-A4A3	AA- 96
FUEL INJECTION PUMP MOUNTING(#27560-)	A4010-A4J5	AA- 98
FUEL INJECTION PUMP (PUMP) (1/2) (INNER PARTS) (#27560-)	A4010-B4J5	AA- 100

	FIG NO.	PAGE
FUEL INJECTION PUMP (PUMP) (2/2) (INNER PARTS) (#27560-)	A4010-C4J5	AA- 104
FUEL INJECTION PUMP (GOVERNOR) (1/2) (INNER PARTS) (#27560-)	A4010-D4J5	AA- 110
FUEL INJECTION PUMP (GOVERNOR) (2/2) (INNER PARTS) (#27560-)	A4010-E4J5	AA- 114
FUEL INJECTION PUMP (COUPLING) (INNER PARTS) (#27560-)	A4010-F4J5	AA- 118
FUEL INJECTION PUMP (FEED PUMP) (INNER PARTS) (#27560-)	A4010-G4J5	AA- 120
FUEL INJECTION PUMP PIPING	A4030-A4C6	AA- 122
FUEL INJECTION PUMP LUBRICATOR	A4060-A4B3	AA- 124
FUEL INJECTION PUMP DRIVE(#22653-)	A4080-A4A8	AA- 126
FUEL FILTER	A4110-A4E4	AA- 128
FUEL FILTER (SLAG HANDLING SPEC.) (#28419-)	A4110-A4H9	AA- 130
WATER SEPARATOR	A4130-A4B3	AA- 132
INJECTION NOZZLE(#25748-)	A4210-A4E5	AA- 134
NOZZLE HOLDER (INNER PARTS) (#25748-)	A4210-B4E5	AA- 136
FUEL RETURN(#25887-)	A4230-A4D5	AA- 140
WATER PUMP(#27560-)	A5010-A4F4	AA- 142
THERMOSTAT AND PIPING(#27560-)	A5010-B4F4	AA- 144
AIR VENT(#27560-)	A5010-C4F4	AA- 146
TENSION PULLEY (WITH HARDENING PULLEY) (#27560-)	A5080-A4B2	AA- 148
CORROSION RESISTOR	A5210-A4D3	AA- 152
CORROSION RESISTOR (SLAG HANDLING SPEC.) (#28419-)	A5210-A4F6	AA- 154
ALTERNATOR MOUNTING (35A)	A6010-A4D6	AA- 156
ALTERNATOR MOUNTING (50A) (#27560-)	A6010-A4D7Z	AA- 158
ALTERNATOR MOUNTING (35A) (WITH HARDENING PULLEY) (#25887-)	A6010-A4F7	AA- 160
ALTERNATOR MOUNTING (50A) (WITH HARDENING PULLEY) (#25887-)	A6010-A4F8	AA- 162
ALTERNATOR (35A) (INNER PARTS)	A6010-B4D6	AA- 164
ALTERNATOR (60A) (INNER PARTS) (#28011-)	A6010-B4D7Y	AA- 168
ALTERNATOR (35A) (WITH HARDENING PULLEY) (INNER PARTS) (#25887-)	A6010-B4F7	AA- 170
ALTERNATOR (60A) (WITH HARDENING PULLEY) (INNER PARTS) (#27971-)	A6010-C4F8	AA- 172
STARTING MOTOR MOUNTING (11KW) (#27560-)	A6210-A4C4	AA- 174
STARTING MOTOR (11KW) (INNER PARTS) (#27560-)	A6210-B4C4	AA- 176
HEATER SWITCH WIRING(#28602-)	A6810-A4F5	AA- 178
FUEL INJECTION PUMP SAFETY GUARD(#25887-)	A6910-A4B9	AA- 180
CYLINDER BLOCK GASKET KIT(#27560-)	A8117-B4A8	AA- 182
CYLINDER HEAD GASKET KIT(#27560-)	A8121-A4A5	AA- 186
WATER PUMP GASKET KIT(#27560-)	A8127-F4A5	AA- 190
NAME PLATE AND CAUTION PLATE(#25887-)	A9810-A4U9	AA- 192
SERVICE PARTS (EXHAUST PIPE AND RAIN CAP) (#27560-)	B9999-A4A3	AA- 194

BO[ENGINE RELATED PARTS]

ENGINE MOUNT	B0100-01A0	BO- 2
EXHAUST PIPE	B0300-01A0	BO- 4
EXHAUST PIPE (SHORT)	B0300-01A1	BO- 6

CO[COOLING SYSTEM]

RADIATOR PIPING(#57021-)	C0120-01A0A	CO- 2
RADIATOR FAN PULLEY AND SHAFT	C0310-01A0	CO- 4
RADIATOR FAN PULLEY AND SHAFT (REVERSIBLE)	C0310-01A1	CO- 6
RADIATOR FAN GUARD AND NET (WITH AIR CONDITIONER)	C0310-02A0	CO- 8

	FIG NO.	PAGE
RADIATOR FAN GUARD AND NET (WITHOUT AIR CONDITIONER)	C0310-02A1	CO- 10
DO[FUEL TANK AND RELATED PARTS]		
FUEL TANK (1/2)	D0100-01A0	DO- 2
FUEL TANK (2/2)	D0100-02A0	DO- 4
FUEL PIPING	D0200-01A0	DO- 6
FUEL PIPING (WITH WATER SEPARATOR)	D0200-01A1	DO- 8
FUEL PIPING (JUNGLE SPEC.)	D0200-01A2	DO- 10
EO[ELECTRICAL SYSTEM]		
BATTERY	E0200-01A0	EO- 2
ELECTRICAL SYSTEM (1/2)	E0200-02A0	EO- 4
ELECTRICAL SYSTEM (2/2)	E0200-03A0	EO- 6
BACK-UP ALARM	E0420-01A0	EO- 8
FO[POWER TRAIN AND FINAL DRIVE]		
POWER TAKE OFF	F2100-01A0	FO- 2
UNIVERSAL JOINT	F2200-01A0	FO- 6
TORQUE CONVERTER (1/4) CASE (TCS43-4F)	F2310-51A0	FO- 8
TORQUE CONVERTER (2/4) TURBINE SHAFT AND STATOR (TCS43-4F)	F2310-52A0	FO- 12
TORQUE CONVERTER (3/4) RELIEF VALVE (TCS43-4F)	F2310-53A0	FO- 16
TORQUE CONVERTER (4/4) REGULATOR VALVE (TCS43-4F)	F2310-54A0	FO- 18
TRANSMISSION (1/4), CASE	F2320-51A0	FO- 20
TRANSMISSION (2/4), PRANETARY GEAR AND SHAFT (1/2)	F2320-52A0	FO- 22
TRANSMISSION (3/4), PRANETARY GEAR AND SHAFT (2/2)	F2320-53A0	FO- 26
TRANSMISSION (4/4), TRANSFER CASE	F2320-54A0	FO- 30
TRANSMISSION VALVE	F2320-55A0	FO- 34
TRANSMISSION VALVE COVER AND LEVER	F2320-56A0	FO- 38
TRANSMISSION REGULATOR VALVE	F2320-57A0	FO- 42
BEVEL GEAR AND SHAFT	F2350-01A0	FO- 44
STEERING CLUTCH	F2360-01A0	FO- 46
BRAKE BAND AND LINKAGE	F2370-01A0	FO- 48
BRAKE BOOSTER	F2370-02A0	FO- 52
BRAKE CYLINDER (WITH BRAKE ASSISTOR)	F2370-03A0	FO- 56
BRAKE AUTOMATIC VALVE (WITH BRAKE ASSISTOR)	F2370-04A0	FO- 58
BRAKE PIPING (WITH BRAKE ASSISTOR)	F2370-05A0	FO- 60
FINAL DRIVE, L.H. (GEAR) (#57003-)	F2380-01A0A	FO- 64
FINAL DRIVE, L.H. (GEAR) (FOR KOUNOIKE)	F2380-01A1	FO- 66
FINAL DRIVE, L.H. (SHAFT AND SPROCKET) (#57003-)	F2380-02A0A	FO- 68
FINAL DRIVE, R.H. (GEAR) (#57003-)	F2380-03A0A	FO- 72
FINAL DRIVE, R.H. (GEAR) (FOR KOUNOIKE)	F2380-03A1	FO- 74
FINAL DRIVE, R.H. (SHAFT AND SPROCKET) (#57003-)	F2380-04A0A	FO- 76
STEERING CONTROL VALVE	F2600-01A0	FO- 80
STEERING PIPING (1/3)	F2700-01A0	FO- 84
STEERING PIPING (2/3)	F2700-02A0	FO- 88
STEERING PIPING (3/3)	F2700-03A0	FO- 90
TORQFLOW TRANSMISSION PIPING	F2700-04A0	FO- 94
BRAKE PIPING	F2700-05A0	FO- 98
PM CLINIC PIPING(#57435-)	F2700-05A2	FO- 102
SWITCH AND VALVE (FOR BRAKE CAUTION) (WITH BRAKE ASSISTOR)	F2700-06A0	FO- 104
OIL COOLER PIPING	F2700-07A0	FO- 106
MAIN RELIEF VALVE	F2700-08A0	FO- 110
STEERING OIL FILTER	F2710-01A0	FO- 112

	FIG NO.	PAGE
OIL STRAINER	F2710-02A0	FO- 114
HO[HYDRAULIC SYSTEM]		
HYDRAULIC TANK (1/2)	H0100-01A0	HO- 2
HYDRAULIC TANK (2/2)	H0100-02A0	HO- 6
BLADE LIFT AND RIPPER CONTROL VALVE (1/2)	H0100-03A0	HO- 8
BLADE LIFT AND RIPPER CONTROL VALVE (2/2)	H0100-04A0	HO- 10
BLADE TILT CONTROL VALVE	H0100-05A0	HO- 14
HYDRAULIC PIPING (TANK TO PUMP)	H0310-01A0	HO- 16
HYDRAULIC PIPING (TAND TO LIFT CYLINDER) (1/3)	H2210-01A0	HO- 18
HYDRAULIC PIPING (TANK TO LIFT CYLINDER) (1/3) (FOR SLAG HANDLING)	H2210-01A2	HO- 20
HYDRAULIC PIPING (TANK TO LIFT CYLINDER) (2/3)	H2210-02A0	HO- 22
HYDRAULIC PIPING (TANK TO LIFT CYLINDER) (JUNGLE SPEC.)	H2210-02A1	HO- 24
HYDRAULIC PIPING (TANK TO LIFT CYLINDER) (2/3) (FOR SLAG HANDLING)	H2210-02A2	HO- 28
HYDRAULIC PIPING (TANK TO LIFT CYLINDER) (3/3)	H2210-03A0	HO- 30
HYDRAULIC PIPING (TANK TO LIFT CYLINDER) (3/3) (FOR SLAG HANDLING)	H2210-03A2	HO- 32
TILT PIPING (TANK TO TILT CYLINDER)	H2220-01A0	HO- 34
RIPPER CONTROL LEVER (FOR VARIABLE TYPE RIPPER)	H2250-01A0	HO- 38
RIPPER CONTROL LEVER (FOR RIGID TYPE RIPPER)	H2250-01A1	HO- 42
JO[MAIN FRAME AND RELATED PARTS]		
STEERING CASE AND MAIN FRAME	J2110-01A0	JO- 2
STEERING CASE AND MAIN FRAME (JUNGLE SPEC.)	J2110-01A1	JO- 4
STEERING CASE AND MAIN FRAME (FOR SAUDI ARABIA)	J2110-01A2	JO- 6
OIL FILLER AND LEVEL GAUGE	J2112-01A0	JO- 8
EQUALIZER BAR	J2700-01A0	JO- 10
EQUALIZER BAR (FOR HARD ROCK) (FOR SAUDI ARABIA)	J2700-01A1	JO- 12
KO[OPERATOR'S COMPARTMENT AND CONTROL SYSTEM]		
OPERATOR'S SEAT (TURN AND RECLINING TYPE) (LEATHER SEAT)	K0110-01A0	KO- 2
OPERATOR'S SEAT ASSEMBLY (TURN AND RECLINING TYPE) (LEATHER SEAT)	K0110-02A0	KO- 4
SEAT BELT (FOR KAB)	K0160-01A0	KO- 6
STEEL CAB (BODY AND FRONT WINDOW) (1/9)	K0210-01A0	KO- 8
STEEL CAB (DOOR AND SIDE WINDOW) (2/9)	K0210-02A0	KO- 12
STEEL CAB (REAR WINDOW) (3/9)	K0210-03A0	KO- 16
STEEL CAB (FURNITURE IN CAB, FRONT) (4/9)	K0210-04A0	KO- 18
STEEL CAB (FURNITURE IN CAB, REAR) (5/9)	K0210-05A0	KO- 20
STEEL CAB (INNER TOP AND CAB MOUNT) (6/9)	K0210-06A0	KO- 22
STEEL CAB (ELECTRICAL PARTS, FRONT) (7/9)	K0210-07A0	KO- 24
STEEL CAB (ELECTRICAL PARTS, REAR) (8/9)	K0210-08A0	KO- 28
STEEL CAB (WINDOW WASHER) (9/9)	K0210-09A0	KO- 32
ROLL OVER PROTECTIVE STRUCTUER	K0410-01A0	KO- 34
ROPS GUARD (WOODY TERRAIN AND JUNGLE SPEC.)	K0410-01A1	KO- 36
ROLL OVER PROTECTIVE STRUCTURE BRACKET	K0410-02A0	KO- 38
COMPRESSOR RELATED PARTS	K0710-01A0	KO- 40
COMPRESSOR RELATED PARTS (FOR SAND DUST)	K0710-01A1	KO- 42
HEATING PIPING (FOR AIR CONDITIONER)	K0710-02A0	KO- 44
COOLING PIPING (FOR AIR CONDITIONER)	K0710-03A0	KO- 48
AIR COMPRESSOR (FOR SAND DUST)	K0710-03A1	KO- 50
AIR CONDITIONER (1/2)	K0710-04A0	KO- 52

	FIG NO.	PAGE
AIR CONDITIONER (2/2)	K0710-05A0	KO- 54
AIR COMPRESSOR	K0710-06A0	KO- 56
ACCESORY (FOR STEEL CAB)	K0810-01A0	KO- 58
FLOOR PLATE	K2110-01A0	KO- 60
RIPPER CONTROL LINKAGE (WITHOUT P.P.C)	K2110-02A0	KO- 64
BRAKE PEDAL	K2110-03A0	KO- 66
PARKING BRAKE LEVER	K2110-04A0	KO- 68
STEERING CONTROL LEVER	K2110-05A0	KO- 70
TRANSMISSION CONTROL LEVER	K2110-06A0	KO- 72
DECELERATOR PEDAL	K2110-07A0	KO- 76
FUEL CONTROL LEVER	K2110-08A0	KO- 78
FUEL CONTROL LINKAGE	K2110-09A0	KO- 80
TRANSMISSION CONTROL LINKAGE (1/3)	K2110-10A0	KO- 84
TRANSMISSION CONTROL LINKAGE (2/3)	K2110-11A0	KO- 86
TRANSMISSION CONTROL LINKAGE (3/3)	K2110-12A0	KO- 88
INSTRUMENT PANEL	K2110-13A0	KO- 90
ARM REST	K2110-14A0	KO- 92
INSTRUMENT PANEL	K2220-01A0	KO- 94
PANEL COVER LOCK	K2220-01A1	KO- 98
MONITOR PANEL	K2220-51A0	KO- 100
BRAKE LINKAGE (WITHOUT BRAKE ASSISTOR)	K2400-01A1	KO- 102
VALVE SEAT (FOR VARIABLE TYPE RIPPER)	K2510-01A0	KO- 104
VALVE SEAT (FOR RIGID TYPE RIPPER)	K2510-01A1	KO- 106
TILT BLADE CONTROL LEVER	K2510-02A0	KO- 108
TILT BLADE CONTROL LINKAGE (1/2)	K2510-03A0	KO- 112
TILT BLADE CONTROL LINKAGE (2/2)	K2510-04A0	KO- 116
SERVO VALVE PIPNG (FOR BLADE LIFT) (FOR VARIABLE TYPE RIPPER)	K2510-05A0	KO- 118

MO[GUARD]

RADIATOR	M2110-01A0	MO- 2
RADIATOR GUARD (FOR HARD ROCK) (FOR SAUDI ARABIA)	M2110-01A1	MO- 4
RADIATOR MOUNT	M2110-02A0	MO- 6
RADIATOR GUARD (PIPNG)	M2110-03A0	MO- 10
RADIATOR GUARD (WOODY TERRAIN SPEC.)	M2110-03A1	MO- 12
RADIATOR FAN GUARD	M2110-04A0	MO- 16
RADIATOR GUARD (WIRING)	M2110-05A0	MO- 20
RADIATOR GUARD AND CYLINDER STAY	M2110-06A0	MO- 24
RADIATOR GUARD (NET)	M2110-07A0	MO- 26
RADIATOR COVER AND CYLINDER STAY	M2110-08A0	MO- 28
CYLINDER STAY	M2111-01A0	MO- 30
RADIATOR GUARD (COVER AND MASK)	M2113-01A0	MO- 32
ENGINE HOOD AND DASHBOAD (SIDE COVER LESS)	M2141-01A0	MO- 34
ENGINE SIDE COVER, L.H. (WITH AFTER COOLER AND PERFORATED)	M2141-01A1	MO- 36
ENGINE HOOD AND DASHBOAD (SOLID)	M2141-01A2	MO- 38
ENGINE HOOD AND DASHBOAD (ADDITIONAL FILTER)	M2141-01A3	MO- 40
ENGINE SIDE COVER, R.H. (WITH AFTER COOLER AND PERFORATED)	M2141-02A1	MO- 42
ENGINE SIDE COVER PERFORATED TYPE	M2142-01A0	MO- 44
SIDE COVER LESS	M2142-01A1	MO- 48
ENGINE SIDE COVER L H. (SOLID TYPE)	M2142-01A2	MO- 50
ENGINE SIDE COVER, R.H. PERFORATED TYPE	M2142-02A0	MO- 52
ENGINE SIDE COVER, R.H. (SOLID TYPE)	M2142-02A1	MO- 54
PRECLEANER COVER (SAND AND DUSTY SPEC.) (ENGINAIRE)	M2190-01A1	MO- 56
PRECLEANER COVER (SAND AND DUSTY SPEC.)	M2190-01A3	MO- 58
ELECTRICAL SYSTEM	M2210-01A0	MO- 60
SUPPORT AND REAR COVER	M2210-02A0	MO- 64
SUPPORT AND REAR COVER (FOR PM CLINIC SERVICE) (#57435-)	M2210-02A2	MO- 66

	FIG NO.	PAGE
STEERING AND BRAKE LINKAGE (SUPPORT)	M2210-03A0	MO- 68
BRAKE LINKAGE (WITH BRAKE ASSISTOR)	M2210-04A0	MO- 70
FENDER	M2210-05A0	MO- 72
FENDER (JUNGLE SPEC.)	M2210-05A2	MO- 74
FENDER (FOR PM CLINIC)	M2210-05A3	MO- 76
FENDER COVER	M2210-06A0	MO- 78
FENDER COVER (JUNGLE SPEC.)	M2210-06A3	MO- 82
CONCENTRATED PIPING	M2210-07A0	MO- 86
AIR CONDITIONER AND BATTERY COVER	M2250-01A0	MO- 88
BOTTOM GUARD	M2810-01A0	MO- 92
BOTTOM GUARD (JUNGLE SPEC.)	M2810-01A1	MO- 94
BOTTOM GUARD (FOR SAUDI ARABIA)	M2810-01A2	MO- 96

RO[UNDER CARRIAGE]

IDLER	R0100-01A0	RO- 2
TRACK ROLLER	R0200-01A0	RO- 6
CARRIER ROLLER	R0300-01A0	RO- 8
TRACK SHOE (LUBRICATE TYPE) (SINGLE GROUSER) (HEAVY-DUTY)	R0500-01A0	RO- 10
TRACK SHOE (DRY TYPE) (SINGLE GROUSER) (HEAVY-DUTY)	R0500-01A2	RO- 14
TRACK SHOE (LUBRICATE TYPE) (560MM WIDE) (MASTER LINK 2 PLACE TYPE)	R0500-01A3	RO- 16
TRACK SHOE (LUBRICATE TYPE) (660MM WIDE) (MASTER LINK 2 PLACE TYPE) (HEAVY-DUTY)	R0500-01A4	RO- 18
TRACK SHOE (LUBRICATE TYPE) (660MM WIDE) (MASTER LINK 2 PLACE TYPE) (COLD WEATHER (A) SPEC.)	R0500-01A5	RO- 20
TRACK FRAME	R2100-01A0	RO- 22
TRACK FRAME (FOR SAUDI ARABIA)	R2100-01A1	RO- 24
TRACK FRAME (REINFORCED TYPE)	R2100-01A2	RO- 26
RECOIL SPRING	R2100-02A0	RO- 28
TRACK FRAME COVER	R2100-03A0	RO- 32
TRACK FRAME COVER (FOR SAUDI ARABIA)	R2100-03A1	RO- 34
ROLLER GUARD	R2200-01A0	RO- 36

TO[WORK EQUIPMENT]

STRAIGHT TILT FRAME	T2110-01A0	TO- 2
C-FRAME	T2110-01A1	TO- 6
STRAIGHT TILT FRAME (REINFORCED TYPE)	T2110-01A2	TO- 10
STRAIGHT TILT BLADE	T2120-01A0	TO- 14
STRAIGHT TILT BLADE (WITH PUSHER PLATE)	T2120-01A1	TO- 18
BLADE TILT CYLINDER PIPING	T2160-01A0	TO- 22
RIPPER SHANK, BEAM AND LINK (MULTI SHANK RIPPER)	T2410-01A0	TO- 24
RIPPER SHANK, BEEM AND LINK (GIANT RIPPER)	T2410-01A1	TO- 28
RIPPER MAIN PIPING (FOR VARIABLE TYPE RIPPER)	T2440-01A0	TO- 32
RIPPER MAIN AND CYLINDER PIPING (FOR FIX TYPE RIPPER)	T2440-01A1	TO- 36
RIPPER ELECTRICAL SYSTEM	T2440-03A0	TO- 40
DRAWBAR	T2810-01A0	TO- 42

UO[MARKS AND PLATES]

MARKS AND PLATES (ENGLISH)	U0100-01A2	UO- 2
MARKS AND PLATES (ENGLISH) (CHARACTOR)	U0100-01A3	UO- 6
MARKS AND PLATES (ENGLISH AND ARABIC)	U0100-01A4	UO- 10
MARKS AND PLATES (ENGLISH AND INDONESIAN)	U0100-01A5	UO- 14
MARKS AND PLATES (PERSIAN)	U0100-01A7	UO- 18
MARKS AND PLATES (MONGOLIA)	U0100-01A8	UO- 22
MARKS AND PLATES (EXCEPT JAPAN) (SEAT BELT)	U0630-01A1	UO- 26

V0[ACCESSORY]	FIG NO.	PAGE
SPARE PARTS	V0100-01A0	V0- 2
TOOL	V0300-01A0	V0- 4

W0[MISCELLANEOUS]		
CAB GUARD SWEEPER (JUNGLE SPEC.) (1/2)	W2119-01A0	W0- 2
CAB GUARD SWEEPER (JUNGLE SPEC.) (2/2)	W2119-02A0	W0- 4
COOLANT AND OIL PAN HEATER (COLD WEATHER (A) SPEC.) (#57430-)	W2121-01A0	W0- 6

Y0[SERVICE KIT AND COMPONENT PARTS]		
SERVICE KIT	Y0100-01A0	Y0- 2
SHOE BOLT AND NUT SERVICE KIT	Y0320-01A0	Y0- 6
TRANSMISSION PUMP	Y1600-01A0	Y0- 8
STEERING PUMP (1/2)	Y1600-11A0	Y0- 10
STEERING PUMP (2/2)	Y1600-12A0	Y0- 12
WORK EQUIPMENT PUMP	Y1600-21A0	Y0- 14
P.P.C. PUMP	Y1600-31A0	Y0- 16
BLADE LIFT CYLINDER (1/2)	Y1620-01A0	Y0- 18
BLADE LIFT CYLINDER (2/2)	Y1620-02A0	Y0- 22
BLADE TILT CYLINDER	Y1620-31A0	Y0- 24
RIPPER LIFT CYLINDER	Y1621-01A0	Y0- 26
RIPPER TILT CYLINDER (FOR VARIABLE TYPE RIPPER)	Y1621-11A0	Y0- 28
PIN PULLER CYLINDER (FOR GIANT RIPPER)	Y1621-21A0	Y0- 30
TANK VALVE (1/5)	Y1660-01A0	Y0- 32
TANK VALVE (2/5)	Y1660-02A0	Y0- 36
TANK VALVE (3/5)	Y1660-03A0	Y0- 38
TANK VALVE (4/5)	Y1660-04A0	Y0- 40
TANK VALVE (5/5)	Y1660-05A0	Y0- 42
CONTROL VALVE (1/2)	Y1660-21A0	Y0- 44
CONTROL VALVE (2/2)	Y1660-22A0	Y0- 46
CONTROL VALVE (BLADE) (1/2)	Y1662-01A0	Y0- 48
CONTROL VALVE (BLADE) (2/2)	Y1662-02A0	Y0- 50
SAFETY VALVE	Y1672-01A0	Y0- 54
BLADE LIFT SERVO VALVE	Y1679-01A0	Y0- 56
BLADE TILT AND RIPPER SERVO VALVE	Y1679-11A0	Y0- 60
RIPPER SELECTOR VALVE	Y1679-21A0	Y0- 64

ZZ[NUMERICAL INDEX]		
		ZZ- 1

ENGINE

FIG. A1010-A4B3 CYLINDER HEAD

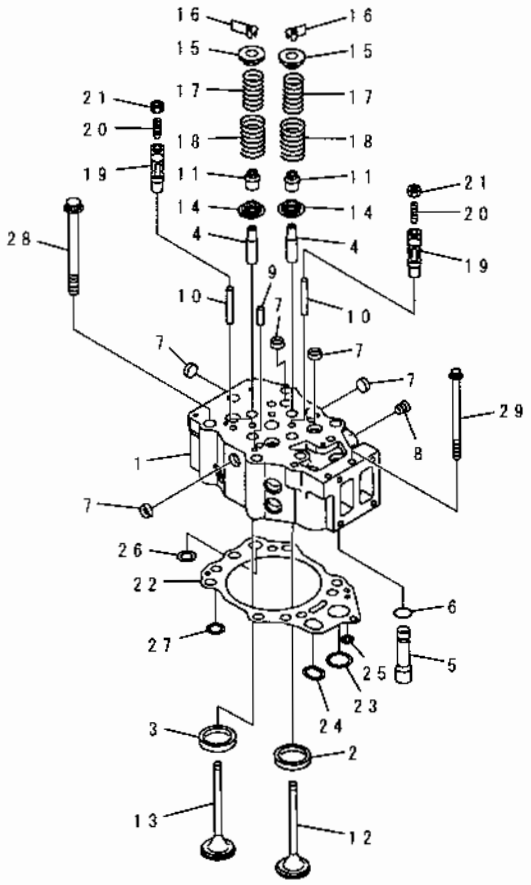

PE34759

INDEX	PART NO	DESCRIPTION	Q'TY	SERIAL NO
	6211-12-1100	CYLINDER HEAD ASS'Y, VALVE LESS.	6	22537-
1	☆	. HEAD, CYLINDER.	1	22537-
2	6210-11-1330	. INSERT, INTAKE VALVE. (STD)	2	22537-
	6210-19-1330	. INSERT, 0.25MM, INTAKE VALVE. (OS)	2	22537-
	6210-18-1330	INSERT, 0.50MM, INTAKE VALVE . (OS)	2	22537-
	6210-17-1330	. INSERT, 0.75MM, INTAKE VALVE. (OS)	2	22537-
	6210-16-1330	. INSERT, 1.00MM, INTAKE VALVE. (OS)	2	22537-
3	6217-11-1321	. INSERT, EXHAUST VALVE. (STD)	2	28790-
	□6210-11-1321	. INSERT, EXHAUST VALVE. (STD)	2	22537-28789
	6217-19-1321	. INSERT, 0.25MM, EXHAUST VALVE. (OS)	2	28790-
	□6210-19-1321	. INSERT, 0.25MM, EXHAUST VALVE. (OS)	2	22537-28789
	6217-18-1321	. INSERT, 0.50MM, EXHAUST VALVE. (OS)	2	28790-
	□6210-18-1321	. INSERT, 0.50MM, EXHAUST VALVE. (OS)	2	22537-28789
	6217-17-1321	. INSERT, 0.75MM, EXHAUST VALVE. (OS)	2	28790-
	□6210-17-1321	. INSERT, 0.75MM, EXHAUST VALVE. (OS)	2	22537-28789
	6217-16-1321	. INSERT, 1.00MM, EXHAUST VALVE. (OS)	2	28790-
	□6210-16-1321	. INSERT, 1.00MM, EXHAUST VALVE (OS)	2	22537-28789
4	6212-16-1440	. GUIDE, VALVE.	4	22537-
5	6210-11-1150	. PIPE.	1	22537-
6	07000-73025	O-RING.	1	28790-
	□07000-63025	. O-RING. (K1)	1	22537-28789
7	6162-13-1150	. PLUG, EXPANSION.	13	22537-
8	07043-50108	. PLUG.	1	22537-
9	04020-00820	. PIN, DOWEL.	2	22537-
10	6210-11-1140	. GUIDE, CROSSHEAD.	2	22537-
11	6212-41-4540	SEAL, VALVE.	24	22537-
12	6215-41-4110	VALVE, INTAKE.	12	22537-
13	6215-41-4212	VALVE, EXHAUST.	12	22537-
14	6210-41-4530	SEAT, LOWER.	24	22537-
15	6210-41-4510	SEAT, UPPER.	24	22537-
16	6136-41-4520	COTTER.	48	22537-
17	6210-41-4440	SPRING, INNER.	24	22537-
18	6210-41-4430	SPRING, OUTER	24	22537-
19	6210-41-5620	CROSSHEAD.	12	22537-
20	6210-41-5641	SCREW.	12	28790-
	□6210-41-5640	SCREW.	12	22537-28789
21	6162-43-5630	NUT.	12	22537-
22	6210-17-1813	GASKET, HEAD (K1)	6	22537-
23	6210-11-1820	. GROMMET, OIL.	1	22537-
24	6210-11-1830	. GROMMET, OIL.	1	22537-
25	6210-11-1840	. GROMMET, OIL.	1	22537-
26	6210-11-1962	. GROMMET, WATER.	1	22537-

FIG NO. : A1010-A4B3

INDEX	PART NO.	DESCRIPTION	Q'TY	SERIAL NO
27	6210-11-1952	. GROMMET, WATER.	4	22537-
28	6210-11-1610	BOLT, HEAD.	36	22537-
29	01438-01020	BOLT.	6	22537-

FIG. A1110-A4A3 HEAD COVER (#26084-)

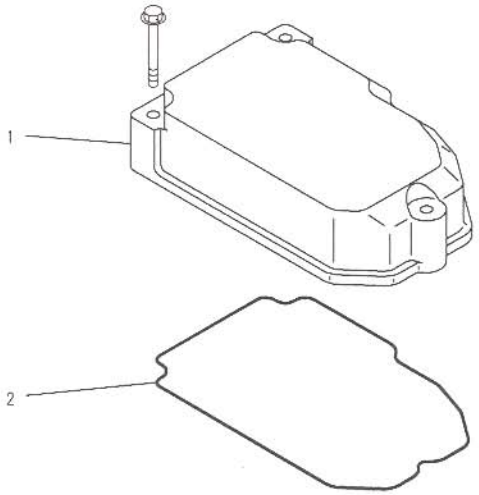

PJ04534

FIG NO. : A1110-A4A3

INDEX	PART NO.	DESCRIPTION	Q'TY	SERIAL NO.
1	6210-11-8111	COVER, ROCKER ARM HOUSING.....	6	26084-
2	6210-11-8820	GASKET.....(K1).....	6	26084-

FIG. A1111-A4A1 HEAD COVER MOUNTING(#26084-)

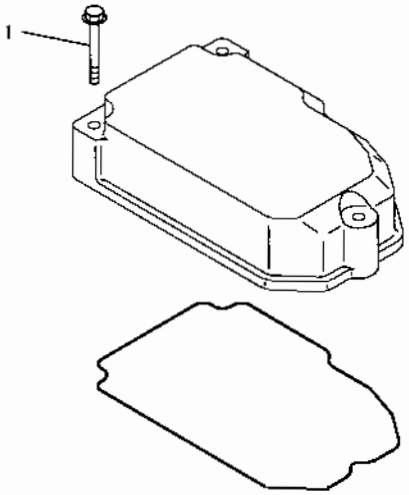

PJD4535

INDEX	PART NO.	DESCRIPTION	Q'TY	SERIAL NO
1	01435-00855	BOLT	18	26084-

FIG. A1310-A4H7 AIR INTAKE MANIFOLD AND AFTER COOLER (#30037-)

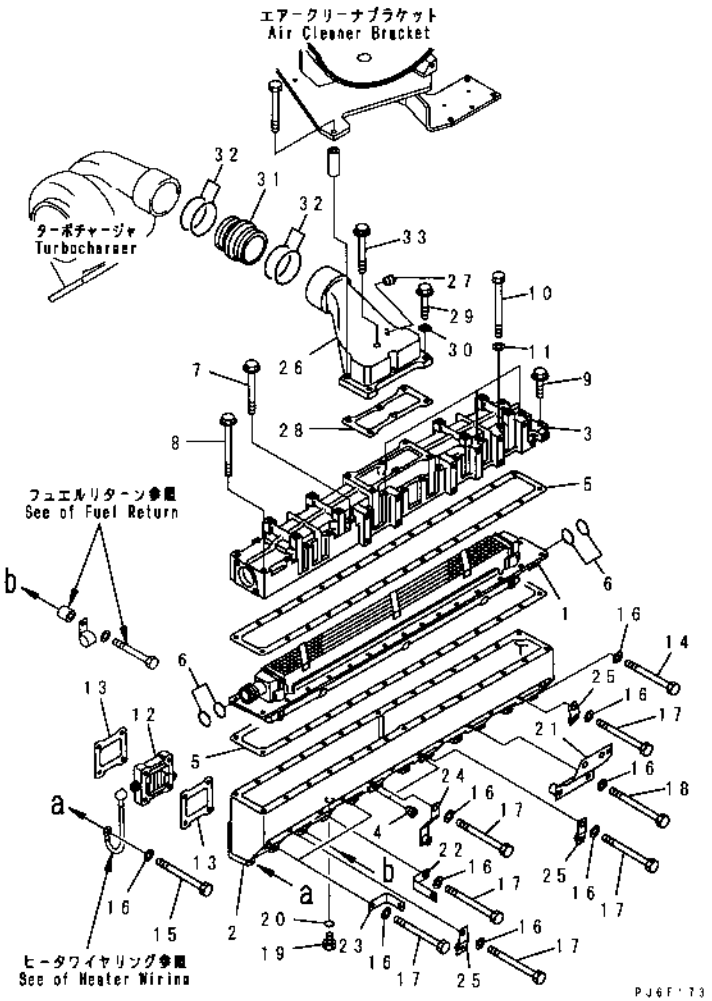

INDEX	PART NO	DESCRIPTION	Q'TY	SERIAL NO
1	6212-61-6121	CORE	1	30037-
2	6212-12-4110	MANIFOLD, AIR INTAKE	1	30037-
3	6212-12-4121	COVER	1	30037-
4	07043-50108	PLUG	2	30037-
5	6215-15-4710	GASKET (K1)	2	30037-
6	6212-61-6431	O-RING (K1)	4	30037-
7	01435-00895	BOLT	22	30037-
8	01436-01000	BOLT	2	30037-
9	01436-01050	BOLT	2	30037-
10	6132-11-4690	BOLT	4	30037-
11	01640-20816	WASHER	4	30037-
12	600-815-4291	HEATER, RIBBON	6	30037-
13	6210-11-4811	GASKET (K1)	12	30037-
14	01011-81055	BOLT	3	30037-
15	01011-81000	BOLT	11	30037-
16	01640-21016	WASHER	23	30037-
17	01011-81060	BOLT	7	30037-
18	01011-81080	BOLT	2	30037-
19	07040-02412	PLUG	1	30037-
20	07005-02416	GASKET (K1)	1	30037-
21	6211-22-5551	BRACKET	1	30037-
22	6207-65-8410	STAY	1	30037-
23	6211-71-5680	BRACKET	2	30037-
24	17A-911-1721	PLATE	1	30037-
25	17A-911-1521	BRACKET	3	30037-
26	6212-11-4320	CONNECTOR	1	30037-
27	07042-00108	PLUG	1	30037-
28	6212-11-4721	GASKET (K1)	1	30037-
29	6150-81-9130	BOLT	4	30037-
30	01641-21016	WASHER	5	30037-
31	6211-11-4410	CONNECTOR	1	30037-
32	02895-67075	O-RING (K1)	4	30037-
33	01437-01085	BOLT	1	30037-

FIG. A1310-B4H7 AFTER COOLER WATER PIPING (#30037-)

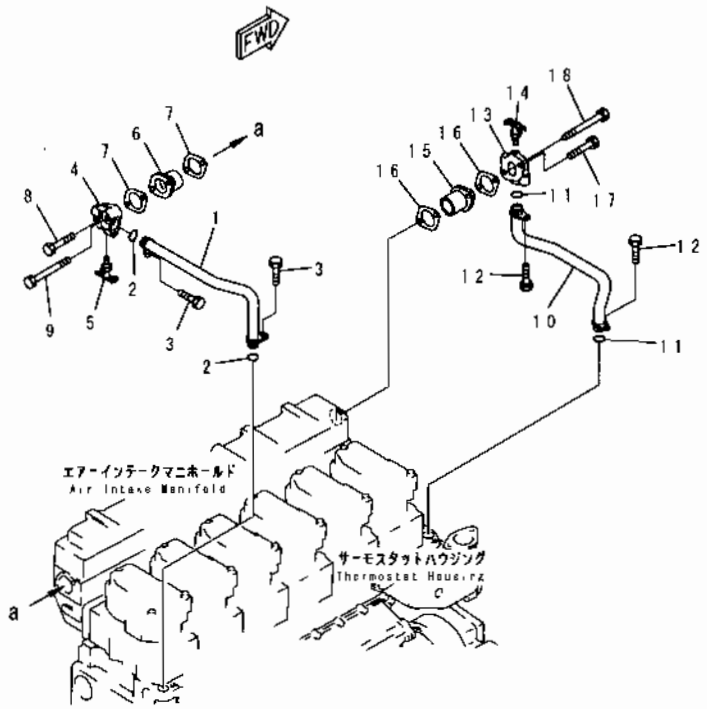

INDEX	PART NO	DESCRIPTION	Q'TY	SERIAL NO
1	6212-62-6410	TUBE	1	30037-
2	6215-61-6630	O-RING	2	30037-
3	01010-81016	BOLT	2	30037-
4	6212-61-6640	CONNECTOR	1	30037-
5	07062-00000	VALVE	1	30037-
6	6212-61-6650	CONNECTOR	1	30037-
7	6212-61-6661	GASKET (K1)	2	30037-
8	01010-81040	BOLT	1	30037-
9	01010-81065	BOLT	1	30037-
10	6212-62-6510	TUBE	1	30037-
11	6215-61-6630	O-RING	2	30037-
12	01010-81016	BOLT	2	30037-
13	6212-61-6620	CONNECTOR	1	30037-
14	07062-00000	VALVE	1	30037-
15	6212-61-6650	CONNECTOR	1	30037-
16	6212-61-6661	GASKET (K1)	2	30037-
17	01010-81040	BOLT	1	30037-
18	01010-81065	BOLT	1	30037-

FIG. A1410-A4F3A AIR CLEANER (WITH HEAT SHIELD) (#30037-)

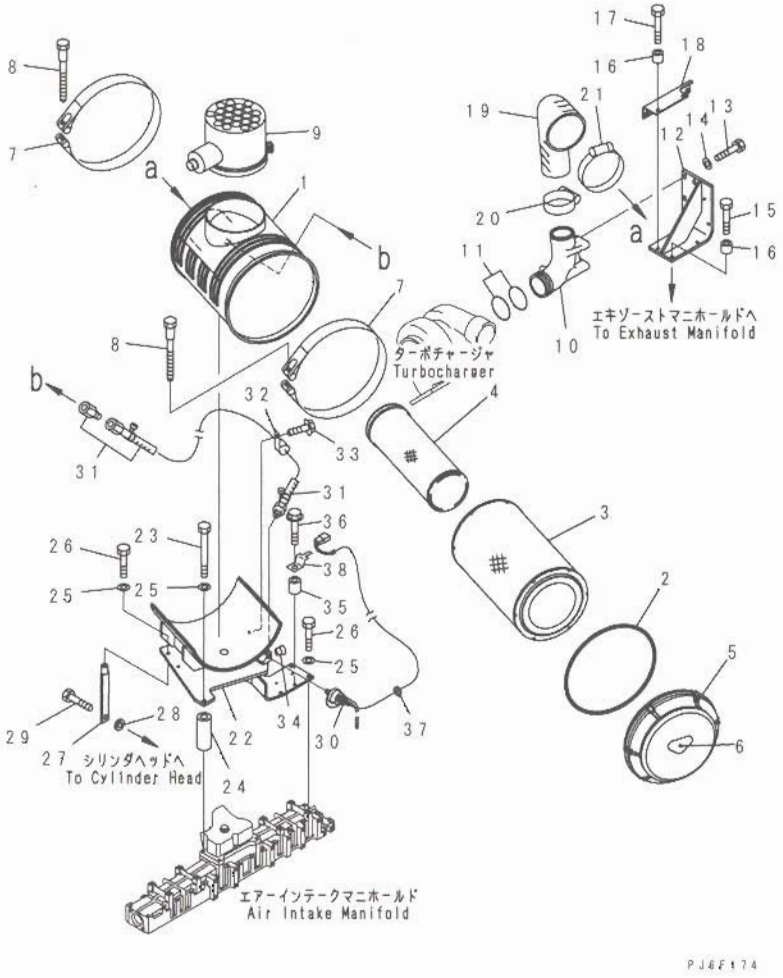

INDEX	PART NO.	DESCRIPTION	Q'TY	SERIAL NO.
	6211-82-7100	AIR CLEANER ASS'Y	1	30037-
1	6211-82-7110	. BODY	1	30037-
	600-185-6100	. ELEMENT ASS'Y	1	30037-
2	600-184-1671	. . O-RING	1	30037-
3	☆	. . ELEMENT, OUTER	1	30037-
4	☆	. . ELEMENT, INNER	1	30037-
5	600-184-1631	. COVER	1	30037-
6	600-184-2810	. PLATE, NAME	1	30037-
7	6240-11-9910	BAND	2	30037-
8	6643-11-4641	BOLT	2	30037-
9	600-183-7570	PRE-CLEANER ASS'Y	1	30037-
10	6211-12-4430	CONNECTOR	1	30037-
11	02895-67081	O-RING (K1)	2	27560-
12	6211-12-4440	BRACKET	1	30037-
13	01010-81035	BOLT	4	27560-
14	01643-31032	WASHER	4	27560-
15	01010-81040	BOLT	2	30037-
16	6631-11-5630	SPACER	4	27560-
17	01010-81045	BOLT	2	27560-
18	6211-11-9640	BRACKET	1	27560-
19	6211-12-4450	HOSE	1	30037-
20	07289-00105	CLAMP	1	30037-
21	07289-00170	CLAMP, HOSE	1	30037-
22	6211-12-4410	BRACKET	1	30037-
23	01011-81010	BOLT	1	30037-
24	6150-81-6940	SPACER	1	30037-
25	01643-31032	WASHER	6	30037-
26	01010-81030	BOLT	5	30037-
27	6211-12-4420	BRACKET	1	30037-
28	6136-11-2980	SPACER	3	30037-
29	01050-51030	BOLT	3	30037-
30	7861-93-1420	SENSOR, SWITCH	1	30037-
31	08671-70080	HOSE	1	30037-
32	04434-51410	CLIP	1	30037-
33	01435-01016	BOLT	1	30037-
34	02720-10204	PLUG	1	30037-
35	144-874-7470	BOSS	1	30037-
36	01435-01040	BOLT	1	30037-
37	08034-00519	BAND	1	30037-
38	08193-20010	CLIP	1	30037-

FIG. A1410-A4F4A AIR CLEANER (WITHOUT HEAT SHIELD) (#30037-)

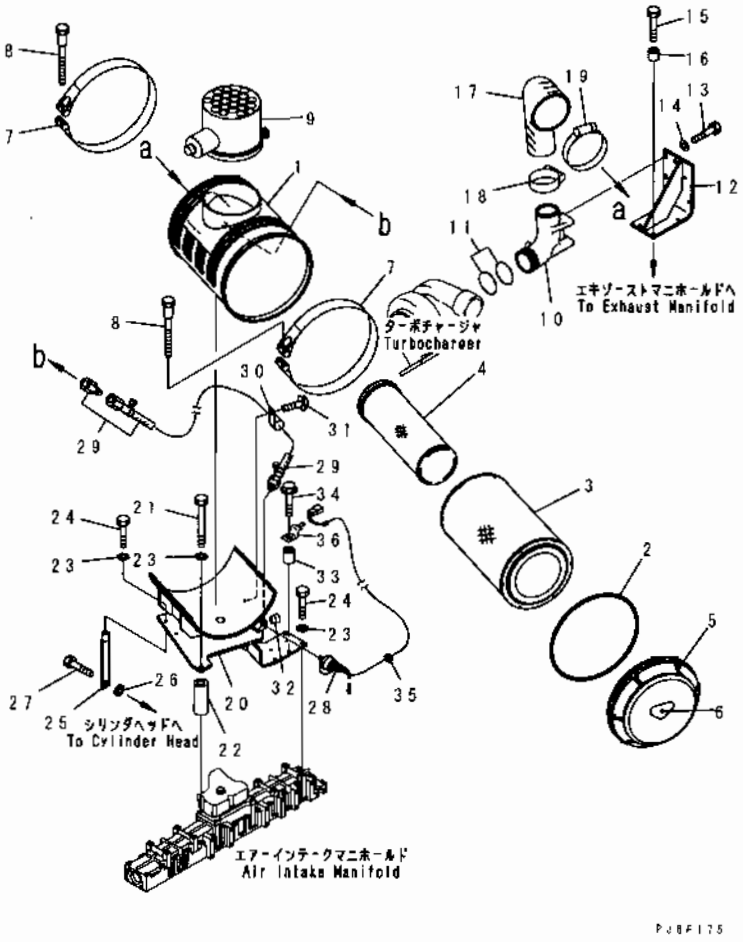

INDEX	PART NO	DESCRIPTION	Q'TY	SERIAL NO
	6211-82-7100	AIR CLEANER ASS'Y	1	30037-
1	6211-82-7110	. BODY	1	30037-
	600-185-6100	. ELEMENT ASS'Y	1	30037-
2	600-184-1671	.. O-RING	1	30037-
3	☆	.. ELEMENT, OUTER	1	30037-
4	☆	.. ELEMENT, INNER	1	30037-
5	600-184-1631	. COVER	1	30037-
6	600-184-2810	. PLATE, NAME	1	30037-
7	6240-11-9910	BAND	2	30037-
8	6643-11-4641	BOLT	2	30037-
9	600-183-7570	PRE-CLEANER ASS'Y	1	30037-
10	6211-12-4430	CONNECTOR	1	30037-
11	02895-67081	O-RING (K1)	2	27560-
12	6211-12-4440	BRACKET	1	30037-
13	01010-81035	BOLT	4	27560-
14	01643-31032	WASHER	4	27560-
15	01010-81040	BOLT	4	27560-
16	6631-11-5630	SPACER	4	27560-
17	6211-12-4450	HOSE	1	30037-
18	07289-00105	CLAMP	1	30037-
19	07289-00170	CLAMP, HOSE	1	30037-
20	6211-12-4410	BRACKET	1	30037-
21	01011-81010	BOLT	3	27560-
22	6150-81-6940	SPACER	1	30037-
23	01643-31032	WASHER	6	30037-
24	01010-81030	BOLT	5	30037-
25	6211-12-4420	BRACKET	1	30037-
26	6136-11-2980	SPACER	3	30037-
27	01050-51030	BOLT	3	30037-
28	7861-93-1420	SENSOR, SWITCH	1	30037-
29	08671-70080	HOSE	1	30037-
30	04434-51410	CLIP	1	30037-
31	01435-01016	BOLT	1	30037-
32	02720-10204	PLUG	1	30037-
33	144-874-7470	BOSS	1	30037-
34	01435-01040	BOLT	1	30037-
35	08034-00519	BAND	1	30037-
36	08193-20010	CLIP	1	30037-

FIG. A1510-A4B9 EXHAUST MANIFOLD

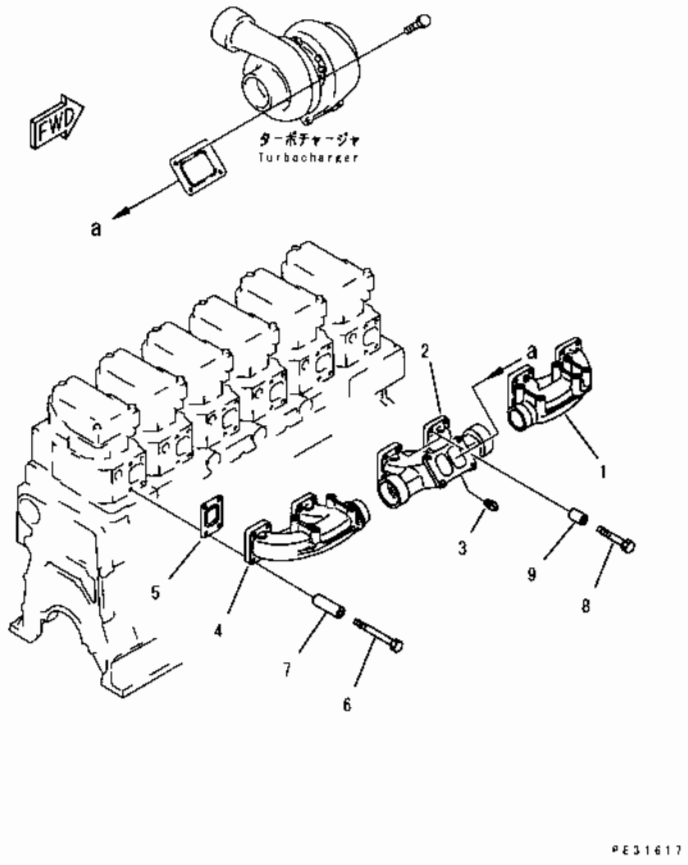

INDEX	PART NO.	DESCRIPTION	Q'TY	SERIAL NO
1	6211-11-5140	MANIFOLD, EXHAUST, FRONT	1	22537-
2	6211-11-5152	MANIFOLD, EXHAUST, CENTER	1	22537-
3	07042-20108	PLUG	1	22537-
4	6211-11-5160	MANIFOLD, EXHAUST, REAR	1	22537-
5	6210-11-5881	GASKET (K1)	6	22537-
6	01011-E1000	BOLT	22	22537-
7	6136-11-5120	SPACER	22	22537-
8	01010-E1055	BOLT	2	22537-
9	6210-11-5820	SPACER	2	22537-

FIG. A1530-A4D3 TURBOCHARGER MOUNTING

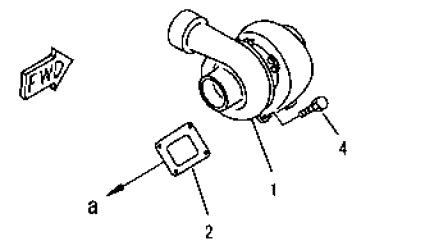

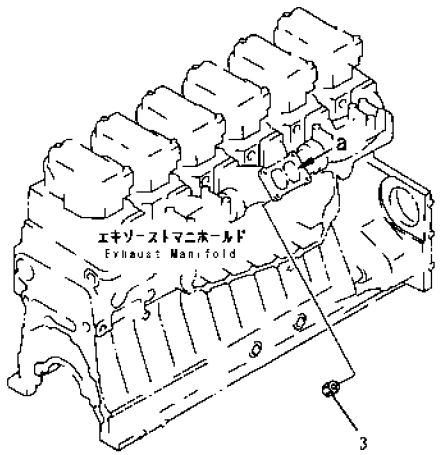

PE32663

FIG NO. : A1530-A4D3

INDEX	PART NO	DESCRIPTION	Q'TY	SERIAL NO
1	(6505-52-5410)	TURBOCHARGER ASS'Y, (SEE FIG. A1530-B4D3).	1	22537-
2	6212-15-5831	GASKET.....(K1).....	1	22537-
3	6114-11-5590	NUT.	4	22537-
4	6138-13-4510	BOLT.....	4	22537-

FIG. A1530-A4G8 TURBOCHARGER MOUNTING (SLAG HANDLING SPEC.)

(#28419-)

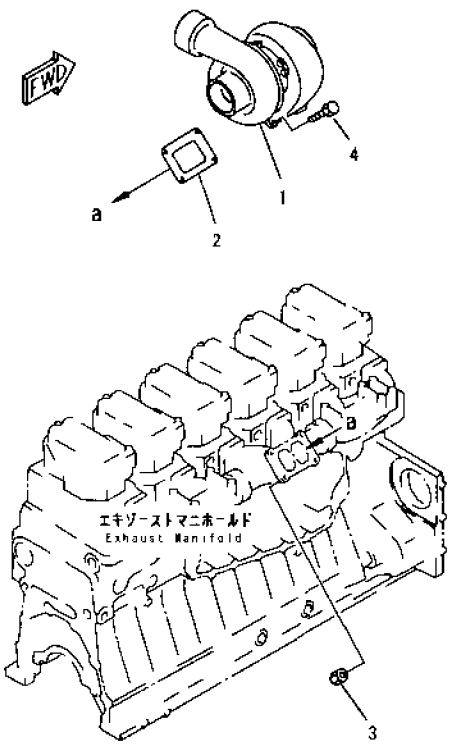

PE32863

INDEX	PART NO	DESCRIPTION	Q'TY	SERIAL NO
1	(6505-52-5410)	TURBOCHARGER ASS'Y, (SEE FIG. A1530-B4G8)	1	28419-
2	6212-15-5831	GASKET.....(K1)	1	28419-
3	6114-11-5590	NUT.....	4	28419-
4	6138-13-4510	BOLT.....	4	28419-

FIG. A1530-B4D3 TURBOCHARGER (INNER PARTS)

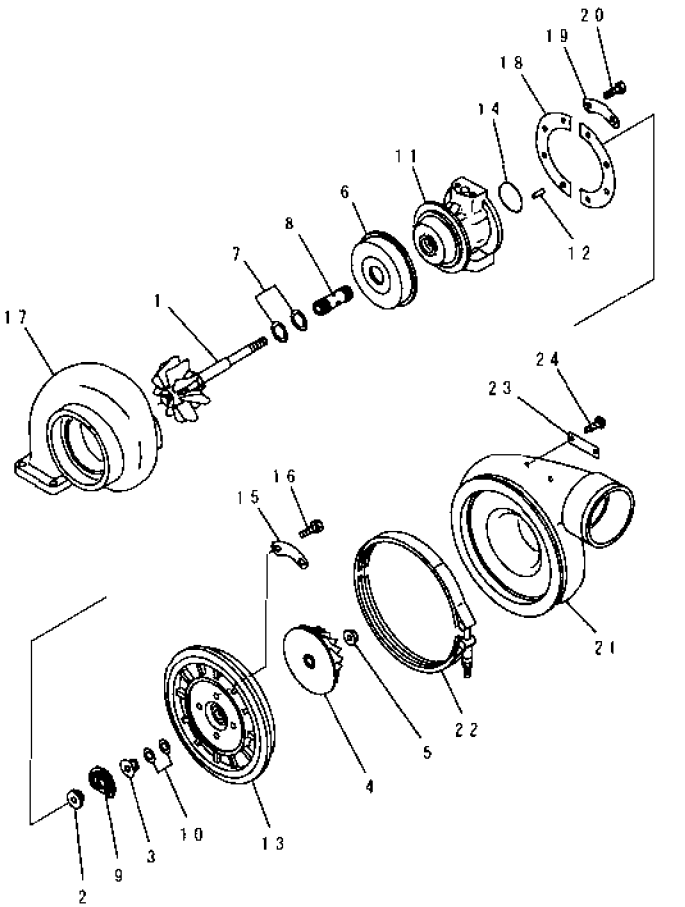

INDEX	PART NO	DESCRIPTION	Q'TY.	SERIAL NO.
	6505-52-5410	TURBOCHARGER ASS'Y, (KTR110G-QD6B)	1	22537-
	6505-51-7810	.CORE ASS'Y	1	22537-
	6505-51-7910	..ROTOR ASS'Y	1	22537-
1	(★6505-51-3020)	...ROTOR	1	22537-
2	(★6505-51-0210)	...COLLAR, THRUST	1	22537-
3	(★6505-51-0252)	...FLINGER	1	22537-
4	(★6505-51-1410)	...IMPELLER	1	22537-
5	(★6505-11-0410)	...NUT	1	22537-
6	6505-51-0711	..SHIELD	1	22537-
7	6505-51-0310	..RING, SEAL	2	22537-
8	6505-51-0111	..BEARING, JOURNAL	1	22537-
9	6505-51-0151	..BEARING, THRUST	1	22537-
10	6505-51-0351	..RING, SEAL	2	22537-
11	6505-51-0011	..HOUSING, CENTER	1	22537-
12	04022-04008	..PIN, DOWEL	1	22537-
13	6505-51-0831	..PLATE	1	28125-
	□6505-51-0830	..PLATE	1	22537-28124
14	07000-E2065	.O-RING	1	22537-
15	6505-51-0610	.LOCK WASHER	2	22537-
16	01010-E0816	.BOLT	4	22537-
17	6505-11-4220	.HOUSING, TURBINE	1	22537-
18	6505-11-0520	.LOCK PLATE	2	22537-
19	6505-11-0550	.LOCK WASHER	4	22537-
20	01020-01016	.BOLT	8	28125-
	□01020-11016	.BOLT	8	22537-28124
21	6505-52-2410	.HOUSING, BLOWER	1	22537-
22	6505-11-0450	.V-BAND	1	22537-
23	6505-99-9011	.PLATE, NAME	1	25064-
	6505-51-9580	PLATE, NAME	1	22537-25063
24	04418-02550	SCREW	2	22537-

FIG. A1530-B4G8 TURBOCHARGER (SLAG HANDLING SPEC.) (INNER PARTS) (#28419-)

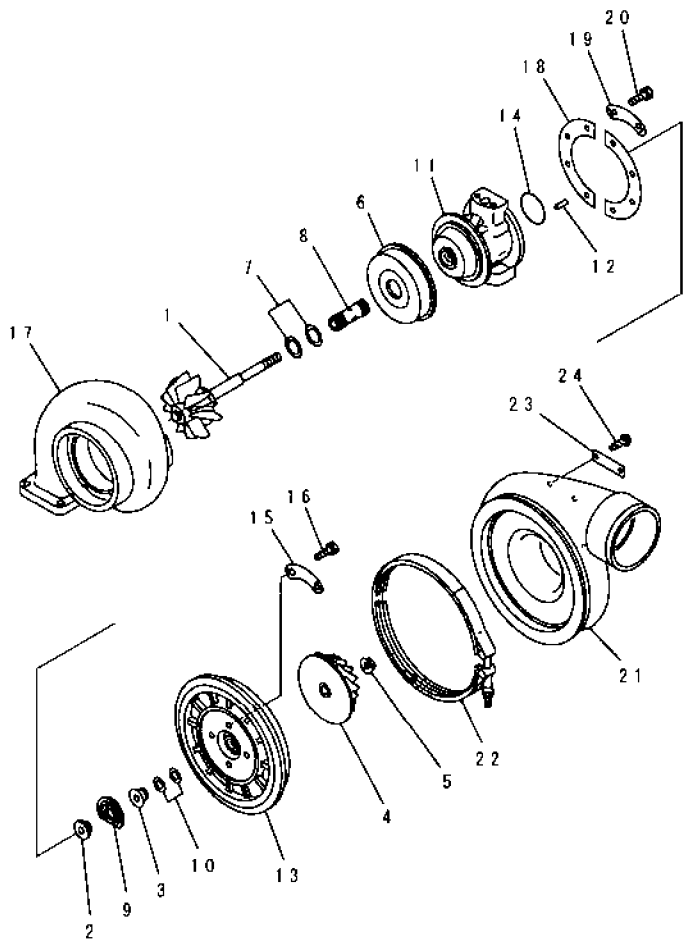

INDEX	PART NO	DESCRIPTION	Q'TY	SERIAL NO
	6505-52-5410	TURBOCHARGER ASS'Y. (KTR110G-QD6B)	1	28419-
	6505-51-7810	.CORE ASS'Y.	1	28419-
	6505-51-7910	..ROTOR ASS'Y.	1	28419-
1	(★6505-51-3020)	...ROTOR.	1	28419-
2	(★6505-51-0210)	...COLLAR, THRUST	1	28419-
3	(★6505-51-0252)	...FLINGER.	1	28419-
4	(★6505-51-1410)	...IMPELLER.	1	28419-
5	(★6505-11-0410)	...NUT.	1	28419-
6	6505-51-0711	..SHIELD.	1	28419-
7	6505-51-0310	.RING, SEAL.	2	28419-
8	6505-51-0111	..BEARING, JOURNAL.	1	28419-
9	6505-51-0151	.BEARING, THRUST	1	28419-
10	6505-51-0351	..RING, SEAL.	2	28419-
11	6505-51-0011	.HOUSING, CENTER	1	28419-
12	04022-04008	..PIN, DOWEL.	1	28419-
13	6505-51-0831	..PLATE.	1	28419-
14	07000-E2065	..O-RING.	1	28419-
15	6505-51-0610	..LOCK, WASHER.	2	28419-
16	01010-E0816	..BOLT.	4	28419-
17	6505-11-4220	.HOUSING, TURBINE	1	28419-
18	6505-11-0520	.LOCK, PLATE.	2	28419-
19	6505-11-0550	.LOCK, WASHER.	4	28419-
20	01020-01016	.BOLT.	8	28419-
21	6505-52-2410	.HOUSING, BLOWER	1	28419-
22	6505-11-0450	.V-BAND.	1	28419-
23	6505-99-9011	.PLATE, NAME.	1	28419-
24	04418-02550	.SCREW.	2	28419-

FIG. A1530-C4D3 TURBOCHARGER OIL PIPING

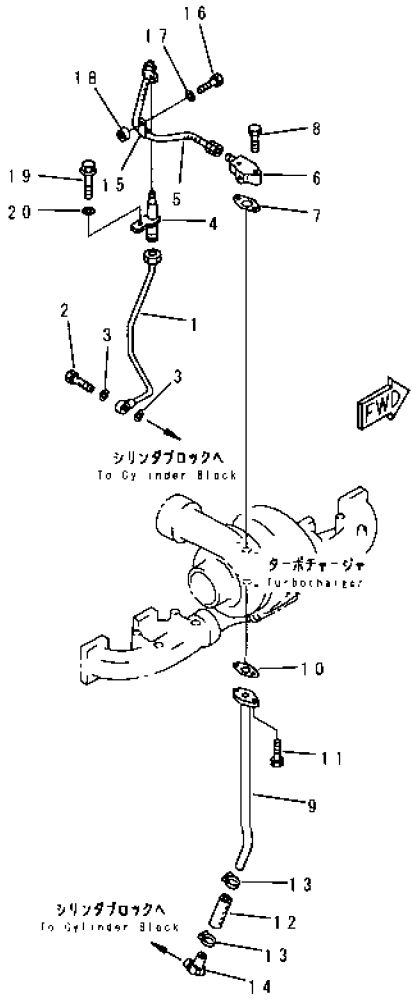

PEJ0143

INDEX	PART NO	DESCRIPTION	Q'TY	SERIAL NO
1	6211-51-8210	TUBE, SUPPLY	1	22537-
2	07206-31014	BOLT, JOINT	1	22537-
3	07005-01412	GASKET (K1)	2	22537-
4	6211-51-8220	CONNECTOR	1	22537-
5	6211-51-8180	HOSE	1	22537-
6	6164-51-8621	FLANGE	1	22537-
	(☒6164-51-8620)	FLANGE	1	(22537-24897)
7	6151-51-8161	GASKET	1	22537-
8	01010-81035	BOLT	2	22537-
9	6211-51-8110	TUBE, DRAIN	1	22537-
10	6151-51-8151	GASKET (K1)	1	22537-
11	01010-81025	BOLT	2	22537-
12	6210-51-8110	HOSE	1	22537-
13	07281-00359	CLAMP	2	22537-
14	6151-51-8130	ELBOW	1	22537-
15	6151-53-8280	CLIP	1	22537-
16	01010-81035	BOLT	1	22537-
17	01643-31032	WASHER	1	22537-
18	6631-11-5630	SPACER	1	22537-
19	01437-01090	BOLT	1	22537-
20	01643-51032	WASHER	1	22537-

FIG. A1530-C4G8 TURBOCHARGER OIL PIPING (SLAG HANDLING SPEC.) (#28419-)

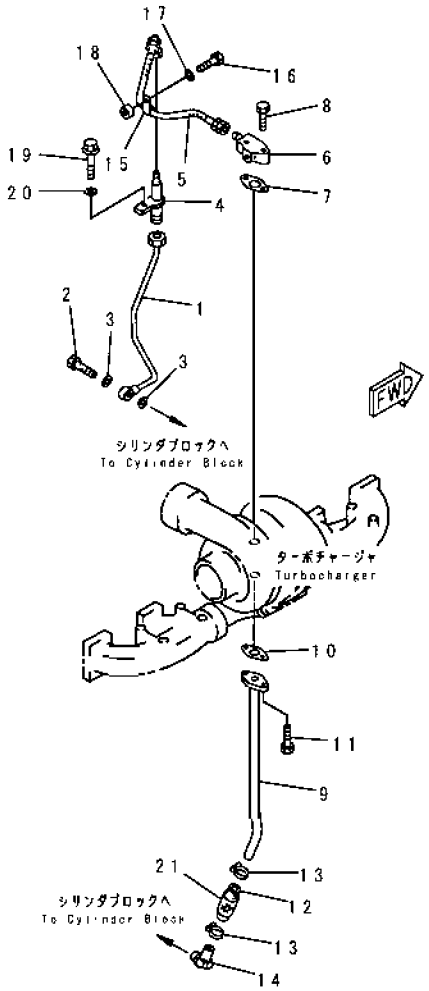

INDEX	PART NO.	DESCRIPTION	Q'TY	SERIAL NO
1	6211-51-8210	TUBE, SUPPLY	1	28419-
2	07206-31014	BOLT, JOINT	1	28419-
3	07005-01412	GASKET (K1)	2	28419-
4	6211-51-8220	CONNECTOR	1	28419-
5	6211-51-8180	HOSE	1	28419-
6	6164-51-8621	FLANGE	1	28419-
7	6151-51-8161	GASKET	1	28419-
8	01010-81035	BOLT	2	28419-
9	6211-51-8110	TUBE, DRAIN	1	28419-
10	6151-51-8151	GASKET (K1)	1	28419-
11	01010-81025	BOLT	2	28419-
12	6210-51-8110	HOSE	1	28419-
13	07281-00419	CLAMP	2	28419-
14	6151-51-8130	ELBOW	1	28419-
15	6151-53-8280	CLIP	1	28419-
16	01010-81035	BOLT	1	28419-
17	01643-31032	WASHER	1	28419-
18	6631-11-5630	SPACER	1	28419-
19	01437-01090	BOLT	1	28419-
20	01643-51032	WASHER	1	28419-
21	6127-11-8490	COVER, HOSE	1	28419-

FIG. A1570-A4B7 HEAT SHIELD(#27560-)

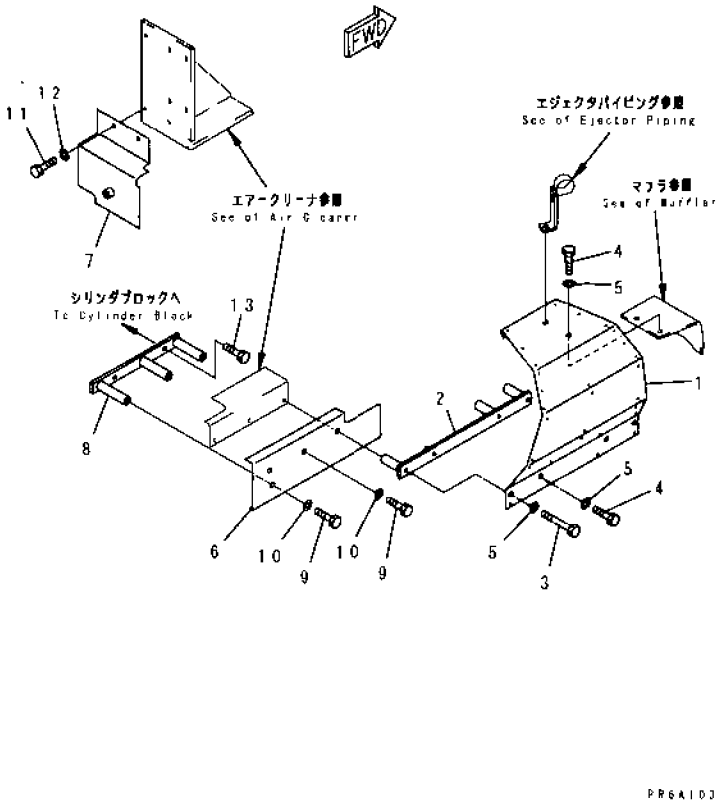

INDEX	PART NO.	DESCRIPTION	Q TY	SERIAL NO
1	6211-11-9510	COVER	1	27560-
2	6211-11-9620	BRACKET	1	27560-
3	01010-81090	BOLT	3	27560-
4	01010-81025	BOLT	2	27560-
5	01643-31032	WASHER	5	27560-
6	6211-11-9540	COVER	1	27560-
7	6211-11-9690	PLATE	1	27560-
8	6211-11-9890	BRACKET	1	27560-
9	01010-81020	BOLT	5	27560-
10	01643-31032	WASHER	5	27560-
11	01010-81020	BOLT	2	27560-
12	01643-31032	WASHER	2	27560-
13	01010-81230	BOLT	2	27560-

FIG. A1610-A4F2A MUFFLER (WITH HEAT SHIELD) (#30037-)

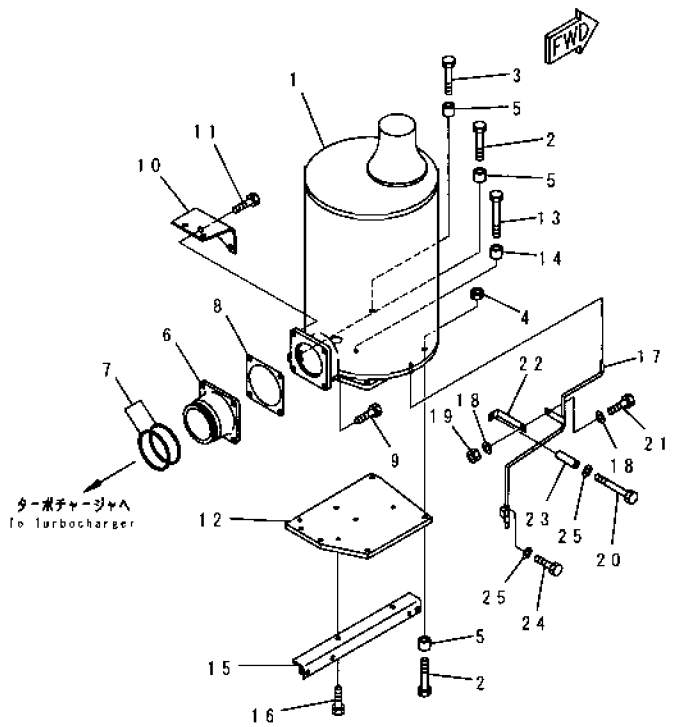

INDEX	PART NO.	DESCRIPTION	Q'TY	SERIAL NO.
1	6211-12-5560	MUFFLER	1	27560-
2	01010-E1060	BOLT	3	27560-
3	01010-E1045	BOLT	2	27560-
4	01580-11008	NUT	2	27560-
5	6631-11-5630	SPACER	5	27560-
6	6211-11-5461	CONNECTOR	1	27560-
7	6211-11-5250	RING, SEAL	2	27560-
8	6211-11-5490	GASKET	1	27560-
9	01010-E1230	BOLT	2	27560-
10	6211-11-9610	BRACKET	1	27560-
11	01010-E1235	BOLT	2	27560-
12	6211-11-5640	PLATE	1	27560-
13	01010-E1045	BOLT	3	27560-
14	6631-11-5630	SPACER	3	27560-
15	6211-11-9630	BRACKET	1	27560-
16	01010-81016	BOLT	2	27560-
17	6211-11-5681	TUBE, DRAIN	1	27560-
18	01640-21016	WASHER	2	27560-
19	01580-11008	NUT	1	27560-
20	01010-81095	BOLT	1	27560-
21	01010-81020	BOLT	1	27560-
22	6136-65-8541	STAY	1	27560-
23	6136-11-5120	SPACER	1	27560-
24	01010-81020	BOLT	1	27560-
25	01643-31032	WASHER	2	27560-

FIG. A1610-A4F3A MUFFLER (WITHOUT HEAT SHIELD) (#30037-)

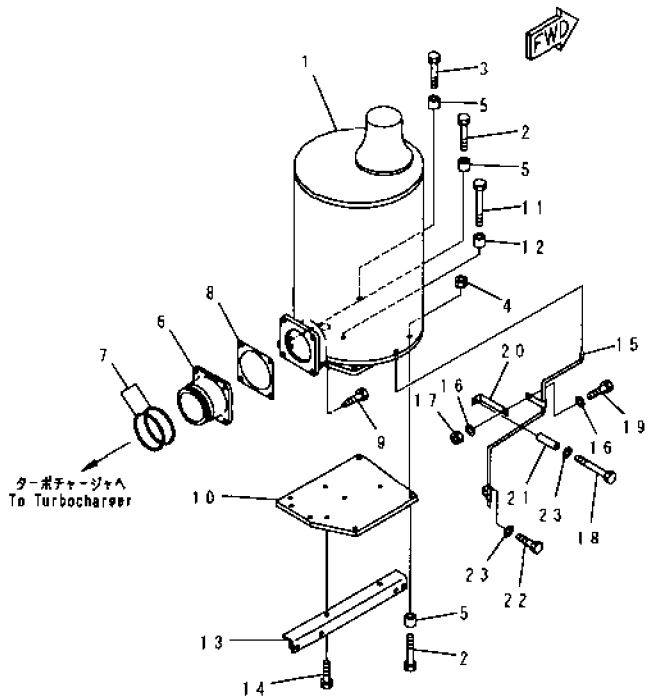

INDEX	PART NO	DESCRIPTION	Q'TY	SERIAL NO
1	6211-12-5560	MUFFLER	1	27560-
2	01010-E1060	BOLT	3	27560-
3	01010-E1045	BOLT	2	27560-
4	01580-11008	NUT	2	27560-
5	6631-11-5630	SPACER	5	27560-
6	6211-11-5461	CONNECTOR	1	27560-
7	6211-11-5250	RING, SEAL	2	27560-
8	6211-11-5490	GASKET	1	27560-
9	01010-E1230	BOLT	4	29672-
10	6211-11-5640	PLATE	1	27560-
11	01010-E1045	BOLT	3	27560-
12	6631-11-5630	SPACER	3	27560-
13	6211-11-9630	BRACKET	1	27560-
14	01010-81016	BOLT	2	27560-
15	6211-11-5681	TUBE, DRAIN	1	27560-
16	01640-21016	WASHER	2	27560-
17	01580-11008	NUT	1	27560-
18	01010-81095	BOLT	1	27560-
19	01010-81020	BOLT	1	27560-
20	6136-65-8541	STAY	1	27560-
21	6136-11-5120	SPACER	1	27560-
22	01010-81020	BOLT	1	27560-
23	01643-31032	WASHER	2	27560-

FIG. A1610-B4F2A EJECTOR PIPING (WITH HEAT SHIELD) (#30037-)

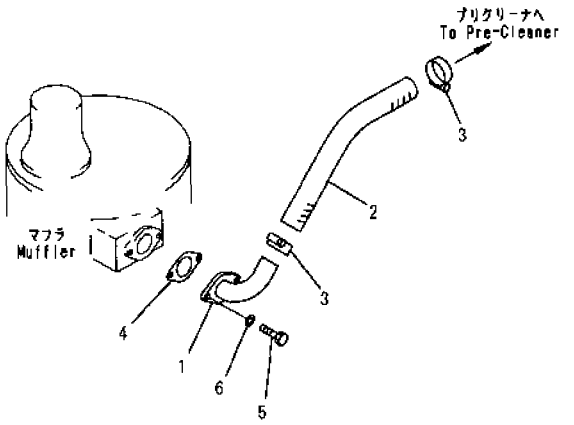

Pu6F176

INDEX	PART NO	DESCRIPTION	Q'TY	SERIAL NO.
1	6211-12-4840	TUBE	1	29672-
2	6211-12-4460	HOSE	1	30037-
3	07281-00549	CLAMP	2	29672-
4	6162-13-5611	GASKET	1	29672-
5	01010-81030	BOLT	2	29672-
6	01643-31032	WASHER	2	29672-

FIG. A2010-A4H9A CYLINDER BLOCK (1/2) (#26660-)

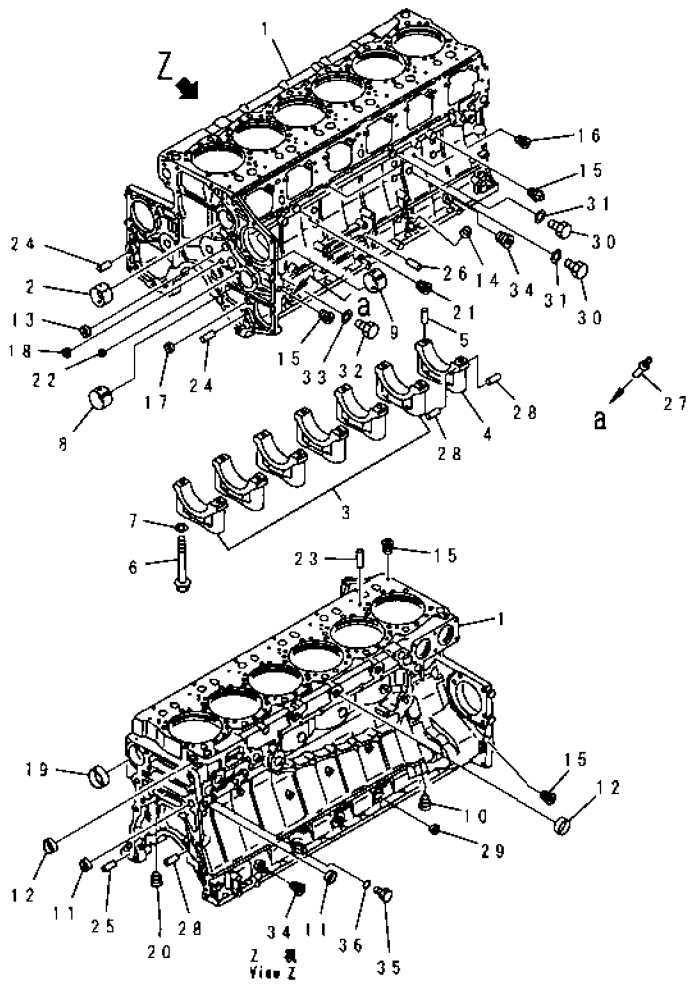

INDEX	PART NO	DESCRIPTION	Q'TY	SERIAL NO.
	6211-22-1101	CYLINDER BLOCK ASS'Y.	1	26660-
1	☆	. BLOCK, CYLINDER	1	26660-
2	6210-21-1491	. BUSHING, CAMSHAFT	7	28881-
	◆6210-21-1490	. BUSHING, CAMSHAFT	7	25749-28880
3	△6210-29-1210	. CAP, MAIN METAL, NO. 1, 2, 3, 4, 5, 6	6	25749-
4	△6210-29-1250	. CAP, MAIN METAL, NO. 7	1	25749-
5	04020-00514	. PIN, DOWEL	2	25749-
6	6210-21-1710	. BOLT	14	25749-
7	01643-31845	. WASHER	14	25749-
8	6210-21-1790	. BUSHING	1	25749-
9	6210-21-1780	. BUSHING	1	25749-
10	07043-01019	. PLUG	1	29133-
	□07043-71019	. PLUG	1	25749-29132
11	6210-81-9210	. PLUG	2	25749-
12	07046-43516	. PLUG	6	25749-
13	07046-42516	. PLUG	2	25749-
14	07046-42010	. PLUG	1	25749-
15	07043-70108	. PLUG	10	25749-
16	07042-70108	. PLUG	2	25749-
17	07046-11816	. PLUG	2	25749-
18	07046-41810	. PLUG	2	25749-
19	07046-47020	. PLUG	1	25749-
20	07043-00415	. PLUG	1	25749-
21	07043-00211	. PLUG	1	25749-
22	07046-41008	. PLUG	1	25749-
23	04020-00820	. PIN, DOWEL	12	25749-
24	6210-21-1910	. PIN	3	25749-
25	6150-21-4770	. PIN, DOWEL	2	25749-
26	04020-01024	. PIN, DOWEL	2	25749-
27	6150-21-5910	. BUSHING	1	25749-
28	6210-21-1390	. PIN	6	25749-
29	07046-42816	. PLUG	2	25749-
30	07040-11409	. PLUG	3	25749-
31	07005-01412	. GASKET (K2)	3	25749-
32	07040-11007	. PLUG	2	25749-
33	07005-01012	. GASKET (K2)	2	25749-
34	07043-70312	. PLUG	2	25749-
35	07040-12012	. PLUG	1	25749-
36	07002-32034	. O-RING	1	25749-

FIG. A1610-B4F3A EJECTOR PIPING (WITHOUT HEAT SHIELD)

(#30037-)

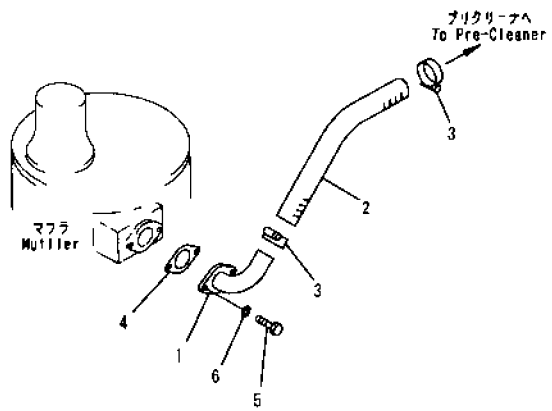

PJ6F176

INDEX	PART NO.	DESCRIPTION	Q'TY.	SERIAL NO
1	6211-12-4840	TUBE	1	29672-
2	6211-12-4460	HOSE	1	30037-
3	07281-00549	CLAMP	1	29672-
4	6162-13-5611	GASKET	1	29672-
5	01010-81030	BOLT	2	29672-
6	01643-31032	WASHER	2	29672-

FIG. A2060-A4C1 CAMFOLLOWER COVER

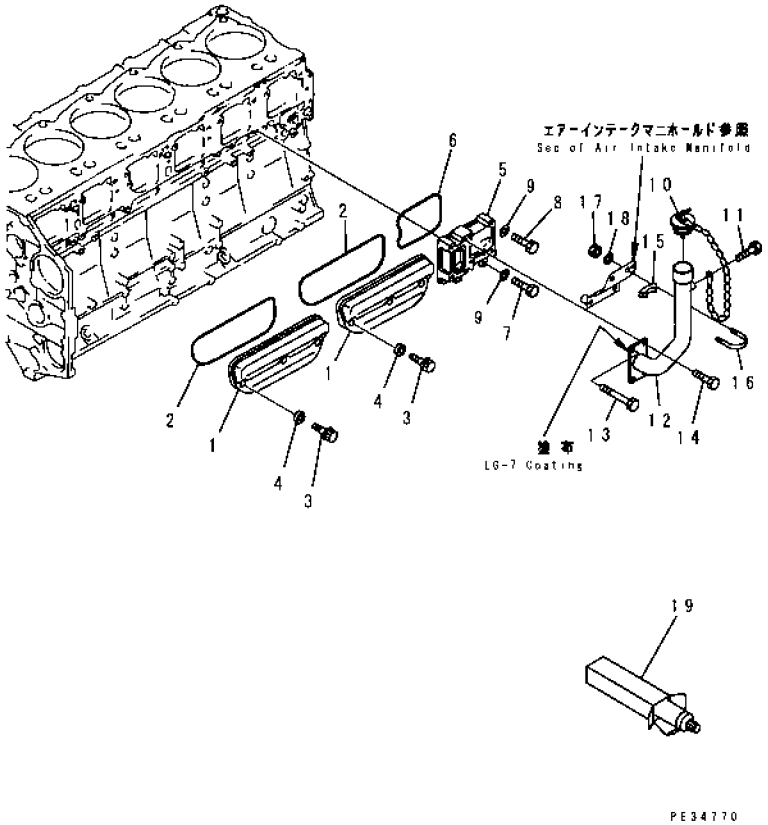

FIG NO. : A2060-A4C1

INDEX	PART NO	DESCRIPTION	Q TY	SERIAL NO
1	6210-21-6410	COVER	2	22537-
2	6210-21-6860	O-RING (K2)	2	22537-
3	6210-21-6471	BOLT	6	22537-
4	6150-21-6391	PACKING (K2)	6	22537-
5	6210-21-6440	COVER	1	22537-
6	6210-21-6452	O-RING (K2)	1	22537-
7	01010-81030	BOLT	2	22537-
8	01010-81065	BOLT	1	22537-
9	01640-21016	WASHER	3	22537-
10	07025-00100	CAP, OIL FILLER	1	22537-
11	01010-81016	BOLT	1	22537-
12	6211-22-5520	FILLER, OIL	1	22537-
13	01010-81070	BOLT	1	22537-
14	01010-81030	BOLT	3	22537-
15	07283-54959	SEAT	1	22537-
16	07283-24949	CLIP	1	22537-
17	01599-01011	NUT	2	22537-
18	01643-31032	WASHER	2	22537-
19	(09920-00150)	LIQUID GASKET, LG-7, 150G	AR	22537-

FIG. A2110-A4F6 OIL PAN AND SUCTION TUBE

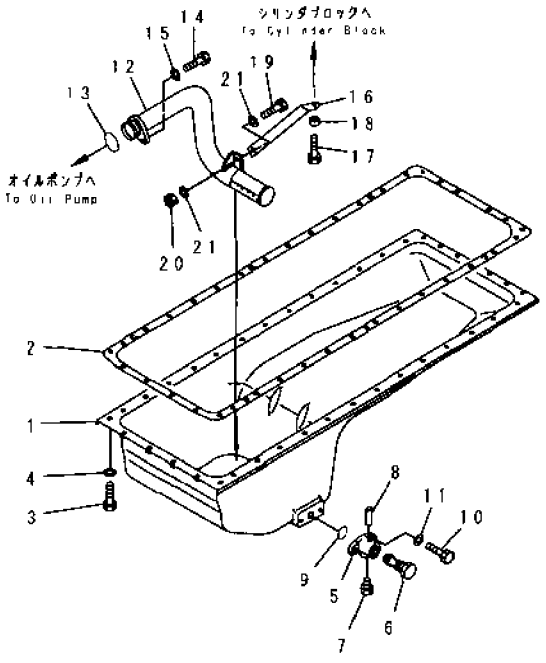

PJ31699

FIG NO. : A2110-A4F6

INDEX	PART NO.	DESCRIPTION	Q'TY	SERIAL NO
1	6210-21-5290	PAN, OIL	1	22537-
2	6210-21-5820	GASKET (K2)	1	22537-
3	01010-81025	BOLT	38	22537-
4	01640-21016	WASHER	38	22537-
	6693-22-5600	VALVE ASS'Y	1	22537-
5	☆	BODY, VALVE	1	22537-
6	☆	VALVE, OIL DRAIN	1	22537-
7	07040-02412	PLUG	1	22537-
8	04020-00514	PIN, DOWEL	1	22537-
9	07000-73028	O-RING (K2)	1	27716-
	□07000-63028	O-RING (K2)	1	22537-27715
10	01010-81025	BOLT	2	22537-
11	01640-21016	WASHER	2	22537-
12	6210-51-6140	STRAINER	1	22537-
13	07000-73040	O-RING	1	27716-
	□07000-63040	O-RING (K2)	1	22537-27715
14	01010-81025	BOLT	1	22537-
15	01643-31032	WASHER	1	22537-
16	6210-51-6150	BRACKET	1	22537-
17	01010-81025	BOLT	1	22537-
18	6131-12-5920	SPACER	1	22537-
19	01010-81030	BOLT	1	22537-
20	01580-01008	NUT	1	22537-
21	01643-31032	WASHER	2	22537-

FIG. A2050-A4A3 IDLER GEAR (#26526-)

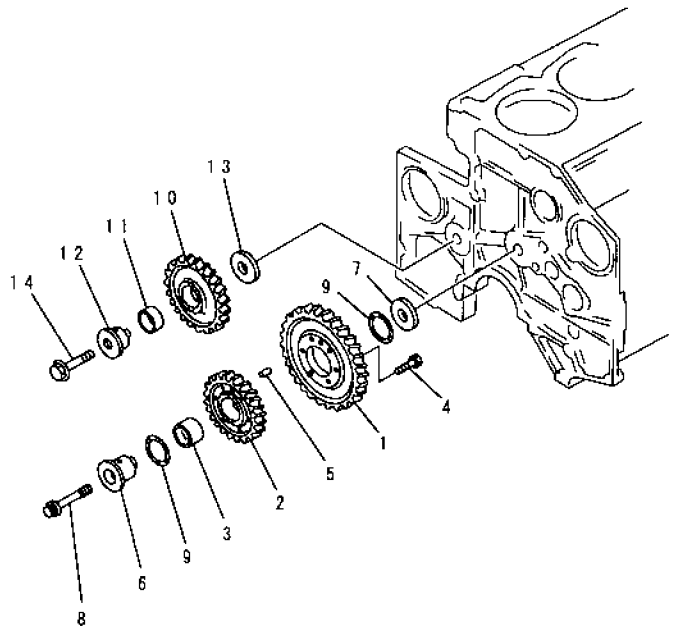

PE38105

INDEX	PART NO.	DESCRIPTION	Q'TY	SERIAL NO
1	6210-31-6311	GEAR, IDLER	1	26526-
	6212-31-6200	IDLER GEAR ASS'Y	1	26526-
2	☆	.GEAR	1	26526-
3	6212-31-6130	.BUSHING	1	26526-
4	01010-80830	BOLT	6	26526-
5	6127-21-1260	PIN, DOWEL	1	26526-
6	6210-22-2410	SHAFT	1	26526-
7	6210-22-2420	PLATE, THRUST	1	26526-
8	6162-33-5322	BOLT	1	26526-
9	6212-31-6140	BEARING	2	26526-
	6212-31-6100	IDLER GEAR ASS'Y	1	26526-
10	☆	.GEAR	1	26526-
11	6212-31-6120	.BUSHING	1	26526-
12	6212-21-2511	SHAFT	1	26526-
13	6210-21-2422	PLATE, THRUST	1	26526-
14	6212-21-2450	BOLT	1	26526-

FIG. A2041-A4G8 FRONT COVER AND BREATHER RELATED PARTS (SLAG HANDLING SPEC.) (#28419-)

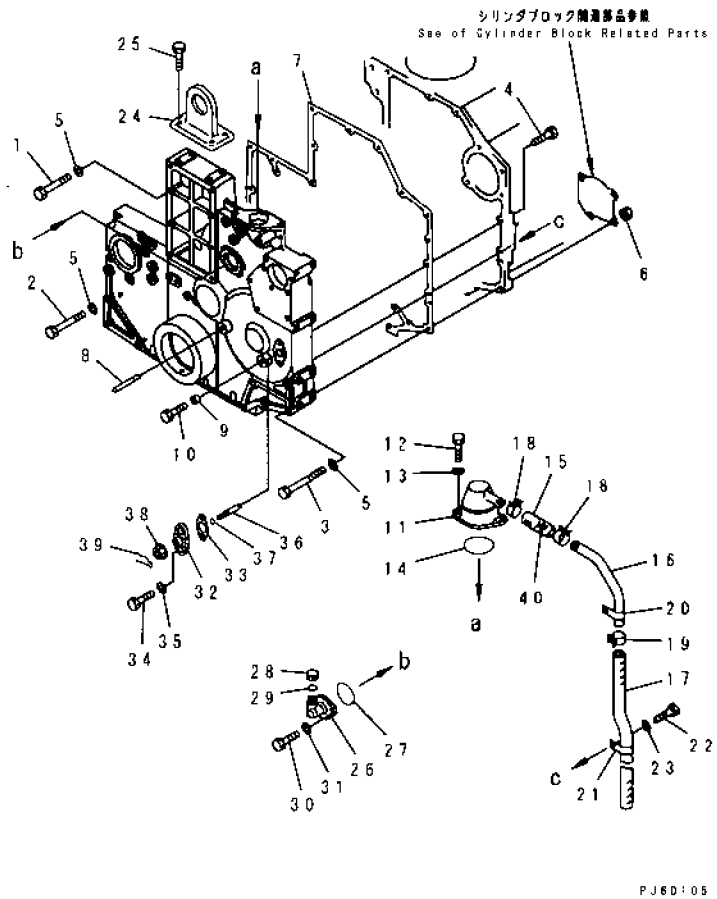

INDEX	PART NO	DESCRIPTION	Q'TY	SERIAL NO
1	01010-81290	BOLT	8	28419-
2	01011-81200	BOLT	2	28419-
3	6210-21-3190	BOLT	3	28419-
4	01010-81045	BOLT	1	28419-
5	01640-21223	WASHER	13	28419-
6	01580-11210	NUT	3	28419-
7	6210-21-3251	GASKET (K2)	1	28419-
8	6210-22-3910	POINTER	1	28419-
9	6131-12-5920	SPACER	1	28419-
10	01010-81025	BOLT	1	28419-
11	6210-21-8711	BREATHER	1	28419-
12	01010-81020	BOLT	2	28419-
13	01640-21016	WASHER	2	28419-
14	07000-72060	O-RING	1	28419-
15	6130-61-6611	HOSE	1	28419-
16	6210-22-8790	TUBE	1	28419-
17	07286-01960	HOSE	1	28419-
18	07285-00280	CLIP	2	28521-
	□07285-00260	CLIP	2	28419-28520
19	07285-00230	CLIP	1	28419-
20	112-946-4170	CLIP	1	28419-
21	04434-52511	CLIP	1	28419-
22	01010-81050	BOLT	1	28419-
23	01640-21016	WASHER	1	28419-
24	6210-21-3751	BRACKET, FRONT	1	28419-
25	01010-81025	BOLT	4	28419-
26	6210-81-4111	BOX ASS'Y, GEAR	1	28419-
27	07000-03050	O-RING (K2)	1	28419-
28	6136-81-5291	CAP	1	28419-
29	6130-82-5270	GASKET (K2)	1	28419-
30	01010-80616	BOLT	2	28419-
31	01640-20610	WASHER	2	28419-
32	6210-72-3241	FLANGE	1	28419-
33	6151-51-8721	GASKET	1	28419-
34	01010-80830	BOLT	2	28419-
35	01643-31032	WASHER	2	28419-
36	6210-72-3231	PIN	1	28419-
37	07000-E1007	O-RING	1	28419-
38	01584-30806	NUT	1	28419-
39	04052-11038	PIN	1	28419-
40	6127-11-8490	COVER, HOSE	1	28419-

FIG. A2040-A4H1 FRONT COVER (#27560-)

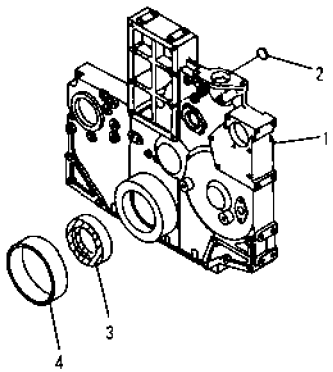

P R E A 1 0 3

INDEX	PART NO	DESCRIPTION	Q'TY	SERIAL NO.
1	6212-22-3210	COVER, FRONT	1	27560-
2	07046-11816	PLUG	7	27560-
3	6711-21-3521	SEAL, FRONT	1	27560-
4	6210-21-3170	SLEEVE	1	27560-

FIG. A2041-A4A5 FRONT COVER AND BREATHER RELATED PARTS (#26075-)

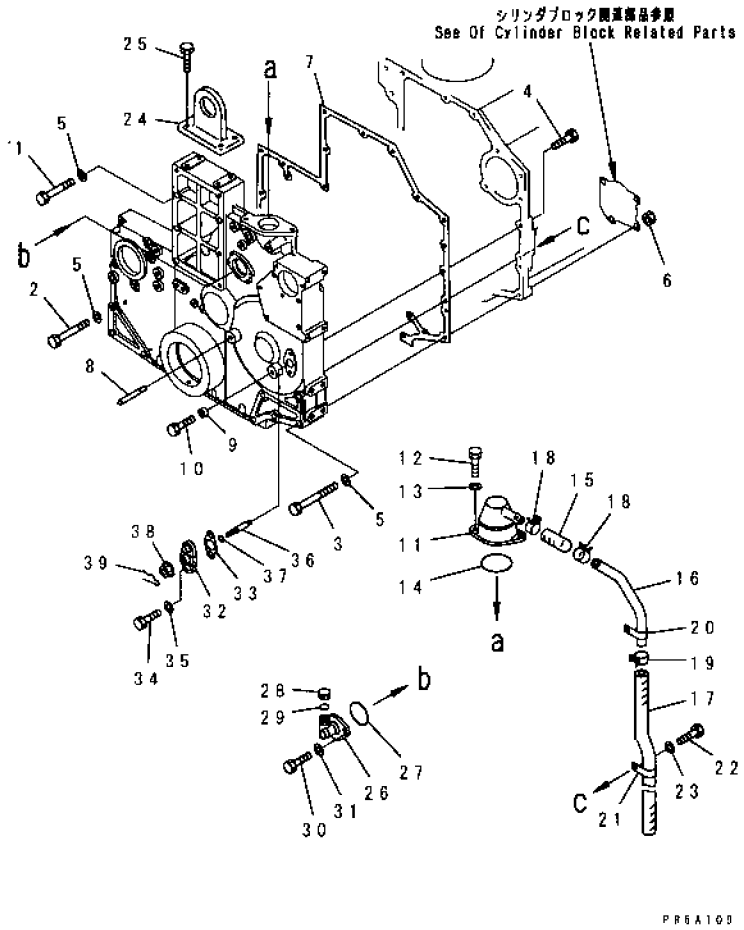

INDEX	PART NO	DESCRIPTION	Q TY	SERIAL NO
1	01010-81290	BOLT	8	26075-
2	01011-81200	BOLT	2	26075-
3	6210-21-3190	BOLT	3	26075-
4	01010-81045	BOLT	1	26075-
5	01640-21223	WASHER	13	26075-
6	01580-11210	NUT	3	26075-
7	6210-21-3251	GASKET (K2)	1	26075-
8	6210-22-3910	POINTER	1	26075-
9	6131-12-5920	SPACER	1	26075-
10	01010-81025	BOLT	1	26075-
11	6210-21-8711	BREATHER	1	26075-
12	01010-81020	BOLT	2	26075-
13	01640-21016	WASHER	2	26075-
14	07000-72060	O-RING	1	27716-
	□07000-62060	O-RING (K2)	1	26075-27715
15	6130-61-6611	HOSE	1	26075-
16	6210-22-8770	TUBE	1	26075-
17	07286-01960	HOSE	1	26075-
18	07285-00260	CLIP	2	26075-
19	07285-00230	CLIP	1	26075-
20	112-946-4170	CLIP	1	26075-
21	04434-52511	CLIP	1	26075-
22	01010-81050	BOLT	1	26075-
23	01640-21016	WASHER	1	26075-
24	6210-21-3751	BRACKET, FRONT	1	26075-
25	01010-81025	BOLT	4	26075-
26	6210-81-4111	BOX ASS'Y, GEAR	1	26075-
27	07000-03050	O-RING (K2)	1	26075-
28	6136-81-5291	CAP	1	26075-
29	6130-82-5270	GASKET (K2)	1	26075-
30	01010-80616	BOLT	2	26075-
31	01640-20610	WASHER	2	26075-
32	6210-72-3241	FLANGE	1	26075-
33	6151-51-8721	GASKET	1	29459-
	□6151-51-8151	GASKET	1	26075-29458
34	01010-80830	BOLT	2	26075-
35	01643-31032	WASHER	2	26075-
36	6210-72-3231	PIN	1	26075-
37	07000-E1007	O-RING	1	26075-
38	01584-30806	NUT	1	26075-
39	04052-11038	PIN	1	26075-

FIG. A2010-B4H9A CYLINDER BLOCK (2/2) (#26660-)

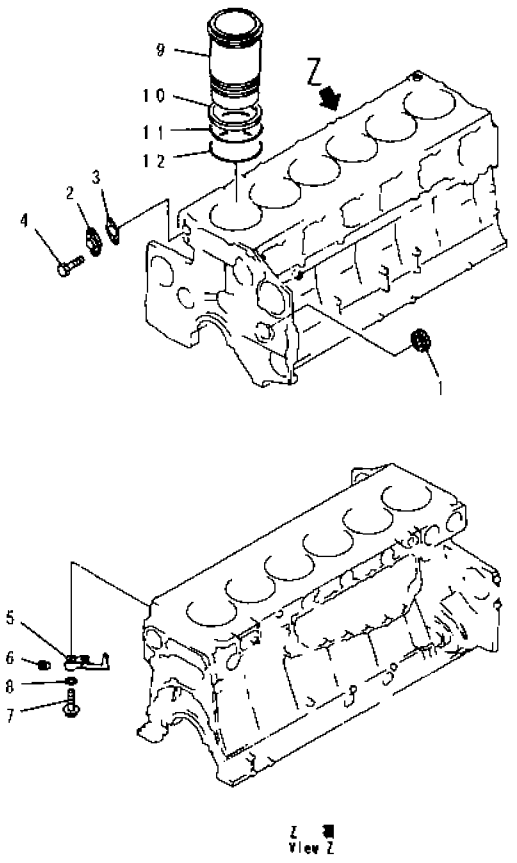

Z 視
View Z

PJD5079

INDEX	PART NO	DESCRIPTION	Q'TY	SERIAL NO
1	6210-71-3183	SEAL, OIL (K2)	1	25749-
	(☒6210-71-3281)	SEAL, OIL (K2)	1	(25749-28559)
2	6210-21-1950	FLANGE	1	25749-
3	6696-61-9921	GASKET (K2)	1	25749-
4	01010-81225	BOLT	2	25749-
	6211-21-1800	NOZZLE ASS'Y, PISTON COOLING	6	25749-
5	6211-21-1820	. NOZZLE	1	25749-
6	02720-40104	. PLUG	1	25749-
7	01437-01025	BOLT	6	25749-
8	01641-21016	WASHER	6	25749-
9	6211-22-2220	LINER, CYLINDER	6	25749-
10	6210-21-2270	SEAL, CREVICE (K2)	6	25749-
11	6210-21-2240	O-RING, CENTER (K2)	6	25749-
12	6210-21-2230	O-RING, LOWER (K2)	6	25749-

FIG. A2011-A4A4 CYLINDER BLOCK RELATED PARTS (#26660-)

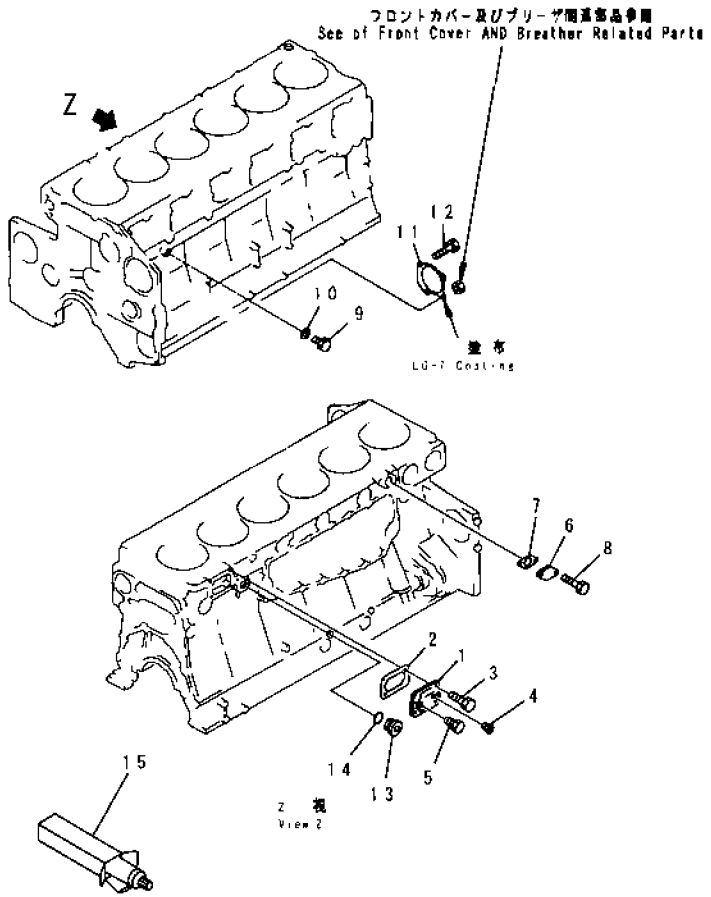

INDEX	PART NO	DESCRIPTION	Q'TY	SERIAL NO
1	6210-21-1960	COVER	1	26660-
2	6210-21-1971	GASKET (K2)	1	26660-
3	01010-81025	BOLT	4	26660-
4	07043-00415	PLUG	1	26660-
5	287-35-11470	PLUG	1	26660-
6	6210-21-1820	PLATE	1	26660-
7	6210-61-6551	GASKET (K2)	1	26660-
8	01010-81025	BOLT	2	26660-
9	07040-11007	PLUG	1	26660-
10	07005-01012	GASKET (K2)	1	26660-
11	6210-21-1860	COVER	1	26660-
12	01010-81220	BOLT	1	26660-
13	6150-21-1180	PLUG	1	26660-
14	6150-21-1190	O-RING	1	26660-
15	09920-00150	LIQUID GASKET, LG-7, 150G	AR	26660-

FIG. A2210-A4E4 FLYWHEEL HOUSING(#27560-)

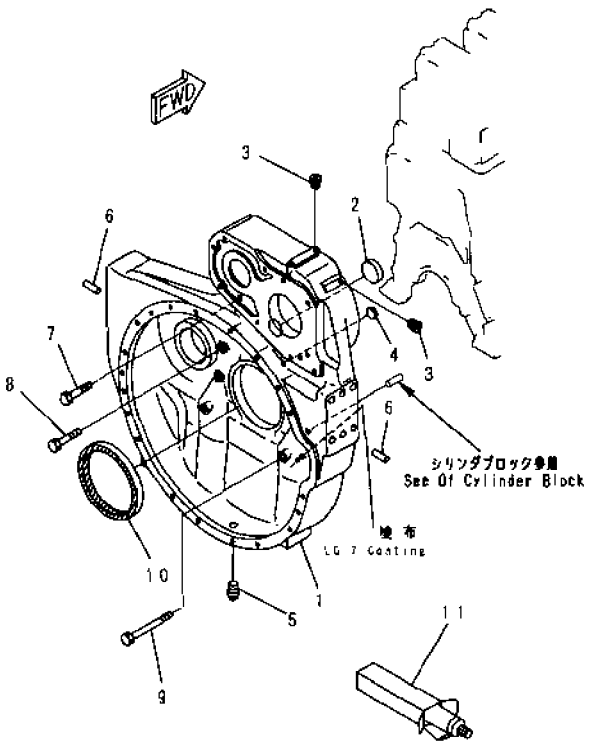

PX6A116

INDEX	PART NO	DESCRIPTION	Q'TY	SERIAL NO.
	6210-21-4050	FLYWHEEL HOUSING A.	1	27560-
1	☆	.HOUSING,FLYWHEEL	1	27560-
2	07046-15520	.PLUG	1	27560-
3	07043-00108	.PLUG	2	27560-
4	07046-12016	.PLUG	6	27560-
5	07042-00415	.PLUG	1	27560-
6	04020-01434	PIN,DOWEL	4	27560-
7	01010-61640	BOLT	3	28478-
	□01010-31640	BOLT	3	27560-28477
8	01010-31650	BOLT	5	27560-
9	01011-61600	BOLT	2	28478-
	□01011-31600	BOLT	2	27560-28477
10	6151-21-4160	SEAL, REAR	1	27560-
11	(09920-00150)	LIQUID GASKET,LG-7, 150G	AR	27560-

FIG. A2110-B4F6 OIL LEVEL GAUGE

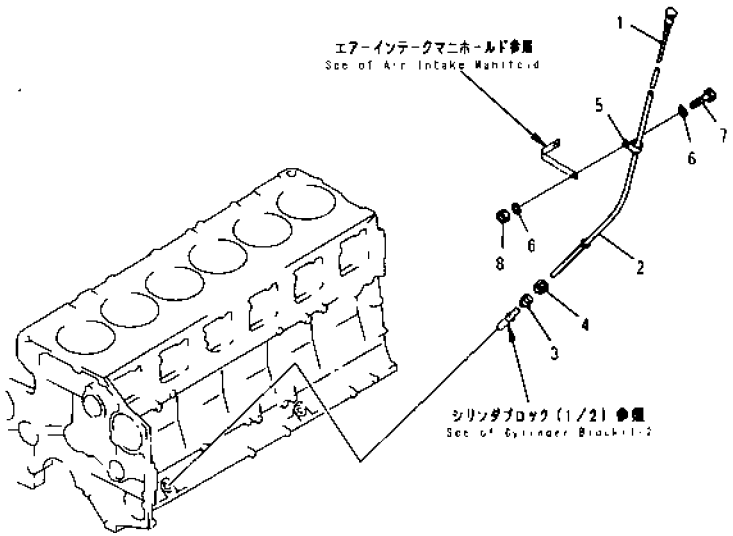

PE34773

INDEX	PART NO.	DESCRIPTION	Q'TY	SERIAL NO
1	6211-21-5340	GAUGE, OIL	1	22537-
2	6211-22-5420	GUIDE, GAUGE	1	22537-
3	6150-21-5920	COLLAR	1	22537-
4	6150-21-5930	NUT	1	22537-
5	6206-21-5520	CLIP	1	22537-
6	01643-31032	WASHER	2	22537-
7	01010-81025	BOLT	1	22537-
8	01580-11008	NUT	1	22537-

FIG. A2210-C4E4 POWER TAKE OFF LUBRICATOR(#27560-)

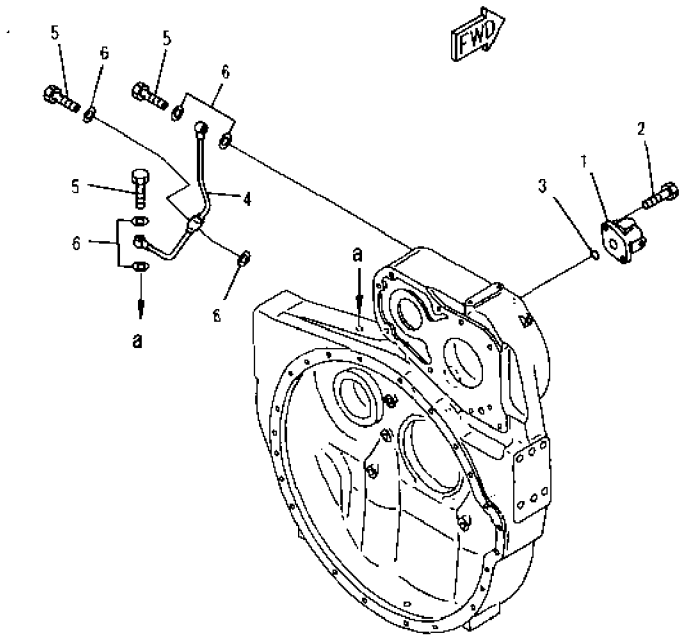

PR6A112

INDEX	PART NO	DESCRIPTION	Q TY	SERIAL NO
1	6151-51-9730	FLANGE	1	27560-
2	01010-81025	BOLT	2	27560-
3	07000-02012	O-RING	1	27560-
4	6151-51-9740	TUBE	1	27560-
5	6600-01-3860	BOLT, JOINT	3	27560-
6	07005-01012	GASKET	6	27560-

FIG. A2210-B4E4 POWER TAKE OFF (#27560-)

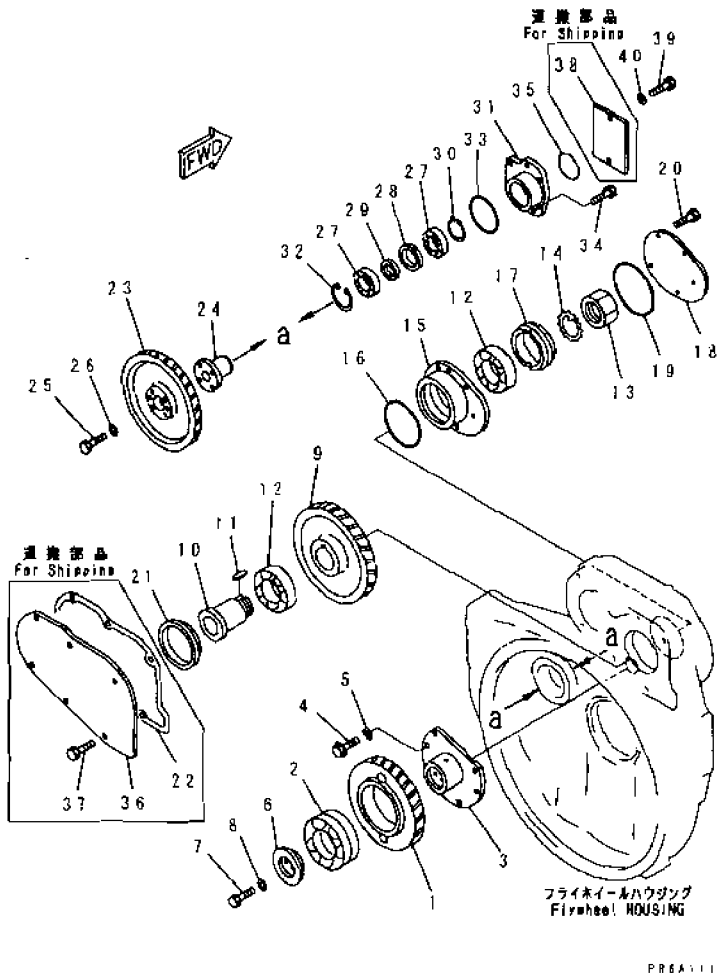

INDEX	PART NO.	DESCRIPTION	Q'TY	SERIAL NO
1	6128-21-4321	GEAR, IDLE	1	27560-
2	6162-23-4550	BEARING	1	27560-
3	6210-21-4160	SHAFT	1	27560-
4	01010-81230	BOLT	6	27560-
5	01643-31232	WASHER	6	27560-
6	6128-21-4340	RETAINER	1	27560-
7	01050-31225	BOLT	2	27560-
8	01643-51232	WASHER	2	27560-
9	6151-21-4310	GEAR	1	27560-
10	6691-21-4170	SHAFT	1	27560-
11	04000-01850	KEY	1	27560-
12	06000-06214	BEARING	2	27560-
13	01530-06814	NUT	1	27560-
14	01658-26823	WASHER, LOCK	1	27560-
15	6151-21-4560	CASE	1	27560-
16	07000-03145	O-RING	1	27560-
17	6151-21-4570	SPACER	1	27560-
18	6151-21-4580	COVER	1	27560-
19	07000-03140	O-RING	1	27560-
20	01010-81030	BOLT	5	27560-
21	6691-21-4190	RING, DOWEL	1	27560-
22	6691-21-4922	GASKET, (FOR SHIPPING)	1	27560-
23	6151-21-4320	GEAR	1	27560-
24	6210-22-4310	SHAFT	1	27560-
25	01050-31030	BOLT	4	27560-
26	01643-31032	WASHER	4	27560-
27	06000-06009	BEARING	2	27560-
28	6691-21-4540	SPACER	1	27560-
29	6691-21-4560	SPACER	1	27560-
30	04064-04518	RING, SNAP	1	27560-
31	6210-22-4320	CASE	1	27560-
32	04065-07525	RING, SNAP	1	27560-
33	07000-03100	O-RING	1	27560-
34	01437-01225	BOLT	4	27560-
35	07000-02105	O-RING	1	27560-
36	6691-21-4910	COVER, (FOR SHIPPING)	1	27560-
37	01010-81230	BOLT, (FOR SHIPPING)	6	27560-
38	6210-22-4330	COVER, (FOR SHIPPING)	1	27560-
39	01010-81235	BOLT	2	27560-
40	01643-31232	WASHER	2	27560-

FIG NO. : A2250-A4D5

FIG. A2250-A4D5 ENGINE MOUNTING(#27560-)

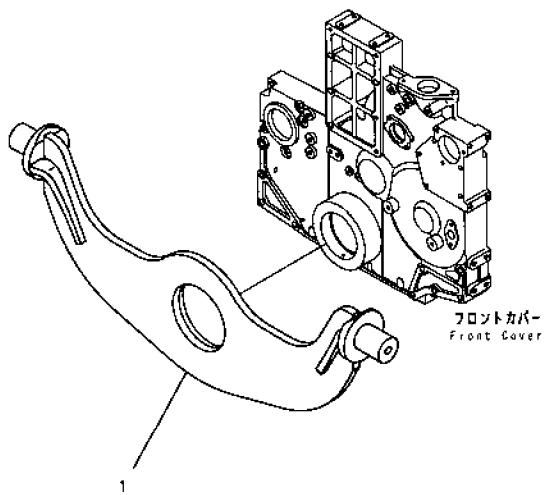

PRGA114

INDEX	PART NO	DESCRIPTION	Q'TY	SERIAL NO
1	175-01-71111	SUPPORT, FRONT.....	1	27560-

FIG. A2230-A4C6 FLYWHEEL (#27560-)

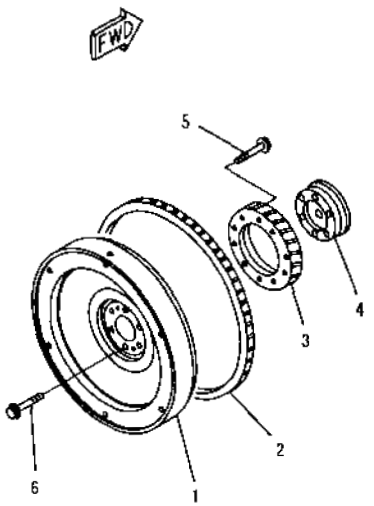

PRGA113

FIG NO. : A2230-A4C6

INDEX	PART NO.	DESCRIPTION	Q'TY	SERIAL NO
	6212-32-1600	FLYWHEEL ASS'Y	1	27560-
1	☆	.FLYWHEEL	1	27560-
2	6645-31-1321	.GEAR, RING	1	27560-
3	6151-31-1930	GEAR	1	27560-
4	6210-31-1910	SPACER	1	27560-
5	6150-81-9130	BOLT	10	27560-
6	6212-32-1450	BOLT	6	27560-

FIG. A2330-A4A5 DAMPER

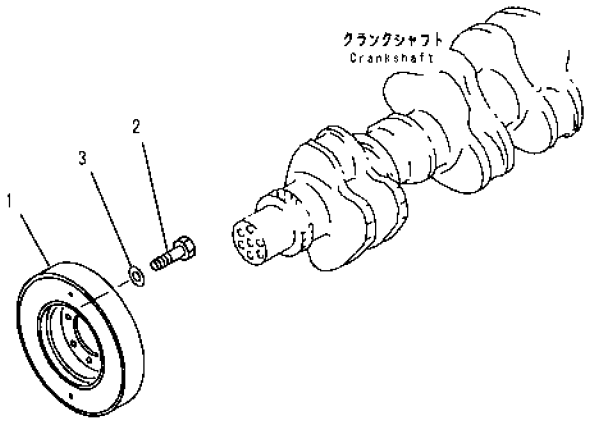

PE38113

INDEX	PART NO	DESCRIPTION	Q'TY	SERIAL NO
1	6211-32-8300	DAMPER ASS'Y	1	24180-
	◆6211-31-8300	DAMPER ASS'Y	1	22537-24179
2	01010-81230	BOLT	6	22537-
3	01643-31232	WASHER	6	22537-

FIG. A2310-A4A1 CRANKSHAFT

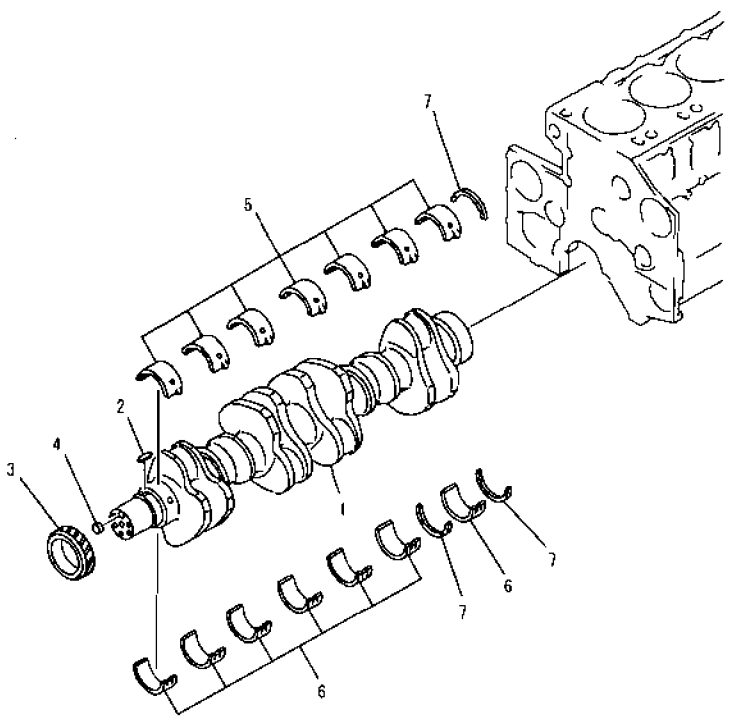

PE39053

INDEX	PART NO.	DESCRIPTION	Q'TY.	SERIAL NO
	6211-31-1010	CRANKSHAFT ASS'Y.	1	22537-
1	☆	.CRANKSHAFT	1	22537-
2	6150-31-1130	.KEY	1	22537-
3	6210-31-1120	.GEAR	1	22537-
4	6211-31-1420	.PIN	1	22537-
		STANDARD		
	6210-21-8000	METAL ASS'Y.	1	22537-
	6210-21-8010	.MAIN METAL ASS'Y.	7	22537-
5	☆	..METAL, UPPER	1	22537-
6	☆	..METAL, LOWER	1	22537-
7	6210-21-8050	.THRUST METAL ASS'Y.	1	22537-
	☆	..METAL	3	22537-
		UNDERSIZE 0.25MM		
	6210-29-8010	MAIN METAL ASS'Y.	7	22537-
5	☆	.METAL, UPPER	1	22537-
6	☆	.METAL, LOWER	1	22537-
		UNDERSIZE 0.50MM		
	6210-28-8010	MAIN METAL ASS'Y.	7	22537-
5	☆	.METAL, UPPER	1	22537-
6	☆	.METAL, LOWER	1	22537-
		UNDERSIZE 0.75MM		
	6210-27-8010	MAIN METAL ASS'Y.	7	22537-
5	☆	.METAL, UPPER	1	22537-
6	☆	.METAL, LOWER	1	22537-
		UNDERSIZE 1.00MM		
	6210-26-8010	MAIN METAL ASS'Y.	7	22537-
5	☆	.METAL, UPPER	1	22537-
6	☆	METAL, LOWER	1	22537-
		OVERSIZE 0.25MM		
7	6210-29-8050	THRUST METAL ASS'Y.	1	22537-
	☆	.METAL	3	22537-
		OVERSIZE 0.50MM		
7	6210-28-8050	THRUST METAL ASS'Y.	1	22537-
	☆	.METAL	3	22537-
		OVERSIZE 0.75MM		
7	6210-27-8050	THRUST METAL ASS'Y.	1	22537-
	☆	.METAL	3	22537-
		OVERSIZE 1.00MM		
7	6210-26-8050	THRUST METAL ASS'Y.	1	22537-
	☆	METAL	3	22537-

FIG. A2370-A4E1 CRANK PULLEY (#27560-)

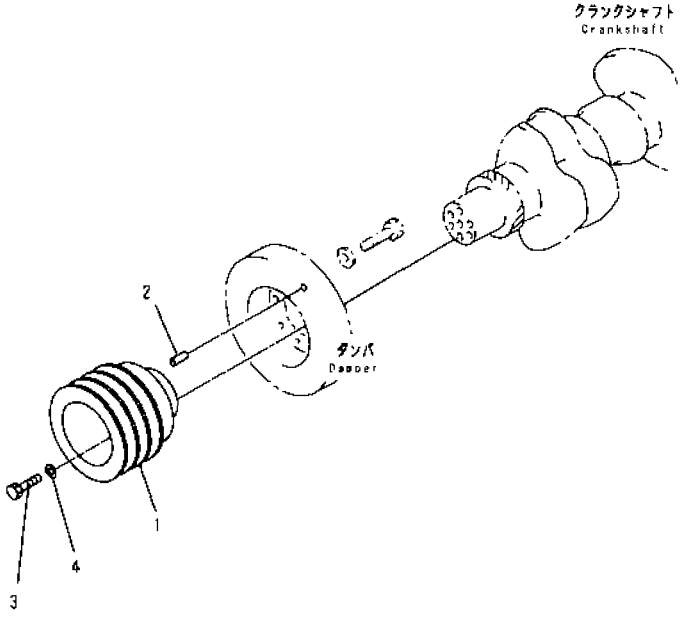

PR6A115

INDEX	PART NO	DESCRIPTION	Q'TY	SERIAL NO
1	6210-32-1240	PULLEY, HARDENING	1	27560-
2	04020-01024	PIN, DOWEL	1	27560-
3	01050-31685	BOLT	6	27560-
4	01643-31645	WASHER	6	27560-

FIG. A2350-A4B2 PISTON

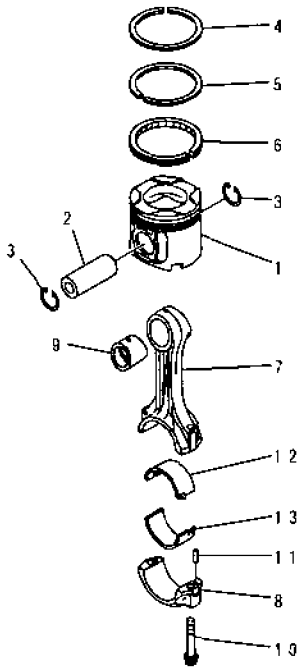

PE34893

INDEX	PART NO	DESCRIPTION	Q'TY	SERIAL NO
1	6211-32-2130	PISTON	6	25210-
	□6211-32-2110	PISTON	6	22537-25209
2	6211-31-2410	PIN, PISTON	6	22537-
3	04065-05220	RING, SNAP	12	22537-
	6211-31-2050	PISTON RING ASS'Y	6	29970-
	□6211-31-2033	PISTON RING ASS'Y	6	22537-29969
4	☆	. RING, TOP	1	29970-
	☆	. RING, TOP	1	22537-29969
5	☆	. RING, SECOND	1	22537-
6	☆	. RING, OIL	1	22537-
	6211-31-3100	CONNECTING ROD ASS'Y	6	22537-
7	☆	. ROD, CONNECTING	1	22537-
8	☆	. CAP	1	22537-
9	6211-31-3130	. BUSHING	1	22537-
10	6210-31-3310	. BOLT	2	22537-
11	02400-10413	. PIN, DOWEL	2	22537-
		STANDARD		
	6210-32-3040	METAL ASS'Y	6	22537-
12	☆	. METAL, UPPER	1	22537-
13	☆	. METAL, LOWER	1	22537-
		UNDERSIZE 0.25MM		
	6210-39-3040	METAL ASS'Y	6	22537-
12	☆	. METAL, UPPER	1	22537-
13	☆	. METAL, LOWER	1	22537-
		UNDERSIZE 0.50MM		
	6210-38-3040	METAL ASS'Y	6	22537-
12	☆	. METAL, UPPER	1	22537-
13	☆	. METAL, LOWER	1	22537-
		UNDERSIZE 0.75MM		
	6210-37-3040	METAL ASS'Y	6	22537-
12	☆	. METAL, UPPER	1	22537-
13	☆	. METAL, LOWER	1	22537-
		UNDERSIZE 1.00MM		
	6210-36-3040	METAL ASS'Y	6	22537-
12	☆	. METAL, UPPER	1	22537-
13	☆	. METAL, LOWER	1	22537-

FIG. A2411-A4A2 ROCKER ARM AND HOUSING (#26075-)

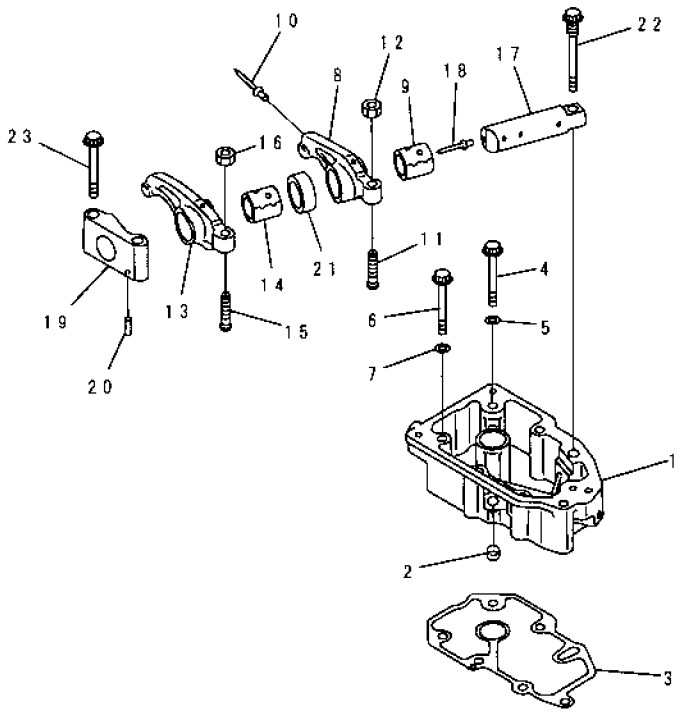

INDEX	PART NO.	DESCRIPTION	Q TY	SERIAL NO
	6210-11-7101	HOUSING ASS'Y	6	26075-
1	☆	.HOUSING, ROCKER ARM	1	26075-
2	07046-41008	.PLUG, EXPANSION	3	26075-
3	6210-11-7830	GASKET	6	26075-
4	01437-01280	BOLT	6	26075-
5	01643-51232	WASHER	6	26075-
6	01437-11080	BOLT	17	26075-
7	01643-51032	WASHER	17	26075-
	6210-41-5041	ROCKER ARM ASS'Y	6	26075-
	6210-41-5401	.ARM ASS'Y	1	26075-
8	☆	..ARM, INTAKE	1	26075-
9	6210-41-5421	..BUSHING	1	26075-
10	6162-43-5340	..RIVET	1	26075-
11	6150-41-5541	.SCREW	1	29328-
	□6150-41-5540	.SCREW	1	26075-29327
12	01582-01008	.NUT	1	26075-
	6210-41-5051	ROCKER ARM ASS'Y	6	26075-
	6210-41-5501	.ARM ASS'Y	1	26075-
13	☆	..ARM, EXHAUST	1	26075-
14	6210-41-5520	..BUSHING	1	26075-
15	6150-41-5541	.SCREW	1	29328-
	□6150-41-5540	.SCREW	1	26075-29327
16	01582-01008	.NUT	1	26075-
	6210-41-5303	ROCKER ARM SHAFT A	6	26075-
17	☆	.SHAFT	1	26075-
18	6162-43-5340	.RIVET	1	26075-
19	6210-41-5530	BRACKET	6	26075-
20	04020-00514	PIN	6	26075-
21	6210-41-5440	COLLAR	6	26075-
22	6210-81-8310	BOLT	6	26075-
23	01438-01220	BOLT	12	26075-

FIG. A2410-A4A6 CAMSHAFT (#26075-)

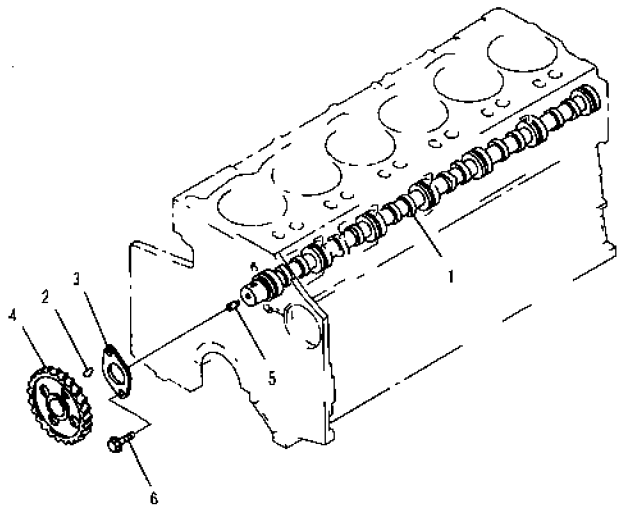

PJD5092

INDEX	PART NO	DESCRIPTION	Q'TY	SERIAL NO
	6210-41-1012	CAMSHAFT ASS'Y	1	26075-
1	☆	. CAMSHAFT	1	26075-
2	04010-00725	. KEY	1	26075-
3	6210-41-1131	. PLATE, THRUST	1	26075-
4	6210-41-1120	. GEAR	1	26075-
5	6210-81-3510	SHAFT	1	26075-
6	01437-01220	BOLT	2	26075-

FIG. A2411-B4A2 CAMFOLLOWER (#26075-)

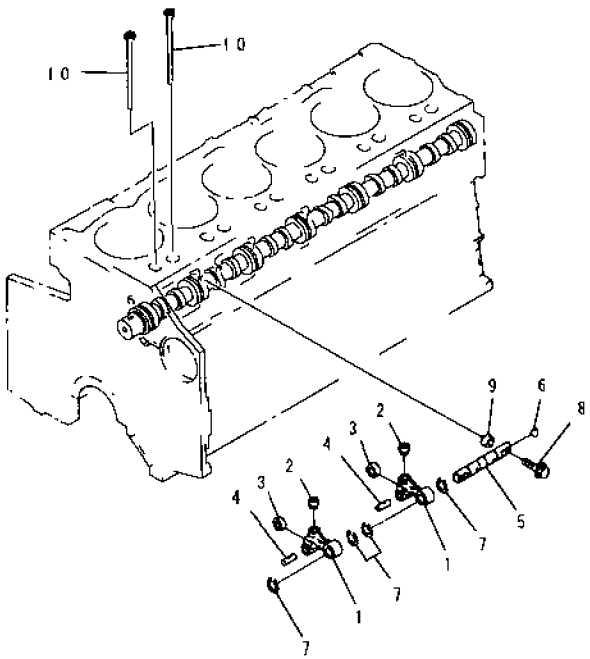

PJD5003

INDEX	PART NO	DESCRIPTION	Q'TY	SERIAL NO
	6210-41-2011	CAMFOLLOWER ASS'Y	6	30202-
	□6210-41-2010	CAMFOLLOWER ASS'Y	6	26075-30201
	6210-41-2301	.LEVER ASS'Y	2	30202-
	□6210-41-2300	.LEVER ASS'Y	2	26075-30201
1	☆	..LEVER	1	26075-
2	☆	..SOCKET	1	26075-
3	☆	..ROLLER, CAM	1	30202-
	☆	..ROLLER, CAM	1	26075-30201
4	☆	..PIN	1	30202-
	☆	..PIN	1	26075-30201
	6210-41-2400	.SHAFT ASS'Y	1	26075-
5	☆	..SHAFT	1	26075-
6	6150-81-8420	.BALL	1	26075-
7	04064-02212	.RING, SNAP	4	26075-
8	6210-41-2450	BOLT	12	26075-
9	6150-41-2430	PIN	12	26075-
10	6210-41-3120	ROD, PUSH	12	26075-

FIG. A2610-A4B5 FRONT POWER TAKE OFF

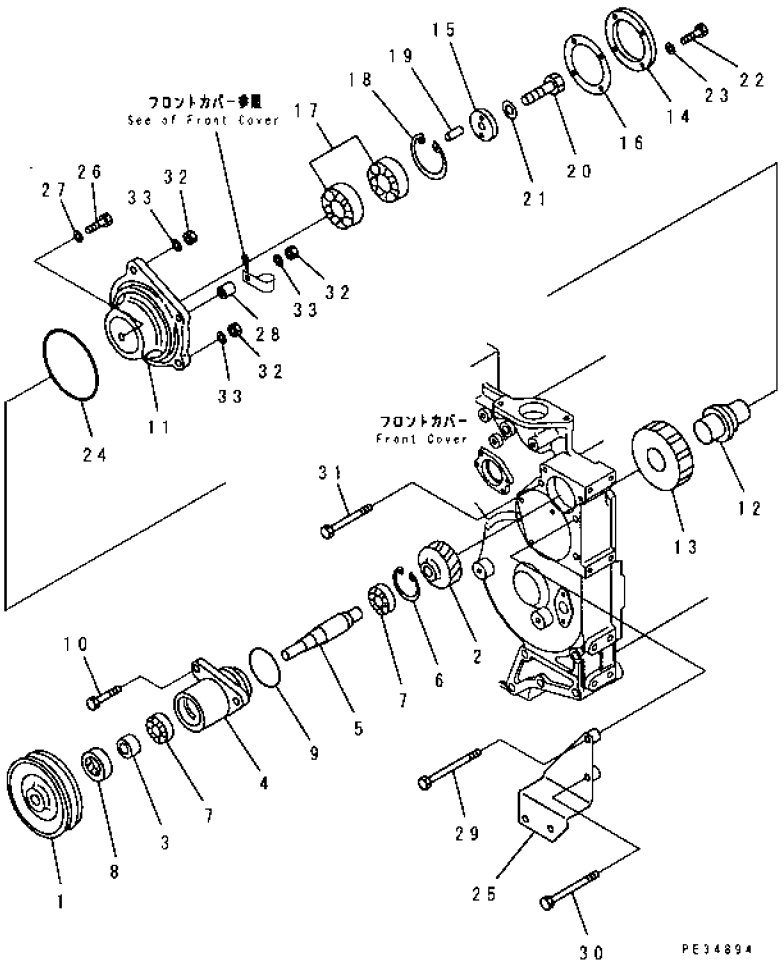

INDEX	PART NO.	DESCRIPTION	Q'TY	SERIAL NO
	6211-21-3403	POWER TAKE OFF ASS'Y.	1	22537-
1	6211-21-3430	.PULLEY, HARDENING.	1	22537-
2	6210-21-3440	.GEAR.	1	22537-
3	6210-21-3451	.SLEEVE.	1	22537-
4	6210-21-3413	.HOUSING.	1	22537-
5	6210-21-3421	.SHAFT.	1	22537-
6	04065-04718	.RING, SNAP.	1	22537-
7	06030-06204	.BEARING, BALL.	2	22537-
8	07012-50028	.SEAL, OIL.	1	22630-
	□07012-00028	.SEAL, OIL. (K2)	1	22537-22629
9	07000-02060	O-RING. (K2)	1	22537-
10	01010-81030	BOLT.	3	22537-
	6210-21-3500	GEAR ASS'Y.	1	22537-
11	6210-21-3510	.HOUSING.	1	22537-
12	6210-21-3520	.SHAFT.	1	22537-
13	6210-21-3530	.GEAR.	1	22537-
14	6210-21-3540	.FLANGE.	1	22537-
15	6210-21-3550	.PLATE.	1	22537-
16	6210-21-3561	.GASKET.	1	22537-
17	06000-06206	.BEARING, BALL.	2	22537-
18	04065-06220	.RING, SNAP.	1	22537-
19	04020-00514	.PIN, DOWEL	1	22537-
20	01010-80820	.BOLT.	1	22537-
21	01653-20808	.WASHER, LOCK.	1	22537-
22	01010-80820	.BOLT.	4	22537-
23	01643-30823	.WASHER.	4	22537-
24	6210-81-5640	O-RING.	1	22537-
25	6211-61-6850	BRACKET.	1	22537-
26	01010-81225	BOLT.	1	22537-
27	01640-21223	WASHER.	1	22537-
28	6631-11-5630	SPACER.	1	22537-
29	01011-81050	BOLT.	1	22537-
30	01011-81035	BOLT.	1	22537-
31	01011-81015	BOLT.	1	22537-
32	01580-01008	NUT.	3	22537-
33	01640-21016	WASHER.	3	22537-

FIG. A3010-A4A1 OIL PUMP

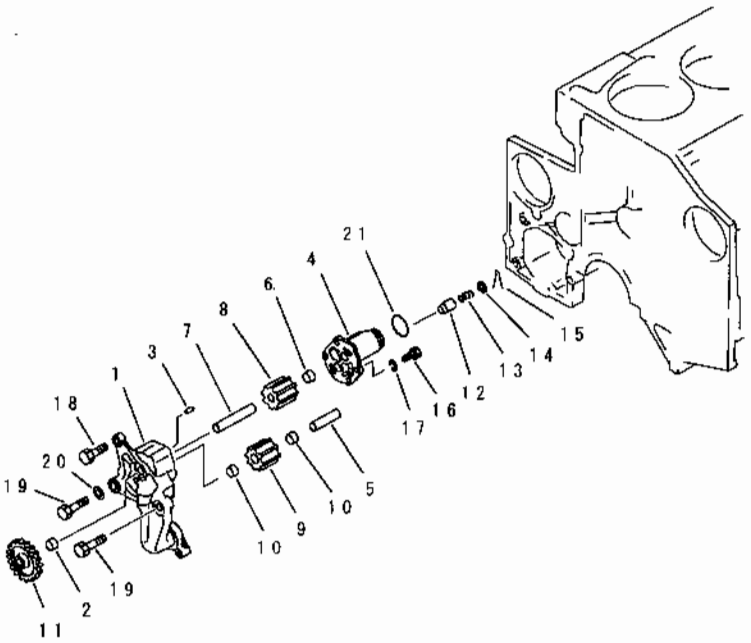

PE38060

INDEX	PART NO	DESCRIPTION	Q'TY	SERIAL NO
	6211-51-1000	OIL PUMP ASS'Y.	1	22537-
	6211-51-1200	.BODY ASS'Y.	1	22537-
1	☆	..BODY.	1	22537-
2	6136-52-1330	..BUSHING.	1	22537-
3	6136-52-1620	..PIN.	1	22537-
	6211-51-1100	.COVER ASS'Y.	1	22537-
4	☆	..COVER.	1	22537-
5	6210-51-1320	..SHAFT, DRIVEN.	1	22537-
6	6136-52-1330	..BUSHING.	1	22537-
	6211-51-1300	.DRIVE SHAFT ASS'Y.	1	22537-
7	6210-51-1310	..SHAFT.	1	22537-
8	☆	..GEAR, DRIVE.	1	22537-
	6211-51-1250	DRIVEN GEAR ASS'Y.	1	22537-
9	☆	..GEAR.	1	22537-
10	6136-52-1330	..BUSHING.	2	22537-
11	6210-51-1510	.GEAR, PUMP DRIVE.	1	22537-
12	6136-52-1640	.VALVE.	1	22537-
13	6136-52-1650	.SPRING.	1	22537-
14	6150-51-1650	.RETAINER.	1	22537-
15	04050-14035	.PIN, COTTER.	1	22537-
16	01010-80825	.BOLT.	4	22537-
17	01602-00825	.WASHER, SPRING.	4	22537-
18	01010-81230	BOLT.	1	22537-
19	01010-81240	BOLT.	2	22537-
20	01643-31232	WASHER.	1	22537-
21	07000-73038	O-RING.	1	27716-
	□07000-63038	O-RING. (K2)	1	22537-27715

FIG. A3110-B4C5 OIL FILTER

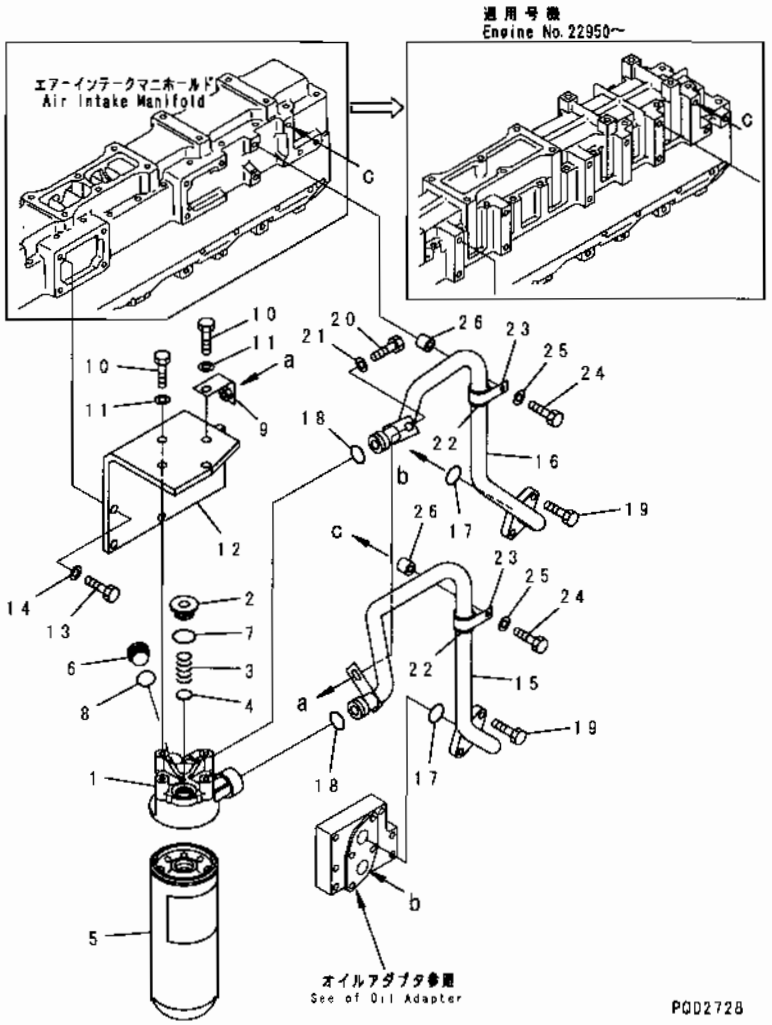

INDEX	PART NO	DESCRIPTION	Q'TY	SERIAL NO
	6212-51-5301	OIL FILTER ASS'Y	1	22537-
1	6212-51-5311	.HEAD	1	22537-
2	600-211-1150	.PLUG	1	22537-
3	6151-51-5320	.SPRING	1	22537-
4	6150-51-4920	.DISC	1	22537-
5	600-211-1231	.CARTRIDGE	1	22537-
6	600-211-1130	PLUG	1	22537-
7	07000-73035	.O-RING	1	22537-
8	600-211-1140	.O-RING	1	22537-
9	6211-51-6460	BRACKET	1	22537-
10	01010-81035	BOLT	4	22537-
11	01643-31032	WASHER	4	22537-
12	6211-52-6450	BRACKET	1	22537-
13	01010-81030	BOLT	4	22537-
14	01643-31032	WASHER	4	22537-
15	6211-52-6420	TUBE	1	22537-
16	6211-52-6430	TUBE	1	22537-
17	07000-73035	O-RING	2	27716-
	□07000-63032	O-RING (K2)	2	22537-27715
18	07000-73025	O-RING	2	27716-
	□07000-63025	O-RING	2	22537-27715
19	01010-81030	BOLT	4	22537-
20	01010-81025	BOLT	1	22537-
21	01643-31032	WASHER	1	22537-
22	07095-20523	CUSHION	2	22537-
23	04434-53211	CLIP	2	22537-
24	01010-81040	BOLT	2	22537-
25	01642-21016	WASHER	2	22537-
26	175-79-83760	SPACER	2	22537-

FIG NO. : A2610-A4B6

FIG. A2610-A4B6 FRONT POWER TAKE OFF (WITHOUT FRONT POWER TAKE OFF)

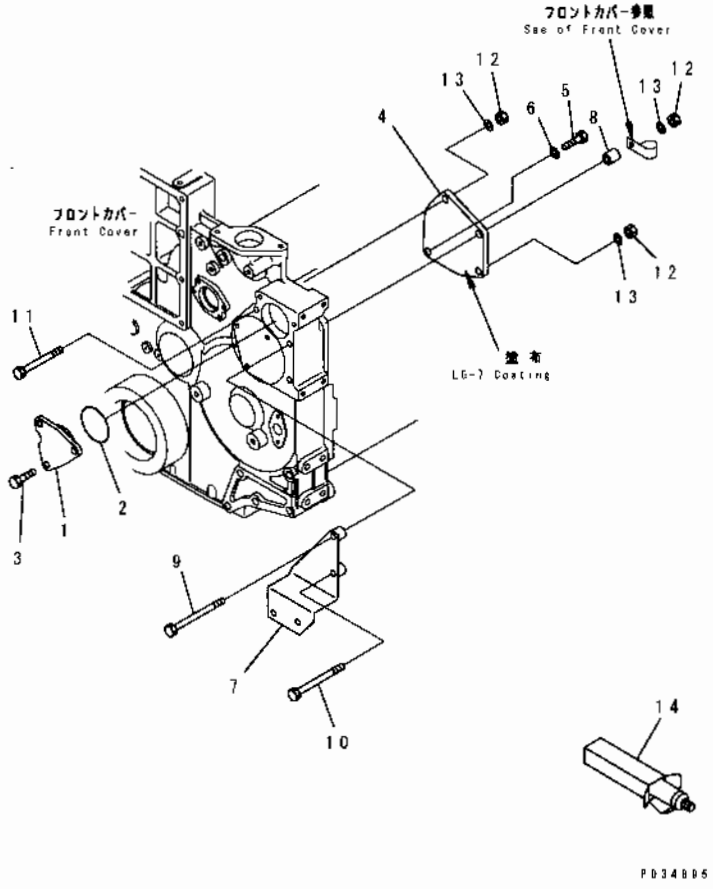

INDEX	PART NO.	DESCRIPTION	Q'TY.	SERIAL NO.
1	6210-21-1880	COVER	1	22537-
2	07000-02060	O-RING (K2)	1	22537-
3	01010-81020	BOLT	3	22537-
4	6210-21-1851	COVER	1	22537-
5	01010-81225	BOLT	1	22537-
6	01640-21223	WASHER	1	22537-
7	6211-61-6850	BRACKET	1	22537-
8	6631-11-5630	SPACER	1	22537-
9	01011-81050	BOLT	1	22537-
10	01011-81035	BOLT	1	22537-
11	01011-81015	BOLT	1	22537-
12	01580-11008	NUT	3	22537-
13	01640-21016	WASHER	3	22537-
14	(09920-00150)	LIQUID GASKET, LG-7, 150G.	AR	22537-

FIG. A3110-A4C5 OIL ADAPTER

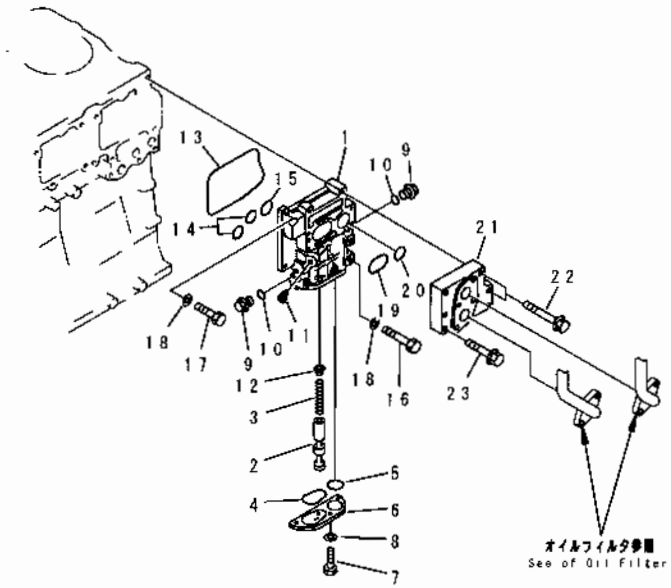

INDEX	PART NO	DESCRIPTION	Q'TY	SERIAL NO
	6211-51-5500	ADAPTER ASS'Y	1	22537-
1	☆	.BODY	1	22537-
2	6210-51-5550	.VALVE	1	22537-
3	6210-51-5560	.SPRING	1	22537-
4	6210-51-5580	.O-RING	1	22537-
5	07000-63032	.O-RING	1	22537-
6	6211-51-5520	.COVER	1	22537-
7	01010-30816	.BOLT	3	22537-
8	01640-20816	.WASHER	3	22537-
9	6210-51-5570	PLUG	2	22537-
10	07000-72018	.O-RING	2	27716-
	□07000-62018	.O-RING	2	22537-27715
11	07043-00211	.PLUG	1	22537-
12	6210-51-5590	.SEAT	1	22537-
13	6210-21-6462	O-RING (K2)	1	22537-
14	07000-73028	O-RING	2	27716-
	□07000-63028	O-RING (K2)	2	22537-27715
15	07000-63032	O-RING (K2)	1	22537-
16	01010-81060	BOLT	5	22537-
17	01010-81030	BOLT	2	22537-
18	01640-21016	WASHER	7	22537-
19	07000-73048	O-RING	1	27716-
	□07000-63048	O-RING (K2)	1	22537-27715
20	07000-63032	O-RING (K2)	1	22537-
21	6212-51-6110	ADAPTER	1	22537-
22	01435-01095	BOLT	2	22537-
23	01435-01050	BOLT	4	22537-

FIG. A4010-A4J5 FUEL INJECTION PUMP MOUNTING(#27560-)

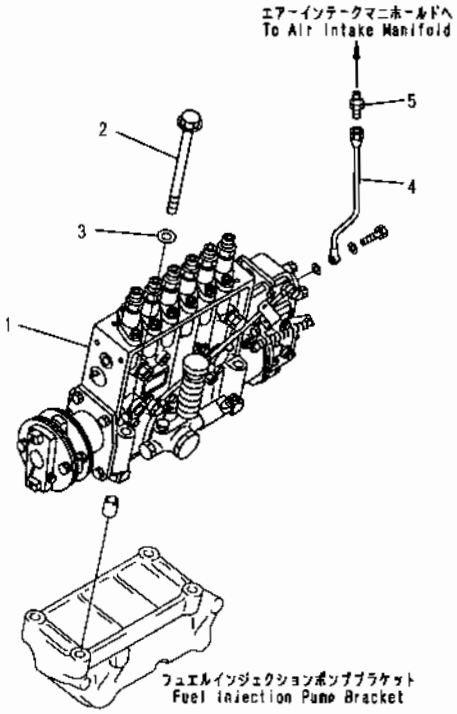

PQD3887

INDEX	PART NO.	DESCRIPTION	Q'TY	SERIAL NO.
1	(6211-72-1150)	INJECTION PUMP ASS'Y.... (SEE FIG. A4010-B4J5)	1	27560-
2	01437-01090	BOLT.....	4	27560-
3	01640-21016	WASHER.....	4	27560-
4	6211-71-1710	TUBE.....	1	27560-
5	07214-50710	CONNECTOR.....	1	27560-

FIG. A3310-A4A3 OIL COOLER (#22653-)

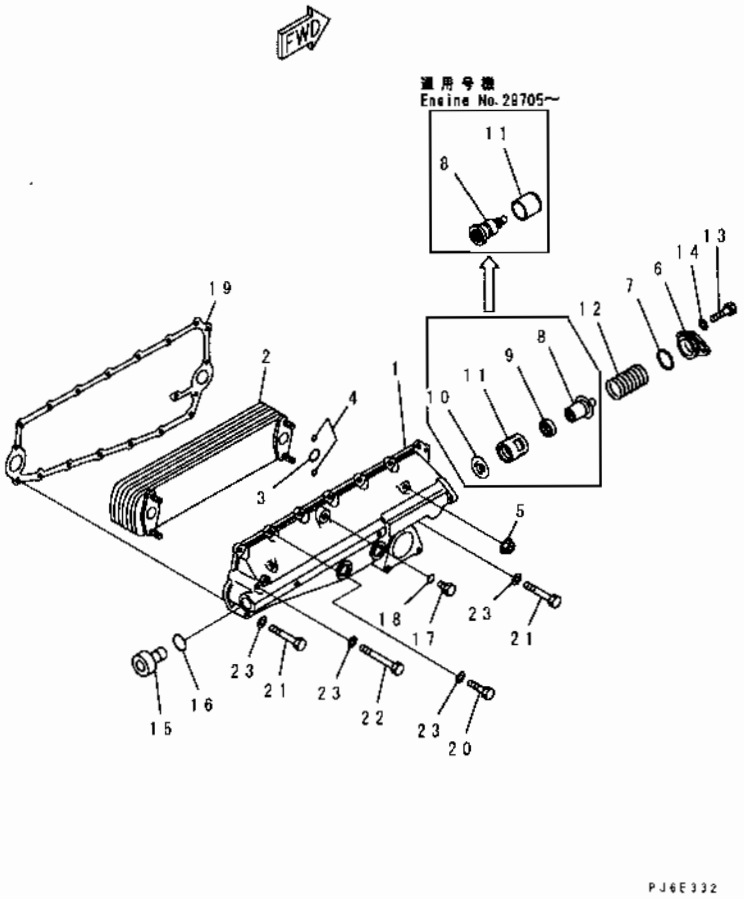

INDEX	PART NO	DESCRIPTION	Q'TY	SERIAL NO.
1	6211-61-2124	COVER	1	29149-
	□6211-61-2123	COVER	1	22653-29148
2	6212-61-2111	ELEMENT	1	22653-
3	6210-61-2520	O-RING (K2)	2	22653-
4	6150-61-2520	O-RING (K2)	4	22653-
5	6150-61-2580	NUT	4	22653-
6	6210-61-2130	COVER	1	22653-
7	07000-73042	O-RING	1	22653-
8	6218-61-2610	THERMOSTAT	1	29705-
	□6212-65-2610	THERMOSTAT	1	22653-29704
9	6150-61-2540	SEAL, OIL (K2)	1	22653-29704
10	6150-61-2151	PLATE	1	22653-29704
11	6218-61-2620	COLLAR	1	29705-
	□6150-61-2141	CASE	1	22653-29704
12	6210-61-2160	SPRING	1	22653-
13	01010-80820	BOLT	2	22653-
14	01640-20816	WASHER	2	22653-
15	07040-13016	PLUG	1	22653-
16	6210-61-2550	O-RING (K2)	1	22653-
17	07040-11409	PLUG, (FOR SHIPPING)	1	22653-
18	07005-01412	GASKET, (FOR SHIPPING) (K2)	1	22653-
19	6210-61-2811	GASKET (K2)	1	22653-
20	01010-81030	BOLT	13	22653-
21	01010-81060	BOLT	2	22653-
22	01010-81090	BOLT	1	22653-
23	01640-21016	WASHER	16	22653-

FIG. A4010-B4J5 FUEL INJECTION PUMP (PUMP) (1/2) (INNER PARTS) (#27560-)

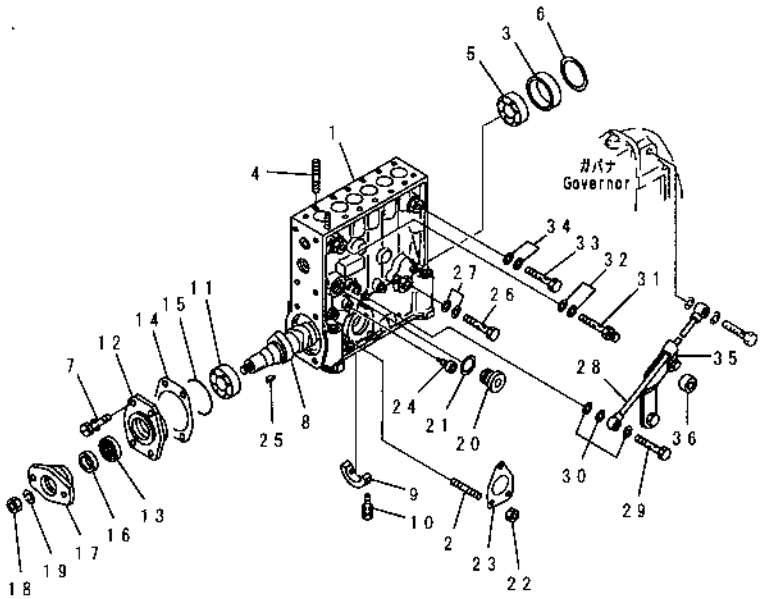

PQ30199

INDEX	PART NO.	DESCRIPTION	Q'TY	SERIAL NO
27	DK029341-4130	..GASKET	2	27560-
28	DK134442-0720	..PIPE	1	27560-
29	DK029731-0490	..BOLT, EYE	1	27560-
30	DK029341-0110	..GASKET	3	27560-
31	DK131424-3420	..VALVE, OVER FLOW	1	27560-
32	DK029341-4130	..GASKET	2	27560-
33	DK029731-4680	..BOLT, EYE	1	27560-
34	DK029341-4130	..GASKET	2	27560-
35	DK134510-8720	..BRACKET	1	27560-
36	DK134510-8800	..SPACER	1	27560-

FIG. A4010-B4J5 FUEL INJECTION PUMP (PUMP) (1/2) (INNER PARTS) (#27560-)

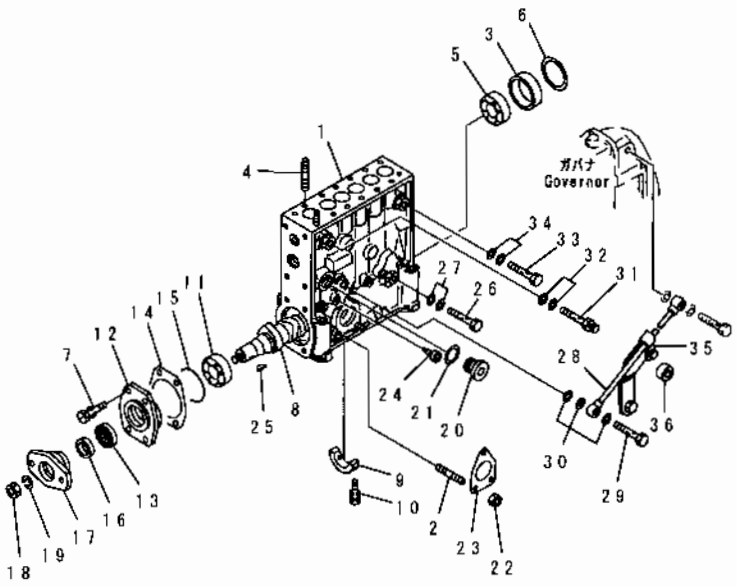

INDEX	PART NO.	DESCRIPTION	Q'TY	SERIAL NO
	6211-72-1150	INJECTION PUMP ASS'Y THIS ASSEMBLY CONSISTS OF ALL PARTS SHOWN IN FIGS. A4010-B4J5 TO A4010-G4J5	1	27560-
	DK106067-1890	. PUMP ASS'Y THIS ASSEMBLY CONSISTS OF ALL PARTS SHOWN IN FIGS A4010-B4J5 AND A4010-C4J5.	1	27560-
1	DK134063-2320	.. HOUSING	1	27560-
2	DK029040-6020	... STUD	3	27560-
3	DK134311-0000	... RING	1	27560-
4	DK134138-0000	... STUD	12	27560-
5	DK016650-2230	.. BEARING	1	27560-
6	DK134303-0400	.. SHIM, 0.60MM	AR	27560-
	DK134303-0000	.. SHIM, 1.20MM	AR	27560-
	DK134303-0100	.. SHIM, 1.50MM	AR	27560-
	DK134303-0200	.. SHIM, 1.80MM	AR	27560-
	DK134303-0300	.. SHIM, 2.00MM	AR	27560-
7	DK029010-6810	.. BOLT	4	27560-
8	DK134371-7300	.. CAMSHAFT	1	27560-
9	DK134306-0600	.. BEARING, CENTER	1	27560-
10	DK020106-2040	.. BOLT	2	27560-
11	DK016650-2230	.. BEARING	1	27560-
12	DK134316-1700	.. COVER	1	27560-
13	DK139629-0000	.. SEAL, OIL	1	27560-
14	DK134314-0000	.. SHIM, 0.10MM	AR	27560-
	DK134314-0100	.. SHIM, 0.12MM	AR	27560-
	DK134314-0200	.. SHIM, 0.14MM	AR	27560-
	DK134314-0300	.. SHIM, 0.16MM	AR	27560-
	DK134314-0400	.. SHIM, 0.18MM	AR	27560-
	DK134314-0500	.. SHIM, 0.30MM	AR	27560-
	DK134314-0600	. SHIM, 0.50MM	AR	27560-
15	DK029635-5010	.. O-RING	1	27560-
16	DK134563-0900	. SLEEVE	1	27560-
17	DK156639-3100	.. COUPLING	1	27560-
18	DK013121-8020	.. NUT	1	27560-
19	DK023641-8410	.. WASHER, SPRING	1	27560-
20	DK134045-0100	.. PLUG	1	27560-
21	DK026524-2940	. GASKET	1	27560-
22	DK139206-0400	.. NUT	3	27560-
23	DK131041-0800	.. GASKET	1	27560-
24	DK134047-0000	.. PLUG	6	27560-
25	DK025805-1910	.. KEY	1	27560-
26	DK134430-3520	.. BOLT, EYE	1	27560-

FIG. A4010-C4J5 FUEL INJECTION PUMP (PUMP) (2/2) (INNER PARTS) (#27560-)

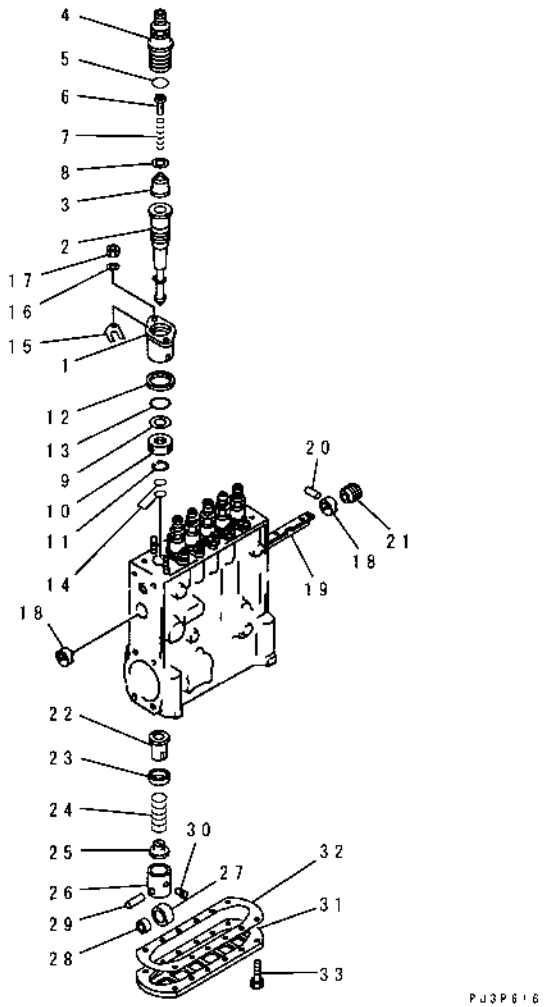

INDEX	PART NO	DESCRIPTION	Q'TY	SERIAL NO
	DK139400-2800	..SHIM, 0.975MM	AR	27560-
	DK139400-2900	..SHIM, 1.000MM	AR	27560-
	DK139400-3000	..SHIM, 1.025MM	AR	27560-
	DK139400-3100	..SHIM, 1.050MM	AR	27560-
	DK139400-3200	..SHIM, 1.075MM	AR	27560-
	DK139400-3300	..SHIM, 1.100MM	AR	27560-
	DK139400-3400	..SHIM, 1.125MM	AR	27560-
	DK139400-3500	..SHIM, 1.150MM	AR	27560-
	DK139400-3600	..SHIM, 1.175MM	AR	27560-
	DK139400-3700	..SHIM, 1.200MM	AR	27560-
	DK139400-3800	..SHIM, 1.225MM	AR	27560-
	DK139400-3900	..SHIM, 1.250MM	AR	27560-
	DK139400-4000	..SHIM, 1.275MM	AR	27560-
	DK139400-4100	..SHIM, 1.300MM	AR	27560-
	DK139400-4200	..SHIM, 1.325MM	AR	27560-
	DK139400-4300	..SHIM, 1.350MM	AR	27560-
	DK139400-4400	..SHIM, 1.375MM	AR	27560-
	DK139400-4500	..SHIM, 1.400MM	AR	27560-
	DK139400-4600	..SHIM, 1.425MM	AR	27560-
	DK139400-4700	..SHIM, 1.450MM	AR	27560-
	DK139400-4800	..SHIM, 1.475MM	AR	27560-
	DK139400-4900	..SHIM, 1.500MM	AR	27560-
	DK139400-5000	..SHIM, 1.525MM	AR	27560-
	DK139400-5100	..SHIM, 1.550MM	AR	27560-
	DK139400-5200	..SHIM, 1.575MM	AR	27560-
	DK139400-5300	..SHIM, 1.600MM	AR	27560-
	DK139400-5400	..SHIM, 1.625MM	AR	27560-
	DK139400-5500	..SHIM, 1.650MM	AR	27560-
	DK139400-5600	..SHIM, 1.675MM	AR	27560-
	DK139400-5700	..SHIM, 1.700MM	AR	27560-
	DK139400-5800	..SHIM, 1.725MM	AR	27560-
	DK139400-5900	..SHIM, 1.750MM	AR	27560-
	DK139400-6000	..SHIM, 1.775MM	AR	27560-
	DK139400-6100	..SHIM, 1.800MM	AR	27560-
	DK139400-6200	..SHIM, 1.825MM	AR	27560-
	DK139400-6300	..SHIM, 1.850MM	AR	27560-
	DK139400-6400	..SHIM, 1.875MM	AR	27560-
	DK139400-6500	..SHIM, 1.900MM	AR	27560-
	DK139400-6600	..SHIM, 1.925MM	AR	27560-
	DK139400-6700	..SHIM, 1.950MM	AR	27560-
	DK139400-6800	..SHIM, 1.975MM	AR	27560-
16	DK134132-0300	..WASHER	12	27560-

FIG. A4010-C4J5 FUEL INJECTION PUMP (PUMP) (2/2) (INNER PARTS) (#27560-)

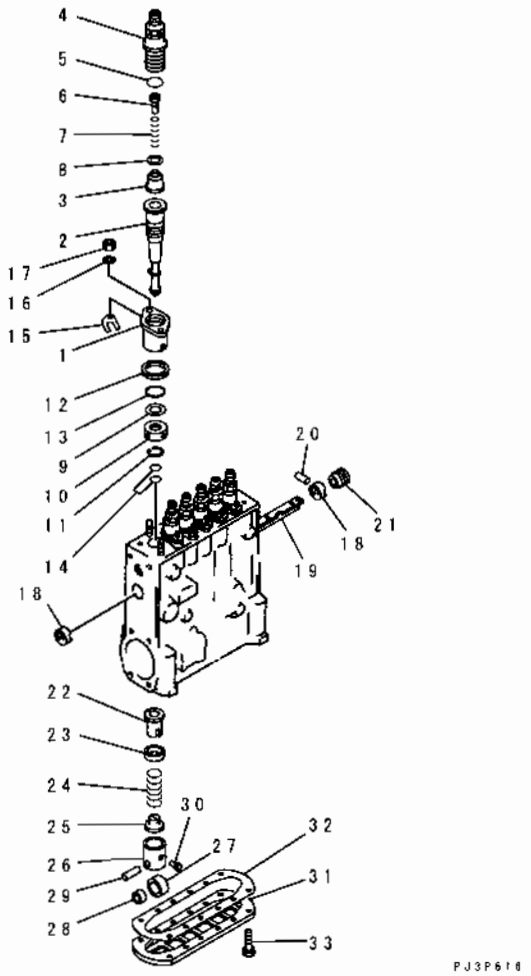

INDEX	PART NO.	DESCRIPTION	Q'TY	SERIAL NO
	(6211-72-1150)	INJECTION PUMP ASS'Y THIS ASSEMBLY CONSISTS OF ALL PARTS SHOWN IN FIGS. A4010-B4J5 TO A4010-G4J5.	1	27560-
	(DK106067-1890)	.PUMP ASS'Y THIS ASSEMBLY CONSISTS OF ALL PARTS SHOWN IN FIGS. A4010-B4J5 AND A4010-C4J5.	1	27560-
	DK134165-1720	..PLUNGER BLOCK A	6	27560-
1	DK134131-1020	...FLANGE	1	27560-
2	DK134153-6420	...PLUNGER ASS'Y	1	27560-
3	DK134110-8920	...VALVE, DELIVERY	1	27560-
4	DK134116-4720	...HOLDER	1	27560-
5	DK029632-2070	. O-RING	1	27560-
6	DK134117-0500	. STOPPER	AR	27560-
	DK134117-2200	...STOPPER	AR	27560-
	DK134117-2300	..STOPPER	AR	27560-
7	DK134112-3400	.. SPRING	1	27560-
8	DK134115-0100	...GASKET	1	27560-
9	DK029302-0140	...WASHER	1	27560-
10	DK134135-0200	...DEFLECTOR	1	27560-
11	DK029602-0010	...RING, SNAP	1	27560-
12	DK134137-0100	...RING	1	27560-
13	DK029632-9030	...O-RING	1	27560-
14	DK029631-5020	...O-RING	2	27560-
15	DK139400-0900	..SHIM, 0.500MM	AR	27560-
	DK139400-1000	..SHIM, 0.525MM	AR	27560-
	DK139400-1100	..SHIM, 0.550MM	AR	27560-
	DK139400-1200	..SHIM, 0.575MM	AR	27560-
	DK139400-1300	..SHIM, 0.600MM	AR	27560-
	DK139400-1400	..SHIM, 0.625MM	AR	27560-
	DK139400-1500	..SHIM, 0.650MM	AR	27560-
	DK139400-1600	.SHIM, 0.675MM	AR	27560-
	DK139400-1700	..SHIM, 0.700MM	AR	27560-
	DK139400-1800	..SHIM, 0.725MM	AR	27560-
	DK139400-1900	..SHIM, 0.750MM	AR	27560-
	DK139400-2000	..SHIM, 0.775MM	AR	27560-
	DK139400-2100	. SHIM, 0.800MM	AR	27560-
	DK139400-2200	..SHIM, 0.825MM	AR	27560-
	DK139400-2300	..SHIM, 0.850MM	AR	27560-
	DK139400-2400	..SHIM, 0.875MM	AR	27560-
	DK139400-2500	..SHIM, 0.900MM	AR	27560-
	DK139400-2600	..SHIM, 0.925MM	AR	27560-
	DK139400-2700	..SHIM, 0.950MM	AR	27560-

FIG. A4010-D4J5 FUEL INJECTION PUMP (GOVERNOR) (1/2) (INNER PARTS) (#27560-)

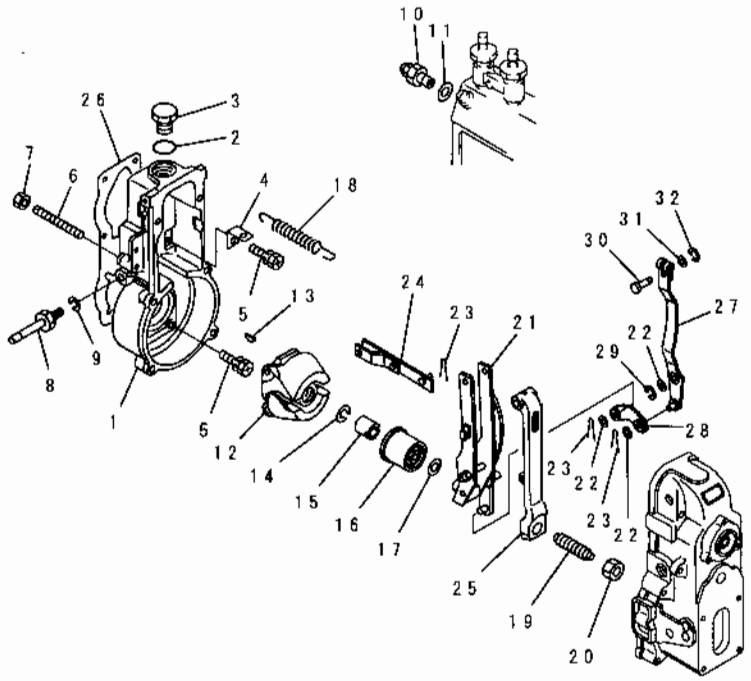

INDEX	PART NO.	DESCRIPTION	Q'TY	SERIAL NO.
	(6211-72-1150)	INJECTION PUMP ASS'Y.	1	27560-
		THIS ASSEMBLY CONSISTS OF ALL PARTS SHOWN IN FIGS. A4010-B4J5 TO A4010-G4J5.		
	DK105407-7400	GOVERNOR ASS'Y.	1	27560-
		THIS ASSEMBLY CONSISTS OF ALL PARTS SHOWN IN FIGS. A4010-D4J5 AND A4010-E4J5.		
1	DK154000-4700	..HOUSING.	1	27560-
2	DK029632-5070	..O-RING	1	27560-
3	DK154007-2900	..PLUG.	1	27560-
4	DK154350-6000	..PLATE.	1	27560-
5	DK020106-2040	..BOLT.	8	27560-
6	DK154010-0100	..SCREW.	1	27560-
7	DK154011-0100	..NUT, LOCK.	1	27560-
8	DK154013-2320	..BOLT.	1	27560-
9	DK014110-8440	..WASHER, SPRING.	1	27560-
10	DK153021-2220	..LIMITER.	1	27560-
11	DK026524-3040	..GASKET.	1	27560-
12	DK154101-0020	..FLYWEIGHT ASS'Y.	1	27560-
13	DK025803-1310	..KEY, 13MM, WOODRUFF.	1	27560-
	DK025803-1610	..KEY, 16MM, WOODRUFF	1	27560-
14	DK029321-2020	..WASHER, SPRING.	1	27560-
15	DK029231-2030	..NUT.	1	27560-
16	DK154123-2320	..SLEEVE.	1	27560-
17	DK029311-0010	..SHIM, 0.20MM.	AR	27560-
	DK029311-0180	..SHIM, 0.30MM	AR	27560-
	DK029311-0190	..SHIM, 0.40MM.	AR	27560-
	DK139410-0000	..SHIM, 0.50MM	AR	27560-
	DK029311-0210	..SHIM, 1.00MM.	AR	27560-
	DK139410-0100	..SHIM, 1.50MM.	AR	27560-
	DK139410-3000	.SHIM, 2.00MM	AR	27560-
	DK139410-3100	..SHIM, 3.00MM.	AR	27560-
	DK139410-3200	..SHIM, 4.00MM.	AR	27560-
18	DK154154-0500	..SPRING.	1	27560-
19	DK154177-3720	.CAPSULE, SPRING.	1	27560-
20	DK029201-6010	.NUT.	1	27560-
21	DK154216-7220	..GUIDE LEVER ASS'Y.	1	27560-
22	DK029310-5170	..SHIM.	3	27560-
23	DK025520-1210	..PIN.	3	27560-
24	DK154230-2920	.LINK.	1	27560-
25	DK154236-4100	..LEVER, TENSION.	1	27560-
26	DK154371-5600	..GASKET.	1	27560-
27	DK154401-3620	..LEVER.	1	27560-

FIG NO. : A4010-C4J5

INDEX	PART NO.	DESCRIPTION	Q'TY	SERIAL NO
17	DK013021-0040	..NUT	12	27560-
18	DK134001-0000	..BUSHING	2	27560-
19	DK134256-0000	..RACK, CONTROL	1	27560-
20	DK024030-2030	.PIN	1	27560-
21	DK134222-0000	..BUSHING	1	27560-
22	DK134241-0320	..SLEEVE, CONTROL	6	27560-
23	DK134216-0000	..SEAT, SPRING	6	27560-
24	DK134215-0700	..SPRING	6	27560-
25	DK134217-0500	..SEAT, SPRING	6	27560-
26	DK134200-0420	..TAPPET ASS'Y	6	27560-
27	DK134204-0100	...ROLLER	1	27560-
28	DK134205-0000	...BUSHING	1	27560-
29	DK134203-0000	...PIN	1	27560-
30	DK131206-0500	...GUIDE	1	27560-
31	DK134043-0800	..COVER	1	27560-
32	DK134042-1400	..GASKET	1	27560-
33	DK012206-1640	..SCREW	12	27560-

FIG. A4010-E4J5 FUEL INJECTION PUMP (GOVERNOR) (2/2) (INNER PARTS) (#27560-)

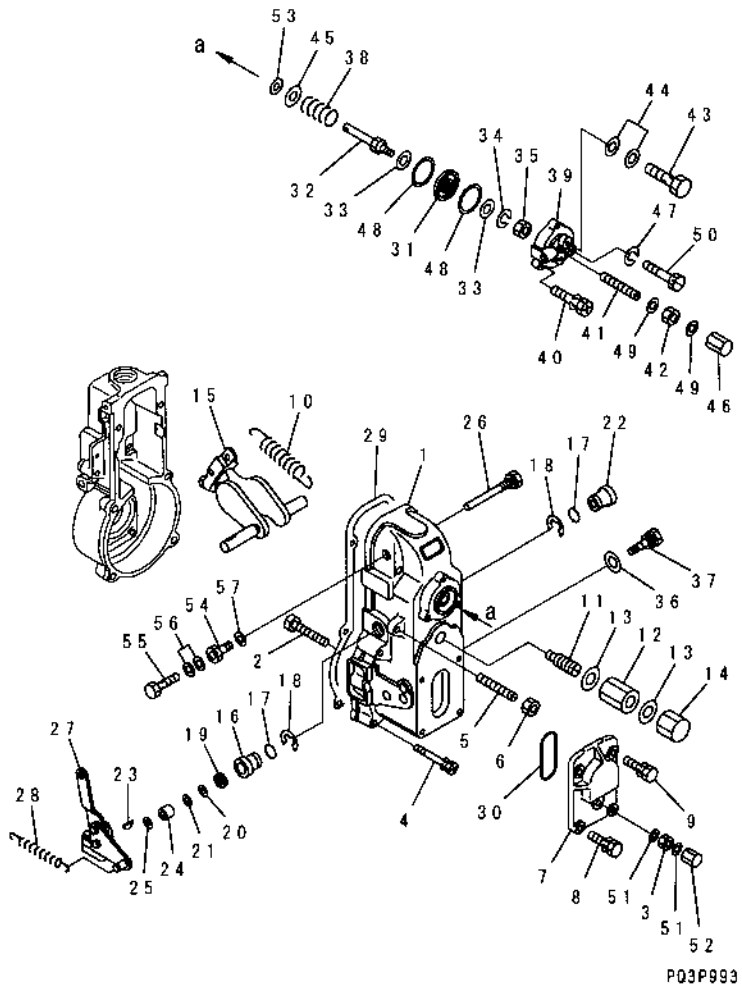

INDEX	PART NO	DESCRIPTION	Q'TY	SERIAL NO
	(6211-72-1150)	INJECTION PUMP ASS'Y THIS ASSEMBLY CONSISTS OF ALL PARTS SHOWN IN FIGS. A4010-B4J5 TO A4010-G4J5.	1	27560-
	(DK105407-7400)	.GOVERNOR ASS'Y THIS ASSEMBLY CONSISTS OF ALL PARTS SHOWN IN FIGS. A4010-D4J5 AND A4010-E4J5.	1	27560-
1	DK154022-6020	..COVER	1	27560-
2	DK154031-4800	. SCREW	1	27560-
3	DK139208-0500	..NUT	1	27560-
4	DK020106-5040	..BOLT	6	27560-
5	DK154010-1100	. SCREW	1	27560-
6	DK154011-0100	..NUT	1	27560-
7	DK154063-7300	. COVER	1	27560-
8	DK029020-6210	..BOLT	2	27560-
9	DK020006-1640	..BOLT	2	27560-
10	DK154150-0400	..SPRING	1	27560-
11	DK154158-0820	..CAPSULE, SPRING	1	27560-
12	DK029201-2290	. NUT	1	27560-
13	DK026512-1540	..GASKET	2	27560-
14	DK154159-1200	. NUT, CAP	1	27560-
15	DK154200-7020	..LEVER ASS'Y	1	27560-
16	DK154204-4300	..BUSHING	1	27560-
17	DK139718-0200	..O-RING	2	27560-
18	DK016010-1640	..RING, SNAP	2	27560-
19	DK139611-0300	..SEAL, OIL	1	27560-
20	DK139411-0000	..SHIM, 0.40MM	1	27560-
21	DK029311-1070	..SHIM, 0.50MM	AR	27560-
22	DK154204-3100	..BUSHING	1	27560-
23	DK025803-1310	..KEY, 13MM	1	27560-
24	DK154206-2800	..COLLAR	1	27560-
25	DK154206-0200	..WASHER, 1.0MM	AR	27560-
26	DK154237-1700	..PIN	1	27560-
27	DK154396-3720	..LEVER	1	27560-
28	DK154314-2600	..SPRING	1	27560-
29	DK154390-0300	..GASKET	1	27560-
30	DK029635-2020	..O-RING	1	27560-
31	DK154400-7420	..DIAPHRAGM	1	27560-
32	DK154400-4800	..ROD	1	27560-
33	DK029330-8050	..GASKET	2	27560-
34	DK139308-0700	..WASHER, SPRING	1	27560-
35	DK013030-6040	..NUT	1	27560-
36	DK026510-1440	..GASKET	1	27560-

FIG NO. : A4010-D4J5

INDEX	PART NO.	DESCRIPTION	Q'TY	SERIAL NO.
28	DK154401-1320	..LINK.	1	27560-
29	DK016010-0540	..RING, SNAP.	1	27560-
30	DK154222-6200	..PIN.	1	27560-
31	DK029300-4010	..WASHER.	1	27560-
32	DK016010-0440	..RING, SNAP.	1	27560-

140E-2

FIG. A4010-F4J5 FUEL INJECTION PUMP (COUPLING) (INNER PARTS)

(#27560-)

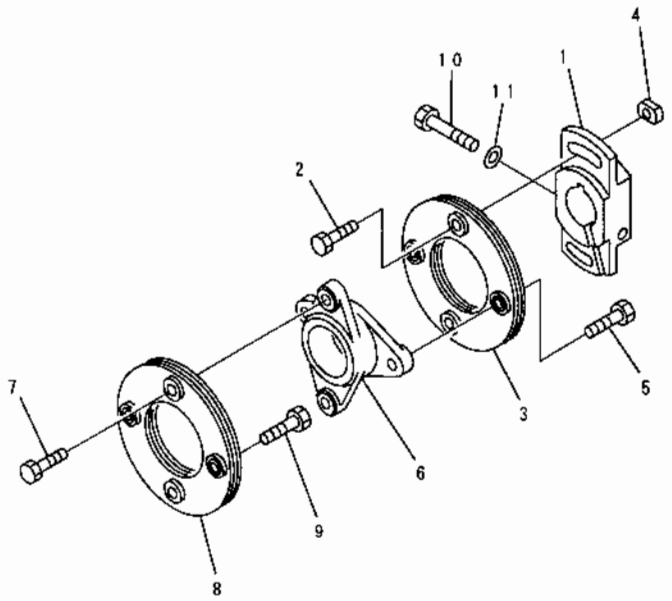

PE3P1D8

INDEX	PART NO	DESCRIPTION	Q'TY	SERIAL NO.
	(6211-72-1150)	INJECTION PUMP ASS'Y..... THIS ASSEMBLY CONSISTS OF ALL PARTS SHOWN IN FIGS. A4010-B4J5 TO A4010-G4J5.	1	27560-
	DK105664-0340	. COUPLING ASS'Y.....	1	27560-
1	DK156631-1700	. . COUPLING.....	1	27560-
2	DK156633-5100	. . BOLT.....	2	27560-
3	DK156605-4320	. . PLATE.....	1	27560-
4	DK156617-2400	. . NUT.....	2	27560-
5	DK156633-4900	. . BOLT.....	2	27560-
6	DK156609-5600	. . COUPLING. CROSS.....	1	27560-
7	DK156633-4900	. . BOLT.....	2	27560-
8	DK156605-4320	. . PLATE.....	1	27560-
9	DK156633-4900	. . BOLT.....	2	27560-
10	DK156633-5200	. . BOLT.....	1	27560-
11	DK156615-2600	. . WASHER.....	1	27560-

FIG NO. : A4010-E4J5

INDEX	PART NO.	DESCRIPTION	Q'TY	SERIAL NO.
37	DK154401-2100	..BOLT	1	27560-
38	DK154416-0400	..SPRING	1	27560-
39	DK154404-5600	..COVER	1	27560-
40	DK020106-2540	..BOLT	2	27560-
41	DK154034-1900	..SCREW	1	27560-
42	DK013020-6040	..NUT	1	27560-
43	DK029731-0180	..BOLT, EYE	1	27560-
44	DK029341-0110	..GASKET	2	27560-
45	DK029312-0210	..SHIM, 0.2MM	AR	27560-
	DK029312-0180	..SHIM, 0.5MM	AR	27560-
46	DK154035-1600	..NUT, CAP	1	27560-
47	DK014110-6440	..WASHER, SPRING	1	27560-
48	DK154413-2600	..GASKET	2	27560-
49	DK026506-1040	..GASKET	2	27560-
50	DK029010-6310	..BOLT	1	27560-
51	DK026508-1140	..GASKET	2	27560-
52	DK154035-2000	.NUT, CAP	1	27560-
53	DK029310-9080	..SHIM	3	27560-
54	DK154036-1600	..ADAPTER	1	27560-
55	DK139806-0000	.BOLT, EYE	1	27560-
56	DK029340-6120	..GASKET	2	27560-
57	DK029331-0090	..GASKET	1	27560-

FIG. A4030-A4C6 FUEL INJECTION PUMP PIPING

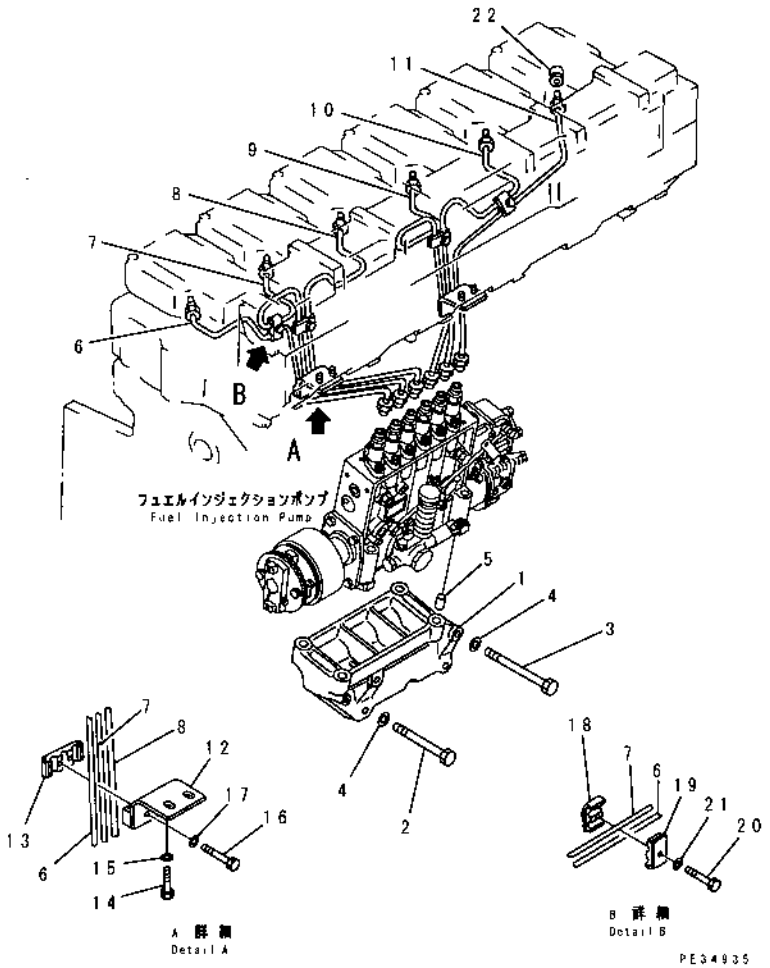

INDEX	PART NO.	DESCRIPTION	Q'TY	SERIAL NO
1	6211-21-6110	BRACKET	1	22537-
2	01010-81250	BOLT	2	22537-
3	01010-81280	BOLT	2	22537-
4	01640-21223	WASHER	4	22537-22720
5	6150-41-2430	PIN, DOWEL	2	22537-
6	6211-72-5110	TUBE, INJECTION, NO. 1	1	22537-
7	6211-72-5120	TUBE, INJECTION, NO. 2	1	22537-
8	6211-72-5130	TUBE, INJECTION, NO. 3	1	22537-
9	6211-72-5140	TUBE, INJECTION, NO. 4	1	22537-
10	6211-72-5150	TUBE, INJECTION, NO. 5	1	22537-
11	6211-72-5160	TUBE, INJECTION, NO. 6	1	22537-
12	6210-71-5512	CLAMP	2	23954-
	(☒6210-71-5511)	CLAMP	2	(23954-28742)
	□6210-71-5510	CLAMP	2	22537-23953
13	6210-71-5522	CLAMP	2	22537-
	(☒6210-71-5520)	CLAMP	2	(22537-28742)
14	01010-80820	BOLT	4	22537-
15	01640-20816	WASHER	4	22537-
16	01010-80635	BOLT	4	22537-
17	01643-30623	WASHER	4	28196-
	□01640-20610	WASHER	4	22537-28216
18	6215-71-5282	CLAMP, WITH THREAD	4	28743-
	◆6162-73-5510	CLAMP, WITH THREAD	4	22653-28742
19	6215-71-5292	CLAMP	4	28743-
	◆6162-73-5520	CLAMP	4	22653-28742
20	01010-80630	BOLT	4	28171-
	□01010-80625	BOLT	4	22537-28170
21	01643-30623	WASHER	4	28171-
	□01640-20610	WASHER	4	22537-28170
22	6215-71-9790	COVER	6	22537-

FIG. A4010-G4J5 FUEL INJECTION PUMP (FEED PUMP) (INNER PARTS) (#27560-)

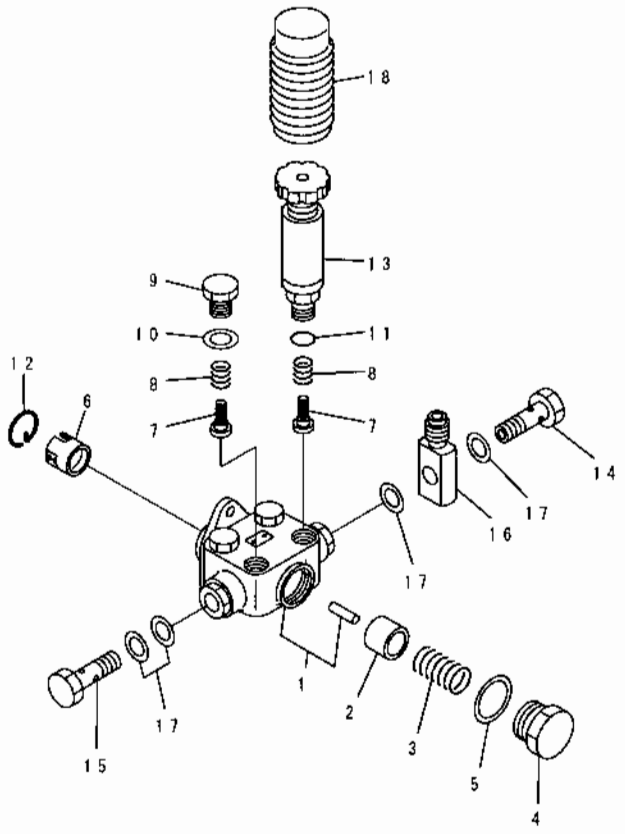

PD3P996

INDEX	PART NO	DESCRIPTION	Q'TY	SERIAL NO
	(6211-72-1150)	INJECTION PUMP ASS'Y. THIS ASSEMBLY CONSISTS OF ALL PARTS SHOWN IN FIGS. A4010-B4J5 TO A4010-G4J5.	1	27560-
	DK105237-5000	.FEED PUMP ASS'Y.	1	27560-
1	DK152004-3820	..HOUSING.	1	27560-
2	DK152100-1120	..PISTON.	1	27560-
3	DK152102-1600	..SPRING.	1	27560-
4	DK152105-1500	..PLUG.	1	27560-
5	DK029332-6030	..GASKET.	1	27560-
6	DK152111-4320	..TAPPET.	1	27560-
7	DK152115-0500	..VALVE.	4	27560-
8	DK152116-0200	..SPRING	4	27560-
9	DK152117-0400	. PLUG.	3	27560-
10	DK029331-6030	..GASKET.	3	27560-
11	DK029631-6060	..O-RING.	1	27560-
12	DK152121-0400	..RING, SNAP.	1	27560-
13	DK152200-5420	..PUMP, PRIMING.	1	27560-
14	DK152300-5920	..BOLT, EYE.	1	27560-
15	DK029731-4680	..BOLT, EYE.	1	27560-
16	DK029711-4430	..EYE.	1	27560-
17	DK029341-4130	..GASKET.	4	27560-
18	DK152320-0100	.COVER	1	27560-

FIG. A4060-A4B3 FUEL INJECTION PUMP LUBRICATOR

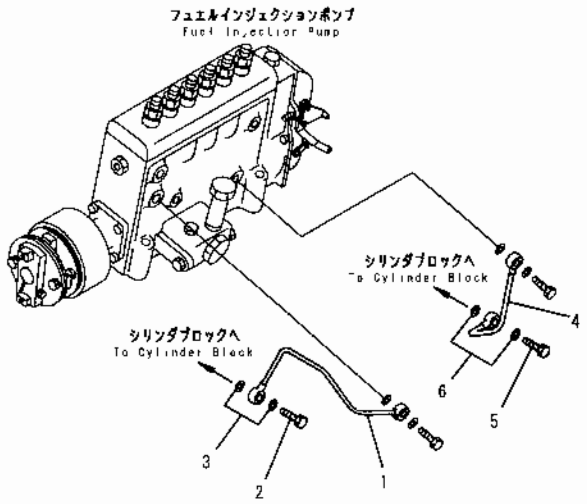

PQD3216

FIG NO. : A4060-A4B3

INDEX	PART NO	DESCRIPTION	Q'TY	SERIAL NO
1	6211-72-5610	TUBE	1	22537-
2	07206-30710	BOLT, JOINT	1	22537-
3	07005-01012	GASKET (K2)	2	22537-
4	6211-71-5710	TUBE, DRAIN	1	22537-
5	07206-31014	BOLT, JOINT	1	22537-
6	07005-01412	GASKET (K2)	2	22537-

FIG. A4080-A4A8 FUEL INJECTION PUMP DRIVE(#22653-)

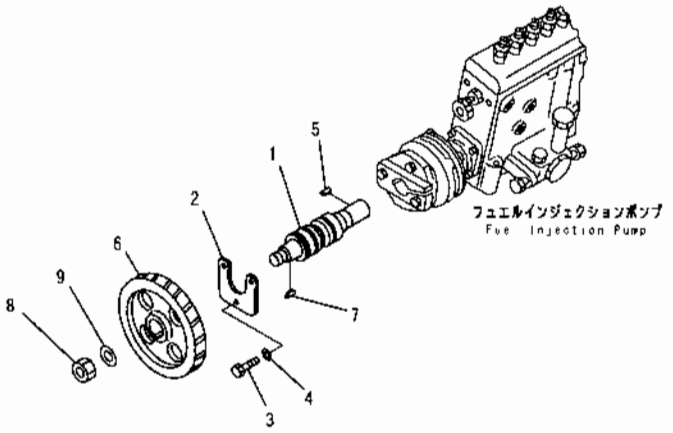

PED0663

FIG NO. : A4080-A4A8

INDEX	PART NO	DESCRIPTION	Q'TY	SERIAL NO
1	6212-72-3171	SHAFT	1	30202-
	□6212-72-3170	SHAFT	1	22653-30201
2	6212-71-3190	PLATE, THRUST	1	22653-
3	01010-80816	BOLT	3	22653-
4	01640-00816	WASHER	3	22653-
5	6150-71-3160	KEY	1	22653-
6	6210-72-3220	GEAR	1	22653-
7	6150-71-3160	KEY	1	22653-
8	01582-02419	NUT	1	22653-
9	01643-32460	WASHER	1	22653-

FIG. A4110-A4E4 FUEL FILTER

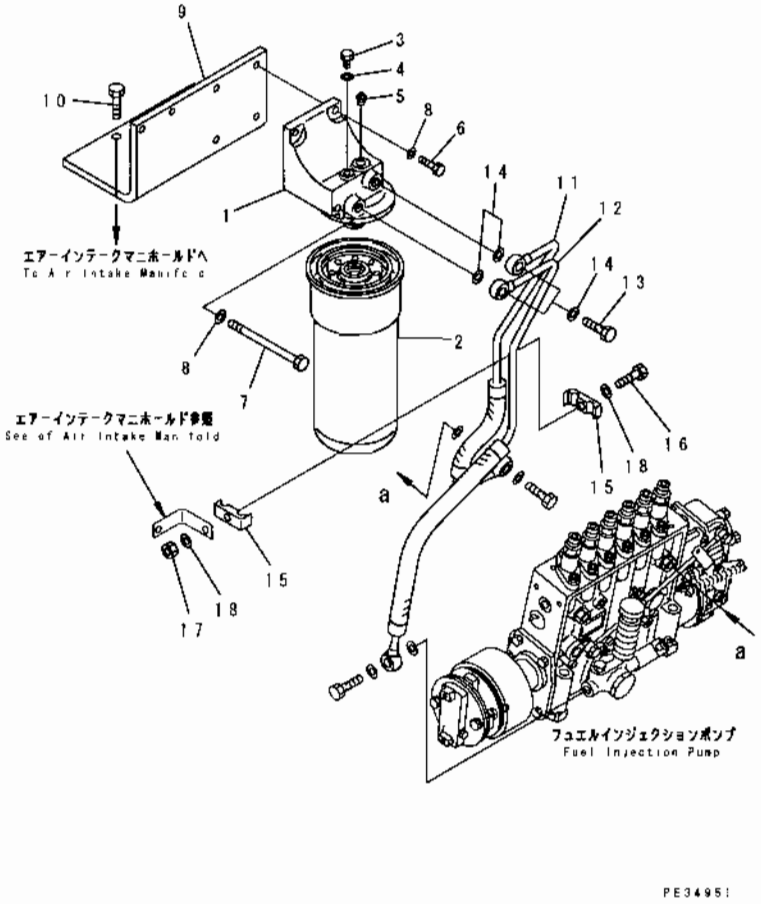

INDEX	PART NO	DESCRIPTION	Q'TY	SERIAL NO.
	6210-71-6202	FUEL FILTER ASS'Y.	1	22537-
1	6210-71-6210	.HEAD	1	22537-
2	600-311-7132	.CARTRIDGE	1	22537-
3	6110-73-6231	.PLUG	1	22537-
4	07005-00812	.GASKET	1	22537-
5	07043-70108	.PLUG	1	22537-
6	01010-81035	BOLT	2	22537-
7	01011-81015	BOLT	2	22537-
8	01643-31032	WASHER	4	22537-
9	6211-72-5250	BRACKET	1	22537-
10	01010-81030	BOLT	4	22537-
11	6211-72-5210	TUBE	1	22537-
12	6211-72-5220	TUBE	1	22537-
13	07206-31014	BOLT, JOINT	2	22537-
14	07005-01412	GASKET (K2)	4	22537-
15	6166-71-7850	CLAMP	2	22537-
16	01010-80840	BOLT	1	22537-
17	01580-10806	NUT	1	22537-
18	01643-30823	WASHER	2	22537-

FIG. A4110-A4H9 FUEL FILTER (SLAG HANDLING SPEC.) (#28419-)

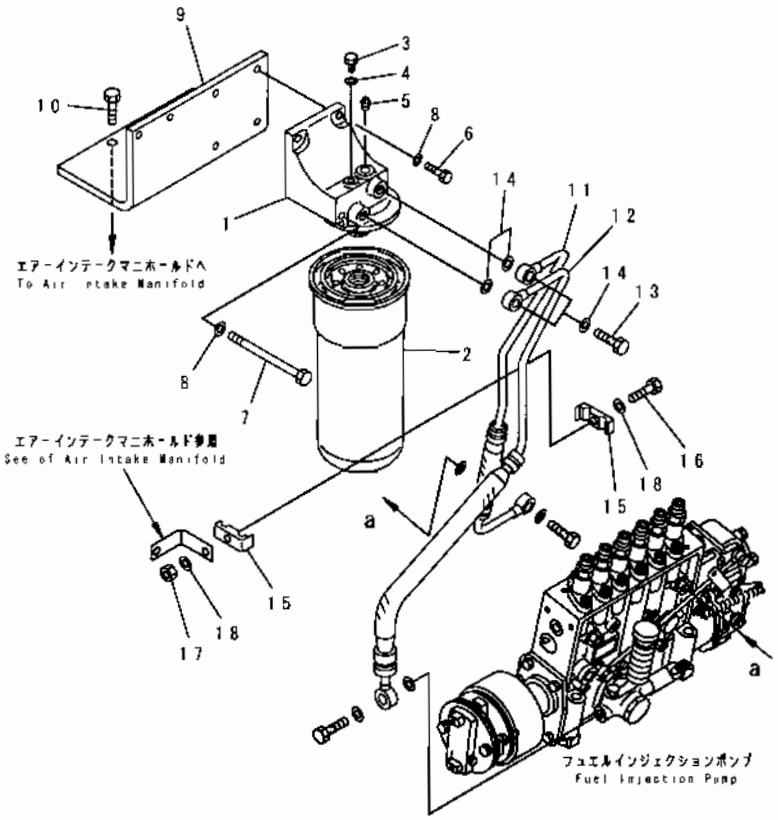

INDEX	PART NO.	DESCRIPTION	Q'TY	SERIAL NO
	6210-71-6202	FUEL FILTER ASS'Y	1	28419-
1	6210-71-6210	.HEAD	1	28419-
2	600-311-7132	.CARTRIDGE	1	28419-
3	6110-73-6231	.PLUG	1	28419-
4	07005-00812	.GASKET	1	28419-
5	07043-70108	.PLUG	1	28419-
6	01010-81035	BOLT	2	28419-
7	01011-81015	BOLT	2	28419-
8	01643-31032	WASHER	4	28419-
9	6211-72-5250	BRACKET	1	28419-
10	01010-81030	BOLT	4	28419-
11	6211-72-5310	TUBE	1	28419-
12	6211-72-5320	TUBE	1	28419-
13	07206-31014	BOLT, JOINT	2	28419-
14	07005-01412	GASKET (K2)	4	28419-
15	6166-71-7850	CLAMP	2	28419-
16	01010-80840	BOLT	1	28419-
17	01580-10806	NUT	1	28419-
18	01643-30823	WASHER	2	28419-

FIG. A4130-A4B3 WATER SEPARATOR

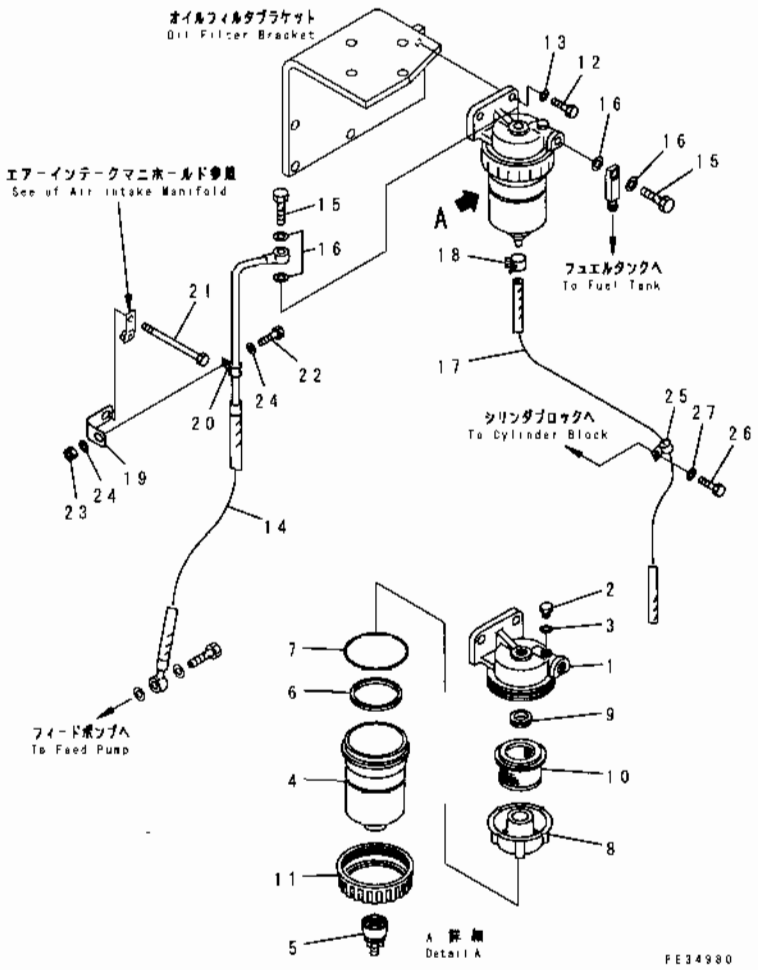

FIG NO. : A4130-A4B3

INDEX	PART NO.	DESCRIPTION	Q'TY	SERIAL NO
	600-311-9732	WATER SEPARATOR A.	1	27456-
	□600-311-9731	WATER SEPARATOR A.	1	22537-27455
1	600-311-9912	.COVER.	1	27456-
	□600-311-9911	.COVER	1	22537-27455
2	6110-73-6231	.PLUG,AIR.	1	22537-
3	07005-00812	.GASKET.	1	22537-
4	600-311-9921	.CASE.	1	27456-
	□600-311-9920	.CASE.	1	22537-27455
5	600-311-9760	.PLUG,DRAIN	1	22537-
6	600-311-9950	RING.	1	22537-
7	600-311-9490	.O-RING.	1	27456-
	□600-311-9890	O-RING.	1	22537-27455
8	600-311-9941	.BAFFLE.	1	22537-
9	600-311-9961	GASKET.	1	22537-
10	600-311-9971	.SCREEN.	1	22537-
11	600-311-9931	.NUT.	1	22537-
12	01010-81025	BOLT.	2	22537-
13	01643-31032	WASHER.	2	22537-
14	6211-71-5280	TUBE.	1	22537-
15	07206-31014	BOLT,JOINT.	2	22537-
16	07005-01412	GASKET. (K2)	4	22537-
17	07286-00875	HOSE.	1	22537-
18	07285-00125	CLIP.	1	22537-
19	6127-11-4421	PLATE.	1	22537-
20	6151-53-8280	CLIP.	1	22537-
21	01011-81065	BOLT.	1	22537-
22	01010-81025	BOLT.	1	22537-
23	01580-11008	NUT.	1	22537-
24	01643-31032	WASHER	2	22537-
25	04434-51610	CLIP.	1	22537-
26	01010-81020	BOLT.	1	22537-
27	01643-31032	WASHER.	1	22537-

FIG. A4210-A4E5 INJECTION NOZZLE (#25748-)

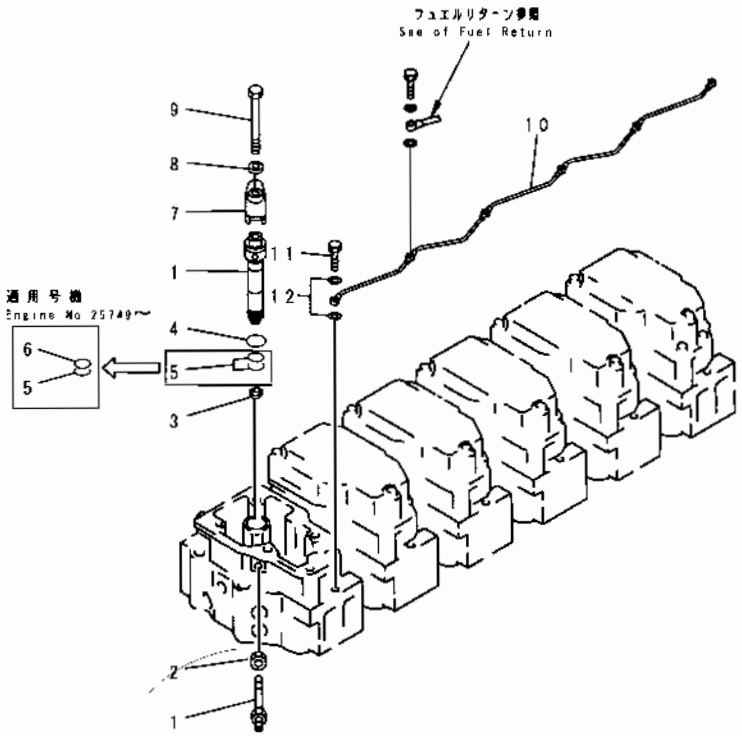

FIG NO. : A4210-A4E5

INDEX	PART NO.	DESCRIPTION	Q'TY	SERIAL NO
1	(6211-12-3600)	NOZZLE HOLDER ASS'Y. (SEE FIG. A4210-B4E5)	6	25748-
2	6211-71-9770	NUT	6	25748-
3	6210-71-1160	GASKET (K1)	6	25748-
4	6210-11-7710	O-RING (K1)	6	25748-
5	07000-F2021	O-RING (K1)	6	25749-
	□07000-22021	O-RING (K1)	6	25748-25750
6	6210-11-7720	O-RING (K1)	6	25748-
7	6210-71-1150	HOLDER	6	25748-
8	6210-71-1140	WASHER	6	25748-
9	01011-81020	BOLT	6	25748-
10	6211-71-5341	TUBE	1	25748-
11	07206-20508	BOLT, JOINT	5	25748-
12	07005-00812	GASKET (K1)	10	25748-

FIG. A4210-B4E5 NOZZLE HOLDER (INNER PARTS) (#25748-)

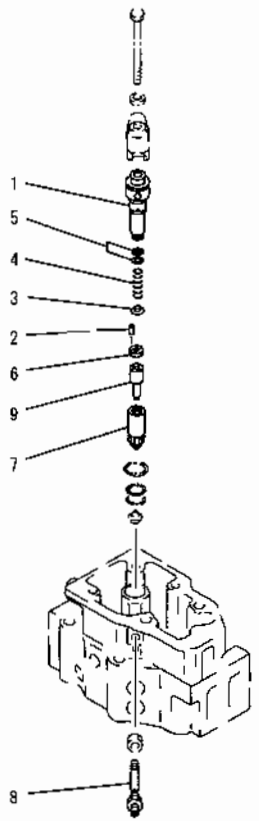

PE39847

INDEX	PART NO	DESCRIPTION	Q'TY	SERIAL NO
	6211-12-3600	NOZZLE HOLDER ASS'Y	6	25748-
1	6212-11-3212	.HOLDER ASS'Y	1	25748-
2	DK150525-1700	. PIN	1	25748-
3	DK150550-5900	..ROD, PUSH	1	25748-
4	DK150562-6200	..SPRING	1	25748-
5	DK150530-4000	..SHIM, 0.500MM	AR	25748-
	DK150530-4100	..SHIM, 0.525MM	AR	25748-
	DK150530-4200	..SHIM, 0.550MM	AR	25748-
	DK150530-4300	..SHIM, 0.575MM	AR	25748-
	DK150530-4400	..SHIM, 0.600MM	AR	25748-
	DK150530-4500	..SHIM, 0.625MM	AR	25748-
	DK150530-4600	..SHIM, 0.650MM	AR	25748-
	DK150530-4700	..SHIM, 0.675MM	AR	25748-
	DK150530-4800	..SHIM, 0.700MM	AR	25748-
	DK150530-4900	.SHIM, 0.725MM	AR	25748-
	DK150530-5000	..SHIM, 0.750MM	AR	25748-
	DK150530-5100	..SHIM, 0.775MM	AR	25748-
	DK150530-5200	..SHIM, 0.800MM	AR	25748-
	DK150530-5300	..SHIM, 0.825MM	AR	25748-
	DK150530-5400	..SHIM, 0.850MM	AR	25748-
	DK150530-5500	..SHIM, 0.875MM	AR	25748-
	DK150530-5600	..SHIM, 0.900MM	AR	25748-
	DK150530-5700	..SHIM, 0.925MM	AR	25748-
	DK150530-5800	..SHIM, 0.950MM	AR	25748-
	DK150530-5900	..SHIM, 0.975MM	AR	25748-
	DK150530-6000	..SHIM, 1.000MM	AR	25748-
	DK150530-6100	..SHIM, 1.025MM	AR	25748-
	DK150530-6200	..SHIM, 1.050MM	AR	25748-
	DK150530-6300	..SHIM, 1.075MM	AR	25748-
	DK150530-6400	..SHIM, 1.100MM	AR	25748-
	DK150530-6500	..SHIM, 1.125MM	AR	25748-
	DK150530-6600	.SHIM, 1.150MM	AR	25748-
	DK150530-6700	..SHIM, 1.175MM	AR	25748-
	DK150530-6800	..SHIM, 1.200MM	AR	25748-
	DK150530-6900	..SHIM, 1.225MM	AR	25748-
	DK150530-7000	..SHIM, 1.250MM	AR	25748-
	DK150530-7100	..SHIM, 1.275MM	AR	25748-
	DK150530-7200	..SHIM, 1.300MM	AR	25748-
	DK150530-7300	.SHIM, 1.325MM	AR	25748-
	DK150530-7400	..SHIM, 1.350MM	AR	25748-
	DK150530-7500	..SHIM, 1.375MM	AR	25748-
	DK150530-7600	..SHIM, 1.400MM	AR	25748-

FIG. A4210-B4E5 NOZZLE HOLDER (INNER PARTS) (#25748-)

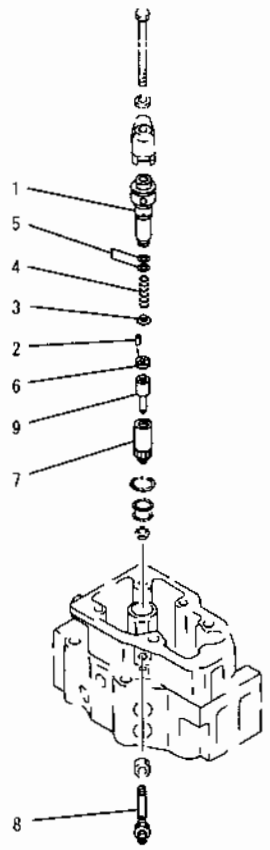

PE39847

FIG NO. : A4210-B4E5

INDEX	PART NO	DESCRIPTION	Q'TY	SERIAL NO.
	DK150530-7700	..SHIM, 1.425MM	AR	25748-
	DK150530-7800	..SHIM, 1.450MM	AR	25748-
	DK150530-7900	.SHIM, 1.475MM	AR	25748-
	DK150530-8000	..SHIM, 1.500MM	AR	25748-
	DK150530-8100	..SHIM, 1.525MM	AR	25748-
	DK150530-8200	..SHIM, 1.550MM	AR	25748-
	DK150530-8300	..SHIM, 1.575MM	AR	25748-
	DK150530-8400	..SHIM, 1.600MM	AR	25748-
	DK150530-8500	..SHIM, 1.625MM	AR	25748-
	DK150530-8600	..SHIM, 1.650MM	AR	25748-
	DK150530-8700	..SHIM, 1.675MM	AR	25748-
	DK150530-8800	..SHIM, 1.700MM	AR	25748-
	DK150530-8900	..SHIM, 1.725MM	AR	25748-
	DK150530-9000	..SHIM, 1.750MM	AR	25748-
	DK150530-9100	..SHIM, 1.775MM	AR	25748-
	DK150530-9200	..SHIM, 1.800MM	AR	25748-
	DK150530-9300	..SHIM, 1.825MM	AR	25748-
	DK150530-9400	..SHIM, 1.850MM	AR	25748-
	DK150530-9500	..SHIM, 1.875MM	AR	25748-
	DK150530-9600	..SHIM, 1.900MM	AR	25748-
	DK150530-9700	..SHIM, 1.925MM	AR	25748-
	DK150530-9800	.SHIM, 1.950MM	AR	25748-
	DK150530-9900	..SHIM, 1.975MM	AR	25748-
6	DK150524-4100	.SPACER	1	25748-
7	DK150651-0000	..NUT	1	25748-
8	6211-11-3131	..CONNECTOR	1	25748-
9	6211-12-3620	.NOZZLE	1	25748-

FIG. A4230-A4D5 FUEL RETURN (#25887-)

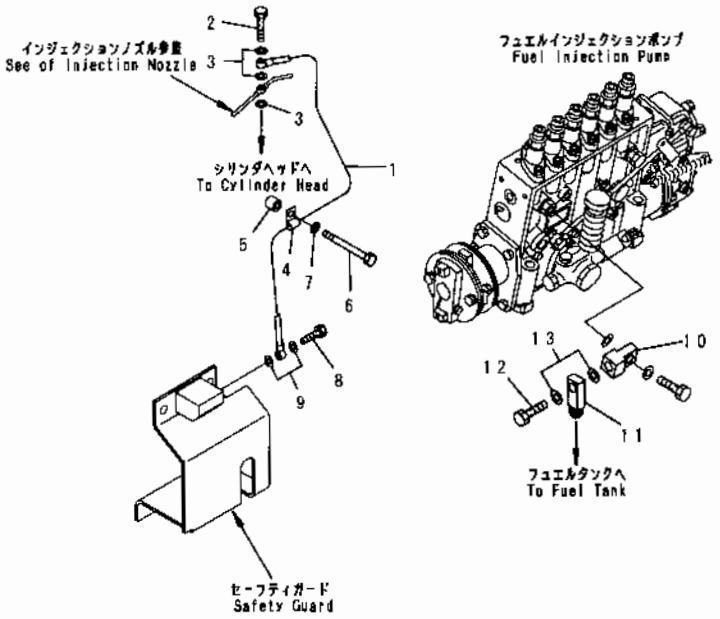

INDEX	PART NO	DESCRIPTION	Q'TY	SERIAL NO
1	6211-72-5810	TUBE	1	25887-
2	6210-71-5370	BOLT, JOINT	1	25887-
3	07005-00812	GASKET (K1)	3	25887-
4	6210-51-8320	CLIP	1	28361-
	□04434-50810	CLIP	1	25887-28360
5	6631-11-5630	SPACER	1	25887-
6	01011-81020	BOLT	1	25887-
7	01640-21016	WASHER	1	25887-
8	07206-30812	BOLT, JOINT	1	25887-
9	07005-01212	GASKET	2	25887-
10	6212-71-8540	JOINT	1	25887-
11	6151-71-8810	JOINT	1	25887-
12	07206-31014	BOLT, JOINT	1	25887-
13	07005-01412	GASKET	2	25887-

FIG. A5010-A4F4 WATER PUMP (#27560-)

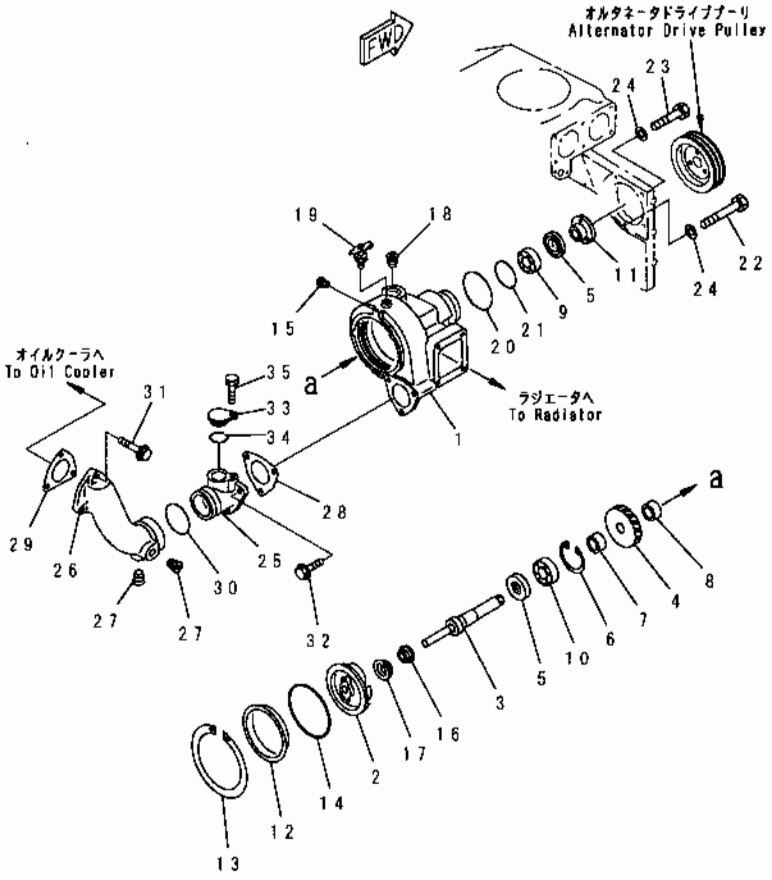

INDEX	PART NO	DESCRIPTION	Q'TY	SERIAL NO
	6212-61-1203	WATER PUMP ASS'Y	1	27560-
1	☆	.BODY	1	27560-
2	6212-61-1220	.IMPELLER	1	27560-
3	6212-61-1322	.SHAFT	1	27560-
4	6212-61-1410	.GEAR	1	27560-
5	6210-61-1520	.SEAL, OIL (K6)	2	27560-
6	04065-07225	.RING, SNAP	1	27560-
7	6212-61-1370	.SPACER	1	27560-
8	6212-61-1380	.SPACER	1	27560-
9	06000-06305	.BEARING, BALL	1	27560-
10	06030-06306	.BEARING, BALL	1	27560-
11	6210-61-1350	.FLANGE	1	27560-
12	6212-61-1150	.COVER	1	27560-
13	6136-61-1130	.RING, SNAP	1	27560-
14	07000-02145	.O-RING (K6)	1	27560-
15	02720-10104	.PLUG	1	27560-
16	6211-61-1530	.SEAL, WATER (K6)	1	27560-
17	6212-61-1330	.RING	1	27560-
18	07043-A1019	PLUG	1	27560-
19	07062-00000	.VALVE	1	27560-
20	07000-72115	O-RING	1	27560-
21	07000-72070	O-RING	1	27560-
22	01010-81095	BOLT	3	27560-
23	01010-81080	BOLT	1	27560-
24	01640-21016	WASHER	4	27560-
25	6210-61-6360	TUBE	1	27560-
26	6210-61-6350	ELBOW	1	27560-
27	07043-00415	PLUG	2	27560-
28	6210-61-6371	GASKET (K6)	1	27560-
29	6210-61-6341	GASKET (K6)	1	27560-
30	07000-G5065	O-RING	1	27560-
31	01437-11080	BOLT	3	27560-
32	01437-11025	BOLT	3	27560-
33	6210-61-6570	COVER	1	27560-
34	07000-G3032	O-RING	1	27560-
35	01010-81020	BOLT	1	27560-

FIG NO. : A5010-B4F4

FIG. A5010-B4F4 THERMOSTAT AND PIPING(#27560-)

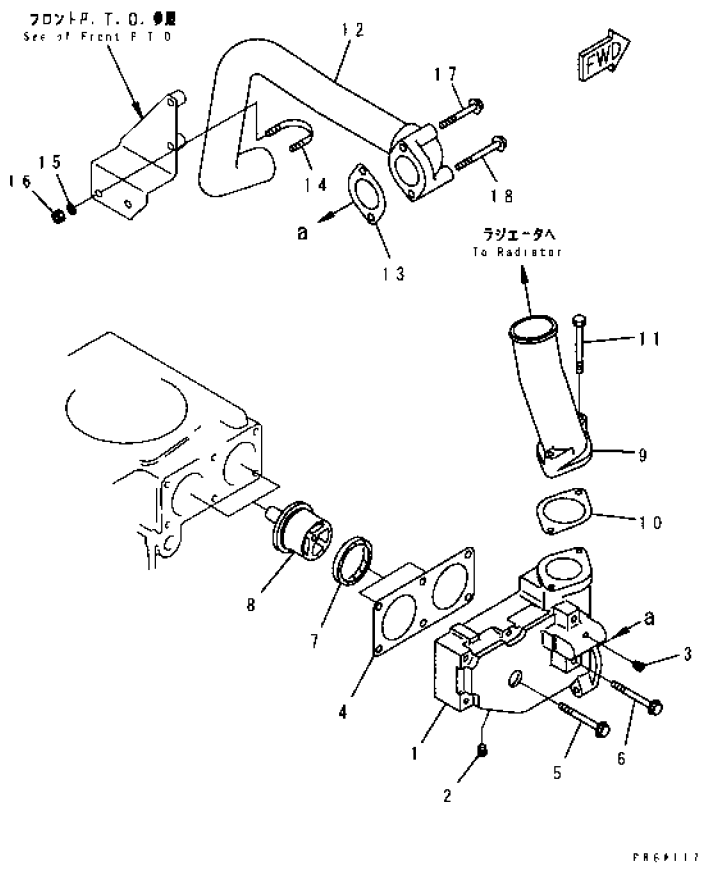

INDEX	PART NO	DESCRIPTION	Q'TY	SERIAL NO
1	6211-61-6410	HOUSING, THERMOSTAT	1	27560-
2	02720-20204	PLUG	1	27560-
3	07043-00108	PLUG	1	27560-
4	6210-61-6421	GASKET (K2)	1	27560-
5	01437-01065	BOLT	4	27560-
6	01438-01005	BOLT	2	27560-
7	6162-13-6440	SEAL, THERMOSTAT (K2)	2	27560-
8	600-421-6630	THERMOSTAT	2	27560-
9	6210-61-6450	CONNECTOR	1	27560-
10	6210-61-6441	GASKET (K2)	1	27560-
11	01010-81050	BOLT	2	27560-
12	6212-62-6820	TUBE	1	27560-
13	6210-61-6870	GASKET (K2)	1	27560-
14	07283-24949	CLIP	1	27560-
15	01643-31032	WASHER	2	27560-
16	01599-01011	NUT	2	27560-
17	01435-01070	BOLT	1	27560-
18	01435-01085	BOLT	1	27560-

FIG. A5010-C4F4 AIR VENT (#27560-)

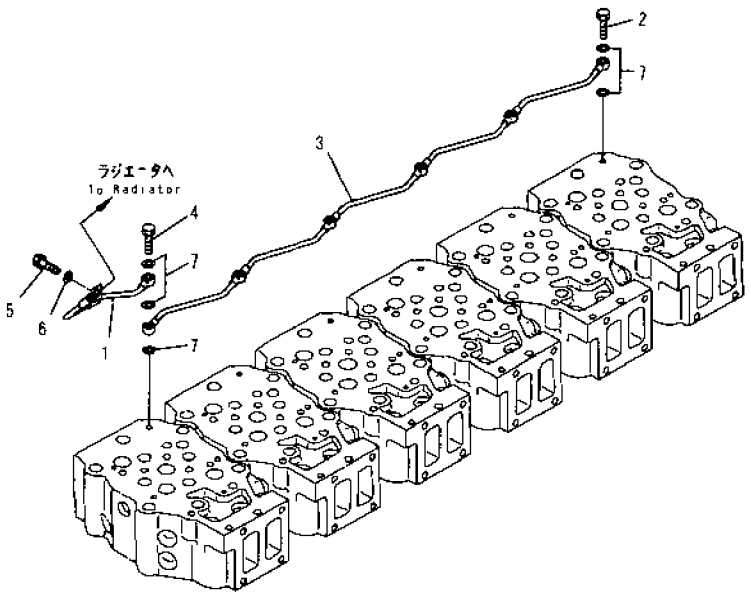

FIG NO. : A5010-C4F4

INDEX	PART NO.	DESCRIPTION	Q'TY	SERIAL NO
1	6210-11-6621	TUBE	1	27560-
2	07206-30710	BOLT, JOINT	5	27560-
3	6210-11-6521	TUBE	1	27560-
4	6215-11-6560	BOLT, JOINT	1	27560-
5	01050-31020	BOLT	1	27560-
6	01640-21016	WASHER	1	27560-
7	07003-01015	GASKET	13	27560-

FIG NO. : A5080-A4B2

FIG. A5080-A4B2 TENSION PULLEY (WITH HARDENING PULLEY)

(#27560-)

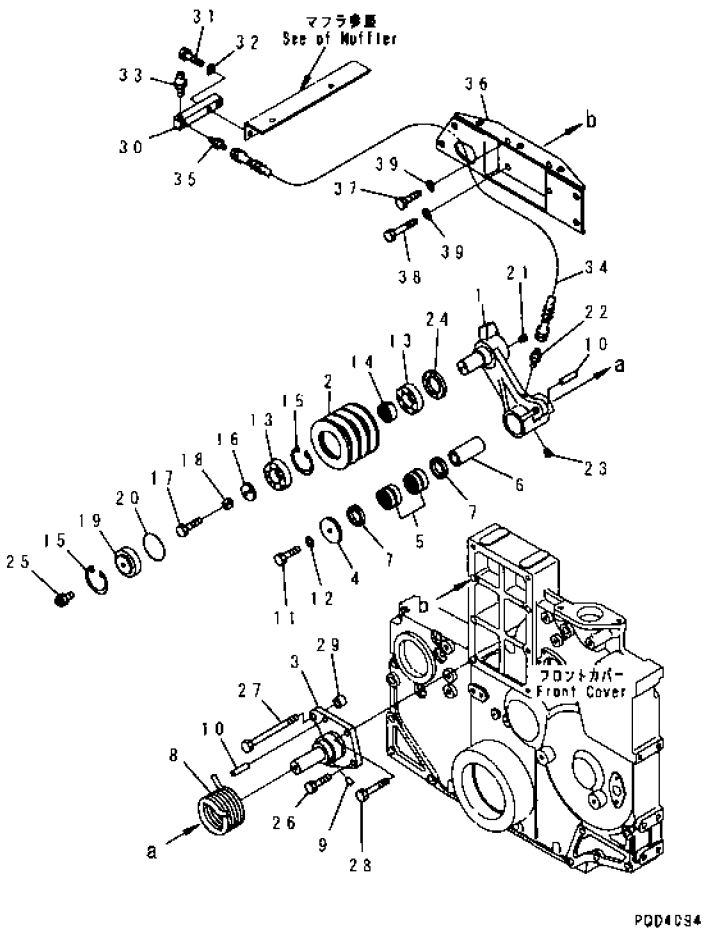

INDEX	PART NO.	DESCRIPTION	Q'TY	SERIAL NO
	6210-62-3401	TENSION PULLEY ASS'Y	1	27561-
	□6210-62-3400	TENSION PULLEY ASS'Y	1	27560-27560
1	6210-62-3410	.LEVER ASS'Y	1	27560-
	☆	..LEVER	1	27560-
	6210-62-3450	..SHAFT	1	27560-
2	6210-62-3430	.PULLEY, HARDENING	1	27560-
3	6210-61-3421	.SHAFT	1	27560-
4	6691-61-2720	.PLATE	1	27560-
5	6162-64-3910	.BEARING	2	27560-
6	6162-64-3920	RACE, INNER	1	27560-
7	6162-64-3930	.SEAL, OIL	2	27560-
8	6210-61-3460	.SPRING	1	27560-
9	04020-00820	.PIN, DOWEL	1	27560-
10	04022-12050	PIN, DOWEL	2	27560-
11	01010-81025	.BOLT	1	27560-
12	01643-31032	WASHER	1	27560-
13	6212-61-3721	.BEARING, BALL	2	28521-
	□6212-61-3720	.BEARING, BALL	2	27560-28520
14	6210-62-3480	SPACER	1	27560-
15	04065-06525	.RING, SNAP	2	27560-
16	6212-61-3750	.WASHER	1	27560-
17	01010-80820	.BOLT	2	27560-
18	6127-61-3790	.LOCK	1	27560-
19	6212-62-3660	.COVER	1	27560-
20	07000-52065	.O-RING	1	27560-
21	07043-00108	.PLUG	1	27560-
22	203-62-21740	.NIPPLE	1	27560-
23	07043-00108	.PLUG	1	27560-
24	07012-00042	.SEAL	1	27560-
25	07029-00000	.VALVE	1	27560-
26	01010-81230	BOLT	2	27560-
27	01011-81200	BOLT	1	27560-
28	01011-81205	BOLT	1	27560-
29	419-54-11270	SPACER	1	27560-
30	6210-61-3370	SEAT	1	27560-
31	01010-81040	BOLT	2	27560-
32	01643-31032	WASHER	2	27560-
33	07020-00675	FITTING, GREASE	1	28011-
	□07020-00000	FITTING, GREASE	1	27560-28010
34	198-03-16470	HOSE	1	27560-
35	203-62-21740	NIPPLE	1	27560-
36	175-03-71611	BRACKET	1	28011-

FIG. A5080-A4B2 TENSION PULLEY (WITH HARDENING PULLEY)

(#27560-)

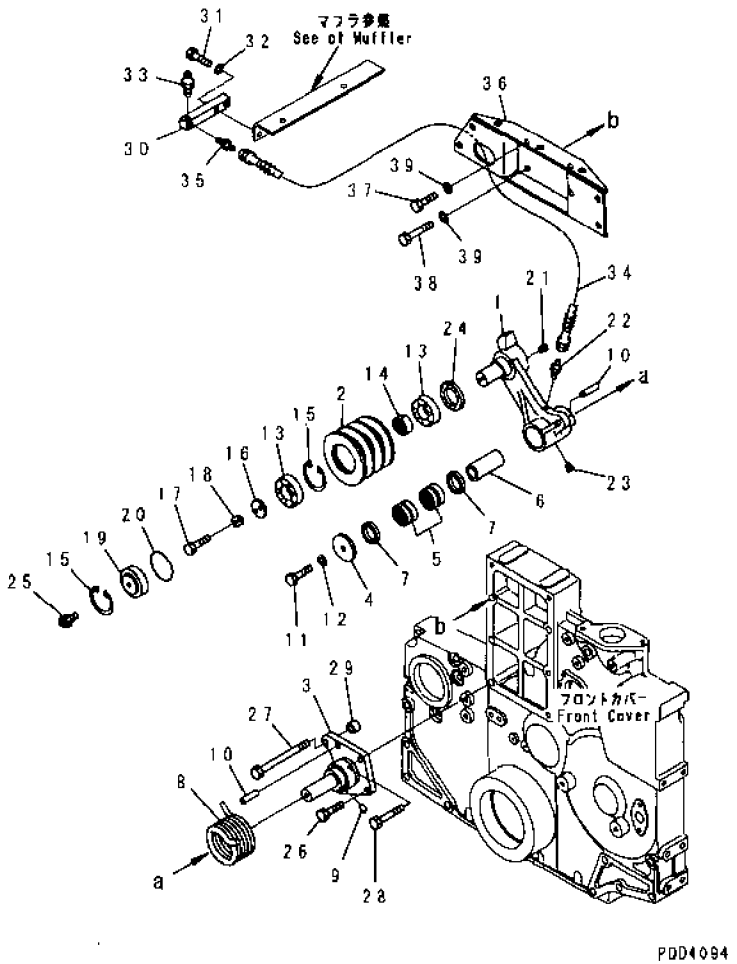

FIG NO. : A5080-A4B2

INDEX	PART NO	DESCRIPTION	Q'TY	SERIAL NO
	□175-03-71610	BRACKET	1	27560-28010
37	01010-81235	BOLT	2	27560-
38	01011-81205	BOLT	2	27560-
39	01640-21223	WASHER	4	27560-

FIG. A5210-A4F6 CORROSION RESISTOR (SLAG HANDLING SPEC.)

(#28419-)

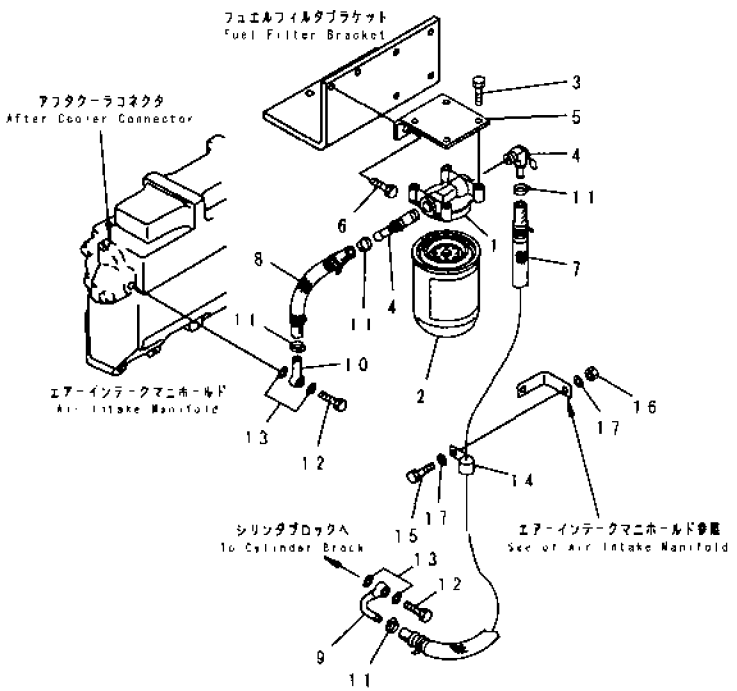

FIG NO. : A5210-A4F6

INDEX	PART NO	DESCRIPTION	Q'TY	SERIAL NO
	6150-61-8172	RESISTOR ASS'Y	1	28419-
1	6150-61-8211	.HEAD	1	28419-
2	600-411-1151	.CARTRIDGE	1	28419-
3	02010-70625	BOLT	4	28419-
4	6150-61-8411	VALVE	2	28419-
5	6211-61-8110	BRACKET	1	28419-
6	01010-81025	BOLT	2	28419-
7	6127-61-8160	HOSE	1	28419-
8	6127-61-8120	HOSE	1	28419-
9	6144-71-5760	JOINT	1	28419-
10	6144-71-5750	JOINT	1	28419-
11	07281-00197	CLAMP	4	28419-
12	07206-31014	BOLT, JOINT	2	28419-
13	07005-01412	GASKET (K2)	4	28419-
14	04434-52511	CLIP	1	28419-
15	01010-81025	BOLT	1	28419-
16	01580-11008	NUT	1	28419-
17	01643-31032	WASHER	2	28419-

FIG. A5210-A4D3 CORROSION RESISTOR

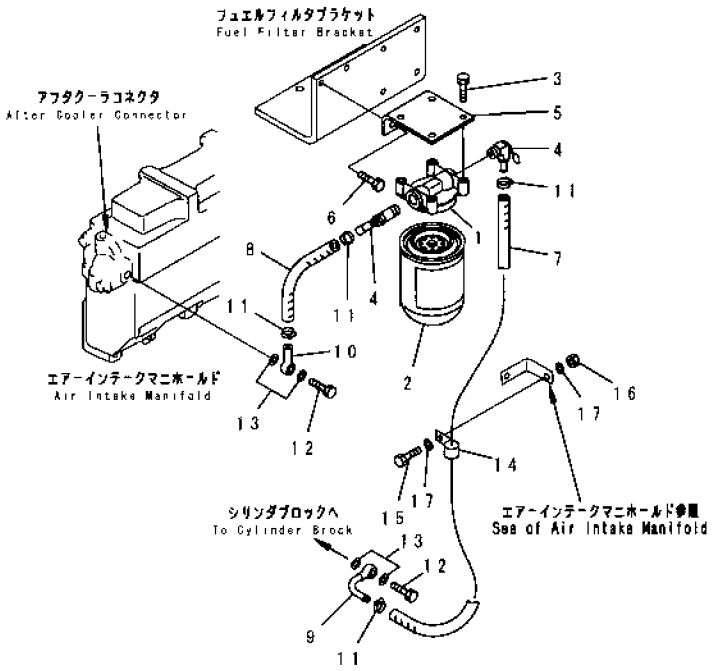

FIG NO. : A5210-A4D3

INDEX	PART NO.	DESCRIPTION	Q'TY	SERIAL NO
	6150-61-8172	RESISTOR ASS'Y	1	22537-
1	6150-61-8211	.HEAD	1	22537-
2	600-411-1151	.CARTRIDGE	1	22537-
3	02010-70625	BOLT	4	22537-
4	6150-61-8411	VALVE	2	22537-
5	6211-61-8110	BRACKET	1	22537-
6	01010-81025	BOLT	2	22537-
7	07260-20971	HOSE	1	22537-
8	07260-20922	HOSE	1	22537-
9	6144-71-5760	JOINT	1	22537-
10	6144-71-5750	JOINT	1	22537-
11	07281-00197	CLAMP	4	22537-
12	07206-31014	BOLT, JOINT	2	22537-
13	07005-01412	GASKET (K2)	4	22537-
14	04434-51610	CLIP	1	24428-
	□04434-51710	CLIP	1	22537-24427
15	01010-81025	BOLT	1	22537-
16	01580-11008	NUT	1	22537-
17	01643-31032	WASHER	2	22537-

FIG. A6010-A4D6 ALTERNATOR MOUNTING (35A)

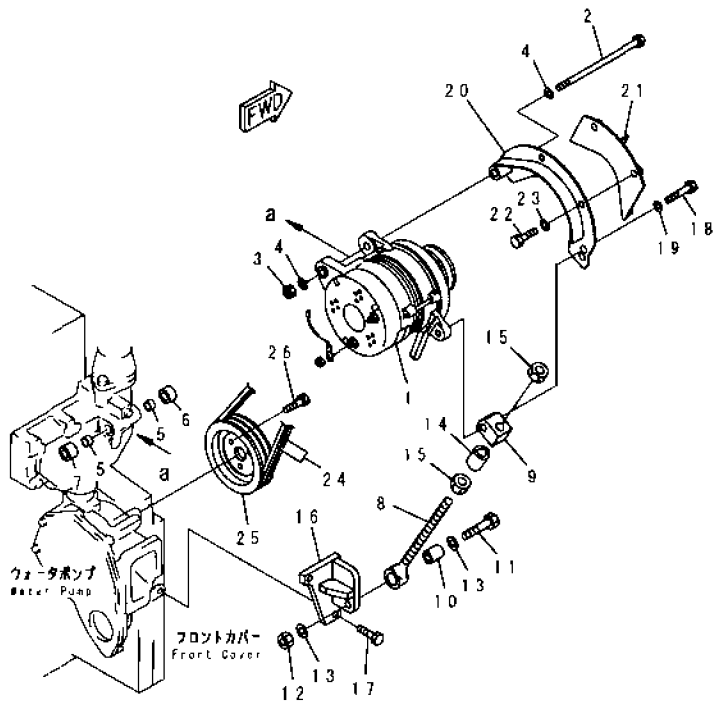

FIG NO. : A6010-A4D6

INDEX	PART NO	DESCRIPTION	Q'TY	SERIAL NO.
1	(600-825-3111)	ALTERNATOR A. (35A). (SEE FIG A6010-B4D6)	1	22950-
	(□600-825-3110)	ALTERNATOR A. (35A). (SEE FIG A6010-B4D6)	1	22537-22949
2	6210-81-6490	BOLT	1	22537-
3	01582-01210	NUT	1	22537-
4	01643-31232	WASHER	2	22537-
5	6210-61-6530	PIN	2	22537-
6	6210-81-6750	SPACER	1	22537-
7	6144-85-6550	SPACER	1	22537-
8	6150-82-8610	ROD, ADJUST	1	22537-
9	6150-82-8690	PLATE	1	22537-
10	6215-81-6150	PIN	1	22537-
11	01010-81260	BOLT	1	22537-
12	01580-11210	NUT	1	22537-
13	01640-21223	WASHER	2	22537-
14	6933-51-5150	SPACER	1	22537-
15	01580-11411	NUT	2	22537-
16	6210-82-6570	BRACKET	1	22537-
17	01010-81025	BOLT	2	22537-
18	01050-51260	BOLT	1	22537-
19	01643-31232	WASHER	1	22537-
20	6210-82-6450	COVER	1	22537-
21	6210-81-6361	COVER	1	22537-
22	01050-51020	BOLT	2	22537-
23	01640-21016	WASHER	2	22537-
24	6212-85-6840	V-BELT SET	1	22537-
25	6210-82-6840	PULLEY, HARDENING	1	22537-
26	01010-80820	BOLT	3	22537-

FIG. A6010-A4D7Z ALTERNATOR MOUNTING (50A) (#27560-)

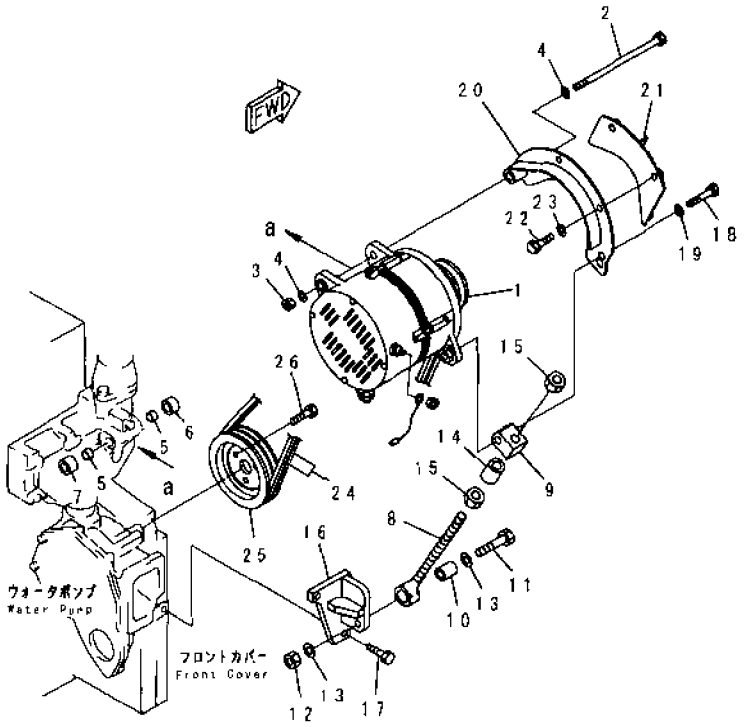

PE35072

FIG NO. : A6010-A4D7Z

INDEX	PART NO	DESCRIPTION	Q'TY	SERIAL NO.
1	(600-825-6110)	ALTERNATOR A. (60A) (SEE FIG. A6010-B4D7Y)	1	28011-
	(□600-821-9770)	ALTERNATOR A. (50A) (SEE FIG. A6010-B4D7Z)	1	27560-28010
2	6210-81-6490	BOLT	1	27560-
3	01582-01210	NUT	1	27560-
4	01643-31232	WASHER	2	27560-
5	6210-61-6530	PIN	2	27560-
6	6210-81-6750	SPACER	1	27560-
7	6144-85-6550	SPACER	1	27560-
8	6150-82-8610	ROD, ADJUST	1	27560-
9	6150-82-8690	PLATE	1	27560-
10	6215-81-6150	PIN	1	27560-
11	01010-81260	BOLT	1	27560-
12	01580-11210	NUT	1	27560-
13	01640-21223	WASHER	2	27560-
14	6933-51-5150	SPACER	1	27560-
15	01580-11411	NUT	2	27560-
16	6210-82-6570	BRACKET	1	27560-
17	01010-81025	BOLT	2	27560-
18	01050-51260	BOLT	1	27560-
19	01643-31232	WASHER	1	27560-
20	6210-82-6450	COVER	1	27560-
21	6210-81-6361	COVER	1	27560-
22	01050-51020	BOLT	2	27560-
23	01640-21016	WASHER	2	27560-
24	6212-85-6840	V-BELT SET	1	27560-
25	6210-82-6840	PULLEY, HARDENING	1	27560-
26	01010-80820	BOLT	3	27560-

FIG NO. : A6010-A4F8

FIG. A6010-A4F8 ALTERNATOR MOUNTING (50A) (WITH HARDENING PULLEY) (#25887-)

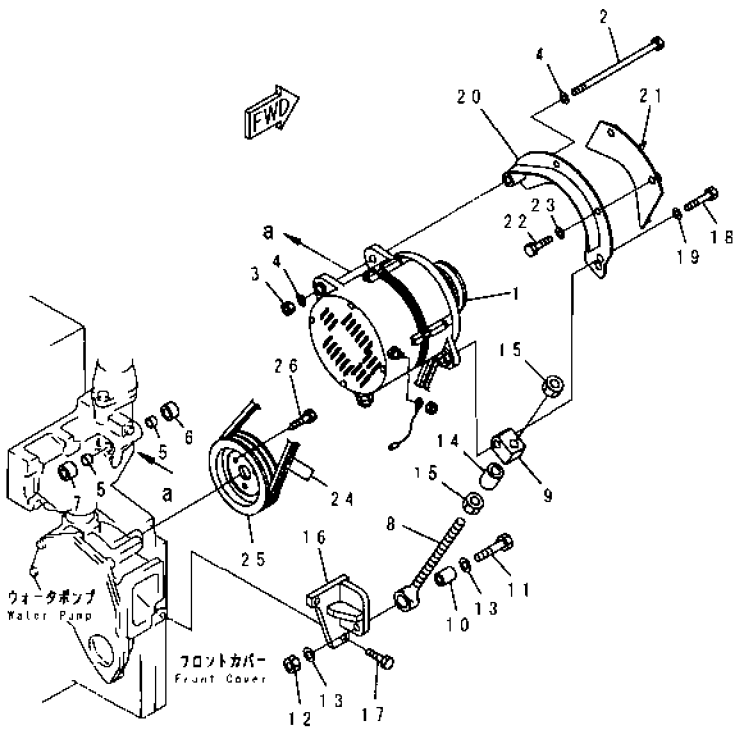

INDEX	PART NO	DESCRIPTION	Q TY	SERIAL NO
1	(600-825-6270)	ALTERNATOR A. (60A). (SEE FIG. A6010-C4F8)	1	27971-
	(◆600-825-6410)	ALTERNATOR A. (50A). (SEE FIG. A6010-B4F8)	1	25887-27970
2	6210-81-6490	BOLT	1	25887-
3	01582-01210	NUT	1	25887-
4	01643-31232	WASHER	2	25887-
5	6210-61-6530	PIN	2	25887-
6	6210-81-6750	SPACER	1	25887-
7	6144-85-6550	SPACER	1	25887-
8	6150-82-8610	ROD, ADJUST	1	25887-
9	6150-82-8690	PLATE	1	25887-
10	6215-81-6150	PIN	1	25887-
11	01010-81260	BOLT	1	25887-
12	01580-11210	NUT	1	25887-
13	01640-21223	WASHER	2	25887-
14	6933-51-5150	SPACER	1	25887-
15	01580-11411	NUT	2	25887-
16	6210-82-6570	BRACKET	1	25887-
17	01010-81025	BOLT	2	25887-
18	01050-51260	BOLT	1	25887-
19	01643-31232	WASHER	1	25887-
20	6210-82-6450	COVER	1	25887-
21	6210-81-6361	COVER	1	25887-
22	01050-51020	BOLT	2	25887-
23	01640-21016	WASHER	2	25887-
24	6212-85-6840	V-BELT SET	1	25887-
25	6210-82-6840	PULLEY, HARDENING	1	25887-
26	01010-80820	BOLT	3	25887-

FIG. A6010-A4F7 ALTERNATOR MOUNTING (35A) (WITH HARDENING PULLEY) (#25887-)

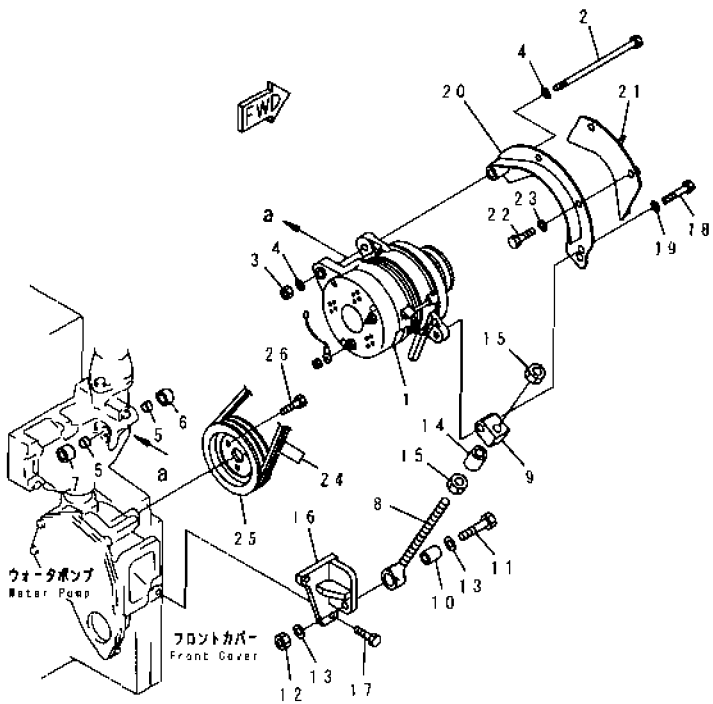

INDEX	PART NO	DESCRIPTION	Q'TY.	SERIAL NO
1	(600-825-3210)	ALTERNATOR A. (35A). (SEE FIG. A6010-84F7)	1	25887-
2	6210-81-6490	BOLT	1	25887-
3	01582-01210	NUT	1	25887-
4	01643-31232	WASHER	2	25887-
5	6210-61-6530	PIN	2	25887-
6	6210-81-6750	SPACER	1	25887-
7	6144-85-6550	SPACER	1	25887-
8	6150-82-8610	ROD, ADJUST	1	25887-
9	6150-82-8690	PLATE	1	25887-
10	6215-81-6150	PIN	1	25887-
11	01010-81260	BOLT	1	25887-
12	01580-11210	NUT	1	25887-
13	01640-21223	WASHER	2	25887-
14	6933-51-5150	SPACER	1	25887-
15	01580-11411	NUT	2	25887-
16	6210-82-6570	BRACKET	1	25887-
17	01010-81025	BOLT	2	25887-
18	01050-51260	BOLT	1	25887-
19	01643-31232	WASHER	1	25887-
20	6210-82-6450	COVER	1	25887-
21	6210-81-6361	COVER	1	25887-
22	01050-51020	BOLT	2	25887-
23	01640-21016	WASHER	2	25887-
24	6212-85-6840	V-BELT SET	1	25887-
25	6210-82-6840	PULLEY, HARDENING	1	25887-
26	01010-80820	BOLT	3	25887-

FIG. A6010-B4D6 ALTERNATOR (35A) (INNER PARTS)

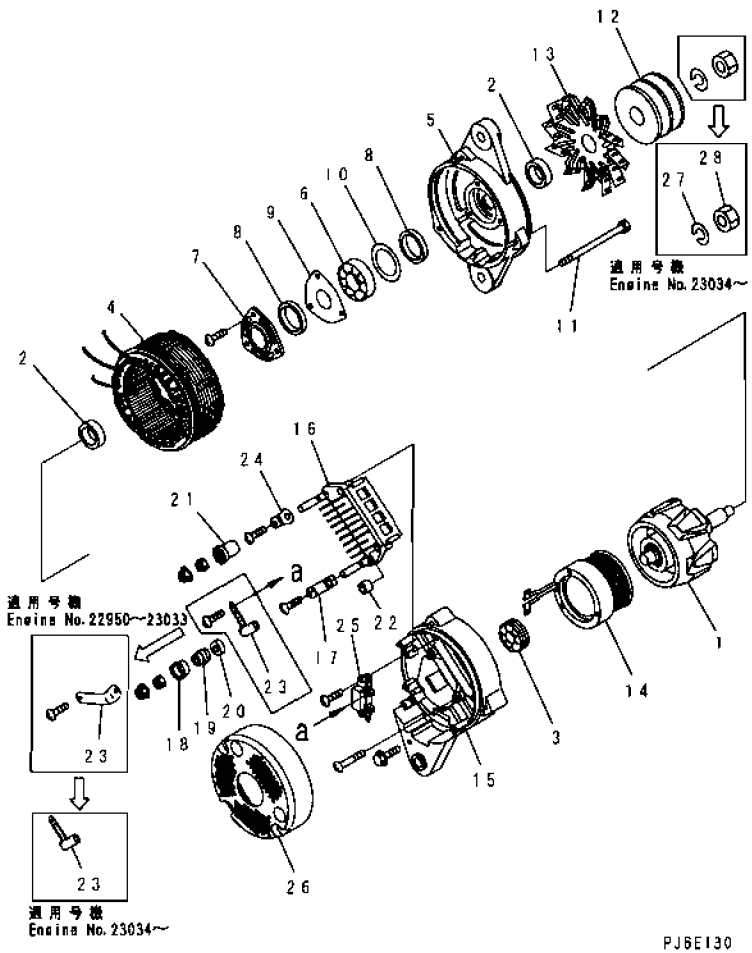

FIG NO. : A6010-B4D6

INDEX	PART NO	DESCRIPTION	Q'TY	SERIAL NO.
	600-825-3111	ALTERNATOR A. (35A)	1	22950-
	□600-825-3110	ALTERNATOR A. (35A)	1	22537-22949
1	KD0-35100-0280	.ROTOR ASS'Y.	1	22537-
2	KD1-33923-0790	.COLLAR.	2	22537-
3	KD0-09201-0870	.BEARING, BALL	1	23034-
	KD0-09201-0990	.BEARING, BALL	1	22950-23033
	KD0-09201-0870	.BEARING, BALL	1	22537-22949
4	KD0-35200-0400	.STATOR ASS'Y.	1	22537-
5	KD0-35300-0130	.FRONT BRACKET ASS'Y.	1	23034-
	KD0-35300-0230	.FRONT BRACKET ASS'Y	1	22950-23033
	KD0-35300-0130	.FRONT BRACKET ASS'Y.	1	22537-22949
6	KD0-09201-0881	..BEARING, BALL	1	23034-
	KD0-09201-1000	..BEARING, BALL	1	22950-23033
	KD0-09201-0880	..BEARING, BALL	1	22537-22949
7	KD0-35926-0070	..RETAINER	1	22537-
8	KD0-35951-0060	..PACKING	2	22537-
9	KD0-35926-0090	..RETAINER	1	22537-
10	KD1-33926-0730	..RETAINER	1	22537-
11	KD0-0275-06802	.BOLT	3	22950-
	KD0-0056-05302	.BOLT	3	22537-22949
12	KD0-35411-0630	.PULLEY	1	22537-
13	KD0-35421-0160	.FAN	1	22537-
14	KD0-35120-0450	.FIELD COIL	1	22537-
	KD0-35700-0662	.REAR BRACKET ASS'Y.	1	23034-
	KD0-35700-0661	REAR BRACKET ASS'Y.	1	22950-23033
	KD0-35700-0660	.REAR BRACKET ASS'Y.	1	22537-22949
15	KD0-35710-0751	..BRACKET, REAR	1	22950-
	KD0-35710-0750	..BRACKET, REAR	1	22537-22949
16	KD0-35730-0510	..RECTIFIER ASS'Y	1	22537-
17	KD0-09170-2501	..CONDENSER	1	22950-
	KD0-09170-2500	..CONDENSER	1	22537-22949
18	KD0-35943-0150	..BUSH, INSULATE	1	22537-
19	KD0-35923-0130	..COLLAR	1	22537-
20	KD0-35943-0160	..BUSH, INSULATE	1	22537-
21	KD0-35943-0140	..BUSH, INSULATE	1	22537-
22	KD0-35943-0170	..BUSH, INSULATE	1	22537-
23	KD0-35784-0280	..BAR, CONNECT	1	23034-
	KD0-35784-0230	..BAR, CONNECT	1	22950-23033
	KD0-35784-0190	..BAR, CONNECT	1	22537-22949
24	KD0-35784-0270	..TERMINAL, PLATE	1	23034-
	KD0-35786-0320	..TERMINAL, PLATE	1	22537-23033
25	KD0-35719-0150	..REGULATOR	1	22537-

FIG. A6010-B4D6 ALTERNATOR (35A) (INNER PARTS)

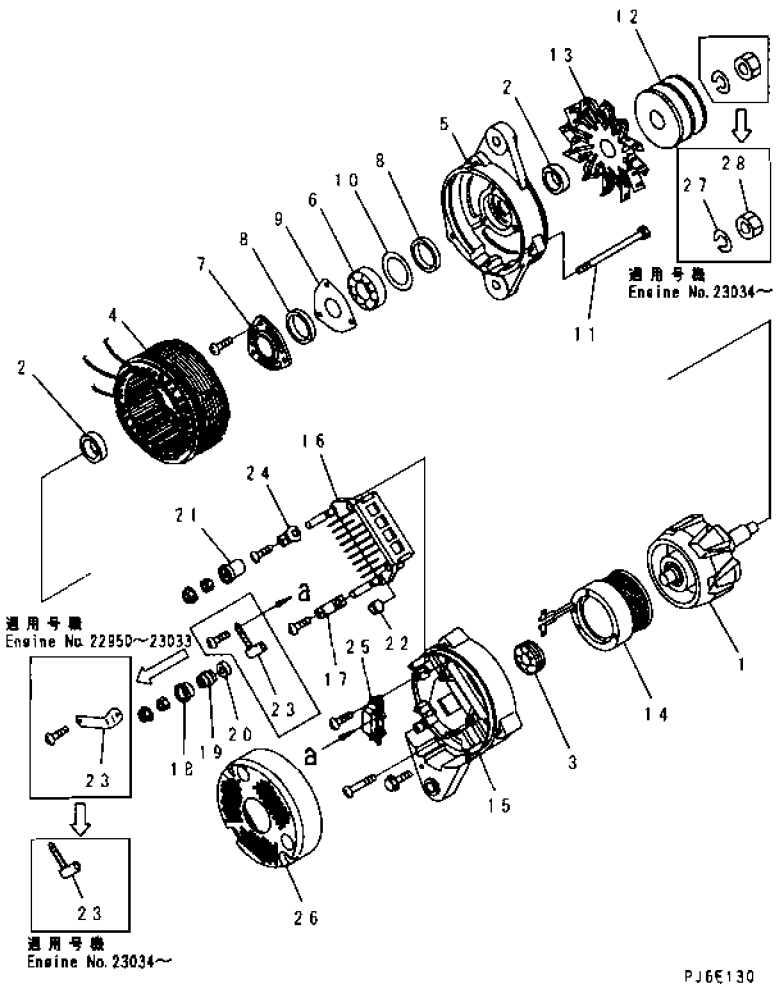

FIG NO. : A6010-B4D6

INDEX	PART NO.	DESCRIPTION	Q'TY	SERIAL NO
26	KD0-35761-0181	.COVER	1	22537-
27	KD1-0335-16002	.WASHER, SPRING	1	23034-
28	KD0-0280-16022	.NUT	1	23034-

FIG. A6010-B4D7Y ALTERNATOR (60A) (INNER PARTS) (#28011-)

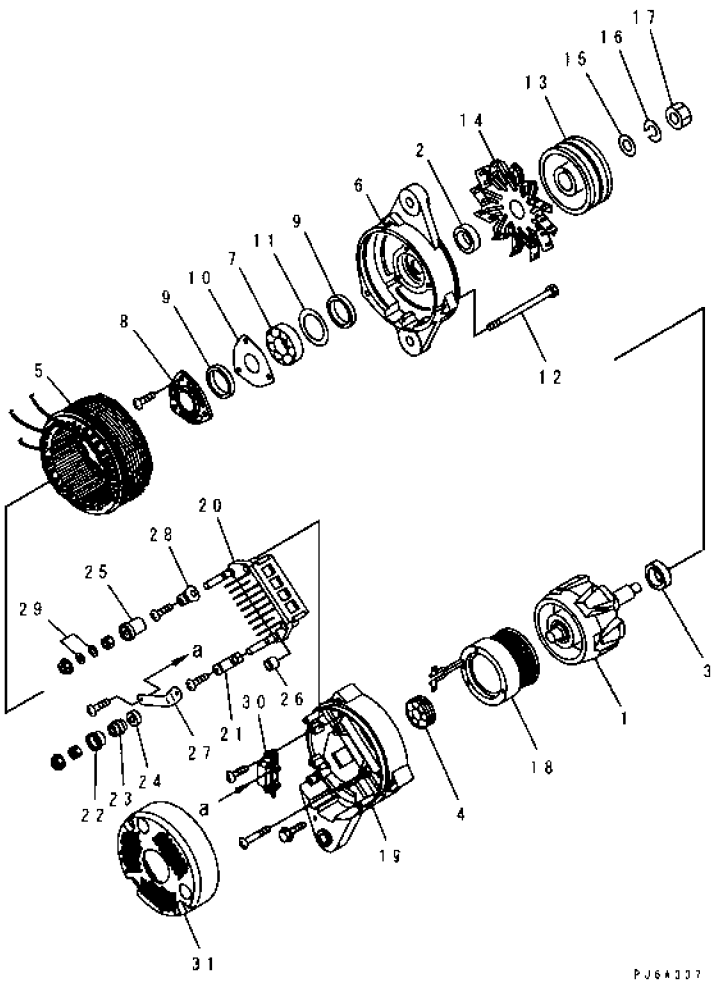

INDEX	PART NO	DESCRIPTION	Q'TY	SERIAL NO
	600-825-6110	ALTERNATOR A. (60A)	1	28011-
1	KD0-35100-0300	.ROTOR ASS'Y	1	28011-
2	KD1-33923-0790	.COLLAR	1	28011-
3	KD0-35923-0160	.COLLAR	1	28011-
4	KD0-09201-0980	.BEARING, BALL	1	28011-
5	KD0-35200-0460	.STATOR ASS'Y	1	28011-
6	KD0-35300-0350	.FRONT BRACKET ASS'Y	1	28011-
7	KD0-09201-1140	..BEARING, BALL	1	28011-
8	KD0-35926-0070	..RETAINER	1	28011-
9	KD0-35951-0060	..PACKING	2	28011-
10	KD0-35926-0090	..RETAINER	1	28011-
11	KD1-33926-0730	..RETAINER	1	28011-
12	KD0-0275-06802	.BOLT	3	28011-
13	KD0-35411-0630	.PULLEY	1	28011-
14	KD0-35421-0230	.FAN	1	28011-
15	KD0-0330-16012	.WASHER, PLAIN	1	28011-
16	KD1-0335-16002	.WASHER, SPRING	1	28011-
17	KD0-0280-16022	.NUT	1	28011-
18	KD0-35120-0290	.FIELD COIL	1	28011-
	KD0-35700-0920	.REAR BRACKET ASS'Y	1	28011-
19	KD0-35710-1010	..BRACKET, REAR	1	28011-
20	KD0-35730-0700	..RECTIFIER ASS'Y	1	28011-
21	KD0-09170-2501	..CONDENSER	1	28011-
22	KD0-35943-0140	..BUSH, INSULATE	1	28011-
23	KD0-35943-0150	..BUSH, INSULATE	1	28011-
24	KD0-35943-0160	..BUSH, INSULATE	1	28011-
25	KD0-35943-0170	..BUSH, INSULATE	1	28011-
26	KD0-35923-0130	..COLLAR	1	28011-
27	KD0-35784-0210	..BAR, CONNECT	1	28011-
28	KD0-35784-0290	..TERMINAL, PLATE	1	28011-
29	KD0-09057-0220	..WASHER	2	28011-
30	KD0-35719-0210	..REGULATOR ASS'Y	1	28011-
31	KD0-35761-0250	.COVER	1	28011-

FIG. A6010-B4F7 ALTERNATOR (35A) (WITH HARDENING PULLEY)

(INNER PARTS) (#25887-)

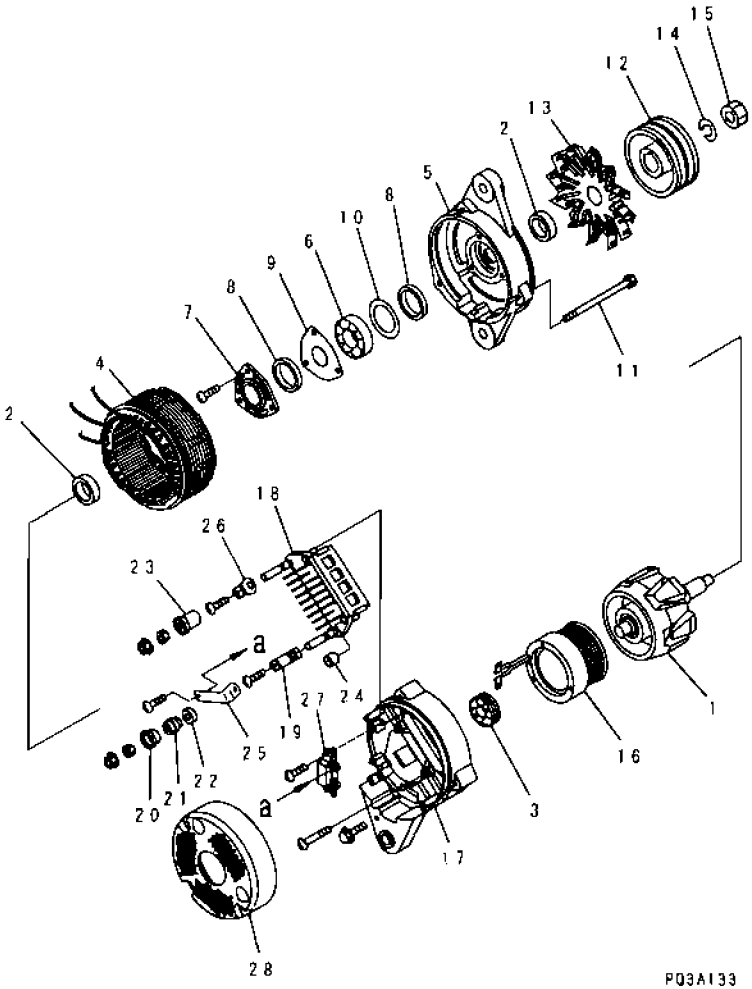

INDEX	PART NO	DESCRIPTION	Q'TY	SERIAL NO.
	600-825-3210	ALTERNATOR A. (35A)	1	25887-
1	KD0-35100-0280	.ROTOR ASS'Y	1	25887-
2	KD1-33923-0790	.COLLAR	2	25887-
3	KD0-09201-0870	.BEARING, BALL	1	25887-
4	KD0-35200-0400	.STATOR ASS'Y	1	25887-
5	KD0-35300-0130	.FRONT BRACKET ASS'Y	1	25887-
6	KD0-09201-0881	..BEARING, BALL	1	25887-
7	KD0-35926-0070	..RETAINER	1	25887-
8	KD0-35951-0060	..PACKING	2	25887-
9	KD0-35926-0090	..RETAINER	1	25887-
10	KD1-33926-0730	..RETAINER	1	25887-
11	KD0-0275-06802	.BOLT	3	25887-
12	KD0-35411-0700	PULLEY, HARDENING	1	25887-
13	KD0-35421-0160	.FAN	1	25887-
14	KD1-0335-16002	.WASHER, SPRING	1	25887-
15	KD0-0280-16022	NUT	1	25887-
16	KD0-35120-0450	.FIELD COIL	1	25887-
	KD0-35700-0661	.REAR BRACKET ASS'Y	1	25887-
17	KD0-35710-0751	..BRACKET, REAR	1	25887-
18	KD0-35730-0510	..RECTIFIER ASS'Y	1	25887-
19	KD0-09170-2501	..CONDENSER	1	25887-
20	KD0-35943-0140	..BUSH, INSULATE	1	25887-
21	KD0-35943-0150	..BUSH, INSULATE	1	25887-
22	KD0-35943-0160	..BUSH, INSULATE	1	25887-
23	KD0-35943-0170	..BUSH, INSULATE	1	25887-
24	KD0-35923-0130	..COLLAR	1	25887-
25	KD0-35784-0230	..BAR, CONNECT	1	25887-
26	KD0-35786-0320	..TERMINAL, PLATE	1	25887-
27	KD0-35719-0151	..REGULATOR ASS'Y	1	25887-
28	KD0-35761-0181	.COVER	1	25887-

FIG. A6010-C4F8 ALTERNATOR (60A) (WITH HARDENING PULLEY)

(INNER PARTS) (#27971-)

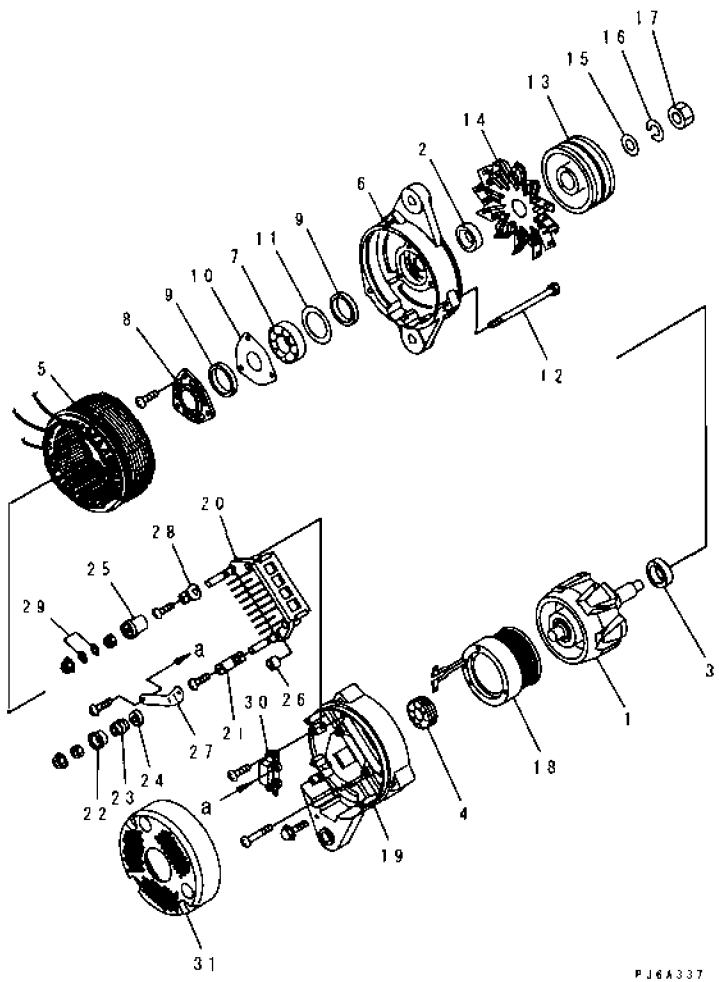

INDEX	PART NO	DESCRIPTION	Q'TY	SERIAL NO
	600-825-6270	ALTERNATOR A (60A)	1	27971-
1	KD0-35100-0300	ROTOR ASS'Y	1	27971-
2	KD1-33923-0790	.COLLAR	1	27971-
3	KD0-35923-0160	.COLLAR	1	27971-
4	KD0-09201-0980	.BEARING, BALL	1	27971-
5	KD0-35200-0460	.STATOR ASS'Y	1	27971-
6	KD0-35300-0350	.FRONT BRACKET ASS'Y	1	27971-
7	KD0-09201-1140	..BEARING, BALL	1	27971-
8	KD0-35926-0070	..RETAINER	1	27971-
9	KD0-35951-0060	..PACKING	2	27971-
10	KD0-35926-0090	..RETAINER	1	27971-
11	KD1-33926-0730	..RETAINER	1	27971-
12	KD0-0275-06802	.BOLT	3	27971-
13	KD0-35411-0700	.PULLEY, HARDENING	1	27971-
14	KD0-35421-0230	.FAN	1	27971-
15	KD0-0330-16012	.WASHER, PLAIN	1	27971-
16	KD1-0335-16002	.WASHER, SPRING	1	27971-
17	KD0-0280-16022	.NUT	1	27971-
18	KD0-35120-0290	.FIELD COIL	1	27971-
	KD0-35700-0920	.REAR BRACKET ASS'Y	1	27971-
19	KD0-35710-1010	..BRACKET, REAR	1	27971-
20	KD0-35730-0700	..RECTIFIER ASS'Y	1	27971-
21	KD0-09170-2501	..CONDENSER	1	27971-
22	KD0-35943-0140	..BUSH, INSULATE	1	27971-
23	KD0-35943-0150	..BUSH, INSULATE	1	27971-
24	KD0-35943-0160	..BUSH, INSULATE	1	27971-
25	KD0-35943-0170	..BUSH, INSULATE	2	27971-
26	KD0-35923-0130	..COLLAR	1	27971-
27	KD0-35784-0210	..BAR, CONNECT	1	27971-
28	KD0-35784-0290	..TERMINAL PLATE	1	27971-
29	KD0-09057-0220	..WASHER	2	27971-
30	KD0-35719-0210	..REGULATOR ASS'Y	1	27971-
31	KD0-35761-0250	.COVER	1	27971-

FIG. A6210-A4C4 STARTING MOTOR MOUNTING (11KW) (#27560-)

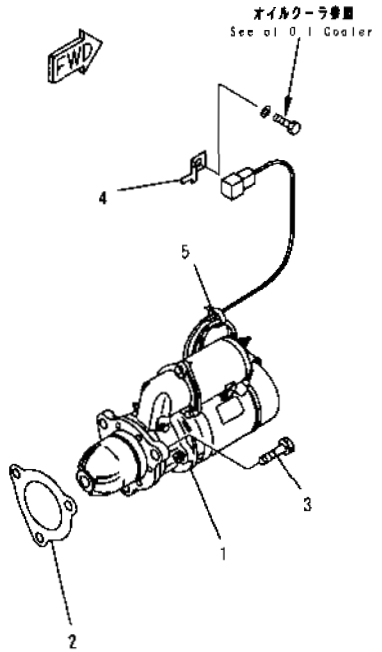

PE31714

INDEX	PART NO	DESCRIPTION	Q'TY	SERIAL NO
1	(600-813-8130)	STARTING MOTOR ASS'Y (11KW) (SEE FIG. A6210-B4C4)	1	27560-
2	6221-81-6810	GASKET (K2)	1	27560-
3	01010-51640	BOLT	3	27560-
4	08053-01510	CLIP	1	27560-
5	08034-00519	BAND	1	27560-

FIG NO. : A6210-B4C4

FIG. A6210-B4C4 STARTING MOTOR (11KW) (INNER PARTS) (#27560-)

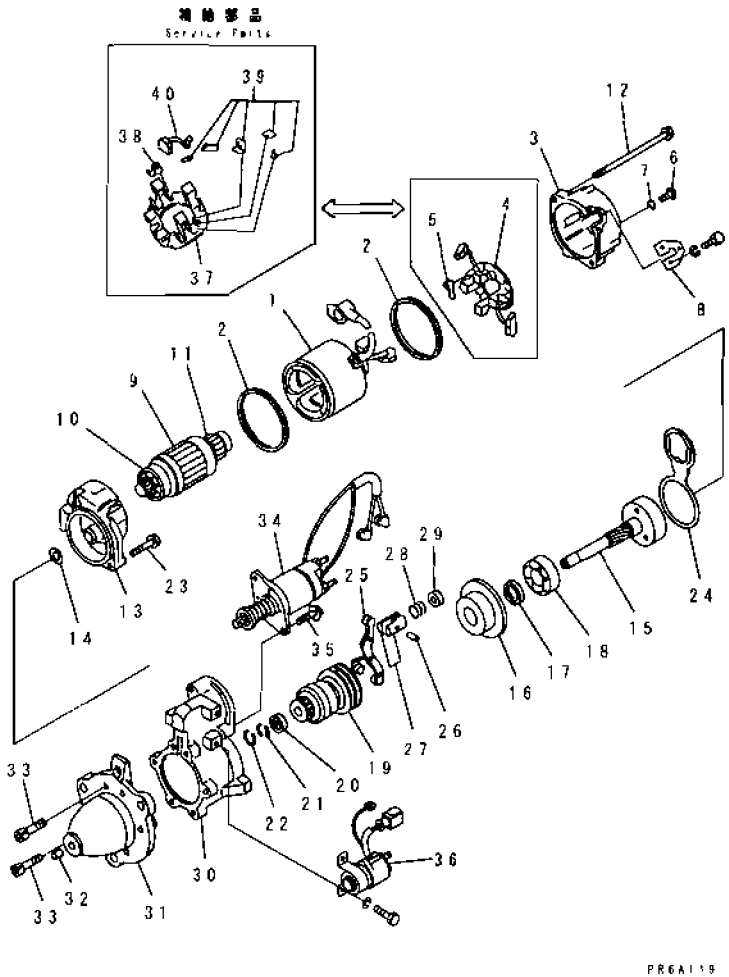

INDEX	PART NO.	DESCRIPTION	Q'TY	SERIAL NO
	600-813-8130	STARTING MOTOR ASS'Y. (11KW)	1	27560-
1	SD1310-10030X0	. YOKE ASS'Y.	1	27560-
2	SD4141-26410X0	. PACKING	2	27560-
3	SD2240-24190X9	. BRACKET, REAR	1	27560-
4	SD1331-04300X0	. BRUSH HOLDER ASS'Y.	1	27560-
5	SD5250-02800X0	.. SPRING, BRUSH	4	27560-
6	SD5000-10500X0	. SCREW	2	27560-
7	SD6414-02940X0	. O-RING	2	27560-
8	SD3040-12100X0	. PLATE	1	27560-
9	SD1320-07830X0	ARMATURE ASS'Y.	1	27560-
10	SD6206-01110X0	. BEARING, BALL	1	27560-
11	SD6206-01120X0	.. BEARING, BALL	1	27560-
12	SD8167-0719060	. BOLT	2	27560-
13	SD2245-00830X0	. CASE, GEAR	1	27560-
14	SD5031-05700X0	. SHIM	1	27560-
15	SD2441-03200X0	. SHAFT	1	27560-
16	SD2244-06902X0	. HOLDER, CENTER	1	27560-
17	SD6410-01000X0	. SEAL, OIL	1	27560-
18	SD6206-01710X0	. BEARING, BALL	1	27560-
19	SD1361-04700X0	PINION CLUTCH ASS'Y.	1	27560-
20	SD3661-02000X0	. STOPPER, PINION	1	27560-
21	SD5221-01200X0	. HOOK	2	27560-
22	SD5058-04200X0	. RING, RETAINING	1	27560-
23	SD5010-27430X0	. BOLT	1	27560-
24	SD4141-26311X0	. PACKING	1	27560-
25	SD1372-04200X0	. LEVER ASS'Y.	1	27560-
26	SD3600-17800X0	. ROD	1	27560-
27	SD4223-05200X0	. HOLDER, LEVER	2	27560-
28	SD5201-10100X0	. COIL, SPRING	1	27560-
29	SD2407-02101X0	. COLLAR	1	27560-
30	SD2244-06831X0	. BRACKET, CENTER	1	27560-
31	SD2046-14200X9	. CASE ASS'Y, PINION	1	27560-
32	SD2620-10500X9	.. METAL	1	27560-
33	SD5010-26200X0	. BOLT	6	27560-
34	SD1350-10921X9	. SWITCH ASS'Y, ENGAGE	1	27560-
35	SD5010-27300X0	. BOLT	2	27560-
36	SD1599-0010010	. RELAY, SAFETY	1	27560-
37	SD7331-04300X9	BRUSH HOLDER ASS'Y. (SERVICE PARTS)	1	27560-
38	SD5250-02800X0	. SPRING, BRUSH	4	27560-
39	SD2660-07400X6	BRUSH, (FOR 1ST SERVICE ONLY)	1	27560-
40	SD2660-07400X7	.. BRUSH, (FROM 2ND SERVICE)	4	27560-

FIG. A6810-A4F5 HEATER SWITCH WIRING(#28602-)

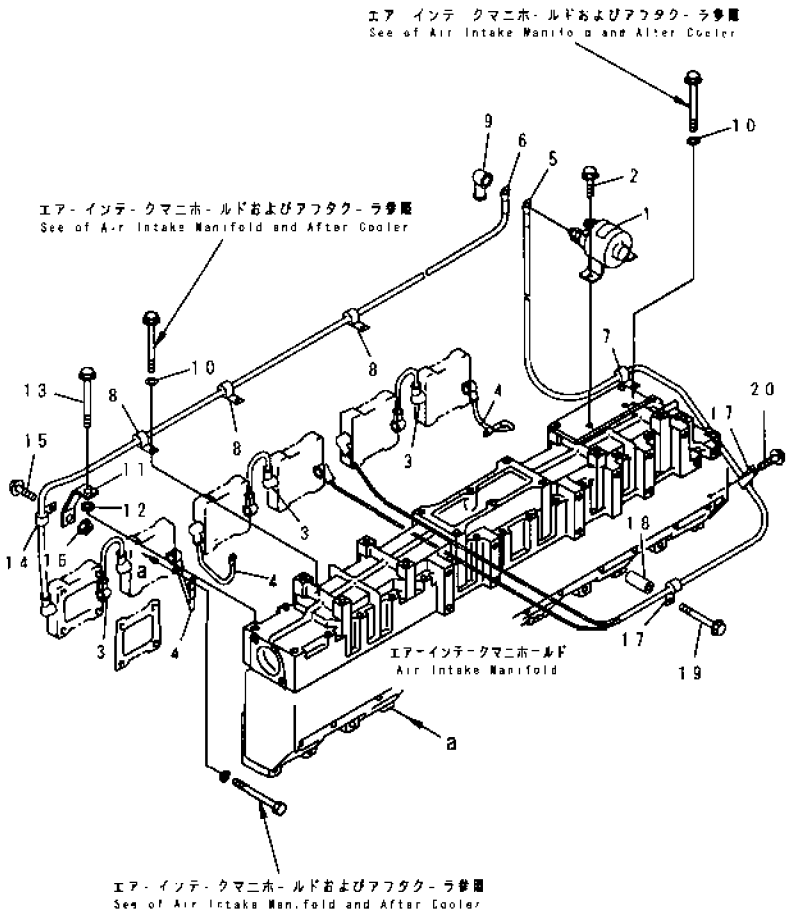

INDEX	PART NO	DESCRIPTION	Q'TY	SERIAL NO
1	600-815-2690	SWITCH	1	28602-
2	01435-00812	BOLT	2	28602-
3	6212-81-4211	WIRE	3	28602-
4	23S-06-11161	WIRE	3	28602-
5	6212-82-4220	WIRE	1	28602-
6	6212-82-4210	WIRE	1	28602-
7	04434-51008	CLIP	1	28602-
8	04434-50808	CLIP	3	28602-
9	08038-06031	CAP	1	28602-
10	01640-20816	WASHER	4	28602-
11	6212-82-4230	STAY	1	28602-
12	209-62-11810	SPACER	1	28602-
13	01436-01005	BOLT	1	28602-
14	04434-50810	CLIP	1	28602-
15	01435-01016	BOLT	1	28602-
16	01584-01008	NUT	1	28602-
17	04434-51010	CLIP	2	28602-
18	6143-11-4290	SPACER	1	28602-
19	01435-01060	BOLT	1	28602-
20	01435-01016	BOLT	1	28602-

FIG. A6910-A4B9 FUEL INJECTION PUMP SAFETY GUARD (#25887-)

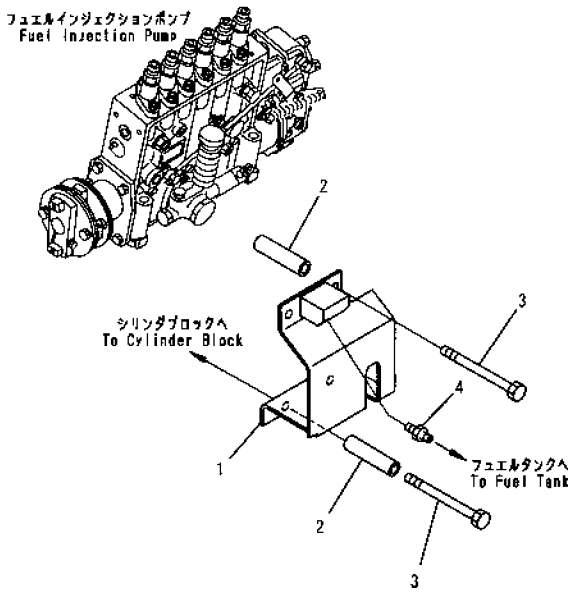

PQD3890

FIG NO. : A6910-A4B9

INDEX	PART NO	DESCRIPTION	Q'TY	SERIAL NO
1	6210-72-3971	COVER, SAFETY	1	25887-
2	6215-71-6190	SPACER	4	25887-
3	01011-81010	BOLT	4	25887-
4	07238-10210	CONNECTOR	1	25887-

FIG. A8117-B4A8 CYLINDER BLOCK GASKET KIT(#27560-)

KIT 詳細については次のページを参照して下さい。
See subsequent pages for details

K-2 6212 K2 9901 シリンダ ブロック ガスケット キット
CYLINDER BLOCK GASKET Kit

上記ガスケットキット以外に、不足分として同時に単品要求しなければならない部品があります。
品番については、明細を参照して下さい。

In addition to the above gasket kit there are other parts not included in the kit that must be ordered as individual parts
For details of the part numbers see the parts list

PDY0240

INDEX	PART NO.	DESCRIPTION	Q'TY	SERIAL NO
2	6212-K2-9901	GASKET KIT,CYLINDER BLOCK	1	27560-
	07005-01412	.GASKET	3	27560-
	07005-01012	.GASKET	2	27560-
	6210-71-3183	.SEAL	1	27560-
	(※6210-71-3281)	.SEAL,OIL	1	(27560-28559)
	6696-61-9921	.GASKET	1	27560-
	6210-21-2270	.SEAL	6	27560-
	6210-21-2240	.O-RING	6	27560-
	6210-21-2230	.O-RING	6	27560-
	6210-21-1971	.GASKET	1	27560-
	6210-61-6551	.GASKET	1	27560-
	6210-21-3251	.GASKET	1	27560-
	07000-62060	.O-RING	1	27560-27715
	07000-03050	.O-RING	1	27560-
	6130-82-5270	.GASKET	1	27560-
	6210-21-6860	.O-RING	2	27560-
	6150-21-6391	.PACKING	6	27560-
	6210-21-6452	.O-RING	1	27560-
	6210-21-5820	.GASKET	1	27560-
	07000-63028	.O-RING	1	27560-27715
	07000-63040	.O-RING	1	27560-27715
	07000-02060	.O-RING	1	27560-
	07000-63028	.O-RING	2	27560-27715
	6210-21-6462	.O-RING	1	27560-
	07000-63038	.O-RING	1	27560-27715
	07000-63032	.O-RING	1	27560-
	07000-63048	.O-RING	1	27560-
	07000-63032	.O-RING	1	27560-
	07000-63032	O-RING	1	27560-27715
	6210-61-2520	.O-RING	2	27560-
	07000-63042	.O-RING	1	27560-
	6150-61-2520	.O-RING	4	27560-
	6150-61-2540	.SEAL	1	27560-
	6210-61-2550	.O-RING	1	27560-
	6210-61-2811	.GASKET	1	27560-
	07005-01412	.GASKET	2	27560-
	07005-01412	.GASKET	4	27560-
	07005-01212	.GASKET	1	27560-
	07005-01412	.GASKET	4	27560-
	6210-61-6421	.GASKET	1	27560-
	6162-13-6440	.SEAL	2	27560-
	6210-61-6441	GASKET	1	27560-

FIG NO. : A8117-B4A8

INDEX	PART NO	DESCRIPTION	Q'TY	SERIAL NO
	6210-61-6870	.GASKET	1	27560-
	07005-01412	.GASKET	4	27560-
	6221-81-6810	.GASKET	1	27560-
		THE FOLLOWING PARTS ARE NOT USED FOR THIS MODEL.		
	01653-21012	WASHER	2	27560-
	07000-02014	.O-RING	1	27560-
	07000-62018	O-RING	2	27560-
	07000-63028	.O-RING	1	27560-
	07000-63038	.O-RING	2	27560-
	07002-23634	.O-RING	1	27560-
	07005-00812	.GASKET	1	27560-
	07005-02216	.GASKET	2	27560-
	07005-01412	.GASKET	12	27560-
	07012-00025	.SEAL	1	27560-
	08034-00414	.BAND	3	27560-
	08034-00519	.BAND	4	27560-
	6136-11-8142	.PACKING	6	27560-
	6136-21-5870	.GASKET	1	27560-
	6150-21-3230	.SEAL, FRONT	1	27560-
	6151-21-4150	.SEAL, REAR	1	27560-
	6150-21-4741	.GASKET	1	27560-
	6162-53-5430	.PACKING	1	27560-
	6162-53-5450	.PACKING	1	27560-
	6210-21-5813	.GASKET	1	27560-
	6210-21-5280	.GASKET	1	27560-
	6210-51-5580	.O-RING	1	27560-
	6210-61-2172	.GASKET	2	27560-
		THE FOLLOWING PARTS ARE THE PARTS NOT INCLUDED IN THE GASKET KIT.		
	07002-32034	O-RING	1	27560-
	6150-21-1190	O-RING	1	27560-
	07005-01012	GASKET	1	27560-
	6711-21-3521	SEAL, FRONT	1	27560-
	6151-51-8721	GASKET	1	27560-
	07000-E1007	O-RING	1	27560-
	6151-21-4160	SEAL, REAR	1	27560-
	6210-81-5640	O-RING	1	27560-
	07000-73032	O-RING	1	27716-
	□07000-63032	O-RING	1	27560-27715
	07005-01012	GASKET	6	27560-
	07000-73025	O-RING	2	27716-

FIG NO. : A8117-B4A8

INDEX	PART NO	DESCRIPTION	Q'TY	SERIAL NO.
	□07000-63025	O-RING	2	27560-27715
	07012-50028	SEAL	1	27560-
	07005-01012	GASKET	2	27560-
	07000-03145	O-RING	1	27560-
	01658-26823	WASHER	1	27560-
	07000-03140	O-RING	1	27560-
	07000-03100	O-RING	1	27560-
	07000-02105	O-RING	1	27560-
	07000-02012	O-RING	1	27560-
	07005-01212	GASKET	1	27560-
	07000-73038	O-RING	1	27716-
	07000-73028	O-RING	2	27716-
	07000-73048	O-RING	1	27716-
	07000-73032	O-RING	1	27716-
	07000-72060	O-RING	1	27716-
	07000-73040	O-RING	1	27716-

FIG. A8121-A4A5 CYLINDER HEAD GASKET KIT (#27560-)

KIT

詳細については次のページを参照して下さい。
See subsequent pages for details

K 1 6212 K1 9901 シリンダ ヘッド ガスケット キット
CYLINDER HEAD GASKET KIT

上記ガスケットキット以外に、不足分として同時に単品要求しなければならない部品があります。
品番については、明細を参照して下さい。

In addition to the above gasket kit there are other parts not included in the kit that must be ordered as individual parts
For details of the part numbers see the parts list

PDY0223

INDEX	PART NO	DESCRIPTION	Q'TY	SERIAL NO.
1	6212-K1-9901	GASKET KIT, CYLINDER HEAD	1	27560-
	07000-63025	.O-RING	6	27560-
	6210-17-1813	GASKET	6	27560-
	6215-15-4710	.GASKET	2	27560-
	6212-61-6431	.O-RING	4	27560-
	6210-11-4811	GASKET	12	27560-
	07005-02416	GASKET	1	27560-
	6212-11-4721	.GASKET	1	27560-
	02895-67075	.O-RING	4	27560-
	6212-61-6661	.GASKET	4	27560-
	6127-81-4823	.GASKET	1	27560-
	02895-67081	.O-RING	2	27560-
	6210-11-5881	.GASKET	6	27560-
	6212-15-5831	.GASKET	1	27560-
	07005-01412	.GASKET	1	27560-
	6151-51-8151	.GASKET	1	27560-
	6210-71-1160	.GASKET	6	27560-
	6210-11-7710	.O-RING	6	27560-
	07000-22021	.O-RING	6	27560-27651
	07005-00812	.GASKET	10	27560-
	07005-00812	.GASKET	3	27560-
		THE FOLLOWING PARTS ARE NOT USED FOR THIS MODEL.		
	07000-22021	.O-RING	6	27560-
	07000-03025	.O-RING	4	27560-
	07005-00812	.GASKET	2	27560-
	07005-01012	.GASKET	12	27560-
	08034-00414	.BAND	3	27560-
	08034-00519	.BAND	3	27560-
	6128-11-5611	.GASKET	2	27560-
	6151-11-5710	.GASKET	1	27560-
	6210-11-7131	.O-RING	6	27560-
	6210-11-7813	.GASKET	6	27560-
	6210-11-8141	.RUBBER	18	27560-
	6210-11-8811	.GASKET	6	27560-
	6211-11-5890	.GASKET	1	27560-
		THE FOLLOWING PARTS ARE THE PARTS NOT INCLUDED IN THE GASKET KIT.		
	6212-41-4540	SEAL	24	27560-
	6210-11-8820	GASKET	6	27560-
	6215-61-6630	O-RING	4	27560-
	07005-01412	GASKET	1	27560-

FIG NO. : A8121-A4A5

INDEX	PART NO	DESCRIPTION	Q'TY	SERIAL NO.
	6151-51-8161	GASKET	1	27560-
	6211-11-5490	GASKET	1	27560-
	6162-13-5611	GASKET	1	29672-
	6162-13-5611	GASKET	2	27560-29671
	6210-11-7830	GASKET	6	27560-
	07005-01212	GASKET	2	27560-
	07003-01015	GASKET	13	27560-
	6210-11-7720	O-RING	6	27560-
	07000-F2021	O-RING	6	27652-

FIG. A8127-F4A5 WATER PUMP GASKET KIT(#27560-)

KIT

詳細については次のページを参照して下さい。
See subsequent pages for details

K-6 6212 K6 9901 ウォータ ポンプ ガスケット キット
WATER PUMP GASKET KIT

上記ガスケットキット以外に、不足分として同時に単品要求しなければならない部品があります。
品番については、明細を参照して下さい。

In addition to the above gasket kit there are other parts not included in the kit that must be ordered as individual parts
For details of the part numbers see the parts list

PDY0225A

FIG NO. : A8127-F4A5

INDEX	PART NO	DESCRIPTION	Q'TY	SERIAL NO.
6	6212-K6-9901	GASKET KIT, WATER PUMP	1	27560-
	6210-61-1520	. SEAL	2	27560-
	07000-02145	. O-RING	1	27560-
	6211-61-1530	. SEAL, WATER	1	27560-
	6210-61-6371	. GASKET	1	27560-
	6210-61-6341	. GASKET	1	27560-
		THE FOLLOWING PARTS ARE NOT USED FOR THIS MODEL.		
	02893-05037	. O-RING	2	27560-
	07000-02055	. O-RING	2	27560-
	07000-02115	. O-RING	1	27560-
	07000-03022	. O-RING	1	27560-
	07000-02070	. O-RING	1	27560-
	07000-03025	. O-RING	1	27560-
	07000-03032	. O-RING	1	27560-
	07000-05065	. O-RING	1	27560-
	6166-11-6290	. O-RING	1	27560-
	6210-61-1510	. SEAL	1	27560-
	6210-61-6231	. GASKET	1	27560-
	6210-61-6331	. GASKET	1	27560-
	6210-61-6421	. GASKET	1	27560-
	6210-61-6441	. GASKET	1	27560-
	6210-61-6551	. GASKET	1	27560-
	6211-61-1170	. GASKET	1	27560-
	6212-61-6821	. GASKET	1	27560-
	6934-61-6210	. O-RING	1	27560-
		THE FOLLOWING PARTS ARE THE PARTS NOT INCLUDED IN THE GASKET KIT		
	07000-G5065	O-RING	1	27560-
	07000-G3032	O-RING	1	27560-
	07000-72115	O-RING	1	27560-
	07000-72070	O-RING	1	27560-

FIG. A9810-A4U9 NAME PLATE AND CAUTION PLATE(#25887-)

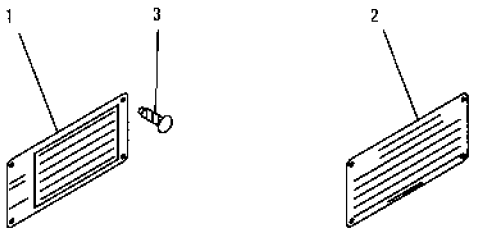

FIG NO. : A9810-A4U9

INDEX	PART NO	DESCRIPTION	Q'TY	SERIAL NO
1	600-023-2340	PLATE, NAME, (LIMITED SUPPLY)	1	29656-
	□09605-01440	PLATE, NAME, (LIMITED SUPPLY)	1	25887-29655
2	600-023-1300	PLATE, (LIMITED SUPPLY)	1	29656-
3	04418-02550	SCREW	4	25887-

FIG. B9999-A4A3 SERVICE PARTS (EXHAUST PIPE AND RAIN CAP)

(#27560-)

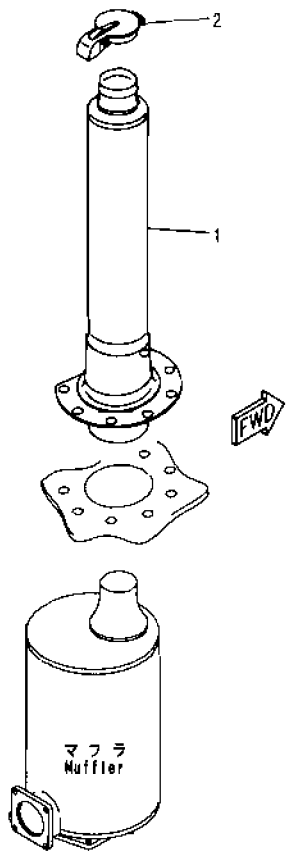

FRGA120

FIG NO. : B9999-A4A3

INDEX	PART NO	DESCRIPTION	Q'TY	SERIAL NO
1	6211-12-5971	PIPE. EXHAUST	1	29565-
	□6211-12-5970	PIPE. EXHAUST	1	27560-29564
2	6150-11-5771	CAP. RAIN	1	27560-29564

ENGINE RELATED PARTS

FIG. B0100-01A0 ENGINE MOUNT

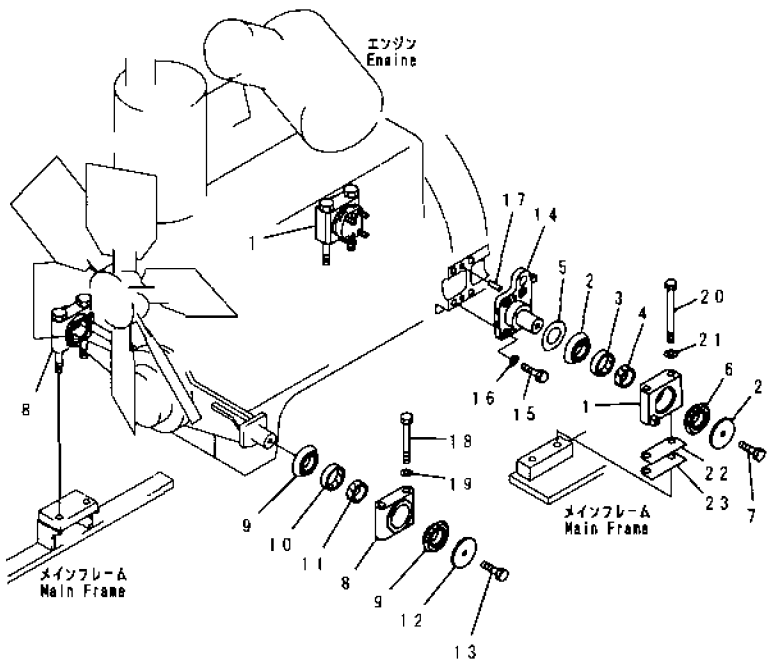

FIG NO. : B0100-01A0

INDEX	PART NO	DESCRIPTION	Q'TY	SERIAL NO
1	175-01-71141	CAP	2	57001-
2	154-01-21310	CUSHION	4	57001-
3	154-01-21320	CUSHION	2	57001-
4	154-01-21330	CUSHION	2	57001-
5	14X-01-11140	SPACER	2	57001-
6	154-01-21350	PLATE	2	57001-
7	01010-81835	BOLT	2	57001-
8	17A-21-12151	CAP	2	57001-
9	154-01-21310	CUSHION	4	57001-
10	154-01-21320	CUSHION	2	57001-
11	154-01-21330	CUSHION	2	57001-
12	154-01-21350	PLATE	2	57001-
13	01010-81835	BOLT	2	57001-
14	175-01-71131	PIN	2	57001-
15	01010-81855	BOLT	8	57001-
16	01643-31845	WASHER	8	57001-
17	04020-01434	PIN, DOWEL	4	57001-
18	01011-82485	BOLT	4	57001-
19	01643-32460	WASHER	4	57001-
20	207-70-13340	BOLT	4	57001-
21	01643-32460	WASHER	4	57001-
22	175-01-71150	SHIM 1.0MM	4	57001-
23	175-01-71160	SHIM 0.2MM	20	57001-

FIG. B0300-01A0 EXHAUST PIPE

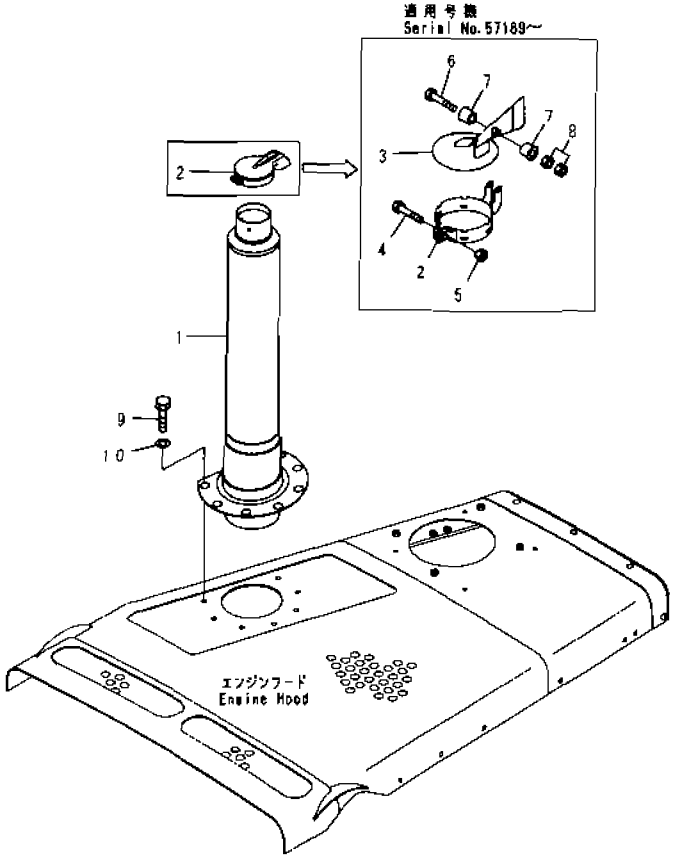

INDEX	PART NO	DESCRIPTION	Q'TY.	SERIAL NO.
1	6211-12-5971	PIPE	1	57189-
	6211-12-5970	PIPE	1	57001-57188
	20Y-01-12300	CAP, RAIN	1	57189-
	6150-11-5771	CAP, RAIN	1	57001-57188
	6090-03-7460	CAP, RAIN	1	57001-57188
2	205-01-85160	BAND	1	57189-
3	20Y-01-12310	PLATE	1	57189-
4	6715-11-5290	BOLT	2	57189-
5	01580-10605	NUT	2	57189-
6	6715-11-5270	BOLT	1	57189-
7	6715-11-5280	BUSHING	2	57189-
8	01580-11008	NUT	2	57189-
9	195-54-43210	BOLT	7	57001-
10	175-54-34170	WASHER	7	57001-

FIG. B0300-01A1 EXHAUST PIPE (SHORT)

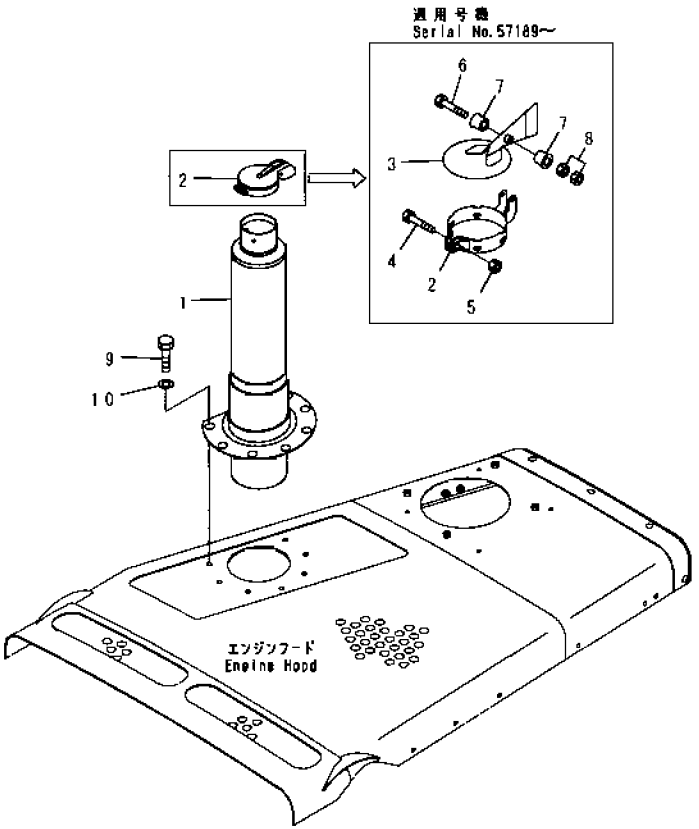

INDEX	PART NO	DESCRIPTION	Q'TY	SERIAL NO
1	6212-12-5911	PIPE	1	57189-
	6212-12-5910	PIPE	1	57001-57188
	20Y-01-12300	CAP, RAIN	1	57189-
	6150-11-5771	CAP, RAIN	1	57001-57188
	6090-03-7460	. CAP, RAIN	1	57001-57188
2	205-01-85160	. BAND	1	57189-
3	20Y-01-12310	. PLATE	1	57189-
4	6715-11-5290	. BOLT	2	57189-
5	01580-10605	. NUT	2	57189-
6	6715-11-5270	. BOLT	1	57189-
7	6715-11-5280	. BUSHING	2	57189-
8	01580-11008	. NUT	2	57189-
9	195-54-43210	BOLT	7	57001-
10	175-54-34170	WASHER	7	57001-

COOLING SYSTEM

FIG. C0120-01A0A RADIATOR PIPING(#57021-)

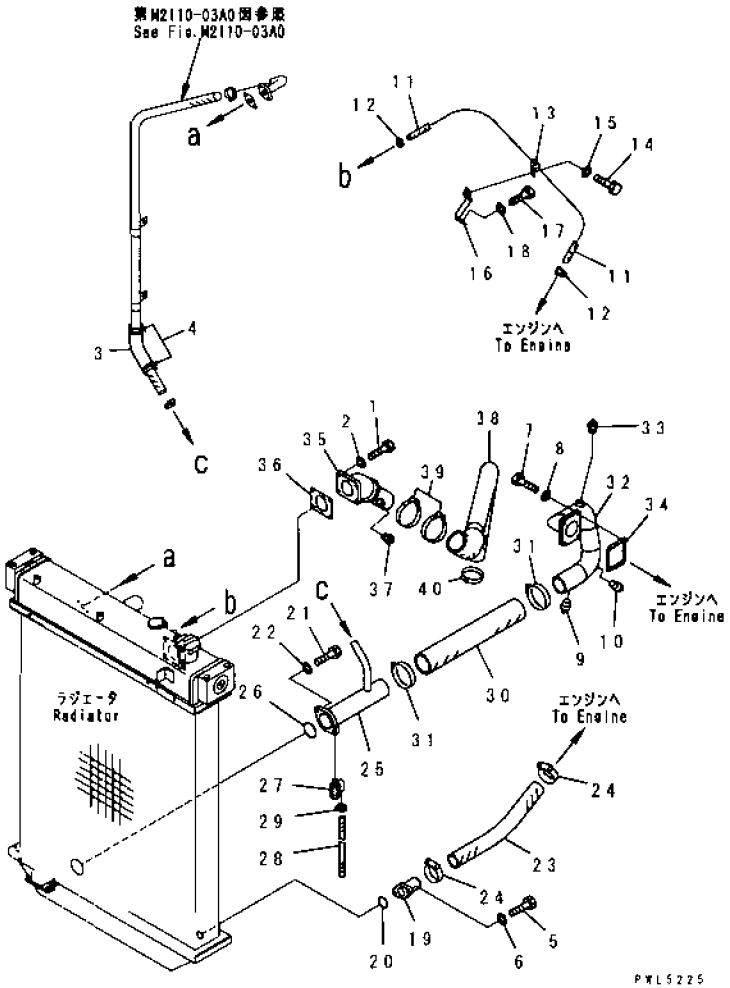

INDEX	PART NO	DESCRIPTION	Q'TY	SERIAL NO
1	01010-81235	BOLT	4	57021-
2	01602-21236	WASHER	4	57001-
3	205-62-53780	COVER	1	57001-
4	08034-00519	BAND	2	57001-
5	01010-81235	BOLT	2	57001-
6	01643-31232	WASHER	2	57001-
7	01010-81035	BOLT	4	57001-
8	01643-31032	WASHER	4	57001-
9	07042-70415	PLUG	1	57001-
10	07042-30108	PLUG	1	57001-
11	175-03-71470	HOSE	1	57021-
12	07281-00197	CLAMP	2	57001-
13	04434-51612	CLIP	1	57001-
14	01010-81225	BOLT	1	57001-
15	01643-31232	WASHER	1	57001-
16	175-03-71290	BRACKET	1	57001-
17	01010-81225	BOLT	1	57001-
18	01643-31232	WASHER	1	57001-
19	17A-03-13180	TUBE	1	57001-
20	07000-73045	O-RING	1	57001-
21	01010-81235	BOLT	2	57001-
22	01643-31232	WASHER	2	57001-
23	175-03-71270	HOSE	1	57001-
24	07289-00055	CLAMP	2	57001-
25	175-03-73140	TUBE	1	57001-
26	07000-72075	O-RING	1	57001-
27	07730-40004	VALVE	1	57001-
28	175-03-31530	HOSE	1	57001-
	175-803-3150	HOSE, DRAIN (FOR SLAG HANDLING)	1	57001-
29	07285-00155	CLIP	1	57001-
30	175-03-71261	HOSE	1	57001-
31	07289-00095	CLAMP	2	57001-
32	175-03-71281	TUBE	1	57001-
33	07042-70415	PLUG	1	57001-
34	17A-03-13170	GASKET	1	57001-
35	175-03-72110	TUBE	1	57021-
36	175-03-32791	GASKET	1	57001-
37	07042-10108	PLUG	1	57001-
38	175-03-71540	HOSE	1	57021-
39	07289-00070	CLAMP	2	57021-
40	07289-00070	CLAMP	1	57001-

FIG. C0310-01A0 RADIATOR FAN PULLEY AND SHAFT

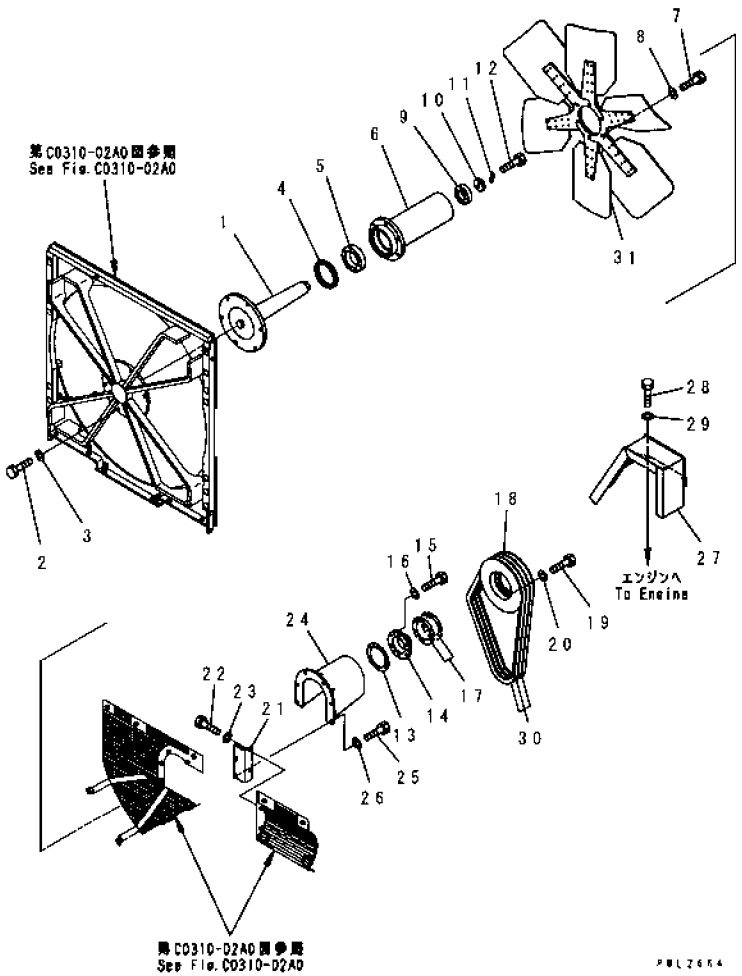

INDEX	PART NO	DESCRIPTION	Q'TY	SERIAL NO.
1	175-03-71521	SHAFT	1	57001-
2	01010-81645	BOLT	6	57001-
3	01643-31645	WASHER	6	57001-
4	07011-50120	SEAL, OIL	1	57001-
5	06040-06018	BEARING, BALL	1	57001-
6	175-03-71531	DRUM, BEARING	1	57001-
7	01010-81240	BOLT	6	57001-
8	01602-21236	WASHER, SPRING	6	57001-
9	06040-06310	BEARING, BALL	1	57001-
10	195-03-11842	HOLDER	1	57001-
11	195-03-11851	LOCK, LOCK	1	57001-
12	01010-81030	BOLT	2	57001-
13	195-03-12810	GASKET	1	57001-
14	175-03-34380	COVER	1	57001-
15	01010-81030	BOLT	3	57001-
16	01602-21030	WASHER, SPRING	3	57001-
17	195-03-11880	SHIM, 1.0MM	10	57001-
18	175-03-71510	PULLEY	1	57001-
19	01010-81260	BOLT	6	57001-
20	01602-21236	WASHER, SPRING	6	57001-
21	175-03-71440	BRACKET	1	57001-
22	01010-81235	BOLT	2	57001-
23	01643-31232	WASHER	2	57001-
24	175-03-71450	COVER	1	57001-
25	01010-81235	BOLT	6	57001-
26	01643-31232	WASHER	6	57001-
27	175-03-71623	COVER	1	57306-
	175-03-71621	COVER	1	57001-57305
28	01010-81225	BOLT	4	57001-
29	01643-31232	WASHER	4	57001-
30	04122-22573	V-BELT SET	1	57001-
31	600-643-1120	FAN	1	57001-

FIG. C0310-01A0 RADIATOR FAN PULLEY AND SHAFT

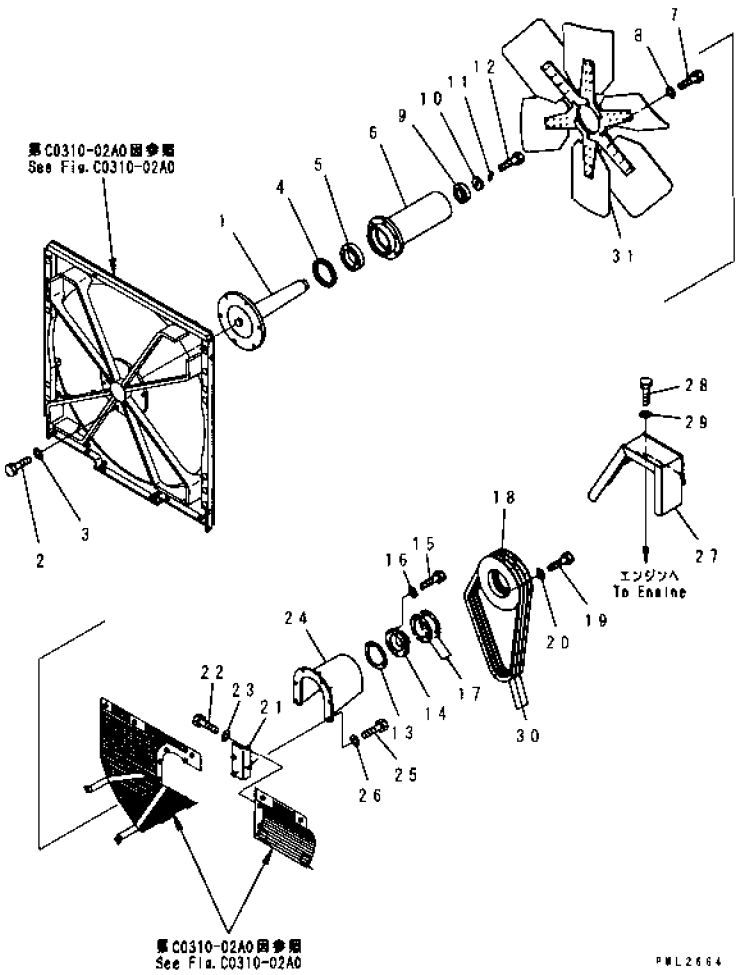

INDEX	PART NO	DESCRIPTION	Q'TY	SERIAL NO.
1	175-03-71521	SHAFT	1	57001-
2	01010-81645	BOLT	6	57001-
3	01643-31645	WASHER	6	57001-
4	07011-50120	SEAL, OIL	1	57001-
5	06040-06018	BEARING, BALL	1	57001-
6	175-03-71531	DRUM, BEARING	1	57001-
7	01010-81240	BOLT	6	57001-
8	01602-21236	WASHER, SPRING	6	57001-
9	06040-06310	BEARING, BALL	1	57001-
10	195-03-11842	HOLDER	1	57001-
11	195-03-11851	LOCK, LOCK	1	57001-
12	01010-81030	BOLT	2	57001-
13	195-03-12810	GASKET	1	57001-
14	175-03-34380	COVER	1	57001-
15	01010-81030	BOLT	3	57001-
16	01602-21030	WASHER, SPRING	3	57001-
17	195-03-11880	SHIM, 1.0MM	10	57001-
18	175-03-71510	PULLEY	1	57001-
19	01010-81260	BOLT	6	57001-
20	01602-21236	WASHER, SPRING	6	57001-
21	175-03-71440	BRACKET	1	57001-
22	01010-81235	BOLT	2	57001-
23	01643-31232	WASHER	2	57001-
24	175-03-71450	COVER	1	57001-
25	01010-81235	BOLT	6	57001-
26	01643-31232	WASHER	6	57001-
27	175-03-71623	COVER	1	57306-
	175-03-71621	COVER	1	57001-57305
28	01010-81225	BOLT	4	57001-
29	01643-31232	WASHER	4	57001-
30	04122-22573	V-BELT SET	1	57001-
31	600-643-1120	FAN	1	57001-

FIG. C0310-02A0 RADIATOR FAN GUARD AND NET (WITH AIR CONDITIONER)

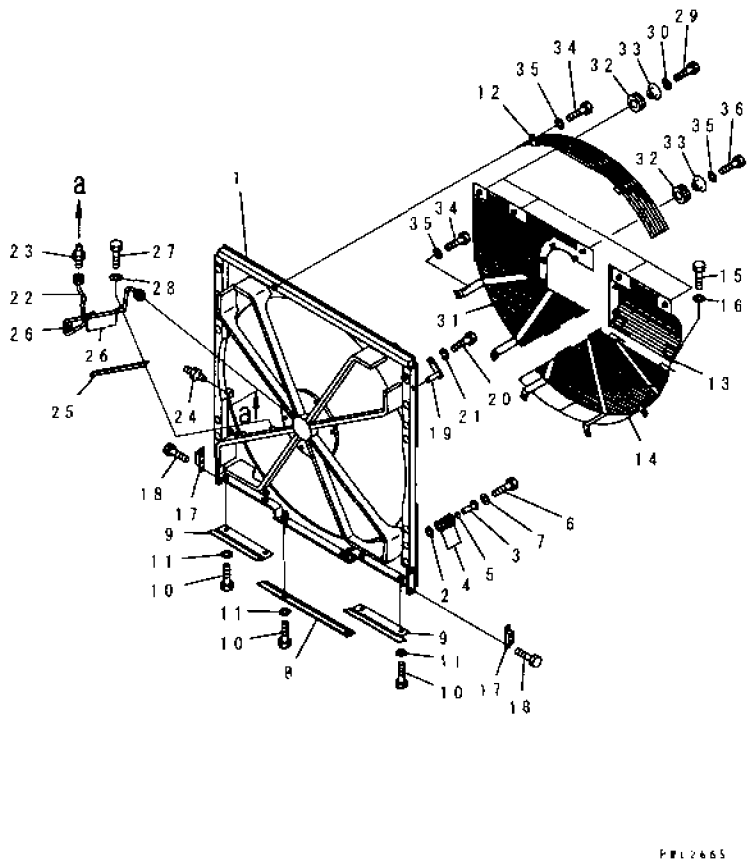

FIG NO. : C0310-02A0

INDEX	PART NO	DESCRIPTION	Q'TY	SERIAL NO.
1	175-03-71351	GUARD	1	57001-
	175-03-00401	COLLAR ASS'Y	10	57001-
2	154-03-51460	.WASHER	1	57001-
3	175-03-71360	.SPACER	1	57001-
4	175-54-27350	.SPRING	4	57001-
5	175-54-28770	.RING	1	57001-
6	01010-81290	BOLT	14	57001-
7	01643-31232	WASHER	14	57001-
8	175-03-71370	SEAL	1	57001-
9	175-03-71380	SEAL, L.H.	1	57001-
	175-03-71390	SEAL, R.H.	1	57001-
10	01010-81225	BOLT	6	57001-
11	01643-31232	WASHER	6	57001-
12	175-03-43170	NET	1	57001-
13	175-03-71430	NET	1	57001-
14	175-03-71410	NET	1	57001-
15	01010-81225	BOLT	4	57001-
16	01643-31232	WASHER	4	57001-
17	195-03-13150	CUSHION	2	57001-
18	01010-81020	BOLT	2	57001-
19	175-03-71710	PIN	1	57001-
20	01010-81230	BOLT	1	57001-
21	01602-21236	WASHER, SPRING	1	57001-
22	175-03-74420	TUBE	1	57001-
23	07213-50710	CONNECTOR	1	57001-
24	07020-00000	FITTING, GREASE	1	57001-
25	175-03-74430	PLATE	1	57001-
26	566-16-11970	CLIP	3	57001-
27	01010-80816	BOLT	3	57001-
28	01643-30823	WASHER	3	57001-
29	01010-81235	BOLT	4	57001-
30	01643-31232	WASHER	4	57001-
31	175-03-71421	NET	1	57001-
32	175-03-42140	RUBBER	5	57001-
33	203-54-14330	COLLAR	5	57001-
34	01010-81235	BOLT	7	57001-
35	01643-31232	WASHER	8	57001-
36	01010-81240	BOLT	1	57001-

FIG. C0310-02A1 RADIATOR FAN GUARD AND NET (WITHOUT AIR CONDITIONER)

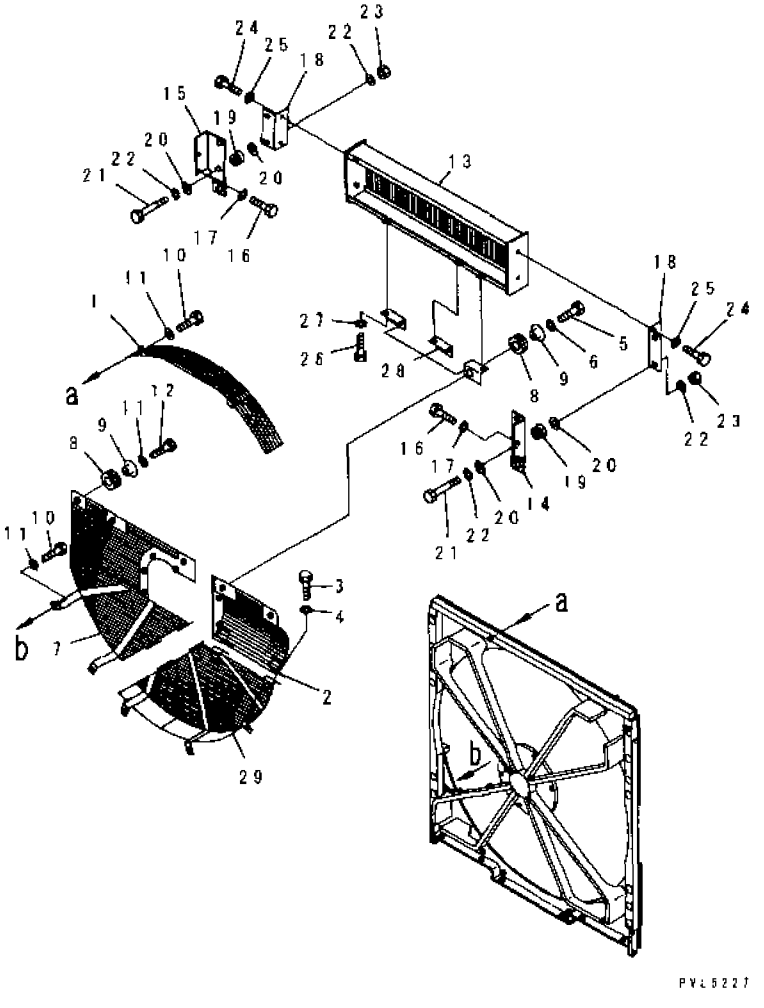

INDEX	PART NO	DESCRIPTION	Q'TY	SERIAL NO.
1	175-03-43170	NET	1	57001-
2	175-03-71430	NET	1	57001-
3	01010-81225	BOLT	4	57001-
4	01643-31232	WASHER	4	57001-
5	01010-81235	BOLT	4	57001-
6	01643-31232	WASHER	4	57001-
7	175-03-71421	NET	1	57001-
8	175-03-42140	RUBBER	5	57001-
9	203-54-14330	COLLAR	5	57001-
10	01010-81235	BOLT	7	57001-
11	01643-31232	WASHER	8	57001-
12	01010-81240	BOLT	1	57001-
13	175-03-71810	NET	1	57001-
14	175-979-7510	BRACKET, L.H.	1	57001-
15	175-979-7520	BRACKET, R.H.	1	57001-
16	01010-81225	BOLT	4	57001-
17	01643-31232	WASHER	4	57001-
18	175-979-7210	BRACKET	2	57001-
19	195-03-41380	CUSHION	4	57001-
20	178-60-12250	COLLAR	8	57001-
21	01010-81060	BOLT	4	57001-
22	01643-31032	WASHER	8	57001-
23	01580-11008	NUT	4	57001-
24	01010-81020	BOLT	4	57001-
25	01643-31032	WASHER	4	57001-
26	01010-81220	BOLT	3	57001-
27	01643-31232	WASHER	3	57001-
28	175-979-7330	BRACKET	3	57001-
29	175-03-71410	NET	1	57001-

FUEL TANK AND RELATED PARTS

FIG. D0100-01A0 FUEL TANK (1/2)

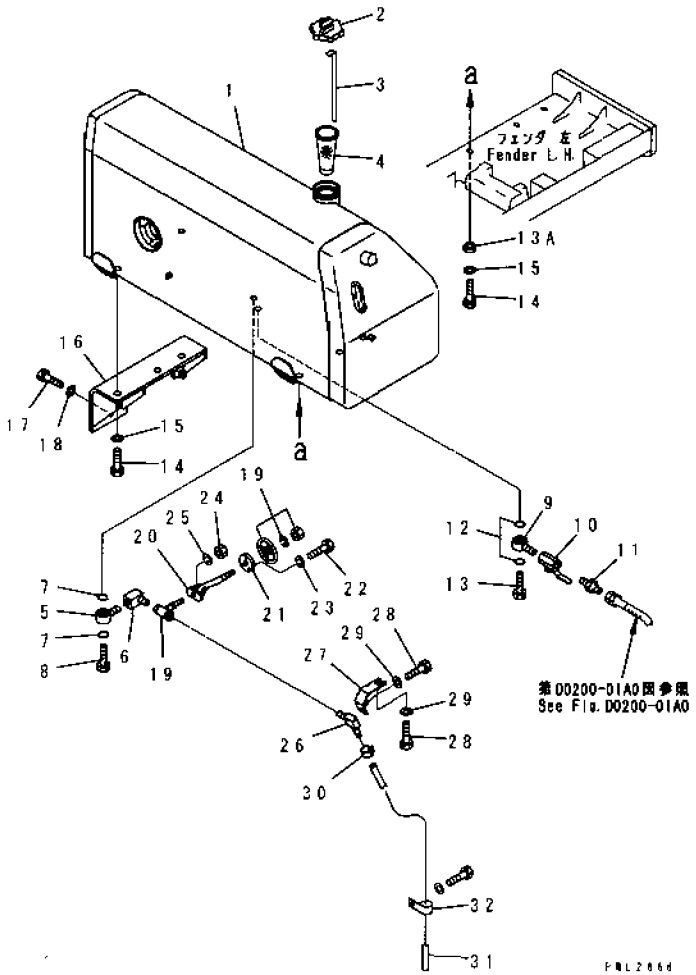

FIG NO. : D0100-01A0

INDEX	PART NO	DESCRIPTION	Q'TY	SERIAL NO
1	175-04-71260	TANK, FUEL	1	57001-
2	07050-41200	CAP	1	57001-
	07050-00000	CAP, FOR SLAG HANDLING AND FOREST	1	57001-
3	175-04-22113	GAUGE, OIL LEVEL	1	57001-
4	07056-18416	STRAINER	1	57001-
5	195-04-11230	JOINT, EYE	1	57001-
6	175-04-21320	ELBOW	1	57001-
7	07000-03035	O-RING	2	57001-
8	195-04-11280	BOLT, JOINT	1	57001-
9	195-04-11230	JOINT, EYE	1	57001-
10	07700-40460	VALVE	1	57001-
11	101-49-13180	NIPPLE	1	57001-
12	07000-03035	O-RING	2	57001-
13	195-04-11280	BOLT, JOINT	1	57001-
13A	198-79-16550	COLLAR	3	57001-
14	01010-62465	BOLT	3	57001-
15	01643-32460	WASHER	3	57001-
16	175-04-25221	BRACKET	1	57001-
17	01010-82060	BOLT	6	57001-
18	01643-32060	WASHER	6	57001-
19	154-04-12492	VALVE	1	57001-
20	175-04-26181	JOINT	1	57001-
21	195-04-11480	BRACKET	1	57001-
22	01010-80616	BOLT	3	57001-
23	01602-20619	WASHER, SPRING	3	57001-
24	01580-10605	NUT	1	57001-
25	01602-20619	WASHER, SPRING	1	57001-
26	195-04-11431	ELBOW	1	57001-
27	175-04-26210	BRACKET	1	57001-
28	01010-51025	BOLT	2	57001-
29	01643-31032	WASHER	2	57001-
30	07285-00130	CLIP	1	57001-
31	07270-01295	TUBE	1	57001-
32	154-04-11210	CLIP	1	57001-

FIG. D0100-02A0 FUEL TANK (2/2)

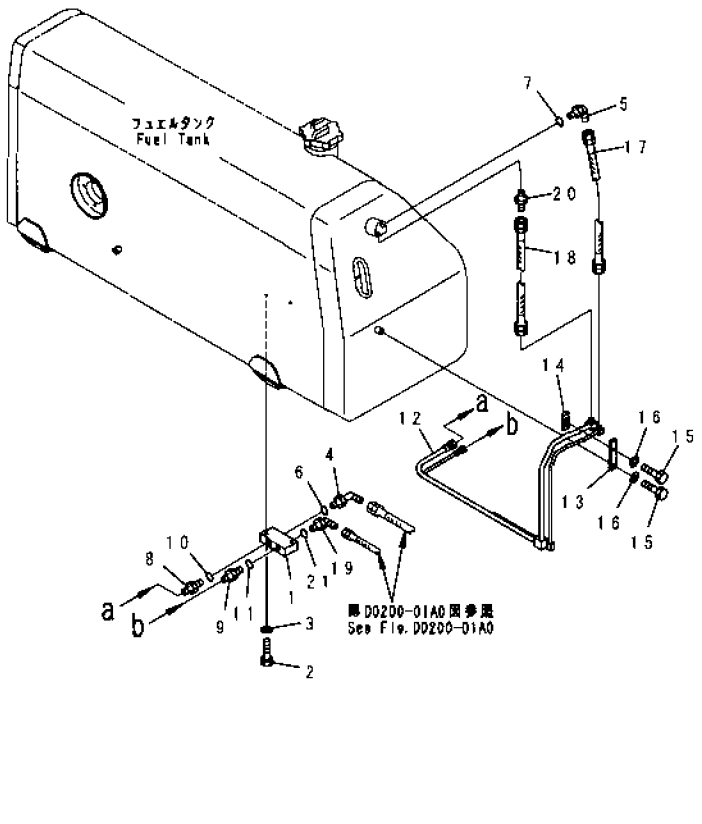

FIG NO. : D0100-02A0

INDEX	PART NO.	DESCRIPTION	Q'TY	SERIAL NO.
1	175-04-71140	BLOCK	1	57001-
2	01010-81050	BOLT	2	57001-
3	01643-31032	WASHER	2	57001-
4	07235-10317	ELBOW	1	57001-
5	07235-10210	ELBOW	1	57001-
6	07002-12034	O-RING	1	57001-
7	07002-11423	O-RING	1	57001-
8	07230-20315	UNION	1	57001-
9	07230-20210	UNION	1	57001-
10	07002-12034	O-RING	1	57001-
11	07002-11423	O-RING	1	57001-
12	175-04-71180	TUBE	1	57001-
13	175-04-71170	PLATE	2	57001-
14	175-04-71151	PLATE	2	57001-
15	01010-81030	BOLT	4	57001-
16	01643-31032	WASHER	4	57001-
17	07102-20203	HOSE	1	57001-
18	203-62-58370	HOSE	1	57001-
19	07235-10210	ELBOW	1	57001-
20	07238-10315	CONNECTOR	1	57001-
21	07002-11423	O-RING	1	57001-

FIG. D0200-01A0 FUEL PIPING

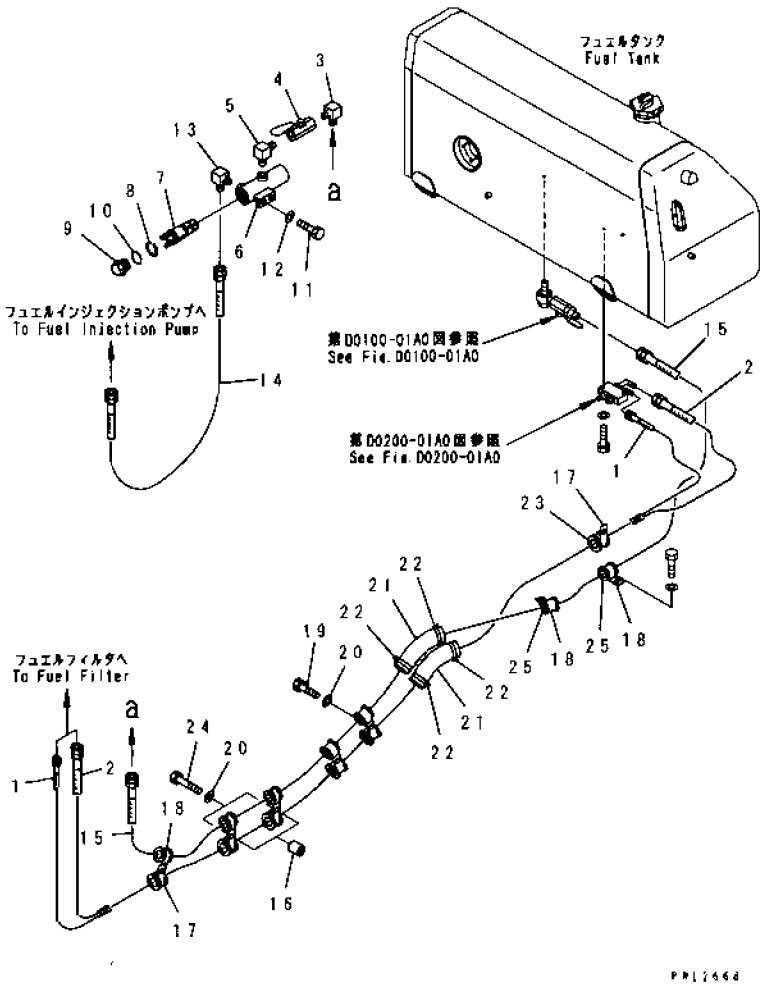

FIG NO. : D0200-01A0

INDEX	PART NO	DESCRIPTION	Q'TY	SERIAL NO.
1	07102-20237	HOSE	1	57001-
2	07102-20336	HOSE	1	57001-
3	195-04-12280	ELBOW	1	57001-
4	07700-40460	VALVE	1	57001-
5	195-04-11450	ELBOW	1	57001-
	175-04-00167	STRAINER ASS'Y	1	57001-
6	175-04-25340	.CASE	1	57001-
	175-04-00210	.STRAINER ASS'Y	1	57001-
	07058-00010	..ELEMENT ASS'Y	1	57001-
7	07058-00005	...ELEMENT	1	57001-
8	07058-00006	...RING	1	57001-
9	07058-00007	...PLUG	1	57001-
10	07000-03040	..O-RING	1	57001-
11	01010-80825	BOLT	2	57001-
12	01602-20825	WASHER, SPRING	2	57001-
13	195-04-12280	ELBOW	1	57001-
14	07102-20404	HOSE	1	57172-
	07102-20406	HOSE	1	57001-57171
15	07102-20436	HOSE	1	57001-
16	195-33-11220	SPACER	2	57001-
17	04434-53411	CLIP	5	57001-
18	04434-52712	CLIP	7	57001-
19	01010-81020	BOLT	5	57001-
20	01643-31032	WASHER	7	57001-
21	205-62-53780	COVER	2	57001-
22	08034-00519	BAND	4	57001-
23	07095-20627	CUSHION	7	57001-
24	01010-81045	BOLT	2	57001-
25	07095-20420	CUSHION	7	57001-

FIG. D0200-01A0 FUEL PIPING

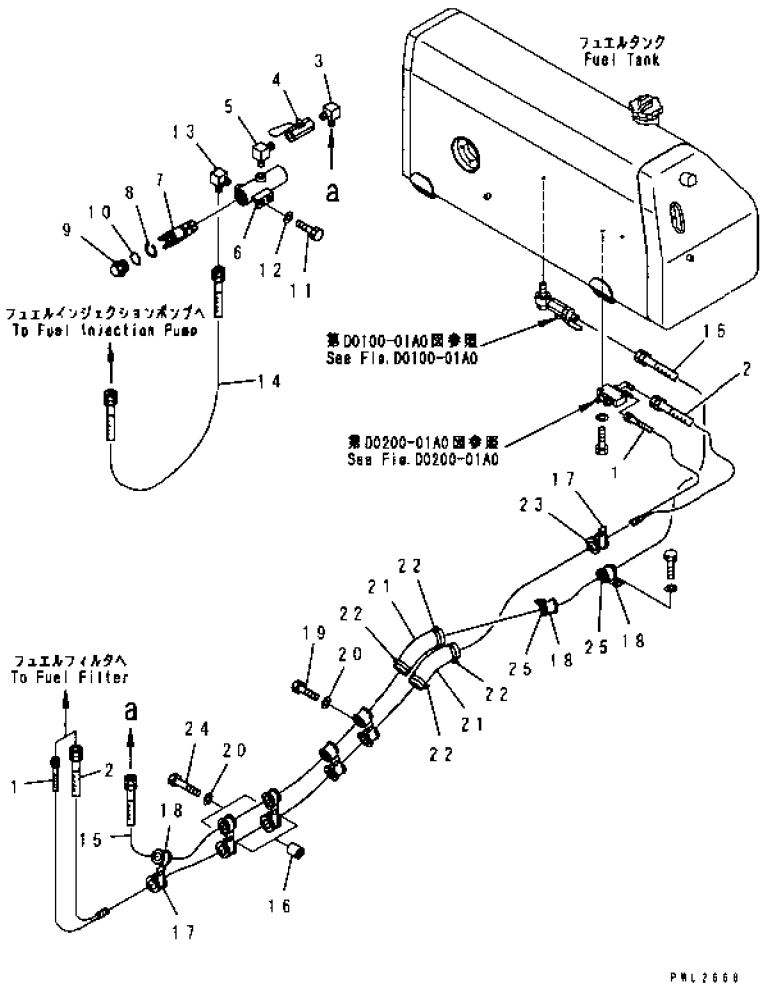

FIG NO. : D0200-01A0

INDEX	PART NO.	DESCRIPTION	Q'TY	SERIAL NO.
1	07102-20237	HOSE	1	57001-
2	07102-20336	HOSE	1	57001-
3	195-04-12280	ELBOW	1	57001-
4	07700-40460	VALVE	1	57001-
5	195-04-11450	ELBOW	1	57001-
	175-04-00167	STRAINER ASS'Y	1	57001-
6	175-04-25340	.CASE	1	57001-
	175-04-00210	.STRAINER ASS'Y	1	57001-
	07058-00010	..ELEMENT ASS'Y	1	57001-
7	07058-00005	...ELEMENT	1	57001-
8	07058-00006	...RING	1	57001-
9	07058-00007	...PLUG	1	57001-
10	07000-03040	..O-RING	1	57001-
11	01010-80825	BOLT	2	57001-
12	01602-20825	WASHER, SPRING	2	57001-
13	195-04-12280	ELBOW	1	57001-
14	07102-20404	HOSE	1	57172-
	07102-20406	HOSE	1	57001-57171
15	07102-20436	HOSE	1	57001-
16	195-33-11220	SPACER	2	57001-
17	04434-53411	CLIP	5	57001-
18	04434-52712	CLIP	7	57001-
19	01010-81020	BOLT	5	57001-
20	01643-31032	WASHER	7	57001-
21	205-62-53780	COVER	2	57001-
22	08034-00519	BAND	4	57001-
23	07095-20627	CUSHION	7	57001-
24	01010-81045	BOLT	2	57001-
25	07095-20420	CUSHION	7	57001-

FIG. D0200-01A1 FUEL PIPING (WITH WATER SEPARATOR)

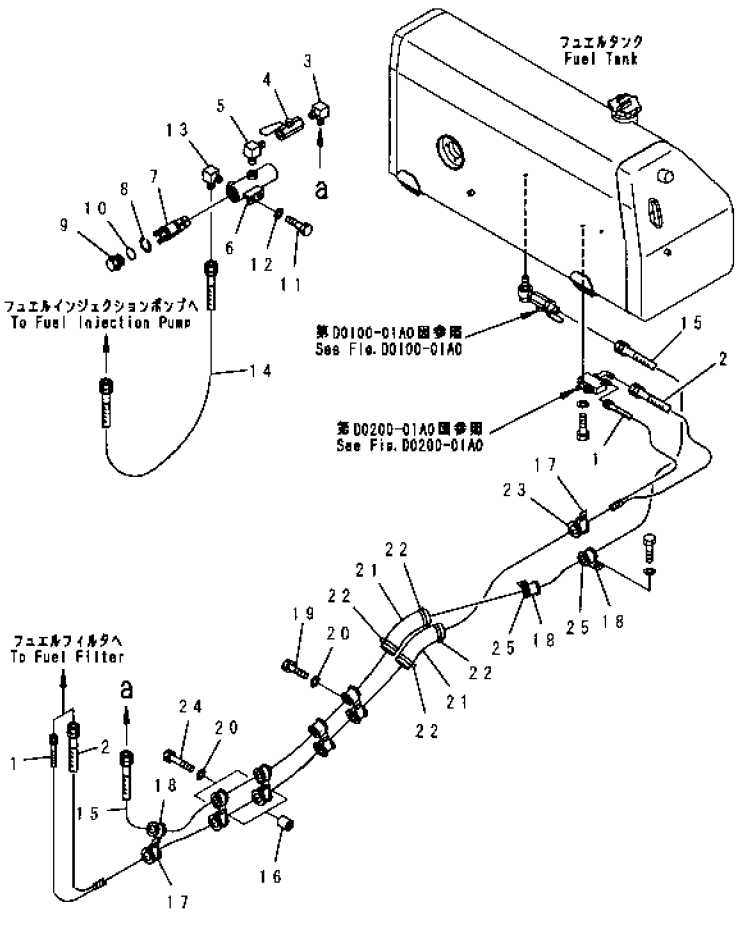

INDEX	PART NO	DESCRIPTION	Q'TY	SERIAL NO
1	07102-20237	HOSE	1	57001-
2	07102-20336	HOSE	1	57001-
3	195-04-12280	ELBOW	1	57001-
4	07700-40460	VALVE	1	57001-
5	195-04-11450	ELBOW	1	57001-
	175-04-00167	STRAINER ASS'Y	1	57001-
6	175-04-25340	.CASE	1	57001-
	175-04-00210	.STRAINER ASS'Y	1	57001-
	07058-00010	..ELEMENT ASS'Y	1	57001-
7	07058-00005	...ELEMENT	1	57001-
8	07058-00006	...RING	1	57001-
9	07058-00007	...PLUG	1	57001-
10	07000-03040	..O-RING	1	57001-
11	01010-80825	BOLT	2	57001-
12	01602-20825	WASHER, SPRING	2	57001-
13	195-04-12280	ELBOW	1	57001-
14	07102-20406	HOSE	1	57172-
	07102-20405	HOSE	1	57001-57171
15	07102-20435	HOSE	1	57001-
16	195-33-11220	SPACER	2	57001-
17	04434-53411	CLIP	5	57001-
18	04434-52712	CLIP	7	57001-
19	01010-81020	BOLT	5	57001-
20	01643-31032	WASHER	7	57001-
21	205-62-53780	COVER	2	57001-
22	08034-00519	BAND	4	57001-
23	07095-20627	CUSHION	7	57001-
24	01010-81045	BOLT	2	57001-
25	07095-20420	CUSHION	7	57001-

FIG NO. : D0200-01A2

FIG. D0200-01A2 FUEL PIPING (JUNGLE SPEC.)

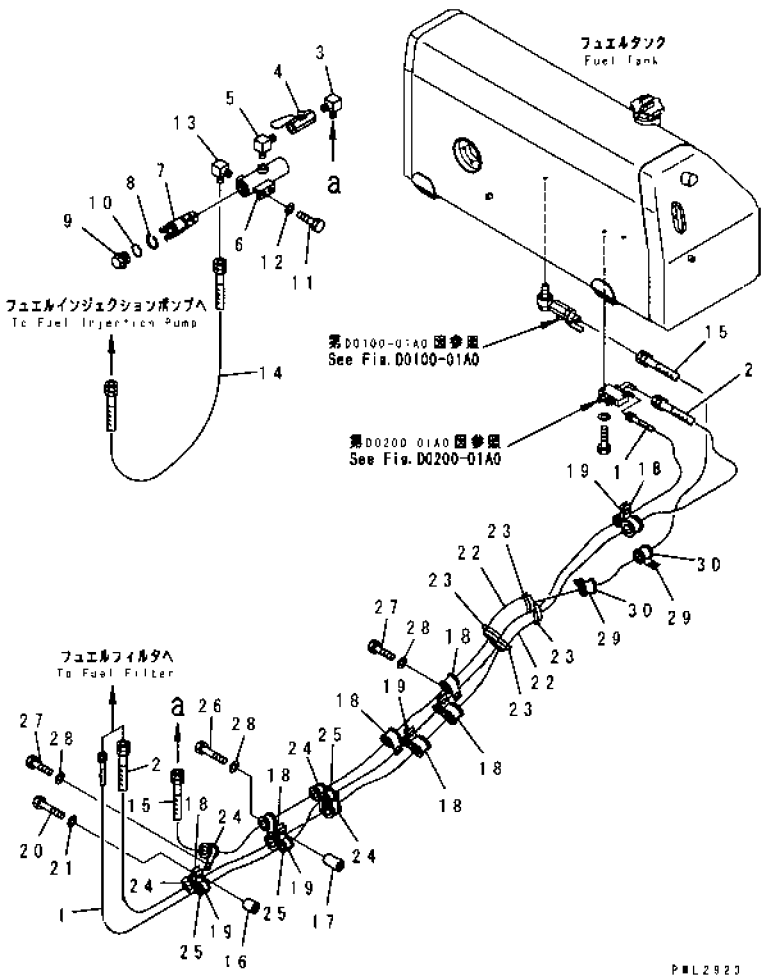

INDEX	PART NO.	DESCRIPTION	Q'TY	SERIAL NO
1	07103-A0237	HOSE	1	57001-
2	07103-A0338	HOSE	1	57001-
3	195-04-12280	ELBOW	1	57001-
4	07700-40460	VALVE	1	57001-
5	195-04-11450	ELBOW	1	57001-
	175-04-00167	STRAINER ASS'Y	1	57001-
6	175-04-25340	CASE	1	57001-
	175-04-00210	STRAINER ASS'Y	1	57001-
	07058-00010	ELEMENT ASS'Y	1	57001-
7	07058-00005	ELEMENT	1	57001-
8	07058-00006	RING	1	57001-
9	07058-00007	PLUG	1	57001-
10	07000-03040	O-RING	1	57001-
11	01010-80825	BOLT	2	57001-
12	01602-20825	WASHER, SPRING	2	57001-
13	195-04-12280	ELBOW	1	57001-
14	07103-A0404	HOSE	1	57172-
	07102-A0406	HOSE	1	57001-57171
15	07103-A0436	HOSE	1	57001-
16	195-33-11220	SPACER	7	57001-
17	22D-62-18450	SPACER	1	57001-
18	04434-53411	CLIP	11	57001-
19	04434-52711	CLIP	6	57001-
20	01010-81045	BOLT	7	57001-
21	01643-31032	WASHER	7	57001-
22	205-62-53780	COVER	2	57001-
23	08034-00519	BAND	4	57001-
24	07095-20627	CUSHION	11	57001-
25	07095-20420	CUSHION	6	57001-
26	01010-81060	BOLT	1	57001-
27	01010-81020	BOLT	3	57001-
28	01643-31032	WASHER	4	57001-
29	04434-53412	CLIP	2	57001-
30	07095-20627	CUSHION	2	57001-

ELECTRICAL SYSTEM

FIG. E0200-02A0 ELECTRICAL SYSTEM (1/2)

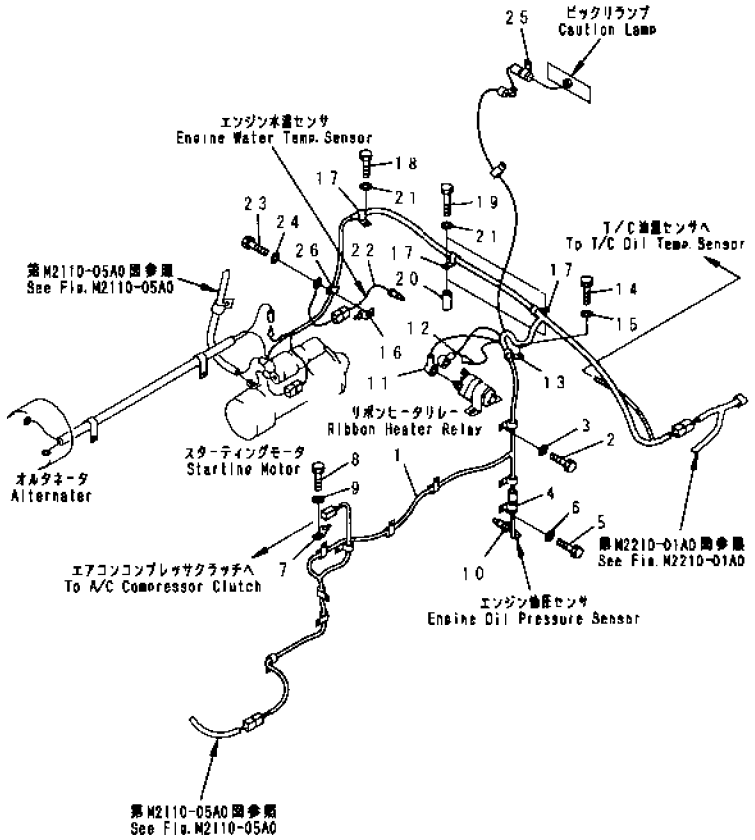

FIG NO. : E0200-02A0

INDEX	PART NO	DESCRIPTION	Q'TY	SERIAL NO
1	175-06-71142	WIRING HARNESS	1	57259-
	175-06-71141	WIRING HARNESS	1	57001-57258
2	01010-81020	BOLT	8	57001-
3	01643-31032	WASHER	8	57001-
4	08052-31711	CLIP	1	57001-
5	01010-81020	BOLT	1	57001-
6	01643-31032	WASHER	1	57001-
7	08053-01512	CLIP	1	57001-
8	01010-81020	BOLT	1	57001-
9	01643-31032	WASHER	1	57001-
10	15A-06-11190	SENSOR	1	57001-
11	08038-02027	CAP	1	57001-
12	08038-00519	CAP	1	57001-
13	08036-01414	CLIP	1	57001-
14	01010-81035	BOLT	1	57001-
15	01643-31032	WASHER	1	57001-
16	08053-00910	CLIP	1	57001-
17	08036-01414	CLIP	3	57001-
18	01010-81220	BOLT	1	57001-
19	01010-81270	BOLT	2	57001-
20	175-40-22540	SPACER	2	57001-
21	01643-31232	WASHER	3	57001-
22	7861-92-3320	SENSOR	1	57001-
23	01010-81020	BOLT	1	57001-
24	01643-31032	WASHER	1	57001-
25	195-06-41740	PLUG	1	57001-
26	08036-01014	CLIP	1	57001-

FIG. E0200-03A0 ELECTRICAL SYSTEM (2/2)

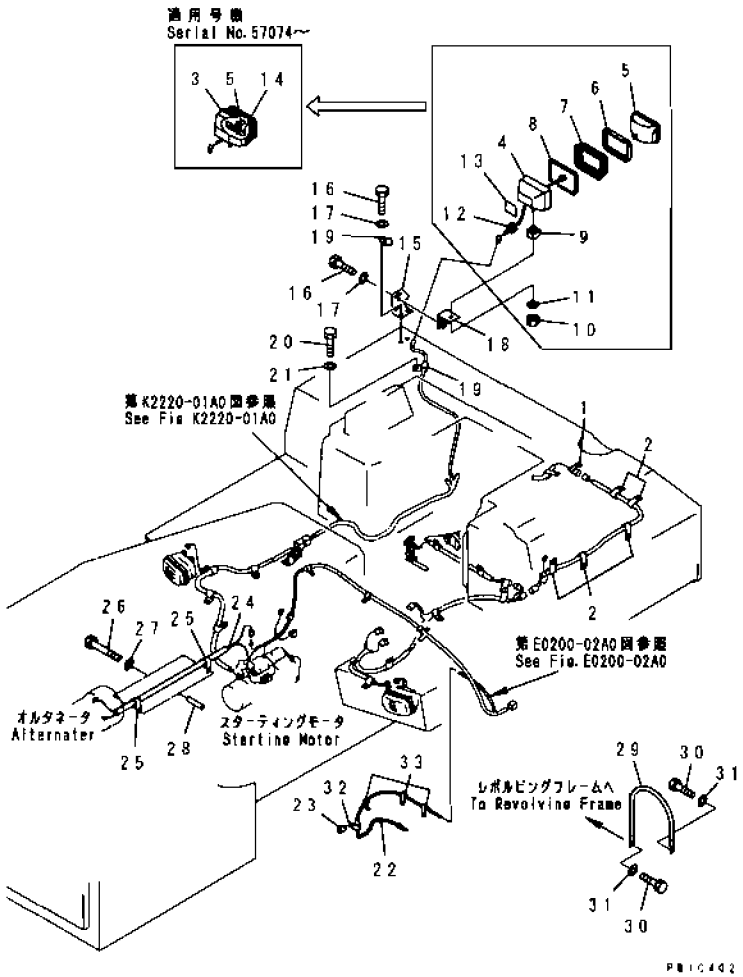

FIG NO. : E0200-03A0

INDEX	PART NO	DESCRIPTION	Q'TY	SERIAL NO
1	195-06-41740	PLUG	1	57001-
2	04434-52310	CLIP	5	57001-
3	17A-06-17940	LAMP ASS'Y	1	57074-
	23S-05-28210	LAMP ASS'Y	1	57001-57073
4	203-06-56160	.HOUSING	1	57001-57073
5	17A-06-17970	.BULB, 70W	1	57074-
	22W-06-12170	.BULB, 24V	1	57001-57073
6	203-06-56180	.RING	1	57001-57073
7	22W-06-12290	.CUSHION	1	57001-57073
8	203-06-56190	.RING	1	57001-57073
9	22W-06-12160	.SEAT	1	57001-57073
10	01582-11411	.NUT	1	57001-57073
11	01602-21442	.WASHER	1	57001-57073
12	09415-01008	.CAP	1	57001-57073
13	23S-05-28220	.PLATE, NAME	1	57001-57073
14	17A-06-17980	.SLEEVE	1	57074-
15	154-06-41340	BRACKET	1	57001-
16	01010-81235	BOLT	4	57001-
17	01643-31232	WASHER	4	57001-
18	154-06-41350	BRACKET	1	57001-
19	08036-00814	CLIP	2	57001-
20	01010-81220	BOLT	1	57001-
21	01643-31232	WASHER	1	57001-
22	7861-91-3310	SENSOR	1	57001-
23	195-33-11220	SPACER	1	57001-
24	175-06-71310	WIRING HARNESS	1	57001-
25	130-Z79-1620	CLIP	2	57001-
26	01011-81015	BOLT	2	57001-
27	01643-31032	WASHER	2	57001-
28	195-01-16420	COLLAR	2	57001-
29	08028-56030	CABLE	1	57126-
30	01010-81020	BOLT	2	57001-
31	01643-31032	WASHER	2	57001-
32	195-06-41820	CLIP	1	57001-
33	08036-10814	CLIP	3	57001-

FIG. E0420-01A0 BACK-UP ALARM

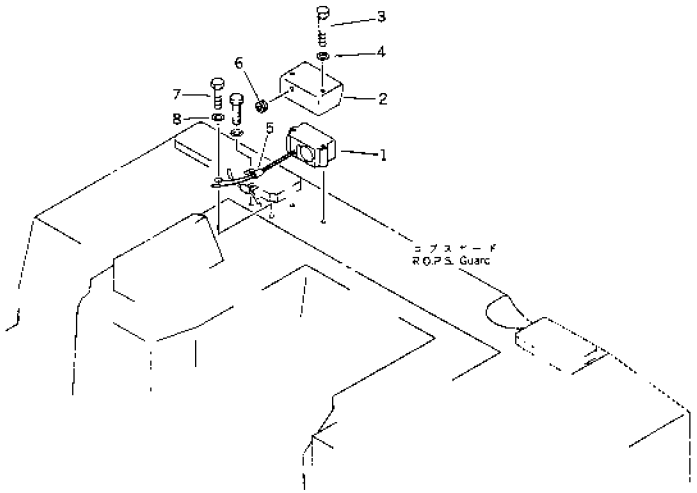

FIG NO. : E0420-01A0

INDEX	PART NO.	DESCRIPTION	Q'TY	SERIAL NO
G-1	(◎175-06-X1140)	BACK-UP ALARM GROUP	1	57001-
1	08164-00000	BUZZER	1	57001-
2	175-06-61421	COVER	1	57001-
3	01011-81005	BOLT	2	57001-
4	01643-31032	WASHER	2	57001-
5	08036-90814	CLIP	1	57001-
6	08037-01008	GROMMET	1	57001-
7	01010-81016	BOLT	1	57001-
8	01643-31032	WASHER	1	57001-

POWER TRAIN AND FINAL DRIVE

FIG. F2100-01A0 POWER TAKE OFF

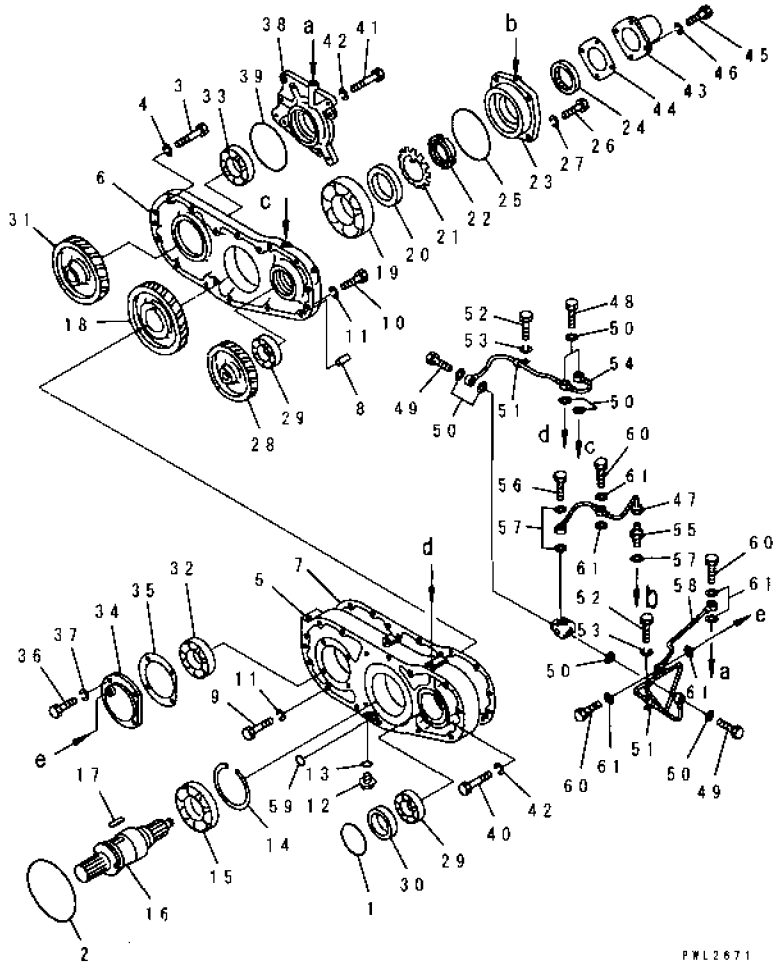

FIG NO. : F2100-01A0

INDEX	PART NO	DESCRIPTION	Q'TY	SERIAL NO
1	07000-12105	O-RING	1	57001-
2	07000-15195	O-RING	1	57001-
3	01011-81205	BOLT	10	57001-
4	01602-21236	WASHER, SPRING	10	57001-
	175-38-00160	P.T.O. ASS'Y	1	57001-
5	154-38-25110	. CASE	1	57001-
6	175-38-11110	. CASE	1	57001-
7	154-01-12131	. GASKET	1	57001-
8	04020-01024	. PIN, DOWEL	2	57001-
9	01010-81255	. BOLT	2	57001-
10	01010-81250	. BOLT	2	57001-
11	01602-21236	. WASHER, SPRING	4	57001-
12	07044-12412	. PLUG, MAGNETIC	1	57001-
13	07002-12434	. O-RING	1	57001-
14	150-21-22180	. RING, SNAP	1	57001-
15	154-01-12280	. BEARING	1	57001-
16	154-01-12221	. SHAFT	1	57001-
17	04000-02050	KEY	2	57001-
18	154-01-12230	GEAR	1	57001-
19	06040-06314	. BEARING	1	57001-
20	154-01-12240	. COLLAR	1	57001-
21	01658-16823	. WASHER, LOCK	1	57001-
22	01530-06814	. NUT	1	57001-
23	154-01-12250	. COVER	1	57001-
24	07012-00060	. SEAL, OIL	1	57001-
25	07000-15150	O-RING	1	57001-
26	01010-81230	. BOLT	4	57001-
27	01602-21236	. WASHER, SPRING	4	57001-
28	154-01-12310	. GEAR	1	57001-
29	06040-06209	. BEARING	2	57001-
30	154-01-12320	. RING	1	57001-
31	175-38-11120	. GEAR	1	57001-
32	06040-06212	. BEARING	1	57001-
33	06040-06312	. BEARING	1	57001-
34	154-01-12420	. COVER	1	57001-
35	154-01-12431	. GASKET	1	57001-
36	01010-81025	. BOLT	4	57001-
37	01602-21030	. WASHER, SPRING	4	57001-
38	175-38-11130	. CAGE	1	57001-
39	07000-15150	O-RING	1	19991123-
40	01011-81205	. BOLT	3	57001-
41	01010-81275	. BOLT	2	57001-

FIG NO. : F2100-01A0

INDEX	PART NO	DESCRIPTION	Q'TY	SERIAL NO
42	01602-21236	. WASHER, SPRING	5	57001-
43	154-01-12260	. COVER	1	57001-
44	154-01-12271	. GASKET	1	57001-
45	01010-81025	. BOLT	4	57001-
46	01602-21030	. WASHER, SPRING	4	57001-
47	154-01-21720	TUBE	1	57001-
48	6600-01-3860	. BOLT, JOINT	2	57001-
49	07206-20610	. BOLT, JOINT	2	57001-
50	07005-01012	. GASKET	6	57001-
51	08036-10614	. CLIP	2	57001-
52	01010-81220	. BOLT	2	57001-
53	01602-21236	. WASHER, SPRING	2	57001-
54	154-01-21730	. TUBE	1	57001-
55	154-01-12520	. NIPPLE	1	57001-
56	07206-20610	. BOLT, JOINT	1	57001-
57	07005-01012	. GASKET	5	57001-
58	175-01-71210	. TUBE	1	57001-
59	07000-13030	O-RING	1	57001-
60	6600-01-3860	. BOLT, JOINT	3	57001-
61	07005-01012	. GASKET	6	57001-

FIG. F2200-01A0 UNIVERSAL JOINT

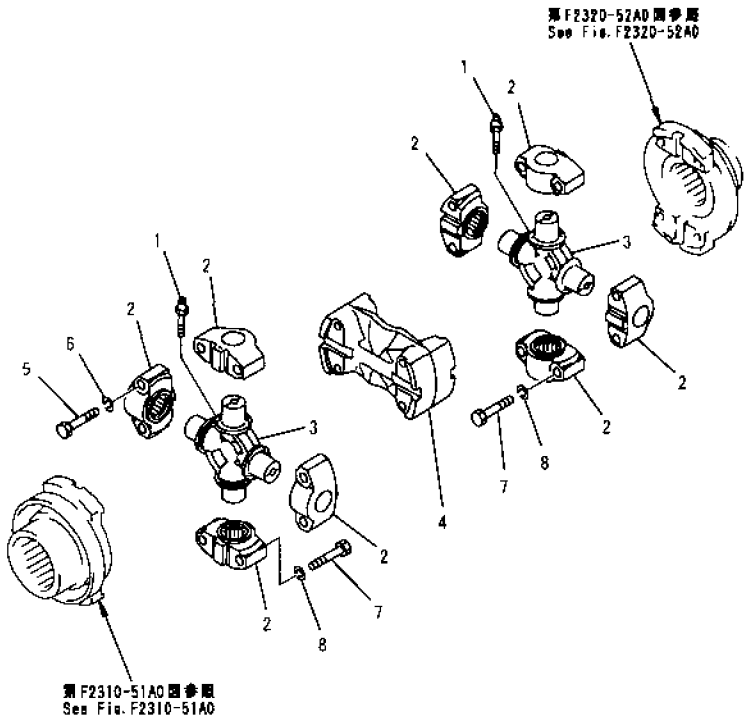

PW152221A

INDEX	PART NO.	DESCRIPTION	Q'TY	SERIAL NO.
	175-20-00050	UNIVERSAL JOINT A.	1	57001-
	175-20-00060	.JOINT ASS'Y.	2	57001-
1	175-20-11140	..FITTING, GREASE	1	57001-
2	175-20-11110	..BEARING	4	57001-
3	175-20-11120	..SPIDER	1	57001-
4	175-20-11130	.PLATE	1	57001-
5	01010-81260	.BOLT	8	57001-
6	01602-21236	.WASHER, SPRING	8	57001-
7	01010-81260	.BOLT	8	57001-
8	01602-21236	.WASHER, SPRING	8	57001-

FIG NO. : F2310-51A0

FIG. F2310-51A0 TORQUE CONVERTER (1/4) CASE (TCS43-4F)

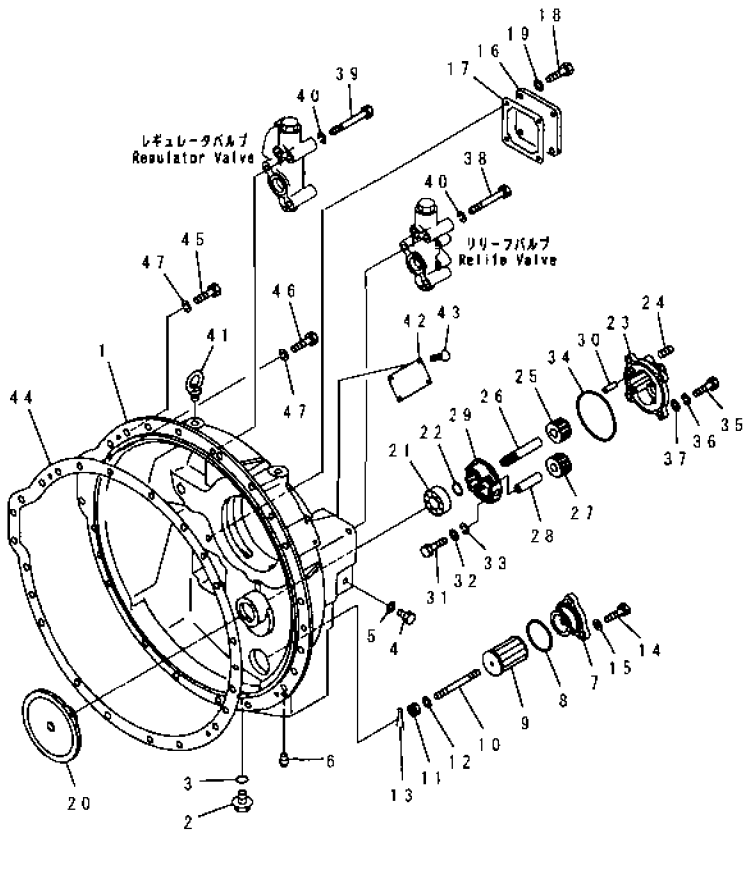

INDEX	PART NO.	DESCRIPTION	Q TY	SERIAL NO.
	175-13-21081	TORQUE CONVERTER A.	1	57001-
		THIS ASSEMBLY CONSISTS OF ALL PARTS SHOWN IN FIGS. F2310-51A0 TO F2310-54A0.		
1	195-13-13114	. HOUSING	1	57001-
2	07044-13620	. PLUG	1	57001-
3	07002-43634	. O-RING (K1)	1	57001-
4	175-13-23290	. PLUG	1	57001-
5	07005-01612	. GASKET (K1)	1	57001-
6	07043-70415	. PLUG	3	57001-
	134-13-13400	. FILTER ASS'Y	1	57001-
7	134-13-13410	.. COVER	1	57001-
8	07000-72070	.. O-RING (K1)	1	57001-
9	195-13-13420	.. FILTER	1	57001-
10	134-13-13430	.. STUD	1	57001-
11	01590-10607	.. NUT	1	57001-
12	01641-20608	.. WASHER	1	57001-
13	04050-11212	.. PIN, COTTER (K1)	1	57001-
14	01010-81230	. BOLT	3	57001-
15	01643-31232	. WASHER	3	57001-
16	175-13-23220	. COVER	1	57001-
17	175-13-23232	. GASKET (K1)	1	57001-
18	01010-81225	. BOLT	4	57001-
19	01643-31232	. WASHER	4	57001-
20	175-13-24111	. GEAR	1	57001-
21	06030-05206	. BEARING, BALL	1	57001-
22	04064-03015	. RING, SNAP	1	57001-
	175-13-23500	. PUMP ASS'Y	1	57001-
23	175-13-23530	.. CASE	1	57001-
24	01190-01011	.. HELISERT	2	57001-
	175-13-23510	.. GEAR ASS'Y	1	57001-
25	☆	... GEAR	1	57001-
26	☆	... SHAFT	1	57001-
	175-13-23520	.. GEAR ASS'Y	1	57001-
27	☆	... GEAR	1	57001-
28	☆	... SHAFT	1	57001-
29	175-13-23540	.. COVER	1	57001-
30	04020-00820	.. PIN, DOWEL	2	57001-
31	01010-80835	.. BOLT	4	57001-
32	01602-20825	.. WASHER, SPRING	4	57001-
33	01641-20812	.. WASHER	4	57001-
34	07000-72115	.. O-RING (K1)	1	57001-
35	01010-81235	. BOLT	4	57001-

FIG NO. : F2310-51A0

FIG. F2310-51A0 TORQUE CONVERTER (1/4) CASE (TCS43-4F)

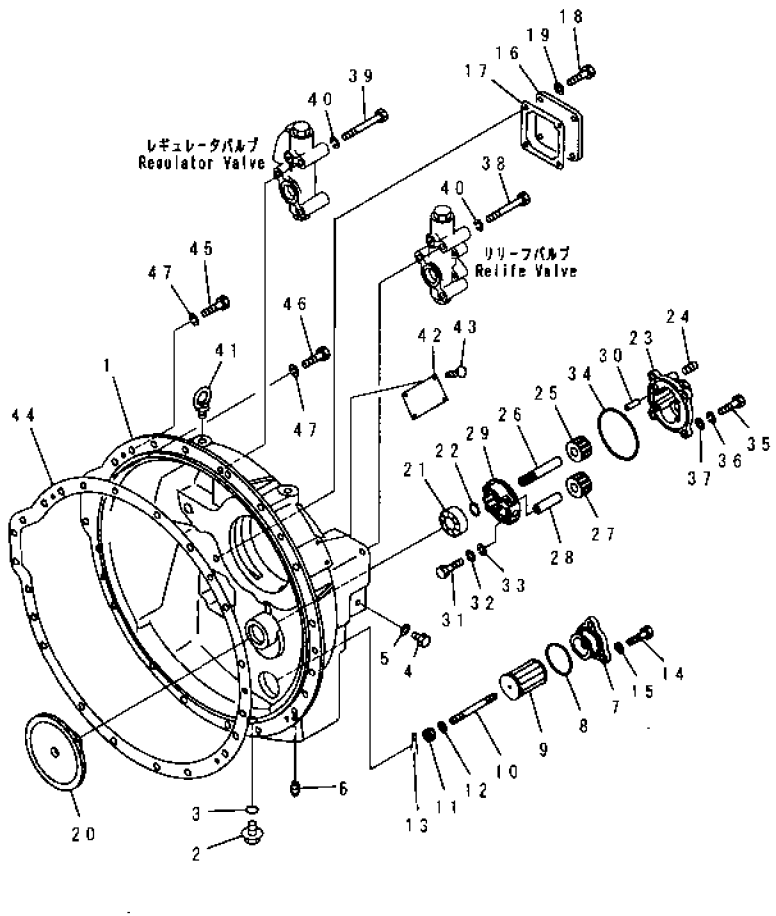

INDEX	PART NO.	DESCRIPTION	Q'TY	SERIAL NO.
36	01602-21236	WASHER, SPRING	4	57001-
37	01641-21223	WASHER	4	57001-
38	01010-81290	BOLT	3	57001-
39	01010-81295	BOLT	3	57001-
40	01602-21236	WASHER, SPRING	6	57001-
41	04530-11628	BOLT, EYE	2	57001-
42	09607-05080	PLATE, NAME, NAME (LIMITED SUPPLY)	1	57001-
43	04418-13060	SCREW	4	57001-
44	175-11-11132	GASKET (K1)	1	57001-
45	01010-81240	BOLT	22	57001-
46	01010-81265	BOLT	1	57001-
47	01602-21236	WASHER, SPRING	23	57001-

FIG. F2310-52A0 TORQUE CONVERTER (2/4) TURBINE SHAFT AND STATOR (TCS43-4F)

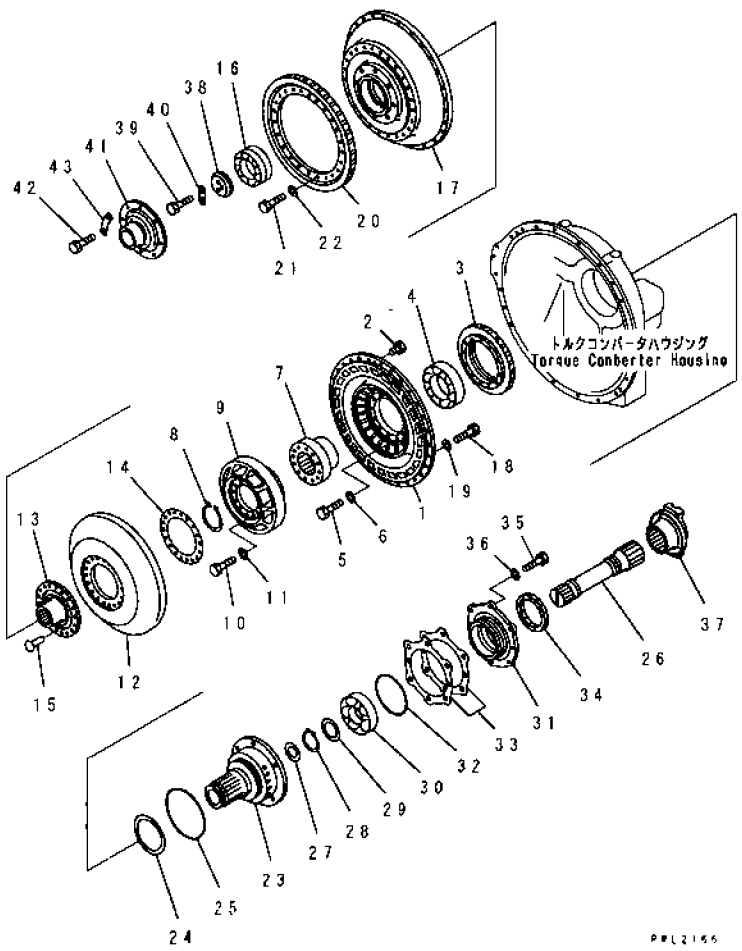

INDEX	PART NO	DESCRIPTION	Q'TY	SERIAL NO.
	(175-13-21081)	TORQUE CONVERTER A..... THIS ASSEMBLY CONSISTS OF ALL PARTS SHOWN IN FIGS.F2310-51A0 TO F2310-54A0.	1	57001-
1	175-13-21125	.PUMP.....	1	57001-
2	07040-11209	.PLUG.....	2	57001-
3	195-13-11143	.GEAR.....	1	57001-
4	175-13-21160	.BEARING, ROLLER.....	1	57001-
5	01010-81045	.BOLT.....	12	57001-
6	01643-31032	.WASHER.....	12	57001-
7	175-13-22122	.RACE.....	1	57001-
8	04064-08530	.RING, SNAP.....	1	57001-
9	175-13-22313	.STATOR.....	1	57001-
10	01010-81030	.BOLT.....	12	57001-
11	01643-31032	.WASHER.....	12	57001-
	175-13-21514	.TURBINE ASS'Y.....	1	57001-
12	☆	..TURBINE.....	1	57001-
13	☆	..BOSS.....	1	57001-
14	☆	..PLATE.....	1	57001-
15	☆	..RIVET.....	18	57001-
16	175-13-21240	.BEARING, BALL.....	1	57001-
17	175-13-21213	.CASE.....	1	57001-
18	01010-81035	.BOLT.....	30	57001-
19	01643-31032	.WASHER.....	30	57001-
20	175-13-21220	.GEAR.....	1	57001-
21	01010-81230	.BOLT.....	24	57001-
22	01643-31232	.WASHER.....	24	57001-
23	15A-13-12520	.SHAFT.....	1	57001-
24	195-13-12711	.RING, SEAL.....	1	57001-
25	07000-75185	.O-RING..... (K1)	1	57001-
26	15A-13-11651	.SHAFT.....	1	57001-
27	178-13-11720	.RING, SEAL.....	1	57001-
28	04064-06525	.RING, SNAP.....	1	57001-
29	175-13-21770	.SPACER.....	1	57001-
30	175-13-53360	.BEARING, BALL.....	1	57001-
31	15A-13-12720	.COVER.....	1	57001-
32	07000-02140	.O-RING..... (K1)	1	57001-
33	195-13-05020	.SHIM ASS'Y..... (K1)	1	57001-
34	07012-50100	.SEAL..... (K1)	1	57001-
35	01010-81245	.BOLT.....	6	57001-
36	01643-31232	.WASHER.....	6	57001-
37	15A-13-11661	.COUPLING.....	1	57001-
38	175-13-21692	.HOLDER.....	1	57001-

FIG NO. : F2310-52A0

FIG. F2310-52A0 TORQUE CONVERTER (2/4) TURBINE SHAFT AND STATOR (TCS43-4F)

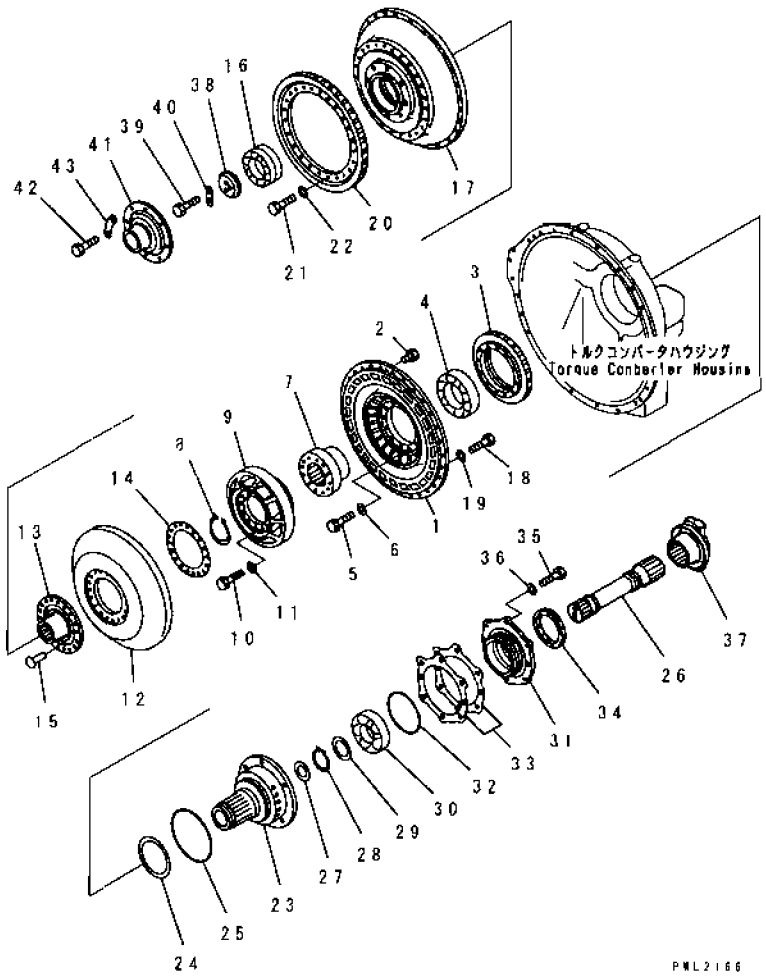

INDEX	PART NO.	DESCRIPTION	Q'TY	SERIAL NO
39	195-13-11810	BOLT	2	57001-
40	175-13-21712	PLATE, LOCK (K1)	1	57001-
41	15A-13-11250	PILOT	1	57001-
42	01010-81230	BOLT	8	57001-
43	195-13-11261	PLATE, LOCK (K1)	4	57001-

FIG. F2310-53A0 TORQUE CONVERTER (3/4) RELIEF VALVE (TCS43-4F)

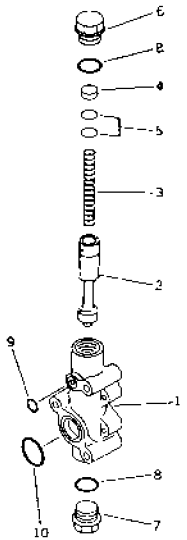

INDEX	PART NO.	DESCRIPTION	Q TY	SERIAL NO
	(175-13-21081)	TORQUE CONVERTER A. THIS ASSEMBLY CONSISTS OF ALL PARTS SHOWN IN FIGS. F2310-51A0 TO F2310-54A0	1	57001-
	195-13-00100	.VALVE ASS'Y.	1	57001-
1	195-13-16110	..BODY.	1	57001-
2	195-13-16120	..SPOOL.	1	57001-
3	195-13-16131	..SPRING, (L=137.7)	1	57001-
4	195-13-16230	..SPACER	1	57001-
5	195-13-05010	..SHIM KIT.	1	57001-
6	195-13-16141	..PLUG	1	57001-
7	195-13-16450	..PLUG.	1	57001-
8	07002-43634	..O-RING. (K1)	2	57001-
9	07000-72018	.O-RING. (K1)	1	57001-
10	07000-73045	.O-RING. (K1)	1	57001-

FIG. F2310-54A0 TORQUE CONVERTER (4/4) REGULATOR VALVE (TCS43-4F)

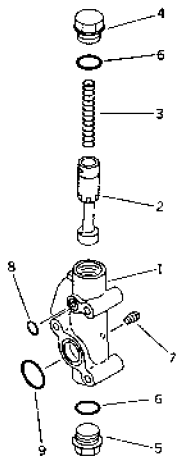

INDEX	PART NO.	DESCRIPTION	Q'TY	SERIAL NO
	(175-13-21081)	TORQUE CONVERTER A.	1	57001-
		THIS ASSEMBLY CONSISTS OF ALL PARTS SHOWN IN FIGS. F2310-51A0 TO F2310-54A0.		
	175-13-00150	.VALVE ASS'Y.	1	57001-
1	175-13-26410	..BODY.	1	57001-
2	195-13-16420	..SPOOL.	1	57001-
3	195-13-16430	..SPRING, (L=126.6)	1	57001-
4	195-13-16141	.PLUG.	1	57001-
5	195-13-16450	..PLUG.	1	57001-
6	07002-43634	..O-RING. . . . . (K1)	2	57001-
7	07042-20108	..PLUG.	1	57001-
8	07000-72018	.O-RING. . . . . (K1)	1	57001-
9	07000-73045	.O-RING. . . . . (K1)	1	57001-

FIG. F2320-51A0 TRANSMISSION (1/4)、CASE

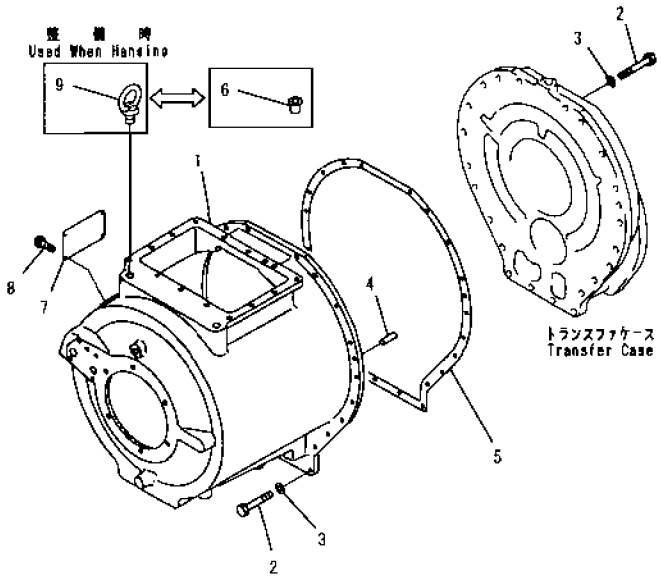

FIG NO. : F2320-51A0

INDEX	PART NO	DESCRIPTION	Q'TY	SERIAL NO
	175-15-41013	TRANSMISSION ASS'Y THIS ASSEMBLY CONSISTS OF ALL PARTS SHOWN IN FIGS. F2320-51A0 TO F2320-57A0.	1	57001-
1	175-15-41112	.CASE	1	57001-
2	01010-81240	.BOLT	22	57001-
3	01643-51232	.WASHER, SPRING	22	57001-
4	04020-01228	.PIN, DOWEL	1	57001-
5	175-15-41122	.GASKET (K2)	1	57001-
6	07048-02216	.PLUG	2	57001-
7	09608-05080	.PLATE, NAME, (LIMITED SUPPLY)	1	57001-
8	04418-13060	.SCREW	4	57001-
9	04530-02438	BOLT, EYE	2	57001-

FIG NO. : F2320-52A0

FIG. F2320-52A0 TRANSMISSION (2/4), PRANETARY GEAR AND SHAFT (1/2)

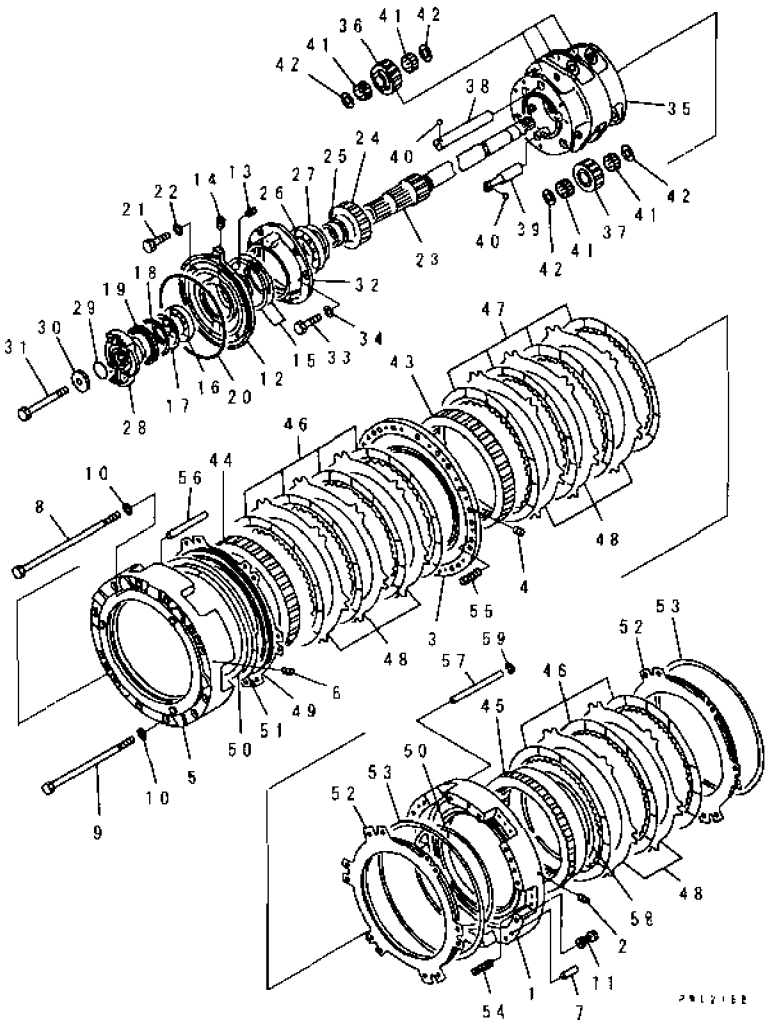

INDEX	PART NO	DESCRIPTION	Q'TY	SERIAL NO.
	(175-15-41013)	TRANSMISSION ASS'Y THIS ASSEMBLY CONSISTS OF ALL PARTS SHOWN IN FIGS. F2320-51A0 TO F2320-57A0.	1	57001-
	175-15-00261	.HOUSING ASS'Y	1	57001-
1	☆	..HOUSING	1	57001-
2	145-14-11320	..PLUG	2	57001-
	175-15-00270	.PLATE ASS'Y	1	57001-
3	☆	..PLATE	1	57001-
4	145-14-11320	..PLUG	2	57001-
	175-15-00283	HOUSING ASS'Y	1	57001-
5	☆	..HOUSING	1	57001-
6	145-14-11320	..PLUG	2	57001-
7	04020-01228	.PIN, DOWEL	2	57001-
8	175-15-41192	.BOLT	12	57001-
9	175-15-41292	.BOLT, CLUTCH	2	57001-
10	145-14-11571	WASHER	14	57001-
11	569-15-41310	.SLEEVE	14	57001-
	15A-15-00190	.CAGE ASS'Y	1	57001-
12	☆	..CAGE	1	57001-
13	195-15-11230	..PLUG (D=2)	1	57001-
14	07043-70211	.PLUG, TAPER	1	57001-
15	07018-12005	.RING, SEAL	2	57001-
16	06000-06216	.BEARING, BALL	1	57001-
17	15A-15-11240	.SPACER	1	57001-
18	04071-00140	.RING, SNAP	1	57001-
19	07012-10110	.SEAL, OIL (K2)	1	57001-
20	07000-05290	.O-RING (K2)	1	57001-
21	01010-81235	.BOLT	6	57001-
22	01643-51232	.WASHER, SPRING	6	57001-
23	175-15-42190	.SHAFT	1	57001-
24	175-15-42122	.GEAR	1	57001-
25	15A-15-12140	.SPACER	1	57001-
26	06000-06924	.BEARING, BALL	1	57001-
27	130-09-16780	.RING, SNAP	1	57001-
28	15A-15-12150	.COUPLING	1	57001-
29	07000-05055	.O-RING (K2)	1	57001-
30	154-15-42180	.HOLDER, COUPLING	1	57001-
31	01051-51800	.BOLT	1	57001-
32	15A-15-12310	CAGE, BEARING	1	57001-
33	01010-81230	.BOLT	6	57001-
34	01643-51232	.WASHER	6	57001-
35	175-15-42322	.CARRIER, PLANETARY	1	57001-

FIG NO. : F2320-52A0

INDEX	PART NO	DESCRIPTION	Q'TY	SERIAL NO
36	175-15-42452	. GEAR, PLANETARY	9	57001-
37	175-15-42471	. GEAR, PLANETARY	3	57001-
38	175-15-42512	. SHAFT, PLANETARY	3	57001-
39	175-15-42532	. SHAFT, PLANETARY	3	57001-
40	04260-00635	. BALL	6	57001-
41	566-15-19130	. BEARING	24	57001-
42	09233-15125	. WASHER	24	57001-
43	175-15-42610	. GEAR, RING	1	57001-
44	175-15-42620	. GEAR, RING	1	57001-
45	175-15-42632	. GEAR, RING	1	57001-
46	19M-15-12721	. DISC, CLUTCH	7	57001-
47	19M-15-12721	. DISC, CLUTCH	4	57001-
48	175-15-42721	. PLATE, CLUTCH	8	57001-
49	175-15-42831	. PISTON, CLUTCH	1	57001-
50	155-15-12820	. RING, SEAL	2	57001-
51	154-15-22811	. RING, SEAL	1	57001-
52	175-15-42871	. PISTON, CLUTCH	2	57001-
53	175-15-59240	. RING, SEAL	2	57001-
54	175-15-42781	. SPRING, (L=66)	12	57001-
55	175-15-42781	. SPRING, (L=66)	12	57001-
56	145-14-12760	. PIN, (D=15, L=181.5)	6	57001-
57	175-15-12780	. PIN, (D=15, L=172)	6	57001-
58	175-15-42670	. RING, SNAP	1	57001-
59	175-15-42880	. SPRING, WASHER TYPE	78	57001-

FIG NO. : F2320-53A0

FIG. F2320-53A0 TRANSMISSION (3/4)、PRANETARY GEAR AND SHAFT (2/2)

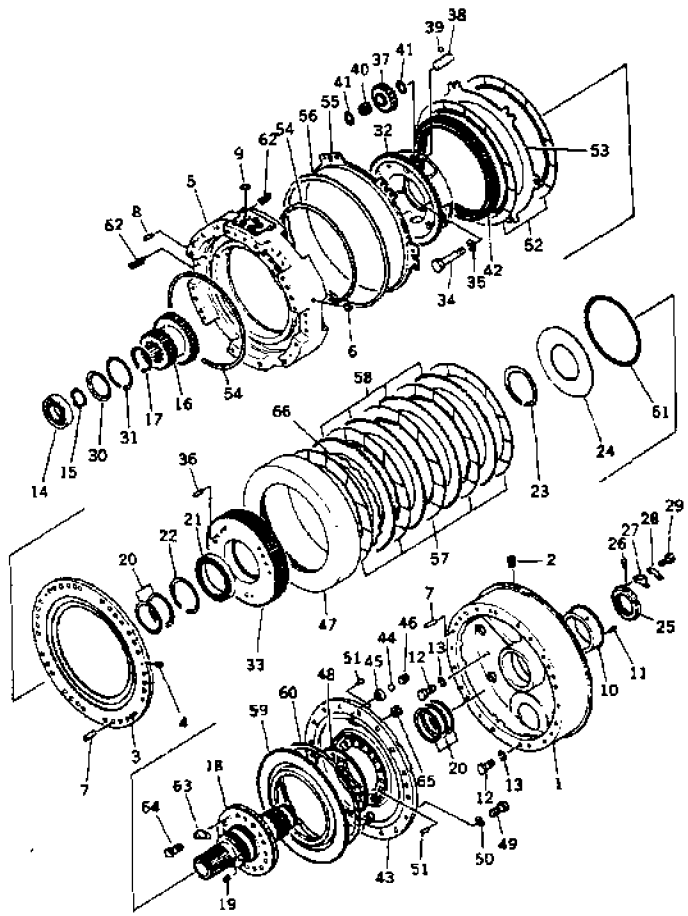

INDEX	PART NO	DESCRIPTION	Q'TY	SERIAL NO.
	(175-15-41013)	TRANSMISSION ASS'Y THIS ASSEMBLY CONSISTS OF ALL PARTS SHOWN IN FIGS. F2320-51A0 TO F2320-57A0.	1	57001-
	178-15-00030	. HOUSING ASS'Y, 1ST	1	57001-
1	☆	.. HOUSING, 1ST CLUTCH	1	57001-
2	234-15-12780	.. SCREW	3	57001-
	175-15-00240	. PLATE ASS'Y, 2ND	1	57001-
3	☆	.. PLATE	1	57001-
4	145-14-11320	. PLUG	2	57001-
	175-15-00251	. HOUSING ASS'Y	1	57001-
5	☆	. HOUSING	1	57001-
6	145-14-11320	.. PLUG	2	57001-
7	175-15-31210	. PIN, DOWEL	4	57001-
8	04020-01228	. PIN, DOWEL	2	57001-
9	07000-73022	. O-RING (K2)	5	57001-
10	175-15-41310	. COLLAR	1	57001-
11	04020-00616	. PIN, DOWEL	1	57001-
12	01010-61435	. BOLT	2	57001-
13	01602-01442	. WASHER, SPRING	2	57001-
14	06042-00212	. BEARING, ROLLER	1	57001-
15	04064-06020	. RING, SNAP	1	57001-
16	175-15-42131	. GEAR	1	57001-
17	04064-08530	. RING, SNAP	1	57001-
	175-15-00314	. SHAFT ASS'Y	1	57001-
18	☆	.. SHAFT	1	57001-
19	145-14-11320	.. PLUG	8	57001-
20	175-15-42850	RING, SEAL	5	57001-
21	06000-06924	. BEARING, BALL	1	57001-
22	130-09-16780	. RING, SNAP	1	57001-
23	04070-00130	. RING, SNAP	1	57001-
24	175-15-42180	. SPRING	1	57001-
25	234-21-12180	. NUT	1	57001-
26	175-15-42220	. PIN, LOCK	1	57001-
27	234-21-12190	. PLATE, LOCK	1	57001-
28	234-21-12210	. PLATE, LOCK	1	57001-
29	01010-80814	. BOLT	2	57001-
30	175-15-42340	. PLATE	1	57001-
31	130-09-15740	. RING, SNAP	1	57001-
32	175-15-42364	. CARRIER, PLANETARY	1	57001-
33	175-15-42371	. GEAR, 1ST	1	57001-
34	01010-61490	. BOLT	6	57001-
35	01643-31445	. WASHER	6	57001-

FIG NO. : F2320-53A0

INDEX	PART NO.	DESCRIPTION	Q'TY	SERIAL NO
36	04020-01228	. PIN, DOWEL	6	57001-
37	175-15-42491	. GEAR	3	57001-
38	175-15-42552	. SHAFT	3	57001-
39	04260-00635	. BALL	3	57001-
40	09232-03838	. BEARING, NEEDLE	3	57001-
41	09233-13820	. WASHER	6	57001-
42	175-15-42650	. GEAR	1	57001-
	175-15-00333	. HOUSING ASS'Y	1	57001-
43	☆	.. HOUSING, 1ST CLUTCH	1	57001-
44	04260-00952	.. BALL	2	57001-
45	175-15-42971	.. COLLAR	2	57001-
46	234-15-12790	.. SCREW	2	57001-
47	175-15-42421	. DRUM, 1ST CLUTCH	1	57001-
48	175-15-42430	. O-RING (K2)	1	57001-
49	01010-81230	. BOLT	12	57001-
50	01643-51232	. WASHER	12	57001-
51	04020-01228	PIN, DOWEL	4	57001-
52	19M-15-12721	. DISC, CLUTCH	2	57001-
53	175-15-42721	. PLATE, CLUTCH	1	57001-
54	155-15-12820	RING, SEAL	2	57001-
55	175-15-42871	. PISTON, CLUTCH	1	57001-
56	175-15-59240	. RING, SEAL	1	57001-
57	195-15-32710	. DISC	5	57001-
58	281-15-12720	. PLATE	4	57001-
59	175-15-42741	. PISTON	1	57001-
60	582-15-19240	. RING, SEAL	1	57001-
61	154-15-22831	. RING, SEAL	1	57001-
62	145-14-12790	. SPRING, (L= 59.0), (L=59)	24	57001-
63	175-15-42240	. PLATE, LOCK	8	57001-
64	175-15-42230	. BOLT, REAMER	16	57001-
65	01582-01210	. NUT	16	57001-
66	175-15-42890	. SPRING	5	57001-

FIG NO. : F2320-54A0

FIG. F2320-54A0 TRANSMISSION (4/4)、TRANSFER CASE

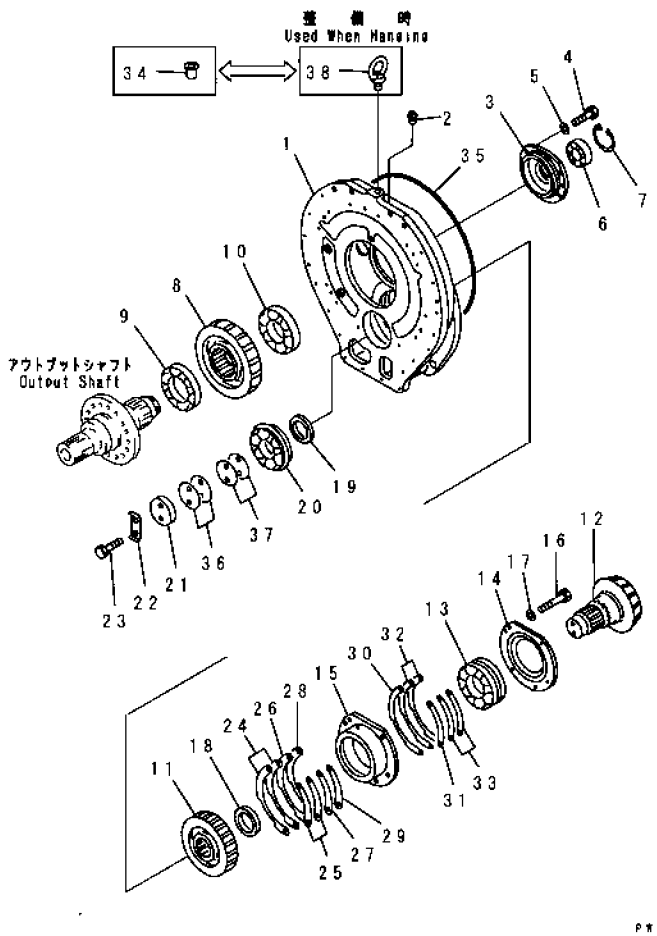

INDEX	PART NO.	DESCRIPTION	Q'TY	SERIAL NO
	(175-15-41013)	TRANSMISSION ASS'Y THIS ASSEMBLY CONSISTS OF ALL PARTS SHOWN IN FIGS. F2320-51A0 TO F2320-57A0.	1	57001-
1	175-15-43116	.CASE	1	57001-
2	07042-20211	..PLUG, TAPER	1	57001-
3	175-15-43152	.CAGE, BEARING	1	57001-
4	01010-81240	.BOLT	5	57001-
5	01643-51232	.WASHER, SPRING	5	57001-
6	06000-22211	.BEARING	1	57001-
7	04065-01030	.RING, SNAP	1	57001-
8	175-15-43212	.GEAR, DRIVE	1	57001-
9	175-15-49340	.BEARING, ROLLER	1	57001-
10	06044-00218	.BEARING, ROLLER	1	57001-
11	175-15-43232	.GEAR, DRIVEN	1	57001-
12	178-15-13240	.SHAFT, PINION	1	57001-
13	178-15-19350	.BEARING	1	57001-
14	178-15-13140	.COVER, BEARING	1	57001-
15	178-15-13260	.CAGE, BEARING	1	57001-
16	01010-81250	.BOLT	4	57001-
17	01643-51232	.WASHER, SPRING	4	57001-
18	178-15-13360	.SPACER	1	57001-
19	178-15-13370	.SPACER	1	57001-
20	178-15-19330	.BEARING, ROLLER	1	57001-
21	178-15-13620	.HOLDER, BEARING	1	57001-
22	04081-07012	.LOCK, HOLDER	1	57001-
23	01010-61435	.BOLT	2	57001-
	175-15-05011	.SHIM KIT (K3)	1	57001-
24	☆	..SHIM, 0.2MM (K3)	2	57001-
25	☆	..SHIM, 0.2MM (K3)	2	57001-
26	☆	..SHIM, 0.3MM (K3)	1	57001-
27	☆	..SHIM, 0.3MM (K3)	1	57001-
28	☆	..SHIM, 1.0MM (K3)	1	57001-
29	☆	..SHIM, 1.0MM (K3)	1	57001-
	175-15-05051	.SHIM KIT (K4)	1	57001-
30	☆	..SHIM, 0.2MM (K4)	1	57001-
31	☆	..SHIM, 0.2MM (K4)	1	57001-
32	☆	..SHIM, 0.3MM (K4)	2	57001-
33	☆	..SHIM, 0.3MM (K4)	2	57001-
34	07048-02216	.PLUG	1	57001-
35	07000-05470	.O-RING (K2)	1	57001-
	178-15-00121	.SHIM ASS'Y	1	57001-
36	☆	..SHIM, 0.2MM	3	57001-

FIG NO. : F2320-54A0

INDEX	PART NO	DESCRIPTION	Q'TY	SERIAL NO
37	☆	..SHIM, 0.3MM.....	3	57001-
38	04530-02438	BOLT, EYE.....	1	57001-

D155A-2A

FIG NO. : F2320-55A0

FIG. F2320-55A0 TRANSMISSION VALVE

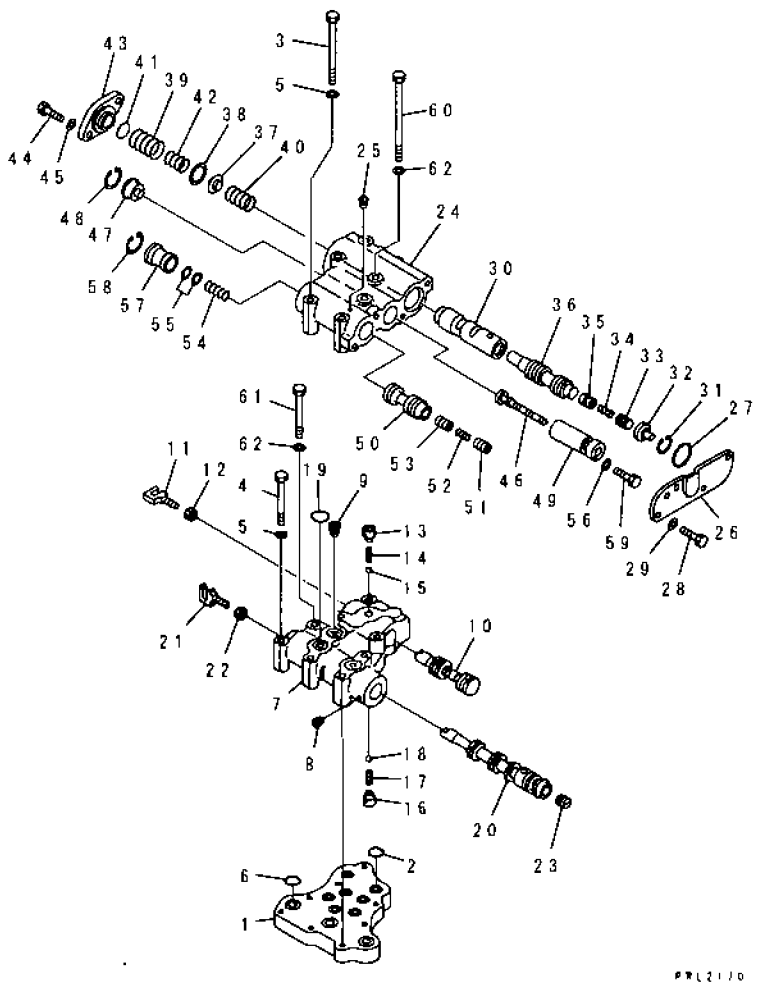

INDEX	PART NO	DESCRIPTION	Q'TY	SERIAL NO
	(175-15-41013)	TRANSMISSION ASS'Y THIS ASSEMBLY CONSISTS OF ALL PARTS SHOWN IN FIGS. F2320-51A0 TO F2320-57A0.	1	57001-
	15A-15-15003	.VALVE ASS'Y	1	57001-
1	175-15-45110	..SEAT, VALVE	1	57001-
2	07000-73022	..O-RING (K5)	7	57001-
3	01011-81035	..BOLT	3	57001-
4	01010-81075	..BOLT	1	57001-
5	01643-31032	..WASHER	4	57001-
6	07000-73025	..O-RING (K5)	3	57001-
7	175-15-45213	..BODY, VALVE	1	57001-
8	15A-15-16450	...PLUG	1	57001-
9	07043-00415	...PLUG	1	57001-
10	175-15-45220	..SPOOL	1	57001-
11	09363-01053	..YOKE	1	57001-
12	01580-11008	..NUT	1	57001-
13	175-15-45260	..DETENT	1	57001-
14	195-15-15680	...SPRING, (L=15.5)	1	57001-
15	04260-00952	...BALL	1	57001-
16	195-15-15671	..DETENT	1	57001-
17	195-15-15680	...SPRING, (L=15.5)	1	57001-
18	04260-00952	...BALL	1	57001-
19	07000-73022	..O-RING (K5)	2	57001-
20	154-15-45230	..SPOOL	1	57001-
21	09363-01053	..YOKE	1	57001-
22	01580-11008	..NUT	1	57001-
23	144-15-25210	..PLUG	1	57001-
24	155-15-15410	..BODY, VALVE	1	57001-
25	07042-80108	..PLUG	1	57001-
26	155-15-15850	..COVER	1	57001-
27	07000-73040	..O-RING (K5)	1	57001-
28	01010-81025	..BOLT	4	57001-
29	01643-31032	..WASHER	4	57001-
30	145-14-43382	..VALVE, MODULATING	1	57001-
31	130-09-15170	..RING, SNAP	1	57001-
32	145-14-23180	..STOPPER	1	57001-
33	175-15-15550	..VALVE, MODULATING	1	57001-
34	180-14-25560	..SPRING, (L=35)	1	57001-
35	195-15-15130	..SEAL, MODULATING	1	57001-
36	145-14-43333	..VALVE, MODULATING	1	57001-
37	145-14-43340	..SEAT	1	57001-
38	145-14-33450	..WASHER	1	57001-

FIG NO. : F2320-55A0

INDEX	PART NO.	DESCRIPTION	Q'TY	SERIAL NO.
39	145-14-33351	..SPRING, (L=53)	1	57001-
40	145-14-33430	..SPRING, (L=42.4)	1	57001-
41	145-14-43370	..SHIM, 0.5MM	7	57001-
42	145-14-33420	..SPRING, (L=41.5)	1	57001-
43	144-15-25330	.COVER	1	57001-
44	01010-81025	..BOLT	2	57001-
45	01643-31032	WASHER	2	57001-
46	155-15-15320	..SPOOL, QUICK RETURN	1	57001-
47	155-15-15360	..STOPPER	1	57001-
48	04065-03515	..RING, SNAP	1	57001-
49	155-15-15351	. SLEEVE	1	57001-
50	175-15-45381	..VALVE, REDUCING	1	57001-
51	568-15-15570	..VALVE, REDUCING	1	57001-
52	180-14-25560	..SPRING	1	57001-
53	198-15-15760	..VALVE, REDUCING	1	57001-
54	234-15-15230	..SPRING, (L= 52.0)	1	57001-
55	103-15-15480	..SHIM, 0.5MM	1	57001-
	103-15-15510	..SHIM, 0.2MM	1	57001-
56	01643-30623	..WASHER	1	57001-
57	175-15-45390	..RETAINER	1	57001-
58	04065-03515	..RING	1	57001-
59	155-15-15370	..BOLT	1	57001-
60	175-15-45180	.BOLT	3	57001-
61	01011-81005	.BOLT	1	57001-
62	01643-31032	.WASHER	4	57001-

FIG. F2320-56A0 TRANSMISSION VALVE COVER AND LEVER

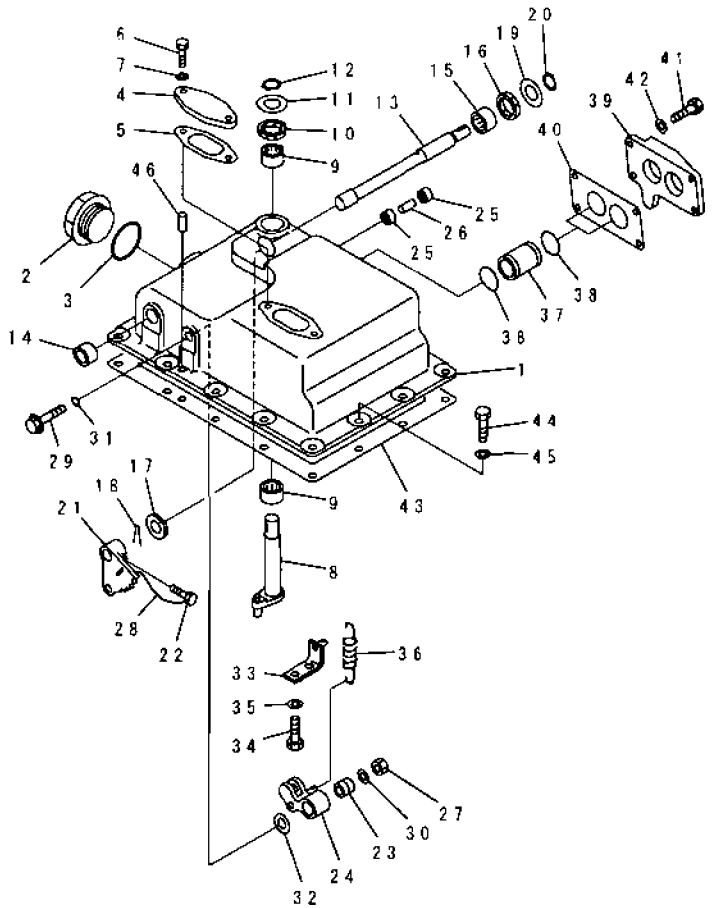

FIG NO. : F2320-56A0

INDEX	PART NO	DESCRIPTION	Q'TY	SERIAL NO
	(175-15-41013)	TRANSMISSION ASS'Y. THIS ASSEMBLY CONSISTS OF ALL PARTS SHOWN IN FIGS. F2320-51A0 TO F2320-57A0.	1	57001-
	15A-15-18000	.COVER ASS'Y.	1	57001-
1	175-15-45512	..COVER.	1	57001-
2	07040-15223	..PLUG.	1	57001-
3	07002-05234	..O-RING. (K5)	1	57001-
4	175-15-45750	..PLATE.	1	57001-
5	154-15-45760	..GASKET. (K5)	1	57001-
6	01010-81020	..BOLT.	2	57001-
7	01643-31032	..WASHER.	2	57001-
8	175-15-45560	..LEVER.	1	57001-
9	06120-02016	.BEARING, NEEDLE.	2	57001-
10	144-15-29110	..SEAL, OIL. (K5)	1	57001-
11	175-15-45570	..WASHER.	1	57001-
12	04064-01812	..RING, SNAP.	1	57001-
13	175-15-45610	..SHAFT, LEVER.	1	57001-
14	06121-02016	..BEARING, NEEDLE.	1	57001-
15	06120-02016	..BEARING, NEEDLE.	1	57001-
16	144-15-29110	.SEAL, OIL. (K5)	1	57001-
17	175-15-45620	..STOPPER.	1	57001-
18	04050-03040	..PIN COTTER.	1	57001-
19	175-15-45570	..WASHER.	1	57001-
20	04064-01812	..RING, SNAP.	1	57001-
21	175-15-45630	.LEVER.	1	57001-
22	125-15-11530	..BOLT.	1	57001-
23	175-15-45670	..SLEEVE.	1	57001-
24	175-15-45690	..LEVER.	1	57001-
25	144-15-29121	..BEARING.	2	57001-
26	144-15-25691	.PIN.	1	57001-
27	01580-11008	..NUT.	1	57001-
28	04059-01010	..WIRE, LOCK.	1	57001-
29	175-15-45650	..BOLT.	1	57001-
30	01643-31032	..WASHER.	1	57001-
31	07002-01223	.O-RING. (K5)	1	57001-
32	175-15-45660	..WASHER.	2	57001-
33	175-15-45780	..BRACKET.	1	57001-
34	01010-81020	.BOLT.	2	57001-
35	01643-31032	.WASHER.	2	57001-
36	154-15-45710	.SPRING.	1	57001-
37	175-15-45550	.SLEEVE.	2	57001-
38	07000-73028	..O-RING. (K5)	4	57001-

FIG NO. : F2320-56A0

INDEX	PART NO	DESCRIPTION	Q'TY	SERIAL NO.
39	175-15-45530	..COVER	1	57001-
40	154-15-45540	..GASKET (K5)	1	57001-
41	01010-81030	..BOLT	4	57001-
42	01643-31032	..WASHER	4	57001-
43	154-15-45520	.GASKET (K5)	1	57001-
44	01010-81025	.BOLT	14	57001-
45	01643-31032	.WASHER	14	57001-
46	04020-01024	.PIN, DOWEL	2	57001-

FIG NO. : F2320-57A0

FIG. F2320-57A0 TRANSMISSION REGULATOR VALVE

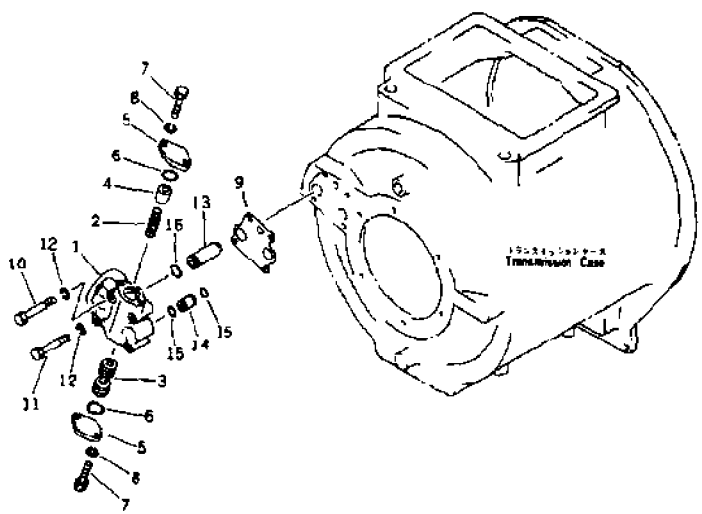

INDEX	PART NO.	DESCRIPTION	Q'TY	SERIAL NO
	(175-15-41013)	TRANSMISSION ASS'Y THIS ASSEMBLY CONSISTS OF ALL PARTS SHOWN IN FIGS. F2320-51A0 TO F2320-57A0.	1	57001-
	175-15-00352	. VALVE ASS'Y	1	57001-
1	175-15-14111	. . BODY	1	57001-
2	175-15-14120	. . SPRING, RETURN	1	57001-
3	175-15-14130	. . SPOOL	1	57001-
4	175-15-14141	. . GUIDE, VALVE	1	57001-
5	175-15-14150	. . COVER	2	57001-
6	07000-73032	. . O-RING (K6)	2	57001-
7	01010-80825	. . BOLT	4	57001-
8	01643-30823	. . WASHER	4	57001-
9	175-15-14162	. . GASKET (K6)	1	57001-
10	01010-81055	. . BOLT	2	57001-
11	01010-81065	. . BOLT	2	57001-
12	01602-21030	. . WASHER, SPRING	4	57001-
13	175-15-44190	. . SLEEVE	1	57001-
14	175-15-44180	. . SLEEVE	1	57001-
15	07000-72018	. . O-RING (K6)	2	57001-
16	07000-73022	. . O-RING (K6)	1	57001-

FIG. F2350-01A0 BEVEL GEAR AND SHAFT

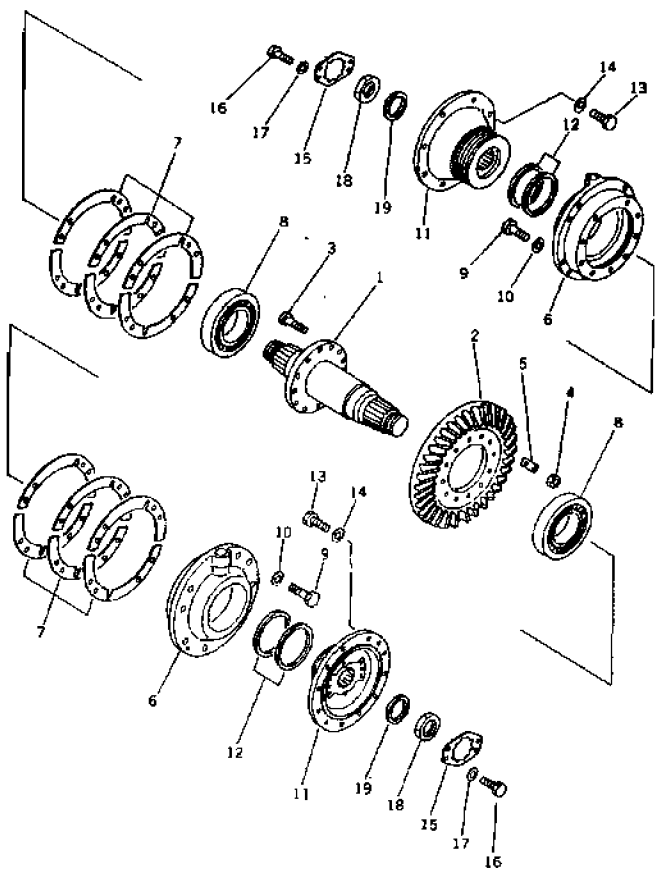

FIG NO. : F2350-01A0

INDEX	PART NO	DESCRIPTION	Q'TY	SERIAL NO
1	175-21-32113	SHAFT	1	57001-
2	175-21-22140	GEAR, BEVEL	1	57001-
3	170-21-12170	BOLT, REAMER	12	57001-
4	01580-11613	NUT	12	57001-
5	170-21-12160	PLATE. LOCK	6	57001-
6	175-21-32190	CAGE	2	57001-
7	175-21-00032	SHIM ASS'Y	2	57001-
8	06000-32219	BEARING	2	57001-
9	01010-81440	BOLT	16	57001-
10	01643-31445	WASHER	16	57001-
11	198-21-11490	HUB	2	57001-
12	170-22-11130	RING, SEAL	4	57001-
13	01010-81645	BOLT	24	57001-
14	01643-31645	WASHER	24	57001-
15	198-21-11480	PLATE. LOCK	2	57001-
16	01010-81025	BOLT	4	57001-
17	01643-31032	WASHER	4	57001-
18	170-21-12141	NUT	2	57001-
19	154-21-22211	PACKING	2	57001-

FIG. F2360-01A0 STEERING CLUTCH

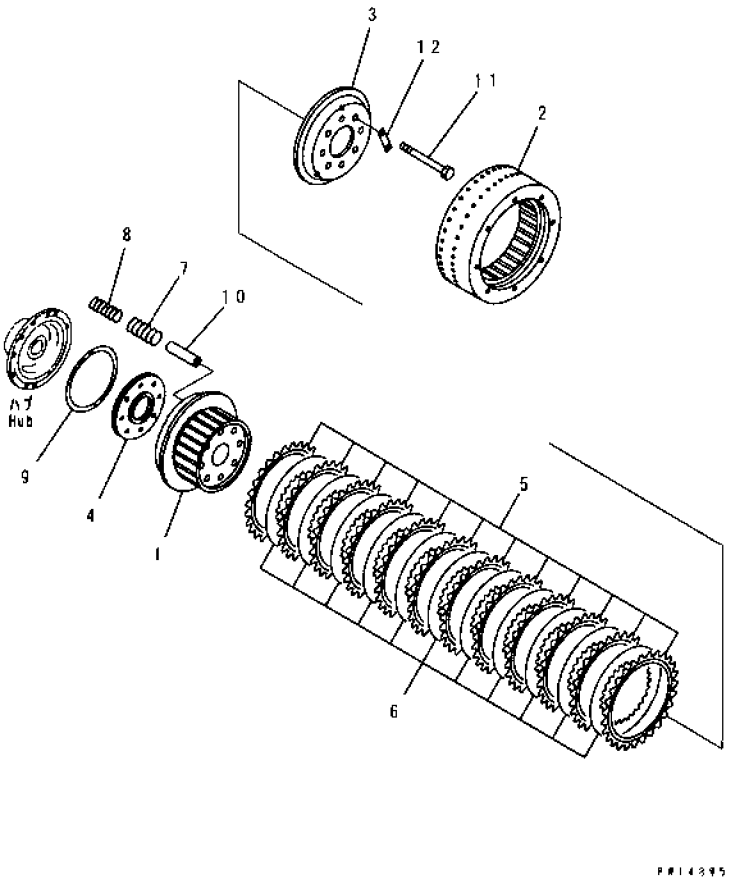

FIG NO. : F2360-01A0

INDEX	PART NO	DESCRIPTION	Q'TY	SERIAL NO
	175-22-00033	CLUTCH ASS'Y.	2	57001-
1	175-22-21271	.DRUM, CLUTCH	1	57001-
2	175-22-21281	.DRUM, BRAKE	1	57001-
3	175-22-21131	.PLATE	1	57001-
4	175-22-21141	.PISTON	1	57001-
5	154-22-11230	.DISC	12	57001-
6	175-22-21160	.PLATE	11	57001-
7	175-22-21170	.SPRING, LARGE	8	57001-
8	175-22-21180	.SPRING, SMALL	8	57001-
9	175-22-21190	.RING, SEAL	1	57001-
10	175-22-21231	.SLEEVE	8	57001-
11	175-22-21242	.BOLT	8	57001-
12	175-22-21250	.WASHER, LOCK	4	57001-

FIG. F2370-01A0 BRAKE BAND AND LINKAGE

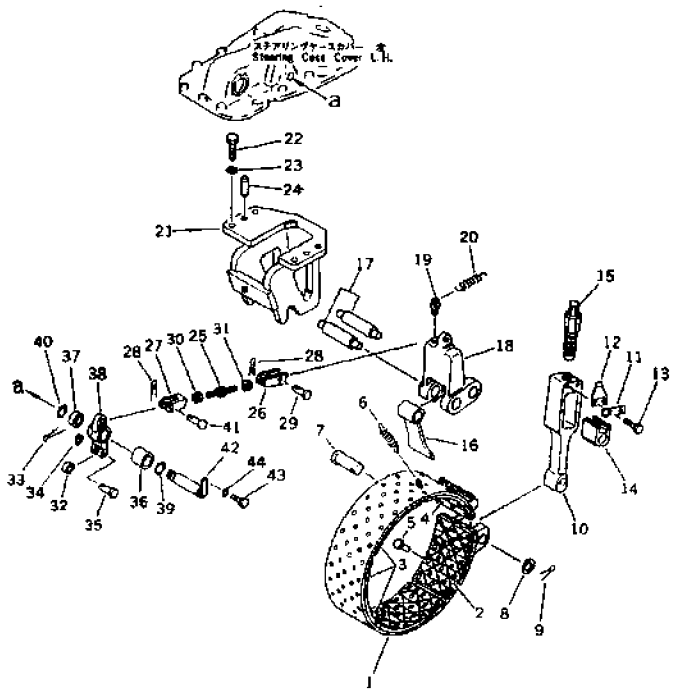

INDEX	PART NO	DESCRIPTION	Q'TY	SERIAL NO
	175-33-00082	BRAKE BAND ASS'Y, L.H	1	57001-
	175-33-00150	BRAKE BAND ASS'Y, L.H. (HEAVY DUTY)	1	57001-
	175-33-00092	BRAKE BAND ASS'Y, R.H	1	57001-
	175-33-00160	BRAKE BAND ASS'Y, R.H. (HEAVY DUTY)	1	57001-
1	☆	.BAND, BRAKE, L.H	1	57001-
	☆	.BAND, BRAKE, R.H	1	57001-
2	175-33-29310	.LINING, BRAKE (A)	1	57001-
	175-33-28430	.LINING, BRAKE (A) (HEAVY DUTY)	1	57001-
3	175-33-29320	.LINING, BRAKE (B)	3	57001-
	175-33-28420	.LINING, BRAKE (B) (HEAVY DUTY)	3	57001-
4	175-33-29330	.LINING, BRAKE (C)	1	57001-
	175-33-28410	.LINING, BRAKE (C) (HEAVY DUTY)	1	57001-
5	04412-00514	.RIVET	99	57001-
6	100-33-13120	SPRING	2	57001-
7	175-33-24210	PIN	2	57001-
8	175-33-24220	WASHER	2	57001-
9	04050-14050	PIN, COTTER	2	57001-
10	175-33-24231	ROD	2	57001-
11	154-33-11620	PLATE, LOCK	2	57001-
12	154-33-11610	SPRING, LOCK	2	57001-
13	01010-81016	BOLT	4	57001-
14	154-33-11540	BLOCK	2	57001-
15	175-33-24272	BOLT, ADJUSTING	2	57001-
16	175-33-24240	END	2	57001-
17	175-33-24260	PIN	4	57001-
18	175-33-24251	LEVER	2	57001-
19	154-33-11650	SEAT	2	57001-
20	150-33-12171	SPRING	2	57001-
21	175-33-24281	BRACKET, L.H	1	57001-
	175-33-24291	BRACKET, R.H	1	57001-
22	01010-82055	BOLT	8	57001-
23	01643-32060	WASHER	8	57001-
24	154-33-11720	PIN, DOWEL	4	57001-
25	175-33-24311	BOLT	2	57001-
26	175-33-24320	YOKE	2	57001-
27	175-33-24330	YOKE	2	57001-
28	04050-04028	PIN, COTTER	4	57001-
29	175-33-24450	PIN	2	57001-
30	01583-01811	NUT	2	57001-
31	175-33-24342	NUT	2	57001-
32	170-33-13330	ROLLER	2	57001-
33	04050-14025	PIN, COTTER	2	57001-

FIG NO. : F2370-01A0

FIG. F2370-01A0 BRAKE BAND AND LINKAGE

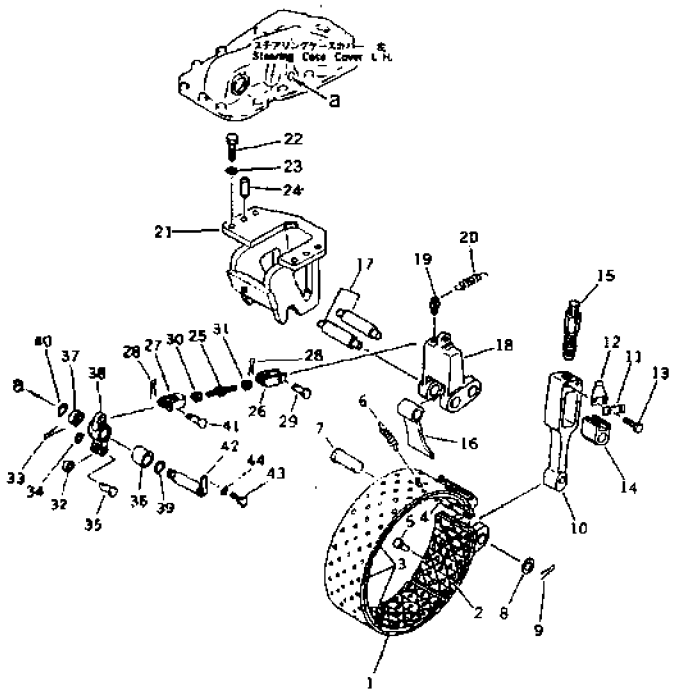

INDEX	PART NO.	DESCRIPTION	Q'TY	SERIAL NO
34	01641-11626	WASHER	2	57001-
35	04205-01645	PIN	2	57001-
36	198-43-13220	SPACER	2	57001-
37	154-33-21280	SPACER	2	57001-
38	175-33-24353	LEVER ASS'Y	2	57001-
39	07000-03030	O-RING	2	57001-
40	07000-03025	O-RING	2	57001-
41	175-33-24450	PIN	2	57001-
42	154-33-21262	SHAFT	2	57001-
43	01010-81025	BOLT	2	57001-
44	01602-21030	WASHER, SPRING	2	57001-

FIG. F2370-02A0 BRAKE BOOSTER

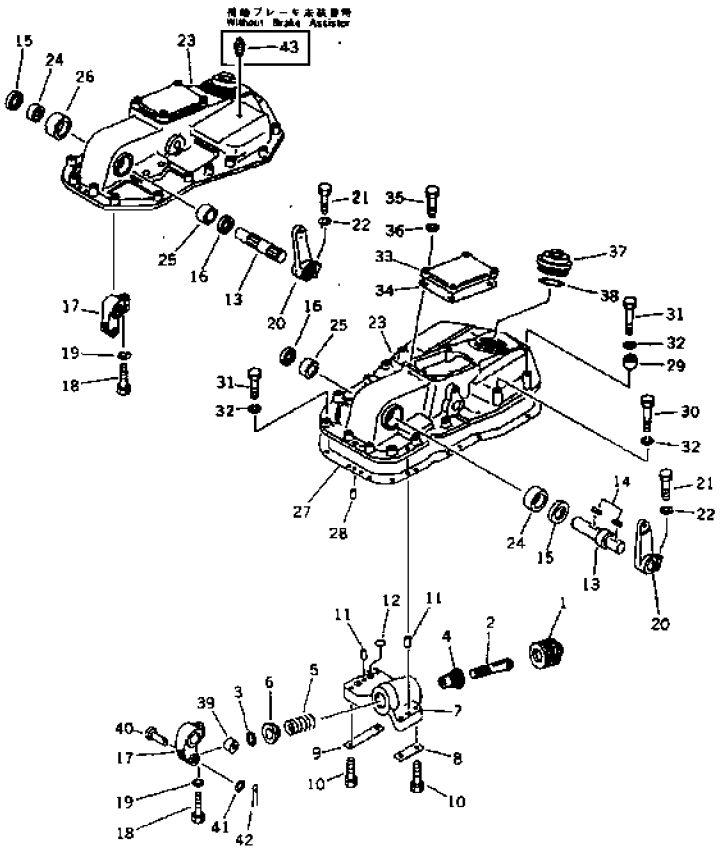

INDEX	PART NO	DESCRIPTION	Q'TY	SERIAL NO
34	175-33-24591	GASKET	2	57001-
35	01010-81235	BOLT	8	57001-
36	01602-21236	WASHER, SPRING	8	57001-
37	154-33-21142	CAP	2	57001-
38	07000-02095	O-RING	2	57001-
39	170-33-13330	ROLLER	2	57001-
40	04205-01645	PIN	2	57001-
41	01641-11626	WASHER	2	57001-
42	04050-14025	PIN, COTTER	2	57001-
43	07042-10108	PLUG, (WITHOUT BRAKE ASSISTOR)	1	57001-

FIG. F2370-02A0 BRAKE BOOSTER

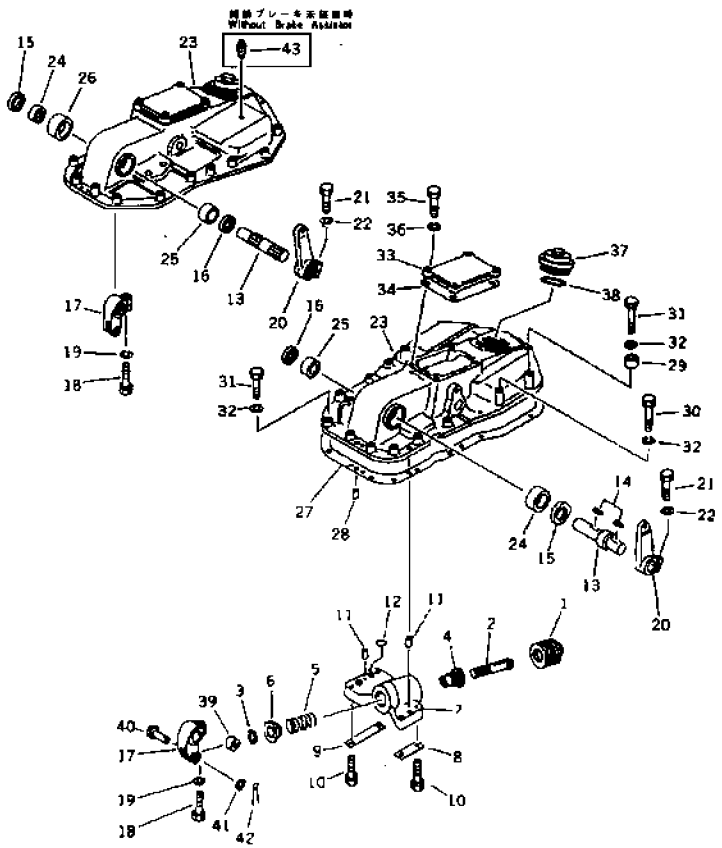

INDEX	PART NO	DESCRIPTION	Q TY	SERIAL NO
1	175-33-28330	PISTON	2	57001-
2	175-33-24441	SPOOL	2	57001-
3	04064-02512	RING, SNAP	2	57001-
4	195-33-14341	BUSHING	2	57001-
5	170-33-13370	SPRING	2	57001-
6	175-33-31310	RETAINER	2	57001-
7	175-33-28310	BODY, L. H.	1	57001-
	175-33-28320	BODY, R. H.	1	57001-
8	154-33-21420	PLATE, LOCK	2	57001-
9	154-33-21430	PLATE, LOCK	2	57001-
10	01010-81255	BOLT	8	57001-
11	04020-01228	PIN, DOWEL	4	57001-
12	07000-02020	O-RING	4	57001-
13	175-33-26130	SHAFT, L. H.	1	57001-
	175-33-32160	SHAFT, R. H.	1	57001-
14	04000-01030	KEY	2	57001-
15	154-33-21340	SEAL, OIL, L. H.	1	57001-
	07012-00030	SEAL, OIL, R. H.	1	57001-
16	154-33-21350	SEAL, OIL	2	57001-
17	154-33-21150	LEVER, L. H.	1	57001-
	175-33-32170	LEVER, R. H.	1	57001-
18	01010-81235	BOLT	2	57001-
19	01602-21236	WASHER, SPRING	2	57001-
20	175-33-25991	LEVER, L. H.	1	57001-
	175-33-32150	LEVER, R. H.	1	57001-
21	01010-81245	BOLT	2	57001-
22	01602-21236	WASHER	2	57001-
	175-33-00066	HOUSING ASS'Y, L. H.	1	57001-
	175-33-00077	HOUSING ASS'Y, R. H.	1	57001-
23	☆	HOUSING, BRAKE, L. H.	1	57001-
	☆	HOUSING, BRAKE, L. H.	1	57001-
24	154-33-21320	BUSHING, L. H.	1	57001-
	195-33-14280	BUSHING, R. H.	1	57001-
25	154-33-21330	BUSHING	1	57001-
26	175-33-32180	COLLAR, R. H	1	57001-
27	175-33-24465	GASKET	2	57001-
28	04020-01228	PIN, DOWEL	4	57001-
29	195-33-11220	SPACER	6	57001-
30	01010-81285	BOLT	4	57001-
31	01010-81265	BOLT	29	57001-
32	01602-21236	WASHER, SPRING	33	57001-
33	175-33-24361	COVER	1	57001-

FIG NO. : F2370-03A0

FIG. F2370-03A0 BRAKE CYLINDER (WITH BRAKE ASSISTOR)

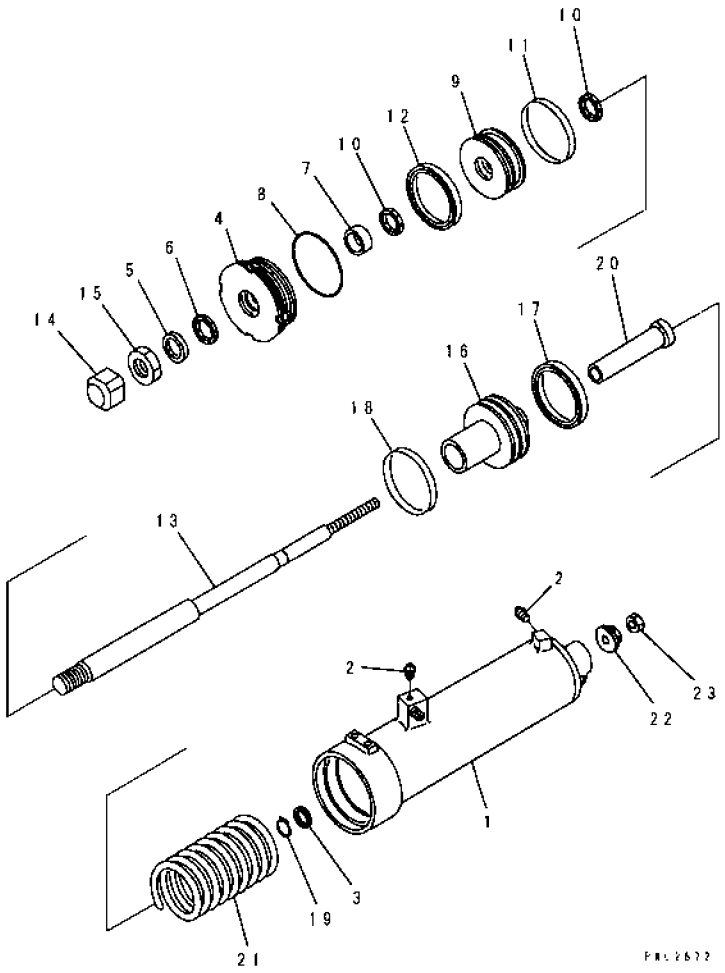

INDEX	PART NO	DESCRIPTION	Q'TY	SERIAL NO
	175-33-00130	CYLINDER ASS'Y	1	57001-
1	195-33-14360	.CYLINDER	1	57001-
2	07042-20108	.PLUG	2	57001-
3	07006-00022	.PACKING	1	57001-
4	195-33-14380	.HEAD	1	57001-
5	07016-00357	.SEAL, DUST	1	57001-
6	707-51-35210	.PACKING	1	57001-
7	195-33-15150	.BUSHING	1	57001-
8	07000-02115	.O-RING	1	57001-
9	195-33-14390	.PISTON	1	57001-
10	707-51-35210	.PACKING	2	57001-
11	07156-01112	.RING, WEAR	1	57001-
12	707-44-11080	.RING, PISTON	1	57001-
13	195-33-14420	.ROD	1	57001-
14	178-33-13190	.NUT	1	57001-
15	01583-13018	.NUT	1	57001-
16	195-33-14411	.PISTON	1	57001-
17	707-44-11080	.RING, PISTON	1	57001-
18	07156-01112	.RING, WEAR	1	57001-
19	04064-02212	.RING, SNAP	1	57001-
20	195-33-14430	.COLLAR	1	57001-
21	195-33-14450	.SPRING	1	57001-
22	195-33-22150	.NUT	1	57001-
23	01580-11411	.NUT	1	57001-

FIG NO. : F2370-04A0

FIG. F2370-04A0 BRAKE AUTOMATIC VALVE (WITH BRAKE ASSISTOR)

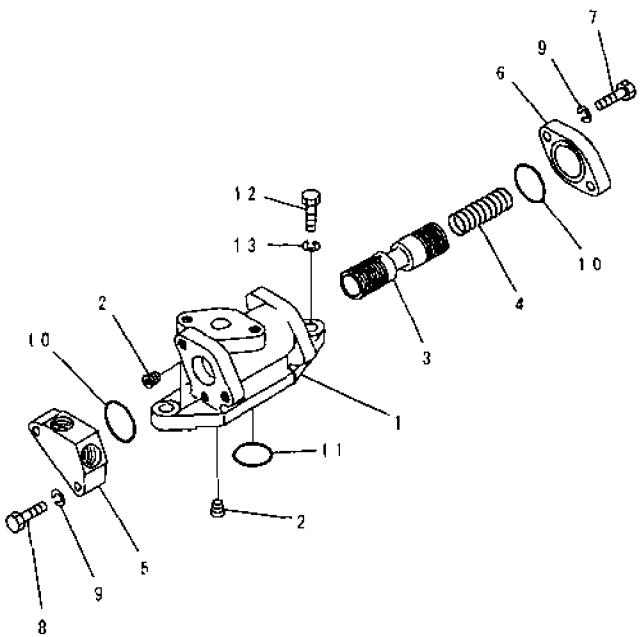

INDEX	PART NO.	DESCRIPTION	Q'TY	SERIAL NO
	175-33-00120	VALVE ASS'Y	1	57001-
1	195-33-14461	.BODY	1	57001-
2	07043-50108	.PLUG	2	57001-
3	195-33-14470	.SPOOL	1	57001-
4	195-33-14480	.SPRING	1	57001-
5	175-33-32241	.FLANGE	1	57001-
6	195-33-14140	FLANGE	1	57001-
7	01010-81035	.BOLT	2	57001-
8	01010-81050	.BOLT	2	57001-
9	01602-21030	.WASHER, SPRING	4	57001-
10	07000-03038	.O-RING	2	57001-
11	07000-03025	O-RING	1	57001-
12	01010-81235	BOLT	2	57001-
13	01602-21236	WASHER, SPRING	2	57001-

FIG. F2370-05A0 BRAKE PIPING (WITH BRAKE ASSISTOR)

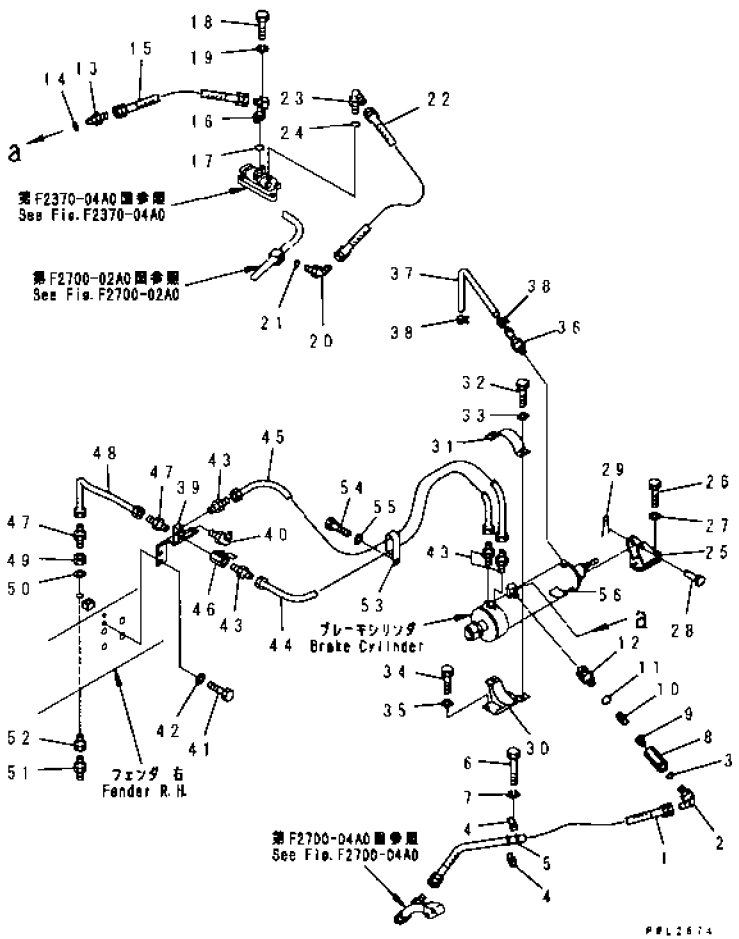

FIG NO. : F2370-05A0

INDEX	PART NO	DESCRIPTION	Q TY	SERIAL NO
1	07102-20308	HOSE	1	57001-
2	07235-10315	ELBOW	1	57001-
3	07002-12034	O-RING	1	57001-
4	175-49-32130	CLAMP	2	57001-
5	07095-00318	CUSHION	1	57001-
6	01010-81070	BOLT	1	57001-
7	01602-21030	WASHER, SPRING	1	57001-
	196-33-31200	VALVE ASS'Y	1	57001-
8	196-33-31210	. BODY	1	57001-
9	205-60-51390	. POPPET	1	57001-
10	205-60-51410	. SPRING	1	57001-
11	07002-02434	. O-RING	1	57001-
12	196-33-31190	. UNION	1	57001-
13	07230-20422	UNION	1	57001-
14	07002-12034	O-RING	1	57001-
15	07102-20403	HOSE	1	57001-
16	175-49-32120	TUBE	1	57001-
17	07000-13025	O-RING	1	57001-
18	01010-81030	BOLT	2	57001-
19	01602-21030	WASHER, SPRING	2	57001-
20	07236-10315	ELBOW	1	57001-
21	07002-12034	O-RING	1	57001-
22	07102-20305	HOSE	1	57001-
23	07235-10315	ELBOW	1	57001-
24	07002-12034	O-RING	1	57001-
25	175-33-32110	BRACKET	1	57001-
26	01010-81640	BOLT	2	57001-
27	01643-31645	WASHER	2	57001-
28	195-33-15110	PIN	1	57001-
29	04050-14028	PIN, COTTER	1	57001-
30	175-33-32120	BRACKET	1	57001-
31	196-33-31320	PLATE	1	57001-
32	01010-81230	BOLT	2	57001-
33	01602-21236	WASHER, SPRING	2	57001-
34	01010-81275	BOLT	2	57001-
35	01643-31232	WASHER	2	57001-
36	07209-01040	NIPPLE	2	57001-
37	07270-30423	TUBE	1	57001-
38	175-04-25180	CLIP	2	57001-
39	175-33-72230	BRACKET	1	57001-
40	07020-00675	FITTING, GREASE	1	57001-
41	01010-81235	BOLT	2	57001-

FIG. F2370-05A0 BRAKE PIPING (WITH BRAKE ASSISTOR)

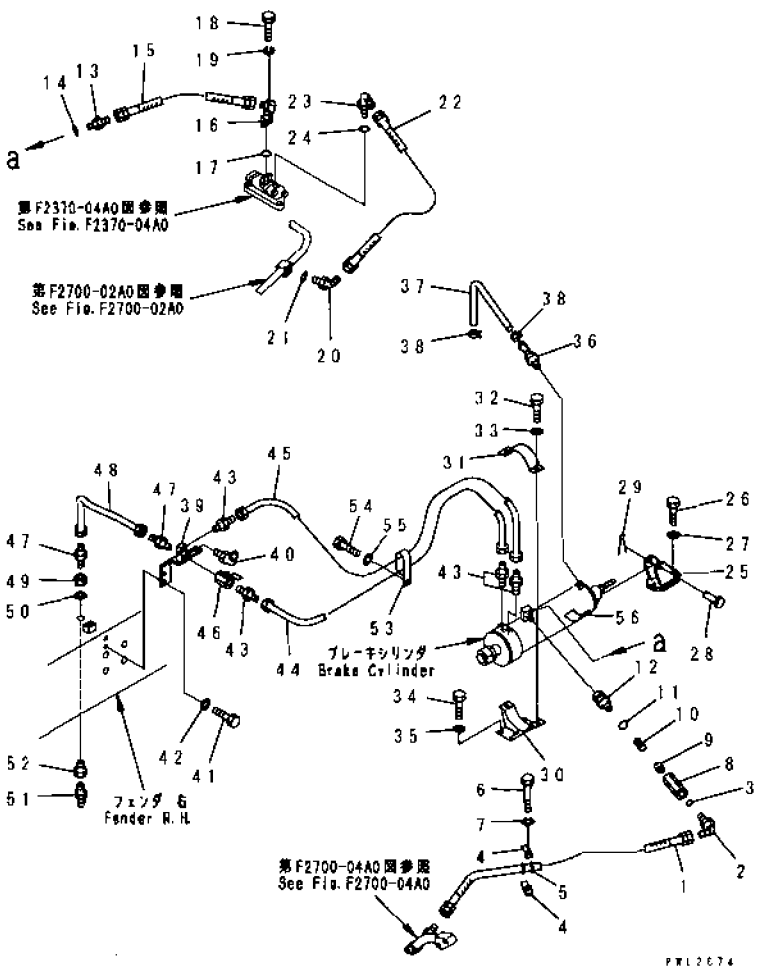

FIG NO. : F2370-05A0

INDEX	PART NO	DESCRIPTION	Q'TY	SERIAL NO
42	01643-31232	WASHER, SPRING	2	57001-
43	07213-50813	CONNECTOR	4	57001-
44	175-33-32192	TUBE	1	57001-
45	175-33-32212	TUBE	1	57001-
46	07700-40240	VALVE	1	57001-
47	07213-50813	CONNECTOR	2	57001-
48	175-33-32220	TUBE	1	57001-
49	01583-12012	NUT	1	57001-
50	01643-32060	WASHER	1	57001-
51	07029-00000	VALVE, RELIEF	1	57001-
52	195-49-13350	NIPPLE	1	57001-
53	04435-00808	CLIP	1	57001-
54	01010-80820	BOLT	1	57001-
55	01602-20825	WASHER, SPRING	1	57001-
56	07843-00064	PLATE, CAUTION, (JAPANESE)	1	57001-

FIG. F2380-01A0A FINAL DRIVE, L.H. (GEAR) (#57003-)

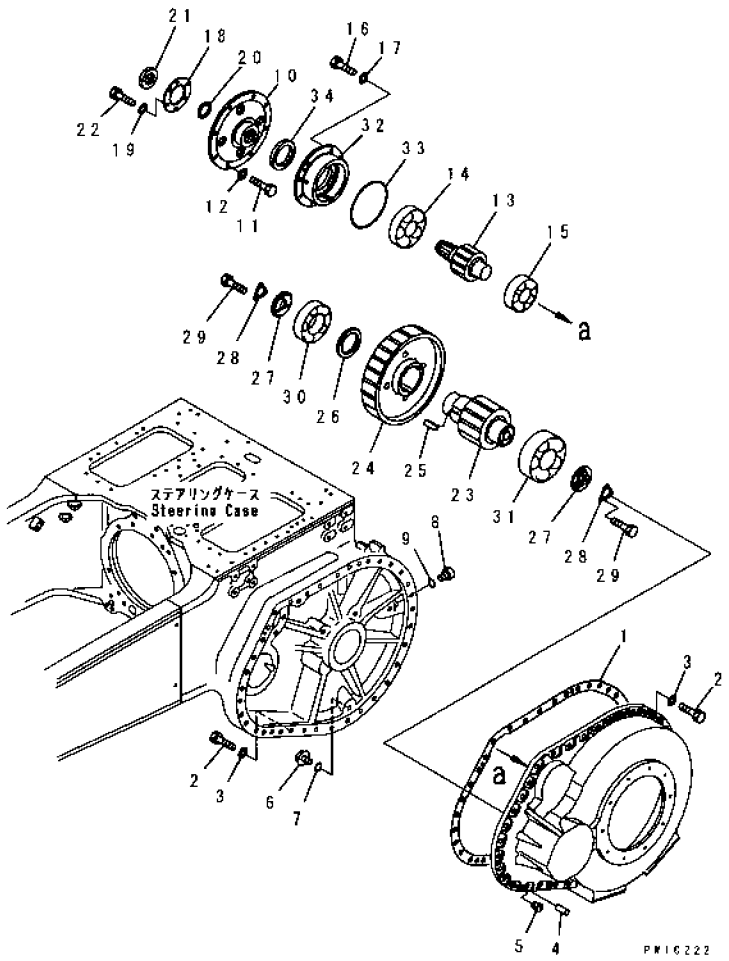

FIG NO. : F2380-01A0A

INDEX	PART NO.	DESCRIPTION	Q'TY	SERIAL NO
1	175-27-31472	GASKET	1	57001-
2	01010-82055	BOLT	36	57001-
3	01643-32060	WASHER	36	57001-
4	04020-01842	PIN, DOWEL	2	57001-
5	07049-02025	PLUG	2	57001-
6	07044-13620	PLUG, DRAIN	1	57001-
7	07002-13634	O-RING	1	57001-
8	07040-13618	PLUG, OIL LEVEL	1	57001-
9	07002-13634	O-RING	1	57001-
10	175-27-31463	FLANGE	1	57001-
11	01010-81850	BOLT	8	57001-
12	01643-31845	WASHER	8	57001-
13	175-27-31495	PINION, FIRST	1	57001-
14	170-09-13210	BEARING, ROLLER	1	57001-
15	170-09-13220	BEARING, ROLLER	1	57001-
16	01010-81640	BOLT	8	57001-
17	01643-31645	WASHER	8	57001-
18	195-27-12620	WASHER, LOCK	1	57001-
19	01643-31232	WASHER	1	57001-
20	170-27-11232	SPACER	1	57001-
21	170-21-12141	NUT	1	57001-
22	01010-81225	BOLT	1	57001-
23	175-27-31233	PINION, SECOND	1	57001-
24	175-27-31255	GEAR, SECOND	1	57001-
25	175-27-31260	KEY	3	57001-
26	175-27-31270	SPACER	1	57001-
27	175-27-31282	HOLDER	2	57001-
28	175-27-32470	WASHER, LOCK	2	57001-
29	01010-81230	BOLT	6	57001-
30	170-09-13230	BEARING, ROLLER	1	57001-
31	170-09-13240	BEARING, ROLLER	1	57001-
32	175-27-31161	CAGE, BEARING	1	57001-
33	07000-05235	O-RING	1	57001-
34	07013-10120	SEAL, OIL	1	57001-

FIG NO. : F2380-01A1

FIG.F2380-01A1 FINAL DRIVE、L.H. (GEAR) (FOR KOUNOIKE)

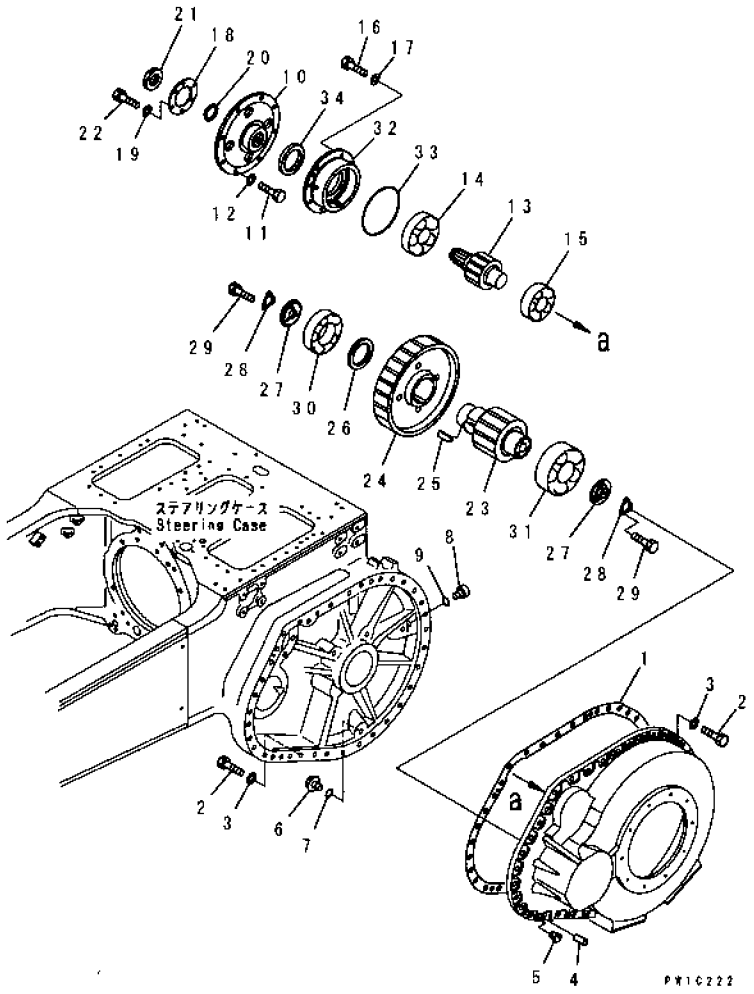

INDEX	PART NO	DESCRIPTION	Q'TY	SERIAL NO
1	175-27-31472	GASKET	1	57001-
2	01010-82055	BOLT	36	57001-
3	01643-32060	WASHER	36	57001-
4	04020-01842	PIN, DOWEL	2	57001-
5	07049-02025	PLUG	2	57001-
6	07044-13620	PLUG, DRAIN	1	57001-
7	07002-33634	O-RING	1	57001-
8	07040-13618	PLUG, OIL LEVEL	1	57001-
9	07002-33634	O-RING	1	57001-
10	175-27-31463	FLANGE	1	57001-
11	01010-81850	BOLT	8	57001-
12	01643-31845	WASHER	8	57001-
13	175-27-31495	PINION, FIRST	1	57001-
14	170-09-13210	BEARING, ROLLER	1	57001-
15	170-09-13220	BEARING, ROLLER	1	57001-
16	01010-81640	BOLT	8	57001-
17	01643-31645	WASHER	8	57001-
18	195-27-12620	WASHER, LOCK	1	57001-
19	01643-31232	WASHER	1	57001-
20	170-27-11232	SPACER	1	57001-
21	170-21-12141	NUT	1	57001-
22	01010-81225	BOLT	1	57001-
23	175-27-31233	PINION, SECOND	1	57001-
24	175-27-31255	GEAR, SECOND	1	57001-
25	175-27-31260	KEY	3	57001-
26	175-27-31270	SPACER	1	57001-
27	175-27-31282	HOLDER	2	57001-
28	175-27-32470	WASHER, LOCK	2	57001-
29	01010-81230	BOLT	6	57001-
30	170-09-13230	BEARING, ROLLER	1	57001-
31	170-09-13240	BEARING, ROLLER	1	57001-
32	175-27-31161	CAGE, BEARING	1	57001-
33	07000-05235	O-RING	1	57001-
34	07013-10120	SEAL, OIL	1	57001-

FIG. F2380-02A0A FINAL DRIVE, L.H. (SHAFT AND SPROCKET)

(#57003-)

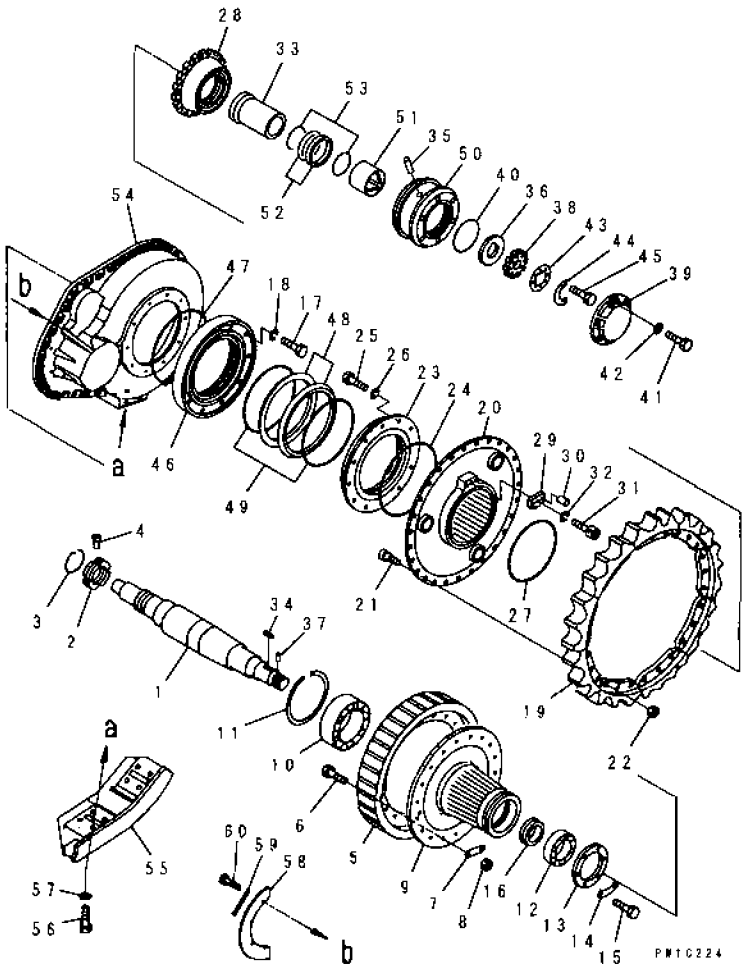

INDEX	PART NO	DESCRIPTION	Q'TY	SERIAL NO.
1	175-27-31343	SHAFT, SPROCKET	1	57001-
2	170-27-12472	NUT	1	57001-
3	170-27-12480	RING, SNAP	1	57001-
4	09243-01230	PIN	1	57001-
5	175-27-31362	GEAR	1	57001-
6	175-27-12181	BOLT, REAMER	18	57001-
7	175-27-31370	PLATE, LOCK	9	57001-
8	01582-02419	NUT	18	57001-
9	175-27-31384	HUB, SPROCKET	1	57001-
10	06030-23134	BEARING, ROLLER	1	57001-
11	04071-00280	RING, SNAP	1	57001-
12	170-09-13250	BEARING, ROLLER	1	57001-
13	175-27-22140	RETAINER	1	57001-
14	170-27-12210	WASHER, LOCK	3	57001-
15	01010-81440	BOLT	6	57001-
16	175-27-22131	SPACER	1	57001-
17	01010-81230	BOLT	10	57001-
18	01602-01236	WASHER, SPRING	10	57001-
19	17A-27-11630	TOOTH	9	57001-
20	175-27-31394	BOSS, SPROCKET	1	57001-
21	178-27-11150	BOLT	27	57001-
22	01803-02430	NUT	27	57001-
23	154-27-12162	COVER	1	57001-
24	07000-15410	O-RING	1	57001-
25	01010-81230	BOLT	10	57001-
26	01602-01236	WASHER, SPRING	10	57001-
27	07000-15315	O-RING	1	57001-
28	175-27-22150	NUT, SPROCKET	1	57001-
29	175-27-31480	STOPPER, SPROCKET	1	57001-
30	170-27-12250	PIN, DOWEL	2	57001-
31	01252-41635	BOLT	1	57001-
32	01602-01648	WASHER, SPRING	1	57001-
33	175-27-31411	SPACER	1	57001-
34	04000-01580	KEY	1	57001-
35	04020-01638	PIN, DOWEL	1	57001-
36	175-27-22255	WASHER	1	57001-
37	175-27-32510	PIN, DOWEL	1	57001-
38	175-27-22272	NUT	1	57001-
39	175-27-22242	COVER	1	57001-
40	07000-15185	O-RING	1	57001-
41	01010-81645	BOLT	6	57001-
42	01643-31645	WASHER	6	57001-

FIG. F2380-02A0A FINAL DRIVE, L.H. (SHAFT AND SPROCKET)

(#57003-)

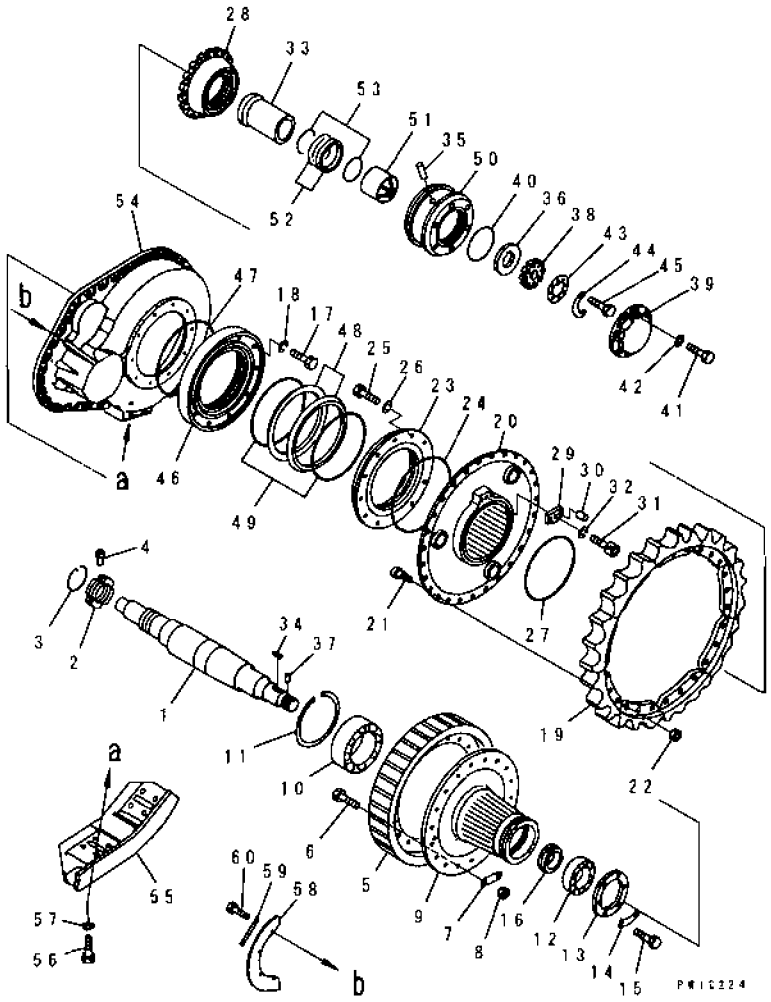

INDEX	PART NO.	DESCRIPTION	Q'TY	SERIAL NO.
43	175-27-31550	PLATE	1	57001-
44	175-27-31560	LOCK	1	57001-
45	01010-81225	BOLT	2	57001-
46	154-27-12152	COVER	1	57001-
47	07000-15410	O-RING	1	57001-
48	423-33-00020	FLOATING SEAL ASS'Y	1	57001-
	170-27-00113	. SEAL RING ASS'Y	1	57001-
	☆	.. RING, SEAL	2	57001-
49	195-27-00150	. O-RING ASS'Y	1	57001-
	195-27-12710	.. O-RING	2	57001-
	175-27-00082	SUPPORT ASS'Y	1	57001-
50	☆	. SUPPORT, SPROCKET	1	57001-
51	175-27-31441	. BUSHING	1	57001-
	175-27-00121	FLOATING SEAL ASS'Y	1	57001-
52	175-27-00131	. SEAL RING ASS'Y	1	57001-
	☆	.. RING, SEAL	2	57001-
53	175-27-00060	. O-RING ASS'Y	1	57001-
	100-27-11330	. O-RING	2	57001-
54	175-27-32730	CASE, L.H.	1	57001-
55	175-27-32611	GUARD, L.H.	1	57001-
56	01010-82455	BOLT	8	57001-
57	01643-32460	WASHER	8	57001-
58	175-27-31530	PLATE	1	57001-
59	175-27-31540	LOCK	2	57001-
60	01010-81230	BOLT	4	57001-

FIG. F2380-03A0A FINAL DRIVE、R.H. (GEAR) (#57003-)

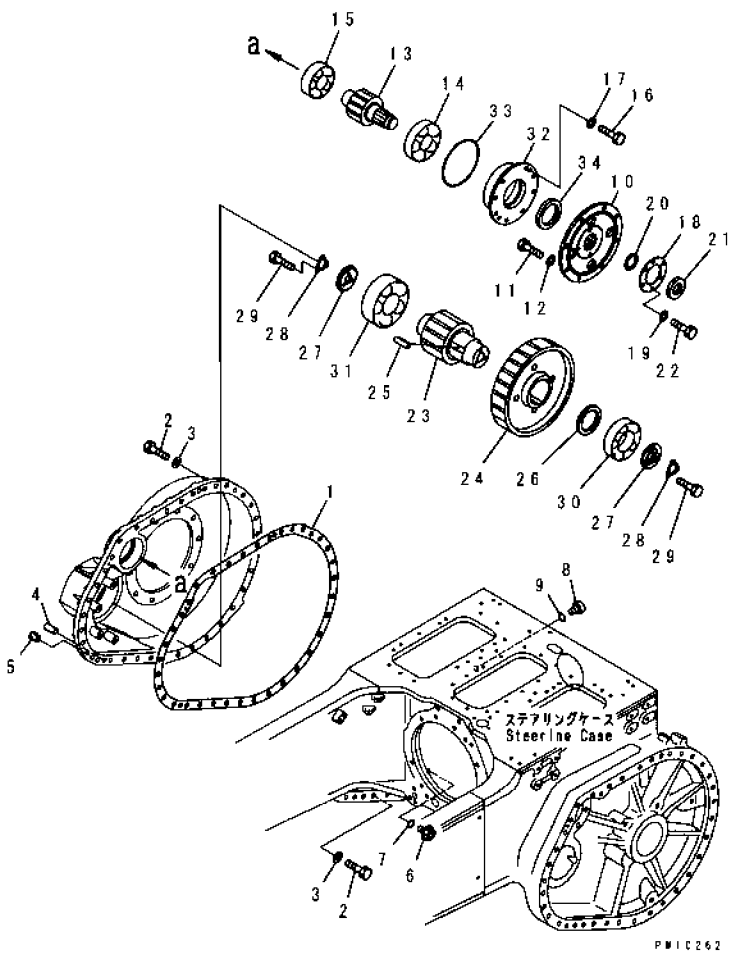

FIG NO. : F2380-03A0A

INDEX	PART NO	DESCRIPTION	Q'TY	SERIAL NO
1	175-27-31472	GASKET	1	57001-
2	01010-82055	BOLT	36	57001-
3	01643-32060	WASHER	36	57001-
4	04020-01842	PIN, DOWEL	2	57001-
5	07049-02025	PLUG	2	57001-
6	07044-13620	PLUG, DRAIN	1	57001-
7	07002-13634	O-RING	1	57001-
8	07040-13618	PLUG, OIL LEVEL	1	57001-
9	07002-13634	O-RING	1	57001-
10	175-27-31463	FLANGE	1	57001-
11	01010-81850	BOLT	8	57001-
12	01643-31845	WASHER	8	57001-
13	175-27-31495	PINION, FIRST	1	57001-
14	170-09-13210	BEARING, ROLLER	1	57001-
15	170-09-13220	BEARING, ROLLER	1	57001-
16	01010-81640	BOLT	8	57001-
17	01643-31645	WASHER	8	57001-
18	195-27-12620	WASHER, LOCK	1	57001-
19	01643-31232	WASHER	1	57001-
20	170-27-11232	SPACER	1	57001-
21	170-21-12141	NUT	1	57001-
22	01010-81225	BOLT	1	57001-
23	175-27-31233	PINION, SECOND	1	57001-
24	175-27-31255	GEAR, SECOND	1	57001-
25	175-27-31260	KEY	3	57001-
26	175-27-31270	SPACER	1	57001-
27	175-27-31282	HOLDER	2	57001-
28	175-27-32470	WASHER, LOCK	2	57001-
29	01010-81230	BOLT	6	57001-
30	170-09-13230	BEARING, ROLLER	1	57001-
31	170-09-13240	BEARING, ROLLER	1	57001-
32	175-27-31161	CAGE, BEARING	1	57001-
33	07000-05235	O-RING	1	57001-
34	07013-10120	SEAL, OIL	1	57001-

FIG NO. : F2380-03A1

FIG. F2380-03A1 FINAL DRIVE, R.H. (GEAR) (FOR KOUNOIKE)

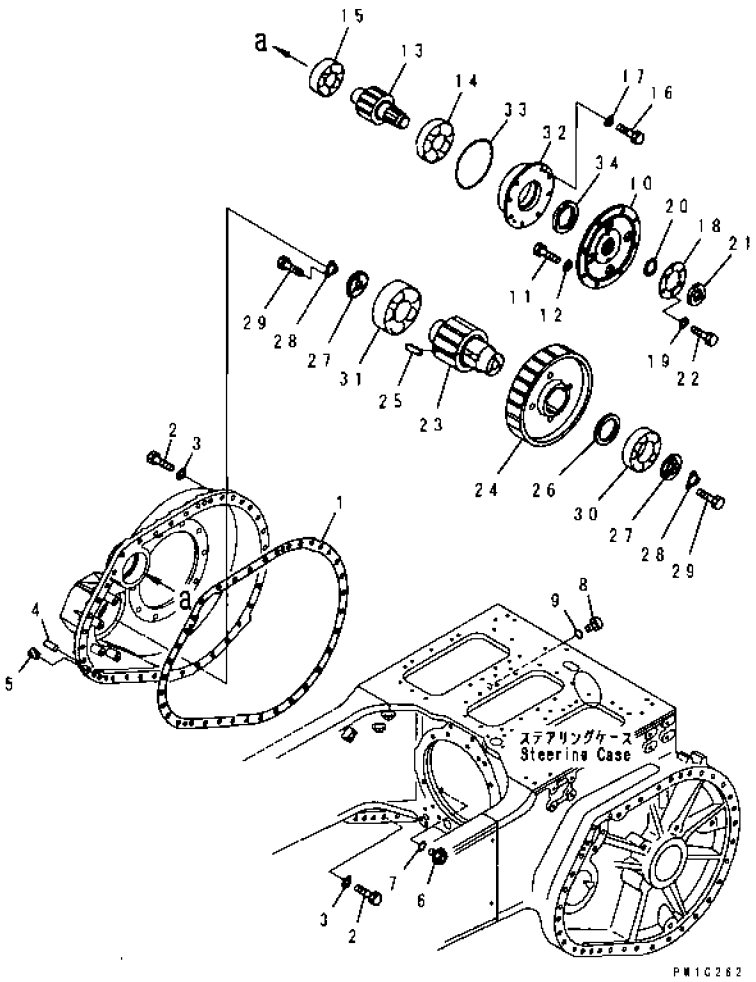

INDEX	PART NO.	DESCRIPTION	Q'TY	SERIAL NO
1	175-27-31472	GASKET	1	57001-
2	01010-82055	BOLT	36	57001-
3	01643-32060	WASHER	36	57001-
4	04020-01842	PIN, DOWEL	2	57001-
5	07049-02025	PLUG	2	57001-
6	07044-13620	PLUG, DRAIN	1	57001-
7	07002-33634	O-RING	1	57001-
8	07040-13618	PLUG, OIL LEVEL	1	57001-
9	07002-33634	O-RING	1	57001-
10	175-27-31463	FLANGE	1	57001-
11	01010-81850	BOLT	8	57001-
12	01643-31845	WASHER	8	57001-
13	175-27-31495	PINION, FIRST	1	57001-
14	170-09-13210	BEARING, ROLLER	1	57001-
15	170-09-13220	BEARING, ROLLER	1	57001-
16	01010-81640	BOLT	8	57001-
17	01643-31645	WASHER	8	57001-
18	195-27-12620	WASHER, LOCK	1	57001-
19	01643-31232	WASHER	1	57001-
20	170-27-11232	SPACER	1	57001-
21	170-21-12141	NUT	1	57001-
22	01010-81225	BOLT	1	57001-
23	175-27-31233	PINION, SECOND	1	57001-
24	175-27-31255	GEAR, SECOND	1	57001-
25	175-27-31260	KEY	3	57001-
26	175-27-31270	SPACER	1	57001-
27	175-27-31282	HOLDER	2	57001-
28	175-27-32470	WASHER, LOCK	2	57001-
29	01010-81230	BOLT	6	57001-
30	170-09-13230	BEARING, ROLLER	1	57001-
31	170-09-13240	BEARING, ROLLER	1	57001-
32	175-27-31161	CAGE, BEARING	1	57001-
33	07000-05235	O-RING	1	57001-
34	07013-10120	SEAL, OIL	1	57001-

FIG. F2380-04A0A FINAL DRIVE, R.H. (SHAFT AND SPROCKET)

(#57003-)

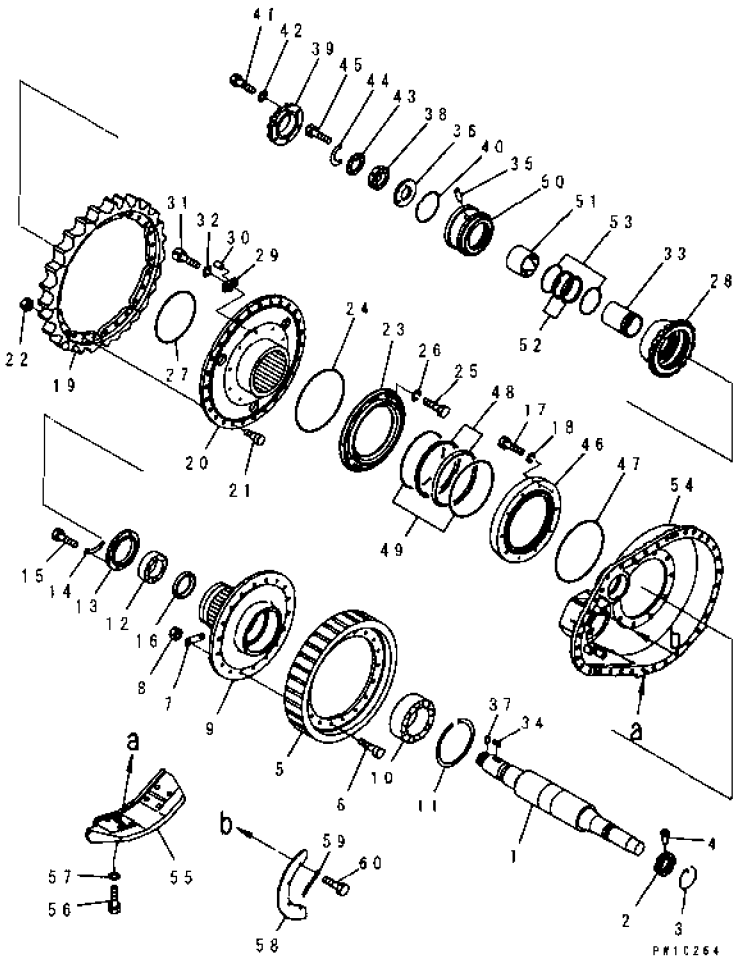

INDEX	PART NO.	DESCRIPTION	Q'TY	SERIAL NO
1	175-27-31343	SHAFT, SPROCKET	1	57001-
2	170-27-12472	NUT	1	57001-
3	170-27-12480	RING, SNAP	1	57001-
4	09243-01230	PIN	1	57001-
5	175-27-31362	GEAR	1	57001-
6	175-27-12181	BOLT, REAMER	18	57001-
7	175-27-31370	PLATE, LOCK	9	57001-
8	01582-02419	NUT	18	57001-
9	175-27-31384	HUB, SPROCKET	1	57001-
10	06030-23134	BEARING, ROLLER	1	57001-
11	04071-00280	RING, SNAP	1	57001-
12	170-09-13250	BEARING, ROLLER	1	57001-
13	175-27-22140	RETAINER	1	57001-
14	170-27-12210	WASHER, LOCK	3	57001-
15	01010-81440	BOLT	6	57001-
16	175-27-22131	SPACER	1	57001-
17	01010-81230	BOLT	10	57001-
18	01602-01236	WASHER, SPRING	10	57001-
19	17A-27-11630	TOOTH	9	57001-
20	175-27-31394	BOSS, SPROCKET	1	57001-
21	178-27-11150	BOLT	27	57001-
22	01803-02430	NUT	27	57001-
23	154-27-12162	COVER	1	57001-
24	07000-15410	O-RING	1	57001-
25	01010-81230	BOLT	10	57001-
26	01602-01236	WASHER, SPRING	10	57001-
27	07000-15315	O-RING	1	57001-
28	175-27-22150	NUT, SPROCKET	1	57001-
29	175-27-31480	STOPPER, SPROCKET	1	57001-
30	170-27-12250	PIN, DOWEL	2	57001-
31	01252-41635	BOLT	1	57001-
32	01602-01648	WASHER, SPRING	1	57001-
33	175-27-31411	SPACER	1	57001-
34	04000-01580	KEY	1	57001-
35	04020-01638	PIN, DOWEL	1	57001-
36	175-27-22255	WASHER	1	57001-
37	175-27-32510	PIN, DOWEL	1	57001-
38	175-27-22272	NUT	1	57001-
39	175-27-22242	COVER	1	57001-
40	07000-15185	O-RING	1	57001-
41	01010-81645	BOLT	6	57001-
42	01643-31645	WASHER	6	57001-

FIG. F2380-04A0A FINAL DRIVE, R.H. (SHAFT AND SPROCKET)

(#57003-)

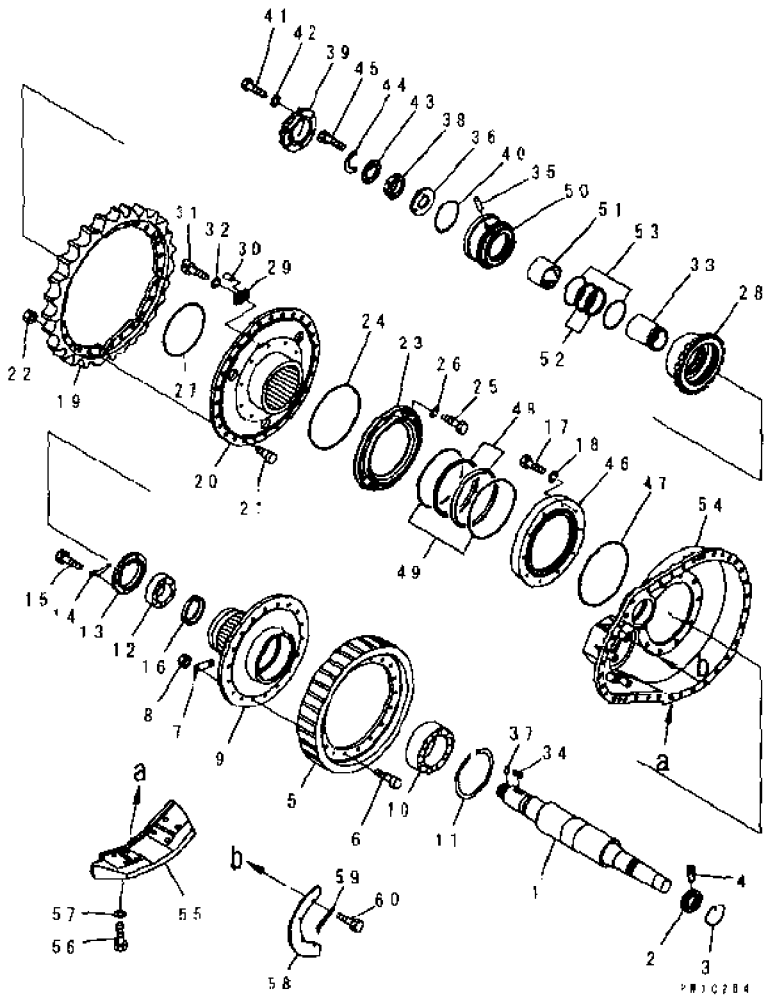

FIG NO. : F2380-04A0A

INDEX	PART NO	DESCRIPTION	Q'TY	SERIAL NO
43	175-27-31550	PLATE	1	57001-
44	175-27-31560	LOCK	1	57001-
45	01010-81225	BOLT	2	57001-
46	154-27-12157	COVER	1	57001-
47	07000-15410	O-RING	1	57001-
48	423-33-00020	FLOATING SEAL ASS'Y	1	57001-
	170-27-00113	. SEAL RING ASS'Y	1	57001-
	☆	.. RING, SEAL	2	57001-
49	195-27-00150	. O-RING ASS'Y	1	57001-
	195-27-12710	.. O-RING	2	57001-
	175-27-00082	SUPPORT ASS'Y	1	57001-
50	☆	. SUPPORT, SPROCKET	1	57001-
51	175-27-31441	. BUSHING	1	57001-
	175-27-00121	FLOATING SEAL ASS'Y	1	57001-
52	175-27-00131	. SEAL RING ASS'Y	1	57001-
	☆	.. RING SEAL	2	57001-
53	175-27-00060	O RING ASS'Y	1	57001-
	109-27-11330	.. O-RING	2	57001-
54	175-27-32740	CASE, R.H.	1	57001-
55	175-27-32641	GUARD, R.H.	1	57001-
56	01010-82455	BOLT	8	57001-
57	01643-32460	WASHER	8	57001-
58	175-27-31530	PLATE	1	57001-
59	175-27-31540	LOCK	2	57001-
60	01010-81230	BOLT	4	57001-

FIG. F2600-01A0 STEERING CONTROL VALVE

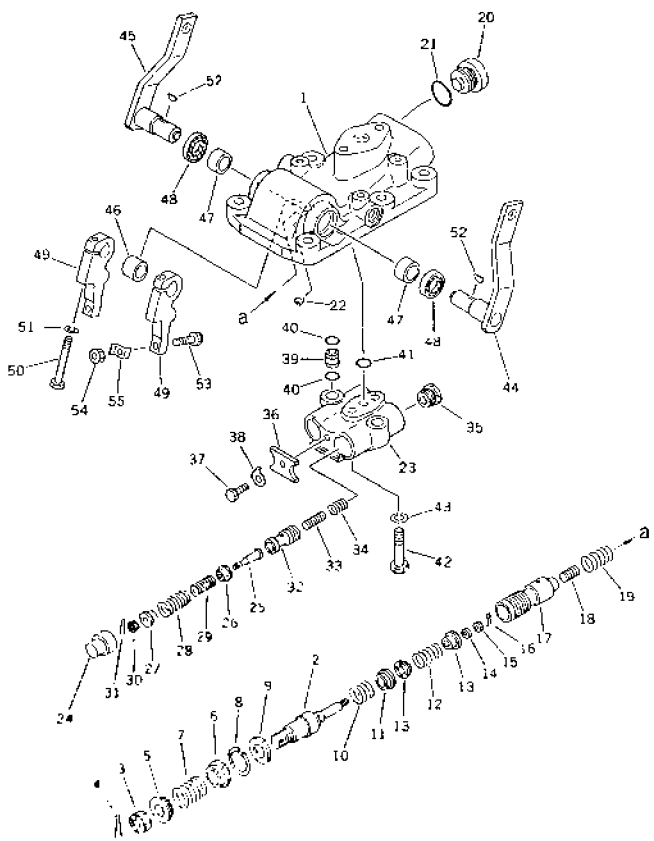

INDEX	PART NO	DESCRIPTION	Q'TY	SERIAL NO
	154-40-00082	STEERING VALVE ASS'Y	1	57001-
1	144-40-22211	. BODY, VALVE	1	57001-
2	195-40-11540	. SHAFT	2	57001-
3	01593-11613	. NUT	2	57001-
4	04050-14025	. PIN, COTTER	2	57001-
5	144-40-22180	. STOPPER	2	57001-
6	144-40-22170	. STOPPER	2	57001-
7	175-40-31230	. SPRING	2	57001-
8	04065-03212	. RING, SNAP	2	57001-
9	195-40-13110	. STOPPER	2	57001-
10	195-40-11550	. SPRING	2	57001-
11	195-40-11560	. STOPPER	2	57001-
12	175-40-31150	. SPRING	2	57001-
13	195-40-11570	. STOPPER	2	57001-
14	144-40-22190	. WASHER	2	57001-
15	01590-10607	. NUT	2	57001-
16	04050-11212	. PIN, COTTER	2	57001-
17	195-40-11531	. VALVE	2	57001-
18	702-11-11190	. PISTON	2	57001-
19	175-40-31130	. SPRING	2	57001-
20	175-40-31530	. PLUG	2	57001-
21	07002-03034	. O-RING	2	57001-
22	07043-50108	. PLUG	1	57001-
23	144-40-22230	. BODY, VALVE	1	57001-
24	144-40-22290	. GUIDE	2	57001-
25	144-40-22260	. SHAFT	2	57001-
26	144-40-22270	. STOPPER	2	57001-
27	144-40-22280	. STOPPER	2	57001-
28	144-40-22340	. SPRING	2	57001-
29	154-40-41130	. SPRING	2	57001-
30	01590-10607	. NUT	2	57001-
31	04050-11212	. PIN, COTTER	2	57001-
32	144-40-22311	. VALVE	2	57001-
33	144-40-22320	. PISTON	2	57001-
34	175-40-31410	. SPRING	2	57001-
35	144-40-22250	. PLUG	2	57001-
36	144-40-22330	. PLATE	1	57001-
37	01010-80816	. BOLT	1	57001-
38	01650-20808	. WASHER	1	57001-
39	175-40-31510	. TUBE	2	57001-
40	07000-02011	. O-RING	4	57001-
41	07000-02015	. O-RING	1	57001-

FIG. F2600-01A0 STEERING CONTROL VALVE

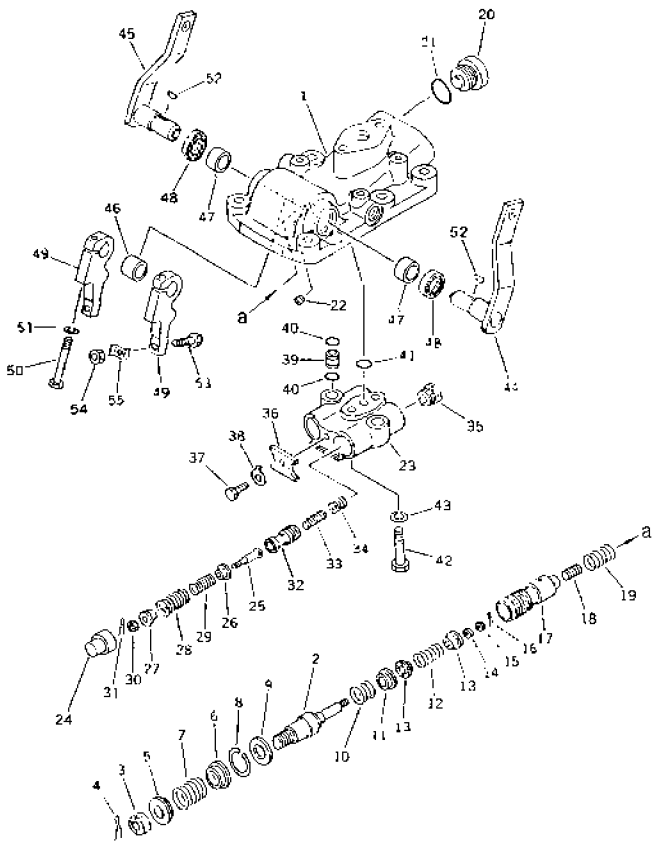

INDEX	PART NO.	DESCRIPTION	Q'TY	SERIAL NO
42	01010-81050	BOLT	2	57001-
43	01602-21030	WASHER, SPRING	2	57001-
44	154-40-41110	LEVER, L.H.	1	57001-
45	154-40-41120	LEVER, R.H.	1	57001-
46	09350-01820	BUSHING	1	57001-
47	09350-02215	BUSHING	2	57001-
48	175-40-31270	SEAL, OIL	2	57001-
49	144-40-22240	LEVER	2	57001-
50	01010-80860	BOLT	2	57001-
51	01602-20825	WASHER, SPRING	2	57001-
52	04010-00416	KEY	2	57001-
53	144-40-22160	BOLT	2	57001-
54	01580-10806	NUT	2	57001-
55	130-21-12330	LOCK	2	57001-

FIG. F2700-01A0 STEERING PIPING (1/3)

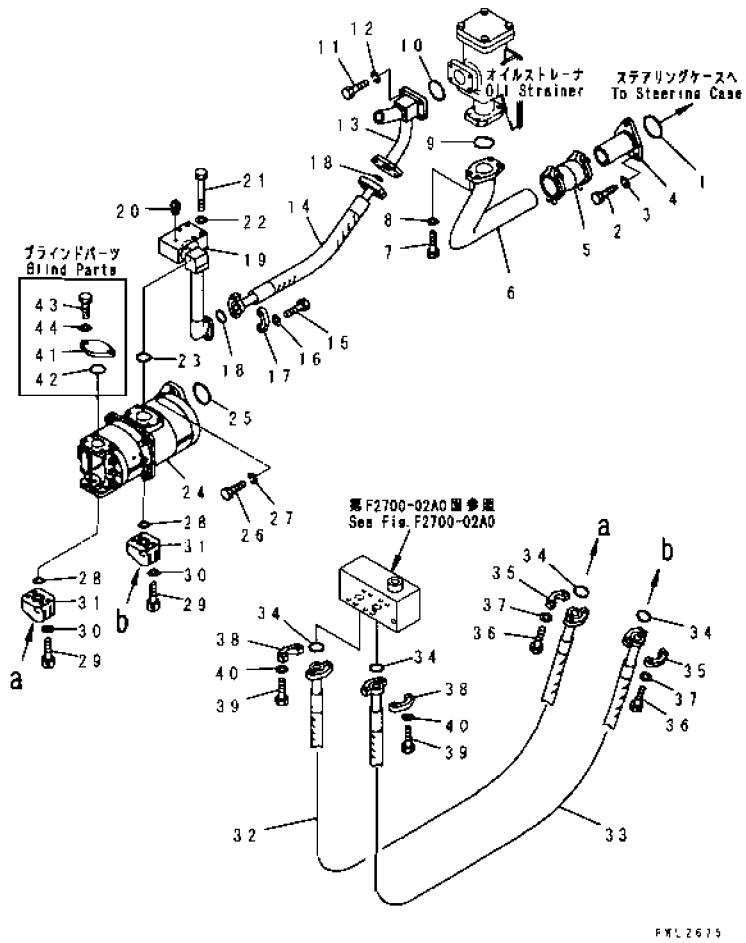

INDEX	PART NO	DESCRIPTION	Q'TY	SERIAL NO
1	07000-13090	O-RING	1	57001-
2	01010-81030	BOLT	3	57001-
3	01602-21030	WASHER, SPRING	3	57001-
4	175-49-22590	TUBE	1	57001-
5	07332-02400	COUPLING	1	57001-
	07332-52400	GASKET	2	57001-
	07332-62400	CLAMP	2	57001-
6	175-49-21112	TUBE	1	57001-
7	01010-81235	BOLT	4	57001-
8	01602-21236	WASHER, SPRING	4	57001-
9	07000-13080	O-RING	1	57001-
10	07000-13082	O-RING	1	57001-
11	01010-81235	BOLT	4	57001-
12	01602-21236	WASHER, SPRING	4	57001-
13	175-49-22113	TUBE	1	57001-
14	07119-01409	HOSE	1	57001-
15	07372-21240	BOLT	8	57001-
16	01643-51232	WASHER	8	57001-
17	07371-31465	FLANGE, SPLIT	4	57001-
18	07000-13048	O-RING	2	57001-
19	175-49-71161	TUBE	1	57001-
20	07042-30108	PLUG	1	57001-
21	01010-81275	BOLT	4	57001-
22	01643-31232	WASHER, SPRING	4	57001-
23	07000-13048	O-RING	1	57001-
24	(705-52-22100)	PUMP ASS'Y, STEERING	1	57001-
25	07000-13095	O-RING	1	57001-
26	01010-81245	BOLT	4	57001-
27	01602-21236	WASHER, SPRING	4	57001-
28	07000-A3025	O-RING	2	57001-
29	01252-70830	BOLT	8	57001-
30	01643-50823	WASHER	4	57001-
31	175-49-71180	BLOCK	2	57001-
32	175-49-73360	HOSE	1	57001-
33	175-49-73380	HOSE	1	57001-
34	07000-A3025	O-RING	4	57001-
35	07371-30638	FLANGE	4	57001-
36	01010-80830	BOLT	8	57001-
37	01643-50823	WASHER	8	57001-
38	07371-30640	FLANGE	4	57001-
39	07372-21035	BOLT	8	57001-
40	01643-51032	WASHER	8	57001-

FIG.F2700-01A0 STEERING PIPING (1/3)

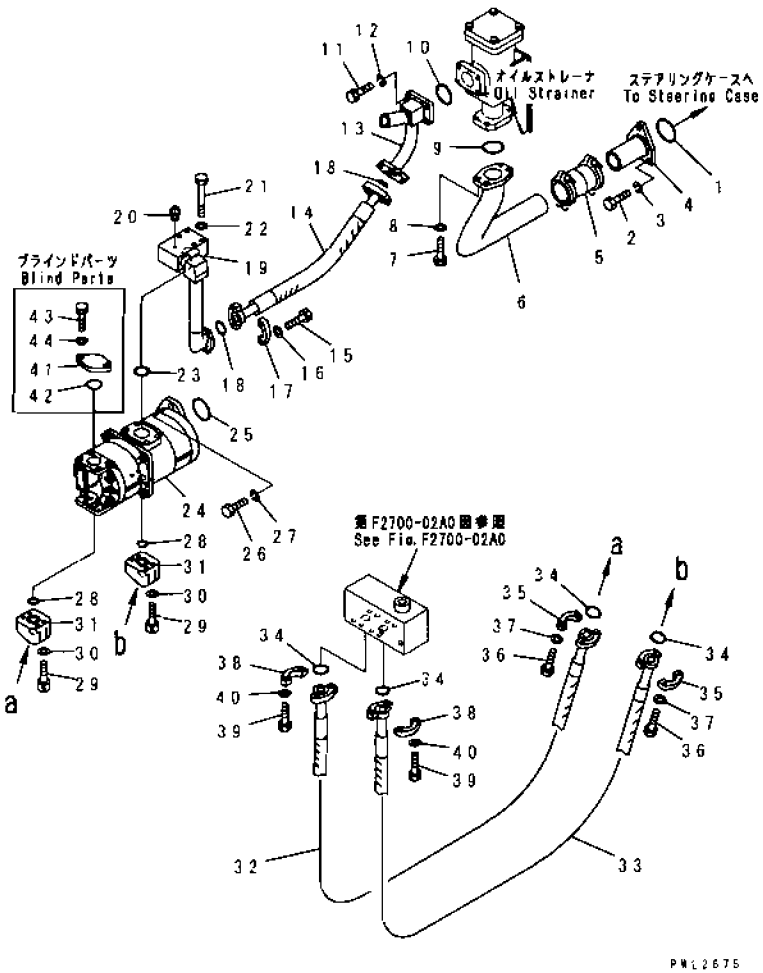

INDEX	PART NO.	DESCRIPTION	Q'TY	SERIAL NO
41	175-49-71170	FLANGE	1	57001-
42	07000-13038	O-RING	1	57001-
43	01010-81030	BOLT	2	57001-
44	01643-31032	WASHER	2	57001-

FIG. F2700-02A0 STEERING PIPING (2/3)

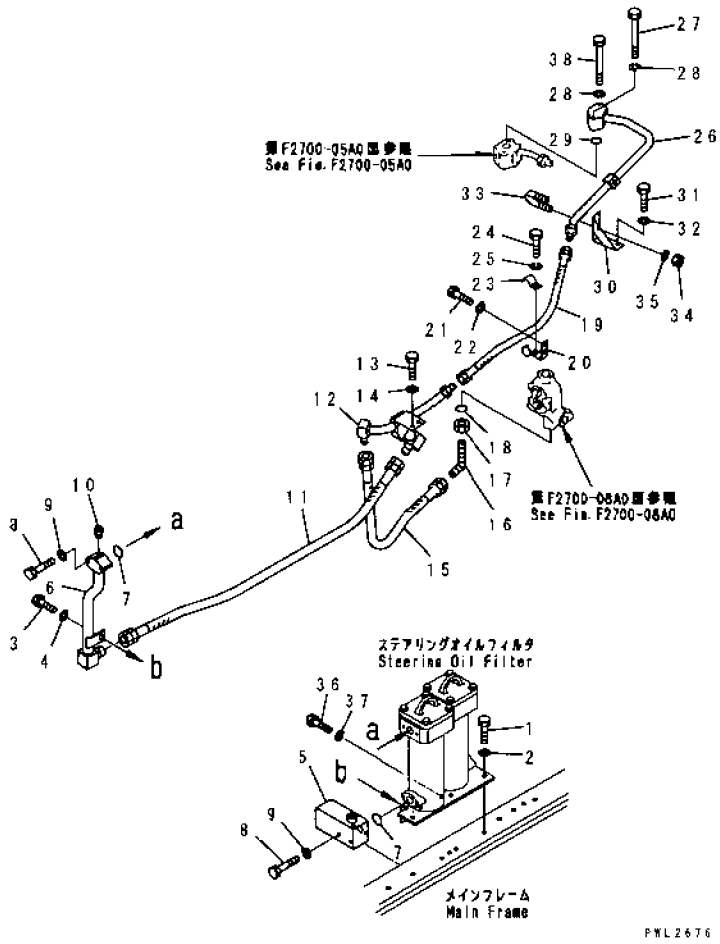

INDEX	PART NO.	DESCRIPTION	Q'TY	SERIAL NO
1	01010-81245	BOLT	3	57001-
2	01643-31232	WASHER	3	57001-
3	01010-81230	BOLT	1	57001-
4	01643-31232	WASHER	1	57001-
5	175-49-71121	BLOCK	1	57001-
6	175-49-71130	TUBE	1	57001-
7	07000-13035	O-RING	2	57001-
8	01010-81090	BOLT	4	57001-
9	01643-31032	WASHER	4	57001-
10	07042-30108	PLUG	1	57001-
11	175-49-73350	HOSE	1	57001-
12	175-49-33160	TUBE	1	57001-
13	01010-81225	BOLT	2	57001-
14	01643-31232	WASHER	2	57001-
15	175-49-33360	HOSE	1	57001-
16	07232-21034	ELBOW	1	57001-
17	07239-23320	NUT	1	57001-
18	07002-13334	O-RING	1	57001-
19	175-49-33370	HOSE	1	57001-
20	175-49-22212	CLAMP	1	57001-
21	01010-81020	BOLT	2	57001-
22	01643-31032	WASHER	2	57001-
23	176-49-41350	CLAMP	1	57001-
24	01010-81230	BOLT	1	57001-
25	01602-21236	WASHER, SPRING	1	57001-
26	175-49-33240	TUBE	1	57001-
27	01011-81020	BOLT	1	57001-
28	01602-21030	WASHER, SPRING	2	57001-
29	07000-13028	O-RING	1	57001-
30	175-49-33250	BRACKET	1	57001-
31	01010-81280	BOLT	1	57001-
32	01643-31232	WASHER	1	57001-
33	07283-22738	CLIP	1	57001-
34	01599-01011	NUT	2	57001-
35	01643-31032	WASHER	2	57001-
36	01010-81230	BOLT	2	57001-
37	01643-31232	WASHER	2	57001-
38	01011-51025	BOLT	1	57001-

FIG. F2700-03A0 STEERING PIPING (3/3)

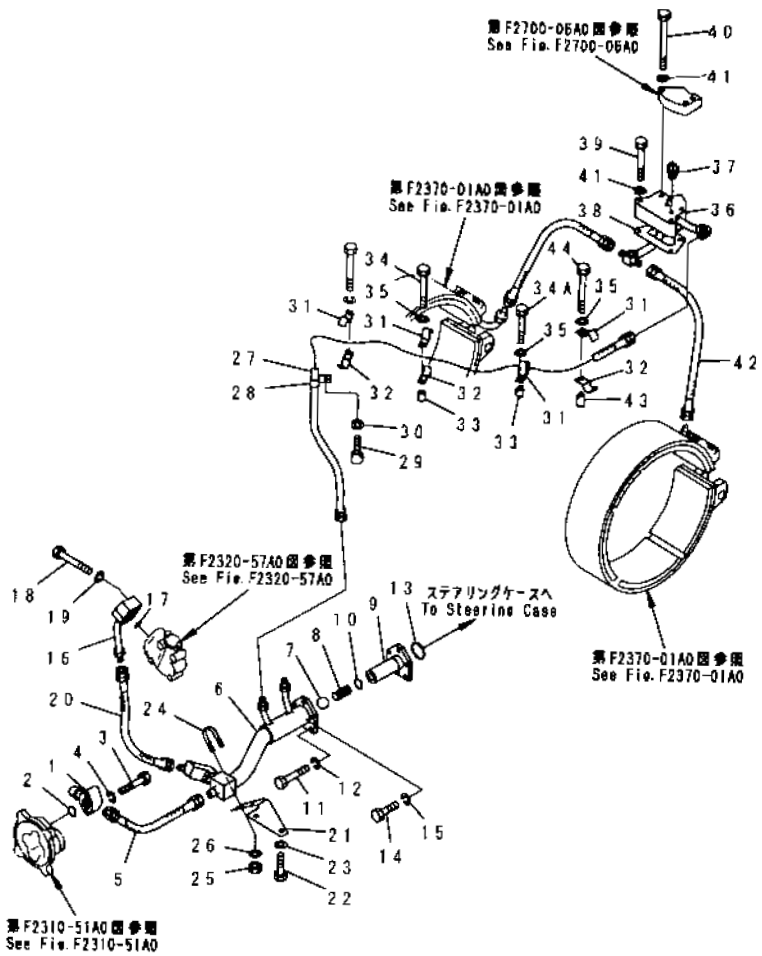

INDEX	PART NO	DESCRIPTION	Q'TY	SERIAL NO
1	175-49-21483	TUBE	1	57001-
2	07000-13028	O-RING	1	57001-
3	01010-81055	BOLT	2	57001-
4	01602-21030	WASHER, SPRING	2	57001-
5	07102-20403	HOSE	1	57001-
	07103-A0403	HOSE, (FOR SLAG HANDLING)	1	57001-
6	175-49-23221	TUBE	1	57001-
7	04260-02540	BALL	1	57001-
8	175-49-23230	SPRING	1	57001-
9	175-49-23211	FLANGE	1	57001-
10	07000-13028	O-RING	1	57001-
11	01010-80620	BOLT	3	57001-
12	01602-20619	WASHER, SPRING	3	57001-
13	07000-13055	O-RING	1	57001-
14	01010-51035	BOLT	3	57001-
15	01602-21030	WASHER, SPRING	3	57001-
16	175-49-21472	TUBE	1	57001-
17	07000-13025	O-RING	1	57001-
18	01010-81060	BOLT	2	57001-
19	01602-21030	WASHER, SPRING	2	57001-
20	07102-20603	HOSE	1	57001-
	07103-A0603	HOSE, (FOR SLAG HANDLING)	1	57001-
21	175-49-21510	BRACKET	1	57001-
22	01010-81230	BOLT	2	57001-
23	01643-31232	WASHER	2	57001-
24	07283-24346	CLIP	1	57001-
25	01599-01011	NUT	2	57001-
26	01643-31032	WASHER	2	57001-
27	07102-20417	HOSE	1	57001-
28	175-49-23340	CLAMP	1	57001-
29	01010-81020	BOLT	1	57001-
30	01602-21030	WASHER, SPRING	1	57001-
31	195-79-12181	CLIP	4	57001-
32	195-78-22471	CLIP	4	57001-
33	195-33-11220	SPACER	2	57001-
34	01010-81275	BOLT	1	57001-
34A	01010-81270	BOLT	1	57001-
35	01643-31232	WASHER	3	57001-
36	175-49-33320	TUBE	1	57001-
37	07042-10108	PLUG	1	57001-
38	175-49-23411	GASKET	1	57001-
39	01010-81280	BOLT	2	57001-

FIG NO. : F2700-03A0

INDEX	PART NO.	DESCRIPTION	Q'TY	SERIAL NO
40	01011-81215	BOLT	2	57001-
41	01643-31232	WASHER	4	57001-
42	175-49-23380	HOSE	2	57001-
43	20Y-03-11220	COLLAR	1	57001-
44	01010-81280	BOLT	1	57001-

FIG. F2700-04A0 TORQFLOW TRANSMISSION PIPING

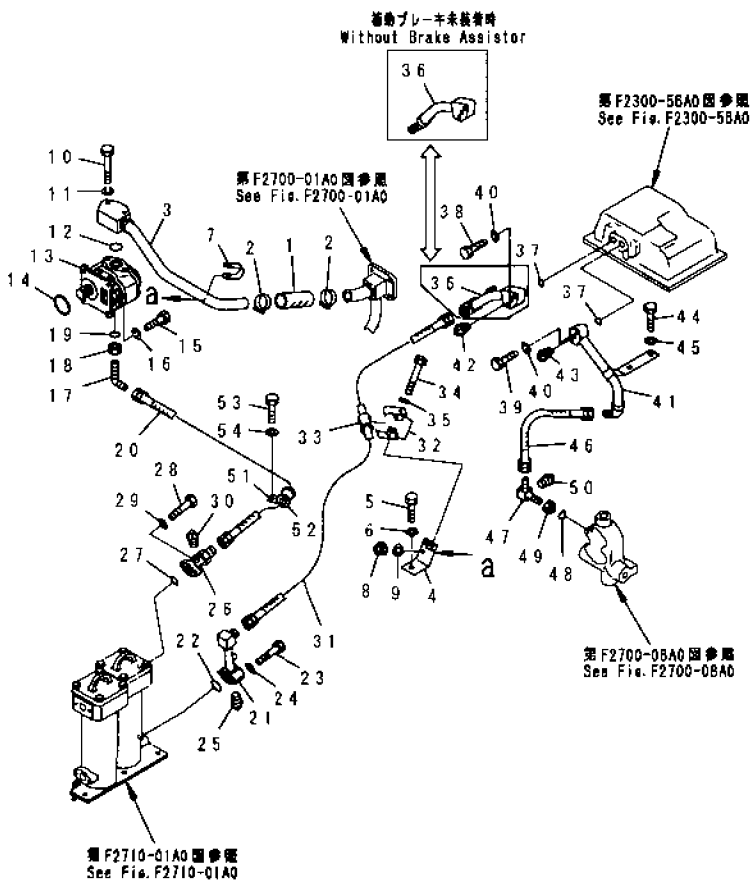

INDEX	PART NO	DESCRIPTION	Q'TY	SERIAL NO
1	07260-04114	HOSE	1	57001-
2	07281-00609	CLAMP	2	57001-
3	175-49-33310	TUBE	1	57001-
4	175-49-33220	BRACKET	1	57001-
5	01010-81640	BOLT	1	57001-
6	01643-31645	WASHER	1	57001-
7	07283-24354	CLIP	1	57001-
8	01599-01011	NUT	2	57001-
9	01643-31032	WASHER	2	57001-
10	01010-81080	BOLT	2	57001-
11	01602-21030	WASHER, SPRING	2	57001-
12	07000-03032	O-RING	1	57001-
13	(07433-71103)	PUMP ASS'Y, TRANSMISSION	1	57001-
14	(07000-03075)	O-RING	1	57001-
15	(01010-51030)	BOLT	1	57001-
16	(01602-21030)	WASHER, SPRING	4	57001-
17	07232-20628	ELBOW	1	57001-
18	07239-22410	NUT	1	57001-
19	07002-02434	O-RING	1	57001-
20	07102-20608	HOSE	1	57001-
21	175-49-71141	TUBE	1	57001-
22	07000-03035	O-RING	1	57001-
23	01010-81060	BOLT	2	57001-
24	01643-31032	WASHER	2	57001-
25	07042-30108	PLUG	2	57001-
26	175-49-71151	TUBE	1	57001-
27	07000-03035	O-RING	1	57001-
28	01010-81035	BOLT	2	57001-
29	01643-31032	WASHER	2	57001-
30	07042-30108	PLUG	1	57001-
31	07102-20613	HOSE	1	57001-
32	198-61-44190	CLAMP	2	57001-
33	07095-20627	CUSHION	1	57001-
34	01010-81230	BOLT	1	57001-
35	01643-31232	WASHER	1	57001-
36	175-49-32150	TUBE, (WITH BRAKE ASSISTOR)	1	57001-
	175-49-23862	TUBE, (WITHOUT BRAKE ASSISTOR)	1	57001-
37	07000-03028	O-RING	2	57001-
38	01010-81065	BOLT	2	57001-
39	01010-81055	BOLT	2	57001-
40	01602-21030	WASHER, SPRING	4	57001-
41	15A-49-11210	TUBE	1	57001-

FIG NO. : F2700-04A0

INDEX	PART NO	DESCRIPTION	Q'TY	SERIAL NO.
42	07042-10108	PLUG	1	57001-
43	07042-30108	PLUG	1	57001-
44	01010-81040	BOLT	2	57001-
45	01643-31032	WASHER	2	57001-
46	07102-20603	HOSE	1	57001-
47	15A-49-11220	ELBOW	1	57001-
48	07002-03334	O-RING	1	57001-
49	07239-13320	NUT	1	57001-
50	07042-30108	PLUG	1	57001-
51	04434-53212	CLIP	1	57001-
52	07095-20627	CUSHION	1	57001-
53	01010-81225	BOLT	1	57001-
54	01643-31232	WASHER	1	57001-

D155A-2A

FIG. F2700-05A0 BRAKE PIPING

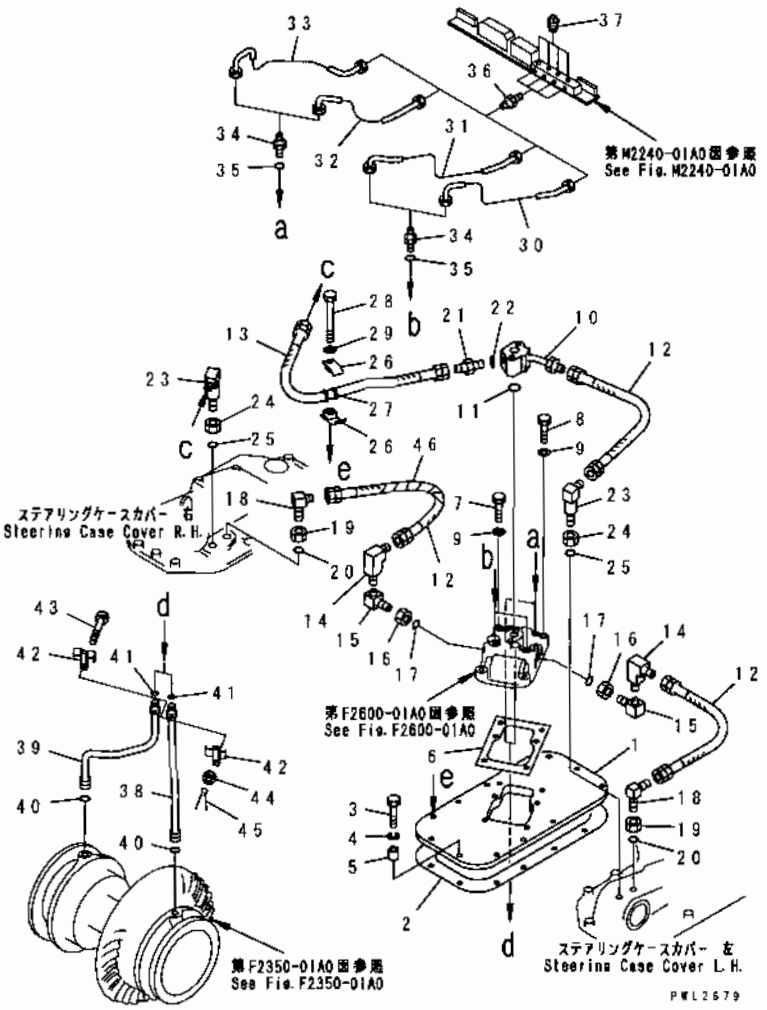

INDEX	PART NO	DESCRIPTION	Q'TY	SERIAL NO
1	175-49-32110	PLATE, (WITH BRAKE ASSISTOR)	1	57001-
	175-49-23460	PLATE, (WITHOUT BRAKE ASSISTOR)	1	57001-
2	175-40-22591	GASKET	1	57001-
3	01010-81260	BOLT	9	57001-
4	01602-21236	WASHER, SPRING	9	57001-
5	195-33-11220	SPACER	9	57001-
6	144-40-22221	GASKET	1	57001-
7	01010-81240	BOLT	1	57001-
8	01010-81250	BOLT	5	57001-
9	01643-31232	WASHER	6	57001-
10	175-33-23470	TUBE	1	57001-
11	07000-13028	O-RING	1	57001-
12	07102-20303	HOSE	3	57001-
13	07102-20306	HOSE	1	57001-
14	203-62-12330	ELBOW	2	57001-
15	195-49-13830	ELBOW	2	57001-
16	195-49-13840	NUT	2	57001-
17	07002-11623	O-RING	2	57001-
18	07232-20315	ELBOW	2	57001-
19	07239-22009	NUT	2	57001-
20	07002-12034	O-RING	2	57001-
21	07230-20315	UNION	1	57001-
22	07002-12034	O-RING	1	57001-
23	175-49-25670	ELBOW	2	57001-
24	07239-22009	NUT	2	57001-
25	07002-12034	O-RING	2	57001-
26	175-49-32130	CLAMP	2	57001-
27	07095-00318	CUSHION	1	57001-
28	01010-81275	BOLT	1	57001-
29	01643-31232	WASHER	1	57001-
30	175-49-25631	TUBE	1	57001-
31	175-49-25641	TUBE	1	57001-
32	175-49-33280	TUBE	1	57001-
33	175-49-33290	TUBE	1	57001-
34	195-49-21361	NIPPLE	4	57001-
35	07002-10823	O-RING	4	57001-
36	07213-50510	CONNECTOR	4	57001-
37	07042-30108	PLUG	4	57001-
38	175-40-22570	TUBE, L.H.	2	57001-
39	175-40-22580	TUBE, R.H.	1	57001-
40	07000-13022	O-RING	2	57001-
41	07000-12018	O-RING	2	57001-

FIG NO. : F2700-05A0

INDEX	PART NO.	DESCRIPTION	Q'TY	SERIAL NO
42	175-40-22461	CLAMP	2	57001-
43	01012-51035	BOLT	1	57001-
44	01590-11012	NUT	1	57001-
45	04050-12018	PIN, COTTER	1	57001-
46	175-49-33330	TUBE	1	57001-

FIG. F2700-05A2 PM CLINIC PIPING(#57435-)

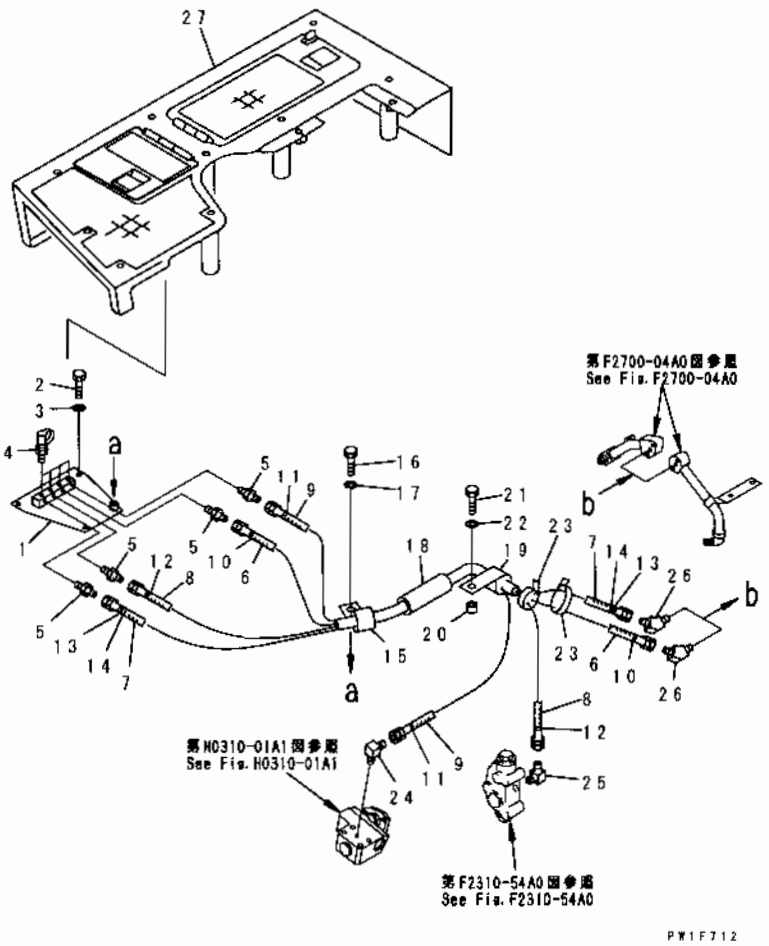

INDEX	PART NO.	DESCRIPTION	Q'TY	SERIAL NO.
1	175-54-71520	BRACKET	1	57435-
2	01010-81020	BOLT	3	57435-
3	01643-31032	WASHER	3	57435-
4	195-49-36120	NIPPLE	4	57435-
5	203-62-21740	NIPPLE	4	57435-
6	17A-49-17151	HOSE, 1450MM	1	57435-
7	17A-49-17151	HOSE, 1450MM	1	57435-
8	198-49-56130	HOSE, 1550MM	1	57435-
9	198-49-56150	HOSE, 1200MM	1	57435-
10	20Y-62-22790	BAND, RED, RED	2	57435-
11	20Y-62-22810	BAND, YELLOW, YELLOW	2	57435-
12	20Y-62-22830	BAND, WHITE, WHITE	2	57435-
13	20Y-62-22830	BAND, WHITE, WHITE	2	57435-
14	20Y-62-22840	BAND, BLACK, BRACK	2	57435-
15	04434-52510	CLIP	1	57435-
16	01010-81020	BOLT	1	57435-
17	01643-31032	WASHER	1	57435-
18	205-62-53780	COVER	1	57435-
19	04434-52510	CLIP	1	57435-
20	201-03-29160	SPACER	1	57435-
21	01010-81035	BOLT	1	57435-
22	01643-31032	WASHER	1	57435-
23	08034-00414	BAND	2	57435-
24	202-62-21430	ELBOW	1	57435-
25	202-62-21430	ELBOW	1	57435-
26	201-62-41910	ELBOW	2	57435-
27	175-54-76820	COVER	1	57435-

FIG. F2700-06A0 SWITCH AND VALVE (FOR BRAKE CAUTION) (WITH BRAKE ASSISTOR)

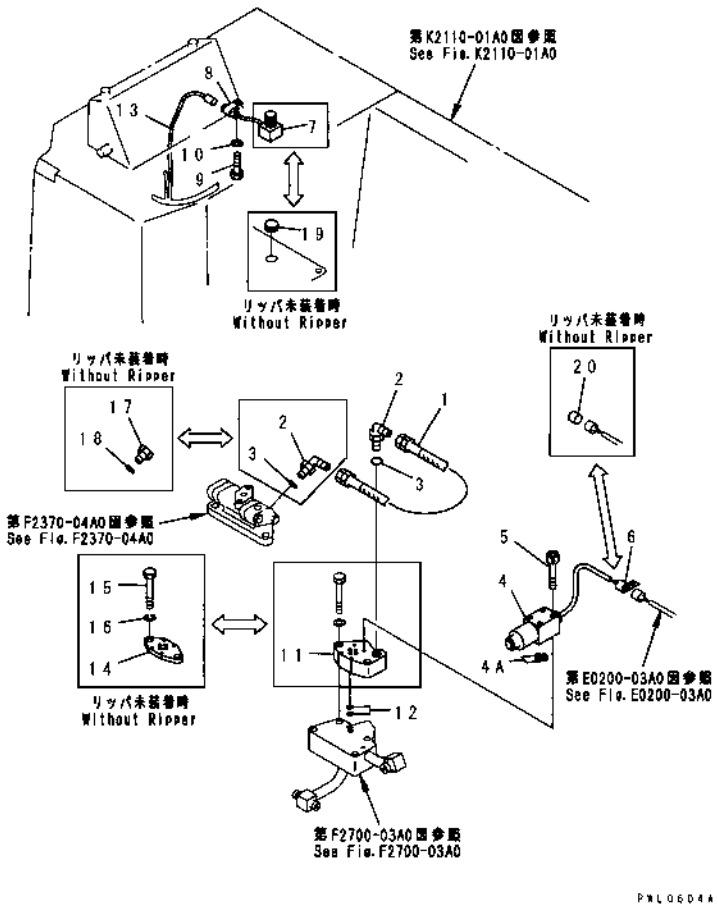

INDEX	PART NO	DESCRIPTION	Q'TY	SERIAL NO
1	07102-20304	HOSE	1	57001-
	07103-A0304	HOSE, (FOR SLAG HANDLING)	1	57001-
2	07235-10315	ELBOW	2	57001-
3	07002-02034	O-RING	2	57001-
4	175-78-69580	VALVE	1	57001-
4A	07000-11009	O-RING	4	57001-
5	01252-40545	BOLT	4	57001-
6	195-06-41820	CLIP	1	57001-
7	175-06-61540	SWITCH ASS'Y	1	57001-
8	195-06-41820	CLIP	1	57001-
9	01010-81020	BOLT	1	57001-
10	01643-31032	WASHER	1	57001-
11	175-79-61250	BLOCK	1	57001-
12	07000-11009	O-RING	2	57001-
13	175-06-61510	WIRING HARNESS, (FOR BRAKE CAUTION)	1	57001-
14	175-79-61260	PLATE, (WITHOUT GIANT RIPPER)	1	57001-
15	01010-81290	BOLT, (WITHOUT GIANT RIPPER)	2	57001-
16	01602-21236	WASHER, (WITHOUT GIANT RIPPER)	2	57001-
17	07040-12012	PLUG, (WITHOUT GIANT RIPPER)	1	57001-
18	07002-02034	O-RING, (WITHOUT GIANT RIPPER)	1	57001-
19	09415-01610	CAP, (WITHOUT GIANT RIPPER)	1	57001-
20	195-06-41740	PLUG, (WITHOUT GIANT RIPPER)	1	57001-

FIG. F2700-07A0 OIL COOLER PIPING

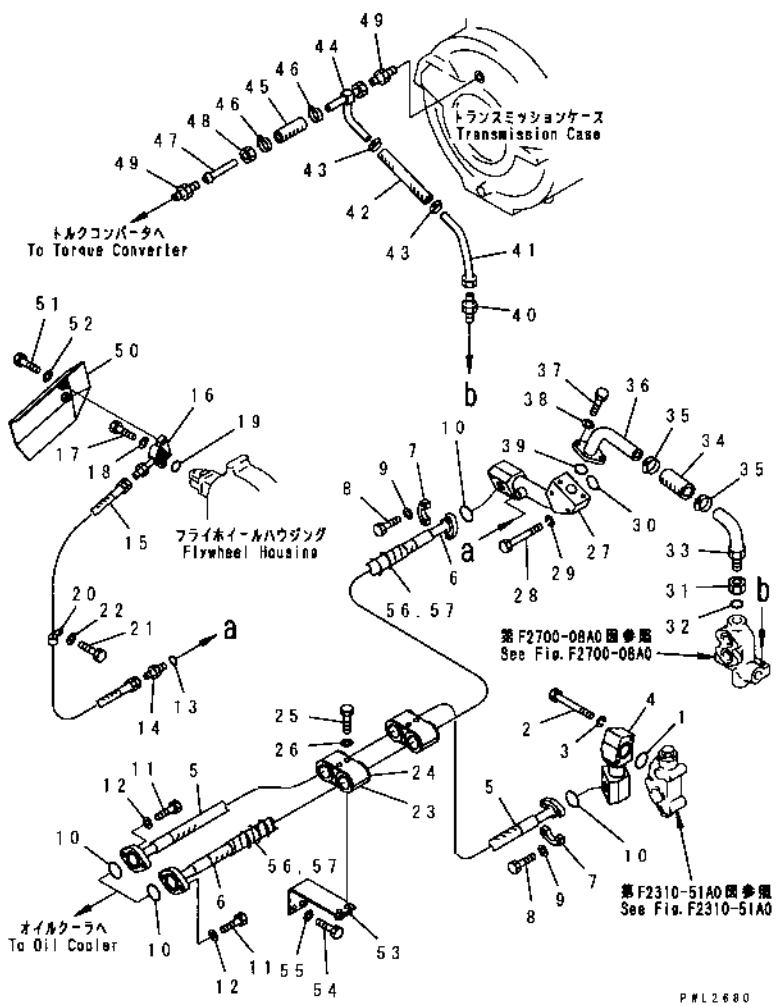

INDEX	PART NO	DESCRIPTION	Q'TY	SERIAL NO
1	07000-33042	O-RING	1	57001-
2	01010-81070	BOLT	2	57001-
3	01602-21030	WASHER, SPRING	2	57001-
4	175-49-71251	TUBE	1	57001-
5	175-49-71221	HOSE	1	57001-
6	175-49-71211	HOSE	1	57001-
7	07371-31255	FLANGE	4	57001-
8	07372-21035	BOLT	8	57001-
9	01643-51032	WASHER	8	57001-
10	07000-13038	O-RING	4	57001-
11	01010-81035	BOLT	4	57001-
12	01643-31032	WASHER	4	57001-
13	07002-02034	O-RING	1	57001-
14	07230-20422	UNION	1	57001-
15	07102-20410	HOSE	1	57001-
16	175-49-71431	TUBE	1	57001-
17	01010-81045	BOLT	2	57001-
18	01643-31032	WASHER	2	57001-
19	07000-03025	O-RING	1	57001-
20	04434-52112	CLIP	1	57001-
21	01010-81225	BOLT	1	57001-
22	01643-31232	WASHER	1	57001-
23	07094-31228	CLAMP	4	57001-
24	07095-01245	CUSHION	4	57001-
25	01010-81285	BOLT	4	57001-
26	01643-31232	WASHER	4	57001-
27	175-49-71241	TUBE	1	57001-
28	01010-81075	BOLT	2	57001-
29	01602-21030	WASHER, SPRING	2	57001-
30	07000-33040	O-RING	1	57001-
31	07239-13320	NUT	1	57001-
32	07002-03334	O-RING	1	57001-
33	175-49-21434	TUBE	1	57001-
34	07260-03213	HOSE	1	57001-
35	07281-00549	CLAMP	2	57001-
36	175-49-25680	TUBE	1	57001-
37	01010-81035	BOLT	2	57001-
38	01643-31032	WASHER	2	57001-
39	07000-03035	O-RING	1	57001-
40	07213-51013	CONNECTOR	1	57001-
41	175-49-23580	TUBE	1	57001-
42	07260-20922	HOSE	1	57001-

FIG NO. : F2700-07A0

INDEX	PART NO.	DESCRIPTION	Q'TY	SERIAL NO.
43	07281-00197	CLAMP	2	57001-
44	175-49-23570	TUBE	1	57001-
45	07260-21410	HOSE	1	57001-
46	07281-00259	CLAMP	2	57001-
47	175-49-11911	TUBE	1	57001-
48	07201-51527	NUT	1	57001-
49	07213-51521	CONNECTOR	2	57001-
50	175-49-71311	COVER, (FOR FIRE PREVENTION)	1	57001-
51	01010-81030	BOLT	2	57001-
52	01643-31032	WASHER	2	57001-
53	175-49-71261	BRACKET	1	57001-
54	01010-81225	BOLT	2	57001-
55	01643-31232	WASHER	2	57001-
56	17M-01-23420	TAPE, (FOR SLAG HANDLING)	1	57021-
57	198-01-18150	WIRE, (FOR SLAG HANDLING)	1	57021-

FIG NO. : F2700-08A0

FIG. F2700-08A0 MAIN RELIEF VALVE

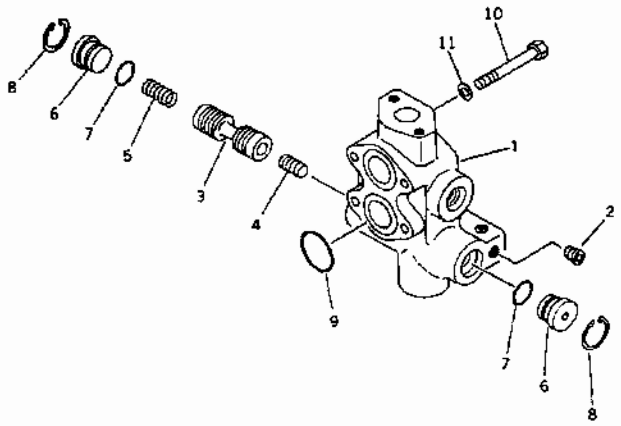

INDEX	PART NO.	DESCRIPTION	Q'TY	SERIAL NO.
	195-49-00090	VALVE ASS'Y	1	57001-
1	☆	. HOUSING	1	57001-
2	07043-50108	. PLUG	1	57001-
3	145-14-23710	. VALVE	1	57001-
4	145-14-23720	. PISTON	1	57001-
5	195-40-11431	. SPRING	1	57001-
6	170-33-13530	. STOPPER	2	57001-
7	07000-03025	. O-RING	2	57001-
8	04065-03515	. RING, SNAP	2	57001-
9	07000-03042	O-RING	2	57001-
10	01010-81085	BOLT	4	57001-
11	01602-21030	WASHER, SPRING	4	57001-

FIG NO. : F2710-01A0

FIG. F2710-01A0 STEERING OIL FILTER

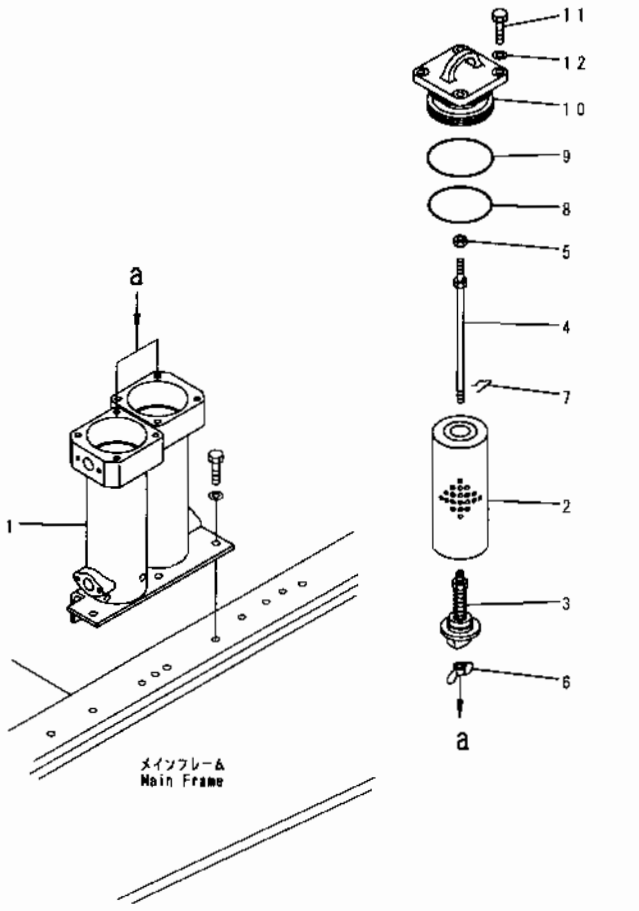

INDEX	PART NO	DESCRIPTION	Q'TY	SERIAL NO
1	175-49-71111	CASE, OIL FILTER	1	57001-
2	175-49-11580	ELEMENT	2	57001-
3	175-49-25530	VALVE ASS'Y	2	57001-
4	175-49-25540	ROD	2	57001-
5	01582-01008	NUT	2	57001-
6	01540-01050	NUT, WING	2	57001-
7	04052-01038	PIN, SNAP	2	57001-
8	07000-02110	O-RING	2	57001-
9	07000-02115	O-RING	2	57001-
10	195-49-13740	COVER	2	57001-
11	01010-81440	BOLT	8	57001-
12	01643-31445	WASHER	8	57001-

FIG. F2710-02A0 OIL STRAINER

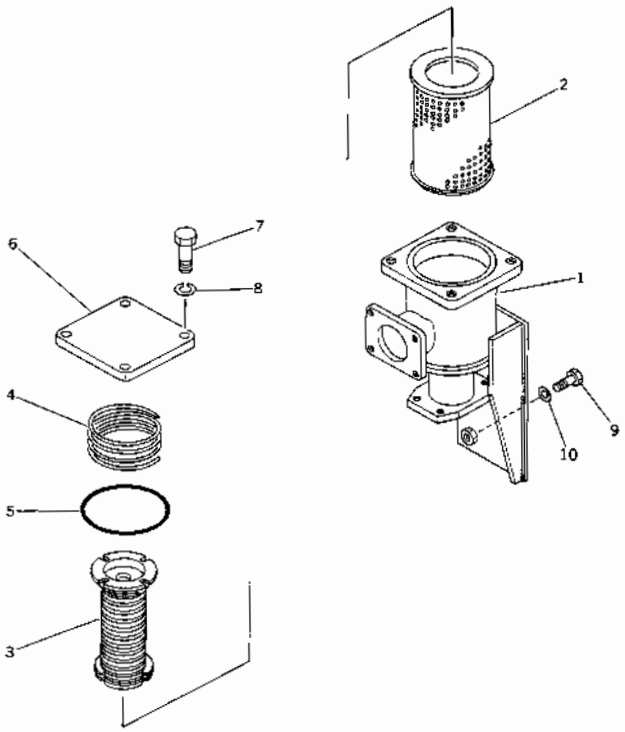

FIG NO. : F2710-02A0

INDEX	PART NO	DESCRIPTION	Q'TY	SERIAL NO
1	175-49-22281	CASE	1	57001-
2	175-49-11222	SCREEN	1	57001-
3	175-49-11231	MAGNET ASS'Y	1	57001-
4	154-19-11230	SPRING	1	57001-
5	07000-03130	O-RING	1	57001-
6	175-49-21690	COVER	1	57001-
7	01010-81235	BOLT	4	57001-
8	01602-21236	WASHER, SPRING	4	57001-
9	01010-81235	BOLT	4	57001-
10	01643-31232	WASHER	4	57001-

HYDRAULIC SYSTEM

FIG. H0100-01A0 HYDRAULIC TANK (1/2)

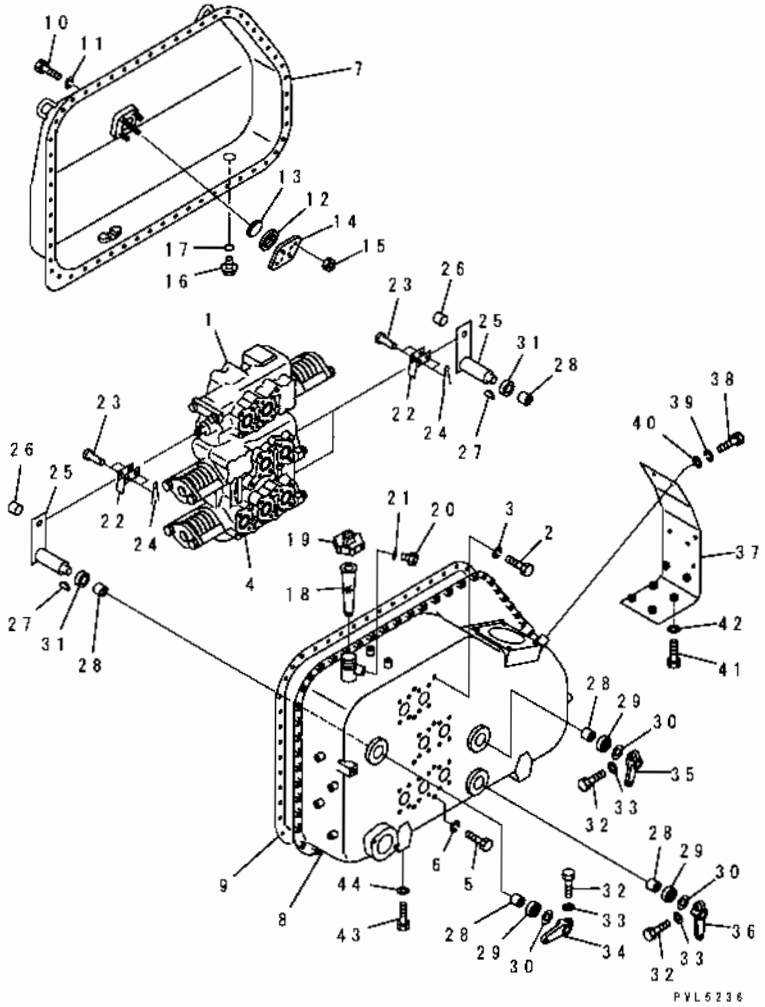

INDEX	PART NO.	DESCRIPTION	Q TY	SERIAL NO
	175-60-00204	TANK VALVE ASS'Y.	1	57001-
		THIS ASSEMBLY CONSISTS OF ALL PARTS SHOWN IN FIGS. H0100-01A0 TO H0100-05A0.		
1	701-41-11006	. VALVE ASS'Y, BLADE TILT.	1	57001-
2	01010-51230	. BOLT.	3	57001-
3	01602-21236	WASHER, SPRING.	3	57001-
4	701-43-24002	. VALVE ASS'Y, BLADE LIFT AND RIPPER.	1	57001-
5	01010-51230	. BOLT.	4	57001-
6	01602-21236	. WASHER, SPRING.	4	57001-
7	175-60-58120	. TANK, HYDRAULIC.	1	57001-
8	175-60-58110	TANK, HYDRAULIC.	1	57001-
9	175-60-27133	. GASKET.	1	57001-
10	01010-51025	. BOLT.	55	57001-
11	01602-21030	. WASHER, SPRING.	55	57001-
12	07715-11257	. RING.	1	57001-
13	07715-00651	. COVER.	1	57001-
14	07715-21074	. CASE.	1	57001-
15	01598-11011	. NUT.	4	57001-
16	07044-13620	. PLUG, DRAIN	1	57001-
17	07002-03634	. O-RING.	1	57001-
18	07056-10045	. STRAINER.	1	57001-
19	07051-00000	. CAP.	1	57001-
	07092-00000	. CAP, (FOR VANDALISM PROTECTION).	1	57001-
	07051-00003	. . GASKET.	1	57001-
20	701-30-63130	. PLUG.	1	57001-
21	07002-02034	. O-RING.	1	57001-
22	141-60-32170	. YOKE.	6	57001-
23	04205-01028	PIN.	6	57001-
24	04050-03015	. PIN, COTTER.	6	57001-
25	175-60-29140	. LEVER.	3	57001-
26	06600-01008	. . BUSHING.	3	57001-
27	04010-00519	. KEY.	3	57001-
28	06120-02520	. BEARING.	6	57001-
29	154-60-12370	. SEAL.	3	57001-
30	01640-22440	. WASHER.	3	57001-
31	175-60-29150	. WASHER.	3	57001-
32	01010-51040	. BOLT.	3	57001-
33	01602-21030	. WASHER, SPRING.	3	57001-
34	175-60-29120	. LEVER.	1	57001-
35	195-60-13120	. LEVER.	1	57001-
36	175-60-27310	. LEVER.	1	57001-
37	175-60-27371	. BRACKET.	1	57001-

FIG NO. : H0100-01A0

INDEX	PART NO.	DESCRIPTION	Q'TY	SERIAL NO.
38	01010-51235	.BOLT	4	57001-
39	01602-21236	.WASHER, SPRING	4	57001-
40	01643-31232	.WASHER	4	57001-
41	01010-81440	BOLT	4	57001-
42	01643-31445	WASHER	4	57001-
43	01010-81850	BOLT	5	57001-
44	01643-31845	WASHER	5	57001-

D155A-2A

FIG. H0100-02A0 HYDRAULIC TANK (2/2)

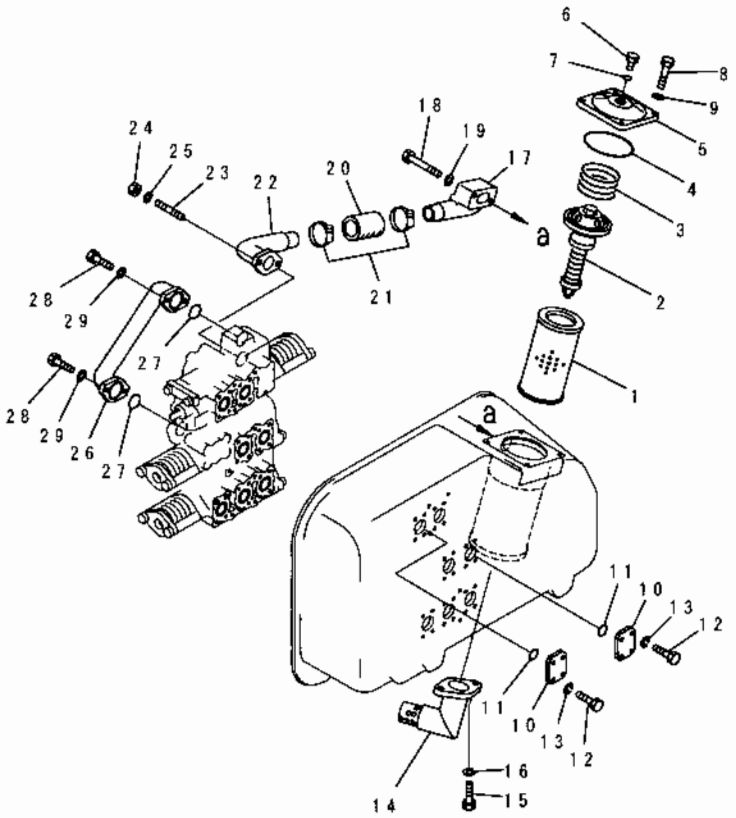

INDEX	PART NO	DESCRIPTION	Q'TY	SERIAL NO
	(175-60-00204)	TANK VALVE ASS'Y THIS ASSEMBLY CONSISTS OF ALL PARTS SHOWN IN FIGS. H0100-01A0 TO H0100-05A0.	1	57001-
1	07063-01100	.ELEMENT, FILTER	1	57001-
2	175-60-27300	.VALVE ASS'Y	1	57001-
3	175-60-27340	.SPRING	1	57001-
4	07000-05150	.O-RING	1	57001-
5	175-60-27171	.COVER	1	57001-
6	154-60-12260	.PLUG	1	57001-
7	07000-02010	.O-RING	1	57001-
8	01010-51235	.BOLT	4	57001-
9	01602-21236	.WASHER, SPRING	4	57001-
10	07378-01460	.FLANGE	4	57001-
11	07000-13048	.O-RING	4	57001-
12	01010-51240	.BOLT	16	57001-
13	01602-21236	.WASHER, SPRING	16	57001-
14	175-60-29130	.BAFFLE	1	57001-
15	01010-31230	.BOLT	2	57001-
16	01643-51232	.WASHER	2	57001-
17	175-60-27262	.TUBE	1	57001-
18	01010-31275	.BOLT	2	57001-
19	01643-51232	.WASHER	2	57001-
20	175-60-29160	.HOSE	1	57001-
21	07281-00709	.CLAMP	2	57001-
22	175-60-27272	.TUBE	1	57001-
23	01144-31435	.STUD	2	57001-
24	01580-01411	.NUT	2	57001-
25	20D-14-11510	.WASHER	2	57001-
26	175-60-27253	.TUBE	1	57001-
27	07000-13050	.O-RING	2	57001-
28	01010-31445	.BOLT	4	57001-
29	20D-14-11510	.WASHER	4	57001-

FIG. H0100-03A0 BLADE LIFT AND RIPPER CONTROL VALVE (1/2)

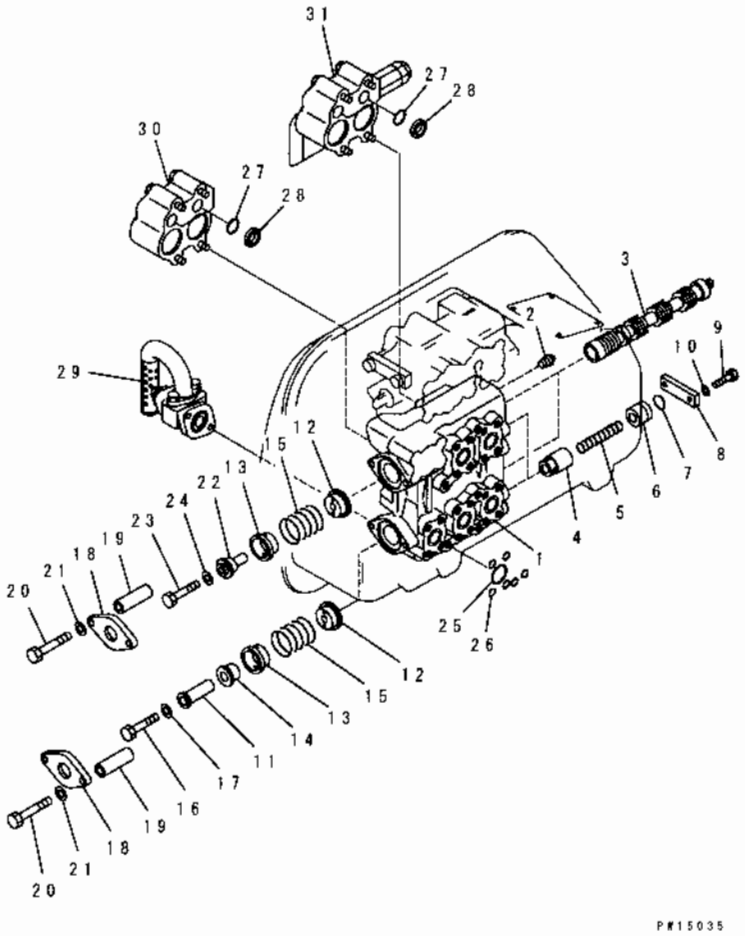

INDEX	PART NO	DESCRIPTION	Q'TY	SERIAL NO
	(175-60-00204)	TANK VALVE ASS'Y. THIS ASSEMBLY CONSISTS OF ALL PARTS SHOWN IN FIGS. H0100-01A0 TO H0100-05A0.	1	57001-
	701-43-24002	. VALVE ASS'Y, BLADE LIFT AND RIPPER. THIS ASSEMBLY CONSISTS OF ALL PARTS SHOWN IN FIGS H0100-03A0 TO H0100-04A0.	1	57001-
	701-43-41002	.. VALVE BODY ASS'Y.	1	57001-
	701-43-00015	... BODY SUB ASS'Y.	1	57001-
1	☆	.... BODY.	1	57001-
2	07042-00415	.... PLUG.	2	57001-
3	☆	.... SPOOL.	2	57001-
4	701-43-31420	... VALVE.	2	57001-
5	701-53-31130	... SPRING.	2	57001-
6	701-43-33130	... SEAT, SPRING.	2	57001-
7	07000-13035	... O-RING.	2	57001-
8	701-53-31160	... PLATE.	2	57001-
9	01010-31445	... BOLT.	4	57001-
10	20D-14-11510	... WASHER.	4	57001-
11	701-43-31440	... COLLAR.	1	57001-
12	701-43-31181	... SPACER.	2	57001-
13	701-43-31191	... SPACER.	2	57001-
14	701-43-31211	.. COLLAR.	1	57001-
15	701-43-31221	.. SPRING, RETURN.	2	57001-
16	01010-31295	... BOLT.	1	57001-
17	01643-51232	... WASHER.	1	57001-
18	701-43-31460	... PLATE.	2	57001-
19	701-43-31470	... COLLAR.	4	57001-
20	01011-31215	... BOLT.	4	57001-
21	01643-51232	... WASHER.	4	57001-
22	701-43-31291	... COLLAR.	1	57001-
23	01010-31290	... BOLT.	1	57001-
24	01643-51232	... WASHER.	1	57001-
25	701-51-31250	... O-RING.	5	57001-
26	07000-02015	... O-RING.	25	57001-
27	07000-13035	... O-RING.	4	57001-
28	701-40-61180	... RING.	4	57001-
29	(701-40-51002)	.. VALVE ASS'Y, MAIN RELIEF.	1	57001-
30	(701-40-61002)	.. VALVE ASS'Y, SUCTION.	1	57001-
31	(701-40-62002)	.. VALVE ASS'Y, SAFETY AND SUCTION.	1	57001-

FIG. H0100-04A0 BLADE LIFT AND RIPPER CONTROL VALVE (2/2)

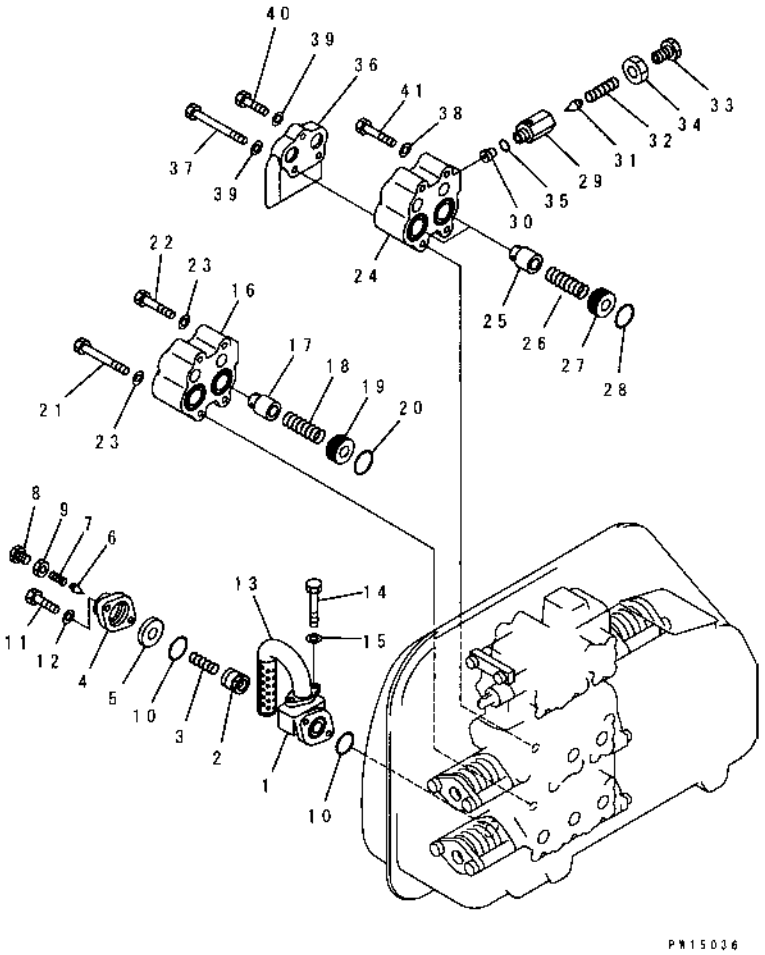

INDEX	PART NO	DESCRIPTION	Q'TY	SERIAL NO
	(175-60-00204)	TANK VALVE ASS'Y. THIS ASSEMBLY CONSISTS OF ALL PARTS SHOWN IN FIGS. H0100-01A0 TO H0100-05A0.	1	57001-
	(701-43-24002)	.VALVE ASS'Y, BLADE LIFT AND RIPPER. THIS ASSEMBLY CONSISTS OF ALL PARTS SHOWN IN FIGS. H0100-03A0 TO H0100-04A0.	1	57001-
	701-40-51002	..VALVE ASS'Y, MAIN RELIEF.	1	57001-
	701-40-00011	...HOUSING ASS'Y.	1	57001-
1	☆	....HOUSING.	1	57001-
2	☆	....VALVE.	1	57001-
3	701-30-51130	...SPRING.	1	57001-
4	701-40-51130	...BODY.	1	57001-
5	701-30-51151	...SEAT, VALVE.	1	57001-
6	701-30-51160	...POPPET.	1	57001-
7	701-30-51171	...SPRING, POPPET.	1	57001-
8	701-10-51160	..PLUG.	1	57001-
9	701-30-51190	...NUT, LOCK.	1	57001-
10	07000-13048	...O-RING.	2	57001-
11	01011-31405	..BOLT.	2	57001-
12	20D-14-11510	...WASHER	2	57001-
13	701-40-51160	...TUBE.	1	57001-
14	01010-31030	...BOLT.	2	57001-
15	01643-51032	...WASHER.	2	57001-
	701-40-61002	..VALVE ASS'Y, SUCTION.	1	57001-
16	701-40-61152	...HOUSING.	1	57001-
17	701-40-61120	...VALVE.	2	57001-
18	701-50-61131	...SPRING.	2	57001-
19	701-40-72120	...SEAT.	2	57001-
20	07000-13040	...O-RING.	2	57001-
21	01011-31420	...BOLT.	2	57001-
22	01010-31495	...BOLT.	2	57001-
23	20D-14-11510	...WASHER.	4	57001-
	701-40-62002	..VALVE ASS'Y, SAFETY AND SUCTION.	1	57001-
24	701-40-62162	...HOUSING	1	57001-
25	701-40-61120	...VALVE.	2	57001-
26	701-50-61131	...SPRING.	2	57001-
27	701-40-72120	...SEAT.	2	57001-
28	07000-13040	...O-RING.	2	57001-
	701-40-00040	...VALVE ASS'Y, SAFETY.	1	57001-
29	☆	....BODY.	1	57001-
30	☆	....SEAT, VALVE.	1	57001-
31	☆	....POPPET.	1	57001-

FIG NO. : H0100-04A0

INDEX	PART NO	DESCRIPTION	Q'TY	SERIAL NO
32	☆	....SPRING	1	57001-
33	☆	....PLUG	1	57001-
34	☆	....NUT	1	57001-
35	07002-13034	...O-RING	1	57001-
36	701-40-62171	...BAFFLE	1	57001-
37	01011-31465	...BOLT	2	57001-
38	20D-14-11510	...WASHER	2	57001-
39	01643-31445	...WASHER	3	57001-
40	01010-31450	...BOLT	1	57001-
41	01010-31495	...BOLT	2	57001-

FIG. H0100-05A0 BLADE TILT CONTROL VALVE

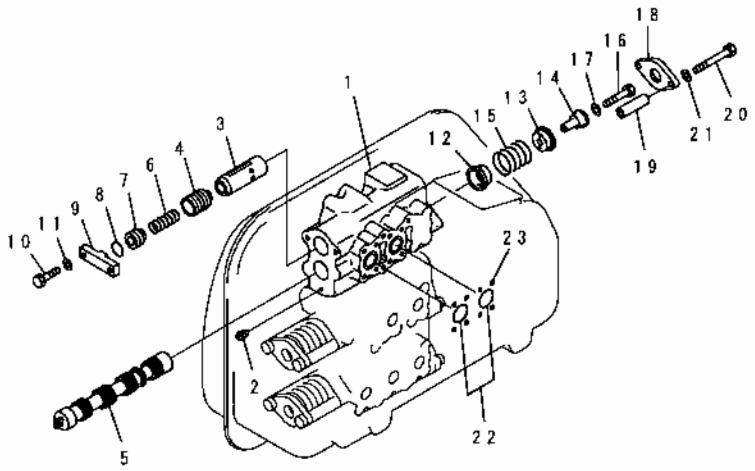

INDEX	PART NO	DESCRIPTION	Q'TY	SERIAL NO
	(175-60-00204)	TANK VALVE ASS'Y. THIS ASSEMBLY CONSISTS OF ALL PARTS SHOWN IN FIGS. H0100-01A0 TO H0100-05A0.	1	57001-
	701-41-11006	.VALVE ASS'Y, BLADE TILT.	1	57001-
	701-41-00016	..VALVE BODY ASS'Y.	1	57001-
1	☆	...BODY.	1	57001-
2	07042-00415	...PLUG.	1	57001-
3	☆	...COLLAR.	1	57001-
4	701-41-31130	...VALVE.	1	57001-
5	☆	...SPOOL.	1	57001-
6	701-41-31180	..SPRING.	1	57001-
7	701-41-31150	..SEAT.	1	57001-
8	07000-13028	..O-RING.	1	57001-
9	701-51-31172	..PLATE.	1	57001-
10	01010-31450	..BOLT.	2	57001-
11	20D-14-11510	.WASHER.	2	57001-
12	701-43-31181	..SPACER.	1	57001-
13	701-43-31191	..SPACER.	1	57001-
14	701-43-31291	..COLLAR.	1	57001-
15	701-43-31221	.SPRING.	1	57001-
16	01010-31290	..BOLT.	1	57001-
17	01643-51232	..WASHER.	1	57001-
18	701-43-31460	..PLATE.	1	57001-
19	701-43-31470	..COLLAR.	2	57001-
20	01011-31215	..BOLT.	2	57001-
21	01643-51232	..WASHER.	2	57001-
22	701-51-31250	..O-RING.	2	57001-
23	07000-02015	..O-RING.	11	57001-

FIG. H0310-01A0 HYDRAULIC PIPING (TANK TO PUMP)

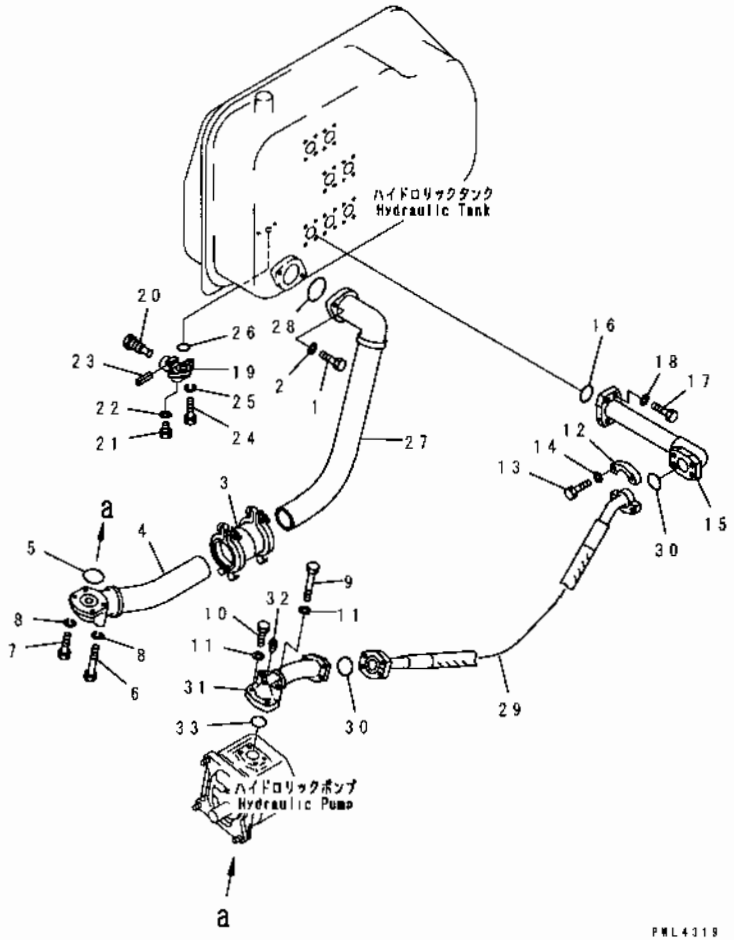

INDEX	PART NO.	DESCRIPTION	Q'TY	SERIAL NO
1	01010-81455	BOLT	2	57001-
2	01643-31445	WASHER	2	57001-
3	07332-02400	COUPLING	1	57001-
	07332-52400	GASKET	2	57001-
	07332-62400	CLAMP	2	57001-
4	175-60-26141	TUBE	1	57001-
5	07000-12070	O-RING	1	57001-
6	01011-81200	BOLT	2	57001-
7	01010-81245	BOLT	2	57001-
8	01602-21236	WASHER	4	57001-
9	01010-81285	BOLT	2	57001-
10	01010-81255	BOLT	2	57001-
11	01602-21236	WASHER	4	57001-
12	07371-31465	FLANGE	4	57001-
13	07372-21240	BOLT	8	57001-
14	01643-51232	WASHER	8	57001-
15	175-60-26182	TUBE	1	57001-
16	07000-13048	O-RING	1	57001-
17	01010-81250	BOLT	4	57001-
18	01602-21236	WASHER	4	57001-
	155-60-12500	VALVE ASS'Y	1	57001-
19	155-60-12510	. BODY	1	57001-
20	155-60-12520	. VALVE	1	57001-
21	07040-12412	. PLUG	1	57001-
22	07005-02416	. GASKET	1	57001-
23	04025-00532	. PIN	1	57001-
24	01010-81025	BOLT	2	57001-
25	01602-21030	WASHER	2	57001-
26	07000-03025	O-RING	1	57001-
27	175-60-26114	TUBE	1	57001-
28	07000-02075	O-RING	1	57001-
29	07114-01409	HOSE	1	57001-
	07115-A1409	HOSE, (FOR SLAG HANDLING)	1	57001-
30	07000-13048	O-RING	2	57001-
	175-60-00252	TUBE ASS'Y	1	57001-
31	175-60-26162	TUBE	1	57001-
32	07042-10108	PLUG	1	57001-
33	07000-13050	O-RING	1	57001-

FIG. H2210-01A0 HYDRAULIC PIPING (TAND TO LIFT CYLINDER)

(1/3)

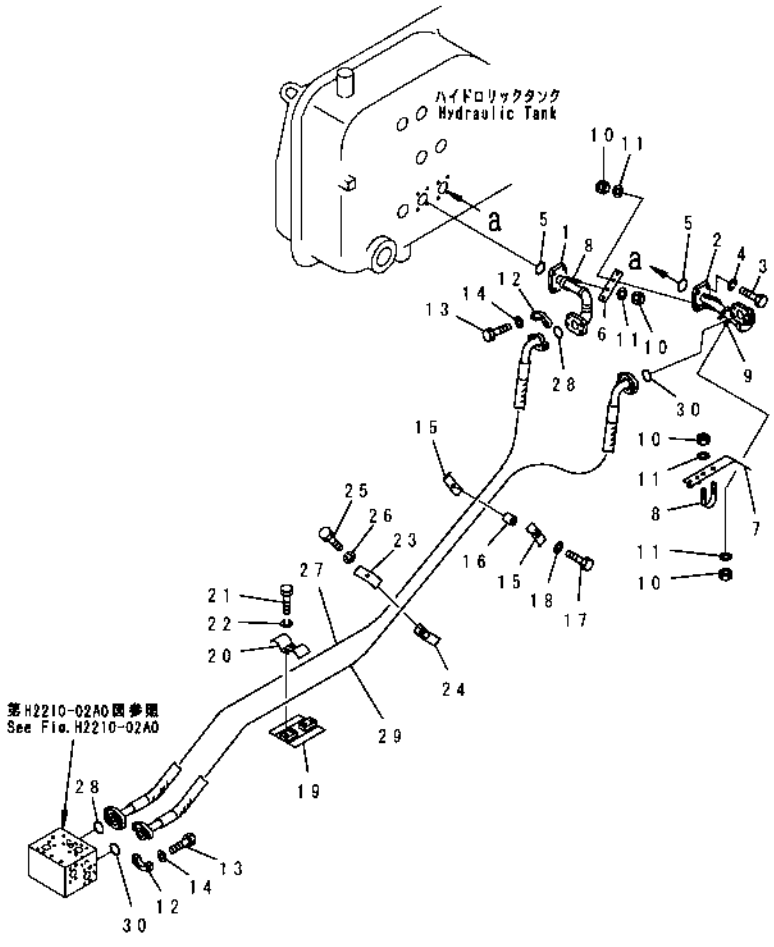

INDEX	PART NO	DESCRIPTION	Q'TY	SERIAL NO.
1	175-61-14451	TUBE	1	57001-
2	175-61-15510	TUBE	1	57001-
3	01010-81250	BOLT	8	57001-
4	01602-21236	WASHER	8	57001-
5	07000-13048	O-RING	2	57001-
6	175-61-17210	PLATE	1	57001-
7	175-61-32340	PLATE	1	57001-
8	07283-24346	CLIP	1	57001-
9	07283-23442	CLIP	3	57001-
10	01599-01011	NUT	8	57001-
11	01643-31032	WASHER	8	57001-
12	07371-31255	FLANGE	8	57001-
13	07372-21035	BOLT	16	57001-
14	01643-51032	WASHER	16	57001-
15	175-61-77230	CLAMP	2	57001-
16	175-61-17240	COLLAR	1	57001-
17	01010-81285	BOLT	1	57001-
18	01643-31232	WASHER	1	57001-
19	175-61-17121	CLAMP	1	57001-
20	175-61-14350	CLAMP	1	57001-
21	01010-81280	BOLT	2	57001-
22	01602-21236	WASHER	2	57001-
23	175-61-14760	CLAMP	1	57001-
24	175-61-14770	CLAMP	1	57001-
25	01010-81045	BOLT	1	57001-
26	01602-21030	WASHER	1	57001-
27	07118-01223	HOSE	1	57001-
28	07000-13038	O-RING	2	57001-
29	07118-01225	HOSE	1	57001-
30	07000-13038	O-RING	2	57001-

FIG.H2210-01A2 HYDRAULIC PIPING (TANK TO LIFT CYLINDER)

(1/3) (FOR SLAG HANDLING)

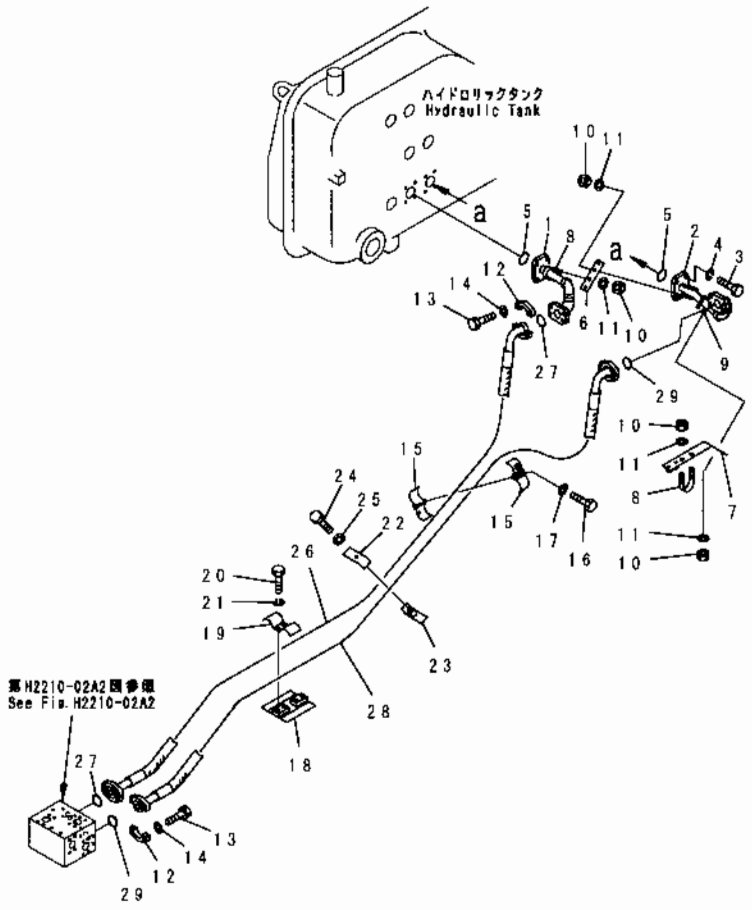

INDEX	PART NO	DESCRIPTION	Q'TY	SERIAL NO
1	175-61-14451	TUBE	1	57001-
2	175-61-15510	TUBE	1	57001-
3	01010-81250	BOLT	8	57001-
4	01602-21236	WASHER	8	57001-
5	07000-13048	O-RING	2	57001-
6	175-61-17210	PLATE	1	57001-
7	175-61-32340	PLATE	1	57001-
8	07283-24346	CLIP	1	57001-
9	07283-23442	CLIP	3	57001-
10	01599-01011	NUT	8	57001-
11	01643-31032	WASHER	8	57001-
12	07371-31255	FLANGE	8	57001-
13	07372-21035	BOLT	16	57001-
14	01643-51032	WASHER	16	57001-
15	175-861-7220	CLAMP, (FOR SLAG HANDLING)	2	57001-
16	01010-81290	BOLT, (FOR SLAG HANDLING)	2	57001-
17	01643-31232	WASHER	2	57001-
18	175-61-17121	CLAMP	1	57001-
19	175-861-2230	CLAMP, (FOR SLAG HANDLING)	1	57001-
20	01010-81285	BOLT	2	57001-
21	01602-21236	WASHER, (FOR SLAG HANDLING)	2	57001-
22	175-849-2310	CLAMP, (FOR SLAG HANDLING)	1	57001-
23	175-849-2290	CLAMP, (FOR SLAG HANDLING)	1	57001-
24	01010-81050	BOLT, (FOR SLAG HANDLING)	1	57001-
25	01602-21030	WASHER	1	57001-
26	07118-A1223	HOSE, (FOR SLAG HANDLING)	1	57001-
27	07000-13038	O-RING	2	57001-
28	07118-A1225	HOSE, (FOR SLAG HANDLING)	1	57001-
29	07000-13038	O-RING	2	57001-

FIG. H2210-02A0 HYDRAULIC PIPING (TANK TO LIFT CYLINDER)

(2/3)

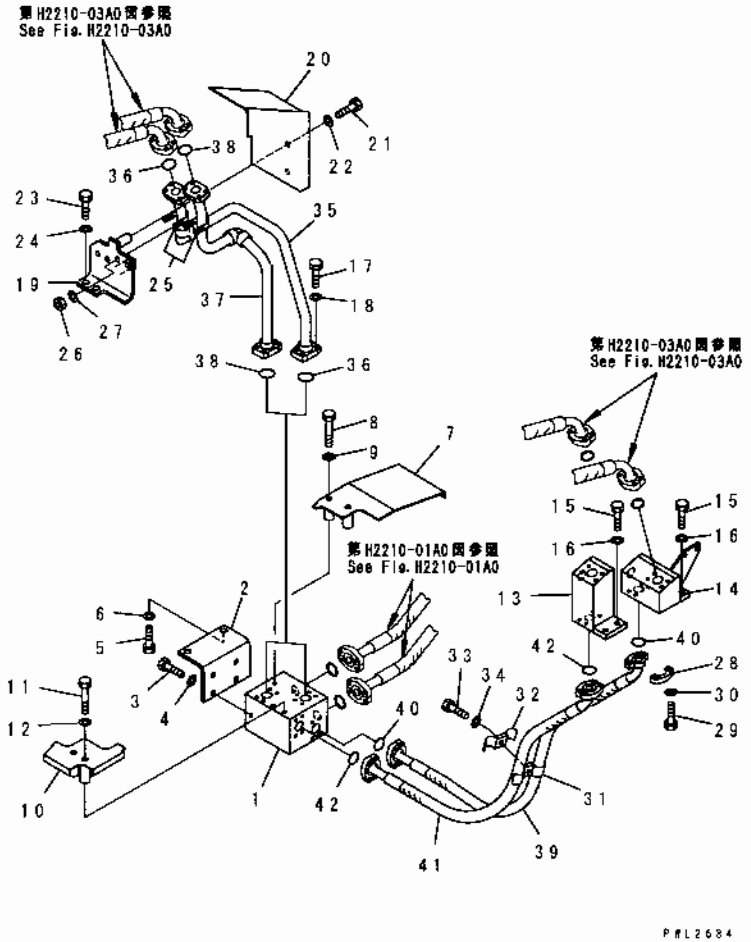

INDEX	PART NO	DESCRIPTION	Q'TY	SERIAL NO
1	175-61-71131	BLOCK	1	57001-
2	175-61-71140	BRACKET	1	57001-
3	01010-81225	BOLT	4	57001-
4	01643-31232	WASHER	4	57001-
5	01010-81635	BOLT	2	57001-
6	01643-31645	WASHER	2	57001-
7	175-61-71250	COVER	1	57001-
8	01010-81280	BOLT	2	57001-
9	01643-31232	WASHER	2	57001-
10	175-61-71240	COVER	1	57001-
11	01010-81290	BOLT	2	57001-
12	01643-31232	WASHER	2	57001-
13	175-61-71120	BLOCK	1	57001-
14	175-61-71280	BLOCK	1	57001-
15	01010-81250	BOLT	4	57001-
16	01643-31232	WASHER	4	57001-
17	07372-21035	BOLT	16	57001-
18	01643-51032	WASHER	16	57001-
19	175-61-71231	BRACKET	1	57001-
20	175-61-71261	COVER	1	57001-
21	01010-81225	BOLT	2	57001-
22	01643-31232	WASHER	2	57001-
23	01010-81245	BOLT	2	57001-
24	01643-31232	WASHER	2	57001-
25	07283-32746	CLIP	2	57001-
26	01597-01009	NUT	4	57001-
27	01643-31032	WASHER	4	57001-
28	07371-31049	FLANGE	8	57001-
29	07372-21035	BOLT	16	57001-
30	01643-51032	WASHER	16	57001-
31	195-78-22320	CLAMP	1	57001-
32	195-78-22330	CLAMP	1	57001-
33	01010-81260	BOLT	1	57001-
34	01602-21236	WASHER	1	57001-
35	175-61-71210	TUBE	1	57001-
36	07000-13035	O-RING	2	57001-
37	175-61-71220	TUBE	1	57001-
38	07000-13035	O-RING	2	57001-
39	07119-01011	HOSE	1	57001-
40	07000-13032	O-RING	2	57001-
41	07119-01012	HOSE	1	57001-
42	07000-13032	O-RING	2	57001-

FIG. H2210-02A1 HYDRAULIC PIPING (TANK TO LIFT CYLINDER)

(JUNGLE SPEC.)

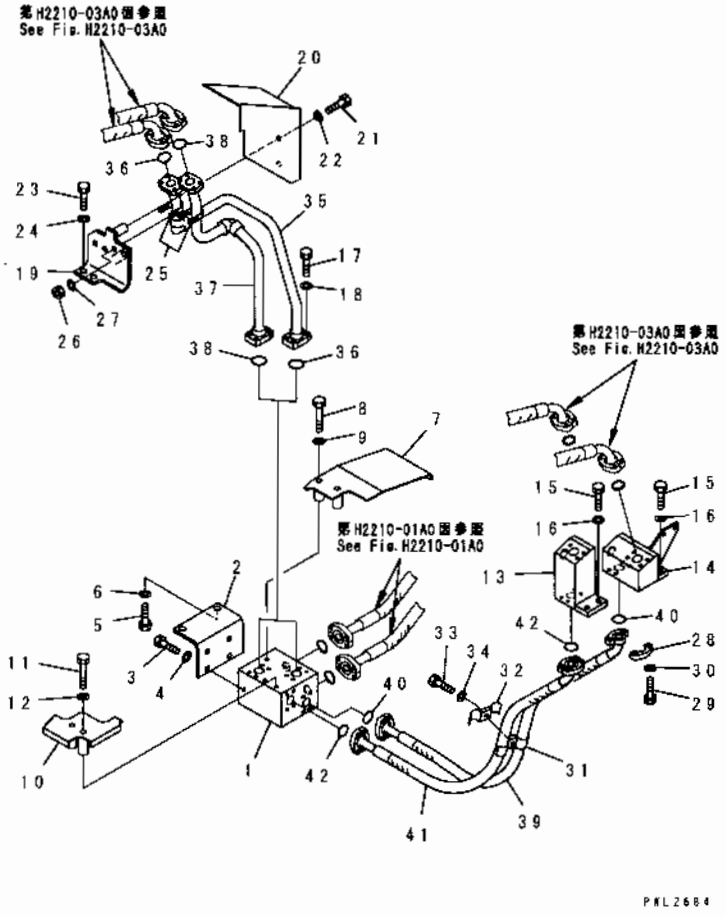

INDEX	PART NO	DESCRIPTION	Q'TY.	SERIAL NO
1	175-61-71131	BLOCK	1	57001-
2	175-61-71140	BRACKET	1	57001-
3	01010-81225	BOLT	4	57001-
4	01643-31232	WASHER	4	57001-
5	01010-81635	BOLT	2	57001-
6	01643-31645	WASHER	2	57001-
7	175-61-71250	COVER	1	57001-
8	01010-81280	BOLT	2	57001-
9	01643-31232	WASHER	2	57001-
10	175-61-71240	COVER	1	57001-
11	01010-81290	BOLT	2	57001-
12	01643-31232	WASHER	2	57001-
13	175-61-71120	BLOCK	1	57001-
14	175-61-71280	BLOCK	1	57001-
15	01010-81250	BOLT	4	57001-
16	01643-31232	WASHER	4	57001-
17	07372-21035	BOLT	16	57001-
18	01643-51032	WASHER	16	57001-
19	175-61-71231	BRACKET	1	57001-
20	175-61-71261	COVER	1	57001-
21	01010-81225	BOLT	2	57001-
22	01643-31232	WASHER	2	57001-
23	01010-81245	BOLT	2	57001-
24	01643-31232	WASHER	2	57001-
25	07283-32746	CLIP	2	57001-
26	01597-01009	NUT	4	57001-
27	01643-31032	WASHER	4	57001-
28	07371-31049	FLANGE	8	57001-
29	07372-21035	BOLT	16	57001-
30	01643-51032	WASHER	16	57001-
31	175-61-14770	CLAMP	1	57001-
32	175-61-14760	CLAMP	1	57001-
33	01010-81050	BOLT	1	57001-
	01010-81255	BOLT, (FOR SLAG HANDLING)	1	57001-
34	01602-21030	WASHER	1	57001-
35	175-61-71210	TUBE	1	57001-
	175-861-2141	HOSE, (FOR SLAG HANDLING)	1	57001-
36	07000-13035	O-RING	2	57001-
37	175-61-71220	TUBE	1	57001-
	175-861-2151	HOSE, (FOR SLAG HANDLING)	1	57001-
38	07000-13035	O-RING	2	57001-
39	07119-A1011	HOSE	1	57001-

FIG. H2210-02A1 HYDRAULIC PIPING (TANK TO LIFT CYLINDER)

(JUNGLE SPEC.)

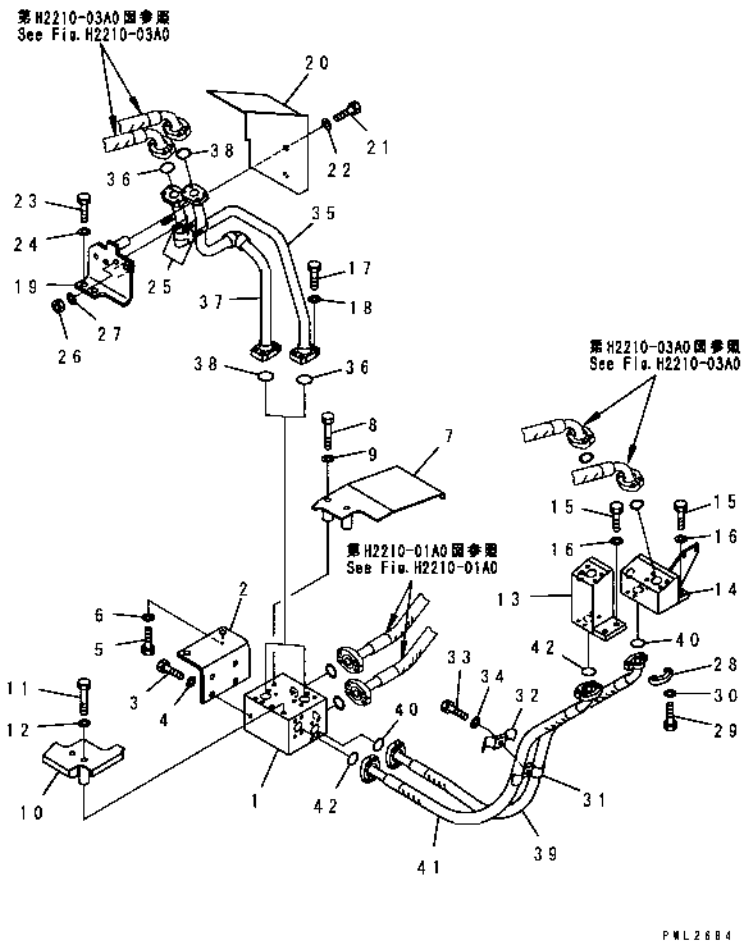

INDEX	PART NO	DESCRIPTION	Q'TY	SERIAL NO
40	07000-13032	O-RING	2	57001-
41	07119-A1012	HOSE	1	57001-
	07115-A1010	HOSE, (FOR SLAG HANDLING)	2	57001-
42	07000-13032	O-RING	2	57001-

FIG. H2210-02A2 HYDRAULIC PIPING (TANK TO LIFT CYLINDER)

(2/3) (FOR SLAG HANDLING)

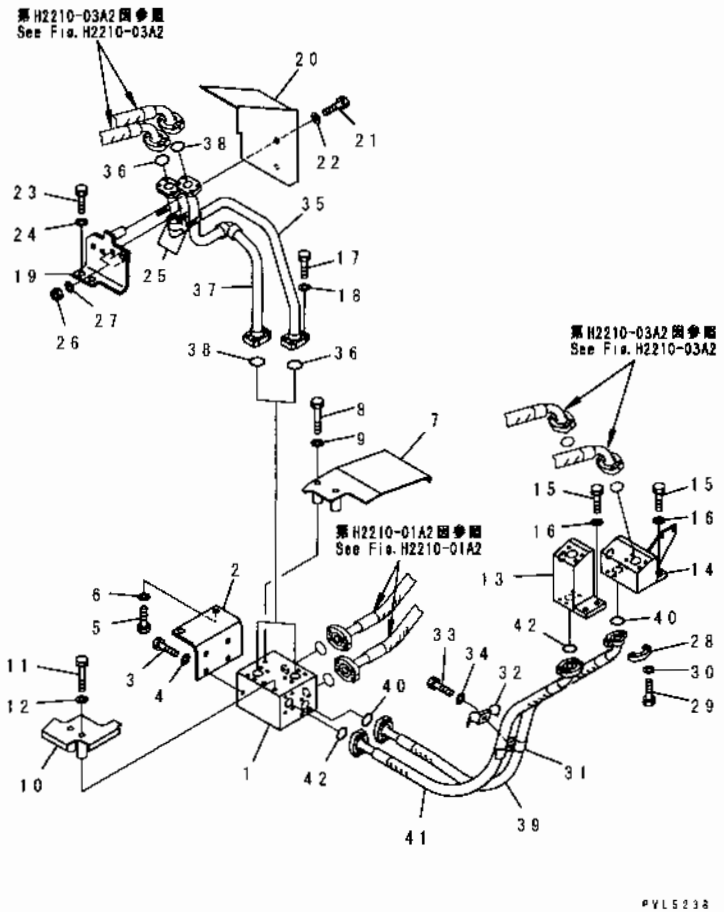

INDEX	PART NO	DESCRIPTION	Q'TY	SERIAL NO
1	175-61-71131	BLOCK	1	57001-
2	175-61-71140	BRACKET	1	57001-
3	01010-81225	BOLT	4	57001-
4	01643-31232	WASHER	4	57001-
5	01010-81635	BOLT	2	57001-
6	01643-31645	WASHER	2	57001-
7	175-61-71250	COVER	1	57001-
8	01010-81280	BOLT	2	57001-
9	01643-31232	WASHER	2	57001-
10	175-61-71240	COVER	1	57001-
11	01010-81290	BOLT	2	57001-
12	01643-31232	WASHER	2	57001-
13	175-61-71120	BLOCK	1	57001-
14	175-61-71280	BLOCK	1	57001-
15	01010-81250	BOLT	4	57001-
16	01643-31232	WASHER	4	57001-
17	07372-21035	BOLT	16	57001-
18	01643-51032	WASHER	16	57001-
19	175-61-71231	BRACKET	1	57001-
20	175-61-71261	COVER	1	57001-
21	01010-81225	BOLT	2	57001-
22	01643-31232	WASHER	2	57001-
23	01010-81245	BOLT	2	57001-
24	01643-31232	WASHER	2	57001-
25	07283-32746	CLIP	2	57001-
26	01597-01009	NUT	4	57001-
27	01643-31032	WASHER	4	57001-
28	07371-31049	FLANGE	8	57001-
29	07372-21035	BOLT	16	57001-
30	01643-51032	WASHER	16	57001-
31	175-878-2160	CLAMP	1	57001-
32	175-878-2131	CLAMP	1	57001-
33	01010-81265	BOLT, (FOR SLAG HANDLING)	1	57001-
34	01602-21236	WASHER	1	57001-
35	175-61-71210	TUBE	1	57001-
36	07000-13035	O-RING	2	57001-
37	175-61-71220	TUBE	1	57001-
38	07000-13035	O-RING	2	57001-
39	07119-A1011	HOSE	1	57001-
40	07000-13032	O-RING	2	57001-
41	07119-A1012	HOSE	1	57001-
42	07000-13032	O-RING	2	57001-

FIG. H2210-03A0 HYDRAULIC PIPING (TANK TO LIFT CYLINDER)

(3/3)

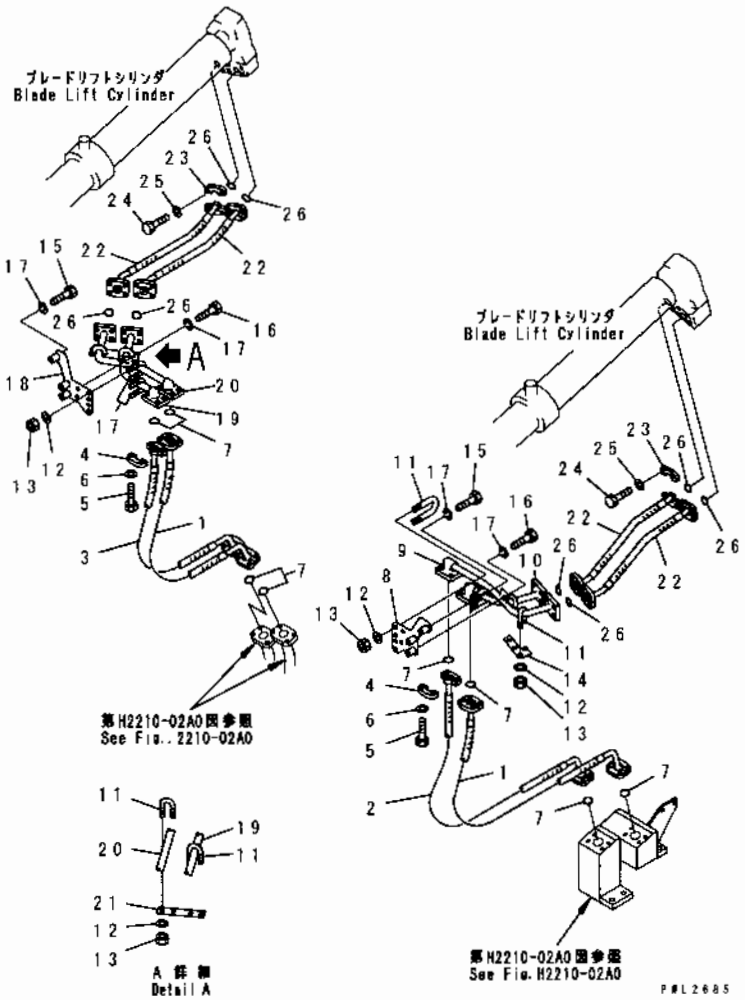

INDEX	PART NO	DESCRIPTION	Q'TY	SERIAL NO
1	07114-01012	HOSE	2	57001-
2	07114-01011	HOSE	1	57001-
3	07114-01013	HOSE	1	57001-
4	07371-31049	FLANGE	16	57001-
5	07372-21035	BOLT	32	57001-
6	01643-51032	WASHER	32	57001-
7	07000-13032	O-RING	8	57001-
8	175-61-18330	PLATE, L.H.	1	57001-
9	175-61-18360	TUBE	1	57001-
10	175-61-18370	TUBE	1	57001-
11	07283-23450	CLIP	4	57001-
12	01643-31032	WASHER	8	57001-
13	01599-01011	NUT	8	57001-
14	175-61-18390	PLATE, L.H.	1	57001-
15	01010-81260	BOLT	2	57001-
16	01010-81265	BOLT	1	57001-
17	01602-21236	WASHER	3	57001-
18	175-61-18380	PLATE, R.H.	1	57001-
19	175-61-18340	TUBE	1	57001-
20	175-61-18350	TUBE	1	57001-
21	175-61-18290	PLATE, R.H.	1	57001-
22	07114-01006	HOSE	4	57001-
23	07371-31049	FLANGE	16	57001-
24	07372-21035	BOLT	32	57001-
25	01643-51032	WASHER	32	57001-
26	07000-13032	O-RING	8	57001-

FIG. H2210-03A2 HYDRAULIC PIPING (TANK TO LIFT CYLINDER)
(3/3) (FOR SLAG HANDLING)

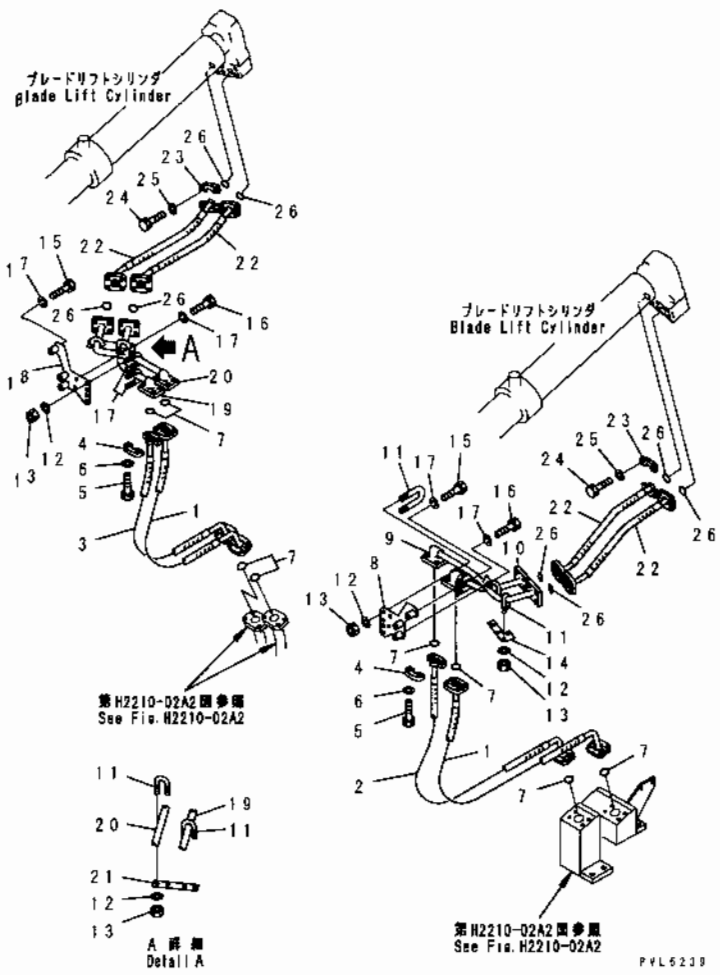

INDEX	PART NO	DESCRIPTION	Q'TY	SERIAL NO
1	07115-A1012	HOSE	2	57001-
2	07115-A1011	HOSE	1	57001-
3	07115-A1013	HOSE	1	57001-
4	07371-31049	FLANGE	16	57001-
5	07372-21035	BOLT	32	57001-
6	01643-51032	WASHER	32	57001-
7	07000-13032	O-RING	8	57001-
8	175-61-18330	PLATE, L.H.	1	57001-
9	175-61-18360	TUBE	1	57001-
10	175-61-18370	TUBE	1	57001-
11	07283-23450	CLIP	4	57001-
12	01643-31032	WASHER	8	57001-
13	01599-01011	NUT	8	57001-
14	175-61-18390	PLATE, L.H.	1	57001-
15	01010-81260	BOLT	2	57001-
16	01010-81265	BOLT	1	57001-
17	01602-21236	WASHER	3	57001-
18	175-61-18380	PLATE, R.H.	1	57001-
19	175-61-18340	TUBE	1	57001-
20	175-61-18350	TUBE	1	57001-
21	175-61-18290	PLATE, R.H.	1	57001-
22	07115-A1006	HOSE	4	57001-
23	07371-31049	FLANGE	16	57001-
24	07372-21035	BOLT	32	57001-
25	01643-51032	WASHER	32	57001-
26	07000-13032	O-RING	8	57001-

FIG. H2220-01A0 TILT PIPING (TANK TO TILT CYLINDER)

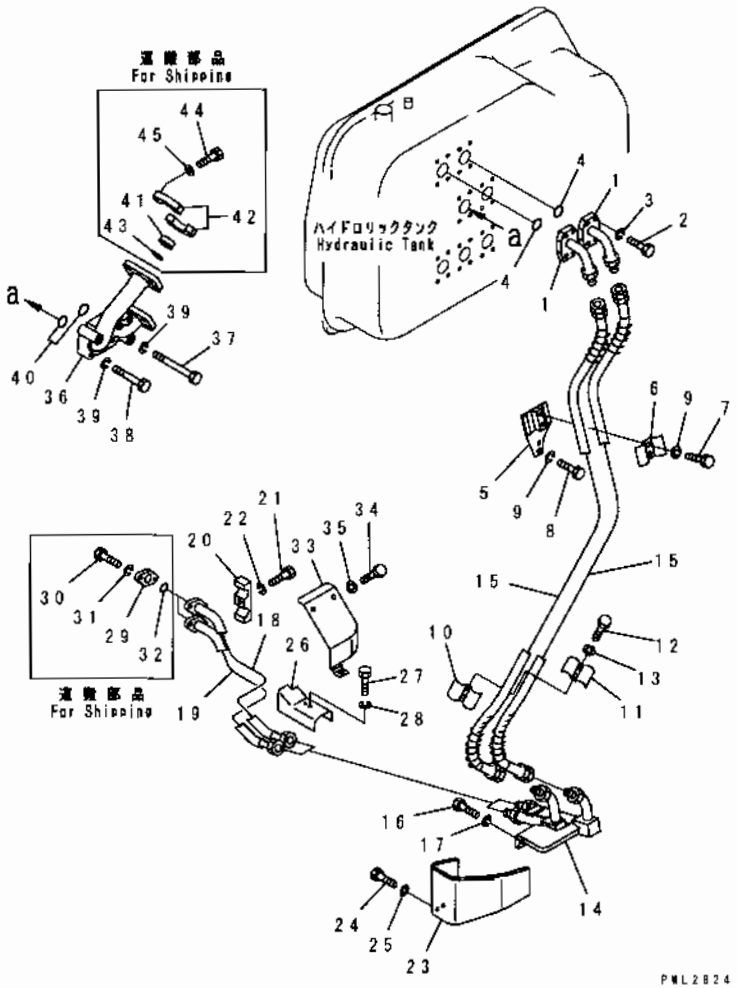

INDEX	PART NO	DESCRIPTION	Q TY	SERIAL NO
1	175-914-4111	TUBE	2	57001-
2	01010-81250	BOLT	8	57001-
3	01602-21236	WASHER, SPRING	8	57001-
4	07000-13048	O-RING	2	57001-
5	175-61-15470	BRACKET	1	57001-
6	175-71-31370	CLAMP	1	57001-
7	01010-81230	BOLT	2	57001-
8	01010-81255	BOLT	2	57001-
9	01602-21236	WASHER, SPRING	4	57001-
10	175-914-4260	CLAMP	1	57001-
11	175-71-31370	CLAMP	1	57001-
12	01010-81250	BOLT	2	57001-
13	01602-21236	WASHER, SPRING	2	57001-
14	175-61-18112	TUBE	1	57001-
15	07109-20517	HOSE	2	57001-
	07113-A0517	HOSE, (FOR SLAG HANDLING)	2	57001-
16	01010-81230	BOLT	2	57001-
17	01602-21236	WASHER, SPRING	2	57001-
18	175-61-34630	TUBE	1	57001-
19	175-61-34640	TUBE	1	57001-
20	175-61-18410	CLAMP	1	57001-
21	01010-81260	BOLT	1	57001-
22	01602-21236	WASHER, SPRING	1	57001-
23	175-61-18162	BRACKET	1	57001-
24	01010-81230	BOLT	2	57001-
25	01643-31232	WASHER	2	57001-
26	175-61-18170	COVER	1	57001-
27	01010-81230	BOLT	2	57001-
28	01602-21236	WASHER, SPRING	2	57001-
29	175-61-18180	FLANGE	2	57001-
30	01010-81240	BOLT	4	57001-
31	01602-21236	WASHER, SPRING	4	57001-
32	07000-13022	O-RING	2	57001-
33	175-61-18221	COVER	1	57001-
34	01010-81430	BOLT	3	57001-
35	01643-31445	WASHER	3	57001-
36	175-78-24411	ELBOW	1	57001-
37	01011-81205	BOLT	4	57001-
38	01010-81270	BOLT	4	57001-
39	01602-21236	WASHER, SPRING	7	57001-
40	07000-13048	O-RING	2	57001-
41	07378-11400	HEAD	2	57001-

FIG NO. : H2220-01A0

INDEX	PART NO	DESCRIPTION	Q'TY	SERIAL NO.
42	07371-31465	FLANGE, SPLIT.....	4	57001-
43	07000-13048	O-RING.....	2	57001-
44	07372-21240	BOLT.....	8	57001-
45	01643-31232	WASHER.....	8	57001-

FIG. H2250-01A0 RIPPER CONTROL LEVER (FOR VARIABLE TYPE RIPPER)

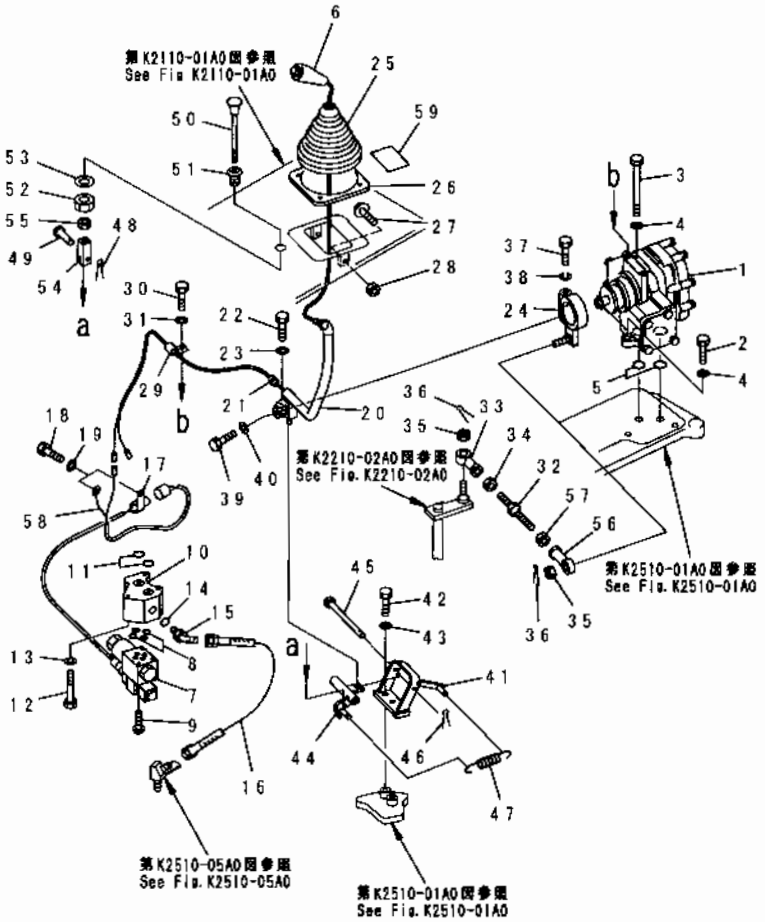

INDEX	PART NO	DESCRIPTION	Q'TY	SERIAL NO
1	(702-12-14001)	SERVO VALVE ASS'Y	1	57001-
2	01010-81040	BOLT	2	57001-
3	01011-81040	BOLT	1	57001-
4	01643-31032	WASHER	3	57001-
5	07000-03022	O-RING	2	57001-
6	175-78-69550	KNOB, SWITCH	1	57001-
7	175-78-69580	VALVE, SOLENOID	1	57001-
8	07000-11009	O-RING	4	57001-
9	01220-40545	SCREW	4	57001-
10	175-78-69450	BLOCK	1	57001-
11	07000-03022	O-RING	2	57001-
12	01010-81090	BOLT	3	57001-
13	01602-21030	WASHER, SPRING	3	57001-
14	07002-02034	O-RING	1	57001-
15	07235-50315	ELBOW	1	57001-
16	07102-20304	HOSE	1	57001-
17	195-06-41820	CLIP	1	57001-
18	01010-81020	BOLT	2	57001-
19	01643-31032	WASHER	2	57001-
20	175-78-69460	LEVER	1	57001-
21	111-06-11250	GROMMET	1	57001-
22	01010-50830	BOLT	1	57001-
23	01643-30823	WASHER	1	57001-
24	195-78-42360	LEVER	1	57001-
25	21T-43-13190	BOOT	1	57001-
26	175-78-69560	COVER	1	57001-
27	195-43-41360	BAMPER	2	57001-
28	01583-11006	NUT	2	57001-
29	08036-10810	CLIP	1	57001-
30	01010-80812	BOLT	1	57001-
31	01643-30823	WASHER	1	57001-
32	04248-31211	ROD	1	57001-
33	04250-91265	END, ROD	1	57001-
34	01508-41207	NUT	1	57001-
35	01593-31210	NUT	2	57001-
36	04050-13020	PIN, COTTER	2	57001-
37	01010-80840	BOLT	1	57001-
38	01602-20825	WASHER, SPRING	1	57001-
39	01010-50835	BOLT	1	57001-
40	01643-30823	WASHER	1	57001-
41	175-78-69422	BRACKET	1	57001-
42	01010-81025	BOLT	2	57001-

FIG NO. : H2250-01A0

INDEX	PART NO	DESCRIPTION	Q'TY	SERIAL NO
43	01643-31032	WASHER	2	57001-
44	175-78-69431	LEVER	1	57001-
45	175-78-69510	PIN	1	57001-
46	04050-12015	PIN, COTTER	1	57001-
47	195-61-45290	SPRING	1	57001-
48	04050-12015	PIN. COTTER	1	57001-
49	04205-10822	PIN	1	57001-
50	195-61-45210	KNOB	1	57001-
51	175-61-31750	BOSS	1	57001-
52	195-61-45230	NUT	1	57001-
53	01640-22232	WASHER	1	57001-
54	04211-20844	YOKE	1	57001-
55	01580-10806	NUT	1	57001-
56	04250-81265	END, ROD	1	57001-
57	01582-11210	NUT	1	57001-
58	175-78-69570	WIRE	1	57001-
59	175-98-41270	PLATE, OPERATING, RIPPER	1	57001-

FIG. H2250-01A1 RIPPER CONTROL LEVER (FOR RIGID TYPE RIPPER)

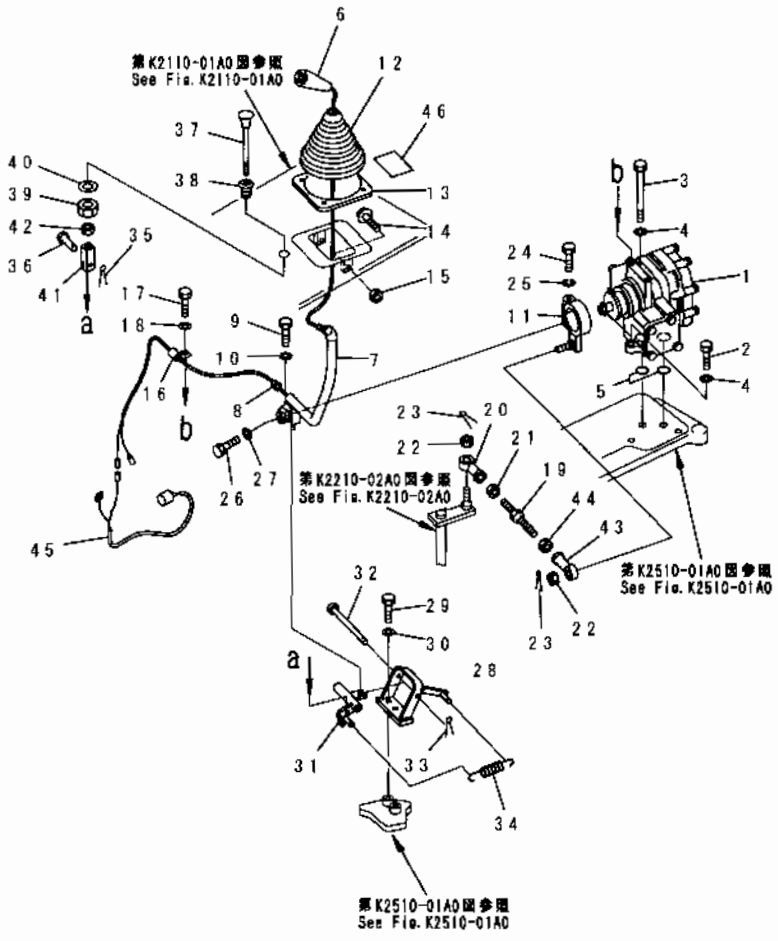

INDEX	PART NO	DESCRIPTION	Q'TY	SERIAL NO
1	(702-12-14001)	SERVO VALVE ASS'Y	1	57001-
2	01010-81040	BOLT	2	57001-
3	01011-81040	BOLT	1	57001-
4	01643-31032	WASHER	3	57001-
5	07000-03022	O-RING	2	57001-
6	175-78-69550	KNOB, SWITCH	1	57001-
7	175-78-69460	LEVER	1	57001-
8	111-06-11250	GROMMET	1	57001-
9	01010-80830	BOLT	1	57001-
10	01643-30823	WASHER	1	57001-
11	195-78-42360	LEVER	1	57001-
12	21T-43-13190	BOOT	1	57001-
13	175-78-69560	COVER	1	57001-
14	195-43-41360	BAMPER	2	57001-
15	01583-11006	NUT	2	57001-
16	08036-10810	CLIP	1	57001-
17	01010-80812	BOLT	1	57001-
18	01643-30823	WASHER	1	57001-
19	04248-31211	ROD	1	57001-
20	04250-91265	END, ROD	1	57001-
21	01508-41207	NUT	1	57001-
22	01593-31210	NUT	2	57001-
23	04050-13020	PIN, COTTER	2	57001-
24	01010-80840	BOLT	1	57001-
25	01602-20825	WASHER, SPRING	1	57001-
26	01010-80835	BOLT	1	57001-
27	01643-30823	WASHER	1	57001-
28	175-78-69422	BRACKET	1	57001-
29	01010-81025	BOLT	2	57001-
30	01643-31032	WASHER	2	57001-
31	175-78-69431	LEVER	1	57001-
32	175-78-69510	PIN	1	57001-
33	04050-12015	PIN, COTTER	1	57001-
34	195-61-45290	SPRING	1	57001-
35	04050-12015	PIN, COTTER	1	57001-
36	04205-10822	PIN	1	57001-
37	195-61-45210	KNOB	1	57001-
38	175-61-31750	BOSS	1	57001-
39	195-61-45230	NUT	1	57001-
40	01640-22232	WASHER	1	57001-
41	04211-20844	YOKE	1	57001-
42	01580-10806	NUT	1	57001-

FIG NO. : H2250-01A1

INDEX	PART NO	DESCRIPTION	Q'TY	SERIAL NO
43	04250-81265	END, ROD	1	57001-
44	01582-11210	NUT	1	57001-
45	175-78-69570	WIRE	1	57001-
46	09671-00001	PLATE, OPERATING, RIPPER	1	57001-

MAIN FRAME AND RELATED PARTS

FIG NO. : J2110-01A0

FIG. J2110-01A0 STEERING CASE AND MAIN FRAME

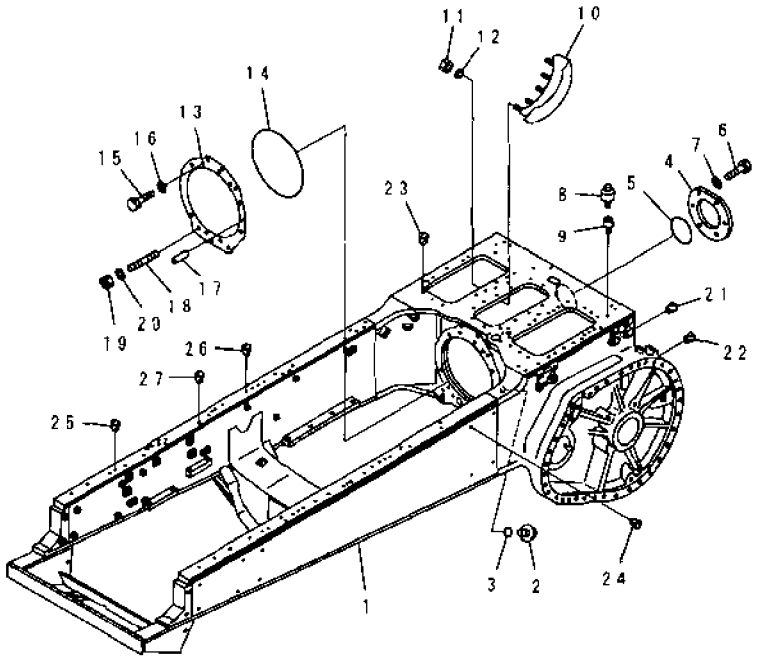

PBL2693

INDEX	PART NO.	DESCRIPTION	Q'TY	SERIAL NO.
1	175-21-77102	FRAME, MAIN	1	57001-
2	07044-13620	PLUG	1	57001-
3	07002-03634	O-RING	1	57001-
	07002-33634	O-RING, (FOR SLAG HANDLING)	1	57001-
4	175-21-32170	COVER	1	57001-
5	07000-05195	O-RING	1	57001-
6	01010-82040	BOLT	6	57001-
7	01643-32060	WASHER	6	57001-
8	07030-00252	BREATHER	3	57001-
9	170-21-11190	NIPPLE	3	57001-
10	175-21-11181	COVER	1	57001-
11	01580-11210	NUT	3	57001-
12	01602-21236	WASHER, SPRING	3	57001-
13	175-21-32185	GASKET	1	57001-
14	07000-05470	O-RING	1	57001-
15	01010-52050	BOLT	6	57001-
16	01643-32060	WASHER	6	57001-
17	04020-01842	PIN	1	57001-
18	01120-32050	STUD	5	57001-
19	01582-02016	NUT	5	57001-
20	01643-32060	WASHER	5	57001-
21	07049-02025	PLUG, (WITH RIPPER OR DRAWBAR)	2	57001-
	154-21-11760	BOLT, (FOR SLAG HANDLING)	2	57001-
22	07049-03949	PLUG, (WITH RIPPER OR DRAWBAR)	22	57001-
	175-21-32910	BOLT, (FOR SLAG HANDLING W/DRAWBAR)	22	57001-
23	07049-01620	PLUG	3	57001-
24	07049-03038	PLUG	8	57001-
25	07049-01418	PLUG	2	57001-
26	07049-02430	PLUG	8	57001-
27	07049-01215	PLUG	11	57001-

FIG. J2110-01A1 STEERING CASE AND MAIN FRAME (JUNGLE SPEC.)

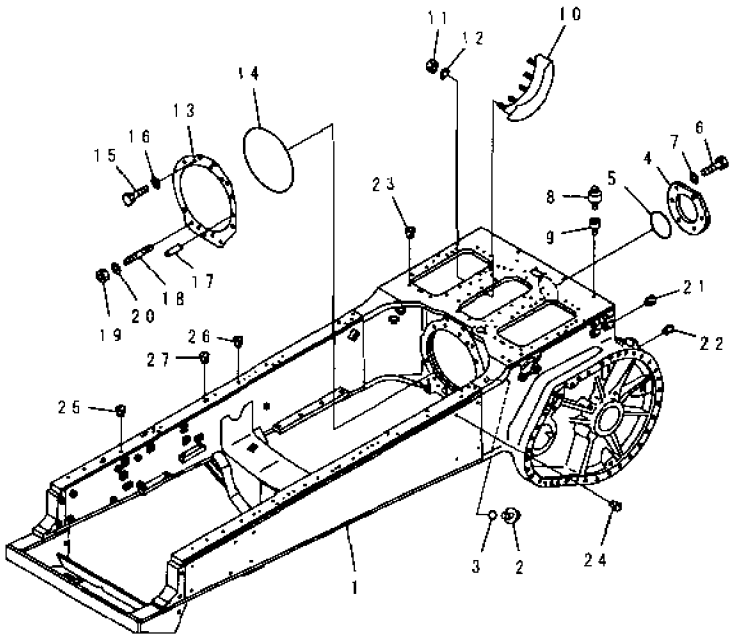

INDEX	PART NO	DESCRIPTION	Q'TY	SERIAL NO.
1	175-21-77400	FRAME, MAIN	1	57001-
2	07044-13620	PLUG	1	57001-
3	07002-03634	O-RING	1	57001-
	07002-33634	O-RING, (FOR SLAG HANDLING)	1	57001-
4	175-21-32170	COVER	1	57001-
5	07000-05195	O-RING	1	57001-
6	01010-82040	BOLT	6	57001-
7	01643-32060	WASHER	6	57001-
8	07030-00252	BREATHER	3	57001-
9	170-21-11190	NIPPLE	3	57001-
10	175-21-11181	COVER	1	57001-
11	01580-11210	NUT	3	57001-
12	01602-21236	WASHER, SPRING	3	57001-
13	175-21-32185	GASKET	1	57001-
14	07000-05470	O-RING	1	57001-
15	01010-52050	BOLT	6	57001-
16	01643-32060	WASHER	6	57001-
17	04020-01842	PIN	1	57001-
18	01120-32050	STUD	5	57001-
19	01582-02016	NUT	5	57001-
20	01643-32060	WASHER	5	57001-
21	07049-02025	PLUG, (WITH RIPPER OR DRAWBAR)	2	57001-
	154-21-11760	BOLT, (FOR SLAG HANDLING)	2	57001-
22	07049-03949	PLUG, (WITH RIPPER OR DRAWBAR)	22	57001-
	175-21-32910	BOLT, (FOR SLAG HANDLING W/DRAWBAR)	22	57001-
23	07049-01620	PLUG	3	57001-
24	07049-03038	PLUG	8	57001-
25	07049-01418	PLUG	2	57001-
26	07049-02430	PLUG	8	57001-
27	07049-01215	PLUG	11	57001-

FIG. J2110-01A2 STEERING CASE AND MAIN FRAME (FOR SAUDI ARABIA)

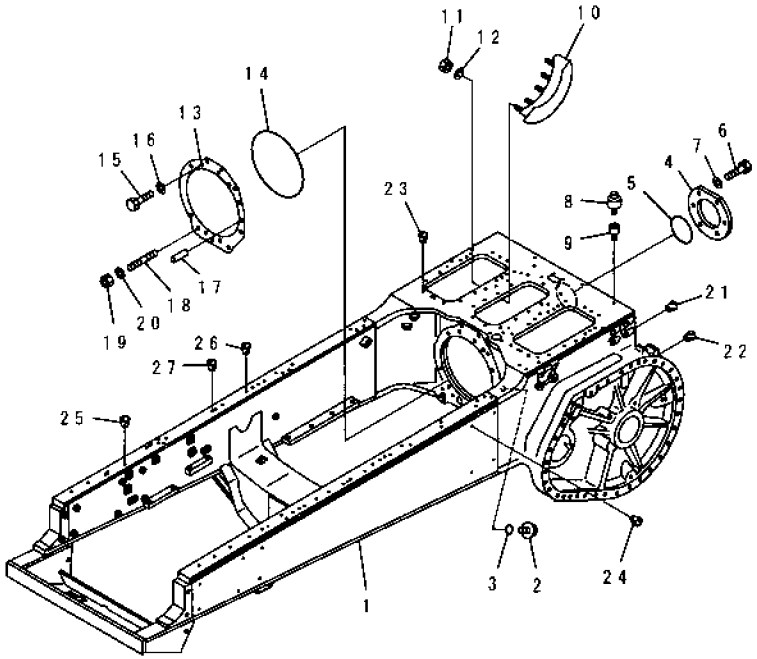

INDEX	PART NO	DESCRIPTION	Q'TY	SERIAL NO
1	175-21-77300	FRAME, MAIN	1	57001-
2	07044-13620	PLUG	1	57001-
3	07002-03634	O-RING	1	57001-
	07002-33634	O-RING, (FOR SLAG HANDLING)	1	57001-
4	175-21-32170	COVER	1	57001-
5	07000-05195	O-RING	1	57001-
6	01010-82040	BOLT	6	57001-
7	01643-32060	WASHER	6	57001-
8	07030-00252	BREATHER	3	57001-
9	170-21-11190	NIPPLE	3	57001-
10	175-21-11181	COVER	1	57001-
11	01580-11210	NUT	3	57001-
12	01602-21236	WASHER, SPRING	3	57001-
13	175-21-32185	GASKET	1	57001-
14	07000-05470	O-RING	1	57001-
15	01010-52050	BOLT	6	57001-
16	01643-32060	WASHER	6	57001-
17	04020-01842	PIN	1	57001-
18	01120-32050	STUD	5	57001-
19	01582-02016	NUT	5	57001-
20	01643-32060	WASHER	5	57001-
21	07049-02025	PLUG, (WITH RIPPER OR DRAWBAR)	2	57001-
	154-21-11760	BOLT, (FOR SLAG HANDLING)	2	57001-
22	07049-03949	PLUG, (WITH RIPPER OR DRAWBAR)	22	57001-
	175-21-32910	BOLT, (FOR SLAG HANDLING W/DRAWBAR)	22	57001-
23	07049-01620	PLUG	3	57001-
24	07049-03038	PLUG	8	57001-
25	07049-01418	PLUG	2	57001-
26	07049-02430	PLUG	8	57001-
27	07049-01215	PLUG	11	57001-

FIG. J2112-01A0 OIL FILLER AND LEVEL GAUGE

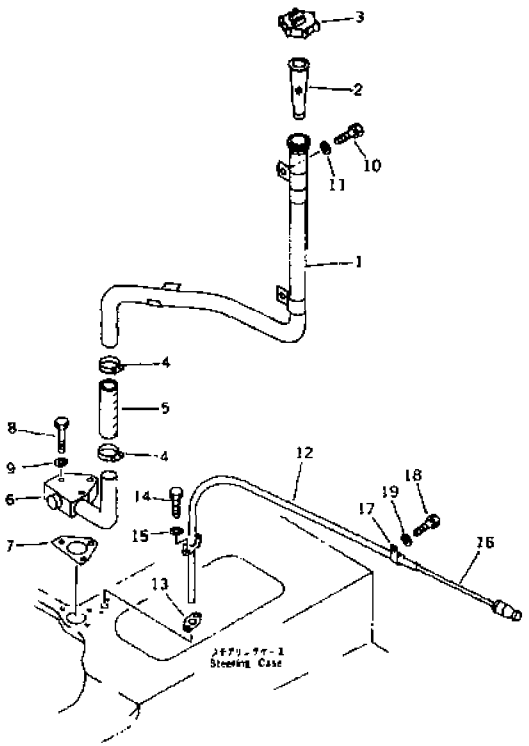

INDEX	PART NO.	DESCRIPTION	Q'TY	SERIAL NO
1	175-21-47160	TUBE	1	57001-
2	07056-10045	STRAINER	1	57001-
3	07051-01000	CAP	1	57001-
	07092-00000	CAP, (FOR VANDALISM PROTECTION)	1	57001-
4	07289-00055	CLAMP, HOSE	2	57001-
5	07260-24111	HOSE	1	57001-
6	175-21-47170	TUBE	1	57001-
7	175-21-47181	GASKET	1	57001-
8	01010-81275	BOLT	3	57001-
9	01643-31232	WASHER	3	57001-
10	01010-81225	BOLT	1	57001-
11	01643-31232	WASHER	3	57001-
12	175-21-47120	TUBE	1	57001-
13	175-21-47141	GASKET	1	57001-
14	01010-81230	BOLT	2	57001-
15	01643-31232	WASHER	2	57001-
16	175-21-47130	GAUGE, OIL LEVEL	1	57001-
17	08036-21414	CLIP	1	57001-
18	01010-81220	BOLT	1	57001-
19	01643-31232	WASHER	2	57001-

FIG. J2700-01A0 EQUALIZER BAR

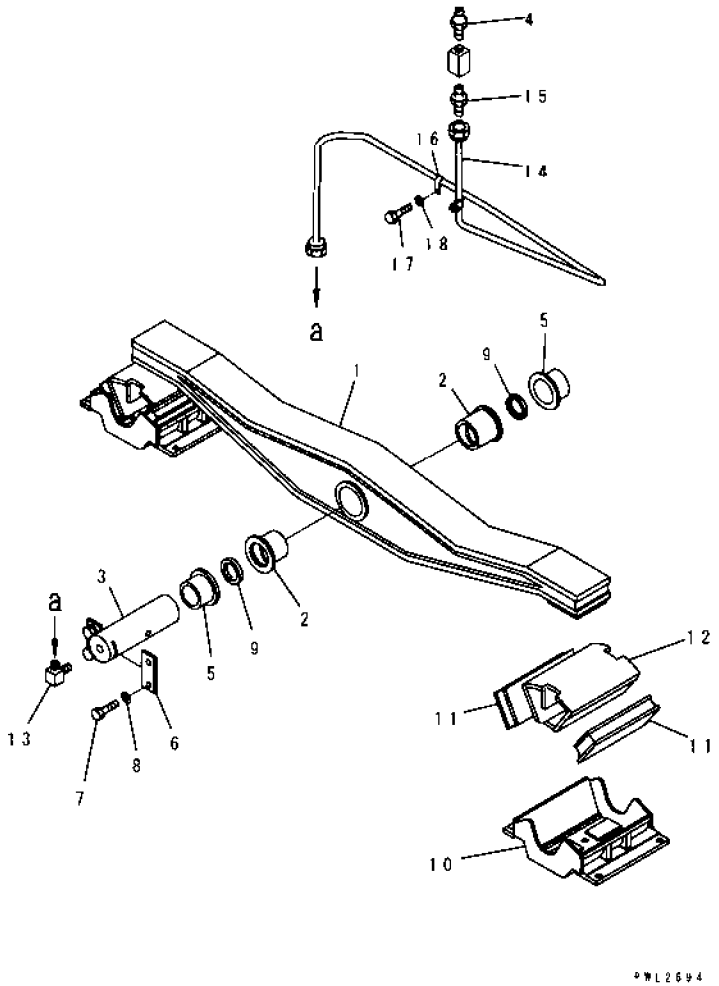

INDEX	PART NO	DESCRIPTION	Q'TY	SERIAL NO
	175-50-00025	EQUALIZER BAR ASS'Y	1	57001-
1	☆	.BAR, EQUALIZER	1	57001-
2	177-50-11160	.BUSHING	2	57001-
3	175-50-21134	PIN	1	57001-
4	07020-00000	FITTING, GREASE	1	57001-
5	175-50-31160	BUSHING	2	57001-
6	04082-00616	LOCK, LOCK	2	57001-
7	01010-81640	BOLT	4	57001-
8	01643-31645	WASHER	4	57001-
9	177-50-11170	SEAL, DUST	2	57001-
10	175-50-32111	SUPPORT	2	57001-
11	170-50-12110	PAD	4	57001-
12	175-50-22131	SEAT, EQUALIZER BAR	2	57001-
13	176-43-41350	ELBOW	1	57001-
14	175-50-71111	TUBE	1	57001-
15	07213-50710	CONNECTOR	1	57001-
16	566-16-11970	CLIP	1	57001-
17	01010-81016	BOLT	1	57001-
18	01643-31032	WASHER	1	57001-

FIG. J2700-01A1 EQUALIZER BAR (FOR HARD ROCK) (FOR SAUDI ARABIA)

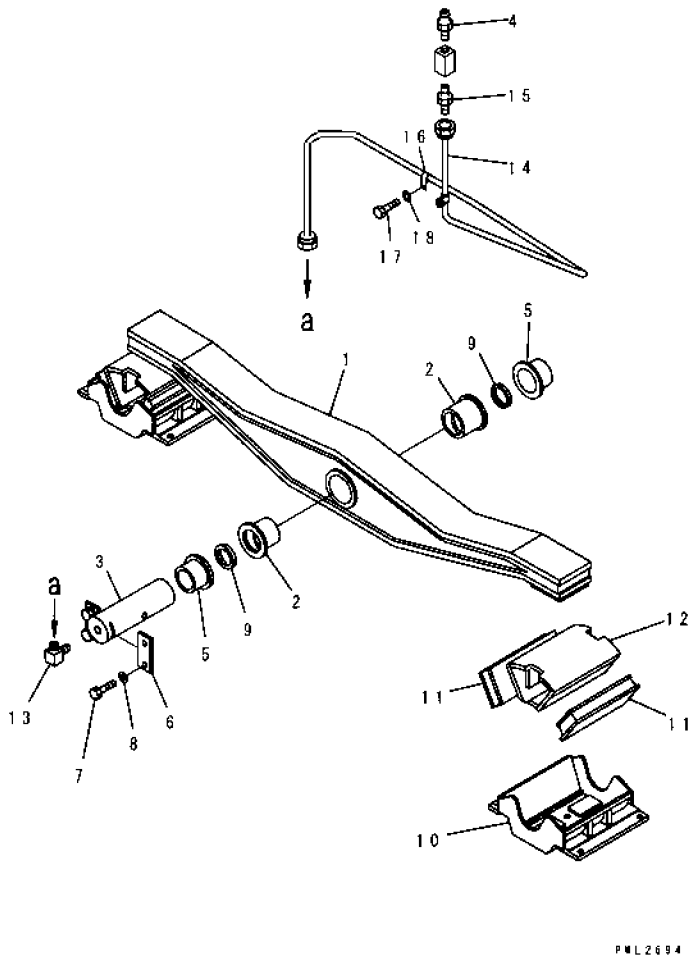

INDEX	PART NO	DESCRIPTION	Q'TY	SERIAL NO
1	175-50-31113	BAR, EQUALIZER	1	57001-
2	177-50-11160	BUSHING	2	57001-
3	175-50-21134	PIN	1	57001-
4	07020-00000	FITTING, GREASE	1	57001-
5	175-50-31160	BUSHING	2	57001-
6	04082-00616	LOCK, LOCK	2	57001-
7	01010-81640	BOLT	4	57001-
8	01643-31645	WASHER	4	57001-
9	177-50-11170	SEAL, DUST	2	57001-
10	175-50-32111	SUPPORT	2	57001-
11	170-50-12110	PAD	4	57001-
12	175-50-22131	SEAT, EQUALIZER BAR	2	57001-
13	176-43-41350	ELBOW	1	57001-
14	175-50-71111	TUBE	1	57001-
15	07213-50710	CONNECTOR	1	57001-
16	566-16-11970	CLIP	1	57001-
17	01010-81016	BOLT	1	57001-
18	01643-31032	WASHER	1	57001-

OPERATOR'S COMPARTMENT AND CONTROL SYSTEM

FIG NO. : K0110-01A0

FIG. K0110-01A0 OPERATOR'S SEAT (TURN AND RECLINING TYPE)
(LEATHER SEAT)

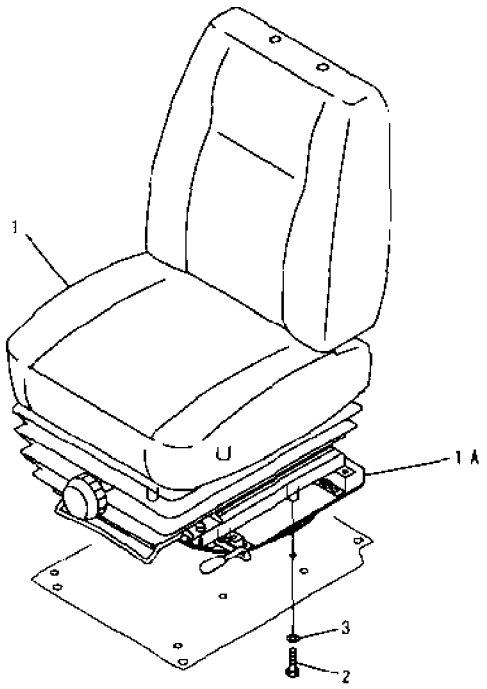

PBB6067

INDEX	PART NO.	DESCRIPTION	Q'TY	SERIAL NO
	(17A-57-22112)	SEAT ASS'Y, LEATHER SEAT	1	57001-
1	(17A-57-22122)	. SEAT ASS'Y, LEATHER	1	57001-
1A	(17A-57-21132)	. TURN TABLE ASS'Y	1	57001-
2	01010-81030	BOLT	4	57001-
3	01643-31032	WASHER	4	57001-

FIG. K0110-02A0 OPERATOR'S SEAT ASSEMBLY (TURN AND RECLINING TYPE) (LEATHER SEAT)

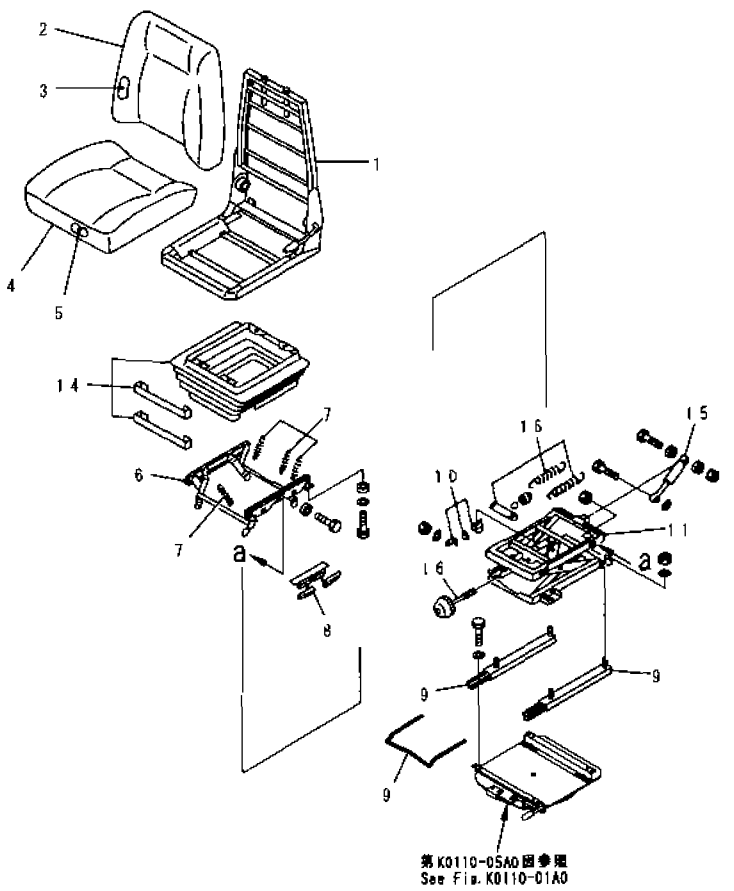

INDEX	PART NO	DESCRIPTION	Q'TY.	SERIAL NO
	17A-57-22112	SEAT ASS'Y	1	57001-
	17A-57-22122	.SEAT ASS'Y	1	57001-
1	AS163576	..FRAME ASS'Y	1	57001-
2	AS169769	..BACK COVER ASS'Y KIT	1	57001-
3	AS160167	..BACK FOAM KIT	1	57001-
4	AS159768	..SEAT COVER ASS'Y KIT	1	57001-
5	AS157154	..SEAT FOAM KIT	1	57001-
6	AS156714	..HEIGHT RISER KIT	1	57001-
7	AS156713	..HI RISER SPRING KIT	1	57001-
8	AS157157	..HI RISER LATCH KIT	1	57001-
9	AS157240	..SLIDE RAIL MOUNT KIT	1	57001-
10	AS156717	..UP STOP/BUMP STOP K	1	57001-
11	AS157230	.SUSPENSION ASS'Y	1	57001-
12	AS164183	..BRACKET KIT, (NOT SHOWN)	1	57001-
13	AS156738	.BEARING KIT, (NOT SHOWN)	1	57001-
14	AS163577	..SUSPENSION COVER KIT	1	57001-
15	AS157228	..DAMPER ASS'Y KIT	1	57001-
16	AS156737	..WEIGHT ADJUSTER KIT	1	57001-

FIG. K0160-01A0 SEAT BELT (FOR KAB)

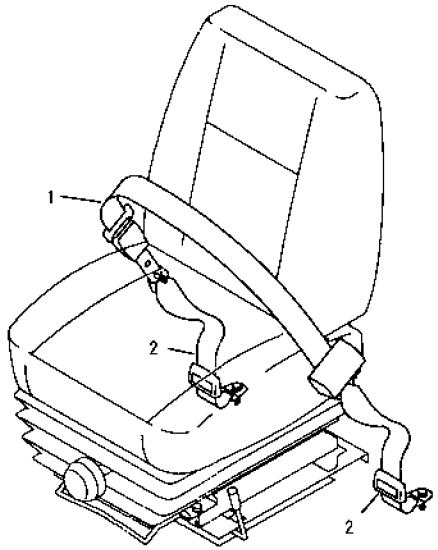

PA80863

INDEX	PART NO.	DESCRIPTION	Q'TY	SERIAL NO
1	17A-57-21202	BELT, LAP	1	57001-
2	09409-20000	BELT, TETHER	2	57001-

FIG. K0210-01A0 STEEL CAB (BODY AND FRONT WINDOW) (1/9)

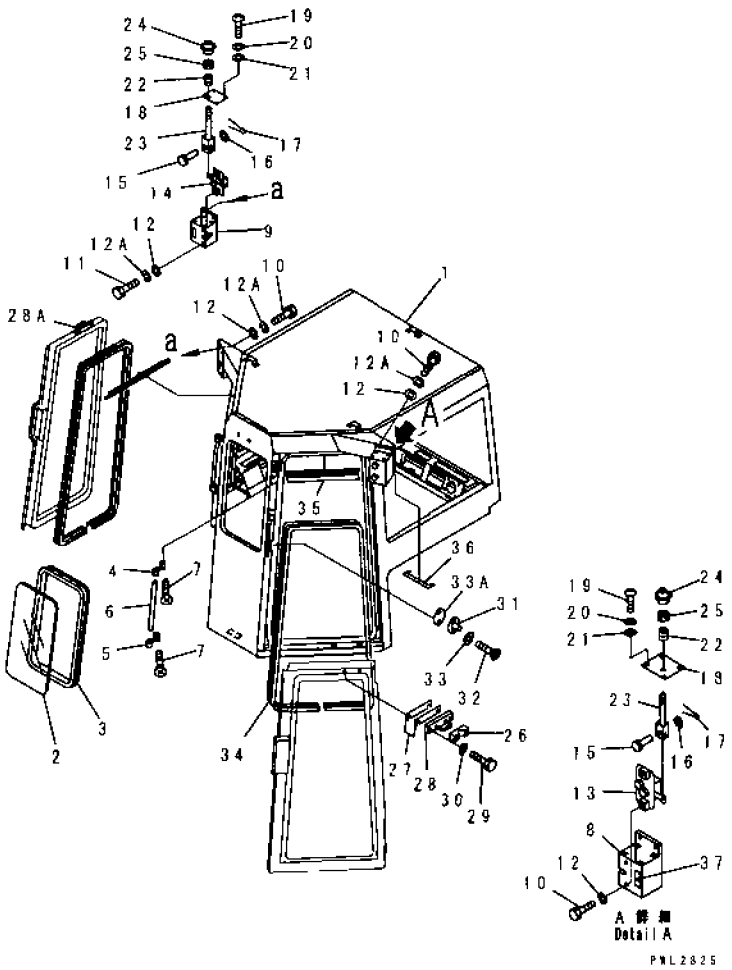

INDEX	PART NO.	DESCRIPTION	Q'TY	SERIAL NO
	175-911-0040	STEEL CAB ASS'Y THIS ASSEMBLY CONSISTS OF ALL PARTS SHOWN IN FIGS. K0210-01A0 TO K0210-09A0.	1	57001-
1	175-911-7112	. CAB	1	57001-
2	195-Z11-1211	. GLASS	1	57001-
3	195-Z11-1161	. STRIP, WEATHER	1	57001-
4	195-Z11-1510	. BRACKET	2	57001-
5	195-Z11-1520	. BRACKET	2	57001-
6	195-Z11-1530	. PIPE	2	57001-
7	01225-30512	. SCREW	16	57001-
8	154-Z11-1120	. BRACKET, L.H.	1	57001-
9	154-Z11-1130	. BRACKET, R.H.	1	57001-
10	01010-81025	. BOLT	8	57001-
11	01010-81030	. BOLT	4	57001-
12	01643-31032	. WASHER	12	57001-
12A	01602-21030	. WASHER, SPRING	12	57001-
13	195-Z11-1430	. LOCK, L.H.	1	57001-
14	195-Z11-1440	. LOCK, R.H	1	57001-
15	04205-10825	. PIN	2	57001-
16	01641-20812	. WASHER	2	57001-
17	04050-12012	. PIN, COTTER	2	57001-
18	195-Z11-1450	. PLATE	2	57001-
19	01220-40616	. SCREW	8	57001-
20	01602-20619	. WASHER, SPRING	8	57001-
21	01643-30623	. WASHER	8	57001-
22	08037-01008	. GROMMET	2	57001-
23	195-Z11-1460	. ROD	2	57001-
24	170-43-17110	. BUTTON, THROTTLE	2	57001-
25	01580-30605	. NUT	2	57001-
26	154-Z11-1340	. RUBBER, L.H.	1	57001-
	154-Z11-1350	. RUBBER, R.H.	1	57001-
27	195-Z11-1480	. SHIM, 1.6MM	4	57001-
28	195-Z11-2750	. BRACKET, L.H.	1	57001-
28A	195-Z11-4860	. BRACKET, R.H.	1	57001-
29	01010-81040	. BOLT	4	57001-
30	01643-31032	. WASHER	4	57001-
31	195-Z11-4530	. STOPPER	2	57001-
32	195-Z11-4560	. SCREW	4	57001-
33	566-54-13570	. WASHER	4	57001-
33A	195-Z11-4570	. SHIM, 1.6MM	8	57001-
34	195-Z11-2110	. SEAL	2	57001-
35	195-Z11-1870	. COVER	2	57001-

FIG. K0210-01A0 STEEL CAB (BODY AND FRONT WINDOW) (1/9)

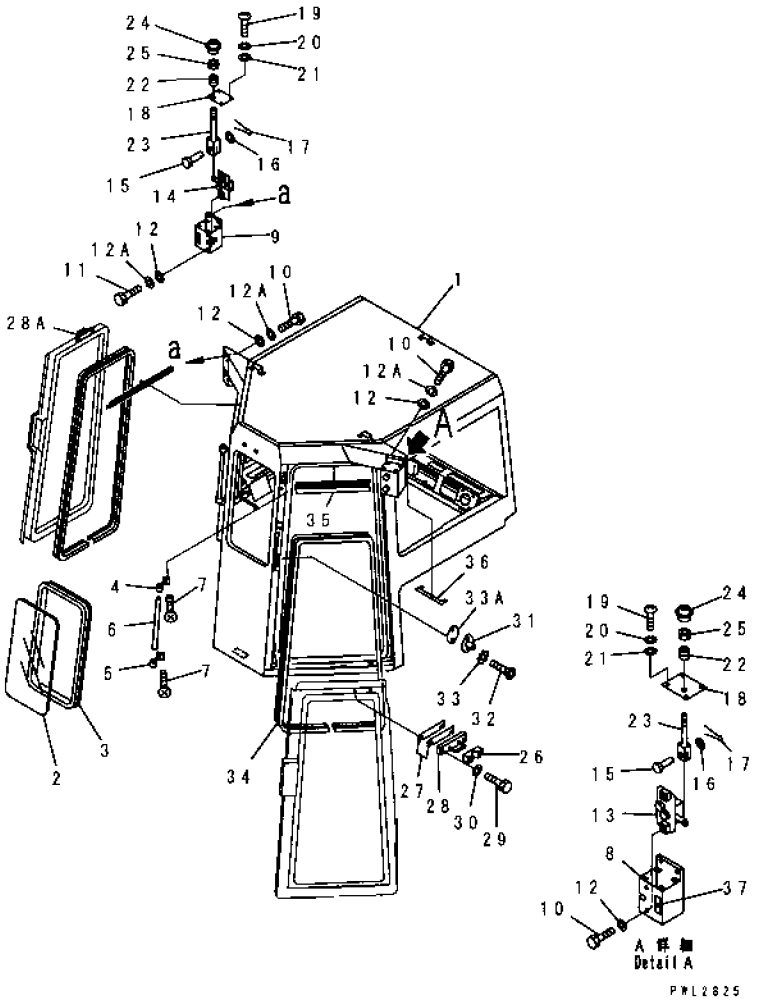

INDEX	PART NO.	DESCRIPTION	Q'TY	SERIAL NO.
36	195-Z11-2710	.SEAT.....	1	57001-
37	09685-00001	.PLATE, OPERATING.....	2	57001-

FIG. K0210-02A0 STEEL CAB (DOOR AND SIDE WINDOW) (2/9)

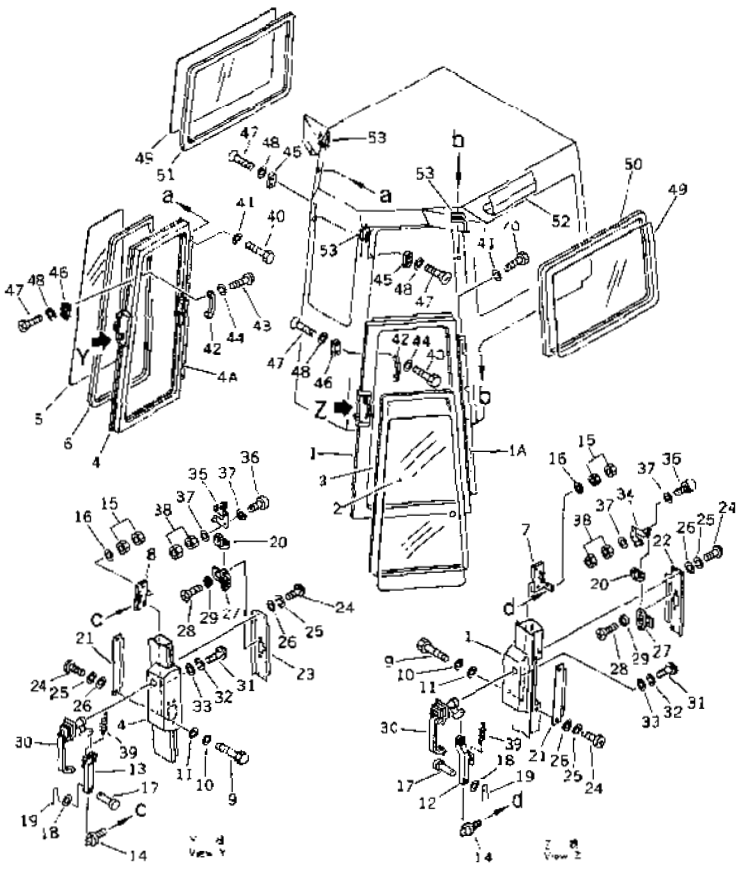

INDEX	PART NO.	DESCRIPTION	Q'TY	SERIAL NO.
	(175-Z11-0040)	WINDOW ASS'Y	1	57001-
		THIS ASSEMBLY CONSISTS OF ALL PARTS SHOWN IN FIGS. K0210-01A0 TO K0210-09A0.		
1	195-Z11-1122	. DOOR, L. H.	1	57001-
1A	195-Z11-1811	.. HINGE (WELDED)	1	57001-
2	195-Z11-1220	GLASS	1	57001-
3	195-Z11-1140	. STRIP, WEATHER	1	57001-
4	195-Z11-1132	. DOOR, R. H.	1	57001-
4A	195-Z11-1791	. HINGE (WELDED)	1	57001-
5	195-Z11-1220	. GLASS	1	57001-
6	195-Z11-1150	. STRIP, WEATHER	1	57001-
7	195-Z11-4510	. LOCK, L. H.	1	57001-
8	195-Z11-4520	. LOCK, R. H.	1	57001-
9	01010-80635	. BOLT	8	57001-
10	01643-30623	. WASHER	8	57001-
11	702-25-21710	. SEAT	8	57001-
12	195-Z11-4540	. ROD, L. H.	1	57001-
13	195-Z11-4550	. ROD, R. H.	1	57001-
14	195-Z11-4640	. ROD	2	57001-
15	01580-10605	. NUT	4	57001-
16	01643-30623	. WASHER	2	57001-
17	04205-10516	. PIN	4	57001-
18	01641-20508	. WASHER	4	57001-
19	04050-11210	. PIN, COTTER	4	57001-
20	195-Z11-1630	. CLIP	2	57001-
21	195-Z11-1590	. COVER	2	57001-
22	195-Z11-4610	. COVER, L. H.	1	57001-
23	195-Z11-4620	. COVER, R. H.	1	57001-
24	195-Z11-1710	. SCREW	16	57001-
25	01601-20513	. WASHER, SPRING	16	57001-
26	01642-00508	. WASHER	16	57001-
27	195-Z11-1610	. HANDLE	2	57001-
28	195-Z11-1730	. SCREW	4	57001-
29	195-Z11-1690	. WASHER	4	57001-
30	14X-911-1531	. HANDLE	2	57001-
31	195-Z11-1710	. SCREW	8	57001-
32	01601-20513	. WASHER, SPRING	8	57001-
33	01641-20508	. WASHER	8	57001-
34	195-Z11-4581	. LEVER, L. H.	1	57001-
35	195-Z11-4591	. LEVER, R. H.	1	57001
36	195-Z11-4630	. SHAFT	2	57001-
37	01643-30623	. WASHER	4	57001-

FIG. K0210-02A0 STEEL CAB (DOOR AND SIDE WINDOW) (2/9)

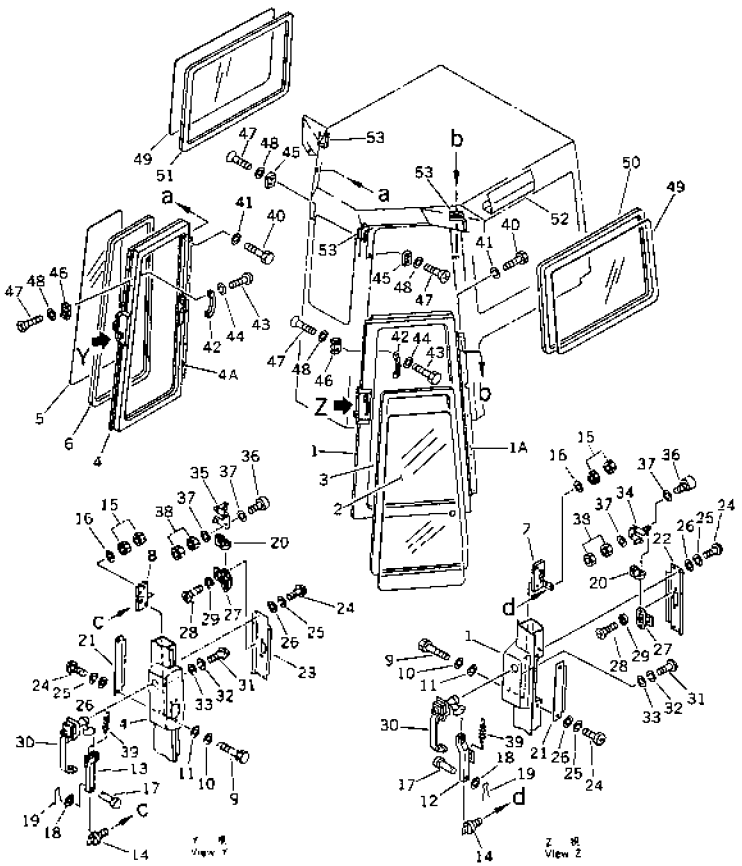

INDEX	PART NO	DESCRIPTION	Q'TY	SERIAL NO.
38	01580-10605	. NUT	4	57001-
39	6970-51-2221	. SPRING	2	57001-
40	01010-80825	. BOLT	10	57001-
41	01643-30823	. WASHER	10	57001-
42	195-Z11-1980	. GRIP	2	57001-
43	195-979-7710	. SCREW	4	57001-
44	01601-20513	. WASHER	4	57001-
45	566-54-13410	. STRIKER	4	57001-
46	566-54-14420	. STOPPER	4	57001-
47	195-Z11-1740	. SCREW	16	57001-
48	566-54-13570	WASHER	16	57001-
49	195-Z11-1230	. GLASS	2	57001-
50	195-Z11-1181	STRIP, WEATHER	1	57001-
51	195-Z11-1191	. STRIP, WEATHER	1	57001-
52	195-Z11-3130	SHEET	1	57001-
53	195-Z11-3140	SHEET	3	57001-

FIG. K0210-03A0 STEEL CAB (REAR WINDOW) (3/9)

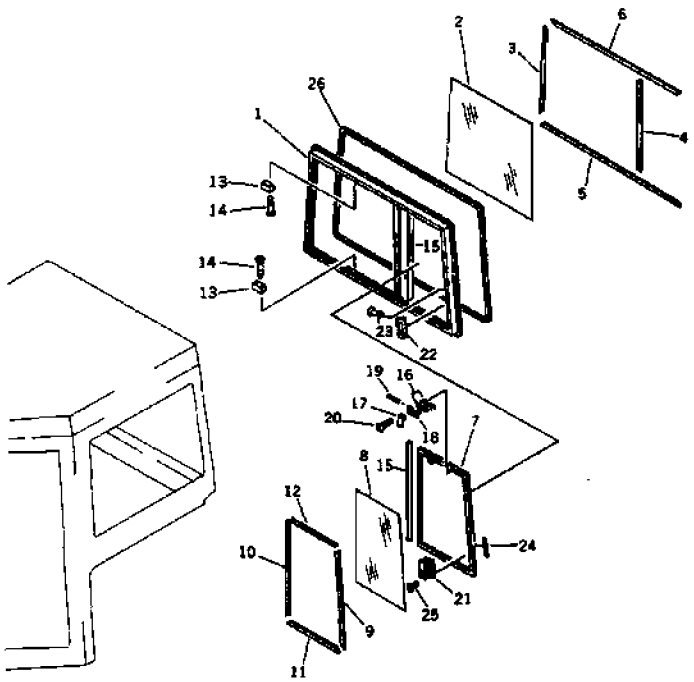

INDEX	PART NO	DESCRIPTION	Q'TY	SERIAL NO
	(175-911-0040)	STEEL CAB ASS'Y THIS ASSEMBLY CONSISTS OF ALL PARTS SHOWN IN FIGS. K0210-01A0 TO K0210-09A0.	1	57001-
1	195-Z11-0021	.WINDOW ASS'Y, REAR	1	57001-
1	195-Z11-1241	..FRAME	1	57001-
2	195-Z11-1250	..GLASS	1	57001-
3	195-Z11-1260	..SEAL	1	57001-
4	195-Z11-1270	..SEAL	1	57001-
5	195-Z11-1280	..SEAL	1	57001-
6	195-Z11-1290	..SEAL	1	57001-
7	195-Z11-1311	.FRAME	1	57001-
8	195-Z11-1320	..GLASS	1	57001-
9	195-Z11-1330	..SEAL	1	57001-
10	195-Z11-1340	..SEAL	1	57001-
11	195-Z11-1350	..SEAL	1	57001-
12	195-Z11-1360	..SEAL	1	57001-
13	195-Z11-1381	..STOPPER	2	57001-
14	01224-40316	..SCREW	4	57001-
15	195-Z11-3690	..SEAL	2	57001-
16	195-Z11-3670	.SHIM, 0.5MM	6	57001-
	195-Z11-1371	..LOCK ASS'Y	2	57001-
17	195-Z11-3630	...LEVER	1	57001-
18	195-Z11-3640	...PLATE	1	57001-
19	04025-00550	...PIN, SPRING	1	57001-
20	01225-40512	..SCREW	4	57001-
21	195-Z11-3650	..LOCK ASS'Y	1	57001-
22	195-Z11-3660	..PLATE	1	57001-
23	01224-40510	..SCREW	5	57001-
24	195-Z11-3680	..PLATE	1	57001-
25	01224-40408	..SCREW	5	57001-
26	195-Z11-1171	.STRIP	1	57001-

FIG. K0210-04A0 STEEL CAB (FURNITURE IN CAB, FRONT) (4/9)

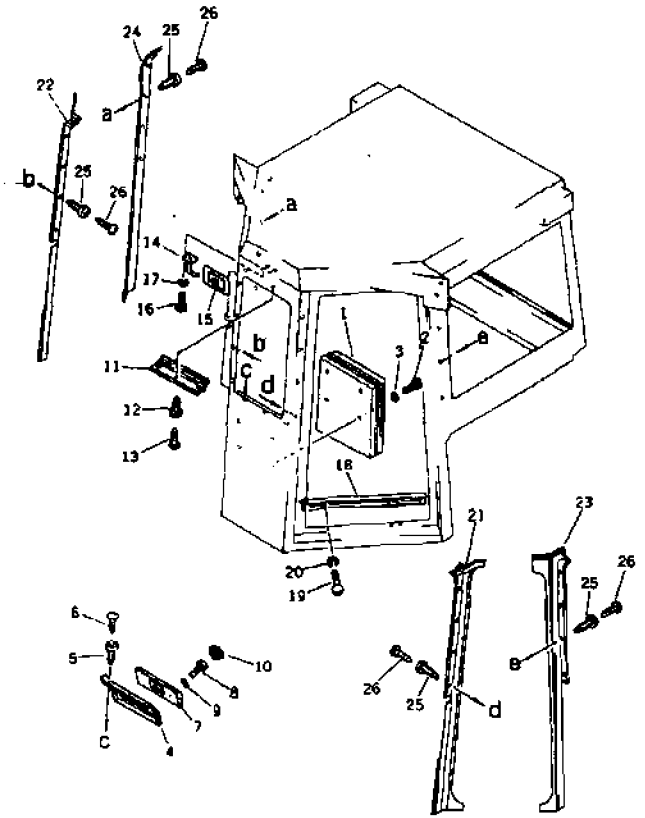

INDEX	PART NO.	DESCRIPTION	Q'TY	SERIAL NO
	(175-911-0040)	STEEL CAB ASS'Y THIS ASSEMBLY CONSISTS OF ALL PARTS SHOWN IN FIGS. K0210-01A0 TO K0210-09A0.	1	57001-
1	195-Z11-2370	.BOX, (NOT USED FOR COLD WEATHER)	1	57001-
2	195-979-7810	.SCREW, (NOT USED FOR COLD WEATHER)	4	57001-
3	01642-20508	.WASHER, (NOT USED FOR COLD WEATHER)	4	57001-
4	195-Z11-1840	.COVER	1	57001-
5	195-Z11-1950	.CLIP	3	57001-
6	195-Z11-1960	.SCREW	3	57001-
7	195-Z11-1490	.BRACKET	1	57001-
8	01010-81230	.BOLT	2	57001-
9	01602-21236	.WASHER, SPRING	2	57001-
10	195-Z11-2970	.CAP	2	57001-
11	195-Z11-1830	.COVER	1	57001-
12	195-Z11-1950	.CLIP	1	57001-
13	195-Z11-1960	.SCREW	1	57001-
14	195-Z11-2170	.STAY	1	57001-
15	195-Z11-2180	.MIRROR	1	57001-
16	195-979-7710	.SCREW	4	57001-
17	01601-20513	.WASHER, SPRING	4	57001-
18	154-Z11-1190	.COVER	2	57001-
19	195-979-7810	.SCREW	6	57001-
20	01601-20513	.WASHER, SPRING	6	57001-
21	195-Z11-1880	.COVER, L.H	1	57001-
22	195-Z11-1890	.COVER, R.H	1	57001-
23	195-Z11-1850	.COVER, L.H	1	57001-
24	195-Z11-1860	.COVER, R.H	1	57001-
25	195-Z11-1950	.CLIP	22	57001-
26	195-Z11-1960	.SCREW	22	57001-

FIG. K0210-05A0 STEEL CAB (FURNITURE IN CAB、REAR) (5/9)

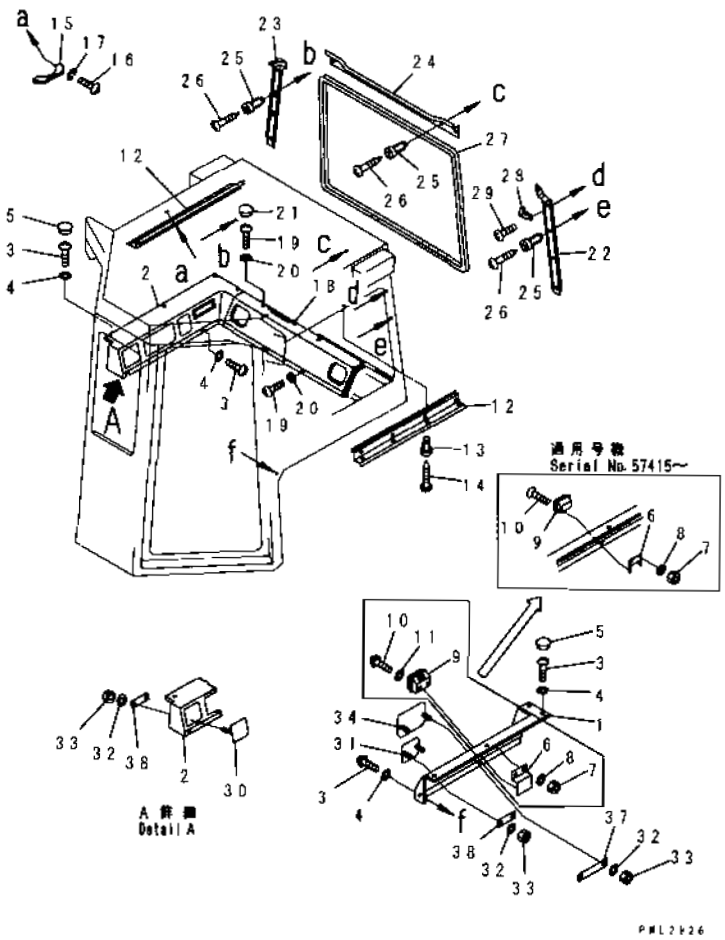

INDEX	PART NO	DESCRIPTION	Q'TY	SERIAL NO
	(175-911-0040)	STEEL CAB ASS'Y THIS ASSEMBLY CONSISTS OF ALL PARTS SHOWN IN FIGS. K0210-01A0 TO K0210-09A0.	1	57001-
1	195-Z11-2331	. PANEL	1	57001-
2	175-911-7351	. PANEL	1	57001-
3	01220-30616	. SCREW	14	57001-
4	01641-20608	. WASHER	14	57001-
5	195-Z11-2360	. CAP	8	57001-
6	195-Z11-4360	. PLATE	1	57415-
	195-Z11-2730	. PLATE	1	57001-57414
7	01580-10605	. NUT	2	57001-
8	01643-30623	. WASHER	2	57001-
9	195-Z11-4350	. ASHTRAY	1	57415-
	205-54-72240	. ASHTRAY	1	57001-57414
10	01224-40410	. SCREW	2	57415-
10	195-979-7720	. SCREW	2	57001-57414
11	01642-20405	. WASHER	2	57001-
12	195-Z11-1910	. COVER	2	57001-
13	195-Z11-1950	. CLIP	8	57001-
14	195-Z11-1960	. SCREW	8	57001-
15	195-Z11-1980	. GRIP	1	57001-
16	195-979-7710	. SCREW	2	57001-
17	01601-20513	. WASHER, SPRING	2	57001-
18	195-Z11-2351	. PANEL	1	57001-
19	01220-30616	. SCREW	4	57001-
20	01641-20608	. WASHER	4	57001-
21	195-Z11-2360	. CAP	2	57001-
22	195-Z11-1931	. COVER, L.H.	1	57001-
23	195-Z11-1941	. COVER, R.H.	1	57001-
24	195-Z11-1920	. COVER	1	57001-
25	195-Z11-1950	. CLIP	17	57001-
26	195-Z11-1960	. SCREW	17	57001-
27	195-Z11-1990	. SEAL	1	57001-
28	205-54-51250	. HANGER	1	57001-
29	195-979-7720	. SCREW	2	57001-
30	195-Z11-2840	. COVER, (FOR AIR CONDITIONER LESS)	1	57001-
31	195-Z11-2840	. COVER, (FOR AIR CONDITIONER LESS)	1	57001-
32	01642-20508	. WASHER, (FOR AIR CONDITIONER LESS)	6	57001-
33	01580-10504	. NUT, (FOR AIR CONDITIONER LESS)	6	57001-
34	195-Z11-2850	. COVER, (FOR AIR CONDITIONER LESS)	1	57001-
37	195-Z11-2870	. PLATE	1	57001-
38	195-Z11-2880	. PLATE	2	57001-

FIG. K0210-06A0 STEEL CAB (INNER TOP AND CAB MOUNT) (6/9)

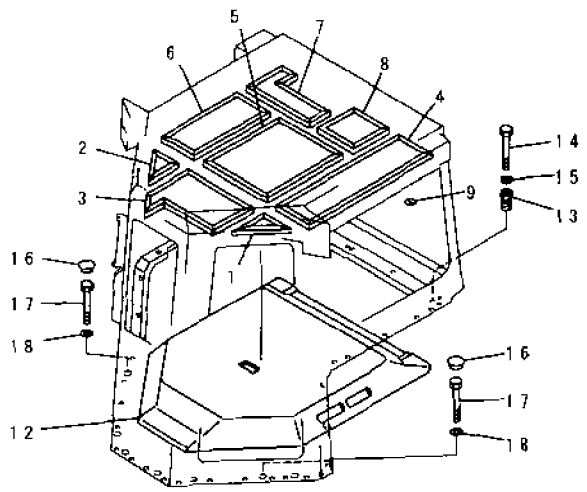

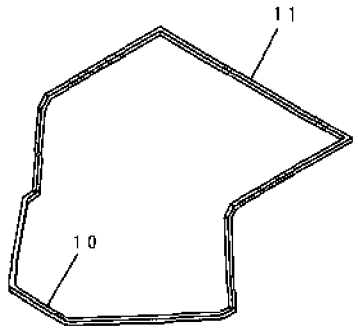

PWL2627

INDEX	PART NO.	DESCRIPTION	Q'TY	SERIAL NO.
	(175-911-0040)	STEEL CAB ASS'Y THIS ASSEMBLY CONSISTS OF ALL PARTS SHOWN IN FIGS K0210-01A0 TO K0210-09A0.	1	57001-
1	195-Z11-2120	.FELT, GLASS	1	57001-
2	195-Z11-2130	.FELT, GLASS	1	57001-
3	195-Z11-2140	.FELT, GLASS	1	57001-
4	195-Z11-2150	.FELT, GLASS	1	57001-
5	195-Z11-2160	.FELT, GLASS	1	57001-
6	195-Z11-2760	.FELT, GLASS	1	57001-
7	195-Z11-2770	.FELT, GLASS	1	57001-
8	195-Z11-2780	.FELT, GLASS	1	57001-
9	04431-30000	.PLATE	31	57001-
10	195-Z11-2520	.SEAT	1	57001-
11	195-Z11-2530	.SEAT	1	57001-
12	154-Z11-5750	.COVER	1	57001-
13	195-Z11-2831	JOINT	7	57001-
14	01010-81485	BOLT	7	57001-
15	01643-31445	WASHER	7	57001-
16	195-Z11-1970	CAP	7	57001-
17	01010-81465	BOLT	7	57001-
18	01643-31445	WASHER	7	57001-

FIG. K0210-07A0 STEEL CAB (ELECTRICAL PARTS、FRONT) (7/9)

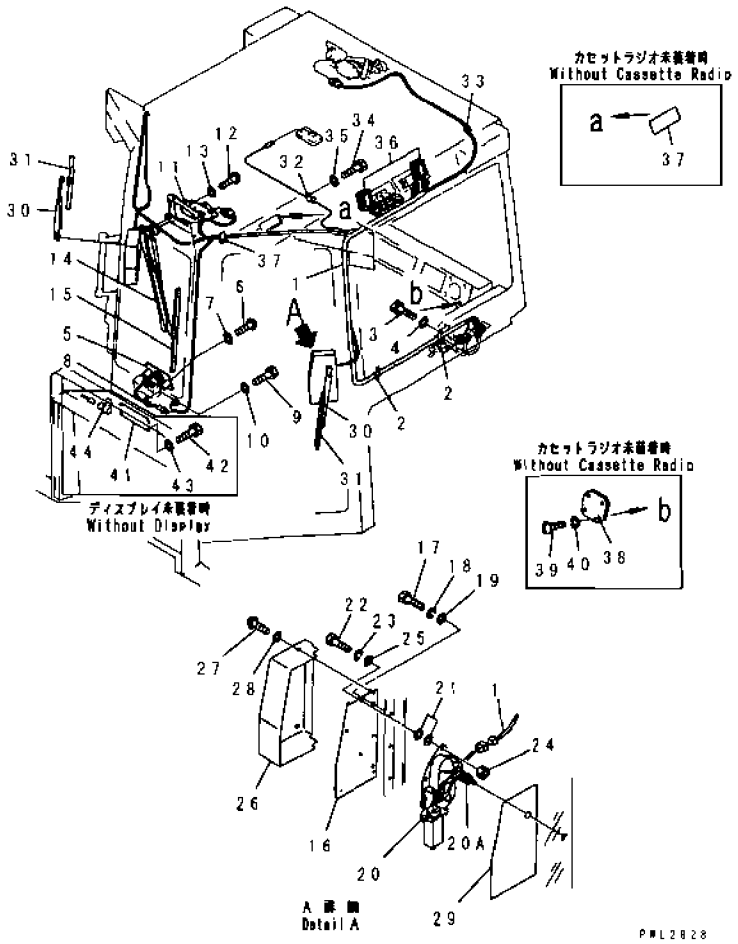

INDEX	PART NO	DESCRIPTION	Q'TY	SERIAL NO.
	(175-911-0040)	STEEL CAB ASS'Y.	1	57001-
		THIS ASSEMBLY CONSISTS OF ALL PARTS SHOWN IN FIGS. K0210-01A0 TO K0210-09A0		
1	195-Z11-2810	.WIRING HARNESS.	1	57001-
2	08036-21414	.CLIP.	2	57001-
3	01010-80810	.BOLT.	2	57001-
4	01643-30823	.WASHER.	2	57001-
	195-06-41360	.DISPLAY ASS'Y.	1	57001-
	195-06-41350	..LAMP.	1	57001-
5	08111-12430	...BULB, 3W.	1	57001-
6	01220-40616	.SCREW.	4	57001-
7	01642-00608	.WASHER	4	57001-
8	08036-31210	.CLIP.	1	57001-
9	01010-80810	.BOLT.	1	57001-
10	01643-30823	.WASHER.	1	57001-
11	195-Z11-2420	.MOTOR ASS'Y.	1	57001-
12	01220-40616	.SCREW.	4	57001-
13	01602-20619	.WASHER, SPRING.	4	57001-
14	195-Z11-2450	.ARM, WIPER	1	57001-
15	195-Z11-2470	BLADE, WIPER.	1	57001-
16	195-Z11-2490	.PLATE.	2	57001-
17	01010-80825	.BOLT.	6	57001-
18	01602-20825	.WASHER, SPRING.	6	57001-
19	01643-30823	.WASHER.	6	57001-
20	195-Z11-2430	.MOTOR ASS'Y.	2	57001-
20A	ND859901-0300	. GROMMET.	1	57001-
21	01643-31032	.WASHER.	12	57001-
22	01010-80830	.BOLT	6	57001-
23	01602-20825	.WASHER, SPRING.	6	57001-
24	01580-00806	.NUT.	6	57001-
25	01643-30823	.WASHER.	6	57001-
26	195-Z11-2220	.COVER	2	57001-
27	01220-40512	.SCREW.	8	57001-
28	01642-20508	.WASHER.	8	57001-
29	195-Z11-2230	.PLATE.	2	57001-
30	195-Z11-2440	.ARM, WIPER.	2	57001-
31	198-911-3260	.BLADE, WIPER	2	57001-
32	08036-22514	.CLIP.	1	57001-
33	08036-21414	.CLIP.	2	57001-
34	01010-80810	.BOLT.	3	57001-
35	01643-30823	.WASHER.	3	57001-
36	195-Z11-2980	.SEAL.	2	57001-

FIG. K0210-07A0 STEEL CAB (ELECTRICAL PARTS、FRONT) (7/9)

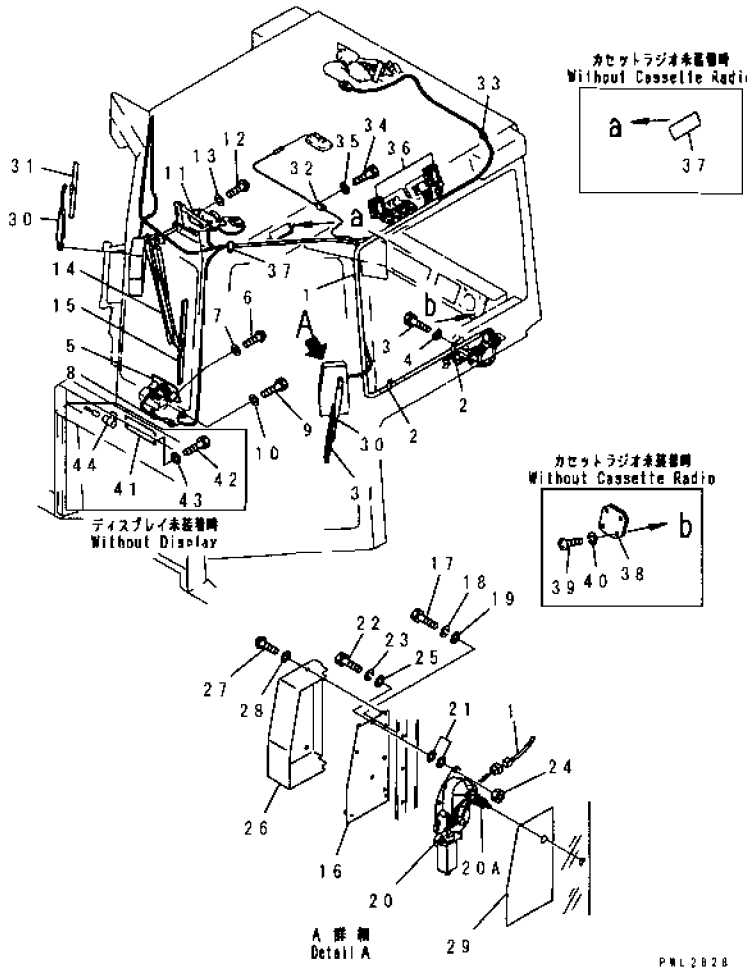

INDEX	PART NO	DESCRIPTION	Q'TY	SERIAL NO
37	195-Z11-2951	COVER	1	57001-
38	195-Z11-2961	COVER	2	57001-
39	195-979-7720	SCREW	8	57001-
40	01601-20410	WASHER, SPRING	8	57001-
41	154-54-45260	PLATE, (USED WHEN DISPLAYLESS)	1	57001-
42	01010-80620	BOLT, (USED WHEN DISPLAYLESS)	4	57001-
43	01643-30623	WASHER, (USED WHEN DISPLAYLESS)	4	57001-
44	209-06-51640	CONNECTOR, (USED WHEN DISPLAYLESS)	1	57001-

FIG. K0210-08A0 STEEL CAB (ELECTRICAL PARTS、REAR) (8/9)

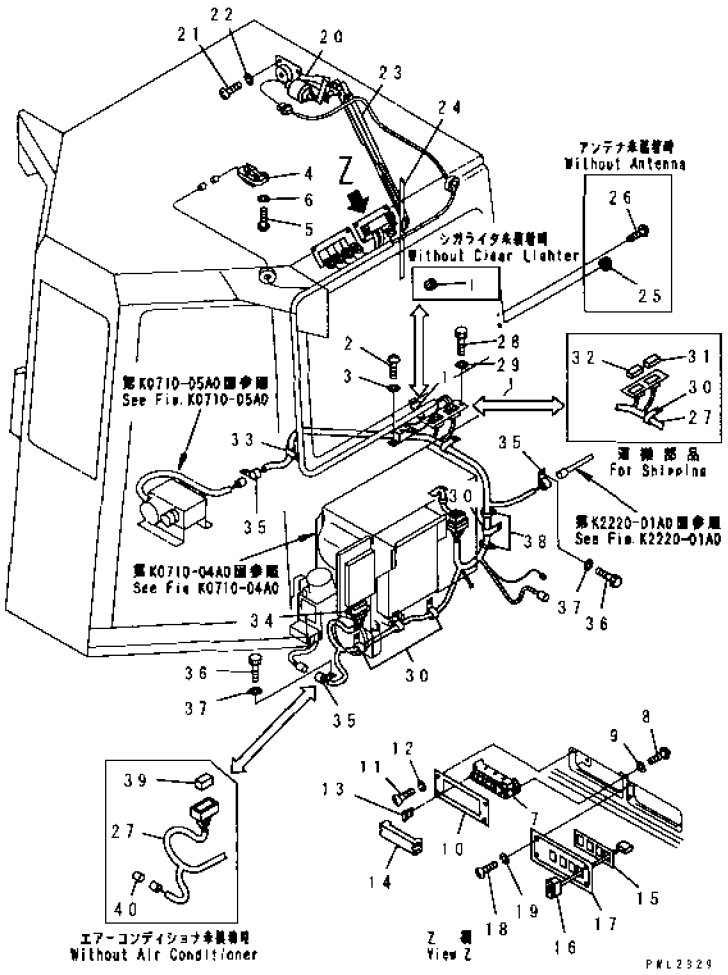

INDEX	PART NO.	DESCRIPTION	Q'TY.	SERIAL NO
	(175-911-0040)	STEEL CAB ASS'Y.	1	57001-
		THIS ASSEMBLY CONSISTS OF ALL PARTS SHOWN IN FIGS. K0210-01A0 TO K0210-09A0.		
1	195-822-6151	. LIGHTER	1	57001-
	09415-00706	. CAP. (WITHOUT LIGHTER)	1	57001-
2	195-979-7720	. SCREW	2	57001-
3	01601-20410	. WASHER, SPRING	2	57001-
4	195-Z11-2190	. LAMP, ROOM	1	57001-
	08116-02410	.. BULB, 10W	1	57001-
5	195-979-7710	. SCREW	4	57001-
6	01601-20513	. WASHER, SPRING	4	57001-
7	195-Z11-2280	. BODY	1	57001-
8	195-979-7710	. SCREW	2	57001-
9	01601-20513	. WASHER, SPRING	2	57001-
10	195-Z11-2250	. PLATE	1	57001-
11	195-979-7720	. SCREW	4	57001-
12	01601-20410	. WASHER, SPRING	4	57001-
13	283-06-16190	. FUSE, 10A	10	57001-
14	195-Z11-2290	. COVER	1	57001-
15	195-Z11-2240	. PLATE	1	57001-
16	195-Z11-2310	. SWITCH, WIPER	4	57001-
17	195-Z11-2270	. PLATE	1	57001-
18	195-979-7720	. SCREW	4	57001-
19	01601-20410	. WASHER, SPRING	4	57001-
20	195-Z11-2420	. MOTOR ASS'Y	1	57001-
21	01220-40616	. SCREW	4	57001-
22	01602-20619	. WASHER, SPRING	4	57001-
23	195-Z11-2460	. ARM, WIPER	1	57001-
24	195-Z11-2470	. BLADE, WIPER	1	57001-
25	09415-00706	. CAP. (WITHOUT ANTENA)	1	57001-
26	195-979-7720	. SCREW. (WITHOUT ANTENA)	2	57001-
27	154-Z11-5571	. WIRING HARNESS	1	57001-
28	01010-80620	. BOLT	2	57001-
29	01643-30623	. WASHER	2	57001-
30	08036-01814	. CLIP	4	57001-
31	195-Z11-7130	. CONNECTOR	1	57001-
32	195-Z11-7120	. CONNECTOR	1	57001-
33	08036-01014	. CLIP	1	57001-
34	195-Z11-5360	. CLIP	2	57001-
35	195-06-41830	. CLIP	3	57001-
36	01010-81220	BOLT	11	57001-
37	01643-31232	. WASHER	11	57001-

FIG. K0210-08A0 STEEL CAB (ELECTRICAL PARTS、REAR) (8/9)

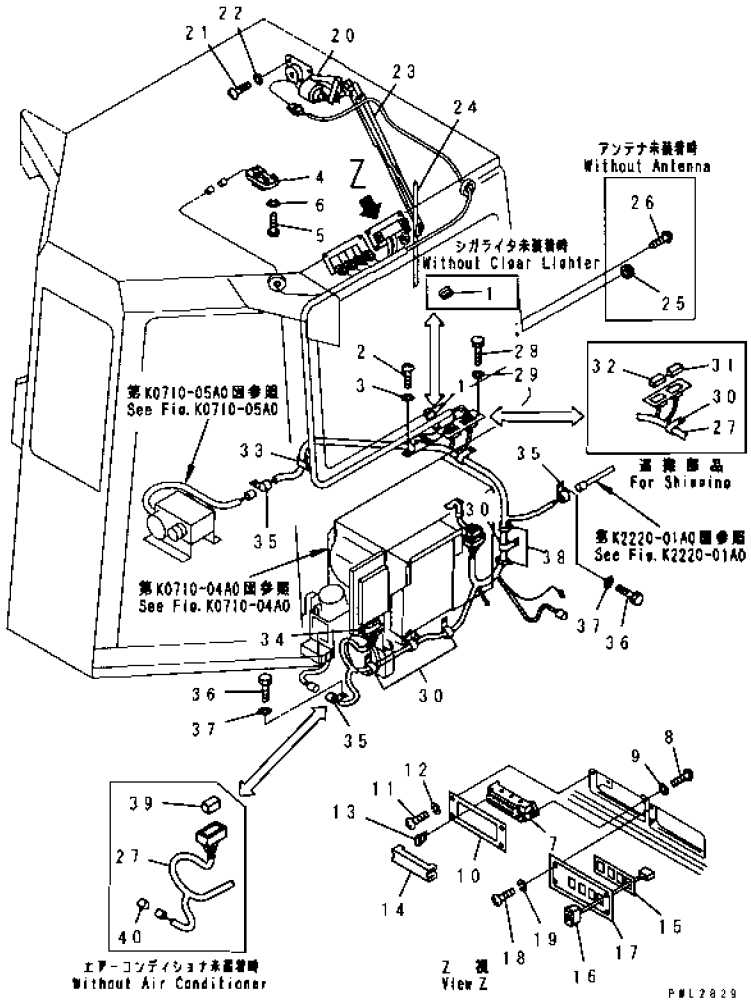

INDEX	PART NO.	DESCRIPTION	Q'TY	SERIAL NO
38	08034-00519	.BAND.....	2	57001-
39	195-Z11-2890	CONNECTOR.....	2	57001-
40	195-Z11-2910	CONNECTOR	2	57001-

FIG. K0210-09A0 STEEL CAB (WINDOW WASHER) (9/9)

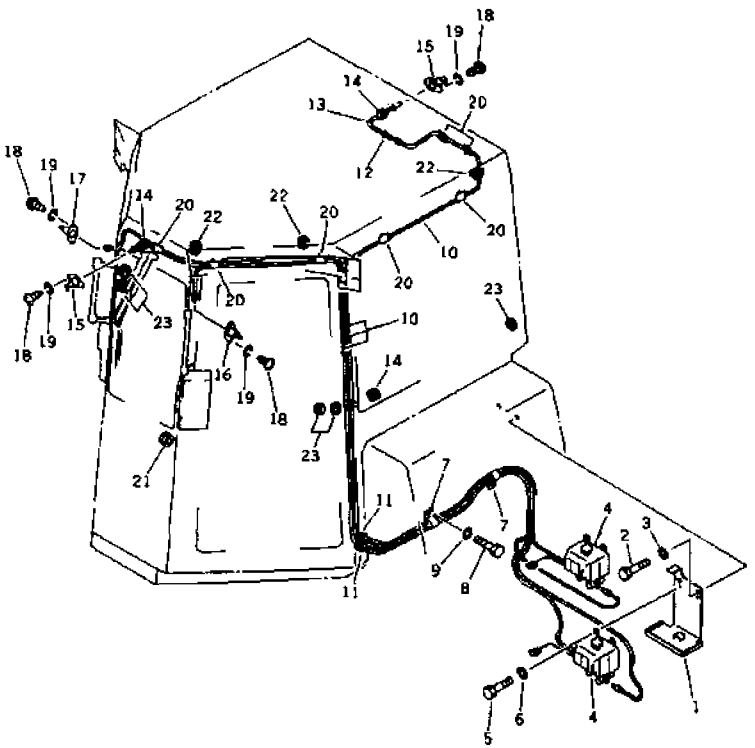

INDEX	PART NO	DESCRIPTION	Q'TY	SERIAL NO
	(175-911-0040)	STEEL CAB ASS'Y THIS ASSEMBLY CONSISTS OF ALL PARTS SHOWN IN FIGS. K0210-01A0 TO K0210-09A0.	1	57001-
1	175-911-7131	.BRACKET	1	57001-
2	01010-51220	.BOLT	2	57001-
3	01643-31232	.WASHER	2	57001-
4	195-979-8511	WASHER TANK	2	57001-
5	01010-50620	.BOLT	4	57001-
6	01643-30623	.WASHER	4	57001-
7	08035-02514	.CLIP	2	57001-
8	01010-51220	.BOLT	1	57001-
9	01643-31232	.WASHER	1	57001-
10	195-979-7760	.HOSE	4	57001-
11	08037-01008	.GROMMET	2	57001-
12	195-979-8590	.VALVE	4	57001-
13	195-979-9410	.HOSE	4	57001-
14	08037-02512	.GROMMET	3	57001-
15	195-Z11-2540	.NOZZLE ASS'Y	2	57001-
16	195-Z11-2550	.NOZZLE ASS'Y	1	57001-
17	195-Z11-2560	.NOZZLE ASS'Y	1	57001-
18	195-979-7810	.SCREW	8	57001-
19	01601-20410	.WASHER, SPRING	8	57001-
20	203-06-21150	.CLIP	40	57001-
21	08037-01510	.GROMMET	1	57001-
22	08037-05016	.GROMMET	3	57001-
23	08037-01008	.GROMMET	5	57001-

FIG NO. : K0410-01A0

FIG. K0410-01A0 ROLL OVER PROTECTIVE STRUCTUER

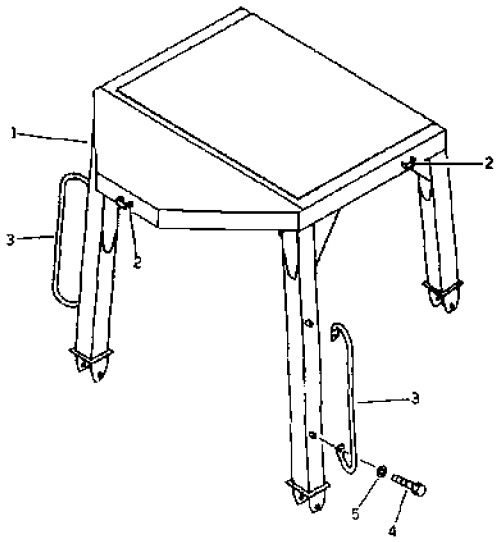

INDEX	PART NO	DESCRIPTION	Q'TY	SERIAL NO.
1	175-978-6110	GUARD	1	57001-
2	154-978-2220	.PLATE (WELDED)	3	57001-
3	09420-01907	HANDLE	2	57001-
4	01010-81230	BOLT	4	57001-
5	01643-31232	WASHER	4	57001-

FIG. K0410-01A1 ROPS GUARD (WOODY TERRAIN AND JUNGLE SPEC.)

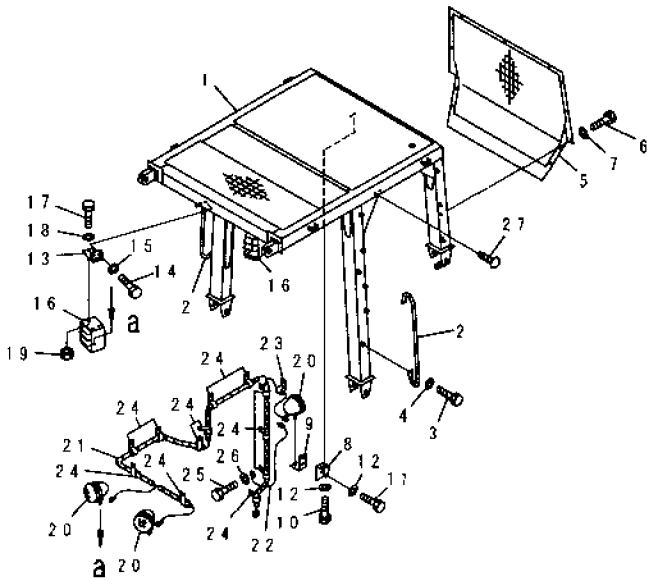

PWL2926

INDEX	PART NO	DESCRIPTION	Q'TY	SERIAL NO
1	175-902-7610	GUARD	1	57001-
2	09420-01907	HANDLE	2	57001-
3	01010-81230	BOLT	4	57001-
4	01643-31232	WASHER	4	57001-
5	175-902-7620	NET	1	57001-
6	01010-51635	BOLT	11	57001-
7	01643-31645	WASHER	11	57001-
8	175-902-7660	BRACKET	1	57001-
9	175-902-7670	BRACKET	1	57001-
10	01010-81230	BOLT	2	57001-
11	01010-81240	BOLT	2	57001-
12	01643-31232	WASHER	4	57001-
13	154-91-42120	BRACKET	2	57001-
14	01010-81230	BOLT	4	57001-
15	01643-31232	WASHER	4	57001-
16	154-06-41530	COVER	2	57001-
17	01010-81235	BOLT	6	57001-
18	01643-31232	WASHER	6	57001-
19	01580-11210	NUT	6	57001-
20	08128-32400	LAMP, FRONT	3	57001-
	08113-02480	BULB, 80W	1	57001-
21	175-902-7680	WIRING HARNESS	1	57001-
22	195-978-2280	WIRE	1	57001-
23	08036-90814	CLIP	1	57001-
24	08035-01510	CLIP	11	57001-
25	01010-81020	BOLT	12	57001-
26	01643-31032	WASHER	12	57001-
27	04418-13060	SCREW	4	57001-

FIG. K0410-02A0 ROLL OVER PROTECTIVE STRUCTURE BRACKET

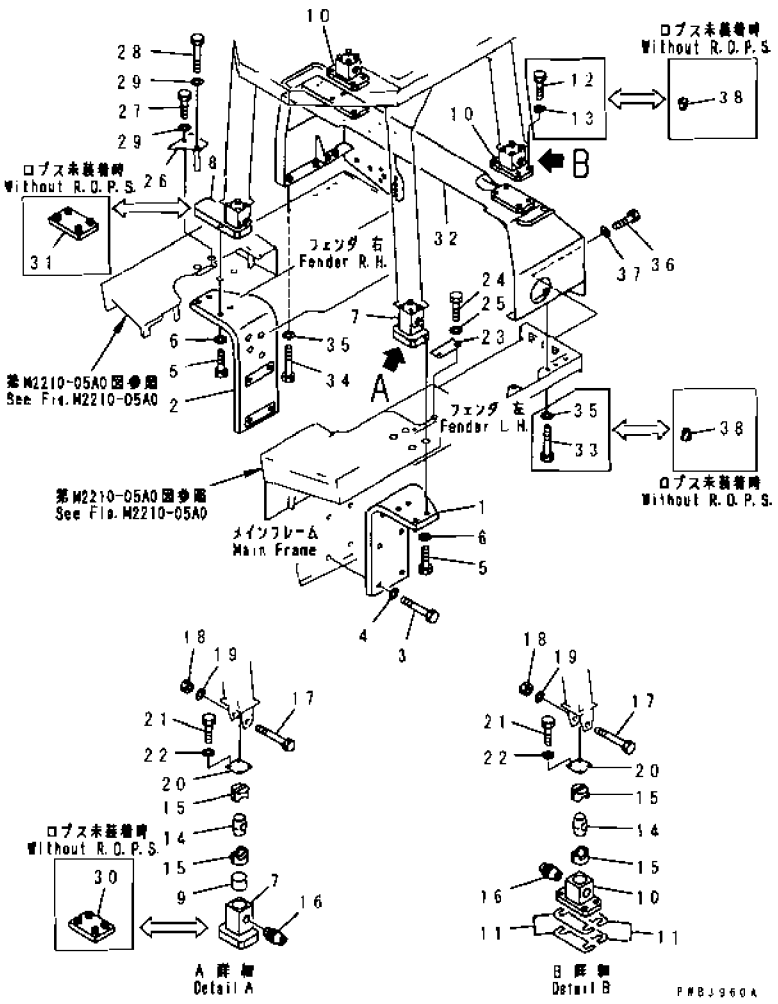

INDEX	PART NO	DESCRIPTION	Q'TY	SERIAL NO
1	175-978-6220	PLATE, L.H.	1	57001-
2	175-978-6230	PLATE, R.H.	1	57001-
3	01011-83010	BOLT	8	57001-
4	01643-33080	WASHER	8	57001-
5	01010-83085	BOLT	8	57001-
6	01643-33080	WASHER	8	57001-
7	175-978-6240	BRACKET, L.H.	1	57001-
8	175-978-6250	BRACKET, R.H.	1	57001-
9	175-978-6290	SEAT	1	57001-
10	175-978-6260	BRACKET	2	57001-
11	154-978-0030	SHIM ASS'Y	1	57001-
12	01010-82465	BOLT	8	57001-
13	01643-32460	WASHER	8	57001-
14	198-978-1470	BLOCK	4	57001-
15	154-54-42220	RUBBER	8	57001-
16	198-54-13761	COLLAR	4	57001-
17	175-978-5210	BOLT	4	57001-
18	01580-12722	NUT	4	57001-
19	01643-32780	WASHER	4	57001-
20	195-56-11320	PLATE	4	57001-
21	01010-81230	BOLT	16	57001-
22	01643-31232	WASHER	16	57001-
23	175-54-46880	PLATE	1	57001-
24	01010-81220	BOLT	1	57001-
25	01643-31232	WASHER	1	57001-
26	175-54-46450	COVER	1	57001-
27	01010-81225	BOLT	2	57001-
28	195-979-5720	BOLT, 210MM	1	57001-
29	01643-31232	WASHER	3	57001-
30	175-911-7360	PLATE, L.H.	1	57001-
31	175-911-7370	PLATE, R.H.	1	57001-
32	175-978-6330	BRACKET	1	57001-
	175-978-6350	BRACKET, (WITH QUICK CHARGE FUEL TANK)	1	57001-
33	01011-82455	BOLT	4	57001-
34	01010-82465	BOLT	4	57001-
35	20Y-25-11240	WASHER	8	57001-
36	01010-82460	BOLT	10	57001-
37	20Y-25-11240	WASHER	10	57001-
38	07049-02430	PLUG	16	57001-

FIG. K0710-01A0 COMPRESSOR RELATED PARTS

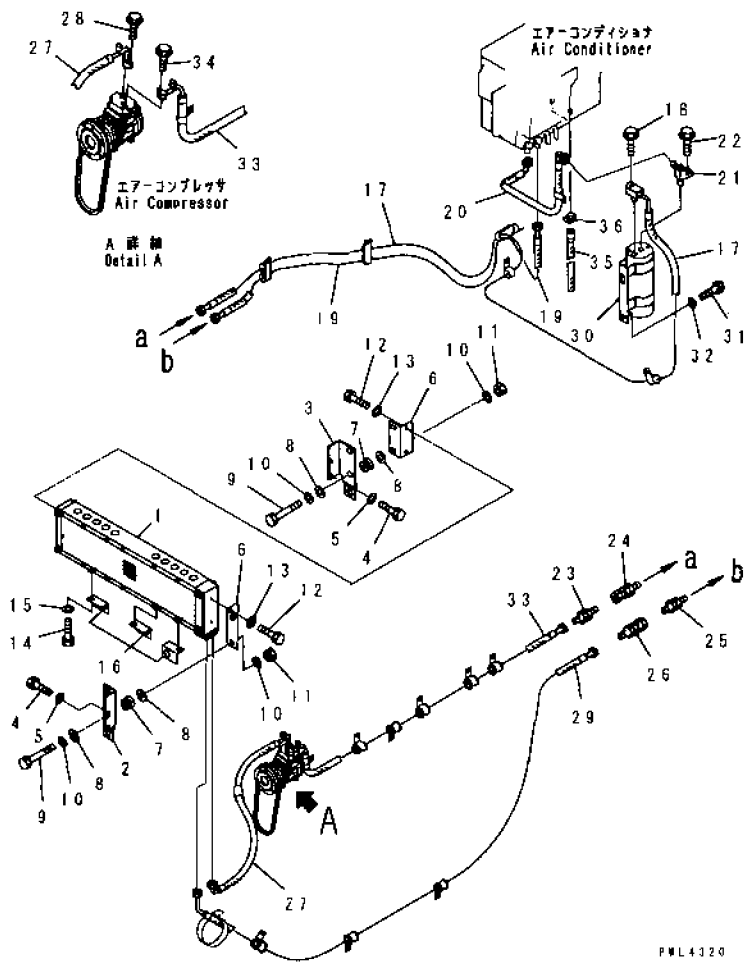

INDEX	PART NO	DESCRIPTION	Q'TY	SERIAL NO
1	175-911-7390	CONDENSER ASS'Y	1	57001-
2	175-979-7510	BRACKET, L.H.	1	57001-
3	175-979-7520	BRACKET, R.H.	1	57001-
4	01010-81225	BOLT	4	57001-
5	01643-31232	WASHER	4	57001-
6	175-979-7210	BRACKET	2	57001-
7	195-03-41380	CUSHION	4	57001-
8	178-60-12250	COLLAR	8	57001-
9	01010-81060	BOLT	4	57001-
10	01643-31032	WASHER	8	57001-
11	01580-11008	NUT	4	57001-
12	01010-81020	BOLT	4	57001-
13	01643-31032	WASHER	4	57001-
14	01010-81220	BOLT	3	57001-
15	01643-31232	WASHER	3	57001-
16	175-979-7330	BRACKET	3	57001-
17	175-911-8230	HOSE	1	57001-
18	01435-00625	BOLT	1	57001-
19	154-911-1150	HOSE	1	57001-
20	154-911-1140	HOSE	1	57001-
21	17A-911-1671	JOINT	1	57001-
22	01435-00625	BOLT	1	57001-
23	17A-911-1541	CONNECTOR ASS'Y	1	57001-
24	17A-911-1531	CONNECTOR ASS'Y	1	57001-
25	17A-911-1561	CONNECTOR ASS'Y	1	57001-
26	17A-911-1551	CONNECTOR ASS'Y	1	57001-
27	175-911-8511	HOSE	1	57001-
28	01435-00630	BOLT	1	57001-
29	175-911-8521	HOSE	1	57001-
30	195-911-7170	HOLDER	1	57001-
31	01010-80820	BOLT	2	57001-
32	01643-30823	WASHER	2	57001-
33	175-911-8531	HOSE	1	57001-
34	01435-00630	BOLT	1	57001-
35	195-Z11-7260	HOSE	2	57001-
36	195-Z11-7270	CLAMP	2	57001-

FIG. K0710-01A1 COMPRESSOR RELATED PARTS (FOR SAND DUST)

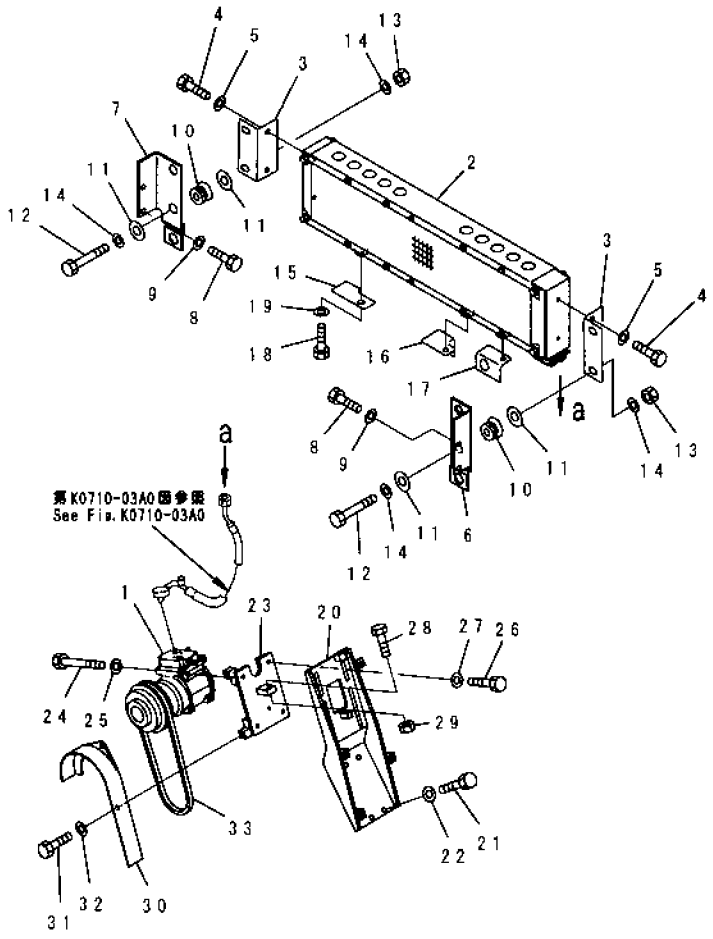

INDEX	PART NO	DESCRIPTION	Q'TY	SERIAL NO
1	(195-911-8990)	AIR COMPRESSOR ASS'Y	1	57001-
2	175-911-7390	CONDENSER ASS'Y	1	57001-
	175-911-8290	CONDENSER ASS'Y, (FOR SLAG HANDLING)	1	57001-
3	175-979-7210	BRACKET	2	57001-
4	01010-81020	BOLT	4	57001-
5	01643-31032	WASHER	4	57001-
6	175-979-7510	BRACKET, L.H.	1	57001-
7	175-979-7520	BRACKET, R.H.	1	57001-
8	01010-81225	BOLT	4	57001-
9	01643-31232	WASHER	4	57001-
10	195-03-41380	CUSHION	4	57001-
11	178-60-12250	COLLAR	8	57001-
12	01010-81060	BOLT	4	57001-
13	01580-11008	NUT	4	57001-
14	01643-31032	WASHER	8	57001-
15	175-03-43181	BRACKET	1	57001-
16	175-03-43190	BRACKET	1	57001-
17	175-979-7330	BRACKET	1	57001-
18	01010-81220	BOLT	3	57001-
19	01643-31232	WASHER	3	57001-
20	175-911-8551	BRACKET	1	57001-
21	01010-81030	BOLT	4	57001-
22	01643-31032	WASHER	4	57001-
23	17A-911-1421	BRACKET	1	57001-
24	01010-80885	BOLT	4	57001-
25	01643-30823	WASHER	4	57001-
26	01010-81025	BOLT	4	57001-
27	203-54-56970	WASHER	4	57001-
28	130-Z79-1740	BOLT	1	57001-
29	01580-11008	NUT	1	57001-
30	175-911-7440	COVER	1	57001-
31	01010-81020	BOLT	2	57001-
32	01643-31032	WASHER	2	57001-
33	04120-21735	V-BELT	1	57001-

FIG. K0710-02A0 HEATING PIPING (FOR AIR CONDITIONER)

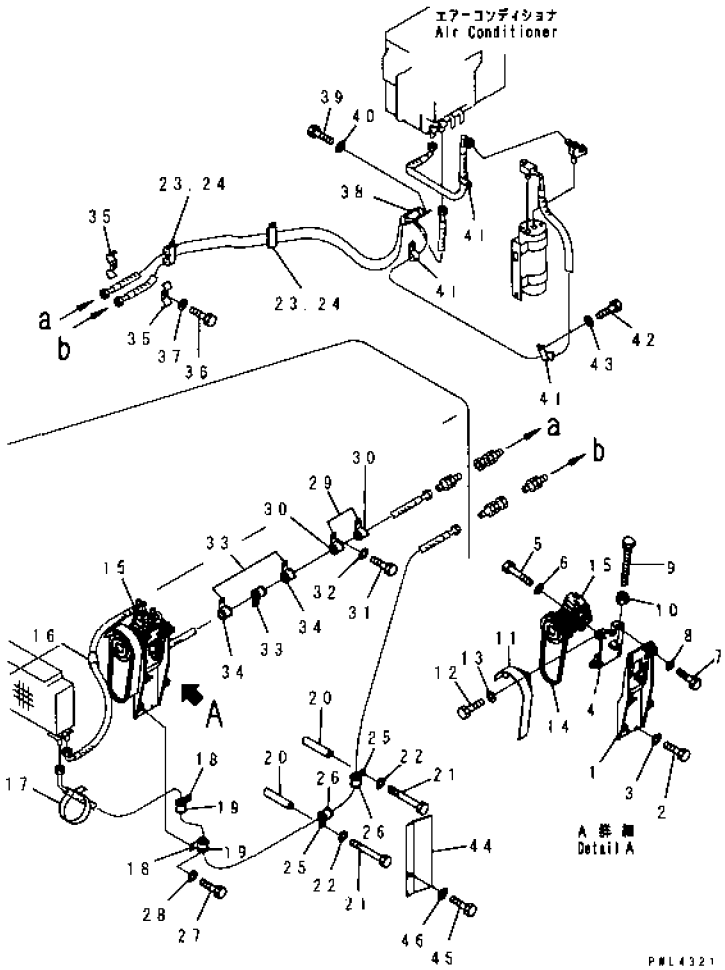

INDEX	PART NO	DESCRIPTION	Q'TY	SERIAL NO
1	175-911-8551	BRACKET	1	57001-
2	01010-81030	BOLT	4	57001-
3	01643-31032	WASHER	4	57001-
4	17A-911-1421	BRACKET	1	57001-
5	01010-80885	BOLT	4	57001-
6	01643-30823	WASHER	4	57001-
7	01010-81025	BOLT	4	57001-
8	203-54-56970	WASHER	4	57001-
9	130-Z79-1740	BOLT	1	57001-
10	01580-11008	NUT	1	57001-
11	175-911-7440	COVER	1	57001-
12	01010-81020	BOLT	2	57001-
13	01643-31032	WASHER	2	57001-
14	04120-21735	V-BELT	1	57001-
15	20Y-979-3111	AIR COMPRESSOR ASS'Y	1	57001-
16	203-62-41160	COVER	1	57001-
17	08034-00519	BAND	3	57001-
18	04434-52112	CLIP	2	57001-
19	07095-20314	CUSHION	2	57001-
20	22S-62-15270	SPACER	2	57001-
21	01011-81020	BOLT	2	57001-
22	01643-31032	WASHER	2	57001-
23	195-01-12520	CLIP	2	57001-
24	04434-51512	CLIP	2	57001-
25	04434-52112	CLIP	2	57001-
26	07095-20314	CUSHION	2	57001-
27	01010-81020	BOLT	2	57001-
28	01643-31032	WASHER	2	57001-
29	04434-52711	CLIP	1	57001-
30	07095-20420	CUSHION	1	57001-
31	01010-81020	BOLT	1	57001-
32	01643-31032	WASHER	1	57001-
33	04434-52711	CLIP	3	57001-
34	07095-20420	CUSHION	3	57001-
35	195-Z11-7220	CLIP	2	57001-
36	01010-81050	BOLT	1	57001-
37	01643-31032	WASHER	1	57001-
38	195-911-5510	CLIP	1	57001-
39	01010-81020	BOLT	1	57001-
40	01643-31032	WASHER	1	57001-
41	04434-51512	CLIP	3	57001-
42	01010-81220	BOLT	3	57001-

FIG. K0710-02A0 HEATING PIPING (FOR AIR CONDITIONER)

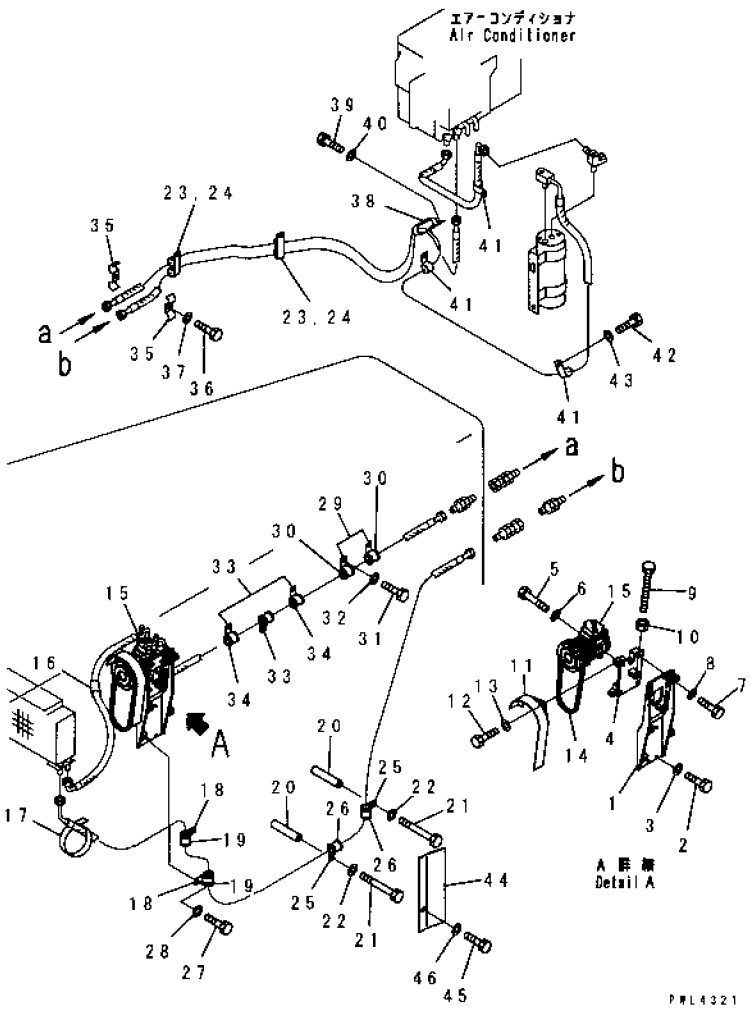

INDEX	PART NO	DESCRIPTION	Q'TY	SERIAL NO
43	01643-31232	WASHER	3	57001-
44	175-61-71270	COVER	1	57001-
45	01010-81020	BOLT	1	57001-
46	01643-31032	WASHER	1	57001-

FIG. K0710-03A0 COOLING PIPING (FOR AIR CONDITIONER)

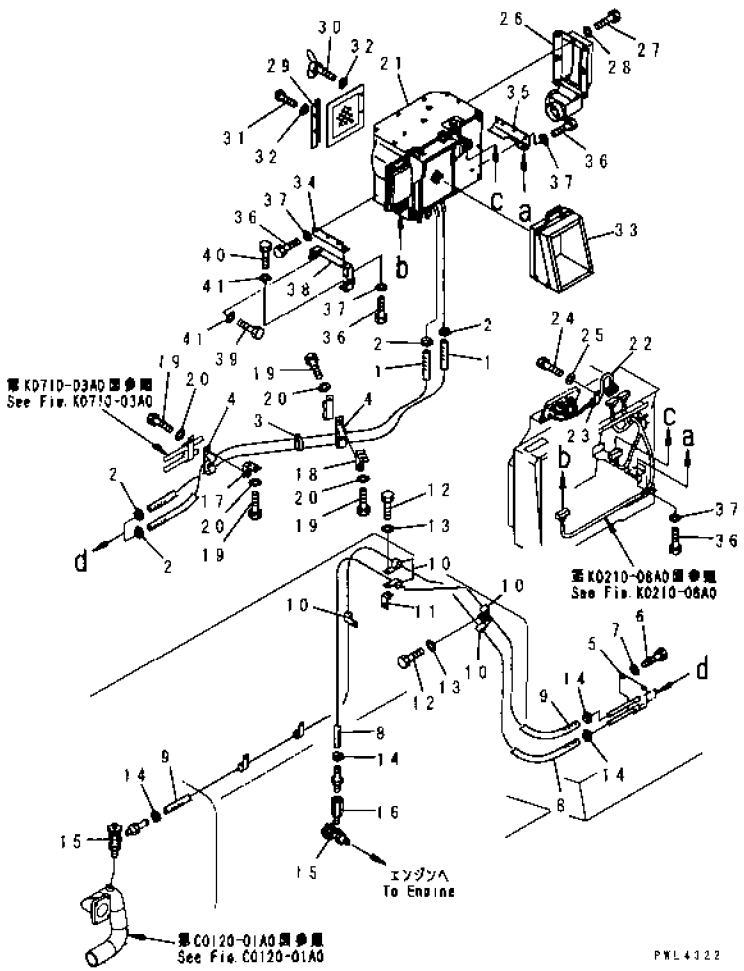

INDEX	PART NO	DESCRIPTION	Q'TY	SERIAL NO
1	09483-50516	HOSE	2	57001-
2	198-09-31210	CLAMP	4	57001-
3	08034-00536	BAND	1	57001-
4	195-979-1550	CLAMP	2	57001-
5	175-911-8541	BRACKET	1	57001-
6	01010-81225	BOLT	2	57001-
7	01643-31232	WASHER	2	57001-
8	09483-50515	HOSE	1	57001-
9	09483-50523	HOSE	1	57126-
	09483-50524	HOSE	1	57001-57125
10	04434-52511	CLIP	6	57001-
11	22T-35-14870	PLATE	1	57001-
12	01010-81020	BOLT	2	57001-
13	01643-31032	WASHER	2	57001-
14	198-09-31210	CLAMP	4	57001-
15	09482-10000	VALVE	2	57001-
16	195-979-7650	JOINT	1	57001-
17	195-Z11-5190	BRACKET	1	57001-
18	175-911-7220	BRACKET	1	57001-
19	01010-81225	BOLT	6	57001-
20	01643-31232	WASHER	6	57001-
21	195-911-7211	UNIT ASS'Y	1	57001-
22	195-Z11-5351	WIRE ASS'Y	1	57001-
23	08036-01814	CLIP	1	57001-
24	01010-81220	BOLT	1	57001-
25	01643-31232	WASHER	1	57001-
26	175-911-7190	DUCT	1	57001-
27	01010-80816	BOLT	7	57001-
28	01643-30823	WASHER	7	57001-
29	154-Z11-5610	PLATE	1	57001-
30	01434-10620	BOLT, WING	2	57001-
31	01220-40616	SCREW	2	57001-
32	01643-30623	WASHER	4	57001-
33	175-911-7140	DUCT	1	57001-
34	175-911-7230	BRACKET	1	57001-
35	175-911-7240	BRACKET	1	57001-
36	01010-81225	BOLT	10	57001-
37	01643-31232	WASHER	10	57001-
38	175-911-7250	BRACKET	1	57001-
39	01010-81225	BOLT	1	57001-
40	01010-81230	BOLT	1	57001-
41	01643-31232	WASHER	2	57001-

FIG. K0710-03A1 AIR COMPRESSOR (FOR SAND DUST)

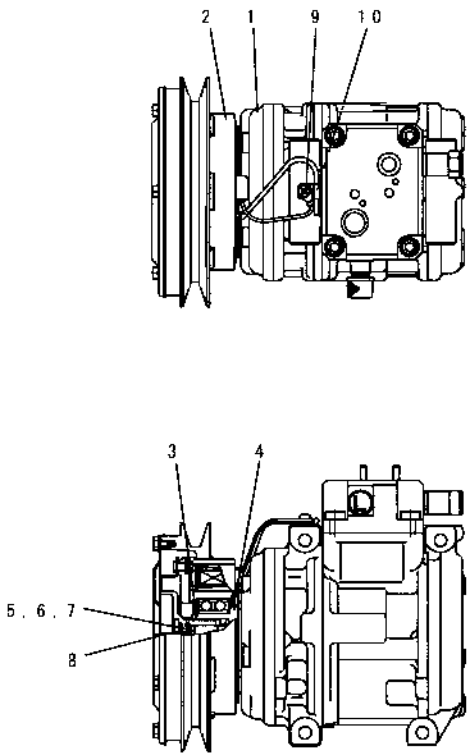

PDB0467

INDEX	PART NO	DESCRIPTION	Q'TY	SERIAL NO.
	195-911-8990	AIR COMPRESSOR ASS'Y	1	57001-
1	ND447200-0243	.COMPRESSOR ASS'Y	1	57001-
2	ND447300-1440	.CLUTCH ASS'Y, MAGNET	1	57001-
3	ND949070-1360	.RING, SNAP	1	57001-
4	ND949070-0640	.RING, SNAP	1	57001-
5	ND949013-7480	.WASHER, 0.1MM, PLATE	1	57001-
6	ND949013-7500	.WASHER, 0.3MM, PLATE	1	57001-
7	ND949013-7510	WASHER, 0.5MM, STEEL PLATE	1	57001-
8	ND949048-0430	.BOLT, WASHER HEAD	1	57001-
9	ND91310-05081	.SCREW, WITH WASHER	1	57001-
10	ND146691-4470	.CLAMP	1	57001-

FIG. K0710-04A0 AIR CONDITIONER (1/2)

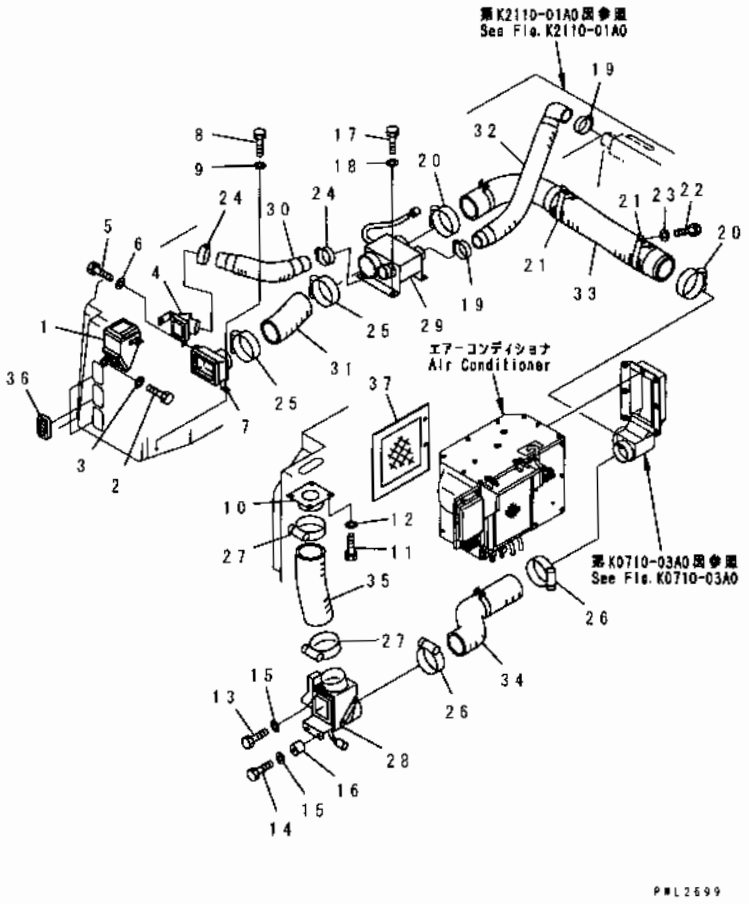

INDEX	PART NO	DESCRIPTION	Q'TY	SERIAL NO
1	154-Z11-5120	DUCT	1	57001-
2	01010-81220	BOLT	2	57001-
3	01643-31232	WASHER	2	57001-
4	175-911-7320	DUCT	1	57001-
5	01010-81220	BOLT	2	57001-
6	01643-31232	WASHER	2	57001-
7	175-911-7330	DUCT	1	57001-
8	01010-81220	BOLT	2	57001-
9	01643-31232	WASHER	2	57001-
10	154-Z11-5240	DUCT	1	57001-
11	01010-81220	BOLT	2	57001-
12	01643-31232	WASHER	2	57001-
13	01010-80820	BOLT	1	57001-
14	01010-80840	BOLT	2	57001-
15	01643-30823	WASHER	3	57001-
16	141-54-38310	BOSS	2	57001-
17	01010-81220	BOLT	4	57001-
18	01643-31232	WASHER	4	57001-
19	07289-00070	CLAMP	2	57001-
20	07281-01159	CLAMP	2	57001-
21	195-Z11-5240	CLIP	2	57001-
22	01010-81220	BOLT	2	57001-
23	01643-31232	WASHER	2	57001-
24	07289-00070	CLAMP	2	57001-
25	07281-01159	CLAMP	2	57001-
26	07281-01159	CLAMP	2	57001-
27	07281-01159	CLAMP	2	57001-
	175-911-7300	HOSE ASS'Y.	1	57001-
28	195-Z11-5501	.DISTRIBUTOR ASS'Y.	1	57001-
29	195-Z11-5400	.DISTRIBUTOR ASS'Y.	1	57001-
30	175-911-7180	.HOSE	1	57001-
31	195-Z11-6740	.AIR DUCT	1	57001-
32	175-911-7260	.HOSE	1	57001-
33	175-911-7170	.HOSE	1	57001-
34	175-911-7160	.HOSE	1	57001-
35	154-Z11-5230	.HOSE	1	57001-
36	142-979-3221	.GRILLE ASS'Y.	6	57001-
37	195-Z11-6691	FILTER	1	57001-

FIG.K0710-05A0 AIR CONDITIONER (2/2)

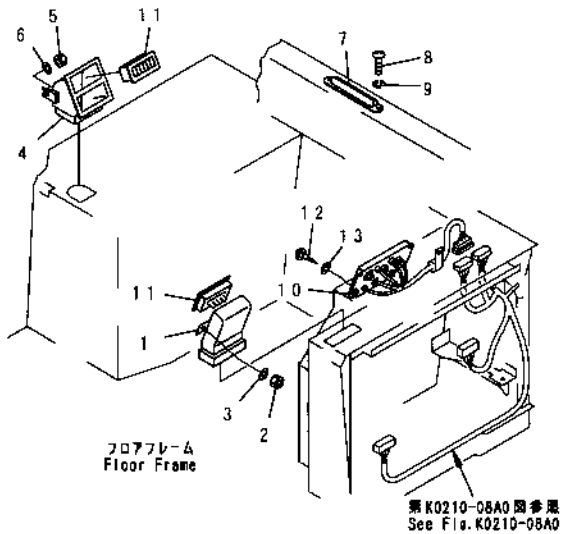

PWL4323

INDEX	PART NO.	DESCRIPTION	Q'TY	SERIAL NO
1	195-Z11-5260	DUCT	1	57001-
2	01580-10605	NUT	2	57001-
3	01643-30623	WASHER	2	57001-
4	195-Z11-5270	DUCT	1	57001-
5	01580-10605	NUT	2	57001-
6	01643-30623	WASHER	2	57001-
7	09487-20220	NOZZLE	1	57001-
8	01220-40408	SCREW	2	57001-
9	01601-20410	WASHER	2	57001-
	195-Z11-6300	PANEL ASS'Y	1	57001-
10	195-Z11-5600	PANEL ASS'Y	1	57001-
11	142-979-3221	GRILLE ASS'Y	4	57001-
12	01220-40616	SCREW	4	57001-
13	01642-20608	WASHER	4	57001-

FIG. K0710-06A0 AIR COMPRESSOR

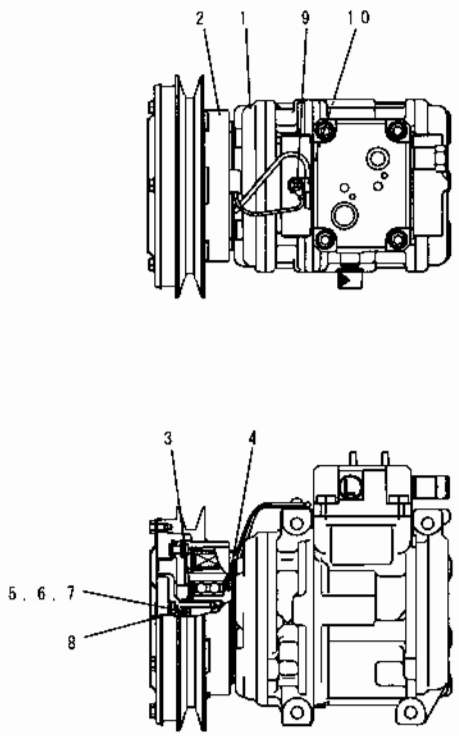

PBB0467

INDEX	PART NO	DESCRIPTION	Q'TY	SERIAL NO.
	20Y-979-3111	AIR COMPRESSOR ASS'Y	1	57001-
1	ND447200-0243	.COMPRESSOR ASS'Y	1	57001-
2	ND447300-1440	.CLUTCH ASS'Y, MAGNET	1	57001-
3	ND949070-1360	.RING, SNAP	1	57001-
4	ND949070-0640	.RING, SNAP	1	57001-
5	ND949013-7480	WASHER, 0.1MM, PLATE	1	57001-
6	ND949013-7500	.WASHER, 0.3MM, PLATE	1	57001-
7	ND949013-7510	.WASHER, 0.5MM, STEEL PLATE	1	57001-
8	ND949048-0430	.BOLT, WASHER HEAD	1	57001-
9	ND91310-05081	.SCREW, WITH WASHER	1	57001-
10	ND146691-4470	.CLAMP	1	57001-

FIG. K0810-01A0 ACCESORY (FOR STEEL CAB)

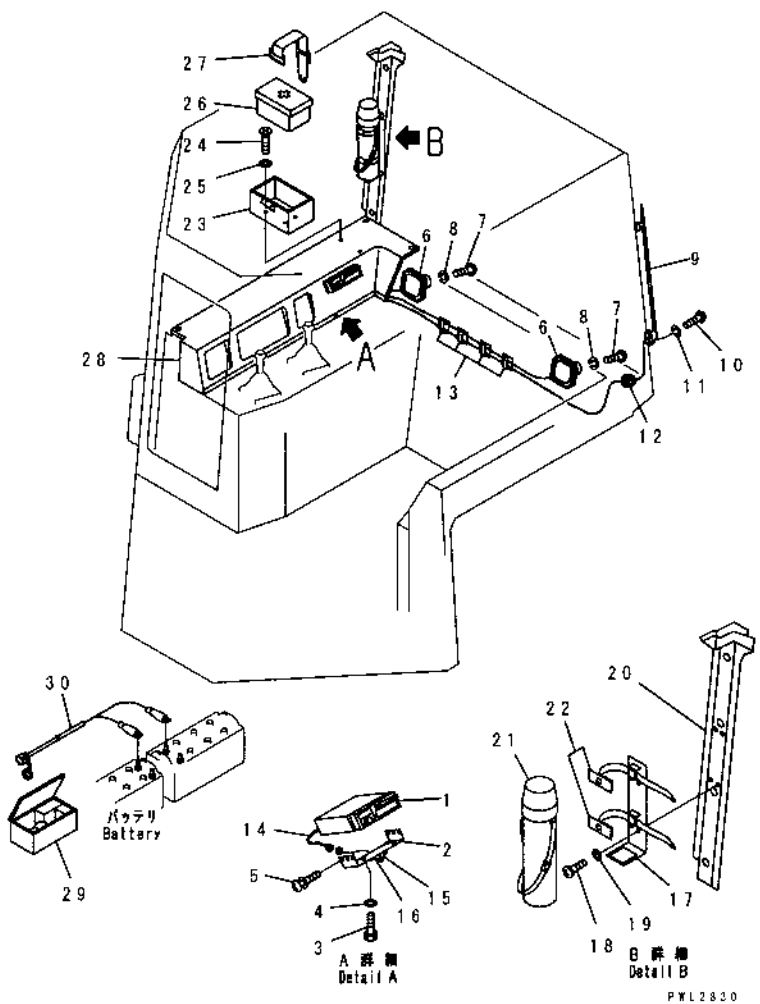

INDEX	PART NO	DESCRIPTION	Q'TY	SERIAL NO
1	175-911-6151	STEREO CASSETTE A., (FOR JAPAN)	1	57001-
	175-911-6111	STEREO CASSETTE A., (EXCEPT JAPAN)	1	57001-
2	195-Z11-2720	BRACKET	1	57001-
3	01010-80616	BOLT	4	57001-
4	01643-30623	WASHER	1	57001-
5	01023-10510	SCREW	6	57001-
6	175-911-6131	SPEAKER	2	57001-
7	195-979-7720	SCREW	8	57001-
8	01601-20410	WASHER, SPRING	8	57001-
9	175-911-6140	ANTENNA ASS'Y	1	57001-
10	195-979-7720	SCREW	2	57001-
11	01601-20410	WASHER, SPRING	2	57001-
12	08037-01008	GROMMET	1	57001-
13	203-06-21150	CLIP	10	57001-
14	08017-30705	CONDUIT	1	57001-
15	08034-00519	BAND	4	57001-
16	195-Z11-3940	BATTERY	1	57001-
17	195-Z11-3170	BRACKET	1	57001-
18	195-979-7710	SCREW	4	57001-
19	01642-20508	WASHER	4	57001-
20	195-Z11-3930	COVER	1	57001-
21	195-911-1722	FLASK, VACUUM	1	57001-
22	195-911-1330	BAND	2	57001-
		==========		
	175-911-X500	FIRST AID GROUP	1	57001-
		==========		
23	195-Z11-2990	COVER	1	57001-
24	195-979-7720	SCREW	3	57001-
25	01642-20405	WASHER	3	57001-
26	195-911-6531	BOX	1	57001-
27	195-911-6562	BAND	1	57001-
28	175-911-7411	PANEL, R.H.	1	57001-
		==========		
	175-98-X1200	LAMP GROUP	1	57001-
		==========		
29	175-900-2470	LAMP	1	57001-
	08105-12410	.BULB, 12W	1	57001-
30	175-98-22370	CABLE	1	57001-
		==========		

FIG. K2110-01A0 FLOOR PLATE

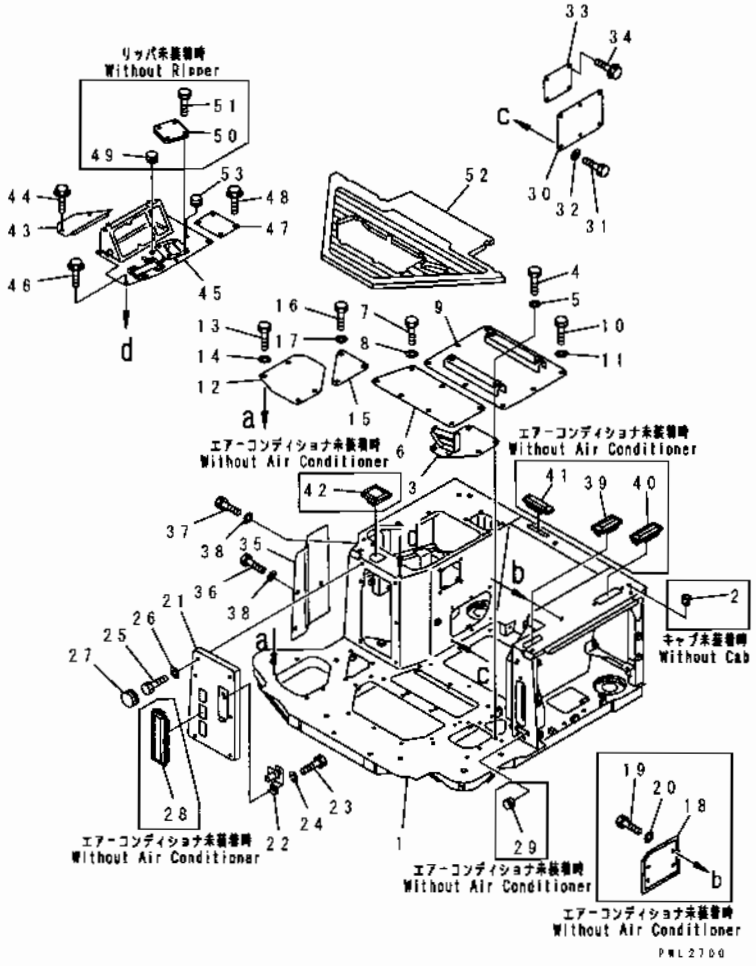

INDEX	PART NO	DESCRIPTION	Q'TY	SERIAL NO
1	175-54-46711	FRAME, FLOOR	1	57001-
2	07049-01418	PLUG	14	57001-
3	154-54-46320	COVER	1	57001-
4	01010-81230	BOLT	4	57001-
5	01643-31232	WASHER	4	57001-
6	175-54-46760	COVER	1	57001-
7	01010-81230	BOLT	7	57001-
8	01643-31232	WASHER	7	57001-
9	175-54-46750	COVER	1	57001-
10	01010-81235	BOLT	8	57001-
11	01643-31232	WASHER	8	57001-
12	175-54-46780	COVER	1	57001-
13	01010-81230	BOLT	4	57001-
14	01643-31232	WASHER	4	57001-
15	154-54-42160	COVER	1	57001-
16	01010-81230	BOLT	3	57001-
17	01643-31232	WASHER	3	57001-
18	154-54-46230	COVER, (WITHOUT AIR CONDITIONER)	1	57001-
19	01010-80620	BOLT, (WITHOUT AIR CONDITIONER)	4	57001-
20	01643-30623	WASHER, (WITHOUT AIR CONDITIONER)	4	57001-
21	154-Z11-5111	COVER	1	57001-
22	175-54-33940	LOCK ASS'Y	1	57001-
23	01010-80812	BOLT	1	57001-
24	01602-20825	WASHER, SPRING	1	57001-
25	01010-81225	BOLT	6	57001-
26	01643-31232	WASHER	6	57001-
27	09415-02512	CAP	6	57001-
28	195-54-45450	CAP, (WITHOUT AIR CONDITIONER)	2	57001-
29	203-54-32260	STOPPER, (WITHOUT AIR CONDITIONER)	2	57001-
30	175-54-46770	COVER	1	57001-
31	01010-81225	BOLT	6	57001-
32	01643-31232	WASHER	6	57001-
33	175-54-46820	COVER	1	57001-
34	01439-00820	BOLT	4	57001-
35	175-54-46490	COVER, R.H.	1	57001-
36	01010-81220	BOLT	3	57001-
37	01010-51235	BOLT	1	57001-
38	01643-31232	WASHER	4	57001-
39	195-54-45410	CAP, (WITHOUT AIR CONDITIONER)	1	57001-
40	195-54-45440	CAP, (WITHOUT AIR CONDITIONER)	1	57001-
41	195-54-45430	CAP, (WITHOUT AIR CONDITIONER)	1	57001-
42	195-54-45420	CAP, (WITHOUT AIR CONDITIONER)	1	57001-

FIG. K2110-01A0 FLOOR PLATE

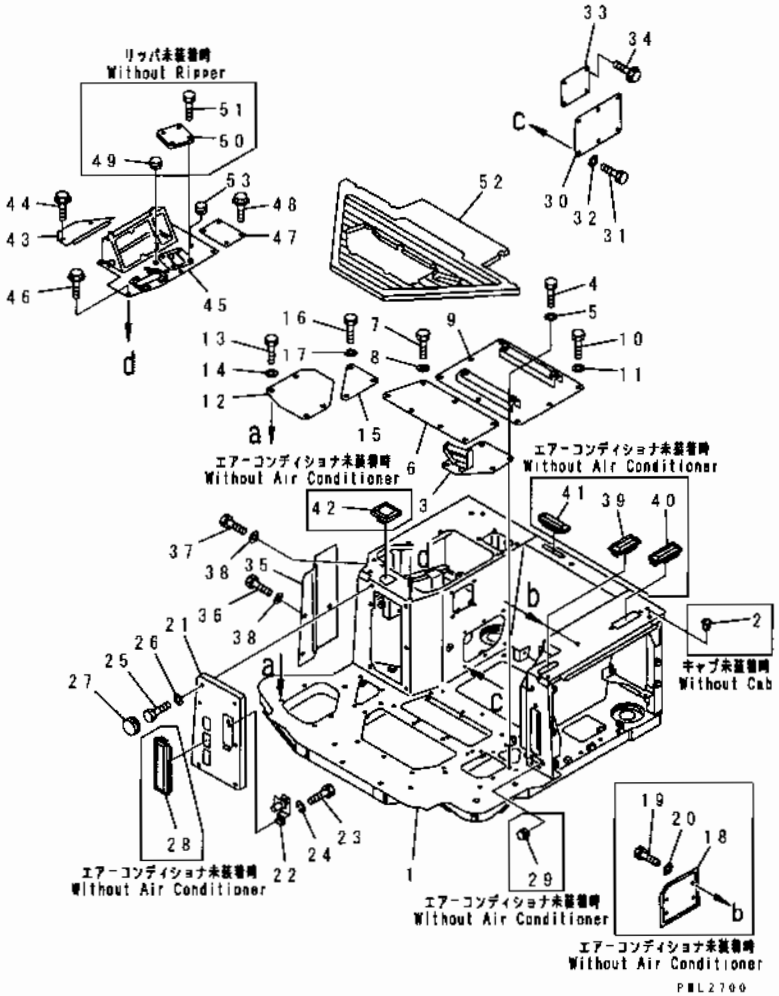

INDEX	PART NO	DESCRIPTION	Q'TY	SERIAL NO
43	175-54-46830	COVER	1	57001-
44	195-54-26210	BOLT	2	57001-
45	175-54-46790	BRACKET	1	57001-
46	195-54-26210	BOLT	5	57001-
47	175-54-46940	COVER	1	57001-
48	195-54-26210	BOLT	4	57001-
49	09415-01610	CAP, (WITHOUT RIPPER)	1	57001-
50	175-54-46960	COVER, (WITHOUT RIPPER)	1	57001-
51	205-06-62170	BOLT, (WITHOUT RIPPER)	4	57001-
52	175-911-7120	MAT	1	57001-
53	09415-01610	CAP, (WITHOUT PIN PULLER)	1	57001-

FIG. K2110-02A0 RIPPER CONTROL LINKAGE (WITHOUT P.P.C)

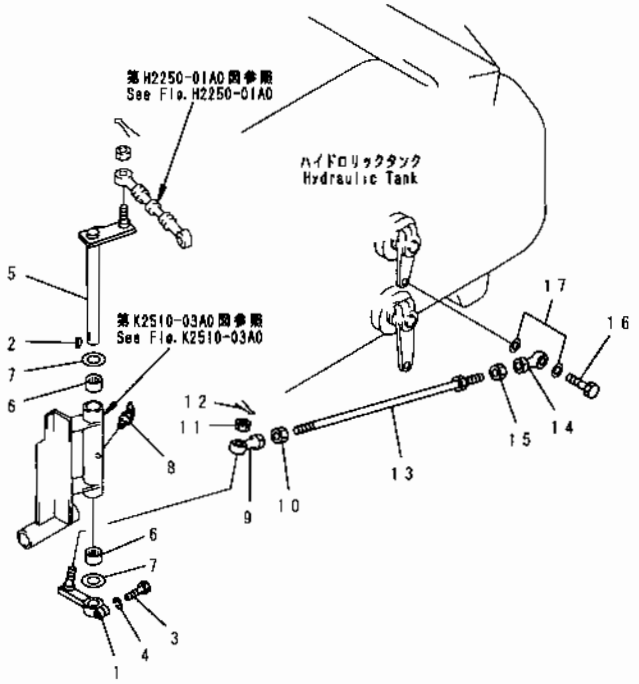

INDEX	PART NO	DESCRIPTION	Q'TY	SERIAL NO.
1	195-78-42310	LEVER	1	57001-
2	04010-00519	KEY	1	57001-
3	01010-80830	BOLT	1	57001-
4	01602-20825	WASHER	1	57001-
5	175-78-69411	SHAFT	1	57001-
6	195-61-41270	BEARING	2	57001-
7	01640-22032	WASHER	2	57001-
8	07020-00900	FITTING, GREASE	1	57001-
9	04250-91265	END, ROD	1	57001-
10	01508-41207	NUT	1	57001-
11	01593-11210	NUT	1	57001-
12	04050-13020	PIN, COTTER	1	57001-
13	04248-31249	ROD	1	57001-
14	04250-81265	END, ROD	1	57001-
15	01582-11210	NUT	1	57001-
16	01090-51240	BOLT	1	57001-
17	04254-01232	SPACER	1	57001-

FIG. K2110-03A0 BRAKE PEDAL

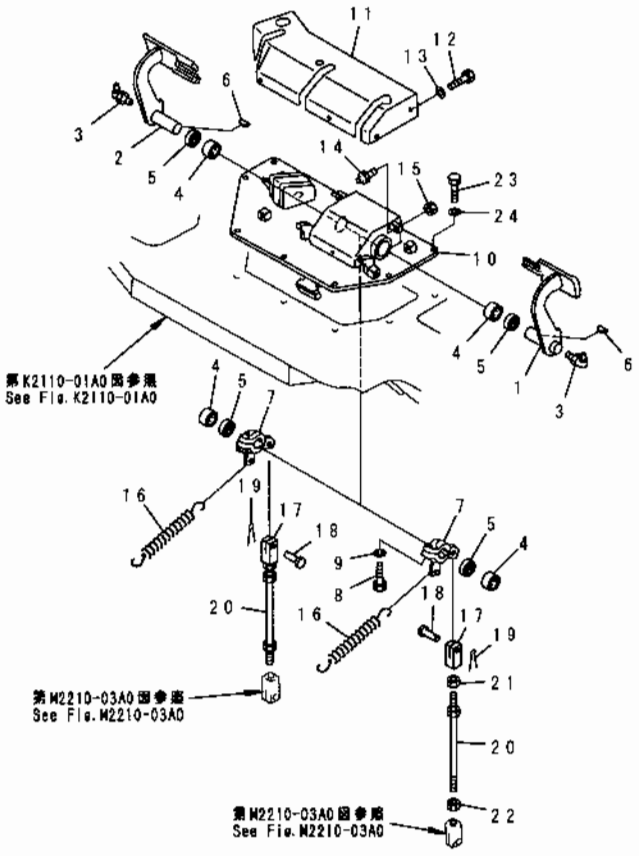

INDEX	PART NO.	DESCRIPTION	Q TY	SERIAL NO
1	175-43-52410	PEDAL, L.H.	1	57001-
2	175-43-52420	PEDAL, R.H.	1	57001-
3	07020-00900	FITTING, GREASE	2	57001-
4	06120-03520	BEARING, NEEDLE	4	57001-
5	06122-03504	SEAL, BEARING	4	57001-
6	04010-01032	KEY	2	57001-
7	175-43-52430	LEVER	2	57001-
8	01010-81245	BOLT	2	57001-
9	01602-21236	WASHER, SPRING	2	57001-
10	15A-43-11141	BRACKET	1	57001-
11	154-43-41122	COVER	1	57001-
12	01010-81225	BOLT	4	57001-
13	01643-31232	WASHER	4	57001-
14	09311-41237	BUMPER	2	57001-
15	01580-11210	NUT	2	57001-
16	154-43-41260	SPRING	2	57001-
17	04211-21478	YOKE	2	57001-
18	04205-11438	PIN	2	57001-
19	04050-14028	PIN, COTTER	2	57001-
20	04248-31435	ROD	2	57001-
21	01582-11411	NUT	2	57001-
22	01508-41408	NUT	2	57001-
23	01010-81235	BOLT	9	57001-
24	01643-31232	WASHER	9	57001-

FIG. K2110-04A0 PARKING BRAKE LEVER

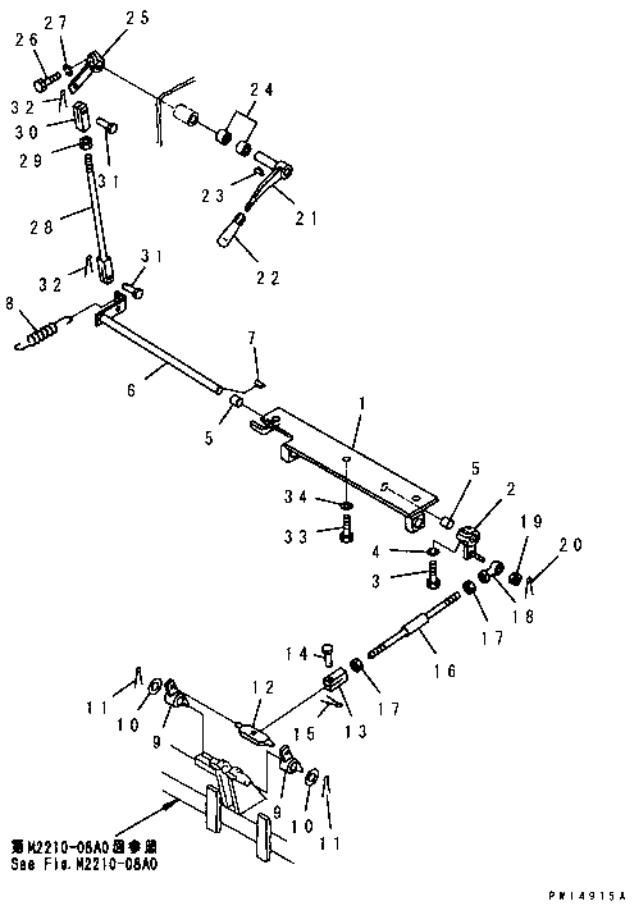

INDEX	PART NO	DESCRIPTION	Q'TY	SERIAL NO
1	175-43-51340	BRACKET	1	57001-
2	154-43-41340	LEVER	1	57001-
3	01010-80830	BOLT	1	57001-
4	01602-20825	WASHER, SPRING	1	57001-
5	09350-01615	BUSHING	2	57001-
6	154-43-41320	LEVER	1	57001-
7	04010-00519	KEY	1	57001-
8	195-43-18491	SPRING	1	57001-
9	154-43-41360	PAWL	2	57001-
10	01640-22032	WASHER	2	57001-
11	04050-14030	PIN, COTTER	2	57001-
12	154-43-41350	BAR	1	57001-
13	04210-21040	YOKE	1	57001-
14	04205-11028	PIN	1	57001-
15	04050-13020	PIN, COTTER	1	57001-
16	04245-41026	ROD	1	57001-
17	01582-11008	NUT	2	57001-
18	04250-81056	END, ROD	1	57001-
19	01593-11008	NUT	1	57001-
20	04050-12018	PIN, COTTER	1	57001-
21	195-43-41260	LEVER	1	57001-
22	09305-00800	KNOB	1	57001-
23	04010-00519	KEY	1	57001-
24	195-61-41260	BEARING	2	57001-
25	154-43-41310	LEVER	1	57001-
26	01010-80830	BOLT	1	57001-
27	01602-20825	WASHER, SPRING	1	57001-
28	04244-41030	ROD	1	57001-
29	01580-11008	NUT	1	57001-
30	04210-21040	YOKE	1	57001-
31	04205-11028	PIN	2	57001-
32	04050-13020	PIN, COTTER	2	57001-
33	01010-81230	BOLT	3	57001-
34	01643-31232	WASHER	3	57001-

FIG. K2110-05A0 STEERING CONTROL LEVER

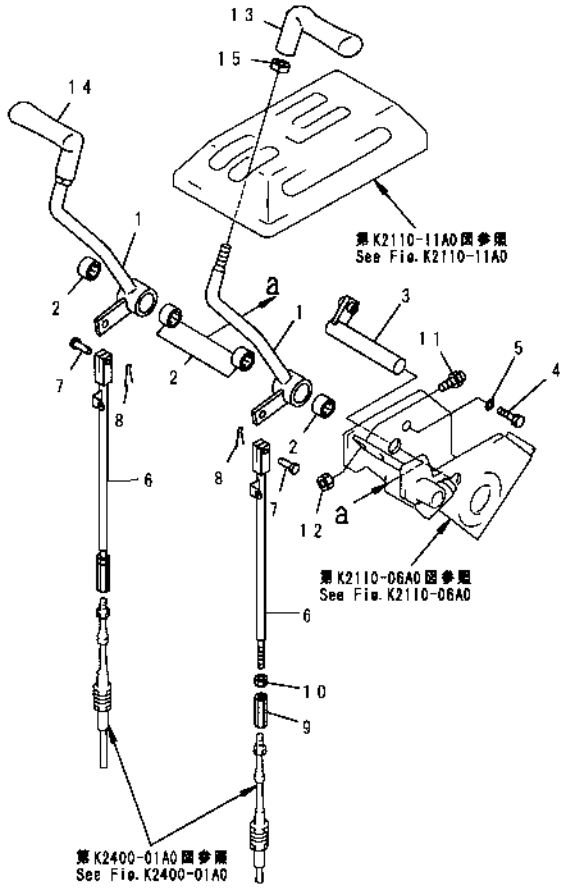

PW138D4A

INDEX	PART NO.	DESCRIPTION	Q'TY	SERIAL NO.
1	154-43-42110	LEVER, L.H.	1	57001-
	154-43-42170	LEVER, R.H.	1	57001-
2	195-43-43190	BEARING, NEEDLE	4	57001-
3	154-43-42120	SHAFT	1	57001-
4	01010-80816	BOLT	1	57001-
5	01643-30823	WASHER	1	57001-
6	154-43-42160	ROD	2	57001-
7	04205-10822	PIN	2	57001-
8	04050-12015	PIN, COTTER	2	57001-
9	144-43-51130	JOINT	2	57001-
10	01508-20805	NUT	2	57001-
11	195-43-41360	BAMPER	2	57001-
12	01583-11006	NUT	2	57001-
13	195-43-41560	KNOB, L.H.	1	57001-
14	195-43-41570	KNOB, R.H.	1	57001-
15	19M-43-11170	NUT	2	57001-

FIG. K2110-06A0 TRANSMISSION CONTROL LEVER

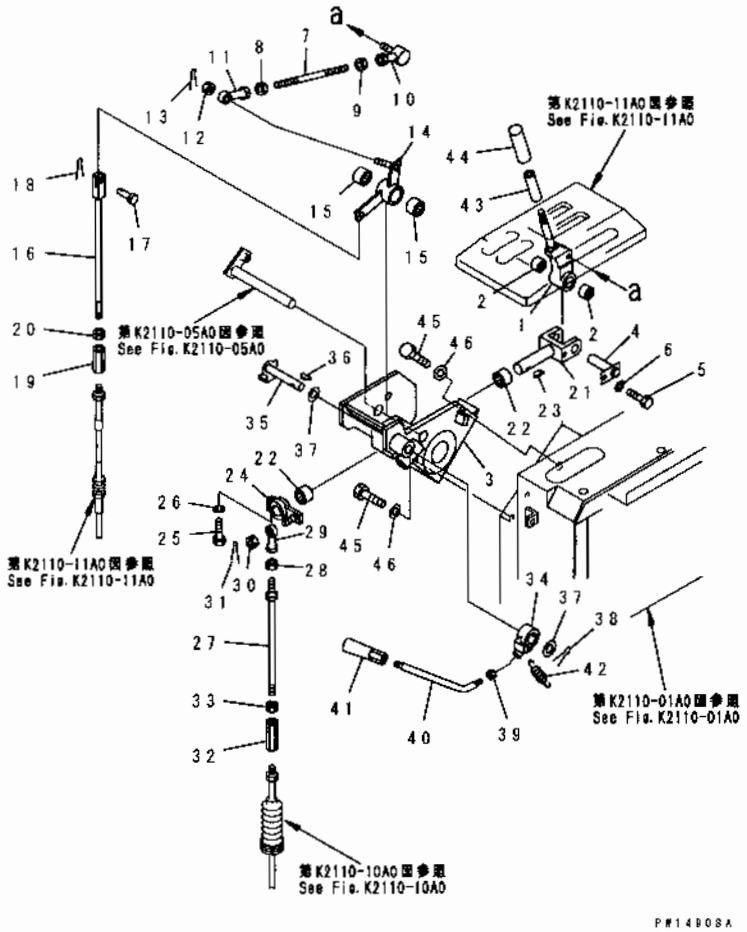

INDEX	PART NO	DESCRIPTION	Q'TY	SERIAL NO.
1	195-43-43150	LEVER	1	57001-
2	195-61-34120	BEARING	2	57001-
3	154-43-43130	BRACKET	1	57001-
4	195-43-43170	PIN	1	57001-
5	01010-80616	BOLT	1	57001-
6	01643-30623	WASHER	1	57001-
7	113-43-11530	ROD	1	57001-
8	01580-10806	NUT	1	57001-
9	01508-40805	NUT	1	57001-
10	04256-00816	JOINT, BALL	1	57001-
11	04250-90847	END, ROD	1	57001-
12	01590-30809	NUT	1	57001-
13	04050-12015	PIN, COTTER	1	57001-
14	154-43-43150	LEVER	1	57001-
15	195-43-43190	BEARING, NEEDLE	2	57001-
16	195-43-41580	ROD	1	57001-
17	04205-10822	PIN	1	57001-
18	04050-12015	PIN, COTTER	1	57001-
19	144-43-51130	JOINT	1	57001-
20	01508-40805	NUT	1	57001-
21	154-43-43210	YOKE	1	57001-
22	195-43-43190	BEARING, NEEDLE	2	57001-
23	04010-00519	KEY	1	57001-
24	154-43-43220	LEVER	1	57001-
25	01010-80830	BOLT	1	57001-
26	01602-20825	WASHER, SPRING	1	57001-
27	04248-31028	ROD	1	57001-
28	01582-11008	NUT	1	57001-
29	04250-81056	END, ROD	1	57001-
30	01593-11008	NUT	1	57001-
31	04050-12018	PIN, COTTER	1	57001-
32	178-43-12180	BUCKLE, TURN	1	57001-
33	01508-41006	NUT	1	57001-
34	195-43-43241	LEVER	1	57001-
35	154-43-43260	PIN	1	57001-
36	04010-00519	KEY	1	57001-
37	01640-21626	WASHER	2	57001-
38	04050-14025	PIN, COTTER	1	57001-
39	195-43-43370	NUT	1	57001-
40	195-43-43360	LEVER	1	57001-
41	09305-00800	KNOB	1	57001-
42	195-43-43260	SPRING	1	57001-

FIG. K2110-06A0 TRANSMISSION CONTROL LEVER

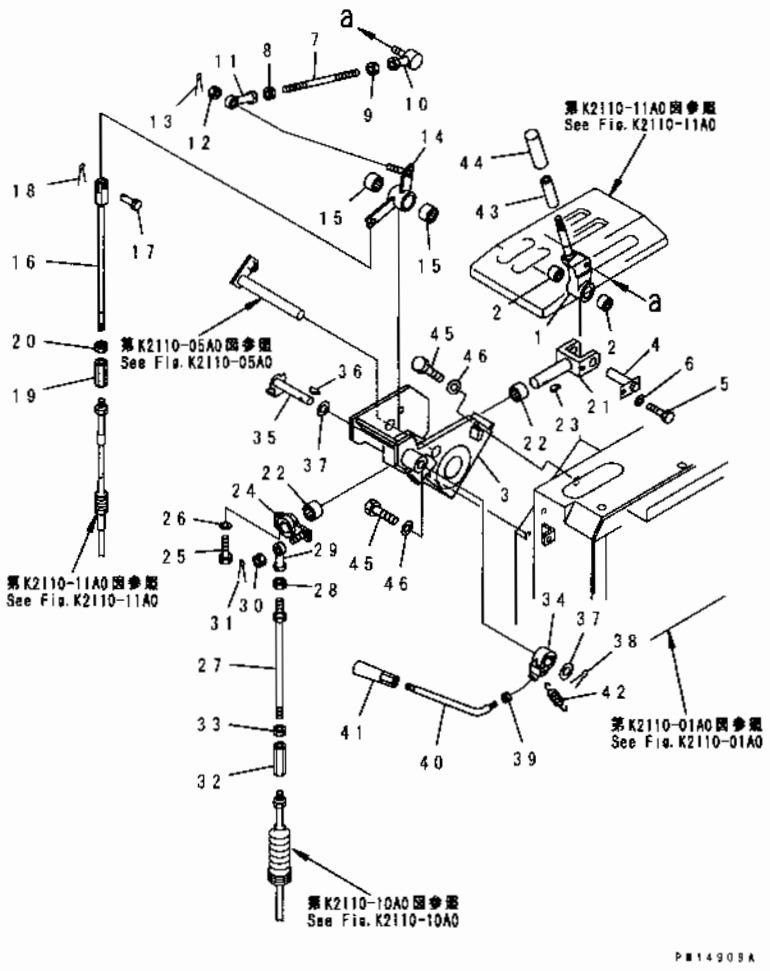

INDEX	PART NO	DESCRIPTION	Q'TY	SERIAL NO.
43	09361-01460	BUSHING	1	57001-
44	09304-01240	KNOB	1	57001-
45	01010-81225	BOLT	4	57001-
46	01643-31232	WASHER	4	57001-

FIG. K2110-07A0 DECELERATOR PEDAL

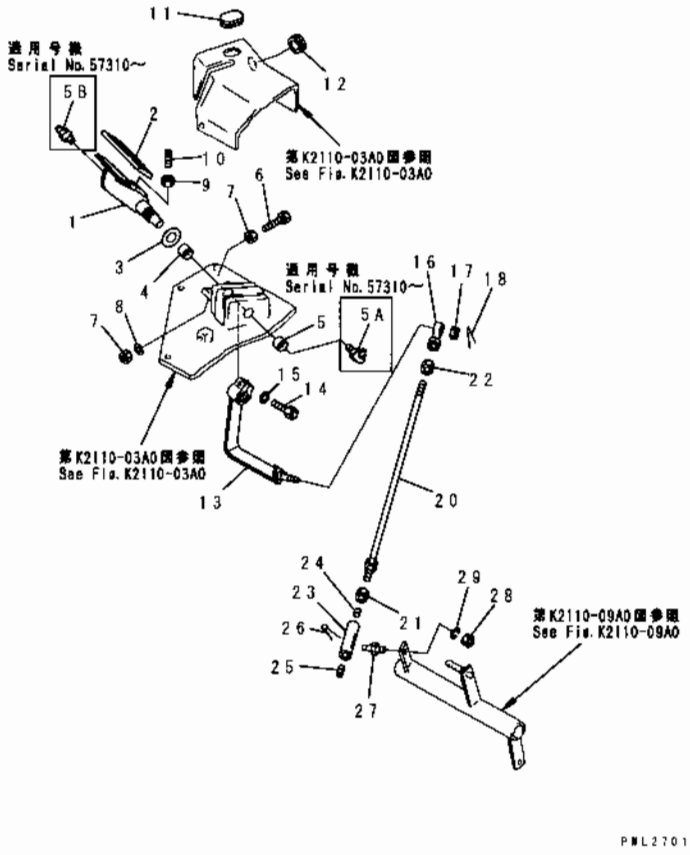

INDEX	PART NO.	DESCRIPTION	Q'TY	SERIAL NO
1	195-43-42350	PEDAL	1	57001-
2	195-43-42340	COVER, RUBBER	1	57001-
3	01643-32460	WASHER	1	57001-
4	195-61-34140	BEARING, NEEDLE	1	57001-
5	195-61-34130	BEARING, NEEDLE	1	57001-
5A	07020-00900	FITTING, GREASE	1	57310-
5B	07020-00000	FITTING, GREASE	1	57310-
6	01016-51060	BOLT	1	57001-
7	01580-11008	NUT	2	57001-
8	01643-31032	WASHER	1	57001-
9	01582-11008	NUT	2	57001-
10	175-43-35210	SCREW	2	57001-
11	195-43-42390	CAP	1	57001-
12	09415-02512	CAP	1	57001-
13	175-43-53410	LEVER	1	57001-
14	01010-81040	BOLT	1	57001-
15	01643-31032	WASHER	1	57001-
16	04250-91056	END, ROD	1	57001-
17	01593-11008	NUT	1	57001-
18	04050-12018	PIN, COTTER	1	57001-
20	04248-31030	ROD	1	57001-
21	01582-11008	NUT	1	57001-
22	01508-21006	NUT, L.H. THREAD	1	57001-
23	195-43-42410	JOINT	1	57001-
24	154-44-14560	SEAT	1	57001-
25	154-44-14570	SEAT	1	57001-
26	04050-12022	PIN, COTTER	1	57001-
27	154-44-14540	BALL	1	57001-
28	01580-10806	NUT	1	57001-
29	01602-20825	WASHER, SPRING	1	57001-

FIG. K2110-08A0 FUEL CONTROL LEVER

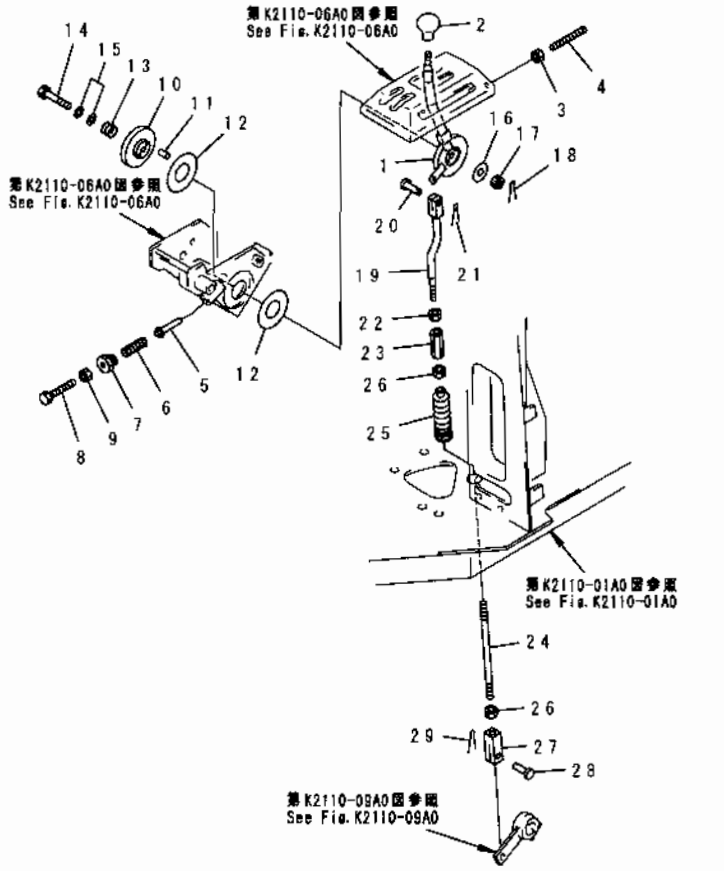

INDEX	PART NO.	DESCRIPTION	Q'TY	SERIAL NO
1	154-43-44110	LEVER	1	57001-
2	09304-01250	KNOB	1	57001-
3	195-43-44220	NUT	1	57001-
4	154-43-44270	SCREW	1	57001-
5	154-43-44261	PIN	1	57001-
6	170-54-11230	SPRING	1	57001-
7	154-43-44250	CAP	1	57001-
8	01016-80860	BOLT	1	57001-
9	01580-10806	NUT	1	57001-
10	154-43-14710	DISC	1	57001-
11	04020-00616	PIN, DOWEL	2	57001-
12	154-43-44280	FACING	2	57001-
13	154-43-14690	SPRING	1	57001-
14	15A-43-11190	BOLT	1	57001-
15	01640-21223	WASHER	2	57001-
16	101-43-11380	COVER	1	57001-
17	01593-11210	NUT	1	57001-
18	04050-13030	PIN, COTTER	1	57001-
19	154-43-44120	ROD	1	57001-
20	04205-10822	PIN	1	57001-
21	04050-12015	PIN, COTTER	1	57001-
22	01508-21006	NUT, L.H. THREAD	1	57001-
23	178-43-12180	BUCKLE, TURN	1	57001-
24	04245-41031	ROD	1	57001-
25	195-43-42280	BELLOWS	1	57001-
26	01582-11008	NUT	2	57001-
27	198-43-18170	YOKE	1	57001-
28	04205-10822	PIN	1	57001-
29	04050-12015	PIN, COTTER	1	57001-

FIG. K2110-09A0 FUEL CONTROL LINKAGE

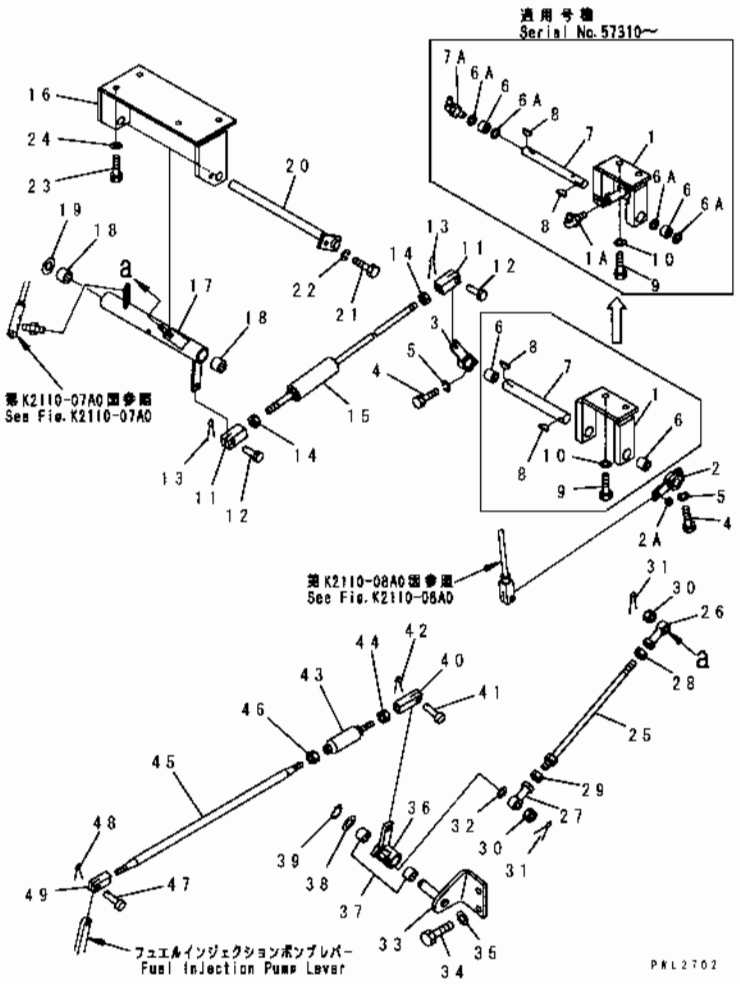

INDEX	PART NO	DESCRIPTION	Q'TY	SERIAL NO
1	175-43-71151	BRACKET	1	57310-
	175-43-54370	BRACKET	1	57001-57309
1A	07020-00675	FITTING, GREASE	1	57310-
2	175-43-54470	LEVER	1	57001-
2A	06600-00805	BUSHING	1	57001-
3	175-43-54440	LEVER	1	57001-
4	01010-80830	BOLT	2	57001-
5	01602-20825	WASHER, SPRING	2	57001-
6	06120-02016	BEARING	2	57310-
	195-43-43190	BEARING, NEEDLE	2	57001-57309
6A	06122-02004	SEAL	4	57310-
7	175-43-71160	SHAFT	1	57310-
	175-43-54360	SHAFT	1	57001-57309
7A	07020-00675	FITTING, GREASE	1	57310-
8	04010-00519	KEY, WOODRUFF	2	57001-
9	01010-81230	BOLT	2	57001-
10	01643-31232	WASHER	2	57001-
11	198-43-18170	YOKE	2	57001-
12	04205-10822	PIN	2	57001-
13	04050-12015	PIN, COTTER	2	57001-
14	01582-11008	NUT	2	57001-
15	175-43-54380	ROD ASS'Y	1	57001-
16	175-43-54420	BRACKET	1	57001-
17	175-43-71130	LEVER	1	57001-
18	195-43-43190	BEARING, NEEDLE	2	57001-
19	281-22-12430	SHIM, 0.5MM	1	57001-
20	175-43-54410	SHAFT	1	57001-
21	01010-81016	BOLT	1	57001-
22	01602-21030	WASHER, SPRING	1	57001-
23	01010-81230	BOLT	4	57001-
24	01643-31232	WASHER	4	57001-
25	04248-31031	ROD	1	57001-
26	04250-91056	END, ROD	1	57001-
27	04250-81056	END, ROD	1	57001-
28	01508-41006	NUT	1	57001-
29	01582-11008	NUT	1	57001-
30	01593-31008	NUT	2	57001-
31	04050-12018	PIN, COTTER	2	57001-
32	04254-11032	SPACER	1	57001-
33	175-43-71110	BRACKET	1	57001-
34	01010-81230	BOLT	2	57001-
35	01643-31232	WASHER	2	57001-

FIG. K2110-09A0 FUEL CONTROL LINKAGE

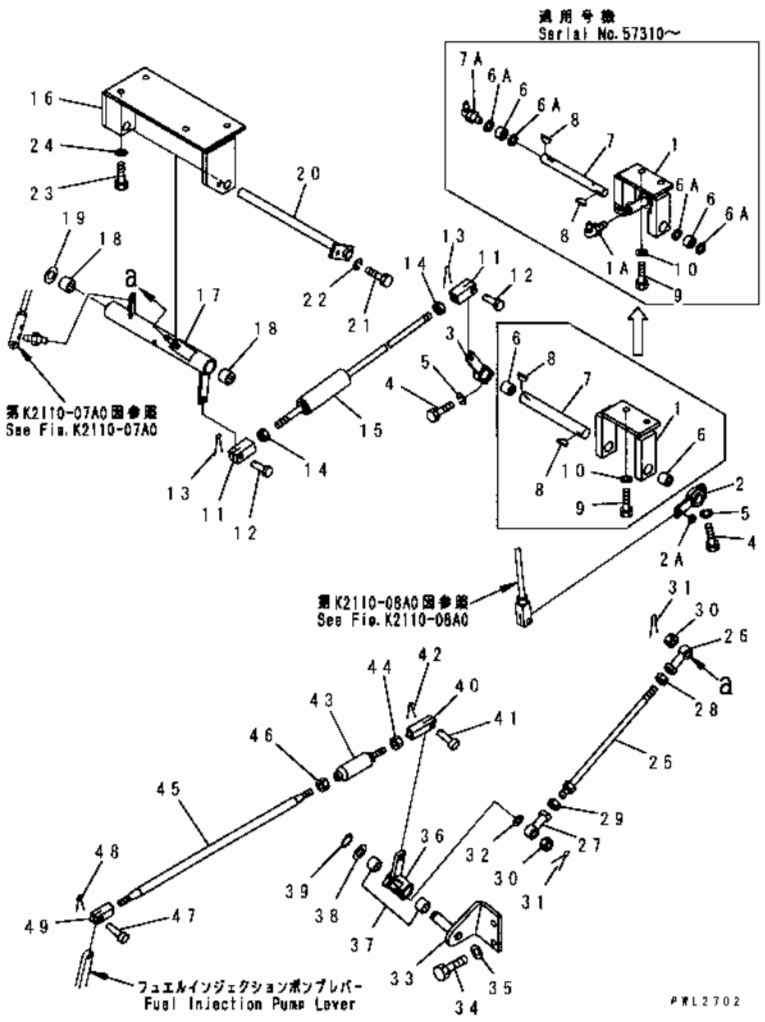

INDEX	PART NO.	DESCRIPTION	Q'TY	SERIAL NO
36	175-43-71120	LEVER	1	57001-
37	195-61-41270	BEARING, NEEDLE	2	57001-
38	01640-22032	WASHER	2	57001-
39	04064-02012	RING, SNAP	1	57001-
40	04211-21055	YOKE	1	57001-
41	04205-11028	PIN	1	57001-
42	04050-13015	PIN, COTTER	1	57001-
43	175-43-34500	ABSORBER ASS'Y	1	57001-
44	01582-11008	NUT	2	57001-
45	04245-41031	ROD	1	57001-
46	01582-11008	NUT	1	57001-
47	04205-10822	PIN	1	57001-
48	04050-12012	PIN, COTTER	1	57001-
49	198-43-18170	YOKE	1	57001-

FIG. K2110-09A0 FUEL CONTROL LINKAGE

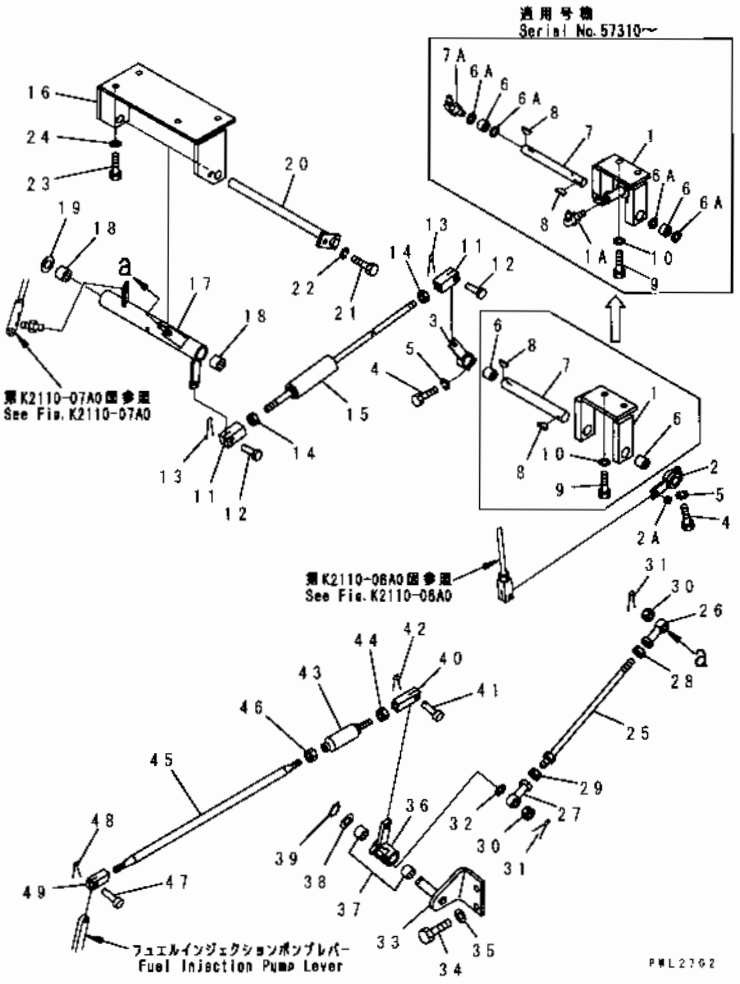

INDEX	PART NO.	DESCRIPTION	Q'TY.	SERIAL NO.
1	175-43-71151	BRACKET	1	57310-
	175-43-54370	BRACKET	1	57001-57309
1A	07020-00675	FITTING, GREASE	1	57310-
2	175-43-54470	LEVER	1	57001-
2A	06600-00805	BUSHING	1	57001-
3	175-43-54440	LEVER	1	57001-
4	01010-80830	BOLT	2	57001-
5	01602-20825	WASHER, SPRING	2	57001-
6	06120-02016	BEARING	2	57310-
	195-43-43190	BEARING, NEEDLE	2	57001-57309
6A	06122-02004	SEAL	4	57310-
7	175-43-71160	SHAFT	1	57310-
	175-43-54360	SHAFT	1	57001-57309
7A	07020-00675	FITTING, GREASE	1	57310-
8	04010-00519	KEY, WOODRUFF	2	57001-
9	01010-81230	BOLT	2	57001-
10	01643-31232	WASHER	2	57001-
11	198-43-18170	YOKE	2	57001-
12	04205-10822	PIN	2	57001-
13	04050-12015	PIN, COTTER	2	57001-
14	01582-11008	NUT	2	57001-
15	175-43-54380	ROD ASS'Y	1	57001-
16	175-43-54420	BRACKET	1	57001-
17	175-43-71130	LEVER	1	57001-
18	195-43-43190	BEARING, NEEDLE	2	57001-
19	281-22-12430	SHIM, 0.5MM	1	57001-
20	175-43-54410	SHAFT	1	57001-
21	01010-81016	BOLT	1	57001-
22	01602-21030	WASHER, SPRING	1	57001-
23	01010-81230	BOLT	4	57001-
24	01643-31232	WASHER	4	57001-
25	04248-31031	ROD	1	57001-
26	04250-91056	END, ROD	1	57001-
27	04250-81056	END, ROD	1	57001-
28	01508-41006	NUT	1	57001-
29	01582-11008	NUT	1	57001-
30	01593-31008	NUT	2	57001-
31	04050-12018	PIN, COTTER	2	57001-
32	04254-11032	SPACER	1	57001-
33	175-43-71110	BRACKET	1	57001-
34	01010-81230	BOLT	2	57001-
35	01643-31232	WASHER	2	57001-

FIG. K2110-10A0 TRANSMISSION CONTROL LINKAGE (1/3)

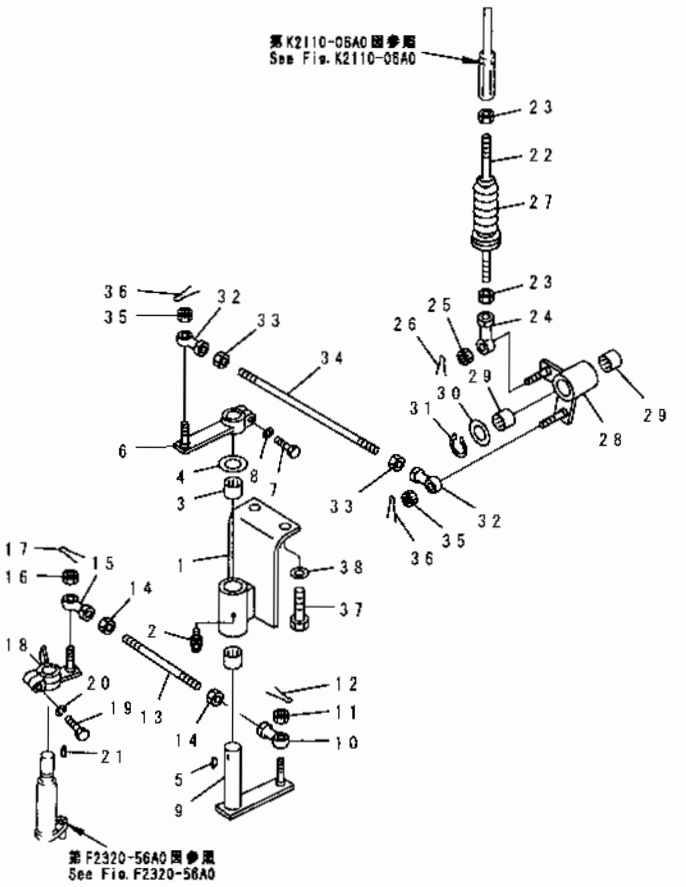

INDEX	PART NO.	DESCRIPTION	Q'TY.	SERIAL NO
1	175-43-54450	BRACKET	1	57001-
2	07020-00675	FITTING, GREASE	1	57001-
3	195-61-41270	BEARING, NEEDLE	2	57001-
4	01640-22032	WASHER	1	57001-
5	04010-00519	KEY	1	57001-
6	175-43-31631	LEVER	1	57001-
7	01010-80830	BOLT	1	57001-
8	01602-20825	WASHER, SPRING	1	57001-
9	175-43-54340	LEVER	1	57001-
10	04250-81056	END, ROD	1	57001-
11	01593-11008	NUT	1	57001-
12	04050-12018	PIN, COTTER	1	57001-
13	04245-41013	ROD	1	57001-
14	01582-11008	NUT	2	57001-
15	04250-81056	END, ROD	1	57001-
16	01593-11008	NUT	1	57001-
17	04050-12018	PIN, COTTER	1	57001-
18	175-43-62120	LEVER	1	57001-
19	01010-50830	BOLT	1	57001-
20	01602-20825	WASHER, SPRING	1	57001-
21	04010-00516	KEY	1	57001-
22	04245-41023	ROD	1	57001-
23	01582-11008	NUT	2	57001-
24	04250-81056	END, ROD	1	57001-
25	01593-11008	NUT	1	57001-
26	04050-12018	PIN, COTTER	1	57001-
27	195-43-42280	BELLOWS	1	57001-
28	175-43-54460	LEVER	1	57001-
29	195-43-43190	BEARING, NEEDLE	2	57001-
30	01643-32060	WASHER	1	57001-
31	04064-02012	RING, SNAP	1	57001-
32	04250-81056	END, ROD	2	57001-
33	01582-11008	NUT	2	57001-
34	04245-41026	ROD	1	57001-
35	01593-11008	NUT	2	57001-
36	04050-12018	PIN, COTTER	2	57001-
37	01010-81225	BOLT	2	57001-
38	01643-31232	WASHER	2	57001-

FIG. K2110-11A0 TRANSMISSION CONTROL LINKAGE (2/3)

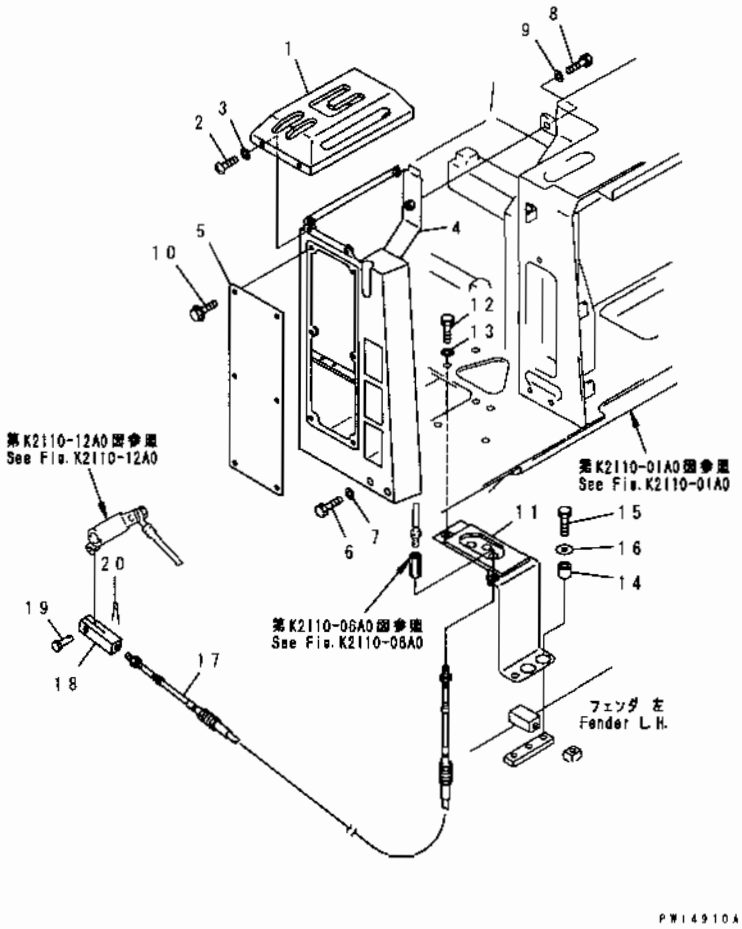

INDEX	PART NO	DESCRIPTION	Q'TY	SERIAL NO
1	154-43-43110	GUIDE	1	57001-
2	01220-40816	SCREW	4	57001-
3	01643-30823	WASHER	4	57001-
4	154-43-43120	COVER	1	57001-
5	154-43-43270	COVER	1	57001-
6	01010-81290	BOLT	2	57001-
7	01643-31232	WASHER	2	57001-
8	01010-81225	BOLT	3	57001-
9	01643-31232	WASHER	3	57001-
10	01439-00814	BOLT	6	57001-
11	175-43-54351	BRACKET	1	57001-
12	01010-81230	BOLT	3	57001-
13	01643-31232	WASHER	3	57001-
14	175-61-14490	SPACER	2	57001-
15	01010-81240	BOLT	2	57001-
16	175-54-34170	WASHER	2	57001-
17	154-43-43160	CABLE	1	57001-
18	04211-20844	YOKE	1	57001-
19	04205-10822	PIN	1	57001-
20	04050-12015	PIN, COTTER	1	57001-

FIG. K2110-12A0 TRANSMISSION CONTROL LINKAGE (3/3)

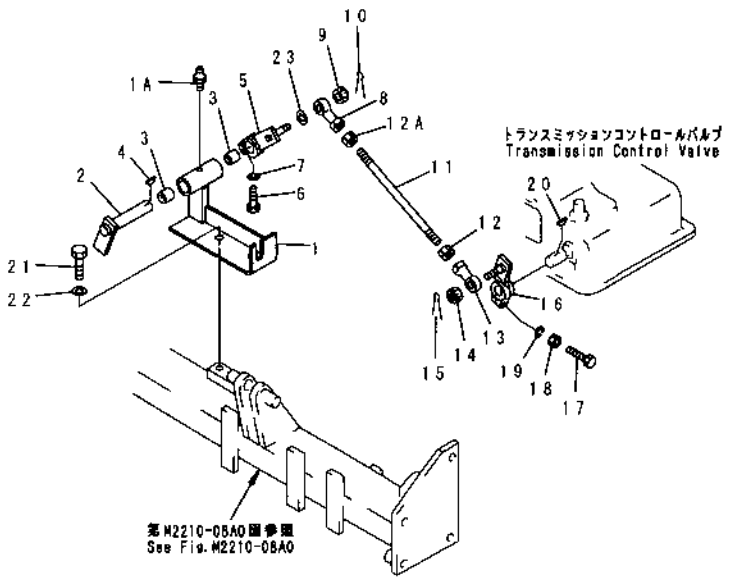

INDEX	PART NO.	DESCRIPTION	Q'TY	SERIAL NO.
1	175-43-71170	BRACKET	1	57306-
	175-43-54310	BRACKET	1	57001-57305
1A	07020-00000	FITTING, GREASE	1	57306-
2	175-43-54320	LEVER	1	57001-
3	06123-02018	BEARING	2	57306-
	195-43-43190	BEARING, NEEDLE	2	57001-57305
4	04010-00519	KEY	1	57001-
5	175-43-54330	LEVER	1	57001-
6	01010-80830	BOLT	1	57001-
7	01602-20825	WASHER, SPRING	1	57001-
8	04250-91056	END, ROD	1	57001-
9	01593-11008	NUT	1	57001-
10	04050-12018	PIN, COTTER	1	57001-
11	04248-31013	ROD	1	57001-
12	01582-11008	NUT	1	57001-
12A	01508-41006	NUT	1	57001-
13	04250-81056	END, ROD	1	57001-
14	01593-11008	NUT	1	57001-
15	04050-12018	PIN, COTTER	1	57001-
16	175-43-51350	LEVER	1	57001-
17	01016-50850	BOLT	1	57001-
18	01580-10806	NUT	1	57001-
19	01602-20825	WASHER, SPRING	1	57001-
20	04010-00516	KEY	1	57001-
21	01010-81225	BOLT	2	57001-
22	01643-31232	WASHER	2	57001-
23	04254-11032	SPACER	1	57001-

FIG. K2110-13A0 INSTRUMENT PANEL

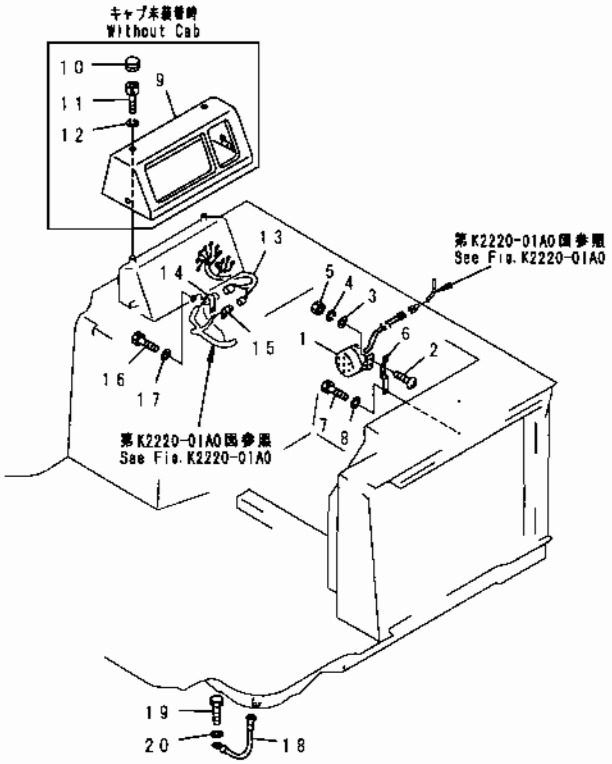

INDEX	PART NO	DESCRIPTION	Q'TY	SERIAL NO.
1	175-06-61430	BUZZER	1	57001-
2	01220-40616	.SCREW	2	57001-
3	01640-20610	.WASHER	2	57001-
4	01602-20619	.WASHER, SPRING	2	57001-
5	01580-10605	.NUT	2	57001-
6	195-06-41410	PLATE	1	57001-
7	01010-80616	BOLT	2	57001-
8	01602-20619	WASHER, SPRING	2	57001-
9	195-06-41580	COVER	1	57001-
10	175-06-38570	CAP	4	57001-
11	01252-40616	BOLT	4	57001-
12	01602-20619	WASHER, SPRING	4	57001-
13	175-06-71120	WIRING HARNESS	1	57001-
14	195-06-41840	CLIP	1	57001-
15	195-06-41820	CLIP	1	57001-
16	01010-81220	BOLT	1	57001-
17	01643-31232	WASHER	1	57001-
18	08028-45030	CABLE	1	57001-
19	01010-81020	BOLT	2	57001-
20	01643-31032	WASHER	2	57001-

FIG. K2110-14A0 ARM REST

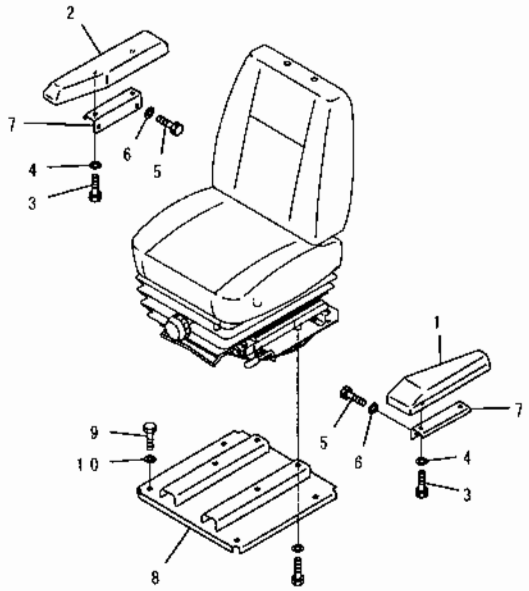

PWL2876

FIG NO. : K2110-14A0

INDEX	PART NO	DESCRIPTION	Q'TY	SERIAL NO
1	154-57-13110	REST, ARM, L.H.	1	57001-
2	154-57-13120	REST, ARM, R.H.	1	57001-
3	01010-80820	BOLT	4	57001-
4	01643-30823	WASHER	4	57001-
5	01010-81020	BOLT	4	57001-
6	01643-31032	WASHER	4	57001-
7	154-57-13140	PLATE	2	57001-
8	154-57-13151	BRACKET	1	57001-
9	01010-81225	BOLT	4	57001-
10	01643-31232	WASHER	4	57001-

FIG. K2220-01A0 INSTRUMENT PANEL

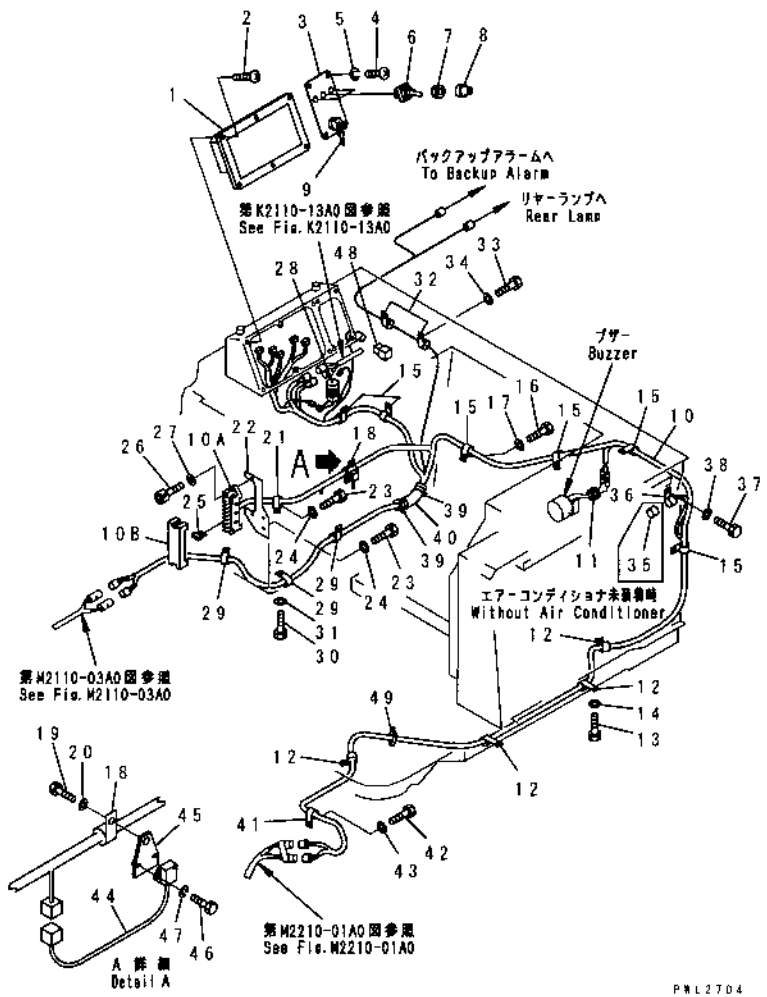

INDEX	PART NO	DESCRIPTION	Q'TY	SERIAL NO
1	(7831-63-2000)	PANEL ASS'Y	1	57001-
2	01225-70625	SCREW	6	57001-
3	154-06-41261	PANEL	1	57001-
4	01220-40620	SCREW	4	57001-
5	01602-20619	WASHER, SPRING	4	57001-
6	195-06-25250	SWITCH	3	57001-
7	7808-19-1920	NUT	3	57001-
8	175-06-27250	CAP	3	57001-
9	7830-11-2510	SWITCH, STARTING	1	57001-
10	175-06-71134	WIRING HARNESS	1	57259-
	175-06-71133	WIRING HARNESS	1	57001-57258
10A	195-Z11-2280	.BODY	1	57001-
10B	195-Z11-2290	.COVER	1	57001-
11	144-874-7520	GROMMET	1	57001-
12	08036-91814	CLIP	4	57001-
13	01010-81220	BOLT	4	57001-
14	01643-31232	WASHER	4	57001-
15	08036-01814	CLIP	6	57001-
16	01010-81220	BOLT	6	57001-
17	01643-31232	WASHER	6	57001-
18	08036-01414	CLIP	1	57001-
19	01010-51230	BOLT	1	57001-
20	01643-31232	WASHER	1	57001-
21	08036-01814	CLIP	1	57001-
22	154-06-41270	PLATE	1	57001-
23	01010-81225	BOLT	2	57001-
24	01643-31232	WASHER	2	57001-
25	08041-01500	FUSE, 15A, 15A	10	57259-
	205-06-73180	FUSE, 15A	13	57001-57258
	08041-02000	FUSE, 20A, 20A	3	57259-
26	01252-30518	BOLT	2	57001-
27	01641-20508	WASHER	2	57001-
28	195-06-41180	SWITCH, HORN	1	57001-
29	08036-01814	CLIP	3	57001-
30	01010-81220	BOLT	3	57001-
31	01643-31232	WASHER	3	57001-
32	08036-00814	CLIP	2	57001-
33	01010-81220	BOLT	2	57001-
34	01643-31232	WASHER	2	57001-
35	207-06-31360	CONNECTOR	1	57001-
36	195-06-41830	CLIP	1	57001-
37	01010-81220	BOLT	1	57001-

FIG NO. : K2220-01A0

INDEX	PART NO.	DESCRIPTION	Q'TY	SERIAL NO.
38	01643-31232	WASHER	1	57001-
39	08034-00519	BAND	2	57001-
40	205-62-53780	COVER	1	57001-
41	08036-91814	CLIP	1	57001-
42	01010-81020	BOLT	1	57001-
43	01643-31032	WASHER	1	57001-
44	423-06-11212	TIMER, BI-METAL	1	57001-
45	175-06-71510	PLATE	1	57001-
46	01010-80620	BOLT	2	57001-
47	01602-20619	WASHER	2	57001-
48	195-06-46280	CONNECTOR ASS'Y	1	57001-
49	08034-00519	BAND	25	57259-

FIG. K2220-01A1 PANEL COVER LOCK

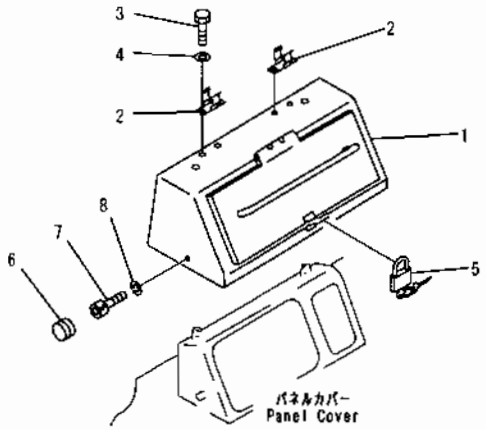

PWL2927

INDEX	PART NO	DESCRIPTION	Q'TY	SERIAL NO
G-1	(⊙154-06-X1170)	LOCK GROUP, PANEL COVER	1	57001-
1	154-06-41540	COVER	1	57001-
2	198-54-19150	SPRING	2	57001-
3	01010-50612	BOLT	4	57001-
4	01643-30623	WASHER	4	57001-
5	09460-00000	LOCK	1	57001-
6	09415-00706	CAP	4	57001-
7	01252-40616	BOLT	4	57001-
8	01602-20619	WASHER, SPRING	4	57001-

FIG NO. : K2220-51A0

FIG. K2220-51A0 MONITOR PANEL

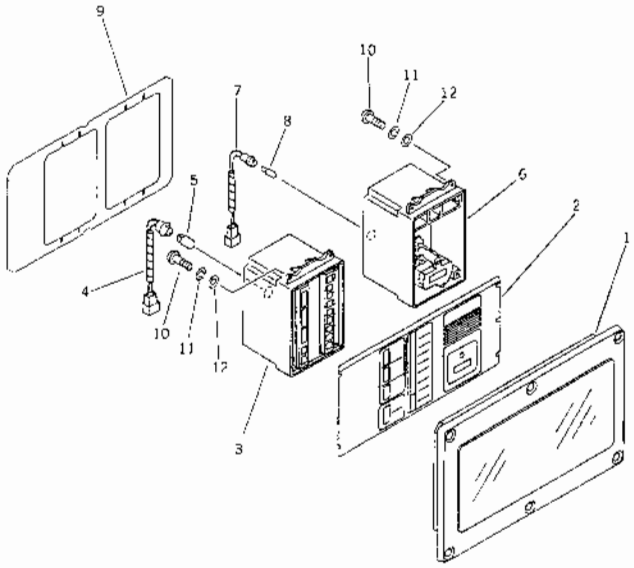

INDEX	PART NO	DESCRIPTION	Q'TY	SERIAL NO
	7831-63-2000	PANEL ASS'Y	1	57001-
1	7831-61-3000	. PANEL	1	57001-
2	7831-63-4110	PLATE	1	57001-
3	7831-63-6100	. MODULE	1	57001-
4	7831-61-9110	. HOLDER	1	57001-
5	08102-12403	. BULB, 3W	1	57001-
6	7831-62-6100	. SERVICE METER	1	57001-
7	7831-62-9110	. HOLDER	1	57001-
8	7815-11-1010	. BULB, 1.4W	1	57001-
9	7831-61-1910	. GASKET	1	57001-
10	7861-86-1330	. SCREW	8	57001-
11	01601-00410	. WASHER	8	57001-
12	01641-00405	. WASHER	8	57001-

FIG NO. : K2400-01A1

FIG.K2400-01A1 BRAKE LINKAGE (WITHOUT BRAKE ASSISTOR)

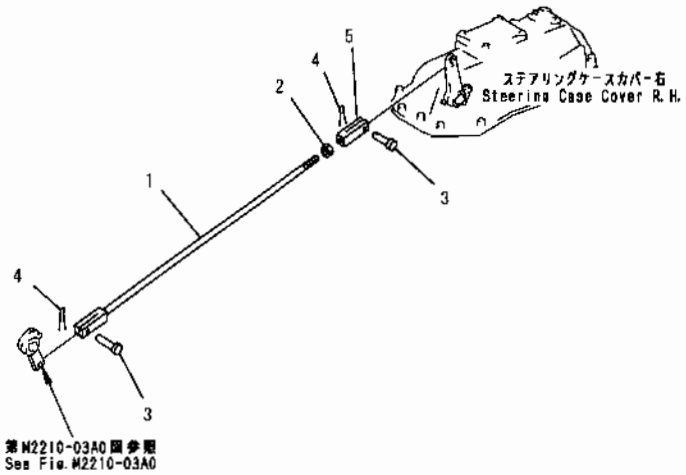

PW15346A

INDEX	PART NO	DESCRIPTION	Q'TY	SERIAL NO
1	04244-51485	ROD	1	57001-
2	01582-11411	NUT	1	57001-
3	04205-11438	PIN	2	57001-
4	04050-14022	PIN, COTTER	2	57001-
5	04211-21478	YOKE	1	57001-

FIG. K2510-01A0 VALVE SEAT (FOR VARIABLE TYPE RIPPER)

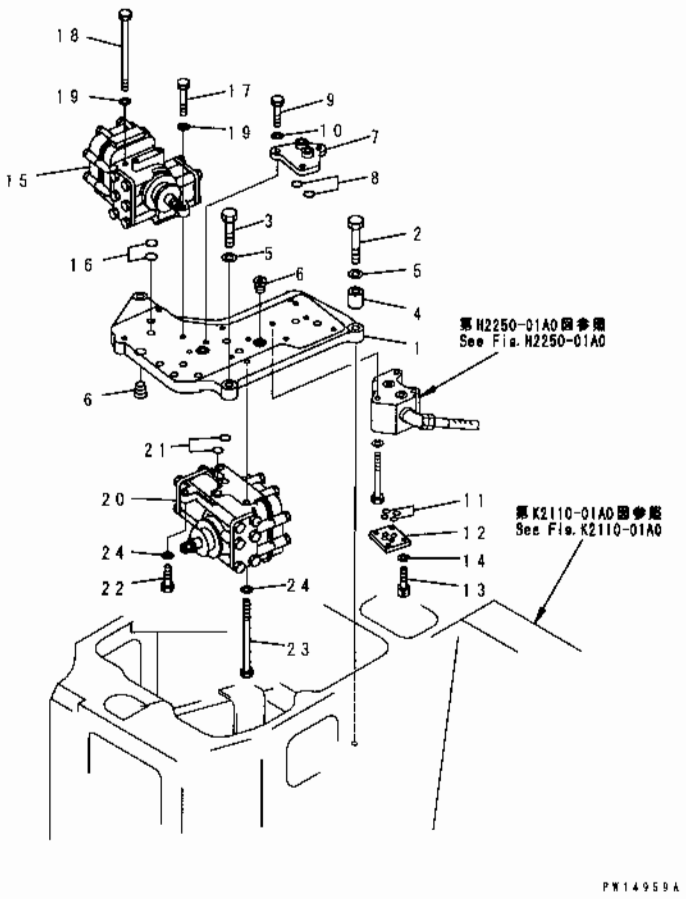

INDEX	PART NO	DESCRIPTION	Q TY	SERIAL NO
1	175-61-35210	SEAT. VALVE	1	57001-
2	01010-81485	BOLT	2	57001-
3	01010-81450	BOLT	1	57001-
4	198-21-12240	BOSS	2	57001-
5	01643-31445	WASHER	3	57001-
6	07043-50617	PLUG	7	57001-
7	175-61-15520	PLATE	1	57001-
8	07000-03022	O-RING	2	57001-
9	01010-81030	BOLT	3	57001-
10	01602-21030	WASHER	3	57001-
11	07000-11009	O-RING	4	57001-
12	175-78-69540	COVER, (WITHOUT PINPULLER)	1	57001-
13	01252-40520	BOLT	4	57001-
14	01601-20513	WASHER	4	57001-
15	(702-12-13002)	SERVO VALVE ASS'Y, (FOR BLADE LIFT)	1	57001-
16	07000-03022	O-RING	2	57001-
17	01010-81040	BOLT	2	57001-
18	01011-81040	BOLT	1	57001-
19	01643-31032	WASHER	3	57001-
20	(702-12-14001)	SERVO VALVE ASS'Y (FOR BLADE TILT AND RIPPER)	1	57001-
21	07000-03022	O-RING	2	57001-
22	01010-81040	BOLT	2	57001-
23	01011-81040	BOLT	1	57001-
24	01643-31032	WASHER	3	57001-

FIG. K2510-01A1 VALVE SEAT (FOR RIGID TYPE RIPPER)

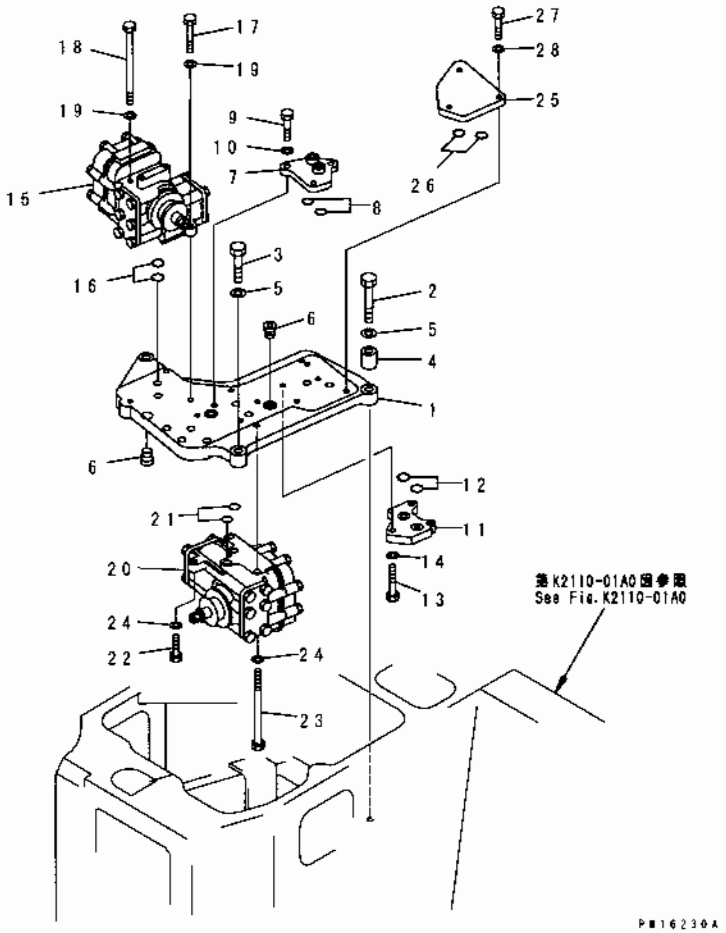

INDEX	PART NO	DESCRIPTION	Q'TY	SERIAL NO
1	175-61-35210	SEAT, VALVE	1	57001-
2	01010-81485	BOLT	2	57001-
3	01010-81450	BOLT	1	57001-
4	198-21-12240	BOSS	2	57001-
5	01643-31445	WASHER	3	57001-
6	07043-50617	PLUG	7	57001-
7	175-61-15520	PLATE	1	57001-
8	07000-03022	O-RING	2	57001-
9	01010-81030	BOLT	3	57001-
10	01602-21030	WASHER	3	57001-
11	195-61-21430	PLATE	1	57001-
12	07000-03022	O-RING	2	57001-
13	01010-81030	BOLT	3	57001-
14	01602-21030	WASHER	3	57001-
15	(702-12-13002)	SERVO VALVE ASS'Y, (FOR BLADE LIFT)	1	57001-
16	07000-03022	O-RING	2	57001-
17	01010-81040	BOLT	2	57001-
18	01011-81040	BOLT	1	57001-
19	01643-31032	WASHER	3	57001-
20	(702-12-14001)	SERVO VALVE ASS'Y (FOR BLADE TILT AND RIPPER)	1	57001-
21	07000-03022	O-RING	2	57001-
22	01010-81040	BOLT	2	57001-
23	01011-81040	BOLT	1	57001-
24	01643-31032	WASHER	3	57001-
25	195-61-21420	PLATE	1	57001-
26	07000-03022	O-RING	2	57001-
27	01010-81030	BOLT	3	57001-
28	01602-21030	WASHER, SPRING	3	57001-

FIG. K2510-02A0 TILT BLADE CONTROL LEVER

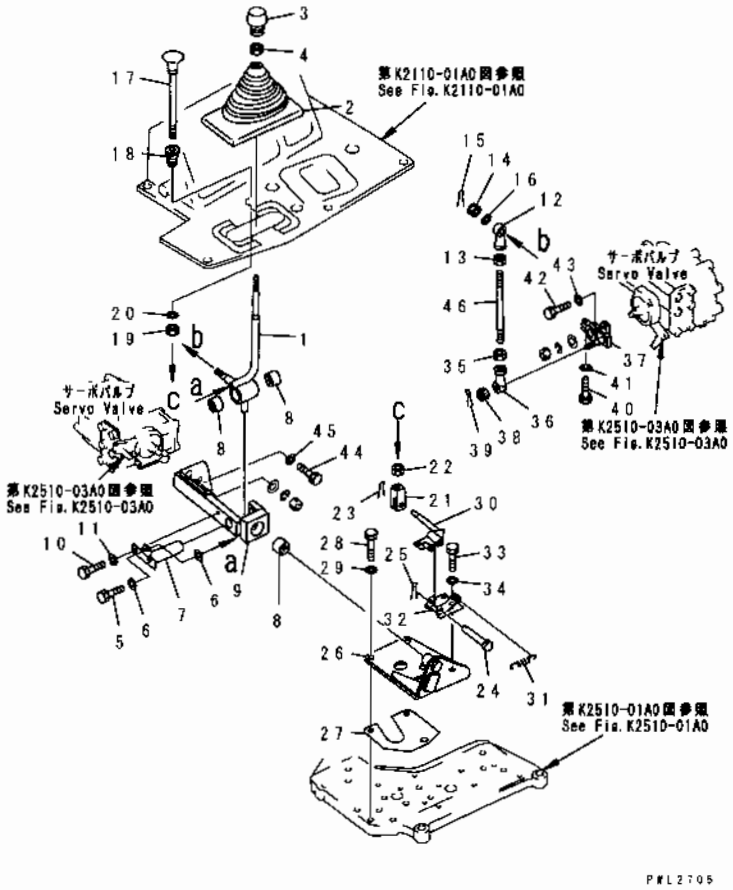

INDEX	PART NO	DESCRIPTION	Q'TY	SERIAL NO.
1	175-61-31521	LEVER	1	57001-
2	175-61-31720	BOOT	1	57001-
3	195-61-45150	KNOB	1	57001-
4	195-43-44220	NUT	1	57001-
5	01010-80820	BOLT	1	57001-
6	01643-30823	WASHER	2	57001-
7	175-61-31730	SHAFT	1	57001-
8	195-61-34140	BEARING, NEEDLE	3	57001-
9	175-61-31650	YOKE	1	57001-
10	01010-80820	BOLT	1	57001-
11	01643-30823	WASHER	1	57001-
12	04250-81265	END	1	57001-
13	01582-11210	NUT	1	57001-
14	01593-11210	NUT	1	57001-
15	04050-13020	PIN, COTTER	1	57001-
16	04254-01232	SPACER	1	57001-
17	175-61-32331	KNOB	1	57001-
18	195-61-45220	BOSS	1	57001-
19	195-61-45230	NUT	1	57001-
20	01640-22232	WASHER	1	57001-
21	04211-20844	YOKE	1	57001-
22	01580-10806	NUT	1	57001-
23	04050-12015	PIN, COTTER	1	57001-
24	22D-09-11170	PIN	1	57001-
25	04050-12015	PIN, COTTER	1	57001-
26	175-61-31660	BRACKET	1	57001-
27	175-61-31710	SHIM	1	57001-
28	01010-81030	BOLT	2	57001-
29	01643-31032	WASHER	2	57001-
30	175-61-31680	LEVER	1	57001-
31	195-61-45290	SPRING	1	57001-
32	175-61-31670	BRACKET	1	57001-
33	01010-81030	BOLT	2	57001-
34	01643-31032	WASHER	2	57001-
35	01582-11210	NUT	1	57001-
36	04250-81265	END, ROD	1	57001-
37	175-61-31690	LEVER	1	57001-
38	01593-11210	NUT	1	57001-
39	04050-13020	PIN, COTTER	1	57001-
40	01010-80830	BOLT	1	57001-
41	01602-20825	WASHER	1	57001-
42	01010-50825	BOLT	1	57001-

FIG. K2510-02A0 TILT BLADE CONTROL LEVER

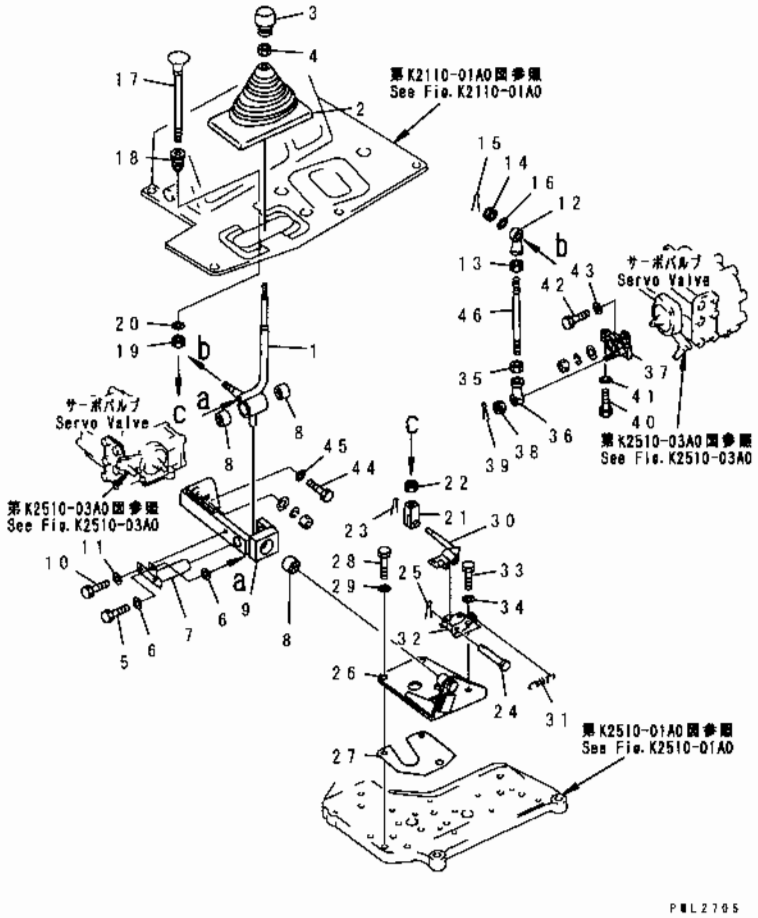

INDEX	PART NO	DESCRIPTION	Q'TY	SERIAL NO
43	01643-30823	WASHER	1	57001-
44	01010-50835	BOLT	1	57001-
45	01643-30823	WASHER	1	57001-
46	04245-41213	ROD	1	57001-

FIG. K2510-03A0 TILT BLADE CONTROL LINKAGE (1/2)

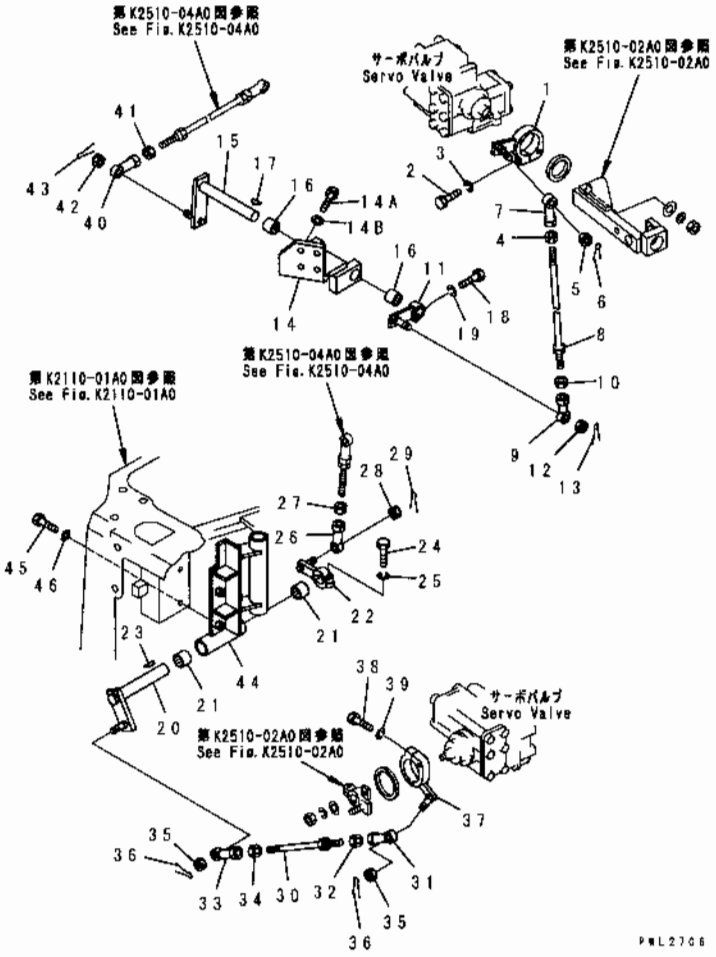

INDEX	PART NO.	DESCRIPTION	Q'TY	SERIAL NO
1	175-61-31540	LEVER	1	57001-
2	01010-80840	BOLT	1	57001-
3	01602-20825	WASHER	1	57001-
4	01508-31207	NUT	1	57001-
5	01593-11210	NUT	1	57001-
6	04050-13020	PIN, COTTER	1	57001-
7	04250-91265	END, ROD	1	57001-
8	04248-31247	ROD	1	57001-
9	04250-81265	END, ROD	1	57001-
10	01582-11210	NUT	1	57001-
11	154-45-35270	LEVER	1	57001-
12	01593-11210	NUT	1	57001-
13	04050-13020	PIN, COTTER	1	57001-
14	175-61-31571	BRACKET	1	57001-
14A	01010-81230	BOLT	4	57001-
14B	01643-31232	WASHER	4	57001-
15	175-61-31560	LEVER	1	57001-
16	195-61-34130	BEARING	2	57001-
17	04010-00519	KEY	1	57001-
18	01010-80830	BOLT	1	57001-
19	01602-20825	WASHER	1	57001-
20	175-61-31590	SHAFT	1	57001-
21	195-61-34130	BEARING	2	57001-
22	195-61-21290	LEVER	1	57001-
23	04010-00519	KEY	1	57001-
24	01010-80830	BOLT	1	57001-
25	01602-20825	WASHER	1	57001-
26	04250-81265	END, ROD	1	57001-
27	01582-11210	NUT	1	57001-
28	01593-11210	NUT	1	57001-
29	04050-13020	PIN, COTTER	1	57001-
30	04248-31223	ROD	1	57001-
31	04250-81265	END, ROD	1	57001-
32	01582-11210	NUT	1	57001-
33	04250-91265	END, ROD	1	57001-
34	01508-41207	NUT	1	57001-
35	01593-11210	NUT	2	57001-
36	04050-13020	PIN, COTTER	2	57001-
37	175-61-31580	LEVER	1	57001-
38	01010-80840	BOLT	1	57001-
39	01602-20825	WASHER	1	57001-
40	04250-81265	END, ROD	1	57001-

FIG. K2510-03A0 TILT BLADE CONTROL LINKAGE (1/2)

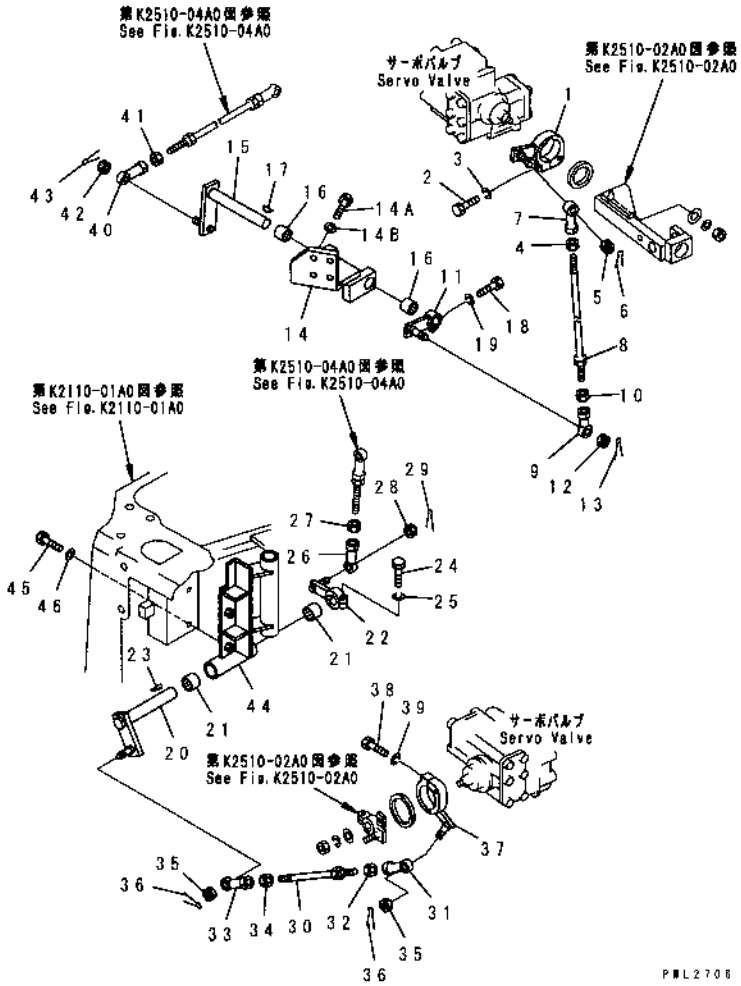

INDEX	PART NO	DESCRIPTION	Q'TY	SERIAL NO.
41	01582-11210	NUT	1	57001-
42	01593-11210	NUT	1	57001-
43	04050-13020	PIN, COTTER	1	57001-
44	175-61-31611	BRACKET	1	57001-
45	01010-81235	BOLT	2	57001-
46	01643-31232	WASHER	2	57001-

FIG. K2510-04A0 TILT BLADE CONTROL LINKAGE (2/2)

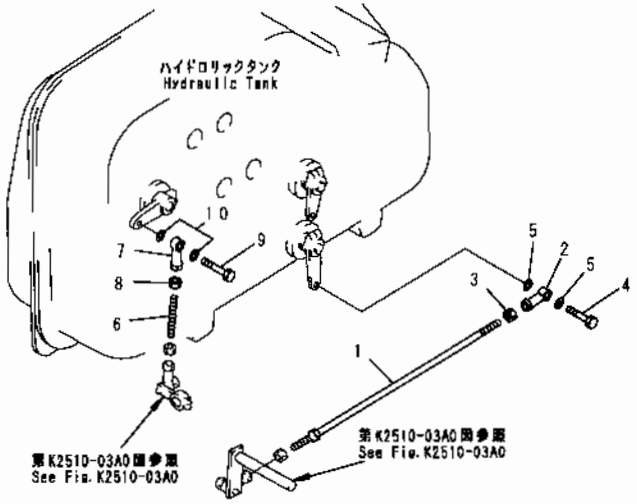

PWL2707

INDEX	PART NO	DESCRIPTION	Q'TY	SERIAL NO
1	04248-31266	ROD	1	57001-
2	04250-91265	END	1	57001-
3	01508-41207	NUT	1	57001-
4	01090-51240	BOLT	1	57001-
5	04254-01232	SPACER	2	57001-
6	04245-41208	ROD	1	57001-
7	04250-81265	END	1	57001-
8	01582-11210	NUT	1	57001-
9	01090-51240	BOLT	1	57001-
10	04254-01232	SPACER	2	57001-

FIG. K2510-05A0 SERVO VALVE PIPNG (FOR BLADE LIFT) (FOR VARIABLE TYPE RIPPER)

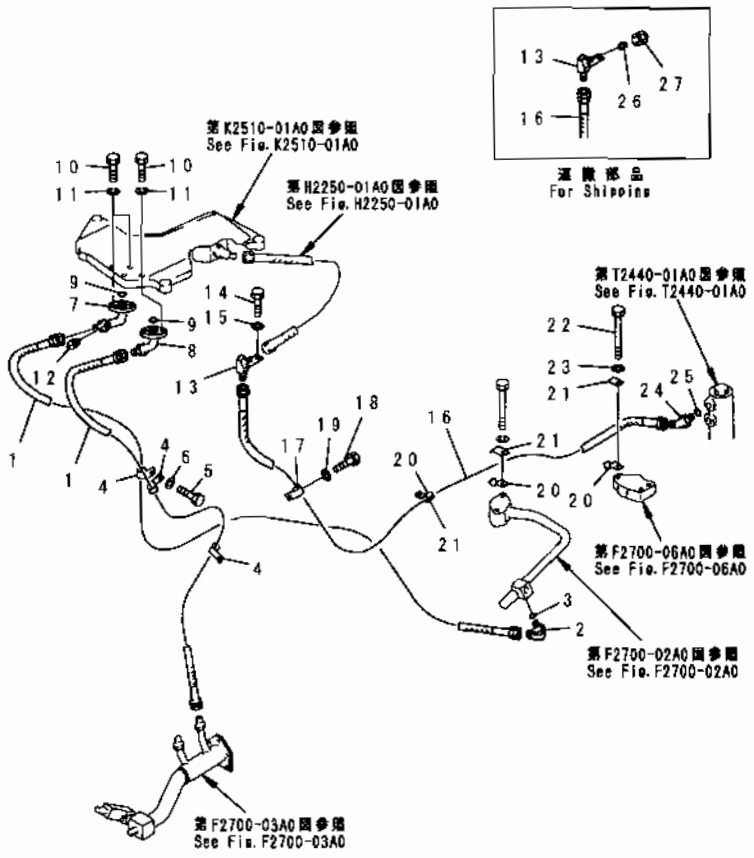

FIG NO. : K2510-05A0

INDEX	PART NO.	DESCRIPTION	Q'TY	SERIAL NO.
1	07102-20415	HOSE	2	57001-
2	07235-10422	ELBOW	1	57001-
3	07002-02034	O-RING	1	57001-
4	08035-02514	CLIP	3	57001-
5	01010-81025	BOLT	1	57001-
6	01643-31032	WASHER	1	57001-
7	175-61-31640	TUBE	1	57001-
8	175-61-31630	TUBE	1	57001-
9	07000-03025	O-RING	2	57001-
10	01010-81045	BOLT	4	57001-
11	01602-21030	WASHER, SPRING	4	57001-
12	07042-30108	PLUG	1	57001-
13	175-78-69530	ELBOW	1	57001-
14	01010-81230	BOLT	2	57001-
15	01643-51232	WASHER	2	57001-
16	07102-20316	HOSE	1	57001-
17	08036-01814	CLIP	1	57001-
18	01010-81016	BOLT	1	57001-
19	01643-31032	WASHER	1	57001-
20	195-79-12181	CLIP	3	57001-
21	195-78-22471	CLIP	3	57001-
22	01011-81215	BOLT	2	57001-
23	01643-51232	WASHER	2	57001-
24	07236-10315	ELBOW	1	57001-
25	07002-02034	O-RING	1	57001-
26	07222-00312	PLUG	1	57001-
27	07221-20315	NUT	1	57001-

GUARD

FIG. M2110-01A0 RADIATOR

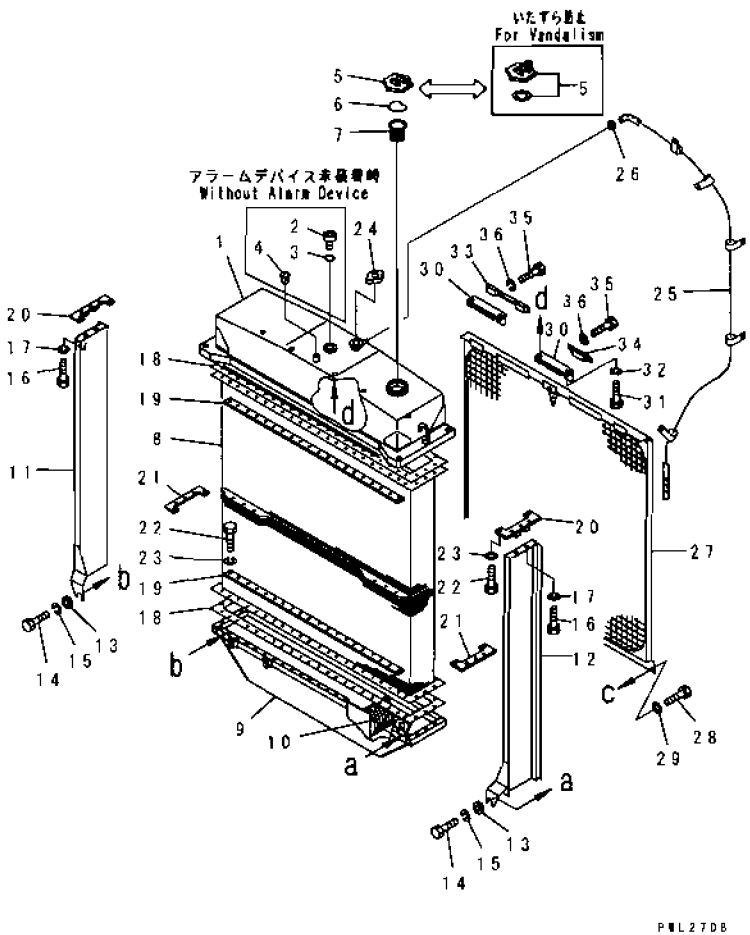

INDEX	PART NO	DESCRIPTION	Q'TY	SERIAL NO
	175-03-00510	RADIATOR ASS'Y	1	57001-
	175-03-00520	.UPPER TANK ASS'Y	1	57001-
1	175-03-71331	..TANK	1	57001-
2	07040-13618	..PLUG	1	57001-
3	07002-43634	..O-RING	1	57001-
4	07049-01012	..PLUG	1	57001-
5	07053-10000	..CAP	1	57001-
	07093-20000	..CAP, FILLER (FOR VANDALISM)	1	57001-
6	07057-03271	.RING, SNAP	1	57001-
7	07056-00048	..STRAINER	1	57001-
8	175-03-71130	.CORE	1	57001-
9	175-03-71111	.TANK	1	57001-
10	175-03-71121	.ELEMENT	1	57001-
11	175-03-71151	.PLATE, L.H.	1	57001-
12	175-03-71161	.PLATE, L.H.	1	57001-
13	195-03-22160	.SEAT	2	57001-
14	01010-81030	.BOLT	2	57001-
15	01602-21030	.WASHER	2	57001-
16	01010-81020	.BOLT	4	57001-
17	01602-21030	.WASHER	4	57001-
18	175-03-31563	.GASKET	2	57001-
19	175-03-31181	.PLATE	4	57001-
20	175-03-32990	.PLATE	2	57001-
21	175-03-32660	.PLATE	2	57001-
22	01010-81030	.BOLT	100	57001-
23	01602-21030	.WASHER	100	57001-
24	125-03-21210	CAP	1	57001-
25	195-03-17880	TUBE	1	57001-
26	07285-00095	CLIP	1	57001-
27	175-03-71140	PROTECTOR	1	57001-
28	01010-81020	BOLT	7	57001-
29	01643-31032	WASHER	7	57001-
30	175-03-32620	BRACKET	3	57001-
31	01010-81020	BOLT	6	57001-
32	01643-31032	WASHER	6	57001-
33	198-03-22410	PLATE	2	57001-
34	175-03-21530	PLATE	1	57001-
35	01010-81020	BOLT	6	57001-
36	01643-31032	WASHER	6	57001-

FIG. M2110-01A1 RADIATOR GUARD (FOR HARD ROCK) (FOR SAUDI ARABIA)

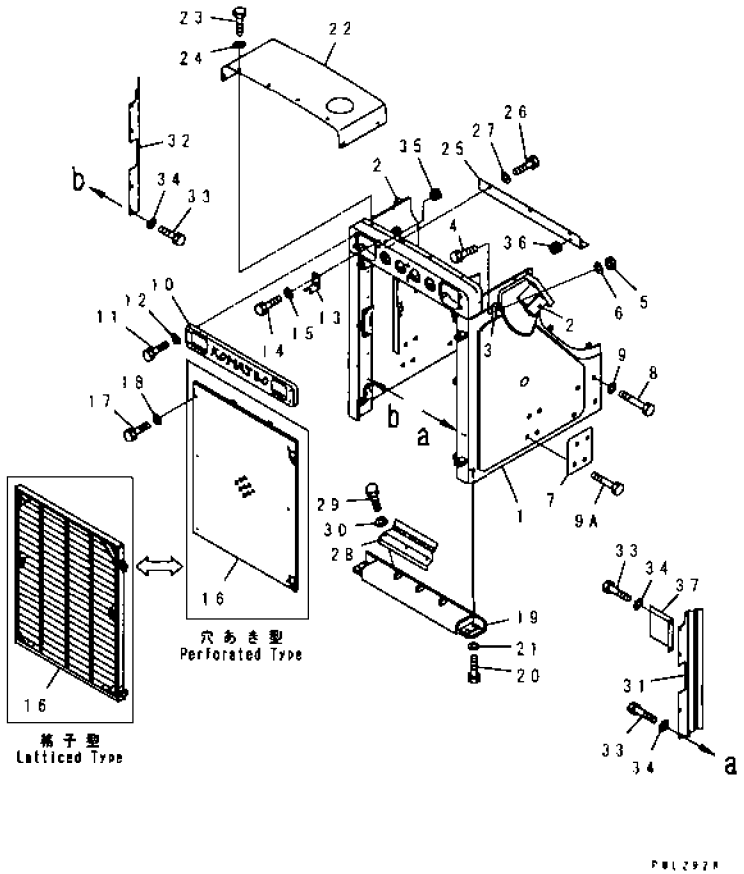

INDEX	PART NO.	DESCRIPTION	Q'TY	SERIAL NO
1	175-54-77410	GUARD	1	57001-
2	175-54-21133	.SUPPORT (WELDED)	2	57001-
3	175-862-3482	.PIN (WELDED)	2	57001-
4	01010-80835	BOLT	2	57001-
5	01580-10806	NUT	2	57001-
6	01643-30823	WASHER	2	57001-
7	175-54-31120	PLATE	2	57001-
8	01019-32755	BOLT	4	57001-
9	01643-32780	WASHER	8	57001-
9A	01019-32760	BOLT	12	57001-
10	154-54-41412	MARK	1	57001-
11	195-54-43260	BOLT	6	57001-
12	198-911-3160	WASHER	6	57001-
13	175-54-46160	BRACKET	2	57001-
14	01010-81230	BOLT	4	57001-
15	01643-31232	WASHER	4	57001-
16	175-54-46262	MASK, PERFORATED TYPE	1	57001-
	175-54-46141	MASK, LATTICED TYPE	1	57001-
17	198-54-42260	BOLT	6	57001-
18	198-54-42290	WASHER	6	57001-
19	175-54-46130	COVER	1	57001-
20	01010-82050	BOLT	4	57001-
21	01643-32060	WASHER	4	57001-
22	175-54-21155	COVER	1	57001-
23	01010-81220	BOLT	8	57001-
24	01643-31232	WASHER	8	57001-
25	175-54-71310	PLATE	1	57001-
26	01010-81225	BOLT	3	57001-
27	01643-31232	WASHER	3	57001-
28	175-54-46150	PLATE	1	57001-
29	01010-81220	BOLT	3	57001-
30	01643-31232	WASHER	3	57001-
31	175-54-71820	PLATE, L.H.	1	57001-
32	175-54-71830	PLATE, R.H.	1	57001-
33	01010-81230	BOLT	8	57001-
34	01643-31232	WASHER	8	57001-
35	08037-03620	GROMMET	2	57001-
36	08037-01008	GROMMET	1	57001-
37	175-54-47270	PLATE	1	57001-

FIG. M2110-02A0 RADIATOR MOUNT

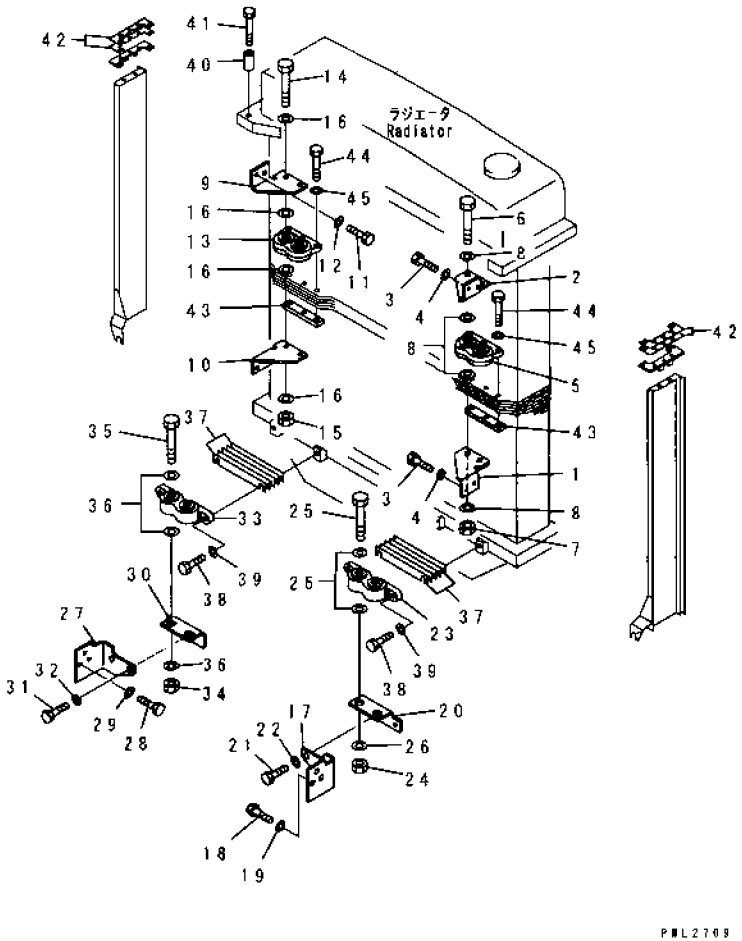

INDEX	PART NO.	DESCRIPTION	Q'TY	SERIAL NO.
1	175-03-32951	BRACKET	1	57001-
2	175-03-32961	BRACKET	1	57001-
3	01010-81225	BOLT	4	57001-
4	01643-31232	WASHER	4	57001-
5	195-03-22401	ISOLATOR ASS'Y	1	57001-
6	01091-52220	BOLT	2	57001-
7	01582-12218	NUT	2	57001-
8	01643-32260	WASHER	8	57001-
9	175-03-32951	BRACKET	1	57001-
10	175-03-32961	BRACKET	1	57001-
11	01010-81225	BOLT	4	57001-
12	01643-31232	WASHER	4	57001-
13	195-03-22401	ISOLATOR ASS'Y	1	57001-
14	01091-52220	BOLT	2	57001-
15	01582-12218	NUT	2	57001-
16	01643-32260	WASHER	8	57001-
17	175-03-71190	BRACKET, L.H.	1	57001-
18	01010-81225	BOLT	3	57001-
19	01643-31232	WASHER	3	57001-
20	175-03-71170	BRACKET, L.H.	1	57001-
21	01010-81435	BOLT	2	57001-
22	01643-31445	WASHER	2	57001-
23	195-03-22501	ISOLATOR ASS'Y	1	57001-
24	01582-12218	NUT	2	57001-
25	01091-52205	BOLT	2	57001-
26	01643-32260	WASHER	6	57001-
27	175-03-71210	BRACKET, R.H.	1	57001-
28	01010-81225	BOLT	3	57001-
29	01643-31232	WASHER	3	57001-
30	175-03-71180	BRACKET, R.H.	1	57001-
31	01010-81435	BOLT	2	57001-
32	01643-31445	WASHER	2	57001-
33	195-03-22501	ISOLATOR ASS'Y	1	57001-
34	01582-12218	NUT	2	57001-
35	01091-52205	BOLT	2	57001-
36	01643-32260	WASHER	6	57001-
37	195-03-22270	SHIM, 1.0MM	12	57001-
38	01010-81245	BOLT	4	57001-
39	01643-31232	WASHER	4	57001-
40	175-03-32650	COLLAR	4	57001-
41	01011-81835	BOLT	4	57001-
42	195-03-11570	SHIM, 1.0MM	8	57001-

FIG NO. : M2110-02A0

INDEX	PART NO.	DESCRIPTION	Q'TY	SERIAL NO
43	198-03-21530	PLATE	2	57001-
44	01010-81075	BOLT	6	57001-
45	01643-31032	WASHER	6	57001-

FIG. M2110-03A0 RADIATOR GUARD (PIPNG)

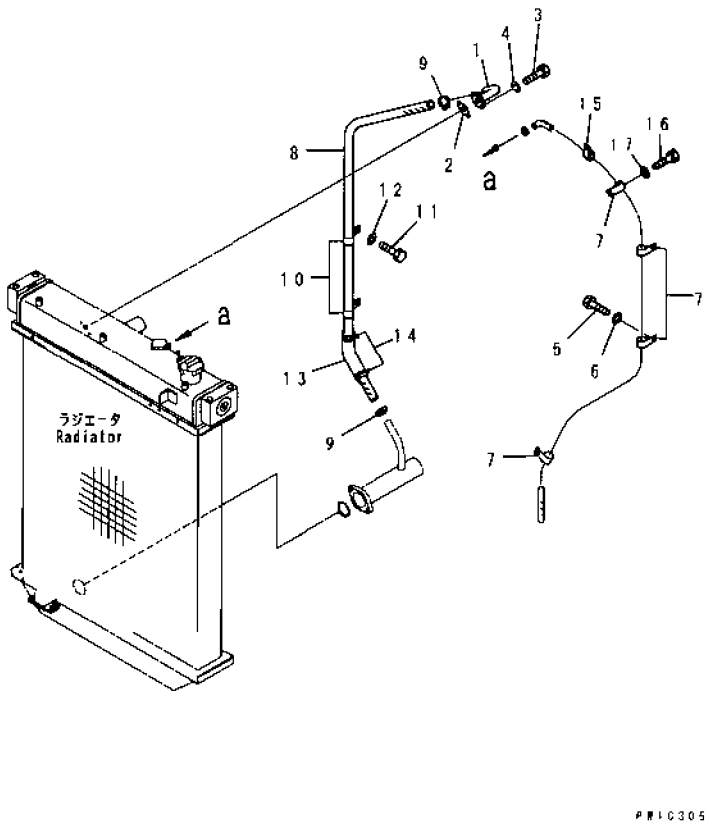

INDEX	PART NO	DESCRIPTION	Q'TY	SERIAL NO
1	175-03-43110	TUBE	1	57001-
2	195-03-11981	GASKET	1	57001-
3	01010-81030	BOLT	2	57001-
4	01602-21030	WASHER	2	57001-
5	01010-81220	BOLT	3	57001-
6	01643-31232	WASHER	3	57001-
7	08036-21214	CLIP	4	57001-
8	195-03-18680	HOSE	1	57001-
9	07281-00419	CLAMP	2	57001-
10	195-03-11511	CLIP	2	57001-
11	01010-81220	BOLT	2	57001-
12	01643-31232	WASHER	2	57001-
13	205-62-53780	COVER	1	57003-
14	08034-00823	BAND	2	57003-
15	08036-21214	CLIP	1	57027-
16	01010-81220	BOLT	1	57027-
17	01643-31232	WASHER	1	57027-

FIG. M2110-03A1 RADIATOR GUARD (WOODY TERRAIN SPEC.)

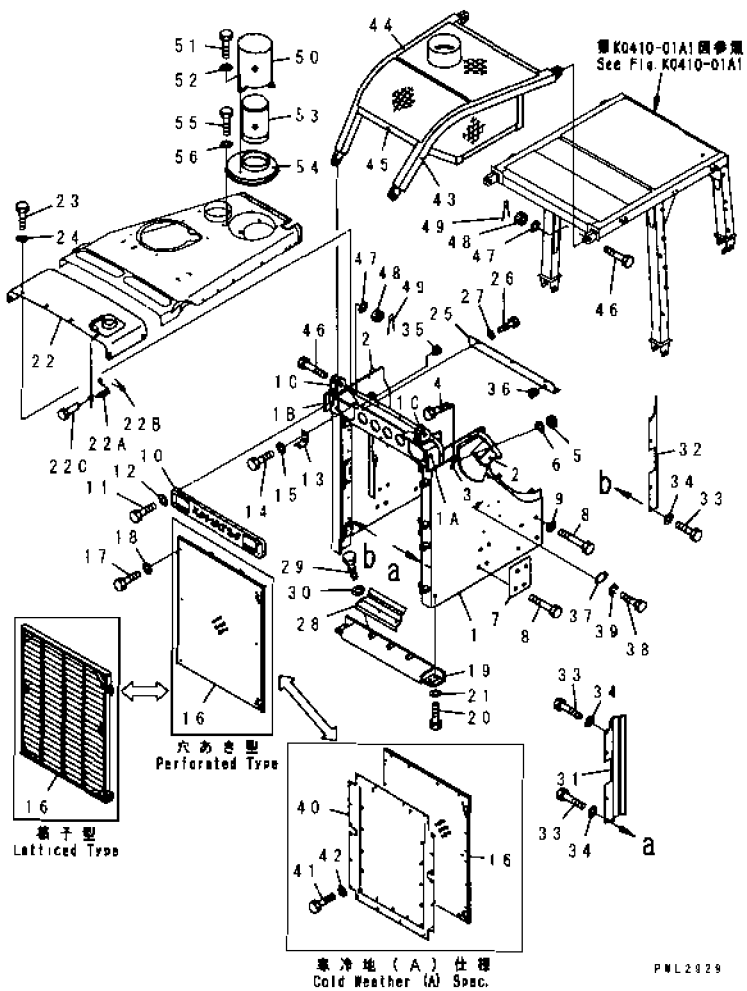

INDEX	PART NO	DESCRIPTION	Q TY.	SERIAL NO
1	175-902-7830	GUARD	1	57001-
1A	175-902-7641	. BRACKET (WELDED)	1	57001-
1B	175-902-7651	. BRACKET (WELDED)	1	57001-
1C	175-902-7120	. BRACKET (WELDED)	2	57001-
2	175-54-21133	. SUPPORT (WELDED)	2	57001-
3	175-862-3482	. PIN (WELDED)	2	57001-
4	01010-80835	BOLT	2	57001-
5	01580-10806	NUT	2	57001-
6	01643-30823	WASHER	2	57001-
7	175-54-31120	PLATE	2	57001-
8	01019-32755	BOLT	16	57001-
9	01643-32780	WASHER	16	57001-
10	154-54-41412	MARK, (NEW LOGO)	1	57001-
11	195-54-43260	BOLT	6	57001-
12	198-911-3160	WASHER	6	57001-
13	175-54-46160	BRACKET	2	57001-
14	01010-81230	BOLT	4	57001-
15	01643-31232	WASHER	4	57001-
16	175-54-46262	MASK, PERFORATED TYPE	1	57001-
	175-54-46270	MASK, PERFORATED TYPE, (A)	1	57001-
	175-54-46141	MASK, LATTICED TYPE	1	57001-
17	198-54-42260	BOLT	6	57001-
18	198-54-42290	WASHER	6	57001-
19	175-54-46130	COVER	1	57001-
20	01010-82050	BOLT	4	57001-
21	01643-32060	WASHER	4	57001-
22	175-54-25990	COVER	1	57001-
22A	09463-00006	SPRING	1	57001-
22B	04205-10618	PIN	2	57001-
22C	04050-11610	PIN, COTTER	2	57001-
23	01010-81220	BOLT	8	57001-
24	01643-31232	WASHER	8	57001-
25	175-54-71310	PLATE	1	57001-
26	01010-81225	BOLT	3	57001-
27	01643-31232	WASHER	3	57001-
28	175-54-46150	PLATE	1	57001-
29	01010-81220	BOLT	3	57001-
30	01643-31232	WASHER	3	57001-
31	175-54-71820	PLATE, L. H.	1	57001-
32	175-54-71830	PLATE, R. H.	1	57001-
33	01010-81230	BOLT	8	57001-
34	01643-31232	WASHER	8	57001-

FIG NO. : M2110-03A1

FIG. M2110-03A1 RADIATOR GUARD (WOODY TERRAIN SPEC.)

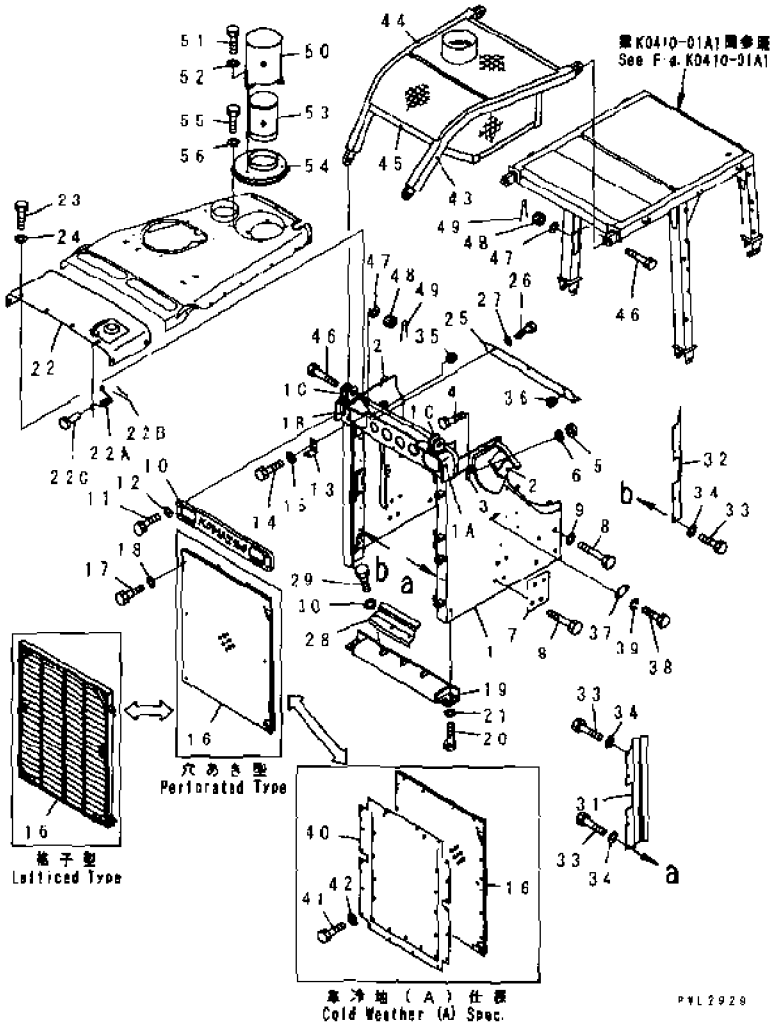

INDEX	PART NO.	DESCRIPTION	Q'TY	SERIAL NO
35	08037-03620	GROMMET	2	57001-
36	08037-01008	GROMMET	1	57001-
37	175-54-41320	PLATE	1	57001-
38	01010-81020	BOLT	2	57001-
39	01602-21030	WASHER, SPRING	2	57001-
40	175-882-1270	SHUTTER, (A)	1	57001-
41	01010-50816	BOLT, (A)	20	57001-
42	01643-30823	WASHER, (A)	20	57001
	175-902-7131	FRAME ASS'Y	1	57001-
43	175-902-7140	FRAME (WELDED)	1	57001-
44	175-902-7150	FRAME (WELDED)	1	57001-
45	175-902-7160	FRAME (WELDED)	1	57001-
46	01013-83635	BOLT	4	57001-
47	01643-33690	WASHER	4	57001-
48	01590-33638	NUT	4	57001-
49	04050-16065	PIN	4	57001-
50	175-54-45680	COVER	1	57001-
51	01010-81025	BOLT	3	57001-
52	01643-31032	WASHER	3	57001-
53	600-18-14940	CAP	1	57001-
54	175-54-75370	COVER	1	57001-
55	01010-81020	BOLT	4	57001-
56	01643-31032	WASHER	4	57001-

FIG. M2110-04A0 RADIATOR FAN GUARD

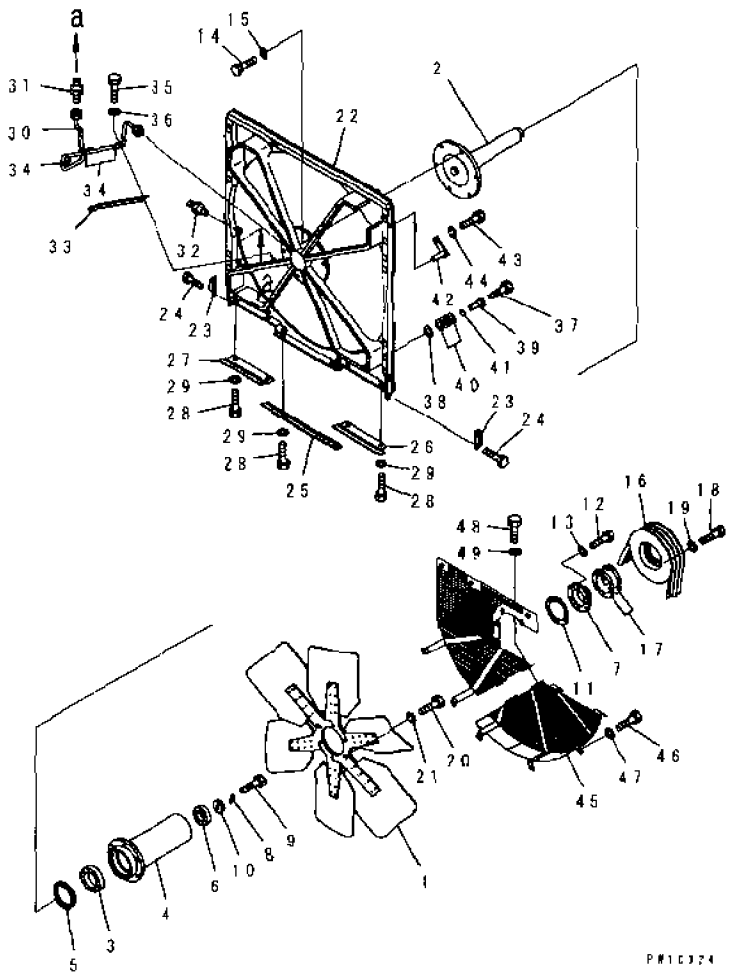

INDEX	PART NO	DESCRIPTION	Q'TY	SERIAL NO
1	600-643-1120	FAN	1	57001-
2	175-03-71521	SHAFT	1	57001-
3	06040-06018	BEARING	1	57001-
4	175-03-71531	DRUM	1	57001-
5	07011-50120	SEAL	1	57001-
6	06040-06310	BEARING	1	57001-
7	175-03-34380	COVER	1	57001-
8	195-03-11851	LOCK	1	57001-
9	01010-81030	BOLT	2	57001-
10	195-03-11842	HOLDER	1	57001-
11	195-03-12810	GASKET	1	57001-
12	01010-81030	BOLT	3	57001-
13	01602-21030	WASHER	3	57001-
14	01010-81645	BOLT	6	57001-
15	01643-31645	WASHER	6	57001-
16	175-03-71510	PULLEY	1	57001-
17	195-03-11880	SHIM, 1.0MM	10	57001-
18	01010-81265	BOLT	6	57001-
19	01602-21236	WASHER	6	57001-
20	01010-81240	BOLT	6	57001-
21	01602-21236	WASHER	6	57001-
22	175-03-71351	GUARD	1	57001-
23	195-03-13150	CUSHION	2	57001-
24	01010-81020	BOLT	4	57001-
25	175-03-71370	SEAL	1	57001-
26	175-03-71380	SEAL, L.H.	1	57001-
27	175-03-71390	SEAL, R.H.	1	57001-
28	01010-81225	BOLT	6	57001-
29	01643-31232	WASHER	6	57001
30	175-03-74420	TUBE	1	57001-
31	07213-50710	CONNECTOR	1	57001-
32	07020-00000	FITTING, GREASE	1	57001-
33	175-03-74430	PLATE	1	57001-
34	566-16-11970	CLIP	3	57001-
35	01010-80816	BOLT	3	57001-
36	01643-30823	WASHER	3	57001-
37	01010-81290	BOLT	14	57001-
38	154-30-51460	WASHER	14	57001-
39	175-03-71360	SPACER	14	57001-
40	175-54-27350	SPRING	56	57001-
41	175-54-28770	RING	14	57001-
42	175-03-71710	PIN	1	57001-

FIG NO. : M2110-04A0

FIG.M2110-04A0 RADIATOR FAN GUARD

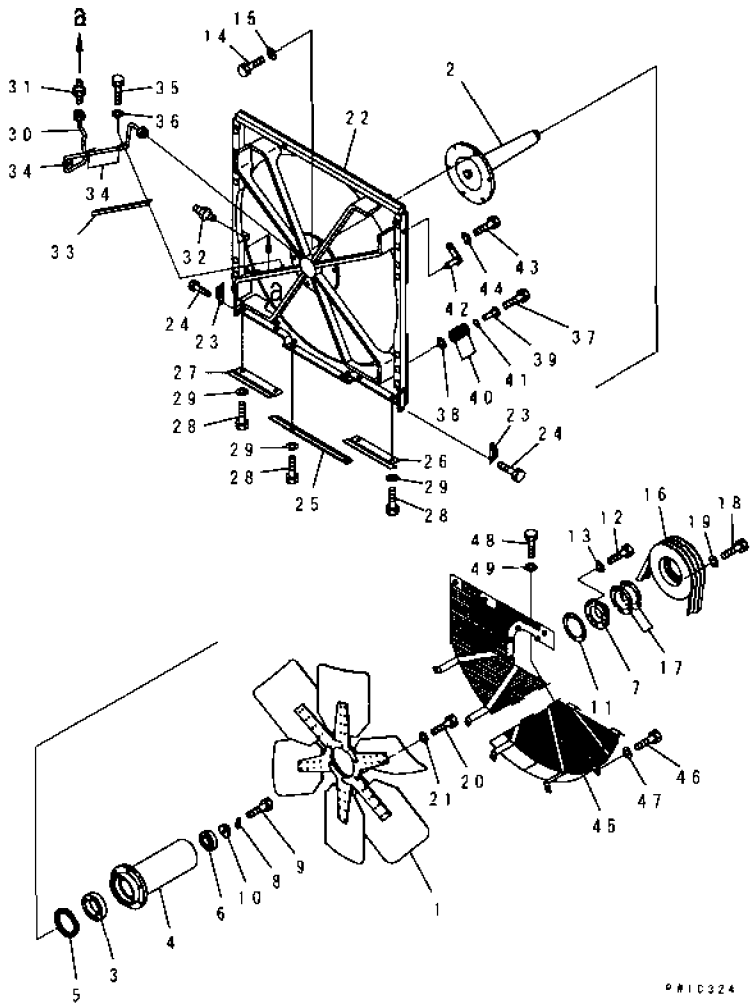

INDEX	PART NO.	DESCRIPTION	Q'TY	SERIAL NO
43	01010-81230	BOLT	1	57001-
44	01602-21236	WASHER	1	57001-
45	175-03-71410	NET	1	57001-
46	01010-81235	BOLT	3	57001-
47	01643-31232	WASHER	3	57001-
48	01010-81225	BOLT	2	57001-
49	01643-31232	WASHER	2	57001-

FIG. M2110-05A0 RADIATOR GUARD (WIRING)

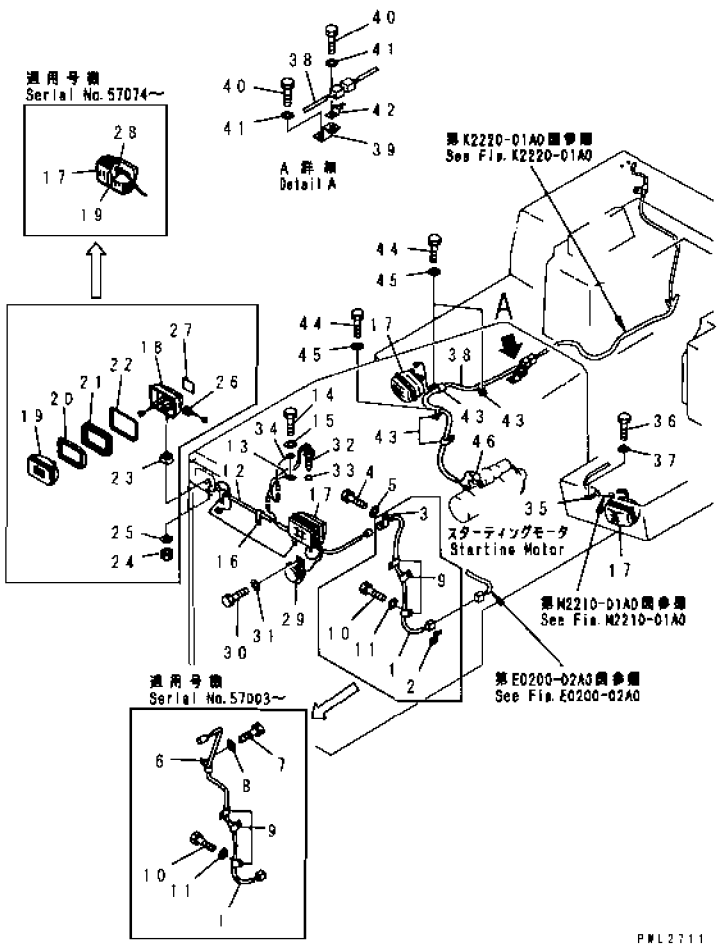

INDEX	PART NO	DESCRIPTION	Q'TY	SERIAL NO
1	175-06-71151	WIRING HARNESS	1	57001-
2	08053-01510	CLIP	1	57001-
3	08052-31711	CLIP	1	57001-
4	01010-81020	BOLT	2	57001-
5	01643-31032	WASHER	2	57001-
6	04434-51012	CLIP	1	57003-
7	01010-81220	BOLT	1	57003-
8	01643-31232	WASHER	1	57003-
9	175-06-25160	CLIP	3	57001-
10	01010-81220	BOLT	3	57001-
11	01643-31232	WASHER	3	57001-
12	175-06-61160	WIRING HARNESS	1	57001-
13	08036-10814	CLIP	1	57001-
14	01010-81016	BOLT	1	57001-
15	01643-31032	WASHER	1	57001-
16	08036-61014	CLIP	3	57001-
17	17A-06-17940	LAMP ASS'Y	4	57074-
	23S-05-28210	LAMP ASS'Y	4	57001-57073
18	203-06-56160	.HOUSING	4	57001-57073
19	17A-06-17970	.BULB, 70W, 70W	4	57074-
	22W-06-12170	.BULB, 24V	4	57001-57073
20	203-06-56180	.RING	4	57001-57073
21	22W-06-12290	.CUSHION	4	57001-57073
22	203-06-56190	.RING	4	57001-57073
23	22W-06-12160	.SEAT	4	57001-57073
24	01582-11411	.NUT	4	57001-57073
25	01602-21442	.WASHER	4	57001-57073
26	09415-01008	.CAP	4	57001-57073
27	23S-05-28220	.PLATE, NAME	4	57001-57073
28	17A-06-17980	.SLEEVE	4	57074-
29	175-06-41110	HORN	1	57001-
30	01010-80820	BOLT	2	57001-
31	01643-30823	WASHER	2	57001-
32	175-06-41302	SENSOR, FLOAT	1	57001-
33	07002-13634	O-RING	1	57001-
34	175-06-51342	WIRE	1	57001-
35	08035-01508	CLIP	1	57001-
36	01010-51220	BOLT	1	57001-
37	01643-31232	WASHER	1	57001-
38	175-06-71381	WIRING HARNESS	1	57001-
39	175-06-61390	BRACKET	1	57001-
40	01010-51020	BOLT	2	57001-

FIG.M2110-05A0 RADIATOR GUARD (WIRING)

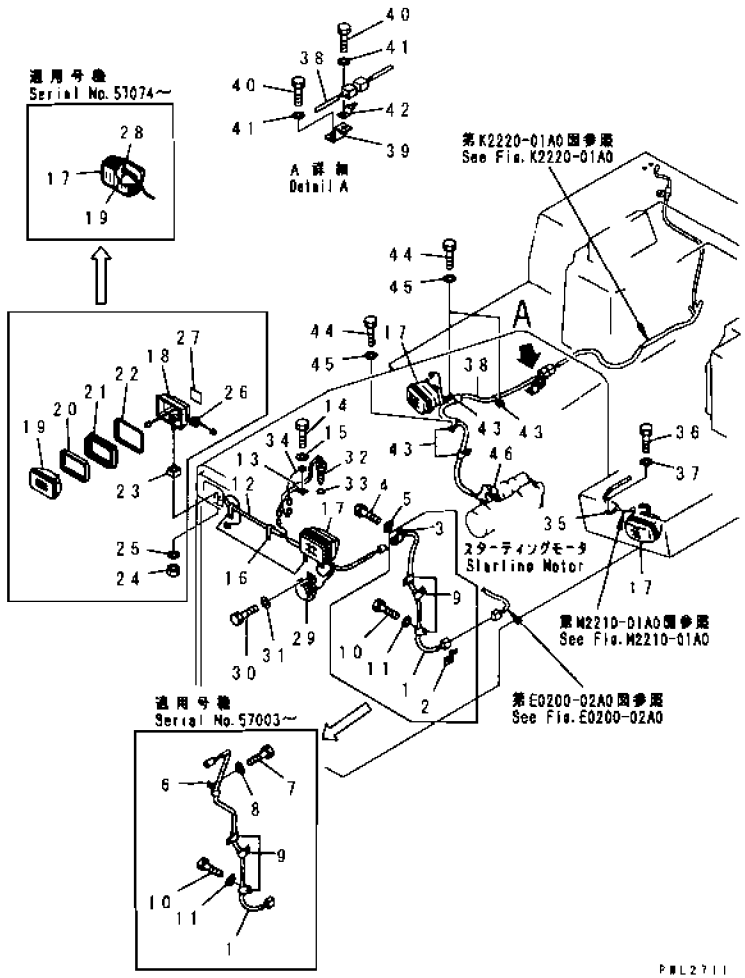

INDEX	PART NO	DESCRIPTION	Q'TY	SERIAL NO
41	01643-31032	WASHER	2	57001-
42	08036-80814	CLIP	1	57001-
43	08036-01014	CLIP	4	57001-
44	01010-81020	BOLT	3	57001-
45	01643-31032	WASHER	3	57001-
46	140-06-18260	CAP	1	57001-

FIG. M2110-06A0 RADIATOR GUARD AND CYLINDER STAY

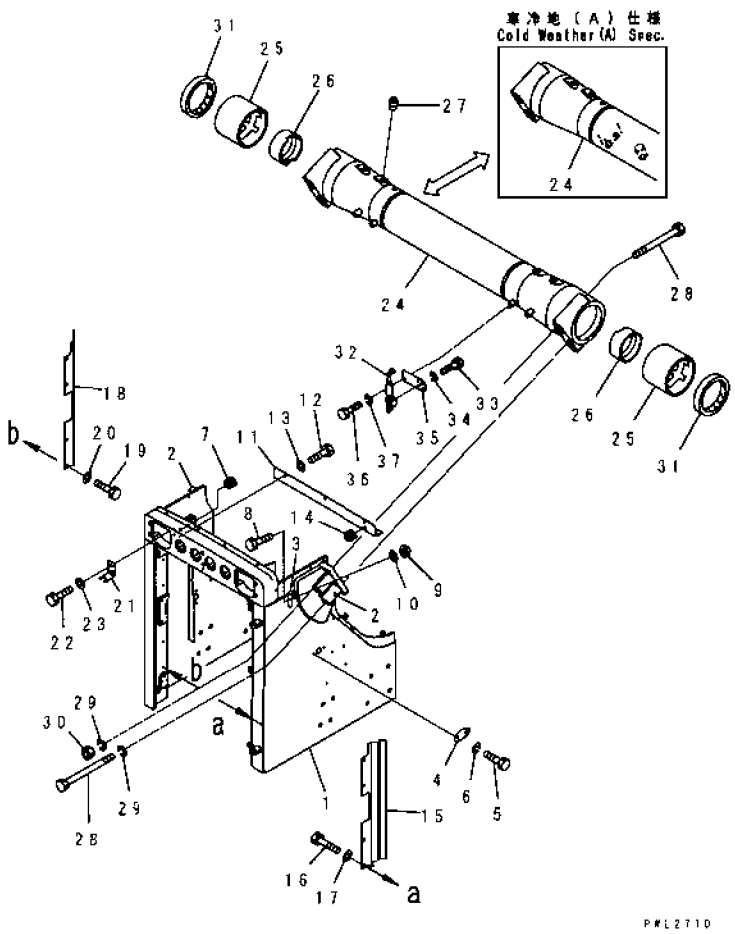

INDEX	PART NO	DESCRIPTION	Q'TY	SERIAL NO.
1	175-54-76110	GUARD	1	57001-
2	175-54-21133	.SUPPORT (WELDED)	1	57001-
3	175-862-3482	.PIN (WELDED)	1	57001-
4	175-54-41320	PLATE	1	57001-
5	01010-81020	BOLT	2	57001-
6	01602-21030	WASHER	2	57001-
7	08037-03620	GROMMET	2	57001-
8	01010-80835	BOLT	2	57001-
9	01580-10806	NUT	2	57001-
10	01643-30823	WASHER	2	57001-
11	175-54-71310	PLATE	1	57001-
12	01010-81225	BOLT	3	57001-
13	01643-31232	WASHER	3	57001-
14	08037-01008	GROMMET	1	57001-
15	175-54-71820	PLATE, L.H.	1	57001-
16	01010-81230	BOLT	4	57001-
17	01643-31232	WASHER	4	57001-
18	175-54-71830	PLATE, R.H.	1	57001-
19	01010-81230	BOLT	4	57001-
20	01643-31232	WASHER	4	57001-
21	175-54-46160	BRACKET	2	57001-
22	01010-81230	BOLT	4	57001-
23	01643-31232	WASHER	4	57001-
	175-61-00018	STAY ASS'Y	1	57001-
24	☆	.STAY, CYLINDER	1	57001-
	☆	.STAY, CYLINDER, (A)	1	57001-
25	175-61-15450	.BUSHING	2	57001-
26	175-61-15460	.BUSHING	2	57001-
27	07042-70108	PLUG	2	57001-
28	175-61-15130	BOLT	8	57001-
29	01602-22783	WASHER	8	57001-
30	01580-12722	NUT	4	57001-
31	07145-00125	SEAL, DUST	2	57001-
32	175-54-21361	CATCH ASS'Y	2	57001-
33	01010-81025	BOLT	6	57001-
34	01602-21030	WASHER	6	57001-
35	175-54-21811	PLATE	2	57001-
36	01010-81225	BOLT	4	57001-
37	01643-31232	WASHER	4	57001-

FIG. M2110-07A0 RADIATOR GUARD (NET)

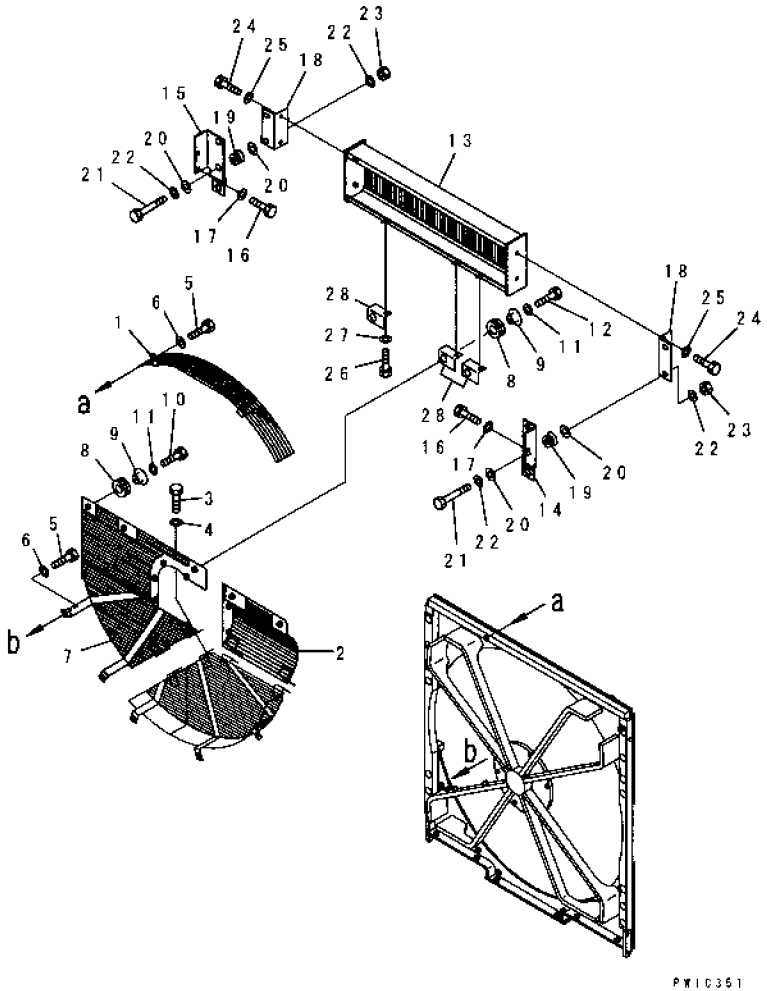

INDEX	PART NO.	DESCRIPTION	Q'TY	SERIAL NO
1	175-03-43170	NET	1	57001-
2	175-03-71430	NET	1	57001-
3	01010-81225	BOLT	2	57001-
4	01643-31232	WASHER	2	57001-
5	01010-81235	BOLT	4	57001-
6	01643-31232	WASHER	4	57001-
7	175-03-71421	NET	1	57001-
8	175-03-42140	RUBBER	5	57001-
9	203-54-14330	COLLAR	5	57001-
10	01010-81235	BOLT	4	57001-
11	01643-31232	WASHER	5	57001-
12	01010-81240	BOLT	1	57001-
13	175-03-71810	NET	1	57001-
14	175-979-7510	BRACKET, L.H.	1	57001-
15	175-979-7520	BRACKET, R.H.	1	57001-
16	01010-81225	BOLT	4	57001-
17	01643-31232	WASHER	4	57001-
18	175-979-7210	BRACKET	2	57001-
19	195-03-41380	CUSHION	4	57001-
20	178-60-12250	COLLAR	8	57001-
21	01010-81060	BOLT	4	57001-
22	01643-31032	WASHER	8	57001-
23	01580-11008	NUT	4	57001-
24	01010-81020	BOLT	4	57001-
25	01643-31032	WASHER	4	57001-
26	01010-81220	BOLT	3	57001-
27	01643-31232	WASHER	3	57001-
28	175-979-7330	BRACKET	3	57001-

FIG NO. : M2110-08A0

FIG. M2110-08A0 RADIATOR COVER AND CYLINDER STAY

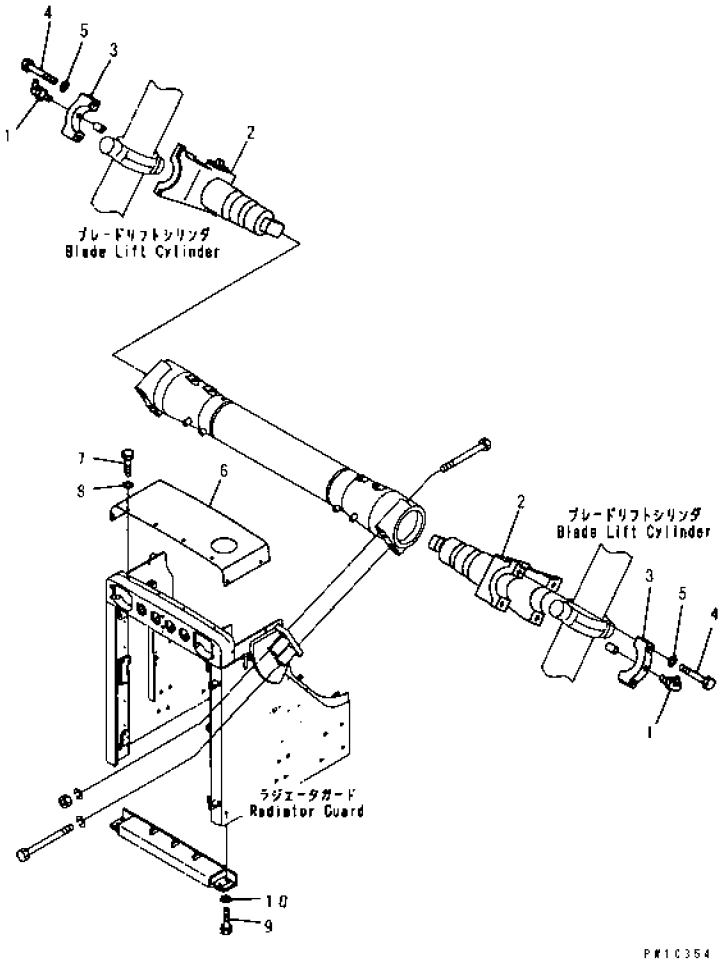

INDEX	PART NO.	DESCRIPTION	Q'TY	SERIAL NO
1	07020-00900	FITTING, GREASE	4	57001-
2	175-61-15410	YOKE	2	57001-
3	175-60-19121	CAP	4	57001-
4	01010-81890	BOLT	8	57001-
5	01643-31845	WASHER	8	57001-
6	175-54-21155	COVER	1	57001-
7	01010-81220	BOLT	8	57001-
8	01643-31232	WASHER	8	57001-
9	01010-82050	BOLT	4	57001-
10	01643-32060	WASHER	4	57001-

FIG. M2111-01A0 CYLINDER STAY

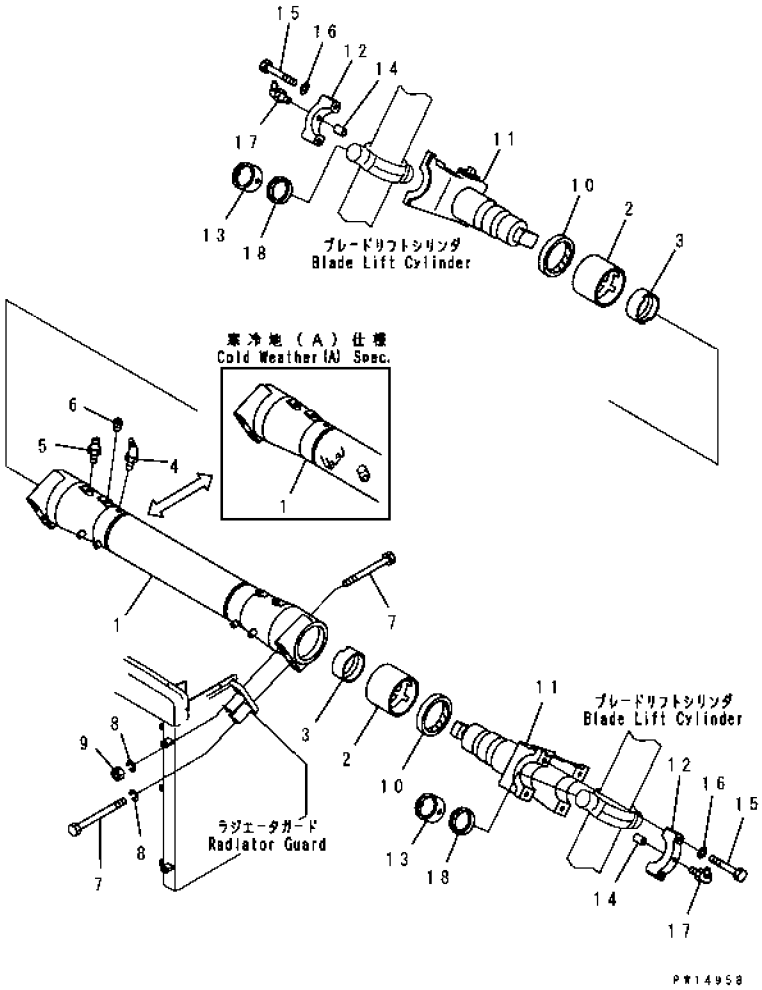

INDEX	PART NO	DESCRIPTION	Q'TY	SERIAL NO
	175-61-00018	STAY ASS'Y	1	57001-
1	☆	. STAY, CYLINDER	1	57001-
	☆	. STAY, CYLINDER, (A)	1	57001-
2	175-61-15450	. BUSHING	2	57001-
3	175-61-15460	. BUSHING	2	57001-
4	07020-00675	FITTING, GREASE	2	57001-
5	07020-00000	FITTING, GREASE	2	57001-
6	07042-70108	PLUG, TAPER	2	57001-
7	175-61-15130	BOLT	8	57001-
8	01602-22783	WASHER, SPRING	8	57001-
9	01580-12722	NUT	4	57001-
10	07145-00125	SEAL, DUST	2	57001-
11	175-61-15410	YOKE	2	57001-
12	175-60-19121	CAP	4	57001-
13	175-61-15201	BUSHING ASS'Y	4	57001-
14	170-70-15190	PIN, DOWEL	4	57001-
15	01010-81890	BOLT	8	57001-
16	01643-31845	WASHER, SPRING	8	57001-
17	07020-00900	FITTING, GREASE	4	57001-
18	07145-00085	SEAL, DUST	4	57001-

FIG. M2113-01A0 RADIATOR GUARD (COVER AND MASK)

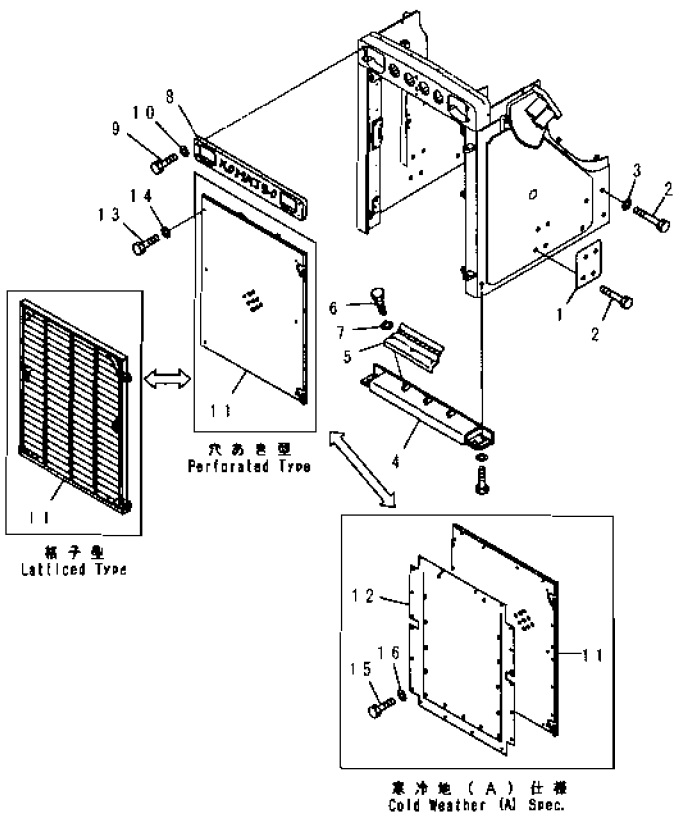

INDEX	PART NO.	DESCRIPTION	Q TY	SERIAL NO
1	175-54-31120	PLATE	2	57001-
2	01019-32755	BOLT	16	57001-
3	01643-32780	WASHER	8	57001-
4	175-54-46130	COVER	1	57001-
5	175-54-46150	PLATE	1	57001-
6	01010-81220	BOLT	3	57001-
7	01643-31232	WASHER	3	57001-
8	154-54-41412	MARK	1	57001-
9	195-54-43260	BOLT	6	57001-
10	198-911-3160	WASHER	6	57001-
11	175-54-46262	MASK	1	57001-
	175-54-46270	MASK, (A)	1	57001-
	175-54-46141	MASK	1	57001-
12	175-882-1270	SHUTTER, (A)	1	57001-
13	198-54-42260	BOLT	6	57001-
14	198-54-42290	WASHER	6	57001-
15	01010-50816	BOLT, (A)	20	57001-
16	01643-30823	WASHER, (A)	20	57001-

FIG. M2141-01A0 ENGINE HOOD AND DASHBOAD (SIDE COVER LESS)

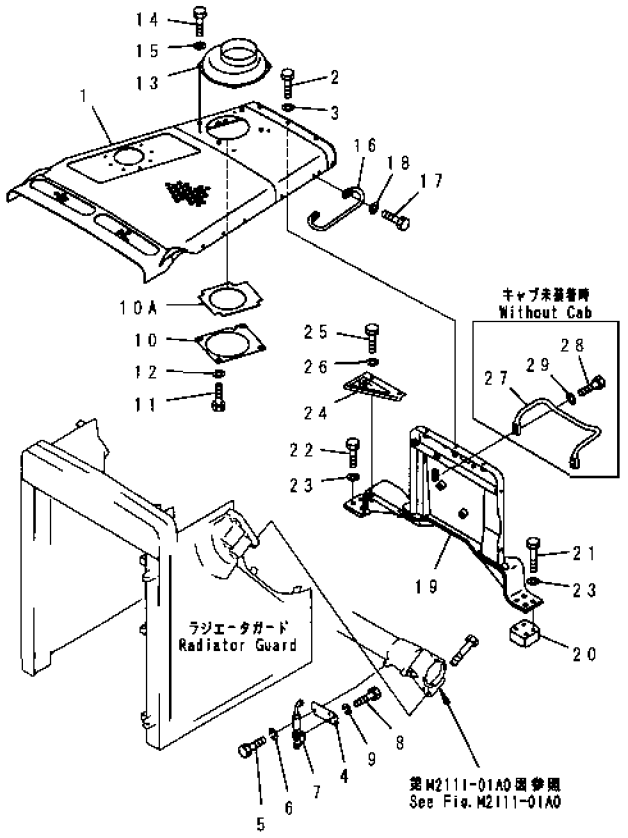

PWL2712

INDEX	PART NO	DESCRIPTION	Q'TY	SERIAL NO
1	175-54-75321	HOOD	1	57001-
2	01010-81225	BOLT	5	57001-
3	175-54-34170	WASHER	5	57001-
4	175-54-21811	PLATE	2	57001-
5	01010-81225	BOLT	4	57001-
6	01602-21030	WASHER	4	57001-
7	175-54-21361	CATCH ASS'Y	2	57001-
8	01019-81025	BOLT	6	57001-
9	01602-21030	WASHER, SPRING	6	57001-
10	175-54-75331	COVER	1	57001-
10A	175-54-75341	SHEET	1	57001-
11	01010-80825	BOLT	4	57001-
12	01643-30823	WASHER	4	57001-
13	175-54-75350	COVER	1	57001-
14	01010-81020	BOLT	4	57001-
15	01643-31032	WASHER	4	57001-
16	09420-01903	HANDLE	2	57001-
17	01010-81235	BOLT	4	57001-
18	01643-31232	WASHER	4	57001-
19	175-54-76351	BRACKET	1	57001-
20	175-54-47320	PLATE	1	57001-
21	01011-81615	BOLT	4	57001-
22	01010-81650	BOLT	4	57001-
23	01643-31645	WASHER	8	57001-
24	175-54-46650	COVER, (WITHOUT SIDE COVER)	1	57001-
25	01010-81225	BOLT, (WITHOUT SIDE COVER)	2	57001-
26	01643-31232	WASHER, (WITHOUT SIDE COVER)	2	57001-
27	154-54-45240	HANDLE, (WITHOUT CAB)	1	57001-
28	01010-81240	BOLT, (WITHOUT CAB)	4	57001-
29	01643-31232	WASHER, (WITHOUT CAB)	4	57001-

FIG. M2141-01A1 ENGINE SIDE COVER, L.H. (WITH AFTER COOLER AND PERFORATED)

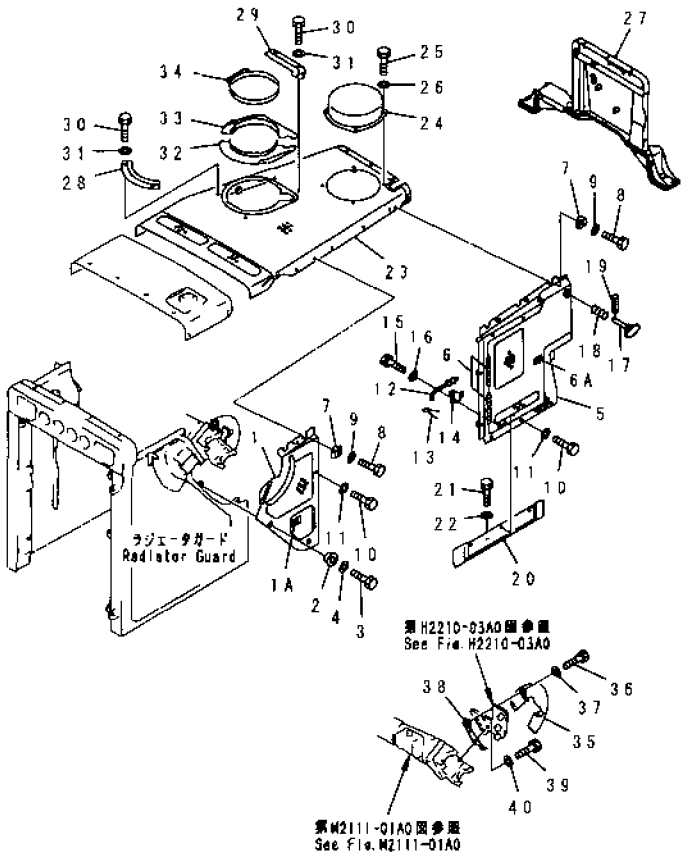

INDEX	PART NO.	DESCRIPTION	Q'TY	SERIAL NO
1	175-54-46191	COVER, L.H. FRONT	1	57001-
1A	195-54-42200	.LOCK ASS'Y (WELDED)	1	57001-
2	154-55-19341	COLLAR	2	57001-
3	01010-81225	BOLT	2	57001-
4	01643-31232	WASHER	2	57001-
5	175-54-76172	COVER, L.H. REAR	1	57001-
6	175-54-29850	.HINGE (WELDED)	2	57001-
6A	195-54-42200	.LOCK ASS'Y (WELDED)	1	57001-
7	09462-00080	STOPPER	5	57001-
8	01010-81250	BOLT	5	57001-
9	01463-31232	WASHER	5	57001-
10	01010-81225	BOLT	5	57001-
11	01643-31232	WASHER	5	57001-
12	175-54-43240	BAR	1	57001-
13	04050-12015	PIN, COTTER	1	57001-
14	198-54-19150	SPRING	1	57001-
15	01010-80612	BOLT	2	57001-
16	01643-30623	WASHER	2	57001-
17	09466-00001	HANDLE	1	57001-
18	700-22-11510	SPRING	1	57001-
19	04025-00524	PIN, SPRING	1	57001-
20	175-54-76221	COVER, L.H.	1	57001-
21	01010-81260	BOLT	2	57001-
22	175-54-21340	WASHER	2	57001-
23	175-54-37570	HOOD	1	57001-
24	175-54-21690	COVER	1	57001-
25	01010-81020	BOLT	4	57001-
26	01643-31232	WASHER	4	57001-
27	175-54-47250	BRACKET	1	57001-
28	175-54-45710	PLATE	1	57001-
29	175-54-45690	PLATE	1	57001-
30	01010-81025	BOLT	4	57001-
31	01643-31032	WASHER	4	57001-
32	175-54-29411	COVER	1	57001-
33	175-54-29421	COVER	1	57001-
34	175-54-29432	CLAMP	1	57001-
35	175-54-25910	COVER, L.H.	1	57001-
36	01010-81230	BOLT	2	57001-
37	01643-31232	WASHER	2	57001-
38	175-54-25920	BRACKET	1	57001-
39	01010-81235	BOLT	2	57001-
40	01643-31232	WASHER	2	57001-

FIG. M2141-01A2 ENGINE HOOD AND DASHBOAD (SOLID)

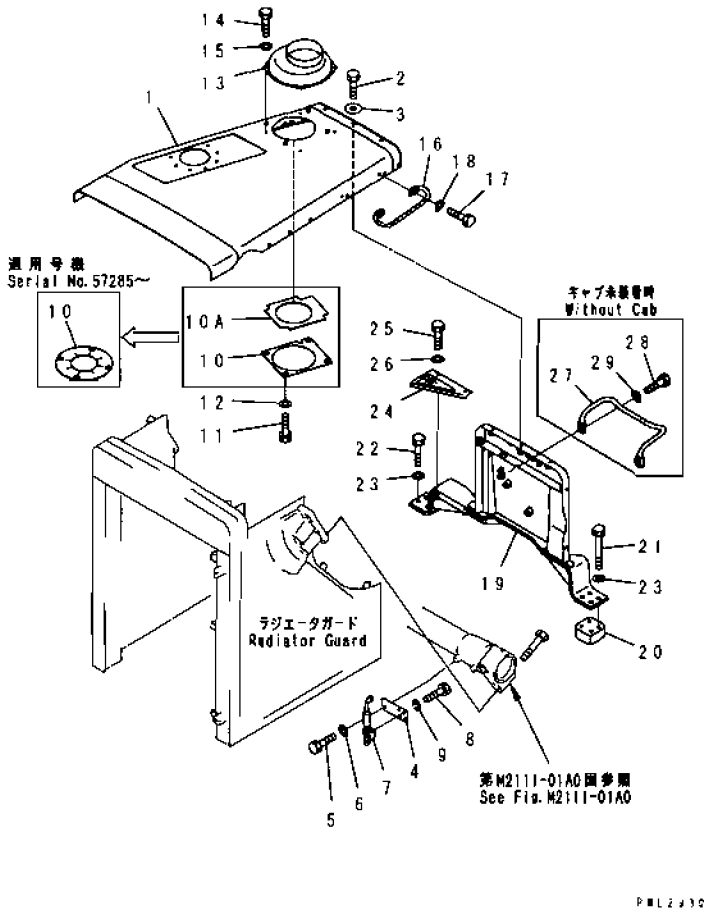

INDEX	PART NO	DESCRIPTION	Q'TY	SERIAL NO
1	175-54-71161	HOOD	1	57285-
	175-54-71160	HOOD	1	57001-57284
2	01010-81225	BOLT	5	57001-
3	175-54-34170	WASHER	5	57001-
4	175-54-21811	PLATE	2	57001-
5	01010-81230	BOLT	4	57001-
6	01643-31232	WASHER	4	57001-
7	175-54-21361	CATCH ASS'Y	2	57001-
8	01019-81025	BOLT	6	57001-
9	01602-21030	WASHER, SPRING	6	57001-
10	175-54-75332	COVER	1	57285-
	175-54-75331	COVER	1	57001-57284
10A	175-54-75341	SHEET	1	57001-57284
11	01010-80825	BOLT	4	57001-
12	01643-30823	WASHER	4	57001-
13	175-54-75350	COVER	1	57001-
14	01010-81020	BOLT	4	57001-
15	01643-31032	WASHER	4	57001-
16	09420-01903	HANDLE	2	57001-
17	01010-81235	BOLT	4	57001-
18	01643-31232	WASHER	4	57001-
19	175-54-76351	BRACKET	1	57001-
20	175-54-47320	PLATE	1	57001-
21	01011-81615	BOLT	4	57001-
22	01010-81650	BOLT	4	57001-
23	01643-31645	WASHER	8	57001-
24	175-54-46650	COVER, (WITHOUT SIDE COVER)	1	57001-
25	01010-81225	BOLT, (WITHOUT SIDE COVER)	2	57001-
26	01643-31232	WASHER, (WITHOUT SIDE COVER)	2	57001-
27	154-54-45240	HANDLE, (WITHOUT CAB)	1	57001-
28	01010-81240	BOLT, (WITHOUT CAB)	4	57001-
29	01643-31232	WASHER, (WITHOUT CAB)	4	57001-

FIG.M2141-01A3 ENGINE HOOD AND DASHBOAD (ADDITIONAL FILTER)

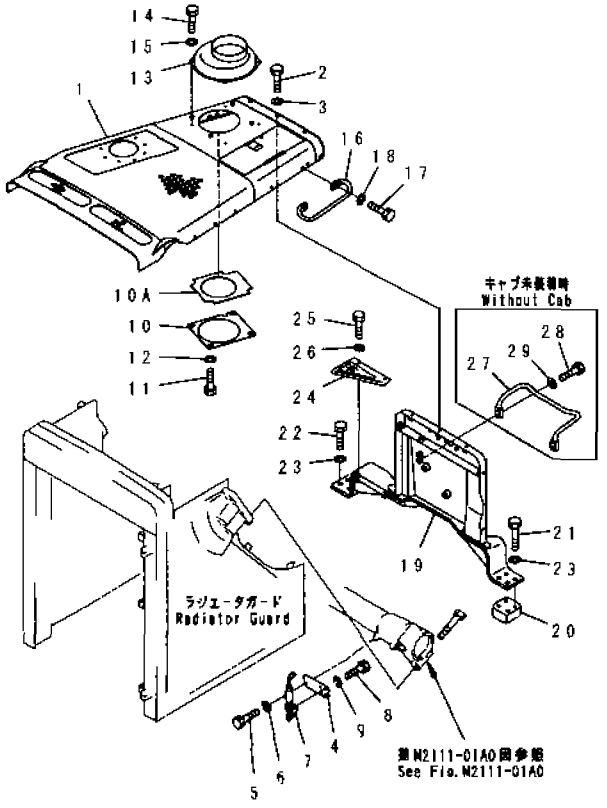

INDEX	PART NO	DESCRIPTION	Q TY	SERIAL NO
1	175-54-75360	HOOD	1	57001-
2	01010-81225	BOLT	5	57001-
3	175-54-34170	WASHER	5	57001-
4	175-54-21811	PLATE	2	57001-
5	01010-81230	BOLT	4	57001-
6	01643-31232	WASHER	4	57001-
7	175-54-21361	CATCH ASS'Y	2	57001-
8	01019-81025	BOLT	6	57001-
9	01602-21030	WASHER SPRING	6	57001-
10	175-54-75331	COVER	1	57001-
10A	175-54-75341	SHEET	1	57001-
11	01010-80825	BOLT	4	57001-
12	01643-30823	WASHER	4	57001-
13	175-54-75350	COVER	1	57001-
14	01010-81020	BOLT	4	57001-
15	01643-31032	WASHER	4	57001-
16	09420-01903	HANDLE	2	57001-
17	01010-81235	BOLT	4	57001-
18	01643-31232	WASHER	4	57001-
19	175-54-76351	BRACKET	1	57001-
20	175-54-47320	PLATE	1	57001-
21	01011-81615	BOLT	4	57001-
22	01010-81650	BOLT	4	57001-
23	01643-31645	WASHER	8	57001-
24	175-54-46650	COVER, (WITHOUT SIDE COVER)	1	57001-
25	01010-81225	BOLT, (WITHOUT SIDE COVER)	2	57001-
26	01643-31232	WASHER, (WITHOUT SIDE COVER)	2	57001-
27	154-54-45240	HANDLE, (WITHOUT CAB)	1	57001-
28	01010-81240	BOLT, (WITHOUT CAB)	4	57001-
29	01643-31232	WASHER, (WITHOUT CAB)	4	57001-

FIG. M2141-02A1 ENGINE SIDE COVER, R.H. (WITH AFTER COOLER AND PERFORATED)

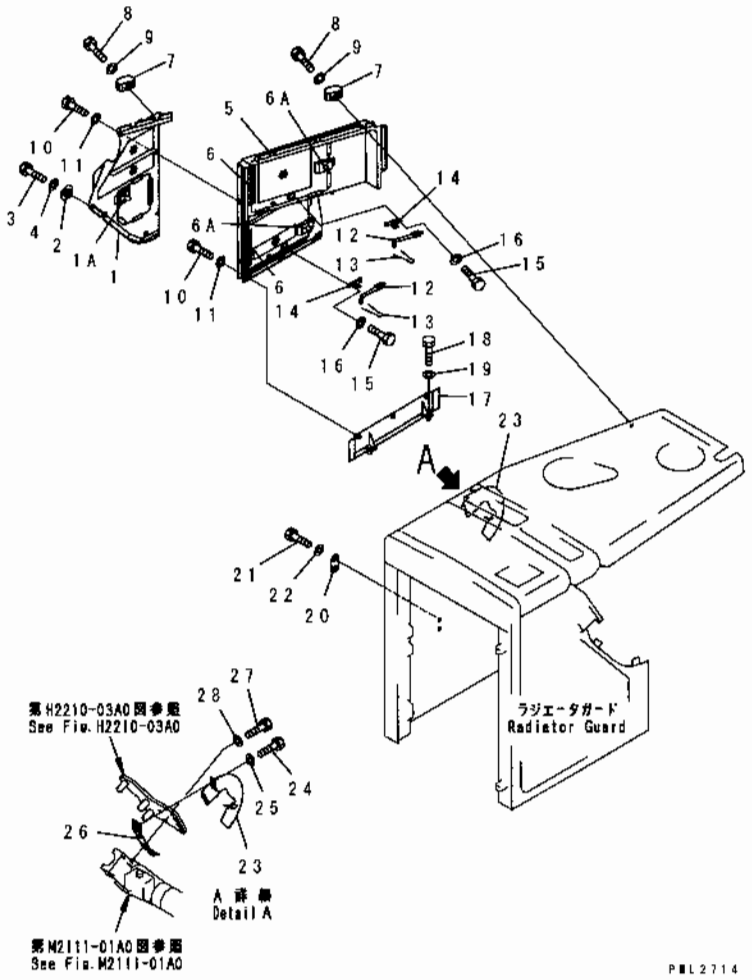

INDEX	PART NO.	DESCRIPTION	Q'TY	SERIAL NO.
1	175-54-76211	COVER, R.H. FRONT	1	57001-
1A	09461-00030	.LEVER (WELDED)	1	57001-
2	154-55-19341	COLLAR	2	57001-
3	01010-81225	BOLT	2	57001-
4	01643-31232	WASHER	2	57001-
5	175-54-76182	COVER, R.H. REAR	1	57001-
6	175-54-29850	.HINGE (WELDED)	3	57001-
6A	09461-00030	.LEVER (WELDED)	2	57001-
7	09462-00080	STOPPER	5	57001-
8	01010-81250	BOLT	5	57001-
9	01643-31232	WASHER	5	57001-
10	01010-81225	BOLT	5	57001-
11	01643-31232	WASHER	5	57001-
12	175-54-43250	BAR, R.H.	2	57001-
13	04050-12015	PIN, COTTER	2	57001-
14	198-54-19150	SPRING	2	57001-
15	01010-80612	BOLT	4	57001-
16	01643-30623	WASHER	4	57001-
17	175-54-76230	COVER, R H	1	57001-
18	01010-81260	BOLT	2	57001-
19	175-54-21340	WASHER	2	57001-
20	175-54-41320	PLATE	1	57001-
21	01010-81020	BOLT	2	57001-
22	01643-31032	WASHER	2	57001-
23	175-54-25930	COVER, R.H.	1	57001-
24	01010-81230	BOLT	2	57001-
25	01643-31232	WASHER	2	57001-
26	175-54-25940	BRACKET, R.H.	1	57001-
27	01010-81235	BOLT	2	57001-
28	01643-31232	WASHER	2	57001-

FIG. M2142-01A0 ENGINE SIDE COVER PERFORATED TYPE

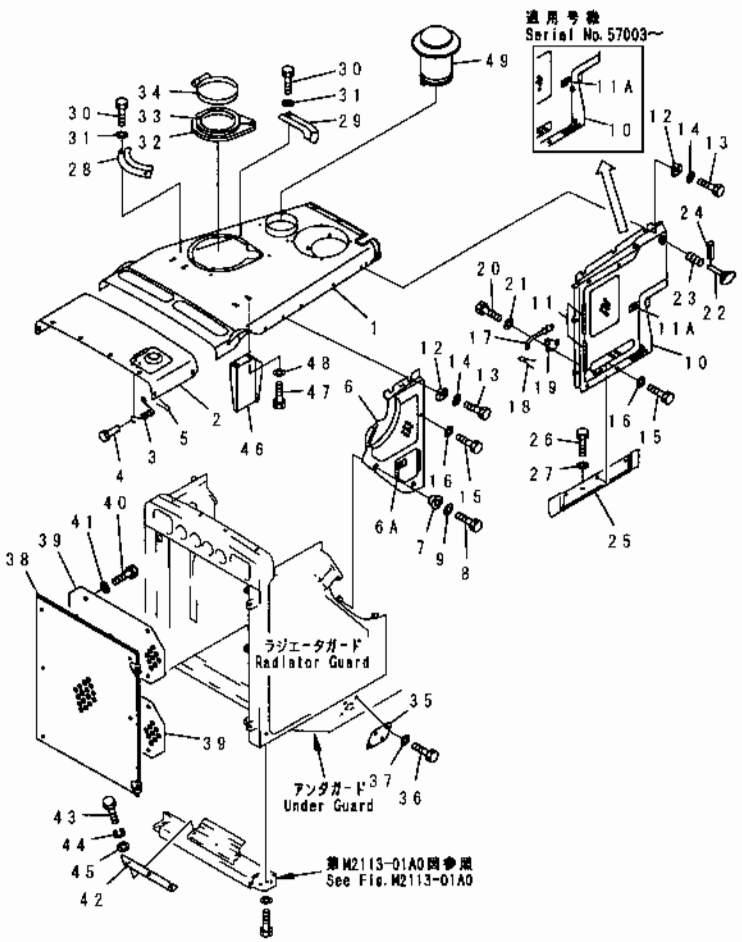

INDEX	PART NO	DESCRIPTION	Q'TY	SERIAL NO
1	175-54-41510	HOOD	1	57001-
2	175-54-25990	COVER	1	57001-
3	09463-00006	SPRING	1	57001-
4	04205-10618	PIN	2	57001-
5	04050-11610	PIN, COTTER	2	57001-
6	175-54-46191	COVER, L.H. FRONT	1	57001-
6A	195-54-42200	.LOCK ASS'Y (WELDED)	1	57001-
7	154-55-19341	COLLAR	2	57001-
8	01010-81225	BOLT	2	57001-
9	01643-31232	WASHER	2	57001-
10	175-54-76172	COVER, L.H. REAR	1	57001-
11	175-54-29850	.HINGE (WELDED)	2	57001-
11A	195-54-42200	.LOCK ASS'Y (WELDED)	1	57001-
12	09462-00080	STOPPER	5	57001-
13	01010-81250	BOLT	5	57001-
14	01643-31232	WASHER	5	57001-
15	01010-81225	BOLT	5	57001-
16	01643-31232	WASHER	5	57001-
17	175-54-43240	BAR	1	57001-
18	04050-12015	PIN, COTTER	1	57001-
19	198-54-19150	SPRING	1	57001-
20	01010-80612	BOLT	2	57001-
21	01643-30623	WASHER	2	57001-
22	09466-00001	HANDLE	1	57001-
23	700-22-11510	SPRING	1	57001-
24	04025-00524	PIN, SPRING	1	57001-
25	175-54-76221	COVER, L.H.	1	57001-
26	01010-81270	BOLT	2	57001-
27	01643-31232	WASHER	2	57001-
28	175-54-45710	PLATE	1	57001-
29	175-54-45690	PLATE	1	57001-
30	01010-81025	BOLT	4	57001-
31	01643-31032	WASHER	4	57001-
32	175-54-29411	COVER	1	57001-
33	175-54-29421	COVER	1	57001-
34	175-54-29432	CLAMP	1	57001-
35	175-54-32140	PLATE	1	57001-
36	01010-81235	BOLT	4	57001-
37	01643-31232	WASHER	4	57001-
38	175-54-46262	MASK	1	57001-
39	175-54-48111	PLATE	2	57001-
40	01010-81655	BOLT	8	57001-

FIG NO. : M2142-01A0

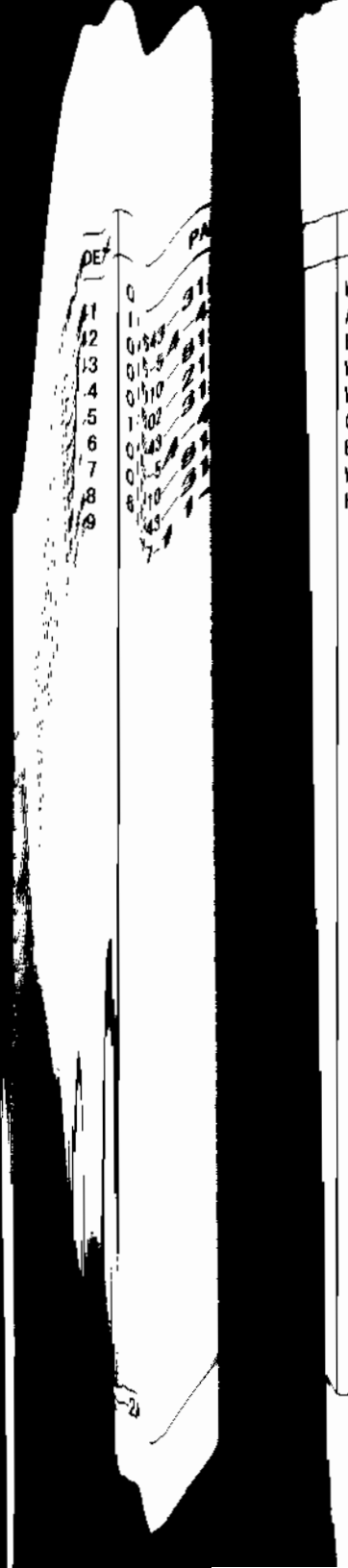

DESCRIPTION	Q'TY	SERIAL NO.
WASHER	8	57001-
ANGLE	1	57001-
BOLT	3	57001-
WASHER, SPRING	3	57001-
WASHER	3	57001-
COVER	2	57001-
BOLT	8	57001-
WASHER	8	57001-
HOOD	1	57001-

FIG NO. : M2142-01A1

FIG. M2142-01A1 SIDE COVER LESS

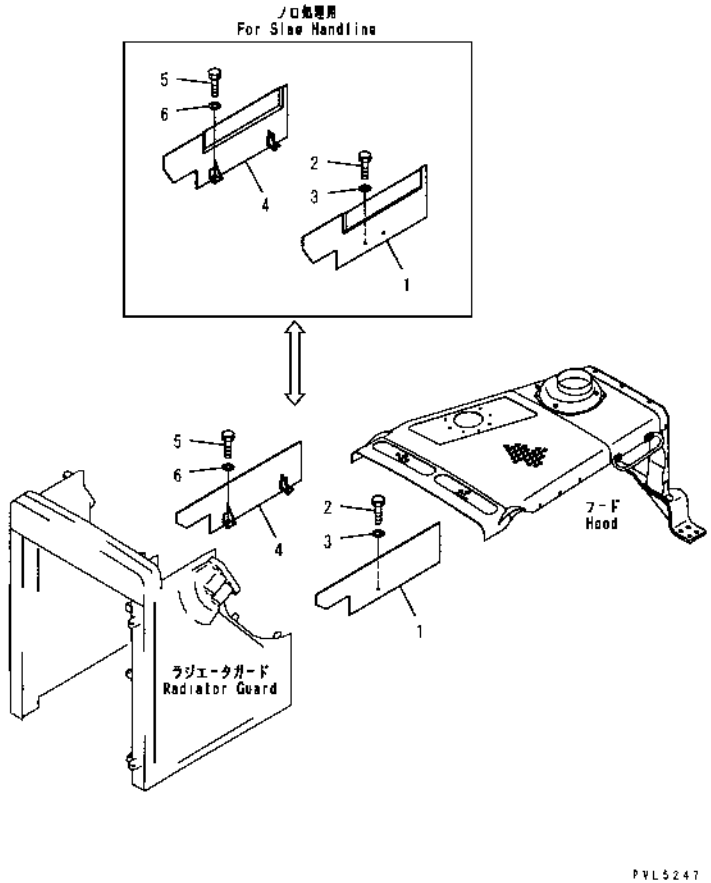

PVL5247

INDEX	PART NO	DESCRIPTION	Q'TY	SERIAL NO
1	175-54-76390	COVER, L.H.	1	57001-
	175-54-76470	COVER, L.H. (FOR SLAG HANDLING)	1	57001-
2	01010-81270	BOLT	2	57001-
3	175-54-21340	WASHER	2	57001-
4	175-54-76410	COVER, R.H.	1	57001-
	175-54-76480	COVER, R.H. (FOR SLAG HANDLING)	1	57001-
5	01010-81270	BOLT	2	57001-
6	175-54-21340	WASHER	2	57001-

FIG. M2142-01A2 ENGINE SIDE COVER L.H. (SOLID TYPE)

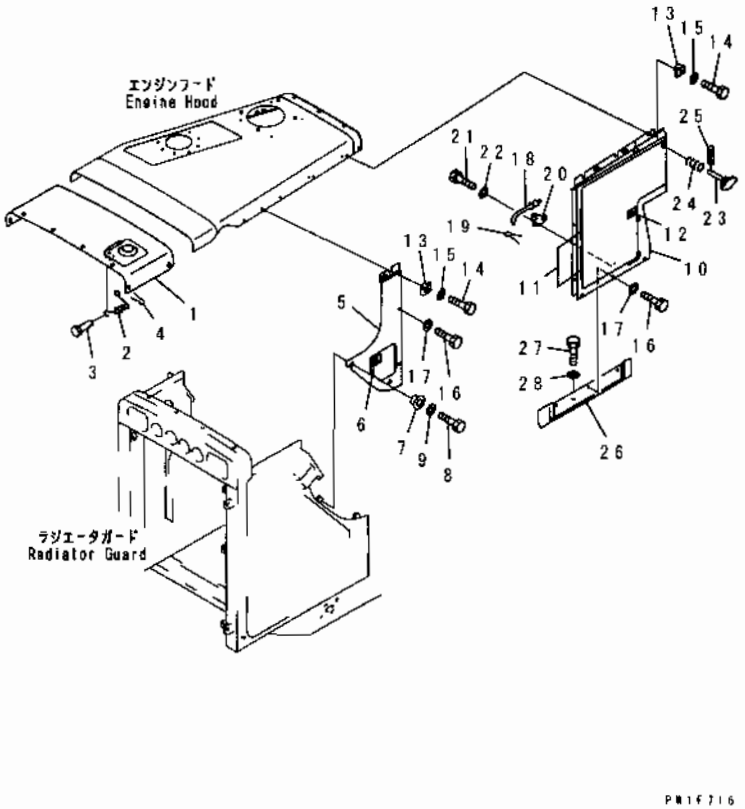

FIG NO. : M2142-01A2

INDEX	PART NO	DESCRIPTION	Q'TY	SERIAL NO
1	175-54-25990	COVER	1	57001-
2	09463-00006	SPRING	1	57001-
3	04205-10618	PIN	2	57001-
4	04050-11610	PIN, COTTER	2	57001-
5	175-54-37711	COVER, L.H. FRONT	1	57001-
6	195-54-42200	.LOCK ASS'Y (WELDED)	1	57001-
7	154-55-19341	COLLAR	2	57001-
8	01010-81225	BOLT	2	57001-
9	01643-31232	WASHER	2	57001-
10	175-862-7520	COVER, L.H. REAR	1	57001-
11	175-54-29850	.HINGE (WELDED)	2	57001-
12	195-54-42200	.LOCK ASS'Y (WELDED)	1	57001-
13	09462-00080	STOPPER	5	57001-
14	01010-81250	BOLT	5	57001-
15	01643-31232	WASHER	5	57001-
16	01010-81225	BOLT	5	57001-
17	01643-31232	WASHER	5	57001-
18	175-54-43240	BAR	1	57001-
19	04050-12015	PIN, COTTER	1	57001-
20	198-54-19150	SPRING	1	57001-
21	01010-80612	BOLT	2	57001-
22	01643-30623	WASHER	2	57001-
23	09466-00001	HANDLE	1	57001-
24	700-22-11510	SPRING	1	57001-
25	04025-00524	PIN, SPRING	1	57001-
26	175-54-76221	COVER, L.H.	1	57001-
27	01010-81270	BOLT	2	57001-
28	01643-31232	WASHER	2	57001-

FIG. M2142-02A0 ENGINE SIDE COVER, R.H. PERFORATED TYPE

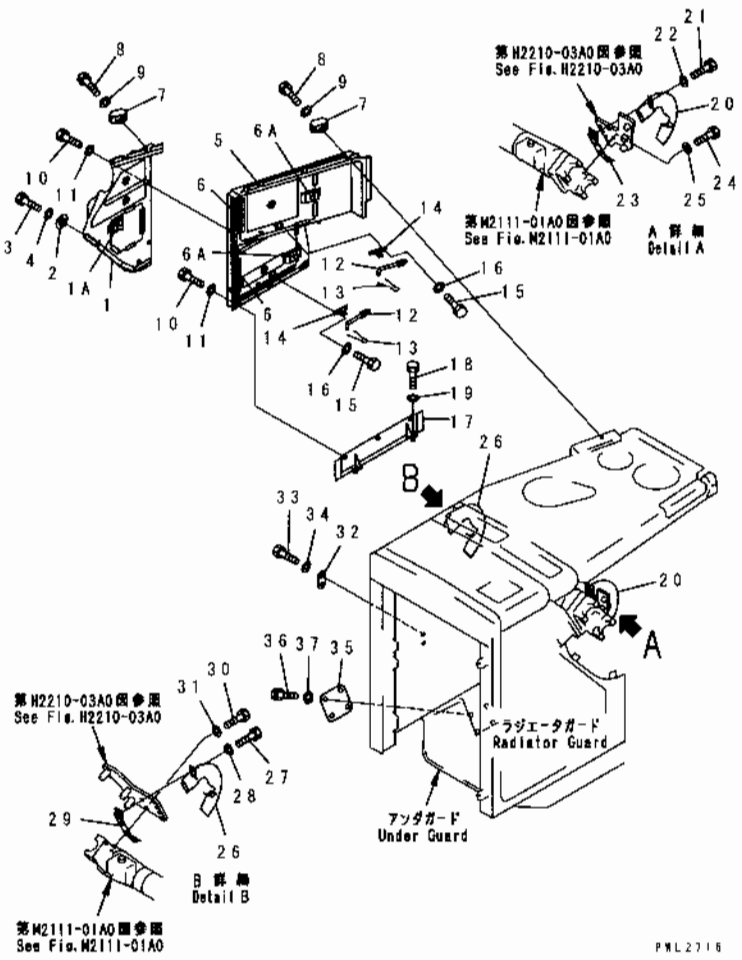

INDEX	PART NO	DESCRIPTION	Q'TY	SERIAL NO
1	175-54-76211	COVER, R.H. FRONT	1	57001-
1A	09461-00030	. LEVER (WELDED)	1	57001-
2	154-55-19341	COLLAR	2	57001-
3	01010-51225	BOLT	2	57001-
4	01643-31232	WASHER	2	57001-
5	175-54-76182	COVER, R.H. REAR	1	57001-
6	175-54-29850	. HINGE (WELDED)	3	57001-
6A	09461-00030	. LEVER (WELDED)	2	57001-
7	09462-00080	STOPPER	5	57001-
8	01010-81250	BOLT	5	57001-
9	01643-31232	WASHER	5	57001-
10	01010-81225	BOLT	5	57001-
11	01643-31232	WASHER	5	57001-
12	154-54-43250	BAR, R.H.	2	57001-
13	04050-12015	PIN, COTTER	2	57001-
14	198-54-19150	SPRING	2	57001-
15	01010-80612	BOLT	4	57001-
16	01643-30623	WASHER	4	57001-
17	175-54-76230	COVER, R.H.	1	57001-
18	01010-81260	BOLT	2	57001-
19	01643-31232	WASHER	2	57001-
20	175-54-25910	COVER, L.H.	1	57001-
21	01010-81230	BOLT	2	57001-
22	01643-31232	WASHER	2	57001-
23	175-54-25920	BRACKET	1	57001-
24	01010-81235	BOLT	2	57001-
25	01643-31232	WASHER	2	57001-
26	175-54-25930	COVER, R.H.	1	57001-
27	01010-81230	BOLT	2	57001-
28	01643-31232	WASHER	2	57001-
29	175-54-25940	BRACKET, R.H.	1	57001-
30	01010-81235	BOLT	2	57001-
31	01643-31232	WASHER	2	57001-
32	175-54-41320	PLATE	1	57001-
33	01010-81020	BOLT	2	57001-
34	01643-31032	WASHER	2	57001-
35	175-54-32140	PLATE	1	57001-
36	01010-81235	BOLT	4	57001-
37	01643-31232	WASHER	4	57001-

FIG. M2142-02A1 ENGINE SIDE COVER, R.H. (SOLID TYPE)

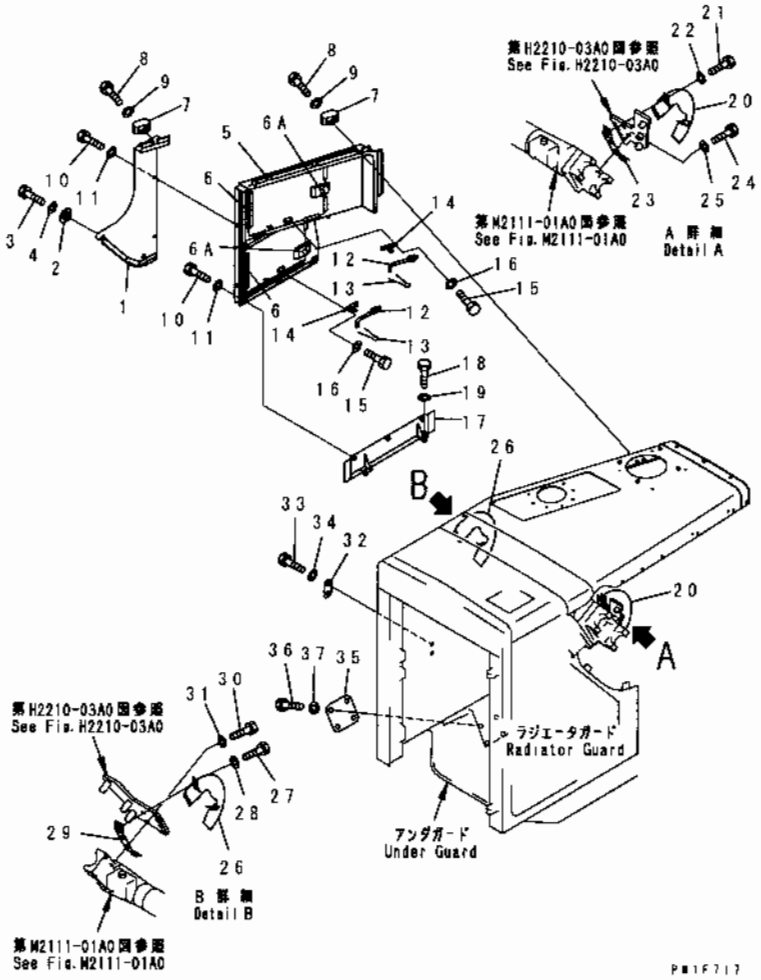

INDEX	PART NO	DESCRIPTION	Q'TY	SERIAL NO
1	175-54-37720	COVER, R.H. FRONT	1	57001-
2	154-55-19341	COLLAR	2	57001-
3	01010-51225	BOLT	2	57001-
4	01643-31232	WASHER	2	57001-
5	175-862-7630	COVER, R.H. REAR	1	57001-
6	175-54-29850	.HINGE (WELDED)	3	57001-
6A	09461-00030	.LEVER (WELDED)	2	57001-
7	09462-00080	STOPPER	5	57001-
8	01010-81250	BOLT	5	57001-
9	01643-31232	WASHER	5	57001-
10	01010-81225	BOLT	5	57001-
11	01643-31232	WASHER	5	57001-
12	154-54-43250	BAR, R.H.	2	57001-
13	04050-12015	PIN, COTTER	2	57001-
14	198-54-19150	SPRING	2	57001-
15	01010-80612	BOLT	4	57001-
16	01643-30623	WASHER	4	57001-
17	175-54-76230	COVER, R.H.	1	57001-
18	01010-81260	BOLT	2	57001-
19	01643-31232	WASHER	2	57001-
20	175-54-25910	COVER, L.H.	1	57001-
21	01010-81230	BOLT	2	57001-
22	01643-31232	WASHER	2	57001-
23	175-54-25920	BRACKET	1	57001-
24	01010-81235	BOLT	2	57001-
25	01643-31232	WASHER	2	57001-
26	175-54-25930	COVER, R.H.	1	57001-
27	01010-81230	BOLT	2	57001-
28	01643-31232	WASHER	2	57001-
29	175-54-25940	BRACKET, R.H.	1	57001-
30	01010-81235	BOLT	2	57001-
31	01643-31232	WASHER	2	57001-
32	175-54-41320	PLATE	1	57001-
33	01010-81020	BOLT	2	57001-
34	01643-31032	WASHER	2	57001-
35	175-54-32140	PLATE	1	57001-
36	01010-81235	BOLT	4	57001-
37	01643-31232	WASHER	4	57001-

FIG. M2190-01A1 PRECLEANER COVER (SAND AND DUSTY SPEC.)

(ENGINAIRE)

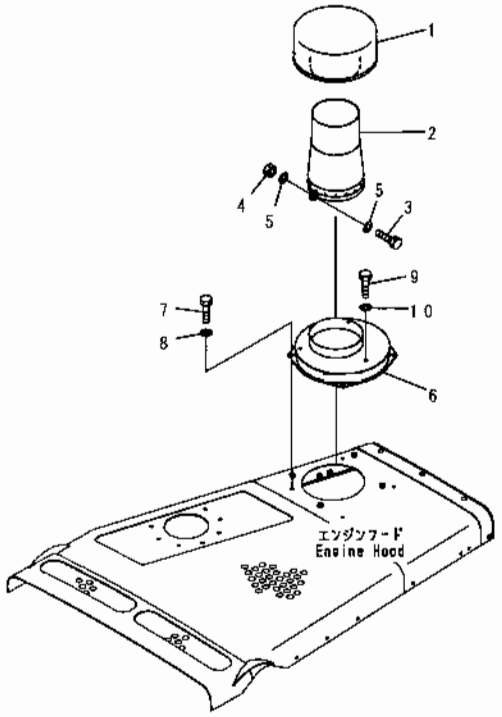

PA1F637

INDEX	PART NO.	DESCRIPTION	Q'TY	SERIAL NO.
1	198-01-51310	PRECLEANER	1	57001-
2	175-54-24620	DUCT	1	57001-
3	01016-51045	BOLT	1	57001-
4	01580-11008	NUT	1	57001-
5	01643-31032	WASHER	2	57001-
6	175-54-75732	COVER	1	57001-
7	01010-81020	BOLT	4	57001-
8	01643-31032	WASHER	4	57001-
9	01010-81020	BOLT	3	57001-
10	01643-31032	WASHER	3	57001-

FIG. M2190-01A3 PRECLEANER COVER (SAND AND DUSTY SPEC.)

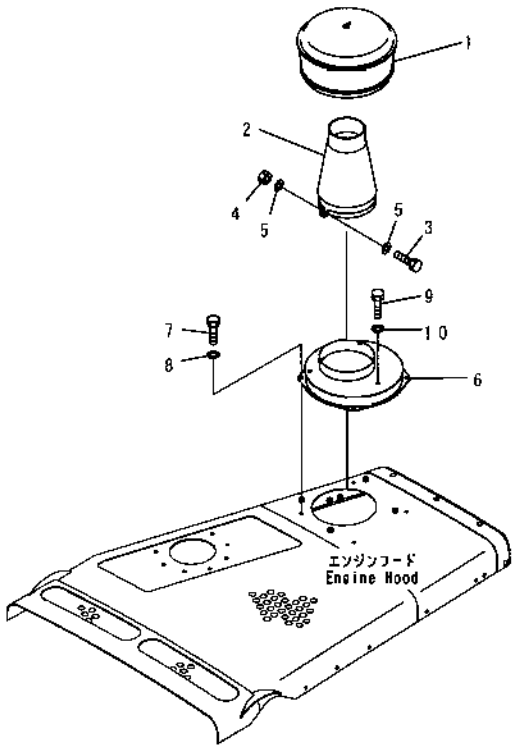

PWL2932

INDEX	PART NO.	DESCRIPTION	Q'TY	SERIAL NO
1	21N-01-31330	PRE CLEANER	1	57001-
2	175-54-24610	DUCT	1	57001-
3	01016-51045	BOLT	1	57001-
4	01580-11008	NUT	1	57001-
5	01643-31032	WASHER	2	57001-
6	175-54-75732	COVER	1	57285-
	□175-54-75731	COVER	1	57140-57284
	□175-54-75730	COVER	1	57001-57139
7	01010-81020	BOLT	4	57001-
8	01643-31032	WASHER	4	57001-
9	01010-81020	BOLT	3	57001-
10	01643-31032	WASHER	3	57001-

FIG. M2210-01A0 ELECTRICAL SYSTEM

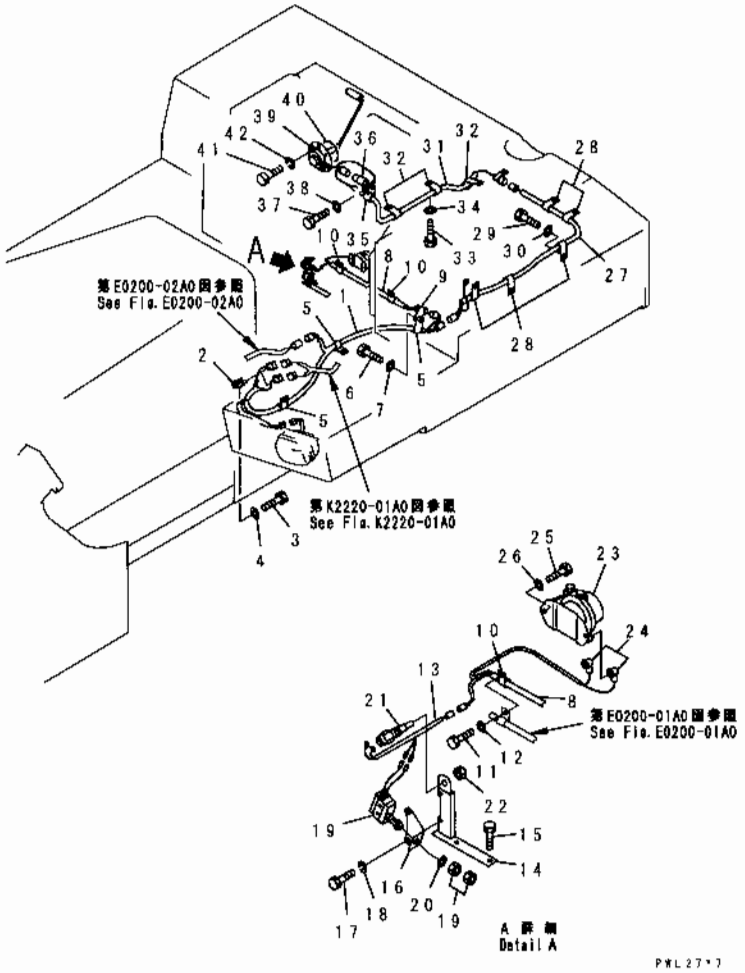

INDEX	PART NO.	DESCRIPTION	Q'TY	SERIAL NO
1	175-06-71172	WIRING HARNESS	1	57285-
	175-06-71171	WIRING HARNESS	1	57001-57284
2	08053-01510	CLIP	2	57001-
3	01010-81016	BOLT	2	57001-
4	01643-31032	WASHER	2	57001-
5	04434-52711	CLIP	3	57001-
6	01010-81020	BOLT	4	57001-
7	01643-31032	WASHER	4	57001-
8	175-06-61180	WIRING HARNESS	1	57001-
9	195-06-41830	CLIP	1	57001-
10	04434-52310	CLIP	2	57001-
11	01010-81016	BOLT	2	57001-
12	01643-31032	WASHER	2	57001-
13	175-06-61190	WIRING HARNESS	1	57001-
14	175-06-38561	BRACKET	1	57001-
15	01010-81035	BOLT	2	57001-
16	175-06-38810	BRACKET	1	57001-
17	01010-80820	BOLT	2	57001-
18	01602-20825	WASHER, SPRING	2	57001-
19	195-06-26260	SWITCH, TRANSMISSION	1	57001-
20	01643-31445	WASHER	1	57001-
21	08074-70000	SWITCH, BACK-UP ALARM	1	57001-
22	01583-11811	NUT	1	57001-
23	08088-20000	SWITCH, BATTERY	1	57001-
24	140-06-18260	CAP	2	57001-
25	01010-80820	BOLT	2	57001-
26	01643-30823	WASHER	2	57001-
27	175-06-61210	WIRING HARNESS	1	57001-
28	04434-52310	CLIP	5	57001-
29	01010-81220	BOLT	5	57001-
30	01643-31232	WASHER	5	57001-
31	175-06-61221	WIRING HARNESS	1	57001-
32	04434-51510	CLIP	3	57001-
33	01010-81016	BOLT	2	57001-
34	01643-31032	WASHER	2	57001-
35	04434-51510	CLIP	1	57001-
36	08053-01512	CLIP	1	57001-
37	01010-81016	BOLT	1	57001-
38	01643-31032	WASHER	1	57001-
39	7861-92-4930	SENSOR, FUEL	1	57001-
40	07000-02085	O-RING	1	57001-
41	01010-81025	BOLT	4	57001-

FIG. M2210-01A0 ELECTRICAL SYSTEM

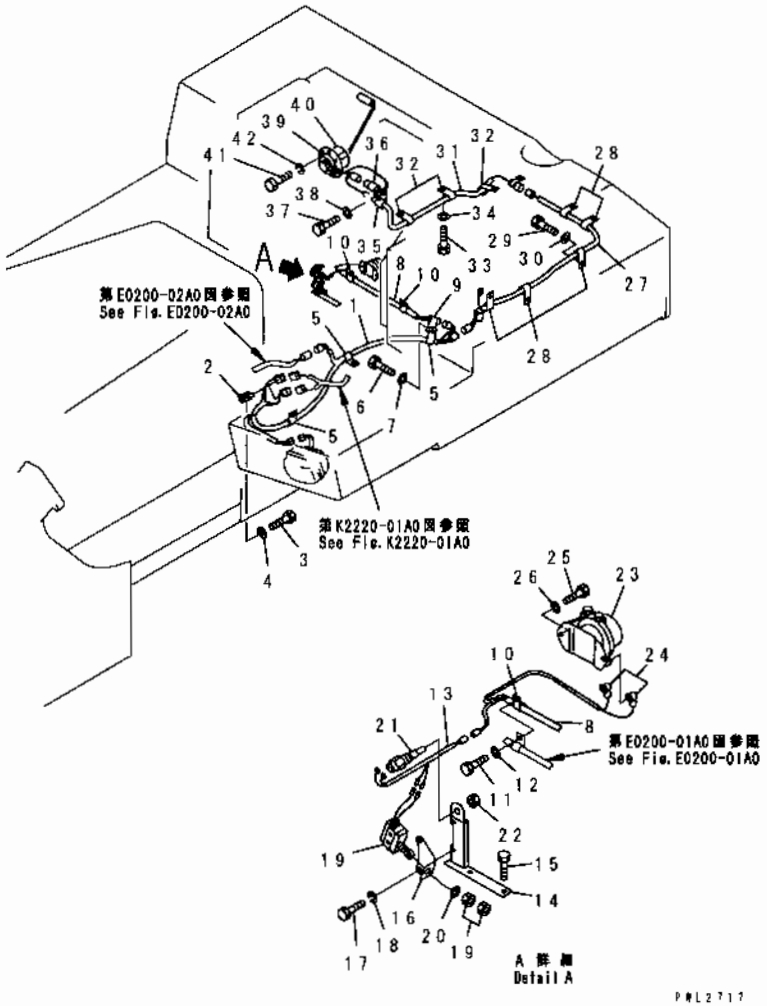

INDEX	PART NO.	DESCRIPTION	Q'TY	SERIAL NO
42	01602-21030	WASHER, SPRING.	4	57001-

FIG. M2210-02A0 SUPPORT AND REAR COVER

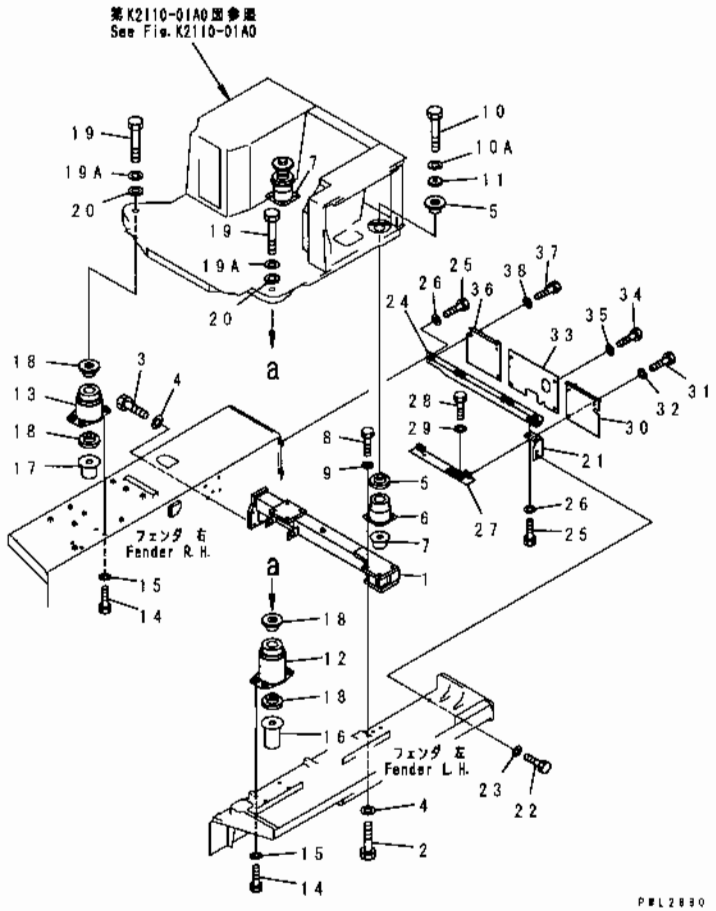

INDEX	PART NO	DESCRIPTION	Q'TY	SERIAL NO
1	175-54-46331	SUPPORT	1	57001-
2	01010-82060	BOLT	7	57001-
3	01010-82045	BOLT	5	57001-
4	01643-32060	WASHER	12	57001-
5	15A-54-15110	RUBBER	4	57001-
6	175-54-46741	BRACKET	2	57001-
7	175-54-46860	BRACKET	2	57001-
8	01010-81635	BOLT	8	57001-
9	01643-31645	WASHER	8	57001-
10	01011-82445	BOLT	2	57001-
10A	01643-32460	WASHER	2	57001-
11	175-03-41440	PLATE	2	57001-
12	175-54-46841	BRACKET, L.H.	1	57001-
13	175-54-46851	BRACKET, R.H.	1	57001-
14	01010-81645	BOLT	8	57001-
15	01643-31645	WASHER	8	57001-
16	175-54-46721	BRACKET, L.H.	1	57001-
17	175-54-46731	BRACKET, R.H.	1	57001-
18	15A-54-15110	RUBBER	4	57001-
19	01011-82445	BOLT	2	57001-
19A	01643-32460	WASHER	2	57001-
20	175-03-41440	PLATE	2	57001-
21	175-54-22273	BRACKET	1	57001-
22	01010-81235	BOLT	2	57001-
23	01643-31232	WASHER	2	57001-
24	175-54-22196	STAY	1	57001-
25	01010-81230	BOLT	3	57001-
26	01643-31232	WASHER	3	57001-
27	175-54-46970	BRACKET	1	57001-
28	01010-81225	BOLT	2	57001-
29	01643-31232	WASHER	2	57001-
30	175-54-46660	COVER	1	57001-
31	01010-81225	BOLT	3	57001-
32	01643-31232	WASHER	3	57001-
33	175-54-46681	COVER	1	57001-
34	01010-81225	BOLT	4	57001-
35	01643-31232	WASHER	4	57001-
36	175-54-46670	COVER	1	57001-
37	01010-81225	BOLT	3	57001-
38	01643-31232	WASHER	3	57001-

FIG. M2210-02A2 SUPPORT AND REAR COVER (FOR PM CLINIC SERVICE) (#57435-)

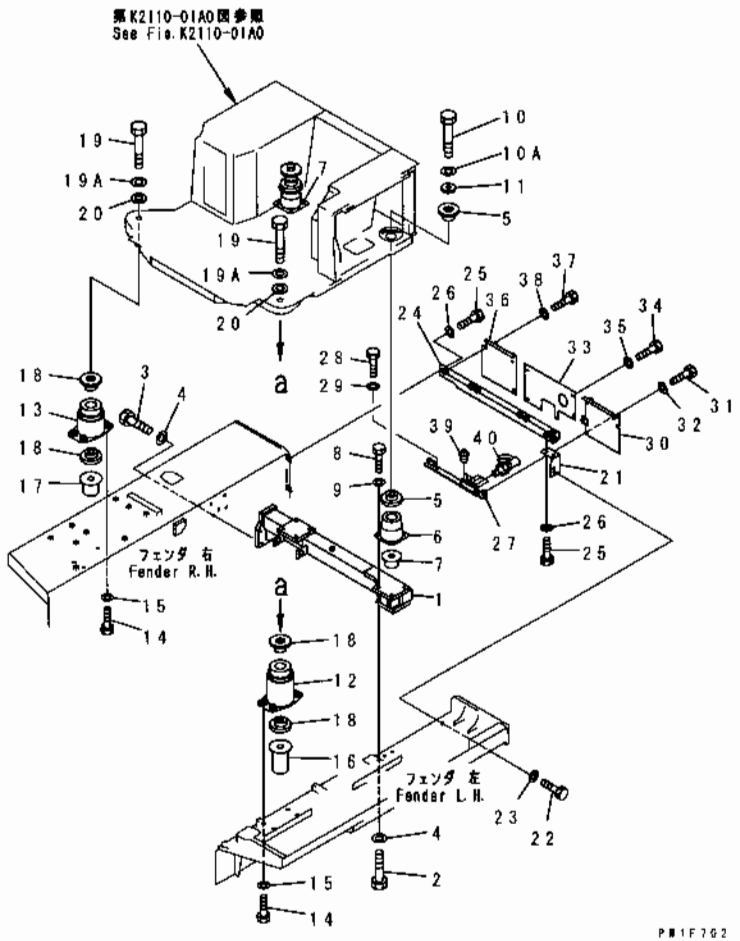

INDEX	PART NO.	DESCRIPTION	Q'TY	SERIAL NO.
1	175-54-46331	SUPPORT	1	57435-
2	01010-82060	BOLT	7	57435-
3	01010-82045	BOLT	5	57435-
4	01643-32060	WASHER	12	57435-
5	15A-54-15110	RUBBER	4	57435-
6	175-54-46741	BRACKET	2	57435-
7	175-54-46860	BRACKET	2	57435-
8	01010-81635	BOLT	8	57435-
9	01643-31645	WASHER	8	57435-
10	01011-82445	BOLT	2	57435-
10A	01643-32460	WASHER	2	57435-
11	175-03-41440	PLATE	2	57435-
12	175-54-46841	BRACKET, L.H.	1	57435-
13	175-54-46851	BRACKET, R.H.	1	57435-
14	01010-81645	BOLT	8	57435-
15	01643-31645	WASHER	8	57435-
16	175-54-46721	BRACKET, L.H.	1	57435-
17	175-54-46731	BRACKET, R.H.	1	57435-
18	15A-54-15110	RUBBER	4	57435-
19	01011-82445	BOLT	2	57435-
19A	01643-32460	WASHER	2	57435-
20	175-03-41440	PLATE	2	57435-
21	175-54-22273	BRACKET	1	57435-
22	01010-81235	BOLT	2	57435-
23	01643-31232	WASHER	2	57435-
24	175-54-22196	STAY	1	57435-
25	01010-81230	BOLT	3	57435-
26	01643-31232	WASHER	3	57435-
27	175-54-76860	BRACKET	1	57435-
28	01010-81225	BOLT	2	57435-
29	01643-31232	WASHER	2	57435-
30	175-54-76840	COVER	1	57435-
31	01010-81225	BOLT	3	57435-
32	01643-31232	WASHER	3	57435-
33	175-54-76850	COVER	1	57435-
34	01010-81225	BOLT	4	57435-
35	01643-31232	WASHER	4	57435-
36	175-54-46670	COVER	1	57435-
37	01010-81225	BOLT	3	57435-
38	01643-31232	WASHER	3	57435-
39	07042-30108	PLUG	4	57435-
40	195-49-36120	NIPPLE	4	57435-

FIG. M2210-03A0 STEERING AND BRAKE LINKAGE (SUPPORT)

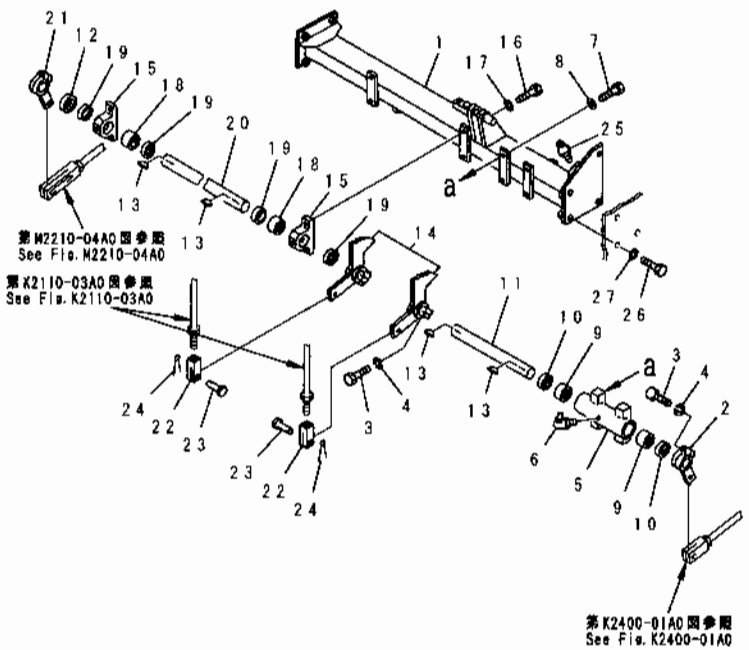

INDEX	PART NO	DESCRIPTION	Q'TY	SERIAL NO
1	175-43-51310	SUPPORT	1	57001-
2	175-43-52510	LEVER	1	57001-
3	01010-81245	BOLT	4	57001-
4	01602-21236	WASHER, SPRING	4	57001-
5	175-43-52460	BRACKET	1	57001-
6	07020-00675	FITTING, GREASE	1	57001-
7	01010-81235	BOLT	4	57001-
8	01643-31232	WASHER	4	57001-
9	06120-03520	BEARING, NEEDLE	2	57001-
10	06122-03504	SEAL, BEARING	2	57001-
11	175-43-52450	SHAFT	1	57001-
12	195-43-24430	SPACER	1	57001-
13	04010-01032	KEY	4	57001-
14	175-43-52440	LEVER	2	57001-
15	195-43-24391	BRACKET	2	57001-
16	01010-81235	BOLT	4	57001-
17	01643-31232	WASHER	4	57001-
18	06120-03520	BEARING, NEEDLE	2	57001-
19	06122-03504	SEAL, BEARING	4	57001-
20	175-43-52470	SHAFT	1	57001-
21	175-43-52510	LEVER	1	57001-
22	04220-21456	YOKE	2	57001-
23	04205-11438	PIN	2	57001-
24	04050-14028	PIN, COTTER	2	57001-
25	07020-00000	FITTING, GREASE	2	57001-
26	01010-81640	BOLT	8	57001-
27	01643-31645	WASHER	8	57001-

FIG. M2210-04A0 BRAKE LINKAGE (WITH BRAKE ASSISTOR)

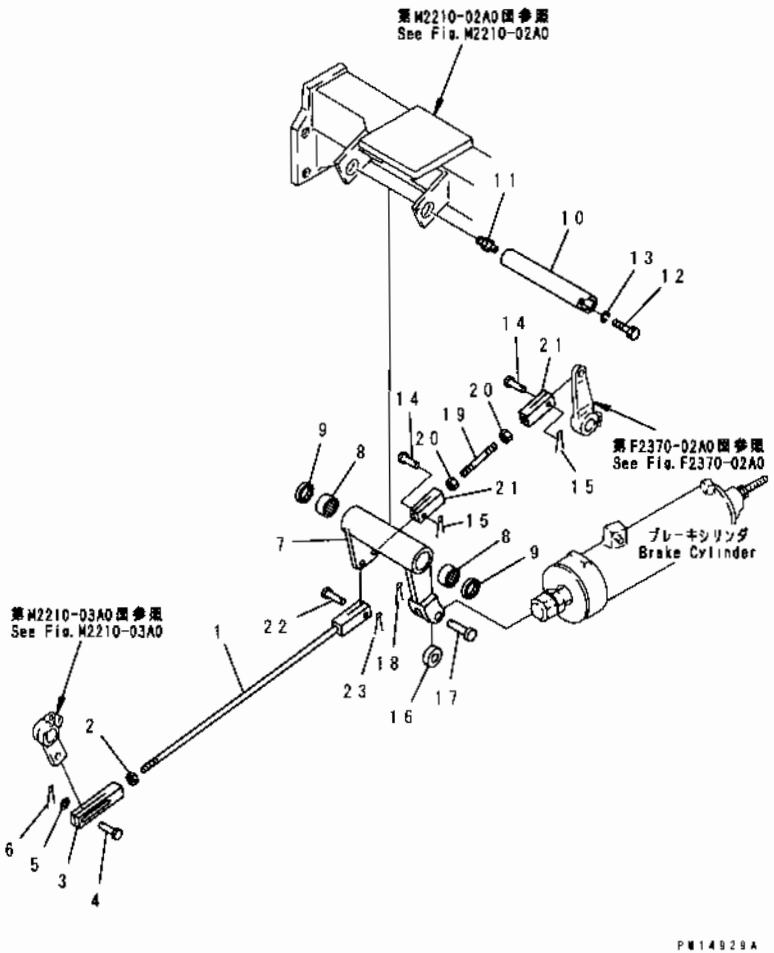

INDEX	PART NO	DESCRIPTION	Q'TY	SERIAL NO.
1	04244-51462	ROD	1	57001-
2	01582-11411	NUT	1	57001-
3	195-43-24290	YOKE	1	57001-
4	04205-11440	PIN	1	57001-
5	01641-21423	WASHER	1	57001-
6	04050-14025	PIN, COTTER	1	57001-
7	175-33-32130	LEVER	1	57001-
8	06120-03520	BEARING, NEEDLE	2	57001-
9	06122-03504	SEAL, BEARING	2	57001-
10	175-33-32140	SHAFT	1	57001-
11	07020-00000	FITTING, GREASE	1	57001-
12	01010-81020	BOLT	1	57001-
13	01602-21030	WASHER, SPRING	1	57001-
14	04205-11438	PIN	2	57001-
15	04050-14022	PIN, COTTER	2	57001-
16	178-33-13260	COLLAR	1	57001-
17	178-33-13250	PIN	1	57001-
18	04050-14028	PIN, COTTER	1	57001-
19	04245-41410	ROD	1	57001-
20	01582-11411	NUT	2	57001-
21	04210-21456	YOKE	2	57001-
22	(04205-11438)	PIN	1	57001-
23	(04050-14022)	PIN, COTTER	1	57001-

FIG. M2210-05A0 FENDER

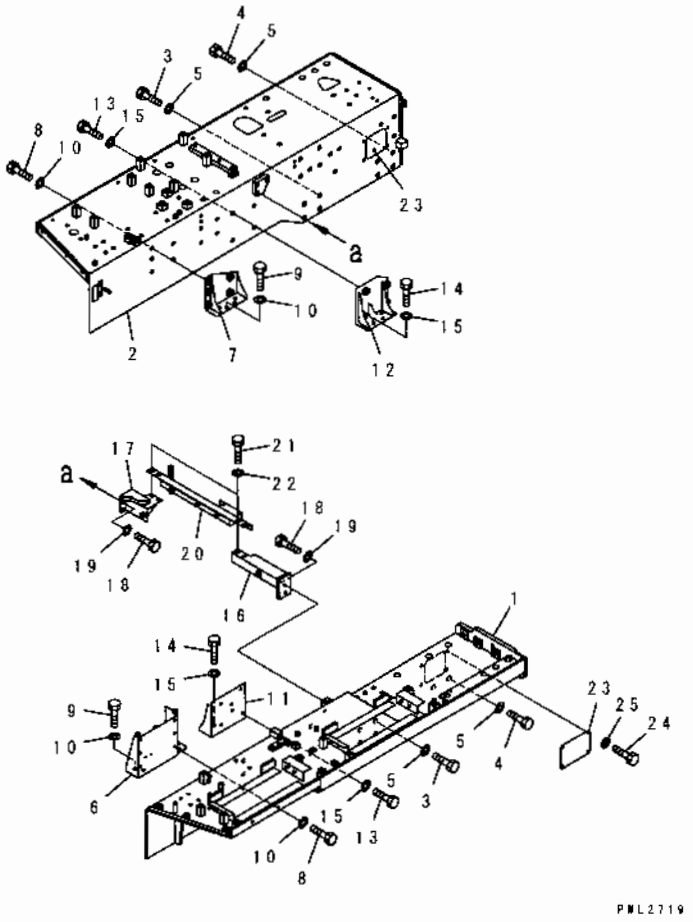

INDEX	PART NO	DESCRIPTION	Q'TY	SERIAL NO.
1	175-54-76310	FENDER, L. H.	1	57001-
2	175-54-76321	FENDER, R. H.	1	57001-
3	01010-82450	BOLT	8	57001-
4	01010-82465	BOLT	8	57001-
5	01643-32460	WASHER	16	57001-
6	175-54-76360	BRACKET	1	57001-
7	175-54-76370	BRACKET	1	57001-
8	01010-81645	BOLT	11	57001-
9	01010-81655	BOLT	8	57001-
10	01643-31645	WASHER	19	57001-
11	175-54-46380	BRACKET	1	57001-
12	175-54-34110	BRACKET	1	57001-
13	01010-81645	BOLT	8	57001-
14	01010-81655	BOLT	8	57001-
15	01643-31645	WASHER	16	57001-
16	175-54-33892	BRACKET	1	57001-
17	175-54-73980	BRACKET	1	57001-
18	01010-81635	BOLT	5	57001-
19	01643-31645	WASHER	5	57001-
20	175-54-46341	SUPPORT	1	57001-
21	01010-81635	BOLT	4	57001-
22	01643-31645	WASHER	4	57001-
23	175-54-22420	COVER	2	57001-
24	01010-81235	BOLT	8	57001-
25	01643-31232	WASHER	8	57001-

FIG. M2210-05A2 FENDER (JUNGLE SPEC.)

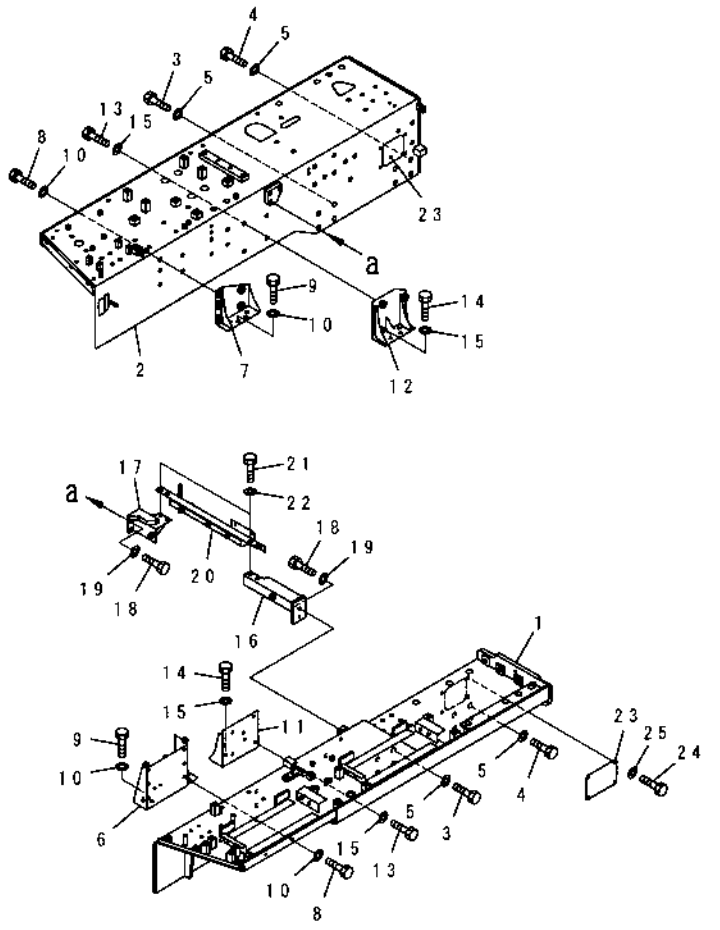

INDEX	PART NO.	DESCRIPTION	Q'TY	SERIAL NO
1	175-902-8650	FENDER, L.H.	1	57001-
2	175-902-8660	FENDER, R.H.	1	57001-
3	01010-82450	BOLT	8	57001-
4	01010-82465	BOLT	8	57001-
5	01643-32460	WASHER	16	57001-
6	175-54-76360	BRACKET	1	57001-
7	175-54-76370	BRACKET	1	57001-
8	01010-81645	BOLT	11	57001-
9	01010-81655	BOLT	8	57001-
10	01643-31645	WASHER	19	57001-
11	175-54-46380	BRACKET	1	57001-
12	175-54-34110	BRACKET	1	57001-
13	01010-81645	BOLT	8	57001-
14	01010-81655	BOLT	8	57001-
15	01643-31645	WASHER	16	57001-
16	175-54-33892	BRACKET	1	57001-
17	175-54-73980	BRACKET	1	57001-
18	01010-81635	BOLT	5	57001-
19	01643-31645	WASHER	5	57001-
20	175-54-46341	SUPPORT	1	57001-
21	01010-81635	BOLT	4	57001-
22	01643-31645	WASHER	4	57001-
23	175-54-22420	COVER	2	57001-
24	01010-81235	BOLT	8	57001-
25	01643-31232	WASHER	8	57001-

FIG. M2210-05A3 FENDER (FOR PM CLINIC)

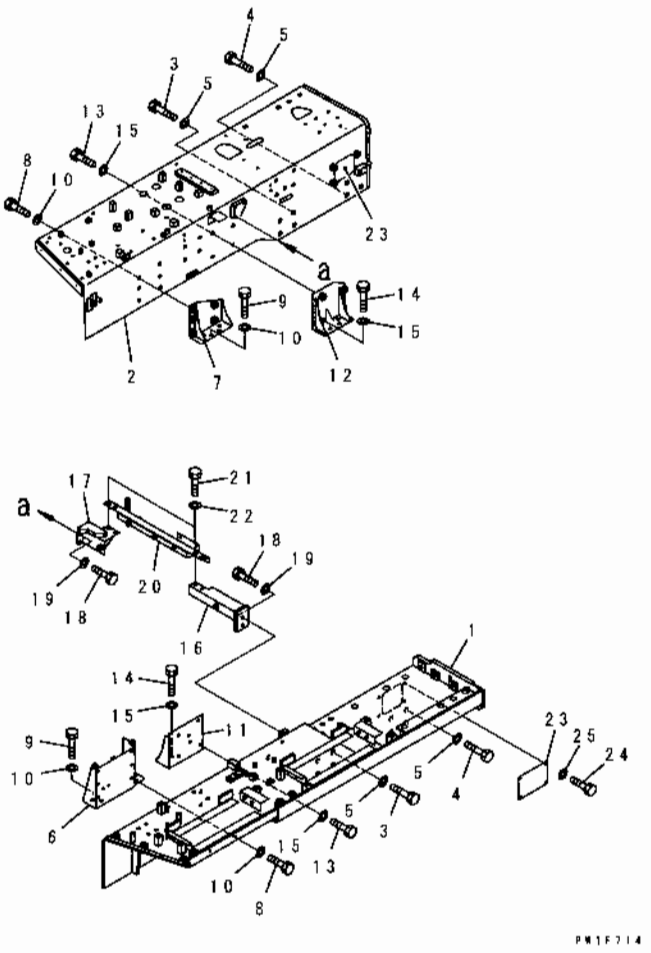

INDEX	PART NO	DESCRIPTION	Q'TY	SERIAL NO
1	175-54-76310	FENDER, L.H.	1	57001-
2	175-54-46321	FENDER, R.H.	1	57435-
3	01010-82450	BOLT	8	57001-
4	01010-82465	BOLT	8	57001-
5	01643-32460	WASHER	16	57001-
6	175-54-76360	BRACKET	1	57001-
7	175-54-76370	BRACKET	1	57001-
8	01010-81645	BOLT	11	57001-
9	01010-81655	BOLT	8	57001-
10	01643-31645	WASHER	19	57001-
11	175-54-46380	BRACKET	1	57001-
12	175-54-34110	BRACKET	1	57001-
13	01010-81645	BOLT	8	57001-
14	01010-81655	BOLT	8	57001-
15	01643-31645	WASHER	16	57001-
16	175-54-33892	BRACKET	1	57001-
17	175-54-73980	BRACKET	1	57001-
18	01010-81635	BOLT	5	57001-
19	01643-31645	WASHER	5	57001-
20	175-54-46341	SUPPORT	1	57001-
21	01010-81635	BOLT	4	57001-
22	01643-31645	WASHER	4	57001-
23	175-54-22420	COVER	2	57001-
24	01010-81235	BOLT	8	57001-
25	01643-31232	WASHER	8	57001-

FIG. M2210-06A0 FENDER COVER

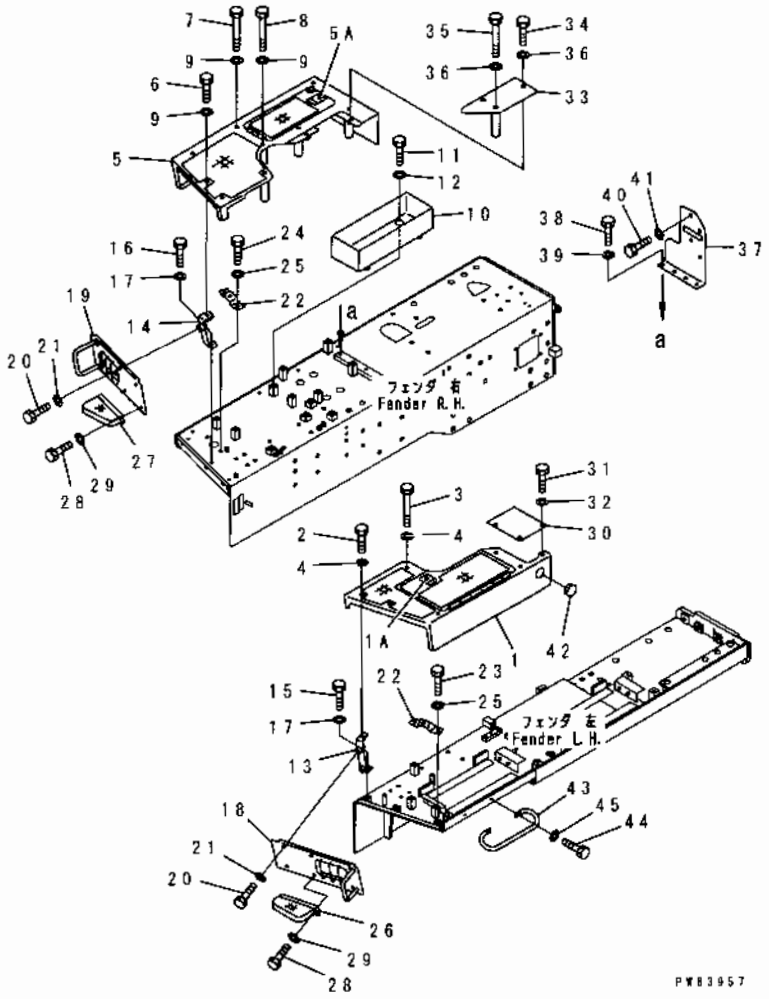

INDEX	PART NO.	DESCRIPTION	Q'TY	SERIAL NO
1	175-54-46420	COVER, L.H.	1	57001-
1A	195-54-42200	.LOCK ASS'Y. (WELDED)	1	57001-
2	01010-81225	BOLT	2	57001-
3	700-851-1120	BOLT	4	57001-
4	01643-31232	WASHER	6	57001-
5	175-54-46430	COVER, R.H.	1	57001-
5A	195-54-42200	.LOCK ASS'Y. (WELDED)	1	57001-
6	01010-81225	BOLT	2	57001-
7	198-54-11190	BOLT	3	57001-
8	195-979-5720	BOLT, 210MM	4	57001-
9	01643-31232	WASHER	9	57001-
10	175-54-46630	BOX	1	57001-
11	01010-81225	BOLT	4	57001-
12	01643-31232	WASHER	4	57001-
13	175-54-46580	BRACKET, L.H.	3	57001-
14	175-54-46610	BRACKET, R.H.	3	57001-
15	01010-81225	BOLT	3	57001-
16	01010-81235	BOLT	3	57001-
17	01643-31232	WASHER	6	57001-
18	175-54-46521	COVER, L.H	1	57285-
	175-54-47450	COVER, L.H.	1	57001-57284
19	175-54-46531	COVER, R.H.	1	57285-
	175-54-47460	COVER, R.H.	1	57001-57284
20	01010-81230	BOLT	8	57001-
21	01643-31232	WASHER	8	57001-
22	175-54-46590	BRACKET	2	57001-
23	01010-81225	BOLT	2	57001-
24	01010-81235	BOLT	2	57001-
25	01643-31232	WASHER	4	57001-
26	175-54-46891	STEP, L.H.	1	57001-
27	175-54-46911	STEP, R.H.	1	57001-
28	01010-81240	BOLT	4	57001-
29	01643-31232	WASHER	4	57001-
30	175-54-46920	COVER, (WITHOUT ROPS GUARD CANOPY)	1	57001-
31	01010-51220	BOLT, (WITHOUT ROPS GUARD, CANOPY)	1	57001-
32	01643-31232	WASHER, (WITHOUT ROPS GUARD, CANOPY)	1	57001-
33	175-54-46930	COVER, (WITHOUT ROPS GUARD, CANOPY)	1	57001-
34	01010-51225	BOLT, (WITHOUT ROPS GUARD, CANOPY)	2	57001-
35	195-979-5720	BOLT, 210MM, (WITHOUT ROPS GUARD, CANOPY)	1	57001-
36	01643-31232	WASHER, (WITHOUT ROPS GUARD, CANOPY)	3	57001-
37	175-54-46620	BRACKET	1	57001-
38	01010-81435	BOLT	4	57001-

FIG NO. : M2210-06A0

INDEX	PART NO.	DESCRIPTION	Q'TY	SERIAL NO
39	01643-31445	WASHER	4	57001-
40	01010-81250	BOLT	4	57001-
41	01643-31232	WASHER	4	57001-
42	175-54-46691	CAP	1	57001-
43	09420-01902	HANDRAIL	1	57001-
44	01010-81235	BOLT	2	57001-
45	01643-31232	WASHER	2	57001-

D155A-2A

FIG NO. : M2210-06A3

INDEX	PART NO	DESCRIPTION	Q'TY	SERIAL NO
41	01643-31232	WASHER	4	57001-
42	175-54-46691	CAP	1	57001-
43	09420-01902	HANDRAIL	1	57001-
44	01010-81235	BOLT	2	57001-
45	01643-31232	WASHER	2	57001-

FIG. M2210-07A0 CONCENTRATED PIPING

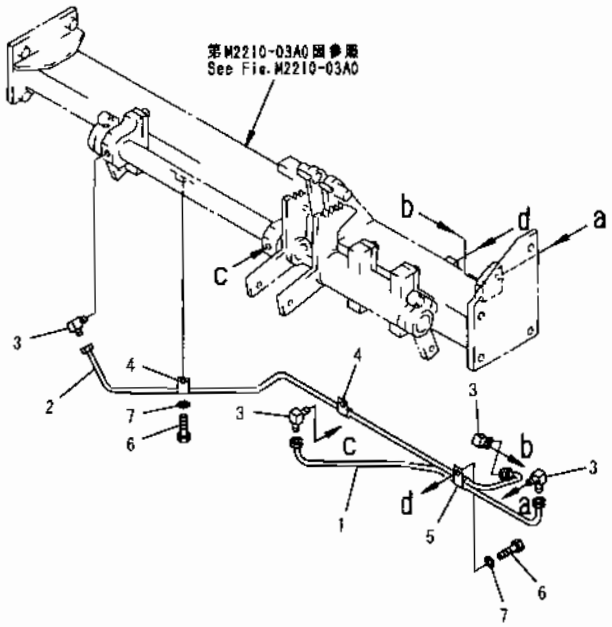

PW14925A

INDEX	PART NO.	DESCRIPTION	Q'TY	SERIAL NO
1	175-43-52481	TUBE	1	57001-
2	175-43-52490	TUBE	1	57001-
3	176-43-41350	ELBOW	4	57001-
4	08036-10814	CLIP	2	57001-
5	08036-11214	CLIP	1	57001-
6	01010-81016	BOLT	3	57001-
7	01643-31032	WASHER	3	57001-

FIG. M2250-01A0 AIR CONDITIONER AND BATTERY COVER

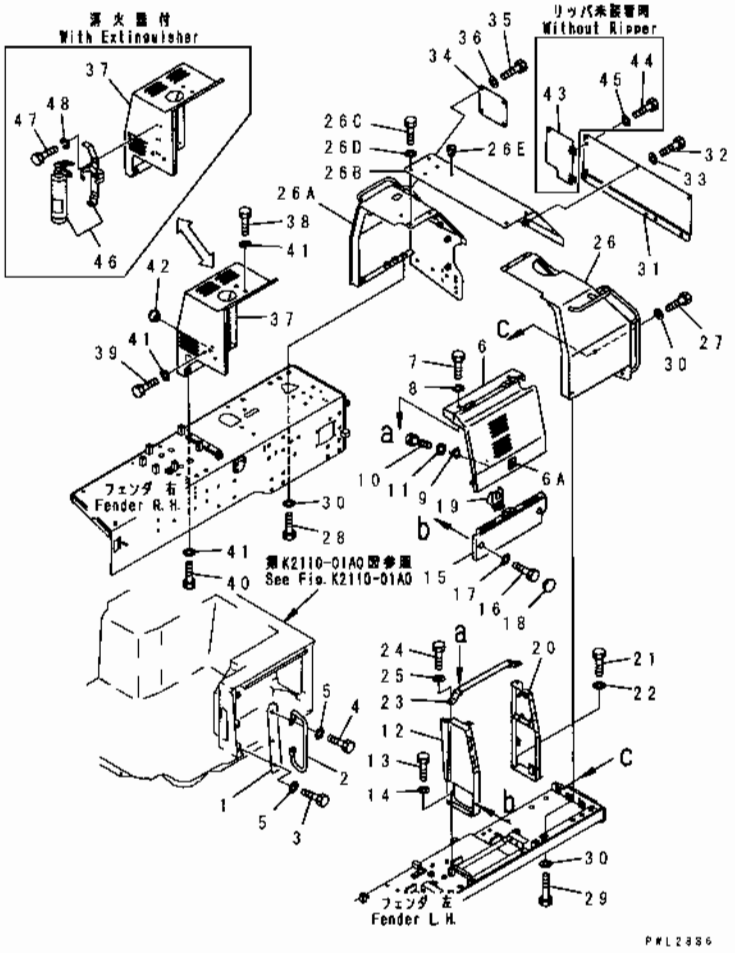

INDEX	PART NO	DESCRIPTION	Q'TY	SERIAL NO
1	175-54-46480	COVER, L.H.	1	57001-
2	154-54-43220	HANDLE, (WITHOUT ROPS GUARD, CANOPY)	1	57001-
3	01010-81220	BOLT, (WITHOUT ROPS GUARD, CANOPY)	1	57001-
4	01010-81235	BOLT, (WITHOUT ROPS GUARD, CANOPY)	2	57001-
5	01643-31232	WASHER, (WITHOUT ROPS GUARD, CANOPY)	3	57001-
6	175-54-49120	COVER	1	57001-
6A	195-54-42200	LOCK ASS'Y (WELDED)	1	57001-
7	01010-81230	BOLT	2	57001-
8	175-54-34170	WASHER	2	57001-
9	198-54-19150	SPRING	1	57001-
10	01010-80612	BOLT	2	57001-
11	01643-30623	WASHER	2	57001-
12	175-54-49112	FRAME	1	57001-
13	01010-81230	BOLT	2	57001-
14	01643-31232	WASHER	2	57001-
15	175-54-46461	COVER	1	57001-
16	01010-81225	BOLT	2	57001-
17	01643-31232	WASHER	2	57001-
18	198-54-41941	CAP	2	57001-
19	175-54-46500	BRACKET ASS'Y	1	57001-
20	175-54-46551	FRAME	1	57001-
21	01010-81230	BOLT	2	57001-
22	01643-31232	WASHER	2	57001-
23	175-54-46560	BRACKET	1	57001-
24	01010-81235	BOLT	2	57001-
25	01643-31232	WASHER	2	57001-
26	175-54-47280	COVER, (WITHOUT ROPS GUARD, CANOPY)	1	57001-
26A	175-54-47290	COVER, (WITHOUT ROPS GUARD, CANOPY)	1	57001-
26B	175-54-47310	COVER, (WITHOUT ROPS GUARD, CANOPY)	1	57001-
26C	01010-81225	BOLT, (WITHOUT ROPS GUARD, CANOPY)	8	57001-
26D	01643-31232	WASHER, (WITHOUT ROPS GUARD, CANOPY)	8	57001-
26E	07049-01012	PLUG, (WITHOUT BACK-UP ALARM)	3	57001-
27	01010-82450	BOLT, (WITHOUT ROPS GUARD, CANOPY)	10	57001-
28	01010-82465	BOLT, (WITHOUT ROPS GUARD, CANOPY)	4	57001-
29	01011-82455	BOLT, (WITHOUT ROPS GUARD, CANOPY)	4	57001-
30	20Y-25-11240	WASHER, (WITHOUT ROPS GUARD, CANOPY)	18	57001-
31	175-54-47360	COVER (WITHOUT CANOPY)	1	57001-
	175-978-6271	COVER, (WITH CANOPY)	1	57001-
32	01010-81220	BOLT, (WITHOUT CANOPY)	7	57001-
33	198-54-42280	WASHER, (WITHOUT CANOPY)	7	57001-
34	175-978-6281	COVER, (WITHOUT CANOPY)	1	57001-
35	01010-81225	BOLT, (WITHOUT CANOPY)	4	57001-

FIG. M2250-01A0 AIR CONDITIONER AND BATTERY COVER

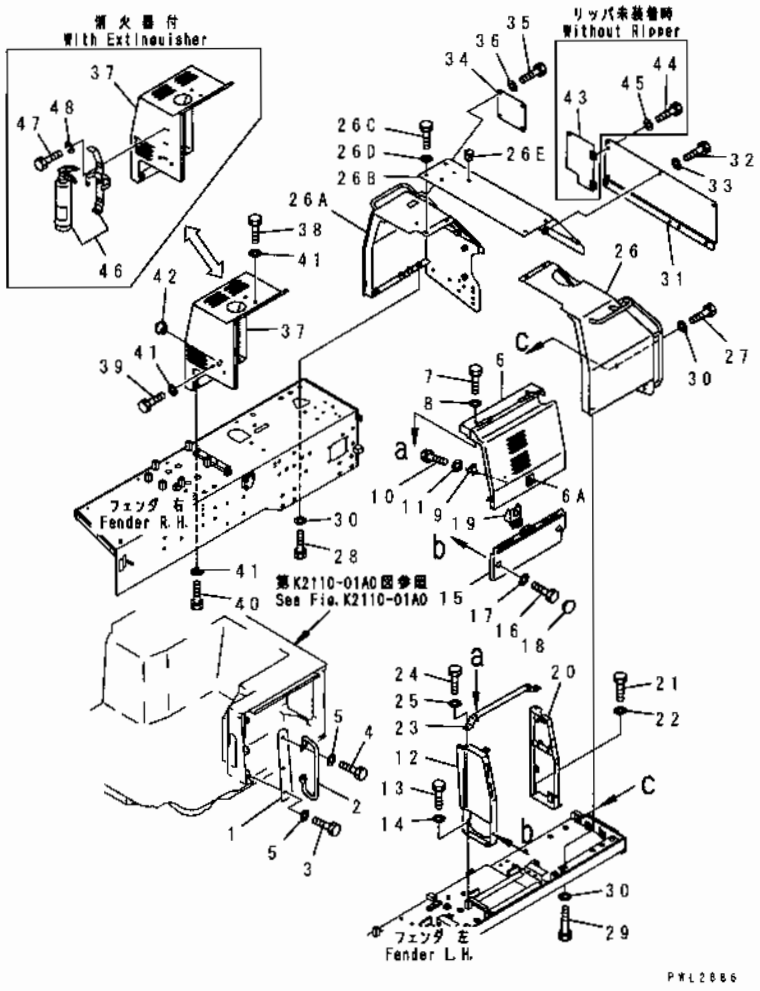

INDEX	PART NO	DESCRIPTION	Q'TY	SERIAL NO
36	198-54-42280	WASHER, (WITHOUT CANOPY)	4	57001-
37	175-54-46510	COVER, (WITHOUT CANOPY)	1	57001-
	175-95-12110	COVER, (WITH EXTINGUISHER)	1	57001-
38	01010-81260	BOLT, (WITHOUT CANOPY)	2	57001-
39	01010-81240	BOLT, (WITHOUT CANOPY)	2	57001-
40	01010-81230	BOLT, (WITHOUT CANOPY)	2	57001-
41	01643-31232	WASHER, (WITHOUT CANOPY)	6	57001-
42	198-54-41941	CAP, (WITHOUT CANOPY)	1	57001-
43	175-54-47241	COVER, (WITHOUT RIPPER)	1	57001-
44	01010-81225	BOLT, (WITHOUT RIPPER)	3	57001-
45	198-54-42280	WASHER, (WITHOUT RIPPER)	3	57001-
46	09495-40010	EXTINGUISHER, (ENGLISH)	1	57001-
	09495-00010	EXTINGUISHER, (JAPANESE)	1	57001-
	09495-11010	FIRE EXTINGUISHER, (ARABIC)	1	57001-
	09495-90010	EXTINGUISHER, (CHINESE)	1	57001-
	09495-50010	EXTINGUISHER, (FRENCH)	1	57001-
	09495-20010	EXTINGUISHER, (GERMAN)	1	57001-
	09495-21010	EXTINGUISHER, (CZECH)	1	57001-
	09495-31010	EXTINGUISHER, (INDONESIAN)	1	57001-
	09495-80010	EXTINGUISHER, (PORTUGUESE)	1	57001-
	09495-30010	EXTINGUISHER, (RUSSIAN)	1	57001-
	09495-10010	EXTINGUISHER, (SPANISH)	1	57001-
	09495-12010	EXTINGUISHER, (PERSIAN)	1	57001-
	09495-60010	EXTINGUISHER, (ITALIAN)	1	57001-
	09495-70010	EXTINGUISHER, (GREEK)	1	57001-
	09495-06010	EXTINGUISHER, (POLISH)	1	57001-
47	01010-80620	BOLT	6	57001-
48	01602-20619	WASHER	6	57001-

FIG. M2810-01A0 BOTTOM GUARD

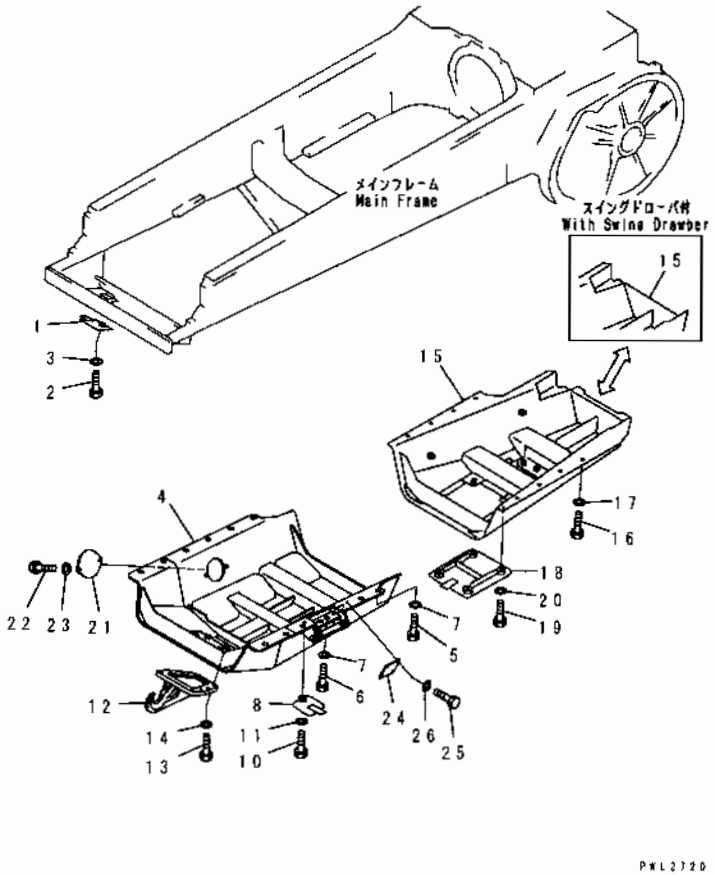

INDEX	PART NO	DESCRIPTION	Q'TY	SERIAL NO
1	175-54-23230	COVER	1	57001-
2	01010-81235	BOLT	1	57001-
3	01643-31232	WASHER	1	57001-
4	175-54-76811	COVER	1	57001-
5	01010-82465	BOLT	11	57001-
6	01010-82455	BOLT	2	57001-
7	01643-32460	WASHER	13	57001-
8	175-54-23230	COVER	1	57001-
10	01010-81235	BOLT	1	57001-
11	01643-31232	WASHER	1	57001-
12	180-54-13160	HOOK	1	57001-
13	01010-82075	BOLT	8	57001-
14	01643-32060	WASHER	8	57001-
15	175-54-24411	COVER	1	57001-
16	01010-82465	BOLT	8	57001-
17	01643-32460	WASHER	8	57001-
18	175-54-23222	COVER	1	57001-
19	01010-81235	BOLT	4	57001-
20	01643-31232	WASHER	4	57001-
21	154-54-12850	PLATE	1	57001-
22	01010-81230	BOLT	2	57001-
23	01643-31232	WASHER	2	57001-
24	144-30-14330	COVER	1	57001-
25	01010-81235	BOLT	4	57001-
26	01643-31232	WASHER	4	57001-

FIG. M2810-01A1 BOTTOM GUARD (JUNGLE SPEC.)

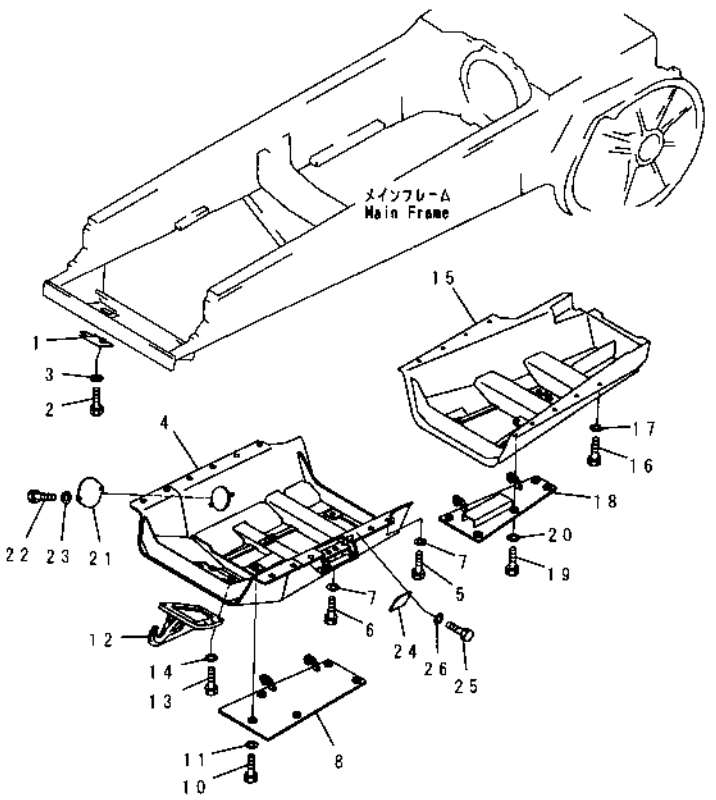

PWL2935

INDEX	PART NO.	DESCRIPTION	Q'TY	SERIAL NO
1	175-54-23230	COVER	1	57001-
2	01010-81235	BOLT	1	57001-
3	01643-31232	WASHER	1	57001-
4	175-54-73140	COVER	1	57001-
5	01010-82465	BOLT	11	57001-
6	01010-82455	BOLT	2	57001-
7	01643-32460	WASHER	13	57001-
8	175-54-73230	COVER	1	57001-
10	01010-81235	BOLT	5	57001-
11	01643-31232	WASHER	5	57001-
12	180-54-13160	HOOK	1	57001-
13	01010-82075	BOLT	8	57001-
14	01643-32060	WASHER	8	57001-
15	175-54-24410	COVER	1	57001-
16	01010-82465	BOLT	8	57001-
17	01643-32460	WASHER	8	57001-
18	175-54-23221	COVER	1	57001-
19	01010-81235	BOLT	5	57001-
20	01643-31232	WASHER	5	57001-
21	154-54-12850	PLATE	1	57001-
22	01010-81230	BOLT	2	57001-
23	01643-31232	WASHER	2	57001-
24	144-30-14330	COVER	1	57001-
25	01010-81235	BOLT	4	57001-
26	01643-31232	WASHER	4	57001-

FIG. M2810-01A2 BOTTOM GUARD (FOR SAUDI ARABIA)

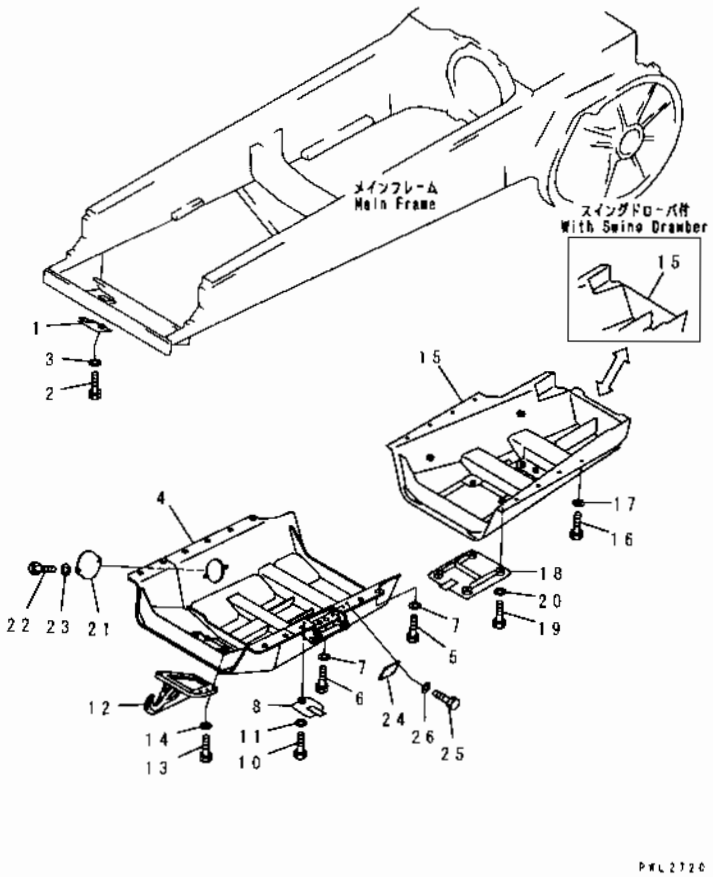

INDEX	PART NO.	DESCRIPTION	Q'TY	SERIAL NO.
1	175-54-23230	COVER	1	57001-
2	01010-81235	BOLT	1	57001-
3	01643-31232	WASHER	1	57001-
4	175-54-76811	COVER	1	57001-
5	01010-82475	BOLT	11	57001-
6	01010-82450	BOLT	2	57001-
7	01643-32460	WASHER	13	57001-
8	175-54-23230	COVER	1	57001-
10	01010-81235	BOLT	1	57001-
11	01643-31232	WASHER	1	57001-
12	180-54-13160	HOOK	1	57001-
13	01010-82075	BOLT	8	57001-
14	01643-32060	WASHER	8	57001-
15	175-54-24411	COVER	1	57001-
16	01010-82465	BOLT	8	57001-
17	01643-32460	WASHER	8	57001-
18	175-54-23222	COVER	1	57001-
19	01010-81235	BOLT	4	57001-
20	01643-31232	WASHER	4	57001-
21	154-54-12850	PLATE	1	57001-
22	01010-81230	BOLT	2	57001-
23	01643-31232	WASHER	2	57001-
24	144-30-14330	COVER	1	57001-
25	01010-81235	BOLT	4	57001-
26	01643-31232	WASHER	4	57001-

UNDER CARRIAGE

FIG NO. : R0100-01A0

FIG. R0100-01A0 IDLER

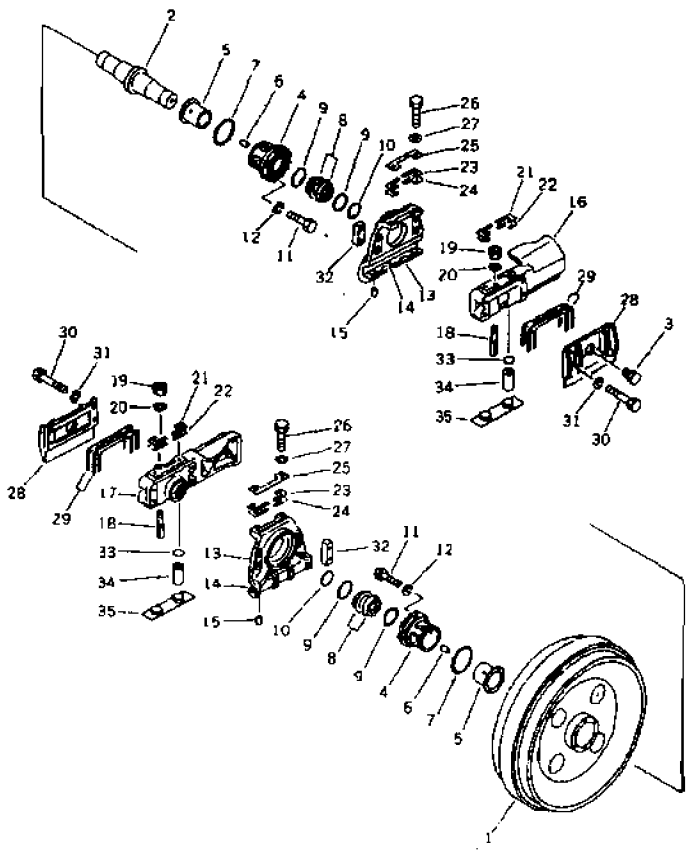

INDEX	PART NO	DESCRIPTION	Q'TY	SERIAL NO
	175-30-00575	FRONT IDLER ASS'Y	2	57001-
	175-30-00525	FRONT IDLER ASS'Y, (FOR SLAG HANDLING)	2	57001-
1	175-30-23114	. IDLER, FRONT	1	57001-
2	175-30-23121	. SHAFT	1	57001-
3	07052-31624	. PLUG	1	57001-
	175-30-36108	. BUSHING ASS'Y	2	57001-
4	☆	.. BUSHING, OUTER	1	57001-
5	☆	.. BUSHING, INNER	1	57001-
6	170-30-91130	.. PIN, DOWEL	2	57001-
7	07000-12130	. O-RING	2	57001-
	07000-32130	. O-RING, (FOR SLAG HANDLING)	2	57001-
	175-30-00702	. FLOATING SEAL ASS'Y	2	57001-
	170-30-00114	. FLOATING SEAL ASS'Y, (FOR SLAG HANDLING)	2	57001-
8	175-30-00691	.. SEAL RING ASS'Y	1	57001-
	☆	... RING, SEAL	2	57001-
9	175-30-00581	.. O-RING ASS'Y	1	57001-
	175-30-00591	.. O-RING ASS'Y	1	57001-
	175-30-16215	... O-RING	2	57001-
	175-30-16211	... O-RING, (FOR SLAG HANDLING)	2	57001-
10	07000-03068	. O-RING	2	57001-
	07000-33068	. O-RING, (FOR SLAG HANDLING)	2	57001-
11	01010-81235	. BOLT	12	57001-
12	01602-01236	. WASHER, SPRING	12	57001-
	175-30-33273	GUIDE ASS'Y	2	57001-
13	175-30-33283	.. GUIDE	1	57001-
14	170-30-13343	.. PLATE (WELDED)	1	57001-
15	04022-12025	.. PIN, DOWEL	2	57001-
16	176-30-43111	. SUPPORT, L.H.	1	57001-
17	176-30-43121	. SUPPORT, R.H.	1	57001-
18	175-30-23172	. BOLT	2	57001-
19	175-30-23180	. NUT	2	57001-
20	01643-31645	. WASHER	2	57001-
	175-30-05050	. SHIM KIT, (A)	2	57001-
21	☆	.. SHIM, 1.0MM	4	57001-
22	☆	.. SHIM, 2.0MM	2	57001-
	175-30-05060	. SHIM KIT, (B)	2	57001-
23	☆	.. SHIM, 1.0MM	8	57001-
24	☆	.. SHIM, 2.0MM	4	57001-
25	175-30-33460	. PLATE	2	57001-
26	175-30-33492	. BOLT	4	57001-
27	01643-32060	. WASHER	4	57001-
28	175-30-33215	. PLATE	2	57001-

FIG NO. : R0100-01A0

INDEX	PART NO	DESCRIPTION	Q'TY	SERIAL NO.
29	175-30-05070	. SHIM KIT	2	57001-
30	01011-82260	. BOLT	8	57001-
31	01602-22268	. WASHER, SPRING	8	57001-
32	175-30-33430	. SEAT	4	57001-
33	195-30-17960	SEAT, SPRING	8	57001-
34	155-30-13230	SPRING	8	57001-
35	175-30-24131	SEAT, SPRING	4	57001-

FIG. R0200-01A0 TRACK ROLLER

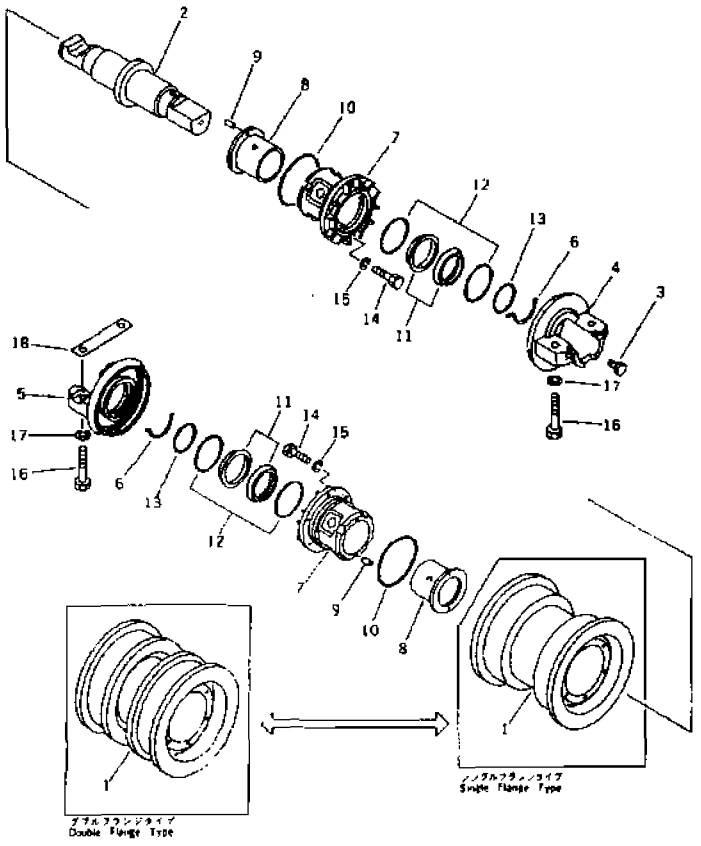

INDEX	PART NO	DESCRIPTION	Q'TY	SERIAL NO
	175-30-00760	TRACK ROLLER ASS'Y, SINGLE FLANGE	4	57001-
	175-30-00545	TRACK ROLLER ASS'Y, (FOR SLAG HANDLING)	4	57001-
	175-30-00770	TRACK ROLLER ASS'Y, DOUBLE FLANGE	10	57001-
	175-30-00555	TRACK ROLLER ASS'Y, (FOR SLAG HANDLING)	10	57001-
1	178-30-16114	. ROLLER, SINGLE FLANGE	1	57001-
	178-30-16124	. ROLLER, DOUBLE FLANGE	1	57001-
2	175-30-36130	. SHAFT	1	57001-
3	07052-31624	. PLUG	1	57001-
4	175-30-36210	. COLLAR	1	57001-
5	175-30-36220	. COLLAR	1	57001-
6	175-30-26230	. RING	2	57001-
	175-30-36108	. BUSHING ASS'Y	2	57001-
7	☆	.. BUSHING	1	57001-
8	☆	.. BUSHING	1	57001-
9	170-30-91130	.. PIN, DOWEL	2	57001-
10	07000-12130	. O-RING	2	57001-
	07000-32130	O-RING, (FOR SLAG HANDLING)	2	57001-
	175-30-00702	. FLOATING SEAL ASS'Y	2	57001-
	170-30-00114	. FLOATING SEAL ASS'Y, (FOR SLAG HANDLING)	2	57001-
11	175-30-00691	.. SEAL RING ASS'Y	1	57001-
	☆	... RING, SEAL	2	57001-
12	175-30-00581	.. O-RING ASS'Y	1	57001-
	175-30-00591	O-RING ASS'Y	1	57001-
	175-30-16215	... O-RING	2	57001-
	175-30-16211	O-RING, (FOR SLAG HANDLING)	2	57001-
13	07000-13068	. O-RING	2	57001-
	07000-33068	. O-RING, (FOR SLAG HANDLING)	2	57001-
14	175-30-36340	. BOLT	12	57001-
15	01643-51232	. WASHER	12	57001-
16	01011-62415	BOLT	56	57001-
17	01602-22472	WASHER, SPRING	56	57001-
18	175-30-26241	PLATE, LOCK	14	57001-

FIG. R0300-01A0 CARRIER ROLLER

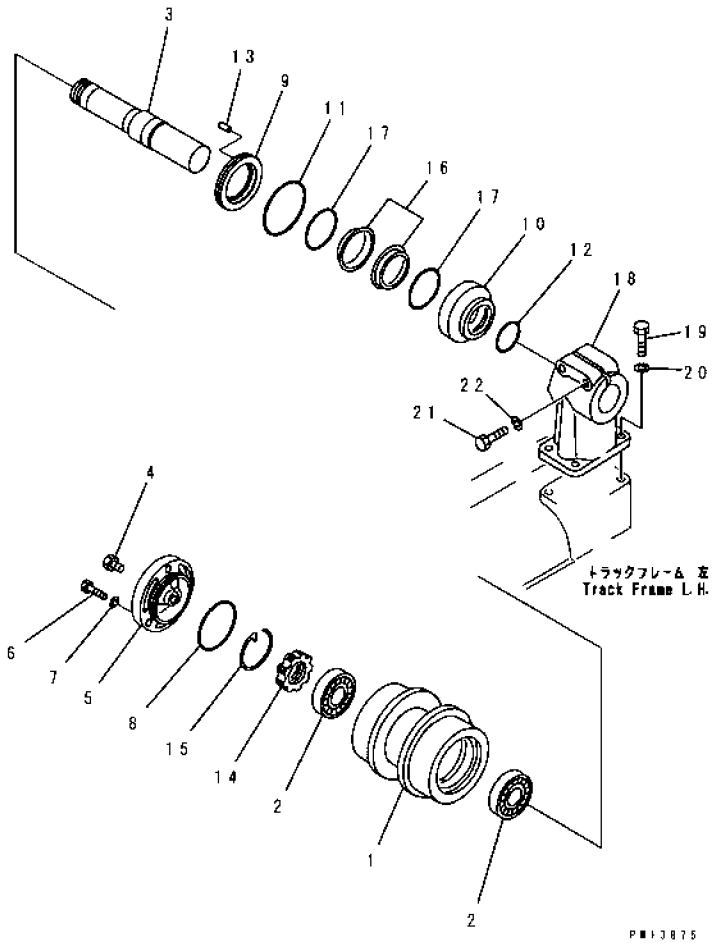

INDEX	PART NO	DESCRIPTION	Q'TY	SERIAL NO
	175-30-00517	CARRIER ROLLER ASS'Y.	4	57001-
	175-30-00780	CARRIER ROLLER ASS'Y. (FOR SLAG HANDLING)	4	57001-
1	175-30-45110	.ROLLER, CARRIER.	1	57001-
2	06002-30212	.BEARING.	2	57001-
3	175-30-25131	.SHAFT, CARRIER ROLLER.	1	57001-
4	07052-31624	.PLUG.	1	57001-
5	175-30-45131	.COVER	1	57001-
6	01010-81435	.BOLT.	3	57001-
7	01643-31445	.WASHER.	3	57001-
8	07000-12110	.O-RING.	1	57001-
	07000-32110	.O-RING, (FOR SLAG HANDLING).	1	57001-
9	175-30-35161	.RING.	1	57001-
10	175-30-35171	.RING.	1	57001-
11	07000-12130	O-RING	1	57001-
	07000-32130	.O-RING, (FOR SLAG HANDLING).	1	57001-
12	07000-12070	.O-RING.	1	57001-
	07000-32070	.O-RING, (FOR SLAG HANDLING).	1	57001-
13	04020-00616	.PIN, DOWEL.	1	57001-
14	170-30-15190	.NUT.	1	57001-
15	170-30-15210	.RING	1	57001-
	154-30-00831	.FLOATING SEAL ASS'Y.	1	57001-
	154-30-00243	.FLOATING SEAL ASS'Y, (FOR SLAG HANDLING)	1	57001-
16	154-30-00821	..SEAL RING ASS'Y.	1	57001-
	☆	...RING, SEAL.	2	57001-
17	150-30-00370	..O-RING ASS'Y.	1	57001-
	154-830-0030	..O-RING ASS'Y.	1	57001-
	150-30-12220	...O-RING.	2	57001-
	154-830-2210	...O-RING, (FOR SLAG HANDLING)	2	57001-
18	175-30-25184	SUPPORT, CARRIER ROLLER.	4	57001-
19	01010-82065	BOLT.	16	57001-
20	01602-22060	WASHER.	16	57001-
21	01010-82090	BOLT.	8	57001-
22	01643-32060	WASHER.	8	57001-

FIG. R0500-01A0 TRACK SHOE (LUBRICATE TYPE) (SINGLE GROUSER) (HEAVY-DUTY)

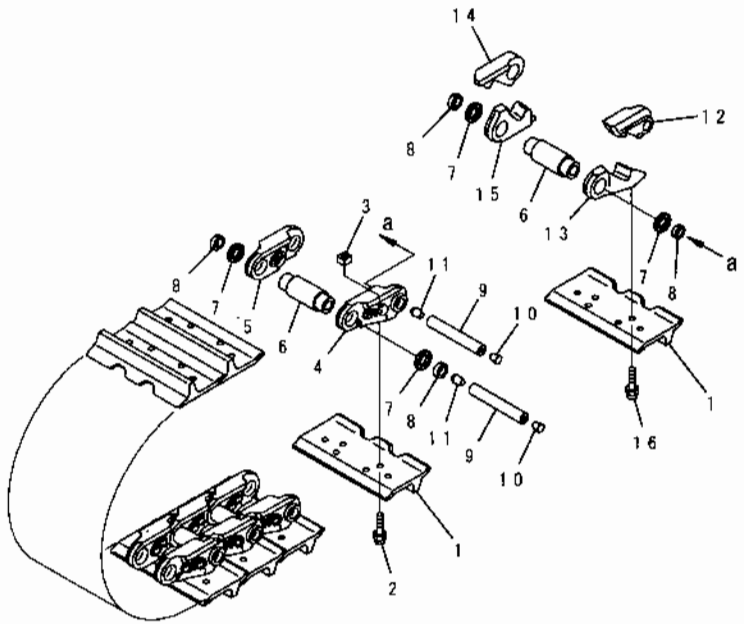

INDEX	PART NO	DESCRIPTION	Q'TY	SERIAL NO
		560MM WIDE		
	175-32-01953	TRACK SHOE ASS'Y	1	57001-
1	175-32-31313	.SHOE, TRACK	82	57001-
2	176-32-11210	.BOLT, SHOE (KIT)	312	57001-
3	178-32-11220	.NUT, SHOE (KIT)	312	57001-
	175-32-00403	.TRACK LINK ASS'Y	1	57001-
4	15A-32-11121	..LINK, TRACK, L.H.	78	57001-
5	15A-32-11131	..LINK, TRACK, R.H.	78	57001-
6	15A-32-11141	..BUSHING	82	57001-
7	175-32-41601	..SEAL ASS'Y	164	57001-
8	175-32-81181	..SPACER	164	57001-
9	175-32-81450	..PIN	82	57001-
10	07059-11830	..PLUG, LARGE	82	57001-
11	07059-20721	..PLUG, SMALL	82	57001-
12	15A-32-11321	.LINK, MASTER, L.H. PIN SIDE	4	57001-
13	15A-32-11331	..LINK, MASTER, L.H. BUSHING SIDE	4	57001-
14	15A-32-11421	..LINK, MASTER, R.H. PIN SIDE	4	57001-
15	15A-32-11431	..LINK, MASTER, R.H. BUSHING SIDE	4	57001-
16	175-32-41261	..BOLT, MASTER, LINK	16	57001-
		610MM WIDE		
	175-32-01963	TRACK SHOE ASS'Y	1	57001-
1	175-32-31410	.SHOE, TRACK	82	57001-
2	176-32-11210	.BOLT, SHOE (KIT)	312	57001-
3	178-32-11220	.NUT, SHOE (KIT)	312	57001-
	175-32-00403	.TRACK LINK ASS'Y	1	57001-
		660MM WIDE		
	175-32-01973	TRACK SHOE ASS'Y	1	57001-
1	175-32-31420	.SHOE, TRACK	82	57001-
2	176-32-11210	.BOLT, SHOE (KIT)	312	57001-
3	178-32-11220	.NUT, SHOE (KIT)	312	57001-
	175-32-00403	.TRACK LINK ASS'Y	1	57001-
		560MM WIDE, (FOR LIMESTONE)		
	175-32-01983	TRACK SHOE ASS'Y	1	57001-
1	175-32-31430	.SHOE, TRACK	82	57001-
2	176-32-11210	.BOLT, SHOE (KIT)	312	57001-
3	178-32-11220	.NUT, SHOE (KIT)	312	57001-
	175-32-00403	TRACK LINK ASS'Y	1	57001-
		OVERSIZE PARTS		
		OVERSIZE 0.10MM		
6	175-98-09230	BUSHING	AR	57001-
9	175-98-09031	PIN	AR	57001-
		OVERSIZE 0.18MM		

FIG NO. : R0500-01A0

INDEX	PART NO	DESCRIPTION	Q'TY	SERIAL NO.
6	175-98-09240	BUSHING.....	AR	57001-
9	175-98-09041	PIN.....	AR	57001-

FIG NO. : R0500-01A2

FIG. R0500-01A2 TRACK SHOE (DRY TYPE) (SINGLE GROUSER) (HEAVY-DUTY)

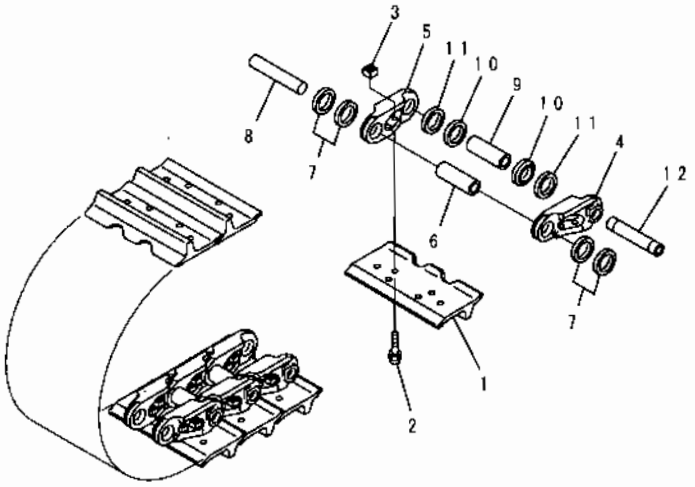

P013799

INDEX	PART NO	DESCRIPTION	Q'TY	SERIAL NO
		560MM WIDE		
	175-32-01461	TRACK SHOE ASS'Y	1	57001-
1	175-32-31313	.SHOE, TRACK	82	57001-
2	176-32-11210	.BOLT, SHOE (KIT)	328	57001-
3	178-32-11220	.NUT, SHOE (KIT)	328	57001-
	175-32-00411	.TRACK LINK ASS'Y	1	57001-
4	15A-32-11121	..LINK, TRACK, L.H	82	57001-
5	15A-32-11131	..LINK, TRACK, R.H	82	57001-
6	176-32-11144	..BUSHING, REGULAR	78	57001-
7	176-32-11292	..WASHER	312	57001-
8	176-32-11152	.PIN, REGULAR	78	57001-
9	176-32-11173	..BUSHING, MASTER	4	57001-
10	176-32-11332	..SPACER, MASTER	8	57001-
11	176-32-11292	..WASHER	8	57001-
12	176-32-11193	..PIN, MASTER	4	57001-

FIG. R0500-01A3 TRACK SHOE (LUBRICATE TYPE) (560MM WIDE)
(MASTER LINK 2 PLACE TYPE)

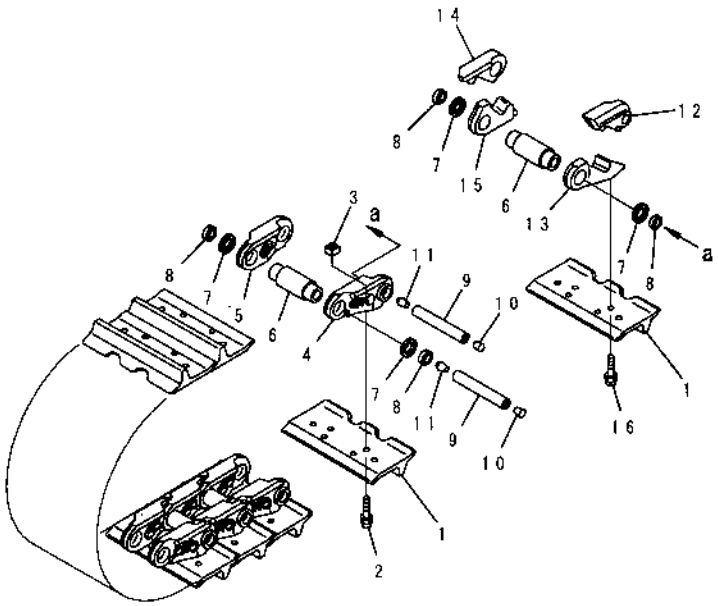

INDEX	PART NO	DESCRIPTION	Q'TY	SERIAL NO
	175-32-02500	TRACK SHOE ASS'Y, 560S W1D155	1	57001-
1	170-32-11115	. SHOE, TRACK	82	57001-
2	176-32-11210	. BOLT, SHOE (KIT)	320	57001-
3	178-32-11220	. NUT, SHOE (KIT)	320	57001-
4	15A-32-11121	. LINK, TRACK, L.H.	80	57001-
5	15A-32-11131	. LINK, TRACK, R.H.	80	57001-
6	15A-32-11141	. BUSHING	82	57001-
7	175-32-41601	. SEAL ASS'Y	164	57001-
8	175-32-81181	. SPACER	164	57001-
9	175-32-81450	. PIN	82	57001-
10	07059-11830	. PLUG, LARGE	82	57001-
11	07059-20721	. PLUG, SMALL	82	57001-
	175-32-08010	. MASTER LINK K. L.H.	1	57001-
12	15A-32-11321	.. LINK, MASTER, L.H. PIN SIDE	2	57001-
13	15A-32-11331	.. LINK, MASTER, L.H. BUSHING SIDE	2	57001-
	175-32-08020	. MASTER LINK K. R.H.	1	57001-
14	15A-32-11421	.. LINK, MASTER, R.H. PIN SIDE	2	57001-
15	15A-32-11431	.. LINK, MASTER, R.H BUSHING SIDE	2	57001-
16	175-32-41261	. BOLT, MASTER, LINK	8	57001-

FIG. R0500-01A4 TRACK SHOE (LUBRICATE TYPE) (660MM WIDE)
(MASTER LINK 2 PLACE TYPE)
(HEAVY-DUTY)

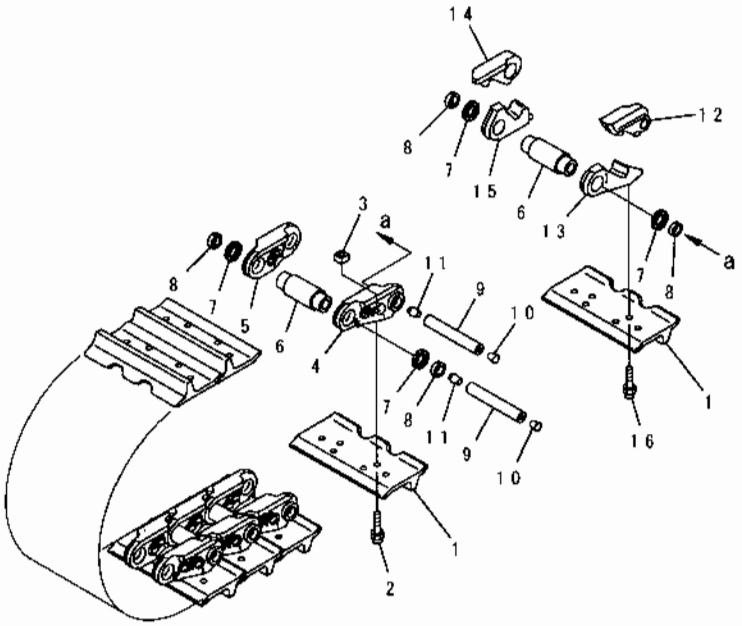

PDB1017

INDEX	PART NO	DESCRIPTION	Q'TY	SERIAL NO.
	175-32-02560	TRACK SHOE ASS'Y	1	57001-
1	175-32-31420	.SHOE, TRACK	82	57001-
2	176-32-11210	.BOLT, SHOE (KIT)	320	57001-
3	178-32-11220	.NUT, SHOE (KIT)	320	57001-
4	15A-32-11121	.LINK, TRACK, L.H.	80	57001-
5	15A-32-11131	.LINK, TRACK, R.H.	80	57001-
6	15A-32-11141	.BUSHING	82	57001-
7	175-32-41601	.SEAL ASS'Y	164	57001-
8	175-32-81181	.SPACER	164	57001-
9	175-32-81450	.PIN	82	57001-
10	07059-11830	.PLUG, LARGE	82	57001-
11	07059-20721	.PLUG, SMALL	82	57001-
	175-32-08010	.MASTER LINK K, L.H.	1	57001-
12	15A-32-11321	..LINK, MASTER, L.H. PIN SIDE	2	57001-
13	15A-32-11331	. LINK, MASTER, L.H. BUSHING SIDE	2	57001-
	175-32-08020	.MASTER LINK K, R.H.	1	57001-
14	15A-32-11421	..LINK, MASTER, R.H. PIN SIDE	2	57001-
15	15A-32-11431	..LINK, MASTER, R.H. BUSHING SIDE	2	57001-
16	175-32-41261	.BOLT, MASTER, LINK	8	57001-

FIG. R0500-01A5 TRACK SHOE (LUBRICATE TYPE) (660MM WIDE) (MASTER LINK 2 PLACE TYPE) (COLD WEATHER (A) SPEC.)

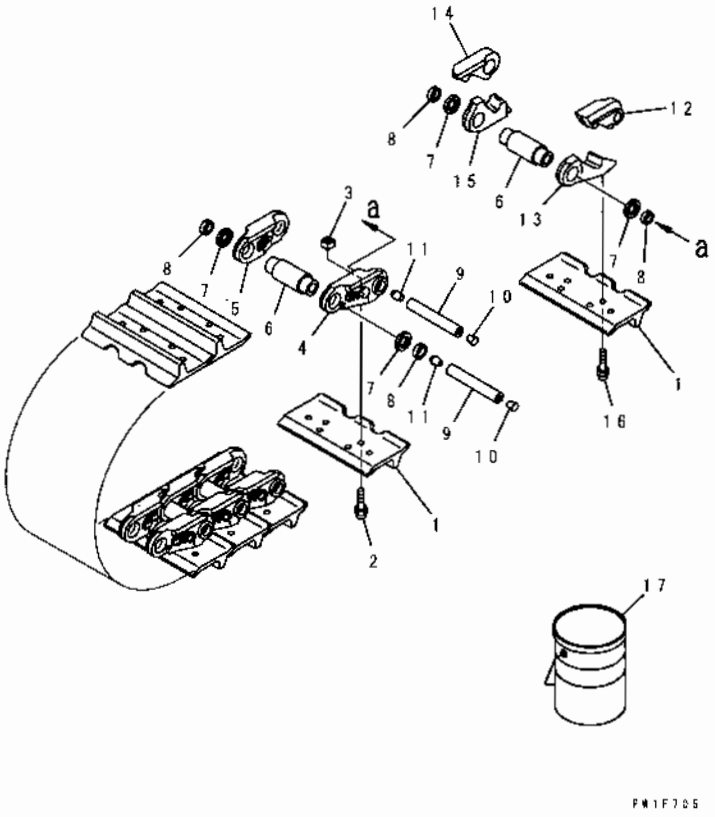

INDEX	PART NO.	DESCRIPTION	Q'TY	SERIAL NO
	175-32-02590	TRACK SHOE ASS'Y	1	57001-
1	170-32-11332	.SHOE, TRACK	82	57001-
2	176-32-11210	.BOLT, SHOE (KIT)	320	57001-
3	178-32-11220	.NUT, SHOE (KIT)	320	57001-
4	15A-32-11121	.LINK, TRACK, L.H.	80	57001-
5	15A-32-11131	.LINK, TRACK, R.H.	80	57001-
6	15A-32-11141	.BUSHING	82	57001-
7	175-32-41601	.SEAL ASS'Y	164	57001-
8	175-32-81181	.SPACER	164	57001-
9	175-32-81450	.PIN	82	57001-
10	07059-11830	.PLUG, LARGE	82	57001-
11	07059-20721	.PLUG, SMALL	82	57001-
	175-32-08010	.MASTER LINK K. L.H.	1	57001-
12	15A-32-11321	..LINK, MASTER, L.H. PIN SIDE	2	57001-
13	15A-32-11331	.LINK, MASTER, L.H. BUSHING SIDE	2	57001-
	175-32-08020	.MASTER LINK K. R.H.	1	57001-
14	15A-32-11421	..LINK, MASTER, R.H. PIN SIDE	2	57001-
15	15A-32-11431	..LINK, MASTER, R.H. BUSHING SIDE	2	57001-
16	175-32-41261	.BOLT, MASTER, LINK	8	57001-
17	150-09-19270	.OIL	AR	57001-

FIG. R2100-01A0 TRACK FRAME

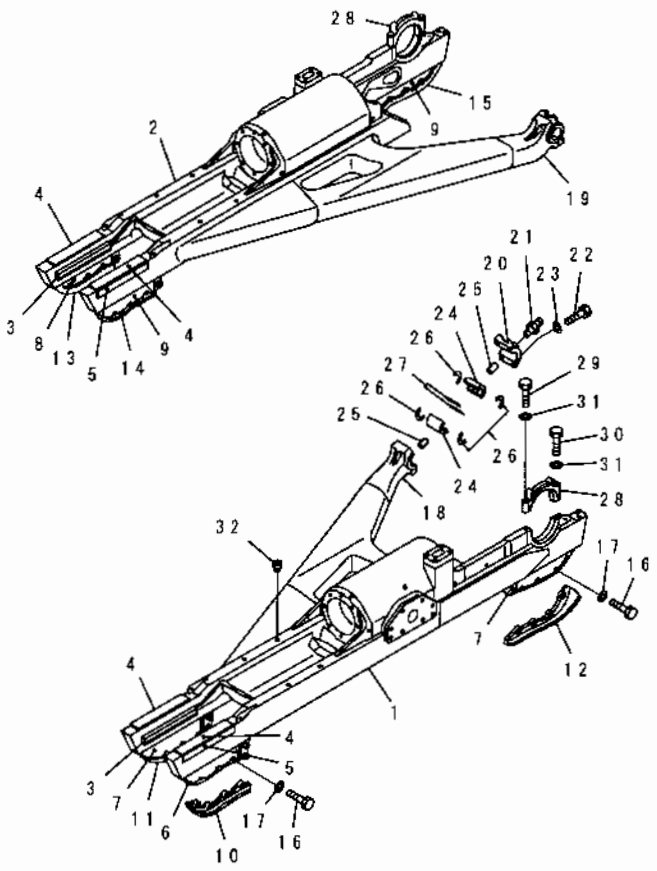

P#L2721

INDEX	PART NO.	DESCRIPTION	Q'TY	SERIAL NO.
1	175-30-71110	FRAME, TRACK, L.H.	1	57001-
2	175-30-71120	FRAME, TRACK, R.H.	1	57001-
3	175-30-11272	.PLATE (WELDED)	2	57001-
4	175-30-21333	.PLATE (WELDED)	2	57001-
5	175-30-21342	.PLATE (WELDED)	2	57001-
6	175-30-21353	GUARD (WELDED)	1	57001-
7	175-30-21363	.GUARD (WELDED)	2	57001-
8	175-30-21363	.GUARD (WELDED)	1	57001-
9	175-30-21353	.GUARD (WELDED)	2	57001-
10	178-30-12161	GUARD	1	57001-
11	178-30-12171	GUARD	1	57001-
12	178-30-12140	GUARD	1	57001-
13	178-30-12171	GUARD	1	57001-
14	178-30-12161	GUARD	1	57001-
15	178-30-12150	PLATE	1	57001-
16	01010-82045	BOLT	24	57001-
17	01643-32060	WASHER	24	57001-
	175-30-00431	BEARING ASS'Y, L.H.	1	57001-
	175-30-00441	BEARING ASS'Y, R.H.	1	57001-
18	☆	HEAD, BRACE, L.H. (WELDED)	1	57001-
19	☆	.HEAD, BRACE, R.H. (WELDED)	1	57001-
20	☆	.CAP	1	57001-
21	07020-00000	.FITTING, GREASE	1	57001-
22	01011-52400	.BOLT	4	57001-
23	01643-32460	.WASHER	4	57001-
24	154-30-11810	BUSHING	4	57001-
25	04020-01024	PIN, DOWEL	4	57001-
26	154-30-11821	PACKING	8	57001-
	154-830-2280	PACKING, (FOR SLAG HANDLING)	8	57001-
27	154-30-11831	PACKING	4	57001-
	154-830-2290	PACKING, (FOR SLAG HANDLING)	4	57001-
28	175-30-31530	CAP, SUPPORT, L.H.	1	57001-
	175-30-31540	CAP, SUPPORT, R.H.	1	57001-
29	01011-83040	BOLT	2	57001-
30	01011-83090	BOLT	2	57001-
31	01643-33080	WASHER	4	57001-
32	07049-02430	PLUG	16	57001-

FIG. R2100-01A1 TRACK FRAME (FOR SAUDI ARABIA)

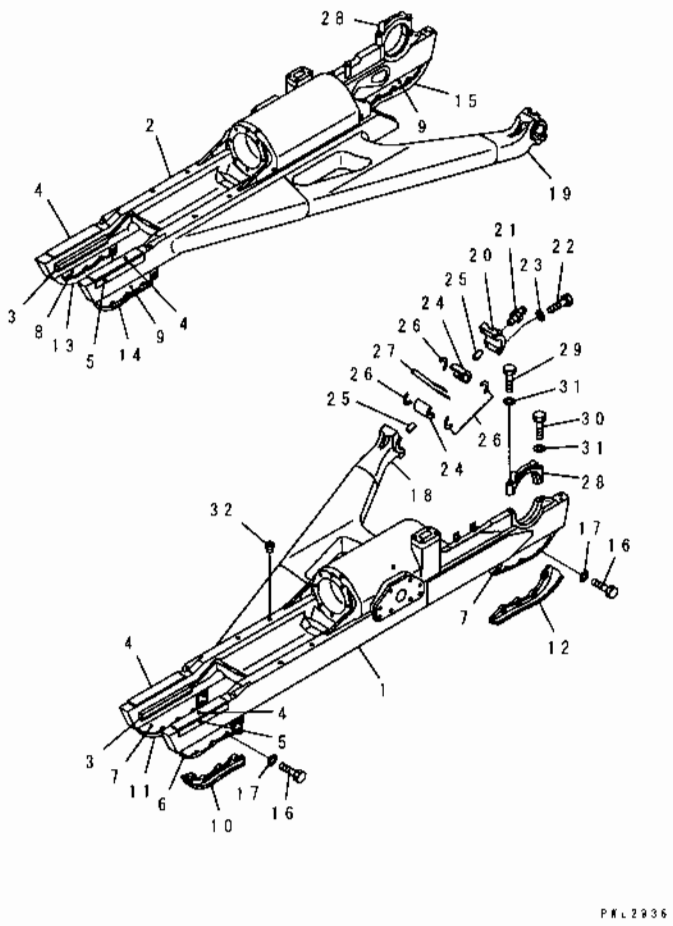

INDEX	PART NO.	DESCRIPTION	Q'TY	SERIAL NO
1	175-30-75110	FRAME, TRACK, L.H.	1	57001-
2	175-30-75120	FRAME, TRACK, R.H.	1	57001-
3	175-30-11272	.PLATE (WELDED)	2	57001-
4	175-30-21333	.PLATE (WELDED)	2	57001-
5	175-30-21342	.PLATE (WELDED)	2	57001-
6	175-30-21353	.GUARD (WELDED)	1	57001-
7	175-30-21363	.GUARD (WELDED)	2	57001-
8	175-30-21363	.GUARD (WELDED)	1	57001-
9	175-30-21353	.GUARD (WELDED)	2	57001-
10	178-30-12161	GUARD	1	57001-
11	178-30-12171	GUARD	1	57001-
12	178-30-12140	GUARD	1	57001-
13	178-30-12171	GUARD	1	57001-
14	178-30-12161	GUARD	1	57001-
15	178-30-12150	PLATE	1	57001-
16	01010-82045	BOLT	24	57001-
17	01643-32060	WASHER	24	57001-
	175-30-00431	BEARING ASS'Y, L.H.	1	57001-
	175-30-00441	BEARING ASS'Y, R.H.	1	57001-
18	☆	.HEAD, BRACE, L.H. (WELDED)	1	57001-
19	☆	.HEAD, BRACE, R.H. (WELDED)	1	57001-
20	☆	.CAP	1	57001-
21	07020-00000	.FITTING, GREASE	1	57001-
22	01011-52400	.BOLT	4	57001-
23	01643-32460	.WASHER	4	57001-
24	154-30-11810	BUSHING	4	57001-
25	04020-01024	PIN, DOWEL	4	57001-
26	154-30-11821	PACKING	8	57001-
	154-830-2280	PACKING, (FOR SLAG HANDLING)	8	57001-
27	154-30-11831	PACKING	4	57001-
	154-830-2290	PACKING, (FOR SLAG HANDLING)	4	57001-
28	175-30-31530	CAP, SUPPORT, L.H.	1	57001-
	175-30-31540	CAP, SUPPORT, R.H.	1	57001-
29	01011-83040	BOLT	2	57001-
30	01011-83090	BOLT	2	57001-
31	01643-33080	WASHER	4	57001-
32	07049-02430	PLUG	16	57001-

FIG. R2100-01A2 TRACK FRAME (REINFORCED TYPE)

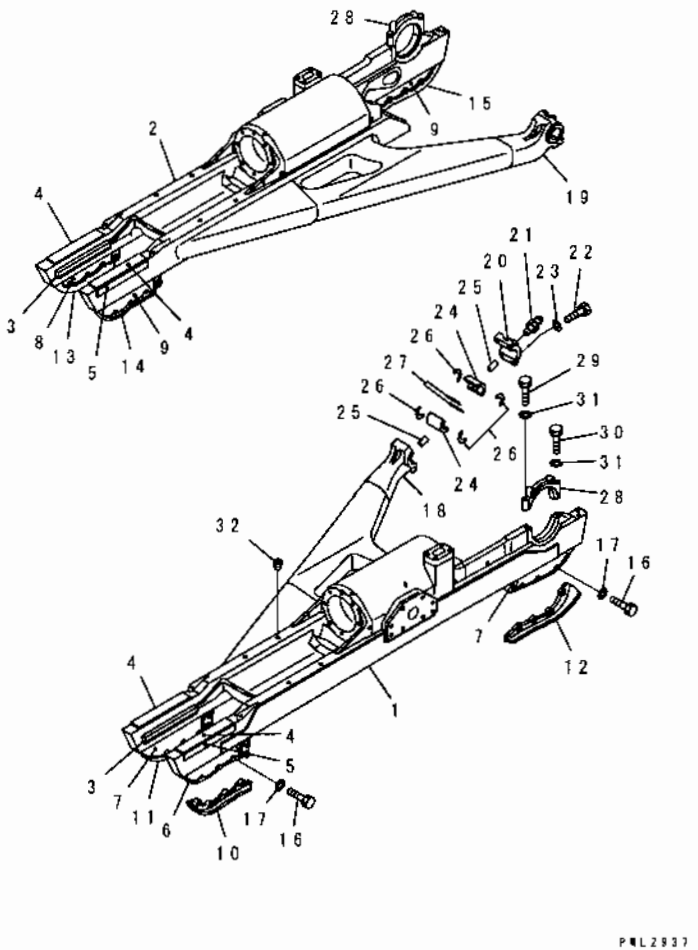

INDEX	PART NO	DESCRIPTION	Q'TY	SERIAL NO
1	175-30-71210	FRAME, TRACK, L.H.	1	57001-
2	175-30-71220	FRAME, TRACK, R.H.	1	57001-
3	175-30-11272	. PLATE (WELDED)	2	57001-
4	175-30-21333	. PLATE (WELDED)	2	57001-
5	175-30-21342	. PLATE (WELDED)	2	57001-
6	175-30-21353	. GUARD (WELDED)	1	57001-
7	175-30-21363	. GUARD (WELDED)	2	57001-
8	175-30-21363	. GUARD (WELDED)	1	57001-
9	175-30-21353	. GUARD (WELDED)	2	57001-
10	178-30-12161	GUARD	1	57001-
11	178-30-12171	GUARD	1	57001-
12	178-30-12140	GUARD	1	57001-
13	178-30-12171	GUARD	1	57001-
14	178-30-12161	GUARD	1	57001-
15	178-30-12150	PLATE	1	57001-
16	01010-82045	BOLT	24	57001-
17	01643-32060	WASHER	24	57001-
	175-30-00431	BEARING ASS'Y, L.H.	1	57001-
	175-30-00441	BEARING ASS'Y, R.H.	1	57001-
18	☆	. HEAD, BRACE, L.H (WELDED)	1	57001-
19	☆	. HEAD, BRACE, R.H. (WELDED)	1	57001-
20	☆	. CAP	1	57001-
21	07020-00000	. FITTING, GREASE	1	57001-
22	01011-52400	. BOLT	4	57001-
23	01643-32460	. WASHER	4	57001-
24	154-30-11810	BUSHING	4	57001-
25	04020-01024	PIN, DOWEL	4	57001-
26	154-30-11821	PACKING	8	57001-
	154-830-2280	PACKING, (FOR SLAG HANDLING)	8	57001-
27	154-30-11831	PACKING	4	57001-
	154-830-2290	PACKING, (FOR SLAG HANDLING)	4	57001-
28	175-30-31530	CAP, SUPPORT, L.H.	1	57001-
	175-30-31540	CAP, SUPPORT, R.H.	1	57001-
29	01011-83040	BOLT	2	57001-
30	01011-83090	BOLT	2	57001-
31	01643-33080	WASHER	4	57001-
32	07049-02430	PLUG	16	57001-

FIG. R2100-02A0 RECOIL SPRING

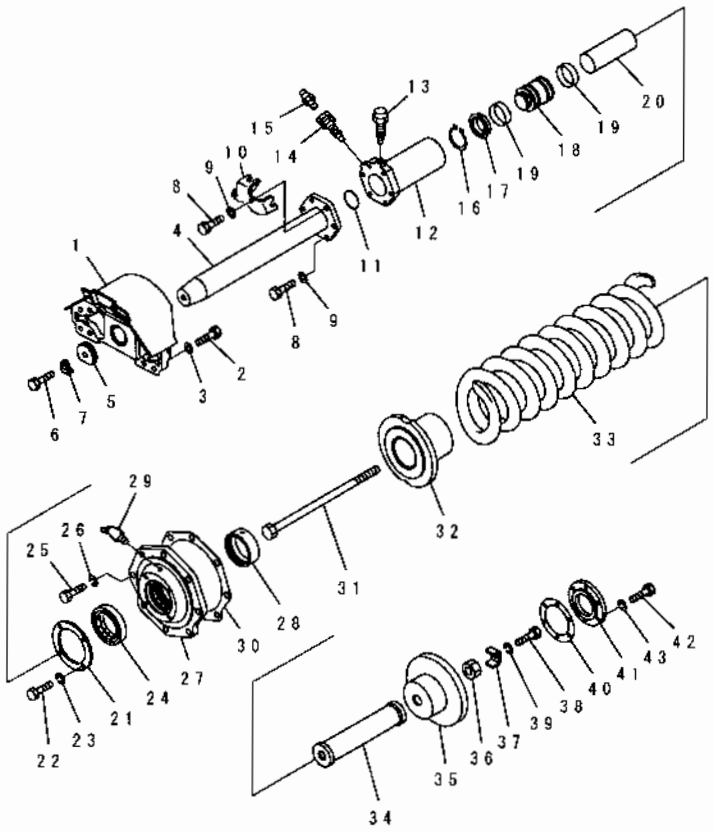

INDEX	PART NO	DESCRIPTION	Q'TY.	SERIAL NO.
1	176-30-44110	YOKE, IDLER	2	57001-
2	01010-82095	BOLT	16	57001-
3	01643-32060	WASHER	16	57001-
4	175-30-34210	SHAFT	2	57001-
5	195-30-14151	WASHER	2	57001-
6	01010-82460	BOLT	2	57001-
7	195-30-14160	PLATE, LOCK	2	57001-
8	01010-81650	BOLT	12	57001-
9	01643-31645	WASHER	12	57001-
10	175-30-34161	STOPPER, STOPPER	2	57001-
11	07000-15090	O-RING	2	57001-
	07000-25090	O-RING, (FOR SLAG HANDLING)	2	57001-
12	175-30-24223	CYLINDER	2	57001-
13	198-30-14420	PLUG	2	57001-
14	07959-30000	VALVE	2	57001-
15	07020-00000	FITTING, GREASE	2	57001-
16	04064-07525	RING, SNAP	2	57001-
17	175-30-24242	PACKING	2	57001-
18	170-30-14212	PISTON	2	57001-
19	170-30-14230	RING, PISTON	4	57001-
20	175-30-44231	PIPE	2	57001-
21	175-30-24270	PLATE	2	57001-
22	01010-81225	BOLT	8	57001-
23	01602-21236	WASHER, SPRING	8	57001-
24	07019-00130	SEAL, DUST	2	57001-
25	01010-82460	BOLT	16	57001-
26	01602-22472	WASHER, SPRING	16	57001-
	175-30-00563	COVER ASS'Y	2	57001-
27	☆	. COVER	1	57001-
28	170-30-14221	. BUSHING	1	57001-
29	07020-00675	. FITTING, GREASE	1	57001-
30	175-30-34261	GASKET	2	57001-
31	175-30-44181	BOLT	2	57001-
32	175-30-44161	PILOT	2	57001-
33	175-30-44250	SPRING, RECOIL	2	57001-
34	175-30-44211	SLEEVE	2	57001-
35	175-30-44171	PILOT	2	57001-
36	01580-03931	NUT	2	57001-
37	175-30-34290	PLATE, LOCK	2	57001-
38	01010-81020	BOLT	2	57001-
39	01643-31032	WASHER	2	57126-
	01602-21030	WASHER, SPRING	2	57001-57125

FIG. R2100-02A0 RECOIL SPRING

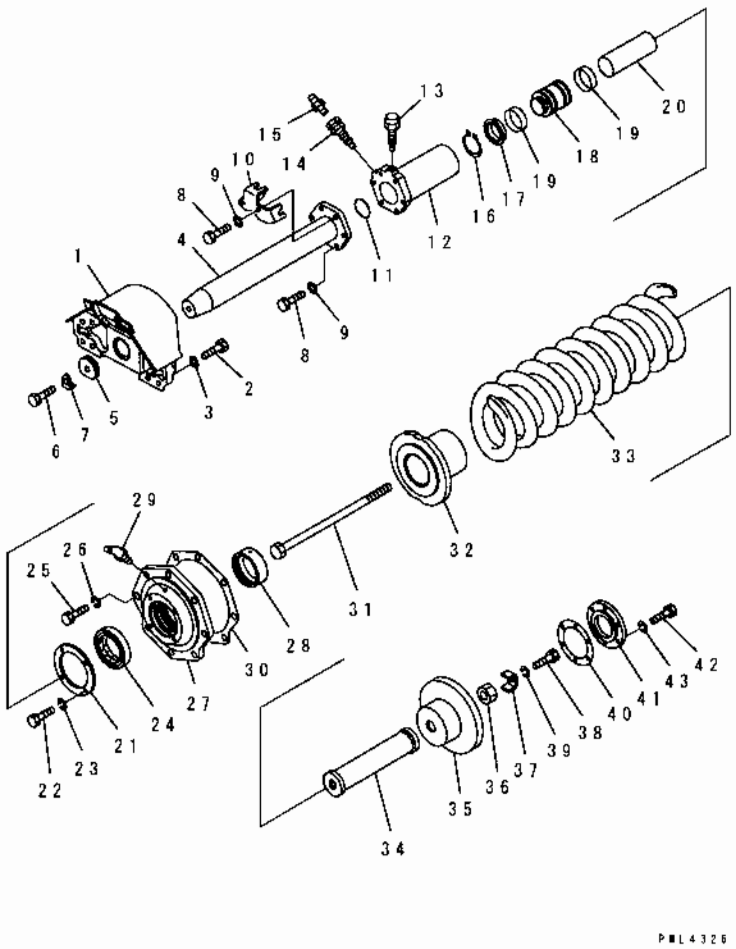

INDEX	PART NO	DESCRIPTION	Q'TY	SERIAL NO
40	170-30-14441	GASKET	2	57001-
41	175-30-34331	COVER	2	57001-
42	01010-81235	BOLT	12	57001-
43	01602-21236	WASHER, SPRING	12	57001-

FIG. R2100-03A0 TRACK FRAME COVER

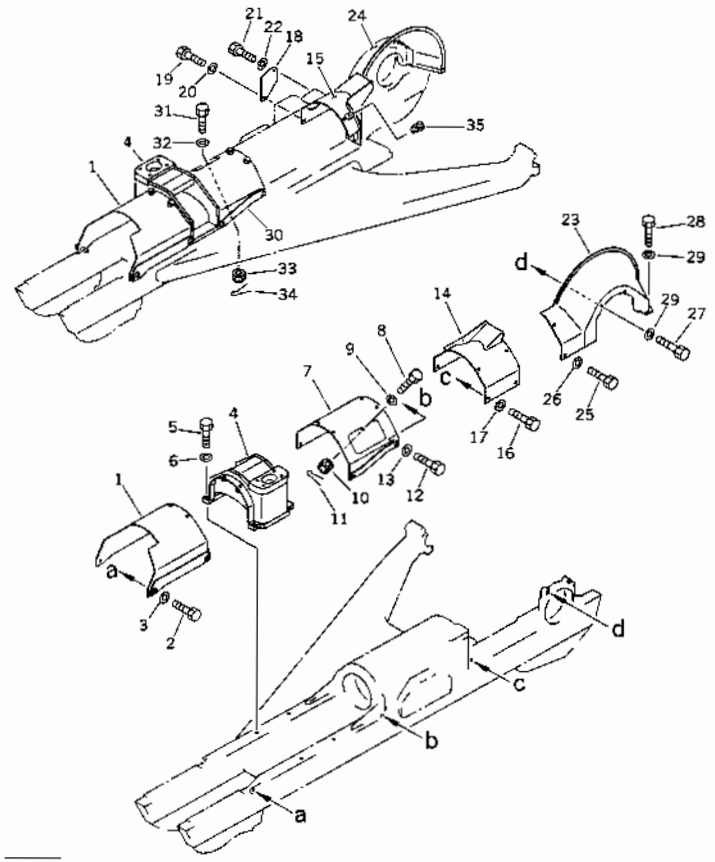

INDEX	PART NO	DESCRIPTION	Q'TY	SERIAL NO
1	175-30-52120	COVER	2	57001-
2	01010-81635	BOLT	12	57001-
3	01643-31645	WASHER	12	57001-
4	175-30-51140	SUPPORT	2	57001-
5	01010-82080	BOLT	8	57001-
6	01643-32060	WASHER	8	57001-
7	175-30-52110	COVER, L.H.	1	57001-
8	195-09-18141	BOLT	1	57001-
9	01642-21216	WASHER	1	57001-
10	01590-31215	NUT	1	57001-
11	04050-13025	PIN, COTTER	1	57001-
12	01010-81635	BOLT	16	57001-
13	01643-31645	WASHER	16	57001-
14	175-30-52130	COVER, L.H.	1	57001-
15	175-30-52140	COVER, R.H.	1	57001-
16	01010-81640	BOLT	6	57001-
17	01643-31645	WASHER	6	57001-
18	175-30-52220	PLATE	1	57001-
19	01010-81640	BOLT	1	57001-
20	01643-31645	WASHER	1	57001-
21	01010-81435	BOLT	1	57001-
22	01643-31445	WASHER	1	57001-
23	175-30-52150	COVER, L.H.	1	57001-
24	175-30-52160	COVER, R.H.	1	57001-
25	01010-81640	BOLT	4	57001-
26	01643-31645	WASHER	4	57001-
27	01010-81630	BOLT	4	57001-
28	01010-81645	BOLT	4	57001-
29	01643-31645	WASHER	8	57001-
30	175-30-52210	COVER, R.H.	1	57001-
31	195-09-18141	BOLT	1	57001-
32	01642-21216	WASHER	1	57001-
33	01590-31215	NUT	1	57001-
34	04050-13025	PIN, COTTER	1	57001-
35	07049-01418	PLUG	1	57001-

FIG. R2100-03A1 TRACK FRAME COVER (FOR SAUDI ARABIA)

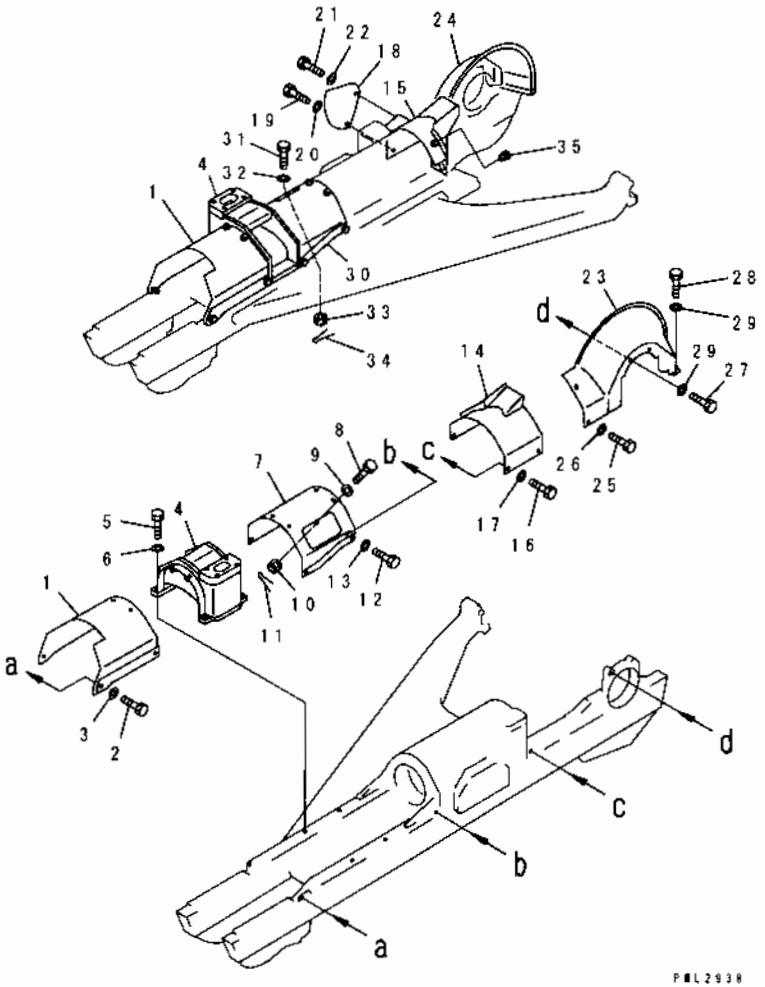

INDEX	PART NO	DESCRIPTION	Q'TY	SERIAL NO
1	175-30-52120	COVER	2	57001-
2	01010-81635	BOLT	12	57001-
3	01643-31645	WASHER	12	57001-
4	175-30-51140	SUPPORT	2	57001-
5	01010-82080	BOLT	8	57001-
6	01643-32060	WASHER	8	57001-
7	175-30-52110	COVER, L.H.	1	57001-
8	195-09-18141	BOLT	1	57001-
9	01642-21216	WASHER	1	57001-
10	01590-31215	NUT	1	57001-
11	04050-13025	PIN, COTTER	1	57001-
12	01010-81635	BOLT	16	57001-
13	01643-31645	WASHER	16	57001-
14	175-30-55130	COVER, L.H.	1	57001-
15	175-30-55140	COVER, R.H.	1	57001-
16	01010-81640	BOLT	6	57001-
17	01643-31645	WASHER	6	57001-
18	175-30-55190	PLATE	1	57001-
19	01010-81435	BOLT	1	57310-
	01010-81640	BOLT	1	57001-57309
20	01643-31445	WASHER	1	57310-
	01643-31645	WASHER	1	57001-57309
21	01010-81435	BOLT	2	57001-
22	01643-31445	WASHER	2	57001-
23	175-30-55150	COVER, L.H.	1	57001-
24	175-30-55160	COVER, R.H.	1	57001-
25	01010-81640	BOLT	4	57001-
26	01643-31645	WASHER	4	57001-
27	01010-81630	BOLT	4	57001-
28	01010-81645	BOLT	4	57001-
29	01643-31645	WASHER	8	57001-
30	175-30-52210	COVER, R.H.	1	57001-
31	195-09-18141	BOLT	1	57001-
32	01642-21216	WASHER	1	57001-
33	01590-31215	NUT	1	57001-
34	04050-13025	PIN, COTTER	1	57001-
35	07049-01418	PLUG	1	57001-

FIG. R2200-01A0 ROLLER GUARD

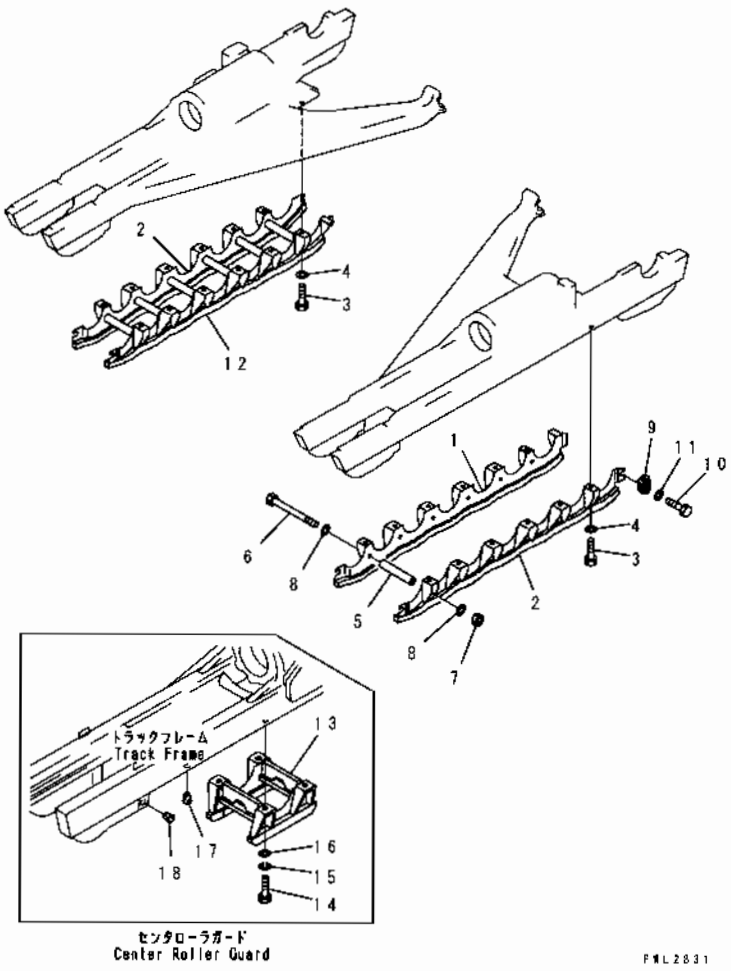

INDEX	PART NO	DESCRIPTION	Q'TY	SERIAL NO
1	175-30-32176	GUARD	1	57001-
2	175-30-32196	GUARD	2	57001-
3	01010-82490	BOLT	24	57001-
4	01643-32460	WASHER	24	57001-
5	175-30-32151	SPACER	12	57001-
6	175-09-11120	BOLT	12	57001-
7	01580-12419	NUT	12	57001-
8	01643-32460	WASHER	24	57001-
9	170-30-12162	RETAINER	6	57001-
10	01010-82050	BOLT	12	57001-
11	01643-32060	WASHER	12	57001-
12	175-30-32186	GUARD	1	57001-
13	175-30-32211	GUARD	2	57001-
14	01010-82490	BOLT	8	57001-
15	01602-22472	WASHER, SPRING	8	57001-
16	01643-32460	WASHER	8	57001-
17	07049-02430	PLUG	16	57001-
18	07049-02025	PLUG	12	57001-

WORK EQUIPMENT

FIG. T2110-01A0 STRAIGHT TILT FRAME

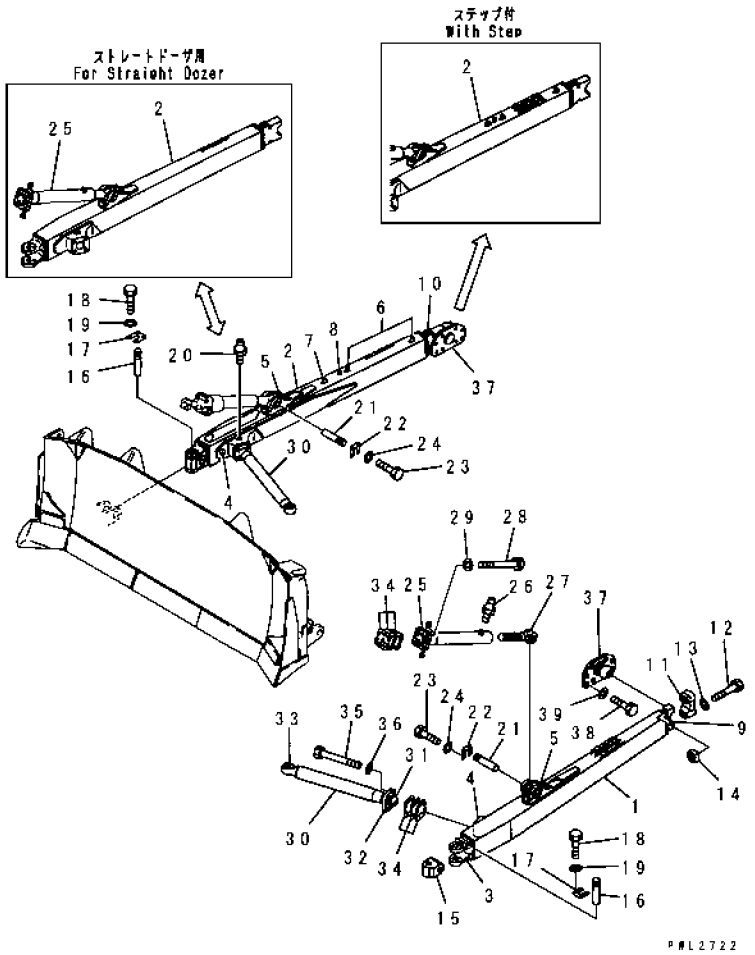

INDEX	PART NO	DESCRIPTION	Q'TY	SERIAL NO.
1	175-71-71150	FRAME	1	57001-
2	175-71-71160	FRAME, R.H.	1	57001-
	175-71-71170	FRAME, R.H. (FOR STRAIGHT DOZER)	1	57001-
	175-71-33290	FRAME, R.H. (WITH STEP)	1	57001-
3	175-71-21182	BRACKET (WELDED)	1	57001-
4	175-71-31173	.BRACKET, L.H. (WELDED)	1	57001-
	175-71-31622	.BRACKET, R.H. (WELDED)	1	57001-
5	175-71-31650	BRACKET, L.H. (WELDED)	1	57001-
	175-71-31660	.BRACKET, R.H (WELDED)	1	57001-
6	195-71-31660	.SEAT (WELDED)	2	57001-
7	195-71-31670	.SEAT (WELDED)	1	57001-
8	195-71-32160	.SEAT (WELDED)	1	57001-
9	175-71-11272	.BRACKET, L.H. (WELDED)	1	57001-
10	175-71-31311	.BRACKET, R.H. (WELDED)	1	57001-
11	175-71-11482	.CAP	1	57001-
12	175-71-11491	.BOLT	4	57001-
13	01643-32260	.WASHER	4	57001-
14	175-71-11520	.NUT	4	57001-
15	175-71-21261	JOINT	2	57001-
16	175-71-21221	PIN	2	57001-
17	175-71-21230	PLATE, LOCK	2	57001-
18	01010-81440	BOLT	8	57001-
19	01643-31445	WASHER	8	57001-
20	07020-00000	FITTING, GREASE	2	57001-
21	154-71-21290	PIN	2	57001-
22	175-71-21330	PLATE, LOCK	2	57001-
23	01010-81435	BOLT	8	57001-
24	01643-31445	WASHER	8	57001-
	175-71-00233	BRACE ASS'Y	1	57001-
	175-71-00233	BRACE ASS'Y, (FOR STRAIGHT DOZER)	2	57001-
25	175-71-21272	.BRACE	1	57001-
26	07020-00000	.FITTING, GREASE	1	57001-
27	175-71-11281	.SCREW	1	57001-
28	01011-82700	BOLT	8	57001-
29	01643-32780	WASHER	8	57001-
30	175-71-31293	ARM	2	57001-
31	175-71-31562	.BALL (WELDED)	1	57001-
32	175-71-31190	.CAP	1	57001-
33	195-71-22681	.JOINT (WELDED)	1	57001-
34	175-71-00302	SHIM ASS'Y	4	57001-
35	01011-82700	BOLT	8	57001-
36	01643-32780	WASHER	8	57001-

FIG NO. : T2110-01A0

INDEX	PART NO.	DESCRIPTION	Q'TY	SERIAL NO.
	175-70-23133	TRUNNION.....	2	57001-
37	175-70-23293	.BALL, STUD..... (WELDED)..	1	57001-
38	01010-82450	BOLT.....	16	57001-
39	01643-32460	WASHER.....	16	57001-

FIG. T2110-01A1 C-FRAME

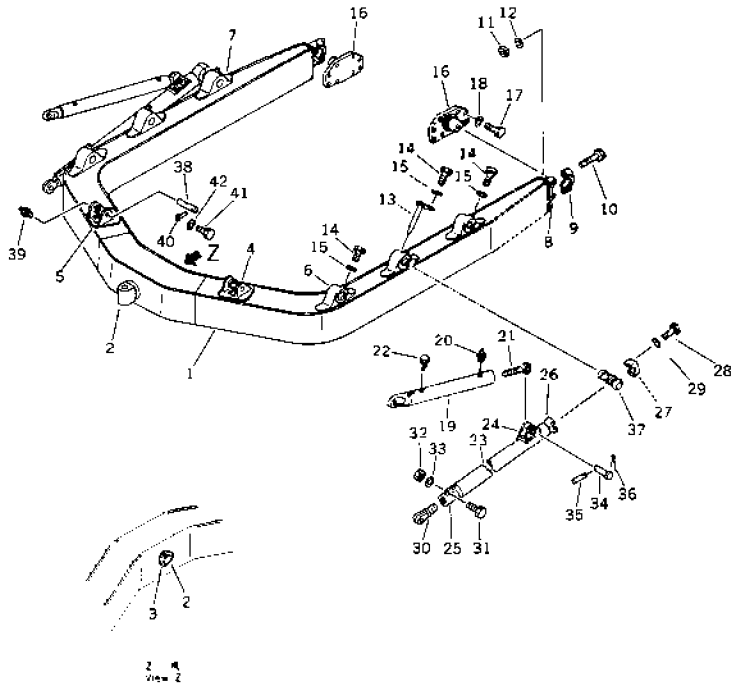

INDEX	PART NO.	DESCRIPTION	Q'TY	SERIAL NO
1	175-70-73100	C-FRAME	1	50001-
2	175-70-13314	. JOINT (WELDED)	1	50001-
3	150-70-23320	. COLLAR (WELDED)	1	50001-
4	175-70-23151	. BRACKET, L.H. (WELDED)	1	50001-
5	175-70-23161	. BRACKET, R.H. (WELDED)	1	50001-
6	175-70-23124	. BRACKET, L.H. (WELDED)	3	50001-
7	175-70-23114	. BRACKET, R.H. (WELDED)	3	50001-
	175-70-00543	. CAP ASS'Y	2	50001-
8	☆	.. BRACKET (WELDED)	1	50001-
9	☆	.. CAP	1	50001-
10	175-71-11491	.. BOLT	4	50001-
11	175-71-11520	.. NUT	4	50001-
12	01643-32260	.. WASHER	4	50001-
13	154-70-19181	PIN	2	50001-
14	01010-51420	BOLT	6	50001-
15	205-06-62270	WASHER	6	50001-
16	175-70-23133	TRUNNION	2	50001-
	175-70-23293	BALL, STUD (WELDED)	1	50001-
17	01010-52450	BOLT	16	50001-
18	01643-32460	WASHER	16	50001-
	175-70-00523	BRACE ASS'Y	2	50001-
19	☆	. BRACE	1	50001-
20	07020-00000	. FITTING, GREASE	2	50001-
21	175-70-22190	. SCREW	1	50001-
22	175-70-12221	SCREW, SET	1	50001-
23	175-70-00514	ARM ASS'Y	2	50001-
	☆	. ARM	1	50001-
24	175-70-22110	.. BRACKET (WELDED)	1	50001-
25	175-70-22130	.. BOSS (WELDED)	1	50001-
	175-70-00593	.. CAP ASS'Y	1	50001-
26	☆	... BRACKET (WELDED)	1	50001-
27	☆	... CAP	1	50001-
28	01010-52095	.. BOLT	4	50001-
29	01643-32060	... WASHER	4	50001-
30	175-70-22160	. JOINT	1	50001-
31	01010-51880	. BOLT	2	50001-
32	01580-01815	. NUT	2	50001-
33	01643-31845	. WASHER	2	50001-
34	150-70-13411	PIN	2	50001-
35	170-70-12240	PIN	2	50001-
36	04050-14025	PIN, COTTER	2	50001-
37	175-70-22141	SHAFT	2	50001-

FIG NO. : T2110-01A1

INDEX	PART NO.	DESCRIPTION	Q'TY	SERIAL NO.
	175-71-00361	SHAFT ASS'Y	2	50001-
38	☆	. SHAFT	1	50001-
39	07020-00000	. FITTING, GREASE	1	50001-
40	195-71-11520	PIN	2	50001-
41	01010-51435	BOLT	2	50001-
42	01643-31445	WASHER	2	50001-

FIG. T2110-01A2 STRAIGHT TILT FRAME (REINFORCED TYPE)

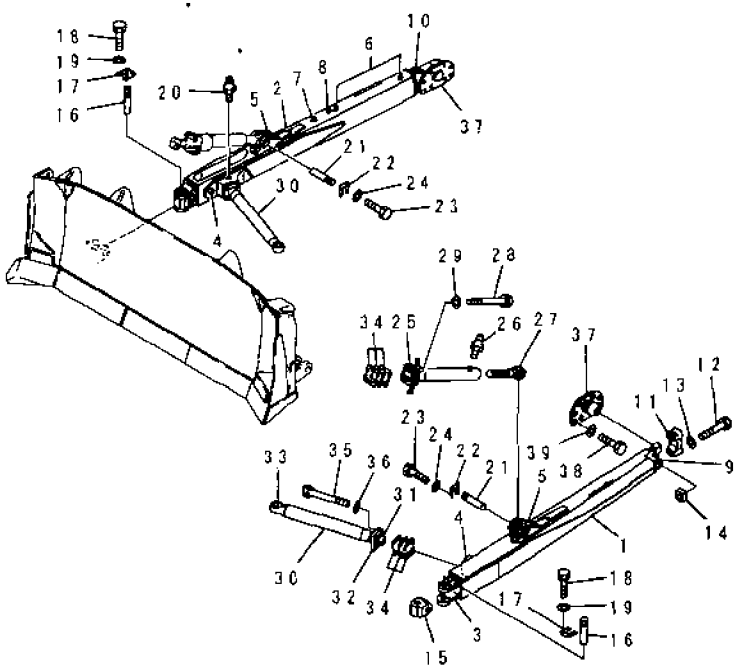

INDEX	PART NO	DESCRIPTION	Q'TY	SERIAL NO
1	175-71-72220	FRAME, L.H.	1	57001-
2	175-71-72230	FRAME, R.H.	1	57001-
3	175-71-21182	.BRACKET (WELDED)	1	57001-
4	175-71-31173	.BRACKET, L.H. (WELDED)	1	57001-
	175-71-31622	.BRACKET, R.H. (WELDED)	1	57001-
5	175-71-31650	.BRACKET, L.H. (WELDED)	1	57001-
	175-71-31660	.BRACKET, R.H. (WELDED)	1	57001-
6	195-71-31660	.SEAT (WELDED)	2	57001-
7	195-71-31670	.SEAT (WELDED)	1	57001-
8	195-71-32160	.SEAT (WELDED)	1	57001-
9	175-71-11272	.BRACKET, L.H. (WELDED)	1	57001-
10	175-71-31311	.BRACKET, R.H. (WELDED)	1	57001-
11	175-71-11482	.CAP	1	57001-
12	175-71-11491	.BOLT	4	57001-
13	01643-32260	.WASHER	4	57001-
14	175-71-11520	.NUT	4	57001-
15	175-71-21261	JOINT	2	57001-
16	175-71-21221	PIN	2	57001-
17	175-71-21230	PLATE, LOCK	2	57001-
18	01010-81440	BOLT	8	57001-
19	01643-31445	WASHER	8	57001-
20	07020-00000	FITTING, GREASE	2	57001-
21	154-71-21290	PIN	2	57001-
22	175-71-21330	PLATE, LOCK	2	57001-
23	01010-81435	BOLT	8	57001-
24	01643-31445	WASHER	8	57001-
	175-71-00233	BRACE ASS'Y	1	57001-
	175-71-00233	BRACE ASS'Y, (FOR STRAIGHT DOZER)	2	57001-
25	175-71-21272	.BRACE	1	57001-
26	07020-00000	.FITTING, GREASE	1	57001-
27	175-71-11281	.SCREW	1	57001-
28	01011-82700	BOLT	8	57001-
29	01643-32780	WASHER	8	57001-
30	175-71-31293	ARM	2	57001-
31	175-71-31562	.BALL (WELDED)	1	57001-
32	175-71-31190	.CAP	1	57001-
33	195-71-22681	.JOINT (WELDED)	1	57001-
34	175-71-00302	SHIM ASS'Y	4	57001-
35	01011-82700	BOLT	8	57001-
36	01643-32780	WASHER	8	57001-
	175-70-23133	TRUNNION	2	57001-
37	175-70-23293	.BALL, STUD (WELDED)	1	57001-

FIG NO. : T2110-01A2

INDEX	PART NO	DESCRIPTION	Q'TY	SERIAL NO.
38	01010-82450	BOLT	16	57001-
39	01643-32460	WASHER	16	57001-

D155A-2A

FIG. T2120-01A0 STRAIGHT TILT BLADE

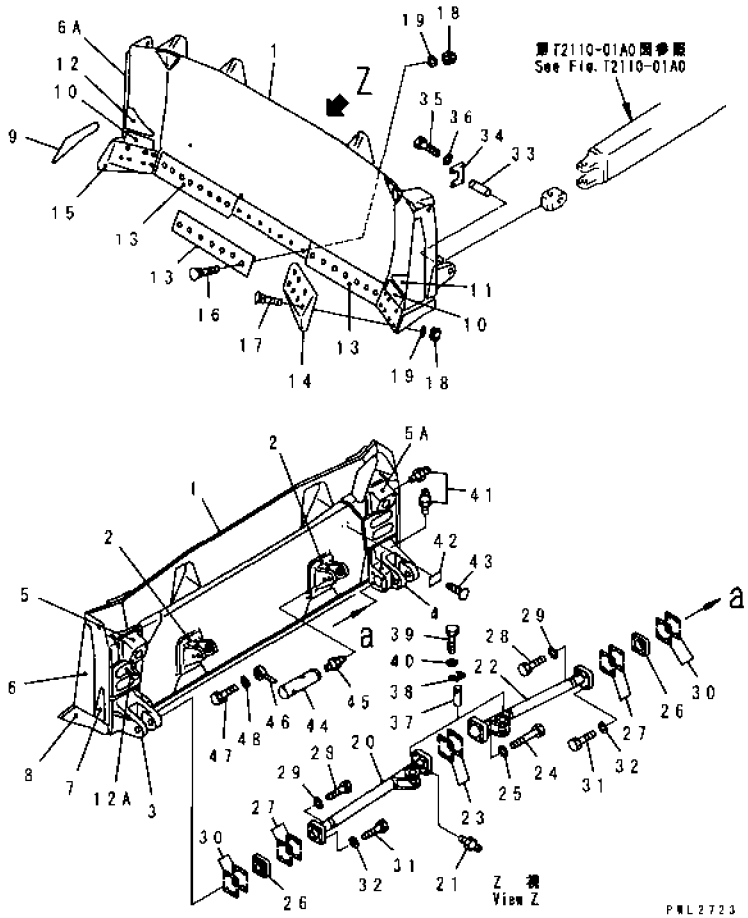

INDEX	PART NO	DESCRIPTION	Q'TY	SERIAL NO
	175-71-31001	BLADE, TILT	1	57001-
1	☆	. BLADE	1	57001-
2	175-71-27843	.. BRACKET (WELDED)	2	57001-
3	175-71-31122	.. BRACKET, L. H. (WELDED)	1	57001-
4	175-71-31132	.. BRACKET, R. H. (WELDED)	1	57001-
5	175-71-31142	. PIVOT (WELDED)	1	57001-
5A	175-71-31780	. PIVOT (WELDED)	1	57001-
6	175-71-31632	.. PLATE (WELDED)	1	57001-
6A	175-71-31790	.. PLATE (WELDED)	1	57001-
7	175-71-31641	.. PLATE (WELDED)	2	57001-
8	175-71-22121	.. PLATE, L. H. (WELDED)	1	57001-
9	175-71-22131	.. PLATE, R. H. (WELDED)	1	57001-
10	175-71-22340	.. PLATE, STOPPER (WELDED)	2	57001-
11	175-71-22350	. PLATE, L. H. (WELDED)	1	57001-
12	175-71-22360	.. PLATE, R. H. (WELDED)	1	57001-
12A	195-71-31540	. HOLDER (WELDED)	1	57001-
13	175-70-26310	EDGE, CUTTING	3	57001-
14	175-71-22272	BIT, END, L. H.	1	57001-
15	175-71-22282	BIT, END, R. H.	1	57001-
16	175-71-11454	BOLT	21	57001-
17	175-71-11463	BOLT	14	57001-
18	175-71-11530	NUT	35	57001-
19	01643-22245	WASHER	35	57001-
20	175-71-31183	ARM, L. H.	1	57001-
21	07020-00000	FITTING, GREASE	1	57001-
22	175-71-31233	ARM, R. H.	1	57001-
23	175-71-00294	SHIM ASS'Y	1	57001-
24	01011-82700	BOLT	4	57001-
25	01643-32780	WASHER	4	57001-
26	175-71-31280	CAP	2	57001-
27	175-71-00302	SHIM ASS'Y	2	57001-
28	01010-81270	BOLT	4	57001-
29	01643-31232	WASHER	4	57001-
30	175-71-00302	SHIM ASS'Y	2	57001-
31	175-71-21351	BOLT	8	57001-
32	01643-32780	WASHER	8	57001-
33	175-71-21221	PIN	2	57001-
34	175-71-21230	PLATE, LOCK	2	57001-
35	01010-81440	BOLT	8	57001-
36	01643-31445	WASHER	8	57001-
37	154-71-21290	PIN	2	57001-
38	175-71-21330	PLATE, LOCK	2	57001-

FIG. T2120-01A1 STRAIGHT TILT BLADE (WITH PUSHER PLATE)

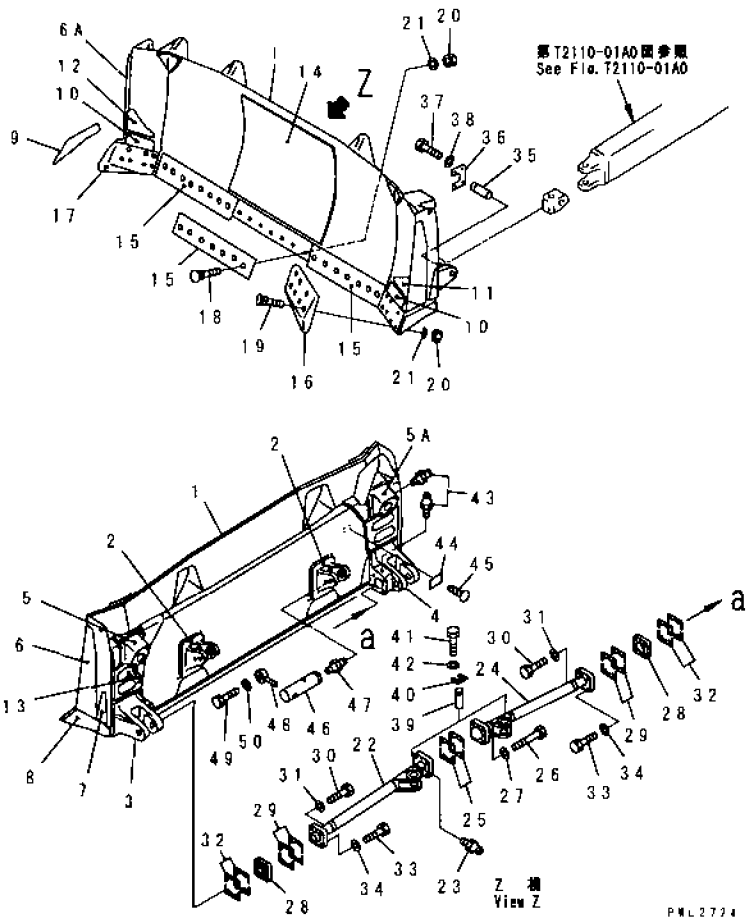

INDEX	PART NO.	DESCRIPTION	Q'TY	SERIAL NO.
	175-937-4214	BLADE ASS'Y, TILT	1	57001-
1	☆	. BLADE	1	57001-
2	175-71-27843	.. BRACKET (WELDED)	2	57001-
3	175-71-31122	.. BRACKET, L.H. (WELDED)	1	57001-
4	175-71-31132	.. BRACKET, R.H. (WELDED)	1	57001-
5	175-71-31142	.. PIVOT (WELDED)	1	57001-
5A	175-71-31780	.. PIVOT (WELDED)	1	57001-
6	175-71-31632	. PLATE (WELDED)	1	57001-
6A	175-71-31790	. PLATE (WELDED)	1	57001-
7	175-71-31641	.. PLATE (WELDED)	2	57001-
8	175-71-22121	.. PLATE, L.H. (WELDED)	1	57001-
9	175-71-22131	.. PLATE, R.H. (WELDED)	1	57001-
10	175-71-22340	.. PLATE, STOPPER (WELDED)	2	57001-
11	175-71-22350	.. PLATE, L.H. (WELDED)	1	57001-
12	175-71-22360	.. PLATE, R.H. (WELDED)	1	57001-
13	195-71-31540	.. HOLDER (WELDED)	1	57001-
14	175-937-4220	. PLATE (WELDED)	1	57001-
15	175-70-26310	EDGE, CUTTING	3	57001-
16	175-71-22272	BIT, END, L.H.	1	57001-
17	175-71-22282	BIT, END, R.H.	1	57001-
18	175-71-11454	BOLT	21	57001-
19	175-71-11463	BOLT	14	57001-
20	175-71-11530	NUT	35	57001-
21	01643-22245	WASHER	35	57001-
22	175-71-31183	ARM, L.H.	1	57001-
23	07020-00000	FITTING, GREASE	1	57001-
24	175-71-31233	ARM, R.H.	1	57001-
25	175-71-00294	SHIM ASS'Y	1	57001-
26	01011-82700	BOLT	4	57001-
27	01643-32780	WASHER	4	57001-
28	175-71-31280	CAP	2	57001-
29	175-71-00302	SHIM ASS'Y	2	57001-
30	01010-81270	BOLT	4	57001-
31	01643-51232	WASHER	4	57001-
32	175-71-00302	SHIM ASS'Y	2	57001-
33	175-71-21351	BOLT	4	57001-
34	01643-32780	WASHER	4	57001-
35	175-71-21221	PIN	2	57001-
36	175-71-21230	PLATE, LOCK	2	57001-
37	01010-81440	BOLT	8	57001-
38	01643-31445	WASHER	8	57001-
39	154-71-21290	PIN	2	57001-

FIG NO. : T2120-01A0

PART NO.	DESCRIPTION	Q'TY	SERIAL NO.
010-8 14	BOLT	8	57001-
643-3 14	WASHER	8	57001-
020-0 00	FITTING, GREASE	4	57001-
601-0 00	PLATE, NAME	1	57001-
418-1 30	SCREW	4	57001-
7-71- 00	SHAFT ASS'Y	2	57001-
	. SHAFT	1	57001-
120-0 00	. FITTING, GREASE	1	57001-
-71- 11	PIN	2	57001-
10-8 14	BOLT	2	57001-
43-3 14	WASHER	2	57001-

D155A-2A

FIG NO. : T2120-01A1

INDEX	PART NO	DESCRIPTION	Q'TY	SERIAL NO.
40	175-71-21330	PLATE, LOCK	2	57001-
41	01010-81435	BOLT	8	57001-
42	01643-31445	WASHER	8	57001-
43	07020-00000	FITTING, GREASE	4	57001-
44	09601-00835	PLATE, NAME	1	57001-
45	04418-13060	SCREW	4	57001-
	175-71-00361	SHAFT ASS'Y	2	57001-
46	☆	. SHAFT	1	57001-
47	07020-00000	. FITTING, GREASE	1	57001-
48	195-71-11520	PIN	2	57001-
49	01010-81435	BOLT	2	57001-
50	01643-31445	WASHER	2	57001-

D155A-2A

FIG. T2160-01A0 BLADE TILT CYLINDER PIPING

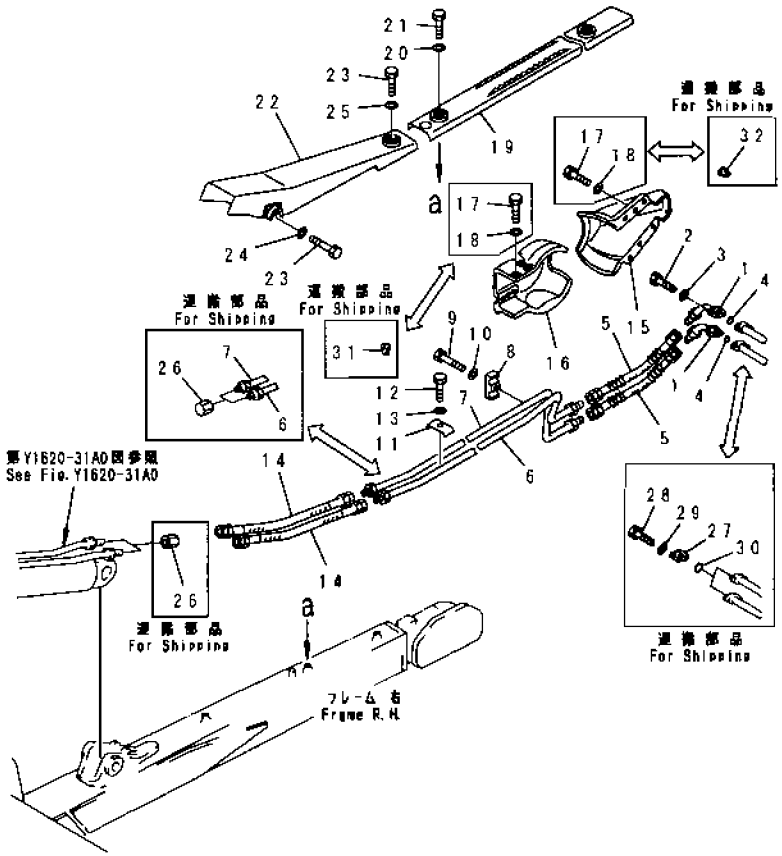

INDEX	PART NO.	DESCRIPTION	Q'TY	SERIAL NO
1	175-71-31430	TUBE	2	57001-
2	01010-81240	BOLT	4	57001-
3	01643-31232	WASHER	4	57001-
4	07000-13022	O-RING	2	57001-
5	195-71-32330	HOSE	2	57001-
	07113-A0506	HOSE, (FOR SLAG HANDLING)	2	57001-
6	175-71-31441	TUBE	1	57001-
7	175-71-31451	TUBE	1	57001-
8	175-61-18410	CLAMP	1	57001-
9	01010-81255	BOLT	1	57001-
10	01643-51232	WASHER	1	57001-
11	154-71-31410	CLAMP	1	57001-
12	01010-81425	BOLT	1	57001-
13	01643-31445	WASHER	1	57001-
14	07113-00506	HOSE	2	57001-
	07113-A0506	HOSE, (FOR SLAG HANDLING)	2	57001-
15	175-71-31331	COVER	1	57001-
16	175-71-31321	COVER	1	57001-
17	01010-82050	BOLT	13	57001-
18	01643-32060	WASHER	13	57001-
19	175-71-33210	COVER	1	57001-
20	195-71-32220	WASHER	2	57001-
21	01010-81435	BOLT	2	57001-
22	175-71-31353	COVER	1	57001-
23	01010-81435	BOLT	3	57001-
24	195-71-32220	WASHER	1	57001-
25	01643-31445	WASHER	2	57001-
	175-71-X1400	BLANK PARTS GROUP	1	57001-
26	195-901-2280	NUT	8	57001-
27	175-71-31480	FLANGE	2	57001-
28	01010-81235	BOLT	4	57001-
29	01643-51232	WASHER	4	57001-
30	07000-13022	O-RING	2	57001-
31	07049-02025	PLUG	7	57001-
32	07049-01418	PLUG	6	57001-

FIG. T2410-01A0 RIPPER SHANK、BEAM AND LINK (MULTI SHANK RIPPER)

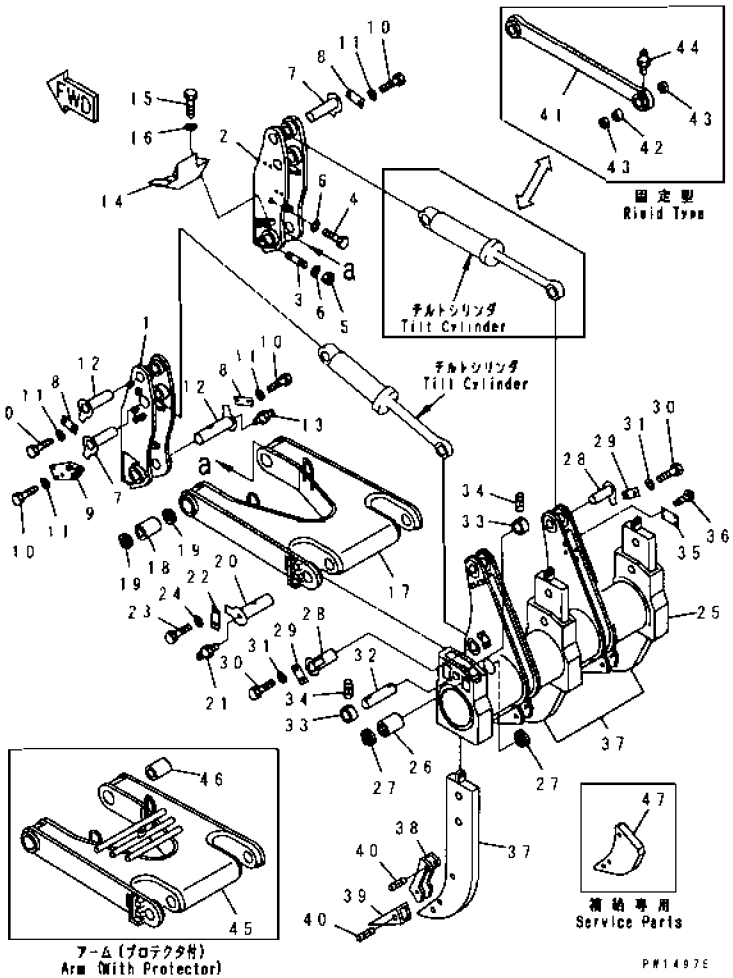

INDEX	PART NO.	DESCRIPTION	Q'TY	SERIAL NO.
1	175-78-61113	BRACKET, L.H.	1	57001-
2	175-78-61124	BRACKET, R.H.	1	57001-
3	195-78-11270	STUD	4	57001-
4	01018-33990	BOLT	10	57001-
5	195-69-11131	NUT	4	57001-
6	195-69-11140	WASHER	14	57001-
7	175-78-61151	PIN	4	57001-
8	195-78-21171	PLATE	5	57001-
9	175-78-61371	PLATE	1	57001-
10	01010-82040	BOLT	13	57001-
11	01643-32060	WASHER	13	57001-
12	175-78-61161	PIN	2	57001-
13	07020-00000	FITTING, GREASE	2	57001-
14	175-78-61320	GUARD	1	57001-
15	01010-81640	BOLT	4	57001-
16	01643-31645	WASHER	4	57001-
	175-78-00091	ARM ASS'Y	1	57001-
17	☆	. ARM	1	57001-
18	175-78-61261	. BUSHING	2	57001-
19	175-78-61281	SEAL, DUST	4	57001-
20	175-78-61171	PIN	2	57001-
21	07020-00000	FITTING, GREASE	2	57001-
22	195-78-21171	PLATE	2	57001-
23	01010-82040	BOLT	4	57001-
24	01643-32060	WASHER	4	57001-
	175-78-00081	BEAM ASS'Y	1	57001-
25	☆	. BEAM	1	57001-
26	175-78-61271	. BUSHING	2	57001-
27	175-78-61281	SEAL, DUST	4	57001-
28	175-78-61182	PIN	4	57001-
29	195-78-21171	PLATE	4	57001-
30	01010-82040	BOLT	8	57001-
31	01643-32060	WASHER	8	57001-
32	175-78-61331	PIN	3	57001-
33	175-78-61341	COLLAR	6	57001-
34	09244-02508	PIN	6	57001-
35	09601-00835	PLATE, NAME	1	57001-
36	04418-13060	SCREW	4	57001-
37	175-78-21615	SHANK	3	57001-
38	195-78-21320	PROTECTOR	3	57001-
39	175-78-31230	POINT	3	57001-
40	09244-02508	PIN	9	57001-

FIG. T2410-01A0 RIPPER SHANK、BEAM AND LINK (MULTI SHANK RIPPER)

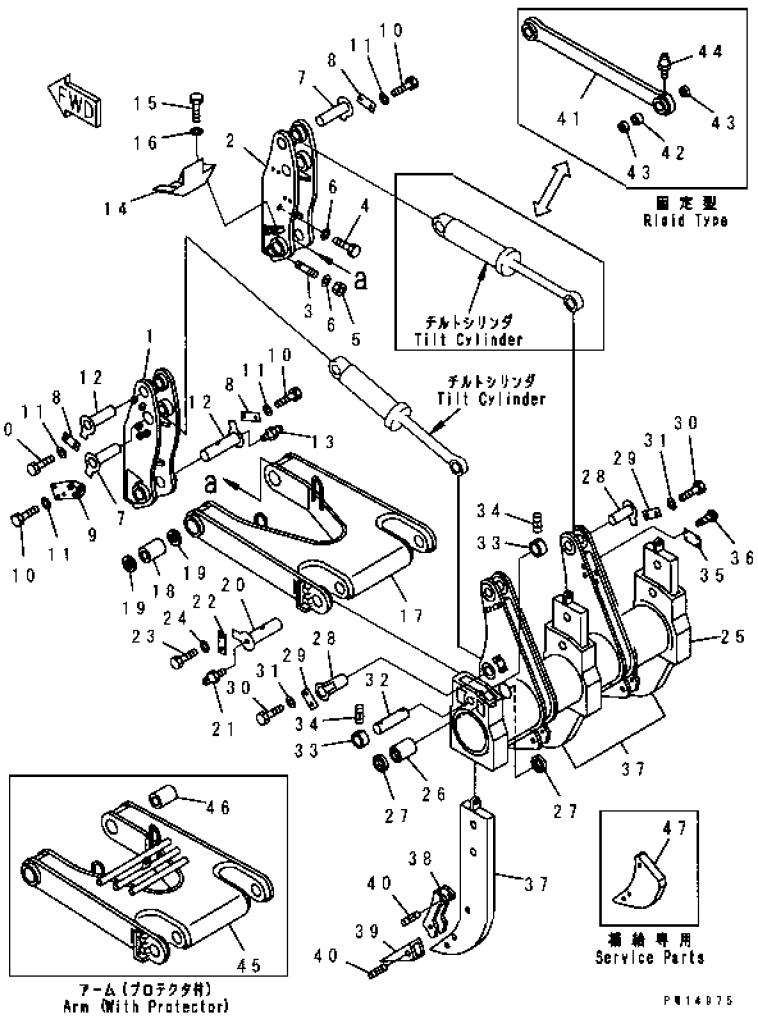

INDEX	PART NO	DESCRIPTION	Q TY	SERIAL NO.
41	175-78-61351	LINK	2	57001-
42	175-78-61362	BUSHING	4	57001-
43	175-78-61281	SEAL	8	57001-
44	07020-00000	FITTING, GREASE	4	57001-
	175-78-00110	ARM ASS'Y, (WITH PROTECTOR)	1	57001-
45	☆	.ARM	1	57001-
46	175-78-61261	.BUSHING	2	57001-
47	175-78-21693	ADAPTER, SERVICE PARTS	3	57001-

FIG. T2410-01A1 RIPPER SHANK、BEEM AND LINK (GIANT RIPPER)

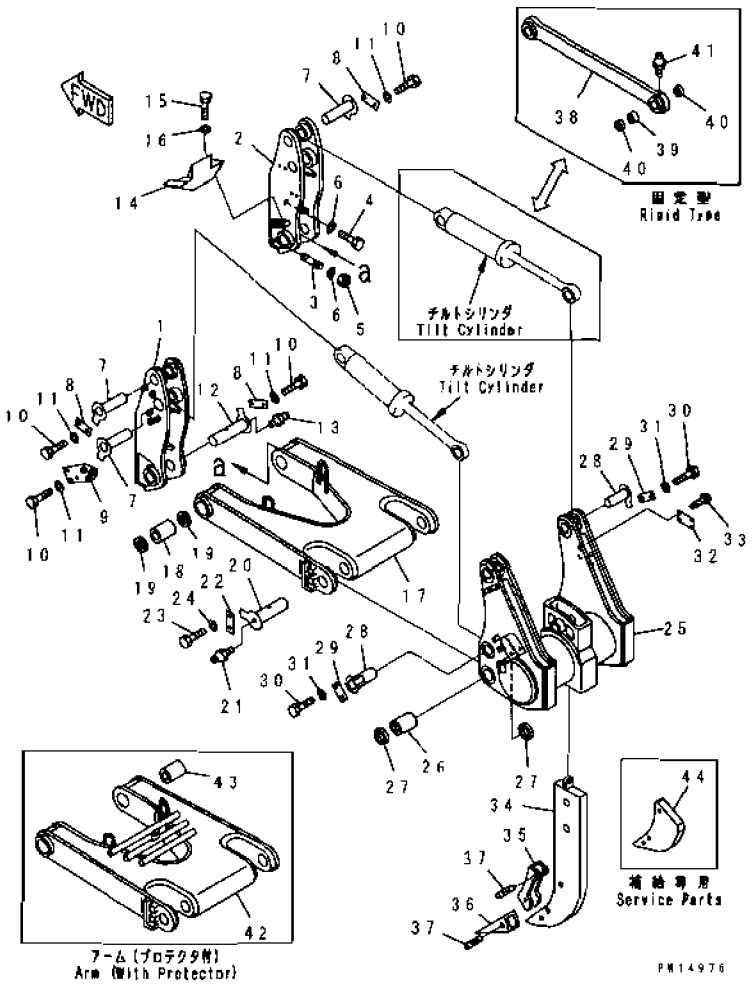

INDEX	PART NO	DESCRIPTION	Q TY.	SERIAL NO
1	175-78-61113	BRACKET, L.H.	1	57001-
2	175-78-61124	BRACKET, R.H.	1	57001-
3	195-78-11270	STUD	4	57001-
4	01018-33990	BOLT	10	57001-
5	195-69-11131	NUT	4	57001-
6	195-69-11140	WASHER	14	57001-
7	175-78-61151	PIN	4	57001-
8	195-78-21171	PLATE	5	57001-
9	175-78-61371	PLATE	1	57001-
10	01010-82040	BOLT	13	57001-
11	01643-32060	WASHER	13	57001-
12	175-78-61161	PIN	2	57001-
13	07020-00000	FITTING, GREASE	2	57001-
14	175-78-61320	GUARD	1	57001-
15	01010-81640	BOLT	4	57001-
16	01643-31645	WASHER	4	57001-
	175-78-00091	ARM ASS'Y	1	57001-
17	☆	. ARM	1	57001-
18	175-78-61261	. BUSHING	2	57001-
19	175-78-61281	SEAL, DUST	4	57001-
20	175-78-61171	PIN	2	57001-
21	07020-00000	FITTING, GREASE	2	57001-
22	195-78-21171	PLATE	2	57001-
23	01010-82040	BOLT	4	57001-
24	01643-32060	WASHER	4	57001-
	175-79-00082	BEAM ASS'Y	1	57001-
25	☆	. BEAM	1	57001-
26	175-78-61271	. BUSHING	2	57001-
27	175-78-61281	SEAL, DUST	4	57001-
28	175-78-61182	PIN	4	57001-
29	195-78-21171	PLATE	4	57001-
30	01010-82040	BOLT	8	57001-
31	01643-32060	WASHER	8	57001-
32	09601-00835	PLATE, NAME	1	57001-
33	04418-13060	SCREW	4	57001-
34	175-79-32131	SHANK	1	57001-
	175-79-32151	SHANK, DEEP TYPE	1	57001-
35	195-78-21320	PROTECTOR	1	57001-
36	175-78-31230	POINT	1	57001-
37	09244-02508	PIN	3	57001-
38	175-78-61351	LINK	2	57001-
39	175-78-61362	BUSHING	4	57001-

FIG. T2410-01A1 RIPPER SHANK、BEEM AND LINK (GIANT RIPPER)

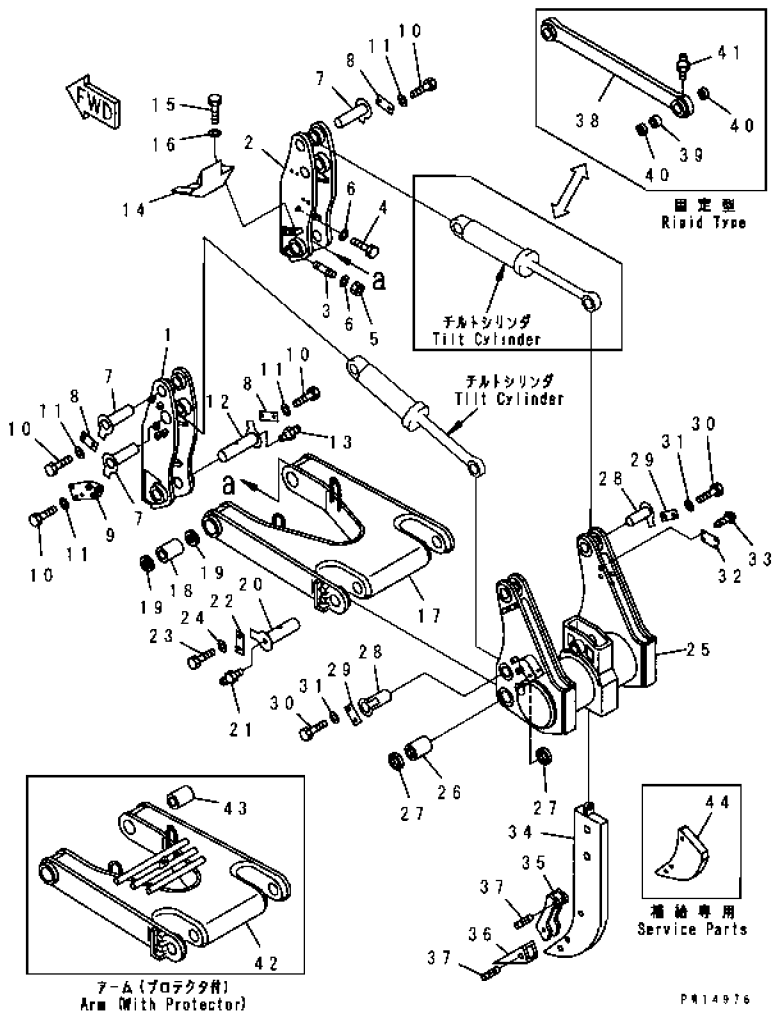

INDEX	PART NO	DESCRIPTION	Q'TY	SERIAL NO
40	175-78-61281	SEAL	8	57001-
41	07020-00000	FITTING, GREASE	4	57001-
	175-78-00110	ARM ASS'Y, (WITH PROTECTOR)	1	57001-
42	☆	. ARM	1	57001-
43	175-78-61261	. BUSHING	2	57001-
44	175-78-21693	ADAPTER, SERVICE PARTS	1	57001-

FIG. T2440-01A0 RIPPER MAIN PIPING (FOR VARIABLE TYPE RIPPER)

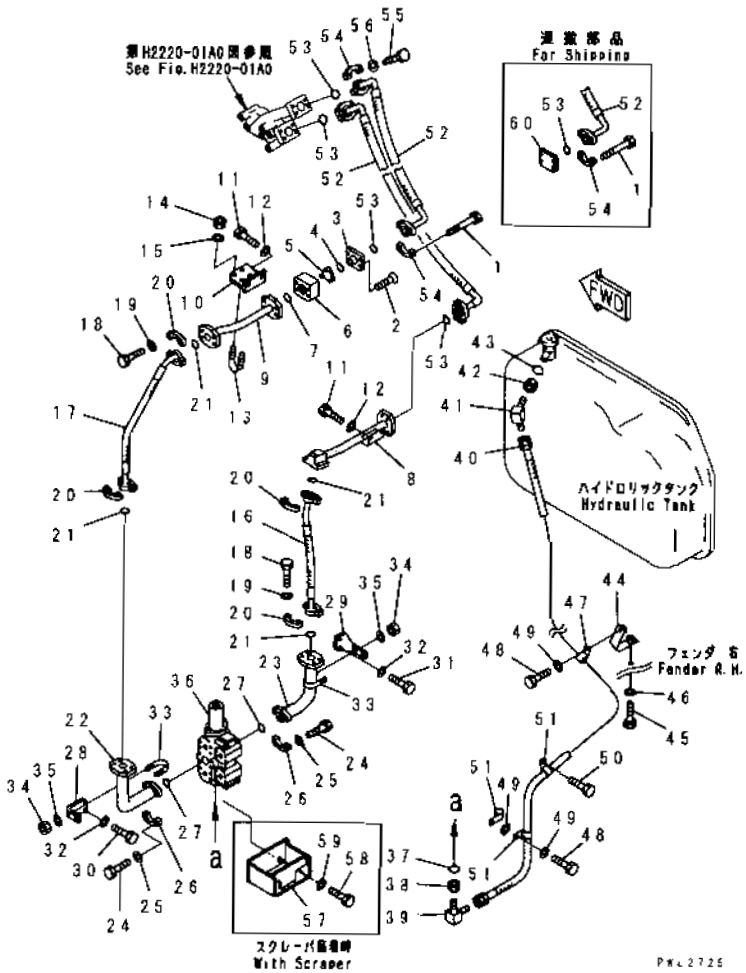

INDEX	PART NO	DESCRIPTION	Q'TY	SERIAL NO
1	01010-81295	BOLT	4	57001-
	175-78-62101	VALVE ASS'Y	1	57001-
2	01224-40620	.SCREW	2	57001-
3	175-78-62140	.FLANGE	1	57001-
4	07000-12055	.O-RING	1	57001-
5	175-78-62151	.VALVE	1	57001-
6	175-78-62260	FLANGE	1	57001-
7	07000-13048	O-RING	1	57001-
8	175-78-62163	TUBE	1	57001-
9	175-78-62173	TUBE	1	57001-
10	175-78-62126	BRACKET	1	57001-
11	01010-81235	BOLT	4	57001-
12	01643-31232	WASHER	4	57001-
13	07283-24354	CLIP	2	57001-
14	01599-01011	NUT	4	57001-
15	01643-31032	WASHER	4	57001-
16	07114-01406	HOSE	1	57001-
	07115-A1406	HOSE, (FOR SLAG HANDLING)	1	57001-
17	07114-01407	HOSE	1	57001-
	07115-A1407	HOSE, (FOR SLAG HANDLING)	1	57001-
18	07372-21240	BOLT	16	57001-
19	01643-51232	WASHER	16	57001-
20	07371-31465	FLANGE, SPLIT	8	57001-
21	07000-13048	O-RING	4	57001-
22	175-78-63110	TUBE, L.H.	1	57001-
23	175-78-63250	TUBE, R.H.	1	57001-
24	07372-21240	BOLT	8	57001-
25	01643-51232	WASHER	8	57001-
26	07371-31465	FLANGE, SPLIT	4	57001-
27	07000-13048	O-RING	2	57001-
28	175-78-63230	BRACKET, L.H.	1	57001-
29	175-78-63241	BRACKET, R.H.	1	57001-
30	01010-81235	BOLT	2	57001-
31	01010-81240	BOLT	2	57001-
32	01643-31232	WASHER	4	57001-
33	07283-24346	CLIP	2	57001-
34	01599-01011	NUT	4	57001-
35	01643-31032	WASHER	4	57001-
36	(700-61-13006)	VALVE ASS'Y	1	57001-
37	07002-01623	O-RING	1	57001-
38	01583-11610	NUT	1	57001-
39	175-78-32170	ELBOW	1	57001-

FIG. T2440-01A0 RIPPER MAIN PIPING (FOR VARIABLE TYPE RIPPER)

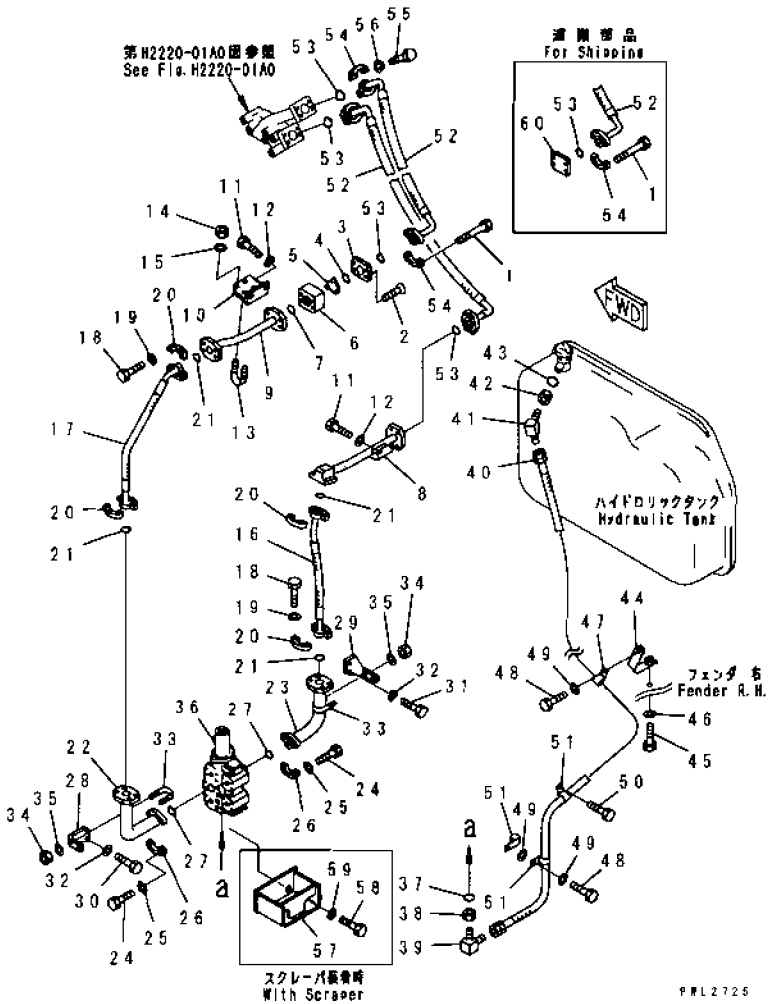

INDEX	PART NO.	DESCRIPTION	Q'TY	SERIAL NO
40	07113-00325	HOSE	1	57001-
	07113-A0325	HOSE, (FOR SLAG HANDLING)	1	57001-
41	07236-10315	ELBOW	1	57001-
42	07239-22009	NUT	1	57001-
43	07002-02034	O-RING	1	57001-
44	175-78-65120	BRACKET	1	57001-
45	01010-81030	BOLT	2	57001-
46	01643-31032	WASHER	2	57001-
47	195-79-12181	CLIP	1	57001-
	195-79-48120	CLIP, (FOR SLAG HANDLING)	1	57001-
48	01010-81025	BOLT	2	57001-
49	01643-31032	WASHER	3	57001-
50	01010-81235	BOLT	1	57001-
51	195-78-22471	CLIP	3	57001-
	195-78-48130	CLIP, (FOR SLAG HANDLING)	3	57001-
52	175-78-62480	HOSE	2	57001-
53	07000-13048	O-RING	4	57001-
54	07371-31465	FLANGE, SPLIT	8	57001-
55	07372-21240	BOLT	12	57001-
56	01643-51232	WASHER	12	57001-
57	175-54-47330	GUARD	1	57001-
58	01010-82045	BOLT	2	57001-
59	01643-32060	WASHER	2	57001-
60	07379-01460	FLANGE, (FOR SHIPPING)	2	57001-

FIG. T2440-01A1 RIPPER MAIN AND CYLINDER PIPING (FOR FIX TYPE RIPPER)

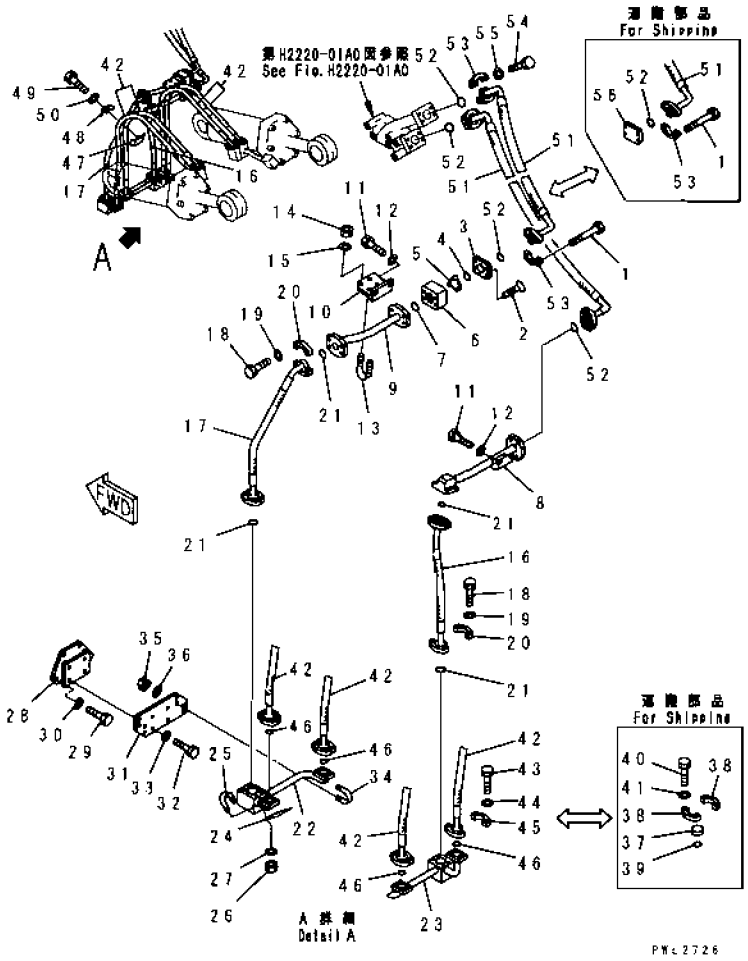

INDEX	PART NO	DESCRIPTION	Q'TY	SERIAL NO
1	01010-81295	BOLT	4	57001-
	175-78-62101	VALVE ASS'Y	1	57001-
2	01224-40620	.SCREW	2	57001-
3	175-78-62140	.FLANGE	1	57001-
4	07000-12055	.O-RING	1	57001-
5	175-78-62151	.VALVE	1	57001-
6	175-78-62260	.FLANGE	1	57001-
7	07000-13048	O-RING	1	57001-
8	175-78-62163	TUBE	1	57001-
9	175-78-62173	TUBE	1	57001-
10	175-78-62126	BRACKET	1	57001-
11	01010-81235	BOLT	4	57001-
12	01643-31232	WASHER	4	57001-
13	07283-24354	CLIP	2	57001-
14	01599-01011	NUT	4	57001-
15	01643-31032	WASHER	4	57001-
16	07114-01406	HOSE	1	57001-
	07115-A1406	HOSE, (FOR SLAG HANDLING)	1	57001-
17	07114-01407	HOSE	1	57001-
	07115-A1407	HOSE, (FOR SLAG HANDLING)	1	57001-
18	07372-21240	BOLT	16	57001-
19	01643-51232	WASHER	16	57001-
20	07371-31465	FLANGE, SPLIT	8	57001-
21	07000-13048	O-RING	4	57001-
22	175-78-62191	TUBE	1	57001-
23	175-78-62211	TUBE	1	57001-
24	175-78-62250	BOLT	1	57001-
25	07283-23442	CLIP	2	57001-
26	01599-01011	NUT	4	57001-
27	01643-31032	WASHER	4	57001-
28	175-78-62320	BRACKET	1	57001-
29	01010-82050	BOLT	4	57001-
30	01643-31232	WASHER	4	57001-
31	175-78-62330	PLATE	1	57001-
32	01010-51235	BOLT	4	57001-
33	01643-31232	WASHER	4	57001-
34	07283-23442	CLIP	4	57001-
35	01599-01011	NUT	8	57001-
36	01643-31032	WASHER	8	57001-
37	07378-11000	HEAD	4	57001-
38	07371-31044	FLANGE	8	57001-
39	07000-13032	O-RING	4	57001-

FIG. T2440-01A1 RIPPER MAIN AND CYLINDER PIPING (FOR FIX TYPE RIPPER)

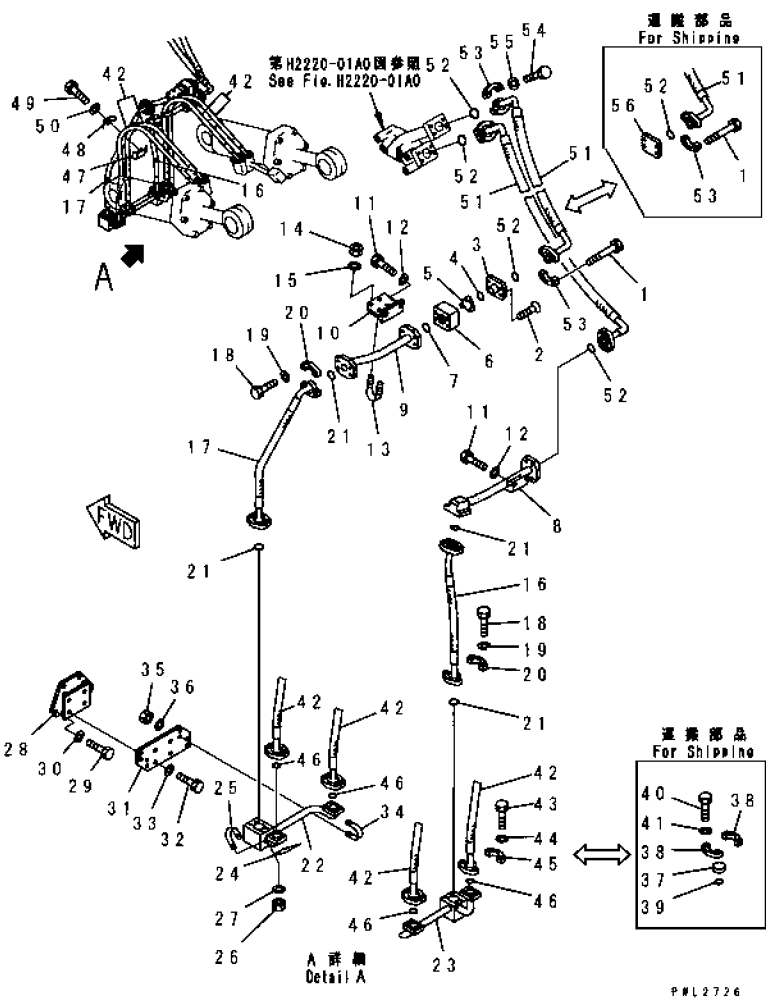

INDEX	PART NO	DESCRIPTION	Q'TY	SERIAL NO
40	07372-21035	BOLT	16	57001-
41	01643-51032	WASHER	16	57001-
42	07114-01015	HOSE	4	57001-
	07115-A1015	HOSE, (FOR SLAG HANDLING)	4	57001-
43	07372-21035	BOLT	32	57001-
44	01643-51032	WASHER	32	57001-
45	07371-31049	FLANGE, SPLIT	16	57001-
46	07000-13032	O-RING	8	57001-
47	195-78-22320	CLAMP	2	57001-
	175-878-2160	CLAMP, (FOR SLAG HANDLING)	2	57001-
48	195-78-22330	CLAMP	2	57001-
	175-878-2131	CLAMP, (FOR SLAG HANDLING)	2	57001-
49	01010-81265	BOLT	2	57001-
	01010-81270	BOLT, (FOR SLAG HANDLING)	2	57001-
50	01643-51232	WASHER	2	57001-
51	175-78-62480	HOSE	2	57001-
52	07000-13048	O-RING	4	57001-
53	07371-31465	FLANGE, SPLIT	8	57001-
54	07372-01240	BOLT	8	57001-
55	01643-51232	WASHER	8	57001-
56	07379-01460	FLANGE, (FOR SHIPPING)	2	57001-

FIG. T2440-03A0 RIPPER ELECTRICAL SYSTEM

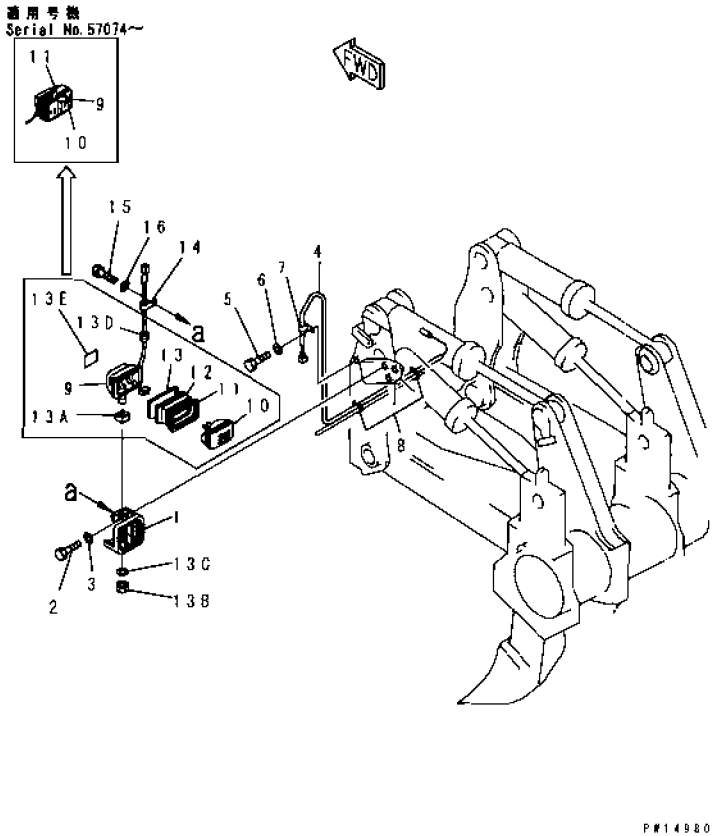

INDEX	PART NO	DESCRIPTION	Q'TY	SERIAL NO
G-1	(⊙175-78-X1701)	ELECTRICAL GROUP	1	57001-
1	195-06-27250	COVER	1	57001-
2	01010-81435	BOLT	3	57001-
3	01643-31445	WASHER	3	57001-
4	175-06-61270	CABLE	1	57001-
5	01010-81020	BOLT	1	57001-
6	01643-31032	WASHER	1	57001-
7	08036-01814	CLIP	1	57001-
8	08034-00414	BAND	2	57001-
9	17A-06-17940	LAMP ASS'Y	1	57074-
	23S-05-28210	LAMP ASS'Y	1	57001-57073
9	203-06-56160	.HOUSING	1	57001-57073
10	17A-06-17970	.BULB, 70W	1	57074-
	22W-06-12170	.BULB, 24V	1	57001-57073
11	17A-06-17980	.SLEEVE	1	57074-
	203-06-56180	.RING	1	57001-57073
12	22W-06-12290	.CUSHION	1	57001-57073
13	203-06-56190	.RING	1	57001-57073
13A	22W-06-12160	.SEAT	1	57001-57073
13B	01582-11411	.NUT	1	57001-57073
13C	01643-31445	.WASHER	1	57001-57073
13D	09415-01008	.CAP	1	57001-57073
13E	23S-05-28220	.PLATE, NAME	1	57001-57073
14	08036-11214	CLIP	1	57001-
15	01010-81020	BOLT	1	57001-
16	01643-31032	WASHER	1	57001-

FIG. T2810-01A0 DRAWBAR

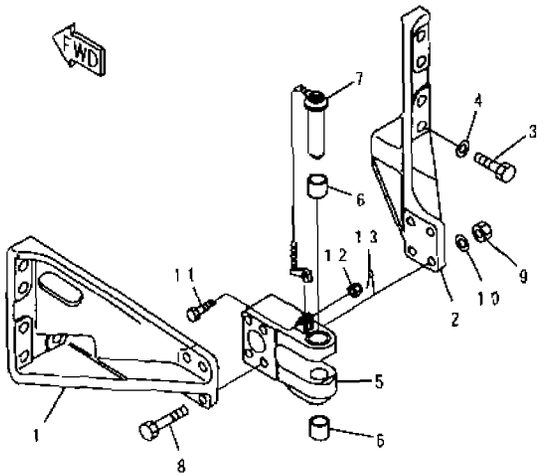

PVL5249

INDEX	PART NO.	DESCRIPTION	Q'TY	SERIAL NO.
1	175-69-21111	BRACKET, L H.	1	57001-
2	175-69-21121	BRACKET, R. H.	1	57001-
3	01018-33990	BOLT	10	57001-
4	195-69-11140	WASHER	10	57001-
	175-69-00012	DRAWBAR ASS'Y	1	57001-
5	175-69-21212	. DRAWBAR	1	57001-
6	195-69-11230	BUSHING	2	57001-
7	195-69-11226	PIN ASS'Y	1	57001-
	195-69-11280	. PIN	1	57001-
	09249-10016	. LATCH	1	57001-
8	170-69-11143	BOLT	4	57001-
9	01580-03326	NUT	4	57001-
10	01643-33380	WASHER	4	57001-
11	01052-51675	BOLT	1	57001-
12	01592-31619	NUT	1	57001-
13	04050-14030	PIN	1	57001-

MARKS AND PLATES

FIG. U0100-01A2 MARKS AND PLATES (ENGLISH)

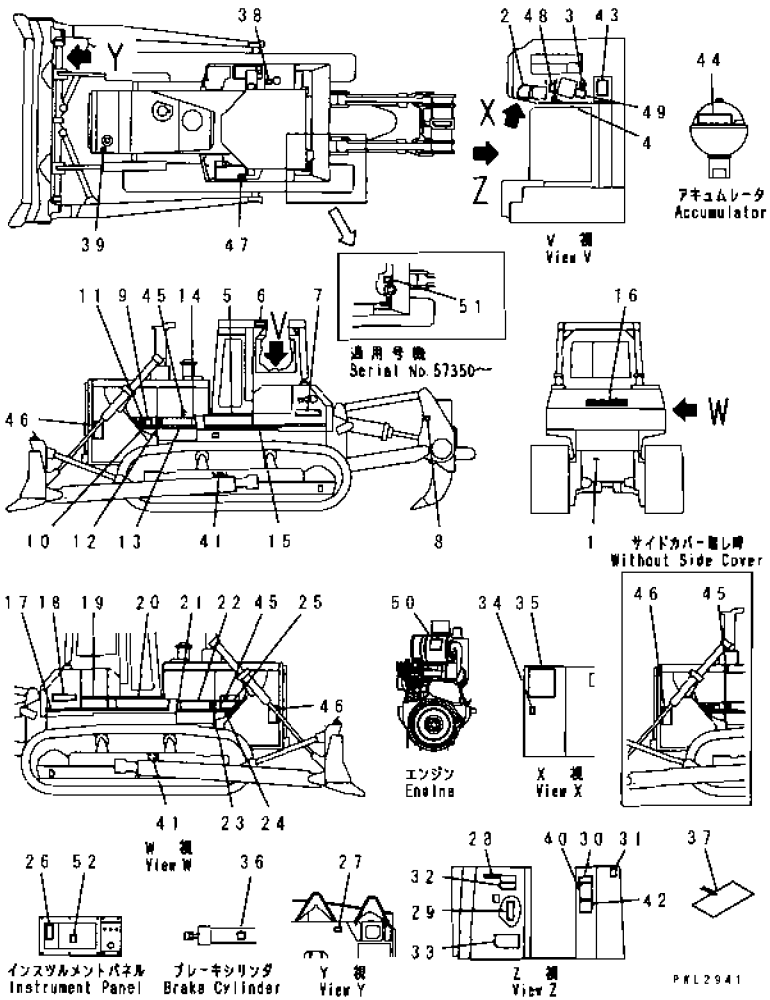

INDEX	PART NO	DESCRIPTION	Q'TY	SERIAL NO.
1	09690-M0063	PLATE, MARK	1	57001-
2	195-98-21140	PLATE, OPERATING, (WITH TILT BLADE)	1	57001-
	09670-00001	PLATE, OPERATING, (WITHOUT TILT BLADE)	1	57001-
3	17M-98-21510	PLATE, OPERATING, PIN PULLER	1	57001-
4	195-98-21190	PLATE, OPERATING, HORN SWITCH	1	57001-
5	175-98-41131	STRIPE, L.H.	1	57001-
6	09620-30200	PLATE, NAME, ROPS	1	57001-
	04418-13060	SCREW	4	57001-
7	175-98-41470	PLATE, MARK	1	57001-
8	09601-60000	PLATE, NAME, RIPPER	1	57001-
	04418-13060	SCREW	4	57001-
9	175-98-41850	STRIPE, L.H.	1	57001-
10	175-98-71870	STRIPE, L.H.	1	57001-
11	195-98-24390	STRIPE	1	57001-
12	175-98-41221	STRIPE	1	57001-
13	175-98-41182	PLATE, MARK	1	57001-
14	175-98-41191	STRIPE, L.H.	1	57001-
15	175-98-41111	STRIPE	1	57001-
16	09690-C0800	PLATE, MARK	1	57001-
17	175-98-41121	STRIPE	1	57001-
18	175-98-41470	PLATE, MARK	1	57001-
19	175-98-41152	PLATE, MARK, R.H.	1	57001-
20	175-98-41162	STRIPE, R.H.	1	57001-
21	175-98-71210	STRIPE, R.H.	1	57001-
22	175-98-71180	PLATE, MARK	1	57001-
23	175-98-71220	STRIPE	1	57001-
24	175-98-71860	STRIPE, R.H.	1	57001-
25	175-98-71880	STRIPE, R.H.	1	57001-
26	195-98-23320	PLATE, MONITOR PANEL	1	57001-
27	09601-60000	PLATE, NAME, BLADE	1	57001-
	04418-13060	SCREW	4	57001-
28	195-98-13810	PLATE, CAUTION, BRAKE ASSISTOR	1	57001-
29	175-98-71390	PLATE, FUSE	1	57001-
30	175-900-2350	PLATE, CAUTION, TRAVELING ON SLOPE	1	57001-
31	09685-00002	PLATE, OPERATING, LOCK LEVER	1	57001-
32	09649-03002	PLATE, INSTRUCTION, ENGINE STOP	1	57001-
33	09602-10000	PLATE, NAME, MACHINE	1	57001-
	04418-13060	SCREW	4	57001-
34	09685-00001	PLATE, OPERATING, LOCK LEVER	1	57001-
35	175-98-71380	PLATE, CHART	1	57001-
36	07843-30064	PLATE, CAUTION, (WITH BRAKE ASSISTOR)	1	57001-
37	09963-A1640	TAG	1	57001-

FIG NO. : U0100-01A2

INDEX	PART NO	DESCRIPTION	Q'TY	SERIAL NO.
38	09653-A0481	PLATE, SAFETY	1	57001-
39	09653-A0481	PLATE, SAFETY	1	57001-
40	09654-B0641	PLATE, SAFETY	1	57001-
41	09657-A0881	PLATE, SAFETY	2	57001-
42	09651-A0641	PLATE, SAFETY	1	57001-
43	09802-B0750	PLATE, SAFETY	1	57001-
44	09659-A057B	PLATE, SAFETY	1	57001-
45	09667-A0481	PLATE, SAFETY	2	57001-
46	09806-B1683	PLATE, SAFETY	2	57001-
47	09808-A0881	PLATE, SAFETY	2	57001-
48	17M-98-21520	PLATE, OPERATING	1	57001-
49	175-98-41270	PLATE, OPERATING, (VARIABLE TYPE RIPPER)	1	57001-
	09671-00001	PLATE, OPERATING, (RIGID TYPE RIPPER)	1	57001-
50	09637-30163	PLATE, INSTRUCTION	1	57001-
51	09669-0000E	PLATE, CAUTION, FUEL	1	57350-
52	175-98-51120	PLATE, DUST INDICATOR	1	57285-

FIG. U0100-01A3 MARKS AND PLATES (ENGLISH) (CHARACTOR)

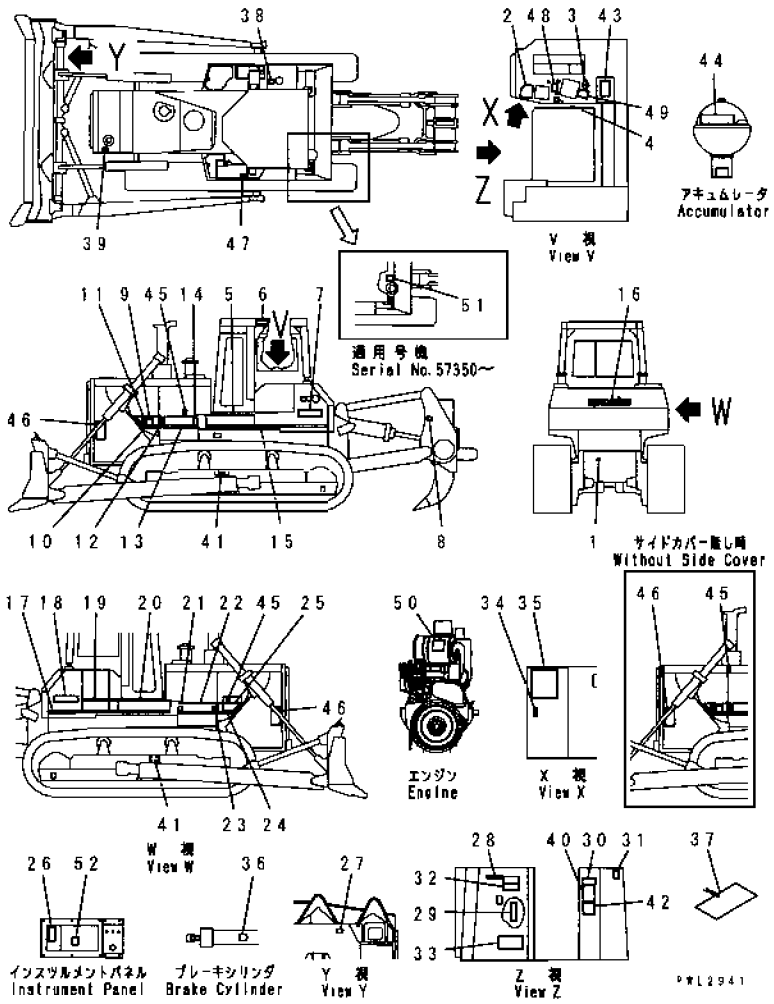

INDEX	PART NO	DESCRIPTION	Q'TY	SERIAL NO
1	09690-M0063	PLATE, MARK	1	57001-
2	195-98-21140	PLATE, OPERATING, (WITH TILT BLADE)	1	57001-
	09670-00001	PLATE, OPERATING, (WITHOUT TILT BLADE)	1	57001-
3	17M-98-21510	PLATE, OPERATING, PIN PULLER	1	57001-
4	195-98-21190	PLATE, OPERATING, HORN SWITCH	1	57001-
5	175-98-41131	STRIPE, L.H.	1	57001-
6	09620-30200	PLATE, NAME, ROPS	1	57001-
	04418-13060	SCREW	4	57001-
7	175-98-41470	PLATE, MARK	1	57001-
8	09601-60000	PLATE, NAME, RIPPER	1	57001-
	04418-13060	SCREW	4	57001-
9	175-98-41850	STRIPE, L.H.	1	57001-
10	175-98-71870	STRIPE, L.H.	1	57001-
11	195-98-24390	STRIPE	1	57001-
12	175-98-41221	STRIPE	1	57001-
13	175-98-41182	PLATE, MARK	1	57001-
14	175-98-41191	STRIPE, L H	1	57001-
15	175-98-41111	STRIPE	1	57001-
16	09690-C0800	PLATE, MARK	1	57001-
17	175-98-41121	STRIPE	1	57001-
18	175-98-41470	PLATE, MARK	1	57001-
19	175-98-41152	PLATE, MARK, R.H.	1	57001-
20	175-98-41162	STRIPE, R H	1	57001-
21	175-98-71210	STRIPE, R.H.	1	57001-
22	175-98-71180	PLATE, MARK	1	57001-
23	175-98-71220	STRIPE	1	57001-
24	175-98-71860	STRIPE, R.H.	1	57001-
25	175-98-71880	STRIPE, R.H.	1	57001-
26	195-98-23320	PLATE, MONITOR PANEL	1	57001-
27	09601-60000	PLATE, NAME, BLADE	1	57001-
	04418-13060	SCREW	4	57001-
28	195-98-13790	PLATE, CAUTION, BRAKE ASSISTOR	1	57001-
29	175-98-71390	PLATE, FUSE	1	57001-
30	175-900-2350	PLATE, CAUTION, TRAVELING ON SLOPE	1	57001-
31	09685-00002	PLATE, OPERATING, LOCK LEVER	1	57001-
32	09649-03002	PLATE, INSTRUCTION, ENGINE STOP	1	57001-
33	09602-10000	PLATE, NAME, MACHINE	1	57001-
	04418-13060	SCREW	4	57001-
34	09685-00001	PLATE, OPERATING, LOCK LEVER	1	57001-
35	175-98-71380	PLATE, CHART	1	57001-
36	07843-30064	PLATE, CAUTION, (WITH BRAKE ASSISTOR)	1	57001-
37	09963-03001	TAG	1	57001-

FIG NO. : U0100-01A3

INDEX	PART NO.	DESCRIPTION	Q'TY	SERIAL NO
38	09653-03001	PLATE, SAFETY	1	57001-
39	09668-03001	PLATE, SAFETY	1	57001-
40	09654-33001	PLATE, SAFETY	1	57001-
41	09657-03003	PLATE, SAFETY	2	57001-
42	09651-03001	PLATE, SAFETY	1	57001-
43	09802-13000	PLATE, SAFETY	1	57001-
44	09659-53000	PLATE, SAFETY	1	57001-
45	09667-03001	PLATE, SAFETY	2	57001-
46	09812-03000	PLATE, SAFETY	2	57001-
47	09808-03000	PLATE, SAFETY	2	57001-
48	17M-98-21520	PLATE, OPERATING	1	57001-
49	175-98-41270	PLATE, OPERATING, (VARIABLE TYPE RIPPER)	1	57001-
	09671-00001	PLATE, OPERATING, (RIGID TYPE RIPPER)	1	57001-
50	09637-30163	PLATE, INSTRUCTION	1	57001-
51	09669-0000E	PLATE, CAUTION, FUEL	1	57350-
52	175-98-51120	PLATE, DUST INDICATOR	1	57285-

FIG. U0100-01A4 MARKS AND PLATES (ENGLISH AND ARABIC)

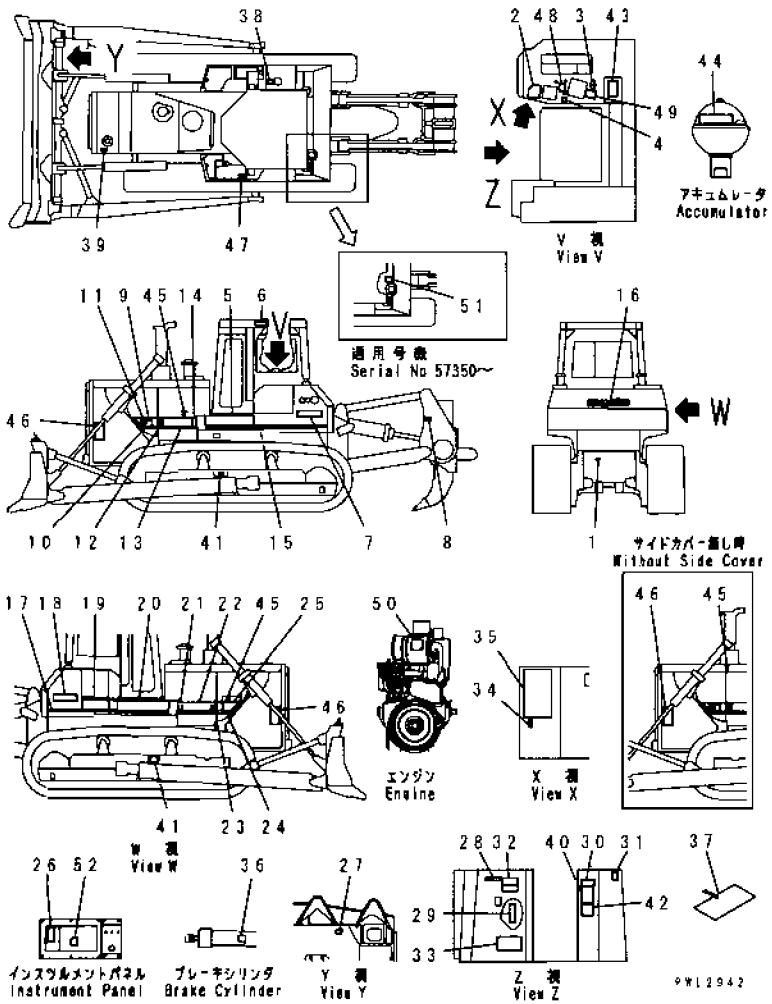

INDEX	PART NO	DESCRIPTION	Q'TY	SERIAL NO
1	09690-M0063	PLATE, MARK	1	57001-
2	195-98-21140	PLATE, OPERATING, (WITH TILT BLADE)	1	57001-
	09670-00001	PLATE, OPERATING, (WITHOUT TILT BLADE)	1	57001-
3	17M-98-21510	PLATE, OPERATING, PIN PULLER	1	57001-
4	195-98-21190	PLATE, OPERATING, HORN SWITCH	1	57001-
5	175-98-41131	STRIPE, L.H.	1	57001-
6	09620-02200	PLATE, NAME, ROPS	1	57001-
	04418-13060	SCREW	4	57001-
7	175-98-41470	PLATE, MARK	1	57001-
8	09601-60000	PLATE, NAME, RIPPER	1	57001-
	04418-13060	SCREW	4	57001-
9	175-98-41850	STRIPE, L.H	1	57001-
10	175-98-71870	STRIPE, L.H.	1	57001-
11	195-98-24390	STRIPE	1	57001-
12	175-98-41221	STRIPE	1	57001-
13	175-98-41182	PLATE, MARK	1	57001-
14	175-98-41191	STRIPE, L.H.	1	57001-
15	175-98-41111	STRIPE	1	57001-
16	09690-C0800	PLATE, MARK	1	57001-
17	175-98-41121	STRIPE	1	57001-
18	175-98-41470	PLATE, MARK	1	57001-
19	175-98-41152	PLATE, MARK, R.H.	1	57001-
20	175-98-41162	STRIPE, R.H.	1	57001-
21	175-98-71210	STRIPE, R.H.	1	57001-
22	175-98-71180	PLATE, MARK	1	57001-
23	175-98-71220	STRIPE	1	57001-
24	175-98-71860	STRIPE, R.H.	1	57001-
25	175-98-71880	STRIPE, R.H.	1	57001-
26	175-98-51110	PLATE	1	57285-
	175-98-41680	PLATE, MONITOR PANEL	1	57001-57284
27	09601-60000	PLATE, NAME, BLADE	1	57001-
	04418-13060	SCREW	4	57001-
28	175-98-41720	PLATE, BRAKE ASSISTOR	1	57001-
29	175-98-71690	PLATE, FUSE	1	57001-
30	175-900-3560	PLATE, CAUTION, TRAVELING ON SLOPE	1	57001-
31	09685-00002	PLATE, OPERATING, LOCK LEVER	1	57001-
32	09649-03002	PLATE, INSTRUCTION, ENGINE STOP	1	57001-
	09649-00202	PLATE, INSTRUCTION	1	57001-
33	09602-10000	PLATE, NAME, MACHINE	1	57001-
	04418-13060	SCREW	4	57001-
34	09685-00001	PLATE, OPERATING, LOCK LEVER	1	57001-
35	175-98-71670	PLATE, CHART	1	57001-

FIG NO. : U0100-01A4

INDEX	PART NO	DESCRIPTION	Q'TY	SERIAL NO.
36	07843-02064	PLATE, CAUTION, (WITH BRAKE ASSISTOR)....	1	57001-
37	09963-A1640	TAG.....	1	57001-
38	09653-A0481	PLATE, SAFETY.....	1	57001-
39	09653-A0481	PLATE, SAFETY.....	1	57001-
40	09654-B0641	PLATE, SAFETY.....	1	57001-
41	09657-A0881	PLATE, SAFETY.....	2	57001-
42	09651-A0641	PLATE, SAFETY	1	57001-
43	09802-B0750	PLATE, SAFETY.....	1	57001-
44	09659-A057B	PLATE, SAFETY.....	1	57001-
45	09667-A0481	PLATE, SAFETY.....	2	57001-
46	09806-B1683	PLATE, SAFETY.....	2	57001-
47	09808-A0881	PLATE, SAFETY.....	2	57001-
48	17M-98-21520	PLATE, OPERATING.....	1	57001-
49	175-98-41270	PLATE, OPERATING, (VARIABLE TYPE RIPPER).	1	57001-
	09671-00001	PLATE, OPERATING, (RIGID TYPE RIPPER)....	1	57001-
50	09637-02163	PLATE, INSTRUCTION.....	1	57001-
51	09669-0000E	PLATE, CAUTION, FUEL.....	1	57350-
52	175-98-51120	PLATE, DUST INDICATOR.....	1	57285-

FIG. U0100-01A5 MARKS AND PLATES (ENGLISH AND INDONESIAN)

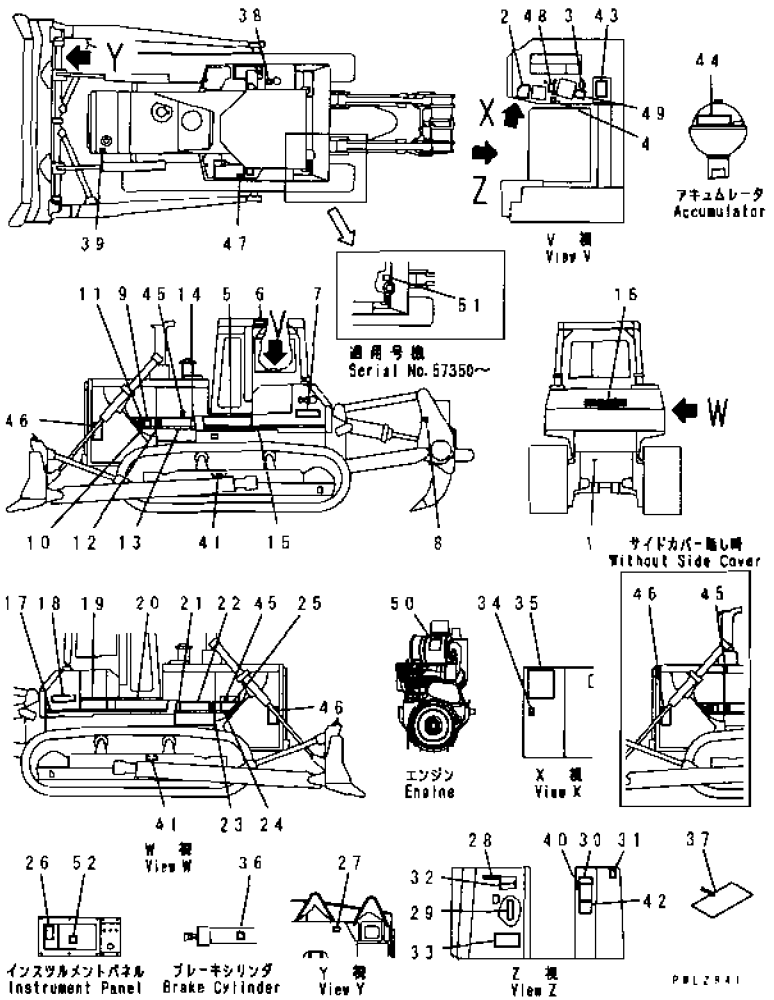

INDEX	PART NO	DESCRIPTION	Q'TY	SERIAL NO
1	09690-M0063	PLATE, MARK	1	57001-
2	195-98-21140	PLATE, OPERATING, (WITH TILT BLADE)	1	57001-
	09670-00001	PLATE, OPERATING, (WITHOUT TILT BLADE)	1	57001-
3	17M-98-21510	PLATE, OPERATING, PIN PULLER	1	57001-
4	195-98-21190	PLATE, OPERATING, HORN SWITCH	1	57001-
5	175-98-41131	STRIPE, L.H.	1	57001-
6	09620-05200	PLATE, NAME, ROPS	1	57001-
	04418-13060	SCREW	4	57001-
7	175-98-41470	PLATE, MARK	1	57001-
8	09601-60000	PLATE, NAME, RIPPER	1	57001-
	04418-13060	SCREW	4	57001-
9	175-98-41850	STRIPE, L.H.	1	57001-
10	175-98-71870	STRIPE, L.H.	1	57001-
11	195-98-24390	STRIPE	1	57001-
12	175-98-41221	STRIPE	1	57001-
13	175-98-41182	PLATE, MARK	1	57001-
14	175-98-41191	STRIPE, L.H.	1	57001-
15	175-98-41111	STRIPE	1	57001-
16	09690-C0800	PLATE, MARK	1	57001-
17	175-98-41121	STRIPE	1	57001-
18	175-98-41470	PLATE, MARK	1	57001-
19	175-98-41152	PLATE, MARK, R.H.	1	57001-
20	175-98-41162	STRIPE, R.H.	1	57001-
21	175-98-71210	STRIPE, R.H.	1	57001-
22	175-98-71180	PLATE, MARK	1	57001-
23	175-98-71220	STRIPE	1	57001-
24	175-98-71860	STRIPE, R.H.	1	57001-
25	175-98-71880	STRIPE, R.H.	1	57001-
26	175-98-41420	PLATE, MONITOR PANEL	1	57001-
27	09601-60000	PLATE, NAME, BLADE	1	57001-
	04418-13060	SCREW	4	57001-
28	175-98-41440	PLATE, CAUTION, BRAKE ASSISTOR	1	57001-
29	175-98-71430	PLATE, FUSE	1	57001-
30	175-900-4840	PLATE, CAUTION, TRAVELING ON SLOPE	1	57001-
31	09685-00002	PLATE, OPERATING, LOCK LEVER	1	57001-
32	09649-03002	PLATE, INSTRUCTION, ENGINE STOP	1	57001-
	09649-00502	PLATE, INSTRUCTION	1	57001-
33	09602-10000	PLATE, NAME, MACHINE	1	57001-
	04418-13060	SCREW	4	57001-
34	09685-00001	PLATE, OPERATING, LOCK LEVER	1	57001-
35	175-98-72410	PLATE, CHART	1	57001-
36	07843-05064	PLATE, CAUTION, (WITH BRAKE ASSISTOR)	1	57001-

FIG NO. : U0100-01A5

INDEX	PART NO	DESCRIPTION	Q'TY	SERIAL NO
37	09963-A1640	TAG	1	57001-
38	09653-A0481	PLATE, SAFETY	1	57001-
39	09653-A0481	PLATE, SAFETY	1	57001-
40	09654-B0641	PLATE, SAFETY	1	57001-
41	09657-A0881	PLATE, SAFETY	2	57001-
42	09651-A0641	PLATE, SAFETY	1	57001-
43	09802-B0750	PLATE, SAFETY	1	57001-
44	09659-A057B	PLATE, SAFETY	1	57001-
45	09667-A0481	PLATE, SAFETY	2	57001-
46	09806-B1683	PLATE, SAFETY	2	57001-
47	09808-A0881	PLATE, SAFETY	2	57001-
48	17M-98-21520	PLATE, OPERATING	1	57001-
49	175-98-41270	PLATE, OPERATING, (VARIABLE TYPE RIPPER)	1	57001-
	09671-00001	PLATE, OPERATING, (RIGID TYPE RIPPER)	1	57001-
50	09637-05163	PLATE, INSTRUCTION	1	57001-
51	09669-0000E	PLATE, CAUTION, FUEL	1	57350-
52	175-98-51120	PLATE, DUST INDICATOR	1	57285-

FIG. U0100-01A7 MARKS AND PLATES (PERSIAN)

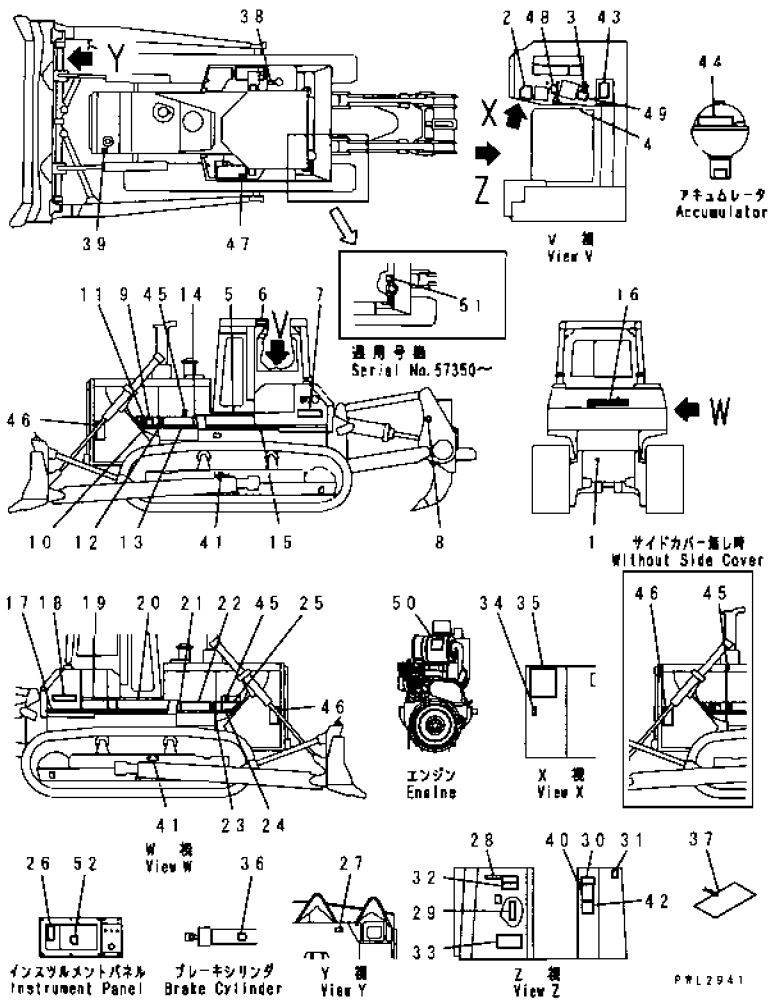

INDEX	PART NO	DESCRIPTION	Q'TY	SERIAL NO
1	09690-M0063	PLATE, MARK, MARK	1	57001-
2	195-98-21140	PLATE, OPERATING	1	57001-
		OPERATING, (WITH TILT BLADE)		
	09670-00001	PLATE, OPERATING	1	57001-
		OPERATING, (WITHOUT TILT BLADE)		
3	17M-98-21510	PLATE, OPERATING, OPERATING, PIN PULLER	1	57001-
4	195-98-21190	PLATE, OPERATING, OPERATING, HORN SWITCH	1	57001-
5	175-98-41131	STRIPE, L.H.	1	57001-
6	09620-04200	PLATE, NAME, NAME, ROPS	1	57001-
	04418-13060	SCREW	4	57001-
7	175-98-41470	PLATE, MARK, MARK	1	57001-
8	09601-60000	PLATE, NAME, NAME, RIPPER	1	57001-
	04418-13060	SCREW	4	57001-
9	175-98-41850	STRIPE, L.H.	1	57001-
10	175-98-71870	STRIPE, L.H.	1	57001-
11	195-98-24390	STRIPE	1	57001-
12	175-98-41221	STRIPE	1	57001-
13	175-98-41182	PLATE, MARK, MARK	1	57001-
14	175-98-41191	STRIPE, L.H.	1	57001-
15	175-98-41111	STRIPE	1	57001-
16	09690-C0800	PLATE, MARK, MARK	1	57001-
17	175-98-41121	STRIPE	1	57001-
18	175-98-41470	PLATE, MARK, MARK	1	57001-
19	175-98-41152	PLATE, MARK, MARK, R.H.	1	57001-
20	175-98-41162	STRIPE, R.H.	1	57001-
21	175-98-71210	STRIPE, R.H.	1	57001-
22	175-98-71180	PLATE, MARK, MARK	1	57001-
23	175-98-71220	STRIPE	1	57001-
24	175-98-71860	STRIPE, R.H.	1	57001-
25	175-98-71880	STRIPE, R.H.	1	57001-
26	195-98-41920	PLATE, MONITOR PANEL	1	57001-
27	09601-60000	PLATE, NAME, NAME, BLADE	1	57001-
	04418-13060	SCREW	4	57001-
28	175-98-41940	PLATE, CAUTION, CAUTION, BRAKE ASSISTOR	1	57001-
29	175-98-41960	PLATE, FUSE	1	57001-
30	195-98-14610	PLATE, NAME, CAUTION, TRAVELING ON SLOPE	1	57001-
31	09685-00002	PLATE, OPERATING, OPERATING, LOCK LEVER	1	57001-
32	09649-00402	PLATE, INSTRUCTION	1	57001-
		INSTRUCTION, ENGINE STOP		
33	09602-10000	PLATE, NAME, NAME, MACHINE	1	57001-
	04418-13060	SCREW	4	57001-
34	09685-00001	PLATE, OPERATING, OPERATING, LOCK LEVER	1	57001-

FIG NO. : U0100-01A7

INDEX	PART NO	DESCRIPTION	Q'TY	SERIAL NO.
35	175-98-41950	PLATE, CHART	1	57001-
36	07843-04064	PLATE, CAUTION, CAUTION, (WITH BRAKE ASSISTOR)	1	57001-
37	09963-A1640	TAG	1	57001-
38	09653-A0481	PLATE, SAFETY, SAFETY	1	57001-
39	09653-A0481	PLATE, SAFETY, SAFETY	1	57001-
40	09654-B0641	PLATE, SAFETY, SAFETY	1	57001-
41	09657-A0881	PLATE, SAFETY, SAFETY	2	57001-
42	09651-A0641	PLATE, SAFETY, SAFETY	1	57001-
43	09802-10400	PLATE, SAFETY	1	57001-
44	09659-A057B	PLATE, SAFETY, SAFETY	1	57001-
45	09667-A0481	PLATE, SAFETY, SAFETY	2	57001-
46	09806-B1683	PLATE, SAFETY, SAFETY	2	57001-
47	09808-A0881	PLATE, SAFETY, SAFETY	2	57001-
48	17M-98-21520	PLATE, OPERATING, OPERATING	1	57001-
49	175-98-41270	PLATE, OPERATING, (VARIABLE TYPE RIPPER),	1	57001-
	09671-00001	PLATE, OPERATING, OPERATING, (RIGID TYPE RIPPER)	1	57001-
50	09637-04163	PLATE, INSTRUCTION, INSTRUCTION	1	57001-
51	09669-0000E	PLATE, CAUTION, CAUTION FUEL	1	57306-
52	175-98-51120	PLATE	1	57001-

FIG. U0100-01A8 MARKS AND PLATES (MONGOLIA)

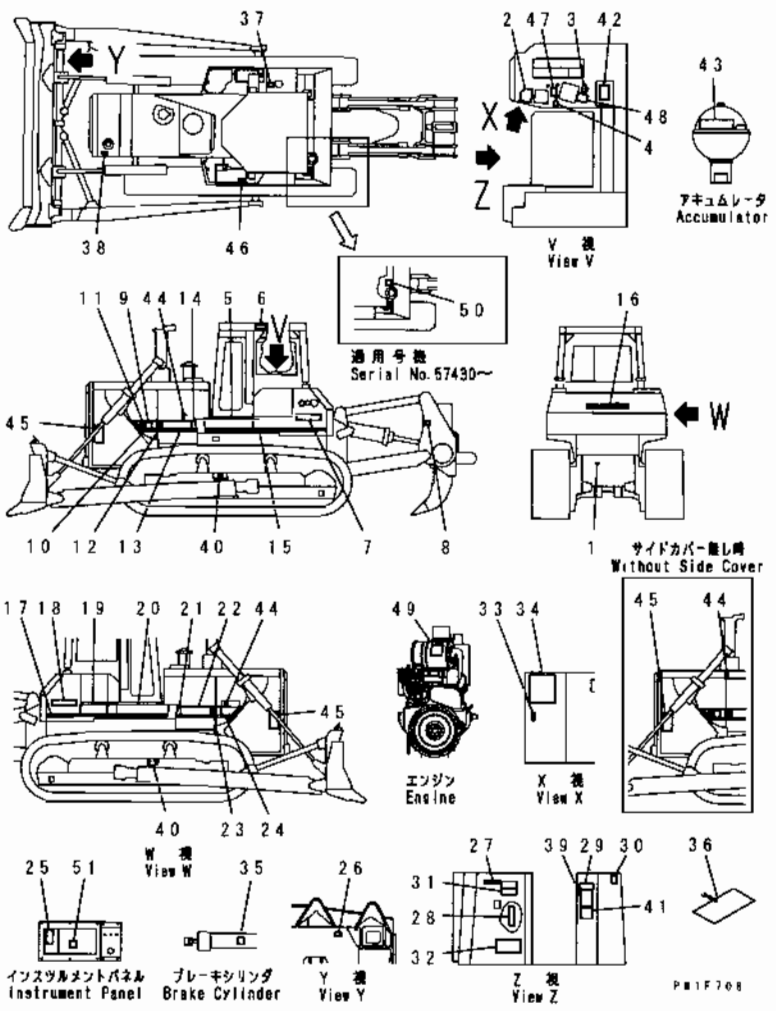

INDEX	PART NO	DESCRIPTION	Q'TY	SERIAL NO
1	09690-M0063	PLATE, MARK	1	57001-
2	195-98-21140	PLATE, OPERATING, (WITH TILT BLADE)	1	57001-
	09670-00001	PLATE, OPERATING, (WITHOUT TILT BLADE)	1	57001-
3	17M-98-21510	PLATE, OPERATING, PIN PULLER	1	57001-
4	195-98-21190	PLATE, OPERATING, HORN SWITCH	1	57001-
5	175-98-41131	STRIPE, L.H.	1	57001-
6	09620-30200	PLATE, NAME, ROPS	1	57001-
	04418-13060	SCREW	4	57001-
7	175-98-41470	PLATE, MARK	1	57001-
8	09601-60000	PLATE, NAME, RIPPER	1	57001-
	04418-13060	SCREW	4	57001-
9	175-98-41850	STRIPE, L.H.	1	57001-
10	175-98-71870	STRIPE, L.H.	1	57001-
11	195-98-24390	STRIPE	1	57001-
12	175-98-41221	STRIPE	1	57001-
13	175-98-41182	PLATE, MARK	1	57001-
14	175-98-41191	STRIPE, L.H.	1	57001-
15	175-98-41111	STRIPE	1	57001-
16	09690-C0800	PLATE, MARK	1	57001-
17	175-98-41121	STRIPE	1	57001-
18	175-98-41470	PLATE, MARK	1	57001-
19	175-98-41152	PLATE, MARK, R.H.	1	57001-
20	175-98-41162	STRIPE, R.H.	1	57001-
21	175-98-71210	STRIPE, R.H.	1	57001-
22	175-98-71180	PLATE, MARK	1	57001-
23	175-98-71220	STRIPE	1	57001-
24	175-98-41171	STRIPE, R.H.	1	57001-
25	195-98-23320	PLATE, MONITOR PANEL	1	57001-
26	09601-60000	PLATE, NAME, BLADE	1	57001-
	04418-13060	SCREW	4	57001-
27	195-98-13810	PLATE, CAUTION, BRAKE ASSISTOR	1	57001-
28	175-98-71390	PLATE, FUSE	1	57001-
29	175-900-2350	PLATE, CAUTION, TRAVELING ON SLOPE	1	57001-
30	09685-00002	PLATE, OPERATING, LOCK LEVER	1	57001-
31	09649-03002	PLATE, INSTRUCTION, ENGINE STOP	1	57001-
32	09602-10000	PLATE, NAME, MACHINE	1	57001-
	04418-13060	SCREW	4	57001-
33	09685-00001	PLATE, OPERATING, LOCK LEVER	1	57001-
34	175-98-71380	PLATE, CHART	1	57001-
35	07843-30064	PLATE, CAUTION, (WITH BRAKE ASSISTOR)	1	57001-
36	09963-A1640	TAG	1	57001-
37	175-98-13960	PLATE, SAFETY	1	57001-

FIG NO. : U0100-01A8

INDEX	PART NO.	DESCRIPTION	Q'TY	SERIAL NO
38	175-98-13940	PLATE, SAFETY	1	57001-
39	175-98-13970	PLATE, SAFETY	1	57001-
40	20Y-00-23130	PLATE	2	57001-
41	20Y-00-23140	PLATE	1	57001-
42	175-98-13990	PLATE, SAFETY	1	57001-
43	09659-A057B	PLATE, SAFETY	1	57001-
44	175-98-13980	PLATE, SAFETY	2	57001-
45	09806-B1683	PLATE, SAFETY	2	57001-
46	09808-A0881	PLATE, SAFETY	2	57001-
47	17M-98-21520	PLATE, OPERATING	1	57001-
48	175-98-41270	PLATE, OPERATING, (VARIABLE TYPE RIPPER)	1	57001-
	09671-00001	PLATE, OPERATING, (RIGID TYPE RIPPER)	1	57001-
49	09637-30163	PLATE, INSTRUCTION	1	57001-
50	09669-0000E	PLATE, CAUTION, FUEL	1	57430-
51	175-98-51120	PLATE, DUST INDICATOR	1	57285-

FIG. U0630-01A1 MARKS AND PLATES (EXCEPT JAPAN) (SEAT BELT)

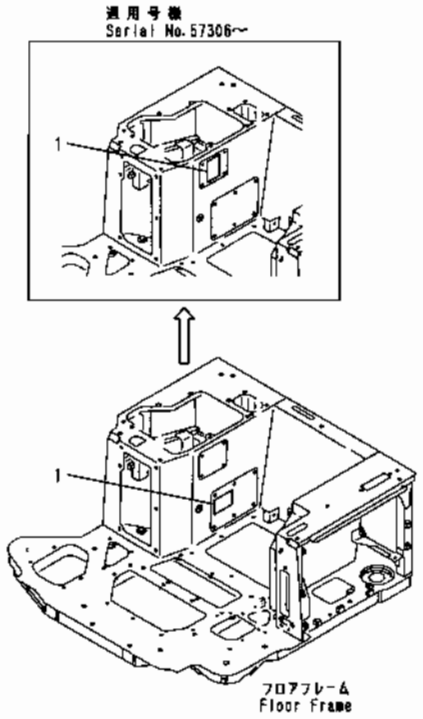

PEL2833

INDEX	PART NO	DESCRIPTION	Q'TY	SERIAL NO.
1	195-98-12940	PLATE, CAUTION. . . . . (ENGLISH) (FOR USA, CANADA)	1	57001-
	198-98-16310	PLATE, CAUTION, (FRENCH).	1	57001-
	195-98-12980	PLATE, CAUTION, (GERMAN).	1	57001-
	195-98-12960	PLATE, CAUTION, (SPANISH).	1	57001-
	195-98-13410	PLATE, CAUTION, (ARABIC).	1	57001-
	195-98-14680	PLATE, CAUTION, (INDONESIAN).	1	57001-
	195-98-13180	PLATE, CAUTION, (RUSSIAN).	1	57001-
	195-98-13250	PLATE, (CHINESE).	1	57001-
	154-98-36630	PLATE, CAUTION, (ITALIAN).	1	57001-
	195-98-14620	PLATE, CAUTION, (PERSIAN).	1	57001-
	195-98-13650	PLATE, CAUTION, (PORTUGUESE).	1	57001-
	195-98-13920	PLATE, CAUTION, (MONGOLIA).	1	57001-

ACCESSORY

FIG. V0100-01A0 SPARE PARTS

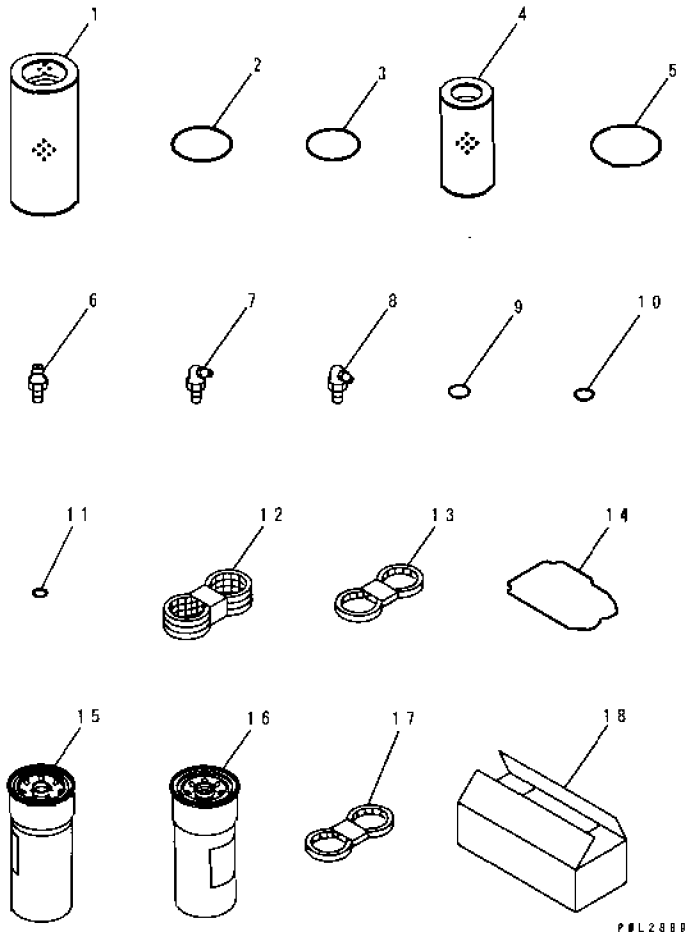

INDEX	PART NO	DESCRIPTION	Q'TY	SERIAL NO
1	175-49-11580	ELEMENT	2	57001-
2	07000-02115	O-RING	2	57001-
3	07000-02110	O-RING	2	57001-
4	07063-01100	ELEMENT	1	57001-
5	07000-05150	O-RING	1	57001-
6	07020-00000	FITTING, GREASE	4	57001-
7	07020-00675	FITTING, GREASE	4	57001-
8	07020-00900	FITTING, GREASE	4	57001-
9	07002-03634	O-RING	11	57001-
10	07000-03040	O-RING	1	57001-
11	07005-02416	GASKET	1	57001-
12	04122-22573	V-BELT SET	6	57001-
13	6212-85-6840	V-BELT SET	6	57001-
14	6210-11-8820	GASKET	36	57001-
15	600-211-1231	CARTRIDGE	6	57001-
16	600-311-7132	CARTRIDGE	6	57001-
17	04120-21735	V-BELT	1	57001-
18	09059-00800	BOX	1	57001-

FIG. V0300-01A0 TOOL

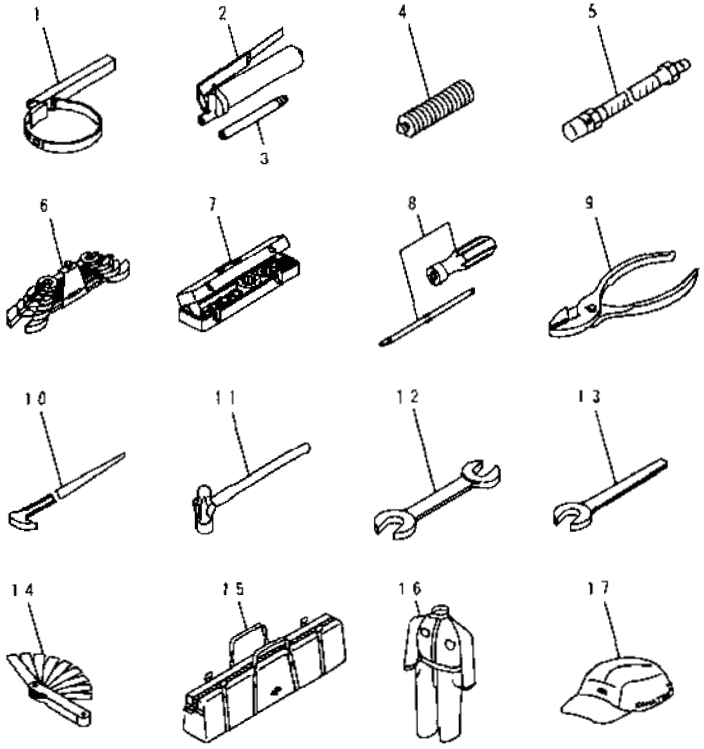

INDEX	PART NO	DESCRIPTION	Q'TY	SERIAL NO
1	09019-08035	WRENCH, FILTER	1	57001-
	07952-70004	GREASE PUMP ASS'Y	1	57006-
	◆07952-80002	GREASE PUMP ASS'Y	1	57001-57005
2	07950-10450	. PUMP, GREASE	1	57001-
3	07951-21045	. NOZZLE	1	57001-
4	07950-90403	CARTRIDGE, GREASE	1	57001-
5	07951-11400	NOZZLE	1	57001-
6	09000-30006	WRENCH SET	1	57001-
7	09020-10284	SOCKET WRENCH SET	1	57001-
8	09033-00190	DRIVER, SCREW	1	57001-
9	09036-00150	PLIERS	1	57001-
10	09055-10390	BAR	1	57001-
11	09039-00150	HAMMER	1	57001-
12	09002-03641	WRENCH, 36X41	1	57001-
13	09001-04600	WRENCH	1	57001-
14	09054-00009	GAUGE	1	57001-
15	09056-05513	BAG	1	57001-
16	09980-10550	OVERALL	1	57001-
17	09982-10057	CAP	1	57001-

MISCELLANEOUS

FIG. W2119-01A0 CAB GUARD SWEEPER (JUNGLE SPEC.) (1/2)

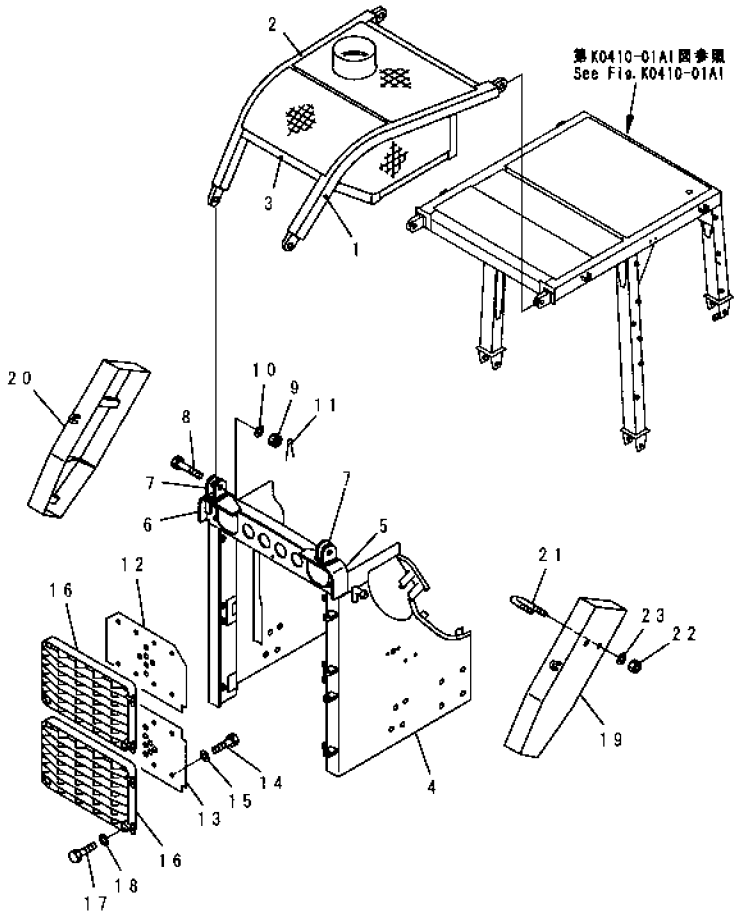

INDEX	PART NO	DESCRIPTION	Q'TY	SERIAL NO.
	175-902-7362	FRAME ASS'Y	1	57001-
1	175-902-7140	.FRAME, L.H (WELDED)	1	57001-
2	175-902-7150	.FRAME, R.H (WELDED)	1	57001-
3	175-902-7160	.FRAME (WELDED)	1	57001-
4	175-902-7632	GUARD ASS'Y	1	57001-
5	175-902-7641	.BRACKET, L.H. (WELDED)	1	57001-
6	175-902-7651	.BRACKET, R.H. (WELDED)	1	57001-
7	175-902-7120	.BRACKET (WELDED)	2	57001-
8	01013-83635	BOLT	4	57001-
9	01590-13638	NUT	4	57001-
10	01643-33690	WASHER	4	57001-
11	04050-16065	PIN, COTTER	4	57001-
12	175-886-1431	PLATE	1	57001-
13	175-886-1441	PLATE	1	57001-
14	01010-81635	BOLT	16	57001-
15	01643-31645	WASHER	16	57001-
16	175-886-1421	GRILL	2	57001-
17	198-54-42260	BOLT	8	57001-
18	198-54-42290	WASHER	8	57001-
19	175-54-25851	COVER, CYLINDER, L.H.	1	57001-
20	175-54-25861	COVER, CYLINDER, R.H.	1	57001-
21	175-54-25871	U-BOLT	4	57001-
22	01598-11617	NUT	8	57001-
23	01643-31645	WASHER	8	57001-

FIG.W2119-02A0 CAB GUARD SWEEPER (JUNGLE SPEC.) (2/2)

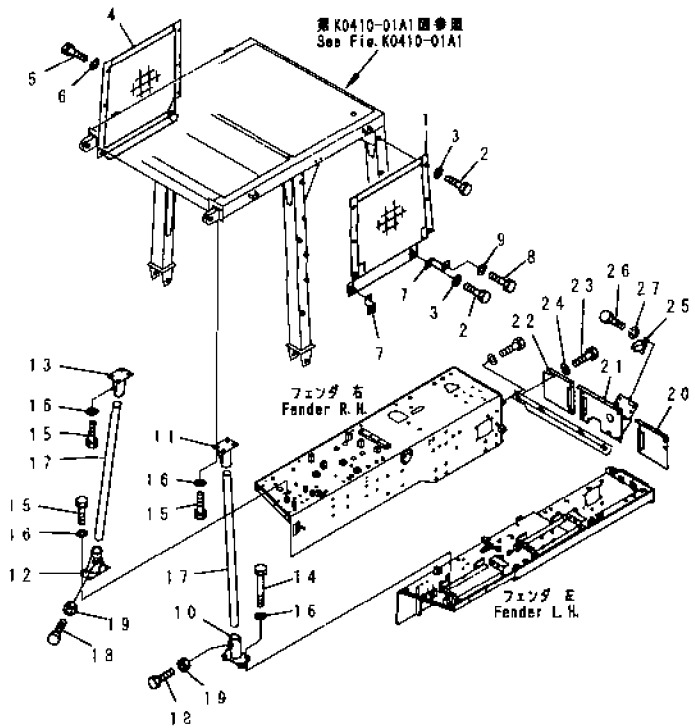

INDEX	PART NO	DESCRIPTION	Q'TY	SERIAL NO
1	175-902-8410	NET, L.H.	1	57001-
2	01010-81635	BOLT	8	57001-
3	01643-31645	WASHER	8	57001-
4	175-902-8420	NET, R.H.	1	57001-
5	01010-81635	BOLT	7	57001-
6	01643-31645	WASHER	7	57001-
7	175-902-8430	BRACKET	2	57001-
8	01010-81635	BOLT	2	57001-
9	01643-31645	WASHER	2	57001-
10	175-902-8510	BRACKET	1	57001-
11	175-902-8520	BRACKET	1	57001-
12	175-902-8530	BRACKET	1	57001-
13	175-902-8540	BRACKET	1	57001-
14	01010-81275	BOLT	4	57001-
15	01010-81230	BOLT	12	57001-
16	01643-31232	WASHER	16	57001-
17	154-91-21310	POLE	2	57001-
18	01016-51450	BOLT	2	57001-
19	01580-11411	NUT	2	57001-
20	175-54-25831	COVER	1	57001-
21	175-54-25822	COVER	1	57001-
22	175-54-25841	COVER	1	57001-
23	01010-51225	BOLT	10	57001-
24	01643-31232	WASHER	10	57001-
25	198-54-19150	SPRING	2	57001-
26	01010-50616	BOLT	4	57001-
27	01602-20619	WASHER	4	57001-

FIG. W2121-01A0 COOLANT AND OIL PAN HEATER (COLD WEATHER (A) SPEC.) (#57430-)

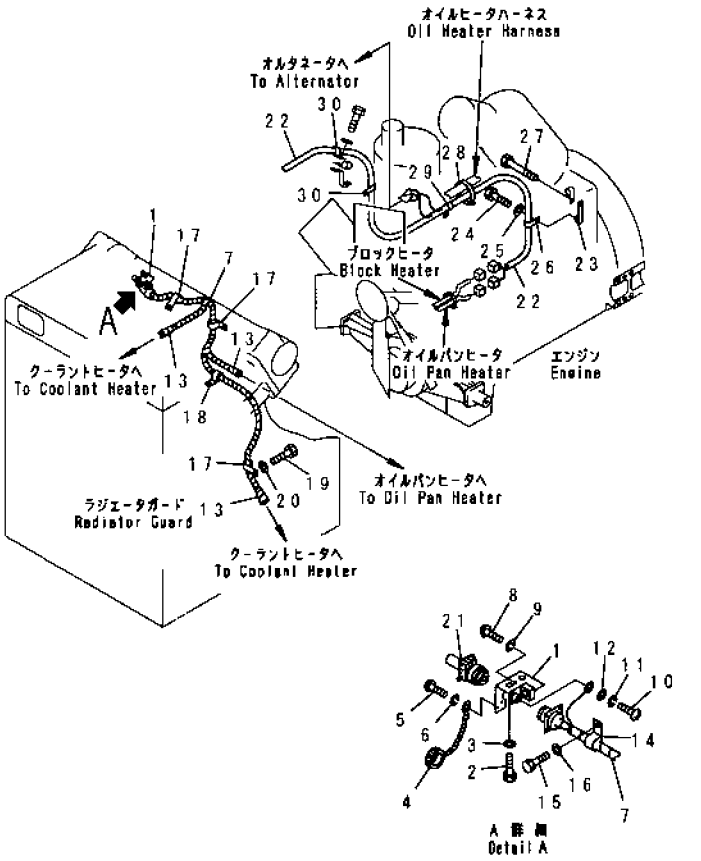

INDEX	PART NO.	DESCRIPTION	Q'TY	SERIAL NO.
1	195-06-22810	BRACKET	1	57430-
2	01010-81225	BOLT	2	57430-
3	01643-31232	WASHER	2	57430-
4	175-06-39830	CAP	1	57430-
5	01220-40312	SCREW	1	57430-
6	01601-20307	WASHER	1	57430-
7	195-06-22821	WIRE ASS'Y	1	57430-
8	01220-40312	SCREW	4	57430-
9	01601-20307	WASHER	4	57430-
10	01220-40612	SCREW	1	57430-
11	01602-20619	WASHER	1	57430-
12	01641-20608	WASHER	1	57430-
13	175-895-4251	TAPE	1	57430-
14	08036-21814	CLIP	1	57430-
15	01010-81220	BOLT	1	57430-
16	01643-31232	WASHER	1	57430-
17	08036-21814	CLIP	3	57430-
18	08036-81214	CLIP	1	57430-
19	01010-81220	BOLT	1	57430-
20	01643-31232	WASHER	1	57430-
21	175-06-37871	PLUG	1	57430-
22	175-06-71210	WIRING HARNESS	1	57430-
23	154-06-41390	BRACKET	1	57430-
24	01010-81225	BOLT	1	57430-
25	01643-31232	WASHER	1	57430-
26	04434-51020	CLIP	1	57430-
27	01011-81020	BOLT	1	57430-
28	08034-00519	BAND	1	57430-
29	04434-51410	CLIP	1	57430-
30	04434-51712	CLIP	2	57430-

SERVICE KIT AND COMPONENT PARTS

FIG. Y0100-01A0 SERVICE KIT

KIT

詳細については次のページを参照してください。
See subsequent pages for details.

K1	15A-13-05011	トルク コンバータ サービス キット TORQUE CONVERTER SERVICE KIT
K2	175-15-05064	トランスミッション サービス キット TRANSMISSION SERVICE KIT
K3	175-15-05011	トランスミッション シム サービス キット TRANSMISSION SHIM SERVICE KIT
K4	175-15-05051	トランスミッション シム サービス キット TRANSMISSION SHIM SERVICE KIT
K5	175-15-05090	トランスミッション コントロール バルブ サービス キット TRANSMISSION CONTROL VALVE SERVICE KIT
K6	175-15-05081	レギュレータ バルブ サービス キット REGULATOR VALVE SERVICE KIT
K7	707-98-53100	ブレード リフト シリンダ サービス キット BLADE LIFT CYLINDER SERVICE KIT
K8	175-63-05140	ブレード チルト シリンダ サービス キット BLADE TILT CYLINDER SERVICE KIT
K9	707-99-71420	リッパ リフト および チルト シリンダ サービス キット RIPPER LIFT AND TILT CYLINDER SERVICE KIT
K10	707-99-12420	ピン プラー シリンダ サービス キット PIN PULLER CYLINDER SERVICE KIT

PWX02BD

INDEX	PART NO.	DESCRIPTION	Q'TY	SERIAL NO
1K	15A-13-05011	TORQUE CONVERTER KIT	1	57001-
	07002-43634	.O-RING	1	57001-
	07005-01612	.GASKET	1	57001-
	07000-72070	.O-RING	1	57001-
	04050-11212	.PIN, COTTER	1	57001-
	175-13-23232	.GASKET	1	57001-
	07000-72115	.O-RING	1	57001-
	175-11-11132	.GASKET	1	57001-
	07000-75185	.O-RING	1	57001-
	07000-02140	.O-RING	1	57001-
	195-13-05020	.SHIM ASS'Y	1	57001-
	07012-50100	.SEAL	1	57001-
	175-13-21712	.PLATE, LOCK	1	57001-
	195-13-11261	.PLATE, LOCK	4	57001-
	07002-43634	.O-RING	2	57001-
	07000-72018	.O-RING	1	57001-
	07000-73045	.O-RING	1	57001-
	07002-43634	.O-RING	2	57001-
	07000-72018	.O-RING	1	57001-
	07000-73045	.O-RING	1	57001-
2K	175-15-05064	TRANSMISSION KIT	1	57001-
	175-15-41122	.GASKET	1	57001-
	07012-10110	.SEAL, OIL	1	57001-
	07000-05290	.O-RING	1	57001-
	07000-05055	.O-RING	1	57001-
	07000-73022	.O-RING	5	57001-
	175-15-42430	.O-RING	1	57001-
	07000-05470	.O-RING	1	57001-
3K	175-15-05011	SHIM KIT	1	57001-
4K	175-15-05051	SHIM KIT	1	57001-
5K	175-15-05090	CONTROL VALVE KIT	1	57001-
	07000-73022	.O-RING	7	57001-
	07000-73025	.O-RING	3	57001-
	07000-73022	.O-RING	2	57001-
	07000-73040	.O-RING	1	57001-
	07002-05234	.O-RING	1	57001-
	154-15-45760	.GASKET	1	57001-
	144-15-29110	.SEAL, OIL	1	57001-
	144-15-29110	.SEAL, OIL	1	57001-
	07002-01223	.O-RING	1	57001-
	07000-73028	.O-RING	4	57001-
	154-15-45540	.GASKET	1	57001-

INDEX	PART NO	DESCRIPTION	Q'TY	SERIAL NO.
	154-15-45520	.GASKET	1	57001-
6K	175-15-05081	SERVICE KIT, REGULATOR	1	57001-
	07000-73032	.O-RING	2	57001-
	175-15-14162	.GASKET	1	57001-
	07000-72018	.O-RING	2	57001-
	07000-73022	O-RING	1	57001-
7K	707-98-53100	SERVICE KIT, BLADE LIFT CYLINDER	2	57001-
	707-51-75110	.U-PACKING	1	57001-
	144-63-94170	.SEAL	1	57001-
	707-44-14180	.RING	1	57001-
	707-39-14820	.RING	2	57001-
	07000-12135	.O-RING	1	57001-
	07146-02136	.RING	1	57001-
	07000-12060	.O-RING	1	57001-
	707-35-52900	.RING	2	57001-
	07000-03095	.O-RING	1	57001-
	07000-03050	.O-RING	2	57001-
	07000-13045	.O-RING	2	57001-
	07000-13035	.O-RING	1	57001-
	07000-13048	.O-RING	1	57001-
8K	175-63-05140	CYLINDER KIT, BLADE TILT CYLINDER	1	57001-
	707-51-90110	.U-PACKING	1	57001-
	195-63-94170	.SEAL	1	57001-
	707-44-22080	.RING	1	57001-
	07155-02250	.RING	1	57001-
	07000-15220	.O-RING	1	57001-
	07001-05220	.RING	1	57001-
	07000-03110	.O-RING	1	57001-
	07000-13035	.O-RING	2	57001-
9K	707-99-71420	SERVICE KIT, RIPPER LIFT AND TILT CYL	4	57001-
	707-51-90110	.U-PACKING	1	57001-
	195-63-94170	.SEAL	1	57001-
	707-44-22280	.RING	1	57001-
	07155-02250	.RING	1	57001-
	07000-15220	.O-RING	1	57001-
	07001-05220	.RING	1	57001-
	07145-00110	.SEAL	4	57001-
	07000-13038	.O-RING	2	57001-
	07000-03110	.O-RING	1	57001-
10K	707-99-12420	SERVICE KIT, PIN PULLER CYLINDER	1	57001-
	707-51-35110	.PACKING	1	57001-
	175-63-75190	.SEAL	1	57001-

FIG NO. : Y0100-01A0

INDEX	PART NO	DESCRIPTION	Q'TY	SERIAL NO
	707-42-70012	.PACKING	2	57001-
	07155-00720	.RING	1	57001-
	07000-12065	.O-RING	1	57001-
	07146-02066	.RING	1	57001-
	07000-03050	.O-RING	1	57001-

FIG. Y0320-01A0 SHOE BOLT AND NUT SERVICE KIT

KIT 詳細については次のページを参照して下さい。
See subsequent pages for details

K-1 178-32-05000 シュー ボルト および ナット サービス キット
SHOE BOLT AND NUT SERVICE KIT

PVL5250

INDEX	PART NO	DESCRIPTION	Q'TY	SERIAL NO
K1	178-32-05000	SHOE BOLT AND NUT K.....	1	57001-
	176-32-11210	.BOLT, SHOE.....	30	57001-
	178-32-11220	.NUT, SHOE.....	30	57001-

FIG. Y1600-01A0 TRANSMISSION PUMP

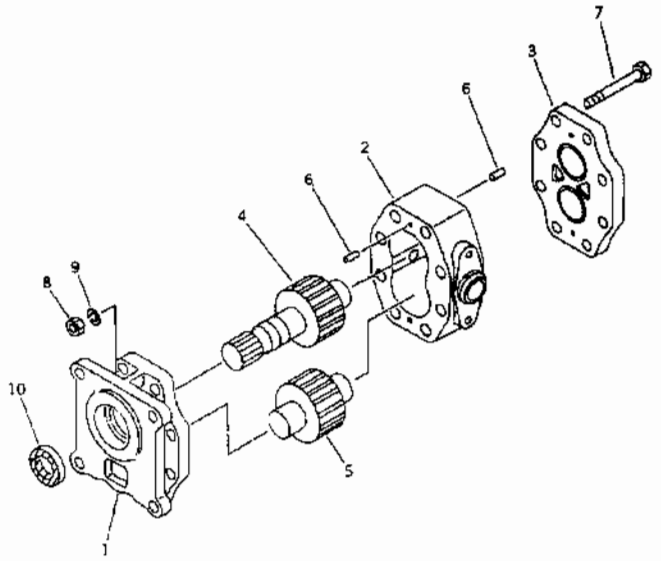

FIG NO. : Y1600-01A0

INDEX	PART NO	DESCRIPTION	Q TY	SERIAL NO
	07433-71103	PUMP ASS'Y.	1	57001-
1	(★07430-71113)	BRACKET.	1	57001-
	(★07430-71150)	. BUSHING.	2	57001-
2	(★07433-71021)	CASE, GEAR.	1	57001-
3	(★07430-71132)	HOUSING.	1	57001-
	(★07430-71150)	. BUSHING.	2	57001-
4	(★07433-71042)	GEAR, DRIVE	1	57001-
5	(★07433-71052)	GEAR, DRIVEN.	1	57001-
6	(★04020-00820)	PIN, DOWEL.	4	57001-
7	(★01050-51295)	BOLT.	8	57001-
8	(★01582-11210)	NUT.	8	57001-
9	(★01602-21236)	WASHER, SPRING.	8	57001-
10	07430-71160	SEAL, OIL.	1	57001-

FIG. Y1600-11A0 STEERING PUMP (1/2)

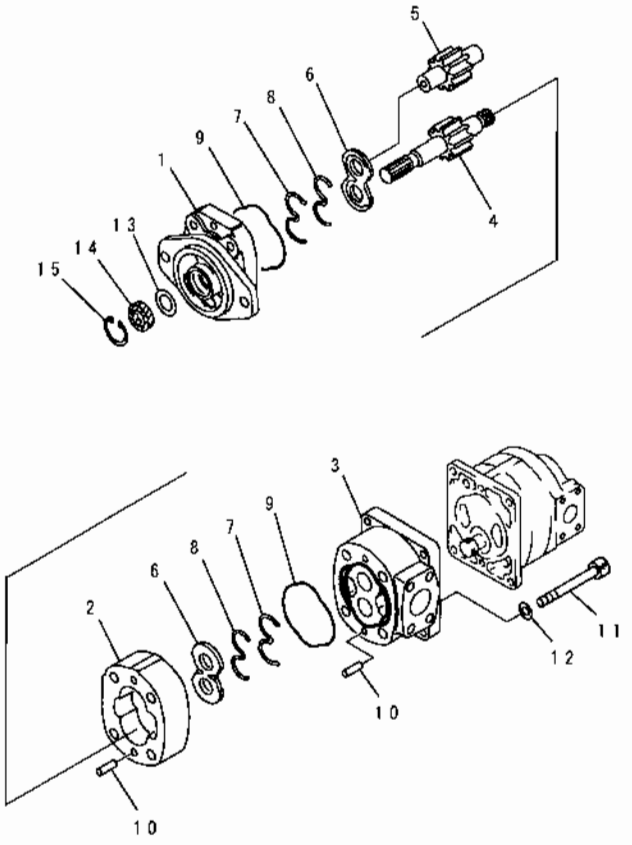

PWL5692

INDEX	PART NO.	DESCRIPTION	Q'TY	SERIAL NO
	705-52-22100	PUMP ASS'Y. (SAR50+50) THIS ASSEMBLY CONSISTS OF ALL PARTS SHOWN IN FIGS. Y1600-11A0 AND Y1600-12A0.	1	57001-
	705-22-34050	. PUMP ASS'Y. (SAR50)	1	57001-
1	(★705-17-02022)	.. BRACKET ASS'Y.	1	57001-
	(★705-17-02353)	... BUSHING	2	57001-
2	(★705-17-34011)	.. CASE, GEAR	1	57001-
3	(★705-17-02221)	. CARRIER ASS'Y.	1	57001-
	(★705-17-02353)	... BUSHING	2	57001-
4	(★705-17-34730)	.. GEAR, DRIVE	1	57001-
5	(★705-17-34511)	.. GEAR, DRIVEN	1	57001-
6	(★705-17-02612)	.. PLATE, SIDE	2	57001-
7	(★705-17-02440)	.. RING, BACK-UP	2	57001-
8	(★705-17-02472)	.. RING, SEAL	2	57001-
9	(★705-17-02381)	.. O-RING	2	57001-
10	(★04020-01024)	.. PIN, DOWEL	4	57001-
11	(★705-17-02790)	.. BOLT	4	57001-
12	(★01643-51232)	.. WASHER	4	57001-
13	705-17-02870	. PLATE	1	57001-
14	705-17-02810	.. SEAL, OIL	1	57001-
15	04065-04018	.. RING, SNAP	1	57001-

FIG. Y1600-12A0 STEERING PUMP (2/2)

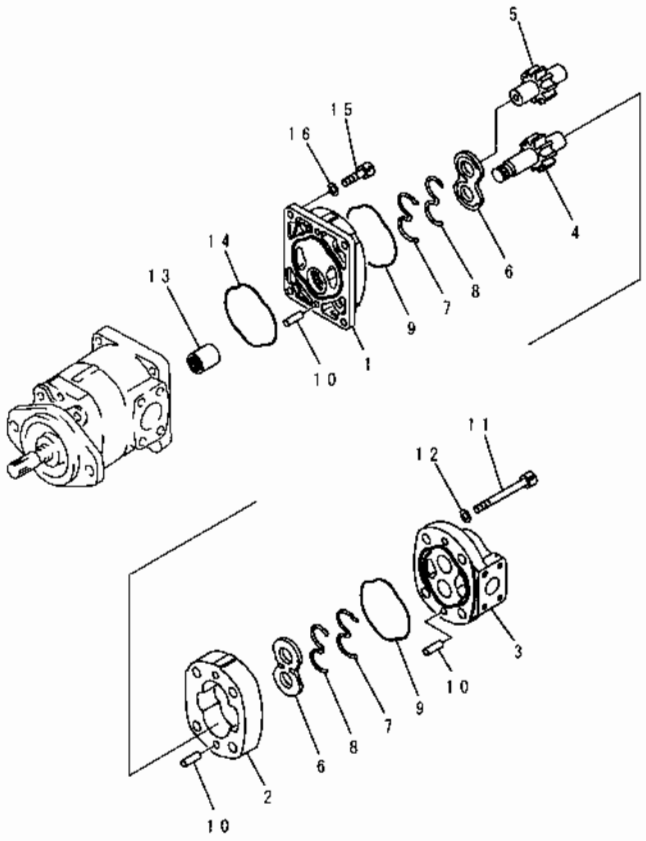

INDEX	PART NO	DESCRIPTION	Q'TY	SERIAL NO
	(705-52-22100)	PUMP ASS'Y. (SAR50+50)	1	57001-
		THIS ASSEMBLY CONSISTS OF ALL PARTS SHOWN IN FIGS. Y1600-11A0 AND Y1600-12A0.		
	705-12-34530	. PUMP ASS'Y. (SAR50)	1	57001-
1	(★705-17-02521)	.. BRACKET ASS'Y.	1	57001-
	(★705-17-02353)	... BUSHING	2	57001-
2	(★705-17-34011)	. CASE, GEAR	1	57001-
3	(★705-17-02122)	.. COVER ASS'Y.	1	57001-
	(★705-17-02353)	... BUSHING	2	57001-
4	(★705-17-34451)	. GEAR, DRIVE	1	57001-
5	(★705-17-34511)	.. GEAR, DRIVEN	1	57001-
6	(★705-17-02612)	.. PLATE, SIDE	2	57001-
7	(★705-17-02440)	.. RING, BACK-UP	2	57001-
8	(★705-17-02472)	.. RING, SEAL	2	57001-
9	(★705-17-02381)	.. O-RING	2	57001-
10	(★04020-01024)	.. PIN, DOWEL	6	57001-
11	(★705-17-02780)	.. BOLT	4	57001-
12	(★01643-51232)	.. WASHER	4	57001-
13	705-17-02330	. COUPLING ASS'Y.	1	57001-
14	705-17-02480	. O-RING	1	57001-
15	705-17-02374	. BOLT	4	57001-
16	01643-51032	. WASHER	4	57001-

FIG. Y1600-21A0 WORK EQUIPMENT PUMP

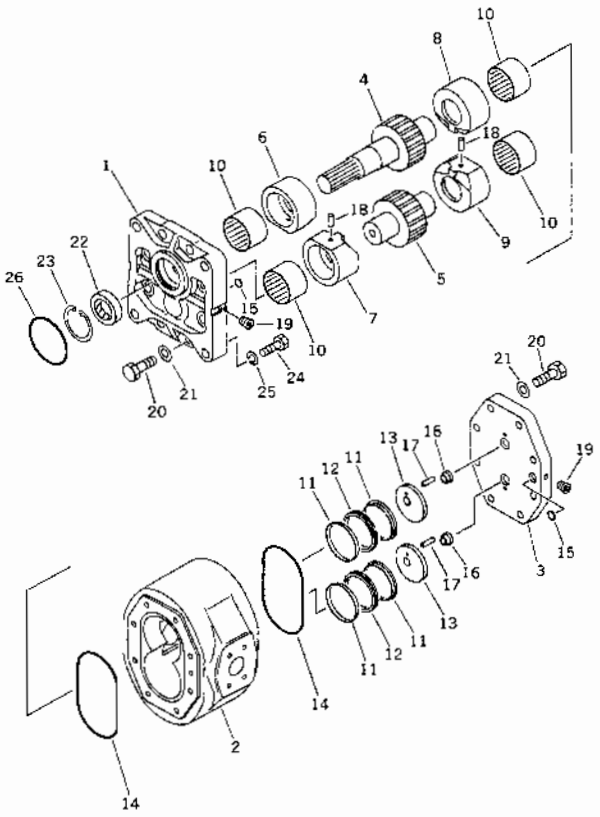

INDEX	PART NO	DESCRIPTION	Q'TY	SERIAL NO
	07446-66200	PUMP ASS'Y (PAL200)	1	57001-
1	(★07445-66611)	.BRACKET	1	57001-
2	(★07446-66220)	.CASE, GEAR	1	57001-
3	(★07442-66030)	.COVER	1	57001-
4	(★07446-66040)	.GEAR, DRIVE	1	57001-
5	(★07446-66050)	.GEAR, DRIVEN	1	57001-
6	(★07445-66760)	.BUSHING	1	57001-
7	(★07445-66860)	.BUSHING	1	57001-
8	(★07445-66770)	.BUSHING	1	57001-
9	(★07445-66870)	.BUSHING	1	57001-
10	(★07445-66181)	.BEARING, NEEDLE	4	57001-
11	(★07445-66091)	.RING, BACK-UP	4	57001-
12	(★07443-66736)	.U-RING	2	57001-
13	(★07445-66130)	.PLATE, SEAL	2	57001-
14	(★07443-66140)	.O-RING, OIL	2	57001-
15	(★07000-12015)	.O-RING	2	57001-
16	(★07438-66090)	.COLLAR	2	57001-
17	(★04025-00412)	.PIN	2	57001-
18	(★07445-66171)	.PIN	2	57001-
19	(★705-17-04970)	.PLUG	2	57001-
20	(★01010-51655)	.BOLT	16	57001-
21	(★01643-51645)	.WASHER	16	57001-
22	07443-11163	.SEAL, OIL	1	57001-
23	04065-06525	.RING, SNAP	1	57001-
24	01010-31445	BOLT	4	57001-
25	01602-01442	WASHER, SPRING	4	57001-
26	07000-03092	O-RING	1	57001-

FIG. Y1600-31A0 P. P. C. PUMP

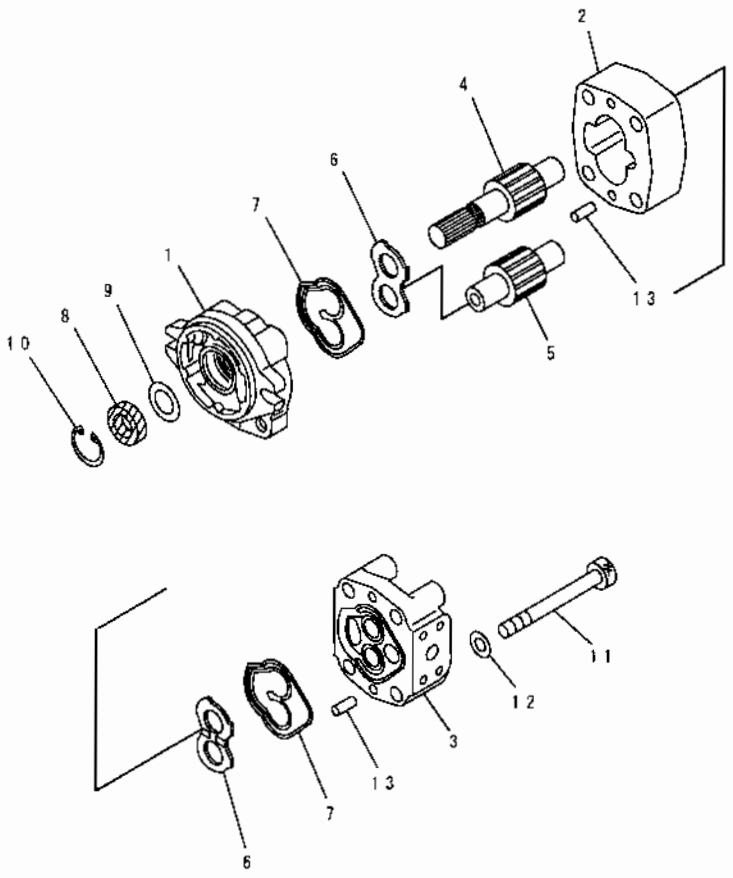

INDEX	PART NO	DESCRIPTION	Q'TY	SERIAL NO
	705-41-01050	PUMP ASS'Y. (SBR(I)14)	1	57001-
1	(★705-41-80210)	BRACKET	1	57001-
	(★705-40-80620)	..BUSHING, (DRIVE SIDE)	1	57001-
	(★705-40-80610)	..BUSHING, (DRIVEN SIDE)	1	57001-
2	(★705-40-26011)	.CASE, GEAR	1	57001-
3	(★705-40-80111)	.COVER	1	57001-
	(★705-40-80610)	..BUSHING, (DRIVE SIDE)	1	57001-
	(★705-40-80620)	..BUSHING, (DRIVEN SIDE)	1	57001-
4	(★705-40-26411)	.GEAR, DRIVE	1	57001-
5	(★705-40-26511)	.GEAR, DRIVEN	1	57001-
6	(★705-40-80720)	.PLATE, SIDE	2	57001-
7	(★705-40-80760)	.SEAL	2	57001-
8	705-40-80810	.SEAL, OIL	1	57001-
9	705-40-80870	.PLATE	1	57001-
10	04065-03515	.RING, SNAP	1	57001-
11	(★705-41-80890)	.BOLT	4	57001-
12	(★01643-51232)	.WASHER	4	57001-
13	(★04020-00820)	.PIN	4	57001-

FIG. Y1620-01A0 BLADE LIFT CYLINDER (1/2)

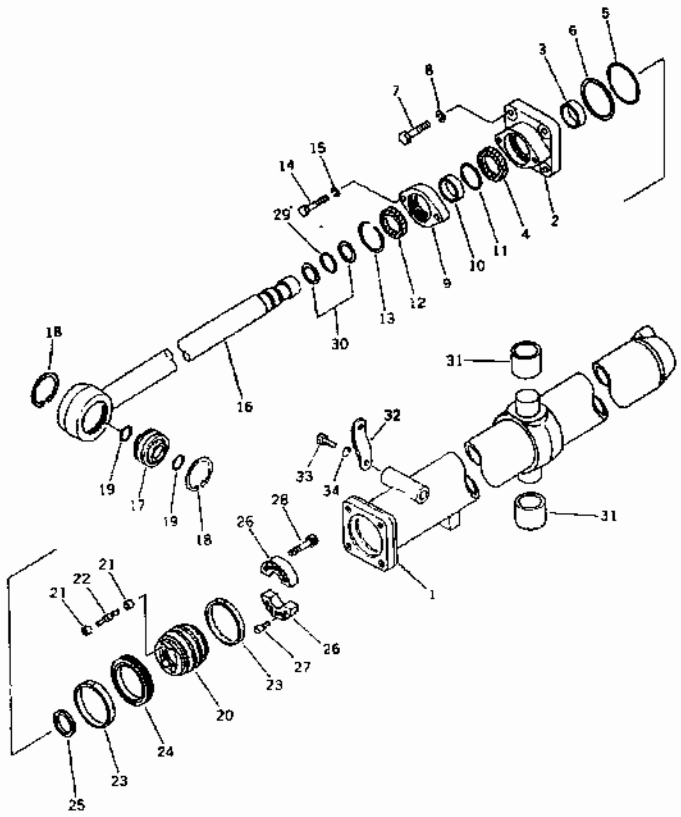

INDEX	PART NO.	DESCRIPTION	Q'TY	SERIAL NO.
G-1	(⊙707-03-X7050)	CYLINDER GROUP, L.H.	1	57049-
G-1	(⊙175-63-X2111)	CYLINDER GROUP, L.H.	1	57001-57048
G-1	(⊙707-03-X7060)	CYLINDER GROUP, R.H.	1	57049-
G-1	(⊙175-63-X2121)	CYLINDER GROUP, R.H.	1	57001-57048
		==========		
	175-63-02111	CYLINDER ASS'Y	1	57001-
1	175-63-22341	.CYLINDER	1	57001-
2	175-63-13131	.HEAD, CYLINDER	1	57001-
3	07177-07530	.BUSHING	1	57001-
4	707-51-75110	.U-PACKING, ROD (KIT)	1	57001-
5	07000-12135	.O-RING (KIT)	1	57001-
6	07146-02136	RING, BACK-UP (KIT)	1	57001-
7	01010-52470	.BOLT	4	57001-
8	01602-22472	.WASHER, SPRING	4	57001-
9	175-63-13630	.GLAND	1	57001-
10	07177-07515	.BUSHING	1	57001-
11	07000-03095	.O-RING (KIT)	1	57001-
12	144-63-94170	.SEAL, DUST (KIT)	1	57001-
13	07179-00097	.RING, SNAP	1	57001-
14	01010-51655	.BOLT	2	57001-
15	01602-21648	.WASHER, SPRING	2	57001-
16	175-63-22320	.ROD, PISTON	1	57001-
17	07137-05008	.BUSHING	1	57001-
	07137-00060	..SEAL, DUST	2	57001-
18	04065-01104	.RING	2	57001-
19	07000-03050	.O-RING (KIT)	2	57001-
	707-91-01450	.PISTON ASS'Y	1	57001-
20	☆	..PISTON	1	57001-
21	☆	..SEAT	8	57001-
22	☆	.VALVE	4	57001-
23	707-39-14820	RING, WEAR (KIT)	2	57001-
24	707-44-14180	.RING, PISTON (KIT)	1	57001-
25	707-40-13051	.RETAINER	1	57001-
26	707-40-14061	.SPACER	2	57001-
27	707-83-10073	.VALVE	4	57001-
28	01252-31235	.BOLT	6	57001-
29	07000-12060	.O-RING (KIT)	1	57001-
30	707-35-52900	.RING, BACK-UP (KIT)	2	57001-
31	175-63-12540	.BUSHING	2	57001-
32	175-63-12370	PLATE	1	57001-
33	01010-51245	BOLT	1	57001-
34	01602-01236	WASHER, SPRING	1	57001-

FIG NO. : Y1620-01A0

INDEX	PART NO	DESCRIPTION	Q'TY	SERIAL NO
		==========		

D155A-2A

FIG. Y1620-02A0 BLADE LIFT CYLINDER (2/2)

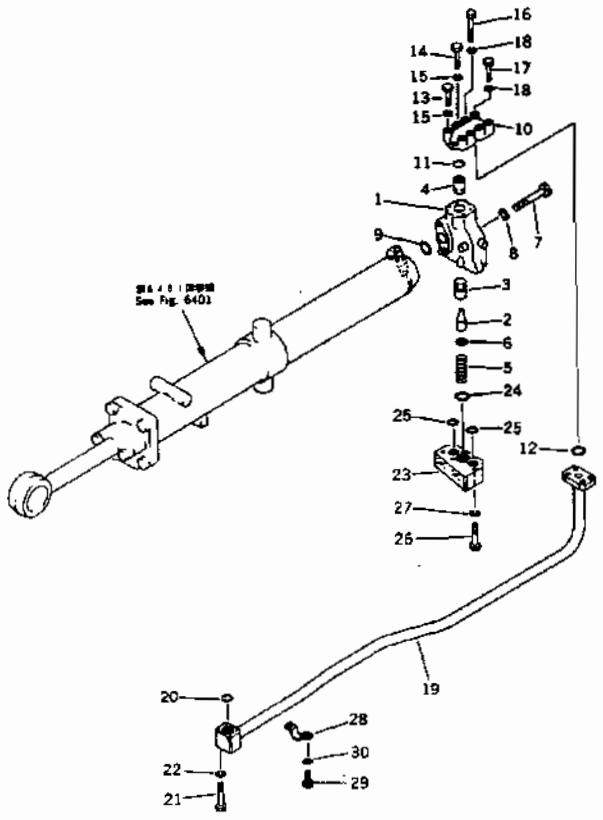

INDEX	PART NO	DESCRIPTION	Q'TY	SERIAL NO
G-1	(⊙707-03-X7050)	CYLINDER GROUP, L. H.	1	57049-
G-1	(⊙175-63-X2111)	CYLINDER GROUP, L. H.	1	57001-57048
G-1	(⊙707-03-X7060)	CYLINDER GROUP, R. H.	1	57049-
G-1	(⊙175-63-X2121)	CYLINDER GROUP, R. H.	1	57001-57048
		==========		
	195-63-14002	VALVE ASS'Y, QUICK DROP	1	57001-
	195-63-00140	. BODY ASS'Y	1	57001-
1	☆	.. BODY	1	57001-
2	☆	.. VALVE	1	57001-
3	☆	.. VALVE	1	57001-
4	195-63-14163	. COLLAR	1	57001-
5	195-63-14180	. SPRING	1	57001-
6	01642-21216	. WASHER	1	57001-
7	01011-51615	. BOLT	2	57001-
8	01602-21648	. WASHER, SPRING	2	57001-
9	07000-12055	O-RING	1	57001-
10	195-63-14130	ELBOW	1	57001-
11	07000-13048	O-RING (KIT)	1	57001-
12	07000-13045	O-RING (KIT)	1	57001-
13	01010-51065	BOLT	2	57001-
14	01010-51075	BOLT	2	57001-
15	01602-21030	WASHER, SPRING	4	57001-
16	01010-51280	BOLT	2	57001-
17	01010-51270	BOLT	2	57001-
18	01602-21236	WASHER, SPRING	4	57001-
19	175-63-13461	TUBE, L. H.	1	57001-
	175-63-13471	TUBE, R. H.	1	57001-
20	07000-13035	O-RING (KIT)	1	57001-
21	01010-51085	BOLT	4	57001-
22	01602-01030	WASHER, SPRING	4	57001-
23	175-63-13562	BLOCK, L. H.	1	57001-
	175-63-13572	BLOCK, R. H.	1	57001-
24	07000-13045	O-RING (KIT)	1	57001-
25	07000-13038	O-RING	2	57001-
26	01010-51275	BOLT	5	57001-
27	01602-21236	WASHER, SPRING	5	57001-
28	07282-03411	CLAMP	1	57001-
29	01010-51020	BOLT	2	57001-
30	01602-21030	WASHER, SPRING	2	57001-
		==========		
K	707-98-53100	SERVICE KIT	2	57001-

FIG. Y1620-31A0 BLADE TILT CYLINDER

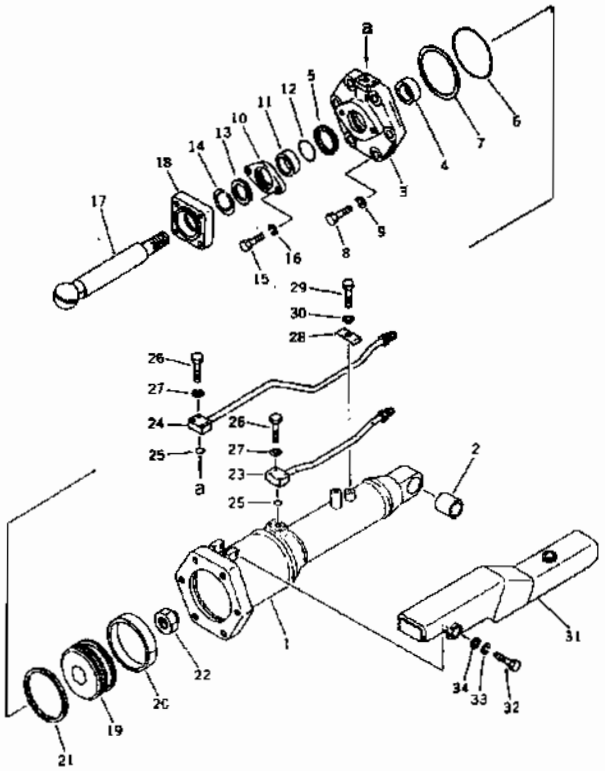

INDEX	PART NO.	DESCRIPTION	Q'TY	SERIAL NO
G-1	(⊙707-04-07060)	CYLINDER ASS'Y	1	57049-
	175-63-52700	CYLINDER ASS'Y	1	57001-
1	175-63-52542	.CYLINDER	1	57001-
2	195-63-52160	.BUSHING, CYLINDER	1	57001-
3	195-63-42133	.HEAD	1	57001-
4	07177-09035	.BUSHING	1	57001-
5	707-51-90110	.U-PACKING, ROD (KIT)	1	57001-
6	07000-15220	.O-RING (KIT)	1	57001-
7	07001-05220	RING, BACK-UP (KIT)	1	57001-
8	01010-83095	.BOLT	6	57001-
9	01601-23075	.WASHER, SPRING	6	57001-
10	195-63-52470	.GLAND	1	57001-
11	07177-09020	.BUSHING	1	57001-
12	07000-03110	.O-RING (KIT)	1	57001-
13	195-63-94170	.SEAL, DUST (KIT)	1	57001-
14	07179-00113	.RING, SNAP	1	57001-
15	01010-31865	.BOLT	2	57001-
16	01602-21854	.WASHER, SPRING	2	57001-
17	175-63-52422	.ROD, PISTON	1	57001-
18	175-71-11211	.CAP	1	57001-
19	707-36-22550	PISTON	1	57001-
20	07155-02250	.RING, WEAR (KIT)	1	57001-
21	707-44-22280	.RING, PISTON (KIT)	1	57001-
22	07165-16870	.NUT	1	57001-
23	175-63-52552	.TUBE	1	57001-
24	175-63-52562	.TUBE	1	57001-
25	07000-13035	.O-RING (KIT)	2	57001-
26	01010-51050	.BOLT	8	57001-
27	01602-21030	WASHER, SPRING	8	57001-
28	195-63-52871	.CLIP	1	57001-
29	01010-51425	.BOLT	1	57001-
30	01602-21442	.WASHER, SPRING	1	57001-
31	175-63-52572	.COVER	1	57001-
32	01010-51440	.BOLT	3	57001-
33	01602-21442	.WASHER, SPRING	3	57001-
34	01643-31445	.WASHER	3	57001-
K	175-63-05140	CYLINDER KIT	1	57001-

FIG. Y1621-01A0 RIPPER LIFT CYLINDER

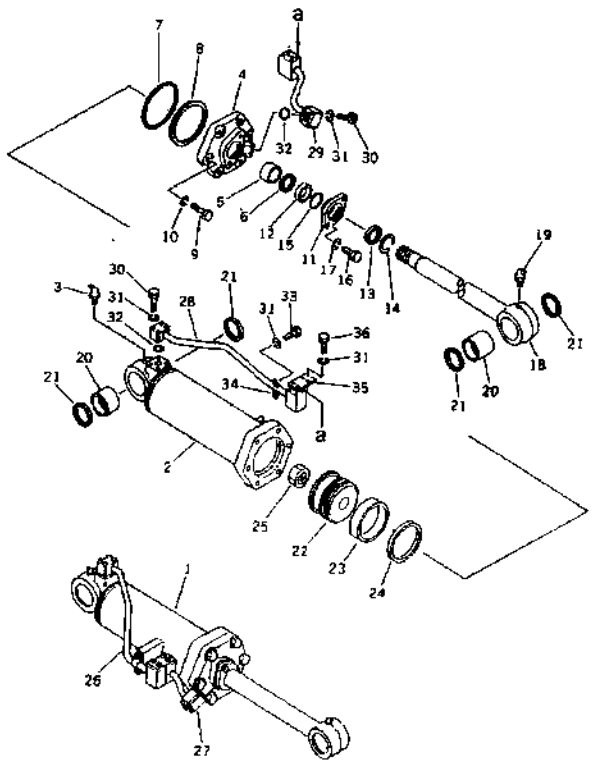

INDEX	PART NO.	DESCRIPTION	Q'TY	SERIAL NO
	175-63-42701	CYLINDER ASS'Y, L.H.	1	57001-
	175-63-42801	CYLINDER ASS'Y, R.H.	1	57001-
1	175-63-42245	.CYLINDER, L.H	1	57001-
2	175-63-42345	.CYLINDER, R.H.	1	57001-
3	07020-00675	.FITTING, GREASE	1	57001-
4	195-63-42133	.HEAD, CYLINDER	1	57001-
5	07177-09035	.BUSHING	1	57001-
6	707-51-90110	.U-PACKING, ROD (KIT)	1	57001-
7	07000-15220	.O-RING (KIT)	1	57001-
8	07001-05220	.RING, BACK-UP (KIT)	1	57001-
9	01010-83095	.BOLT	6	57001-
10	01601-23075	.WASHER, SPRING	6	57001-
11	195-63-52470	GLAND	1	57001-
12	07177-09020	BUSHING	1	57001-
13	195-63-94170	.SEAL, DUST (KIT)	1	57001-
14	07179-00113	.RING, SNAP	1	57001-
15	07000-03110	O-RING (KIT)	1	57001-
16	01010-51865	.BOLT	2	57001-
17	01602-21854	.WASHER, SPRING	2	57001-
18	175-63-42221	.ROD, PISTON	1	57001-
19	07020-00900	.FITTING, GREASE	1	57001-
20	07144-11110	.BUSHING	2	57001-
21	07145-00110	.SEAL, DUST (KIT)	4	57001-
22	707-36-22550	PISTON	1	57001-
23	07155-02250	.RING, WEAR (KIT)	1	57001-
24	707-44-22280	.RING, PISTON (KIT)	1	57001-
25	175-63-52432	.NUT, NYLON	1	57001-
26	175-63-42581	.TUBE, L.H.	1	57001-
27	175-63-42482	.TUBE, L.H.	1	57001-
28	175-63-42591	.TUBE, R.H.	1	57001-
29	175-63-42491	.TUBE, R.H.	1	57001-
30	01010-51080	.BOLT	8	57001-
31	01602-21030	.WASHER, SPRING	14	57001-
32	07000-13038	.O-RING (KIT)	2	57001-
33	01010-51020	.BOLT	2	57001-
34	07282-03411	.CLAMP	1	57001-
35	175-63-42790	.PLATE	1	57001-
36	01010-51025	BOLT	4	57001-
K	707-99-71420	SERVICE KIT	2	57001-

FIG. Y1621-11A0 RIPPER TILT CYLINDER (FOR VARIABLE TYPE RIPPER)

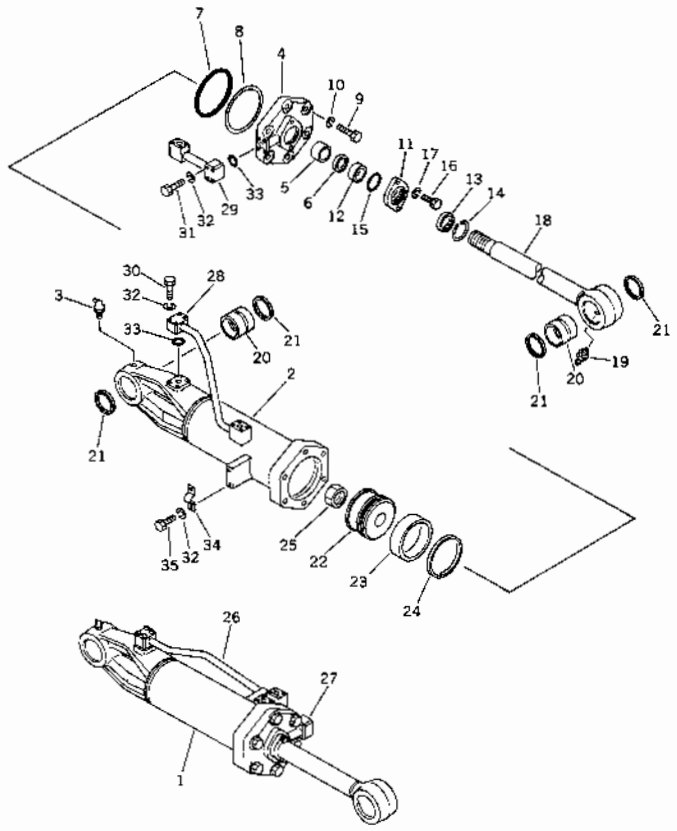

INDEX	PART NO	DESCRIPTION	Q'TY	SERIAL NO
	175-63-43700	CYLINDER ASS'Y, L.H.	1	57001-
	175-63-43800	CYLINDER ASS'Y, R.H.	1	57001-
1	175-63-43142	. CYLINDER, L.H.	1	57001-
2	175-63-43242	. CYLINDER, R.H.	1	57001-
3	07020-00675	. FITTING, GREASE	1	57001-
4	195-63-42133	. HEAD, CYLINDER	1	57001-
5	07177-09035	. BUSHING	1	57001-
6	707-51-90110	. U-PACKING, ROD (KIT)	1	57001-
7	07000-15220	. O-RING (KIT)	1	57001-
8	07001-05220	. RING, BACK-UP (KIT)	1	57001-
9	01010-83095	. BOLT	6	57001-
10	01601-23075	. WASHER, SPRING	6	57001-
11	195-63-52470	. GLAND	1	57001-
12	07177-09020	. BUSHING	1	57001-
13	195-63-94170	. SEAL, DUST (KIT)	1	57001-
14	707-75-90011	. RING, SNAP	1	57001-
	□07179-00113	. RING, SNAP	1	57001-.
15	07000-03110	. O-RING (KIT)	1	57001-
16	01010-51865	. BOLT	2	57001-
17	01602-21854	. WASHER, SPRING	2	57001-
18	175-63-43121	. ROD, PISTON	1	57001-
19	07020-00000	. FITTING, GREASE	1	57001-
20	07144-11110	. BUSHING	2	57001-
21	07145-00110	. SEAL, DUST (KIT)	4	57001-
22	707-36-22550	. PISTON	1	57001-
23	07155-02250	. RING, WEAR (KIT)	1	57001-
24	707-44-22280	. RING, PISTON (KIT)	1	57001-
25	175-63-52432	. NUT, NYLON	1	57001-
26	175-63-43171	. TUBE, L.H.	1	57001-
27	175-63-43271	. TUBE, L.H.	1	57001-
28	175-63-43181	. TUBE, R.H.	1	57001-
29	175-63-43281	. TUBE, R.H.	1	57001-
30	01010-51080	. BOLT	4	57001-
31	01010-51065	. BOLT	4	57001-
32	01602-21030	. WASHER, SPRING	10	57001-
33	07000-13038	. O-RING (KIT)	2	57001-
34	07282-03411	. CLAMP	1	57001-
35	01010-51020	. BOLT	2	57001-
K	707-99-71420	SERVICE KIT	2	57001-

FIG. Y1621-21A0 PIN PULLER CYLINDER (FOR GIANT RIPPER)

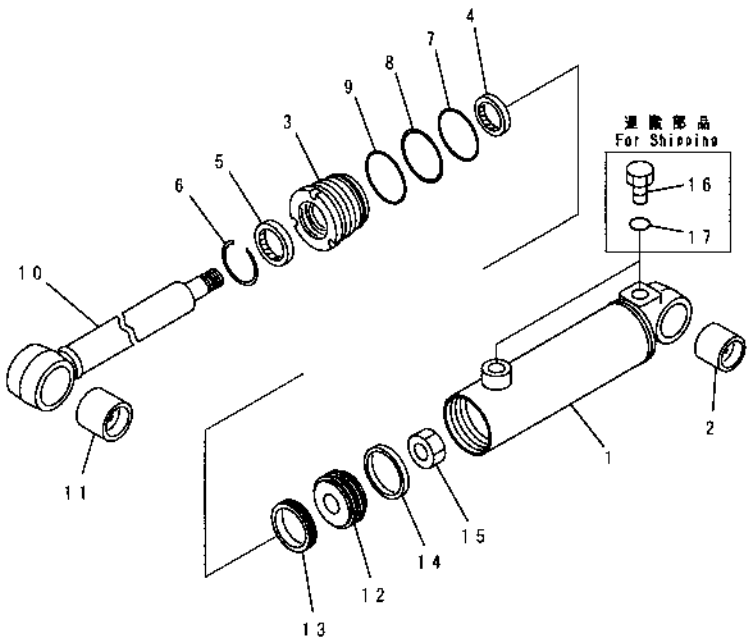

PWB6832

INDEX	PART NO	DESCRIPTION	Q'TY	SERIAL NO
	175-63-02180	CYLINDER ASS'Y	1	57001-
1	175-63-49440	.CYLINDER	1	57001-
2	175-63-49170	.BUSHING	1	57001-
3	707-29-70360	.HEAD, CYLINDER	1	57001-
4	707-51-35210	.PACKING, ROD (KIT)	1	57001-
5	175-63-75190	.SEAL, DUST (KIT)	1	57001-
6	07179-12047	.RING, SNAP	1	57001-
7	07000-12065	.O-RING (KIT)	1	57001-
8	07146-02066	.RING, BACK-UP (KIT)	1	57001-
9	07000-02070	.O-RING (KIT)	1	57001-
10	175-63-49420	.ROD, PISTON	1	57001-
11	175-63-49170	.BUSHING	1	57001-
12	707-36-70930	.PISTON	1	57001-
13	707-44-70070	.RING, PISTON (KIT)	1	57001-
14	07156-00710	.RING, WEAR (KIT)	1	57001-
15	01580-02419	.NUT	1	57001-
16	07040-12012	.PLUG	2	57001-
17	07002-02034	.O-RING	2	57001-
K	707-98-12460	SERVICE KIT	1	57001-

FIG. Y1660-01A0 TANK VALVE (1/5)

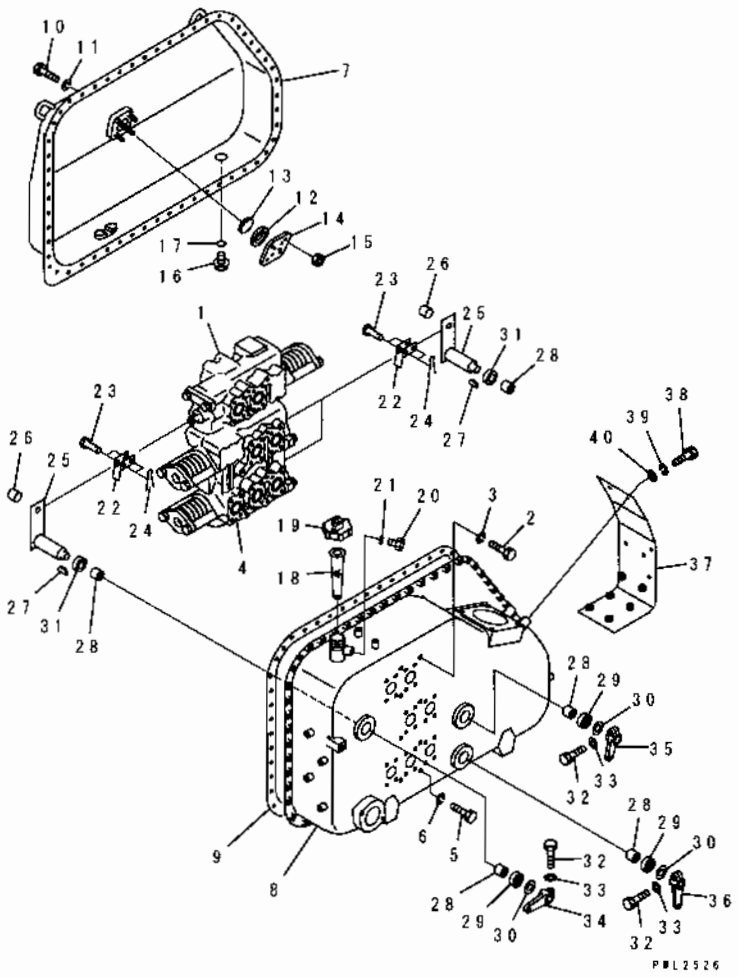

INDEX	PART NO	DESCRIPTION	Q'TY	SERIAL NO
	175-60-72000	TANK VALVE ASS'Y. THIS ASSEMBLY CONSISTS OF ALL PARTS SHOWN IN FIGS. Y1660-01A0 TO Y1660-05A0.	1	57001-
1	701-41-11006	.VALVE ASS'Y, BLADE TILT.	1	57001-
2	01010-81230	.BOLT.	3	57001-
3	01602-21236	.WASHER, SPRING.	3	57001-
4	701-43-28000	.VALVE ASS'Y, BLADE LIFT AND RIPPER.	1	57001-
5	01010-81230	.BOLT.	4	57001-
6	01602-21236	.WASHER, SPRING.	4	57001-
7	175-60-58120	.TANK, HYDRAULIC.	1	57001-
8	175-60-58110	.TANK, HYDRAULIC.	1	57001-
9	175-60-27133	.GASKET.	1	57001-
10	01010-81025	BOLT.	55	57001-
11	01602-21030	.WASHER, SPRING	55	57001-
12	07715-11257	.RING.	1	57001-
13	07715-00651	.COVER.	1	57001-
14	07715-21074	.CASE.	1	57001-
15	01598-11011	.NUT.	4	57001-
16	07044-13620	.PLUG, DRAIN.	1	57001-
17	07002-03634	.O-RING.	1	57001-
18	07056-10045	.STRAINER.	1	57001-
19	07051-00000	.CAP	1	57001-
	07051-00003	..GASKET.	1	57001-
20	701-30-63130	.PLUG.	1	57001-
21	07002-02034	O-RING.	1	57001-
22	141-60-32170	YOKE.	6	57001-
23	04205-01028	.PIN.	6	57001-
24	04050-03015	.PIN, COTTER.	6	57001-
25	175-60-29140	.LEVER.	3	57001-
26	06600-01008	. BUSHING.	3	57001-
27	04010-00519	.KEY.	3	57001-
28	06120-02520	.BEARING.	6	57001-
29	154-60-12370	.SEAL.	3	57001-
30	01640-22440	.WASHER.	3	57001-
31	175-60-29150	.WASHER	3	57001-
32	01010-81040	BOLT.	3	57001-
33	01602-21030	.WASHER, SPRING.	3	57001-
34	175-60-29120	.LEVER.	1	57001-
35	195-60-13120	.LEVER.	1	57001-
36	175-60-27310	.LEVER.	1	57001-
37	175-60-27371	.BRACKET.	1	57001-
38	01010-81235	.BOLT.	4	57001-

FIG NO. : Y1660-01A0

FIG. Y1660-01A0 TANK VALVE (1/5)

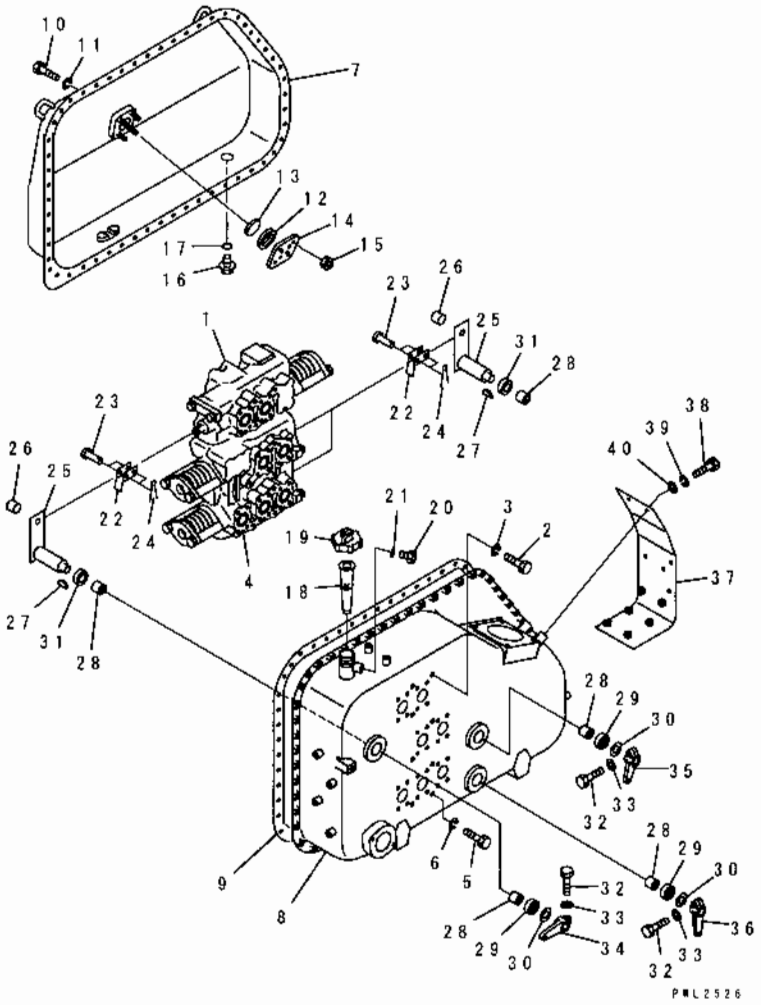

INDEX	PART NO.	DESCRIPTION	Q'TY	SERIAL NO
39	01602-21236	.WASHER, SPRING.....	4	57001-
40	01643-31232	WASHER.....	4	57001-

FIG. Y1660-02A0 TANK VALVE (2/5)

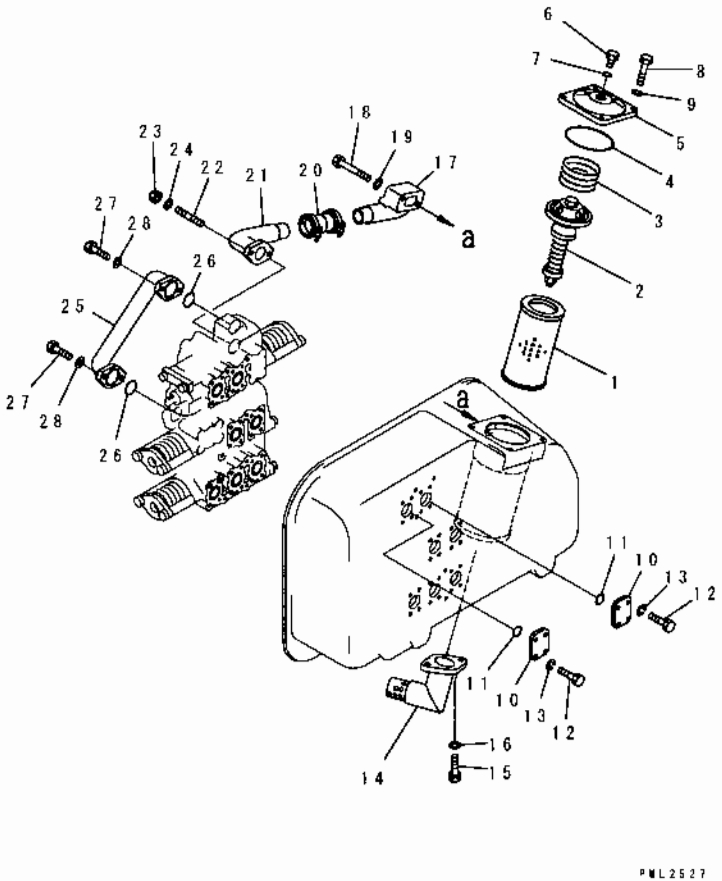

INDEX	PART NO	DESCRIPTION	Q'TY	SERIAL NO
	(175-60-72000)	TANK VALVE ASS'Y THIS ASSEMBLY CONSISTS OF ALL PARTS SHOWN IN FIGS. Y1660-01A0 TO Y1660-05A0.	1	57001-
1	175-60-27380	. ELEMENT, FILTER	1	57001-
2	175-60-27300	VALVE ASS'Y	1	57001-
3	175-60-27340	. SPRING	1	57001-
4	07000-05150	. O-RING	1	57001-
5	175-60-27171	. COVER	1	57001-
6	154-60-12260	. PLUG	1	57001-
7	07000-02010	. O-RING	1	57001-
8	01010-81235	. BOLT	4	57001-
9	01602-21236	. WASHER, SPRING	4	57001-
10	07378-01460	. FLANGE	2	57001-
11	07000-13048	O-RING	2	57001-
12	01010-81240	. BOLT	8	57001-
13	01602-21236	. WASHER, SPRING	8	57001-
14	175-60-29130	. BAFFLE	1	57001-
15	01010-81230	. BOLT	2	57001-
16	01643-51232	. WASHER	2	57001-
17	175-60-27262	TUBE	1	57001-
18	01010-81275	. BOLT	2	57001-
19	01643-51232	. WASHER	2	57001-
20	07332-01400	. COUPLING ASS'Y	1	57001-
21	175-60-27272	. TUBE	1	57001-
22	01144-31435	. STUD	2	57001-
23	01580-01411	. NUT	2	57001-
24	20D-14-11510	. WASHER	2	57001-
25	175-60-27253	. TUBE	1	57001-
26	07000-13050	. O-RING	2	57001-
27	01010-31445	. BOLT	4	57001-
28	20D-14-11510	. WASHER	4	57001-

FIG. Y1660-03A0 TANK VALVE (3/5)

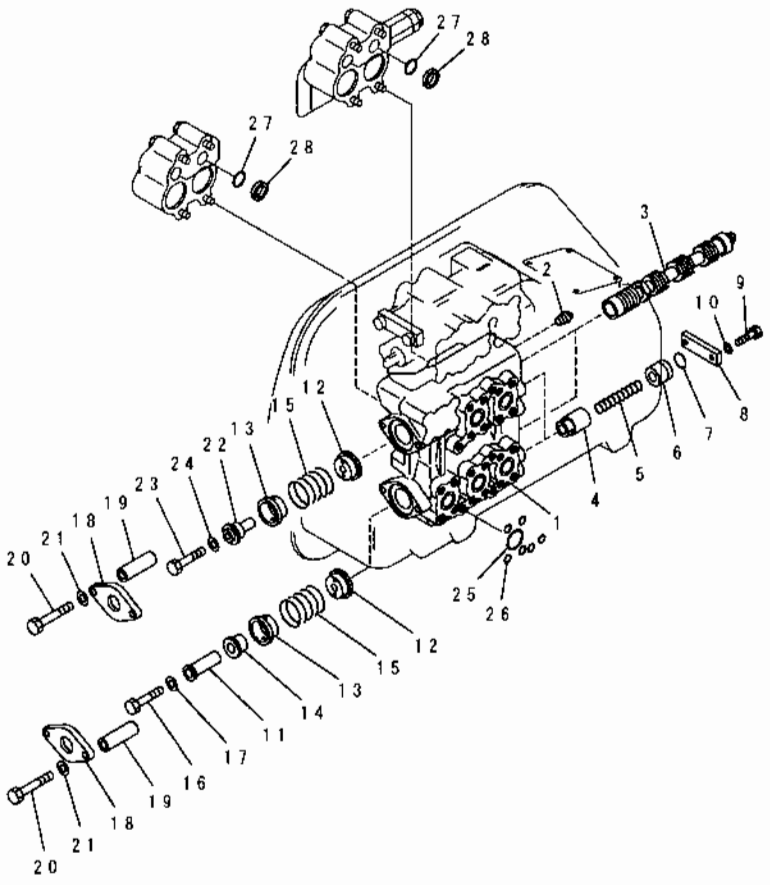

INDEX	PART NO.	DESCRIPTION	Q'TY	SERIAL NO
	(175-60-72000)	TANK VALVE ASS'Y.	1	57001-
		THIS ASSEMBLY CONSISTS OF ALL PARTS SHOWN IN FIGS. Y1660-01A0 TO Y1660-05A0.		
	701-43-28000	. VALVE ASS'Y, BLADE LIFT AND RIPPER.	1	57001-
	701-43-41002	. . VALVE BODY ASS'Y.	1	57001-
	701-43-00015	. . . BODY SUB ASS'Y.	1	57001-
1	☆	. . . BODY.	1	57001-
2	07042-00415	. . . PLUG.	2	57001-
3	☆	. . . SPOOL.	2	57001-
4	701-43-31420	. . . VALVE.	2	57001-
5	701-53-31130	. . . SPRING	2	57001-
6	701-43-33130	. . . SEAT, SPRING.	2	57001-
7	07000-13035	. . . O-RING.	2	57001-
8	701-53-31160	. . . PLATE.	2	57001-
9	01010-31445	. . . BOLT	4	57001-
10	20D-14-11510	. . . WASHER.	4	57001-
11	701-43-31440	. . COLLAR	1	57001-
12	701-43-31181	. . . SPACER.	2	57001-
13	701-43-31191	. . . SPACER.	2	57001-
14	701-43-31211	. . COLLAR.	1	57001-
15	701-43-31221	. . . SPRING, RETURN.	2	57001-
16	01010-81295	. . . BOLT.	1	57001-
17	01643-51232	. . WASHER.	1	57001-
18	701-43-31460	. . . PLATE.	2	57001-
19	701-43-31470	. . COLLAR.	4	57001-
20	01011-81215	. . BOLT.	4	57001-
21	01643-51232	. . . WASHER.	4	57001-
22	701-43-31291	. . . COLLAR.	1	57001-
23	01010-81290	. . BOLT.	1	57001-
24	01643-51232	. . . WASHER.	1	57001-
25	701-51-31250	. . . O-RING.	5	57001-
26	07000-02015	. . . O-RING.	25	57001-
27	07000-13035	. . . O-RING.	4	57001-
28	701-40-61180	. . . RING.	4	57001-

FIG. Y1660-04A0 TANK VALVE (4/5)

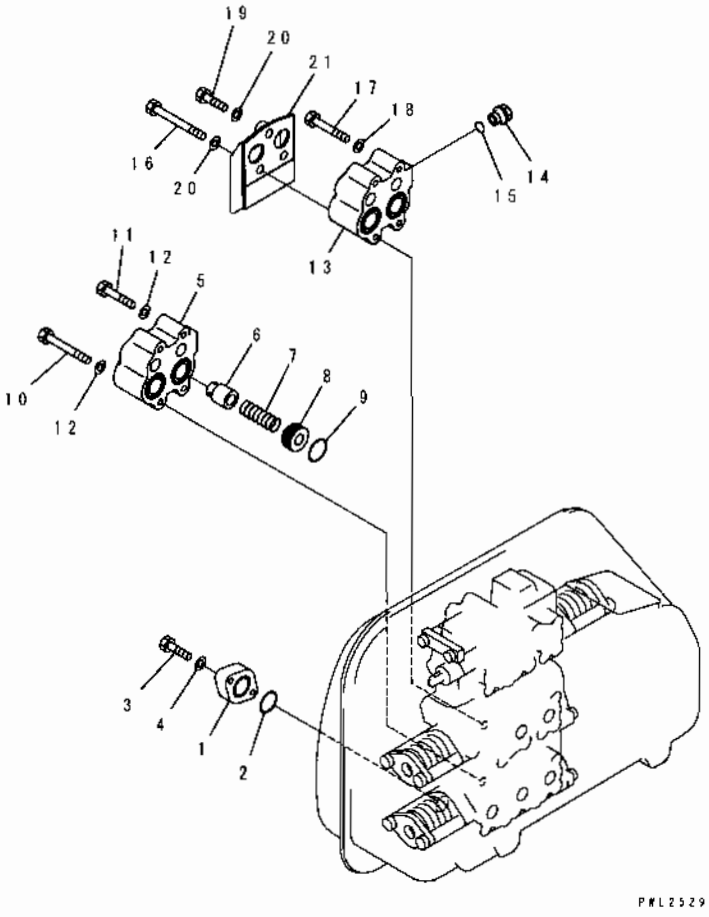

INDEX	PART NO	DESCRIPTION	Q'TY	SERIAL NO.
	(175-60-72000)	TANK VALVE ASS'Y THIS ASSEMBLY CONSISTS OF ALL PARTS SHOWN IN FIGS. Y1660-01A0 TO Y1660-05A0	1	57001-
	(701-43-28000)	. VALVE ASS'Y, BLADE LIFT AND RIPPER	1	57001-
1	701-41-36120	.. PLATE	1	57001-
2	07000-13050	.. O-RING	1	57001-
3	01010-61450	.. BOLT	2	57001-
4	20D-14-11510	. WASHER	2	57001-
	701-40-61002	.. VALVE ASS'Y, SUCTION	1	57001-
5	701-40-61152	... HOUSING	1	57001-
6	701-40-61120	... VALVE	2	57001-
7	701-50-61131	... SPRING	2	57001-
8	701-40-72120	.. SEAT	2	57001-
9	07000-13040	... O-RING	2	57001-
10	01011-31420	... BOLT	2	57001-
11	01010-31495	... BOLT	2	57001-
12	20D-14-11510	... WASHER	4	57001-
	701-40-81000	.. VALVE ASS'Y, SAFETY AND SUCTION	1	57001-
13	701-40-62162	... HOUSING	1	57001-
14	07041-13012	... PLUG	1	57001-
15	07002-13034	... O-RING	1	57001-
16	01011-31465	... BOLT	2	57001-
17	01010-31495	.. BOLT	2	57001-
18	20D-14-11510	... WASHER, SAFETY	2	57001-
19	☆	... BOLT	1	57001-
20	☆	... WASHER, VALVE	3	57001-
21	☆	... BAFFLE	1	57001-

FIG. Y1660-05A0 TANK VALVE (5/5)

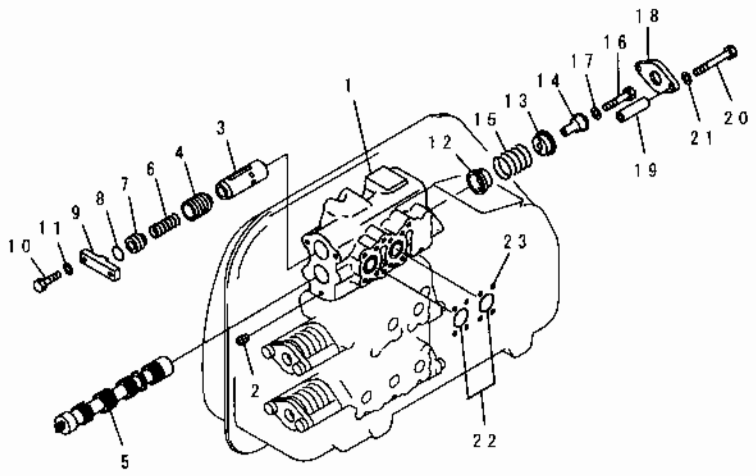

INDEX	PART NO	DESCRIPTION	Q TY	SERIAL NO.
	(175-60-72000)	TANK VALVE ASS'Y.	1	57001-
		THIS ASSEMBLY CONSISTS OF ALL PARTS SHOWN IN FIGS Y1660-01A0 TO Y1660-05A0.		
	701-41-11006	.VALVE ASS'Y, BLADE TILT	1	57001-
	701-41-00016	..VALVE BODY ASS'Y	1	57001-
1	☆	. BODY	1	57001-
2	07042-00415	...PLUG	1	57001-
3	☆	. COLLAR	1	57001-
4	701-41-31130	...VALVE	1	57001-
5	☆	...SPOOL	1	57001-
6	701-41-31180	.SPRING	1	57001-
7	701-41-31150	..SEAT	1	57001-
8	07000-13028	..O-RING	1	57001-
9	701-51-31172	..PLATE	1	57001-
10	01010-31450	..BOLT	2	57001-
11	20D-14-11510	..WASHER	2	57001-
12	701-43-31181	..SPACER	1	57001-
13	701-43-31191	..SPACER	1	57001-
14	701-43-31291	..COLLAR	1	57001-
15	701-43-31221	..SPRING	1	57001-
16	01010-81290	..BOLT	1	57001-
17	01643-51232	..WASHER	1	57001-
18	701-43-31460	..PLATE	1	57001-
19	701-43-31470	..COLLAR	2	57001-
20	01011-81215	..BOLT	2	57001-
21	01643-51232	..WASHER	2	57001-
22	701-51-31250	. O-RING	2	57001-
23	07000-02015	. O-RING	11	57001-

FIG. Y1660-21A0 CONTROL VALVE (1/2)

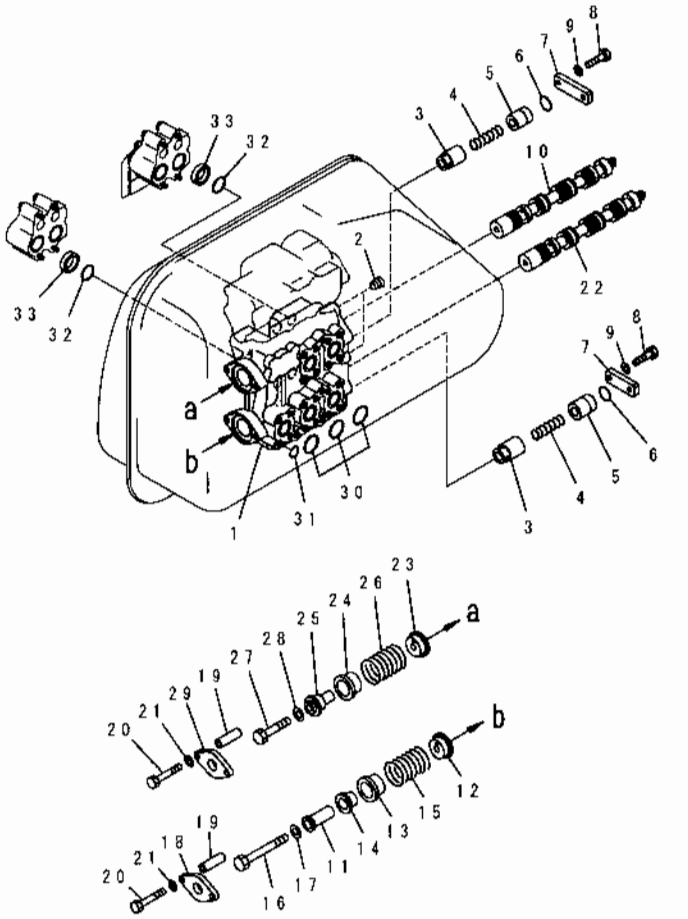

INDEX	PART NO	DESCRIPTION	Q'TY	SERIAL NO.
	701-43-28000	VALVE ASS'Y.	1	57001-
		THIS ASSEMBLY CONSISTS OF ALL PARTS SHOWN IN FIGS. Y1660-11A0 TO Y1660-13A0		
	701-43-41002	. VALVE BODY ASS'Y.	1	57001-
	701-43-00015	.. BODY SUB ASS'Y.	1	57001-
1	☆	.. BODY, VALVE.	1	57001-
2	07042-00415	.. PLUG.	2	57001-
3	701-43-31420	.. VALVE, CHECK.	2	57001-
4	701-53-31130	.. SPRING.	2	57001-
5	701-43-33130	. SEAT.	2	57001-
6	07000-13035	.. O-RING.	2	57001-
7	701-53-31160	.. PLATE.	2	57001-
8	01010-31445	.. BOLT.	4	57001-
9	20D-14-11510	.. WASHER.	4	57001-
10	☆	.. SPOOL.	1	57001-
11	701-43-31440	.. COLLAR.	1	57001-
12	701-43-31181	.. SPACER.	1	57001-
13	701-43-31191	.. SPACER.	1	57001-
14	701-43-31211	.. COLLAR	1	57001-
15	701-43-31221	.. SPRING.	1	57001-
16	01010-81295	.. BOLT.	1	57001-
17	01643-51232	.. WASHER.	1	57001-
18	701-43-31460	.. PLATE.	1	57001-
19	701-43-31470	.. COLLAR.	4	57001-
20	01011-81215	.. BOLT.	4	57001-
21	01643-51232	.. WASHER.	4	57001-
22	☆	.. SPOOL.	1	57001-
23	701-43-31181	. SPACER.	1	57001-
24	701-43-31191	. SPACER.	1	57001-
25	701-43-31291	.. COLLAR.	1	57001-
26	701-43-31221	.. SPRING.	1	57001-
27	01010-81290	.. BOLT.	1	57001-
28	01643-51232	.. WASHER.	1	57001-
29	701-43-31460	.. PLATE.	1	57001-
30	701-51-31250	.. O-RING.	5	57001-
31	07000-02015	.. O-RING.	25	57001-
32	07000-13035	. O-RING.	4	57001-
33	701-40-61180	.. RING, BACK-UP.	4	57001-

FIG. Y1660-22A0 CONTROL VALVE (2/2)

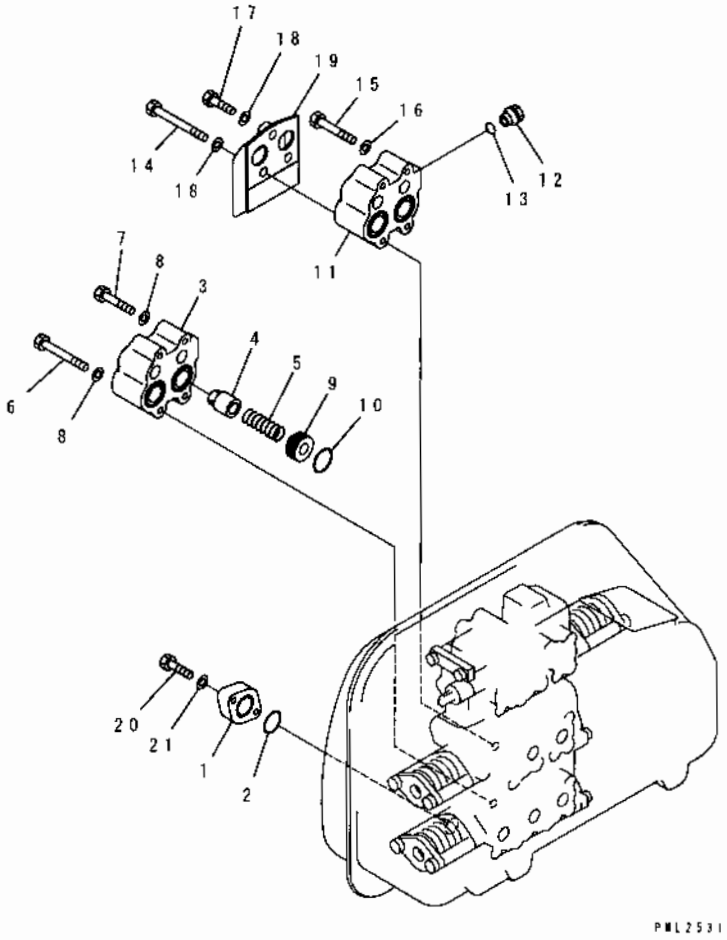

INDEX	PART NO.	DESCRIPTION	Q'TY	SERIAL NO.
	(701-43-28000)	VALVE ASS'Y THIS ASSEMBLY CONSISTS OF ALL PARTS SHOWN IN FIGS. Y1660-11A0 TO Y1660-13A0.	1	57001-
1	701-41-36120	.PLATE	1	57001-
2	07000-13050	.O-RING	1	57001-
	701-40-61002	.VALVE ASS'Y	1	57001-
3	701-40-61152	..HOUSING, SUCTION VALVE	1	57001-
4	701-40-61120	..VALVE, SUCTION	2	57001-
5	701-50-61131	..SPRING	2	57001-
6	01011-31420	..BOLT	2	57001-
7	01010-31495	.BOLT	2	57001-
8	20D-14-11510	..WASHER	4	57001-
9	07000-13040	.O-RING	2	57001-
10	701-40-72120	..SEAT	2	57001-
	701-40-81000	.VALVE ASS'Y, SUCTION AND SAFETY	1	57001-
11	701-40-62162	..HOUSING, SUCTION VALVE	1	57001-
12	07041-13012	..PLUG	1	57001-
13	07002-13034	..O-RING	1	57001-
14	01011-31465	..BOLT	2	57001-
15	01010-31495	..BOLT	2	57001-
16	20D-14-11510	..WASHER	2	57001-
17	01010-31450	..BOLT	1	57001-
18	01643-31445	..WASHER	3	57001-
19	701-40-81170	..BAFFLE	1	57001-
20	01010-61450	BOLT	2	57001-
21	20D-14-11510	.WASHER	2	57001-

FIG. Y1662-01A0 CONTROL VALVE (BLADE) (1/2)

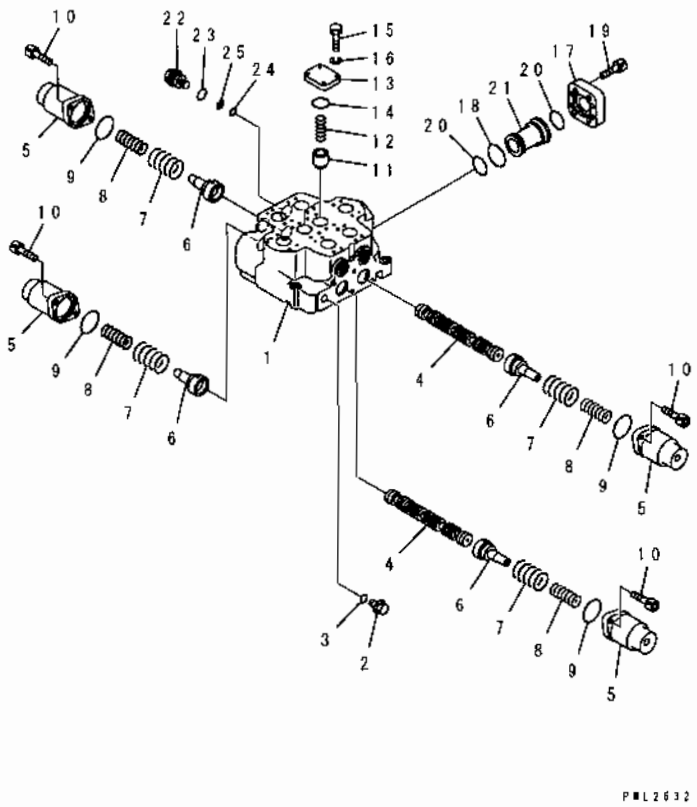

INDEX	PART NO.	DESCRIPTION	Q'TY	SERIAL NO.
	709-12-13800	VALVE ASS'Y.	2	57001-
		THIS ASSEMBLY CONSISTS OF ALL PARTS SHOWN IN FIGS. Y1662-01A0 TO Y1662-02A0.		
	709-12-00150	. BODY GROUP ASS'Y.	1	57001-
1	☆	.. BODY, VALVE.	1	57001-
2	700-22-11370	.. PLUG.	1	57001-
3	07002-12434	.. O-RING.	1	57001-
4	☆	. SPOOL.	2	57001-
5	709-14-11520	.. CASE.	4	57001-
6	709-14-11530	.. RETAINER.	4	57001-
7	709-14-11550	.. SPRING.	4	57001-
8	709-12-12280	.. SPRING.	4	57001-
9	07000-12065	.. O-RING	4	57001-
10	01252-61035	.. BOLT.	8	57001-
11	709-12-11411	. VALVE.	2	57001-
12	709-12-11430	.. SPRING.	2	57001-
13	709-12-12440	.. PLATE.	2	57001-
14	07000-13048	.. O-RING.	2	57001-
15	01010-81250	.. BOLT.	8	57001-
16	01602-21236	.. WASHER, SPRING.	8	57001-
17	709-12-12612	.. FLANGE.	1	57001-
18	07000-12060	.. O-RING	1	57001-
19	01252-61235	.. BOLT.	4	57001-
20	07000-12055	.. O-RING.	2	57001-
21	709-12-12710	.. FLANGE.	1	57001-
22	700-94-11260	PLUG.	1	57001-
23	07002-13634	. O-RING.	1	57001-
24	07000-12018	. O-RING.	1	57001-
25	07001-02018	. RING, BACK-UP.	1	57001-

FIG. Y1662-02A0 CONTROL VALVE (BLADE) (2/2)

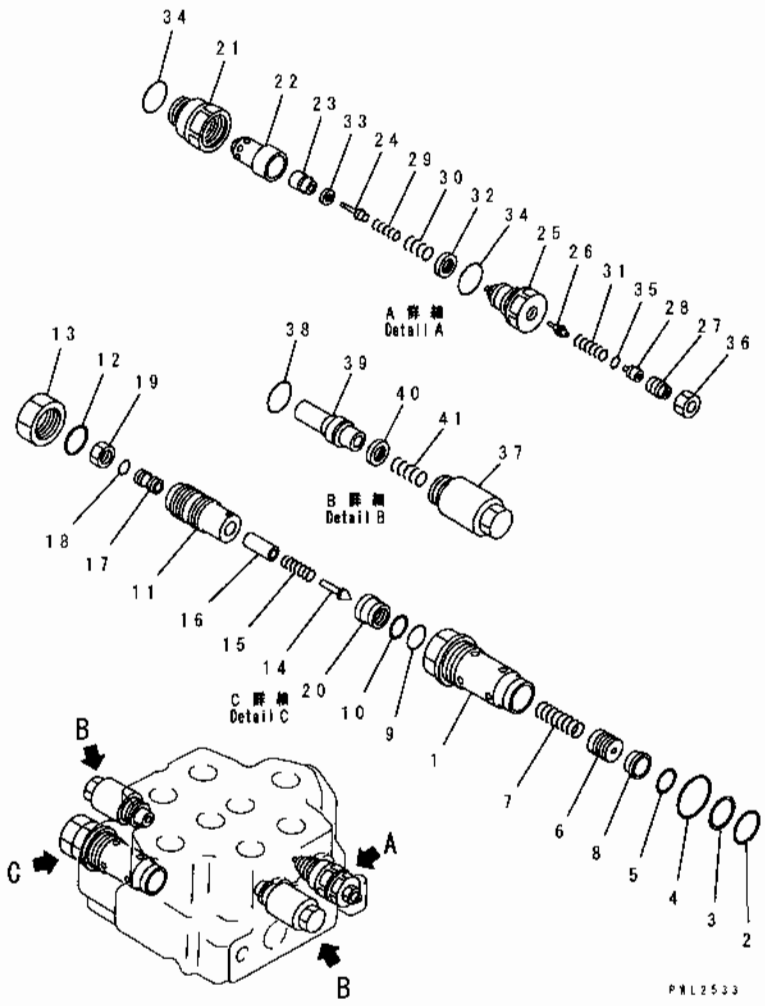

INDEX	PART NO.	DESCRIPTION	Q'TY	SERIAL NO.
	(709-12-13800)	VALVE ASS'Y. THIS ASSEMBLY CONSISTS OF ALL PARTS SHOWN IN FIGS. Y1662-01A0 TO Y1662-02A0.	2	57001-
	709-10-54500	.VALVE ASS'Y, RELIEF	1	57001-
1	☆	..SLEEVE	1	57001-
2	07000-13032	..O-RING	1	57001-
3	07001-03032	..RING, BACK-UP	1	57001-
4	07002-15234	..O-RING	1	57001-
5	☆	..RING, SNAP	1	57001-
6	☆	..VALVE	1	57001-
7	☆	..SPRING	1	57001-
8	☆	..RETAINER	1	57001-
9	☆	..O-RING	1	57001-
10	☆	..RING, BACK-UP	1	57001-
11	☆	..HOLDER	1	57001-
12	☆	..O-RING	1	57001-
13	☆	..NUT	1	57001-
14	☆	.POPPET	1	57001-
15	☆	..SPRING	1	57001-
16	☆	..RETAINER	1	57001-
17	☆	..SCREW	1	57001-
18	☆	..O-RING	1	57001-
19	☆	..NUT	1	57001-
20	☆	..SEAT	1	57001-
	709-90-71700	.VALVE ASS'Y, SUCTION AND SAFETY	1	57001-
21	☆	..SLEEVE	1	57001-
22	☆	..SLEEVE	1	57001-
23	☆	..POPPET	1	57001-
24	☆	..PISTON	1	57001-
25	☆	..PLUG	1	57001-
26	☆	..POPPET	1	57001-
27	☆	..SCREW	1	57001-
28	☆	..SPACER	1	57001-
29	☆	..SPRING	1	57001-
30	☆	..SPRING	1	57001-
31	☆	..SPRING	1	57001-
32	☆	..SEAL	1	57001-
33	☆	..SEAL	1	57001-
34	07002-13634	..O-RING	2	57001-
35	☆	..O-RING	1	57001-
36	☆	..NUT	1	57001-
	700-90-74001	.VALVE ASS'Y, SUCTION	2	57001-

FIG NO. : Y1662-02A0

INDEX	PART NO	DESCRIPTION	Q'TY	SERIAL NO.
37	☆	. SLEEVE	1	57001-
38	07002-03634	. . O-RING	1	57001-
39	☆	. . VALVE	1	57001-
40	☆	. . SEAL	1	57001-
41	☆	. . SPRING	1	57001-

D155A-2A

FIG. Y1672-01A0 SAFETY VALVE

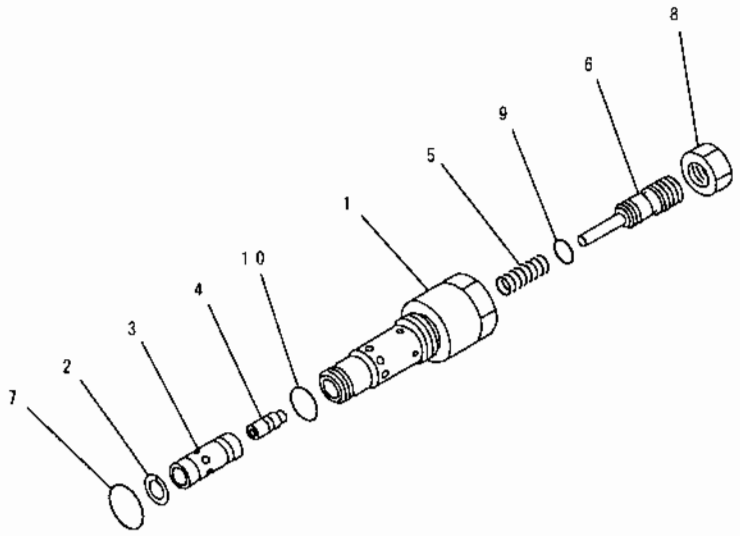

PLA1871

INDEX	PART NO.	DESCRIPTION	Q'TY	SERIAL NO
	708-23-00910	RELIEF VALVE ASS'Y.	1	57001-
1	708-23-14710	.SLEEVE.	1	57001-
2	708-23-14820	.RING.	1	57001-
3	708-23-14930	.VALVE.	1	57001-
4	708-23-14950	.PISTON.	1	57001-
5	708-23-14740	.SPRING.	1	57001-
6	708-23-14760	.SCREW.	1	57001-
7	07002-02434	.O-RING.	1	57001-
8	706-73-75350	.NUT.	1	57001-
9	07000-02010	.O-RING.	1	57001-
10	700-22-11410	.O-RING.	1	57001-

FIG. Y1679-01A0 BLADE LIFT SERVO VALVE

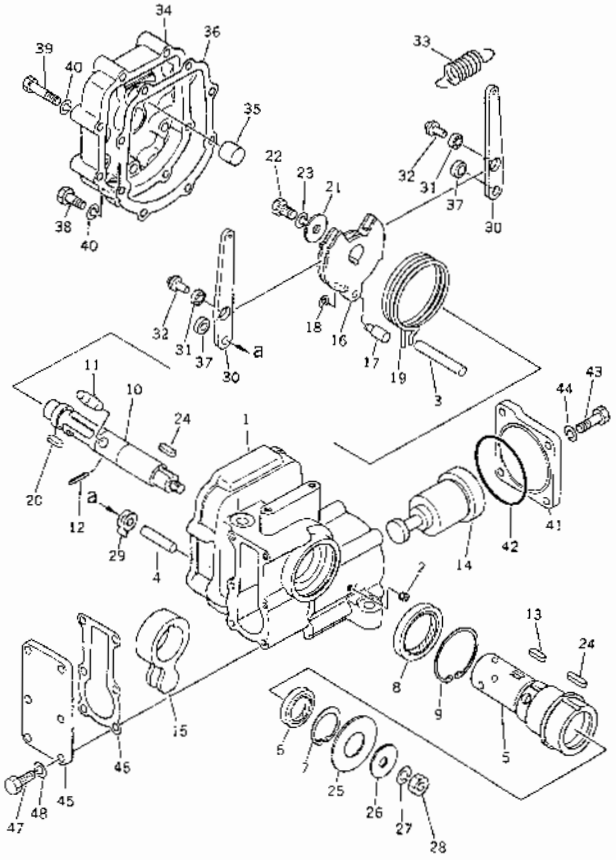

INDEX	PART NO	DESCRIPTION	Q'TY	SERIAL NO
	702-12-13002	SERVO VALVE ASS'Y	1	57001-
1	☆	. HOUSING	1	57001-
2	07043-00108	. PLUG	2	57001-
3	702-12-12140	. PIN	1	57001-
4	702-12-12150	. PIN	2	57001-
5	☆	SLEEVE	1	57001-
6	702-12-12390	. SEAL, OIL	1	57001-
7	04065-04018	. RING, SNAP	1	57001-
8	702-12-12410	. SEAL, OIL	1	57001-
9	04065-06020	. RING, SNAP	1	57001-
10	☆	. ROTOR	1	57001-
11	702-12-12180	. PIN	1	57001-
12	04025-00316	. PIN, SPRING	1	57001-
13	04000-00520	. KEY	1	57001-
14	☆	. PISTON	1	57001-
15	702-12-12210	. LEVER	1	57001-
16	702-12-12221	. DETENT	1	57001-
17	702-12-12230	. PIN	1	57001-
18	702-12-12240	RING, SNAP	1	57001-
19	702-12-12251	. SPRING	1	57001-
20	04000-00515	. KEY	1	57001-
21	702-12-12420	. WASHER	1	57001-
22	01010-80816	. BOLT	1	57001-
23	01602-20825	. WASHER, SPRING	1	57001-
24	04000-00520	. KEY	2	57001-
25	702-12-12280	. WASHER	1	57001-
26	702-12-12270	. WASHER	1	57001-
27	01580-11008	NUT	1	57001-
28	01602-21030	. WASHER, SPRING	1	57001-
29	01641-21016	. WASHER	4	57001-
30	702-12-12291	. LEVER	2	57001-
31	702-12-12310	. BEARING	2	57001-
32	702-12-12320	. ROLLER	2	57001-
33	702-12-12331	. SPRING	1	57001-
34	702-12-13120	. COVER	1	57001-
35	702-12-12340	. PIN	1	57001-
36	702-12-13141	. GASKET	1	57001-
37	702-12-12361	. SPACER	2	57001-
38	01010-80835	. BOLT	2	57001-
39	01010-80845	. BOLT	6	57001-
40	01602-20825	. WASHER, SPRING	8	57001-
41	702-12-13160	. COVER	1	57001-

FIG. Y1679-01A0 BLADE LIFT SERVO VALVE

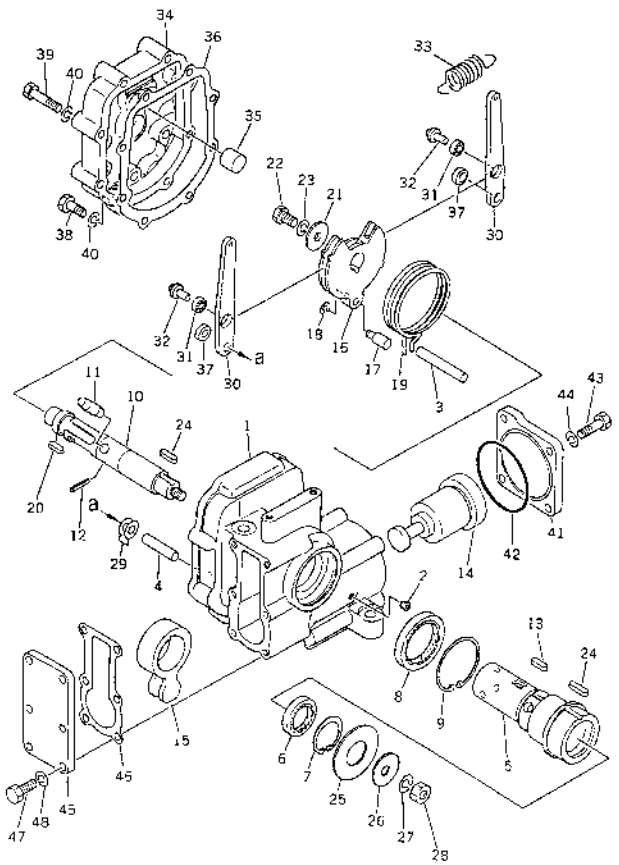

INDEX	PART NO.	DESCRIPTION	Q'TY	SERIAL NO
42	07000-22070	O-RING	1	57001-
43	01010-80825	BOLT	4	57001-
44	01602-20825	WASHER, SPRING	4	57001-
45	702-12-13130	COVER	1	57001-
46	702-12-13151	GASKET	1	57001-
47	01010-80825	BOLT	6	57001-
48	01602-20825	WASHER, SPRING	6	57001-

FIG. Y1679-11A0 BLADE TILT AND RIPPER SERVO VALVE

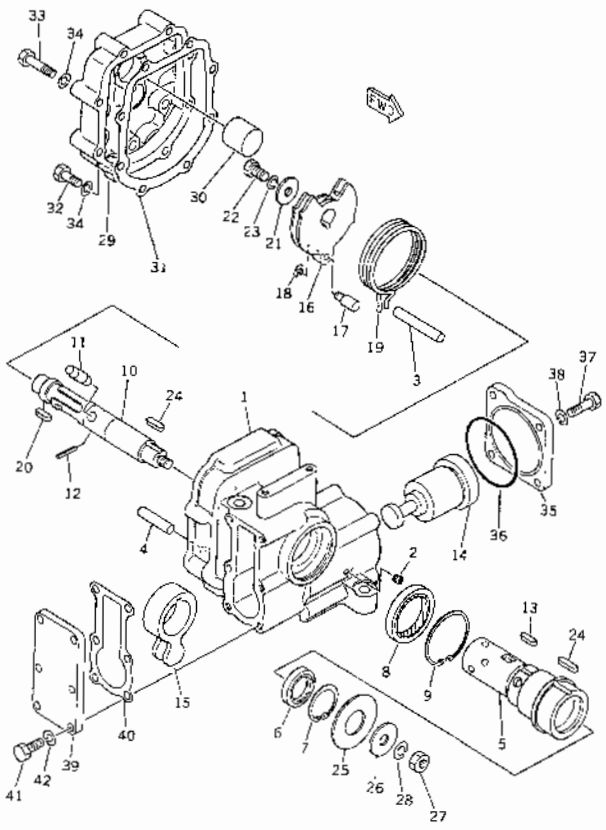

INDEX	PART NO	DESCRIPTION	Q'TY	SERIAL NO
	702-12-14001	SERVO VALVE ASS'Y	2	57001-
1	702-12-13110	. HOUSING	1	57001-
2	07043-00108	. PLUG	2	57001-
3	702-12-12140	. PIN	1	57001-
4	702-12-12150	. PIN	1	57001-
5	☆	. SLEEVE	1	57001-
6	702-12-12390	. SEAL, OIL	1	57001-
7	04065-04018	. RING, SNAP	1	57001-
8	702-12-12410	. SEAL, OIL	1	57001-
9	04065-06020	. RING, SNAP	1	57001-
10	☆	. ROTOR	1	57001-
11	702-12-12180	PIN	1	57001-
12	04025-00316	. PIN, SPRING	1	57001-
13	04000-00520	KEY	1	57001-
14	☆	. PISTON	1	57001-
15	702-12-12210	. LEVER	1	57001-
16	702-12-12451	. DETENT	1	57001-
17	702-12-12230	. PIN	1	57001-
18	702-12-12240	. RING, SNAP	1	57001-
19	702-12-12251	. SPRING	1	57001-
20	04000-00515	. KEY	1	57001-
21	702-12-12420	. WASHER	1	57001-
22	01010-80816	. BOLT	1	57001-
23	01602-20825	. WASHER, SPRING	1	57001-
24	04000-00520	. KEY	2	57001-
25	702-12-12280	. WASHER	1	57001-
26	702-12-12270	. WASHER	1	57001-
27	01580-11008	. NUT	1	57001-
28	01602-21030	. WASHER, SPRING	1	57001-
29	702-12-13220	. COVER	1	57001-
30	702-12-13210	. PIN	1	57001-
31	702-12-13141	. GASKET	1	57001-
32	01010-80835	. BOLT	2	57001-
33	01010-80845	BOLT	6	57001-
34	01602-20825	. WASHER, SPRING	8	57001-
35	702-12-13160	. COVER	1	57001-
36	07000-22070	O-RING	1	57001-
37	01010-80825	BOLT	4	57001-
38	01602-20825	. WASHER, SPRING	4	57001-
39	702-12-13130	COVER	1	57001-
40	702-12-13151	. GASKET	1	57001-
41	01010-80825	. BOLT	6	57001-

FIG. Y1679-11A0 BLADE TILT AND RIPPER SERVO VALVE

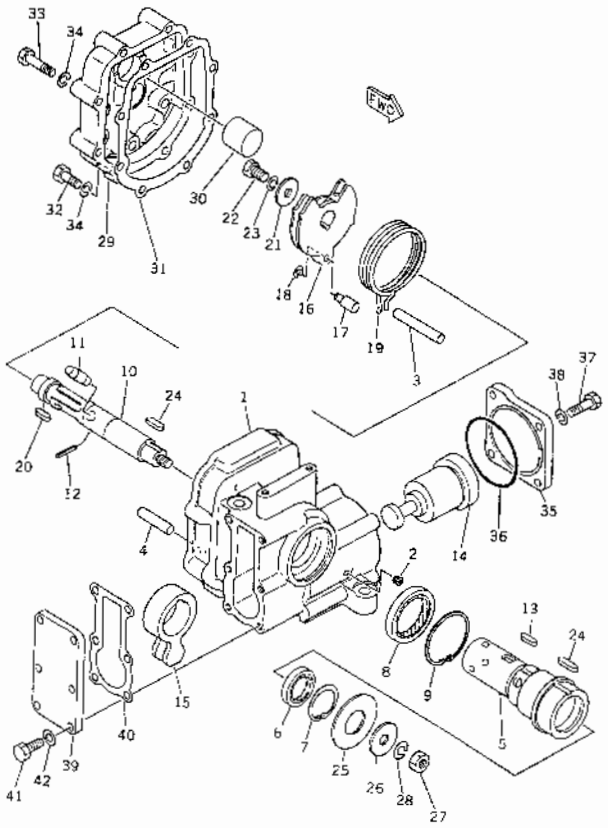

INDEX	PART NO	DESCRIPTION	Q'TY	SERIAL NO
42	01602-20825	WASHER, SPRING	6	57001-

FIG. Y1679-21A0 RIPPER SELECTOR VALVE

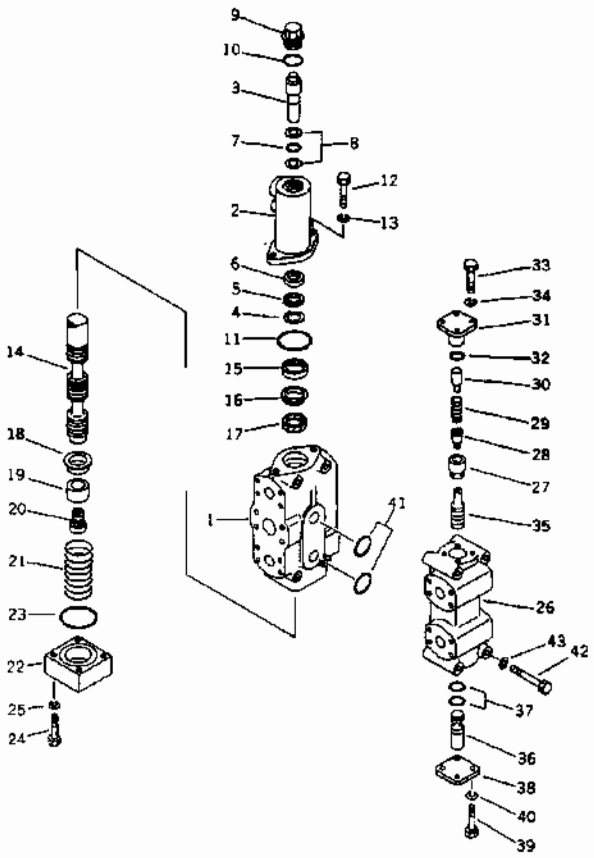

INDEX	PART NO.	DESCRIPTION	Q'TY	SERIAL NO.
	700-61-13006	VALVE ASS'Y	1	57001-
	700-61-33002	. VALVE ASS'Y	1	57001-
1	700-61-33111	.. BODY, VALVE	1	57001-
	700-61-00041	.. BODY AND PISTON A	1	57001-
2	☆	... BODY	1	57001-
3	☆	... PISTON	1	57001-
4	700-61-33450	.. RING, SNAP	1	57001-
5	700-61-33440	.. SPACER	1	57001-
6	07016-00226	.. SEAL, DUST	1	57001-
7	07000-02018	. O-RING	1	57001-
8	07001-02018	. RING, BACK-UP	2	57001-
9	700-61-33420	.. PLUG	1	57001-
10	07002-03634	.. O-RING	1	57001-
11	07000-02065	.. O-RING	1	57001-
12	01010-81235	.. BOLT	2	57001-
13	01602-21236	.. WASHER, SPRING	2	57001-
14	☆	.. SPOOL	1	57001-
15	07016-00407	. SEAL, DUST	1	57001-
16	700-52-31310	.. SPACER	1	57001-
17	07006-00040	.. PACKING	1	57001-
18	700-61-33470	.. RETAINER	1	57001-
19	700-61-33510	.. COLLAR	1	57001-
20	700-61-33520	.. PLUG	1	57001-
21	700-61-33481	.. SPRING	1	57001-
22	700-61-33490	.. COVER	1	57001-
23	07000-02070	.. O-RING	1	57001-
24	01010-81060	. BOLT	4	57001-
25	01602-21030	. WASHER, SPRING	4	57001-
	700-61-34002	. VALVE ASS'Y	1	57001-
26	700-61-34111	.. BODY, VALVE	1	57001-
27	700-61-34220	.. VALVE, CHECK	1	57001-
28	700-61-34340	.. VALVE, CHECK	1	57001-
29	700-61-34230	. SPRING	1	57001-
30	700-61-34510	.. STOPPER	1	57001-
31	700-61-34141	. PLUG	1	57001-
32	07000-13025	.. O-RING	1	57001-
33	01010-81030	.. BOLT	4	57001-
34	01602-21030	.. WASHER, SPRING	4	57001-
35	700-61-34330	. PISTON, PILOT	1	57001-
36	700-61-34320	. PLUG	1	57001-
37	07000-12021	. O-RING	2	57001-
38	700-61-34310	.. PLATE	1	57001-

FIG NO. : Y1679-21A0

FIG. Y1679-21A0 RIPPER SELECTOR VALVE

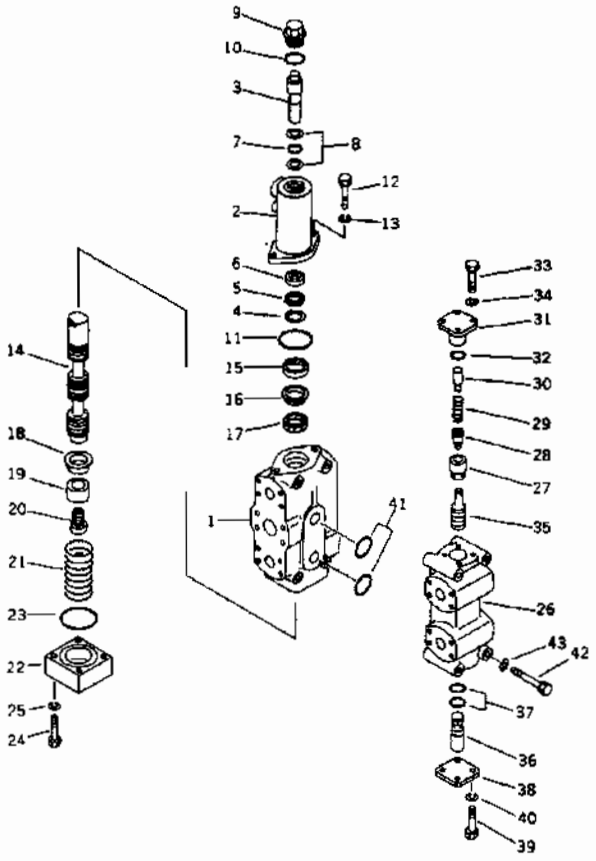

INDEX	PART NO.	DESCRIPTION	Q'TY	SERIAL NO
39	01010-81030	..BOLT	4	57001-
40	01602-21030	..WASHER, SPRING	4	57001-
41	07000-13035	..O-RING	2	57001-
42	01011-81000	..BOLT	4	57001-
43	01602-21030	..WASHER, SPRING	4	57001-

NUMERICAL INDEX

PARTS NO	FIG NO	INDEX	PAGE
AS156713	K0110-02A0	7	KO- 5
AS156714	K0110-02A0	6	KO- 5
AS156717	K0110-02A0	10	KO- 5
AS156737	K0110-02A0	16	KO- 5
AS156738	K0110-02A0	13	KO- 5
AS157154	K0110-02A0	5	KO- 5
AS157157	K0110-02A0	8	KO- 5
AS157228	K0110-02A0	15	KO- 5
AS157230	K0110-02A0	11	KO- 5
AS157240	K0110-02A0	9	KO- 5
AS159768	K0110-02A0	4	KO- 5
AS160167	K0110-02A0	3	KO- 5
AS163576	K0110-02A0	1	KO- 5
AS163577	K0110-02A0	14	KO- 5
AS164183	K0110-02A0	12	KO- 5
AS169769	K0110-02A0	2	KO- 5
DK012206-1640	A4010-C4J5	33	AA- 107
DK013020-6040	A4010-E4J5	42	AA- 116
DK013021-0040	A4010-C4J5	17	AA- 107
DK013030-6040	A4010-E4J5	35	AA- 115
DK013121-8020	A4010-B4J5	18	AA- 101
DK014110-6440	A4010-E4J5	47	AA- 116
DK014110-8440	A4010-D4J5	9	AA- 111
DK016010-0440	A4010-D4J5	32	AA- 112
DK016010-0540	A4010-D4J5	29	AA- 112
DK016010-1640	A4010-E4J5	18	AA- 115
DK016650-2230	A4010-B4J5	11	AA- 101
DK016650-2230	A4010-B4J5	5	AA- 101
DK020006-1640	A4010-E4J5	9	AA- 115
DK020106-2040	A4010-B4J5	10	AA- 101
DK020106-2040	A4010-D4J5	5	AA- 111
DK020106-2540	A4010-E4J5	40	AA- 116
DK020106-5040	A4010-E4J5	4	AA- 115
DK023641-8410	A4010-B4J5	19	AA- 101
DK024030-2030	A4010-C4J5	20	AA- 107
DK025520-1210	A4010-D4J5	23	AA- 111
DK025803-1310	A4010-D4J5	13	AA- 111
DK025803-1310	A4010-E4J5	23	AA- 115
DK025803-1610	A4010-D4J5	13	AA- 111
DK025805-1910	A4010-B4J5	25	AA- 101
DK026506-1040	A4010-E4J5	49	AA- 116
DK026508-1140	A4010-E4J5	51	AA- 116
DK026510-1440	A4010-E4J5	36	AA- 115
DK026512-1540	A4010-E4J5	13	AA- 115
DK026524-2940	A4010-B4J5	21	AA- 101
DK026524-3040	A4010-D4J5	11	AA- 111
DK029010-6310	A4010-E4J5	50	AA- 116
DK029010-6810	A4010-B4J5	7	AA- 101
DK029020-6210	A4010-E4J5	8	AA- 115
DK029040-6020	A4010-B4J5	2	AA- 101

PARTS NO	FIG NO.	INDEX	PAGE
DK029201-2290	A4010-E4J5	12	AA- 115
DK029201-6010	A4010-D4J5	20	AA- 111
DK029231-2030	A4010-D4J5	15	AA- 111
DK029300-4010	A4010-D4J5	31	AA- 112
DK029302-0140	A4010-C4J5	9	AA- 105
DK029310-5170	A4010-D4J5	22	AA- 111
DK029310-9080	A4010-E4J5	53	AA- 116
DK029311-0010	A4010-D4J5	17	AA- 111
DK029311-0180	A4010-D4J5	17	AA- 111
DK029311-0190	A4010-D4J5	17	AA- 111
DK029311-0210	A4010-D4J5	17	AA- 111
DK029311-1070	A4010-E4J5	21	AA- 115
DK029312-0180	A4010-E4J5	45	AA- 116
DK029312-0210	A4010-E4J5	45	AA- 116
DK029321-2020	A4010-D4J5	14	AA- 111
DK029330-8050	A4010-E4J5	33	AA- 115
DK029331-0090	A4010-E4J5	57	AA- 116
DK029331-6030	A4010-G4J5	10	AA- 121
DK029332-6030	A4010-G4J5	5	AA- 121
DK029340-6120	A4010-E4J5	56	AA- 116
DK029341-0110	A4010-B4J5	30	AA- 102
DK029341-0110	A4010-E4J5	44	AA- 116
DK029341-4130	A4010-B4J5	27	AA- 102
DK029341-4130	A4010-B4J5	32	AA- 102
DK029341-4130	A4010-B4J5	34	AA- 102
DK029341-4130	A4010-G4J5	17	AA- 121
DK029602-0010	A4010-C4J5	11	AA- 105
DK029631-5020	A4010-C4J5	14	AA- 105
DK029631-6060	A4010-G4J5	11	AA- 121
DK029632-2070	A4010-C4J5	5	AA- 105
DK029632-5070	A4010-D4J5	2	AA- 111
DK029632-9030	A4010-C4J5	13	AA- 105
DK029635-2020	A4010-E4J5	30	AA- 115
DK029635-5010	A4010-B4J5	15	AA- 101
DK029711-4430	A4010-G4J5	16	AA- 121
DK029731-0180	A4010-E4J5	43	AA- 116
DK029731-0490	A4010-B4J5	29	AA- 102
DK029731-4680	A4010-B4J5	33	AA- 102
DK029731-4680	A4010-G4J5	15	AA- 121
DK105237-5000	A4010-G4J5	1	AA- 121
DK105407-7400	A4010-D4J5	1	AA- 111
DK105407-7400	A4010-E4J5	1	AA- 115
DK105664-0340	A4010-F4J5	1	AA- 119
DK106067-1890	A4010-B4J5	1	AA- 101
DK106067-1890	A4010-C4J5	1	AA- 105
DK131041-0800	A4010-B4J5	23	AA- 101
DK131206-0500	A4010-C4J5	30	AA- 107
DK131424-3420	A4010-B4J5	31	AA- 102
DK134001-0000	A4010-C4J5	18	AA- 107
DK134042-1400	A4010-C4J5	32	AA- 107

PARTS NO.	FIG NO.	INDEX	PAGE
DK134043-0800	A4010-C4J5	31	AA- 107
DK134045-0100	A4010-B4J5	20	AA- 101
DK134047-0000	A4010-B4J5	24	AA- 101
DK134063-2320	A4010-B4J5	1	AA- 101
DK134110-8920	A4010-C4J5	3	AA- 105
DK134112-3400	A4010-C4J5	7	AA- 105
DK134115-0100	A4010-C4J5	8	AA- 105
DK134116-4720	A4010-C4J5	4	AA- 105
DK134117-0500	A4010-C4J5	6	AA- 105
DK134117-2200	A4010-C4J5	6	AA- 105
DK134117-2300	A4010-C4J5	6	AA- 105
DK134131-1020	A4010-C4J5	1	AA- 105
DK134132-0300	A4010-C4J5	16	AA- 106
DK134135-0200	A4010-C4J5	10	AA- 105
DK134137-0100	A4010-C4J5	12	AA- 105
DK134138-0000	A4010-B4J5	4	AA- 101
DK134153-6420	A4010-C4J5	2	AA- 105
DK134165-1720	A4010-C4J5	1	AA- 105
DK134200-0420	A4010-C4J5	26	AA- 107
DK134203-0000	A4010-C4J5	29	AA- 107
DK134204-0100	A4010-C4J5	27	AA- 107
DK134205-0000	A4010-C4J5	28	AA- 107
DK134215-0700	A4010-C4J5	24	AA- 107
DK134216-0000	A4010-C4J5	23	AA- 107
DK134217-0500	A4010-C4J5	25	AA- 107
DK134222-0000	A4010-C4J5	21	AA- 107
DK134241-0320	A4010-C4J5	22	AA- 107
DK134256-0000	A4010-C4J5	19	AA- 107
DK134303-0000	A4010-B4J5	6	AA- 101
DK134303-0100	A4010-B4J5	6	AA- 101
DK134303-0200	A4010-B4J5	6	AA- 101
DK134303-0300	A4010-B4J5	6	AA- 101
DK134303-0400	A4010-B4J5	6	AA- 101
DK134306-0600	A4010-B4J5	9	AA- 101
DK134311-0000	A4010-B4J5	3	AA- 101
DK134314-0000	A4010-B4J5	14	AA- 101
DK134314-0100	A4010-B4J5	14	AA- 101
DK134314-0200	A4010-B4J5	14	AA- 101
DK134314-0300	A4010-B4J5	14	AA- 101
DK134314-0400	A4010-B4J5	14	AA- 101
DK134314-0500	A4010-B4J5	14	AA- 101
DK134314-0600	A4010-B4J5	14	AA- 101
DK134316-1700	A4010-B4J5	12	AA- 101
DK134371-7300	A4010-B4J5	8	AA- 101
DK134430-3520	A4010-B4J5	26	AA- 101
DK134442-0720	A4010-B4J5	28	AA- 102
DK134510-8720	A4010-B4J5	35	AA- 102
DK134510-8800	A4010-B4J5	36	AA- 102
DK134563-0900	A4010-B4J5	16	AA- 101
DK139206-0400	A4010-B4J5	22	AA- 101

PARTS NO	FIG NO	INDEX	PAGE
DK139208-0500	A4010-E4J5	3	AA- 115
DK139308-0700	A4010-E4J5	34	AA- 115
DK139400-0900	A4010-C4J5	15	AA- 105
DK139400-1000	A4010-C4J5	15	AA- 105
DK139400-1100	A4010-C4J5	15	AA- 105
DK139400-1200	A4010-C4J5	15	AA- 105
DK139400-1300	A4010-C4J5	15	AA- 105
DK139400-1400	A4010-C4J5	15	AA- 105
DK139400-1500	A4010-C4J5	15	AA- 105
DK139400-1600	A4010-C4J5	15	AA- 105
DK139400-1700	A4010-C4J5	15	AA- 105
DK139400-1800	A4010-C4J5	15	AA- 105
DK139400-1900	A4010-C4J5	15	AA- 105
DK139400-2000	A4010-C4J5	15	AA- 105
DK139400-2100	A4010-C4J5	15	AA- 105
DK139400-2200	A4010-C4J5	15	AA- 105
DK139400-2300	A4010-C4J5	15	AA- 105
DK139400-2400	A4010-C4J5	15	AA- 105
DK139400-2500	A4010-C4J5	15	AA- 105
DK139400-2600	A4010-C4J5	15	AA- 105
DK139400-2700	A4010-C4J5	15	AA- 105
DK139400-2800	A4010-C4J5	15	AA- 106
DK139400-2900	A4010-C4J5	15	AA- 106
DK139400-3000	A4010-C4J5	15	AA- 106
DK139400-3100	A4010-C4J5	15	AA- 106
DK139400-3200	A4010-C4J5	15	AA- 106
DK139400-3300	A4010-C4J5	15	AA- 106
DK139400-3400	A4010-C4J5	15	AA- 106
DK139400-3500	A4010-C4J5	15	AA- 106
DK139400-3600	A4010-C4J5	15	AA- 106
DK139400-3700	A4010-C4J5	15	AA- 106
DK139400-3800	A4010-C4J5	15	AA- 106
DK139400-3900	A4010-C4J5	15	AA- 106
DK139400-4000	A4010-C4J5	15	AA- 106
DK139400-4100	A4010-C4J5	15	AA- 106
DK139400-4200	A4010-C4J5	15	AA- 106
DK139400-4300	A4010-C4J5	15	AA- 106
DK139400-4400	A4010-C4J5	15	AA- 106
DK139400-4500	A4010-C4J5	15	AA- 106
DK139400-4600	A4010-C4J5	15	AA- 106
DK139400-4700	A4010-C4J5	15	AA- 106
DK139400-4800	A4010-C4J5	15	AA- 106
DK139400-4900	A4010-C4J5	15	AA- 106
DK139400-5000	A4010-C4J5	15	AA- 106
DK139400-5100	A4010-C4J5	15	AA- 106
DK139400-5200	A4010-C4J5	15	AA- 106
DK139400-5300	A4010-C4J5	15	AA- 106
DK139400-5400	A4010-C4J5	15	AA- 106
DK139400-5500	A4010-C4J5	15	AA- 106
DK139400-5600	A4010-C4J5	15	AA- 106

PARTS NO.	FIG NO.	INDEX	PAGE
DK139400-5700	A4010-C4J5	15	AA- 106
DK139400-5800	A4010-C4J5	15	AA- 106
DK139400-5900	A4010-C4J5	15	AA- 106
DK139400-6000	A4010-C4J5	15	AA- 106
DK139400-6100	A4010-C4J5	15	AA- 106
DK139400-6200	A4010-C4J5	15	AA- 106
DK139400-6300	A4010-C4J5	15	AA- 106
DK139400-6400	A4010-C4J5	15	AA- 106
DK139400-6500	A4010-C4J5	15	AA- 106
DK139400-6600	A4010-C4J5	15	AA- 106
DK139400-6700	A4010-C4J5	15	AA- 106
DK139400-6800	A4010-C4J5	15	AA- 106
DK139410-0000	A4010-D4J5	17	AA- 111
DK139410-0100	A4010-D4J5	17	AA- 111
DK139410-3000	A4010-D4J5	17	AA- 111
DK139410-3100	A4010-D4J5	17	AA- 111
DK139410-3200	A4010-D4J5	17	AA- 111
DK139411-0000	A4010-E4J5	20	AA- 115
DK139611-0300	A4010-E4J5	19	AA- 115
DK139629-0000	A4010-B4J5	13	AA- 101
DK139718-0200	A4010-E4J5	17	AA- 115
DK139806-0000	A4010-E4J5	55	AA- 116
DK150524-4100	A4210-B4E5	6	AA- 138
DK150525-1700	A4210-B4E5	2	AA- 137
DK150530-4000	A4210-B4E5	5	AA- 137
DK150530-4100	A4210-B4E5	5	AA- 137
DK150530-4200	A4210-B4E5	5	AA- 137
DK150530-4300	A4210-B4E5	5	AA- 137
DK150530-4400	A4210-B4E5	5	AA- 137
DK150530-4500	A4210-B4E5	5	AA- 137
DK150530-4600	A4210-B4E5	5	AA- 137
DK150530-4700	A4210-B4E5	5	AA- 137
DK150530-4800	A4210-B4E5	5	AA- 137
DK150530-4900	A4210-B4E5	5	AA- 137
DK150530-5000	A4210-B4E5	5	AA- 137
DK150530-5100	A4210-B4E5	5	AA- 137
DK150530-5200	A4210-B4E5	5	AA- 137
DK150530-5300	A4210-B4E5	5	AA- 137
DK150530-5400	A4210-B4E5	5	AA- 137
DK150530-5500	A4210-B4E5	5	AA- 137
DK150530-5600	A4210-B4E5	5	AA- 137
DK150530-5700	A4210-B4E5	5	AA- 137
DK150530-5800	A4210-B4E5	5	AA- 137
DK150530-5900	A4210-B4E5	5	AA- 137
DK150530-6000	A4210-B4E5	5	AA- 137
DK150530-6100	A4210-B4E5	5	AA- 137
DK150530-6200	A4210-B4E5	5	AA- 137
DK150530-6300	A4210-B4E5	5	AA- 137
DK150530-6400	A4210-B4E5	5	AA- 137
DK150530-6500	A4210-B4E5	5	AA- 137

PARTS NO.	FIG NO	INDEX	PAGE
DK150530-6600	A4210-B4E5	5	AA- 137
DK150530-6700	A4210-B4E5	5	AA- 137
DK150530-6800	A4210-B4E5	5	AA- 137
DK150530-6900	A4210-B4E5	5	AA- 137
DK150530-7000	A4210-B4E5	5	AA- 137
DK150530-7100	A4210-B4E5	5	AA- 137
DK150530-7200	A4210-B4E5	5	AA- 137
DK150530-7300	A4210-B4E5	5	AA- 137
DK150530-7400	A4210-B4E5	5	AA- 137
DK150530-7500	A4210-B4E5	5	AA- 137
DK150530-7600	A4210-B4E5	5	AA- 137
DK150530-7700	A4210-B4E5	5	AA- 138
DK150530-7800	A4210-B4E5	5	AA- 138
DK150530-7900	A4210-B4E5	5	AA- 138
DK150530-8000	A4210-B4E5	5	AA- 138
DK150530-8100	A4210-B4E5	5	AA- 138
DK150530-8200	A4210-B4E5	5	AA- 138
DK150530-8300	A4210-B4E5	5	AA- 138
DK150530-8400	A4210-B4E5	5	AA- 138
DK150530-8500	A4210-B4E5	5	AA- 138
DK150530-8600	A4210-B4E5	5	AA- 138
DK150530-8700	A4210-B4E5	5	AA- 138
DK150530-8800	A4210-B4E5	5	AA- 138
DK150530-8900	A4210-B4E5	5	AA- 138
DK150530-9000	A4210-B4E5	5	AA- 138
DK150530-9100	A4210-B4E5	5	AA- 138
DK150530-9200	A4210-B4E5	5	AA- 138
DK150530-9300	A4210-B4E5	5	AA- 138
DK150530-9400	A4210-B4E5	5	AA- 138
DK150530-9500	A4210-B4E5	5	AA- 138
DK150530-9600	A4210-B4E5	5	AA- 138
DK150530-9700	A4210-B4E5	5	AA- 138
DK150530-9800	A4210-B4E5	5	AA- 138
DK150530-9900	A4210-B4E5	5	AA- 138
DK150550-5900	A4210-B4E5	3	AA- 137
DK150562-6200	A4210-B4E5	4	AA- 137
DK150651-0000	A4210-B4E5	7	AA- 138
DK152004-3820	A4010-G4J5	1	AA- 121
DK152100-1120	A4010-G4J5	2	AA- 121
DK152102-1600	A4010-G4J5	3	AA- 121
DK152105-1500	A4010-G4J5	4	AA- 121
DK152111-4320	A4010-G4J5	6	AA- 121
DK152115-0500	A4010-G4J5	7	AA- 121
DK152116-0200	A4010-G4J5	8	AA- 121
DK152117-0400	A4010-G4J5	9	AA- 121
DK152121-0400	A4010-G4J5	12	AA- 121
DK152200-5420	A4010-G4J5	13	AA- 121
DK152300-5920	A4010-G4J5	14	AA- 121
DK152320-0100	A4010-G4J5	18	AA- 121
DK153021-2220	A4010-D4J5	10	AA- 111

PARTS NO	FIG NO.	INDEX	PAGE
DK154000-4700	A4010-D4J5	1	AA- 111
DK154007-2900	A4010-D4J5	3	AA- 111
DK154010-0100	A4010-D4J5	6	AA- 111
DK154010-1100	A4010-E4J5	5	AA- 115
DK154011-0100	A4010-D4J5	7	AA- 111
DK154011-0100	A4010-E4J5	6	AA- 115
DK154013-2320	A4010-D4J5	8	AA- 111
DK154022-6020	A4010-E4J5	1	AA- 115
DK154031-4800	A4010-E4J5	2	AA- 115
DK154034-1900	A4010-E4J5	41	AA- 116
DK154035-1600	A4010-E4J5	46	AA- 116
DK154035-2000	A4010-E4J5	52	AA- 116
DK154036-1600	A4010-E4J5	54	AA- 116
DK154063-7300	A4010-E4J5	7	AA- 115
DK154101-0020	A4010-D4J5	12	AA- 111
DK154123-2320	A4010-D4J5	16	AA- 111
DK154150-0400	A4010-E4J5	10	AA- 115
DK154154-0500	A4010-D4J5	18	AA- 111
DK154158-0820	A4010-E4J5	11	AA- 115
DK154159-1200	A4010-E4J5	14	AA- 115
DK154177-3720	A4010-D4J5	19	AA- 111
DK154200-7020	A4010-E4J5	15	AA- 115
DK154204-3100	A4010-E4J5	22	AA- 115
DK154204-4300	A4010-E4J5	16	AA- 115
DK154206-0200	A4010-E4J5	25	AA- 115
DK154206-2800	A4010-E4J5	24	AA- 115
DK154216-7220	A4010-D4J5	21	AA- 111
DK154222-6200	A4010-D4J5	30	AA- 112
DK154230-2920	A4010-D4J5	24	AA- 111
DK154236-4100	A4010-D4J5	25	AA- 111
DK154237-1700	A4010-E4J5	26	AA- 115
DK154314-2600	A4010-E4J5	28	AA- 115
DK154350-6000	A4010-D4J5	4	AA- 111
DK154371-5600	A4010-D4J5	26	AA- 111
DK154390-0300	A4010-E4J5	29	AA- 115
DK154396-3720	A4010-E4J5	27	AA- 115
DK154400-4800	A4010-E4J5	32	AA- 115
DK154400-7420	A4010-E4J5	31	AA- 115
DK154401-1320	A4010-D4J5	28	AA- 112
DK154401-2100	A4010-E4J5	37	AA- 116
DK154401-3620	A4010-D4J5	27	AA- 111
DK154404-5600	A4010-E4J5	39	AA- 116
DK154413-2600	A4010-E4J5	48	AA- 116
DK154416-0400	A4010-E4J5	38	AA- 116
DK156605-4320	A4010-F4J5	3	AA- 119
DK156605-4320	A4010-F4J5	8	AA- 119
DK156609-5600	A4010-F4J5	6	AA- 119
DK156615-2600	A4010-F4J5	11	AA- 119
DK156617-2400	A4010-F4J5	4	AA- 119
DK156631-1700	A4010-F4J5	1	AA- 119

PARTS NO	FIG NO.	INDEX	PAGE
DK156633-4900	A4010-F4J5	5	AA- 119
DK156633-4900	A4010-F4J5	7	AA- 119
DK156633-4900	A4010-F4J5	9	AA- 119
DK156633-5100	A4010-F4J5	2	AA- 119
DK156633-5200	A4010-F4J5	10	AA- 119
DK156639-3100	A4010-B4J5	17	AA- 101
KDO-0056-05302	A6010-B4D6	11	AA- 165
KDO-0275-06802	A6010-B4D6	11	AA- 165
KDO-0275-06802	A6010-B4D7Y	12	AA- 169
KDO-0275-06802	A6010-B4F7	11	AA- 171
KDO-0275-06802	A6010-C4F8	12	AA- 173
KDO-0280-16022	A6010-B4D6	28	AA- 165
KDO-0280-16022	A6010-B4D7Y	17	AA- 169
KDO-0280-16022	A6010-B4F7	15	AA- 171
KDO-0280-16022	A6010-C4F8	17	AA- 173
KDO-0330-16012	A6010-B4D7Y	15	AA- 169
KDO-0330-16012	A6010-C4F8	15	AA- 173
KDO-09057-0220	A6010-B4D7Y	29	AA- 169
KDO-09057-0220	A6010-C4F8	29	AA- 173
KDO-09170-2500	A6010-B4D6	17	AA- 165
KDO-09170-2501	A6010-B4D6	17	AA- 165
KDO-09170-2501	A6010-B4D7Y	21	AA- 169
KDO-09170-2501	A6010-B4F7	19	AA- 171
KDO-09170-2501	A6010-C4F8	21	AA- 173
KDO-09201-0870	A6010-B4D6	3	AA- 165
KDO-09201-0870	A6010-B4D6	3	AA- 165
KDO-09201-0870	A6010-B4F7	3	AA- 171
KDO-09201-0880	A6010-B4D6	6	AA- 165
KDO-09201-0881	A6010-B4D6	6	AA- 165
KDO-09201-0881	A6010-B4F7	6	AA- 171
KDO-09201-0980	A6010-B4D7Y	4	AA- 169
KDO-09201-0980	A6010-C4F8	4	AA- 173
KDO-09201-0990	A6010-B4D6	3	AA- 165
KDO-09201-1000	A6010-B4D6	6	AA- 165
KDO-09201-1140	A6010-B4D7Y	7	AA- 169
KDO-09201-1140	A6010-C4F8	7	AA- 173
KDO-35100-0280	A6010-B4D6	1	AA- 165
KDO-35100-0280	A6010-B4F7	1	AA- 171
KDO-35100-0300	A6010-B4D7Y	1	AA- 169
KDO-35100-0300	A6010-C4F8	1	AA- 173
KDO-35120-0290	A6010-B4D7Y	18	AA- 169
KDO-35120-0290	A6010-C4F8	18	AA- 173
KDO-35120-0450	A6010-B4D6	14	AA- 165
KDO-35120-0450	A6010-B4F7	16	AA- 171
KDO-35200-0400	A6010-B4D6	4	AA- 165
KDO-35200-0400	A6010-B4F7	4	AA- 171
KDO-35200-0460	A6010-B4D7Y	5	AA- 169
KDO-35200-0460	A6010-C4F8	5	AA- 173
KDO-35300-0130	A6010-B4D6	5	AA- 165
KDO-35300-0130	A6010-B4D6	5	AA- 165

PARTS NO.	FIG NO.	INDEX	PAGE
KDO-35300-0130	A6010-B4F7	5	AA- 171
KDO-35300-0230	A6010-B4D6	5	AA- 165
KDO-35300-0350	A6010-B4D7Y	6	AA- 169
KDO-35300-0350	A6010-C4F8	6	AA- 173
KDO-35411-0630	A6010-B4D6	12	AA- 165
KDO-35411-0630	A6010-B4D7Y	13	AA- 169
KDO-35411-0700	A6010-B4F7	12	AA- 171
KDO-35411-0700	A6010-C4F8	13	AA- 173
KDO-35421-0160	A6010-B4D6	13	AA- 165
KDO-35421-0160	A6010-B4F7	13	AA- 171
KDO-35421-0230	A6010-B4D7Y	14	AA- 169
KDO-35421-0230	A6010-C4F8	14	AA- 173
KDO-35700-0660	A6010-B4D6	15	AA- 165
KDO-35700-0661	A6010-B4D6	15	AA- 165
KDO-35700-0661	A6010-B4F7	17	AA- 171
KDO-35700-0662	A6010-B4D6	15	AA- 165
KDO-35700-0920	A6010-B4D7Y	19	AA- 169
KDO-35700-0920	A6010-C4F8	19	AA- 173
KDO-35710-0750	A6010-B4D6	15	AA- 165
KDO-35710-0751	A6010-B4D6	15	AA- 165
KDO-35710-0751	A6010-B4F7	17	AA- 171
KDO-35710-1010	A6010-B4D7Y	19	AA- 169
KDO-35710-1010	A6010-C4F8	19	AA- 173
KDO-35719-0150	A6010-B4D6	25	AA- 165
KDO-35719-0151	A6010-B4F7	27	AA- 171
KDO-35719-0210	A6010-B4D7Y	30	AA- 169
KDO-35719-0210	A6010-C4F8	30	AA- 173
KDO-35730-0510	A6010-B4D6	16	AA- 165
KDO-35730-0510	A6010-B4F7	18	AA- 171
KDO-35730-0700	A6010-B4D7Y	20	AA- 169
KDO-35730-0700	A6010-C4F8	20	AA- 173
KDO-35761-0181	A6010-B4D6	26	AA- 166
KDO-35761-0181	A6010-B4F7	28	AA- 171
KDO-35761-0250	A6010-B4D7Y	31	AA- 169
KDO-35761-0250	A6010-C4F8	31	AA- 173
KDO-35784-0190	A6010-B4D6	23	AA- 165
KDO-35784-0210	A6010-B4D7Y	27	AA- 169
KDO-35784-0210	A6010-C4F8	27	AA- 173
KDO-35784-0230	A6010-B4D6	23	AA- 165
KDO-35784-0230	A6010-B4F7	25	AA- 171
KDO-35784-0270	A6010-B4D6	24	AA- 165
KDO-35784-0280	A6010-B4D6	23	AA- 165
KDO-35784-0290	A6010-B4D7Y	28	AA- 169
KDO-35784-0290	A6010-C4F8	28	AA- 173
KDO-35786-0320	A6010-B4D6	24	AA- 165
KDO-35786-0320	A6010-B4F7	26	AA- 171
KDO-35923-0130	A6010-B4D6	19	AA- 165
KDO-35923-0130	A6010-B4D7Y	26	AA- 169
KDO-35923-0130	A6010-B4F7	24	AA- 171
KDO-35923-0130	A6010-C4F8	26	AA- 173

PARTS NO	FIG NO.	INDEX	PAGE
KDO-35923-0160	A6010-B4D7Y	3	AA- 169
KDO-35923-0160	A6010-C4F8	3	AA- 173
KDO-35926-0070	A6010-B4D6	7	AA- 165
KDO-35926-0070	A6010-B4D7Y	8	AA- 169
KDO-35926-0070	A6010-B4F7	7	AA- 171
KDO-35926-0070	A6010-C4F8	8	AA- 173
KDO-35926-0090	A6010-B4D6	9	AA- 165
KDO-35926-0090	A6010-B4D7Y	10	AA- 169
KDO-35926-0090	A6010-B4F7	9	AA- 171
KDO-35926-0090	A6010-C4F8	10	AA- 173
KDO-35943-0140	A6010-B4D6	21	AA- 165
KDO-35943-0140	A6010-B4D7Y	22	AA- 169
KDO-35943-0140	A6010-B4F7	20	AA- 171
KDO-35943-0140	A6010-C4F8	22	AA- 173
KDO-35943-0150	A6010-B4D6	18	AA- 165
KDO-35943-0150	A6010-B4D7Y	23	AA- 169
KDO-35943-0150	A6010-B4F7	21	AA- 171
KDO-35943-0150	A6010-C4F8	23	AA- 173
KDO-35943-0160	A6010-B4D6	20	AA- 165
KDO-35943-0160	A6010-B4D7Y	24	AA- 169
KDO-35943-0160	A6010-B4F7	22	AA- 171
KDO-35943-0160	A6010-C4F8	24	AA- 173
KDO-35943-0170	A6010-B4D6	22	AA- 165
KDO-35943-0170	A6010-B4D7Y	25	AA- 169
KDO-35943-0170	A6010-B4F7	23	AA- 171
KDO-35943-0170	A6010-C4F8	25	AA- 173
KDO-35951-0060	A6010-B4D6	8	AA- 165
KDO-35951-0060	A6010-B4D7Y	9	AA- 169
KDO-35951-0060	A6010-B4F7	8	AA- 171
KDO-35951-0060	A6010-C4F8	9	AA- 173
KD1-0335-16002	A6010-B4D6	27	AA- 166
KD1-0335-16002	A6010-B4D7Y	16	AA- 169
KD1-0335-16002	A6010-B4F7	14	AA- 171
KD1-0335-16002	A6010-C4F8	16	AA- 173
KD1-33923-0790	A6010-B4D6	2	AA- 165
KD1-33923-0790	A6010-B4D7Y	2	AA- 169
KD1-33923-0790	A6010-B4F7	2	AA- 171
KD1-33923-0790	A6010-C4F8	2	AA- 173
KD1-33926-0730	A6010-B4D6	10	AA- 165
KD1-33926-0730	A6010-B4D7Y	11	AA- 169
KD1-33926-0730	A6010-B4F7	10	AA- 171
KD1-33926-0730	A6010-C4F8	11	AA- 173
ND146691-4470	K0710-03A1	10	KO- 51
ND146691-4470	K0710-06A0	10	KO- 57
ND447200-0243	K0710-03A1	1	KO- 51
ND447200-0243	K0710-06A0	1	KO- 57
ND447300-1440	K0710-03A1	2	KO- 51
ND447300-1440	K0710-06A0	2	KO- 57
ND859901-0300	K0210-07A0	20A	KO- 25
ND91310-05081	K0710-03A1	9	KO- 51

PARTS NO.	FIG NO.	INDEX	PAGE
ND91310-05081	K0710-06A0	9	KO- 57
ND949013-7480	K0710-03A1	5	KO- 51
ND949013-7480	K0710-06A0	5	KO- 57
ND949013-7500	K0710-03A1	6	KO- 51
ND949013-7500	K0710-06A0	6	KO- 57
ND949013-7510	K0710-03A1	7	KO- 51
ND949013-7510	K0710-06A0	7	KO- 57
ND949048-0430	K0710-03A1	8	KO- 51
ND949048-0430	K0710-06A0	8	KO- 57
ND949070-0640	K0710-03A1	4	KO- 51
ND949070-0640	K0710-06A0	4	KO- 57
ND949070-1360	K0710-03A1	3	KO- 51
ND949070-1360	K0710-06A0	3	KO- 57
SD1310-10030X0	A6210-B4C4	1	AA- 177
SD1320-07830X0	A6210-B4C4	9	AA- 177
SD1331-04300X0	A6210-B4C4	4	AA- 177
SD1331-04300X9	A6210-B4C4	37	AA- 177
SD1350-10921X9	A6210-B4C4	34	AA- 177
SD1361-04700X0	A6210-B4C4	19	AA- 177
SD1372-04200X0	A6210-B4C4	25	AA- 177
SD1599-0010010	A6210-B4C4	36	AA- 177
SD2046-14200X9	A6210-B4C4	31	AA- 177
SD2240-24190X9	A6210-B4C4	3	AA- 177
SD2244-06831X0	A6210-B4C4	30	AA- 177
SD2244-06902X0	A6210-B4C4	16	AA- 177
SD2245-00830X0	A6210-B4C4	13	AA- 177
SD2407-02101X0	A6210-B4C4	29	AA- 177
SD2441-03200X0	A6210-B4C4	15	AA- 177
SD2620-10500X9	A6210-B4C4	32	AA- 177
SD2660-07400X6	A6210-B4C4	39	AA- 177
SD2660-07400X7	A6210-B4C4	40	AA- 177
SD3040-12100X0	A6210-B4C4	8	AA- 177
SD3600-17800X0	A6210-B4C4	26	AA- 177
SD3661-02000X0	A6210-B4C4	20	AA- 177
SD4141-26311X0	A6210-B4C4	24	AA- 177
SD4141-26410X0	A6210-B4C4	2	AA- 177
SD4223-05200X0	A6210-B4C4	27	AA- 177
SD5000-10500X0	A6210-B4C4	6	AA- 177
SD5010-26200X0	A6210-B4C4	33	AA- 177
SD5010-27300X0	A6210-B4C4	35	AA- 177
SD5010-27430X0	A6210-B4C4	23	AA- 177
SD5031-05700X0	A6210-B4C4	14	AA- 177
SD5058-04200X0	A6210-B4C4	22	AA- 177
SD5201-10100X0	A6210-B4C4	28	AA- 177
SD5221-01200X0	A6210-B4C4	21	AA- 177
SD5250-02800X0	A6210-B4C4	38	AA- 177
SD5250-02800X0	A6210-B4C4	5	AA- 177
SD6206-01110X0	A6210-B4C4	10	AA- 177
SD6206-01120X0	A6210-B4C4	11	AA- 177
SD6206-01710X0	A6210-B4C4	18	AA- 177

PARTS NO.	FIG NO.	INDEX	PAGE
SD6410-01000X0	A6210-B4C4	17	AA- 177
SD6414-02940X0	A6210-B4C4	7	AA- 177
SD8167-0719060	A6210-B4C4	12	AA- 177
01010-E0816	A1530-B4D3	16	AA- 25
01010-E0816	A1530-B4G8	16	AA- 27
01010-E1045	A1610-A4F2A	13	AA- 35
01010-E1045	A1610-A4F2A	3	AA- 35
01010-E1045	A1610-A4F3A	11	AA- 37
01010-E1045	A1610-A4F3A	3	AA- 37
01010-E1055	A1510-A4B9	8	AA- 19
01010-E1060	A1610-A4F2A	2	AA- 35
01010-E1060	A1610-A4F3A	2	AA- 37
01010-E1230	A1610-A4F2A	9	AA- 35
01010-E1230	A1610-A4F3A	9	AA- 37
01010-E1235	A1610-A4F2A	11	AA- 35
01010-30816	A3110-A4C5	7	AA- 93
01010-30830	E0200-01A0	3	EO- 3
01010-31030	H0100-04A0	14	HO- 11
01010-31230	H0100-02A0	15	HO- 7
01010-31275	H0100-02A0	18	HO- 7
01010-31290	H0100-03A0	23	HO- 9
01010-31290	H0100-05A0	16	HO- 15
01010-31295	H0100-03A0	16	HO- 9
01010-31445	H0100-02A0	28	HO- 7
01010-31445	H0100-03A0	9	HO- 9
01010-31445	Y1600-21A0	24	YO- 15
01010-31445	Y1660-02A0	27	YO- 37
01010-31445	Y1660-03A0	9	YO- 39
01010-31445	Y1660-21A0	8	YO- 45
01010-31450	H0100-04A0	40	HO- 11
01010-31450	H0100-05A0	10	HO- 15
01010-31450	Y1660-05A0	10	YO- 43
01010-31450	Y1660-22A0	17	YO- 47
01010-31495	H0100-04A0	22	HO- 11
01010-31495	H0100-04A0	41	HO- 11
01010-31495	Y1660-04A0	11	YO- 41
01010-31495	Y1660-04A0	17	YO- 41
01010-31495	Y1660-22A0	15	YO- 47
01010-31495	Y1660-22A0	7	YO- 47
01010-31640	A2210-A4E4	7	AA- 63
01010-31650	A2210-A4E4	8	AA- 63
01010-31865	Y1620-31A0	15	YO- 25
01010-50612	K2220-01A1	3	KO- 99
01010-50616	W2119-02A0	26	WO- 5
01010-50620	K0210-09A0	5	KO- 33
01010-50816	M2110-03A1	41	MO- 14
01010-50816	M2113-01A0	15	MO- 33
01010-50825	K2510-02A0	42	KO- 109
01010-50830	H2250-01A0	22	HO- 39
01010-50830	K2110-10A0	19	KO- 85

PARTS NO.	FIG NO	INDEX	PAGE
01010-50835	H2250-01A0	39	H0- 39
01010-50835	K2510-02A0	44	K0- 110
01010-51020	M2110-05A0	40	M0- 21
01010-51020	Y1620-02A0	29	Y0- 23
01010-51020	Y1621-01A0	33	Y0- 27
01010-51020	Y1621-11A0	35	Y0- 29
01010-51025	D0100-01A0	28	D0- 3
01010-51025	H0100-01A0	10	H0- 3
01010-51025	Y1621-01A0	36	Y0- 27
01010-51030	F2700-04A0	15	F0- 95
01010-51035	F2700-03A0	14	F0- 91
01010-51040	H0100-01A0	32	H0- 3
01010-51050	Y1620-31A0	26	Y0- 25
01010-51065	Y1620-02A0	13	Y0- 23
01010-51065	Y1621-11A0	31	Y0- 29
01010-51075	Y1620-02A0	14	Y0- 23
01010-51080	Y1621-01A0	30	Y0- 27
01010-51080	Y1621-11A0	30	Y0- 29
01010-51085	Y1620-02A0	21	Y0- 23
01010-51220	K0210-09A0	2	K0- 33
01010-51220	K0210-09A0	8	K0- 33
01010-51220	M2110-05A0	36	M0- 21
01010-51220	M2210-06A0	31	M0- 79
01010-51220	M2210-06A3	31	M0- 83
01010-51225	M2142-02A0	3	M0- 53
01010-51225	M2142-02A1	3	M0- 55
01010-51225	M2210-06A0	34	M0- 79
01010-51225	M2210-06A3	34	M0- 83
01010-51225	W2119-02A0	23	W0- 5
01010-51230	H0100-01A0	2	H0- 3
01010-51230	H0100-01A0	5	H0- 3
01010-51230	K2220-01A0	19	K0- 95
01010-51235	H0100-01A0	38	H0- 4
01010-51235	H0100-02A0	8	H0- 7
01010-51235	K2110-01A0	37	K0- 61
01010-51235	T2440-01A1	32	T0- 37
01010-51240	H0100-02A0	12	H0- 7
01010-51245	Y1620-01A0	33	Y0- 19
01010-51270	Y1620-02A0	17	Y0- 23
01010-51275	Y1620-02A0	26	Y0- 23
01010-51280	Y1620-02A0	16	Y0- 23
01010-51420	T2110-01A1	14	T0- 7
01010-51425	Y1620-31A0	29	Y0- 25
01010-51435	T2110-01A1	41	T0- 8
01010-51440	Y1620-31A0	32	Y0- 25
01010-51635	K0410-01A1	6	K0- 37
01010-51640	A6210-A4C4	3	AA- 175
01010-51655	Y1600-21A0	20	Y0- 15
01010-51655	Y1620-01A0	14	Y0- 19
01010-51865	Y1621-01A0	16	Y0- 27

PARTS NO	FIG NO.	INDEX	PAGE
01010-51865	Y1621-11A0	16	Y0- 29
01010-51880	T2110-01A1	31	T0- 7
01010-52050	J2110-01A0	15	J0- 3
01010-52050	J2110-01A1	15	J0- 5
01010-52050	J2110-01A2	15	J0- 7
01010-52095	T2110-01A1	28	T0- 7
01010-52450	T2110-01A1	17	T0- 7
01010-52470	Y1620-01A0	7	Y0- 19
01010-61435	F2320-53A0	12	F0- 27
01010-61435	F2320-54A0	23	F0- 31
01010-61450	Y1660-04A0	3	Y0- 41
01010-61450	Y1660-22A0	20	Y0- 47
01010-61490	F2320-53A0	34	F0- 27
01010-61640	A2210-A4E4	7	AA- 63
01010-62465	D0100-01A0	14	D0- 3
01010-80612	M2141-01A1	15	M0- 37
01010-80612	M2141-02A1	15	M0- 43
01010-80612	M2142-01A0	20	M0- 45
01010-80612	M2142-01A2	21	M0- 51
01010-80612	M2142-02A0	15	M0- 53
01010-80612	M2142-02A1	15	M0- 55
01010-80612	M2250-01A0	10	M0- 89
01010-80616	A2041-A4A5	30	AA- 51
01010-80616	A2041-A4G8	30	AA- 53
01010-80616	D0100-01A0	22	D0- 3
01010-80616	K0810-01A0	3	K0- 59
01010-80616	K2110-06A0	5	K0- 73
01010-80616	K2110-13A0	7	K0- 91
01010-80620	F2700-03A0	11	F0- 91
01010-80620	K0210-07A0	42	K0- 26
01010-80620	K0210-08A0	28	K0- 29
01010-80620	K2110-01A0	19	K0- 61
01010-80620	K2220-01A0	46	K0- 96
01010-80620	M2250-01A0	47	M0- 90
01010-80625	A4030-A4C6	20	AA- 123
01010-80625	C0310-01A1	33	C0- 7
01010-80630	A4030-A4C6	20	AA- 123
01010-80635	A4030-A4C6	16	AA- 123
01010-80635	K0210-02A0	9	K0- 13
01010-80810	K0210-07A0	3	K0- 25
01010-80810	K0210-07A0	34	K0- 25
01010-80810	K0210-07A0	9	K0- 25
01010-80812	H2250-01A0	30	H0- 39
01010-80812	H2250-01A1	17	H0- 43
01010-80812	K2110-01A0	23	K0- 61
01010-80814	F2320-53A0	29	F0- 27
01010-80816	A4080-A4A8	3	AA- 127
01010-80816	C0310-02A0	27	C0- 9
01010-80816	F2600-01A0	37	F0- 81
01010-80816	K0710-03A0	27	K0- 49

PARTS NO.	FIG NO	INDEX	PAGE
01010-80816	K2110-05A0	4	K0- 71
01010-80816	M2110-04A0	35	M0- 17
01010-80816	Y1679-01A0	22	Y0- 57
01010-80816	Y1679-11A0	22	Y0- 61
01010-80820	A2610-A4B5	20	AA- 87
01010-80820	A2610-A4B5	22	AA- 87
01010-80820	A3310-A4A3	13	AA- 97
01010-80820	A4030-A4C6	14	AA- 123
01010-80820	A5080-A4B2	17	AA- 149
01010-80820	A6010-A4D6	26	AA- 157
01010-80820	A6010-A4D7Z	26	AA- 159
01010-80820	A6010-A4F7	26	AA- 161
01010-80820	A6010-A4F8	26	AA- 163
01010-80820	F2370-05A0	54	F0- 62
01010-80820	K0710-01A0	31	K0- 41
01010-80820	K0710-04A0	13	K0- 53
01010-80820	K2110-14A0	3	K0- 93
01010-80820	K2510-02A0	10	K0- 109
01010-80820	K2510-02A0	5	K0- 109
01010-80820	M2110-05A0	30	M0- 21
01010-80820	M2210-01A0	17	M0- 61
01010-80820	M2210-01A0	25	M0- 61
01010-80825	A3010-A4A1	16	AA- 91
01010-80825	D0200-01A0	11	D0- 7
01010-80825	D0200-01A1	11	D0- 9
01010-80825	D0200-01A2	11	D0- 11
01010-80825	F2320-57A0	7	F0- 43
01010-80825	K0210-02A0	40	K0- 14
01010-80825	K0210-07A0	17	K0- 25
01010-80825	M2141-01A0	11	M0- 35
01010-80825	M2141-01A2	11	M0- 39
01010-80825	M2141-01A3	11	M0- 41
01010-80825	Y1679-01A0	43	Y0- 58
01010-80825	Y1679-01A0	47	Y0- 58
01010-80825	Y1679-11A0	37	Y0- 61
01010-80825	Y1679-11A0	41	Y0- 61
01010-80830	A2041-A4A5	34	AA- 51
01010-80830	A2041-A4G8	34	AA- 53
01010-80830	A2050-A4A3	4	AA- 55
01010-80830	F2700-01A0	36	F0- 85
01010-80830	H2250-01A1	9	H0- 43
01010-80830	K0210-07A0	22	K0- 25
01010-80830	K2110-02A0	3	K0- 65
01010-80830	K2110-04A0	26	K0- 69
01010-80830	K2110-04A0	3	K0- 69
01010-80830	K2110-06A0	25	K0- 73
01010-80830	K2110-09A0	4	K0- 81
01010-80830	K2110-10A0	7	K0- 85
01010-80830	K2110-12A0	6	K0- 89
01010-80830	K2510-02A0	40	K0- 109

PARTS NO	FIG NO.	INDEX	PAGE
01010-80830	K2510-03A0	18	K0- 113
01010-80830	K2510-03A0	24	K0- 113
01010-80835	F2310-51A0	31	F0- 9
01010-80835	H2250-01A1	26	H0- 43
01010-80835	M2110-01A1	4	M0- 5
01010-80835	M2110-03A1	4	M0- 13
01010-80835	M2110-06A0	8	M0- 25
01010-80835	Y1679-01A0	38	Y0- 57
01010-80835	Y1679-11A0	32	Y0- 61
01010-80840	A4110-A4E4	16	AA- 129
01010-80840	A4110-A4H9	16	AA- 131
01010-80840	H2250-01A0	37	H0- 39
01010-80840	H2250-01A1	24	H0- 43
01010-80840	K0710-04A0	14	K0- 53
01010-80840	K2510-03A0	2	K0- 113
01010-80840	K2510-03A0	38	K0- 113
01010-80845	Y1679-01A0	39	Y0- 57
01010-80845	Y1679-11A0	33	Y0- 61
01010-80860	F2600-01A0	50	F0- 82
01010-80885	K0710-01A1	24	K0- 43
01010-80885	K0710-02A0	5	K0- 45
01010-81016	A1310-B4H7	12	AA- 13
01010-81016	A1310-B4H7	3	AA- 13
01010-81016	A1610-A4F2A	16	AA- 35
01010-81016	A1610-A4F3A	14	AA- 37
01010-81016	A2060-A4C1	11	AA- 57
01010-81016	E0200-01A0	15	E0- 3
01010-81016	E0200-01A0	22	E0- 3
01010-81016	E0420-01A0	7	E0- 9
01010-81016	F2370-01A0	13	F0- 49
01010-81016	J2700-01A0	17	J0- 11
01010-81016	J2700-01A1	17	J0- 13
01010-81016	K2110-09A0	21	K0- 81
01010-81016	K2510-05A0	18	K0- 119
01010-81016	M2110-05A0	14	M0- 21
01010-81016	M2210-01A0	11	M0- 61
01010-81016	M2210-01A0	3	M0- 61
01010-81016	M2210-01A0	33	M0- 61
01010-81016	M2210-01A0	37	M0- 61
01010-81016	M2210-07A0	6	M0- 87
01010-81020	A1570-A4B7	11	AA- 33
01010-81020	A1570-A4B7	9	AA- 33
01010-81020	A1610-A4F2A	21	AA- 35
01010-81020	A1610-A4F2A	24	AA- 35
01010-81020	A1610-A4F3A	19	AA- 37
01010-81020	A1610-A4F3A	22	AA- 37
01010-81020	A2041-A4A5	12	AA- 51
01010-81020	A2041-A4G8	12	AA- 53
01010-81020	A2610-A4B6	3	AA- 89
01010-81020	A4130-A4B3	26	AA- 133

PARTS NO	FIG NO	INDEX	PAGE
01010-81020	A5010-A4F4	35	AA- 143
01010-81020	C0310-02A0	18	CO- 9
01010-81020	C0310-02A1	24	CO- 11
01010-81020	D0200-01A0	19	DO- 7
01010-81020	D0200-01A1	19	DO- 9
01010-81020	D0200-01A2	27	DO- 11
01010-81020	E0200-01A0	18	EO- 3
01010-81020	E0200-02A0	2	EO- 5
01010-81020	E0200-02A0	23	EO- 5
01010-81020	E0200-02A0	5	EO- 5
01010-81020	E0200-02A0	8	EO- 5
01010-81020	E0200-03A0	30	EO- 7
01010-81020	F2320-56A0	34	FO- 39
01010-81020	F2320-56A0	6	FO- 39
01010-81020	F2700-02A0	21	FO- 89
01010-81020	F2700-03A0	29	FO- 91
01010-81020	F2700-05A2	16	FO- 103
01010-81020	F2700-05A2	2	FO- 103
01010-81020	F2700-06A0	9	FO- 105
01010-81020	H2250-01A0	18	HO- 39
01010-81020	K0410-01A1	25	KO- 37
01010-81020	K0710-01A0	12	KO- 41
01010-81020	K0710-01A1	31	KO- 43
01010-81020	K0710-01A1	4	KO- 43
01010-81020	K0710-02A0	12	KO- 45
01010-81020	K0710-02A0	27	KO- 45
01010-81020	K0710-02A0	31	KO- 45
01010-81020	K0710-02A0	39	KO- 45
01010-81020	K0710-02A0	45	KO- 46
01010-81020	K0710-03A0	12	KO- 49
01010-81020	K2110-13A0	19	KO- 91
01010-81020	K2110-14A0	5	KO- 93
01010-81020	K2220-01A0	42	KO- 96
01010-81020	M2110-01A0	16	MO- 3
01010-81020	M2110-01A0	28	MO- 3
01010-81020	M2110-01A0	31	MO- 3
01010-81020	M2110-01A0	35	MO- 3
01010-81020	M2110-03A1	38	MO- 14
01010-81020	M2110-03A1	55	MO- 14
01010-81020	M2110-04A0	24	MO- 17
01010-81020	M2110-05A0	4	MO- 21
01010-81020	M2110-05A0	44	MO- 22
01010-81020	M2110-06A0	5	MO- 25
01010-81020	M2110-07A0	24	MO- 27
01010-81020	M2141-01A0	14	MO- 35
01010-81020	M2141-01A1	25	MO- 37
01010-81020	M2141-01A2	14	MO- 39
01010-81020	M2141-01A3	14	MO- 41
01010-81020	M2141-02A1	21	MO- 43
01010-81020	M2142-02A0	33	MO- 53

PARTS NO.	FIG NO	INDEX	PAGE
01010-81020	M2142-02A1	33	MO- 55
01010-81020	M2190-01A1	7	MO- 57
01010-81020	M2190-01A1	9	MO- 57
01010-81020	M2190-01A3	7	MO- 59
01010-81020	M2190-01A3	9	MO- 59
01010-81020	M2210-01A0	6	MO- 61
01010-81020	M2210-04A0	12	MO- 71
01010-81020	R2100-02A0	38	RO- 29
01010-81020	T2440-03A0	15	TO- 41
01010-81020	T2440-03A0	5	TO- 41
01010-81025	A1530-C4D3	11	AA- 29
01010-81025	A1530-C4G8	11	AA- 31
01010-81025	A1570-A4B7	4	AA- 33
01010-81025	A2011-A4A4	3	AA- 47
01010-81025	A2011-A4A4	8	AA- 47
01010-81025	A2041-A4A5	10	AA- 51
01010-81025	A2041-A4A5	25	AA- 51
01010-81025	A2041-A4G8	10	AA- 53
01010-81025	A2041-A4G8	25	AA- 53
01010-81025	A2110-A4F6	10	AA- 59
01010-81025	A2110-A4F6	14	AA- 59
01010-81025	A2110-A4F6	17	AA- 59
01010-81025	A2110-A4F6	3	AA- 59
01010-81025	A2110-B4F6	7	AA- 61
01010-81025	A2210-C4E4	2	AA- 67
01010-81025	A3110-B4C5	20	AA- 95
01010-81025	A4130-A4B3	12	AA- 133
01010-81025	A4130-A4B3	22	AA- 133
01010-81025	A5080-A4B2	11	AA- 149
01010-81025	A5210-A4D3	15	AA- 153
01010-81025	A5210-A4D3	6	AA- 153
01010-81025	A5210-A4F6	15	AA- 155
01010-81025	A5210-A4F6	6	AA- 155
01010-81025	A6010-A4D6	17	AA- 157
01010-81025	A6010-A4D7Z	17	AA- 159
01010-81025	A6010-A4F7	17	AA- 161
01010-81025	A6010-A4F8	17	AA- 163
01010-81025	F2100-01A0	36	FO- 3
01010-81025	F2100-01A0	45	FO- 4
01010-81025	F2320-55A0	28	FO- 35
01010-81025	F2320-55A0	44	FO- 36
01010-81025	F2320-56A0	44	FO- 40
01010-81025	F2350-01A0	16	FO- 45
01010-81025	F2370-01A0	43	FO- 50
01010-81025	H0310-01A0	24	HO- 17
01010-81025	H2250-01A0	42	HO- 39
01010-81025	H2250-01A1	29	HO- 43
01010-81025	K0210-01A0	10	KO- 9
01010-81025	K0710-01A1	26	KO- 43
01010-81025	K0710-02A0	7	KO- 45

PARTS NO	FIG NO.	INDEX	PAGE
01010-81025	K2510-05A0	5	KO- 119
01010-81025	M2110-03A1	51	MO- 14
01010-81025	M2110-06A0	33	MO- 25
01010-81025	M2141-01A1	30	MO- 37
01010-81025	M2142-01A0	30	MO- 45
01010-81025	M2210-01A0	41	MO- 61
01010-81025	T2440-01A0	48	TO- 34
01010-81025	Y1660-01A0	10	YO- 33
01010-81030	A1410-A4F3A	26	AA- 15
01010-81030	A1410-A4F4A	24	AA- 17
01010-81030	A1610-B4F2A	5	AA- 39
01010-81030	A1610-B4F3A	5	AA- 41
01010-81030	A2060-A4C1	14	AA- 57
01010-81030	A2060-A4C1	7	AA- 57
01010-81030	A2110-A4F6	19	AA- 59
01010-81030	A2210-B4E4	20	AA- 65
01010-81030	A2610-A4B5	10	AA- 87
01010-81030	A3110-A4C5	17	AA- 93
01010-81030	A3110-B4C5	13	AA- 95
01010-81030	A3110-B4C5	19	AA- 95
01010-81030	A3310-A4A3	20	AA- 97
01010-81030	A4110-A4E4	10	AA- 129
01010-81030	A4110-A4H9	10	AA- 131
01010-81030	C0310-01A0	12	CO- 5
01010-81030	C0310-01A0	15	CO- 5
01010-81030	C0310-01A1	12	CO- 7
01010-81030	C0310-01A1	15	CO- 7
01010-81030	D0100-02A0	15	DO- 5
01010-81030	F2310-52A0	10	FO- 13
01010-81030	F2320-56A0	41	FO- 40
01010-81030	F2370-05A0	18	FO- 61
01010-81030	F2700-01A0	2	FO- 85
01010-81030	F2700-01A0	43	FO- 86
01010-81030	F2700-07A0	51	FO- 108
01010-81030	K0110-01A0	2	KO- 3
01010-81030	K0210-01A0	11	KO- 9
01010-81030	K0710-01A1	21	KO- 43
01010-81030	K0710-02A0	2	KO- 45
01010-81030	K2510-01A0	9	KO- 105
01010-81030	K2510-01A1	13	KO- 107
01010-81030	K2510-01A1	27	KO- 107
01010-81030	K2510-01A1	9	KO- 107
01010-81030	K2510-02A0	28	KO- 109
01010-81030	K2510-02A0	33	KO- 109
01010-81030	M2110-01A0	14	MO- 3
01010-81030	M2110-01A0	22	MO- 3
01010-81030	M2110-03A0	3	MO- 11
01010-81030	M2110-04A0	12	MO- 17
01010-81030	M2110-04A0	9	MO- 17
01010-81030	T2440-01A0	45	TO- 34

PARTS NO	FIG NO '	INDEX	PAGE
01010-81030	Y1679-21A0	33	YO- 65
01010-81030	Y1679-21A0	39	YO- 66
01010-81035	A1410-A4F3A	13	AA- 15
01010-81035	A1410-A4F4A	13	AA- 17
01010-81035	A1530-C4D3	16	AA- 29
01010-81035	A1530-C4D3	8	AA- 29
01010-81035	A1530-C4G8	16	AA- 31
01010-81035	A1530-C4G8	8	AA- 31
01010-81035	A3110-B4C5	10	AA- 95
01010-81035	A4110-A4E4	6	AA- 129
01010-81035	A4110-A4H9	6	AA- 131
01010-81035	C0120-01A0A	7	CO- 3
01010-81035	E0200-02A0	14	EO- 5
01010-81035	F2310-52A0	18	FO- 13
01010-81035	F2370-04A0	7	FO- 59
01010-81035	F2700-04A0	28	FO- 95
01010-81035	F2700-05A2	21	FO- 103
01010-81035	F2700-07A0	11	FO- 107
01010-81035	F2700-07A0	37	FO- 107
01010-81035	M2210-01A0	15	MO- 61
01010-81040	A1310-B4H7	17	AA- 13
01010-81040	A1310-B4H7	8	AA- 13
01010-81040	A1410-A4F3A	15	AA- 15
01010-81040	A1410-A4F4A	15	AA- 17
01010-81040	A3110-B4C5	24	AA- 95
01010-81040	A5080-A4B2	31	AA- 149
01010-81040	F2700-04A0	44	FO- 96
01010-81040	H2250-01A0	2	HO- 39
01010-81040	H2250-01A1	2	HO- 43
01010-81040	K0210-01A0	29	KO- 9
01010-81040	K2110-07A0	14	KO- 77
01010-81040	K2510-01A0	17	KO- 105
01010-81040	K2510-01A0	22	KO- 105
01010-81040	K2510-01A1	17	KO- 107
01010-81040	K2510-01A1	22	KO- 107
01010-81040	Y1660-01A0	32	YO- 33
01010-81045	A1410-A4F3A	17	AA- 15
01010-81045	A2041-A4A5	4	AA- 51
01010-81045	A2041-A4G8	4	AA- 53
01010-81045	D0200-01A0	24	DO- 7
01010-81045	D0200-01A1	24	DO- 9
01010-81045	D0200-01A2	20	DO- 11
01010-81045	F2310-52A0	5	FO- 13
01010-81045	F2700-07A0	17	FO- 107
01010-81045	H2210-01A0	25	HO- 19
01010-81045	K2510-05A0	10	KO- 119
01010-81050	A2041-A4A5	22	AA- 51
01010-81050	A2041-A4G8	22	AA- 53
01010-81050	A5010-B4F4	11	AA- 145
01010-81050	D0100-02A0	2	DO- 5

PARTS NO.	FIG NO	INDEX	PAGE
01010-50835	H2250-01A0	39	H0- 39
01010-50835	K2510-02A0	44	K0- 110
01010-51020	M2110-05A0	40	M0- 21
01010-51020	Y1620-02A0	29	Y0- 23
01010-51020	Y1621-01A0	33	Y0- 27
01010-51020	Y1621-11A0	35	Y0- 29
01010-51025	D0100-01A0	28	D0- 3
01010-51025	H0100-01A0	10	H0- 3
01010-51025	Y1621-01A0	36	Y0- 27
01010-51030	F2700-04A0	15	F0- 95
01010-51035	F2700-03A0	14	F0- 91
01010-51040	H0100-01A0	32	H0- 3
01010-51050	Y1620-31A0	26	Y0- 25
01010-51065	Y1620-02A0	13	Y0- 23
01010-51065	Y1621-11A0	31	Y0- 29
01010-51075	Y1620-02A0	14	Y0- 23
01010-51080	Y1621-01A0	30	Y0- 27
01010-51080	Y1621-11A0	30	Y0- 29
01010-51085	Y1620-02A0	21	Y0- 23
01010-51220	K0210-09A0	2	K0- 33
01010-51220	K0210-09A0	8	K0- 33
01010-51220	M2110-05A0	36	M0- 21
01010-51220	M2210-06A0	31	M0- 79
01010-51220	M2210-06A3	31	M0- 83
01010-51225	M2142-02A0	3	M0- 53
01010-51225	M2142-02A1	3	M0- 55
01010-51225	M2210-06A0	34	M0- 79
01010-51225	M2210-06A3	34	M0- 83
01010-51225	W2119-02A0	23	W0- 5
01010-51230	H0100-01A0	2	H0- 3
01010-51230	H0100-01A0	5	H0- 3
01010-51230	K2220-01A0	19	K0- 95
01010-51235	H0100-01A0	38	H0- 4
01010-51235	H0100-02A0	8	H0- 7
01010-51235	K2110-01A0	37	K0- 61
01010-51235	T2440-01A1	32	T0- 37
01010-51240	H0100-02A0	12	H0- 7
01010-51245	Y1620-01A0	33	Y0- 19
01010-51270	Y1620-02A0	17	Y0- 23
01010-51275	Y1620-02A0	26	Y0- 23
01010-51280	Y1620-02A0	16	Y0- 23
01010-51420	T2110-01A1	14	T0- 7
01010-51425	Y1620-31A0	29	Y0- 25
01010-51435	T2110-01A1	41	T0- 8
01010-51440	Y1620-31A0	32	Y0- 25
01010-51635	K0410-01A1	6	K0- 37
01010-51640	A6210-A4C4	3	AA- 175
01010-51655	Y1600-21A0	20	Y0- 15
01010-51655	Y1620-01A0	14	Y0- 19
01010-51865	Y1621-01A0	16	Y0- 27

PARTS NO.	FIG NO.	INDEX	PAGE
01010-51865	Y1621-11A0	16	Y0- 29
01010-51880	T2110-01A1	31	T0- 7
01010-52050	J2110-01A0	15	J0- 3
01010-52050	J2110-01A1	15	J0- 5
01010-52050	J2110-01A2	15	J0- 7
01010-52095	T2110-01A1	28	T0- 7
01010-52450	T2110-01A1	17	T0- 7
01010-52470	Y1620-01A0	7	Y0- 19
01010-61435	F2320-53A0	12	F0- 27
01010-61435	F2320-54A0	23	F0- 31
01010-61450	Y1660-04A0	3	Y0- 41
01010-61450	Y1660-22A0	20	Y0- 47
01010-61490	F2320-53A0	34	F0- 27
01010-61640	A2210-A4E4	7	AA- 63
01010-62465	D0100-01A0	14	D0- 3
01010-80612	M2141-01A1	15	M0- 37
01010-80612	M2141-02A1	15	M0- 43
01010-80612	M2142-01A0	20	M0- 45
01010-80612	M2142-01A2	21	M0- 51
01010-80612	M2142-02A0	15	M0- 53
01010-80612	M2142-02A1	15	M0- 55
01010-80612	M2250-01A0	10	M0- 89
01010-80616	A2041-A4A5	30	AA- 51
01010-80616	A2041-A4G8	30	AA- 53
01010-80616	D0100-01A0	22	D0- 3
01010-80616	K0810-01A0	3	K0- 59
01010-80616	K2110-06A0	5	K0- 73
01010-80616	K2110-13A0	7	K0- 91
01010-80620	F2700-03A0	11	F0- 91
01010-80620	K0210-07A0	42	K0- 26
01010-80620	K0210-08A0	28	K0- 29
01010-80620	K2110-01A0	19	K0- 61
01010-80620	K2220-01A0	46	K0- 96
01010-80620	M2250-01A0	47	M0- 90
01010-80625	A4030-A4C6	20	AA- 123
01010-80625	C0310-01A1	33	C0- 7
01010-80630	A4030-A4C6	20	AA- 123
01010-80635	A4030-A4C6	16	AA- 123
01010-80635	K0210-02A0	9	K0- 13
01010-80810	K0210-07A0	3	K0- 25
01010-80810	K0210-07A0	34	K0- 25
01010-80810	K0210-07A0	9	K0- 25
01010-80812	H2250-01A0	30	H0- 39
01010-80812	H2250-01A1	17	H0- 43
01010-80812	K2110-01A0	23	K0- 61
01010-80814	F2320-53A0	29	F0- 27
01010-80816	A4080-A4A8	3	AA- 127
01010-80816	C0310-02A0	27	C0- 9
01010-80816	F2600-01A0	37	F0- 81
01010-80816	K0710-03A0	27	K0- 49

PARTS NO	FIG NO	INDEX	PAGE
01010-80816	K2110-05A0	4	K0- 71
01010-80816	M2110-04A0	35	M0- 17
01010-80816	Y1679-01A0	22	Y0- 57
01010-80816	Y1679-11A0	22	Y0- 61
01010-80820	A2610-A4B5	20	AA- 87
01010-80820	A2610-A4B5	22	AA- 87
01010-80820	A3310-A4A3	13	AA- 97
01010-80820	A4030-A4C6	14	AA- 123
01010-80820	A5080-A4B2	17	AA- 149
01010-80820	A6010-A4D6	26	AA- 157
01010-80820	A6010-A4D7Z	26	AA- 159
01010-80820	A6010-A4F7	26	AA- 161
01010-80820	A6010-A4F8	26	AA- 163
01010-80820	F2370-05A0	54	F0- 62
01010-80820	K0710-01A0	31	K0- 41
01010-80820	K0710-04A0	13	K0- 53
01010-80820	K2110-14A0	3	K0- 93
01010-80820	K2510-02A0	10	K0- 109
01010-80820	K2510-02A0	5	K0- 109
01010-80820	M2110-05A0	30	M0- 21
01010-80820	M2210-01A0	17	M0- 61
01010-80820	M2210-01A0	25	M0- 61
01010-80825	A3010-A4A1	16	AA- 91
01010-80825	D0200-01A0	11	D0- 7
01010-80825	D0200-01A1	11	D0- 9
01010-80825	D0200-01A2	11	D0- 11
01010-80825	F2320-57A0	7	F0- 43
01010-80825	K0210-02A0	40	K0- 14
01010-80825	K0210-07A0	17	K0- 25
01010-80825	M2141-01A0	11	M0- 35
01010-80825	M2141-01A2	11	M0- 39
01010-80825	M2141-01A3	11	M0- 41
01010-80825	Y1679-01A0	43	Y0- 58
01010-80825	Y1679-01A0	47	Y0- 58
01010-80825	Y1679-11A0	37	Y0- 61
01010-80825	Y1679-11A0	41	Y0- 61
01010-80830	A2041-A4A5	34	AA- 51
01010-80830	A2041-A4G8	34	AA- 53
01010-80830	A2050-A4A3	4	AA- 55
01010-80830	F2700-01A0	36	F0- 85
01010-80830	H2250-01A1	9	H0- 43
01010-80830	K0210-07A0	22	K0- 25
01010-80830	K2110-02A0	3	K0- 65
01010-80830	K2110-04A0	26	K0- 69
01010-80830	K2110-04A0	3	K0- 69
01010-80830	K2110-06A0	25	K0- 73
01010-80830	K2110-09A0	4	K0- 81
01010-80830	K2110-10A0	7	K0- 85
01010-80830	K2110-12A0	6	K0- 89
01010-80830	K2510-02A0	40	K0- 109

PARTS NO.	FIG NO	INDEX	PAGE
01010-80830	K2510-03A0	18	K0- 113
01010-80830	K2510-03A0	24	K0- 113
01010-80835	F2310-51A0	31	F0- 9
01010-80835	H2250-01A1	26	H0- 43
01010-80835	M2110-01A1	4	M0- 5
01010-80835	M2110-03A1	4	M0- 13
01010-80835	M2110-06A0	8	M0- 25
01010-80835	Y1679-01A0	38	Y0- 57
01010-80835	Y1679-11A0	32	Y0- 61
01010-80840	A4110-A4E4	16	AA- 129
01010-80840	A4110-A4H9	16	AA- 131
01010-80840	H2250-01A0	37	H0- 39
01010-80840	H2250-01A1	24	H0- 43
01010-80840	K0710-04A0	14	K0- 53
01010-80840	K2510-03A0	2	K0- 113
01010-80840	K2510-03A0	38	K0- 113
01010-80845	Y1679-01A0	39	Y0- 57
01010-80845	Y1679-11A0	33	Y0- 61
01010-80860	F2600-01A0	50	F0- 82
01010-80885	K0710-01A1	24	K0- 43
01010-80885	K0710-02A0	5	K0- 45
01010-81016	A1310-B4H7	12	AA- 13
01010-81016	A1310-B4H7	3	AA- 13
01010-81016	A1610-A4F2A	16	AA- 35
01010-81016	A1610-A4F3A	14	AA- 37
01010-81016	A2060-A4C1	11	AA- 57
01010-81016	E0200-01A0	15	E0- 3
01010-81016	E0200-01A0	22	E0- 3
01010-81016	E0420-01A0	7	E0- 9
01010-81016	F2370-01A0	13	F0- 49
01010-81016	J2700-01A0	17	J0- 11
01010-81016	J2700-01A1	17	J0- 13
01010-81016	K2110-09A0	21	K0- 81
01010-81016	K2510-05A0	18	K0- 119
01010-81016	M2110-05A0	14	M0- 21
01010-81016	M2210-01A0	11	M0- 61
01010-81016	M2210-01A0	3	M0- 61
01010-81016	M2210-01A0	33	M0- 61
01010-81016	M2210-01A0	37	M0- 61
01010-81016	M2210-07A0	6	M0- 87
01010-81020	A1570-A4B7	11	AA- 33
01010-81020	A1570-A4B7	9	AA- 33
01010-81020	A1610-A4F2A	21	AA- 35
01010-81020	A1610-A4F2A	24	AA- 35
01010-81020	A1610-A4F3A	19	AA- 37
01010-81020	A1610-A4F3A	22	AA- 37
01010-81020	A2041-A4A5	12	AA- 51
01010-81020	A2041-A4G8	12	AA- 53
01010-81020	A2610-A4B6	3	AA- 89
01010-81020	A4130-A4B3	26	AA- 133

PARTS NO.	FIG NO	INDEX	PAGE
01010-81020	A5010-A4F4	35	AA- 143
01010-81020	C0310-02A0	18	CO- 9
01010-81020	C0310-02A1	24	CO- 11
01010-81020	D0200-01A0	19	DO- 7
01010-81020	D0200-01A1	19	DO- 9
01010-81020	D0200-01A2	27	DO- 11
01010-81020	E0200-01A0	18	EO- 3
01010-81020	E0200-02A0	2	EO- 5
01010-81020	E0200-02A0	23	EO- 5
01010-81020	E0200-02A0	5	EO- 5
01010-81020	E0200-02A0	8	EO- 5
01010-81020	E0200-03A0	30	EO- 7
01010-81020	F2320-56A0	34	FO- 39
01010-81020	F2320-56A0	6	FO- 39
01010-81020	F2700-02A0	21	FO- 89
01010-81020	F2700-03A0	29	FO- 91
01010-81020	F2700-05A2	16	FO- 103
01010-81020	F2700-05A2	2	FO- 103
01010-81020	F2700-06A0	9	FO- 105
01010-81020	H2250-01A0	18	HO- 39
01010-81020	K0410-01A1	25	KO- 37
01010-81020	K0710-01A0	12	KO- 41
01010-81020	K0710-01A1	31	KO- 43
01010-81020	K0710-01A1	4	KO- 43
01010-81020	K0710-02A0	12	KO- 45
01010-81020	K0710-02A0	27	KO- 45
01010-81020	K0710-02A0	31	KO- 45
01010-81020	K0710-02A0	39	KO- 45
01010-81020	K0710-02A0	45	KO- 46
01010-81020	K0710-03A0	12	KO- 49
01010-81020	K2110-13A0	19	KO- 91
01010-81020	K2110-14A0	5	KO- 93
01010-81020	K2220-01A0	42	KO- 96
01010-81020	M2110-01A0	16	MO- 3
01010-81020	M2110-01A0	28	MO- 3
01010-81020	M2110-01A0	31	MO- 3
01010-81020	M2110-01A0	35	MO- 3
01010-81020	M2110-03A1	38	MO- 14
01010-81020	M2110-03A1	55	MO- 14
01010-81020	M2110-04A0	24	MO- 17
01010-81020	M2110-05A0	4	MO- 21
01010-81020	M2110-05A0	44	MO- 22
01010-81020	M2110-06A0	5	MO- 25
01010-81020	M2110-07A0	24	MO- 27
01010-81020	M2141-01A0	14	MO- 35
01010-81020	M2141-01A1	25	MO- 37
01010-81020	M2141-01A2	14	MO- 39
01010-81020	M2141-01A3	14	MO- 41
01010-81020	M2141-02A1	21	MO- 43
01010-81020	M2142-02A0	33	MO- 53

PARTS NO	FIG NO.	INDEX	PAGE
01010-81020	M2142-02A1	33	MO- 55
01010-81020	M2190-01A1	7	MO- 57
01010-81020	M2190-01A1	9	MO- 57
01010-81020	M2190-01A3	7	MO- 59
01010-81020	M2190-01A3	9	MO- 59
01010-81020	M2210-01A0	6	MO- 61
01010-81020	M2210-04A0	12	MO- 71
01010-81020	R2100-02A0	38	RO- 29
01010-81020	T2440-03A0	15	TO- 41
01010-81020	T2440-03A0	5	TO- 41
01010-81025	A1530-C4D3	11	AA- 29
01010-81025	A1530-C4G8	11	AA- 31
01010-81025	A1570-A4B7	4	AA- 33
01010-81025	A2011-A4A4	3	AA- 47
01010-81025	A2011-A4A4	8	AA- 47
01010-81025	A2041-A4A5	10	AA- 51
01010-81025	A2041-A4A5	25	AA- 51
01010-81025	A2041-A4G8	10	AA- 53
01010-81025	A2041-A4G8	25	AA- 53
01010-81025	A2110-A4F6	10	AA- 59
01010-81025	A2110-A4F6	14	AA- 59
01010-81025	A2110-A4F6	17	AA- 59
01010-81025	A2110-A4F6	3	AA- 59
01010-81025	A2110-B4F6	7	AA- 61
01010-81025	A2210-C4E4	2	AA- 67
01010-81025	A3110-B4C5	20	AA- 95
01010-81025	A4130-A4B3	12	AA- 133
01010-81025	A4130-A4B3	22	AA- 133
01010-81025	A5080-A4B2	11	AA- 149
01010-81025	A5210-A4D3	15	AA- 153
01010-81025	A5210-A4D3	6	AA- 153
01010-81025	A5210-A4F6	15	AA- 155
01010-81025	A5210-A4F6	6	AA- 155
01010-81025	A6010-A4D6	17	AA- 157
01010-81025	A6010-A4D7Z	17	AA- 159
01010-81025	A6010-A4F7	17	AA- 161
01010-81025	A6010-A4F8	17	AA- 163
01010-81025	F2100-01A0	36	FO- 3
01010-81025	F2100-01A0	45	FO- 4
01010-81025	F2320-55A0	28	FO- 35
01010-81025	F2320-55A0	44	FO- 36
01010-81025	F2320-56A0	44	FO- 40
01010-81025	F2350-01A0	16	FO- 45
01010-81025	F2370-01A0	43	FO- 50
01010-81025	H0310-01A0	24	HO- 17
01010-81025	H2250-01A0	42	HO- 39
01010-81025	H2250-01A1	29	HO- 43
01010-81025	K0210-01A0	10	KO- 9
01010-81025	K0710-01A1	26	KO- 43
01010-81025	K0710-02A0	7	KO- 45

PARTS NO.	FIG NO.	INDEX	PAGE
01010-81025	K2510-05A0	5	KO- 119
01010-81025	M2110-03A1	51	MO- 14
01010-81025	M2110-06A0	33	MO- 25
01010-81025	M2141-01A1	30	MO- 37
01010-81025	M2142-01A0	30	MO- 45
01010-81025	M2210-01A0	41	MO- 61
01010-81025	T2440-01A0	48	TO- 34
01010-81025	Y1660-01A0	10	YO- 33
01010-81030	A1410-A4F3A	26	AA- 15
01010-81030	A1410-A4F4A	24	AA- 17
01010-81030	A1610-B4F2A	5	AA- 39
01010-81030	A1610-B4F3A	5	AA- 41
01010-81030	A2060-A4C1	14	AA- 57
01010-81030	A2060-A4C1	7	AA- 57
01010-81030	A2110-A4F6	19	AA- 59
01010-81030	A2210-B4E4	20	AA- 65
01010-81030	A2610-A4B5	10	AA- 87
01010-81030	A3110-A4C5	17	AA- 93
01010-81030	A3110-B4C5	13	AA- 95
01010-81030	A3110-B4C5	19	AA- 95
01010-81030	A3310-A4A3	20	AA- 97
01010-81030	A4110-A4E4	10	AA- 129
01010-81030	A4110-A4H9	10	AA- 131
01010-81030	C0310-01A0	12	CO- 5
01010-81030	C0310-01A0	15	CO- 5
01010-81030	C0310-01A1	12	CO- 7
01010-81030	C0310-01A1	15	CO- 7
01010-81030	D0100-02A0	15	DO- 5
01010-81030	F2310-52A0	10	FO- 13
01010-81030	F2320-56A0	41	FO- 40
01010-81030	F2370-05A0	18	FO- 61
01010-81030	F2700-01A0	2	FO- 85
01010-81030	F2700-01A0	43	FO- 86
01010-81030	F2700-07A0	51	FO- 108
01010-81030	K0110-01A0	2	KO- 3
01010-81030	K0210-01A0	11	KO- 9
01010-81030	K0710-01A1	21	KO- 43
01010-81030	K0710-02A0	2	KO- 45
01010-81030	K2510-01A0	9	KO- 105
01010-81030	K2510-01A1	13	KO- 107
01010-81030	K2510-01A1	27	KO- 107
01010-81030	K2510-01A1	9	KO- 107
01010-81030	K2510-02A0	28	KO- 109
01010-81030	K2510-02A0	33	KO- 109
01010-81030	M2110-01A0	14	MO- 3
01010-81030	M2110-01A0	22	MO- 3
01010-81030	M2110-03A0	3	MO- 11
01010-81030	M2110-04A0	12	MO- 17
01010-81030	M2110-04A0	9	MO- 17
01010-81030	T2440-01A0	45	TO- 34

PARTS NO.	FIG NO.	INDEX	PAGE
01010-81030	Y1679-21A0	33	YO- 65
01010-81030	Y1679-21A0	39	YO- 66
01010-81035	A1410-A4F3A	13	AA- 15
01010-81035	A1410-A4F4A	13	AA- 17
01010-81035	A1530-C4D3	16	AA- 29
01010-81035	A1530-C4D3	8	AA- 29
01010-81035	A1530-C4G8	16	AA- 31
01010-81035	A1530-C4G8	8	AA- 31
01010-81035	A3110-B4C5	10	AA- 95
01010-81035	A4110-A4E4	6	AA- 129
01010-81035	A4110-A4H9	6	AA- 131
01010-81035	C0120-01A0A	7	CO- 3
01010-81035	E0200-02A0	14	EO- 5
01010-81035	F2310-52A0	18	FO- 13
01010-81035	F2370-04A0	7	FO- 59
01010-81035	F2700-04A0	28	FO- 95
01010-81035	F2700-05A2	21	FO- 103
01010-81035	F2700-07A0	11	FO- 107
01010-81035	F2700-07A0	37	FO- 107
01010-81035	M2210-01A0	15	MO- 61
01010-81040	A1310-B4H7	17	AA- 13
01010-81040	A1310-B4H7	8	AA- 13
01010-81040	A1410-A4F3A	15	AA- 15
01010-81040	A1410-A4F4A	15	AA- 17
01010-81040	A3110-B4C5	24	AA- 95
01010-81040	A5080-A4B2	31	AA- 149
01010-81040	F2700-04A0	44	FO- 96
01010-81040	H2250-01A0	2	HO- 39
01010-81040	H2250-01A1	2	HO- 43
01010-81040	K0210-01A0	29	KO- 9
01010-81040	K2110-07A0	14	KO- 77
01010-81040	K2510-01A0	17	KO- 105
01010-81040	K2510-01A0	22	KO- 105
01010-81040	K2510-01A1	17	KO- 107
01010-81040	K2510-01A1	22	KO- 107
01010-81040	Y1660-01A0	32	YO- 33
01010-81045	A1410-A4F3A	17	AA- 15
01010-81045	A2041-A4A5	4	AA- 51
01010-81045	A2041-A4G8	4	AA- 53
01010-81045	D0200-01A0	24	DO- 7
01010-81045	D0200-01A1	24	DO- 9
01010-81045	D0200-01A2	20	DO- 11
01010-81045	F2310-52A0	5	FO- 13
01010-81045	F2700-07A0	17	FO- 107
01010-81045	H2210-01A0	25	HO- 19
01010-81045	K2510-05A0	10	KO- 119
01010-81050	A2041-A4A5	22	AA- 51
01010-81050	A2041-A4G8	22	AA- 53
01010-81050	A5010-B4F4	11	AA- 145
01010-81050	D0100-02A0	2	DO- 5

PARTS NO.	FIG NO	INDEX	PAGE
01010-81050	F2370-04A0	8	F0- 59
01010-81050	F2600-01A0	42	F0- 82
01010-81050	H2210-01A2	24	H0- 21
01010-81050	H2210-02A1	33	H0- 25
01010-81050	K0710-02A0	36	K0- 45
01010-81055	F2320-57A0	10	F0- 43
01010-81055	F2700-03A0	3	F0- 91
01010-81055	F2700-04A0	39	F0- 95
01010-81060	A3110-A4C5	16	AA- 93
01010-81060	A3310-A4A3	21	AA- 97
01010-81060	C0310-02A1	21	C0- 11
01010-81060	D0200-01A2	26	D0- 11
01010-81060	F2700-03A0	18	F0- 91
01010-81060	F2700-04A0	23	F0- 95
01010-81060	K0710-01A0	9	K0- 41
01010-81060	K0710-01A1	12	K0- 43
01010-81060	M2110-07A0	21	M0- 27
01010-81060	Y1679-21A0	24	Y0- 65
01010-81065	A1310-B4H7	18	AA- 13
01010-81065	A1310-B4H7	9	AA- 13
01010-81065	A2060-A4C1	8	AA- 57
01010-81065	F2320-57A0	11	F0- 43
01010-81065	F2700-04A0	38	F0- 95
01010-81070	A2060-A4C1	13	AA- 57
01010-81070	F2370-05A0	6	F0- 61
01010-81070	F2700-07A0	2	F0- 107
01010-81075	F2320-55A0	4	F0- 35
01010-81075	F2700-07A0	28	F0- 107
01010-81075	M2110-02A0	44	M0- 8
01010-81080	A5010-A4F4	23	AA- 143
01010-81080	F2700-04A0	10	F0- 95
01010-81085	F2700-08A0	10	F0- 111
01010-81090	A1570-A4B7	3	AA- 33
01010-81090	A3310-A4A3	22	AA- 97
01010-81090	F2700-02A0	8	F0- 89
01010-81090	H2250-01A0	12	H0- 39
01010-81095	A1610-A4F2A	20	AA- 35
01010-81095	A1610-A4F3A	18	AA- 37
01010-81095	A5010-A4F4	22	AA- 143
01010-81220	A2011-A4A4	12	AA- 47
01010-81220	C0310-02A1	26	C0- 11
01010-81220	E0200-02A0	18	E0- 5
01010-81220	E0200-03A0	20	E0- 7
01010-81220	F2100-01A0	52	F0- 4
01010-81220	J2112-01A0	18	J0- 9
01010-81220	K0210-08A0	36	K0- 29
01010-81220	K0410-02A0	24	K0- 39
01010-81220	K0710-01A0	14	K0- 41
01010-81220	K0710-01A1	18	K0- 43
01010-81220	K0710-02A0	42	K0- 45

PARTS NO	FIG NO	INDEX	PAGE
01010-81220	K0710-03A0	24	K0- 49
01010-81220	K0710-04A0	11	K0- 53
01010-81220	K0710-04A0	17	K0- 53
01010-81220	K0710-04A0	2	K0- 53
01010-81220	K0710-04A0	22	K0- 53
01010-81220	K0710-04A0	5	K0- 53
01010-81220	K0710-04A0	8	K0- 53
01010-81220	K2110-01A0	36	K0- 61
01010-81220	K2110-13A0	16	K0- 91
01010-81220	K2220-01A0	13	K0- 95
01010-81220	K2220-01A0	16	K0- 95
01010-81220	K2220-01A0	30	K0- 95
01010-81220	K2220-01A0	33	K0- 95
01010-81220	K2220-01A0	37	K0- 95
01010-81220	M2110-01A1	23	M0- 5
01010-81220	M2110-01A1	29	M0- 5
01010-81220	M2110-03A0	11	M0- 11
01010-81220	M2110-03A0	16	M0- 11
01010-81220	M2110-03A0	5	M0- 11
01010-81220	M2110-03A1	23	M0- 13
01010-81220	M2110-03A1	29	M0- 13
01010-81220	M2110-05A0	10	M0- 21
01010-81220	M2110-05A0	7	M0- 21
01010-81220	M2110-07A0	26	M0- 27
01010-81220	M2110-08A0	7	M0- 29
01010-81220	M2113-01A0	6	M0- 33
01010-81220	M2210-01A0	29	M0- 61
01010-81220	M2250-01A0	3	M0- 89
01010-81220	M2250-01A0	32	M0- 89
01010-81220	W2121-01A0	15	W0- 7
01010-81220	W2121-01A0	19	W0- 7
01010-81225	A2010-B4H9A	4	AA- 45
01010-81225	A2610-A4B5	26	AA- 87
01010-81225	A2610-A4B6	5	AA- 89
01010-81225	C0120-01A0A	14	C0- 3
01010-81225	C0120-01A0A	17	C0- 3
01010-81225	C0310-01A0	28	C0- 5
01010-81225	C0310-01A1	28	C0- 7
01010-81225	C0310-02A0	10	C0- 9
01010-81225	C0310-02A0	15	C0- 9
01010-81225	C0310-02A1	16	C0- 11
01010-81225	C0310-02A1	3	C0- 11
01010-81225	F2310-51A0	18	F0- 9
01010-81225	F2380-01A0A	22	F0- 65
01010-81225	F2380-01A1	22	F0- 67
01010-81225	F2380-02A0A	45	F0- 70
01010-81225	F2380-03A0A	22	F0- 73
01010-81225	F2380-03A1	22	F0- 75
01010-81225	F2380-04A0A	45	F0- 78
01010-81225	F2700-02A0	13	F0- 89

PARTS NO.	FIG NO	INDEX	PAGE
01010-81225	F2700-04A0	53	F0- 96
01010-81225	F2700-07A0	21	F0- 107
01010-81225	F2700-07A0	54	F0- 108
01010-81225	H2210-02A0	21	H0- 23
01010-81225	H2210-02A0	3	H0- 23
01010-81225	H2210-02A1	21	H0- 25
01010-81225	H2210-02A1	3	H0- 25
01010-81225	H2210-02A2	21	H0- 29
01010-81225	H2210-02A2	3	H0- 29
01010-81225	J2112-01A0	10	J0- 9
01010-81225	K0410-02A0	27	K0- 39
01010-81225	K0710-01A0	4	K0- 41
01010-81225	K0710-01A1	8	K0- 43
01010-81225	K0710-03A0	19	K0- 49
01010-81225	K0710-03A0	36	K0- 49
01010-81225	K0710-03A0	39	K0- 49
01010-81225	K0710-03A0	6	K0- 49
01010-81225	K2110-01A0	25	K0- 61
01010-81225	K2110-01A0	31	K0- 61
01010-81225	K2110-03A0	12	K0- 67
01010-81225	K2110-06A0	45	K0- 74
01010-81225	K2110-10A0	37	K0- 85
01010-81225	K2110-11A0	8	K0- 87
01010-81225	K2110-12A0	21	K0- 89
01010-81225	K2110-14A0	9	K0- 93
01010-81225	K2220-01A0	23	K0- 95
01010-81225	M2110-01A1	26	M0- 5
01010-81225	M2110-02A0	11	M0- 7
01010-81225	M2110-02A0	18	M0- 7
01010-81225	M2110-02A0	28	M0- 7
01010-81225	M2110-02A0	3	M0- 7
01010-81225	M2110-03A1	26	M0- 13
01010-81225	M2110-04A0	28	M0- 17
01010-81225	M2110-04A0	48	M0- 18
01010-81225	M2110-06A0	12	M0- 25
01010-81225	M2110-06A0	36	M0- 25
01010-81225	M2110-07A0	16	M0- 27
01010-81225	M2110-07A0	3	M0- 27
01010-81225	M2141-01A0	2	M0- 35
01010-81225	M2141-01A0	25	M0- 35
01010-81225	M2141-01A0	5	M0- 35
01010-81225	M2141-01A1	10	M0- 37
01010-81225	M2141-01A1	3	M0- 37
01010-81225	M2141-01A2	2	M0- 39
01010-81225	M2141-01A2	25	M0- 39
01010-81225	M2141-01A3	2	M0- 41
01010-81225	M2141-01A3	25	M0- 41
01010-81225	M2141-02A1	10	M0- 43
01010-81225	M2141-02A1	3	M0- 43
01010-81225	M2142-01A0	15	M0- 45

PARTS NO.	FIG NO .	INDEX	PAGE
01010-81225	M2142-01A0	47	M0- 46
01010-81225	M2142-01A0	8	M0- 45
01010-81225	M2142-01A2	16	M0- 51
01010-81225	M2142-01A2	8	M0- 51
01010-81225	M2142-02A0	10	M0- 53
01010-81225	M2142-02A1	10	M0- 55
01010-81225	M2210-02A0	28	M0- 65
01010-81225	M2210-02A0	31	M0- 65
01010-81225	M2210-02A0	34	M0- 65
01010-81225	M2210-02A0	37	M0- 65
01010-81225	M2210-02A2	28	M0- 67
01010-81225	M2210-02A2	31	M0- 67
01010-81225	M2210-02A2	34	M0- 67
01010-81225	M2210-02A2	37	M0- 67
01010-81225	M2210-06A0	11	M0- 79
01010-81225	M2210-06A0	15	M0- 79
01010-81225	M2210-06A0	2	M0- 79
01010-81225	M2210-06A0	23	M0- 79
01010-81225	M2210-06A0	6	M0- 79
01010-81225	M2210-06A3	11	M0- 83
01010-81225	M2210-06A3	15	M0- 83
01010-81225	M2210-06A3	2	M0- 83
01010-81225	M2210-06A3	23	M0- 83
01010-81225	M2210-06A3	6	M0- 83
01010-81225	M2250-01A0	16	M0- 89
01010-81225	M2250-01A0	26C	M0- 89
01010-81225	M2250-01A0	35	M0- 89
01010-81225	M2250-01A0	44	M0- 90
01010-81225	R2100-02A0	22	R0- 29
01010-81225	W2121-01A0	2	W0- 7
01010-81225	W2121-01A0	24	W0- 7
01010-81230	A1570-A4B7	13	AA- 33
01010-81230	A2210-B4E4	37	AA- 65
01010-81230	A2210-B4E4	4	AA- 65
01010-81230	A2330-A4A5	2	AA- 75
01010-81230	A3010-A4A1	18	AA- 91
01010-81230	A5080-A4B2	26	AA- 149
01010-81230	C0310-02A0	20	C0- 9
01010-81230	F2100-01A0	26	F0- 3
01010-81230	F2310-51A0	14	F0- 9
01010-81230	F2310-52A0	21	F0- 13
01010-81230	F2310-52A0	42	F0- 14
01010-81230	F2320-52A0	33	F0- 23
01010-81230	F2320-53A0	49	F0- 28
01010-81230	F2370-05A0	32	F0- 61
01010-81230	F2380-01A0A	29	F0- 65
01010-81230	F2380-01A1	29	F0- 67
01010-81230	F2380-02A0A	17	F0- 69
01010-81230	F2380-02A0A	25	F0- 69
01010-81230	F2380-02A0A	60	F0- 70

PARTS NO.	FIG NO.	INDEX	PAGE
01010-81230	F2380-03A0A	29	F0- 73
01010-81230	F2380-03A1	29	F0- 75
01010-81230	F2380-04A0A	17	F0- 77
01010-81230	F2380-04A0A	25	F0- 77
01010-81230	F2380-04A0A	60	F0- 78
01010-81230	F2700-02A0	24	F0- 89
01010-81230	F2700-02A0	3	F0- 89
01010-81230	F2700-02A0	36	F0- 89
01010-81230	F2700-03A0	22	F0- 91
01010-81230	F2700-04A0	34	F0- 95
01010-81230	H2220-01A0	16	H0- 35
01010-81230	H2220-01A0	24	H0- 35
01010-81230	H2220-01A0	27	H0- 35
01010-81230	H2220-01A0	7	H0- 35
01010-81230	J2112-01A0	14	J0- 9
01010-81230	K0210-04A0	8	K0- 19
01010-81230	K0410-01A0	4	K0- 35
01010-81230	K0410-01A1	10	K0- 37
01010-81230	K0410-01A1	14	K0- 37
01010-81230	K0410-01A1	3	K0- 37
01010-81230	K0410-02A0	21	K0- 39
01010-81230	K0710-03A0	40	K0- 49
01010-81230	K2110-01A0	13	K0- 61
01010-81230	K2110-01A0	16	K0- 61
01010-81230	K2110-01A0	4	K0- 61
01010-81230	K2110-01A0	7	K0- 61
01010-81230	K2110-04A0	33	K0- 69
01010-81230	K2110-09A0	23	K0- 81
01010-81230	K2110-09A0	34	K0- 81
01010-81230	K2110-09A0	9	K0- 81
01010-81230	K2110-11A0	12	K0- 87
01010-81230	K2510-03A0	14A	K0- 113
01010-81230	K2510-05A0	14	K0- 119
01010-81230	M2110-01A1	14	M0- 5
01010-81230	M2110-01A1	33	M0- 5
01010-81230	M2110-03A1	14	M0- 13
01010-81230	M2110-03A1	33	M0- 13
01010-81230	M2110-04A0	43	M0- 18
01010-81230	M2110-06A0	16	M0- 25
01010-81230	M2110-06A0	19	M0- 25
01010-81230	M2110-06A0	22	M0- 25
01010-81230	M2141-01A1	36	M0- 37
01010-81230	M2141-01A2	5	M0- 39
01010-81230	M2141-01A3	5	M0- 41
01010-81230	M2141-02A1	24	M0- 43
01010-81230	M2142-01A0	43	M0- 46
01010-81230	M2142-02A0	21	M0- 53
01010-81230	M2142-02A0	27	M0- 53
01010-81230	M2142-02A1	21	M0- 55
01010-81230	M2142-02A1	27	M0- 55

PARTS NO.	FIG NO.	INDEX	PAGE
01010-81230	M2210-02A0	25	M0- 65
01010-81230	M2210-02A2	25	M0- 67
01010-81230	M2210-06A0	20	M0- 79
01010-81230	M2210-06A3	20	M0- 83
01010-81230	M2250-01A0	13	M0- 89
01010-81230	M2250-01A0	21	M0- 89
01010-81230	M2250-01A0	40	M0- 90
01010-81230	M2250-01A0	7	M0- 89
01010-81230	M2810-01A0	22	M0- 93
01010-81230	M2810-01A1	22	M0- 95
01010-81230	M2810-01A2	22	M0- 97
01010-81230	W2119-02A0	15	W0- 5
01010-81230	Y1660-01A0	2	Y0- 33
01010-81230	Y1660-01A0	5	Y0- 33
01010-81230	Y1660-02A0	15	Y0- 37
01010-81235	A2210-B4E4	39	AA- 65
01010-81235	A5080-A4B2	37	AA- 150
01010-81235	C0120-01A0A	1	C0- 3
01010-81235	C0120-01A0A	21	C0- 3
01010-81235	C0120-01A0A	5	C0- 3
01010-81235	C0310-01A0	22	C0- 5
01010-81235	C0310-01A0	25	C0- 5
01010-81235	C0310-01A1	22	C0- 7
01010-81235	C0310-01A1	25	C0- 7
01010-81235	C0310-02A0	29	C0- 9
01010-81235	C0310-02A0	34	C0- 9
01010-81235	C0310-02A1	10	C0- 11
01010-81235	C0310-02A1	5	C0- 11
01010-81235	E0200-03A0	16	E0- 7
01010-81235	F2310-51A0	35	F0- 9
01010-81235	F2320-52A0	21	F0- 23
01010-81235	F2370-02A0	18	F0- 53
01010-81235	F2370-02A0	35	F0- 54
01010-81235	F2370-04A0	12	F0- 59
01010-81235	F2370-05A0	41	F0- 61
01010-81235	F2700-01A0	11	F0- 85
01010-81235	F2700-01A0	7	F0- 85
01010-81235	F2710-02A0	7	F0- 115
01010-81235	F2710-02A0	9	F0- 115
01010-81235	K0410-01A1	17	K0- 37
01010-81235	K2110-01A0	10	K0- 61
01010-81235	K2110-03A0	23	K0- 67
01010-81235	K2510-03A0	45	K0- 114
01010-81235	M2110-04A0	46	M0- 18
01010-81235	M2110-07A0	10	M0- 27
01010-81235	M2110-07A0	5	M0- 27
01010-81235	M2141-01A0	17	M0- 35
01010-81235	M2141-01A1	39	M0- 37
01010-81235	M2141-01A2	17	M0- 39
01010-81235	M2141-01A3	17	M0- 41

PARTS NO.	FIG NO.	INDEX	PAGE
01010-81235	M2141-02A1	27	M0- 43
01010-81235	M2142-01A0	36	M0- 45
01010-81235	M2142-02A0	24	M0- 53
01010-81235	M2142-02A0	30	M0- 53
01010-81235	M2142-02A0	36	M0- 53
01010-81235	M2142-02A1	24	M0- 55
01010-81235	M2142-02A1	30	M0- 55
01010-81235	M2142-02A1	36	M0- 55
01010-81235	M2210-02A0	22	M0- 65
01010-81235	M2210-02A2	22	M0- 67
01010-81235	M2210-03A0	16	M0- 69
01010-81235	M2210-03A0	7	M0- 69
01010-81235	M2210-05A0	24	M0- 73
01010-81235	M2210-05A2	24	M0- 75
01010-81235	M2210-05A3	24	M0- 77
01010-81235	M2210-06A0	16	M0- 79
01010-81235	M2210-06A0	24	M0- 79
01010-81235	M2210-06A0	44	M0- 80
01010-81235	M2210-06A3	16	M0- 83
01010-81235	M2210-06A3	24	M0- 83
01010-81235	M2210-06A3	44	M0- 84
01010-81235	M2250-01A0	24	M0- 89
01010-81235	M2250-01A0	4	M0- 89
01010-81235	M2810-01A0	10	M0- 93
01010-81235	M2810-01A0	19	M0- 93
01010-81235	M2810-01A0	2	M0- 93
01010-81235	M2810-01A0	25	M0- 93
01010-81235	M2810-01A1	10	M0- 95
01010-81235	M2810-01A1	19	M0- 95
01010-81235	M2810-01A1	2	M0- 95
01010-81235	M2810-01A1	25	M0- 95
01010-81235	M2810-01A2	10	M0- 97
01010-81235	M2810-01A2	19	M0- 97
01010-81235	M2810-01A2	2	M0- 97
01010-81235	M2810-01A2	25	M0- 97
01010-81235	R0100-01A0	11	R0- 3
01010-81235	R2100-02A0	42	R0- 30
01010-81235	T2160-01A0	28	T0- 23
01010-81235	T2440-01A0	11	T0- 33
01010-81235	T2440-01A0	30	T0- 33
01010-81235	T2440-01A0	50	T0- 34
01010-81235	T2440-01A1	11	T0- 37
01010-81235	Y1660-01A0	38	Y0- 33
01010-81235	Y1660-02A0	8	Y0- 37
01010-81235	Y1679-21A0	12	Y0- 65
01010-81240	A3010-A4A1	19	AA- 91
01010-81240	C0310-01A0	7	C0- 5
01010-81240	C0310-01A1	7	C0- 7
01010-81240	C0310-02A0	36	C0- 9
01010-81240	C0310-02A1	12	C0- 11

PARTS NO.	FIG NO '	INDEX	PAGE
01010-81240	F2310-51A0	45	F0- 10
01010-81240	F2320-51A0	2	F0- 21
01010-81240	F2320-54A0	4	F0- 31
01010-81240	F2700-05A0	7	F0- 99
01010-81240	H2220-01A0	30	H0- 35
01010-81240	K0410-01A1	11	K0- 37
01010-81240	K2110-11A0	15	K0- 87
01010-81240	M2110-04A0	20	M0- 17
01010-81240	M2110-07A0	12	M0- 27
01010-81240	M2141-01A0	28	M0- 35
01010-81240	M2141-01A2	28	M0- 39
01010-81240	M2141-01A3	28	M0- 41
01010-81240	M2210-06A0	28	M0- 79
01010-81240	M2210-06A3	28	M0- 83
01010-81240	M2250-01A0	39	M0- 90
01010-81240	T2160-01A0	2	T0- 23
01010-81240	T2440-01A0	31	T0- 33
01010-81240	Y1660-02A0	12	Y0- 37
01010-81245	F2310-52A0	35	F0- 13
01010-81245	F2370-02A0	21	F0- 53
01010-81245	F2700-01A0	26	F0- 85
01010-81245	F2700-02A0	1	F0- 89
01010-81245	H0310-01A0	7	H0- 17
01010-81245	H2210-02A0	23	H0- 23
01010-81245	H2210-02A1	23	H0- 25
01010-81245	H2210-02A2	23	H0- 29
01010-81245	K2110-03A0	8	K0- 67
01010-81245	M2110-02A0	38	M0- 7
01010-81245	M2210-03A0	3	M0- 69
01010-81250	A4030-A4C6	2	AA- 123
01010-81250	F2100-01A0	10	F0- 3
01010-81250	F2320-54A0	16	F0- 31
01010-81250	F2700-05A0	8	F0- 99
01010-81250	H0310-01A0	17	H0- 17
01010-81250	H2210-01A0	3	H0- 19
01010-81250	H2210-01A2	3	H0- 21
01010-81250	H2210-02A0	15	H0- 23
01010-81250	H2210-02A1	15	H0- 25
01010-81250	H2210-02A2	15	H0- 29
01010-81250	H2220-01A0	12	H0- 35
01010-81250	H2220-01A0	2	H0- 35
01010-81250	M2141-01A1	8	M0- 37
01010-81250	M2141-02A1	8	M0- 43
01010-81250	M2142-01A0	13	M0- 45
01010-81250	M2142-01A2	14	M0- 51
01010-81250	M2142-02A0	8	M0- 53
01010-81250	M2142-02A1	8	M0- 55
01010-81250	M2210-06A0	40	M0- 80
01010-81250	M2210-06A3	40	M0- 83
01010-81250	Y1662-01A0	15	Y0- 49

PARTS NO	FIG NO.	INDEX	PAGE
01010-81255	F2100-01A0	9	F0- 3
01010-81255	F2370-02A0	10	F0- 53
01010-81255	H0310-01A0	10	H0- 17
01010-81255	H2210-02A1	33	H0- 25
01010-81255	H2220-01A0	8	H0- 35
01010-81255	T2160-01A0	9	T0- 23
01010-81260	A6010-A4D6	11	AA- 157
01010-81260	A6010-A4D7Z	11	AA- 159
01010-81260	A6010-A4F7	11	AA- 161
01010-81260	A6010-A4F8	11	AA- 163
01010-81260	C0310-01A0	19	C0- 5
01010-81260	C0310-01A1	19	C0- 7
01010-81260	F2200-01A0	5	F0- 7
01010-81260	F2200-01A0	7	F0- 7
01010-81260	F2700-05A0	3	F0- 99
01010-81260	H2210-02A0	33	H0- 23
01010-81260	H2210-03A0	15	H0- 31
01010-81260	H2210-03A2	15	H0- 33
01010-81260	H2220-01A0	21	H0- 35
01010-81260	M2141-01A1	21	M0- 37
01010-81260	M2141-02A1	18	M0- 43
01010-81260	M2142-02A0	18	M0- 53
01010-81260	M2142-02A1	18	M0- 55
01010-81260	M2250-01A0	38	M0- 90
01010-81265	F2310-51A0	46	F0- 10
01010-81265	F2370-02A0	31	F0- 53
01010-81265	H2210-02A2	33	H0- 29
01010-81265	H2210-03A0	16	H0- 31
01010-81265	H2210-03A2	16	H0- 33
01010-81265	M2110-04A0	18	M0- 17
01010-81265	T2440-01A1	49	T0- 38
01010-81270	E0200-02A0	19	E0- 5
01010-81270	F2700-03A0	34A	F0- 91
01010-81270	H2220-01A0	38	H0- 35
01010-81270	M2142-01A0	26	M0- 45
01010-81270	M2142-01A1	2	M0- 49
01010-81270	M2142-01A1	5	M0- 49
01010-81270	M2142-01A2	27	M0- 51
01010-81270	T2120-01A0	28	T0- 15
01010-81270	T2120-01A1	30	T0- 19
01010-81270	T2440-01A1	49	T0- 38
01010-81275	F2100-01A0	41	F0- 3
01010-81275	F2370-05A0	34	F0- 61
01010-81275	F2700-01A0	21	F0- 85
01010-81275	F2700-03A0	34	F0- 91
01010-81275	F2700-05A0	28	F0- 99
01010-81275	J2112-01A0	8	J0- 9
01010-81275	W2119-02A0	14	W0- 5
01010-81275	Y1660-02A0	18	Y0- 37
01010-81280	A4030-A4C6	3	AA- 123

PARTS NO.	FIG NO.	INDEX	PAGE
01010-81280	F2700-02A0	31	F0- 89
01010-81280	F2700-03A0	39	F0- 91
01010-81280	F2700-03A0	44	F0- 92
01010-81280	H2210-01A0	21	H0- 19
01010-81280	H2210-02A0	8	H0- 23
01010-81280	H2210-02A1	8	H0- 25
01010-81280	H2210-02A2	8	H0- 29
01010-81285	F2370-02A0	30	F0- 53
01010-81285	F2700-07A0	25	F0- 107
01010-81285	H0310-01A0	9	H0- 17
01010-81285	H2210-01A0	17	H0- 19
01010-81285	H2210-01A2	20	H0- 21
01010-81290	A2041-A4A5	1	AA- 51
01010-81290	A2041-A4G8	1	AA- 53
01010-81290	C0310-02A0	6	C0- 9
01010-81290	F2310-51A0	38	F0- 10
01010-81290	F2700-06A0	15	F0- 105
01010-81290	H2210-01A2	16	H0- 21
01010-81290	H2210-02A0	11	H0- 23
01010-81290	H2210-02A1	11	H0- 25
01010-81290	H2210-02A2	11	H0- 29
01010-81290	K2110-11A0	6	K0- 87
01010-81290	M2110-04A0	37	M0- 17
01010-81290	Y1660-03A0	23	Y0- 39
01010-81290	Y1660-05A0	16	Y0- 43
01010-81290	Y1660-21A0	27	Y0- 45
01010-81295	F2310-51A0	39	F0- 10
01010-81295	T2440-01A0	1	T0- 33
01010-81295	T2440-01A1	1	T0- 37
01010-81295	Y1660-03A0	16	Y0- 39
01010-81295	Y1660-21A0	16	Y0- 45
01010-81425	T2160-01A0	12	T0- 23
01010-81430	H2220-01A0	34	H0- 35
01010-81435	M2110-02A0	21	M0- 7
01010-81435	M2110-02A0	31	M0- 7
01010-81435	M2210-06A0	38	M0- 79
01010-81435	M2210-06A3	38	M0- 83
01010-81435	R0300-01A0	6	R0- 9
01010-81435	R2100-03A0	21	R0- 33
01010-81435	R2100-03A1	19	R0- 35
01010-81435	R2100-03A1	21	R0- 35
01010-81435	T2110-01A0	23	T0- 3
01010-81435	T2110-01A2	23	T0- 11
01010-81435	T2120-01A0	39	T0- 16
01010-81435	T2120-01A0	47	T0- 16
01010-81435	T2120-01A1	41	T0- 20
01010-81435	T2120-01A1	49	T0- 20
01010-81435	T2160-01A0	21	T0- 23
01010-81435	T2160-01A0	23	T0- 23
01010-81435	T2440-03A0	2	T0- 41

PARTS NO	FIG NO	INDEX	PAGE
01010-81440	F2350-01A0	9	F0- 45
01010-81440	F2380-02A0A	15	F0- 69
01010-81440	F2380-04A0A	15	F0- 77
01010-81440	F2710-01A0	11	F0- 113
01010-81440	H0100-01A0	41	H0- 4
01010-81440	T2110-01A0	18	T0- 3
01010-81440	T2110-01A2	18	T0- 11
01010-81440	T2120-01A0	35	T0- 15
01010-81440	T2120-01A1	37	T0- 19
01010-81450	K2510-01A0	3	K0- 105
01010-81450	K2510-01A1	3	K0- 107
01010-81455	H0310-01A0	1	H0- 17
01010-81465	K0210-06A0	17	K0- 23
01010-81485	K0210-06A0	14	K0- 23
01010-81485	K2510-01A0	2	K0- 105
01010-81485	K2510-01A1	2	K0- 107
01010-81630	R2100-03A0	27	R0- 33
01010-81630	R2100-03A1	27	R0- 35
01010-81635	H2210-02A0	5	H0- 23
01010-81635	H2210-02A1	5	H0- 25
01010-81635	H2210-02A2	5	H0- 29
01010-81635	M2210-02A0	8	M0- 65
01010-81635	M2210-02A2	8	M0- 67
01010-81635	M2210-05A0	18	M0- 73
01010-81635	M2210-05A0	21	M0- 73
01010-81635	M2210-05A2	18	M0- 75
01010-81635	M2210-05A2	21	M0- 75
01010-81635	M2210-05A3	18	M0- 77
01010-81635	M2210-05A3	21	M0- 77
01010-81635	R2100-03A0	12	R0- 33
01010-81635	R2100-03A0	2	R0- 33
01010-81635	R2100-03A1	12	R0- 35
01010-81635	R2100-03A1	2	R0- 35
01010-81635	W2119-01A0	14	W0- 3
01010-81635	W2119-02A0	2	W0- 5
01010-81635	W2119-02A0	5	W0- 5
01010-81635	W2119-02A0	8	W0- 5
01010-81640	F2370-05A0	26	F0- 61
01010-81640	F2380-01A0A	16	F0- 65
01010-81640	F2380-01A1	16	F0- 67
01010-81640	F2380-03A0A	16	F0- 73
01010-81640	F2380-03A1	16	F0- 75
01010-81640	F2700-04A0	5	F0- 95
01010-81640	J2700-01A0	7	J0- 11
01010-81640	J2700-01A1	7	J0- 13
01010-81640	M2210-03A0	26	M0- 69
01010-81640	R2100-03A0	16	R0- 33
01010-81640	R2100-03A0	19	R0- 33
01010-81640	R2100-03A0	25	R0- 33
01010-81640	R2100-03A1	16	R0- 35

PARTS NO	FIG NO .	INDEX	PAGE
01010-81640	R2100-03A1	19	R0- 35
01010-81640	R2100-03A1	25	R0- 35
01010-81640	T2410-01A0	15	T0- 25
01010-81640	T2410-01A1	15	T0- 29
01010-81645	C0310-01A0	2	C0- 5
01010-81645	C0310-01A1	2	C0- 7
01010-81645	F2350-01A0	13	F0- 45
01010-81645	F2380-02A0A	41	F0- 69
01010-81645	F2380-04A0A	41	F0- 77
01010-81645	M2110-04A0	14	M0- 17
01010-81645	M2210-02A0	14	M0- 65
01010-81645	M2210-02A2	14	M0- 67
01010-81645	M2210-05A0	13	M0- 73
01010-81645	M2210-05A0	8	M0- 73
01010-81645	M2210-05A2	13	M0- 75
01010-81645	M2210-05A2	8	M0- 75
01010-81645	M2210-05A3	13	M0- 77
01010-81645	M2210-05A3	8	M0- 77
01010-81645	R2100-03A0	28	R0- 33
01010-81645	R2100-03A1	28	R0- 35
01010-81650	M2141-01A0	22	M0- 35
01010-81650	M2141-01A2	22	M0- 39
01010-81650	M2141-01A3	22	M0- 41
01010-81650	R2100-02A0	8	R0- 29
01010-81655	M2142-01A0	40	M0- 45
01010-81655	M2210-05A0	14	M0- 73
01010-81655	M2210-05A0	9	M0- 73
01010-81655	M2210-05A2	14	M0- 75
01010-81655	M2210-05A2	9	M0- 75
01010-81655	M2210-05A3	14	M0- 77
01010-81655	M2210-05A3	9	M0- 77
01010-81835	B0100-01A0	13	B0- 3
01010-81835	B0100-01A0	7	B0- 3
01010-81850	F2380-01A0A	11	F0- 65
01010-81850	F2380-01A1	11	F0- 67
01010-81850	F2380-03A0A	11	F0- 73
01010-81850	F2380-03A1	11	F0- 75
01010-81850	H0100-01A0	43	H0- 4
01010-81855	B0100-01A0	15	B0- 3
01010-81890	M2110-08A0	4	M0- 29
01010-81890	M2111-01A0	15	M0- 31
01010-82040	J2110-01A0	6	J0- 3
01010-82040	J2110-01A1	6	J0- 5
01010-82040	J2110-01A2	6	J0- 7
01010-82040	T2410-01A0	10	T0- 25
01010-82040	T2410-01A0	23	T0- 25
01010-82040	T2410-01A0	30	T0- 25
01010-82040	T2410-01A1	10	T0- 29
01010-82040	T2410-01A1	23	T0- 29
01010-82040	T2410-01A1	30	T0- 29

PARTS NO.	FIG NO	INDEX	PAGE
01010-82045	M2210-02A0	3	MO- 65
01010-82045	M2210-02A2	3	MO- 67
01010-82045	R2100-01A0	16	RO- 23
01010-82045	R2100-01A1	16	RO- 25
01010-82045	R2100-01A2	16	RO- 27
01010-82045	T2440-01A0	58	TO- 34
01010-82050	M2110-01A1	20	MO- 5
01010-82050	M2110-03A1	20	MO- 13
01010-82050	M2110-08A0	9	MO- 29
01010-82050	R2200-01A0	10	RO- 37
01010-82050	T2160-01A0	17	TO- 23
01010-82050	T2440-01A1	29	TO- 37
01010-82055	F2370-01A0	22	FO- 49
01010-82055	F2380-01A0A	2	FO- 65
01010-82055	F2380-01A1	2	FO- 67
01010-82055	F2380-03A0A	2	FO- 73
01010-82055	F2380-03A1	2	FO- 75
01010-82060	D0100-01A0	17	DO- 3
01010-82060	M2210-02A0	2	MO- 65
01010-82060	M2210-02A2	2	MO- 67
01010-82065	R0300-01A0	19	RO- 9
01010-82075	M2810-01A0	13	MO- 93
01010-82075	M2810-01A1	13	MO- 95
01010-82075	M2810-01A2	13	MO- 97
01010-82080	R2100-03A0	5	RO- 33
01010-82080	R2100-03A1	5	RO- 35
01010-82090	R0300-01A0	21	RO- 9
01010-82095	R2100-02A0	2	RO- 29
01010-82450	M2210-05A0	3	MO- 73
01010-82450	M2210-05A2	3	MO- 75
01010-82450	M2210-05A3	3	MO- 77
01010-82450	M2250-01A0	27	MO- 89
01010-82450	M2810-01A2	6	MO- 97
01010-82450	T2110-01A0	38	TO- 4
01010-82450	T2110-01A2	38	TO- 12
01010-82455	F2380-02A0A	56	FO- 70
01010-82455	F2380-04A0A	56	FO- 78
01010-82455	M2810-01A0	6	MO- 93
01010-82455	M2810-01A1	6	MO- 95
01010-82460	K0410-02A0	36	KO- 39
01010-82460	R2100-02A0	25	RO- 29
01010-82460	R2100-02A0	6	RO- 29
01010-82465	K0410-02A0	12	KO- 39
01010-82465	K0410-02A0	34	KO- 39
01010-82465	M2210-05A0	4	MO- 73
01010-82465	M2210-05A2	4	MO- 75
01010-82465	M2210-05A3	4	MO- 77
01010-82465	M2250-01A0	28	MO- 89
01010-82465	M2810-01A0	16	MO- 93
01010-82465	M2810-01A0	5	MO- 93

PARTS NO.	FIG NO.	INDEX	PAGE
01010-82465	M2810-01A1	16	MO- 95
01010-82465	M2810-01A1	5	MO- 95
01010-82465	M2810-01A2	16	MO- 97
01010-82475	M2810-01A2	5	MO- 97
01010-82490	R2200-01A0	14	RO- 37
01010-82490	R2200-01A0	3	RO- 37
01010-83085	K0410-02A0	5	KO- 39
01010-83095	Y1620-31A0	8	YO- 25
01010-83095	Y1621-01A0	9	YO- 27
01010-83095	Y1621-11A0	9	YO- 29
01011-E1000	A1510-A4B9	6	AA- 19
01011-31215	H0100-03A0	20	HO- 9
01011-31215	H0100-05A0	20	HO- 15
01011-31405	H0100-04A0	11	HO- 11
01011-31420	H0100-04A0	21	HO- 11
01011-31420	Y1660-04A0	10	YO- 41
01011-31420	Y1660-22A0	6	YO- 47
01011-31465	H0100-04A0	37	HO- 11
01011-31465	Y1660-04A0	16	YO- 41
01011-31465	Y1660-22A0	14	YO- 47
01011-31600	A2210-A4E4	9	AA- 63
01011-51025	F2700-02A0	38	FO- 89
01011-51615	Y1620-02A0	7	YO- 23
01011-52400	R2100-01A0	22	RO- 23
01011-52400	R2100-01A1	22	RO- 25
01011-52400	R2100-01A2	22	RO- 27
01011-61600	A2210-A4E4	9	AA- 63
01011-62415	R0200-01A0	16	RO- 7
01011-81000	A1310-A4H7	15	AA- 11
01011-81000	Y1679-21A0	42	YO- 66
01011-81005	E0420-01A0	3	EO- 9
01011-81005	F2320-55A0	61	FO- 36
01011-81010	A1410-A4F3A	23	AA- 15
01011-81010	A1410-A4F4A	21	AA- 17
01011-81010	A6910-A4B9	3	AA- 181
01011-81015	A2610-A4B5	31	AA- 87
01011-81015	A2610-A4B6	11	AA- 89
01011-81015	A4110-A4E4	7	AA- 129
01011-81015	A4110-A4H9	7	AA- 131
01011-81015	E0200-03A0	26	EO- 7
01011-81020	A4210-A4E5	9	AA- 135
01011-81020	A4230-A4D5	6	AA- 141
01011-81020	F2700-02A0	27	FO- 89
01011-81020	K0710-02A0	21	KO- 45
01011-81020	W2121-01A0	27	WO- 7
01011-81035	A2610-A4B5	30	AA- 87
01011-81035	A2610-A4B6	10	AA- 89
01011-81035	F2320-55A0	3	FO- 35
01011-81040	H2250-01A0	3	HO- 39
01011-81040	H2250-01A1	3	HO- 43

PARTS NO.	FIG NO	INDEX	PAGE
01011-81040	K2510-01A0	18	KO- 105
01011-81040	K2510-01A0	23	KO- 105
01011-81040	K2510-01A1	18	KO- 107
01011-81040	K2510-01A1	23	KO- 107
01011-81050	A2610-A4B5	29	AA- 87
01011-81050	A2610-A4B6	9	AA- 89
01011-81055	A1310-A4H7	14	AA- 11
01011-81060	A1310-A4H7	17	AA- 11
01011-81065	A4130-A4B3	21	AA- 133
01011-81080	A1310-A4H7	18	AA- 11
01011-81200	A2041-A4A5	2	AA- 51
01011-81200	A2041-A4G8	2	AA- 53
01011-81200	A5080-A4B2	27	AA- 149
01011-81200	H0310-01A0	6	HO- 17
01011-81205	A5080-A4B2	28	AA- 149
01011-81205	A5080-A4B2	38	AA- 150
01011-81205	F2100-01A0	3	FO- 3
01011-81205	F2100-01A0	40	FO- 3
01011-81205	H2220-01A0	37	HO- 35
01011-81215	F2700-03A0	40	FO- 92
01011-81215	K2510-05A0	22	KO- 119
01011-81215	Y1660-03A0	20	YO- 39
01011-81215	Y1660-05A0	20	YO- 43
01011-81215	Y1660-21A0	20	YO- 45
01011-81615	M2141-01A0	21	MO- 35
01011-81615	M2141-01A2	21	MO- 39
01011-81615	M2141-01A3	21	MO- 41
01011-81835	M2110-02A0	41	MO- 7
01011-82260	R0100-01A0	30	RO- 4
01011-82445	M2210-02A0	10	MO- 65
01011-82445	M2210-02A0	19	MO- 65
01011-82445	M2210-02A2	10	MO- 67
01011-82445	M2210-02A2	19	MO- 67
01011-82455	K0410-02A0	33	KO- 39
01011-82455	M2250-01A0	29	MO- 89
01011-82485	B0100-01A0	18	BO- 3
01011-82700	T2110-01A0	28	TO- 3
01011-82700	T2110-01A0	35	TO- 3
01011-82700	T2110-01A2	28	TO- 11
01011-82700	T2110-01A2	35	TO- 11
01011-82700	T2120-01A0	24	TO- 15
01011-82700	T2120-01A1	26	TO- 19
01011-83010	K0410-02A0	3	KO- 39
01011-83040	R2100-01A0	29	RO- 23
01011-83040	R2100-01A1	29	RO- 25
01011-83040	R2100-01A2	29	RO- 27
01011-83090	R2100-01A0	30	RO- 23
01011-83090	R2100-01A1	30	RO- 25
01011-83090	R2100-01A2	30	RO- 27
01012-51035	F2700-05A0	43	FO- 100

PARTS NO	FIG NO.	INDEX	PAGE
01013-83635	M2110-03A1	46	MO- 14
01013-83635	W2119-01A0	8	WO- 3
01016-50850	K2110-12A0	17	KO- 89
01016-51045	M2190-01A1	3	MO- 57
01016-51045	M2190-01A3	3	MO- 59
01016-51060	K2110-07A0	6	KO- 77
01016-51450	W2119-02A0	18	WO- 5
01016-80860	K2110-08A0	8	KO- 79
01018-33990	T2410-01A0	4	TO- 25
01018-33990	T2410-01A1	4	TO- 29
01018-33990	T2810-01A0	3	TO- 43
01019-32755	M2110-01A1	8	MO- 5
01019-32755	M2110-03A1	8	MO- 13
01019-32755	M2113-01A0	2	MO- 33
01019-32760	M2110-01A1	9A	MO- 5
01019-81025	M2141-01A0	8	MO- 35
01019-81025	M2141-01A2	8	MO- 39
01019-81025	M2141-01A3	8	MO- 41
01020-01016	A1530-B4D3	20	AA- 25
01020-01016	A1530-B4G8	20	AA- 27
01020-11016	A1530-B4D3	20	AA- 25
01023-10510	K0810-01A0	5	KO- 59
01050-31018	E0200-01A0	5	EO- 3
01050-31020	A5010-C4F4	5	AA- 147
01050-31030	A2210-B4E4	25	AA- 65
01050-31225	A2210-B4E4	7	AA- 65
01050-31685	A2370-A4E1	3	AA- 79
01050-51020	A6010-A4D6	22	AA- 157
01050-51020	A6010-A4D7Z	22	AA- 159
01050-51020	A6010-A4F7	22	AA- 161
01050-51020	A6010-A4F8	22	AA- 163
01050-51030	A1410-A4F3A	29	AA- 15
01050-51030	A1410-A4F4A	27	AA- 17
01050-51260	A6010-A4D6	18	AA- 157
01050-51260	A6010-A4D7Z	18	AA- 159
01050-51260	A6010-A4F7	18	AA- 161
01050-51260	A6010-A4F8	18	AA- 163
01050-51295	Y1600-01A0	7	YO- 9
01051-51800	F2320-52A0	31	FO- 23
01052-51675	T2810-01A0	11	TO- 43
01090-51240	K2110-02A0	16	KO- 65
01090-51240	K2510-04A0	4	KO- 117
01090-51240	K2510-04A0	9	KO- 117
01091-52205	M2110-02A0	25	MO- 7
01091-52205	M2110-02A0	35	MO- 7
01091-52220	M2110-02A0	14	MO- 7
01091-52220	M2110-02A0	6	MO- 7
01120-32050	J2110-01A0	18	JO- 3
01120-32050	J2110-01A1	18	JO- 5
01120-32050	J2110-01A2	18	JO- 7

PARTS NO.	FIG NO.	INDEX	PAGE
01144-31435	H0100-02A0	23	H0- 7
01144-31435	Y1660-02A0	22	Y0- 37
01190-01011	F2310-51A0	24	F0- 9
01220-30616	K0210-05A0	19	K0- 21
01220-30616	K0210-05A0	3	K0- 21
01220-40312	W2121-01A0	5	W0- 7
01220-40312	W2121-01A0	8	W0- 7
01220-40408	K0710-05A0	8	K0- 55
01220-40512	K0210-07A0	27	K0- 25
01220-40545	H2250-01A0	9	H0- 39
01220-40612	W2121-01A0	10	W0- 7
01220-40616	K0210-01A0	19	K0- 9
01220-40616	K0210-07A0	12	K0- 25
01220-40616	K0210-07A0	6	K0- 25
01220-40616	K0210-08A0	21	K0- 29
01220-40616	K0710-03A0	31	K0- 49
01220-40616	K0710-05A0	12	K0- 55
01220-40616	K2110-13A0	2	K0- 91
01220-40620	K2220-01A0	4	K0- 95
01220-40816	K2110-11A0	2	K0- 87
01224-40316	K0210-03A0	14	K0- 17
01224-40408	K0210-03A0	25	K0- 17
01224-40410	K0210-05A0	10	K0- 21
01224-40510	K0210-03A0	23	K0- 17
01224-40620	T2440-01A0	2	T0- 33
01224-40620	T2440-01A1	2	T0- 37
01225-30512	K0210-01A0	7	K0- 9
01225-40512	K0210-03A0	20	K0- 17
01225-70625	K2220-01A0	2	K0- 95
01252-30518	K2220-01A0	26	K0- 95
01252-31235	Y1620-01A0	28	Y0- 19
01252-40520	K2510-01A0	13	K0- 105
01252-40545	F2700-06A0	5	F0- 105
01252-40616	K2110-13A0	11	K0- 91
01252-40616	K2220-01A1	7	K0- 99
01252-41635	F2380-02A0A	31	F0- 69
01252-41635	F2380-04A0A	31	F0- 77
01252-61035	Y1662-01A0	10	Y0- 49
01252-61235	Y1662-01A0	19	Y0- 49
01252-70830	F2700-01A0	29	F0- 85
01434-10620	K0710-03A0	30	K0- 49
01435-00625	K0710-01A0	18	K0- 41
01435-00625	K0710-01A0	22	K0- 41
01435-00630	K0710-01A0	28	K0- 41
01435-00630	K0710-01A0	34	K0- 41
01435-00812	A6810-A4F5	2	AA- 179
01435-00855	A1111-A4A1	1	AA- 9
01435-00895	A1310-A4H7	7	AA- 11
01435-01016	A1410-A4F3A	33	AA- 15
01435-01016	A1410-A4F4A	31	AA- 17

PARTS NO.	FIG NO	INDEX	PAGE
01435-01016	A6810-A4F5	15	AA- 179
01435-01016	A6810-A4F5	20	AA- 179
01435-01040	A1410-A4F3A	36	AA- 15
01435-01040	A1410-A4F4A	34	AA- 17
01435-01050	A3110-A4C5	23	AA- 93
01435-01060	A6810-A4F5	19	AA- 179
01435-01070	A5010-B4F4	17	AA- 145
01435-01085	A5010-B4F4	18	AA- 145
01435-01095	A3110-A4C5	22	AA- 93
01436-01000	A1310-A4H7	8	AA- 11
01436-01005	A6810-A4F5	13	AA- 179
01436-01050	A1310-A4H7	9	AA- 11
01437-01025	A2010-B4H9A	7	AA- 45
01437-01065	A5010-B4F4	5	AA- 145
01437-01085	A1310-A4H7	33	AA- 11
01437-01090	A1530-C4D3	19	AA- 29
01437-01090	A1530-C4G8	19	AA- 31
01437-01090	A4010-A4J5	2	AA- 99
01437-01220	A2410-A4A6	6	AA- 81
01437-01225	A2210-B4E4	34	AA- 65
01437-01280	A2411-A4A2	4	AA- 83
01437-11025	A5010-A4F4	32	AA- 143
01437-11080	A2411-A4A2	6	AA- 83
01437-11080	A5010-A4F4	31	AA- 143
01438-01005	A5010-B4F4	6	AA- 145
01438-01020	A1010-A4B3	29	AA- 4
01438-01220	A2411-A4A2	23	AA- 83
01439-00814	K2110-11A0	10	K0- 87
01439-00820	K2110-01A0	34	K0- 61
01463-31232	M2141-01A1	9	M0- 37
01508-20805	K2110-05A0	10	K0- 71
01508-21006	K2110-07A0	22	K0- 77
01508-21006	K2110-08A0	22	K0- 79
01508-31207	K2510-03A0	4	K0- 113
01508-40805	K2110-06A0	20	K0- 73
01508-40805	K2110-06A0	9	K0- 73
01508-41006	K2110-06A0	33	K0- 73
01508-41006	K2110-09A0	28	K0- 81
01508-41006	K2110-12A0	12A	K0- 89
01508-41207	H2250-01A0	34	H0- 39
01508-41207	H2250-01A1	21	H0- 43
01508-41207	K2110-02A0	10	K0- 65
01508-41207	K2510-03A0	34	K0- 113
01508-41207	K2510-04A0	3	K0- 117
01508-41408	K2110-03A0	22	K0- 67
01530-06814	A2210-B4E4	13	AA- 65
01530-06814	F2100-01A0	22	F0- 3
01540-01050	F2710-01A0	6	F0- 113
01580-00806	E0200-01A0	4	E0- 3
01580-00806	K0210-07A0	24	K0- 25

PARTS NO	FIG NO.	INDEX	PAGE
01580-01008	A2110-A4F6	20	AA- 59
01580-01008	A2610-A4B5	32	AA- 87
01580-01411	H0100-02A0	24	H0- 7
01580-01411	Y1660-02A0	23	Y0- 37
01580-01815	T2110-01A1	32	T0- 7
01580-02419	Y1621-21A0	15	Y0- 31
01580-03326	T2810-01A0	9	T0- 43
01580-03931	R2100-02A0	36	R0- 29
01580-10504	K0210-05A0	33	K0- 21
01580-10605	B0300-01A0	5	B0- 5
01580-10605	B0300-01A1	5	B0- 7
01580-10605	C0310-01A1	34	C0- 7
01580-10605	D0100-01A0	24	D0- 3
01580-10605	K0210-02A0	15	K0- 13
01580-10605	K0210-02A0	38	K0- 14
01580-10605	K0210-05A0	7	K0- 21
01580-10605	K0710-05A0	2	K0- 55
01580-10605	K0710-05A0	5	K0- 55
01580-10605	K2110-13A0	5	K0- 91
01580-10806	A4110-A4E4	17	AA- 129
01580-10806	A4110-A4H9	17	AA- 131
01580-10806	F2600-01A0	54	F0- 82
01580-10806	H2250-01A0	55	H0- 40
01580-10806	H2250-01A1	42	H0- 43
01580-10806	K2110-06A0	8	K0- 73
01580-10806	K2110-07A0	28	K0- 77
01580-10806	K2110-08A0	9	K0- 79
01580-10806	K2110-12A0	18	K0- 89
01580-10806	K2510-02A0	22	K0- 109
01580-10806	M2110-01A1	5	M0- 5
01580-10806	M2110-03A1	5	M0- 13
01580-10806	M2110-06A0	9	M0- 25
01580-11008	A1610-A4F2A	19	AA- 35
01580-11008	A1610-A4F2A	4	AA- 35
01580-11008	A1610-A4F3A	17	AA- 37
01580-11008	A1610-A4F3A	4	AA- 37
01580-11008	A2110-B4F6	8	AA- 61
01580-11008	A2610-A4B6	12	AA- 89
01580-11008	A4130-A4B3	23	AA- 133
01580-11008	A5210-A4D3	16	AA- 153
01580-11008	A5210-A4F6	16	AA- 155
01580-11008	B0300-01A0	8	B0- 5
01580-11008	B0300-01A1	8	B0- 7
01580-11008	C0310-02A1	23	C0- 11
01580-11008	E0200-01A0	9	E0- 3
01580-11008	F2320-55A0	12	F0- 35
01580-11008	F2320-55A0	22	F0- 35
01580-11008	F2320-56A0	27	F0- 39
01580-11008	K0710-01A0	11	K0- 41
01580-11008	K0710-01A1	13	K0- 43

PARTS NO.	FIG NO '	INDEX	PAGE
01580-11008	K0710-01A1	29	K0- 43
01580-11008	K0710-02A0	10	K0- 45
01580-11008	K2110-04A0	29	K0- 69
01580-11008	K2110-07A0	7	K0- 77
01580-11008	M2110-07A0	23	M0- 27
01580-11008	M2190-01A1	4	M0- 57
01580-11008	M2190-01A3	4	M0- 59
01580-11008	Y1679-01A0	27	Y0- 57
01580-11008	Y1679-11A0	27	Y0- 61
01580-11210	A2041-A4A5	6	AA- 51
01580-11210	A2041-A4G8	6	AA- 53
01580-11210	A6010-A4D6	12	AA- 157
01580-11210	A6010-A4D7Z	12	AA- 159
01580-11210	A6010-A4F7	12	AA- 161
01580-11210	A6010-A4F8	12	AA- 163
01580-11210	J2110-01A0	11	J0- 3
01580-11210	J2110-01A1	11	J0- 5
01580-11210	J2110-01A2	11	J0- 7
01580-11210	K0410-01A1	19	K0- 37
01580-11210	K2110-03A0	15	K0- 67
01580-11411	A6010-A4D6	15	AA- 157
01580-11411	A6010-A4D7Z	15	AA- 159
01580-11411	A6010-A4F7	15	AA- 161
01580-11411	A6010-A4F8	15	AA- 163
01580-11411	F2370-03A0	23	F0- 57
01580-11411	W2119-02A0	19	W0- 5
01580-11613	F2350-01A0	4	F0- 45
01580-12419	R2200-01A0	7	R0- 37
01580-12722	K0410-02A0	18	K0- 39
01580-12722	M2110-06A0	30	M0- 25
01580-12722	M2111-01A0	9	M0- 31
01580-30605	K0210-01A0	25	K0- 9
01582-01008	A2411-A4A2	12	AA- 83
01582-01008	A2411-A4A2	16	AA- 83
01582-01008	F2710-01A0	5	F0- 113
01582-01210	A6010-A4D6	3	AA- 157
01582-01210	A6010-A4D7Z	3	AA- 159
01582-01210	A6010-A4F7	3	AA- 161
01582-01210	A6010-A4F8	3	AA- 163
01582-01210	F2320-53A0	65	F0- 28
01582-02016	J2110-01A0	19	J0- 3
01582-02016	J2110-01A1	19	J0- 5
01582-02016	J2110-01A2	19	J0- 7
01582-02419	A4080-A4A8	8	AA- 127
01582-02419	F2380-02A0A	8	F0- 69
01582-02419	F2380-04A0A	8	F0- 77
01582-11008	K2110-04A0	17	K0- 69
01582-11008	K2110-06A0	28	K0- 73
01582-11008	K2110-07A0	21	K0- 77
01582-11008	K2110-07A0	9	K0- 77

PARTS NO	FIG NO	INDEX	PAGE
01582-11008	K2110-08A0	26	KO- 79
01582-11008	K2110-09A0	14	KO- 81
01582-11008	K2110-09A0	29	KO- 81
01582-11008	K2110-09A0	44	KO- 82
01582-11008	K2110-09A0	46	KO- 82
01582-11008	K2110-10A0	14	KO- 85
01582-11008	K2110-10A0	23	KO- 85
01582-11008	K2110-10A0	33	KO- 85
01582-11008	K2110-12A0	12	KO- 89
01582-11210	H2250-01A0	57	HO- 40
01582-11210	H2250-01A1	44	HO- 44
01582-11210	K2110-02A0	15	KO- 65
01582-11210	K2510-02A0	13	KO- 109
01582-11210	K2510-02A0	35	KO- 109
01582-11210	K2510-03A0	10	KO- 113
01582-11210	K2510-03A0	27	KO- 113
01582-11210	K2510-03A0	32	KO- 113
01582-11210	K2510-03A0	41	KO- 114
01582-11210	K2510-04A0	8	KO- 117
01582-11210	Y1600-01A0	8	YO- 9
01582-11411	E0200-03A0	10	EO- 7
01582-11411	K2110-03A0	21	KO- 67
01582-11411	K2400-01A1	2	KO- 103
01582-11411	M2110-05A0	24	MO- 21
01582-11411	M2210-04A0	2	MO- 71
01582-11411	M2210-04A0	20	MO- 71
01582-11411	T2440-03A0	13B	TO- 41
01582-12218	M2110-02A0	15	MO- 7
01582-12218	M2110-02A0	24	MO- 7
01582-12218	M2110-02A0	34	MO- 7
01582-12218	M2110-02A0	7	MO- 7
01583-01811	F2370-01A0	30	FO- 49
01583-11006	H2250-01A0	28	HO- 39
01583-11006	H2250-01A1	15	HO- 43
01583-11006	K2110-05A0	12	KO- 71
01583-11610	T2440-01A0	38	TO- 33
01583-11811	M2210-01A0	22	MO- 61
01583-12012	F2370-05A0	49	FO- 62
01583-13018	F2370-03A0	15	FO- 57
01584-01008	A6810-A4F5	16	AA- 179
01584-30806	A2041-A4A5	38	AA- 51
01584-30806	A2041-A4G8	38	AA- 53
01590-10607	F2310-51A0	11	FO- 9
01590-10607	F2600-01A0	15	FO- 81
01590-10607	F2600-01A0	30	FO- 81
01590-11012	F2700-05A0	44	FO- 100
01590-13638	W2119-01A0	9	WO- 3
01590-30809	K2110-06A0	12	KO- 73
01590-31215	R2100-03A0	10	RO- 33
01590-31215	R2100-03A0	33	RO- 33

PARTS NO.	FIG NO.	INDEX	PAGE
01590-31215	R2100-03A1	10	RO- 35
01590-31215	R2100-03A1	33	RO- 35
01590-33638	M2110-03A1	48	MO- 14
01592-31619	T2810-01A0	12	TO- 43
01593-11008	K2110-04A0	19	KO- 69
01593-11008	K2110-06A0	30	KO- 73
01593-11008	K2110-07A0	17	KO- 77
01593-11008	K2110-10A0	11	KO- 85
01593-11008	K2110-10A0	16	KO- 85
01593-11008	K2110-10A0	25	KO- 85
01593-11008	K2110-10A0	35	KO- 85
01593-11008	K2110-12A0	14	KO- 89
01593-11008	K2110-12A0	9	KO- 89
01593-11210	K2110-02A0	11	KO- 65
01593-11210	K2110-08A0	17	KO- 79
01593-11210	K2510-02A0	14	KO- 109
01593-11210	K2510-02A0	38	KO- 109
01593-11210	K2510-03A0	12	KO- 113
01593-11210	K2510-03A0	28	KO- 113
01593-11210	K2510-03A0	35	KO- 113
01593-11210	K2510-03A0	42	KO- 114
01593-11210	K2510-03A0	5	KO- 113
01593-11613	F2600-01A0	3	FO- 81
01593-31008	K2110-09A0	30	KO- 81
01593-31210	H2250-01A0	35	HO- 39
01593-31210	H2250-01A1	22	HO- 43
01597-01009	H2210-02A0	26	HO- 23
01597-01009	H2210-02A1	26	HO- 25
01597-01009	H2210-02A2	26	HO- 29
01598-11011	H0100-01A0	15	HO- 3
01598-11011	Y1660-01A0	15	YO- 33
01598-11617	W2119-01A0	22	WO- 3
01599-01011	A2060-A4C1	17	AA- 57
01599-01011	A5010-B4F4	16	AA- 145
01599-01011	F2700-02A0	34	FO- 89
01599-01011	F2700-03A0	25	FO- 91
01599-01011	F2700-04A0	8	FO- 95
01599-01011	H2210-01A0	10	HO- 19
01599-01011	H2210-01A2	10	HO- 21
01599-01011	H2210-03A0	13	HO- 31
01599-01011	H2210-03A2	13	HO- 33
01599-01011	T2440-01A0	14	TO- 33
01599-01011	T2440-01A0	34	TO- 33
01599-01011	T2440-01A1	14	TO- 37
01599-01011	T2440-01A1	26	TO- 37
01599-01011	T2440-01A1	35	TO- 37
01601-00410	K2220-51A0	11	KO- 101
01601-20307	W2121-01A0	6	WO- 7
01601-20307	W2121-01A0	9	WO- 7
01601-20410	K0210-07A0	40	KO- 26

PARTS NO.	FIG NO.	INDEX	PAGE
01601-20410	K0210-08A0	12	KO- 29
01601-20410	K0210-08A0	19	KO- 29
01601-20410	K0210-08A0	3	KO- 29
01601-20410	K0210-09A0	19	KO- 33
01601-20410	K0710-05A0	9	KO- 55
01601-20410	K0810-01A0	11	KO- 59
01601-20410	K0810-01A0	8	KO- 59
01601-20513	K0210-02A0	25	KO- 13
01601-20513	K0210-02A0	32	KO- 13
01601-20513	K0210-02A0	44	KO- 14
01601-20513	K0210-04A0	17	KO- 19
01601-20513	K0210-04A0	20	KO- 19
01601-20513	K0210-05A0	17	KO- 21
01601-20513	K0210-08A0	6	KO- 29
01601-20513	K0210-08A0	9	KO- 29
01601-20513	K2510-01A0	14	KO- 105
01601-23075	Y1620-31A0	9	YO- 25
01601-23075	Y1621-01A0	10	YO- 27
01601-23075	Y1621-11A0	10	YO- 29
01602-00825	A3010-A4A1	17	AA- 91
01602-01030	Y1620-02A0	22	YO- 23
01602-01236	F2380-02A0A	18	FO- 69
01602-01236	F2380-02A0A	26	FO- 69
01602-01236	F2380-04A0A	18	FO- 77
01602-01236	F2380-04A0A	26	FO- 77
01602-01236	R0100-01A0	12	RO- 3
01602-01236	Y1620-01A0	34	YO- 19
01602-01442	F2320-53A0	13	FO- 27
01602-01442	Y1600-21A0	25	YO- 15
01602-01648	F2380-02A0A	32	FO- 69
01602-01648	F2380-04A0A	32	FO- 77
01602-20619	D0100-01A0	23	DO- 3
01602-20619	D0100-01A0	25	DO- 3
01602-20619	F2700-03A0	12	FO- 91
01602-20619	K0210-01A0	20	KO- 9
01602-20619	K0210-07A0	13	KO- 25
01602-20619	K0210-08A0	22	KO- 29
01602-20619	K2110-13A0	12	KO- 91
01602-20619	K2110-13A0	4	KO- 91
01602-20619	K2110-13A0	8	KO- 91
01602-20619	K2220-01A0	47	KO- 96
01602-20619	K2220-01A0	5	KO- 95
01602-20619	K2220-01A1	8	KO- 99
01602-20619	M2250-01A0	48	MO- 90
01602-20619	W2119-02A0	27	WO- 5
01602-20619	W2121-01A0	11	WO- 7
01602-20825	D0200-01A0	12	DO- 7
01602-20825	D0200-01A1	12	DO- 9
01602-20825	D0200-01A2	12	DO- 11
01602-20825	F2310-51A0	32	FO- 9

PARTS NO	FIG NO	INDEX	PAGE
01602-20825	F2370-05A0	55	FO- 62
01602-20825	F2600-01A0	51	FO- 82
01602-20825	H2250-01A0	38	HO- 39
01602-20825	H2250-01A1	25	HO- 43
01602-20825	K0210-07A0	18	KO- 25
01602-20825	K0210-07A0	23	KO- 25
01602-20825	K2110-01A0	24	KO- 61
01602-20825	K2110-02A0	4	KO- 65
01602-20825	K2110-04A0	27	KO- 69
01602-20825	K2110-04A0	4	KO- 69
01602-20825	K2110-06A0	26	KO- 73
01602-20825	K2110-07A0	29	KO- 77
01602-20825	K2110-09A0	5	KO- 81
01602-20825	K2110-10A0	20	KO- 85
01602-20825	K2110-10A0	8	KO- 85
01602-20825	K2110-12A0	19	KO- 89
01602-20825	K2110-12A0	7	KO- 89
01602-20825	K2510-02A0	41	KO- 109
01602-20825	K2510-03A0	19	KO- 113
01602-20825	K2510-03A0	25	KO- 113
01602-20825	K2510-03A0	3	KO- 113
01602-20825	K2510-03A0	39	KO- 113
01602-20825	M2210-01A0	18	MO- 61
01602-20825	Y1679-01A0	23	YO- 57
01602-20825	Y1679-01A0	40	YO- 57
01602-20825	Y1679-01A0	44	YO- 58
01602-20825	Y1679-01A0	48	YO- 58
01602-20825	Y1679-11A0	23	YO- 61
01602-20825	Y1679-11A0	34	YO- 61
01602-20825	Y1679-11A0	38	YO- 61
01602-20825	Y1679-11A0	42	YO- 62
01602-21030	C0310-01A0	16	CO- 5
01602-21030	C0310-01A1	16	CO- 7
01602-21030	F2100-01A0	37	FO- 3
01602-21030	F2100-01A0	46	FO- 4
01602-21030	F2320-57A0	12	FO- 43
01602-21030	F2370-01A0	44	FO- 50
01602-21030	F2370-04A0	9	FO- 59
01602-21030	F2370-05A0	19	FO- 61
01602-21030	F2370-05A0	7	FO- 61
01602-21030	F2600-01A0	43	FO- 82
01602-21030	F2700-01A0	3	FO- 85
01602-21030	F2700-02A0	28	FO- 89
01602-21030	F2700-03A0	15	FO- 91
01602-21030	F2700-03A0	19	FO- 91
01602-21030	F2700-03A0	30	FO- 91
01602-21030	F2700-03A0	4	FO- 91
01602-21030	F2700-04A0	11	FO- 95
01602-21030	F2700-04A0	16	FO- 95
01602-21030	F2700-04A0	40	FO- 95

PARTS NO.	FIG NO.	INDEX	PAGE
01602-21030	F2700-07A0	29	F0- 107
01602-21030	F2700-07A0	3	F0- 107
01602-21030	F2700-08A0	11	F0- 111
01602-21030	H0100-01A0	11	H0- 3
01602-21030	H0100-01A0	33	H0- 3
01602-21030	H0310-01A0	25	H0- 17
01602-21030	H2210-01A0	26	H0- 19
01602-21030	H2210-01A2	25	H0- 21
01602-21030	H2210-02A1	34	H0- 25
01602-21030	H2250-01A0	13	H0- 39
01602-21030	K0210-01A0	12A	K0- 9
01602-21030	K2110-09A0	22	K0- 81
01602-21030	K2510-01A0	10	K0- 105
01602-21030	K2510-01A1	10	K0- 107
01602-21030	K2510-01A1	14	K0- 107
01602-21030	K2510-01A1	28	K0- 107
01602-21030	K2510-05A0	11	K0- 119
01602-21030	M2110-01A0	15	M0- 3
01602-21030	M2110-01A0	17	M0- 3
01602-21030	M2110-01A0	23	M0- 3
01602-21030	M2110-03A0	4	M0- 11
01602-21030	M2110-03A1	39	M0- 14
01602-21030	M2110-04A0	13	M0- 17
01602-21030	M2110-06A0	34	M0- 25
01602-21030	M2110-06A0	6	M0- 25
01602-21030	M2141-01A0	6	M0- 35
01602-21030	M2141-01A0	9	M0- 35
01602-21030	M2141-01A2	9	M0- 39
01602-21030	M2141-01A3	9	M0- 41
01602-21030	M2210-01A0	42	M0- 62
01602-21030	M2210-04A0	13	M0- 71
01602-21030	R2100-02A0	39	R0- 29
01602-21030	Y1620-02A0	15	Y0- 23
01602-21030	Y1620-02A0	30	Y0- 23
01602-21030	Y1620-31A0	27	Y0- 25
01602-21030	Y1621-01A0	31	Y0- 27
01602-21030	Y1621-11A0	32	Y0- 29
01602-21030	Y1660-01A0	11	Y0- 33
01602-21030	Y1660-01A0	33	Y0- 33
01602-21030	Y1679-01A0	28	Y0- 57
01602-21030	Y1679-11A0	28	Y0- 61
01602-21030	Y1679-21A0	25	Y0- 65
01602-21030	Y1679-21A0	34	Y0- 65
01602-21030	Y1679-21A0	40	Y0- 66
01602-21030	Y1679-21A0	43	Y0- 66
01602-21236	C0120-01A0A	2	C0- 3
01602-21236	C0310-01A0	20	C0- 5
01602-21236	C0310-01A0	8	C0- 5
01602-21236	C0310-01A1	20	C0- 7
01602-21236	C0310-01A1	8	C0- 7

PARTS NO.	FIG NO	INDEX	PAGE
01602-21236	C0310-02A0	21	C0- 9
01602-21236	F2100-01A0	11	F0- 3
01602-21236	F2100-01A0	27	F0- 3
01602-21236	F2100-01A0	4	F0- 3
01602-21236	F2100-01A0	42	F0- 4
01602-21236	F2100-01A0	53	F0- 4
01602-21236	F2200-01A0	6	F0- 7
01602-21236	F2200-01A0	8	F0- 7
01602-21236	F2310-51A0	36	F0- 10
01602-21236	F2310-51A0	40	F0- 10
01602-21236	F2310-51A0	47	F0- 10
01602-21236	F2370-02A0	19	F0- 53
01602-21236	F2370-02A0	22	F0- 53
01602-21236	F2370-02A0	32	F0- 53
01602-21236	F2370-02A0	36	F0- 54
01602-21236	F2370-04A0	13	F0- 59
01602-21236	F2370-05A0	33	F0- 61
01602-21236	F2700-01A0	12	F0- 85
01602-21236	F2700-01A0	27	F0- 85
01602-21236	F2700-01A0	8	F0- 85
01602-21236	F2700-02A0	25	F0- 89
01602-21236	F2700-05A0	4	F0- 99
01602-21236	F2700-06A0	16	F0- 105
01602-21236	F2710-02A0	8	F0- 115
01602-21236	H0100-01A0	3	H0- 3
01602-21236	H0100-01A0	39	H0- 4
01602-21236	H0100-01A0	6	H0- 3
01602-21236	H0100-02A0	13	H0- 7
01602-21236	H0100-02A0	9	H0- 7
01602-21236	H0310-01A0	11	H0- 17
01602-21236	H0310-01A0	18	H0- 17
01602-21236	H0310-01A0	8	H0- 17
01602-21236	H2210-01A0	22	H0- 19
01602-21236	H2210-01A0	4	H0- 19
01602-21236	H2210-01A2	21	H0- 21
01602-21236	H2210-01A2	4	H0- 21
01602-21236	H2210-02A0	34	H0- 23
01602-21236	H2210-02A2	34	H0- 29
01602-21236	H2210-03A0	17	H0- 31
01602-21236	H2210-03A2	17	H0- 33
01602-21236	H2220-01A0	13	H0- 35
01602-21236	H2220-01A0	17	H0- 35
01602-21236	H2220-01A0	22	H0- 35
01602-21236	H2220-01A0	28	H0- 35
01602-21236	H2220-01A0	3	H0- 35
01602-21236	H2220-01A0	31	H0- 35
01602-21236	H2220-01A0	39	H0- 35
01602-21236	H2220-01A0	9	H0- 35
01602-21236	J2110-01A0	12	J0- 3
01602-21236	J2110-01A1	12	J0- 5

PARTS NO.	FIG NO	INDEX	PAGE
01602-21236	J2110-01A2	12	J0- 7
01602-21236	K0210-04A0	9	K0- 19
01602-21236	K2110-03A0	9	K0- 67
01602-21236	M2110-04A0	19	M0- 17
01602-21236	M2110-04A0	21	M0- 17
01602-21236	M2110-04A0	44	M0- 18
01602-21236	M2142-01A0	44	M0- 46
01602-21236	M2210-03A0	4	M0- 69
01602-21236	R2100-02A0	23	R0- 29
01602-21236	R2100-02A0	43	R0- 30
01602-21236	Y1600-01A0	9	Y0- 9
01602-21236	Y1620-02A0	18	Y0- 23
01602-21236	Y1620-02A0	27	Y0- 23
01602-21236	Y1660-01A0	3	Y0- 33
01602-21236	Y1660-01A0	39	Y0- 34
01602-21236	Y1660-01A0	6	Y0- 33
01602-21236	Y1660-02A0	13	Y0- 37
01602-21236	Y1660-02A0	9	Y0- 37
01602-21236	Y1662-01A0	16	Y0- 49
01602-21236	Y1679-21A0	13	Y0- 65
01602-21442	E0200-03A0	11	E0- 7
01602-21442	M2110-05A0	25	M0- 21
01602-21442	Y1620-31A0	30	Y0- 25
01602-21442	Y1620-31A0	33	Y0- 25
01602-21648	Y1620-01A0	15	Y0- 19
01602-21648	Y1620-02A0	8	Y0- 23
01602-21854	Y1620-31A0	16	Y0- 25
01602-21854	Y1621-01A0	17	Y0- 27
01602-21854	Y1621-11A0	17	Y0- 29
01602-22060	R0300-01A0	20	R0- 9
01602-22268	R0100-01A0	31	R0- 4
01602-22472	R0200-01A0	17	R0- 7
01602-22472	R2100-02A0	26	R0- 29
01602-22472	R2200-01A0	15	R0- 37
01602-22472	Y1620-01A0	8	Y0- 19
01602-22783	M2110-06A0	29	M0- 25
01602-22783	M2111-01A0	8	M0- 31
01640-00816	A4080-A4A8	4	AA- 127
01640-01016	E0200-01A0	6	E0- 3
01640-20610	A2041-A4A5	31	AA- 51
01640-20610	A2041-A4G8	31	AA- 53
01640-20610	A4030-A4C6	17	AA- 123
01640-20610	A4030-A4C6	21	AA- 123
01640-20610	K2110-13A0	3	K0- 91
01640-20816	A1310-A4H7	11	AA- 11
01640-20816	A3110-A4C5	8	AA- 93
01640-20816	A3310-A4A3	14	AA- 97
01640-20816	A4030-A4C6	15	AA- 123
01640-20816	A6810-A4F5	10	AA- 179
01640-21016	A1310-A4H7	16	AA- 11

PARTS NO.	FIG NO.	INDEX	PAGE
01640-21016	A1610-A4F2A	18	AA- 35
01640-21016	A1610-A4F3A	16	AA- 37
01640-21016	A2041-A4A5	13	AA- 51
01640-21016	A2041-A4A5	23	AA- 51
01640-21016	A2041-A4G8	13	AA- 53
01640-21016	A2041-A4G8	23	AA- 53
01640-21016	A2060-A4C1	9	AA- 57
01640-21016	A2110-A4F6	11	AA- 59
01640-21016	A2110-A4F6	4	AA- 59
01640-21016	A2610-A4B5	33	AA- 87
01640-21016	A2610-A4B6	13	AA- 89
01640-21016	A3110-A4C5	18	AA- 93
01640-21016	A3310-A4A3	23	AA- 97
01640-21016	A4010-A4J5	3	AA- 99
01640-21016	A4230-A4D5	7	AA- 141
01640-21016	A5010-A4F4	24	AA- 143
01640-21016	A5010-C4F4	6	AA- 147
01640-21016	A6010-A4D6	23	AA- 157
01640-21016	A6010-A4D7Z	23	AA- 159
01640-21016	A6010-A4F7	23	AA- 161
01640-21016	A6010-A4F8	23	AA- 163
01640-21016	E0200-01A0	10	E0- 3
01640-21223	A2041-A4A5	5	AA- 51
01640-21223	A2041-A4G8	5	AA- 53
01640-21223	A2610-A4B5	27	AA- 87
01640-21223	A2610-A4B6	6	AA- 89
01640-21223	A4030-A4C6	4	AA- 123
01640-21223	A5080-A4B2	39	AA- 150
01640-21223	A6010-A4D6	13	AA- 157
01640-21223	A6010-A4D7Z	13	AA- 159
01640-21223	A6010-A4F7	13	AA- 161
01640-21223	A6010-A4F8	13	AA- 163
01640-21223	K2110-08A0	15	K0- 79
01640-21626	K2110-06A0	37	K0- 73
01640-22032	K2110-02A0	7	K0- 65
01640-22032	K2110-04A0	10	K0- 69
01640-22032	K2110-09A0	38	K0- 82
01640-22032	K2110-10A0	4	K0- 85
01640-22232	H2250-01A0	53	H0- 40
01640-22232	H2250-01A1	40	H0- 43
01640-22232	K2510-02A0	20	K0- 109
01640-22440	H0100-01A0	30	H0- 3
01640-22440	Y1660-01A0	30	Y0- 33
01641-00405	K2220-51A0	12	K0- 101
01641-11626	F2370-01A0	34	F0- 50
01641-11626	F2370-02A0	41	F0- 54
01641-20508	K0210-02A0	18	K0- 13
01641-20508	K0210-02A0	33	K0- 13
01641-20508	K2220-01A0	27	K0- 95
01641-20608	F2310-51A0	12	F0- 9

PARTS NO.	FIG NO.	INDEX	PAGE
01641-20608	K0210-05A0	20	K0- 21
01641-20608	K0210-05A0	4	K0- 21
01641-20608	W2121-01A0	12	W0- 7
01641-20812	F2310-51A0	33	F0- 9
01641-20812	K0210-01A0	16	K0- 9
01641-21016	A1310-A4H7	30	AA- 11
01641-21016	A2010-B4H9A	8	AA- 45
01641-21016	Y1679-01A0	29	Y0- 57
01641-21223	F2310-51A0	37	F0- 10
01641-21423	M2210-04A0	5	M0- 71
01642-00508	K0210-02A0	26	K0- 13
01642-00608	K0210-07A0	7	K0- 25
01642-20405	K0210-05A0	11	K0- 21
01642-20405	K0810-01A0	25	K0- 59
01642-20508	K0210-04A0	3	K0- 19
01642-20508	K0210-05A0	32	K0- 21
01642-20508	K0210-07A0	28	K0- 25
01642-20508	K0810-01A0	19	K0- 59
01642-20608	K0710-05A0	13	K0- 55
01642-21016	A3110-B4C5	25	AA- 95
01642-21216	R2100-03A0	32	R0- 33
01642-21216	R2100-03A0	9	R0- 33
01642-21216	R2100-03A1	32	R0- 35
01642-21216	R2100-03A1	9	R0- 35
01642-21216	Y1620-02A0	6	Y0- 23
01643-22245	T2120-01A0	19	T0- 15
01643-22245	T2120-01A1	21	T0- 19
01643-30623	A4030-A4C6	17	AA- 123
01643-30623	A4030-A4C6	21	AA- 123
01643-30623	F2320-55A0	56	F0- 36
01643-30623	K0210-01A0	21	K0- 9
01643-30623	K0210-02A0	10	K0- 13
01643-30623	K0210-02A0	16	K0- 13
01643-30623	K0210-02A0	37	K0- 13
01643-30623	K0210-05A0	8	K0- 21
01643-30623	K0210-07A0	43	K0- 26
01643-30623	K0210-08A0	29	K0- 29
01643-30623	K0210-09A0	6	K0- 33
01643-30623	K0710-03A0	32	K0- 49
01643-30623	K0710-05A0	3	K0- 55
01643-30623	K0710-05A0	6	K0- 55
01643-30623	K0810-01A0	4	K0- 59
01643-30623	K2110-01A0	20	K0- 61
01643-30623	K2110-06A0	6	K0- 73
01643-30623	K2220-01A1	4	K0- 99
01643-30623	M2141-01A1	16	M0- 37
01643-30623	M2141-02A1	16	M0- 43
01643-30623	M2142-01A0	21	M0- 45
01643-30623	M2142-01A2	22	M0- 51
01643-30623	M2142-02A0	16	M0- 53

PARTS NO	FIG NO.	INDEX	PAGE
01643-30623	M2142-02A1	16	M0- 55
01643-30623	M2250-01A0	11	M0- 89
01643-30823	A2610-A4B5	23	AA- 87
01643-30823	A4110-A4E4	18	AA- 129
01643-30823	A4110-A4H9	18	AA- 131
01643-30823	C0310-02A0	28	C0- 9
01643-30823	F2320-57A0	8	F0- 43
01643-30823	H2250-01A0	23	H0- 39
01643-30823	H2250-01A0	31	H0- 39
01643-30823	H2250-01A0	40	H0- 39
01643-30823	H2250-01A1	10	H0- 43
01643-30823	H2250-01A1	18	H0- 43
01643-30823	H2250-01A1	27	H0- 43
01643-30823	K0210-02A0	41	K0- 14
01643-30823	K0210-07A0	10	K0- 25
01643-30823	K0210-07A0	19	K0- 25
01643-30823	K0210-07A0	25	K0- 25
01643-30823	K0210-07A0	35	K0- 25
01643-30823	K0210-07A0	4	K0- 25
01643-30823	K0710-01A0	32	K0- 41
01643-30823	K0710-01A1	25	K0- 43
01643-30823	K0710-02A0	6	K0- 45
01643-30823	K0710-03A0	28	K0- 49
01643-30823	K0710-04A0	15	K0- 53
01643-30823	K2110-05A0	5	K0- 71
01643-30823	K2110-11A0	3	K0- 87
01643-30823	K2110-14A0	4	K0- 93
01643-30823	K2510-02A0	11	K0- 109
01643-30823	K2510-02A0	43	K0- 110
01643-30823	K2510-02A0	45	K0- 110
01643-30823	K2510-02A0	6	K0- 109
01643-30823	M2110-01A1	6	M0- 5
01643-30823	M2110-03A1	42	M0- 14
01643-30823	M2110-03A1	6	M0- 13
01643-30823	M2110-04A0	36	M0- 17
01643-30823	M2110-05A0	31	M0- 21
01643-30823	M2110-06A0	10	M0- 25
01643-30823	M2113-01A0	16	M0- 33
01643-30823	M2141-01A0	12	M0- 35
01643-30823	M2141-01A2	12	M0- 39
01643-30823	M2141-01A3	12	M0- 41
01643-30823	M2210-01A0	26	M0- 61
01643-31032	A1410-A4F3A	14	AA- 15
01643-31032	A1410-A4F3A	25	AA- 15
01643-31032	A1410-A4F4A	14	AA- 17
01643-31032	A1410-A4F4A	23	AA- 17
01643-31032	A1530-C4D3	17	AA- 29
01643-31032	A1530-C4G8	17	AA- 31
01643-31032	A1570-A4B7	10	AA- 33
01643-31032	A1570-A4B7	12	AA- 33

PARTS NO.	FIG NO.	INDEX	PAGE
01643-31032	A1570-A4B7	5	AA- 33
01643-31032	A1610-A4F2A	25	AA- 35
01643-31032	A1610-A4F3A	23	AA- 37
01643-31032	A1610-B4F2A	6	AA- 39
01643-31032	A1610-B4F3A	6	AA- 41
01643-31032	A2041-A4A5	35	AA- 51
01643-31032	A2041-A4G8	35	AA- 53
01643-31032	A2060-A4C1	18	AA- 57
01643-31032	A2110-A4F6	15	AA- 59
01643-31032	A2110-A4F6	21	AA- 59
01643-31032	A2110-B4F6	6	AA- 61
01643-31032	A2210-B4E4	26	AA- 65
01643-31032	A3110-B4C5	11	AA- 95
01643-31032	A3110-B4C5	14	AA- 95
01643-31032	A3110-B4C5	21	AA- 95
01643-31032	A4110-A4E4	8	AA- 129
01643-31032	A4110-A4H9	8	AA- 131
01643-31032	A4130-A4B3	13	AA- 133
01643-31032	A4130-A4B3	24	AA- 133
01643-31032	A4130-A4B3	27	AA- 133
01643-31032	A5010-B4F4	15	AA- 145
01643-31032	A5080-A4B2	12	AA- 149
01643-31032	A5080-A4B2	32	AA- 149
01643-31032	A5210-A4D3	17	AA- 153
01643-31032	A5210-A4F6	17	AA- 155
01643-31032	C0120-01A0A	8	C0- 3
01643-31032	C0310-02A1	22	C0- 11
01643-31032	C0310-02A1	25	C0- 11
01643-31032	D0100-01A0	29	D0- 3
01643-31032	D0100-02A0	16	D0- 5
01643-31032	D0100-02A0	3	D0- 5
01643-31032	D0200-01A0	20	D0- 7
01643-31032	D0200-01A1	20	D0- 9
01643-31032	D0200-01A2	21	D0- 11
01643-31032	D0200-01A2	28	D0- 11
01643-31032	E0200-01A0	16	E0- 3
01643-31032	E0200-01A0	19	E0- 3
01643-31032	E0200-01A0	23	E0- 3
01643-31032	E0200-02A0	15	E0- 5
01643-31032	E0200-02A0	24	E0- 5
01643-31032	E0200-02A0	3	E0- 5
01643-31032	E0200-02A0	6	E0- 5
01643-31032	E0200-02A0	9	E0- 5
01643-31032	E0200-03A0	27	E0- 7
01643-31032	E0200-03A0	31	E0- 7
01643-31032	E0420-01A0	4	E0- 9
01643-31032	E0420-01A0	8	E0- 9
01643-31032	F2310-52A0	11	F0- 13
01643-31032	F2310-52A0	19	F0- 13
01643-31032	F2310-52A0	6	F0- 13

PARTS NO	FIG NO.	INDEX	PAGE
01643-31032	F2320-55A0	29	F0- 35
01643-31032	F2320-55A0	45	F0- 36
01643-31032	F2320-55A0	5	F0- 35
01643-31032	F2320-55A0	62	F0- 36
01643-31032	F2320-56A0	30	F0- 39
01643-31032	F2320-56A0	35	F0- 39
01643-31032	F2320-56A0	42	F0- 40
01643-31032	F2320-56A0	45	F0- 40
01643-31032	F2320-56A0	7	F0- 39
01643-31032	F2350-01A0	17	F0- 45
01643-31032	F2700-01A0	44	F0- 86
01643-31032	F2700-02A0	22	F0- 89
01643-31032	F2700-02A0	35	F0- 89
01643-31032	F2700-02A0	9	F0- 89
01643-31032	F2700-03A0	26	F0- 91
01643-31032	F2700-04A0	24	F0- 95
01643-31032	F2700-04A0	29	F0- 95
01643-31032	F2700-04A0	45	F0- 96
01643-31032	F2700-04A0	9	F0- 95
01643-31032	F2700-05A2	17	F0- 103
01643-31032	F2700-05A2	22	F0- 103
01643-31032	F2700-05A2	3	F0- 103
01643-31032	F2700-06A0	10	F0- 105
01643-31032	F2700-07A0	12	F0- 107
01643-31032	F2700-07A0	18	F0- 107
01643-31032	F2700-07A0	38	F0- 107
01643-31032	F2700-07A0	52	F0- 108
01643-31032	H2210-01A0	11	H0- 19
01643-31032	H2210-01A2	11	H0- 21
01643-31032	H2210-02A0	27	H0- 23
01643-31032	H2210-02A1	27	H0- 25
01643-31032	H2210-02A2	27	H0- 29
01643-31032	H2210-03A0	12	H0- 31
01643-31032	H2210-03A2	12	H0- 33
01643-31032	H2250-01A0	19	H0- 39
01643-31032	H2250-01A0	4	H0- 39
01643-31032	H2250-01A0	43	H0- 40
01643-31032	H2250-01A1	30	H0- 43
01643-31032	H2250-01A1	4	H0- 43
01643-31032	J2700-01A0	18	J0- 11
01643-31032	J2700-01A1	18	J0- 13
01643-31032	K0110-01A0	3	K0- 3
01643-31032	K0210-01A0	12	K0- 9
01643-31032	K0210-01A0	30	K0- 9
01643-31032	K0210-07A0	21	K0- 25
01643-31032	K0410-01A1	26	K0- 37
01643-31032	K0710-01A0	10	K0- 41
01643-31032	K0710-01A0	13	K0- 41
01643-31032	K0710-01A1	14	K0- 43
01643-31032	K0710-01A1	22	K0- 43

PARTS NO.	FIG NO	INDEX	PAGE
01643-31032	K0710-01A1	32	K0- 43
01643-31032	K0710-01A1	5	K0- 43
01643-31032	K0710-02A0	13	K0- 45
01643-31032	K0710-02A0	22	K0- 45
01643-31032	K0710-02A0	28	K0- 45
01643-31032	K0710-02A0	3	K0- 45
01643-31032	K0710-02A0	32	K0- 45
01643-31032	K0710-02A0	37	K0- 45
01643-31032	K0710-02A0	40	K0- 45
01643-31032	K0710-02A0	46	K0- 46
01643-31032	K0710-03A0	13	K0- 49
01643-31032	K2110-07A0	15	K0- 77
01643-31032	K2110-07A0	8	K0- 77
01643-31032	K2110-13A0	20	K0- 91
01643-31032	K2110-14A0	6	K0- 93
01643-31032	K2220-01A0	43	K0- 96
01643-31032	K2510-01A0	19	K0- 105
01643-31032	K2510-01A0	24	K0- 105
01643-31032	K2510-01A1	19	K0- 107
01643-31032	K2510-01A1	24	K0- 107
01643-31032	K2510-02A0	29	K0- 109
01643-31032	K2510-02A0	34	K0- 109
01643-31032	K2510-05A0	19	K0- 119
01643-31032	K2510-05A0	6	K0- 119
01643-31032	M2110-01A0	29	M0- 3
01643-31032	M2110-01A0	32	M0- 3
01643-31032	M2110-01A0	36	M0- 3
01643-31032	M2110-02A0	45	M0- 8
01643-31032	M2110-03A1	52	M0- 14
01643-31032	M2110-03A1	56	M0- 14
01643-31032	M2110-05A0	15	M0- 21
01643-31032	M2110-05A0	41	M0- 22
01643-31032	M2110-05A0	45	M0- 22
01643-31032	M2110-05A0	5	M0- 21
01643-31032	M2110-07A0	22	M0- 27
01643-31032	M2110-07A0	25	M0- 27
01643-31032	M2141-01A0	15	M0- 35
01643-31032	M2141-01A1	31	M0- 37
01643-31032	M2141-01A2	15	M0- 39
01643-31032	M2141-01A3	15	M0- 41
01643-31032	M2141-02A1	22	M0- 43
01643-31032	M2142-01A0	31	M0- 45
01643-31032	M2142-02A0	34	M0- 53
01643-31032	M2142-02A1	34	M0- 55
01643-31032	M2190-01A1	10	M0- 57
01643-31032	M2190-01A1	5	M0- 57
01643-31032	M2190-01A1	8	M0- 57
01643-31032	M2190-01A3	10	M0- 59
01643-31032	M2190-01A3	5	M0- 59
01643-31032	M2190-01A3	8	M0- 59

PARTS NO.	FIG NO	INDEX	PAGE
01643-31032	M2210-01A0	12	M0- 61
01643-31032	M2210-01A0	34	M0- 61
01643-31032	M2210-01A0	38	M0- 61
01643-31032	M2210-01A0	4	M0- 61
01643-31032	M2210-01A0	7	M0- 61
01643-31032	M2210-07A0	7	M0- 87
01643-31032	R2100-02A0	39	R0- 29
01643-31032	T2440-01A0	15	T0- 33
01643-31032	T2440-01A0	35	T0- 33
01643-31032	T2440-01A0	46	T0- 34
01643-31032	T2440-01A0	49	T0- 34
01643-31032	T2440-01A1	15	T0- 37
01643-31032	T2440-01A1	27	T0- 37
01643-31032	T2440-01A1	36	T0- 37
01643-31032	T2440-03A0	16	T0- 41
01643-31032	T2440-03A0	6	T0- 41
01643-31232	A2210-B4E4	40	AA- 65
01643-31232	A2210-B4E4	5	AA- 65
01643-31232	A2330-A4A5	3	AA- 75
01643-31232	A3010-A4A1	20	AA- 91
01643-31232	A6010-A4D6	19	AA- 157
01643-31232	A6010-A4D6	4	AA- 157
01643-31232	A6010-A4D7Z	19	AA- 159
01643-31232	A6010-A4D7Z	4	AA- 159
01643-31232	A6010-A4F7	19	AA- 161
01643-31232	A6010-A4F7	4	AA- 161
01643-31232	A6010-A4F8	19	AA- 163
01643-31232	A6010-A4F8	4	AA- 163
01643-31232	C0120-01A0A	15	C0- 3
01643-31232	C0120-01A0A	18	C0- 3
01643-31232	C0120-01A0A	22	C0- 3
01643-31232	C0120-01A0A	6	C0- 3
01643-31232	C0310-01A0	23	C0- 5
01643-31232	C0310-01A0	26	C0- 5
01643-31232	C0310-01A0	29	C0- 5
01643-31232	C0310-01A1	23	C0- 7
01643-31232	C0310-01A1	26	C0- 7
01643-31232	C0310-01A1	29	C0- 7
01643-31232	C0310-02A0	11	C0- 9
01643-31232	C0310-02A0	16	C0- 9
01643-31232	C0310-02A0	30	C0- 9
01643-31232	C0310-02A0	35	C0- 9
01643-31232	C0310-02A0	7	C0- 9
01643-31232	C0310-02A1	11	C0- 11
01643-31232	C0310-02A1	17	C0- 11
01643-31232	C0310-02A1	27	C0- 11
01643-31232	C0310-02A1	4	C0- 11
01643-31232	C0310-02A1	6	C0- 11
01643-31232	E0200-02A0	21	E0- 5
01643-31232	E0200-03A0	17	E0- 7

PARTS NO.	FIG NO	INDEX	PAGE
01643-31232	E0200-03A0	21	E0- 7
01643-31232	F2310-51A0	15	F0- 9
01643-31232	F2310-51A0	19	F0- 9
01643-31232	F2310-52A0	22	F0- 13
01643-31232	F2310-52A0	36	F0- 13
01643-31232	F2370-05A0	35	F0- 61
01643-31232	F2370-05A0	42	F0- 62
01643-31232	F2380-01A0A	19	F0- 65
01643-31232	F2380-01A1	19	F0- 67
01643-31232	F2380-03A0A	19	F0- 73
01643-31232	F2380-03A1	19	F0- 75
01643-31232	F2700-01A0	22	F0- 85
01643-31232	F2700-02A0	14	F0- 89
01643-31232	F2700-02A0	2	F0- 89
01643-31232	F2700-02A0	32	F0- 89
01643-31232	F2700-02A0	37	F0- 89
01643-31232	F2700-02A0	4	F0- 89
01643-31232	F2700-03A0	23	F0- 91
01643-31232	F2700-03A0	35	F0- 91
01643-31232	F2700-03A0	41	F0- 92
01643-31232	F2700-04A0	35	F0- 95
01643-31232	F2700-04A0	54	F0- 96
01643-31232	F2700-05A0	29	F0- 99
01643-31232	F2700-05A0	9	F0- 99
01643-31232	F2700-07A0	22	F0- 107
01643-31232	F2700-07A0	26	F0- 107
01643-31232	F2700-07A0	55	F0- 108
01643-31232	F2710-02A0	10	F0- 115
01643-31232	H0100-01A0	40	H0- 4
01643-31232	H2210-01A0	18	H0- 19
01643-31232	H2210-01A2	17	H0- 21
01643-31232	H2210-02A0	12	H0- 23
01643-31232	H2210-02A0	16	H0- 23
01643-31232	H2210-02A0	22	H0- 23
01643-31232	H2210-02A0	24	H0- 23
01643-31232	H2210-02A0	4	H0- 23
01643-31232	H2210-02A0	9	H0- 23
01643-31232	H2210-02A1	12	H0- 25
01643-31232	H2210-02A1	16	H0- 25
01643-31232	H2210-02A1	22	H0- 25
01643-31232	H2210-02A1	24	H0- 25
01643-31232	H2210-02A1	4	H0- 25
01643-31232	H2210-02A1	9	H0- 25
01643-31232	H2210-02A2	12	H0- 29
01643-31232	H2210-02A2	16	H0- 29
01643-31232	H2210-02A2	22	H0- 29
01643-31232	H2210-02A2	24	H0- 29
01643-31232	H2210-02A2	4	H0- 29
01643-31232	H2210-02A2	9	H0- 29
01643-31232	H2220-01A0	25	H0- 35

PARTS NO.	FIG NO ,	INDEX	PAGE
01643-31232	H2220-01A0	45	H0- 36
01643-31232	J2112-01A0	11	J0- 9
01643-31232	J2112-01A0	15	J0- 9
01643-31232	J2112-01A0	19	J0- 9
01643-31232	J2112-01A0	9	J0- 9
01643-31232	K0210-08A0	37	K0- 29
01643-31232	K0210-09A0	3	K0- 33
01643-31232	K0210-09A0	9	K0- 33
01643-31232	K0410-01A0	5	K0- 35
01643-31232	K0410-01A1	12	K0- 37
01643-31232	K0410-01A1	15	K0- 37
01643-31232	K0410-01A1	18	K0- 37
01643-31232	K0410-01A1	4	K0- 37
01643-31232	K0410-02A0	22	K0- 39
01643-31232	K0410-02A0	25	K0- 39
01643-31232	K0410-02A0	29	K0- 39
01643-31232	K0710-01A0	15	K0- 41
01643-31232	K0710-01A0	5	K0- 41
01643-31232	K0710-01A1	19	K0- 43
01643-31232	K0710-01A1	9	K0- 43
01643-31232	K0710-02A0	43	K0- 46
01643-31232	K0710-03A0	20	K0- 49
01643-31232	K0710-03A0	25	K0- 49
01643-31232	K0710-03A0	37	K0- 49
01643-31232	K0710-03A0	41	K0- 49
01643-31232	K0710-03A0	7	K0- 49
01643-31232	K0710-04A0	12	K0- 53
01643-31232	K0710-04A0	18	K0- 53
01643-31232	K0710-04A0	23	K0- 53
01643-31232	K0710-04A0	3	K0- 53
01643-31232	K0710-04A0	6	K0- 53
01643-31232	K0710-04A0	9	K0- 53
01643-31232	K2110-01A0	11	K0- 61
01643-31232	K2110-01A0	14	K0- 61
01643-31232	K2110-01A0	17	K0- 61
01643-31232	K2110-01A0	26	K0- 61
01643-31232	K2110-01A0	32	K0- 61
01643-31232	K2110-01A0	38	K0- 61
01643-31232	K2110-01A0	5	K0- 61
01643-31232	K2110-01A0	8	K0- 61
01643-31232	K2110-03A0	13	K0- 67
01643-31232	K2110-03A0	24	K0- 67
01643-31232	K2110-04A0	34	K0- 69
01643-31232	K2110-06A0	46	K0- 74
01643-31232	K2110-09A0	10	K0- 81
01643-31232	K2110-09A0	24	K0- 81
01643-31232	K2110-09A0	35	K0- 81
01643-31232	K2110-10A0	38	K0- 85
01643-31232	K2110-11A0	13	K0- 87
01643-31232	K2110-11A0	7	K0- 87

PARTS NO	FIG NO.	INDEX	PAGE
01643-31232	K2110-11A0	9	KO- 87
01643-31232	K2110-12A0	22	KO- 89
01643-31232	K2110-13A0	17	KO- 91
01643-31232	K2110-14A0	10	KO- 93
01643-31232	K2220-01A0	14	KO- 95
01643-31232	K2220-01A0	17	KO- 95
01643-31232	K2220-01A0	20	KO- 95
01643-31232	K2220-01A0	24	KO- 95
01643-31232	K2220-01A0	31	KO- 95
01643-31232	K2220-01A0	34	KO- 95
01643-31232	K2220-01A0	38	KO- 96
01643-31232	K2510-03A0	14B	KO- 113
01643-31232	K2510-03A0	46	KO- 114
01643-31232	M2110-01A1	15	MO- 5
01643-31232	M2110-01A1	24	MO- 5
01643-31232	M2110-01A1	27	MO- 5
01643-31232	M2110-01A1	30	MO- 5
01643-31232	M2110-01A1	34	MO- 5
01643-31232	M2110-02A0	12	MO- 7
01643-31232	M2110-02A0	19	MO- 7
01643-31232	M2110-02A0	29	MO- 7
01643-31232	M2110-02A0	39	MO- 7
01643-31232	M2110-02A0	4	MO- 7
01643-31232	M2110-03A0	12	MO- 11
01643-31232	M2110-03A0	17	MO- 11
01643-31232	M2110-03A0	6	MO- 11
01643-31232	M2110-03A1	15	MO- 13
01643-31232	M2110-03A1	24	MO- 13
01643-31232	M2110-03A1	27	MO- 13
01643-31232	M2110-03A1	30	MO- 13
01643-31232	M2110-03A1	34	MO- 13
01643-31232	M2110-04A0	29	MO- 17
01643-31232	M2110-04A0	47	MO- 18
01643-31232	M2110-04A0	49	MO- 18
01643-31232	M2110-05A0	11	MO- 21
01643-31232	M2110-05A0	37	MO- 21
01643-31232	M2110-05A0	8	MO- 21
01643-31232	M2110-06A0	13	MO- 25
01643-31232	M2110-06A0	17	MO- 25
01643-31232	M2110-06A0	20	MO- 25
01643-31232	M2110-06A0	23	MO- 25
01643-31232	M2110-06A0	37	MO- 25
01643-31232	M2110-07A0	11	MO- 27
01643-31232	M2110-07A0	17	MO- 27
01643-31232	M2110-07A0	27	MO- 27
01643-31232	M2110-07A0	4	MO- 27
01643-31232	M2110-07A0	6	MO- 27
01643-31232	M2110-08A0	8	MO- 29
01643-31232	M2113-01A0	7	MO- 33
01643-31232	M2141-01A0	18	MO- 35

PARTS NO	FIG NO	INDEX	PAGE
01643-31232	M2141-01A0	26	MO- 35
01643-31232	M2141-01A0	29	MO- 35
01643-31232	M2141-01A1	11	MO- 37
01643-31232	M2141-01A1	26	MO- 37
01643-31232	M2141-01A1	37	MO- 37
01643-31232	M2141-01A1	4	MO- 37
01643-31232	M2141-01A1	40	MO- 37
01643-31232	M2141-01A2	18	MO- 39
01643-31232	M2141-01A2	26	MO- 39
01643-31232	M2141-01A2	29	MO- 39
01643-31232	M2141-01A2	6	MO- 39
01643-31232	M2141-01A3	18	MO- 41
01643-31232	M2141-01A3	26	MO- 41
01643-31232	M2141-01A3	29	MO- 41
01643-31232	M2141-01A3	6	MO- 41
01643-31232	M2141-02A1	11	MO- 43
01643-31232	M2141-02A1	25	MO- 43
01643-31232	M2141-02A1	28	MO- 43
01643-31232	M2141-02A1	4	MO- 43
01643-31232	M2141-02A1	9	MO- 43
01643-31232	M2142-01A0	14	MO- 45
01643-31232	M2142-01A0	16	MO- 45
01643-31232	M2142-01A0	27	MO- 45
01643-31232	M2142-01A0	37	MO- 45
01643-31232	M2142-01A0	45	MO- 46
01643-31232	M2142-01A0	48	MO- 46
01643-31232	M2142-01A0	9	MO- 45
01643-31232	M2142-01A2	15	MO- 51
01643-31232	M2142-01A2	17	MO- 51
01643-31232	M2142-01A2	28	MO- 51
01643-31232	M2142-01A2	9	MO- 51
01643-31232	M2142-02A0	11	MO- 53
01643-31232	M2142-02A0	19	MO- 53
01643-31232	M2142-02A0	22	MO- 53
01643-31232	M2142-02A0	25	MO- 53
01643-31232	M2142-02A0	28	MO- 53
01643-31232	M2142-02A0	31	MO- 53
01643-31232	M2142-02A0	37	MO- 53
01643-31232	M2142-02A0	4	MO- 53
01643-31232	M2142-02A0	9	MO- 53
01643-31232	M2142-02A1	11	MO- 55
01643-31232	M2142-02A1	19	MO- 55
01643-31232	M2142-02A1	22	MO- 55
01643-31232	M2142-02A1	25	MO- 55
01643-31232	M2142-02A1	28	MO- 55
01643-31232	M2142-02A1	31	MO- 55
01643-31232	M2142-02A1	37	MO- 55
01643-31232	M2142-02A1	4	MO- 55
01643-31232	M2142-02A1	9	MO- 55
01643-31232	M2210-01A0	30	MO- 61

PARTS NO.	FIG NO.	INDEX	PAGE
01643-31232	M2210-02A0	23	MO- 65
01643-31232	M2210-02A0	26	MO- 65
01643-31232	M2210-02A0	29	MO- 65
01643-31232	M2210-02A0	32	MO- 65
01643-31232	M2210-02A0	35	MO- 65
01643-31232	M2210-02A0	38	MO- 65
01643-31232	M2210-02A2	23	MO- 67
01643-31232	M2210-02A2	26	MO- 67
01643-31232	M2210-02A2	29	MO- 67
01643-31232	M2210-02A2	32	MO- 67
01643-31232	M2210-02A2	35	MO- 67
01643-31232	M2210-02A2	38	MO- 67
01643-31232	M2210-03A0	17	MO- 69
01643-31232	M2210-03A0	8	MO- 69
01643-31232	M2210-05A0	25	MO- 73
01643-31232	M2210-05A2	25	MO- 75
01643-31232	M2210-05A3	25	MO- 77
01643-31232	M2210-06A0	12	MO- 79
01643-31232	M2210-06A0	17	MO- 79
01643-31232	M2210-06A0	21	MO- 79
01643-31232	M2210-06A0	25	MO- 79
01643-31232	M2210-06A0	29	MO- 79
01643-31232	M2210-06A0	32	MO- 79
01643-31232	M2210-06A0	36	MO- 79
01643-31232	M2210-06A0	4	MO- 79
01643-31232	M2210-06A0	41	MO- 80
01643-31232	M2210-06A0	45	MO- 80
01643-31232	M2210-06A0	9	MO- 79
01643-31232	M2210-06A3	12	MO- 83
01643-31232	M2210-06A3	17	MO- 83
01643-31232	M2210-06A3	21	MO- 83
01643-31232	M2210-06A3	25	MO- 83
01643-31232	M2210-06A3	29	MO- 83
01643-31232	M2210-06A3	32	MO- 83
01643-31232	M2210-06A3	36	MO- 83
01643-31232	M2210-06A3	4	MO- 83
01643-31232	M2210-06A3	41	MO- 84
01643-31232	M2210-06A3	45	MO- 84
01643-31232	M2210-06A3	9	MO- 83
01643-31232	M2250-01A0	14	MO- 89
01643-31232	M2250-01A0	17	MO- 89
01643-31232	M2250-01A0	22	MO- 89
01643-31232	M2250-01A0	25	MO- 89
01643-31232	M2250-01A0	26D	MO- 89
01643-31232	M2250-01A0	41	MO- 90
01643-31232	M2250-01A0	5	MO- 89
01643-31232	M2810-01A0	11	MO- 93
01643-31232	M2810-01A0	20	MO- 93
01643-31232	M2810-01A0	23	MO- 93
01643-31232	M2810-01A0	26	MO- 93

PARTS NO	FIG NO	INDEX	PAGE
01643-31232	M2810-01A0	3	MO- 93
01643-31232	M2810-01A1	11	MO- 95
01643-31232	M2810-01A1	20	MO- 95
01643-31232	M2810-01A1	23	MO- 95
01643-31232	M2810-01A1	26	MO- 95
01643-31232	M2810-01A1	3	MO- 95
01643-31232	M2810-01A2	11	MO- 97
01643-31232	M2810-01A2	20	MO- 97
01643-31232	M2810-01A2	23	MO- 97
01643-31232	M2810-01A2	26	MO- 97
01643-31232	M2810-01A2	3	MO- 97
01643-31232	T2120-01A0	29	TO- 15
01643-31232	T2160-01A0	3	TO- 23
01643-31232	T2440-01A0	12	TO- 33
01643-31232	T2440-01A0	32	TO- 33
01643-31232	T2440-01A1	12	TO- 37
01643-31232	T2440-01A1	30	TO- 37
01643-31232	T2440-01A1	33	TO- 37
01643-31232	W2119-02A0	16	WO- 5
01643-31232	W2119-02A0	24	WO- 5
01643-31232	W2121-01A0	16	WO- 7
01643-31232	W2121-01A0	20	WO- 7
01643-31232	W2121-01A0	25	WO- 7
01643-31232	W2121-01A0	3	WO- 7
01643-31232	Y1660-01A0	40	YO- 34
01643-31445	F2320-53A0	35	FO- 27
01643-31445	F2350-01A0	10	FO- 45
01643-31445	F2710-01A0	12	FO- 113
01643-31445	H0100-01A0	42	HO- 4
01643-31445	H0100-04A0	39	HO- 11
01643-31445	H0310-01A0	2	HO- 17
01643-31445	H2220-01A0	35	HO- 35
01643-31445	K0210-06A0	15	KO- 23
01643-31445	K0210-06A0	18	KO- 23
01643-31445	K2510-01A0	5	KO- 105
01643-31445	K2510-01A1	5	KO- 107
01643-31445	M2110-02A0	22	MO- 7
01643-31445	M2110-02A0	32	MO- 7
01643-31445	M2210-01A0	20	MO- 61
01643-31445	M2210-06A0	39	MO- 80
01643-31445	M2210-06A3	39	MO- 83
01643-31445	R0300-01A0	7	RO- 9
01643-31445	R2100-03A0	22	RO- 33
01643-31445	R2100-03A1	20	RO- 35
01643-31445	R2100-03A1	22	RO- 35
01643-31445	T2110-01A0	19	TO- 3
01643-31445	T2110-01A0	24	TO- 3
01643-31445	T2110-01A1	42	TO- 8
01643-31445	T2110-01A2	19	TO- 11
01643-31445	T2110-01A2	24	TO- 11

PARTS NO	FIG NO.	INDEX	PAGE
01643-31232	K2110-11A0	9	KO- 87
01643-31232	K2110-12A0	22	KO- 89
01643-31232	K2110-13A0	17	KO- 91
01643-31232	K2110-14A0	10	KO- 93
01643-31232	K2220-01A0	14	KO- 95
01643-31232	K2220-01A0	17	KO- 95
01643-31232	K2220-01A0	20	KO- 95
01643-31232	K2220-01A0	24	KO- 95
01643-31232	K2220-01A0	31	KO- 95
01643-31232	K2220-01A0	34	KO- 95
01643-31232	K2220-01A0	38	KO- 96
01643-31232	K2510-03A0	14B	KO- 113
01643-31232	K2510-03A0	46	KO- 114
01643-31232	M2110-01A1	15	MO- 5
01643-31232	M2110-01A1	24	MO- 5
01643-31232	M2110-01A1	27	MO- 5
01643-31232	M2110-01A1	30	MO- 5
01643-31232	M2110-01A1	34	MO- 5
01643-31232	M2110-02A0	12	MO- 7
01643-31232	M2110-02A0	19	MO- 7
01643-31232	M2110-02A0	29	MO- 7
01643-31232	M2110-02A0	39	MO- 7
01643-31232	M2110-02A0	4	MO- 7
01643-31232	M2110-03A0	12	MO- 11
01643-31232	M2110-03A0	17	MO- 11
01643-31232	M2110-03A0	6	MO- 11
01643-31232	M2110-03A1	15	MO- 13
01643-31232	M2110-03A1	24	MO- 13
01643-31232	M2110-03A1	27	MO- 13
01643-31232	M2110-03A1	30	MO- 13
01643-31232	M2110-03A1	34	MO- 13
01643-31232	M2110-04A0	29	MO- 17
01643-31232	M2110-04A0	47	MO- 18
01643-31232	M2110-04A0	49	MO- 18
01643-31232	M2110-05A0	11	MO- 21
01643-31232	M2110-05A0	37	MO- 21
01643-31232	M2110-05A0	8	MO- 21
01643-31232	M2110-06A0	13	MO- 25
01643-31232	M2110-06A0	17	MO- 25
01643-31232	M2110-06A0	20	MO- 25
01643-31232	M2110-06A0	23	MO- 25
01643-31232	M2110-06A0	37	MO- 25
01643-31232	M2110-07A0	11	MO- 27
01643-31232	M2110-07A0	17	MO- 27
01643-31232	M2110-07A0	27	MO- 27
01643-31232	M2110-07A0	4	MO- 27
01643-31232	M2110-07A0	6	MO- 27
01643-31232	M2110-08A0	8	MO- 29
01643-31232	M2113-01A0	7	MO- 33
01643-31232	M2141-01A0	18	MO- 35

PARTS NO	FIG NO	INDEX	PAGE
01643-31232	M2141-01A0	26	MO- 35
01643-31232	M2141-01A0	29	MO- 35
01643-31232	M2141-01A1	11	MO- 37
01643-31232	M2141-01A1	26	MO- 37
01643-31232	M2141-01A1	37	MO- 37
01643-31232	M2141-01A1	4	MO- 37
01643-31232	M2141-01A1	40	MO- 37
01643-31232	M2141-01A2	18	MO- 39
01643-31232	M2141-01A2	26	MO- 39
01643-31232	M2141-01A2	29	MO- 39
01643-31232	M2141-01A2	6	MO- 39
01643-31232	M2141-01A3	18	MO- 41
01643-31232	M2141-01A3	26	MO- 41
01643-31232	M2141-01A3	29	MO- 41
01643-31232	M2141-01A3	6	MO- 41
01643-31232	M2141-02A1	11	MO- 43
01643-31232	M2141-02A1	25	MO- 43
01643-31232	M2141-02A1	28	MO- 43
01643-31232	M2141-02A1	4	MO- 43
01643-31232	M2141-02A1	9	MO- 43
01643-31232	M2142-01A0	14	MO- 45
01643-31232	M2142-01A0	16	MO- 45
01643-31232	M2142-01A0	27	MO- 45
01643-31232	M2142-01A0	37	MO- 45
01643-31232	M2142-01A0	45	MO- 46
01643-31232	M2142-01A0	48	MO- 46
01643-31232	M2142-01A0	9	MO- 45
01643-31232	M2142-01A2	15	MO- 51
01643-31232	M2142-01A2	17	MO- 51
01643-31232	M2142-01A2	28	MO- 51
01643-31232	M2142-01A2	9	MO- 51
01643-31232	M2142-02A0	11	MO- 53
01643-31232	M2142-02A0	19	MO- 53
01643-31232	M2142-02A0	22	MO- 53
01643-31232	M2142-02A0	25	MO- 53
01643-31232	M2142-02A0	28	MO- 53
01643-31232	M2142-02A0	31	MO- 53
01643-31232	M2142-02A0	37	MO- 53
01643-31232	M2142-02A0	4	MO- 53
01643-31232	M2142-02A0	9	MO- 53
01643-31232	M2142-02A1	11	MO- 55
01643-31232	M2142-02A1	19	MO- 55
01643-31232	M2142-02A1	22	MO- 55
01643-31232	M2142-02A1	25	MO- 55
01643-31232	M2142-02A1	28	MO- 55
01643-31232	M2142-02A1	31	MO- 55
01643-31232	M2142-02A1	37	MO- 55
01643-31232	M2142-02A1	4	MO- 55
01643-31232	M2142-02A1	9	MO- 55
01643-31232	M2210-01A0	30	MO- 61

PARTS NO.	FIG NO.	INDEX	PAGE
01643-31232	M2210-02A0	23	MO- 65
01643-31232	M2210-02A0	26	MO- 65
01643-31232	M2210-02A0	29	MO- 65
01643-31232	M2210-02A0	32	MO- 65
01643-31232	M2210-02A0	35	MO- 65
01643-31232	M2210-02A0	38	MO- 65
01643-31232	M2210-02A2	23	MO- 67
01643-31232	M2210-02A2	26	MO- 67
01643-31232	M2210-02A2	29	MO- 67
01643-31232	M2210-02A2	32	MO- 67
01643-31232	M2210-02A2	35	MO- 67
01643-31232	M2210-02A2	38	MO- 67
01643-31232	M2210-03A0	17	MO- 69
01643-31232	M2210-03A0	8	MO- 69
01643-31232	M2210-05A0	25	MO- 73
01643-31232	M2210-05A2	25	MO- 75
01643-31232	M2210-05A3	25	MO- 77
01643-31232	M2210-06A0	12	MO- 79
01643-31232	M2210-06A0	17	MO- 79
01643-31232	M2210-06A0	21	MO- 79
01643-31232	M2210-06A0	25	MO- 79
01643-31232	M2210-06A0	29	MO- 79
01643-31232	M2210-06A0	32	MO- 79
01643-31232	M2210-06A0	36	MO- 79
01643-31232	M2210-06A0	4	MO- 79
01643-31232	M2210-06A0	41	MO- 80
01643-31232	M2210-06A0	45	MO- 80
01643-31232	M2210-06A0	9	MO- 79
01643-31232	M2210-06A3	12	MO- 83
01643-31232	M2210-06A3	17	MO- 83
01643-31232	M2210-06A3	21	MO- 83
01643-31232	M2210-06A3	25	MO- 83
01643-31232	M2210-06A3	29	MO- 83
01643-31232	M2210-06A3	32	MO- 83
01643-31232	M2210-06A3	36	MO- 83
01643-31232	M2210-06A3	4	MO- 83
01643-31232	M2210-06A3	41	MO- 84
01643-31232	M2210-06A3	45	MO- 84
01643-31232	M2210-06A3	9	MO- 83
01643-31232	M2250-01A0	14	MO- 89
01643-31232	M2250-01A0	17	MO- 89
01643-31232	M2250-01A0	22	MO- 89
01643-31232	M2250-01A0	25	MO- 89
01643-31232	M2250-01A0	260	MO- 89
01643-31232	M2250-01A0	41	MO- 90
01643-31232	M2250-01A0	5	MO- 89
01643-31232	M2810-01A0	11	MO- 93
01643-31232	M2810-01A0	20	MO- 93
01643-31232	M2810-01A0	23	MO- 93
01643-31232	M2810-01A0	26	MO- 93

PARTS NO	FIG NO.	INDEX	PAGE
01643-31232	M2810-01A0	3	MO- 93
01643-31232	M2810-01A1	11	MO- 95
01643-31232	M2810-01A1	20	MO- 95
01643-31232	M2810-01A1	23	MO- 95
01643-31232	M2810-01A1	26	MO- 95
01643-31232	M2810-01A1	3	MO- 95
01643-31232	M2810-01A2	11	MO- 97
01643-31232	M2810-01A2	20	MO- 97
01643-31232	M2810-01A2	23	MO- 97
01643-31232	M2810-01A2	26	MO- 97
01643-31232	M2810-01A2	3	MO- 97
01643-31232	T2120-01A0	29	TO- 15
01643-31232	T2160-01A0	3	TO- 23
01643-31232	T2440-01A0	12	TO- 33
01643-31232	T2440-01A0	32	TO- 33
01643-31232	T2440-01A1	12	TO- 37
01643-31232	T2440-01A1	30	TO- 37
01643-31232	T2440-01A1	33	TO- 37
01643-31232	W2119-02A0	16	WO- 5
01643-31232	W2119-02A0	24	WO- 5
01643-31232	W2121-01A0	16	WO- 7
01643-31232	W2121-01A0	20	WO- 7
01643-31232	W2121-01A0	25	WO- 7
01643-31232	W2121-01A0	3	WO- 7
01643-31232	Y1660-01A0	40	YO- 34
01643-31445	F2320-53A0	35	FO- 27
01643-31445	F2350-01A0	10	FO- 45
01643-31445	F2710-01A0	12	FO- 113
01643-31445	H0100-01A0	42	HO- 4
01643-31445	H0100-04A0	39	HO- 11
01643-31445	H0310-01A0	2	HO- 17
01643-31445	H2220-01A0	35	HO- 35
01643-31445	K0210-06A0	15	KO- 23
01643-31445	K0210-06A0	18	KO- 23
01643-31445	K2510-01A0	5	KO- 105
01643-31445	K2510-01A1	5	KO- 107
01643-31445	M2110-02A0	22	MO- 7
01643-31445	M2110-02A0	32	MO- 7
01643-31445	M2210-01A0	20	MO- 61
01643-31445	M2210-06A0	39	MO- 80
01643-31445	M2210-06A3	39	MO- 83
01643-31445	R0300-01A0	7	RO- 9
01643-31445	R2100-03A0	22	RO- 33
01643-31445	R2100-03A0	20	RO- 35
01643-31445	R2100-03A1	22	RO- 35
01643-31445	T2110-01A0	19	TO- 3
01643-31445	T2110-01A0	24	TO- 3
01643-31445	T2110-01A1	42	TO- 8
01643-31445	T2110-01A2	19	TO- 11
01643-31445	T2110-01A2	24	TO- 11

PARTS NO	FIG NO.	INDEX	PAGE
01643-31445	T2120-01A0	36	TO- 15
01643-31445	T2120-01A0	40	TO- 16
01643-31445	T2120-01A0	48	TO- 16
01643-31445	T2120-01A1	38	TO- 19
01643-31445	T2120-01A1	42	TO- 20
01643-31445	T2120-01A1	50	TO- 20
01643-31445	T2160-01A0	13	TO- 23
01643-31445	T2160-01A0	25	TO- 23
01643-31445	T2440-03A0	13C	TO- 41
01643-31445	T2440-03A0	3	TO- 41
01643-31445	Y1620-31A0	34	YO- 25
01643-31445	Y1660-22A0	18	YO- 47
01643-31645	A2370-A4E1	4	AA- 79
01643-31645	C0310-01A0	3	CO- 5
01643-31645	C0310-01A1	3	CO- 7
01643-31645	F2350-01A0	14	FO- 45
01643-31645	F2370-05A0	27	FO- 61
01643-31645	F2380-01A0A	17	FO- 65
01643-31645	F2380-01A1	17	FO- 67
01643-31645	F2380-02A0A	42	FO- 69
01643-31645	F2380-03A0A	17	FO- 73
01643-31645	F2380-03A1	17	FO- 75
01643-31645	F2380-04A0A	42	FO- 77
01643-31645	F2700-04A0	6	FO- 95
01643-31645	H2210-02A0	6	HO- 23
01643-31645	H2210-02A1	6	HO- 25
01643-31645	H2210-02A2	6	HO- 29
01643-31645	J2700-01A0	8	JO- 11
01643-31645	J2700-01A1	8	JO- 13
01643-31645	K0410-01A1	7	KO- 37
01643-31645	M2110-04A0	15	MO- 17
01643-31645	M2141-01A0	23	MO- 35
01643-31645	M2141-01A2	23	MO- 39
01643-31645	M2141-01A3	23	MO- 41
01643-31645	M2142-01A0	41	MO- 46
01643-31645	M2210-02A0	15	MO- 65
01643-31645	M2210-02A0	9	MO- 65
01643-31645	M2210-02A2	15	MO- 67
01643-31645	M2210-02A2	9	MO- 67
01643-31645	M2210-03A0	27	MO- 69
01643-31645	M2210-05A0	10	MO- 73
01643-31645	M2210-05A0	15	MO- 73
01643-31645	M2210-05A0	19	MO- 73
01643-31645	M2210-05A0	22	MO- 73
01643-31645	M2210-05A2	10	MO- 75
01643-31645	M2210-05A2	15	MO- 75
01643-31645	M2210-05A2	19	MO- 75
01643-31645	M2210-05A2	22	MO- 75
01643-31645	M2210-05A3	10	MO- 77
01643-31645	M2210-05A3	15	MO- 77

PARTS NO.	FIG NO.	INDEX	PAGE
01643-31645	M2210-05A3	19	MO- 77
01643-31645	M2210-05A3	22	MO- 77
01643-31645	R0100-01A0	20	RO- 3
01643-31645	R2100-02A0	9	RO- 29
01643-31645	R2100-03A0	13	RO- 33
01643-31645	R2100-03A0	17	RO- 33
01643-31645	R2100-03A0	20	RO- 33
01643-31645	R2100-03A0	26	RO- 33
01643-31645	R2100-03A0	29	RO- 33
01643-31645	R2100-03A0	3	RO- 33
01643-31645	R2100-03A1	13	RO- 35
01643-31645	R2100-03A1	17	RO- 35
01643-31645	R2100-03A1	20	RO- 35
01643-31645	R2100-03A1	26	RO- 35
01643-31645	R2100-03A1	29	RO- 35
01643-31645	R2100-03A1	3	RO- 35
01643-31645	T2410-01A0	16	TO- 25
01643-31645	T2410-01A1	16	TO- 29
01643-31645	W2119-01A0	15	WO- 3
01643-31645	W2119-01A0	23	WO- 3
01643-31645	W2119-02A0	3	WO- 5
01643-31645	W2119-02A0	6	WO- 5
01643-31645	W2119-02A0	9	WO- 5
01643-31845	A2010-A4H9A	7	AA- 43
01643-31845	B0100-01A0	16	BO- 3
01643-31845	F2380-01A0A	12	FO- 65
01643-31845	F2380-01A1	12	FO- 67
01643-31845	F2380-03A0A	12	FO- 73
01643-31845	F2380-03A1	12	FO- 75
01643-31845	H0100-01A0	44	HO- 4
01643-31845	M2110-08A0	5	MO- 29
01643-31845	M2111-01A0	16	MO- 31
01643-31845	T2110-01A1	33	TO- 7
01643-32060	D0100-01A0	18	DO- 3
01643-32060	F2370-01A0	23	FO- 49
01643-32060	F2370-05A0	50	FO- 62
01643-32060	F2380-01A0A	3	FO- 65
01643-32060	F2380-01A1	3	FO- 67
01643-32060	F2380-03A0A	3	FO- 73
01643-32060	F2380-03A1	3	FO- 75
01643-32060	J2110-01A0	16	JO- 3
01643-32060	J2110-01A0	20	JO- 3
01643-32060	J2110-01A0	7	JO- 3
01643-32060	J2110-01A1	16	JO- 5
01643-32060	J2110-01A1	20	JO- 5
01643-32060	J2110-01A1	7	JO- 5
01643-32060	J2110-01A2	16	JO- 7
01643-32060	J2110-01A2	20	JO- 7
01643-32060	J2110-01A2	7	JO- 7
01643-32060	K2110-10A0	30	KO- 85

PARTS NO	FIG NO	INDEX	PAGE
01643-32060	M2110-01A1	21	MO- 5
01643-32060	M2110-03A1	21	MO- 13
01643-32060	M2110-08A0	10	MO- 29
01643-32060	M2210-02A0	4	MO- 65
01643-32060	M2210-02A2	4	MO- 67
01643-32060	M2810-01A0	14	MO- 93
01643-32060	M2810-01A1	14	MO- 95
01643-32060	M2810-01A2	14	MO- 97
01643-32060	R0100-01A0	27	RO- 3
01643-32060	R0300-01A0	22	RO- 9
01643-32060	R2100-01A0	17	RO- 23
01643-32060	R2100-01A1	17	RO- 25
01643-32060	R2100-01A2	17	RO- 27
01643-32060	R2100-02A0	3	RO- 29
01643-32060	R2100-03A0	6	RO- 33
01643-32060	R2100-03A1	6	RO- 35
01643-32060	R2200-01A0	11	RO- 37
01643-32060	T2110-01A1	29	TO- 7
01643-32060	T2160-01A0	18	TO- 23
01643-32060	T2410-01A0	11	TO- 25
01643-32060	T2410-01A0	24	TO- 25
01643-32060	T2410-01A0	31	TO- 25
01643-32060	T2410-01A1	11	TO- 29
01643-32060	T2410-01A1	24	TO- 29
01643-32060	T2410-01A1	31	TO- 29
01643-32060	T2440-01A0	59	TO- 34
01643-32260	M2110-02A0	16	MO- 7
01643-32260	M2110-02A0	26	MO- 7
01643-32260	M2110-02A0	36	MO- 7
01643-32260	M2110-02A0	8	MO- 7
01643-32260	T2110-01A0	13	TO- 3
01643-32260	T2110-01A1	12	TO- 7
01643-32260	T2110-01A2	13	TO- 11
01643-32460	A4080-A4A8	9	AA- 127
01643-32460	B0100-01A0	19	BO- 3
01643-32460	B0100-01A0	21	BO- 3
01643-32460	D0100-01A0	15	DO- 3
01643-32460	F2380-02A0A	57	FO- 70
01643-32460	F2380-04A0A	57	FO- 78
01643-32460	K0410-02A0	13	KO- 39
01643-32460	K2110-07A0	3	KO- 77
01643-32460	M2210-02A0	10A	MO- 65
01643-32460	M2210-02A0	19A	MO- 65
01643-32460	M2210-02A2	10A	MO- 67
01643-32460	M2210-02A2	19A	MO- 67
01643-32460	M2210-05A0	5	MO- 73
01643-32460	M2210-05A2	5	MO- 75
01643-32460	M2210-05A3	5	MO- 77
01643-32460	M2810-01A0	17	MO- 93
01643-32460	M2810-01A0	7	MO- 93

PARTS NO	FIG NO .	INDEX	PAGE
01643-32460	M2810-01A1	17	MO- 95
01643-32460	M2810-01A1	7	MO- 95
01643-32460	M2810-01A2	17	MO- 97
01643-32460	M2810-01A2	7	MO- 97
01643-32460	R2100-01A0	23	RO- 23
01643-32460	R2100-01A1	23	RO- 25
01643-32460	R2100-01A2	23	RO- 27
01643-32460	R2200-01A0	16	RO- 37
01643-32460	R2200-01A0	4	RO- 37
01643-32460	R2200-01A0	8	RO- 37
01643-32460	T2110-01A0	39	TO- 4
01643-32460	T2110-01A1	18	TO- 7
01643-32460	T2110-01A2	39	TO- 12
01643-32780	K0410-02A0	19	KO- 39
01643-32780	M2110-01A1	9	MO- 5
01643-32780	M2110-03A1	9	MO- 13
01643-32780	M2113-01A0	3	MO- 33
01643-32780	T2110-01A0	29	TO- 3
01643-32780	T2110-01A0	36	TO- 3
01643-32780	T2110-01A2	29	TO- 11
01643-32780	T2110-01A2	36	TO- 11
01643-32780	T2120-01A0	25	TO- 15
01643-32780	T2120-01A0	32	TO- 15
01643-32780	T2120-01A1	27	TO- 19
01643-32780	T2120-01A1	34	TO- 19
01643-33080	K0410-02A0	4	KO- 39
01643-33080	K0410-02A0	6	KO- 39
01643-33080	R2100-01A0	31	RO- 23
01643-33080	R2100-01A1	31	RO- 25
01643-33080	R2100-01A2	31	RO- 27
01643-33380	T2810-01A0	10	TO- 43
01643-33690	M2110-03A1	47	MO- 14
01643-33690	W2119-01A0	10	WO- 3
01643-50823	F2700-01A0	30	FO- 85
01643-50823	F2700-01A0	37	FO- 85
01643-51032	A1530-C4D3	20	AA- 29
01643-51032	A1530-C4G8	20	AA- 31
01643-51032	A2411-A4A2	7	AA- 83
01643-51032	F2700-01A0	40	FO- 85
01643-51032	F2700-07A0	9	FO- 107
01643-51032	H0100-04A0	15	HO- 11
01643-51032	H2210-01A0	14	HO- 19
01643-51032	H2210-01A2	14	HO- 21
01643-51032	H2210-02A0	18	HO- 23
01643-51032	H2210-02A0	30	HO- 23
01643-51032	H2210-02A1	18	HO- 25
01643-51032	H2210-02A1	30	HO- 25
01643-51032	H2210-02A2	18	HO- 29
01643-51032	H2210-02A2	30	HO- 29
01643-51032	H2210-03A0	25	HO- 31

PARTS NO	FIG NO.	INDEX	PAGE
01643-51032	H2210-03A0	6	H0- 31
01643-51032	H2210-03A2	25	H0- 33
01643-51032	H2210-03A2	6	H0- 33
01643-51032	T2440-01A1	41	T0- 38
01643-51032	T2440-01A1	44	T0- 38
01643-51032	Y1600-12A0	16	Y0- 13
01643-51232	A2210-B4E4	8	AA- 65
01643-51232	A2411-A4A2	5	AA- 83
01643-51232	F2320-51A0	3	F0- 21
01643-51232	F2320-52A0	22	F0- 23
01643-51232	F2320-52A0	34	F0- 23
01643-51232	F2320-53A0	50	F0- 28
01643-51232	F2320-54A0	17	F0- 31
01643-51232	F2320-54A0	5	F0- 31
01643-51232	F2700-01A0	16	F0- 85
01643-51232	H0100-02A0	16	H0- 7
01643-51232	H0100-02A0	19	H0- 7
01643-51232	H0100-03A0	17	H0- 9
01643-51232	H0100-03A0	21	H0- 9
01643-51232	H0100-03A0	24	H0- 9
01643-51232	H0100-05A0	17	H0- 15
01643-51232	H0100-05A0	21	H0- 15
01643-51232	H0310-01A0	14	H0- 17
01643-51232	K2510-05A0	15	K0- 119
01643-51232	K2510-05A0	23	K0- 119
01643-51232	R0200-01A0	15	R0- 7
01643-51232	T2120-01A1	31	T0- 19
01643-51232	T2160-01A0	10	T0- 23
01643-51232	T2160-01A0	29	T0- 23
01643-51232	T2440-01A0	19	T0- 33
01643-51232	T2440-01A0	25	T0- 33
01643-51232	T2440-01A0	56	T0- 34
01643-51232	T2440-01A1	19	T0- 37
01643-51232	T2440-01A1	50	T0- 38
01643-51232	T2440-01A1	55	T0- 38
01643-51232	Y1600-11A0	12	Y0- 11
01643-51232	Y1600-12A0	12	Y0- 13
01643-51232	Y1600-31A0	12	Y0- 17
01643-51232	Y1660-02A0	16	Y0- 37
01643-51232	Y1660-02A0	19	Y0- 37
01643-51232	Y1660-03A0	17	Y0- 39
01643-51232	Y1660-03A0	21	Y0- 39
01643-51232	Y1660-03A0	24	Y0- 39
01643-51232	Y1660-05A0	17	Y0- 43
01643-51232	Y1660-05A0	21	Y0- 43
01643-51232	Y1660-21A0	17	Y0- 45
01643-51232	Y1660-21A0	21	Y0- 45
01643-51232	Y1660-21A0	28	Y0- 45
01643-51645	Y1600-21A0	21	Y0- 15
01650-20808	F2600-01A0	38	F0- 81

PARTS NO.	FIG NO.	INDEX	PAGE
01653-20808	A2610-A4B5	21	AA- 87
01653-21012	A8117-B4A8	2	AA- 184
01658-16823	F2100-01A0	21	F0- 3
01658-26823	A2210-B4E4	14	AA- 65
01658-26823	A8117-B4A8	2	AA- 185
01803-02430	F2380-02A0A	22	F0- 69
01803-02430	F2380-04A0A	22	F0- 77
02010-70625	A5210-A4D3	3	AA- 153
02010-70625	A5210-A4F6	3	AA- 155
02400-10413	A2350-A4B2	11	AA- 77
02720-10104	A5010-A4F4	15	AA- 143
02720-10204	A1410-A4F3A	34	AA- 15
02720-10204	A1410-A4F4A	32	AA- 17
02720-20204	A5010-B4F4	2	AA- 145
02720-40104	A2010-B4H9A	6	AA- 45
02893-05037	A8127-F4A5	6	AA- 191
02895-67075	A1310-A4H7	32	AA- 11
02895-67075	A8121-A4A5	1	AA- 187
02895-67081	A1410-A4F3A	11	AA- 15
02895-67081	A1410-A4F4A	11	AA- 17
02895-67081	A8121-A4A5	1	AA- 187
04000-00515	Y1679-01A0	20	Y0- 57
04000-00515	Y1679-11A0	20	Y0- 61
04000-00520	Y1679-01A0	13	Y0- 57
04000-00520	Y1679-01A0	24	Y0- 57
04000-00520	Y1679-11A0	13	Y0- 61
04000-00520	Y1679-11A0	24	Y0- 61
04000-01030	F2370-02A0	14	F0- 53
04000-01580	F2380-02A0A	34	F0- 69
04000-01580	F2380-04A0A	34	F0- 77
04000-01850	A2210-B4E4	11	AA- 65
04000-02050	F2100-01A0	17	F0- 3
04010-00416	F2600-01A0	52	F0- 82
04010-00516	K2110-10A0	21	K0- 85
04010-00516	K2110-12A0	20	K0- 89
04010-00519	H0100-01A0	27	H0- 3
04010-00519	K2110-02A0	2	K0- 65
04010-00519	K2110-04A0	23	K0- 69
04010-00519	K2110-04A0	7	K0- 69
04010-00519	K2110-06A0	23	K0- 73
04010-00519	K2110-06A0	36	K0- 73
04010-00519	K2110-09A0	8	K0- 81
04010-00519	K2110-10A0	5	K0- 85
04010-00519	K2110-12A0	4	K0- 89
04010-00519	K2510-03A0	17	K0- 113
04010-00519	K2510-03A0	23	K0- 113
04010-00519	Y1660-01A0	27	Y0- 33
04010-00725	A2410-A4A6	2	AA- 81
04010-01032	K2110-03A0	6	K0- 67
04010-01032	M2210-03A0	13	M0- 69

PARTS NO	FIG NO	INDEX	PAGE
04020-00514	A2010-A4H9A	5	AA- 43
04020-00514	A2110-A4F6	8	AA- 59
04020-00514	A2411-A4A2	20	AA- 83
04020-00514	A2610-A4B5	19	AA- 87
04020-00616	F2320-53A0	11	F0- 27
04020-00616	K2110-08A0	11	K0- 79
04020-00616	R0300-01A0	13	R0- 9
04020-00820	A1010-A4B3	9	AA- 3
04020-00820	A2010-A4H9A	23	AA- 43
04020-00820	A5080-A4B2	9	AA- 149
04020-00820	F2310-51A0	30	F0- 9
04020-00820	Y1600-01A0	6	Y0- 9
04020-00820	Y1600-31A0	13	Y0- 17
04020-01024	A2010-A4H9A	26	AA- 43
04020-01024	A2370-A4E1	2	AA- 79
04020-01024	F2100-01A0	8	F0- 3
04020-01024	F2320-56A0	46	F0- 40
04020-01024	R2100-01A0	25	R0- 23
04020-01024	R2100-01A1	25	R0- 25
04020-01024	R2100-01A2	25	R0- 27
04020-01024	Y1600-11A0	10	Y0- 11
04020-01024	Y1600-12A0	10	Y0- 13
04020-01228	F2320-51A0	4	F0- 21
04020-01228	F2320-52A0	7	F0- 23
04020-01228	F2320-53A0	36	F0- 28
04020-01228	F2320-53A0	51	F0- 28
04020-01228	F2320-53A0	8	F0- 27
04020-01228	F2370-02A0	11	F0- 53
04020-01228	F2370-02A0	28	F0- 53
04020-01434	A2210-A4E4	6	AA- 63
04020-01434	B0100-01A0	17	B0- 3
04020-01638	F2380-02A0A	35	F0- 69
04020-01638	F2380-04A0A	35	F0- 77
04020-01842	F2380-01A0A	4	F0- 65
04020-01842	F2380-01A1	4	F0- 67
04020-01842	F2380-03A0A	4	F0- 73
04020-01842	F2380-03A1	4	F0- 75
04020-01842	J2110-01A0	17	J0- 3
04020-01842	J2110-01A1	17	J0- 5
04020-01842	J2110-01A2	17	J0- 7
04022-04008	A1530-B4D3	12	AA- 25
04022-04008	A1530-B4G8	12	AA- 27
04022-12025	R0100-01A0	15	R0- 3
04022-12050	A5080-A4B2	10	AA- 149
04025-00316	Y1679-01A0	12	Y0- 57
04025-00316	Y1679-11A0	12	Y0- 61
04025-00412	Y1600-21A0	17	Y0- 15
04025-00524	M2141-01A1	19	M0- 37
04025-00524	M2142-01A0	24	M0- 45
04025-00524	M2142-01A2	25	M0- 51

PARTS NO.	FIG NO '	INDEX	PAGE
04025-00532	H0310-01A0	23	H0- 17
04025-00550	K0210-03A0	19	K0- 17
04050-03015	H0100-01A0	24	H0- 3
04050-03015	Y1660-01A0	24	Y0- 33
04050-03040	F2320-56A0	18	F0- 39
04050-04028	F2370-01A0	28	F0- 49
04050-11210	K0210-02A0	19	K0- 13
04050-11212	F2310-51A0	13	F0- 9
04050-11212	F2600-01A0	16	F0- 81
04050-11212	F2600-01A0	31	F0- 81
04050-11212	Y0100-01A0	1K	Y0- 3
04050-11610	M2110-03A1	22C	M0- 13
04050-11610	M2142-01A0	5	M0- 45
04050-11610	M2142-01A2	4	M0- 51
04050-12012	K0210-01A0	17	K0- 9
04050-12012	K2110-09A0	48	K0- 82
04050-12015	H2250-01A0	46	H0- 40
04050-12015	H2250-01A0	48	H0- 40
04050-12015	H2250-01A1	33	H0- 43
04050-12015	H2250-01A1	35	H0- 43
04050-12015	K2110-05A0	8	K0- 71
04050-12015	K2110-06A0	13	K0- 73
04050-12015	K2110-06A0	18	K0- 73
04050-12015	K2110-08A0	21	K0- 79
04050-12015	K2110-08A0	29	K0- 79
04050-12015	K2110-09A0	13	K0- 81
04050-12015	K2110-11A0	20	K0- 87
04050-12015	K2510-02A0	23	K0- 109
04050-12015	K2510-02A0	25	K0- 109
04050-12015	M2141-01A1	13	M0- 37
04050-12015	M2141-02A1	13	M0- 43
04050-12015	M2142-01A0	18	M0- 45
04050-12015	M2142-01A2	19	M0- 51
04050-12015	M2142-02A0	13	M0- 53
04050-12015	M2142-02A1	13	M0- 55
04050-12018	F2700-05A0	45	F0- 100
04050-12018	K2110-04A0	20	K0- 69
04050-12018	K2110-06A0	31	K0- 73
04050-12018	K2110-07A0	18	K0- 77
04050-12018	K2110-09A0	31	K0- 81
04050-12018	K2110-10A0	12	K0- 85
04050-12018	K2110-10A0	17	K0- 85
04050-12018	K2110-10A0	26	K0- 85
04050-12018	K2110-10A0	36	K0- 85
04050-12018	K2110-12A0	10	K0- 89
04050-12018	K2110-12A0	15	K0- 89
04050-12022	K2110-07A0	26	K0- 77
04050-13015	K2110-09A0	42	K0- 82
04050-13020	H2250-01A0	36	H0- 39
04050-13020	H2250-01A1	23	H0- 43

PARTS NO.	FIG NO	INDEX	PAGE
04050-13020	K2110-02A0	12	KO- 65
04050-13020	K2110-04A0	15	KO- 69
04050-13020	K2110-04A0	32	KO- 69
04050-13020	K2510-02A0	15	KO- 109
04050-13020	K2510-02A0	39	KO- 109
04050-13020	K2510-03A0	13	KO- 113
04050-13020	K2510-03A0	29	KO- 113
04050-13020	K2510-03A0	36	KO- 113
04050-13020	K2510-03A0	43	KO- 114
04050-13020	K2510-03A0	6	KO- 113
04050-13025	R2100-03A0	11	RO- 33
04050-13025	R2100-03A0	34	RO- 33
04050-13025	R2100-03A1	11	RO- 35
04050-13025	R2100-03A1	34	RO- 35
04050-13030	K2110-08A0	18	KO- 79
04050-14022	K2400-01A1	4	KO- 103
04050-14022	M2210-04A0	15	MO- 71
04050-14022	M2210-04A0	23	MO- 71
04050-14025	F2370-01A0	33	FO- 49
04050-14025	F2370-02A0	42	FO- 54
04050-14025	F2600-01A0	4	FO- 81
04050-14025	K2110-06A0	38	KO- 73
04050-14025	M2210-04A0	6	MO- 71
04050-14025	T2110-01A1	36	TO- 7
04050-14028	F2370-05A0	29	FO- 61
04050-14028	K2110-03A0	19	KO- 67
04050-14028	M2210-03A0	24	MO- 69
04050-14028	M2210-04A0	18	MO- 71
04050-14030	K2110-04A0	11	KO- 69
04050-14030	T2810-01A0	13	TO- 43
04050-14035	A3010-A4A1	15	AA- 91
04050-14050	F2370-01A0	9	FO- 49
04050-16065	M2110-03A1	49	MO- 14
04050-16065	W2119-01A0	11	WO- 3
04052-01038	F2710-01A0	7	FO- 113
04052-11038	A2041-A4A5	39	AA- 51
04052-11038	A2041-A4G8	39	AA- 53
04059-01010	F2320-56A0	28	FO- 39
04064-01812	F2320-56A0	12	FO- 39
04064-01812	F2320-56A0	20	FO- 39
04064-02012	K2110-09A0	39	KO- 82
04064-02012	K2110-10A0	31	KO- 85
04064-02212	A2411-B4A2	7	AA- 85
04064-02212	F2370-03A0	19	FO- 57
04064-02512	F2370-02A0	3	FO- 53
04064-03015	F2310-51A0	22	FO- 9
04064-04518	A2210-B4E4	30	AA- 65
04064-06020	F2320-53A0	15	FO- 27
04064-06525	F2310-52A0	28	FO- 13
04064-07525	R2100-02A0	16	RO- 29

PARTS NO.	FIG NO.	INDEX	PAGE
04064-08530	F2310-52A0	8	FO- 13
04064-08530	F2320-53A0	17	FO- 27
04065-01030	F2320-54A0	7	FO- 31
04065-01104	Y1620-01A0	18	YO- 19
04065-03212	F2600-01A0	8	FO- 81
04065-03515	F2320-55A0	48	FO- 36
04065-03515	F2320-55A0	58	FO- 36
04065-03515	F2700-08A0	8	FO- 111
04065-03515	Y1600-31A0	10	YO- 17
04065-04018	Y1600-11A0	15	YO- 11
04065-04018	Y1679-01A0	7	YO- 57
04065-04018	Y1679-11A0	7	YO- 61
04065-04718	A2610-A4B5	6	AA- 87
04065-05220	A2350-A4B2	3	AA- 77
04065-06020	Y1679-01A0	9	YO- 57
04065-06020	Y1679-11A0	9	YO- 61
04065-06220	A2610-A4B5	18	AA- 87
04065-06525	A5080-A4B2	15	AA- 149
04065-06525	Y1600-21A0	23	YO- 15
04065-07225	A5010-A4F4	6	AA- 143
04065-07525	A2210-B4E4	32	AA- 65
04070-00130	F2320-53A0	23	FO- 27
04071-00140	F2320-52A0	18	FO- 23
04071-00280	F2380-02A0A	11	FO- 69
04071-00280	F2380-04A0A	11	FO- 77
04081-07012	F2320-54A0	22	FO- 31
04082-00616	J2700-01A0	6	JO- 11
04082-00616	J2700-01A1	6	JO- 13
04120-21735	K0710-01A1	33	KO- 43
04120-21735	K0710-02A0	14	KO- 45
04120-21735	V0100-01A0	17	VO- 3
04122-22573	C0310-01A0	30	CO- 5
04122-22573	C0310-01A1	30	CO- 7
04122-22573	V0100-01A0	12	VO- 3
04205-01028	H0100-01A0	23	HO- 3
04205-01028	Y1660-01A0	23	YO- 33
04205-01645	F2370-01A0	35	FO- 50
04205-01645	F2370-02A0	40	FO- 54
04205-10516	K0210-02A0	17	KO- 13
04205-10618	M2110-03A1	22B	MO- 13
04205-10618	M2142-01A0	4	MO- 45
04205-10618	M2142-01A2	3	MO- 51
04205-10822	H2250-01A0	49	HO- 40
04205-10822	H2250-01A1	36	HO- 43
04205-10822	K2110-05A0	7	KO- 71
04205-10822	K2110-06A0	17	KO- 73
04205-10822	K2110-08A0	20	KO- 79
04205-10822	K2110-08A0	28	KO- 79
04205-10822	K2110-09A0	12	KO- 81
04205-10822	K2110-09A0	47	KO- 82

PARTS NO	FIG NO.	INDEX	PAGE
04205-10822	K2110-11A0	19	KO- 87
04205-10825	K0210-01A0	15	KO- 9
04205-11028	K2110-04A0	14	KO- 69
04205-11028	K2110-04A0	31	KO- 69
04205-11028	K2110-09A0	41	KO- 82
04205-11438	K2110-03A0	18	KO- 67
04205-11438	K2400-01A1	3	KO- 103
04205-11438	M2210-03A0	23	MO- 69
04205-11438	M2210-04A0	14	MO- 71
04205-11438	M2210-04A0	22	MO- 71
04205-11440	M2210-04A0	4	MO- 71
04210-21040	K2110-04A0	13	KO- 69
04210-21040	K2110-04A0	30	KO- 69
04210-21456	M2210-04A0	21	MO- 71
04211-20844	H2250-01A0	54	HO- 40
04211-20844	H2250-01A1	41	HO- 43
04211-20844	K2110-11A0	18	KO- 87
04211-20844	K2510-02A0	21	KO- 109
04211-21055	K2110-09A0	40	KO- 82
04211-21478	K2110-03A0	17	KO- 67
04211-21478	K2400-01A1	5	KO- 103
04220-21456	M2210-03A0	22	MO- 69
04244-41030	K2110-04A0	28	KO- 69
04244-51462	M2210-04A0	1	MO- 71
04244-51485	K2400-01A1	1	KO- 103
04245-41013	K2110-10A0	13	KO- 85
04245-41023	K2110-10A0	22	KO- 85
04245-41026	K2110-04A0	16	KO- 69
04245-41026	K2110-10A0	34	KO- 85
04245-41031	K2110-08A0	24	KO- 79
04245-41031	K2110-09A0	45	KO- 82
04245-41208	K2510-04A0	6	KO- 117
04245-41213	K2510-02A0	46	KO- 110
04245-41410	M2210-04A0	19	MO- 71
04248-31013	K2110-12A0	11	KO- 89
04248-31028	K2110-06A0	27	KO- 73
04248-31030	K2110-07A0	20	KO- 77
04248-31031	K2110-09A0	25	KO- 81
04248-31211	H2250-01A0	32	HO- 39
04248-31211	H2250-01A1	19	HO- 43
04248-31223	K2510-03A0	30	KO- 113
04248-31247	K2510-03A0	8	KO- 113
04248-31249	K2110-02A0	13	KO- 65
04248-31266	K2510-04A0	1	KO- 117
04248-31435	K2110-03A0	20	KO- 67
04250-81056	K2110-04A0	18	KO- 69
04250-81056	K2110-06A0	29	KO- 73
04250-81056	K2110-09A0	27	KO- 81
04250-81056	K2110-10A0	10	KO- 85
04250-81056	K2110-10A0	15	KO- 85

PARTS NO.	FIG NO	INDEX	PAGE
04250-81056	K2110-10A0	24	KO- 85
04250-81056	K2110-10A0	32	KO- 85
04250-81056	K2110-12A0	13	KO- 89
04250-81265	H2250-01A0	56	HO- 40
04250-81265	H2250-01A1	43	HO- 44
04250-81265	K2110-02A0	14	KO- 65
04250-81265	K2510-02A0	12	KO- 109
04250-81265	K2510-02A0	36	KO- 109
04250-81265	K2510-03A0	26	KO- 113
04250-81265	K2510-03A0	31	KO- 113
04250-81265	K2510-03A0	40	KO- 113
04250-81265	K2510-03A0	9	KO- 113
04250-81265	K2510-04A0	7	KO- 117
04250-90847	K2110-06A0	11	KO- 73
04250-91056	K2110-07A0	16	KO- 77
04250-91056	K2110-09A0	26	KO- 81
04250-91056	K2110-12A0	8	KO- 89
04250-91265	H2250-01A0	33	HO- 39
04250-91265	H2250-01A1	20	HO- 43
04250-91265	K2110-02A0	9	KO- 65
04250-91265	K2510-03A0	33	KO- 113
04250-91265	K2510-03A0	7	KO- 113
04250-91265	K2510-04A0	2	KO- 117
04254-01232	K2110-02A0	17	KO- 65
04254-01232	K2510-02A0	16	KO- 109
04254-01232	K2510-04A0	10	KO- 117
04254-01232	K2510-04A0	5	KO- 117
04254-11032	K2110-09A0	32	KO- 81
04254-11032	K2110-12A0	23	KO- 89
04256-00816	K2110-06A0	10	KO- 73
04260-00635	F2320-52A0	40	FO- 24
04260-00635	F2320-53A0	39	FO- 28
04260-00952	F2320-53A0	44	FO- 28
04260-00952	F2320-55A0	15	FO- 35
04260-00952	F2320-55A0	18	FO- 35
04260-02540	F2700-03A0	7	FO- 91
04412-00514	F2370-01A0	5	FO- 49
04418-02550	A1530-B4D3	24	AA- 25
04418-02550	A1530-B4G8	24	AA- 27
04418-02550	A9810-A4U9	3	AA- 193
04418-13060	F2310-51A0	43	FO- 10
04418-13060	F2320-51A0	8	FO- 21
04418-13060	K0410-01A1	27	KO- 37
04418-13060	T2120-01A0	43	TO- 16
04418-13060	T2120-01A1	45	TO- 20
04418-13060	T2410-01A0	36	TO- 25
04418-13060	T2410-01A1	33	TO- 29
04418-13060	U0100-01A2	27	UO- 3
04418-13060	U0100-01A2	33	UO- 3
04418-13060	U0100-01A2	6	UO- 3

PARTS NO.	FIG NO.	INDEX	PAGE
04418-13060	U0100-01A2	8	U0- 3
04418-13060	U0100-01A3	27	U0- 7
04418-13060	U0100-01A3	33	U0- 7
04418-13060	U0100-01A3	6	U0- 7
04418-13060	U0100-01A3	8	U0- 7
04418-13060	U0100-01A4	27	U0- 11
04418-13060	U0100-01A4	33	U0- 11
04418-13060	U0100-01A4	6	U0- 11
04418-13060	U0100-01A4	8	U0- 11
04418-13060	U0100-01A5	27	U0- 15
04418-13060	U0100-01A5	33	U0- 15
04418-13060	U0100-01A5	6	U0- 15
04418-13060	U0100-01A5	8	U0- 15
04418-13060	U0100-01A7	27	U0- 19
04418-13060	U0100-01A7	33	U0- 19
04418-13060	U0100-01A7	6	U0- 19
04418-13060	U0100-01A7	8	U0- 19
04418-13060	U0100-01A8	26	U0- 23
04418-13060	U0100-01A8	32	U0- 23
04418-13060	U0100-01A8	6	U0- 23
04418-13060	U0100-01A8	8	U0- 23
04431-30000	K0210-06A0	9	K0- 23
04434-50808	A6810-A4F5	8	AA- 179
04434-50810	A4230-A4D5	4	AA- 141
04434-50810	A6810-A4F5	14	AA- 179
04434-51008	A6810-A4F5	7	AA- 179
04434-51010	A6810-A4F5	17	AA- 179
04434-51012	M2110-05A0	6	M0- 21
04434-51020	W2121-01A0	26	W0- 7
04434-51410	A1410-A4F3A	32	AA- 15
04434-51410	A1410-A4F4A	30	AA- 17
04434-51410	W2121-01A0	29	W0- 7
04434-51510	M2210-01A0	32	M0- 61
04434-51510	M2210-01A0	35	M0- 61
04434-51512	K0710-02A0	24	K0- 45
04434-51512	K0710-02A0	41	K0- 45
04434-51610	A4130-A4B3	25	AA- 133
04434-51610	A5210-A4D3	14	AA- 153
04434-51612	C0120-01A0A	13	C0- 3
04434-51710	A5210-A4D3	14	AA- 153
04434-51712	W2121-01A0	30	W0- 7
04434-52112	F2700-07A0	20	F0- 107
04434-52112	K0710-02A0	18	K0- 45
04434-52112	K0710-02A0	25	K0- 45
04434-52310	E0200-03A0	2	E0- 7
04434-52310	M2210-01A0	10	M0- 61
04434-52310	M2210-01A0	28	M0- 61
04434-52510	F2700-05A2	15	F0- 103
04434-52510	F2700-05A2	19	F0- 103
04434-52511	A2041-A4A5	21	AA- 51

PARTS NO.	FIG NO.	INDEX	PAGE
04434-52511	A2041-A4G8	21	AA- 53
04434-52511	A5210-A4F6	14	AA- 155
04434-52511	K0710-03A0	10	K0- 49
04434-52711	D0200-01A2	19	D0- 11
04434-52711	E0200-01A0	14	E0- 3
04434-52711	E0200-01A0	17	E0- 3
04434-52711	E0200-01A0	21	E0- 3
04434-52711	K0710-02A0	29	K0- 45
04434-52711	K0710-02A0	33	K0- 45
04434-52711	M2210-01A0	5	M0- 61
04434-52712	D0200-01A0	18	D0- 7
04434-52712	D0200-01A1	18	D0- 9
04434-53211	A3110-B4C5	23	AA- 95
04434-53212	F2700-04A0	51	F0- 96
04434-53411	D0200-01A0	17	D0- 7
04434-53411	D0200-01A1	17	D0- 9
04434-53411	D0200-01A2	18	D0- 11
04434-53412	D0200-01A2	29	D0- 11
04435-00808	F2370-05A0	53	F0- 62
04530-02438	F2320-51A0	9	F0- 21
04530-02438	F2320-54A0	38	F0- 31
04530-11628	F2310-51A0	41	F0- 10
06000-06009	A2210-B4E4	27	AA- 65
06000-06206	A2610-A4B5	17	AA- 87
06000-06214	A2210-B4E4	12	AA- 65
06000-06216	F2320-52A0	16	F0- 23
06000-06305	A5010-A4F4	9	AA- 143
06000-06924	F2320-52A0	26	F0- 23
06000-06924	F2320-53A0	21	F0- 27
06000-22211	F2320-54A0	6	F0- 31
06000-32219	F2350-01A0	8	F0- 45
06002-30212	R0300-01A0	2	R0- 9
06030-05206	F2310-51A0	21	F0- 9
06030-06204	A2610-A4B5	7	AA- 87
06030-06306	A5010-A4F4	10	AA- 143
06030-23134	F2380-02A0A	10	F0- 69
06030-23134	F2380-04A0A	10	F0- 77
06040-06018	C0310-01A0	5	C0- 5
06040-06018	C0310-01A1	5	C0- 7
06040-06018	M2110-04A0	3	M0- 17
06040-06209	F2100-01A0	29	F0- 3
06040-06212	F2100-01A0	32	F0- 3
06040-06310	C0310-01A0	9	C0- 5
06040-06310	C0310-01A1	9	C0- 7
06040-06310	M2110-04A0	6	M0- 17
06040-06312	F2100-01A0	33	F0- 3
06040-06314	F2100-01A0	19	F0- 3
06042-00212	F2320-53A0	14	F0- 27
06044-00218	F2320-54A0	10	F0- 31
06120-02016	F2320-56A0	15	F0- 39

PARTS NO	FIG NO	INDEX	PAGE
06120-02016	F2320-56A0	9	F0- 39
06120-02016	K2110-09A0	6	K0- 81
06120-02520	H0100-01A0	28	H0- 3
06120-02520	Y1660-01A0	28	Y0- 33
06120-03520	K2110-03A0	4	K0- 67
06120-03520	M2210-03A0	18	M0- 69
06120-03520	M2210-03A0	9	M0- 69
06120-03520	M2210-04A0	8	M0- 71
06121-02016	F2320-56A0	14	F0- 39
06122-02004	K2110-09A0	6A	K0- 81
06122-03504	K2110-03A0	5	K0- 67
06122-03504	M2210-03A0	10	M0- 69
06122-03504	M2210-03A0	19	M0- 69
06122-03504	M2210-04A0	9	M0- 71
06123-02018	K2110-12A0	3	K0- 89
06600-00805	K2110-09A0	2A	K0- 81
06600-01008	H0100-01A0	26	H0- 3
06600-01008	Y1660-01A0	26	Y0- 33
07000-A3025	F2700-01A0	28	F0- 85
07000-A3025	F2700-01A0	34	F0- 85
07000-E1007	A2041-A4A5	37	AA- 51
07000-E1007	A2041-A4G8	37	AA- 53
07000-E1007	A8117-B4A8	2	AA- 184
07000-E2065	A1530-B4D3	14	AA- 25
07000-E2065	A1530-B4G8	14	AA- 27
07000-F2021	A4210-A4E5	5	AA- 135
07000-F2021	A8121-A4A5	1	AA- 188
07000-G3032	A5010-A4F4	34	AA- 143
07000-G3032	A8127-F4A5	6	AA- 191
07000-G5065	A5010-A4F4	30	AA- 143
07000-G5065	A8127-F4A5	6	AA- 191
07000-02010	H0100-02A0	7	H0- 7
07000-02010	Y1660-02A0	7	Y0- 37
07000-02010	Y1672-01A0	9	Y0- 55
07000-02011	F2600-01A0	40	F0- 81
07000-02012	A2210-C4E4	3	AA- 67
07000-02012	A8117-B4A8	2	AA- 185
07000-02014	A8117-B4A8	2	AA- 184
07000-02015	F2600-01A0	41	F0- 81
07000-02015	H0100-03A0	26	H0- 9
07000-02015	H0100-05A0	23	H0- 15
07000-02015	Y1660-03A0	26	Y0- 39
07000-02015	Y1660-05A0	23	Y0- 43
07000-02015	Y1660-21A0	31	Y0- 45
07000-02018	Y1679-21A0	7	Y0- 65
07000-02020	F2370-02A0	12	F0- 53
07000-02055	A8127-F4A5	6	AA- 191
07000-02060	A2610-A4B5	9	AA- 87
07000-02060	A2610-A4B6	2	AA- 89
07000-02060	A8117-B4A8	2	AA- 183

PARTS NO.	FIG NO	INDEX	PAGE
07000-02065	Y1679-21A0	11	Y0- 65
07000-02070	A8127-F4A5	6	AA- 191
07000-02070	Y1621-21A0	9	Y0- 31
07000-02070	Y1679-21A0	23	Y0- 65
07000-02075	H0310-01A0	28	H0- 17
07000-02085	M2210-01A0	40	M0- 61
07000-02095	F2370-02A0	38	F0- 54
07000-02105	A2210-B4E4	35	AA- 65
07000-02105	A8117-B4A8	2	AA- 185
07000-02110	F2710-01A0	8	F0- 113
07000-02110	V0100-01A0	3	V0- 3
07000-02115	A8127-F4A5	6	AA- 191
07000-02115	F2370-03A0	8	F0- 57
07000-02115	F2710-01A0	9	F0- 113
07000-02115	V0100-01A0	2	V0- 3
07000-02140	F2310-52A0	32	F0- 13
07000-02140	Y0100-01A0	1K	Y0- 3
07000-02145	A5010-A4F4	14	AA- 143
07000-02145	A8127-F4A5	6	AA- 191
07000-03022	A8127-F4A5	6	AA- 191
07000-03022	H2250-01A0	11	H0- 39
07000-03022	H2250-01A0	5	H0- 39
07000-03022	H2250-01A1	5	H0- 43
07000-03022	K2510-01A0	16	K0- 105
07000-03022	K2510-01A0	21	K0- 105
07000-03022	K2510-01A0	8	K0- 105
07000-03022	K2510-01A1	12	K0- 107
07000-03022	K2510-01A1	16	K0- 107
07000-03022	K2510-01A1	21	K0- 107
07000-03022	K2510-01A1	26	K0- 107
07000-03022	K2510-01A1	8	K0- 107
07000-03025	A8121-A4A5	1	AA- 187
07000-03025	A8127-F4A5	6	AA- 191
07000-03025	F2370-01A0	40	F0- 50
07000-03025	F2370-04A0	11	F0- 59
07000-03025	F2700-07A0	19	F0- 107
07000-03025	F2700-08A0	7	F0- 111
07000-03025	H0310-01A0	26	H0- 17
07000-03025	K2510-05A0	9	K0- 119
07000-03028	F2700-04A0	37	F0- 95
07000-03030	F2370-01A0	39	F0- 50
07000-03032	A8127-F4A5	6	AA- 191
07000-03032	F2700-04A0	12	F0- 95
07000-03035	D0100-01A0	12	D0- 3
07000-03035	D0100-01A0	7	D0- 3
07000-03035	F2700-04A0	22	F0- 95
07000-03035	F2700-04A0	27	F0- 95
07000-03035	F2700-07A0	39	F0- 107
07000-03038	F2370-04A0	10	F0- 59
07000-03040	D0200-01A0	10	D0- 7

PARTS NO.	FIG NO	INDEX	PAGE
07000-03040	D0200-01A1	10	D0- 9
07000-03040	D0200-01A2	10	D0- 11
07000-03040	V0100-01A0	10	V0- 3
07000-03042	F2700-08A0	9	F0- 111
07000-03050	A2041-A4A5	27	AA- 51
07000-03050	A2041-A4G8	27	AA- 53
07000-03050	A8117-B4A8	2	AA- 183
07000-03050	Y0100-01A0	10K	Y0- 5
07000-03050	Y0100-01A0	7K	Y0- 4
07000-03050	Y1620-01A0	19	Y0- 19
07000-03068	R0100-01A0	10	R0- 3
07000-03075	F2700-04A0	14	F0- 95
07000-03092	Y1600-21A0	26	Y0- 15
07000-03095	Y0100-01A0	7K	Y0- 4
07000-03095	Y1620-01A0	11	Y0- 19
07000-03100	A2210-B4E4	33	AA- 65
07000-03100	A8117-B4A8	2	AA- 185
07000-03110	Y0100-01A0	8K	Y0- 4
07000-03110	Y0100-01A0	9K	Y0- 4
07000-03110	Y1620-31A0	12	Y0- 25
07000-03110	Y1621-01A0	15	Y0- 27
07000-03110	Y1621-11A0	15	Y0- 29
07000-03130	F2710-02A0	5	F0- 115
07000-03140	A2210-B4E4	19	AA- 65
07000-03140	A8117-B4A8	2	AA- 185
07000-03145	A2210-B4E4	16	AA- 65
07000-03145	A8117-B4A8	2	AA- 185
07000-05055	F2320-52A0	29	F0- 23
07000-05055	Y0100-01A0	2K	Y0- 3
07000-05065	A8127-F4A5	6	AA- 191
07000-05150	H0100-02A0	4	H0- 7
07000-05150	V0100-01A0	5	V0- 3
07000-05150	Y1660-02A0	4	Y0- 37
07000-05195	J2110-01A0	5	J0- 3
07000-05195	J2110-01A1	5	J0- 5
07000-05195	J2110-01A2	5	J0- 7
07000-05235	F2380-01A0A	33	F0- 65
07000-05235	F2380-01A1	33	F0- 67
07000-05235	F2380-03A0A	33	F0- 73
07000-05235	F2380-03A1	33	F0- 75
07000-05290	F2320-52A0	20	F0- 23
07000-05290	Y0100-01A0	2K	Y0- 3
07000-05470	F2320-54A0	35	F0- 31
07000-05470	J2110-01A0	14	J0- 3
07000-05470	J2110-01A1	14	J0- 5
07000-05470	J2110-01A2	14	J0- 7
07000-05470	Y0100-01A0	2K	Y0- 3
07000-11009	F2700-06A0	12	F0- 105
07000-11009	F2700-06A0	4A	F0- 105
07000-11009	H2250-01A0	8	H0- 39

PARTS NO.	FIG NO.	INDEX	PAGE
07000-11009	K2510-01A0	11	K0- 105
07000-12015	Y1600-21A0	15	Y0- 15
07000-12018	F2700-05A0	41	F0- 99
07000-12018	Y1662-01A0	24	Y0- 49
07000-12021	Y1679-21A0	37	Y0- 65
07000-12055	T2440-01A0	4	T0- 33
07000-12055	T2440-01A1	4	T0- 37
07000-12055	Y1620-02A0	9	Y0- 23
07000-12055	Y1662-01A0	20	Y0- 49
07000-12060	Y0100-01A0	7K	Y0- 4
07000-12060	Y1620-01A0	29	Y0- 19
07000-12060	Y1662-01A0	18	Y0- 49
07000-12065	Y0100-01A0	10K	Y0- 5
07000-12065	Y1621-21A0	7	Y0- 31
07000-12065	Y1662-01A0	9	Y0- 49
07000-12070	H0310-01A0	5	H0- 17
07000-12070	R0300-01A0	12	R0- 9
07000-12105	F2100-01A0	1	F0- 3
07000-12110	R0300-01A0	8	R0- 9
07000-12130	R0100-01A0	7	R0- 3
07000-12130	R0200-01A0	10	R0- 7
07000-12130	R0300-01A0	11	R0- 9
07000-12135	Y0100-01A0	7K	Y0- 4
07000-12135	Y1620-01A0	5	Y0- 19
07000-13022	F2700-05A0	40	F0- 99
07000-13022	H2220-01A0	32	H0- 35
07000-13022	T2160-01A0	30	T0- 23
07000-13022	T2160-01A0	4	T0- 23
07000-13025	F2370-05A0	17	F0- 61
07000-13025	F2700-03A0	17	F0- 91
07000-13025	Y1679-21A0	32	Y0- 65
07000-13028	F2700-02A0	29	F0- 89
07000-13028	F2700-03A0	10	F0- 91
07000-13028	F2700-03A0	2	F0- 91
07000-13028	F2700-05A0	11	F0- 99
07000-13028	H0100-05A0	8	H0- 15
07000-13028	Y1660-05A0	8	Y0- 43
07000-13030	F2100-01A0	59	F0- 4
07000-13032	H2210-02A0	40	H0- 23
07000-13032	H2210-02A0	42	H0- 23
07000-13032	H2210-02A1	40	H0- 26
07000-13032	H2210-02A1	42	H0- 26
07000-13032	H2210-02A2	40	H0- 29
07000-13032	H2210-02A2	42	H0- 29
07000-13032	H2210-03A0	26	H0- 31
07000-13032	H2210-03A0	7	H0- 31
07000-13032	H2210-03A2	26	H0- 33
07000-13032	H2210-03A2	7	H0- 33
07000-13032	T2440-01A1	39	T0- 37
07000-13032	T2440-01A1	46	T0- 38

PARTS NO	FIG NO	INDEX	PAGE
07000-13032	Y1662-02A0	2	Y0- 51
07000-13035	F2700-02A0	7	F0- 89
07000-13035	H0100-03A0	27	H0- 9
07000-13035	H0100-03A0	7	H0- 9
07000-13035	H2210-02A0	36	H0- 23
07000-13035	H2210-02A0	38	H0- 23
07000-13035	H2210-02A1	36	H0- 25
07000-13035	H2210-02A1	38	H0- 25
07000-13035	H2210-02A2	36	H0- 29
07000-13035	H2210-02A2	38	H0- 29
07000-13035	Y0100-01A0	7K	Y0- 4
07000-13035	Y0100-01A0	8K	Y0- 4
07000-13035	Y1620-02A0	20	Y0- 23
07000-13035	Y1620-31A0	25	Y0- 25
07000-13035	Y1660-03A0	27	Y0- 39
07000-13035	Y1660-03A0	7	Y0- 39
07000-13035	Y1660-21A0	32	Y0- 45
07000-13035	Y1660-21A0	6	Y0- 45
07000-13035	Y1679-21A0	41	Y0- 66
07000-13038	F2700-01A0	42	F0- 86
07000-13038	F2700-07A0	10	F0- 107
07000-13038	H2210-01A0	28	H0- 19
07000-13038	H2210-01A0	30	H0- 19
07000-13038	H2210-01A2	27	H0- 21
07000-13038	H2210-01A2	29	H0- 21
07000-13038	Y0100-01A0	9K	Y0- 4
07000-13038	Y1620-02A0	25	Y0- 23
07000-13038	Y1621-01A0	32	Y0- 27
07000-13038	Y1621-11A0	33	Y0- 29
07000-13040	H0100-04A0	20	H0- 11
07000-13040	H0100-04A0	28	H0- 11
07000-13040	Y1660-04A0	9	Y0- 41
07000-13040	Y1660-22A0	9	Y0- 47
07000-13045	Y0100-01A0	7K	Y0- 4
07000-13045	Y1620-02A0	12	Y0- 23
07000-13045	Y1620-02A0	24	Y0- 23
07000-13048	F2700-01A0	18	F0- 85
07000-13048	F2700-01A0	23	F0- 85
07000-13048	H0100-02A0	11	H0- 7
07000-13048	H0100-04A0	10	H0- 11
07000-13048	H0310-01A0	16	H0- 17
07000-13048	H0310-01A0	30	H0- 17
07000-13048	H2210-01A0	5	H0- 19
07000-13048	H2210-01A2	5	H0- 21
07000-13048	H2220-01A0	4	H0- 35
07000-13048	H2220-01A0	40	H0- 35
07000-13048	H2220-01A0	43	H0- 36
07000-13048	T2440-01A0	21	T0- 33
07000-13048	T2440-01A0	27	T0- 33
07000-13048	T2440-01A0	53	T0- 34

PARTS NO	FIG NO.	INDEX	PAGE
07000-13048	T2440-01A0	7	T0- 33
07000-13048	T2440-01A1	21	T0- 37
07000-13048	T2440-01A1	52	T0- 38
07000-13048	T2440-01A1	7	T0- 37
07000-13048	Y0100-01A0	7K	Y0- 4
07000-13048	Y1620-02A0	11	Y0- 23
07000-13048	Y1660-02A0	11	Y0- 37
07000-13048	Y1662-01A0	14	Y0- 49
07000-13050	H0100-02A0	27	H0- 7
07000-13050	H0310-01A0	33	H0- 17
07000-13050	Y1660-02A0	26	Y0- 37
07000-13050	Y1660-04A0	2	Y0- 41
07000-13050	Y1660-22A0	2	Y0- 47
07000-13055	F2700-03A0	13	F0- 91
07000-13068	R0200-01A0	13	R0- 7
07000-13080	F2700-01A0	9	F0- 85
07000-13082	F2700-01A0	10	F0- 85
07000-13090	F2700-01A0	1	F0- 85
07000-13095	F2700-01A0	25	F0- 85
07000-15090	R2100-02A0	11	R0- 29
07000-15150	F2100-01A0	25	F0- 3
07000-15150	F2100-01A0	39	F0- 3
07000-15185	F2380-02A0A	40	F0- 69
07000-15185	F2380-04A0A	40	F0- 77
07000-15195	F2100-01A0	2	F0- 3
07000-15220	Y0100-01A0	8K	Y0- 4
07000-15220	Y0100-01A0	9K	Y0- 4
07000-15220	Y1620-31A0	6	Y0- 25
07000-15220	Y1621-01A0	7	Y0- 27
07000-15220	Y1621-11A0	7	Y0- 29
07000-15315	F2380-02A0A	27	F0- 69
07000-15315	F2380-04A0A	27	F0- 77
07000-15410	F2380-02A0A	24	F0- 69
07000-15410	F2380-02A0A	47	F0- 70
07000-15410	F2380-04A0A	24	F0- 77
07000-15410	F2380-04A0A	47	F0- 78
07000-22021	A4210-A4E5	5	AA- 135
07000-22021	A8121-A4A5	1	AA- 187
07000-22021	A8121-A4A5	1	AA- 187
07000-22070	Y1679-01A0	42	Y0- 58
07000-22070	Y1679-11A0	36	Y0- 61
07000-25090	R2100-02A0	11	R0- 29
07000-32070	R0300-01A0	12	R0- 9
07000-32110	R0300-01A0	8	R0- 9
07000-32130	R0100-01A0	7	R0- 3
07000-32130	R0200-01A0	10	R0- 7
07000-32130	R0300-01A0	11	R0- 9
07000-33040	F2700-07A0	30	F0- 107
07000-33042	F2700-07A0	1	F0- 107
07000-33068	R0100-01A0	10	R0- 3

PARTS NO	FIG NO.	INDEX	PAGE
07000-33068	R0200-01A0	13	R0- 7
07000-52065	A5080-A4B2	20	AA- 149
07000-62018	A3110-A4C5	10	AA- 93
07000-62018	A8117-B4A8	2	AA- 184
07000-62060	A2041-A4A5	14	AA- 51
07000-62060	A8117-B4A8	2	AA- 183
07000-63025	A1010-A4B3	6	AA- 3
07000-63025	A3110-B4C5	18	AA- 95
07000-63025	A8117-B4A8	2	AA- 185
07000-63025	A8121-A4A5	1	AA- 187
07000-63028	A2110-A4F6	9	AA- 59
07000-63028	A3110-A4C5	14	AA- 93
07000-63028	A8117-B4A8	2	AA- 183
07000-63028	A8117-B4A8	2	AA- 184
07000-63028	A8117-B4A8	2	AA- 183
07000-63032	A3110-A4C5	15	AA- 93
07000-63032	A3110-A4C5	20	AA- 93
07000-63032	A3110-A4C5	5	AA- 93
07000-63032	A3110-B4C5	17	AA- 95
07000-63032	A8117-B4A8	2	AA- 183
07000-63032	A8117-B4A8	2	AA- 183
07000-63032	A8117-B4A8	2	AA- 183
07000-63032	A8117-B4A8	2	AA- 184
07000-63038	A3010-A4A1	21	AA- 91
07000-63038	A8117-B4A8	2	AA- 183
07000-63038	A8117-B4A8	2	AA- 184
07000-63040	A2110-A4F6	13	AA- 59
07000-63040	A8117-B4A8	2	AA- 183
07000-63042	A8117-B4A8	2	AA- 183
07000-63048	A3110-A4C5	19	AA- 93
07000-63048	A8117-B4A8	2	AA- 183
07000-72018	A3110-A4C5	10	AA- 93
07000-72018	F2310-53A0	9	F0- 17
07000-72018	F2310-54A0	8	F0- 19
07000-72018	F2320-57A0	15	F0- 43
07000-72018	Y0100-01A0	1K	Y0- 3
07000-72018	Y0100-01A0	1K	Y0- 3
07000-72018	Y0100-01A0	6K	Y0- 4
07000-72060	A2041-A4A5	14	AA- 51
07000-72060	A2041-A4G8	14	AA- 53
07000-72060	A8117-B4A8	2	AA- 185
07000-72070	A5010-A4F4	21	AA- 143
07000-72070	A8127-F4A5	6	AA- 191
07000-72070	F2310-51A0	8	F0- 9
07000-72070	Y0100-01A0	1K	Y0- 3
07000-72075	C0120-01A0A	26	C0- 3
07000-72115	A5010-A4F4	20	AA- 143
07000-72115	A8127-F4A5	6	AA- 191
07000-72115	F2310-51A0	34	F0- 9
07000-72115	Y0100-01A0	1K	Y0- 3

PARTS NO	FIG NO	INDEX	PAGE
07000-73022	F2320-53A0	9	F0- 27
07000-73022	F2320-55A0	19	F0- 35
07000-73022	F2320-55A0	2	F0- 35
07000-73022	F2320-57A0	16	F0- 43
07000-73022	Y0100-01A0	2K	Y0- 3
07000-73022	Y0100-01A0	5K	Y0- 3
07000-73022	Y0100-01A0	5K	Y0- 3
07000-73022	Y0100-01A0	6K	Y0- 4
07000-73025	A1010-A4B3	6	AA- 3
07000-73025	A3110-B4C5	18	AA- 95
07000-73025	A8117-B4A8	2	AA- 184
07000-73025	F2320-55A0	6	F0- 35
07000-73025	Y0100-01A0	5K	Y0- 3
07000-73028	A2110-A4F6	9	AA- 59
07000-73028	A3110-A4C5	14	AA- 93
07000-73028	A8117-B4A8	2	AA- 185
07000-73028	F2320-56A0	38	F0- 39
07000-73028	Y0100-01A0	5K	Y0- 3
07000-73032	A8117-B4A8	2	AA- 184
07000-73032	A8117-B4A8	2	AA- 185
07000-73032	F2320-57A0	6	F0- 43
07000-73032	Y0100-01A0	6K	Y0- 4
07000-73035	A3110-B4C5	17	AA- 95
07000-73035	A3110-B4C5	7	AA- 95
07000-73038	A3010-A4A1	21	AA- 91
07000-73038	A8117-B4A8	2	AA- 185
07000-73040	A2110-A4F6	13	AA- 59
07000-73040	A8117-B4A8	2	AA- 185
07000-73040	F2320-55A0	27	F0- 35
07000-73040	Y0100-01A0	5K	Y0- 3
07000-73042	A3310-A4A3	7	AA- 97
07000-73045	C0120-01A0A	20	C0- 3
07000-73045	F2310-53A0	10	F0- 17
07000-73045	F2310-54A0	9	F0- 19
07000-73045	Y0100-01A0	1K	Y0- 3
07000-73045	Y0100-01A0	1K	Y0- 3
07000-73048	A3110-A4C5	19	AA- 93
07000-73048	A8117-B4A8	2	AA- 185
07000-75185	F2310-52A0	25	F0- 13
07000-75185	Y0100-01A0	1K	Y0- 3
07001-02018	Y1662-01A0	25	Y0- 49
07001-02018	Y1679-21A0	8	Y0- 65
07001-03032	Y1662-02A0	3	Y0- 51
07001-05220	Y0100-01A0	8K	Y0- 4
07001-05220	Y0100-01A0	9K	Y0- 4
07001-05220	Y1620-31A0	7	Y0- 25
07001-05220	Y1621-01A0	8	Y0- 27
07001-05220	Y1621-11A0	8	Y0- 29
07002-01223	F2320-56A0	31	F0- 39
07002-01223	Y0100-01A0	5K	Y0- 3

PARTS NO.	FIG NO.	INDEX	PAGE
07002-01623	T2440-01A0	37	T0- 33
07002-02034	F2700-06A0	18	F0- 105
07002-02034	F2700-06A0	3	F0- 105
07002-02034	F2700-07A0	13	F0- 107
07002-02034	H0100-01A0	21	H0- 3
07002-02034	H2250-01A0	14	H0- 39
07002-02034	K2510-05A0	25	K0- 119
07002-02034	K2510-05A0	3	K0- 119
07002-02034	T2440-01A0	43	T0- 34
07002-02034	Y1621-21A0	17	Y0- 31
07002-02034	Y1660-01A0	21	Y0- 33
07002-02434	F2370-05A0	11	F0- 61
07002-02434	F2700-04A0	19	F0- 95
07002-02434	Y1672-01A0	7	Y0- 55
07002-03034	F2600-01A0	21	F0- 81
07002-03334	F2700-04A0	48	F0- 96
07002-03334	F2700-07A0	32	F0- 107
07002-03634	H0100-01A0	17	H0- 3
07002-03634	J2110-01A0	3	J0- 3
07002-03634	J2110-01A1	3	J0- 5
07002-03634	J2110-01A2	3	J0- 7
07002-03634	V0100-01A0	9	V0- 3
07002-03634	Y1660-01A0	17	Y0- 33
07002-03634	Y1662-02A0	38	Y0- 51
07002-03634	Y1679-21A0	10	Y0- 65
07002-05234	F2320-56A0	3	F0- 39
07002-05234	Y0100-01A0	5K	Y0- 3
07002-10823	F2700-05A0	35	F0- 99
07002-11423	D0100-02A0	11	D0- 5
07002-11423	D0100-02A0	21	D0- 5
07002-11423	D0100-02A0	7	D0- 5
07002-11623	F2700-05A0	17	F0- 99
07002-12034	D0100-02A0	10	D0- 5
07002-12034	D0100-02A0	6	D0- 5
07002-12034	F2370-05A0	14	F0- 61
07002-12034	F2370-05A0	21	F0- 61
07002-12034	F2370-05A0	24	F0- 61
07002-12034	F2370-05A0	3	F0- 61
07002-12034	F2700-05A0	20	F0- 99
07002-12034	F2700-05A0	22	F0- 99
07002-12034	F2700-05A0	25	F0- 99
07002-12434	F2100-01A0	13	F0- 3
07002-12434	Y1662-01A0	3	Y0- 49
07002-13034	H0100-04A0	35	H0- 11
07002-13034	Y1660-04A0	15	Y0- 41
07002-13034	Y1660-22A0	13	Y0- 47
07002-13334	F2700-02A0	18	F0- 89
07002-13634	F2380-01A0A	7	F0- 65
07002-13634	F2380-01A0A	9	F0- 65
07002-13634	F2380-03A0A	7	F0- 73

PARTS NO	FIG NO	INDEX	PAGE
07002-13634	F2380-03A0A	9	F0- 73
07002-13634	M2110-05A0	33	M0- 21
07002-13634	Y1662-01A0	23	Y0- 49
07002-13634	Y1662-02A0	34	Y0- 51
07002-15234	Y1662-02A0	4	Y0- 51
07002-23634	A8117-B4A8	2	AA- 184
07002-32034	A2010-A4H9A	36	AA- 43
07002-32034	A8117-B4A8	2	AA- 184
07002-33634	F2380-01A1	7	F0- 67
07002-33634	F2380-01A1	9	F0- 67
07002-33634	F2380-03A1	7	F0- 75
07002-33634	F2380-03A1	9	F0- 75
07002-33634	J2110-01A0	3	J0- 3
07002-33634	J2110-01A1	3	J0- 5
07002-33634	J2110-01A2	3	J0- 7
07002-43634	F2310-51A0	3	F0- 9
07002-43634	F2310-53A0	8	F0- 17
07002-43634	F2310-54A0	6	F0- 19
07002-43634	M2110-01A0	3	M0- 3
07002-43634	Y0100-01A0	1K	Y0- 3
07002-43634	Y0100-01A0	1K	Y0- 3
07002-43634	Y0100-01A0	1K	Y0- 3
07003-01015	A5010-C4F4	7	AA- 147
07003-01015	A8121-A4A5	1	AA- 188
07005-00812	A4110-A4E4	4	AA- 129
07005-00812	A4110-A4H9	4	AA- 131
07005-00812	A4130-A4B3	3	AA- 133
07005-00812	A4210-A4E5	12	AA- 135
07005-00812	A4230-A4D5	3	AA- 141
07005-00812	A8117-B4A8	2	AA- 184
07005-00812	A8121-A4A5	1	AA- 187
07005-00812	A8121-A4A5	1	AA- 187
07005-00812	A8121-A4A5	1	AA- 187
07005-01012	A2010-A4H9A	33	AA- 43
07005-01012	A2011-A4A4	10	AA- 47
07005-01012	A2210-C4E4	6	AA- 67
07005-01012	A4060-A4B3	3	AA- 125
07005-01012	A8117-B4A8	2	AA- 185
07005-01012	A8117-B4A8	2	AA- 184
07005-01012	A8117-B4A8	2	AA- 184
07005-01012	A8117-B4A8	2	AA- 183
07005-01012	A8121-A4A5	1	AA- 187
07005-01012	F2100-01A0	50	F0- 4
07005-01012	F2100-01A0	57	F0- 4
07005-01012	F2100-01A0	61	F0- 4
07005-01212	A4230-A4D5	9	AA- 141
07005-01212	A8117-B4A8	2	AA- 185
07005-01212	A8117-B4A8	2	AA- 183
07005-01212	A8121-A4A5	1	AA- 188
07005-01412	A1530-C4D3	3	AA- 29

PARTS NO	FIG NO.	INDEX	PAGE
07005-01412	A1530-C4G8	3	AA- 31
07005-01412	A2010-A4H9A	31	AA- 43
07005-01412	A3310-A4A3	18	AA- 97
07005-01412	A4060-A4B3	6	AA- 125
07005-01412	A4110-A4E4	14	AA- 129
07005-01412	A4110-A4H9	14	AA- 131
07005-01412	A4130-A4B3	16	AA- 133
07005-01412	A4230-A4D5	13	AA- 141
07005-01412	A5210-A4D3	13	AA- 153
07005-01412	A5210-A4F6	13	AA- 155
07005-01412	A8117-B4A8	2	AA- 183
07005-01412	A8117-B4A8	2	AA- 183
07005-01412	A8117-B4A8	2	AA- 183
07005-01412	A8117-B4A8	2	AA- 183
07005-01412	A8117-B4A8	2	AA- 184
07005-01412	A8117-B4A8	2	AA- 184
07005-01412	A8121-A4A5	1	AA- 187
07005-01412	A8121-A4A5	1	AA- 187
07005-01612	F2310-51A0	5	FO- 9
07005-01612	Y0100-01A0	1K	YO- 3
07005-02216	A8117-B4A8	2	AA- 184
07005-02416	A1310-A4H7	20	AA- 11
07005-02416	A8121-A4A5	1	AA- 187
07005-02416	H0310-01A0	22	HO- 17
07005-02416	V0100-01A0	11	VO- 3
07006-00022	F2370-03A0	3	FO- 57
07006-00040	Y1679-21A0	17	YO- 65
07011-50120	C0310-01A0	4	CO- 5
07011-50120	C0310-01A1	4	CO- 7
07011-50120	M2110-04A0	5	MO- 17
07012-00025	A8117-B4A8	2	AA- 184
07012-00028	A2610-A4B5	8	AA- 87
07012-00030	F2370-02A0	15	FO- 53
07012-00042	A5080-A4B2	24	AA- 149
07012-00060	F2100-01A0	24	FO- 3
07012-10110	F2320-52A0	19	FO- 23
07012-10110	Y0100-01A0	2K	YO- 3
07012-50028	A2610-A4B5	8	AA- 87
07012-50028	A8117-B4A8	2	AA- 185
07012-50100	F2310-52A0	34	FO- 13
07012-50100	Y0100-01A0	1K	YO- 3
07013-10120	F2380-01A0A	34	FO- 65
07013-10120	F2380-01A1	34	FO- 67
07013-10120	F2380-03A0A	34	FO- 73
07013-10120	F2380-03A1	34	FO- 75
07016-00226	Y1679-21A0	6	YO- 65
07016-00357	F2370-03A0	5	FO- 57
07016-00407	Y1679-21A0	15	YO- 65
07018-12005	F2320-52A0	15	FO- 23
07019-00130	R2100-02A0	24	RO- 29

PARTS NO	FIG NO.	INDEX	PAGE
07020-00000	A5080-A4B2	33	AA- 149
07020-00000	C0310-02A0	24	CO- 9
07020-00000	J2700-01A0	4	JO- 11
07020-00000	J2700-01A1	4	JO- 13
07020-00000	K2110-07A0	5B	KO- 77
07020-00000	K2110-12A0	1A	KO- 89
07020-00000	M2110-04A0	32	MO- 17
07020-00000	M2111-01A0	5	MO- 31
07020-00000	M2210-03A0	25	MO- 69
07020-00000	M2210-04A0	11	MO- 71
07020-00000	R2100-01A0	21	RO- 23
07020-00000	R2100-01A1	21	RO- 25
07020-00000	R2100-01A2	21	RO- 27
07020-00000	R2100-02A0	15	RO- 29
07020-00000	T2110-01A0	20	TO- 3
07020-00000	T2110-01A0	26	TO- 3
07020-00000	T2110-01A1	20	TO- 7
07020-00000	T2110-01A1	39	TO- 8
07020-00000	T2110-01A2	20	TO- 11
07020-00000	T2110-01A2	26	TO- 11
07020-00000	T2120-01A0	21	TO- 15
07020-00000	T2120-01A0	41	TO- 16
07020-00000	T2120-01A0	45	TO- 16
07020-00000	T2120-01A1	23	TO- 19
07020-00000	T2120-01A1	43	TO- 20
07020-00000	T2120-01A1	47	TO- 20
07020-00000	T2410-01A0	13	TO- 25
07020-00000	T2410-01A0	21	TO- 25
07020-00000	T2410-01A0	44	TO- 26
07020-00000	T2410-01A1	13	TO- 29
07020-00000	T2410-01A1	21	TO- 29
07020-00000	T2410-01A1	41	TO- 30
07020-00000	V0100-01A0	6	VO- 3
07020-00000	Y1621-11A0	19	YO- 29
07020-00675	A5080-A4B2	33	AA- 149
07020-00675	F2370-05A0	40	FO- 61
07020-00675	K2110-09A0	1A	KO- 81
07020-00675	K2110-09A0	7A	KO- 81
07020-00675	K2110-10A0	2	KO- 85
07020-00675	M2111-01A0	4	MO- 31
07020-00675	M2210-03A0	6	MO- 69
07020-00675	R2100-02A0	29	RO- 29
07020-00675	V0100-01A0	7	VO- 3
07020-00675	Y1621-01A0	3	YO- 27
07020-00675	Y1621-11A0	3	YO- 29
07020-00900	K2110-02A0	8	KO- 65
07020-00900	K2110-03A0	3	KO- 67
07020-00900	K2110-07A0	5A	KO- 77
07020-00900	M2110-08A0	1	MO- 29
07020-00900	M2111-01A0	17	MO- 31

PARTS NO.	FIG NO.	INDEX	PAGE
07020-00900	V0100-01A0	8	VO- 3
07020-00900	Y1621-01A0	19	YO- 27
07025-00100	A2060-A4C1	10	AA- 57
07029-00000	A5080-A4B2	25	AA- 149
07029-00000	F2370-05A0	51	FO- 62
07030-00252	J2110-01A0	8	JO- 3
07030-00252	J2110-01A1	8	JO- 5
07030-00252	J2110-01A2	8	JO- 7
07040-02412	A1310-A4H7	19	AA- 11
07040-02412	A2110-A4F6	7	AA- 59
07040-11007	A2010-A4H9A	32	AA- 43
07040-11007	A2011-A4A4	9	AA- 47
07040-11209	F2310-52A0	2	FO- 13
07040-11409	A2010-A4H9A	30	AA- 43
07040-11409	A3310-A4A3	17	AA- 97
07040-12012	A2010-A4H9A	35	AA- 43
07040-12012	F2700-06A0	17	FO- 105
07040-12012	Y1621-21A0	16	YO- 31
07040-12412	H0310-01A0	21	HO- 17
07040-13016	A3310-A4A3	15	AA- 97
07040-13618	F2380-01A0A	8	FO- 65
07040-13618	F2380-01A1	8	FO- 67
07040-13618	F2380-03A0A	8	FO- 73
07040-13618	F2380-03A1	8	FO- 75
07040-13618	M2110-01A0	2	MO- 3
07040-15223	F2320-56A0	2	FO- 39
07041-13012	Y1660-04A0	14	YO- 41
07041-13012	Y1660-22A0	12	YO- 47
07042-00108	A1310-A4H7	27	AA- 11
07042-00415	A2210-A4E4	5	AA- 63
07042-00415	H0100-03A0	2	HO- 9
07042-00415	H0100-05A0	2	HO- 15
07042-00415	Y1660-03A0	2	YO- 39
07042-00415	Y1660-05A0	2	YO- 43
07042-00415	Y1660-21A0	2	YO- 45
07042-10108	C0120-01A0A	37	CO- 3
07042-10108	F2370-02A0	43	FO- 54
07042-10108	F2700-03A0	37	FO- 91
07042-10108	F2700-04A0	42	FO- 96
07042-10108	H0310-01A0	32	HO- 17
07042-20108	A1510-A4B9	3	AA- 19
07042-20108	F2310-54A0	7	FO- 19
07042-20108	F2370-03A0	2	FO- 57
07042-20211	F2320-54A0	2	FO- 31
07042-30108	C0120-01A0A	10	CO- 3
07042-30108	F2700-01A0	20	FO- 85
07042-30108	F2700-02A0	10	FO- 89
07042-30108	F2700-04A0	25	FO- 95
07042-30108	F2700-04A0	30	FO- 95
07042-30108	F2700-04A0	43	FO- 96

PARTS NO.	FIG NO .	INDEX	PAGE
07042-30108	F2700-04A0	50	FO- 96
07042-30108	F2700-05A0	37	FO- 99
07042-30108	K2510-05A0	12	KO- 119
07042-30108	M2210-02A2	39	MO- 67
07042-70108	A2010-A4H9A	16	AA- 43
07042-70108	M2110-06A0	27	MO- 25
07042-70108	M2111-01A0	6	MO- 31
07042-70415	C0120-01A0A	33	CO- 3
07042-70415	C0120-01A0A	9	CO- 3
07042-80108	F2320-55A0	25	FO- 35
07043-A1019	A5010-A4F4	18	AA- 143
07043-00108	A2210-A4E4	3	AA- 63
07043-00108	A5010-B4F4	3	AA- 145
07043-00108	A5080-A4B2	21	AA- 149
07043-00108	A5080-A4B2	23	AA- 149
07043-00108	Y1679-01A0	2	YO- 57
07043-00108	Y1679-11A0	2	YO- 61
07043-00211	A2010-A4H9A	21	AA- 43
07043-00211	A3110-A4C5	11	AA- 93
07043-00415	A2010-A4H9A	20	AA- 43
07043-00415	A2011-A4A4	4	AA- 47
07043-00415	A5010-A4F4	27	AA- 143
07043-00415	F2320-55A0	9	FO- 35
07043-01019	A2010-A4H9A	10	AA- 43
07043-50108	A1010-A4B3	8	AA- 3
07043-50108	A1310-A4H7	4	AA- 11
07043-50108	F2370-04A0	2	FO- 59
07043-50108	F2600-01A0	22	FO- 81
07043-50108	F2700-08A0	2	FO- 111
07043-50617	K2510-01A0	6	KO- 105
07043-50617	K2510-01A1	6	KO- 107
07043-70108	A2010-A4H9A	15	AA- 43
07043-70108	A4110-A4E4	5	AA- 129
07043-70108	A4110-A4H9	5	AA- 131
07043-70211	F2320-52A0	14	FO- 23
07043-70312	A2010-A4H9A	34	AA- 43
07043-70415	F2310-51A0	6	FO- 9
07043-71019	A2010-A4H9A	10	AA- 43
07044-12412	F2100-01A0	12	FO- 3
07044-13620	F2310-51A0	2	FO- 9
07044-13620	F2380-01A0A	6	FO- 65
07044-13620	F2380-01A1	6	FO- 67
07044-13620	F2380-03A0A	6	FO- 73
07044-13620	F2380-03A1	6	FO- 75
07044-13620	H0100-01A0	16	HO- 3
07044-13620	J2110-01A0	2	JO- 3
07044-13620	J2110-01A1	2	JO- 5
07044-13620	J2110-01A2	2	JO- 7
07044-13620	Y1660-01A0	16	YO- 33
07046-11816	A2010-A4H9A	17	AA- 43

PARTS NO.	FIG NO.	INDEX	PAGE
07046-11816	A2040-A4H1	2	AA- 49
07046-12016	A2210-A4E4	4	AA- 63
07046-15520	A2210-A4E4	2	AA- 63
07046-41008	A2010-A4H9A	22	AA- 43
07046-41008	A2411-A4A2	2	AA- 83
07046-41810	A2010-A4H9A	18	AA- 43
07046-42010	A2010-A4H9A	14	AA- 43
07046-42516	A2010-A4H9A	13	AA- 43
07046-42816	A2010-A4H9A	29	AA- 43
07046-43516	A2010-A4H9A	12	AA- 43
07046-47020	A2010-A4H9A	19	AA- 43
07048-02216	F2320-51A0	6	FO- 21
07048-02216	F2320-54A0	34	FO- 31
07049-01012	M2110-01A0	4	MO- 3
07049-01012	M2250-01A0	26E	MO- 89
07049-01215	J2110-01A0	27	JO- 3
07049-01215	J2110-01A1	27	JO- 5
07049-01215	J2110-01A2	27	JO- 7
07049-01418	J2110-01A0	25	JO- 3
07049-01418	J2110-01A1	25	JO- 5
07049-01418	J2110-01A2	25	JO- 7
07049-01418	K2110-01A0	2	KO- 61
07049-01418	R2100-03A0	35	RO- 33
07049-01418	R2100-03A1	35	RO- 35
07049-01418	T2160-01A0	32	TO- 23
07049-01620	J2110-01A0	23	JO- 3
07049-01620	J2110-01A1	23	JO- 5
07049-01620	J2110-01A2	23	JO- 7
07049-02025	F2380-01A0A	5	FO- 65
07049-02025	F2380-01A1	5	FO- 67
07049-02025	F2380-03A0A	5	FO- 73
07049-02025	F2380-03A1	5	FO- 75
07049-02025	J2110-01A0	21	JO- 3
07049-02025	J2110-01A1	21	JO- 5
07049-02025	J2110-01A2	21	JO- 7
07049-02025	R2200-01A0	18	RO- 37
07049-02025	T2160-01A0	31	TO- 23
07049-02430	J2110-01A0	26	JO- 3
07049-02430	J2110-01A1	26	JO- 5
07049-02430	J2110-01A2	26	JO- 7
07049-02430	K0410-02A0	38	KO- 39
07049-02430	R2100-01A0	32	RO- 23
07049-02430	R2100-01A1	32	RO- 25
07049-02430	R2100-01A2	32	RO- 27
07049-02430	R2200-01A0	17	RO- 37
07049-03038	J2110-01A0	24	JO- 3
07049-03038	J2110-01A1	24	JO- 5
07049-03038	J2110-01A2	24	JO- 7
07049-03949	J2110-01A0	22	JO- 3
07049-03949	J2110-01A1	22	JO- 5

PARTS NO.	FIG NO.	INDEX	PAGE
07049-03949	J2110-01A2	22	JO- 7
07050-00000	D0100-01A0	2	DO- 3
07050-41200	D0100-01A0	2	DO- 3
07051-00000	H0100-01A0	19	HO- 3
07051-00000	Y1660-01A0	19	YO- 33
07051-00003	H0100-01A0	19	HO- 3
07051-00003	Y1660-01A0	19	YO- 33
07051-01000	J2112-01A0	3	JO- 9
07052-31624	R0100-01A0	3	RO- 3
07052-31624	R0200-01A0	3	RO- 7
07052-31624	R0300-01A0	4	RO- 9
07053-10000	M2110-01A0	5	MO- 3
07056-00048	M2110-01A0	7	MO- 3
07056-10045	H0100-01A0	18	HO- 3
07056-10045	J2112-01A0	2	JO- 9
07056-10045	Y1660-01A0	18	YO- 33
07056-18416	D0100-01A0	4	DO- 3
07057-03271	M2110-01A0	6	MO- 3
07058-00005	D0200-01A0	7	DO- 7
07058-00005	D0200-01A1	7	DO- 9
07058-00005	D0200-01A2	7	DO- 11
07058-00006	D0200-01A0	8	DO- 7
07058-00006	D0200-01A1	8	DO- 9
07058-00006	D0200-01A2	8	DO- 11
07058-00007	D0200-01A0	9	DO- 7
07058-00007	D0200-01A1	9	DO- 9
07058-00007	D0200-01A2	9	DO- 11
07058-00010	D0200-01A0	7	DO- 7
07058-00010	D0200-01A1	7	DO- 9
07058-00010	D0200-01A2	7	DO- 11
07059-11830	R0500-01A0	10	RO- 11
07059-11830	R0500-01A3	10	RO- 17
07059-11830	R0500-01A4	10	RO- 19
07059-11830	R0500-01A5	10	RO- 21
07059-20721	R0500-01A0	11	RO- 11
07059-20721	R0500-01A3	11	RO- 17
07059-20721	R0500-01A4	11	RO- 19
07059-20721	R0500-01A5	11	RO- 21
07062-00000	A1310-B4H7	14	AA- 13
07062-00000	A1310-B4H7	5	AA- 13
07062-00000	A5010-A4F4	19	AA- 143
07063-01100	H0100-02A0	1	HO- 7
07063-01100	V0100-01A0	4	VO- 3
07092-00000	H0100-01A0	19	HO- 3
07092-00000	J2112-01A0	3	JO- 9
07093-20000	M2110-01A0	5	MO- 3
07094-31228	F2700-07A0	23	FO- 107
07095-00318	F2370-05A0	5	FO- 61
07095-00318	F2700-05A0	27	FO- 99
07095-01245	F2700-07A0	24	FO- 107

PARTS NO	FIG NO	INDEX	PAGE
07095-20314	K0710-02A0	19	KO- 45
07095-20314	K0710-02A0	26	KO- 45
07095-20420	D0200-01A0	25	DO- 7
07095-20420	D0200-01A1	25	DO- 9
07095-20420	D0200-01A2	25	DO- 11
07095-20420	K0710-02A0	30	KO- 45
07095-20420	K0710-02A0	34	KO- 45
07095-20523	A3110-B4C5	22	AA- 95
07095-20627	D0200-01A0	23	DO- 7
07095-20627	D0200-01A1	23	DO- 9
07095-20627	D0200-01A2	24	DO- 11
07095-20627	D0200-01A2	30	DO- 11
07095-20627	F2700-04A0	33	FO- 95
07095-20627	F2700-04A0	52	FO- 96
07102-A0406	D0200-01A2	14	DO- 11
07102-20203	D0100-02A0	17	DO- 5
07102-20237	D0200-01A0	1	DO- 7
07102-20237	D0200-01A1	1	DO- 9
07102-20303	F2700-05A0	12	FO- 99
07102-20304	F2700-06A0	1	FO- 105
07102-20304	H2250-01A0	16	HO- 39
07102-20305	F2370-05A0	22	FO- 61
07102-20306	F2700-05A0	13	FO- 99
07102-20308	F2370-05A0	1	FO- 61
07102-20316	K2510-05A0	16	KO- 119
07102-20336	D0200-01A0	2	DO- 7
07102-20336	D0200-01A1	2	DO- 9
07102-20403	F2370-05A0	15	FO- 61
07102-20403	F2700-03A0	5	FO- 91
07102-20404	D0200-01A0	14	DO- 7
07102-20405	D0200-01A1	14	DO- 9
07102-20406	D0200-01A0	14	DO- 7
07102-20406	D0200-01A1	14	DO- 9
07102-20410	F2700-07A0	15	FO- 107
07102-20415	K2510-05A0	1	KO- 119
07102-20417	F2700-03A0	27	FO- 91
07102-20435	D0200-01A1	15	DO- 9
07102-20436	D0200-01A0	15	DO- 7
07102-20603	F2700-03A0	20	FO- 91
07102-20603	F2700-04A0	46	FO- 96
07102-20608	F2700-04A0	20	FO- 95
07102-20613	F2700-04A0	31	FO- 95
07103-A0237	D0200-01A2	1	DO- 11
07103-A0304	F2700-06A0	1	FO- 105
07103-A0338	D0200-01A2	2	DO- 11
07103-A0403	F2700-03A0	5	FO- 91
07103-A0404	D0200-01A2	14	DO- 11
07103-A0436	D0200-01A2	15	DO- 11
07103-A0603	F2700-03A0	20	FO- 91
07109-20517	H2220-01A0	15	HO- 35

PARTS NO.	FIG NO '	INDEX	PAGE
07113-A0325	T2440-01A0	40	TO- 34
07113-A0506	T2160-01A0	14	TO- 23
07113-A0506	T2160-01A0	5	TO- 23
07113-A0517	H2220-01A0	15	HO- 35
07113-00325	T2440-01A0	40	TO- 34
07113-00506	T2160-01A0	14	TO- 23
07114-01006	H2210-03A0	22	HO- 31
07114-01011	H2210-03A0	2	HO- 31
07114-01012	H2210-03A0	1	HO- 31
07114-01013	H2210-03A0	3	HO- 31
07114-01015	T2440-01A1	42	TO- 38
07114-01406	T2440-01A0	16	TO- 33
07114-01406	T2440-01A1	16	TO- 37
07114-01407	T2440-01A0	17	TO- 33
07114-01407	T2440-01A1	17	TO- 37
07114-01409	H0310-01A0	29	HO- 17
07115-A1006	H2210-03A2	22	HO- 33
07115-A1010	H2210-02A1	41	HO- 26
07115-A1011	H2210-03A2	2	HO- 33
07115-A1012	H2210-03A2	1	HO- 33
07115-A1013	H2210-03A2	3	HO- 33
07115-A1015	T2440-01A1	42	TO- 38
07115-A1406	T2440-01A0	16	TO- 33
07115-A1406	T2440-01A1	16	TO- 37
07115-A1407	T2440-01A0	17	TO- 33
07115-A1407	T2440-01A1	17	TO- 37
07115-A1409	H0310-01A0	29	HO- 17
07118-A1223	H2210-01A2	26	HO- 21
07118-A1225	H2210-01A2	28	HO- 21
07118-01223	H2210-01A0	27	HO- 19
07118-01225	H2210-01A0	29	HO- 19
07119-A1011	H2210-02A1	39	HO- 25
07119-A1011	H2210-02A2	39	HO- 29
07119-A1012	H2210-02A1	41	HO- 26
07119-A1012	H2210-02A2	41	HO- 29
07119-01011	H2210-02A0	39	HO- 23
07119-01012	H2210-02A0	41	HO- 23
07119-01409	F2700-01A0	14	FO- 85
07137-00060	Y1620-01A0	17	YO- 19
07137-05008	Y1620-01A0	17	YO- 19
07144-11110	Y1621-01A0	20	YO- 27
07144-11110	Y1621-11A0	20	YO- 29
07145-00085	M2111-01A0	18	MO- 31
07145-00110	Y0100-01A0	9K	YO- 4
07145-00110	Y1621-01A0	21	YO- 27
07145-00110	Y1621-11A0	21	YO- 29
07145-00125	M2110-06A0	31	MO- 25
07145-00125	M2111-01A0	10	MO- 31
07146-02066	Y0100-01A0	10K	YO- 5
07146-02066	Y1621-21A0	8	YO- 31

PARTS NO.	FIG NO	INDEX	PAGE
07146-02136	Y0100-01A0	7K	Y0- 4
07146-02136	Y1620-01A0	6	Y0- 19
07155-00720	Y0100-01A0	10K	Y0- 5
07155-02250	Y0100-01A0	8K	Y0- 4
07155-02250	Y0100-01A0	9K	Y0- 4
07155-02250	Y1620-31A0	20	Y0- 25
07155-02250	Y1621-01A0	23	Y0- 27
07155-02250	Y1621-11A0	23	Y0- 29
07156-00710	Y1621-21A0	14	Y0- 31
07156-01112	F2370-03A0	11	F0- 57
07156-01112	F2370-03A0	18	F0- 57
07165-16870	Y1620-31A0	22	Y0- 25
07177-07515	Y1620-01A0	10	Y0- 19
07177-07530	Y1620-01A0	3	Y0- 19
07177-09020	Y1620-31A0	11	Y0- 25
07177-09020	Y1621-01A0	12	Y0- 27
07177-09020	Y1621-11A0	12	Y0- 29
07177-09035	Y1620-31A0	4	Y0- 25
07177-09035	Y1621-01A0	5	Y0- 27
07177-09035	Y1621-11A0	5	Y0- 29
07179-00097	Y1620-01A0	13	Y0- 19
07179-00113	Y1620-31A0	14	Y0- 25
07179-00113	Y1621-01A0	14	Y0- 27
07179-00113	Y1621-11A0	14	Y0- 29
07179-12047	Y1621-21A0	6	Y0- 31
07201-51527	F2700-07A0	48	F0- 108
07206-20508	A4210-A4E5	11	AA- 135
07206-20610	F2100-01A0	49	F0- 4
07206-20610	F2100-01A0	56	F0- 4
07206-30710	A4060-A4B3	2	AA- 125
07206-30710	A5010-C4F4	2	AA- 147
07206-30812	A4230-A4D5	8	AA- 141
07206-31014	A1530-C4D3	2	AA- 29
07206-31014	A1530-C4G8	2	AA- 31
07206-31014	A4060-A4B3	5	AA- 125
07206-31014	A4110-A4E4	13	AA- 129
07206-31014	A4110-A4H9	13	AA- 131
07206-31014	A4130-A4B3	15	AA- 133
07206-31014	A4230-A4D5	12	AA- 141
07206-31014	A5210-A4D3	12	AA- 153
07206-31014	A5210-A4F6	12	AA- 155
07209-01040	F2370-05A0	36	F0- 61
07213-50510	F2700-05A0	36	F0- 99
07213-50710	C0310-02A0	23	C0- 9
07213-50710	J2700-01A0	15	J0- 11
07213-50710	J2700-01A1	15	J0- 13
07213-50710	M2110-04A0	31	M0- 17
07213-50813	F2370-05A0	43	F0- 62
07213-50813	F2370-05A0	47	F0- 62
07213-51013	F2700-07A0	40	F0- 107

PARTS NO	FIG NO.	INDEX	PAGE
07213-51521	F2700-07A0	49	F0- 108
07214-50710	A4010-A4J5	5	AA- 99
07221-20315	K2510-05A0	27	K0- 119
07222-00312	K2510-05A0	26	K0- 119
07230-20210	D0100-02A0	9	D0- 5
07230-20315	D0100-02A0	8	D0- 5
07230-20315	F2700-05A0	21	F0- 99
07230-20422	F2370-05A0	13	F0- 61
07230-20422	F2700-07A0	14	F0- 107
07232-20315	F2700-05A0	18	F0- 99
07232-20628	F2700-04A0	17	F0- 95
07232-21034	F2700-02A0	16	F0- 89
07235-10210	D0100-02A0	19	D0- 5
07235-10210	D0100-02A0	5	D0- 5
07235-10315	F2370-05A0	2	F0- 61
07235-10315	F2370-05A0	23	F0- 61
07235-10315	F2700-06A0	2	F0- 105
07235-10317	D0100-02A0	4	D0- 5
07235-10422	K2510-05A0	2	K0- 119
07235-50315	H2250-01A0	15	H0- 39
07236-10315	F2370-05A0	20	F0- 61
07236-10315	K2510-05A0	24	K0- 119
07236-10315	T2440-01A0	41	T0- 34
07238-10210	A6910-A4B9	4	AA- 181
07238-10315	D0100-02A0	20	D0- 5
07239-13320	F2700-04A0	49	F0- 96
07239-13320	F2700-07A0	31	F0- 107
07239-22009	F2700-05A0	19	F0- 99
07239-22009	F2700-05A0	24	F0- 99
07239-22009	T2440-01A0	42	T0- 34
07239-22410	F2700-04A0	18	F0- 95
07239-23320	F2700-02A0	17	F0- 89
07260-03213	F2700-07A0	34	F0- 107
07260-04114	F2700-04A0	1	F0- 95
07260-20922	A5210-A4D3	8	AA- 153
07260-20922	F2700-07A0	42	F0- 107
07260-20971	A5210-A4D3	7	AA- 153
07260-21410	F2700-07A0	45	F0- 108
07260-24111	J2112-01A0	5	J0- 9
07270-01295	D0100-01A0	31	D0- 3
07270-30423	F2370-05A0	37	F0- 61
07281-00197	A5210-A4D3	11	AA- 153
07281-00197	A5210-A4F6	11	AA- 155
07281-00197	C0120-01A0A	12	C0- 3
07281-00197	F2700-07A0	43	F0- 108
07281-00259	F2700-07A0	46	F0- 108
07281-00359	A1530-C4D3	13	AA- 29
07281-00419	A1530-C4G8	13	AA- 31
07281-00419	M2110-03A0	9	M0- 11
07281-00549	A1610-B4F2A	3	AA- 39

PARTS NO	FIG NO.	INDEX	PAGE
07281-00549	A1610-B4F3A	3	AA- 41
07281-00549	F2700-07A0	35	F0- 107
07281-00609	F2700-04A0	2	F0- 95
07281-00709	H0100-02A0	21	H0- 7
07281-01159	K0710-04A0	20	K0- 53
07281-01159	K0710-04A0	25	K0- 53
07281-01159	K0710-04A0	26	K0- 53
07281-01159	K0710-04A0	27	K0- 53
07282-03411	Y1620-02A0	28	Y0- 23
07282-03411	Y1621-01A0	34	Y0- 27
07282-03411	Y1621-11A0	34	Y0- 29
07283-22738	F2700-02A0	33	F0- 89
07283-23442	H2210-01A0	9	H0- 19
07283-23442	H2210-01A2	9	H0- 21
07283-23442	T2440-01A1	25	T0- 37
07283-23442	T2440-01A1	34	T0- 37
07283-23450	H2210-03A0	11	H0- 31
07283-23450	H2210-03A2	11	H0- 33
07283-24346	F2700-03A0	24	F0- 91
07283-24346	H2210-01A0	8	H0- 19
07283-24346	H2210-01A2	8	H0- 21
07283-24346	T2440-01A0	33	T0- 33
07283-24354	F2700-04A0	7	F0- 95
07283-24354	T2440-01A0	13	T0- 33
07283-24354	T2440-01A1	13	T0- 37
07283-24949	A2060-A4C1	16	AA- 57
07283-24949	A5010-B4F4	14	AA- 145
07283-32746	H2210-02A0	25	H0- 23
07283-32746	H2210-02A1	25	H0- 25
07283-32746	H2210-02A2	25	H0- 29
07283-54959	A2060-A4C1	15	AA- 57
07285-00095	M2110-01A0	26	M0- 3
07285-00125	A4130-A4B3	18	AA- 133
07285-00130	D0100-01A0	30	D0- 3
07285-00155	C0120-01A0A	29	C0- 3
07285-00230	A2041-A4A5	19	AA- 51
07285-00230	A2041-A4G8	19	AA- 53
07285-00260	A2041-A4A5	18	AA- 51
07285-00260	A2041-A4G8	18	AA- 53
07285-00280	A2041-A4G8	18	AA- 53
07286-00875	A4130-A4B3	17	AA- 133
07286-01960	A2041-A4A5	17	AA- 51
07286-01960	A2041-A4G8	17	AA- 53
07289-00055	C0120-01A0A	24	C0- 3
07289-00055	J2112-01A0	4	J0- 9
07289-00070	C0120-01A0A	39	C0- 3
07289-00070	C0120-01A0A	40	C0- 3
07289-00070	K0710-04A0	19	K0- 53
07289-00070	K0710-04A0	24	K0- 53
07289-00095	C0120-01A0A	31	C0- 3
07289-00105	A1410-A4F3A	20	AA- 15
07289-00105	A1410-A4F4A	18	AA- 17
07289-00170	A1410-A4F3A	21	AA- 15
07289-00170	A1410-A4F4A	19	AA- 17
07332-01400	Y1660-02A0	20	Y0- 37
07332-02400	F2700-01A0	5	F0- 85
07332-02400	H0310-01A0	3	H0- 17
07332-52400	F2700-01A0	5	F0- 85
07332-52400	H0310-01A0	4	H0- 17
07332-62400	F2700-01A0	5	F0- 85
07332-62400	H0310-01A0	4	H0- 17
07371-30638	F2700-01A0	35	F0- 85
07371-30640	F2700-01A0	38	F0- 85
07371-31044	T2440-01A1	38	T0- 37
07371-31049	H2210-02A0	28	H0- 23
07371-31049	H2210-02A1	28	H0- 25
07371-31049	H2210-02A2	28	H0- 29
07371-31049	H2210-03A0	23	H0- 31
07371-31049	H2210-03A0	4	H0- 31
07371-31049	H2210-03A2	23	H0- 33
07371-31049	H2210-03A2	4	H0- 33
07371-31049	T2440-01A1	45	T0- 38
07371-31255	F2700-07A0	7	F0- 107
07371-31255	H2210-01A0	12	H0- 19
07371-31255	H2210-01A2	12	H0- 21
07371-31465	F2700-01A0	17	F0- 85
07371-31465	H0310-01A0	12	H0- 17
07371-31465	H2220-01A0	42	H0- 36
07371-31465	T2440-01A0	20	T0- 33
07371-31465	T2440-01A0	26	T0- 33
07371-31465	T2440-01A0	54	T0- 34
07371-31465	T2440-01A1	20	T0- 37
07371-31465	T2440-01A1	53	T0- 38
07372-01240	T2440-01A1	54	T0- 38
07372-21035	F2700-01A0	39	F0- 85
07372-21035	F2700-07A0	8	F0- 107
07372-21035	H2210-01A0	13	H0- 19
07372-21035	H2210-01A2	13	H0- 21
07372-21035	H2210-02A0	17	H0- 23
07372-21035	H2210-02A0	29	H0- 23
07372-21035	H2210-02A1	17	H0- 25
07372-21035	H2210-02A1	29	H0- 25
07372-21035	H2210-02A2	17	H0- 29
07372-21035	H2210-02A2	29	H0- 29
07372-21035	H2210-03A0	24	H0- 31
07372-21035	H2210-03A0	5	H0- 31
07372-21035	H2210-03A2	24	H0- 33
07372-21035	H2210-03A2	5	H0- 33
07372-21035	T2440-01A1	40	T0- 38
07372-21035	T2440-01A1	43	T0- 38

PARTS NO	FIG NO	INDEX	PAGE
07372-21240	F2700-01A0	15	F0- 85
07372-21240	H0310-01A0	13	H0- 17
07372-21240	H2220-01A0	44	H0- 36
07372-21240	T2440-01A0	18	T0- 33
07372-21240	T2440-01A0	24	T0- 33
07372-21240	T2440-01A0	55	T0- 34
07372-21240	T2440-01A1	18	T0- 37
07378-01460	H0100-02A0	10	H0- 7
07378-01460	Y1660-02A0	10	Y0- 37
07378-11000	T2440-01A1	37	T0- 37
07378-11400	H2220-01A0	41	H0- 35
07379-01460	T2440-01A0	60	T0- 34
07379-01460	T2440-01A1	56	T0- 38
07430-71113	Y1600-01A0	1	Y0- 9
07430-71132	Y1600-01A0	3	Y0- 9
07430-71150	Y1600-01A0	1	Y0- 9
07430-71150	Y1600-01A0	3	Y0- 9
07430-71160	Y1600-01A0	10	Y0- 9
07433-71021	Y1600-01A0	2	Y0- 9
07433-71042	Y1600-01A0	4	Y0- 9
07433-71052	Y1600-01A0	5	Y0- 9
07433-71103	F2700-04A0	13	F0- 95
07433-71103	Y1600-01A0	1	Y0- 9
07438-66090	Y1600-21A0	16	Y0- 15
07442-66030	Y1600-21A0	3	Y0- 15
07443-11163	Y1600-21A0	22	Y0- 15
07443-66140	Y1600-21A0	14	Y0- 15
07443-66736	Y1600-21A0	12	Y0- 15
07445-66091	Y1600-21A0	11	Y0- 15
07445-66130	Y1600-21A0	13	Y0- 15
07445-66171	Y1600-21A0	18	Y0- 15
07445-66181	Y1600-21A0	10	Y0- 15
07445-66611	Y1600-21A0	1	Y0- 15
07445-66760	Y1600-21A0	6	Y0- 15
07445-66770	Y1600-21A0	8	Y0- 15
07445-66860	Y1600-21A0	7	Y0- 15
07445-66870	Y1600-21A0	9	Y0- 15
07446-66040	Y1600-21A0	4	Y0- 15
07446-66050	Y1600-21A0	5	Y0- 15
07446-66200	Y1600-21A0	1	Y0- 15
07446-66220	Y1600-21A0	2	Y0- 15
07700-40240	F2370-05A0	46	F0- 62
07700-40460	D0100-01A0	10	D0- 3
07700-40460	D0200-01A0	4	D0- 7
07700-40460	D0200-01A1	4	D0- 9
07700-40460	D0200-01A2	4	D0- 11
07715-00651	H0100-01A0	13	H0- 3
07715-00651	Y1660-01A0	13	Y0- 33
07715-11257	H0100-01A0	12	H0- 3
07715-11257	Y1660-01A0	12	Y0- 33

PARTS NO.	FIG NO	INDEX	PAGE
07715-21074	H0100-01A0	14	H0- 3
07715-21074	Y1660-01A0	14	Y0- 33
07730-40004	C0120-01A0A	27	C0- 3
07843-00064	F2370-05A0	56	F0- 62
07843-02064	U0100-01A4	36	U0- 12
07843-04064	U0100-01A7	36	U0- 20
07843-05064	U0100-01A5	36	U0- 15
07843-30064	U0100-01A2	36	U0- 3
07843-30064	U0100-01A3	36	U0- 7
07843-30064	U0100-01A8	35	U0- 23
07950-10450	V0300-01A0	2	V0- 5
07950-90403	V0300-01A0	4	V0- 5
07951-11400	V0300-01A0	5	V0- 5
07951-21045	V0300-01A0	3	V0- 5
07952-70004	V0300-01A0	1	V0- 5
07952-80002	V0300-01A0	1	V0- 5
07959-30000	R2100-02A0	14	R0- 29
08000-00000	E0200-01A0	2	E0- 3
08000-00001	E0200-01A0	2	E0- 3
08000-32220	E0200-01A0	1	E0- 3
08017-30705	K0810-01A0	14	K0- 59
08028-46030	K2110-13A0	18	K0- 91
08028-56030	E0200-03A0	29	E0- 7
08034-00414	A8117-B4A8	2	AA- 184
08034-00414	A8121-A4A5	1	AA- 187
08034-00414	F2700-05A2	23	F0- 103
08034-00414	T2440-03A0	8	T0- 41
08034-00519	A1410-A4F3A	37	AA- 15
08034-00519	A1410-A4F4A	35	AA- 17
08034-00519	A6210-A4C4	5	AA- 175
08034-00519	A8117-B4A8	2	AA- 184
08034-00519	A8121-A4A5	1	AA- 187
08034-00519	C0120-01A0A	4	C0- 3
08034-00519	D0200-01A0	22	D0- 7
08034-00519	D0200-01A1	22	D0- 9
08034-00519	D0200-01A2	23	D0- 11
08034-00519	K0210-08A0	38	K0- 30
08034-00519	K0710-02A0	17	K0- 45
08034-00519	K0810-01A0	15	K0- 59
08034-00519	K2220-01A0	39	K0- 96
08034-00519	K2220-01A0	49	K0- 96
08034-00519	W2121-01A0	28	W0- 7
08034-00536	K0710-03A0	3	K0- 49
08034-00823	M2110-03A0	14	M0- 11
08035-01508	M2110-05A0	35	M0- 21
08035-01510	K0410-01A1	24	K0- 37
08035-02514	K0210-09A0	7	K0- 33
08035-02514	K2510-05A0	4	K0- 119
08036-00814	E0200-03A0	19	E0- 7
08036-00814	K2220-01A0	32	K0- 95

PARTS NO	FIG NO.	INDEX	PAGE
08036-01014	E0200-02A0	26	E0- 5
08036-01014	K0210-08A0	33	K0- 29
08036-01014	M2110-05A0	43	M0- 22
08036-01414	E0200-02A0	13	E0- 5
08036-01414	E0200-02A0	17	E0- 5
08036-01414	K2220-01A0	18	K0- 95
08036-01814	K0210-08A0	30	K0- 29
08036-01814	K0710-03A0	23	K0- 49
08036-01814	K2220-01A0	15	K0- 95
08036-01814	K2220-01A0	21	K0- 95
08036-01814	K2220-01A0	29	K0- 95
08036-01814	K2510-05A0	17	K0- 119
08036-01814	T2440-03A0	7	T0- 41
08036-10614	F2100-01A0	51	F0- 4
08036-10810	H2250-01A0	29	H0- 39
08036-10810	H2250-01A1	16	H0- 43
08036-10814	E0200-03A0	33	E0- 7
08036-10814	M2110-05A0	13	M0- 21
08036-10814	M2210-07A0	4	M0- 87
08036-11214	M2210-07A0	5	M0- 87
08036-11214	T2440-03A0	14	T0- 41
08036-21214	M2110-03A0	15	M0- 11
08036-21214	M2110-03A0	7	M0- 11
08036-21414	J2112-01A0	17	J0- 9
08036-21414	K0210-07A0	2	K0- 25
08036-21414	K0210-07A0	33	K0- 25
08036-21814	W2121-01A0	14	W0- 7
08036-21814	W2121-01A0	17	W0- 7
08036-22514	K0210-07A0	32	K0- 25
08036-31210	K0210-07A0	8	K0- 25
08036-61014	M2110-05A0	16	M0- 21
08036-80814	M2110-05A0	42	M0- 22
08036-81214	W2121-01A0	18	W0- 7
08036-90814	E0420-01A0	5	E0- 9
08036-90814	K0410-01A1	23	K0- 37
08036-91814	K2220-01A0	12	K0- 95
08036-91814	K2220-01A0	41	K0- 96
08037-01008	E0420-01A0	6	E0- 9
08037-01008	K0210-01A0	22	K0- 9
08037-01008	K0210-09A0	11	K0- 33
08037-01008	K0210-09A0	23	K0- 33
08037-01008	K0810-01A0	12	K0- 59
08037-01008	M2110-01A1	36	M0- 5
08037-01008	M2110-03A1	36	M0- 14
08037-01008	M2110-06A0	14	M0- 25
08037-01510	K0210-09A0	21	K0- 33
08037-02512	K0210-09A0	14	K0- 33
08037-03620	M2110-01A1	35	M0- 5
08037-03620	M2110-03A1	35	M0- 14
08037-03620	M2110-06A0	7	M0- 25

PARTS NO	FIG NO'	INDEX	PAGE
08037-05016	K0210-09A0	22	K0- 33
08038-00035	E0200-01A0	24	E0- 3
08038-00519	E0200-02A0	12	E0- 5
08038-02027	E0200-02A0	11	E0- 5
08038-06031	A6810-A4F5	9	AA- 179
08038-22511	E0200-01A0	11	E0- 3
08038-42511	E0200-01A0	11A	E0- 3
08041-01500	K2220-01A0	25	K0- 95
08041-02000	K2220-01A0	25	K0- 95
08052-31711	E0200-02A0	4	E0- 5
08052-31711	M2110-05A0	3	M0- 21
08053-00910	E0200-02A0	16	E0- 5
08053-01510	A6210-A4C4	4	AA- 175
08053-01510	M2110-05A0	2	M0- 21
08053-01510	M2210-01A0	2	M0- 61
08053-01512	E0200-02A0	7	E0- 5
08053-01512	M2210-01A0	36	M0- 61
08074-70000	M2210-01A0	21	M0- 61
08088-20000	M2210-01A0	23	M0- 61
08102-12403	K2220-51A0	5	K0- 101
08105-12410	K0810-01A0	28	K0- 59
08111-12430	K0210-07A0	5	K0- 25
08113-02480	K0410-01A1	20	K0- 37
08116-02410	K0210-08A0	4	K0- 29
08128-32400	K0410-01A1	20	K0- 37
08164-00000	E0420-01A0	1	E0- 9
08193-20010	A1410-A4F3A	38	AA- 15
08193-20010	A1410-A4F4A	36	AA- 17
08671-70080	A1410-A4F3A	31	AA- 15
08671-70080	A1410-A4F4A	29	AA- 17
09000-30006	V0300-01A0	6	V0- 5
09001-04600	V0300-01A0	13	V0- 5
09002-03641	V0300-01A0	12	V0- 5
09019-08035	V0300-01A0	1	V0- 5
09020-10284	V0300-01A0	7	V0- 5
09033-00190	V0300-01A0	8	V0- 5
09036-00150	V0300-01A0	9	V0- 5
09039-00150	V0300-01A0	11	V0- 5
09054-00009	V0300-01A0	14	V0- 5
09055-10390	V0300-01A0	10	V0- 5
09056-05513	V0300-01A0	15	V0- 5
09059-00800	V0100-01A0	18	V0- 3
09232-03838	F2320-53A0	40	F0- 28
09233-13820	F2320-53A0	41	F0- 28
09233-15125	F2320-52A0	42	F0- 24
09243-01230	F2380-02A0A	4	F0- 69
09243-01230	F2380-04A0A	4	F0- 77
09244-02508	T2410-01A0	34	T0- 25
09244-02508	T2410-01A0	40	T0- 25
09244-02508	T2410-01A1	37	T0- 29

PARTS NO.	FIG NO.	INDEX	PAGE
09249-10016	T2810-01A0	8	TO- 43
09304-01240	K2110-06A0	44	KO- 74
09304-01250	K2110-08A0	2	KO- 79
09305-00800	K2110-04A0	22	KO- 69
09305-00800	K2110-06A0	41	KO- 73
09311-41237	K2110-03A0	14	KO- 67
09350-01615	K2110-04A0	5	KO- 69
09350-01820	F2600-01A0	46	FO- 82
09350-02215	F2600-01A0	47	FO- 82
09361-01460	K2110-06A0	43	KO- 74
09363-01053	F2320-55A0	11	FO- 35
09363-01053	F2320-55A0	21	FO- 35
09409-20000	K0160-01A0	2	KO- 7
09415-00706	K0210-08A0	1	KO- 29
09415-00706	K0210-08A0	25	KO- 29
09415-00706	K2220-01A1	6	KO- 99
09415-01008	E0200-03A0	12	EO- 7
09415-01008	M2110-05A0	26	MO- 21
09415-01008	T2440-03A0	13D	TO- 41
09415-01610	F2700-06A0	19	FO- 105
09415-01610	K2110-01A0	49	KO- 62
09415-01610	K2110-01A0	53	KO- 62
09415-02512	K2110-01A0	27	KO- 61
09415-02512	K2110-07A0	12	KO- 77
09420-01902	M2210-06A0	43	MO- 80
09420-01902	M2210-06A3	43	MO- 84
09420-01903	M2141-01A0	16	MO- 35
09420-01903	M2141-01A2	16	MO- 39
09420-01903	M2141-01A3	16	MO- 41
09420-01907	K0410-01A0	3	KO- 35
09420-01907	K0410-01A1	2	KO- 37
09460-00000	K2220-01A1	5	KO- 99
09461-00030	M2141-02A1	1A	MO- 43
09461-00030	M2141-02A1	6A	MO- 43
09461-00030	M2142-02A0	1A	MO- 53
09461-00030	M2142-02A0	6A	MO- 53
09461-00030	M2142-02A1	6A	MO- 55
09462-00080	M2141-01A1	7	MO- 37
09462-00080	M2141-02A1	7	MO- 43
09462-00080	M2142-01A0	12	MO- 45
09462-00080	M2142-01A2	13	MO- 51
09462-00080	M2142-02A0	7	MO- 53
09462-00080	M2142-02A1	7	MO- 55
09463-00006	M2110-03A1	22A	MO- 13
09463-00006	M2142-01A0	3	MO- 45
09463-00006	M2142-01A2	2	MO- 51
09466-00001	M2141-01A1	17	MO- 37
09466-00001	M2142-01A0	22	MO- 45
09466-00001	M2142-01A2	23	MO- 51
09482-10000	K0710-03A0	15	KO- 49

PARTS NO	FIG NO.	INDEX	PAGE
09483-50515	K0710-03A0	8	KO- 49
09483-50516	K0710-03A0	1	KO- 49
09483-50523	K0710-03A0	9	KO- 49
09483-50524	K0710-03A0	9	KO- 49
09487-20220	K0710-05A0	7	KO- 55
09495-00010	M2250-01A0	46	MO- 90
09495-06010	M2250-01A0	46	MO- 90
09495-10010	M2250-01A0	46	MO- 90
09495-11010	M2250-01A0	46	MO- 90
09495-12010	M2250-01A0	46	MO- 90
09495-20010	M2250-01A0	46	MO- 90
09495-21010	M2250-01A0	46	MO- 90
09495-30010	M2250-01A0	46	MO- 90
09495-31010	M2250-01A0	46	MO- 90
09495-40010	M2250-01A0	46	MO- 90
09495-50010	M2250-01A0	46	MO- 90
09495-60010	M2250-01A0	46	MO- 90
09495-70010	M2250-01A0	46	MO- 90
09495-80010	M2250-01A0	46	MO- 90
09495-90010	M2250-01A0	46	MO- 90
09601-00835	T2120-01A0	42	TO- 16
09601-00835	T2120-01A1	44	TO- 20
09601-00835	T2410-01A0	35	TO- 25
09601-00835	T2410-01A1	32	TO- 29
09601-60000	U0100-01A2	27	UO- 3
09601-60000	U0100-01A2	8	UO- 3
09601-60000	U0100-01A3	27	UO- 7
09601-60000	U0100-01A3	8	UO- 7
09601-60000	U0100-01A4	27	UO- 11
09601-60000	U0100-01A4	8	UO- 11
09601-60000	U0100-01A5	27	UO- 15
09601-60000	U0100-01A5	8	UO- 15
09601-60000	U0100-01A7	27	UO- 19
09601-60000	U0100-01A7	8	UO- 19
09601-60000	U0100-01A8	26	UO- 23
09601-60000	U0100-01A8	8	UO- 23
09602-10000	U0100-01A2	33	UO- 3
09602-10000	U0100-01A3	33	UO- 7
09602-10000	U0100-01A4	33	UO- 11
09602-10000	U0100-01A5	33	UO- 15
09602-10000	U0100-01A7	33	UO- 19
09602-10000	U0100-01A8	32	UO- 23
09605-01440	A9810-A4U9	1	AA- 193
09607-05080	F2310-51A0	42	FO- 10
09608-05080	F2320-51A0	7	FO- 21
09620-02200	U0100-01A4	6	UO- 11
09620-04200	U0100-01A7	6	UO- 19
09620-05200	U0100-01A5	6	UO- 15
09620-30200	U0100-01A2	6	UO- 3
09620-30200	U0100-01A3	6	UO- 7

PARTS NO.	FIG NO	INDEX	PAGE
09620-30200	U0100-01A8	6	UO- 23
09637-02163	U0100-01A4	50	UO- 12
09637-04163	U0100-01A7	50	UO- 20
09637-05163	U0100-01A5	50	UO- 16
09637-30163	U0100-01A2	50	UO- 4
09637-30163	U0100-01A3	50	UO- 8
09637-30163	U0100-01A8	49	UO- 24
09649-00202	U0100-01A4	32	UO- 11
09649-00402	U0100-01A7	32	UO- 19
09649-00502	U0100-01A5	32	UO- 15
09649-03002	U0100-01A2	32	UO- 3
09649-03002	U0100-01A3	32	UO- 7
09649-03002	U0100-01A4	32	UO- 11
09649-03002	U0100-01A5	32	UO- 15
09649-03002	U0100-01A8	31	UO- 23
09651-A0641	U0100-01A2	42	UO- 4
09651-A0641	U0100-01A4	42	UO- 12
09651-A0641	U0100-01A5	42	UO- 16
09651-A0641	U0100-01A7	42	UO- 20
09651-03001	U0100-01A3	42	UO- 8
09653-A0481	U0100-01A2	38	UO- 4
09653-A0481	U0100-01A2	39	UO- 4
09653-A0481	U0100-01A4	38	UO- 12
09653-A0481	U0100-01A4	39	UO- 12
09653-A0481	U0100-01A5	38	UO- 16
09653-A0481	U0100-01A5	39	UO- 16
09653-A0481	U0100-01A7	38	UO- 20
09653-A0481	U0100-01A7	39	UO- 20
09653-03001	U0100-01A3	38	UO- 8
09654-B0641	U0100-01A2	40	UO- 4
09654-B0641	U0100-01A4	40	UO- 12
09654-B0641	U0100-01A5	40	UO- 16
09654-B0641	U0100-01A7	40	UO- 20
09654-33001	U0100-01A3	40	UO- 8
09657-A0881	U0100-01A2	41	UO- 4
09657-A0881	U0100-01A4	41	UO- 12
09657-A0881	U0100-01A5	41	UO- 16
09657-A0881	U0100-01A7	41	UO- 20
09657-03003	U0100-01A3	41	UO- 8
09659-A057B	U0100-01A2	44	UO- 4
09659-A057B	U0100-01A4	44	UO- 12
09659-A057B	U0100-01A5	44	UO- 16
09659-A057B	U0100-01A7	44	UO- 20
09659-A057B	U0100-01A8	43	UO- 24
09659-53000	U0100-01A3	44	UO- 8
09667-A0481	U0100-01A2	45	UO- 4
09667-A0481	U0100-01A4	45	UO- 12
09667-A0481	U0100-01A5	45	UO- 16
09667-A0481	U0100-01A7	45	UO- 20
09667-03001	U0100-01A3	45	UO- 8

PARTS NO.	FIG NO.	INDEX	PAGE
09668-03001	U0100-01A3	39	UO- 8
09669-0000E	U0100-01A2	51	UO- 4
09669-0000E	U0100-01A3	51	UO- 8
09669-0000E	U0100-01A4	51	UO- 12
09669-0000E	U0100-01A5	51	UO- 16
09669-0000E	U0100-01A7	51	UO- 20
09669-0000E	U0100-01A8	50	UO- 24
09670-00001	U0100-01A2	2	UO- 3
09670-00001	U0100-01A3	2	UO- 7
09670-00001	U0100-01A4	2	UO- 11
09670-00001	U0100-01A5	2	UO- 15
09670-00001	U0100-01A7	2	UO- 19
09670-00001	U0100-01A8	2	UO- 23
09671-00001	H2250-01A1	46	HO- 44
09671-00001	U0100-01A2	49	UO- 4
09671-00001	U0100-01A3	49	UO- 8
09671-00001	U0100-01A4	49	UO- 12
09671-00001	U0100-01A5	49	UO- 16
09671-00001	U0100-01A7	49	UO- 20
09671-00001	U0100-01A8	48	UO- 24
09685-00001	K0210-01A0	37	KO- 10
09685-00001	U0100-01A2	34	UO- 3
09685-00001	U0100-01A3	34	UO- 7
09685-00001	U0100-01A4	34	UO- 11
09685-00001	U0100-01A5	34	UO- 15
09685-00001	U0100-01A7	34	UO- 19
09685-00001	U0100-01A8	33	UO- 23
09685-00002	U0100-01A2	31	UO- 3
09685-00002	U0100-01A3	31	UO- 7
09685-00002	U0100-01A4	31	UO- 11
09685-00002	U0100-01A5	31	UO- 15
09685-00002	U0100-01A7	31	UO- 19
09685-00002	U0100-01A8	30	UO- 23
09690-C0800	U0100-01A2	16	UO- 3
09690-C0800	U0100-01A3	16	UO- 7
09690-C0800	U0100-01A4	16	UO- 11
09690-C0800	U0100-01A5	16	UO- 15
09690-C0800	U0100-01A7	16	UO- 19
09690-C0800	U0100-01A8	16	UO- 23
09690-M0063	U0100-01A2	1	UO- 3
09690-M0063	U0100-01A3	1	UO- 7
09690-M0063	U0100-01A4	1	UO- 11
09690-M0063	U0100-01A5	1	UO- 15
09690-M0063	U0100-01A7	1	UO- 19
09690-M0063	U0100-01A8	1	UO- 23
09802-B0750	U0100-01A2	43	UO- 4
09802-B0750	U0100-01A4	43	UO- 12
09802-B0750	U0100-01A5	43	UO- 16
09802-10400	U0100-01A7	43	UO- 20
09802-13000	U0100-01A3	43	UO- 8

PARTS NO.	FIG NO.	INDEX	PAGE
09806-B1683	U0100-01A2	46	U0- 4
09806-B1683	U0100-01A4	46	U0- 12
09806-B1683	U0100-01A5	46	U0- 16
09806-B1683	U0100-01A7	46	U0- 20
09806-B1683	U0100-01A8	45	U0- 24
09808-A0881	U0100-01A2	47	U0- 4
09808-A0881	U0100-01A4	47	U0- 12
09808-A0881	U0100-01A5	47	U0- 16
09808-A0881	U0100-01A7	47	U0- 20
09808-A0881	U0100-01A8	46	U0- 24
09808-03000	U0100-01A3	47	U0- 8
09812-03000	U0100-01A3	46	U0- 8
09920-00150	A2011-A4A4	15	AA- 47
09920-00150	A2060-A4C1	19	AA- 57
09920-00150	A2210-A4E4	11	AA- 63
09920-00150	A2610-A4B6	14	AA- 89
09963-A1640	U0100-01A2	37	U0- 3
09963-A1640	U0100-01A4	37	U0- 12
09963-A1640	U0100-01A5	37	U0- 16
09963-A1640	U0100-01A7	37	U0- 20
09963-A1640	U0100-01A8	36	U0- 23
09963-03001	U0100-01A3	37	U0- 7
09980-10550	V0300-01A0	16	V0- 5
09982-10057	V0300-01A0	17	V0- 5
10T-49-13180	D0100-01A0	11	D0- 3
100-27-11330	F2380-02A0A	53	F0- 70
100-27-11330	F2380-04A0A	53	F0- 78
100-33-13120	F2370-01A0	6	F0- 49
101-43-11380	K2110-08A0	16	K0- 79
103-15-15480	F2320-55A0	55	F0- 36
103-15-15510	F2320-55A0	55	F0- 36
111-06-11250	H2250-01A0	21	H0- 39
111-06-11250	H2250-01A1	8	H0- 43
112-946-4170	A2041-A4A5	20	AA- 51
112-946-4170	A2041-A4G8	20	AA- 53
113-43-11530	K2110-06A0	7	K0- 73
125-03-21210	M2110-01A0	24	M0- 3
125-15-11530	F2320-56A0	22	F0- 39
130-Z79-1620	E0200-03A0	25	E0- 7
130-Z79-1740	K0710-01A1	28	K0- 43
130-Z79-1740	K0710-02A0	9	K0- 45
130-09-15170	F2320-55A0	31	F0- 35
130-09-15740	F2320-53A0	31	F0- 27
130-09-16780	F2320-52A0	27	F0- 23
130-09-16780	F2320-53A0	22	F0- 27
130-21-12330	F2600-01A0	55	F0- 82
134-13-13400	F2310-51A0	7	F0- 9
134-13-13410	F2310-51A0	7	F0- 9
134-13-13430	F2310-51A0	10	F0- 9
14X-01-11140	B0100-01A0	5	B0- 3

PARTS NO	FIG NO.	INDEX	PAGE
14X-911-1531	K0210-02A0	30	K0- 13
140-06-18260	M2110-05A0	46	M0- 22
140-06-18260	M2210-01A0	24	M0- 61
141-54-38310	K0710-04A0	16	K0- 53
141-60-32170	H0100-01A0	22	H0- 3
141-60-32170	Y1660-01A0	22	Y0- 33
142-979-3221	K0710-04A0	36	K0- 53
142-979-3221	K0710-05A0	11	K0- 55
144-15-25210	F2320-55A0	23	F0- 35
144-15-25330	F2320-55A0	43	F0- 36
144-15-25691	F2320-56A0	26	F0- 39
144-15-29110	F2320-56A0	10	F0- 39
144-15-29110	F2320-56A0	16	F0- 39
144-15-29110	Y0100-01A0	5K	Y0- 3
144-15-29110	Y0100-01A0	5K	Y0- 3
144-15-29121	F2320-56A0	25	F0- 39
144-30-14330	M2810-01A0	24	M0- 93
144-30-14330	M2810-01A1	24	M0- 95
144-30-14330	M2810-01A2	24	M0- 97
144-40-22160	F2600-01A0	53	F0- 82
144-40-22170	F2600-01A0	6	F0- 81
144-40-22180	F2600-01A0	5	F0- 81
144-40-22190	F2600-01A0	14	F0- 81
144-40-22211	F2600-01A0	1	F0- 81
144-40-22221	F2700-05A0	6	F0- 99
144-40-22230	F2600-01A0	23	F0- 81
144-40-22240	F2600-01A0	49	F0- 82
144-40-22250	F2600-01A0	35	F0- 81
144-40-22260	F2600-01A0	25	F0- 81
144-40-22270	F2600-01A0	26	F0- 81
144-40-22280	F2600-01A0	27	F0- 81
144-40-22290	F2600-01A0	24	F0- 81
144-40-22311	F2600-01A0	32	F0- 81
144-40-22320	F2600-01A0	33	F0- 81
144-40-22330	F2600-01A0	36	F0- 81
144-40-22340	F2600-01A0	28	F0- 81
144-43-51130	K2110-05A0	9	K0- 71
144-43-51130	K2110-06A0	19	K0- 73
144-63-94170	Y0100-01A0	7K	Y0- 4
144-63-94170	Y1620-01A0	12	Y0- 19
144-874-7470	A1410-A4F3A	35	AA- 15
144-874-7470	A1410-A4F4A	33	AA- 17
144-874-7520	K2220-01A0	11	K0- 95
145-14-11320	F2320-52A0	2	F0- 23
145-14-11320	F2320-52A0	4	F0- 23
145-14-11320	F2320-52A0	6	F0- 23
145-14-11320	F2320-53A0	19	F0- 27
145-14-11320	F2320-53A0	4	F0- 27
145-14-11320	F2320-53A0	6	F0- 27
145-14-11571	F2320-52A0	10	F0- 23

PARTS NO.	FIG NO	INDEX	PAGE
145-14-12760	F2320-52A0	56	F0- 24
145-14-12790	F2320-53A0	62	F0- 28
145-14-23180	F2320-55A0	32	F0- 35
145-14-23710	F2700-08A0	3	F0- 111
145-14-23720	F2700-08A0	4	F0- 111
145-14-33351	F2320-55A0	39	F0- 36
145-14-33420	F2320-55A0	42	F0- 36
145-14-33430	F2320-55A0	40	F0- 36
145-14-33450	F2320-55A0	38	F0- 35
145-14-43333	F2320-55A0	36	F0- 35
145-14-43340	F2320-55A0	37	F0- 35
145-14-43370	F2320-55A0	41	F0- 36
145-14-43382	F2320-55A0	30	F0- 35
15A-06-11190	E0200-02A0	10	E0- 5
15A-13-05011	Y0100-01A0	1K	Y0- 3
15A-13-11250	F2310-52A0	41	F0- 14
15A-13-11651	F2310-52A0	26	F0- 13
15A-13-11661	F2310-52A0	37	F0- 13
15A-13-12520	F2310-52A0	23	F0- 13
15A-13-12720	F2310-52A0	31	F0- 13
15A-15-00190	F2320-52A0	12	F0- 23
15A-15-11240	F2320-52A0	17	F0- 23
15A-15-12140	F2320-52A0	25	F0- 23
15A-15-12150	F2320-52A0	28	F0- 23
15A-15-12310	F2320-52A0	32	F0- 23
15A-15-15003	F2320-55A0	1	F0- 35
15A-15-16450	F2320-55A0	8	F0- 35
15A-15-18000	F2320-56A0	1	F0- 39
15A-32-11121	R0500-01A0	4	R0- 11
15A-32-11121	R0500-01A2	4	R0- 15
15A-32-11121	R0500-01A3	4	R0- 17
15A-32-11121	R0500-01A4	4	R0- 19
15A-32-11121	R0500-01A5	4	R0- 21
15A-32-11131	R0500-01A0	5	R0- 11
15A-32-11131	R0500-01A2	5	R0- 15
15A-32-11131	R0500-01A3	5	R0- 17
15A-32-11131	R0500-01A4	5	R0- 19
15A-32-11131	R0500-01A5	5	R0- 21
15A-32-11141	R0500-01A0	6	R0- 11
15A-32-11141	R0500-01A3	6	R0- 17
15A-32-11141	R0500-01A4	6	R0- 19
15A-32-11141	R0500-01A5	6	R0- 21
15A-32-11321	R0500-01A0	12	R0- 11
15A-32-11321	R0500-01A3	12	R0- 17
15A-32-11321	R0500-01A4	12	R0- 19
15A-32-11321	R0500-01A5	12	R0- 21
15A-32-11331	R0500-01A0	13	R0- 11
15A-32-11331	R0500-01A3	13	R0- 17
15A-32-11331	R0500-01A4	13	R0- 19
15A-32-11331	R0500-01A5	13	R0- 21

PARTS NO	FIG NO.	INDEX	PAGE
15A-32-11421	R0500-01A0	14	R0- 11
15A-32-11421	R0500-01A3	14	R0- 17
15A-32-11421	R0500-01A4	14	R0- 19
15A-32-11421	R0500-01A5	14	R0- 21
15A-32-11431	R0500-01A0	15	R0- 11
15A-32-11431	R0500-01A3	15	R0- 17
15A-32-11431	R0500-01A4	15	R0- 19
15A-32-11431	R0500-01A5	15	R0- 21
15A-43-11141	K2110-03A0	10	K0- 67
15A-43-11190	K2110-08A0	14	K0- 79
15A-49-11210	F2700-04A0	41	F0- 95
15A-49-11220	F2700-04A0	47	F0- 96
15A-54-15110	M2210-02A0	18	M0- 65
15A-54-15110	M2210-02A0	5	M0- 65
15A-54-15110	M2210-02A2	18	M0- 67
15A-54-15110	M2210-02A2	5	M0- 67
150-09-19270	R0500-01A5	17	R0- 21
150-21-22180	F2100-01A0	14	F0- 3
150-30-00370	R0300-01A0	17	R0- 9
150-30-12220	R0300-01A0	17	R0- 9
150-33-12171	F2370-01A0	20	F0- 49
150-70-13411	T2110-01A1	34	T0- 7
150-70-23320	T2110-01A1	3	T0- 7
154-Z11-1120	K0210-01A0	8	K0- 9
154-Z11-1130	K0210-01A0	9	K0- 9
154-Z11-1190	K0210-04A0	18	K0- 19
154-Z11-1340	K0210-01A0	26	K0- 9
154-Z11-1350	K0210-01A0	26	K0- 9
154-Z11-5111	K2110-01A0	21	K0- 61
154-Z11-5120	K0710-04A0	1	K0- 53
154-Z11-5230	K0710-04A0	35	K0- 53
154-Z11-5240	K0710-04A0	10	K0- 53
154-Z11-5571	K0210-08A0	27	K0- 29
154-Z11-5610	K0710-03A0	29	K0- 49
154-Z11-5750	K0210-06A0	12	K0- 23
154-01-12131	F2100-01A0	7	F0- 3
154-01-12221	F2100-01A0	16	F0- 3
154-01-12230	F2100-01A0	18	F0- 3
154-01-12240	F2100-01A0	20	F0- 3
154-01-12250	F2100-01A0	23	F0- 3
154-01-12260	F2100-01A0	43	F0- 4
154-01-12271	F2100-01A0	44	F0- 4
154-01-12280	F2100-01A0	15	F0- 3
154-01-12310	F2100-01A0	28	F0- 3
154-01-12320	F2100-01A0	30	F0- 3
154-01-12420	F2100-01A0	34	F0- 3
154-01-12431	F2100-01A0	35	F0- 3
154-01-12520	F2100-01A0	55	F0- 4
154-01-21310	B0100-01A0	2	B0- 3
154-01-21310	B0100-01A0	9	B0- 3

PARTS NO.	FIG NO.	INDEX	PAGE
154-01-21320	B0100-01A0	10	B0- 3
154-01-21320	B0100-01A0	3	B0- 3
154-01-21330	B0100-01A0	11	B0- 3
154-01-21330	B0100-01A0	4	B0- 3
154-01-21350	B0100-01A0	12	B0- 3
154-01-21350	B0100-01A0	6	B0- 3
154-01-21720	F2100-01A0	47	F0- 4
154-01-21730	F2100-01A0	54	F0- 4
154-03-51460	C0310-02A0	2	C0- 9
154-04-11210	D0100-01A0	32	D0- 3
154-04-12492	D0100-01A0	19	D0- 3
154-06-X1170	K2220-01A1	G-1	K0- 99
154-06-41261	K2220-01A0	3	K0- 95
154-06-41270	K2220-01A0	22	K0- 95
154-06-41340	E0200-03A0	15	E0- 7
154-06-41350	E0200-03A0	18	E0- 7
154-06-41390	W2121-01A0	23	W0- 7
154-06-41530	K0410-01A1	16	K0- 37
154-06-41540	K2220-01A1	1	K0- 99
154-15-22811	F2320-52A0	51	F0- 24
154-15-22831	F2320-53A0	61	F0- 28
154-15-42180	F2320-52A0	30	F0- 23
154-15-45230	F2320-55A0	20	F0- 35
154-15-45520	F2320-56A0	43	F0- 40
154-15-45520	Y0100-01A0	5K	Y0- 4
154-15-45540	F2320-56A0	40	F0- 40
154-15-45540	Y0100-01A0	5K	Y0- 3
154-15-45710	F2320-56A0	36	F0- 39
154-15-45760	F2320-56A0	5	F0- 39
154-15-45760	Y0100-01A0	5K	Y0- 3
154-19-11230	F2710-02A0	4	F0- 115
154-21-11760	J2110-01A0	21	J0- 3
154-21-11760	J2110-01A1	21	J0- 5
154-21-11760	J2110-01A2	21	J0- 7
154-21-22211	F2350-01A0	19	F0- 45
154-22-11230	F2360-01A0	5	F0- 47
154-27-12152	F2380-02A0A	46	F0- 70
154-27-12152	F2380-04A0A	46	F0- 78
154-27-12162	F2380-02A0A	23	F0- 69
154-27-12162	F2380-04A0A	23	F0- 77
154-30-00243	R0300-01A0	16	R0- 9
154-30-00821	R0300-01A0	16	R0- 9
154-30-00831	R0300-01A0	16	R0- 9
154-30-11810	R2100-01A0	24	R0- 23
154-30-11810	R2100-01A1	24	R0- 25
154-30-11810	R2100-01A2	24	R0- 27
154-30-11821	R2100-01A0	26	R0- 23
154-30-11821	R2100-01A1	26	R0- 25
154-30-11821	R2100-01A2	26	R0- 27
154-30-11831	R2100-01A0	27	R0- 23

PARTS NO	FIG NO.	INDEX	PAGE
154-30-11831	R2100-01A1	27	R0- 25
154-30-11831	R2100-01A2	27	R0- 27
154-30-51460	M2110-04A0	38	M0- 17
154-33-11540	F2370-01A0	14	F0- 49
154-33-11610	F2370-01A0	12	F0- 49
154-33-11620	F2370-01A0	11	F0- 49
154-33-11650	F2370-01A0	19	F0- 49
154-33-11720	F2370-01A0	24	F0- 49
154-33-21142	F2370-02A0	37	F0- 54
154-33-21150	F2370-02A0	17	F0- 53
154-33-21262	F2370-01A0	42	F0- 50
154-33-21280	F2370-01A0	37	F0- 50
154-33-21320	F2370-02A0	24	F0- 53
154-33-21330	F2370-02A0	25	F0- 53
154-33-21340	F2370-02A0	15	F0- 53
154-33-21350	F2370-02A0	16	F0- 53
154-33-21420	F2370-02A0	8	F0- 53
154-33-21430	F2370-02A0	9	F0- 53
154-38-25110	F2100-01A0	5	F0- 3
154-40-00082	F2600-01A0	1	F0- 81
154-40-41110	F2600-01A0	44	F0- 82
154-40-41120	F2600-01A0	45	F0- 82
154-40-41130	F2600-01A0	29	F0- 81
154-43-14690	K2110-08A0	13	K0- 79
154-43-14710	K2110-08A0	10	K0- 79
154-43-41122	K2110-03A0	11	K0- 67
154-43-41260	K2110-03A0	16	K0- 67
154-43-41310	K2110-04A0	25	K0- 69
154-43-41320	K2110-04A0	6	K0- 69
154-43-41340	K2110-04A0	2	K0- 69
154-43-41350	K2110-04A0	12	K0- 69
154-43-41360	K2110-04A0	9	K0- 69
154-43-42110	K2110-05A0	1	K0- 71
154-43-42120	K2110-05A0	3	K0- 71
154-43-42160	K2110-05A0	6	K0- 71
154-43-42170	K2110-05A0	1	K0- 71
154-43-43110	K2110-11A0	1	K0- 87
154-43-43120	K2110-11A0	4	K0- 87
154-43-43130	K2110-06A0	3	K0- 73
154-43-43150	K2110-06A0	14	K0- 73
154-43-43160	K2110-11A0	17	K0- 87
154-43-43210	K2110-06A0	21	K0- 73
154-43-43220	K2110-06A0	24	K0- 73
154-43-43260	K2110-06A0	35	K0- 73
154-43-43270	K2110-11A0	5	K0- 87
154-43-44110	K2110-08A0	1	K0- 79
154-43-44120	K2110-08A0	19	K0- 79
154-43-44250	K2110-08A0	7	K0- 79
154-43-44261	K2110-08A0	5	K0- 79
154-43-44270	K2110-08A0	4	K0- 79

PARTS NO	FIG NO.	INDEX	PAGE
154-43-44280	K2110-08A0	12	K0- 79
154-44-14540	K2110-07A0	27	K0- 77
154-44-14560	K2110-07A0	24	K0- 77
154-44-14570	K2110-07A0	25	K0- 77
154-45-35270	K2510-03A0	11	K0- 113
154-54-12850	M2810-01A0	21	M0- 93
154-54-12850	M2810-01A1	21	M0- 95
154-54-12850	M2810-01A2	21	M0- 97
154-54-41412	M2110-01A1	10	M0- 5
154-54-41412	M2110-03A1	10	M0- 13
154-54-41412	M2113-01A0	8	M0- 33
154-54-42160	K2110-01A0	15	K0- 61
154-54-42220	K0410-02A0	15	K0- 39
154-54-43220	M2250-01A0	2	M0- 89
154-54-43250	M2142-02A0	12	M0- 53
154-54-43250	M2142-02A1	12	M0- 55
154-54-45240	M2141-01A0	27	M0- 35
154-54-45240	M2141-01A2	27	M0- 39
154-54-45240	M2141-01A3	27	M0- 41
154-54-45260	K0210-07A0	41	K0- 26
154-54-46230	K2110-01A0	18	K0- 61
154-54-46320	K2110-01A0	3	K0- 61
154-55-19341	M2141-01A1	2	M0- 37
154-55-19341	M2141-02A1	2	M0- 43
154-55-19341	M2142-01A0	7	M0- 45
154-55-19341	M2142-01A2	7	M0- 51
154-55-19341	M2142-02A0	2	M0- 53
154-55-19341	M2142-02A1	2	M0- 55
154-57-13110	K2110-14A0	1	K0- 93
154-57-13120	K2110-14A0	2	K0- 93
154-57-13140	K2110-14A0	7	K0- 93
154-57-13151	K2110-14A0	8	K0- 93
154-60-12260	H0100-02A0	6	H0- 7
154-60-12260	Y1660-02A0	6	Y0- 37
154-60-12370	H0100-01A0	29	H0- 3
154-60-12370	Y1660-01A0	29	Y0- 33
154-70-19181	T2110-01A1	13	T0- 7
154-71-21290	T2110-01A0	21	T0- 3
154-71-21290	T2110-01A2	21	T0- 11
154-71-21290	T2120-01A0	37	T0- 15
154-71-21290	T2120-01A1	39	T0- 19
154-71-31410	T2160-01A0	11	T0- 23
154-830-0030	R0300-01A0	17	R0- 9
154-830-2210	R0300-01A0	17	R0- 9
154-830-2280	R2100-01A0	26	R0- 23
154-830-2280	R2100-01A1	26	R0- 25
154-830-2280	R2100-01A2	26	R0- 27
154-830-2290	R2100-01A0	27	R0- 23
154-830-2290	R2100-01A1	27	R0- 25
154-830-2290	R2100-01A2	27	R0- 27

PARTS NO.	FIG NO	INDEX	PAGE
154-91-21310	W2119-02A0	17	W0- 5
154-91-42120	K0410-01A1	13	K0- 37
154-911-1140	K0710-01A0	20	K0- 41
154-911-1150	K0710-01A0	19	K0- 41
154-978-0030	K0410-02A0	11	K0- 39
154-978-2220	K0410-01A0	2	K0- 35
154-98-36630	U0630-01A1	1	U0- 27
155-15-12820	F2320-52A0	50	F0- 24
155-15-12820	F2320-53A0	54	F0- 28
155-15-15320	F2320-55A0	46	F0- 36
155-15-15351	F2320-55A0	49	F0- 36
155-15-15360	F2320-55A0	47	F0- 36
155-15-15370	F2320-55A0	59	F0- 36
155-15-15410	F2320-55A0	24	F0- 35
155-15-15850	F2320-55A0	26	F0- 35
155-30-13230	R0100-01A0	34	R0- 4
155-60-12500	H0310-01A0	19	H0- 17
155-60-12510	H0310-01A0	19	H0- 17
155-60-12520	H0310-01A0	20	H0- 17
17A-03-13170	C0120-01A0A	34	C0- 3
17A-03-13180	C0120-01A0A	19	C0- 3
17A-06-17940	E0200-03A0	3	E0- 7
17A-06-17940	M2110-05A0	17	M0- 21
17A-06-17940	T2440-03A0	9	T0- 41
17A-06-17970	E0200-03A0	5	E0- 7
17A-06-17970	M2110-05A0	19	M0- 21
17A-06-17970	T2440-03A0	10	T0- 41
17A-06-17980	E0200-03A0	14	E0- 7
17A-06-17980	M2110-05A0	28	M0- 21
17A-06-17980	T2440-03A0	11	T0- 41
17A-21-12151	B0100-01A0	8	B0- 3
17A-27-11630	F2380-02A0A	19	F0- 69
17A-27-11630	F2380-04A0A	19	F0- 77
17A-49-17151	F2700-05A2	6	F0- 103
17A-49-17151	F2700-05A2	7	F0- 103
17A-57-21132	K0110-01A0	1A	K0- 3
17A-57-21202	K0160-01A0	1	K0- 7
17A-57-22112	K0110-01A0	1	K0- 3
17A-57-22112	K0110-02A0	1	K0- 5
17A-57-22122	K0110-01A0	1	K0- 3
17A-57-22122	K0110-02A0	1	K0- 5
17A-911-1421	K0710-01A1	23	K0- 43
17A-911-1421	K0710-02A0	4	K0- 45
17A-911-1521	A1310-A4H7	25	AA- 11
17A-911-1531	K0710-01A0	24	K0- 41
17A-911-1541	K0710-01A0	23	K0- 41
17A-911-1551	K0710-01A0	26	K0- 41
17A-911-1561	K0710-01A0	25	K0- 41
17A-911-1671	K0710-01A0	21	K0- 41
17A-911-1721	A1310-A4H7	24	AA- 11

PARTS NO	FIG NO	INDEX	PAGE
17M-01-23420	F2700-07A0	56	F0- 108
17M-98-21510	U0100-01A2	3	U0- 3
17M-98-21510	U0100-01A3	3	U0- 7
17M-98-21510	U0100-01A4	3	U0- 11
17M-98-21510	U0100-01A5	3	U0- 15
17M-98-21510	U0100-01A7	3	U0- 19
17M-98-21510	U0100-01A8	3	U0- 23
17M-98-21520	U0100-01A2	48	U0- 4
17M-98-21520	U0100-01A3	48	U0- 8
17M-98-21520	U0100-01A4	48	U0- 12
17M-98-21520	U0100-01A5	48	U0- 16
17M-98-21520	U0100-01A7	48	U0- 20
17M-98-21520	U0100-01A8	47	U0- 24
170-09-13210	F2380-01A0A	14	F0- 65
170-09-13210	F2380-01A1	14	F0- 67
170-09-13210	F2380-03A0A	14	F0- 73
170-09-13210	F2380-03A1	14	F0- 75
170-09-13220	F2380-01A0A	15	F0- 65
170-09-13220	F2380-01A1	15	F0- 67
170-09-13220	F2380-03A0A	15	F0- 73
170-09-13220	F2380-03A1	15	F0- 75
170-09-13230	F2380-01A0A	30	F0- 65
170-09-13230	F2380-01A1	30	F0- 67
170-09-13230	F2380-03A0A	30	F0- 73
170-09-13230	F2380-03A1	30	F0- 75
170-09-13240	F2380-01A0A	31	F0- 65
170-09-13240	F2380-01A1	31	F0- 67
170-09-13240	F2380-03A0A	31	F0- 73
170-09-13240	F2380-03A1	31	F0- 75
170-09-13250	F2380-02A0A	12	F0- 69
170-09-13250	F2380-04A0A	12	F0- 77
170-21-11190	J2110-01A0	9	J0- 3
170-21-11190	J2110-01A1	9	J0- 5
170-21-11190	J2110-01A2	9	J0- 7
170-21-12141	F2350-01A0	18	F0- 45
170-21-12141	F2380-01A0A	21	F0- 65
170-21-12141	F2380-01A1	21	F0- 67
170-21-12141	F2380-03A0A	21	F0- 73
170-21-12141	F2380-03A1	21	F0- 75
170-21-12160	F2350-01A0	5	F0- 45
170-21-12170	F2350-01A0	3	F0- 45
170-22-11130	F2350-01A0	12	F0- 45
170-27-00113	F2380-02A0A	48	F0- 70
170-27-00113	F2380-04A0A	48	F0- 78
170-27-11232	F2380-01A0A	20	F0- 65
170-27-11232	F2380-01A1	20	F0- 67
170-27-11232	F2380-03A0A	20	F0- 73
170-27-11232	F2380-03A1	20	F0- 75
170-27-12210	F2380-02A0A	14	F0- 69
170-27-12210	F2380-04A0A	14	F0- 77

PARTS NO.	FIG NO.	INDEX	PAGE
170-27-12250	F2380-02A0A	30	F0- 69
170-27-12250	F2380-04A0A	30	F0- 77
170-27-12472	F2380-02A0A	2	F0- 69
170-27-12472	F2380-04A0A	2	F0- 77
170-27-12480	F2380-02A0A	3	F0- 69
170-27-12480	F2380-04A0A	3	F0- 77
170-30-00114	R0100-01A0	8	R0- 3
170-30-00114	R0200-01A0	11	R0- 7
170-30-12162	R2200-01A0	9	R0- 37
170-30-13343	R0100-01A0	14	R0- 3
170-30-14212	R2100-02A0	18	R0- 29
170-30-14221	R2100-02A0	28	R0- 29
170-30-14230	R2100-02A0	19	R0- 29
170-30-14441	R2100-02A0	40	R0- 30
170-30-15190	R0300-01A0	14	R0- 9
170-30-15210	R0300-01A0	15	R0- 9
170-30-91130	R0100-01A0	6	R0- 3
170-30-91130	R0200-01A0	9	R0- 7
170-32-11115	R0500-01A3	1	R0- 17
170-32-11332	R0500-01A5	1	R0- 21
170-33-13330	F2370-01A0	32	F0- 49
170-33-13330	F2370-02A0	39	F0- 54
170-33-13370	F2370-02A0	5	F0- 53
170-33-13530	F2700-08A0	6	F0- 111
170-43-17110	K0210-01A0	24	K0- 9
170-50-12110	J2700-01A0	11	J0- 11
170-50-12110	J2700-01A1	11	J0- 13
170-54-11230	K2110-08A0	6	K0- 79
170-69-11143	T2810-01A0	8	T0- 43
170-70-12240	T2110-01A1	35	T0- 7
170-70-15190	M2111-01A0	14	M0- 31
175-Z11-0040	K0210-02A0	1	K0- 13
175-01-71111	A2250-A4D5	1	AA- 71
175-01-71131	B0100-01A0	14	B0- 3
175-01-71141	B0100-01A0	1	B0- 3
175-01-71150	B0100-01A0	22	B0- 3
175-01-71160	B0100-01A0	23	B0- 3
175-01-71210	F2100-01A0	58	F0- 4
175-03-00401	C0310-02A0	2	C0- 9
175-03-00510	M2110-01A0	1	M0- 3
175-03-00520	M2110-01A0	1	M0- 3
175-03-21530	M2110-01A0	34	M0- 3
175-03-31181	M2110-01A0	19	M0- 3
175-03-31530	C0120-01A0A	28	C0- 3
175-03-31563	M2110-01A0	18	M0- 3
175-03-32620	M2110-01A0	30	M0- 3
175-03-32650	M2110-02A0	40	M0- 7
175-03-32660	M2110-01A0	21	M0- 3
175-03-32791	C0120-01A0A	36	C0- 3
175-03-32951	M2110-02A0	1	M0- 7

PARTS NO.	FIG NO	INDEX	PAGE
175-03-32951	M2110-02A0	9	M0- 7
175-03-32961	M2110-02A0	10	M0- 7
175-03-32961	M2110-02A0	2	M0- 7
175-03-32990	M2110-01A0	20	M0- 3
175-03-34380	C0310-01A0	14	C0- 5
175-03-34380	C0310-01A1	14	C0- 7
175-03-34380	M2110-04A0	7	M0- 17
175-03-41440	M2210-02A0	11	M0- 65
175-03-41440	M2210-02A0	20	M0- 65
175-03-41440	M2210-02A2	11	M0- 67
175-03-41440	M2210-02A2	20	M0- 67
175-03-42140	C0310-02A0	32	C0- 9
175-03-42140	C0310-02A1	8	C0- 11
175-03-42140	M2110-07A0	8	M0- 27
175-03-43110	M2110-03A0	1	M0- 11
175-03-43170	C0310-02A0	12	C0- 9
175-03-43170	C0310-02A1	1	C0- 11
175-03-43170	M2110-07A0	1	M0- 27
175-03-43181	K0710-01A1	15	K0- 43
175-03-43190	K0710-01A1	16	K0- 43
175-03-71111	M2110-01A0	9	M0- 3
175-03-71121	M2110-01A0	10	M0- 3
175-03-71130	M2110-01A0	8	M0- 3
175-03-71140	M2110-01A0	27	M0- 3
175-03-71151	M2110-01A0	11	M0- 3
175-03-71161	M2110-01A0	12	M0- 3
175-03-71170	M2110-02A0	20	M0- 7
175-03-71180	M2110-02A0	30	M0- 7
175-03-71190	M2110-02A0	17	M0- 7
175-03-71210	M2110-02A0	27	M0- 7
175-03-71261	C0120-01A0A	30	C0- 3
175-03-71270	C0120-01A0A	23	C0- 3
175-03-71281	C0120-01A0A	32	C0- 3
175-03-71290	C0120-01A0A	16	C0- 3
175-03-71331	M2110-01A0	1	M0- 3
175-03-71351	C0310-02A0	1	C0- 9
175-03-71351	M2110-04A0	22	M0- 17
175-03-71360	C0310-02A0	3	C0- 9
175-03-71360	M2110-04A0	39	M0- 17
175-03-71370	C0310-02A0	8	C0- 9
175-03-71370	M2110-04A0	25	M0- 17
175-03-71380	C0310-02A0	9	C0- 9
175-03-71380	M2110-04A0	26	M0- 17
175-03-71390	C0310-02A0	9	C0- 9
175-03-71390	M2110-04A0	27	M0- 17
175-03-71410	C0310-02A0	14	C0- 9
175-03-71410	C0310-02A1	29	C0- 11
175-03-71410	M2110-04A0	45	M0- 18
175-03-71421	C0310-02A0	31	C0- 9
175-03-71421	C0310-02A1	7	C0- 11

PARTS NO	FIG NO'	INDEX	PAGE
175-03-71421	M2110-07A0	7	M0- 27
175-03-71430	C0310-02A0	13	C0- 9
175-03-71430	C0310-02A1	2	C0- 11
175-03-71430	M2110-07A0	2	M0- 27
175-03-71440	C0310-01A0	21	C0- 5
175-03-71440	C0310-01A1	21	C0- 7
175-03-71450	C0310-01A0	24	C0- 5
175-03-71450	C0310-01A1	24	C0- 7
175-03-71470	C0120-01A0A	11	C0- 3
175-03-71510	C0310-01A0	18	C0- 5
175-03-71510	C0310-01A1	18	C0- 7
175-03-71510	M2110-04A0	16	M0- 17
175-03-71521	C0310-01A0	1	C0- 5
175-03-71521	C0310-01A1	1	C0- 7
175-03-71521	M2110-04A0	2	M0- 17
175-03-71531	C0310-01A0	6	C0- 5
175-03-71531	C0310-01A1	6	C0- 7
175-03-71531	M2110-04A0	4	M0- 17
175-03-71540	C0120-01A0A	38	C0- 3
175-03-71610	A5080-A4B2	36	AA- 150
175-03-71611	A5080-A4B2	36	AA- 149
175-03-71621	C0310-01A0	27	C0- 5
175-03-71621	C0310-01A1	27	C0- 7
175-03-71623	C0310-01A0	27	C0- 5
175-03-71623	C0310-01A1	27	C0- 7
175-03-71710	C0310-02A0	19	C0- 9
175-03-71710	M2110-04A0	42	M0- 17
175-03-71810	C0310-02A1	13	C0- 11
175-03-71810	M2110-07A0	13	M0- 27
175-03-72110	C0120-01A0A	35	C0- 3
175-03-73140	C0120-01A0A	25	C0- 3
175-03-74420	C0310-02A0	22	C0- 9
175-03-74420	M2110-04A0	30	M0- 17
175-03-74430	C0310-02A0	25	C0- 9
175-03-74430	M2110-04A0	33	M0- 17
175-04-00167	D0200-01A0	6	D0- 7
175-04-00167	D0200-01A1	6	D0- 9
175-04-00167	D0200-01A2	6	D0- 11
175-04-00210	D0200-01A0	7	D0- 7
175-04-00210	D0200-01A1	7	D0- 9
175-04-00210	D0200-01A2	7	D0- 11
175-04-21320	D0100-01A0	6	D0- 3
175-04-22113	D0100-01A0	3	D0- 3
175-04-25180	F2370-05A0	38	F0- 61
175-04-25221	D0100-01A0	16	D0- 3
175-04-25340	D0200-01A0	6	D0- 7
175-04-25340	D0200-01A1	6	D0- 9
175-04-25340	D0200-01A2	6	D0- 11
175-04-26181	D0100-01A0	20	D0- 3
175-04-26210	D0100-01A0	27	D0- 3

PARTS NO.	FIG NO.	INDEX	PAGE
175-04-71140	D0100-02A0	1	D0- 5
175-04-71151	D0100-02A0	14	D0- 5
175-04-71170	D0100-02A0	13	D0- 5
175-04-71180	D0100-02A0	12	D0- 5
175-04-71260	D0100-01A0	1	D0- 3
175-06-X1140	E0420-01A0	G-1	E0- 9
175-06-25160	M2110-05A0	9	M0- 21
175-06-27250	K2220-01A0	8	K0- 95
175-06-37871	W2121-01A0	21	W0- 7
175-06-38561	M2210-01A0	14	M0- 61
175-06-38570	K2110-13A0	10	K0- 91
175-06-38810	M2210-01A0	16	M0- 61
175-06-39621	E0200-01A0	8	E0- 3
175-06-39830	W2121-01A0	4	W0- 7
175-06-41110	M2110-05A0	29	M0- 21
175-06-41302	M2110-05A0	32	M0- 21
175-06-51342	M2110-05A0	34	M0- 21
175-06-61160	M2110-05A0	12	M0- 21
175-06-61180	M2210-01A0	8	M0- 61
175-06-61190	M2210-01A0	13	M0- 61
175-06-61210	M2210-01A0	27	M0- 61
175-06-61221	M2210-01A0	31	M0- 61
175-06-61240	E0200-01A0	12	E0- 3
175-06-61250	E0200-01A0	20	E0- 3
175-06-61260	E0200-01A0	13	E0- 3
175-06-61270	T2440-03A0	4	T0- 41
175-06-61390	M2110-05A0	39	M0- 21
175-06-61421	E0420-01A0	2	E0- 9
175-06-61430	K2110-13A0	1	K0- 91
175-06-61510	F2700-06A0	13	F0- 105
175-06-61540	F2700-06A0	7	F0- 105
175-06-71120	K2110-13A0	13	K0- 91
175-06-71133	K2220-01A0	10	K0- 95
175-06-71134	K2220-01A0	10	K0- 95
175-06-71141	E0200-02A0	1	E0- 5
175-06-71142	E0200-02A0	1	E0- 5
175-06-71151	M2110-05A0	1	M0- 21
175-06-71171	M2210-01A0	1	M0- 61
175-06-71172	M2210-01A0	1	M0- 61
175-06-71210	W2121-01A0	22	W0- 7
175-06-71310	E0200-03A0	24	E0- 7
175-06-71381	M2110-05A0	38	M0- 21
175-06-71510	K2220-01A0	45	K0- 96
175-09-11120	R2200-01A0	6	R0- 37
175-11-11132	F2310-51A0	44	F0- 10
175-11-11132	Y0100-01A0	1K	Y0- 3
175-13-00150	F2310-54A0	1	F0- 19
175-13-21081	F2310-51A0	1	F0- 9
175-13-21081	F2310-52A0	1	F0- 13
175-13-21081	F2310-53A0	1	F0- 17

PARTS NO.	FIG NO	INDEX	PAGE
175-13-21081	F2310-54A0	1	F0- 19
175-13-21125	F2310-52A0	1	F0- 13
175-13-21160	F2310-52A0	4	F0- 13
175-13-21213	F2310-52A0	17	F0- 13
175-13-21220	F2310-52A0	20	F0- 13
175-13-21240	F2310-52A0	16	F0- 13
175-13-21514	F2310-52A0	12	F0- 13
175-13-21692	F2310-52A0	38	F0- 13
175-13-21712	F2310-52A0	40	F0- 14
175-13-21712	Y0100-01A0	1K	Y0- 3
175-13-21770	F2310-52A0	29	F0- 13
175-13-22122	F2310-52A0	7	F0- 13
175-13-22313	F2310-52A0	9	F0- 13
175-13-23220	F2310-51A0	16	F0- 9
175-13-23232	F2310-51A0	17	F0- 9
175-13-23232	Y0100-01A0	1K	Y0- 3
175-13-23290	F2310-51A0	4	F0- 9
175-13-23500	F2310-51A0	23	F0- 9
175-13-23510	F2310-51A0	25	F0- 9
175-13-23520	F2310-51A0	27	F0- 9
175-13-23530	F2310-51A0	23	F0- 9
175-13-23540	F2310-51A0	29	F0- 9
175-13-24111	F2310-51A0	20	F0- 9
175-13-26410	F2310-54A0	1	F0- 19
175-13-53360	F2310-52A0	30	F0- 13
175-15-00240	F2320-53A0	3	F0- 27
175-15-00251	F2320-53A0	5	F0- 27
175-15-00261	F2320-52A0	1	F0- 23
175-15-00270	F2320-52A0	3	F0- 23
175-15-00283	F2320-52A0	5	F0- 23
175-15-00314	F2320-53A0	18	F0- 27
175-15-00333	F2320-53A0	43	F0- 28
175-15-00352	F2320-57A0	1	F0- 43
175-15-05011	F2320-54A0	24	F0- 31
175-15-05011	Y0100-01A0	3K	Y0- 3
175-15-05051	F2320-54A0	30	F0- 31
175-15-05051	Y0100-01A0	4K	Y0- 3
175-15-05064	Y0100-01A0	2K	Y0- 3
175-15-05081	Y0100-01A0	6K	Y0- 4
175-15-05090	Y0100-01A0	5K	Y0- 3
175-15-12780	F2320-52A0	57	F0- 24
175-15-14111	F2320-57A0	1	F0- 43
175-15-14120	F2320-57A0	2	F0- 43
175-15-14130	F2320-57A0	3	F0- 43
175-15-14141	F2320-57A0	4	F0- 43
175-15-14150	F2320-57A0	5	F0- 43
175-15-14162	F2320-57A0	9	F0- 43
175-15-14162	Y0100-01A0	6K	Y0- 4
175-15-15550	F2320-55A0	33	F0- 35
175-15-31210	F2320-53A0	7	F0- 27

PARTS NO.	FIG NO	INDEX	PAGE
175-15-41013	F2320-51A0	1	F0- 21
175-15-41013	F2320-52A0	1	F0- 23
175-15-41013	F2320-53A0	1	F0- 27
175-15-41013	F2320-54A0	1	F0- 31
175-15-41013	F2320-55A0	1	F0- 35
175-15-41013	F2320-56A0	1	F0- 39
175-15-41013	F2320-57A0	1	F0- 43
175-15-41112	F2320-51A0	1	F0- 21
175-15-41122	F2320-51A0	5	F0- 21
175-15-41122	Y0100-01A0	2K	Y0- 3
175-15-41192	F2320-52A0	8	F0- 23
175-15-41292	F2320-52A0	9	F0- 23
175-15-41310	F2320-53A0	10	F0- 27
175-15-42122	F2320-52A0	24	F0- 23
175-15-42131	F2320-53A0	16	F0- 27
175-15-42180	F2320-53A0	24	F0- 27
175-15-42190	F2320-52A0	23	F0- 23
175-15-42220	F2320-53A0	26	F0- 27
175-15-42230	F2320-53A0	64	F0- 28
175-15-42240	F2320-53A0	63	F0- 28
175-15-42322	F2320-52A0	35	F0- 23
175-15-42340	F2320-53A0	30	F0- 27
175-15-42364	F2320-53A0	32	F0- 27
175-15-42371	F2320-53A0	33	F0- 27
175-15-42421	F2320-53A0	47	F0- 28
175-15-42430	F2320-53A0	48	F0- 28
175-15-42430	Y0100-01A0	2K	Y0- 3
175-15-42452	F2320-52A0	36	F0- 24
175-15-42471	F2320-52A0	37	F0- 24
175-15-42491	F2320-53A0	37	F0- 28
175-15-42512	F2320-52A0	38	F0- 24
175-15-42532	F2320-52A0	39	F0- 24
175-15-42552	F2320-53A0	38	F0- 28
175-15-42610	F2320-52A0	43	F0- 24
175-15-42620	F2320-52A0	44	F0- 24
175-15-42632	F2320-52A0	45	F0- 24
175-15-42650	F2320-53A0	42	F0- 28
175-15-42670	F2320-52A0	58	F0- 24
175-15-42721	F2320-52A0	48	F0- 24
175-15-42721	F2320-53A0	53	F0- 28
175-15-42741	F2320-53A0	59	F0- 28
175-15-42781	F2320-52A0	54	F0- 24
175-15-42781	F2320-52A0	55	F0- 24
175-15-42831	F2320-52A0	49	F0- 24
175-15-42850	F2320-53A0	20	F0- 27
175-15-42871	F2320-52A0	52	F0- 24
175-15-42871	F2320-53A0	55	F0- 28
175-15-42880	F2320-52A0	59	F0- 24
175-15-42890	F2320-53A0	66	F0- 28
175-15-42971	F2320-53A0	45	F0- 28

PARTS NO	FIG NO	INDEX	PAGE
175-15-43116	F2320-54A0	1	F0- 31
175-15-43152	F2320-54A0	3	F0- 31
175-15-43212	F2320-54A0	8	F0- 31
175-15-43232	F2320-54A0	11	F0- 31
175-15-44180	F2320-57A0	14	F0- 43
175-15-44190	F2320-57A0	13	F0- 43
175-15-45110	F2320-55A0	1	F0- 35
175-15-45180	F2320-55A0	60	F0- 36
175-15-45213	F2320-55A0	7	F0- 35
175-15-45220	F2320-55A0	10	F0- 35
175-15-45260	F2320-55A0	13	F0- 35
175-15-45381	F2320-55A0	50	F0- 36
175-15-45390	F2320-55A0	57	F0- 36
175-15-45512	F2320-56A0	1	F0- 39
175-15-45530	F2320-56A0	39	F0- 40
175-15-45550	F2320-56A0	37	F0- 39
175-15-45560	F2320-56A0	8	F0- 39
175-15-45570	F2320-56A0	11	F0- 39
175-15-45570	F2320-56A0	19	F0- 39
175-15-45610	F2320-56A0	13	F0- 39
175-15-45620	F2320-56A0	17	F0- 39
175-15-45630	F2320-56A0	21	F0- 39
175-15-45650	F2320-56A0	29	F0- 39
175-15-45660	F2320-56A0	32	F0- 39
175-15-45670	F2320-56A0	23	F0- 39
175-15-45680	F2320-56A0	24	F0- 39
175-15-45750	F2320-56A0	4	F0- 39
175-15-45780	F2320-56A0	33	F0- 39
175-15-49340	F2320-54A0	9	F0- 31
175-15-59240	F2320-52A0	53	F0- 24
175-15-59240	F2320-53A0	56	F0- 28
175-20-00060	F2200-01A0	1	F0- 7
175-20-00060	F2200-01A0	1	F0- 7
175-20-11110	F2200-01A0	2	F0- 7
175-20-11120	F2200-01A0	3	F0- 7
175-20-11130	F2200-01A0	4	F0- 7
175-20-11140	F2200-01A0	1	F0- 7
175-21-00032	F2350-01A0	7	F0- 45
175-21-11181	J2110-01A0	10	J0- 3
175-21-11181	J2110-01A1	10	J0- 5
175-21-11181	J2110-01A2	10	J0- 7
175-21-22140	F2350-01A0	2	F0- 45
175-21-32113	F2350-01A0	1	F0- 45
175-21-32170	J2110-01A0	4	J0- 3
175-21-32170	J2110-01A1	4	J0- 5
175-21-32170	J2110-01A2	4	J0- 7
175-21-32185	J2110-01A0	13	J0- 3
175-21-32185	J2110-01A1	13	J0- 5
175-21-32185	J2110-01A2	13	J0- 7
175-21-32190	F2350-01A0	6	F0- 45

PARTS NO.	FIG NO.	INDEX	PAGE
175-21-32910	J2110-01A0	22	J0- 3
175-21-32910	J2110-01A1	22	J0- 5
175-21-32910	J2110-01A2	22	J0- 7
175-21-47120	J2112-01A0	12	J0- 9
175-21-47130	J2112-01A0	16	J0- 9
175-21-47141	J2112-01A0	13	J0- 9
175-21-47160	J2112-01A0	1	J0- 9
175-21-47170	J2112-01A0	6	J0- 9
175-21-47181	J2112-01A0	7	J0- 9
175-21-77102	J2110-01A0	1	J0- 3
175-21-77300	J2110-01A2	1	J0- 7
175-21-77400	J2110-01A1	1	J0- 5
175-22-00033	F2360-01A0	1	F0- 47
175-22-21131	F2360-01A0	3	F0- 47
175-22-21141	F2360-01A0	4	F0- 47
175-22-21160	F2360-01A0	6	F0- 47
175-22-21170	F2360-01A0	7	F0- 47
175-22-21180	F2360-01A0	8	F0- 47
175-22-21190	F2360-01A0	9	F0- 47
175-22-21231	F2360-01A0	10	F0- 47
175-22-21242	F2360-01A0	11	F0- 47
175-22-21250	F2360-01A0	12	F0- 47
175-22-21271	F2360-01A0	1	F0- 47
175-22-21281	F2360-01A0	2	F0- 47
175-27-00060	F2380-02A0A	53	F0- 70
175-27-00060	F2380-04A0A	53	F0- 78
175-27-00082	F2380-02A0A	50	F0- 70
175-27-00082	F2380-04A0A	50	F0- 78
175-27-00121	F2380-02A0A	51	F0- 70
175-27-00121	F2380-04A0A	52	F0- 78
175-27-00131	F2380-02A0A	52	F0- 70
175-27-00131	F2380-04A0A	52	F0- 78
175-27-12181	F2380-02A0A	6	F0- 69
175-27-12181	F2380-04A0A	6	F0- 77
175-27-22131	F2380-02A0A	16	F0- 69
175-27-22131	F2380-04A0A	16	F0- 77
175-27-22140	F2380-02A0A	13	F0- 69
175-27-22140	F2380-04A0A	13	F0- 77
175-27-22150	F2380-02A0A	28	F0- 69
175-27-22150	F2380-04A0A	28	F0- 77
175-27-22242	F2380-02A0A	39	F0- 69
175-27-22242	F2380-04A0A	39	F0- 77
175-27-22255	F2380-02A0A	36	F0- 69
175-27-22255	F2380-04A0A	36	F0- 77
175-27-22272	F2380-02A0A	38	F0- 69
175-27-22272	F2380-04A0A	38	F0- 77
175-27-31161	F2380-01A0A	32	F0- 65
175-27-31161	F2380-01A1	32	F0- 67
175-27-31161	F2380-03A0A	32	F0- 73
175-27-31161	F2380-03A1	32	F0- 75

PARTS NO.	FIG NO.	INDEX	PAGE
175-27-31233	F2380-01A0A	23	F0- 65
175-27-31233	F2380-01A1	23	F0- 67
175-27-31233	F2380-03A0A	23	F0- 73
175-27-31233	F2380-03A1	23	F0- 75
175-27-31255	F2380-01A0A	24	F0- 65
175-27-31255	F2380-01A1	24	F0- 67
175-27-31255	F2380-03A0A	24	F0- 73
175-27-31255	F2380-03A1	24	F0- 75
175-27-31260	F2380-01A0A	25	F0- 65
175-27-31260	F2380-01A1	25	F0- 67
175-27-31260	F2380-03A0A	25	F0- 73
175-27-31260	F2380-03A1	25	F0- 75
175-27-31270	F2380-01A0A	26	F0- 65
175-27-31270	F2380-01A1	26	F0- 67
175-27-31270	F2380-03A0A	26	F0- 73
175-27-31270	F2380-03A1	26	F0- 75
175-27-31282	F2380-01A0A	27	F0- 65
175-27-31282	F2380-01A1	27	F0- 67
175-27-31282	F2380-03A0A	27	F0- 73
175-27-31282	F2380-03A1	27	F0- 75
175-27-31343	F2380-02A0A	1	F0- 69
175-27-31343	F2380-04A0A	1	F0- 77
175-27-31362	F2380-02A0A	5	F0- 69
175-27-31362	F2380-04A0A	5	F0- 77
175-27-31370	F2380-02A0A	7	F0- 69
175-27-31370	F2380-04A0A	7	F0- 77
175-27-31384	F2380-02A0A	9	F0- 69
175-27-31384	F2380-04A0A	9	F0- 77
175-27-31394	F2380-02A0A	20	F0- 69
175-27-31394	F2380-04A0A	20	F0- 77
175-27-31411	F2380-02A0A	33	F0- 69
175-27-31411	F2380-04A0A	33	F0- 77
175-27-31441	F2380-02A0A	51	F0- 70
175-27-31441	F2380-04A0A	51	F0- 78
175-27-31463	F2380-01A0A	10	F0- 65
175-27-31463	F2380-01A1	10	F0- 67
175-27-31463	F2380-03A0A	10	F0- 73
175-27-31463	F2380-03A1	10	F0- 75
175-27-31472	F2380-01A0A	1	F0- 65
175-27-31472	F2380-01A1	1	F0- 67
175-27-31472	F2380-03A0A	1	F0- 73
175-27-31472	F2380-03A1	1	F0- 75
175-27-31480	F2380-02A0A	29	F0- 69
175-27-31480	F2380-04A0A	29	F0- 77
175-27-31495	F2380-01A0A	13	F0- 65
175-27-31495	F2380-01A1	13	F0- 67
175-27-31495	F2380-03A0A	13	F0- 73
175-27-31495	F2380-03A1	13	F0- 75
175-27-31530	F2380-02A0A	58	F0- 70
175-27-31530	F2380-04A0A	58	F0- 78

PARTS NO	FIG NO	INDEX	PAGE
175-27-31540	F2380-02A0A	59	F0- 70
175-27-31540	F2380-04A0A	59	F0- 78
175-27-31550	F2380-02A0A	43	F0- 70
175-27-31550	F2380-04A0A	43	F0- 78
175-27-31560	F2380-02A0A	44	F0- 70
175-27-31560	F2380-04A0A	44	F0- 78
175-27-32470	F2380-01A0A	28	F0- 65
175-27-32470	F2380-01A1	28	F0- 67
175-27-32470	F2380-03A0A	28	F0- 73
175-27-32470	F2380-03A1	28	F0- 75
175-27-32510	F2380-02A0A	37	F0- 69
175-27-32510	F2380-04A0A	37	F0- 77
175-27-32611	F2380-02A0A	55	F0- 70
175-27-32641	F2380-04A0A	55	F0- 78
175-27-32730	F2380-02A0A	54	F0- 70
175-27-32740	F2380-04A0A	54	F0- 78
175-30-00431	R2100-01A0	18	R0- 23
175-30-00431	R2100-01A1	18	R0- 25
175-30-00431	R2100-01A2	18	R0- 27
175-30-00441	R2100-01A0	18	R0- 23
175-30-00441	R2100-01A1	18	R0- 25
175-30-00441	R2100-01A2	18	R0- 27
175-30-00517	R0300-01A0	1	R0- 9
175-30-00525	R0100-01A0	1	R0- 3
175-30-00545	R0200-01A0	1	R0- 7
175-30-00555	R0200-01A0	1	R0- 7
175-30-00563	R2100-02A0	27	R0- 29
175-30-00575	R0100-01A0	1	R0- 3
175-30-00581	R0100-01A0	9	R0- 3
175-30-00581	R0200-01A0	12	R0- 7
175-30-00591	R0100-01A0	9	R0- 3
175-30-00591	R0200-01A0	12	R0- 7
175-30-00691	R0100-01A0	8	R0- 3
175-30-00691	R0200-01A0	11	R0- 7
175-30-00702	R0100-01A0	8	R0- 3
175-30-00702	R0200-01A0	11	R0- 7
175-30-00760	R0200-01A0	1	R0- 7
175-30-00770	R0200-01A0	1	R0- 7
175-30-00780	R0300-01A0	1	R0- 9
175-30-05050	R0100-01A0	21	R0- 3
175-30-05060	R0100-01A0	23	R0- 3
175-30-05070	R0100-01A0	29	R0- 4
175-30-11272	R2100-01A0	3	R0- 23
175-30-11272	R2100-01A1	3	R0- 25
175-30-11272	R2100-01A2	3	R0- 27
175-30-16211	R0100-01A0	9	R0- 3
175-30-16211	R0200-01A0	12	R0- 7
175-30-16215	R0100-01A0	9	R0- 3
175-30-16215	R0200-01A0	12	R0- 7
175-30-21333	R2100-01A0	4	R0- 23

PARTS NO.	FIG NO.	INDEX	PAGE
175-30-21333	R2100-01A1	4	R0- 25
175-30-21333	R2100-01A2	4	R0- 27
175-30-21342	R2100-01A0	5	R0- 23
175-30-21342	R2100-01A1	5	R0- 25
175-30-21342	R2100-01A2	5	R0- 27
175-30-21353	R2100-01A0	6	R0- 23
175-30-21353	R2100-01A0	9	R0- 23
175-30-21353	R2100-01A1	6	R0- 25
175-30-21353	R2100-01A1	9	R0- 25
175-30-21353	R2100-01A2	6	R0- 27
175-30-21353	R2100-01A2	9	R0- 27
175-30-21363	R2100-01A0	7	R0- 23
175-30-21363	R2100-01A0	8	R0- 23
175-30-21363	R2100-01A1	7	R0- 25
175-30-21363	R2100-01A1	8	R0- 25
175-30-21363	R2100-01A2	7	R0- 27
175-30-21363	R2100-01A2	8	R0- 27
175-30-23114	R0100-01A0	1	R0- 3
175-30-23121	R0100-01A0	2	R0- 3
175-30-23172	R0100-01A0	18	R0- 3
175-30-23180	R0100-01A0	19	R0- 3
175-30-24131	R0100-01A0	35	R0- 4
175-30-24223	R2100-02A0	12	R0- 29
175-30-24242	R2100-02A0	17	R0- 29
175-30-24270	R2100-02A0	21	R0- 29
175-30-25131	R0300-01A0	3	R0- 9
175-30-25184	R0300-01A0	18	R0- 9
175-30-26230	R0200-01A0	6	R0- 7
175-30-26241	R0200-01A0	18	R0- 7
175-30-31530	R2100-01A0	28	R0- 23
175-30-31530	R2100-01A1	28	R0- 25
175-30-31530	R2100-01A2	28	R0- 27
175-30-31540	R2100-01A0	28	R0- 23
175-30-31540	R2100-01A1	28	R0- 25
175-30-31540	R2100-01A2	28	R0- 27
175-30-32151	R2200-01A0	5	R0- 37
175-30-32176	R2200-01A0	1	R0- 37
175-30-32186	R2200-01A0	12	R0- 37
175-30-32196	R2200-01A0	2	R0- 37
175-30-32211	R2200-01A0	13	R0- 37
175-30-33215	R0100-01A0	28	R0- 3
175-30-33273	R0100-01A0	13	R0- 3
175-30-33283	R0100-01A0	13	R0- 3
175-30-33430	R0100-01A0	32	R0- 4
175-30-33460	R0100-01A0	25	R0- 3
175-30-33492	R0100-01A0	26	R0- 3
175-30-34161	R2100-02A0	10	R0- 29
175-30-34210	R2100-02A0	4	R0- 29
175-30-34261	R2100-02A0	30	R0- 29
175-30-34290	R2100-02A0	37	R0- 29

PARTS NO.	FIG NO	INDEX	PAGE
175-04-71140	D0100-02A0	1	D0- 5
175-04-71151	D0100-02A0	14	D0- 5
175-04-71170	D0100-02A0	13	D0- 5
175-04-71180	D0100-02A0	12	D0- 5
175-04-71260	D0100-01A0	1	D0- 3
175-06-X1140	E0420-01A0	G-1	E0- 9
175-06-25160	M2110-05A0	9	M0- 21
175-06-27250	K2220-01A0	8	K0- 95
175-06-37871	W2121-01A0	21	W0- 7
175-06-38561	M2210-01A0	14	M0- 61
175-06-38570	K2110-13A0	10	K0- 91
175-06-38810	M2210-01A0	16	M0- 61
175-06-39621	E0200-01A0	8	E0- 3
175-06-39830	W2121-01A0	4	W0- 7
175-06-41110	M2110-05A0	29	M0- 21
175-06-41302	M2110-05A0	32	M0- 21
175-06-51342	M2110-05A0	34	M0- 21
175-06-61160	M2110-05A0	12	M0- 21
175-06-61180	M2210-01A0	8	M0- 61
175-06-61190	M2210-01A0	13	M0- 61
175-06-61210	M2210-01A0	27	M0- 61
175-06-61221	M2210-01A0	31	M0- 61
175-06-61240	E0200-01A0	12	E0- 3
175-06-61250	E0200-01A0	20	E0- 3
175-06-61260	E0200-01A0	13	E0- 3
175-06-61270	T2440-03A0	4	T0- 41
175-06-61390	M2110-05A0	39	M0- 21
175-06-61421	E0420-01A0	2	E0- 9
175-06-61430	K2110-13A0	1	K0- 91
175-06-61510	F2700-06A0	13	F0- 105
175-06-61540	F2700-06A0	7	F0- 105
175-06-71120	K2110-13A0	13	K0- 91
175-06-71133	K2220-01A0	10	K0- 95
175-06-71134	K2220-01A0	10	K0- 95
175-06-71141	E0200-02A0	1	E0- 5
175-06-71142	E0200-02A0	1	E0- 5
175-06-71151	M2110-05A0	1	M0- 21
175-06-71171	M2210-01A0	1	M0- 61
175-06-71172	M2210-01A0	1	M0- 61
175-06-71210	W2121-01A0	22	W0- 7
175-06-71310	E0200-03A0	24	E0- 7
175-06-71381	M2110-05A0	38	M0- 21
175-06-71510	K2220-01A0	45	K0- 96
175-09-11120	R2200-01A0	6	R0- 37
175-11-11132	F2310-51A0	44	F0- 10
175-11-11132	Y0100-01A0	1K	Y0- 3
175-13-00150	F2310-54A0	1	F0- 19
175-13-21081	F2310-51A0	1	F0- 9
175-13-21081	F2310-52A0	1	F0- 13
175-13-21081	F2310-53A0	1	F0- 17

PARTS NO	FIG NO	INDEX	PAGE
175-13-21081	F2310-54A0	1	F0- 19
175-13-21125	F2310-52A0	1	F0- 13
175-13-21160	F2310-52A0	4	F0- 13
175-13-21213	F2310-52A0	17	F0- 13
175-13-21220	F2310-52A0	20	F0- 13
175-13-21240	F2310-52A0	16	F0- 13
175-13-21514	F2310-52A0	12	F0- 13
175-13-21692	F2310-52A0	38	F0- 13
175-13-21712	F2310-52A0	40	F0- 14
175-13-21712	Y0100-01A0	1K	Y0- 3
175-13-21770	F2310-52A0	29	F0- 13
175-13-22122	F2310-52A0	7	F0- 13
175-13-22313	F2310-52A0	9	F0- 13
175-13-23220	F2310-51A0	16	F0- 9
175-13-23232	F2310-51A0	17	F0- 9
175-13-23232	Y0100-01A0	1K	Y0- 3
175-13-23290	F2310-51A0	4	F0- 9
175-13-23500	F2310-51A0	23	F0- 9
175-13-23510	F2310-51A0	25	F0- 9
175-13-23520	F2310-51A0	27	F0- 9
175-13-23530	F2310-51A0	23	F0- 9
175-13-23540	F2310-51A0	29	F0- 9
175-13-24111	F2310-51A0	20	F0- 9
175-13-26410	F2310-54A0	1	F0- 19
175-13-53360	F2310-52A0	30	F0- 13
175-15-00240	F2320-53A0	3	F0- 27
175-15-00251	F2320-53A0	5	F0- 27
175-15-00261	F2320-52A0	1	F0- 23
175-15-00270	F2320-52A0	3	F0- 23
175-15-00283	F2320-52A0	5	F0- 23
175-15-00314	F2320-53A0	18	F0- 27
175-15-00333	F2320-53A0	43	F0- 28
175-15-00352	F2320-57A0	1	F0- 43
175-15-05011	F2320-54A0	24	F0- 31
175-15-05011	Y0100-01A0	3K	Y0- 3
175-15-05051	F2320-54A0	30	F0- 31
175-15-05051	Y0100-01A0	4K	Y0- 3
175-15-05064	Y0100-01A0	2K	Y0- 3
175-15-05081	Y0100-01A0	6K	Y0- 4
175-15-05090	Y0100-01A0	5K	Y0- 3
175-15-12780	F2320-52A0	57	F0- 24
175-15-14111	F2320-57A0	1	F0- 43
175-15-14120	F2320-57A0	2	F0- 43
175-15-14130	F2320-57A0	3	F0- 43
175-15-14141	F2320-57A0	4	F0- 43
175-15-14150	F2320-57A0	5	F0- 43
175-15-14162	F2320-57A0	9	F0- 43
175-15-14162	Y0100-01A0	6K	Y0- 4
175-15-15550	F2320-55A0	33	F0- 35
175-15-31210	F2320-53A0	7	F0- 27

PARTS NO	FIG NO	INDEX	PAGE
175-15-41013	F2320-51A0	1	F0- 21
175-15-41013	F2320-52A0	1	F0- 23
175-15-41013	F2320-53A0	1	F0- 27
175-15-41013	F2320-54A0	1	F0- 31
175-15-41013	F2320-55A0	1	F0- 35
175-15-41013	F2320-56A0	1	F0- 39
175-15-41013	F2320-57A0	1	F0- 43
175-15-41112	F2320-51A0	1	F0- 21
175-15-41122	F2320-51A0	5	F0- 21
175-15-41122	Y0100-01A0	2K	Y0- 3
175-15-41192	F2320-52A0	8	F0- 23
175-15-41292	F2320-52A0	9	F0- 23
175-15-41310	F2320-53A0	10	F0- 27
175-15-42122	F2320-52A0	24	F0- 23
175-15-42131	F2320-53A0	16	F0- 27
175-15-42180	F2320-53A0	24	F0- 27
175-15-42190	F2320-52A0	23	F0- 23
175-15-42220	F2320-53A0	26	F0- 27
175-15-42230	F2320-53A0	64	F0- 28
175-15-42240	F2320-53A0	63	F0- 28
175-15-42322	F2320-52A0	35	F0- 23
175-15-42340	F2320-53A0	30	F0- 27
175-15-42364	F2320-53A0	32	F0- 27
175-15-42371	F2320-53A0	33	F0- 27
175-15-42421	F2320-53A0	47	F0- 28
175-15-42430	F2320-53A0	48	F0- 28
175-15-42430	Y0100-01A0	2K	Y0- 3
175-15-42452	F2320-52A0	36	F0- 24
175-15-42471	F2320-52A0	37	F0- 24
175-15-42491	F2320-53A0	37	F0- 28
175-15-42512	F2320-52A0	38	F0- 24
175-15-42532	F2320-52A0	39	F0- 24
175-15-42552	F2320-53A0	38	F0- 28
175-15-42610	F2320-52A0	43	F0- 24
175-15-42620	F2320-52A0	44	F0- 24
175-15-42632	F2320-52A0	45	F0- 24
175-15-42650	F2320-53A0	42	F0- 28
175-15-42670	F2320-52A0	58	F0- 24
175-15-42721	F2320-52A0	48	F0- 24
175-15-42721	F2320-53A0	53	F0- 28
175-15-42741	F2320-53A0	59	F0- 28
175-15-42781	F2320-52A0	54	F0- 24
175-15-42781	F2320-52A0	55	F0- 24
175-15-42831	F2320-52A0	49	F0- 24
175-15-42850	F2320-53A0	20	F0- 27
175-15-42871	F2320-52A0	52	F0- 24
175-15-42871	F2320-53A0	55	F0- 28
175-15-42880	F2320-52A0	59	F0- 24
175-15-42890	F2320-53A0	66	F0- 28
175-15-42971	F2320-53A0	45	F0- 28

PARTS NO	FIG NO ,	INDEX	PAGE
175-15-43116	F2320-54A0	1	F0- 31
175-15-43152	F2320-54A0	3	F0- 31
175-15-43212	F2320-54A0	8	F0- 31
175-15-43232	F2320-54A0	11	F0- 31
175-15-44180	F2320-57A0	14	F0- 43
175-15-44190	F2320-57A0	13	F0- 43
175-15-45110	F2320-55A0	1	F0- 35
175-15-45180	F2320-55A0	60	F0- 36
175-15-45213	F2320-55A0	7	F0- 35
175-15-45220	F2320-55A0	10	F0- 35
175-15-45260	F2320-55A0	13	F0- 35
175-15-45381	F2320-55A0	50	F0- 36
175-15-45390	F2320-55A0	57	F0- 36
175-15-45512	F2320-56A0	1	F0- 39
175-15-45530	F2320-56A0	39	F0- 40
175-15-45550	F2320-56A0	37	F0- 39
175-15-45560	F2320-56A0	8	F0- 39
175-15-45570	F2320-56A0	11	F0- 39
175-15-45570	F2320-56A0	19	F0- 39
175-15-45610	F2320-56A0	13	F0- 39
175-15-45620	F2320-56A0	17	F0- 39
175-15-45630	F2320-56A0	21	F0- 39
175-15-45650	F2320-56A0	29	F0- 39
175-15-45660	F2320-56A0	32	F0- 39
175-15-45670	F2320-56A0	23	F0- 39
175-15-45690	F2320-56A0	24	F0- 39
175-15-45750	F2320-56A0	4	F0- 39
175-15-45780	F2320-56A0	33	F0- 39
175-15-49340	F2320-54A0	9	F0- 31
175-15-59240	F2320-52A0	53	F0- 24
175-15-59240	F2320-53A0	56	F0- 28
175-20-00050	F2200-01A0	1	F0- 7
175-20-00060	F2200-01A0	1	F0- 7
175-20-11110	F2200-01A0	2	F0- 7
175-20-11120	F2200-01A0	3	F0- 7
175-20-11130	F2200-01A0	4	F0- 7
175-20-11140	F2200-01A0	1	F0- 7
175-21-00032	F2350-01A0	7	F0- 45
175-21-11181	J2110-01A0	10	J0- 3
175-21-11181	J2110-01A1	10	J0- 5
175-21-11181	J2110-01A2	10	J0- 7
175-21-22140	F2350-01A0	2	F0- 45
175-21-32113	F2350-01A0	1	F0- 45
175-21-32170	J2110-01A0	4	J0- 3
175-21-32170	J2110-01A1	4	J0- 5
175-21-32170	J2110-01A2	4	J0- 7
175-21-32185	J2110-01A0	13	J0- 3
175-21-32185	J2110-01A1	13	J0- 5
175-21-32185	J2110-01A2	13	J0- 7
175-21-32190	F2350-01A0	6	F0- 45

PARTS NO.	FIG NO	INDEX	PAGE
175-30-34331	R2100-02A0	41	R0- 30
175-30-35161	R0300-01A0	9	R0- 9
175-30-35171	R0300-01A0	10	R0- 9
175-30-36108	R0100-01A0	3	R0- 3
175-30-36108	R0200-01A0	7	R0- 7
175-30-36130	R0200-01A0	2	R0- 7
175-30-36210	R0200-01A0	4	R0- 7
175-30-36220	R0200-01A0	5	R0- 7
175-30-36340	R0200-01A0	14	R0- 7
175-30-44161	R2100-02A0	32	R0- 29
175-30-44171	R2100-02A0	35	R0- 29
175-30-44181	R2100-02A0	31	R0- 29
175-30-44211	R2100-02A0	34	R0- 29
175-30-44231	R2100-02A0	20	R0- 29
175-30-44250	R2100-02A0	33	R0- 29
175-30-45110	R0300-01A0	1	R0- 9
175-30-45131	R0300-01A0	5	R0- 9
175-30-51140	R2100-03A0	4	R0- 33
175-30-51140	R2100-03A1	4	R0- 35
175-30-52110	R2100-03A0	7	R0- 33
175-30-52110	R2100-03A1	7	R0- 35
175-30-52120	R2100-03A0	1	R0- 33
175-30-52120	R2100-03A1	1	R0- 35
175-30-52130	R2100-03A0	14	R0- 33
175-30-52140	R2100-03A0	15	R0- 33
175-30-52150	R2100-03A0	23	R0- 33
175-30-52160	R2100-03A0	24	R0- 33
175-30-52210	R2100-03A0	30	R0- 33
175-30-52210	R2100-03A1	30	R0- 35
175-30-52220	R2100-03A0	18	R0- 33
175-30-55130	R2100-03A1	14	R0- 35
175-30-55140	R2100-03A1	15	R0- 35
175-30-55150	R2100-03A1	23	R0- 35
175-30-55160	R2100-03A1	24	R0- 35
175-30-55190	R2100-03A1	18	R0- 35
175-30-71110	R2100-01A0	1	R0- 23
175-30-71120	R2100-01A0	2	R0- 23
175-30-71210	R2100-01A2	1	R0- 27
175-30-71220	R2100-01A2	2	R0- 27
175-30-75110	R2100-01A1	1	R0- 25
175-30-75120	R2100-01A1	2	R0- 25
175-32-00403	R0500-01A0	4	R0- 11
175-32-00403	R0500-01A0	4	R0- 11
175-32-00403	R0500-01A0	4	R0- 11
175-32-00403	R0500-01A0	4	R0- 11
175-32-00411	R0500-01A2	4	R0- 15
175-32-01461	R0500-01A2	1	R0- 15
175-32-01953	R0500-01A0	1	R0- 11
175-32-01963	R0500-01A0	1	R0- 11
175-32-01973	R0500-01A0	1	R0- 11

PARTS NO	FIG NO.	INDEX	PAGE
175-32-01983	R0500-01A0	1	R0- 11
175-32-02500	R0500-01A3	1	R0- 17
175-32-02560	R0500-01A4	1	R0- 19
175-32-02590	R0500-01A5	1	R0- 21
175-32-08010	R0500-01A3	12	R0- 17
175-32-08010	R0500-01A4	12	R0- 19
175-32-08010	R0500-01A5	12	R0- 21
175-32-08020	R0500-01A3	14	R0- 17
175-32-08020	R0500-01A4	14	R0- 19
175-32-08020	R0500-01A5	14	R0- 21
175-32-31313	R0500-01A0	1	R0- 11
175-32-31313	R0500-01A2	1	R0- 15
175-32-31410	R0500-01A0	1	R0- 11
175-32-31420	R0500-01A0	1	R0- 11
175-32-31420	R0500-01A4	1	R0- 19
175-32-31430	R0500-01A0	1	R0- 11
175-32-41261	R0500-01A0	16	R0- 11
175-32-41261	R0500-01A3	16	R0- 17
175-32-41261	R0500-01A4	16	R0- 19
175-32-41261	R0500-01A5	16	R0- 21
175-32-41601	R0500-01A0	7	R0- 11
175-32-41601	R0500-01A3	7	R0- 17
175-32-41601	R0500-01A4	7	R0- 19
175-32-41601	R0500-01A5	7	R0- 21
175-32-81181	R0500-01A0	8	R0- 11
175-32-81181	R0500-01A3	8	R0- 17
175-32-81181	R0500-01A4	8	R0- 19
175-32-81181	R0500-01A5	8	R0- 21
175-32-81450	R0500-01A0	9	R0- 11
175-32-81450	R0500-01A3	9	R0- 17
175-32-81450	R0500-01A4	9	R0- 19
175-32-81450	R0500-01A5	9	R0- 21
175-33-00066	F2370-02A0	23	F0- 53
175-33-00077	F2370-02A0	23	F0- 53
175-33-00082	F2370-01A0	1	F0- 49
175-33-00092	F2370-01A0	1	F0- 49
175-33-00120	F2370-04A0	1	F0- 59
175-33-00130	F2370-03A0	1	F0- 57
175-33-00150	F2370-01A0	1	F0- 49
175-33-00160	F2370-01A0	1	F0- 49
175-33-23470	F2700-05A0	10	F0- 99
175-33-24210	F2370-01A0	7	F0- 49
175-33-24220	F2370-01A0	8	F0- 49
175-33-24231	F2370-01A0	10	F0- 49
175-33-24240	F2370-01A0	16	F0- 49
175-33-24251	F2370-01A0	18	F0- 49
175-33-24260	F2370-01A0	17	F0- 49
175-33-24272	F2370-01A0	15	F0- 49
175-33-24281	F2370-01A0	21	F0- 49
175-33-24291	F2370-01A0	21	F0- 49

PARTS NO.	FIG NO.	INDEX	PAGE
175-33-24311	F2370-01A0	25	F0- 49
175-33-24320	F2370-01A0	26	F0- 49
175-33-24330	F2370-01A0	27	F0- 49
175-33-24342	F2370-01A0	31	F0- 49
175-33-24353	F2370-01A0	38	F0- 50
175-33-24361	F2370-02A0	33	F0- 53
175-33-24441	F2370-02A0	2	F0- 53
175-33-24450	F2370-01A0	29	F0- 49
175-33-24458	F2370-01A0	41	F0- 50
175-33-24465	F2370-02A0	27	F0- 53
175-33-24591	F2370-02A0	34	F0- 54
175-33-25991	F2370-02A0	20	F0- 53
175-33-26130	F2370-02A0	13	F0- 53
175-33-28310	F2370-02A0	7	F0- 53
175-33-28320	F2370-02A0	7	F0- 53
175-33-28330	F2370-02A0	1	F0- 53
175-33-28410	F2370-01A0	4	F0- 49
175-33-28420	F2370-01A0	3	F0- 49
175-33-28430	F2370-01A0	2	F0- 49
175-33-29310	F2370-01A0	2	F0- 49
175-33-29320	F2370-01A0	3	F0- 49
175-33-29330	F2370-01A0	4	F0- 49
175-33-31310	F2370-02A0	6	F0- 53
175-33-32110	F2370-05A0	25	F0- 61
175-33-32120	F2370-05A0	30	F0- 61
175-33-32130	M2210-04A0	7	M0- 71
175-33-32140	M2210-04A0	10	M0- 71
175-33-32150	F2370-02A0	20	F0- 53
175-33-32160	F2370-02A0	13	F0- 53
175-33-32170	F2370-02A0	17	F0- 53
175-33-32180	F2370-02A0	26	F0- 53
175-33-32192	F2370-05A0	44	F0- 62
175-33-32212	F2370-05A0	45	F0- 62
175-33-32220	F2370-05A0	48	F0- 62
175-33-32241	F2370-04A0	5	F0- 59
175-33-72230	F2370-05A0	39	F0- 61
175-38-00160	F2100-01A0	5	F0- 3
175-38-11110	F2100-01A0	6	F0- 3
175-38-11120	F2100-01A0	31	F0- 3
175-38-11130	F2100-01A0	38	F0- 3
175-40-22461	F2700-05A0	42	F0- 100
175-40-22540	E0200-02A0	20	E0- 5
175-40-22570	F2700-05A0	38	F0- 99
175-40-22580	F2700-05A0	39	F0- 99
175-40-22591	F2700-05A0	2	F0- 99
175-40-31130	F2600-01A0	19	F0- 81
175-40-31150	F2600-01A0	12	F0- 81
175-40-31230	F2600-01A0	7	F0- 81
175-40-31270	F2600-01A0	48	F0- 82
175-40-31410	F2600-01A0	34	F0- 81

PARTS NO	FIG NO	INDEX	PAGE
175-40-31510	F2600-01A0	39	F0- 81
175-40-31530	F2600-01A0	20	F0- 81
175-43-31631	K2110-10A0	6	K0- 85
175-43-34500	K2110-09A0	43	K0- 82
175-43-35210	K2110-07A0	10	K0- 77
175-43-51310	M2210-03A0	1	M0- 69
175-43-51340	K2110-04A0	1	K0- 69
175-43-51350	K2110-12A0	16	K0- 89
175-43-52410	K2110-03A0	1	K0- 67
175-43-52420	K2110-03A0	2	K0- 67
175-43-52430	K2110-03A0	7	K0- 67
175-43-52440	M2210-03A0	14	M0- 69
175-43-52450	M2210-03A0	11	M0- 69
175-43-52460	M2210-03A0	5	M0- 69
175-43-52470	M2210-03A0	20	M0- 69
175-43-52481	M2210-07A0	1	M0- 87
175-43-52490	M2210-07A0	2	M0- 87
175-43-52510	M2210-03A0	2	M0- 69
175-43-52510	M2210-03A0	21	M0- 69
175-43-53410	K2110-07A0	13	K0- 77
175-43-54310	K2110-12A0	1	K0- 89
175-43-54320	K2110-12A0	2	K0- 89
175-43-54330	K2110-12A0	5	K0- 89
175-43-54340	K2110-10A0	9	K0- 85
175-43-54351	K2110-11A0	11	K0- 87
175-43-54360	K2110-09A0	7	K0- 81
175-43-54370	K2110-09A0	1	K0- 81
175-43-54380	K2110-09A0	15	K0- 81
175-43-54410	K2110-09A0	20	K0- 81
175-43-54420	K2110-09A0	16	K0- 81
175-43-54440	K2110-09A0	3	K0- 81
175-43-54450	K2110-10A0	1	K0- 85
175-43-54460	K2110-10A0	28	K0- 85
175-43-54470	K2110-09A0	2	K0- 81
175-43-62120	K2110-10A0	18	K0- 85
175-43-71110	K2110-09A0	33	K0- 81
175-43-71120	K2110-09A0	36	K0- 82
175-43-71130	K2110-09A0	17	K0- 81
175-43-71151	K2110-09A0	1	K0- 81
175-43-71160	K2110-09A0	7	K0- 81
175-43-71170	K2110-12A0	1	K0- 89
175-49-11222	F2710-02A0	2	F0- 115
175-49-11231	F2710-02A0	3	F0- 115
175-49-11580	F2710-01A0	2	F0- 113
175-49-11580	V0100-01A0	1	V0- 3
175-49-11911	F2700-07A0	47	F0- 108
175-49-21112	F2700-01A0	6	F0- 85
175-49-21434	F2700-07A0	33	F0- 107
175-49-21472	F2700-03A0	16	F0- 91
175-49-21483	F2700-03A0	1	F0- 91

PARTS NO	FIG NO.	INDEX	PAGE
175-49-21510	F2700-03A0	21	F0- 91
175-49-21690	F2710-02A0	6	F0- 115
175-49-22113	F2700-01A0	13	F0- 85
175-49-22212	F2700-02A0	20	F0- 89
175-49-22281	F2710-02A0	1	F0- 115
175-49-22590	F2700-01A0	4	F0- 85
175-49-23211	F2700-03A0	9	F0- 91
175-49-23221	F2700-03A0	6	F0- 91
175-49-23230	F2700-03A0	8	F0- 91
175-49-23340	F2700-03A0	28	F0- 91
175-49-23380	F2700-03A0	42	F0- 92
175-49-23411	F2700-03A0	38	F0- 91
175-49-23460	F2700-05A0	1	F0- 99
175-49-23570	F2700-07A0	44	F0- 108
175-49-23580	F2700-07A0	41	F0- 107
175-49-23862	F2700-04A0	36	F0- 95
175-49-25530	F2710-01A0	3	F0- 113
175-49-25540	F2710-01A0	4	F0- 113
175-49-25631	F2700-05A0	30	F0- 99
175-49-25641	F2700-05A0	31	F0- 99
175-49-25670	F2700-05A0	23	F0- 99
175-49-25680	F2700-07A0	36	F0- 107
175-49-32110	F2700-05A0	1	F0- 99
175-49-32120	F2370-05A0	16	F0- 61
175-49-32130	F2370-05A0	4	F0- 61
175-49-32130	F2700-05A0	26	F0- 99
175-49-32150	F2700-04A0	36	F0- 95
175-49-33160	F2700-02A0	12	F0- 89
175-49-33220	F2700-04A0	4	F0- 95
175-49-33240	F2700-02A0	26	F0- 89
175-49-33250	F2700-02A0	30	F0- 89
175-49-33280	F2700-05A0	32	F0- 99
175-49-33290	F2700-05A0	33	F0- 99
175-49-33310	F2700-04A0	3	F0- 95
175-49-33320	F2700-03A0	36	F0- 91
175-49-33330	F2700-05A0	46	F0- 100
175-49-33360	F2700-02A0	15	F0- 89
175-49-33370	F2700-02A0	19	F0- 89
175-49-71111	F2710-01A0	1	F0- 113
175-49-71121	F2700-02A0	5	F0- 89
175-49-71130	F2700-02A0	6	F0- 89
175-49-71141	F2700-04A0	21	F0- 95
175-49-71151	F2700-04A0	26	F0- 95
175-49-71161	F2700-01A0	19	F0- 85
175-49-71170	F2700-01A0	41	F0- 86
175-49-71180	F2700-01A0	31	F0- 85
175-49-71211	F2700-07A0	6	F0- 107
175-49-71221	F2700-07A0	5	F0- 107
175-49-71241	F2700-07A0	27	F0- 107
175-49-71251	F2700-07A0	4	F0- 107

PARTS NO.	FIG NO.	INDEX	PAGE
175-49-71261	F2700-07A0	53	F0- 108
175-49-71311	F2700-07A0	50	F0- 108
175-49-71431	F2700-07A0	16	F0- 107
175-49-73350	F2700-02A0	11	F0- 89
175-49-73360	F2700-01A0	32	F0- 85
175-49-73380	F2700-01A0	33	F0- 85
175-50-00025	J2700-01A0	1	J0- 11
175-50-21134	J2700-01A0	3	J0- 11
175-50-21134	J2700-01A1	3	J0- 13
175-50-22131	J2700-01A0	12	J0- 11
175-50-22131	J2700-01A1	12	J0- 13
175-50-31113	J2700-01A1	1	J0- 13
175-50-31160	J2700-01A0	5	J0- 11
175-50-31160	J2700-01A1	5	J0- 13
175-50-32111	J2700-01A0	10	J0- 11
175-50-32111	J2700-01A1	10	J0- 13
175-50-71111	J2700-01A0	14	J0- 11
175-50-71111	J2700-01A1	14	J0- 13
175-54-21133	M2110-01A1	2	M0- 5
175-54-21133	M2110-03A1	2	M0- 13
175-54-21133	M2110-06A0	2	M0- 25
175-54-21155	M2110-01A1	22	M0- 5
175-54-21155	M2110-08A0	6	M0- 29
175-54-21340	M2141-01A1	22	M0- 37
175-54-21340	M2141-02A1	19	M0- 43
175-54-21340	M2142-01A1	3	M0- 49
175-54-21340	M2142-01A1	6	M0- 49
175-54-21361	M2110-06A0	32	M0- 25
175-54-21361	M2141-01A0	7	M0- 35
175-54-21361	M2141-01A2	7	M0- 39
175-54-21361	M2141-01A3	7	M0- 41
175-54-21690	M2141-01A1	24	M0- 37
175-54-21811	M2110-06A0	35	M0- 25
175-54-21811	M2141-01A0	4	M0- 35
175-54-21811	M2141-01A2	4	M0- 39
175-54-21811	M2141-01A3	4	M0- 41
175-54-22196	M2210-02A0	24	M0- 65
175-54-22196	M2210-02A2	24	M0- 67
175-54-22273	M2210-02A0	21	M0- 65
175-54-22273	M2210-02A2	21	M0- 67
175-54-22420	M2210-05A0	23	M0- 73
175-54-22420	M2210-05A2	23	M0- 75
175-54-22420	M2210-05A3	23	M0- 77
175-54-23221	M2810-01A1	18	M0- 95
175-54-23222	M2810-01A0	18	M0- 93
175-54-23222	M2810-01A2	18	M0- 97
175-54-23230	M2810-01A0	1	M0- 93
175-54-23230	M2810-01A0	8	M0- 93
175-54-23230	M2810-01A1	1	M0- 95
175-54-23230	M2810-01A2	1	M0- 97

PARTS NO.	FIG NO	INDEX	PAGE
175-54-23230	M2810-01A2	8	M0- 97
175-54-24410	M2810-01A1	15	M0- 95
175-54-24411	M2810-01A0	15	M0- 93
175-54-24411	M2810-01A2	15	M0- 97
175-54-24610	M2190-01A3	2	M0- 59
175-54-24620	M2190-01A1	2	M0- 57
175-54-25822	W2119-02A0	21	W0- 5
175-54-25831	W2119-02A0	20	W0- 5
175-54-25841	W2119-02A0	22	W0- 5
175-54-25851	W2119-01A0	19	W0- 3
175-54-25861	W2119-01A0	20	W0- 3
175-54-25871	W2119-01A0	21	W0- 3
175-54-25910	M2141-01A1	35	M0- 37
175-54-25910	M2142-02A0	20	M0- 53
175-54-25910	M2142-02A1	20	M0- 55
175-54-25920	M2141-01A1	38	M0- 37
175-54-25920	M2142-02A0	23	M0- 53
175-54-25920	M2142-02A1	23	M0- 55
175-54-25930	M2141-02A1	23	M0- 43
175-54-25930	M2142-02A0	26	M0- 53
175-54-25930	M2142-02A1	26	M0- 55
175-54-25940	M2141-02A1	26	M0- 43
175-54-25940	M2142-02A0	29	M0- 53
175-54-25940	M2142-02A1	29	M0- 55
175-54-25990	M2110-03A1	22	M0- 13
175-54-25990	M2142-01A0	2	M0- 45
175-54-25990	M2142-01A2	1	M0- 51
175-54-27350	C0310-02A0	4	C0- 9
175-54-27350	M2110-04A0	40	M0- 17
175-54-28770	C0310-02A0	5	C0- 9
175-54-28770	M2110-04A0	41	M0- 17
175-54-29411	M2141-01A1	32	M0- 37
175-54-29411	M2142-01A0	32	M0- 45
175-54-29421	M2141-01A1	33	M0- 37
175-54-29421	M2142-01A0	33	M0- 45
175-54-29432	M2141-01A1	34	M0- 37
175-54-29432	M2142-01A0	34	M0- 45
175-54-29850	M2141-01A1	6	M0- 37
175-54-29850	M2141-02A1	6	M0- 43
175-54-29850	M2142-01A0	11	M0- 45
175-54-29850	M2142-01A2	11	M0- 51
175-54-29850	M2142-02A0	6	M0- 53
175-54-29850	M2142-02A1	6	M0- 55
175-54-31120	M2110-01A1	7	M0- 5
175-54-31120	M2110-03A1	7	M0- 13
175-54-31120	M2113-01A0	1	M0- 33
175-54-32140	M2142-01A0	35	M0- 45
175-54-32140	M2142-02A0	35	M0- 53
175-54-32140	M2142-02A1	35	M0- 55
175-54-33892	M2210-05A0	16	M0- 73

PARTS NO	FIG NO.	INDEX	PAGE
175-54-33892	M2210-05A2	16	M0- 75
175-54-33892	M2210-05A3	16	M0- 77
175-54-33940	K2110-01A0	22	K0- 61
175-54-34110	M2210-05A0	12	M0- 73
175-54-34110	M2210-05A2	12	M0- 75
175-54-34110	M2210-05A3	12	M0- 77
175-54-34170	B0300-01A0	10	B0- 5
175-54-34170	B0300-01A1	10	B0- 7
175-54-34170	K2110-11A0	16	K0- 87
175-54-34170	M2141-01A0	3	M0- 35
175-54-34170	M2141-01A2	3	M0- 39
175-54-34170	M2141-01A3	3	M0- 41
175-54-34170	M2250-01A0	8	M0- 89
175-54-37570	M2141-01A1	23	M0- 37
175-54-37711	M2142-01A2	5	M0- 51
175-54-37720	M2142-02A1	1	M0- 55
175-54-41320	M2110-03A1	37	M0- 14
175-54-41320	M2110-06A0	4	M0- 25
175-54-41320	M2141-02A1	20	M0- 43
175-54-41320	M2142-02A0	32	M0- 53
175-54-41320	M2142-02A1	32	M0- 55
175-54-41490	M2142-01A0	46	M0- 46
175-54-41510	M2142-01A0	1	M0- 45
175-54-43240	M2141-01A1	12	M0- 37
175-54-43240	M2142-01A0	17	M0- 45
175-54-43240	M2142-01A2	18	M0- 51
175-54-43250	M2141-02A1	12	M0- 43
175-54-45680	M2110-03A1	50	M0- 14
175-54-45690	M2141-01A1	29	M0- 37
175-54-45690	M2142-01A0	29	M0- 45
175-54-45710	M2141-01A1	28	M0- 37
175-54-45710	M2142-01A0	28	M0- 45
175-54-46130	M2110-01A1	19	M0- 5
175-54-46130	M2110-03A1	19	M0- 13
175-54-46130	M2113-01A0	4	M0- 33
175-54-46141	M2110-01A1	16	M0- 5
175-54-46141	M2110-03A1	16	M0- 13
175-54-46141	M2113-01A0	11	M0- 33
175-54-46150	M2110-01A1	28	M0- 5
175-54-46150	M2110-03A1	28	M0- 13
175-54-46150	M2113-01A0	5	M0- 33
175-54-46160	M2110-01A1	13	M0- 5
175-54-46160	M2110-03A1	13	M0- 13
175-54-46160	M2110-06A0	21	M0- 25
175-54-46191	M2141-01A1	1	M0- 37
175-54-46191	M2142-01A0	6	M0- 45
175-54-46262	M2110-01A1	16	M0- 5
175-54-46262	M2110-03A1	16	M0- 13
175-54-46262	M2113-01A0	11	M0- 33
175-54-46262	M2142-01A0	38	M0- 45

PARTS NO.	FIG NO.	INDEX	PAGE
175-54-46270	M2110-03A1	16	MO- 13
175-54-46270	M2113-01A0	11	MO- 33
175-54-46321	M2210-05A3	2	MO- 77
175-54-46331	M2210-02A0	1	MO- 65
175-54-46331	M2210-02A2	1	MO- 67
175-54-46341	M2210-05A0	20	MO- 73
175-54-46341	M2210-05A2	20	MO- 75
175-54-46341	M2210-05A3	20	MO- 77
175-54-46380	M2210-05A0	11	MO- 73
175-54-46380	M2210-05A2	11	MO- 75
175-54-46380	M2210-05A3	11	MO- 77
175-54-46420	M2210-06A0	1	MO- 79
175-54-46430	M2210-06A0	5	MO- 79
175-54-46450	K0410-02A0	26	KO- 39
175-54-46461	M2250-01A0	15	MO- 89
175-54-46480	M2250-01A0	1	MO- 89
175-54-46490	K2110-01A0	35	KO- 61
175-54-46500	M2250-01A0	19	MO- 89
175-54-46510	M2250-01A0	37	MO- 90
175-54-46521	M2210-06A0	18	MO- 79
175-54-46531	M2210-06A0	19	MO- 79
175-54-46551	M2250-01A0	20	MO- 89
175-54-46560	M2250-01A0	23	MO- 89
175-54-46580	M2210-06A0	13	MO- 79
175-54-46580	M2210-06A3	13	MO- 83
175-54-46590	M2210-06A0	22	MO- 79
175-54-46590	M2210-06A3	22	MO- 83
175-54-46610	M2210-06A0	14	MO- 79
175-54-46610	M2210-06A3	14	MO- 83
175-54-46620	M2210-06A0	37	MO- 79
175-54-46620	M2210-06A3	37	MO- 83
175-54-46630	M2210-06A0	10	MO- 79
175-54-46630	M2210-06A3	10	MO- 83
175-54-46650	M2141-01A0	24	MO- 35
175-54-46650	M2141-01A2	24	MO- 39
175-54-46650	M2141-01A3	24	MO- 41
175-54-46660	M2210-02A0	30	MO- 65
175-54-46670	M2210-02A0	36	MO- 65
175-54-46670	M2210-02A2	36	MO- 67
175-54-46681	M2210-02A0	33	MO- 65
175-54-46691	M2210-06A0	42	MO- 80
175-54-46691	M2210-06A3	42	MO- 84
175-54-46711	K2110-01A0	1	KO- 61
175-54-46721	M2210-02A0	16	MO- 65
175-54-46721	M2210-02A2	16	MO- 67
175-54-46731	M2210-02A0	17	MO- 65
175-54-46731	M2210-02A2	17	MO- 67
175-54-46741	M2210-02A0	6	MO- 65
175-54-46741	M2210-02A2	6	MO- 67
175-54-46750	K2110-01A0	9	KO- 61

PARTS NO.	FIG NO	INDEX	PAGE
175-54-46760	K2110-01A0	6	KO- 61
175-54-46770	K2110-01A0	30	KO- 61
175-54-46780	K2110-01A0	12	KO- 61
175-54-46790	K2110-01A0	45	KO- 62
175-54-46820	K2110-01A0	33	KO- 61
175-54-46830	K2110-01A0	43	KO- 62
175-54-46841	M2210-02A0	12	MO- 65
175-54-46841	M2210-02A2	12	MO- 67
175-54-46851	M2210-02A0	13	MO- 65
175-54-46851	M2210-02A2	13	MO- 67
175-54-46860	M2210-02A0	7	MO- 65
175-54-46860	M2210-02A2	7	MO- 67
175-54-46880	K0410-02A0	23	KO- 39
175-54-46891	M2210-06A0	26	MO- 79
175-54-46891	M2210-06A3	26	MO- 83
175-54-46911	M2210-06A0	27	MO- 79
175-54-46911	M2210-06A3	27	MO- 83
175-54-46920	M2210-06A0	30	MO- 79
175-54-46920	M2210-06A3	30	MO- 83
175-54-46930	M2210-06A0	33	MO- 79
175-54-46930	M2210-06A3	33	MO- 83
175-54-46940	K2110-01A0	47	KO- 62
175-54-46960	K2110-01A0	50	KO- 62
175-54-46970	M2210-02A0	27	MO- 65
175-54-47241	M2250-01A0	43	MO- 90
175-54-47250	M2141-01A1	27	MO- 37
175-54-47260	M2142-01A0	42	MO- 46
175-54-47270	M2110-01A1	37	MO- 5
175-54-47280	M2250-01A0	26	MO- 89
175-54-47290	M2250-01A0	26A	MO- 89
175-54-47310	M2250-01A0	26B	MO- 89
175-54-47320	M2141-01A0	20	MO- 35
175-54-47320	M2141-01A2	20	MO- 39
175-54-47320	M2141-01A3	20	MO- 41
175-54-47330	T2440-01A0	57	TO- 34
175-54-47360	M2250-01A0	31	MO- 89
175-54-47450	M2210-06A0	18	MO- 79
175-54-47460	M2210-06A0	19	MO- 79
175-54-48111	M2142-01A0	39	MO- 45
175-54-49112	M2250-01A0	12	MO- 89
175-54-49120	M2250-01A0	6	MO- 89
175-54-71160	M2141-01A2	1	MO- 39
175-54-71161	M2141-01A2	1	MO- 39
175-54-71310	M2110-01A1	25	MO- 5
175-54-71310	M2110-03A1	25	MO- 13
175-54-71310	M2110-06A0	11	MO- 25
175-54-71520	F2700-05A2	1	FO- 103
175-54-71820	M2110-01A1	31	MO- 5
175-54-71820	M2110-03A1	31	MO- 13
175-54-71820	M2110-06A0	15	MO- 25

PARTS NO.	FIG NO.	INDEX	PAGE
175-54-71830	M2110-01A1	32	MO- 5
175-54-71830	M2110-03A1	32	MO- 13
175-54-71830	M2110-06A0	18	MO- 25
175-54-73140	M2810-01A1	4	MO- 95
175-54-73230	M2810-01A1	8	MO- 95
175-54-73980	M2210-05A0	17	MO- 73
175-54-73980	M2210-05A2	17	MO- 75
175-54-73980	M2210-05A3	17	MO- 77
175-54-75321	M2141-01A0	1	MO- 35
175-54-75331	M2141-01A0	10	MO- 35
175-54-75331	M2141-01A2	10	MO- 39
175-54-75331	M2141-01A3	10	MO- 41
175-54-75332	M2141-01A2	10	MO- 39
175-54-75341	M2141-01A0	10A	MO- 35
175-54-75341	M2141-01A2	10A	MO- 39
175-54-75341	M2141-01A3	10A	MO- 41
175-54-75350	M2141-01A0	13	MO- 35
175-54-75350	M2141-01A2	13	MO- 39
175-54-75350	M2141-01A3	13	MO- 41
175-54-75360	M2141-01A3	1	MO- 41
175-54-75370	M2110-03A1	54	MO- 14
175-54-75730	M2190-01A3	6	MO- 59
175-54-75731	M2190-01A3	6	MO- 59
175-54-75732	M2190-01A1	6	MO- 57
175-54-75732	M2190-01A3	6	MO- 59
175-54-76110	M2110-06A0	1	MO- 25
175-54-76172	M2141-01A1	5	MO- 37
175-54-76172	M2142-01A0	10	MO- 45
175-54-76182	M2141-02A1	5	MO- 43
175-54-76182	M2142-02A0	5	MO- 53
175-54-76211	M2141-02A1	1	MO- 43
175-54-76211	M2142-02A0	1	MO- 53
175-54-76221	M2141-01A1	20	MO- 37
175-54-76221	M2142-01A0	25	MO- 45
175-54-76221	M2142-01A2	26	MO- 51
175-54-76230	M2141-02A1	17	MO- 43
175-54-76230	M2142-02A0	17	MO- 53
175-54-76230	M2142-02A1	17	MO- 55
175-54-76310	M2210-05A0	1	MO- 73
175-54-76310	M2210-05A3	1	MO- 77
175-54-76321	M2210-05A0	2	MO- 73
175-54-76351	M2141-01A0	19	MO- 35
175-54-76351	M2141-01A2	19	MO- 39
175-54-76351	M2141-01A3	19	MO- 41
175-54-76360	M2210-05A0	6	MO- 73
175-54-76360	M2210-05A2	6	MO- 75
175-54-76360	M2210-05A3	6	MO- 77
175-54-76370	M2210-05A0	7	MO- 73
175-54-76370	M2210-05A2	7	MO- 75
175-54-76370	M2210-05A3	7	MO- 77

PARTS NO.	FIG NO.	INDEX	PAGE
175-54-76390	M2142-01A1	1	MO- 49
175-54-76410	M2142-01A1	4	MO- 49
175-54-76470	M2142-01A1	1	MO- 49
175-54-76480	M2142-01A1	5	MO- 49
175-54-76811	M2810-01A0	4	MO- 93
175-54-76811	M2810-01A2	4	MO- 97
175-54-76820	F2700-05A2	27	FO- 103
175-54-76840	M2210-02A2	30	MO- 67
175-54-76850	M2210-02A2	33	MO- 67
175-54-76860	M2210-02A2	27	MO- 67
175-54-77410	M2110-01A1	1	MO- 5
175-60-00204	H0100-01A0	1	HO- 3
175-60-00204	H0100-02A0	1	HO- 7
175-60-00204	H0100-03A0	1	HO- 9
175-60-00204	H0100-04A0	1	HO- 11
175-60-00204	H0100-05A0	1	HO- 15
175-60-00252	H0310-01A0	31	HO- 17
175-60-19121	M2110-08A0	3	MO- 29
175-60-19121	M2111-01A0	12	MO- 31
175-60-26114	H0310-01A0	27	HO- 17
175-60-26141	H0310-01A0	4	HO- 17
175-60-26162	H0310-01A0	31	HO- 17
175-60-26182	H0310-01A0	15	HO- 17
175-60-27133	H0100-01A0	9	HO- 3
175-60-27133	Y1660-01A0	9	YO- 33
175-60-27171	H0100-02A0	5	HO- 7
175-60-27171	Y1660-02A0	5	YO- 37
175-60-27253	H0100-02A0	26	HO- 7
175-60-27253	Y1660-02A0	25	YO- 37
175-60-27262	H0100-02A0	17	HO- 7
175-60-27262	Y1660-02A0	17	YO- 37
175-60-27272	H0100-02A0	22	HO- 7
175-60-27272	Y1660-02A0	21	YO- 37
175-60-27300	H0100-02A0	2	HO- 7
175-60-27300	Y1660-02A0	2	YO- 37
175-60-27310	H0100-01A0	36	HO- 3
175-60-27310	Y1660-01A0	36	YO- 33
175-60-27340	H0100-02A0	3	HO- 7
175-60-27340	Y1660-02A0	3	YO- 37
175-60-27371	H0100-01A0	37	HO- 3
175-60-27371	Y1660-01A0	37	YO- 33
175-60-27380	Y1660-02A0	1	YO- 37
175-60-29120	H0100-01A0	34	HO- 3
175-60-29120	Y1660-01A0	34	YO- 33
175-60-29130	H0100-02A0	14	HO- 7
175-60-29130	Y1660-02A0	14	YO- 37
175-60-29140	H0100-01A0	25	HO- 3
175-60-29140	Y1660-01A0	25	YO- 33
175-60-29150	H0100-01A0	31	HO- 3
175-60-29150	Y1660-01A0	31	YO- 33

PARTS NO.	FIG NO	INDEX	PAGE
175-60-29160	H0100-02A0	20	H0- 7
175-60-58110	H0100-01A0	8	H0- 3
175-60-58110	Y1660-01A0	8	Y0- 33
175-60-58120	H0100-01A0	7	H0- 3
175-60-58120	Y1660-01A0	7	Y0- 33
175-60-72000	Y1660-01A0	1	Y0- 33
175-60-72000	Y1660-02A0	1	Y0- 37
175-60-72000	Y1660-03A0	1	Y0- 39
175-60-72000	Y1660-04A0	1	Y0- 41
175-60-72000	Y1660-05A0	1	Y0- 43
175-61-00018	M2110-06A0	24	M0- 25
175-61-00018	M2111-01A0	1	M0- 31
175-61-14350	H2210-01A0	20	H0- 19
175-61-14451	H2210-01A0	1	H0- 19
175-61-14451	H2210-01A2	1	H0- 21
175-61-14490	K2110-11A0	14	K0- 87
175-61-14760	H2210-01A0	23	H0- 19
175-61-14760	H2210-02A1	32	H0- 25
175-61-14770	H2210-01A0	24	H0- 19
175-61-14770	H2210-02A1	31	H0- 25
175-61-15130	M2110-06A0	28	M0- 25
175-61-15130	M2111-01A0	7	M0- 31
175-61-15201	M2111-01A0	13	M0- 31
175-61-15410	M2110-08A0	2	M0- 29
175-61-15410	M2111-01A0	11	M0- 31
175-61-15450	M2110-06A0	25	M0- 25
175-61-15450	M2111-01A0	2	M0- 31
175-61-15460	M2110-06A0	26	M0- 25
175-61-15460	M2111-01A0	3	M0- 31
175-61-15470	H2220-01A0	5	H0- 35
175-61-15510	H2210-01A0	2	H0- 19
175-61-15510	H2210-01A2	2	H0- 21
175-61-15520	K2510-01A0	7	K0- 105
175-61-15520	K2510-01A1	7	K0- 107
175-61-17121	H2210-01A0	19	H0- 19
175-61-17121	H2210-01A2	18	H0- 21
175-61-17210	H2210-01A0	6	H0- 19
175-61-17210	H2210-01A2	6	H0- 21
175-61-17240	H2210-01A0	16	H0- 19
175-61-18112	H2220-01A0	14	H0- 35
175-61-18162	H2220-01A0	23	H0- 35
175-61-18170	H2220-01A0	26	H0- 35
175-61-18180	H2220-01A0	29	H0- 35
175-61-18221	H2220-01A0	33	H0- 35
175-61-18290	H2210-03A0	21	H0- 31
175-61-18290	H2210-03A2	21	H0- 33
175-61-18330	H2210-03A0	8	H0- 31
175-61-18330	H2210-03A2	8	H0- 33
175-61-18340	H2210-03A0	19	H0- 31
175-61-18340	H2210-03A2	19	H0- 33

PARTS NO.	FIG NO.	INDEX	PAGE
175-61-18350	H2210-03A0	20	H0- 31
175-61-18350	H2210-03A2	20	H0- 33
175-61-18360	H2210-03A0	9	H0- 31
175-61-18360	H2210-03A2	9	H0- 33
175-61-18370	H2210-03A0	10	H0- 31
175-61-18370	H2210-03A2	10	H0- 33
175-61-18380	H2210-03A0	18	H0- 31
175-61-18380	H2210-03A2	18	H0- 33
175-61-18390	H2210-03A0	14	H0- 31
175-61-18390	H2210-03A2	14	H0- 33
175-61-18410	H2220-01A0	20	H0- 35
175-61-18410	T2160-01A0	8	T0- 23
175-61-31521	K2510-02A0	1	K0- 109
175-61-31540	K2510-03A0	1	K0- 113
175-61-31560	K2510-03A0	15	K0- 113
175-61-31571	K2510-03A0	14	K0- 113
175-61-31580	K2510-03A0	37	K0- 113
175-61-31590	K2510-03A0	20	K0- 113
175-61-31611	K2510-03A0	44	K0- 114
175-61-31630	K2510-05A0	8	K0- 119
175-61-31640	K2510-05A0	7	K0- 119
175-61-31650	K2510-02A0	9	K0- 109
175-61-31660	K2510-02A0	26	K0- 109
175-61-31670	K2510-02A0	32	K0- 109
175-61-31680	K2510-02A0	30	K0- 109
175-61-31690	K2510-02A0	37	K0- 109
175-61-31710	K2510-02A0	27	K0- 109
175-61-31720	K2510-02A0	2	K0- 109
175-61-31730	K2510-02A0	7	K0- 109
175-61-31750	H2250-01A0	51	H0- 40
175-61-31750	H2250-01A1	38	H0- 43
175-61-32331	K2510-02A0	17	K0- 109
175-61-32340	H2210-01A0	7	H0- 19
175-61-32340	H2210-01A2	7	H0- 21
175-61-34630	H2220-01A0	18	H0- 35
175-61-34640	H2220-01A0	19	H0- 35
175-61-35210	K2510-01A0	1	K0- 105
175-61-35210	K2510-01A1	1	K0- 107
175-61-71120	H2210-02A0	13	H0- 23
175-61-71120	H2210-02A1	13	H0- 25
175-61-71120	H2210-02A2	13	H0- 29
175-61-71131	H2210-02A0	1	H0- 23
175-61-71131	H2210-02A1	1	H0- 25
175-61-71131	H2210-02A2	1	H0- 29
175-61-71140	H2210-02A0	2	H0- 23
175-61-71140	H2210-02A1	2	H0- 25
175-61-71140	H2210-02A2	2	H0- 29
175-61-71210	H2210-02A0	35	H0- 23
175-61-71210	H2210-02A1	35	H0- 25
175-61-71210	H2210-02A2	35	H0- 29

PARTS NO	FIG NO.	INDEX	PAGE
175-61-71220	H2210-02A0	37	H0- 23
175-61-71220	H2210-02A1	37	H0- 25
175-61-71220	H2210-02A2	37	H0- 29
175-61-71231	H2210-02A0	19	H0- 23
175-61-71231	H2210-02A1	19	H0- 25
175-61-71231	H2210-02A2	19	H0- 29
175-61-71240	H2210-02A0	10	H0- 23
175-61-71240	H2210-02A1	10	H0- 25
175-61-71240	H2210-02A2	10	H0- 29
175-61-71250	H2210-02A0	7	H0- 23
175-61-71250	H2210-02A1	7	H0- 25
175-61-71250	H2210-02A2	7	H0- 29
175-61-71261	H2210-02A0	20	H0- 23
175-61-71261	H2210-02A1	20	H0- 25
175-61-71261	H2210-02A2	20	H0- 29
175-61-71270	K0710-02A0	44	K0- 46
175-61-71280	H2210-02A0	14	H0- 23
175-61-71280	H2210-02A1	14	H0- 25
175-61-71280	H2210-02A2	14	H0- 29
175-61-77230	H2210-01A0	15	H0- 19
175-63-X2111	Y1620-01A0	G-1	Y0- 19
175-63-X2111	Y1620-02A0	G-1	Y0- 23
175-63-X2121	Y1620-01A0	G-1	Y0- 19
175-63-X2121	Y1620-02A0	G-1	Y0- 23
175-63-02111	Y1620-01A0	1	Y0- 19
175-63-02180	Y1621-21A0	1	Y0- 31
175-63-05140	Y0100-01A0	8K	Y0- 4
175-63-05140	Y1620-31A0	K	Y0- 25
175-63-12370	Y1620-01A0	32	Y0- 19
175-63-12540	Y1620-01A0	31	Y0- 19
175-63-13131	Y1620-01A0	2	Y0- 19
175-63-13461	Y1620-02A0	19	Y0- 23
175-63-13471	Y1620-02A0	19	Y0- 23
175-63-13562	Y1620-02A0	23	Y0- 23
175-63-13572	Y1620-02A0	23	Y0- 23
175-63-13630	Y1620-01A0	9	Y0- 19
175-63-22320	Y1620-01A0	16	Y0- 19
175-63-22341	Y1620-01A0	1	Y0- 19
175-63-42221	Y1621-01A0	18	Y0- 27
175-63-42245	Y1621-01A0	1	Y0- 27
175-63-42345	Y1621-01A0	2	Y0- 27
175-63-42482	Y1621-01A0	27	Y0- 27
175-63-42491	Y1621-01A0	29	Y0- 27
175-63-42581	Y1621-01A0	26	Y0- 27
175-63-42591	Y1621-01A0	28	Y0- 27
175-63-42701	Y1621-01A0	1	Y0- 27
175-63-42790	Y1621-01A0	35	Y0- 27
175-63-42801	Y1621-01A0	1	Y0- 27
175-63-43121	Y1621-11A0	18	Y0- 29
175-63-43142	Y1621-11A0	1	Y0- 29

PARTS NO	FIG NO.	INDEX	PAGE
175-63-43171	Y1621-11A0	26	Y0- 29
175-63-43181	Y1621-11A0	28	Y0- 29
175-63-43242	Y1621-11A0	2	Y0- 29
175-63-43271	Y1621-11A0	27	Y0- 29
175-63-43281	Y1621-11A0	29	Y0- 29
175-63-43700	Y1621-11A0	1	Y0- 29
175-63-43800	Y1621-11A0	1	Y0- 29
175-63-49170	Y1621-21A0	11	Y0- 31
175-63-49170	Y1621-21A0	2	Y0- 31
175-63-49420	Y1621-21A0	10	Y0- 31
175-63-49440	Y1621-21A0	1	Y0- 31
175-63-52422	Y1620-31A0	17	Y0- 25
175-63-52432	Y1621-01A0	25	Y0- 27
175-63-52432	Y1621-11A0	25	Y0- 29
175-63-52542	Y1620-31A0	1	Y0- 25
175-63-52552	Y1620-31A0	23	Y0- 25
175-63-52562	Y1620-31A0	24	Y0- 25
175-63-52572	Y1620-31A0	31	Y0- 25
175-63-52700	Y1620-31A0	1	Y0- 25
175-63-75190	Y0100-01A0	10K	Y0- 4
175-63-75190	Y1621-21A0	5	Y0- 31
175-69-00012	T2810-01A0	5	T0- 43
175-69-21111	T2810-01A0	1	T0- 43
175-69-21121	T2810-01A0	2	T0- 43
175-69-21212	T2810-01A0	5	T0- 43
175-70-00514	T2110-01A1	23	T0- 7
175-70-00523	T2110-01A1	18	T0- 7
175-70-00543	T2110-01A1	7	T0- 7
175-70-00593	T2110-01A1	25	T0- 7
175-70-12221	T2110-01A1	22	T0- 7
175-70-13314	T2110-01A1	2	T0- 7
175-70-22110	T2110-01A1	24	T0- 7
175-70-22130	T2110-01A1	25	T0- 7
175-70-22141	T2110-01A1	37	T0- 7
175-70-22160	T2110-01A1	30	T0- 7
175-70-22190	T2110-01A1	21	T0- 7
175-70-23114	T2110-01A1	7	T0- 7
175-70-23124	T2110-01A1	6	T0- 7
175-70-23133	T2110-01A0	37	T0- 4
175-70-23133	T2110-01A1	16	T0- 7
175-70-23133	T2110-01A2	37	T0- 11
175-70-23151	T2110-01A1	4	T0- 7
175-70-23161	T2110-01A1	5	T0- 7
175-70-23293	T2110-01A0	37	T0- 4
175-70-23293	T2110-01A1	16	T0- 7
175-70-23293	T2110-01A2	37	T0- 11
175-70-26310	T2120-01A0	13	T0- 15
175-70-26310	T2120-01A1	15	T0- 19
175-70-73100	T2110-01A1	1	T0- 7
175-71-X1400	T2160-01A0	26	T0- 23

PARTS NO.	FIG NO	INDEX	PAGE
175-71-00233	T2110-01A0	25	TO- 3
175-71-00233	T2110-01A0	25	TO- 3
175-71-00233	T2110-01A2	25	TO- 11
175-71-00233	T2110-01A2	25	TO- 11
175-71-00294	T2120-01A0	23	TO- 15
175-71-00294	T2120-01A1	25	TO- 19
175-71-00302	T2110-01A0	34	TO- 3
175-71-00302	T2110-01A2	34	TO- 11
175-71-00302	T2120-01A0	27	TO- 15
175-71-00302	T2120-01A0	30	TO- 15
175-71-00302	T2120-01A1	29	TO- 19
175-71-00302	T2120-01A1	32	TO- 19
175-71-00361	T2110-01A1	37	TO- 8
175-71-00361	T2120-01A0	44	TO- 16
175-71-00361	T2120-01A1	45	TO- 20
175-71-11211	Y1620-31A0	18	YO- 25
175-71-11272	T2110-01A0	9	TO- 3
175-71-11272	T2110-01A2	9	TO- 11
175-71-11281	T2110-01A0	27	TO- 3
175-71-11281	T2110-01A2	27	TO- 11
175-71-11454	T2120-01A0	16	TO- 15
175-71-11454	T2120-01A1	18	TO- 19
175-71-11463	T2120-01A0	17	TO- 15
175-71-11463	T2120-01A1	19	TO- 19
175-71-11482	T2110-01A0	11	TO- 3
175-71-11482	T2110-01A2	11	TO- 11
175-71-11491	T2110-01A0	12	TO- 3
175-71-11491	T2110-01A1	10	TO- 7
175-71-11491	T2110-01A2	12	TO- 11
175-71-11520	T2110-01A0	14	TO- 3
175-71-11520	T2110-01A1	11	TO- 7
175-71-11520	T2110-01A2	14	TO- 11
175-71-11530	T2120-01A0	18	TO- 15
175-71-11530	T2120-01A1	20	TO- 19
175-71-21182	T2110-01A0	3	TO- 3
175-71-21182	T2110-01A2	3	TO- 11
175-71-21221	T2110-01A0	16	TO- 3
175-71-21221	T2110-01A2	16	TO- 11
175-71-21221	T2120-01A0	33	TO- 15
175-71-21221	T2120-01A1	35	TO- 19
175-71-21230	T2110-01A0	17	TO- 3
175-71-21230	T2110-01A2	17	TO- 11
175-71-21230	T2120-01A0	34	TO- 15
175-71-21230	T2120-01A1	36	TO- 19
175-71-21261	T2110-01A0	15	TO- 3
175-71-21261	T2110-01A2	15	TO- 11
175-71-21272	T2110-01A0	25	TO- 3
175-71-21272	T2110-01A2	25	TO- 11
175-71-21330	T2110-01A0	22	TO- 3
175-71-21330	T2110-01A2	22	TO- 11

PARTS NO	FIG NO.	INDEX	PAGE
175-71-21330	T2120-01A0	38	TO- 15
175-71-21330	T2120-01A1	40	TO- 20
175-71-21351	T2120-01A0	31	TO- 15
175-71-21351	T2120-01A1	33	TO- 19
175-71-22121	T2120-01A0	8	TO- 15
175-71-22121	T2120-01A1	8	TO- 19
175-71-22131	T2120-01A0	9	TO- 15
175-71-22131	T2120-01A1	9	TO- 19
175-71-22272	T2120-01A0	14	TO- 15
175-71-22272	T2120-01A1	16	TO- 19
175-71-22282	T2120-01A0	15	TO- 15
175-71-22282	T2120-01A1	17	TO- 19
175-71-22340	T2120-01A0	10	TO- 15
175-71-22340	T2120-01A1	10	TO- 19
175-71-22350	T2120-01A0	11	TO- 15
175-71-22350	T2120-01A1	11	TO- 19
175-71-22360	T2120-01A0	12	TO- 15
175-71-22360	T2120-01A1	12	TO- 19
175-71-27843	T2120-01A0	2	TO- 15
175-71-27843	T2120-01A1	2	TO- 19
175-71-31001	T2120-01A0	1	TO- 15
175-71-31122	T2120-01A0	3	TO- 15
175-71-31122	T2120-01A1	3	TO- 19
175-71-31132	T2120-01A0	4	TO- 15
175-71-31132	T2120-01A1	4	TO- 19
175-71-31142	T2120-01A0	5	TO- 15
175-71-31142	T2120-01A1	5	TO- 19
175-71-31173	T2110-01A0	4	TO- 3
175-71-31173	T2110-01A2	4	TO- 11
175-71-31183	T2120-01A0	20	TO- 15
175-71-31183	T2120-01A1	22	TO- 19
175-71-31190	T2110-01A0	32	TO- 3
175-71-31190	T2110-01A2	32	TO- 11
175-71-31233	T2120-01A0	22	TO- 15
175-71-31233	T2120-01A1	24	TO- 19
175-71-31280	T2120-01A0	26	TO- 15
175-71-31280	T2120-01A1	28	TO- 19
175-71-31293	T2110-01A0	30	TO- 3
175-71-31293	T2110-01A2	30	TO- 11
175-71-31311	T2110-01A0	10	TO- 3
175-71-31311	T2110-01A2	10	TO- 11
175-71-31321	T2160-01A0	16	TO- 23
175-71-31331	T2160-01A0	15	TO- 23
175-71-31353	T2160-01A0	22	TO- 23
175-71-31370	H2220-01A0	11	HO- 35
175-71-31370	H2220-01A0	6	HO- 35
175-71-31430	T2160-01A0	1	TO- 23
175-71-31441	T2160-01A0	6	TO- 23
175-71-31451	T2160-01A0	7	TO- 23
175-71-31480	T2160-01A0	27	TO- 23

PARTS NO.	FIG NO	INDEX	PAGE
175-71-31562	T2110-01A0	31	TO- 3
175-71-31562	T2110-01A2	31	TO- 11
175-71-31622	T2110-01A0	4	TO- 3
175-71-31622	T2110-01A2	4	TO- 11
175-71-31632	T2120-01A0	6	TO- 15
175-71-31632	T2120-01A1	6	TO- 19
175-71-31641	T2120-01A0	7	TO- 15
175-71-31641	T2120-01A1	7	TO- 19
175-71-31650	T2110-01A0	5	TO- 3
175-71-31650	T2110-01A2	5	TO- 11
175-71-31660	T2110-01A0	5	TO- 3
175-71-31660	T2110-01A2	5	TO- 11
175-71-31780	T2120-01A0	5A	TO- 15
175-71-31780	T2120-01A1	5A	TO- 19
175-71-31790	T2120-01A0	6A	TO- 15
175-71-31790	T2120-01A1	6A	TO- 19
175-71-33210	T2160-01A0	19	TO- 23
175-71-33290	T2110-01A0	2	TO- 3
175-71-71150	T2110-01A0	1	TO- 3
175-71-71160	T2110-01A0	2	TO- 3
175-71-71170	T2110-01A0	2	TO- 3
175-71-72220	T2110-01A2	1	TO- 11
175-71-72230	T2110-01A2	2	TO- 11
175-78-X1701	T2440-03A0	G-1	TO- 41
175-78-00081	T2410-01A0	25	TO- 25
175-78-00091	T2410-01A0	17	TO- 25
175-78-00091	T2410-01A1	17	TO- 29
175-78-00110	T2410-01A0	45	TO- 26
175-78-00110	T2410-01A1	42	TO- 30
175-78-21615	T2410-01A0	37	TO- 25
175-78-21693	T2410-01A0	47	TO- 26
175-78-21693	T2410-01A1	44	TO- 30
175-78-24411	H2220-01A0	36	HO- 35
175-78-31230	T2410-01A0	39	TO- 25
175-78-31230	T2410-01A1	36	TO- 29
175-78-32170	T2440-01A0	39	TO- 33
175-78-61113	T2410-01A0	1	TO- 25
175-78-61113	T2410-01A1	1	TO- 29
175-78-61124	T2410-01A0	2	TO- 25
175-78-61124	T2410-01A1	2	TO- 29
175-78-61151	T2410-01A0	7	TO- 25
175-78-61151	T2410-01A1	7	TO- 29
175-78-61161	T2410-01A0	12	TO- 25
175-78-61161	T2410-01A1	12	TO- 29
175-78-61171	T2410-01A0	20	TO- 25
175-78-61171	T2410-01A1	20	TO- 29
175-78-61182	T2410-01A0	28	TO- 25
175-78-61182	T2410-01A1	28	TO- 29
175-78-61261	T2410-01A0	18	TO- 25
175-78-61261	T2410-01A0	46	TO- 26

PARTS NO.	FIG NO	INDEX	PAGE
175-78-61261	T2410-01A1	18	TO- 29
175-78-61261	T2410-01A1	43	TO- 30
175-78-61271	T2410-01A0	26	TO- 25
175-78-61271	T2410-01A1	26	TO- 29
175-78-61281	T2410-01A0	19	TO- 25
175-78-61281	T2410-01A0	27	TO- 25
175-78-61281	T2410-01A0	43	TO- 26
175-78-61281	T2410-01A1	19	TO- 29
175-78-61281	T2410-01A1	27	TO- 29
175-78-61281	T2410-01A1	40	TO- 30
175-78-61320	T2410-01A0	14	TO- 25
175-78-61320	T2410-01A1	14	TO- 29
175-78-61331	T2410-01A0	32	TO- 25
175-78-61341	T2410-01A0	33	TO- 25
175-78-61351	T2410-01A0	41	TO- 26
175-78-61351	T2410-01A1	38	TO- 29
175-78-61362	T2410-01A0	42	TO- 26
175-78-61362	T2410-01A1	39	TO- 29
175-78-61371	T2410-01A0	9	TO- 25
175-78-61371	T2410-01A1	9	TO- 29
175-78-62101	T2440-01A0	2	TO- 33
175-78-62101	T2440-01A1	2	TO- 37
175-78-62126	T2440-01A0	10	TO- 33
175-78-62126	T2440-01A1	10	TO- 37
175-78-62140	T2440-01A0	3	TO- 33
175-78-62140	T2440-01A1	3	TO- 37
175-78-62151	T2440-01A0	5	TO- 33
175-78-62151	T2440-01A1	5	TO- 37
175-78-62163	T2440-01A0	8	TO- 33
175-78-62163	T2440-01A1	8	TO- 37
175-78-62173	T2440-01A0	9	TO- 33
175-78-62173	T2440-01A1	9	TO- 37
175-78-62191	T2440-01A1	22	TO- 37
175-78-62211	T2440-01A1	23	TO- 37
175-78-62250	T2440-01A1	24	TO- 37
175-78-62260	T2440-01A0	6	TO- 33
175-78-62260	T2440-01A1	6	TO- 37
175-78-62320	T2440-01A1	28	TO- 37
175-78-62330	T2440-01A1	31	TO- 37
175-78-62480	T2440-01A0	52	TO- 34
175-78-62480	T2440-01A1	51	TO- 38
175-78-63110	T2440-01A0	22	TO- 33
175-78-63230	T2440-01A0	28	TO- 33
175-78-63241	T2440-01A0	29	TO- 33
175-78-63250	T2440-01A0	23	TO- 33
175-78-65120	T2440-01A0	44	TO- 34
175-78-69411	K2110-02A0	5	KO- 65
175-78-69422	H2250-01A0	41	HO- 39
175-78-69422	H2250-01A1	28	HO- 43
175-78-69431	H2250-01A0	44	HO- 40

PARTS NO.	FIG NO.	INDEX	PAGE
175-78-69431	H2250-01A1	31	HO- 43
175-78-69450	H2250-01A0	10	HO- 39
175-78-69460	H2250-01A0	20	HO- 39
175-78-69460	H2250-01A1	7	HO- 43
175-78-69510	H2250-01A0	45	HO- 40
175-78-69510	H2250-01A1	32	HO- 43
175-78-69530	K2510-05A0	13	KO- 119
175-78-69540	K2510-01A0	12	KO- 105
175-78-69550	H2250-01A0	6	HO- 39
175-78-69550	H2250-01A1	6	HO- 43
175-78-69560	H2250-01A0	26	HO- 39
175-78-69560	H2250-01A1	13	HO- 43
175-78-69570	H2250-01A0	58	HO- 40
175-78-69570	H2250-01A1	45	HO- 44
175-78-69580	F2700-06A0	4	FO- 105
175-78-69580	H2250-01A0	7	HO- 39
175-79-00082	T2410-01A1	25	TO- 29
175-79-32131	T2410-01A1	34	TO- 29
175-79-32151	T2410-01A1	34	TO- 29
175-79-61250	F2700-06A0	11	FO- 105
175-79-61260	F2700-06A0	14	FO- 105
175-79-83760	A3110-B4C5	26	AA- 95
175-803-3150	C0120-01A0A	28	CO- 3
175-849-2290	H2210-01A2	23	HO- 21
175-849-2310	H2210-01A2	22	HO- 21
175-861-2141	H2210-02A1	35	HO- 25
175-861-2151	H2210-02A1	37	HO- 25
175-861-2230	H2210-01A2	19	HO- 21
175-861-7220	H2210-01A2	15	HO- 21
175-862-3482	M2110-01A1	3	MO- 5
175-862-3482	M2110-03A1	3	MO- 13
175-862-3482	M2110-06A0	3	MO- 25
175-862-7520	M2142-01A2	10	MO- 51
175-862-7630	M2142-02A1	5	MO- 55
175-878-2131	H2210-02A2	32	HO- 29
175-878-2131	T2440-01A1	48	TO- 38
175-878-2160	H2210-02A2	31	HO- 29
175-878-2160	T2440-01A1	47	TO- 38
175-882-1270	M2110-03A1	40	MO- 14
175-882-1270	M2113-01A0	12	MO- 33
175-886-1421	W2119-01A0	16	WO- 3
175-886-1431	W2119-01A0	12	WO- 3
175-886-1441	W2119-01A0	13	WO- 3
175-895-4251	W2121-01A0	13	WO- 7
175-900-2350	U0100-01A2	30	UO- 3
175-900-2350	U0100-01A3	30	UO- 7
175-900-2350	U0100-01A8	29	UO- 23
175-900-2470	K0810-01A0	29	KO- 59
175-900-3560	U0100-01A4	30	UO- 11
175-900-3910	C0310-01A1	31	CO- 7

PARTS NO.	FIG NO.	INDEX	PAGE
175-900-3920	C0310-01A1	31	CO- 7
175-900-3930	C0310-01A1	32	CO- 7
175-900-4840	U0100-01A5	30	UO- 15
175-902-7120	M2110-03A1	1C	MO- 13
175-902-7120	W2119-01A0	7	WO- 3
175-902-7131	M2110-03A1	43	MO- 14
175-902-7140	M2110-03A1	43	MO- 14
175-902-7140	W2119-01A0	1	WO- 3
175-902-7150	M2110-03A1	44	MO- 14
175-902-7150	W2119-01A0	2	WO- 3
175-902-7160	M2110-03A1	45	MO- 14
175-902-7160	W2119-01A0	3	WO- 3
175-902-7362	W2119-01A0	1	WO- 3
175-902-7610	K0410-01A1	1	KO- 37
175-902-7620	K0410-01A1	5	KO- 37
175-902-7632	W2119-01A0	4	WO- 3
175-902-7641	M2110-03A1	1A	MO- 13
175-902-7641	W2119-01A0	5	WO- 3
175-902-7651	M2110-03A1	1B	MO- 13
175-902-7651	W2119-01A0	6	WO- 3
175-902-7660	K0410-01A1	8	KO- 37
175-902-7670	K0410-01A1	9	KO- 37
175-902-7680	K0410-01A1	21	KO- 37
175-902-7690	M2210-06A3	18	MO- 83
175-902-7710	M2210-06A3	19	MO- 83
175-902-7830	M2110-03A1	1	MO- 13
175-902-8410	W2119-02A0	1	WO- 5
175-902-8420	W2119-02A0	4	WO- 5
175-902-8430	W2119-02A0	7	WO- 5
175-902-8510	W2119-02A0	10	WO- 5
175-902-8520	W2119-02A0	11	WO- 5
175-902-8530	W2119-02A0	12	WO- 5
175-902-8540	W2119-02A0	13	WO- 5
175-902-8570	M2210-06A3	1	MO- 83
175-902-8580	M2210-06A3	5	MO- 83
175-902-8650	M2210-05A2	1	MO- 75
175-902-8660	M2210-05A2	2	MO- 75
175-911-X500	K0810-01A0	23	KO- 59
175-911-0040	K0210-01A0	1	KO- 9
175-911-0040	K0210-03A0	1	KO- 17
175-911-0040	K0210-04A0	1	KO- 19
175-911-0040	K0210-05A0	1	KO- 21
175-911-0040	K0210-06A0	1	KO- 23
175-911-0040	K0210-07A0	1	KO- 25
175-911-0040	K0210-08A0	1	KO- 29
175-911-0040	K0210-09A0	1	KO- 33
175-911-6111	K0810-01A0	1	KO- 59
175-911-6131	K0810-01A0	6	KO- 59
175-911-6140	K0810-01A0	9	KO- 59
175-911-6151	K0810-01A0	1	KO- 59

PARTS NO.	FIG NO.	INDEX	PAGE
175-911-7112	K0210-01A0	1	KO- 9
175-911-7120	K2110-01A0	52	KO- 62
175-911-7131	K0210-09A0	1	KO- 33
175-911-7140	K0710-03A0	33	KO- 49
175-911-7160	K0710-04A0	34	KO- 53
175-911-7170	K0710-04A0	33	KO- 53
175-911-7180	K0710-04A0	30	KO- 53
175-911-7190	K0710-03A0	26	KO- 49
175-911-7220	K0710-03A0	18	KO- 49
175-911-7230	K0710-03A0	34	KO- 49
175-911-7240	K0710-03A0	35	KO- 49
175-911-7250	K0710-03A0	38	KO- 49
175-911-7260	K0710-04A0	32	KO- 53
175-911-7300	K0710-04A0	28	KO- 53
175-911-7320	K0710-04A0	4	KO- 53
175-911-7330	K0710-04A0	7	KO- 53
175-911-7351	K0210-05A0	2	KO- 21
175-911-7360	K0410-02A0	30	KO- 39
175-911-7370	K0410-02A0	31	KO- 39
175-911-7390	K0710-01A0	1	KO- 41
175-911-7390	K0710-01A1	2	KO- 43
175-911-7411	K0810-01A0	28	KO- 59
175-911-7440	K0710-01A1	30	KO- 43
175-911-7440	K0710-02A0	11	KO- 45
175-911-8230	K0710-01A0	17	KO- 41
175-911-8290	K0710-01A1	2	KO- 43
175-911-8511	K0710-01A0	27	KO- 41
175-911-8521	K0710-01A0	29	KO- 41
175-911-8531	K0710-01A0	33	KO- 41
175-911-8541	K0710-03A0	5	KO- 49
175-911-8551	K0710-01A1	20	KO- 43
175-911-8551	K0710-02A0	1	KO- 45
175-914-4111	H2220-01A0	1	HO- 35
175-914-4260	H2220-01A0	10	HO- 35
175-937-4214	T2120-01A1	1	TO- 19
175-937-4220	T2120-01A1	14	TO- 19
175-95-12110	M2250-01A0	37	MO- 90
175-978-5210	K0410-02A0	17	KO- 39
175-978-6110	K0410-01A0	1	KO- 35
175-978-6220	K0410-02A0	1	KO- 39
175-978-6230	K0410-02A0	2	KO- 39
175-978-6240	K0410-02A0	7	KO- 39
175-978-6250	K0410-02A0	8	KO- 39
175-978-6260	K0410-02A0	10	KO- 39
175-978-6271	M2250-01A0	31	MO- 89
175-978-6281	M2250-01A0	34	MO- 89
175-978-6290	K0410-02A0	9	KO- 39
175-978-6330	K0410-02A0	32	KO- 39
175-978-6350	K0410-02A0	32	KO- 39
175-979-7210	C0310-02A1	18	CO- 11

PARTS NO.	FIG NO.	INDEX	PAGE
175-979-7210	K0710-01A0	6	KO- 41
175-979-7210	K0710-01A1	3	KO- 43
175-979-7210	M2110-07A0	18	MO- 27
175-979-7330	C0310-02A1	28	CO- 11
175-979-7330	K0710-01A0	16	KO- 41
175-979-7330	K0710-01A1	17	KO- 43
175-979-7330	M2110-07A0	28	MO- 27
175-979-7510	C0310-02A1	14	CO- 11
175-979-7510	K0710-01A0	2	KO- 41
175-979-7510	K0710-01A1	6	KO- 43
175-979-7510	M2110-07A0	14	MO- 27
175-979-7520	C0310-02A1	15	CO- 11
175-979-7520	K0710-01A0	3	KO- 41
175-979-7520	K0710-01A1	7	KO- 43
175-979-7520	M2110-07A0	15	MO- 27
175-98-X1200	K0810-01A0	29	KO- 59
175-98-09031	R0500-01A0	9	RO- 11
175-98-09041	R0500-01A0	9	RO- 12
175-98-09230	R0500-01A0	6	RO- 11
175-98-09240	R0500-01A0	6	RO- 12
175-98-13940	U0100-01A8	38	UO- 24
175-98-13960	U0100-01A8	37	UO- 23
175-98-13970	U0100-01A8	39	UO- 24
175-98-13980	U0100-01A8	44	UO- 24
175-98-13990	U0100-01A8	42	UO- 24
175-98-22370	K0810-01A0	30	KO- 59
175-98-41111	U0100-01A2	15	UO- 3
175-98-41111	U0100-01A3	15	UO- 7
175-98-41111	U0100-01A4	15	UO- 11
175-98-41111	U0100-01A5	15	UO- 15
175-98-41111	U0100-01A7	15	UO- 19
175-98-41111	U0100-01A8	15	UO- 23
175-98-41121	U0100-01A2	17	UO- 3
175-98-41121	U0100-01A3	17	UO- 7
175-98-41121	U0100-01A4	17	UO- 11
175-98-41121	U0100-01A5	17	UO- 15
175-98-41121	U0100-01A7	17	UO- 19
175-98-41121	U0100-01A8	17	UO- 23
175-98-41131	U0100-01A2	5	UO- 3
175-98-41131	U0100-01A3	5	UO- 7
175-98-41131	U0100-01A4	5	UO- 11
175-98-41131	U0100-01A5	5	UO- 15
175-98-41131	U0100-01A7	5	UO- 19
175-98-41131	U0100-01A8	5	UO- 23
175-98-41152	U0100-01A2	19	UO- 3
175-98-41152	U0100-01A3	19	UO- 7
175-98-41152	U0100-01A4	19	UO- 11
175-98-41152	U0100-01A5	19	UO- 15
175-98-41152	U0100-01A7	19	UO- 19
175-98-41152	U0100-01A8	19	UO- 23

PARTS NO.	FIG NO	INDEX	PAGE
175-98-41162	U0100-01A2	20	U0- 3
175-98-41162	U0100-01A3	20	U0- 7
175-98-41162	U0100-01A4	20	U0- 11
175-98-41162	U0100-01A5	20	U0- 15
175-98-41162	U0100-01A7	20	U0- 19
175-98-41162	U0100-01A8	20	U0- 23
175-98-41171	U0100-01A8	24	U0- 23
175-98-41182	U0100-01A2	13	U0- 3
175-98-41182	U0100-01A3	13	U0- 7
175-98-41182	U0100-01A4	13	U0- 11
175-98-41182	U0100-01A5	13	U0- 15
175-98-41182	U0100-01A7	13	U0- 19
175-98-41182	U0100-01A8	13	U0- 23
175-98-41191	U0100-01A2	14	U0- 3
175-98-41191	U0100-01A3	14	U0- 7
175-98-41191	U0100-01A4	14	U0- 11
175-98-41191	U0100-01A5	14	U0- 15
175-98-41191	U0100-01A7	14	U0- 19
175-98-41191	U0100-01A8	14	U0- 23
175-98-41221	U0100-01A2	12	U0- 3
175-98-41221	U0100-01A3	12	U0- 7
175-98-41221	U0100-01A4	12	U0- 11
175-98-41221	U0100-01A5	12	U0- 15
175-98-41221	U0100-01A7	12	U0- 19
175-98-41221	U0100-01A8	12	U0- 23
175-98-41270	H2250-01A0	59	H0- 40
175-98-41270	U0100-01A2	49	U0- 4
175-98-41270	U0100-01A3	49	U0- 8
175-98-41270	U0100-01A4	49	U0- 12
175-98-41270	U0100-01A5	49	U0- 16
175-98-41270	U0100-01A7	49	U0- 20
175-98-41270	U0100-01A8	48	U0- 24
175-98-41420	U0100-01A5	26	U0- 15
175-98-41440	U0100-01A5	28	U0- 15
175-98-41470	U0100-01A2	18	U0- 3
175-98-41470	U0100-01A2	7	U0- 3
175-98-41470	U0100-01A3	18	U0- 7
175-98-41470	U0100-01A3	7	U0- 7
175-98-41470	U0100-01A4	18	U0- 11
175-98-41470	U0100-01A4	7	U0- 11
175-98-41470	U0100-01A5	18	U0- 15
175-98-41470	U0100-01A5	7	U0- 15
175-98-41470	U0100-01A7	18	U0- 19
175-98-41470	U0100-01A7	7	U0- 19
175-98-41470	U0100-01A8	18	U0- 23
175-98-41470	U0100-01A8	7	U0- 23
175-98-41680	U0100-01A4	26	U0- 11
175-98-41720	U0100-01A4	28	U0- 11
175-98-41850	U0100-01A2	9	U0- 3
175-98-41850	U0100-01A3	9	U0- 7
175-98-41850	U0100-01A4	9	U0- 11
175-98-41850	U0100-01A5	9	U0- 15
175-98-41850	U0100-01A7	9	U0- 19
175-98-41850	U0100-01A8	9	U0- 23
175-98-41940	U0100-01A7	28	U0- 19
175-98-41950	U0100-01A7	35	U0- 20
175-98-41960	U0100-01A7	29	U0- 19
175-98-51110	U0100-01A4	26	U0- 11
175-98-51120	U0100-01A2	52	U0- 4
175-98-51120	U0100-01A3	52	U0- 8
175-98-51120	U0100-01A4	52	U0- 12
175-98-51120	U0100-01A5	52	U0- 16
175-98-51120	U0100-01A7	52	U0- 20
175-98-51120	U0100-01A8	51	U0- 24
175-98-71180	U0100-01A2	22	U0- 3
175-98-71180	U0100-01A3	22	U0- 7
175-98-71180	U0100-01A4	22	U0- 11
175-98-71180	U0100-01A5	22	U0- 15
175-98-71180	U0100-01A7	22	U0- 19
175-98-71180	U0100-01A8	22	U0- 23
175-98-71210	U0100-01A2	21	U0- 3
175-98-71210	U0100-01A3	21	U0- 7
175-98-71210	U0100-01A4	21	U0- 11
175-98-71210	U0100-01A5	21	U0- 15
175-98-71210	U0100-01A7	21	U0- 19
175-98-71210	U0100-01A8	21	U0- 23
175-98-71220	U0100-01A2	23	U0- 3
175-98-71220	U0100-01A3	23	U0- 7
175-98-71220	U0100-01A4	23	U0- 11
175-98-71220	U0100-01A5	23	U0- 15
175-98-71220	U0100-01A7	23	U0- 19
175-98-71220	U0100-01A8	23	U0- 23
175-98-71380	U0100-01A2	35	U0- 3
175-98-71380	U0100-01A3	35	U0- 7
175-98-71380	U0100-01A8	34	U0- 23
175-98-71390	U0100-01A2	29	U0- 3
175-98-71390	U0100-01A3	29	U0- 7
175-98-71390	U0100-01A8	28	U0- 23
175-98-71430	U0100-01A5	29	U0- 15
175-98-71670	U0100-01A4	35	U0- 11
175-98-71690	U0100-01A4	29	U0- 11
175-98-71860	U0100-01A2	24	U0- 3
175-98-71860	U0100-01A3	24	U0- 7
175-98-71860	U0100-01A4	24	U0- 11
175-98-71860	U0100-01A5	24	U0- 15
175-98-71860	U0100-01A7	24	U0- 19
175-98-71870	U0100-01A2	10	U0- 3
175-98-71870	U0100-01A3	10	U0- 7
175-98-71870	U0100-01A4	10	U0- 11
175-98-71870	U0100-01A5	10	U0- 15
175-98-71870	U0100-01A7	10	U0- 19
175-98-71870	U0100-01A8	10	U0- 23
175-98-71880	U0100-01A2	25	U0- 3
175-98-71880	U0100-01A3	25	U0- 7
175-98-71880	U0100-01A4	25	U0- 11
175-98-71880	U0100-01A5	25	U0- 15
175-98-71880	U0100-01A7	25	U0- 19
175-98-72410	U0100-01A5	35	U0- 15
176-30-43111	R0100-01A0	16	R0- 3
176-30-43121	R0100-01A0	17	R0- 3
176-30-44110	R2100-02A0	1	R0- 29
176-32-11144	R0500-01A2	6	R0- 15
176-32-11152	R0500-01A2	8	R0- 15
176-32-11173	R0500-01A2	9	R0- 15
176-32-11193	R0500-01A2	12	R0- 15
176-32-11210	R0500-01A0	2	R0- 11
176-32-11210	R0500-01A0	2	R0- 11
176-32-11210	R0500-01A0	2	R0- 11
176-32-11210	R0500-01A0	2	R0- 11
176-32-11210	R0500-01A2	2	R0- 15
176-32-11210	R0500-01A3	2	R0- 17
176-32-11210	R0500-01A4	2	R0- 19
176-32-11210	R0500-01A5	2	R0- 21
176-32-11210	Y0320-01A0	1	Y0- 7
176-32-11292	R0500-01A2	11	R0- 15
176-32-11292	R0500-01A2	7	R0- 15
176-32-11332	R0500-01A2	10	R0- 15
176-43-41350	J2700-01A0	13	J0- 11
176-43-41350	J2700-01A1	13	J0- 13
176-43-41350	M2210-07A0	3	M0- 87
176-49-41350	F2700-02A0	23	F0- 89
177-50-11160	J2700-01A0	2	J0- 11
177-50-11160	J2700-01A1	2	J0- 13
177-50-11170	J2700-01A0	9	J0- 11
177-50-11170	J2700-01A1	9	J0- 13
178-13-11720	F2310-52A0	27	F0- 13
178-15-00030	F2320-53A0	1	F0- 27
178-15-00121	F2320-54A0	36	F0- 31
178-15-13140	F2320-54A0	14	F0- 31
178-15-13240	F2320-54A0	12	F0- 31
178-15-13260	F2320-54A0	15	F0- 31
178-15-13360	F2320-54A0	18	F0- 31
178-15-13370	F2320-54A0	19	F0- 31
178-15-13620	F2320-54A0	21	F0- 31
178-15-19330	F2320-54A0	20	F0- 31
178-15-19350	F2320-54A0	13	F0- 31
178-27-11150	F2380-02A0A	21	F0- 69
178-27-11150	F2380-04A0A	21	F0- 77
178-30-12140	R2100-01A0	12	R0- 23
178-30-12140	R2100-01A1	12	R0- 25
178-30-12140	R2100-01A2	12	R0- 27
178-30-12150	R2100-01A0	15	R0- 23
178-30-12150	R2100-01A1	15	R0- 25
178-30-12150	R2100-01A2	15	R0- 27
178-30-12161	R2100-01A0	10	R0- 23
178-30-12161	R2100-01A0	14	R0- 23
178-30-12161	R2100-01A1	10	R0- 25
178-30-12161	R2100-01A1	14	R0- 25
178-30-12161	R2100-01A2	10	R0- 27
178-30-12161	R2100-01A2	14	R0- 27
178-30-12171	R2100-01A0	11	R0- 23
178-30-12171	R2100-01A0	13	R0- 23
178-30-12171	R2100-01A1	11	R0- 25
178-30-12171	R2100-01A1	13	R0- 25
178-30-12171	R2100-01A2	11	R0- 27
178-30-12171	R2100-01A2	13	R0- 27
178-30-16114	R0200-01A0	1	R0- 7
178-30-16124	R0200-01A0	1	R0- 7
178-32-05000	Y0320-01A0	K1	Y0- 7
178-32-11220	R0500-01A0	3	R0- 11
178-32-11220	R0500-01A0	3	R0- 11
178-32-11220	R0500-01A0	3	R0- 11
178-32-11220	R0500-01A0	3	R0- 11
178-32-11220	R0500-01A2	3	R0- 15
178-32-11220	R0500-01A3	3	R0- 17
178-32-11220	R0500-01A4	3	R0- 19
178-32-11220	R0500-01A5	3	R0- 21
178-32-11220	Y0320-01A0	2	Y0- 7
178-33-13190	F2370-03A0	14	F0- 57
178-33-13250	M2210-04A0	17	M0- 71
178-33-13260	M2210-04A0	16	M0- 71
178-43-12180	K2110-06A0	32	K0- 73
178-43-12180	K2110-08A0	23	K0- 79
178-60-12250	C0310-02A1	20	C0- 11
178-60-12250	K0710-01A0	8	K0- 41
178-60-12250	K0710-01A1	11	K0- 43
178-60-12250	M2110-07A0	20	M0- 27
180-14-25560	F2320-55A0	34	F0- 35
180-14-25560	F2320-55A0	52	F0- 36
180-54-13160	M2810-01A0	12	M0- 93
180-54-13160	M2810-01A1	12	M0- 95
180-54-13160	M2810-01A2	12	M0- 97
19M-15-12721	F2320-52A0	46	F0- 24
19M-15-12721	F2320-52A0	47	F0- 24
19M-15-12721	F2320-53A0	52	F0- 28
19M-43-11170	K2110-05A0	15	K0- 71
195-Z11-0021	K0210-03A0	1	K0- 17
195-Z11-1122	K0210-02A0	1	K0- 13
195-Z11-1132	K0210-02A0	4	K0- 13
195-Z11-1140	K0210-02A0	3	K0- 13

PARTS NO	FIG NO.	INDEX	PAGE
195-Z11-1150	K0210-02A0	6	K0- 13
195-Z11-1161	K0210-01A0	3	K0- 9
195-Z11-1171	K0210-03A0	26	K0- 17
195-Z11-1181	K0210-02A0	50	K0- 14
195-Z11-1191	K0210-02A0	51	K0- 14
195-Z11-1211	K0210-01A0	2	K0- 9
195-Z11-1220	K0210-02A0	2	K0- 13
195-Z11-1220	K0210-02A0	5	K0- 13
195-Z11-1230	K0210-02A0	49	K0- 14
195-Z11-1241	K0210-03A0	1	K0- 17
195-Z11-1250	K0210-03A0	2	K0- 17
195-Z11-1260	K0210-03A0	3	K0- 17
195-Z11-1270	K0210-03A0	4	K0- 17
195-Z11-1280	K0210-03A0	5	K0- 17
195-Z11-1290	K0210-03A0	6	K0- 17
195-Z11-1311	K0210-03A0	7	K0- 17
195-Z11-1320	K0210-03A0	8	K0- 17
195-Z11-1330	K0210-03A0	9	K0- 17
195-Z11-1340	K0210-03A0	10	K0- 17
195-Z11-1350	K0210-03A0	11	K0- 17
195-Z11-1360	K0210-03A0	12	K0- 17
195-Z11-1371	K0210-03A0	17	K0- 17
195-Z11-1381	K0210-03A0	13	K0- 17
195-Z11-1430	K0210-01A0	13	K0- 9
195-Z11-1440	K0210-01A0	14	K0- 9
195-Z11-1450	K0210-01A0	18	K0- 9
195-Z11-1460	K0210-01A0	23	K0- 9
195-Z11-1480	K0210-01A0	27	K0- 9
195-Z11-1490	K0210-04A0	7	K0- 19
195-Z11-1510	K0210-01A0	4	K0- 9
195-Z11-1520	K0210-01A0	5	K0- 9
195-Z11-1530	K0210-01A0	6	K0- 9
195-Z11-1590	K0210-02A0	21	K0- 13
195-Z11-1610	K0210-02A0	27	K0- 13
195-Z11-1630	K0210-02A0	20	K0- 13
195-Z11-1690	K0210-02A0	29	K0- 13
195-Z11-1710	K0210-02A0	24	K0- 13
195-Z11-1710	K0210-02A0	31	K0- 13
195-Z11-1730	K0210-02A0	28	K0- 13
195-Z11-1740	K0210-02A0	47	K0- 14
195-Z11-1791	K0210-02A0	4A	K0- 13
195-Z11-1811	K0210-02A0	1A	K0- 13
195-Z11-1830	K0210-04A0	11	K0- 19
195-Z11-1840	K0210-04A0	4	K0- 19
195-Z11-1850	K0210-04A0	23	K0- 19
195-Z11-1860	K0210-04A0	24	K0- 19
195-Z11-1870	K0210-01A0	35	K0- 9
195-Z11-1880	K0210-04A0	21	K0- 19
195-Z11-1890	K0210-04A0	22	K0- 19
195-Z11-1910	K0210-05A0	12	K0- 21

PARTS NO.	FIG NO.	INDEX	PAGE
195-Z11-1920	K0210-05A0	24	K0- 21
195-Z11-1931	K0210-05A0	22	K0- 21
195-Z11-1941	K0210-05A0	23	K0- 21
195-Z11-1950	K0210-04A0	12	K0- 19
195-Z11-1950	K0210-04A0	25	K0- 19
195-Z11-1950	K0210-04A0	5	K0- 19
195-Z11-1950	K0210-05A0	13	K0- 21
195-Z11-1950	K0210-05A0	25	K0- 21
195-Z11-1960	K0210-04A0	13	K0- 19
195-Z11-1960	K0210-04A0	26	K0- 19
195-Z11-1960	K0210-04A0	6	K0- 19
195-Z11-1960	K0210-05A0	14	K0- 21
195-Z11-1960	K0210-05A0	26	K0- 21
195-Z11-1970	K0210-06A0	16	K0- 23
195-Z11-1980	K0210-02A0	42	K0- 14
195-Z11-1980	K0210-05A0	15	K0- 21
195-Z11-1990	K0210-05A0	27	K0- 21
195-Z11-2110	K0210-01A0	34	K0- 9
195-Z11-2120	K0210-06A0	1	K0- 23
195-Z11-2130	K0210-06A0	2	K0- 23
195-Z11-2140	K0210-06A0	3	K0- 23
195-Z11-2150	K0210-06A0	4	K0- 23
195-Z11-2160	K0210-06A0	5	K0- 23
195-Z11-2170	K0210-04A0	14	K0- 19
195-Z11-2180	K0210-04A0	15	K0- 19
195-Z11-2190	K0210-08A0	4	K0- 29
195-Z11-2220	K0210-07A0	26	K0- 25
195-Z11-2230	K0210-07A0	29	K0- 25
195-Z11-2240	K0210-08A0	15	K0- 29
195-Z11-2250	K0210-08A0	10	K0- 29
195-Z11-2270	K0210-08A0	17	K0- 29
195-Z11-2280	K0210-08A0	7	K0- 29
195-Z11-2280	K2220-01A0	10A	K0- 95
195-Z11-2290	K0210-08A0	14	K0- 29
195-Z11-2290	K2220-01A0	10B	K0- 95
195-Z11-2310	K0210-08A0	16	K0- 29
195-Z11-2331	K0210-05A0	1	K0- 21
195-Z11-2351	K0210-05A0	18	K0- 21
195-Z11-2360	K0210-05A0	21	K0- 21
195-Z11-2360	K0210-05A0	5	K0- 21
195-Z11-2370	K0210-04A0	1	K0- 19
195-Z11-2420	K0210-07A0	11	K0- 25
195-Z11-2420	K0210-08A0	20	K0- 29
195-Z11-2430	K0210-07A0	20	K0- 25
195-Z11-2440	K0210-07A0	30	K0- 25
195-Z11-2450	K0210-07A0	14	K0- 25
195-Z11-2460	K0210-08A0	23	K0- 29
195-Z11-2470	K0210-07A0	15	K0- 25
195-Z11-2470	K0210-08A0	24	K0- 29
195-Z11-2490	K0210-07A0	16	K0- 25

PARTS NO.	FIG NO.	INDEX	PAGE
195-Z11-2520	K0210-06A0	10	K0- 23
195-Z11-2530	K0210-06A0	11	K0- 23
195-Z11-2540	K0210-09A0	15	K0- 33
195-Z11-2550	K0210-09A0	16	K0- 33
195-Z11-2560	K0210-09A0	17	K0- 33
195-Z11-2710	K0210-01A0	36	K0- 10
195-Z11-2720	K0810-01A0	2	K0- 59
195-Z11-2730	K0210-05A0	6	K0- 21
195-Z11-2750	K0210-01A0	28	K0- 9
195-Z11-2760	K0210-06A0	6	K0- 23
195-Z11-2770	K0210-06A0	7	K0- 23
195-Z11-2780	K0210-06A0	8	K0- 23
195-Z11-2810	K0210-07A0	1	K0- 25
195-Z11-2831	K0210-06A0	13	K0- 23
195-Z11-2840	K0210-05A0	30	K0- 21
195-Z11-2840	K0210-05A0	31	K0- 21
195-Z11-2850	K0210-05A0	34	K0- 21
195-Z11-2870	K0210-05A0	37	K0- 21
195-Z11-2880	K0210-05A0	38	K0- 21
195-Z11-2890	K0210-08A0	39	K0- 30
195-Z11-2910	K0210-08A0	40	K0- 30
195-Z11-2951	K0210-07A0	37	K0- 26
195-Z11-2961	K0210-07A0	38	K0- 26
195-Z11-2970	K0210-04A0	10	K0- 19
195-Z11-2980	K0210-07A0	36	K0- 25
195-Z11-2990	K0810-01A0	23	K0- 59
195-Z11-3130	K0210-02A0	52	K0- 14
195-Z11-3140	K0210-02A0	53	K0- 14
195-Z11-3170	K0810-01A0	17	K0- 59
195-Z11-3630	K0210-03A0	17	K0- 17
195-Z11-3640	K0210-03A0	18	K0- 17
195-Z11-3650	K0210-03A0	21	K0- 17
195-Z11-3660	K0210-03A0	22	K0- 17
195-Z11-3670	K0210-03A0	16	K0- 17
195-Z11-3680	K0210-03A0	24	K0- 17
195-Z11-3690	K0210-03A0	15	K0- 17
195-Z11-3930	K0810-01A0	20	K0- 59
195-Z11-3940	K0810-01A0	16	K0- 59
195-Z11-4350	K0210-05A0	9	K0- 21
195-Z11-4360	K0210-05A0	6	K0- 21
195-Z11-4510	K0210-02A0	7	K0- 13
195-Z11-4520	K0210-02A0	8	K0- 13
195-Z11-4530	K0210-01A0	31	K0- 9
195-Z11-4540	K0210-02A0	12	K0- 13
195-Z11-4550	K0210-02A0	13	K0- 13
195-Z11-4560	K0210-01A0	32	K0- 9
195-Z11-4570	K0210-01A0	33A	K0- 9
195-Z11-4581	K0210-02A0	34	K0- 13
195-Z11-4591	K0210-02A0	35	K0- 13
195-Z11-4610	K0210-02A0	22	K0- 13

PARTS NO.	FIG NO.	INDEX	PAGE
195-Z11-4620	K0210-02A0	23	K0- 13
195-Z11-4630	K0210-02A0	36	K0- 13
195-Z11-4640	K0210-02A0	14	K0- 13
195-Z11-4860	K0210-01A0	28A	K0- 9
195-Z11-5190	K0710-03A0	17	K0- 49
195-Z11-5240	K0710-04A0	21	K0- 53
195-Z11-5260	K0710-05A0	1	K0- 55
195-Z11-5270	K0710-05A0	4	K0- 55
195-Z11-5351	K0710-03A0	22	K0- 49
195-Z11-5360	K0210-08A0	34	K0- 29
195-Z11-5400	K0710-04A0	29	K0- 53
195-Z11-5501	K0710-04A0	28	K0- 53
195-Z11-5600	K0710-05A0	10	K0- 55
195-Z11-6300	K0710-05A0	10	K0- 55
195-Z11-6691	K0710-04A0	37	K0- 53
195-Z11-6740	K0710-04A0	31	K0- 53
195-Z11-7120	K0210-08A0	32	K0- 29
195-Z11-7130	K0210-08A0	31	K0- 29
195-Z11-7220	K0710-02A0	35	K0- 45
195-Z11-7260	K0710-01A0	35	K0- 41
195-Z11-7270	K0710-01A0	36	K0- 41
195-01-12520	K0710-02A0	23	K0- 45
195-01-16420	E0200-03A0	28	E0- 7
195-03-11511	M2110-03A0	10	M0- 11
195-03-11570	M2110-02A0	42	M0- 7
195-03-11842	C0310-01A0	10	C0- 5
195-03-11842	C0310-01A1	10	C0- 7
195-03-11842	M2110-04A0	10	M0- 17
195-03-11851	C0310-01A0	11	C0- 5
195-03-11851	C0310-01A1	11	C0- 7
195-03-11851	M2110-04A0	8	M0- 17
195-03-11880	C0310-01A0	17	C0- 5
195-03-11880	C0310-01A1	17	C0- 7
195-03-11880	M2110-04A0	17	M0- 17
195-03-11981	M2110-03A0	2	M0- 11
195-03-12810	C0310-01A0	13	C0- 5
195-03-12810	C0310-01A1	13	C0- 7
195-03-12810	M2110-04A0	11	M0- 17
195-03-13150	C0310-02A0	17	C0- 9
195-03-13150	M2110-04A0	23	M0- 17
195-03-17880	M2110-01A0	25	M0- 3
195-03-18680	M2110-03A0	8	M0- 11
195-03-22160	M2110-01A0	13	M0- 3
195-03-22270	M2110-02A0	37	M0- 7
195-03-22401	M2110-02A0	13	M0- 7
195-03-22401	M2110-02A0	5	M0- 7
195-03-22501	M2110-02A0	23	M0- 7
195-03-22501	M2110-02A0	33	M0- 7
195-03-41380	C0310-02A1	19	C0- 11
195-03-41380	K0710-01A0	7	K0- 41

PARTS NO	FIG NO.	INDEX	PAGE
195-03-41380	K0710-01A1	10	K0- 43
195-03-41380	M2110-07A0	19	M0- 27
195-04-11230	D0100-01A0	5	D0- 3
195-04-11230	D0100-01A0	9	D0- 3
195-04-11280	D0100-01A0	13	D0- 3
195-04-11280	D0100-01A0	8	D0- 3
195-04-11431	D0100-01A0	26	D0- 3
195-04-11450	D0200-01A0	5	D0- 7
195-04-11450	D0200-01A1	5	D0- 9
195-04-11450	D0200-01A2	5	D0- 11
195-04-11480	D0100-01A0	21	D0- 3
195-04-12280	D0200-01A0	13	D0- 7
195-04-12280	D0200-01A0	3	D0- 7
195-04-12280	D0200-01A1	13	D0- 9
195-04-12280	D0200-01A1	3	D0- 9
195-04-12280	D0200-01A2	13	D0- 11
195-04-12280	D0200-01A2	3	D0- 11
195-06-19461	E0200-01A0	7	E0- 3
195-06-22810	W2121-01A0	1	W0- 7
195-06-22821	W2121-01A0	7	W0- 7
195-06-25250	K2220-01A0	6	K0- 95
195-06-26260	M2210-01A0	19	M0- 61
195-06-27250	T2440-03A0	1	T0- 41
195-06-41180	K2220-01A0	28	K0- 95
195-06-41350	K0210-07A0	5	K0- 25
195-06-41360	K0210-07A0	5	K0- 25
195-06-41410	K2110-13A0	6	K0- 91
195-06-41580	K2110-13A0	9	K0- 91
195-06-41740	E0200-02A0	25	E0- 5
195-06-41740	E0200-03A0	1	E0- 7
195-06-41740	F2700-06A0	20	F0- 105
195-06-41820	E0200-03A0	32	E0- 7
195-06-41820	F2700-06A0	6	F0- 105
195-06-41820	F2700-06A0	8	F0- 105
195-06-41820	H2250-01A0	17	H0- 39
195-06-41820	K2110-13A0	15	K0- 91
195-06-41830	K0210-08A0	35	K0- 29
195-06-41830	K2220-01A0	36	K0- 95
195-06-41830	M2210-01A0	9	M0- 61
195-06-41840	K2110-13A0	14	K0- 91
195-06-46280	K2220-01A0	48	K0- 96
195-09-18141	R2100-03A0	31	R0- 33
195-09-18141	R2100-03A0	8	R0- 33
195-09-18141	R2100-03A1	31	R0- 35
195-09-18141	R2100-03A1	8	R0- 35
195-13-00100	F2310-53A0	1	F0- 17
195-13-05010	F2310-53A0	5	F0- 17
195-13-05020	F2310-52A0	33	F0- 13
195-13-05020	Y0100-01A0	1K	Y0- 3
195-13-11143	F2310-52A0	3	F0- 13

PARTS NO	FIG NO.	INDEX	PAGE
195-13-11261	F2310-52A0	43	F0- 14
195-13-11261	Y0100-01A0	1K	Y0- 3
195-13-11810	F2310-52A0	39	F0- 14
195-13-12711	F2310-52A0	24	F0- 13
195-13-13114	F2310-51A0	1	F0- 9
195-13-13420	F2310-51A0	9	F0- 9
195-13-16110	F2310-53A0	1	F0- 17
195-13-16120	F2310-53A0	2	F0- 17
195-13-16131	F2310-53A0	3	F0- 17
195-13-16141	F2310-53A0	6	F0- 17
195-13-16141	F2310-54A0	4	F0- 19
195-13-16230	F2310-53A0	4	F0- 17
195-13-16420	F2310-54A0	2	F0- 19
195-13-16430	F2310-54A0	3	F0- 19
195-13-16450	F2310-53A0	7	F0- 17
195-13-16450	F2310-54A0	5	F0- 19
195-15-11230	F2320-52A0	13	F0- 23
195-15-15130	F2320-55A0	35	F0- 35
195-15-15671	F2320-55A0	16	F0- 35
195-15-15680	F2320-55A0	14	F0- 35
195-15-15680	F2320-55A0	17	F0- 35
195-15-32710	F2320-53A0	57	F0- 28
195-27-00150	F2380-02A0A	49	F0- 70
195-27-00150	F2380-04A0A	49	F0- 78
195-27-12620	F2380-01A0A	18	F0- 65
195-27-12620	F2380-01A1	18	F0- 67
195-27-12620	F2380-03A0A	18	F0- 73
195-27-12620	F2380-03A1	18	F0- 75
195-27-12710	F2380-02A0A	49	F0- 70
195-27-12710	F2380-04A0A	49	F0- 78
195-30-14151	R2100-02A0	5	R0- 29
195-30-14160	R2100-02A0	7	R0- 29
195-30-17960	R0100-01A0	33	R0- 4
195-33-11220	D0200-01A0	16	D0- 7
195-33-11220	D0200-01A1	16	D0- 9
195-33-11220	D0200-01A2	16	D0- 11
195-33-11220	E0200-03A0	23	E0- 7
195-33-11220	F2370-02A0	29	F0- 53
195-33-11220	F2700-03A0	33	F0- 91
195-33-11220	F2700-05A0	5	F0- 99
195-33-14140	F2370-04A0	6	F0- 59
195-33-14280	F2370-02A0	24	F0- 53
195-33-14341	F2370-02A0	4	F0- 53
195-33-14360	F2370-03A0	1	F0- 57
195-33-14380	F2370-03A0	4	F0- 57
195-33-14390	F2370-03A0	9	F0- 57
195-33-14411	F2370-03A0	16	F0- 57
195-33-14420	F2370-03A0	13	F0- 57
195-33-14430	F2370-03A0	20	F0- 57
195-33-14450	F2370-03A0	21	F0- 57

PARTS NO	FIG NO.	INDEX	PAGE
195-33-14461	F2370-04A0	1	F0- 59
195-33-14470	F2370-04A0	3	F0- 59
195-33-14480	F2370-04A0	4	F0- 59
195-33-15110	F2370-05A0	28	F0- 61
195-33-15150	F2370-03A0	7	F0- 57
195-33-22150	F2370-03A0	22	F0- 57
195-40-11431	F2700-08A0	5	F0- 111
195-40-11531	F2600-01A0	17	F0- 81
195-40-11540	F2600-01A0	2	F0- 81
195-40-11550	F2600-01A0	10	F0- 81
195-40-11560	F2600-01A0	11	F0- 81
195-40-11570	F2600-01A0	13	F0- 81
195-40-13110	F2600-01A0	9	F0- 81
195-43-18491	K2110-04A0	8	K0- 69
195-43-24290	M2210-04A0	3	M0- 71
195-43-24391	M2210-03A0	15	M0- 69
195-43-24430	M2210-03A0	12	M0- 69
195-43-41260	K2110-04A0	21	K0- 69
195-43-41360	H2250-01A0	27	H0- 39
195-43-41360	H2250-01A1	14	H0- 43
195-43-41360	K2110-05A0	11	K0- 71
195-43-41560	K2110-05A0	13	K0- 71
195-43-41570	K2110-05A0	14	K0- 71
195-43-41580	K2110-06A0	16	K0- 73
195-43-42280	K2110-08A0	25	K0- 79
195-43-42280	K2110-10A0	27	K0- 85
195-43-42340	K2110-07A0	2	K0- 77
195-43-42350	K2110-07A0	1	K0- 77
195-43-42390	K2110-07A0	11	K0- 77
195-43-42410	K2110-07A0	23	K0- 77
195-43-43150	K2110-06A0	1	K0- 73
195-43-43170	K2110-06A0	4	K0- 73
195-43-43190	K2110-05A0	2	K0- 71
195-43-43190	K2110-06A0	15	K0- 73
195-43-43190	K2110-06A0	22	K0- 73
195-43-43190	K2110-09A0	18	K0- 81
195-43-43190	K2110-09A0	6	K0- 81
195-43-43190	K2110-10A0	29	K0- 85
195-43-43190	K2110-12A0	3	K0- 89
195-43-43241	K2110-06A0	34	K0- 73
195-43-43260	K2110-06A0	42	K0- 73
195-43-43360	K2110-06A0	40	K0- 73
195-43-43370	K2110-06A0	39	K0- 73
195-43-44220	K2110-08A0	3	K0- 79
195-43-44220	K2510-02A0	4	K0- 109
195-49-00090	F2700-08A0	1	F0- 111
195-49-13350	F2370-05A0	52	F0- 62
195-49-13740	F2710-01A0	10	F0- 113
195-49-13830	F2700-05A0	15	F0- 99
195-49-13840	F2700-05A0	16	F0- 99

PARTS NO	FIG NO.	INDEX	PAGE
195-49-21361	F2700-05A0	34	F0- 99
195-49-36120	F2700-05A2	4	F0- 103
195-49-36120	M2210-02A2	40	M0- 67
195-54-26210	K2110-01A0	44	K0- 62
195-54-26210	K2110-01A0	46	K0- 62
195-54-26210	K2110-01A0	48	K0- 62
195-54-42200	M2141-01A1	1A	M0- 37
195-54-42200	M2141-01A1	6A	M0- 37
195-54-42200	M2142-01A0	11A	M0- 45
195-54-42200	M2142-01A0	6A	M0- 45
195-54-42200	M2142-01A2	12	M0- 51
195-54-42200	M2142-01A2	6	M0- 51
195-54-42200	M2210-06A0	1A	M0- 79
195-54-42200	M2210-06A0	5A	M0- 79
195-54-42200	M2210-06A3	1A	M0- 83
195-54-42200	M2210-06A3	5A	M0- 83
195-54-42200	M2250-01A0	6A	M0- 89
195-54-43210	B0300-01A0	9	B0- 5
195-54-43210	B0300-01A1	9	B0- 7
195-54-43260	M2110-01A1	11	M0- 5
195-54-43260	M2110-03A1	11	M0- 13
195-54-43260	M2113-01A0	9	M0- 33
195-54-45410	K2110-01A0	39	K0- 61
195-54-45420	K2110-01A0	42	K0- 61
195-54-45430	K2110-01A0	41	K0- 61
195-54-45440	K2110-01A0	40	K0- 61
195-54-45450	K2110-01A0	28	K0- 61
195-56-11320	K0410-02A0	20	K0- 39
195-60-13120	H0100-01A0	35	H0- 3
195-60-13120	Y1660-01A0	35	Y0- 33
195-61-21290	K2510-03A0	22	K0- 113
195-61-21420	K2510-01A1	25	K0- 107
195-61-21430	K2510-01A1	11	K0- 107
195-61-34120	K2110-06A0	2	K0- 73
195-61-34130	K2110-07A0	5	K0- 77
195-61-34130	K2510-03A0	16	K0- 113
195-61-34130	K2510-03A0	21	K0- 113
195-61-34140	K2110-07A0	4	K0- 77
195-61-34140	K2510-02A0	8	K0- 109
195-61-41260	K2110-04A0	24	K0- 69
195-61-41270	K2110-02A0	6	K0- 65
195-61-41270	K2110-09A0	37	K0- 82
195-61-41270	K2110-10A0	3	K0- 85
195-61-45150	K2510-02A0	3	K0- 109
195-61-45210	H2250-01A0	50	H0- 40
195-61-45210	H2250-01A1	37	H0- 43
195-61-45220	K2510-02A0	18	K0- 109
195-61-45230	H2250-01A0	52	H0- 40
195-61-45230	H2250-01A1	39	H0- 43
195-61-45230	K2510-02A0	19	K0- 109

PARTS NO	FIG NO.	INDEX	PAGE
195-61-45290	H2250-01A0	47	H0- 40
195-61-45290	H2250-01A1	34	H0- 43
195-61-45290	K2510-02A0	31	K0- 109
195-63-00140	Y1620-02A0	1	Y0- 23
195-63-14002	Y1620-02A0	1	Y0- 23
195-63-14130	Y1620-02A0	10	Y0- 23
195-63-14163	Y1620-02A0	4	Y0- 23
195-63-14180	Y1620-02A0	5	Y0- 23
195-63-42133	Y1620-31A0	3	Y0- 25
195-63-42133	Y1621-01A0	4	Y0- 27
195-63-42133	Y1621-11A0	4	Y0- 29
195-63-52160	Y1620-31A0	2	Y0- 25
195-63-52470	Y1620-31A0	10	Y0- 25
195-63-52470	Y1621-01A0	11	Y0- 27
195-63-52470	Y1621-11A0	11	Y0- 29
195-63-52871	Y1620-31A0	28	Y0- 25
195-63-94170	Y0100-01A0	8K	Y0- 4
195-63-94170	Y0100-01A0	9K	Y0- 4
195-63-94170	Y1620-31A0	13	Y0- 25
195-63-94170	Y1621-01A0	13	Y0- 27
195-63-94170	Y1621-11A0	13	Y0- 29
195-69-11131	T2410-01A0	5	T0- 25
195-69-11131	T2410-01A1	5	T0- 29
195-69-11140	T2410-01A0	6	T0- 25
195-69-11140	T2410-01A1	6	T0- 29
195-69-11140	T2810-01A0	4	T0- 43
195-69-11226	T2810-01A0	7	T0- 43
195-69-11230	T2810-01A0	6	T0- 43
195-69-11280	T2810-01A0	8	T0- 43
195-71-11520	T2110-01A1	40	T0- 8
195-71-11520	T2120-01A0	46	T0- 16
195-71-11520	T2120-01A1	48	T0- 20
195-71-22681	T2110-01A0	33	T0- 3
195-71-22681	T2110-01A2	33	T0- 11
195-71-31540	T2120-01A0	12A	T0- 15
195-71-31540	T2120-01A1	13	T0- 19
195-71-31660	T2110-01A0	6	T0- 3
195-71-31660	T2110-01A2	6	T0- 11
195-71-31670	T2110-01A0	7	T0- 3
195-71-31670	T2110-01A2	7	T0- 11
195-71-32160	T2110-01A0	8	T0- 3
195-71-32160	T2110-01A2	8	T0- 11
195-71-32220	T2160-01A0	20	T0- 23
195-71-32220	T2160-01A0	24	T0- 23
195-71-32330	T2160-01A0	5	T0- 23
195-78-11270	T2410-01A0	3	T0- 25
195-78-11270	T2410-01A1	3	T0- 29
195-78-21171	T2410-01A0	22	T0- 25
195-78-21171	T2410-01A0	29	T0- 25
195-78-21171	T2410-01A0	8	T0- 25

PARTS NO.	FIG NO.	INDEX	PAGE
195-78-21171	T2410-01A1	22	T0- 29
195-78-21171	T2410-01A1	29	T0- 29
195-78-21171	T2410-01A1	8	T0- 29
195-78-21320	T2410-01A0	38	T0- 25
195-78-21320	T2410-01A1	35	T0- 29
195-78-22320	H2210-02A0	31	H0- 23
195-78-22320	T2440-01A1	47	T0- 38
195-78-22330	H2210-02A0	32	H0- 23
195-78-22330	T2440-01A1	48	T0- 38
195-78-22471	F2700-03A0	32	F0- 91
195-78-22471	K2510-05A0	21	K0- 119
195-78-22471	T2440-01A0	51	T0- 34
195-78-42310	K2110-02A0	1	K0- 65
195-78-42360	H2250-01A0	24	H0- 39
195-78-42360	H2250-01A1	11	H0- 43
195-78-48130	T2440-01A0	51	T0- 34
195-79-12181	F2700-03A0	31	F0- 91
195-79-12181	K2510-05A0	20	K0- 119
195-79-12181	T2440-01A0	47	T0- 34
195-79-48120	T2440-01A0	47	T0- 34
195-822-6151	K0210-08A0	1	K0- 29
195-901-2280	T2160-01A0	26	T0- 23
195-911-1330	K0810-01A0	22	K0- 59
195-911-1722	K0810-01A0	21	K0- 59
195-911-5510	K0710-02A0	38	K0- 45
195-911-6531	K0810-01A0	26	K0- 59
195-911-6562	K0810-01A0	27	K0- 59
195-911-7170	K0710-01A0	30	K0- 41
195-911-7211	K0710-03A0	21	K0- 49
195-911-8990	K0710-01A1	1	K0- 43
195-911-8990	K0710-03A1	1	K0- 51
195-978-2280	K0410-01A1	22	K0- 37
195-979-1550	K0710-03A0	4	K0- 49
195-979-5720	K0410-02A0	28	K0- 39
195-979-5720	M2210-06A0	35	M0- 79
195-979-5720	M2210-06A0	8	M0- 79
195-979-5720	M2210-06A3	35	M0- 83
195-979-5720	M2210-06A3	8	M0- 83
195-979-7650	K0710-03A0	16	K0- 49
195-979-7710	K0210-02A0	43	K0- 14
195-979-7710	K0210-04A0	16	K0- 19
195-979-7710	K0210-05A0	16	K0- 21
195-979-7710	K0210-08A0	5	K0- 29
195-979-7710	K0210-08A0	8	K0- 29
195-979-7710	K0810-01A0	18	K0- 59
195-979-7720	K0210-05A0	10	K0- 21
195-979-7720	K0210-05A0	29	K0- 21
195-979-7720	K0210-07A0	39	K0- 26
195-979-7720	K0210-08A0	11	K0- 29
195-979-7720	K0210-08A0	18	K0- 29

PARTS NO	FIG NO	INDEX	PAGE
195-979-7720	K0210-08A0	2	K0- 29
195-979-7720	K0210-08A0	26	K0- 29
195-979-7720	K0810-01A0	10	K0- 59
195-979-7720	K0810-01A0	24	K0- 59
195-979-7720	K0810-01A0	7	K0- 59
195-979-7760	K0210-09A0	10	K0- 33
195-979-7810	K0210-04A0	19	K0- 19
195-979-7810	K0210-04A0	2	K0- 19
195-979-7810	K0210-09A0	18	K0- 33
195-979-8511	K0210-09A0	4	K0- 33
195-979-8590	K0210-09A0	12	K0- 33
195-979-9410	K0210-09A0	13	K0- 33
195-98-12940	U0630-01A1	1	U0- 27
195-98-12960	U0630-01A1	1	U0- 27
195-98-12980	U0630-01A1	1	U0- 27
195-98-13180	U0630-01A1	1	U0- 27
195-98-13250	U0630-01A1	1	U0- 27
195-98-13410	U0630-01A1	1	U0- 27
195-98-13650	U0630-01A1	1	U0- 27
195-98-13790	U0100-01A3	28	U0- 7
195-98-13810	U0100-01A2	28	U0- 3
195-98-13810	U0100-01A8	27	U0- 23
195-98-13920	U0630-01A1	1	U0- 27
195-98-14610	U0100-01A7	30	U0- 19
195-98-14620	U0630-01A1	1	U0- 27
195-98-14680	U0630-01A1	1	U0- 27
195-98-21140	U0100-01A2	2	U0- 3
195-98-21140	U0100-01A3	2	U0- 7
195-98-21140	U0100-01A4	2	U0- 11
195-98-21140	U0100-01A5	2	U0- 15
195-98-21140	U0100-01A7	2	U0- 19
195-98-21140	U0100-01A8	2	U0- 23
195-98-21190	U0100-01A2	4	U0- 3
195-98-21190	U0100-01A3	4	U0- 7
195-98-21190	U0100-01A4	4	U0- 11
195-98-21190	U0100-01A5	4	U0- 15
195-98-21190	U0100-01A7	4	U0- 19
195-98-21190	U0100-01A8	4	U0- 23
195-98-23320	U0100-01A2	26	U0- 3
195-98-23320	U0100-01A3	26	U0- 7
195-98-23320	U0100-01A8	25	U0- 23
195-98-24390	U0100-01A2	11	U0- 3
195-98-24390	U0100-01A3	11	U0- 7
195-98-24390	U0100-01A4	11	U0- 11
195-98-24390	U0100-01A5	11	U0- 15
195-98-24390	U0100-01A7	11	U0- 19
195-98-24390	U0100-01A8	11	U0- 23
195-98-41920	U0100-01A7	26	U0- 19
196-33-31190	F2370-05A0	12	F0- 61
196-33-31200	F2370-05A0	8	F0- 61

PARTS NO	FIG NO.	INDEX	PAGE
196-33-31210	F2370-05A0	8	F0- 61
196-33-31320	F2370-05A0	31	F0- 61
198-01-18150	F2700-07A0	57	F0- 108
198-01-51310	M2190-01A1	1	M0- 57
198-03-16470	A5080-A4B2	34	AA- 149
198-03-21530	M2110-02A0	43	M0- 8
198-03-22410	M2110-01A0	33	M0- 3
198-09-31210	K0710-03A0	14	K0- 49
198-09-31210	K0710-03A0	2	K0- 49
198-15-15760	F2320-55A0	53	F0- 36
198-21-11480	F2350-01A0	15	F0- 45
198-21-11490	F2350-01A0	11	F0- 45
198-21-12240	K2510-01A0	4	K0- 105
198-21-12240	K2510-01A1	4	K0- 107
198-30-14420	R2100-02A0	13	R0- 29
198-43-13220	F2370-01A0	36	F0- 50
198-43-18170	K2110-08A0	27	K0- 79
198-43-18170	K2110-09A0	11	K0- 81
198-43-18170	K2110-09A0	49	K0- 82
198-49-56130	F2700-05A2	8	F0- 103
198-49-56150	F2700-05A2	9	F0- 103
198-54-11190	M2210-06A0	7	M0- 79
198-54-11190	M2210-06A3	7	M0- 83
198-54-13761	K0410-02A0	16	K0- 39
198-54-19150	K2220-01A1	2	K0- 99
198-54-19150	M2141-01A1	14	M0- 37
198-54-19150	M2141-02A1	14	M0- 43
198-54-19150	M2142-01A0	19	M0- 45
198-54-19150	M2142-01A2	20	M0- 51
198-54-19150	M2142-02A0	14	M0- 53
198-54-19150	M2142-02A1	14	M0- 55
198-54-19150	M2250-01A0	9	M0- 89
198-54-19150	W2119-02A0	25	W0- 5
198-54-41941	M2250-01A0	18	M0- 89
198-54-41941	M2250-01A0	42	M0- 90
198-54-42260	M2110-01A1	17	M0- 5
198-54-42260	M2110-03A1	17	M0- 13
198-54-42260	M2113-01A0	13	M0- 33
198-54-42260	W2119-01A0	17	W0- 3
198-54-42280	M2250-01A0	33	M0- 89
198-54-42280	M2250-01A0	36	M0- 90
198-54-42280	M2250-01A0	45	M0- 90
198-54-42290	M2110-01A1	18	M0- 5
198-54-42290	M2110-03A1	18	M0- 13
198-54-42290	M2113-01A0	14	M0- 33
198-54-42290	W2119-01A0	18	W0- 3
198-61-44190	F2700-04A0	32	F0- 95
198-79-16550	D0100-01A0	13A	D0- 3
198-911-3160	M2110-01A1	12	M0- 5
198-911-3160	M2110-03A1	12	M0- 13

PARTS NO.	FIG NO.	INDEX	PAGE
198-911-3160	M2113-01A0	10	MO- 33
198-911-3260	K0210-07A0	31	KO- 25
198-978-1470	K0410-02A0	14	KO- 39
198-98-16310	U0630-01A1	1	UO- 27
20D-14-11510	H0100-02A0	25	HO- 7
20D-14-11510	H0100-02A0	29	HO- 7
20D-14-11510	H0100-03A0	10	HO- 9
20D-14-11510	H0100-04A0	12	HO- 11
20D-14-11510	H0100-04A0	23	HO- 11
20D-14-11510	H0100-04A0	38	HO- 11
20D-14-11510	H0100-05A0	11	HO- 15
20D-14-11510	Y1660-02A0	24	YO- 37
20D-14-11510	Y1660-02A0	28	YO- 37
20D-14-11510	Y1660-03A0	10	YO- 39
20D-14-11510	Y1660-04A0	12	YO- 41
20D-14-11510	Y1660-04A0	18	YO- 41
20D-14-11510	Y1660-04A0	4	YO- 41
20D-14-11510	Y1660-05A0	11	YO- 43
20D-14-11510	Y1660-21A0	9	YO- 45
20D-14-11510	Y1660-22A0	16	YO- 47
20D-14-11510	Y1660-22A0	21	YO- 47
20D-14-11510	Y1660-22A0	8	YO- 47
20Y-00-23130	U0100-01A8	40	UO- 24
20Y-00-23140	U0100-01A8	41	UO- 24
20Y-01-12300	B0300-01A0	2	BO- 5
20Y-01-12300	B0300-01A1	2	BO- 7
20Y-01-12310	B0300-01A0	3	BO- 5
20Y-01-12310	B0300-01A1	3	BO- 7
20Y-03-11220	F2700-03A0	43	FO- 92
20Y-25-11240	K0410-02A0	35	KO- 39
20Y-25-11240	K0410-02A0	37	KO- 39
20Y-25-11240	M2250-01A0	30	MO- 89
20Y-62-22790	F2700-05A2	10	FO- 103
20Y-62-22810	F2700-05A2	11	FO- 103
20Y-62-22830	F2700-05A2	12	FO- 103
20Y-62-22830	F2700-05A2	13	FO- 103
20Y-62-22840	F2700-05A2	14	FO- 103
20Y-979-3111	K0710-02A0	15	KO- 45
20Y-979-3111	K0710-06A0	1	KO- 57
201-03-29160	F2700-05A2	20	FO- 103
201-62-41910	F2700-05A2	26	FO- 103
202-62-21430	F2700-05A2	24	FO- 103
202-62-21430	F2700-05A2	25	FO- 103
203-06-21150	K0210-09A0	20	KO- 33
203-06-21150	K0810-01A0	13	KO- 59
203-06-56160	E0200-03A0	4	EO- 7
203-06-56160	M2110-05A0	18	MO- 21
203-06-56160	T2440-03A0	9	TO- 41
203-06-56180	E0200-03A0	6	EO- 7
203-06-56180	M2110-05A0	20	MO- 21

PARTS NO.	FIG NO	INDEX	PAGE
203-06-56180	T2440-03A0	11	TO- 41
203-06-56190	E0200-03A0	8	EO- 7
203-06-56190	M2110-05A0	22	MO- 21
203-06-56190	T2440-03A0	13	TO- 41
203-54-14330	C0310-02A0	33	CO- 9
203-54-14330	C0310-02A1	9	CO- 11
203-54-14330	M2110-07A0	9	MO- 27
203-54-32260	K2110-01A0	29	KO- 61
203-54-56970	K0710-01A1	27	KO- 43
203-54-56970	K0710-02A0	8	KO- 45
203-62-12330	F2700-05A0	14	FO- 99
203-62-21740	A5080-A4B2	22	AA- 149
203-62-21740	A5080-A4B2	35	AA- 149
203-62-21740	F2700-05A2	5	FO- 103
203-62-41160	K0710-02A0	16	KO- 45
203-62-58370	D0100-02A0	18	DO- 5
205-01-85160	B0300-01A0	2	BO- 5
205-01-85160	B0300-01A1	2	BO- 7
205-06-62170	K2110-01A0	51	KO- 62
205-06-62270	T2110-01A1	15	TO- 7
205-06-73180	K2220-01A0	25	KO- 95
205-54-51250	K0210-05A0	28	KO- 21
205-54-72240	K0210-05A0	9	KO- 21
205-60-51390	F2370-05A0	9	FO- 61
205-60-51410	F2370-05A0	10	FO- 61
205-62-53780	C0120-01A0A	3	CO- 3
205-62-53780	D0200-01A0	21	DO- 7
205-62-53780	D0200-01A1	21	DO- 9
205-62-53780	D0200-01A2	22	DO- 11
205-62-53780	F2700-05A2	18	FO- 103
205-62-53780	K2220-01A0	40	KO- 96
205-62-53780	M2110-03A0	13	MO- 11
207-06-31360	K2220-01A0	35	KO- 95
207-70-13340	B0100-01A0	20	BO- 3
209-06-51640	K0210-07A0	44	KO- 26
209-62-11810	A6810-A4F5	12	AA- 179
21N-01-31330	M2190-01A3	1	MO- 59
21T-43-13190	H2250-01A0	25	HO- 39
21T-43-13190	H2250-01A1	12	HO- 43
22D-09-11170	K2510-02A0	24	KO- 109
22D-62-18450	D0200-01A2	17	DO- 11
22S-62-15270	K0710-02A0	20	KO- 45
22T-35-14870	K0710-03A0	11	KO- 49
22W-06-12160	E0200-03A0	9	EO- 7
22W-06-12160	M2110-05A0	23	MO- 21
22W-06-12160	T2440-03A0	13A	TO- 41
22W-06-12170	E0200-03A0	5	EO- 7
22W-06-12170	M2110-05A0	19	MO- 21
22W-06-12170	T2440-03A0	10	TO- 41
22W-06-12290	E0200-03A0	7	EO- 7

PARTS NO	FIG NO.	INDEX	PAGE
22W-06-12290	M2110-05A0	21	MO- 21
22W-06-12290	T2440-03A0	12	TO- 41
23S-05-28210	E0200-03A0	3	EO- 7
23S-05-28210	M2110-05A0	17	MO- 21
23S-05-28210	T2440-03A0	9	TO- 41
23S-05-28220	E0200-03A0	13	EO- 7
23S-05-28220	M2110-05A0	27	MO- 21
23S-05-28220	T2440-03A0	13E	TO- 41
23S-06-11161	A6810-A4F5	4	AA- 179
234-15-12780	F2320-53A0	2	FO- 27
234-15-12790	F2320-53A0	46	FO- 28
234-15-15230	F2320-55A0	54	FO- 36
234-21-12180	F2320-53A0	25	FO- 27
234-21-12190	F2320-53A0	27	FO- 27
234-21-12210	F2320-53A0	28	FO- 27
281-15-12720	F2320-53A0	58	FO- 28
281-22-12430	K2110-09A0	19	KO- 81
283-06-16190	K0210-08A0	13	KO- 29
287-35-11470	A2011-A4A4	5	AA- 47
419-54-11270	A5080-A4B2	29	AA- 149
423-06-11212	K2220-01A0	44	KO- 96
423-33-00020	F2380-02A0A	48	FO- 70
423-33-00020	F2380-04A0A	48	FO- 78
566-15-19130	F2320-52A0	41	FO- 24
566-16-11970	C0310-02A0	26	CO- 9
566-16-11970	J2700-01A0	16	JO- 11
566-16-11970	J2700-01A1	16	JO- 13
566-16-11970	M2110-04A0	34	MO- 17
566-54-13410	K0210-02A0	45	KO- 14
566-54-13570	K0210-01A0	33	KO- 9
566-54-13570	K0210-02A0	48	KO- 14
566-54-14420	K0210-02A0	46	KO- 14
568-15-15570	F2320-55A0	51	FO- 36
569-15-41310	F2320-52A0	11	FO- 23
582-15-19240	F2320-53A0	60	FO- 28
600-023-1300	A9810-A4U9	2	AA- 193
600-023-2340	A9810-A4U9	1	AA- 193
600-18-14940	M2110-03A1	53	MO- 14
600-183-7570	A1410-A4F3A	9	AA- 15
600-183-7570	A1410-A4F4A	9	AA- 17
600-184-1631	A1410-A4F3A	5	AA- 15
600-184-1631	A1410-A4F4A	5	AA- 17
600-184-1671	A1410-A4F3A	2	AA- 15
600-184-1671	A1410-A4F4A	2	AA- 17
600-184-2810	A1410-A4F3A	6	AA- 15
600-184-2810	A1410-A4F4A	6	AA- 17
600-185-6100	A1410-A4F3A	2	AA- 15
600-185-6100	A1410-A4F4A	2	AA- 17
600-211-1130	A3110-B4C5	6	AA- 95
600-211-1140	A3110-B4C5	8	AA- 95

PARTS NO	FIG NO.	INDEX	PAGE
600-211-1150	A3110-B4C5	2	AA- 95
600-211-1231	A3110-B4C5	5	AA- 95
600-211-1231	V0100-01A0	15	VO- 3
600-311-7132	A4110-A4E4	2	AA- 129
600-311-7132	A4110-A4H9	2	AA- 131
600-311-7132	V0100-01A0	16	VO- 3
600-311-9490	A4130-A4B3	7	AA- 133
600-311-9731	A4130-A4B3	1	AA- 133
600-311-9732	A4130-A4B3	1	AA- 133
600-311-9760	A4130-A4B3	5	AA- 133
600-311-9890	A4130-A4B3	7	AA- 133
600-311-9911	A4130-A4B3	1	AA- 133
600-311-9912	A4130-A4B3	1	AA- 133
600-311-9920	A4130-A4B3	4	AA- 133
600-311-9921	A4130-A4B3	4	AA- 133
600-311-9931	A4130-A4B3	11	AA- 133
600-311-9941	A4130-A4B3	8	AA- 133
600-311-9950	A4130-A4B3	6	AA- 133
600-311-9961	A4130-A4B3	9	AA- 133
600-311-9971	A4130-A4B3	10	AA- 133
600-411-1151	A5210-A4D3	2	AA- 153
600-411-1151	A5210-A4F6	2	AA- 155
600-421-6630	A5010-B4F4	8	AA- 145
600-643-1120	C0310-01A0	31	CO- 5
600-643-1120	M2110-04A0	1	MO- 17
600-813-8130	A6210-A4C4	1	AA- 175
600-813-8130	A6210-B4C4	1	AA- 177
600-815-2690	A6810-A4F5	1	AA- 179
600-815-4291	A1310-A4H7	12	AA- 11
600-821-9770	A6010-A4D7Z	1	AA- 159
600-825-3110	A6010-A4D6	1	AA- 157
600-825-3110	A6010-B4D6	1	AA- 165
600-825-3111	A6010-A4D6	1	AA- 157
600-825-3111	A6010-B4D6	1	AA- 165
600-825-3210	A6010-A4F7	1	AA- 161
600-825-3210	A6010-B4F7	1	AA- 171
600-825-6110	A6010-A4D7Z	1	AA- 159
600-825-6110	A6010-B4D7Y	1	AA- 169
600-825-6270	A6010-A4F8	1	AA- 163
600-825-6270	A6010-C4F8	1	AA- 173
600-825-6410	A6010-A4F8	1	AA- 163
6090-03-7460	B0300-01A0	2	BO- 5
6090-03-7460	B0300-01A1	2	BO- 7
6110-73-6231	A4110-A4E4	3	AA- 129
6110-73-6231	A4110-A4H9	3	AA- 131
6110-73-6231	A4130-A4B3	2	AA- 133
6114-11-5590	A1530-A4D3	3	AA- 21
6114-11-5590	A1530-A4G8	3	AA- 23
6127-11-4421	A4130-A4B3	19	AA- 133
6127-11-4580	M2142-01A0	49	MO- 46

PARTS NO	FIG NO.	INDEX	PAGE
6127-11-8490	A1530-C4G8	21	AA- 31
6127-11-8490	A2041-A4G8	40	AA- 53
6127-21-1260	A2050-A4A3	5	AA- 55
6127-61-3790	A5080-A4B2	18	AA- 149
6127-61-8120	A5210-A4F6	8	AA- 155
6127-61-8160	A5210-A4F6	7	AA- 155
6127-81-4823	A8121-A4A5	1	AA- 187
6128-11-5611	A8121-A4A5	1	AA- 187
6128-21-4321	A2210-B4E4	1	AA- 65
6128-21-4340	A2210-B4E4	6	AA- 65
6130-61-6611	A2041-A4A5	15	AA- 51
6130-61-6611	A2041-A4G8	15	AA- 53
6130-82-5270	A2041-A4A5	29	AA- 51
6130-82-5270	A2041-A4G8	29	AA- 53
6130-82-5270	A8117-B4A8	2	AA- 183
6131-12-5920	A2041-A4A5	9	AA- 51
6131-12-5920	A2041-A4G8	9	AA- 53
6131-12-5920	A2110-A4F6	18	AA- 59
6132-11-4690	A1310-A4H7	10	AA- 11
6136-11-2980	A1410-A4F3A	28	AA- 15
6136-11-2980	A1410-A4F4A	26	AA- 17
6136-11-5120	A1510-A4B9	7	AA- 19
6136-11-5120	A1610-A4F2A	23	AA- 35
6136-11-5120	A1610-A4F3A	21	AA- 37
6136-11-8142	A8117-B4A8	2	AA- 184
6136-21-5870	A8117-B4A8	2	AA- 184
6136-41-4520	A1010-A4B3	16	AA- 3
6136-52-1330	A3010-A4A1	10	AA- 91
6136-52-1330	A3010-A4A1	2	AA- 91
6136-52-1330	A3010-A4A1	6	AA- 91
6136-52-1620	A3010-A4A1	3	AA- 91
6136-52-1640	A3010-A4A1	12	AA- 91
6136-52-1650	A3010-A4A1	13	AA- 91
6136-61-1130	A5010-A4F4	13	AA- 143
6136-65-8541	A1610-A4F2A	22	AA- 35
6136-65-8541	A1610-A4F3A	20	AA- 37
6136-81-5291	A2041-A4A5	28	AA- 51
6136-81-5291	A2041-A4G8	28	AA- 53
6138-13-4510	A1530-A4D3	4	AA- 21
6138-13-4510	A1530-A4G8	4	AA- 23
6143-11-4290	A6810-A4F5	18	AA- 179
6144-71-5750	A5210-A4D3	10	AA- 153
6144-71-5750	A5210-A4F6	10	AA- 155
6144-71-5760	A5210-A4D3	9	AA- 153
6144-71-5760	A5210-A4F6	9	AA- 155
6144-85-6550	A6010-A4D6	7	AA- 157
6144-85-6550	A6010-A4D7Z	7	AA- 159
6144-85-6550	A6010-A4F7	7	AA- 161
6144-85-6550	A6010-A4F8	7	AA- 163
6150-11-5771	B0300-01A0	2	B0- 5

PARTS NO.	FIG NO.	INDEX	PAGE
6150-11-5771	B0300-01A1	2	B0- 7
6150-11-5771	B9999-A4A3	2	AA- 195
6150-21-1180	A2011-A4A4	13	AA- 47
6150-21-1190	A2011-A4A4	14	AA- 47
6150-21-1190	A8117-B4A8	2	AA- 184
6150-21-3230	A8117-B4A8	2	AA- 184
6150-21-4741	A8117-B4A8	2	AA- 184
6150-21-4770	A2010-A4H9A	25	AA- 43
6150-21-5910	A2010-A4H9A	27	AA- 43
6150-21-5920	A2110-B4F6	3	AA- 61
6150-21-5930	A2110-B4F6	4	AA- 61
6150-21-6391	A2060-A4C1	4	AA- 57
6150-21-6391	A8117-B4A8	2	AA- 183
6150-31-1130	A2310-A4A1	2	AA- 73
6150-41-2430	A2411-B4A2	9	AA- 85
6150-41-2430	A4030-A4C6	5	AA- 123
6150-41-5540	A2411-A4A2	11	AA- 83
6150-41-5540	A2411-A4A2	15	AA- 83
6150-41-5541	A2411-A4A2	11	AA- 83
6150-41-5541	A2411-A4A2	15	AA- 83
6150-51-1650	A3010-A4A1	14	AA- 91
6150-51-4920	A3110-B4C5	4	AA- 95
6150-61-2141	A3310-A4A3	11	AA- 97
6150-61-2151	A3310-A4A3	10	AA- 97
6150-61-2520	A3310-A4A3	4	AA- 97
6150-61-2520	A8117-B4A8	2	AA- 183
6150-61-2540	A3310-A4A3	9	AA- 97
6150-61-2540	A8117-B4A8	2	AA- 183
6150-61-2580	A3310-A4A3	5	AA- 97
6150-61-8172	A5210-A4D3	1	AA- 153
6150-61-8172	A5210-A4F6	1	AA- 155
6150-61-8211	A5210-A4D3	1	AA- 153
6150-61-8211	A5210-A4F6	1	AA- 155
6150-61-8411	A5210-A4D3	4	AA- 153
6150-61-8411	A5210-A4F6	4	AA- 155
6150-71-3160	A4080-A4A8	5	AA- 127
6150-71-3160	A4080-A4A8	7	AA- 127
6150-81-6940	A1410-A4F3A	24	AA- 15
6150-81-6940	A1410-A4F4A	22	AA- 17
6150-81-8420	A2411-B4A2	6	AA- 85
6150-81-9130	A1310-A4H7	29	AA- 11
6150-81-9130	A2230-A4C6	5	AA- 69
6150-82-8610	A6010-A4D6	8	AA- 157
6150-82-8610	A6010-A4D7Z	8	AA- 159
6150-82-8610	A6010-A4F7	8	AA- 161
6150-82-8610	A6010-A4F8	8	AA- 163
6150-82-8690	A6010-A4D6	9	AA- 157
6150-82-8690	A6010-A4D7Z	9	AA- 159
6150-82-8690	A6010-A4F7	9	AA- 161
6150-82-8690	A6010-A4F8	9	AA- 163

PARTS NO.	FIG NO.	INDEX	PAGE
6151-11-5710	A8121-A4A5	1	AA- 187
6151-21-4150	A8117-B4A8	2	AA- 184
6151-21-4160	A2210-A4E4	10	AA- 63
6151-21-4160	A8117-B4A8	2	AA- 184
6151-21-4310	A2210-B4E4	9	AA- 65
6151-21-4320	A2210-B4E4	23	AA- 65
6151-21-4560	A2210-B4E4	15	AA- 65
6151-21-4570	A2210-B4E4	17	AA- 65
6151-21-4580	A2210-B4E4	18	AA- 65
6151-31-1930	A2230-A4C6	3	AA- 69
6151-51-5320	A3110-B4C5	3	AA- 95
6151-51-8130	A1530-C4D3	14	AA- 29
6151-51-8130	A1530-C4G8	14	AA- 31
6151-51-8151	A1530-C4D3	10	AA- 29
6151-51-8151	A1530-C4G8	10	AA- 31
6151-51-8151	A2041-A4A5	33	AA- 51
6151-51-8151	A8121-A4A5	1	AA- 187
6151-51-8161	A1530-C4D3	7	AA- 29
6151-51-8161	A1530-C4G8	7	AA- 31
6151-51-8161	A8121-A4A5	1	AA- 188
6151-51-8721	A2041-A4A5	33	AA- 51
6151-51-8721	A2041-A4G8	33	AA- 53
6151-51-8721	A8117-B4A8	2	AA- 184
6151-51-9730	A2210-C4E4	1	AA- 67
6151-51-9740	A2210-C4E4	4	AA- 67
6151-53-8280	A1530-C4D3	15	AA- 29
6151-53-8280	A1530-C4G8	15	AA- 31
6151-53-8280	A4130-A4B3	20	AA- 133
6151-71-8810	A4230-A4D5	11	AA- 141
6162-13-1150	A1010-A4B3	7	AA- 3
6162-13-5611	A1610-B4F2A	4	AA- 39
6162-13-5611	A1610-B4F3A	4	AA- 41
6162-13-5611	A8121-A4A5	1	AA- 188
6162-13-5611	A8121-A4A5	1	AA- 188
6162-13-6440	A5010-B4F4	7	AA- 145
6162-13-6440	A8117-B4A8	2	AA- 183
6162-23-4550	A2210-B4E4	2	AA- 65
6162-33-5322	A2050-A4A3	8	AA- 55
6162-43-5340	A2411-A4A2	10	AA- 83
6162-43-5340	A2411-A4A2	18	AA- 83
6162-43-5630	A1010-A4B3	21	AA- 3
6162-53-5430	A8117-B4A8	2	AA- 184
6162-53-5450	A8117-B4A8	2	AA- 184
6162-64-3910	A5080-A4B2	5	AA- 149
6162-64-3920	A5080-A4B2	6	AA- 149
6162-64-3930	A5080-A4B2	7	AA- 149
6162-73-5510	A4030-A4C6	18	AA- 123
6162-73-5520	A4030-A4C6	19	AA- 123
6164-51-8620	A1530-C4D3	6	AA- 29
6164-51-8621	A1530-C4D3	6	AA- 29

PARTS NO	FIG NO.	INDEX	PAGE
6164-51-8621	A1530-C4G8	6	AA- 31
6166-11-6290	A8127-F4A5	6	AA- 191
6166-71-7850	A4110-A4E4	15	AA- 129
6166-71-7850	A4110-A4H9	15	AA- 131
6206-21-5520	A2110-B4F6	5	AA- 61
6207-65-8410	A1310-A4H7	22	AA- 11
6210-11-1140	A1010-A4B3	10	AA- 3
6210-11-1150	A1010-A4B3	5	AA- 3
6210-11-1321	A1010-A4B3	3	AA- 3
6210-11-1330	A1010-A4B3	2	AA- 3
6210-11-1610	A1010-A4B3	28	AA- 4
6210-11-1820	A1010-A4B3	23	AA- 3
6210-11-1830	A1010-A4B3	24	AA- 3
6210-11-1840	A1010-A4B3	25	AA- 3
6210-11-1952	A1010-A4B3	27	AA- 4
6210-11-1962	A1010-A4B3	26	AA- 3
6210-11-4811	A1310-A4H7	13	AA- 11
6210-11-4811	A8121-A4A5	1	AA- 187
6210-11-5820	A1510-A4B9	9	AA- 19
6210-11-5881	A1510-A4B9	5	AA- 19
6210-11-5881	A8121-A4A5	1	AA- 187
6210-11-6521	A5010-C4F4	3	AA- 147
6210-11-6621	A5010-C4F4	1	AA- 147
6210-11-7101	A2411-A4A2	1	AA- 83
6210-11-7131	A8121-A4A5	1	AA- 187
6210-11-7710	A4210-A4E5	4	AA- 135
6210-11-7710	A8121-A4A5	1	AA- 187
6210-11-7720	A4210-A4E5	6	AA- 135
6210-11-7720	A8121-A4A5	1	AA- 188
6210-11-7813	A8121-A4A5	1	AA- 187
6210-11-7830	A2411-A4A2	3	AA- 83
6210-11-7830	A8121-A4A5	1	AA- 188
6210-11-8111	A1110-A4A3	1	AA- 7
6210-11-8141	A8121-A4A5	1	AA- 187
6210-11-8811	A8121-A4A5	1	AA- 187
6210-11-8820	A1110-A4A3	2	AA- 7
6210-11-8820	A8121-A4A5	1	AA- 187
6210-11-8820	V0100-01A0	14	V0- 3
6210-16-1321	A1010-A4B3	3	AA- 3
6210-16-1330	A1010-A4B3	2	AA- 3
6210-17-1321	A1010-A4B3	3	AA- 3
6210-17-1330	A1010-A4B3	2	AA- 3
6210-17-1813	A1010-A4B3	22	AA- 3
6210-17-1813	A8121-A4A5	1	AA- 187
6210-18-1321	A1010-A4B3	3	AA- 3
6210-18-1330	A1010-A4B3	2	AA- 3
6210-19-1321	A1010-A4B3	3	AA- 3
6210-19-1330	A1010-A4B3	2	AA- 3
6210-21-1390	A2010-A4H9A	28	AA- 43
6210-21-1490	A2010-A4H9A	2	AA- 43

PARTS NO	FIG NO.	INDEX	PAGE
6210-21-1491	A2010-A4H9A	2	AA- 43
6210-21-1710	A2010-A4H9A	6	AA- 43
6210-21-1780	A2010-A4H9A	9	AA- 43
6210-21-1790	A2010-A4H9A	8	AA- 43
6210-21-1820	A2011-A4A4	6	AA- 47
6210-21-1851	A2610-A4B6	4	AA- 89
6210-21-1860	A2011-A4A4	11	AA- 47
6210-21-1880	A2610-A4B6	1	AA- 89
6210-21-1910	A2010-A4H9A	24	AA- 43
6210-21-1950	A2010-B4H9A	2	AA- 45
6210-21-1960	A2011-A4A4	1	AA- 47
6210-21-1971	A2011-A4A4	2	AA- 47
6210-21-1971	A8117-B4A8	2	AA- 183
6210-21-2230	A2010-B4H9A	12	AA- 45
6210-21-2230	A8117-B4A8	2	AA- 183
6210-21-2240	A2010-B4H9A	11	AA- 45
6210-21-2240	A8117-B4A8	2	AA- 183
6210-21-2270	A2010-B4H9A	10	AA- 45
6210-21-2270	A8117-B4A8	2	AA- 183
6210-21-2422	A2050-A4A3	13	AA- 55
6210-21-3170	A2040-A4H1	4	AA- 49
6210-21-3190	A2041-A4A5	3	AA- 51
6210-21-3190	A2041-A4G8	3	AA- 53
6210-21-3251	A2041-A4A5	7	AA- 51
6210-21-3251	A2041-A4G8	7	AA- 53
6210-21-3251	A8117-B4A8	2	AA- 183
6210-21-3413	A2610-A4B5	4	AA- 87
6210-21-3421	A2610-A4B5	5	AA- 87
6210-21-3440	A2610-A4B5	2	AA- 87
6210-21-3451	A2610-A4B5	3	AA- 87
6210-21-3500	A2610-A4B5	11	AA- 87
6210-21-3510	A2610-A4B5	11	AA- 87
6210-21-3520	A2610-A4B5	12	AA- 87
6210-21-3530	A2610-A4B5	13	AA- 87
6210-21-3540	A2610-A4B5	14	AA- 87
6210-21-3550	A2610-A4B5	15	AA- 87
6210-21-3561	A2610-A4B5	16	AA- 87
6210-21-3751	A2041-A4A5	24	AA- 51
6210-21-3751	A2041-A4G8	24	AA- 53
6210-21-4050	A2210-A4E4	1	AA- 63
6210-21-4160	A2210-B4E4	3	AA- 65
6210-21-5280	A8117-B4A8	2	AA- 184
6210-21-5290	A2110-A4F6	1	AA- 59
6210-21-5813	A8117-B4A8	2	AA- 184
6210-21-5820	A2110-A4F6	2	AA- 59
6210-21-5820	A8117-B4A8	2	AA- 183
6210-21-6410	A2060-A4C1	1	AA- 57
6210-21-6440	A2060-A4C1	5	AA- 57
6210-21-6452	A2060-A4C1	6	AA- 57
6210-21-6452	A8117-B4A8	2	AA- 183

PARTS NO.	FIG NO	INDEX	PAGE
6210-21-6462	A3110-A4C5	13	AA- 93
6210-21-6462	A8117-B4A8	2	AA- 183
6210-21-6471	A2060-A4C1	3	AA- 57
6210-21-6860	A2060-A4C1	2	AA- 57
6210-21-6860	A8117-B4A8	2	AA- 183
6210-21-8000	A2310-A4A1	5	AA- 73
6210-21-8010	A2310-A4A1	5	AA- 73
6210-21-8050	A2310-A4A1	7	AA- 73
6210-21-8711	A2041-A4A5	11	AA- 51
6210-21-8711	A2041-A4G8	11	AA- 53
6210-22-2410	A2050-A4A3	6	AA- 55
6210-22-2420	A2050-A4A3	7	AA- 55
6210-22-3910	A2041-A4A5	8	AA- 51
6210-22-3910	A2041-A4G8	8	AA- 53
6210-22-4310	A2210-B4E4	24	AA- 65
6210-22-4320	A2210-B4E4	31	AA- 65
6210-22-4330	A2210-B4E4	38	AA- 65
6210-22-8770	A2041-A4A5	16	AA- 51
6210-22-8790	A2041-A4G8	16	AA- 53
6210-26-8010	A2310-A4A1	5	AA- 73
6210-26-8050	A2310-A4A1	7	AA- 73
6210-27-8010	A2310-A4A1	5	AA- 73
6210-27-8050	A2310-A4A1	7	AA- 73
6210-28-8010	A2310-A4A1	5	AA- 73
6210-28-8050	A2310-A4A1	7	AA- 73
6210-29-1210	A2010-A4H9A	3	AA- 43
6210-29-1250	A2010-A4H9A	4	AA- 43
6210-29-8010	A2310-A4A1	5	AA- 73
6210-29-8050	A2310-A4A1	7	AA- 73
6210-31-1120	A2310-A4A1	3	AA- 73
6210-31-1910	A2230-A4C6	4	AA- 69
6210-31-3310	A2350-A4B2	10	AA- 77
6210-31-6311	A2050-A4A3	1	AA- 55
6210-32-1240	A2370-A4E1	1	AA- 79
6210-32-3040	A2350-A4B2	12	AA- 77
6210-36-3040	A2350-A4B2	12	AA- 77
6210-37-3040	A2350-A4B2	12	AA- 77
6210-38-3040	A2350-A4B2	12	AA- 77
6210-39-3040	A2350-A4B2	12	AA- 77
6210-41-1012	A2410-A4A6	1	AA- 81
6210-41-1120	A2410-A4A6	4	AA- 81
6210-41-1131	A2410-A4A6	3	AA- 81
6210-41-2010	A2411-B4A2	1	AA- 85
6210-41-2011	A2411-B4A2	1	AA- 85
6210-41-2300	A2411-B4A2	1	AA- 85
6210-41-2301	A2411-B4A2	1	AA- 85
6210-41-2400	A2411-B4A2	5	AA- 85
6210-41-2450	A2411-B4A2	8	AA- 85
6210-41-3120	A2411-B4A2	10	AA- 85
6210-41-4430	A1010-A4B3	18	AA- 3

PARTS NO.	FIG NO.	INDEX	PAGE
6210-41-4440	A1010-A4B3	17	AA- 3
6210-41-4510	A1010-A4B3	15	AA- 3
6210-41-4530	A1010-A4B3	14	AA- 3
6210-41-5041	A2411-A4A2	8	AA- 83
6210-41-5051	A2411-A4A2	13	AA- 83
6210-41-5303	A2411-A4A2	17	AA- 83
6210-41-5401	A2411-A4A2	8	AA- 83
6210-41-5421	A2411-A4A2	9	AA- 83
6210-41-5440	A2411-A4A2	21	AA- 83
6210-41-5501	A2411-A4A2	13	AA- 83
6210-41-5520	A2411-A4A2	14	AA- 83
6210-41-5530	A2411-A4A2	19	AA- 83
6210-41-5620	A1010-A4B3	19	AA- 3
6210-41-5640	A1010-A4B3	20	AA- 3
6210-41-5641	A1010-A4B3	20	AA- 3
6210-51-1310	A3010-A4A1	7	AA- 91
6210-51-1320	A3010-A4A1	5	AA- 91
6210-51-1510	A3010-A4A1	11	AA- 91
6210-51-5550	A3110-A4C5	2	AA- 93
6210-51-5560	A3110-A4C5	3	AA- 93
6210-51-5570	A3110-A4C5	9	AA- 93
6210-51-5580	A3110-A4C5	4	AA- 93
6210-51-5580	A8117-B4A8	2	AA- 184
6210-51-5590	A3110-A4C5	12	AA- 93
6210-51-6140	A2110-A4F6	12	AA- 59
6210-51-6150	A2110-A4F6	16	AA- 59
6210-51-8110	A1530-C4D3	12	AA- 29
6210-51-8110	A1530-C4G8	12	AA- 31
6210-51-8320	A4230-A4D5	4	AA- 141
6210-61-1350	A5010-A4F4	11	AA- 143
6210-61-1510	A8127-F4A5	6	AA- 191
6210-61-1520	A5010-A4F4	5	AA- 143
6210-61-1520	A8127-F4A5	6	AA- 191
6210-61-2130	A3310-A4A3	6	AA- 97
6210-61-2160	A3310-A4A3	12	AA- 97
6210-61-2172	A8117-B4A8	2	AA- 184
6210-61-2520	A3310-A4A3	3	AA- 97
6210-61-2520	A8117-B4A8	2	AA- 183
6210-61-2550	A3310-A4A3	16	AA- 97
6210-61-2550	A8117-B4A8	2	AA- 183
6210-61-2811	A3310-A4A3	19	AA- 97
6210-61-2811	A8117-B4A8	2	AA- 183
6210-61-3370	A5080-A4B2	30	AA- 149
6210-61-3421	A5080-A4B2	3	AA- 149
6210-61-3460	A5080-A4B2	8	AA- 149
6210-61-6231	A8127-F4A5	6	AA- 191
6210-61-6331	A8127-F4A5	6	AA- 191
6210-61-6341	A5010-A4F4	29	AA- 143
6210-61-6341	A8127-F4A5	6	AA- 191
6210-61-6350	A5010-A4F4	26	AA- 143

PARTS NO.	FIG NO.	INDEX	PAGE
6210-61-6360	A5010-A4F4	25	AA- 143
6210-61-6371	A5010-A4F4	28	AA- 143
6210-61-6371	A8127-F4A5	6	AA- 191
6210-61-6421	A5010-B4F4	4	AA- 145
6210-61-6421	A8117-B4A8	2	AA- 183
6210-61-6421	A8127-F4A5	6	AA- 191
6210-61-6441	A5010-B4F4	10	AA- 145
6210-61-6441	A8117-B4A8	2	AA- 183
6210-61-6441	A8127-F4A5	6	AA- 191
6210-61-6450	A5010-B4F4	9	AA- 145
6210-61-6530	A6010-A4D6	5	AA- 157
6210-61-6530	A6010-A4D7Z	5	AA- 159
6210-61-6530	A6010-A4F7	5	AA- 161
6210-61-6530	A6010-A4F8	5	AA- 163
6210-61-6551	A2011-A4A4	7	AA- 47
6210-61-6551	A8117-B4A8	2	AA- 183
6210-61-6551	A8127-F4A5	6	AA- 191
6210-61-6570	A5010-A4F4	33	AA- 143
6210-61-6870	A5010-B4F4	13	AA- 145
6210-61-6870	A8117-B4A8	2	AA- 184
6210-62-3400	A5080-A4B2	1	AA- 149
6210-62-3401	A5080-A4B2	1	AA- 149
6210-62-3410	A5080-A4B2	1	AA- 149
6210-62-3430	A5080-A4B2	2	AA- 149
6210-62-3450	A5080-A4B2	1	AA- 149
6210-62-3480	A5080-A4B2	14	AA- 149
6210-71-1140	A4210-A4E5	8	AA- 135
6210-71-1150	A4210-A4E5	7	AA- 135
6210-71-1160	A4210-A4E5	3	AA- 135
6210-71-1160	A8121-A4A5	1	AA- 187
6210-71-3183	A2010-B4H9A	1	AA- 45
6210-71-3183	A8117-B4A8	2	AA- 183
6210-71-3281	A2010-B4H9A	1	AA- 45
6210-71-3281	A8117-B4A8	2	AA- 183
6210-71-5370	A4230-A4D5	2	AA- 141
6210-71-5510	A4030-A4C6	12	AA- 123
6210-71-5511	A4030-A4C6	12	AA- 123
6210-71-5512	A4030-A4C6	12	AA- 123
6210-71-5520	A4030-A4C6	13	AA- 123
6210-71-5522	A4030-A4C6	13	AA- 123
6210-71-6202	A4110-A4E4	1	AA- 129
6210-71-6202	A4110-A4H9	1	AA- 131
6210-71-6210	A4110-A4E4	1	AA- 129
6210-71-6210	A4110-A4H9	1	AA- 131
6210-72-3220	A4080-A4A8	6	AA- 127
6210-72-3231	A2041-A4A5	36	AA- 51
6210-72-3231	A2041-A4G8	36	AA- 53
6210-72-3241	A2041-A4A5	32	AA- 51
6210-72-3241	A2041-A4G8	32	AA- 53
6210-72-3971	A6910-A4B9	1	AA- 181

PARTS NO.	FIG NO.	INDEX	PAGE
6210-81-3510	A2410-A4A6	5	AA- 81
6210-81-4111	A2041-A4A5	26	AA- 51
6210-81-4111	A2041-A4G8	26	AA- 53
6210-81-5640	A2610-A4B5	24	AA- 87
6210-81-5640	A8117-B4A8	2	AA- 184
6210-81-6361	A6010-A4D6	21	AA- 157
6210-81-6361	A6010-A4D7Z	21	AA- 159
6210-81-6361	A6010-A4F7	21	AA- 161
6210-81-6361	A6010-A4F8	21	AA- 163
6210-81-6490	A6010-A4D6	2	AA- 157
6210-81-6490	A6010-A4D7Z	2	AA- 159
6210-81-6490	A6010-A4F7	2	AA- 161
6210-81-6490	A6010-A4F8	2	AA- 163
6210-81-6750	A6010-A4D6	6	AA- 157
6210-81-6750	A6010-A4D7Z	6	AA- 159
6210-81-6750	A6010-A4F7	6	AA- 161
6210-81-6750	A6010-A4F8	6	AA- 163
6210-81-8310	A2411-A4A2	22	AA- 83
6210-81-9210	A2010-A4H9A	11	AA- 43
6210-82-6450	A6010-A4D6	20	AA- 157
6210-82-6450	A6010-A4D7Z	20	AA- 159
6210-82-6450	A6010-A4F7	20	AA- 161
6210-82-6450	A6010-A4F8	20	AA- 163
6210-82-6570	A6010-A4D6	16	AA- 157
6210-82-6570	A6010-A4D7Z	16	AA- 159
6210-82-6570	A6010-A4F7	16	AA- 161
6210-82-6570	A6010-A4F8	16	AA- 163
6210-82-6840	A6010-A4D6	25	AA- 157
6210-82-6840	A6010-A4D7Z	25	AA- 159
6210-82-6840	A6010-A4F7	25	AA- 161
6210-82-6840	A6010-A4F8	25	AA- 163
6211-11-3131	A4210-B4E5	8	AA- 138
6211-11-4410	A1310-A4H7	31	AA- 11
6211-11-5140	A1510-A4B9	1	AA- 19
6211-11-5152	A1510-A4B9	2	AA- 19
6211-11-5160	A1510-A4B9	4	AA- 19
6211-11-5250	A1610-A4F2A	7	AA- 35
6211-11-5250	A1610-A4F3A	7	AA- 37
6211-11-5461	A1610-A4F2A	6	AA- 35
6211-11-5461	A1610-A4F3A	6	AA- 37
6211-11-5490	A1610-A4F2A	8	AA- 35
6211-11-5490	A1610-A4F3A	8	AA- 37
6211-11-5490	A8121-A4A5	1	AA- 188
6211-11-5640	A1610-A4F2A	12	AA- 35
6211-11-5640	A1610-A4F3A	10	AA- 37
6211-11-5681	A1610-A4F2A	17	AA- 35
6211-11-5681	A1610-A4F3A	15	AA- 37
6211-11-5890	A8121-A4A5	1	AA- 187
6211-11-9510	A1570-A4B7	1	AA- 33
6211-11-9540	A1570-A4B7	6	AA- 33

PARTS NO.	FIG NO	INDEX	PAGE
6211-11-9610	A1610-A4F2A	10	AA- 35
6211-11-9620	A1570-A4B7	2	AA- 33
6211-11-9630	A1610-A4F2A	15	AA- 35
6211-11-9630	A1610-A4F3A	13	AA- 37
6211-11-9640	A1410-A4F3A	18	AA- 15
6211-11-9690	A1570-A4B7	7	AA- 33
6211-11-9890	A1570-A4B7	8	AA- 33
6211-12-1100	A1010-A4B3	1	AA- 3
6211-12-3600	A4210-A4E5	1	AA- 135
6211-12-3600	A4210-B4E5	1	AA- 137
6211-12-3620	A4210-B4E5	9	AA- 138
6211-12-4410	A1410-A4F3A	22	AA- 15
6211-12-4410	A1410-A4F4A	20	AA- 17
6211-12-4420	A1410-A4F3A	27	AA- 15
6211-12-4420	A1410-A4F4A	25	AA- 17
6211-12-4430	A1410-A4F3A	10	AA- 15
6211-12-4430	A1410-A4F4A	10	AA- 17
6211-12-4440	A1410-A4F3A	12	AA- 15
6211-12-4440	A1410-A4F4A	12	AA- 17
6211-12-4450	A1410-A4F3A	19	AA- 15
6211-12-4450	A1410-A4F4A	17	AA- 17
6211-12-4460	A1610-B4F2A	2	AA- 39
6211-12-4460	A1610-B4F3A	2	AA- 41
6211-12-4840	A1610-B4F2A	1	AA- 39
6211-12-4840	A1610-B4F3A	1	AA- 41
6211-12-5560	A1610-A4F2A	1	AA- 35
6211-12-5560	A1610-A4F3A	1	AA- 37
6211-12-5970	B0300-01A0	1	BO- 5
6211-12-5970	B9999-A4A3	1	AA- 195
6211-12-5971	B0300-01A0	1	BO- 5
6211-12-5971	B9999-A4A3	1	AA- 195
6211-21-1800	A2010-B4H9A	5	AA- 45
6211-21-1820	A2010-B4H9A	5	AA- 45
6211-21-3403	A2610-A4B5	1	AA- 87
6211-21-3430	A2610-A4B5	1	AA- 87
6211-21-5340	A2110-B4F6	1	AA- 61
6211-21-6110	A4030-A4C6	1	AA- 123
6211-22-1101	A2010-A4H9A	1	AA- 43
6211-22-2220	A2010-B4H9A	9	AA- 45
6211-22-5420	A2110-B4F6	2	AA- 61
6211-22-5520	A2060-A4C1	12	AA- 57
6211-22-5551	A1310-A4H7	21	AA- 11
6211-31-1010	A2310-A4A1	1	AA- 73
6211-31-1420	A2310-A4A1	4	AA- 73
6211-31-2033	A2350-A4B2	4	AA- 77
6211-31-2050	A2350-A4B2	4	AA- 77
6211-31-2410	A2350-A4B2	2	AA- 77
6211-31-3100	A2350-A4B2	7	AA- 77
6211-31-3130	A2350-A4B2	9	AA- 77
6211-31-8300	A2330-A4A5	1	AA- 75

PARTS NO	FIG NO.	INDEX	PAGE
6211-32-2110	A2350-A4B2	1	AA- 77
6211-32-2130	A2350-A4B2	1	AA- 77
6211-32-8300	A2330-A4A5	1	AA- 75
6211-51-1000	A3010-A4A1	1	AA- 91
6211-51-1100	A3010-A4A1	4	AA- 91
6211-51-1200	A3010-A4A1	1	AA- 91
6211-51-1250	A3010-A4A1	9	AA- 91
6211-51-1300	A3010-A4A1	7	AA- 91
6211-51-5500	A3110-A4C5	1	AA- 93
6211-51-5520	A3110-A4C5	6	AA- 93
6211-51-6460	A3110-B4C5	9	AA- 95
6211-51-8110	A1530-C4D3	9	AA- 29
6211-51-8110	A1530-C4G8	9	AA- 31
6211-51-8180	A1530-C4D3	5	AA- 29
6211-51-8180	A1530-C4G8	5	AA- 31
6211-51-8210	A1530-C4D3	1	AA- 29
6211-51-8210	A1530-C4G8	1	AA- 31
6211-51-8220	A1530-C4D3	4	AA- 29
6211-51-8220	A1530-C4G8	4	AA- 31
6211-52-6420	A3110-B4C5	15	AA- 95
6211-52-6430	A3110-B4C5	16	AA- 95
6211-52-6450	A3110-B4C5	12	AA- 95
6211-61-1170	A8127-F4A5	6	AA- 191
6211-61-1530	A5010-A4F4	16	AA- 143
6211-61-1530	A8127-F4A5	6	AA- 191
6211-61-2123	A3310-A4A3	1	AA- 97
6211-61-2124	A3310-A4A3	1	AA- 97
6211-61-6410	A5010-B4F4	1	AA- 145
6211-61-6850	A2610-A4B5	25	AA- 87
6211-61-6850	A2610-A4B6	7	AA- 89
6211-61-8110	A5210-A4D3	5	AA- 153
6211-61-8110	A5210-A4F6	5	AA- 155
6211-71-1710	A4010-A4J5	4	AA- 99
6211-71-5280	A4130-A4B3	14	AA- 133
6211-71-5341	A4210-A4E5	10	AA- 135
6211-71-5680	A1310-A4H7	23	AA- 11
6211-71-5710	A4060-A4B3	4	AA- 125
6211-71-9770	A4210-A4E5	2	AA- 135
6211-72-1150	A4010-A4J5	1	AA- 99
6211-72-1150	A4010-B4J5	1	AA- 101
6211-72-1150	A4010-C4J5	1	AA- 105
6211-72-1150	A4010-D4J5	1	AA- 111
6211-72-1150	A4010-E4J5	1	AA- 115
6211-72-1150	A4010-F4J5	1	AA- 119
6211-72-1150	A4010-G4J5	1	AA- 121
6211-72-5110	A4030-A4C6	6	AA- 123
6211-72-5120	A4030-A4C6	7	AA- 123
6211-72-5130	A4030-A4C6	8	AA- 123
6211-72-5140	A4030-A4C6	9	AA- 123
6211-72-5150	A4030-A4C6	10	AA- 123

PARTS NO	FIG NO.	INDEX	PAGE
6211-72-5160	A4030-A4C6	11	AA- 123
6211-72-5210	A4110-A4E4	11	AA- 129
6211-72-5220	A4110-A4E4	12	AA- 129
6211-72-5250	A4110-A4E4	9	AA- 129
6211-72-5250	A4110-A4H9	9	AA- 131
6211-72-5310	A4110-A4H9	11	AA- 131
6211-72-5320	A4110-A4H9	12	AA- 131
6211-72-5610	A4060-A4B3	1	AA- 125
6211-72-5810	A4230-A4D5	1	AA- 141
6211-82-7100	A1410-A4F3A	1	AA- 15
6211-82-7100	A1410-A4F4A	1	AA- 17
6211-82-7110	A1410-A4F3A	1	AA- 15
6211-82-7110	A1410-A4F4A	1	AA- 17
6212-K1-9901	A8121-A4A5	1	AA- 187
6212-K2-9901	A8117-B4A8	2	AA- 183
6212-K6-9901	A8127-F4A5	6	AA- 191
6212-11-3212	A4210-B4E5	1	AA- 137
6212-11-4320	A1310-A4H7	26	AA- 11
6212-11-4721	A1310-A4H7	28	AA- 11
6212-11-4721	A8121-A4A5	1	AA- 187
6212-12-4110	A1310-A4H7	2	AA- 11
6212-12-4121	A1310-A4H7	3	AA- 11
6212-12-5910	B0300-01A1	1	BO- 7
6212-12-5911	B0300-01A1	1	BO- 7
6212-15-5831	A1530-A4D3	2	AA- 21
6212-15-5831	A1530-A4G8	2	AA- 23
6212-15-5831	A8121-A4A5	1	AA- 187
6212-16-1440	A1010-A4B3	4	AA- 3
6212-21-2450	A2050-A4A3	14	AA- 55
6212-21-2511	A2050-A4A3	12	AA- 55
6212-22-3210	A2040-A4H1	1	AA- 49
6212-31-6100	A2050-A4A3	10	AA- 55
6212-31-6120	A2050-A4A3	11	AA- 55
6212-31-6130	A2050-A4A3	3	AA- 55
6212-31-6140	A2050-A4A3	9	AA- 55
6212-31-6200	A2050-A4A3	2	AA- 55
6212-32-1450	A2230-A4C6	6	AA- 69
6212-32-1600	A2230-A4C6	1	AA- 69
6212-41-4540	A1010-A4B3	11	AA- 3
6212-41-4540	A8121-A4A5	1	AA- 187
6212-51-5301	A3110-B4C5	1	AA- 95
6212-51-5311	A3110-B4C5	1	AA- 95
6212-51-6110	A3110-A4C5	21	AA- 93
6212-61-1150	A5010-A4F4	12	AA- 143
6212-61-1203	A5010-A4F4	1	AA- 143
6212-61-1220	A5010-A4F4	2	AA- 143
6212-61-1322	A5010-A4F4	3	AA- 143
6212-61-1330	A5010-A4F4	17	AA- 143
6212-61-1370	A5010-A4F4	7	AA- 143
6212-61-1380	A5010-A4F4	8	AA- 143

PARTS NO.	FIG NO.	INDEX	PAGE
6212-61-1410	A5010-A4F4	4	AA- 143
6212-61-2111	A3310-A4A3	2	AA- 97
6212-61-3720	A5080-A4B2	13	AA- 149
6212-61-3721	A5080-A4B2	13	AA- 149
6212-61-3750	A5080-A4B2	16	AA- 149
6212-61-6121	A1310-A4H7	1	AA- 11
6212-61-6431	A1310-A4H7	6	AA- 11
6212-61-6431	A8121-A4A5	1	AA- 187
6212-61-6620	A1310-B4H7	13	AA- 13
6212-61-6640	A1310-B4H7	4	AA- 13
6212-61-6650	A1310-B4H7	15	AA- 13
6212-61-6650	A1310-B4H7	6	AA- 13
6212-61-6661	A1310-B4H7	16	AA- 13
6212-61-6661	A1310-B4H7	7	AA- 13
6212-61-6661	A8121-A4A5	1	AA- 187
6212-61-6821	A8127-F4A5	6	AA- 191
6212-62-3660	A5080-A4B2	19	AA- 149
6212-62-6410	A1310-B4H7	1	AA- 13
6212-62-6510	A1310-B4H7	10	AA- 13
6212-62-6820	A5010-B4F4	12	AA- 145
6212-65-2610	A3310-A4A3	8	AA- 97
6212-71-3190	A4080-A4A8	2	AA- 127
6212-71-8540	A4230-A4D5	10	AA- 141
6212-72-3170	A4080-A4A8	1	AA- 127
6212-72-3171	A4080-A4A8	1	AA- 127
6212-81-4211	A6810-A4F5	3	AA- 179
6212-82-4210	A6810-A4F5	6	AA- 179
6212-82-4220	A6810-A4F5	5	AA- 179
6212-82-4230	A6810-A4F5	11	AA- 179
6212-85-6840	A6010-A4D6	24	AA- 157
6212-85-6840	A6010-A4D7Z	24	AA- 159
6212-85-6840	A6010-A4F7	24	AA- 161
6212-85-6840	A6010-A4F8	24	AA- 163
6212-85-6840	V0100-01A0	13	VO- 3
6215-11-6560	A5010-C4F4	4	AA- 147
6215-15-4710	A1310-A4H7	5	AA- 11
6215-15-4710	A8121-A4A5	1	AA- 187
6215-41-4110	A1010-A4B3	12	AA- 3
6215-41-4212	A1010-A4B3	13	AA- 3
6215-61-6630	A1310-B4H7	11	AA- 13
6215-61-6630	A1310-B4H7	2	AA- 13
6215-61-6630	A8121-A4A5	1	AA- 187
6215-71-5282	A4030-A4C6	18	AA- 123
6215-71-5292	A4030-A4C6	19	AA- 123
6215-71-6190	A6910-A4B9	2	AA- 181
6215-71-9790	A4030-A4C6	22	AA- 123
6215-81-6150	A6010-A4D6	10	AA- 157
6215-81-6150	A6010-A4D7Z	10	AA- 159
6215-81-6150	A6010-A4F7	10	AA- 161
6215-81-6150	A6010-A4F8	10	AA- 163

PARTS NO	FIG NO.	INDEX	PAGE
6217-11-1321	A1010-A4B3	3	AA- 3
6217-16-1321	A1010-A4B3	3	AA- 3
6217-17-1321	A1010-A4B3	3	AA- 3
6217-18-1321	A1010-A4B3	3	AA- 3
6217-19-1321	A1010-A4B3	3	AA- 3
6218-61-2610	A3310-A4A3	8	AA- 97
6218-61-2620	A3310-A4A3	11	AA- 97
6221-81-6810	A6210-A4C4	2	AA- 175
6221-81-6810	A8117-B4A8	2	AA- 184
6240-11-9910	A1410-A4F3A	7	AA- 15
6240-11-9910	A1410-A4F4A	7	AA- 17
6505-11-0410	A1530-B4D3	5	AA- 25
6505-11-0410	A1530-B4G8	5	AA- 27
6505-11-0450	A1530-B4D3	22	AA- 25
6505-11-0450	A1530-B4G8	22	AA- 27
6505-11-0520	A1530-B4D3	18	AA- 25
6505-11-0520	A1530-B4G8	18	AA- 27
6505-11-0550	A1530-B4D3	19	AA- 25
6505-11-0550	A1530-B4G8	19	AA- 27
6505-11-4220	A1530-B4D3	17	AA- 25
6505-11-4220	A1530-B4G8	17	AA- 27
6505-51-0011	A1530-B4D3	11	AA- 25
6505-51-0011	A1530-B4G8	11	AA- 27
6505-51-0111	A1530-B4D3	8	AA- 25
6505-51-0111	A1530-B4G8	8	AA- 27
6505-51-0151	A1530-B4D3	9	AA- 25
6505-51-0151	A1530-B4G8	9	AA- 27
6505-51-0210	A1530-B4D3	2	AA- 25
6505-51-0210	A1530-B4G8	2	AA- 27
6505-51-0252	A1530-B4D3	3	AA- 25
6505-51-0252	A1530-B4G8	3	AA- 27
6505-51-0310	A1530-B4D3	7	AA- 25
6505-51-0310	A1530-B4G8	7	AA- 27
6505-51-0351	A1530-B4D3	10	AA- 25
6505-51-0351	A1530-B4G8	10	AA- 27
6505-51-0610	A1530-B4D3	15	AA- 25
6505-51-0610	A1530-B4G8	15	AA- 27
6505-51-0711	A1530-B4D3	6	AA- 25
6505-51-0711	A1530-B4G8	6	AA- 27
6505-51-0830	A1530-B4D3	13	AA- 25
6505-51-0831	A1530-B4D3	13	AA- 25
6505-51-0831	A1530-B4G8	13	AA- 27
6505-51-1410	A1530-B4D3	4	AA- 25
6505-51-1410	A1530-B4G8	4	AA- 27
6505-51-3020	A1530-B4D3	1	AA- 25
6505-51-3020	A1530-B4G8	1	AA- 27
6505-51-7810	A1530-B4D3	1	AA- 25
6505-51-7810	A1530-B4G8	1	AA- 27
6505-51-7910	A1530-B4D3	1	AA- 25
6505-51-7910	A1530-B4G8	1	AA- 27

PARTS NO	FIG NO	INDEX	PAGE
6505-51-9580	A1530-B4D3	23	AA- 25
6505-52-2410	A1530-B4D3	21	AA- 25
6505-52-2410	A1530-B4G8	21	AA- 27
6505-52-5410	A1530-A4D3	1	AA- 21
6505-52-5410	A1530-A4G8	1	AA- 23
6505-52-5410	A1530-B4D3	1	AA- 25
6505-52-5410	A1530-B4G8	1	AA- 27
6505-99-9011	A1530-B4D3	23	AA- 25
6505-99-9011	A1530-B4G8	23	AA- 27
6600-01-3860	A2210-C4E4	5	AA- 67
6600-01-3860	F2100-01A0	48	FO- 4
6600-01-3860	F2100-01A0	60	FO- 4
6631-11-5630	A1410-A4F3A	16	AA- 15
6631-11-5630	A1410-A4F4A	16	AA- 17
6631-11-5630	A1530-C4D3	18	AA- 29
6631-11-5630	A1530-C4G8	18	AA- 31
6631-11-5630	A1610-A4F2A	14	AA- 35
6631-11-5630	A1610-A4F2A	5	AA- 35
6631-11-5630	A1610-A4F3A	12	AA- 37
6631-11-5630	A1610-A4F3A	5	AA- 37
6631-11-5630	A2610-A4B5	28	AA- 87
6631-11-5630	A2610-A4B6	8	AA- 89
6631-11-5630	A4230-A4D5	5	AA- 141
6643-11-4641	A1410-A4F3A	8	AA- 15
6643-11-4641	A1410-A4F4A	8	AA- 17
6645-31-1321	A2230-A4C6	2	AA- 69
6691-21-4170	A2210-B4E4	10	AA- 65
6691-21-4190	A2210-B4E4	21	AA- 65
6691-21-4540	A2210-B4E4	28	AA- 65
6691-21-4560	A2210-B4E4	29	AA- 65
6691-21-4910	A2210-B4E4	36	AA- 65
6691-21-4922	A2210-B4E4	22	AA- 65
6691-61-2720	A5080-A4B2	4	AA- 149
6693-22-5600	A2110-A4F6	5	AA- 59
6696-61-9921	A2010-B4H9A	3	AA- 45
6696-61-9921	A8117-B4A8	2	AA- 183
6711-21-3521	A2040-A4H1	3	AA- 49
6711-21-3521	A8117-B4A8	2	AA- 184
6715-11-5270	B0300-01A0	6	BO- 5
6715-11-5270	B0300-01A1	6	BO- 7
6715-11-5280	B0300-01A0	7	BO- 5
6715-11-5280	B0300-01A1	7	BO- 7
6715-11-5290	B0300-01A0	4	BO- 5
6715-11-5290	B0300-01A1	4	BO- 7
6933-51-5150	A6010-A4D6	14	AA- 157
6933-51-5150	A6010-A4D7Z	14	AA- 159
6933-51-5150	A6010-A4F7	14	AA- 161
6933-51-5150	A6010-A4F8	14	AA- 163
6934-61-6210	A8127-F4A5	6	AA- 191
6970-51-2221	K0210-02A0	39	KO- 14

PARTS NO	FIG NO	INDEX	PAGE
700-22-11370	Y1662-01A0	2	YO- 49
700-22-11410	Y1672-01A0	10	YO- 55
700-22-11510	M2141-01A1	18	MO- 37
700-22-11510	M2142-01A0	23	MO- 45
700-22-11510	M2142-01A2	24	MO- 51
700-52-31310	Y1679-21A0	16	YO- 65
700-61-00041	Y1679-21A0	2	YO- 65
700-61-13006	T2440-01A0	36	TO- 33
700-61-13006	Y1679-21A0	1	YO- 65
700-61-33002	Y1679-21A0	1	YO- 65
700-61-33111	Y1679-21A0	1	YO- 65
700-61-33420	Y1679-21A0	9	YO- 65
700-61-33440	Y1679-21A0	5	YO- 65
700-61-33450	Y1679-21A0	4	YO- 65
700-61-33470	Y1679-21A0	18	YO- 65
700-61-33481	Y1679-21A0	21	YO- 65
700-61-33490	Y1679-21A0	22	YO- 65
700-61-33510	Y1679-21A0	19	YO- 65
700-61-33520	Y1679-21A0	20	YO- 65
700-61-34002	Y1679-21A0	26	YO- 65
700-61-34111	Y1679-21A0	26	YO- 65
700-61-34141	Y1679-21A0	31	YO- 65
700-61-34220	Y1679-21A0	27	YO- 65
700-61-34230	Y1679-21A0	29	YO- 65
700-61-34310	Y1679-21A0	38	YO- 65
700-61-34320	Y1679-21A0	36	YO- 65
700-61-34330	Y1679-21A0	35	YO- 65
700-61-34340	Y1679-21A0	28	YO- 65
700-61-34510	Y1679-21A0	30	YO- 65
700-851-1120	M2210-06A0	3	MO- 79
700-851-1120	M2210-06A3	3	MO- 83
700-90-74001	Y1662-02A0	37	YO- 51
700-94-11260	Y1662-01A0	22	YO- 49
701-10-51160	H0100-04A0	8	HO- 11
701-30-51130	H0100-04A0	3	HO- 11
701-30-51151	H0100-04A0	5	HO- 11
701-30-51160	H0100-04A0	6	HO- 11
701-30-51171	H0100-04A0	7	HO- 11
701-30-51190	H0100-04A0	9	HO- 11
701-30-63130	H0100-01A0	20	HO- 3
701-30-63130	Y1660-01A0	20	YO- 33
701-40-00011	H0100-04A0	1	HO- 11
701-40-00040	H0100-04A0	29	HO- 11
701-40-51002	H0100-03A0	29	HO- 9
701-40-51002	H0100-04A0	1	HO- 11
701-40-51130	H0100-04A0	4	HO- 11
701-40-51160	H0100-04A0	13	HO- 11
701-40-61002	H0100-03A0	30	HO- 9
701-40-61002	H0100-04A0	16	HO- 11
701-40-61002	Y1660-04A0	5	YO- 41

PARTS NO.	FIG NO.	INDEX	PAGE
701-40-61002	Y1660-22A0	3	YO- 47
701-40-61120	H0100-04A0	17	HO- 11
701-40-61120	H0100-04A0	25	HO- 11
701-40-61120	Y1660-04A0	6	YO- 41
701-40-61120	Y1660-22A0	4	YO- 47
701-40-61152	H0100-04A0	16	HO- 11
701-40-61152	Y1660-04A0	5	YO- 41
701-40-61152	Y1660-22A0	3	YO- 47
701-40-61180	H0100-03A0	28	HO- 9
701-40-61180	Y1660-03A0	28	YO- 39
701-40-61180	Y1660-21A0	33	YO- 45
701-40-62002	H0100-03A0	31	HO- 9
701-40-62002	H0100-04A0	24	HO- 11
701-40-62162	H0100-04A0	24	HO- 11
701-40-62162	Y1660-04A0	13	YO- 41
701-40-62162	Y1660-22A0	11	YO- 47
701-40-62171	H0100-04A0	36	HO- 11
701-40-72120	H0100-04A0	19	HO- 11
701-40-72120	H0100-04A0	27	HO- 11
701-40-72120	Y1660-04A0	8	YO- 41
701-40-72120	Y1660-22A0	10	YO- 47
701-40-81000	Y1660-04A0	13	YO- 41
701-40-81000	Y1660-22A0	11	YO- 47
701-40-81170	Y1660-22A0	19	YO- 47
701-41-00016	H0100-05A0	1	HO- 15
701-41-00016	Y1660-05A0	1	YO- 43
701-41-11006	H0100-01A0	1	HO- 3
701-41-11006	H0100-05A0	1	HO- 15
701-41-11006	Y1660-01A0	1	YO- 33
701-41-11006	Y1660-05A0	1	YO- 43
701-41-31130	H0100-05A0	4	HO- 15
701-41-31130	Y1660-05A0	4	YO- 43
701-41-31150	H0100-05A0	7	HO- 15
701-41-31150	Y1660-05A0	7	YO- 43
701-41-31180	H0100-05A0	6	HO- 15
701-41-31180	Y1660-05A0	6	YO- 43
701-41-36120	Y1660-04A0	1	YO- 41
701-41-36120	Y1660-22A0	1	YO- 47
701-43-00015	H0100-03A0	1	HO- 9
701-43-00015	Y1660-03A0	1	YO- 39
701-43-00015	Y1660-21A0	1	YO- 45
701-43-24002	H0100-01A0	4	HO- 3
701-43-24002	H0100-03A0	1	HO- 9
701-43-24002	H0100-04A0	1	HO- 11
701-43-28000	Y1660-01A0	4	YO- 33
701-43-28000	Y1660-03A0	1	YO- 39
701-43-28000	Y1660-04A0	1	YO- 41
701-43-28000	Y1660-21A0	1	YO- 45
701-43-28000	Y1660-22A0	1	YO- 47
701-43-31181	H0100-03A0	12	HO- 9

PARTS NO.	FIG NO.	INDEX	PAGE
701-43-31181	H0100-05A0	12	HO- 15
701-43-31181	Y1660-03A0	12	YO- 39
701-43-31181	Y1660-05A0	12	YO- 43
701-43-31181	Y1660-21A0	12	YO- 45
701-43-31181	Y1660-21A0	23	YO- 45
701-43-31191	H0100-03A0	13	HO- 9
701-43-31191	H0100-05A0	13	HO- 15
701-43-31191	Y1660-03A0	13	YO- 39
701-43-31191	Y1660-05A0	13	YO- 43
701-43-31191	Y1660-21A0	13	YO- 45
701-43-31191	Y1660-21A0	24	YO- 45
701-43-31211	H0100-03A0	14	HO- 9
701-43-31211	Y1660-03A0	14	YO- 39
701-43-31211	Y1660-21A0	14	YO- 45
701-43-31221	H0100-03A0	15	HO- 9
701-43-31221	H0100-05A0	15	HO- 15
701-43-31221	Y1660-03A0	15	YO- 39
701-43-31221	Y1660-05A0	15	YO- 43
701-43-31221	Y1660-21A0	15	YO- 45
701-43-31221	Y1660-21A0	26	YO- 45
701-43-31291	H0100-03A0	22	HO- 9
701-43-31291	H0100-05A0	14	HO- 15
701-43-31291	Y1660-03A0	22	YO- 39
701-43-31291	Y1660-05A0	14	YO- 43
701-43-31291	Y1660-21A0	25	YO- 45
701-43-31420	H0100-03A0	4	HO- 9
701-43-31420	Y1660-03A0	4	YO- 39
701-43-31420	Y1660-21A0	3	YO- 45
701-43-31440	H0100-03A0	11	HO- 9
701-43-31440	Y1660-03A0	11	YO- 39
701-43-31440	Y1660-21A0	11	YO- 45
701-43-31460	H0100-03A0	18	HO- 9
701-43-31460	H0100-05A0	18	HO- 15
701-43-31460	Y1660-03A0	18	YO- 39
701-43-31460	Y1660-05A0	18	YO- 43
701-43-31460	Y1660-21A0	18	YO- 45
701-43-31460	Y1660-21A0	29	YO- 45
701-43-31470	H0100-03A0	19	HO- 9
701-43-31470	H0100-05A0	19	HO- 15
701-43-31470	Y1660-03A0	19	YO- 39
701-43-31470	Y1660-05A0	19	YO- 43
701-43-31470	Y1660-21A0	19	YO- 45
701-43-33130	H0100-03A0	6	HO- 9
701-43-33130	Y1660-03A0	6	YO- 39
701-43-33130	Y1660-21A0	5	YO- 45
701-43-41002	H0100-03A0	1	HO- 9
701-43-41002	Y1660-03A0	1	YO- 39
701-43-41002	Y1660-21A0	1	YO- 45
701-50-61131	H0100-04A0	18	HO- 11
701-50-61131	H0100-04A0	26	HO- 11

PARTS NO	FIG NO	INDEX	PAGE
701-50-61131	Y1660-04A0	7	YO- 41
701-50-61131	Y1660-22A0	5	YO- 47
701-51-31172	H0100-05A0	9	HO- 15
701-51-31172	Y1660-05A0	9	YO- 43
701-51-31250	H0100-03A0	25	HO- 9
701-51-31250	H0100-05A0	22	HO- 15
701-51-31250	Y1660-03A0	25	YO- 39
701-51-31250	Y1660-05A0	22	YO- 43
701-51-31250	Y1660-21A0	30	YO- 45
701-53-31130	H0100-03A0	5	HO- 9
701-53-31130	Y1660-03A0	5	YO- 39
701-53-31130	Y1660-21A0	4	YO- 45
701-53-31160	H0100-03A0	8	HO- 9
701-53-31160	Y1660-03A0	8	YO- 39
701-53-31160	Y1660-21A0	7	YO- 45
702-11-11190	F2600-01A0	18	FO- 81
702-12-12140	Y1679-01A0	3	YO- 57
702-12-12140	Y1679-11A0	3	YO- 61
702-12-12150	Y1679-01A0	4	YO- 57
702-12-12150	Y1679-11A0	4	YO- 61
702-12-12180	Y1679-01A0	11	YO- 57
702-12-12180	Y1679-11A0	11	YO- 61
702-12-12210	Y1679-01A0	15	YO- 57
702-12-12210	Y1679-11A0	15	YO- 61
702-12-12221	Y1679-01A0	16	YO- 57
702-12-12230	Y1679-01A0	17	YO- 57
702-12-12230	Y1679-11A0	17	YO- 61
702-12-12240	Y1679-01A0	18	YO- 57
702-12-12240	Y1679-11A0	18	YO- 61
702-12-12251	Y1679-01A0	19	YO- 57
702-12-12251	Y1679-11A0	19	YO- 61
702-12-12270	Y1679-01A0	26	YO- 57
702-12-12270	Y1679-11A0	26	YO- 61
702-12-12280	Y1679-01A0	25	YO- 57
702-12-12280	Y1679-11A0	25	YO- 61
702-12-12291	Y1679-01A0	30	YO- 57
702-12-12310	Y1679-01A0	31	YO- 57
702-12-12320	Y1679-01A0	32	YO- 57
702-12-12331	Y1679-01A0	33	YO- 57
702-12-12340	Y1679-01A0	35	YO- 57
702-12-12361	Y1679-01A0	37	YO- 57
702-12-12390	Y1679-01A0	6	YO- 57
702-12-12390	Y1679-11A0	6	YO- 61
702-12-12410	Y1679-01A0	8	YO- 57
702-12-12410	Y1679-11A0	8	YO- 61
702-12-12420	Y1679-01A0	21	YO- 57
702-12-12420	Y1679-11A0	21	YO- 61
702-12-12451	Y1679-11A0	16	YO- 61
702-12-13002	K2510-01A0	15	KO- 105
702-12-13002	K2510-01A1	15	KO- 107

PARTS NO	FIG NO.	INDEX	PAGE
702-12-13002	Y1679-01A0	1	YO- 57
702-12-13110	Y1679-11A0	1	YO- 61
702-12-13120	Y1679-01A0	34	YO- 57
702-12-13130	Y1679-01A0	45	YO- 58
702-12-13130	Y1679-11A0	39	YO- 61
702-12-13141	Y1679-01A0	36	YO- 57
702-12-13141	Y1679-11A0	31	YO- 61
702-12-13151	Y1679-01A0	46	YO- 58
702-12-13151	Y1679-11A0	40	YO- 61
702-12-13160	Y1679-01A0	41	YO- 57
702-12-13160	Y1679-11A0	35	YO- 61
702-12-13210	Y1679-11A0	30	YO- 61
702-12-13220	Y1679-11A0	29	YO- 61
702-12-14001	H2250-01A0	1	HO- 39
702-12-14001	H2250-01A1	1	HO- 43
702-12-14001	K2510-01A0	20	KO- 105
702-12-14001	K2510-01A1	20	KO- 107
702-12-14001	Y1679-11A0	1	YO- 61
702-25-21710	K0210-02A0	11	KO- 13
705-12-34530	Y1600-12A0	1	YO- 13
705-17-02022	Y1600-11A0	1	YO- 11
705-17-02122	Y1600-12A0	3	YO- 13
705-17-02221	Y1600-11A0	3	YO- 11
705-17-02330	Y1600-12A0	13	YO- 13
705-17-02353	Y1600-11A0	1	YO- 11
705-17-02353	Y1600-11A0	3	YO- 11
705-17-02353	Y1600-12A0	1	YO- 13
705-17-02353	Y1600-12A0	3	YO- 13
705-17-02374	Y1600-12A0	15	YO- 13
705-17-02381	Y1600-11A0	9	YO- 11
705-17-02381	Y1600-12A0	9	YO- 13
705-17-02440	Y1600-11A0	7	YO- 11
705-17-02440	Y1600-12A0	7	YO- 13
705-17-02472	Y1600-11A0	8	YO- 11
705-17-02472	Y1600-12A0	8	YO- 13
705-17-02480	Y1600-12A0	14	YO- 13
705-17-02521	Y1600-12A0	1	YO- 13
705-17-02612	Y1600-11A0	6	YO- 11
705-17-02612	Y1600-12A0	6	YO- 13
705-17-02780	Y1600-12A0	11	YO- 13
705-17-02790	Y1600-11A0	11	YO- 11
705-17-02810	Y1600-11A0	14	YO- 11
705-17-02870	Y1600-11A0	13	YO- 11
705-17-04970	Y1600-21A0	19	YO- 15
705-17-34011	Y1600-11A0	2	YO- 11
705-17-34011	Y1600-12A0	2	YO- 13
705-17-34451	Y1600-12A0	4	YO- 13
705-17-34511	Y1600-11A0	5	YO- 11
705-17-34511	Y1600-12A0	5	YO- 13
705-17-34730	Y1600-11A0	4	YO- 11

PARTS NO.	FIG NO.	INDEX	PAGE
705-22-34050	Y1600-11A0	1	Y0- 11
705-40-26011	Y1600-31A0	2	Y0- 17
705-40-26411	Y1600-31A0	4	Y0- 17
705-40-26511	Y1600-31A0	5	Y0- 17
705-40-80111	Y1600-31A0	3	Y0- 17
705-40-80610	Y1600-31A0	1	Y0- 17
705-40-80610	Y1600-31A0	3	Y0- 17
705-40-80620	Y1600-31A0	1	Y0- 17
705-40-80620	Y1600-31A0	3	Y0- 17
705-40-80720	Y1600-31A0	6	Y0- 17
705-40-80760	Y1600-31A0	7	Y0- 17
705-40-80810	Y1600-31A0	8	Y0- 17
705-40-80870	Y1600-31A0	9	Y0- 17
705-41-01050	Y1600-31A0	1	Y0- 17
705-41-80210	Y1600-31A0	1	Y0- 17
705-41-80890	Y1600-31A0	11	Y0- 17
705-52-22100	F2700-01A0	24	F0- 85
705-52-22100	Y1600-11A0	1	Y0- 11
705-52-22100	Y1600-12A0	1	Y0- 13
706-73-75350	Y1672-01A0	8	Y0- 55
707-03-X7050	Y1620-01A0	G-1	Y0- 19
707-03-X7050	Y1620-02A0	G-1	Y0- 23
707-03-X7060	Y1620-01A0	G-1	Y0- 19
707-03-X7060	Y1620-02A0	G-1	Y0- 23
707-04-07060	Y1620-31A0	G-1	Y0- 25
707-29-70360	Y1621-21A0	3	Y0- 31
707-35-52900	Y0100-01A0	7K	Y0- 4
707-35-52900	Y1620-01A0	30	Y0- 19
707-36-22550	Y1620-31A0	19	Y0- 25
707-36-22550	Y1621-01A0	22	Y0- 27
707-36-22550	Y1621-11A0	22	Y0- 29
707-36-70930	Y1621-21A0	12	Y0- 31
707-39-14820	Y0100-01A0	7K	Y0- 4
707-39-14820	Y1620-01A0	23	Y0- 19
707-40-13051	Y1620-01A0	25	Y0- 19
707-40-14061	Y1620-01A0	26	Y0- 19
707-42-70012	Y0100-01A0	10K	Y0- 5
707-44-11080	F2370-03A0	12	F0- 57
707-44-11080	F2370-03A0	17	F0- 57
707-44-14180	Y0100-01A0	7K	Y0- 4
707-44-14180	Y1620-01A0	24	Y0- 19
707-44-22080	Y0100-01A0	8K	Y0- 4
707-44-22280	Y0100-01A0	9K	Y0- 4
707-44-22280	Y1620-31A0	21	Y0- 25
707-44-22280	Y1621-01A0	24	Y0- 27
707-44-22280	Y1621-11A0	24	Y0- 29
707-44-70070	Y1621-21A0	13	Y0- 31
707-51-35110	Y0100-01A0	10K	Y0- 4
707-51-35210	F2370-03A0	10	F0- 57
707-51-35210	F2370-03A0	6	F0- 57
707-51-35210	Y1621-21A0	4	Y0- 31
707-51-75110	Y0100-01A0	7K	Y0- 4
707-51-75110	Y1620-01A0	4	Y0- 19
707-51-90110	Y0100-01A0	8K	Y0- 4
707-51-90110	Y0100-01A0	9K	Y0- 4
707-51-90110	Y1620-31A0	5	Y0- 25
707-51-90110	Y1621-01A0	6	Y0- 27
707-51-90110	Y1621-11A0	6	Y0- 29
707-75-90011	Y1621-11A0	14	Y0- 29
707-83-10073	Y1620-01A0	27	Y0- 19
707-91-01450	Y1620-01A0	20	Y0- 19
707-98-12460	Y1621-21A0	K	Y0- 31
707-98-53100	Y0100-01A0	7K	Y0- 4
707-98-53100	Y1620-02A0	K	Y0- 23
707-99-12420	Y0100-01A0	10K	Y0- 4
707-99-71420	Y0100-01A0	9K	Y0- 4
707-99-71420	Y1621-01A0	K	Y0- 27
707-99-71420	Y1621-11A0	K	Y0- 29
708-23-00910	Y1672-01A0	1	Y0- 55
708-23-14710	Y1672-01A0	1	Y0- 55
708-23-14740	Y1672-01A0	5	Y0- 55
708-23-14760	Y1672-01A0	6	Y0- 55
708-23-14820	Y1672-01A0	2	Y0- 55
708-23-14930	Y1672-01A0	3	Y0- 55
708-23-14950	Y1672-01A0	4	Y0- 55
709-10-54500	Y1662-02A0	1	Y0- 51
709-12-00150	Y1662-01A0	1	Y0- 49
709-12-11411	Y1662-01A0	11	Y0- 49
709-12-11430	Y1662-01A0	12	Y0- 49
709-12-12280	Y1662-01A0	8	Y0- 49
709-12-12440	Y1662-01A0	13	Y0- 49
709-12-12612	Y1662-01A0	17	Y0- 49
709-12-12710	Y1662-01A0	21	Y0- 49
709-12-13800	Y1662-01A0	1	Y0- 49
709-12-13800	Y1662-02A0	1	Y0- 51
709-14-11520	Y1662-01A0	5	Y0- 49
709-14-11530	Y1662-01A0	6	Y0- 49
709-14-11550	Y1662-01A0	7	Y0- 49
709-90-71700	Y1662-02A0	21	Y0- 51
7808-19-1920	K2220-01A0	7	K0- 95
7815-11-1010	K2220-51A0	8	K0- 101
7830-11-2510	K2220-01A0	9	K0- 95
7831-61-1910	K2220-51A0	9	K0- 101
7831-61-3000	K2220-51A0	1	K0- 101
7831-61-9110	K2220-51A0	4	K0- 101
7831-62-6100	K2220-51A0	6	K0- 101
7831-62-9110	K2220-51A0	7	K0- 101
7831-63-2000	K2220-01A0	1	K0- 95
7831-63-2000	K2220-51A0	1	K0- 101
7831-63-4110	K2220-51A0	2	K0- 101
7831-63-6100	K2220-51A0	3	K0- 101
7861-86-1330	K2220-51A0	10	K0- 101
7861-91-3310	E0200-03A0	22	E0- 7
7861-92-3320	E0200-02A0	22	E0- 5
7861-92-4930	M2210-01A0	39	M0- 61
7861-93-1420	A1410-A4F3A	30	AA- 15
7861-93-1420	A1410-A4F4A	28	AA- 17

For future use, write your Komatsu machine and distributor information below:

Machine Serial Number:

Engine Serial Number:

Date Delivered:

Komatsu Distributor Name:

Address:

Phone Number:

Fax Number:

E-mail Address:

© All Right Reserved. June 10, 2003

Komatsu and its logo are the registered name and trademark of Komatsu Ltd., Japan