RUTHZIL TRATOR COMERCIAL DE PEÇAS LTDA 11 97083-6812 ROLANDO

PARTBOOK

D155A-6



D155A-6

Printed By : Dwi Iswanto (airafather6107170)

Printed By : Dwi Iswanto (airafather6107170)

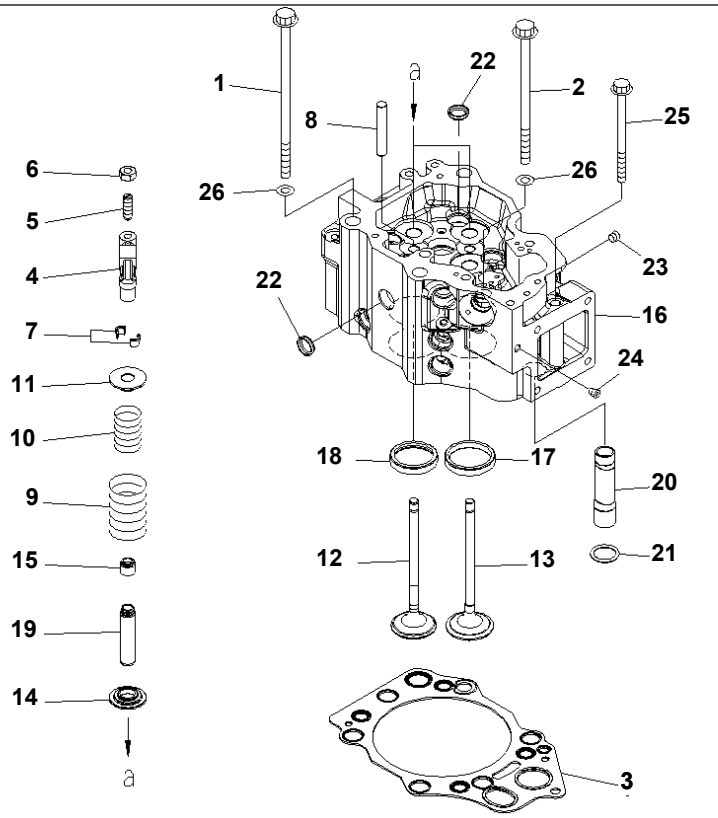

Ref. A1010-A4D2 **Page 030010**

SAA6D140E-5GR-W S/N 630001-UP
CYLINDER HEAD

Item	Part No.	Part Name	Qty	Serial No.
1	6217-11-1610	BOLT,HEAD	18	630001-
2	6217-11-1620	BOLT,HEAD	18	630001-
3	6210-17-1814	GASKET,HEAD	6	630001-
	6210-11-1820	· GROMMET,OIL	1	630001-
	6210-11-1831	· GROMMET,OIL	1	630001-
	6210-11-1840	· GROMMET,OIL	1	630001-
	6210-11-1962	· GROMMET,WATER	1	630001-
	6210-11-1952	· GROMMET,WATER	4	630001-
	6210-11-1940	· GROMMET,WATER	4	630001-
4	6210-41-5620	CROSSHEAD	12	630001-
5	6210-41-5641	SCREW	12	630001-
6	6162-43-5630	NUT,LOCK	12	630001-
7	6136-41-4520	COTTER,VALVE	48	630001-
8	6210-11-1140	GUIDE,CROSSHEAD	12	630001-
9	6210-41-4430	SPRING,OUTER	24	630001-
10	6210-41-4440	SPRING,INNER	24	630001-
11	6210-41-4510	SEAT,UPPER	24	630001-
12	6215-41-4212	VALVE,EXHAUST	12	630027-
	6215-41-4220	VALVE,EXHAUST	12	630001-630026
13	6217-41-4110	VALVE,INTAKE	12	630001-
14	6217-41-4531	SEAT,LOWER	24	630001-
15	6217-41-4540	SEAL,SEAL	24	630001-
	6261-11-1100	CYLINDER HEAD ASS'Y	6	630001-
16	☆	· HEAD,CYLINDER	1	630001-
17	6216-11-1330	· INSERT,INTAKE VALVE (STD)	2	630001-
	6216-19-1330	· INSERT¤ 0.25MM,INTAKE VALVE (OS)	2	630001-
	6216-18-1330	· INSERT¤ 0.50MM,INTAKE VALVE (OS)	2	630001-
	6216-17-1330	· INSERT¤ 0.75MM,INTAKE VALVE (OS)	2	630001-
	6216-16-1330	· INSERT¤ 1.00MM,INTAKE VALVE (OS)	2	630001-
18	6217-11-1321	· INSERT,EXHAUST VALVE (STD)	2	630001-

Printed By : Dwi Iswanto (airafather6107170)

CYLINDER HEAD

Item	Part No.	Part Name	Qty	Serial No.
	6217-19-1321	· INSERT¤ 0.25MM,EXHAUST VALVE (OS)	2	630001-
	6217-18-1321	· INSERT¤ 0.50MM,EXHAUST VALVE (OS)	2	630001-
	6217-17-1321	· INSERT¤ 0.75MM,EXHAUST VALVE (OS)	2	630001-
	6217-16-1321	· INSERT¤ 1.00MM,EXHAUST VALVE (OS)	2	630001-
19	6217-16-1441	· GUIDE,VALVE	4	630001-
20	6210-11-1150	· PIPE	1	630001-
21	07000-73025	· O-RING	1	630001-
22	6162-13-1150	· PLUG,EXPANSION	13	630001-
23	07043-50108	· PLUG	1	630001-
24	708-21-12541	· PLUG	2	630001-
25	01438-01020	BOLT	6	630001-
26	01643-51645	WASHER	36	630001-

Printed By : Dwi Iswanto (airafather6107170)

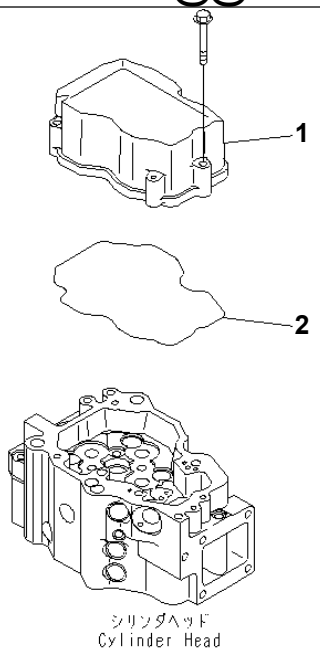

PY6B635

Ref. A1110-A4A4 **Page 030020**

SAA6D140E-5GR-W S/N 630001-UP
CYLINDER HEAD COVER

Item	Part No.	Part Name	Qty	Serial No.
1	6217-11-8110	COVER,CYLINDER HEAD	6	630001-
2	6217-11-8830	GASKET	6	630001-

Printed By : Dwi Iswanto (airafather6107170)

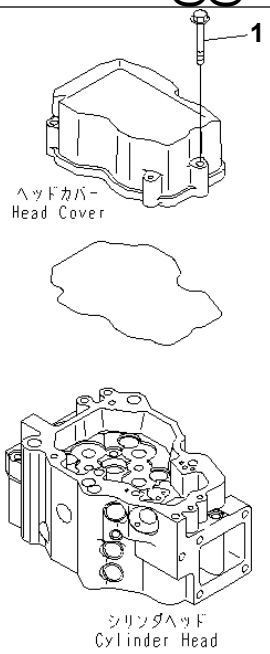

PY6B636

Ref. A1111-A4A1 **Page 030030**

SAA6D140E-5GR-W S/N 630001-UP
HEAD COVER MOUNTING BOLT

Item	Part No.	Part Name	Qty	Serial No.
1	01435-00855	BOLT	18	630001-

Printed By : Dwi Iswanto (airafather6107170)

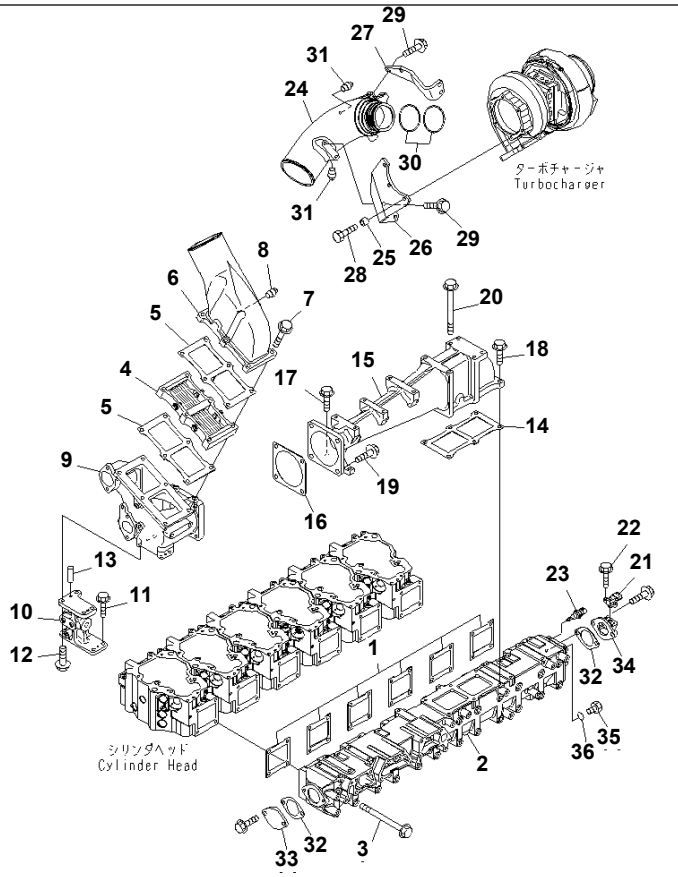

Ref. A1310-A4L7 **Page 030040**

SAA6D140E-5GR-W S/N 630001-UP

AIR INTAKE MANIFOLD AND CONNECTION(#630014-)

Item	Part No.	Part Name	Qty	Serial No.
1	6210-11-4811	GASKET	6	630014-
2	6261-11-4110	MANIFOLD,AIR INTAKE	1	630014-
3	01436-01070	BOLT	24	630014-
4	600-815-4280	HEATER,RIBBON	1	630014-
5	6211-11-4821	GASKET	2	630014-
6	6261-11-4310	CONNECTOR	1	630014-
7	01435-01070	BOLT	5	630014-
8	07042-A0108	PLUG	1	630014-
9	6261-11-7210	HOUSING,JUNCTION	1	630014-
10	6261-11-7220	BRACKET	1	630014-
11	01435-01025	BOLT	4	630014-
12	01435-01030	BOLT	4	630014-
13	04020-00820	PIN,DOWEL	2	630014-
14	6211-11-4821	GASKET	1	630014-
15	6261-11-7410	CONNECTOR	1	630014-
16	6261-11-7450	GASKET	1	630014-
17	01435-01030	BOLT	2	630014-
18	01435-01035	BOLT	2	630014-
19	01435-01235	BOLT	4	630014-
20	01436-01080	BOLT	4	630014-
21	6261-81-2700	SENSOR ASS'Y,BOOST PRESSURE	1	630014-
	6261-81-2710	· SENSOR	1	630011-
	6261-81-2720	· O-RING	1	630014-
22	01435-00616	BOLT	2	630014-
23	6560-61-7300	SENSOR ASS'Y,INTAKE AIR TEMPERATURE	1	630014-
	6560-61-7310	· SENSOR	1	630014-
	6735-21-1930	· O-RING	1	630014-
24	6261-11-4420	CONNECTOR	1	630014-
25	6631-11-5630	SPACER	3	630014-
26	6261-11-4551	BRACKET	1	630014-

Printed By : Dwi Iswanto (airafather6107170)

AIR INTAKE MANIFOLD AND CONNECTION(#630014-)

Item	Part No.	Part Name	Qty	Serial No.
27	6261-11-4460	BRACKET	1	630014-
28	01020-11040	BOLT	3	630014-
29	01435-01030	BOLT	6	630014-
30	02895-77075	O-RING	2	630014-
31	07042-A0108	PLUG	2	630014-
32	6212-61-6662	GASKET	2	630014-
33	6215-61-6670	PLATE	1	630014-
34	6261-11-4160	BLOCK	1	630014-
35	07040-11409	PLUG	1	630014-
36	07002-21423	O-RING	1	630014-

Printed By : Dwi Iswanto (airafather6107170)

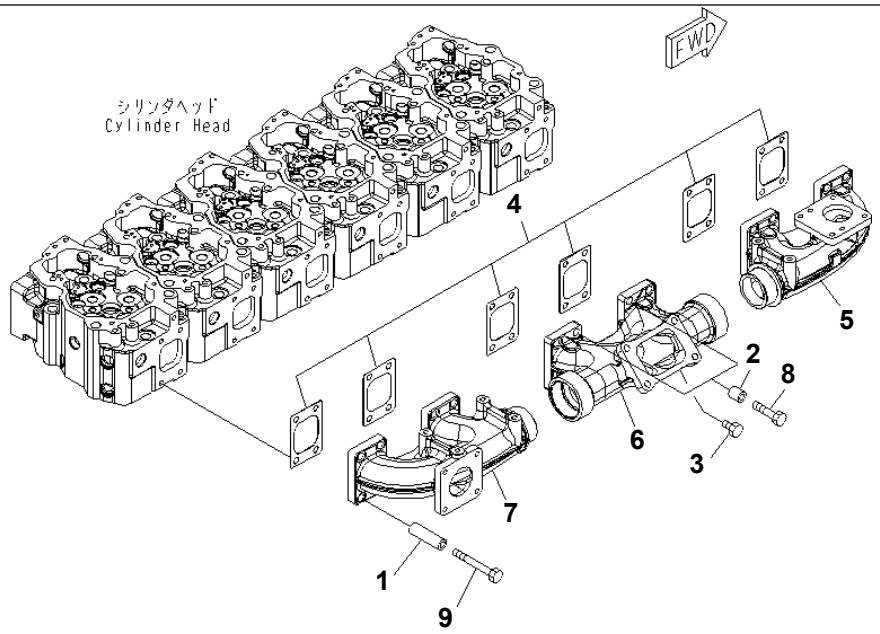

00059291

Ref. A1510-A4F9 **Page 030050**

SAA6D140E-5GR-W S/N 630001-UP
EXHAUST MANIFOLD(#630003-)

Item	Part No.	Part Name	Qty	Serial No.
1	6136-11-5120	SPACER	22	630003-
2	6210-11-5820	SPACER	2	630003-
3	6215-11-5920	PLUG	1	630003-
4	6261-11-5880	GASKET	6	630003-
5	6261-11-5110	MANIFOLD,FRONT	1	630003-
6	6211-11-5152	MANIFOLD,CENTER	1	630003-
7	6261-11-5130	MANIFOLD,REAR	1	630003-
8	01010-E1055	BOLT	2	630003-
9	01011-E1000	BOLT	22	630003-

Printed By : Dwi Iswanto (airafather6107170)

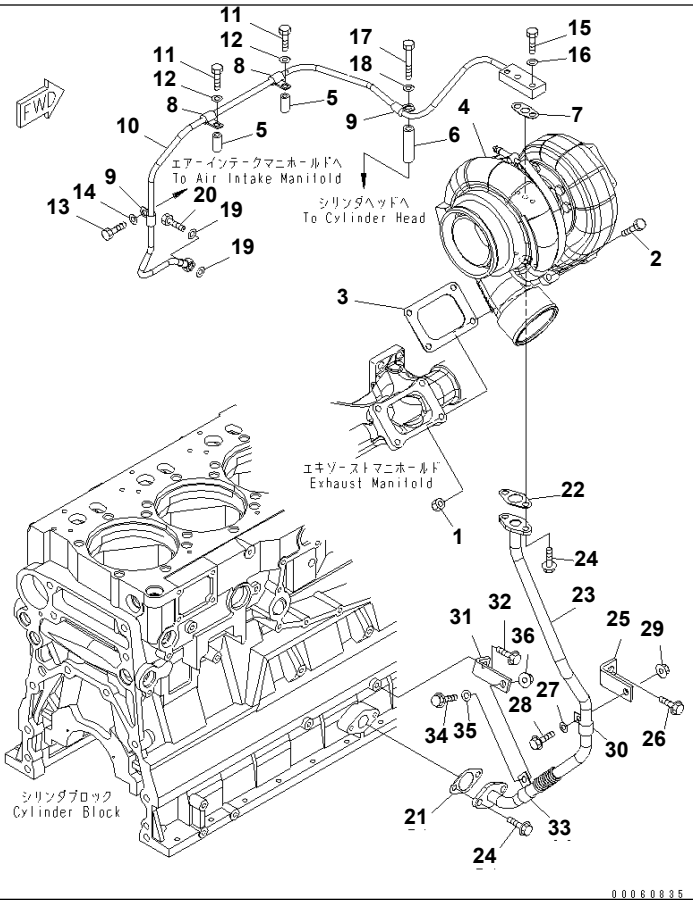

Ref. A1530-A4M2 **Page 030060**

SAA6D140E-5GR-W S/N 630001-UP
TURBOCHARGER MOUNTING AND LUBRICATOR(#630014-)

Item	Part No.	Part Name	Qty	Serial No.
1	6114-11-5590	NUT	3	630014-
2	6138-13-4510	BOLT	3	630014-
3	6261-11-5850	GASKET	1	630014-
4	(6505-68-5540)	TURBOCHARGER ASS'Y,(SEE FIG.A1530-C4M2)	1	630014-
5	207-62-32890	COLLAR	2	630014-
6	6136-11-5120	SPACER	1	630014-
7	6151-51-8161	GASKET	1	630014-
8	6215-71-4930	CLAMP	2	630014-
9	6215-71-4940	CLAMP	2	630014-
10	6261-51-8160	TUBE,SUPPLY	1	630014-
11	01010-80850	BOLT	2	630014-
12	01643-30823	WASHER	2	630014-
13	01010-81020	BOLT	1	630014-
14	01643-31032	WASHER	1	630014-
15	01010-81035	BOLT	2	630014-
16	01643-31032	WASHER	2	630014-
17	01010-81090	BOLT	1	630014-
18	01643-31032	WASHER	1	630014-
19	07005-01412	GASKET	2	630014-
20	07206-31014	BOLT,JOINT	1	630014-
21	6127-51-6822	GASKET	1	630014-
22	6151-51-8151	GASKET	1	630014-
23	6261-51-8110	TUBE,DRAIN	1	630014-
24	01435-01025	BOLT	4	630014-
25	6261-51-8280	BRACKET	1	630014-
26	01435-01225	BOLT	1	630014-
27	01643-31032	WASHER	1	630014-
28	01435-01025	BOLT	1	630014-
29	01584-01008	NUT	1	630014-
30	04434-51910	CLIP	1	630014-

Printed By : Dwi Iswanto (airafather6107170)

TURBOCHARGER MOUNTING AND LUBRICATOR(#630014-)

Item	Part No.	Part Name	Qty	Serial No.
31	6261-51-8130	BRACKET	1	630014-
32	01435-01025	BOLT	1	630014-
33	04434-51910	CLIP	1	630014-
34	01435-01025	BOLT	1	630014-
35	01643-31032	WASHER	1	630014-
36	01584-01008	NUT	1	630014-

Printed By : Dwi Iswanto (airafather6107170)

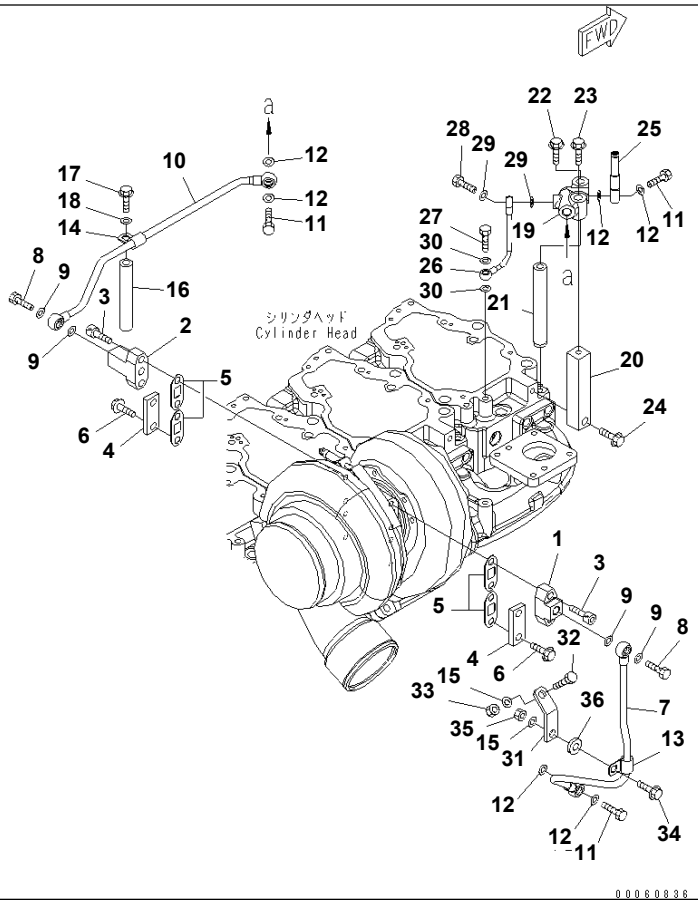

Ref. A1530-B4M2 **Page 030070**

SAA6D140E-5GR-W S/N 630001-UP
TURBOCHARGER WATER PIPING(#630014-)

Item	Part No.	Part Name	Qty	Serial No.
1	6261-61-8670	JOINT	1	630014-
2	6261-61-8680	JOINT	1	630014-
3	01252-61035	BOLT	4	630014-
4	6164-62-8230	PLATE	2	630014-
5	6164-62-8241	GASKET	4	630014-
6	01435-01025	BOLT	4	630014-
7	6261-61-8730	TUBE,INLET	1	630014-
8	07206-31014	BOLT,JOINT	2	630014-
9	07005-01412	GASKET	4	630014-
10	6261-61-8720	TUBE,RETURN	1	630014-
11	07206-31014	BOLT,JOINT	3	630014-
12	07005-01412	GASKET	6	630014-
13	6215-71-4940	CLAMP	1	630014-
14	6215-71-4940	CLAMP	1	630014-
15	01643-31032	WASHER	2	630014-
16	6151-51-5490	SPACER	1	630014-
17	01436-01040	BOLT	1	630014-
18	01643-31032	WASHER	1	630014-
19	6261-61-8740	BLOCK	1	630014-
20	6218-61-8730	BLOCK	1	630014-
21	6261-61-8750	SPACER	1	630014-
22	01436-01090	BOLT	1	630014-
23	01435-01045	BOLT	1	630014-
24	01435-01040	BOLT	1	630014-
25	6141-71-1710	JOINT	1	630014-
26	6261-11-6670	TUBE	1	630014-
27	6215-11-6560	BOLT,JOINT	1	630014-
28	07206-30710	BOLT,JOINT	1	630014-
29	07005-01012	GASKET	2	630014-
30	07003-01015	GASKET	2	630014-

Printed By : Dwi Iswanto (airafather6107170)

TURBOCHARGER WATER PIPING(#630014-)

Item	Part No.	Part Name	Qty	Serial No.
31	6261-11-9490	BRACKET	1	630014-
32	6217-11-5910	BOLT	1	630014-
33	6114-11-5590	NUT	1	630014-
34	01435-01030	BOLT	1	630014-
35	01584-01008	NUT	1	630014-
36	6110-23-6490	SPACER	1	630014-

Printed By : Dwi Iswanto (airafather6107170)

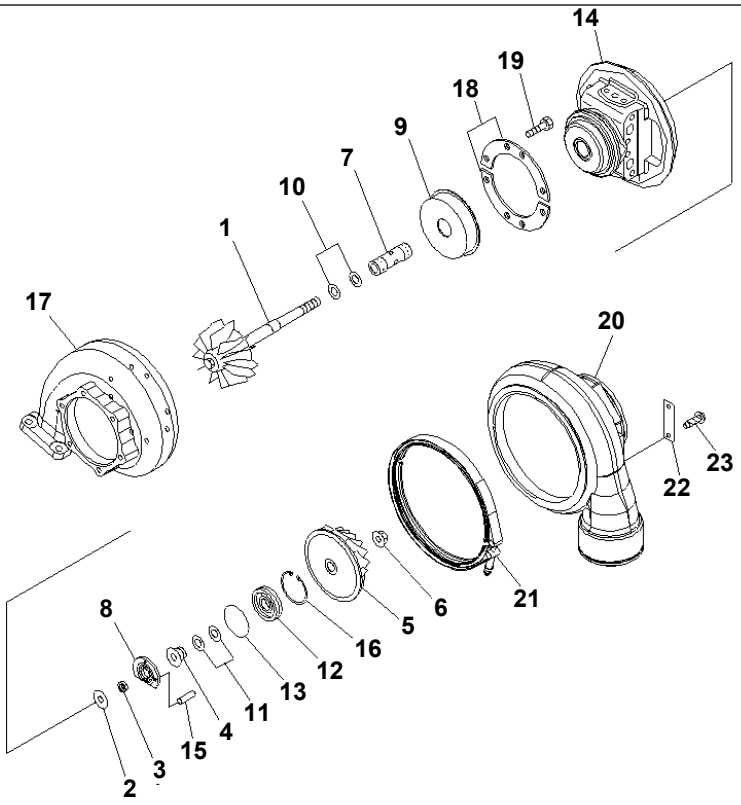

00041613

Ref. A1530-C4M2 **Page 030080**

SAA6D140E-5GR-W S/N 630001-UP

TURBOCHARGER (KTR110L-3H4EW) (INNER PARTS)(#630014-)

Item	Part No.	Part Name	Qty	Serial No.
	6505-68-5540	TURBOCHARGER ASS'Y	1	630014-
	6505-68-5910	· CORE ASS'Y	1	630014-
1	☆	· · ROTOR,TURBINE	1	630014-
2	☆	· · PLATE,THRUST	1	630014-
3	☆	· · SPACER,COLLAR	1	630014-
4	☆	· · FLINGER	1	630014-
5	☆	· · IMPELLER,BLOWER	1	630014-
6	☆	· · NUT,LOCK	1	630014-
7	☆	· · BEARING,JOURNAL	1	630014-
8	☆	· · BEARING,THRUST	1	630014-
9	☆	· · SHIELD,HEAT	1	630014-
10	☆	· · RING,SEAL	2	630014-
11	☆	· · RING,SEAL	2	630014-
12	☆	· · INSERT	1	630014-
13	☆	· · O-RING	1	630014-
14	☆	· · HOUSING,CENTER	1	630014-
15	☆	· · PIN,DOWEL	1	630014-
16	☆	· · RING,SNAP	1	630014-
17	6505-61-4470	· HOUSING,TURBINE	1	630014-
18	6505-11-0520	· PLATE,LOCK	2	630014-
19	01020-01016	· BOLT	8	630014-
20	6505-61-2030	· HOUSING,BLOWER	1	630014-
21	6505-11-0450	· V-BAND	1	630014-
22	6505-99-9011	· PLATE¤ NAME	1	630014-
23	04418-02550	· SCREW	2	630014-

Printed By : Dwi Iswanto (airafather6107170)

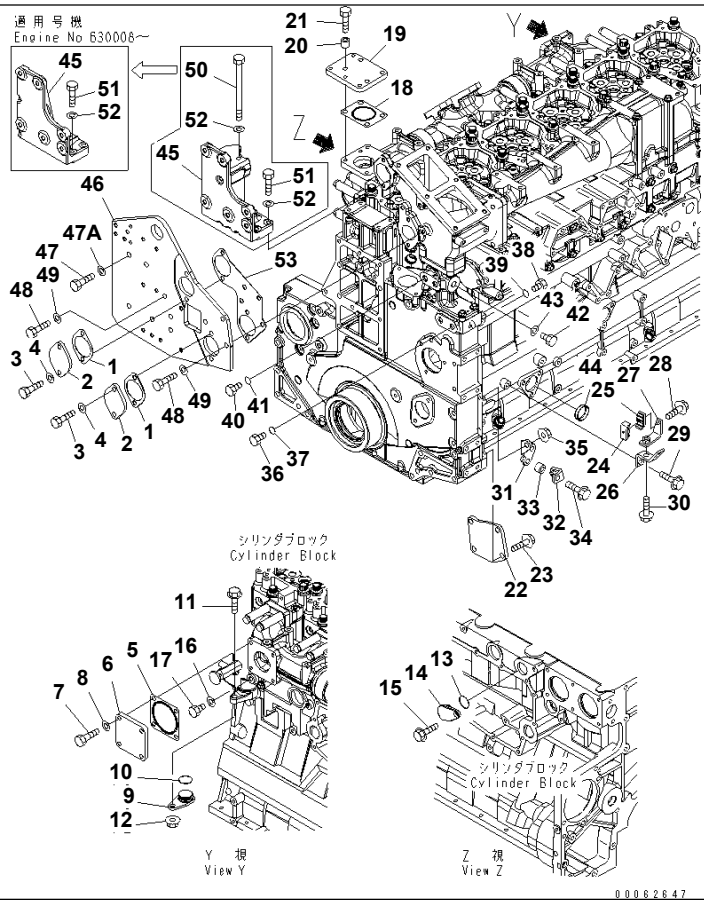

Ref. A1550-A4B1 **Page 030090**

SAA6D140E-5GR-W S/N 630001-UP
COVER FOR EGR LESS

Item	Part No.	Part Name	Qty	Serial No.
1	6166-61-6341	GASKET	2	630001-
2	6245-11-4220	PLATE	2	630001-
3	01010-81035	BOLT	4	630001-
4	01643-31032	WASHER	4	630001-
5	6138-13-4240	GASKET	1	630001-
6	6261-11-9160	PLATE	1	630001-
7	01020-11030	BOLT	4	630001-
8	01643-31032	WASHER	4	630001-
9	6261-61-7280	COVER	1	630001-
10	6261-61-7260	O-RING	1	630001-
11	01435-01035	BOLT	1	630001-
12	01584-01008	NUT	1	630001-
13	6261-61-7260	O-RING	1	630001-
14	6261-61-7280	COVER	1	630001-
15	01435-01020	BOLT	1	630001-
16	07005-01212	GASKET	1	630001-
17	07040-11209	PLUG	1	630001-
18	6261-11-9520	GASKET	1	630001-
19	6261-11-9240	PLATE	1	630001-
20	6631-11-5630	SPACER	4	630001-
21	01020-11045	BOLT	4	630001-
22	6217-21-1860	COVER	1	630001-
23	01435-01225	BOLT	4	630001-
24	6217-71-6640	CLAMP	1	630001-
25	6217-71-6650	CLAMP	1	630001-
26	6261-71-6190	BRACKET	1	630001-
27	6261-71-5430	BRACKET	1	630001-
28	01435-00630	BOLT	1	630001-
29	01435-01020	BOLT	1	630001-
30	01435-01025	BOLT	1	630001-

Printed By : Dwi Iswanto (airafather6107170)

COVER FOR EGR LESS

Item	Part No.	Part Name	Qty	Serial No.
31	6261-51-9450	BRACKET	1	630001-
32	6261-51-9460	BRACKET	1	630001-
33	195-01-14540	COLLAR	1	630001-
34	01435-01040	BOLT	1	630001-
35	01584-01008	NUT	1	630001-
36	07040-11409	PLUG	2	630001-
37	07002-21423	O-RING	2	630001-
38	07040-11812	PLUG	1	630001-
39	07002-21823	O-RING	1	630001-
40	07040-11409	PLUG	2	630001-
41	07002-21423	O-RING	2	630001-
42	07040-11612	PLUG	1	630001-
43	07005-01612	GASKET	1	630001-
44	07046-44016	PLUG	1	630001-
45	6261-61-3842	BRACKET	1	630008-
	□6261-61-3841	BRACKET	1	630001-630007
46	6261-21-3920	PLATE	1	630001-
47	01010-81235	BOLT	6	630001-
47A	01643-31232	WASHER	6	630001-
48	01010-81030	BOLT	4	630001-
49	01643-31032	WASHER	4	630001-
50	01011-81080	BOLT	2	630001-630007
51	01010-81045	BOLT	4	630008-
	01010-81045	BOLT	2	630001-630007
52	01643-31032	WASHER	4	630001-
53	6261-21-3970	GASKET	1	630001-

Printed By : Dwi Iswanto (airafather6107170)

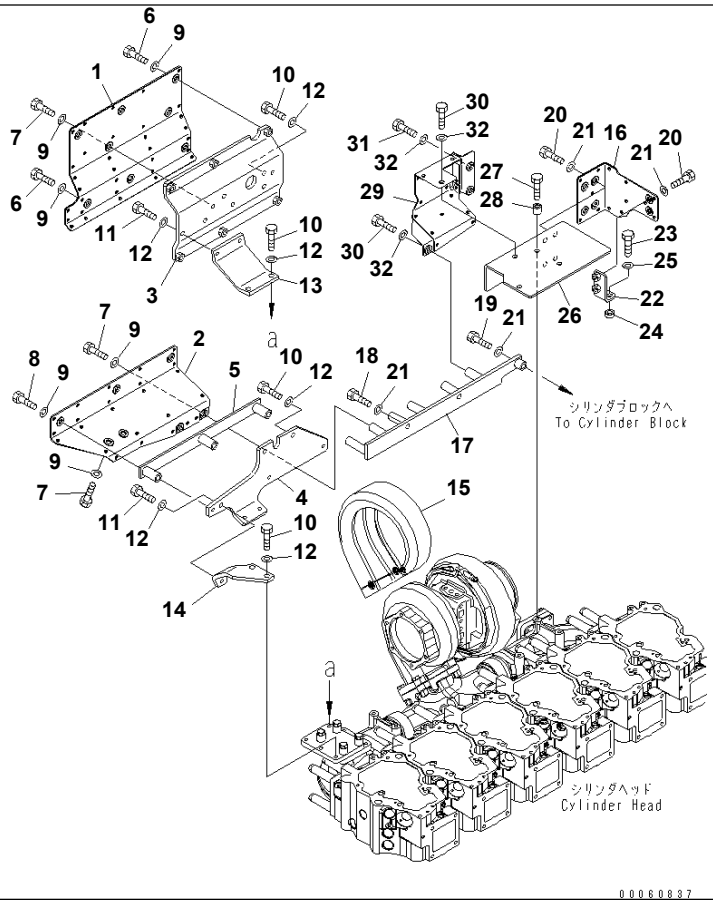

Ref. A1570-A4G3 **Page 030100**

SAA6D140E-5GR-W S/N 630001-UP
HEAT SHIELD(#630006-)

Item	Part No.	Part Name	Qty	Serial No.
1	6261-11-7690	COVER,HEAT SHIELD	1	630006-
2	6261-11-7620	COVER,HEAT SHIELD	1	630006-
3	6261-11-8120	BRACKET	1	630006-
4	6261-11-8130	BRACKET	1	630006-
5	6261-11-7920	BRACKET	1	630006-
6	01010-81030	BOLT	6	630006-
7	01010-81025	BOLT	6	630006-
8	01010-81070	BOLT	3	630006-
9	01643-31032	WASHER	15	630006-
10	01010-E1025	BOLT	10	630006-
11	01010-81025	BOLT	3	630006-
12	01643-31032	WASHER	13	630006-
13	6261-11-8140	BRACKET	1	630006-
14	6261-11-8150	BRACKET	1	630006-
15	6261-11-8430	COVER,TURBOCHARGER	1	630006-
16	6261-11-8880	COVER,HEAT SHIELD	1	630006-
17	6261-11-7680	BRACKET	1	630006-
18	01010-81025	BOLT	2	630006-
19	01010-81045	BOLT	1	630006-
20	01010-81025	BOLT	4	630006-
21	01643-31032	WASHER	7	630006-
22	6261-11-8490	BRACKET	1	630006-
23	01010-81040	BOLT	1	630006-
24	6132-21-4630	SPACER	1	630006-
25	01643-31032	WASHER	1	630006-
26	6261-11-8540	BRACKET	1	630006-
27	01010-E1040	BOLT	3	630006-
28	6631-11-5630	SPACER	3	630006-
29	6261-11-7910	COVER,HEAT SHIELD	1	630006-
30	01010-81025	BOLT	2	630006-

Printed By : Dwi Iswanto (airafather6107170)

HEAT SHIELD(#630006-)

Item	Part No.	Part Name	Qty	Serial No.
31	01010-81030	BOLT	2	630006-
32	01643-31032	WASHER	4	630006-

Printed By : Dwi Iswanto (airafather6107170)

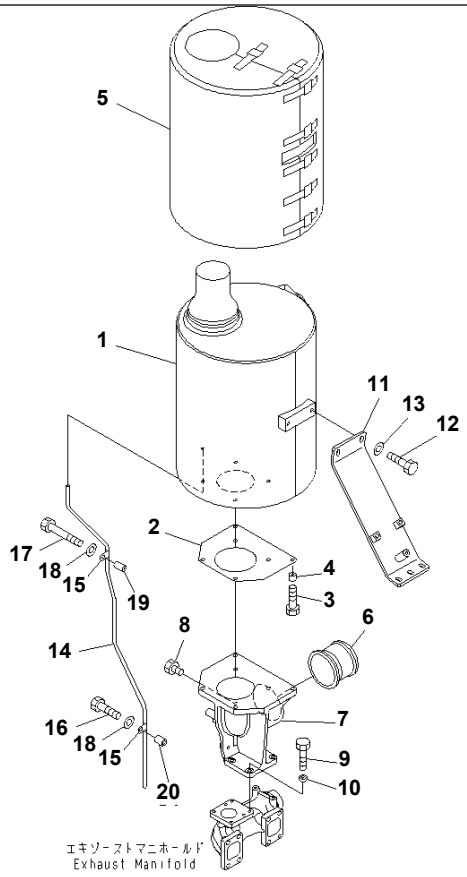

Ref. A1610-A4M3 **Page 030110**

SAA6D140E-5GR-W S/N 630001-UP
MUFFLER(#630014-)

Item	Part No.	Part Name	Qty	Serial No.
1	6261-11-5681	MUFFLER	1	630047-
	□6261-11-5680	MUFFLER	1	630014-630046
2	6261-11-5550	GASKET	1	630014-
3	01010-E1050	BOLT	6	630014-
4	6631-11-5630	SPACER	6	630014-
5	6261-11-5910	COVER,SHIELD HEAT	1	630014-
6	6261-11-5770	CONNECTOR,EXHAUST	1	630014-
7	6261-11-5540	ELBOW,EXHAUST	1	630014-
8	6215-11-5920	PLUG	1	630014-
9	01010-E1045	BOLT	4	630014-
10	6151-61-3781	SPACER	4	630014-
11	6261-11-6450	BRACKET	1	630014-
12	01010-81025	BOLT	5	630014-
13	203-54-56970	WASHER	5	630014-
14	6261-11-5640	TUBE,DRAIN	1	630014-
15	6991-11-5990	CLAMP	2	630014-
16	01010-81055	BOLT	1	630014-
17	01011-81040	BOLT	1	630014-
18	01643-31032	WASHER	2	630014-
19	6136-11-5120	SPACER	1	630014-
20	6164-11-5590	SPACER	1	630014-

Printed By : Dwi Iswanto (airafather6107170)

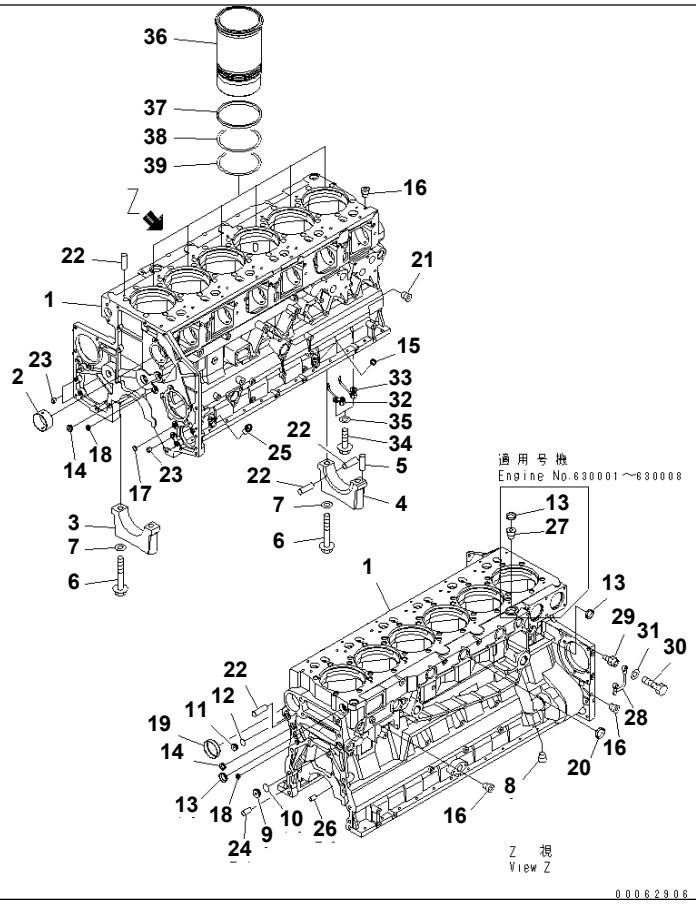

Ref. A2010-A4K5 **Page 030120**

SAA6D140E-5GR-W S/N 630001-UP
CYLINDER BLOCK

Item	Part No.	Part Name	Qty	Serial No.
	6261-21-1100	CYLINDER BLOCK ASS'Y	1	630001-
	☆	· BLOCK SUB ASS'Y	1	630001-
1	☆	· · BLOCK,CYLINDER	1	630001-
2	6210-21-1491	· · BUSHING,CAMSHAFT	7	630001-
3	☆	· · CAP,MAIN METAL¤ NO.1¤2¤3¤4¤5¤6	6	630001-
4	☆	· · CAP,MAIN METAL¤ NO.7	1	630001-
5	04020-00514	· · PIN,DOWEL	2	630001-
6	6217-21-1710	· · BOLT	14	630001-
7	01643-31845	· · WASHER	14	630001-
8	07043-01019	· PLUG	1	630001-
9	6217-21-1980	· PLUG	1	630001-
10	07000-72025	· O-RING	1	630001-
11	6217-21-1990	· PLUG	1	630001-
12	07000-72021	· O-RING	1	630001-
13	07046-43516	· PLUG	2	630009-
	07046-43516	· PLUG	3	630001-630008
14	07046-42516	· PLUG	2	630001-
15	07046-42010	· PLUG	1	630001-
16	07043-70108	· PLUG	11	630001-
17	07046-11816	· PLUG,EXPANSION	3	630001-
18	07046-41810	· PLUG	2	630001-
19	07046-47020	· PLUG	1	630001-
20	07046-44016	· PLUG	3	630001-
21	07043-70211	· PLUG	2	630001-
22	04020-00820	· PIN,DOWEL	12	630001-
23	6210-21-1910	· PIN,RING	3	630001-
24	6150-21-4770	· PIN,DOWEL	2	630001-
25	6150-21-5910	· BUSHING	1	630001-
26	6210-21-1390	· PIN	6	630001-
27	07043-00617	· PLUG	1	630001-630008

Printed By : Dwi Iswanto (airafather6107170)

CYLINDER BLOCK

Item	Part No.	Part Name	Qty	Serial No.
28	6261-21-1611	TUBE	1	630001-
29	6132-21-4620	NIPPLE	2	630001-
30	6934-72-7190	BOLT	2	630001-
31	07005-01012	GASKET	4	630001-
32	6261-21-1910	NOZZLE,PISTON COOLING¤ FRONT	6	630001-
33	6261-21-1920	NOZZLE,PISTON COOLING¤ REAR	6	630001-
34	01437-01025	BOLT	12	630001-
35	01643-51032	WASHER	12	630001-
36	6211-22-2220	LINER,CYLINDER	6	630001-
37	6210-21-2270	SEAL,CREVICE	6	630001-
38	6210-21-2240	O-RING,CENTER	6	630001-
39	6210-21-2230	O-RING,LOWER	6	630001-

Printed By : Dwi Iswanto (airafather6107170)

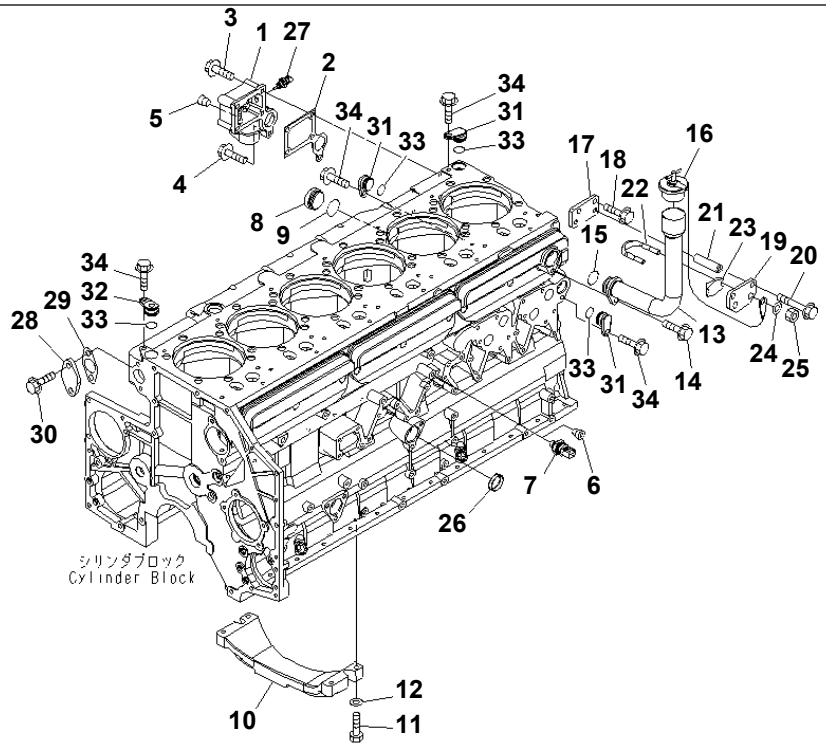

0 0 0 4 1 5 5 1

Ref. A2011-A4M8 **Page 030130**

SAA6D140E-5GR-W S/N 630001-UP
CYLINDER BLOCK ACCESSORY(#630006-)

Item	Part No.	Part Name	Qty	Serial No.
1	6261-21-1990	COVER	1	630006-
2	6261-21-1970	GASKET	1	630006-
3	01435-01065	BOLT	4	630006-
4	01435-01035	BOLT	1	630006-
5	07043-A0415	PLUG	1	630006-
6	07043-70108	PLUG	2	630006-
7	6219-81-1961	SENSOR ASS'Y,OIL PRESSURE	1	630006-
	6219-81-1991	· O-RING	1	630006-
8	6150-21-1180	PLUG	1	630006-
9	6150-21-1190	O-RING	1	630006-
10	6217-21-1220	BRACKET	1	630006-
11	01010-81050	BOLT	4	630006-
12	01643-31032	WASHER	4	630006-
13	6261-21-7130	FILLER,OIL	1	630006-
14	01435-01030	BOLT	1	630006-
15	07000-73034	O-RING	1	630006-
16	07025-00100	CAP,OIL FILLER	1	630006-
17	6261-21-7210	PLATE	1	630006-
18	01435-01025	BOLT	2	630006-
19	6261-21-7290	PLATE	1	630006-
20	01435-01090	BOLT	2	630006-
21	6221-81-6940	SPACER	2	630006-
22	07283-34354	CLIP	1	630006-
23	07283-54353	SEAT	1	630006-
24	01643-31032	WASHER	2	630006-
25	01597-01009	NUT	2	630006-
26	07046-44016	PLUG	1	630006-
27	6261-81-6901	SENSOR ASS'Y,TEMPERATURE	1	630094-
	6261-81-6900	SENSOR ASS'Y,TEMPERATURE	1	630006-630093
	6261-81-6910	· SENSOR	1	630006-630093

Printed By : Dwi Iswanto (airafather6107170)

CYLINDER BLOCK ACCESSORY(#630006-)

Item	Part No.	Part Name	Qty	Serial No.
	6261-84-9740	· O-RING	1	630006-
28	6210-21-1950	FLANGE	1	630006-
29	6696-61-9921	GASKET	1	630006-
30	01435-01225	BOLT	2	630006-
31	6217-21-1940	COVER	3	630006-
32	6218-21-1940	COVER	1	630006-
33	07000-73025	O-RING	4	630006-
34	01435-01020	BOLT	4	630006-

Printed By : Dwi Iswanto (airafather6107170)

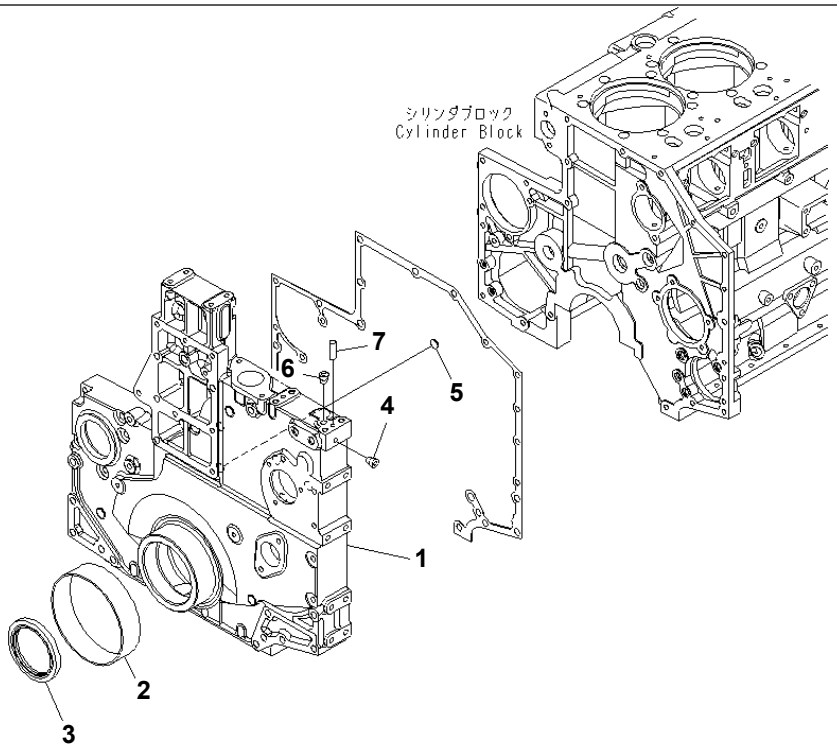

00041607

Ref. A2040-A4H5 **Page 030140**

SAA6D140E-5GR-W S/N 630001-UP
FRONT COVER (WITH SLEEVE)(#630014-)

Item	Part No.	Part Name	Qty	Serial No.
1	6261-21-3210	COVER,FRONT	1	630014-
2	6210-21-3170	SLEEVE	1	630014-
3	6711-21-3521	SEAL¤ FRONT	1	630014-
4	07043-70108	PLUG	1	630014-
5	07046-11816	PLUG,EXPANSION	6	630014-
6	07043-70211	PLUG	1	630014-
7	04020-00820	PIN,DOWEL	2	630014-

Printed By : Dwi Iswanto (airafather6107170)

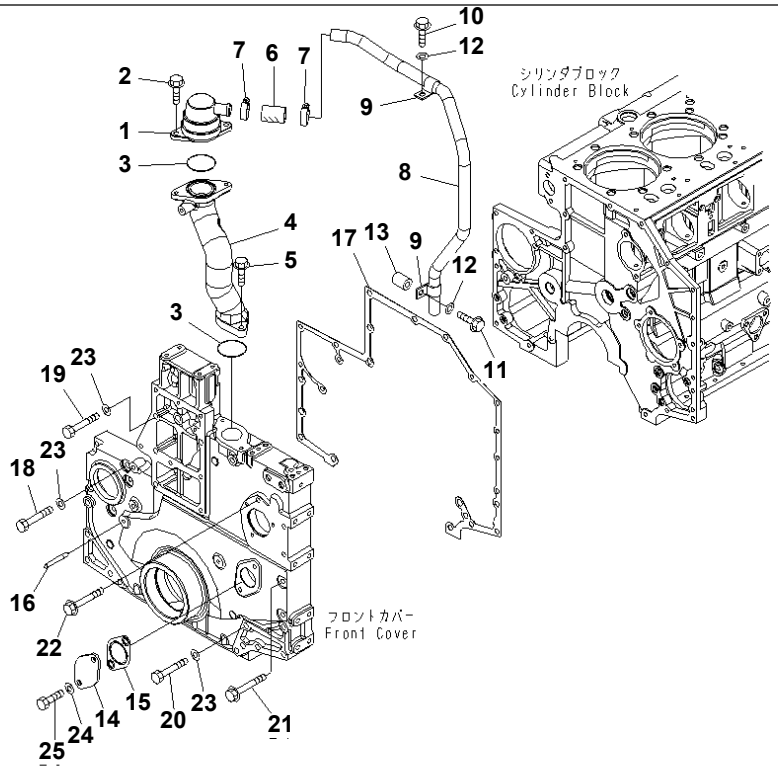

00041608

Ref. A2041-A4K9 **Page 030150**

SAA6D140E-5GR-W S/N 630001-UP
FRONT COVER ACCESSORY AND BREATHER(#630006-)

Item	Part No.	Part Name	Qty	Serial No.
1	6212-25-8710	BREATHER	1	630006-
2	01435-01025	BOLT	2	630006-
3	07000-72060	O-RING	2	630006-
4	6261-21-8610	CONNECTOR	1	630006-
5	01435-01035	BOLT	2	630006-
6	6141-64-7841	HOSE	1	630006-
7	07281-00419	CLAMP	2	630006-
8	6261-21-8850	TUBE,BLOWBY	1	630006-
9	154-04-12420	CLAMP	2	630006-
10	01435-01020	BOLT	1	630006-
11	01435-01050	BOLT	1	630006-
12	01643-31032	WASHER	2	630006-
13	6166-11-5391	SPACER	1	630006-
14	6251-21-3211	PLATE	1	630006-
15	6251-21-3231	GASKET	1	630006-
16	6210-22-3910	POINTER	1	630006-
17	6217-21-3251	GASKET	1	630006-
18	01010-81275	BOLT	1	630006-
19	01010-81290	BOLT	12	630006-
20	01011-81200	BOLT	2	630006-
21	01436-01010	BOLT	1	630006-
22	01435-01090	BOLT	3	630006-
23	01640-21223	WASHER	15	630006-
24	6251-21-3250	GASKET	2	630006-
25	01050-51225	BOLT	2	630006-

Printed By : Dwi Iswanto (airafather6107170)

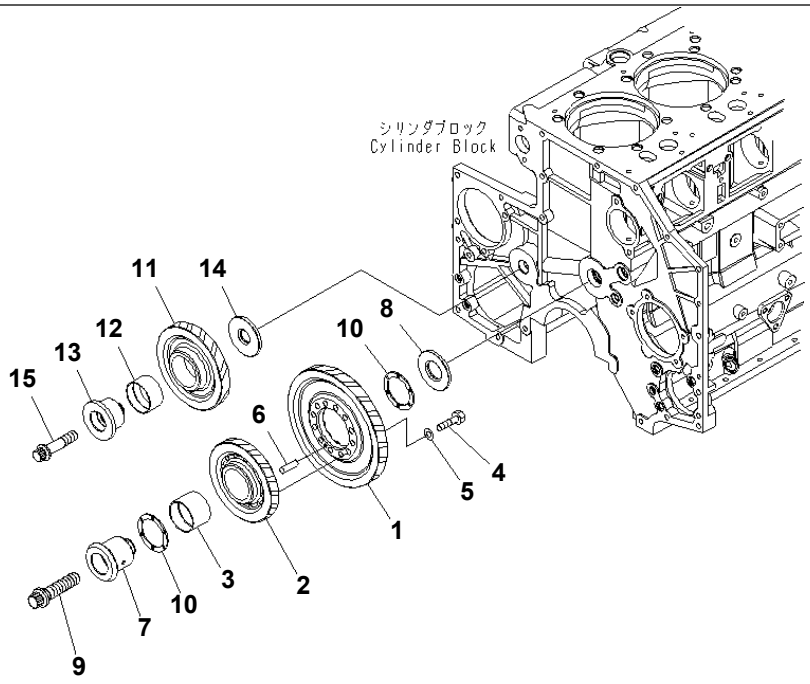

00041488

Ref. A2050-A4A9 **Page 030160**

SAA6D140E-5GR-W S/N 630001-UP
IDLER GEAR

Item	Part No.	Part Name	Qty	Serial No.
1	6212-31-6440	GEAR	1	630001-
	6212-31-6420	IDLER GEAR ASS'Y	1	630001-
2	☆	· GEAR,IDLER	1	630001-
3	6212-31-6130	· BUSHING	1	630001-
4	22X-22-12670	BOLT	12	630001-
5	6212-31-6490	WASHER	12	630001-
6	04020-00514	PIN,DOWEL	1	630001-
7	6210-22-2410	SHAFT	1	630001-
8	6210-22-2420	PLATE	1	630001-
9	6162-33-5322	BOLT	1	630001-
10	6212-31-6140	BEARING,THRUST	2	630001-
	6212-31-6100	IDLER GEAR ASS'Y	1	630001-
11	☆	· GEAR,IDLER	1	630001-
12	6212-31-6120	· BUSHING	1	630001-
13	6212-21-2511	SHAFT	1	630001-
14	6210-21-2422	PLATE,THRUST	1	630001-
15	6212-21-2450	BOLT	1	630001-

Printed By : Dwi Iswanto (airafather6107170)

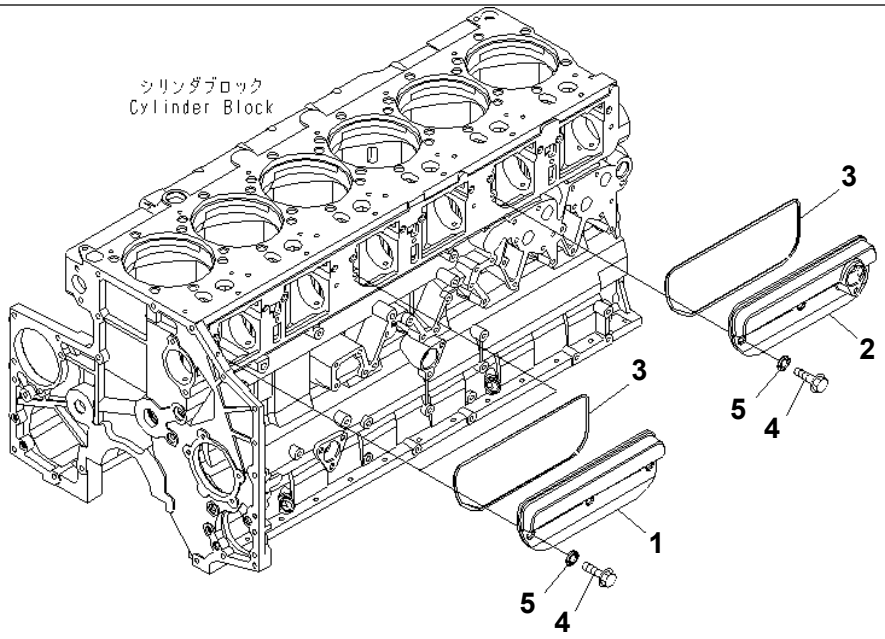

00041619

Ref. A2060-A4D2 **Page 030170**

SAA6D140E-5GR-W S/N 630001-UP
CAMFOLLOWER COVER(#630006-)

Item	Part No.	Part Name	Qty	Serial No.
1	6210-21-6410	COVER,CAMFOLLOWER	2	630006-
2	6261-21-6410	COVER,CAMFOLLOWER¤ WITH FLANGE	1	630006-
3	6217-21-6880	O-RING	3	630006-
4	6210-21-6471	BOLT	9	630006-
5	6150-21-6391	PACKING	9	630006-

Printed By : Dwi Iswanto (airafather6107170)

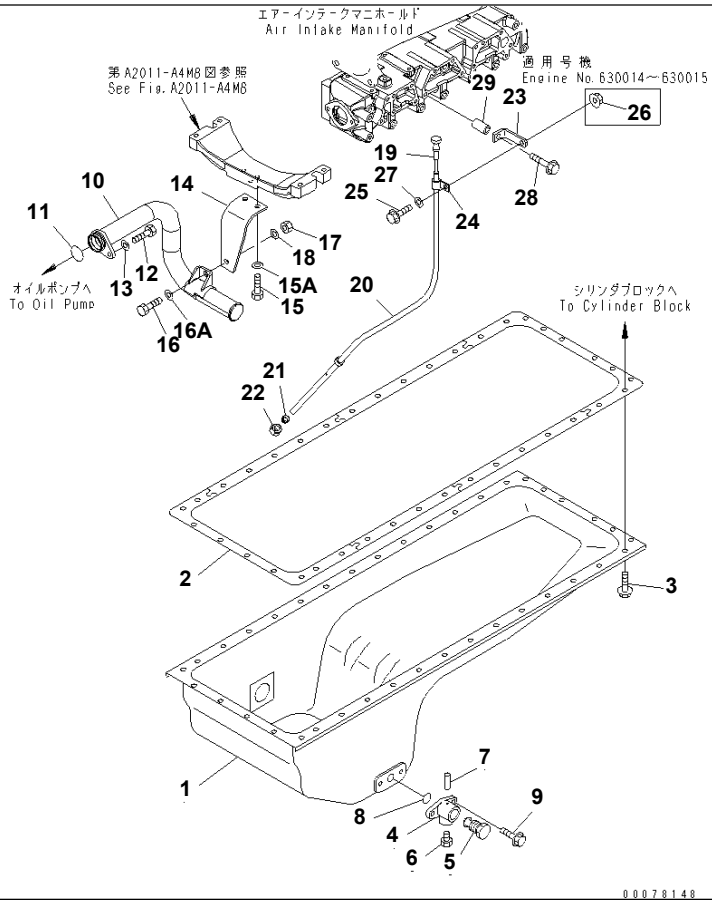

Ref. A2110-A4S3 **Page 030180**

SAA6D140E-5GR-W S/N 630001-UP

OIL PAN AND SUCTION TUBE(#630014-)

Item	Part No.	Part Name	Qty	Serial No.
1	6210-21-5290	PAN,OIL	1	630014-
2	6210-21-5820	GASKET	1	630014-
3	01435-01025	BOLT	38	630014-
	6693-22-5600	VALVE ASS'Y	1	630014-
4	☆	· BODY	1	630014-
5	☆	· VALVE	1	630014-
6	07040-02412	· PLUG	1	630014-
7	04020-00514	· PIN,DOWEL	1	630014-
8	07000-73028	O-RING	1	630014-
9	01435-01025	BOLT	2	630014-
10	6261-51-6540	STRAINER	1	630014-
11	07000-73040	O-RING	1	630014-
12	01010-81025	BOLT	1	630014-
13	01643-31032	WASHER	1	630014-
14	6261-51-6550	BRACKET	1	630014-
15	01010-81025	BOLT	2	630014-
15A	01643-31032	WASHER	2	630014-
16	01010-81030	BOLT	1	630014-
16A	01643-31032	WASHER	1	630014-
17	01580-01008	NUT	1	630014-
18	01643-31032	WASHER	1	630014-
19	6261-21-5381	GAUGE,OIL LEVEL	1	630014-
20	6261-21-5510	GUIDE,OIL GAUGE	1	630014-
21	6150-21-5920	COLLAR	1	630014-
22	6150-21-5930	NUT	1	630014-
23	6261-21-5520	BRACKET	1	630014-
24	04434-51310	CLIP	1	630014-
25	01435-01025	BOLT	1	630014-
26	01584-01008	NUT	1	630014-630015
27	01643-31032	WASHER	1	630014-

Printed By : Dwi Iswanto (airafather6107170)

OIL PAN AND SUCTION TUBE(#630014-)

Item	Part No.	Part Name	Qty	Serial No.
28	01436-01045	BOLT	1	630014-
29	6206-11-4490	SPACER	1	630014-

Printed By : Dwi Iswanto (airafather6107170)

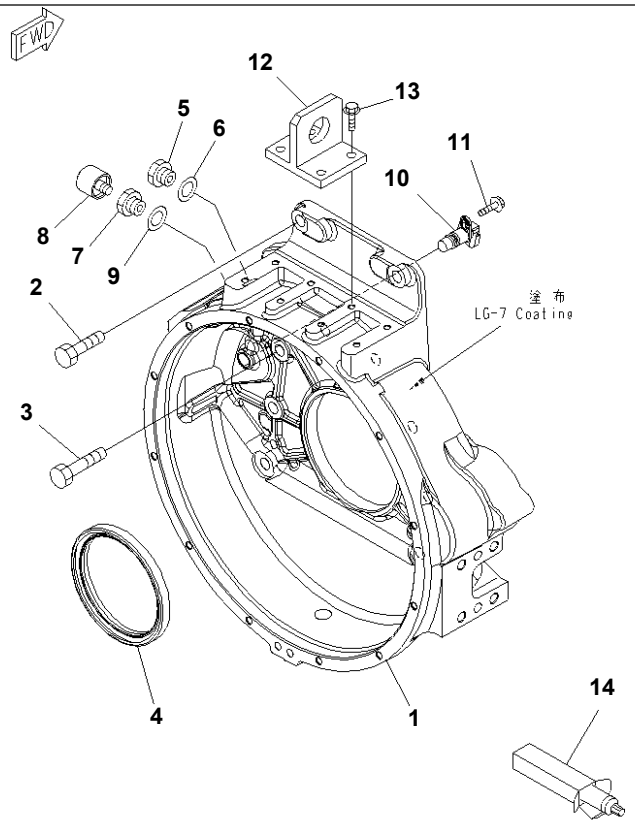

Ref. A2210-A4H5 **Page 030190**

SAA6D140E-5GR-W S/N 630001-UP
FLYWHEEL HOUSING(#630006-)

Item	Part No.	Part Name	Qty	Serial No.
1	6261-21-4740	HOUSING,FLYWHEEL	1	630006-
2	01010-61650	BOLT	8	630006-
3	01010-61665	BOLT	2	630006-
4	6151-21-4150	SEAL¤ REAR	1	630006-
5	6114-11-8910	PLUG	1	630006-
6	07005-02216	GASKET	1	630006-
7	6151-21-4960	PLUG	1	630006-
8	07030-00252	BREATHER	1	630006-
9	07005-02216	GASKET	1	630006-
10	6261-81-2901	SENSOR ASS'Y,REVOLUTION	1	630006-
	6261-81-2911	· SENSOR	1	630006-
	6271-81-9220	· O-RING	1	630006-
11	01435-00816	BOLT	1	630006-
12	6210-21-4770	HANGER,REAR	1	630006-
13	01435-01025	BOLT	4	630006-
14	09920-00150	LIQUID GASKET,LG-7¤ 150G	AR	630006-

Printed By : Dwi Iswanto (airafather6107170)

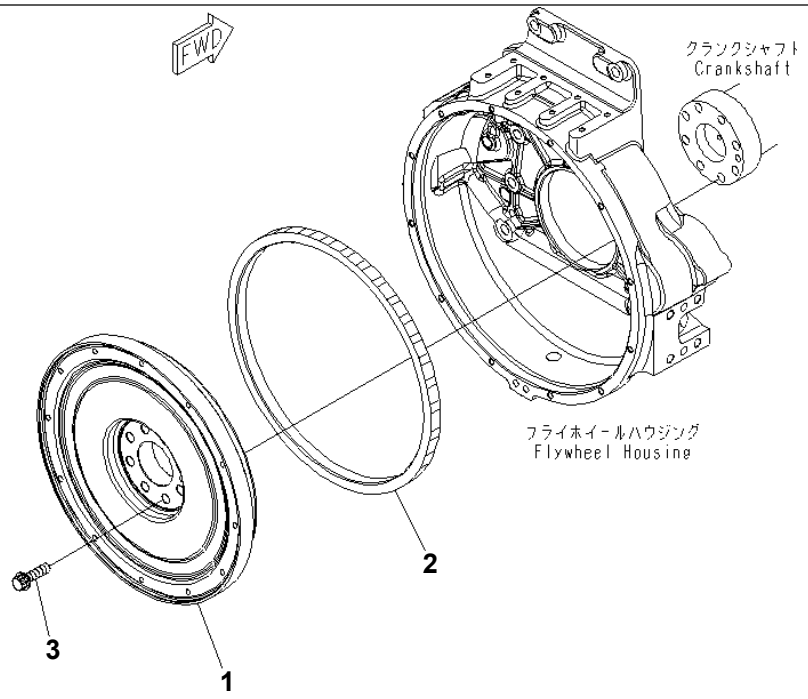

00041648

Ref. A2230-A4E1 **Page 030200**

SAA6D140E-5GR-W S/N 630001-UP
FLYWHEEL

Item	Part No.	Part Name	Qty	Serial No.
	6261-31-4100	FLYWHEEL ASS'Y	1	630001-
1	☆	· FLYWHEEL	1	630001-
2	6150-31-1351	· GEAR,RING	1	630001-
3	6210-31-1350	BOLT	8	630001-

Printed By : Dwi Iswanto (airafather6107170)

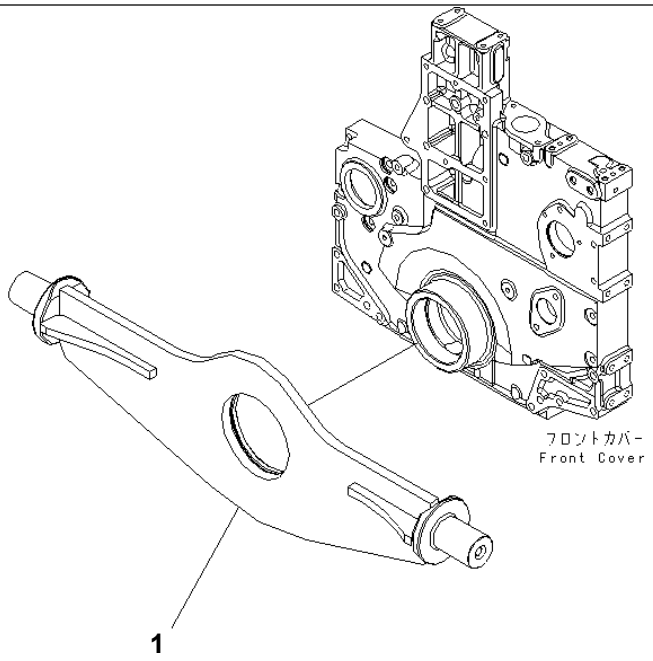

00042010

Ref. A2250-A4F7 **Page 030210**

SAA6D140E-5GR-W S/N 630001-UP
ENGINE FRONT SUPPORT(#630014-)

Item	Part No.	Part Name	Qty	Serial No.
1	17A-01-41110	SUPPORT,FRONT	1	630014-

Printed By : Dwi Iswanto (airafather6107170)

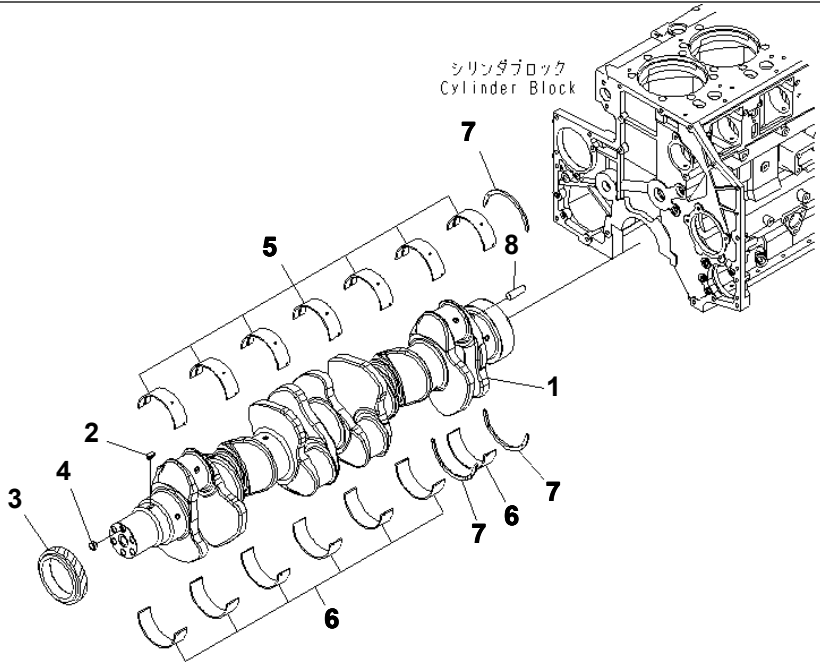

00041228

Ref. A2310-A4B4 **Page 030220**

SAA6D140E-5GR-W S/N 630001-UP
CRANKSHAFT

Item	Part No.	Part Name	Qty	Serial No.
	6261-31-1200	CRANKSHAFT ASS'Y	1	630001-
1	☆	· CRANKSHAFT	1	630001-
2	6150-31-1130	· KEY	1	630001-
3	6210-31-1120	· GEAR,CRANK	1	630001-
4	6211-31-1420	· PIN	1	630001-
		STANDARD		
	6210-21-8000	METAL ASS'Y	1	630001-
	6210-21-8010	· MAIN METAL ASS'Y	7	630001-
5	☆	· · METAL,UPPER	1	630001-
6	☆	· · METAL,LOWER	1	630001-
7	6210-21-8050	· THRUST METAL ASS'Y	1	630001-
	☆	· · METAL,THRUST	3	630001-
		UNDERSIZE 0.25MM		
	6210-29-8010	MAIN METAL ASS'Y	7	630001-
5	☆	· METAL,UPPER	1	630001-
6	☆	· METAL,LOWER	1	630001-
		UNDERSIZE 0.50MM		
	6210-28-8010	MAIN METAL ASS'Y	7	630001-
5	☆	· METAL,UPPER	1	630001-
6	☆	· METAL,LOWER	1	630001-
		UNDERSIZE 0.75MM		
	6210-27-8010	MAIN METAL ASS'Y	7	630001-
5	☆	· METAL,UPPER	1	630001-
6	☆	· METAL,LOWER	1	630001-
		UNDERSIZE 1.00MM		
	6210-26-8010	MAIN METAL ASS'Y	7	630001-
5	☆	· METAL,UPPER	1	630001-
6	☆	· METAL,LOWER	1	630001-
		OVERSIZE 0.25MM		
7	6210-29-8050	THRUST METAL ASS'Y	1	630001-

Printed By : Dwi Iswanto (airafather6107170)

CRANKSHAFT

Item	Part No.	Part Name	Qty	Serial No.
	☆	· METAL,THRUST OVERSIZE 0.50MM	3	630001-
7	6210-28-8050	THRUST METAL ASS'Y	1	630001-
	☆	· METAL,THRUST OVERSIZE 0.75MM	3	630001-
7	6210-27-8050	THRUST METAL ASS'Y	1	630001-
	☆	· METAL,THRUST OVERSIZE 1.00MM	3	630001-
7	6210-26-8050	THRUST METAL ASS'Y	1	630001-
	☆	· METAL,THRUST	3	630001-
8	04020-01228	PIN,DOWEL	1	630001-

Printed By : Dwi Iswanto (airafather6107170)

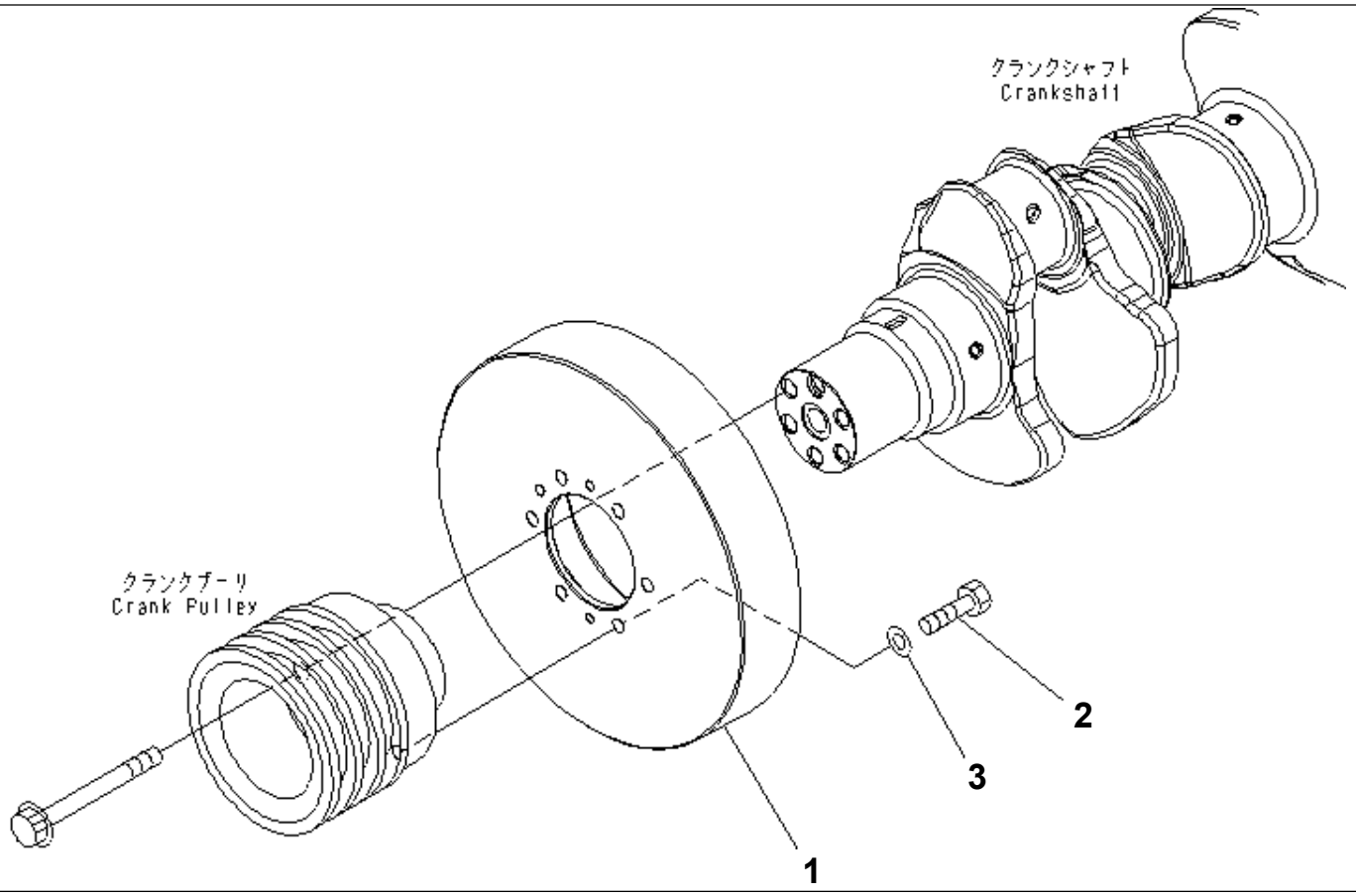

Ref. A2330-A4B7 **Page 030230**

SAA6D140E-5GR-W S/N 630001-UP
VIBRATION DAMPER(#630006-)

Item	Part No.	Part Name	Qty	Serial No.
1	6261-31-8300	DAMPER ASS'Y,VIBRATION	1	630006-
2	01010-81230	BOLT	6	630006-
3	01643-31232	WASHER	6	630006-

Printed By : Dwi Iswanto (airafather6107170)

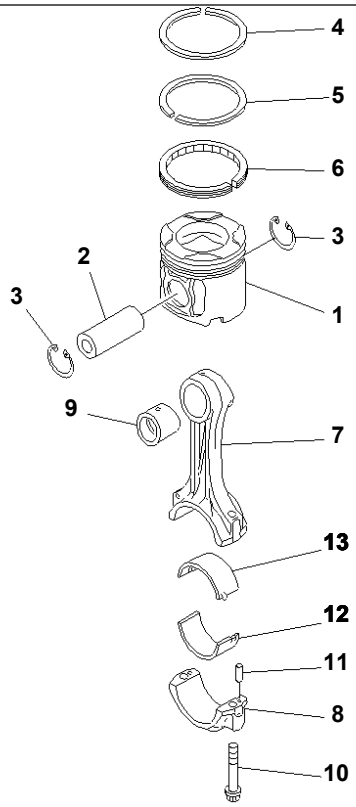

00041249

Ref. A2350-A4C9 **Page 030240**

SAA6D140E-5GR-W S/N 630001-UP
PISTON AND CONNECTING ROD

Item	Part No.	Part Name	Qty	Serial No.
1	6261-31-2130	PISTON	6	630001-
2	6211-31-2410	PIN,PISTON	6	630001-
3	04065-05220	RING,SNAP	12	630001-
	6261-31-2030	PISTON RING ASS'Y,PER CYLINDER	6	630001-
4	☆	· RING,TOP	1	630001-
5	☆	· RING,SECOND	1	630001-
6	☆	· RING,OIL	1	630001-
	6261-31-3100	CONNECTING ROD	6	630001-
7	☆	· ROD,CONNECTING	1	630001-
8	☆	· CAP,CONNECTING ROD	1	630001-
9	6261-31-3140	· BUSHING	1	630001-
10	6210-31-3310	· BOLT	2	630001-
11	02400-10413	· PIN,DOWEL	2	630001-
		STANDARD		
	6210-32-3040	METAL ASS'Y	6	630001-
12	☆	· METAL,LOWER	1	630001-
13	☆	· METAL,UPPER	1	630001-
		UNDERSIZE 0.25MM		
	6210-39-3040	METAL ASS'Y	6	630001-
12	☆	· METAL,LOWER	1	630001-
13	☆	· METAL,UPPER	1	630001-
		UNDERSIZE 0.50MM		
	6210-38-3040	METAL ASS'Y	6	630001-
12	☆	· METAL,LOWER	1	630001-
13	☆	· METAL,UPPER	1	630001-
		UNDERSIZE 0.75MM		
	6210-37-3040	METAL ASS'Y	6	630001-
12	☆	· METAL,LOWER	1	630001-
13	☆	· METAL,UPPER	1	630001-
		UNDERSIZE 1.00MM		

Printed By : Dwi Iswanto (airafather6107170)

PISTON AND CONNECTING ROD

Item	Part No.	Part Name	Qty	Serial No.
	6210-36-3040	METAL ASS'Y	6	630001-
12	☆	· METAL,LOWER	1	630001-
13	☆	· METAL,UPPER	1	630001-

Printed By : Dwi Iswanto (airafather6107170)

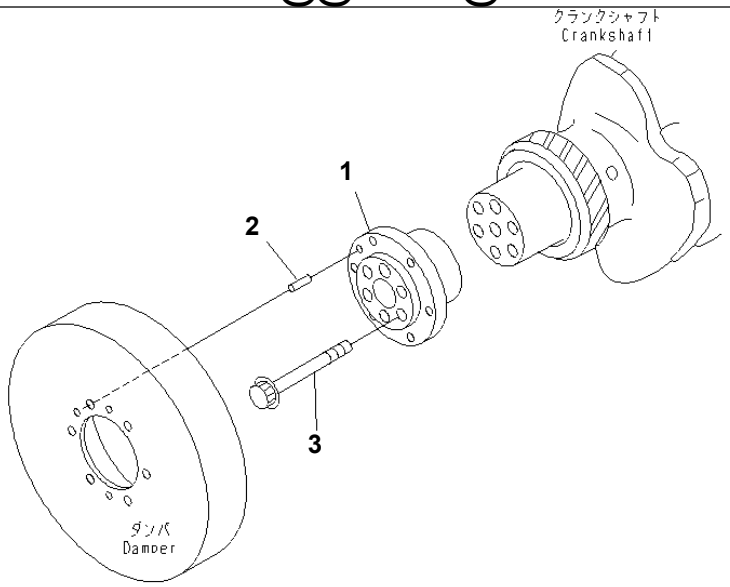

PJ6D822

Ref. A2370-A4F8 **Page 030250**

SAA6D140E-5GR-W S/N 630001-UP
DAMPER FLANGE

Item	Part No.	Part Name	Qty	Serial No.
1	6218-31-1530	FLANGE	1	630001-
2	04020-01024	PIN,DOWEL	1	630001-
3	6164-21-2490	BOLT	6	630001-

Printed By : Dwi Iswanto (airafather6107170)

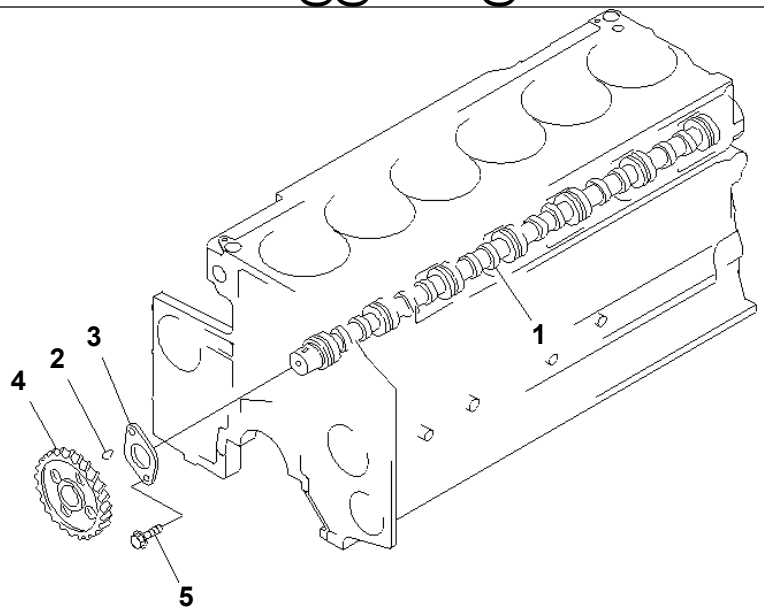

PV6B671

Ref. A2410-A4A5 **Page 030260**

SAA6D140E-5GR-W S/N 630001-UP
CAMSHAFT

Item	Part No.	Part Name	Qty	Serial No.
	6210-41-1012	CAMSHAFT ASS'Y	1	630001-
1	☆	· CAMSHAFT	1	630001-
2	04010-00725	· KEY	1	630001-
3	6210-41-1131	· PLATE,THRUST	1	630001-
4	6210-41-1120	· GEAR,CAMSHAFT	1	630001-
5	01437-01220	BOLT	2	630001-

Printed By : Dwi Iswanto (airafather6107170)

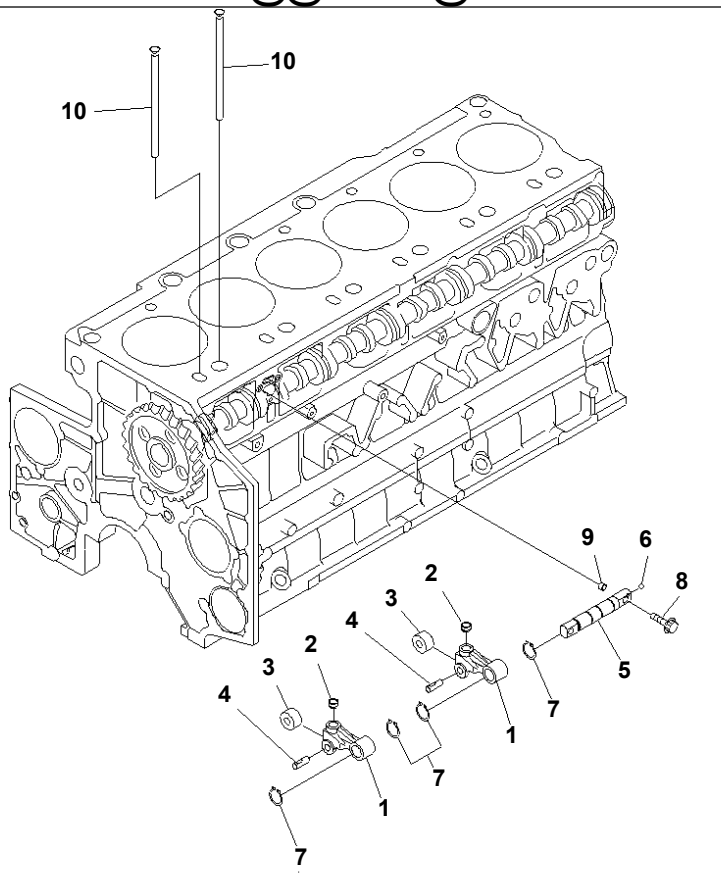

Ref. A2411-A4B3 **Page 030270**

SAA6D140E-5GR-W S/N 630001-UP

CAMFOLLOWER AND PUSH ROD

Item	Part No.	Part Name	Qty	Serial No.
	6210-41-2320	LEVER ASS'Y	12	630001-
1	☆	· LEVER,ROD	1	630001-
2	☆	· SOCKET	1	630001-
3	☆	· ROLLER,CAM	1	630001-
4	☆	· PIN	1	630001-
	6210-41-2400	SHAFT ASS'Y	6	630001-
5	☆	· SHAFT	1	630001-
6	6150-81-8420	· BALL	1	630001-
7	04064-02212	RING,SNAP	24	630001-
8	6210-41-2450	BOLT	12	630001-
9	6150-41-2430	PIN	12	630001-
10	6210-41-3120	ROD,PUSH	12	630001-

Printed By : Dwi Iswanto (airafather6107170)

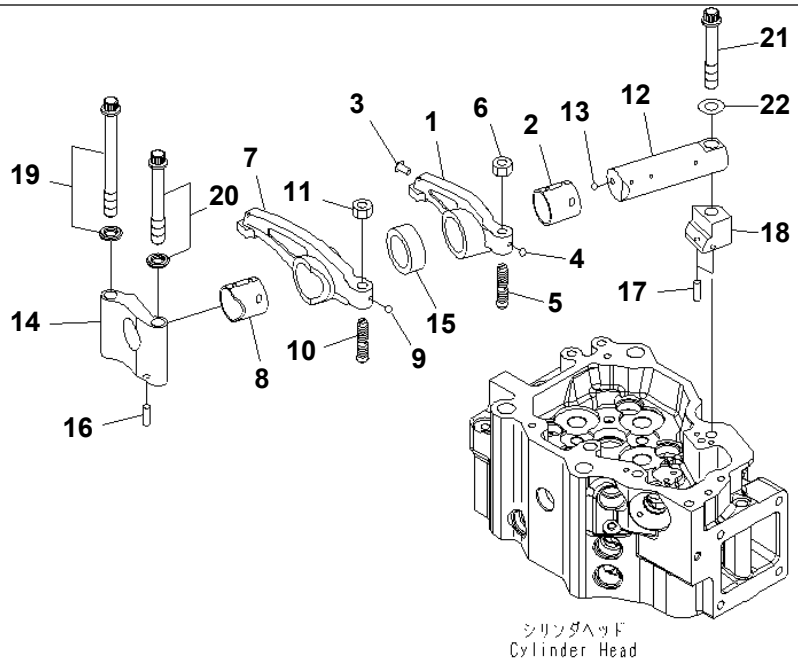

00041636

Ref. A2411-B4B3 **Page 030280**

SAA6D140E-5GR-W S/N 630001-UP
ROCKER ARM

Item	Part No.	Part Name	Qty	Serial No.
	6261-41-5040	ROCKER ARM ASS'Y,INTAKE	6	630001-
	6261-41-5400	· ARM ASS'Y	1	630001-
1	☆	· · ARM,ROCKER	1	630001-
2	6261-41-5420	· · BUSHING	1	630001-
3	6162-43-5340	· · RIVET	1	630001-
4	04260-00317	· · BALL,STEEL	1	630001-
5	6217-41-5550	· SCREW	1	630001-
6	01582-01008	· NUT	1	630001-
	6261-41-5050	ROCKER ARM ASS'Y,EXHAUST	6	630001-
	6261-41-5500	· ARM ASS'Y	1	630001-
7	☆	· · ARM,ROCKER	1	630001-
8	6261-41-5520	· · BUSHING	1	630001-
9	04260-00317	· · BALL,STEEL	1	630001-
10	6217-41-5550	· SCREW	1	630001-
11	01582-01008	· NUT	1	630001-
	6934-42-5300	ROCKER ARM SHAFT A.	6	630001-
12	☆	· SHAFT,ARM	1	630001-
13	04260-00635	· BALL	1	630001-
14	6261-41-5530	BRACKET	6	630001-
15	6210-41-5440	COLLAR	6	630001-
16	04020-00514	PIN,DOWEL	6	630001-
17	04020-00514	PIN,DOWEL	12	630001-
18	6217-41-5540	SPACER	6	630001-
19	6217-41-5570	BOLT	6	630001-
20	6217-41-5560	BOLT	6	630001-
21	6217-81-8311	BOLT	6	630001-
22	01643-51232	WASHER	6	630001-

Printed By : Dwi Iswanto (airafather6107170)

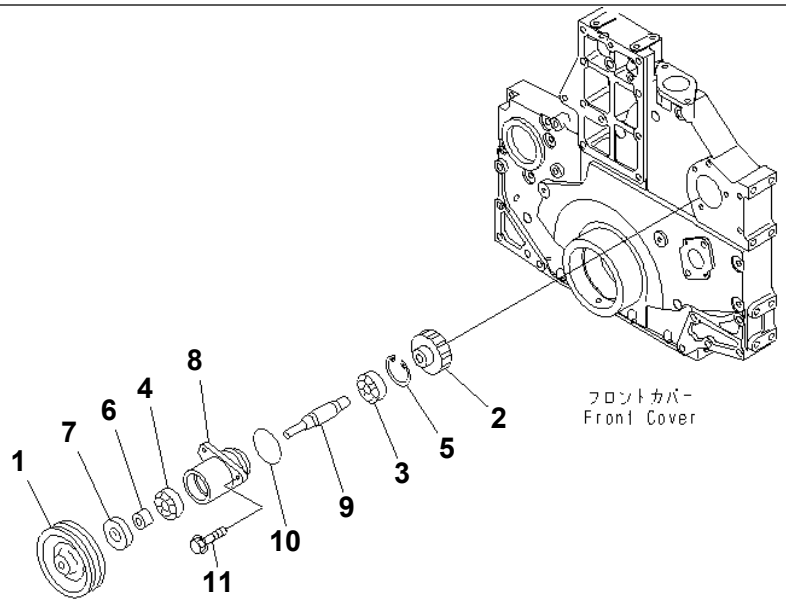

00050696

Ref. A2610-A4C8 **Page 030290**

SAA6D140E-5GR-W S/N 630001-UP

FRONT POWER TAKE OFF (HARDENING PULLEY SPEC.)

Item	Part No.	Part Name	Qty	Serial No.
	6217-21-3601	POWER TAKE OFF ASS'Y	1	630001-
1	6218-21-3870	· PULLEY¤ HARDENING	1	630001-
2	6217-21-3540	· GEAR	1	630001-
3	06340-06204	· BEARING,BALL	1	630001-
4	06340-06304	· BEARING,BALL	1	630001-
5	04065-04718	· RING,SNAP	1	630001-
6	6218-21-3831	· SPACER	1	630001-
7	07012-C0032	· SEAL,OIL	1	630001-
8	6218-21-3811	· HOUSING	1	630001-
9	6218-21-3820	· SHAFT	1	630001-
10	07000-02060	O-RING	1	630001-
11	01435-01030	BOLT	3	630001-

Printed By : Dwi Iswanto (airafather6107170)

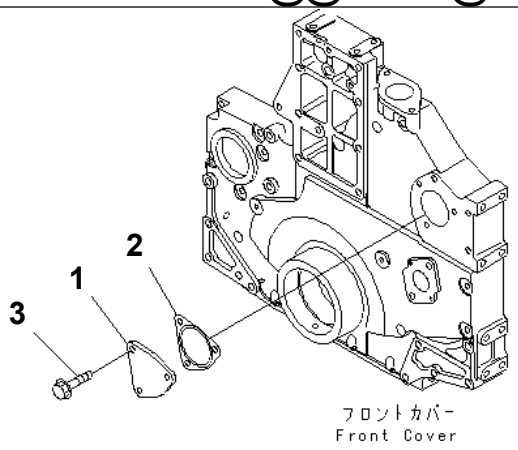

PJ6D284

Ref. A2610-A4D3 **Page 030300**

SAA6D140E-5GR-W S/N 630001-UP

FRONT POWER TAKE OFF (NON DRIVE SPEC.)(#630014-)

Item	Part No.	Part Name	Qty	Serial No.
1	6217-21-3440	PLATE	1	630014-
2	6217-21-3430	GASKET	1	630014-
3	01435-01020	BOLT	3	630014-

Printed By : Dwi Iswanto (airafather6107170)

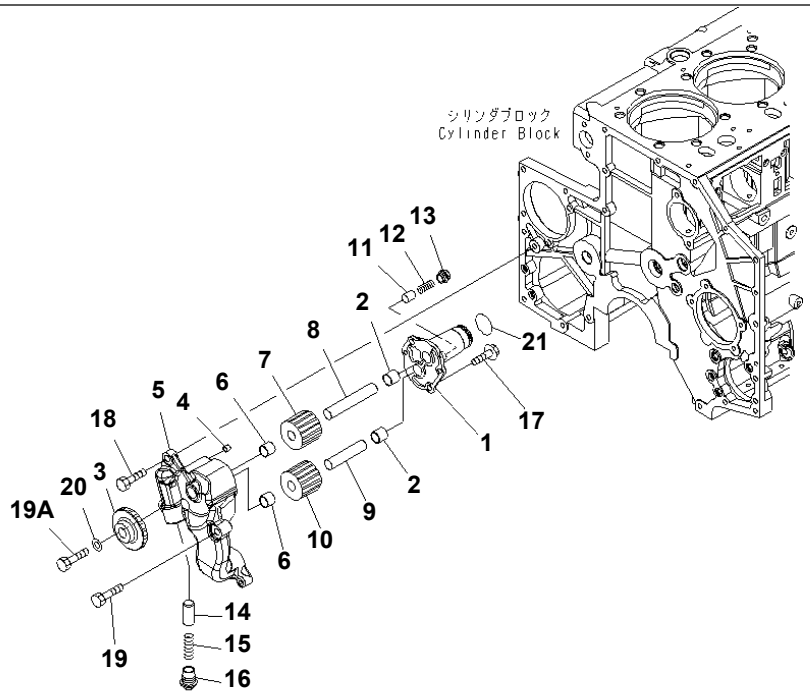

00041175

Ref. A3010-A4A8 **Page 030310**

SAA6D140E-5GR-W S/N 630001-UP
LUBRICATING OIL PUMP

Item	Part No.	Part Name	Qty	Serial No.
	6261-51-2000	OIL PUMP ASS'Y	1	630001-
	PML152-07110	· COVER ASS'Y	1	630001-
1	☆	· · COVER	1	630001-
2	PML130-03300	· · BUSHING	2	630001-
	PML160-11301	· GEAR ASS'Y,PUMP DRIVE	1	630001-
3	☆	· · GEAR,MAIN DRIVE	1	630001-
4	☆	· · PIN	2	630001-
	PML150-08501	· · COVER ASS'Y	1	630001-
5	☆	· · · BODY	1	630001-
6	PML130-03300	· · · BUSHING	2	630001-
	PML154-09200	· · SHAFT ASS'Y,DRIVE	1	630001-
7	☆	· · · GEAR,DRIVE	1	630001-
8	☆	· · · SHAFT	1	630001-
	PML156-07400	· SHAFT ASS'Y,DRIVEN	1	630001-
9	☆	· · SHAFT	1	630001-
10	☆	· · GEAR,DRIVEN	1	630001-
11	PML136-00501	· VALVE	1	630001-
12	PML137-05800	· SPRING,VALVE	1	630001-
13	PML139-01300	· PLUG	1	630001-
14	PML136-00201	· VALVE	1	630001-
15	PML137-04800	· SPRING,VALVE	1	630001-
16	PML139-01520	· PLUG	1	630001-
17	PMMF14-0229	· BOLT	4	630001-
18	01010-81235	BOLT	1	630001-
19	01010-81245	BOLT	1	630001-
19A	01010-81245	BOLT	1	630001-
20	01643-31232	WASHER	1	630001-
21	07000-73038	O-RING	1	630001-

Printed By : Dwi Iswanto (airafather6107170)

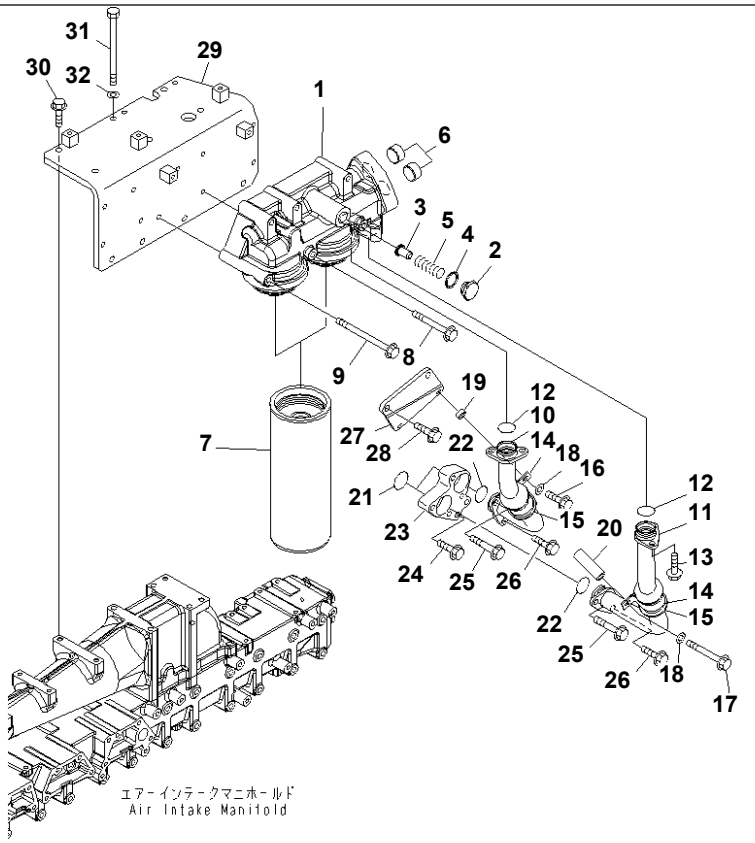

00041666

Ref. A3110-A4F9Z **Page 030320**

SAA6D140E-5GR-W S/N 630001-UP
OIL FILTER AND PIPING(#630014-630014)

Item	Part No.	Part Name	Qty	Serial No.
	6261-51-6600	HEAD ASS'Y,OIL FILTER	1	630014-630014
1	6261-51-6610	· HEAD	1	630014-630014
2	6217-51-5660	· CAP	1	630014-630014
3	6162-55-5230	· VALVE	1	630014-630014
4	6162-53-5430	· PACKING	1	630014-630014
5	600-211-1890	· SPRING	1	630014-630014
6	6261-51-6620	· PLUG	2	630014-630014
7	600-211-1340	CARTRIDGE,OIL	2	630014-630014
8	01435-01095	BOLT	3	630014-630014
9	01436-01040	BOLT	3	630014-630014
10	6261-51-6120	TUBE,INLET	1	630014-630014
11	6261-51-6130	TUBE,OUTLET	1	630014-630014
12	07000-73034	O-RING	2	630014-630014
13	01435-01025	BOLT	4	630014-630014
14	6165-61-6770	CLIP	2	630014-630014
15	6261-51-5751	CUSHION	2	630014-630014
16	01435-01025	BOLT	1	630014-630014
17	01435-01085	BOLT	1	630014-630014
18	01643-31032	WASHER	2	630014-630014
19	417-823-1460	SPACER	1	630014-630014
20	6211-11-9790	SPACER	1	630014-630014
21	07000-73038	O-RING	2	630014-630014
22	07000-73034	O-RING	2	630014-630014
23	6261-51-5180	FLANGE	1	630014-630014
24	01435-01045	BOLT	2	630014-630014
25	01435-01050	BOLT	2	630014-630014
26	01435-01020	BOLT	2	630014-630014
27	6261-51-6140	BRACKET	1	630014-630014
28	01435-01025	BOLT	2	630014-630014
29	6261-51-5810	BRACKET	1	630014-630014

Printed By : Dwi Iswanto (airafather6107170)

OIL FILTER AND PIPING(#630014-630014)

Item	Part No.	Part Name	Qty	Serial No.
30	01435-01025	BOLT	8	630014-630014
31	01011-81095	BOLT	2	630014-630014
32	01643-31032	WASHER	2	630014-630014

Printed By : Dwi Iswanto (airafather6107170)

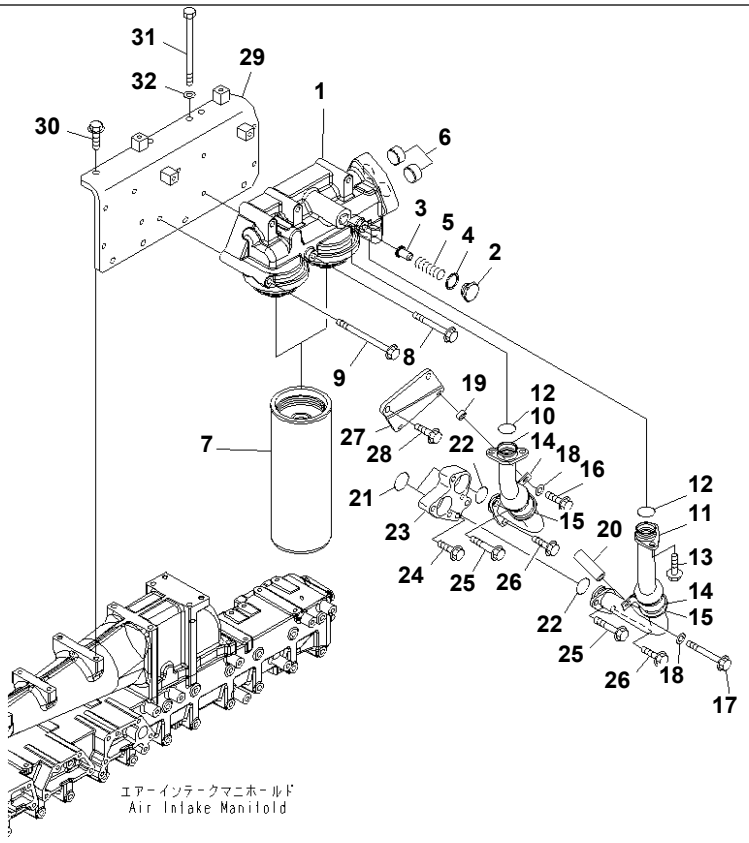

00062653

Ref. A3110-A4H2 **Page 030330**

SAA6D140E-5GR-W S/N 630001-UP
OIL FILTER AND PIPING(#630015-)

Item	Part No.	Part Name	Qty	Serial No.
	6261-51-6600	HEAD ASS'Y,OIL FILTER	1	630015-
1	6261-51-6610	· HEAD	1	630015-
2	6217-51-5660	· CAP	1	630015-
3	6162-55-5230	· VALVE	1	630015-
4	6162-53-5430	· PACKING	1	630015-
5	600-211-1890	· SPRING	1	630015-
6	6261-51-6620	· PLUG	2	630015-
7	600-211-1340	CARTRIDGE,OIL	2	630015-
8	01435-01095	BOLT	3	630015-
9	01436-01040	BOLT	3	630015-
10	6261-51-6120	TUBE,INLET	1	630015-
11	6261-51-6130	TUBE,OUTLET	1	630015-
12	07000-73034	O-RING	2	630015-
13	01435-01025	BOLT	4	630015-
14	6165-61-6770	CLIP	2	630015-
15	6261-51-5751	CUSHION	2	630015-
16	01435-01025	BOLT	1	630015-
17	01435-01085	BOLT	1	630015-
18	01643-31032	WASHER	2	630015-
19	417-823-1460	SPACER	1	630015-
20	6211-11-9790	SPACER	1	630015-
21	07000-73038	O-RING	2	630015-
22	07000-73034	O-RING	2	630015-
23	6261-51-5180	FLANGE	1	630015-
24	01435-01045	BOLT	2	630015-
25	01435-01050	BOLT	2	630015-
26	01435-01020	BOLT	2	630015-
27	6261-51-6140	BRACKET	1	630015-
28	01435-01025	BOLT	2	630015-
29	6261-51-5840	BRACKET	1	630015-

Printed By : Dwi Iswanto (airafather6107170)

OIL FILTER AND PIPING(#630015-)

Item	Part No.	Part Name	Qty	Serial No.
30	01435-01025	BOLT	6	630015-
31	01011-81095	BOLT	2	630015-
32	01643-31032	WASHER	2	630015-

Printed By : Dwi Iswanto (airafather6107170)

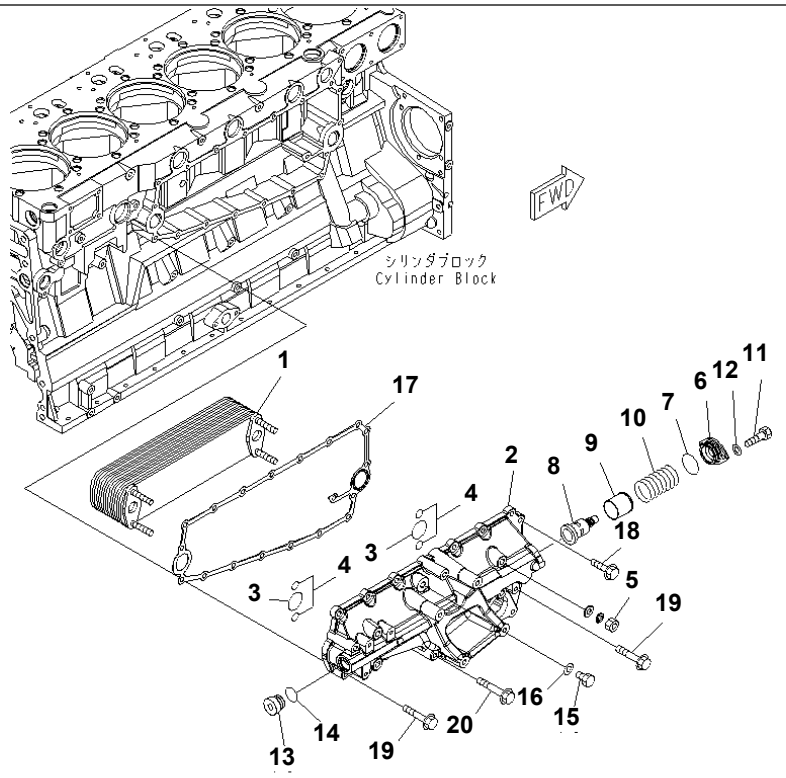

00041177

Ref. A3310-A4D7 **Page 030340**

SAA6D140E-5GR-W S/N 630001-UP
OIL COOLER

Item	Part No.	Part Name	Qty	Serial No.
1	6261-61-2110	ELEMENT,OIL COOLER	1	630001-
2	6261-61-2120	COVER	1	630001-
3	6210-61-2520	O-RING	2	630001-
4	07000-A2016	O-RING	4	630001-
5	6215-61-2580	NUT	4	630001-
6	6210-61-2130	COVER	1	630001-
7	07000-73042	O-RING	1	630001-
8	6261-61-2610	THERMOSTAT	1	630001-
9	6218-61-2620	COLLAR	1	630001-
10	6210-61-2160	SPRING	1	630001-
11	01010-80820	BOLT	2	630001-
12	01640-20816	WASHER	2	630001-
13	07040-13016	PLUG	1	630001-
14	6210-61-2550	O-RING	1	630001-
15	07040-11409	PLUG	1	630001-
16	07005-01412	GASKET	1	630001-
17	6210-61-2811	GASKET	1	630001-
18	01435-01030	BOLT	10	630001-
19	01435-01060	BOLT	3	630001-
20	01435-01090	BOLT	3	630001-

Printed By : Dwi Iswanto (airafather6107170)

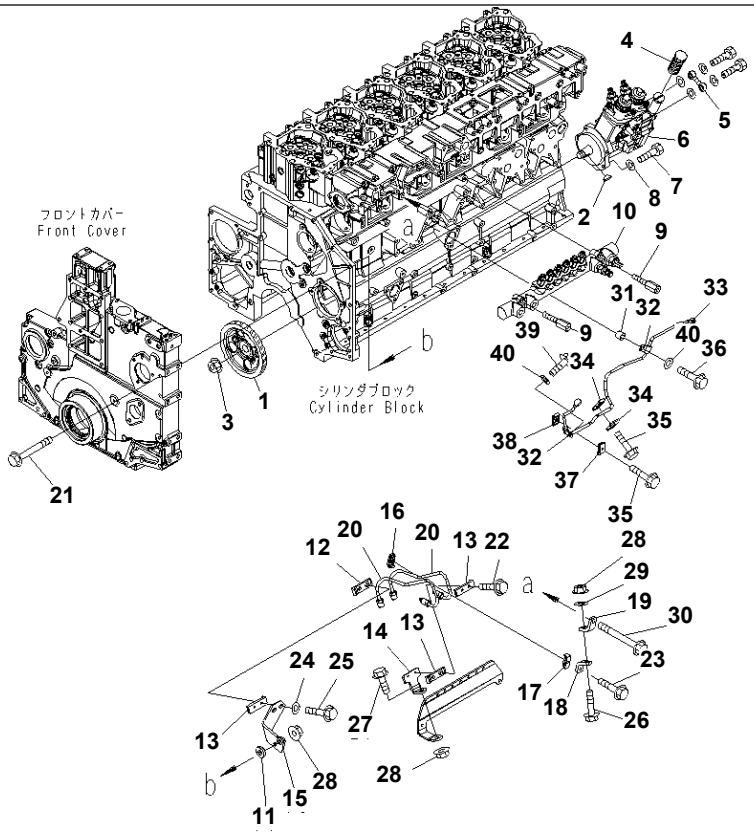

Ref. A4010-A4R4 **Page 030350**

SAA6D140E-5GR-W S/N 630001-UP

FUEL SUPPLY PUMP AND COMMON RAIL MOUNTING

Item	Part No.	Part Name	Qty	Serial No.
1	6261-71-3220	GEAR,PUMP DRIVE	1	630001-
2	04010-00519	KEY,WOODRUFF	1	630001-
3	6219-71-3150	NUT	1	630001-
4	6217-71-1910	COVER,PRIMING PUMP	1	630001-
5	6217-71-5910	TUBE	1	630001-
6	6261-71-1110	SUPPLY PUMP ASS'Y	1	630001-
7	01010-81035	BOLT	4	630001-
8	01643-31032	WASHER	4	630001-
9	6217-71-5251	BOLT	2	630001-
10	(6261-71-1220)	COMMON RAIL ASS'Y,(SEE FIG.A4010-B4R4)	1	630001-
11	6110-23-6490	SPACER	1	630001-
12	6217-71-5170	CLAMP	1	630001-
13	6217-71-5210	CLAMP	3	630001-
14	6217-71-5281	BRACKET	1	630001-
15	6261-71-5910	BRACKET	1	630001-
16	6217-71-6640	CLAMP	1	630001-
17	6217-71-6650	CLAMP	1	630001-
18	6261-71-5670	BRACKET	1	630001-
19	6261-71-5690	BRACKET	1	630001-
20	6261-71-4111	TUBE,SUPPLY	2	630074-
	6261-71-4110	TUBE,SUPPLY	2	630001-630073
21	01436-01010	BOLT	1	630001-
22	01435-00630	BOLT	2	630001-
23	01435-00635	BOLT	1	630001-
24	01643-30823	WASHER	2	630001-
25	01435-00640	BOLT	2	630001-
26	01435-01035	BOLT	1	630001-
27	01435-01025	BOLT	1	630001-
28	01584-01008	NUT	3	630001-
29	01643-31032	WASHER	1	630001-

Printed By : Dwi Iswanto (airafather6107170)

FUEL SUPPLY PUMP AND COMMON RAIL MOUNTING

Item	Part No.	Part Name	Qty	Serial No.
30	01436-01080	BOLT	1	630001-
31	175-79-83760	SPACER	1	630001-
32	6210-51-8320	CLIP	2	630001-
33	6261-71-5411	TUBE,OVER FLOW	1	630001-
34	6162-75-5680	CLAMP	2	630001-
35	01435-00630	BOLT	3	630001-
36	01435-01040	BOLT	1	630001-
37	6217-71-6650	CLAMP	1	630001-
38	6217-71-6640	CLAMP	1	630001-
39	01435-01020	BOLT	1	630001-
40	01643-31032	WASHER	2	630001-

Printed By : Dwi Iswanto (airafather6107170)

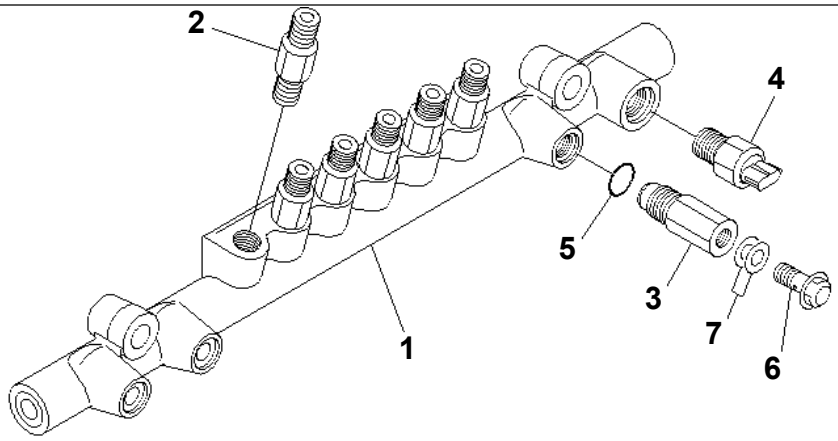

00053657

Ref. A4010-B4R4 **Page 030360**

SAA6D140E-5GR-W S/N 630001-UP
COMMON RAIL (INNER PARTS)

Item	Part No.	Part Name	Qty	Serial No.
1	6261-71-1220	COMMON RAIL ASS'Y,COMMON	1	630001-
2	ND095400-0310	· LIMITER ASS'Y,FUEL FLOW	6	630001-
3	ND095420-0440	· LIMITER ASS'Y,FUEL PRESSURE	1	630001-
4	ND499000-6160	· SENSOR ASS'Y,FUEL PRESSURE	1	630001-
5	ND095444-0020	· PICCO RING	1	630001-
6	ND095438-0090	· BOLT,JOINT	1	630001-
7	ND949010-2530	· GASKET	2	630001-

Printed By : Dwi Iswanto (airafather6107170)

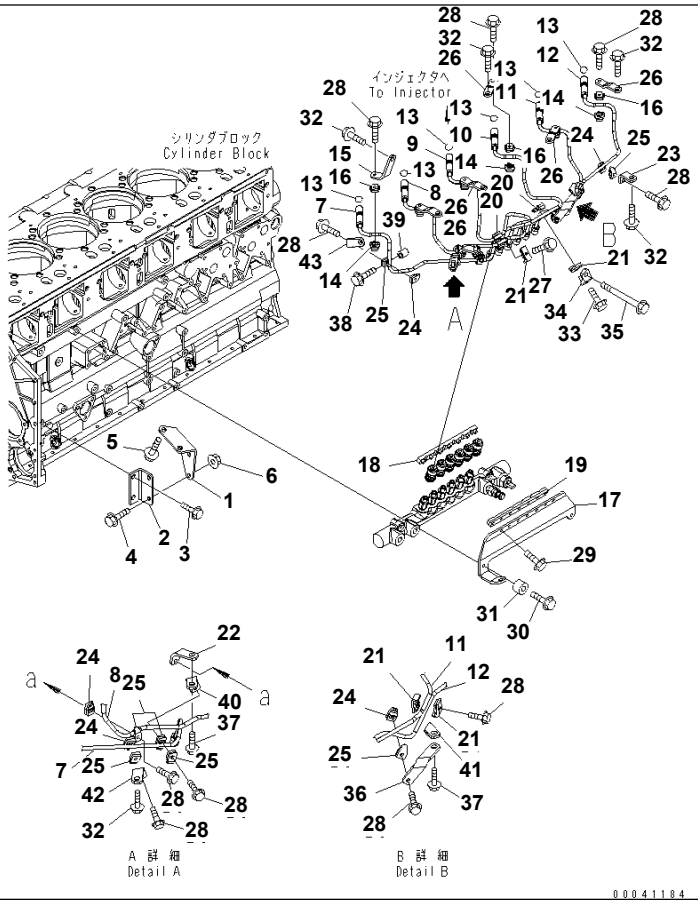

Ref. A4030-A4C1 **Page 030370**

SAA6D140E-5GR-W S/N 630001-UP
FUEL SUPPLY PUMP BRACKET AND PIPING

Item	Part No.	Part Name	Qty	Serial No.
1	6217-21-6110	BRACKET	1	630001-
2	6217-21-6120	BRACKET	1	630001-
3	01435-01020	BOLT	2	630001-
4	01435-01025	BOLT	2	630001-
5	01435-01220	BOLT	2	630001-
6	01584-01008	NUT	2	630001-
7	6261-71-5111	TUBE,INJECTION¤ NO.1	1	630074-
	6261-71-5110	TUBE,INJECTION¤ NO.1	1	630001-630073
8	6261-71-5121	TUBE,INJECTION¤ NO.2	1	630074-
	6261-71-5120	TUBE,INJECTION¤ NO.2	1	630001-630073
9	6261-71-5131	TUBE,INJECTION¤ NO.3	1	630074-
	6261-71-5130	TUBE,INJECTION¤ NO.3	1	630001-630073
10	6261-71-5141	TUBE,INJECTION¤ NO.4	1	630074-
	6261-71-5140	TUBE,INJECTION¤ NO.4	1	630001-630073
11	6261-71-5151	TUBE,INJECTION¤ NO.5	1	630074-
	6261-71-5150	TUBE,INJECTION¤ NO.5	1	630001-630073
12	6261-71-5161	TUBE,INJECTION¤ NO.6	1	630074-
	6261-71-5160	TUBE,INJECTION¤ NO.6	1	630001-630073
13	07000-E2015	O-RING	6	630001-
14	6261-71-6660	CLAMP	6	630001-
15	6261-71-5190	BRACKET	1	630001-
16	6261-71-6670	CLAMP	6	630001-
17	6217-71-5740	BRACKET	1	630001-
18	6217-71-5260	CLAMP	1	630001-
19	6217-71-5760	CLAMP	1	630001-
20	6217-71-6640	CLAMP	2	630001-
21	6217-71-6650	CLAMP	4	630001-
22	6261-71-5610	BRACKET	1	630001-
23	6261-71-5630	BRACKET	1	630001-
24	6217-71-6660	CLAMP	5	630001-

Printed By : Dwi Iswanto (airafather6107170)

FUEL SUPPLY PUMP BRACKET AND PIPING

Item	Part No.	Part Name	Qty	Serial No.
25	6217-71-6670	CLAMP	7	630001-
26	6261-71-5650	BRACKET	5	630001-
27	01435-00625	BOLT	1	630001-
28	01435-00630	BOLT	13	630001-
29	01435-00635	BOLT	7	630001-
30	01010-80830	BOLT	2	630001-
31	198-920-1530	COLLAR	2	630001-
32	01435-01020	BOLT	8	630001-
33	01435-00650	BOLT	1	630001-
34	6261-71-5660	BRACKET	1	630001-
35	01436-01080	BOLT	1	630001-
36	6261-71-5740	BRACKET	1	630001-
37	01435-01025	BOLT	2	630001-
38	01435-01050	BOLT	1	630001-
39	6210-11-5820	SPACER	1	630001-
40	6261-71-5750	BRACKET	1	630001-
41	6261-71-5760	BRACKET	1	630001-
42	6261-71-5720	BRACKET	1	630001-
43	6261-71-5710	BRACKET	1	630001-

Printed By : Dwi Iswanto (airafather6107170)

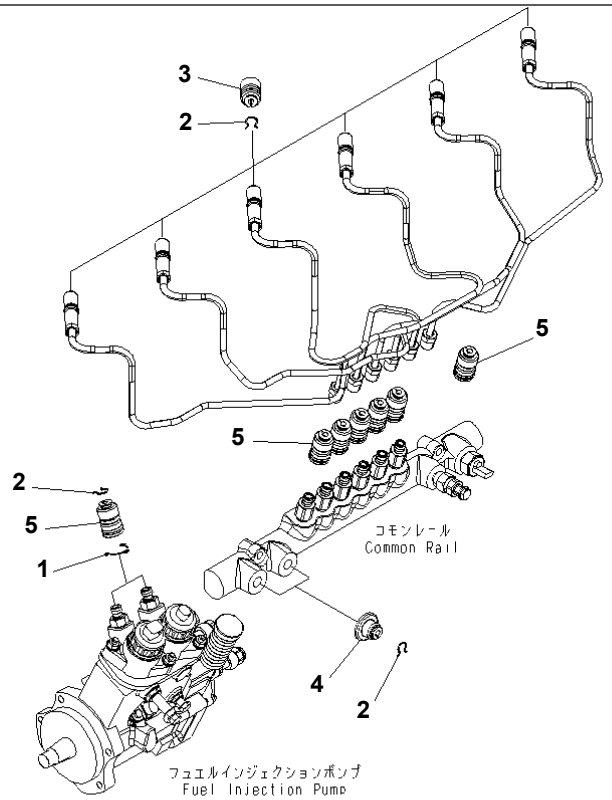

00041185

Ref. A4030-B4C1 **Page 030380**

SAA6D140E-5GR-W S/N 630001-UP
FUEL SUPPLY TUBE JOINT SUPPORT

Item	Part No.	Part Name	Qty	Serial No.
1	6156-71-9730	CLIP	2	630001-
2	6217-71-5770	CLAMP	10	630001-
3	6217-71-9770	CAP	6	630001-
4	6217-71-9780	CAP	2	630001-
5	6217-71-9791	COVER	8	630001-

Printed By : Dwi Iswanto (airafather6107170)

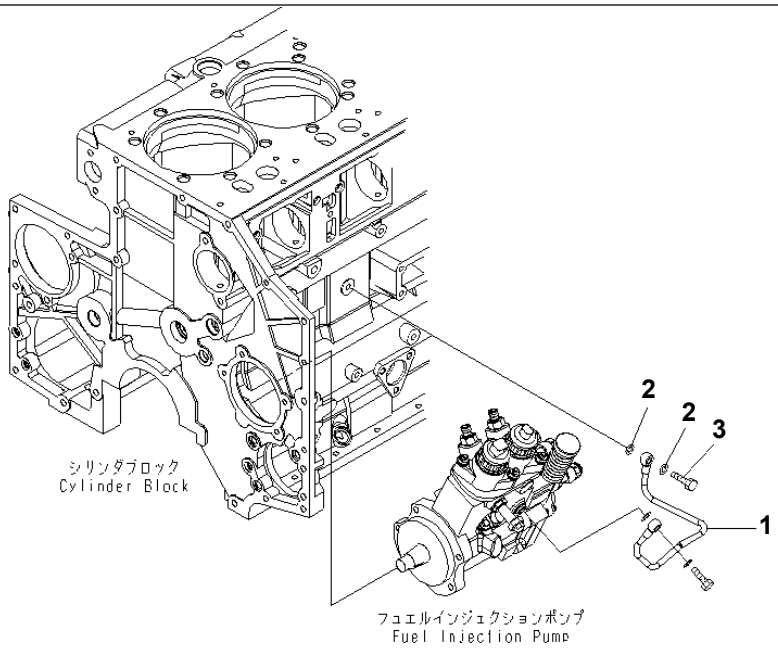

00060638

Ref. A4060-A4C4 **Page 030390**

SAA6D140E-5GR-W S/N 630001-UP
FUEL SUPPLY PUMP LUBRICATOR

Item	Part No.	Part Name	Qty	Serial No.
1	6261-51-7110	TUBE,SUPPLY	1	630001-
2	07005-01012	GASKET	2	630001-
3	6934-72-7190	BOLT,JOINT	1	630001-

Printed By : Dwi Iswanto (airafather6107170)

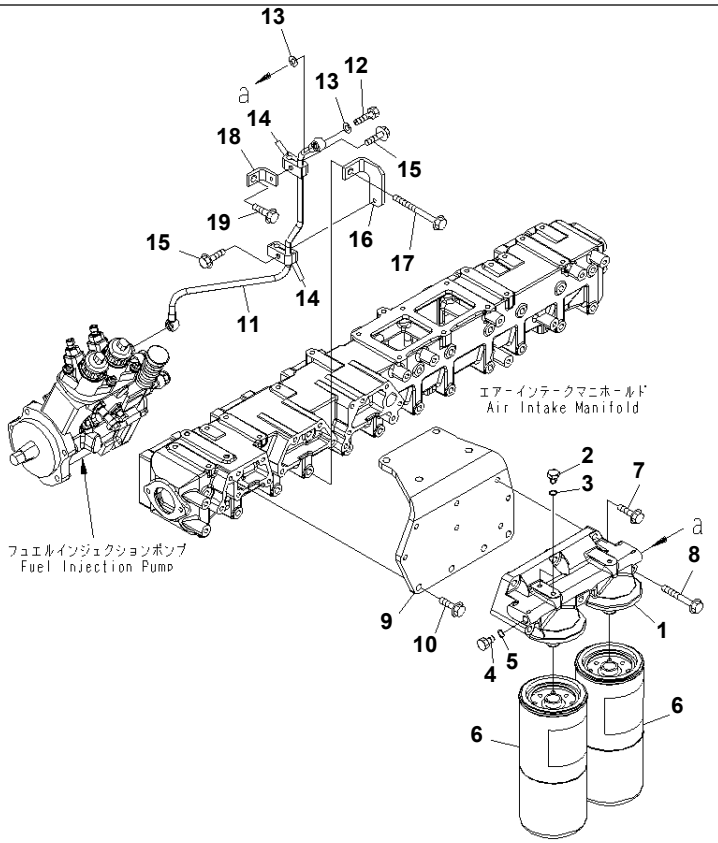

Ref. A4110-A4N1 **Page 030400**

SAA6D140E-5GR-W S/N 630001-UP
FUEL FILTER (THREAD 1-5/8)(#630006-)

Item	Part No.	Part Name	Qty	Serial No.
	6261-71-6800	HEAD ASS'Y,FUEL FILTER	1	630006-
1	6261-71-6810	· HEAD (1-5/8)	1	630006-
2	6110-73-6231	· PLUG	2	630006-
3	07005-00812	· GASKET	2	630006-
4	07040-11409	· PLUG	1	630006-
5	07005-01412	· GASKET	1	630006-
6	☆	CARTRIDGE (1-5/8),(SEE FIG.A4119-A6A4)	2	630006-
7	01435-01035	BOLT	3	630006-
8	01436-01000	BOLT	3	630006-
9	6261-71-6440	BRACKET	1	630006-
10	01435-01025	BOLT	4	630006-
11	6261-71-6451	TUBE	1	630006-
12	07206-31014	BOLT,JOINT	1	630006-
13	07005-01412	GASKET	2	630006-
14	6166-75-6820	CLAMP	4	630006-
15	01435-00830	BOLT	2	630006-
16	6261-71-6460	BRACKET	1	630006-
17	01436-01075	BOLT	1	630006-
18	6261-71-5390	STAY	1	630006-
19	01435-01020	BOLT	1	630006-

Printed By : Dwi Iswanto (airafather6107170)

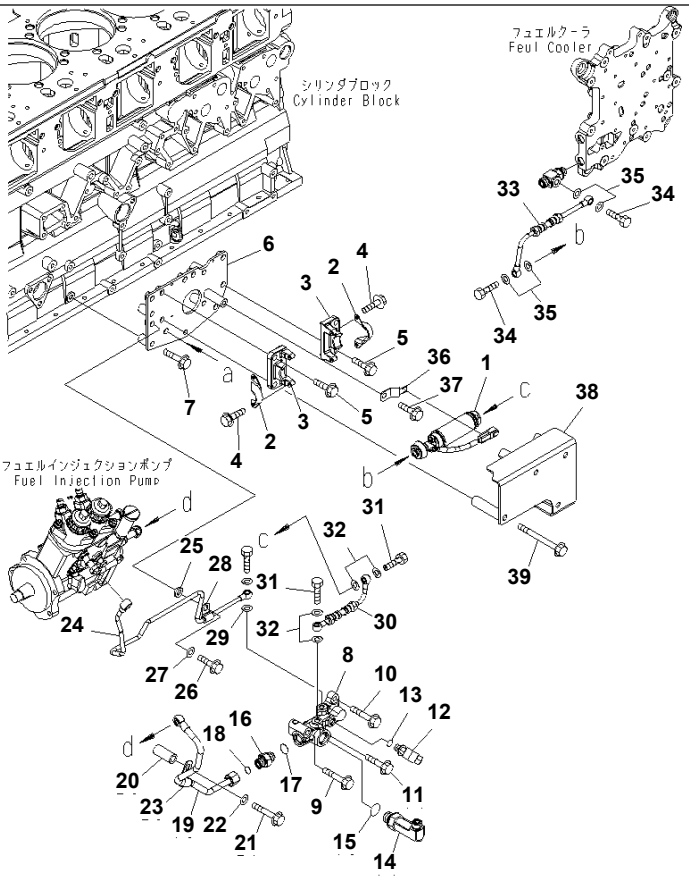

Ref. A4110-B4N1 **Page 030410**

SAA6D140E-5GR-W S/N 630001-UP
FUEL PRIMING PUMP(#630006-)

Item	Part No.	Part Name	Qty	Serial No.
1	6245-71-8110	PUMP ASS'Y,PRIMING	1	630006-
2	6245-71-5680	BRACKET	2	630006-
3	6219-71-8600	BLOCK	2	630006-
	6210-21-1390	· PIN	2	630006-
	6219-71-8610	· BLOCK	1	630006-
4	01435-00612	BOLT	4	630006-
5	01435-01035	BOLT	2	630006-
6	6261-71-7210	BRACKET	1	630006-
7	01435-01045	BOLT	3	630006-
8	6261-71-7230	BLOCK	1	630006-
9	01435-01065	BOLT	1	630006-
10	01435-01060	BOLT	1	630006-
11	01435-01055	BOLT	1	630006-
12	11Y-62-12510	ELBOW	1	630006-
13	07002-21423	O-RING	1	630006-
14	02782-10426	ELBOW	1	630006-
15	07002-22434	O-RING	1	630006-
16	02781-00422	UNION	1	630006-
17	07002-22034	O-RING	1	630006-
18	02896-21012	O-RING	1	630006-
19	6261-71-7110	TUBE	1	630006-
20	6112-23-6961	SPACER	1	630006-
21	01435-01070	BOLT	1	630006-
22	01643-31032	WASHER	1	630006-
23	6162-63-8820	CLIP	1	630006-
24	6261-71-7150	TUBE	1	630006-
25	6136-11-2980	SPACER	1	630006-
26	01435-01030	BOLT	1	630006-
27	01643-31032	WASHER	1	630006-
28	6210-51-8320	CLIP	1	630006-

Printed By : Dwi Iswanto (airafather6107170)

FUEL PRIMING PUMP(#630006-)

Item	Part No.	Part Name	Qty	Serial No.
29	07005-01212	GASKET	1	630006-
30	6261-71-7120	HOSE	1	630006-
31	07206-30812	BOLT,JOINT	2	630006-
32	07005-01212	GASKET	4	630006-
33	6261-71-7130	HOSE	1	630006-
34	07206-30812	BOLT,JOINT	2	630006-
35	07005-01212	GASKET	4	630006-
36	08193-20010	CLIP	1	630006-
37	01435-01016	BOLT	1	630006-
38	6261-71-7320	COVER	1	630006-
39	01436-01020	BOLT	4	630006-

Printed By : Dwi Iswanto (airafather6107170)

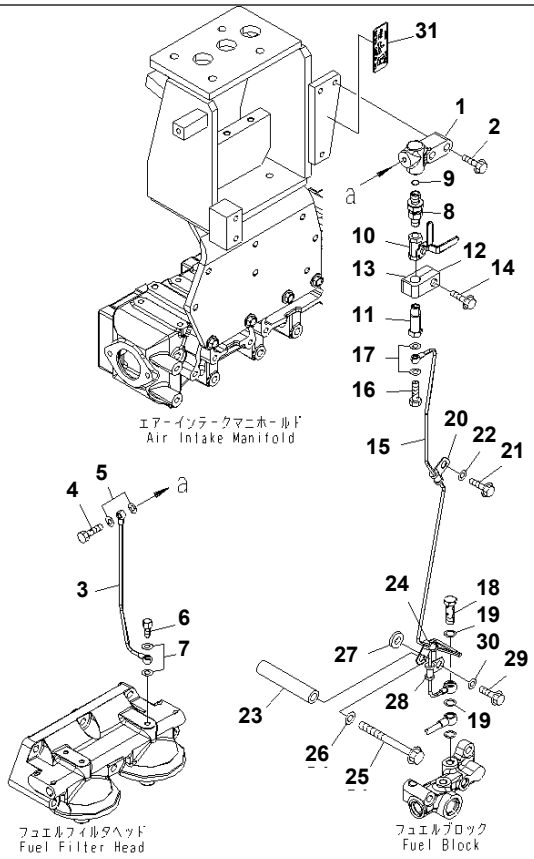

Ref. A4110-C4N1 **Page 030420**

SAA6D140E-5GR-W S/N 630001-UP
FUEL AIR VENT(#630006-)

Item	Part No.	Part Name	Qty	Serial No.
1	6261-71-7190	BLOCK	1	630006-
2	01435-01045	BOLT	2	630006-
3	6261-71-7520	TUBE	1	630006-
4	07206-30508	BOLT,JOINT	1	630006-
5	07005-00812	GASKET	2	630006-
6	6245-71-5960	BOLT,JOINT	1	630006-
7	07005-00812	GASKET	2	630006-
8	205-62-74690	NIPPLE	1	630006-
9	07002-21423	O-RING	1	630006-
10	6128-81-4810	VALVE	1	630006-
11	6245-71-6180	BOLT	1	630006-
12	6240-71-6530	CLAMP	1	630006-
13	6240-71-6540	CLAMP	1	630006-
14	01435-01045	BOLT	1	630006-
15	6261-71-7510	TUBE	1	630006-
16	07206-30508	BOLT,JOINT	1	630006-
17	07005-00812	GASKET	2	630006-
18	6354-71-5560	BOLT,JOINT	1	630006-
19	07005-01212	GASKET	2	630006-
20	6245-71-5950	CLIP	1	630006-
21	01435-01020	BOLT	1	630006-
22	01643-31032	WASHER	1	630006-
23	6206-81-9870	SPACER	1	630006-
24	6245-71-5950	CLIP	1	630006-
25	01436-01030	BOLT	1	630006-
26	01643-31032	WASHER	1	630006-
27	6110-23-6490	SPACER	1	630006-
28	6245-71-5950	CLIP	1	630006-
29	01435-01030	BOLT	1	630006-
30	01643-31032	WASHER	1	630006-

Printed By : Dwi Iswanto (airafather6107170)

FUEL AIR VENT(#630006-)

Item	Part No.	Part Name	Qty	Serial No.
31	6245-81-9420	PLATE	1	630006-

Printed By : Dwi Iswanto (airafather6107170)

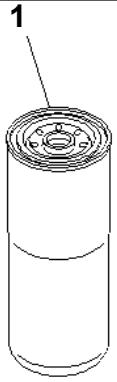

00042185

Ref. A4119-A4A1 **Page 030430**

SAA6D140E-5GR-W S/N 630001-UP
FUEL FILTER CARTRIDGE (SERVICE ONLY)

Item	Part No.	Part Name	Qty	Serial No.
1	600-319-3550	CARTRIDGE (1-5/8),FUEL FILTER	1	630012-
	□600-319-3520	CARTRIDGE (1-5/8),FUEL FILTER	1	630001-630011

Printed By : Dwi Iswanto (airafather6107170)

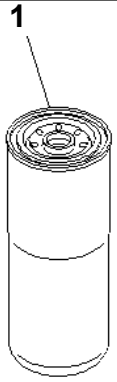

00042185

Ref. A4119-A6A4 **Page 030440**

SAA6D140E-5GR-W S/N 630001-UP

FUEL FILTER CARTRIDGE (SERVICE ONLY)(#630016-)

Item	Part No.	Part Name	Qty	Serial No.
1	600-319-3550	CARTRIDGE (1-5/8),FUEL	2	630016-

Printed By : Dwi Iswanto (airafather6107170)

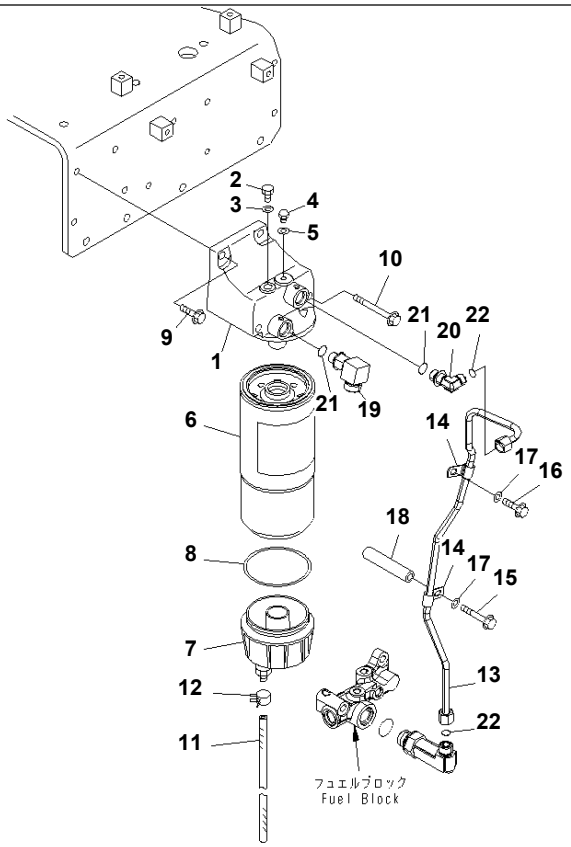

Ref. A4150-A4B3 **Page 030450**

SAA6D140E-5GR-W S/N 630001-UP
PRE-FILTER (THREAD 1-1/4)(#630006-)

Item	Part No.	Part Name	Qty	Serial No.
	6251-71-7100	HEAD ASS'Y	1	630006-
1	6251-71-7110	· HEAD,FILTER	1	630006-
2	07040-11209	· PLUG	1	630006-
3	07005-01212	· GASKET	1	630006-
4	6110-73-6231	· PLUG	1	630006-
5	07005-00812	· GASKET	1	630006-
	600-311-4500	FILTER ASS'Y	1	630006-
6	600-311-4510	· CARTRIDGE (1-1/4),(SEE FIG.A4159-A4A3)	1	630006-
7	600-311-3220	· CAP	1	630006-
8	600-311-3230	· SEAL	1	630006-
9	01435-01030	BOLT	2	630006-
10	01436-01010	BOLT	2	630006-
11	07286-00860	HOSE	1	630006-
12	07285-00125	CLIP	1	630006-
13	6261-71-6490	TUBE,OUTLET	1	630006-
14	6162-63-8820	CLIP	2	630006-
15	01436-01030	BOLT	1	630006-
16	01435-01020	BOLT	1	630006-
17	01643-31032	WASHER	2	630006-
18	6206-81-9870	SPACER	1	630006-
19	206-62-73440	ELBOW	1	630006-
20	02782-10422	ELBOW	1	630006-
21	07002-22034	O-RING	2	630006-
22	02896-21012	O-RING	2	630006-

Printed By : Dwi Iswanto (airafather6107170)

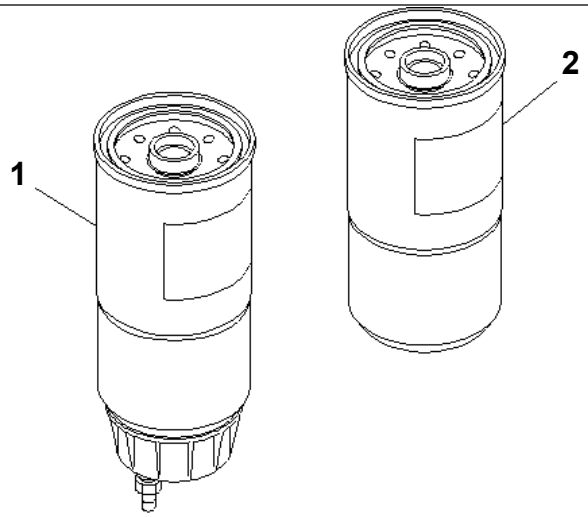

00044908

Ref. A4159-A4A3 **Page 030460**

SAA6D140E-5GR-W S/N 630001-UP
PRE-FILTER (SERVICE ONLY)(#630014-)

Item	Part No.	Part Name	Qty	Serial No.
1	600-319-4500	CARTRIDGE ASS'Y,(1-1/4)	2	630014-
2	600-319-4540	CARTRIDGE (1-1/4)	2	630014-

Printed By : Dwi Iswanto (airafather6107170)

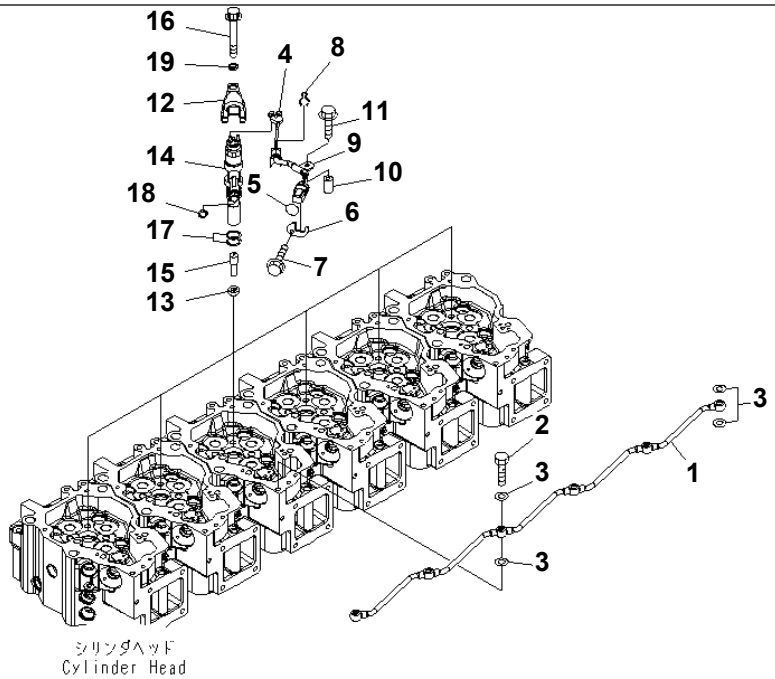

00041229

Ref. A4210-A4G3 **Page 030470**

SAA6D140E-5GR-W S/N 630001-UP
FUEL INJECTOR AND SPILL TUBE(#630003-)

Item	Part No.	Part Name	Qty	Serial No.
1	6217-71-7110	TUBE,SPILL	1	630003-
2	6934-72-7190	BOLT	5	630003-
3	07005-01012	GASKET	12	630003-
4	6217-81-9252	WIRING HARNESS	6	630003-
5	07000-E2018	O-RING	6	630003-
6	6217-71-5320	PLATE	6	630003-
7	01435-00610	BOLT	6	630003-
8	6217-71-5340	CLAMP	6	630003-
9	6217-71-1150	CLAMP	6	630003-
10	6217-71-1170	SPACER	6	630003-
11	01435-00635	BOLT	6	630003-
12	6217-71-1161	HOLDER	6	630003-
13	6261-71-6150	GASKET	6	630003-
	6261-11-3200	INJECTOR ASS'Y	6	630003-
14	☆	· HOLDER	1	630003-
15	☆	· NOZZLE	1	630003-
16	01437-01070	BOLT	6	630003-
17	6219-71-1150	GASKET	12	630003-
18	6219-71-1160	GASKET	6	630003-
19	6217-71-1140	WASHER	6	630003-

Printed By : Dwi Iswanto (airafather6107170)

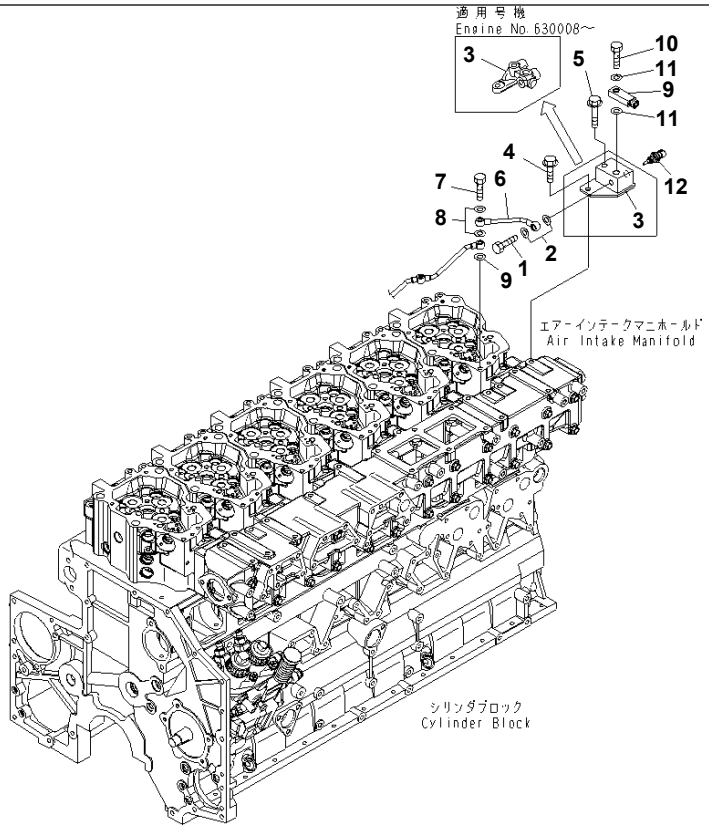

Ref. A4230-A4H1 **Page 030480**

SAA6D140E-5GR-W S/N 630001-UP
FUEL RETURN(#630006-)

Item	Part No.	Part Name	Qty	Serial No.
1	07206-30812	BOLT,JOINT	1	630006-
2	07005-01212	GASKET	2	630006-
3	6261-71-8651	BLOCK	1	630008-
	□6261-71-8650	BLOCK	1	630006-630007
4	01435-01025	BOLT	1	630008-
	□01435-01020	BOLT	1	630006-630007
5	01435-01055	BOLT	1	630006-
6	6261-71-5810	TUBE,RETURN	1	630006-
7	6215-11-6560	BOLT,JOINT	1	630006-
8	07005-01012	GASKET	3	630006-
9	6156-71-5370	JOINT	1	630006-
10	07206-31014	BOLT,JOINT	1	630006-
11	07005-01412	GASKET	2	630006-
12	6261-81-6901	SENSOR ASS'Y,FUEL TEMPERATURE	1	630094-
	6261-81-6900	SENSOR ASS'Y,FUEL TEMPERATURE	1	630006-630093
	6261-81-6910	· SENSOR	1	630006-630093
	6261-84-9740	· O-RING	1	630006-

Printed By : Dwi Iswanto (airafather6107170)

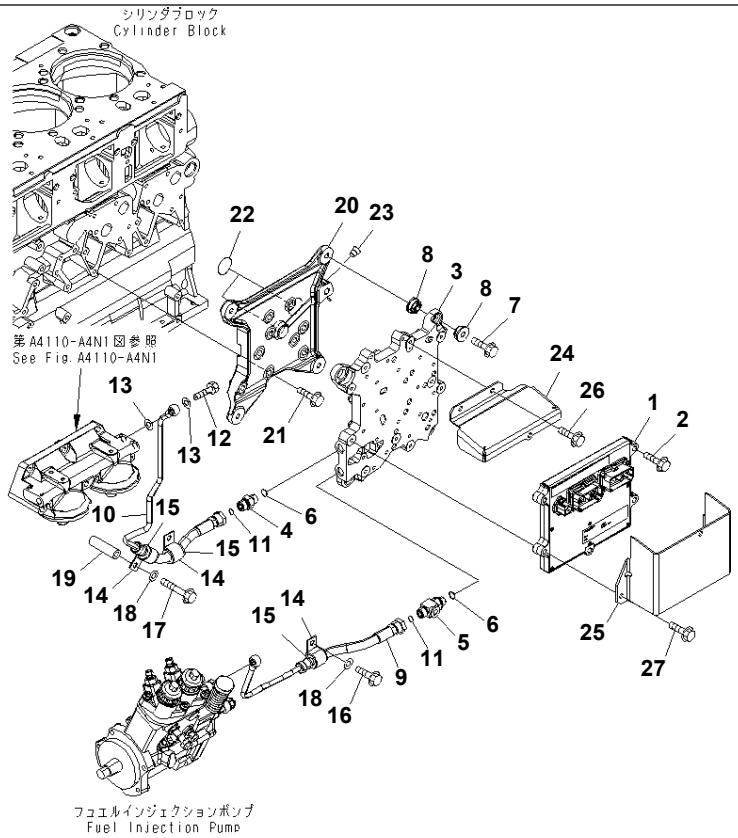

Ref. A4710-A4K5 Page 030490

SAA6D140E-5GR-W S/N 630001-UP

FUEL INJECTION CONTROLLER(#630014-)

Item	Part No.	Part Name	Qty	Serial No.
1	600-462-3100	CONTROLLER ASS'Y	1	630014-
2	01435-00840	BOLT	3	630014-
3	6219-81-7100	COOLER,FUEL	1	630014-
4	02781-00420	UNION	1	630014-
5	6261-71-7140	ELBOW	1	630014-
6	07002-21823	O-RING	2	630014-
7	01435-01045	BOLT	4	630014-
8	6251-81-7210	CUSHION	8	630014-
9	6261-71-6180	HOSE,INLET	1	630014-
10	6261-71-6480	HOSE,RETURN	1	630014-
11	02896-21012	O-RING	2	630014-
12	07206-31014	BOLT,JOINT	1	630014-
13	07005-01412	GASKET	2	630014-
14	04434-52511	CLIP	3	630014-
15	07095-30318	CUSHION	3	630014-
16	01435-01020	BOLT	1	630014-
17	01435-01090	BOLT	1	630014-
18	01643-31032	WASHER	2	630014-
19	6136-11-5120	SPACER	1	630014-
20	6261-81-7310	BRACKET	1	630014-
21	01435-01045	BOLT	9	630014-
22	07000-73038	O-RING	2	630014-
23	07043-70211	PLUG	1	630014-
24	6261-81-9820	COVER	1	630014-
25	6261-81-9830	COVER	1	630014-
26	01435-00820	BOLT	3	630014-
27	01435-00845	BOLT	2	630014-

Printed By : Dwi Iswanto (airafather6107170)

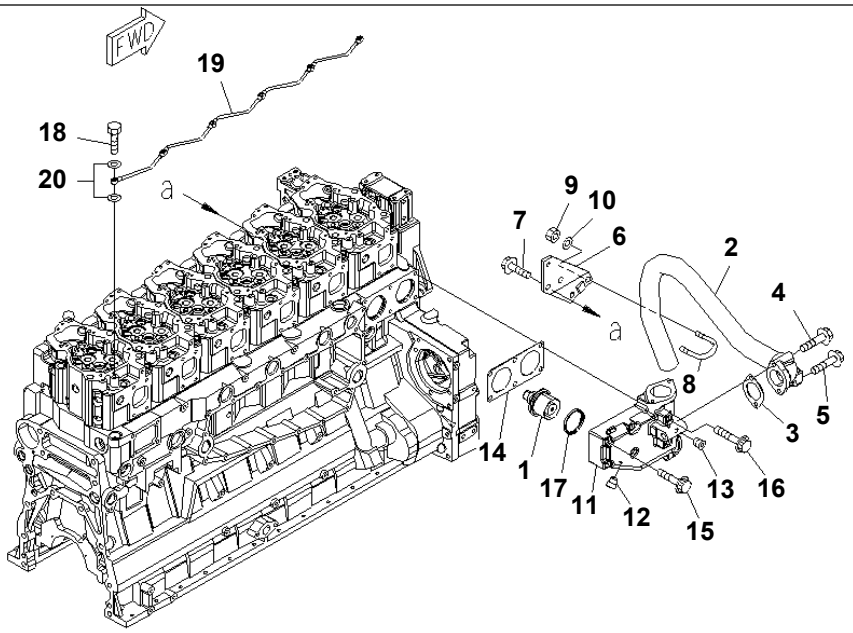

00041856

Ref. A5010-A4M1 **Page 030500**

SAA6D140E-5GR-W S/N 630001-UP
THERMOSTAT AND AIR VENT(#630006-)

Item	Part No.	Part Name	Qty	Serial No.
1	600-421-6630	THERMOSTAT	2	630006-
2	6261-61-6810	TUBE,BYPASS	1	630006-
3	6210-61-6870	GASKET	1	630006-
4	01435-01070	BOLT	1	630006-
5	01435-01085	BOLT	1	630006-
6	6261-61-6820	BRACKET	1	630006-
7	01435-01225	BOLT	2	630006-
8	07283-34957	CLIP	1	630006-
9	01597-01009	NUT	2	630006-
10	01643-31032	WASHER	2	630006-
11	6211-61-6410	HOUSING,THERMOSTAT	1	630006-
12	02720-20204	PLUG	1	630006-
13	07043-00108	PLUG	1	630006-
14	6210-61-6421	GASKET	1	630006-
15	01437-01065	BOLT	4	630006-
16	01438-01005	BOLT	2	630006-
17	6162-13-6440	SEAL,THERMOSTAT	2	630006-
18	07206-30710	BOLT,JOINT	5	630006-
19	6217-11-6520	TUBE,AIR VENT	1	630006-
20	07003-01015	GASKET	11	630006-

Printed By : Dwi Iswanto (airafather6107170)

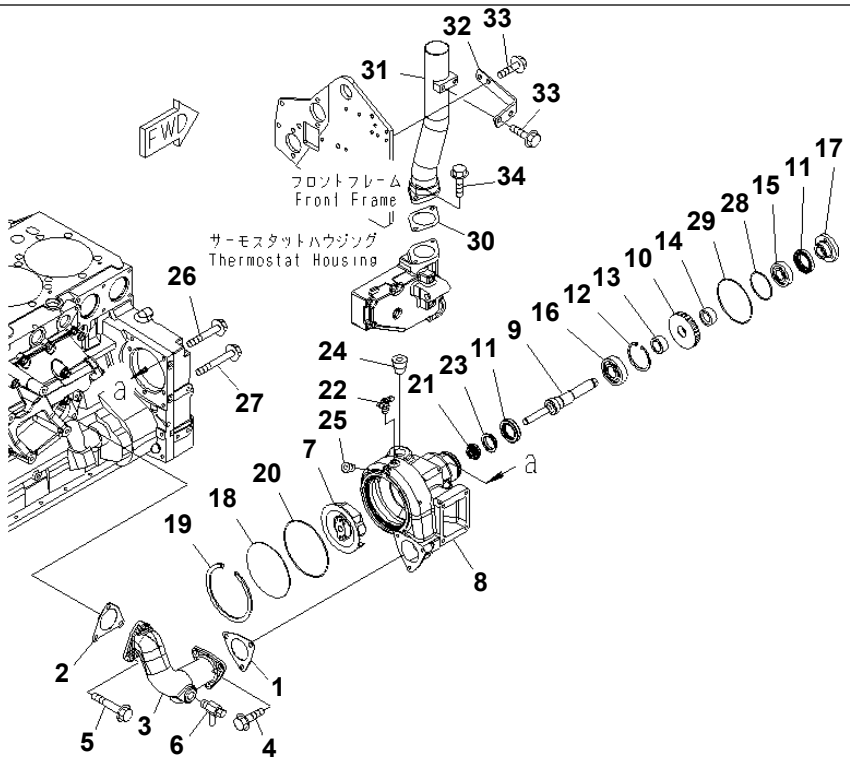

Ref. A5010-B4M1 **Page 030510**

SAA6D140E-5GR-W S/N 630001-UP
WATER PUMP(#630006-)

Item	Part No.	Part Name	Qty	Serial No.
1	6217-61-6330	GASKET	1	630006-
2	6217-61-6340	GASKET	1	630006-
3	6217-61-6350	ELBOW	1	630006-
4	01437-01025	BOLT	3	630006-
5	01437-11080	BOLT	3	630006-
6	07730-50004	VALVE,DRAIN	1	630006-
	6261-61-1201	WATER PUMP ASS'Y	1	630006-
7	6261-61-1210	· IMPELLER	1	630006-
8	6261-61-1120	· CASE	1	630006-
9	6261-61-1310	· SHAFT	1	630006-
10	6212-61-1410	· GEAR	1	630006-
11	6210-61-1520	· SEAL	2	630006-
12	04065-07225	· RING	1	630006-
13	6212-61-1370	· SPACER	1	630006-
14	6212-61-1380	· SPACER	1	630006-
15	06000-06305	· BEARING,BALL	1	630006-
16	06030-06306	· BEARING,BALL	1	630006-
17	6210-61-1350	· FLANGE	1	630006-
18	6261-61-1150	· COVER	1	630006-
19	6261-61-1190	· RING,SNAP	1	630006-
20	6261-61-1170	· O-RING	1	630006-
21	6211-61-1533	· SEAL¤ WATER	1	630006-
22	07062-00000	· VALVE,AIR BLOW	1	630006-
23	6212-61-1330	· RING	1	630006-
24	07043-A1019	· PLUG	1	630006-
25	02720-10104	· PLUG	1	630006-
26	01435-01075	BOLT	1	630006-
27	01435-01095	BOLT	3	630006-
28	07000-72070	O-RING	1	630006-
29	07000-72115	O-RING	1	630006-

Printed By : Dwi Iswanto (airafather6107170)

WATER PUMP(#630006-)

Item	Part No.	Part Name	Qty	Serial No.
30	6210-61-6441	GASKET	1	630006-
31	6261-61-6260	TUBE,OUTLET	1	630006-
32	6261-61-6270	BRACKET	1	630006-
33	01435-01020	BOLT	4	630006-
34	01435-01025	BOLT	2	630006-

Printed By : Dwi Iswanto (airafather6107170)

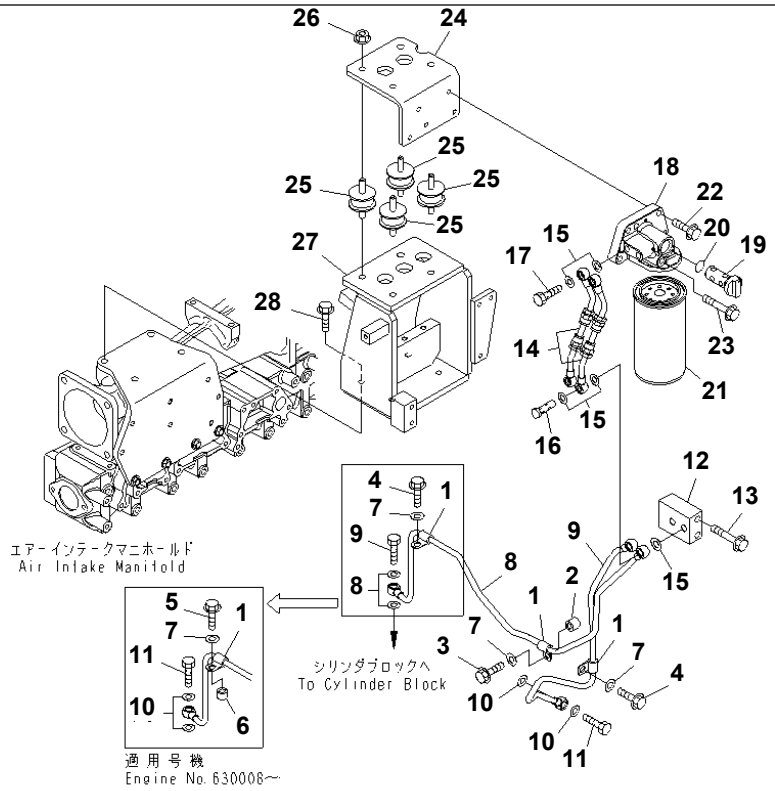

Ref. A5210-A4K4 **Page 030520**

SAA6D140E-5GR-W S/N 630001-UP
CORROSION RESISTOR(#630006-)

Item	Part No.	Part Name	Qty	Serial No.
1	6215-71-4940	CLAMP	3	630006-
2	6631-11-5630	SPACER	1	630006-
3	01435-01045	BOLT	1	630006-
4	01435-01020	BOLT	1	630008-
	01435-01020	BOLT	2	630006-630007
5	01435-01035	BOLT	1	630008-
6	6631-11-6390	SPACER	1	630008-
7	01643-31032	WASHER	3	630006-
8	6261-61-8850	TUBE,RETURN	1	630006-
9	6261-61-8841	TUBE,INLET	1	630006-
10	07005-01412	GASKET	4	630006-
11	07206-31014	BOLT,JOINT	2	630006-
12	6261-61-8870	BLOCK	1	630006-
13	01435-01095	BOLT	2	630006-
14	6261-61-8860	HOSE	2	630006-
15	07005-01412	GASKET	10	630006-
16	7700-45-1710	BOLT	2	630006-
17	07206-31014	BOLT,JOINT	2	630006-
	6217-61-8170	RESISTOR ASS'Y,CORROSION	1	630006-
	6217-61-8231	· HEAD ASS'Y	1	630006-
18	☆	· · HEAD,CORROSION	1	630006-
19	6217-61-8221	· · VALVE	1	630006-
20	07000-A2021	· · O-RING	1	630006-
21	600-411-1161	· CARTRIDGE,CORROSION	1	630006-
22	01435-01035	BOLT	4	630006-
23	01436-01000	BOLT	1	630006-
24	6261-61-8830	BRACKET	1	630006-
25	17A-54-13851	CUSHION	4	630006-
26	01584-01008	NUT	8	630006-
27	6261-61-8930	BRACKET	1	630006-

Printed By : Dwi Iswanto (airafather6107170)

CORROSION RESISTOR(#630006-)

Item	Part No.	Part Name	Qty	Serial No.
28	01435-01040	BOLT	4	630008-
	□01435-01035	BOLT	4	630006-630007

Printed By : Dwi Iswanto (airafather6107170)

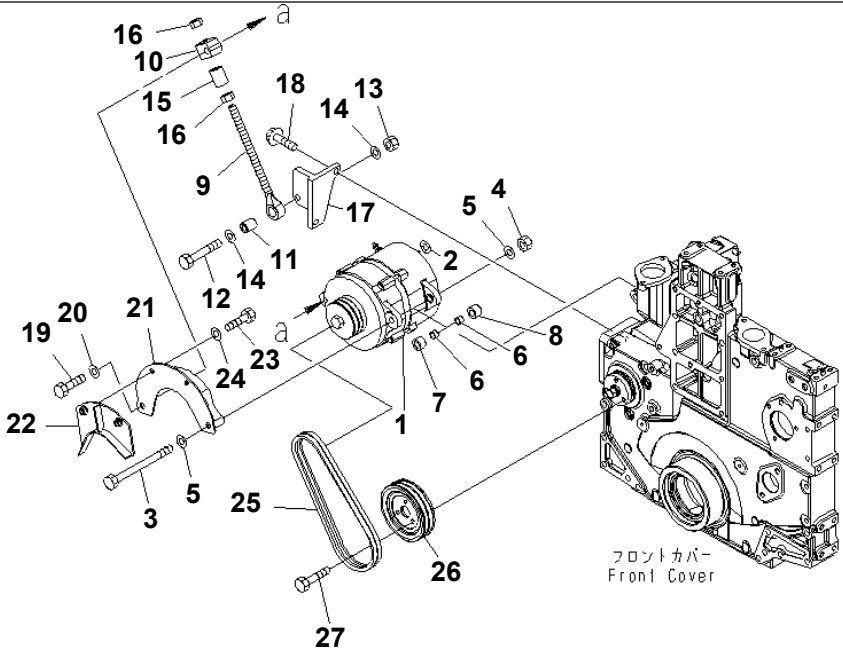

00051935

Ref. A6010-A4N6 **Page 030530**

SAA6D140E-5GR-W S/N 630001-UP

ALTERNATOR MOUNTING (50A) (SANDY AND DUSTY SPEC.)(#630014-)

Item	Part No.	Part Name	Qty	Serial No.
1	(600-825-6270)	ALTERNATOR A. (60A),(SEE FIG.A6010-B4N6)	1	630014-
2	600-815-9980	WASHER,TERMINAL	1	630014-
3	6210-81-6490	BOLT	1	630014-
4	01582-01210	NUT	1	630014-
5	01643-31232	WASHER	2	630014-
6	6210-61-6530	PIN	2	630014-
7	6210-81-6750	SPACER	1	630014-
8	6217-81-6550	SPACER	1	630014-
9	6240-81-8611	ROD,ADJUSTING	1	630014-
10	6261-81-8340	PLATE	1	630014-
11	6215-81-6150	PIN	1	630014-
12	01010-81260	BOLT	1	630014-
13	01580-11210	NUT	1	630014-
14	01643-31232	WASHER	2	630014-
15	6261-81-8350	SPACER	1	630014-
16	01580-11613	NUT	2	630014-
17	6210-82-6570	BRACKET	1	630014-
18	01435-01025	BOLT	2	630014-
19	01050-51260	BOLT	1	630014-
20	01643-31232	WASHER	1	630014-
21	6261-81-6460	COVER,SAFETY	1	630014-
22	6210-81-6361	COVER,SAFETY	1	630014-
23	01050-51020	BOLT	2	630014-
24	01640-21016	WASHER	2	630014-
25	6210-81-6960	V-BELT SET	1	630014-
26	6210-82-6840	PULLEY¤ HARDENING	1	630014-
27	01010-80820	BOLT	3	630014-

Printed By : Dwi Iswanto (airafather6107170)

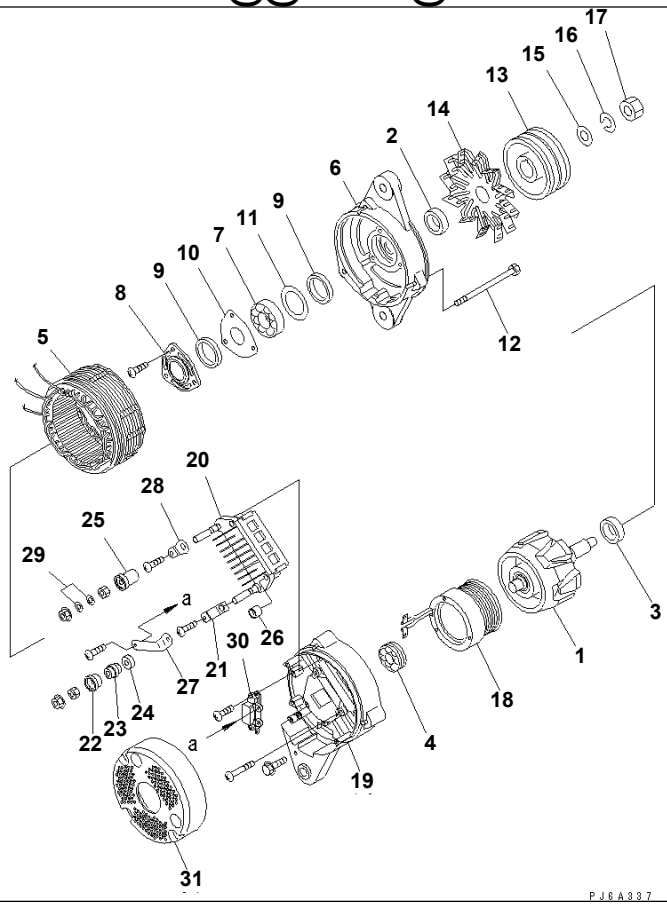

Ref. A6010-B4N6 **Page 030540**

SAA6D140E-5GR-W S/N 630001-UP

ALTERNATOR (50A) (SANDY AND DUSTY SPEC.) (INNER PARTS)(#630014-)

Item	Part No.	Part Name	Qty	Serial No.
	600-825-6270	ALTERNATOR A. (60A)	1	630014-
1	KD0-35100-0300	· ROTOR ASS'Y	1	630014-
2	KD1-33923-0790	· COLLAR	1	630014-
3	KD1-35923-0160	· COLLAR	1	630014-
4	KD0-09201-0980	· BEARING,BALL	1	630014-
5	KD0-35200-0460	· STATOR ASS'Y	1	630014-
6	KD0-35300-0350	· FRONT BRACKET ASS'Y	1	630014-
7	KD0-09201-1140	· · BEARING,BALL	1	630014-
8	KD0-35926-0070	· · RETAINER	1	630014-
9	KD0-35951-0060	· · PACKING	2	630014-
10	KD0-35926-0090	· · RETAINER	1	630014-
11	KD1-33926-0730	· · RETAINER	1	630014-
12	KD0-0275-06802	· BOLT	3	630014-
13	KD0-35411-0700	· PULLEY¤ HARDENING	1	630014-
14	KD0-35421-0230	· FAN	1	630014-
15	KD0-0330-16012	· WASHER,PLAIN	1	630014-
16	KD1-0335-16002	· WASHER,SPRING	1	630014-
17	KD0-0280-16022	· NUT	1	630014-
18	KD0-35120-0290	· FIELD COIL ASS'Y	1	630014-
	KD0-35700-0920	· REAR BRACKET ASS'Y	1	630014-
19	KD0-35710-1010	· · BRACKET,REAR	1	630014-
20	KD0-35730-0700	· · RECTIFIER ASS'Y	1	630014-
21	KD0-09170-2501	· · CONDENSER	1	630014-
22	KD0-35943-0150	· · BUSHING,INSULATE	1	630014-
23	KD0-35923-0130	· · COLLAR	1	630014-
24	KD0-35943-0160	· · BUSHING,INSULATE	1	630014-
25	KD0-35943-0140	· · BUSHING,INSULATE	1	630014-
26	KD0-35943-0170	· · BUSHING,INSULATE	2	630014-
27	KD0-35784-0210	· · BAR,CONNECT	1	630014-
28	KD0-35784-0290	· · BAR,PLATE	1	630014-

Printed By : Dwi Iswanto (airafather6107170)

ALTERNATOR (50A) (SANDY AND DUSTY SPEC.) (INNER PARTS)(#630014-)

Item	Part No.	Part Name	Qty	Serial No.
29	KD0-09057-0220	・・WASHER	2	630014-
30	KD7-35719-0211	・・REGULATOR ASS'Y	1	630014-
31	KD0-35761-0250	・COVER	1	630014-

Printed By : Dwi Iswanto (airafather6107170)

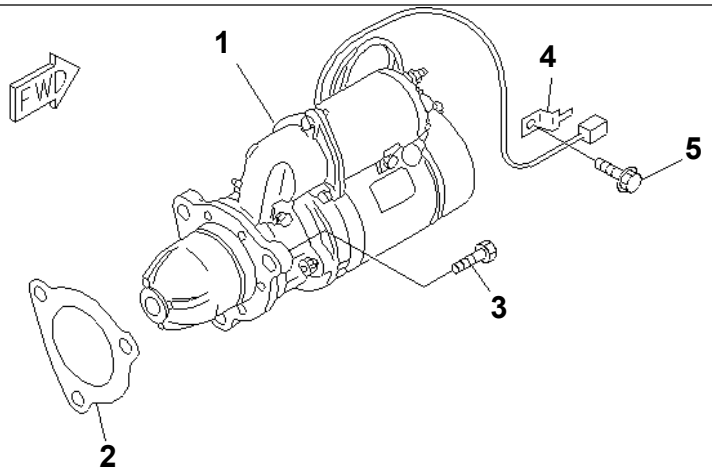

00061039

Ref. A6210-A4E3 **Page 030550**

SAA6D140E-5GR-W S/N 630001-UP

STARTING MOTOR MOUNTING (11KW)(#630006-)

Item	Part No.	Part Name	Qty	Serial No.
1	(600-813-9322)	STARTING MOTOR ASS'Y,(11KW) (SEE FIG.A6210-B4E3)	1	630006-
2	6221-81-6810	GASKET	1	630006-
3	01010-61640	BOLT	3	630006-
4	08193-20010	CLIP	1	630006-
5	01435-01050	BOLT	1	630006-

Printed By : Dwi Iswanto (airafather6107170)

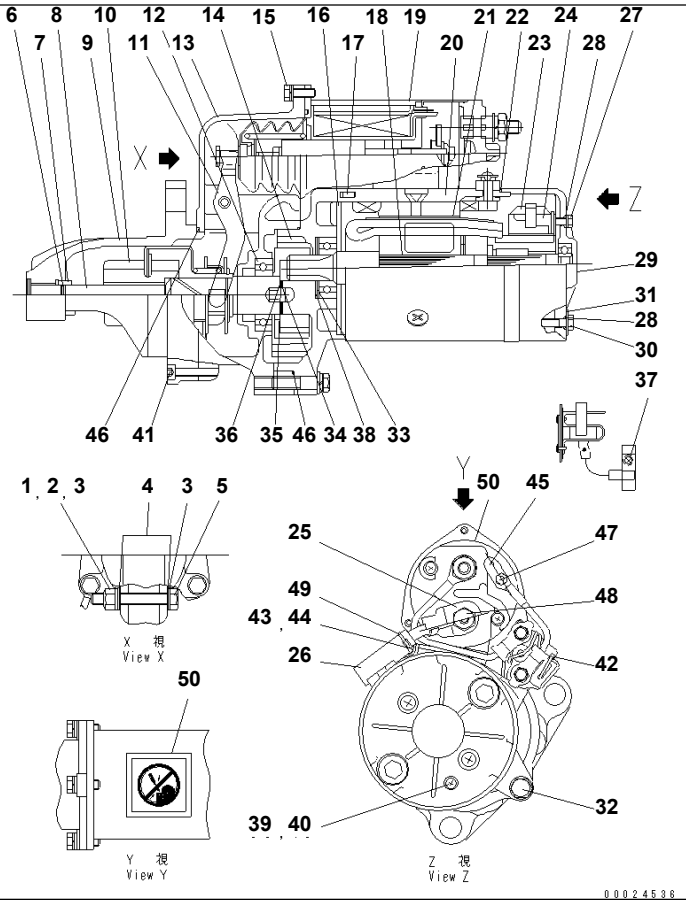

Ref. A6210-B4E3 **Page 030560**

SAA6D140E-5GR-W S/N 630001-UP
STARTING MOTOR (11KW) (INNER PARTS)(#630006-)

Item	Part No.	Part Name	Qty	Serial No.
	600-813-9322	STARTING MOTOR ASS'Y,(11KW)	1	630006-
1	KD1-09279-0090	· NUT	1	630006-
2	KD1-0335-08002	· WASHER,SPRING	4	630006-
3	KD1-0330-08022	· WASHER	5	630006-
4	KD1-0345-08001	· WASHER	2	630006-
5	KD0-23303-0020	· PIN,LEVER	1	630006-
6	KD1-23914-0020	· RING,CLIP	1	630006-
7	KD1-23181-0020	· STOPPER,PINION	1	630006-
8	KD0-23120-0180	· SHAFT ASS'Y	1	630006-
9	KD0-23310-1670	· FRONT BRACKET ASS'Y	1	630006-
10	KD1-23500-0970	· CLUTCH ASS'Y,OVER RUNNING	1	630006-
11	KD1-23320-0290	· SHIFT LEVER ASS'Y	1	630006-
12	KD0-09201-0850	· BEARING,BALL	1	630006-
13	KD0-23500-0410	· CENTER BRACKET A.	1	630006-
14	KD0-23511-1101	· BRACKET,CENTER	1	630006-
15	KD0-0270-06202	· BOLT	3	630006-
16	KD1-23951-0051	· PACKING	1	630006-
17	KD1-0400-30100	· PIN,STRAIGHT	1	630006-
18	KD0-23100-0430	· ARMATURE ASS'Y	1	630006-
19	KD0-47100-4651	· MAGNETIC SWITCH A.	1	630006-
20	KD0-23200-0671	· YOKE ASS'Y	1	630006-
21	KD0-09271-3620	· NAME PLATE	1	630006-
22	KD1-09211-1120	· O-RING	1	630006-
23	KD1-23740-0351	· BRUSH ASS'Y	2	630006-
24	KD0-23750-0490	· BRUSH HOLDER A.	1	630006-
25	KD0-47761-2681	· COVER	1	630006-
26	KD0-47761-2691	· COVER	1	630006-
27	KD0-09011-3140	· SCREW	2	630006-
28	KD1-09211-0081	· O-RING	2	630006-
29	KD0-23710-0221	· BRACKET,REAR	1	630006-

Printed By : Dwi Iswanto (airafather6107170)

STARTING MOTOR (11KW) (INNER PARTS)(#630006-)

Item	Part No.	Part Name	Qty	Serial No.
30	KD0-09001-4380	· BOLT	2	630006-
31	KD1-47921-0790	· WASHER	2	630006-
32	KD0-0276-08402	· BOLT	3	630006-
33	KD0-09057-0110	· WASHER	1	630006-
34	KD1-23941-0040	· WASHER,INSULATE	1	630006-
35	KD1-23921-0140	· WASHER	1	630006-
36	KD1-23921-0130	· WASHER	1	630006-
37	KD0-0055-05082	· SCREW,REAR	2	630006-
38	KD0-09057-0190	· WASHER	1	630006-
39	KD0-0020-05062	· SCREW	1	630006-
40	KD1-0345-05001	· WASHER	1	630006-
41	KD1-0240-06305	· BOLT	6	630006-
42	KD0-25000-8332	· SWITCH ASS'Y	1	630006-
43	KD0-0270-06602	· BOLT	1	630006-
44	KD1-47927-1390	· HOLDER	1	630006-
45	KD0-47761-2671	· COVER	1	630006-
46	KD1-09211-0981	· O-RING	2	630006-
47	KD0-09006-0660	· NUT	1	630006-
48	KD0-09006-0670	· NUT	1	630006-
49	KD1-09257-0050	· BAND	1	630006-
50	KD0-09275-1430	· PLATE,CAUTION	1	630006-

Printed By : Dwi Iswanto (airafather6107170)

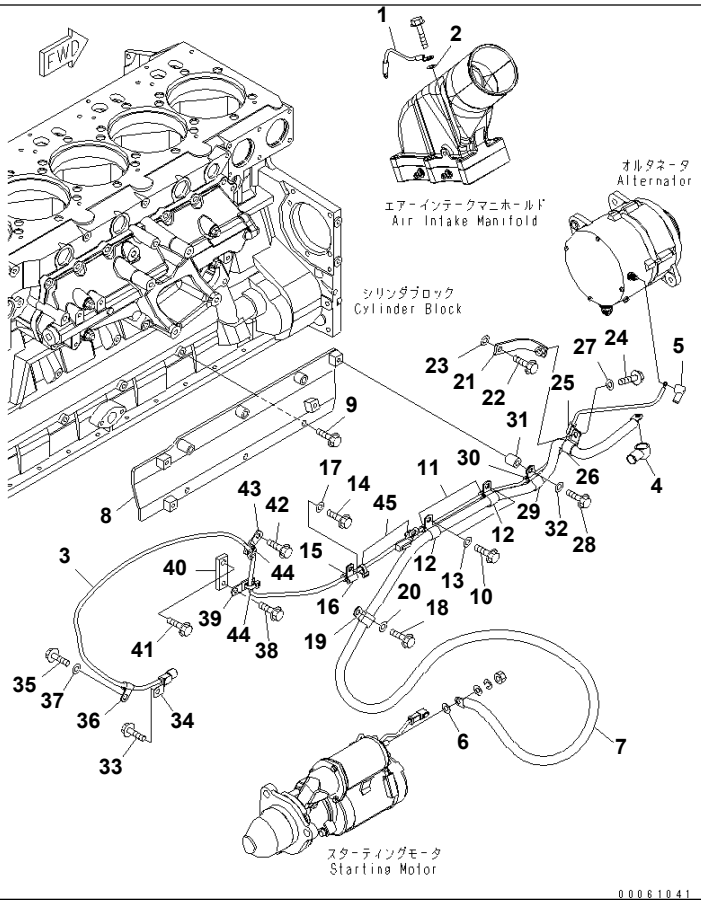

Ref. A6810-A4L3 **Page 030570**

SAA6D140E-5GR-W S/N 630001-UP
ELECTRICAL WIRING (1/4)(#630006-)

Item	Part No.	Part Name	Qty	Serial No.
1	6211-81-4280	WIRE¤ 220MM	1	630006-
2	01643-51032	WASHER	1	630006-
3	6261-81-8330	WIRING HARNESS	1	630006-
4	6218-81-8160	CAP	1	630006-
5	08038-00519	CAP	1	630006-
6	01643-31032	WASHER	1	630006-
7	6261-81-8190	WIRING HARNESS	1	630006-
8	6261-81-8540	COVER	1	630006-
9	01435-01020	BOLT	2	630006-
10	01435-01045	BOLT	2	630006-
11	600-051-2060	CLIP	2	630006-
12	600-051-2180	CLIP	2	630006-
13	01643-31032	WASHER	2	630006-
14	01435-01020	BOLT	1	630006-
15	600-051-2080	CLIP	1	630006-
16	600-051-2060	CLIP	1	630006-
17	01643-31032	WASHER	1	630006-
18	01435-01020	BOLT	1	630006-
19	600-051-2180	CLIP	1	630006-
20	01643-31032	WASHER	1	630006-
21	6204-21-5571	BRACKET	1	630006-
22	01435-01020	BOLT	1	630006-
23	01643-31032	WASHER	1	630006-
24	01435-01025	BOLT	1	630006-
25	600-051-2060	CLIP	1	630006-
26	600-051-2180	CLIP	1	630006-
27	01643-31032	WASHER	1	630006-
28	01435-01045	BOLT	1	630006-
29	600-051-2180	CLIP	1	630006-
30	600-051-2060	CLIP	1	630006-

Printed By : Dwi Iswanto (airafather6107170)

ELECTRICAL WIRING (1/4)(#630006-)

Item	Part No.	Part Name	Qty	Serial No.
31	144-874-7470	BOSS	1	630006-
32	01643-31032	WASHER	1	630006-
33	01435-01025	BOLT	1	630006-
34	08193-20010	CLIP	1	630006-
35	01435-01020	BOLT	1	630006-
36	600-051-2080	CLIP	1	630006-
37	01643-31032	WASHER	1	630006-
38	01435-01016	BOLT	1	630006-
39	6218-81-8430	CLAMP	1	630006-
40	6261-81-8660	PLATE	1	630006-
41	01435-01030	BOLT	1	630006-
42	01435-01016	BOLT	1	630006-
43	6218-81-8430	CLAMP	1	630006-
44	6218-81-8490	BAND	2	630006-
45	6218-81-8490	BAND	3	630006-

Printed By : Dwi Iswanto (airafather6107170)

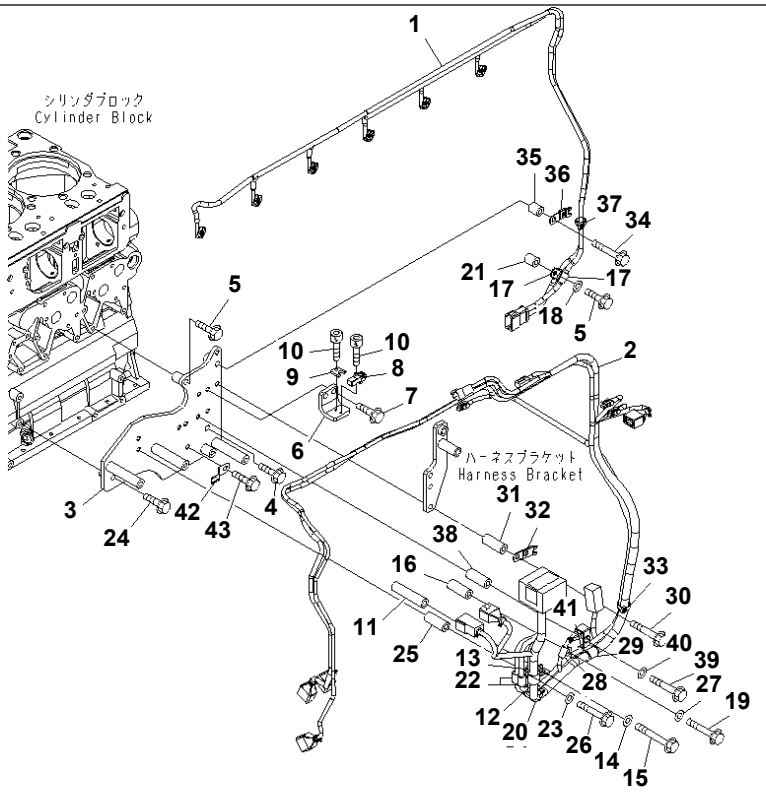

00061192

Ref. A6810-B4L3 **Page 030580**

SAA6D140E-5GR-W S/N 630001-UP
ELECTRICAL WIRING (2/4)(#630006-)

Item	Part No.	Part Name	Qty	Serial No.
1	6261-81-8120	WIRING HARNESS	1	630006-
2	6261-81-6120	WIRE HARNESS	1	630006-
3	6261-81-8920	BRACKET	1	630006-
4	01435-01025	BOLT	1	630006-
5	01435-01045	BOLT	2	630006-
6	6261-81-1380	BRACKET	1	630006-
7	01435-01020	BOLT	2	630006-
8	6261-81-2600	SENSOR	1	630006-
9	6251-81-9680	PLATE	1	630006-
10	01252-60516	BOLT	2	630006-
11	195-01-16420	COLLAR	1	630006-
12	600-051-2180	CLIP	1	630006-
13	600-051-2080	CLIP	1	630006-
14	01643-31032	WASHER	1	630006-
15	01436-01015	BOLT	1	630006-
16	6164-91-6290	SPACER	1	630006-
17	600-051-2100	CLIP	2	630006-
18	01643-31032	WASHER	1	630006-
19	01435-01075	BOLT	1	630006-
20	6218-81-8490	BAND	1	630006-
21	144-874-7470	BOSS	1	630006-
22	600-051-2100	CLIP	2	630006-
23	01643-31032	WASHER	1	630006-
24	01435-01045	BOLT	1	630006-
25	6164-91-6290	SPACER	1	630006-
26	01435-01075	BOLT	1	630006-
27	01643-31032	WASHER	1	630006-
28	600-051-2080	CLIP	1	630006-
29	600-051-2180	CLIP	1	630006-
30	01435-01080	BOLT	1	630006-

Printed By : Dwi Iswanto (airafather6107170)

ELECTRICAL WIRING (2/4)(#630006-)

Item	Part No.	Part Name	Qty	Serial No.
31	6164-91-6290	SPACER	1	630006-
32	6218-81-8440	CLAMP	1	630006-
33	6218-81-8490	BAND	1	630006-
34	01435-01085	BOLT	1	630006-
35	144-874-7470	BOSS	1	630006-
36	6218-81-8430	CLAMP	1	630006-
37	6218-81-8490	BAND	1	630006-
38	6164-91-6290	SPACER	1	630006-
39	01435-01075	BOLT	1	630006-
40	01643-31032	WASHER	1	630006-
41	600-051-2080	CLIP	1	630006-
42	08193-20010	CLIP	1	630006-
43	01435-01016	BOLT	1	630006-

Printed By : Dwi Iswanto (airafather6107170)

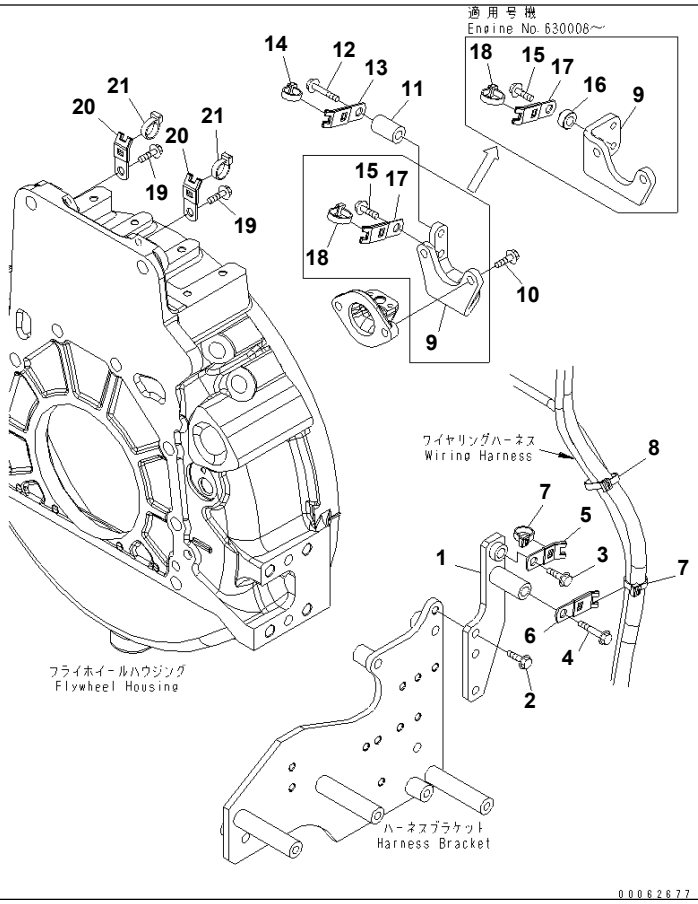

Ref. A6810-C4L3 **Page 030590**

SAA6D140E-5GR-W S/N 630001-UP
ELECTRICAL WIRING (3/4)(#630006-)

Item	Part No.	Part Name	Qty	Serial No.
1	6261-81-8210	BRACKET	1	630006-
2	01435-01020	BOLT	1	630006-
3	01435-01025	BOLT	1	630006-
4	01435-01065	BOLT	1	630006-
5	6218-81-8430	CLAMP	1	630006-
6	6218-81-8440	CLAMP	1	630006-
7	6218-81-8490	BAND	2	630006-
8	6218-81-8490	BAND	1	630006-
9	6261-81-9440	BRACKET	1	630008-
	□6261-81-8440	BRACKET	1	630006-630007
10	01435-01035	BOLT	2	630006-
11	6150-81-6920	SPACER	1	630006-
12	01435-01050	BOLT	1	630006-
13	6218-81-8440	CLAMP	1	630006-
14	6218-81-8490	BAND	1	630006-
15	01435-01025	BOLT	1	630008-
	□01435-01016	BOLT	1	630006-630007
16	6132-21-4630	SPACER	1	630008-
17	6218-81-8440	CLAMP	1	630006-
18	6218-81-8490	BAND	1	630006-
19	01435-01016	BOLT	2	630006-
20	6218-81-8430	CLAMP	2	630006-
21	6218-81-8490	BAND	2	630006-

Printed By : Dwi Iswanto (airafather6107170)

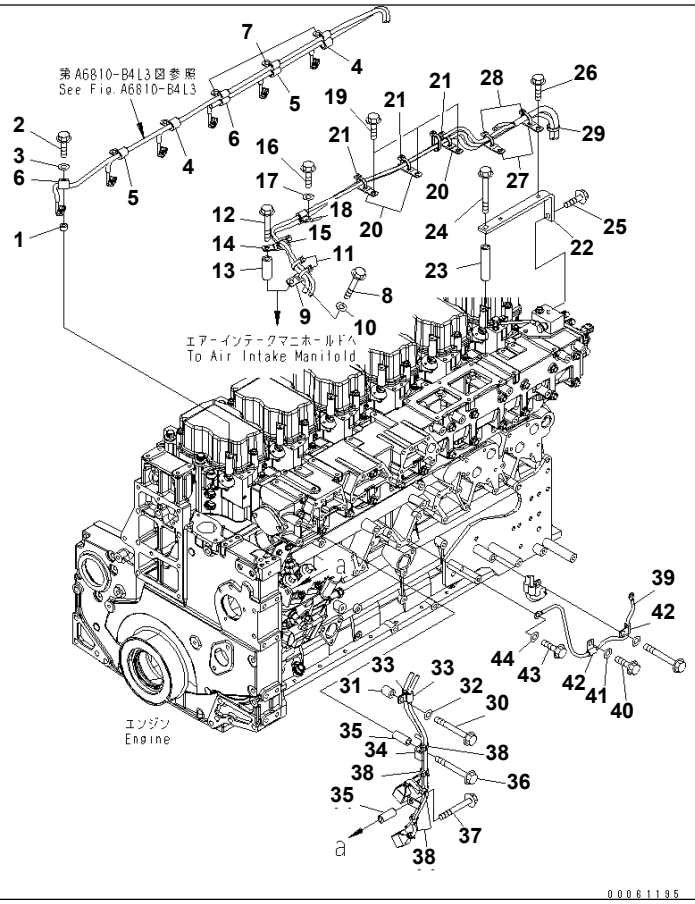

Ref. A6810-D4L3 **Page 030600**

SAA6D140E-5GR-W S/N 630001-UP
ELECTRICAL WIRING (4/4)(#630006-)

Item	Part No.	Part Name	Qty	Serial No.
1	6691-41-8230	SPACER¤ 10MM	6	630006-
2	01435-00830	BOLT	6	630006-
3	01643-30823	WASHER	6	630006-
4	600-051-2160	CLIP	2	630006-
5	600-051-2140	CLIP	2	630006-
6	600-051-2120	CLIP	2	630006-
7	600-051-2100	CLIP	3	630006-
8	01435-01075	BOLT	1	630006-
9	6218-81-8440	CLAMP	1	630006-
10	01643-51032	WASHER	1	630006-
11	6218-81-8490	BAND	2	630006-
12	01435-01075	BOLT	1	630006-
13	6150-81-6940	SPACER	1	630006-
14	6218-81-8440	CLAMP	1	630006-
15	6218-81-8490	BAND	1	630006-
16	01435-01020	BOLT	1	630006-
17	01643-31032	WASHER	1	630006-
18	600-051-2080	CLIP	2	630006-
19	01435-01016	BOLT	3	630006-
20	6218-81-8440	CLAMP	3	630006-
21	6218-81-8490	BAND	3	630006-
22	6261-81-8450	BRACKET	1	630006-
23	195-01-16420	COLLAR	1	630006-
24	01436-01015	BOLT	1	630006-
25	01435-01025	BOLT	1	630006-
26	01435-01016	BOLT	2	630006-
27	6218-81-8440	CLAMP	2	630006-
28	6218-81-8490	BAND	2	630006-
29	6218-81-8490	BAND	1	630006-
30	01435-01045	BOLT	1	630006-

Printed By : Dwi Iswanto (airafather6107170)

ELECTRICAL WIRING (4/4)(#630006-)

Item	Part No.	Part Name	Qty	Serial No.
31	144-874-7470	BOSS	1	630006-
32	01643-31032	WASHER	1	630006-
33	600-051-2080	CLIP	2	630006-
34	6261-81-8650	BRACKET	1	630006-
35	6143-11-4290	SPACER	2	630006-
36	01435-01065	BOLT	1	630006-
37	01435-01070	BOLT	1	630006-
38	6218-81-8490	BAND	4	630006-
39	6261-81-8560	WIRING HARNESS	1	630006-
40	01435-01020	BOLT	1	630006-
41	01643-31032	WASHER	1	630006-
42	600-051-2060	CLIP	2	630006-
43	01435-01016	BOLT	1	630006-
44	01643-31032	WASHER	1	630006-

Printed By : Dwi Iswanto (airafather6107170)

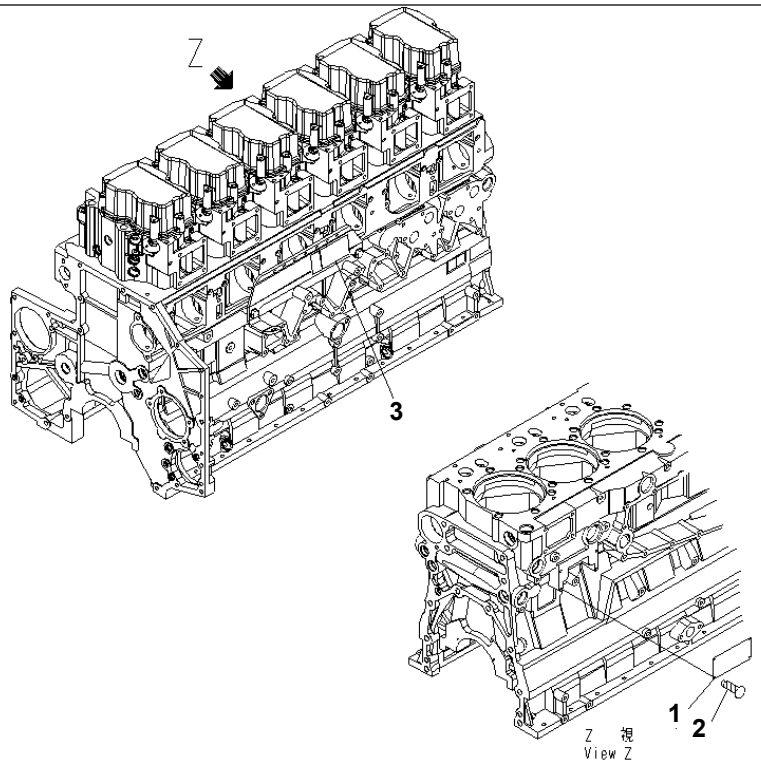

00060753

Ref. A9810-A6Y2 **Page 030610**

SAA6D140E-5GR-W S/N 630001-UP
NAME PLATE AND CAUTION (ENGLISH)

Item	Part No.	Part Name	Qty	Serial No.
1	600-023-2340	PLATE¤ NAME,(LIMITED SUPPLY)	1	630001-
2	04418-02550	SCREW	4	630001-
3	6217-71-9331	PLATE,WARNING	1	630001-

Printed By : Dwi Iswanto (airafather6107170)

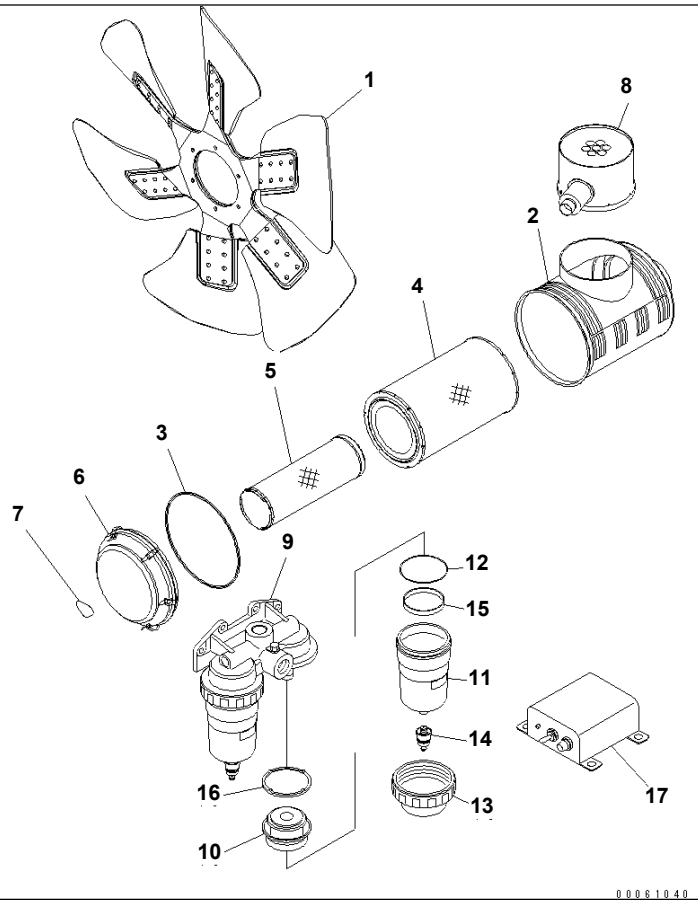

Ref. B9999-A4W6 **Page 030620**

SAA6D140E-5GR-W S/N 630001-UP

COOLING FAN¤ AIR CLEANER¤ WATER SEPARATOR AND TIMER(#630014-)

Item	Part No.	Part Name	Qty	Serial No.
1	600-645-1180	FAN	1	630014-
	6240-81-7402	AIR CLEANER ASS'Y	1	630014-
2	6240-81-7411	· BODY	1	630014-
	600-185-6100	· ELEMENT ASS'Y	1	630014-
3	600-184-1671	· · O-RING	1	630014-
4	600-185-6110	· · ELEMENT,OUTER	1	630014-
5	☆	· · ELEMENT,INNER	1	630014-
6	600-184-1632	· COVER	1	630014-
7	600-184-2810	· PLATE,NAME	1	630014-
8	600-183-7521	PRE CLEANER	1	630014-
	600-311-9330	WATER SEPARATOR A.	1	630014-
9	600-311-9410	· HEAD	1	630014-
10	600-311-9370	· SCREEN	2	630014-
11	600-311-9350	· CASE	2	630014-
12	600-311-9360	· O-RING	2	630014-
13	600-311-9380	· RING	2	630014-
14	600-311-9480	· PLUG	2	630014-
15	600-311-9390	· RING	2	630014-
16	600-311-9420	· GASKET	2	630014-
17	600-815-9471	SWITCH,TIMER	1	630014-

Printed By : Dwi Iswanto (airafather6107170)

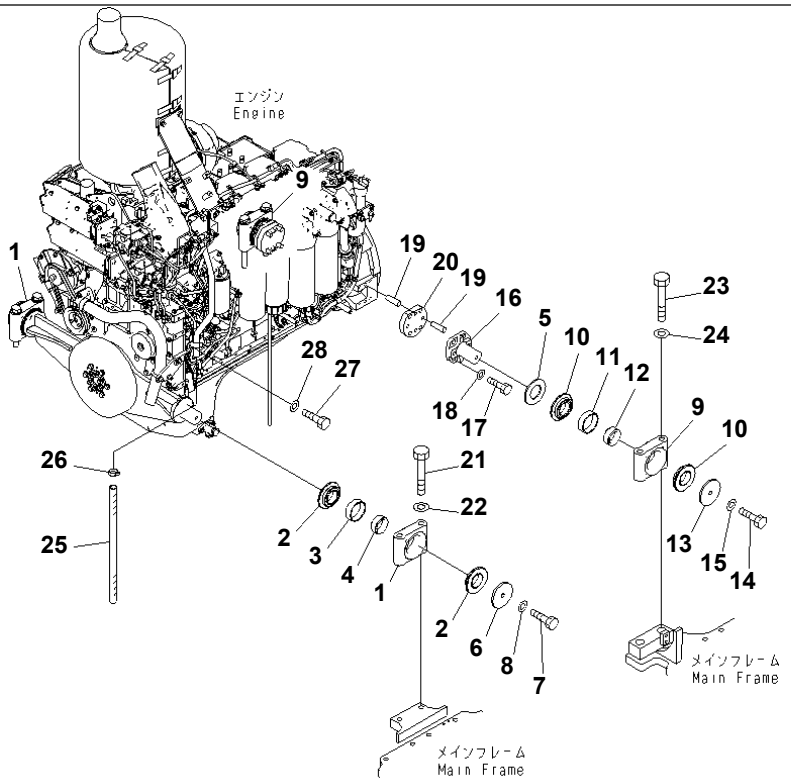

Ref. B0100-01A0 **Page 030010**

D155A-6 S/N 85001-UP
ENGINE MOUNT

Item	Part No.	Part Name	Qty	Serial No.
1	17A-21-12151	CAP	2	85001-
2	154-01-21310	CUSHION	4	85001-
3	154-01-21320	CUSHION	2	85001-
4	154-01-21330	CUSHION	2	85001-
5	14X-01-11140	SPACER	2	85001-
6	14X-01-11150	PLATE	2	85001-
7	01010-81645	BOLT	2	85001-
8	01643-31645	WASHER	2	85001-
9	17A-21-12151	CAP	2	85001-
10	154-01-21310	CUSHION	4	85001-
11	154-01-21320	CUSHION	2	85001-
12	154-01-21330	CUSHION	2	85001-
13	14X-01-11150	PLATE	2	85001-
14	01010-81645	BOLT	2	85001-
15	01643-31645	WASHER	2	85001-
16	17A-01-41120	PIN	2	85001-
17	01010-81670	BOLT	8	85001-
18	01643-31645	WASHER	8	85001-
19	04020-01434	PIN	8	85001-
20	17A-01-41131	PLATE	2	85001-
21	01011-82485	BOLT	4	85001-
22	01643-32460	WASHER	4	85001-
23	203-09-21110	BOLT	4	85001-
24	01643-32460	WASHER	4	85001-
25	07286-02660	HOSE	1	85001-
26	07281-00359	CLAMP	1	85001-
27	01010-81025	BOLT	1	85001-
28	01643-31032	WASHER	1	85001-

Printed By : Dwi Iswanto (airafather6107170)

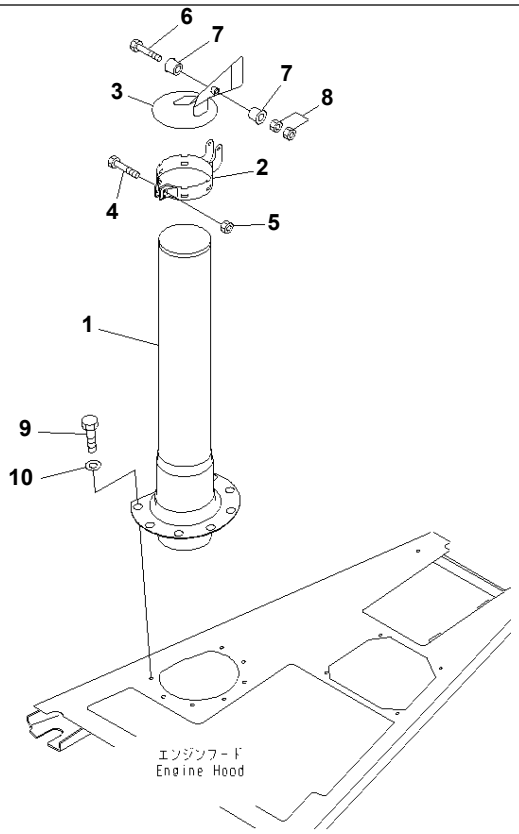

00063511

Ref. B0300-01A0 **Page 030020**

D155A-6 S/N 85001-UP
EXHAUST PIPE

Item	Part No.	Part Name	Qty	Serial No.
1	17A-01-41210	PIPE	1	85001-
	20Y-01-12300	CAP	1	85001-
2	205-01-85160	· BAND	1	85001-
3	20Y-01-12310	· PLATE,RAIN	1	85001-
4	6715-11-5290	· BOLT	2	85001-
5	01580-10605	· NUT	2	85001-
6	6715-11-5270	· BOLT	1	85001-
7	6715-11-5280	· BUSHING	2	85001-
8	01580-11008	NUT	2	85001-
9	195-54-43210	BOLT	8	85001-
10	175-54-34170	WASHER	8	85001-

Printed By : Dwi Iswanto (airafather6107170)

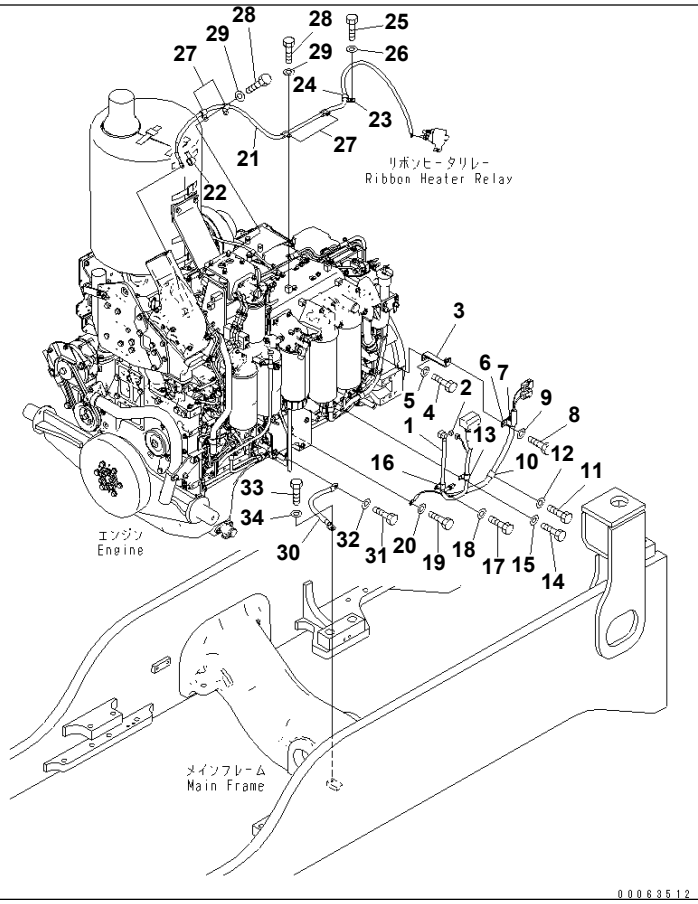

Ref. B0500-01A0 **Page 030030**

D155A-6 S/N 85001-UP
WIRING (ENGINE SIDE)

Item	Part No.	Part Name	Qty	Serial No.
1	17A-06-43190	WIRING HARNESS	1	85001-
2	19M-06-31720	・ RESISTOR	1	85001-
3	17A-911-4391	BRACKET	1	85001-
4	01010-81030	BOLT	1	85001-
5	01643-31032	WASHER	1	85001-
6	04434-52711	CLIP	1	85001-
7	07095-20419	CUSHION	1	85001-
8	01010-81020	BOLT	1	85001-
9	01643-31032	WASHER	1	85001-
10	600-051-2190	CLIP	1	85001-
11	01010-81020	BOLT	1	85001-
12	01643-31032	WASHER	1	85001-
13	600-051-2140	CLIP	1	85001-
14	01010-81020	BOLT	1	85001-
15	01643-31032	WASHER	1	85001-
16	600-051-2140	CLIP	1	85001-
17	01010-81020	BOLT	1	85001-
18	01643-31032	WASHER	1	85001-
19	01010-81020	BOLT	1	85001-
20	01643-31032	WASHER	1	85001-
21	17A-06-41292	WIRING HARNESS	1	85001-
22	08038-02027	CAP	1	85001-
23	04434-51910	CLIP	1	85001-
24	07095-20213	CUSHION	1	85001-
25	01010-81020	BOLT	1	85001-
26	01643-31032	WASHER	1	85001-
27	600-051-2140	CLIP	4	85001-
28	01010-81020	BOLT	4	85001-
29	01643-31032	WASHER	4	85001-
30	175-06-51440	WIRE	1	85001-

Printed By : Dwi Iswanto (airafather6107170)

WIRING (ENGINE SIDE)

Item	Part No.	Part Name	Qty	Serial No.
31	01010-81020	BOLT	1	85001-
32	01643-31032	WASHER	1	85001-
33	01010-81225	BOLT	1	85001-
34	01643-31232	WASHER	1	85001-

Printed By : Dwi Iswanto (airafather6107170)

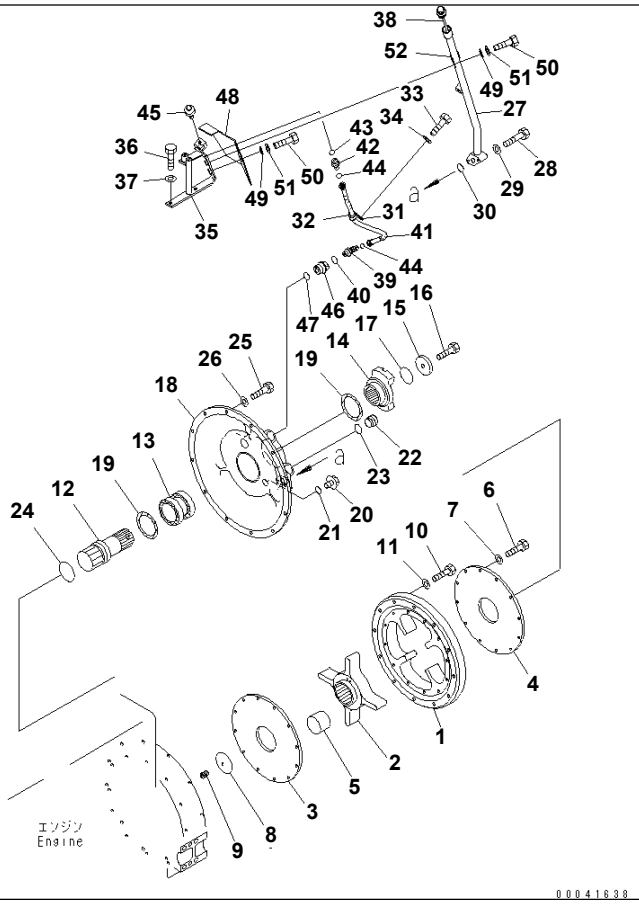

Ref. B0600-01A0 **Page 030040**

D155A-6 S/N 85001-UP
DAMPER(#85001-85024)

Item	Part No.	Part Name	Qty	Serial No.
1	154-12-71231	BODY	1	85001-@
2	17A-12-11151	BODY	1	85001-@
3	17A-12-11161	FLANGE	1	85001-@
4	17A-12-11171	FLANGE	1	85001-@
5	287-01-12180	CUSHION	8	85001-@
6	01010-81085	BOLT	12	85001-@
7	01643-31032	WASHER	12	85001-@
8	17A-12-11230	PLUG	1	85001-@
9	07029-00000	VALVE	1	85001-@
10	01010-81255	BOLT	12	85001-@
11	01643-31232	WASHER	12	85001-@
12	154-12-71220	SHAFT	1	85001-@
13	17A-12-12181	BEARING	1	85001-@
14	17A-12-11221	COUPLING	1	85001-@
15	17A-12-11260	HOLDER	1	85001-@
16	01010-81680	BOLT	1	85001-@
17	07000-75060	O-RING	1	85001-@
18	17A-12-12111	COVER	1	85001-@
19	17A-12-11270	SEAL	2	85001-@
20	07044-12412	PLUG	1	85001-@
21	07002-02434	O-RING	1	85001-@
22	07041-13612	PLUG	2	85001-@
23	07002-13634	O-RING	2	85001-@
24	07000-E5075	O-RING	1	85001-@
25	01010-81235	BOLT	12	85001-@
26	01643-31232	WASHER	12	85001-@
27	17A-12-41111	TUBE	1	85001-@
28	01010-81060	BOLT	2	85001-@
29	01643-31032	WASHER	2	85001-@
30	07000-73028	O-RING	1	85001-@

Printed By : Dwi Iswanto (airafather6107170)

DAMPER(#85001-85024)

Item	Part No.	Part Name	Qty	Serial No.
31	04434-52112	CLIP	1	85001-@
32	07095-20314	CUSHION	1	85001-@
33	01010-81230	BOLT	1	85001-@
34	01643-31232	WASHER	1	85001-@
35	17A-12-41121	BRACKET	1	85001-@
36	01010-81025	BOLT	2	85001-@
37	01643-31032	WASHER	2	85001-@
38	17A-12-41160	GAUGE	1	85001-@
39	02782-10315	ELBOW	1	85001-@
40	07002-12034	O-RING	1	85001-@
41	02760-003A6	HOSE	1	85001-@
42	02781-00315	UNION	1	85001-@
43	07002-12034	O-RING	1	85001-@
44	02896-11009	O-RING	2	85001-@
45	07030-00252	BREATHER	1	85001-@
46	17A-12-41140	PLUG	1	85001-@
47	07002-13634	O-RING	1	85001-@
48	17A-12-41152	RUBBER	1	85001-85024
49	103-54-24440	WASHER	2	85001-@
50	01010-81230	BOLT	2	85001-@
51	01643-31232	WASHER	2	85001-@
52	04434-52712	CLIP	1	85001-@

Printed By : Dwi Iswanto (airafather6107170)

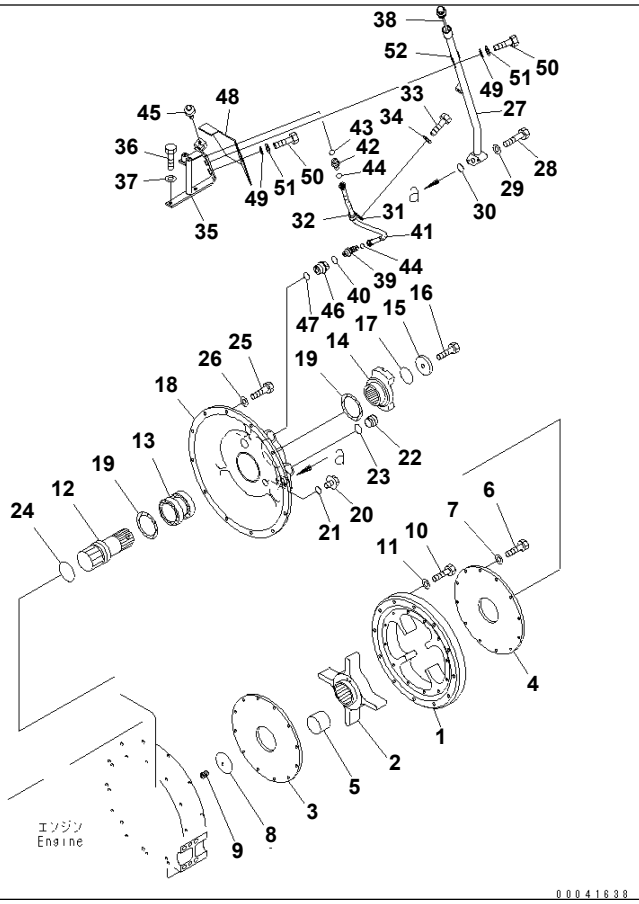

Ref. B0600-01A0A **Page 030050**

D155A-6 S/N 85001-UP
DAMPER(#85025-)

Item	Part No.	Part Name	Qty	Serial No.
1	154-12-71231	BODY	1	85001-
2	17A-12-11151	BODY	1	85001-
3	17A-12-11161	FLANGE	1	85001-
4	17A-12-11171	FLANGE	1	85001-
5	287-01-12180	CUSHION	8	85001-
6	01010-81085	BOLT	12	85001-
7	01643-31032	WASHER	12	85001-
8	17A-12-11230	PLUG	1	85001-
9	07029-00000	VALVE	1	85001-
10	01010-81255	BOLT	12	85001-
11	01643-31232	WASHER	12	85001-
12	154-12-71220	SHAFT	1	85001-
13	17A-12-12181	BEARING	1	85001-
14	17A-12-11221	COUPLING	1	85001-
15	17A-12-11260	HOLDER	1	85001-
16	01010-81680	BOLT	1	85001-
17	07000-75060	O-RING	1	85001-
18	17A-12-12111	COVER	1	85001-
19	17A-12-11270	SEAL	2	85001-
20	07044-12412	PLUG	1	85001-
21	07002-02434	O-RING	1	85001-
22	07041-13612	PLUG	2	85001-
23	07002-13634	O-RING	2	85001-
24	07000-E5075	O-RING	1	85001-
25	01010-81235	BOLT	12	85001-
26	01643-31232	WASHER	12	85001-
27	17A-12-41111	TUBE	1	85001-
28	01010-81060	BOLT	2	85001-
29	01643-31032	WASHER	2	85001-
30	07000-73028	O-RING	1	85001-

Printed By : Dwi Iswanto (airafather6107170)

DAMPER(#85025-)

Item	Part No.	Part Name	Qty	Serial No.
31	04434-52112	CLIP	1	85001-
32	07095-20314	CUSHION	1	85001-
33	01010-81230	BOLT	1	85001-
34	01643-31232	WASHER	1	85001-
35	17A-12-41121	BRACKET	1	85001-
36	01010-81025	BOLT	2	85001-
37	01643-31032	WASHER	2	85001-
38	17A-12-41160	GAUGE	1	85001-
39	02782-10315	ELBOW	1	85001-
40	07002-12034	O-RING	1	85001-
41	02760-003A6	HOSE	1	85001-
42	02781-00315	UNION	1	85001-
43	07002-12034	O-RING	1	85001-
44	02896-11009	O-RING	2	85001-
45	07030-00252	BREATHER	1	85001-
46	17A-12-41140	PLUG	1	85001-
47	07002-13634	O-RING	1	85001-
48	17A-12-41153	SHEET	1	85025-
49	103-54-24440	WASHER	2	85001-
50	01010-81230	BOLT	2	85001-
51	01643-31232	WASHER	2	85001-
52	04434-52712	CLIP	1	85001-

Printed By : Dwi Iswanto (airafather6107170)

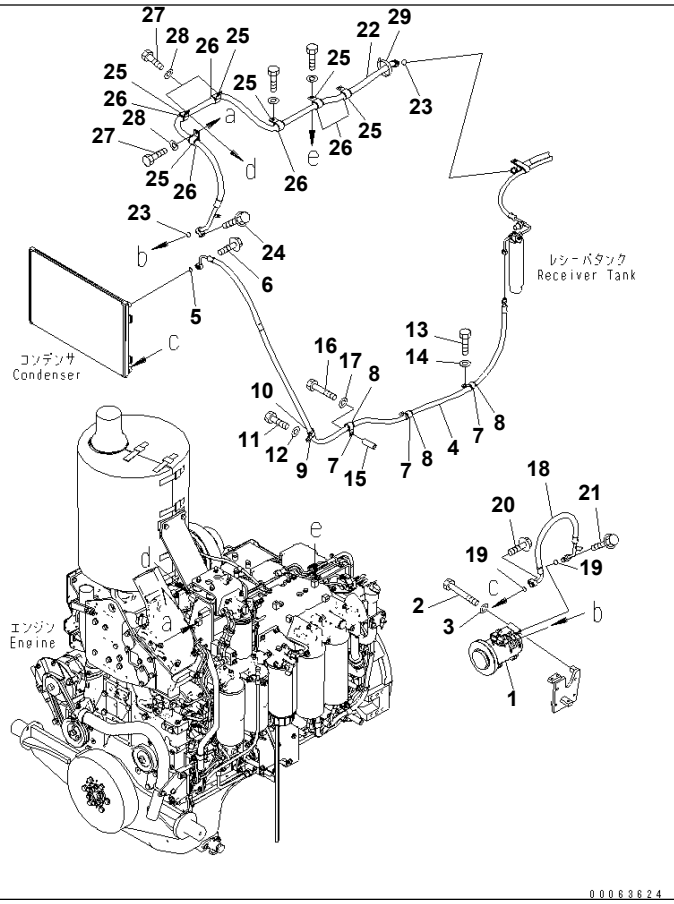

Ref. B0710-01A0 **Page 030060**

D155A-6 S/N 85001-UP
AIR COMPRESSOR (COMPRESSOR AND HOSE)

Item	Part No.	Part Name	Qty	Serial No.
1	(17A-911-4810)	COMPRESSOR ASS'Y	1	85001-
2	01010-80875	BOLT	4	85001-
3	01643-30823	WASHER	4	85001-
4	17A-911-4361	HOSE	1	85001-
5	20Y-979-3150	O-RING	1	85001-
6	01435-00630	BOLT	1	85001-
7	04434-52112	CLIP	3	85001-
8	07095-20314	CUSHION	3	85001-
9	04434-52112	CLIP	1	85001-
10	07095-20314	CUSHION	1	85001-
11	01010-81225	BOLT	1	85001-
12	01643-31232	WASHER	1	85001-
13	01010-81225	BOLT	2	85001-
14	01643-31232	WASHER	2	85001-
15	175-61-17240	COLLAR	1	85001-
16	01010-81280	BOLT	1	85001-
17	01643-31232	WASHER	1	85001-
18	17A-911-4850	HOSE	1	85001-
19	20Y-979-3140	· O-RING	2	85001-
20	01435-00630	BOLT	1	85001-
21	01435-00630	BOLT	1	85001-
22	17A-911-4841	HOSE	1	85001-
23	20Y-979-3130	· O-RING	2	85001-
24	01435-00630	BOLT	1	85001-
25	04434-52711	CLIP	6	85001-
26	07095-20420	CUSHION	6	85001-
27	01010-81020	BOLT	3	85001-
28	01643-31032	WASHER	3	85001-
29	08034-20536	BAND	1	85001-

Printed By : Dwi Iswanto (airafather6107170)

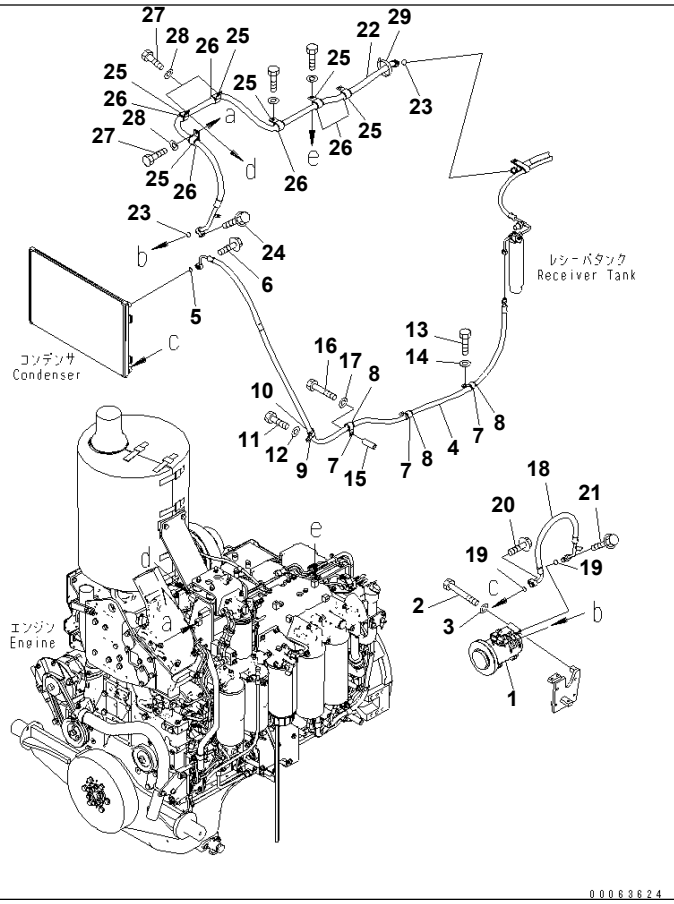

Ref. B0710-01A1 **Page 030070**

D155A-6 S/N 85001-UP
AIR COMPRESSOR (COMPRESSOR AND HOSE) (FOR SAND AND DUSTY SPEC.)

Item	Part No.	Part Name	Qty	Serial No.
1	(154-911-7842)	COMPRESSOR ASS'Y	1	85001-
2	01010-80875	BOLT	4	85001-
3	01643-30823	WASHER	4	85001-
4	17A-911-4361	HOSE	1	85001-
5	20Y-979-3150	O-RING	1	85001-
6	01435-00630	BOLT	1	85001-
7	04434-52112	CLIP	3	85001-
8	07095-20314	CUSHION	3	85001-
9	04434-52112	CLIP	1	85001-
10	07095-20314	CUSHION	1	85001-
11	01010-81225	BOLT	1	85001-
12	01643-31232	WASHER	1	85001-
13	01010-81225	BOLT	2	85001-
14	01643-31232	WASHER	2	85001-
15	175-61-17240	COLLAR	1	85001-
16	01010-81280	BOLT	1	85001-
17	01643-31232	WASHER	1	85001-
18	17A-911-4850	HOSE	1	85001-
19	20Y-979-3140	· O-RING	2	85001-
20	01435-00630	BOLT	1	85001-
21	01435-00630	BOLT	1	85001-
22	17A-911-4841	HOSE	1	85001-
23	20Y-979-3130	· O-RING	2	85001-
24	01435-00630	BOLT	1	85001-
25	04434-52711	CLIP	6	85001-
26	07095-20420	CUSHION	6	85001-
27	01010-81020	BOLT	3	85001-
28	01643-31032	WASHER	3	85001-
29	08034-20536	BAND	1	85001-

Printed By : Dwi Iswanto (airafather6107170)

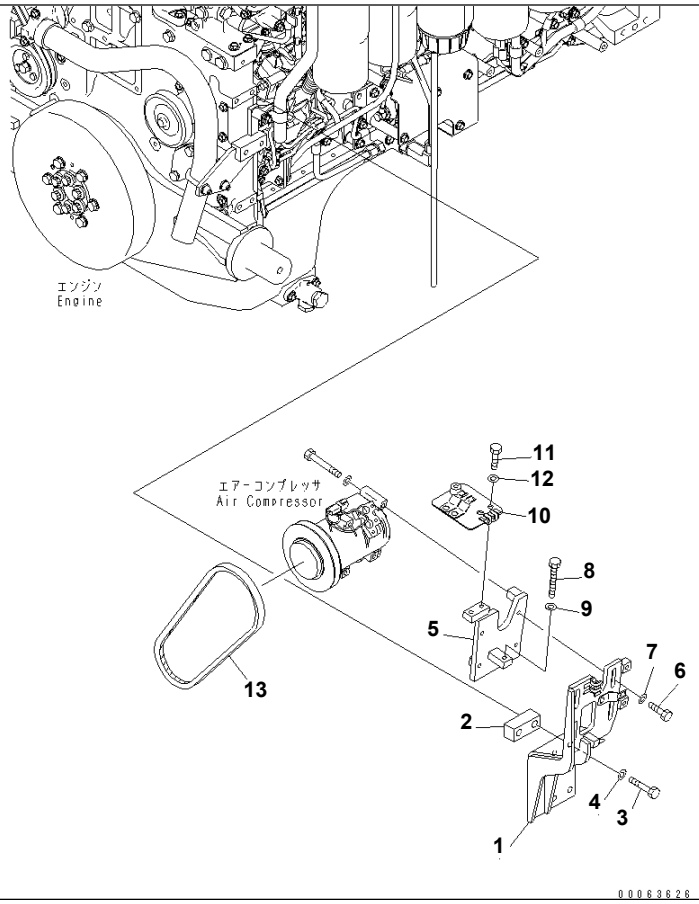

Ref. B0710-02A0 **Page 030080**

D155A-6 S/N 85001-UP
AIR COMPRESSOR (COMPRESSOR MOUNT)

Item	Part No.	Part Name	Qty	Serial No.
1	17A-911-4663	BRACKET	1	85001-
2	17A-911-4762	SPACER	1	85001-
3	01010-81260	BOLT	4	85001-
4	01643-31232	WASHER	4	85001-
5	17A-911-4674	BRACKET	1	85001-
6	01010-81025	BOLT	4	85001-
7	203-54-56970	WASHER	4	85001-
8	01016-51090	BOLT	1	85001-
9	01580-11008	NUT	1	85001-
10	17A-911-4831	BRACKET	1	85001-
11	01010-81020	BOLT	2	85001-
12	01643-31032	WASHER	2	85001-
13	17A-911-4680	V-BELT	1	85001-

Printed By : Dwi Iswanto (airafather6107170)

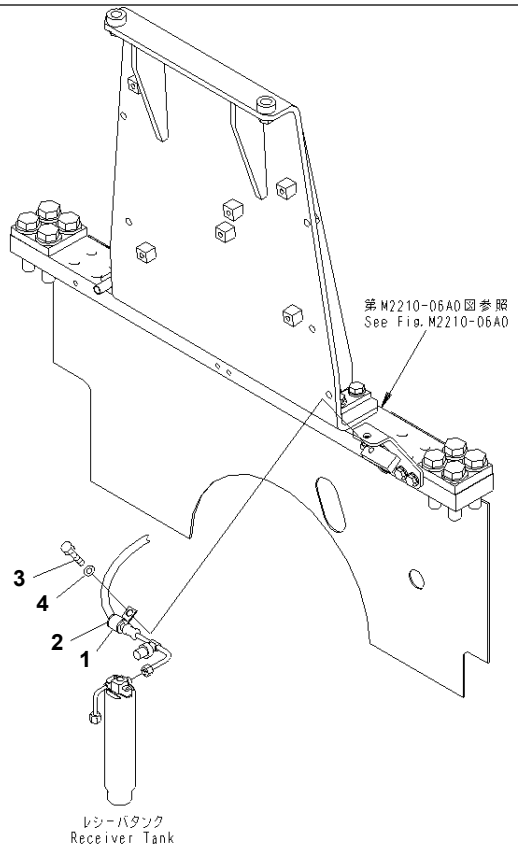

00063629

Ref. B0710-03A0 **Page 030090**

D155A-6 S/N 85001-UP
AIR COMPRESSOR (CLIP)

Item	Part No.	Part Name	Qty	Serial No.
1	04434-52112	CLIP	1	85001-
2	07095-20314	CUSHION	1	85001-
3	01010-81220	BOLT	1	85001-
4	01643-31232	WASHER	1	85001-

Printed By : Dwi Iswanto (airafather6107170)

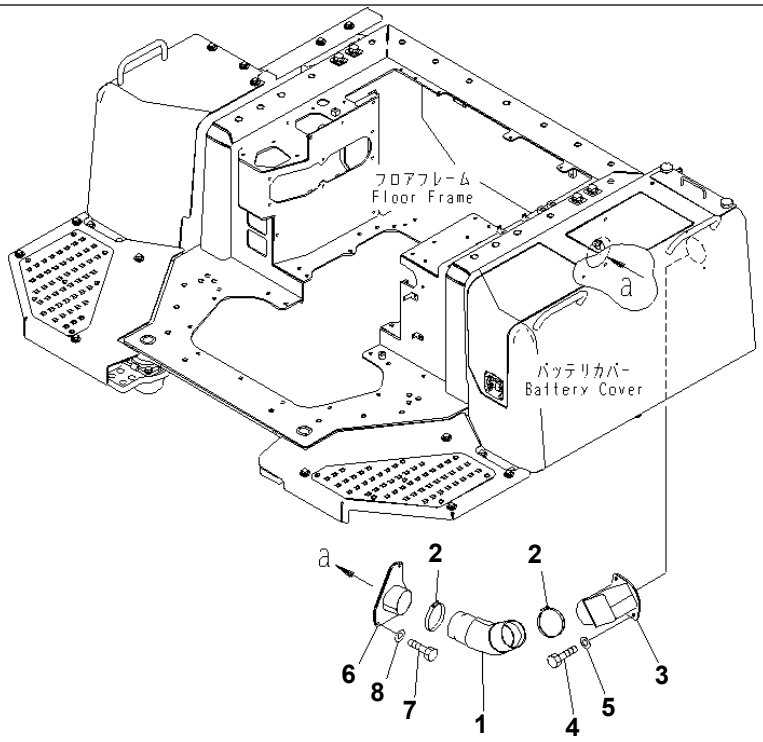

00063631

Ref. B0710-04A0 **Page 030100**

D155A-6 S/N 85001-UP
AIR COMPRESSOR (DUCT)

Item	Part No.	Part Name	Qty	Serial No.
1	142-979-3470	HOSE	1	85001-
2	07281-01159	CLAMP	2	85001-
3	17A-911-4244	DUCT	1	85001-
4	01010-81020	BOLT	2	85001-
5	01643-31032	WASHER	2	85001-
6	17A-979-2222	DUCT	1	85001-
7	01010-81030	BOLT	3	85001-
8	01643-31032	WASHER	3	85001-

Printed By : Dwi Iswanto (airafather6107170)

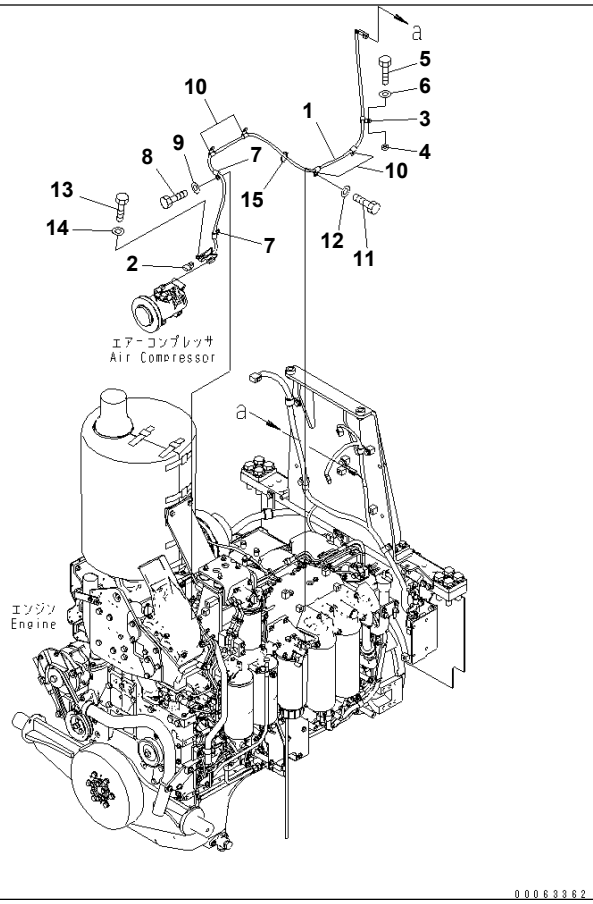

Ref. B0710-05A0 **Page 030110**

D155A-6 S/N 85001-UP
AIR COMPRESSOR (WIRING)

Item	Part No.	Part Name	Qty	Serial No.
1	17A-06-43360	WIRING HARNESS	1	85001-
2	21J-06-13661	· DIODE	1	85001-
3	600-051-2100	CLIP	1	85001-
4	208-01-11270	WASHER	1	85001-
5	01010-81030	BOLT	1	85001-
6	01643-31032	WASHER	1	85001-
7	600-051-2100	CLIP	2	85001-
8	01010-81020	BOLT	1	85001-
9	01643-31032	WASHER	1	85001-
10	600-051-2100	CLIP	4	85001-
11	01010-81020	BOLT	2	85001-
12	01643-31032	WASHER	2	85001-
13	01010-81020	BOLT	1	85001-
14	01643-31032	WASHER	1	85001-
15	08034-20414	BAND	1	85001-

Printed By : Dwi Iswanto (airafather6107170)

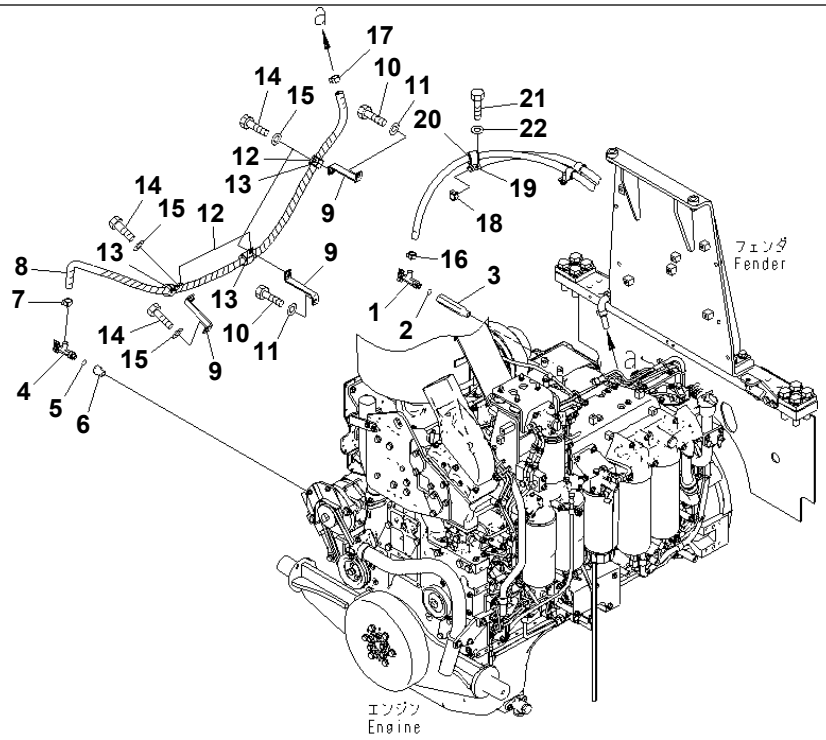

Ref. B0720-01A0 Page 030120

D155A-6 S/N 85001-UP

HEATER LINE

Item	Part No.	Part Name	Qty	Serial No.
1	17A-911-4510	VALVE	1	85001-
2	07002-11623	O-RING	1	85001-
3	17A-911-4520	JOINT	1	85001-
4	17A-911-4510	VALVE	1	85001-
5	07002-11623	O-RING	1	85001-
6	17A-911-4530	JOINT	1	85001-
7	09479-02400	CLAMP	1	85001-
8	17A-911-4383	HOSE	1	85001-
9	17A-911-4391	BRACKET	3	85001-
10	01010-81020	BOLT	3	85001-
11	01643-31032	WASHER	3	85001-
12	04434-53211	CLIP	3	85001-
13	07095-20523	CUSHION	3	85001-
14	01010-81020	BOLT	3	85001-
15	01643-31032	WASHER	3	85001-
16	09479-02400	CLAMP	1	85001-
17	09479-02400	CLAMP	1	85001-
18	09479-02400	CLAMP	1	85001-
19	04434-53412	CLIP	1	85001-
20	07095-20625	CUSHION	1	85001-
21	01010-81220	BOLT	1	85001-
22	01643-31232	WASHER	1	85001-

Printed By : Dwi Iswanto (airafather6107170)

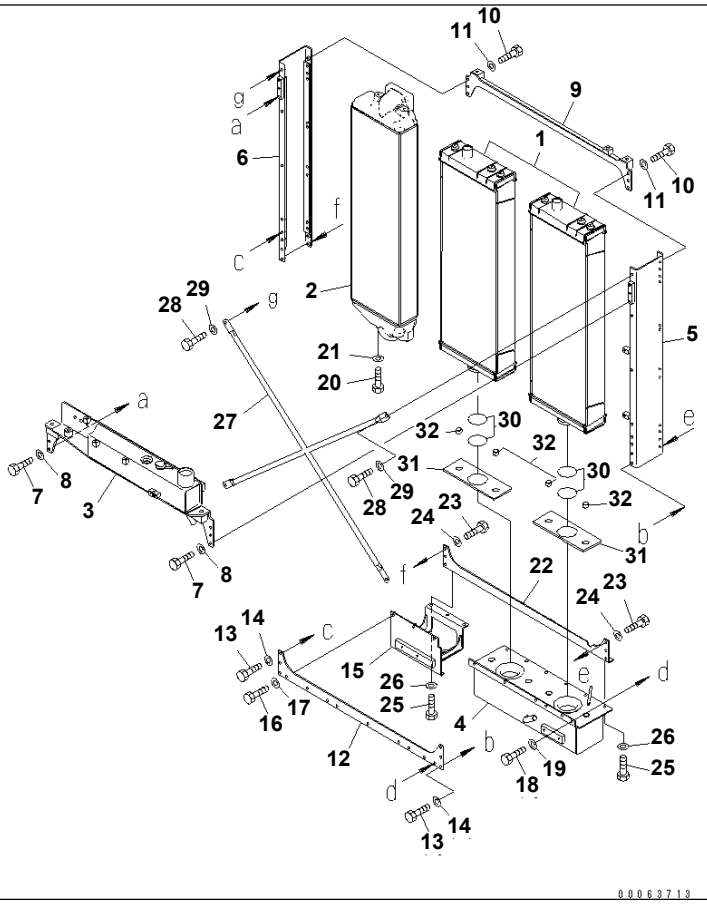

Ref. C0110-01A0 **Page 060010**

D155A-6 S/N 85001-UP
COOLING (RADIATOR)

Item	Part No.	Part Name	Qty	Serial No.
1	17A-03-41112	CORE	2	85001-
2	17A-03-41122	AFTER COOLER	1	85001-
3	17A-03-41131	TANK	1	85001-
4	17A-03-41142	TANK	1	85001-
5	17A-03-44151	FRAME	1	85001-
6	17A-03-44161	FRAME	1	85001-
7	01010-81230	BOLT	6	85001-
8	01643-31232	WASHER	6	85001-
9	17A-03-41171	FRAME	1	85001-
10	01010-81225	BOLT	6	85001-
11	01643-31232	WASHER	6	85001-
12	17A-03-41181	BRACKET	1	85001-
13	01010-81230	BOLT	6	85001-
14	01643-31232	WASHER	6	85001-
15	17A-03-41380	BRACKET	1	85001-
16	01010-81230	BOLT	3	85001-
17	01643-31232	WASHER	3	85001-
18	01010-81230	BOLT	6	85001-
19	01643-31232	WASHER	6	85001-
20	01010-81235	BOLT	2	85001-
21	01643-31232	WASHER	2	85001-
22	17A-03-41441	FRAME	1	85001-
23	01010-81230	BOLT	6	85001-
24	01643-31232	WASHER	6	85001-
25	01010-81230	BOLT	9	85001-
26	01643-31232	WASHER	9	85001-
27	17A-03-41251	STAY	1	85001-
28	01010-81225	BOLT	4	85001-
29	01643-31232	WASHER	4	85001-
30	17A-03-41220	O-RING	4	85001-

Printed By : Dwi Iswanto (airafather6107170)

COOLING (RADIATOR)

Item	Part No.	Part Name	Qty	Serial No.
31	17A-03-41231	CUSHION	2	85001-
32	22B-03-12590	CUSHION	4	85001-

Printed By : Dwi Iswanto (airafather6107170)

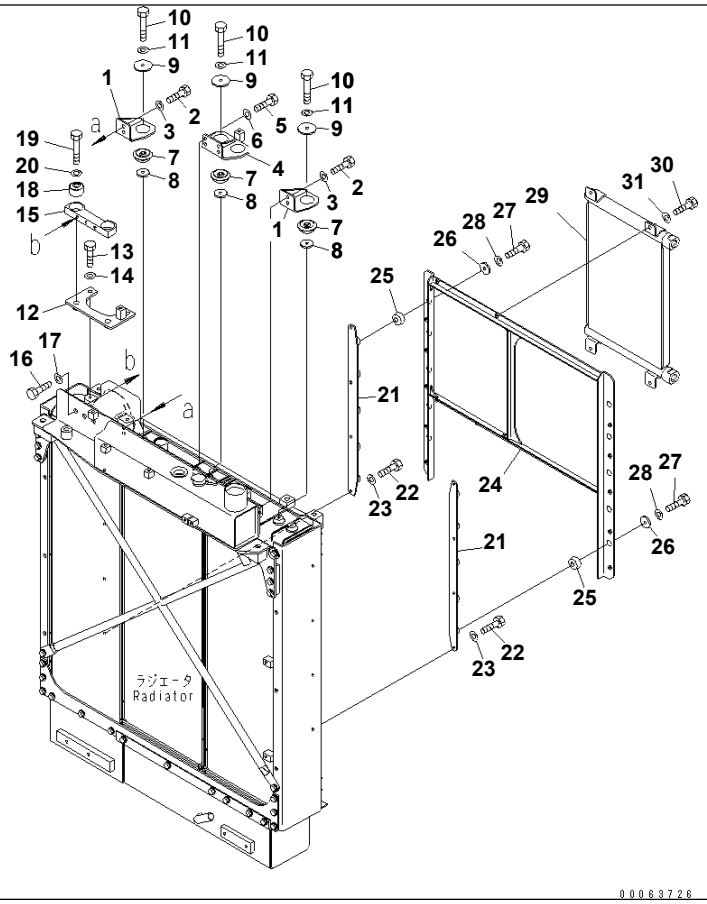

Ref. C0110-02A0 **Page 060020**

D155A-6 S/N 85001-UP
COOLING (OIL COOLER) (WITHOUT CAB)

Item	Part No.	Part Name	Qty	Serial No.
1	17A-03-41311	BRACKET	2	85001-
2	01010-81225	BOLT	4	85001-
3	01643-31232	WASHER	4	85001-
4	17A-03-41271	BRACKET	1	85001-
5	01010-81225	BOLT	4	85001-
6	01643-31232	WASHER	4	85001-
7	17A-03-41361	CUSHION	4	85001-
8	178-60-12250	COLLAR	4	85001-
9	17A-03-41371	PLATE	4	85001-
10	01010-81065	BOLT	4	85001-
11	01643-31032	WASHER	4	85001-
12	17A-03-41281	BRACKET	1	85001-
13	01010-81240	BOLT	2	85001-
14	01643-31232	WASHER	2	85001-
15	17A-03-41291	BRACKET	1	85001-
16	01010-81225	BOLT	3	85001-
17	01643-31232	WASHER	3	85001-
18	135-03-12110	DAMPER	2	85001-
19	01010-81465	BOLT	2	85001-
20	01643-31445	WASHER	2	85001-
21	17A-03-44531	BRACKET	2	85001-
22	01010-81225	BOLT	8	85001-
23	01643-31232	WASHER	8	85001-
24	17A-03-44521	BRACKET	1	85001-
25	195-03-41380	CUSHION	10	85001-
26	178-60-12250	COLLAR	10	85001-
27	01010-81050	BOLT	10	85001-
28	01643-31032	WASHER	10	85001-
29	154-03-76190	OIL COOLER	1	85001-
30	01010-81025	BOLT	4	85001-

Printed By : Dwi Iswanto (airafather6107170)

COOLING (OIL COOLER) (WITHOUT CAB)

Item	Part No.	Part Name	Qty	Serial No.
31	01643-31032	WASHER	4	85001-

Printed By : Dwi Iswanto (airafather6107170)

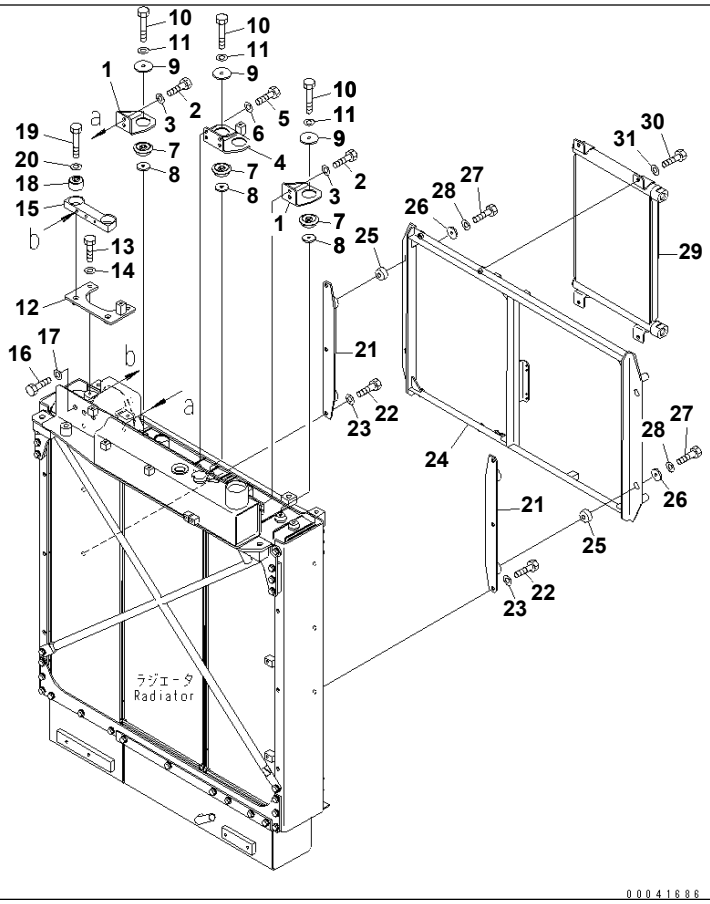

Ref. C0110-02A1 **Page 060030**

D155A-6 S/N 85001-UP
COOLING (OIL COOLER) (WITH CAB)

Item	Part No.	Part Name	Qty	Serial No.
1	17A-03-41311	BRACKET	2	85001-
2	01010-81225	BOLT	4	85001-
3	01643-31232	WASHER	4	85001-
4	17A-03-41271	BRACKET	1	85001-
5	01010-81225	BOLT	4	85001-
6	01643-31232	WASHER	4	85001-
7	17A-03-41361	CUSHION	4	85001-
8	178-60-12250	COLLAR	4	85001-
9	17A-03-41371	PLATE	4	85001-
10	01010-81065	BOLT	4	85001-
11	01643-31032	WASHER	4	85001-
12	17A-03-41281	BRACKET	1	85001-
13	01010-81240	BOLT	2	85001-
14	01643-31232	WASHER	2	85001-
15	17A-03-41291	BRACKET	1	85001-
16	01010-81225	BOLT	3	85001-
17	01643-31232	WASHER	3	85001-
18	135-03-12110	DAMPER	2	85001-
19	01010-81465	BOLT	2	85001-
20	01643-31445	WASHER	2	85001-
21	17A-03-41531	BRACKET	2	85001-
22	01010-81225	BOLT	6	85001-
23	01643-31232	WASHER	6	85001-
24	17A-03-44621	BRACKET	1	85001-
25	195-03-41380	CUSHION	4	85001-
26	178-60-12250	COLLAR	4	85001-
27	01010-81050	BOLT	4	85001-
28	01643-31032	WASHER	4	85001-
29	154-03-76190	OIL COOLER	1	85001-
30	01010-81025	BOLT	4	85001-

Printed By : Dwi Iswanto (airafather6107170)

COOLING (OIL COOLER) (WITH CAB)

Item	Part No.	Part Name	Qty	Serial No.
31	01643-31032	WASHER	4	85001-

Printed By : Dwi Iswanto (airafather6107170)

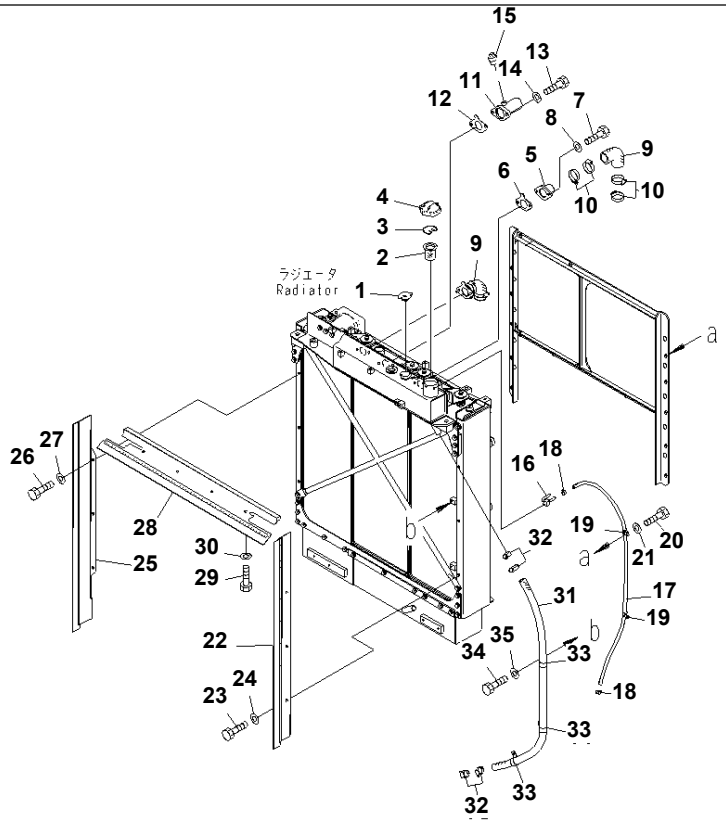

D155A-6 S/N 85001-UP

COOLING (RADIATOR PIPING) (WITHOUT CAB)

Item	Part No.	Part Name	Qty	Serial No.
1	201-03-51310	CAP	1	85001-
2	07056-00048	STRAINER	1	85001-
3	07057-03271	RING	1	85001-
4	07053-10000	CAP	1	85001-
5	17A-03-41321	TUBE	2	85001-
6	17A-03-41240	GASKET	2	85001-
7	01010-81030	BOLT	4	85001-
8	01643-31032	WASHER	4	85001-
9	17A-03-41212	HOSE	2	85001-
10	07289-00055	CLAMP	8	85001-
11	17A-03-41341	TUBE	1	85001-
12	17A-03-41351	GASKET	1	85001-
13	01010-81235	BOLT	2	85001-
14	01643-31232	WASHER	2	85001-
15	07042-70108	PLUG	1	85001-
16	17A-03-41930	TUBE	1	85001-
17	17A-03-41981	HOSE	1	85001-
18	07281-00197	CLAMP	2	85001-
19	04434-51612	CLIP	2	85001-
20	01010-81230	BOLT	2	85001-
21	01643-31232	WASHER	2	85001-
22	17A-03-41461	BAFFLE	1	85001-
23	01010-81225	BOLT	3	85001-
24	01643-31232	WASHER	3	85001-
25	17A-03-41471	BAFFLE	1	85001-
26	01010-81225	BOLT	3	85001-
27	01643-31232	WASHER	3	85001-
28	17A-03-41411	BAFFLE	1	85001-
29	01010-81225	BOLT	4	85001-
30	01643-31232	WASHER	4	85001-

Printed By : Dwi Iswanto (airafather6107170)

COOLING (RADIATOR PIPING) (WITHOUT CAB)

Item	Part No.	Part Name	Qty	Serial No.
31	17A-03-41331	HOSE	1	85001-
32	07289-00035	CLAMP	4	85001-
33	04434-53412	CLIP	3	85001-
34	01010-81220	BOLT	2	85001-
35	01643-31232	WASHER	2	85001-

Printed By : Dwi Iswanto (airafather6107170)

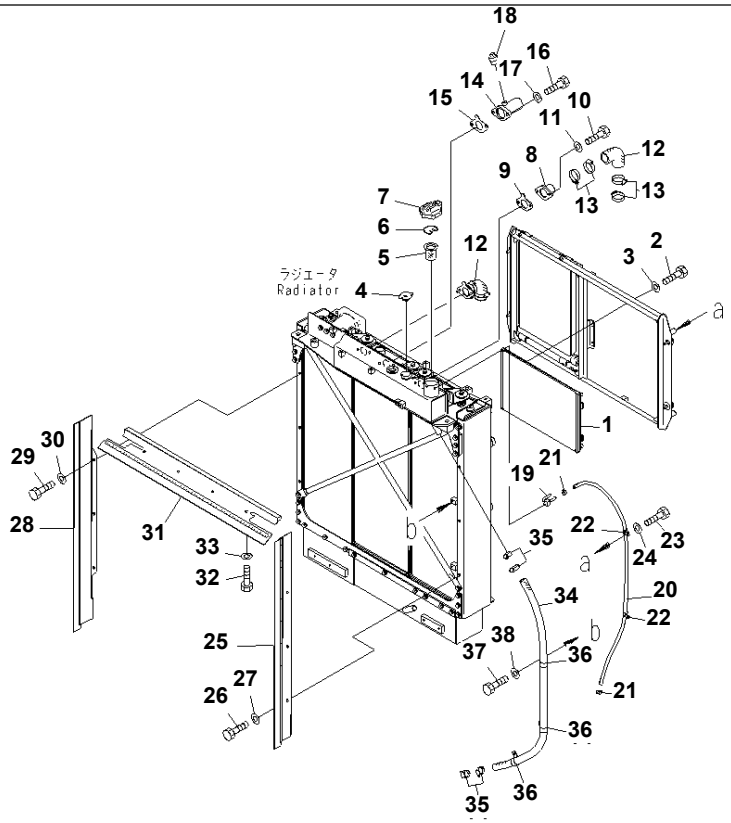

Ref. C0110-03A1 **Page 060050**

D155A-6 S/N 85001-UP
COOLING (RADIATOR PIPING AND CONDENSER) (WITH CAB)

Item	Part No.	Part Name	Qty	Serial No.
1	208-979-7520	CONDENSER ASS'Y	1	85001-
2	01010-80616	BOLT	8	85001-
3	01643-30623	WASHER	8	85001-
4	201-03-51310	CAP	1	85001-
5	07056-00048	STRAINER	1	85001-
6	07057-03271	RING	1	85001-
7	07093-20000	CAP	1	85001-
8	17A-03-41321	TUBE	2	85001-
9	17A-03-41240	GASKET	2	85001-
10	01010-81030	BOLT	4	85001-
11	01643-31032	WASHER	4	85001-
12	17A-03-41212	HOSE	2	85001-
13	07289-00055	CLAMP	8	85001-
14	17A-03-41341	TUBE	1	85001-
15	17A-03-41351	GASKET	1	85001-
16	01010-81235	BOLT	2	85001-
17	01643-31232	WASHER	2	85001-
18	07042-70108	PLUG	1	85001-
19	17A-03-41930	TUBE	1	85001-
20	17A-03-41981	HOSE	1	85001-
21	07281-00197	CLAMP	2	85001-
22	04434-51612	CLIP	2	85001-
23	01010-81230	BOLT	2	85001-
24	01643-31232	WASHER	2	85001-
25	17A-03-41461	BAFFLE	1	85001-
26	01010-81225	BOLT	3	85001-
27	01643-31232	WASHER	3	85001-
28	17A-03-41471	BAFFLE	1	85001-
29	01010-81225	BOLT	3	85001-
30	01643-31232	WASHER	3	85001-

Printed By : Dwi Iswanto (airafather6107170)

COOLING (RADIATOR PIPING AND CONDENSER) (WITH CAB)

Item	Part No.	Part Name	Qty	Serial No.
31	17A-03-41411	BAFFLE	1	85001-
32	01010-81225	BOLT	4	85001-
33	01643-31232	WASHER	4	85001-
34	17A-03-41331	HOSE	1	85001-
35	07289-00035	CLAMP	4	85001-
36	04434-53412	CLIP	3	85001-
37	01010-81220	BOLT	2	85001-
38	01643-31232	WASHER	2	85001-

Printed By : Dwi Iswanto (airafather6107170)

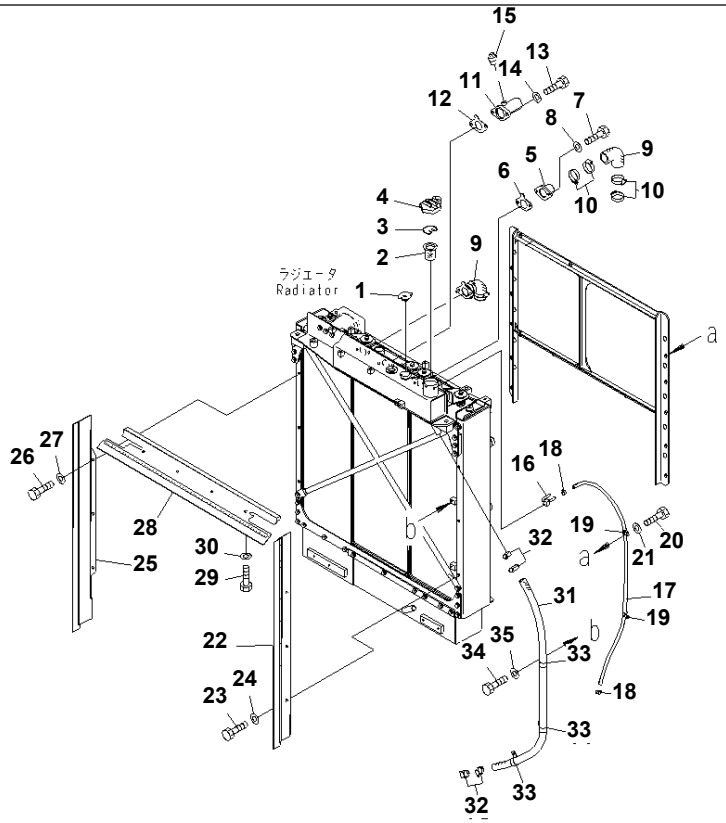

Ref. C0110-03A2 Page 060060

D155A-6 S/N 85001-UP

COOLING (RADIATOR PIPING) (WITHOUT CAB) (WITH LOCK CAP)

Item	Part No.	Part Name	Qty	Serial No.
1	201-03-51310	CAP	1	85001-
2	07056-00048	STRAINER	1	85001-
3	07057-03271	RING	1	85001-
4	07093-20000	CAP	1	85001-
5	17A-03-41321	TUBE	2	85001-
6	17A-03-41240	GASKET	2	85001-
7	01010-81030	BOLT	4	85001-
8	01643-31032	WASHER	4	85001-
9	17A-03-41212	HOSE	2	85001-
10	07289-00055	CLAMP	8	85001-
11	17A-03-41341	TUBE	1	85001-
12	17A-03-41351	GASKET	1	85001-
13	01010-81235	BOLT	2	85001-
14	01643-31232	WASHER	2	85001-
15	07042-70108	PLUG	1	85001-
16	17A-03-41930	TUBE	1	85001-
17	17A-03-41981	HOSE	1	85001-
18	07281-00197	CLAMP	2	85001-
19	04434-51612	CLIP	2	85001-
20	01010-81230	BOLT	2	85001-
21	01643-31232	WASHER	2	85001-
22	17A-03-41461	BAFFLE	1	85001-
23	01010-81225	BOLT	3	85001-
24	01643-31232	WASHER	3	85001-
25	17A-03-41471	BAFFLE	1	85001-
26	01010-81225	BOLT	3	85001-
27	01643-31232	WASHER	3	85001-
28	17A-03-41411	BAFFLE	1	85001-
29	01010-81225	BOLT	4	85001-
30	01643-31232	WASHER	4	85001-

Printed By : Dwi Iswanto (airafather6107170)

COOLING (RADIATOR PIPING) (WITHOUT CAB) (WITH LOCK CAP)

Item	Part No.	Part Name	Qty	Serial No.
31	17A-03-41331	HOSE	1	85001-
32	07289-00035	CLAMP	4	85001-
33	04434-53412	CLIP	3	85001-
34	01010-81220	BOLT	2	85001-
35	01643-31232	WASHER	2	85001-

Printed By : Dwi Iswanto (airafather6107170)

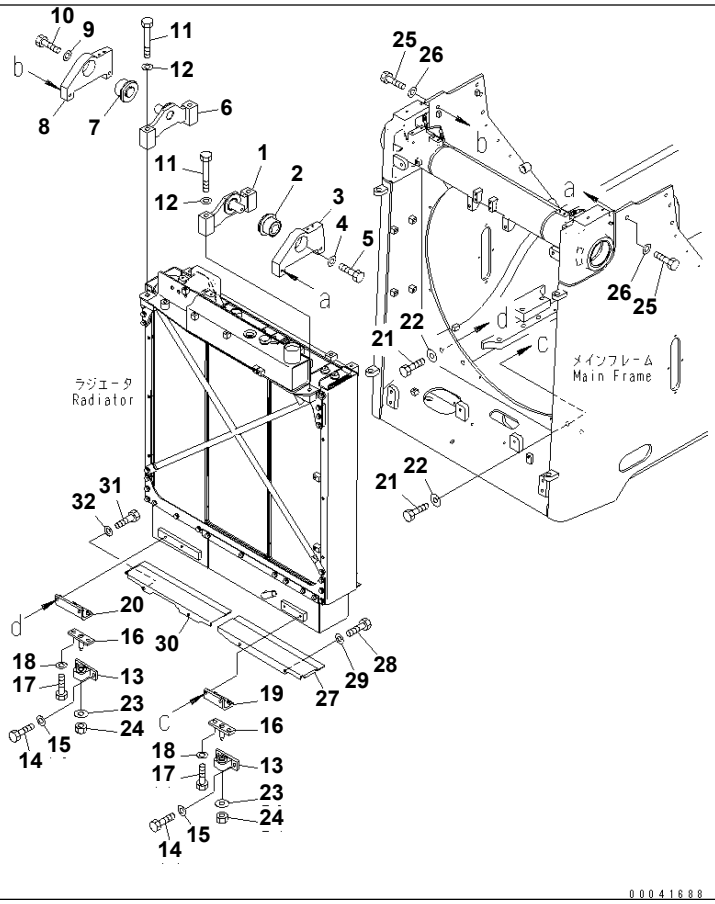

Ref. C0110-04A0 **Page 060070**

D155A-6 S/N 85001-UP
COOLING (RADIATOR MOUNT)(#85001-85024)

Item	Part No.	Part Name	Qty	Serial No.
1	17A-03-41550	BRACKET	1	85001-@
2	17A-03-11281	RUBBER	1	85001-@
3	17A-03-41651	BRACKET	1	85001-@
4	205-70-65890	WASHER	1	85001-@
5	01010-81225	BOLT	1	85001-@
6	17A-03-41560	BRACKET	1	85001-@
7	17A-03-11281	RUBBER	1	85001-@
8	17A-03-41661	BRACKET	1	85001-@
9	205-70-65890	WASHER	1	85001-@
10	01010-81225	BOLT	1	85001-@
11	01011-81630	BOLT	4	85001-@
12	01643-31645	WASHER	4	85001-@
13	17A-03-23101	ISOLATOR ASS'Y	2	85001-85024
14	01010-81230	BOLT	4	85001-@
15	01643-31232	WASHER	4	85001-@
16	17A-03-11271	BRACKET	2	85001-@
17	01010-81240	BOLT	4	85001-@
18	01643-31232	WASHER	4	85001-@
19	17A-03-41831	BRACKET	1	85001-@
20	17A-03-41950	BRACKET	1	85001-@
21	01010-81250	BOLT	4	85001-@
22	175-54-34170	WASHER	4	85001-@
23	175-54-34170	WASHER	2	85001-@
24	01580-11210	NUT	2	85001-@
25	01010-81645	BOLT	4	85001-@
26	01643-31645	WASHER	4	85001-@
27	17A-03-41421	BAFFLE	1	85001-@
28	01010-81225	BOLT	2	85001-@
29	01643-31232	WASHER	2	85001-@
30	17A-03-41431	BAFFLE	1	85001-@

Printed By : Dwi Iswanto (airafather6107170)

COOLING (RADIATOR MOUNT)(#85001-85024)

Item	Part No.	Part Name	Qty	Serial No.
31	01010-81225	BOLT	2	85001-@
32	01643-31232	WASHER	2	85001-@

Printed By : Dwi Iswanto (airafather6107170)

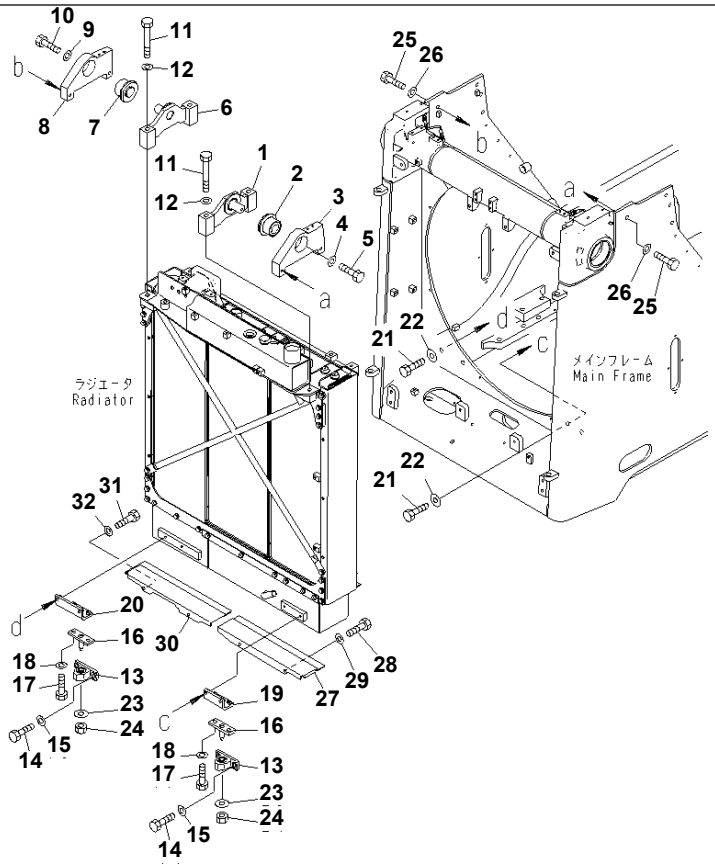

Ref. C0110-04A0A **Page 060080**

D155A-6 S/N 85001-UP
COOLING (RADIATOR MOUNT)(#85025-)

Item	Part No.	Part Name	Qty	Serial No.
1	17A-03-41550	BRACKET	1	85001-
2	17A-03-11281	RUBBER	1	85001-
3	17A-03-41651	BRACKET	1	85001-
4	205-70-65890	WASHER	1	85001-
5	01010-81225	BOLT	1	85001-
6	17A-03-41560	BRACKET	1	85001-
7	17A-03-11281	RUBBER	1	85001-
8	17A-03-41661	BRACKET	1	85001-
9	205-70-65890	WASHER	1	85001-
10	01010-81225	BOLT	1	85001-
11	01011-81630	BOLT	4	85001-
12	01643-31645	WASHER	4	85001-
13	17A-03-42601	ISOLATOR ASS'Y	2	85025-
14	01010-81230	BOLT	4	85001-
15	01643-31232	WASHER	4	85001-
16	17A-03-11271	BRACKET	2	85001-
17	01010-81240	BOLT	4	85001-
18	01643-31232	WASHER	4	85001-
19	17A-03-41831	BRACKET	1	85001-
20	17A-03-41950	BRACKET	1	85001-
21	01010-81250	BOLT	4	85001-
22	175-54-34170	WASHER	4	85001-
23	175-54-34170	WASHER	2	85001-
24	01580-11210	NUT	2	85001-
25	01010-81645	BOLT	4	85001-
26	01643-31645	WASHER	4	85001-
27	17A-03-41421	BAFFLE	1	85001-
28	01010-81225	BOLT	2	85001-
29	01643-31232	WASHER	2	85001-
30	17A-03-41431	BAFFLE	1	85001-

Printed By : Dwi Iswanto (airafather6107170)

COOLING (RADIATOR MOUNT)(#85025-)

Item	Part No.	Part Name	Qty	Serial No.
31	01010-81225	BOLT	2	85001-
32	01643-31232	WASHER	2	85001-

Printed By : Dwi Iswanto (airafather6107170)

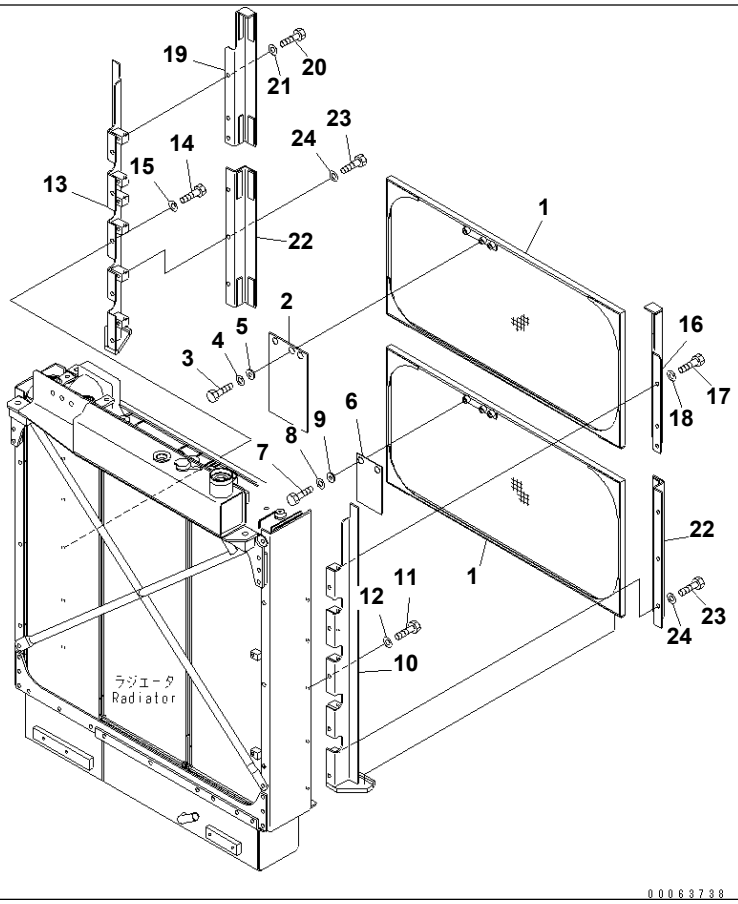

Ref. C0110-05A0 **Page 060090**

D155A-6 S/N 85001-UP
COOLING (RADIATOR CORE) (WITHOUT CAB)

Item	Part No.	Part Name	Qty	Serial No.
1	17A-03-44411	PROTECTOR	2	85001-
2	17A-03-44841	RUBBER	1	85001-
3	01010-81020	BOLT	3	85001-
4	01643-31032	WASHER	3	85001-
5	175-54-34170	WASHER	3	85001-
6	17A-03-44851	RUBBER	1	85001-
7	01010-81020	BOLT	2	85001-
8	01643-31032	WASHER	2	85001-
9	175-54-34170	WASHER	2	85001-
10	17A-03-44431	BRACKET	1	85001-
11	01010-81230	BOLT	5	85001-
12	01643-31232	WASHER	5	85001-
13	17A-03-44451	BRACKET	1	85001-
14	01010-81230	BOLT	5	85001-
15	01643-31232	WASHER	5	85001-
16	17A-03-44441	BRACKET	1	85001-
17	01010-81230	BOLT	3	85001-
18	01643-31232	WASHER	3	85001-
19	17A-03-44461	BRACKET	1	85001-
20	01010-81230	BOLT	3	85001-
21	01643-31232	WASHER	3	85001-
22	17A-03-44471	BRACKET	2	85001-
23	01010-81230	BOLT	6	85001-
24	01643-31232	WASHER	6	85001-

Printed By : Dwi Iswanto (airafather6107170)

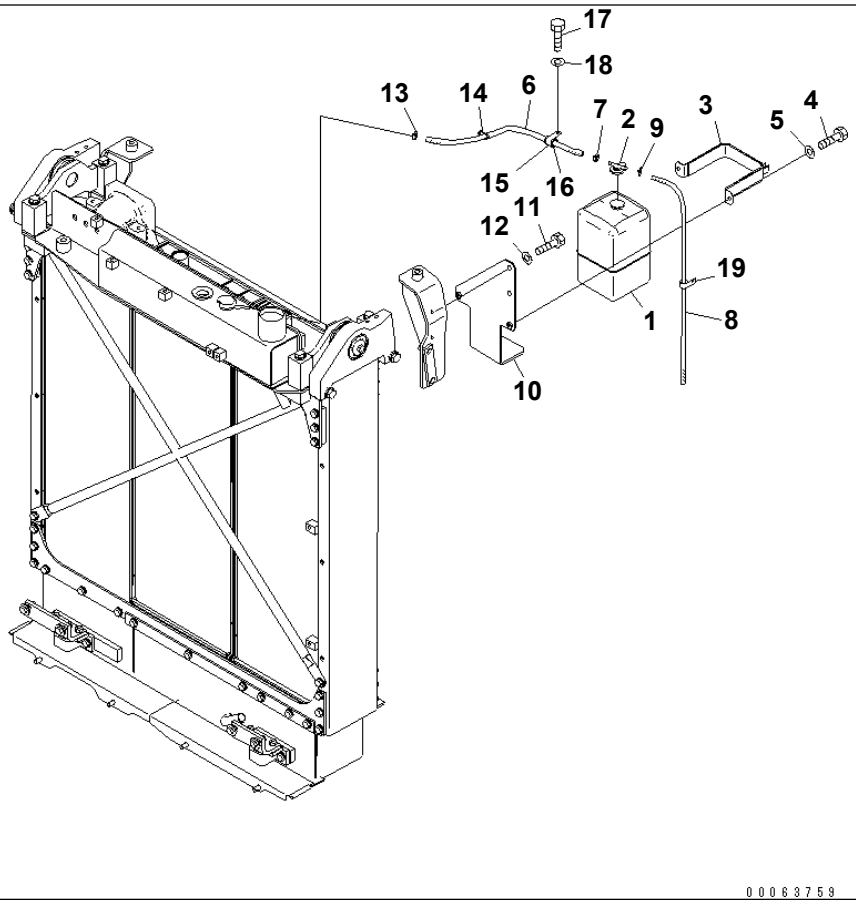

Ref. C0110-06A0 **Page 060100**

D155A-6 S/N 85001-UP

COOLING (RESERVE TANK) (WITHOUT CAB)

Item	Part No.	Part Name	Qty	Serial No.
1	17A-03-14111	TANK	1	85001-
2	17A-03-14120	· CAP ASS'Y	1	85001-
3	17A-03-41970	BRACKET	1	85001-
4	01010-81025	BOLT	2	85001-
5	01643-31032	WASHER	2	85001-
6	17A-03-44961	HOSE	1	85001-
7	11Y-09-11170	CLIP	1	85001-
8	20Y-03-32610	HOSE	1	85001-
9	11Y-09-11120	CLIP	1	85001-
10	17A-03-41911	BRACKET	1	85001-
11	01010-81225	BOLT	2	85001-
12	01643-31232	WASHER	2	85001-
13	11Y-09-11170	CLIP	1	85001-
14	08034-20823	BAND	1	85001-
15	04434-52112	CLIP	1	85001-
16	07095-20314	CUSHION	1	85001-
17	01010-81225	BOLT	1	85001-
18	01643-31232	WASHER	1	85001-
19	04434-51210	CLIP	1	85001-

Printed By : Dwi Iswanto (airafather6107170)

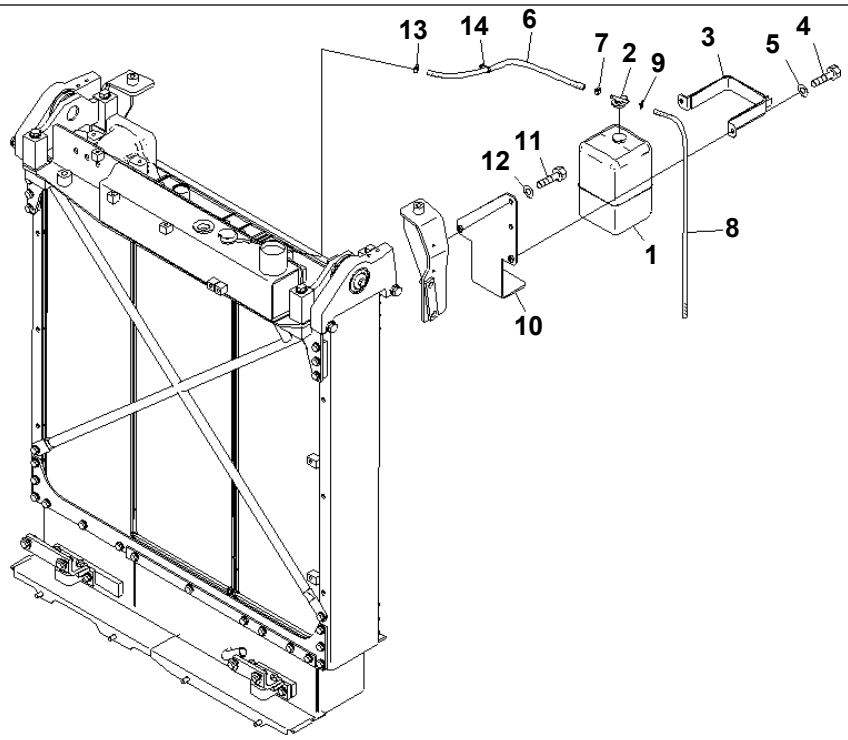

00063766

Ref. C0110-06A1 **Page 060110**

D155A-6 S/N 85001-UP

COOLING (RESERVE TANK) (WITH CAB)

Item	Part No.	Part Name	Qty	Serial No.
1	17A-03-14111	TANK	1	85001-
2	17A-03-14120	· CAP ASS'Y	1	85001-
3	17A-03-41970	BRACKET	1	85001-
4	01010-81025	BOLT	2	85001-
5	01643-31032	WASHER	2	85001-
6	17A-03-41960	HOSE	1	85001-
7	11Y-09-11170	CLIP	1	85001-
8	20Y-03-32610	HOSE	1	85001-
9	11Y-09-11120	CLIP	1	85001-
10	17A-03-41911	BRACKET	1	85001-
11	01010-81225	BOLT	2	85001-
12	01643-31232	WASHER	2	85001-
13	11Y-09-11170	CLIP	1	85001-
14	08034-20823	BAND	1	85001-

Printed By : Dwi Iswanto (airafather6107170)

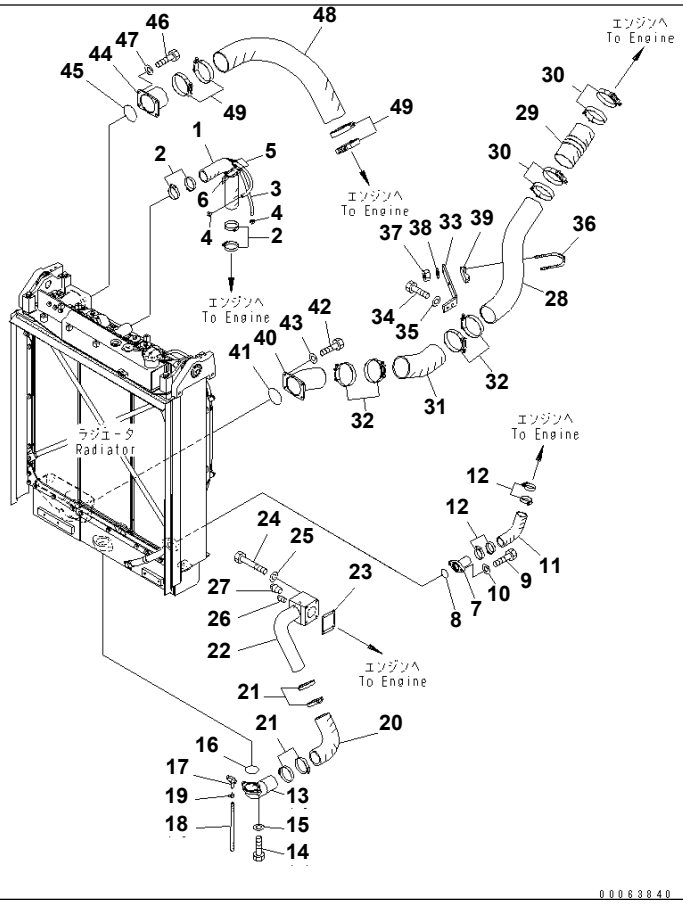

Ref. C0120-01A0 **Page 060120**

D155A-6 S/N 85001-UP
RADIATOR PIPING

Item	Part No.	Part Name	Qty	Serial No.
1	17A-03-41612	HOSE	1	85001-
2	07289-00070	CLAMP	4	85001-
3	09483-10312	HOSE	1	85001-
4	07281-00197	CLAMP	2	85001-
5	205-62-72140	COVER	2	85001-
6	08034-20536	BAND	4	85001-
7	17A-03-23441	TUBE	1	85001-
8	07000-G3045	O-RING	1	85001-
9	01010-81235	BOLT	2	85001-
10	01643-31232	WASHER	2	85001-
11	17A-03-41641	HOSE	1	85001-
12	07289-00055	CLAMP	4	85001-
13	17A-03-41621	TUBE	1	85001-
14	01010-81235	BOLT	2	85001-
15	01643-31232	WASHER	2	85001-
16	07000-G2075	O-RING	1	85001-
17	07730-50004	VALVE	1	85001-
18	175-03-31530	HOSE	1	85001-
19	07285-00155	CLIP	1	85001-
20	17A-03-44690	HOSE	1	85001-
21	07289-00095	CLAMP	4	85001-
22	17A-03-44631	TUBE	1	85001-
23	17A-03-13170	GASKET	1	85001-
24	01011-81035	BOLT	4	85001-
25	01643-31032	WASHER	4	85001-
26	07042-30108	PLUG	1	85001-
27	07042-70415	PLUG	1	85001-
28	17A-03-41711	TUBE	1	85001-
29	209-03-41711	HOSE	1	85001-
30	208-62-73910	CLAMP	4	85001-

Printed By : Dwi Iswanto (airafather6107170)

RADIATOR PIPING

Item	Part No.	Part Name	Qty	Serial No.
31	17A-03-41771	HOSE	1	85001-
32	208-62-73910	CLAMP	4	85001-
33	17A-03-41751	BRACKET	1	85001-
34	01010-81225	BOLT	2	85001-
35	01643-31232	WASHER	2	85001-
36	07283-31193	CLIP	1	85001-
37	01597-01211	NUT	2	85001-
38	01643-31232	WASHER	2	85001-
39	17A-03-41791	SEAT	1	85001-
40	17A-03-41722	TUBE	1	85001-
41	07000-E2110	O-RING	1	85001-
42	01010-81230	BOLT	4	85001-
43	01643-31232	WASHER	4	85001-
44	17A-03-41742	TUBE	1	85001-
45	07000-E2110	O-RING	1	85001-
46	01010-81230	BOLT	4	85001-
47	01643-31232	WASHER	4	85001-
48	17A-03-41731	HOSE	1	85001-
49	208-62-73910	CLAMP	4	85001-

Printed By : Dwi Iswanto (airafather6107170)

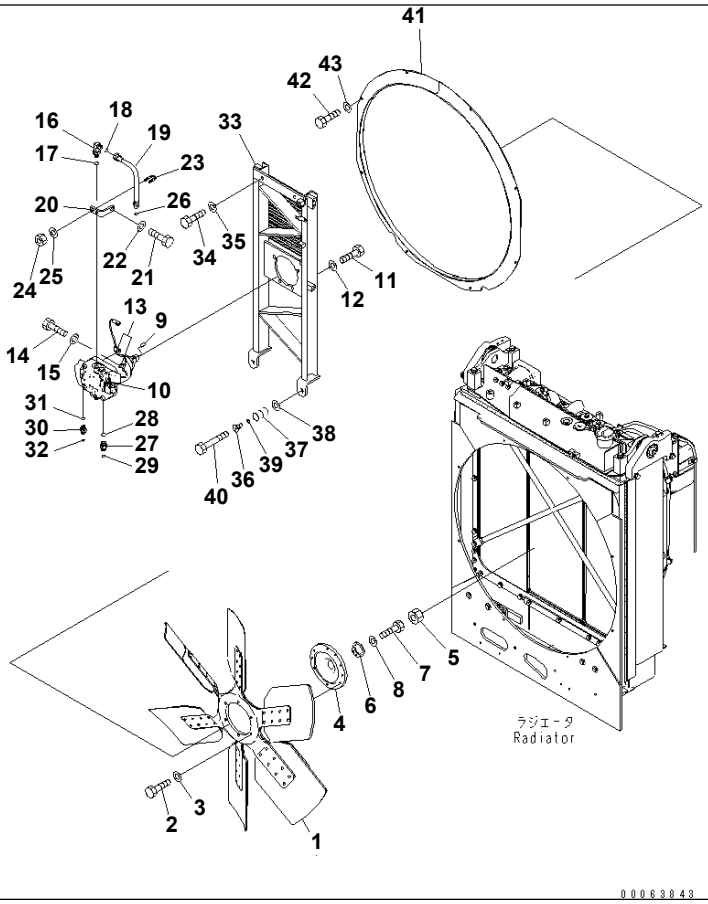

Ref. C0200-01A0 **Page 060130**

D155A-6 S/N 85001-UP
FAN (BLOWER)

Item	Part No.	Part Name	Qty	Serial No.
1	600-645-1180	FAN	1	85001-
2	01010-81240	BOLT	6	85001-
3	01643-31232	WASHER	6	85001-
4	17A-03-44120	BOSS	1	85001-
5	01583-13621	NUT	1	85001-
6	01660-03650	LOCK	1	85001-
7	01010-81020	BOLT	1	85001-
8	01643-31032	WASHER	1	85001-
9	04010-01032	KEY	1	85001-
10	(708-7W-00140)	MOTOR ASS'Y	1	85001-
11	01010-81640	BOLT	4	85001-
12	01643-31645	WASHER	4	85001-
13	04434-50612	CLIP	2	85001-
14	01010-81225	BOLT	2	85001-
15	01643-31232	WASHER	2	85001-
16	02782-1052A	ELBOW	1	85001-
17	07002-12434	O-RING	1	85001-
18	02896-11015	O-RING	1	85001-
19	17A-03-23221	TUBE	1	85001-
20	17A-03-42132	BRACKET	1	85001-
21	01010-81225	BOLT	1	85001-
22	01643-31232	WASHER	1	85001-
23	07283-32236	CLIP	1	85001-
24	01597-01009	NUT	2	85001-
25	01643-31032	WASHER	2	85001-
26	02896-11015	O-RING	1	85001-
27	02781-00522	UNION	1	85001-
28	07002-12434	O-RING	1	85001-
29	02896-11015	O-RING	1	85001-
30	02781-00516	UNION	1	85001-

Printed By : Dwi Iswanto (airafather6107170)

FAN (BLOWER)

Item	Part No.	Part Name	Qty	Serial No.
31	07002-12034	O-RING	1	85001-
32	02896-11015	O-RING	1	85001-
33	17A-03-42111	SUPPORT	1	85001-
34	01010-81640	BOLT	2	85001-
35	01643-31645	WASHER	2	85001-
36	198-03-61550	SPACER	2	85001-
37	175-54-27350	SPRING	8	85001-
38	154-30-51460	WASHER	2	85001-
39	175-54-28770	RING	2	85001-
40	01010-81260	BOLT	2	85001-
41	17A-03-44210	SHROUD	1	85001-
42	01010-81225	BOLT	8	85001-
43	01643-31232	WASHER	8	85001-

Printed By : Dwi Iswanto (airafather6107170)

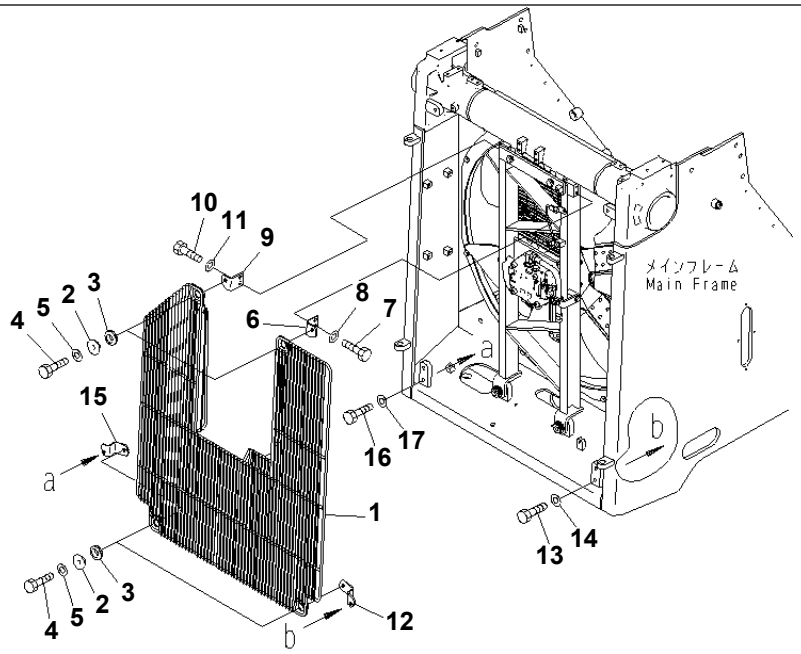

00041775

Ref. C0310-01A0 **Page 060140**

D155A-6 S/N 85001-UP
FAN GUARD(#85001-85024)

Item	Part No.	Part Name	Qty	Serial No.
1	17A-03-43311	NET	1	85001-85024
2	203-54-14330	COLLAR	4	85001-@
3	175-03-42140	RUBBER	4	85001-@
4	01010-81240	BOLT	4	85001-85024
5	01643-31232	WASHER	4	85001-@
6	17A-03-43321	BRACKET,L.H.	1	85001-@
7	01010-81225	BOLT	2	85001-@
8	01643-31232	WASHER	2	85001-@
9	17A-03-43331	BRACKET,R.H.	1	85001-@
10	01010-81225	BOLT	2	85001-@
11	01643-31232	WASHER	2	85001-@
12	17A-03-43340	BRACKET,L.H.	1	85001-85024
13	01010-81245	BOLT	1	85001-@
14	01643-31232	WASHER	1	85001-@
15	17A-03-43351	BRACKET,R.H.	1	85001-85024
16	01010-81245	BOLT	1	85001-@
17	01643-31232	WASHER	1	85001-@

Printed By : Dwi Iswanto (airafather6107170)

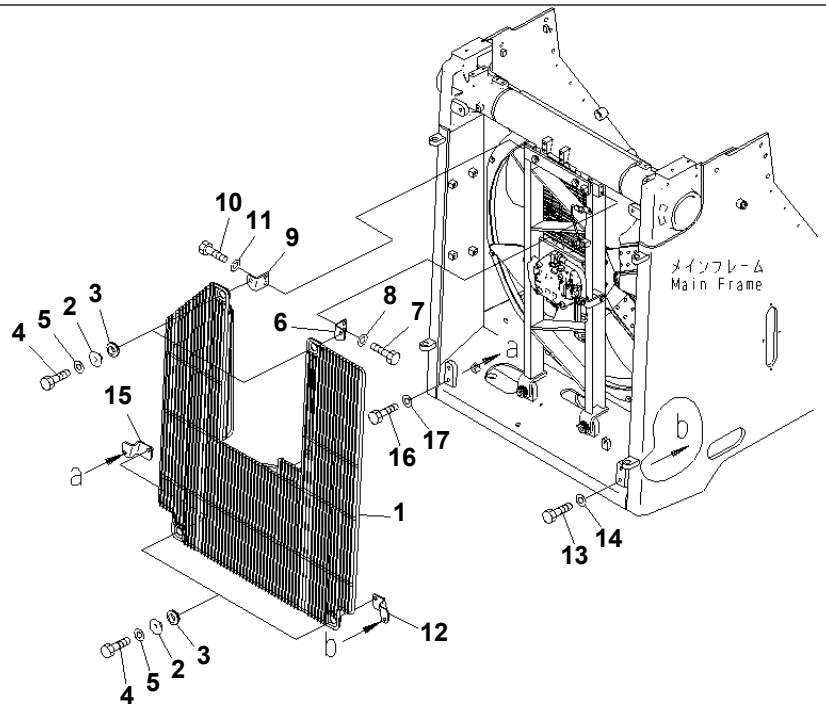

00080721

Ref. C0310-01A0A **Page 060150**

D155A-6 S/N 85001-UP
FAN GUARD(#85025-)

Item	Part No.	Part Name	Qty	Serial No.
1	17A-03-43312	NET	1	85025-
2	203-54-14330	COLLAR	4	85001-
3	175-03-42140	RUBBER	4	85001-
4	01010-81245	BOLT	4	85025-
5	01643-31232	WASHER	4	85001-
6	17A-03-43321	BRACKET	1	85001-
7	01010-81225	BOLT	2	85001-
8	01643-31232	WASHER	2	85001-
9	17A-03-43331	BRACKET	1	85001-
10	01010-81225	BOLT	2	85001-
11	01643-31232	WASHER	2	85001-
12	17A-03-43341	BRACKET	1	85025-
13	01010-81245	BOLT	1	85001-
14	01643-31232	WASHER	1	85001-
15	17A-03-43352	BRACKET	1	85025-
16	01010-81245	BOLT	1	85001-
17	01643-31232	WASHER	1	85001-

Printed By : Dwi Iswanto (airafather6107170)

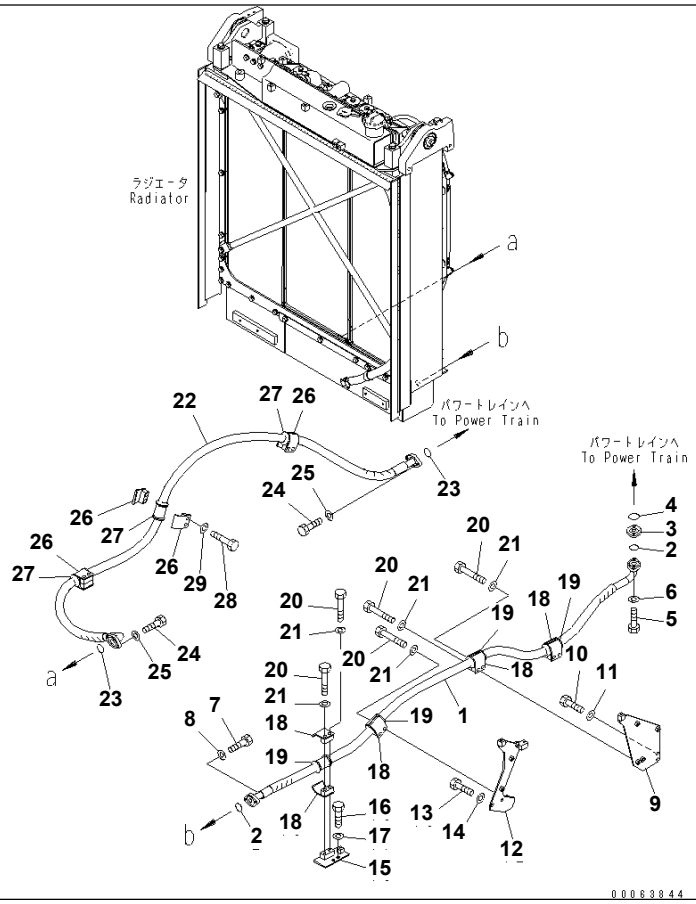

Ref. C0400-01A0 **Page 060160**

D155A-6 S/N 85001-UP
OIL COOLER LINE

Item	Part No.	Part Name	Qty	Serial No.
1	17A-49-41542	HOSE	1	85001-
2	07000-73032	O-RING	2	85001-
3	17A-49-41811	PLATE	1	85001-
4	07000-73038	O-RING	1	85001-
5	01010-81045	BOLT	2	85001-
6	01643-31032	WASHER	2	85001-
7	01010-81035	BOLT	2	85001-
8	01643-31032	WASHER	2	85001-
9	17A-49-41471	BRACKET	1	85001-
10	01010-81225	BOLT	2	85001-
11	01643-31232	WASHER	2	85001-
12	17A-49-41482	BRACKET	1	85001-
13	01010-81225	BOLT	2	85001-
14	01643-31232	WASHER	2	85001-
15	17A-61-41622	BRACKET	1	85001-
16	01010-81230	BOLT	2	85001-
17	01643-31232	WASHER	2	85001-
18	07094-11024	CLAMP	8	85001-
19	07095-01038	CUSHION	4	85001-
20	01010-81280	BOLT	8	85001-
21	01643-31232	WASHER	8	85001-
22	17A-49-41752	HOSE	1	85001-
23	07000-73032	O-RING	2	85001-
24	01010-81035	BOLT	4	85001-
25	01643-31032	WASHER	4	85001-
26	07094-11024	CLAMP	6	85001-
27	07095-01038	CUSHION	3	85001-
28	01010-81280	BOLT	6	85001-
29	01643-31232	WASHER	6	85001-

Printed By : Dwi Iswanto (airafather6107170)

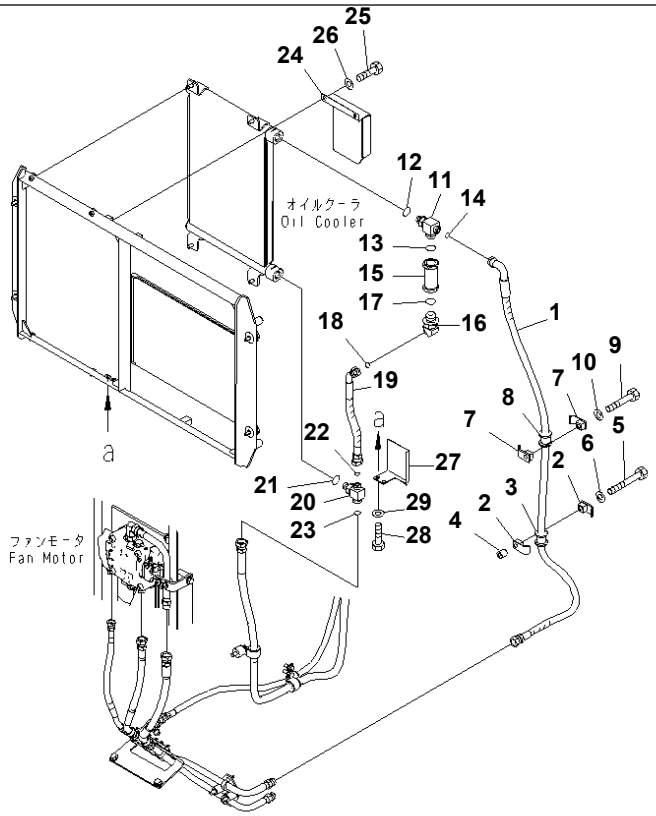

00063850

D155A-6 S/N 85001-UP

HYDRAULIC OIL COOLER PIPING (WITH CAB)

Item	Part No.	Part Name	Qty	Serial No.
1	17A-03-43361	HOSE	1	85001-
2	07094-10417	CLAMP	2	85001-
3	07095-00423	CUSHION	1	85001-
4	195-33-11220	SPACER	1	85001-
5	01010-81295	BOLT	1	85001-
6	01643-31232	WASHER	1	85001-
7	07094-10417	CLAMP	2	85001-
8	07095-00423	CUSHION	1	85001-
9	01010-81265	BOLT	1	85001-
10	01643-31232	WASHER	1	85001-
11	17A-03-42860	TEE	1	85001-
12	07002-12434	O-RING	1	85001-
13	07002-13334	O-RING	1	85001-
14	02896-11015	O-RING	1	85001-
15	20S-62-16160	VALVE ASS'Y	1	85001-
16	17A-03-41871	ELBOW	1	85001-
17	07002-13334	O-RING	1	85001-
18	02896-11015	O-RING	1	85001-
19	02755-005A3	HOSE	1	85001-
20	17A-03-42881	TEE	1	85001-
21	07002-12434	O-RING	1	85001-
22	02896-11015	O-RING	1	85001-
23	02896-11018	O-RING	1	85001-
24	17A-03-41841	PLATE	1	85001-
25	01010-81020	BOLT	2	85001-
26	01643-31032	WASHER	2	85001-
27	17A-03-41851	PLATE	1	85001-
28	01010-81020	BOLT	2	85001-
29	01643-31032	WASHER	2	85001-

Printed By : Dwi Iswanto (airafather6107170)

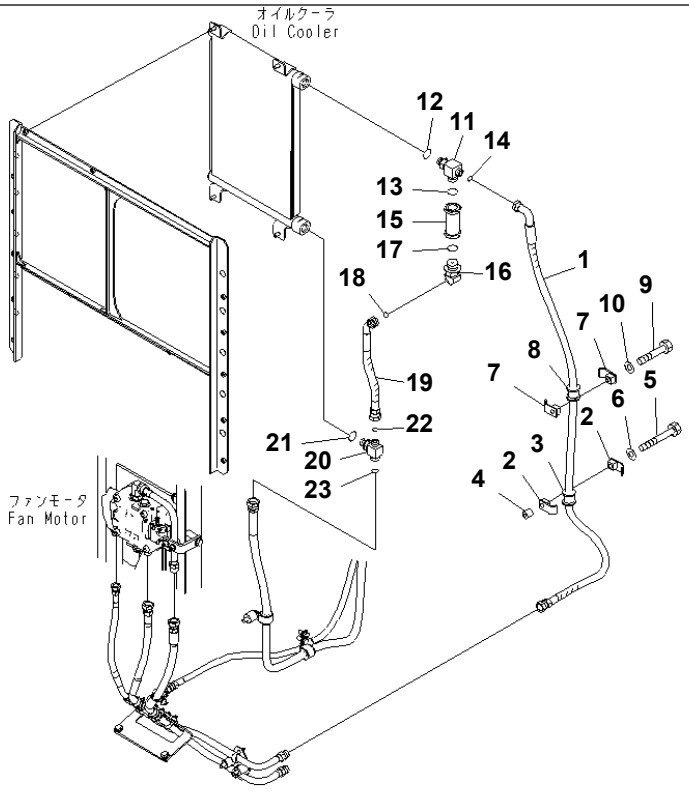

00063853

Ref. C0610-01A1 **Page 060180**

D155A-6 S/N 85001-UP
HYDRAULIC OIL COOLER PIPING (WITHOUT CAB)

Item	Part No.	Part Name	Qty	Serial No.
1	17A-03-43361	HOSE	1	85001-
2	07094-10417	CLAMP	2	85001-
3	07095-00423	CUSHION	1	85001-
4	195-33-11220	SPACER	1	85001-
5	01010-81295	BOLT	1	85001-
6	01643-31232	WASHER	1	85001-
7	07094-10417	CLAMP	2	85001-
8	07095-00423	CUSHION	1	85001-
9	01010-81265	BOLT	1	85001-
10	01643-31232	WASHER	1	85001-
11	17A-03-42860	TEE	1	85001-
12	07002-12434	O-RING	1	85001-
13	07002-13334	O-RING	1	85001-
14	02896-11015	O-RING	1	85001-
15	20S-62-16160	VALVE ASS'Y	1	85001-
16	17A-03-41871	ELBOW	1	85001-
17	07002-13334	O-RING	1	85001-
18	02896-11015	O-RING	1	85001-
19	02755-005A3	HOSE	1	85001-
20	17A-03-42881	TEE	1	85001-
21	07002-12434	O-RING	1	85001-
22	02896-11015	O-RING	1	85001-
23	02896-11018	O-RING	1	85001-

Printed By : Dwi Iswanto (airafather6107170)

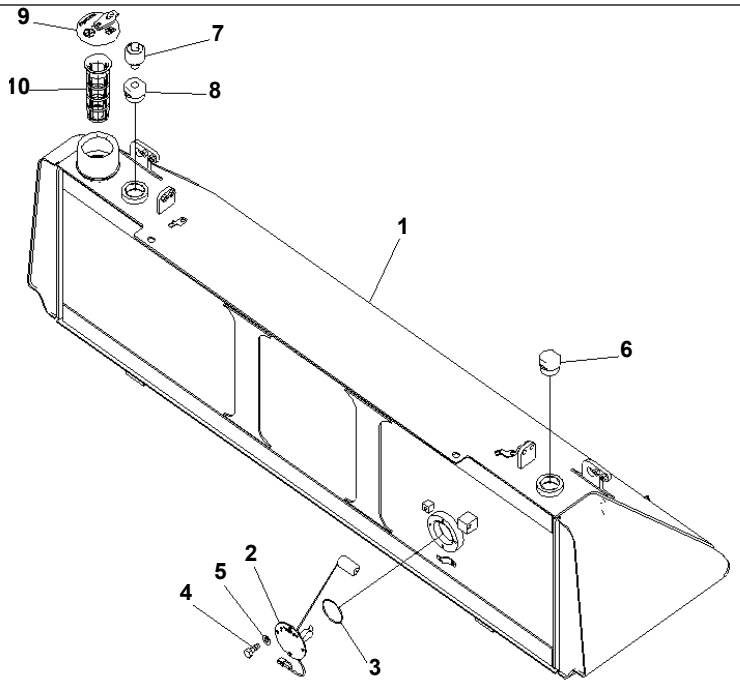

00065444-V

Ref. D0100-01A0 **Page 090010**

D155A-6 S/N 85001-UP
FUEL TANK

Item	Part No.	Part Name	Qty	Serial No.
1	17A-04-41112	TANK	1	85001-
2	7861-93-4940	SENSOR	1	85001-
3	07000-12085	O-RING	1	85001-
4	01010-81016	BOLT	4	85001-
5	01643-31032	WASHER	4	85001-
6	195-04-14130	PLUG	1	85001-
7	22U-60-21520	BREATHER	1	85001-
8	17A-04-42150	ADAPTER	1	85001-
9	17A-04-41411	CAP	1	85001-
10	07056-18422	STRAINER	1	85001-

Printed By : Dwi Iswanto (airafather6107170)

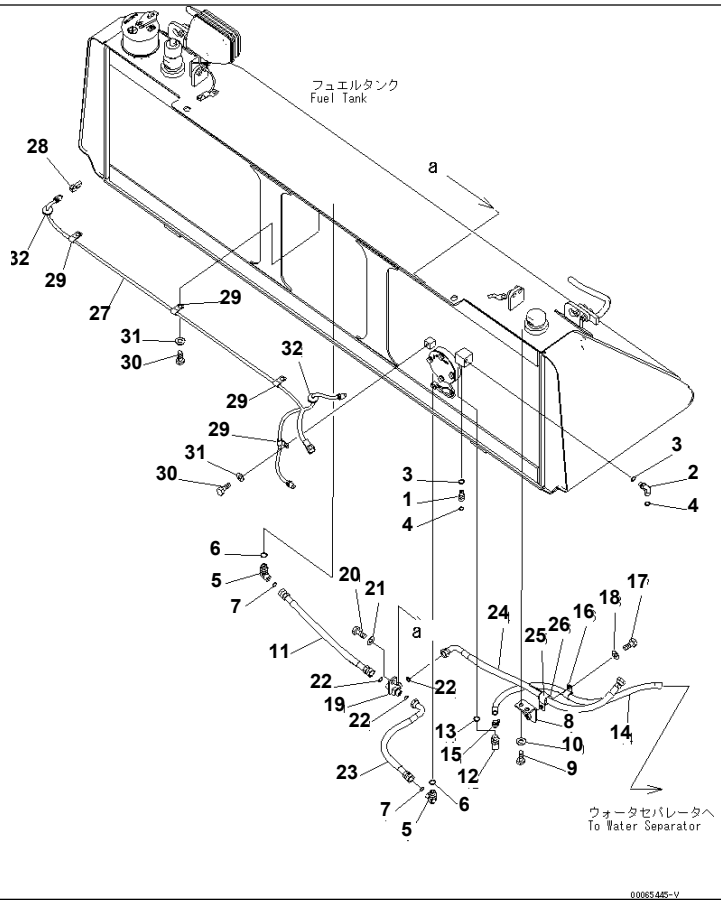

Ref. D0100-02A0 **Page 090020**

D155A-6 S/N 85001-UP
FUEL TANK (FUEL LINES)

Item	Part No.	Part Name	Qty	Serial No.
1	02781-0031D	UNION	1	85001-
2	02782-10311	ELBOW	1	85001-
3	07002-11423	O-RING	2	85001-
4	02896-11009	O-RING	2	85001-
5	02782-10420	ELBOW	2	85001-
6	07002-11823	O-RING	2	85001-
7	02896-11012	O-RING	2	85001-
8	17A-04-42231	BRACKET	1	85001-
9	01010-81225	BOLT	2	85001-
10	01643-31232	WASHER	2	85001-
11	02762-004A4	HOSE	1	85001-
12	17A-04-42560	ELBOW	1	85001-
13	07002-11823	O-RING	1	85001-
14	17A-04-42590	TUBE	1	85001-
15	07281-00197	CLAMP	1	85001-
16	04434-51812	CLIP	1	85001-
17	01010-81225	BOLT	1	85001-
18	01643-31232	WASHER	1	85001-
19	17A-04-42210	TEE	1	85001-
20	01010-81225	BOLT	1	85001-
21	01643-31232	WASHER	1	85001-
22	02896-11012	O-RING	3	85001-
23	02763-00404	HOSE	1	85001-
24	17A-04-42550	HOSE	1	85001-
25	04434-52712	CLIP	1	85001-
26	07095-20419	CUSHION	1	85001-
27	17A-06-41253	WIRING HARNESS	1	85001-
28	08192-22830	･ CONNECTOR	1	85001-
29	04434-51012	CLIP	4	85001-
30	01010-81225	BOLT	4	85001-

Printed By : Dwi Iswanto (airafather6107170)

FUEL TANK (FUEL LINES)

Item	Part No.	Part Name	Qty	Serial No.
31	01643-31232	WASHER	4	85001-
32	135-06-34260	GROMMET	2	85001-

Printed By : Dwi Iswanto (airafather6107170)

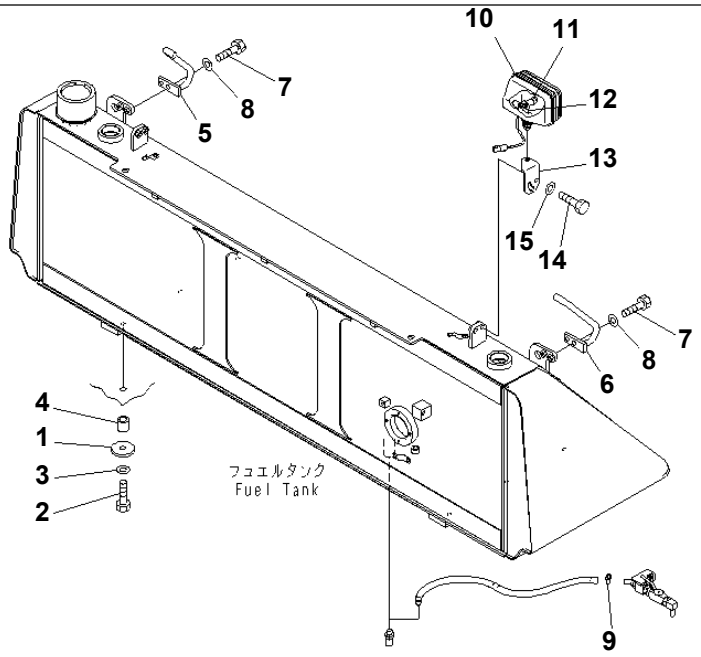

00065446

Ref. D0100-03A0 **Page 090030**

D155A-6 S/N 85001-UP

FUEL TANK (MOUNT AND REAR WORK LAMP)

Item	Part No.	Part Name	Qty	Serial No.
1	17A-04-11191	PLATE	6	85001-
2	01010-81675	BOLT	6	85001-
3	01643-31645	WASHER	6	85001-
4	195-54-42560	BOSS	6	85001-
5	17A-04-41161	GRIP,R.H.	1	85001-
6	17A-04-41181	GRIP,L.H.	1	85001-
7	01010-81240	BOLT	4	85001-
8	01643-31232	WASHER	4	85001-
9	07281-00197	CLAMP	1	85001-
10	17A-06-17931	LAMP ASS'Y	1	85001-
11	17A-06-17970	· BULB¤ 70W	1	85001-
12	17A-06-17980	· SLEEVE	1	85001-
13	17A-06-41611	PLATE,R.H.	1	85001-
14	01010-81235	BOLT	2	85001-
15	01643-31232	WASHER	2	85001-

Printed By : Dwi Iswanto (airafather6107170)

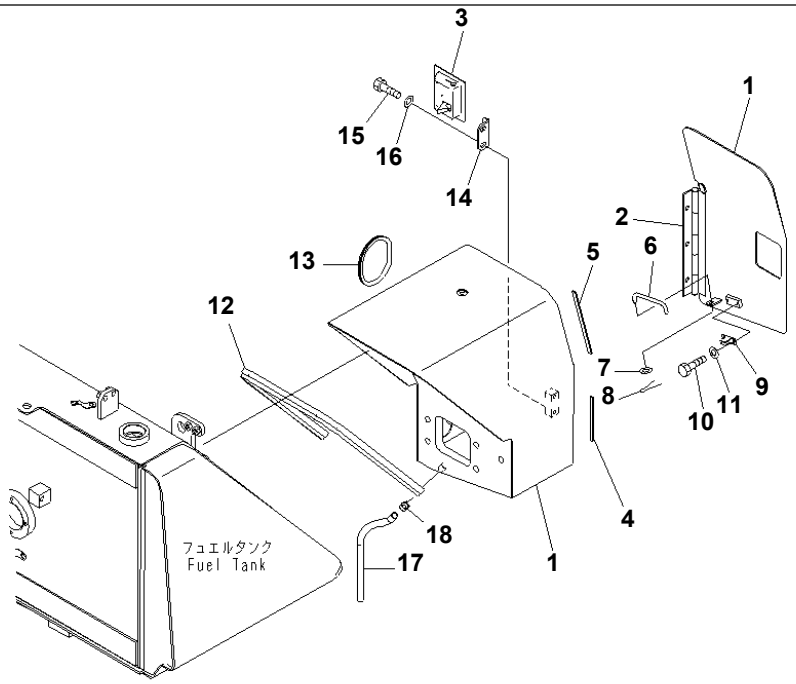

00065493

Ref. D0110-01A0 **Page 090040**

D155A-6 S/N 85001-UP

WATER SEPARATOR BOX (COVER)

Item	Part No.	Part Name	Qty	Serial No.
	17A-54-44600	COVER ASS'Y	1	85001-
1	☆	· COVER	1	85001-
2	09457-00330	· · HINGE	1	85001-
3	17A-54-14231	· · LOCK	1	85001-
4	17A-54-44650	· · SEAL	1	85001-
5	17A-54-44990	· · SEAL	1	85001-
6	17A-54-44671	· BAR	1	85001-
7	01643-31232	· WASHER	1	85001-
8	04050-13018	· PIN	1	85001-
9	198-54-19150	· SPRING	1	85001-
10	01010-80612	· BOLT	2	85001-
11	01643-30623	· WASHER	2	85001-
12	17A-54-44970	· SEAL	1	85001-
13	17A-54-44980	· TRIM	1	85001-
14	22U-54-24411	· BRACKET	1	85001-
15	01010-81025	· BOLT	2	85001-
16	01643-31032	· WASHER	2	85001-
17	07270-01535	TUBE	1	85001-
18	07285-00180	CLIP	1	85001-

Printed By : Dwi Iswanto (airafather6107170)

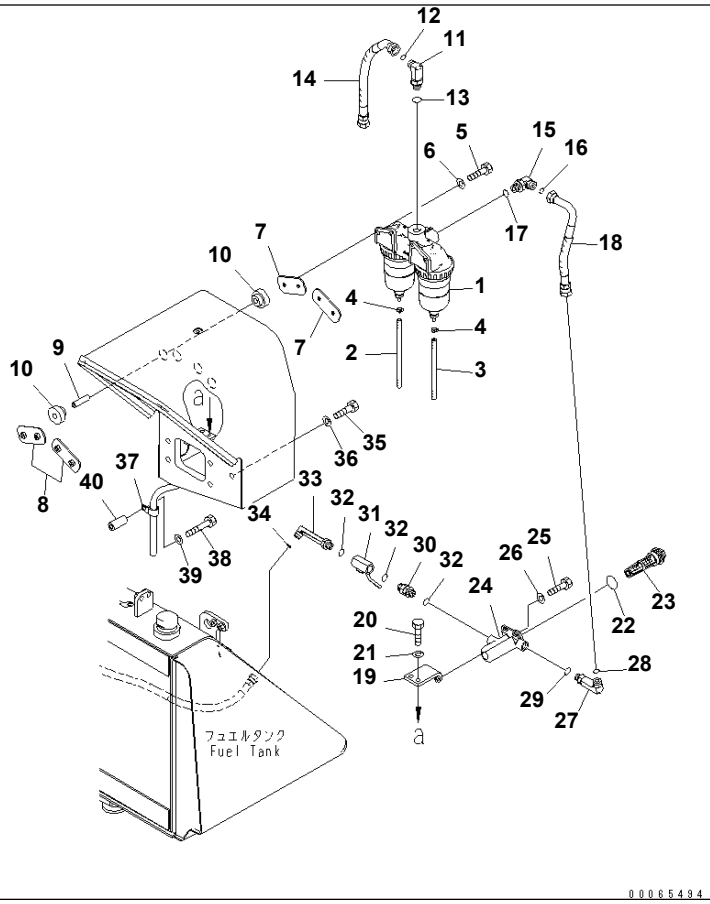

Ref. D0110-02A0 **Page 090050**

D155A-6 S/N 85001-UP
WATER SEPARATOR BOX (WATER SEPARATOR)

Item	Part No.	Part Name	Qty	Serial No.
1	(600-311-9330)	WATER SEPARATOR A.	1	85001-
2	07286-00825	HOSE	1	85001-
3	07286-00822	HOSE	1	85001-
4	07285-00125	CLIP	2	85001-
5	01011-81000	BOLT	4	85001-
6	01643-31032	WASHER	4	85001-
7	17A-04-42420	PLATE	2	85001-
8	17A-04-42460	BRACKET	2	85001-
9	17A-04-42480	COLLAR	4	85001-
10	17A-04-42450	CUSHION	8	85001-
11	02782-1052A	ELBOW	1	85001-
12	02896-11015	O-RING	1	85001-
13	07002-12434	O-RING	1	85001-
14	17A-04-42570	HOSE	1	85001-
15	02782-10522	ELBOW	1	85001-
16	02896-11015	O-RING	1	85001-
17	07002-12434	O-RING	1	85001-
18	17A-04-42381	HOSE	1	85001-
19	17A-04-42261	BRACKET	1	85001-
20	01010-81230	BOLT	2	85001-
21	01643-31232	WASHER	2	85001-
	17A-04-41190	FILTER ASS'Y	1	85001-
22	07002-14234	· O-RING	1	85001-
23	07058-00010	· ELEMENT ASS'Y	1	85001-
24	14X-04-21660	· CASE	1	85001-
25	01010-80825	BOLT	2	85001-
26	01643-30823	WASHER	2	85001-
27	02782-10520	ELBOW	1	85001-
28	02896-11015	O-RING	1	85001-
29	07002-12034	O-RING	1	85001-

Printed By : Dwi Iswanto (airafather6107170)

WATER SEPARATOR BOX (WATER SEPARATOR)

Item	Part No.	Part Name	Qty	Serial No.
30	17A-04-41331	CONNECTOR	1	85001-
31	14X-04-21620	VALVE	1	85001-
32	07002-12034	O-RING	3	85001-
33	17A-04-42271	ELBOW	1	85001-
34	02896-11012	O-RING	1	85001-
35	01010-81660	BOLT	5	85001-
36	01643-31645	WASHER	5	85001-
37	04434-52112	CLIP	1	85001-
38	01010-81280	BOLT	1	85001-
39	01643-31232	WASHER	1	85001-
40	203-62-44510	SPACER	1	85001-

Printed By : Dwi Iswanto (airafather6107170)

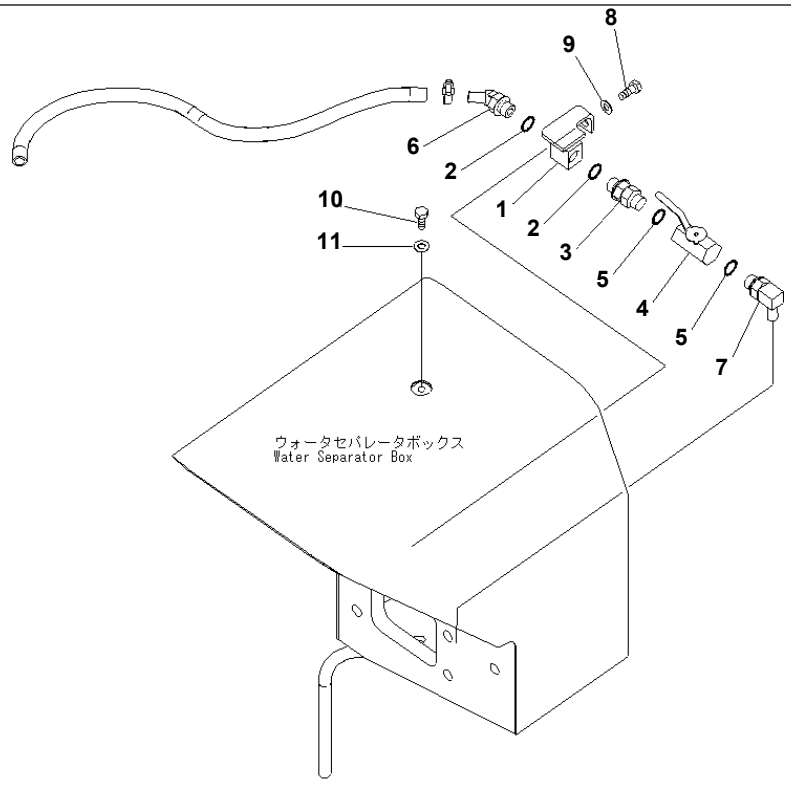

Ref. D0110-03A0 **Page 090060**

D155A-6 S/N 85001-UP
WATER SEPARATOR BOX (FUEL DRAIN)

Item	Part No.	Part Name	Qty	Serial No.
1	17A-04-42511	JOINT	1	85001-
2	07002-12034	O-RING	2	85001-
3	17A-04-41331	CONNECTOR	1	85001-
4	14X-04-21620	VALVE	1	85001-
5	07002-12034	O-RING	2	85001-
6	17A-04-42541	ELBOW	1	85001-
7	17A-04-42531	ELBOW	1	85001-
8	01010-81225	BOLT	1	85001-
9	01643-31232	WASHER	1	85001-
10	01010-81225	BOLT	1	85001-
11	01643-31232	WASHER	1	85001-

Printed By : Dwi Iswanto (airafather6107170)

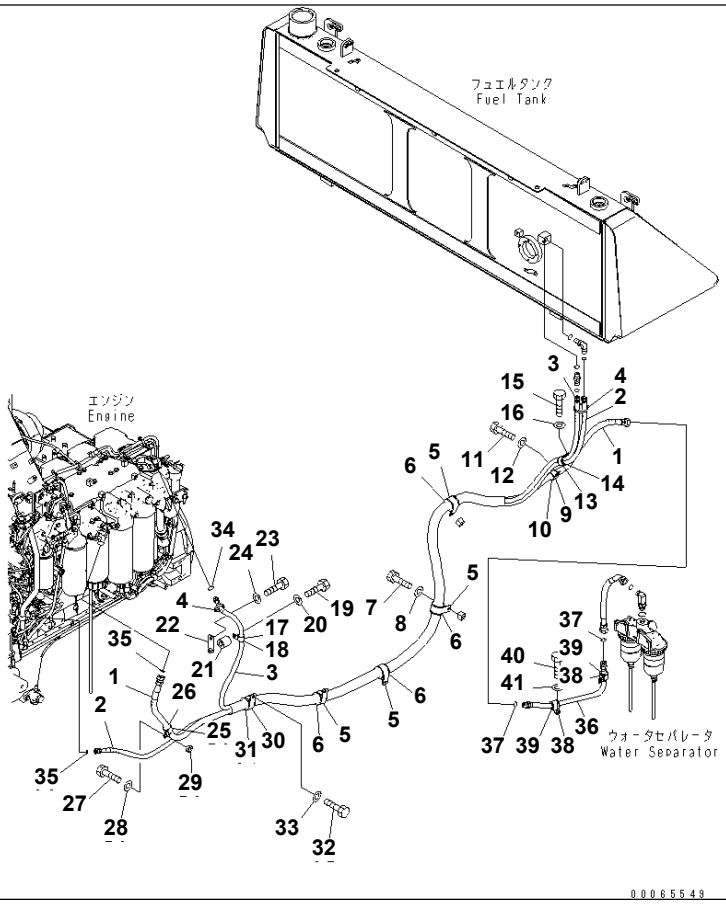

Ref. D0200-01A0 **Page 090070**

D155A-6 S/N 85001-UP
FUEL PIPING

Item	Part No.	Part Name	Qty	Serial No.
1	02762-00539	HOSE	1	85001-
2	02762-00335	HOSE	1	85001-
3	02762-00337	HOSE	1	85001-
4	20Y-62-22790	BAND¤ RED	2	85001-
5	21T-62-76830	CLIP	4	85001-
6	198-04-41210	CUSHION	4	85001-
7	01010-81230	BOLT	4	85001-
8	01643-31232	WASHER	4	85001-
9	04434-53212	CLIP	1	85001-
10	07095-20523	CUSHION	1	85001-
11	01010-81225	BOLT	1	85001-
12	01643-31232	WASHER	1	85001-
13	04434-53412	CLIP	1	85001-
14	07095-20627	CUSHION	1	85001-
15	01010-81225	BOLT	1	85001-
16	01643-31232	WASHER	1	85001-
17	04434-52112	CLIP	1	85001-
18	07095-20314	CUSHION	1	85001-
19	01010-81250	BOLT	1	85001-
20	01643-31232	WASHER	1	85001-
21	195-33-11220	SPACER	1	85001-
22	154-Z11-5340	BRACKET	1	85001-
23	01010-81025	BOLT	1	85001-
24	01643-31032	WASHER	1	85001-
25	04434-53212	CLIP	1	85001-
26	07095-20523	CUSHION	1	85001-
27	01010-81235	BOLT	1	85001-
28	01643-31232	WASHER	1	85001-
29	198-43-15310	COLLAR¤ 10MM	1	85001-
30	21T-62-76830	CLIP	1	85001-

Printed By : Dwi Iswanto (airafather6107170)

FUEL PIPING

Item	Part No.	Part Name	Qty	Serial No.
31	198-04-41210	CUSHION	1	85001-
32	01010-81230	BOLT	1	85001-
33	01643-31232	WASHER	1	85001-
34	02896-11015	O-RING	1	85001-
35	02896-11009	O-RING	2	85001-
36	17A-04-42371	TUBE	1	85001-
37	02896-11015	O-RING	2	85001-
38	04434-53212	CLIP	2	85001-
39	07095-20522	CUSHION	2	85001-
40	01010-81230	BOLT	2	85001-
41	01643-31232	WASHER	2	85001-

Printed By : Dwi Iswanto (airafather6107170)

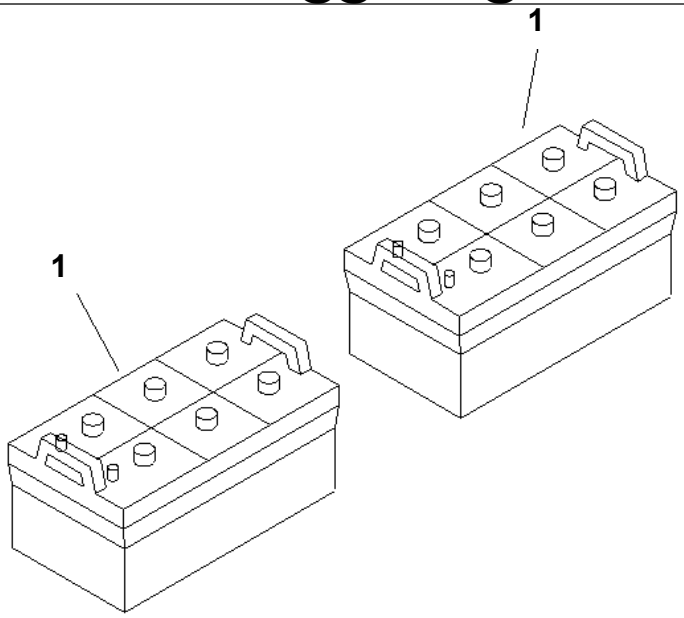

PAB0746

Ref. E0110-01A0 **Page 120010**

D155A-6 S/N 85001-UP
BATTERY (C200 DRY)

Item	Part No.	Part Name	Qty	Serial No.
1	08000-12221	BATTERY (C200),(C200 OR F300-20)	2	85001-
	08000-00000	TERMINAL¤ (+),(NOT SHOWN)	1	85001-
	08000-00001	TERMINAL¤ (-),(NOT SHOWN)	1	85001-

Printed By : Dwi Iswanto (airafather6107170)

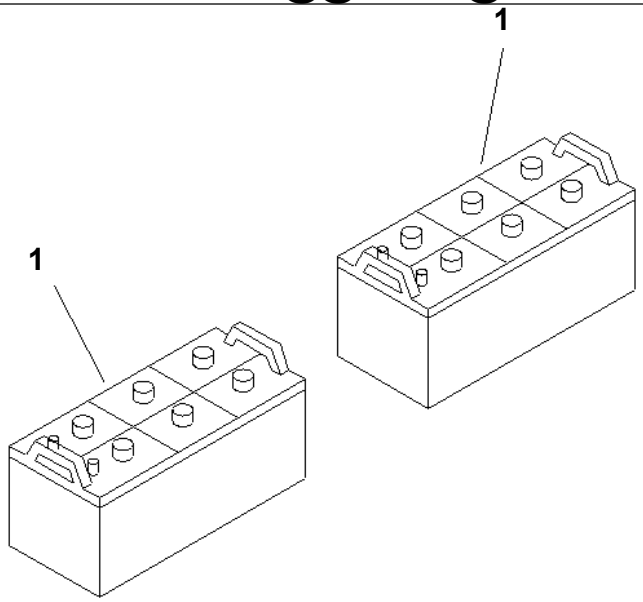

PAB0745

Ref. E0110-01A1 **Page 120020**

D155A-6 S/N 85001-UP
BATTERY (NS200 DRY)

Item	Part No.	Part Name	Qty	Serial No.
1	08000-42220	BATTERY (165G51)	2	85001-
	08000-00000	TERMINAL¤ (+),(NOT SHOWN)	1	85001-
	08000-00001	TERMINAL¤ (-),(NOT SHOWN)	1	85001-

Printed By : Dwi Iswanto (airafather6107170)

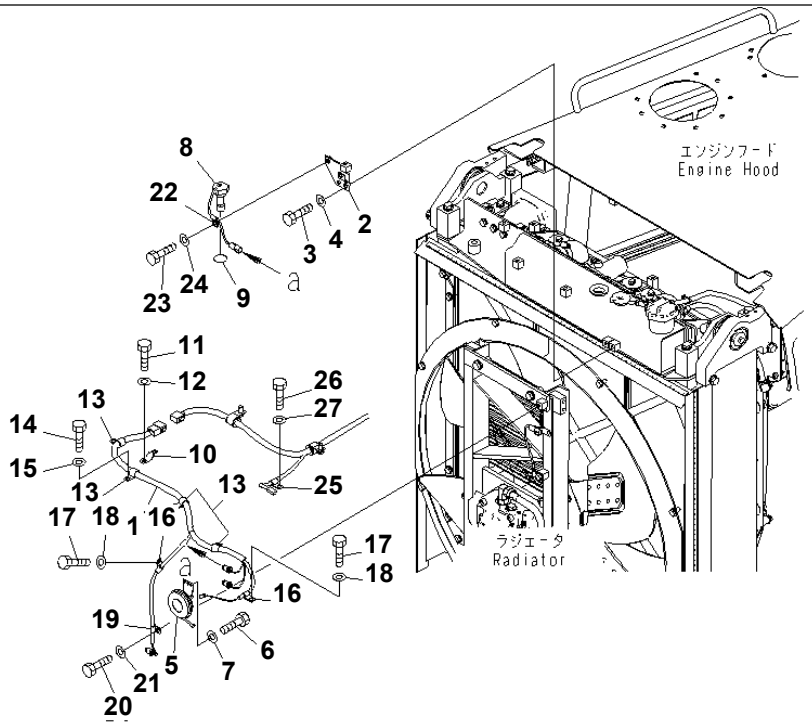

00065685

Ref. E0200-01A0 **Page 120030**

D155A-6 S/N 85001-UP
WIRING (RADIATOR AND ENGINE HOOD)

Item	Part No.	Part Name	Qty	Serial No.
1	17A-06-43241	WIRING HARNESS	1	85001-
2	17A-06-43710	BRACKET	1	85001-
3	01010-81225	BOLT	2	85001-
4	01643-31232	WASHER	2	85001-
5	19M-06-18220	HORN	1	85001-
6	01010-80820	BOLT	2	85001-
7	01643-30823	WASHER	2	85001-
8	7861-93-4520	SENSOR	1	85001-
9	07002-13634	O-RING	1	85001-
10	08193-21012	CLIP	1	85001-
11	01010-81225	BOLT	1	85001-
12	01643-31232	WASHER	1	85001-
13	04434-51712	CLIP	4	85001-
14	01010-81225	BOLT	4	85001-
15	01643-31232	WASHER	4	85001-
16	04434-51012	CLIP	2	85001-
17	01010-81225	BOLT	2	85001-
18	01643-31232	WASHER	2	85001-
19	04434-51012	CLIP	1	85001-
20	01010-81225	BOLT	1	85001-
21	01643-31232	WASHER	1	85001-
22	04434-50612	CLIP	1	85001-
23	01010-81225	BOLT	1	85001-
24	01643-31232	WASHER	1	85001-
25	600-051-3100	CLIP	1	85001-
26	01010-81225	BOLT	1	85001-
27	01643-31232	WASHER	1	85001-

Printed By : Dwi Iswanto (airafather6107170)

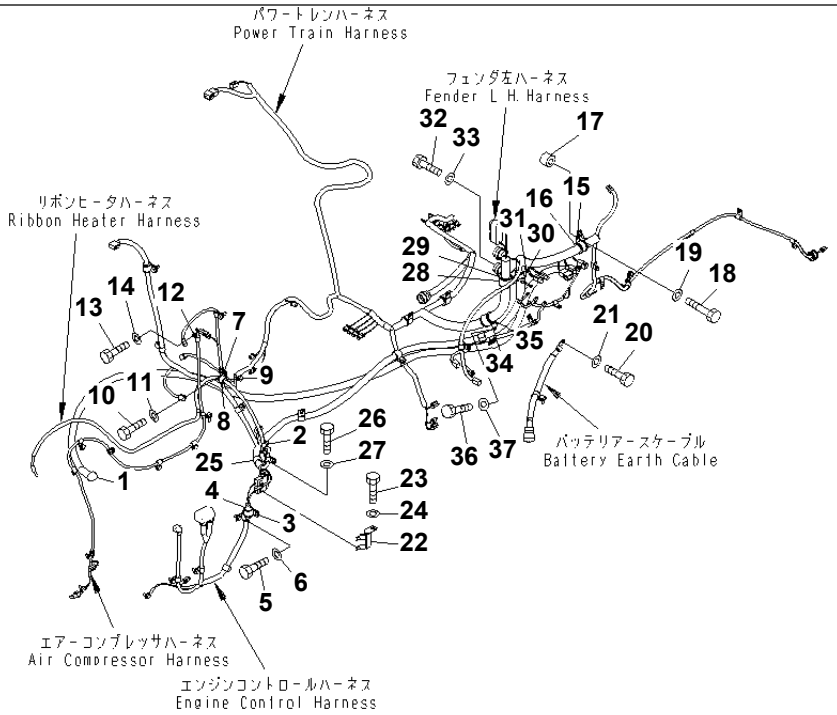

00065686

Ref. E0200-02A0 **Page 120040**

WIRING (FENDER)

Item	Part No.	Part Name	Qty	Serial No.
1	17A-06-41540	CAP	1	85001-
2	08038-02027	CAP	1	85001-
3	04434-52712	CLIP	1	85001-
4	07095-20419	CUSHION	1	85001-
5	01010-81225	BOLT	1	85001-
6	01643-31232	WASHER	1	85001-
7	04434-51412	CLIP	1	85001-
8	04434-51912	CLIP	1	85001-
9	07095-20213	CUSHION	1	85001-
10	01010-81225	BOLT	1	85001-
11	01643-31232	WASHER	1	85001-
12	600-051-3100	CLIP	1	85001-
13	01010-81225	BOLT	1	85001-
14	01643-31232	WASHER	1	85001-
15	155-61-15350	CLIP	1	85001-
16	22M-62-13660	CUSHION	1	85001-
17	144-947-3490	SPACER	1	85001-
18	01010-81240	BOLT	1	85001-
19	01643-31232	WASHER	1	85001-
20	01010-81220	BOLT	2	85001-
21	01643-31232	WASHER	2	85001-
22	17A-06-41951	BRACKET	1	85001-
23	01010-81225	BOLT	1	85001-
24	01643-31232	WASHER	1	85001-
25	04434-52712	CLIP	1	85001-
26	01010-81225	BOLT	1	85001-
27	01643-31232	WASHER	1	85001-
28	23T-62-12160	CLIP	1	85001-
29	20T-62-71831	CUSHION	1	85001-
30	155-61-15350	CLIP	1	85001-

Printed By : Dwi Iswanto (airafather6107170)

WIRING (FENDER)

Item	Part No.	Part Name	Qty	Serial No.
31	22M-62-13660	CUSHION	1	85001-
32	01010-81225	BOLT	1	85001-
33	01643-31232	WASHER	1	85001-
34	23T-62-12160	CLIP	1	85001-
35	20T-62-71831	CUSHION	1	85001-
36	01010-81225	BOLT	1	85001-
37	01643-31232	WASHER	1	85001-

Printed By : Dwi Iswanto (airafather6107170)

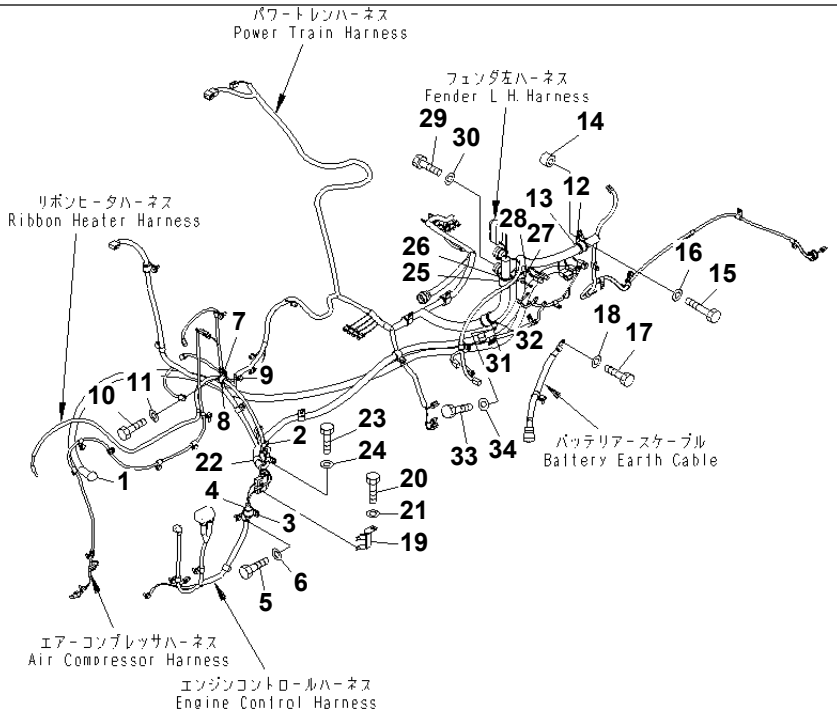

00065689

Ref. E0200-02A1 **Page 120050**

WIRING (FENDER) (WITHOUT CAB)

Item	Part No.	Part Name	Qty	Serial No.
1	17A-06-41540	CAP	1	85001-
2	08038-02027	CAP	1	85001-
3	04434-52712	CLIP	1	85001-
4	07095-20419	CUSHION	1	85001-
5	01010-81225	BOLT	1	85001-
6	01643-31232	WASHER	1	85001-
7	04434-51412	CLIP	1	85001-
8	04434-51912	CLIP	1	85001-
9	07095-20213	CUSHION	1	85001-
10	01010-81225	BOLT	1	85001-
11	01643-31232	WASHER	1	85001-
12	04434-53412	CLIP	1	85001-
13	07095-20625	CUSHION	1	85001-
14	144-947-3490	SPACER	1	85001-
15	01010-81240	BOLT	1	85001-
16	01643-31232	WASHER	1	85001-
17	01010-81220	BOLT	2	85001-
18	01643-31232	WASHER	2	85001-
19	17A-06-41951	BRACKET	1	85001-
20	01010-81225	BOLT	1	85001-
21	01643-31232	WASHER	1	85001-
22	04434-52712	CLIP	1	85001-
23	01010-81225	BOLT	1	85001-
24	01643-31232	WASHER	1	85001-
25	23T-62-12160	CLIP	1	85001-
26	20T-62-71831	CUSHION	1	85001-
27	155-61-15350	CLIP	1	85001-
28	22M-62-13660	CUSHION	1	85001-
29	01010-81225	BOLT	1	85001-
30	01643-31232	WASHER	1	85001-

Printed By : Dwi Iswanto (airafather6107170)

WIRING (FENDER) (WITHOUT CAB)

Item	Part No.	Part Name	Qty	Serial No.
31	23T-62-12160	CLIP	1	85001-
32	20T-62-71831	CUSHION	1	85001-
33	01010-81225	BOLT	1	85001-
34	01643-31232	WASHER	1	85001-

Printed By : Dwi Iswanto (airafather6107170)

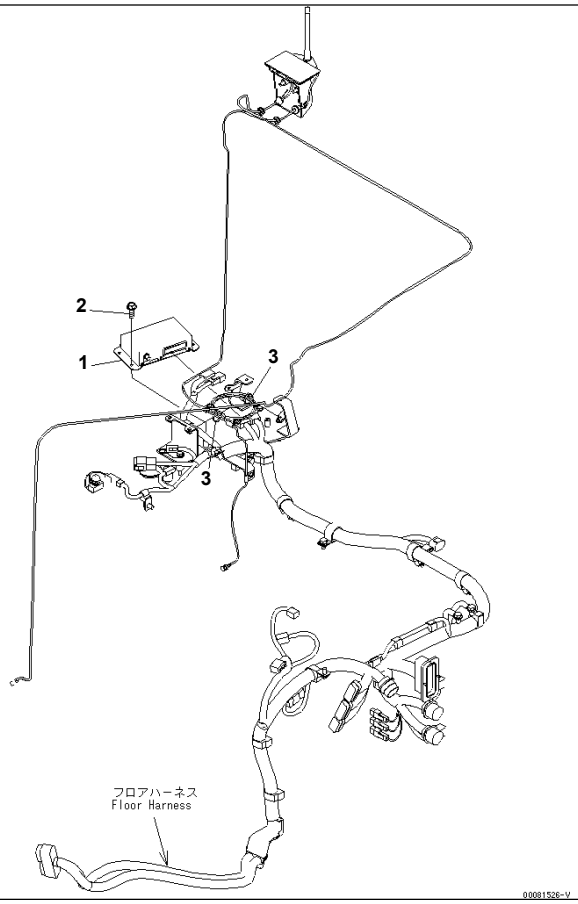

Ref. E0201-01A0 **Page 120070**

D155A-6 S/N 85001-UP
KOMTRAX (FOR OVERSEAS)

Item	Part No.	Part Name	Qty	Serial No.
1	7826-23-3011	CONTROLLER	1	85001-
2	01435-00614	BOLT	4	85001-
3	20Y-06-21460	CLIP	2	85001-

Printed By : Dwi Iswanto (airafather6107170)

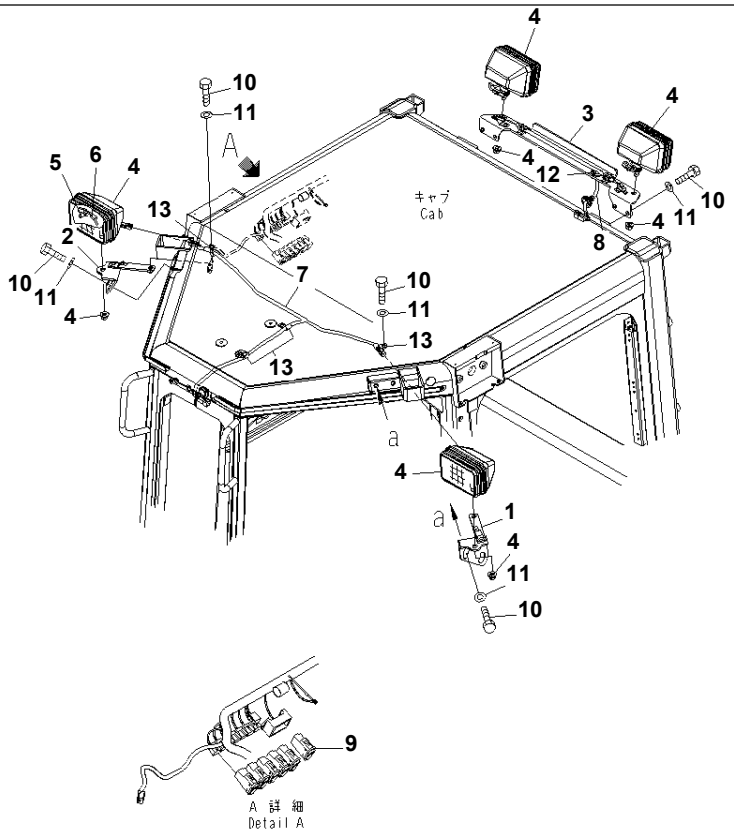

00042012

Ref. E0300-01A0 **Page 120080**

D155A-6 S/N 85001-UP
FRONT AND REAR WORK LAMP

Item	Part No.	Part Name	Qty	Serial No.
1	17A-979-1880	BRACKET,L.H.	1	85001-
2	17A-979-1890	BRACKET,R.H.	1	85001-
3	17A-979-2930	BRACKET	1	85001-
4	17A-06-17931	LAMP ASS'Y	4	85001-
5	17A-06-17970	· BULB¤ 70W	1	85001-
6	17A-06-17980	· SLEEVE	1	85001-
7	17A-979-2921	WIRING HARNESS	1	85001-
8	17A-979-2941	WIRING HARNESS	1	85001-
9	17A-06-42230	SWITCH	1	85001-
10	01010-D1225	BOLT	12	85001-
11	01643-71232	WASHER	12	85001-
12	205-977-7310	GROMMET	1	85001-
13	04434-51012	CLIP	4	85001-

Printed By : Dwi Iswanto (airafather6107170)

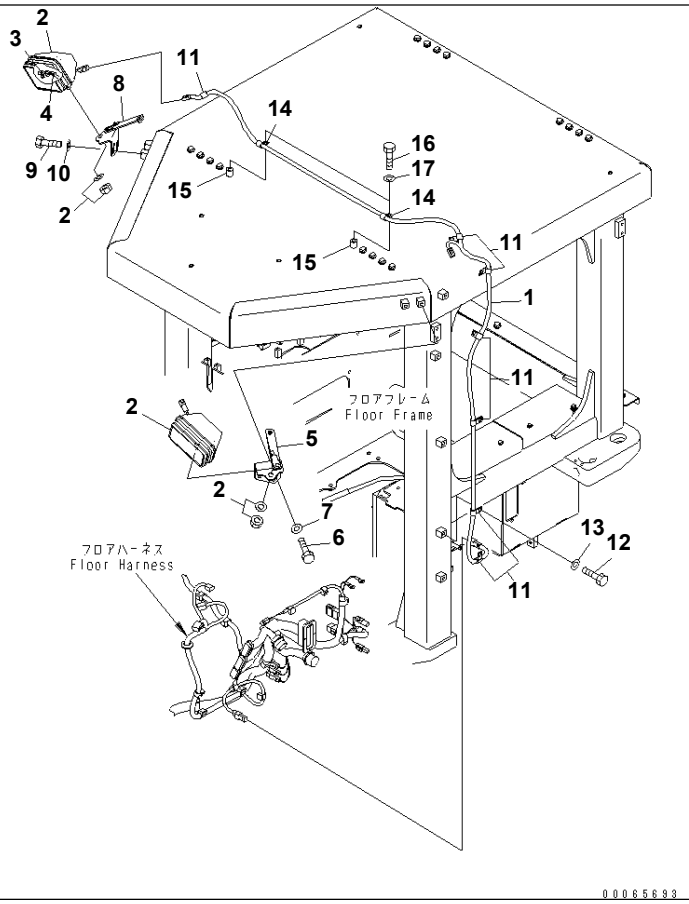

Ref. E0300-01A1 Page 120090

D155A-6 S/N 85001-UP

FRONT WORK LAMP (WITHOUT CAB)

Item	Part No.	Part Name	Qty	Serial No.
1	17A-06-43390	WIRING HARNESS	1	85001-
2	17A-06-17931	LAMP ASS'Y	2	85001-
3	17A-06-17970	· BULB¤ 70W	1	85001-
4	17A-06-17980	· SLEEVE	1	85001-
5	17A-979-1880	BRACKET,L.H.	1	85001-
6	01010-81225	BOLT	2	85001-
7	01643-31232	WASHER	2	85001-
8	17A-979-1890	BRACKET,R.H.	1	85001-
9	01010-81225	BOLT	2	85001-
10	01643-31232	WASHER	2	85001-
11	04434-51412	CLIP	7	85001-
12	01010-81225	BOLT	7	85001-
13	01643-31232	WASHER	7	85001-
14	04434-51412	CLIP	2	85001-
15	195-33-11220	SPACER	2	85001-
16	01010-81255	BOLT	2	85001-
17	01643-31232	WASHER	2	85001-

Printed By : Dwi Iswanto (airafather6107170)

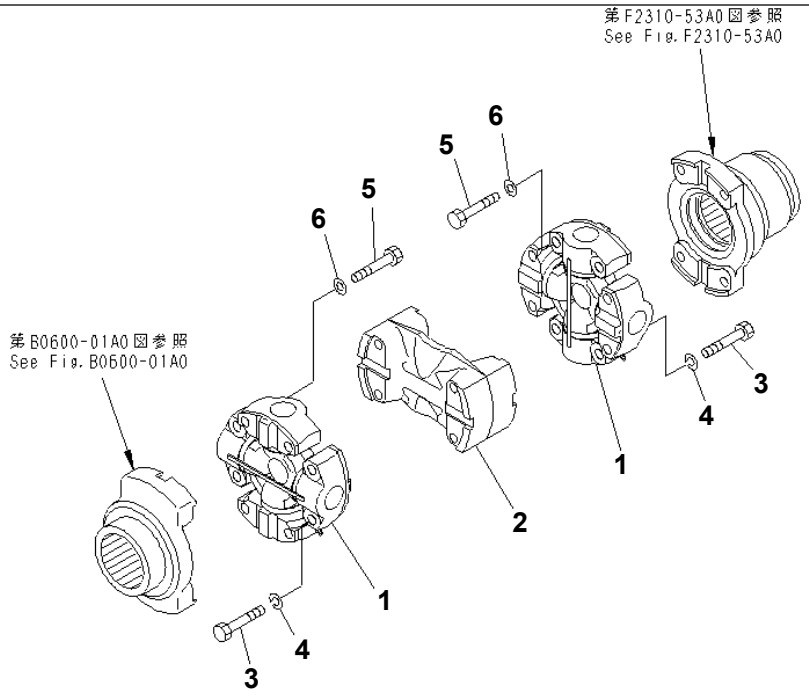

00042013

Ref. F2200-01A0 Page 150010

D155A-6 S/N 85001-UP
UNIVERSAL JOINT

Item	Part No.	Part Name	Qty	Serial No.
	17A-20-11201	UNIVERSAL JOINT	1	85001-
1	17A-20-11211	· SPIDER	2	85001-
2	175-20-11130	· PLATE	1	85001-
3	01010-81260	· BOLT	8	85001-
4	01602-21236	· WASHER	8	85001-
5	01010-81260	BOLT	8	85001-
6	01643-51232	WASHER	8	85001-

Printed By : Dwi Iswanto (airafather6107170)

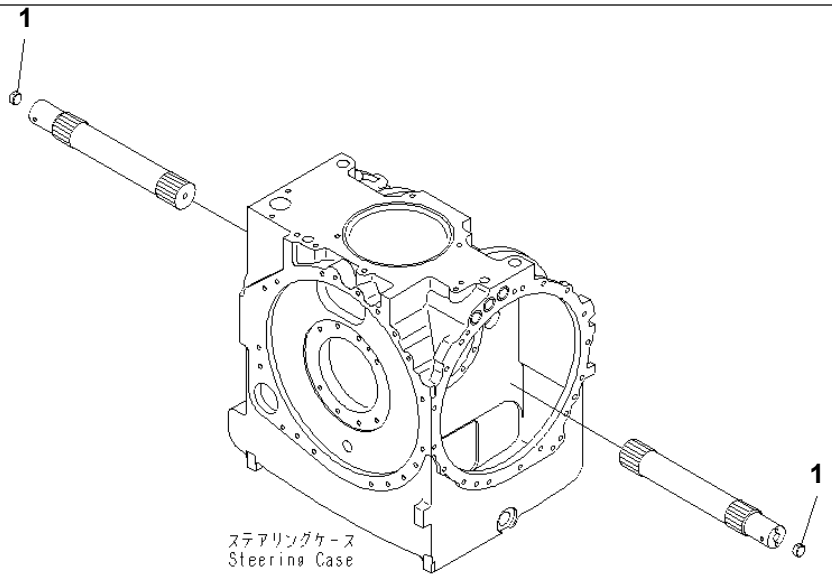

00071337

Ref. F2300-01A0 Page 150020

D155A-6 S/N 85001-UP

POWER TRAIN (BUTTON)(#85001-85024)

Item	Part No.	Part Name	Qty	Serial No.
	(17A-22-50000)	POWER TRAIN ASS'Y	1	85001-85024
1	195-22-12580	BUTTON	2	85001-@

Printed By : Dwi Iswanto (airafather6107170)

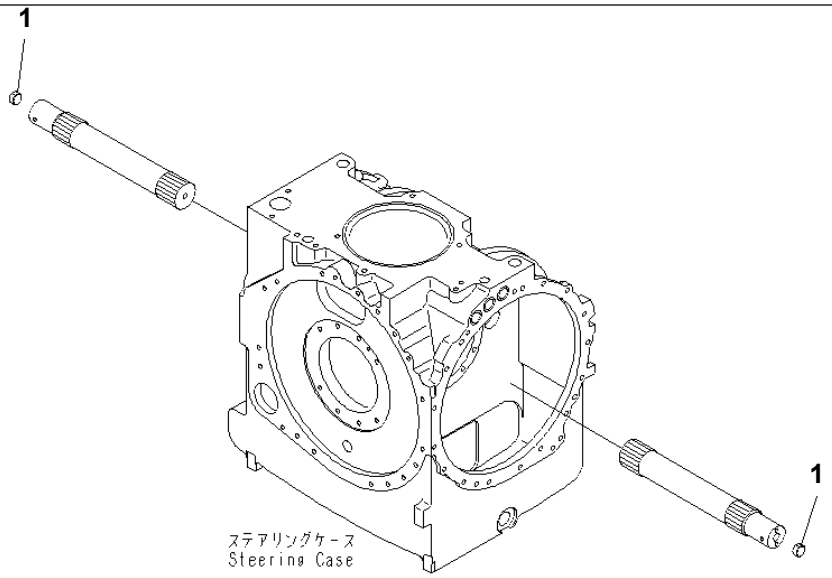

00071337

Ref. F2300-01A0A **Page 150030**

D155A-6 S/N 85001-UP
POWER TRAIN (BUTTON)(#85025-)

Item	Part No.	Part Name	Qty	Serial No.
	(17A-22-50001)	POWER TRAIN ASS'Y	1	85025-
1	195-22-12580	BUTTON	2	85001-

Printed By : Dwi Iswanto (airafather6107170)

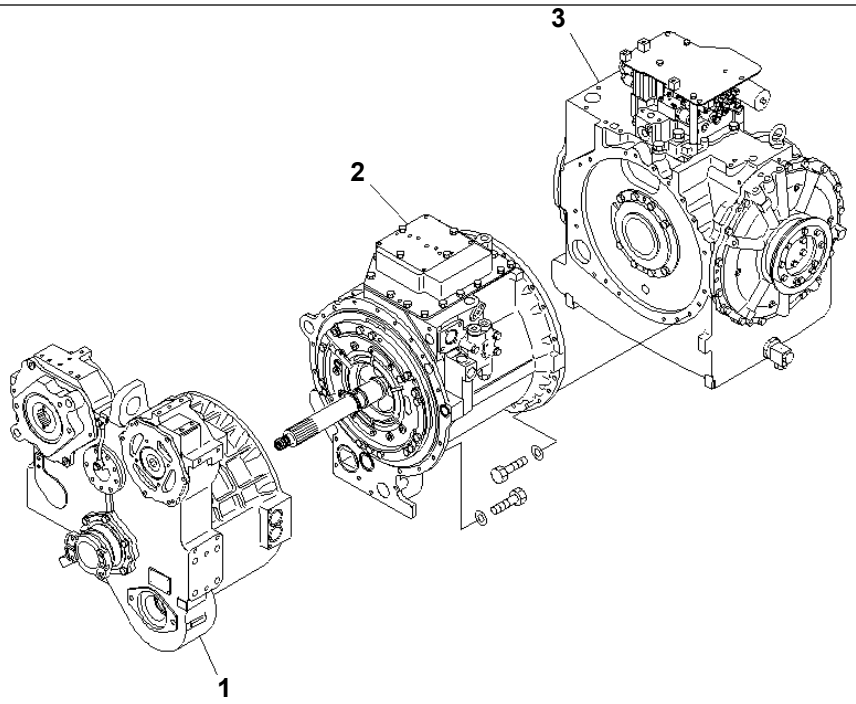

00064437

Ref. F2300-51A0 **Page 150040**

D155A-6 S/N 85001-UP
POWER TRAIN

Item	Part No.	Part Name	Qty	Serial No.
	17A-22-50001	POWER TRAIN ASS'Y	1	85025-
	17A-22-50000	POWER TRAIN ASS'Y	1	85001-85024
		THESE ASSEMBLIES CONSIST OF ALL PARTS SHOWN IN FIGS.F2300-51A0 TO F2300-60A0.		
1	(17A-13-51000)	CONVERTER ASS'Y	1	85001-
2	(17A-15-51000)	TRANSMISSION ASS'Y	1	85001-
3	(17A-22-51000)	STEERING ASS'Y	1	85001-

Printed By : Dwi Iswanto (airafather6107170)

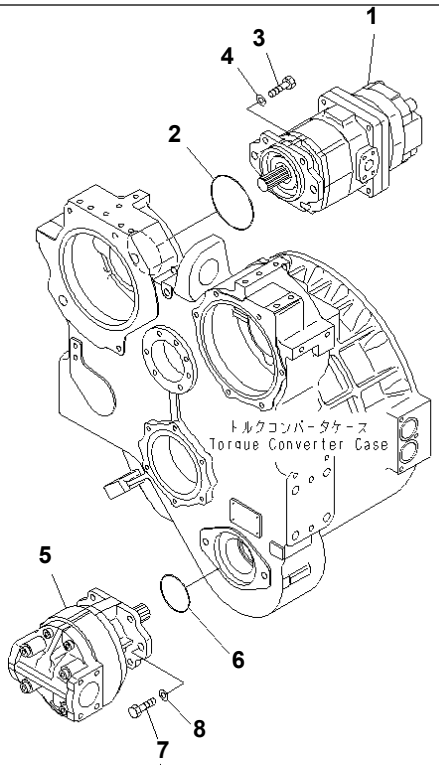

00064438

Ref. F2300-52A0 **Page 150050**

D155A-6 S/N 85001-UP
POWER TRAIN (PUMP)

Item	Part No.	Part Name	Qty	Serial No.
	(17A-22-50001)	POWER TRAIN ASS'Y	1	85025-
	(17A-22-50000)	POWER TRAIN ASS'Y	1	85001-85024
		THESE ASSEMBLIES CONSIST OF ALL PARTS SHOWN IN FIGS.F2300-51A0 TO F2300-60A0.		
1	(705-52-30A00)	· PUMP ASS'Y	1	85001-
2	07000-72130	· O-RING	1	85001-
3	01010-81645	· BOLT	2	85001-
4	01643-31645	· WASHER	2	85001-
5	(705-22-42100)	· SAR125 S HT	1	85025-
	(705-22-42090)	· PUMP ASS'Y	1	85001-85024
6	07000-72130	· O-RING	1	85001-
7	01010-81645	· BOLT	2	85001-
8	01643-31645	· WASHER	2	85001-

Printed By : Dwi Iswanto (airafather6107170)

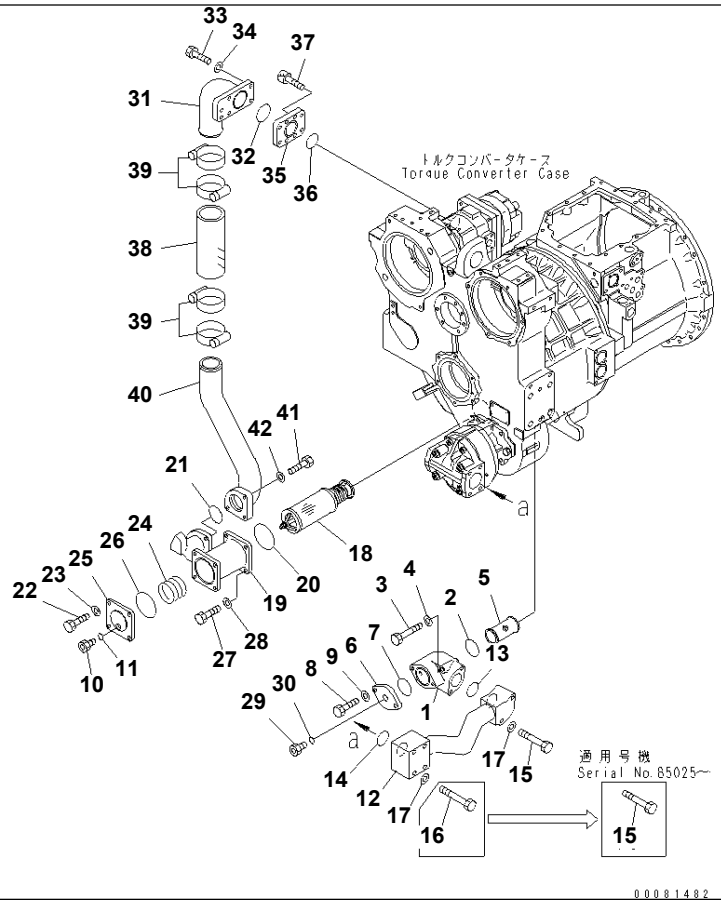

Ref. F2300-53A0 **Page 150060**

D155A-6 S/N 85001-UP
POWER TRAIN (POWER LINE SUCTION)

Item	Part No.	Part Name	Qty	Serial No.
	(17A-22-50001)	POWER TRAIN ASS'Y	1	85025-
	(17A-22-50000)	POWER TRAIN ASS'Y	1	85001-85024
		THESE ASSEMBLIES CONSIST OF ALL PARTS SHOWN IN FIGS.F2300-51A0 TO F2300-60A0.		
1	17A-49-41310	· ELBOW	1	85001-
2	07000-72070	· O-RING	1	85001-
3	01010-81290	· BOLT	2	85001-
4	01643-31232	· WASHER	2	85001-
5	17A-49-41320	· STRAINER	1	85001-
6	17A-49-15141	· FLANGE	1	85001-
7	07000-72070	· O-RING	1	85001-
8	01010-81235	· BOLT	2	85001-
9	01643-31232	· WASHER	2	85001-
10	07040-12412	· PLUG	1	85001-
11	07002-12434	· O-RING	1	85001-
12	17A-49-43110	· TUBE	1	85025-
	17A-49-42111	· TUBE	1	85001-85024
13	07000-72055	· O-RING	1	85001-
14	07000-72060	· O-RING	1	85025-
	07000-72075	· O-RING	1	85001-85024
15	01011-81200	· BOLT	6	85025-
	01011-81200	· BOLT	2	85001-85024
16	01011-81210	· BOLT	4	85001-
17	01643-31232	· WASHER	6	85001-
18	17A-49-41630	· MAGNET ASS'Y	1	85001-
19	17A-49-42640	· HEAD	1	85001-
20	07000-72110	· O-RING	1	85001-
21	07000-72070	· O-RING	1	85001-
22	01010-81235	· BOLT	4	85001-
23	01643-31232	· WASHER	4	85001-

Printed By : Dwi Iswanto (airafather6107170)

POWER TRAIN (POWER LINE SUCTION)

Item	Part No.	Part Name	Qty	Serial No.
24	14X-49-12320	· SPRING	1	85001-
25	17A-49-41680	· COVER	1	85001-
26	07000-72100	· O-RING	1	85001-
27	01010-81235	· BOLT	4	85001-
28	01643-31232	· WASHER	4	85001-
29	07040-12012	· PLUG	1	85001-
30	07002-12034	· O-RING	1	85001-
31	17A-49-41191	· TUBE	1	85001-
32	07000-72055	· O-RING	1	85001-
33	01010-81245	· BOLT	4	85001-
34	01643-31232	· WASHER	4	85001-
35	17A-49-41231	· FLANGE	1	85001-
36	07000-72055	· O-RING	1	85001-
37	01252-71225	· BOLT	4	85001-
38	07260-07425	· HOSE	1	85001-
39	07289-00095	· CLAMP	4	85001-
40	17A-49-42220	· TUBE	1	85001-
41	01010-81250	· BOLT	3	85001-
42	01643-31232	· WASHER	3	85001-

Printed By : Dwi Iswanto (airafather6107170)

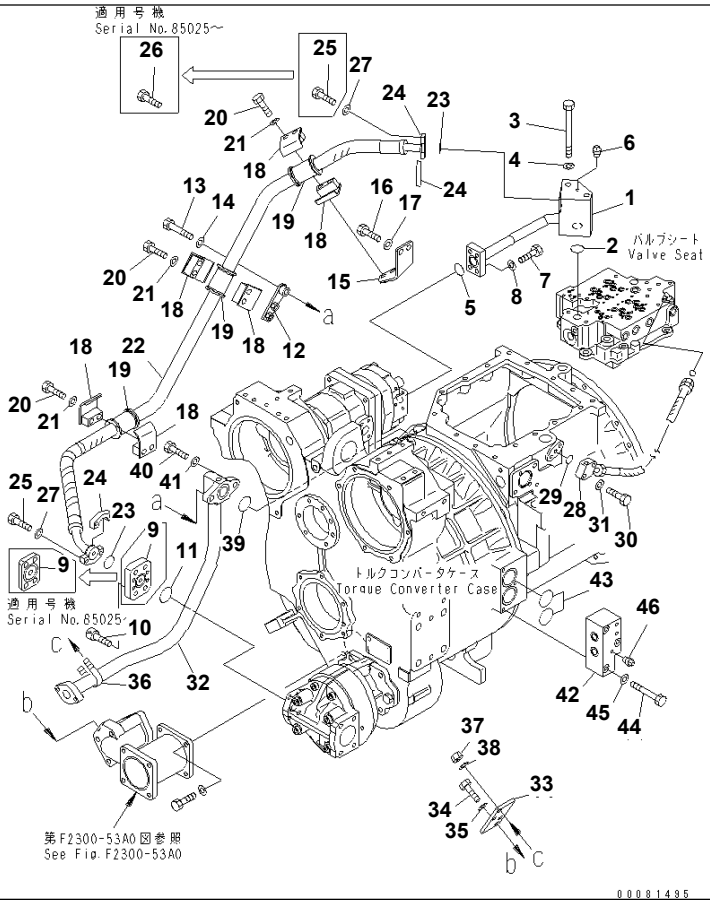

Ref. F2300-54A0 **Page 150070**

D155A-6 S/N 85001-UP
POWER TRAIN (POWER LINE PIPING)

Item	Part No.	Part Name	Qty	Serial No.
	(17A-22-50001)	POWER TRAIN ASS'Y	1	85025-
	(17A-22-50000)	POWER TRAIN ASS'Y	1	85001-85024
		THESE ASSEMBLIES CONSIST OF ALL PARTS SHOWN IN FIGS.F2300-51A0 TO F2300-60A0.		
1	17A-49-42131	· TUBE	1	85001-
2	07000-73035	· O-RING	1	85001-
3	01011-81040	· BOLT	2	85001-
4	203-54-56970	· WASHER	2	85001-
5	07000-73035	· O-RING	1	85001-
6	07042-80108	· PLUG	1	85001-
7	07372-21040	· BOLT	4	85001-
8	01643-51032	· WASHER	4	85001-
9	17A-49-43120TY	· FLANGE	1	85025-
	17A-49-41840	· FLANGE	1	85001-85024
10	01252-71225	· BOLT	4	85001-
11	07000-73032	· O-RING	1	85025-
	07000-72035	· O-RING	1	85001-85024
12	17A-49-42721	· BRACKET	1	85001-
13	01010-81265	· BOLT	1	85001-
14	01643-31232	· WASHER	1	85001-
15	17A-49-42731	· BRACKET	1	85001-
16	01010-81225	· BOLT	2	85001-
17	01643-31232	· WASHER	2	85001-
18	07094-11024	· CLAMP	6	85001-
19	07095-01035	· CUSHION	3	85001-
20	01010-81285	· BOLT	6	85001-
21	01643-31232	· WASHER	6	85001-
22	17A-49-43130	· HOSE	1	85025-
	17A-49-42951	· HOSE	1	85001-85024
23	07000-73032	· O-RING	2	85001-

Printed By : Dwi Iswanto (airafather6107170)

POWER TRAIN (POWER LINE PIPING)

Item	Part No.	Part Name	Qty	Serial No.
24	07371-31049	· FLANGE	4	85001-
25	07372-21035	· BOLT	4	85025-
	07372-21035	· BOLT	8	85001-85024
26	07372-21045	· BOLT	4	85025-
27	01643-51032	· WASHER	8	85001-
28	17A-49-42271	· HOSE	1	85001-
29	07000-72018	· O-RING	1	85001-
30	01010-81040	· BOLT	2	85001-
31	01643-31032	· WASHER	2	85001-
32	17A-49-41261	· TUBE	1	85001-
33	17A-49-42670	· BRACKET	1	85001-
34	01010-81230	· BOLT	2	85001-
35	01643-31232	· WASHER	2	85001-
36	07283-33442	· CLIP	1	85001-
37	01597-01009	· NUT	2	85001-
38	01643-31032	· WASHER	2	85001-
39	07000-73045	· O-RING	1	85001-
40	01010-81245	· BOLT	1	85001-
41	01643-31232	· WASHER	1	85001-
42	17A-49-42331	· BLOCK	1	85001-
43	07000-73050	· O-RING	2	85001-
44	01010-81085	· BOLT	3	85001-
45	01643-31032	· WASHER	3	85001-
46	07042-80108	· PLUG	1	85001-

Printed By : Dwi Iswanto (airafather6107170)

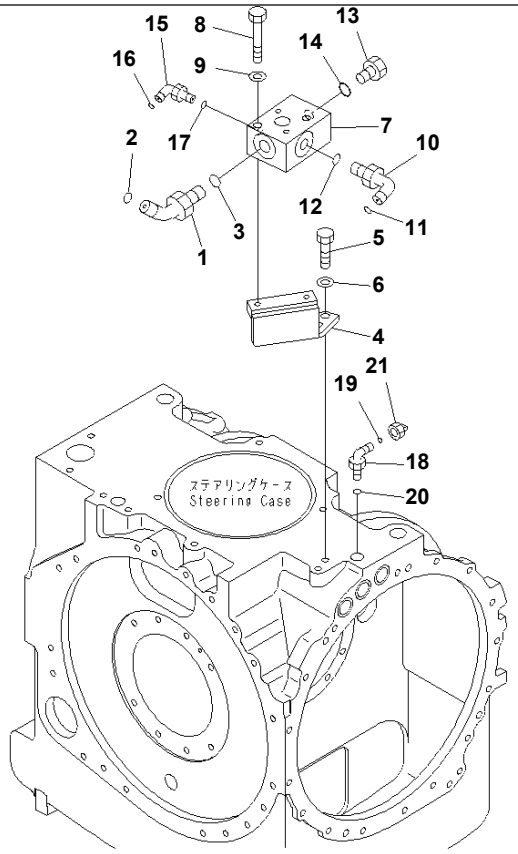

Ref. F2300-55A0 **Page 150080**

D155A-6 S/N 85001-UP

POWER TRAIN (PIPING AND BRACKET)

Item	Part No.	Part Name	Qty	Serial No.
	(17A-22-50001)	POWER TRAIN ASS'Y	1	85025-
	(17A-22-50000)	POWER TRAIN ASS'Y	1	85001-85024
		THESE ASSEMBLIES CONSIST OF ALL PARTS SHOWN IN FIGS.F2300-51A0 TO F2300-60A0.		
1	02783-10628	· ELBOW	1	85001-
2	02896-11018	· O-RING	1	85001-
3	07002-12434	· O-RING	1	85001-
4	17A-49-42150	· BRACKET	1	85001-
5	01010-81235	· BOLT	2	85001-
6	01643-31232	· WASHER	2	85001-
7	17A-49-41161	· BLOCK	1	85001-
8	01010-81280	· BOLT	2	85001-
9	01643-31232	· WASHER	2	85001-
10	02782-10425	· ELBOW	1	85001-
11	02896-11012	· O-RING	1	85001-
12	07002-12434	· O-RING	1	85001-
13	07040-12412	· PLUG	1	85001-
14	07002-12434	· O-RING	1	85001-
15	02782-10210	· ELBOW	1	85001-
16	02896-11008	· O-RING	1	85001-
17	07002-11423	· O-RING	1	85001-
18	02782-10315	· ELBOW	1	85001-
19	02896-11009	· O-RING	1	85001-
20	07002-12034	· O-RING	1	85001-
21	02789-10315	· PLUG	1	85001-

Printed By : Dwi Iswanto (airafather6107170)

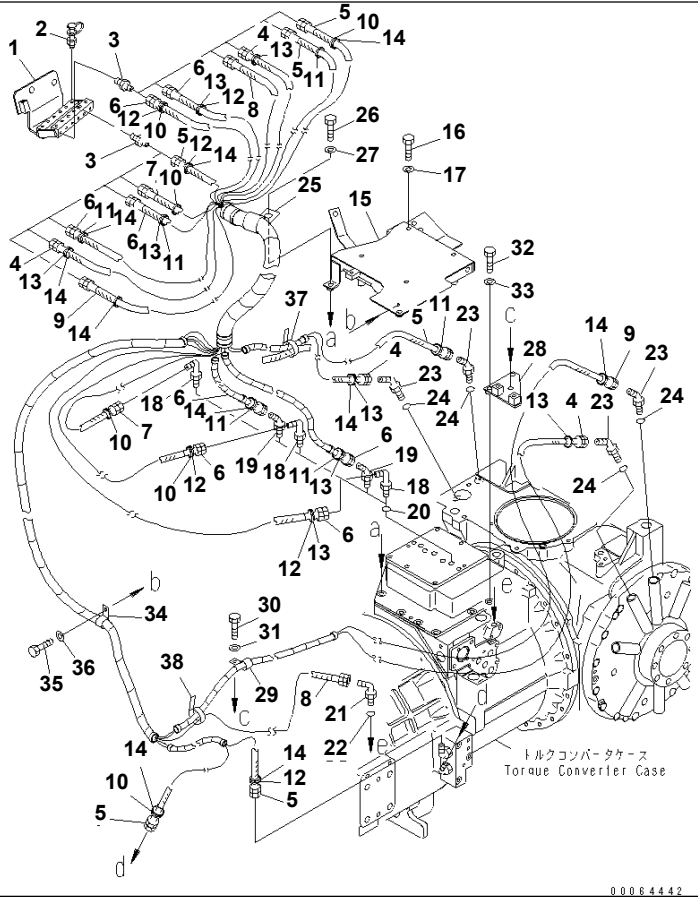

Ref. F2300-56A0 **Page 150090**

D155A-6 S/N 85001-UP

POWER TRAIN (CONCENTRATED PIPING)

Item	Part No.	Part Name	Qty	Serial No.
	(17A-22-50001)	POWER TRAIN ASS'Y	1	85025-
	(17A-22-50000)	POWER TRAIN ASS'Y	1	85001-85024
		THESE ASSEMBLIES CONSIST OF ALL PARTS SHOWN IN FIGS.F2300-51A0 TO F2300-60A0.		
1	17A-49-42341	· BRACKET	1	85001-
2	195-49-36120	· NIPPLE	12	85001-
3	203-62-21740	· NIPPLE	12	85001-
4	17A-49-17571	· HOSE	2	85001-
5	17A-49-21261	· HOSE¤ 1770MM	3	85001-
6	17A-49-42310	· HOSE¤ 1220MM	4	85001-
7	17A-49-42320	· HOSE¤ 1120MM	1	85001-
8	17A-49-42350	· HOSE¤ 1380MM	1	85001-
9	17A-49-42371	· HOSE	1	85001-
10	20Y-62-22790	· BAND¤ RED,RED	6	85001-
11	20Y-62-22810	· BAND¤ YELLOW,YELLOW	6	85001-
12	20Y-62-22820	· BAND¤ BLUE,BLUE	6	85001-
13	20Y-62-22830	· BAND¤ WHITE,WHITE	8	85001-
14	20Y-62-22840	· BAND¤ BLACK,BLACK	10	85001-
15	17A-49-42761	· BRACKET	1	85001-
16	01011-81030	· BOLT	4	85001-
17	01643-31032	· WASHER	4	85001-
18	17A-15-41360	· ELBOW	3	85001-
19	17A-15-41370	· ELBOW	2	85001-
20	07002-61023	· O-RING	5	85001-
21	17A-15-41380	· ELBOW	1	85001-
22	07002-61223	· O-RING	1	85001-
23	17A-22-41390	· ELBOW	4	85001-
24	07002-61623	· O-RING	4	85001-
25	21T-06-11940	· CLIP	1	85001-
26	01010-81225	· BOLT	1	85001-

Printed By : Dwi Iswanto (airafather6107170)

POWER TRAIN (CONCENTRATED PIPING)

Item	Part No.	Part Name	Qty	Serial No.
27	01643-31232	· WASHER	1	85001-
28	17A-49-41770	· BRACKET	1	85001-
29	04434-51712	· CLIP	2	85001-
30	01010-81225	· BOLT	2	85001-
31	01643-31232	· WASHER	2	85001-
32	01010-81245	· BOLT	2	85001-
33	01643-31232	· WASHER	2	85001-
34	04434-52712	· CLIP	1	85001-
35	01010-81225	· BOLT	1	85001-
36	01643-31232	· WASHER	1	85001-
37	08034-20536	· BAND	1	85001-
38	08034-20414	· BAND	2	85001-

Printed By : Dwi Iswanto (airafather6107170)

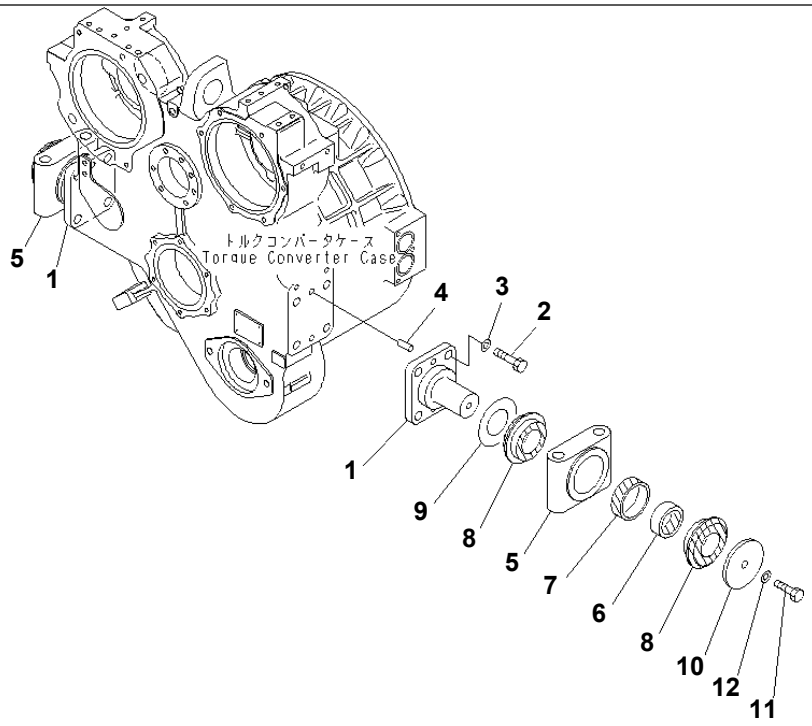

00064443

Ref. F2300-57A0 **Page 150100**

D155A-6 S/N 85001-UP
POWER TRAIN (MOUNTING PARTS)

Item	Part No.	Part Name	Qty	Serial No.
	(17A-22-50001)	POWER TRAIN ASS'Y	1	85025-
	(17A-22-50000)	POWER TRAIN ASS'Y	1	85001-85024
		THESE ASSEMBLIES CONSIST OF ALL PARTS SHOWN IN FIGS.F2300-51A0 TO F2300-60A0.		
1	17A-21-12110	· PIN	2	85001-
2	01010-62055	· BOLT	8	85001-
3	01643-32060	· WASHER	8	85001-
4	04020-01434	· PIN	4	85001-
5	17A-21-12151	· CAP	2	85001-
6	154-01-21330	· CUSHION	2	85001-
7	154-01-21320	· CUSHION	2	85001-
8	154-01-21310	· CUSHION	4	85001-
9	14X-01-11140	· SPACER	2	85001-
10	14X-01-11150	· PLATE	2	85001-
11	01010-61645	· BOLT	2	85001-
12	01643-31645	· WASHER	2	85001-

Printed By : Dwi Iswanto (airafather6107170)

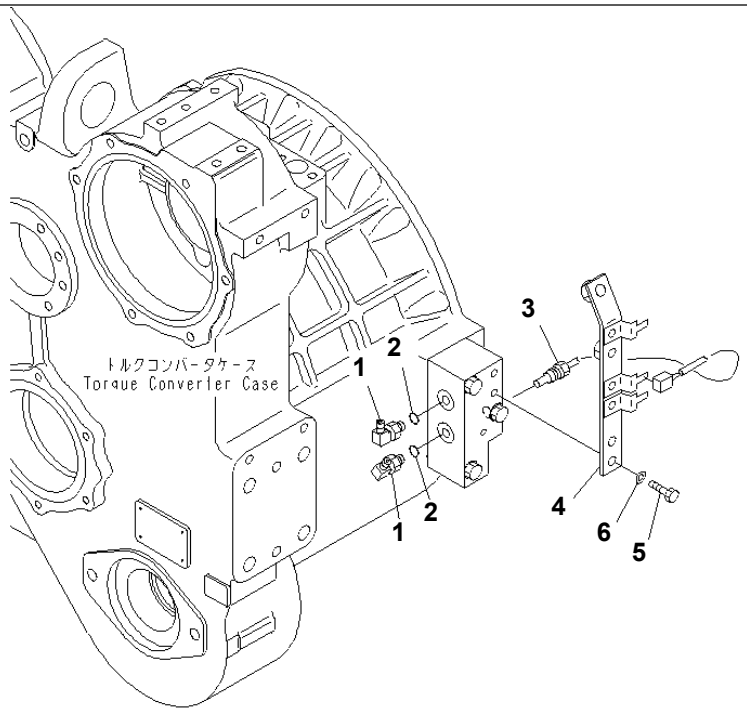

00064444

Ref. F2300-58A0 **Page 150110**

D155A-6 S/N 85001-UP
POWER TRAIN (ELECTRICAL)

Item	Part No.	Part Name	Qty	Serial No.
	(17A-22-50001)	POWER TRAIN ASS'Y	1	85025-
	(17A-22-50000)	POWER TRAIN ASS'Y	1	85001-85024
		THESE ASSEMBLIES CONSIST OF ALL PARTS SHOWN IN FIGS.F2300-51A0 TO F2300-60A0.		
1	17A-15-41380	ELBOW	2	85001-
2	07002-61223	O-RING	2	85001-
3	7861-93-3320	SENSOR	1	85001-
4	17A-06-41571	BRACKET	1	85001-
5	01010-81025	BOLT	2	85001-
6	01643-31032	WASHER	2	85001-

Printed By : Dwi Iswanto (airafather6107170)

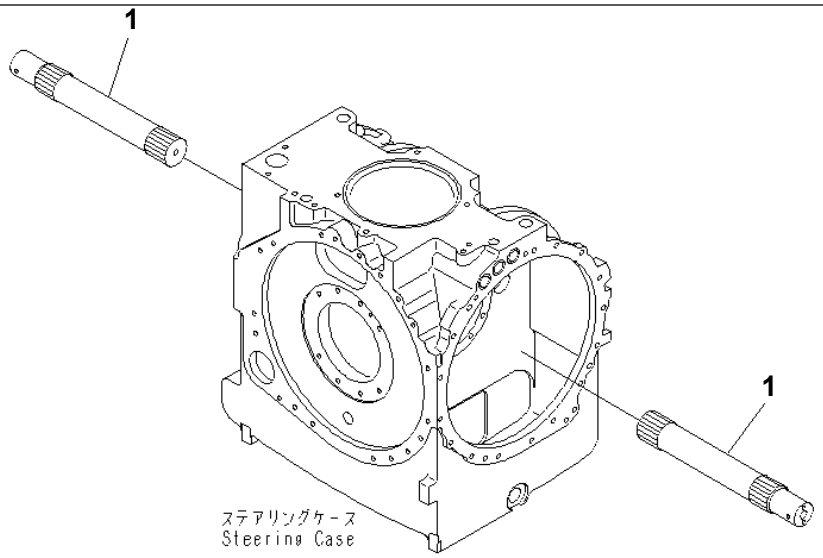

00064445

Ref. F2300-59A0 **Page 150120**

D155A-6 S/N 85001-UP
POWER TRAIN (MAIN SHAFT)

Item	Part No.	Part Name	Qty	Serial No.
	(17A-22-50001)	POWER TRAIN ASS'Y	1	85025-
	(17A-22-50000)	POWER TRAIN ASS'Y	1	85001-85024
		THESE ASSEMBLIES CONSIST OF ALL PARTS SHOWN IN FIGS.F2300-51A0 TO F2300-60A0.		
1	17A-22-18110	· SHAFT	2	85001-

Printed By : Dwi Iswanto (airafather6107170)

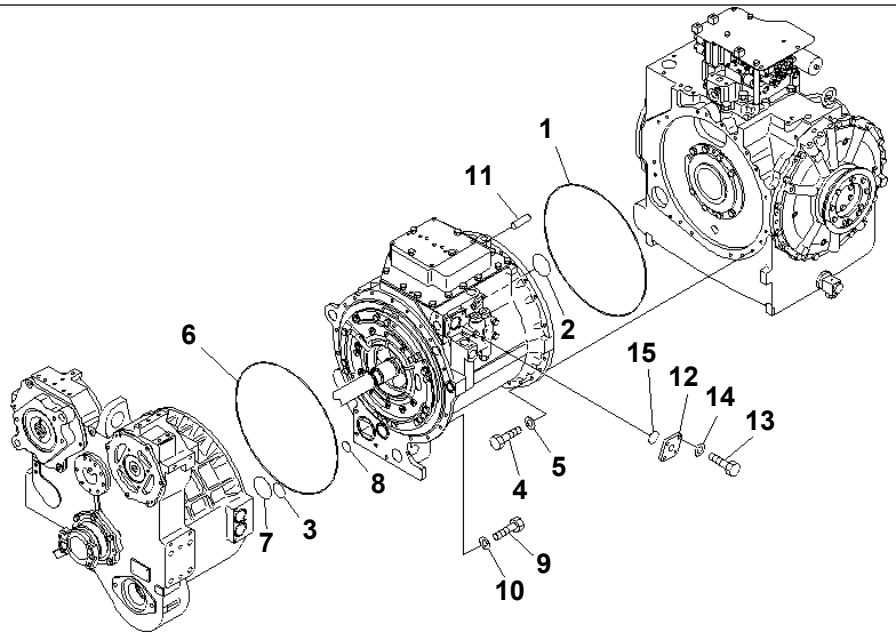

00064446

Ref. F2300-60A0 **Page 150130**

D155A-6 S/N 85001-UP
POWER TRAIN (ACCESSORY)

Item	Part No.	Part Name	Qty	Serial No.
	(17A-22-50001)	POWER TRAIN ASS'Y	1	85025-
	(17A-22-50000)	POWER TRAIN ASS'Y	1	85001-85024
		THESE ASSEMBLIES CONSIST OF ALL PARTS SHOWN IN FIGS.F2300-51A0 TO F2300-60A0.		
1	17M-15-45980	· O-RING	1	85001-
2	07000-72085	· O-RING	1	85001-
3	07000-72055	· O-RING	1	85001-
4	01010-81240	· BOLT	18	85001-
5	01643-31232	· WASHER	18	85001-
6	17M-15-45980	· O-RING	1	85001-
7	07000-72085	· O-RING	1	85001-
8	07000-73038	· O-RING	1	85001-
9	01010-81235	· BOLT	19	85001-
10	01643-31232	· WASHER	19	85001-
11	04020-01228	· PIN	1	85001-
12	17A-15-25840	· PLATE	1	85001-
13	01010-81235	· BOLT	2	85001-
14	01643-31232	· WASHER	2	85001-
15	07000-73045	· O-RING	1	85001-

Printed By : Dwi Iswanto (airafather6107170)

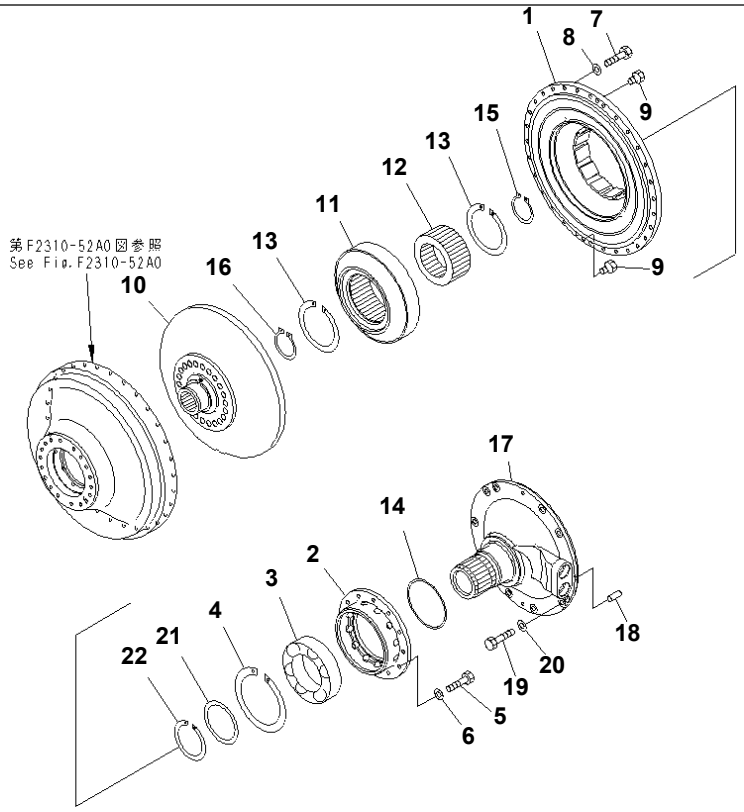

0 0 0 6 4 4 4 7

Ref. F2310-51A0 **Page 150140**

D155A-6 S/N 85001-UP
TORQUE CONVERTER (BARE)

Item	Part No.	Part Name	Qty	Serial No.
	17A-13-51000	CONVERTER ASS'Y THIS ASSEMBLY CONSISTS OF ALL PARTS SHOWN IN FIGS.F2310-51A0 TO F2310-54A0.	1	85001-
	17A-13-00040	· T/C BARE ASS'Y THIS ASSEMBLY CONSISTS OF ALL PARTS SHOWN IN FIGS.F2310-51A0 AND F2310-52A0.	1	85001-
1	17A-13-21121	· · PUMP	1	85001-
2	17A-13-41140	· · RETAINER	1	85001-
3	17A-13-31160	· · BEARING	1	85001-
4	04071-00180	· · RING	1	85001-
5	01010-81035	· · BOLT	12	85001-
6	01643-31032	· · WASHER	12	85001-
7	01010-81040	· · BOLT	30	85001-
8	01643-31032	· · WASHER	30	85001-
9	07040-11209	· · PLUG	2	85001-
10	17A-13-51510	· · TURBINE,COMPLETE	1	85001-
11	17A-13-42110	· · STATOR	1	85001-
12	17A-13-52130	· · RACE	1	85001-
13	04071-00150	· · RING	2	85001-
14	195-13-12711	· · RING (K1)	1	85001-
15	04064-01030	· · RING	1	85001-
16	04064-09530	· · RING	1	85001-
17	17A-13-58520	· · STATOR SHAFT	1	85001-
18	04020-01228	· · PIN	1	85001-
19	01010-81240	· · BOLT	10	85001-
20	01643-31232	· · WASHER	10	85001-
21	17A-13-41770	· · PLATE	1	85001-
22	04070-00105	· · RING	1	85001-

Printed By : Dwi Iswanto (airafather6107170)

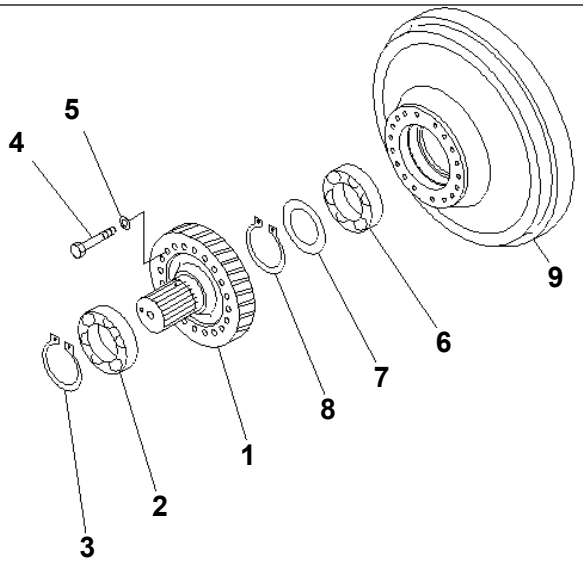

00064448

Ref. F2310-52A0 **Page 150150**

D155A-6 S/N 85001-UP
TORQUE CONVERTER (INPUT AND DRIVE CASE)

Item	Part No.	Part Name	Qty	Serial No.
	(17A-13-51000)	CONVERTER ASS'Y THIS ASSEMBLY CONSISTS OF ALL PARTS SHOWN IN FIGS.F2310-51A0 TO F2310-54A0.	1	85001-
	(17A-13-00040)	· T/C BARE ASS'Y THIS ASSEMBLY CONSISTS OF ALL PARTS SHOWN IN FIGS.F2310-51A0 AND F2310-52A0.	1	85001-
1	17A-13-51350	· · SHAFT	1	85001-
2	17A-13-39320	· · BEARING	1	85001-
3	04064-08025	· · RING	1	85001-
4	01010-81270	· · BOLT	18	85001-
5	01643-31232	· · WASHER	18	85001-
6	711-16-11560	· · BEARING	1	85001-
7	711-53-11770	· · PLATE	1	85001-
8	04064-08025	· · RING	1	85001-
9	17A-13-51210	· · CASE	1	85001-

Printed By : Dwi Iswanto (airafather6107170)

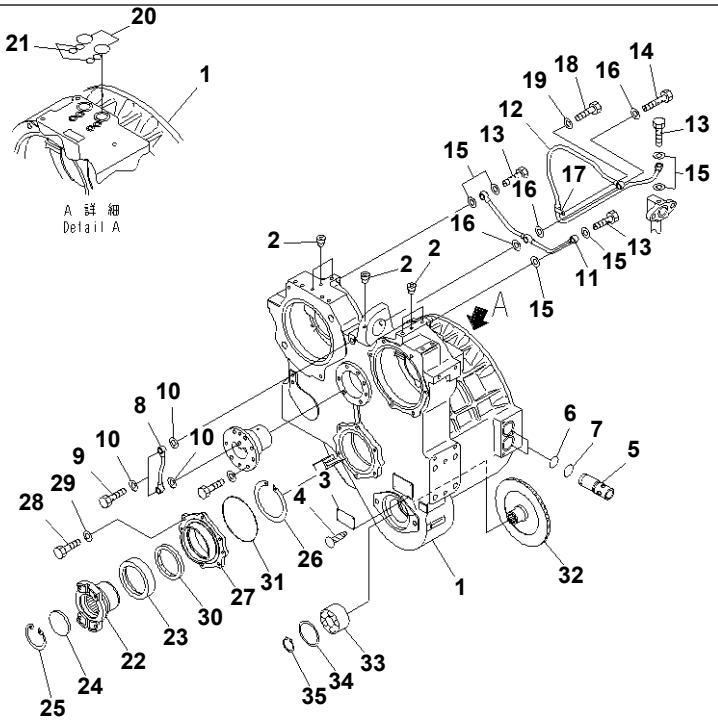

00064449

Ref. F2310-53A0 **Page 150160**

D155A-6 S/N 85001-UP

TORQUE CONVERTER (CASE)

Item	Part No.	Part Name	Qty	Serial No.
	(17A-13-51000)	CONVERTER ASS'Y THIS ASSEMBLY CONSISTS OF ALL PARTS SHOWN IN FIGS.F2310-51A0 TO F2310-54A0.	1	85001-
	17A-13-00291	· CASE ASS'Y	1	85001-
1	☆	· · CASE	1	85001-
2	07043-70108	· · PLUG	7	85001-
3	09607-05080	· PLATE¤ NAME	1	85001-
4	04418-13060	· SCREW	4	85001-
5	17A-13-22550	· SLEEVE	2	85001-
6	07000-73035	· O-RING (K1)	2	85001-
7	07000-73038	· O-RING (K1)	2	85001-
8	17A-13-46910	· TUBE	1	85001-
9	07206-31216	· BOLT	2	85001-
10	07005-01612	· GASKET (K1)	4	85001-
11	17A-13-46950	· TUBE	1	85001-
12	17A-13-46961	· TUBE	1	85001-
13	07206-31216	· BOLT	3	85001-
14	17A-13-46970	· BOLT,BOLT	1	85001-
15	07005-01612	· GASKET (K1)	6	85001-
16	07005-01612	· GASKET (K1)	3	85001-
17	562-13-16860	· CLIP	1	85001-
18	01010-81220	· BOLT	1	85001-
19	01643-31232	· WASHER	1	85001-
20	07000-73030	· O-RING (K1)	2	85001-
21	07000-72015	· O-RING (K1)	4	85001-
	17A-13-38660	· COUPLING COMPLETE	1	85001-
22	☆	· · COUPLING	1	85001-
23	17A-15-18271	· · COVER	1	85001-
24	17A-15-18392	· CAP	1	85001-
25	04065-09030	· RING	1	85001-

Printed By : Dwi Iswanto (airafather6107170)

TORQUE CONVERTER (CASE)

Item	Part No.	Part Name	Qty	Serial No.
26	04077-00140	· RING	1	85001-
27	17A-13-43350	· RETAINER	1	85001-
28	01010-81030	· BOLT	6	85001-
29	01643-31032	· WASHER	6	85001-
30	07012-50100	· SEAL (K1)	1	85001-
31	07000-75165	· O-RING (K1)	1	85001-
32	17A-13-44120	· GEAR	1	85001-
33	06030-05209	· BEARING	1	85001-
34	04065-08530	· RING	1	85001-
35	04064-04518	· RING,SNAP	1	85001-

Printed By : Dwi Iswanto (airafather6107170)

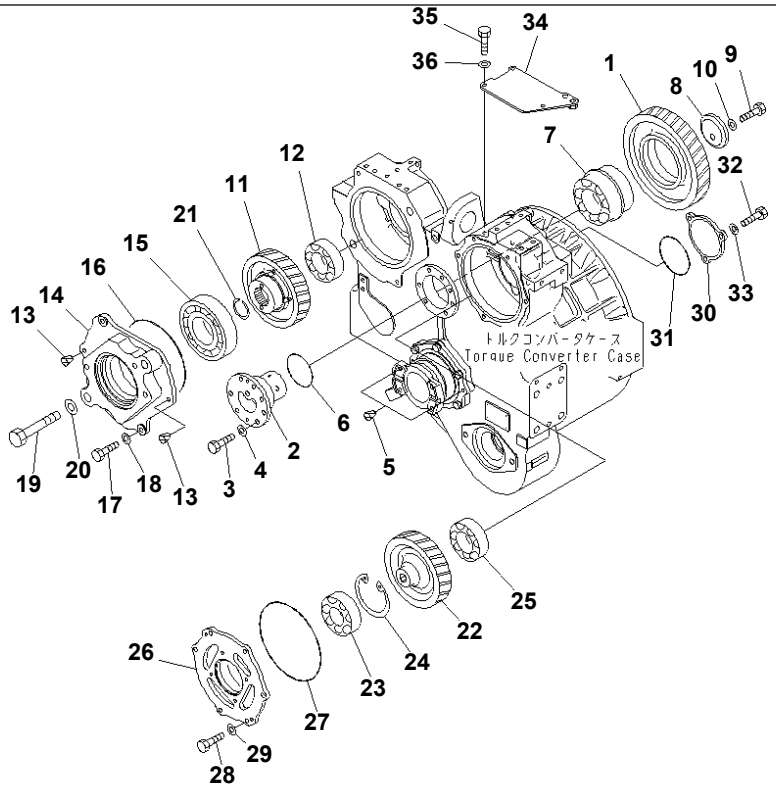

00064450

Ref. F2310-54A0 **Page 150170**

D155A-6 S/N 85001-UP
TORQUE CONVERTER (POWER TAKE OFF)

Item	Part No.	Part Name	Qty	Serial No.
	(17A-13-51000)	CONVERTER ASS'Y THIS ASSEMBLY CONSISTS OF ALL PARTS SHOWN IN FIGS.F2310-51A0 TO F2310-54A0.	1	85001-
1	17A-13-34220	· GEAR	1	85001-
2	17M-13-44240	· SHAFT	1	85001-
3	01010-81235	· BOLT	7	85001-
4	01643-31232	· WASHER	7	85001-
5	07049-01012	· PLUG	2	85001-
6	07000-72095	· O-RING (K1)	1	85001-
7	569-13-14460	· BEARING	1	85001-
8	17A-15-18350	· HOLDER	1	85001-
9	01010-61645	· BOLT	1	85001-
10	01643-31645	· WASHER	1	85001-
11	17A-13-54311	· GEAR	1	85001-
12	17A-13-39340	· BEARING	1	85001-
13	07049-01215	· PLUG	6	85001-
14	17A-13-54491	· COVER	1	85001-
15	06040-06313	· BEARING	1	85001-
16	07000-75230	· O-RING (K1)	1	85001-
17	01010-81240	· BOLT	2	85001-
18	01643-31232	· WASHER	2	85001-
19	01011-82400	· BOLT	2	85001-
20	01643-32460	· WASHER	2	85001-
21	04071-00140	· RING	1	85001-
22	17A-13-44340	· GEAR	1	85001-
23	06040-06311	· BEARING	1	85001-
24	04065-01204	· RING	1	85001-
25	17A-13-39340	· BEARING	1	85001-
26	17A-13-44480	· COVER	1	85001-
27	07000-75230	· O-RING (K1)	1	85001-

Printed By : Dwi Iswanto (airafather6107170)

TORQUE CONVERTER (POWER TAKE OFF)

Item	Part No.	Part Name	Qty	Serial No.
28	01010-81235	· BOLT	6	85001-
29	01643-31232	· WASHER	6	85001-
30	425-15-13450	· COVER	1	85001-
31	07000-72115	· O-RING (K1)	1	85001-
32	01010-81230	· BOLT	3	85001-
33	01643-31232	· WASHER	3	85001-
34	17A-13-56221	· COVER	1	85001-
35	01010-81025	· BOLT	3	85001-
36	01643-31032	· WASHER	3	85001-

Printed By : Dwi Iswanto (airafather6107170)

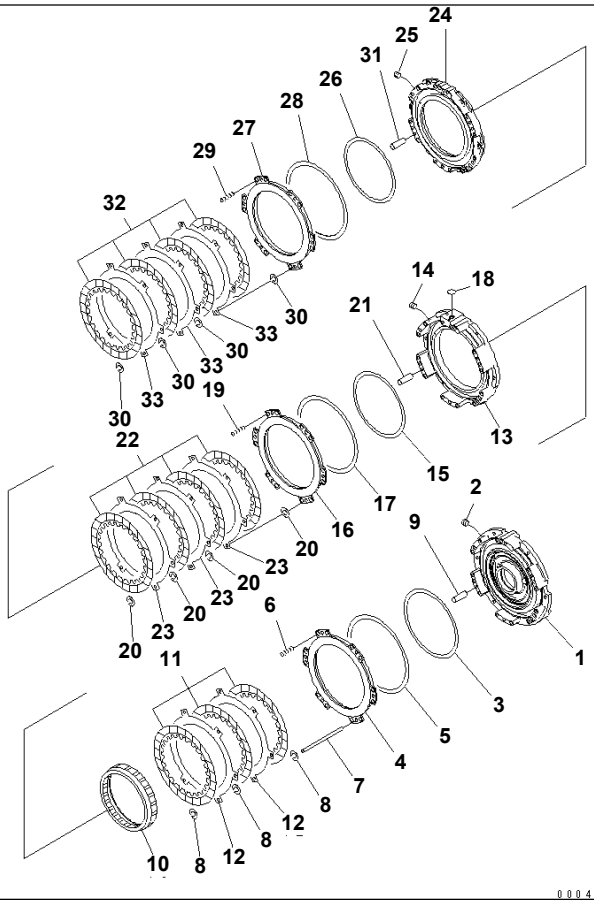

Ref. F2320-51A0 **Page 150180**

D155A-6 S/N 85001-UP
TRANSMISSION (HOUSING) (1/3)

Item	Part No.	Part Name	Qty	Serial No.
	17A-15-51000	TRANSMISSION ASS'Y THIS ASSEMBLY CONSISTS OF ALL PARTS SHOWN IN FIGS.F2320-51A0 TO F2320-61A0.	1	85001-
	17A-15-00711	· HOUSING ASS'Y	1	85001-
1	17A-15-41132	· · HOUSING	1	85001-
2	568-15-11380	· · PLUG	1	85001-
3	562-15-19230	· RING (K2)	1	85001-
4	17M-15-42730	· PISTON	1	85001-
5	566-15-79260	· RING (K2)	1	85001-
6	566-15-12880	· SPRING	12	85001-
7	425-15-11270	· PIN	6	85001-
8	175-15-42880	· SPRING	18	85001-
9	04020-01434	· PIN	2	85001-
10	17A-15-42660	· RING GEAR	1	85001-
11	195-15-32710	· DISC	3	85001-
12	17A-15-42740	· PLATE	2	85001-
	17A-15-00720	· HOUSING ASS'Y	1	85001-
13	17A-15-41140	· · HOUSING	1	85001-
14	145-14-11320	· · PLUG	1	85001-
15	144-15-22881	· RING (K2)	1	85001-
16	17A-15-42770	· PISTON	1	85001-
17	568-15-12830	· RING (K2)	1	85001-
18	07000-72020	· O-RING	1	85001-
19	195-15-48140	· SPRING	12	85001-
20	175-15-42880	· SPRING	24	85001-
21	04020-01434	· PIN	2	85001-
22	195-15-32710	· DISC	4	85001-
23	17A-15-42740	· PLATE	3	85001-
	17A-15-00730	· HOUSING ASS'Y	1	85001-
24	17A-15-41150	· · HOUSING	1	85001-

Printed By : Dwi Iswanto (airafather6107170)

TRANSMISSION (HOUSING) (1/3)

Item	Part No.	Part Name	Qty	Serial No.
25	145-14-11320	· · PLUG	1	85001-
26	425-15-19250	· RING (K2)	1	85001-
27	17A-15-22750	· PISTON	1	85001-
28	566-15-79260	· RING (K2)	1	85001-
29	195-15-48140	· SPRING	12	85001-
30	175-15-42880	· SPRING	24	85001-
31	04020-01434	· PIN	2	85001-
32	195-15-32710	· DISC	4	85001-
33	17A-15-42740	· PLATE	3	85001-

Printed By : Dwi Iswanto (airafather6107170)

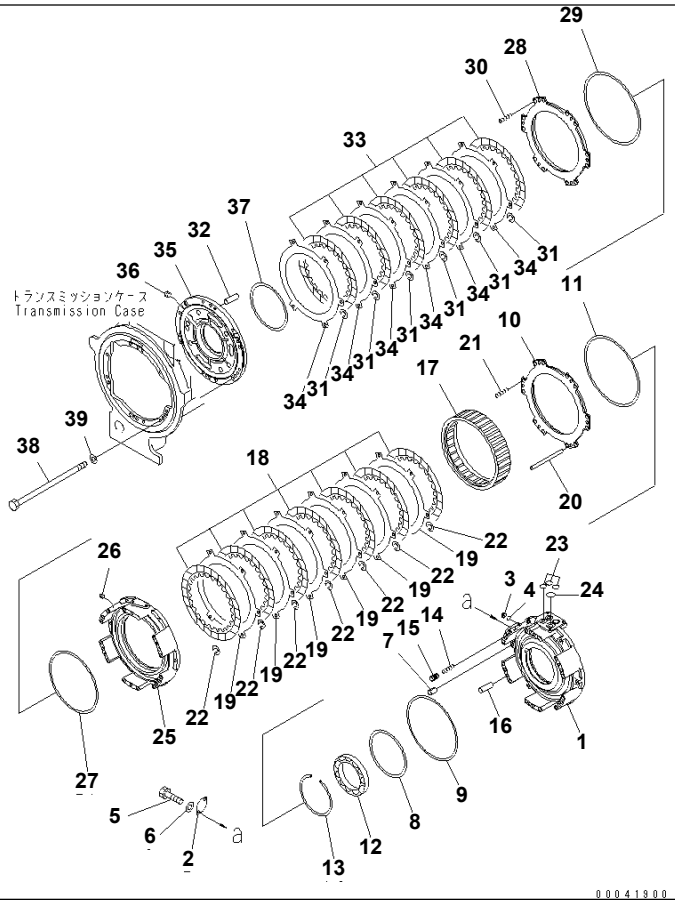

Ref. F2320-52A0 **Page 150190**

D155A-6 S/N 85001-UP

TRANSMISSION (HOUSING) (2/3)

Item	Part No.	Part Name	Qty	Serial No.
	(17A-15-51000)	TRANSMISSION ASS'Y THIS ASSEMBLY CONSISTS OF ALL PARTS SHOWN IN FIGS.F2320-51A0 TO F2320-61A0.	1	85001-
	17A-15-00741	· HOUSING ASS'Y	1	85001-
1	☆	· · HOUSING	1	85001-
2	17A-15-41310	· · COVER	1	85001-
3	134-22-66140	· · SLEEVE	1	85001-
4	07000-72018	· · O-RING (K2)	1	85001-
5	01010-80616	· · BOLT	2	85001-
6	01643-30623	· · WASHER	2	85001-
7	569-15-41310	· SLEEVE	17	85001-
8	17M-15-49270	· RING	1	85001-
9	562-15-19230	· RING (K2)	1	85001-
10	17A-15-42760	· PISTON	1	85001-
11	568-15-12840	· RING (K2)	1	85001-
12	06000-06930	· BEARING	1	85001-
13	04071-00210	· RING	1	85001-
14	700-80-51390	· SPRING	1	85001-
15	287-15-15360	· PISTON	1	85001-
16	04020-01434	· PIN	2	85001-
17	17A-15-42631	· RING GEAR	1	85001-
18	195-15-32710	· DISC	7	85001-
19	17A-15-42740	· PLATE	6	85001-
20	424-15-11270	· PIN¤(D=18.0¤L=210.0)	6	85001-
21	144-40-21790	· SPRING	12	85001-
22	175-15-42880	· SPRING	42	85001-
23	07000-73030	· O-RING (K2)	3	85001-
24	07000-73035	· O-RING (K2)	1	85001-
	17A-15-00750	· HOUSING ASS'Y	1	85001-
25	☆	· · HOUSING	1	85001-

Printed By : Dwi Iswanto (airafather6107170)

TRANSMISSION (HOUSING) (2/3)

Item	Part No.	Part Name	Qty	Serial No.
26	145-14-11320	· · PLUG	1	85001-
27	144-15-22881	· RING (K2)	1	85001-
28	17A-15-42770	· PISTON	1	85001-
29	568-15-12830	· RING (K2)	1	85001-
30	144-40-21790	· SPRING	12	85001-
31	175-15-42880	· SPRING	36	85001-
32	04020-01434	· PIN	2	85001-
33	195-15-32710	· DISC	6	85001-
34	17A-15-42740	· PLATE	6	85001-
	17A-15-00760	· HOUSING ASS'Y	1	85001-
35	☆	· · HOUSING	1	85001-
36	175-15-11230	· · PLUG	1	85001-
37	17M-15-49270	· RING	1	85001-
38	281-15-11392	· BOLT	4	85001-
39	145-14-11571	· WASHER	4	85001-

Printed By : Dwi Iswanto (airafather6107170)

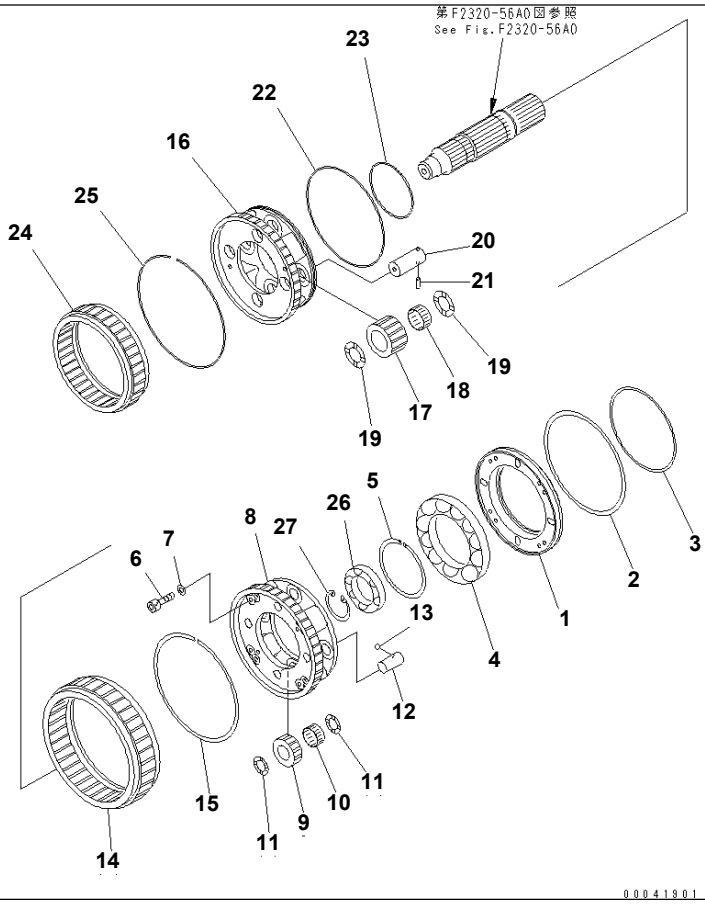

Ref. F2320-53A0 **Page 150200**

D155A-6 S/N 85001-UP

TRANSMISSION (HOUSING) (3/3)

Item	Part No.	Part Name	Qty	Serial No.
	(17A-15-51000)	TRANSMISSION ASS'Y THIS ASSEMBLY CONSISTS OF ALL PARTS SHOWN IN FIGS.F2320-51A0 TO F2320-61A0.	1	85001-
1	17A-15-42370	· COVER	1	85001-
2	17M-15-49280	· RING	1	85001-
3	17M-15-49290	· RING	1	85001-
4	06030-06928	· BEARING	1	85001-
5	04070-00140	· RING	1	85001-
6	01252-41060	· BOLT	8	85001-
7	01643-31032	· WASHER	8	85001-
8	17A-15-42351	· CARRIER	1	85001-
9	17A-15-42451	· GEAR	4	85001-
10	418-17-39311	· BEARING	4	85001-
11	17A-15-42570	· THRUST WASHER	8	85001-
12	17A-15-42550	· SHAFT	4	85001-
13	04260-00635	· BALL	4	85001-
14	17A-15-42650	· RING GEAR	1	85001-
15	561-15-59510	· RING	1	85001-
16	17A-15-42342	· CARRIER	1	85001-
17	17A-15-42442	· GEAR	4	85001-
18	17A-15-49440	· BEARING	4	85001-
19	569-15-32580	· WASHER	8	85001-
20	17A-15-42540	· SHAFT	4	85001-
21	17A-15-42960	· PIN	4	85001-
22	154-15-49260	· RING	1	85001-
23	566-15-79230	· RING	1	85001-
24	17A-15-42640	· RING GEAR	1	85001-
25	561-15-59510	· RING	1	85001-
26	17A-15-29321	· BEARING	1	85001-
27	04065-01154	· RING	1	85001-

Printed By : Dwi Iswanto (airafather6107170)

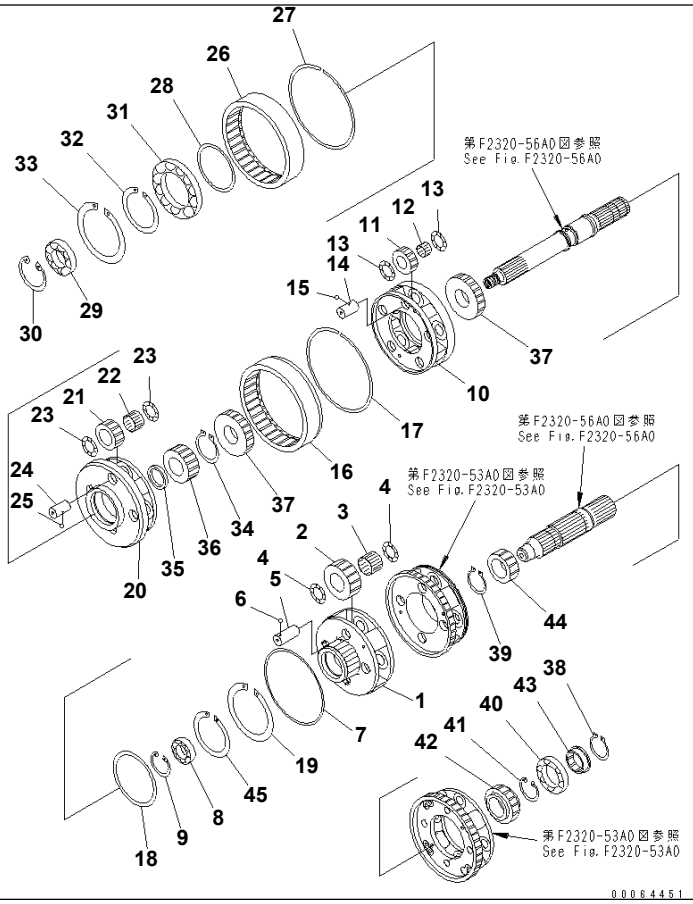

Ref. F2320-54A0 **Page 150210**

D155A-6 S/N 85001-UP
TRANSMISSION (CARRIER)

Item	Part No.	Part Name	Qty	Serial No.
	(17A-15-51000)	TRANSMISSION ASS'Y THIS ASSEMBLY CONSISTS OF ALL PARTS SHOWN IN FIGS.F2320-51A0 TO F2320-61A0.	1	85001-
1	17A-15-42332	· CARRIER	1	85001-
2	17A-15-42431	· GEAR	4	85001-
3	20G-26-11240	· BEARING	4	85001-
4	569-15-32580	· WASHER	8	85001-
5	17A-15-42531	· SHAFT	4	85001-
6	04260-00635	· BALL	4	85001-
7	17M-15-49270	· RING	1	85001-
8	17A-15-39310	· BEARING	1	85001-
9	04065-08025	· RING	1	85001-
10	17A-15-42321	· CARRIER	1	85001-
11	17A-15-42421	· GEAR	5	85001-
12	569-15-59410	· BEARING	5	85001-
13	569-15-32580	· WASHER	10	85001-
14	17A-15-42521	· SHAFT	5	85001-
15	04260-00635	· BALL	5	85001-
16	17A-15-42620	· RING GEAR	1	85001-
17	17A-15-49520	· RING¤ SNAP	1	85001-
18	17A-15-42161	· SPACER	1	85001-
19	04070-00150	· RING	1	85001-
20	17A-15-42311	· CARRIER	1	85001-
21	17M-15-42411	· GEAR	4	85001-
22	17M-15-39440	· BEARING	4	85001-
23	561-15-32570	· WASHER	8	85001-
24	17A-15-42510	· SHAFT	4	85001-
25	04260-00635	· BALL	4	85001-
26	17A-15-42610	· RING GEAR	1	85001-
27	17A-15-29510	· RING	1	85001-

Printed By : Dwi Iswanto (airafather6107170)

TRANSMISSION (CARRIER)

Item	Part No.	Part Name	Qty	Serial No.
28	17A-15-42140	· SPACER	1	85001-
29	714-12-19380	· BEARING	1	85001-
30	04065-01104	· RING	1	85001-
31	06030-06928	· BEARING	1	85001-
32	04070-00140	· RING	1	85001-
33	04071-00190	· RING	1	85001-
34	04064-06020	· RING	3	85001-
35	17M-15-42140	· SPACER	1	85001-
36	17M-15-42211	· GEAR	1	85001-
37	17A-15-42221	· GEAR	1	85001-
38	04064-06320	· RING	1	85001-
39	04064-06320	· RING	1	85001-
40	17A-15-29321	· BEARING	1	85001-
41	04065-01154	· RING	1	85001-
42	17A-15-42252	· GEAR	1	85001-
43	17A-15-42710	· SPACER	2	85001-
44	17A-15-42240	· GEAR	1	85001-
45	04070-00115	· RING	1	85001-

Printed By : Dwi Iswanto (airafather6107170)

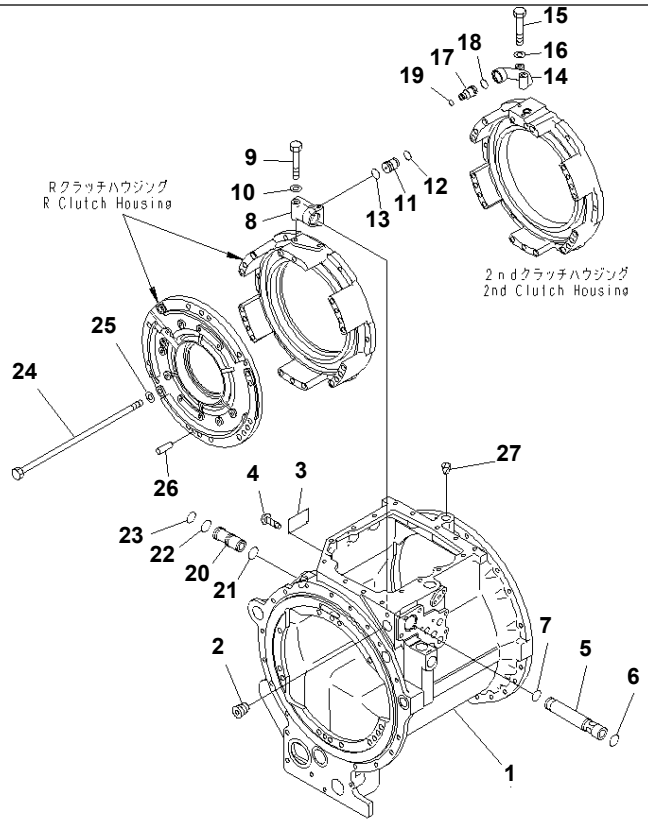

Ref. F2320-55A0 **Page 150220**

D155A-6 S/N 85001-UP

TRANSMISSION (CASE)

Item	Part No.	Part Name	Qty	Serial No.
	(17A-15-51000)	TRANSMISSION ASS'Y THIS ASSEMBLY CONSISTS OF ALL PARTS SHOWN IN FIGS.F2320-51A0 TO F2320-61A0.	1	85001-
	17A-15-00770	· CASE ASS'Y	1	85001-
1	17A-15-41110	· · CASE	1	85001-
2	07043-71019	· · PLUG	5	85001-
3	09608-05080	· PLATE¤ NAME	1	85001-
4	04418-13060	· SCREW	4	85001-
5	17A-15-25181	· SLEEVE	1	85001-
6	07000-73030	· O-RING (K2)	1	85001-
7	07000-73028	· O-RING (K2)	1	85001-
8	17A-15-25150	· BLOCK	1	85001-
9	01010-81075	· BOLT	2	85001-
10	01643-31032	· WASHER	2	85001-
11	17A-15-35160	· SLEEVE	1	85001-
12	07000-72014	· O-RING (K2)	1	85001-
13	07000-73025	· O-RING (K2)	1	85001-
14	17A-15-25140	· BLOCK	1	85001-
15	01010-81060	· BOLT	2	85001-
16	01643-31032	· WASHER	2	85001-
17	17M-15-45190	· SLEEVE	1	85001-
18	07000-73022	· O-RING (K2)	1	85001-
19	07000-72014	· O-RING (K2)	1	85001-
20	17A-15-24152	· SLEEVE	1	85001-
21	07000-73028	· O-RING (K2)	1	85001-
22	07000-73030	· O-RING (K2)	1	85001-
23	07000-73032	· O-RING (K2)	1	85001-
24	426-15-11260	· BOLT	13	85001-
25	145-14-11571	· WASHER	13	85001-
26	04020-01434	· PIN	2	85001-

Printed By : Dwi Iswanto (airafather6107170)

TRANSMISSION (CASE)

Item	Part No.	Part Name	Qty	Serial No.
27	07049-02430	· PLUG	1	85001-

Printed By : Dwi Iswanto (airafather6107170)

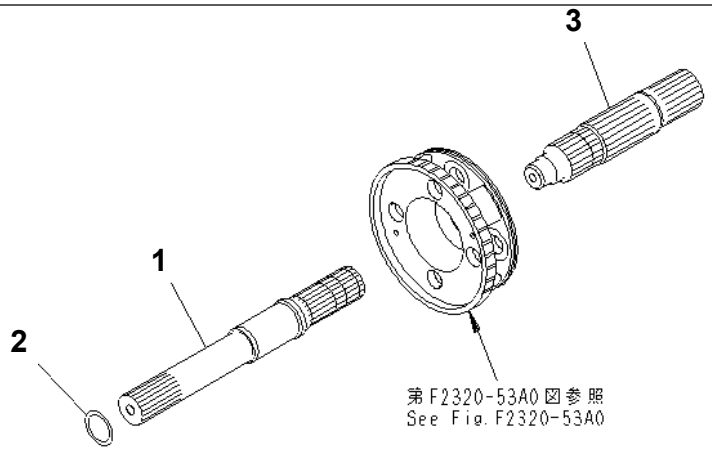

00064452

Ref. F2320-56A0 **Page 150230**

D155A-6 S/N 85001-UP
TRANSMISSION (INPUT AND OUTPUT)

Item	Part No.	Part Name	Qty	Serial No.
	(17A-15-51000)	TRANSMISSION ASS'Y THIS ASSEMBLY CONSISTS OF ALL PARTS SHOWN IN FIGS.F2320-51A0 TO F2320-61A0.	1	85001-
1	17A-15-52110	· SHAFT	1	85001-
2	07018-10653	· RING	1	85001-
3	17A-15-42131	· SHAFT	1	85001-

Printed By : Dwi Iswanto (airafather6107170)

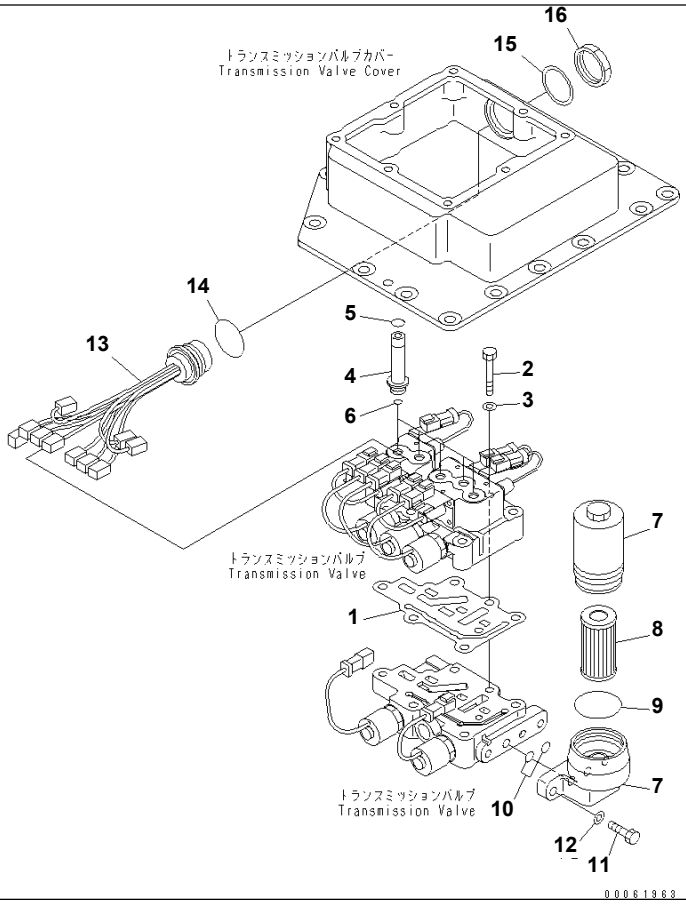

Ref. F2320-57A0 **Page 150240**

D155A-6 S/N 85001-UP
TRANSMISSION (FILTER AND HARNESS)

Item	Part No.	Part Name	Qty	Serial No.
	(17A-15-51000)	TRANSMISSION ASS'Y THIS ASSEMBLY CONSISTS OF ALL PARTS SHOWN IN FIGS.F2320-51A0 TO F2320-61A0.	1	85001-
	17M-15-55501	· T/M VALVE ASS'Y	1	85010-
	17A-15-45501	· T/M VALVE ASS'Y THESE ASSEMBLY CONSISTS OF ALL PARTS SHOWN IN FIGS.F2320-57A0 TO F2320-59A0.	1	85001-85009
1	195-15-75531	· · GASKET (K3)	1	85001-
2	01010-81055	· · BOLT	2	85001-
3	01643-31032	· · WASHER	2	85001-
4	17A-15-45540	· · SLEEVE	5	85001-
5	07000-72016	· O-RING (K3)	5	85001-
6	07002-61823	· O-RING (K3)	5	85001-
7	154-15-65553	· FILTER ASS'Y	1	85001-
8	154-15-65561	· · ELEMENT	1	85001-
9	154-15-65590	· · O-RING (K3)	1	85001-
10	07000-72014	· O-RING (K3)	2	85001-
11	01010-81035	· BOLT	2	85001-
12	01643-31032	· WASHER	2	85001-
13	195-15-77200	· HARNESS	1	85001-
14	195-15-75740	· · · O-RING (K3)	1	85001-
15	08191-50809	· · · WASHER¤ LOCK	1	85001-
16	08191-50808	· · · NUT	1	85001-

Printed By : Dwi Iswanto (airafather6107170)

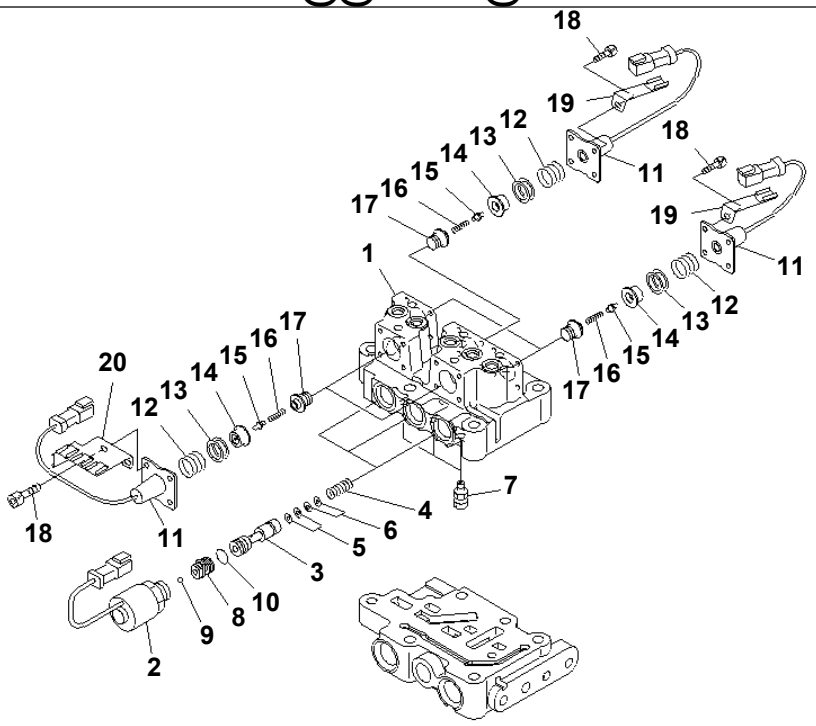

P W 0 D 2 1 2

Ref. F2320-58A0 **Page 150250**

D155A-6 S/N 85001-UP
TRANSMISSION (UPPER VALVE))

Item	Part No.	Part Name	Qty	Serial No.
	(17A-15-51000)	TRANSMISSION ASS'Y THIS ASSEMBLY CONSISTS OF ALL PARTS SHOWN IN FIGS.F2320-51A0 TO F2320-61A0.	1	85001-
	(17M-15-55501)	· T/M VALVE ASS'Y	1	85010-
	(17A-15-45501)	· T/M VALVE ASS'Y THESE ASSEMBLY CONSISTS OF ALL PARTS SHOWN IN FIGS.F2320-57A0 TO F2320-59A0.	1	85001-85009
	17M-15-00313	· · VALVE ASS'Y	1	85001-
	(☒17M-15-00311)	· · VALVE ASS'Y	1	(85001-85009)
1	☆	· · · BODY	1	85001-
2	☆	· · · SOLENOID	3	85001-
3	☆	· · · SPOOL	3	85010-
	☆	· · · SPOOL	3	85001-85009
4	☆	· · · SPRING	3	85001-
5	☆	· · · SHIM¤ 0.5MM	12	85001-
6	☆	· · · SHIM¤ 0.2MM	12	85001-
7	☆	· · · PLUG	3	85001-
8	☆	· · · VALVE	3	85001-
9	☆	· · · BALL	3	85001-
10	☆	· · · O-RING	3	85001-
11	☆	· · · SWITCH ASS'Y	5	85001-
	(☒714-23-15620)	· · · SWITCH ASS'Y	5	(85001-85009)
12	☆	· · · SPRING	5	85001-
13	☆	· · · SHIM¤ 0.5MM	10	85001-
14	☆	· · · SPRING SEAT	5	85001-
15	☆	· · · PIN	5	85001-
	(☒714-23-15680)	· · · PIN	5	(85001-85009)
16	☆	· · · SPRING	5	85001-
17	☆	· · · SLEEVE	5	85001-
18	01252-60510	· · · BOLT	20	85001-

Printed By : Dwi Iswanto (airafather6107170)

TRANSMISSION (UPPER VALVE))

Item	Part No.	Part Name	Qty	Serial No.
19	195-15-77341	・・・ BRACKET	3	85001-
20	195-15-77351	・・・ BRACKET	2	85001-

Printed By : Dwi Iswanto (airafather6107170)

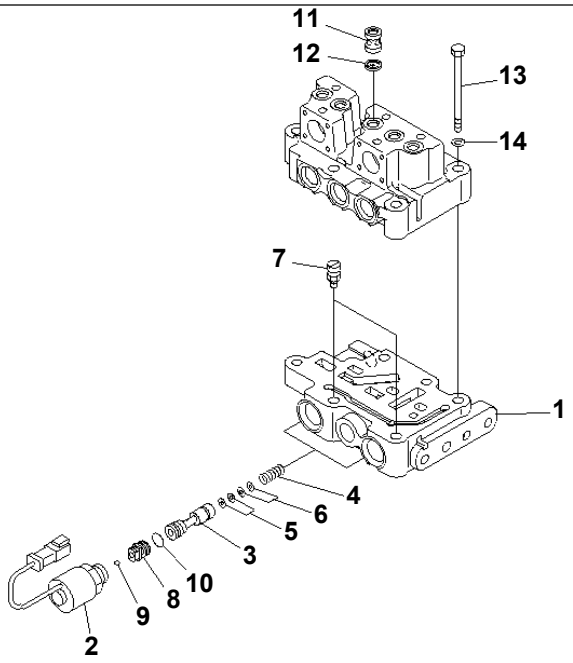

00041906

Ref. F2320-59A0 **Page 150260**

D155A-6 S/N 85001-UP
TRANSMISSION (LOWER VALVE AND MOUTING)

Item	Part No.	Part Name	Qty	Serial No.
	(17A-15-51000)	TRANSMISSION ASS'Y THIS ASSEMBLY CONSISTS OF ALL PARTS SHOWN IN FIGS.F2320-51A0 TO F2320-61A0.	1	85001-
	17M-15-55501	· T/M VALVE ASS'Y	1	85010-
	17A-15-45501	· T/M VALVE ASS'Y THESE ASSEMBLY CONSISTS OF ALL PARTS SHOWN IN FIGS.F2320-57A0 TO F2320-59A0.	1	85001-85009
	17M-15-00323	· · VALVE ASS'Y	1	85010-
	17M-15-00321	· · VALVE ASS'Y	1	85001-85009
1	☆	· · · BODY	1	85001-
2	☆	· · · SOLENOID	2	85001-
3	☆	· · · SPOOL	2	85010-
	☆	· · · SPOOL	2	85001-85009
4	☆	· · · SPRING	2	85001-
5	☆	· · · SHIM¤ 0.5MM	8	85001-
6	☆	· · · SHIM¤ 0.2MM	8	85001-
7	☆	· · · PLUG	2	85001-
8	☆	· · · VALVE	2	85001-
9	☆	· · · BALL	2	85001-
10	☆	· · · O-RING	2	85001-
11	195-15-76320	· · SLEEVE	5	85001-
12	195-15-76330	· · FILTER	5	85001-
13	195-15-76410	· BOLT	4	85001-
14	01643-51032	· WASHER	4	85001-

Printed By : Dwi Iswanto (airafather6107170)

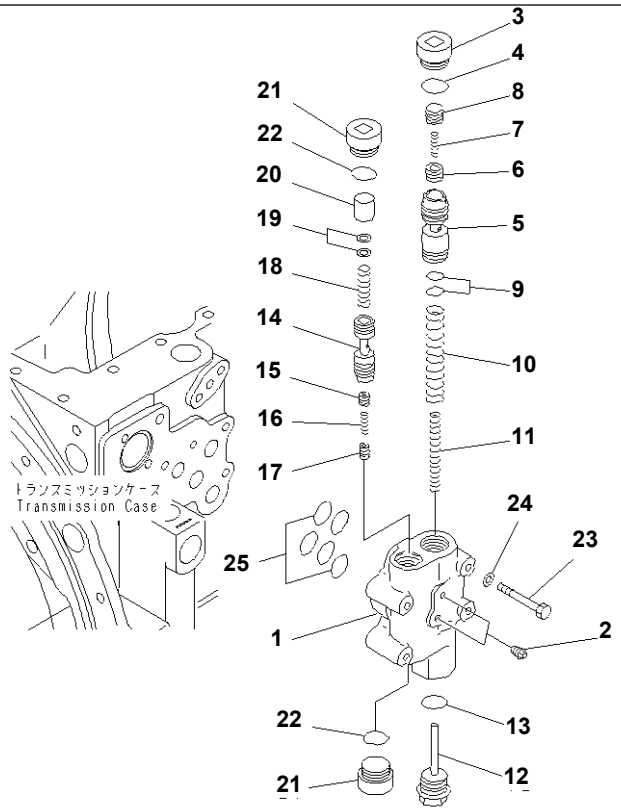

Ref. F2320-60A0 **Page 150270**

D155A-6 S/N 85001-UP

TRANSMISSION (MAIN RELIEF VALVE)

Item	Part No.	Part Name	Qty	Serial No.
	(17A-15-51000)	TRANSMISSION ASS'Y THIS ASSEMBLY CONSISTS OF ALL PARTS SHOWN IN FIGS.F2320-51A0 TO F2320-61A0.	1	85001-
	134-15-76001	· RELIEF VALVE ASS'Y	1	85001-
1	☆	· · BODY	1	85001-
2	07042-80108	· · PLUG	3	85001-
3	14X-15-15850	· · PLUG	1	85001-
4	07002-03034	· · O-RING (K4)	1	85001-
5	134-15-75230	· · VALVE	1	85001-
6	426-15-15490	· · VALVE	1	85001-
7	198-15-15770	· · SPRING¤ (L= 30.0)	1	85001-
8	426-15-15480	· · VALVE	1	85001-
9	198-15-15570	· · SHIM¤ 0.50MM	6	85001-
10	426-15-16251	· · SPRING¤ (L=122.0)	1	85001-
11	426-15-16261	· · SPRING¤ (L=108.0)	1	85001-
12	426-15-15810	· · PLUG	1	85001-
13	07002-03034	· · O-RING (K4)	1	85001-
14	12H-15-14130	· · SPOOL	1	85001-
15	104-15-25490	· · VALVE	1	85001-
16	125-15-15290	· · SPRING	1	85001-
17	104-15-25480	· · VALVE	1	85001-
18	14X-15-16210	· · SPRING	1	85001-
19	175-15-56470	· · SHIM¤ 0.50MM	3	85001-
20	12H-15-14140	· · GUIDE	1	85001-
21	14X-15-15850	· · PLUG	2	85001-
22	07002-03034	· · O-RING (K4)	2	85001-
23	01010-81065	· BOLT	4	85001-
24	01643-31032	· WASHER	4	85001-
25	07000-73030	· O-RING (K4)	5	85001-

Printed By : Dwi Iswanto (airafather6107170)

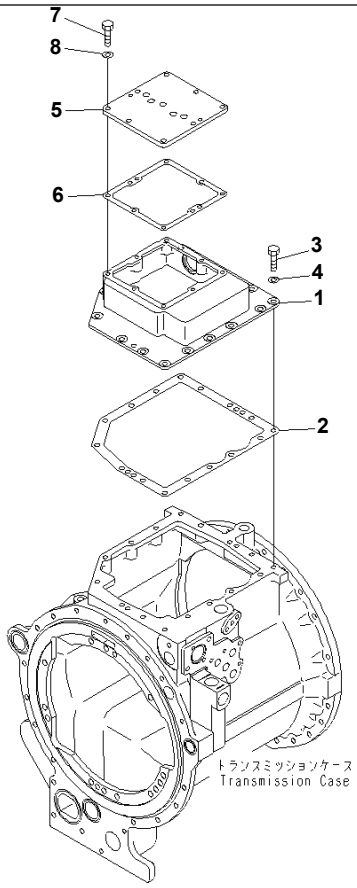

Ref. F2320-61A0 **Page 150280**

D155A-6 S/N 85001-UP
TRANSMISSION (VALVE COVER)

Item	Part No.	Part Name	Qty	Serial No.
	(17A-15-51000)	TRANSMISSION ASS'Y THIS ASSEMBLY CONSISTS OF ALL PARTS SHOWN IN FIGS.F2320-51A0 TO F2320-61A0.	1	85001-
1	17M-15-45810	· COVER	1	85001-
2	17A-15-25911	· GASKET (K2)	1	85001-
3	01010-81230	· BOLT	16	85001-
4	01643-31232	· WASHER	16	85001-
5	17A-15-41220	· COVER	1	85001-
6	195-15-71230	· GASKET (K2)	1	85001-
7	01010-81030	· BOLT	8	85001-
8	01643-31032	· WASHER	8	85001-

Printed By : Dwi Iswanto (airafather6107170)

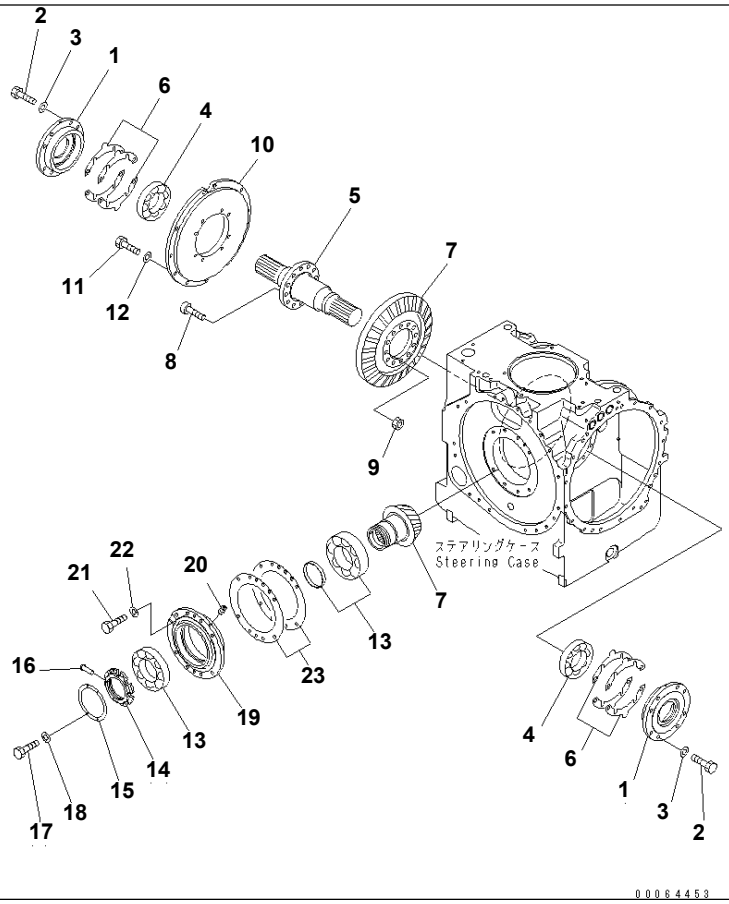

Ref. F2370-51A0 **Page 150290**

D155A-6 S/N 85001-UP

STEERING (BEVEL GEAR)

Item	Part No.	Part Name	Qty	Serial No.
	(17A-22-51000)	STEERING ASS'Y THIS ASSEMBLY CONSISTS OF ALL PARTS SHOWN IN FIGS.F2370-51A0 TO F2370-60A0.	1	85001-
1	17A-22-15130	· CAGE	2	85001-
2	01010-81245	· BOLT	16	85001-
3	01643-31232	· WASHER	16	85001-
4	06002-32217	· BEARING	2	85001-
5	17A-22-15110	· SHAFT	1	85001-
6	17A-22-00010	· SHIM ASS'Y	1	85001-
	☆	· · SHIM¤ 0.1MM	4	85001-
	☆	· · SHIM¤ 0.2MM	8	85001-
	☆	· · SHIM¤ 0.5MM	12	85001-
	☆	· · SHIM¤ 0.05MM	2	85001-
7	17A-22-55900	· PINION ASS'Y	1	85001-
	☆	· · PINION SHAFT	1	85001-
	☆	· · BEVEL GEAR	1	85001-
8	01084-01655	· BOLT	12	85001-
9	01582-01613	· NUT	12	85001-
10	17A-22-16120	· CAGE	1	85001-
11	01010-81235	· BOLT	8	85001-
12	01643-31232	· WASHER	8	85001-
13	17A-22-51170	· BEARING	1	85001-
14	17A-22-55210	· NUT	1	85001-
15	17A-22-25220	· PLATE	1	85001-
16	154-22-65860	· PIN	1	85001-
17	01010-80614	· BOLT	4	85001-
18	01643-30623	· WASHER	4	85001-
19	17A-22-55150	· CAGE	1	85001-
20	01310-10808	· SCREW	1	85001-
21	01010-81240	· BOLT	8	85001-

Printed By : Dwi Iswanto (airafather6107170)

STEERING (BEVEL GEAR)

Item	Part No.	Part Name	Qty	Serial No.
22	01643-31232	· WASHER	8	85001-
23	17A-22-00020	· SHIM ASS'Y	1	85001-
	☆	· · SHIM¤ 0.1MM	1	85001-
	☆	· · SHIM¤ 0.2MM	2	85001-
	☆	· · SHIM¤ 0.5MM	3	85001-

Printed By : Dwi Iswanto (airafather6107170)

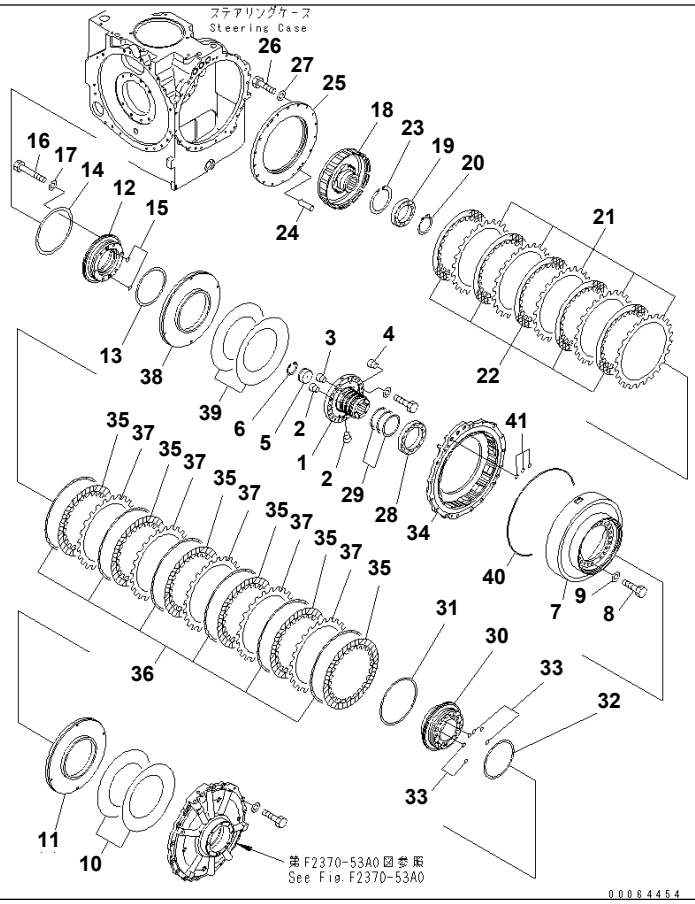

Ref. F2370-52A0 **Page 150300**

D155A-6 S/N 85001-UP
STEERING (CLUTCH AND BRAKE) (1/2)

Item	Part No.	Part Name	Qty	Serial No.
		SERIAL NO. IN ( ) INDICATES TRANSMISSION SERIAL NO.		
	(17A-22-51000)	STEERING ASS'Y	1	85001-
		THIS ASSEMBLY CONSISTS OF ALL PARTS SHOWN IN FIGS.F2370-51A0 TO F2370-60A0.		
	17A-22-00200	· BRAKE ASS'Y	2	85001-
		THIS ASSEMBLY CONSISTS OF ALL PARTS SHOWN IN FIGS.F2370-52A0 AND F2370-53A0.		
1	17A-22-11110	· · HUB	1	85001-
2	07043-70211	· · PLUG	2	85001-
3	07043-70211	· · PLUG	2	85001-
4	17A-22-57361	· · ORIFICE	2	85010-
	◆17A-22-57360	· · PLUG	1	85001-85009
5	17A-22-11161	· · STOPPER	1	85001-
6	04065-07225	· · RING	1	85001-
7	17A-22-13151	· · DRUM	1	85001-
8	01010-81235	· · BOLT	22	85001-
9	01643-31232	· · WASHER	22	85001-
10	17M-22-43430	· · SPRING ASS'Y	1	85001-
	17M-22-13430	· · · SPRING	2	85001-
11	17A-22-12150	· · PISTON	1	85001-
12	17A-22-13121	· · CYLINDER	1	85001-
13	103-15-29210	· · SEAL (K5)	1	85001-
14	113-15-12840	· · RING (K5)	1	85001-
15	07000-72018	· · O-RING (K5)	2	85001-
16	01010-81285	· · BOLT	6	85001-
17	01643-31232	· · WASHER	6	85001-
18	17A-22-13111	· · HUB	1	85001-
19	06030-06020	· · BEARING	1	85001-
20	04064-01030	· · RING	1	85001-
21	17A-22-12120	· · PLATE	5	85001-

Printed By : Dwi Iswanto (airafather6107170)

STEERING (CLUTCH AND BRAKE) (1/2)

Item	Part No.	Part Name	Qty	Serial No.
22	17M-22-23310	· · DISC	5	85001-
23	04071-00150	· · RING	1	85001-
24	04020-00820	· · PIN	2	85001-
25	17A-22-13160	· · STOPPER	1	85001-
26	01010-81040	· · BOLT	18	85001-
27	01643-31032	· · WASHER	18	85001-
28	06030-06926	· · BEARING	1	85001-
29	17A-22-11141	· · SEAL (K5)	3	85001-
30	17A-22-11132	· · CYLINDER	1	85001-
31	113-15-12840	· · RING (K5)	1	85001-
32	103-15-29210	· · SEAL (K5)	1	85001-
33	07000-72018	· · O-RING (K5)	6	85001-
34	17A-22-41180	· · DRUM	1	85001-
35	17A-22-11170	· · DISC	6	85001-
36	17A-22-12130	· · SPRING	6	85001-
37	17A-22-12120	· · PLATE	5	85001-
38	17A-22-12150	· · PISTON	1	85001-
39	17M-22-43430	· · SPRING ASS'Y	1	85001-
	17M-22-13430	· · · SPRING	2	85001-
40	07000-75490	· · O-RING (K5)	1	85001-
41	07000-73025	· · O-RING (K5)	3	85001-

Printed By : Dwi Iswanto (airafather6107170)

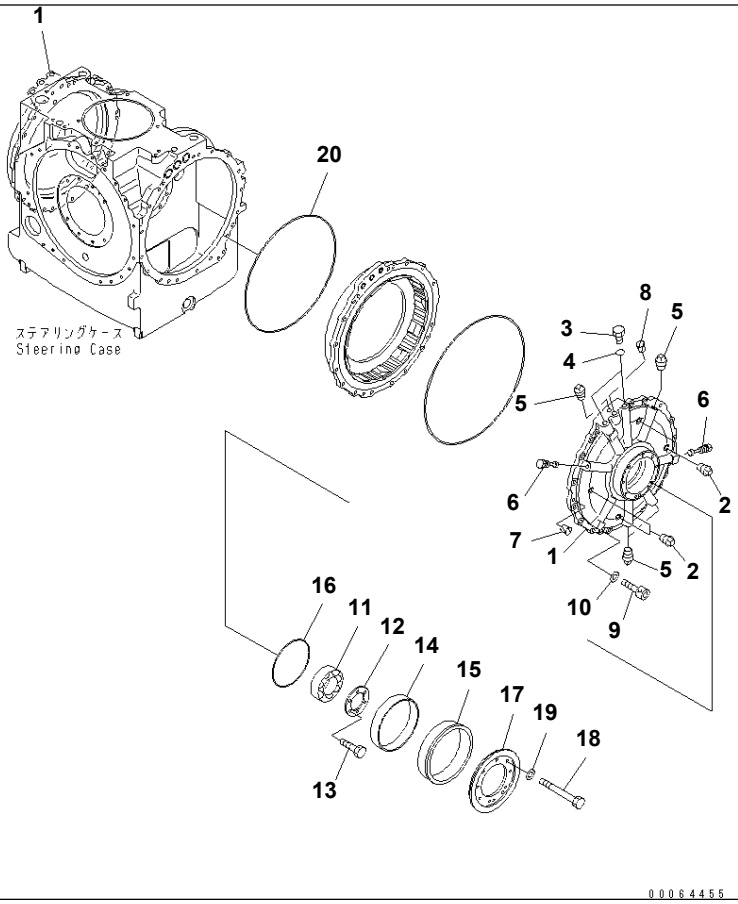

Ref. F2370-53A0 **Page 150310**

D155A-6 S/N 85001-UP
STEERING (CLUTCH AND BRAKE) (2/2)

Item	Part No.	Part Name	Qty	Serial No.
	(17A-22-51000)	STEERING ASS'Y THIS ASSEMBLY CONSISTS OF ALL PARTS SHOWN IN FIGS.F2370-51A0 TO F2370-60A0.	1	85001-
	(17A-22-00200)	· BRAKE ASS'Y	2	85001-
1	17A-22-42220	· · CASE	1	85001-
2	07042-70211	· · PLUG	4	85001-
3	07040-11612	· · PLUG	2	85001-
4	07002-61623	· · O-RING (K5)	2	85001-
5	07042-70312	· · PLUG	4	85001-
6	17A-22-11190	· · PLUG	2	85001-
7	07049-01215	· · PLUG	2	85001-
8	07049-02025	· · PLUG	1	85001-
9	01252-41245	· · BOLT	4	85001-
10	01643-31232	· · WASHER	4	85001-
11	06030-06922	· · BEARING	1	85001-
12	17A-22-12170	· · PLATE	1	85001-
13	01010-81030	· · BOLT	6	85001-
14	14Y-21-13130	· · BUSHING	1	85001-
15	14Y-21-13240	· · COLLAR	2	85001-
	14Y-21-13220	· · · COLLAR	2	85001-
	14Y-21-13230	· · · CUSHION	4	85001-
16	14Y-22-15220	· · O-RING (K5)	2	85001-
17	17A-21-12132	· · FLANGE	2	85001-
18	01011-81000	· · BOLT	16	85001-
19	01643-31032	· · WASHER	16	85001-
20	07000-75465	· · O-RING (K5)	2	85001-

Printed By : Dwi Iswanto (airafather6107170)

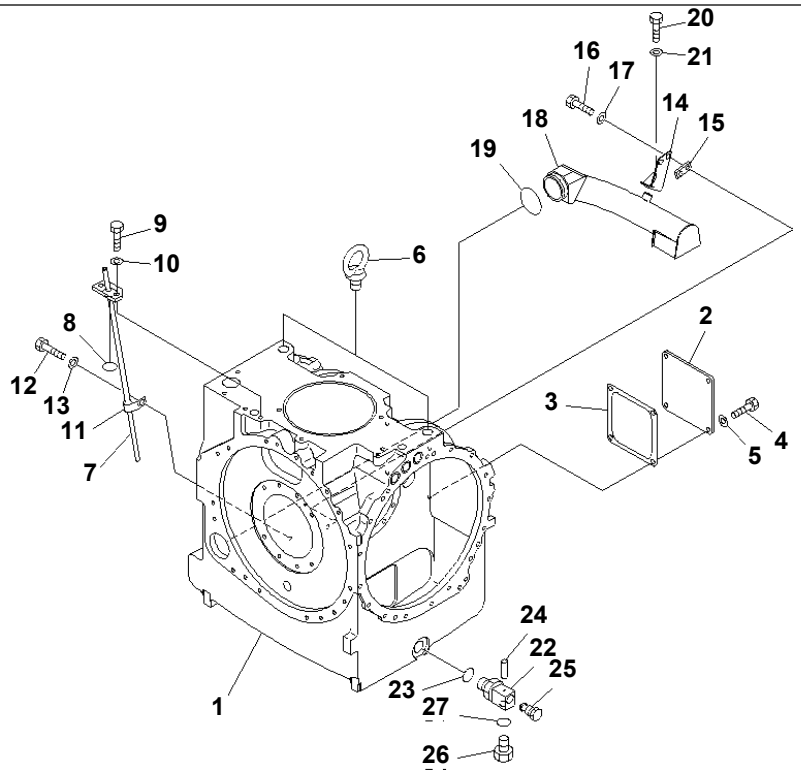

00064456

Ref. F2370-54A0 **Page 150320**

D155A-6 S/N 85001-UP
STEERING (TORQUE CASE) (1/2)

Item	Part No.	Part Name	Qty	Serial No.
	(17A-22-51000)	STEERING ASS'Y THIS ASSEMBLY CONSISTS OF ALL PARTS SHOWN IN FIGS.F2370-51A0 TO F2370-60A0.	1	85001-
1	17A-22-57370	· CASE	1	85001-
2	17A-22-17311	· PLATE	1	85001-
3	17A-22-17320	· GASKET (K5)	1	85001-
4	01010-81230	· BOLT	4	85001-
5	01643-31232	· WASHER	4	85001-
6	04530-13045	· BOLT	2	85001-
7	17A-22-16261	· TUBE	1	85001-
8	07000-73035	· O-RING (K5)	1	85001-
9	01010-81230	· BOLT	2	85001-
10	01643-31232	· WASHER	2	85001-
11	156-76-21170	· CLIP	1	85001-
12	01010-81235	· BOLT	1	85001-
13	01643-31232	· WASHER	1	85001-
14	17A-22-47210	· BRACKET	1	85001-
15	17A-22-16230	· PLATE	1	85001-
16	01010-81235	· BOLT	2	85001-
17	01643-31232	· WASHER	2	85001-
18	17A-22-46210	· TUBE	1	85001-
19	07000-72075	· O-RING (K5)	1	85001-
20	01010-81225	· BOLT	1	85001-
21	01643-31232	· WASHER	1	85001-
22	17A-22-47990	· JOINT	1	85001-
23	07002-63634	· O-RING (K5)	1	85001-
24	04020-00514	· PIN	1	85001-
25	195-49-31280	· VALVE	1	85001-
26	07040-12412	· PLUG	1	85001-
27	07002-62434	· O-RING (K5)	1	85001-

Printed By : Dwi Iswanto (airafather6107170)

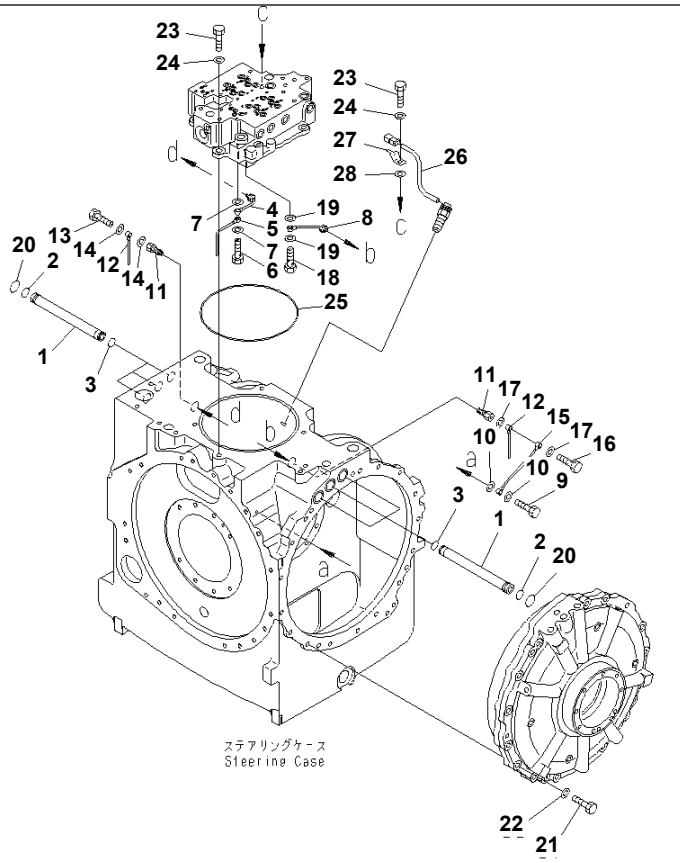

Ref. F2370-55A0 **Page 150330**

D155A-6 S/N 85001-UP
STEERING (TORQUE CASE) (2/2)

Item	Part No.	Part Name	Qty	Serial No.
	(17A-22-51000)	STEERING ASS'Y THIS ASSEMBLY CONSISTS OF ALL PARTS SHOWN IN FIGS.F2370-51A0 TO F2370-60A0.	1	85001-
1	17A-22-46190	· TUBE	6	85001-
2	07000-73022	· O-RING (K5)	6	85001-
3	07000-72021	· O-RING (K5)	6	85001-
4	17A-22-16160	· TUBE	1	85001-
5	17A-22-56190	· TUBE	1	85001-
6	17A-22-17180	· JOINT	1	85001-
7	07005-00812	· GASKET (K5)	2	85001-
8	17A-22-16170	· TUBE	1	85001-
9	07206-30508	· BOLT	1	85001-
10	07005-00812	· GASKET (K5)	2	85001-
11	195-22-12380	· CONNECTOR	2	85001-
12	17A-22-16180	· TUBE	2	85001-
13	07206-30508	· BOLT	1	85001-
14	07005-00812	· GASKET (K5)	2	85001-
15	17A-22-15190	· TUBE	1	85001-
16	17A-22-17180	· JOINT	1	85001-
17	07005-00812	· GASKET (K5)	2	85001-
18	07206-30508	· BOLT	1	85001-
19	07005-00812	· GASKET (K5)	2	85001-
20	07000-73032	· O-RING (K5)	6	85001-
21	01010-81260	· BOLT	32	85001-
22	01643-31232	· WASHER	32	85001-
23	01010-81235	· BOLT	4	85001-
24	01643-31232	· WASHER	4	85001-
25	07000-75260	· O-RING (K5)	1	85001-
26	7861-93-2330	· SENSOR	1	85001-
27	08193-20012	· CLIP	1	85001-

Printed By : Dwi Iswanto (airafather6107170)

STEERING (TORQUE CASE) (2/2)

Item	Part No.	Part Name	Qty	Serial No.
28	01643-31232	· WASHER	1	85001-

Printed By : Dwi Iswanto (airafather6107170)

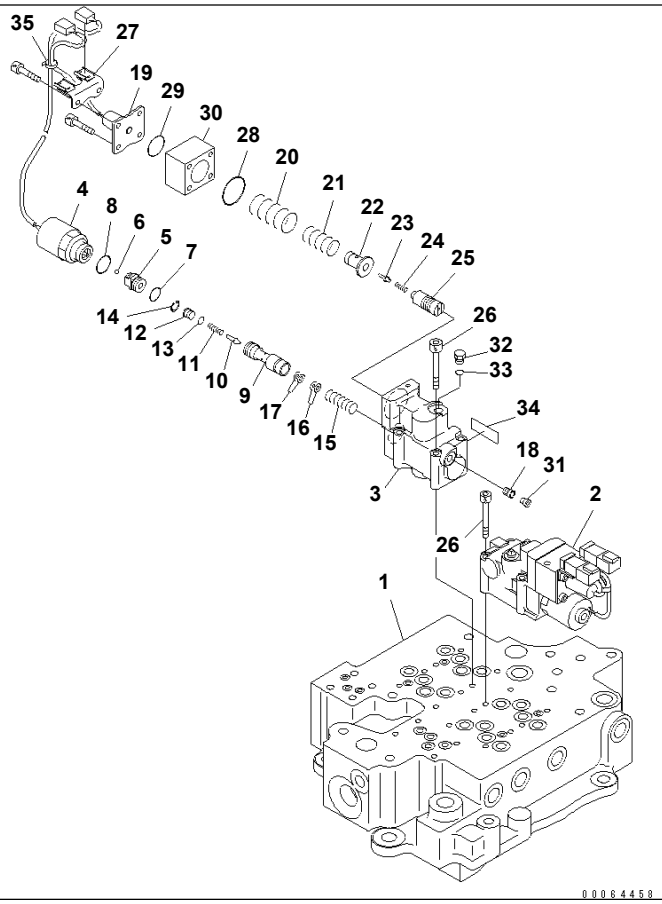

Ref. F2370-56A0 **Page 150340**

D155A-6 S/N 85001-UP
STEERING (TORQUE CASE) (1/3)

Item	Part No.	Part Name	Qty	Serial No.
	(17A-22-51000)	STEERING ASS'Y THIS ASSEMBLY CONSISTS OF ALL PARTS SHOWN IN FIGS.F2370-51A0 TO F2370-60A0.	1	85001-
	17A-22-56001	· STEERING VALVE	1	85010-
	17A-22-56000	· STEERING VALVE THESE ASSEMBLIES CONSIST OF ALL PARTS SHOWN IN FIGS.F2370-56A0 AND F2370-57A0.	1	85001-85009
1	17A-22-56110	· · VALVE SEAT	1	85001-
2	17A-22-46401	· · VALVE ASS'Y	4	85001-
	(☒17A-22-46400)	· · ECMV ASS'Y	4	(85001-85009)
3	☆	· · · VALVE BODY	1	85001-
4	☆	· · · SOLENOID	1	85010-
	☆	· · · SOLENOID	1	85001-85009
5	☆	· · · VALVE	1	85001-
6	☆	· · · BALL	1	85001-
7	☆	· · · O-RING	1	85001-
8	☆	· · · O-RING	1	85001-
9	☆	· · · SPOOL	1	85001-
10	☆	· · · POPPET	1	85001-
11	☆	· · · SPRING	1	85001-
12	☆	· · · SLEEVE	1	85001-
13	☆	· · · O-RING	1	85001-
14	☆	· · · RING	1	85001-
15	☆	· · · SPRING	1	85001-
16	☆	· · · SHIM¤ 0.5MM	3	85001-
17	☆	· · · SHIM¤ 0.2MM	3	85001-
18	☆	· · · PLUG	1	85001-
19	☆	· · · SWITCH ASS'Y	1	85001-
	(☒714-23-15620)	· · · SWITCH ASS'Y	1	(85001-85009)
20	☆	· · · SPRING	1	85001-

Printed By : Dwi Iswanto (airafather6107170)

STEERING (TORQUE CASE) (1/3)

Item	Part No.	Part Name	Qty	Serial No.
21	☆	・・・ SPRING	1	85001-
22	☆	・・・ SPRING SEAT	1	85001-
23	☆	・・・ PIN	1	85001-
	(☒195-22-75270)	・・・ PIN	1	(85001-85009)
24	☆	・・・ SPRING	1	85001-
25	☆	・・・ SLEEVE	1	85001-
26	01252-70540	・・・ BOLT	4	85001-
27	714-23-15690	・・・ BRACKET	1	85001-
28	☆	・・・ O-RING	1	85001-
29	☆	・・・ O-RING	1	85001-
30	☆	・・・ COVER	1	85001-
31	☆	・・・ PLUG	1	85001-
32	☆	・・・ PLUG	1	85001-
33	☆	・・・ O-RING	1	85001-
34	(★700-11-31940)	・・・ PLATE,(LIMITED SUPPLY)	1	85001-
35	08034-00310	・・・ BAND	1	85001-

Printed By : Dwi Iswanto (airafather6107170)

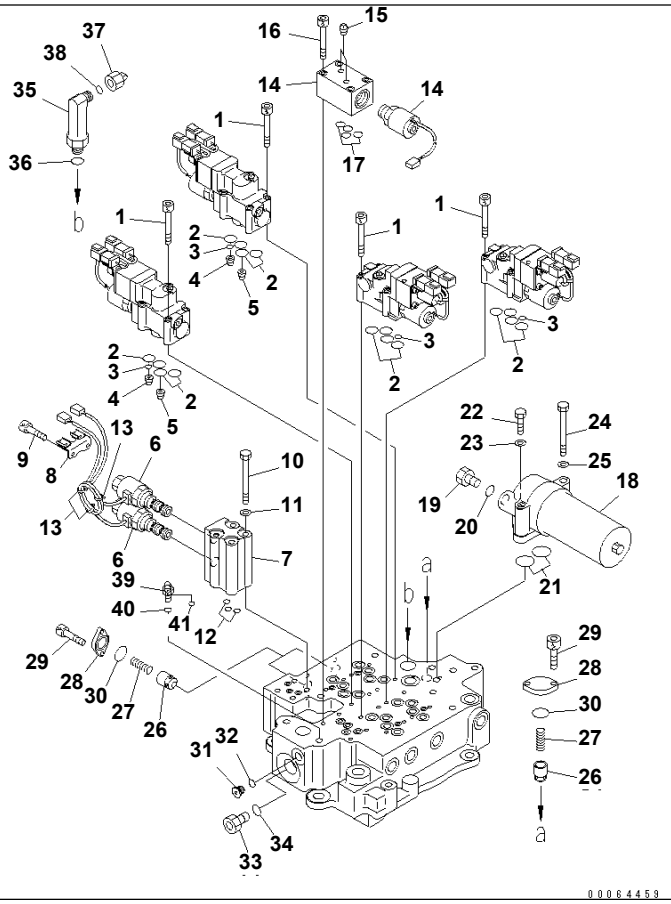

Ref. F2370-57A0 **Page 150350**

D155A-6 S/N 85001-UP
STEERING (TORQUE CASE) (2/3)

Item	Part No.	Part Name	Qty	Serial No.
	(17A-22-51000)	STEERING ASS'Y THIS ASSEMBLY CONSISTS OF ALL PARTS SHOWN IN FIGS.F2370-51A0 TO F2370-60A0.	1	85001-
	(17A-22-56001)	· STEERING VALVE	1	85001-
	(☒17A-22-56000)	· STEERING VALVE THESE ASSEMBLIES CONSIST OF ALL PARTS SHOWN IN FIGS.F2370-56A0 AND F2370-57A0.	1	(85001-85009)
1	01252-70650	· · BOLT	16	85001-
2	07000-72015	· · O-RING (K6)	16	85001-
3	07000-71007	· · O-RING (K6)	4	85001-
4	17A-22-46250	· · ORIFICE	2	85001-
5	17A-22-46260	· · ORIFICE	2	85001-
	17A-22-46100	· · VALVE ASS'Y	1	85001-
6	209-60-77290	· · · SOLENOID VALVE	2	85001-
7	☆	· · · VALVE BODY	1	85001-
8	714-23-15690	· · · BRACKET	1	85001-
9	01252-70510	· · · BOLT	2	85001-
10	20T-62-61970	· · BOLT	4	85001-
11	01643-30823	· · WASHER	4	85001-
12	07000-71007	· · O-RING (K6)	3	85001-
13	08034-00310	· · BAND	3	85001-
14	17M-22-42100	· · VALVE ASS'Y	1	85001-
15	07042-80108	· · · PLUG	2	85001-
16	01252-70650	· · BOLT	4	85001-
17	07000-72010	· · O-RING (K6)	4	85001-
18	569-15-51720	· · FILTER	1	85001-
	569-15-51731	· · · ELEMENT ASS'Y	1	85010-
	◆569-15-51730	· · · ELEMENT ASS'Y	1	85001-85009
	07000-02060	· · · O-RING (K6)	1	85001-
19	07040-11812	· · PLUG	1	85001-

Printed By : Dwi Iswanto (airafather6107170)

STEERING (TORQUE CASE) (2/3)

Item	Part No.	Part Name	Qty	Serial No.
20	07002-61823	· · O-RING (K6)	1	85001-
21	07000-73022	· · O-RING (K6)	2	85001-
22	01010-81035	· · BOLT	1	85001-
23	01643-31032	· · WASHER	1	85001-
24	01010-81085	· · BOLT	2	85001-
25	01643-31032	· · WASHER	2	85001-
26	07750-01623	· · VALVE	3	85001-
27	07750-01628	· · SPRING	3	85001-
28	709-25-11670	· · PLATE	3	85001-
29	01252-60616	· · BOLT	6	85001-
30	07000-72021	· · O-RING (K6)	3	85001-
31	708-7R-11220	· · PLUG	24	85001-
32	07002-61223	· · O-RING (K6)	24	85001-
33	07040-12412	· · PLUG	3	85001-
34	07002-62434	· · O-RING (K6)	3	85001-
35	02782-10317	· · ELBOW	1	85001-
36	07002-62034	· · O-RING (K6)	1	85001-
37	02789-10315	· · PLUG	1	85001-
38	02896-61009	· · O-RING (K6)	1	85001-
39	02782-10422	· · ELBOW	1	85001-
40	07002-62034	· · O-RING (K6)	1	85001-
41	02896-11012	· · O-RING (K6)	1	85001-

Printed By : Dwi Iswanto (airafather6107170)

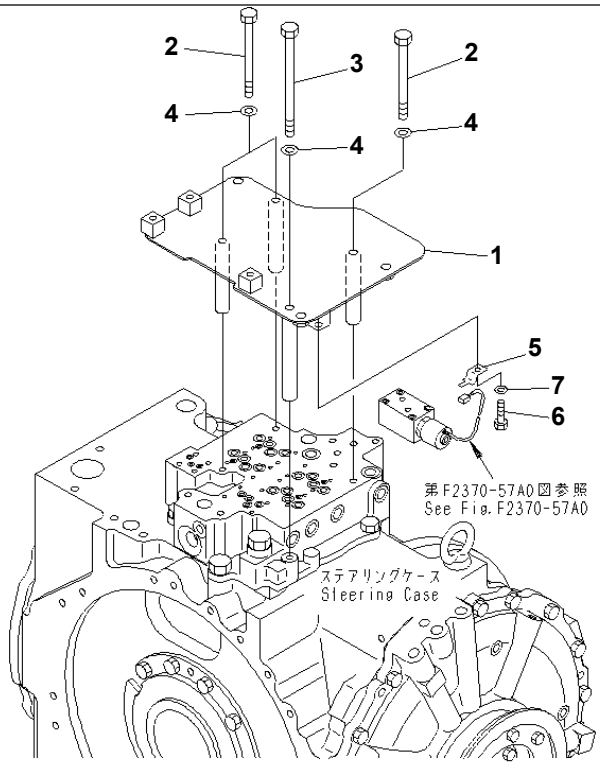

00064460

Ref. F2370-58A0 **Page 150360**

D155A-6 S/N 85001-UP
STEERING (TORQUE CASE) (3/3)

Item	Part No.	Part Name	Qty	Serial No.
	(17A-22-51000)	STEERING ASS'Y THIS ASSEMBLY CONSISTS OF ALL PARTS SHOWN IN FIGS.F2370-51A0 TO F2370-60A0.	1	85001-
1	17A-22-56140	· COVER	1	85001-
2	01011-81050	· BOLT	3	85001-
3	01011-81090	· BOLT	1	85001-
4	01643-31032	· WASHER	4	85001-
5	08193-20012	· CLIP	1	85001-
6	01010-81225	· BOLT	1	85001-
7	01643-31232	· WASHER	1	85001-

Printed By : Dwi Iswanto (airafather6107170)

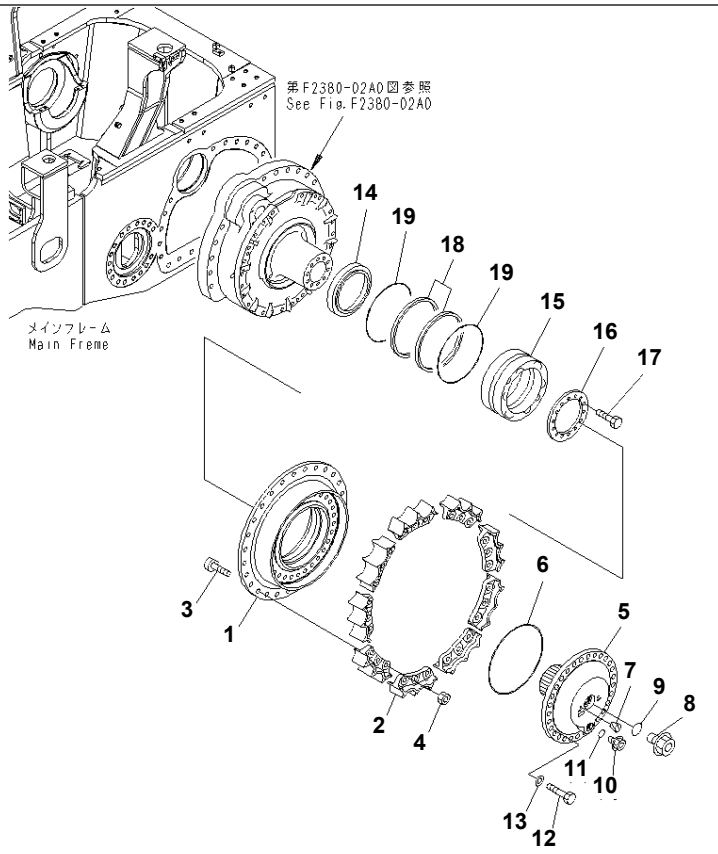

Ref. F2380-01A0 Page 150370

D155A-6 S/N 85001-UP

FINAL DRIVE (SPROCKET AND HUB) (L.H.)

Item	Part No.	Part Name	Qty	Serial No.
	17A-27-00142	FINAL DRIVE ASS	1	85043-
	□17A-27-00141	FINAL DRIVE,L.H.	1	85001-85042
1	17A-27-41151	· HUB	1	85001-
2	17A-27-41630	· TEETH	9	85001-
3	178-27-11150	· BOLT	27	85001-
4	01803-02430	· NUT	27	85001-
5	17A-27-41141	· SHAFT	1	85043-
	□17A-27-41140	· SHAFT	1	85001-85042
6	07000-A5460	· O-RING	1	85001-
7	07049-01215	· PLUG	2	85001-
8	07044-13620	· PLUG	1	85001-
9	07002-13634	· O-RING	1	85001-
10	07044-12412	· PLUG	1	85001-
11	07002-12434	· O-RING	1	85001-
12	01010-82780	· BOLT	29	85001-
13	01643-32780	· WASHER	29	85001-
14	17A-27-41290	· COLLAR	1	85001-
15	17A-09-41190	· BEARING	1	85043-
	□17A-09-41170	· BEARING	1	85001-85042
16	17M-27-21390	· HOLDER	1	85001-
17	01010-81640	· BOLT	14	85001-
	17M-27-00180	· FLOATING SEAL ASS'Y	1	85001-
18	☆	· · RING	2	85001-
19	☆	· · O-RING	2	85001-

Printed By : Dwi Iswanto (airafather6107170)

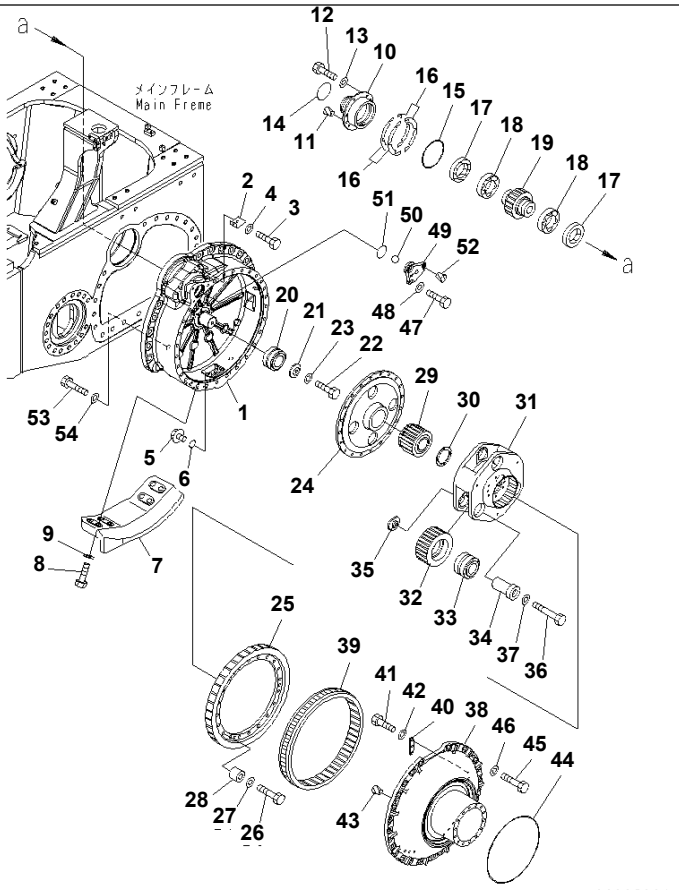

Ref. F2380-02A0 **Page 150380**

FINAL DRIVE (GEAR AND CASE) (L.H.)

Item	Part No.	Part Name	Qty	Serial No.
	(17A-27-00140)	FINAL DRIVE ASS'Y,L.H.	1	85001-
1	17A-27-41111	· CASE	1	85001-
2	17A-27-11371	· PLATE	1	85001-
3	01010-81020	· BOLT	2	85001-
4	01643-31032	· WASHER	2	85001-
5	07044-13620	· PLUG	2	85001-
6	07002-13634	· O-RING	2	85001-
7	17A-27-41510	· GUARD,L.H.	1	85001-
8	01010-82460	· BOLT	8	85001-
9	01643-32460	· WASHER	8	85001-
10	17A-27-41171	· CAGE	1	85001-
11	07049-01215	· PLUG	2	85001-
12	01010-81235	· BOLT	6	85001-
13	01643-31232	· WASHER	6	85001-
14	07000-A5105	· O-RING	1	85001-
15	07000-A5185	· O-RING	1	85001-
16	17A-27-00050	· SHIM ASS'Y	1	85001-
	☆	· · SHIM¤ 1.0MM	6	85001-
	☆	· · SHIM¤ 0.5MM	2	85001-
	☆	· · SHIM¤ 0.15MM	18	85001-
17	17M-09-41120	· SEAL	2	85001-
18	423-22-32870	· BEARING	2	85001-
19	17A-27-41210	· PINION	1	85001-
20	17A-09-41121	· BEARING	1	85001-
21	17A-27-41270	· HOLDER	1	85001-
22	01010-81640	· BOLT	1	85001-
23	01643-31645	· WASHER	1	85001-
24	17A-27-41230	· HUB	1	85001-
25	17A-27-41220	· GEAR	1	85001-
26	01010-81670	· BOLT	20	85001-

Printed By : Dwi Iswanto (airafather6107170)

FINAL DRIVE (GEAR AND CASE) (L.H.)

Item	Part No.	Part Name	Qty	Serial No.
27	01643-31645	· WASHER	20	85001-
28	176-54-11760	· SPACER	20	85001-
29	17A-27-41241	· GEAR	1	85001-
30	20Y-27-21310	· WASHER	1	85001-
31	17A-27-41160	· CARRIER	1	85001-
32	17A-27-41251	· GEAR	3	85001-
33	17A-09-41131	· BEARING	3	85001-
34	17A-27-41280	· SHAFT	3	85001-
35	154-27-72320	· HOLDER	3	85001-
36	01011-81660	· BOLT	3	85001-
37	01643-31645	· WASHER	3	85001-
38	17A-27-41130	· COVER	1	85001-
39	17A-27-41260	· GEAR	1	85001-
40	17M-27-21780	· PLATE	6	85001-
41	01010-81230	· BOLT	18	85001-
42	01643-31232	· WASHER	18	85001-
43	07049-02025	· PLUG	3	85001-
44	17A-09-41150	· O-RING	1	85001-
45	01010-82055	· BOLT	28	85001-
46	01643-32060	· WASHER	28	85001-
47	01010-81230	· BOLT	3	85001-
48	01643-31232	· WASHER	3	85001-
49	17A-27-41181	· COVER	1	85001-
50	04260-01905	· BALL	1	85001-
51	07000-A2075	· O-RING	1	85001-
52	07049-01215	· PLUG	2	85001-
53	01010-82780	BOLT	22	85001-
54	01643-32780	WASHER	22	85001-

Printed By : Dwi Iswanto (airafather6107170)

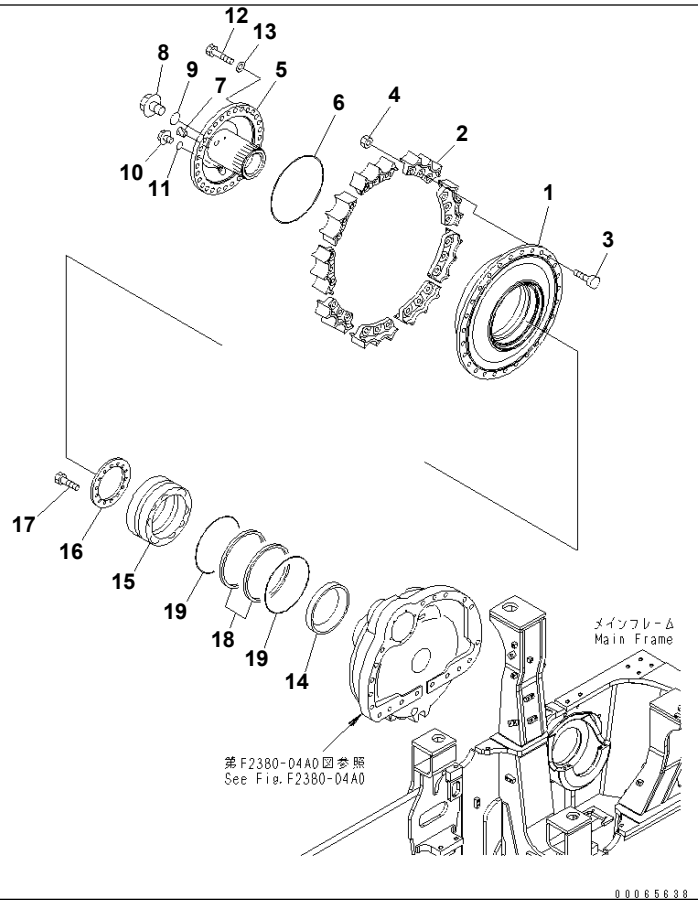

Ref. F2380-03A0 **Page 150390**

D155A-6 S/N 85001-UP

FINAL DRIVE (SPROCKET AND HUB) (R.H.)

Item	Part No.	Part Name	Qty	Serial No.
	17A-27-00152	FINAL DRIVE ASS	1	85043-
	(□17A-27-00151)	FINAL DRIVE,R.H.	1	85001-85042
1	17A-27-41151	· HUB	1	85001-
2	17A-27-41630	· TEETH	9	85001-
3	178-27-11150	· BOLT	27	85001-
4	01803-02430	· NUT	27	85001-
5	17A-27-41141	· SHAFT	1	85043-
	□17A-27-41140	· SHAFT	1	85001-85042
6	07000-A5460	· O-RING	1	85001-
7	07049-01215	· PLUG	2	85001-
8	07044-13620	· PLUG	1	85001-
9	07002-13634	· O-RING	1	85001-
10	07044-12412	· PLUG	1	85001-
11	07002-12434	· O-RING	1	85001-
12	01010-82780	· BOLT	29	85001-
13	01643-32780	· WASHER	29	85001-
14	17A-27-41290	· COLLAR	1	85001-
15	17A-09-41190	· BEARING	1	85043-
	□17A-09-41170	· BEARING	1	85001-85042
16	17M-27-21390	· HOLDER	1	85001-
17	01010-81640	· BOLT	14	85001-
	17M-27-00180	· FLOATING SEAL ASS'Y	1	85001-
18	☆	· · RING	2	85001-
19	☆	· · O-RING	2	85001-

Printed By : Dwi Iswanto (airafather6107170)

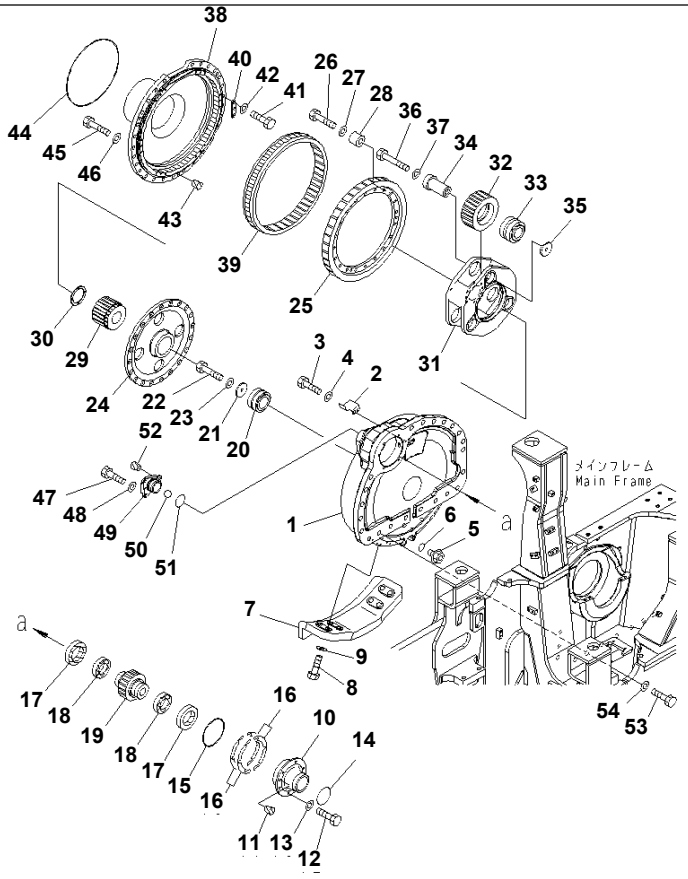

Ref. F2380-04A0 **Page 150400**

D155A-6 S/N 85001-UP

FINAL DRIVE (GEAR AND CASE) (R.H.)

Item	Part No.	Part Name	Qty	Serial No.
	17A-27-00150	FINAL DRIVE ASS'Y,R.H.	1	85001-
1	17A-27-41121	· CASE	1	85001-
2	17A-27-11381	· PLATE	1	85001-
3	01010-81020	· BOLT	2	85001-
4	01643-31032	· WASHER	2	85001-
5	07044-13620	· PLUG	2	85001-
6	07002-13634	· O-RING	2	85001-
7	17A-27-41520	· GUARD,R.H.	1	85001-
8	01010-82460	· BOLT	8	85001-
9	01643-32460	· WASHER	8	85001-
10	17A-27-41171	· CAGE	1	85001-
11	07049-01215	· PLUG	2	85001-
12	01010-81235	· BOLT	6	85001-
13	01643-31232	· WASHER	6	85001-
14	07000-A5105	· O-RING	1	85001-
15	07000-A5185	· O-RING	1	85001-
16	17A-27-00050	· SHIM ASS'Y	1	85001-
	☆	· · SHIM¤ 1.0MM	6	85001-
	☆	· · SHIM¤ 0.5MM	2	85001-
	☆	· · SHIM¤ 0.15MM	18	85001-
17	17M-09-41120	· SEAL	2	85001-
18	423-22-32870	· BEARING	2	85001-
19	17A-27-41210	· PINION	1	85001-
20	17A-09-41121	· BEARING	1	85001-
21	17A-27-41270	· HOLDER	1	85001-
22	01010-81640	· BOLT	1	85001-
23	01643-31645	· WASHER	1	85001-
24	17A-27-41230	· HUB	1	85001-
25	17A-27-41220	· GEAR	1	85001-
26	01010-81670	· BOLT	20	85001-

Printed By : Dwi Iswanto (airafather6107170)

FINAL DRIVE (GEAR AND CASE) (R.H.)

Item	Part No.	Part Name	Qty	Serial No.
27	01643-31645	· WASHER	20	85001-
28	176-54-11760	· SPACER	20	85001-
29	17A-27-41241	· GEAR	1	85001-
30	20Y-27-21310	· WASHER	1	85001-
31	17A-27-41160	· CARRIER	1	85001-
32	17A-27-41251	· GEAR	3	85001-
33	17A-09-41131	· BEARING	3	85001-
34	17A-27-41280	· SHAFT	3	85001-
35	154-27-72320	· HOLDER	3	85001-
36	01011-81660	· BOLT	3	85001-
37	01643-31645	· WASHER	3	85001-
38	17A-27-41130	· COVER	1	85001-
39	17A-27-41260	· GEAR	1	85001-
40	17M-27-21780	· PLATE	6	85001-
41	01010-81230	· BOLT	18	85001-
42	01643-31232	· WASHER	18	85001-
43	07049-02025	· PLUG	3	85001-
44	17A-09-41150	· O-RING	1	85001-
45	01010-82055	· BOLT	28	85001-
46	01643-32060	· WASHER	28	85001-
47	01010-81230	· BOLT	3	85001-
48	01643-31232	· WASHER	3	85001-
49	17A-27-41181	· COVER	1	85001-
50	04260-01905	· BALL	1	85001-
51	07000-A2075	· O-RING	1	85001-
52	07049-01215	· PLUG	2	85001-
53	01010-82780	BOLT	22	85001-
54	01643-32780	WASHER	22	85001-

Printed By : Dwi Iswanto (airafather6107170)

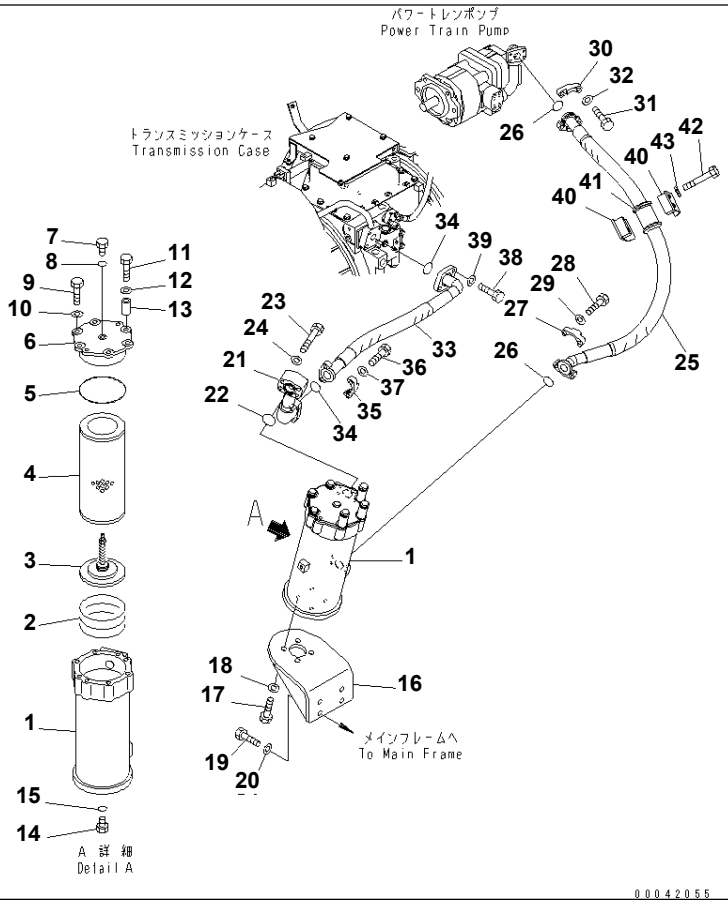

Ref. F2700-01A0 Page 150410

D155A-6 S/N 85001-UP
POWER LINE PIPING

Item	Part No.	Part Name	Qty	Serial No.
	17A-49-41201	FILTER ASS'Y	1	85001-
1	17A-49-41821	· CASE	1	85001-
2	21T-60-13650	· SPRING	1	85001-
3	17M-49-42310	· VALVE ASS'Y	1	85001-
4	07063-51100	· ELEMENT	1	85001-
5	07000-12130	· O-RING	1	85001-
6	17A-49-15441	· COVER	1	85001-
7	07040-11007	· PLUG	1	85001-
8	07002-11023	· O-RING	1	85001-
9	01010-81230	· BOLT	3	85001-
10	01643-31232	· WASHER	3	85001-
11	01010-81275	· BOLT	3	85001-
12	01643-31232	· WASHER	3	85001-
13	205-03-71331	· COLLAR	3	85001-
14	07040-12412	· PLUG	1	85001-
15	07002-12434	· O-RING	1	85001-
16	17A-49-41921	BRACKET	1	85001-
17	01010-81230	BOLT	4	85001-
18	01643-31232	WASHER	4	85001-
19	01010-81230	BOLT	4	85001-
20	01643-31232	WASHER	4	85001-
21	17A-49-42740	TUBE	1	85001-
22	07000-73035	O-RING	1	85001-
23	01010-81065	BOLT	4	85001-
24	01643-51032	WASHER	4	85001-
25	07125-010A9	HOSE	1	85001-
26	07000-13032	O-RING	2	85001-
27	07371-31049	FLANGE	2	85001-
28	07372-21035	BOLT	4	85001-
29	01643-51032	WASHER	4	85001-

Printed By : Dwi Iswanto (airafather6107170)

POWER LINE PIPING

Item	Part No.	Part Name	Qty	Serial No.
30	07371-31049	FLANGE	2	85001-
31	07372-21035	BOLT	4	85001-
32	01643-51032	WASHER	4	85001-
33	17A-49-42450	HOSE	1	85001-
34	07000-13032	O-RING	2	85001-
35	07371-31049	FLANGE	2	85001-
36	07372-21035	BOLT	4	85001-
37	01643-51032	WASHER	4	85001-
38	01010-81045	BOLT	2	85001-
39	01643-31032	WASHER	2	85001-
40	07094-11024	CLAMP	2	85001-
41	07095-01034	CUSHION	1	85001-
42	01010-81280	BOLT	2	85001-
43	01643-31232	WASHER	2	85001-

Printed By : Dwi Iswanto (airafather6107170)

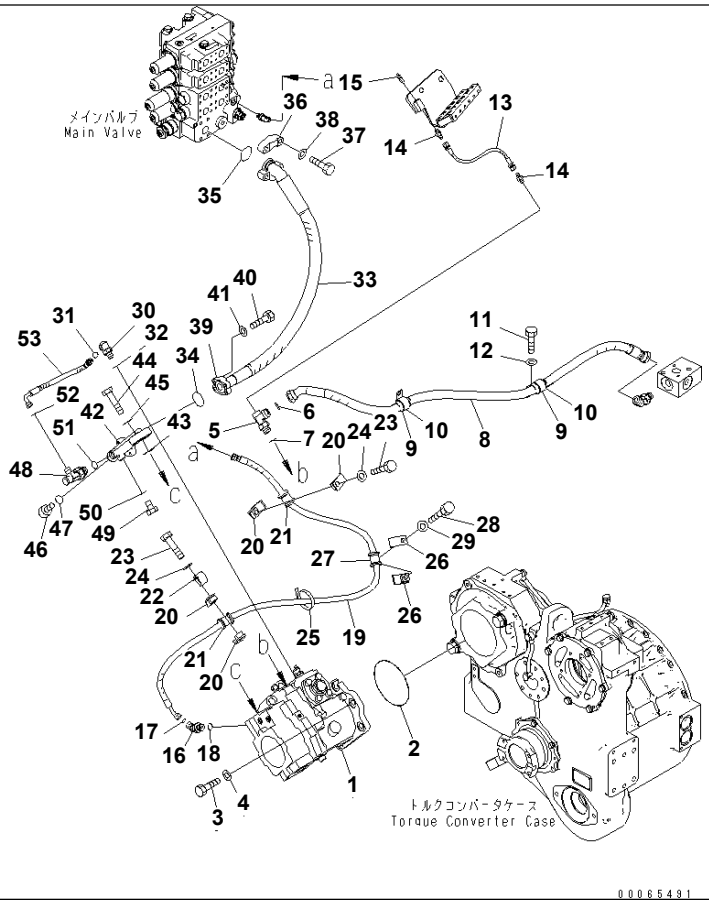

Ref. F2720-01A0 **Page 150420**

D155A-6 S/N 85001-UP
POWER TRAIN OIL LINE (PUMP AMD DELIVERT HOSE)

Item	Part No.	Part Name	Qty	Serial No.
1	(708-1L-00670)	PUMP	1	85001-
2	07000-75160	O-RING	1	85001-
3	01010-81650	BOLT	4	85001-
4	01643-31645	WASHER	4	85001-
5	17A-61-42411	ELBOW	1	85001-
6	02896-11018	O-RING	1	85001-
7	07002-12434	O-RING	1	85001-
8	17A-61-42441	HOSE	1	85001-
9	113-899-7950	CLIP	2	85001-
10	07095-20625	CUSHION	2	85001-
11	01010-81225	BOLT	2	85001-
12	01643-31232	WASHER	2	85001-
13	17A-49-42491	HOSE	1	85001-
14	203-62-21740	NIPPLE	2	85001-
15	20B-27-11210	BLEEDER	1	85001-
16	154-61-75761	ELBOW	1	85001-
17	02896-11008	O-RING	1	85001-
18	07002-11423	O-RING	1	85001-
19	17A-61-42471	HOSE	1	85001-
20	07094-10315	CLAMP	4	85001-
21	07095-00314	CUSHION	2	85001-
22	21T-06-11940	CLIP	1	85001-
23	01010-81260	BOLT	2	85001-
24	01643-31232	WASHER	2	85001-
25	08034-20823	BAND	1	85001-
26	07094-10315	CLAMP	2	85001-
27	07095-00314	CUSHION	1	85001-
28	01010-81260	BOLT	1	85001-
29	01643-31232	WASHER	1	85001-
30	02782-10210	ELBOW	1	85001-

Printed By : Dwi Iswanto (airafather6107170)

POWER TRAIN OIL LINE (PUMP AMD DELIVERT HOSE)

Item	Part No.	Part Name	Qty	Serial No.
31	02896-11008	O-RING	1	85001-
32	07002-11423	O-RING	1	85001-
33	17A-49-42511	HOSE	1	85001-
34	07000-13032	O-RING	1	85001-
35	07000-13038	O-RING	1	85001-
36	07371-51260	FLANGE	2	85001-
37	01010-81250	BOLT	4	85001-
38	01643-31232	WASHER	4	85001-
39	07371-31049	FLANGE	2	85001-
40	07372-21035	BOLT	4	85001-
41	01643-51032	WASHER	4	85001-
42	17A-49-42390	BLOCK	1	85001-
43	07000-13035	O-RING	1	85001-
44	07372-21040	BOLT	4	85001-
45	01643-51032	WASHER	4	85001-
46	07040-12414	PLUG	1	85001-
47	07002-12434	O-RING	1	85001-
48	22M-62-21390	ELBOW	1	85001-
49	07040-11007	PLUG	1	85001-
50	07002-11023	O-RING	1	85001-
51	07002-11823	O-RING	1	85001-
52	02896-11008	O-RING	1	85001-
53	02778-00203	HOSE	1	85001-

Printed By : Dwi Iswanto (airafather6107170)

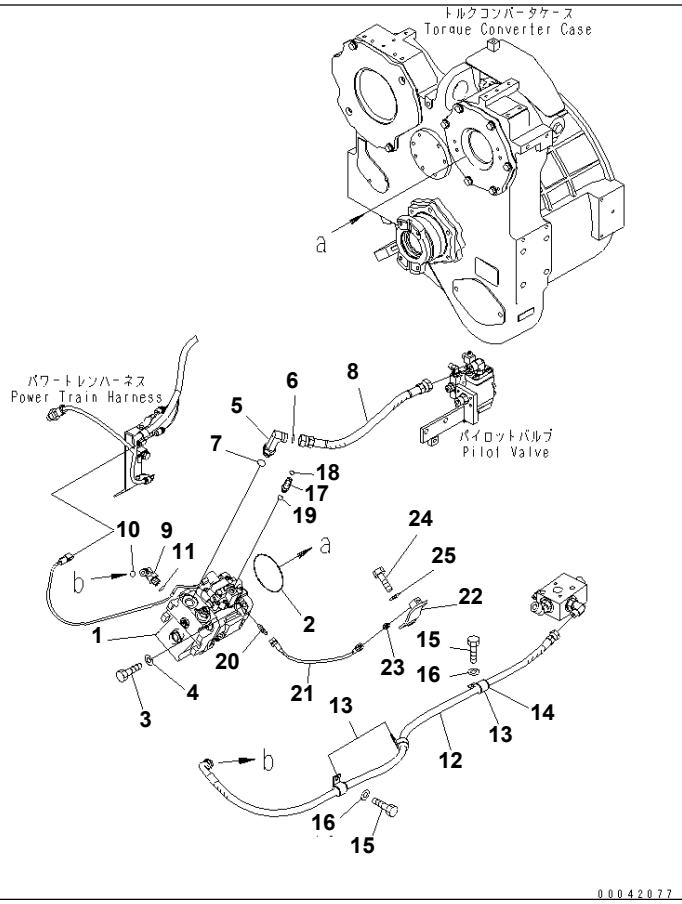

Ref. F2720-02A0 **Page 150430**

D155A-6 S/N 85001-UP

POWER TRAIN OIL LINE (FAN PUMP)(#85001-85024)

Item	Part No.	Part Name	Qty	Serial No.
1	(708-1T-00470)	PUMP ASS'Y	1	85001-@
2	07000-72105	O-RING	1	85001-@
3	01010-81240	BOLT	4	85001-@
4	01643-31232	WASHER	4	85001-@
5	02782-10524	ELBOW	1	85001-@
6	02896-11015	O-RING	1	85001-@
7	07002-12434	O-RING	1	85001-@
8	02765-005A4	HOSE	1	85001-@
9	02782-10422	ELBOW	1	85001-@
10	02896-11012	O-RING	1	85001-@
11	07002-12034	O-RING	1	85001-@
12	17A-61-41930	HOSE	1	85001-@
13	04434-52512	CLIP	3	85001-@
14	07095-20318	CUSHION	3	85001-@
15	01010-81225	BOLT	3	85001-@
16	01643-31232	WASHER	3	85001-@
17	02782-1021A	ELBOW	1	85001-85024
18	02896-11008	O-RING	1	85001-@
19	07002-11423	O-RING	1	85001-@
20	17A-61-21340	NIPPLE	1	85001-@
21	17A-49-41791	HOSE	1	85001-@
22	17A-61-21331	BRACKET	1	85001-@
23	203-62-21740	NIPPLE	1	85001-@
24	01010-81230	BOLT	1	85001-@
25	01643-31232	WASHER	1	85001-@

Printed By : Dwi Iswanto (airafather6107170)

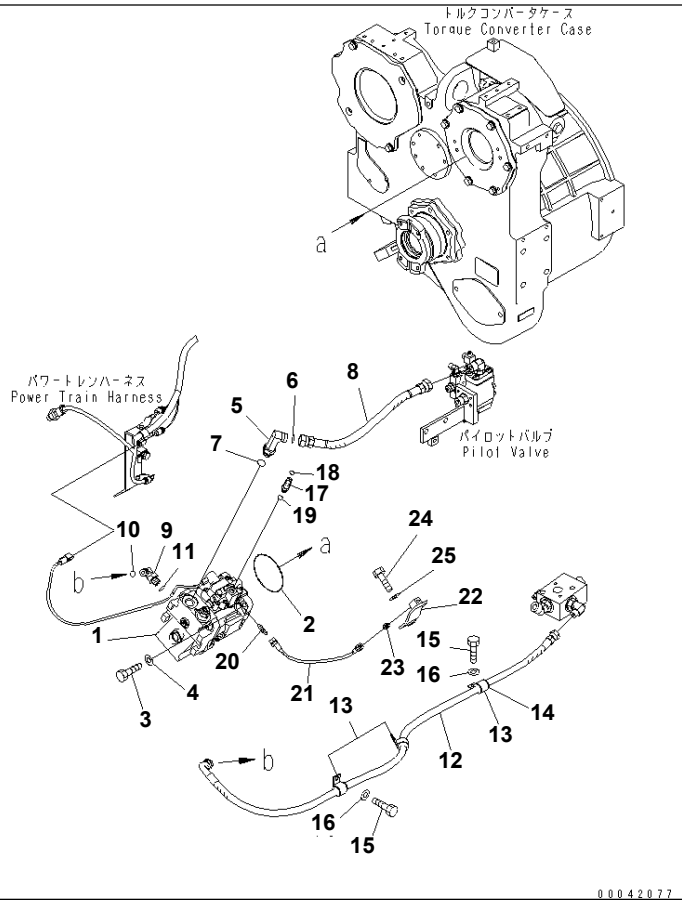

Ref. F2720-02A0A **Page 150440**

D155A-6 S/N 85001-UP
POWER TRAIN OIL LINE (FAN PUMP)(#85025-)

Item	Part No.	Part Name	Qty	Serial No.
1	(708-1T-00470)	PUMP ASS'Y	1	85001-
2	07000-72105	O-RING	1	85001-
3	01010-81240	BOLT	4	85001-
4	01643-31232	WASHER	4	85001-
5	02782-10524	ELBOW	1	85001-
6	02896-11015	O-RING	1	85001-
7	07002-12434	O-RING	1	85001-
8	02765-005A4	HOSE	1	85001-
9	02782-10422	ELBOW	1	85001-
10	02896-11012	O-RING	1	85001-
11	07002-12034	O-RING	1	85001-
12	17A-61-41930	HOSE	1	85001-
13	04434-52512	CLIP	3	85001-
14	07095-20318	CUSHION	3	85001-
15	01010-81225	BOLT	3	85001-
16	01643-31232	WASHER	3	85001-
17	02783-10210	ELBOW	1	85025-
18	02896-11008	O-RING	1	85001-
19	07002-11423	O-RING	1	85001-
20	17A-61-21340	NIPPLE	1	85001-
21	17A-49-41791	HOSE	1	85001-
22	17A-61-21331	BRACKET	1	85001-
23	203-62-21740	NIPPLE	1	85001-
24	01010-81230	BOLT	1	85001-
25	01643-31232	WASHER	1	85001-

Printed By : Dwi Iswanto (airafather6107170)

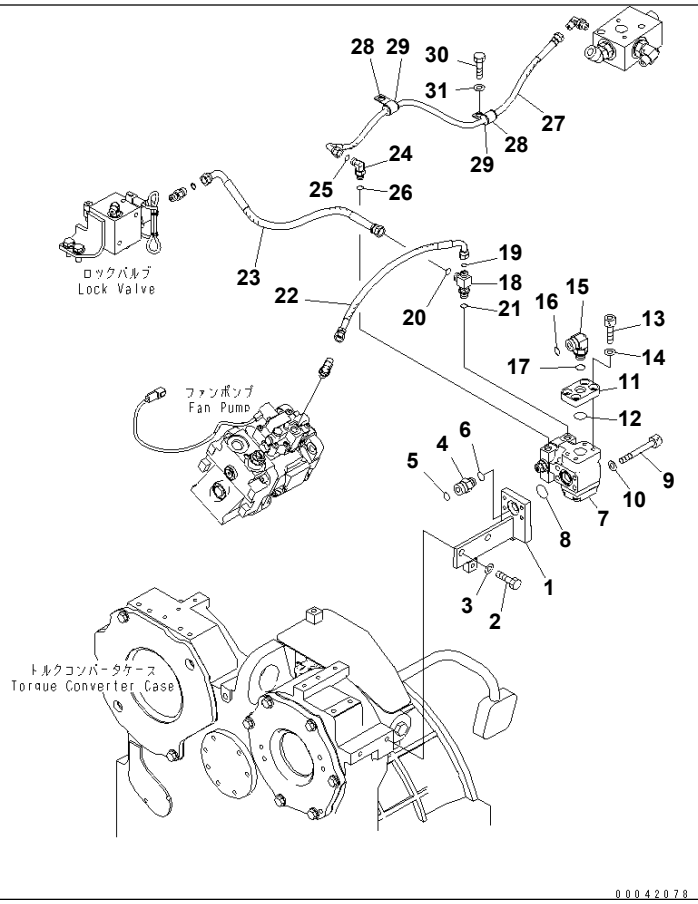

Ref. F2720-03A0 **Page 150450**

D155A-6 S/N 85001-UP
POWER TRAIN OIL LINE (REDUCING VALVE)(#85001-85024)

Item	Part No.	Part Name	Qty	Serial No.
1	17A-49-41421	BRACKET	1	85001-@
2	01010-81230	BOLT	2	85001-@
3	01643-31232	WASHER	2	85001-@
4	02781-00516	UNION	1	85001-@
5	02896-11015	O-RING	1	85001-@
6	07002-12034	O-RING	1	85001-@
7	702-21-09250	VALVE ASS'Y	1	85001-@
8	07000-13032	O-RING	1	85001-@
9	01252-71085	BOLT	4	85001-@
10	01643-51032	WASHER	4	85001-@
11	17A-61-21221	PLATE	1	85001-@
12	07000-13032	O-RING	1	85001-@
13	01252-71025	BOLT	4	85001-@
14	01643-51032	WASHER	4	85001-@
15	02782-10516	ELBOW	1	85001-@
16	02896-11015	O-RING	1	85001-@
17	07002-12034	O-RING	1	85001-@
18	21K-62-72481	TEE	1	85001-85024
19	02896-11008	O-RING	1	85001-85024
20	02896-11009	O-RING	1	85001-@
21	07002-11423	O-RING	1	85001-@
22	421-V91-3340	HOSE	1	85001-85024
23	02754-003A4	HOSE	1	85001-85024
24	02782-10210	ELBOW	1	85001-@
25	02896-11008	O-RING	1	85001-@
26	07002-11423	O-RING	1	85001-@
27	02763-002A8	HOSE	1	85001-@
28	04434-51712	CLIP	2	85001-@
29	07095-20211	CUSHION	2	85001-@
30	01010-81225	BOLT	1	85001-@

Printed By : Dwi Iswanto (airafather6107170)

POWER TRAIN OIL LINE (REDUCING VALVE)(#85001-85024)

Item	Part No.	Part Name	Qty	Serial No.
31	01643-31232	WASHER	1	85001-@

Printed By : Dwi Iswanto (airafather6107170)

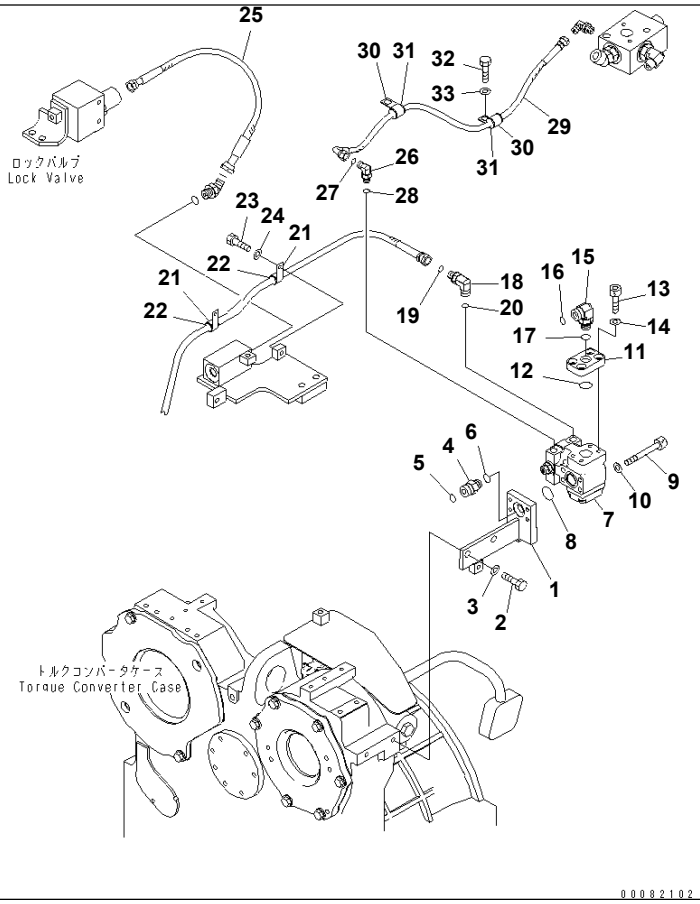

Ref. F2720-03A0A **Page 150460**

D155A-6 S/N 85001-UP

POWER TRAIN OIL LINE (REDUCING VALVE)(#85025-)

Item	Part No.	Part Name	Qty	Serial No.
1	17A-49-41421	BRACKET	1	85001-
2	01010-81230	BOLT	2	85001-
3	01643-31232	WASHER	2	85001-
4	02781-00516	UNION	1	85001-
5	02896-11015	O-RING	1	85001-
6	07002-12034	O-RING	1	85001-
7	702-21-09250	VALVE ASS'Y	1	85001-
8	07000-13032	O-RING	1	85001-
9	01252-71085	BOLT	4	85001-
10	01643-51032	WASHER	4	85001-
11	17A-61-21221	PLATE	1	85001-
12	07000-13032	O-RING	1	85001-
13	01252-71025	BOLT	4	85001-
14	01643-51032	WASHER	4	85001-
15	02782-10516	ELBOW	1	85001-
16	02896-11015	O-RING	1	85001-
17	07002-12034	O-RING	1	85001-
18	02782-10311	ELBOW	1	85025-
19	02896-11009	O-RING	1	85025-
20	07002-11423	O-RING	1	85025-
21	04434-52112	CLIP	2	85025-
22	07095-20314	CUSHION	2	85025-
23	01010-81225	BOLT	2	85025-
24	01643-31232	WASHER	2	85025-
25	02754-00304	HOSE	1	85025-
26	02782-10210	ELBOW	1	85001-
27	02896-11008	O-RING	1	85001-
28	07002-11423	O-RING	1	85001-
29	02763-002A8	HOSE	1	85001-
30	04434-51712	CLIP	2	85001-

Printed By : Dwi Iswanto (airafather6107170)

POWER TRAIN OIL LINE (REDUCING VALVE)(#85025-)

Item	Part No.	Part Name	Qty	Serial No.
31	07095-20211	CUSHION	2	85001-
32	01010-81225	BOLT	1	85001-
33	01643-31232	WASHER	1	85001-

Printed By : Dwi Iswanto (airafather6107170)

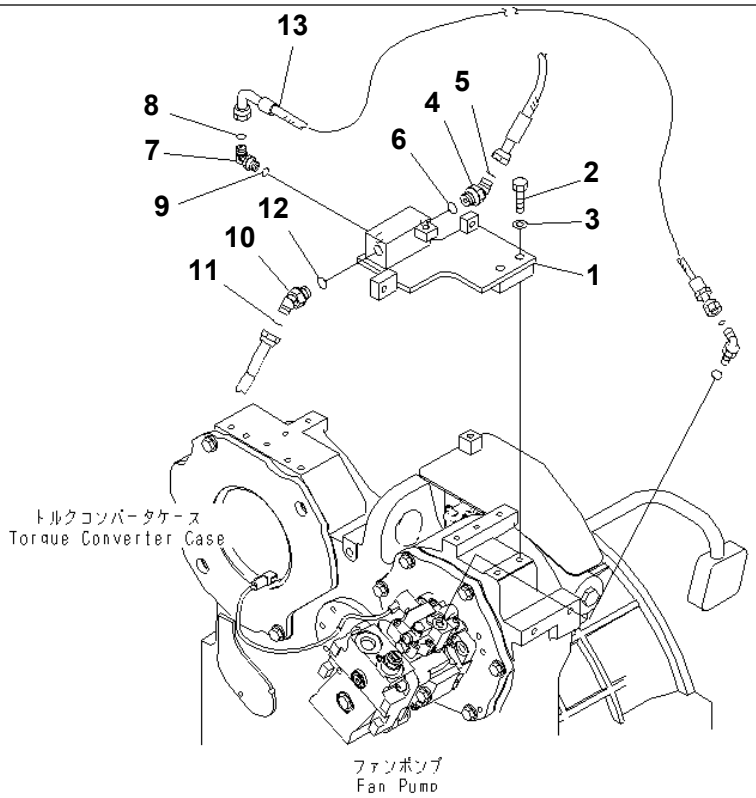

00082157

Ref. F2720-04A0 **Page 150470**

D155A-6 S/N 85001-UP
POWER TRAIN OIL LINE (FILTER PIPING)(#85025-)

Item	Part No.	Part Name	Qty	Serial No.
1	17A-61-43921	BRACKET	1	85025-
2	01010-81250	BOLT	2	85025-
3	01643-31232	WASHER	2	85025-
4	02783-10315	ELBOW	1	85025-
5	02896-11009	O-RING	1	85025-
6	07002-12034	O-RING	1	85025-
7	02782-10210	ELBOW	1	85025-
8	02896-11008	O-RING	1	85025-
9	07002-11423	O-RING	1	85025-
10	02783-10315	ELBOW	1	85025-
11	02896-11009	O-RING	1	85025-
12	07002-12034	O-RING	1	85025-
13	17A-61-43890	HOSE	1	85025-

Printed By : Dwi Iswanto (airafather6107170)

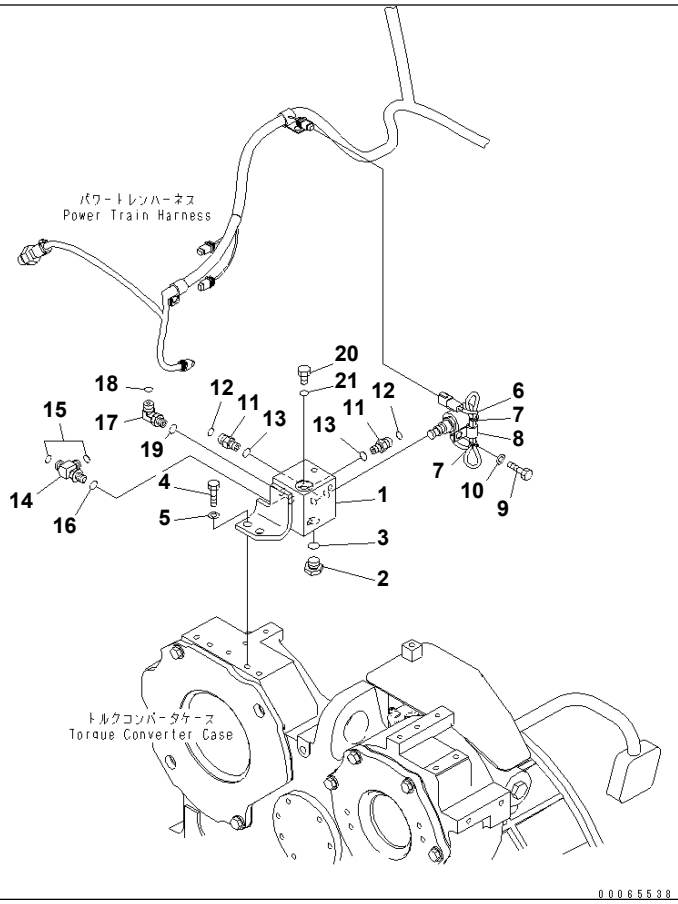

Ref. F2720-05A0 **Page 150480**

D155A-6 S/N 85001-UP
POWER TRAIN OIL LINE (LOCK VALVE)

Item	Part No.	Part Name	Qty	Serial No.
1	17A-49-41432	BLOCK	1	85014-
	□17A-49-41431	BLOCK	1	85001-85013
2	07040-12012	PLUG	1	85001-
3	07002-12034	O-RING	1	85001-
4	01010-81230	BOLT	2	85001-
5	01643-31232	WASHER	2	85001-
6	198-06-56520	SOLENOID VALVE	1	85001-
7	08034-20414	BAND	2	85001-
8	04434-51212	CLIP	1	85001-
9	01010-81220	BOLT	1	85001-
10	01643-31232	WASHER	1	85001-
11	02781-0031D	UNION	2	85001-
12	02896-11009	O-RING	2	85001-
13	07002-11423	O-RING	2	85001-
14	21N-64-36680	TEE	1	85001-
15	02896-11009	O-RING	2	85001-
16	07002-11423	O-RING	1	85001-
17	02782-10311	ELBOW	1	85001-
18	02896-11009	O-RING	1	85001-
19	07002-11423	O-RING	1	85001-
20	07040-11409	PLUG	1	85001-
21	07002-11423	O-RING	1	85001-

Printed By : Dwi Iswanto (airafather6107170)

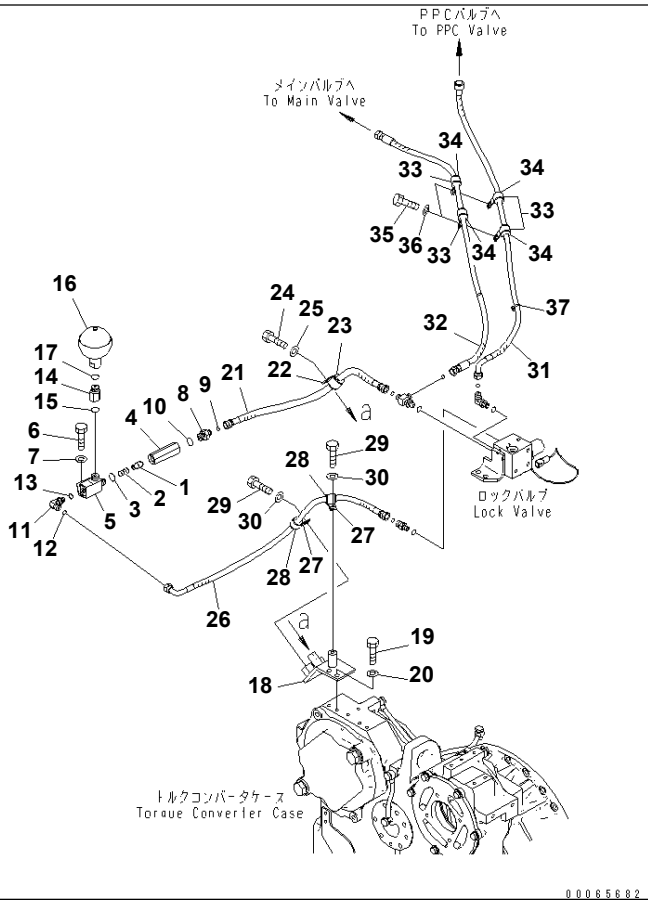

Ref. F2720-06A0 **Page 150490**

D155A-6 S/N 85001-UP
POWER TRAIN OIL LINE (ACCUMLATOR)

Item	Part No.	Part Name	Qty	Serial No.
	17A-61-41501	VALVE ASS'Y	1	85001-
1	20X-62-21950	· VALVE	1	85001-
2	203-60-21260	· SPRING	1	85001-
3	07002-02034	· O-RING	1	85001-
4	203-62-58670	· BODY	1	85001-
5	17A-61-41511	· TEE	1	85001-
6	01010-81020	BOLT	2	85001-
7	01643-31032	WASHER	2	85001-
8	02781-00315	UNION	1	85001-
9	02896-11009	O-RING	1	85001-
10	07002-12034	O-RING	1	85001-
11	02782-10311	ELBOW	1	85001-
12	02896-11009	O-RING	1	85001-
13	07002-11423	O-RING	1	85001-
14	154-61-75782	ADAPTER	1	85001-
15	07002-12034	O-RING	1	85001-
16	20Y-60-11410	ACCUMULATOR	1	85001-
17	07002-12034	O-RING	1	85001-
18	17A-49-41591	BRACKET	1	85001-
19	01010-81230	BOLT	2	85001-
20	01643-31232	WASHER	2	85001-
21	17A-61-42480	HOSE	1	85005-
	□17A-61-41480	HOSE	1	85001-85004
22	04434-52712	CLIP	1	85001-
23	07095-20418	CUSHION	1	85001-
24	01010-81225	BOLT	1	85001-
25	01643-31232	WASHER	1	85001-
26	17A-61-41490	HOSE	1	85001-
27	04434-52112	CLIP	2	85001-
28	07095-20314	CUSHION	2	85001-

Printed By : Dwi Iswanto (airafather6107170)

POWER TRAIN OIL LINE (ACCUMLATOR)

Item	Part No.	Part Name	Qty	Serial No.
29	01010-81225	BOLT	2	85001-
30	01643-31232	WASHER	2	85001-
31	17A-61-42552	HOSE	1	85001-
32	17A-61-42561	HOSE	1	85001-
33	04434-52112	CLIP	4	85001-
34	07095-20314	CUSHION	4	85001-
35	01010-81225	BOLT	2	85001-
36	01643-31232	WASHER	2	85001-
37	08034-20823	BAND	1	85001-

Printed By : Dwi Iswanto (airafather6107170)

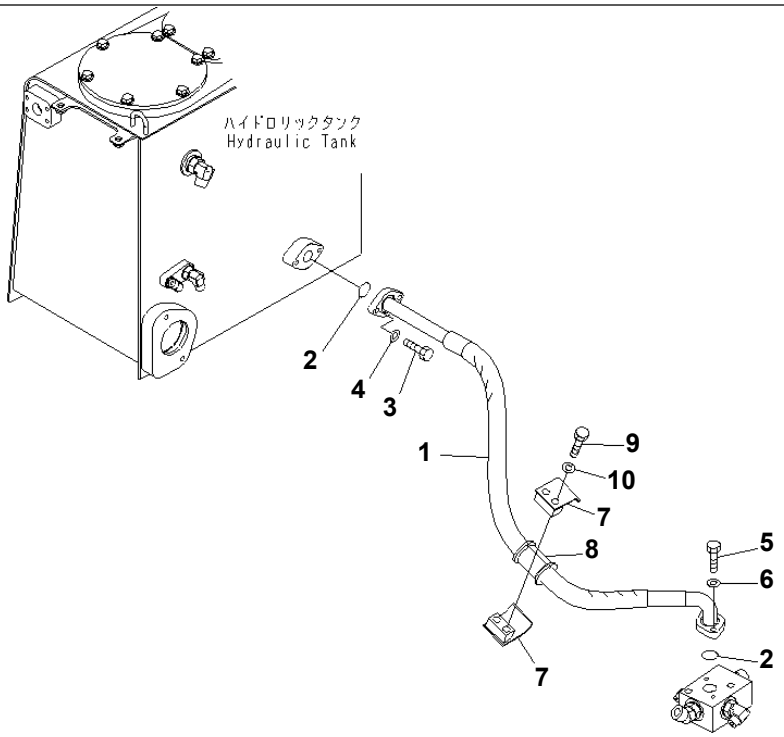

00065683

Ref. F2720-07A0 **Page 150500**

D155A-6 S/N 85001-UP
POWER TRAIN OIL LINE (DRAIN HOSE)

Item	Part No.	Part Name	Qty	Serial No.
1	17A-49-42621	HOSE	1	85001-
2	07000-13032	O-RING	2	85001-
3	01010-81030	BOLT	2	85001-
4	01643-31032	WASHER	2	85001-
5	01010-81035	BOLT	2	85001-
6	01643-31032	WASHER	2	85001-
7	07094-11024	CLAMP	2	85001-
8	07095-01034	CUSHION	1	85001-
9	01010-81280	BOLT	2	85001-
10	01643-31232	WASHER	2	85001-

Printed By : Dwi Iswanto (airafather6107170)

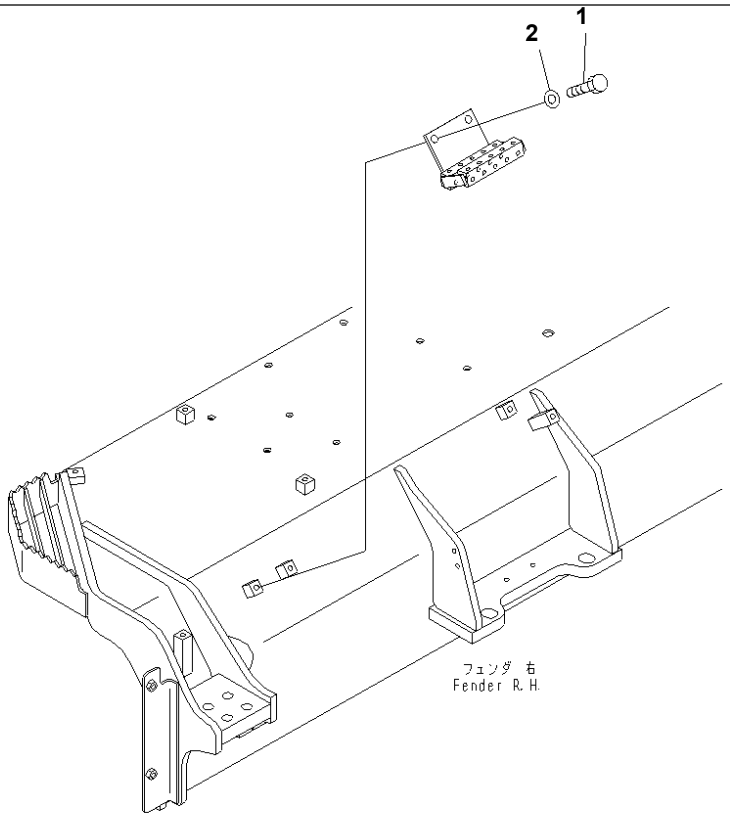

00049146

Ref. F2720-08A0 **Page 150510**

D155A-6 S/N 85001-UP
POWER OIL LINE (CONCENTRATED BOLT)

Item	Part No.	Part Name	Qty	Serial No.
1	01010-81225	BOLT	2	85001-
2	01643-31232	WASHER	2	85001-

Printed By : Dwi Iswanto (airafather6107170)

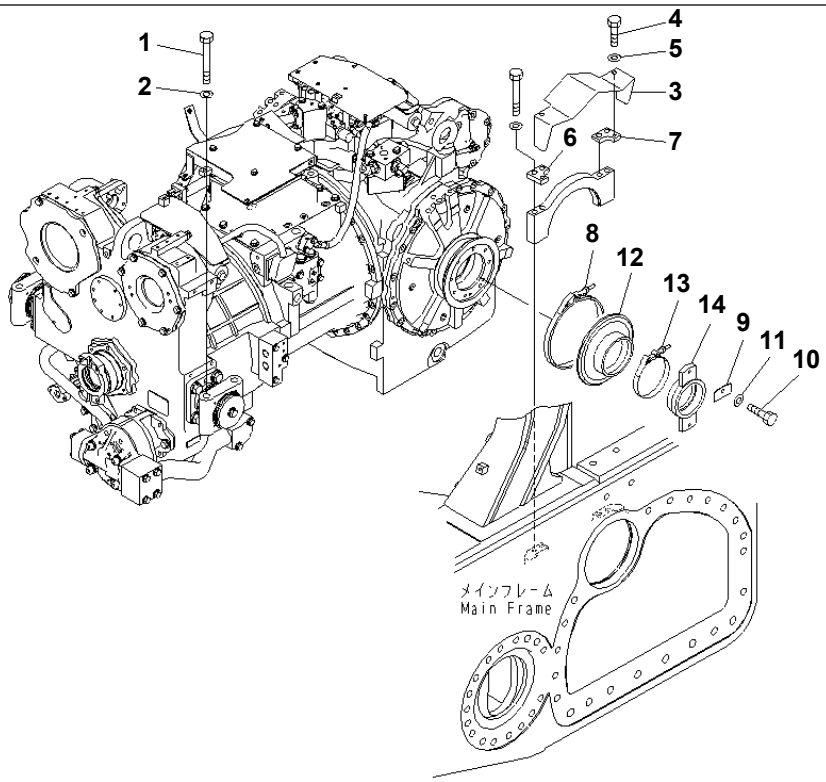

00042085

Ref. F2810-01A0 **Page 150520**

D155A-6 S/N 85001-UP
POWER LINE MOUNT

Item	Part No.	Part Name	Qty	Serial No.
1	01011-82485	BOLT	4	85001-
2	01643-32460	WASHER	4	85001-
3	17A-21-41381	COVER	2	85001-
4	01010-81225	BOLT	4	85001-
5	01643-31232	WASHER	4	85001-
6	17A-21-41341	PLATE	2	85001-
7	17A-21-41371	PLATE	2	85001-
8	14Y-21-13210	COUPLING	2	85001-
9	14Y-21-11231	PLATE	4	85001-
10	01010-81030	BOLT	4	85001-
11	01643-31032	WASHER	4	85001-
12	14Y-21-13160	SEAL	2	85001-
13	14Y-21-13190	CLAMP	2	85001-
14	17A-21-44131	CAGE	2	85001-

Printed By : Dwi Iswanto (airafather6107170)

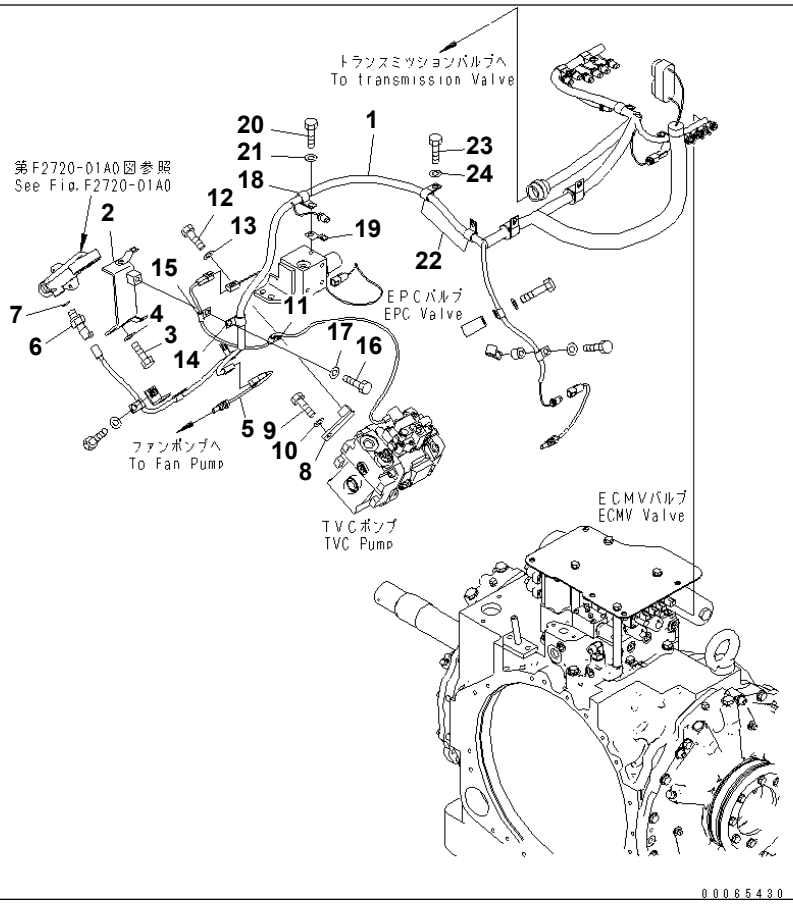

Ref. F2830-01A0 **Page 150530**

D155A-6 S/N 85001-UP
WIRING (POWER LINE) (1/2)

Item	Part No.	Part Name	Qty	Serial No.
1	17A-06-43151	WIRING HARNESS	1	85001-
2	17A-06-43161	BRACKET	1	85001-
3	01010-81225	BOLT	2	85001-
4	01643-31232	WASHER	2	85001-
5	7861-93-3320	SENSOR,OIL TEMPERATURE	1	85001-
6	7861-93-1650	SENSOR	1	85001-
7	07002-11823	O-RING	1	85001-
8	154-49-51980	BRACKET	1	85001-
9	01010-81225	BOLT	1	85001-
10	01643-31232	WASHER	1	85001-
11	04434-50612	CLIP	1	85001-
12	01010-81220	BOLT	1	85001-
13	01643-31232	WASHER	1	85001-
14	04434-51712	CLIP	1	85001-
15	04434-50612	CLIP	1	85001-
16	01010-81225	BOLT	1	85001-
17	01643-31232	WASHER	1	85001-
18	04434-51712	CLIP	1	85001-
19	08193-21012	CLIP	1	85001-
20	01010-81225	BOLT	1	85001-
21	01643-31232	WASHER	1	85001-
22	04434-51712	CLIP	2	85001-
23	01010-81225	BOLT	2	85001-
24	01643-31232	WASHER	2	85001-

Printed By : Dwi Iswanto (airafather6107170)

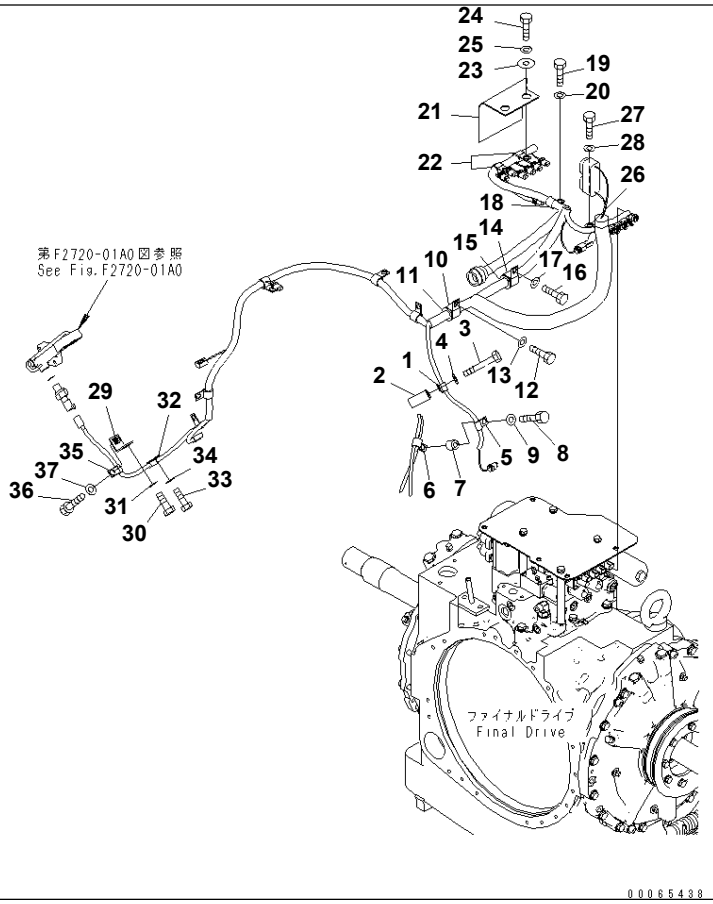

Ref. F2830-02A0 **Page 150540**

D155A-6 S/N 85001-UP
WIRING (POWER LINE) (2/2)

Item	Part No.	Part Name	Qty	Serial No.
1	04434-51012	CLIP	1	85001-
2	144-54-51280	COLLAR	1	85001-
3	01010-81280	BOLT	1	85001-
4	01643-31232	WASHER	1	85001-
5	04434-51012	CLIP	1	85001-
6	04434-51712	CLIP	1	85001-
7	195-33-11220	SPACER	1	85001-
8	01010-81250	BOLT	1	85001-
9	01643-31232	WASHER	1	85001-
10	04434-53212	CLIP	1	85001-
11	07095-20522	CUSHION	1	85001-
12	01010-81225	BOLT	1	85001-
13	01643-31232	WASHER	1	85001-
14	04434-53412	CLIP	1	85001-
15	07095-20627	CUSHION	1	85001-
16	01010-81225	BOLT	1	85001-
17	01643-31232	WASHER	1	85001-
18	04434-51912	CLIP	1	85001-
19	01010-81225	BOLT	1	85001-
20	01643-31232	WASHER	1	85001-
21	17A-06-41932	RUBBER	1	85001-
22	04434-51912	CLIP	2	85001-
23	103-54-24440	WASHER	2	85001-
24	01010-81230	BOLT	2	85001-
25	01643-31232	WASHER	2	85001-
26	04434-51412	CLIP	1	85001-
27	01010-81225	BOLT	1	85001-
28	01643-31232	WASHER	1	85001-
29	04434-51012	CLIP	2	85001-
30	01010-81225	BOLT	2	85001-

Printed By : Dwi Iswanto (airafather6107170)

WIRING (POWER LINE) (2/2)

Item	Part No.	Part Name	Qty	Serial No.
31	01643-31232	WASHER	2	85001-
32	154-49-51640	BRACKET	1	85001-
33	01010-81225	BOLT	1	85001-
34	01643-31232	WASHER	1	85001-
35	04434-51012	CLIP	1	85001-
36	01010-81225	BOLT	1	85001-
37	01643-31232	WASHER	1	85001-

Printed By : Dwi Iswanto (airafather6107170)

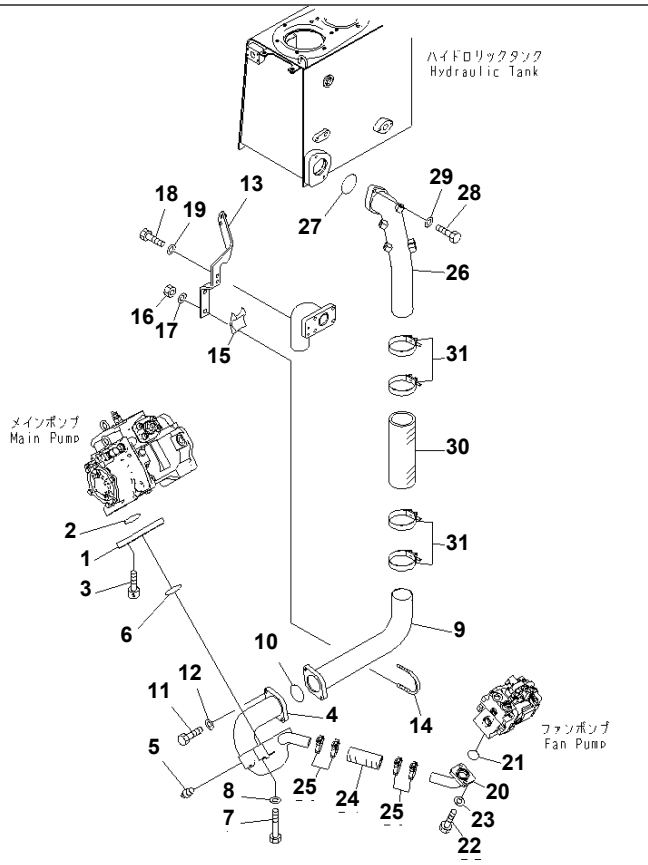

Ref. H0310-01A0 **Page 180010**

D155A-6 S/N 85001-UP
HYDRAULIC PUMP LINE

Item	Part No.	Part Name	Qty	Serial No.
1	17A-49-42251	FLANGE	1	85001-
2	07000-12080	O-RING	1	85001-
3	01252-61230	BOLT	4	85001-
4	17A-49-42240	TUBE	1	85001-
5	07042-70108	PLUG	1	85001-
6	07000-12080	O-RING	1	85001-
7	01010-81280	BOLT	4	85001-
8	01643-31232	WASHER	4	85001-
9	17A-49-41381	TUBE	1	85001-
10	07000-12080	O-RING	1	85001-
11	01010-81250	BOLT	2	85001-
12	01643-31232	WASHER	2	85001-
13	17A-49-41372	BRACKET	1	85001-
14	07283-38981	CLIP	1	85001-
15	17A-49-41931	SEAT	1	85001-
16	01597-01211	NUT	2	85001-
17	01643-31232	WASHER	2	85001-
18	01010-81230	BOLT	2	85001-
19	01643-31232	WASHER	2	85001-
20	17A-49-42281	TUBE	1	85001-
21	07000-13048	O-RING	1	85001-
22	01010-81240	BOLT	2	85001-
23	01643-31232	WASHER	2	85001-
24	07260-04114	HOSE	1	85001-
25	17A-61-41770	CLAMP	4	85001-
26	17A-60-41141	TUBE	1	85001-
27	07000-12090	O-RING	1	85001-
28	01010-81245	BOLT	2	85001-
29	01643-31232	WASHER	2	85001-
30	07260-08732	HOSE	1	85001-

Printed By : Dwi Iswanto (airafather6107170)

HYDRAULIC PUMP LINE

Item	Part No.	Part Name	Qty	Serial No.
31	20Y-62-51671	CLAMP	4	85001-

Printed By : Dwi Iswanto (airafather6107170)

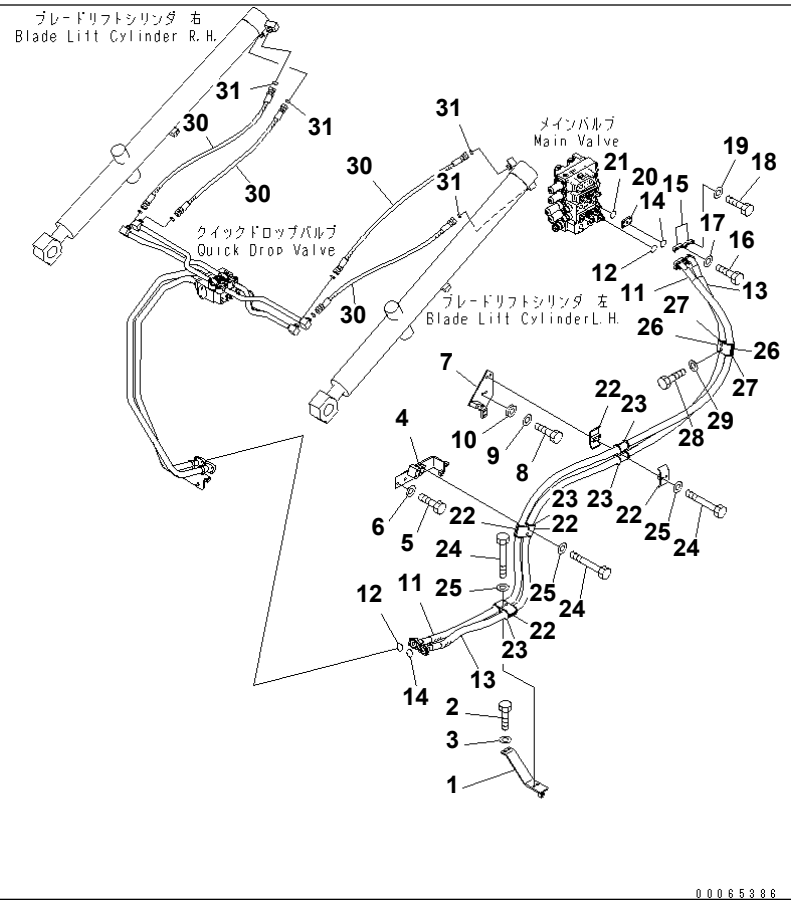

Ref. H2210-01A0 Page 180020

D155A-6 S/N 85001-UP

BLADE LIFT PIPING (BLADE LIFT HOSE)

Item	Part No.	Part Name	Qty	Serial No.
1	17A-61-41112	BRACKET	1	85001-
2	01010-81235	BOLT	2	85001-
3	01643-31232	WASHER	2	85001-
4	17A-61-41124	BRACKET	1	85001-
5	01010-81235	BOLT	2	85001-
6	01643-31232	WASHER	2	85001-
7	17A-61-41131	BRACKET	1	85001-
8	01010-81235	BOLT	2	85001-
9	01643-31232	WASHER	2	85001-
10	205-62-54562	SPACER	2	85001-
11	17A-61-42251	HOSE	1	85001-
12	07000-13032	O-RING	2	85001-
13	17A-61-42261	HOSE	1	85001-
14	07000-13032	O-RING	2	85001-
15	07371-31049	FLANGE	8	85001-
16	07372-21035	BOLT	12	85001-
17	01643-51032	WASHER	12	85001-
18	07372-21045	BOLT	4	85001-
19	01643-51032	WASHER	4	85001-
20	17A-61-43762	PLATE	1	85001-
21	07000-13035	O-RING	1	85001-
22	07094-31024	CLAMP	6	85001-
23	07095-01035	CUSHION	6	85001-
24	01010-81285	BOLT	6	85001-
25	01643-31232	WASHER	6	85001-
26	07094-31024	CLAMP	2	85001-
27	07095-01035	CUSHION	2	85001-
28	01010-81290	BOLT	2	85001-
29	01643-31232	WASHER	2	85001-
30	02756-00612	HOSE	4	85001-

Printed By : Dwi Iswanto (airafather6107170)

BLADE LIFT PIPING (BLADE LIFT HOSE)

Item	Part No.	Part Name	Qty	Serial No.
31	02896-11018	O-RING	4	85001-

Printed By : Dwi Iswanto (airafather6107170)

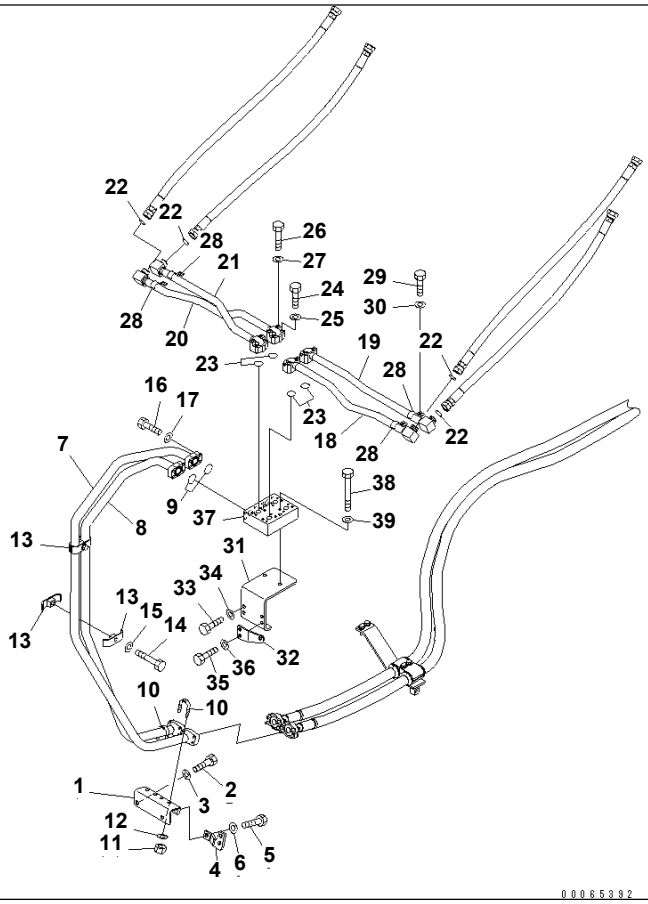

Ref. H2210-02A0 **Page 180030**

D155A-6 S/N 85001-UP
BLADE LIFT PIPING (BLADE LIFT TUBE)

Item	Part No.	Part Name	Qty	Serial No.
1	17A-61-41741	BRACKET	1	85001-
2	01010-81230	BOLT	2	85001-
3	01643-31232	WASHER	2	85001-
4	17A-61-43751	BRACKET	1	85001-
5	01010-81230	BOLT	1	85001-
6	01643-31232	WASHER	1	85001-
7	17A-61-43711	TUBE	1	85001-
8	17A-61-43721	TUBE	1	85001-
9	07000-13035	O-RING	2	85001-
10	07283-33442	CLIP	2	85001-
11	01597-01009	NUT	4	85001-
12	01643-31032	WASHER	4	85001-
13	07094-30417	CLAMP	4	85001-
14	01010-81265	BOLT	2	85001-
15	01643-31232	WASHER	2	85001-
16	07372-21040	BOLT	8	85001-
17	01643-51032	WASHER	8	85001-
18	17A-61-43511	TUBE	1	85001-
19	17A-61-43521	TUBE	1	85001-
20	17A-61-43631	TUBE	1	85001-
21	17A-61-43641	TUBE	1	85001-
22	02896-11018	O-RING	4	85001-
23	07000-13030	O-RING	4	85001-
24	07372-21045	BOLT	8	85001-
25	01643-51032	WASHER	8	85001-
26	07372-21060	BOLT	8	85001-
27	01643-51032	WASHER	8	85001-
28	112-62-32150	CLAMP	4	85001-
29	01010-81225	BOLT	4	85001-
30	01643-31232	WASHER	4	85001-

Printed By : Dwi Iswanto (airafather6107170)

BLADE LIFT PIPING (BLADE LIFT TUBE)

Item	Part No.	Part Name	Qty	Serial No.
31	17A-61-43541	BRACKET	1	85001-
32	17A-54-41970	BRACKET	1	85001-
33	01010-81230	BOLT	2	85001-
34	01643-31232	WASHER	2	85001-
35	01010-81235	BOLT	2	85001-
36	01643-31232	WASHER	2	85001-
37	17A-61-43551	BLOCK	1	85001-
38	01010-81285	BOLT	2	85001-
39	01643-51232	WASHER	2	85001-

Printed By : Dwi Iswanto (airafather6107170)

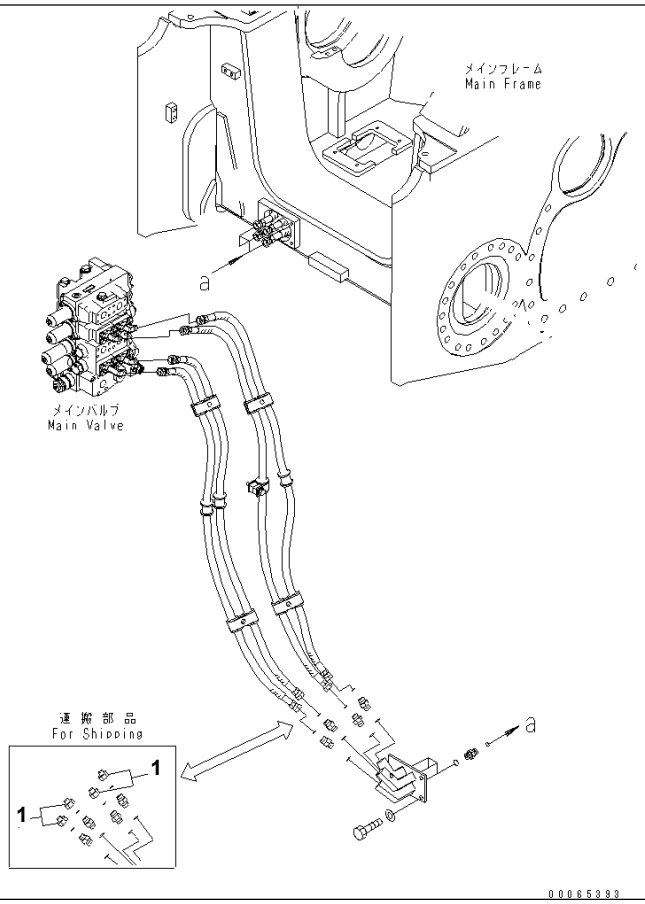

Ref. H2210-03A0 **Page 180040**

D155A-6 S/N 85001-UP

BLADE LIFT LINE (PLUG FOR SHPPING)

Item	Part No.	Part Name	Qty	Serial No.
1	02789-10628	PLUG	4	85001-

Printed By : Dwi Iswanto (airafather6107170)

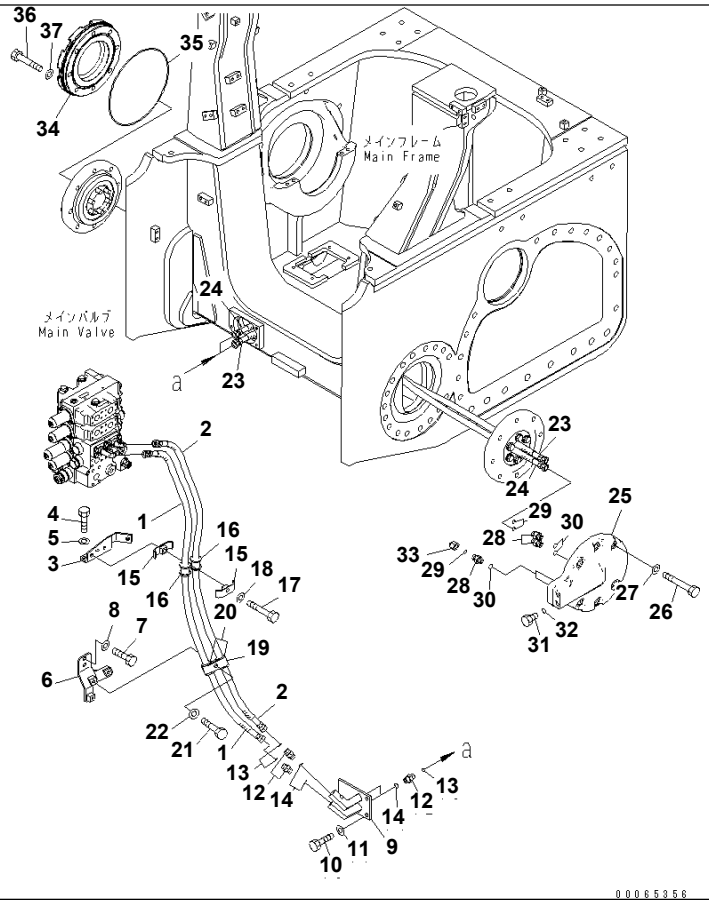

Ref. H2220-01A0 **Page 180050**

D155A-6 S/N 85001-UP

BLADE TILT LINE (FOR SINGLE TILT DOZER)

Item	Part No.	Part Name	Qty	Serial No.
1	17A-61-42381	HOSE	1	85001-
2	17A-61-42371	HOSE	1	85001-
3	17A-61-41881	BRACKET	1	85001-
4	01010-81230	BOLT	2	85001-
5	01643-31232	WASHER	2	85001-
6	17A-61-41851	BRACKET	1	85001-
7	01010-81230	BOLT	2	85001-
8	01643-31232	WASHER	2	85001-
9	17A-61-41690	FLANGE	1	85001-
10	01010-81230	BOLT	3	85001-
11	01643-31232	WASHER	3	85001-
12	02781-00422	UNION	4	85001-
13	02896-11012	O-RING	4	85001-
14	07002-12034	O-RING	4	85001-
15	07094-30417	CLAMP	2	85001-
16	07095-00420	CUSHION	2	85001-
17	01010-81265	BOLT	1	85001-
18	01643-31232	WASHER	1	85001-
19	07094-30417	CLAMP	2	85001-
20	07095-00420	CUSHION	2	85001-
21	01010-81265	BOLT	1	85001-
22	01643-31232	WASHER	1	85001-
23	17A-61-41161	HOSE	1	85001-
24	17A-61-41151	HOSE	1	85001-
25	17A-50-41161	COVER	1	85001-
26	01010-81680	BOLT	6	85001-
27	01643-31645	WASHER	6	85001-
28	02781-00422	UNION	4	85001-
29	02896-11012	O-RING	4	85001-
30	07002-12034	O-RING	4	85001-

Printed By : Dwi Iswanto (airafather6107170)

BLADE TILT LINE (FOR SINGLE TILT DOZER)

Item	Part No.	Part Name	Qty	Serial No.
31	07040-12012	PLUG	2	85001-
32	07002-12034	O-RING	2	85001-
33	02789-10422	PLUG	2	85001-
34	17A-50-41171	COVER	1	85001-
35	07000-15230	O-RING	1	85001-
36	01010-81660	BOLT	8	85001-
37	01643-31645	WASHER	8	85001-

Printed By : Dwi Iswanto (airafather6107170)

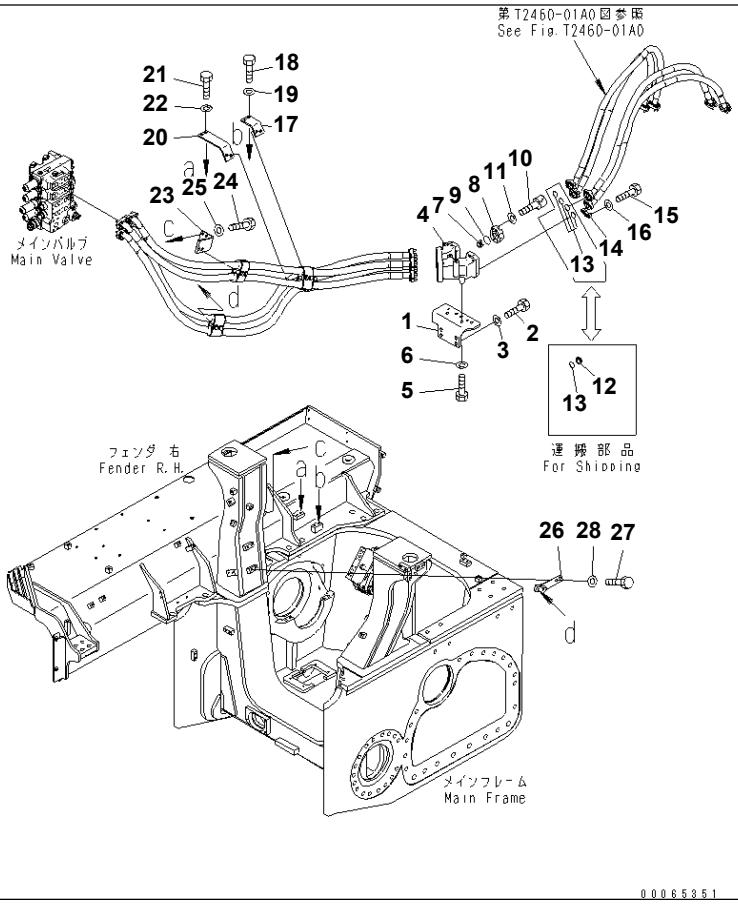

Ref. H2250-01A0 Page 180060

D155A-6 S/N 85001-UP

RIPPER PIPING (FOR SINGLE TILT) (1/2)

Item	Part No.	Part Name	Qty	Serial No.
1	17A-78-45390	BRACKET	1	85001-
2	01010-81640	BOLT	4	85001-
3	01643-31645	WASHER	4	85001-
4	17A-78-42151	BLOCK	1	85001-
5	01010-81235	BOLT	4	85001-
6	01643-31232	WASHER	4	85001-
7	17A-78-12160	VALVE	1	85001-
8	17A-78-12120	FLANGE	1	85001-
9	07000-13045	O-RING	1	85001-
10	01252-71035	BOLT	4	85001-
11	01643-51032	WASHER	4	85001-
12	07378-11000	HEAD	4	85001-
13	07000-13032	O-RING	4	85001-
14	07371-31049	FLANGE	8	85001-
15	07372-21035	BOLT	16	85001-
16	01643-51032	WASHER	16	85001-
17	17A-61-41192	BRACKET	1	85001-
18	01010-81230	BOLT	2	85001-
19	01643-31232	WASHER	2	85001-
20	17A-61-41211	BRACKET	1	85001-
21	01010-81230	BOLT	2	85001-
22	01643-31232	WASHER	2	85001-
23	17A-61-41221	BRACKET	1	85001-
24	01010-81230	BOLT	2	85001-
25	01643-31232	WASHER	2	85001-
26	17A-49-41582	BRACKET	1	85001-
27	01010-81230	BOLT	2	85001-
28	01643-31232	WASHER	2	85001-

Printed By : Dwi Iswanto (airafather6107170)

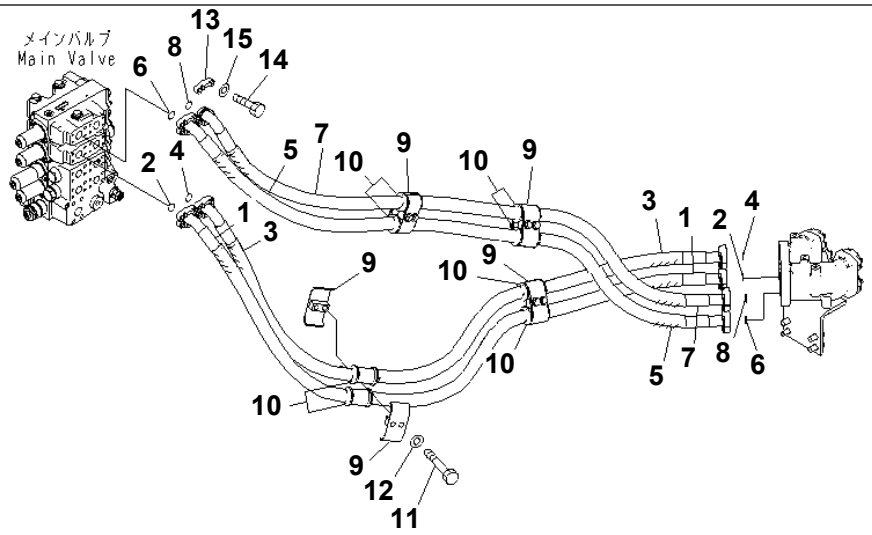

00065353

Ref. H2250-02A0 Page 180070

D155A-6 S/N 85001-UP

RIPPER PIPING (FOR SINGLE TILT) (2/2)

Item	Part No.	Part Name	Qty	Serial No.
1	17A-61-41650	HOSE	1	85001-
2	07000-13032	O-RING	2	85001-
3	17A-61-42661	HOSE	1	85001-
4	07000-13032	O-RING	2	85001-
5	17A-61-42351	HOSE	1	85001-
6	07000-13032	O-RING	2	85001-
7	17A-61-42361	HOSE	1	85001-
8	07000-13032	O-RING	2	85001-
9	07094-31024	CLAMP	8	85001-
10	07095-01035	CUSHION	8	85001-
11	01010-81290	BOLT	8	85001-
12	01643-31232	WASHER	8	85001-
13	07371-31049	FLANGE	16	85001-
14	07372-21035	BOLT	32	85001-
15	01643-51032	WASHER	32	85001-

Printed By : Dwi Iswanto (airafather6107170)

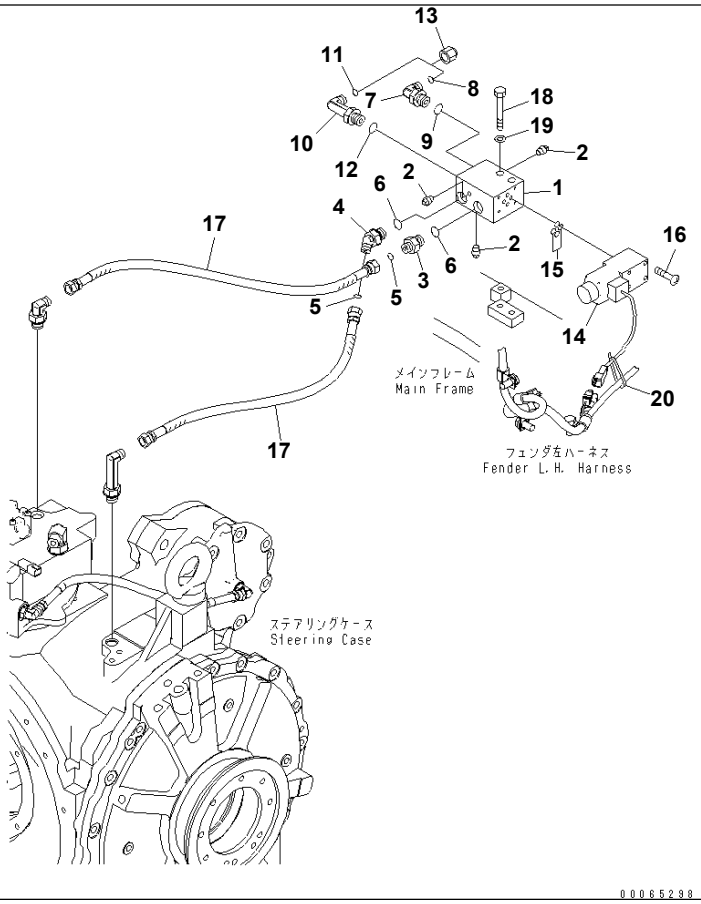

Ref. H2252-01A0 **Page 180080**

D155A-6 S/N 85001-UP
PIN PULLER LINE (FOR GIANT RIPPER)

Item	Part No.	Part Name	Qty	Serial No.
1	17A-79-41310	BODY	1	85001-
2	07042-70108	PLUG	3	85001-
3	02781-00315	UNION	1	85001-
4	02783-10315	ELBOW	1	85001-
5	02896-11009	O-RING	2	85001-
6	07002-12034	O-RING	2	85001-
7	02782-10315	ELBOW	1	85001-
8	02896-11009	O-RING	1	85001-
9	07002-12034	O-RING	1	85001-
10	02782-10316	ELBOW	1	85001-
11	02896-11009	O-RING	1	85001-
12	07002-12034	O-RING	1	85001-
13	02789-10315	PLUG	2	85001-
14	198-06-56580	VALVE	1	85001-
15	07000-11009	O-RING	4	85001-
16	01220-40545	SCREW	4	85001-
17	17A-61-41760	HOSE	2	85001-
18	01010-81275	BOLT	2	85001-
19	01643-31232	WASHER	2	85001-
20	08034-20414	BAND	1	85001-

Printed By : Dwi Iswanto (airafather6107170)

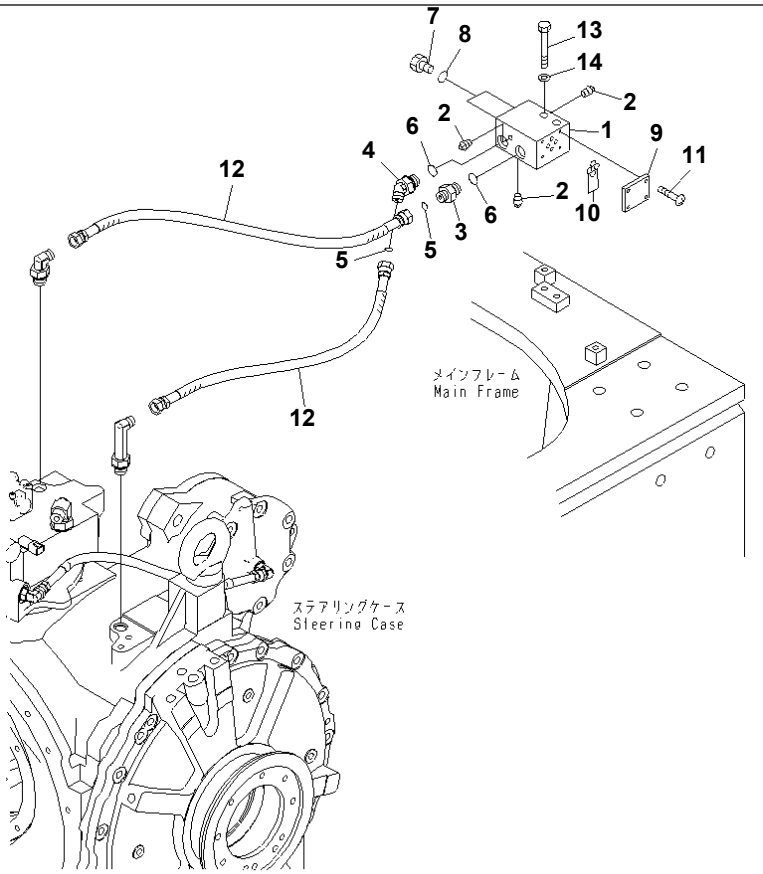

Ref. H2252-01A1 **Page 180090**

D155A-6 S/N 85001-UP
PIN PULLER LINE (FOR MULTI RIPPER)

Item	Part No.	Part Name	Qty	Serial No.
1	17A-79-41310	BODY	1	85001-
2	07042-70108	PLUG	3	85001-
3	02781-00315	UNION	1	85001-
4	02783-10315	ELBOW	1	85001-
5	02896-11009	O-RING	2	85001-
6	07002-12034	O-RING	2	85001-
7	07040-12012	PLUG	2	85001-
8	07002-12034	O-RING	2	85001-
9	195-79-12410	PLATE	1	85001-
10	07000-11009	O-RING	4	85001-
11	01220-40516	SCREW	4	85001-
12	17A-61-41760	HOSE	2	85001-
13	01010-81275	BOLT	2	85001-
14	01643-31232	WASHER	2	85001-

Printed By : Dwi Iswanto (airafather6107170)

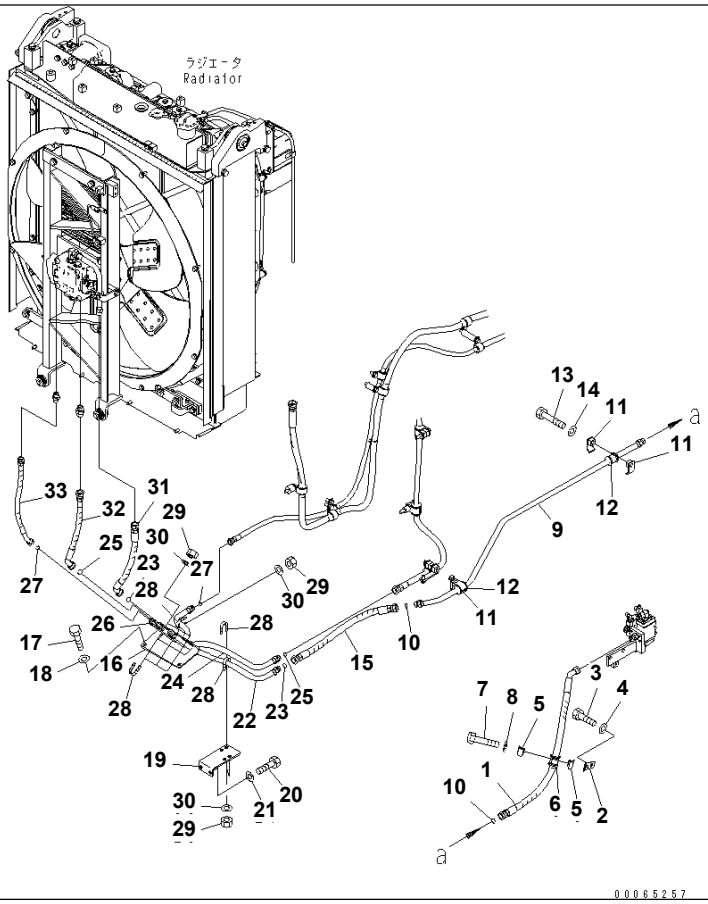

Ref. H2260-01A0 **Page 180100**

D155A-6 S/N 85001-UP
FAN OIL PIPING

Item	Part No.	Part Name	Qty	Serial No.
1	17A-61-41571	HOSE	1	85001-
2	17A-61-41630	BRACKET	1	85001-
3	01010-81230	BOLT	1	85001-
4	01643-31232	WASHER	1	85001-
5	07094-10518	CLAMP	2	85001-
6	07095-00524	CUSHION	1	85001-
7	01010-81265	BOLT	1	85001-
8	01643-31232	WASHER	1	85001-
9	17A-61-41611	TUBE	1	85001-
10	02896-11015	O-RING	2	85001-
11	07094-10417	CLAMP	6	85001-
12	07095-00421	CUSHION	3	85001-
13	01010-81265	BOLT	3	85001-
14	01643-31232	WASHER	3	85001-
15	02765-00505	HOSE	1	85001-
16	17A-03-43221	BRACKET	1	85001-
17	01010-81225	BOLT	2	85001-
18	01643-31232	WASHER	2	85001-
19	17A-03-43460	BRACKET	1	85001-
20	01010-81230	BOLT	2	85001-
21	01643-31232	WASHER	2	85001-
22	17A-03-43232	TUBE	1	85001-
23	02896-11015	O-RING	2	85001-
24	17A-03-43242	TUBE	1	85001-
25	02896-11015	O-RING	2	85001-
26	17A-03-43450	TUBE	1	85001-
27	02896-11015	O-RING	2	85001-
28	07283-32236	CLIP	6	85001-
29	01597-01009	NUT	12	85001-
30	01643-31032	WASHER	12	85001-

Printed By : Dwi Iswanto (airafather6107170)

FAN OIL PIPING

Item	Part No.	Part Name	Qty	Serial No.
31	02767-005A4	HOSE	1	85001-
32	02764-00504	HOSE	1	85001-
33	17A-61-42780	HOSE	1	85001-

Printed By : Dwi Iswanto (airafather6107170)

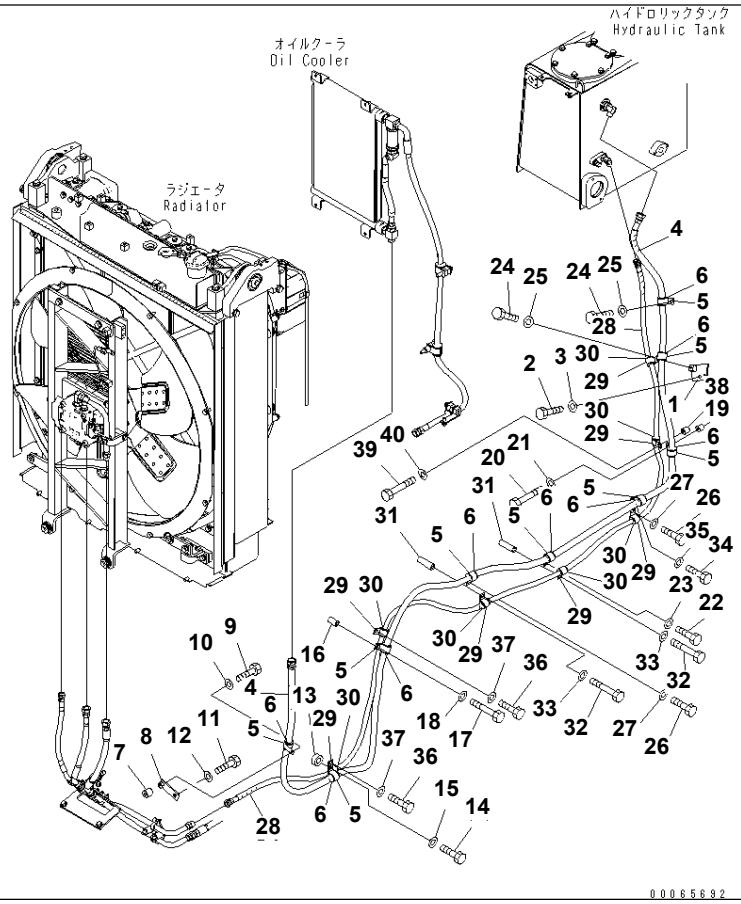

Ref. H2260-02A0 **Page 180110**

D155A-6 S/N 85001-UP
FAN DRIVE LINE (FAN RETURN AND DRAIN LINE)

Item	Part No.	Part Name	Qty	Serial No.
1	17A-61-41340	BRACKET	1	85001-
2	01010-81225	BOLT	2	85001-
3	01643-31232	WASHER	2	85001-
4	17A-03-41942	HOSE	1	85001-
5	04434-53412	CLIP	9	85001-
6	07095-20625	CUSHION	9	85001-
7	113-99-21890	SPACER	1	85001-
8	154-Z11-5340	BRACKET	1	85001-
9	01010-81235	BOLT	1	85001-
10	01643-31232	WASHER	1	85001-
11	01010-81255	BOLT	1	85001-
12	01643-31232	WASHER	1	85001-
13	198-43-15310	COLLAR¤ 10MM	1	85001-
14	01010-81235	BOLT	1	85001-
15	01643-31232	WASHER	1	85001-
16	205-03-71330	COLLAR	1	85001-
17	01010-81265	BOLT	1	85001-
18	01643-31232	WASHER	1	85001-
19	6131-22-3750	BOSS	1	85001-
20	01010-81250	BOLT	1	85001-
21	01643-31232	WASHER	1	85001-
22	01010-81230	BOLT	1	85001-
23	01643-31232	WASHER	1	85001-
24	01010-81225	BOLT	2	85001-
25	01643-31232	WASHER	2	85001-
26	01010-81220	BOLT	2	85001-
27	01643-31232	WASHER	2	85001-
28	17A-61-42790	HOSE	1	85001-
29	04434-53212	CLIP	7	85001-
30	07095-20523	CUSHION	7	85001-

Printed By : Dwi Iswanto (airafather6107170)

FAN DRIVE LINE (FAN RETURN AND DRAIN LINE)

Item	Part No.	Part Name	Qty	Serial No.
31	581-60-17860	SPACER	2	85001-
32	01011-81205	BOLT	2	85001-
33	01643-31232	WASHER	2	85001-
34	01010-81220	BOLT	1	85001-
35	01643-31232	WASHER	1	85001-
36	01010-81230	BOLT	2	85001-
37	01643-31232	WASHER	2	85001-
38	6131-22-3750	BOSS	1	85001-
39	01010-81250	BOLT	1	85001-
40	01643-31232	WASHER	1	85001-

Printed By : Dwi Iswanto (airafather6107170)

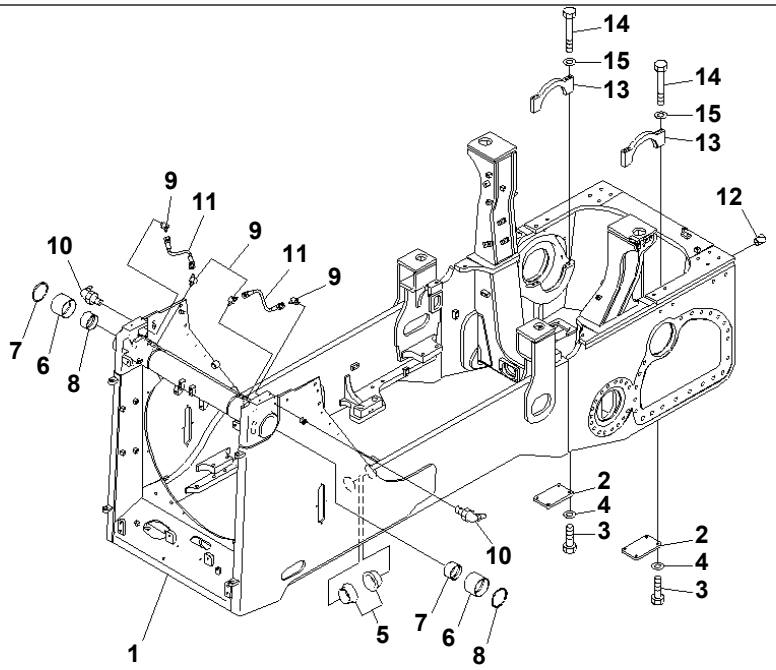

00042163

Ref. J2100-01A0 **Page 210010**

D155A-6 S/N 85001-UP
MAIN FRAME

Item	Part No.	Part Name	Qty	Serial No.
1	17A-21-41211	FRAME ASS'Y	1	85001-
2	17A-21-11151	PLATE	2	85001-
3	01010-81225	BOLT	8	85001-
4	01643-31232	WASHER	8	85001-
5	17A-50-42211	BUSHING	2	85001-
6	175-61-15450	BUSHING	2	85001-
7	175-61-15460	BUSHING	2	85001-
8	07145-00125	SEAL	2	85001-
9	201-62-41910	ELBOW	4	85001-
10	07020-00675	FITTING,GREASE	2	85001-
11	17A-61-41820	HOSE	2	85001-
12	07049-03949	PLUG	22	85001-
13	17A-21-41391	CAP	2	85001-
14	01011-81655	BOLT	8	85001-
15	01643-31645	WASHER	8	85001-

Printed By : Dwi Iswanto (airafather6107170)

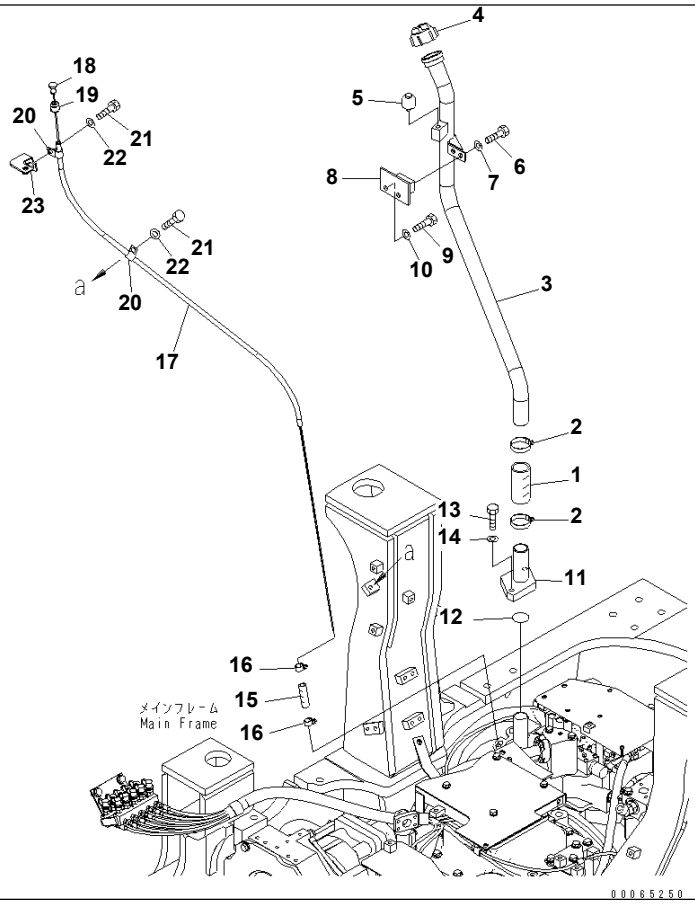

Ref. J2112-01A0 **Page 210020**

D155A-6 S/N 85001-UP
LEVEL GAUGE PIPING

Item	Part No.	Part Name	Qty	Serial No.
1	07260-24111	HOSE	1	85001-
2	07281-00549	CLAMP	2	85001-
3	17A-21-45110	TUBE	1	85001-
4	07051-01000	CAP	1	85001-
	07051-00005	· GASKET	1	85001-
5	07030-00252	BREATHER	1	85001-
6	01010-81225	BOLT	2	85001-
7	01643-31232	WASHER	2	85001-
8	17A-21-43141	BRACKET	1	85001-
9	01010-81230	BOLT	2	85001-
10	01643-31232	WASHER	2	85001-
11	17A-21-45140	PIPE	1	85001-
12	07000-12070	O-RING	1	85001-
13	01010-81245	BOLT	2	85001-
14	01643-31232	WASHER	2	85001-
15	17A-21-13131	HOSE	1	85001-
16	07281-00259	CLAMP	2	85001-
17	17A-21-45120	PIPE	1	85001-
18	17A-21-45131	GAUGE	1	85001-
19	08013-01513	· CAP	1	85001-
20	04434-51412	CLIP	2	85001-
21	01010-81230	BOLT	2	85001-
22	01643-31232	WASHER	2	85001-
23	17A-21-45150	BRACKET	1	85001-

Printed By : Dwi Iswanto (airafather6107170)

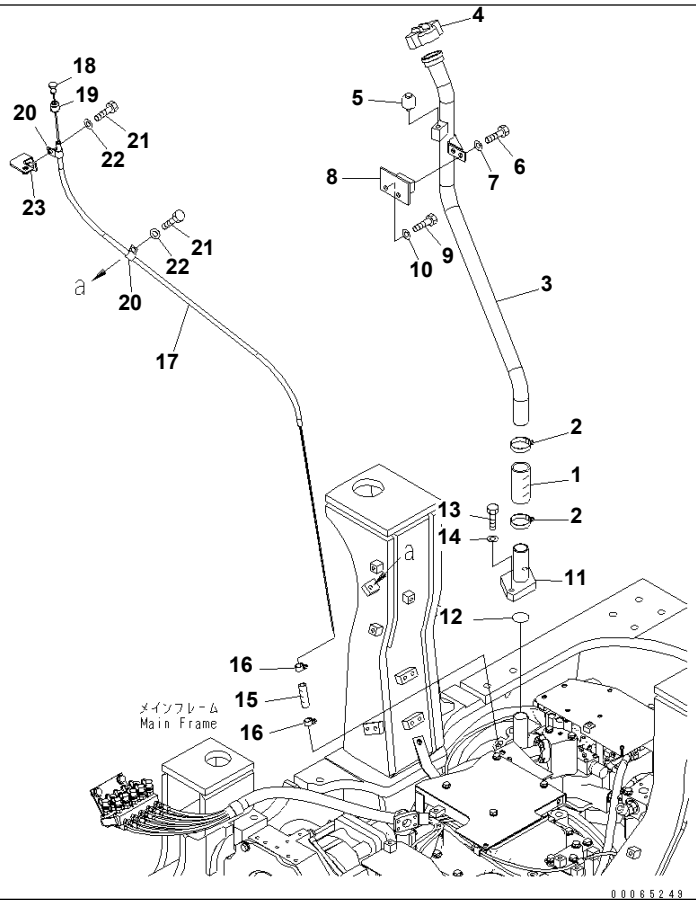

Ref. J2112-01A1 **Page 210030**

D155A-6 S/N 85001-UP
LEVEL GAUGE PIPING (WITH LOCK)

Item	Part No.	Part Name	Qty	Serial No.
1	07260-24111	HOSE	1	85001-
2	07281-00549	CLAMP	2	85001-
3	17A-21-45110	TUBE	1	85001-
4	07092-01000	CAP	1	85001-
	07051-00005	· GASKET	1	85001-
5	07030-00252	BREATHER	1	85001-
6	01010-81225	BOLT	2	85001-
7	01643-31232	WASHER	2	85001-
8	17A-21-43141	BRACKET	1	85001-
9	01010-81230	BOLT	2	85001-
10	01643-31232	WASHER	2	85001-
11	17A-21-45140	PIPE	1	85001-
12	07000-12070	O-RING	1	85001-
13	01010-81245	BOLT	2	85001-
14	01643-31232	WASHER	2	85001-
15	17A-21-13131	HOSE	1	85001-
16	07281-00259	CLAMP	2	85001-
17	17A-21-45120	PIPE	1	85001-
18	17A-21-45131	GAUGE	1	85001-
19	08013-01513	CAP	1	85001-
20	04434-51412	CLIP	2	85001-
21	01010-81230	BOLT	2	85001-
22	01643-31232	WASHER	2	85001-
23	17A-21-45150	BRACKET	1	85001-

Printed By : Dwi Iswanto (airafather6107170)

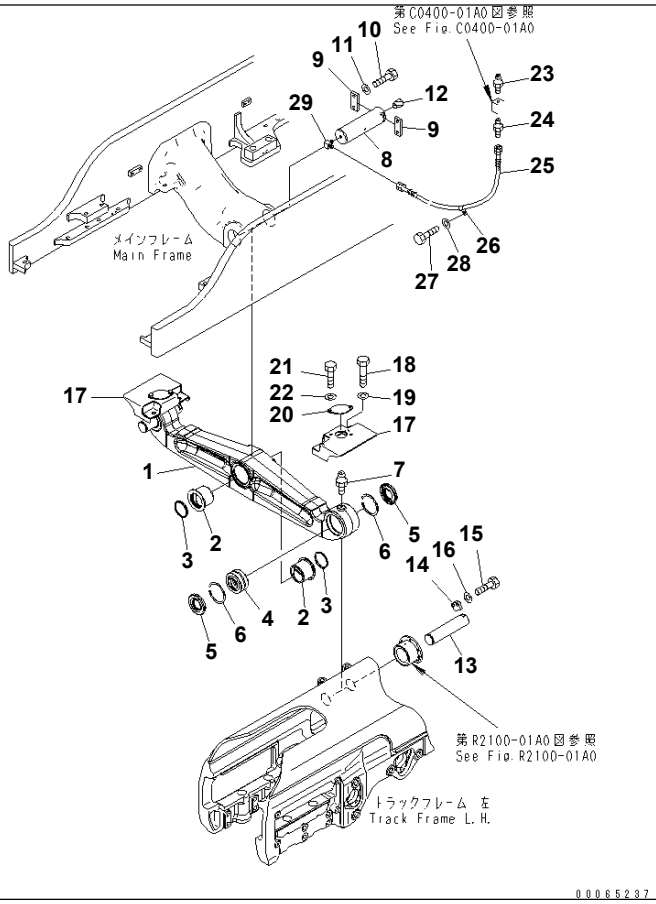

Ref. J2700-01A0 Page 210040

D155A-6 S/N 85001-UP

SUSPENSION (SINGLE TILT)

Item	Part No.	Part Name	Qty	Serial No.
	17A-50-00111	EQUALIZER BAR ASS'Y	1	85001-
1	☆	· BAR	1	85001-
2	17A-50-42131	· BUSHING	2	85001-
3	15A-78-11180	· SEAL	2	85001-
4	17A-50-42151	· BUSHING	2	85001-
5	17A-50-42160	· SEAL	4	85001-
6	04071-00130	· RING	4	85001-
7	07020-00000	· FITTING	2	85001-
8	17A-50-42120	PIN	1	85001-
9	04082-00616	LOCK	2	85001-
10	01010-81640	BOLT	4	85001-
11	01643-31645	WASHER	4	85001-
12	07049-01620	PLUG	1	85001-
13	17A-50-42140	PIN	2	85001-
14	17A-50-42220	LOCK	2	85001-
15	01010-81640	BOLT	4	85001-
16	01643-31645	WASHER	4	85001-
17	17A-50-42171	COVER	2	85001-
18	01011-82450	BOLT	4	85001-
19	01643-32460	WASHER	4	85001-
20	17A-50-42181	PLATE	2	85001-
21	01010-81230	BOLT	4	85001-
22	01643-31232	WASHER	4	85001-
23	07020-00000	FITTING	1	85001-
24	203-62-21740	NIPPLE	1	85001-
25	17M-03-26140	HOSE	1	85001-
26	198-904-4280	CLIP	1	85001-
27	01010-81220	BOLT	1	85001-
28	01643-31232	WASHER	1	85001-
29	202-62-21430	ELBOW	1	85001-

Printed By : Dwi Iswanto (airafather6107170)

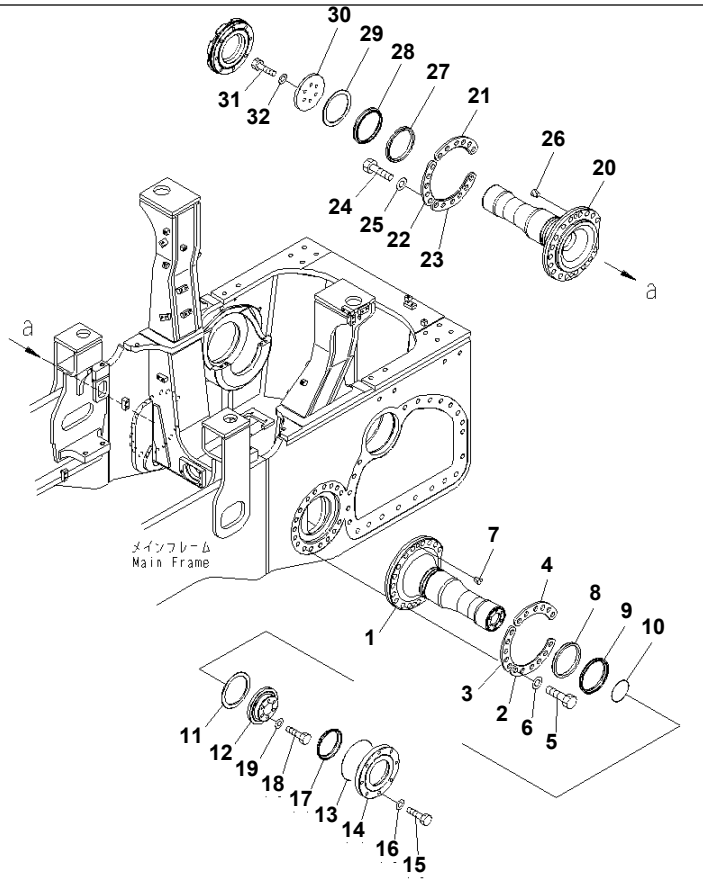

Ref. J2700-02A0 Page 210050

D155A-6 S/N 85001-UP

PIVOT SHAFT (SINGLE TILT)

Item	Part No.	Part Name	Qty	Serial No.
1	17A-50-41331	SHAFT	1	85002-
	□17A-50-41111	SHAFT	1	85001-85001
2	17A-50-41250	PLATE	1	85001-85001
3	17A-50-41260	PLATE	1	85001-85001
4	17A-50-41270	PLATE	1	85001-85001
5	01011-82700	BOLT	17	85001-
6	01643-32780	WASHER	17	85001-
7	07049-02734	PLUG	2	85001-
8	17A-50-11151	RING	1	85001-
9	17A-50-11140	SEAL	1	85001-
10	07000-12125	O-RING	1	85001-
11	17A-50-41190	SPACER	1	85001-
12	17A-50-41120	WASHER	1	85001-
13	07000-15230	O-RING	1	85001-
14	17A-50-41130	WASHER	1	85001-
15	01010-81660	BOLT	2	85001-
16	01643-31645	WASHER	2	85001-
17	14Y-30-18150	SEAL	1	85001-
18	01010-81680	BOLT	6	85001-
19	01643-31645	WASHER	6	85001-
20	17A-50-41321	SHAFT	1	85002-
	□17A-50-41311	SHAFT	1	85001-85001
21	17A-50-41250	PLATE	1	85001-85001
22	17A-50-41260	PLATE	1	85001-85001
23	17A-50-41270	PLATE	1	85001-85001
24	01011-82700	BOLT	17	85001-
25	01643-32780	WASHER	17	85001-
26	07049-02734	PLUG	2	85001-
27	17A-50-11151	RING	1	85001-
28	17A-50-11140	SEAL	1	85001-

Printed By : Dwi Iswanto (airafather6107170)

PIVOT SHAFT (SINGLE TILT)

Item	Part No.	Part Name	Qty	Serial No.
29	17A-50-41190	SPACER	1	85001-
30	17A-50-41140	WASHER	1	85001-
31	01010-81645	BOLT	6	85001-
32	01643-31645	WASHER	6	85001-

Printed By : Dwi Iswanto (airafather6107170)

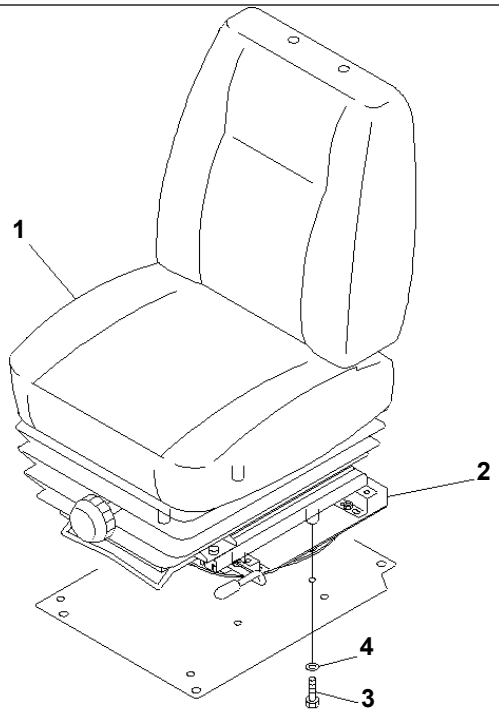

00063856

Ref. K0110-01A0 **Page 240010**

D155A-6 S/N 85001-UP
OPERATOR'S SEAT (TURN AND RECLINING TYPE) (LEATHER SEAT) (WITHOUT CAB)

Item	Part No.	Part Name	Qty	Serial No.
	17A-57-22112	SEAT ASS'Y,LEATHER	1	85001-
1	17A-57-22122	· SEAT ASS'Y,LEATHER	1	85001-
2	17A-57-21132	· TURN TABLE ASS'Y	1	85001-
3	01010-81030	BOLT	4	85001-
4	01643-31032	WASHER	4	85001-

Printed By : Dwi Iswanto (airafather6107170)

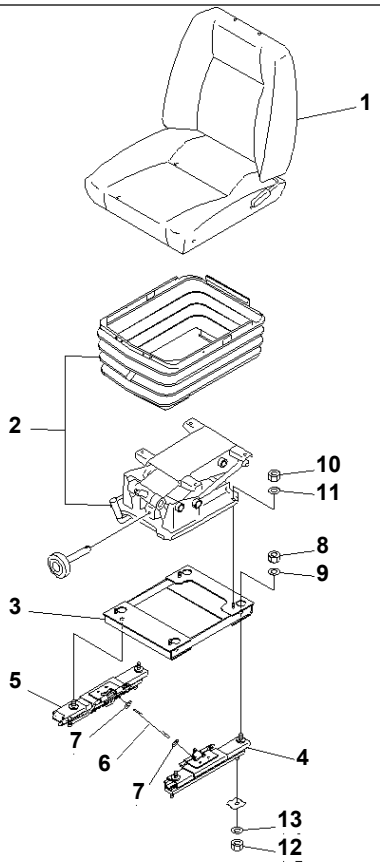

Ref. K0110-01A1 **Page 240020**

D155A-6 S/N 85001-UP

OPERATOR'S SEAT (TURN AND RECLINING TYPE) (FABRIC SEAT)

Item	Part No.	Part Name	Qty	Serial No.
	17A-57-23201	SEAT ASS'Y,FABRIC	1	85001-
1	17A-57-23210	· SEAT ASS'Y,FABRIC	1	85001-
2	17A-57-23280	· SUSPENSION ASS'Y	1	85001-
	17A-57-23531	· ADJUSTER ASS'Y	1	85001-
3	17A-57-23220	· · BRACKET	1	85001-
4	17A-57-23230	· · ADJUSTER	1	85001-
5	17A-57-23241	· · ADJUSTER	1	85001-
6	17A-57-23270	· · WIRE	1	85001-
7	01640-20816	· · WASHER	2	85001-
8	01582-11210	· · NUT	4	85001-
9	01643-51232	· · WASHER	4	85001-
10	01580-10806	· NUT	4	85001-
11	01643-50823	· WASHER	4	85001-
12	01582-11210	NUT	4	85001-
13	01643-31232	WASHER	4	85001-

Printed By : Dwi Iswanto (airafather6107170)

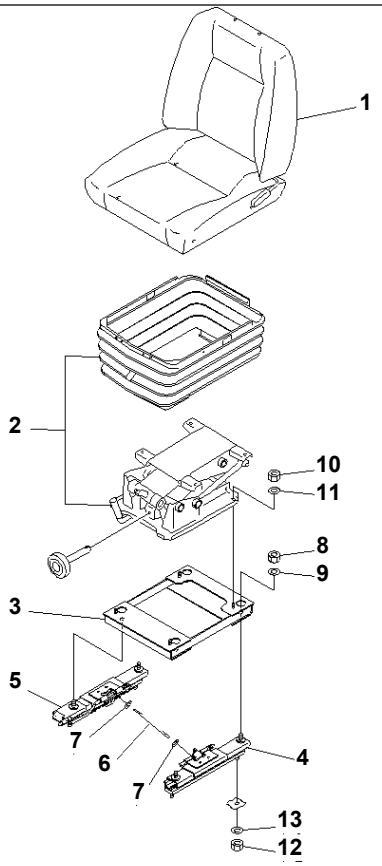

Ref. K0110-01A2 **Page 240030**

D155A-6 S/N 85001-UP
OPERATOR'S SEAT (TURN AND RECLINING TYPE) (LEATHER SEAT) (WITH CAB)

Item	Part No.	Part Name	Qty	Serial No.
	17A-57-23301	SEAT ASS'Y,LEATHER	1	85001-
1	17A-57-23310	· SEAT ASS'Y,LEATHER	1	85001-
2	17A-57-23280	· SUSPENSION ASS'Y	1	85001-
	17A-57-23531	· ADJUSTER ASS'Y	1	85001-
3	17A-57-23220	· · BRACKET	1	85001-
4	17A-57-23230	· · ADJUSTER	1	85001-
5	17A-57-23241	· · ADJUSTER	1	85001-
6	17A-57-23270	· · WIRE	1	85001-
7	01640-20816	· · WASHER	2	85001-
8	01582-11210	· · NUT	4	85001-
9	01643-51232	· · WASHER	4	85001-
10	01580-10806	· NUT	4	85001-
11	01643-50823	· WASHER	4	85001-
12	01582-11210	NUT	4	85001-
13	01643-31232	WASHER	4	85001-

Printed By : Dwi Iswanto (airafather6107170)

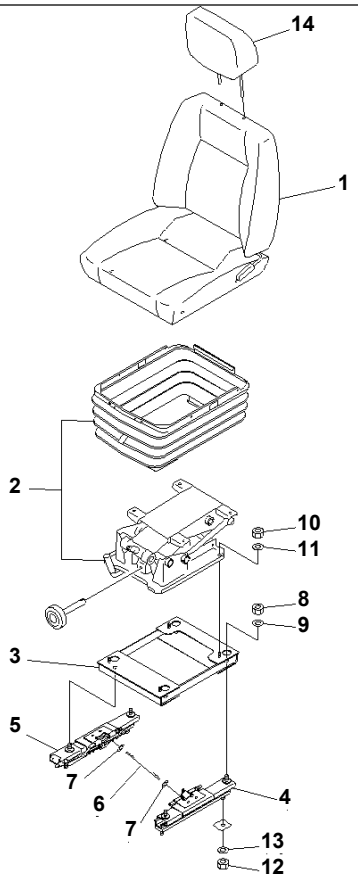

Ref. K0110-01A3 **Page 240040**

D155A-6 S/N 85001-UP
OPERATOR'S SEAT (TURN AND RECLINING TYPE) (FABRIC SEAT) (WITH HEAD REST)

Item	Part No.	Part Name	Qty	Serial No.
	17A-57-23201	SEAT ASS'Y,FABRIC	1	85001-
1	17A-57-23210	· SEAT ASS'Y,FABRIC	1	85001-
2	17A-57-23280	· SUSPENSION ASS'Y	1	85001-
	17A-57-23531	· ADJUSTER ASS'Y	1	85001-
3	17A-57-23220	· · BRACKET	1	85001-
4	17A-57-23230	· · ADJUSTER	1	85001-
5	17A-57-23241	· · ADJUSTER	1	85001-
6	17A-57-23270	· · WIRE	1	85001-
7	01640-20816	· · WASHER	2	85001-
8	01582-11210	· · NUT	4	85001-
9	01643-51232	· · WASHER	4	85001-
10	01580-10806	· NUT	4	85001-
11	01643-50823	· WASHER	4	85001-
12	01582-11210	NUT	4	85001-
13	01643-31232	WASHER	4	85001-
14	17A-57-21170	HEAD REST	1	85001-

Printed By : Dwi Iswanto (airafather6107170)

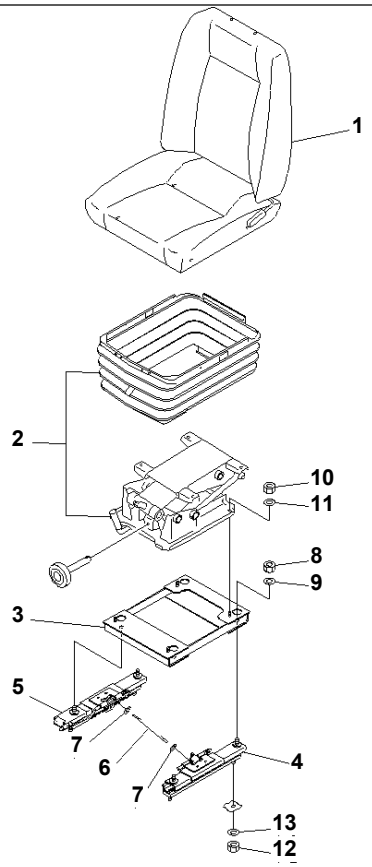

00043515

Ref. K0110-01A4 **Page 240050**

D155A-6 S/N 85001-UP
OPERATOR'S SEAT (TURN AND RECLINING TYPE) (FABRIC HIGHT BACK SEAT)

Item	Part No.	Part Name	Qty	Serial No.
	17A-57-23501	SEAT ASS'Y	1	85001-
1	17A-57-23510	· SEAT ASS'Y	1	85001-
2	17A-57-23540	· SUSPENSION ASS'Y	1	85001-
	17A-57-23550	· ADJUSTER ASS'Y	1	85001-
3	17A-57-23220	· · BRACKET	1	85001-
4	17A-57-23290	· · ADJUSTER	1	85001-
5	17A-57-23560	· · ADJUSTER	1	85001-
6	17A-57-23270	· · WIRE	1	85001-
7	01640-20816	· · WASHER	2	85001-
8	01582-11210	· · NUT	4	85001-
9	01643-51232	· · WASHER	4	85001-
10	01580-10806	· NUT	4	85001-
11	01643-50823	· WASHER	4	85001-
12	01582-11210	NUT	4	85001-
13	01643-31232	WASHER	4	85001-

Printed By : Dwi Iswanto (airafather6107170)

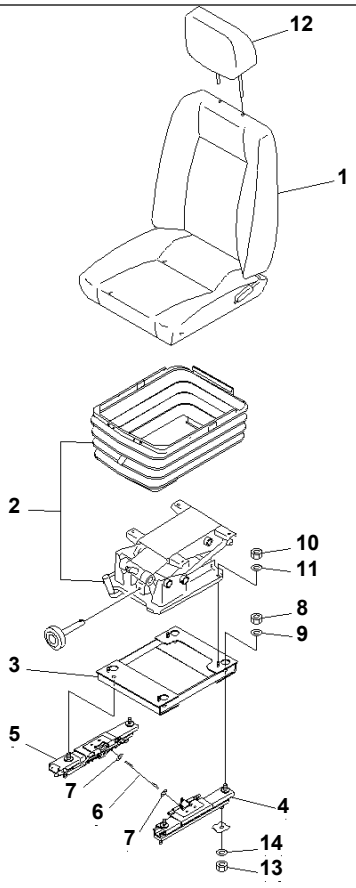

Ref. K0110-01A5 **Page 240060**

D155A-6 S/N 85001-UP

OPERATOR'S SEAT (TURN AND RECLINING TYPE) (FABRIC HIGHT BACK SEAT) (WITH HEAD REST)

Item	Part No.	Part Name	Qty	Serial No.
	17A-57-23501	SEAT ASS'Y	1	85001-
1	17A-57-23510	· SEAT ASS'Y	1	85001-
2	17A-57-23540	· SUSPENSION ASS'Y	1	85001-
	17A-57-23550	· ADJUSTER ASS'Y	1	85001-
3	17A-57-23220	· · BRACKET	1	85001-
4	17A-57-23290	· · ADJUSTER	1	85001-
5	17A-57-23560	· · ADJUSTER	1	85001-
6	17A-57-23270	· · WIRE	1	85001-
7	01640-20816	· · WASHER	2	85001-
8	01582-11210	· · NUT	4	85001-
9	01643-51232	· · WASHER	4	85001-
10	01580-10806	· NUT	4	85001-
11	01643-50823	· WASHER	4	85001-
12	17A-57-23520	HEAD ASS'Y	1	85001-
13	01582-11210	NUT	4	85001-
14	01643-31232	WASHER	4	85001-

Printed By : Dwi Iswanto (airafather6107170)

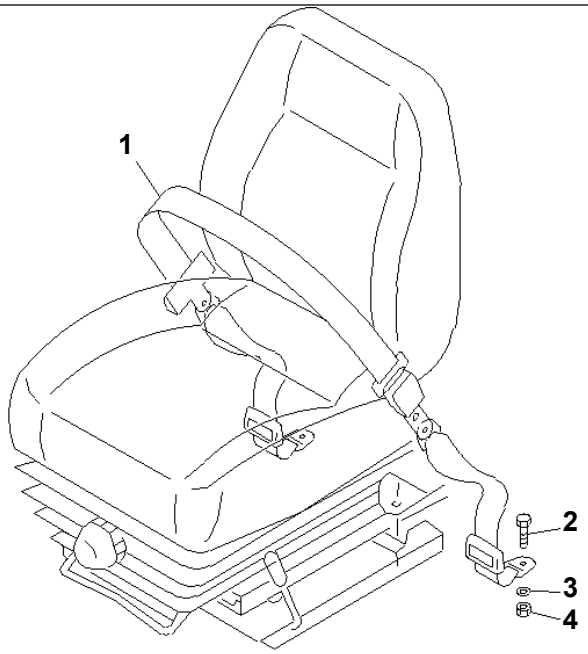

00063927

Ref. K0160-01A0 **Page 240070**

D155A-6 S/N 85001-UP

SEAT BELT (FOR KAB) (WITHOUT CAB)

Item	Part No.	Part Name	Qty	Serial No.
1	17A-57-21202	BELT¤ LAP	1	85001-
	09409-20000	BELT¤ TETHER	2	85001-
2	09409-00001	· BOLT	2	85001-
3	09409-00002	· WASHER	2	85001-
4	09409-00003	· NUT	2	85001-

Printed By : Dwi Iswanto (airafather6107170)

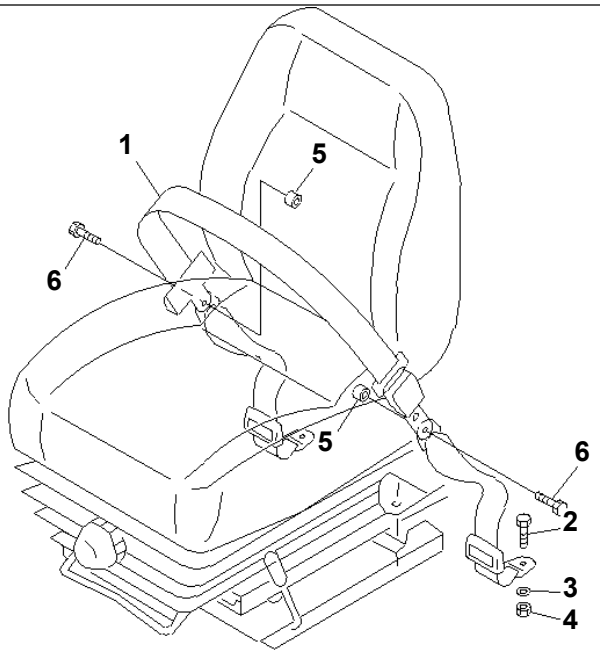

00042179

Ref. K0160-01A1 **Page 240080**

D155A-6 S/N 85001-UP

SEAT BELT (FOR KAB) (WITH CAB)

Item	Part No.	Part Name	Qty	Serial No.
1	17A-57-21202	BELT¤ LAP	1	85001-
	09409-20000	BELT¤ TETHER	2	85001-
2	09409-00001	· BOLT	2	85001-
3	09409-00002	· WASHER	2	85001-
4	09409-00003	· NUT	2	85001-
5	205-970-2410	PIPE	2	85001-
6	02030-70757	BOLT	2	85001-

Printed By : Dwi Iswanto (airafather6107170)

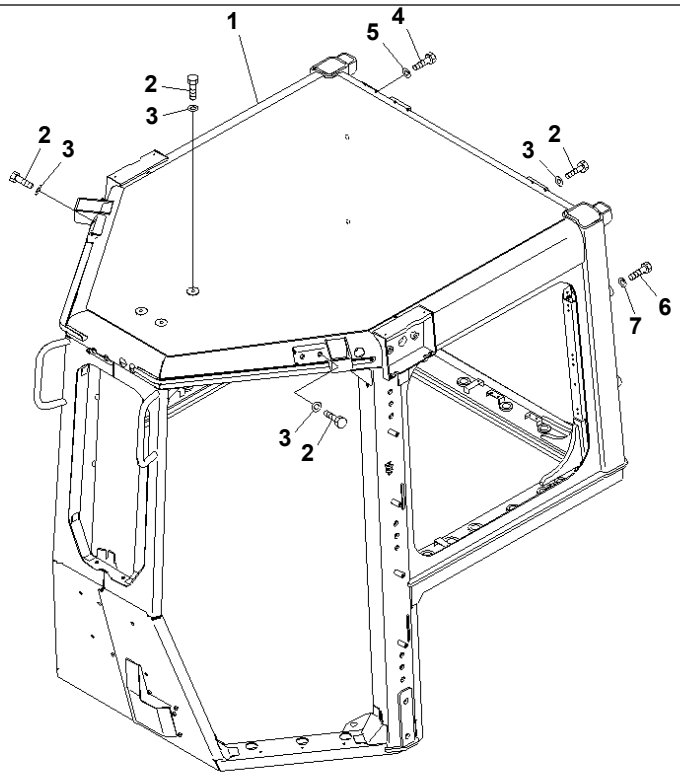

00042279

Ref. K0210-01A0 **Page 240090**

D155A-6 S/N 85001-UP
CAB (BODY)

Item	Part No.	Part Name	Qty	Serial No.
1	17A-979-1112	CAB ASS'Y	1	85001-
2	01010-D1220	BOLT	11	85001-
3	01643-71232	WASHER	11	85001-
4	01010-D0816	BOLT	2	85001-
5	01643-70823	WASHER	2	85001-
6	01010-82035	BOLT	4	85001-
7	01643-32060	WASHER	4	85001-

Printed By : Dwi Iswanto (airafather6107170)

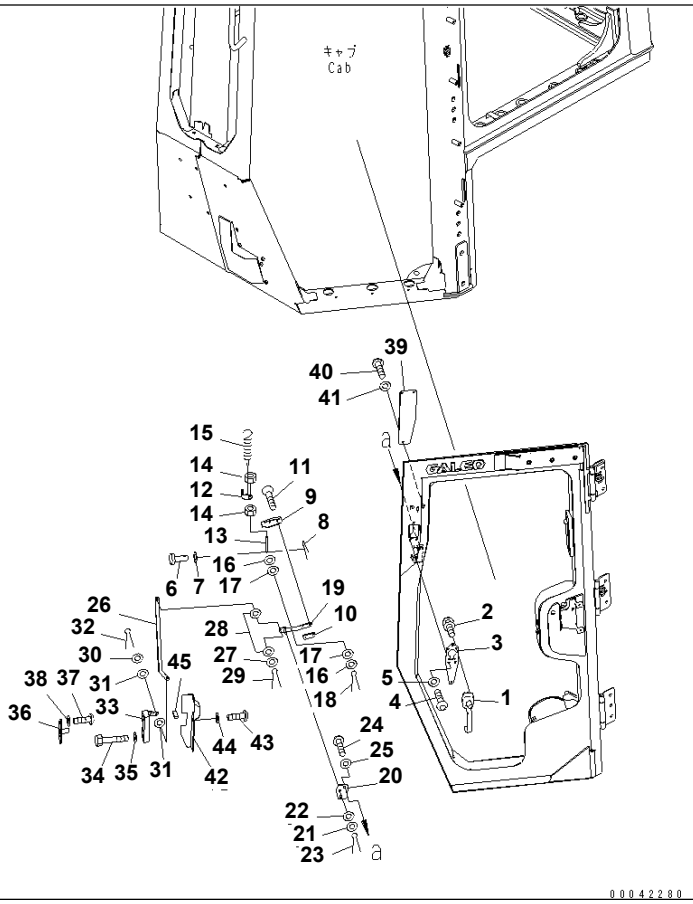

Ref. K0210-02A0 **Page 240100**

D155A-6 S/N 85001-UP
CAB (DOOR LOCK) (L.H.)

Item	Part No.	Part Name	Qty	Serial No.
1	198-Z11-3710	HANDLE ASS'Y	1	85001-
2	01023-10520	SCREW	5	85001-
3	12Y-978-3210	PLATE	1	85001-
4	01245-00620	SCREW	3	85001-
5	01643-70623	WASHER	3	85001-
6	04205-10622	PIN	1	85001-
7	01643-70623	WASHER	4	85001-
8	04050-11612	PIN	1	85001-
9	12Y-978-3281	KNOB	1	85001-
10	12Y-978-3290	PLATE	1	85001-
11	01023-20410	SCREW	2	85001-
12	12Y-978-3221	PLATE	1	85001-
13	12Y-978-3241	ROD	1	85001-
14	01580-00605	NUT	2	85001-
15	176-06-42170	SPRING	1	85001-
16	01643-70623	WASHER	2	85001-
17	12Y-978-3310	RUBBER	2	85001-
18	04050-11612	PIN	1	85001-
19	12Y-978-3251	PLATE	1	85001-
20	12Y-978-3261	PLATE	1	85001-
21	01643-70823	WASHER	1	85001-
22	12Y-978-3360	RUBBER	1	85001-
23	04050-12012	PIN	1	85001-
24	01245-00620	SCREW	2	85001-
25	01643-70623	WASHER	2	85001-
26	17A-979-3320	PLATE	1	85001-
27	01640-20610	WASHER	1	85001-
28	12Y-978-3310	RUBBER	2	85001-
29	04050-11612	PIN	1	85001-
30	01643-70623	WASHER	1	85001-

Printed By : Dwi Iswanto (airafather6107170)

CAB (DOOR LOCK) (L.H.)

Item	Part No.	Part Name	Qty	Serial No.
31	12Y-978-3310	RUBBER	2	85001-
32	04050-11612	PIN	1	85001-
33	195-Z11-4520	LOCK	1	85001-
34	01010-D0635	BOLT	4	85001-
35	01643-70623	WASHER	4	85001-
36	12Y-978-3480	STRIKER	1	85001-
37	01245-00825	SCREW	4	85001-
38	01643-70823	WASHER	4	85001-
39	12Y-978-3340	PLATE	1	85001-
40	01245-00620	SCREW	3	85001-
41	01643-70623	WASHER	3	85001-
42	17A-979-3741	COVER	1	85001-
43	01245-00620	SCREW	2	85001-
44	01643-70623	WASHER	2	85001-
45	17A-979-3811	SHEET	1	85001-

Printed By : Dwi Iswanto (airafather6107170)

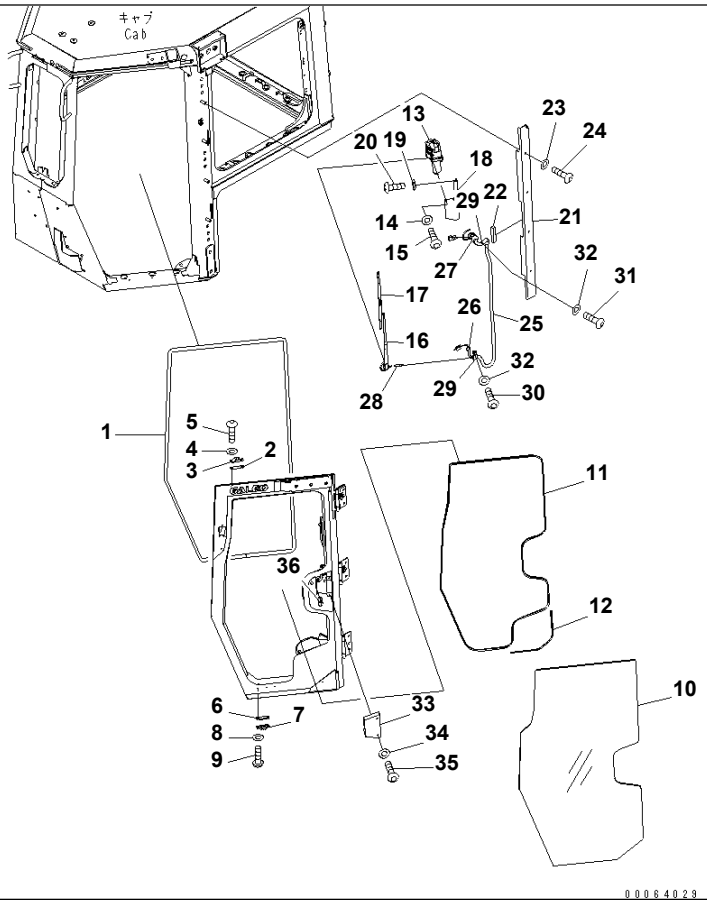

Ref. K0210-03A0 Page 240110

D155A-6 S/N 85001-UP

CAB (DOOR WIPER) (L.H.)

Item	Part No.	Part Name	Qty	Serial No.
1	12Y-978-3370	SEAL	1	85001-
2	14X-911-1761	SHIM¤ 1.2MM	2	85001-
3	14X-911-1690	DUMPER	1	85001-
4	01643-70623	WASHER	2	85001-
5	01245-00620	SCREW	2	85001-
6	14X-911-1761	SHIM¤ 1.2MM	2	85001-
7	14X-911-1690	DUMPER	1	85001-
8	01643-70623	WASHER	2	85001-
9	01245-00620	SCREW	2	85001-
10	17A-979-1361	GLASS	1	85001-
11	17A-979-1381	SEAL	1	85001-
12	17A-979-1390	SEAL	1	85001-
13	12Y-978-2431	WIPER MOTOR	1	85010-
	□12Y-978-2430	WIPER MOTOR	1	85001-85009
14	01643-70623	WASHER	2	85001-
15	01245-00616	SCREW	2	85001-
16	12Y-978-2490	WIPER ARM	1	85001-
17	17A-Z11-2581	BLADE	1	85001-
18	12Y-978-2550	BRACKET	1	85001-
19	01643-70823	WASHER	2	85001-
20	01245-00825	SCREW	2	85001-
21	17A-979-3452	PLATE	1	85001-
22	17A-979-3651	· SHEET	1	85001-
23	01643-70823	WASHER	4	85001-
24	01245-00816	SCREW	4	85001-
25	17A-979-2522	WIRING HARNESS	1	85001-
26	08037-01610	GROMMET	1	85001-
27	08037-11825	GROMMET	1	85001-
28	195-979-8590	VALVE	1	85001-
29	04434-51708	CLIP	2	85001-

Printed By : Dwi Iswanto (airafather6107170)

CAB (DOOR WIPER) (L.H.)

Item	Part No.	Part Name	Qty	Serial No.
30	01245-00825	SCREW	1	85001-
31	01245-00816	SCREW	1	85001-
32	01643-70823	WASHER	2	85001-
33	17A-979-3671	COVER	1	85001-
34	01643-70623	WASHER	4	85001-
35	01245-00620	SCREW	4	85001-
36	08037-01008	GROMMET	1	85001-

Printed By : Dwi Iswanto (airafather6107170)

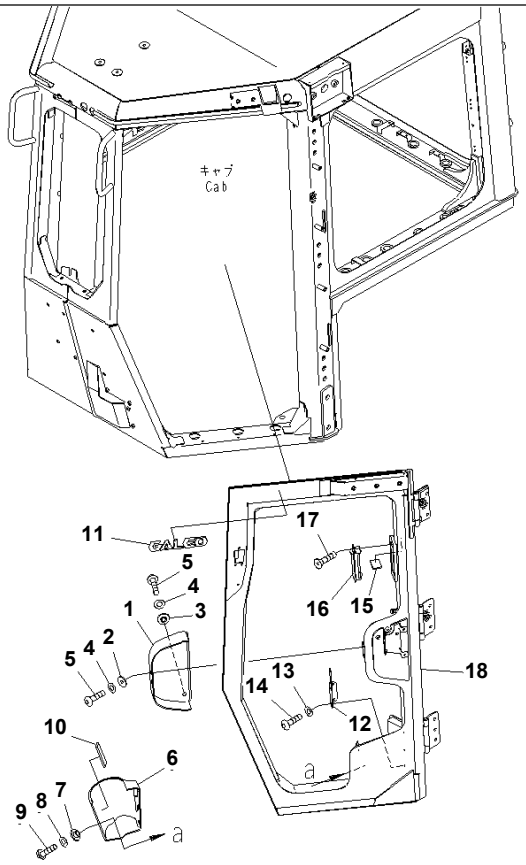

00064030

Ref. K0210-04A0 **Page 240120**

D155A-6 S/N 85001-UP
CAB (DOOR) (L.H.)

Item	Part No.	Part Name	Qty	Serial No.
1	12Y-978-3381	COVER	1	85001-
2	12Y-978-2660	COLLAR	2	85001-
3	17A-979-1620	COLLAR	2	85001-
4	01643-70623	WASHER	4	85001-
5	01245-00620	SCREW	4	85001-
6	17A-979-3632	COVER	1	85001-
7	12Y-978-2660	COLLAR	3	85001-
8	01643-70623	WASHER	3	85001-
9	01245-00620	SCREW	3	85001-
10	17A-979-3470	RUBBER	1	85001-
11	09970-00230	PLATE	1	85001-85009
12	17A-979-3710	COVER	1	85001-
13	01643-70623	WASHER	4	85001-
14	01245-00620	SCREW	4	85001-
15	17A-979-3730	SHEET	2	85001-
16	17A-Z11-7161	LOUVER	1	85001-
17	01236-60308	SCREW	2	85001-
18	17A-979-3113	DOOR	1	85001-

Printed By : Dwi Iswanto (airafather6107170)

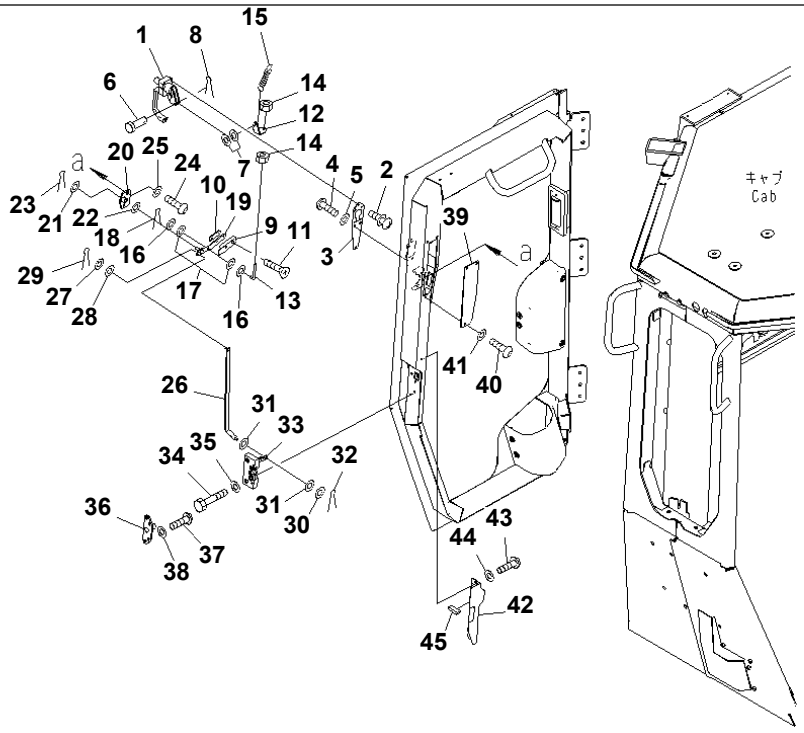

Ref. K0210-05A0 **Page 240130**

D155A-6 S/N 85001-UP
CAB (DOOR LOCK) (R.H.)

Item	Part No.	Part Name	Qty	Serial No.
1	198-Z11-3710	HANDLE ASS'Y	1	85001-
2	01023-10520	SCREW	5	85001-
3	12Y-978-3210	PLATE	1	85001-
4	01245-00620	SCREW	3	85001-
5	01643-70623	WASHER	3	85001-
6	04205-10622	PIN	1	85001-
7	01643-70623	WASHER	4	85001-
8	04050-11612	PIN	1	85001-
9	12Y-978-3281	KNOB	1	85001-
10	12Y-978-3290	PLATE	1	85001-
11	01023-20410	SCREW	2	85001-
12	12Y-978-3231	PLATE	1	85001-
13	12Y-978-3241	ROD	1	85001-
14	01580-00605	NUT	2	85001-
15	176-06-42170	SPRING	1	85001-
16	01643-70623	WASHER	2	85001-
17	12Y-978-3310	RUBBER	2	85001-
18	04050-11612	PIN	1	85001-
19	12Y-978-3470	PLATE	1	85001-
20	12Y-978-3271	PLATE	1	85001-
21	01643-70823	WASHER	1	85001-
22	12Y-978-3360	RUBBER	1	85001-
23	04050-12012	PIN	1	85001-
24	01245-00620	SCREW	2	85001-
25	01643-70623	WASHER	2	85001-
26	17A-979-3330	PLATE	1	85001-
27	01640-20610	WASHER	1	85001-
28	12Y-978-3310	RUBBER	2	85001-
29	04050-11612	PIN	1	85001-
30	01643-70623	WASHER	1	85001-

Printed By : Dwi Iswanto (airafather6107170)

CAB (DOOR LOCK) (R.H.)

Item	Part No.	Part Name	Qty	Serial No.
31	12Y-978-3310	RUBBER	2	85001-
32	04050-11612	PIN	1	85001-
33	195-Z11-4510	LOCK	1	85001-
34	01010-D0635	BOLT	4	85001-
35	01643-70623	WASHER	4	85001-
36	12Y-978-3480	STRIKER	1	85001-
37	01245-00825	SCREW	4	85001-
38	01643-70823	WASHER	4	85001-
39	12Y-978-3340	PLATE	1	85001-
40	01245-00620	SCREW	3	85001-
41	01643-70623	WASHER	3	85001-
42	17A-979-3751	COVER	1	85001-
43	01245-00620	SCREW	2	85001-
44	01643-70623	WASHER	2	85001-
45	17A-979-3811	SHEET	1	85001-

Printed By : Dwi Iswanto (airafather6107170)

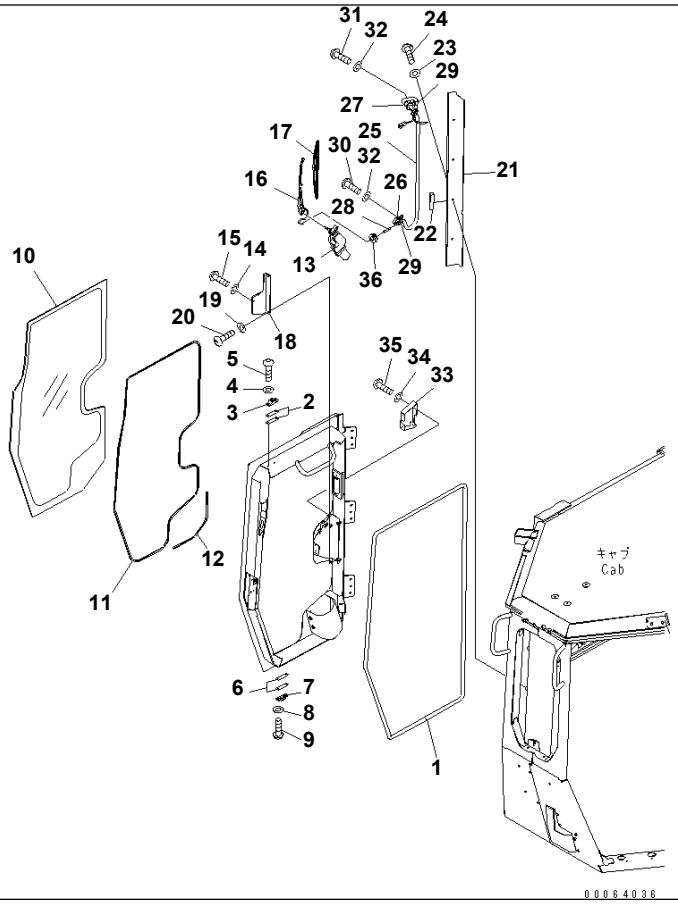

Ref. K0210-06A0 **Page 240140**

D155A-6 S/N 85001-UP
CAB (DOOR WIPER) (R.H.)

Item	Part No.	Part Name	Qty	Serial No.
1	12Y-978-3370	SEAL	1	85001-
2	14X-911-1761	SHIM¤ 1.2MM	2	85001-
3	14X-911-1690	DUMPER	1	85001-
4	01643-70623	WASHER	2	85001-
5	01245-00620	SCREW	2	85001-
6	14X-911-1761	SHIM¤ 1.2MM	2	85001-
7	14X-911-1690	DUMPER	1	85001-
8	01643-70623	WASHER	2	85001-
9	01245-00620	SCREW	2	85001-
10	17A-979-1371	GLASS	1	85001-
11	17A-979-1381	SEAL	1	85001-
12	17A-979-1390	SEAL	1	85001-
13	12Y-978-2441	WIPER MOTOR	1	85010-
	□12Y-978-2440	WIPER MOTOR	1	85001-85009
14	01643-70623	WASHER	2	85001-
15	01245-00616	SCREW	2	85001-
16	12Y-978-2490	WIPER ARM	1	85001-
17	17A-Z11-2581	BLADE	1	85001-
18	12Y-978-2560	BRACKET	1	85001-
19	01643-70823	WASHER	2	85001-
20	01245-00825	SCREW	2	85001-
21	17A-979-3462	PLATE	1	85001-
22	17A-979-3651	· SHEET	1	85001-
23	01643-70823	WASHER	4	85001-
24	01245-00816	SCREW	4	85001-
25	17A-979-2522	WIRING HARNESS	1	85001-
26	08037-01610	· GROMMET	1	85001-
27	08037-11825	· GROMMET	1	85001-
28	195-979-8590	VALVE	1	85001-
29	04434-51708	CLIP	2	85001-

Printed By : Dwi Iswanto (airafather6107170)

CAB (DOOR WIPER) (R.H.)

Item	Part No.	Part Name	Qty	Serial No.
30	01245-00825	SCREW	1	85001-
31	01245-00816	SCREW	1	85001-
32	01643-70823	WASHER	2	85001-
33	17A-979-3681	COVER	1	85001-
34	01643-70623	WASHER	4	85001-
35	01245-00620	SCREW	4	85001-
36	08037-01008	GROMMET	1	85001-

Printed By : Dwi Iswanto (airafather6107170)

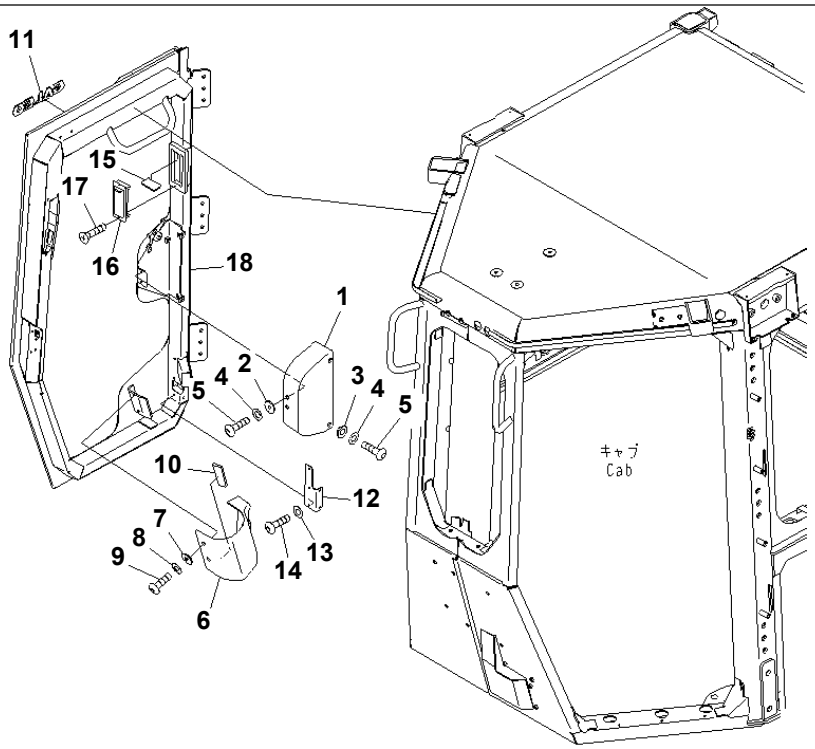

00064039

Ref. K0210-07A0 **Page 240150**

D155A-6 S/N 85001-UP
CAB (DOOR) (R.H.)

Item	Part No.	Part Name	Qty	Serial No.
1	12Y-978-3381	COVER	1	85001-
2	12Y-978-2660	COLLAR	2	85001-
3	17A-979-1620	COLLAR	2	85001-
4	01643-70623	WASHER	4	85001-
5	01245-00620	SCREW	4	85001-
6	17A-979-3642	COVER	1	85001-
7	12Y-978-2660	COLLAR	3	85001-
8	01643-70623	WASHER	3	85001-
9	01245-00620	SCREW	3	85001-
10	17A-979-3470	RUBBER	1	85001-
11	09970-00230	PLATE	1	85001-85009
12	17A-979-3720	COVER	1	85001-
13	01643-70623	WASHER	4	85001-
14	01245-00620	SCREW	4	85001-
15	17A-979-3730	SHEET	2	85001-
16	17A-Z11-7161	LOUVER	1	85001-
17	01236-60308	SCREW	2	85001-
18	17A-979-3123	DOOR	1	85001-

Printed By : Dwi Iswanto (airafather6107170)

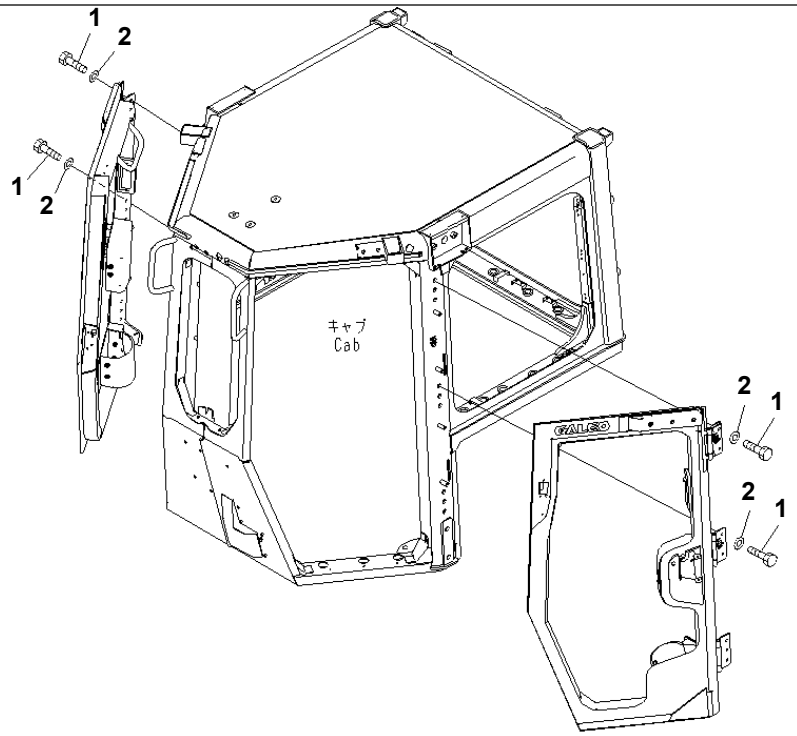

00042286

Ref. K0210-08A0 **Page 240160**

D155A-6 S/N 85001-UP
CAB (DOOR INSTALLATION)

Item	Part No.	Part Name	Qty	Serial No.
1	01010-D1040	BOLT	18	85001-
2	01643-71032	WASHER	18	85001-

Printed By : Dwi Iswanto (airafather6107170)

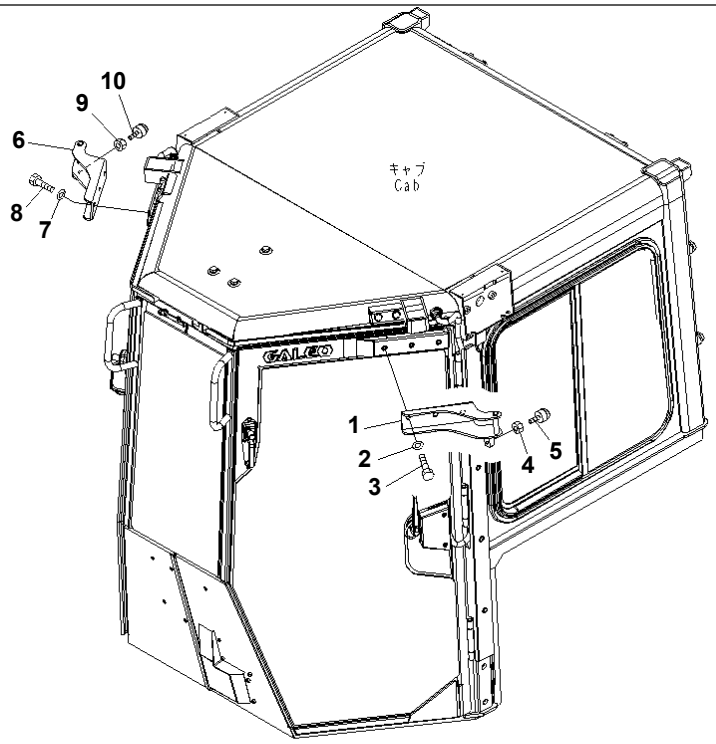

00042287

Ref. K0210-09A0 **Page 240170**

D155A-6 S/N 85001-UP
CAB (DOOR OPEN LOCK BRACKET)

Item	Part No.	Part Name	Qty	Serial No.
1	17A-979-3411	STRIKER	1	85001-
2	01643-71232	WASHER	3	85001-
3	01010-D1230	BOLT	3	85001-
4	01580-11210	NUT	1	85001-
5	17A-Z11-3592	STOPPER	1	85001-
6	17A-979-3421	BRACKET	1	85001-
7	01643-71232	WASHER	3	85001-
8	01010-D1230	BOLT	3	85001-
9	01580-11210	NUT	1	85001-
10	17A-Z11-3592	STOPPER	1	85001-

Printed By : Dwi Iswanto (airafather6107170)

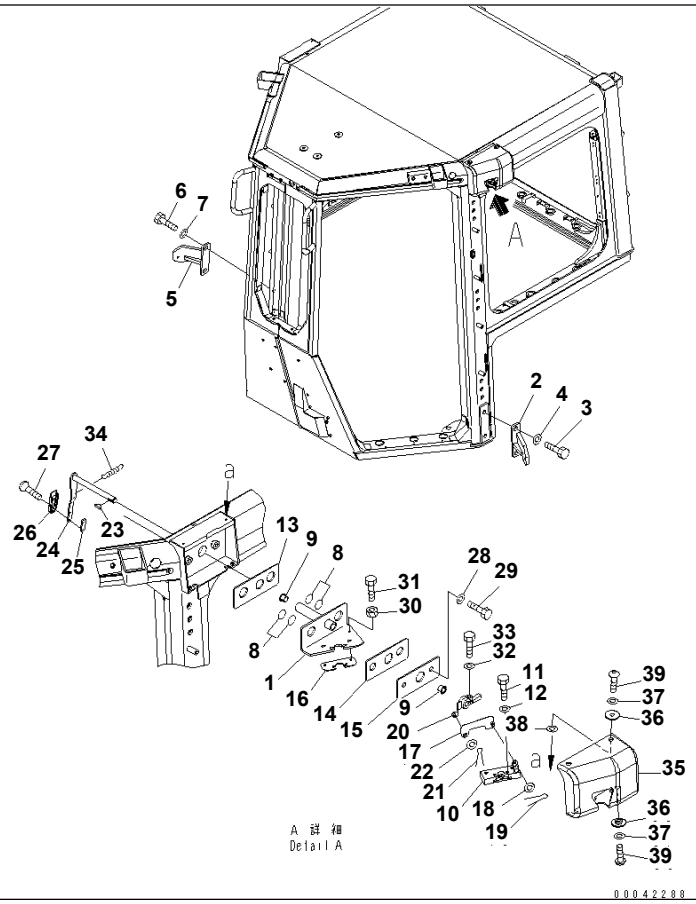

Ref. K0210-10A0 **Page 240180**

D155A-6 S/N 85001-UP
CAB (DOOR OPEN LOCK) (L.H.)

Item	Part No.	Part Name	Qty	Serial No.
1	17A-979-3511	BRACKET	1	85001-
2	17A-979-3480	BRACKET	1	85001-
3	198-54-42260	BOLT	2	85001-
4	01643-71645	WASHER	2	85001-
5	17A-979-3490	BRACKET	1	85001-
6	198-54-42260	BOLT	2	85001-
7	01643-71645	WASHER	2	85001-
8	07000-13025	O-RING	4	85001-
9	17A-Z11-1810	BUSHING	2	85001-
10	195-Z11-4520	LOCK	1	85001-
11	01643-70623	WASHER	4	85001-
12	01010-D0635	BOLT	4	85001-
13	17A-979-3531	RUBBER	1	85001-
14	12Y-978-3541	RUBBER	1	85001-
15	12Y-978-3551	PLATE	1	85001-
16	17A-Z11-3680	PLATE	1	85001-
17	17A-979-3561	PLATE	1	85001-
18	01640-20610	WASHER	1	85001-
19	04050-11612	PIN	1	85001-
20	17A-979-3581	LEVER	1	85001-
21	04050-11612	PIN	1	85001-
22	01640-20610	WASHER	1	85001-
23	04010-00516	KEY	1	85001-
24	17A-979-3611	LEVER	1	85001-
25	12Y-978-3290	PLATE	1	85001-
26	12Y-978-3281	KNOB	1	85001-
27	01023-20410	SCREW	2	85001-
28	01643-71232	WASHER	2	85001-
29	01010-D1230	BOLT	2	85001-
30	01580-10605	NUT	1	85001-

Printed By : Dwi Iswanto (airafather6107170)

CAB (DOOR OPEN LOCK) (L.H.)

Item	Part No.	Part Name	Qty	Serial No.
31	01010-80620	BOLT	1	85001-
32	01643-70823	WASHER	1	85001-
33	01010-80825	BOLT	1	85001-
34	176-06-42170	SPRING	1	85001-
35	17A-979-3433	COVER	1	85001-
36	12Y-978-2660	COLLAR	4	85001-
37	01643-70623	WASHER	4	85001-
38	17A-Z11-2813	PLATE	4	85001-
39	01245-00620	SCREW	4	85001-

Printed By : Dwi Iswanto (airafather6107170)

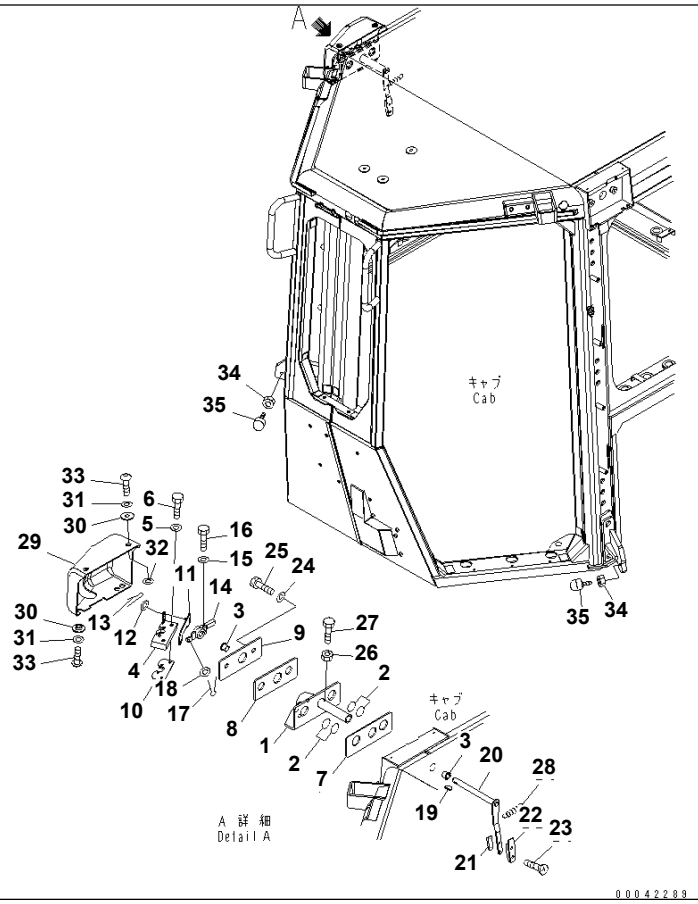

Ref. K0210-11A0 **Page 240190**

D155A-6 S/N 85001-UP
CAB (DOOR OPEN LOCK) (R.H.)

Item	Part No.	Part Name	Qty	Serial No.
1	17A-979-3521	BRACKET	1	85001-
2	07000-13025	O-RING	4	85001-
3	17A-Z11-1810	BUSHING	2	85001-
4	195-Z11-4510	LOCK	1	85001-
5	01643-70623	WASHER	4	85001-
6	01010-D0635	BOLT	4	85001-
7	17A-979-3531	RUBBER	1	85001-
8	12Y-978-3541	RUBBER	1	85001-
9	12Y-978-3551	PLATE	1	85001-
10	17A-Z11-3680	PLATE	1	85001-
11	17A-979-3571	PLATE	1	85001-
12	01640-20610	WASHER	1	85001-
13	04050-11612	PIN	1	85001-
14	17A-979-3591	LEVER	1	85001-
15	01643-70823	WASHER	1	85001-
16	01010-80825	BOLT	1	85001-
17	04050-11612	PIN	1	85001-
18	01640-20610	WASHER	1	85001-
19	04010-00516	KEY	1	85001-
20	17A-979-3621	LEVER	1	85001-
21	12Y-978-3290	PLATE	1	85001-
22	12Y-978-3281	KNOB	1	85001-
23	01023-20410	SCREW	2	85001-
24	01643-71232	WASHER	2	85001-
25	01010-D1230	BOLT	2	85001-
26	01580-10605	NUT	1	85001-
27	01010-80620	BOLT	1	85001-
28	176-06-42170	SPRING	1	85001-
29	17A-979-3443	COVER	1	85001-
30	12Y-978-2660	COLLAR	4	85001-

Printed By : Dwi Iswanto (airafather6107170)

CAB (DOOR OPEN LOCK) (R.H.)

Item	Part No.	Part Name	Qty	Serial No.
31	01643-70623	WASHER	4	85001-
32	17A-Z11-2813	PLATE	4	85001-
33	01245-00620	SCREW	4	85001-
34	01580-11210	NUT	2	85001-
35	17A-Z11-3592	STOPPER	2	85001-

Printed By : Dwi Iswanto (airafather6107170)

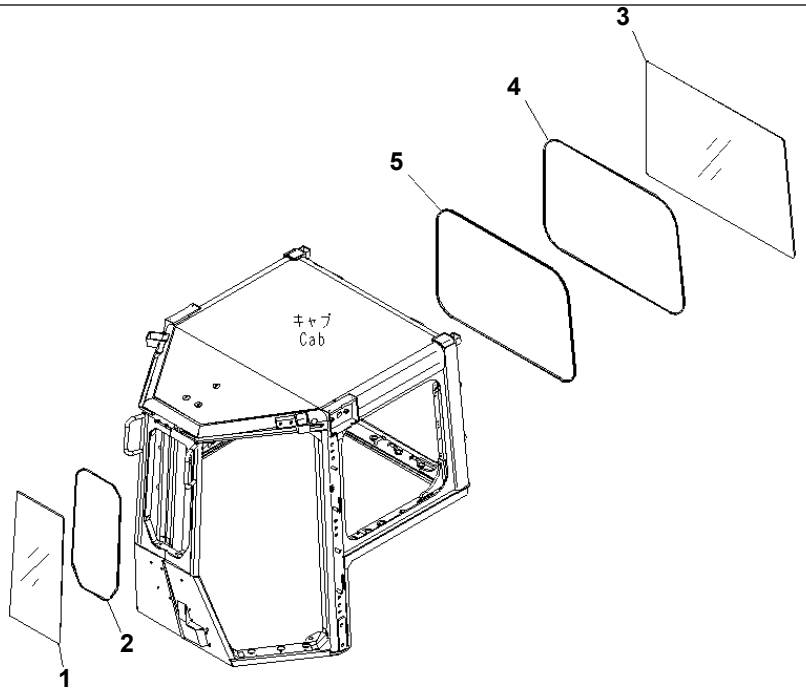

00042290

Ref. K0210-12A0 **Page 240200**

D155A-6 S/N 85001-UP
CAB (SASH)

Item	Part No.	Part Name	Qty	Serial No.
1	17A-979-1312	GLASS	1	85001-
2	17A-979-1321	SEAL	1	85001-
3	17A-979-1331	GLASS	1	85001-
4	17A-979-1341	SEAL	1	85001-
5	17A-979-1351	TRIM	1	85001-

Printed By : Dwi Iswanto (airafather6107170)

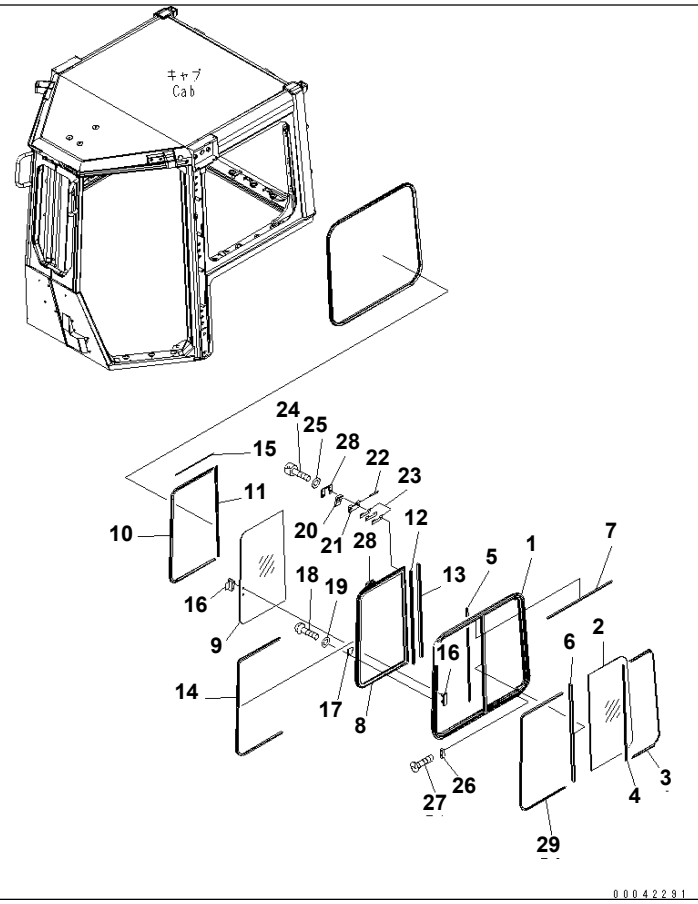

Ref. K0210-13A0 **Page 240210**

CAB (WINDOW GLASS AND SASH) (L.H.)

Item	Part No.	Part Name	Qty	Serial No.
	12Y-978-1400	SASH ASS'Y	1	85001-
	12Y-978-1410	· SASH ASS'Y	1	85001-
1	12Y-978-1420	· · FRAME	1	85001-
2	12Y-978-1450	· · GLASS	1	85001-
3	12Y-978-1460	· · SEAL	1	85001-
4	12Y-978-1470	· · SEAL	1	85001-
5	12Y-978-1480	· · SEAL (BONDED)	1	85001-
6	12Y-978-1490	· · SEAL	1	85001-
7	12Y-978-1550	· · SEAL (BONDED)	1	85001-
	12Y-978-1430	· SASH ASS'Y	1	85001-
8	12Y-978-1440	· · FRAME	1	85001-
9	12Y-978-1560	· · GLASS	1	85001-
10	12Y-978-1570	· · SEAL	1	85001-
11	12Y-978-1580	· · SEAL	1	85001-
12	12Y-978-1590	· · SEAL (BONDED)	1	85001-
13	12Y-978-1610	· · SEAL	1	85001-
14	12Y-978-1620	· · CHANNEL	1	85001-
15	12Y-978-1630	· · SEAL (BONDED)	1	85001-
16	17A-Z11-1610	· LOCK ASS'Y	1	85001-
17	17A-Z11-1620	· STRIKER	1	85001-
18	01252-80514	· BOLT	2	85001-
19	01641-50508	· WASHER	2	85001-
	195-Z11-1371	· LOCK ASS'Y	2	85001-
20	195-Z11-3630	· · LEVER	1	85001-
21	195-Z11-3640	· · PLATE	1	85001-
22	195-Z11-3860	· · PIN	1	85001-
23	195-Z11-3670	· SHIM¤ 0.5MM	6	85001-
24	01252-80514	· BOLT	4	85001-
25	01641-50508	· WASHER	4	85001-
26	195-Z11-1381	· STOPPER	1	85001-

Printed By : Dwi Iswanto (airafather6107170)

CAB (WINDOW GLASS AND SASH) (L.H.)

Item	Part No.	Part Name	Qty	Serial No.
27	01224-40316	· SCREW	2	85001-
28	17A-Z11-1660	· PLATE	2	85001-
29	12Y-978-1640	· SEAL	1	85001-

Printed By : Dwi Iswanto (airafather6107170)

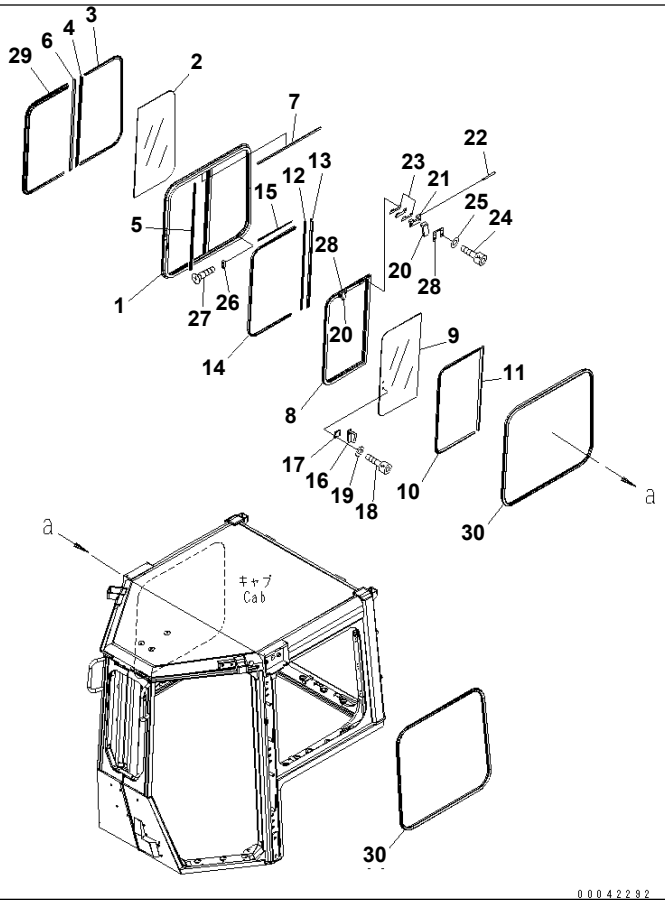

Ref. K0210-14A0 **Page 240220**

D155A-6 S/N 85001-UP
CAB (WINDOW GLASS AND SASH) (R.H.)

Item	Part No.	Part Name	Qty	Serial No.
	12Y-978-1500	SASH ASS'Y	1	85001-
	12Y-978-1510	· SASH ASS'Y	1	85001-
1	12Y-978-1520	· · FRAME	1	85001-
2	12Y-978-1450	· · GLASS	1	85001-
3	12Y-978-1460	· · SEAL	1	85001-
4	12Y-978-1470	· · SEAL	1	85001-
5	12Y-978-1480	· · SEAL (BONDED)	1	85001-
6	12Y-978-1490	· · SEAL	1	85001-
7	12Y-978-1550	· · SEAL (BONDED)	1	85001-
	12Y-978-1530	· SASH ASS'Y	1	85001-
8	12Y-978-1540	· · FRAME	1	85001-
9	12Y-978-1560	· · GLASS	1	85001-
10	12Y-978-1570	· · SEAL	1	85001-
11	12Y-978-1580	· · SEAL	1	85001-
12	12Y-978-1590	· · SEAL (BONDED)	1	85001-
13	12Y-978-1610	· · SEAL	1	85001-
14	12Y-978-1620	· · CHANNEL	1	85001-
15	12Y-978-1630	· · SEAL (BONDED)	1	85001-
16	17A-Z11-1610	· LOCK ASS'Y	1	85001-
17	17A-Z11-1620	· STRIKER	1	85001-
18	01252-80514	· BOLT	2	85001-
19	01641-50508	· WASHER	2	85001-
	195-Z11-1371	· LOCK ASS'Y	2	85001-
20	195-Z11-3630	· · LEVER	1	85001-
21	195-Z11-3640	· · PLATE	1	85001-
22	195-Z11-3860	· · PIN	1	85001-
23	195-Z11-3670	· SHIM¤ 0.5MM	6	85001-
24	01252-80514	· BOLT	4	85001-
25	01641-50508	· WASHER	4	85001-
26	195-Z11-1381	· STOPPER	1	85001-

Printed By : Dwi Iswanto (airafather6107170)

CAB (WINDOW GLASS AND SASH) (R.H.)

Item	Part No.	Part Name	Qty	Serial No.
27	01224-40316	· SCREW	2	85001-
28	17A-Z11-1660	· PLATE	2	85001-
29	12Y-978-1640	· SEAL	1	85001-
30	12Y-978-1390	WEATHER STRIP	2	85001-

Printed By : Dwi Iswanto (airafather6107170)

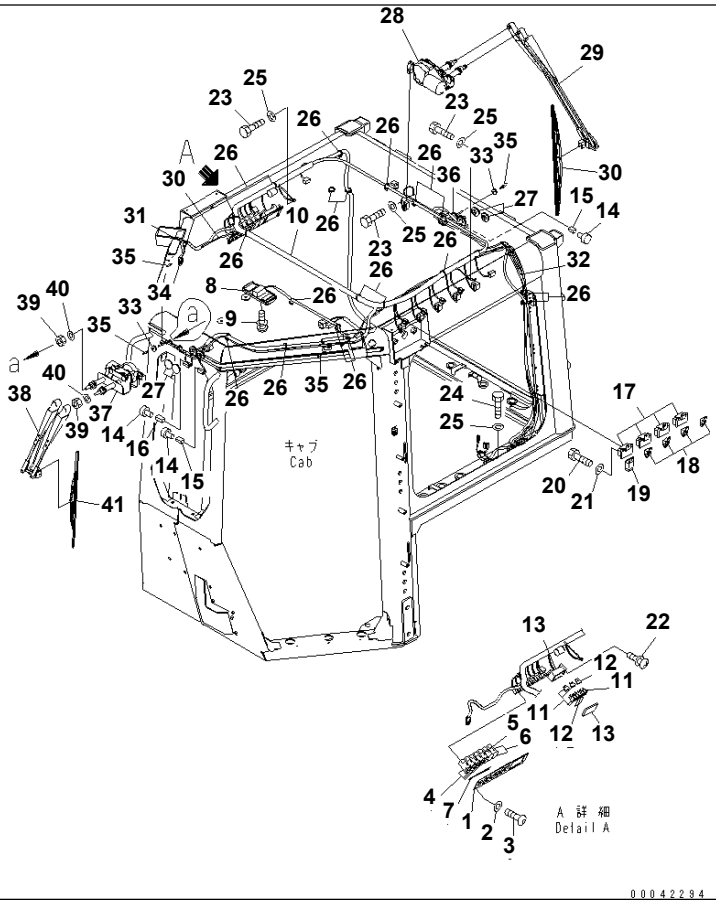

Ref. K0210-15A0 **Page 240230**

D155A-6 S/N 85001-UP

CAB (PANEL SWITCH¤ FRONT AND REAR WIPER)

Item	Part No.	Part Name	Qty	Serial No.
1	17A-979-3140	COVER	1	85001-
2	01643-70623	WASHER	4	85001-
3	01245-00620	SCREW	4	85001-
4	17A-06-42210	SWITCH	4	85001-
5	17A-06-42220	SWITCH	1	85001-
6	20Y-06-42190	COVER	2	85001-
7	17A-Z11-2350	PANEL	1	85001-
8	421-06-26210	LAMP ASS'Y	1	85001-
9	01023-10520	SCREW	2	85001-
10	17A-979-2511	WIRING HARNESS	1	85001-
11	08041-01000	· FUSE¤ 10A	5	85001-
12	08041-02000	· FUSE¤ 20A	4	85001-
13	08044-00600	· FUSE BOX	1	85001-
14	08191-00770	· PLUG	10	85001-
15	08192-14100	· CONNECTOR	2	85001-
16	08192-12100	· CONNECTOR	1	85001-
17	17A-Z11-2420	RELAY¤ 6-TERMINAL	4	85001-
18	7861-74-5100	RELAY	4	85001-
19	198-911-9240	RELAY¤ 4-TERMINAL	1	85001-
20	01010-80616	BOLT	9	85001-
21	01643-70623	WASHER	9	85001-
22	01023-10520	SCREW	2	85001-
23	01010-80616	BOLT	3	85001-
24	01435-00610	BOLT	1	85001-
25	01643-70623	WASHER	4	85001-
26	08034-20519	BAND	22	85001-
27	09415-02512	CAP	4	85001-
28	17A-979-2850	WIPER MOTOR	1	85001-
29	17A-979-2860	WIPER ARM	1	85001-
30	17A-979-2870	WIPER	1	85001-

Printed By : Dwi Iswanto (airafather6107170)

CAB (PANEL SWITCH¤ FRONT AND REAR WIPER)

Item	Part No.	Part Name	Qty	Serial No.
31	17A-979-2530	HOSE	2	85001-
32	17A-979-2540	HOSE	2	85001-
33	17A-Z11-2660	CAP	2	85001-
34	08037-01008	GROMMET	1	85001-
35	195-979-8590	VALVE	4	85001-
36	135-06-34260	GROMMET	1	85001-
37	17A-Z11-2512	WIPER MOTOR	1	85001-
38	17A-Z11-2530	WIPER ASS'Y	1	85001-
39	01580-10806	NUT	2	85001-
40	01640-20816	WASHER	2	85001-
41	17A-979-1420	BLADE	1	85001-

Printed By : Dwi Iswanto (airafather6107170)

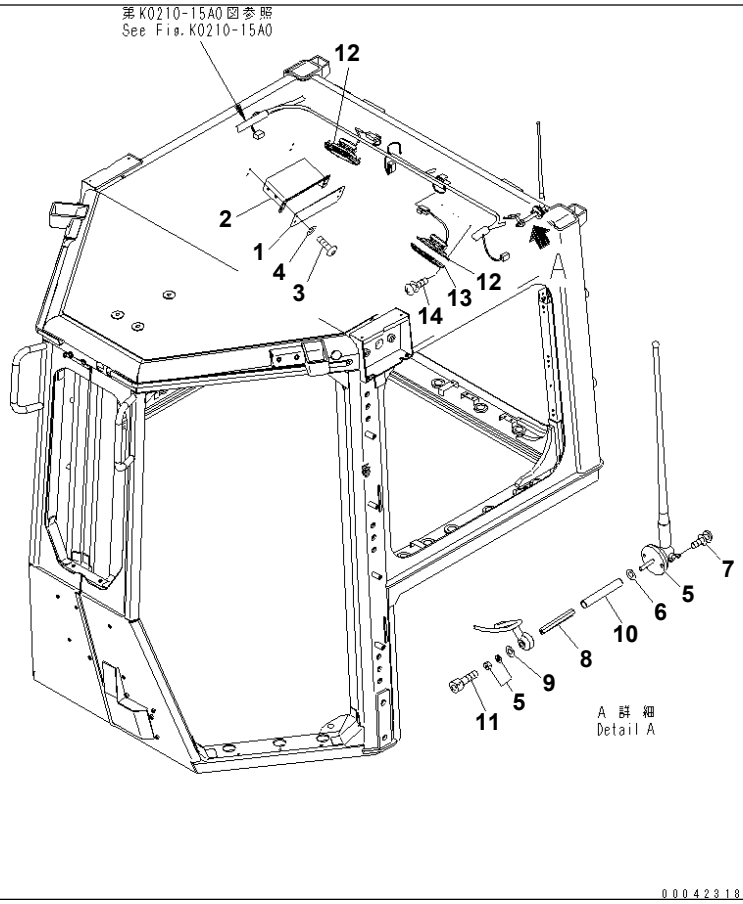

Ref. K0210-16A0 Page 240240

D155A-6 S/N 85001-UP

CAB (RADIO ADD-ON)

Item	Part No.	Part Name	Qty	Serial No.
1	17A-Z11-2240	PLATE	1	85001-
2	12Y-978-2210	BRACKET	1	85001-
3	01245-00620	SCREW	4	85001-
4	01643-70623	WASHER	4	85001-
5	198-Z11-4611	RUBBER ANTENNA	1	85001-
6	01643-70623	WASHER	1	85001-
7	01023-20416	SCREW	2	85001-
8	17A-979-2691	BAR	1	85001-
9	01643-70623	WASHER	1	85001-
10	08023-10007	TUBE	1	85001-
11	01252-70530	BOLT	1	85001-
12	11Y-979-1950	SPEAKER	2	85001-
13	418-967-2150	COVER	2	85001-
14	01023-20425	SCREW	8	85001-

Printed By : Dwi Iswanto (airafather6107170)

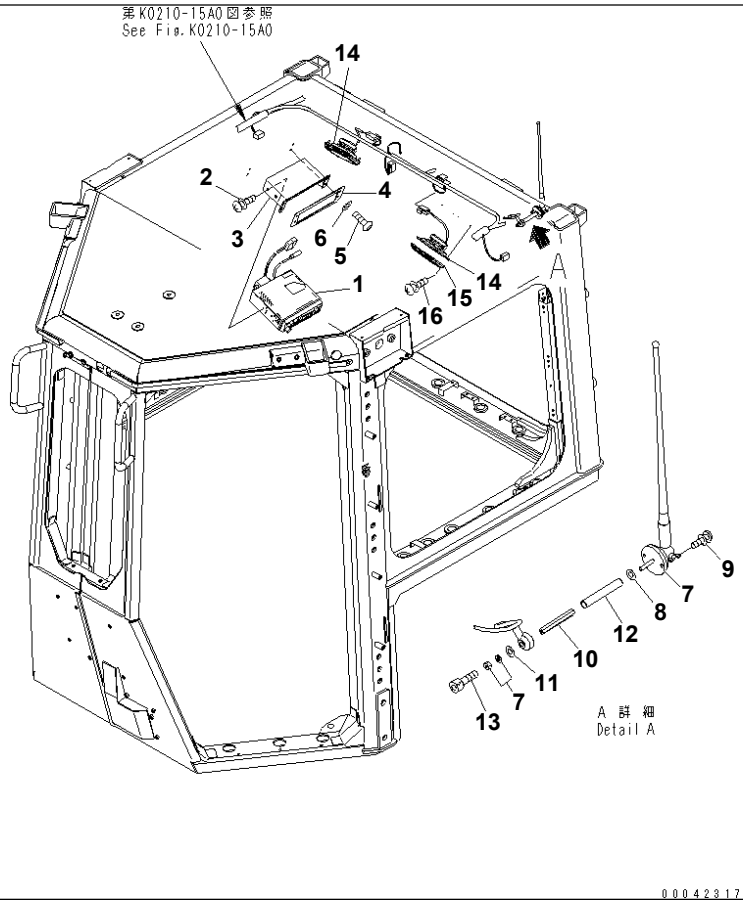

00042317

D155A-6 S/N 85001-UP

CAB (AM-FM RADIO AND CASSETTE STEREO) (FOR EU SPEC.)

Item	Part No.	Part Name	Qty	Serial No.
1	195-Z11-8913	STEREO	1	85010-
	□195-Z11-8912	STEREO	1	85001-85009
2	01023-20510	SCREW	4	85001-
3	12Y-978-2210	BRACKET	1	85001-
4	12Y-978-2280	PLATE	1	85001-
5	01245-00620	SCREW	4	85001-
6	01643-70623	WASHER	4	85001-
7	198-Z11-4611	RUBBER ANTENNA	1	85001-
8	01643-70623	WASHER	1	85001-
9	01023-20416	SCREW	2	85001-
10	17A-979-2691	BAR	1	85001-
11	01643-70623	WASHER	1	85001-
12	08023-10007	TUBE	1	85001-
13	01252-70530	BOLT	1	85001-
14	11Y-979-1950	SPEAKER	2	85001-
15	418-967-2150	COVER	2	85001-
16	01023-20425	SCREW	8	85001-

Printed By : Dwi Iswanto (airafather6107170)

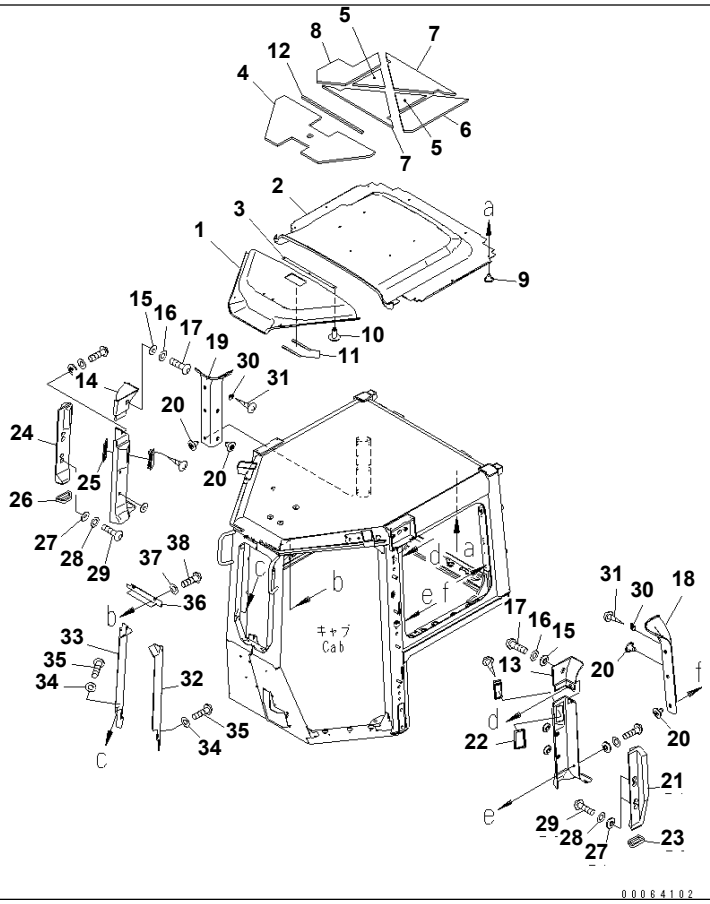

Ref. K0210-17A0 **Page 240260**

D155A-6 S/N 85001-UP
CAB (INSIDE COVER)

Item	Part No.	Part Name	Qty	Serial No.
1	17A-979-2612	COVER	1	85001-
	17A-979-2301	COVER	1	85001-
2	17A-979-2622	· COVER	1	85001-
3	17A-979-1780	· PLATE	1	85001-
4	17A-979-2711	SHEET	1	85001-
5	17A-979-1720	SHEET	2	85001-
6	17A-979-1730	SHEET	1	85001-
7	17A-979-1740	SHEET	2	85001-
8	17A-979-1750	SHEET	1	85001-
9	20Y-54-18690	RIVET	15	85001-
10	198-Z11-6370	CLIP	3	85001-
11	17A-979-1760	SHEET	2	85001-
12	17A-979-1790	SHEET	1	85001-
13	17A-979-1630	COVER	1	85001-
14	17A-979-1640	COVER	1	85001-
15	17A-979-1620	COLLAR	2	85001-
16	01643-70623	WASHER	2	85001-
17	01245-00620	SCREW	2	85001-
18	17A-979-2652	COVER	1	85001-
19	17A-979-2662	COVER	1	85001-
20	20Y-54-18690	RIVET	10	85001-
21	17A-979-1911	DUCT	1	85001-
22	17A-979-1930	· SEAL (BONDED)	1	85001-
23	17A-979-2731	· SEAL (BONDED)	1	85001-
24	17A-979-1921	DUCT	1	85001-
25	17A-979-1930	· SEAL (BONDED)	1	85001-
26	17A-979-2741	· SEAL (BONDED)	1	85001-
27	17A-979-1620	COLLAR	4	85001-
28	01643-70623	WASHER	4	85001-
29	01245-00616	SCREW	4	85001-

Printed By : Dwi Iswanto (airafather6107170)

CAB (INSIDE COVER)

Item	Part No.	Part Name	Qty	Serial No.
30	17A-Z11-2940	HOOK	2	85001-
31	01370-40412	SCREW	4	85001-
32	17A-979-2953	COVER	1	85001-
33	17A-979-1952	COVER	1	85001-
34	01643-70623	WASHER	6	85001-
35	01245-00620	SCREW	6	85001-
36	17A-979-1942	COVER	1	85001-
37	01643-70623	WASHER	2	85001-
38	01245-00620	SCREW	2	85001-

Printed By : Dwi Iswanto (airafather6107170)

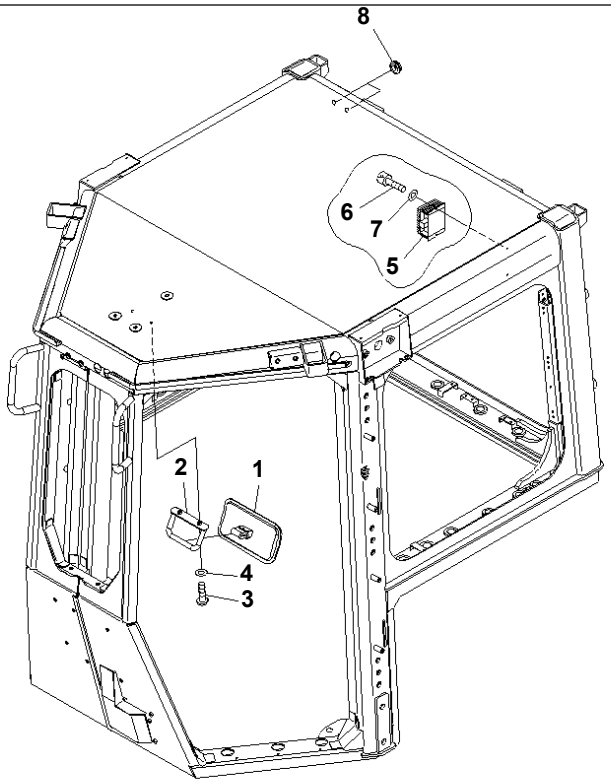

00042297

Ref. K0210-18A0 **Page 240270**

D155A-6 S/N 85001-UP
CAB (BACK MIRROR AND KOMTRAX LESS)

Item	Part No.	Part Name	Qty	Serial No.
1	195-Z11-2180	MIRROR	1	85001-
2	17A-Z11-1922	BRACKET	1	85001-
3	01245-00825	SCREW	2	85001-
4	01643-70823	WASHER	2	85001-
5	12Y-06-11650	CONVERTER	1	85001-
6	01252-80514	BOLT	2	85001-
7	01641-50508	WASHER	2	85001-
8	09415-01008	CAP	2	85001-

Printed By : Dwi Iswanto (airafather6107170)

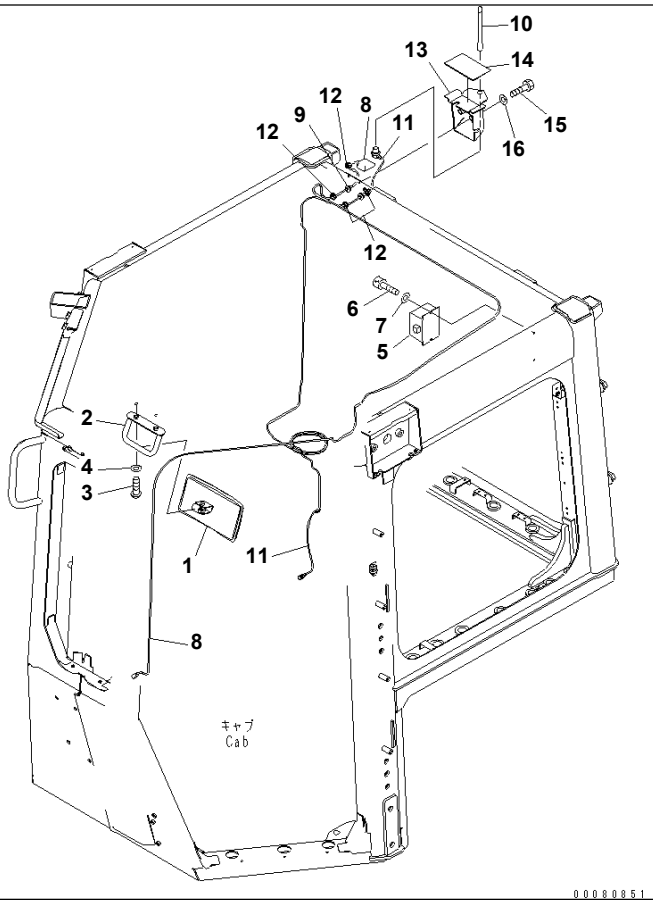

Ref. K0210-18A4 **Page 240280**

D155A-6 S/N 85001-UP
CAB (MIRROR AND KOMTRAX)(#85001-85009)

Item	Part No.	Part Name	Qty	Serial No.
1	195-Z11-2180	MIRROR	1	85001-@
2	17A-Z11-1922	BRACKET	1	85001-@
3	01245-00825	SCREW	2	85001-@
4	01643-70823	WASHER	2	85001-@
5	12Y-06-11650	CONVERTER	1	85001-@
6	01252-80514	BOLT	2	85001-@
7	01641-50508	WASHER	2	85001-@
8	8A13-10-4300	ANTENNA	1	85001-@
9	08037-10610	· GROMMET	1	85001-@
10	8A13-10-2100	ANTENNA	1	85001-@
11	8A13-10-2200	CABLE	1	85001-@
12	175-06-81610	GROMMET	4	85001-@
13	17A-979-3961	BRACKET	1	85010-@
	■17A-979-3960	BRACKET (17A-979-3961¤,14X-06-51840¤ 08059-00413)	1	85001-85009
14	17A-979-3970	PLATE	1	85001-85009
15	01010-D0850	BOLT	2	85001-@
16	01643-70823	WASHER	2	85001-@

Printed By : Dwi Iswanto (airafather6107170)

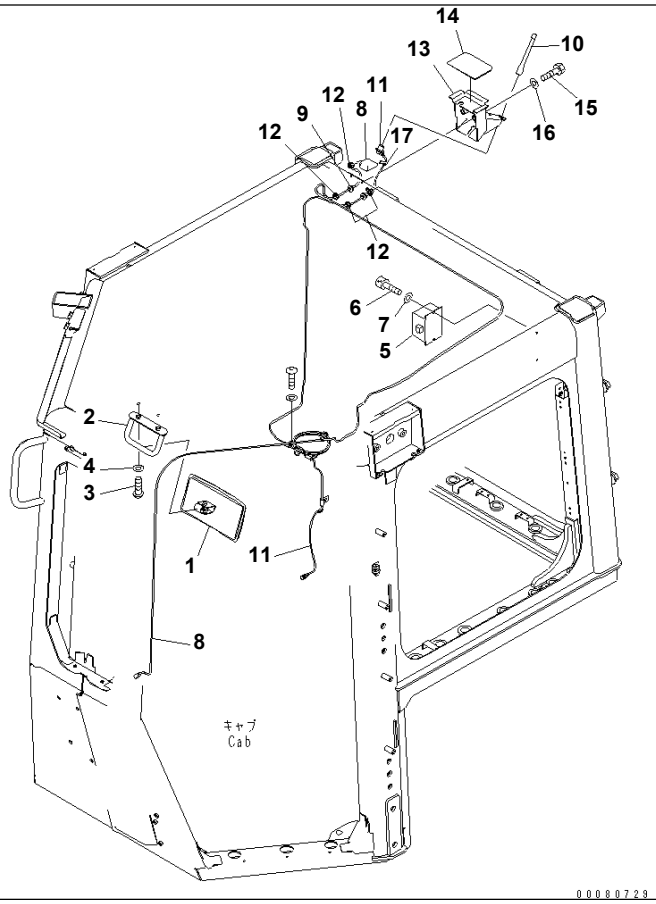

Ref. K0210-18A4A **Page 240290**

D155A-6 S/N 85001-UP
CAB (MIRROR AND KOMTRAX)(#85010-)

Item	Part No.	Part Name	Qty	Serial No.
1	195-Z11-2180	MIRROR	1	85001-
2	17A-Z11-1922	BRACKET	1	85001-
3	01245-00825	SCREW	2	85001-
4	01643-70823	WASHER	2	85001-
5	12Y-06-11650	CONVERTER	1	85001-
6	01252-80514	BOLT	2	85001-
7	01641-50508	WASHER	2	85001-
8	8A13-10-4300	ANTENNA	1	85001-
9	08037-10610	· GROMMET	1	85001-
10	8A13-10-2100	ANTENNA	1	85001-
11	8A13-10-2200	CABLE	1	85001-
12	175-06-81610	GROMMET	4	85001-
13	17A-979-3961	BRACKET	1	85010-
14	14X-06-51840	PLATE	1	85010-
15	01010-D0850	BOLT	2	85001-
16	01643-70823	WASHER	2	85001-
17	08059-00413	CLIP	2	85010-

Printed By : Dwi Iswanto (airafather6107170)

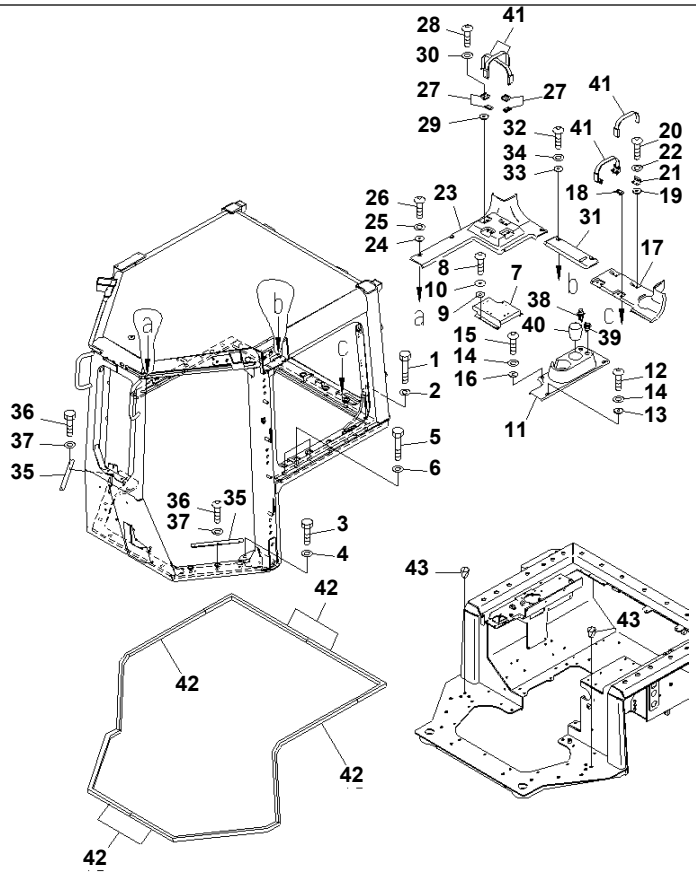

Ref. K0210-19A0 **Page 240300**

D155A-6 S/N 85001-UP
CAB (ENVELOPE PARTS)

Item	Part No.	Part Name	Qty	Serial No.
1	01011-82020	BOLT	15	85001-
2	01643-32060	WASHER	15	85001-
3	01010-81655	BOLT	12	85001-
4	01643-31645	WASHER	12	85001-
5	01011-82425	BOLT	6	85001-
6	01643-32460	WASHER	6	85001-
7	17A-979-2792	COVER	1	85001-
8	01245-00625	SCREW	4	85001-
9	17A-979-3880	PLATE	4	85001-
10	103-15-15210	WASHER	4	85001-
11	17A-979-2751	COVER	1	85001-
12	01245-00625	SCREW	2	85001-
13	12Y-978-2660	COLLAR	2	85001-
14	01643-70623	WASHER	4	85001-
15	01245-00625	SCREW	2	85001-
16	17A-Z11-2813	PLATE	2	85001-
17	17A-979-2761	COVER	1	85001-
18	17A-979-3350	PLATE	2	85009-
	☐17A-979-1650	PLATE	2	85001-85008
19	17A-979-3360	PLATE	2	85009-
	☐17A-979-1660	PLATE	2	85001-85008
20	01245-00625	SCREW	8	85001-
21	12Y-978-2660	COLLAR	8	85001-
22	01643-70623	WASHER	8	85001-
23	17A-979-2771	COVER	1	85001-
24	12Y-978-2660	COLLAR	3	85001-
25	01643-70623	WASHER	3	85001-
26	01245-00625	SCREW	3	85001-
27	17A-979-3350	PLATE	4	85009-
	☐17A-979-1650	PLATE	4	85001-85008

Printed By : Dwi Iswanto (airafather6107170)

CAB (ENVELOPE PARTS)

Item	Part No.	Part Name	Qty	Serial No.
28	01245-00625	SCREW	8	85001-
29	12Y-978-2660	COLLAR	8	85001-
30	01643-70623	WASHER	8	85001-
31	17A-979-2781	COVER	1	85001-
32	01245-00625	SCREW	2	85001-
33	12Y-978-2660	COLLAR	2	85001-
34	01643-70623	WASHER	2	85001-
35	12Y-978-2890	PLATE	2	85001-
36	01245-00620	SCREW	6	85009-
	□01245-00625	SCREW	6	85001-85008
37	01643-70623	WASHER	6	85001-
38	20Y-06-23472	LIGHTER	1	85001-
39	12Y-06-11640	SOCKET ASS'Y	1	85001-
40	20Y-43-41491	ASHTRAY	1	85001-
41	423-54-42790	BAND	4	85009-
	□198-911-7350	BAND	4	85001-85008
42	17A-Z11-3541	SEAL	6	85001-
43	07049-01215	PLUG	2	85001-

Printed By : Dwi Iswanto (airafather6107170)

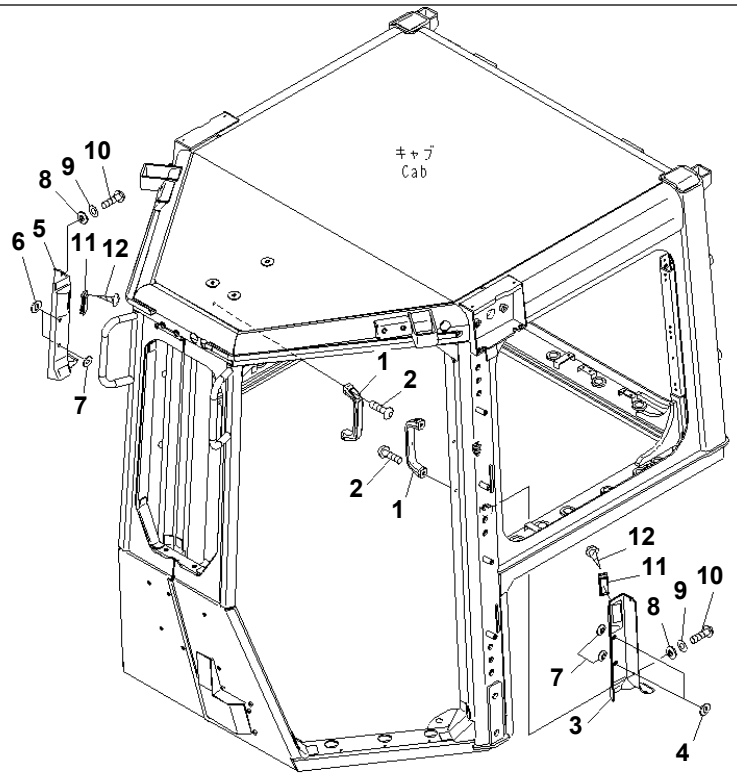

00064207

Ref. K0210-20A0 **Page 240310**

D155A-6 S/N 85001-UP

CAB (ENVELOPE PARTS) (GRIP)

Item	Part No.	Part Name	Qty	Serial No.
1	361-54-21150	HANDLE	2	85001-
2	01245-00825	SCREW	4	85001-
	17A-979-2400	COVER ASS'Y	1	85001-
3	17A-979-2632	· COVER	1	85001-
4	17A-979-3890	· PLATE (BONDED)	2	85001-
	17A-979-2500	COVER ASS'Y	1	85001-
5	17A-979-2642	· COVER	1	85001-
6	17A-979-3890	· PLATE (BONDED)	2	85001-
7	17A-979-1611	COLLAR	4	85001-
8	17A-979-1620	COLLAR	4	85001-
9	01643-70623	WASHER	4	85001-
10	01245-00625	SCREW	4	85009-
	□01245-00620	SCREW	4	85001-85008
11	17A-Z11-7161	LOUVER	2	85001-
12	01370-20316	SCREW	4	85001-

Printed By : Dwi Iswanto (airafather6107170)

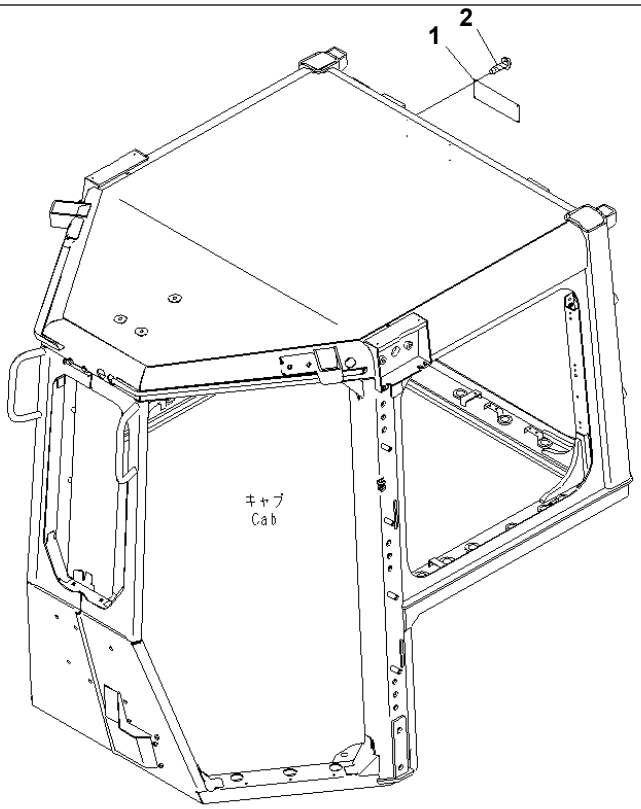

00042808

Ref. K0210-21A0 **Page 240320**

D155A-6 S/N 85001-UP
CAB (ROPS PLATE)

Item	Part No.	Part Name	Qty	Serial No.
1	(★09620-A2000)	PLATE	1	85001-
2	04418-13060	SCREW	4	85001-

Printed By : Dwi Iswanto (airafather6107170)

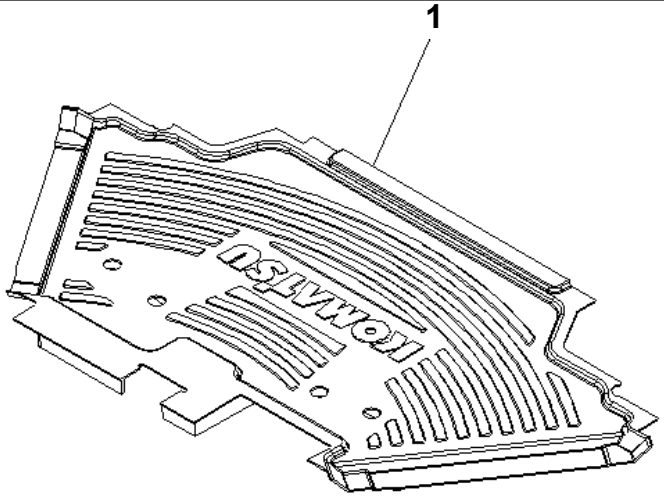

00042336

Ref. K0310-01A0 **Page 240330**

D155A-6 S/N 85001-UP
FLOOR MAT

Item	Part No.	Part Name	Qty	Serial No.
1	17A-979-2882	MAT	1	85001-

Printed By : Dwi Iswanto (airafather6107170)

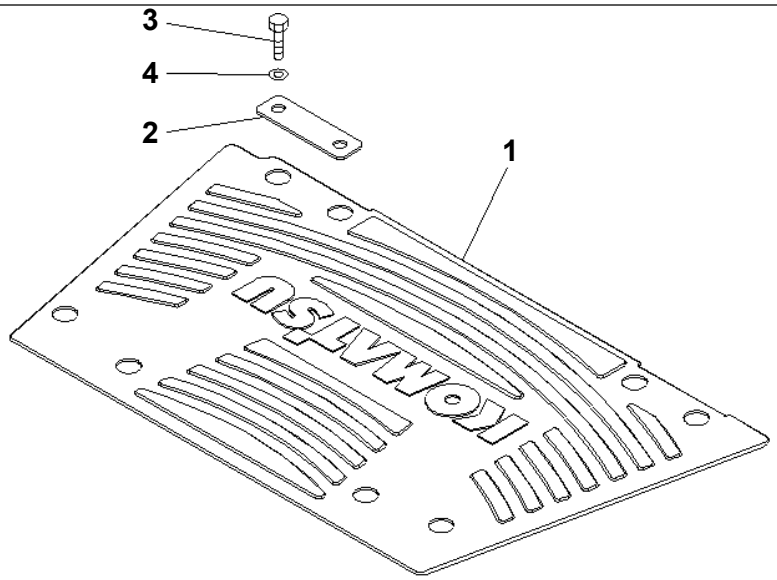

00064209

Ref. K0310-01A1 **Page 240340**

D155A-6 S/N 85001-UP
FLOOR MAT (WITHOUT CAB)

Item	Part No.	Part Name	Qty	Serial No.
1	17A-54-48491	MAT	1	85001-
2	17A-54-48530	PLATE	2	85001-
3	01010-D1230	BOLT	4	85001-
4	01643-71232	WASHER	4	85001-

Printed By : Dwi Iswanto (airafather6107170)

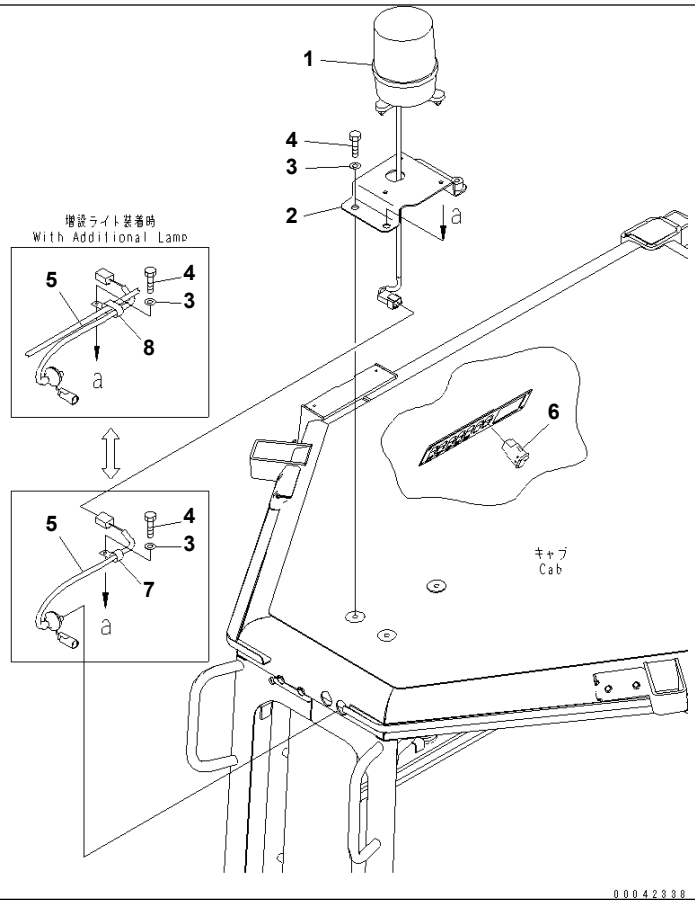

Ref. K0410-01A0 Page 240350

D155A-6 S/N 85001-UP
BEACON

Item	Part No.	Part Name	Qty	Serial No.
1	14X-890-1160	LAMP	1	85001-
2	17A-06-41811	BRACKET	1	85001-
3	01643-71232	WASHER	3	85001-
4	01010-D1220	BOLT	3	85001-
5	17A-06-41820	WIRING HARNESS	1	85001-
6	17A-06-42240	SWITCH	1	85001-
7	04434-51012	CLIP	1	85001-
8	04435-51012	CLIP	1	85001-

Printed By : Dwi Iswanto (airafather6107170)

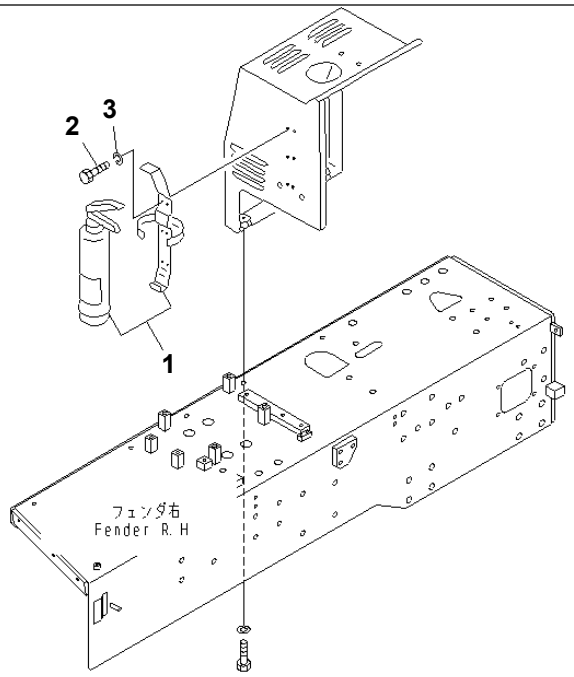

00016877

Ref. K0830-01A0 **Page 240360**

D155A-6 S/N 85001-UP
EXTINGUISHER (ENGLISH) (WITHOUT CAB)

Item	Part No.	Part Name	Qty	Serial No.
1	09495-40010	EXTINGUISHER	1	85001-
2	01010-80620	BOLT	6	85001-
3	01602-20619	WASHER	6	85001-

Printed By : Dwi Iswanto (airafather6107170)

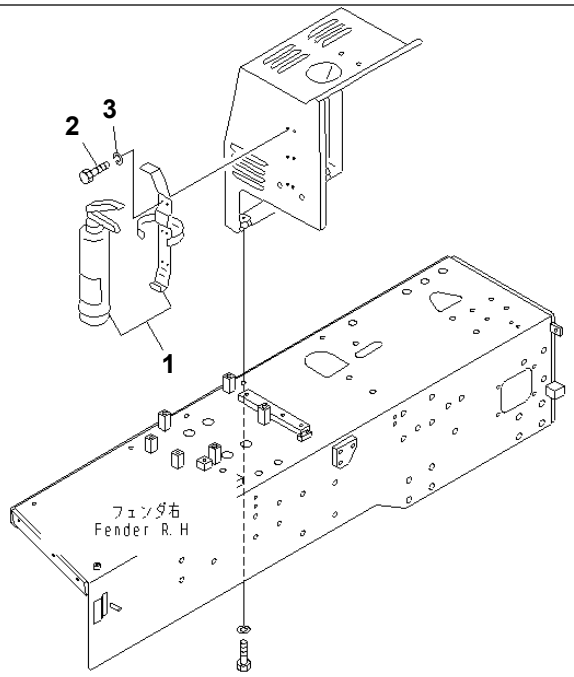

00016877

Ref. K0830-01A1 **Page 240370**

D155A-6 S/N 85001-UP
EXTINGUISHER (ARABIC) (WITHOUT CAB)

Item	Part No.	Part Name	Qty	Serial No.
1	09495-11010	EXTINGUISHER	1	85001-
2	01010-80620	BOLT	6	85001-
3	01602-20619	WASHER	6	85001-

Printed By : Dwi Iswanto (airafather6107170)

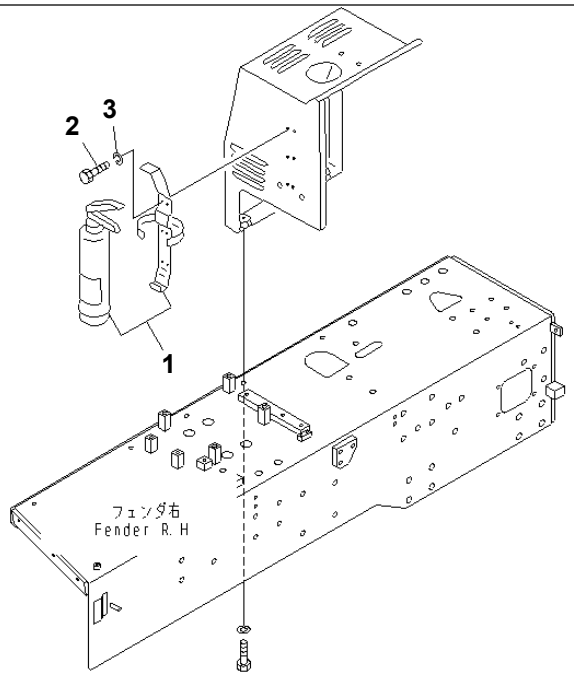

00016877

Ref. K0830-01A2 **Page 240380**

D155A-6 S/N 85001-UP
EXTINGUISHER (CHINESE) (WITHOUT CAB)

Item	Part No.	Part Name	Qty	Serial No.
1	09495-90010	EXTINGUISHER	1	85001-
2	01010-80620	BOLT	6	85001-
3	01602-20619	WASHER	6	85001-

Printed By : Dwi Iswanto (airafather6107170)

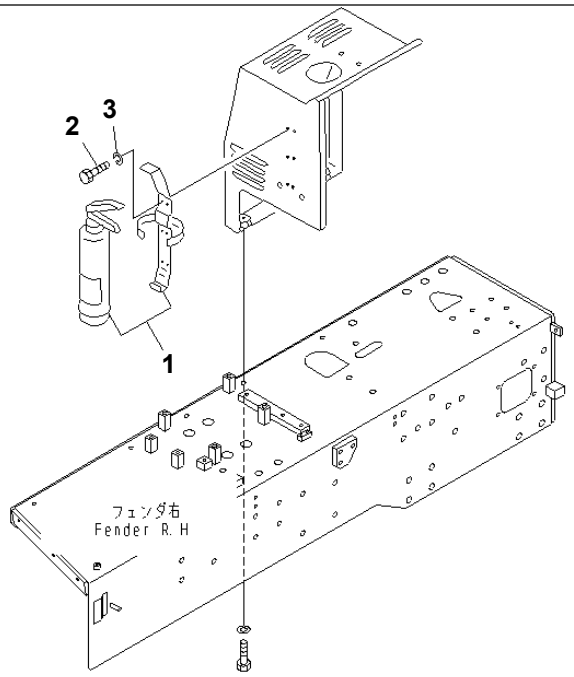

00016877

Ref. K0830-01A3 **Page 240390**

D155A-6 S/N 85001-UP
EXTINGUISHER (FRENCH) (WITHOUT CAB)

Item	Part No.	Part Name	Qty	Serial No.
1	09495-50010	EXTINGUISHER	1	85001-
2	01010-80620	BOLT	6	85001-
3	01602-20619	WASHER	6	85001-

Printed By : Dwi Iswanto (airafather6107170)

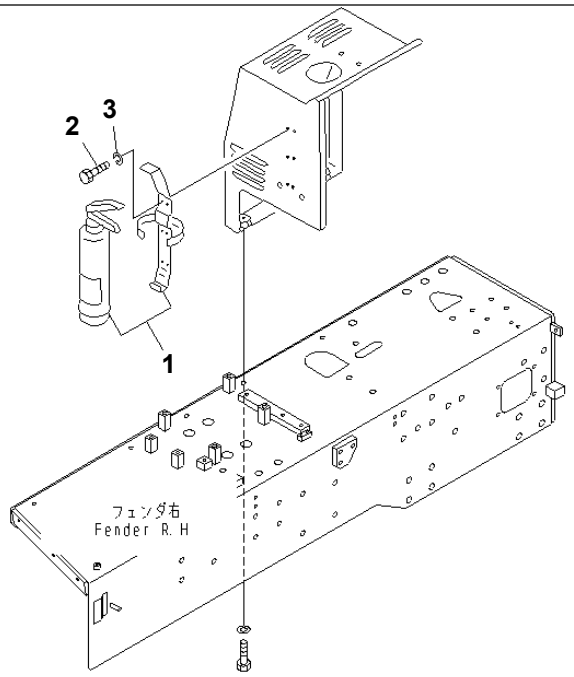

00016877

Ref. K0830-01A4 **Page 240400**

D155A-6 S/N 85001-UP
EXTINGUISHER (INDONESIAN) (WITHOUT CAB)

Item	Part No.	Part Name	Qty	Serial No.
1	09495-31010	EXTINGUISHER	1	85001-
2	01010-80620	BOLT	6	85001-
3	01602-20619	WASHER	6	85001-

Printed By : Dwi Iswanto (airafather6107170)

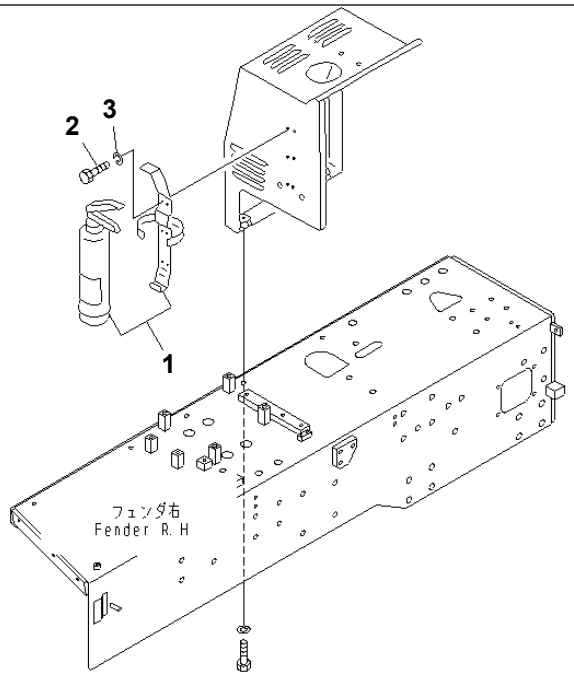

00016877

Ref. K0830-01A5 **Page 240410**

D155A-6 S/N 85001-UP
EXTINGUISHER (PORTUGUESE) (WITHOUT CAB)

Item	Part No.	Part Name	Qty	Serial No.
1	09495-80010	EXTINGUISHER	1	85001-
2	01010-80620	BOLT	6	85001-
3	01602-20619	WASHER	6	85001-

Printed By : Dwi Iswanto (airafather6107170)

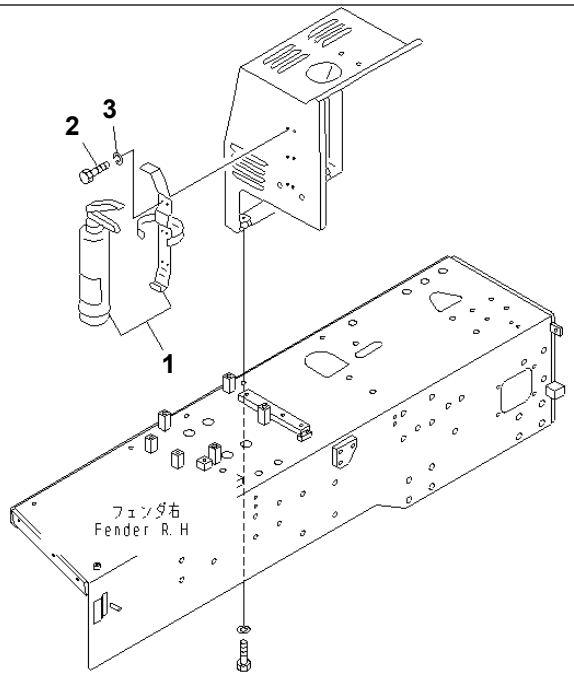

00016877

Ref. K0830-01A6 **Page 240420**

D155A-6 S/N 85001-UP
EXTINGUISHER (RUSSIAN) (WITHOUT CAB)

Item	Part No.	Part Name	Qty	Serial No.
1	09495-30010	EXTINGUISHER	1	85001-
2	01010-80620	BOLT	6	85001-
3	01602-20619	WASHER	6	85001-

Printed By : Dwi Iswanto (airafather6107170)

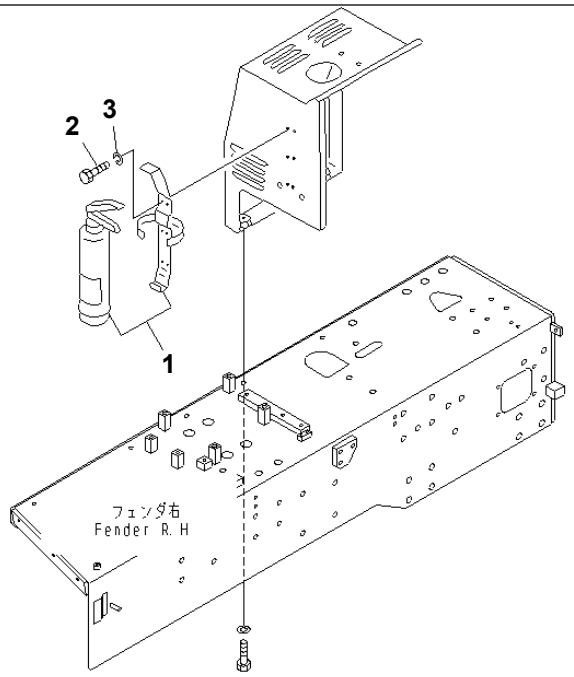

00016877

Ref. K0830-01A7 **Page 240430**

D155A-6 S/N 85001-UP
EXTINGUISHER (PERSIAN) (WITHOUT CAB)

Item	Part No.	Part Name	Qty	Serial No.
1	09495-12010	EXTINGUISHER	1	85001-
2	01010-80620	BOLT	6	85001-
3	01602-20619	WASHER	6	85001-

Printed By : Dwi Iswanto (airafather6107170)

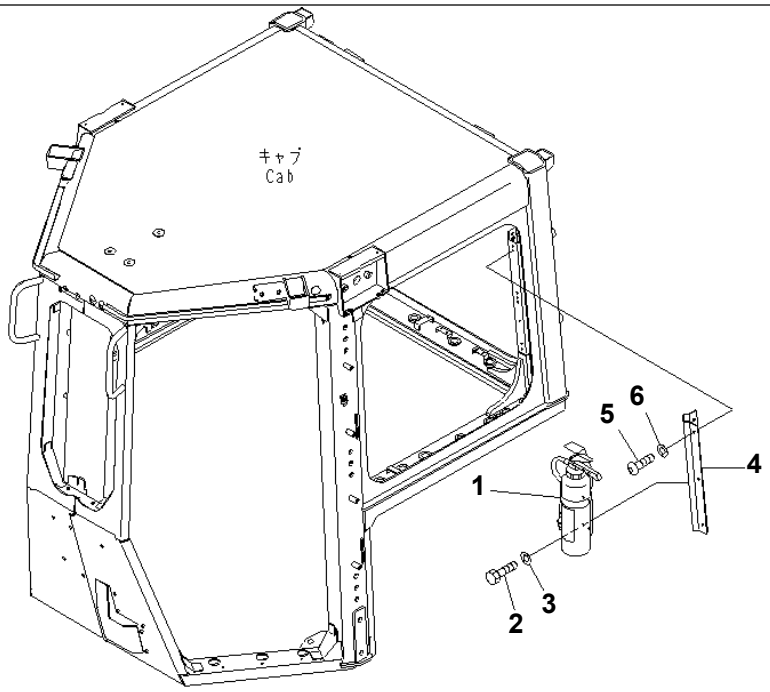

00042357

Ref. K0830-01A8 **Page 240440**

D155A-6 S/N 85001-UP
EXTINGUISHER (ENGLISH) (WITH CAB)

Item	Part No.	Part Name	Qty	Serial No.
1	09495-40010	EXTINGUISHER	1	85001-
2	01010-D0620	BOLT	6	85001-
3	01643-70623	WASHER	6	85001-
4	17A-979-1770	BRACKET	1	85001-
5	01245-00625	SCREW	6	85001-
6	01643-70823	WASHER	6	85001-

Printed By : Dwi Iswanto (airafather6107170)

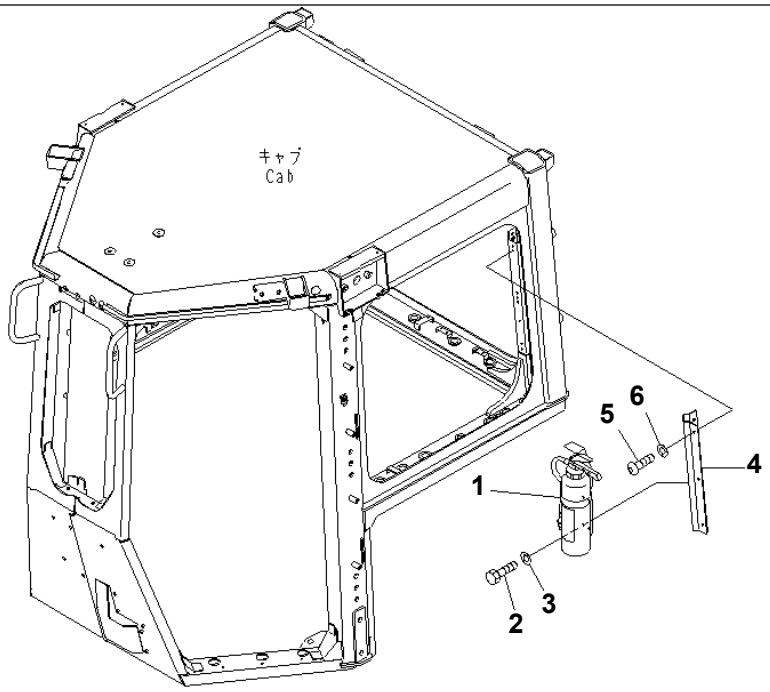

00042357

Ref. K0830-01A9 **Page 240450**

D155A-6 S/N 85001-UP
EXTINGUISHER (CHINESE) (WITH CAB)

Item	Part No.	Part Name	Qty	Serial No.
1	09495-90010	EXTINGUISHER	1	85001-
2	01010-D0620	BOLT	6	85001-
3	01643-70623	WASHER	6	85001-
4	17A-979-1770	BRACKET	1	85001-
5	01245-00625	SCREW	6	85001-
6	01643-70823	WASHER	6	85001-

Printed By : Dwi Iswanto (airafather6107170)

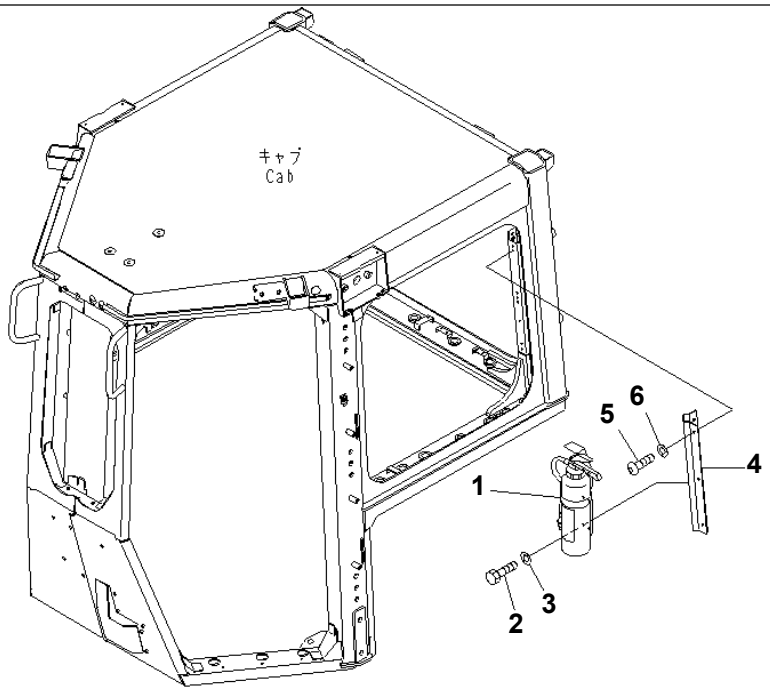

00042357

Ref. K0830-01B0 **Page 240460**

D155A-6 S/N 85001-UP
EXTINGUISHER (ARABIC) (WITH CAB)

Item	Part No.	Part Name	Qty	Serial No.
1	09495-11010	EXTINGUISHER	1	85001-
2	01010-D0620	BOLT	6	85001-
3	01643-70623	WASHER	6	85001-
4	17A-979-1770	BRACKET	1	85001-
5	01245-00625	SCREW	6	85001-
6	01643-70823	WASHER	6	85001-

Printed By : Dwi Iswanto (airafather6107170)

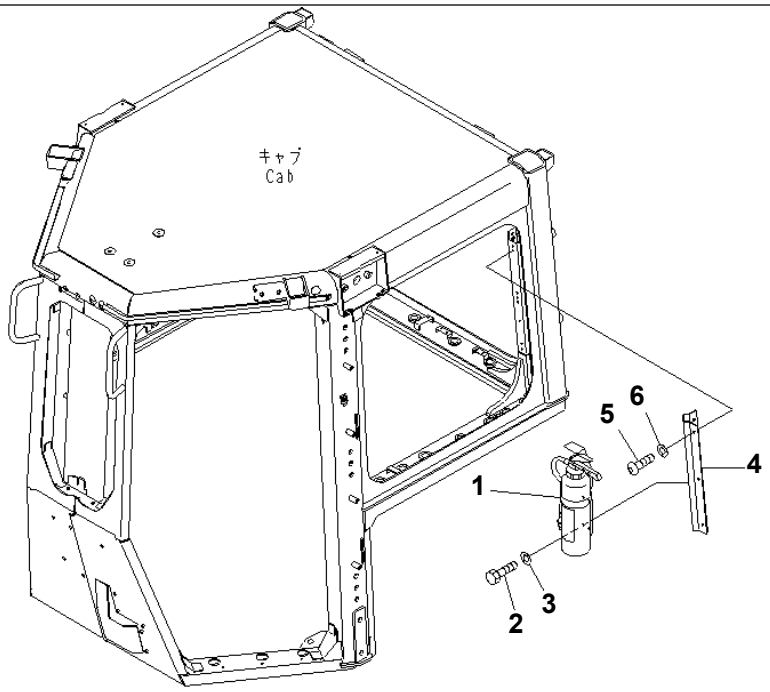

00042357

Ref. K0830-01B1 **Page 240470**

D155A-6 S/N 85001-UP
EXTINGUISHER (INDONESIAN) (WITH CAB)

Item	Part No.	Part Name	Qty	Serial No.
1	09495-31010	EXTINGUISHER	1	85001-
2	01010-D0620	BOLT	6	85001-
3	01643-70623	WASHER	6	85001-
4	17A-979-1770	BRACKET	1	85001-
5	01245-00625	SCREW	6	85001-
6	01643-70823	WASHER	6	85001-

Printed By : Dwi Iswanto (airafather6107170)

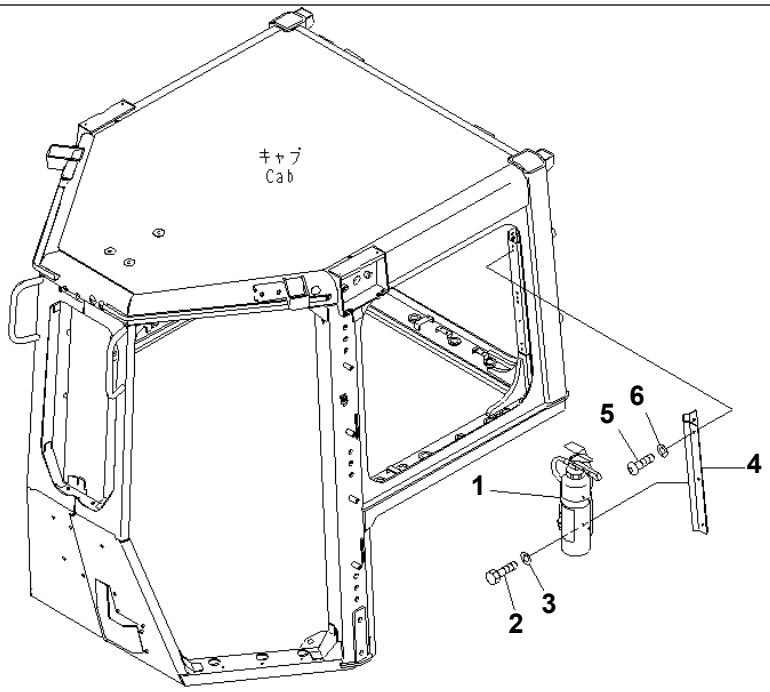

00042357

Ref. K0830-01B2 **Page 240480**

D155A-6 S/N 85001-UP
EXTINGUISHER (FRENCH) (WITH CAB)

Item	Part No.	Part Name	Qty	Serial No.
1	09495-50010	EXTINGUISHER	1	85001-
2	01010-D0620	BOLT	6	85001-
3	01643-70623	WASHER	6	85001-
4	17A-979-1770	BRACKET	1	85001-
5	01245-00625	SCREW	6	85001-
6	01643-70823	WASHER	6	85001-

Printed By : Dwi Iswanto (airafather6107170)

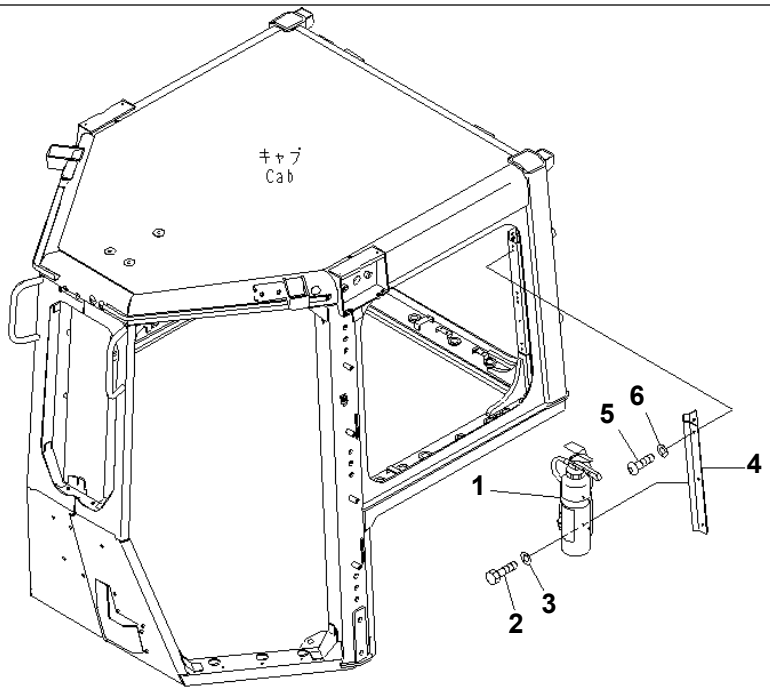

00042357

Ref. K0830-01B3 **Page 240490**

D155A-6 S/N 85001-UP
EXTINGUISHER (PERSIAN) (WITH CAB)

Item	Part No.	Part Name	Qty	Serial No.
1	09495-12010	EXTINGUISHER	1	85001-
2	01010-D0620	BOLT	6	85001-
3	01643-70623	WASHER	6	85001-
4	17A-979-1770	BRACKET	1	85001-
5	01245-00625	SCREW	6	85001-
6	01643-70823	WASHER	6	85001-

Printed By : Dwi Iswanto (airafather6107170)

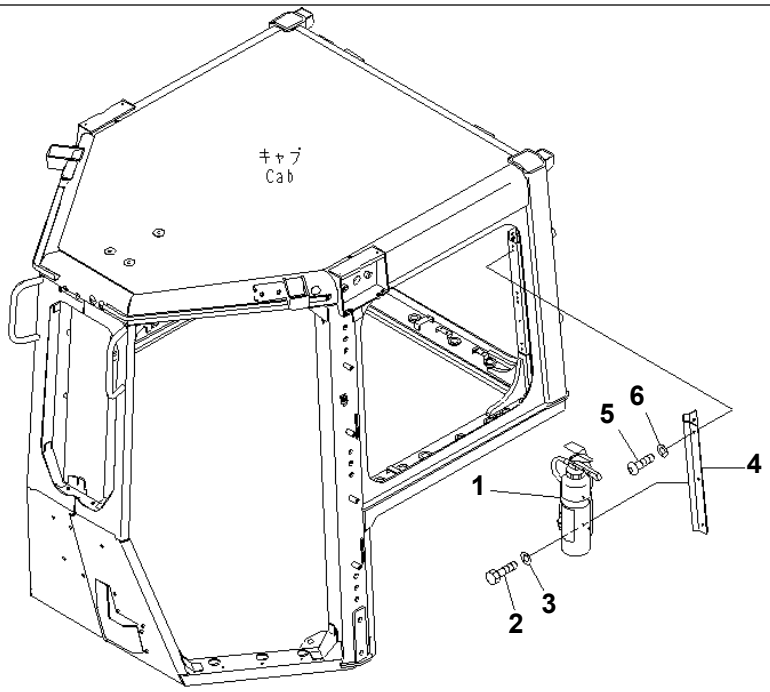

00042357

Ref. K0830-01B4 **Page 240500**

D155A-6 S/N 85001-UP
EXTINGUISHER (RUSSIAN) (WITH CAB)

Item	Part No.	Part Name	Qty	Serial No.
1	09495-30010	EXTINGUISHER	1	85001-
2	01010-D0620	BOLT	6	85001-
3	01643-70623	WASHER	6	85001-
4	17A-979-1770	BRACKET	1	85001-
5	01245-00625	SCREW	6	85001-
6	01643-70823	WASHER	6	85001-

Printed By : Dwi Iswanto (airafather6107170)

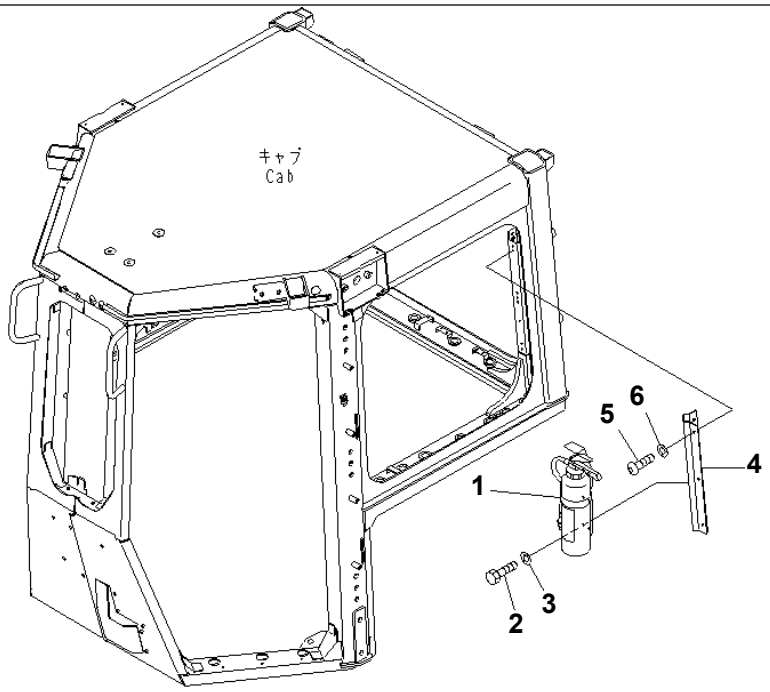

00042357

Ref. K0830-01B5 **Page 240510**

D155A-6 S/N 85001-UP
EXTINGUISHER (PORTUGUESE) (WITH CAB)

Item	Part No.	Part Name	Qty	Serial No.
1	09495-80010	EXTINGUISHER	1	85001-
2	01010-D0620	BOLT	6	85001-
3	01643-70623	WASHER	6	85001-
4	17A-979-1770	BRACKET	1	85001-
5	01245-00625	SCREW	6	85001-
6	01643-70823	WASHER	6	85001-

Printed By : Dwi Iswanto (airafather6107170)

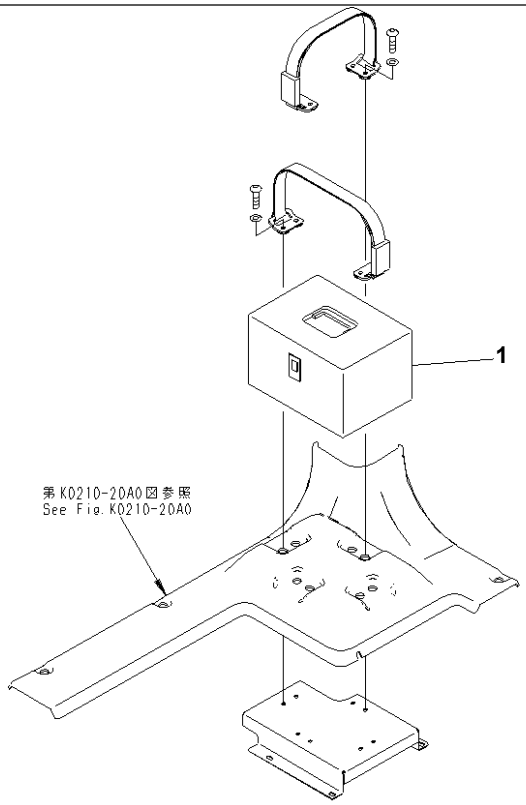

00042358

Ref. K0840-01A0 **Page 240520**

D155A-6 S/N 85001-UP
FIRST AID BOX

Item	Part No.	Part Name	Qty	Serial No.
1	17A-911-1830	BOX	1	85001-

Printed By : Dwi Iswanto (airafather6107170)

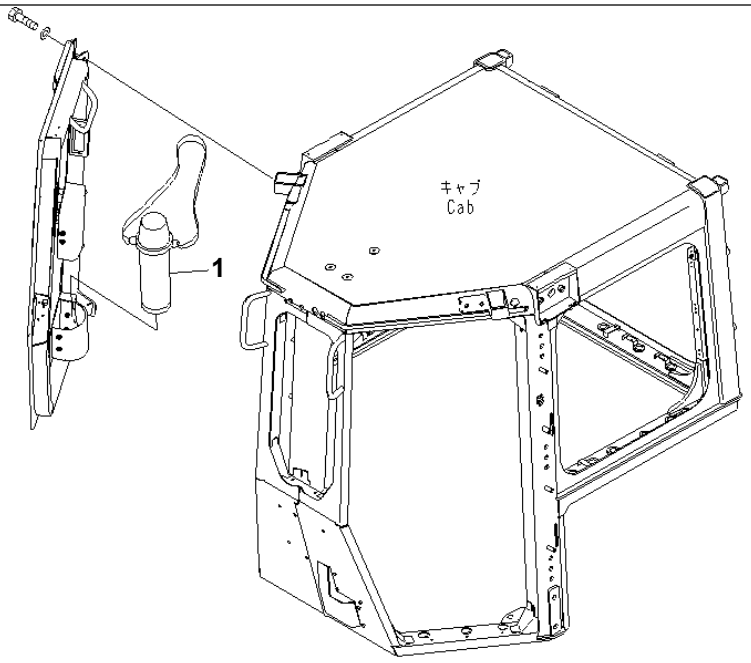

00042359

Ref. K0850-01A0 **Page 240530**

D155A-6 S/N 85001-UP
THERMOS BOTTLE

Item	Part No.	Part Name	Qty	Serial No.
1	195-911-1722	FLASK	1	85001-

Printed By : Dwi Iswanto (airafather6107170)

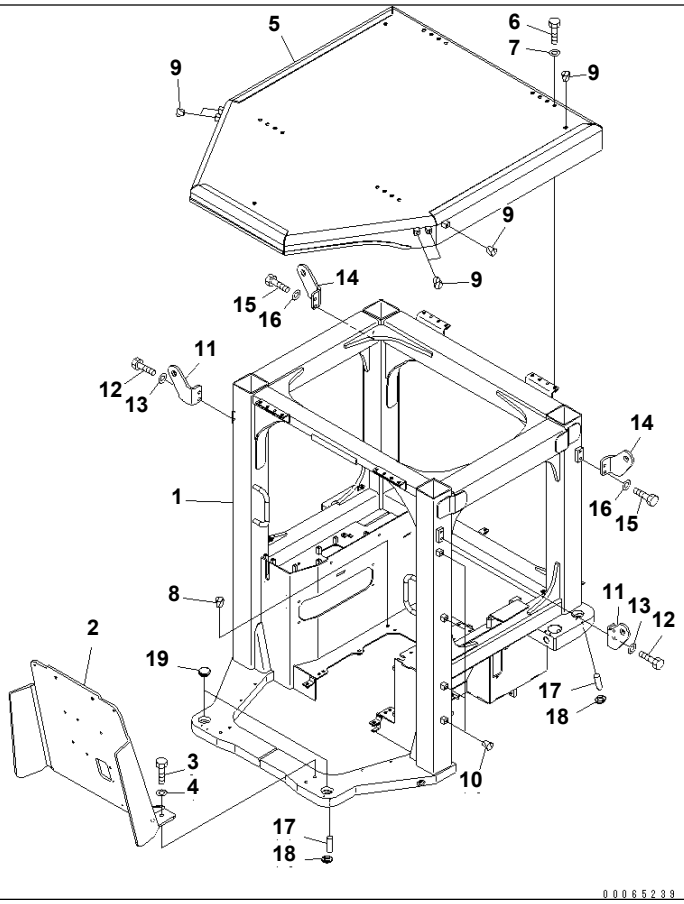

Ref. K2110-01A0 **Page 240540**

D155A-6 S/N 85001-UP
FLOOR FRAME (WITHOUT CAB)

Item	Part No.	Part Name	Qty	Serial No.
1	17A-978-3111	FRAME	1	85001-
2	17A-978-3211	BRACKET	1	85001-
3	01010-81640	BOLT	4	85001-
4	01643-31645	WASHER	4	85001-
5	17A-978-3221	ROOF	1	85001-
6	01010-81230	BOLT	16	85001-
7	01643-31232	WASHER	16	85001-
8	07049-01215	PLUG	2	85001-
9	07049-01215	PLUG	8	85001-
10	07049-01215	PLUG	4	85001-
11	17A-54-48511	PLATE	2	85001-
12	01010-81230	BOLT	4	85001-
13	01643-31232	WASHER	4	85001-
14	17A-54-48521	PLATE	2	85001-
15	01010-81230	BOLT	4	85001-
16	01643-31232	WASHER	4	85001-
17	04020-00616	PIN	8	85001-
18	17A-54-46440	PLATE	4	85001-
19	17A-54-48690	CAP	2	85001-

Printed By : Dwi Iswanto (airafather6107170)

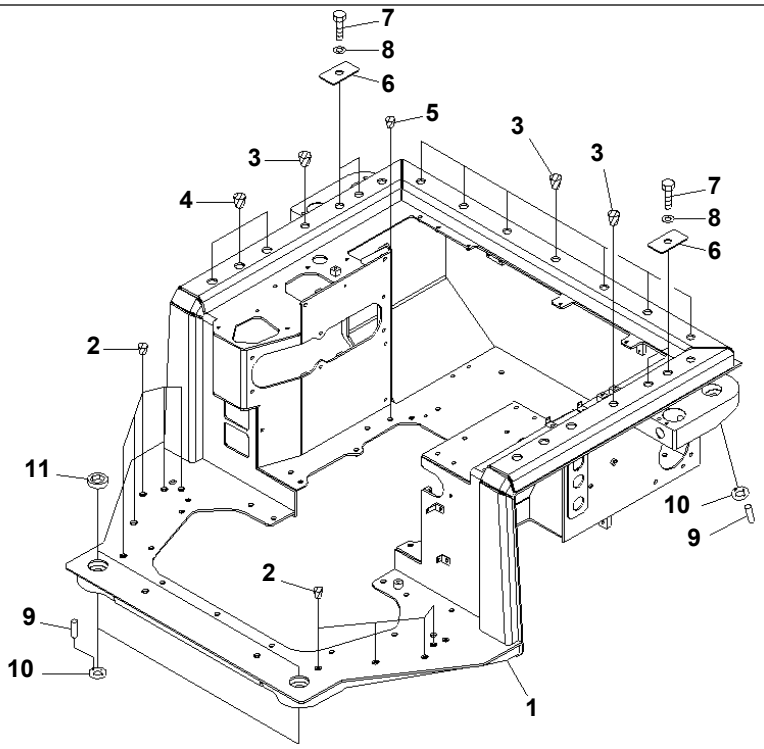

00065572

Ref. K2110-01A1 **Page 240550**

D155A-6 S/N 85001-UP
FLOOR FRAME (WITH CAB)

Item	Part No.	Part Name	Qty	Serial No.
1	17A-54-47111	FRAME	1	85001-
2	07049-01620	PLUG	10	85001-
3	07049-02025	PLUG	9	85001-
4	07049-02430	PLUG	6	85001-
5	07049-01215	PLUG	2	85001-
6	17A-54-46291	PLATE	4	85001-
7	01010-82050	BOLT	4	85001-
8	01643-32060	WASHER	4	85001-
9	04020-00616	PIN	8	85001-
10	17A-54-46440	PLATE	4	85001-
11	17A-54-46690	CAP	2	85001-

Printed By : Dwi Iswanto (airafather6107170)

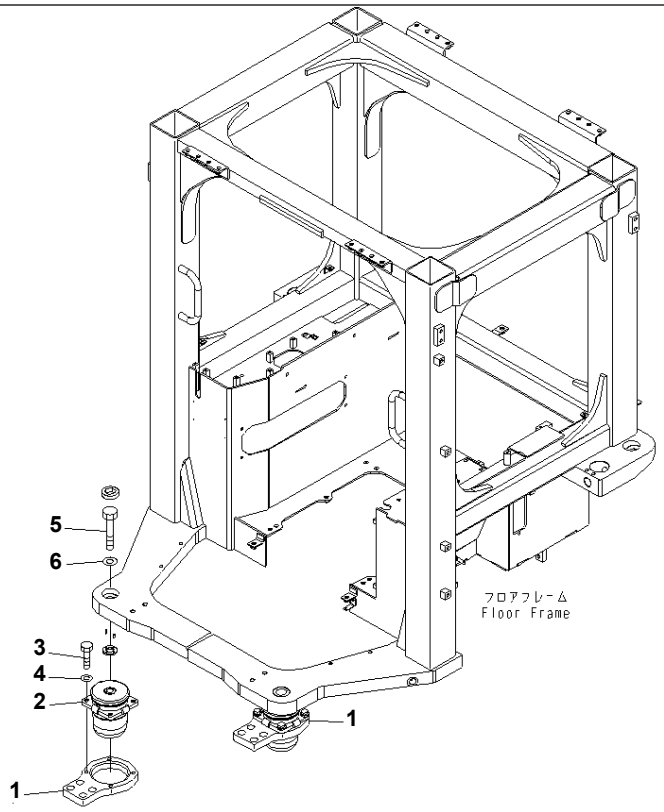

00065240

Ref. K2110-02A0 **Page 240560**

D155A-6 S/N 85001-UP

FLOOR FRAME (FLOOR MOUNT) (WITHOUT CAB)

Item	Part No.	Part Name	Qty	Serial No.
1	17A-54-46330	PLATE	2	85001-
2	17A-54-46120	CUSHION	2	85001-
3	01010-81440	BOLT	8	85001-
4	01643-31445	WASHER	8	85001-
5	01010-82470	BOLT	2	85001-
6	01643-32460	WASHER	2	85001-

Printed By : Dwi Iswanto (airafather6107170)

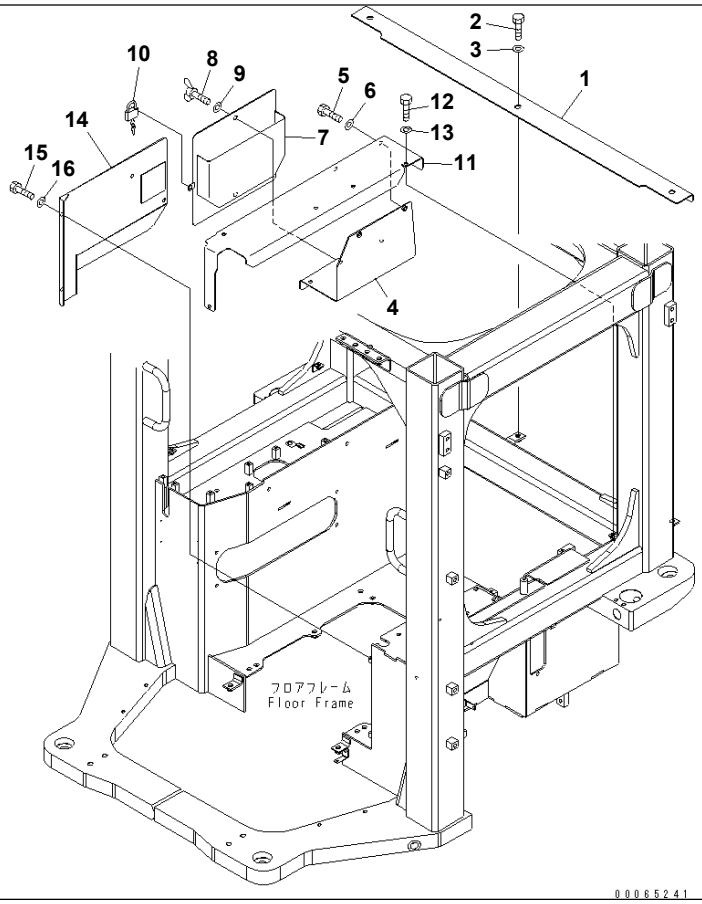

Ref. K2110-03A0 **Page 240570**

D155A-6 S/N 85001-UP

FLOOR FRAME (REAR COVER¤ L.H.) (WITHOUT CAB)

Item	Part No.	Part Name	Qty	Serial No.
1	17A-54-48281	COVER	1	85001-
2	01010-81230	BOLT	3	85001-
3	01643-31232	WASHER	3	85001-
4	17A-54-48271	COVER	1	85001-
5	01010-80820	BOLT	2	85001-
6	01643-30823	WASHER	2	85001-
7	17A-54-48571	COVER	1	85001-
8	17A-54-45890	BOLT	2	85001-
9	01643-31032	WASHER	2	85001-
10	09460-00000	LOCK	1	85001-
11	17A-54-48251	COVER	1	85001-
12	01010-80820	BOLT	6	85001-
13	01643-30823	WASHER	6	85001-
14	17A-54-48261	COVER	1	85001-
15	01010-80820	BOLT	4	85001-
16	01643-30823	WASHER	4	85001-

Printed By : Dwi Iswanto (airafather6107170)

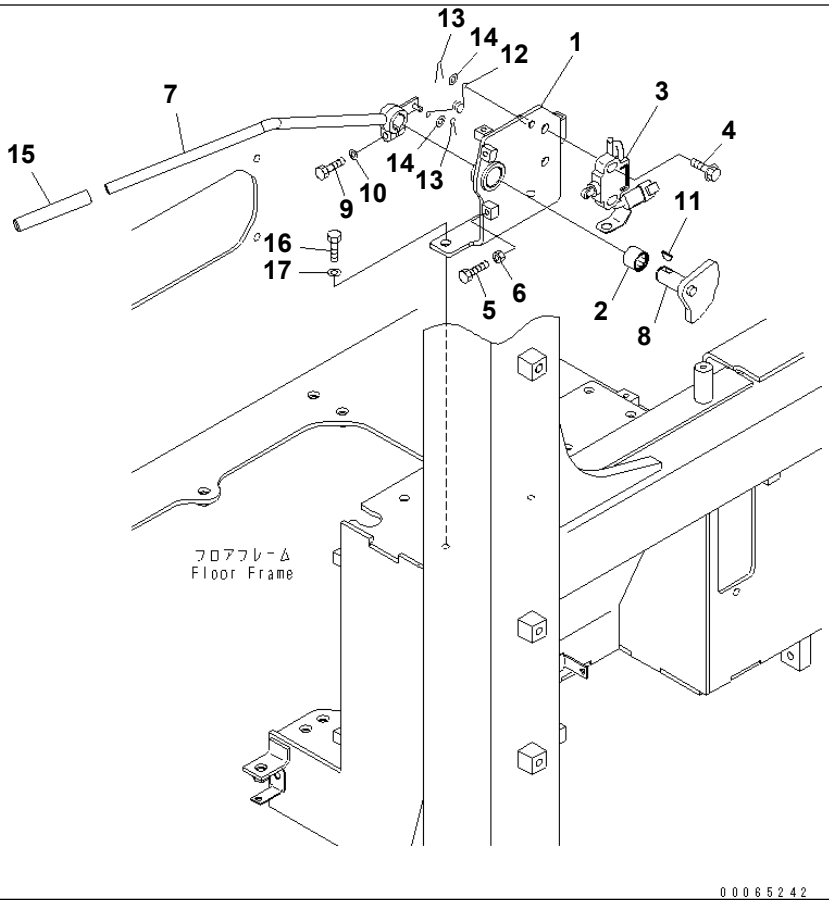

Ref. K2110-04A0 **Page 240580**

D155A-6 S/N 85001-UP

FLOOR FRAME (PARKING BRAKE LEVER) (WITHOUT CAB)

Item	Part No.	Part Name	Qty	Serial No.
1	17A-43-44511	BRACKET	1	85001-
2	06124-02020	BEARING	1	85001-
3	11Y-06-22150	SWITCH	1	85001-
4	01435-01035	BOLT	2	85001-
5	01016-50830	BOLT	2	85001-
6	01580-10806	NUT	2	85001-
7	17A-43-44520	LEVER	1	85001-
8	17A-43-44531	LEVER	1	85001-
9	01010-80830	BOLT	1	85001-
10	01643-30823	WASHER	1	85001-
11	04010-00516	KEY	1	85001-
12	198-54-75760	SPRING	1	85001-
13	04050-11612	PIN	2	85001-
14	01640-20610	WASHER	2	85001-
15	417-43-28270	CAP	1	85001-
16	01010-81020	BOLT	2	85001-
17	01643-31032	WASHER	2	85001-

Printed By : Dwi Iswanto (airafather6107170)

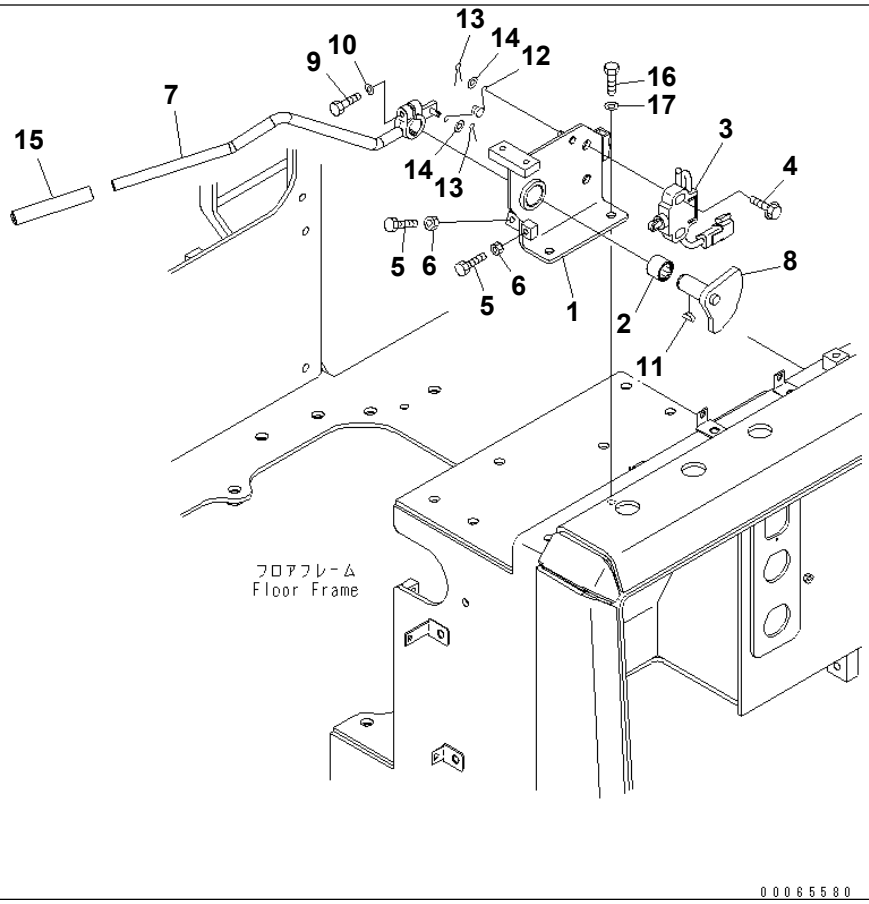

00065580

Ref. K2110-04A1 **Page 240590**

D155A-6 S/N 85001-UP

FLOOR FRAME (PARKING BRAKE LEVER) (WITH CAB)

Item	Part No.	Part Name	Qty	Serial No.
1	17A-43-44211	BRACKET	1	85001-
2	06124-02020	BEARING	1	85001-
3	11Y-06-22150	SWITCH	1	85001-
4	01435-01035	BOLT	2	85001-
5	01016-50830	BOLT	2	85001-
6	01580-10806	NUT	2	85001-
7	17A-43-44220	LEVER	1	85001-
8	17A-43-44231	LEVER	1	85001-
9	01010-80830	BOLT	1	85001-
10	01643-30823	WASHER	1	85001-
11	04010-00516	KEY	1	85001-
12	198-54-75760	SPRING	1	85001-
13	04050-11612	PIN	2	85001-
14	01640-20610	WASHER	2	85001-
15	417-43-28270	CAP	1	85001-
16	01010-81030	BOLT	2	85001-
17	01643-31032	WASHER	2	85001-

Printed By : Dwi Iswanto (airafather6107170)

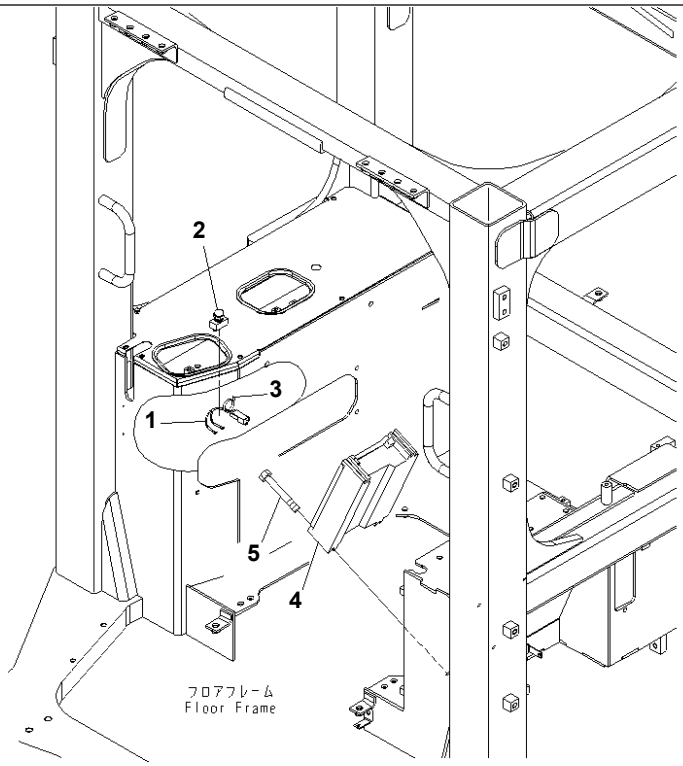

00065243

Ref. K2110-05A0 **Page 240600**

D155A-6 S/N 85001-UP
FLOOR FRAME (SWITCH AND CONTROLLER) (WITHOUT CAB)

Item	Part No.	Part Name	Qty	Serial No.
1	08064-10000	HORN SWITCH	1	85001-
2	17A-06-41860	WIRING HARNESS	1	85001-
3	08034-20310	・ BAND	1	85001-
4	7830-54-3001	CONTROLLER	1	85001-
5	01435-00890	BOLT	4	85001-

Printed By : Dwi Iswanto (airafather6107170)

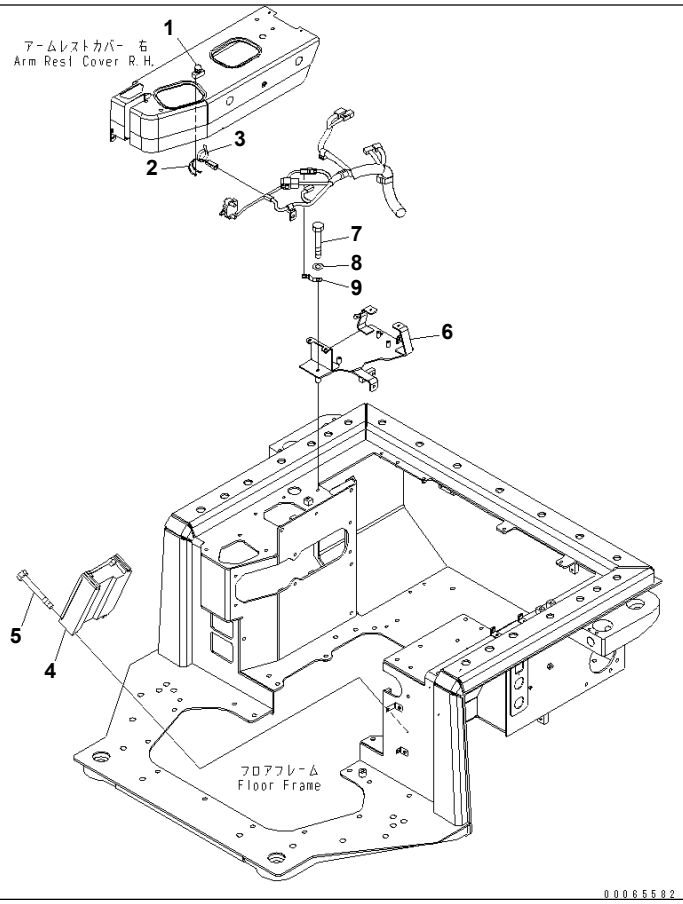

Ref. K2110-05A1 **Page 240610**

D155A-6 S/N 85001-UP
FLOOR FRAME (SWITCH AND CONTROLLER) (WITH CAB)

Item	Part No.	Part Name	Qty	Serial No.
1	08064-10000	HORN SWITCH	1	85001-
2	17A-06-41860	WIRING HARNESS	1	85001-
3	08034-20310	· BAND	1	85001-
4	7830-54-3001	CONTROLLER	1	85001-
5	01435-00885	BOLT	4	85001-
6	17A-54-47121	BRACKET	1	85001-
7	01010-80865	BOLT	3	85001-
8	01643-30823	WASHER	3	85001-
9	08193-20010	CLIP	1	85001-

Printed By : Dwi Iswanto (airafather6107170)

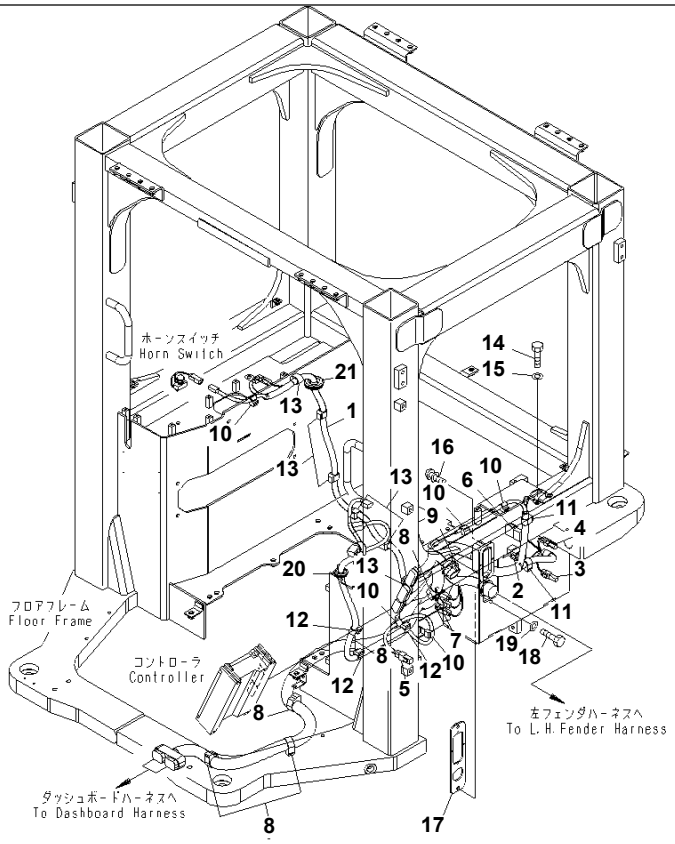

Ref. K2110-06A0 **Page 240620**

D155A-6 S/N 85001-UP

FLOOR FRAME (WIRING HARNESS) (WITHOUT CAB)

Item	Part No.	Part Name	Qty	Serial No.
1	17A-06-43311	WIRING HARNESS	1	85001-
2	08055-00481	· CONNECTOR	1	85001-
3	08192-12830	· CONNECTOR	1	85001-
4	08192-23830	· CONNECTOR	1	85001-
5	08192-24830	· CONNECTOR	1	85001-
6	08192-29931	· CONNECTOR	1	85001-
7	21J-06-13661	· DIODE	3	85001-
8	08211-02820	CLIP	5	85001-
9	08211-01920	CLIP	1	85001-
10	08211-00720	CLIP	5	85001-
11	08211-01520	CLIP	3	85001-
12	08211-01320	CLIP	4	85001-
13	08211-01020	CLIP	6	85001-
14	01010-81220	BOLT	2	85001-
15	01643-31232	WASHER	2	85001-
16	01023-10416	SCREW	4	85001-
17	17A-06-43550	BRACKET	1	85001-
18	01010-80820	BOLT	2	85001-
19	01643-30823	WASHER	2	85001-
20	207-54-16860	GROMMET	1	85001-
21	209-06-51470	GROMMET	2	85001-

Printed By : Dwi Iswanto (airafather6107170)

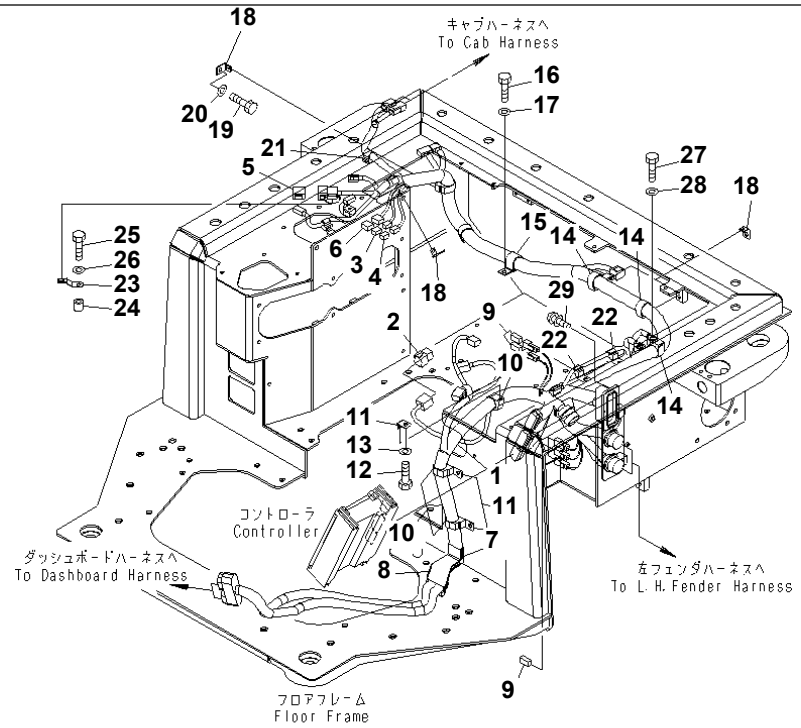

00065637

Ref. K2110-06A1 **Page 240630**

D155A-6 S/N 85001-UP
FLOOR FRAME (WIRING HARNESS) (WITH CAB)

Item	Part No.	Part Name	Qty	Serial No.
1	17A-06-43111	WIRING HARNESS	1	85001-
2	08055-00481	· CONNECTOR	1	85001-
3	08192-12830	· CONNECTOR	1	85001-
4	08192-23830	· CONNECTOR	1	85001-
5	08192-29931	· CONNECTOR	1	85001-
6	08192-29932	· CONNECTOR	1	85001-
7	17A-06-41881	· COVER	1	85001-
8	17A-06-41891	· COVER	1	85001-
9	21J-06-13661	· DIODE	5	85001-
10	08211-02820	CLIP	3	85001-
11	08057-12010	CLIP	3	85001-
12	01010-81020	BOLT	3	85001-
13	01643-31032	WASHER	3	85001-
14	08211-02820	CLIP	3	85001-
15	04434-53411	CLIP	1	85001-
16	01010-81020	BOLT	1	85001-
17	01643-31032	WASHER	1	85001-
18	08057-12010	CLIP	4	85001-
19	01010-81020	BOLT	4	85001-
20	01643-31032	WASHER	4	85001-
21	08211-01320	CLIP	1	85001-
22	08211-00720	CLIP	2	85001-
23	08193-20010	CLIP	1	85001-
24	195-33-11220	SPACER	1	85001-
25	01010-81040	BOLT	1	85001-
26	01643-31032	WASHER	1	85001-
27	01010-81020	BOLT	2	85001-
28	01643-31032	WASHER	2	85001-
29	01023-10416	SCREW	4	85001-

Printed By : Dwi Iswanto (airafather6107170)

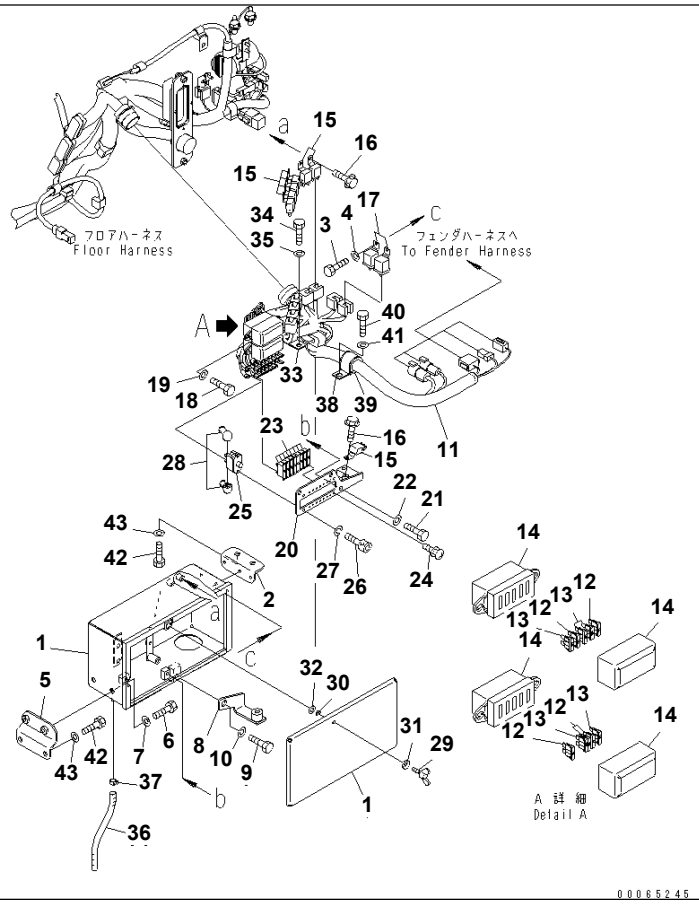

Ref. K2110-07A0 **Page 240640**

D155A-6 S/N 85001-UP
FLOOR FRAME (WIRING HARNESS AND FUSE) (WITHOUT CAB)

Item	Part No.	Part Name	Qty	Serial No.
1	17A-06-43511	BRACKET	1	85001-
2	17A-06-43560	BRACKET	1	85001-
3	01010-80616	BOLT	3	85001-
4	01643-30623	WASHER	3	85001-
5	17A-06-43570	BRACKET	1	85001-
6	01010-81020	BOLT	2	85001-
7	01643-31032	WASHER	2	85001-
8	17A-06-41912	BRACKET	1	85001-
9	01010-81225	BOLT	1	85001-
10	01643-31232	WASHER	1	85001-
11	17A-06-41223	WIRING HARNESS	1	85001-
12	08041-00500	· FUSE¤ 5A	7	85001-
13	08041-02000	· FUSE¤ 20A	7	85001-
14	20T-06-71560	· FUSE BOX	2	85001-
15	7861-74-5100	RELAY	7	85001-
16	01435-00612	BOLT	7	85001-
17	569-06-61960	RELAY	2	85001-
18	01010-80816	BOLT	4	85001-
19	01643-30823	WASHER	4	85001-
20	17A-06-41662	BRACKET	1	85001-
21	01010-80816	BOLT	3	85001-
22	01643-30823	WASHER	3	85001-
23	195-979-8340	BREAKER	8	85001-
24	01023-10308	SCREW	16	85001-
25	209-06-77460	CIRCUIT BREAKER	1	85001-
26	01252-70410	BOLT	2	85001-
27	01601-20410	WASHER	2	85001-
28	08038-00519	CAP	2	85001-
29	198-911-6970	BOLT	1	85001-
30	198-911-6990	RING	1	85001-

Printed By : Dwi Iswanto (airafather6107170)

FLOOR FRAME (WIRING HARNESS AND FUSE) (WITHOUT CAB)

Item	Part No.	Part Name	Qty	Serial No.
31	01643-70623	WASHER	1	85001-
32	01640-20610	WASHER	1	85001-
33	04434-52711	CLIP	1	85001-
34	01010-81020	BOLT	1	85001-
35	01643-31032	WASHER	1	85001-
36	07270-20820	TUBE	1	85001-
37	07285-00115	CLIP	1	85001-
38	04434-53412	CLIP	1	85001-
39	07095-20627	CUSHION	1	85001-
40	01010-81225	BOLT	1	85001-
41	01643-31232	WASHER	1	85001-
42	01010-81020	BOLT	4	85001-
43	01643-31032	WASHER	4	85001-

Printed By : Dwi Iswanto (airafather6107170)

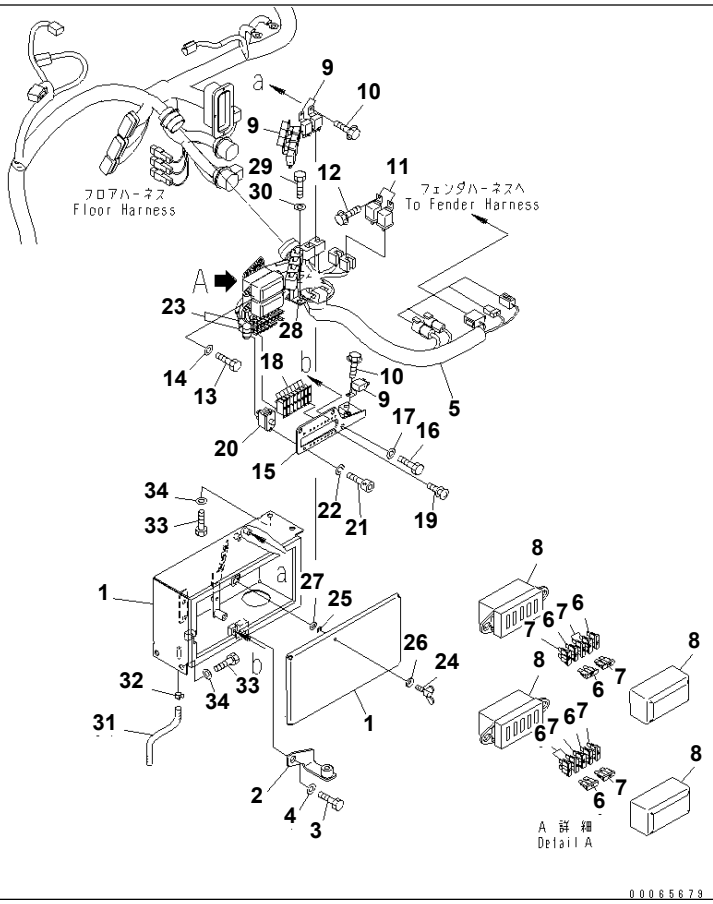

Ref. K2110-07A1 **Page 240650**

D155A-6 S/N 85001-UP
FLOOR FRAME (WIRING HARNESS AND FUSE) (WITH CAB)

Item	Part No.	Part Name	Qty	Serial No.
1	17A-06-41511	BRACKET	1	85001-
2	17A-06-41912	BRACKET	1	85001-
3	01010-81225	BOLT	1	85001-
4	01643-31232	WASHER	1	85001-
5	17A-06-41223	WIRING HARNESS	1	85001-
6	08041-00500	· FUSE¤ 5A	7	85001-
7	08041-02000	· FUSE¤ 20A	7	85001-
8	20T-06-71560	· FUSE BOX	2	85001-
9	7861-74-5100	RELAY	7	85001-
10	01435-00612	BOLT	7	85001-
11	569-06-61960	RELAY	2	85001-
12	01435-00612	BOLT	2	85001-
13	01010-80816	BOLT	4	85001-
14	01643-30823	WASHER	4	85001-
15	17A-06-41662	BRACKET	1	85001-
16	01010-80816	BOLT	3	85001-
17	01643-30823	WASHER	3	85001-
18	195-979-8340	BREAKER	8	85001-
19	01023-10308	SCREW	16	85001-
20	209-06-77460	CIRCUIT BREAKER	1	85001-
21	01252-70410	BOLT	2	85001-
22	01601-20410	WASHER	2	85001-
23	08038-00519	CAP	2	85001-
24	198-911-6970	BOLT	1	85001-
25	198-911-6990	RING	1	85001-
26	01643-70623	WASHER	1	85001-
27	01640-20610	WASHER	1	85001-
28	04434-52711	CLIP	1	85001-
29	01010-81020	BOLT	1	85001-
30	01643-31032	WASHER	1	85001-

Printed By : Dwi Iswanto (airafather6107170)

FLOOR FRAME (WIRING HARNESS AND FUSE) (WITH CAB)

Item	Part No.	Part Name	Qty	Serial No.
31	07270-20820	TUBE	1	85001-
32	07285-00115	CLIP	1	85001-
33	01010-81020	BOLT	4	85001-
34	01643-31032	WASHER	4	85001-

Printed By : Dwi Iswanto (airafather6107170)

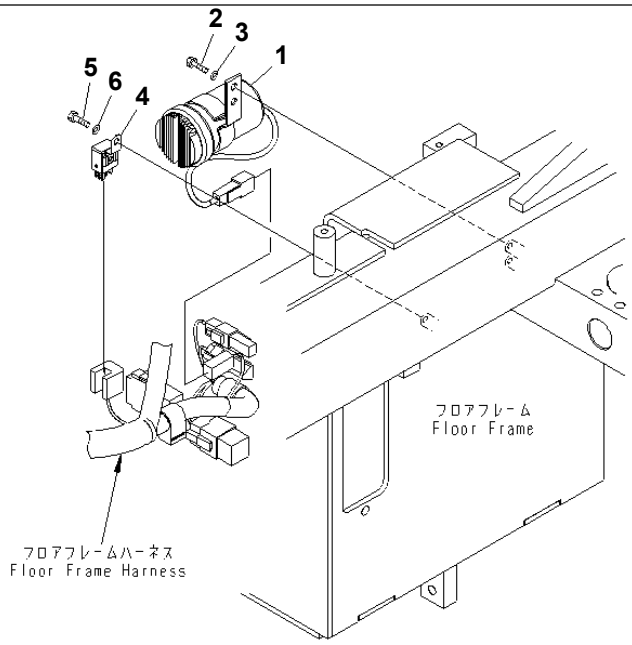

00065246

Ref. K2110-08A0 **Page 240660**

D155A-6 S/N 85001-UP

FLOOR FRAME (MONITOR BUZZER) (WITHOUT CAB)

Item	Part No.	Part Name	Qty	Serial No.
1	17A-06-43210	BUZZER	1	85001-
2	01010-80616	BOLT	2	85001-
3	01643-30623	WASHER	2	85001-
4	7861-74-5100	RELAY	1	85001-
5	01010-80616	BOLT	1	85001-
6	01643-30623	WASHER	1	85001-

Printed By : Dwi Iswanto (airafather6107170)

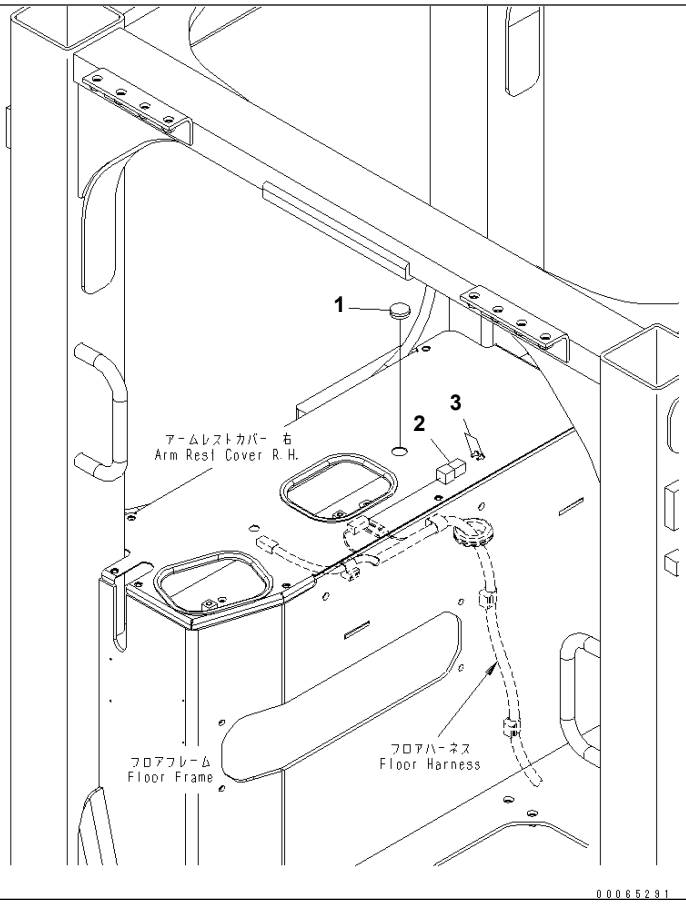

Ref. K2110-09A0 **Page 240670**

D155A-6 S/N 85001-UP

FLOOR FRAME (WITHOUT PIN PULLER SWITCH) (MALTI RIPPER)

Item	Part No.	Part Name	Qty	Serial No.
1	09415-01610	CAP	1	85001-
2	08192-22100	CONNECTOR	1	85001-
3	08191-00770	PLUG	2	85001-

Printed By : Dwi Iswanto (airafather6107170)

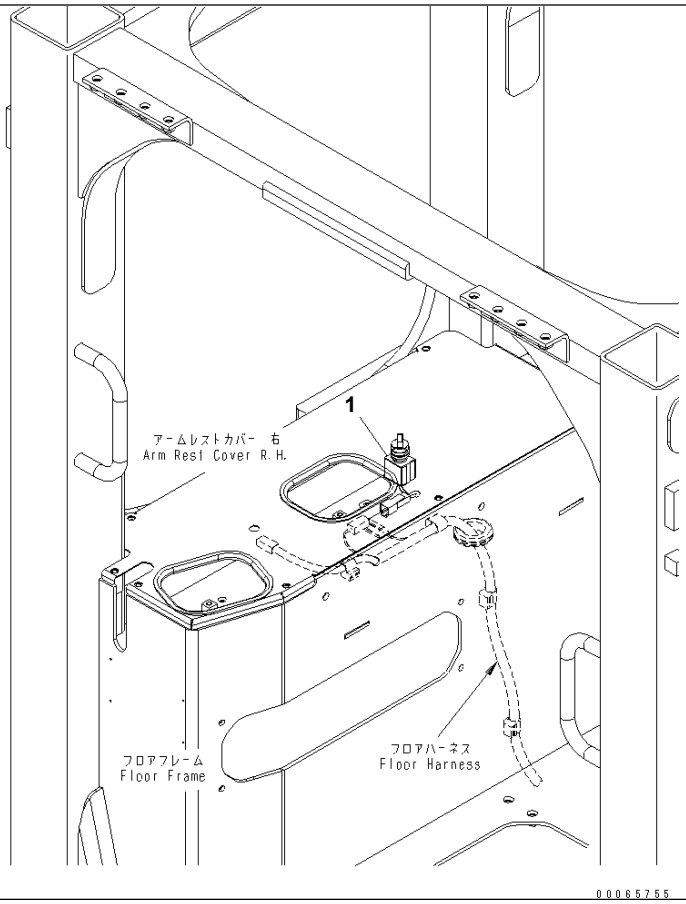

Ref. K2110-09A2 **Page 240680**

D155A-6 S/N 85001-UP
FLOOR FRAME (PIN PULLER SWITCH)

Item	Part No.	Part Name	Qty	Serial No.
1	17A-06-41850	SWITCH ASS'Y	1	85001-

Printed By : Dwi Iswanto (airafather6107170)

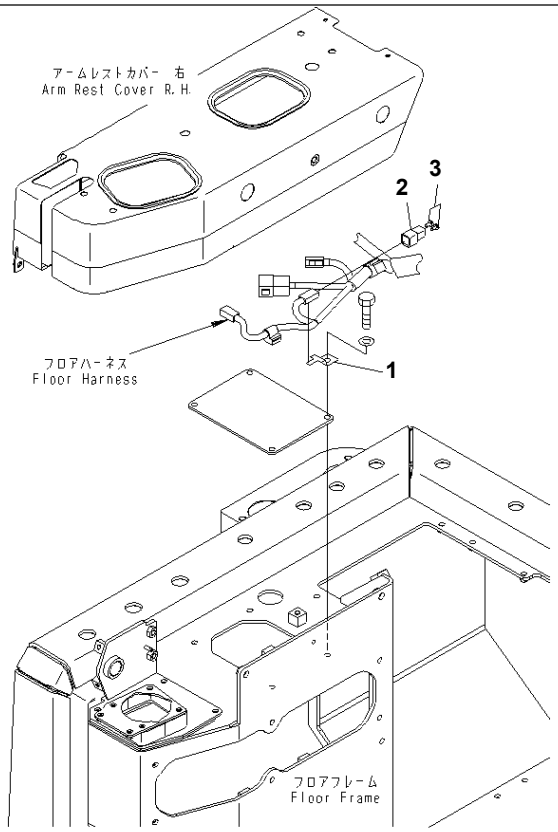

00065761

Ref. K2110-09A4 **Page 240690**

D155A-6 S/N 85001-UP
FLOOR FRAME (WITHOUT PIN PULLER SWITCH) (WORK EQUIP LESS)

Item	Part No.	Part Name	Qty	Serial No.
1	08193-20010	CLIP	1	85001-
2	08192-22100	CONNECTOR	1	85001-
3	08191-00770	PLUG	2	85001-

Printed By : Dwi Iswanto (airafather6107170)

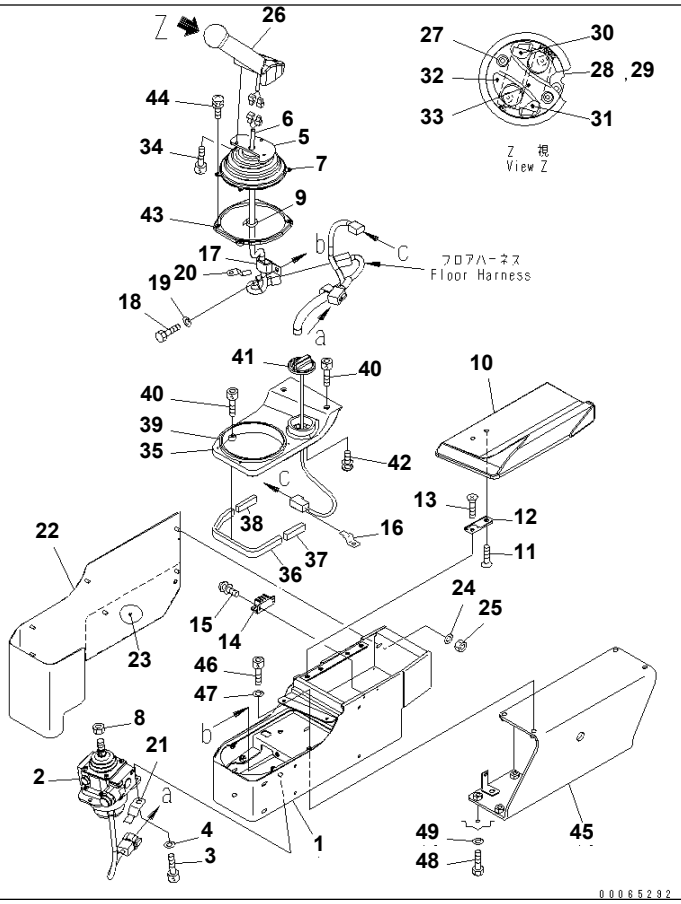

Ref. K2110-10A0 **Page 240700**

D155A-6 S/N 85001-UP
FLOOR FRAME (LEVER AND CONSOLE) (WITHOUT CAB)

Item	Part No.	Part Name	Qty	Serial No.
1	154-43-73710	BOX	1	85001-
2	(702-16-02213)	LEVER ASS'Y	1	85010-
	(□702-16-02212)	LEVER ASS'Y	1	85001-85009
3	01252-70825	BOLT	3	85001-
4	01643-30823	WASHER	3	85001-
	14X-06-31311	WIRING HARNESS	1	85001-
5	154-43-73531	· BRACKET	1	85001-
6	☆	· WIRING HARNESS	1	85001-
7	14X-43-34331	· BOOT	1	85001-
8	20T-43-71190	NUT	1	85001-
9	08034-20519	BAND	2	85001-
10	154-43-73641	PAD	1	85001-
11	01224-70408	· SCREW	8	85001-
12	19M-43-33660	· HINGE	2	85001-
13	01224-70408	SCREW	4	85001-
14	154-43-73651	MAGNET	1	85001-
15	01023-10308	SCREW	4	85001-
16	08193-21012	CLIP	1	85001-
17	04435-51408	CLIP	1	85001-
18	01010-80816	BOLT	1	85001-
19	01643-30823	WASHER	1	85001-
20	08193-20010	CLIP	1	85001-
21	08193-31012	CLIP	1	85001-
22	17A-43-44140	PAD	1	85001-
23	17A-43-44150	· RUBBER	1	85001-
24	01640-20610	WASHER	8	85001-
25	01580-20605	NUT	8	85001-
26	19M-43-33110	KNOB ASS'Y	1	85001-
27	19M-09-11510	· BOLT	2	85001-
28	19M-43-33140	· SWITCH ASS'Y	1	85001-

Printed By : Dwi Iswanto (airafather6107170)

FLOOR FRAME (LEVER AND CONSOLE) (WITHOUT CAB)

Item	Part No.	Part Name	Qty	Serial No.
29	19M-43-33170	· · PLATE	1	85001-
30	19M-43-33460	· · SWITCH	1	85001-
31	19M-43-33470	· · SWITCH	1	85001-
32	19M-43-33150	· RUBBER	1	85001-
33	19M-43-33160	· COVER	1	85001-
34	01252-80514	BOLT	3	85001-
	14X-43-34320	FINISHER	1	85001-
35	154-43-73620	· FINISHER	1	85001-
36	14X-54-38310	· SHEET	1	85001-
37	14X-54-38320	· SHEET	1	85001-
38	14X-54-38330	· SHEET	1	85001-
39	14X-54-38350	· SHEET	1	85001-
40	01252-70520	BOLT	4	85001-
41	14X-06-31501	DIAL	1	85001-
42	01023-60410	SCREW	2	85001-
43	14X-43-34341	COVER	1	85001-
44	01023-70414	SCREW	4	85001-
45	17A-43-44611	BRACKET	1	85001-
46	01252-70820	BOLT	4	85001-
47	01643-30823	WASHER	4	85001-
48	01010-81030	BOLT	6	85001-
49	01643-31032	WASHER	6	85001-

Printed By : Dwi Iswanto (airafather6107170)

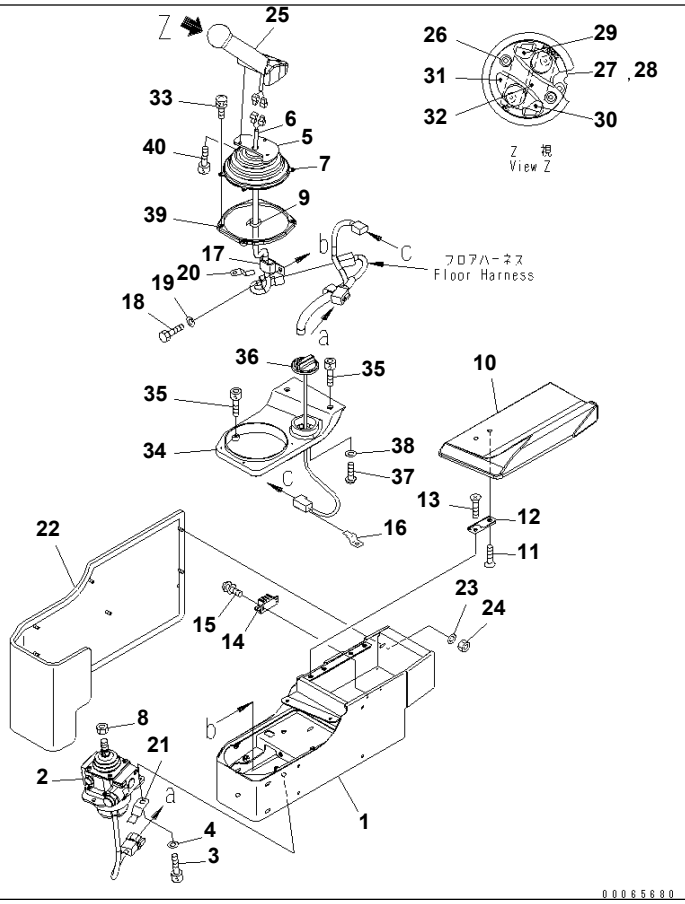

D155A-6 S/N 85001-UP

FLOOR FRAME (LEVER AND CONSOLE) (WITH CAB)

Item	Part No.	Part Name	Qty	Serial No.
1	154-43-73611	BOX	1	85001-
2	(702-16-02213)	LEVER ASS'Y	1	85010-
	(□702-16-02212)	LEVER ASS'Y	1	85001-85009
3	01252-70825	BOLT	3	85001-
4	01643-30823	WASHER	3	85001-
	14X-06-31311	WIRING HARNESS	1	85001-
5	154-43-73531	· BRACKET	1	85001-
6	☆	· WIRING HARNESS	1	85001-
7	14X-43-34331	· BOOT	1	85001-
8	20T-43-71190	NUT	1	85001-
9	08034-20519	BAND	4	85001-
10	154-43-73641	PAD	1	85001-
11	01224-70408	· SCREW	8	85001-
12	19M-43-33660	· HINGE	2	85001-
13	01224-70408	SCREW	4	85001-
14	154-43-73651	MAGNET	1	85001-
15	01023-10308	SCREW	4	85001-
16	08053-01510	CLIP	1	85001-
17	04435-51408	CLIP	1	85001-
18	01010-80816	BOLT	1	85001-
19	01643-30823	WASHER	1	85001-
20	08193-20010	CLIP	1	85001-
21	08193-31012	CLIP	1	85001-
22	154-43-73281	PAD	1	85001-
23	01640-20610	WASHER	8	85001-
24	01580-20605	NUT	8	85001-
25	19M-43-33110	KNOB ASS'Y	1	85001-
26	19M-09-11510	· BOLT	2	85001-
27	19M-43-33140	· SWITCH ASS'Y	1	85001-
28	19M-43-33170	· · PLATE	1	85001-

Printed By : Dwi Iswanto (airafather6107170)

FLOOR FRAME (LEVER AND CONSOLE) (WITH CAB)

Item	Part No.	Part Name	Qty	Serial No.
29	19M-43-33460	· · SWITCH	1	85001-
30	19M-43-33470	· · SWITCH	1	85001-
31	19M-43-33150	· RUBBER	1	85001-
32	19M-43-33160	· COVER	1	85001-
33	01252-80514	BOLT	3	85001-
34	154-43-73620	FINISHER	1	85001-
35	01252-70520	BOLT	4	85001-
36	7825-30-1301	DIAL	1	85001-
37	01220-40408	SCREW	2	85001-
38	01641-20405	WASHER	2	85001-
39	14X-43-34341	COVER	1	85001-
40	01023-70414	SCREW	4	85001-

Printed By : Dwi Iswanto (airafather6107170)

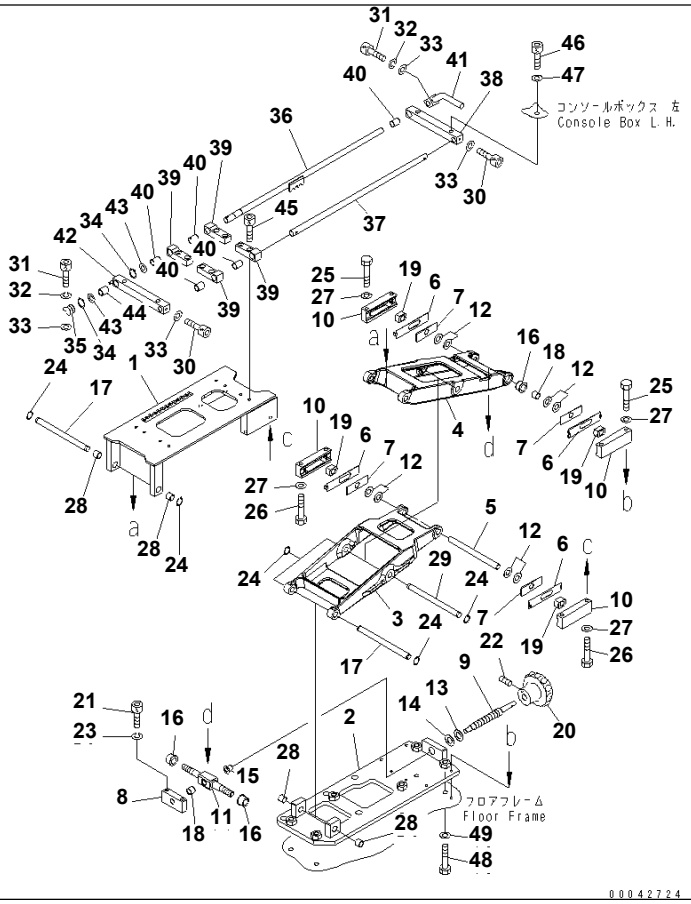

Ref. K2110-11A1 **Page 240720**

D155A-6 S/N 85001-UP
FLOOR FRAME (LIFT AND SLIDER) (WITH CAB)

Item	Part No.	Part Name	Qty	Serial No.
	154-43-73301	LIFT ASS'Y	1	85001-
1	154-43-73211	· PLATE	1	85001-
2	154-43-73831	· PLATE	1	85001-
3	17A-43-26211	· ARM	1	85001-
4	154-43-73850	· ARM	1	85001-
5	154-43-73860	· SHAFT	1	85001-
6	154-43-73870	· PLATE	4	85001-
7	154-43-73880	· PLATE	4	85001-
8	154-43-73890	· BLOCK	1	85001-
9	154-43-73910	· SHAFT	1	85001-
10	154-43-73920	· BOX	4	85001-
11	154-43-73930	· SHAFT	1	85001-
12	19M-43-34520	· SHIM	8	85001-
13	363-43-38550	· SHIM¤ 0.2MM	2	85001-
14	154-43-73950	· SHIM	2	85001-
15	154-43-73960	· BUSHING	1	85001-
16	19M-43-34250	· BUSHING	1	85001-
17	19M-43-34280	· SHAFT	2	85001-
18	19M-43-34290	· BUSHING	2	85001-
19	19M-43-34320	· BUSHING	4	85001-
20	20A-43-15311	· KNOB	1	85001-
21	01252-80530	· BOLT	2	85001-
22	01312-20612	· SCREW	1	85001-
23	01601-20512	· WASHER	2	85001-
24	04064-01010	· RING	6	85001-
25	01010-80635	· BOLT	4	85001-
26	01010-80640	· BOLT	4	85001-
27	01643-30623	· WASHER	8	85001-
28	06600-01008	· BUSHING	4	85001-
29	17A-43-26231	· SHAFT	1	85001-

Printed By : Dwi Iswanto (airafather6107170)

FLOOR FRAME (LIFT AND SLIDER) (WITH CAB)

Item	Part No.	Part Name	Qty	Serial No.
	154-43-73601	SLIDER ASS'Y	1	85001-
30	01252-80412	· BOLT	2	85001-
31	01252-80414	· BOLT	2	85001-
32	01601-20411	· WASHER	2	85001-
33	01640-20408	· WASHER	4	85001-
34	04064-01010	· RING	2	85001-
35	154-43-73670	· SPRING	1	85001-
36	154-43-73680	· SHAFT	1	85001-
37	19M-43-34120	· SHAFT	1	85001-
38	19M-43-34132	· GUIDE	1	85001-
39	19M-43-34141	· GUIDE	4	85001-
40	19M-43-34150	· BUSHING	5	85001-
41	19M-43-34160	· LEVER	2	85001-
42	19M-43-34182	· GUIDE	1	85001-
43	19M-09-34110	· WASHER	2	85001-
44	19M-43-34190	· BUSHING	1	85001-
45	01252-80516	BOLT	8	85001-
46	01252-70816	BOLT	4	85001-
47	01643-30823	WASHER	4	85001-
48	01010-81030	BOLT	6	85001-
49	01643-31032	WASHER	6	85001-

Printed By : Dwi Iswanto (airafather6107170)

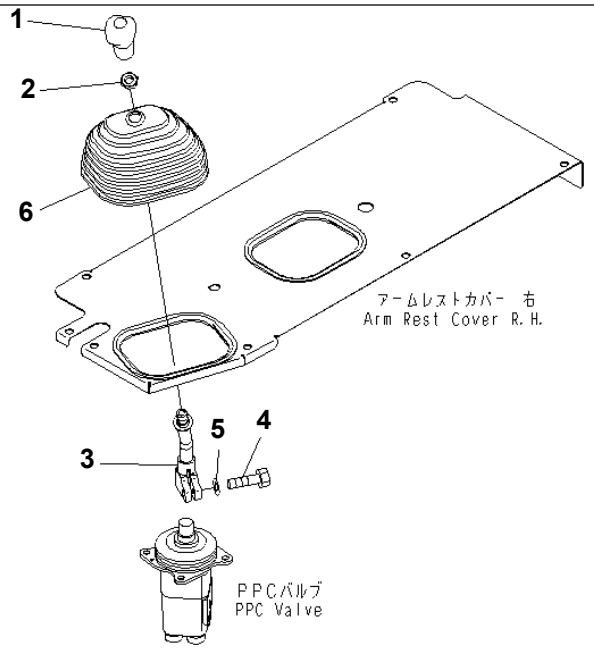

00065293

Ref. K2110-12A0 **Page 240730**

D155A-6 S/N 85001-UP
FLOOR FRAME (BLADE CONTROL LEVER) (SINGLE TILT) (WITHOUT CAB)

Item	Part No.	Part Name	Qty	Serial No.
1	14X-43-14171	KNOB	1	85001-
2	20T-43-71190	NUT	1	85001-
3	17A-43-15350	LEVER	1	85001-
4	01010-81030	BOLT	1	85001-
5	01643-31032	WASHER	1	85001-
6	14X-43-11320	BOOT	1	85001-

Printed By : Dwi Iswanto (airafather6107170)

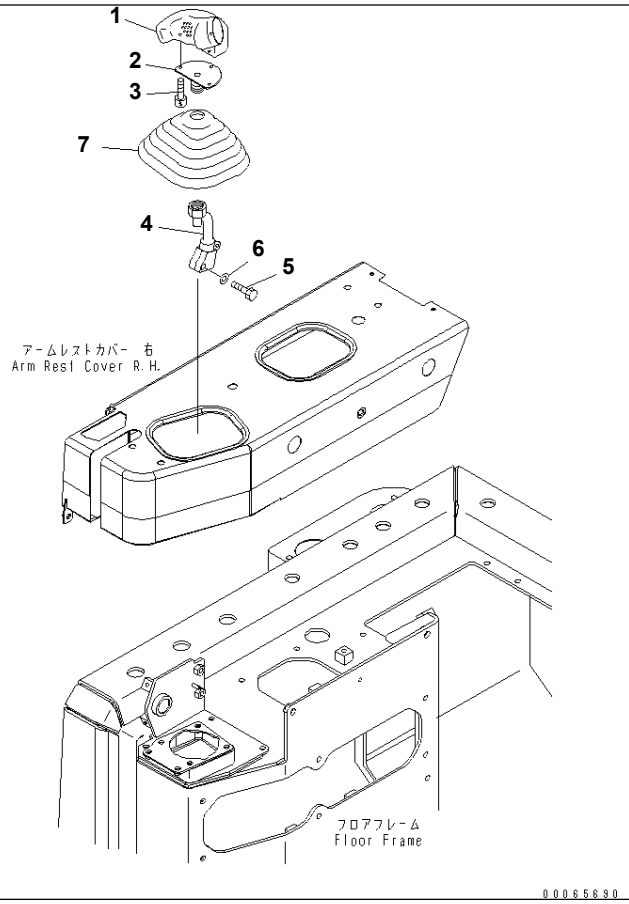

Ref. K2110-12A1 **Page 240740**

D155A-6 S/N 85001-UP

FLOOR FRAME (BLADE CONTROL LEVER) (SINGLE TILT) (WITH CAB)

Item	Part No.	Part Name	Qty	Serial No.
1	195-43-64410	KNOB ASS'Y	1	85001-
2	19M-43-38220	BRACKET	1	85001-
3	01252-80510	BOLT	3	85001-
4	19M-43-38211	LEVER	1	85001-
5	01010-81030	BOLT	1	85001-
6	01643-31032	WASHER	1	85001-
7	11Y-43-11181	BOOT	1	85001-

Printed By : Dwi Iswanto (airafather6107170)

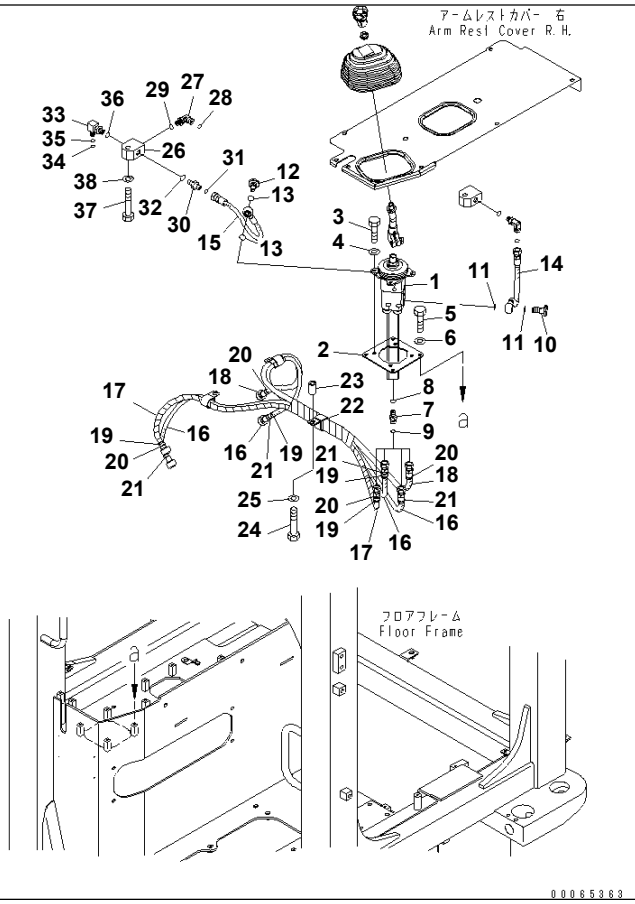

Ref. K2110-13A0 **Page 240750**

D155A-6 S/N 85001-UP

FLOOR FRAME (BLADE CONTROL) (PPC PIPING) (WITHOUT CAB)

Item	Part No.	Part Name	Qty	Serial No.
1	(702-16-06161)	PILOT VALVE	1	85001-
2	17A-43-44620	BRACKET	1	85001-
3	01010-80825	BOLT	4	85001-
4	01643-30823	WASHER	4	85001-
5	01010-80825	BOLT	4	85001-
6	01643-30823	WASHER	4	85001-
7	02781-0031D	UNION	4	85001-
8	07002-11423	O-RING	4	85001-
9	02896-11009	O-RING	4	85001-
10	702-16-53240	PLUG	1	85001-
11	07000-12018	O-RING	2	85001-
12	203-62-57730	BOLT	1	85001-
13	07000-12018	O-RING	2	85001-
14	17A-61-42810	HOSE	1	85001-
15	17A-61-42820	HOSE	1	85001-
16	198-61-61591	HOSE¤ 1000MM	2	85001-
17	17A-61-42950	HOSE	1	85001-
18	17A-61-42960	HOSE	1	85001-
19	20Y-62-22840	BAND¤ BLACK	4	85001-
20	20Y-62-22850	BAND¤ GREEN	4	85001-
21	20Y-62-22860	BAND¤ BROWN	4	85001-
22	04434-53412	CLIP	1	85001-
23	415-03-11210	SPACER	1	85001-
24	01010-81255	BOLT	1	85001-
25	01643-31232	WASHER	1	85001-
26	207-62-52550	TEE	1	85001-
27	02782-10311	ELBOW	1	85001-
28	02896-11009	O-RING	1	85001-
29	07002-11423	O-RING	1	85001-
30	02781-0031D	UNION	1	85001-

Printed By : Dwi Iswanto (airafather6107170)

FLOOR FRAME (BLADE CONTROL) (PPC PIPING) (WITHOUT CAB)

Item	Part No.	Part Name	Qty	Serial No.
31	02896-11009	O-RING	1	85001-
32	07002-11423	O-RING	1	85001-
33	20Y-62-22271	ELBOW	1	85001-
34	201-60-11390	· O-RING	1	85001-
35	20Y-62-19560	· O-RING	1	85001-
36	07002-11423	O-RING	1	85001-
37	01010-81250	BOLT	1	85001-
38	01643-31232	WASHER	1	85001-

Printed By : Dwi Iswanto (airafather6107170)

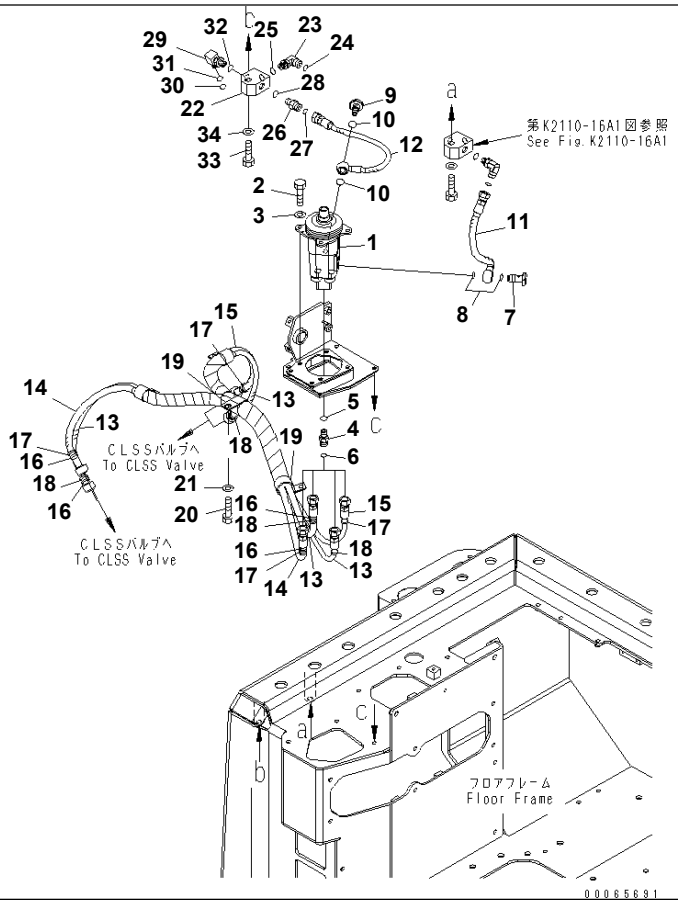

Ref. K2110-13A1 **Page 240760**

D155A-6 S/N 85001-UP

FLOOR FRAME (BLADE CONTROL) (PPC PIPING) (WITH CAB)

Item	Part No.	Part Name	Qty	Serial No.
1	(702-16-06161)	PILOT VALVE	1	85001-
2	01010-80825	BOLT	4	85001-
3	01643-30823	WASHER	4	85001-
4	02781-0031D	UNION	4	85001-
5	07002-11423	O-RING	4	85001-
6	02896-11009	O-RING	4	85001-
7	702-16-53240	PLUG	1	85001-
8	07000-12018	O-RING	2	85001-
9	203-62-57730	BOLT	1	85001-
10	07000-12018	O-RING	2	85001-
11	17A-61-42810	HOSE	1	85001-
12	17A-61-42820	HOSE	1	85001-
13	198-61-61591	HOSE¤ 1000MM	2	85001-
14	17A-61-42950	HOSE	1	85001-
15	17A-61-42960	HOSE	1	85001-
16	20Y-62-22840	BAND¤ BLACK	4	85001-
17	20Y-62-22850	BAND¤ GREEN	4	85001-
18	20Y-62-22860	BAND¤ BROWN	4	85001-
19	04434-53412	CLIP	2	85001-
20	01010-81225	BOLT	2	85001-
21	01643-31232	WASHER	2	85001-
22	207-62-52550	TEE	1	85001-
23	02782-10311	ELBOW	1	85001-
24	02896-11009	O-RING	1	85001-
25	07002-11423	O-RING	1	85001-
26	02781-0031D	UNION	1	85001-
27	02896-11009	O-RING	1	85001-
28	07002-11423	O-RING	1	85001-
29	20Y-62-22271	ELBOW	1	85001-
30	201-60-11390	· O-RING	1	85001-

Printed By : Dwi Iswanto (airafather6107170)

FLOOR FRAME (BLADE CONTROL) (PPC PIPING) (WITH CAB)

Item	Part No.	Part Name	Qty	Serial No.
31	20Y-62-19560	· O-RING	1	85001-
32	07002-11423	O-RING	1	85001-
33	01010-81250	BOLT	1	85001-
34	01643-31232	WASHER	1	85001-

Printed By : Dwi Iswanto (airafather6107170)

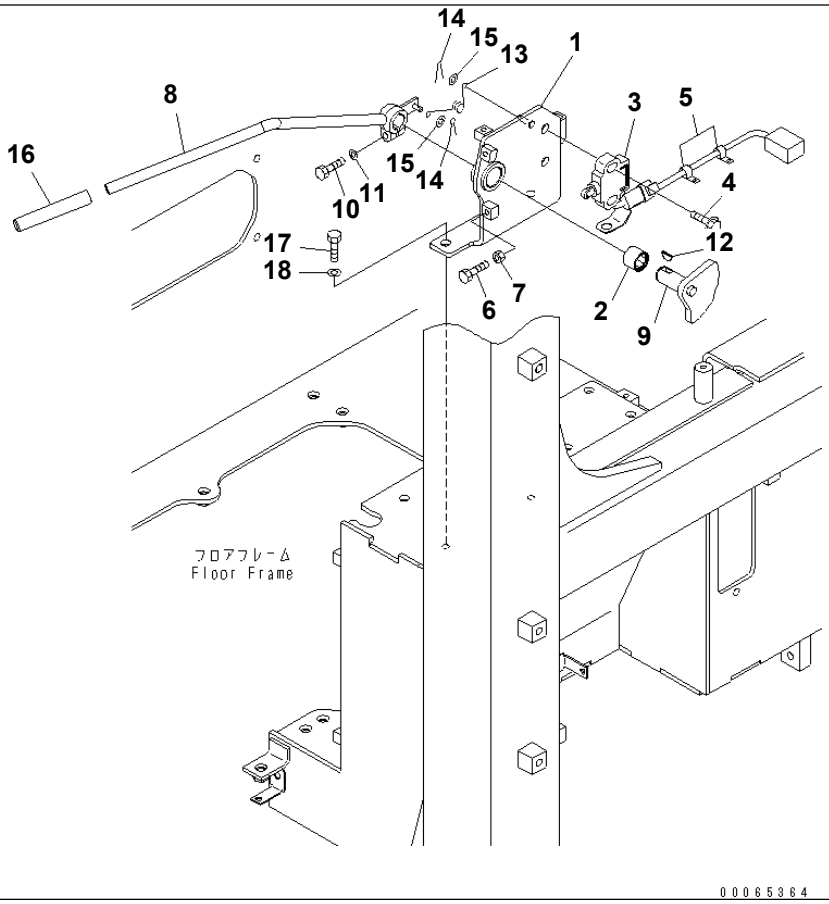

Ref. K2110-14A0 **Page 240770**

D155A-6 S/N 85001-UP

FLOOR FRAME (BLADE LOCK LEVER) (WITHOUT CAB)

Item	Part No.	Part Name	Qty	Serial No.
1	17A-43-44541	BRACKET	1	85001-
2	06124-02020	BEARING	1	85001-
3	11Y-06-22150	SWITCH	1	85001-
4	01435-01035	BOLT	2	85001-
5	04434-50808	CLIP	2	85001-
6	01016-50830	BOLT	2	85001-
7	01580-10806	NUT	2	85001-
8	17A-43-44551	LEVER	1	85001-
9	17A-43-44561	LEVER	1	85001-
10	01010-80830	BOLT	1	85001-
11	01643-30823	WASHER	1	85001-
12	04010-00516	KEY	1	85001-
13	17A-43-41760	SPRING	1	85001-
14	04050-11612	PIN	2	85001-
15	01640-20610	WASHER	2	85001-
16	417-43-28270	CAP	1	85001-
17	01010-81030	BOLT	2	85001-
18	01643-31032	WASHER	2	85001-

Printed By : Dwi Iswanto (airafather6107170)

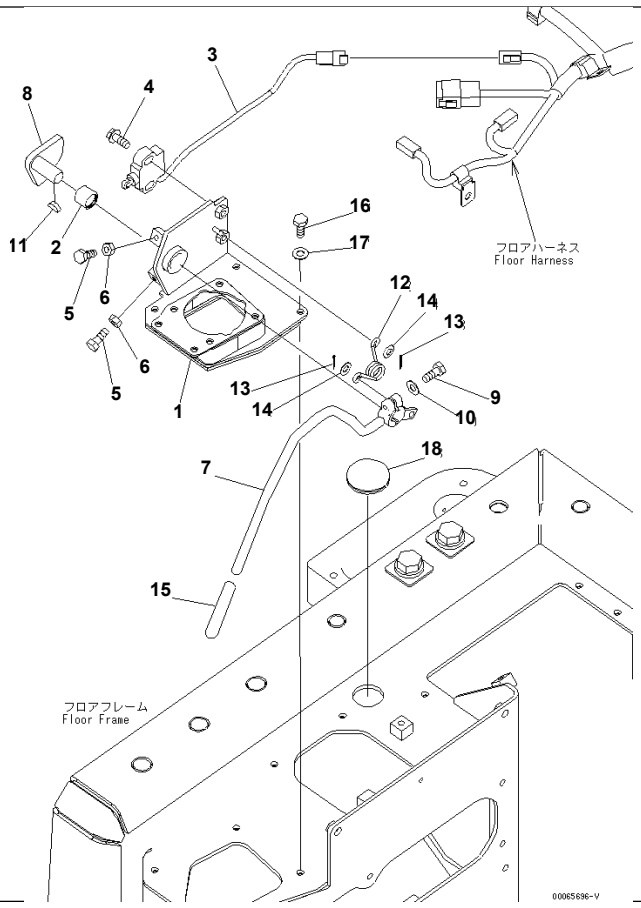

Ref. K2110-14A1 **Page 240780**

D155A-6 S/N 85001-UP

FLOOR FRAME (BLADE LOCK LEVER) (WITH CAB)

Item	Part No.	Part Name	Qty	Serial No.
1	17A-43-44311	BRACKET	1	85001-
2	06124-02020	BEARING	1	85001-
3	11Y-06-22150	SWITCH	1	85001-
4	01435-01035	BOLT	2	85001-
5	01016-50830	BOLT	2	85001-
6	01580-10806	NUT	2	85001-
7	17A-43-44121	LEVER	1	85001-
8	17A-43-44131	LEVER	1	85001-
9	01010-80830	BOLT	1	85001-
10	01643-30823	WASHER	1	85001-
11	04010-00516	KEY	1	85001-
12	17A-43-41760	SPRING	1	85001-
13	04050-11612	PIN	2	85001-
14	01640-20610	WASHER	2	85001-
15	417-43-28270	CAP	1	85001-
16	01010-80825	BOLT	3	85001-
17	01643-30823	WASHER	3	85001-
18	09415-03614	CAP	1	85001-

Printed By : Dwi Iswanto (airafather6107170)

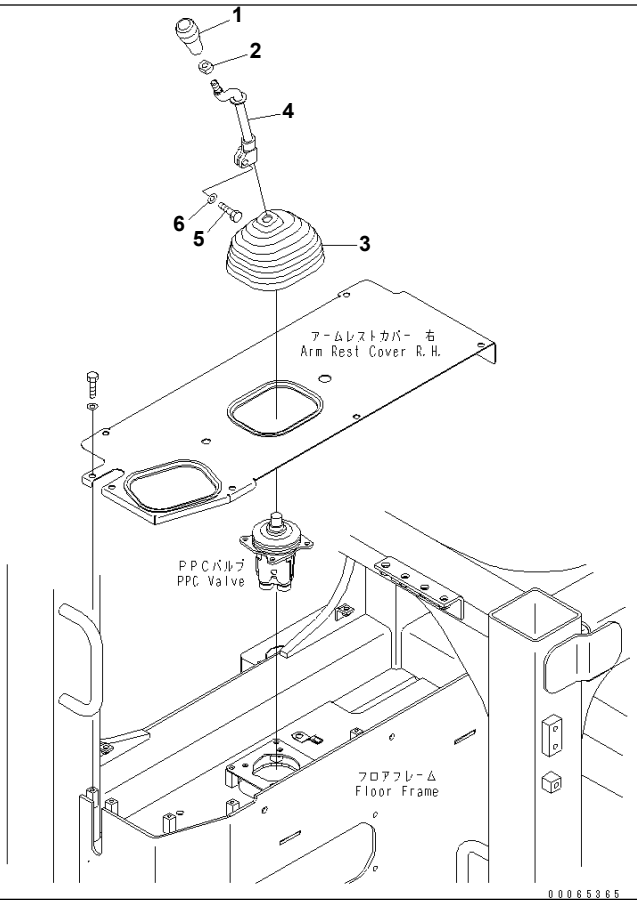

Ref. K2110-15A0 **Page 240790**

D155A-6 S/N 85001-UP
FLOOR FRAME (RIPPER CONTROL LEVER) (WITHOUT CAB)

Item	Part No.	Part Name	Qty	Serial No.
1	14Z-43-11310	KNOB	1	85001-
2	19M-43-11170	NUT	1	85001-
3	14X-43-11320	BOOT	1	85001-
4	17A-43-25762	LEVER	1	85001-
5	01010-81030	BOLT	1	85001-
6	01643-31032	WASHER	1	85001-

Printed By : Dwi Iswanto (airafather6107170)

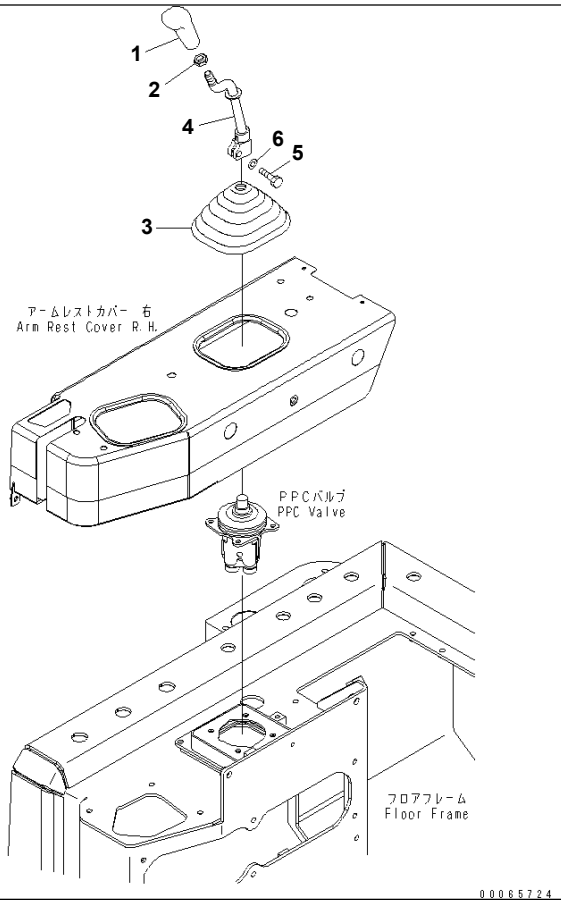

Ref. K2110-15A1 **Page 240800**

D155A-6 S/N 85001-UP
FLOOR FRAME (RIPPER CONTROL LEVER) (WITH CAB)

Item	Part No.	Part Name	Qty	Serial No.
1	17A-43-42240	KNOB	1	85001-
2	20T-43-71190	NUT	1	85001-
3	11Y-43-11181	BOOT	1	85001-
4	17A-43-42230	LEVER	1	85001-
5	01010-81030	BOLT	1	85001-
6	01643-31032	WASHER	1	85001-

Printed By : Dwi Iswanto (airafather6107170)

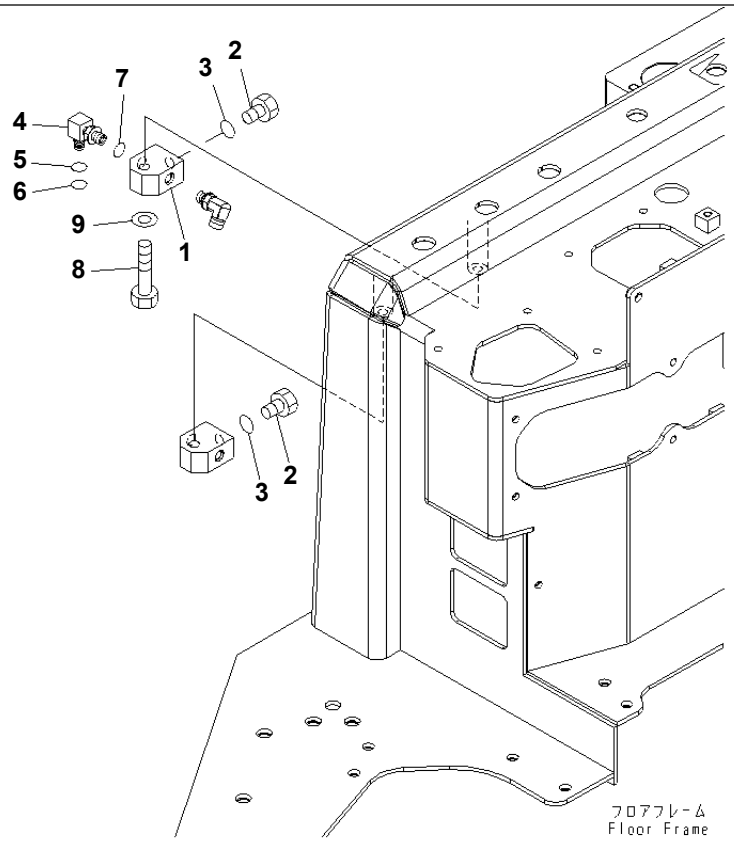

Ref. K2110-15A4 **Page 240810**

D155A-6 S/N 85001-UP
FLOOR FRAME (RIPPER CONTROL LESS)

Item	Part No.	Part Name	Qty	Serial No.
1	207-62-52550	TEE	1	85001-
2	07040-11409	PLUG	2	85001-
3	07002-11423	O-RING	2	85001-
4	20Y-62-22271	ELBOW	1	85001-
5	201-60-11390	・ O-RING	1	85001-
6	20Y-62-19560	・ O-RING	1	85001-
7	07002-11423	O-RING	1	85001-
8	01010-81250	BOLT	1	85001-
9	01643-31232	WASHER	1	85001-

Printed By : Dwi Iswanto (airafather6107170)

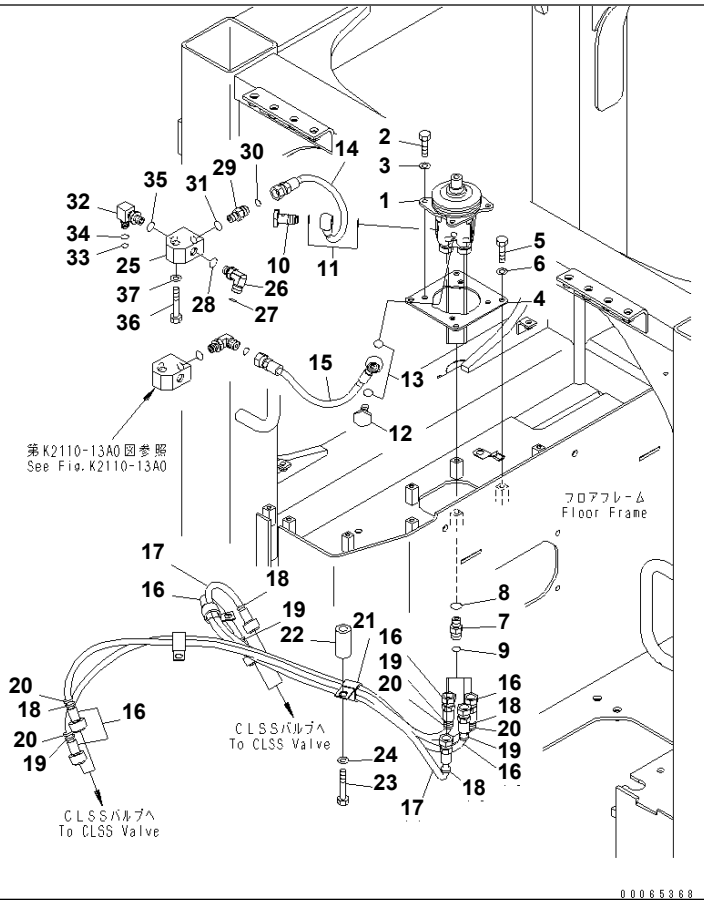

Ref. K2110-16A0 **Page 240820**

D155A-6 S/N 85001-UP

FLOOR FRAME (RIPPER CONTROL) (PPC PIPING) (WITHOUT CAB)

Item	Part No.	Part Name	Qty	Serial No.
1	(702-16-01200)	PILOT VALVE	1	85001-
2	01010-80825	BOLT	4	85001-
3	01643-30823	WASHER	4	85001-
4	17A-43-44620	BRACKET	1	85001-
5	01010-80825	BOLT	4	85001-
6	01643-30823	WASHER	4	85001-
7	02781-0031D	UNION	4	85001-
8	07002-11423	O-RING	4	85001-
9	02896-11009	O-RING	4	85001-
10	702-16-53240	PLUG	1	85001-
11	07000-12018	O-RING	2	85001-
12	203-62-57730	BOLT	1	85001-
13	07000-12018	O-RING	2	85001-
14	17A-61-42820	HOSE	1	85001-
15	17A-61-42830	HOSE	1	85001-
16	17A-61-42970	HOSE	3	85001-
17	17A-61-42980	HOSE	1	85001-
18	20Y-62-22790	BAND¤ RED	4	85001-
19	20Y-62-22810	BAND¤ YELLOW	4	85001-
20	20Y-62-22840	BAND¤ BLACK	4	85001-
21	04434-52712	CLIP	1	85001-
22	144-54-51280	COLLAR	1	85001-
23	01010-81275	BOLT	1	85001-
24	01643-31232	WASHER	1	85001-
25	207-62-52550	TEE	1	85001-
26	02782-10311	ELBOW	1	85001-
27	02896-11009	O-RING	1	85001-
28	07002-11423	O-RING	1	85001-
29	02781-0031D	UNION	1	85001-
30	02896-11009	O-RING	1	85001-

Printed By : Dwi Iswanto (airafather6107170)

FLOOR FRAME (RIPPER CONTROL) (PPC PIPING) (WITHOUT CAB)

Item	Part No.	Part Name	Qty	Serial No.
31	07002-11423	O-RING	1	85001-
32	20Y-62-22271	ELBOW	1	85001-
33	201-60-11390	· O-RING	1	85001-
34	20Y-62-19560	· O-RING	1	85001-
35	07002-11423	O-RING	1	85001-
36	01010-81250	BOLT	1	85001-
37	01643-31232	WASHER	1	85001-

Printed By : Dwi Iswanto (airafather6107170)

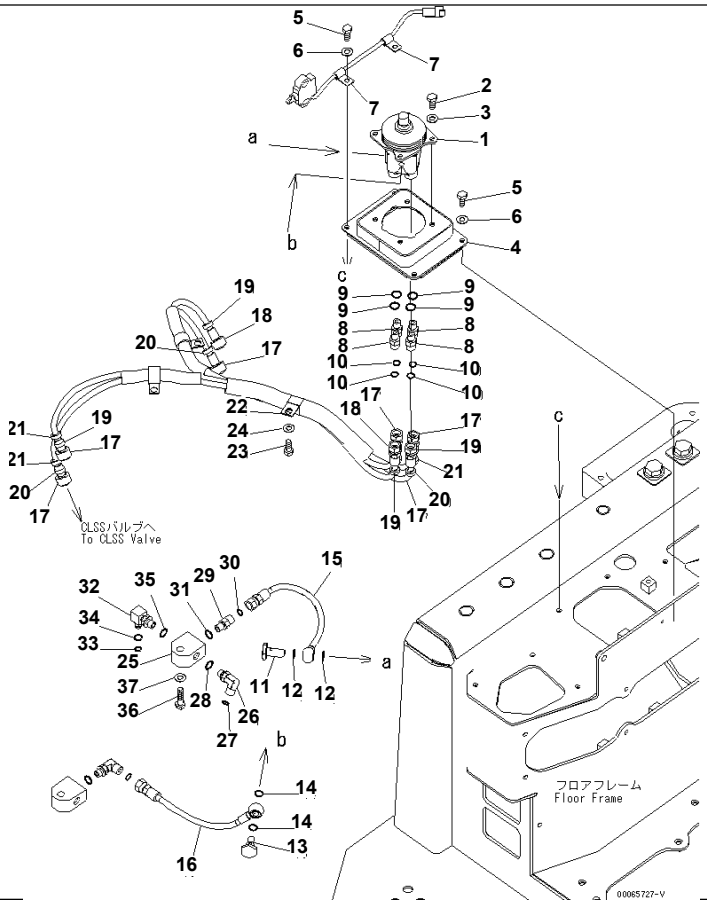

Ref. K2110-16A1 **Page 240830**

D155A-6 S/N 85001-UP
FLOOR FRAME (RIPPER CONTROL) (PPC PIPING) (WITH CAB)

Item	Part No.	Part Name	Qty	Serial No.
1	(702-16-01200)	PILOT VALVE	1	85001-
2	01010-80825	BOLT	4	85001-
3	01643-30823	WASHER	4	85001-
4	17A-43-44330	BRACKET	1	85001-
5	01010-80825	BOLT	4	85001-
6	01643-30823	WASHER	4	85001-
7	04434-50808	CLIP	2	85001-
8	02781-0031D	UNION	4	85001-
9	07002-11423	O-RING	4	85001-
10	02896-11009	O-RING	4	85001-
11	702-16-53240	PLUG	1	85001-
12	07000-12018	O-RING	2	85001-
13	203-62-57730	BOLT	1	85001-
14	07000-12018	O-RING	2	85001-
15	17A-61-42820	HOSE	1	85001-
16	17A-61-42830	HOSE	1	85001-
17	17A-61-42970	HOSE	3	85001-
18	17A-61-42980	HOSE	1	85001-
19	20Y-62-22790	BAND¤ RED	4	85001-
20	20Y-62-22810	BAND¤ YELLOW	4	85001-
21	20Y-62-22840	BAND¤ BLACK	4	85001-
22	04434-52712	CLIP	1	85001-
23	01010-81225	BOLT	1	85001-
24	01643-31232	WASHER	1	85001-
25	207-62-52550	TEE	1	85001-
26	02782-10311	ELBOW	1	85001-
27	02896-11009	O-RING	1	85001-
28	07002-11423	O-RING	1	85001-
29	02781-0031D	UNION	1	85001-
30	02896-11009	O-RING	1	85001-

Printed By : Dwi Iswanto (airafather6107170)

FLOOR FRAME (RIPPER CONTROL) (PPC PIPING) (WITH CAB)

Item	Part No.	Part Name	Qty	Serial No.
31	07002-11423	O-RING	1	85001-
32	20Y-62-22271	ELBOW	1	85001-
33	201-60-11390	· O-RING	1	85001-
34	20Y-62-19560	· O-RING	1	85001-
35	07002-11423	O-RING	1	85001-
36	01010-81250	BOLT	1	85001-
37	01643-31232	WASHER	1	85001-

Printed By : Dwi Iswanto (airafather6107170)

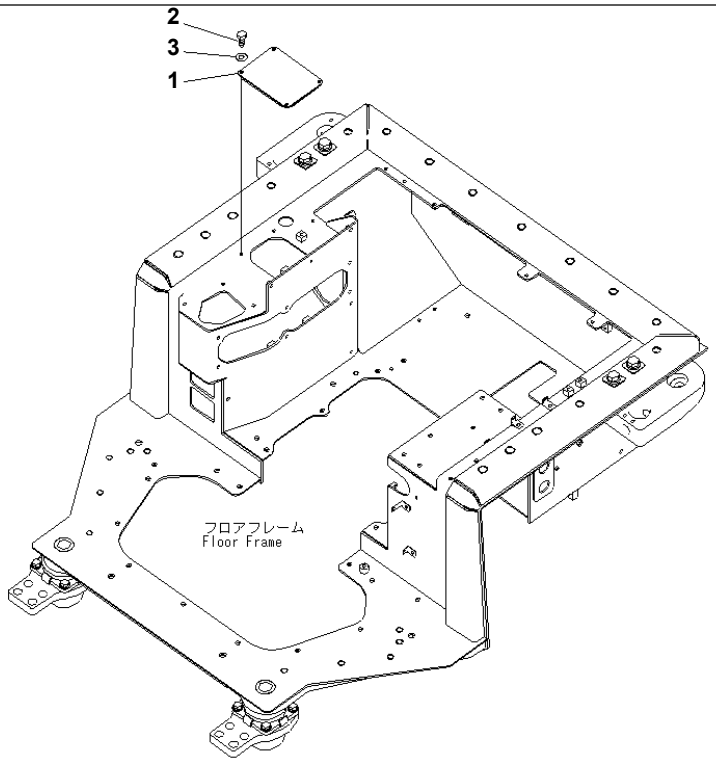

Ref. K2110-16A4 **Page 240840**

D155A-6 S/N 85001-UP

FLOOR FRAME (RIPPER CONTROL LESS) (BLANK COVER)

Item	Part No.	Part Name	Qty	Serial No.
1	17A-43-44360	COVER	1	85001-
2	01010-80825	BOLT	4	85001-
3	01643-30823	WASHER	4	85001-

Printed By : Dwi Iswanto (airafather6107170)

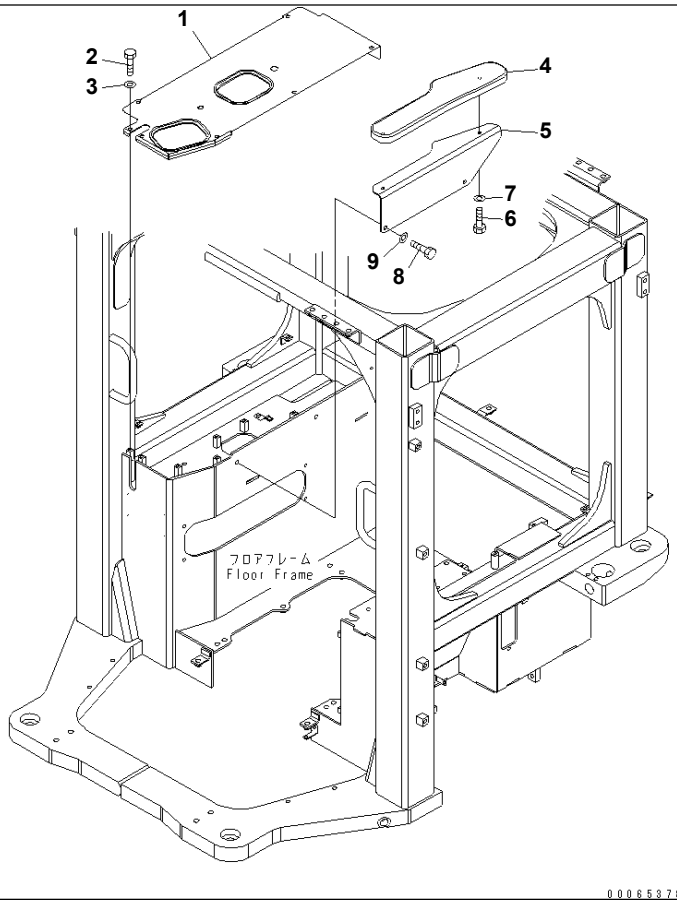

Ref. K2110-17A0 **Page 240850**

D155A-6 S/N 85001-UP

FLOOR FRAME (ARM REST AND COVER) (WITH RIPPER) (WITHOUT CAB)

Item	Part No.	Part Name	Qty	Serial No.
1	17A-54-48241	COVER	1	85001-
2	01010-80820	BOLT	7	85001-
3	01643-30823	WASHER	7	85001-
	17A-54-48291	ARM REST ASS'Y	1	85001-
4	17A-54-48181	· ARM REST	1	85001-
5	17A-54-48190	· PLATE	1	85001-
6	01010-80820	· BOLT	2	85001-
7	01643-30823	· WASHER	2	85001-
8	01010-81020	BOLT	2	85001-
9	01643-31032	WASHER	2	85001-

Printed By : Dwi Iswanto (airafather6107170)

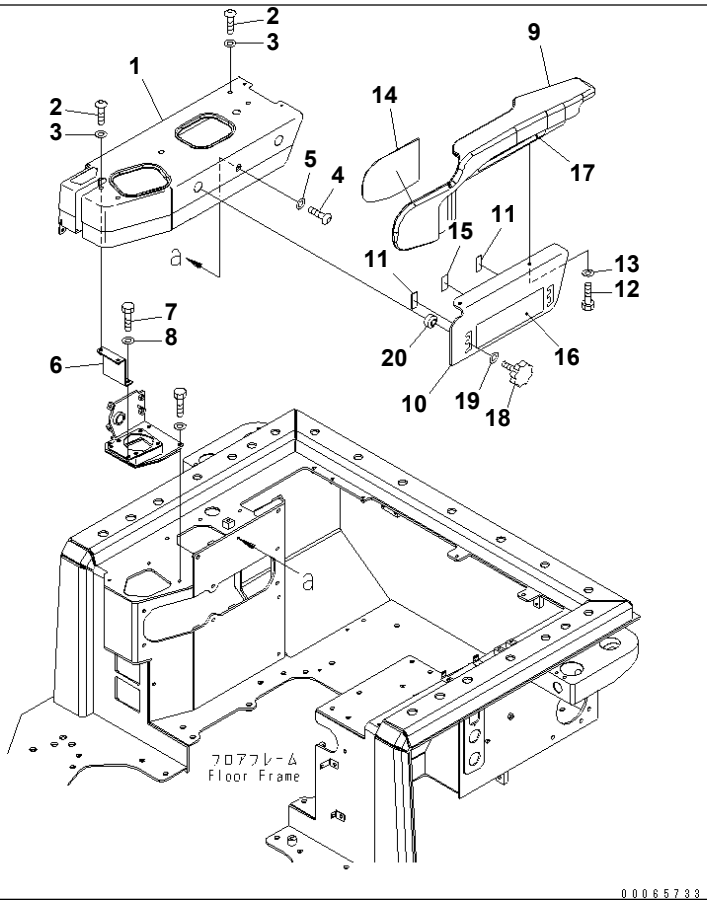

Ref. K2110-17A1 **Page 240860**

D155A-6 S/N 85001-UP
FLOOR FRAME (ARM REST AND COVER) (WITH RIPPER) (WITH CAB)

Item	Part No.	Part Name	Qty	Serial No.
1	17A-54-47231	COVER	1	85001-
2	01245-00820	SCREW	4	85001-
3	01643-70823	WASHER	4	85001-
4	01245-00616	SCREW	1	85001-
5	01640-20610	WASHER	1	85001-
6	17A-54-46411	BRACKET	1	85001-
7	01010-80825	BOLT	2	85001-
8	01643-30823	WASHER	2	85001-
	14X-54-36310	ARM REST ASS'Y	1	85001-
9	14X-54-36320	· REST	1	85001-
10	14X-54-36330	· PLATE	1	85001-
11	134-54-66240	· SHEET	2	85001-
12	01010-80820	· BOLT	1	85001-
13	01643-30823	· WASHER	1	85001-
14	14X-54-36340	· SHEET	1	85001-
15	17A-43-42310	· RUBBER	1	85001-
16	134-54-66190	PLATE	1	85001-
17	134-54-66290	PLATE	1	85001-
18	195-54-68760	KNOB	2	85001-
19	01643-31032	WASHER	2	85001-
20	17A-54-25610	SPACER	2	85001-

Printed By : Dwi Iswanto (airafather6107170)

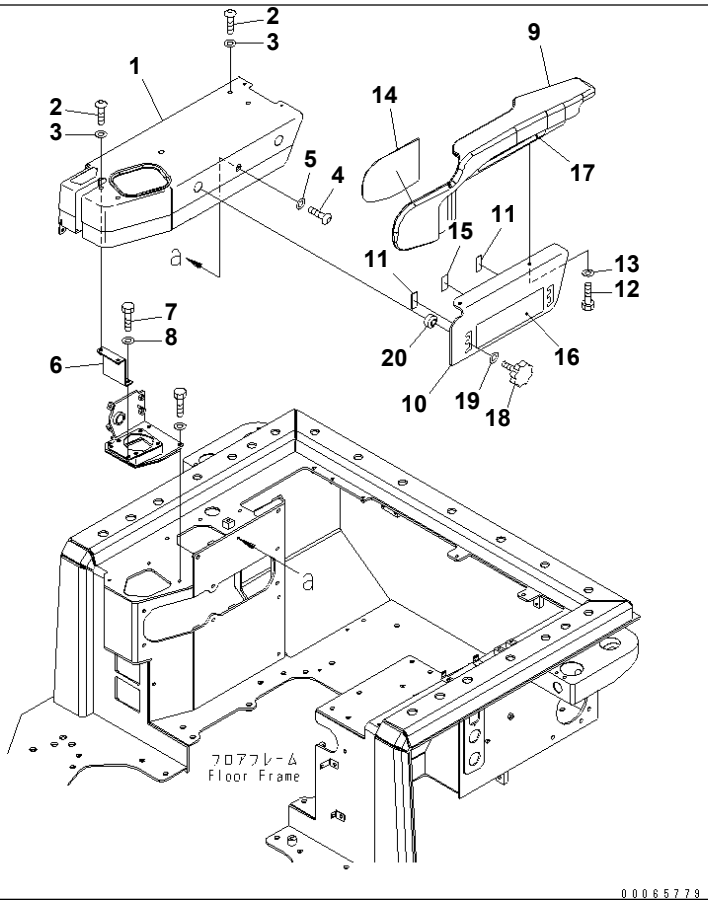

Ref. K2110-17A4 **Page 240870**

D155A-6 S/N 85001-UP
FLOOR FRAME (ARM REST AND COVER) (WITHOUT RIPPER)

Item	Part No.	Part Name	Qty	Serial No.
1	17A-54-47240	COVER	1	85001-
2	01245-00820	SCREW	4	85001-
3	01643-70823	WASHER	4	85001-
4	01245-00616	SCREW	1	85001-
5	01640-20610	WASHER	1	85001-
6	17A-54-46411	BRACKET	1	85001-
7	01010-80825	BOLT	2	85001-
8	01643-30823	WASHER	2	85001-
	14X-54-36310	ARM REST ASS'Y	1	85001-
9	14X-54-36320	· REST	1	85001-
10	14X-54-36330	· PLATE	1	85001-
11	134-54-66240	· SHEET	2	85001-
12	01010-80820	· BOLT	1	85001-
13	01643-30823	· WASHER	1	85001-
14	14X-54-36340	· SHEET	1	85001-
15	17A-43-42310	· RUBBER	1	85001-
16	134-54-66190	PLATE	1	85001-
17	134-54-66290	PLATE	1	85001-
18	195-54-68760	KNOB	2	85001-
19	01643-31032	WASHER	2	85001-
20	17A-54-25610	SPACER	2	85001-

Printed By : Dwi Iswanto (airafather6107170)

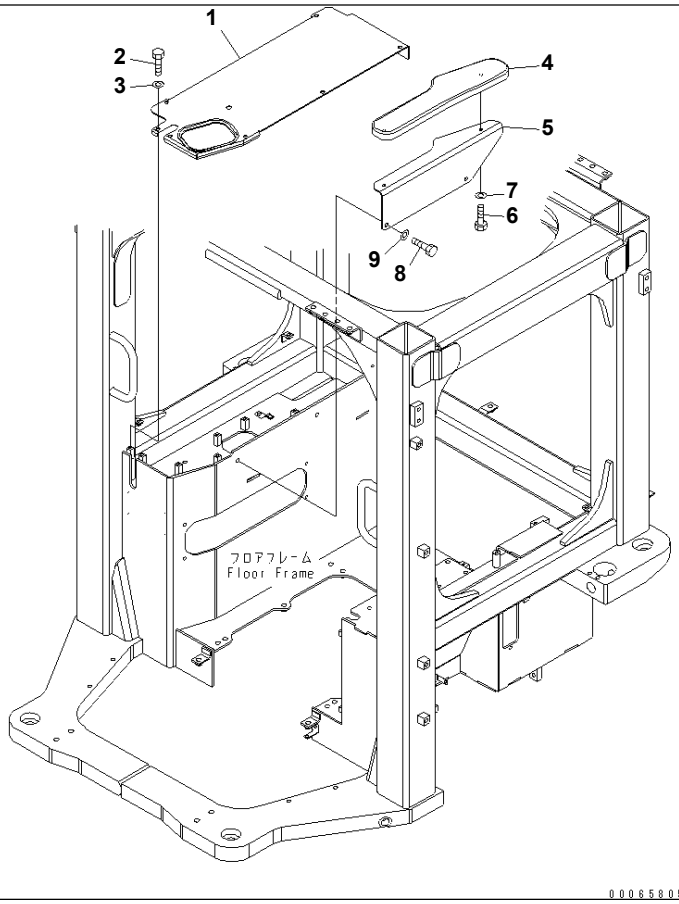

Ref. K2110-17A5 **Page 240880**

D155A-6 S/N 85001-UP
FLOOR FRAME (ARM REST AND COVER) (WITHOUT RIPPER) (WITHOUT CAB)

Item	Part No.	Part Name	Qty	Serial No.
1	17A-54-48590	COVER	1	85001-
2	01010-80820	BOLT	7	85001-
3	01643-30823	WASHER	7	85001-
	17A-54-48291	ARM REST ASS'Y	1	85001-
4	17A-54-48181	· ARM REST	1	85001-
5	17A-54-48190	· PLATE	1	85001-
6	01010-80820	· BOLT	2	85001-
7	01643-30823	· WASHER	2	85001-
8	01010-81020	BOLT	2	85001-
9	01643-31032	WASHER	2	85001-

Printed By : Dwi Iswanto (airafather6107170)

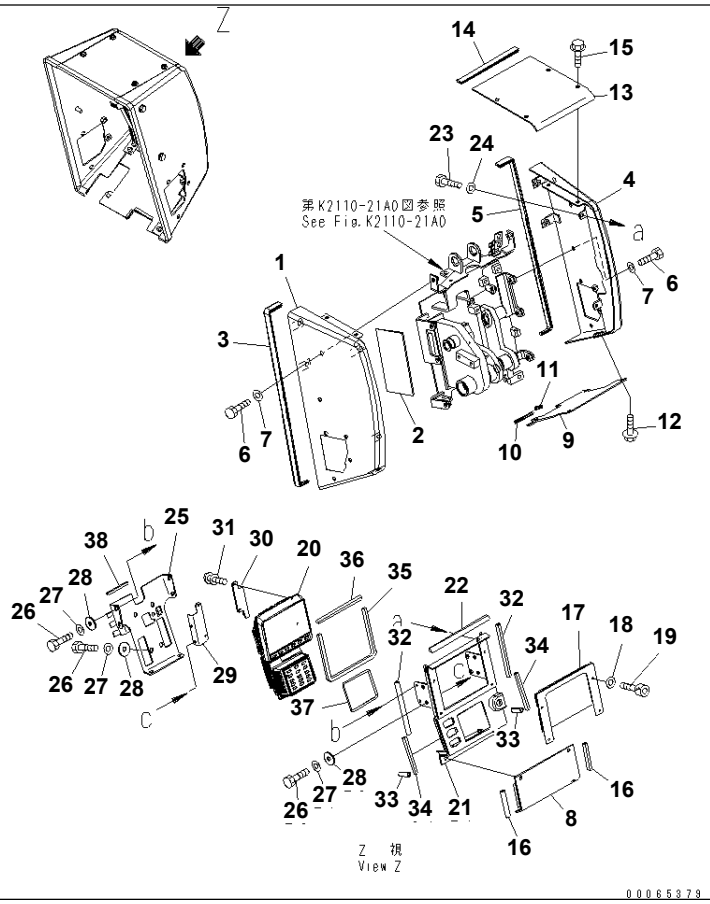

Ref. K2110-18A0 **Page 240890**

D155A-6 S/N 85001-UP

FLOOR FRAME (DASHBOARD) (COVER AND MONITOR)

Item	Part No.	Part Name	Qty	Serial No.
1	17A-54-48311	COVER	1	85001-
2	17A-54-48540	· SEAL	1	85001-
3	17A-54-48550	· SEAL	1	85001-
4	17A-54-48321	COVER	1	85001-
5	17A-54-48550	· SEAL	1	85001-
6	01010-81025	BOLT	8	85001-
7	01643-31032	WASHER	8	85001-
8	17A-54-46541	COVER	1	85001-
9	17A-54-48351	COVER	1	85001-
10	17A-54-48370	· TRIM	1	85001-
11	17A-54-48390	· TRIM	1	85001-
12	01435-40820	BOLT	8	85001-
13	17A-54-48331	COVER	1	85001-
14	17A-54-48560	· SEAL	1	85001-
15	01435-00820	BOLT	4	85001-
16	17A-54-46771	· SHEET	2	85001-
17	17A-54-48361	COVER	1	85001-
18	01641-50508	WASHER	4	85001-
19	01252-80520	BOLT	4	85001-
20	7831-69-1181	MONITOR	1	85001-
21	17A-54-48341	COVER	1	85001-
22	17A-54-48580	· SEAL	1	85001-
23	01010-80816	BOLT	2	85001-
24	01643-30823	WASHER	2	85001-
25	17A-54-46712	BRACKET	1	85001-
26	01010-80616	BOLT	12	85001-
27	01643-30623	WASHER	12	85001-
28	17A-Z11-2813	PLATE	12	85001-
29	17A-54-46721	BRACKET	1	85001-
30	17A-54-46731	BRACKET	1	85001-

Printed By : Dwi Iswanto (airafather6107170)

FLOOR FRAME (DASHBOARD) (COVER AND MONITOR)

Item	Part No.	Part Name	Qty	Serial No.
31	01023-10410	SCREW	4	85001-
32	17A-54-46751	SEAL	2	85001-
33	17A-54-46761	SEAL	2	85001-
34	17A-54-46780	SEAL	2	85001-
35	17A-54-46661	SHEET	1	85001-
36	17A-54-46820	SEAL	1	85001-
37	17A-54-46671	SHEET	1	85001-
38	17A-54-45990	SEAL	1	85001-

Printed By : Dwi Iswanto (airafather6107170)

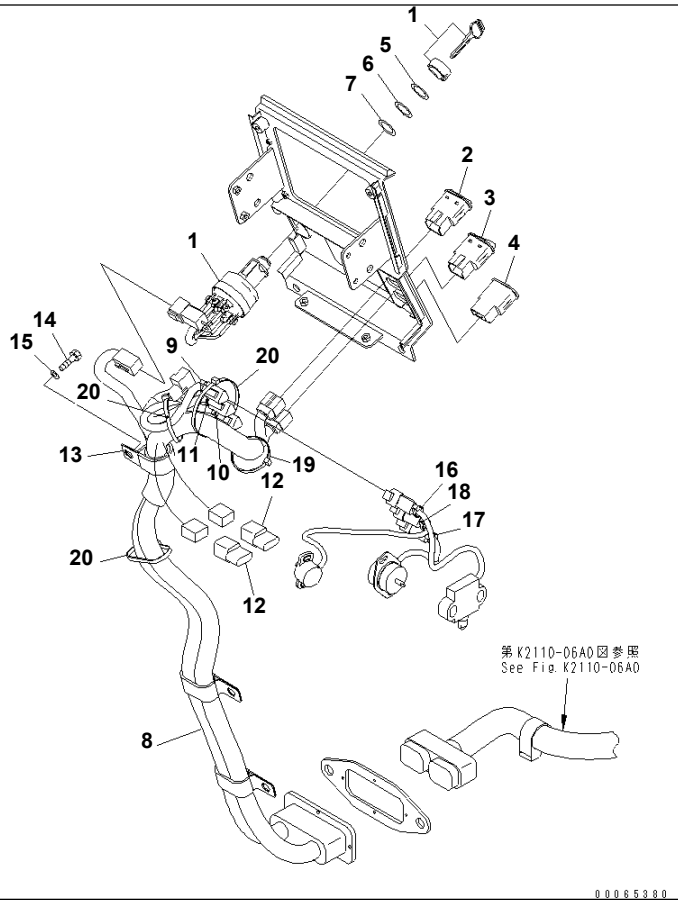

Ref. K2110-19A0 **Page 240900**

D155A-6 S/N 85001-UP

FLOOR FRAME (DASHBOARD) (SWITCH AND WIRING)

Item	Part No.	Part Name	Qty	Serial No.
1	198-06-62141	WIRING HARNESS	1	85001-
2	17A-06-42250	SWITCH	1	85001-
3	17A-06-42260	SWITCH	1	85001-
4	20Y-06-42190	COVER	1	85001-
5	23S-15-45860	SHIM¤ 0.5MM	2	85001-
6	20Y-43-41750	WASHER	2	85001-
7	20Y-43-41790	WASHER	2	85001-
8	17A-06-43321	WIRING HARNESS	1	85001-
9	20Y-62-22790	· BAND¤ RED	1	85001-
10	20Y-62-22810	· BAND¤ YELLOW	1	85001-
11	20Y-62-22820	· BAND¤ BLUE	1	85001-
12	21J-06-13661	· DIODE	2	85001-
13	04434-53411	CLIP	1	85001-
14	01010-81020	BOLT	1	85001-
15	01643-31032	WASHER	1	85001-
16	20Y-62-22790	BAND¤ RED	1	85001-
17	20Y-62-22810	BAND¤ YELLOW	1	85001-
18	20Y-62-22820	BAND¤ BLUE	1	85001-
19	08034-20519	BAND	1	85001-
20	08034-20536	BAND	3	85001-

Printed By : Dwi Iswanto (airafather6107170)

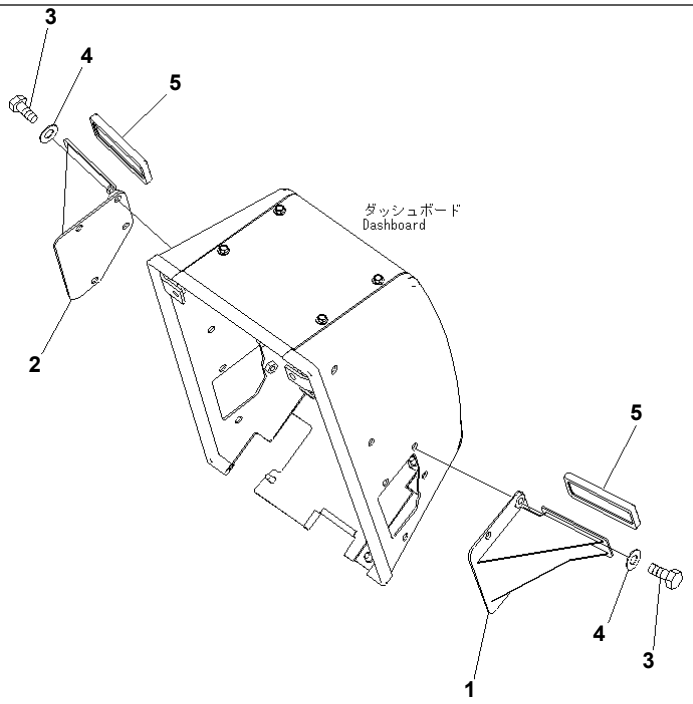

00065431-V

Ref. K2110-20A0 **Page 240910**

D155A-6 S/N 85001-UP
FLOOR FRAME (DASHBOARD) (FOOT REST)

Item	Part No.	Part Name	Qty	Serial No.
1	17A-54-48471	BRACKET	1	85001-
2	17A-54-48481	BRACKET	1	85001-
3	01010-81025	BOLT	4	85001-
4	01643-31032	WASHER	4	85001-
5	203-43-56450	CAP¤ PEDAL	2	85001-

Printed By : Dwi Iswanto (airafather6107170)

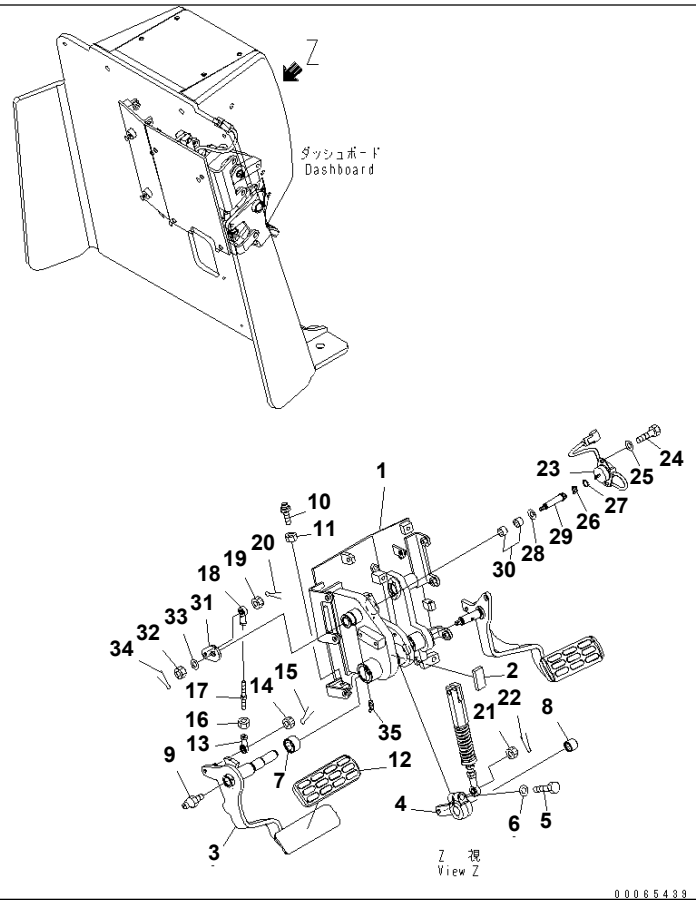

Ref. K2110-21A0 **Page 240920**

D155A-6 S/N 85001-UP
FLOOR FRAME (DASHBOARD) (PEDAL CONTROL) (1/3)

Item	Part No.	Part Name	Qty	Serial No.
1	17A-43-44411	BRACKET	1	85001-
2	17A-43-44450	· RUBBER	1	85001-
3	17A-43-41121	PEDAL	1	85001-
4	17A-43-41140	LEVER	1	85001-
5	01010-81245	BOLT	1	85001-
6	01643-31232	WASHER	1	85001-
7	06124-03020	BEARING	1	85001-
8	06124-02020	BEARING	1	85001-
9	07020-00000	FITTING	1	85001-
10	09311-41237	BUMPER	1	85001-
11	01580-11210	NUT	1	85001-
12	14X-43-12110	PEDAL CAP	1	85001-
13	04250-80847	END	1	85001-
14	01590-30809	NUT	1	85001-
15	04050-12015	PIN	1	85001-
16	01580-10806	NUT	1	85001-
17	04248-30808	ROD	1	85001-
18	04250-90847	END	1	85001-
19	01590-30809	NUT	1	85001-
20	04050-12015	PIN	1	85001-
21	01593-31008	NUT	1	85001-
22	04050-12018	PIN	1	85001-
23	7861-93-4131	SENSOR	1	85010-
	□7861-93-4130	SENSOR	1	85001-85009
24	01010-80616	BOLT	2	85001-
25	01643-30623	WASHER	2	85001-
26	142-43-13180	SPRING	1	85001-
27	04064-01610	RING	1	85001-
28	6110-11-1620	WASHER	1	85001-
29	17A-43-41182	SHAFT	1	85001-

Printed By : Dwi Iswanto (airafather6107170)

FLOOR FRAME (DASHBOARD) (PEDAL CONTROL) (1/3)

Item	Part No.	Part Name	Qty	Serial No.
30	06123-01414	BEARING	2	85001-
31	17A-43-41172	PLATE	1	85001-
32	01590-30809	NUT	1	85001-
33	01643-30823	WASHER	1	85001-
34	04050-12015	PIN	1	85001-
35	07020-00675	FITTING	1	85001-

Printed By : Dwi Iswanto (airafather6107170)

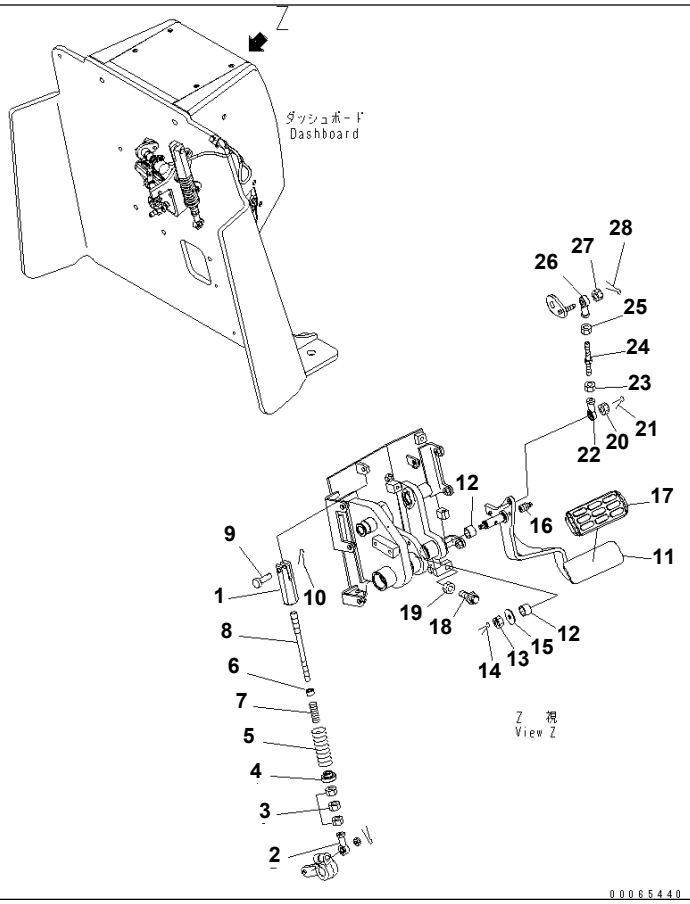

Ref. K2110-22A0 **Page 240930**

D155A-6 S/N 85001-UP

FLOOR FRAME (DASHBOARD) (PEDAL CONTROL) (2/3)

Item	Part No.	Part Name	Qty	Serial No.
1	17A-43-41531	YOKE	1	85001-
2	04250-81056	END	1	85001-
3	01582-11008	NUT	3	85001-
4	17A-43-41521	GUIDE	1	85001-
5	17A-43-44440	SPRING	1	85001-
6	202-970-1220	WASHER	1	85001-
7	700-92-11690	SPRING	1	85001-
8	17A-43-41511	ROD	1	85001-
9	04205-11038	PIN	1	85001-
10	04050-13020	PIN	1	85001-
11	17A-43-41131	PEDAL	1	85001-
12	06123-02018	BEARING	2	85001-
13	01593-31008	NUT	1	85001-
14	04050-12018	PIN	1	85001-
15	175-54-88110	WASHER	1	85001-
16	07020-00000	FITTING	1	85001-
17	14X-43-13760	CAP	1	85001-
18	09311-41237	BUMPER	1	85001-
19	01580-11210	NUT	1	85001-
20	01590-30809	NUT	1	85001-
21	04050-12015	PIN	1	85001-
22	04250-80847	END	1	85001-
23	01580-10806	NUT	1	85001-
24	04248-30808	ROD	1	85001-
25	01508-40805	NUT	1	85001-
26	04250-90847	END	1	85001-
27	01590-30809	NUT	1	85001-
28	04050-12015	PIN	1	85001-

Printed By : Dwi Iswanto (airafather6107170)

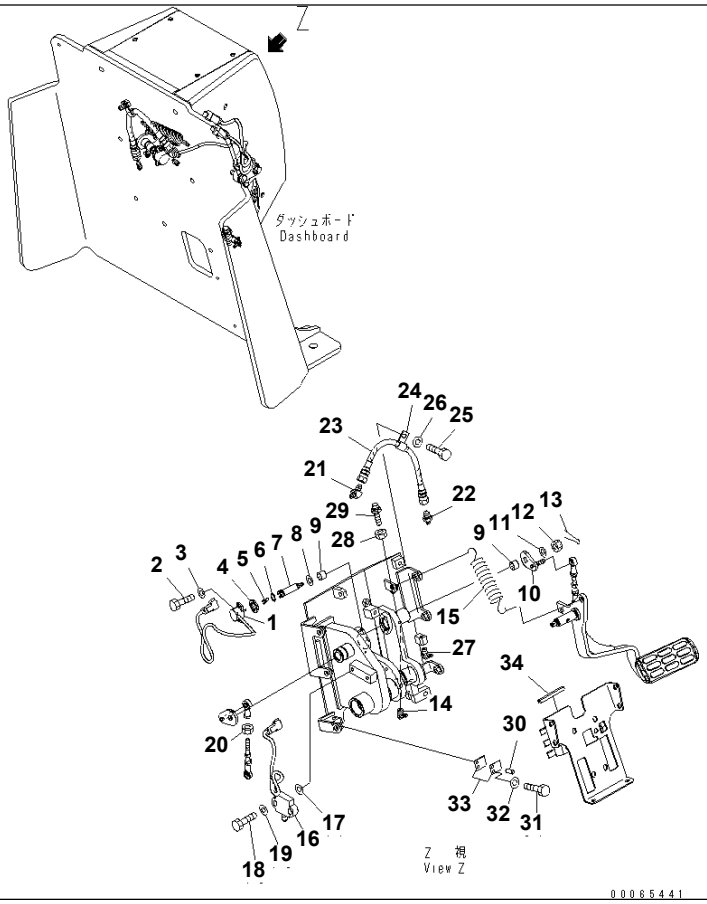

Ref. K2110-23A0 **Page 240940**

D155A-6 S/N 85001-UP
FLOOR FRAME (DASHBOARD) (PEDAL CONTROL) (3/3)

Item	Part No.	Part Name	Qty	Serial No.
1	17A-06-41981	SENSOR	1	85001-
2	01252-70414	BOLT	2	85001-
3	01640-20408	WASHER	2	85001-
4	12Y-43-12160	PLATE	1	85001-
5	142-43-13180	SPRING	1	85001-
6	04064-01610	RING	1	85001-
7	6110-11-1620	WASHER	1	85001-
8	17A-43-41161	SHAFT	1	85001-
9	06123-01414	BEARING	2	85001-
10	17A-43-41152	LEVER	1	85001-
11	01643-30823	WASHER	1	85001-
12	01590-30809	NUT	1	85001-
13	04050-12015	PIN	1	85001-
14	07020-00900	FITTING	1	85001-
15	154-43-41260	SPRING	1	85001-
16	11Y-06-22150	SWITCH	1	85001-
17	01640-21016	WASHER	2	85001-
18	01010-81035	BOLT	2	85001-
19	01643-31032	WASHER	2	85001-
20	01508-40805	NUT	1	85001-
21	205-70-65780	ELBOW	1	85001-
22	205-70-51390	NIPPLE	1	85001-
23	17A-43-41250	HOSE	1	85001-
24	04434-51210	CLIP	1	85001-
25	01010-81020	BOLT	1	85001-
26	01643-31032	WASHER	1	85001-
27	07020-00900	FITTING	1	85001-
28	01580-11210	NUT	1	85001-
29	09311-41237	BUMPER	1	85001-
30	04020-00616	PIN	1	85001-

Printed By : Dwi Iswanto (airafather6107170)

FLOOR FRAME (DASHBOARD) (PEDAL CONTROL) (3/3)

Item	Part No.	Part Name	Qty	Serial No.
31	01010-80616	BOLT	1	85001-
32	01643-30623	WASHER	1	85001-
33	17A-43-41190	SHIM	2	85001-
34	17A-979-2970	SEAL	1	85001-

Printed By : Dwi Iswanto (airafather6107170)

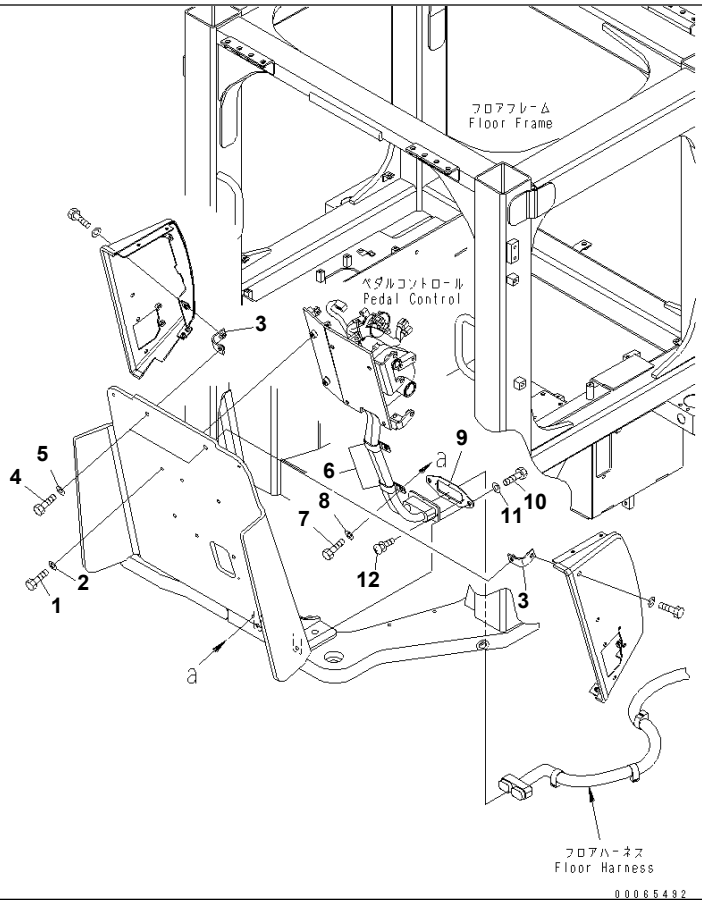

Ref. K2110-24A0 **Page 240950**

D155A-6 S/N 85001-UP

FLOOR FRAME (DASHBOARD) (DASH MOUNT)

Item	Part No.	Part Name	Qty	Serial No.
1	01010-81030	BOLT	6	85001-
2	01643-31032	WASHER	6	85001-
3	17A-54-48460	BRACKET	2	85001-
4	01010-81030	BOLT	2	85001-
5	01643-31032	WASHER	2	85001-
6	421-07-11550	CLIP	2	85001-
7	01010-81020	BOLT	2	85001-
8	01643-31032	WASHER	2	85001-
9	17A-06-43521	BRACKET	1	85001-
10	01010-81225	BOLT	2	85001-
11	01643-31232	WASHER	2	85001-
12	01023-10416	SCREW	4	85001-

Printed By : Dwi Iswanto (airafather6107170)

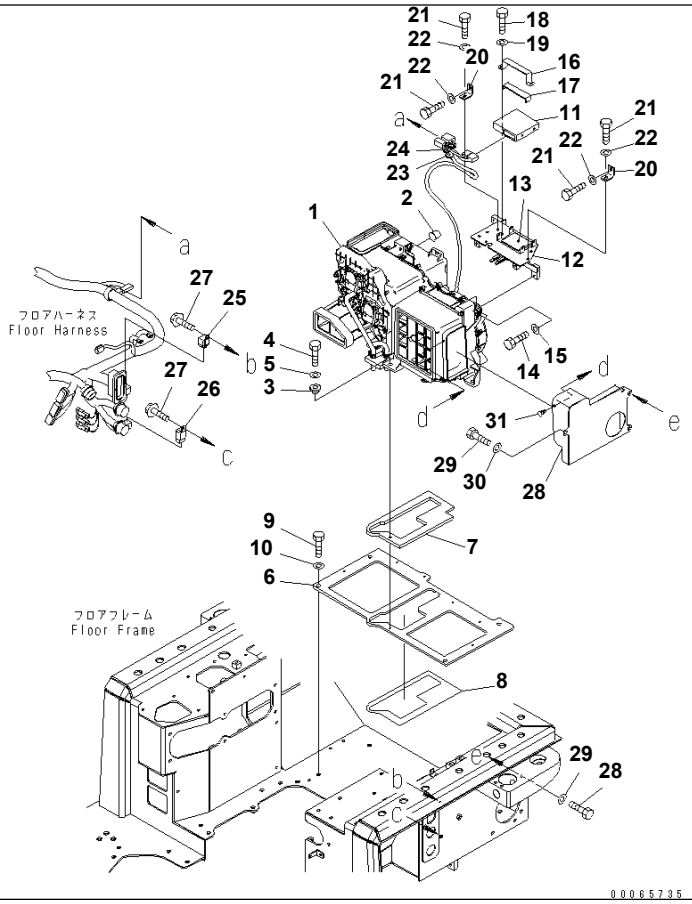

Ref. K2110-25A1 **Page 240960**

D155A-6 S/N 85001-UP
FLOOR FRAME (AIR CONDITIONER)

Item	Part No.	Part Name	Qty	Serial No.
1	(20Y-810-1211)	AIR CONDITIONER	1	85001-
2	17A-979-3131	CAP	1	85001-
3	208-979-7540	COLLAR	7	85001-
4	01010-80825	BOLT	7	85001-
5	01643-30823	WASHER	7	85001-
6	17A-979-2171	PLATE	1	85001-
7	17A-979-2310	· SHEET	1	85001-
8	17A-979-2330	· SHEET	1	85001-
9	01010-81230	BOLT	4	85001-
10	01643-31232	WASHER	4	85001-
11	17A-979-3180	CONTROLLER	1	85001-
12	17A-979-2351	BRACKET	1	85001-
13	17A-979-2360	· SEAL	1	85001-
14	01010-80825	BOLT	2	85001-
15	01643-30823	WASHER	2	85001-
16	17A-979-2370	BRACKET	1	85001-
17	17A-979-2380	SHEET	1	85001-
18	01010-80816	BOLT	2	85001-
19	01643-30823	WASHER	2	85001-
20	17A-979-2120	BRACKET	2	85001-
21	01010-80825	BOLT	4	85001-
22	01643-30823	WASHER	4	85001-
23	08037-01610	GROMMET	1	85001-
24	08059-00413	CLIP	1	85001-
25	20Y-979-6771	RELAY	1	85001-
26	421-07-31270	RELAY	1	85001-
27	01435-00616	BOLT	2	85001-
28	17A-979-2211	DUCT	1	85001-
29	01010-81020	BOLT	3	85001-
30	01643-31032	WASHER	3	85001-

Printed By : Dwi Iswanto (airafather6107170)

FLOOR FRAME (AIR CONDITIONER)

Item	Part No.	Part Name	Qty	Serial No.
31	208-53-12680	CLIP	1	85001-

Printed By : Dwi Iswanto (airafather6107170)

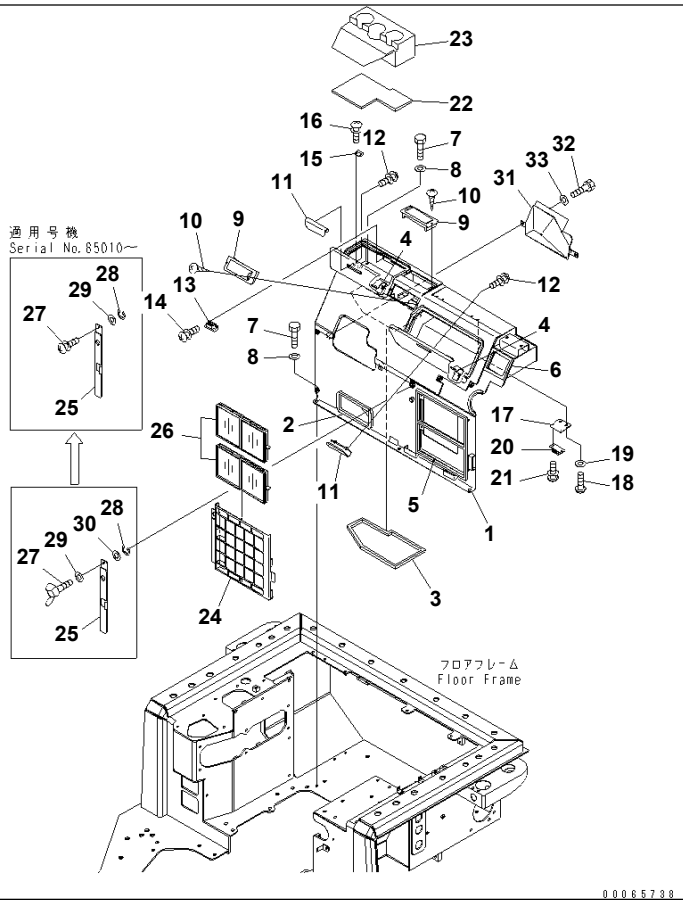

Ref. K2110-26A1 **Page 240970**

D155A-6 S/N 85001-UP
FLOOR FRAME (AIR CONDITIONER COVER)(#85001-85013)

Item	Part No.	Part Name	Qty	Serial No.
1	17A-979-4111	COVER	1	85001-@
2	17A-979-2251	· SEAL	1	85001-@
3	17A-979-2281	· SEAT	1	85001-@
4	17A-979-2390	· HINGE	4	85001-@
5	17A-979-2430	· SEAL	1	85001-@
6	17A-979-2891	· SEAL	1	85001-@
7	01010-80825	BOLT	6	85001-@
8	01643-30823	WASHER	6	85001-@
9	17A-Z11-7161	LOUVER	2	85001-@
10	01370-20308	SCREW	4	85001-@
11	17A-54-46940	BRACKET	2	85001-@
12	01023-10508	SCREW	4	85001-@
13	154-43-73651	MAGNET	1	85001-@
14	01023-10306	SCREW	4	85001-@
15	17A-54-46961	PLATE	1	85001-@
16	01023-10508	SCREW	2	85001-@
17	17A-54-46951	PLATE	2	85001-@
18	01245-00616	SCREW	4	85001-@
19	01643-70623	WASHER	4	85001-@
20	09452-14503	CATCHER	2	85001-@
21	01023-10306	SCREW	4	85001-@
22	17A-979-2411	CUSHION	1	85001-@
23	17A-979-2261	CUSHION	1	85001-@
24	17A-979-2422	COVER	1	85001-@
25	17A-979-1691	BRACKET	1	85001-@
26	20Y-979-6261	FILTER	2	85001-@
27	01023-10616	SCREW	1	85010-85013
	□198-911-6970	BOLT	1	85001-85009
28	195-54-78790	SNAP RING	1	85010-@
	□198-911-6990	RING	1	85001-85009

Printed By : Dwi Iswanto (airafather6107170)

FLOOR FRAME (AIR CONDITIONER COVER)(#85001-85013)

Item	Part No.	Part Name	Qty	Serial No.
29	01640-20610	WASHER	1	85010-@
	□01643-70623	WASHER	1	85001-85009
30	01640-20610	WASHER	1	85001-85009
31	17A-54-46930	COVER	1	85001-@
32	01010-80816	BOLT	2	85001-@
33	01643-30823	WASHER	2	85001-@

Printed By : Dwi Iswanto (airafather6107170)

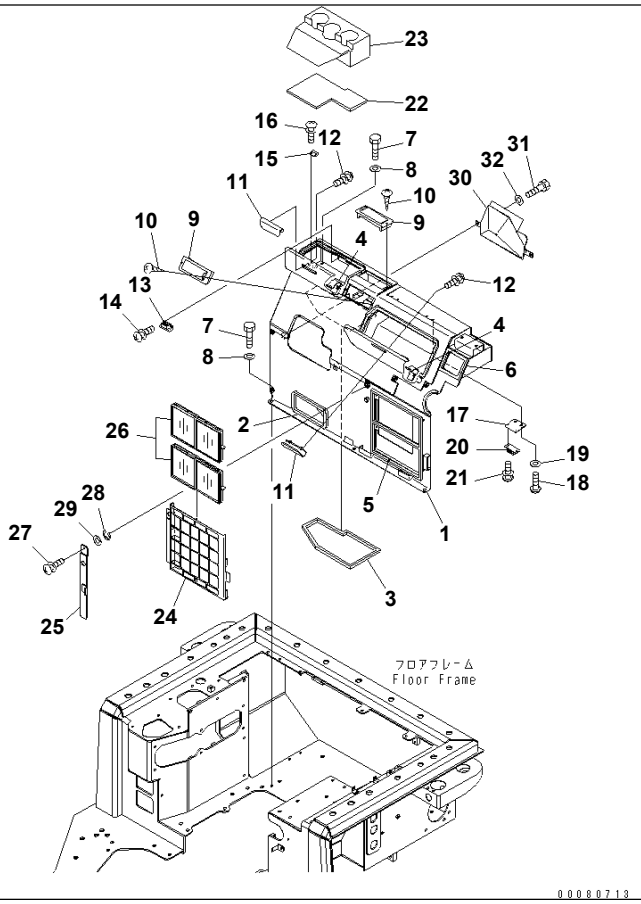

Ref. K2110-26A1A **Page 240980**

D155A-6 S/N 85001-UP
FLOOR FRAME (AIR CONDITIONER COVER)(#85014-)

Item	Part No.	Part Name	Qty	Serial No.
1	17A-979-4111	COVER	1	85001-
2	17A-979-2251	· SEAL	1	85001-
3	17A-979-2281	· SEAT	1	85001-
4	17A-979-2390	· HINGE	4	85001-
5	17A-979-2430	· SEAL	1	85001-
6	17A-979-2891	· SEAL	1	85001-
7	01010-80825	BOLT	6	85001-
8	01643-30823	WASHER	6	85001-
9	17A-Z11-7161	LOUVER	2	85001-
10	01370-20308	SCREW	4	85001-
11	17A-54-46940	BRACKET	2	85001-
12	01023-10508	SCREW	4	85001-
13	154-43-73651	MAGNET	1	85001-
14	01023-10306	SCREW	4	85001-
15	17A-54-46961	PLATE	1	85001-
16	01023-10508	SCREW	2	85001-
17	17A-54-46951	PLATE	2	85001-
18	01245-00616	SCREW	4	85001-
19	01643-70623	WASHER	4	85001-
20	09452-14503	CATCHER	2	85001-
21	01023-10306	SCREW	4	85001-
22	17A-979-2411	CUSHION	1	85001-
23	17A-979-2261	CUSHION	1	85001-
24	17A-979-2422	COVER	1	85001-
25	17A-979-1691	BRACKET	1	85001-
26	20Y-979-6261	FILTER	2	85001-
27	01232-10616	SCREW	1	85014-
28	195-54-78790	SNAP RING	1	85010-
29	01640-20610	WASHER	1	85010-
30	17A-54-46930	COVER	1	85001-

Printed By : Dwi Iswanto (airafather6107170)

FLOOR FRAME (AIR CONDITIONER COVER)(#85014-)

Item	Part No.	Part Name	Qty	Serial No.
31	01010-80816	BOLT	2	85001-
32	01643-30823	WASHER	2	85001-

Printed By : Dwi Iswanto (airafather6107170)

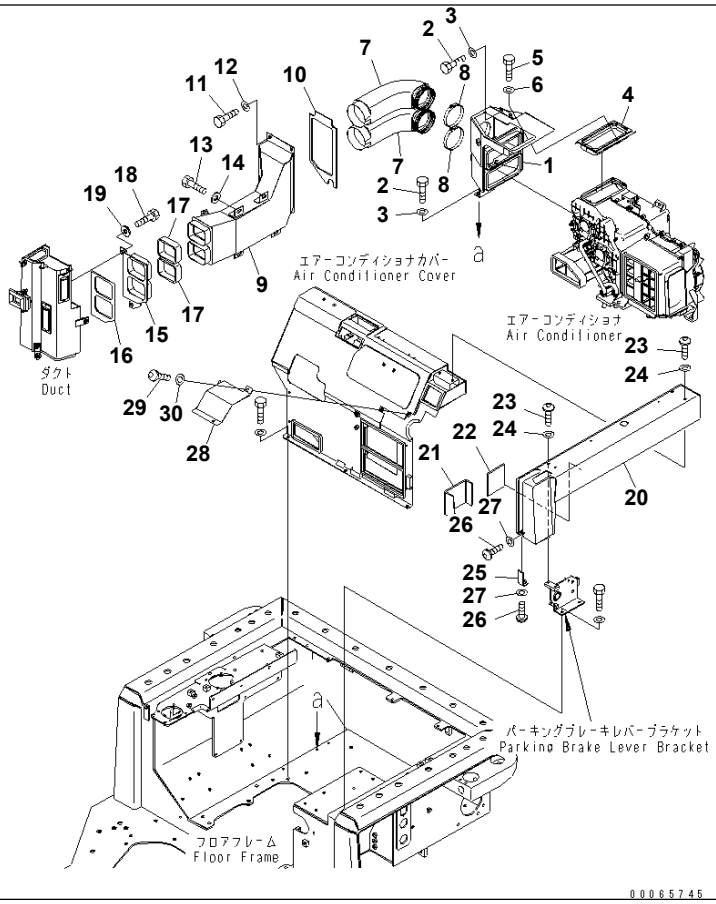

Ref. K2110-27A1 **Page 240990**

D155A-6 S/N 85001-UP
FLOOR FRAME (AIR CONDITIONER DUCT)

Item	Part No.	Part Name	Qty	Serial No.
1	17A-979-2131	DUCT	1	85001-
2	01010-80825	BOLT	4	85001-
3	01643-30823	WASHER	4	85001-
4	17A-979-1710	BRACKET	1	85001-
5	01010-80816	BOLT	2	85001-
6	01643-30823	WASHER	2	85001-
7	208-53-12220	DUCT	2	85001-
8	07281-01159	CLAMP	2	85001-
9	17A-54-47171	DUCT	1	85001-
10	17A-54-47160	· SEAL	1	85001-
11	01010-81030	BOLT	3	85001-
12	01643-31032	WASHER	3	85001-
13	01010-81020	BOLT	4	85001-
14	203-54-56970	WASHER	4	85001-
15	17A-54-47181	DUCT	1	85001-
16	17A-54-47141	· SEAL	1	85001-
17	17A-54-47151	· SEAL	2	85001-
18	01010-81020	BOLT	2	85001-
19	203-54-56970	WASHER	2	85001-
20	17A-54-47270	COVER	1	85001-
21	17A-54-46880	· SEAL	1	85001-
22	17A-54-46890	· SEAL	1	85001-
23	01245-00820	SCREW	4	85001-
24	01643-70823	WASHER	4	85001-
25	17A-54-46831	BRACKET	1	85001-
26	01245-00616	SCREW	2	85001-
27	01643-70623	WASHER	2	85001-
28	17A-54-46812	COVER	1	85001-
29	01245-00820	SCREW	3	85001-
30	01643-70823	WASHER	3	85001-

Printed By : Dwi Iswanto (airafather6107170)

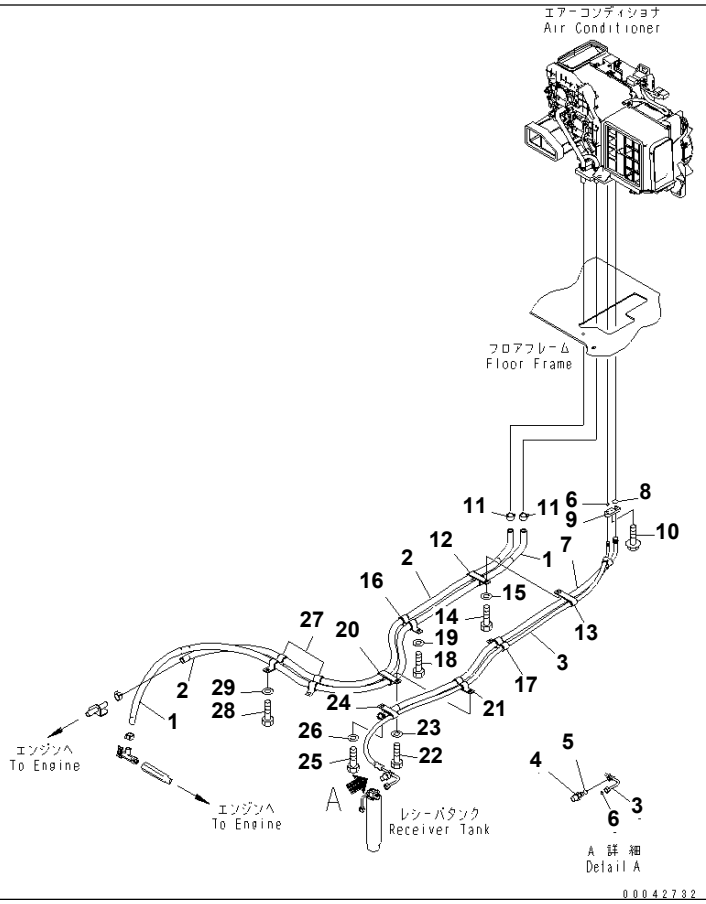

Ref. K2110-28A1 **Page 241000**

D155A-6 S/N 85001-UP
FLOOR FRAME (AIR CONDITIONER PIPING)

Item	Part No.	Part Name	Qty	Serial No.
1	17A-979-2822	HOSE	1	85001-
2	17A-979-2321	HOSE	1	85001-
3	17A-979-2831	HOSE	1	85001-
4	ND443440-0030	・ SWITCH,PRESSURE	1	85001-
5	ND949142-0040	・・ O-RING	1	85001-
6	20Y-979-3150	・ O-RING	2	85001-
7	17A-979-2841	HOSE	1	85001-
8	20Y-979-3130	・ O-RING	1	85001-
9	208-979-7650	CONNECTOR	1	85001-
10	01435-00620	BOLT	1	85001-
11	09479-02400	CLAMP	2	85001-
12	195-979-1550	CLAMP	1	85001-
13	195-Z11-7250	CLIP	1	85001-
14	01010-81230	BOLT	1	85001-
15	01643-31232	WASHER	1	85001-
16	195-979-1550	CLAMP	1	85001-
17	195-Z11-7250	CLIP	1	85001-
18	01010-81230	BOLT	1	85001-
19	01643-31232	WASHER	1	85001-
20	195-979-1550	CLAMP	1	85001-
21	17A-911-4421	CLIP	1	85001-
22	01010-81230	BOLT	1	85001-
23	01643-31232	WASHER	1	85001-
24	17A-911-4460	CLIP	1	85001-
25	01010-81230	BOLT	1	85001-
26	01643-31232	WASHER	1	85001-
27	195-979-1550	CLAMP	2	85001-
28	01010-81230	BOLT	2	85001-
29	01643-31232	WASHER	2	85001-

Printed By : Dwi Iswanto (airafather6107170)

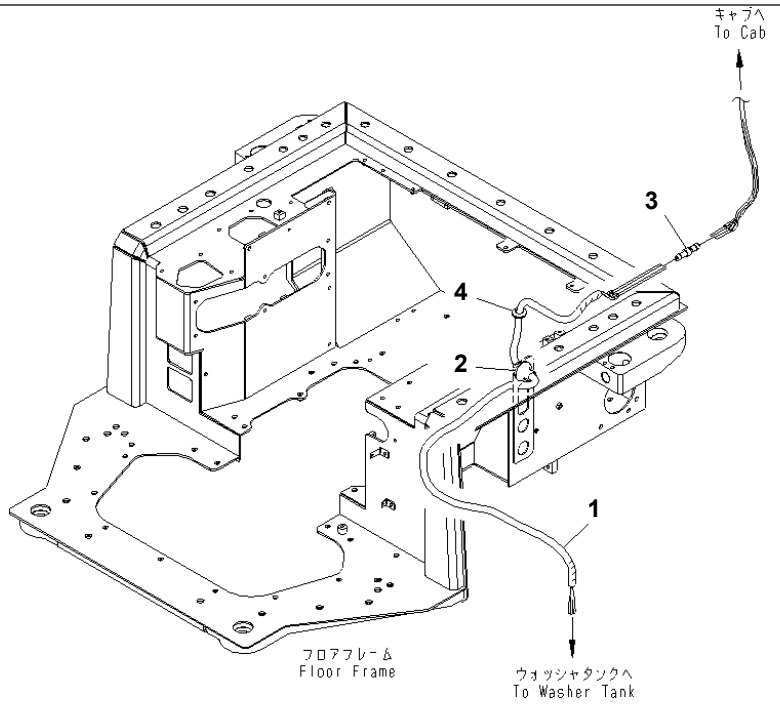

00065750

Ref. K2110-29A1 **Page 241010**

D155A-6 S/N 85001-UP
FLOOR FRAME (WASHER HOSE)

Item	Part No.	Part Name	Qty	Serial No.
	17A-979-2571	HOSE ASS'Y	1	85001-
1	☆	· HOSE	4	85001-
2	08037-12536	· GROMMET	1	85001-
3	195-979-8590	· VALVE	4	85001-
4	08037-02512	GROMMET	1	85001-

Printed By : Dwi Iswanto (airafather6107170)

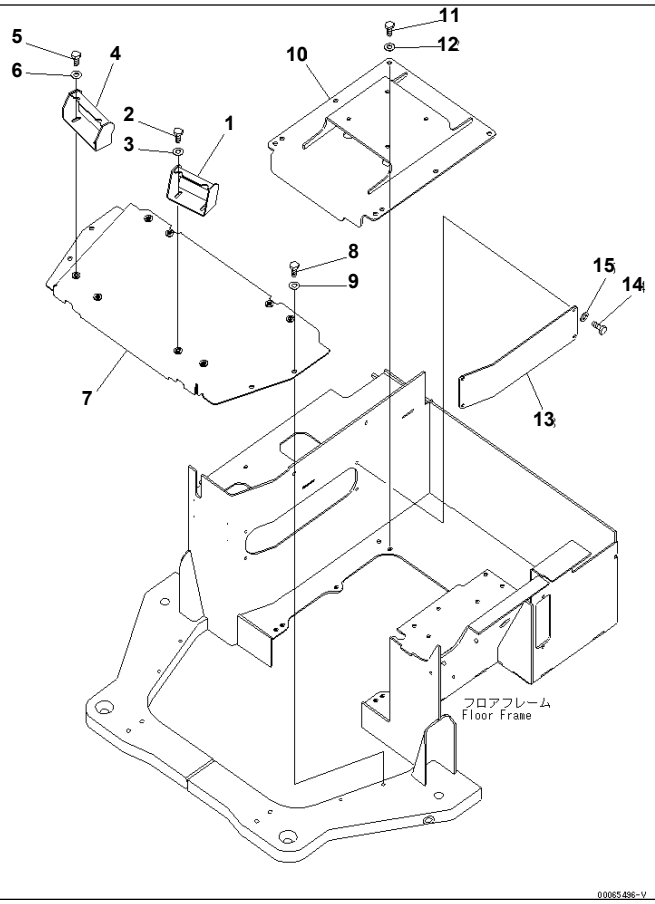

Ref. K2110-30A0 **Page 241020**

D155A-6 S/N 85001-UP
FLOOR FRAME (FLOOR COVER)

Item	Part No.	Part Name	Qty	Serial No.
1	17A-43-41311	BRACKET	1	85001-
2	01010-D1020	BOLT	2	85001-
3	01643-71032	WASHER	2	85001-
4	17A-43-41241	BRACKET	1	85001-
5	01010-D1020	BOLT	2	85001-
6	01643-71032	WASHER	2	85001-
7	17A-54-48211	COVER	1	85001-
8	01010-81230	BOLT	4	85001-
9	01643-31232	WASHER	4	85001-
10	17A-54-48221	COVER	1	85001-
11	01010-81230	BOLT	8	85001-
12	01643-31232	WASHER	8	85001-
13	17A-54-48230	COVER	1	85001-
14	01010-80820	BOLT	4	85001-
15	01643-30823	WASHER	4	85001-

Printed By : Dwi Iswanto (airafather6107170)

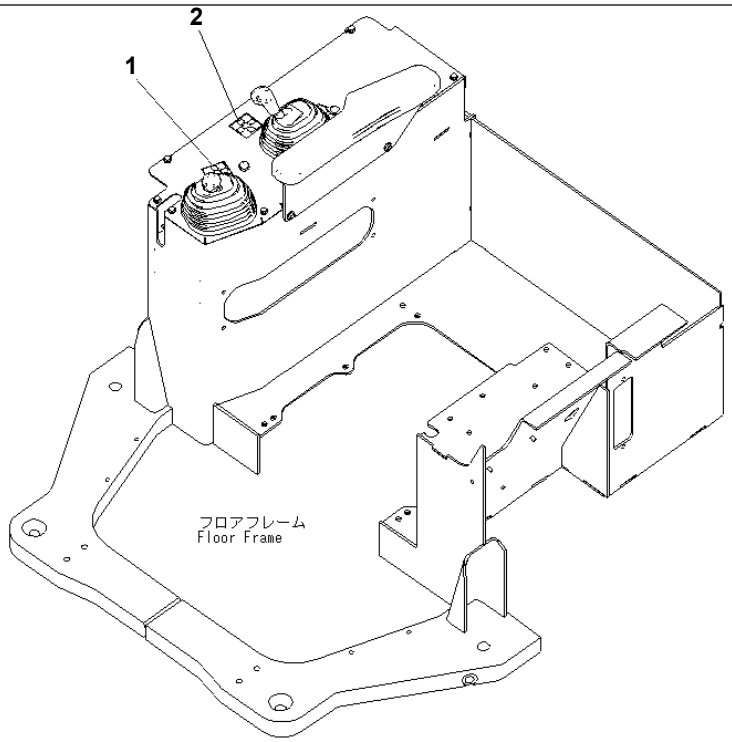

00065539-V

Ref. K2110-31A0 **Page 241030**

D155A-6 S/N 85001-UP
FLOOR FRAME (DECAL) (FOR SINGLE TILT DOZER) (MULTI RIPPER)

Item	Part No.	Part Name	Qty	Serial No.
1	14X-98-11250	PLATE¤ OPERATING	1	85001-
2	17A-98-11160	PLATE	1	85001-

Printed By : Dwi Iswanto (airafather6107170)

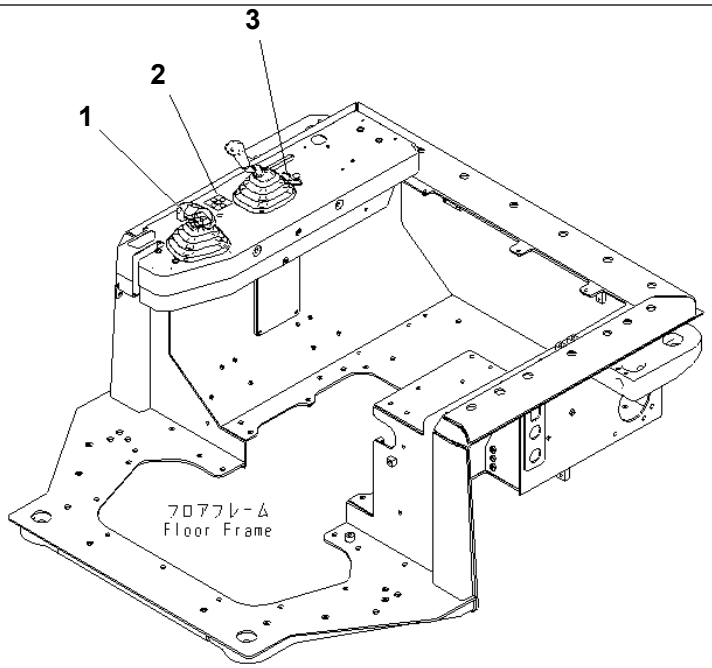

00042734

Ref. K2110-31A2 **Page 241040**

D155A-6 S/N 85001-UP

FLOOR FRAME (DECAL) (FOR SINGLE TILT DOZER) (GIANT RIPPER)

Item	Part No.	Part Name	Qty	Serial No.
1	14X-98-11250	PLATE¤ OPERATING	1	85001-
2	17A-98-11160	PLATE	1	85001-
3	17A-98-11171	PLATE	1	85001-

Printed By : Dwi Iswanto (airafather6107170)

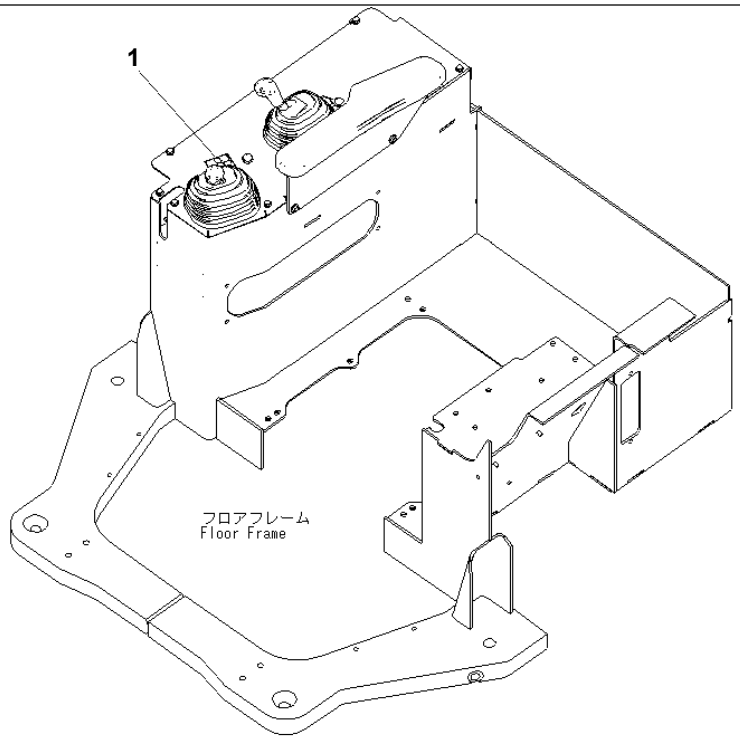

00065780-V

Ref. K2110-31A4 **Page 241050**

D155A-6 S/N 85001-UP
FLOOR FRAME (DECAL) (FOR SINGLE TILT DOZER) (WITHOUT RIPPER)

Item	Part No.	Part Name	Qty	Serial No.
1	14X-98-11250	PLATE¤ OPERATING	1	85001-

Printed By : Dwi Iswanto (airafather6107170)

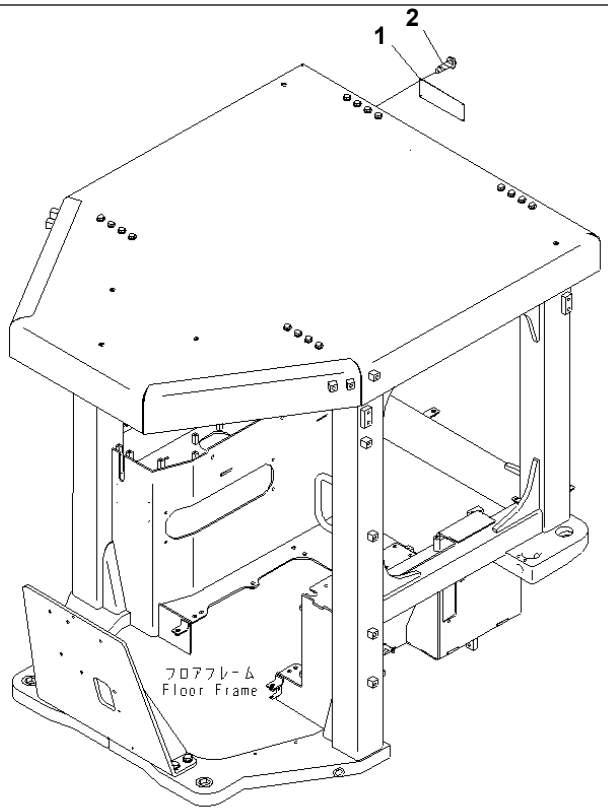

00065548

Ref. K2110-32A0 **Page 241060**

D155A-6 S/N 85001-UP
FLOOR FRAME (ROPS PLATE) (WITHOUT CAB)

Item	Part No.	Part Name	Qty	Serial No.
1	09620-A2000	PLATE	1	85001-
2	04418-13060	SCREW	4	85001-

Printed By : Dwi Iswanto (airafather6107170)

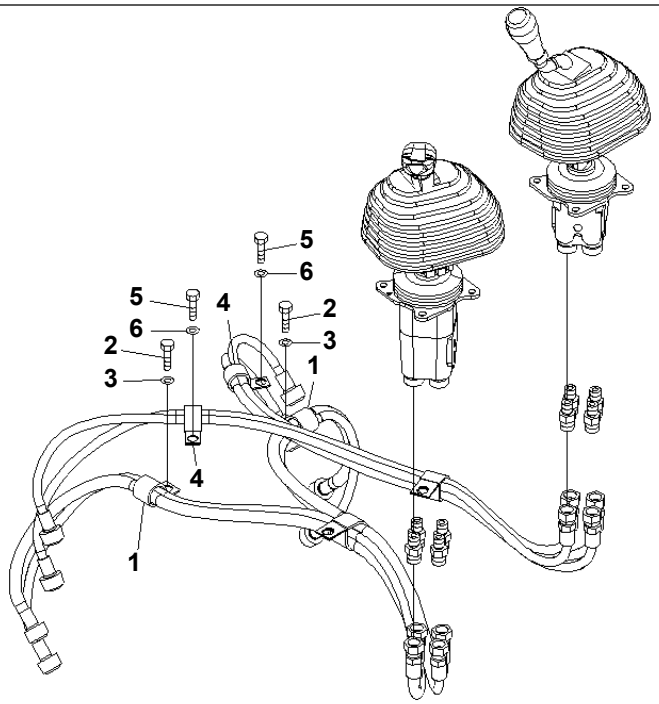

00065681

Ref. K2110-33A0 **Page 241070**

D155A-6 S/N 85001-UP

FLOOR FRAME (BLADE AND RIPPER PPC CLAMP)

Item	Part No.	Part Name	Qty	Serial No.
1	04434-52512	CLIP	2	85001-
2	01010-81225	BOLT	2	85001-
3	01643-31232	WASHER	2	85001-
4	04434-52312	CLIP	2	85001-
5	01010-81225	BOLT	2	85001-
6	01643-31232	WASHER	2	85001-

Printed By : Dwi Iswanto (airafather6107170)

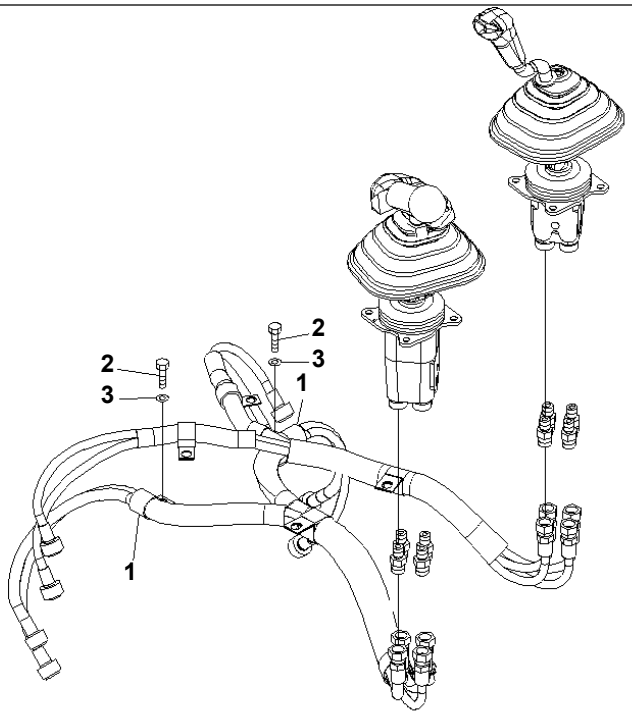

00065785

Ref. K2110-33A4 **Page 241080**

D155A-6 S/N 85001-UP

FLOOR FRAME (BLADE PPC CLAMP) (WITHOUT RIPPER)

Item	Part No.	Part Name	Qty	Serial No.
1	04434-52512	CLIP	2	85001-
2	01010-81225	BOLT	2	85001-
3	01643-31232	WASHER	2	85001-

Printed By : Dwi Iswanto (airafather6107170)

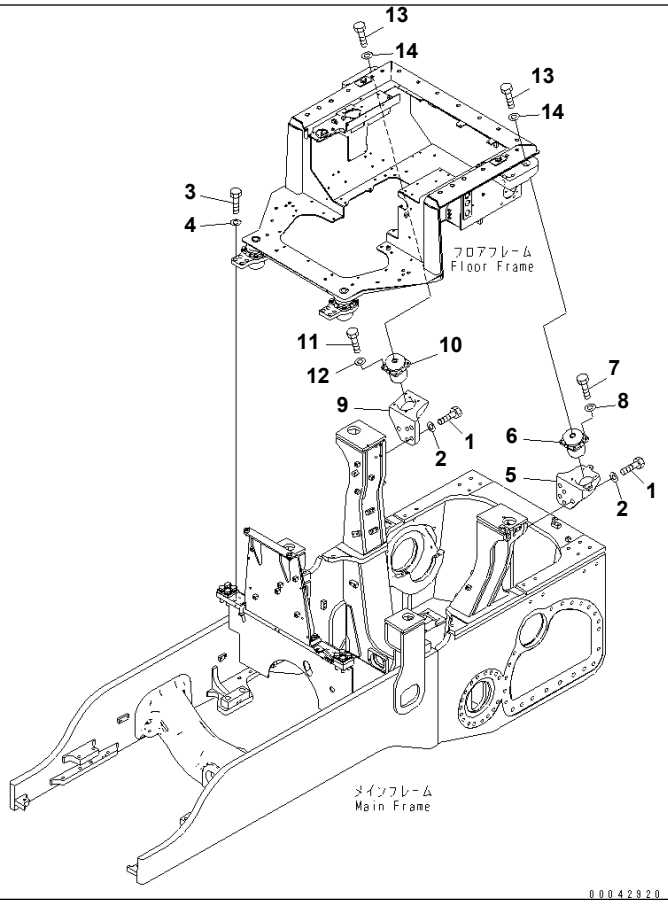

Ref. K2120-01A0 **Page 241090**

D155A-6 S/N 85001-UP
FLOOR MOUNT (WITH CAB)

Item	Part No.	Part Name	Qty	Serial No.
1	01010-82475	BOLT	10	85001-
2	01643-32460	WASHER	10	85001-
3	01010-82060	BOLT	8	85001-
4	01643-32060	WASHER	8	85001-
5	17A-54-48132	BRACKET,L.H.	1	85001-
6	17A-54-46130	CUSHION	1	85001-
7	01010-81440	BOLT	4	85001-
8	01643-31445	WASHER	4	85001-
9	17A-54-48142	BRACKET,R.H.	1	85001-
10	17A-54-46130	CUSHION	1	85001-
11	01010-81440	BOLT	4	85001-
12	01643-31445	WASHER	4	85001-
13	01010-82465	BOLT	2	85001-
14	01643-32460	WASHER	2	85001-

Printed By : Dwi Iswanto (airafather6107170)

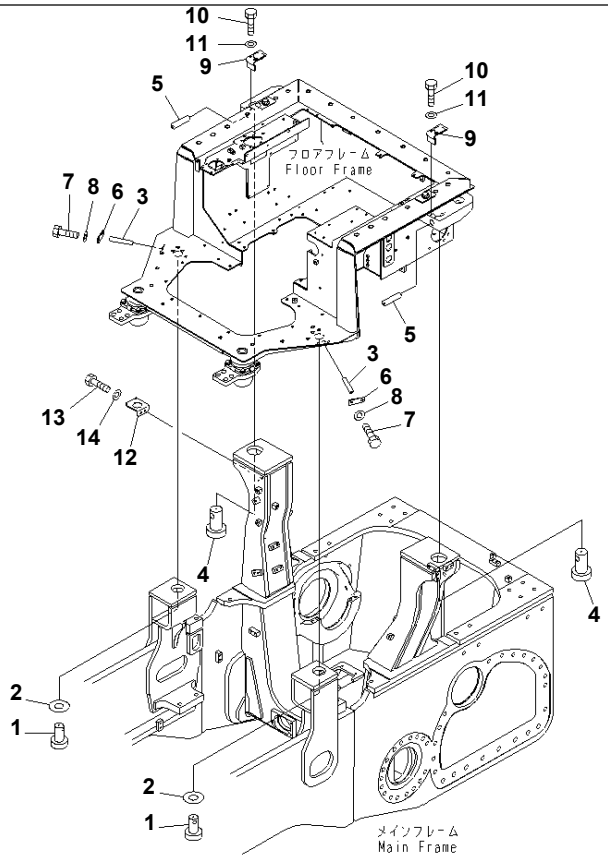

Ref. K2120-02A0 **Page 241100**

D155A-6 S/N 85001-UP
FLOOR MOUNT (STOPPER PIN) (WITH CAB)

Item	Part No.	Part Name	Qty	Serial No.
1	17A-979-1811	PIN	2	85001-
2	17A-979-1510	SHEET (BONDED)	2	85001-
3	17A-979-1821	PIN	2	85001-
4	17A-979-1831	PIN	2	85001-
5	17A-979-1841	PIN	2	85001-
6	11S-959-1780	SHIM	2	85001-
7	01010-81230	BOLT	4	85001-
8	01643-31232	WASHER	4	85001-
9	17A-979-1871	PLATE	2	85001-
10	01010-81225	BOLT	3	85001-
11	01643-31232	WASHER	3	85001-
12	17A-979-1860	BRACKET	1	85001-
13	01010-81225	BOLT	2	85001-
14	01643-31232	WASHER	2	85001-

Printed By : Dwi Iswanto (airafather6107170)

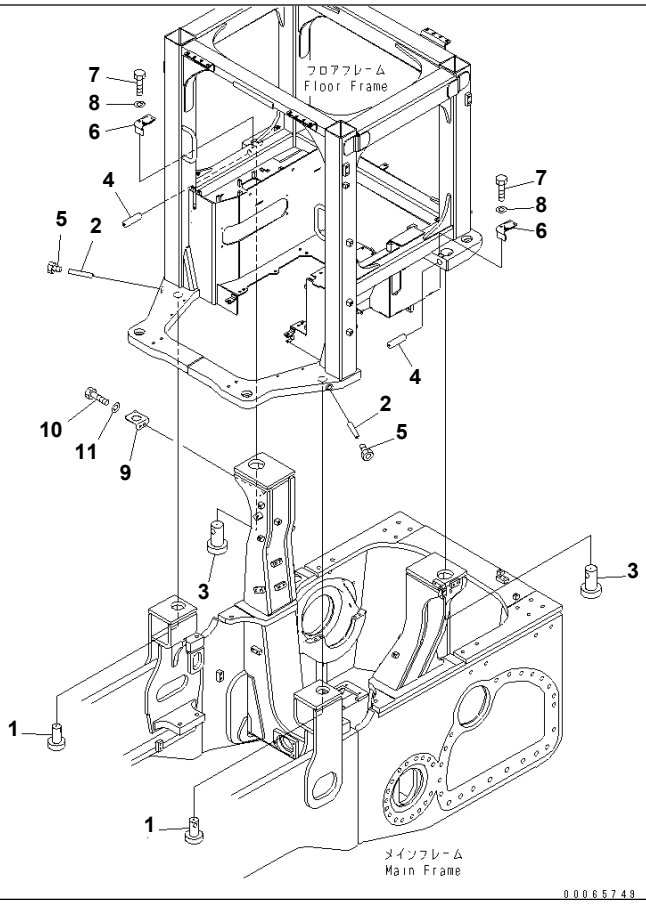

Ref. K2120-02A1 **Page 241110**

D155A-6 S/N 85001-UP
FLOOR MOUNT (STOPPER PIN) (WITHOUT CAB)

Item	Part No.	Part Name	Qty	Serial No.
1	17A-979-1811	PIN	2	85001-
2	17A-979-1821	PIN	2	85001-
3	17A-979-1831	PIN	2	85001-
4	17A-979-1841	PIN	2	85001-
5	07040-12412	PLUG	2	85001-
6	17A-979-1871	PLATE	2	85001-
7	01010-81225	BOLT	3	85001-
8	01643-31232	WASHER	3	85001-
9	17A-979-1860	BRACKET	1	85001-
10	01010-81225	BOLT	2	85001-
11	01643-31232	WASHER	2	85001-

Printed By : Dwi Iswanto (airafather6107170)

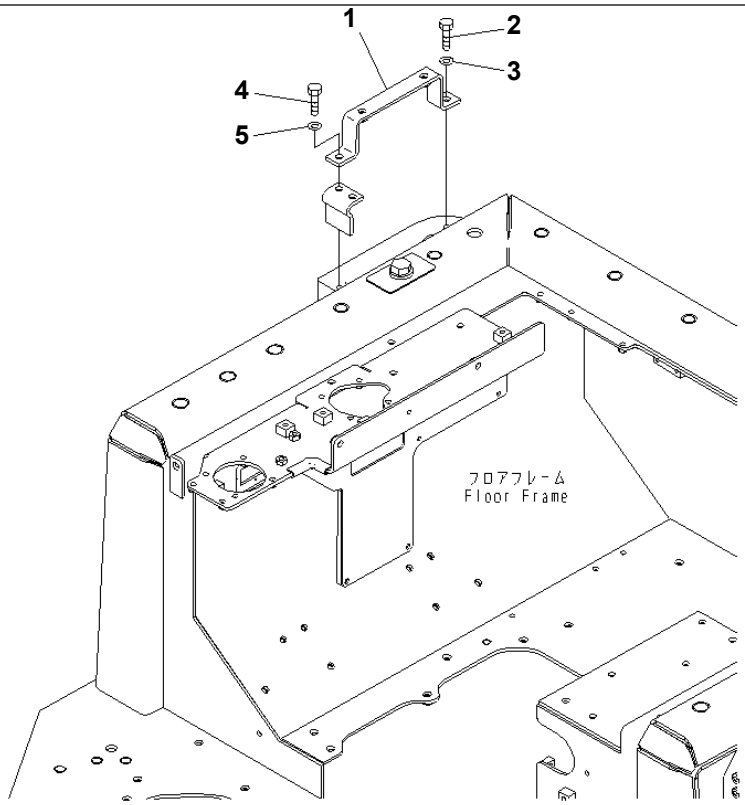

00042922

Ref. K2120-03A0 **Page 241120**

D155A-6 S/N 85001-UP
FLOOR MOUNT (BRACKET) (WITH CAB)

Item	Part No.	Part Name	Qty	Serial No.
1	17A-54-45290	BRACKET	1	85001-
2	01010-81225	BOLT	1	85001-
3	01643-31232	WASHER	1	85001-
4	01010-81230	BOLT	1	85001-
5	01643-31232	WASHER	1	85001-

Printed By : Dwi Iswanto (airafather6107170)

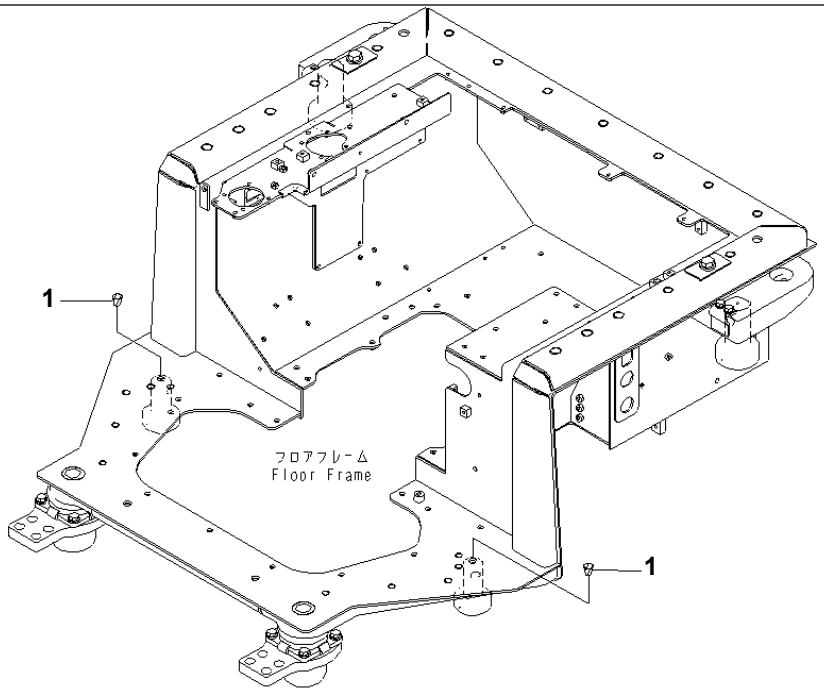

00065751

Ref. K2120-04A0 **Page 241130**

D155A-6 S/N 85001-UP
FLOOR MOUNT (PLUG) (WITH CAB)

Item	Part No.	Part Name	Qty	Serial No.
1	07049-00811	PLUG	2	85001-

Printed By : Dwi Iswanto (airafather6107170)

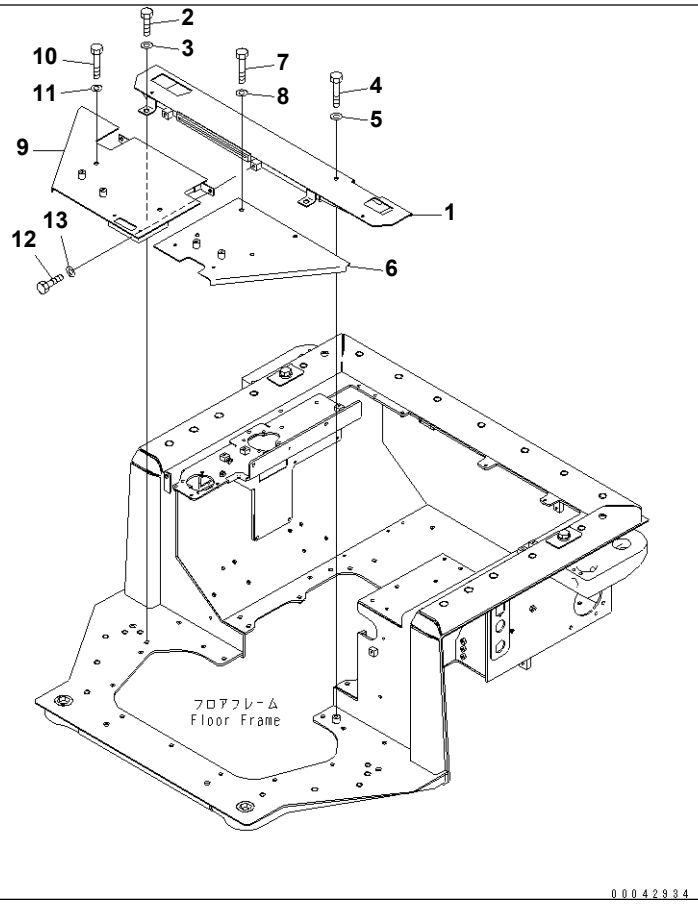

Ref. K2130-01A0 **Page 241140**

D155A-6 S/N 85001-UP

FLOOR FRAME COVER (AIR CONDITIONER DUCT) (WITH CAB)

Item	Part No.	Part Name	Qty	Serial No.
1	17A-54-46182	COVER	1	85001-
2	01010-81225	BOLT	2	85001-
3	01643-31232	WASHER	2	85001-
4	01010-81245	BOLT	1	85001-
5	01643-31232	WASHER	1	85001-
6	17A-54-46842	COVER	1	85001-
7	01010-81260	BOLT	4	85001-
8	01643-31232	WASHER	4	85001-
9	17A-54-46851	COVER	1	85001-
10	01010-81260	BOLT	2	85001-
11	01643-31232	WASHER	2	85001-
12	01010-81225	BOLT	2	85001-
13	01643-31232	WASHER	2	85001-

Printed By : Dwi Iswanto (airafather6107170)

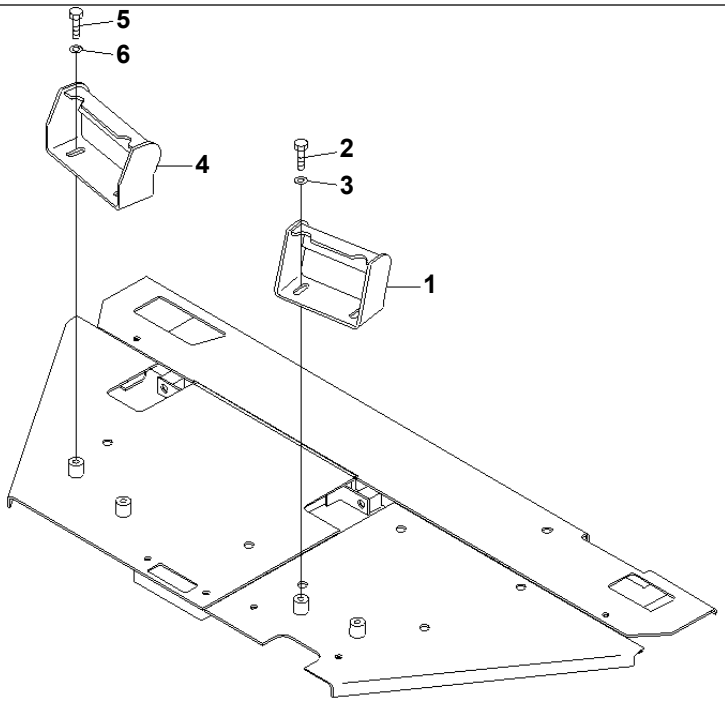

00042935

Ref. K2130-02A0 **Page 241150**

D155A-6 S/N 85001-UP

FLOOR FRAME COVER (FOOT REST) (WITH CAB)

Item	Part No.	Part Name	Qty	Serial No.
1	17A-43-41311	BRACKET	1	85001-
2	01010-D1020	BOLT	2	85001-
3	01643-71032	WASHER	2	85001-
4	17A-43-41241	BRACKET	1	85001-
5	01010-D1020	BOLT	2	85001-
6	01643-71032	WASHER	2	85001-

Printed By : Dwi Iswanto (airafather6107170)

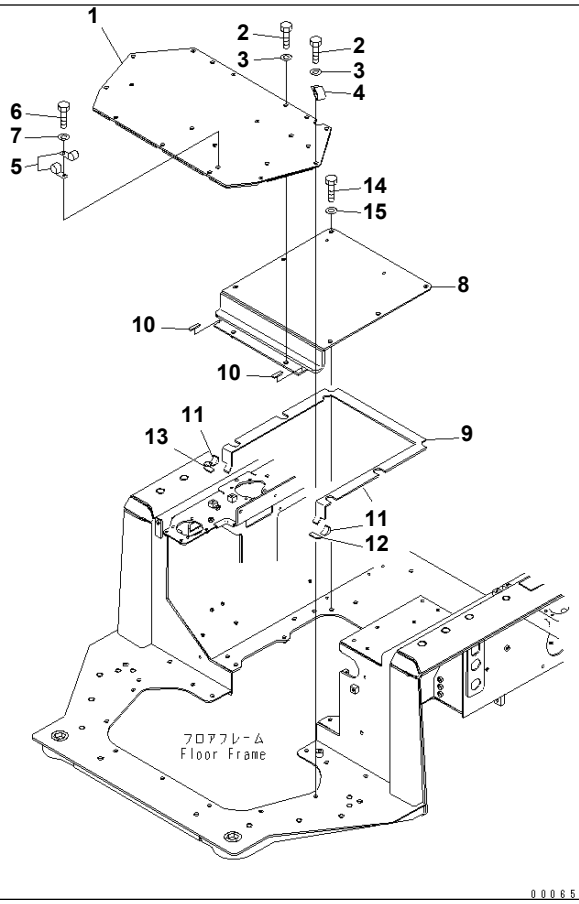

Ref. K2130-03A0 **Page 241160**

D155A-6 S/N 85001-UP
FLOOR FRAME COVER (COVER) (FOOT) (WITH CAB)

Item	Part No.	Part Name	Qty	Serial No.
1	17A-54-46141	COVER	1	85001-
2	01010-81230	BOLT	13	85001-
3	01643-31232	WASHER	13	85001-
4	421-07-11550	CLIP	1	85001-
5	04434-52312	CLIP	2	85001-
6	01010-81230	BOLT	1	85001-
7	01643-31232	WASHER	1	85001-
8	17A-54-46151	COVER	1	85001-
9	17A-54-46161	· SHEET (BONDED)	1	85001-
10	195-54-64390	· SHEET (BONDED)	2	85001-
11	17A-54-46210	· SHEET (BONDED)	2	85001-
12	17A-54-46280	· SHEET (BONDED)	1	85001-
13	17A-54-46320	· SHEET (BONDED)	1	85001-
14	01010-81230	BOLT	6	85001-
15	01643-31232	WASHER	6	85001-

Printed By : Dwi Iswanto (airafather6107170)

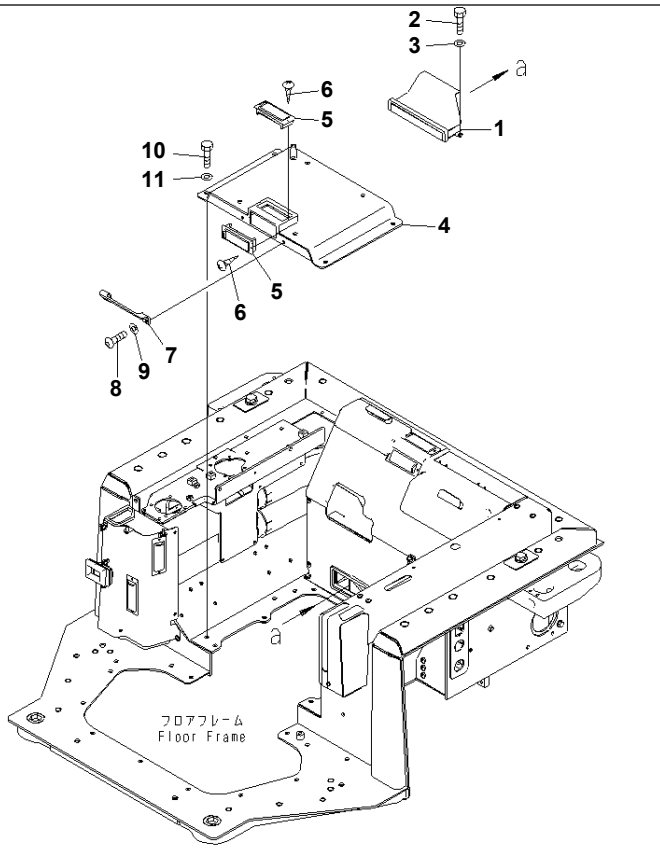

Ref. K2130-04A0 **Page 241170**

D155A-6 S/N 85001-UP
FLOOR FRAME COVER (DUCT) (WITH CAB)

Item	Part No.	Part Name	Qty	Serial No.
1	17A-979-2271	DUCT	1	85001-
2	01010-80825	BOLT	2	85001-
3	01643-30823	WASHER	2	85001-
4	17A-57-41113	BRACKET	1	85001-
5	17A-Z11-7161	LOUVER	2	85001-
6	01370-20308	SCREW	4	85001-
7	17A-57-41161	PLATE	1	85001-
8	01245-00830	SCREW	2	85001-
9	01643-70823	WASHER	2	85001-
10	01010-81235	BOLT	4	85001-
11	01643-31232	WASHER	4	85001-

Printed By : Dwi Iswanto (airafather6107170)

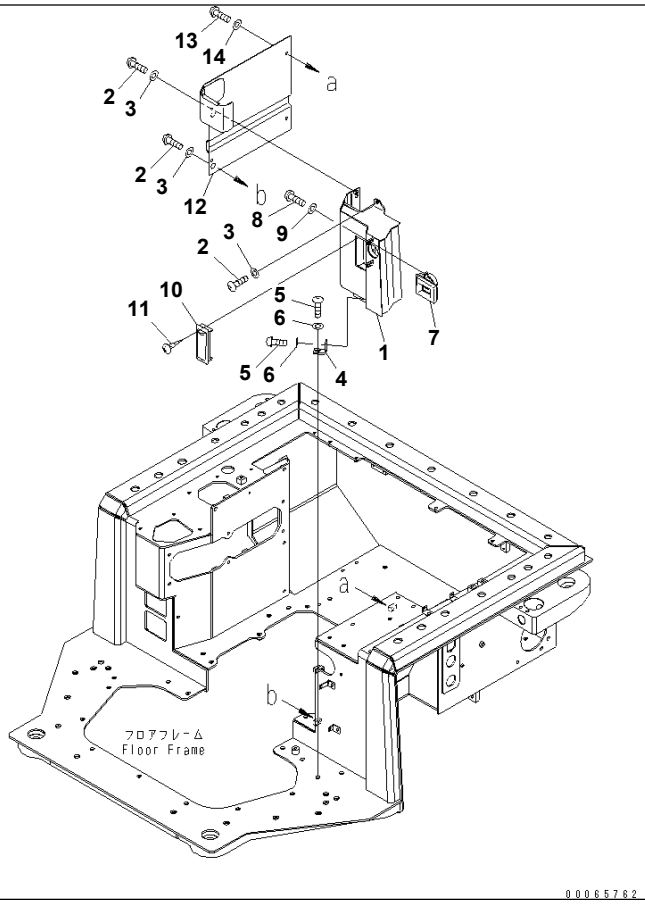

Ref. K2130-05A0 **Page 241180**

D155A-6 S/N 85001-UP
FLOOR FRAME COVER (L.H.) (WITH CAB)

Item	Part No.	Part Name	Qty	Serial No.
1	17A-54-46223	DUCT	1	85001-
2	01245-00820	SCREW	3	85001-
3	01643-70823	WASHER	3	85001-
4	17A-979-2120	BRACKET	1	85001-
5	01245-00820	SCREW	2	85001-
6	01643-70823	WASHER	2	85001-
7	17A-54-45160	DUCT	1	85001-
8	01245-00616	SCREW	2	85001-
9	01643-70623	WASHER	2	85001-
10	17A-Z11-7161	LOUVER	1	85001-
11	01370-20308	SCREW	2	85001-
12	17A-54-46351	COVER	1	85001-
13	01245-00820	SCREW	4	85001-
14	01643-70823	WASHER	4	85001-

Printed By : Dwi Iswanto (airafather6107170)

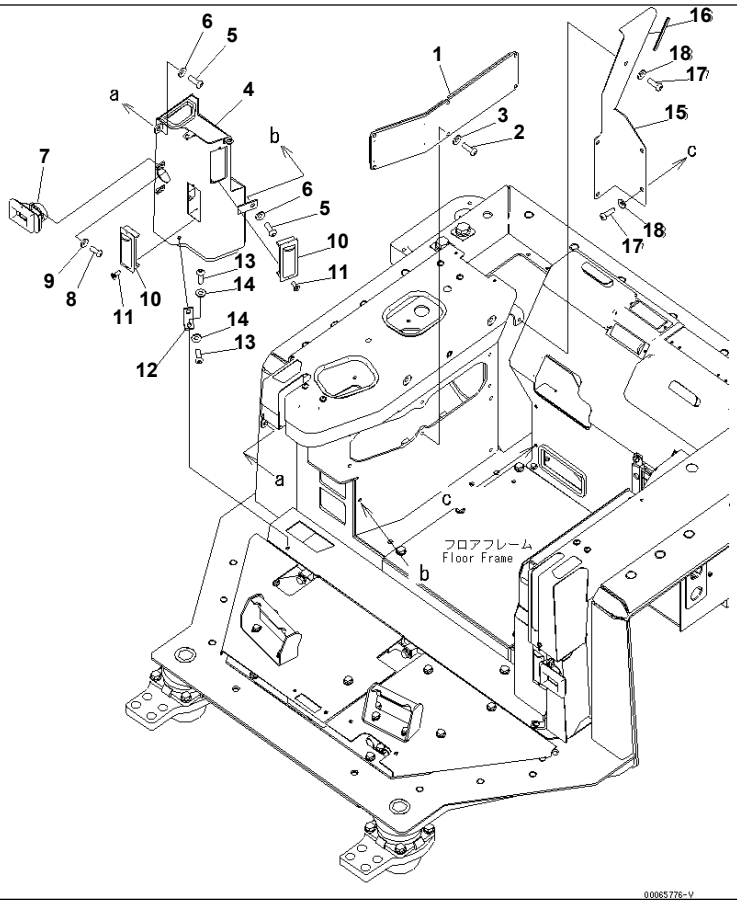

Ref. K2130-06A0 **Page 241190**

D155A-6 S/N 85001-UP
FLOOR FRAME COVER (R.H.) (WITH CAB)

Item	Part No.	Part Name	Qty	Serial No.
1	17A-54-47341	COVER	1	85001-
2	01245-00825	SCREW	6	85001-
3	01643-70823	WASHER	6	85001-
4	17A-54-47191	DUCT	1	85001-
5	01245-00820	SCREW	4	85001-
6	01643-70823	WASHER	4	85001-
7	17A-54-45160	DUCT	1	85001-
8	01245-00616	SCREW	2	85001-
9	01643-70623	WASHER	2	85001-
10	17A-Z11-7161	LOUVER	2	85001-
11	01370-20308	SCREW	4	85001-
12	17A-979-2120	BRACKET	1	85001-
13	01245-00820	SCREW	2	85001-
14	01643-70823	WASHER	2	85001-
15	17A-54-47361	COVER	1	85001-
16	17A-54-47370	· TRIM (BONDED)	1	85001-
17	01245-00820	SCREW	5	85001-
18	01643-70823	WASHER	5	85001-

Printed By : Dwi Iswanto (airafather6107170)

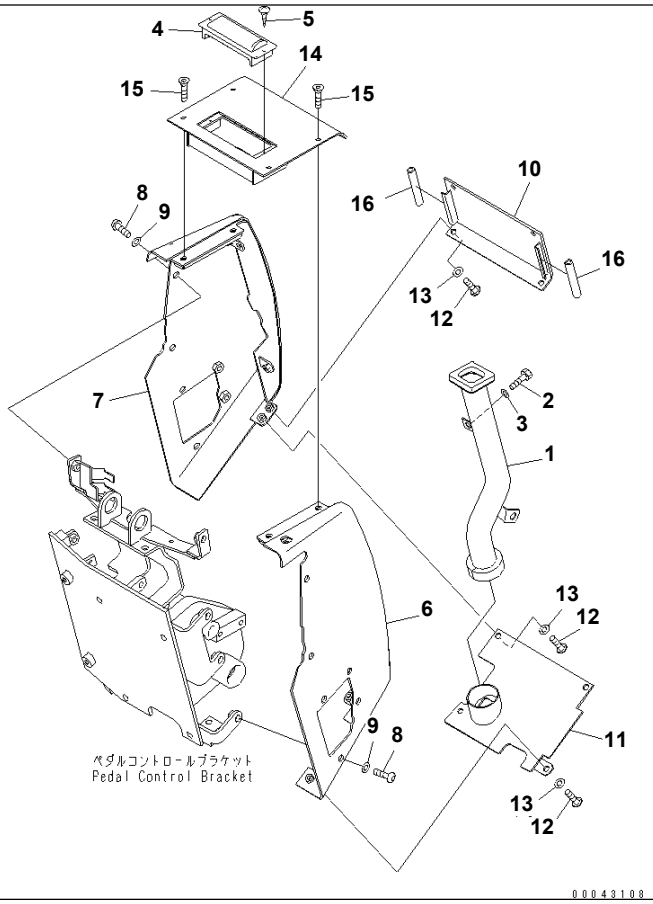

Ref. K2210-01A0 **Page 241200**

D155A-6 S/N 85001-UP
DASHBOARD (DUCT AND COVER)

Item	Part No.	Part Name	Qty	Serial No.
1	17A-979-2451	DUCT	1	85001-
2	01010-81020	BOLT	2	85001-
3	01643-31032	WASHER	2	85001-
4	17A-Z11-7161	LOUVER	1	85001-
5	01370-20316	SCREW	2	85001-
6	17A-54-46513	COVER,L.H.	1	85001-
7	17A-54-46524	COVER	1	85005-
	□17A-54-46523	COVER,R.H.	1	85001-85004
8	01245-01025	SCREW	8	85001-
9	01643-71032	WASHER	8	85001-
10	17A-54-46541	COVER	1	85001-
11	17A-54-46551	COVER	1	85001-
12	01245-00820	SCREW	8	85001-
13	01643-70823	WASHER	8	85001-
14	17A-54-46561	COVER	1	85001-
15	01240-00616	SCREW	4	85001-
16	17A-54-46771	SHEET	2	85001-

Printed By : Dwi Iswanto (airafather6107170)

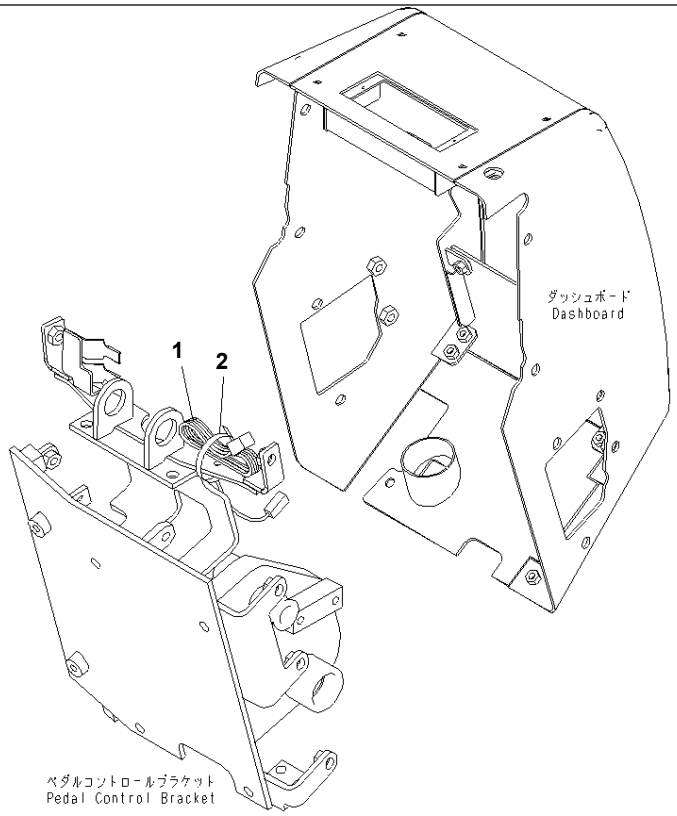

00043109

Ref. K2210-02A1 **Page 241210**

D155A-6 S/N 85001-UP
DASHBOARD (KOMTRAX)

Item	Part No.	Part Name	Qty	Serial No.
1	8A13-10-1410	CABLE	1	85001-
2	20Y-06-24320	BAND	1	85001-

Printed By : Dwi Iswanto (airafather6107170)

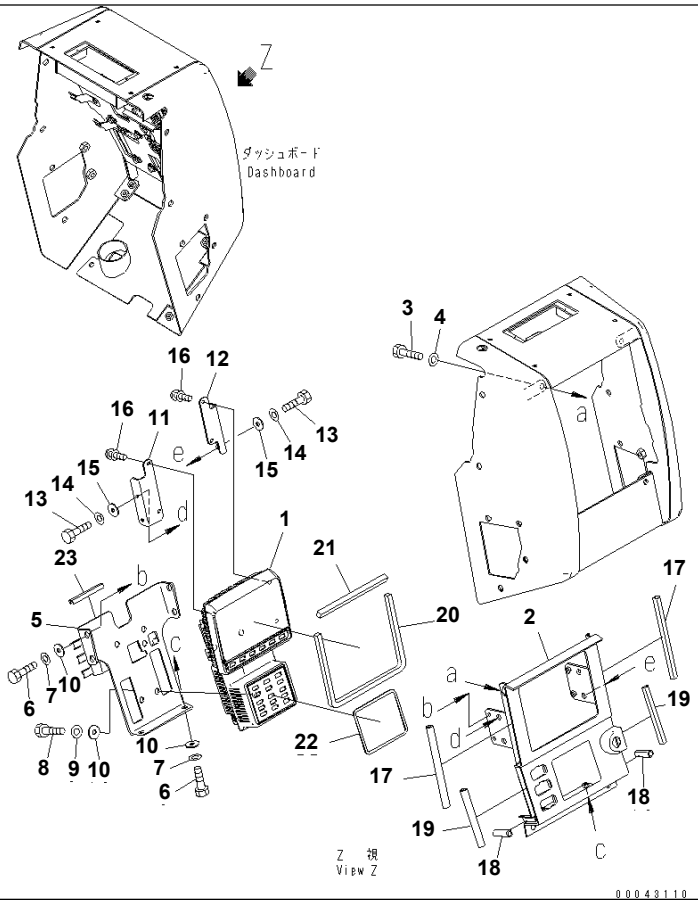

Ref. K2210-03A0 **Page 241220**

D155A-6 S/N 85001-UP
DASHBOARD (MONITOR AND MOUNT)

Item	Part No.	Part Name	Qty	Serial No.
1	7831-69-1141	MONITOR	1	85001-
2	17A-54-46532	COVER	1	85001-
3	01010-80816	BOLT	2	85001-
4	01643-30823	WASHER	2	85001-
5	17A-54-46712	BRACKET	1	85001-
6	01010-80616	BOLT	6	85001-
7	01643-30623	WASHER	6	85001-
8	01010-80620	BOLT	4	85001-
9	01643-30623	WASHER	4	85001-
10	17A-Z11-2813	PLATE	10	85001-
11	17A-54-46721	BRACKET	1	85001-
12	17A-54-46731	BRACKET	1	85001-
13	01010-80616	BOLT	4	85001-
14	01643-30623	WASHER	4	85001-
15	17A-Z11-2813	PLATE	4	85001-
16	01023-10410	SCREW	4	85001-
17	17A-54-46751	SEAL	2	85001-
18	17A-54-46761	SEAL	2	85001-
19	17A-54-46780	SEAL	2	85001-
20	17A-54-46661	SHEET	1	85001-
21	17A-54-46820	SEAL	1	85001-
22	17A-54-46671	SHEET	1	85001-
23	17A-54-45990	SEAL	1	85001-

Printed By : Dwi Iswanto (airafather6107170)

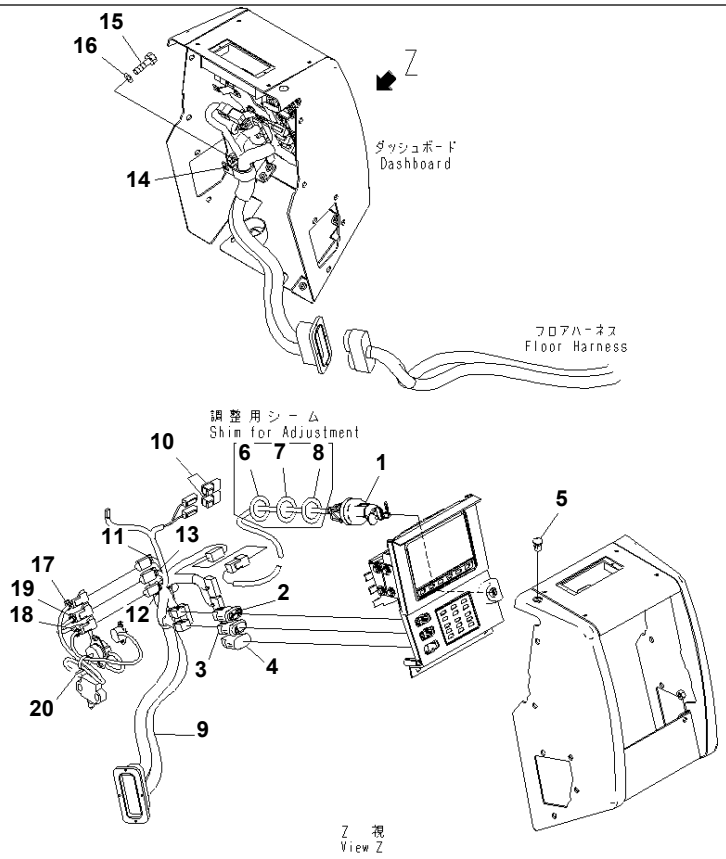

Ref. K2210-04A0 **Page 241230**

D155A-6 S/N 85001-UP

DASHBOARD (SWITCH AND WIRING)

Item	Part No.	Part Name	Qty	Serial No.
1	198-06-62141	WIRING HARNESS	1	85001-
2	17A-06-42250	SWITCH	1	85001-
3	17A-06-42260	SWITCH	1	85001-
4	20Y-06-42190	COVER	1	85001-
5	20Y-979-6161	SENSOR	1	85001-
6	23S-15-45860	SHIM¤ 0.5MM	2	85001-
7	20Y-43-41750	WASHER	2	85001-
8	20Y-43-41790	WASHER	2	85001-
9	17A-06-41122	WIRING HARNESS	1	85001-
10	21J-06-13661	· DIODE	2	85001-
11	20Y-62-22790	· BAND¤ RED	1	85001-
12	20Y-62-22810	· BAND¤ YELLOW	1	85001-
13	20Y-62-22820	· BAND¤ BLUE	1	85001-
14	04434-53411	CLIP	1	85001-
15	01010-81020	BOLT	1	85001-
16	01643-31032	WASHER	1	85001-
17	20Y-62-22790	BAND¤ RED	1	85001-
18	20Y-62-22810	BAND¤ YELLOW	1	85001-
19	20Y-62-22820	BAND¤ BLUE	1	85001-
20	20Y-06-24320	BAND	1	85001-

Printed By : Dwi Iswanto (airafather6107170)

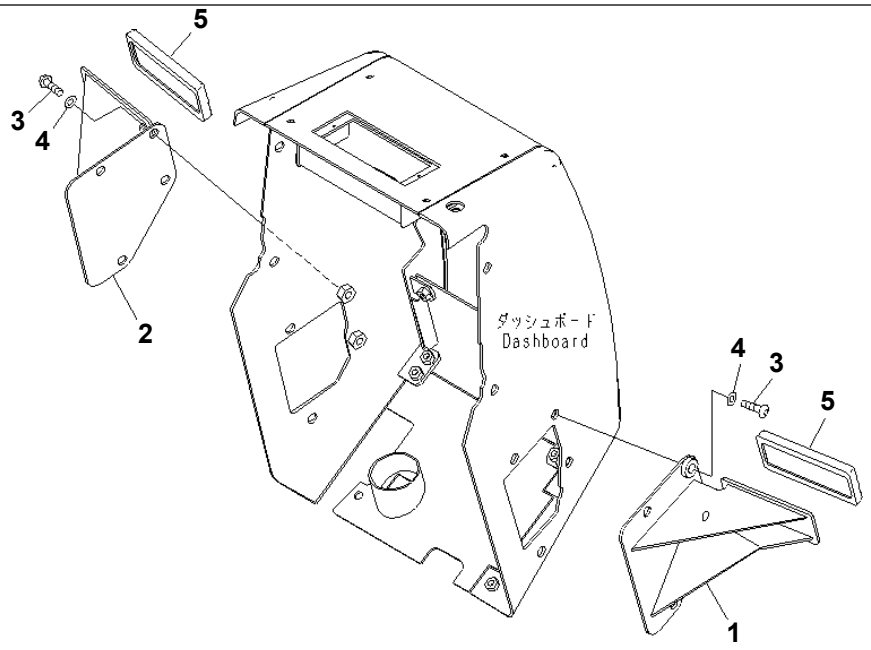

00065739

Ref. K2210-05A0 **Page 241240**

D155A-6 S/N 85001-UP
DASHBOARD (FOOT REST)

Item	Part No.	Part Name	Qty	Serial No.
1	17A-54-46582	BRACKET	1	85001-
2	17A-54-46592	BRACKET	1	85001-
3	01245-01025	SCREW	4	85001-
4	01643-71032	WASHER	4	85001-
5	203-43-56450	CAP¤ PEDAL	2	85001-

Printed By : Dwi Iswanto (airafather6107170)

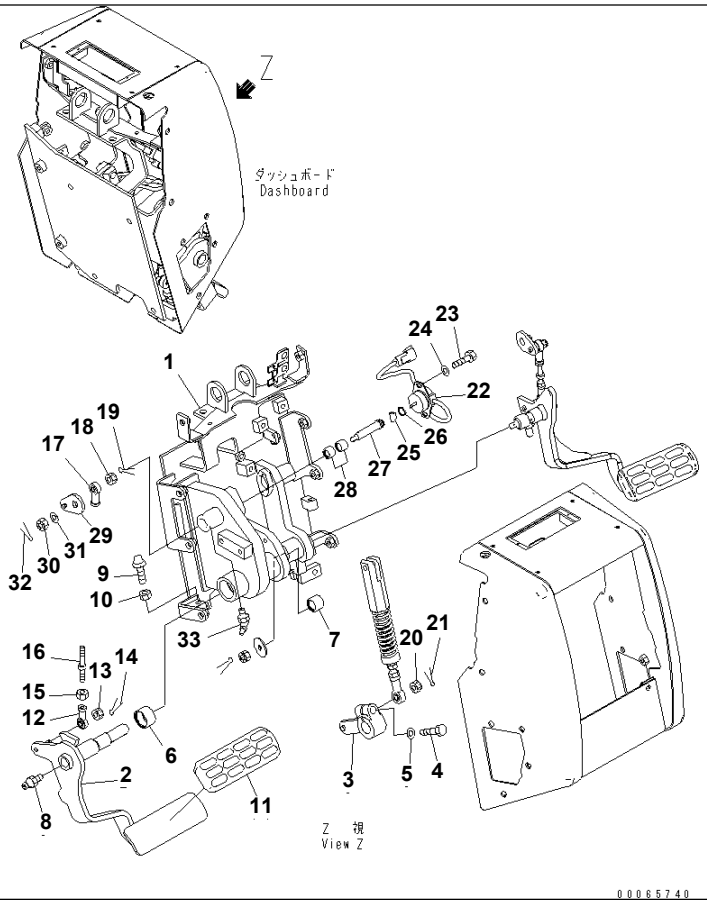

Ref. K2210-06A0 **Page 241250**

D155A-6 S/N 85001-UP
DASHBOARD (PEDAL CONTROL) (1/3)

Item	Part No.	Part Name	Qty	Serial No.
1	17A-43-41112	BRACKET	1	85001-
2	17A-43-41121	PEDAL	1	85001-
3	17A-43-41140	LEVER	1	85001-
4	01010-81245	BOLT	1	85001-
5	01643-31232	WASHER	1	85001-
6	06124-03020	BEARING	1	85001-
7	06124-02020	BEARING	1	85001-
8	07020-00000	FITTING	1	85001-
9	09311-41237	BUMPER	1	85001-
10	01580-11210	NUT	1	85001-
11	14X-43-12110	PEDAL CAP	1	85001-
12	04250-80847	END	1	85001-
13	01590-30809	NUT	1	85001-
14	04050-12015	PIN	1	85001-
15	01580-10806	NUT	1	85001-
16	04248-30808	ROD	1	85001-
17	04250-90847	END	1	85001-
18	01590-30809	NUT	1	85001-
19	04050-12015	PIN	1	85001-
20	01593-31008	NUT	1	85001-
21	04050-12018	PIN	1	85001-
22	7861-93-4131	SENSOR	1	85014-
	7861-93-4130	SENSOR	1	85001-85013
23	01010-80616	BOLT	2	85001-
24	01643-30623	WASHER	2	85001-
25	142-43-13180	SPRING	1	85001-
26	04064-01610	RING	1	85001-
27	17A-43-41182	SHAFT	1	85001-
28	06123-01414	BEARING	2	85001-
29	17A-43-41172	PLATE	1	85001-

Printed By : Dwi Iswanto (airafather6107170)

DASHBOARD (PEDAL CONTROL) (1/3)

Item	Part No.	Part Name	Qty	Serial No.
30	01590-30809	NUT	1	85001-
31	01643-30823	WASHER	1	85001-
32	04050-12015	PIN	1	85001-
33	07020-00675	FITTING	1	85001-

Printed By : Dwi Iswanto (airafather6107170)

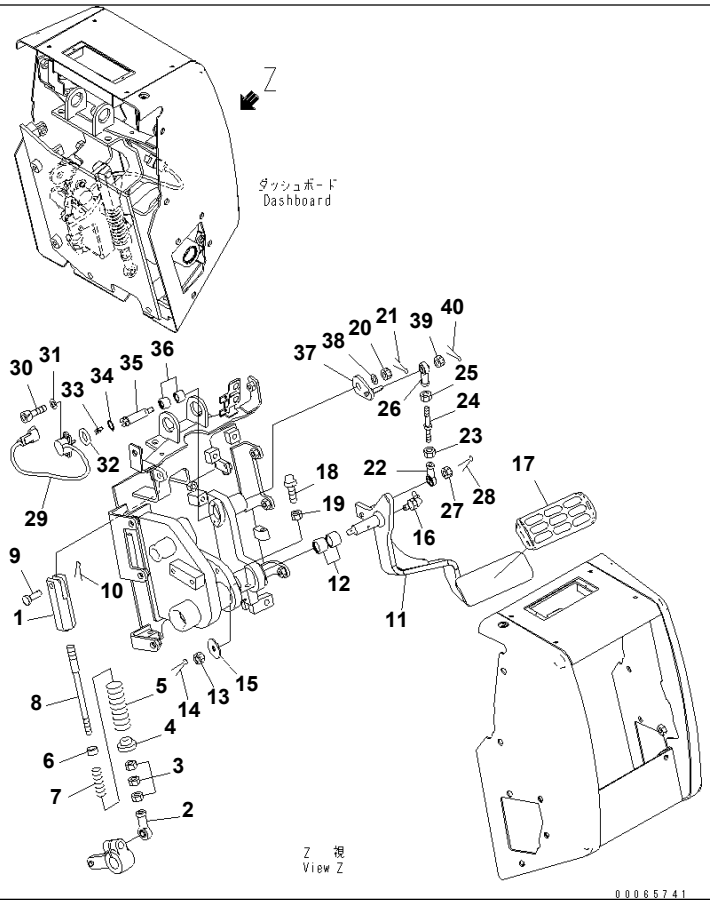

Ref. K2210-07A0 **Page 241260**

D155A-6 S/N 85001-UP
DASHBOARD (PEDAL CONTROL) (2/3)

Item	Part No.	Part Name	Qty	Serial No.
1	17A-43-41531	YOKE	1	85001-
2	04250-81056	END	1	85001-
3	01582-11008	NUT	3	85001-
4	17A-43-41521	GUIDE	1	85001-
5	714-10-17151	SPRING	1	85001-
6	202-970-1220	WASHER	1	85001-
7	700-92-11690	SPRING	1	85001-
8	17A-43-41511	ROD	1	85001-
9	04205-11038	PIN	1	85001-
10	04050-13020	PIN	1	85001-
11	17A-43-41131	PEDAL	1	85001-
12	06123-02020	BEARING	2	85001-
13	01593-31008	NUT	1	85001-
14	04050-12018	PIN	1	85001-
15	175-54-88110	WASHER	1	85001-
16	07020-00000	FITTING	1	85001-
17	14X-43-13760	CAP	1	85001-
18	09311-41237	BUMPER	1	85001-
19	01580-11210	NUT	1	85001-
20	01590-30809	NUT	1	85001-
21	04050-12015	PIN	1	85001-
22	04250-80847	END	1	85001-
23	01580-10806	NUT	1	85001-
24	04248-30808	ROD	1	85001-
25	01508-40805	NUT	1	85001-
26	04250-90847	END	1	85001-
27	01590-30809	NUT	1	85001-
28	04050-12015	PIN	1	85001-
29	17A-06-41980	SENSOR	1	85001-
30	01252-70414	BOLT	2	85001-

Printed By : Dwi Iswanto (airafather6107170)

DASHBOARD (PEDAL CONTROL) (2/3)

Item	Part No.	Part Name	Qty	Serial No.
31	01640-20408	WASHER	2	85001-
32	12Y-43-12160	PLATE	1	85001-
33	142-43-13180	SPRING	1	85001-
34	04064-01610	RING	1	85001-
35	17A-43-41161	SHAFT	1	85001-
36	06123-01414	BEARING	2	85001-
37	17A-43-41152	LEVER	1	85001-
38	01643-30823	WASHER	1	85001-
39	01590-30809	NUT	1	85001-
40	04050-12015	PIN	1	85001-

Printed By : Dwi Iswanto (airafather6107170)

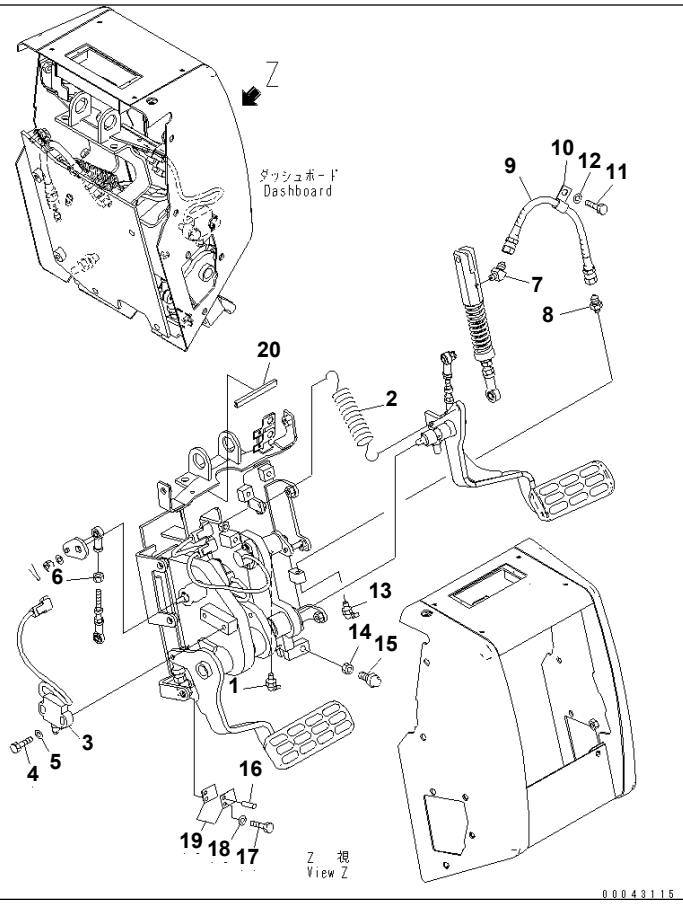

Ref. K2210-08A0 **Page 241270**

D155A-6 S/N 85001-UP
DASHBOARD (PEDAL CONTROL) (3/3)

Item	Part No.	Part Name	Qty	Serial No.
1	07020-00900	FITTING	1	85001-
2	154-43-41260	SPRING	1	85001-
3	11Y-06-22150	SWITCH	1	85001-
4	01010-81035	BOLT	2	85001-
5	01643-31032	WASHER	2	85001-
6	01508-40805	NUT	1	85001-
7	205-70-65780	ELBOW	1	85001-
8	205-70-51390	NIPPLE	1	85001-
9	17A-43-41250	HOSE	1	85001-
10	04434-51210	CLIP	1	85001-
11	01010-81020	BOLT	1	85001-
12	01643-31032	WASHER	1	85001-
13	07020-00900	FITTING	1	85001-
14	01580-11210	NUT	1	85001-
15	09311-41237	BUMPER	1	85001-
16	04020-00616	PIN	1	85001-
17	01010-80616	BOLT	1	85001-
18	01643-30623	WASHER	1	85001-
19	17A-43-41190	SHIM	2	85001-
20	17A-979-2970	SEAL	1	85001-

Printed By : Dwi Iswanto (airafather6107170)

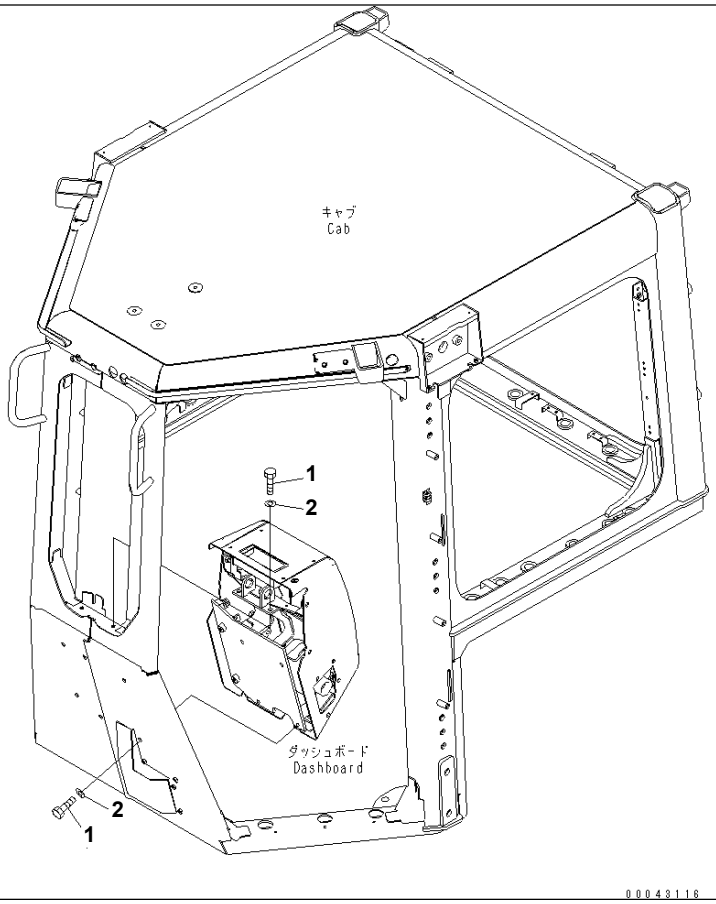

Ref. K2210-09A0 **Page 241280**

D155A-6 S/N 85001-UP
DASHBOARD (MOUNT)

Item	Part No.	Part Name	Qty	Serial No.
1	01010-81030	BOLT	8	85001-
2	01643-31032	WASHER	8	85001-

Printed By : Dwi Iswanto (airafather6107170)

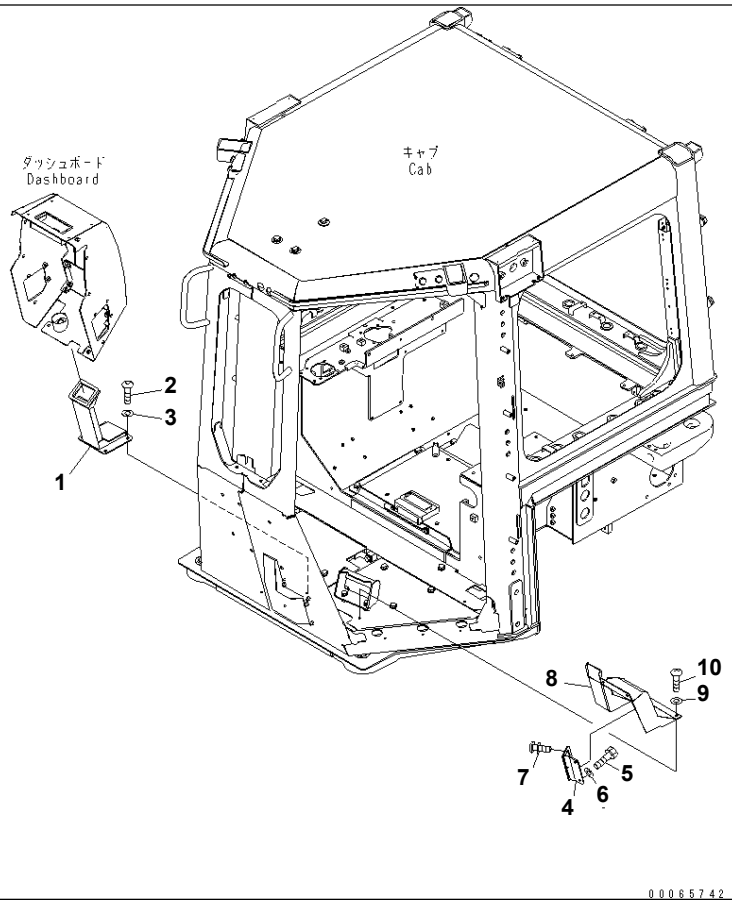

Ref. K2210-10A0 **Page 241290**

D155A-6 S/N 85001-UP
DASHBOARD (DUCT)

Item	Part No.	Part Name	Qty	Serial No.
1	17A-979-2471	DUCT	1	85001-
2	01245-00820	SCREW	4	85001-
3	01643-70823	WASHER	4	85001-
4	17A-06-41721	BRACKET	1	85001-
5	01010-80825	BOLT	2	85001-
6	01643-30823	WASHER	2	85001-
7	01023-10416	SCREW	4	85001-
8	17A-06-41731	COVER	1	85001-
9	01643-70823	WASHER	4	85001-
10	01245-00820	SCREW	4	85001-

Printed By : Dwi Iswanto (airafather6107170)

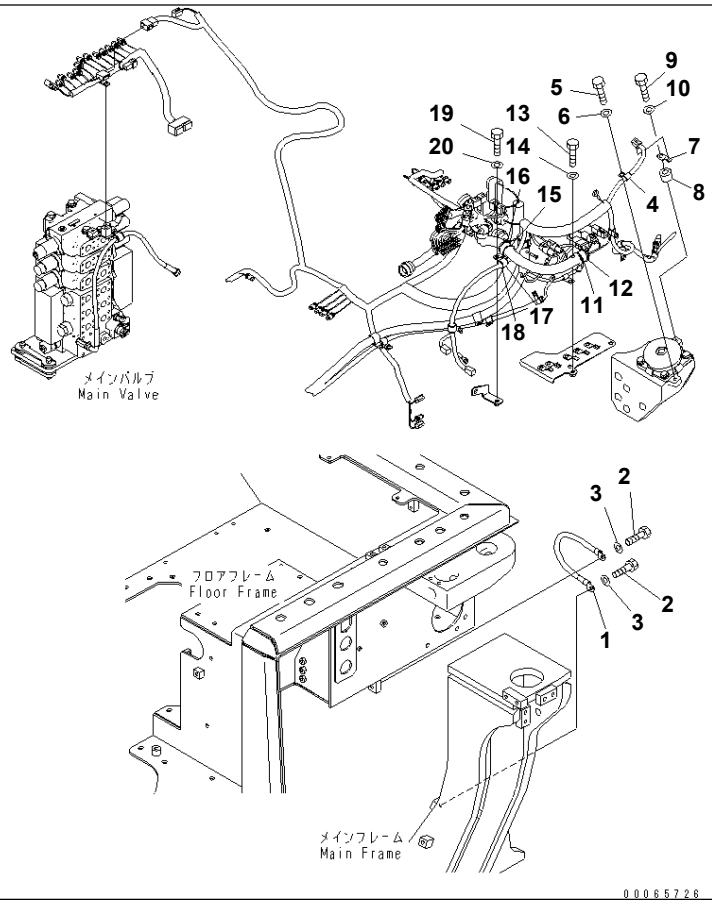

Ref. K2290-01A0 **Page 241300**

D155A-6 S/N 85001-UP
WIRING (FLOOR) (WITH CAB)

Item	Part No.	Part Name	Qty	Serial No.
1	175-06-51440	WIRE	1	85001-
2	01010-81225	BOLT	2	85001-
3	01643-31232	WASHER	2	85001-
4	04434-51412	CLIP	1	85001-
5	01010-81225	BOLT	1	85001-
6	01643-31232	WASHER	1	85001-
7	08193-21012	CLIP	1	85001-
8	144-947-3490	SPACER	1	85001-
9	01010-81240	BOLT	1	85001-
10	01643-31232	WASHER	1	85001-
11	04434-53412	CLIP	1	85001-
12	07095-20627	CUSHION	1	85001-
13	01010-81225	BOLT	1	85001-
14	01643-31232	WASHER	1	85001-
15	04434-53412	CLIP	1	85001-
16	07095-20627	CUSHION	1	85001-
17	04434-51912	CLIP	1	85001-
18	07095-20213	CUSHION	1	85001-
19	01010-81225	BOLT	1	85001-
20	01643-31232	WASHER	1	85001-

Printed By : Dwi Iswanto (airafather6107170)

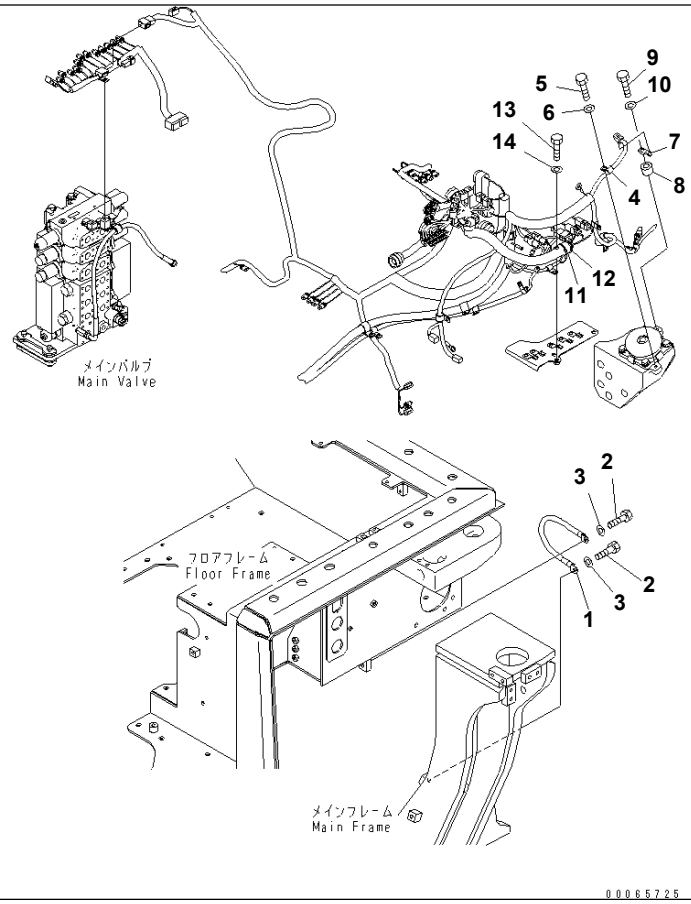

Ref. K2290-01A1 **Page 241310**

D155A-6 S/N 85001-UP
WIRING (FLOOR) (WITHOUT CAB)

Item	Part No.	Part Name	Qty	Serial No.
1	175-06-51440	WIRE	1	85001-
2	01010-81225	BOLT	2	85001-
3	01643-31232	WASHER	2	85001-
4	04434-51412	CLIP	1	85001-
5	01010-81225	BOLT	1	85001-
6	01643-31232	WASHER	1	85001-
7	08193-21012	CLIP	1	85001-
8	144-947-3490	SPACER	1	85001-
9	01010-81240	BOLT	1	85001-
10	01643-31232	WASHER	1	85001-
11	04434-53412	CLIP	1	85001-
12	07095-20627	CUSHION	1	85001-
13	01010-81225	BOLT	1	85001-
14	01643-31232	WASHER	1	85001-

Printed By : Dwi Iswanto (airafather6107170)

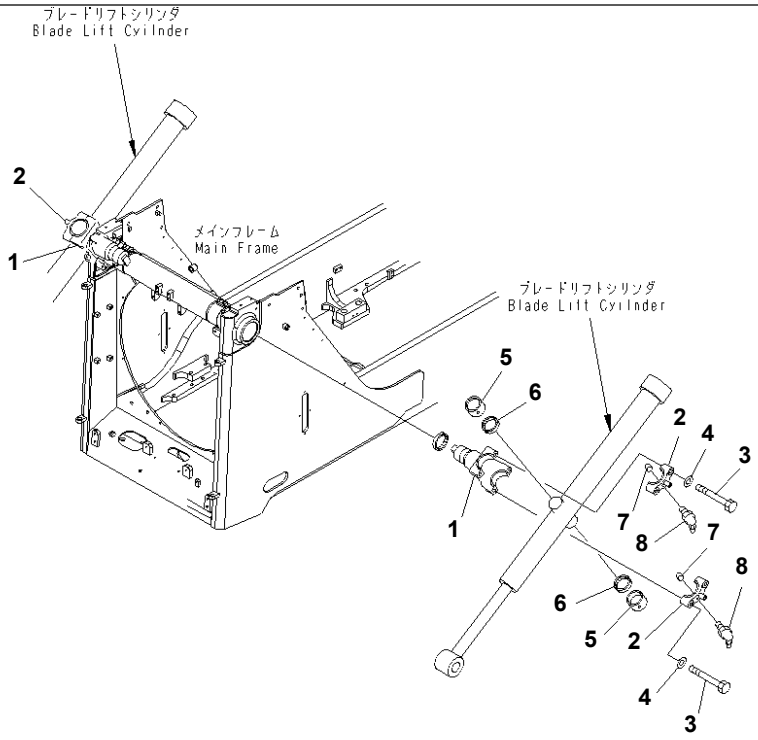

00049628

Ref. M2111-01A0 **Page 270010**

D155A-6 S/N 85001-UP
LIFT CYLINDER SUPPORT

Item	Part No.	Part Name	Qty	Serial No.
1	17A-61-43110	YOKE	2	85001-
2	17A-61-49122	CAP	4	85001-
3	01010-82095	BOLT	8	85001-
4	01643-32060	WASHER	8	85001-
5	175-61-15201	BUSHING ASS'Y	4	85001-
6	07145-00085	SEAL	4	85001-
7	154-61-75750	PIN	4	85001-
8	07020-00675	FITTING	4	85001-

Printed By : Dwi Iswanto (airafather6107170)

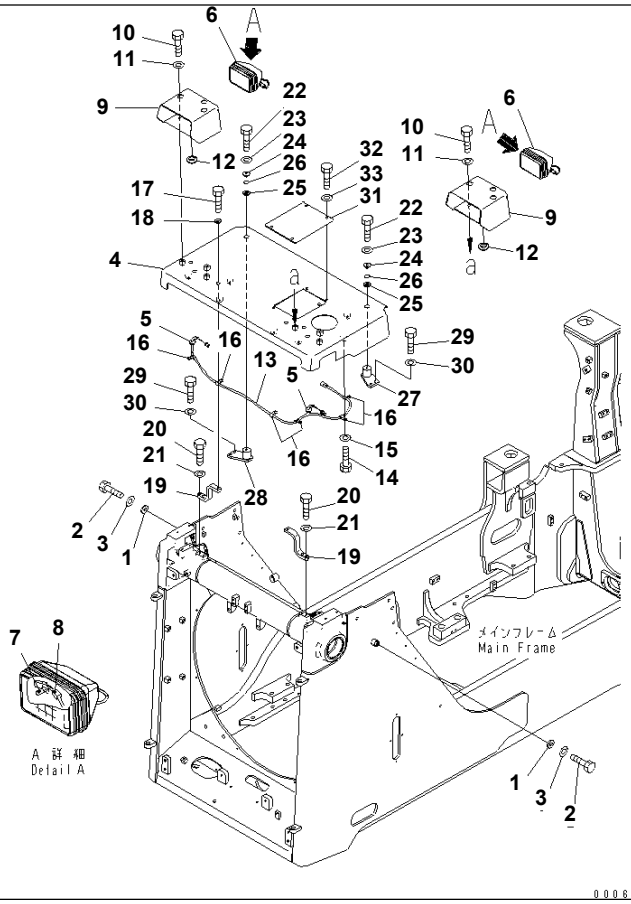

Ref. M2113-01A1 **Page 270020**

D155A-6 S/N 85001-UP

RADIATOR GUARD RETATED (COVER AND HEAD LAMP)(#85001-85013)

Item	Part No.	Part Name	Qty	Serial No.
1	21T-09-11330	WASHER	2	85001-@
2	01010-81230	BOLT	2	85001-@
3	01643-31232	WASHER	2	85001-@
4	17A-54-41922	COVER	1	85014-@
	□17A-54-41921	COVER	1	85001-85013
5	135-06-34260	GROMMET	2	85001-@
6	17A-06-17931	LAMP ASS'Y	2	85001-@
7	17A-06-17970	BULB¤ 70W	2	85001-@
8	17A-06-17980	SLEEVE	2	85001-@
9	17A-06-43681	COVER	1	85014-@
	□17A-06-43680	COVER	1	85001-85013
10	01010-81225	BOLT	6	85001-@
11	01643-31232	WASHER	6	85001-@
12	08037-03614	GROMMET	2	85001-@
13	17A-06-41231	WIRING HARNESS	1	85001-@
14	01010-81220	BOLT	6	85001-@
15	01643-31232	WASHER	6	85001-@
16	04434-51012	CLIP	6	85001-@
17	01010-81225	BOLT	2	85001-@
18	175-54-34170	WASHER	2	85001-@
19	17A-54-41941	BRACKET	2	85001-@
20	01010-81235	BOLT	4	85001-@
21	01643-31232	WASHER	4	85001-@
22	01010-81235	BOLT	2	85001-@
23	01643-31232	WASHER	2	85001-@
24	15B-54-14220	COLLAR	2	85001-@
25	175-54-27350	SPRING	4	85001-@
26	175-54-28770	RING	2	85001-@
27	17A-03-42581	BRACKET	1	85001-@
28	17A-03-42591	BRACKET	1	85001-@

Printed By : Dwi Iswanto (airafather6107170)

RADIATOR GUARD RETATED (COVER AND HEAD LAMP)(#85001-85013)

Item	Part No.	Part Name	Qty	Serial No.
29	01010-81230	BOLT	4	85001-@
30	01643-31232	WASHER	4	85001-@
31	17A-54-41631	COVER	1	85001-85013
32	01010-81220	BOLT	4	85001-@
33	01643-31232	WASHER	4	85001-@

Printed By : Dwi Iswanto (airafather6107170)

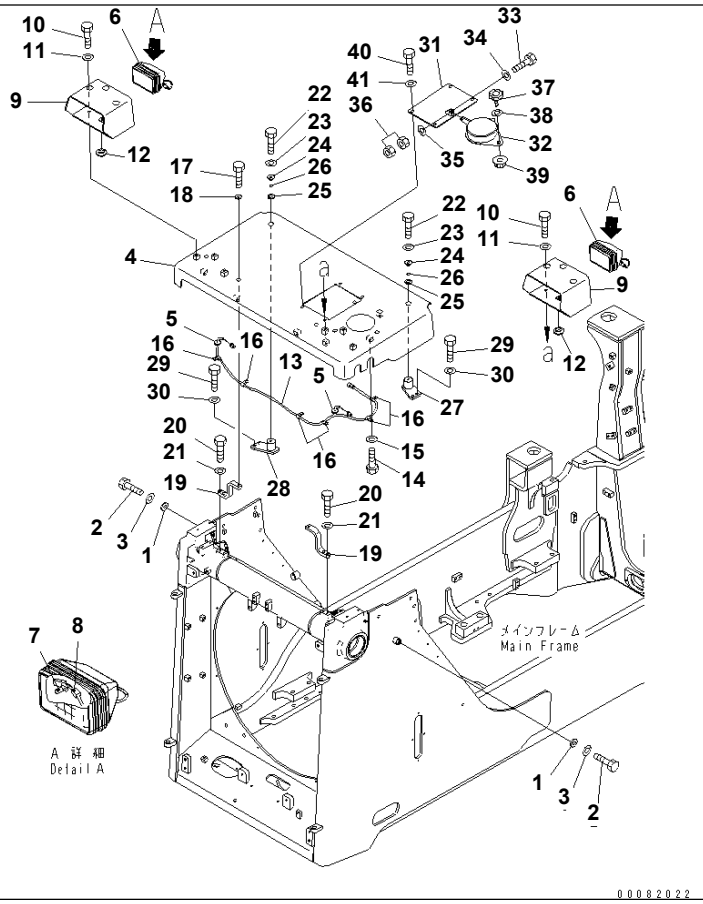

Ref. M2113-01A1A **Page 270030**

D155A-6 S/N 85001-UP

RADIATOR GUARD RETATED (COVER AND HEAD LAMP)(#85014-85024)

Item	Part No.	Part Name	Qty	Serial No.
1	21T-09-11330	WASHER	2	85001-@
2	01010-81230	BOLT	2	85001-@
3	01643-31232	WASHER	2	85001-@
4	17A-54-41922	COVER	1	85014-@
5	135-06-34260	GROMMET	2	85001-@
6	17A-06-17931	LAMP ASS'Y	2	85001-@
7	17A-06-17970	BULB¤ 70W	2	85001-@
8	17A-06-17980	SLEEVE	2	85001-@
9	17A-06-43681	COVER	1	85014-85024
10	01010-81225	BOLT	6	85001-@
11	01643-31232	WASHER	6	85001-@
12	08037-03614	GROMMET	2	85001-@
13	17A-06-41231	WIRING HARNESS	1	85001-@
14	01010-81220	BOLT	6	85001-@
15	01643-31232	WASHER	6	85001-@
16	04434-51012	CLIP	6	85001-@
17	01010-81225	BOLT	2	85001-@
18	175-54-34170	WASHER	2	85001-@
19	17A-54-41941	BRACKET	2	85001-@
20	01010-81235	BOLT	4	85001-@
21	01643-31232	WASHER	4	85001-@
22	01010-81235	BOLT	2	85001-@
23	01643-31232	WASHER	2	85001-@
24	15B-54-14220	COLLAR	2	85001-@
25	175-54-27350	SPRING	4	85001-@
26	175-54-28770	RING	2	85001-@
27	17A-03-42581	BRACKET	1	85001-@
28	17A-03-42591	BRACKET	1	85001-@
29	01010-81230	BOLT	4	85001-@
30	01643-31232	WASHER	4	85001-@

Printed By : Dwi Iswanto (airafather6107170)

RADIATOR GUARD RETATED (COVER AND HEAD LAMP)(#85014-85024)

Item	Part No.	Part Name	Qty	Serial No.
31	17A-54-41632	COVER	1	85014-@
32	17A-54-43331	COVER	1	85014-@
33	01010-81045	BOLT	1	85014-@
34	01643-31032	WASHER	1	85014-@
35	01643-31032	WASHER	1	85014-@
36	01580-11008	NUT	2	85014-@
37	195-54-68760	KNOB	1	85014-@
38	01640-21016	WASHER	1	85014-@
39	01594-01008	NUT	1	85014-@
40	01010-81220	BOLT	4	85001-@
41	01643-31232	WASHER	4	85001-@

Printed By : Dwi Iswanto (airafather6107170)

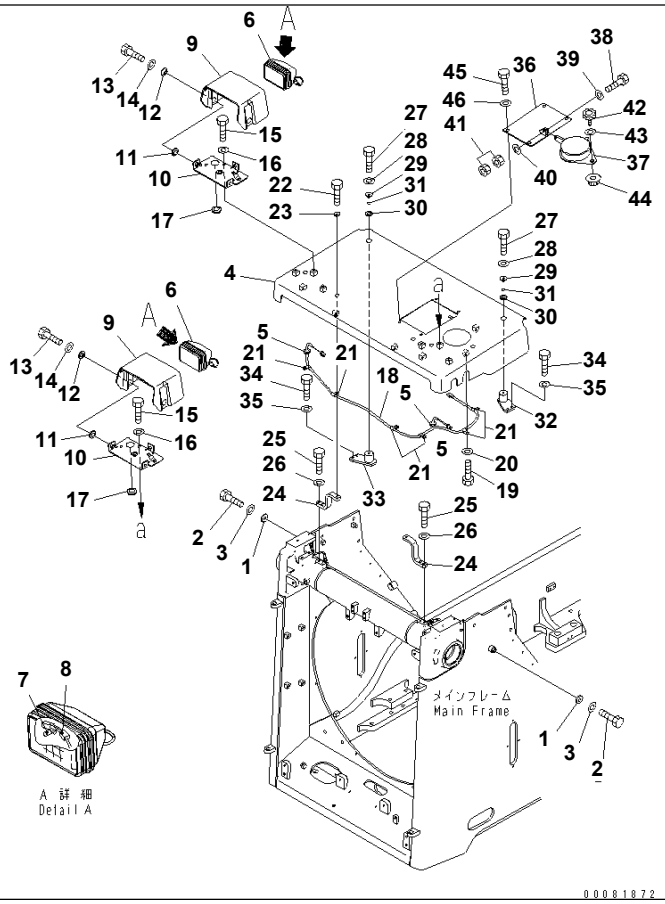

Ref. M2113-01A1B **Page 270040**

D155A-6 S/N 85001-UP

RADIATOR GUARD RETATED (COVER AND HEAD LAMP)(#85025-)

Item	Part No.	Part Name	Qty	Serial No.
1	21T-09-11330	WASHER	2	85001-
2	01010-81230	BOLT	2	85001-
3	01643-31232	WASHER	2	85001-
4	17A-54-41922	COVER	1	85025-
5	135-06-34260	GROMMET	2	85001-
6	17A-06-17931	LAMP ASS'Y	2	85001-
7	17A-06-17970	BULB¤ 70W	2	85001-
8	17A-06-17980	SLEEVE	2	85001-
9	17A-54-41991	COVER	2	85025-
10	17A-54-41981	BRACKET	2	85025-
11	175-03-42140	RUBBER	6	85025-
12	203-54-14330	COLLAR	6	85025-
13	01010-81235	BOLT	6	85025-
14	01643-31232	WASHER	6	85025-
15	01010-81225	BOLT	6	85001-
16	01643-31232	WASHER	6	85001-
17	08037-03614	GROMMET	2	85001-
18	17A-06-41231	WIRING HARNESS	1	85001-
19	01010-81220	BOLT	6	85001-
20	01643-31232	WASHER	6	85001-
21	04434-51012	CLIP	6	85001-
22	01010-81225	BOLT	2	85001-
23	175-54-34170	WASHER	2	85001-
24	17A-54-41941	BRACKET	2	85001-
25	01010-81235	BOLT	4	85001-
26	01643-31232	WASHER	4	85001-
27	01010-81235	BOLT	2	85001-
28	01643-31232	WASHER	2	85001-
29	15B-54-14220	COLLAR	2	85001-
30	175-54-27350	SPRING	4	85001-

Printed By : Dwi Iswanto (airafather6107170)

RADIATOR GUARD RETATED (COVER AND HEAD LAMP)(#85025-)

Item	Part No.	Part Name	Qty	Serial No.
31	175-54-28770	RING	2	85001-
32	17A-03-42581	BRACKET	1	85001-
33	17A-03-42591	BRACKET	1	85001-
34	01010-81230	BOLT	4	85001-
35	01643-31232	WASHER	4	85001-
36	17A-54-41632	COVER	1	85025-
37	17A-54-43331	COVER	1	85025-
38	01010-81045	BOLT	1	85025-
39	01643-31032	WASHER	1	85025-
40	01643-31032	WASHER	1	85025-
41	01580-11008	NUT	2	85025-
42	195-54-68760	KNOB	1	85025-
43	01640-21016	WASHER	1	85025-
44	01594-01008	NUT	1	85025-
45	01010-81220	BOLT	4	85001-
46	01643-31232	WASHER	4	85001-

Printed By : Dwi Iswanto (airafather6107170)

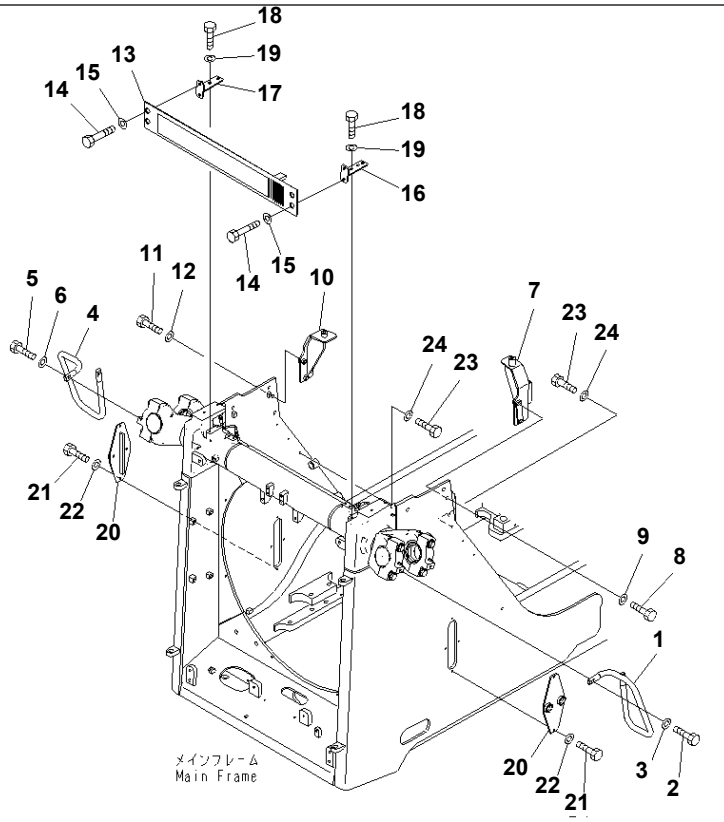

Ref. M2113-02A0 **Page 270050**

D155A-6 S/N 85001-UP

RADIATOR GUARD RETATED (GRIP AND MASK) (WITHOUT CAB)

Item	Part No.	Part Name	Qty	Serial No.
1	17A-54-41812	GRIP	1	85001-
2	01010-81235	BOLT	2	85001-
3	01643-31232	WASHER	2	85001-
4	17A-54-41822	GRIP	1	85001-
5	01010-81235	BOLT	2	85001-
6	01643-31232	WASHER	2	85001-
7	17A-54-48161	BRACKET	1	85001-
8	01010-81650	BOLT	2	85001-
9	01643-31645	WASHER	2	85001-
10	17A-54-48671	BRACKET	1	85001-
11	01010-81650	BOLT	2	85001-
12	01643-31645	WASHER	2	85001-
13	17A-54-41910	MASK	1	85001-
14	01010-D1225	BOLT	4	85001-
15	01643-71232	WASHER	4	85001-
16	17A-54-41770	BRACKET	1	85001-
17	17A-54-41790	BRACKET	1	85001-
18	01010-81225	BOLT	4	85001-
19	01643-31232	WASHER	4	85001-
20	17A-54-41192	COVER	2	85001-
21	01010-81020	BOLT	8	85001-
22	01643-31032	WASHER	8	85001-
23	01010-81020	BOLT	6	85001-
24	01643-31032	WASHER	6	85001-

Printed By : Dwi Iswanto (airafather6107170)

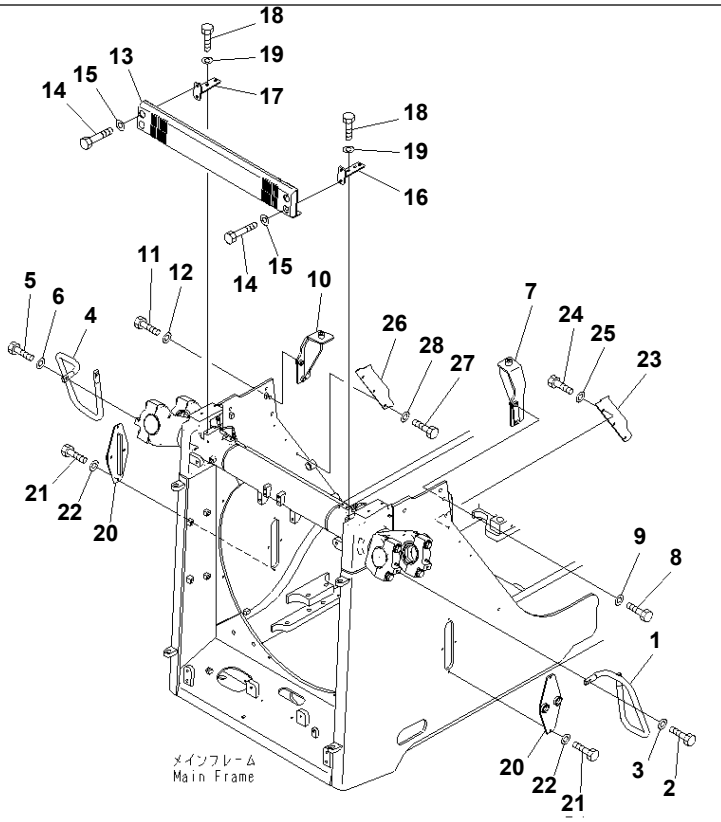

Ref. M2113-02A1 **Page 270060**

D155A-6 S/N 85001-UP
RADIATOR GUARD RETATED (GRIP AND MASK)

Item	Part No.	Part Name	Qty	Serial No.
1	17A-54-41812	GRIP	1	85001-
2	01010-81235	BOLT	2	85001-
3	01643-31232	WASHER	2	85001-
4	17A-54-41822	GRIP	1	85001-
5	01010-81235	BOLT	2	85001-
6	01643-31232	WASHER	2	85001-
7	17A-54-42162	BRACKET	1	85001-
8	01010-81650	BOLT	2	85001-
9	01643-31645	WASHER	2	85001-
10	17A-54-42172	BRACKET	1	85001-
11	01010-81650	BOLT	2	85001-
12	01643-31645	WASHER	2	85001-
13	17A-54-41910	MASK	1	85001-
14	01010-D1225	BOLT	4	85001-
15	01643-71232	WASHER	4	85001-
16	17A-54-41770	BRACKET	1	85001-
17	17A-54-41790	BRACKET	1	85001-
18	01010-81225	BOLT	4	85001-
19	01643-31232	WASHER	4	85001-
20	17A-54-41192	COVER	2	85001-
21	01010-81020	BOLT	8	85001-
22	01643-31032	WASHER	8	85001-
23	17A-54-42461	COVER	1	85001-
24	01010-81020	BOLT	3	85001-
25	01643-31032	WASHER	3	85001-
26	17A-54-42471	COVER	1	85001-
27	01010-81020	BOLT	3	85001-
28	01643-31032	WASHER	3	85001-

Printed By : Dwi Iswanto (airafather6107170)

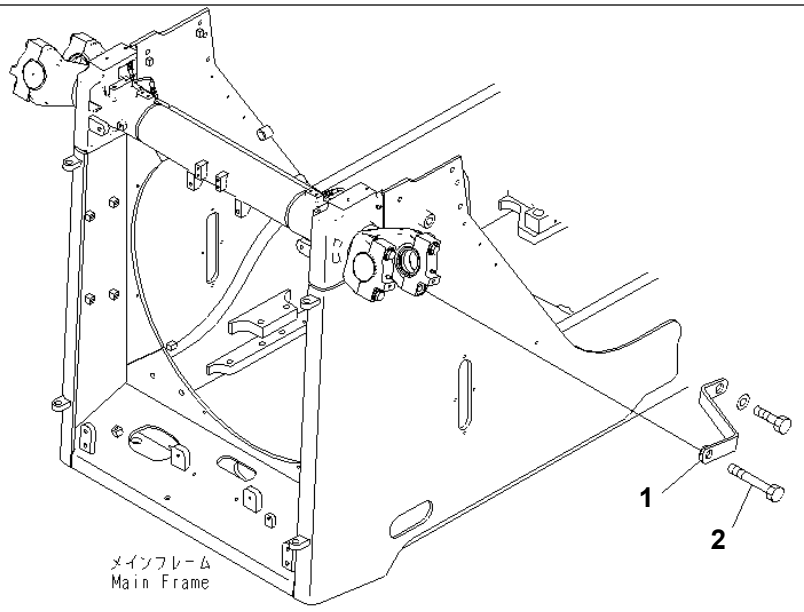

00049074

Ref. M2113-03A0 **Page 270070**

D155A-6 S/N 85001-UP
RADIATOR GUARD RETATED (FOR SIPPING)

Item	Part No.	Part Name	Qty	Serial No.
1	17A-61-43120	BRACKET	2	85001-
2	01011-82015	BOLT	2	85001-

Printed By : Dwi Iswanto (airafather6107170)

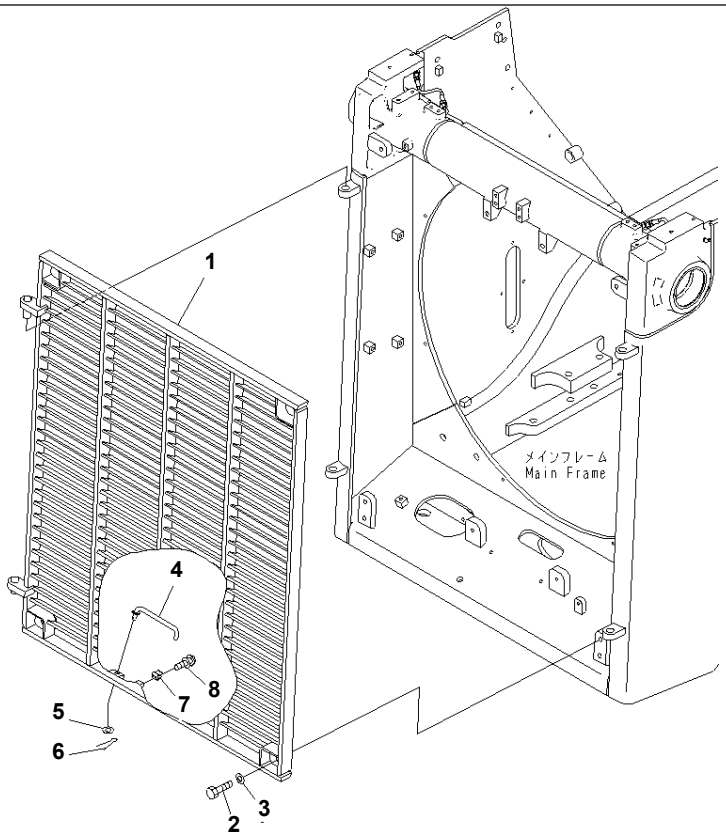

00043100

Ref. M2120-01A0 **Page 270080**

D155A-6 S/N 85001-UP
RADIATOR MASK (LATTICE)

Item	Part No.	Part Name	Qty	Serial No.
1	17A-54-41511	MASK	1	85001-
2	01010-81645	BOLT	4	85001-
3	01643-31645	WASHER	4	85001-
4	17A-54-41711	BAR	1	85001-
5	01643-31232	WASHER	1	85001-
6	04050-14025	PIN	1	85001-
7	20R-54-11460	SPRING	1	85001-
8	01023-10510	SCREW	2	85001-

Printed By : Dwi Iswanto (airafather6107170)

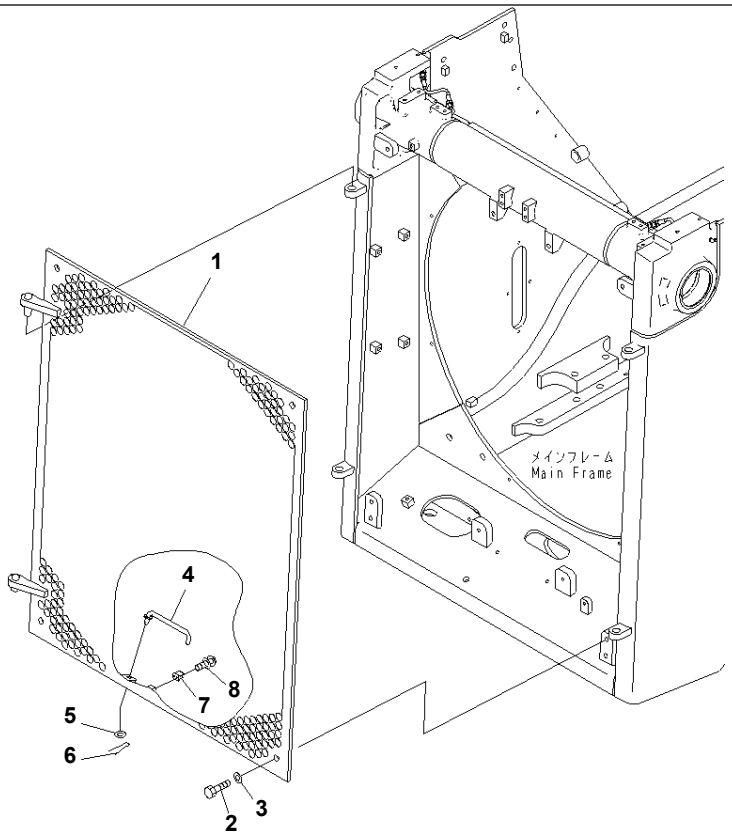

Ref. M2120-01A1 **Page 270090**

D155A-6 S/N 85001-UP
RADIATOR MASK (PERFORATED)

Item	Part No.	Part Name	Qty	Serial No.
1	17A-54-41521	MASK	1	85001-
2	01010-81655	BOLT	4	85001-
3	01643-31645	WASHER	4	85001-
4	17A-54-41711	BAR	1	85001-
5	01643-31232	WASHER	1	85001-
6	04050-14025	PIN	1	85001-
7	20R-54-11460	SPRING	1	85001-
8	01023-10510	SCREW	2	85001-

Printed By : Dwi Iswanto (airafather6107170)

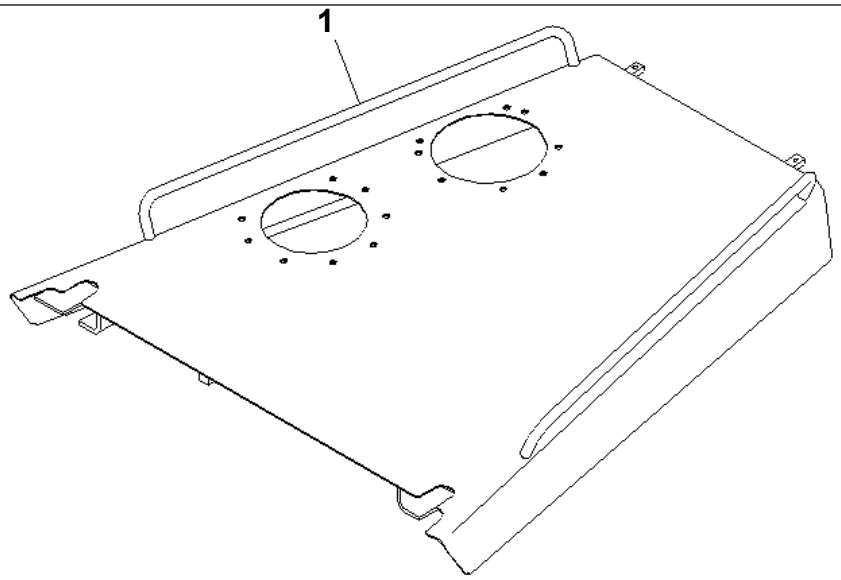

00073498

Ref. M2140-01A1 **Page 270100**

D155A-6 S/N 85001-UP

ENGINE HOOD (ENGINE HOOD AND SIDE COVER) (WITHOUT CAB)

Item	Part No.	Part Name	Qty	Serial No.
1	17A-54-44812	HOOD	1	85001-

Printed By : Dwi Iswanto (airafather6107170)

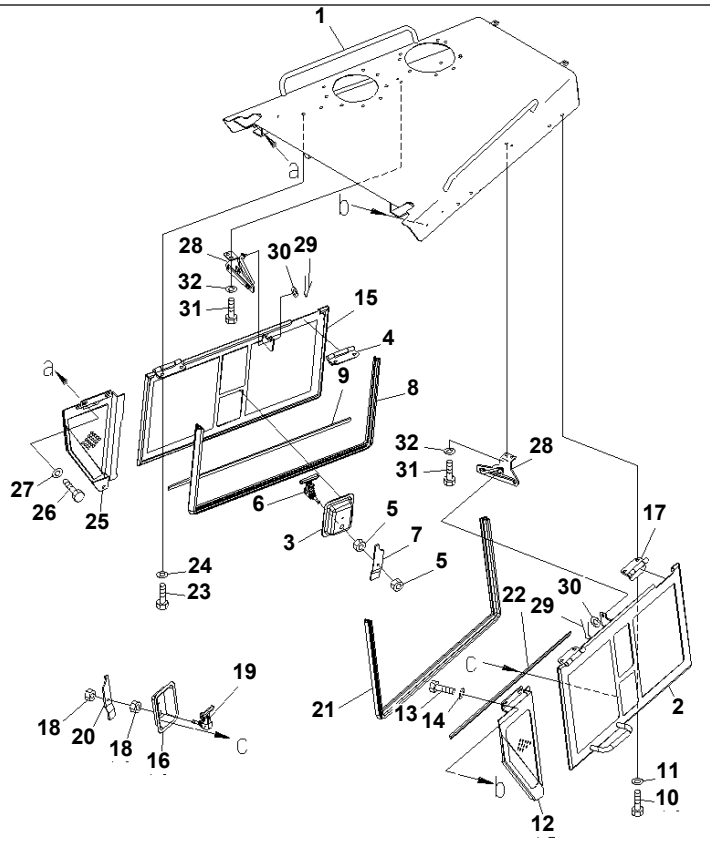

Ref. M2140-01A2 **Page 270110**

D155A-6 S/N 85001-UP
ENGINE HOOD (ENGINE HOOD AND SIDE COVER)(#85001-85009)

Item	Part No.	Part Name	Qty	Serial No.
1	17A-54-42115	HOOD	1	85005-85009
	□17A-54-42114	HOOD	1	85001-85004
	17A-54-42212	COVER	1	85001-85009
2	17A-54-42231	· COVER	1	85001-85009
3	17A-54-42321	· · PLATE (WELDED)	1	85001-85009
4	17A-54-42390	· · HINGE (WELDED)	2	85001-@
5	01583-11207	· NUT	2	85001-@
6	17A-54-42311	· LEVER	1	85001-@
7	17A-54-42332	· PLATE	1	85001-@
8	17A-54-42610	· SEAL (BONDED)	1	85001-@
9	17A-54-42660	· SEAL (BONDED)	1	85001-@
10	01010-81225	BOLT	4	85001-@
11	01643-31232	WASHER	4	85001-@
12	17A-54-42412	COVER	1	85001-85009
13	01010-81230	BOLT	2	85001-85009
14	175-54-34170	WASHER	2	85001-85009
	17A-54-42222	COVER	1	85001-85009
15	17A-54-42231	· COVER	1	85001-85009
16	17A-54-42321	· · PLATE (WELDED)	1	85001-85009
17	17A-54-42390	· · HINGE (WELDED)	2	85001-@
18	01583-11207	· NUT	2	85001-@
19	17A-54-42311	· LEVER	1	85001-85009
20	17A-54-42332	· PLATE	1	85001-85009
21	17A-54-42610	· SEAL	1	85001-@
22	17A-54-42660	· SEAL	1	85001-@
23	01010-81225	BOLT	4	85001-@
24	01643-31232	WASHER	4	85001-@
25	17A-54-42422	COVER	1	85001-85009
26	01010-81230	BOLT	2	85010-@
	01010-81225	BOLT	2	85001-85009

Printed By : Dwi Iswanto (airafather6107170)

ENGINE HOOD (ENGINE HOOD AND SIDE COVER)(#85001-85009)

Item	Part No.	Part Name	Qty	Serial No.
27	175-54-34170	WASHER	2	85001-85009
28	17A-54-42362	BRACKET	1	85001-@
29	04050-13020	PIN	2	85001-@
30	01643-31232	WASHER	2	85001-@
31	01010-81225	BOLT	4	85001-@
32	01643-31232	WASHER	4	85001-@

Printed By : Dwi Iswanto (airafather6107170)

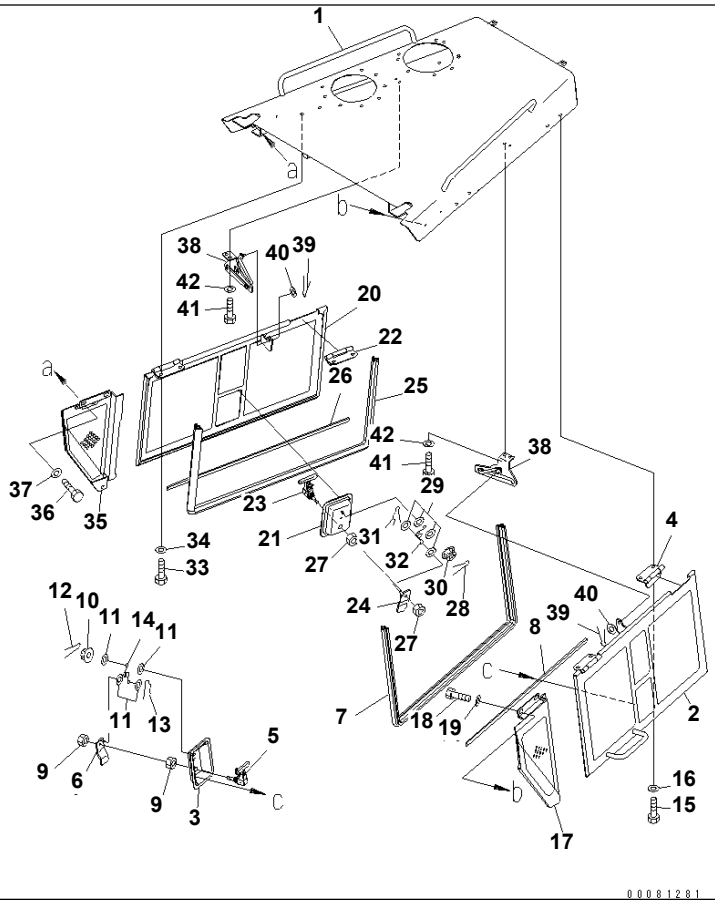

Ref. M2140-01A2A **Page 270120**

D155A-6 S/N 85001-UP
ENGINE HOOD (ENGINE HOOD AND SIDE COVER)(#85010-)

Item	Part No.	Part Name	Qty	Serial No.
1	17A-54-42191	HOOD	1	85010-
	17A-54-42213	COVER	1	85010-
2	☆	· COVER	1	85010-
3	17A-54-42322	· · PLATE (WELDED)	1	85010-
4	17A-54-42390	· · HINGE (WELDED)	2	85001-
5	17A-54-42312	· LEVER	1	85010-
6	17A-54-42333	· PLATE	1	85010-
7	17A-54-42610	· SEAL (BONDED)	1	85001-
8	17A-54-42660	· SEAL (BONDED)	1	85001-
9	01583-11207	· NUT	2	85001-
10	01590-30607	· NUT	1	85010-
11	01643-30623	· WASHER	4	85010-
12	04050-11612	· PIN	1	85010-
13	04052-20633	· PIN	1	85001-
14	198-54-75760	· SPRING	1	85010-
15	01010-81225	BOLT	4	85001-
16	01643-31232	WASHER	4	85001-
17	17A-54-42413	COVER	1	85010-
18	01010-D1230	BOLT	2	85010-
19	17A-54-42370	WASHER	2	85010-
	17A-54-42223	COVER	1	85010-
20	☆	· COVER ----------	1	85010-
21	17A-54-42322	· · PLATE (WELDED)	1	85010-
22	17A-54-42390	· · HINGE (WELDED)	2	85001-
23	17A-54-42312	· LEVER	1	85010-
24	17A-54-42333	· PLATE	1	85010-
25	17A-54-42610	· SEAL (BONDED)	1	85001-
26	17A-54-42660	· SEAL (BONDED)	1	85001-
27	01583-11207	· NUT	2	85001-
28	01590-30607	· NUT	1	85010-

Printed By : Dwi Iswanto (airafather6107170)

ENGINE HOOD (ENGINE HOOD AND SIDE COVER)(#85010-)

Item	Part No.	Part Name	Qty	Serial No.
29	01643-30623	· WASHER	4	85010-
30	04050-11612	· PIN	1	85001-
31	04052-20633	· PIN	1	85001-
32	198-54-75760	· SPRING	1	85010-
33	01010-81225	BOLT	4	85001-
34	01643-31232	WASHER	4	85001-
35	17A-54-42423	COVER	1	85010-
36	01010-D1230	BOLT	2	85010-
37	17A-54-42370	WASHER	2	85010-
38	17A-54-42362	BRACKET	2	85001-
39	04050-13020	PIN	2	85001-
40	01643-31232	WASHER	2	85001-
41	01010-81225	BOLT	4	85001-
42	01643-31232	WASHER	4	85001-

Printed By : Dwi Iswanto (airafather6107170)

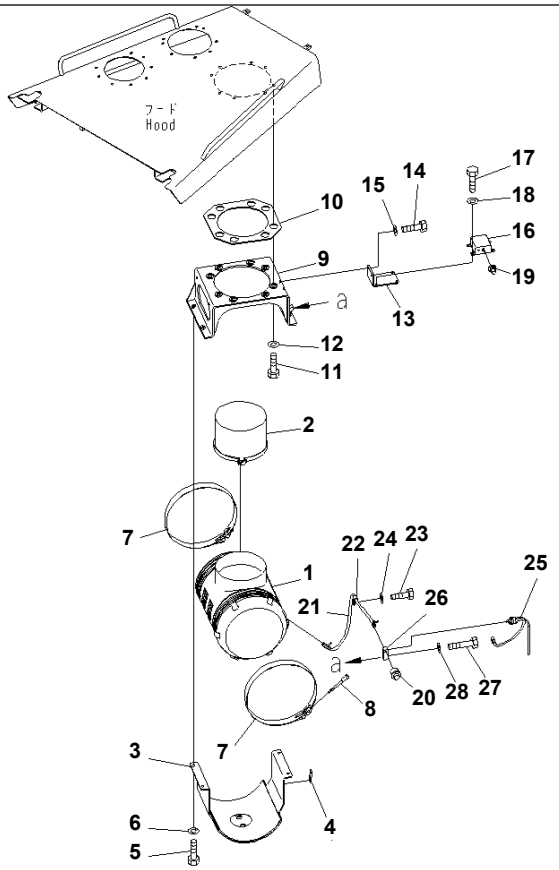

Ref. M2140-02A2 **Page 270130**

D155A-6 S/N 85001-UP
ENGINE HOOD (AIR CLEANER AND INDICATOR)

Item	Part No.	Part Name	Qty	Serial No.
1	(6240-81-7402)	AIR CLEANER ASS'Y	1	85001-
2	600-183-7521	PRE CLEANER	1	85001-
3	17A-01-41311	BRACKET	1	85001-
4	08193-21012	· CLIP (WELDED)	1	85001-
5	01010-81240	BOLT	4	85001-
6	01643-31232	WASHER	4	85001-
7	6240-11-9910	BAND	2	85001-
8	6643-11-4641	BOLT	2	85001-
9	17A-01-44321	COVER	1	85001-
10	17A-01-41330	SHEET	1	85001-
11	01010-81230	BOLT	8	85001-
12	01643-31232	WASHER	8	85001-
13	17A-01-41910	BRACKET	1	85001-
14	01010-81230	BOLT	2	85001-
15	01643-31232	WASHER	2	85001-
16	600-815-9471	SWITCH,PRIMING PUMP TIMER	1	85001-
17	01010-80820	BOLT	4	85001-
18	01643-30823	WASHER	4	85001-
19	08504-10000	CAP	1	85001-
20	08672-01000	INDICATOR	1	85001-
21	08671-70100	HOSE	1	85001-
22	04434-51412	CLIP	1	85001-
23	01010-81225	BOLT	1	85001-
24	01643-31232	WASHER	1	85001-
25	7861-93-1420	SENSOR,AIR FILTER CLOGGING	1	85001-
26	17A-01-41341	BLOCK	1	85001-
27	01010-81250	BOLT	1	85001-
28	01643-31232	WASHER	1	85001-

Printed By : Dwi Iswanto (airafather6107170)

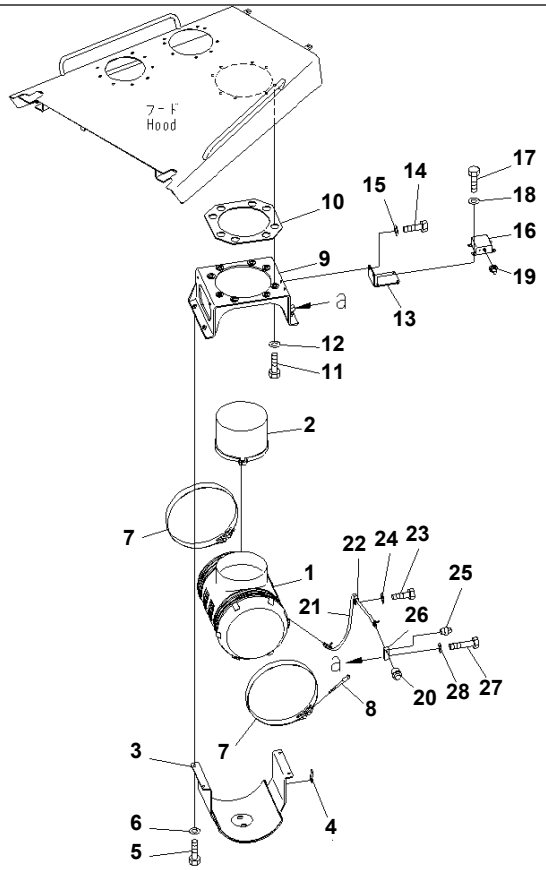

Ref. M2140-02A3 **Page 270140**

D155A-6 S/N 85001-UP
ENGINE HOOD (AIR CLEANER AND WITHOUT SENSOR)

Item	Part No.	Part Name	Qty	Serial No.
1	(6240-81-7402)	AIR CLEANER ASS'Y	1	85001-
2	600-183-7521	PRE CLEANER	1	85001-
3	17A-01-41311	BRACKET	1	85001-
4	08193-21012	· CLIP (WELDED)	1	85001-
5	01010-81240	BOLT	4	85001-
6	01643-31232	WASHER	4	85001-
7	6240-11-9910	BAND	2	85001-
8	6643-11-4641	BOLT	2	85001-
9	17A-01-44321	COVER	1	85001-
10	17A-01-41330	SHEET	1	85001-
11	01010-81230	BOLT	8	85001-
12	01643-31232	WASHER	8	85001-
13	17A-01-41910	BRACKET	1	85001-
14	01010-81230	BOLT	2	85001-
15	01643-31232	WASHER	2	85001-
16	600-815-9471	SWITCH,TIMER	1	85001-
17	01010-80820	BOLT	4	85001-
18	01643-30823	WASHER	4	85001-
19	08504-10000	CAP	1	85001-
20	08672-01000	INDICATOR	1	85001-
21	08671-70100	HOSE	1	85001-
22	04434-51412	CLIP	1	85001-
23	01010-81225	BOLT	1	85001-
24	01643-31232	WASHER	1	85001-
25	07042-70108	PLUG	1	85001-
26	17A-01-41341	BLOCK	1	85001-
27	01010-81250	BOLT	1	85001-
28	01643-31232	WASHER	1	85001-

Printed By : Dwi Iswanto (airafather6107170)

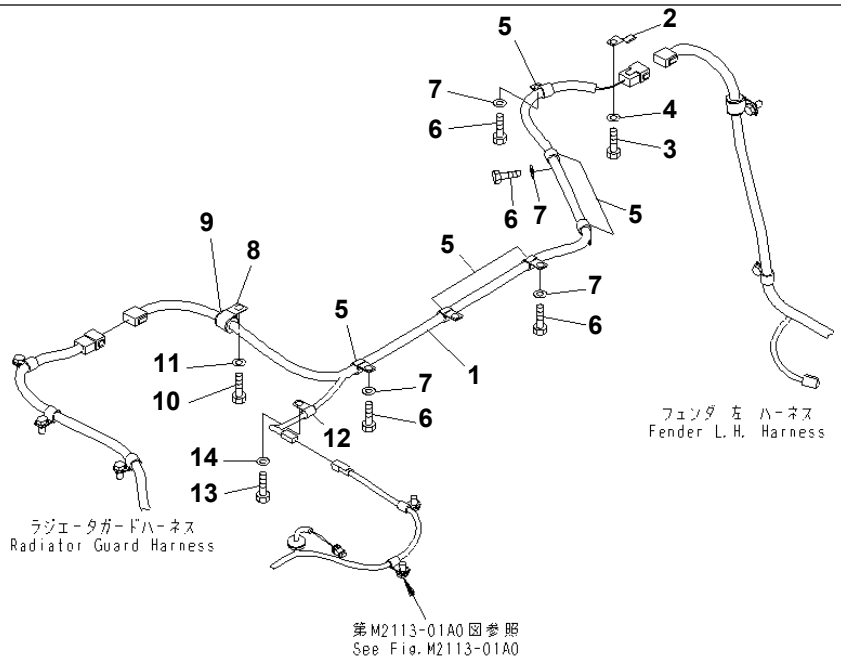

00063614

Ref. M2140-03A2 **Page 270150**

D155A-6 S/N 85001-UP
ENGINE HOOD (HOOD HARNESS)

Item	Part No.	Part Name	Qty	Serial No.
1	17A-06-41492	WIRING HARNESS	1	85001-
2	08193-21012	CLIP	1	85001-
3	01010-81225	BOLT	1	85001-
4	01643-31232	WASHER	1	85001-
5	04434-51712	CLIP	6	85001-
6	01010-81225	BOLT	6	85001-
7	01643-31232	WASHER	6	85001-
8	04434-52712	CLIP	1	85001-
9	07095-20418	CUSHION	1	85001-
10	01010-81225	BOLT	1	85001-
11	01643-31232	WASHER	1	85001-
12	600-051-3100	CLIP	1	85001-
13	01010-81225	BOLT	1	85001-
14	01643-31232	WASHER	1	85001-

Printed By : Dwi Iswanto (airafather6107170)

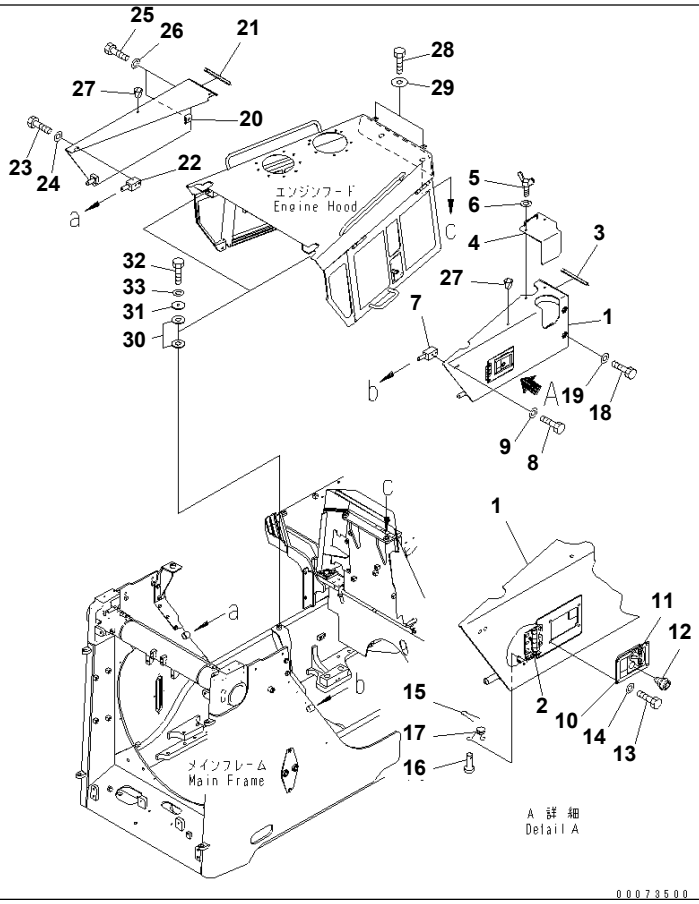

Ref. M2140-04A1 **Page 270160**

D155A-6 S/N 85001-UP

ENGINE HOOD (SIDE COVER AND HOOD MOUNT) (WITHOUT CAB)

Item	Part No.	Part Name	Qty	Serial No.
1	17A-54-44581	COVER	1	85001-
2	17A-54-44891	· HINGE (WELDED)	1	85001-
3	17A-54-44940	· SEAL (BONDED)	1	85001-
4	17A-54-44951	COVER	1	85001-
5	17A-54-45890	BOLT	2	85001-
6	01643-31032	WASHER	2	85001-
7	17A-54-44791	BRACKET	1	85001-
8	01010-81225	BOLT	2	85001-
9	01643-31232	WASHER	2	85001-
	198-54-55990	LOCK ASS'Y	1	85001-
10	198-54-42480	· HOOK	1	85001-
11	198-54-42491	· SPRING	1	85001-
12	421-54-11381	· LOCK	1	85001-
13	01580-10806	NUT	4	85001-
14	01643-30823	WASHER	4	85001-
15	04050-11610	PIN	2	85001-
16	04205-10618	PIN	2	85001-
17	09463-00002	SPRING	1	85001-
18	01010-81235	BOLT	2	85001-
19	01643-31232	WASHER	2	85001-
20	17A-54-44591	COVER	1	85001-
21	17A-54-44940	· SEAL (BONDED)	1	85001-
22	17A-54-44791	BRACKET	1	85001-
23	01010-81225	BOLT	2	85001-
24	01643-31232	WASHER	2	85001-
25	01010-81230	BOLT	2	85001-
26	01643-31232	WASHER	2	85001-
27	07049-01215	PLUG	2	85001-
28	01010-81660	BOLT	2	85001-
29	21T-09-11330	WASHER	2	85001-

Printed By : Dwi Iswanto (airafather6107170)

ENGINE HOOD (SIDE COVER AND HOOD MOUNT) (WITHOUT CAB)

Item	Part No.	Part Name	Qty	Serial No.
30	195-54-46180	PLATE	4	85001-
31	6930-21-4120	PLATE	2	85001-
32	01010-81650	BOLT	2	85001-
33	01643-31645	WASHER	2	85001-

Printed By : Dwi Iswanto (airafather6107170)

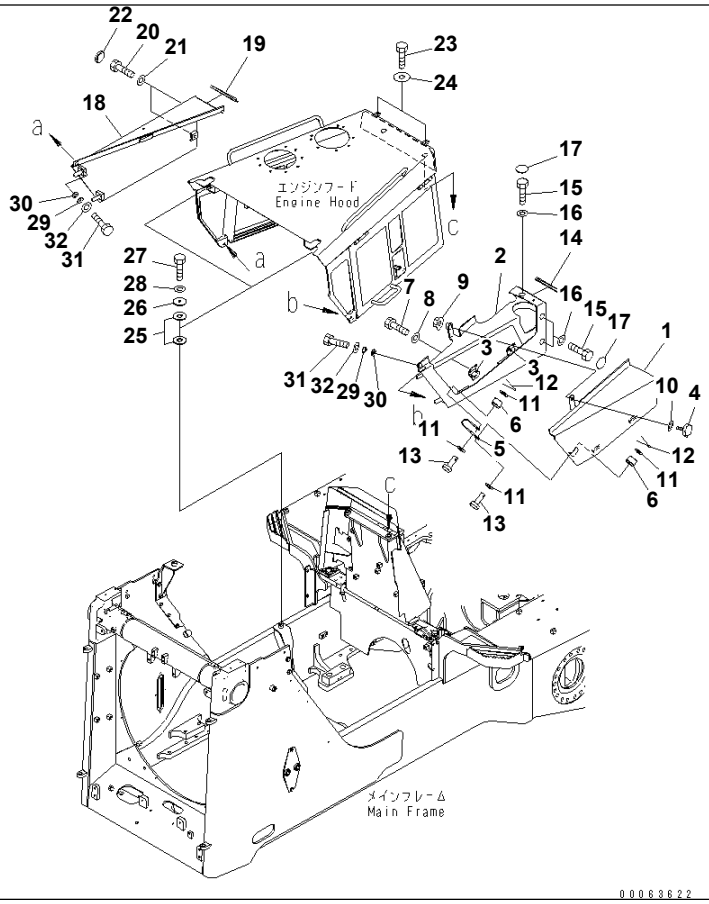

Ref. M2140-04A2 **Page 270170**

D155A-6 S/N 85001-UP
ENGONE HOOD (SIDE COVER AND HOOD MOUNT)(#85001-85009)

Item	Part No.	Part Name	Qty	Serial No.
1	17A-54-42513	COVER ASS'Y	1	85010-@
	□17A-54-42512	COVER ASS'Y	1	85001-85009
	17A-54-42572	· COVER	1	85010-@
	□17A-54-42571	· COVER	1	85001-85009
2	☆	· · COVER	1	85010-@
	☆	· · COVER	1	85001-85009
3	17A-54-42591	· · · HINGE (WELDED)	2	85001-85009
4	195-54-68760	· KNOB	1	85001-@
5	418-54-21390	· WIRE	1	85001-@
6	424-54-14380	· COLLAR	2	85001-@
7	01010-80816	· BOLT	4	85001-@
8	01643-30823	· WASHER	4	85001-@
9	01594-01008	· NUT	1	85001-@
10	01640-21016	· WASHER	1	85001-@
11	01643-31032	· WASHER	4	85001-@
12	04050-13020	· PIN	2	85001-@
13	04205-11028	· PIN	2	85001-@
14	17A-54-44940	SEAL (BONDED)	1	85001-@
15	01010-81230	BOLT	3	85001-@
16	01643-31232	WASHER	3	85001-@
17	195-54-42981	CAP	3	85001-@
18	17A-54-42523	COVER	1	85010-@
	□17A-54-42522	COVER	1	85001-85009
19	17A-54-44940	SEAL (BONDED)	1	85001-@
20	01010-81230	BOLT	2	85001-@
21	01643-31232	WASHER	2	85001-@
22	195-54-42981	CAP	2	85001-@
23	01010-81660	BOLT	2	85001-@
24	21T-09-11330	WASHER	2	85001-@
25	195-54-46180	PLATE	4	85001-@

Printed By : Dwi Iswanto (airafather6107170)

ENGONE HOOD (SIDE COVER AND HOOD MOUNT)(#85001-85009)

Item	Part No.	Part Name	Qty	Serial No.
26	6930-21-4120	PLATE	2	85001-@
27	01010-81645	BOLT	2	85001-@
28	01643-31645	WASHER	2	85001-@
29	17A-54-42380	COLLER	2	85010-@
	□20Y-973-2430	COLLAR	2	85001-85009
30	195-54-75990	SPACER	2	85001-@
31	01010-81230	BOLT	2	85001-@
32	01643-31232	WASHER	2	85001-@

Printed By : Dwi Iswanto (airafather6107170)

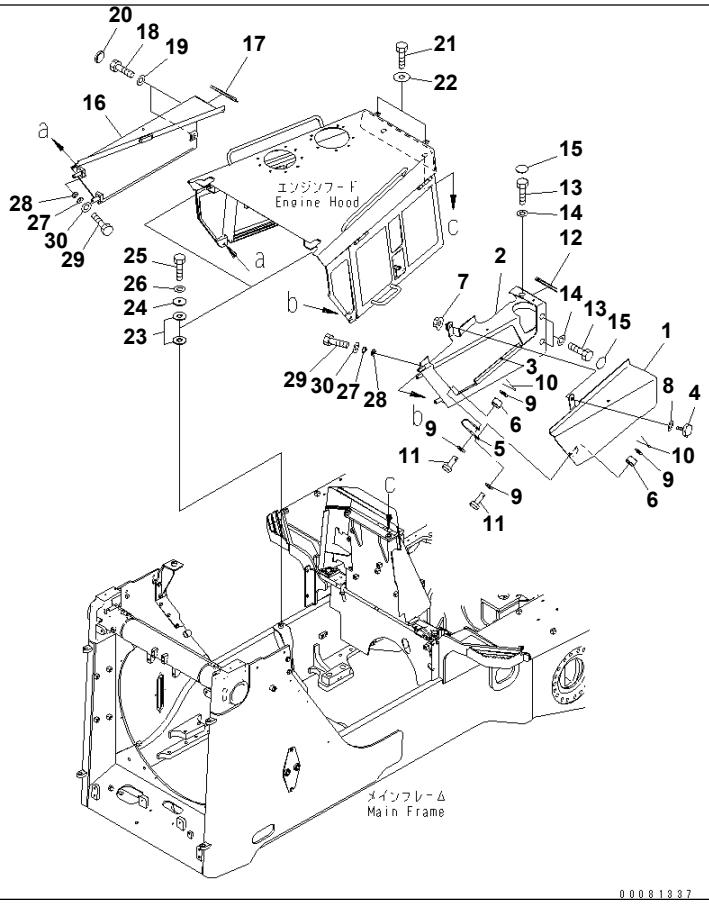

Ref. M2140-04A2A **Page 270180**

D155A-6 S/N 85001-UP

ENGINE HOOD (SIDE COVER AND HOOD MOUNT)(#85010-)

Item	Part No.	Part Name	Qty	Serial No.
1	17A-54-42572	COVER	1	85010-
2	17A-54-42583	COVER	1	85010-
3	17A-54-42670	・ HINGE (WELDED)	1	85010-
4	195-54-68760	KNOB	1	85001-
5	418-54-21390	WIRE	1	85001-
6	424-54-14380	COLLAR	2	85001-
7	01594-01008	NUT	1	85001-
8	01640-21016	WASHER	1	85001-
9	01643-31032	WASHER	4	85001-
10	04050-13020	PIN	2	85001-
11	04205-11028	PIN	2	85001-
12	17A-54-44940	SEAL (BONDED)	1	85001-
13	01010-81230	BOLT	3	85001-
14	01643-31232	WASHER	3	85001-
15	195-54-42981	CAP	3	85001-
16	17A-54-42523	COVER	1	85010-
17	17A-54-44940	SEAL (BONDED)	1	85001-
18	01010-81230	BOLT	2	85001-
19	01643-31232	WASHER	2	85001-
20	195-54-42981	CAP	2	85001-
21	01010-81660	BOLT	2	85001-
22	21T-09-11330	WASHER	2	85001-
23	195-54-46180	PLATE	4	85001-
24	6930-21-4120	PLATE	2	85001-
25	01010-81645	BOLT	2	85001-
26	01643-31645	WASHER	2	85001-
27	17A-54-42380	COLLER	2	85010-
28	195-54-75990	SPACER	2	85001-
29	01010-81230	BOLT	2	85001-
30	01643-31232	WASHER	2	85001-

Printed By : Dwi Iswanto (airafather6107170)

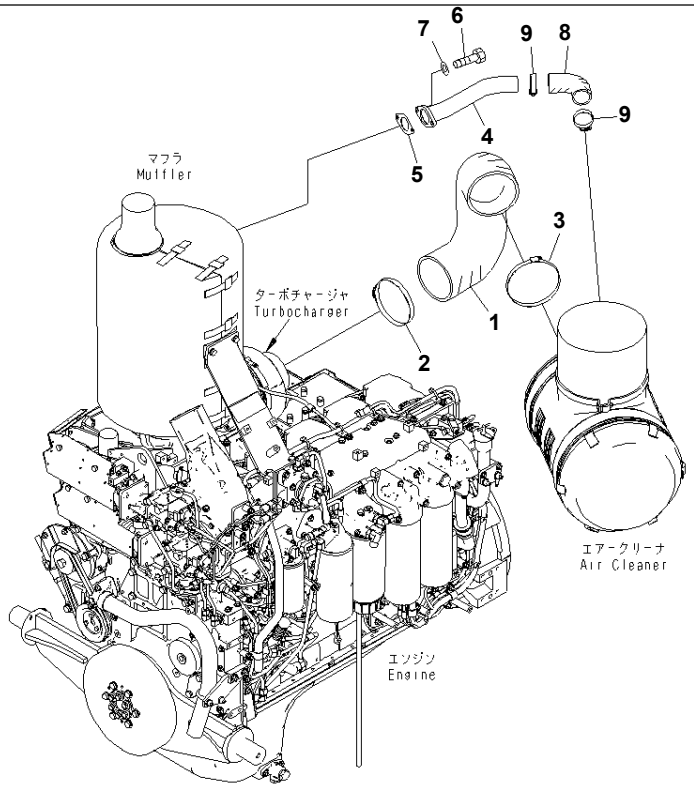

00043491

Ref. M2140-05A2 **Page 270190**

D155A-6 S/N 85001-UP
ENGINE HOOD (AIR AND EJECT PIPING)

Item	Part No.	Part Name	Qty	Serial No.
1	17A-01-41360	HOSE	1	85001-
2	07289-00160	CLAMP	1	85001-
3	07289-00170	CLAMP	1	85001-
4	17A-01-41220	TUBE	1	85001-
5	6162-13-5611	GASKET	1	85001-
6	01010-81030	BOLT	2	85001-
7	01643-31032	WASHER	2	85001-
8	6162-13-5870	HOSE	1	85001-
9	07289-00055	CLAMP	2	85001-

Printed By : Dwi Iswanto (airafather6107170)

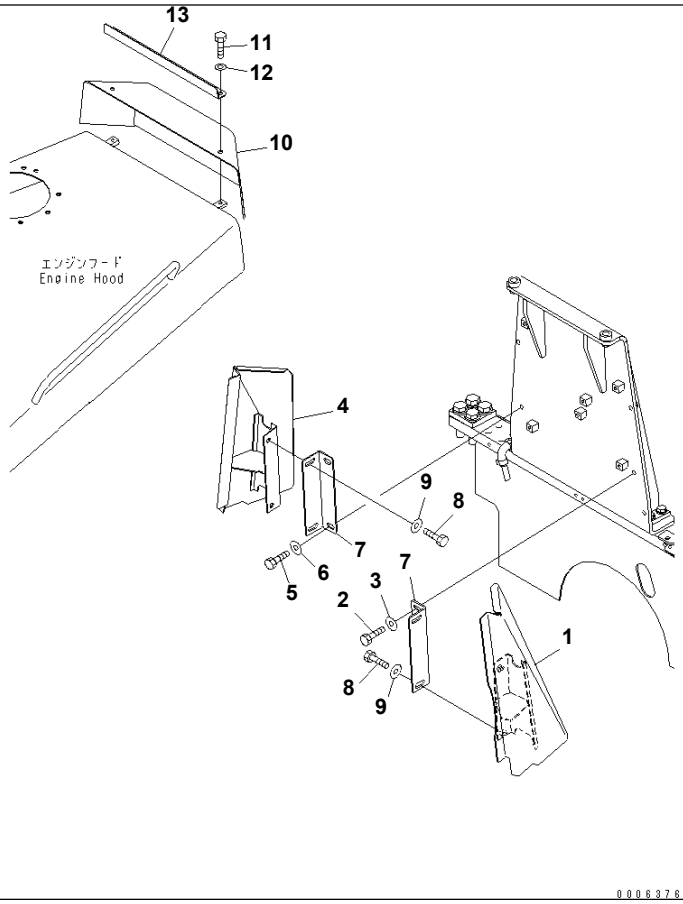

Ref. M2143-01A0 **Page 270200**

D155A-6 S/N 85001-UP
HOOD MOUNT

Item	Part No.	Part Name	Qty	Serial No.
1	17A-54-42432	COVER	1	85001-
2	01010-81230	BOLT	2	85001-
3	175-54-34170	WASHER	2	85001-
4	17A-54-42442	COVER	1	85001-
5	01010-81230	BOLT	2	85001-
6	175-54-34170	WASHER	2	85001-
7	17A-54-42490	BRACKET	2	85001-
8	01010-81240	BOLT	4	85001-
9	175-54-34170	WASHER	4	85001-
10	17A-54-42451	COVER	1	85001-
11	01010-81230	BOLT	2	85001-
12	01643-31232	WASHER	2	85001-
13	17A-54-42481	GUARD	1	85001-

Printed By : Dwi Iswanto (airafather6107170)

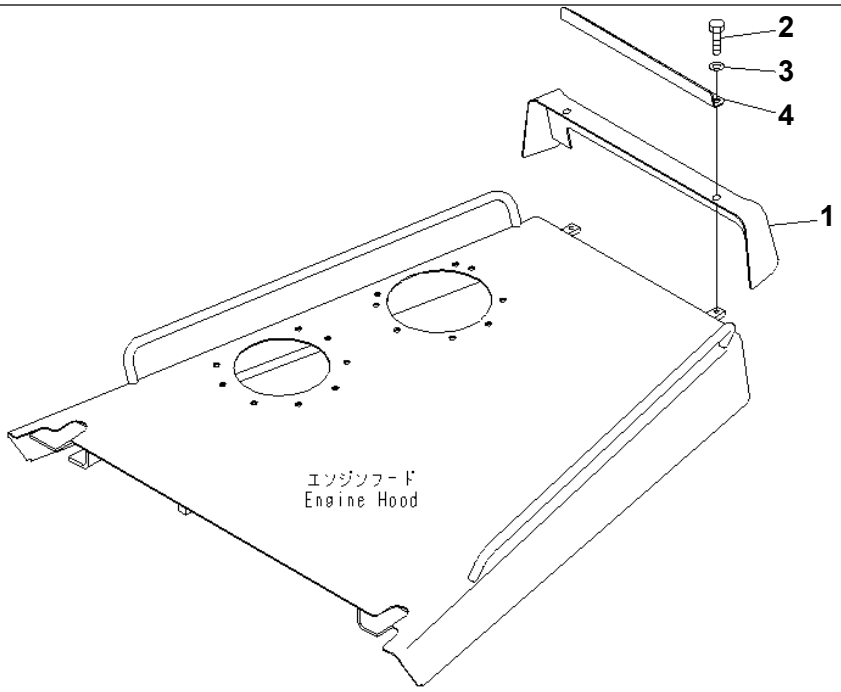

00073519

Ref. M2143-01A1 **Page 270210**

D155A-6 S/N 85001-UP
HOOD MOUNT (WITHOUT CAB)

Item	Part No.	Part Name	Qty	Serial No.
1	17A-54-44851	COVER	1	85001-
2	01010-81230	BOLT	2	85001-
3	01643-31232	WASHER	2	85001-
4	17A-54-42481	GUARD	1	85001-

Printed By : Dwi Iswanto (airafather6107170)

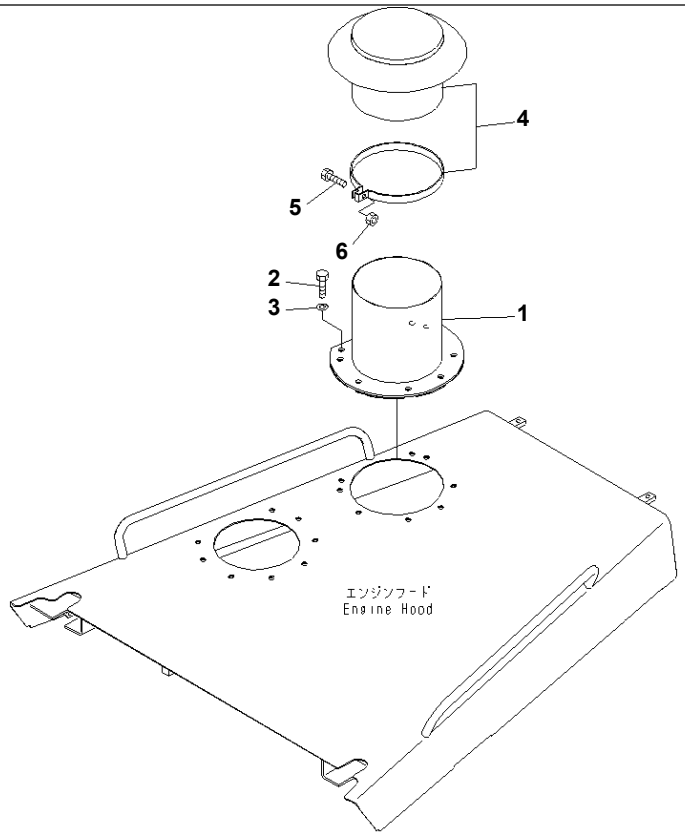

Ref. M2190-01A0 **Page 270220**

D155A-6 S/N 85001-UP
MUFFLER

Item	Part No.	Part Name	Qty	Serial No.
1	17A-01-41391	PIPE	1	85001-
2	01010-D1225	BOLT	8	85001-
3	01643-71232	WASHER	8	85001-
4	600-181-4990	HOOD	1	85001-
5	01016-51045	· BOLT	1	85001-
6	01580-11008	· NUT	1	85001-

Printed By : Dwi Iswanto (airafather6107170)

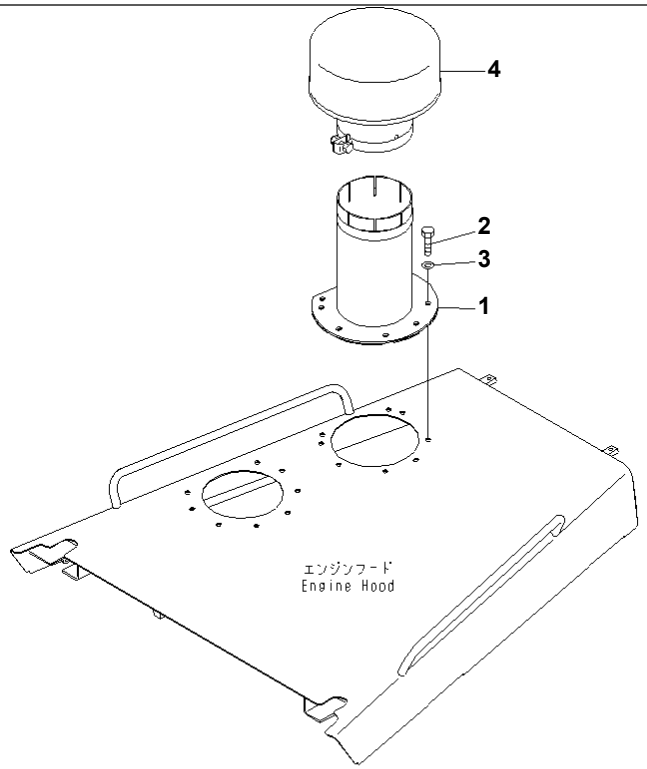

00049640

Ref. M2190-01A1 **Page 270230**

D155A-6 S/N 85001-UP
PRECLEANER DUCT (ENGINAIRE)

Item	Part No.	Part Name	Qty	Serial No.
1	17A-01-41790	PIPE	1	85001-
2	01010-D1225	BOLT	8	85001-
3	01643-71232	WASHER	8	85001-
4	198-01-51310	PRECLEANER	1	85001-

Printed By : Dwi Iswanto (airafather6107170)

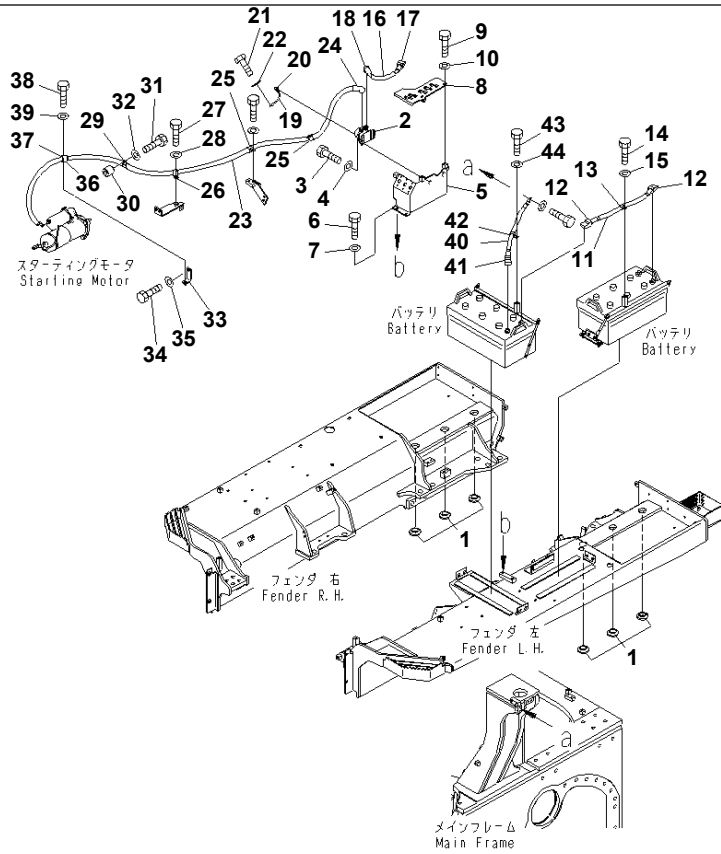

Ref. M2210-01A5 Page 270240

D155A-6 S/N 85001-UP

FENDER (STARTING HARNESS) (NS200 WET)

Item	Part No.	Part Name	Qty	Serial No.
1	17A-04-12550	CUSHION	6	85001-
2	08088-30000	SWITCH	1	85001-
3	01010-80825	BOLT	2	85001-
4	01643-30823	WASHER	2	85001-
5	17A-06-41531	BRACKET	1	85001-
6	01010-81225	BOLT	3	85001-
7	01643-31232	WASHER	3	85001-
8	17A-06-41551	BRACKET	1	85001-
9	01010-81225	BOLT	2	85001-
10	01643-31232	WASHER	2	85001-
11	08028-HE060	CABLE	1	85001-
12	08038-42511	CAP	2	85001-
13	04434-52312	CLIP	1	85001-
14	01010-81225	BOLT	1	85001-
15	01643-31232	WASHER	1	85001-
16	08028-HE035	CABLE	1	85001-
17	08038-42511	CAP	1	85001-
18	17A-06-41540	CAP	1	85001-
19	209-06-19680	WIRE	1	85001-
20	08038-00519	CAP	1	85001-
21	01010-80816	BOLT	1	85001-
22	01643-30823	WASHER	1	85001-
23	17A-06-41272	WIRING HARNESS	1	85001-
24	17A-06-41540	CAP	1	85001-
25	04434-52712	CLIP	2	85001-
26	04434-52712	CLIP	1	85001-
27	01010-81225	BOLT	1	85001-
28	01643-31232	WASHER	1	85001-
29	04434-52712	CLIP	1	85001-
30	195-33-11220	SPACER	1	85001-

Printed By : Dwi Iswanto (airafather6107170)

FENDER (STARTING HARNESS) (NS200 WET)

Item	Part No.	Part Name	Qty	Serial No.
31	01010-81245	BOLT	1	85001-
32	01643-31232	WASHER	1	85001-
33	17A-06-41771	BRACKET	1	85001-
34	01010-81225	BOLT	1	85001-
35	01643-31232	WASHER	1	85001-
36	04434-53412	CLIP	1	85001-
37	07095-20625	CUSHION	1	85001-
38	01010-81225	BOLT	1	85001-
39	01643-31232	WASHER	1	85001-
40	08028-FF055	CABLE	1	85001-
41	08038-22511	CAP	1	85001-
42	04434-52312	CLIP	1	85001-
43	01010-81225	BOLT	1	85001-
44	01643-31232	WASHER	1	85001-

Printed By : Dwi Iswanto (airafather6107170)

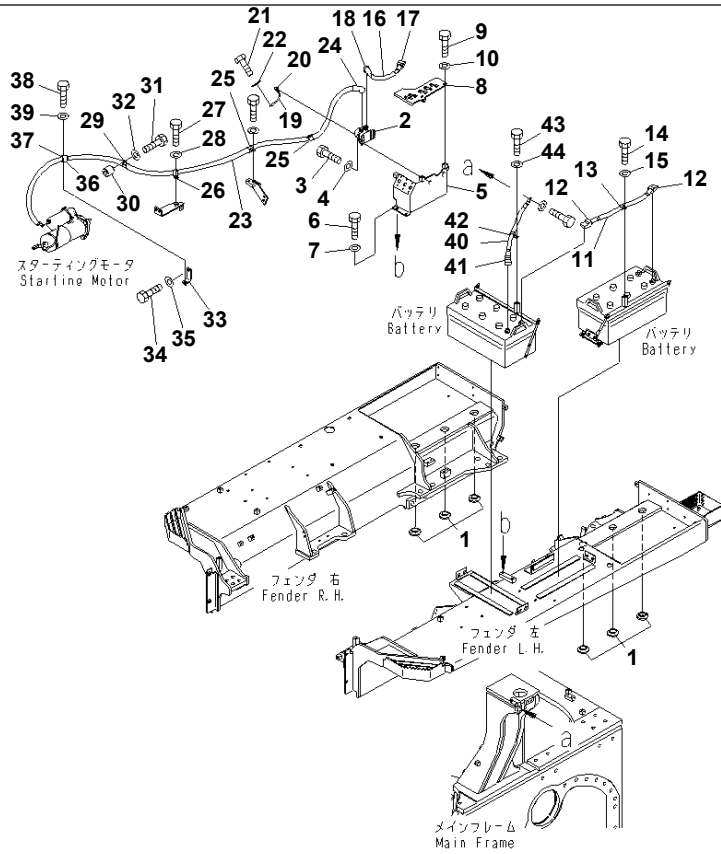

Ref. M2210-01A6 Page 270250

D155A-6 S/N 85001-UP

FENDER (STARTING HARNESS) (LARGE BATTERY) (C200 WET)

Item	Part No.	Part Name	Qty	Serial No.
1	17A-04-12550	CUSHION	6	85001-
2	08088-30000	SWITCH	1	85001-
3	01010-80825	BOLT	2	85001-
4	01643-30823	WASHER	2	85001-
5	17A-06-41531	BRACKET	1	85001-
6	01010-81225	BOLT	3	85001-
7	01643-31232	WASHER	3	85001-
8	17A-06-41551	BRACKET	1	85001-
9	01010-81225	BOLT	2	85001-
10	01643-31232	WASHER	2	85001-
11	08028-GE055	CABLE	1	85001-
12	08038-42511	CAP	2	85001-
13	04434-52312	CLIP	1	85001-
14	01010-81225	BOLT	1	85001-
15	01643-31232	WASHER	1	85001-
16	08028-GE035	CABLE	1	85001-
17	08038-42511	CAP	1	85001-
18	17A-06-41540	CAP	1	85001-
19	209-06-19680	WIRE	1	85001-
20	08038-00519	CAP	1	85001-
21	01010-80816	BOLT	1	85001-
22	01643-30823	WASHER	1	85001-
23	17A-06-41272	WIRING HARNESS	1	85001-
24	17A-06-41540	CAP	1	85001-
25	04434-52712	CLIP	2	85001-
26	04434-52712	CLIP	1	85001-
27	01010-81225	BOLT	1	85001-
28	01643-31232	WASHER	1	85001-
29	04434-52712	CLIP	1	85001-
30	195-33-11220	SPACER	1	85001-

Printed By : Dwi Iswanto (airafather6107170)

FENDER (STARTING HARNESS) (LARGE BATTERY) (C200 WET)

Item	Part No.	Part Name	Qty	Serial No.
31	01010-81245	BOLT	1	85001-
32	01643-31232	WASHER	1	85001-
33	17A-06-41771	BRACKET	1	85001-
34	01010-81225	BOLT	1	85001-
35	01643-31232	WASHER	1	85001-
36	04434-53412	CLIP	1	85001-
37	07095-20625	CUSHION	1	85001-
38	01010-81225	BOLT	1	85001-
39	01643-31232	WASHER	1	85001-
40	08028-EF055	CABLE	1	85001-
41	08038-22511	CAP	1	85001-
42	04434-52312	CLIP	1	85001-
43	01010-81225	BOLT	1	85001-
44	01643-31232	WASHER	1	85001-

Printed By : Dwi Iswanto (airafather6107170)

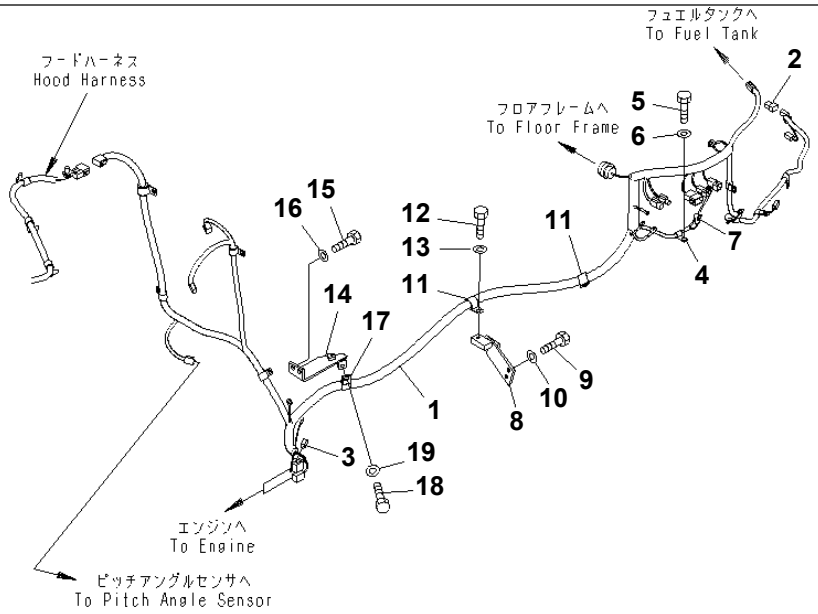

00065120

Ref. M2210-02A1 **Page 270260**

D155A-6 S/N 85001-UP
FENDER (MAIN HARNESS) (WITHOUT CAB)

Item	Part No.	Part Name	Qty	Serial No.
1	17A-06-43331	WIRING HARNESS	1	85001-
2	08192-22830	· CONNECTOR	1	85001-
3	21J-06-13661	· DIODE	1	85001-
4	04434-51012	CLIP	1	85001-
5	01010-81225	BOLT	1	85001-
6	01643-31232	WASHER	1	85001-
7	08038-00519	CAP	1	85001-
8	17A-06-41582	BRACKET	1	85001-
9	01010-81225	BOLT	2	85001-
10	01643-31232	WASHER	2	85001-
11	04434-52712	CLIP	2	85001-
12	01010-81225	BOLT	2	85001-
13	01643-31232	WASHER	2	85001-
14	17A-06-41642	BRACKET	1	85001-
15	01010-81225	BOLT	2	85001-
16	01643-31232	WASHER	2	85001-
17	04434-52712	CLIP	1	85001-
18	01010-81225	BOLT	1	85001-
19	01643-31232	WASHER	1	85001-

Printed By : Dwi Iswanto (airafather6107170)

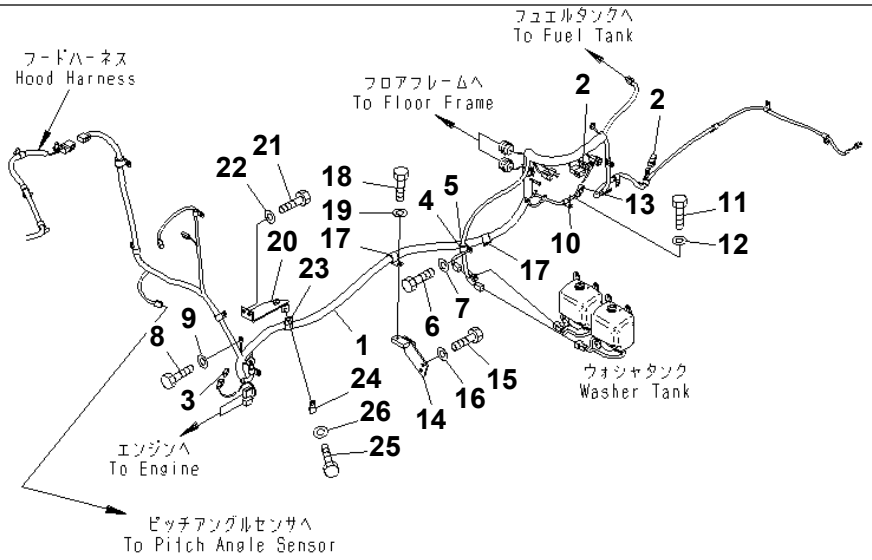

00063625

Ref. M2210-02A5 Page 270270

D155A-6 S/N 85001-UP

FENDER (MAIN HARNESS)

Item	Part No.	Part Name	Qty	Serial No.
1	17A-06-43131	WIRING HARNESS	1	85001-
2	08192-22830	· CONNECTOR	2	85001-
3	21J-06-13661	· DIODE	1	85001-
4	04434-51912	CLIP	1	85001-
5	07095-20213	CUSHION	1	85001-
6	01010-81225	BOLT	1	85001-
7	01643-31232	WASHER	1	85001-
8	01010-81225	BOLT	1	85001-
9	01643-31232	WASHER	1	85001-
10	04434-51012	CLIP	1	85001-
11	01010-81225	BOLT	1	85001-
12	01643-31232	WASHER	1	85001-
13	08038-00519	CAP	1	85001-
14	17A-06-41582	BRACKET	1	85001-
15	01010-81225	BOLT	2	85001-
16	01643-31232	WASHER	2	85001-
17	04434-52712	CLIP	2	85001-
18	01010-81225	BOLT	2	85001-
19	01643-31232	WASHER	2	85001-
20	17A-06-41642	BRACKET	1	85001-
21	01010-81225	BOLT	2	85001-
22	01643-31232	WASHER	2	85001-
23	04434-52712	CLIP	1	85001-
24	04434-51412	CLIP	1	85001-
25	01010-81225	BOLT	1	85001-
26	01643-31232	WASHER	1	85001-

Printed By : Dwi Iswanto (airafather6107170)

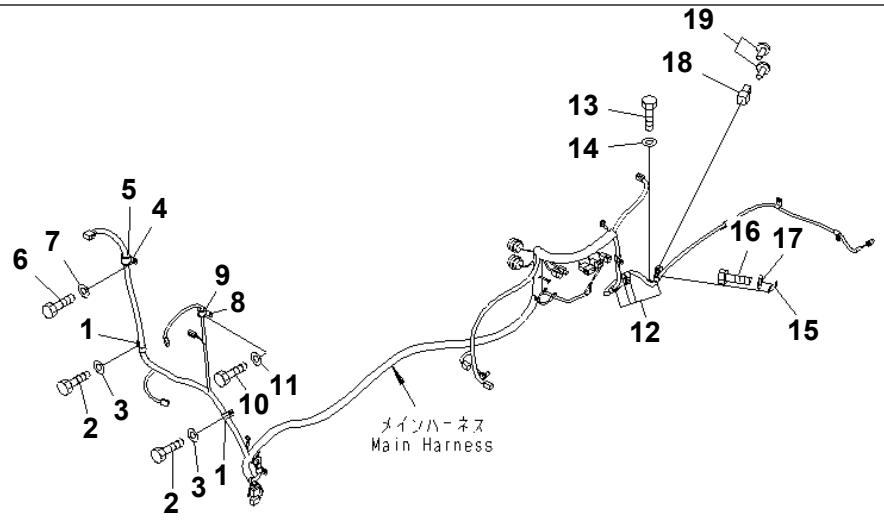

00065122

D155A-6 S/N 85001-UP

FENDER (MAIN HARNESS) (CLIP) (WITHOUT CAB)

Item	Part No.	Part Name	Qty	Serial No.
1	04434-51912	CLIP	2	85001-
2	01010-81225	BOLT	2	85001-
3	01643-31232	WASHER	2	85001-
4	04434-51912	CLIP	1	85001-
5	07095-20213	CUSHION	1	85001-
6	01010-81225	BOLT	1	85001-
7	01643-31232	WASHER	1	85001-
8	04434-52712	CLIP	1	85001-
9	07095-20419	CUSHION	1	85001-
10	01010-81225	BOLT	1	85001-
11	01643-31232	WASHER	1	85001-
12	04434-51412	CLIP	5	85001-
13	01010-81225	BOLT	5	85001-
14	01643-31232	WASHER	5	85001-
15	08193-21012	CLIP	1	85001-
16	01010-81225	BOLT	1	85001-
17	01643-31232	WASHER	1	85001-
18	08192-22100	CONNECTOR	1	85001-
19	08191-00770	PLUG	2	85001-

Printed By : Dwi Iswanto (airafather6107170)

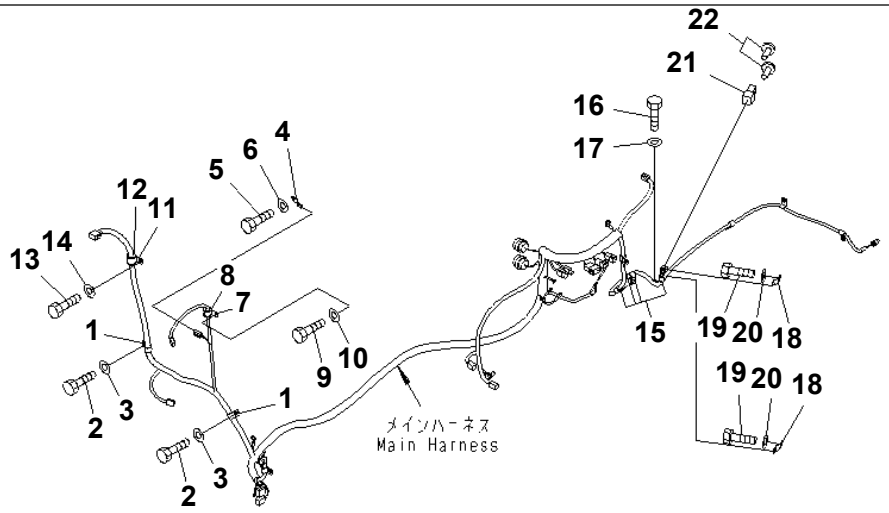

00063627

D155A-6 S/N 85001-UP

FENDER (MAIN HARNESS) (CLIP)

Item	Part No.	Part Name	Qty	Serial No.
1	04434-51912	CLIP	2	85001-
2	01010-81225	BOLT	2	85001-
3	01643-31232	WASHER	2	85001-
4	08193-21012	CLIP	1	85001-
5	01010-81225	BOLT	1	85001-
6	01643-31232	WASHER	1	85001-
7	04434-51912	CLIP	1	85001-
8	07095-20213	CUSHION	1	85001-
9	01010-81225	BOLT	1	85001-
10	01643-31232	WASHER	1	85001-
11	04434-52712	CLIP	1	85001-
12	07095-20419	CUSHION	1	85001-
13	01010-81225	BOLT	1	85001-
14	01643-31232	WASHER	1	85001-
15	04434-51412	CLIP	5	85001-
16	01010-81225	BOLT	5	85001-
17	01643-31232	WASHER	5	85001-
18	08193-21012	CLIP	1	85001-
19	01010-81225	BOLT	1	85001-
20	01643-31232	WASHER	1	85001-
21	08192-22100	CONNECTOR	1	85001-
22	08191-00770	PLUG	2	85001-

Printed By : Dwi Iswanto (airafather6107170)

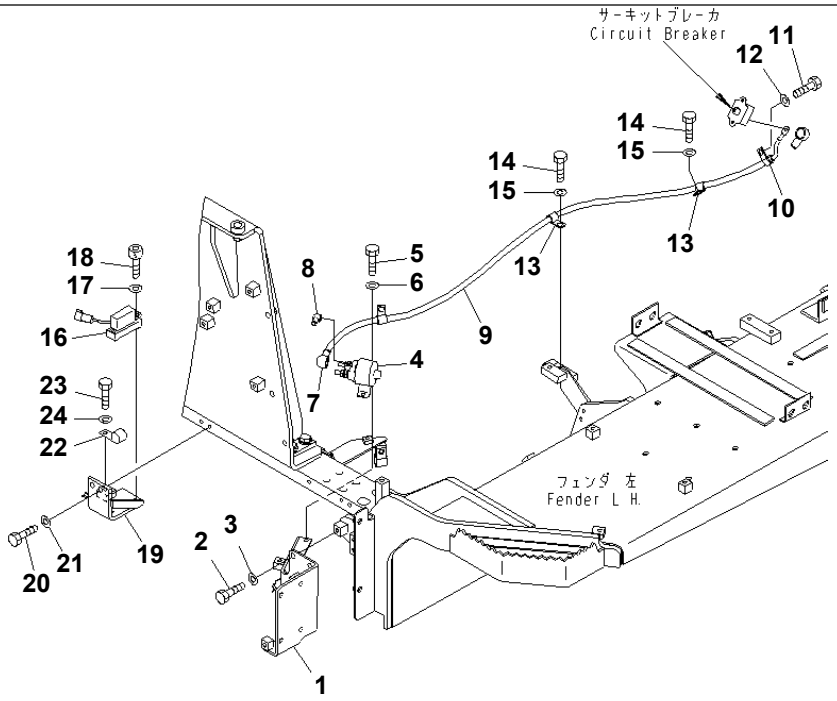

00063630

Ref. M2210-04A5 **Page 270300**

D155A-6 S/N 85001-UP
FENDER (HEATER RELAY)

Item	Part No.	Part Name	Qty	Serial No.
1	17A-06-41671	BRACKET	1	85001-
2	01010-81225	BOLT	3	85001-
3	01643-31232	WASHER	3	85001-
4	600-815-2690	SWITCH,RIBBON HEATER	1	85001-
5	01010-80820	BOLT	2	85001-
6	01643-30823	WASHER	2	85001-
7	08038-02027	CAP	1	85001-
8	08038-00519	CAP	1	85001-
9	17A-06-41281	WIRING HARNESS	1	85001-
10	04434-51412	CLIP	1	85001-
11	01010-81225	BOLT	1	85001-
12	01643-31232	WASHER	1	85001-
13	04434-51412	CLIP	2	85001-
14	01010-81225	BOLT	2	85001-
15	01643-31232	WASHER	2	85001-
16	7861-93-5390	SENSOR	1	85001-
17	01643-30623	WASHER	2	85001-
18	01252-70635	BOLT	2	85001-
19	17A-06-41653	BRACKET	1	85001-
20	01010-81230	BOLT	2	85001-
21	01643-31232	WASHER	2	85001-
22	600-051-3300	CLIP	1	85001-
23	01010-81225	BOLT	1	85001-
24	01643-31232	WASHER	1	85001-

Printed By : Dwi Iswanto (airafather6107170)

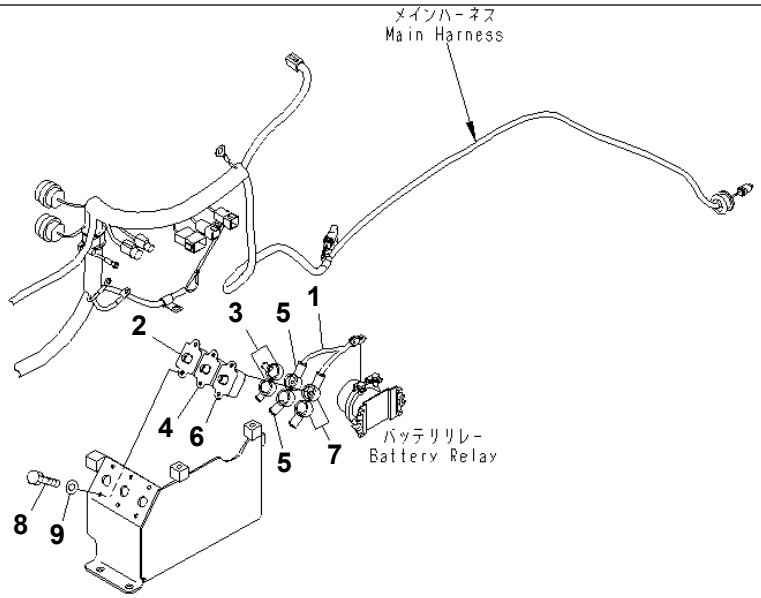

00063634

Ref. M2210-05A5 **Page 270310**

D155A-6 S/N 85001-UP
FENDER (BRAKER)

Item	Part No.	Part Name	Qty	Serial No.
1	17A-06-41211	WIRING HARNESS	1	85001-
2	198-06-62830	CIRCUIT BREAKER	1	85001-
3	08038-00525	CAP	2	85001-
4	198-06-62840	CIRCUIT BREAKER	1	85001-
5	08038-02027	CAP	2	85001-
6	198-06-62840	CIRCUIT BREAKER	1	85001-
7	08038-02027	CAP	2	85001-
8	01010-80616	BOLT	6	85001-
9	01643-30623	WASHER	6	85001-

Printed By : Dwi Iswanto (airafather6107170)

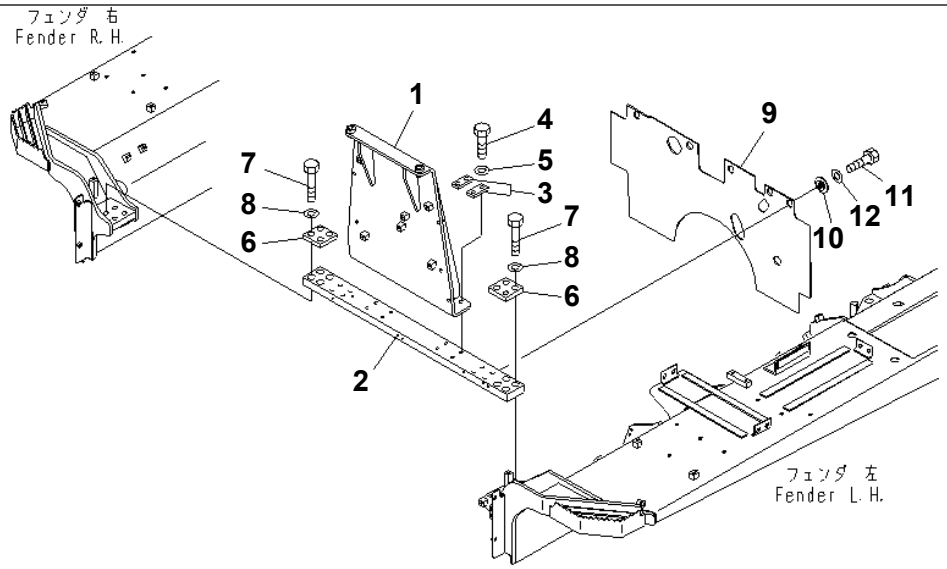

00065123

Ref. M2210-06A1 **Page 270320**

D155A-6 S/N 85001-UP

FENDER (FOOD MOUNT) (WITHOUT CAB)(#85001-85024)

Item	Part No.	Part Name	Qty	Serial No.
	17A-54-42931	BRACKET ASS'Y	1	85001-85024
1	☆	· BRACKET	1	85001-85024
2	17A-54-42921	· PLATE	1	85001-85024
3	17A-54-42961	· PLATE	4	85001-@
4	01010-81655	· BOLT	8	85001-@
5	01643-31645	· WASHER	8	85001-@
6	17A-54-42971	PLATE	2	85001-@
7	01011-82400	BOLT	8	85001-@
8	01643-32460	WASHER	8	85001-@
9	17A-54-42890	RUBBER	1	85001-85024
10	203-54-62670	COLLAR	5	85001-@
11	01010-81225	BOLT	5	85001-@
12	01643-31232	WASHER	5	85001-@

Printed By : Dwi Iswanto (airafather6107170)

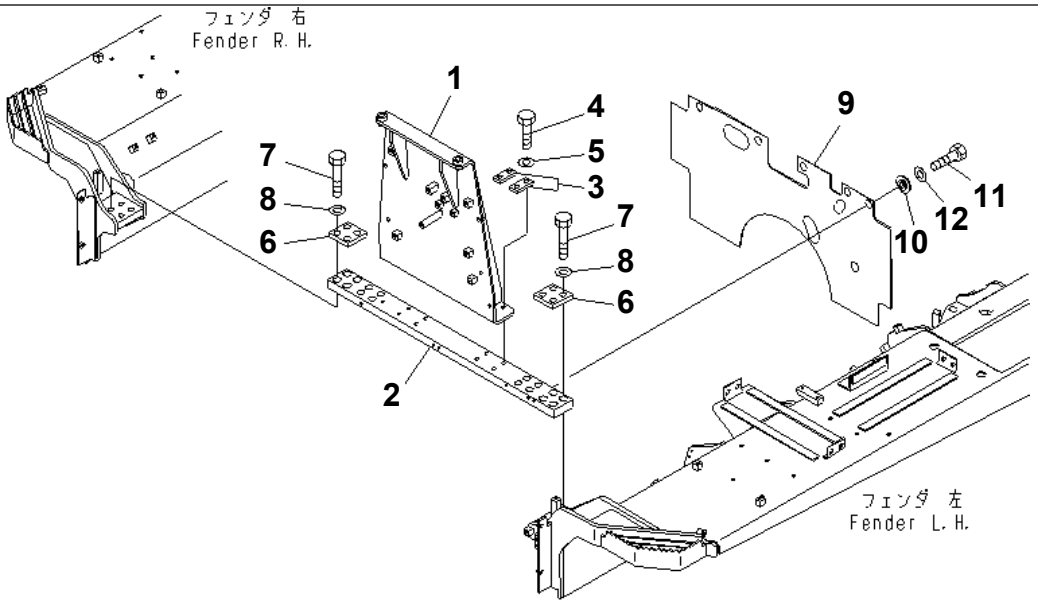

00082168

Ref. M2210-06A1A **Page 270330**

D155A-6 S/N 85001-UP

FENDER (FOOD MOUNT) (WITHOUT CAB)(#85025-)

Item	Part No.	Part Name	Qty	Serial No.
	17A-54-42932	BRACKET ASS'Y	1	85025-
1	☆	· BRACKET	1	85025-
2	17A-54-42922	· PLATE	1	85025-
3	17A-54-42961	· PLATE	4	85001-
4	01010-81655	· BOLT	8	85001-
5	01643-31645	· WASHER	8	85001-
6	17A-54-42971	PLATE	2	85001-
7	01011-82400	BOLT	8	85001-
8	01643-32460	WASHER	8	85001-
9	17A-54-42891	RUBBER	1	85025-
10	203-54-62670	COLLAR	5	85001-
11	01010-81225	BOLT	5	85001-
12	01643-31232	WASHER	5	85001-

Printed By : Dwi Iswanto (airafather6107170)

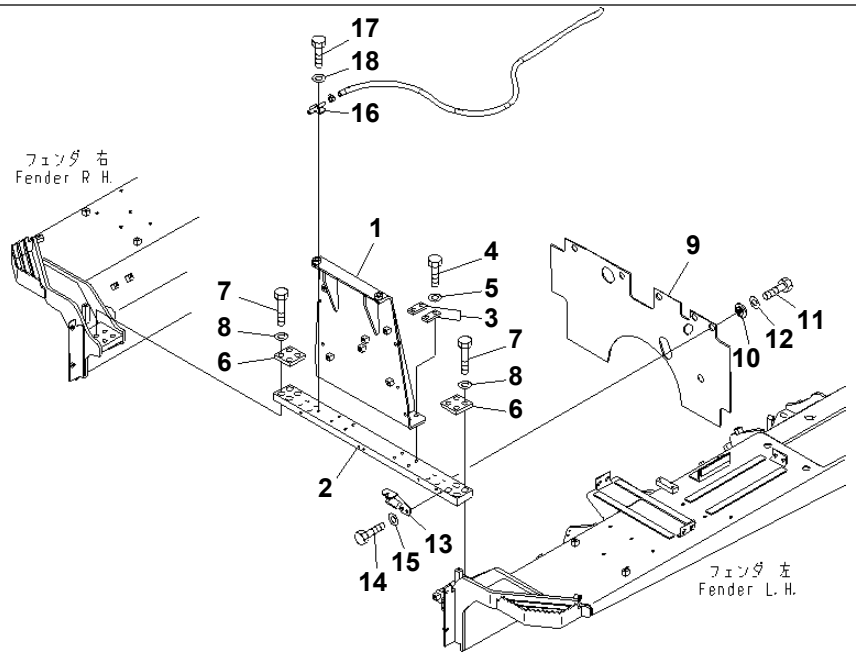

00063636

Ref. M2210-06A5 **Page 270340**

D155A-6 S/N 85001-UP
FENDER (FOOD MOUNT)(#85001-85024)

Item	Part No.	Part Name	Qty	Serial No.
	17A-54-42931	BRACKET ASS'Y	1	85001-85024
1	☆	· BRACKET	1	85001-85024
2	17A-54-42921	· PLATE	1	85001-85024
3	17A-54-42961	· PLATE	4	85001-@
4	01010-81655	· BOLT	8	85001-@
5	01643-31645	· WASHER	8	85001-@
6	17A-54-42971	PLATE	2	85001-@
7	01011-82400	BOLT	8	85001-@
8	01643-32460	WASHER	8	85001-@
9	17A-54-42890	RUBBER	1	85001-85024
10	203-54-62670	COLLAR	5	85001-@
11	01010-81225	BOLT	5	85001-@
12	01643-31232	WASHER	5	85001-@
13	17A-54-42531	BRACKET	1	85001-@
14	01010-81225	BOLT	2	85001-@
15	01643-31232	WASHER	2	85001-@
16	17A-911-4411	BRACKET	1	85001-@
17	01010-81225	BOLT	1	85001-@
18	01643-31232	WASHER	1	85001-@

Printed By : Dwi Iswanto (airafather6107170)

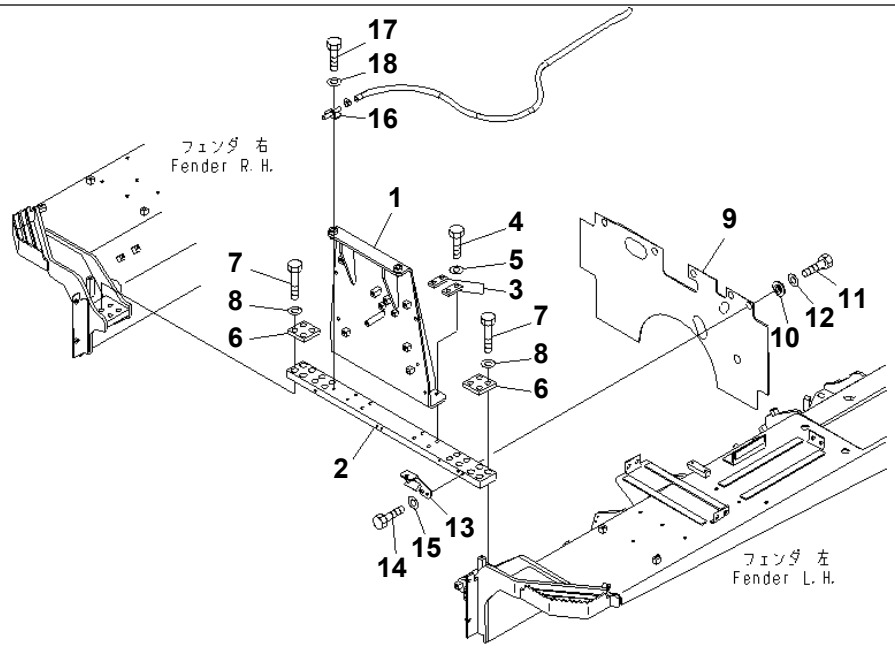

00082170

Ref. M2210-06A5A **Page 270350**

D155A-6 S/N 85001-UP
FENDER (FOOD MOUNT)(#85025-)

Item	Part No.	Part Name	Qty	Serial No.
	17A-54-42932	BRACKET ASS'Y	1	85025-
1	☆	· BRACKET	1	85025-
2	17A-54-42922	· PLATE	1	85025-
3	17A-54-42961	· PLATE	4	85001-
4	01010-81655	· BOLT	8	85001-
5	01643-31645	· WASHER	8	85001-
6	17A-54-42971	PLATE	2	85001-
7	01011-82400	BOLT	8	85001-
8	01643-32460	WASHER	8	85001-
9	17A-54-42891	RUBBER	1	85025-
10	203-54-62670	COLLAR	5	85001-
11	01010-81225	BOLT	5	85001-
12	01643-31232	WASHER	5	85001-
13	17A-54-42531	BRACKET	1	85001-
14	01010-81225	BOLT	2	85001-
15	01643-31232	WASHER	2	85001-
16	17A-911-4411	BRACKET	1	85001-
17	01010-81225	BOLT	1	85001-
18	01643-31232	WASHER	1	85001-

Printed By : Dwi Iswanto (airafather6107170)

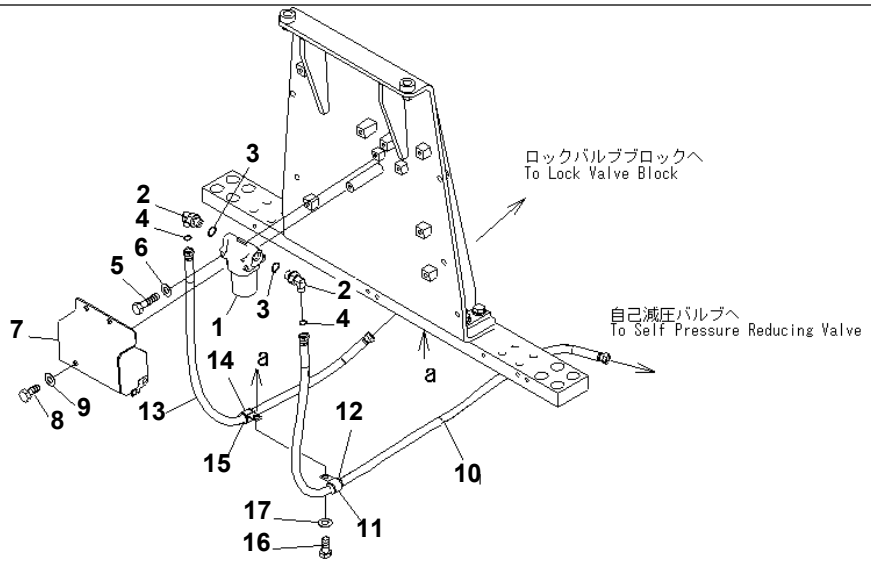

00080715-V

Ref. M2210-07A1 **Page 270360**

D155A-6 S/N 85001-UP
FENDER (PILOT FILTER)(#85025-)

Item	Part No.	Part Name	Qty	Serial No.
1	(20Y-62-51681)	FILTER ASS'Y	1	85025-
2	02782-10315	ELBOW	2	85025-
3	07002-12034	O-RING	2	85025-
4	02896-11009	O-RING	2	85025-
5	01010-81075	BOLT	2	85025-
6	01643-31032	WASHER	2	85025-
7	17A-61-43941	COVER	1	85025-
8	01010-81225	BOLT	3	85025-
9	01643-31232	WASHER	3	85025-
10	17A-61-43910	HOSE	1	85025-
11	04434-52112	CLIP	1	85025-
12	07095-20314	CUSHION	1	85025-
13	17A-61-43930	HOSE	1	85025-
14	04434-52112	CLIP	1	85025-
15	07095-20314	CUSHION	1	85025-
16	01010-81225	BOLT	1	85025-
17	01643-31232	WASHER	1	85025-

Printed By : Dwi Iswanto (airafather6107170)

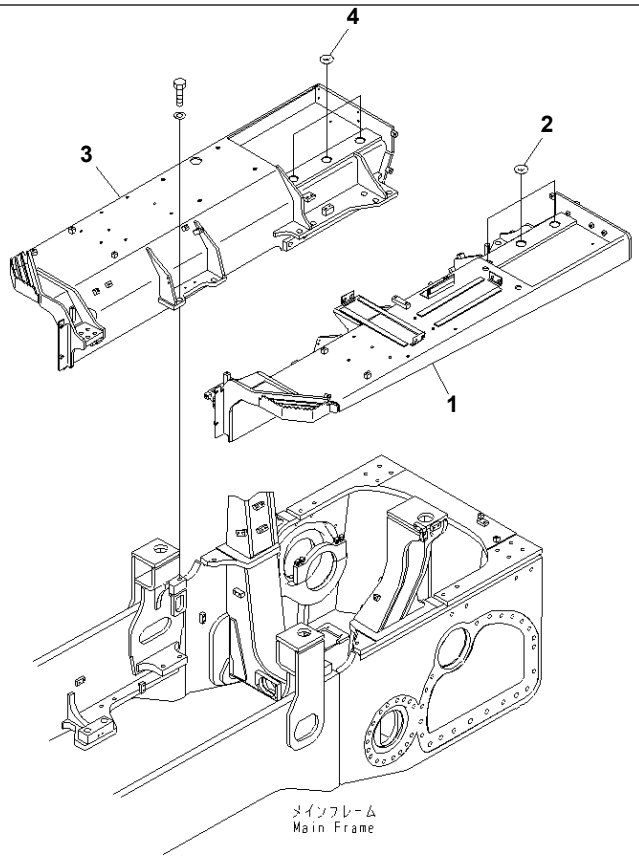

00063637

Ref. M2210-08A5 **Page 270370**

D155A-6 S/N 85001-UP
FENDER

Item	Part No.	Part Name	Qty	Serial No.
1	17A-54-44512	FENDER	1	85010-
	□17A-54-44511	FENDER	1	85001-85009
2	17A-04-12550	CUSHION	3	85001-
3	17A-54-44521	FENDER	1	85001-
4	17A-04-12550	CUSHION	3	85001-

Printed By : Dwi Iswanto (airafather6107170)

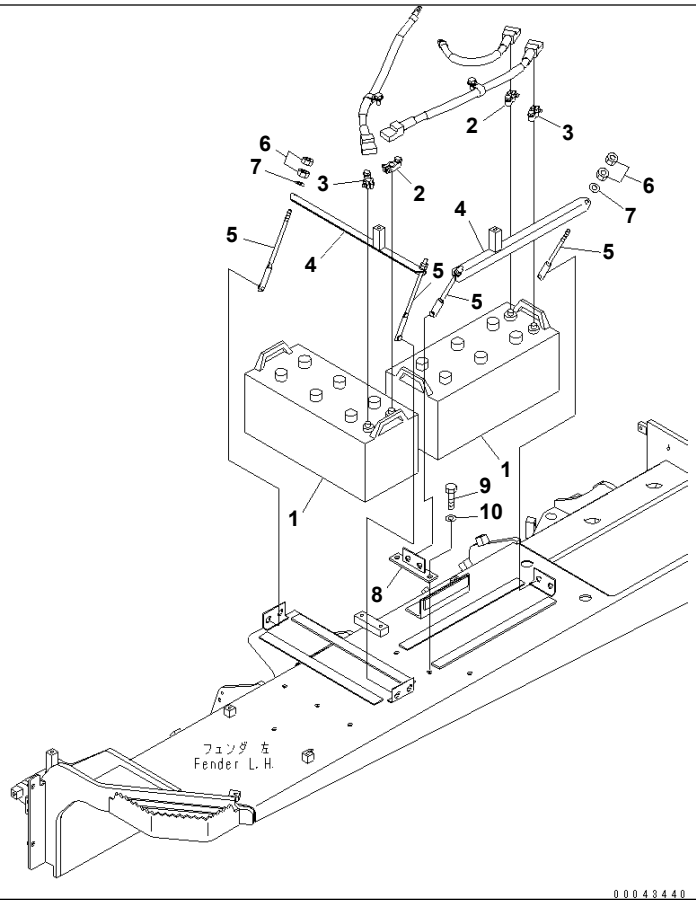

Ref. M2210-09A5 **Page 270380**

D155A-6 S/N 85001-UP
FENDER (BATTERY) (NS200 WET)

Item	Part No.	Part Name	Qty	Serial No.
1	08000-32220	BATTERY¤ WET	2	85001-
2	08000-00000	TERMINAL¤ (+)	2	85001-
3	08000-00001	TERMINAL¤ (-)	2	85001-
4	17A-06-41941	HOLDER	1	85001-
5	175-06-39621	ROD	4	85001-
6	01580-11008	NUT	8	85001-
7	01643-31032	WASHER	4	85001-
8	17A-54-44171	BRACKET	1	85001-
9	01010-81230	BOLT	2	85001-
10	01643-31232	WASHER	2	85001-

Printed By : Dwi Iswanto (airafather6107170)

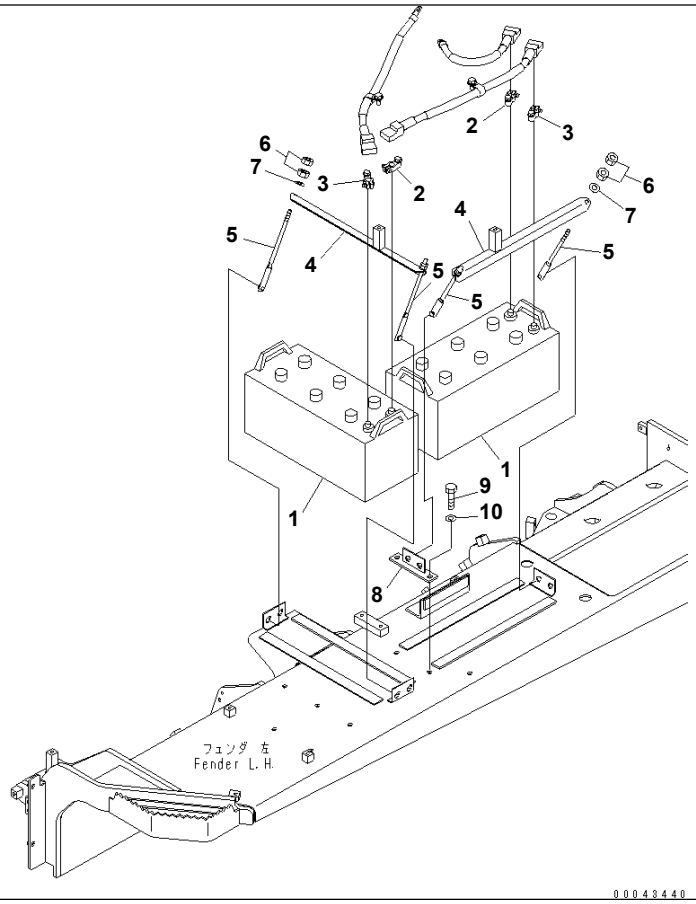

Ref. M2210-09A6 **Page 270390**

D155A-6 S/N 85001-UP

FENDER (LARGE BATERRY) (C200 WET)

Item	Part No.	Part Name	Qty	Serial No.
1	08000-02221	BATTERY¤ WET	2	85001-
2	08000-00000	TERMINAL¤ (+)	2	85001-
3	08000-00001	TERMINAL¤ (-)	2	85001-
4	17A-06-41941	HOLDER	1	85001-
5	175-06-39621	ROD	4	85001-
6	01580-11008	NUT	8	85001-
7	01643-31032	WASHER	4	85001-
8	17A-54-44171	BRACKET	1	85001-
9	01010-81230	BOLT	2	85001-
10	01643-31232	WASHER	2	85001-

Printed By : Dwi Iswanto (airafather6107170)

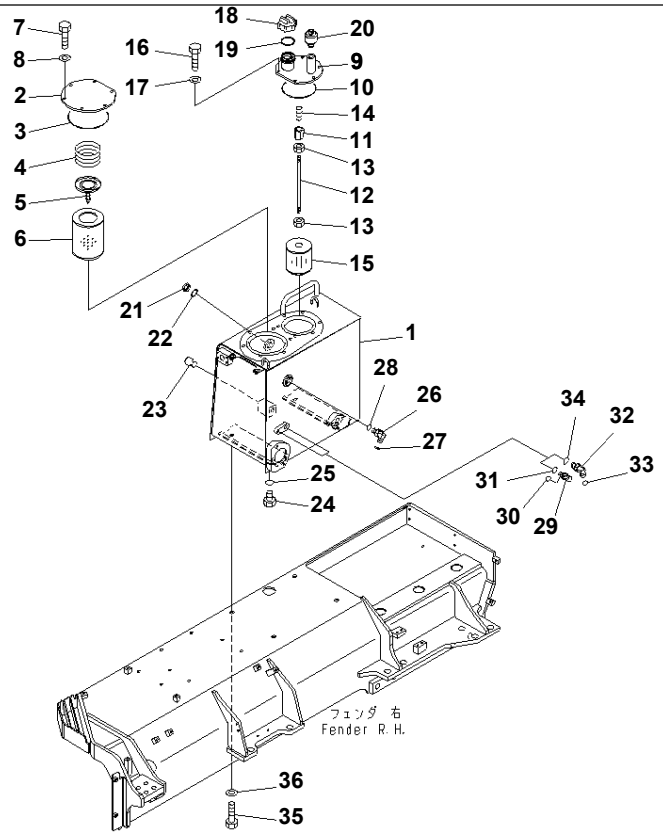

Ref. M2210-10A1 **Page 270400**

D155A-6 S/N 85001-UP
FENDER (HYDRAULIC TANK) (WITHOUT CAB)(#85001-85013)

Item	Part No.	Part Name	Qty	Serial No.
	17A-60-41201	TANK ASS'Y	1	85014-@
	□17A-60-41200	TANK ASS'Y	1	85001-85013
1	☆	· TANK	1	85001-@
2	22U-60-21232	· COVER	1	85001-@
3	07000-15195	· O-RING	1	85001-@
4	20Y-60-21240	· SPRING	1	85001-@
5	20Y-60-31131	· VALVE ASS'Y	1	85001-@
6	207-60-71182	· ELEMENT	1	85010-@
	□207-60-71181	· ELEMENT	1	85001-85009
7	01010-81230	· BOLT	6	85001-@
8	01643-31232	· WASHER	6	85001-@
9	17A-60-42172	· COVER	1	85014-@
	□17A-60-42171	· COVER	1	85001-85013
10	07000-15160	· O-RING	1	85001-@
	17A-60-41211	· STRAINER ASS'Y	1	85001-@
	17A-60-41221	· · ROD ASS'Y	1	85001-@
11	20Y-60-21320	· · · HOLDER	1	85001-@
12	☆	· · · ROD	1	85001-@
13	☆	· · · NUT	2	85001-@
14	12R-60-11230	· · · SPRING	1	85001-@
15	22B-60-11160	· · STRAINER	1	85001-@
16	01010-81230	· BOLT	6	85001-@
17	01643-31232	· WASHER	6	85001-@
18	07051-01000	· CAP	1	85001-@
19	07051-00005	· · GASKET	1	85001-@
20	22U-60-21520	· BREATHER	1	85001-@
21	20N-60-11143	· GAUGE	1	85001-@
22	20N-60-11181	· · GASKET	1	85001-@
23	198-60-19820	· VALVE	1	85001-@
24	07040-12412	· PLUG	1	85001-@

Printed By : Dwi Iswanto (airafather6107170)

FENDER (HYDRAULIC TANK) (WITHOUT CAB)(#85001-85013)

Item	Part No.	Part Name	Qty	Serial No.
25	07002-12434	· O-RING	1	85001-@
26	02782-10522	· ELBOW	1	85001-@
27	02896-11015	· O-RING	1	85001-@
28	07002-12434	· O-RING	1	85001-@
29	02782-10311	· ELBOW	1	85001-@
30	02896-11009	· O-RING	1	85001-@
31	07002-11423	· O-RING	1	85001-@
32	02782-10516	· ELBOW	1	85001-@
33	02896-11015	· O-RING	1	85001-@
34	07002-12034	· O-RING	1	85001-@
35	01010-81635	BOLT	4	85001-@
36	01643-31645	WASHER	4	85001-@

Printed By : Dwi Iswanto (airafather6107170)

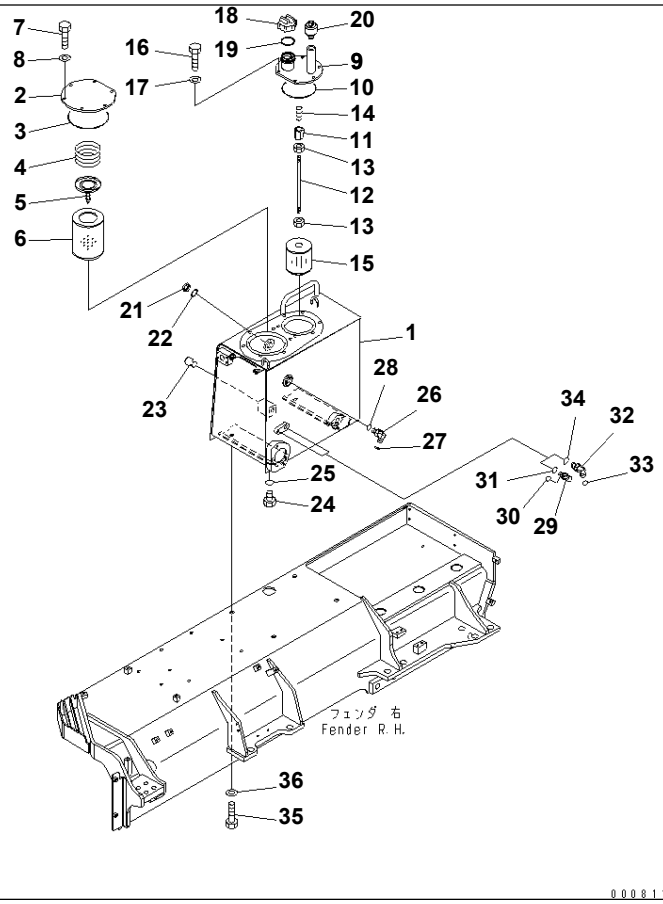

Ref. M2210-10A1A **Page 270410**

D155A-6 S/N 85001-UP
FENDER (HYDRAULIC TANK) (WITHOUT CAB)(#85014-)

Item	Part No.	Part Name	Qty	Serial No.
	17A-60-41201	TANK ASS'Y	1	85014-
1	☆	· TANK	1	85001-
2	22U-60-21232	· COVER	1	85001-
3	07000-15195	· O-RING	1	85001-
4	20Y-60-21240	· SPRING	1	85001-
5	20Y-60-31131	· VALVE ASS'Y	1	85001-
6	207-60-71182	· ELEMENT	1	85010-
7	01010-81230	· BOLT	6	85001-
8	01643-31232	· WASHER	6	85001-
9	17A-60-42172	· COVER	1	85014-
10	07000-15160	· O-RING	1	85001-
	17A-60-41211	· STRAINER ASS'Y	1	85001-
	17A-60-41221	· · ROD ASS'Y	1	85001-
11	20Y-60-21320	· · · HOLDER	1	85001-
12	☆	· · · ROD	1	85001-
13	☆	· · · NUT	2	85001-
14	12R-60-11230	· · · SPRING	1	85001-
15	22B-60-11160	· · STRAINER	1	85001-
16	01010-81230	· BOLT	6	85001-
17	01643-31232	· WASHER	6	85001-
18	07051-01000	· CAP	1	85001-
19	07051-00005	· · GASKET	1	85001-
20	22U-60-21520	· BREATHER	1	85001-
21	20N-60-11143	· GAUGE	1	85001-
22	20N-60-11181	· GASKET	1	85001-
23	198-60-19820	· VALVE	1	85001-
24	07040-12412	· PLUG	1	85001-
25	07002-12434	· O-RING	1	85001-
26	02782-10522	· ELBOW	1	85001-
27	02896-11015	· O-RING	1	85001-

Printed By : Dwi Iswanto (airafather6107170)

FENDER (HYDRAULIC TANK) (WITHOUT CAB)(#85014-)

Item	Part No.	Part Name	Qty	Serial No.
28	07002-12434	· O-RING	1	85001-
29	02782-10311	· ELBOW	1	85001-
30	02896-11009	· O-RING	1	85001-
31	07002-11423	· O-RING	1	85001-
32	02782-10516	· ELBOW	1	85001-
33	02896-11015	· O-RING	1	85001-
34	07002-12034	· O-RING	1	85001-
35	01010-81635	BOLT	4	85001-
36	01643-31645	WASHER	4	85001-

Printed By : Dwi Iswanto (airafather6107170)

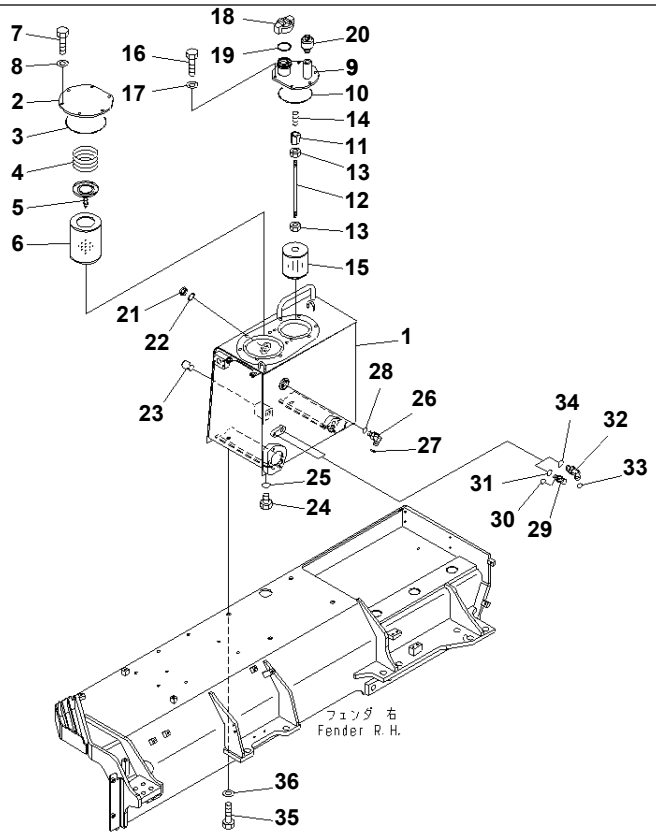

Ref. M2210-10A5 **Page 270420**

D155A-6 S/N 85001-UP
FENDER (HYDRAULIC TANK)(#85001-85013)

Item	Part No.	Part Name	Qty	Serial No.
	17A-60-41104	TANK ASS'Y	1	85014-@
	□17A-60-41103	TANK ASS'Y	1	85001-85013
1	☆	· TANK	1	85001-@
2	22U-60-21232	· COVER	1	85001-@
3	07000-15195	· O-RING	1	85001-@
4	20Y-60-21240	· SPRING	1	85001-@
5	20Y-60-31131	· VALVE ASS'Y	1	85001-@
6	207-60-71182	· ELEMENT	1	85010-@
	□207-60-71181	· ELEMENT	1	85001-85009
7	01010-81230	· BOLT	6	85001-@
8	01643-31232	· WASHER	6	85001-@
9	17A-60-42172	· COVER	1	85014-@
	□17A-60-42171	· COVER	1	85001-85013
10	07000-15160	· O-RING	1	85001-@
	17A-60-41211	· STRAINER ASS'Y	1	85001-@
	17A-60-41221	· · ROD ASS'Y	1	85001-@
11	20Y-60-21320	· · · HOLDER	1	85001-@
12	☆	· · · ROD	1	85001-@
13	☆	· · · NUT	2	85001-@
14	12R-60-11230	· · · SPRING	1	85001-@
15	22B-60-11160	· · STRAINER	1	85001-@
16	01010-81230	· BOLT	6	85001-@
17	01643-31232	· WASHER	6	85001-@
18	07092-01000	· CAP	1	85001-@
19	07051-00005	· · GASKET	1	85001-@
20	22U-60-21520	· BREATHER	1	85001-@
21	20N-60-11143	· GAUGE	1	85001-@
22	20N-60-11181	· · GASKET	1	85001-@
23	198-60-19820	· VALVE	1	85001-@
24	07040-12412	· PLUG	1	85001-@

Printed By : Dwi Iswanto (airafather6107170)

FENDER (HYDRAULIC TANK)(#85001-85013)

Item	Part No.	Part Name	Qty	Serial No.
25	07002-12434	· O-RING	1	85001-@
26	02782-10522	· ELBOW	1	85001-@
27	02896-11015	· O-RING	1	85001-@
28	07002-12434	· O-RING	1	85001-@
29	02782-10311	· ELBOW	1	85001-@
30	02896-11009	· O-RING	1	85001-@
31	07002-11423	· O-RING	1	85001-@
32	02782-10516	· ELBOW	1	85001-@
33	02896-11015	· O-RING	1	85001-@
34	07002-12034	· O-RING	1	85001-@
35	01010-81635	BOLT	4	85001-@
36	01643-31645	WASHER	4	85001-@

Printed By : Dwi Iswanto (airafather6107170)

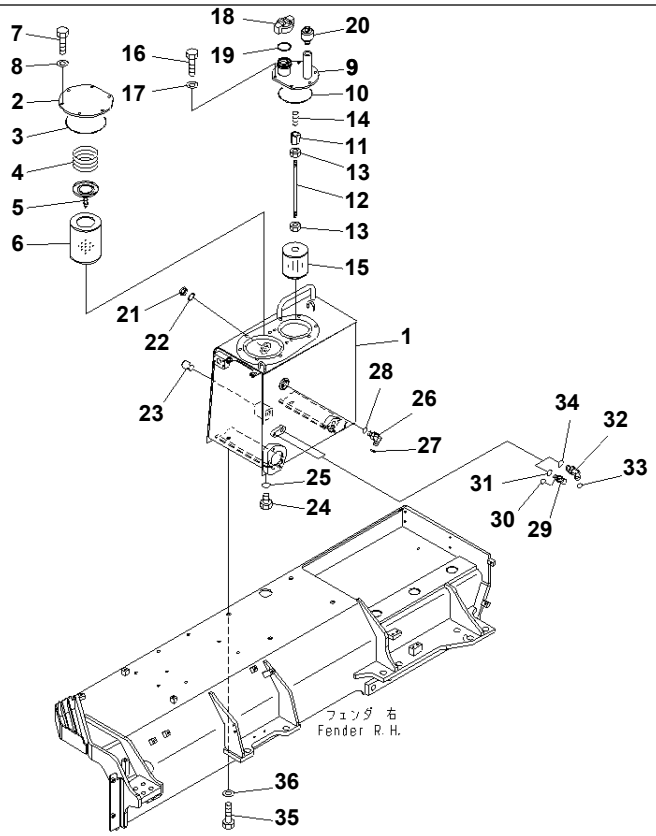

Ref. M2210-10A5A Page 270430

D155A-6 S/N 85001-UP

FENDER (HYDRAULIC TANK)(#85014-)

Item	Part No.	Part Name	Qty	Serial No.
	17A-60-41104	TANK ASS'Y	1	85014-
1	☆	· TANK	1	85001-
2	22U-60-21232	· COVER	1	85001-
3	07000-15195	· O-RING	1	85001-
4	20Y-60-21240	· SPRING	1	85001-
5	20Y-60-31131	· VALVE ASS'Y	1	85001-
6	207-60-71182	· ELEMENT	1	85010-
7	01010-81230	· BOLT	6	85001-
8	01643-31232	· WASHER	6	85001-
9	17A-60-42172	· COVER	1	85014-
10	07000-15160	· O-RING	1	85001-
	17A-60-41211	· STRAINER ASS'Y	1	85001-
	17A-60-41221	· · ROD ASS'Y	1	85001-
11	20Y-60-21320	· · · HOLDER	1	85001-
12	☆	· · · ROD	1	85001-
13	☆	· · · NUT	2	85001-
14	12R-60-11230	· · · SPRING	1	85001-
15	22B-60-11160	· · STRAINER	1	85001-
16	01010-81230	· BOLT	6	85001-
17	01643-31232	· WASHER	6	85001-
18	07092-01000	· CAP	1	85001-
19	07051-00005	· · GASKET	1	85001-
20	22U-60-21520	· BREATHER	1	85001-
21	20N-60-11143	· GAUGE	1	85001-
22	20N-60-11181	· · GASKET	1	85001-
23	198-60-19820	· VALVE	1	85001-
24	07040-12412	· PLUG	1	85001-
25	07002-12434	· O-RING	1	85001-
26	02782-10522	· ELBOW	1	85001-
27	02896-11015	· O-RING	1	85001-

Printed By : Dwi Iswanto (airafather6107170)

FENDER (HYDRAULIC TANK)(#85014-)

Item	Part No.	Part Name	Qty	Serial No.
28	07002-12434	· O-RING	1	85001-
29	02782-10311	· ELBOW	1	85001-
30	02896-11009	· O-RING	1	85001-
31	07002-11423	· O-RING	1	85001-
32	02782-10516	· ELBOW	1	85001-
33	02896-11015	· O-RING	1	85001-
34	07002-12034	· O-RING	1	85001-
35	01010-81635	BOLT	4	85001-
36	01643-31645	WASHER	4	85001-

Printed By : Dwi Iswanto (airafather6107170)

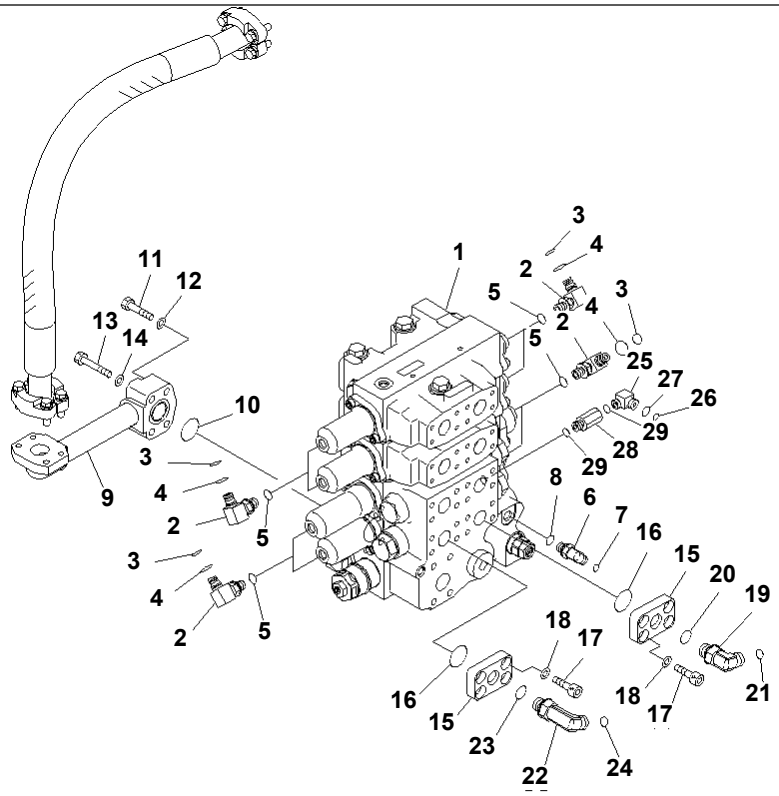

Ref. M2210-11A5 **Page 270440**

D155A-6 S/N 85001-UP
FENDER (C.L.S.S. VALVE) (FOR SINGLE TILT DOZER)

Item	Part No.	Part Name	Qty	Serial No.
1	(723-64-11400)	CONTROL VALVE ASS'Y	1	85001-
2	20Y-62-22271	ELBOW	8	85001-
3	201-60-11390	· O-RING	1	85001-
4	20Y-62-19560	· O-RING	1	85001-
5	07002-11423	O-RING	8	85001-
6	154-61-75761	ELBOW	1	85001-
7	02896-11008	O-RING	1	85001-
8	07002-11423	O-RING	1	85001-
9	17A-60-41120	TUBE	1	85001-
10	07000-73035	O-RING	1	85001-
11	01010-81055	BOLT	2	85001-
12	01643-31032	WASHER	2	85001-
13	01010-81060	BOLT	2	85001-
14	01643-31032	WASHER	2	85001-
15	17A-61-21221	PLATE	2	85014-
	17M-61-43180	PLATE	2	85001-85013
16	07000-13032	O-RING	2	85001-
17	01252-71025	BOLT	8	85001-
18	01643-51032	WASHER	8	85001-
19	02783-10422	ELBOW	1	85001-
20	07002-12034	O-RING	1	85001-
21	02896-11012	O-RING	1	85001-
22	02782-10423	ELBOW	1	85001-
23	07002-12034	O-RING	1	85001-
24	02896-11012	O-RING	1	85001-
25	20Y-62-22271	ELBOW	1	85001-
26	201-60-11390	O-RING	1	85001-
27	20Y-62-19560	O-RING	1	85001-
28	20Y-62-22160	ADAPTER	1	85001-
29	07002-11423	O-RING	2	85001-

Printed By : Dwi Iswanto (airafather6107170)

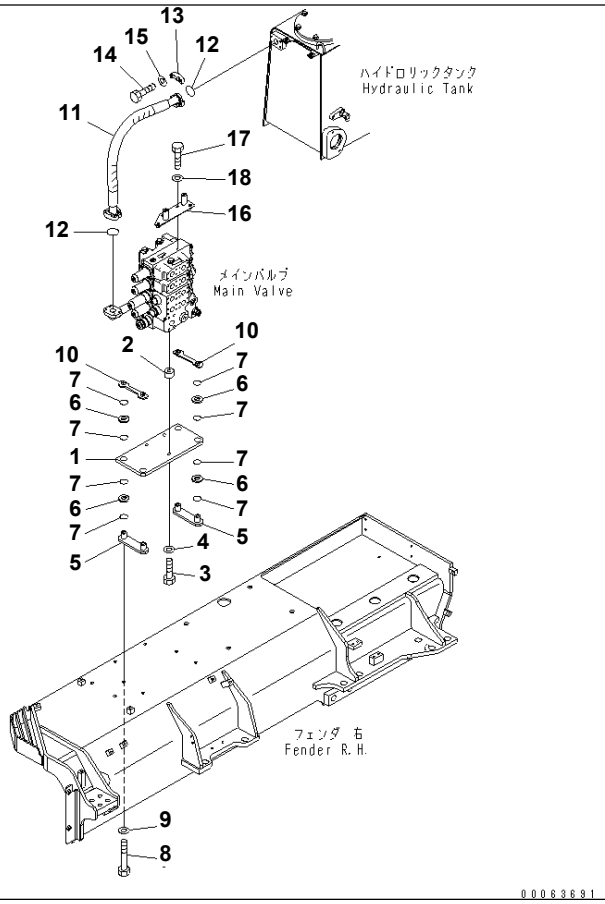

Ref. M2210-12A5 **Page 270450**

D155A-6 S/N 85001-UP

FENDER (C.L.S.S. VALVE MOUNT)

Item	Part No.	Part Name	Qty	Serial No.
1	17A-60-42511	BRACKET	1	85001-
2	17A-60-42520	PLATE	3	85001-
3	01010-81470	BOLT	3	85001-
4	01643-31445	WASHER	3	85001-
5	17A-60-41520	BRACKET	2	85001-
6	14X-60-12120	CUSHION	8	85001-
7	07000-13025	O-RING	8	85001-
8	01010-81275	BOLT	4	85001-
9	01643-31232	WASHER	4	85001-
10	17A-60-41531	BRACKET	1	85001-
11	07296-412A7	HOSE	1	85001-
12	07000-73038	O-RING	2	85001-
13	07371-31255	FLANGE	4	85001-
14	07372-21035	BOLT	8	85001-
15	01643-51032	WASHER	8	85001-
16	17A-61-44111	PLATE	1	85001-
17	01010-80812	BOLT	2	85001-
18	01643-30823	WASHER	2	85001-

Printed By : Dwi Iswanto (airafather6107170)

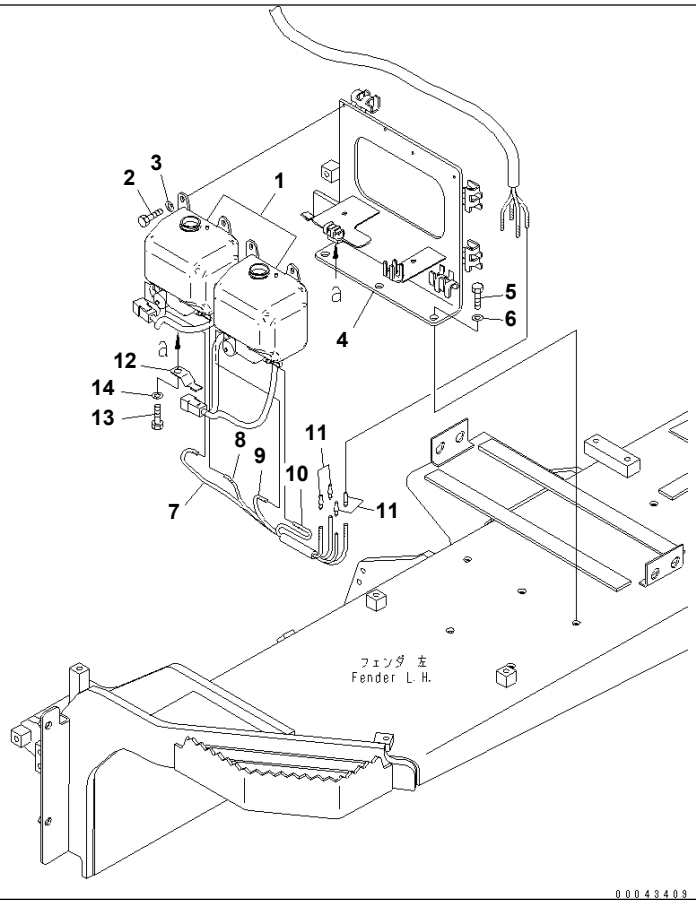

Ref. M2210-13A5 **Page 270460**

D155A-6 S/N 85001-UP
FENDER (WASHER TANK)

Item	Part No.	Part Name	Qty	Serial No.
1	17A-911-4130	WASHER	2	85001-
2	01010-80616	BOLT	4	85001-
3	01643-30623	WASHER	4	85001-
4	17A-911-4111	BRACKET	1	85001-
5	01010-81230	BOLT	3	85001-
6	01643-31232	WASHER	3	85001-
	17A-911-4122	HOSE ASS'Y	1	85001-
7	☆	· HOSE	1	85001-
8	☆	· HOSE	1	85001-
9	☆	· HOSE	1	85001-
10	☆	· HOSE	1	85001-
11	195-979-8590	· VALVE	4	85001-
12	08193-21012	CLIP	1	85001-
13	01010-81225	BOLT	1	85001-
14	01643-31232	WASHER	1	85001-

Printed By : Dwi Iswanto (airafather6107170)

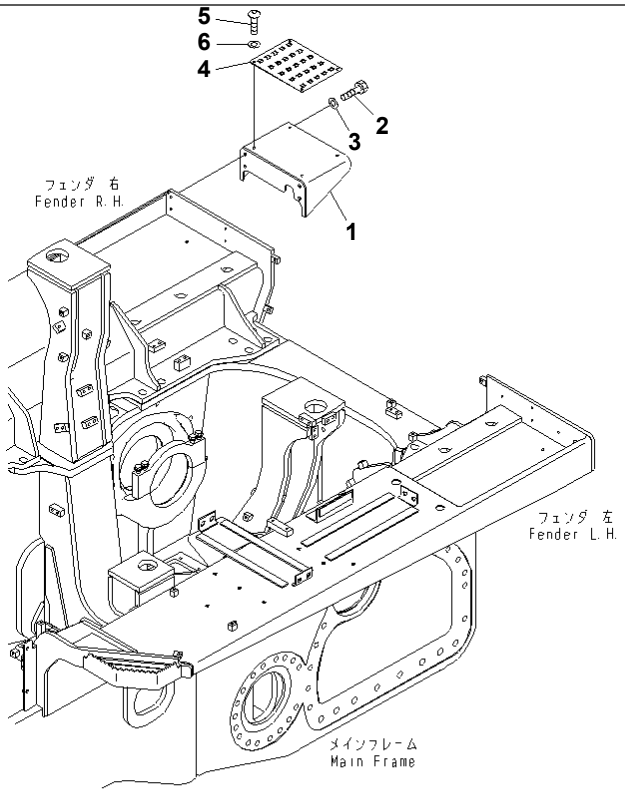

00063694

Ref. M2210-14A5 **Page 270470**

D155A-6 S/N 85001-UP
FENDER (REAR STEP)

Item	Part No.	Part Name	Qty	Serial No.
1	17A-54-44162	COVER	1	85001-
2	01010-81230	BOLT	4	85001-
3	01643-31232	WASHER	4	85001-
4	17A-54-44151	PLATE	1	85001-
5	01245-00820	SCREW	4	85001-
6	01643-70823	WASHER	4	85001-

Printed By : Dwi Iswanto (airafather6107170)

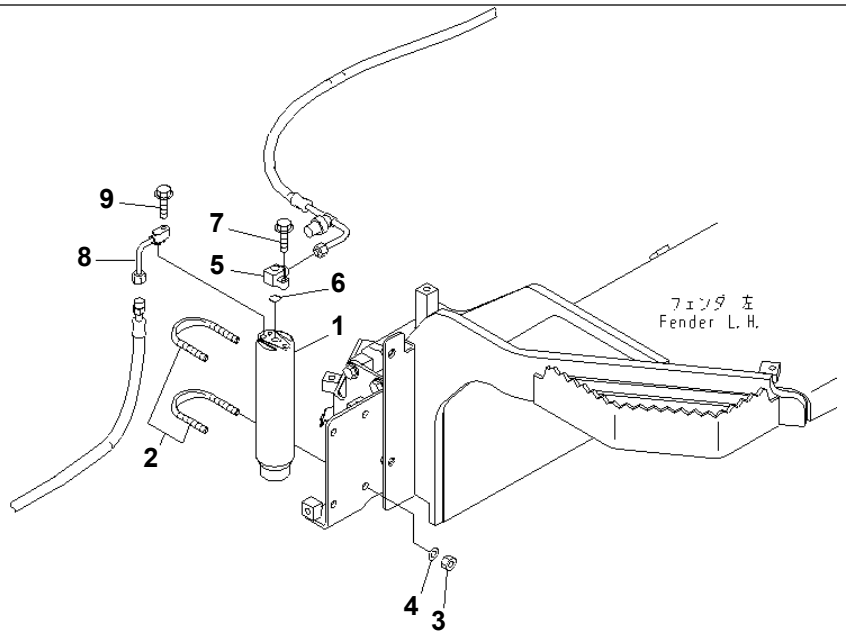

00043411

Ref. M2210-15A5 **Page 270480**

D155A-6 S/N 85001-UP
FENDER (RECEIVER TANK)

Item	Part No.	Part Name	Qty	Serial No.
1	20Y-979-3120	TANK	1	85001-
2	07283-36155	CLIP	2	85001-
3	01597-01009	NUT	4	85001-
4	01643-31032	WASHER	4	85001-
5	17A-911-1671	JOINT	1	85001-
6	20Y-979-3150	O-RING	1	85001-
7	01435-00625	BOLT	1	85001-
8	17A-911-1511	TUBE	1	85001-
9	01435-00625	BOLT	1	85001-

Printed By : Dwi Iswanto (airafather6107170)

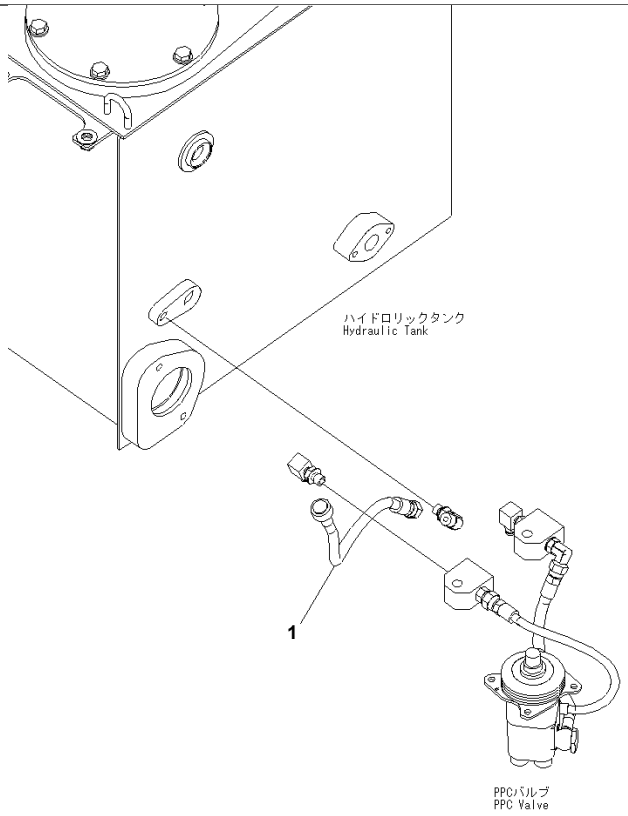

Ref. M2210-16A5 **Page 270490**

D155A-6 S/N 85001-UP
FENDER (P.P.C. HOSE)

Item	Part No.	Part Name	Qty	Serial No.
1	17A-61-42571	HOSE	1	85001-

Printed By : Dwi Iswanto (airafather6107170)

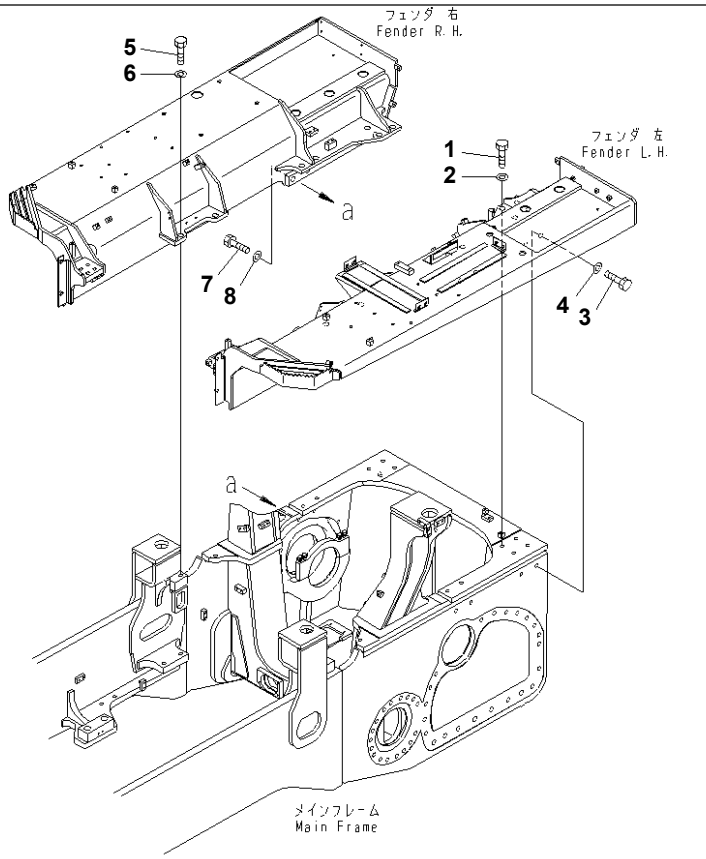

Ref. M2210-17A5 **Page 270500**

D155A-6 S/N 85001-UP
FENDER (MOUNT BOLT)

Item	Part No.	Part Name	Qty	Serial No.
1	01010-82470	BOLT	8	85001-
2	17A-54-44130	WASHER	8	85001-
3	01010-82480	BOLT	4	85001-
4	01643-32460	WASHER	4	85001-
5	01010-82470	BOLT	8	85001-
6	17A-54-44130	WASHER	8	85001-
7	01010-82480	BOLT	4	85001-
8	01643-32460	WASHER	4	85001-

Printed By : Dwi Iswanto (airafather6107170)

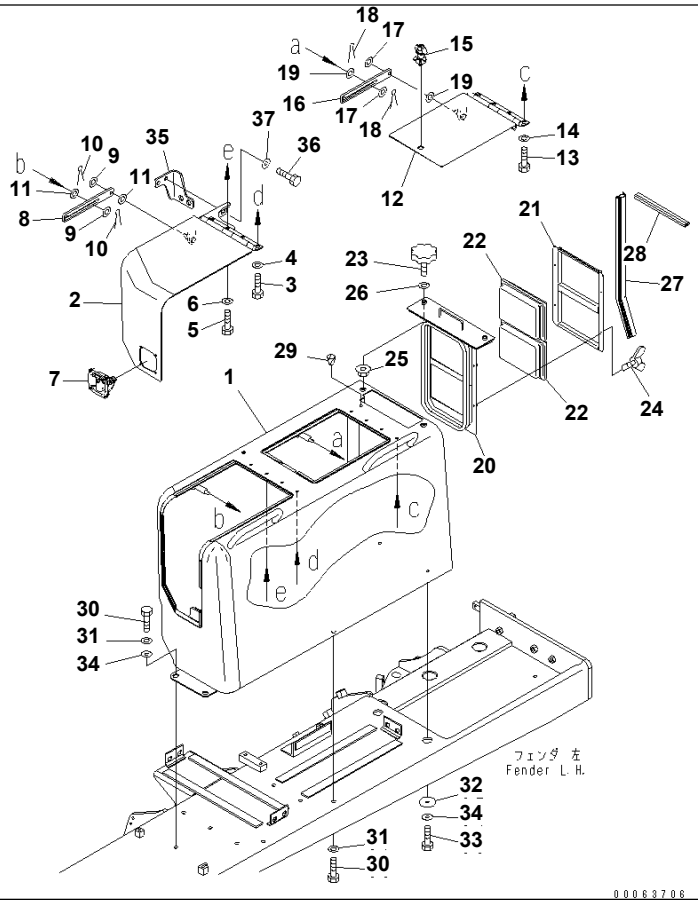

Ref. M2214-01A0 **Page 270510**

D155A-6 S/N 85001-UP
FENDER RELATED (COVER L.H.)(#85001-85013)

Item	Part No.	Part Name	Qty	Serial No.
	17A-54-45104	COVER ASS'Y	1	85014-@
	□17A-54-45103	COVER ASS'Y	1	85001-85013
1	☆	· COVER	1	85001-85013
2	17A-54-45123	· COVER	1	85001-@
3	01010-81230	· BOLT	2	85001-@
4	01643-31232	· WASHER	2	85001-@
5	01010-81235	· BOLT	2	85001-@
6	01643-31232	· WASHER	2	85001-@
7	17A-54-45182	· LEVER	1	85014-@
	□17A-54-45180	· LEVER	1	85001-85013
8	17A-54-45151	· PLATE	1	85001-@
9	01640-21123	· WASHER	2	85001-@
10	04050-13020	· PIN	2	85001-@
11	17A-54-45440	· WASHER	2	85001-@
12	17A-54-45133	· COVER	0	85014-@
	□17A-54-45132	· COVER	0	85001-85013
13	01010-81230	· BOLT	4	85001-@
14	01643-31232	· WASHER	4	85001-@
15	17A-54-45190	· LEVER	1	85001-85013
16	17A-54-45151	· PLATE	1	85001-@
17	01640-21123	· WASHER	2	85001-@
18	04050-13020	· PIN	2	85001-@
19	17A-54-45440	· WASHER	2	85001-@
	17A-911-4201	· FILTER ASS'Y	1	85001-@
20	☆	· · BRACKET	1	85001-@
21	17A-911-4220	· · BRACKET	1	85001-@
22	14X-911-7750	· · FILTER	2	85001-@
23	195-54-68760	· · KNOB	2	85001-@
24	01434-00412	· · BOLT¤ WING	4	85001-@
25	01594-01008	· · NUT	2	85001-@

Printed By : Dwi Iswanto (airafather6107170)

FENDER RELATED (COVER L.H.)(#85001-85013)

Item	Part No.	Part Name	Qty	Serial No.
26	01640-21016	· · WASHER	2	85001-@
27	17A-54-28530	· SEAL (BONDED)	1	85001-@
28	17A-54-45350	· SEAL (BONDED)	1	85001-@
29	07049-01215	PLUG	1	85001-@
30	01010-81230	BOLT	3	85001-@
31	01643-31232	WASHER	3	85001-@
32	195-56-11210	PLATE	2	85001-@
33	01010-81230	BOLT	2	85001-@
34	175-54-34170	WASHER	2	85001-@
35	17A-54-45171	BRACKET	1	85001-@
36	01010-81230	BOLT	4	85001-@
37	175-54-34170	WASHER	4	85001-@

Printed By : Dwi Iswanto (airafather6107170)

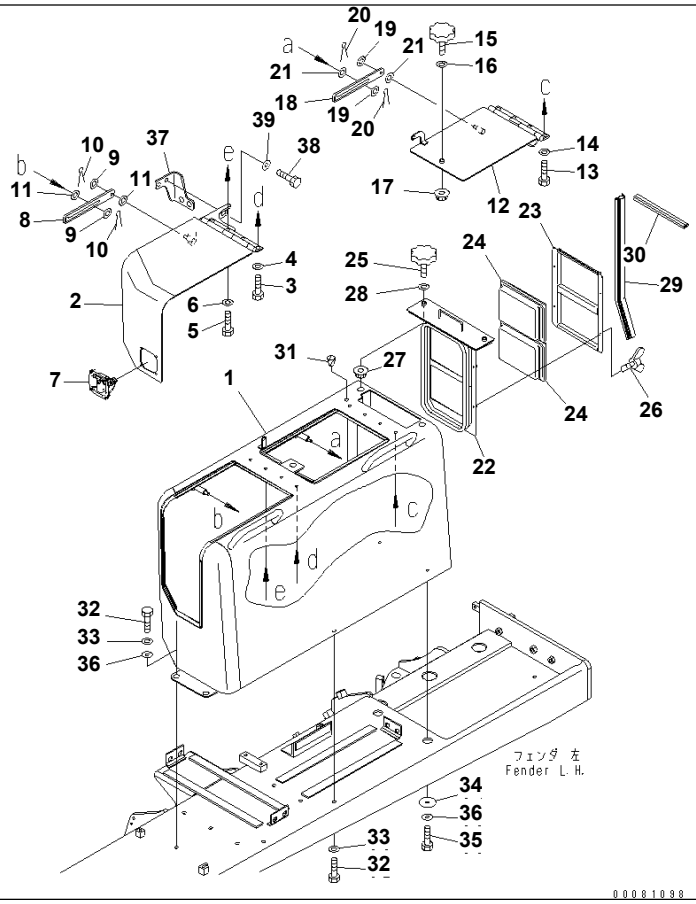

Ref. M2214-01A0A **Page 270520**

D155A-6 S/N 85001-UP
FENDER RELATED (COVER L.H.)(#85014-)

Item	Part No.	Part Name	Qty	Serial No.
	17A-54-45104	COVER ASS'Y	1	85014-
1	☆	· COVER	1	85014-
2	17A-54-45123	· COVER	1	85001-
3	01010-81230	· BOLT	2	85001-
4	01643-31232	· WASHER	2	85001-
5	01010-81235	· BOLT	2	85001-
6	01643-31232	· WASHER	2	85001-
7	17A-54-45182	· LEVER	1	85014-
8	17A-54-45151	· PLATE	1	85001-
9	01640-21123	· WASHER	2	85001-
10	04050-13020	· PIN	2	85001-
11	17A-54-45440	· WASHER	2	85001-
12	17A-54-45133	· COVER	0	85014-
13	01010-81230	· BOLT	4	85001-
14	01643-31232	· WASHER	4	85001-
15	195-54-68760	· KNOB	1	85014-
16	01640-21016	· WASHER	1	85014-
17	01594-01008	· NUT	1	85014-
18	17A-54-45151	· PLATE	1	85001-
19	01640-21123	· WASHER	2	85001-
20	04050-13020	· PIN	2	85001-
21	17A-54-45440	· WASHER	2	85001-
	17A-911-4201	· FILTER ASS'Y	1	85001-
22	☆	· · BRACKET	1	85001-
23	17A-911-4220	· · BRACKET	1	85001-
24	14X-911-7750	· · FILTER	2	85001-
25	195-54-68760	· · KNOB	2	85001-
26	01434-00412	· · BOLT¤ WING	4	85001-
27	01594-01008	· · NUT	2	85001-
28	01640-21016	· · WASHER	2	85001-

Printed By : Dwi Iswanto (airafather6107170)

FENDER RELATED (COVER L.H.)(#85014-)

Item	Part No.	Part Name	Qty	Serial No.
29	17A-54-28530	· SEAL (BONDED)	1	85001-
30	17A-54-45350	· SEAL (BONDED)	1	85001-
31	07049-01215	PLUG	1	85001-
32	01010-81230	BOLT	3	85001-
33	01643-31232	WASHER	3	85001-
34	195-56-11210	PLATE	2	85001-
35	01010-81230	BOLT	2	85001-
36	175-54-34170	WASHER	2	85001-
37	17A-54-45171	BRACKET	1	85001-
38	01010-81230	BOLT	4	85001-
39	175-54-34170	WASHER	4	85001-

Printed By : Dwi Iswanto (airafather6107170)

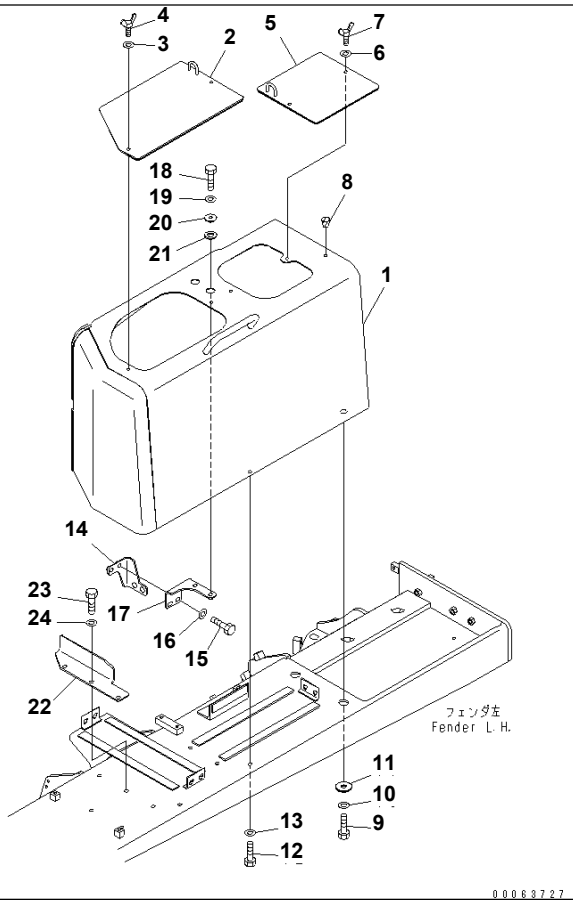

Ref. M2214-01A1 **Page 270530**

D155A-6 S/N 85001-UP
FENDER RELATED (COVER L.H.) (WITHOUT CAB)

Item	Part No.	Part Name	Qty	Serial No.
	17A-54-45701	COVER ASS'Y	1	85001-
1	☆	· COVER	1	85001-
2	17A-54-45721	· COVER	1	85001-
3	01643-31032	· WASHER	2	85001-
4	17A-54-45890	· BOLT	2	85001-
5	17A-54-45731	· COVER	1	85001-
6	01643-31032	· WASHER	2	85001-
7	17A-54-45890	· BOLT	2	85001-
8	07049-01215	PLUG	1	85001-
9	01010-81230	BOLT	2	85001-
10	01643-31232	WASHER	2	85001-
11	195-56-11210	PLATE	2	85001-
12	01010-81230	BOLT	2	85001-
13	175-54-34170	WASHER	2	85001-
14	17A-54-45171	BRACKET	1	85001-
15	01010-81230	BOLT	4	85001-
16	175-54-34170	WASHER	4	85001-
17	17A-54-45791	BRACKET	1	85001-
18	01010-81235	BOLT	2	85001-
19	01643-31232	WASHER	2	85001-
20	20Y-973-2430	COLLAR	2	85001-
21	195-54-75990	SPACER	2	85001-
22	17A-54-45691	BRACKET	1	85001-
23	01010-81230	BOLT	3	85001-
24	01643-31232	WASHER	3	85001-

Printed By : Dwi Iswanto (airafather6107170)

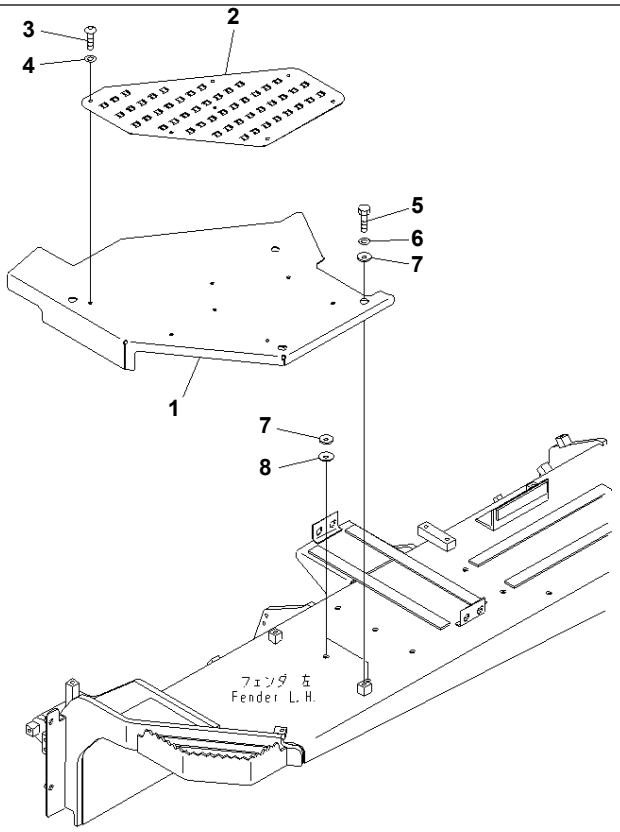

00043150

Ref. M2214-02A0 **Page 270540**

D155A-6 S/N 85001-UP
FENDER RELATED (STEP COVER L.H.)

Item	Part No.	Part Name	Qty	Serial No.
1	17A-54-45311	COVER	1	85001-
2	17A-54-45331	PLATE	1	85001-
3	01245-00816	SCREW	7	85001-
4	01643-70823	WASHER	7	85001-
5	01010-81230	BOLT	4	85001-
6	175-54-34170	WASHER	4	85001-
7	20S-71-11250	SPACER¤ 2.3MM	2	85001-
8	21K-46-21190	PLATE¤ 1.0MM	3	85001-

Printed By : Dwi Iswanto (airafather6107170)

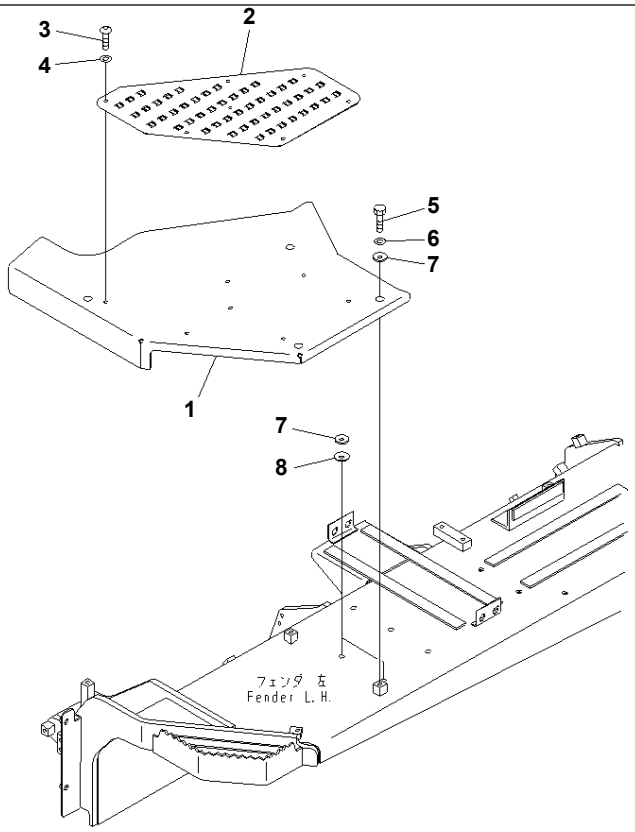

00063728

Ref. M2214-02A1 **Page 270550**

D155A-6 S/N 85001-UP
FENDER RELATED (STEP COVER L.H.) (WITHOUT CAB)

Item	Part No.	Part Name	Qty	Serial No.
1	17A-54-45751	COVER	1	85001-
2	17A-54-45331	PLATE	1	85001-
3	01245-00816	SCREW	7	85001-
4	01643-70823	WASHER	7	85001-
5	01010-81230	BOLT	4	85001-
6	175-54-34170	WASHER	4	85001-
7	20S-71-11250	SPACER¤ 2.3MM	2	85001-
8	21K-46-21190	PLATE¤ 1.0MM	3	85001-

Printed By : Dwi Iswanto (airafather6107170)

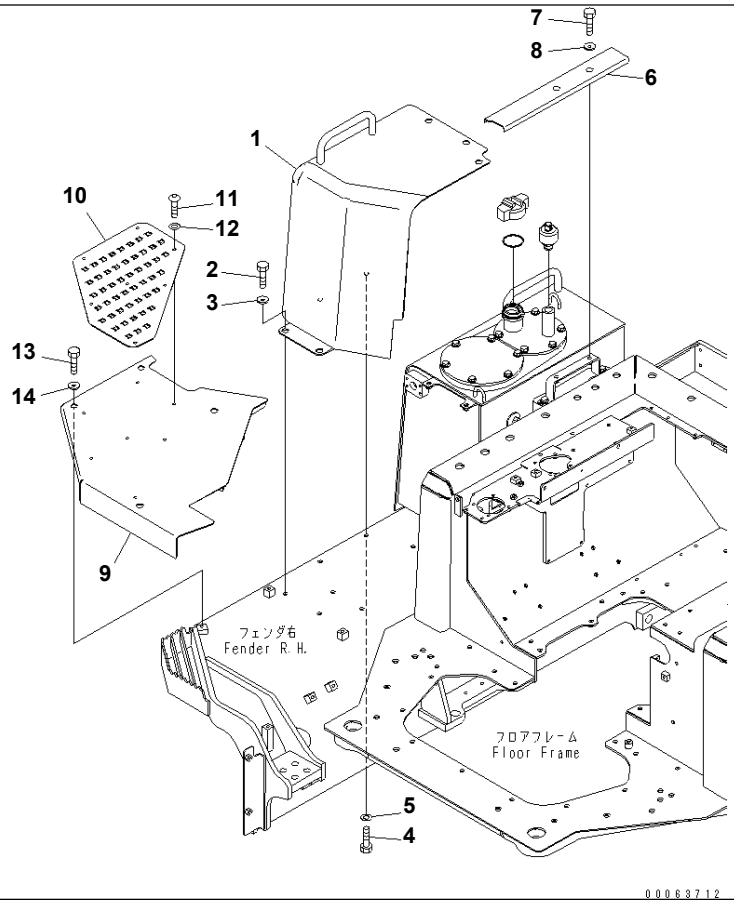

Ref. M2214-03A0 **Page 270560**

D155A-6 S/N 85001-UP
FENDER RELATED (COVER R.H.)

Item	Part No.	Part Name	Qty	Serial No.
1	17A-54-45212	COVER	1	85001-
2	01010-81230	BOLT	5	85001-
3	175-54-34170	WASHER	5	85001-
4	01010-81230	BOLT	2	85001-
5	01643-31232	WASHER	2	85001-
6	17A-54-45421	COVER	1	85001-
7	01010-81230	BOLT	2	85001-
8	175-54-34170	WASHER	2	85001-
9	17A-54-45321	COVER	1	85001-
10	17A-54-45341	PLATE	1	85001-
11	01245-00816	SCREW	7	85001-
12	01643-70823	WASHER	7	85001-
13	01010-81230	BOLT	4	85001-
14	175-54-34170	WASHER	4	85001-

Printed By : Dwi Iswanto (airafather6107170)

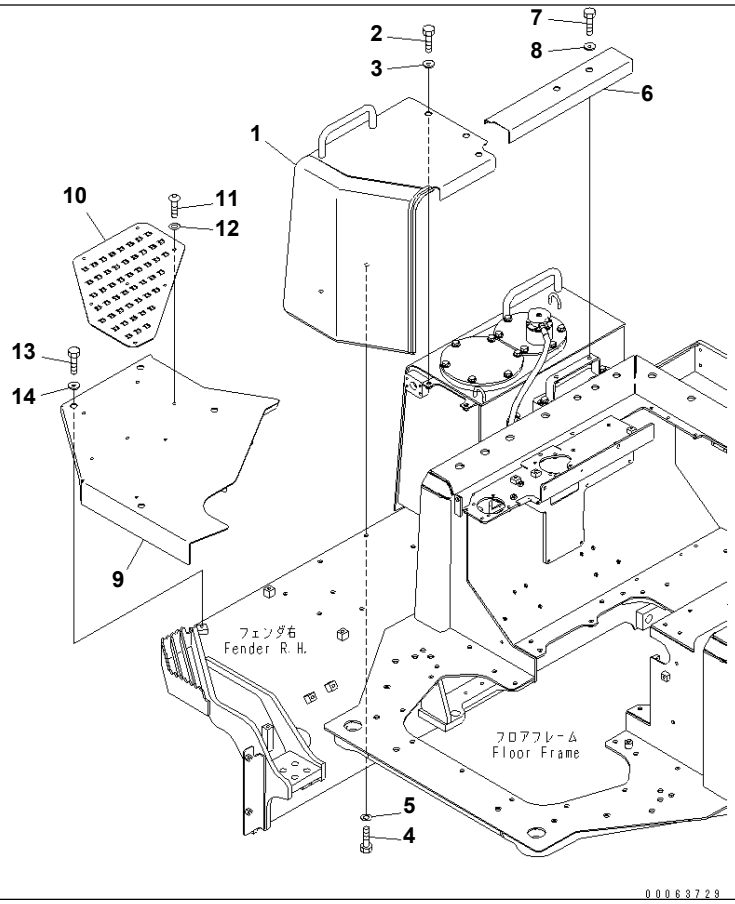

Ref. M2214-03A1 **Page 270570**

D155A-6 S/N 85001-UP

FENDER RELATED (COVER R.H.) (WITHOUT CAB)

Item	Part No.	Part Name	Qty	Serial No.
1	17A-54-45741	COVER	1	85001-
2	01010-81230	BOLT	3	85001-
3	175-54-34170	WASHER	3	85001-
4	01010-81230	BOLT	2	85001-
5	01643-31232	WASHER	2	85001-
6	17A-54-45621	COVER	1	85001-
7	01010-81230	BOLT	2	85001-
8	175-54-34170	WASHER	2	85001-
9	17A-54-45761	COVER	1	85001-
10	17A-54-45341	PLATE	1	85001-
11	01245-00816	SCREW	7	85001-
12	01643-70823	WASHER	7	85001-
13	01010-81230	BOLT	4	85001-
14	175-54-34170	WASHER	4	85001-

Printed By : Dwi Iswanto (airafather6107170)

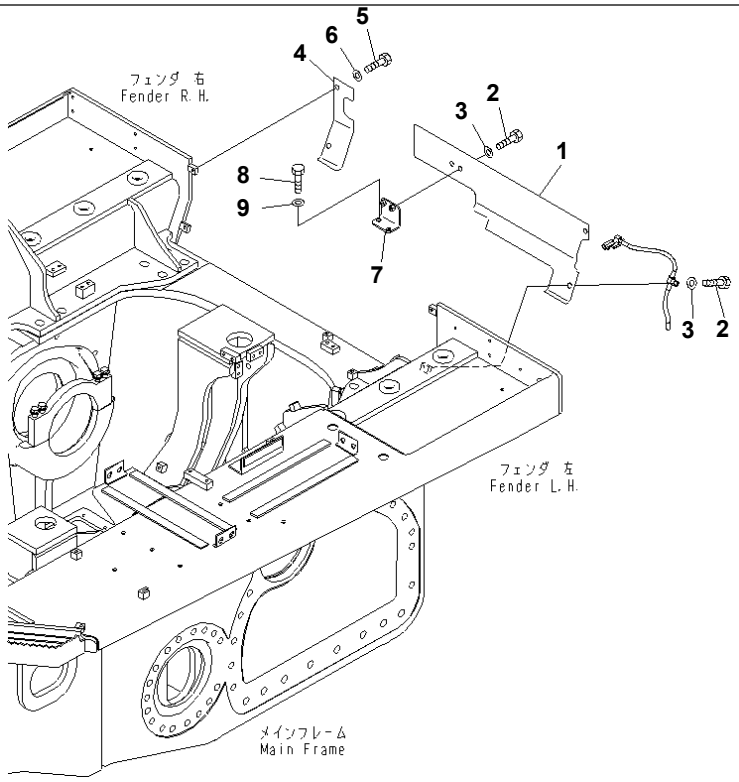

00063767

Ref. M2240-01A0 **Page 270580**

D155A-6 S/N 85001-UP
REAR COVER

Item	Part No.	Part Name	Qty	Serial No.
1	17A-54-44411	COVER	1	85001-
2	01010-81225	BOLT	4	85001-
3	01643-31232	WASHER	4	85001-
4	17A-54-44220	COVER	1	85001-
5	01010-81225	BOLT	2	85001-
6	01643-31232	WASHER	2	85001-
7	17A-54-44231	BRACKET	1	85001-
8	01010-81225	BOLT	2	85001-
9	01643-31232	WASHER	2	85001-

Printed By : Dwi Iswanto (airafather6107170)

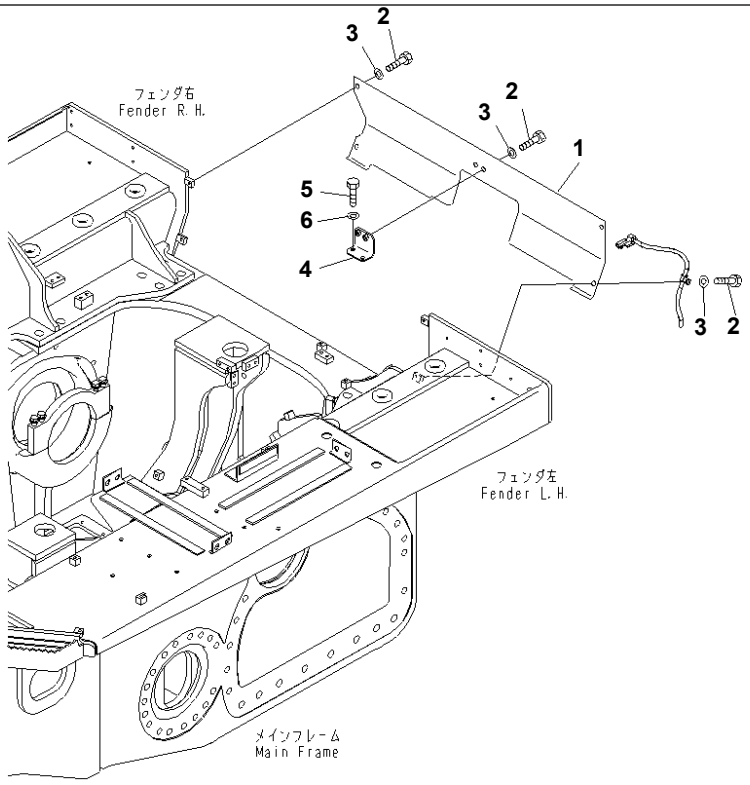

00063780

Ref. M2240-01A1 **Page 270590**

D155A-6 S/N 85001-UP
REAR COVER (RIPPER LESS)

Item	Part No.	Part Name	Qty	Serial No.
1	17A-54-44420	COVER	1	85001-
2	01010-81225	BOLT	6	85001-
3	01643-31232	WASHER	6	85001-
4	17A-54-44231	BRACKET	1	85001-
5	01010-81225	BOLT	2	85001-
6	01643-31232	WASHER	2	85001-

Printed By : Dwi Iswanto (airafather6107170)

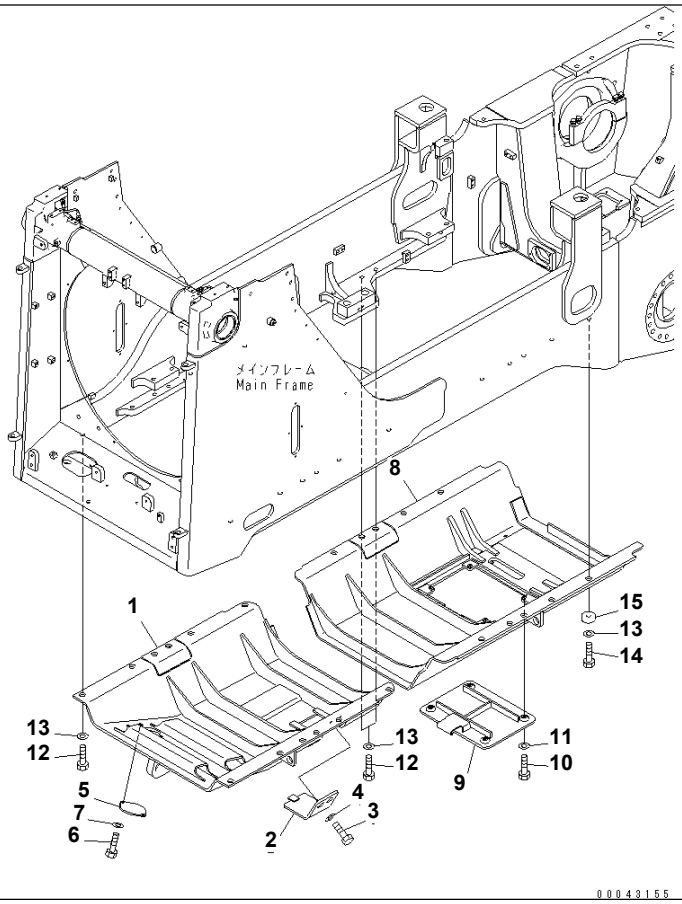

Ref. M2810-01A0 **Page 270600**

D155A-6 S/N 85001-UP
UNDER GUARD

Item	Part No.	Part Name	Qty	Serial No.
1	17A-54-48623	COVER	1	85001-
2	17A-54-48640	COVER	1	85001-
3	01010-81230	BOLT	2	85002-
	01010-81235	BOLT	2	85001-85001
4	01643-31232	WASHER	2	85001-
5	17A-30-41380	COVER	1	85002-
	□205-30-71181	COVER	1	85001-85001
6	01010-81230	BOLT	2	85002-
	01010-81235	BOLT	2	85001-85001
7	01643-31232	WASHER	2	85001-
8	17A-54-48611	COVER	1	85001-
9	17A-54-15150	COVER	1	85001-
10	01010-81235	BOLT	4	85001-
11	01643-31232	WASHER	4	85001-
12	01010-82450	BOLT	14	85001-
13	01643-32460	WASHER	22	85001-
14	01010-82475	BOLT	8	85001-
15	17A-54-48650	PLATE	8	85001-

Printed By : Dwi Iswanto (airafather6107170)

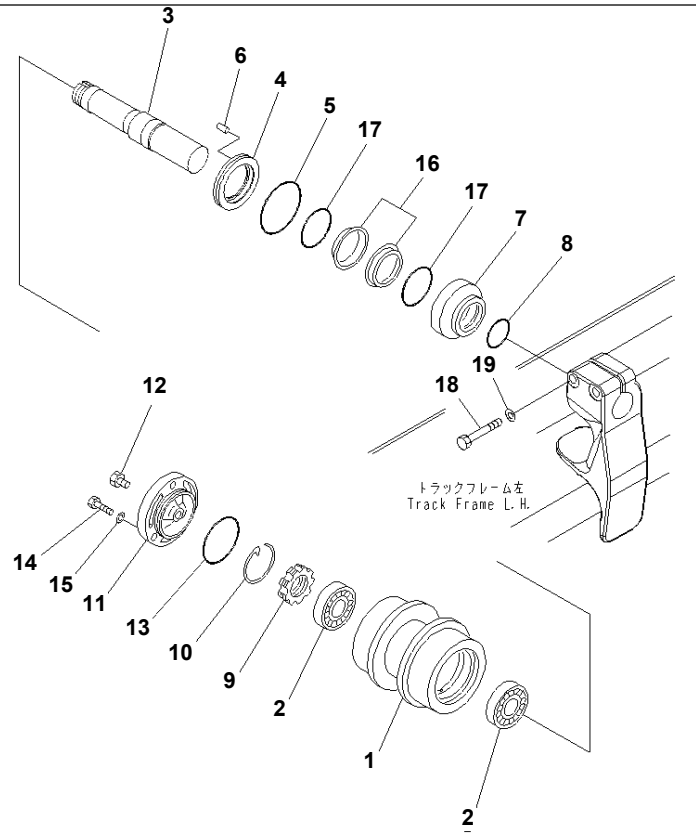

Ref. R2100-06A0 **Page 300190**

D155A-6 S/N 85001-UP

TRACK FRAME (CARRIER ROLLER) (L.H.)

Item	Part No.	Part Name	Qty	Serial No.
	17A-30-00720	CARRIER ROLLER ASS'Y	2	85001-
1	175-30-45111	· ROLLER	1	85001-
2	06002-30212	· BEARING	2	85001-
3	175-30-25131	· SHAFT	1	85001-
4	175-30-35161	· RING	1	85001-
5	07000-12130	· O-RING	1	85001-
6	04020-00616	· PIN	1	85001-
7	175-30-35171	· RING	1	85001-
8	07000-12070	· O-RING	1	85001-
9	170-30-15190	· NUT	1	85001-
10	170-30-15210	· RING	1	85001-
11	175-30-45131	· COVER	1	85001-
12	07052-31624	· PLUG	1	85001-
13	07000-12110	· O-RING	1	85001-
14	01010-81435	· BOLT	3	85001-
15	01643-31445	· WASHER	3	85001-
	154-30-00831	· FLOATING SEAL ASS'Y	1	85001-
16	☆	· · RING	2	85001-
17	☆	· · O-RING	2	85001-
18	01011-82005	BOLT	4	85001-
19	01643-32060	WASHER	4	85001-

Printed By : Dwi Iswanto (airafather6107170)

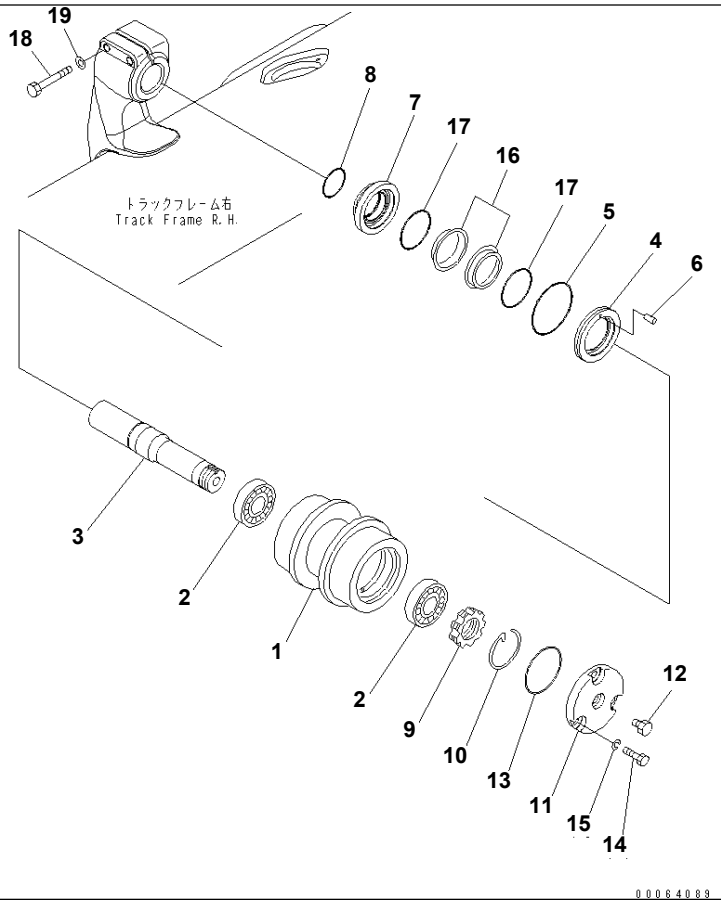

Ref. R2100-13A0 Page 300260

D155A-6 S/N 85001-UP

TRACK FRAME (CARRIER ROLLER) (R.H.)

Item	Part No.	Part Name	Qty	Serial No.
	17A-30-00720	CARRIER ROLLER ASS'Y	2	85001-
1	175-30-45111	· ROLLER	1	85001-
2	06002-30212	· BEARING	2	85001-
3	175-30-25131	· SHAFT	1	85001-
4	175-30-35161	· RING	1	85001-
5	07000-12130	· O-RING	1	85001-
6	04020-00616	· PIN	1	85001-
7	175-30-35171	· RING	1	85001-
8	07000-12070	· O-RING	1	85001-
9	170-30-15190	· NUT	1	85001-
10	170-30-15210	· RING	1	85001-
11	175-30-45131	· COVER	1	85001-
12	07052-31624	· PLUG	1	85001-
13	07000-12110	· O-RING	1	85001-
14	01010-81435	· BOLT	3	85001-
15	01643-31445	· WASHER	3	85001-
	154-30-00831	· FLOATING SEAL ASS'Y	1	85001-
16	☆	· · RING	2	85001-
17	☆	· · O-RING	2	85001-
18	01011-82005	BOLT	4	85001-
19	01643-32060	WASHER	4	85001-

Printed By : Dwi Iswanto (airafather6107170)

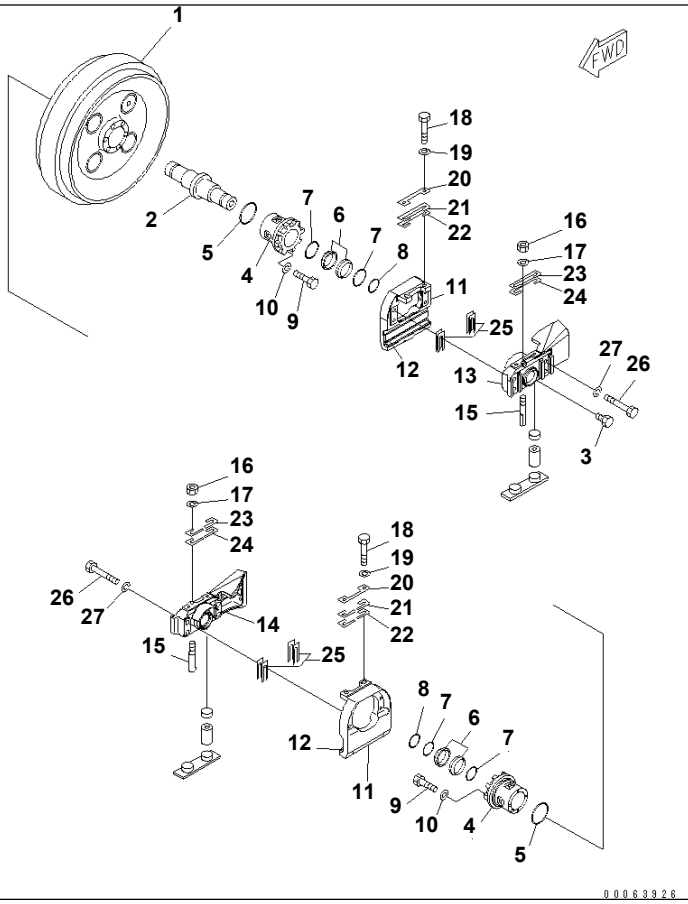

Ref. R2100-02A0 **Page 300150**

D155A-6 S/N 85001-UP
TRACK FRAME (FRONT IDLER) (L.H.)

Item	Part No.	Part Name	Qty	Serial No.
	17A-30-00430	IDLER ASS'Y	1	85001-
1	175-30-23114	· IDLER	1	85001-
2	175-30-23121	· SHAFT	1	85001-
3	07052-31624	· PLUG	1	85001-
4	175-30-36108	· BUSHING ASS'Y	2	85001-
5	07000-12130	· O-RING	2	85001-
	175-30-00702	· FLOATING SEAL ASS'Y	2	85001-
6	☆	· · SEAL RING	2	85001-
7	☆	· · O-RING	2	85001-
8	07000-03068	· O-RING	2	85001-
9	01010-81235	· BOLT	12	85001-
10	01602-21236	· WASHER	12	85001-
11	17A-30-48342	· GUIDE ASS'Y	2	85001-
12	17A-30-48390	· · PLATE (WELDED)	1	85001-
13	17A-30-48311	· SUPPORT	1	85001-
14	17A-30-48321	· SUPPORT	1	85001-
15	175-30-23172	· BOLT	2	85001-
16	175-30-23180	· NUT	2	85001-
17	01643-31645	· WASHER	2	85001-
18	175-30-33492	· BOLT	4	85001-
19	01643-32060	· WASHER	4	85001-
20	175-30-33460	· PLATE	2	85001-
	175-30-05050	· SHIM KIT	2	85001-
21	☆	· · SHIM¤ 1.0MM	4	85001-
22	☆	· · SHIM¤ 2.0MM	2	85001-
	175-30-05060	· SHIM KIT	2	85001-
23	☆	· · SHIM¤ 1.0MM	4	85001-
24	☆	· · SHIM¤ 2.0MM	2	85001-
25	175-30-05072	· SHIM ASS'Y	2	85001-
	☆	· · SHIM¤ 1.0MM	8	85001-

Printed By : Dwi Iswanto (airafather6107170)

TRACK FRAME (FRONT IDLER) (L.H.)

Item	Part No.	Part Name	Qty	Serial No.
	☆	･ ･ SHIM¤ 0.5MM	1	85001-
26	01011-62225	･ BOLT	8	85001-
27	01643-32260	･ WASHER	8	85001-

Printed By : Dwi Iswanto (airafather6107170)

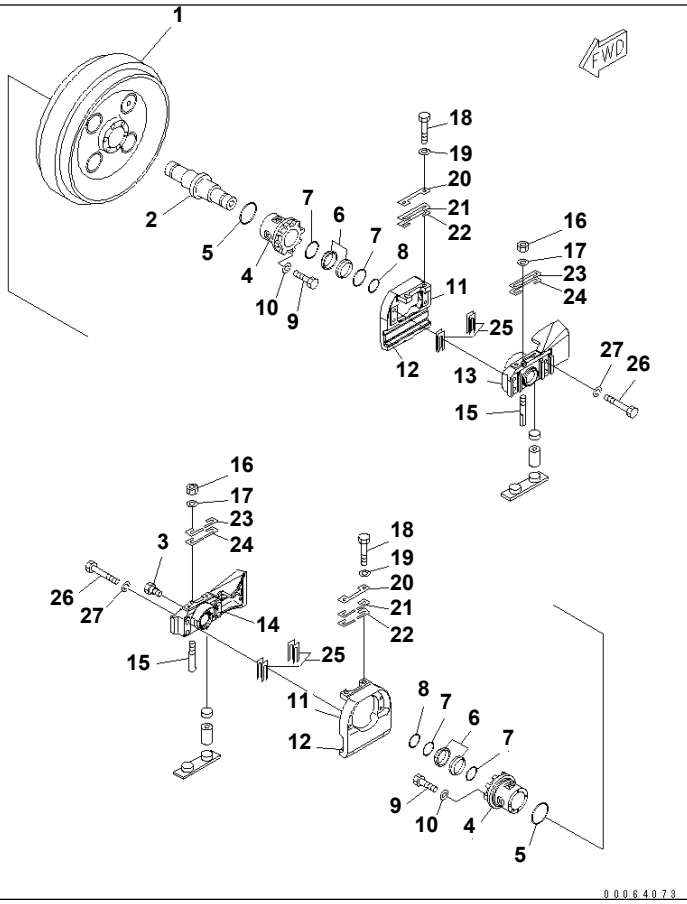

Ref. R2100-09A0 **Page 300220**

D155A-6 S/N 85001-UP
TRACK FRAME (FRONT IDLER) (R.H.)

Item	Part No.	Part Name	Qty	Serial No.
	17A-30-00430	IDLER ASS'Y	1	85001-
1	175-30-23114	· IDLER	1	85001-
2	175-30-23121	· SHAFT	1	85001-
3	07052-31624	· PLUG	1	85001-
4	175-30-36108	· BUSHING ASS'Y	2	85001-
5	07000-12130	· O-RING	2	85001-
	175-30-00702	· FLOATING SEAL ASS'Y	2	85001-
6	☆	· · SEAL RING	2	85001-
7	☆	· · O-RING	2	85001-
8	07000-03068	· O-RING	2	85001-
9	01010-81235	· BOLT	12	85001-
10	01602-21236	· WASHER	12	85001-
11	17A-30-48342	· GUIDE ASS'Y	2	85001-
12	17A-30-48390	· · PLATE	1	85001-
13	17A-30-48311	· SUPPORT	1	85001-
14	17A-30-48321	· SUPPORT	1	85001-
15	175-30-23172	· BOLT	2	85001-
16	175-30-23180	· NUT	2	85001-
17	01643-31645	· WASHER	2	85001-
18	175-30-33492	· BOLT	4	85001-
19	01643-32060	· WASHER	4	85001-
20	175-30-33460	· PLATE	2	85001-
	175-30-05050	· SHIM KIT	2	85001-
21	☆	· · SHIM¤ 1.0MM	4	85001-
22	☆	· · SHIM¤ 2.0MM	2	85001-
	175-30-05060	· SHIM KIT	2	85001-
23	175-30-33440	· · SHIM¤ 1.0MM	4	85001-
24	175-30-33450	· · SHIM¤ 2.0MM	2	85001-
25	175-30-05072	· SHIM ASS'Y	2	85001-
	☆	· SHIM¤ 1.0MM	8	85001-

Printed By : Dwi Iswanto (airafather6107170)

TRACK FRAME (FRONT IDLER) (R.H.)

Item	Part No.	Part Name	Qty	Serial No.
	☆	· SHIM¤ 0.5MM	1	85001-
26	01011-62225	BOLT	8	85001-
27	01643-32260	WASHER	8	85001-

Printed By : Dwi Iswanto (airafather6107170)

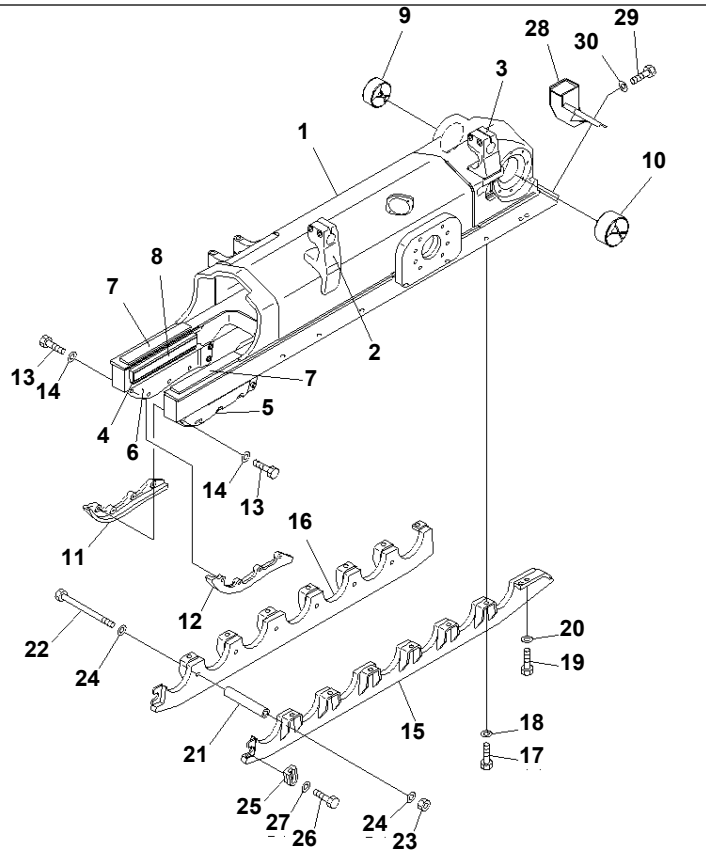

D155A-6 S/N 85001-UP
TRACK FRAME (L.H.)

Item	Part No.	Part Name	Qty	Serial No.
	17A-30-00852	TRACK FRAME ASS'Y	1	85001-
1	17A-30-48102	· FRAME	1	85001-
2	17A-30-41411	· · SUPPORT (WELDED)	1	85001-
3	17A-30-48161	· · SUPPORT (WELDED)	1	85001-
4	175-30-11272	· · PLATE (WELDED)	2	85001-
5	175-30-21353	· · GUARD (WELDED)	1	85001-
6	175-30-21363	· · GUARD (WELDED)	1	85001-
7	17A-30-48370	· · PLATE (WELDED)	2	85001-
8	17A-30-48380	· · PLATE (WELDED)	2	85001-
9	17A-50-41210	· BUSHING	1	85001-
10	17A-50-11130	· BUSHING	1	85001-
11	178-30-12161	GUARD	1	85001-
12	178-30-12171	GUARD	1	85001-
13	01010-82045	BOLT	12	85001-
14	01643-32060	WASHER	12	85001-
15	17A-30-48911	GUARD	1	85001-
16	17A-30-48931	GUARD	1	85001-
17	01010-62450	BOLT	12	85001-
18	01643-32460	WASHER	12	85001-
19	01010-62460	BOLT	3	85001-
20	01643-32460	WASHER	3	85001-
21	17A-30-48981	SPACER	6	85001-
22	195-30-37250	BOLT	6	85001-
23	01580-12419	NUT	6	85001-
24	01643-32460	WASHER	12	85001-
25	170-30-12162	RETAINER	2	85001-
26	01010-62050	BOLT	4	85001-
27	01643-32060	WASHER	4	85001-
28	17A-30-48961	COVER	1	85001-
29	01010-62040	BOLT	4	85001-

Printed By : Dwi Iswanto (airafather6107170)

TRACK FRAME (L.H.)

Item	Part No.	Part Name	Qty	Serial No.
30	01643-32060	WASHER	4	85001-

Printed By : Dwi Iswanto (airafather6107170)

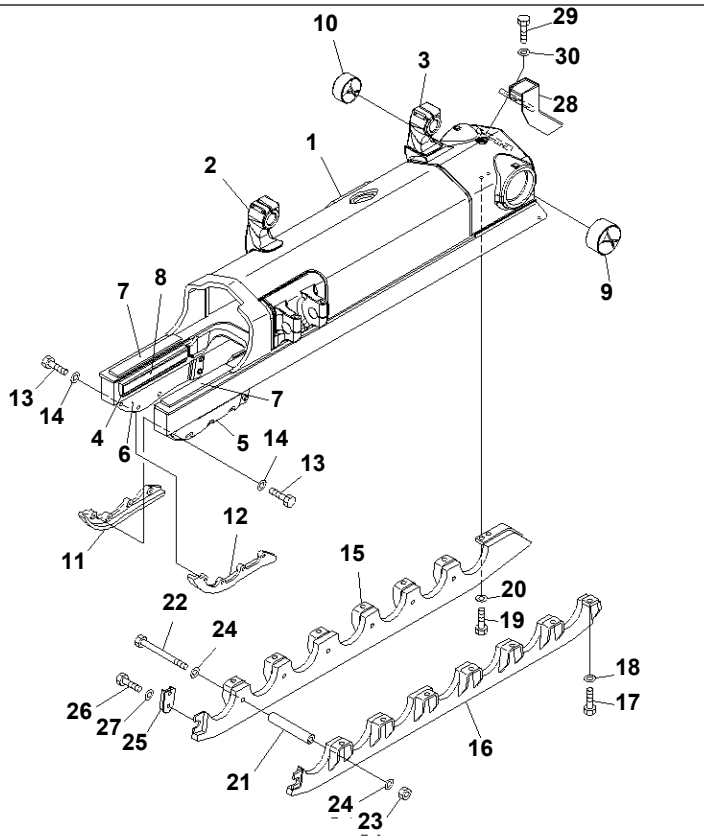

00064045

Ref. R2100-08A0 **Page 300210**

D155A-6 S/N 85001-UP
TRACK FRAME (R.H.)

Item	Part No.	Part Name	Qty	Serial No.
	17A-30-00862	TRACK FRAME ASS'Y	1	85001-
1	17A-30-48202	· FRAME	1	85001-
2	17A-30-41411	· · SUPPORT (WELDED)	1	85001-
3	17A-30-48161	· · SUPPORT (WELDED)	1	85001-
4	175-30-11272	· · PLATE (WELDED)	2	85001-
5	175-30-21353	· · GUARD (WELDED)	1	85001-
6	175-30-21363	· · GUARD (WELDED)	1	85001-
7	17A-30-48370	· · PLATE (WELDED)	1	85001-
8	17A-30-48380	· · PLATE (WELDED)	2	85001-
9	17A-50-41210	· BUSHING	1	85001-
10	17A-50-11130	· BUSHING	1	85001-
11	178-30-12161	GUARD	1	85001-
12	178-30-12171	GUARD	1	85001-
13	01010-82045	BOLT	12	85001-
14	01643-32060	WASHER	12	85001-
15	17A-30-48921	GUARD	1	85001-
16	17A-30-48941	GUARD	1	85001-
17	01010-62450	BOLT	12	85001-
18	01643-32460	WASHER	12	85001-
19	01010-62460	BOLT	3	85001-
20	01643-32460	WASHER	3	85001-
21	17A-30-48981	SPACER	6	85001-
22	195-30-37250	BOLT	6	85001-
23	01580-12419	NUT	6	85001-
24	01643-32460	WASHER	12	85001-
25	170-30-12162	RETAINER	2	85001-
26	01010-62050	BOLT	4	85001-
27	01643-32060	WASHER	4	85001-
28	17A-30-48971	COVER	1	85001-
29	01010-62040	BOLT	4	85001-

Printed By : Dwi Iswanto (airafather6107170)

TRACK FRAME (R.H.)

Item	Part No.	Part Name	Qty	Serial No.
30	01643-32060	WASHER	4	85001-

Printed By : Dwi Iswanto (airafather6107170)

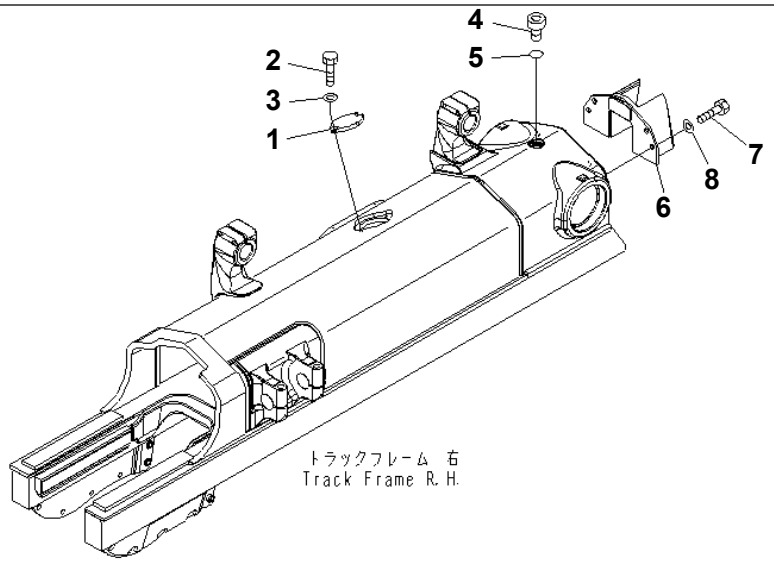

00064090

Ref. R2100-14A0 **Page 300270**

D155A-6 S/N 85001-UP

TRACK FRAME (REAR COVER) (R.H.)

Item	Part No.	Part Name	Qty	Serial No.
1	17A-30-41380	COVER	1	85001-
2	01010-81230	BOLT	2	85001-
3	01643-31232	WASHER	2	85001-
4	07040-13618	PLUG	1	85001-
5	07002-13634	O-RING	1	85001-
6	17A-30-48951	COVER	1	85001-
7	01010-62040	BOLT	3	85001-
8	01643-32060	WASHER	3	85001-

Printed By : Dwi Iswanto (airafather6107170)

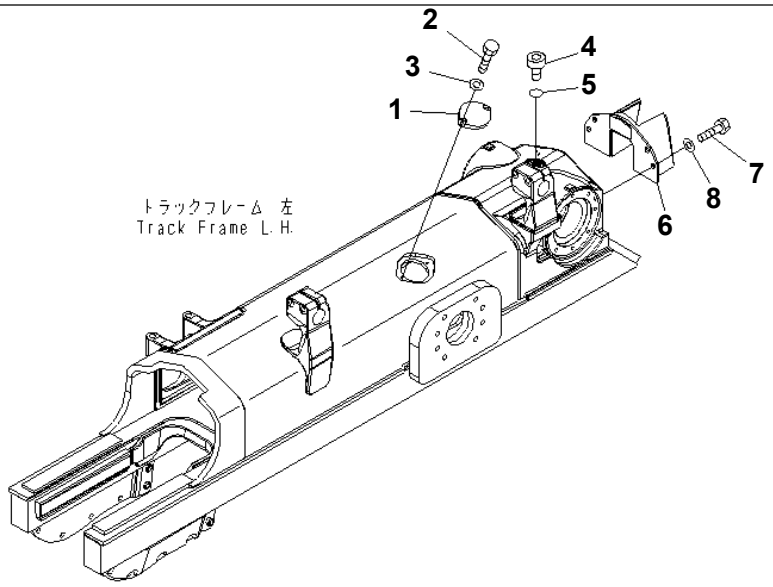

00064032

Ref. R2100-07A0 **Page 300200**

D155A-6 S/N 85001-UP
TRACK FRAME (REAR COVER)

Item	Part No.	Part Name	Qty	Serial No.
1	17A-30-41380	COVER	1	85001-
2	01010-81230	BOLT	2	85001-
3	01643-31232	WASHER	2	85001-
4	07040-13618	PLUG	1	85001-
5	07002-13634	O-RING	1	85001-
6	17A-30-48951	COVER	1	85001-
7	01010-62040	BOLT	3	85001-
8	01643-32060	WASHER	3	85001-

Printed By : Dwi Iswanto (airafather6107170)

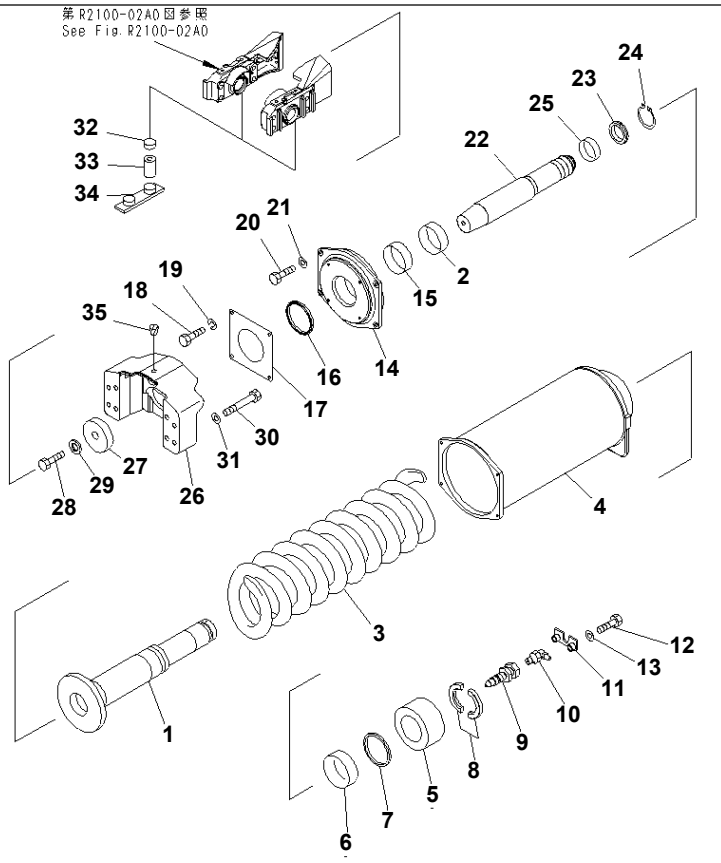

Ref. R2100-03A0 **Page 300160**

D155A-6 S/N 85001-UP

TRACK FRAME (RECOIL SPRING) (L.H.)

Item	Part No.	Part Name	Qty	Serial No.
1	17A-30-48461	CYLINDER	1	85001-
2	07177-01140	BUSHING	1	85001-
3	17A-30-48471	SPRING	1	85001-
4	17A-30-48431	CABIN	1	85001-
5	17A-30-48481	NUT	1	85001-
6	07177-01140	BUSHING	1	85001-
7	21M-30-14150	SEAL	1	85001-
8	17A-30-48491	SPACER	2	85001-
9	17A-30-48630	VALVE	1	85001-
10	07020-00900	FITTING,GREASE	1	85001-
11	14X-30-13174	PLATE	1	85001-
12	01010-80830	BOLT	2	85001-
13	01643-30823	WASHER	2	85001-
14	17A-30-48411	HOLDER	1	85001-
15	07177-01140	BUSHING	1	85001-
16	21M-30-14150	SEAL	1	85001-
17	17A-30-48520	COVER	1	85001-
18	01010-81020	BOLT	4	85001-
19	01643-31032	WASHER	4	85001-
20	01010-81240	BOLT	4	85001-
21	01643-31232	WASHER	4	85001-
22	17A-30-48511	PISTON	1	85001-
23	175-30-24242	PACKING	1	85001-
24	04064-07525	RING	1	85001-
25	07155-01025	RING	2	85001-
26	17A-30-48621	YOKE	1	85001-
27	17A-30-48531	PLATE	1	85001-
28	01010-82470	BOLT	1	85001-
29	01643-32460	WASHER	1	85001-
30	01011-82045	BOLT	8	85001-

Printed By : Dwi Iswanto (airafather6107170)

TRACK FRAME (RECOIL SPRING) (L.H.)

Item	Part No.	Part Name	Qty	Serial No.
31	01643-32060	WASHER	8	85001-
32	195-30-17960	PLATE	4	85001-
33	155-30-13230	SPRING	4	85001-
34	175-30-24131	SEAT	2	85001-
35	07049-02025	PLUG	1	85001-

Printed By : Dwi Iswanto (airafather6107170)

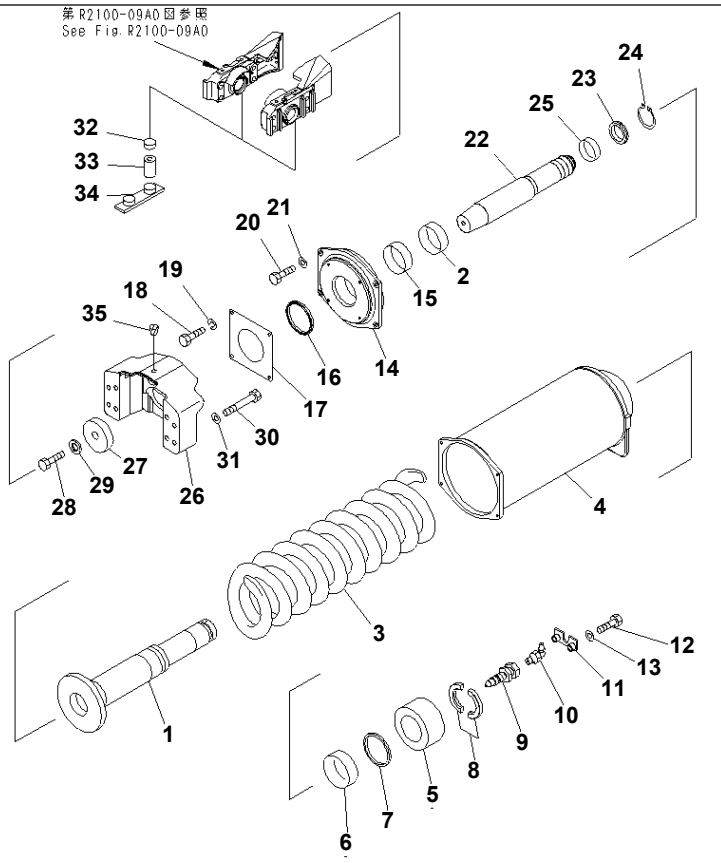

Ref. R2100-10A0 **Page 300230**

D155A-6 S/N 85001-UP

TRACK FRAME (RECOIL SPRING) (R.H.)

Item	Part No.	Part Name	Qty	Serial No.
1	17A-30-48461	CYLINDER	1	85001-
2	07177-01140	BUSHING	1	85001-
3	17A-30-48471	SPRING	1	85001-
4	17A-30-48431	CABIN	1	85001-
5	17A-30-48481	NUT	1	85001-
6	07177-01140	BUSHING	1	85001-
7	21M-30-14150	SEAL	1	85001-
8	17A-30-48491	SPACER	2	85001-
9	17A-30-48630	VALVE	1	85001-
10	07020-00900	FITTING	1	85001-
11	14X-30-13174	PLATE	1	85001-
12	01010-80830	BOLT	2	85001-
13	01643-30823	WASHER	2	85001-
14	17A-30-48411	HOLDER	1	85001-
15	07177-01140	BUSHING	1	85001-
16	21M-30-14150	SEAL	1	85001-
17	17A-30-48520	COVER	1	85001-
18	01010-81020	BOLT	4	85001-
19	01643-31032	WASHER	4	85001-
20	01010-81240	BOLT	4	85001-
21	01643-31232	WASHER	4	85001-
22	17A-30-48511	PISTON	1	85001-
23	175-30-24242	PACKING	1	85001-
24	04064-07525	RING	1	85001-
25	07155-01025	RING	2	85001-
26	17A-30-48621	YOKE	1	85001-
27	17A-30-48531	PLATE	1	85001-
28	01010-82470	BOLT	1	85001-
29	01643-32460	WASHER	1	85001-
30	01011-82045	BOLT	8	85001-

Printed By : Dwi Iswanto (airafather6107170)

TRACK FRAME (RECOIL SPRING) (R.H.)

Item	Part No.	Part Name	Qty	Serial No.
31	01643-32060	WASHER	8	85001-
32	195-30-17960	PLATE	4	85001-
33	155-30-13230	SPRING	4	85001-
34	175-30-24131	SEAT	2	85001-
35	07049-02025	PLUG	1	85001-

Printed By : Dwi Iswanto (airafather6107170)

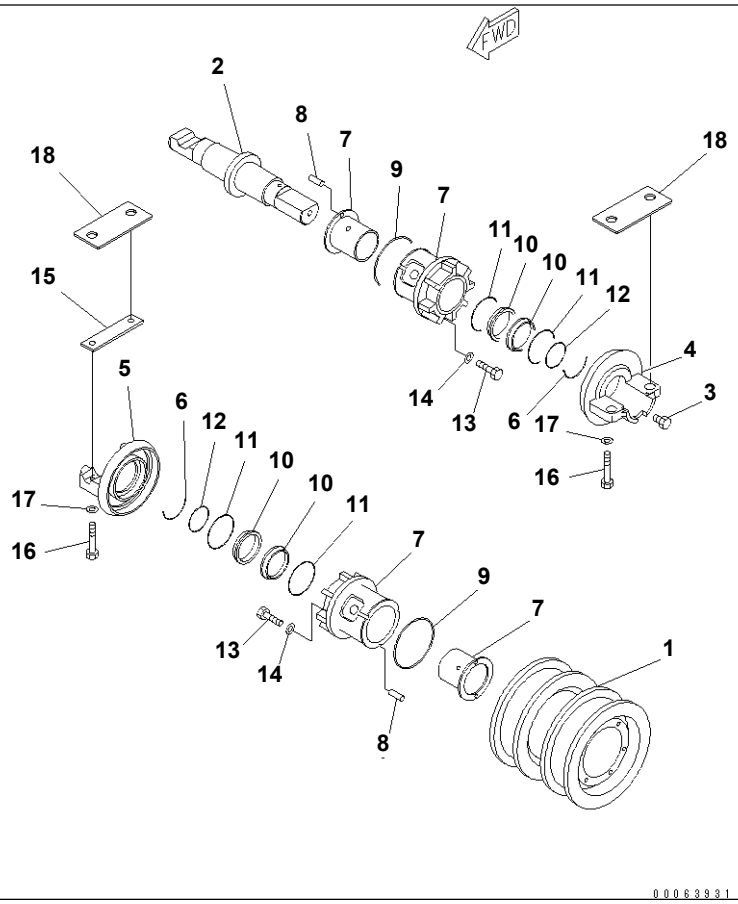

Ref. R2100-05A0 Page 300180

D155A-6 S/N 85001-UP

TRACK FRAME (TRACK ROLLER) (DOBLE) (L.H.)

Item	Part No.	Part Name	Qty	Serial No.
	175-30-00770	TRACK ROLLER ASS'Y	5	85001-
1	178-30-16124	· ROLLER	1	85001-
2	175-30-36130	· SHAFT	1	85001-
3	07052-31624	· PLUG	1	85001-
4	175-30-36210	· COLLAR	1	85001-
5	175-30-36220	· COLLAR	1	85001-
6	175-30-26230	· RING	2	85001-
7	175-30-36108	· BUSHING ASS'Y	2	85001-
8	170-30-91130	· · PIN	2	85001-
9	07000-12130	· O-RING	2	85001-
	175-30-00702	· FLOATING SEAL ASS'Y	2	85001-
10	☆	· · SEAL RING	2	85001-
11	☆	· · O-RING	2	85001-
12	07000-03068	· O-RING	2	85001-
13	175-30-36340	· BOLT	12	85001-
14	01643-51232	· WASHER	12	85001-
15	175-30-26241	PLATE	7	85001-
16	01010-62490	BOLT	28	85001-
17	01643-32460	WASHER	28	85001-
18	17A-30-48251	PLATE	14	85001-

Printed By : Dwi Iswanto (airafather6107170)

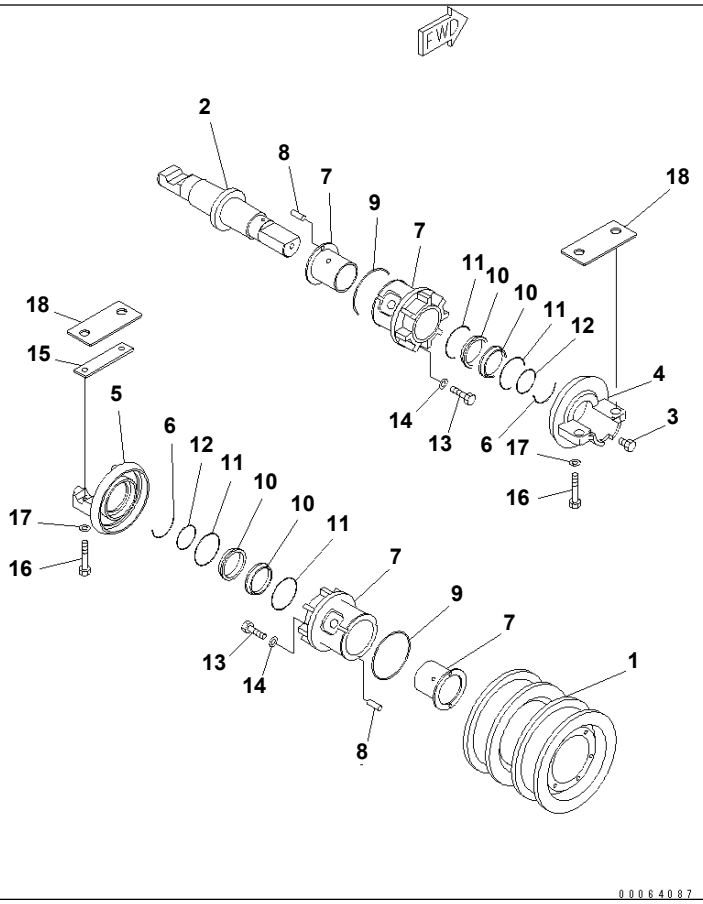

Ref. R2100-12A0 Page 300250

D155A-6 S/N 85001-UP

TRACK FRAME (TRACK ROLLER) (DOUBLE) (R.H.)

Item	Part No.	Part Name	Qty	Serial No.
	175-30-00770	TRACK ROLLER ASS'Y	5	85001-
1	178-30-16124	· ROLLER	1	85001-
2	175-30-36130	· SHAFT	1	85001-
3	07052-31624	· PLUG	1	85001-
4	175-30-36210	· COLLAR	1	85001-
5	175-30-36220	· COLLAR	1	85001-
6	175-30-26230	· RING	2	85001-
7	175-30-36108	· BUSHING ASS'Y	2	85001-
8	170-30-91130	· · PIN	2	85001-
9	07000-12130	· O-RING	2	85001-
	175-30-00702	· FLOATING SEAL ASS'Y	2	85001-
10	☆	· · SEAL RING	2	85001-
11	☆	· · O-RING	2	85001-
12	07000-03068	· O-RING	2	85001-
13	175-30-36340	· BOLT	12	85001-
14	01643-51232	· WASHER	12	85001-
15	175-30-26241	PLATE	7	85001-
16	01010-62490	BOLT	28	85001-
17	01643-32460	WASHER	28	85001-
18	17A-30-48251	PLATE	14	85001-

Printed By : Dwi Iswanto (airafather6107170)

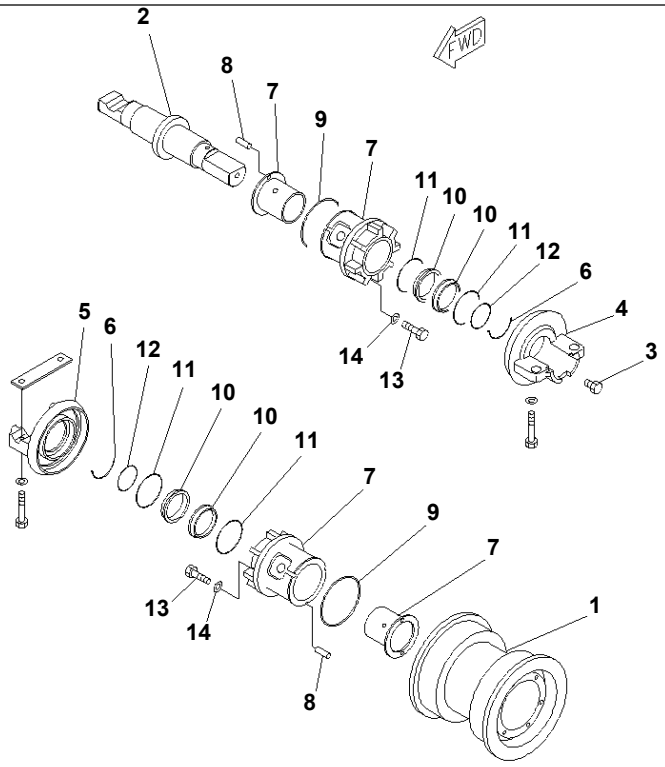

00028781

Ref. R2100-04A0 **Page 300170**

D155A-6 S/N 85001-UP
TRACK FRAME (TRACK ROLLER) (SINGLE) (L.H.)

Item	Part No.	Part Name	Qty	Serial No.
	175-30-00760	TRACK ROLLER ASS'Y	2	85001-
1	178-30-16114	· ROLLER	1	85001-
2	175-30-36130	· SHAFT	1	85001-
3	07052-31624	· PLUG	1	85001-
4	175-30-36210	· COLLAR	1	85001-
5	175-30-36220	· COLLAR	1	85001-
6	175-30-26230	· RING	2	85001-
7	175-30-36108	· BUSHING ASS'Y	2	85001-
8	170-30-91130	· · PIN	2	85001-
9	07000-12130	· O-RING	2	85001-
	175-30-00702	· FLOATING SEAL ASS'Y	2	85001-
10	☆	· · SEAL RING	2	85001-
11	☆	· · O-RING	2	85001-
12	07000-03068	· O-RING	2	85001-
13	175-30-36340	· BOLT	12	85001-
14	01643-51232	· WASHER	12	85001-

Printed By : Dwi Iswanto (airafather6107170)

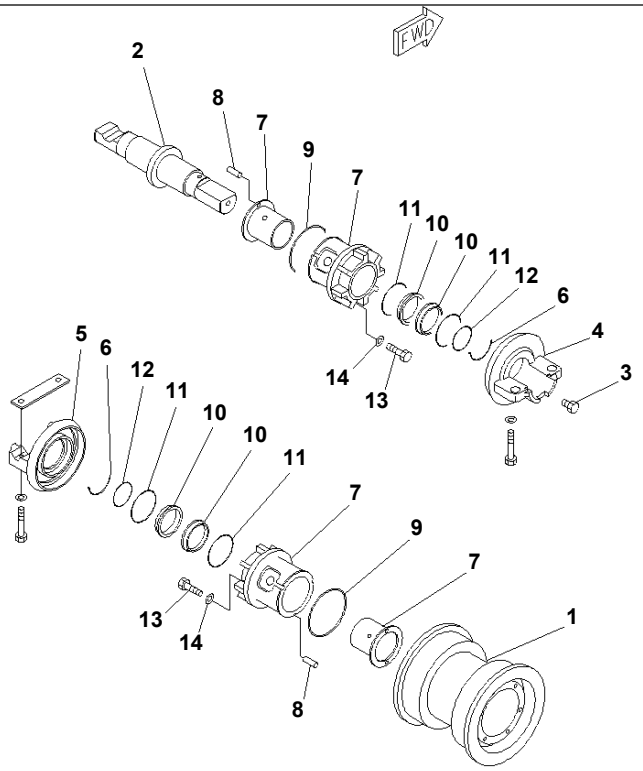

00042606

Ref. R2100-11A0 **Page 300240**

D155A-6 S/N 85001-UP

TRACK FRAME (TRACK ROLLER) (SINGLE) (R.H.)

Item	Part No.	Part Name	Qty	Serial No.
	175-30-00760	TRACK ROLLER ASS'Y	2	85001-
1	178-30-16114	· ROLLER	1	85001-
2	175-30-36130	· SHAFT	1	85001-
3	07052-31624	· PLUG	1	85001-
4	175-30-36210	· COLLAR	1	85001-
5	175-30-36220	· COLLAR	1	85001-
6	175-30-26230	· RING	2	85001-
7	175-30-36108	· BUSHING ASS'Y	2	85001-
8	170-30-91130	· · PIN	2	85001-
9	07000-12130	· O-RING	2	85001-
	175-30-00702	· FLOATING SEAL ASS'Y	2	85001-
10	☆	· · SEAL RING	2	85001-
11	☆	· · O-RING	2	85001-
12	07000-03068	· O-RING	2	85001-
13	175-30-36340	· BOLT	12	85001-
14	01643-51232	· WASHER	12	85001-

Printed By : Dwi Iswanto (airafather6107170)

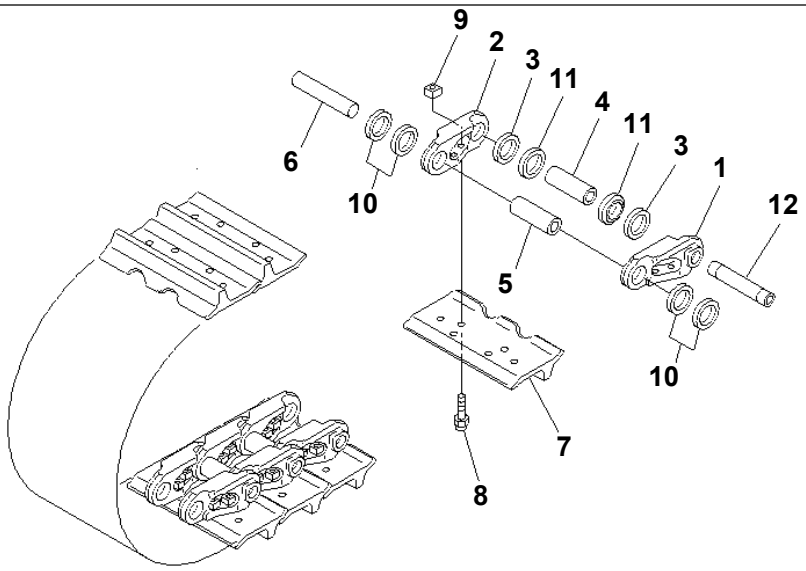

00016069

D155A-6 S/N 85001-UP

TRACK SHOE (DRY TYPE) (560MM WIDE) (SINGLE GROUSER) (COLD WEATHER (A) SPEC.)

Item	Part No.	Part Name	Qty	Serial No.
	175-32-01413	TRACK SHOE ASS'Y	1	85001-
1	15A-32-77120	· LINK	42	85001-
2	15A-32-77130	· LINK	82	85001-
3	176-32-11292	· WASHER	312	85001-
4	176-32-11174	· BUSHING	4	85001-
5	176-32-11145	· BUSHING	78	85001-
6	176-32-11152	· PIN	78	85001-
7	170-32-11115	· SHOE	82	85001-
8	176-32-11210	· BOLT¤ SHOE (Y0320-K1)	328	85001-
9	178-32-11220	· NUT¤ SHOE (Y0320-K1)	328	85001-
10	15A-32-77120	· LINK	40	85001-
	176-32-11292	· WASHER	8	85001-
11	176-32-11332	· SPACER	8	85001-
12	176-32-11193	· PIN	4	85001-

Printed By : Dwi Iswanto (airafather6107170)

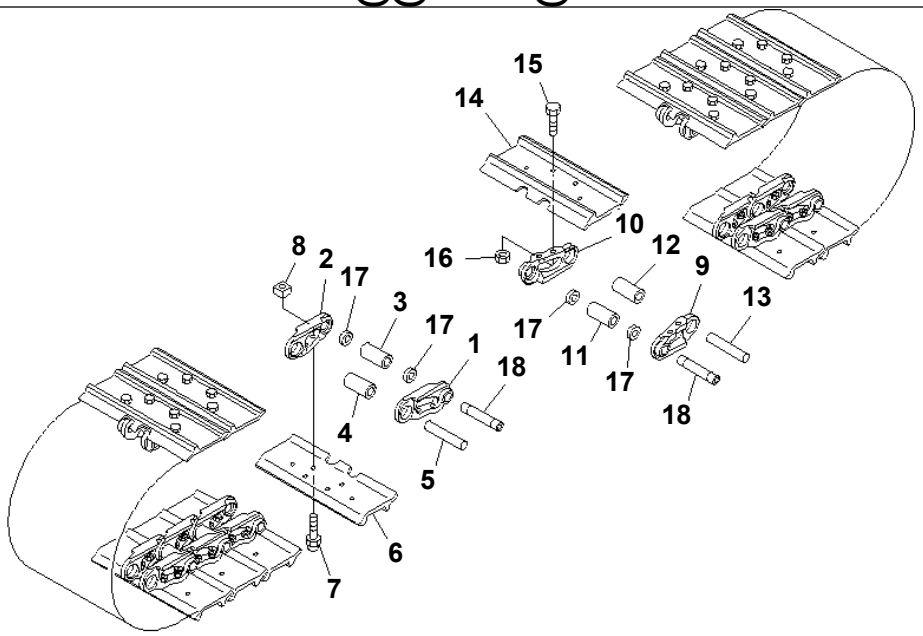

P V L 5 2 4 8

Ref. R0500-01B2 **Page 300130**

D155A-6 S/N 85001-UP

TRACK SHOE (DRY TYPE) (560MM WIDE) (SINGLE GROUSER) (FOR SLAG HANDLING SPEC.)

Item	Part No.	Part Name	Qty	Serial No.
	175-32-04714	TRACK SHOE ASS'Y	1	85001-
1	15A-32-77120	· LINK	42	85001-
2	15A-32-77130	· LINK	42	85001-
3	176-32-11174	· BUSHING	2	85001-
4	175-32-11243	· BUSHING	40	85001-
5	176-32-11152	· PIN	40	85001-
6	175-32-31313	· SHOE	42	85001-
7	176-32-11210	· BOLT¤ SHOE (Y0320-K1)	168	85001-
8	178-32-11220	· NUT¤ SHOE (Y0320-K1)	168	85001-
9	15A-32-77120	· LINK	40	85001-
10	15A-32-77130	· LINK	40	85001-
11	176-32-11174	· BUSHING	2	85001-
12	175-32-11243	· BUSHING	38	85001-
13	176-32-11152	· PIN	38	85001-
14	175-32-31313	· SHOE	40	85001-
15	176-32-11210	· BOLT¤ SHOE (Y0320-K1)	160	85001-
16	178-32-11220	· NUT¤ SHOE (Y0320-K1)	160	85001-
17	175-32-11180	· SPACER	8	85001-
18	176-32-11193	· PIN	4	85001-

Printed By : Dwi Iswanto (airafather6107170)

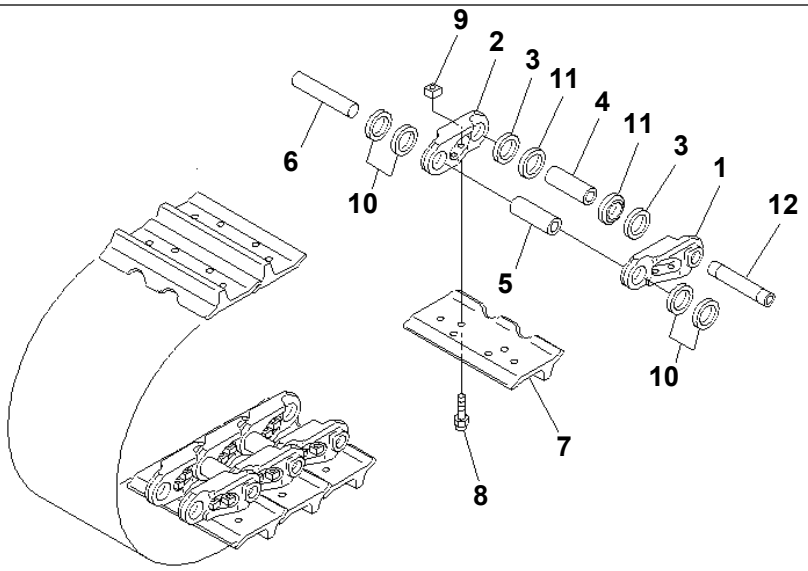

00016069

Ref. R0500-01B1 **Page 300120**

D155A-6 S/N 85001-UP
TRACK SHOE (DRY TYPE) (560MM WIDE) (SINGLE GROUSER) (HEAVY-DUTY TYPE)

Item	Part No.	Part Name	Qty	Serial No.
	175-32-01463	TRACK SHOE ASS'Y	1	85001-
1	15A-32-77120	· LINK	82	85001-
2	15A-32-77130	· LINK	82	85001-
3	176-32-11292	· WASHER	312	85001-
4	176-32-11174	· BUSHING	4	85001-
5	176-32-11145	· BUSHING	78	85001-
6	176-32-11152	· PIN	78	85001-
7	175-32-31313	· SHOE	82	85001-
8	176-32-11210	· BOLT¤ SHOE (Y0320-K01	328	85001-
9	178-32-11220	· NUT¤ SHOE (Y0320-K01	328	85001-
10	176-32-11292	· WASHER	8	85001-
11	176-32-11332	· SPACER	8	85001-
12	176-32-11193	· PIN	4	85001-

Printed By : Dwi Iswanto (airafather6107170)

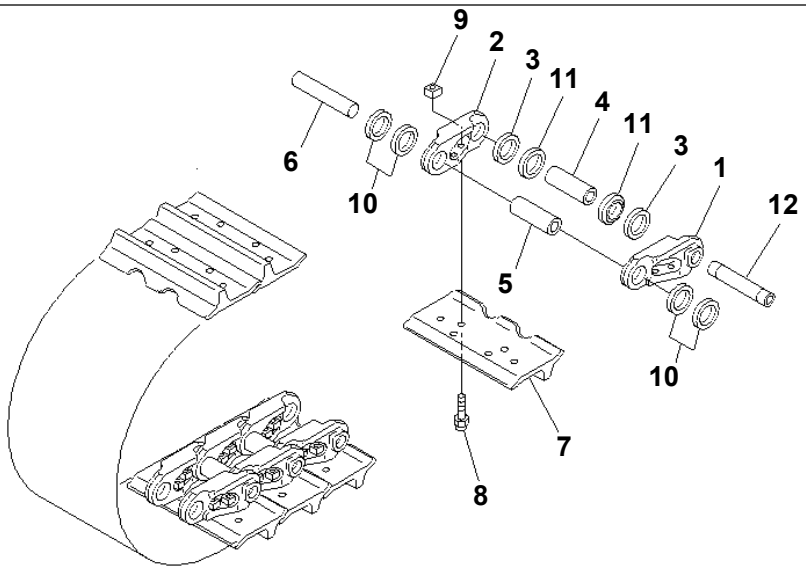

00016069

Ref. R0500-01B0 **Page 300110**

D155A-6 S/N 85001-UP
TRACK SHOE (DRY TYPE) (660MM WIDE) (SINGLE GROUSER)

Item	Part No.	Part Name	Qty	Serial No.
	175-32-01433	TRACK SHOE ASS'Y	1	85001-
1	15A-32-77120	· LINK	82	85001-
2	15A-32-77130	· LINK	82	85001-
3	176-32-11292	· WASHER	312	85001-
4	176-32-11174	· BUSHING	4	85001-
5	176-32-11145	· BUSHING	78	85001-
6	176-32-11152	· PIN	78	85001-
7	170-32-11332	· SHOE	82	85001-
8	176-32-11210	· BOLT¤ SHOE (Y0320-K01	328	85001-
9	178-32-11220	· NUT¤ SHOE (Y0320-K01	328	85001-
10	176-32-11292	· WASHER	8	85001-
11	176-32-11332	· SPACER	8	85001-
12	176-32-11193	· PIN	4	85001-

Printed By : Dwi Iswanto (airafather6107170)

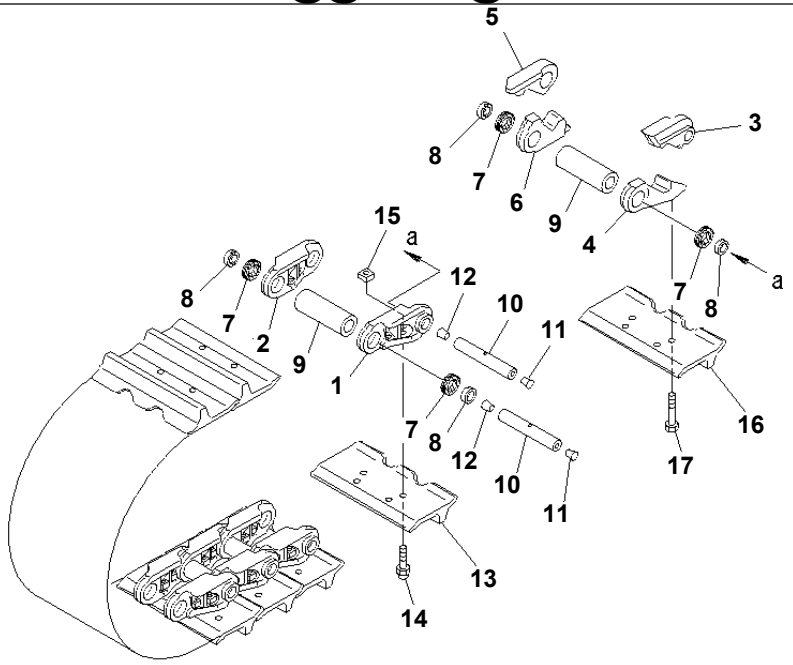

PWL3579

Ref. R0500-01A0 **Page 300010**

D155A-6 S/N 85001-UP
TRACK SHOE (LUBRICATE TYPE) (SINGLE GROUSER) (560MM WIDE)

Item	Part No.	Part Name	Qty	Serial No.
	175-32-02503	TRACK SHOE ASS'Y	1	85001-
1	15A-32-77120	· LINK	80	85001-
2	15A-32-77130	· LINK	80	85001-
	175-32-08010	· MASTER LINK K. L.H.	2	85001-
3	☆	· · LINK	1	85001-
4	☆	· · LINK	1	85001-
	175-32-08020	· MASTER LINK K. R.H.	2	85001-
5	☆	· · LINK	1	85001-
6	☆	· · LINK	1	85001-
7	17A-32-21201	· SEAL ASS'Y	164	85001-
8	175-32-81181	· SPACER	164	85001-
9	15A-32-11142	· BUSHING	82	85001-
10	175-32-81450	· PIN	82	85001-
11	07059-11830	· PLUG	82	85001-
12	07059-20721	· PLUG	82	85001-
13	170-32-11115	· SHOE	80	85001-
14	176-32-11210	· BOLT¤ SHOE (Y0320-K1)	320	85001-
15	178-32-11220	· NUT¤ SHOE (Y0320-K1)	320	85001-
16	170-32-11115	· SHOE	2	85001-
17	175-32-41261	· BOLT	8	85001-

Printed By : Dwi Iswanto (airafather6107170)

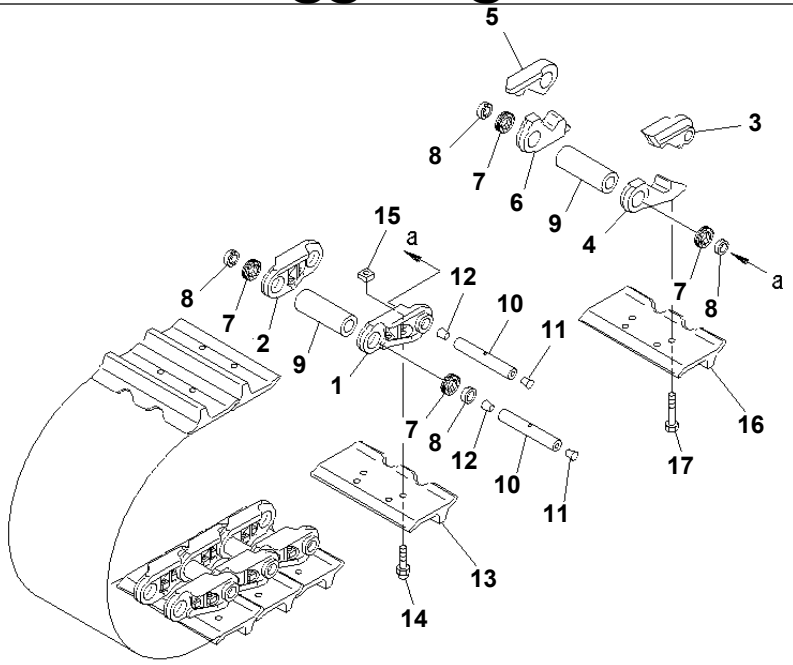

PWL3579

Ref. R0500-01A6 **Page 300070**

D155A-6 S/N 85001-UP
TRACK SHOE (LUBRICATE TYPE) (SINGLE GROUSER) (660MM WIDE) (HEAVY-TYPE)

Item	Part No.	Part Name	Qty	Serial No.
	175-32-02563	TRACK SHOE ASS'Y	1	85001-
1	15A-32-77120	· LINK	80	85001-
2	15A-32-77130	· LINK	80	85001-
	175-32-08010	· MASTER LINK K. L.H.	2	85001-
3	☆	· · LINK	1	85001-
4	☆	· · LINK	1	85001-
	175-32-08020	· MASTER LINK K. R.H.	2	85001-
5	☆	· · LINK	1	85001-
6	☆	· · LINK	1	85001-
7	17A-32-21201	· SEAL ASS'Y	164	85001-
8	175-32-81181	· SPACER	164	85001-
9	15A-32-11142	· BUSHING	82	85001-
10	175-32-81450	· PIN	82	85001-
11	07059-11830	· PLUG	82	85001-
12	07059-20721	· PLUG	82	85001-
13	175-32-31420	· SHOE	80	85001-
14	176-32-11210	· BOLT¤ SHOE (Y0320-K1)	320	85001-
15	178-32-11220	· NUT¤ SHOE (Y0320-K1)	320	85001-
16	175-32-31420	· SHOE	2	85001-
17	175-32-41261	· BOLT	8	85001-

Printed By : Dwi Iswanto (airafather6107170)

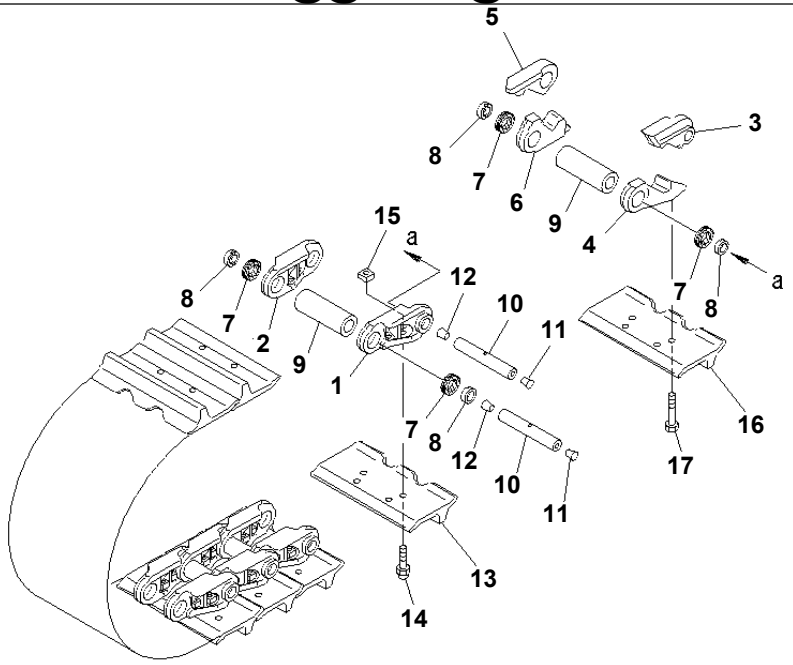

PWL3579

D155A-6 S/N 85001-UP

TRACK SHOE (LUBRICATE TYPE) (SINGLE GROUSER) (710MM WIDE)

Item	Part No.	Part Name	Qty	Serial No.
	175-32-02533	TRACK SHOE ASS'Y	1	85001-
1	15A-32-77120	· LINK	80	85001-
2	15A-32-77130	· LINK	80	85001-
	175-32-08010	· MASTER LINK K. L.H.	2	85001-
3	☆	· · LINK	1	85001-
4	☆	· · LINK	1	85001-
	175-32-08020	· MASTER LINK K. R.H.	2	85001-
5	☆	· · LINK	1	85001-
6	☆	· · LINK	1	85001-
7	17A-32-21201	· SEAL ASS'Y	164	85001-
8	175-32-81181	· SPACER	164	85001-
9	15A-32-11142	· BUSHING	82	85001-
10	175-32-81450	· PIN	82	85001-
11	07059-11830	· PLUG	82	85001-
12	07059-20721	· PLUG	82	85001-
13	175-32-11132	· SHOE	80	85001-
14	176-32-11210	· BOLT¤ SHOE (Y0320-K1)	320	85001-
15	178-32-11220	· NUT¤ SHOE (Y0320-K1)	320	85001-
16	175-32-11132	· SHOE	2	85001-
17	175-32-41261	· BOLT	8	85001-

Printed By : Dwi Iswanto (airafather6107170)

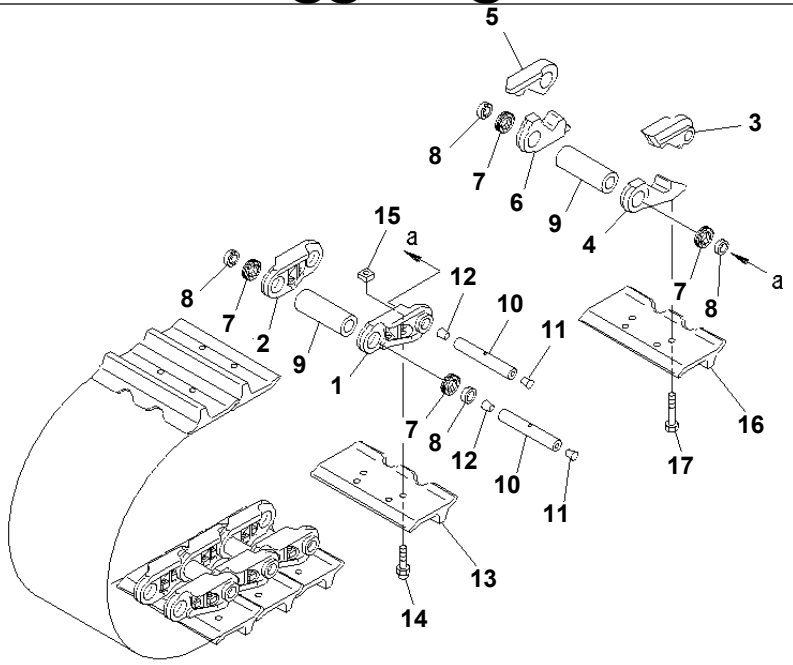

PWL3579

Ref. R0500-01A2 **Page 300030**

D155A-6 S/N 85001-UP
TRACK SHOE (LUBRICATE TYPE) (SINGLE GROUSER) (660MM WIDE)

Item	Part No.	Part Name	Qty	Serial No.
	175-32-02523	TRACK SHOE ASS'Y	1	85001-
1	15A-32-77120	· LINK	80	85001-
2	15A-32-77130	· LINK	80	85001-
	175-32-08010	· MASTER LINK K. L.H.	2	85001-
3	☆	· · LINK	1	85001-
4	☆	· · LINK	1	85001-
	175-32-08020	· MASTER LINK K. R.H.	2	85001-
5	☆	· · LINK	1	85001-
6	☆	· · LINK	1	85001-
7	17A-32-21201	· SEAL ASS'Y	164	85001-
8	175-32-81181	· SPACER	164	85001-
9	15A-32-11142	· BUSHING	82	85001-
10	175-32-81450	· PIN	82	85001-
11	07059-11830	· PLUG	82	85001-
12	07059-20721	· PLUG	82	85001-
13	170-32-11332	· SHOE	80	85001-
14	176-32-11210	· BOLT¤ SHOE (Y0320-K1)	320	85001-
15	178-32-11220	· NUT¤ SHOE (Y0320-K1)	320	85001-
16	170-32-11332	· SHOE	2	85001-
17	175-32-41261	· BOLT	8	85001-

Printed By : Dwi Iswanto (airafather6107170)

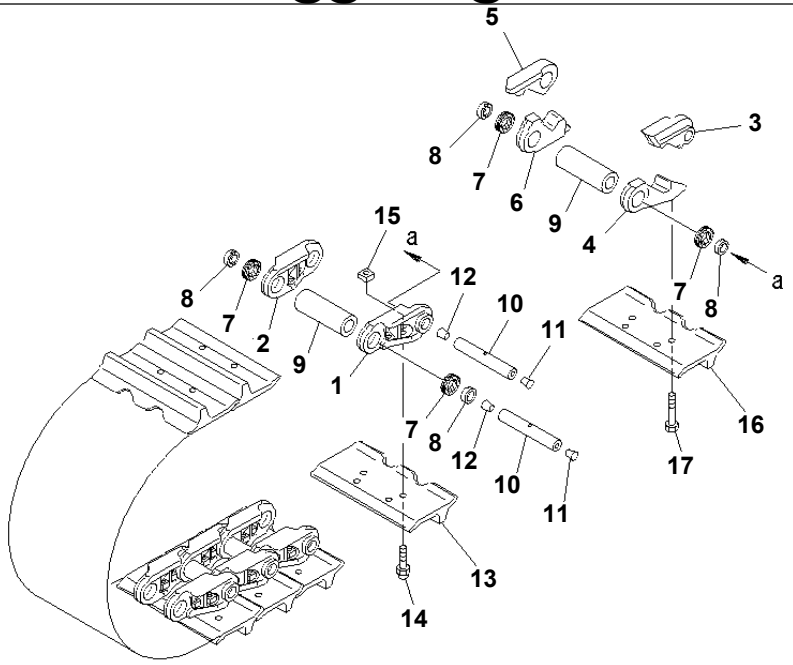

PWL3579

Ref. R0500-01A8 Page 300090

D155A-6 S/N 85001-UP

TRACK SHOE (LUBRICATE TYPE) (SINGLE GROUSER) (660MM WIDE) (COLD WEATHER (A) SPEC.)

Item	Part No.	Part Name	Qty	Serial No.
	175-32-02593	TRACK SHOE ASS'Y	1	85001-
1	15A-32-77120	· LINK	80	85001-
2	15A-32-77130	· LINK	80	85001-
	175-32-08010	· MASTER LINK K. L.H.	2	85001-
3	☆	· · LINK	1	85001-
4	☆	· · LINK	1	85001-
	175-32-08020	· MASTER LINK K. R.H.	2	85001-
5	☆	· · LINK	1	85001-
6	☆	· · LINK	1	85001-
7	17A-32-21201	· SEAL ASS'Y	164	85001-
8	175-32-81181	· SPACER	164	85001-
9	15A-32-11142	· BUSHING	82	85001-
10	175-32-81450	· PIN	82	85001-
11	07059-11830	· PLUG	82	85001-
12	07059-20721	· PLUG	82	85001-
13	170-32-11332	· SHOE	80	85001-
14	176-32-11210	· BOLT¤ SHOE (Y0320-K1)	320	85001-
15	178-32-11220	· NUT¤ SHOE (Y0320-K1)	320	85001-
16	170-32-11332	· SHOE	2	85001-
17	175-32-41261	· BOLT	8	85001-

Printed By : Dwi Iswanto (airafather6107170)

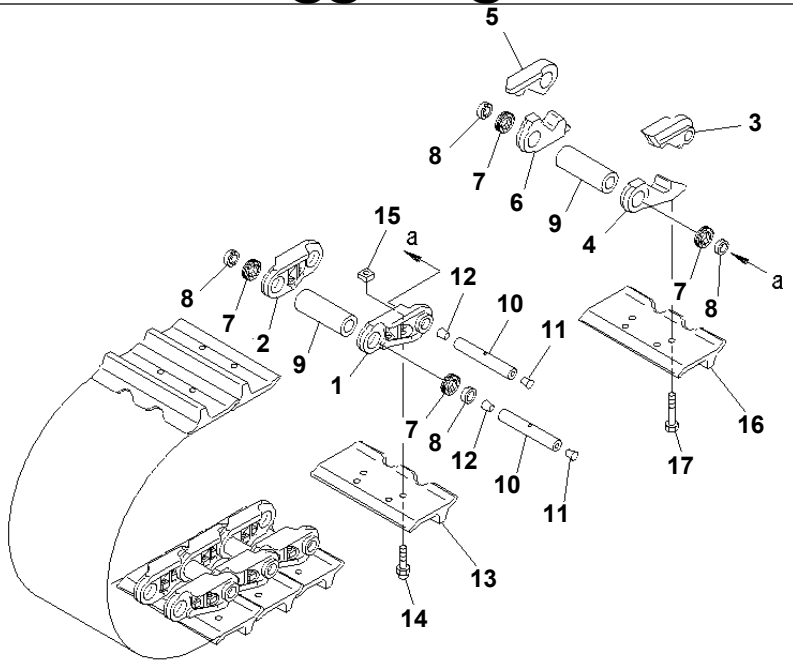

PWL3579

Ref. R0500-01A1 **Page 300020**

D155A-6 S/N 85001-UP
TRACK SHOE (LUBRICATE TYPE) (SINGLE GROUSER) (610MM WIDE)

Item	Part No.	Part Name	Qty	Serial No.
	175-32-02513	TRACK SHOE ASS'Y	1	85001-
1	15A-32-77120	· LINK	80	85001-
2	15A-32-77130	· LINK	80	85001-
	175-32-08010	· MASTER LINK K. L.H.	2	85001-
3	☆	· · LINK	1	85001-
4	☆	· · LINK	1	85001-
	175-32-08020	· MASTER LINK K. R.H.	2	85001-
5	☆	· · LINK	1	85001-
6	☆	· · LINK	1	85001-
7	17A-32-21201	· SEAL ASS'Y	164	85001-
8	175-32-81181	· SPACER	164	85001-
9	15A-32-11142	· BUSHING	82	85001-
10	175-32-81450	· PIN	82	85001-
11	07059-11830	· PLUG	82	85001-
12	07059-20721	· PLUG	82	85001-
13	175-32-11113	· SHOE	80	85001-
14	176-32-11210	· BOLT¤ SHOE (Y0320-K1)	320	85001-
15	178-32-11220	· NUT¤ SHOE (Y0320-K1)	320	85001-
16	175-32-11113	· SHOE	2	85001-
17	175-32-41261	· BOLT	8	85001-

Printed By : Dwi Iswanto (airafather6107170)

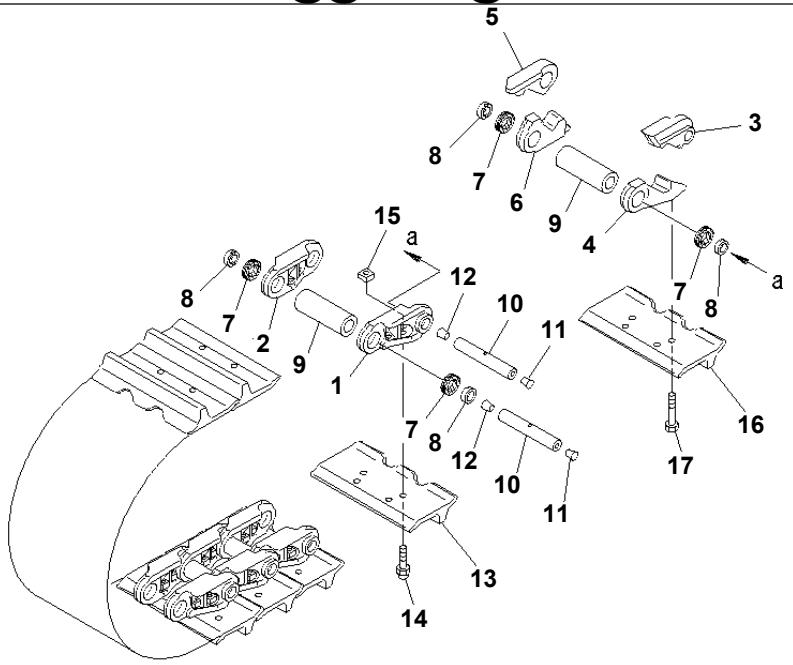

PWL3579

Ref. R0500-01A7 Page 300080

D155A-6 S/N 85001-UP

TRACK SHOE (LUBRICATE TYPE) (SINGLE GROUSER) (560MM WIDE) (LOW HARD)

Item	Part No.	Part Name	Qty	Serial No.
	175-32-02573	TRACK SHOE ASS'Y	1	85001-
1	15A-32-77120	· LINK	80	85001-
2	15A-32-77130	· LINK	80	85001-
	175-32-08010	· MASTER LINK K. L.H.	2	85001-
3	☆	· · LINK	1	85001-
4	☆	· · LINK	1	85001-
	175-32-08020	· MASTER LINK K. R.H.	2	85001-
5	☆	· · LINK	1	85001-
6	☆	· · LINK	1	85001-
7	17A-32-21201	· SEAL ASS'Y	164	85001-
8	175-32-81181	· SPACER	164	85001-
9	15A-32-11142	· BUSHING	82	85001-
10	175-32-81450	· PIN	82	85001-
11	07059-11830	· PLUG	82	85001-
12	07059-20721	· PLUG	82	85001-
13	175-32-31430	· SHOE	80	85001-
14	176-32-11210	· BOLT¤ SHOE (Y0320-K1)	320	85001-
15	178-32-11220	· NUT¤ SHOE (Y0320-K1)	320	85001-
16	175-32-31430	· SHOE	2	85001-
17	175-32-41261	· BOLT	8	85001-

Printed By : Dwi Iswanto (airafather6107170)

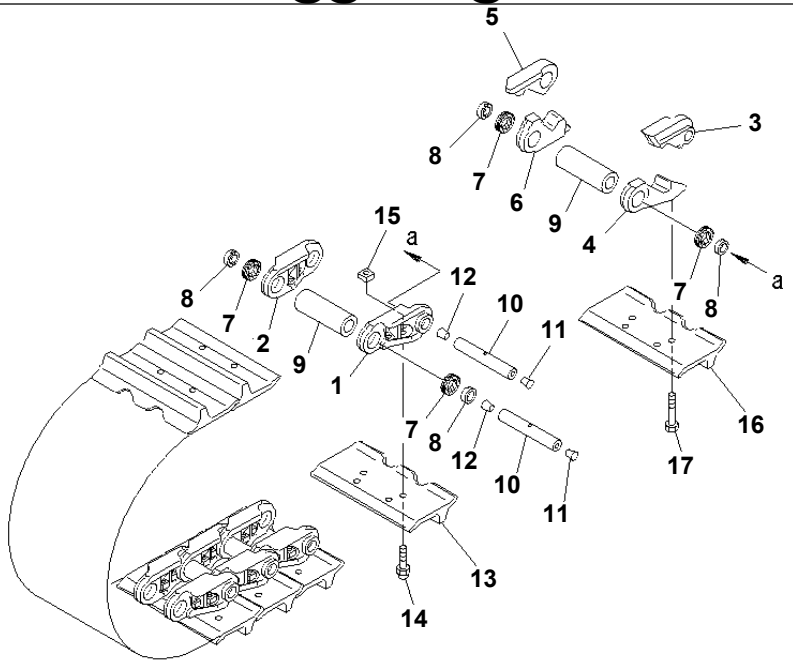

PWL3579

D155A-6 S/N 85001-UP
TRACK SHOE (LUBRICATE TYPE) (SINGLE GROUSER) (560MM WIDE) (HEAVY-TYPE)

Item	Part No.	Part Name	Qty	Serial No.
	175-32-02543	TRACK SHOE ASS'Y	1	85001-
1	15A-32-77120	· LINK	80	85001-
2	15A-32-77130	· LINK	80	85001-
	175-32-08010	· MASTER LINK K. L.H.	1	85001-
3	☆	· · LINK	1	85001-
4	☆	· · LINK	1	85001-
	175-32-08020	· MASTER LINK K. R.H.	2	85001-
5	☆	· · LINK	1	85001-
6	☆	· · LINK	1	85001-
7	17A-32-21201	· SEAL ASS'Y	164	85001-
8	175-32-81181	· SPACER	164	85001-
9	15A-32-11142	· BUSHING	82	85001-
10	175-32-81450	· PIN	82	85001-
11	07059-11830	· PLUG	82	85001-
12	07059-20721	· PLUG	82	85001-
13	175-32-31313	· SHOE	80	85001-
14	176-32-11210	· BOLT¤ SHOE (Y0320-K1)	320	85001-
15	178-32-11220	· NUT¤ SHOE (Y0320-K1)	320	85001-
16	175-32-31313	· SHOE	2	85001-
17	175-32-41261	· BOLT	8	85001-

Printed By : Dwi Iswanto (airafather6107170)

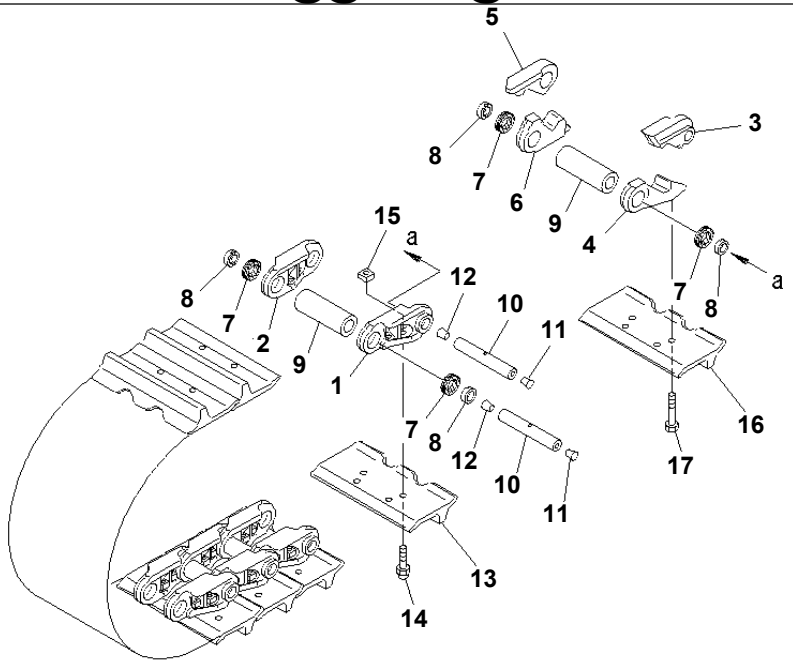

PWL3579

Ref. R0500-01A5 **Page 300060**

D155A-6 S/N 85001-UP
TRACK SHOE (LUBRICATE TYPE) (SINGLE GROUSER) (610MM WIDE) (HEAVY-TYPE)

Item	Part No.	Part Name	Qty	Serial No.
	175-32-02553	TRACK SHOE ASS'Y	1	85001-
1	15A-32-77120	· LINK	80	85001-
2	15A-32-77130	· LINK	80	85001-
	175-32-08010	· MASTER LINK K. L.H.	2	85001-
3	☆	· · LINK	1	85001-
4	☆	· · LINK	1	85001-
	175-32-08020	· MASTER LINK K. R.H.	2	85001-
5	☆	· · LINK	1	85001-
6	☆	· · LINK	1	85001-
7	17A-32-21201	· SEAL ASS'Y	164	85001-
8	175-32-81181	· SPACER	164	85001-
9	15A-32-11142	· BUSHING	82	85001-
10	175-32-81450	· PIN	82	85001-
11	07059-11830	· PLUG	82	85001-
12	07059-20721	· PLUG	82	85001-
13	175-32-31410	· SHOE	80	85001-
14	176-32-11210	· BOLT¤ SHOE (Y0320-K1)	320	85001-
15	178-32-11220	· NUT¤ SHOE (Y0320-K1)	320	85001-
16	175-32-31410	· SHOE	2	85001-
17	175-32-41261	· BOLT	8	85001-

Printed By : Dwi Iswanto (airafather6107170)

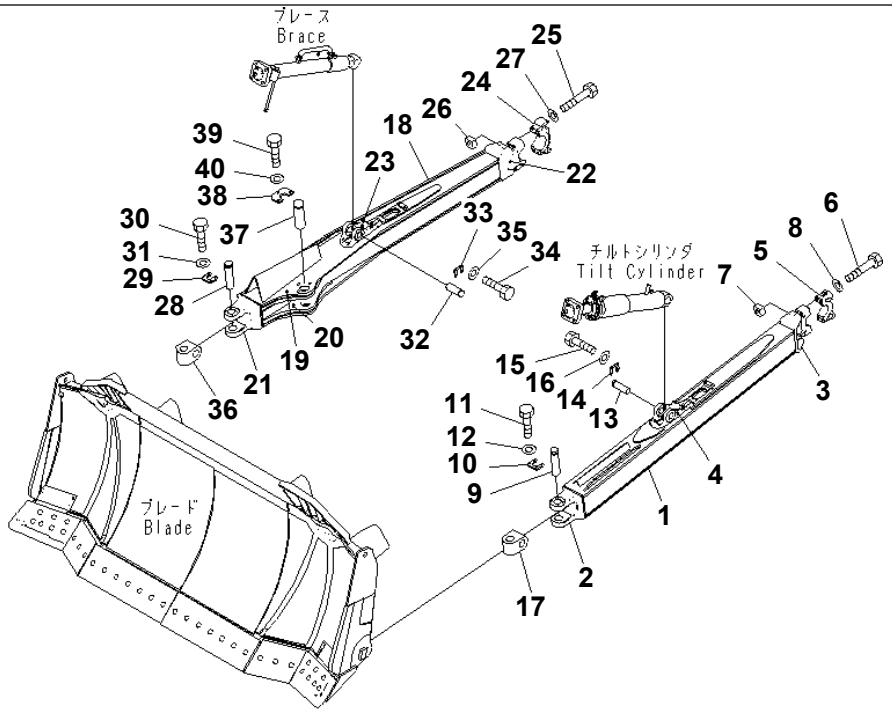

00042145

Ref. T2110-01A0 **Page 330010**

D155A-6 S/N 85001-UP

DOZER FRAME (STRAIGHT TILT)

Item	Part No.	Part Name	Qty	Serial No.
1	17A-71-45312	FRAME	1	85001-
2	17A-71-45321	· BRACKET (WELDED)	1	85001-
3	17A-71-45331	· BRACKET (WELDED)	1	85001-
4	17A-71-12481	· BRACKET (WELDED)	1	85001-
5	17A-71-12280	CAP	1	85001-
6	175-71-11491	BOLT	4	85001-
7	175-71-11520	NUT	4	85001-
8	01643-32260	WASHER	4	85001-
9	175-71-21221	PIN	1	85001-
10	175-71-21230	PLATE	1	85001-
11	01010-81440	BOLT	4	85001-
12	01643-31445	WASHER	4	85001-
13	154-71-21290	PIN	1	85001-
14	175-71-21330	PLATE	1	85001-
15	01010-81435	BOLT	4	85001-
16	01643-31445	WASHER	4	85001-
17	175-71-21261	JOINT	1	85001-
18	17A-71-45412	FRAME	1	85001-
19	17A-71-45H52	· PLATE (WELDED)	1	85001-
20	17A-71-45H62	· PLATE (WELDED)	1	85001-
21	17A-71-45421	· BRACKET (WELDED)	1	85001-
22	17A-71-45431	· BRACKET (WELDED)	1	85001-
23	17A-71-12132	· BRACKET (WELDED)	1	85001-
24	17A-71-45460	CAP	1	85001-
25	561-88-48950	BOLT	4	85001-
26	175-71-11520	NUT	4	85001-
27	01643-32260	WASHER	4	85001-
28	175-71-21221	PIN	1	85001-
29	175-71-21230	PLATE	1	85001-
30	01010-81440	BOLT	4	85001-

Printed By : Dwi Iswanto (airafather6107170)

DOZER FRAME (STRAIGHT TILT)

Item	Part No.	Part Name	Qty	Serial No.
31	01643-31445	WASHER	4	85001-
32	154-71-21290	PIN	1	85001-
33	175-71-21330	PLATE	1	85001-
34	01010-81435	BOLT	4	85001-
35	01643-31445	WASHER	4	85001-
36	175-71-21261	JOINT	1	85001-
37	09255-06245	PIN	1	85001-
38	17A-71-45490	LOCK	1	85001-
39	01010-82080	BOLT	3	85001-
40	01643-32060	WASHER	3	85001-

Printed By : Dwi Iswanto (airafather6107170)

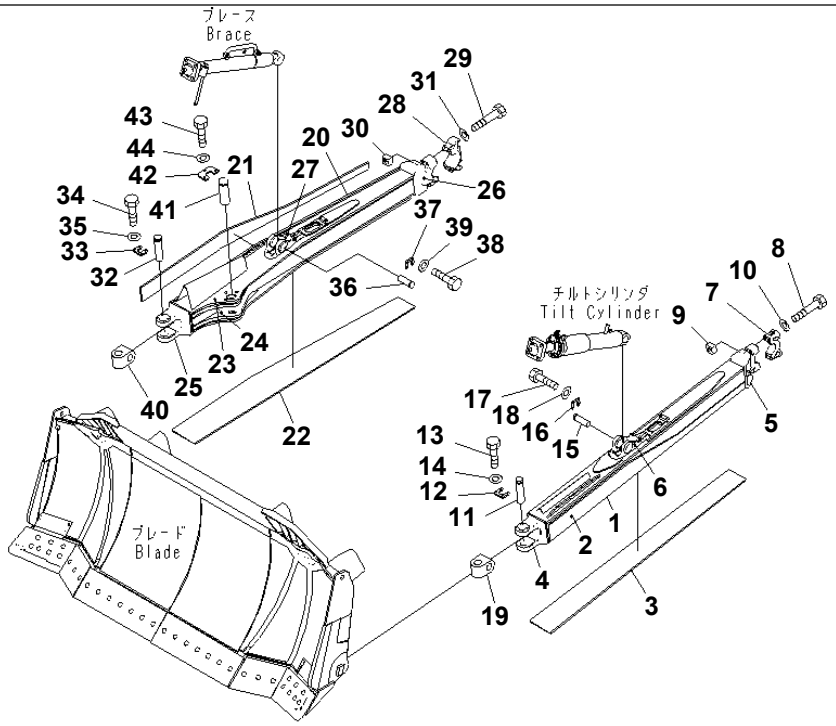

Ref. T2110-01A1 **Page 330020**

D155A-6 S/N 85001-UP
DOZER FRAME (REINFORCED TYPE)

Item	Part No.	Part Name	Qty	Serial No.
1	17A-71-46312	FRAME	1	85001-
2	17A-71-46320	· PLATE (WELDED)	1	85001-
3	17A-71-46331	· PLATE (WELDED)	1	85001-
4	17A-71-45321	· BRACKET (WELDED)	1	85001-
5	17A-71-45331	· BRACKET (WELDED)	1	85001-
6	17A-71-12481	· BRACKET (WELDED)	1	85001-
7	17A-71-12280	CAP	1	85001-
8	175-71-11491	BOLT	4	85001-
9	175-71-11520	NUT	4	85001-
10	01643-32260	WASHER	4	85001-
11	175-71-21221	PIN	1	85001-
12	175-71-21230	PLATE	1	85001-
13	01010-81440	BOLT	4	85001-
14	01643-31445	WASHER	4	85001-
15	154-71-21290	PIN	1	85001-
16	175-71-21330	PLATE	1	85001-
17	01010-81435	BOLT	4	85001-
18	01643-31445	WASHER	4	85001-
19	175-71-21261	JOINT	1	85001-
20	17A-71-46411	FRAME	1	85001-
21	17A-71-46420	· PLATE (WELDED)	1	85001-
22	17A-71-46431	· PLATE (WELDED)	1	85001-
23	17A-71-45H52	· PLATE (WELDED)	1	85001-
24	17A-71-45H62	· PLATE (WELDED)	1	85001-
25	17A-71-45421	· BRACKET (WELDED)	1	85001-
26	17A-71-45431	· BRACKET (WELDED)	1	85001-
27	17A-71-12132	· BRACKET (WELDED)	1	85001-
28	17A-71-45460	CAP	1	85001-
29	561-88-48950	BOLT	4	85001-
30	175-71-11520	NUT	4	85001-

Printed By : Dwi Iswanto (airafather6107170)

DOZER FRAME (REINFORCED TYPE)

Item	Part No.	Part Name	Qty	Serial No.
31	01643-32260	WASHER	4	85001-
32	175-71-21221	PIN	1	85001-
33	175-71-21230	PLATE	1	85001-
34	01010-81440	BOLT	4	85001-
35	01643-31445	WASHER	4	85001-
36	154-71-21290	PIN	1	85001-
37	175-71-21330	PLATE	1	85001-
38	01010-81435	BOLT	4	85001-
39	01643-31445	WASHER	4	85001-
40	175-71-21261	JOINT	1	85001-
41	09255-06245	PIN	1	85001-
42	17A-71-45490	LOCK	1	85001-
43	01010-82080	BOLT	3	85001-
44	01643-32060	WASHER	3	85001-

Printed By : Dwi Iswanto (airafather6107170)

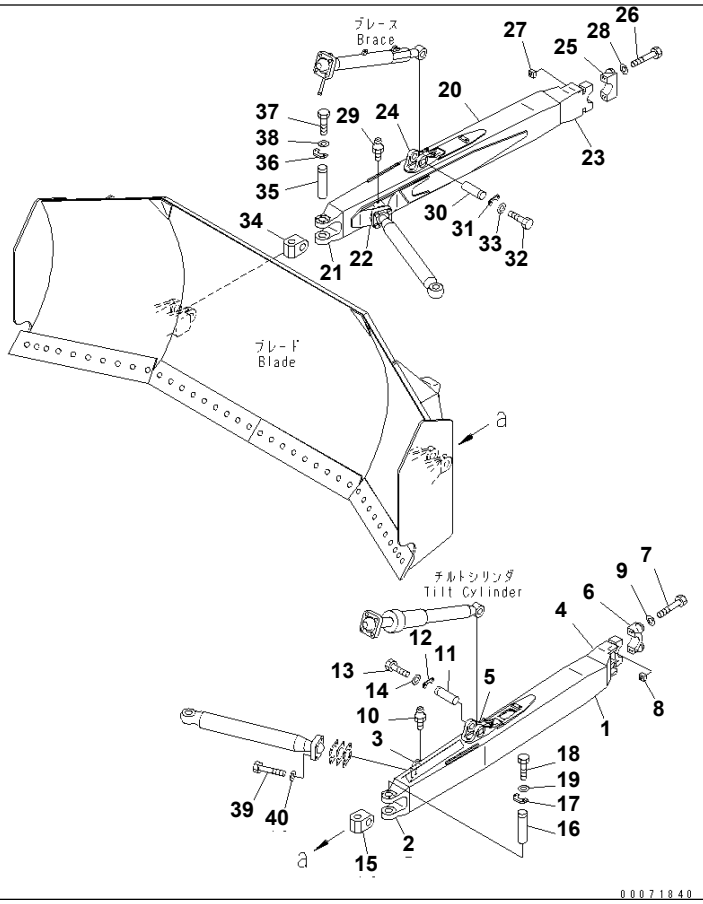

Ref. T2110-01A5 **Page 330030**

DOZER FRAME (FOR COAL DOZER)

Item	Part No.	Part Name	Qty	Serial No.
1	17A-73-41120	FRAME	1	85001-
2	175-71-21182	· BRACKET (WELDED)	1	85001-
3	175-71-31173	· BRACKET (WELDED)	1	85001-
4	17A-71-12241	· BRACKET (WELDED)	1	85001-
5	17A-71-12481	· BRACKET (WELDED)	1	85001-
6	17A-71-12280	CAP	1	85001-
7	175-71-11491	BOLT	4	85001-
8	175-71-11520	NUT	4	85001-
9	01643-32260	WASHER	4	85001-
10	07020-00000	FITTING,GREASE	1	85001-
11	154-71-21290	PIN	1	85001-
12	175-71-21330	PLATE	1	85001-
13	01010-81435	BOLT	4	85001-
14	01643-31445	WASHER	4	85001-
15	175-71-21261	JOINT	1	85001-
16	175-71-21221	PIN	1	85001-
17	175-71-21230	PLATE	1	85001-
18	01010-81440	BOLT	4	85001-
19	01643-31445	WASHER	4	85001-
20	17A-73-41130	FRAME	1	85001-
21	175-71-21182	· BRACKET (WELDED)	1	85001-
22	175-71-31622	· BRACKET (WELDED)	1	85001-
23	17A-71-12241	· BRACKET (WELDED)	1	85001-
24	17A-71-12132	· BRACKET (WELDED)	1	85001-
25	17A-71-12280	CAP	1	85001-
26	175-71-11491	BOLT	4	85001-
27	175-71-11520	NUT	4	85001-
28	01643-32260	WASHER	4	85001-
29	07020-00000	FITTING,GREASE	1	85001-
30	154-71-21290	PIN	1	85001-

Printed By : Dwi Iswanto (airafather6107170)

DOZER FRAME (FOR COAL DOZER)

Item	Part No.	Part Name	Qty	Serial No.
31	175-71-21330	PLATE	1	85001-
32	01010-81435	BOLT	4	85001-
33	01643-31445	WASHER	4	85001-
34	175-71-21261	JOINT	1	85001-
35	175-71-21221	PIN	1	85001-
36	175-71-21230	PLATE	1	85001-
37	01010-81440	BOLT	4	85001-
38	01643-31445	WASHER	4	85001-
39	01011-82700	BOLT	8	85001-
40	01643-32780	WASHER	8	85001-

Printed By : Dwi Iswanto (airafather6107170)

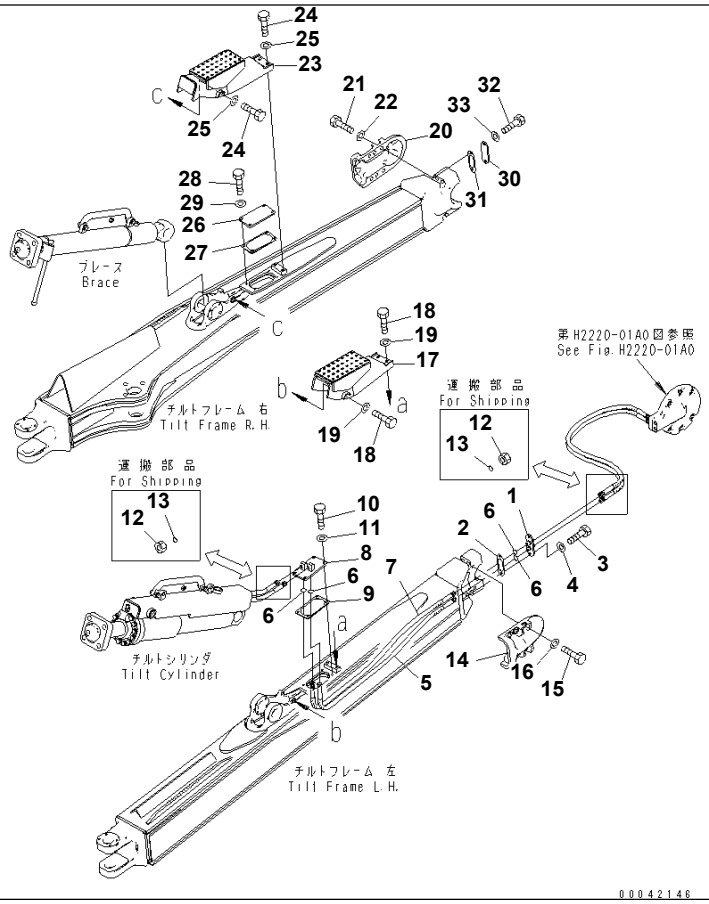

Ref. T2110-02A0 **Page 330040**

D155A-6 S/N 85001-UP

BLADE TILT PIPING (TILT DOZER)(#85001-85013)

Item	Part No.	Part Name	Qty	Serial No.
1	154-71-71820	FLANGE	1	85001-@
2	17A-71-12331	GASKET	1	85001-@
3	01010-81230	BOLT	2	85001-@
4	01643-31232	WASHER	2	85001-@
5	17A-71-45651	HOSE	1	85001-@
6	02896-11012	O-RING	4	85001-@
7	17A-71-45750	HOSE	1	85001-@
8	154-71-71840	FLANGE	1	85001-@
9	154-71-71850	GASKET	1	85001-@
10	01010-81225	BOLT	4	85001-@
11	01643-31232	WASHER	4	85001-@
12	02789-00422	PLUG	4	85001-@
13	02896-11012	O-RING	4	85001-@
14	17A-71-12291	COVER	1	85001-@
15	01010-82050	BOLT	6	85001-@
16	01643-32060	WASHER	6	85001-@
17	17A-71-45353	COVER	1	85014-@
	□17A-71-45352	COVER	1	85001-85013
18	01010-81635	BOLT	4	85001-@
19	01643-31645	WASHER	4	85001-@
20	17M-71-41920	COVER	1	85001-@
21	01010-82050	BOLT	6	85001-@
22	01643-32060	WASHER	6	85001-@
23	17A-71-45962	COVER	1	85014-@
	□17A-71-45961	COVER	1	85001-85013
24	01010-81635	BOLT	4	85001-@
25	01643-31645	WASHER	4	85001-@
26	17A-71-45470	PLATE	1	85001-@
27	154-71-71850	GASKET	1	85001-@
28	01010-81225	BOLT	4	85001-@

Printed By : Dwi Iswanto (airafather6107170)

BLADE TILT PIPING (TILT DOZER)(#85001-85013)

Item	Part No.	Part Name	Qty	Serial No.
29	01643-31232	WASHER	4	85001-@
30	17A-71-12471	PLATE	1	85001-@
31	17A-71-12331	GASKET	1	85001-@
32	01010-81230	BOLT	2	85001-@
33	01643-31232	WASHER	2	85001-@

Printed By : Dwi Iswanto (airafather6107170)

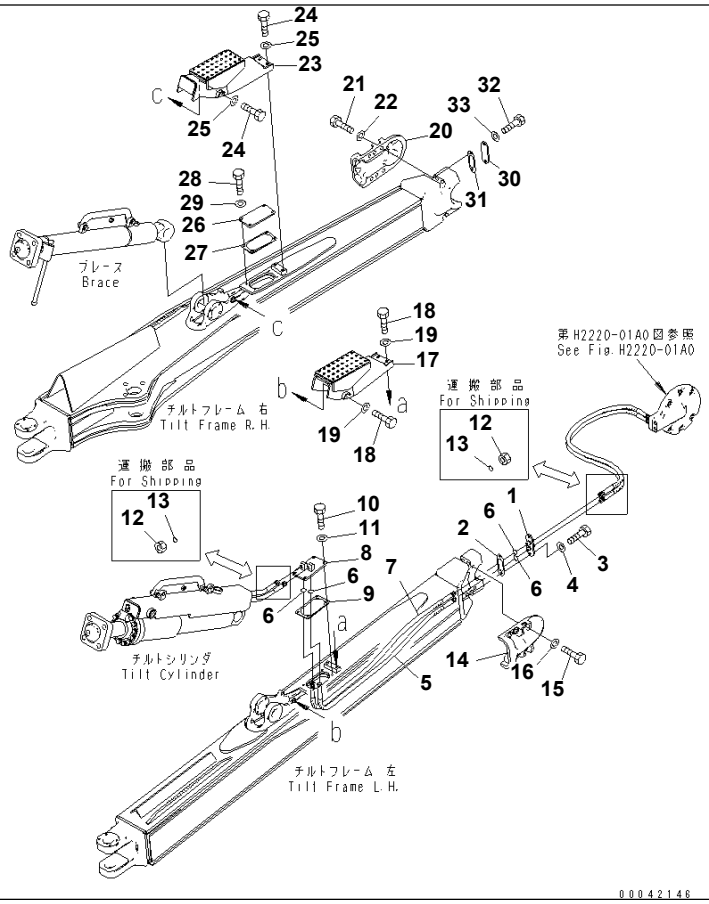

Ref. T2110-02A0A **Page 330050**

D155A-6 S/N 85001-UP
BLADE TILT PIPING (TILT DOZER)(#85014-)

Item	Part No.	Part Name	Qty	Serial No.
1	154-71-71820	FLANGE	1	85001-
2	17A-71-12331	GASKET	1	85001-
3	01010-81230	BOLT	2	85001-
4	01643-31232	WASHER	2	85001-
5	17A-71-45651	HOSE	1	85001-
6	02896-11012	O-RING	4	85001-
7	17A-71-45750	HOSE	1	85001-
8	154-71-71840	FLANGE	1	85001-
9	154-71-71850	GASKET	1	85001-
10	01010-81225	BOLT	4	85001-
11	01643-31232	WASHER	4	85001-
12	02789-00422	PLUG	4	85001-
13	02896-11012	O-RING	4	85001-
14	17A-71-12291	COVER	1	85001-
15	01010-82050	BOLT	6	85001-
16	01643-32060	WASHER	6	85001-
17	17A-71-45353	COVER	1	85014-
18	01010-81635	BOLT	4	85001-
19	01643-31645	WASHER	4	85001-
20	17M-71-41920	COVER	1	85001-
21	01010-82050	BOLT	6	85001-
22	01643-32060	WASHER	6	85001-
23	17A-71-45962	COVER	1	85014-
24	01010-81635	BOLT	4	85001-
25	01643-31645	WASHER	4	85001-
26	17A-71-45470	PLATE	1	85001-
27	154-71-71850	GASKET	1	85001-
28	01010-81225	BOLT	4	85001-
29	01643-31232	WASHER	4	85001-
30	17A-71-12471	PLATE	1	85001-

Printed By : Dwi Iswanto (airafather6107170)

BLADE TILT PIPING (TILT DOZER)(#85014-)

Item	Part No.	Part Name	Qty	Serial No.
31	17A-71-12331	GASKET	1	85001-
32	01010-81230	BOLT	2	85001-
33	01643-31232	WASHER	2	85001-

Printed By : Dwi Iswanto (airafather6107170)

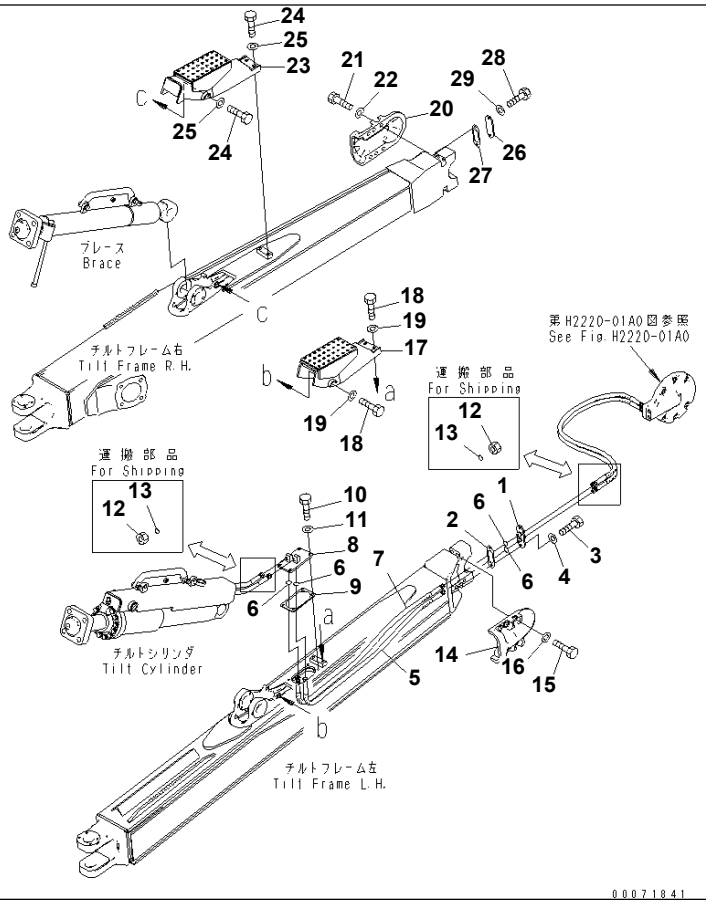

Ref. T2110-02A5 **Page 330060**

D155A-6 S/N 85001-UP
BLADE TILT PIPING (FOR COAL DOZER)

Item	Part No.	Part Name	Qty	Serial No.
1	154-71-71820	FLANGE	1	85001-
2	17A-71-12331	GASKET	1	85001-
3	01010-81230	BOLT	2	85001-
4	01643-31232	WASHER	2	85001-
5	17A-73-41140	HOSE	1	85001-
6	02896-11012	O-RING	4	85001-
7	17A-73-41150	HOSE	1	85001-
8	154-71-71840	FLANGE	1	85001-
9	154-71-71850	GASKET	1	85001-
10	01010-81225	BOLT	4	85001-
11	01643-31232	WASHER	4	85001-
12	02789-00422	PLUG	4	85001-
13	02896-11012	O-RING	4	85001-
14	17A-71-12291	COVER	1	85001-
15	01010-82050	BOLT	6	85001-
16	01643-32060	WASHER	6	85001-
17	17A-71-45353	COVER	1	85001-
18	01010-81635	BOLT	4	85001-
19	01643-31645	WASHER	4	85001-
20	17A-71-12291	COVER	1	85001-
21	01010-82050	BOLT	6	85001-
22	01643-32060	WASHER	6	85001-
23	17A-71-45962	COVER	1	85001-
24	01010-81635	BOLT	4	85001-
25	01643-31645	WASHER	4	85001-
26	17A-71-12471	PLATE	1	85001-
27	17A-71-12331	GASKET	1	85001-
28	01010-81230	BOLT	2	85001-
29	01643-31232	WASHER	2	85001-

Printed By : Dwi Iswanto (airafather6107170)

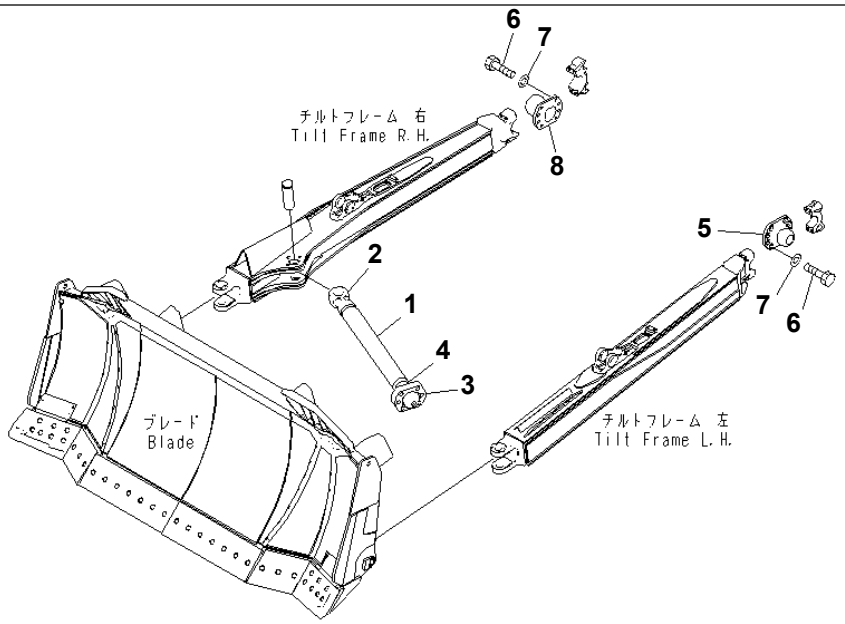

00042144

Ref. T2110-03A0 Page 330070

D155A-6 S/N 85001-UP

DOZER FRAME ARM AND TRUNNION (TILT DOZER)

Item	Part No.	Part Name	Qty	Serial No.
1	17A-71-45511	ARM	1	85001-
2	17A-71-45521	· JOINT (WELDED)	1	85001-
3	17A-71-45531	· CAP (WELDED)	1	85001-
4	17A-71-45541	· STUD (WELDED)	1	85001-
5	17A-71-12262	TRUNNION	1	85001-
6	01010-82450	BOLT	16	85001-
7	01643-32460	WASHER	16	85001-
8	17A-71-45970	TRUNNION	1	85001-

Printed By : Dwi Iswanto (airafather6107170)

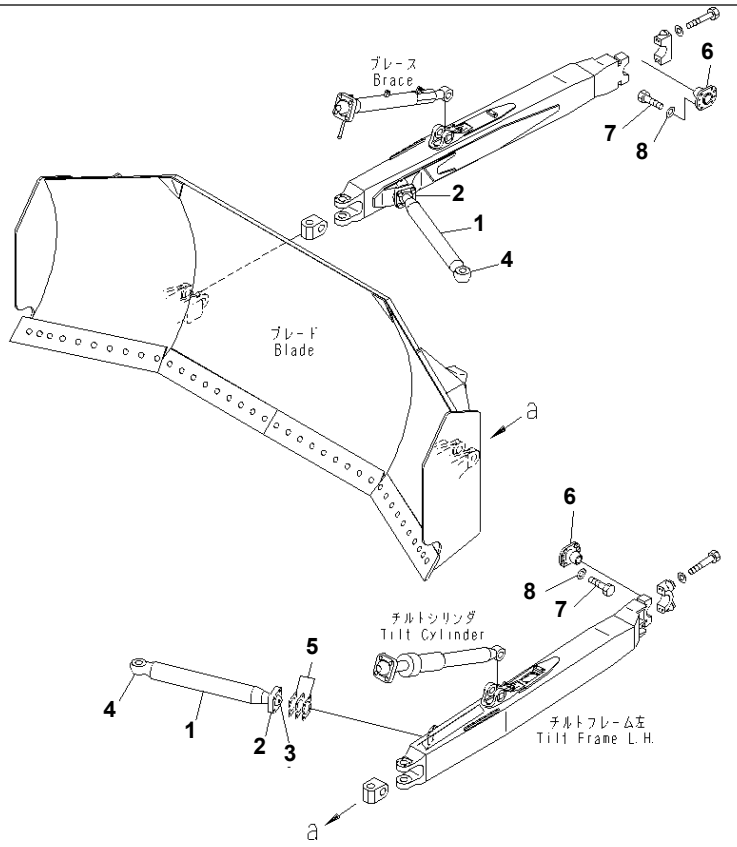

00071848

Ref. T2110-03A5 **Page 330080**

D155A-6 S/N 85001-UP

DOZER FRAME ARM AND TRUNNION (FOR COAL DOZER)

Item	Part No.	Part Name	Qty	Serial No.
1	175-71-31293	ARM ----------	2	85001-
2	175-71-31190	· CAP (WELDED)	1	85001-
3	175-71-31563	· STUD (WELDED)	1	85001-
4	195-71-22681	· JOINT (WELDED)	1	85001-
5	175-71-00302	SHIM ASS'Y	2	85001-
	175-71-31250	· SHIM¤ 0.5MM	8	85001-
	175-71-31260	· SHIM¤ 1.0MM	16	85001-
	175-71-31270	· SHIM¤ 2.3MM	8	85001-
6	17A-71-12262	TRUNNION	2	85001-
7	01010-82450	BOLT	16	85001-
8	01643-32460	WASHER	16	85001-

Printed By : Dwi Iswanto (airafather6107170)

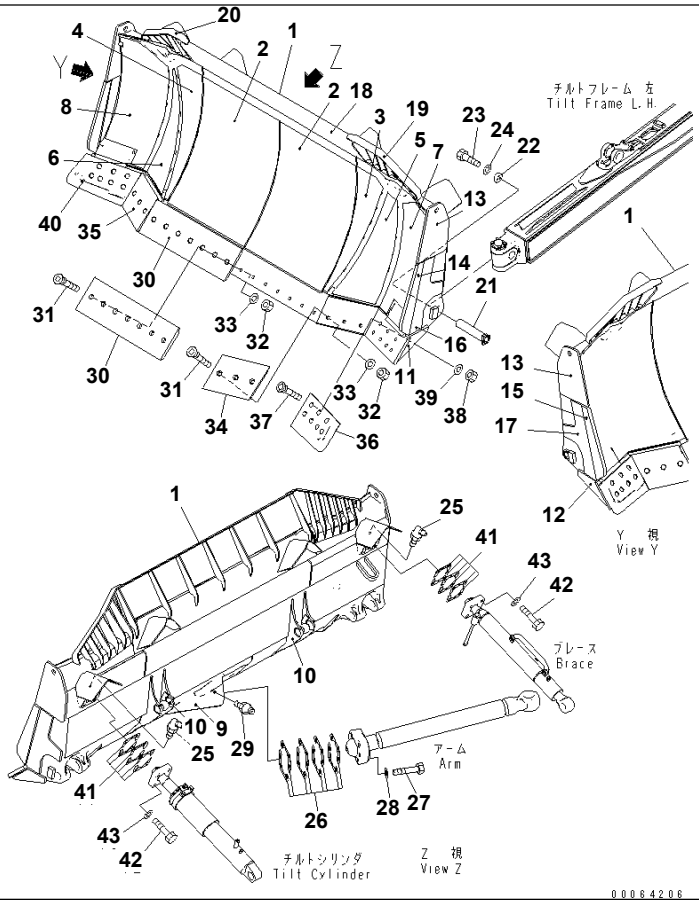

Ref. T2120-01A0 Page 330090

D155A-6 S/N 85001-UP

BLADE SIGMADOZER (REINFORCED TYPE)(#85001-85024)

Item	Part No.	Part Name	Qty	Serial No.
1	17A-71-45913	BLADE	1	85010-85024
	□17A-71-46113	BLADE	1	85001-85009
2	17A-71-46121	· PLATE (WELDED)	2	85001-85024
3	17A-71-46130	· PLATE (WELDED)	1	85001-85024
4	17A-71-46140	· PLATE (WELDED)	1	85001-85024
5	17A-71-46150	· PLATE (WELDED)	1	85001-85024
6	17A-71-46160	· PLATE (WELDED)	1	85001-85024
7	17A-71-46171	· PLATE (WELDED)	1	85001-85024
8	17A-71-46181	· PLATE (WELDED)	1	85001-85024
9	17A-71-45141	· BRACKET (WELDED)	1	85001-85024
10	17A-71-45151	· BRACKET (WELDED)	2	85001-85024
11	17A-71-45192	· PLATE (WELDED)	1	85001-85024
12	17A-71-45292	· PLATE (WELDED)	1	85001-85024
13	17A-71-45A90	· PLATE (WELDED)	2	85001-85024
14	17A-71-45D11	· PLATE (WELDED)	1	85001-85024
15	17A-71-45D21	· PLATE (WELDED)	1	85001-85024
16	17A-71-45D30	· PLATE (WELDED)	1	85001-85024
17	17A-71-45D40	· PLATE (WELDED)	1	85001-85024
18	17A-71-45923	· SPILL GUARD (WELDED)	1	85010-85024
	□17A-71-45922	· SPILL GUARD (WELDED)	1	85001-85009
19	17A-71-45933	· SPILL GUARD (WELDED)	1	85010-85024
	□17A-71-45932	· SPILL GUARD (WELDED)	1	85001-85009
20	17A-71-45943	· SPILL GUARD (WELDED)	1	85010-85024
	□17A-71-45942	· SPILL GUARD (WELDED)	1	85001-85009
21	17A-71-45383	PIN	2	85001-85024
22	17A-71-45390	PLATE	2	85001-85024
23	01010-81645	BOLT	6	85001-85024
24	01643-31645	WASHER	6	85001-85024
25	07020-00675	FITTING	2	85001-85024
26	17A-71-00410	SHIM ASS'Y	1	85001-85024

Printed By : Dwi Iswanto (airafather6107170)

BLADE SIGMADOZER (REINFORCED TYPE)(#85001-85024)

Item	Part No.	Part Name	Qty	Serial No.
	☆	･ SHIM¤ 2.0MM	2	85001-85024
	☆	･ SHIM¤ 1.0MM	4	85001-85024
	☆	･ SHIM¤ 0.5MM	4	85001-85024
27	01011-83335	BOLT	6	85001-85024
28	01643-33380	WASHER	6	85001-85024
29	07020-00000	FITTING	1	85001-85024
30	17A-71-45210	CUTTING EDGE	2	85001-85024
31	17A-71-12451	BOLT	20	85001-85024
32	17M-71-21530	NUT	20	85001-85024
33	01643-22460	WASHER	20	85001-85024
34	17A-71-46670	CUTTING EDGE	1	85010-85024
	□17A-71-45220	CUTTING EDGE	1	85001-85009
35	17A-71-46680	CUTTING EDGE	1	85010-85024
	□17A-71-45230	CUTTING EDGE	1	85001-85009
36	17A-71-46611	END BIT	1	85010-85024
	□17A-71-45712	END BIT	1	85001-85009
37	17A-71-12451	BOLT	14	85001-85024
38	17M-71-21530	NUT	14	85001-85024
39	01643-22460	WASHER	14	85001-85024
40	17A-71-46621	END BIT	1	85010-85024
	□17A-71-45722	END BIT	1	85001-85009
41	17A-71-00420	SHIM ASS'Y	2	85001-85024
	☆	･ SHIM¤ 0.5MM	2	85001-85024
	☆	･ SHIM¤ 1.0MM	4	85001-85024
	☆	･ SHIM¤ 2.3MM	2	85001-85024
42	01011-62700	BOLT	8	85001-85024
43	01643-32780	WASHER	8	85001-85024

Printed By : Dwi Iswanto (airafather6107170)

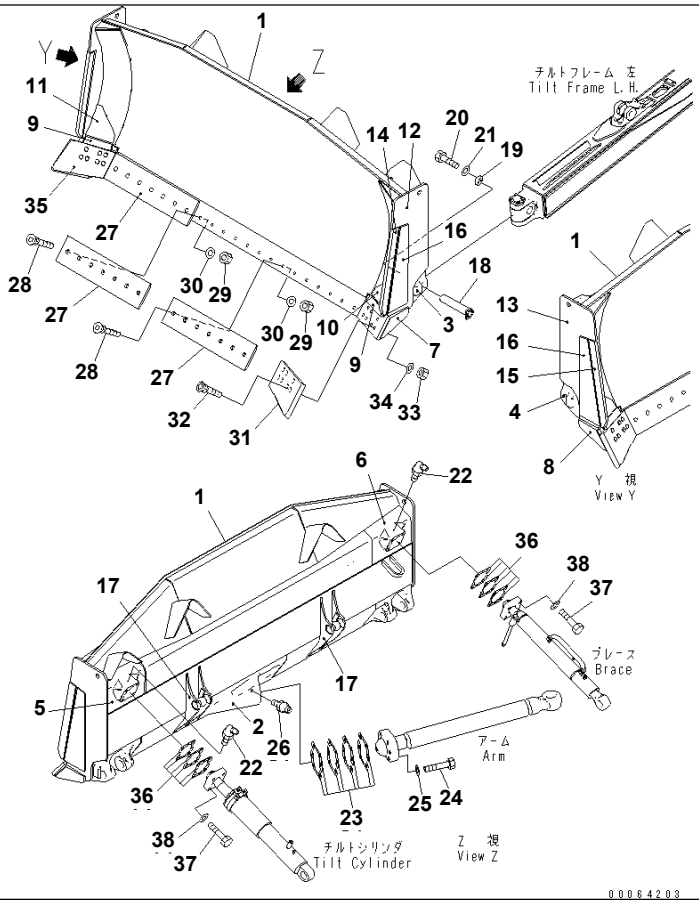

Ref. T2120-01A1 **Page 330100**

D155A-6 S/N 85001-UP
BLADE SEMI-U DOZER

Item	Part No.	Part Name	Qty	Serial No.
1	17A-71-41111	BLADE	1	85001-
2	17A-71-41142	· BRACKET (WELDED)	1	85001-
3	17A-71-41152	· BRACKET (WELDED)	1	85001-
4	17A-71-41162	· BRACKET (WELDED)	1	85001-
5	17A-71-41171	· PIVOT (WELDED)	1	85001-
6	17A-71-41181	· PIVOT (WELDED)	1	85001-
7	17A-71-41210	· PLATE (WELDED)	1	85001-
8	17A-71-41220	· PLATE (WELDED)	1	85001-
9	17A-71-41240	· STOPPER (WELDED)	2	85001-
10	17A-71-41250	· PLATE (WELDED)	1	85001-
11	17A-71-41260	· PLATE (WELDED)	1	85001-
12	17A-71-41C10	· PLATE (WELDED)	1	85001-
13	17A-71-41C21	· PLATE (WELDED)	1	85001-
14	17A-71-41C31	· PLATE (WELDED)	1	85001-
15	17A-71-41C41	· PLATE (WELDED)	1	85001-
16	17A-71-41C70	· PLATE (WELDED)	2	85001-
17	17A-71-45151	· BRACKET (WELDED)	2	85001-
18	17A-71-45383	PIN	2	85001-
19	17A-71-45390	PLATE	2	85001-
20	01010-81645	BOLT	6	85001-
21	01643-31645	WASHER	6	85001-
22	07020-00675	FITTING,GREASE	2	85001-
23	17A-71-00410	SHIM ASS'Y	1	85001-
	☆	· SHIM¤ 2.0MM	2	85001-
	☆	· SHIM¤ 1.0MM	4	85001-
	☆	· SHIM¤ 0.5MM	4	85001-
24	01011-83335	BOLT	6	85001-
25	01643-33380	WASHER	6	85001-
26	07020-00000	FITTING	1	85001-
27	175-70-26310	EDGE	3	85001-

Printed By : Dwi Iswanto (airafather6107170)

BLADE SEMI-U DOZER

Item	Part No.	Part Name	Qty	Serial No.
28	175-71-11454	BOLT	21	85001-
29	175-71-11530	NUT	21	85001-
30	01643-22245	WASHER	21	85001-
31	175-71-22272	BIT	1	85001-
32	175-71-11463	BOLT	14	85001-
33	175-71-11530	NUT	14	85001-
34	01643-22245	WASHER	14	85001-
35	175-71-22282	BIT	1	85001-
36	17A-71-00420	SHIM ASS'Y	2	85001-
	☆	· SHIM¤ 0.5MM	2	85001-
	☆	· SHIM¤ 1.0MM	4	85001-
	☆	· SHIM¤ 2.3MM	2	85001-
37	01011-62700	BOLT	8	85001-
38	01643-32780	WASHER	8	85001-

Printed By : Dwi Iswanto (airafather6107170)

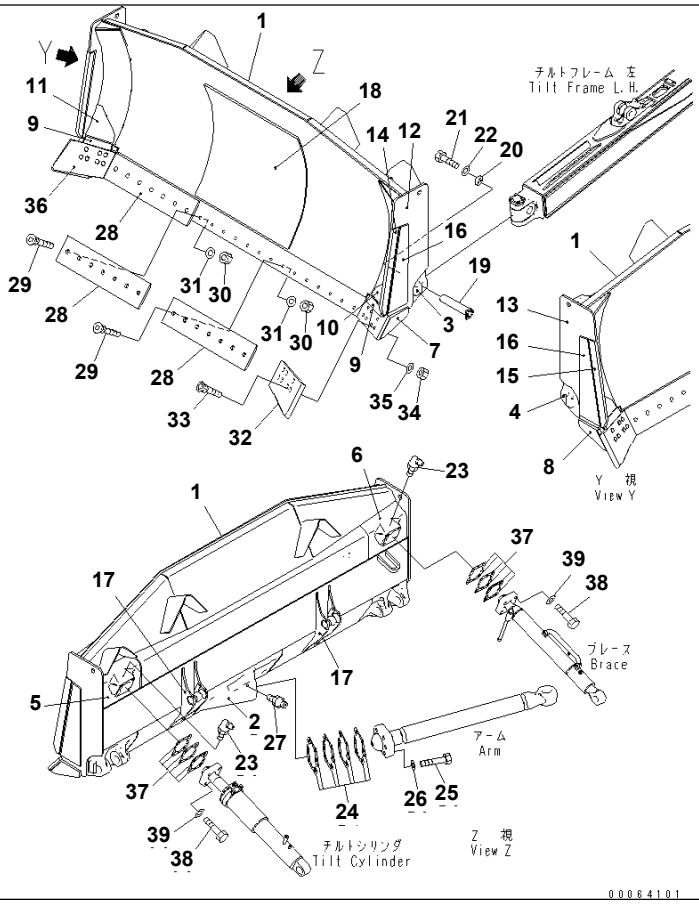

Ref. T2120-01A2 **Page 330110**

BLADE SEMI-U DOZER (WITH PUSHER PLATE)

Item	Part No.	Part Name	Qty	Serial No.
1	17A-937-4110	BLADE	1	85001-
2	17A-71-41142	· BRACKET (WELDED)	1	85001-
3	17A-71-41152	· BRACKET (WELDED)	1	85001-
4	17A-71-41162	· BRACKET (WELDED)	1	85001-
5	17A-71-41171	· PIVOT (WELDED)	1	85001-
6	17A-71-41181	· PIVOT (WELDED)	1	85001-
7	17A-71-41210	· PLATE (WELDED)	1	85001-
8	17A-71-41220	· PLATE (WELDED)	1	85001-
9	17A-71-41240	· STOPPER (WELDED)	2	85001-
10	17A-71-41250	· PLATE (WELDED)	1	85001-
11	17A-71-41260	· PLATE (WELDED)	1	85001-
12	17A-71-41C10	· PLATE (WELDED)	1	85001-
13	17A-71-41C21	· PLATE (WELDED)	1	85001-
14	17A-71-41C31	· PLATE (WELDED)	1	85001-
15	17A-71-41C41	· PLATE (WELDED)	1	85001-
16	17A-71-41C70	· PLATE (WELDED)	2	85001-
17	17A-71-45151	· BRACKET (WELDED)	2	85001-
18	175-937-4220	· PLATE (WELDED)	1	85001-
19	17A-71-45383	PIN	2	85001-
20	17A-71-45390	PLATE	2	85001-
21	01010-81645	BOLT	6	85001-
22	01643-31645	WASHER	6	85001-
23	07020-00675	FITTING	2	85001-
24	17A-71-00410	SHIM ASS'Y	1	85001-
	☆	SHIM¤ 2.0MM	2	85001-
	☆	SHIM¤ 1.0MM	4	85001-
	☆	SHIM¤ 0.5MM	4	85001-
25	01011-83335	BOLT	6	85001-
26	01643-33380	WASHER	6	85001-
27	07020-00000	FITTING	1	85001-

Printed By : Dwi Iswanto (airafather6107170)

BLADE SEMI-U DOZER (WITH PUSHER PLATE)

Item	Part No.	Part Name	Qty	Serial No.
28	175-70-26310	EDGE	3	85001-
29	175-71-11454	BOLT	21	85001-
30	175-71-11530	NUT	21	85001-
31	01643-22245	WASHER	21	85001-
32	175-71-22272	BIT	1	85001-
33	175-71-11463	BOLT	14	85001-
34	175-71-11530	NUT	14	85001-
35	01643-22245	WASHER	14	85001-
36	175-71-22282	BIT	1	85001-
37	17A-71-00420	SHIM ASS'Y	2	85001-
	☆	· SHIM¤ 0.5MM	2	85001-
	☆	· SHIM¤ 1.0MM	4	85001-
	☆	· SHIM¤ 2.3MM	2	85001-
38	01011-62700	BOLT	8	85001-
39	01643-32780	WASHER	8	85001-

Printed By : Dwi Iswanto (airafather6107170)

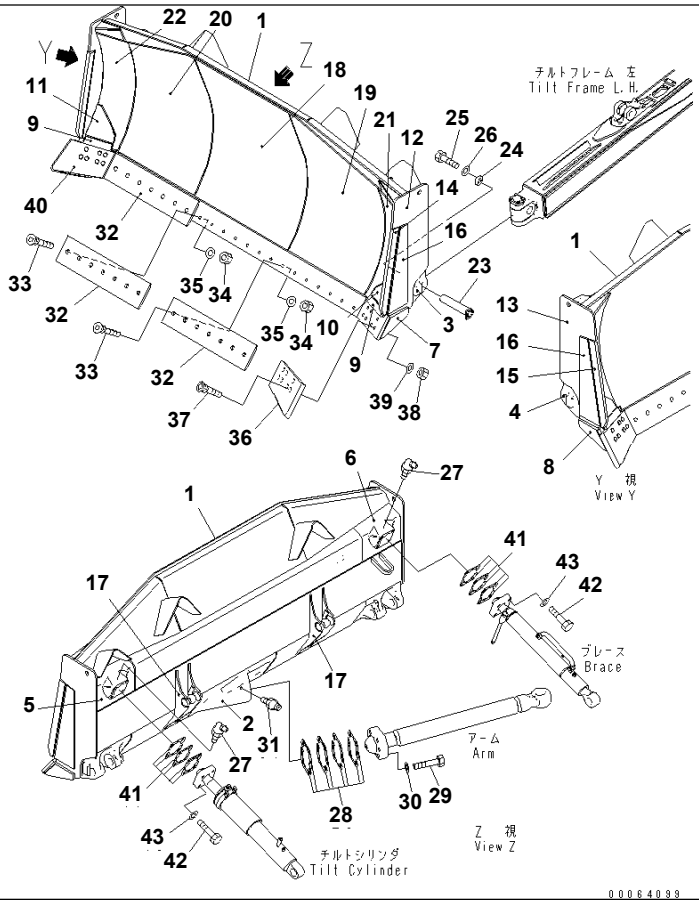

Ref. T2120-01A3 Page 330120

D155A-6 S/N 85001-UP

BLADE SEMI-U DOZER (REINFORCED TYPE)

Item	Part No.	Part Name	Qty	Serial No.
1	17A-71-42111	BLADE	1	85001-
2	17A-71-41142	· BRACKET (WELDED)	1	85001-
3	17A-71-41152	· BRACKET (WELDED)	1	85001-
4	17A-71-41162	· BRACKET (WELDED)	1	85001-
5	17A-71-41171	· PIVOT (WELDED)	1	85001-
6	17A-71-41181	· PIVOT (WELDED)	1	85001-
7	17A-71-41210	· PLATE (WELDED)	1	85001-
8	17A-71-41220	· PLATE (WELDED)	1	85001-
9	17A-71-41240	· STOPPER (WELDED)	2	85001-
10	17A-71-41250	· PLATE (WELDED)	1	85001-
11	17A-71-41260	· PLATE (WELDED)	1	85001-
12	17A-71-41C10	· PLATE (WELDED)	1	85001-
13	17A-71-41C21	· PLATE (WELDED)	1	85001-
14	17A-71-41C31	· PLATE (WELDED)	1	85001-
15	17A-71-41C41	· PLATE (WELDED)	1	85001-
16	17A-71-41C70	· PLATE (WELDED)	2	85001-
17	17A-71-45151	· BRACKET (WELDED)	2	85001-
18	17A-71-42120	· PLATE (WELDED)	1	85001-
19	17A-71-42130	· PLATE (WELDED)	1	85001-
20	17A-71-42140	· PLATE (WELDED)	1	85001-
21	17A-71-42150	· PLATE (WELDED)	1	85001-
22	17A-71-42160	· PLATE (WELDED)	1	85001-
23	17A-71-45383	PIN	2	85001-
24	17A-71-45390	PLATE	2	85001-
25	01010-81645	BOLT	6	85001-
26	01643-31645	WASHER	6	85001-
27	07020-00675	FITTING,GREASE	2	85001-
28	17A-71-00410	SHIM ASS'Y	1	85001-
	☆	· SHIM¤ 2.0MM	2	85001-
	☆	· SHIM¤ 1.0MM	4	85001-

Printed By : Dwi Iswanto (airafather6107170)

BLADE SEMI-U DOZER (REINFORCED TYPE)

Item	Part No.	Part Name	Qty	Serial No.
	☆	· SHIM¤ 0.5MM	4	85001-
29	01011-83335	BOLT	6	85001-
30	01643-33380	WASHER	6	85001-
31	07020-00000	FITTING,GREASE	1	85001-
32	175-70-26310	EDGE	3	85001-
33	175-71-11454	BOLT	21	85001-
34	175-71-11530	NUT	21	85001-
35	01643-22245	WASHER	21	85001-
36	175-71-22272	BIT	1	85001-
37	175-71-11463	BOLT	14	85001-
38	175-71-11530	NUT	14	85001-
39	01643-22245	WASHER	14	85001-
40	175-71-22282	BIT	1	85001-
41	17A-71-00420	SHIM ASS'Y	2	85001-
	☆	· SHIM¤ 0.5MM	2	85001-
	☆	· SHIM¤ 1.0MM	4	85001-
	☆	· SHIM¤ 2.3MM	2	85001-
42	01011-62700	BOLT	8	85001-
43	01643-32780	WASHER	8	85001-

Printed By : Dwi Iswanto (airafather6107170)

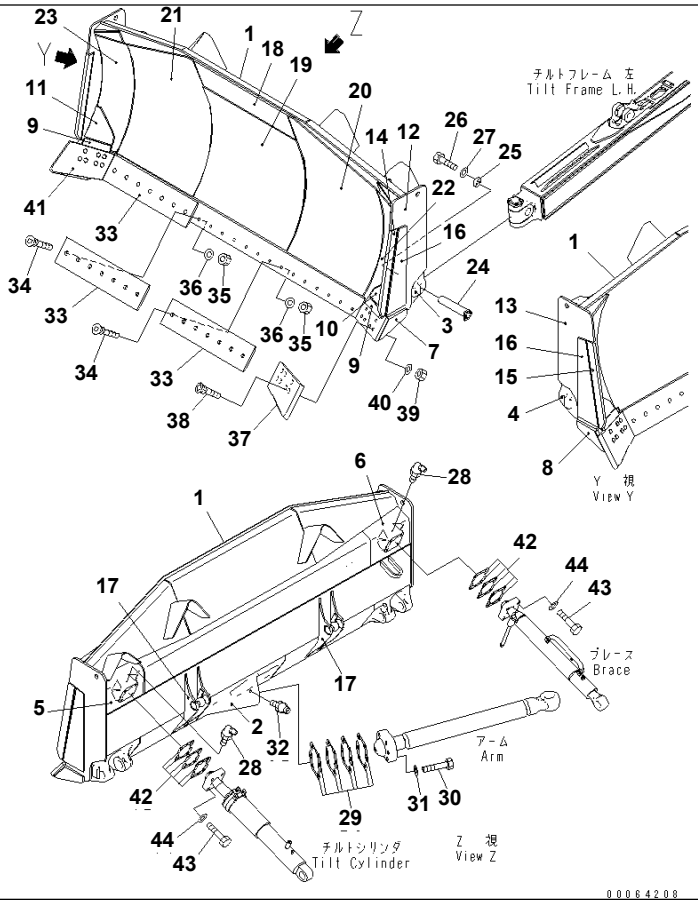

Ref. T2120-01A4 Page 330130

D155A-6 S/N 85001-UP

BLADE SEMI-U DOZER (REINFORCED TYPE) (WITH PUSH PLATE)

Item	Part No.	Part Name	Qty	Serial No.
1	17A-937-4210	BLADE	1	85001-
2	17A-71-41142	· BRACKET (WELDED)	1	85001-
3	17A-71-41152	· BRACKET (WELDED)	1	85001-
4	17A-71-41162	· BRACKET (WELDED)	1	85001-
5	17A-71-41171	· PIVOT (WELDED)	1	85001-
6	17A-71-41181	· PIVOT (WELDED)	1	85001-
7	17A-71-41210	· PLATE (WELDED)	1	85001-
8	17A-71-41220	· PLATE (WELDED)	1	85001-
9	17A-71-41240	· STOPPER (WELDED)	2	85001-
10	17A-71-41250	· PLATE (WELDED)	1	85001-
11	17A-71-41260	· PLATE (WELDED)	1	85001-
12	17A-71-41C10	· PLATE (WELDED)	1	85001-
13	17A-71-41C21	· PLATE (WELDED)	1	85001-
14	17A-71-41C31	· PLATE (WELDED)	1	85001-
15	17A-71-41C41	· PLATE (WELDED)	1	85001-
16	17A-71-41C70	· PLATE (WELDED)	2	85001-
17	17A-71-45151	· BRACKET (WELDED)	2	85001-
18	175-71-33220	· PLATE (WELDED)	1	85001-
19	17A-937-4220	· PLATE (WELDED)	1	85001-
20	17A-71-42130	· PLATE (WELDED)	1	85001-
21	17A-71-42140	· PLATE (WELDED)	1	85001-
22	17A-71-42150	· PLATE (WELDED)	1	85001-
23	17A-71-42160	· PLATE (WELDED)	1	85001-
24	17A-71-45383	PIN	2	85001-
25	17A-71-45390	PLATE	2	85001-
26	01010-81645	BOLT	6	85001-
27	01643-31645	WASHER	6	85001-
28	07020-00675	FITTING,GREASE	2	85001-
29	17A-71-00410	SHIM ASS'Y	1	85001-
	☆	· SHIM¤ 2.0MM	2	85001-

Printed By : Dwi Iswanto (airafather6107170)

BLADE SEMI-U DOZER (REINFORCED TYPE) (WITH PUSH PLATE)

Item	Part No.	Part Name	Qty	Serial No.
	☆	· SHIM¤ 1.0MM	4	85001-
	☆	· SHIM¤ 0.5MM	4	85001-
30	01011-83335	BOLT	6	85001-
31	01643-33380	WASHER	6	85001-
32	07020-00000	FITTING,GREASE	1	85001-
33	175-70-26310	EDGE	3	85001-
34	175-71-11454	BOLT	21	85001-
35	175-71-11530	NUT	21	85001-
36	01643-22245	WASHER	21	85001-
37	175-71-22272	BIT	1	85001-
38	175-71-11463	BOLT	14	85001-
39	175-71-11530	NUT	14	85001-
40	01643-22245	WASHER	14	85001-
41	175-71-22282	BIT	1	85001-
42	17A-71-00420	SHIM ASS'Y	2	85001-
	☆	· SHIM¤ 0.5MM	2	85001-
	☆	· SHIM¤ 1.0MM	4	85001-
	☆	· SHIM¤ 2.3MM	2	85001-
43	01011-62700	BOLT	8	85001-
44	01643-32780	WASHER	8	85001-

Printed By : Dwi Iswanto (airafather6107170)

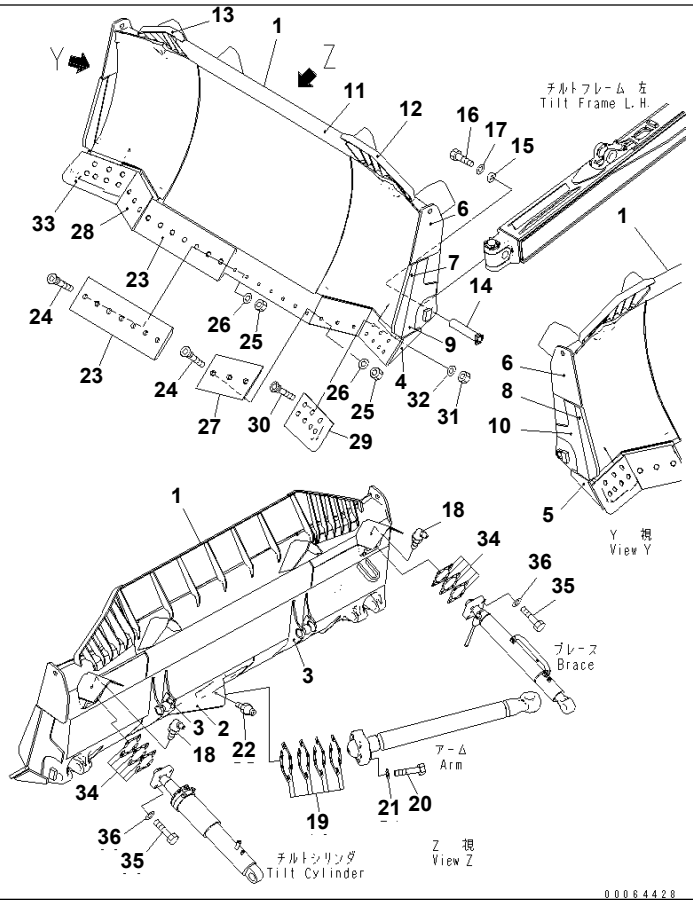

Ref. T2120-01A5 **Page 330140**

D155A-6 S/N 85001-UP

BLADE SIGMADOZER(#85001-85013)

Item	Part No.	Part Name	Qty	Serial No.
1	17A-71-45913	BLADE	1	85014-@
	□17A-71-45912	· BLADE	1	85001-85013
2	17A-71-45141	· BRACKET (WELDED)	1	85001-@
3	17A-71-45151	· BRACKET (WELDED)	2	85001-@
4	17A-71-45192	· PLATE (WELDED)	1	85001-@
5	17A-71-45292	· PLATE (WELDED)	1	85001-@
6	17A-71-45A90	· PLATE (WELDED)	2	85001-85013
7	17A-71-45D11	· PLATE (WELDED)	1	85001-85013
8	17A-71-45D21	· PLATE (WELDED)	1	85001-85013
9	17A-71-45D30	· PLATE (WELDED)	1	85001-@
10	17A-71-45D40	· PLATE (WELDED)	1	85001-@
11	17A-71-45922	· SPILL GUARD (WELDED)	1	85001-85013
12	17A-71-45932	· SPILL GUARD (WELDED)	1	85001-85013
13	17A-71-45942	· SPILL GUARD (WELDED)	1	85001-85013
14	17A-71-45383	PIN	2	85001-@
15	17A-71-45390	PLATE	2	85001-@
16	01010-81645	BOLT	6	85001-@
17	01643-31645	WASHER	6	85001-@
18	07020-00675	FITTING,GREASE	2	85001-@
19	17A-71-00410	SHIM ASS'Y	1	85001-@
	☆	· SHIM¤ 2.0MM	2	85001-@
	☆	· SHIM¤ 1.0MM	4	85001-@
	☆	· SHIM¤ 0.5MM	4	85001-@
20	01011-83335	BOLT	6	85001-@
21	01643-33380	WASHER	6	85001-@
22	07020-00000	FITTING,GREASE	1	85001-@
23	17A-71-45210	CUTTING EDGE	2	85001-@
24	17A-71-12451	BOLT	20	85001-@
25	17M-71-21530	NUT	20	85001-@
26	01643-22460	WASHER	20	85001-@

Printed By : Dwi Iswanto (airafather6107170)

BLADE SIGMADOZER(#85001-85013)

Item	Part No.	Part Name	Qty	Serial No.
27	17A-71-45220	CUTTING EDGE	1	85001-@
28	17A-71-45230	CUTTING EDGE	1	85001-@
29	17A-71-45712	END BIT	1	85001-@
30	17A-71-12451	BOLT	14	85001-@
31	17M-71-21530	NUT	14	85001-@
32	01643-22460	WASHER	14	85001-@
33	17A-71-45722	END BIT	1	85001-@
34	17A-71-00420	SHIM ASS'Y	2	85001-@
	☆	· SHIM¤ 0.5MM	2	85001-@
	☆	· SHIM¤ 1.0MM	4	85001-@
	☆	· SHIM¤ 2.3MM	2	85001-@
35	01011-62700	BOLT	8	85001-@
36	01643-32780	WASHER	8	85001-@

Printed By : Dwi Iswanto (airafather6107170)

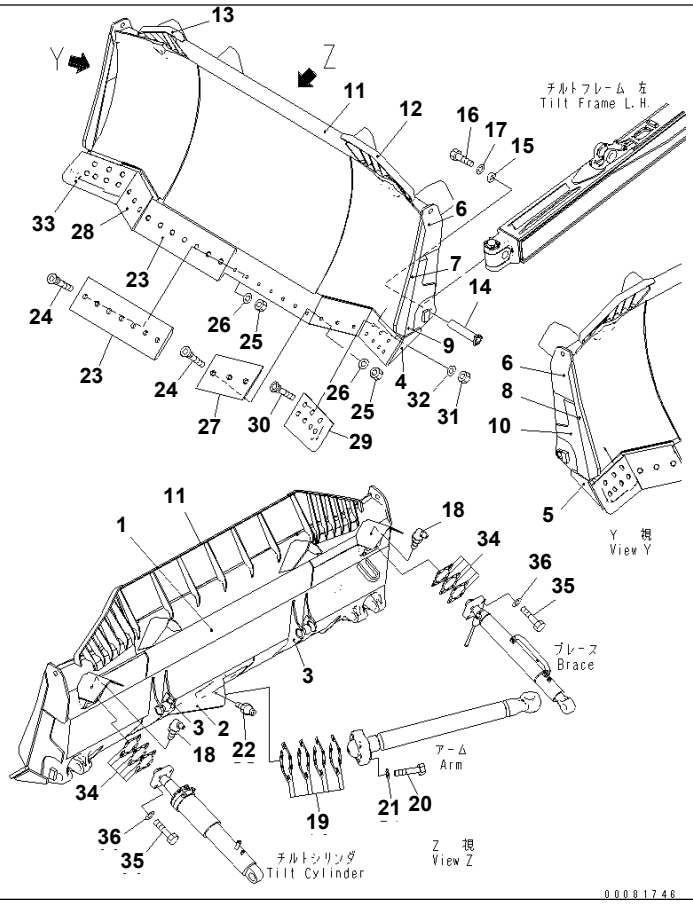

Ref. T2120-01A5A **Page 330150**

D155A-6 S/N 85001-UP
BLADE SIGMADOZER(#85014-)

Item	Part No.	Part Name	Qty	Serial No.
1	17A-71-45913	BLADE	1	85014-
2	17A-71-45141	· BRACKET (WELDED)	1	85001-
3	17A-71-45151	· BRACKET (WELDED)	2	85001-
4	17A-71-45192	· PLATE (WELDED)	1	85001-
5	17A-71-45292	· PLATE (WELDED)	1	85001-
6	17A-71-45A91	· PLATE (WELDED)	2	85014-
7	17A-71-45D12	· PLATE (WELDED)	1	85014-
8	17A-71-45D22	· PLATE (WELDED)	1	85014-
9	17A-71-45D30	· PLATE (WELDED)	1	85001-
10	17A-71-45D40	· PLATE (WELDED)	1	85001-
11	17A-71-45923	· SPILL GUARD (WELDED)	1	85014-
12	17A-71-45933	· SPILL GUARD (WELDED)	1	85014-
13	17A-71-45943	· SPILL GUARD (WELDED)	1	85014-
14	17A-71-45383	PIN	2	85001-
15	17A-71-45390	PLATE	2	85001-
16	01010-81645	BOLT	6	85001-
17	01643-31645	WASHER	6	85001-
18	07020-00675	FITTING,GREASE	2	85001-
19	17A-71-00410	SHIM ASS'Y	1	85001-
	☆	· SHIM¤ 2.0MM	2	85001-
	☆	· SHIM¤ 1.0MM	4	85001-
	☆	· SHIM¤ 0.5MM	4	85001-
20	01011-83335	BOLT	6	85001-
21	01643-33380	WASHER	6	85001-
22	07020-00000	FITTING,GREASE	1	85001-
23	17A-71-45210	CUTTING EDGE	2	85001-
24	17A-71-12451	BOLT	20	85001-
25	17M-71-21530	NUT	20	85001-
26	01643-22460	WASHER	20	85001-
27	17A-71-45220	CUTTING EDGE	1	85001-

Printed By : Dwi Iswanto (airafather6107170)

BLADE SIGMADOZER(#85014-)

Item	Part No.	Part Name	Qty	Serial No.
28	17A-71-45230	CUTTING EDGE	1	85001-
29	17A-71-45712	END BIT	1	85001-
30	17A-71-12451	BOLT	14	85001-
31	17M-71-21530	NUT	14	85001-
32	01643-22460	WASHER	14	85001-
33	17A-71-45722	END BIT	1	85001-
34	17A-71-00420	SHIM ASS'Y	2	85001-
	☆	･ SHIM¤ 0.5MM	2	85001-
	☆	･ SHIM¤ 1.0MM	4	85001-
	☆	･ SHIM¤ 2.3MM	2	85001-
35	01011-62700	BOLT	8	85001-
36	01643-32780	WASHER	8	85001-

Printed By : Dwi Iswanto (airafather6107170)

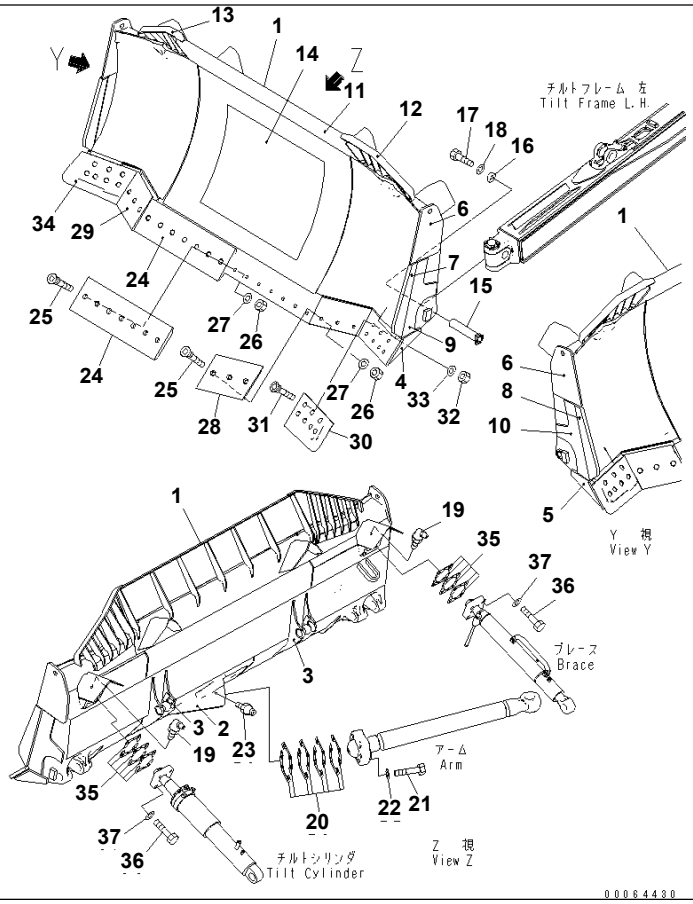

Ref. T2120-01A6 Page 330160

D155A-6 S/N 85001-UP

BLADE SIGMADOZER (WITH PUSH PLATE)(#85001-85013)

Item	Part No.	Part Name	Qty	Serial No.
1	17A-937-4510	BLADE	1	85001-85013
2	17A-71-45141	· BRACKET (WELDED)	1	85001-@
3	17A-71-45151	· BRACKET (WELDED)	2	85001-@
4	17A-71-45192	· PLATE (WELDED)	1	85001-@
5	17A-71-45292	· PLATE (WELDED)	1	85001-@
6	17A-71-45A90	· PLATE (WELDED)	2	85001-85013
7	17A-71-45D11	· PLATE (WELDED)	1	85001-85013
8	17A-71-45D21	· PLATE (WELDED)	1	85001-85013
9	17A-71-45D30	· PLATE (WELDED)	1	85001-@
10	17A-71-45D40	· PLATE (WELDED)	1	85001-@
11	17A-71-45922	· SPILL GUARD (WELDED)	1	85001-85013
12	17A-71-45932	· SPILL GUARD (WELDED)	1	85001-85013
13	17A-71-45942	· SPILL GUARD (WELDED)	1	85001-85013
14	17A-937-4520	· PLATE (WELDED)	1	85001-@
15	17A-71-45383	PIN	2	85001-@
16	17A-71-45390	PLATE	2	85001-@
17	01010-81645	BOLT	6	85001-@
18	01643-31645	WASHER	6	85001-@
19	07020-00675	FITTING,GREASE	2	85001-@
20	17A-71-00410	SHIM ASS'Y	1	85001-@
	☆	· SHIM¤ 2.0MM	2	85001-@
	☆	· SHIM¤ 1.0MM	4	85001-@
	☆	· SHIM¤ 0.5MM	4	85001-@
21	01011-83335	BOLT	6	85001-@
22	01643-33380	WASHER	6	85001-@
23	07020-00000	FITTING,GREASE	1	85001-@
24	17A-71-45210	CUTTING EDGE	2	85001-@
25	17A-71-12451	BOLT	20	85001-@
26	17M-71-21530	NUT	20	85001-@
27	01643-22460	WASHER	20	85001-@

Printed By : Dwi Iswanto (airafather6107170)

BLADE SIGMADOZER (WITH PUSH PLATE)(#85001-85013)

Item	Part No.	Part Name	Qty	Serial No.
28	17A-71-45220	CUTTING EDGE	1	85001-@
29	17A-71-45230	CUTTING EDGE	1	85001-@
30	17A-71-45712	END BIT	1	85001-@
31	17A-71-12451	BOLT	14	85001-@
32	17M-71-21530	NUT	14	85001-@
33	01643-22460	WASHER	14	85001-@
34	17A-71-45722	END BIT	1	85001-@
35	17A-71-00420	SHIM ASS'Y	2	85001-@
	☆	･ SHIM¤ 0.5MM	2	85001-@
	☆	･ SHIM¤ 1.0MM	4	85001-@
	☆	･ SHIM¤ 2.3MM	2	85001-@
36	01011-62700	BOLT	8	85001-@
37	01643-32780	WASHER	8	85001-@

Printed By : Dwi Iswanto (airafather6107170)

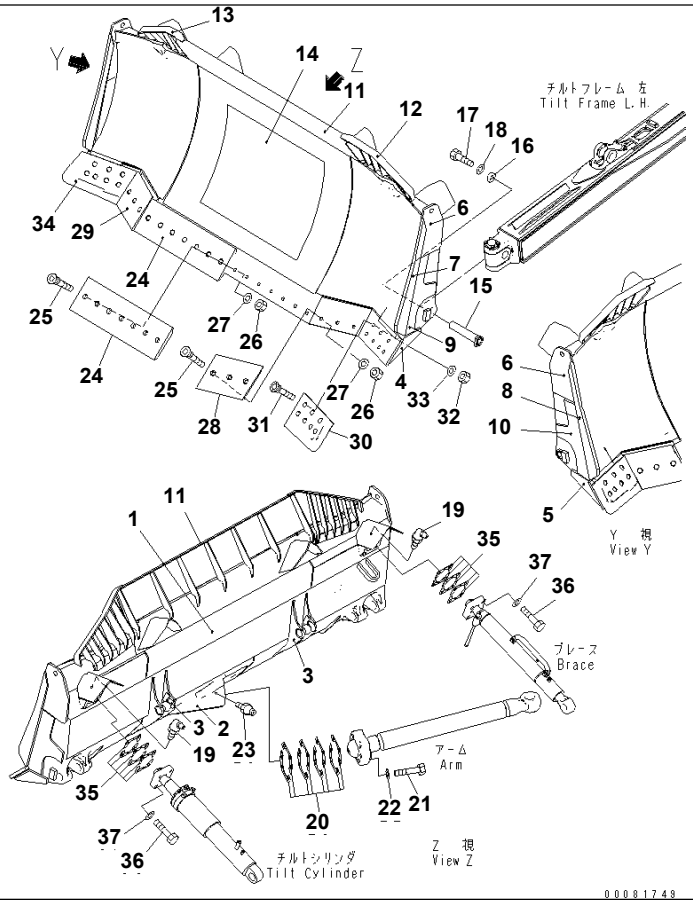

Ref. T2120-01A6A Page 330170

D155A-6 S/N 85001-UP

BLADE SIGMADOZER (WITH PUSH PLATE)(#85014-)

Item	Part No.	Part Name	Qty	Serial No.
1	17A-937-4511	BLADE	1	85014-
2	17A-71-45141	· BRACKET (WELDED)	1	85001-
3	17A-71-45151	· BRACKET (WELDED)	2	85001-
4	17A-71-45192	· PLATE (WELDED)	1	85001-
5	17A-71-45292	· PLATE (WELDED)	1	85001-
6	17A-71-45A91	· PLATE (WELDED)	2	85014-
7	17A-71-45D12	· PLATE (WELDED)	1	85014-
8	17A-71-45D22	· PLATE (WELDED)	1	85014-
9	17A-71-45D30	· PLATE (WELDED)	1	85001-
10	17A-71-45D40	· PLATE (WELDED)	1	85001-
11	17A-71-45923	· SPILL GUARD (WELDED)	1	85014-
12	17A-71-45933	· SPILL GUARD (WELDED)	1	85014-
13	17A-71-45943	· SPILL GUARD (WELDED)	1	85014-
14	17A-937-4520	· PLATE (WELDED)	1	85001-
15	17A-71-45383	PIN	2	85001-
16	17A-71-45390	PLATE	2	85001-
17	01010-81645	BOLT	6	85001-
18	01643-31645	WASHER	6	85001-
19	07020-00675	FITTING,GREASE	2	85001-
20	17A-71-00410	SHIM ASS'Y	1	85001-
	☆	· SHIM¤ 2.0MM	2	85001-
	☆	· SHIM¤ 1.0MM	4	85001-
	☆	· SHIM¤ 0.5MM	4	85001-
21	01011-83335	BOLT	6	85001-
22	01643-33380	WASHER	6	85001-
23	07020-00000	FITTING,GREASE	1	85001-
24	17A-71-45210	CUTTING EDGE	2	85001-
25	17A-71-12451	BOLT	20	85001-
26	17M-71-21530	NUT	20	85001-
27	01643-22460	WASHER	20	85001-

Printed By : Dwi Iswanto (airafather6107170)

BLADE SIGMADOZER (WITH PUSH PLATE)(#85014-)

Item	Part No.	Part Name	Qty	Serial No.
28	17A-71-45220	CUTTING EDGE	1	85001-
29	17A-71-45230	CUTTING EDGE	1	85001-
30	17A-71-45712	END BIT	1	85001-
31	17A-71-12451	BOLT	14	85001-
32	17M-71-21530	NUT	14	85001-
33	01643-22460	WASHER	14	85001-
34	17A-71-45722	END BIT	1	85001-
35	17A-71-00420	SHIM ASS'Y	2	85001-
	☆	･ SHIM¤ 0.5MM	2	85001-
	☆	･ SHIM¤ 1.0MM	4	85001-
	☆	･ SHIM¤ 2.3MM	2	85001-
36	01011-62700	BOLT	8	85001-
37	01643-32780	WASHER	8	85001-

Printed By : Dwi Iswanto (airafather6107170)

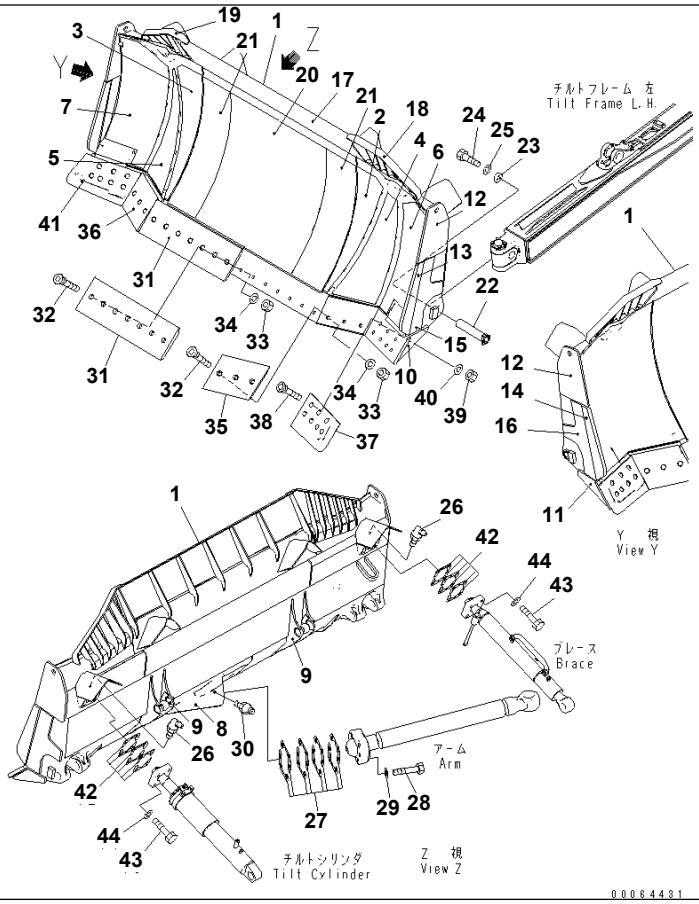

Ref. T2120-01A7 Page 330180

D155A-6 S/N 85001-UP

BLADE SIGMADOZER (REINFORCED TYPE) (WITH PUSH PLATE)

Item	Part No.	Part Name	Qty	Serial No.
1	17A-937-4611	BLADE	1	85010-
	□17A-937-4610	BLADE	1	85001-85009
2	17A-71-46130	· PLATE (WELDED)	1	85001-
3	17A-71-46140	· PLATE (WELDED)	1	85001-
4	17A-71-46150	· PLATE (WELDED)	1	85001-
5	17A-71-46160	· PLATE (WELDED)	1	85001-
6	17A-71-46171	· PLATE (WELDED)	1	85001-
7	17A-71-46181	· PLATE (WELDED)	1	85001-
8	17A-71-45141	· BRACKET (WELDED)	1	85001-
9	17A-71-45151	· BRACKET (WELDED)	2	85001-
10	17A-71-45192	· PLATE (WELDED)	1	85001-
11	17A-71-45292	· PLATE (WELDED)	1	85001-
12	17A-71-45A90	· PLATE (WELDED)	2	85001-
13	17A-71-45D11	· PLATE (WELDED)	1	85001-
14	17A-71-45D21	· PLATE (WELDED)	1	85001-
15	17A-71-45D30	· PLATE (WELDED)	1	85001-
16	17A-71-45D40	· PLATE (WELDED)	1	85001-
17	17A-71-45923	· SPILL GUARD (WELDED)	1	85010-
	□17A-71-45922	· SPILL GUARD (WELDED)	1	85001-85009
18	17A-71-45933	· SPILL GUARD (WELDED)	1	85010-
	□17A-71-45932	· SPILL GUARD (WELDED)	1	85001-85009
19	17A-71-45943	· SPILL GUARD (WELDED)	1	85010-
	□17A-71-45942	· SPILL GUARD (WELDED)	1	85001-85009
20	17A-937-4520	· PLATE (WELDED)	1	85001-
21	17A-71-46190	· PLATE (WELDED)	2	85001-
22	17A-71-45383	PIN	2	85001-
23	17A-71-45390	PLATE	2	85001-
24	01010-81645	BOLT	6	85001-
25	01643-31645	WASHER	6	85001-
26	07020-00675	FITTING,GREASE	2	85001-

Printed By : Dwi Iswanto (airafather6107170)

BLADE SIGMADOZER (REINFORCED TYPE) (WITH PUSH PLATE)

Item	Part No.	Part Name	Qty	Serial No.
27	17A-71-00410	SHIM ASS'Y	1	85001-
	☆	· SHIM¤ 2.0MM	2	85001-
	☆	· SHIM¤ 1.0MM	4	85001-
	☆	· SHIM¤ 0.5MM	4	85001-
28	01011-83335	BOLT	6	85001-
29	01643-33380	WASHER	6	85001-
30	07020-00000	FITTING,GREASE	1	85001-
31	17A-71-45210	CUTTING EDGE	2	85001-
32	17A-71-12451	BOLT	20	85001-
33	17M-71-21530	NUT	20	85001-
34	01643-22460	WASHER	20	85001-
35	17A-71-46670	CUTTING EDGE	1	85010-
	17A-71-45220	CUTTING EDGE	1	85001-85009
36	17A-71-46680	CUTTING EDGE	1	85010-
	□17A-71-45230	CUTTING EDGE	1	85001-85009
37	17A-71-46611	END BIT	1	85010-
	□17A-71-45712	END BIT	1	85001-85009
38	17A-71-12451	BOLT	14	85001-
39	17M-71-21530	NUT	14	85001-
40	01643-22460	WASHER	14	85001-
41	17A-71-46621	END BIT	1	85010-
	□17A-71-45722	END BIT	1	85001-85009
42	17A-71-00420	SHIM ASS'Y	2	85001-
	☆	· SHIM¤ 0.5MM	2	85001-
	☆	· SHIM¤ 1.0MM	4	85001-
	☆	· SHIM¤ 2.3MM	2	85001-
43	01011-62700	BOLT	8	85001-
44	01643-32780	WASHER	8	85001-

Printed By : Dwi Iswanto (airafather6107170)

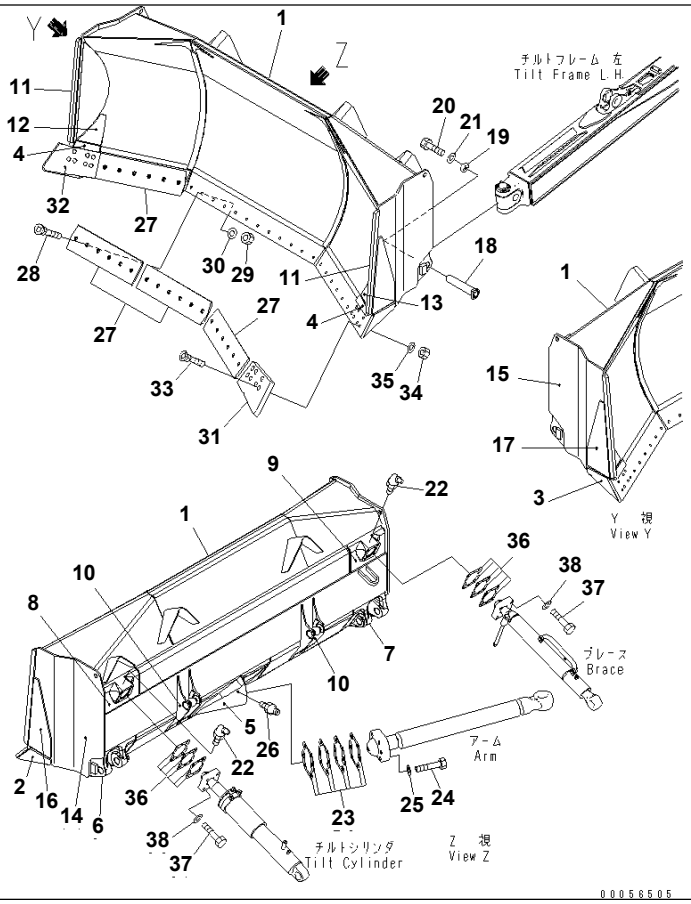

Ref. T2120-01A8 **Page 330190**

D155A-6 S/N 85001-UP

BLADE FULL-U DOZER

Item	Part No.	Part Name	Qty	Serial No.
1	17A-72-41111	BLADE	1	85001-
2	175-72-22121	· PLATE (WELDED)	1	85001-
3	175-72-22131	· PLATE (WELDED)	1	85001-
4	175-72-31120	· PLATE (WELDED)	2	85001-
5	17A-71-41142	· BRACKET (WELDED)	1	85001-
6	17A-71-41152	· BRACKET (WELDED)	1	85001-
7	17A-71-41162	· BRACKET (WELDED)	1	85001-
8	17A-71-41171	· PIVOT (WELDED)	1	85001-
9	17A-71-41181	· PIVOT (WELDED)	1	85001-
10	17A-71-45151	· BRACKET (WELDED)	2	85001-
11	17A-72-41120	· PLATE (WELDED)	2	85001-
12	17A-72-41131	· PLATE (WELDED)	1	85001-
13	17A-72-41141	· PLATE (WELDED)	1	85001-
14	17A-72-41C11	· PLATE (WELDED)	1	85001-
15	17A-72-41C21	· PLATE (WELDED)	1	85001-
16	17A-72-41F40	· PLATE (WELDED)	1	85001-
17	17A-72-41F50	· PLATE (WELDED)	1	85001-
18	17A-71-45383	PIN	2	85001-
19	17A-71-45390	PLATE	2	85001-
20	01010-81645	BOLT	6	85001-
21	01643-31645	WASHER	6	85001-
22	07020-00675	FITTING	2	85001-
23	17A-71-00410	SHIM ASS'Y	1	85001-
	☆	· SHIM¤ 2.0MM	2	85001-
	☆	· SHIM¤ 1.0MM	4	85001-
	☆	· SHIM¤ 0.5MM	4	85001-
24	01011-83335	BOLT	6	85001-
25	01643-33380	WASHER	6	85001-
26	07020-00000	FITTING	1	85001-
27	175-72-21123	EDGE	4	85001-

Printed By : Dwi Iswanto (airafather6107170)

BLADE FULL-U DOZER

Item	Part No.	Part Name	Qty	Serial No.
28	175-71-11454	BOLT	24	85001-
29	175-71-11530	NUT	24	85001-
30	01643-22245	WASHER	24	85001-
31	175-70-21126	BIT	1	85001-
32	175-70-21136	BIT	1	85001-
33	175-71-11463	BOLT	14	85001-
34	175-71-11530	NUT	14	85001-
35	01643-22245	WASHER	14	85001-
36	17A-71-00420	SHIM ASS'Y	2	85001-
	☆	· SHIM¤ 0.5MM	2	85001-
	☆	· SHIM¤ 1.0MM	4	85001-
	☆	· SHIM¤ 2.3MM	2	85001-
37	01011-62700	BOLT	8	85001-
38	01643-32780	WASHER	8	85001-

Printed By : Dwi Iswanto (airafather6107170)

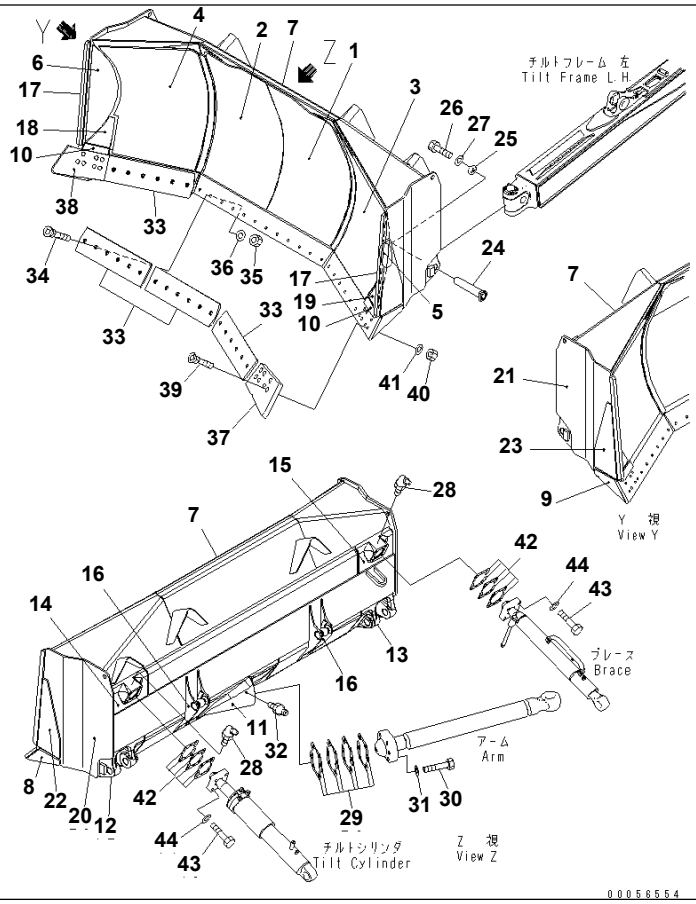

Ref. T2120-01A9 **Page 330200**

D155A-6 S/N 85001-UP

BLADE FULL-U DOZER (REINFORCED TYPE)

Item	Part No.	Part Name	Qty	Serial No.
	17A-72-42121	BLADE	1	85001-
1	17A-72-42130	· PLATE (WELDED)	1	85001-
2	17A-72-42140	· PLATE (WELDED)	1	85001-
3	17A-72-42150	· PLATE (WELDED)	1	85001-
4	17A-72-42160	· PLATE (WELDED)	1	85001-
5	17A-72-42170	· PLATE (WELDED)	1	85001-
6	17A-72-42180	· PLATE (WELDED)	1	85001-
7	17A-72-42111	· BLADE (WELDED)	1	85001-
8	175-72-22121	· · PLATE (WELDED)	1	85001-
9	175-72-22131	· · PLATE (WELDED)	1	85001-
10	175-72-31120	· · PLATE (WELDED)	1	85001-
11	17A-71-41142	· · BRACKET (WELDED)	1	85001-
12	17A-71-41152	· · BRACKET (WELDED)	1	85001-
13	17A-71-41162	· · BRACKET (WELDED)	1	85001-
14	17A-71-41171	· · PIVOT (WELDED)	1	85001-
15	17A-71-41181	· · PIVOT (WELDED)	1	85001-
16	17A-71-45151	· · BRACKET (WELDED)	2	85001-
17	17A-72-41120	· · PLATE (WELDED)	2	85001-
18	17A-72-41131	· · PLATE (WELDED)	1	85001-
19	17A-72-41141	· · PLATE (WELDED)	1	85001-
20	17A-72-41C11	· · PLATE (WELDED)	1	85001-
21	17A-72-41C21	· · PLATE (WELDED)	1	85001-
22	17A-72-41F40	· · PLATE (WELDED)	1	85001-
23	17A-72-41F50	· · PLATE (WELDED)	1	85001-
24	17A-71-45383	PIN	2	85001-
25	17A-71-45390	PLATE	2	85001-
26	01010-81645	BOLT	6	85001-
27	01643-31645	WASHER	6	85001-
28	07020-00675	FITTING,GREASE	2	85001-
29	17A-71-00410	SHIM ASS'Y	1	85001-

Printed By : Dwi Iswanto (airafather6107170)

BLADE FULL-U DOZER (REINFORCED TYPE)

Item	Part No.	Part Name	Qty	Serial No.
	☆	· SHIM¤ 2.0MM	2	85001-
	☆	· SHIM¤ 1.0MM	4	85001-
	☆	· SHIM¤ 0.5MM	4	85001-
30	01011-83335	BOLT	6	85001-
31	01643-33380	WASHER	6	85001-
32	07020-00000	FITTING,GREASE	1	85001-
33	175-72-21123	EDGE	4	85001-
34	175-71-11454	BOLT	24	85001-
35	175-71-11530	NUT	24	85001-
36	01643-22245	WASHER	24	85001-
37	175-70-21126	BIT	1	85001-
38	175-70-21136	BIT	1	85001-
39	175-71-11463	BOLT	14	85001-
40	175-71-11530	NUT	14	85001-
41	01643-22245	WASHER	14	85001-
42	17A-71-00420	SHIM ASS'Y	2	85001-
	☆	· SHIM¤ 0.5MM	2	85001-
	☆	· SHIM¤ 1.0MM	4	85001-
	☆	· SHIM¤ 2.3MM	2	85001-
43	01011-62700	BOLT	8	85001-
44	01643-32780	WASHER	8	85001-

Printed By : Dwi Iswanto (airafather6107170)

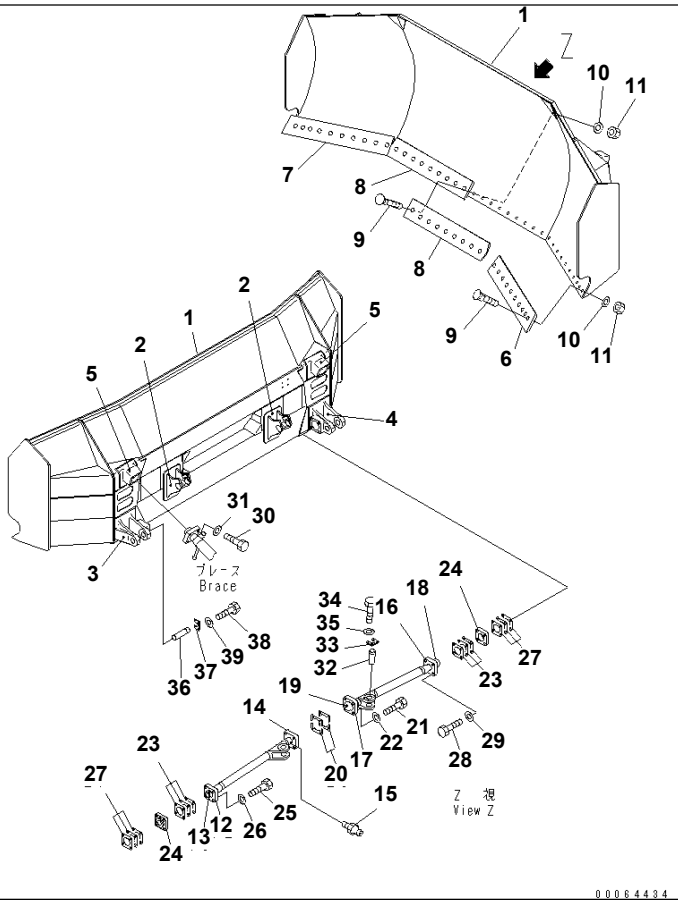

Ref. T2120-01B0 **Page 330210**

D155A-6 S/N 85001-UP
BLADE COAL DOZER

Item	Part No.	Part Name	Qty	Serial No.
	17A-73-41111	BLADE	1	85001-
1	17A-73-11110	· BLADE	1	85001-
2	17A-73-11120	· BRACKET (WELDED)	2	85001-
3	175-71-31121	· BRACKET (WELDED)	1	85001-
4	175-71-31131	· BRACKET (WELDED)	1	85001-
5	175-71-31141	· PIVOT	2	85001-
6	175-73-11141	EDGE	1	85001-
7	175-73-11151	EDGE	1	85001-
8	175-73-11131	EDGE	2	85001-
9	175-71-11454	BOLT	38	85001-
10	01643-22245	WASHER	38	85001-
11	175-71-11530	NUT	38	85001-
	175-71-31183	ARM	1	85001-
12	175-71-31190	· CAP (WELDED)	1	85001-
13	175-71-31563	· STUD (WELDED)	1	85001-
14	175-71-31221	· CAP (WELDED)	1	85001-
15	07020-00000	FITTING,GREASE	3	85001-
	175-71-31233	ARM	1	85001-
16	175-71-31190	· CAP (WELDED)	1	85001-
17	175-71-31380	· CAP (WELDED)	1	85001-
18	175-71-31563	· STUD (WELDED)	1	85001-
19	175-71-31241	· STUD (WELDED)	1	85001-
20	175-71-00294	SHIM ASS'Y	1	85001-
	☆	· SHIM¤ 0.5MM	4	85001-
	☆	· SHIM¤ 1.0MM	8	85001-
	☆	· SHIM¤ 2.3MM	4	85001-
21	01011-82700	BOLT	4	85001-
22	01643-32780	WASHER	4	85001-
23	17A-71-00420	SHIM ASS'Y	2	85001-
	☆	· SHIM¤ 0.5MM	4	85001-

Printed By : Dwi Iswanto (airafather6107170)

BLADE COAL DOZER

Item	Part No.	Part Name	Qty	Serial No.
	☆	· SHIM¤ 1.0MM	8	85001-
	☆	· SHIM¤ 2.3MM	4	85001-
24	175-71-31280	CAP	2	85001-
25	01010-81270	BOLT	4	85001-
26	01643-51232	WASHER	4	85001-
27	17A-71-00420	SHIM ASS'Y	2	85001-
	175-71-31250	SHIM¤ 0.5MM	4	85001-
	175-71-31260	SHIM¤ 1.0MM	4	85001-
	175-71-31270	SHIM¤ 2.3MM	12	85001-
28	175-71-21351	BOLT	8	85001-
29	01643-32780	WASHER	8	85001-
30	01011-82700	BOLT	8	85001-
31	01643-32780	WASHER	8	85001-
32	154-71-21290	PIN	2	85001-
33	175-71-21330	PLATE	2	85001-
34	01010-81435	BOLT	8	85001-
35	01643-31445	WASHER	8	85001-
36	175-71-21221	PIN	2	85001-
37	175-71-21230	PLATE	2	85001-
38	01010-81440	BOLT	8	85001-
39	01643-31445	WASHER	8	85001-

Printed By : Dwi Iswanto (airafather6107170)

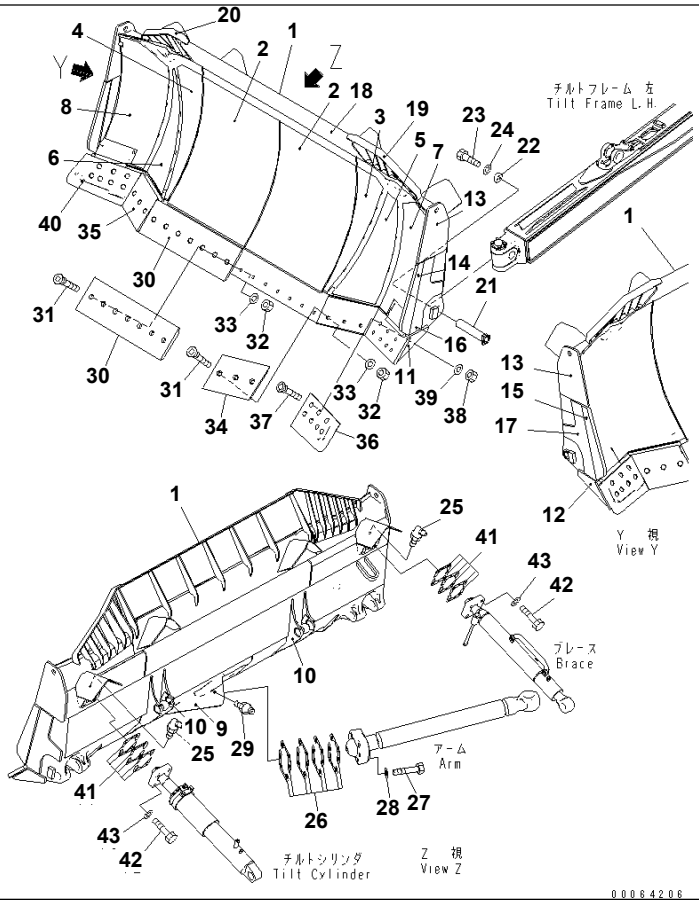

Ref. T2120-01B3 Page 330220

D155A-6 S/N 85001-UP

BLADE SIGMADOZER (REINFORCED TYPE) (SUPERHARD BIT AND EDGE)

Item	Part No.	Part Name	Qty	Serial No.
1	17A-71-46113	BLADE	1	85001-
2	17A-71-46121	· PLATE (WELDED)	2	85001-
3	17A-71-46130	· PLATE (WELDED)	1	85001-
4	17A-71-46140	· PLATE (WELDED)	1	85001-
5	17A-71-46150	· PLATE (WELDED)	1	85001-
6	17A-71-46160	· PLATE (WELDED)	1	85001-
7	17A-71-46171	· PLATE (WELDED)	1	85001-
8	17A-71-46181	· PLATE (WELDED)	1	85001-
9	17A-71-45141	· BRACKET (WELDED)	1	85001-
10	17A-71-45151	· BRACKET (WELDED)	2	85001-
11	17A-71-45192	· PLATE (WELDED)	1	85001-
12	17A-71-45292	· PLATE (WELDED)	1	85001-
13	17A-71-45A90	· PLATE (WELDED)	2	85001-
14	17A-71-45D11	· PLATE (WELDED)	1	85001-
15	17A-71-45D21	· PLATE (WELDED)	1	85001-
16	17A-71-45D30	· PLATE (WELDED)	1	85001-
17	17A-71-45D40	· PLATE (WELDED)	1	85001-
18	17A-71-45923	· SPILL GUARD (WELDED)	1	85001-
19	17A-71-45933	· SPILL GUARD (WELDED)	1	85001-
20	17A-71-45943	· SPILL GUARD (WELDED)	1	85001-
21	17A-71-45383	PIN	2	85001-
22	17A-71-45390	PLATE	2	85001-
23	01010-81645	BOLT	6	85001-
24	01643-31645	WASHER	6	85001-
25	07020-00675	FITTING	2	85001-
26	17A-71-00410	SHIM ASS'Y	1	85001-
	☆	· SHIM¤ 2.0MM	2	85001-
	☆	· SHIM¤ 1.0MM	4	85001-
	☆	· SHIM¤ 0.5MM	4	85001-
27	01011-83335	BOLT	6	85001-

Printed By : Dwi Iswanto (airafather6107170)

BLADE SIGMADOZER (REINFORCED TYPE) (SUPERHARD BIT AND EDGE)

Item	Part No.	Part Name	Qty	Serial No.
28	01643-33380	WASHER	6	85001-
29	07020-00000	FITTING	1	85001-
30	17A-71-45210	CUTTING EDGE	2	85001-
31	17A-71-12451	BOLT	20	85001-
32	17M-71-21530	NUT	20	85001-
33	01643-22460	WASHER	20	85001-
34	17A-71-46670	CUTTING EDGE	1	85001-
35	17A-71-46680	CUTTING EDGE	1	85001-
36	17A-71-46611	END BIT	1	85001-
37	17A-71-12451	BOLT	14	85001-
38	17M-71-21530	NUT	14	85001-
39	01643-22460	WASHER	14	85001-
40	17A-71-46621	END BIT	1	85001-
41	17A-71-00420	SHIM ASS'Y	2	85001-
	☆	･ SHIM¤ 0.5MM	2	85001-
	☆	･ SHIM¤ 1.0MM	4	85001-
	☆	･ SHIM¤ 2.3MM	2	85001-
42	01011-62700	BOLT	8	85001-
43	01643-32780	WASHER	8	85001-

Printed By : Dwi Iswanto (airafather6107170)

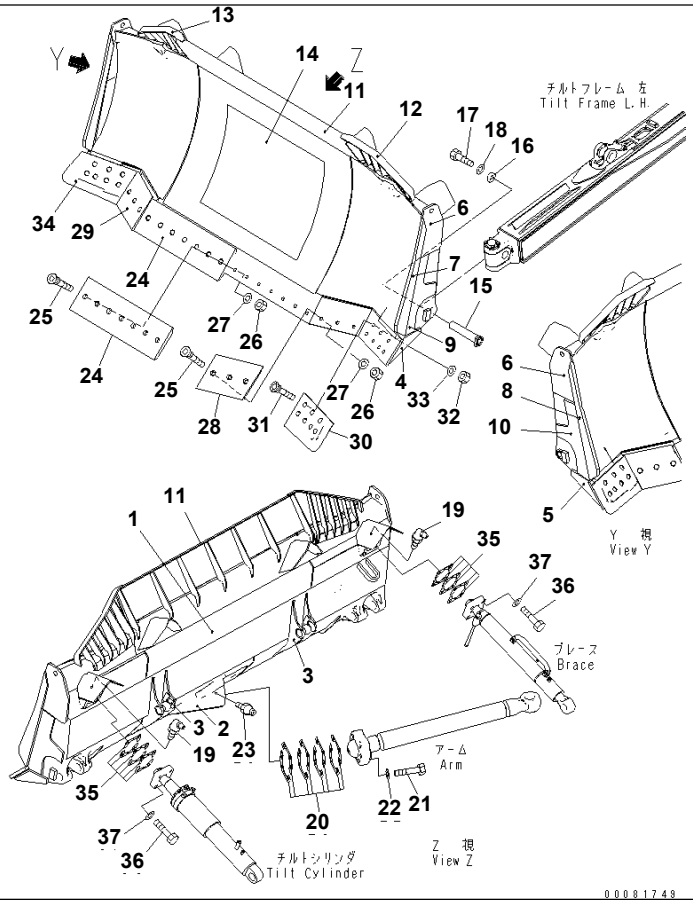

Ref. T2120-01B4 Page 330230

D155A-6 S/N 85001-UP

BLADE SIGMADOZER (SUPERHARD BIT AND EDGE) (WITH PUSH PLATE)

Item	Part No.	Part Name	Qty	Serial No.
1	17A-937-4511	BLADE	1	85001-
2	17A-71-45141	· BRACKET (WELDED)	1	85001-
3	17A-71-45151	· BRACKET (WELDED)	2	85001-
4	17A-71-45192	· PLATE (WELDED)	1	85001-
5	17A-71-45292	· PLATE (WELDED)	1	85001-
6	17A-71-45A91	· PLATE (WELDED)	2	85001-
7	17A-71-45D12	· PLATE (WELDED)	1	85001-
8	17A-71-45D22	· PLATE (WELDED)	1	85001-
9	17A-71-45D30	· PLATE (WELDED)	1	85001-
10	17A-71-45D40	· PLATE (WELDED)	1	85001-
11	17A-71-45923	· SPILL GUARD (WELDED)	1	85001-
12	17A-71-45933	· SPILL GUARD (WELDED)	1	85001-
13	17A-71-45943	· SPILL GUARD (WELDED)	1	85001-
14	17A-937-4520	· PLATE (WELDED)	1	85001-
15	17A-71-45383	PIN	2	85001-
16	17A-71-45390	PLATE	2	85001-
17	01010-81645	BOLT	6	85001-
18	01643-31645	WASHER	6	85001-
19	07020-00675	FITTING,GREASE	2	85001-
20	17A-71-00410	SHIM ASS'Y	1	85001-
	☆	· SHIM¤ 2.0MM	2	85001-
	☆	· SHIM¤ 1.0MM	4	85001-
	☆	· SHIM¤ 0.5MM	4	85001-
21	01011-83335	BOLT	6	85001-
22	01643-33380	WASHER	6	85001-
23	07020-00000	FITTING,GREASE	1	85001-
24	17A-71-45210	CUTTING EDGE	2	85001-
25	17A-71-12451	BOLT	20	85001-
26	17M-71-21530	NUT	20	85001-
27	01643-22460	WASHER	20	85001-

Printed By : Dwi Iswanto (airafather6107170)

BLADE SIGMADOZER (SUPERHARD BIT AND EDGE) (WITH PUSH PLATE)

Item	Part No.	Part Name	Qty	Serial No.
28	17A-71-46670	CUTTING EDGE	1	85001-
29	17A-71-46680	CUTTING EDGE	1	85001-
30	17A-71-46611	END BIT	1	85001-
31	17A-71-12451	BOLT	14	85001-
32	17M-71-21530	NUT	14	85001-
33	01643-22460	WASHER	14	85001-
34	17A-71-46621	END BIT	1	85001-
35	17A-71-00420	SHIM ASS'Y	2	85001-
	☆	･ SHIM¤ 0.5MM	2	85001-
	☆	･ SHIM¤ 1.0MM	4	85001-
	☆	･ SHIM¤ 2.3MM	2	85001-
36	01011-62700	BOLT	8	85001-
37	01643-32780	WASHER	8	85001-

Printed By : Dwi Iswanto (airafather6107170)

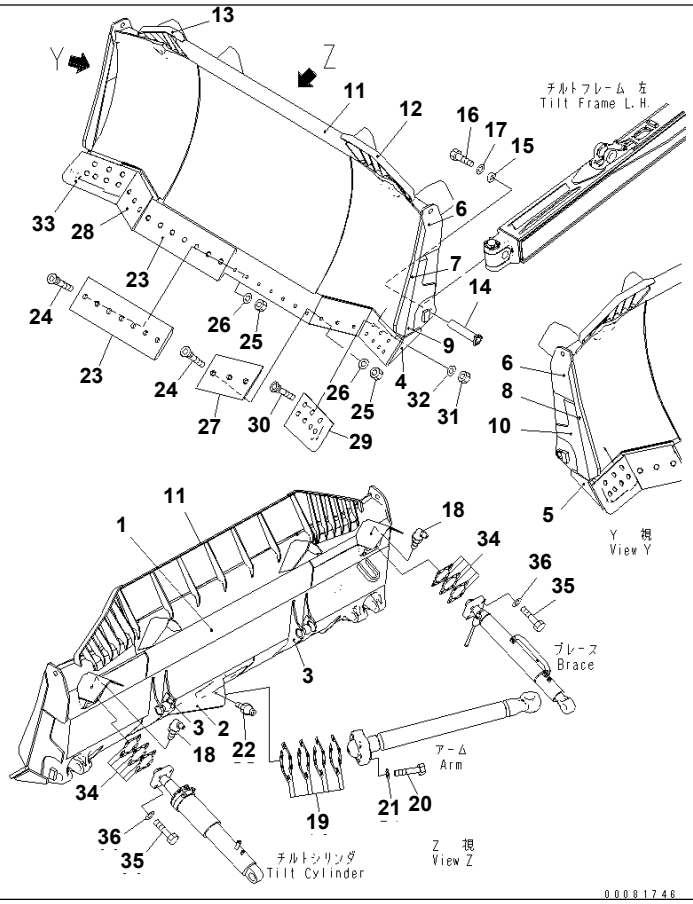

Ref. T2120-01B7 Page 330240

D155A-6 S/N 85001-UP
BLADE SIGMADOZER (WITH SUPPER HARDNESS END BIT AND CUTTING EDGE)(#85025-)

Item	Part No.	Part Name	Qty	Serial No.
1	17A-71-45913	BLADE	1	85025-
2	17A-71-45141	· BRACKET (WELDED)	1	85025-
3	17A-71-45151	· BRACKET (WELDED)	2	85025-
4	17A-71-45192	· PLATE (WELDED)	1	85025-
5	17A-71-45292	· PLATE (WELDED)	1	85025-
6	17A-71-45A91	· PLATE (WELDED)	2	85025-
7	17A-71-45D12	· PLATE (WELDED)	1	85025-
8	17A-71-45D22	· PLATE (WELDED)	1	85025-
9	17A-71-45D30	· PLATE (WELDED)	1	85025-
10	17A-71-45D40	· PLATE (WELDED)	1	85025-
11	17A-71-45923	· SPILL GUARD (WELDED)	1	85025-
12	17A-71-45933	· SPILL GUARD (WELDED)	1	85025-
13	17A-71-45943	· SPILL GUARD (WELDED)	1	85025-
14	17A-71-45383	PIN	2	85025-
15	17A-71-45390	PLATE	2	85025-
16	01010-81645	BOLT	6	85025-
17	01643-31645	WASHER	6	85025-
18	07020-00675	FITTING	2	85025-
19	17A-71-00410	SHIM ASS'Y	1	85025-
	☆	· SHIM¤ 2.0MM	2	85025-
	☆	· SHIM¤ 1.0MM	4	85025-
	☆	· SHIM¤ 0.5MM	4	85025-
20	01011-83335	BOLT	6	85025-
21	01643-33380	WASHER	6	85025-
22	07020-00000	FITTING	1	85025-
23	17A-71-45210	CUTTING EDGE	2	85025-
24	17A-71-12451	BOLT	20	85025-
25	17M-71-21530	NUT	20	85025-
26	01643-22460	WASHER	20	85025-

Printed By : Dwi Iswanto (airafather6107170)

BLADE SIGMADOZER (WITH SUPPER HARDNESS END BIT AND CUTTING EDGE)(#85025-)

Item	Part No.	Part Name	Qty	Serial No.
27	17A-71-46670	CUTTING EDGE	1	85025-
28	17A-71-46680	CUTTING EDGE	1	85025-
29	17A-71-46611	END BIT	1	85025-
30	17A-71-12451	BOLT	14	85025-
31	17M-71-21530	NUT	14	85025-
32	01643-22460	WASHER	14	85025-
33	17A-71-46621	END BIT	1	85025-
34	17A-71-00420	SHIM ASS'Y	2	85025-
	175-71-31250	· SHIM¤ 0.5MM	2	85025-
	175-71-31260	· SHIM¤ 1.0MM	4	85025-
	175-71-31270	· SHIM¤ 2.3MM	2	85025-
35	01011-62700	BOLT	8	85025-
36	01643-32780	WASHER	8	85025-

Printed By : Dwi Iswanto (airafather6107170)

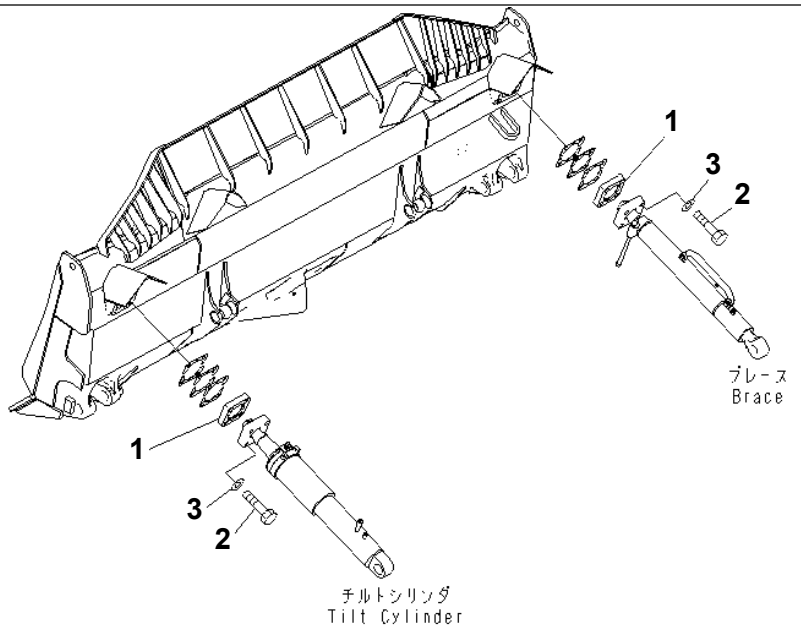

00081801

Ref. T2120-02B5 **Page 330250**

D155A-6 S/N 85001-UP
BLADE SIGMADOZER (REINFORCED TYPE) (WITH PUSH PLATE) (EDGE ANGLE ADJUSTING)(#85025-)

Item	Part No.	Part Name	Qty	Serial No.
1	17A-71-45980	SPACER	2	85025-
2	01011-62740	BOLT	8	85025-
3	01643-32780	WASHER	8	85025-

Printed By : Dwi Iswanto (airafather6107170)

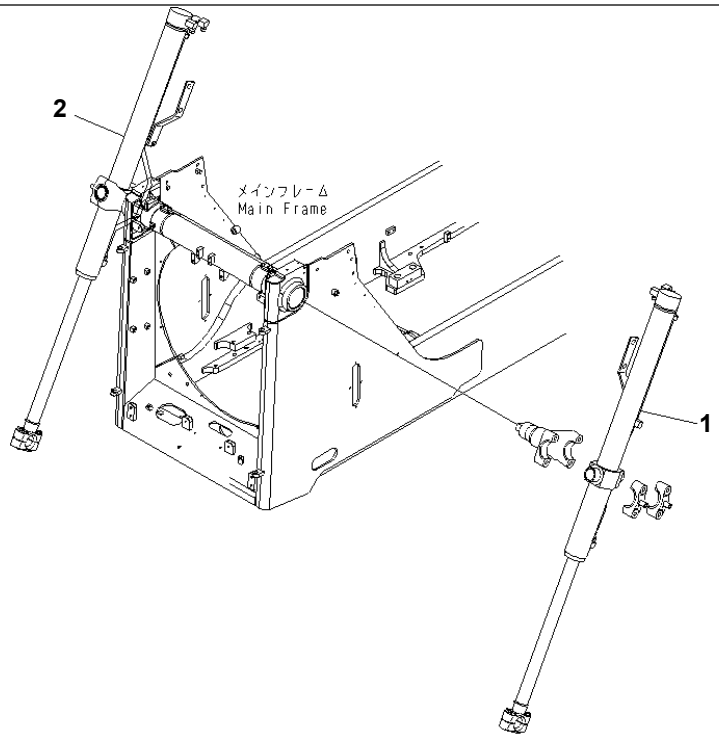

00042277

Ref. T2140-01A0 **Page 330260**

D155A-6 S/N 85001-UP
BLADE LIFT CYLINDER

Item	Part No.	Part Name	Qty	Serial No.
1	(⊙707-02-X7920)	CYLINDER GROUP	1	85001-
2	(⊙707-02-X7930)	CYLINDER GROUP	1	85001-

Printed By : Dwi Iswanto (airafather6107170)

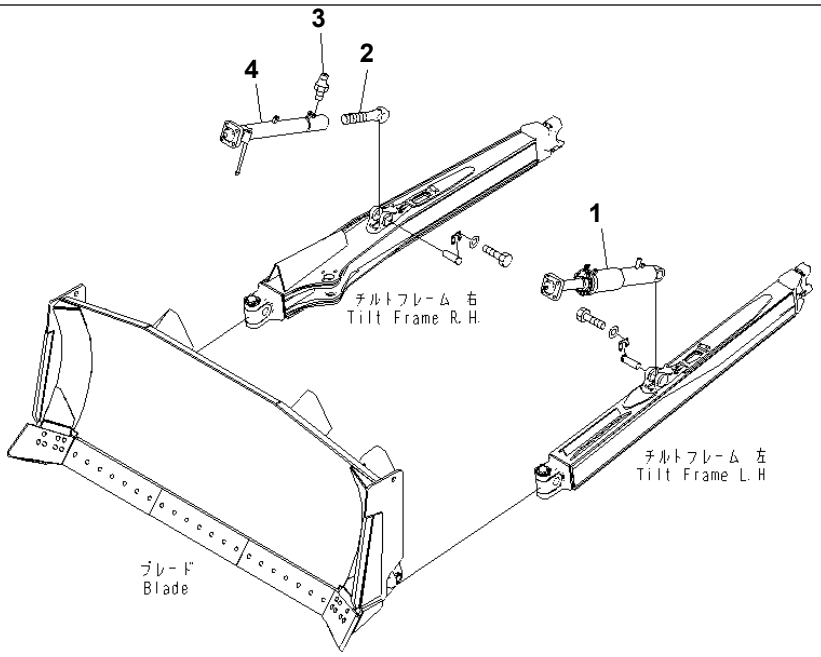

00042319

Ref. T2150-01A0 **Page 330270**

D155A-6 S/N 85001-UP
BLADE TILT CYLINDER (SINGLE TILT DOZER)

Item	Part No.	Part Name	Qty	Serial No.
1	(⊙707-04-0Z180)	CYLINDER ASS'Y	1	85001-
2	175-71-11281	SCREW	1	85001-
3	07020-00000	FITTING,GREASE	1	85001-
4	17A-71-41710	BRACE	1	85001-

Printed By : Dwi Iswanto (airafather6107170)

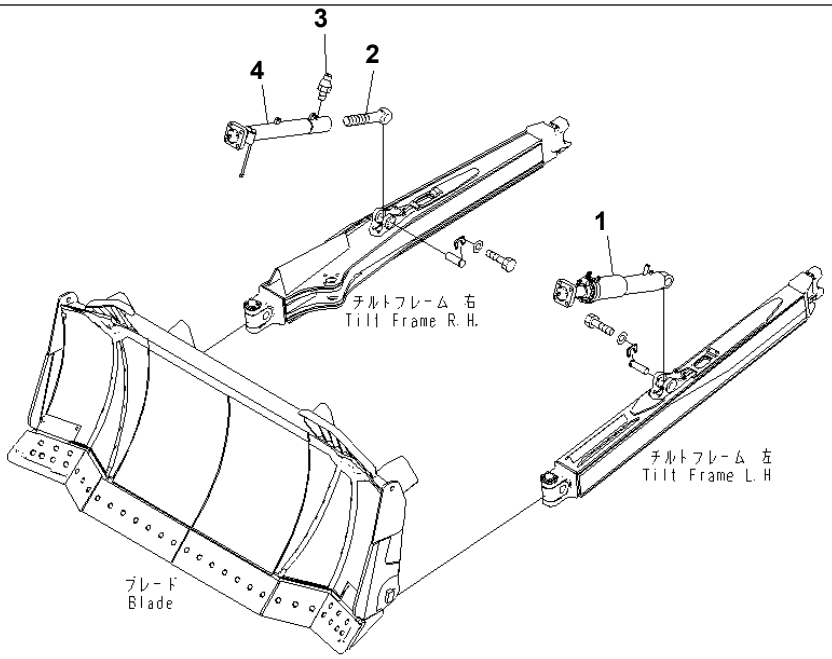

00042320

Ref. T2150-01A1 **Page 330280**

D155A-6 S/N 85001-UP
BLADE TILT CYLINDER (SINGLE TILT SIGMADOZER)

Item	Part No.	Part Name	Qty	Serial No.
1	(⊙707-04-0Z160)	CYLINDER ASS'Y	1	85001-
2	175-71-11281	SCREW	1	85001-
3	07020-00000	FITTING,GREASE	1	85001-
4	17A-71-45681	BRACE	1	85001-

Printed By : Dwi Iswanto (airafather6107170)

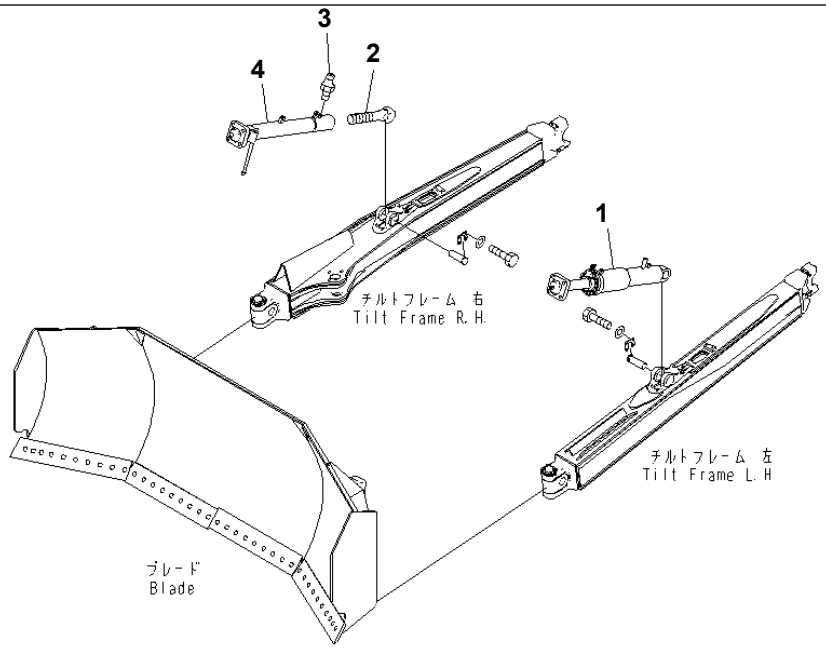

00064436

Ref. T2150-01A2 **Page 330290**

D155A-6 S/N 85001-UP
BLADE TILT CYLINDER (COAL DOZER)

Item	Part No.	Part Name	Qty	Serial No.
1	(⊙707-04-0Z190)	CYLINDER ASS'Y	1	85001-
2	175-71-11281	SCREW	1	85001-
3	07020-00000	FITTING,GREASE	1	85001-
4	17A-71-45681	BRACE	1	85001-

Printed By : Dwi Iswanto (airafather6107170)

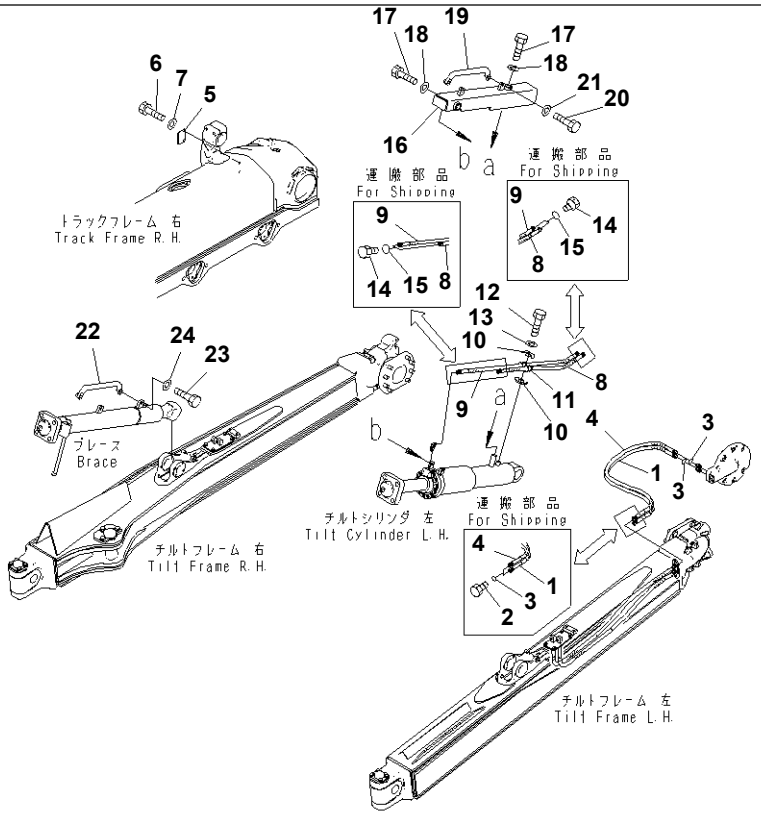

00042529

Ref. T2160-01A0 **Page 330300**

D155A-6 S/N 85001-UP
BLADE TILT PIPING (SINGLE TILT DOZER)

Item	Part No.	Part Name	Qty	Serial No.
1	17A-71-45651	HOSE	1	85001-
2	07376-70422	PLUG	2	85001-
3	02896-11012	O-RING	4	85001-
4	17A-71-45750	HOSE	1	85001-
5	17A-30-48990	PLATE	1	85001-
6	01010-81225	BOLT	2	85001-
7	01643-31232	WASHER	2	85001-
8	17A-71-45880	HOSE	1	85001-
9	17A-71-45870	HOSE	1	85001-
10	07094-30417	CLAMP	2	85001-
11	07095-00420	CUSHION	2	85001-
12	01010-81265	BOLT	1	85001-
13	01643-31232	WASHER	1	85001-
14	07376-70422	PLUG	4	85001-
15	02896-11012	O-RING	4	85001-
16	17A-71-45890	COVER	1	85001-
17	01010-81635	BOLT	3	85001-
18	01643-31645	WASHER	3	85001-
19	195-71-62151	HANDLE	1	85001-
20	01010-81660	BOLT	2	85001-
21	01643-31645	WASHER	2	85001-
22	195-71-62151	HANDLE	1	85001-
23	01010-81660	BOLT	2	85001-
24	01643-31645	WASHER	2	85001-

Printed By : Dwi Iswanto (airafather6107170)

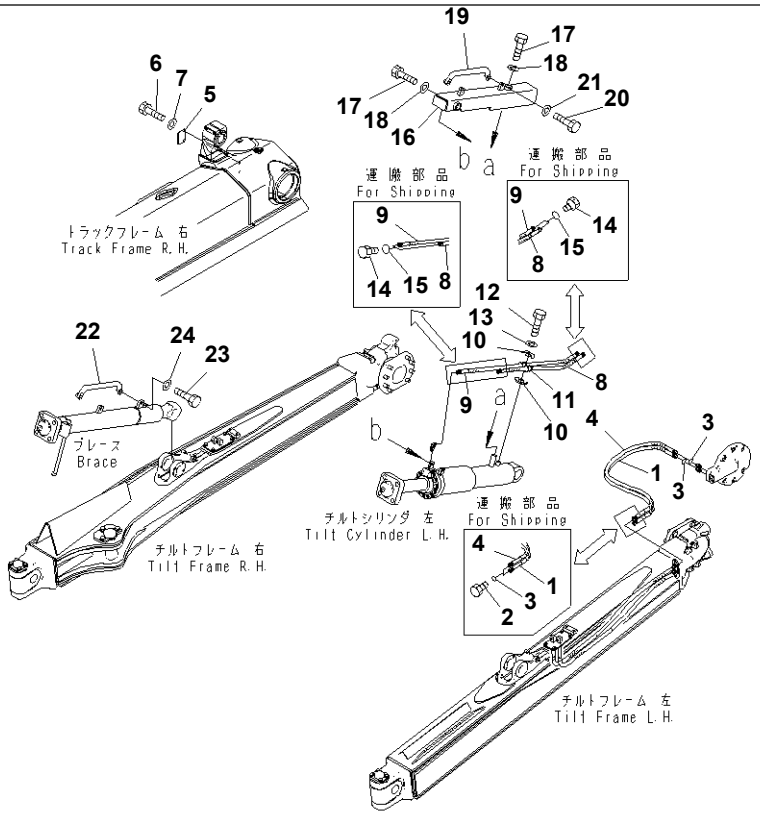

00064461

Ref. T2160-01A1 **Page 330310**

D155A-6 S/N 85001-UP
BLADE TILT PIPING (COAL DOZER)

Item	Part No.	Part Name	Qty	Serial No.
1	17A-71-45651	HOSE	1	85001-
2	07376-70422	PLUG	2	85001-
3	02896-11012	O-RING	4	85001-
4	17A-71-45750	HOSE	1	85001-
5	17A-30-48990	PLATE	1	85001-
6	01010-81225	BOLT	2	85001-
7	01643-31232	WASHER	2	85001-
8	17A-71-45741	HOSE	1	85001-
9	17A-71-45731	HOSE	1	85001-
10	07094-30417	CLAMP	2	85001-
11	07095-00420	CUSHION	2	85001-
12	01010-81265	BOLT	1	85001-
13	01643-31232	WASHER	1	85001-
14	07376-70422	PLUG	4	85001-
15	02896-11012	O-RING	4	85001-
16	17A-71-45661	COVER	1	85001-
17	01010-81635	BOLT	3	85001-
18	01643-31645	WASHER	3	85001-
19	195-71-62151	HANDLE	1	85001-
20	01010-81660	BOLT	2	85001-
21	01643-31645	WASHER	2	85001-
22	195-71-62151	HANDLE	1	85001-
23	01010-81660	BOLT	2	85001-
24	01643-31645	WASHER	2	85001-

Printed By : Dwi Iswanto (airafather6107170)

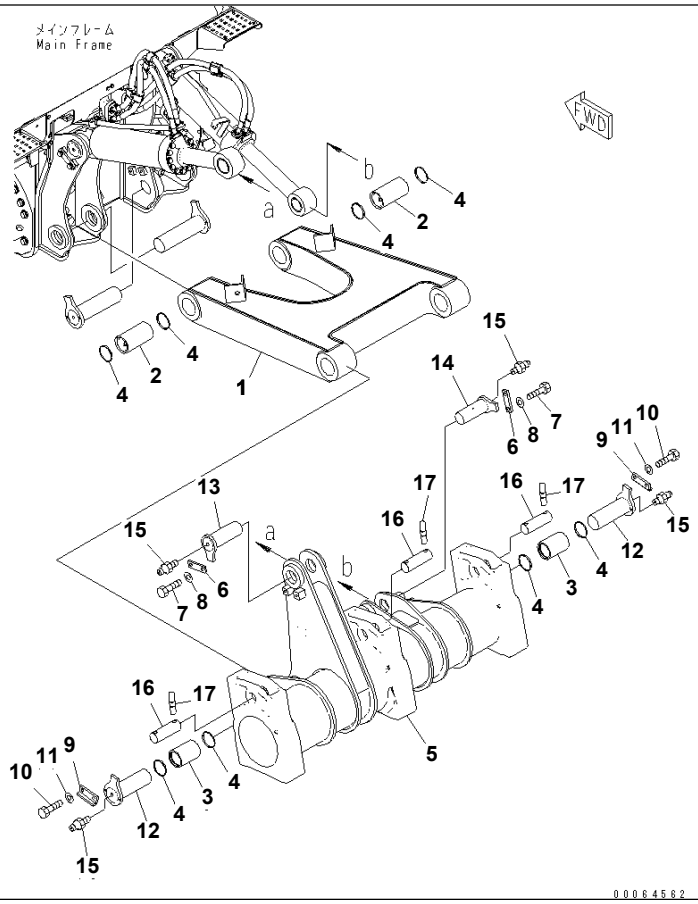

Ref. T2400-01A0 **Page 330320**

D155A-6 S/N 85001-UP

RIPPER BEAM AND ARM (FOR MULT RIPPER)

Item	Part No.	Part Name	Qty	Serial No.
1	17A-78-47211	ARM	1	85002-
	17A-78-42112	ARM	1	85001-@
2	17A-78-44210	BUSHING	2	85001-
3	175-78-61271	BUSHING	2	85001-
4	175-78-61281	SEAL	8	85001-
5	17A-78-43111	BEAM	1	85001-
6	205-70-61560	PLATE	2	85001-
7	01010-82040	BOLT	4	85001-
8	01643-32060	WASHER	4	85001-
9	17A-78-43130	BRACKET	2	85001-
10	01010-82040	BOLT	4	85001-
11	01643-32060	WASHER	4	85001-
12	17A-78-44120	PIN	2	85001-
13	17A-78-44150	PIN	1	85001-
14	17A-78-44180	PIN	1	85001-
15	07020-00000	FITTING,GREASE	4	85001-
16	17A-78-11190	PIN	3	85001-
17	09244-02508	PIN	6	85001-

Printed By : Dwi Iswanto (airafather6107170)

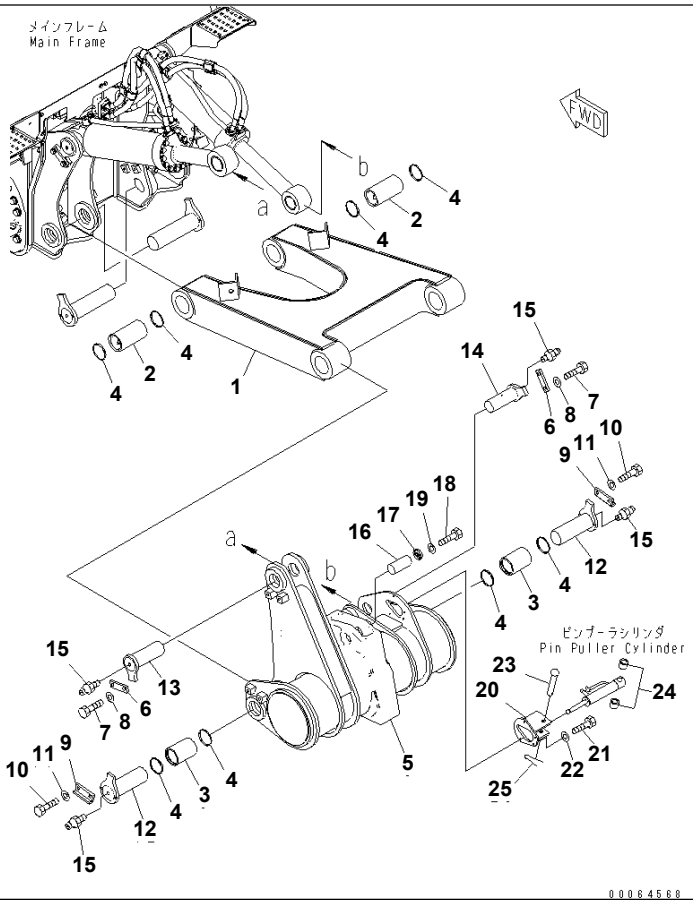

Ref. T2400-01A1 **Page 330330**

D155A-6 S/N 85001-UP
RIPPER BEAM AND ARM (FOR GIANT RIPPER)

Item	Part No.	Part Name	Qty	Serial No.
1	17A-78-47211	ARM	1	85002-
	□17A-78-42112	ARM	1	85001-85001
2	17A-78-44210	BUSHING	2	85001-
3	175-78-61271	BUSHING	2	85001-
4	175-78-61281	SEAL	8	85001-
5	17A-79-43111	BEAM	1	85001-
6	205-70-61560	PLATE	2	85001-
7	01010-82040	BOLT	4	85001-
8	01643-32060	WASHER	4	85001-
9	17A-78-43130	BRACKET	2	85001-
10	01010-82040	BOLT	4	85001-
11	01643-32060	WASHER	4	85001-
12	17A-78-44120	PIN	2	85001-
13	17A-78-44150	PIN	1	85001-
14	17A-78-44180	PIN	1	85001-
15	07020-00000	FITTING,GREASE	4	85001-
16	15A-79-12110	PIN	1	85001-
17	175-79-61160	PLATE	2	85001-
18	01010-81030	BOLT	4	85001-
19	01643-51032	WASHER	4	85001-
20	17A-79-43210	BRACKET	1	85001-
21	01010-81245	BOLT	4	85001-
22	01643-31232	WASHER	4	85001-
23	195-79-52130	PIN	1	85001-
24	195-79-52110	COLLAR	2	85001-
25	04050-16040	PIN	1	85001-

Printed By : Dwi Iswanto (airafather6107170)

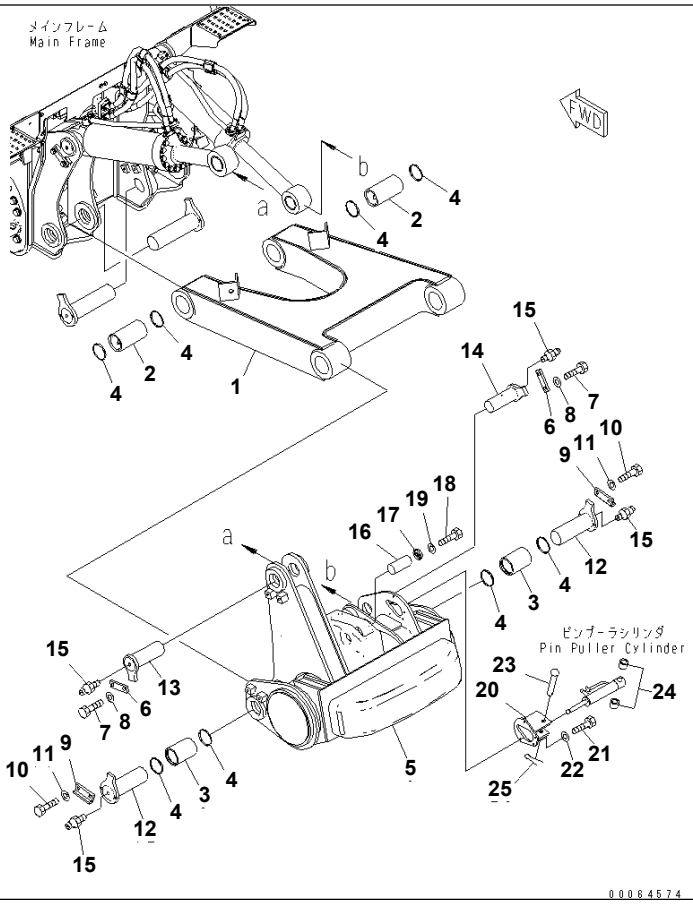

Ref. T2400-01A2 **Page 330340**

D155A-6 S/N 85001-UP
RIPPER BEAM AND ARM (FOR GIANT RIPPER) (WITH PUSHER BLOCK)

Item	Part No.	Part Name	Qty	Serial No.
1	17A-78-47211	ARM	1	85002-
	□17A-78-42112	ARM	1	85001-85001
2	17A-78-44210	BUSHING	2	85001-
3	175-78-61271	BUSHING	2	85001-
4	175-78-61281	SEAL	8	85001-
5	17A-79-43310	BEAM	1	85001-
6	205-70-61560	PLATE	2	85001-
7	01010-82040	BOLT	4	85001-
8	01643-32060	WASHER	4	85001-
9	17A-78-43130	BRACKET	2	85001-
10	01010-82040	BOLT	4	85001-
11	01643-32060	WASHER	4	85001-
12	17A-78-44120	PIN	2	85001-
13	17A-78-44150	PIN	1	85001-
14	17A-78-44180	PIN	1	85001-
15	07020-00000	FITTING,GREASE	4	85001-
16	15A-79-12110	PIN	1	85001-
17	175-79-61160	PLATE	2	85001-
18	01010-81030	BOLT	4	85001-
19	01643-51032	WASHER	4	85001-
20	17A-79-43210	BRACKET	1	85001-
21	01010-81245	BOLT	4	85001-
22	01643-31232	WASHER	4	85001-
23	195-79-52130	PIN	1	85001-
24	195-79-52110	COLLAR	2	85001-
25	04050-16040	PIN	1	85001-

Printed By : Dwi Iswanto (airafather6107170)

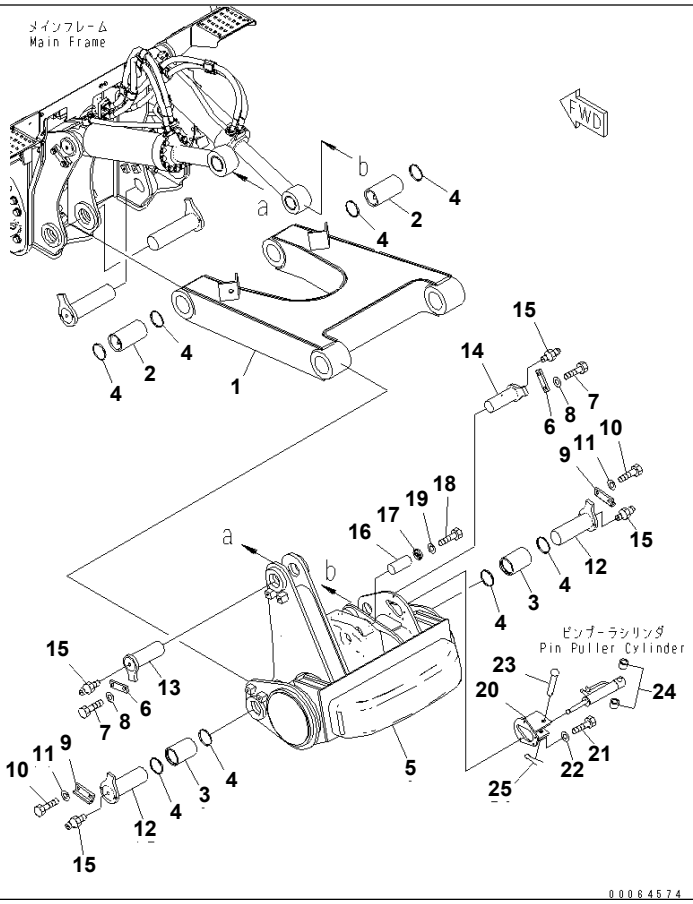

Ref. T2400-01A3 **Page 330350**

D155A-6 S/N 85001-UP
RIPPER BEAM AND ARM (FOR GIANT RIPPER) (WITH PUSHER BLOCK AND LARGE SHANK)

Item	Part No.	Part Name	Qty	Serial No.
1	17A-78-47211	ARM	1	85001-
2	17A-78-44210	BUSHING	2	85001-
3	175-78-61271	BUSHING	2	85001-
4	175-78-61281	SEAL	8	85001-
5	17A-79-47312	BEAM	1	85001-
6	205-70-61560	PLATE	2	85001-
7	01010-82040	BOLT	4	85001-
8	01643-32060	WASHER	4	85001-
9	17A-78-43130	BRACKET	2	85001-
10	01010-82040	BOLT	4	85001-
11	01643-32060	WASHER	4	85001-
12	17A-78-44120	PIN	2	85001-
13	17A-78-44150	PIN	1	85001-
14	17A-78-44180	PIN	1	85001-
15	07020-00000	FITTING,GREASE	4	85001-
16	17M-79-11120	PIN	1	85001-
17	175-79-61160	PLATE	2	85001-
18	01010-81030	BOLT	4	85001-
19	01643-51032	WASHER	4	85001-
20	17A-79-47390	BRACKET	1	85001-
21	01010-81245	BOLT	4	85001-
22	01643-31232	WASHER	4	85001-
23	195-79-52130	PIN	1	85001-
24	195-79-52110	COLLAR	2	85001-
25	04050-16040	PIN	1	85001-

Printed By : Dwi Iswanto (airafather6107170)

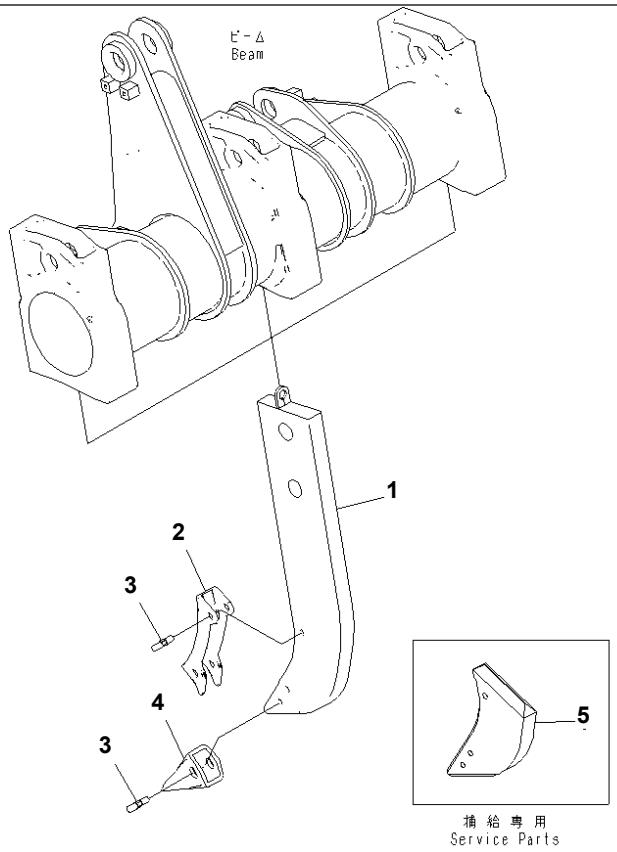

Ref. T2400-02A0 **Page 330360**

D155A-6 S/N 85001-UP

RIPPER SHANK (FOR MULTI RIPPER)

Item	Part No.	Part Name	Qty	Serial No.
1	17A-78-43121	SHANK	3	85001-
2	195-78-21320	PROTECTOR	3	85001-
3	09244-02508	PIN	9	85001-
4	175-78-31230	POINT	3	85001-
5	175-78-21693	SHANK,SERVICE PARTS	3	85001-

Printed By : Dwi Iswanto (airafather6107170)

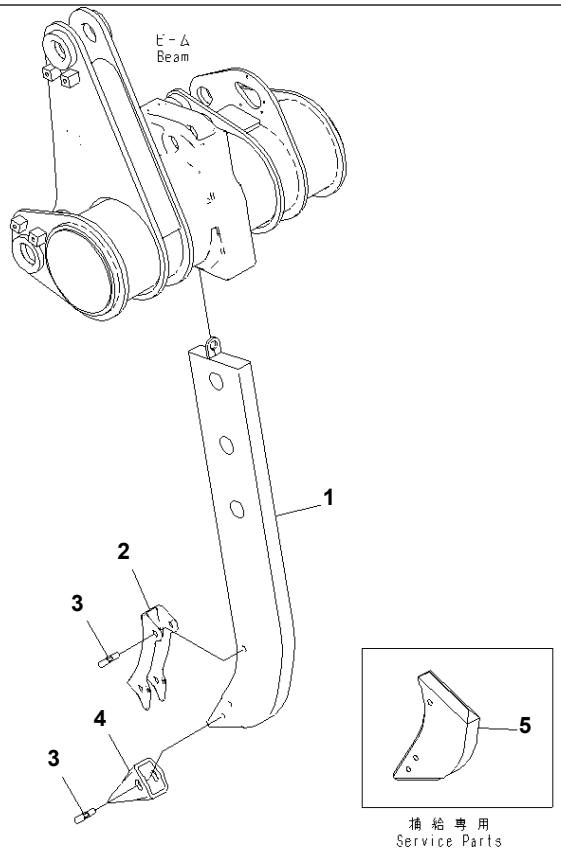

Ref. T2400-02A1 **Page 330370**

D155A-6 S/N 85001-UP
RIPPER SHANK AND POINT (FOR GIANT RIPPER)

Item	Part No.	Part Name	Qty	Serial No.
1	15A-79-11120	SHANK	1	85001-
2	195-78-21320	PROTECTOR	1	85001-
3	09244-02508	PIN	3	85001-
4	175-78-31230	POINT	1	85001-
5	175-78-21693	SHANK,SERVICE PARTS	1	85001-

Printed By : Dwi Iswanto (airafather6107170)

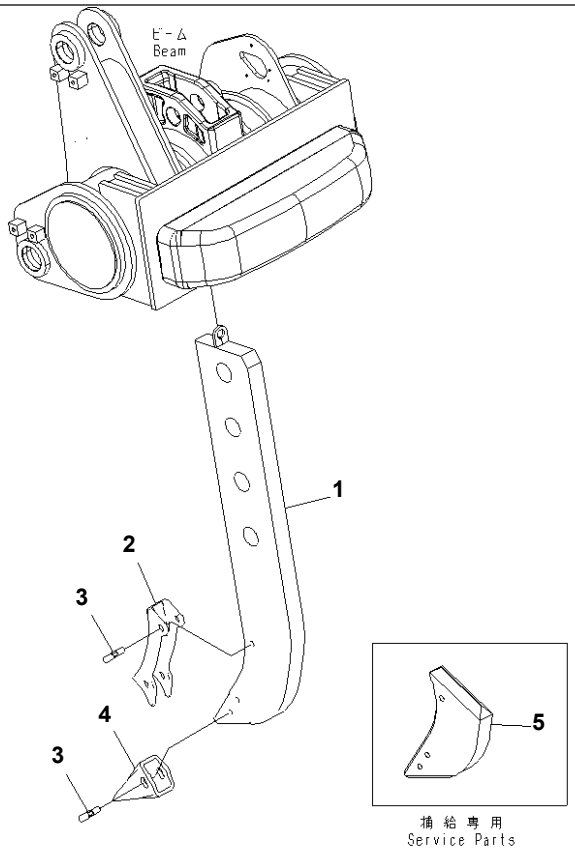

Ref. T2400-02A3 **Page 330380**

D155A-6 S/N 85001-UP

RIPPER SHANK AND POINT (FOR GIANT RIPPER AND LARGE SHANK)

Item	Part No.	Part Name	Qty	Serial No.
1	175-79-32131	SHANK	1	85001-
2	195-78-21320	PROTECTOR	1	85001-
3	09244-02508	PIN	3	85001-
4	175-78-31230	POINT	1	85001-
5	175-78-21693	SHANK,SERVICE PARTS	1	85001-

Printed By : Dwi Iswanto (airafather6107170)

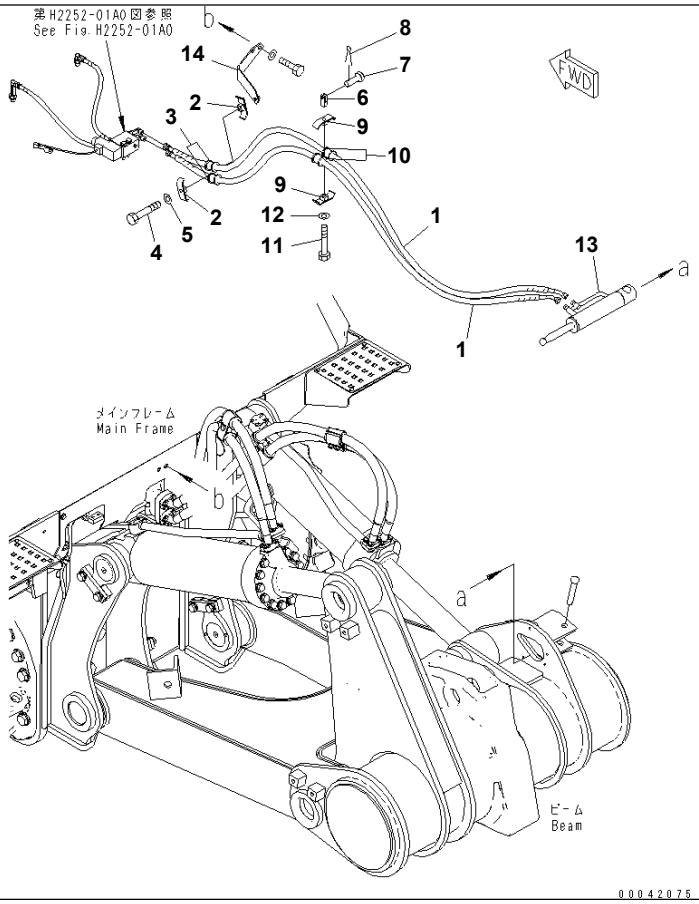

Ref. T2400-03A1 **Page 330390**

D155A-6 S/N 85001-UP
PIN PULLER CYLINDER AND PIPING

Item	Part No.	Part Name	Qty	Serial No.
1	17A-61-41432	HOSE	2	85001-
2	07094-30315	CLAMP	2	85001-
3	07095-00317	CUSHION	2	85001-
4	01010-81265	BOLT	1	85001-
5	01643-31232	WASHER	1	85001-
6	144-947-2850	YOKE	1	85001-
7	04205-11028	PIN	1	85001-
8	04050-13015	PIN	1	85001-
9	07094-30315	CLAMP	2	85001-
10	07095-00317	CUSHION	2	85001-
11	01010-81060	BOLT	1	85001-
12	01643-31032	WASHER	1	85001-
13	(⊙707-04-00210)	CYLINDER ASS'Y	1	85001-
14	17A-61-41420	BRACKET	1	85001-

Printed By : Dwi Iswanto (airafather6107170)

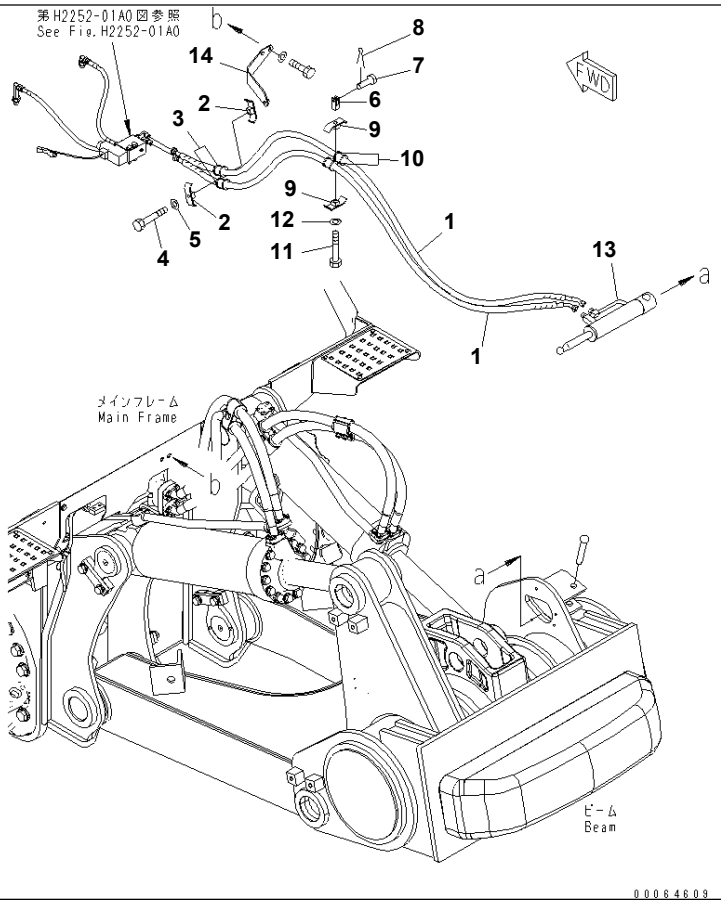

Ref. T2400-03A3 **Page 330400**

D155A-6 S/N 85001-UP

PIN PULLER CYLINDER AND PIPING (FOR LARGE SHANK)

Item	Part No.	Part Name	Qty	Serial No.
1	17A-61-41432	HOSE	2	85001-
2	07094-30315	CLAMP	2	85001-
3	07095-00317	CUSHION	2	85001-
4	01010-81265	BOLT	1	85001-
5	01643-31232	WASHER	1	85001-
6	144-947-2850	YOKE	1	85001-
7	04205-11028	PIN	1	85001-
8	04050-13015	PIN	1	85001-
9	07094-30315	CLAMP	2	85001-
10	07095-00317	CUSHION	2	85001-
11	01010-81060	BOLT	1	85001-
12	01643-31032	WASHER	1	85001-
13	(⊙707-04-00230)	CYLINDER ASS'Y	1	85001-
14	17A-61-41420	BRACKET	1	85001-

Printed By : Dwi Iswanto (airafather6107170)

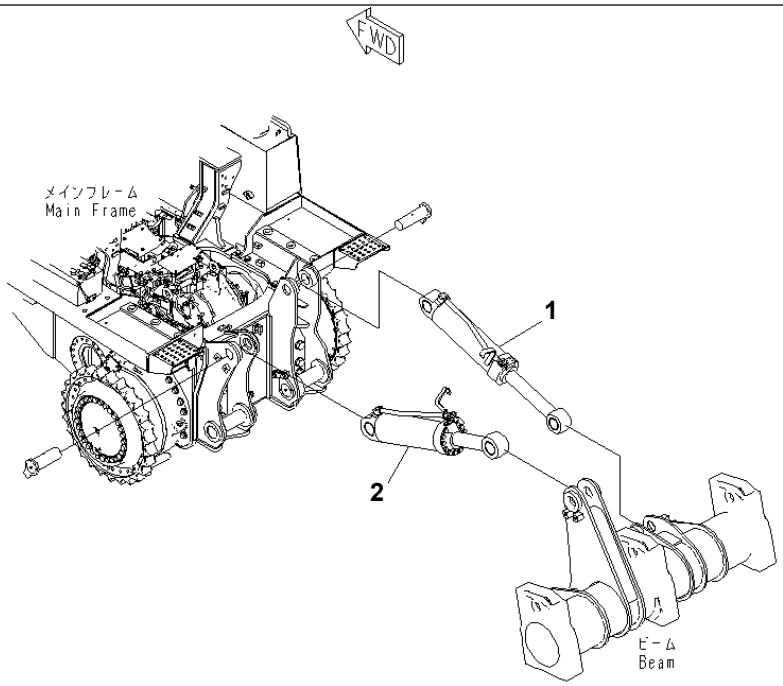

00042059

Ref. T2400-04A0 **Page 330410**

D155A-6 S/N 85001-UP
RIPPER CYLINDER

Item	Part No.	Part Name	Qty	Serial No.
1	(⊙707-01-XK410)	CYLINDER GROUP	1	85001-
2	(⊙707-01-XK420)	CYLINDER GROUP	1	85001-

Printed By : Dwi Iswanto (airafather6107170)

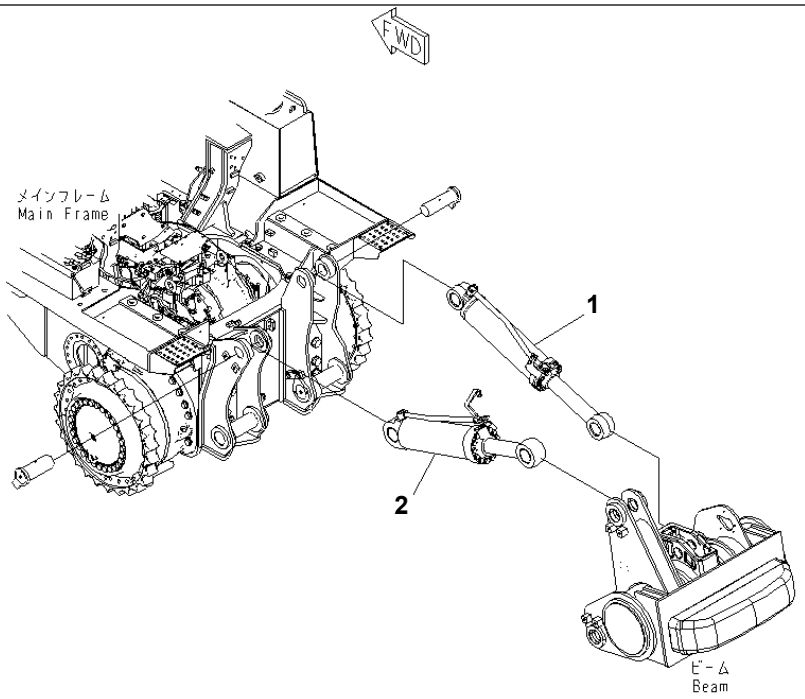

00064610

Ref. T2400-04A3 **Page 330420**

D155A-6 S/N 85001-UP

RIPPER CULINDER (FOR LARGE SHANK)

Item	Part No.	Part Name	Qty	Serial No.
1	(⊙707-01-XAC60)	CYLINDER ASS'Y	1	85001-
2	(⊙707-01-XK420)	CYLINDER GROUP	1	85001-

Printed By : Dwi Iswanto (airafather6107170)

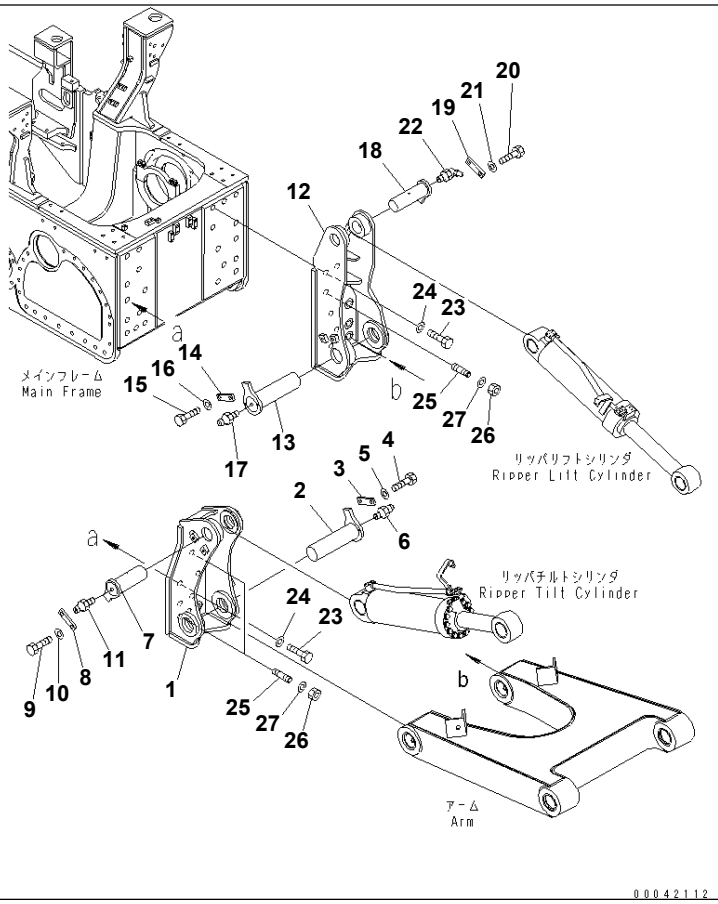

Ref. T2440-01A0 **Page 330430**

D155A-6 S/N 85001-UP
RIPPER MOUNT

Item	Part No.	Part Name	Qty	Serial No.
1	17A-78-41112	BRACKET	1	85001-
2	17A-78-44110	PIN	1	85001-
3	205-70-61560	PLATE	1	85001-
4	01010-82040	BOLT	2	85001-
5	01643-32060	WASHER	2	85001-
6	07020-00000	FITTING,GREASE	1	85001-
7	17A-78-44150	PIN	1	85001-
8	205-70-61560	PLATE	1	85001-
9	01010-82040	BOLT	2	85001-
10	01643-32060	WASHER	2	85001-
11	07020-00000	FITTING,GREASE	1	85001-
12	17A-78-41122	BRACKET	1	85001-
13	17A-78-44110	PIN	1	85001-
14	205-70-61560	PLATE	1	85001-
15	01010-82040	BOLT	2	85001-
16	01643-32060	WASHER	2	85001-
17	07020-00000	FITTING,GREASE	1	85001-
18	17A-78-44161	PIN	1	85001-
19	205-70-61560	PLATE	1	85001-
20	01010-82040	BOLT	2	85001-
21	01643-32060	WASHER	2	85001-
22	07020-00675	FITTING,GREASE	1	85001-
23	01018-33990	BOLT	14	85001-
24	195-69-11140	WASHER	14	85001-
25	195-78-11270	STUD	4	85001-
26	195-69-11131	NUT	4	85001-
27	195-69-11140	WASHER	4	85001-

Printed By : Dwi Iswanto (airafather6107170)

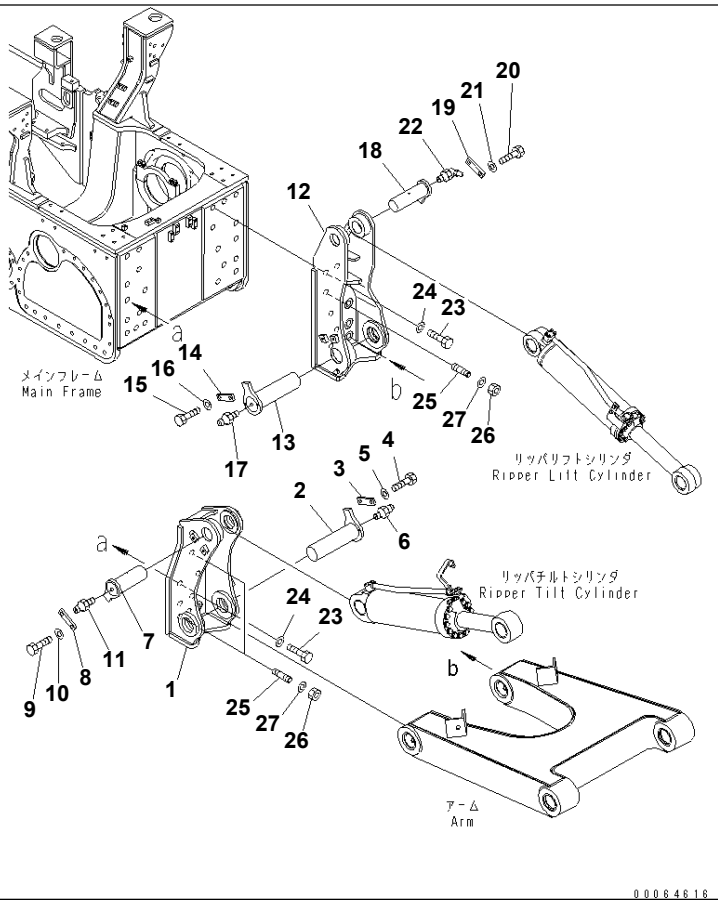

Ref. T2440-01A1 **Page 330440**

D155A-6 S/N 85001-UP
RIPPER MOUNT (FOR LARGE SHANK)

Item	Part No.	Part Name	Qty	Serial No.
1	17A-78-41112	BRACKET	1	85001-
2	17A-78-44110	PIN	1	85001-
3	205-70-61560	PLATE	1	85001-
4	01010-82040	BOLT	2	85001-
5	01643-32060	WASHER	2	85001-
6	07020-00000	FITTING,GREASE	1	85001-
7	17A-78-44150	PIN	1	85001-
8	205-70-61560	PLATE	1	85001-
9	01010-82040	BOLT	2	85001-
10	01643-32060	WASHER	2	85001-
11	07020-00000	FITTING,GREASE	1	85001-
12	17A-78-47920	BRACKET	1	85001-
13	17A-78-44110	PIN	1	85001-
14	205-70-61560	PLATE	1	85001-
15	01010-82040	BOLT	2	85001-
16	01643-32060	WASHER	2	85001-
17	07020-00000	FITTING,GREASE	1	85001-
18	17A-78-44161	PIN	1	85001-
19	205-70-61560	PLATE	1	85001-
20	01010-82040	BOLT	2	85001-
21	01643-32060	WASHER	2	85001-
22	07020-00675	FITTING,GREASE	1	85001-
23	01018-33990	BOLT	14	85001-
24	195-69-11140	WASHER	14	85001-
25	195-78-11270	STUD	4	85001-
26	195-69-11131	NUT	4	85001-
27	195-69-11140	WASHER	4	85001-

Printed By : Dwi Iswanto (airafather6107170)

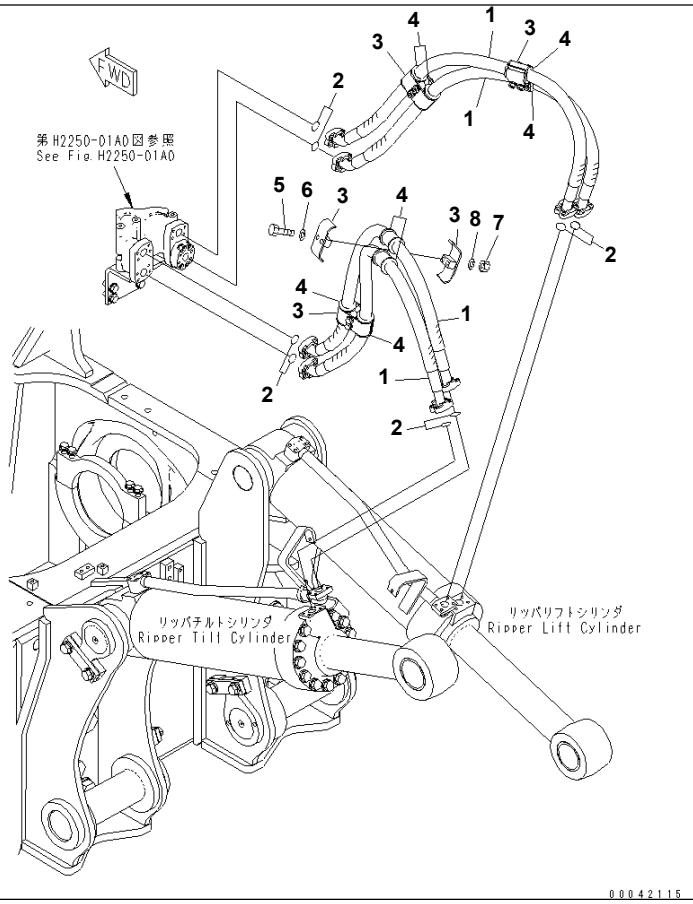

Ref. T2460-01A0 **Page 330450**

D155A-6 S/N 85001-UP

RIPPER CYLINDER PIPING (FOR VARIABLE TYPE RIPPER)

Item	Part No.	Part Name	Qty	Serial No.
1	07120-01016	HOSE	4	85001-
2	07000-13032	O-RING	8	85001-
3	07094-31024	CLAMP	8	85001-
4	07095-01035	CUSHION	8	85001-
5	01010-81275	BOLT	8	85001-
6	01643-31232	WASHER	8	85001-
7	01580-11210	NUT	8	85001-
8	01643-31232	WASHER	8	85001-

Printed By : Dwi Iswanto (airafather6107170)

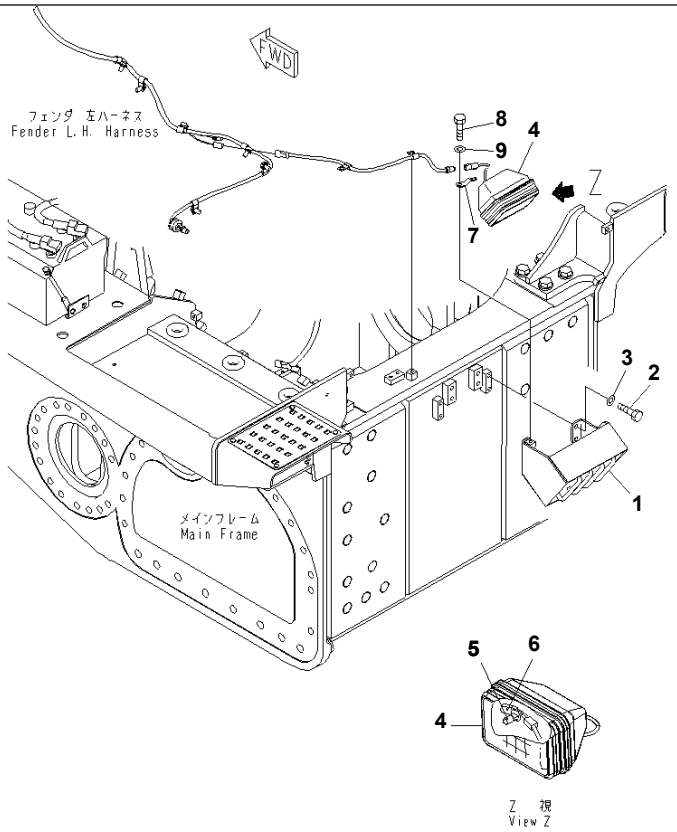

Ref. T2470-01A0 **Page 330460**

D155A-6 S/N 85001-UP
RIPPER POINT LIGHT

Item	Part No.	Part Name	Qty	Serial No.
1	17A-06-43790	COVER	1	85001-
2	01010-81230	BOLT	4	85001-
3	01643-31232	WASHER	4	85001-
4	17A-06-17931	LAMP ASS'Y	1	85001-
5	08192-12830	CONNECTOR	1	85001-
	17A-06-17970	· BULB¤ 70W	1	85001-
6	17A-06-17980	· SLEEVE	1	85001-
7	08193-21012	CLIP	1	85001-
8	01010-81230	BOLT	1	85001-
9	01643-31232	WASHER	1	85001-

Printed By : Dwi Iswanto (airafather6107170)

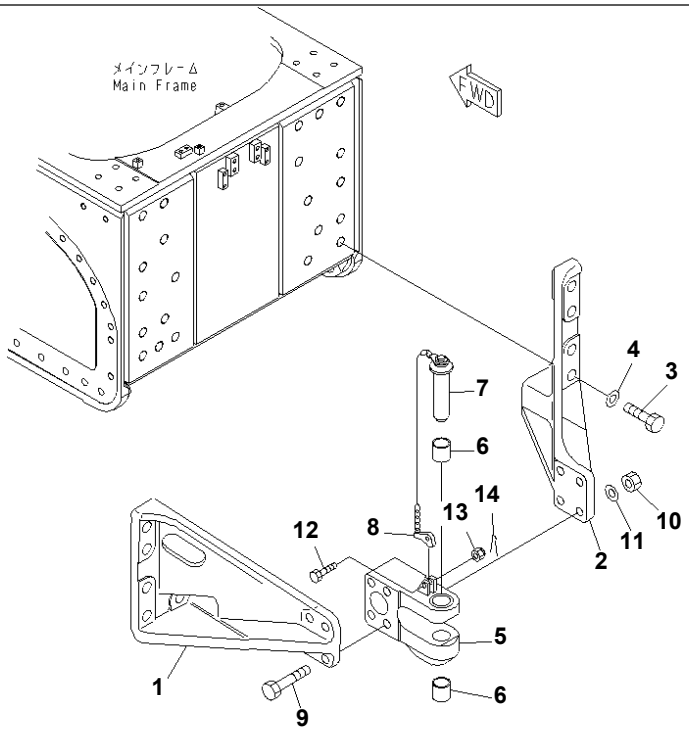

00042122

Ref. T2810-01A0 **Page 330470**

D155A-6 S/N 85001-UP
DRAUBAR (HITCH)

Item	Part No.	Part Name	Qty	Serial No.
1	175-69-21111	BRACKET	1	85001-
2	175-69-21121	BRACKET	1	85001-
3	01018-33990	BOLT	10	85001-
4	195-69-11140	WASHER	10	85001-
	175-69-00012	DRAWBAR ASS'Y	1	85001-
5	175-69-21212	· DRAWBAR	1	85001-
6	195-69-11230	· BUSHING	2	85001-
	195-69-11226	PIN ASS'Y	1	85001-
7	195-69-11280	· PIN	1	85001-
8	09249-10016	· LATCH	1	85001-
9	170-69-11143	BOLT	4	85001-
10	01580-03326	NUT	4	85001-
11	01643-33380	WASHER	4	85001-
12	01052-51675	BOLT	1	85001-
13	01592-31619	NUT	1	85001-
14	04050-14030	PIN	1	85001-

Printed By : Dwi Iswanto (airafather6107170)

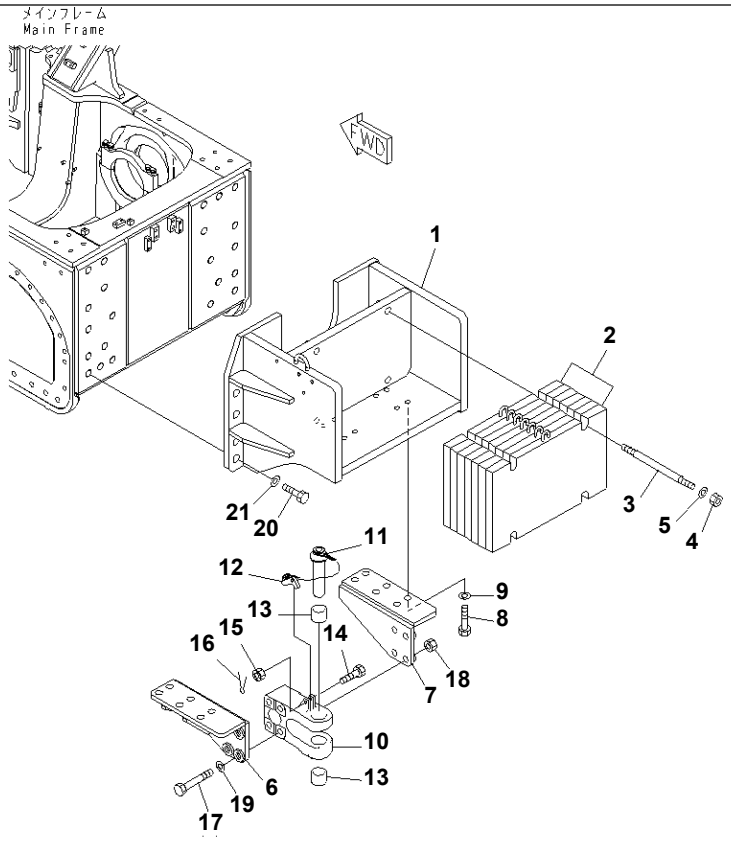

Ref. T2820-01A0 **Page 330480**

D155A-6 S/N 85001-UP
COUNTER WEIGHT

Item	Part No.	Part Name	Qty	Serial No.
	175-69-00023	COUNTER WEIGHT G.	1	85001-
1	175-69-22112	· BRACKET	1	85001-
2	195-69-12121	· WEIGHT	7	85001-
3	175-69-22140	· BOLT	4	85001-
4	01580-13024	· NUT	4	85001-
5	01643-33080	· WASHER	4	85001-
6	195-69-12141	· BRACKET	1	85001-
7	195-69-12151	· BRACKET	1	85001-
8	01010-83075	· BOLT	12	85001-
9	01643-33080	· WASHER	12	85001-
	175-69-00014	· DRAWBAR ASS'Y	1	85001-
10	175-69-21212	· · DRAWBAR	1	85001-
	195-69-11226	· · PIN ASS'Y	1	85001-
11	195-69-11280	· · · PIN	1	85001-
12	09249-10016	· · · LATCH	1	85001-
13	195-69-11230	· · BUSHING	2	85001-
14	01052-51675	· BOLT	1	85001-
15	01592-31619	· NUT	1	85001-
16	04050-14030	· PIN	1	85001-
17	170-69-11143	· BOLT	4	85001-
18	07165-13336	· NUT	4	85001-
19	01643-33380	· WASHER	4	85001-
20	01018-33990	BOLT	10	85001-
21	195-69-11140	WASHER	10	85001-

Printed By : Dwi Iswanto (airafather6107170)

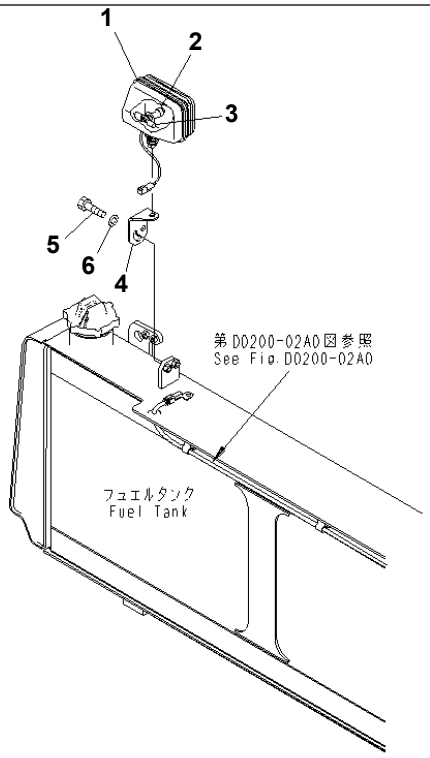

00042136

Ref. T2850-01A0 **Page 330490**

D155A-6 S/N 85001-UP
REAR LAMP (FOR RIPPER)

Item	Part No.	Part Name	Qty	Serial No.
1	17A-06-17931	LAMP ASS'Y	1	85001-
2	17A-06-17970	· BULB¤ 70W	1	85001-
3	17A-06-17980	· SLEEVE	1	85001-
4	17A-06-41591	PLATE	1	85001-
5	01010-81235	BOLT	2	85001-
6	01643-31232	WASHER	2	85001-

Printed By : Dwi Iswanto (airafather6107170)

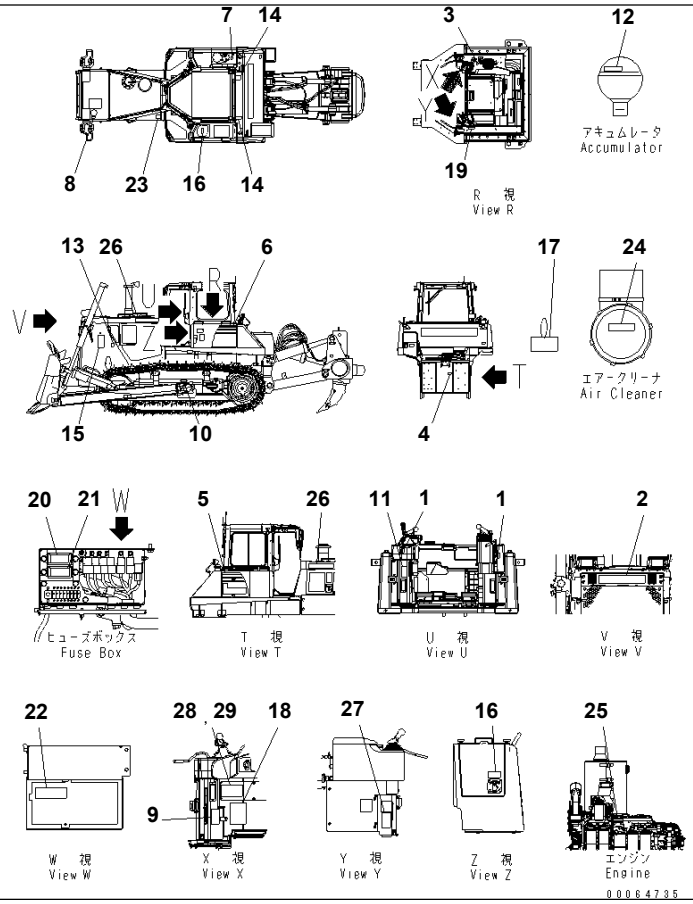

Ref. U0100-01A1 **Page 360010**

D155A-6 S/N 85001-UP

MARKS AND PLATES (INDONESIA) (WITH CAB)(#85001-85024)

Item	Part No.	Part Name	Qty	Serial No.
1	14X-98-11170	PLATE¤ OPERATING,LOCK	2	85001-@
2	09690-F0630	PLATE¤ MARK	1	85001-@
3	17A-98-11180	PLATE,HORN	1	85001-@
4	09690-M0063	PLATE¤ MARK,COMPANY NAME	1	85001-@
5	17A-98-42120	MARK	1	85001-@
6	17A-98-42110	MARK	1	85001-@
7	09653-A0481	PLATE¤ SAFETY,OIL	1	85001-@
8	09653-A0481	PLATE¤ SAFETY,WATER	1	85001-@
9	09654-B0641	PLATE¤ SAFETY,AFTER OPERATING	1	85001-@
10	09657-A0881	PLATE¤ SAFETY,ADJUSTMENT TRACK TENSION	2	85001-@
11	09651-A0641	PLATE¤ SAFETY,BEFORE OPERATING	1	85001-@
12	09659-A057B	PLATE¤ SAFETY,ACCUMLATOR	1	85001-@
13	09667-A0481	PLATE¤ SAFETY,ROLLING THINGS	2	85001-@
14	09805-C0881	PLATE¤ SAFETY	2	85001-@
15	09806-B1683	PLATE¤ SAFETY	2	85001-@
16	09808-A0881	PLATE¤ SAFETY,BATTERY CABLE	2	85001-@
17	09963-A1640	TAG,DO NUT OPERATE	1	85001-@
18	17A-98-41330	OIL CHART	1	85001-85024
19	09649-00512	PLATE¤ INSTRUCTION,ENGINE STOP	1	85001-@
20	17A-98-42270	PLATE,FUSE	1	85001-@
21	17A-98-42250	PLATE,FUSE	1	85001-@
22	17A-98-42410	PLATE,CIRCUIT BREAKER	1	85001-@
23	17A-98-42520	PLATE,ENGINE DAMPA OIL	1	85001-@
24	09637-05163	PLATE¤ INSTRUCTION,AIR CLEANER	1	85001-@
25	6217-71-6530	PLATE,FUEL FILTER	1	85001-@
26	09690-F0560	PLATE¤ MARK	2	85001-@
27	09802-10500	PLATE¤ SAFETY,COMFIRM OF REAR	1	85001-@
28	(★09602-10001)	PLATE¤ NAME	1	85001-@
29	04418-13060	SCREW	4	85001-@

Printed By : Dwi Iswanto (airafather6107170)

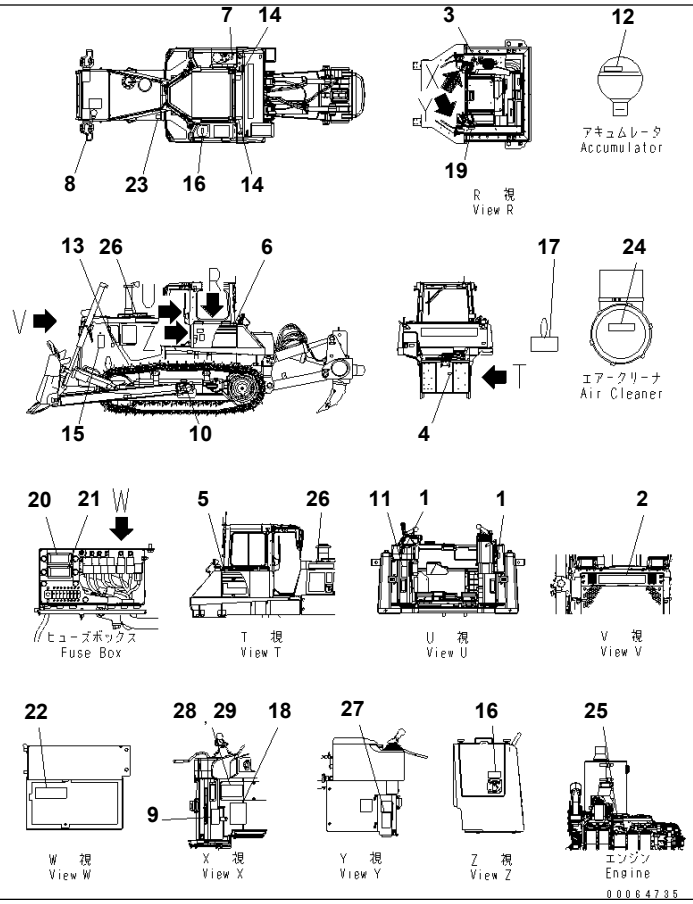

Ref. U0100-01A1A **Page 360020**

D155A-6 S/N 85001-UP
MARKS AND PLATES (INDONESIA) (WITH CAB)(#85025-)

Item	Part No.	Part Name	Qty	Serial No.
1	14X-98-11170	PLATE¤ OPERATING,LOCK	2	85001-
2	09690-F0630	PLATE¤ MARK	1	85001-
3	17A-98-11180	PLATE,HORN	1	85001-
4	09690-M0063	PLATE¤ MARK,COMPANY NAME	1	85001-
5	17A-98-42120	MARK	1	85001-
6	17A-98-42110	MARK	1	85001-
7	09653-A0481	PLATE¤ SAFETY	1	85001-
8	09653-A0481	PLATE¤ SAFETY	1	85001-
9	09654-B0641	PLATE¤ SAFETY	1	85001-
10	09657-A0881	PLATE¤ SAFETY	2	85001-
11	09651-A0641	PLATE¤ SAFETY	1	85001-
12	09659-A057B	PLATE¤ SAFETY	1	85001-
13	09667-A0481	PLATE¤ SAFETY	2	85001-
14	09805-C0881	PLATE¤ SAFETY	2	85001-
15	09806-B1683	PLATE¤ SAFETY	2	85001-
16	09808-A0881	PLATE¤ SAFETY	2	85001-
17	09963-A1640	TAG	1	85001-
18	17A-98-41331	OIL CHART	1	85025-
19	09649-00512	PLATE¤ INSTRUCTION,ENGINE STOP	1	85001-
20	17A-98-42270	PLATE,FUSE	1	85001-
21	17A-98-42250	PLATE,FUSE	1	85001-
22	17A-98-42410	PLATE,CIRCUIT BREAKER	1	85001-
23	17A-98-42520	PLATE,ENGINE DAMPA OIL	1	85001-
24	09637-05163	PLATE¤ INSTRUCTION,AIR CLEANER	1	85001-
25	6217-71-6530	PLATE,FUEL FILTER	1	85001-
26	09690-F0560	PLATE¤ MARK	2	85001-
27	09802-10500	PLATE¤ SAFETY,COMFIRM OF REAR	1	85001-
28	(★09602-10001)	PLATE¤ NAME	1	85001-
29	04418-13060	SCREW	4	85001-

Printed By : Dwi Iswanto (airafather6107170)

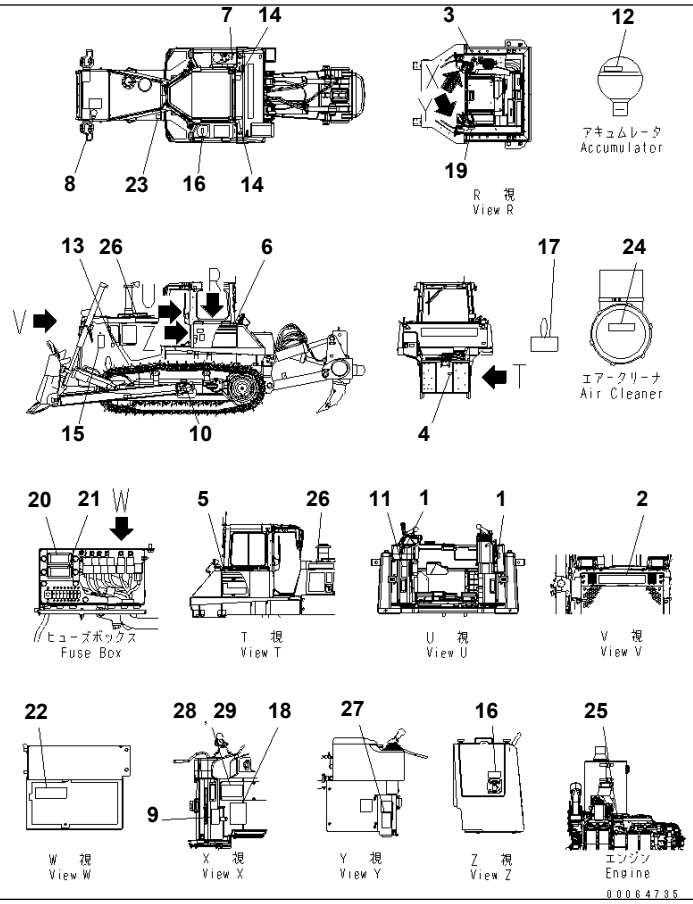

Ref. U0100-01A2 **Page 360030**

D155A-6 S/N 85001-UP

MARKS AND PLATES (ENGLISH) (WITH CAB)(#85001-85024)

Item	Part No.	Part Name	Qty	Serial No.
1	14X-98-11170	PLATE¤ OPERATING,LOCK	2	85001-@
2	09690-F0630	PLATE¤ MARK	1	85001-@
3	17A-98-11180	PLATE,HORN	1	85001-@
4	09690-M0063	PLATE¤ MARK,COMPANY NAME	1	85001-@
5	17A-98-42120	MARK	1	85001-@
6	17A-98-42110	MARK	1	85001-@
7	09653-A0481	PLATE¤ SAFETY,OIL	1	85001-@
8	09653-A0481	PLATE¤ SAFETY,WATER	1	85001-@
9	09654-B0641	PLATE¤ SAFETY,AFTER OPERATING	1	85001-@
10	09657-A0881	PLATE¤ SAFETY,ADJUSTMENT TRACK TENSION	2	85001-@
11	09651-A0641	PLATE¤ SAFETY,BEFORE OPERATING	1	85001-@
12	09659-A057B	PLATE¤ SAFETY,ACCUMLATOR	1	85001-@
13	09667-A0481	PLATE¤ SAFETY,ROLLING THINGS	2	85001-@
14	09805-C0881	PLATE¤ SAFETY	2	85001-@
15	09806-B1683	PLATE¤ SAFETY	2	85001-@
16	09808-A0881	PLATE¤ SAFETY,BATTERY CABLE	2	85001-@
17	09963-A1640	TAG,DO NUT OPERATE	1	85001-@
18	17A-98-41330	OIL CHART	1	85001-85024
19	09649-03012	PLATE¤ INSTRUCTION,ENGINE STOP	1	85001-@
20	17A-98-41190	PLATE,FUSE	1	85001-@
21	17A-98-42330	PLATE,FUSE	1	85001-@
22	17A-98-42130	PLATE,CIRCUIT BREAKER	1	85001-@
23	17A-98-41160	PLATE,ENGINE DAMPA OIL	1	85001-@
24	09637-30163	PLATE¤ INSTRUCTION,AIR CLEANER	1	85001-@
25	6217-71-6470	PLATE¤ CAUTION,FUEL FILTER	1	85001-@
26	09690-F0560	PLATE¤ MARK	2	85001-@
27	09802-13000	PLATE¤ SAFETY,COMFIRM OF REAR	1	85001-@
28	(★09602-10001)	PLATE¤ NAME	1	85001-@
29	04418-13060	SCREW	4	85001-@

Printed By : Dwi Iswanto (airafather6107170)

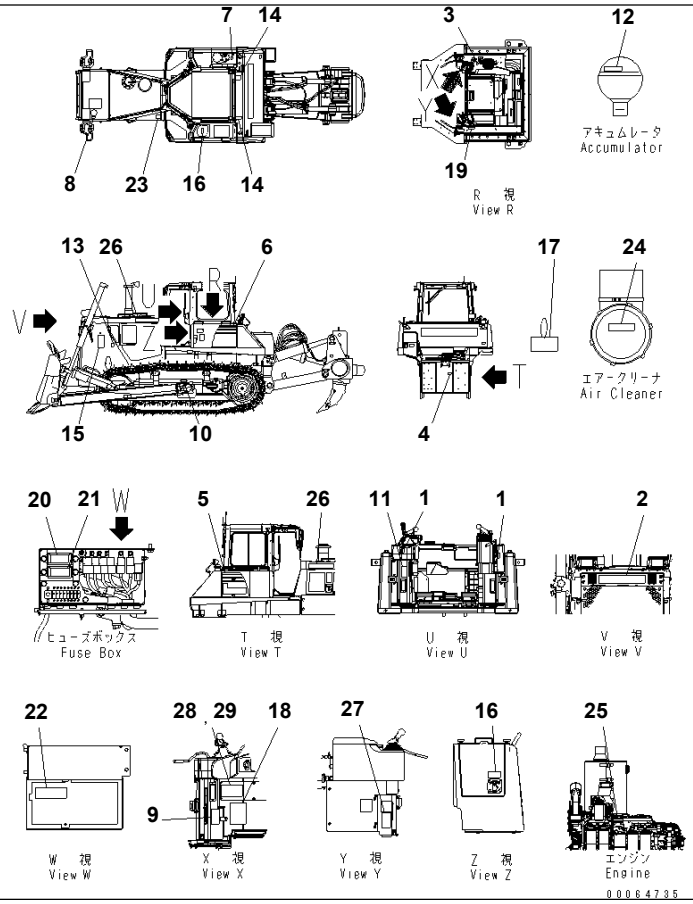

Ref. U0100-01A2A **Page 360040**

D155A-6 S/N 85001-UP

MARKS AND PLATES (ENGLISH) (WITH CAB)(#85025-)

Item	Part No.	Part Name	Qty	Serial No.
1	14X-98-11170	PLATE¤ OPERATING,LOCK	2	85001-
2	09690-F0630	PLATE¤ MARK	1	85001-
3	17A-98-11180	PLATE,HORN	1	85001-
4	09690-M0063	PLATE¤ MARK,COMPANY NAME	1	85001-
5	17A-98-42120	MARK	1	85001-
6	17A-98-42110	MARK	1	85001-
7	09653-A0481	PLATE¤ SAFETY,OIL	1	85001-
8	09653-A0481	PLATE¤ SAFETY,WATER	1	85001-
9	09654-B0641	PLATE¤ SAFETY,AFTER OPERATING	1	85001-
10	09657-A0881	PLATE¤ SAFETY,ADJUSTMENT TRACK TENSION	2	85001-
11	09651-A0641	PLATE¤ SAFETY,BEFORE OPERATING	1	85001-
12	09659-A057B	PLATE¤ SAFETY,ACCUMLATOR	1	85001-
13	09667-A0481	PLATE¤ SAFETY,ROLLING THINGS	2	85001-
14	09805-C0881	PLATE¤ SAFETY	2	85001-
15	09806-B1683	PLATE¤ SAFETY	2	85001-
16	09808-A0881	PLATE¤ SAFETY,BATTERY CABLE	2	85001-
17	09963-A1640	TAG,DO NUT OPERATE	1	85001-
18	17A-98-41331	OIL CHART	1	85025-
19	09649-03012	PLATE¤ INSTRUCTION,ENGINE STOP	1	85001-
20	17A-98-41190	PLATE,FUSE	1	85001-
21	17A-98-42330	PLATE,FUSE	1	85001-
22	17A-98-42130	PLATE,CIRCUIT BREAKER	1	85001-
23	17A-98-41160	PLATE,ENGINE DAMPA OIL	1	85001-
24	09637-30163	PLATE¤ INSTRUCTION,AIR CLEANER	1	85001-
25	6217-71-6470	PLATE¤ CAUTION,FUEL FILTER	1	85001-
26	09690-F0560	PLATE¤ MARK	2	85001-
27	09802-13000	PLATE¤ SAFETY,COMFIRM OF REAR	1	85001-
28	(★09602-10001)	PLATE¤ NAME	1	85001-
29	04418-13060	SCREW	4	85001-

Printed By : Dwi Iswanto (airafather6107170)

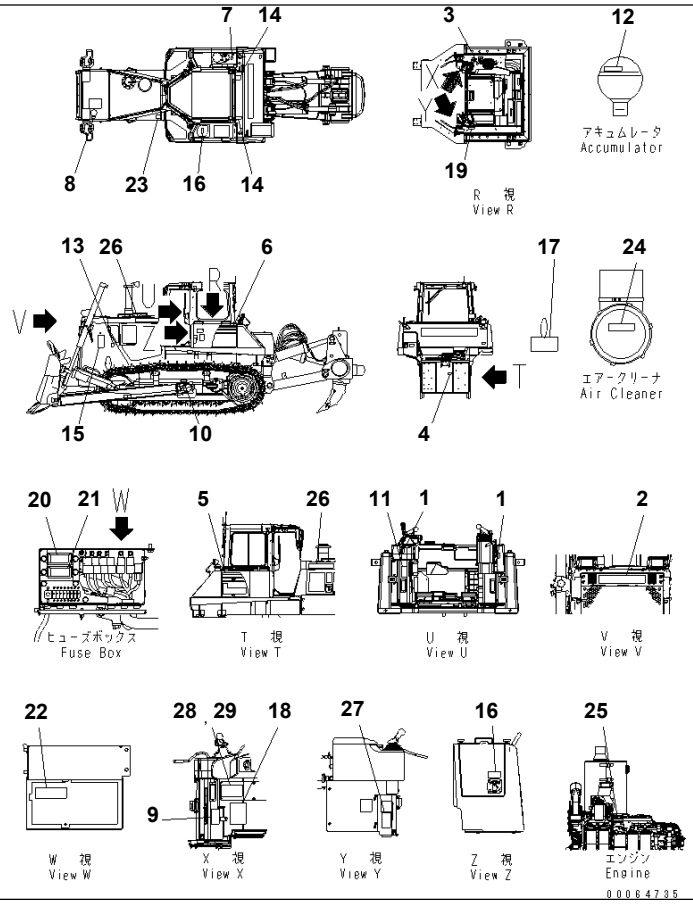

Ref. U0100-01A3 **Page 360050**

D155A-6 S/N 85001-UP

MARKS AND PLATES (CHINESE) (WITH CAB)(#85001-85024)

Item	Part No.	Part Name	Qty	Serial No.
1	14X-98-11170	PLATE¤ OPERATING,LOCK	2	85001-@
2	09690-F0630	PLATE¤ MARK	1	85001-@
3	17A-98-11180	PLATE,HORN	1	85001-@
4	09690-M0063	PLATE¤ MARK,COMPANY NAME	1	85001-@
5	17A-98-42120	MARK	1	85001-@
6	17A-98-42110	MARK	1	85001-@
7	09653-A0481	PLATE¤ SAFETY,OIL	1	85001-@
8	09653-A0481	PLATE¤ SAFETY,WATER	1	85001-@
9	09654-B0641	PLATE¤ SAFETY,AFTER OPERATING	1	85001-@
10	09657-A0881	PLATE¤ SAFETY,ADJUSTMENT TRACK TENSION	2	85001-@
11	09651-A0641	PLATE¤ SAFETY,BEFORE OPERATING	1	85001-@
12	09659-A057B	PLATE¤ SAFETY,ACCUMLATOR	1	85001-@
13	09667-A0481	PLATE¤ SAFETY,ROLLING THINGS	2	85001-@
14	09805-C0881	PLATE¤ SAFETY	2	85001-@
15	09806-B1683	PLATE¤ SAFETY	2	85001-@
16	09808-A0881	PLATE¤ SAFETY,BATTERY CABLE	2	85001-@
17	09963-A1640	TAG,DO NUT OPERATE	1	85001-@
18	17A-98-41330	OIL CHART	1	85001-85024
19	09649-09012	PLATE¤ INSTRUCTION,ENGINE STOP	1	85001-@
20	17A-98-42260	PLATE,FUSE	1	85001-@
21	17A-98-42220	PLATE,FUSE	1	85001-@
22	17A-98-42350	PLATE,CIRCUIT BREAKER	1	85001-@
23	17A-98-42510	PLATE,ENGINE DAMPA OIL	1	85001-@
24	09637-90263	PLATE¤ INSTRUCTION,AIR CLEANER	1	85001-@
25	6217-71-6520	PLATE¤ CAUTION,FUEL FILTER	1	85001-@
26	09690-F0560	PLATE¤ MARK	2	85001-@
27	09802-19000	PLATE¤ SAFETY,COMFIRM OF REAR	1	85001-@
28	(★09602-10001)	PLATE¤ NAME	1	85001-@
29	04418-13060	SCREW	4	85001-@

Printed By : Dwi Iswanto (airafather6107170)

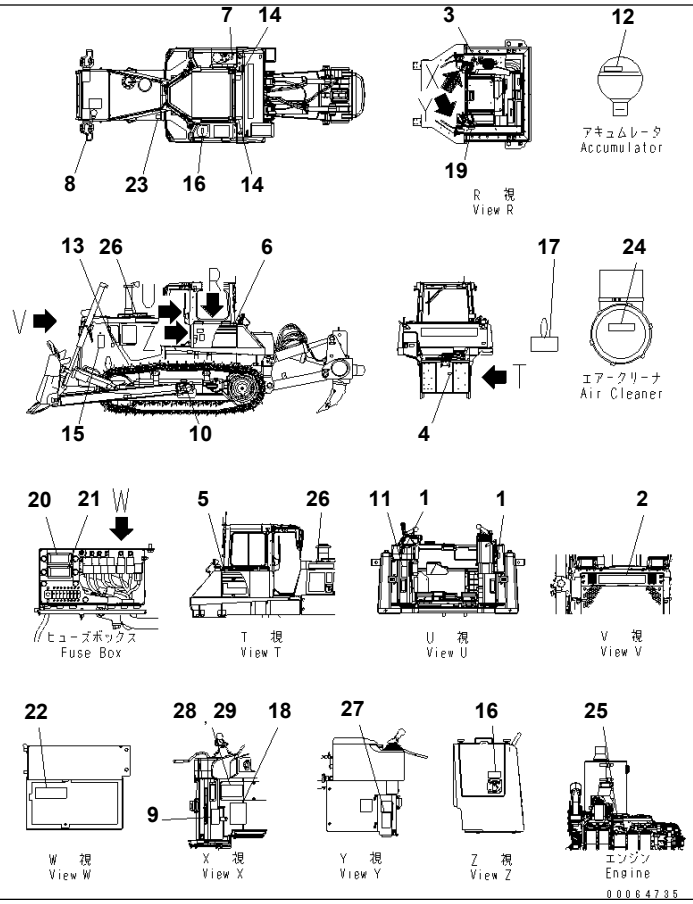

Ref. U0100-01A3A **Page 360060**

D155A-6 S/N 85001-UP
MARKS AND PLATES (CHINESE) (WITH CAB)(#85025-)

Item	Part No.	Part Name	Qty	Serial No.
1	14X-98-11170	PLATE¤ OPERATING,LOCK	2	85001-
2	09690-F0630	PLATE¤ MARK	1	85001-
3	17A-98-11180	PLATE,HORN	1	85001-
4	09690-M0063	PLATE¤ MARK,COMPANY NAME	1	85001-
5	17A-98-42120	MARK	1	85001-
6	17A-98-42110	MARK	1	85001-
7	09653-A0481	PLATE¤ SAFETY,OIL	1	85001-
8	09653-A0481	PLATE¤ SAFETY,WATER	1	85001-
9	09654-B0641	PLATE¤ SAFETY,AFTER OPERATING	1	85001-
10	09657-A0881	PLATE¤ SAFETY,ADJUSTMENT TRACK TENSION	2	85001-
11	09651-A0641	PLATE¤ SAFETY,BEFORE OPERATING	1	85001-
12	09659-A057B	PLATE¤ SAFETY,ACCUMLATOR	1	85001-
13	09667-A0481	PLATE¤ SAFETY,ROLLING THINGS	2	85001-
14	09805-C0881	PLATE¤ SAFETY	2	85001-
15	09806-B1683	PLATE¤ SAFETY	2	85001-
16	09808-A0881	PLATE¤ SAFETY,BATTERY CABLE	2	85001-
17	09963-A1640	TAG,DO NUT OPERATE	1	85001-
18	17A-98-41331	OIL CHART	1	85025-
19	09649-09012	PLATE¤ INSTRUCTION,ENGINE STOP	1	85001-
20	17A-98-42260	PLATE,FUSE	1	85001-
21	17A-98-42220	PLATE,FUSE	1	85001-
22	17A-98-42350	PLATE,CIRCUIT BREAKER	1	85001-
23	17A-98-42510	PLATE,ENGINE DAMPA OIL	1	85001-
24	09637-90263	PLATE¤ INSTRUCTION,AIR CLEANER	1	85001-
25	6217-71-6520	PLATE¤ CAUTION,FUEL FILTER	1	85001-
26	09690-F0560	PLATE¤ MARK	2	85001-
27	09802-19000	PLATE¤ SAFETY,COMFIRM OF REAR	1	85001-
28	(★09602-10001)	PLATE¤ NAME	1	85001-
29	04418-13060	SCREW	4	85001-

Printed By : Dwi Iswanto (airafather6107170)

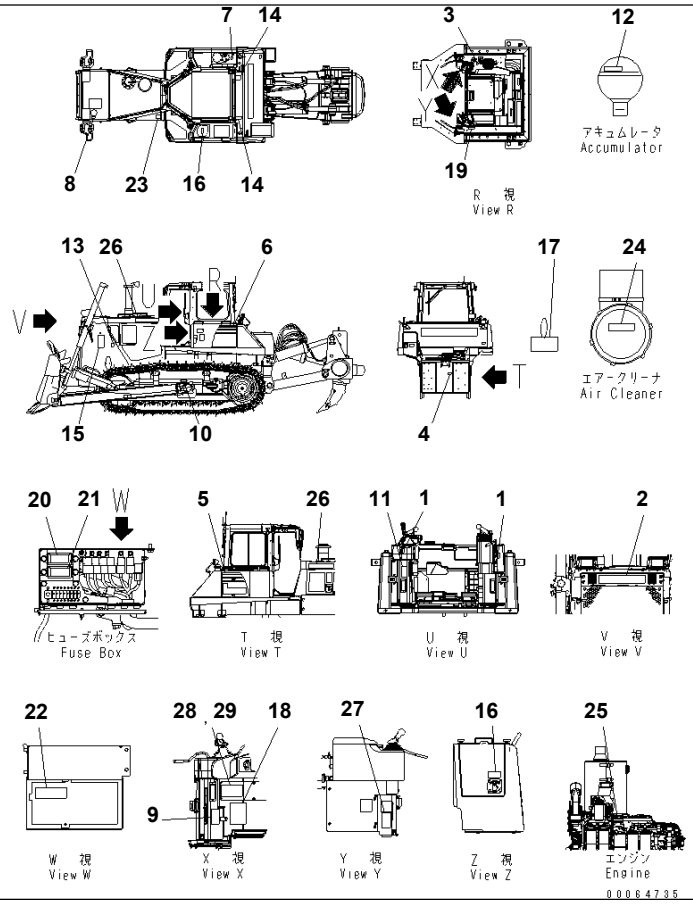

Ref. U0100-01A4 **Page 360070**

D155A-6 S/N 85001-UP

MARKS AND PLATES (ARABIC) (WITH CAB)(#85001-85024)

Item	Part No.	Part Name	Qty	Serial No.
1	14X-98-11170	PLATE¤ OPERATING,LOCK	2	85001-@
2	09690-F0630	PLATE¤ MARK	1	85001-@
3	17A-98-11180	PLATE,HORN	1	85001-@
4	09690-M0063	PLATE¤ MARK,COMPANY NAME	1	85001-@
5	17A-98-42120	MARK	1	85001-@
6	17A-98-42110	MARK	1	85001-@
7	09653-A0481	PLATE¤ SAFETY,OIL	1	85001-@
8	09653-A0481	PLATE¤ SAFETY,WATER	1	85001-@
9	09654-B0641	PLATE¤ SAFETY,AFTER OPERATING	1	85001-@
10	09657-A0881	PLATE¤ SAFETY,ADJUSTMENT TRACK TENSION	2	85001-@
11	09651-A0641	PLATE¤ SAFETY,BEFORE OPERATING	1	85001-@
12	09659-A057B	PLATE¤ SAFETY,ACCUMLATOR	1	85001-@
13	09667-A0481	PLATE¤ SAFETY,ROLLING THINGS	2	85001-@
14	09805-C0881	PLATE¤ SAFETY	2	85001-@
15	09806-B1683	PLATE¤ SAFETY	2	85001-@
16	09808-A0881	PLATE¤ SAFETY,BATTERY CABLE	2	85001-@
17	09963-A1640	TAG,DO NUT OPERATE	1	85001-@
18	17A-98-41330	OIL CHART	1	85001-85024
19	09649-00212	PLATE¤ INSTRUCTION,ENGINE STOP	1	85001-@
20	17A-98-41270	PLATE,FUSE	1	85001-@
21	17A-98-42180	PLATE,FUSE	1	85001-@
22	17A-98-41280	PLATE,CIRCUIT BREAKER	1	85001-@
23	17A-98-42190	PLATE,ENGINE DAMPA OIL	1	85001-@
24	09637-02163	PLATE¤ INSTRUCTION,AIR CLEANER	1	85001-@
25	6217-71-6560	PLATE,FUEL FILTER	1	85001-@
26	09690-F0560	PLATE¤ MARK	2	85001-@
27	09802-10200	PLATE¤ SAFETY,COMFIRM OF REAR	1	85001-@
28	(★09602-10001)	PLATE¤ NAME	1	85001-@
29	04418-13060	SCREW	4	85001-@

Printed By : Dwi Iswanto (airafather6107170)

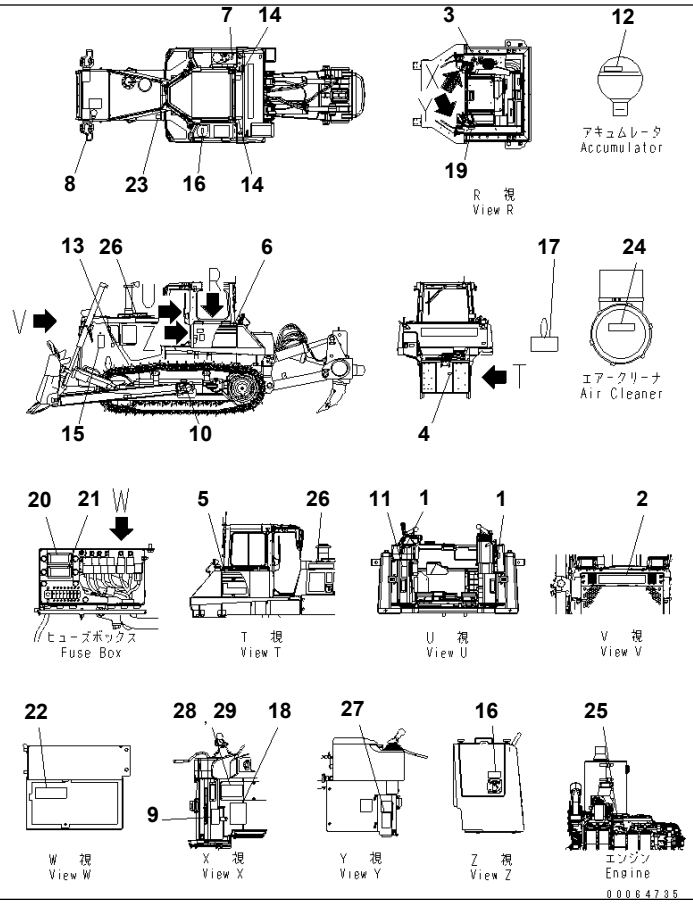

Ref. U0100-01A4A **Page 360080**

D155A-6 S/N 85001-UP

MARKS AND PLATES (ARABIC) (WITH CAB)(#85025-)

Item	Part No.	Part Name	Qty	Serial No.
1	14X-98-11170	PLATE¤ OPERATING,LOCK	2	85001-
2	09690-F0630	PLATE¤ MARK	1	85001-
3	17A-98-11180	PLATE,HORN	1	85001-
4	09690-M0063	PLATE¤ MARK,COMPANY NAME	1	85001-
5	17A-98-42120	MARK	1	85001-
6	17A-98-42110	MARK	1	85001-
7	09653-A0481	PLATE¤ SAFETY,OIL	1	85001-
8	09653-A0481	PLATE¤ SAFETY,WATER	1	85001-
9	09654-B0641	PLATE¤ SAFETY,AFTER OPERATING	1	85001-
10	09657-A0881	PLATE¤ SAFETY,ADJUSTMENT TRACK TENSION	2	85001-
11	09651-A0641	PLATE¤ SAFETY,BEFORE OPERATING	1	85001-
12	09659-A057B	PLATE¤ SAFETY,ACCUMLATOR	1	85001-
13	09667-A0481	PLATE¤ SAFETY,ROLLING THINGS	2	85001-
14	09805-C0881	PLATE¤ SAFETY	2	85001-
15	09806-B1683	PLATE¤ SAFETY	2	85001-
16	09808-A0881	PLATE¤ SAFETY,BATTERY CABLE	2	85001-
17	09963-A1640	TAG,DO NUT OPERATE	1	85001-
18	17A-98-41331	OIL CHART	1	85025-
19	09649-00212	PLATE¤ INSTRUCTION,ENGINE STOP	1	85001-
20	17A-98-41270	PLATE,FUSE	1	85001-
21	17A-98-42180	PLATE,FUSE	1	85001-
22	17A-98-41280	PLATE,CIRCUIT BREAKER	1	85001-
23	17A-98-42190	PLATE,ENGINE DAMPA OIL	1	85001-
24	09637-02163	PLATE¤ INSTRUCTION,AIR CLEANER	1	85001-
25	6217-71-6560	PLATE,FUEL FILTER	1	85001-
26	09690-F0560	PLATE¤ MARK	2	85001-
27	09802-10200	PLATE¤ SAFETY,COMFIRM OF REAR	1	85001-
28	(★09602-10001)	PLATE¤ NAME	1	85001-
29	04418-13060	SCREW	4	85001-

Printed By : Dwi Iswanto (airafather6107170)

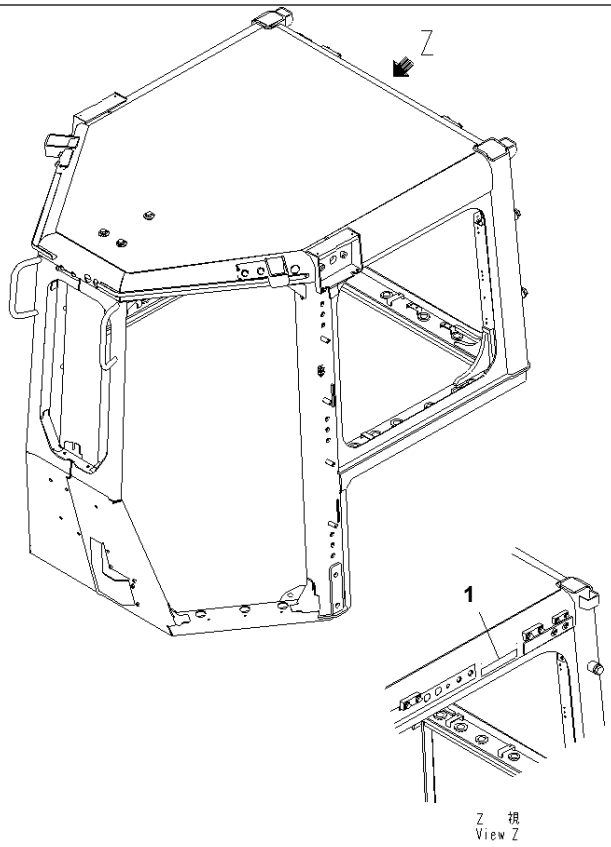

Ref. U0520-01A5 **Page 360300**

D155A-6 S/N 85001-UP

MARKS AND PLATE (INDONESIAN) (R.O.P.S.)

Item	Part No.	Part Name	Qty	Serial No.
1	09620-A2050	PLATE	1	85001-

Printed By : Dwi Iswanto (airafather6107170)

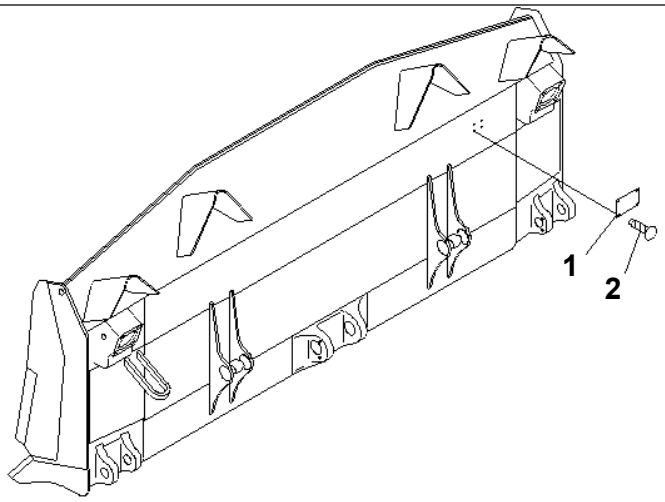

00059526

Ref. U0640-01A0 **Page 360420**

D155A-6 S/N 85001-UP
PLATE (BLADE)

Item	Part No.	Part Name	Qty	Serial No.
1	09601-60000	PLATE¤ NAME	1	85001-
2	04418-13060	SCREW	4	85001-

Printed By : Dwi Iswanto (airafather6107170)

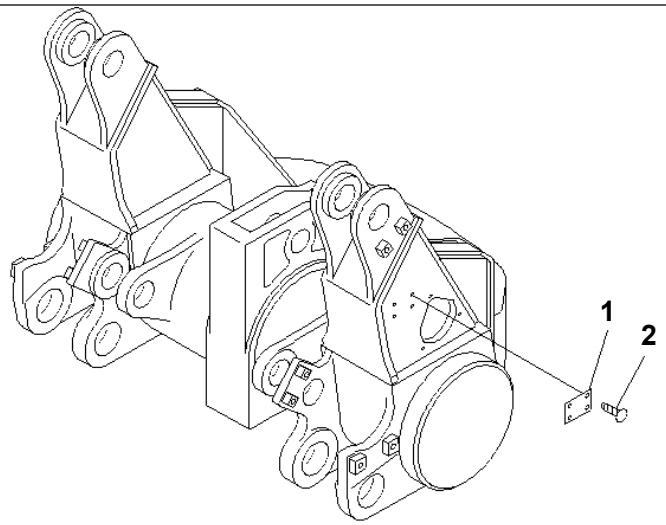

00059496

Ref. U0650-01A0 **Page 360430**

D155A-6 S/N 85001-UP
PLATE (RIPPER)

Item	Part No.	Part Name	Qty	Serial No.
1	09601-60000	PLATE¤ NAME	1	85001-
2	04418-13060	SCREW	4	85001-

Printed By : Dwi Iswanto (airafather6107170)

D155A-6 S/N 85001-UP
00065105

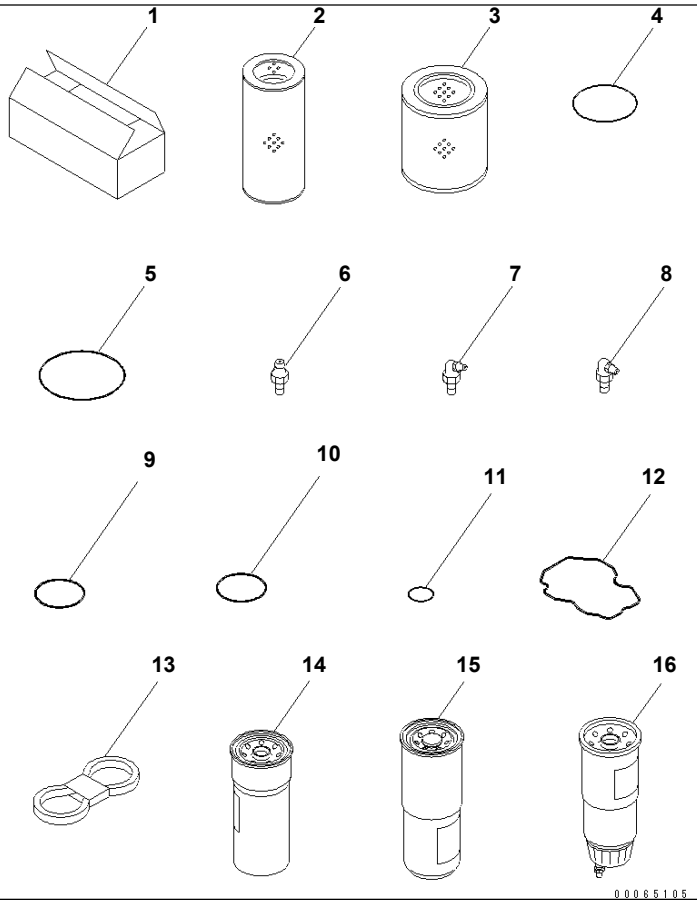

Ref. V0100-01A0 **Page 390010**

D155A-6 S/N 85001-UP
SPARE PARTS

Item	Part No.	Part Name	Qty	Serial No.
1	09059-00800	BOX	1	85001-
2	07063-51100	ELEMENT	1	85001-
3	207-60-71182	ELEMENT	1	85010-
	208-60-71120	ELEMENT	1	85001-85009
4	07000-12130	O-RING	1	85001-
5	07000-15195	O-RING	1	85001-
6	07020-00000	FITTING	4	85001-
7	07020-00675	FITTING	4	85001-
8	07020-00900	FITTING	4	85001-
9	07002-13634	O-RING	6	85001-
10	07002-63634	O-RING	1	85001-
11	07002-02034	O-RING	1	85001-
12	6217-11-8830	GASKET	6	85001-
13	6210-81-6960	V-BELT SET	1	85001-
14	600-211-1340	CARTRIDGE	2	85001-
15	600-319-3550	CARTRIDGE (1-5/8)	2	85001-
16	600-319-4500	CARTRIDGE ASS'Y	1	85001-

Printed By : Dwi Iswanto (airafather6107170)

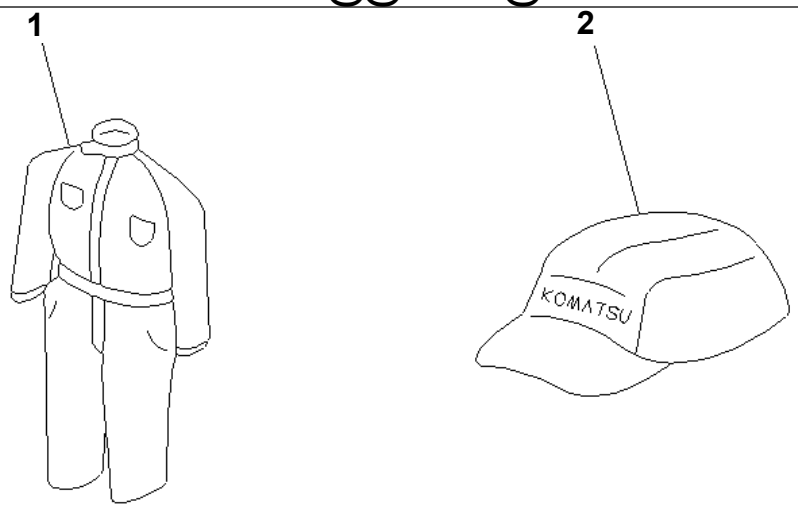

PX13549

Ref. V0200-01A0 **Page 390020**

D155A-6 S/N 85001-UP
CAP AND OVERALL

Item	Part No.	Part Name	Qty	Serial No.
	09980-92550	CAP AND OVERALL KIT	1	85001-
1	09980-10550	· OVERALL	1	85001-
2	09982-20057	· CAP	1	85001-

Printed By : Dwi Iswanto (airafather6107170)

D155A-6 S/N 85001-UP
00041831

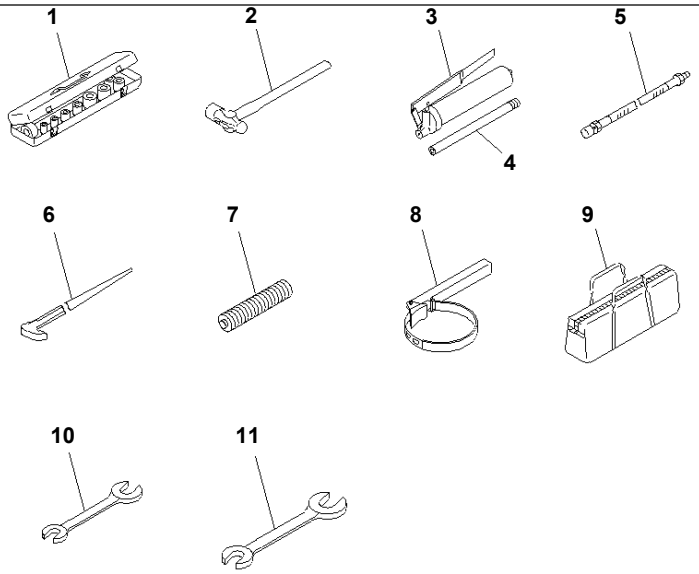

00041831

Ref. V0300-01A0 **Page 390030**

D155A-6 S/N 85001-UP
TOOL

Item	Part No.	Part Name	Qty	Serial No.
1	09020-10284	SOCKET WRENCH SET	1	85001-
2	09039-00150	HAMMER	1	85001-
	07952-70004	GREASE PUMP ASS'Y	1	85001-
3	07950-10450	· PUMP	1	85001-
4	07951-41017	· NOZZLE	1	85001-
5	07951-31400	NOZZLE	1	85001-
6	09055-10390	BAR	1	85001-
7	07950-90403	CARTRIDGE	1	85001-
8	09019-28036	WRENCH	1	85001-
9	09056-04613	BAG	1	85001-
10	09002-01417	WRENCH¤ 14X17	1	85001-
11	09002-01922	WRENCH¤ 19X22	1	85001-

Printed By : Dwi Iswanto (airafather6107170)

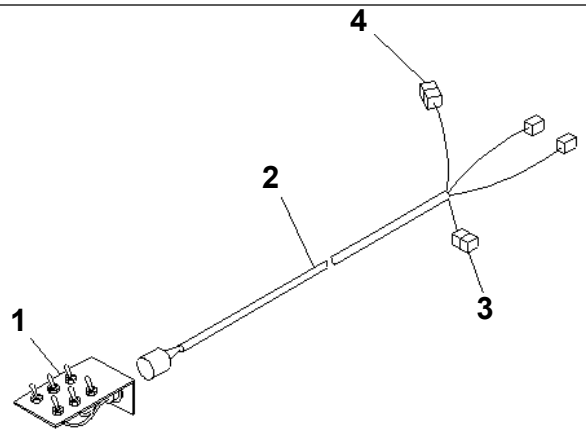

00065111

Ref. V0305-01A0 **Page 390040**

D155A-6 S/N 85001-UP
EMERGENCY TOOL

Item	Part No.	Part Name	Qty	Serial No.
1	19M-06-32820	SWITCH ASS'Y	1	85001-
2	17A-06-41431	WIRING HARNESS	1	85001-
3	21J-06-13661	DIODE	1	85001-
4	7824-66-6430	RESISTOR	1	85001-

Printed By : Dwi Iswanto (airafather6107170)

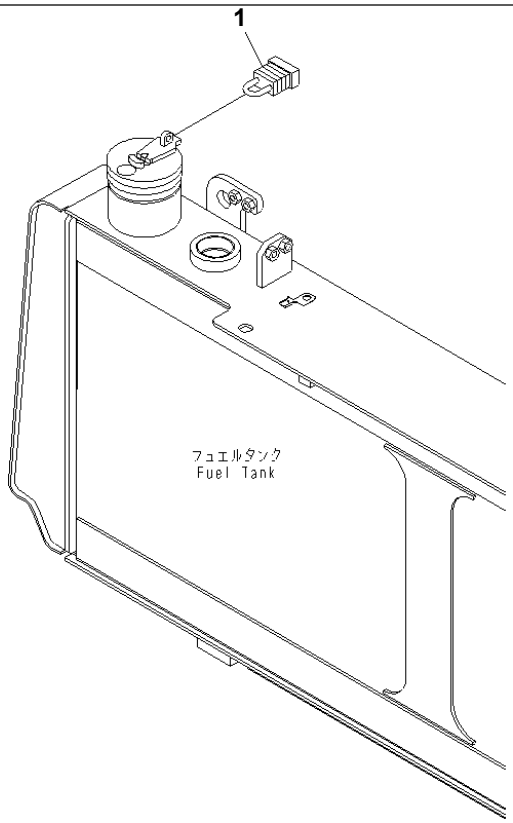

00065121

Ref. W2111-01A0 **Page 420010**

D155A-6 S/N 85001-UP
VANDALISM PROTECTION CAP(#85001-85013)

Item	Part No.	Part Name	Qty	Serial No.
1	17A-04-41440	LOCK	1	85001-85013

Printed By : Dwi Iswanto (airafather6107170)

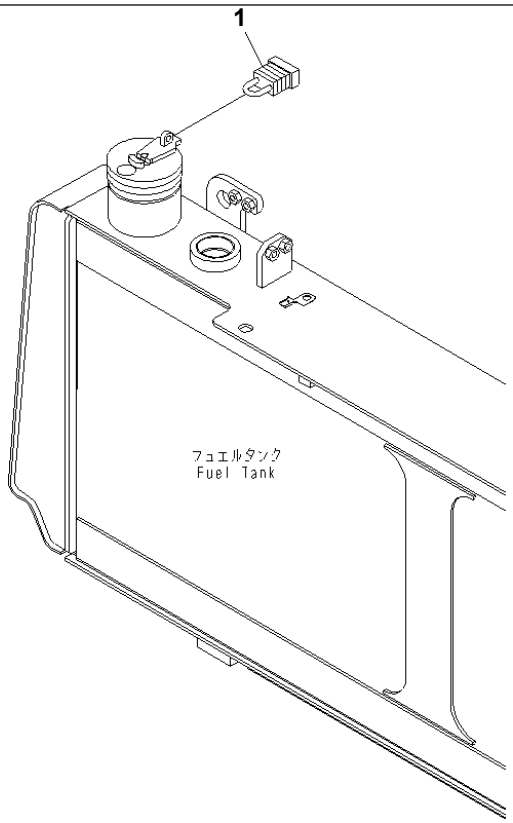

00065121

Ref. W2111-01A0A **Page 420020**

D155A-6 S/N 85001-UP
VANDALISM PROTECTION CAP(#85014-)

Item	Part No.	Part Name	Qty	Serial No.
1	17A-04-41440	LOCK	2	85014-

Printed By : Dwi Iswanto (airafather6107170)

KIT 詳細については次のページを参照して下さい。 See subsequent pages for details.

K-1	17A-13-05330	トルク コンバータ サービス キット TORQUE CONVERTER SERVICE KIT
K-2	17A-15-05210	トランスミッション サービス キット TRANSMISSION SERVICE KIT
K-3	17A-15-05221	トランスミッション コントロール バルブ サービス キット TRANSMISSION CONTROL VALVE SERVICE KIT
K-4	14X-15-05130	トランスミッション メイン リリーフ バルブ サービス キット TRANSMISSION MAIN RELIEF VALVE SERVICE KIT
K-5	17A-22-05210	ステアリング サービス キット STEERING SERVICE KIT
K-6	17A-22-05220	ステアリング バルブ サービス キット STEERING VALVE SERVICE KIT

D155A-6 S/N 85001-UP

SERVICE KIT (TORQUE CONVERTER AND TRANSMISSION)

Item	Part No.	Part Name	Qty	Serial No.
K-1	17A-13-05330	SERVICE KIT,TORQUE CONVERTER	1	85001-
	07000-72015	· O-RING,(F2310-53A0 -21)	4	85001-
	07000-72095	· O-RING,(F2310-54A0 -6)	1	85001-
	07000-72115	· O-RING,(F2310-54A0 -31)	1	85001-
	07000-73030	· O-RING,(F2310-53A0 -20)	2	85001-
	07000-73035	· O-RING,(F2310-53A0 -6)	2	85001-
	07000-73038	· O-RING,(F2310-53A0 -7)	2	85001-
	07000-75165	· O-RING,(F2310-53A0 -31)	1	85001-
	07000-75230	· O-RING,(F2310-54A0 -16)	1	85001-
	07000-75230	· O-RING,(F2310-54A0 -27)	1	85001-
	07005-01612	· GASKET,(F2310-53A0 -10)	4	85001-
	07005-01612	· GASKET,(F2310-53A0 -15)	6	85001-
	07005-01612	· GASKET,(F2310-53A0 -16)	3	85001-
	07012-50100	· SEAL,(F2310-53A0 -30)	1	85001-
	195-13-12711	· · RING,(F2310-51A0 -14)	1	85001-
K-2	17A-15-05210	SERVICE KIT,TRANSMISSION	1	85001-
	07000-72014	· O-RING,(F2320-55A0 -12)	1	85001-
	07000-72014	· O-RING,(F2320-55A0 -19)	1	85001-
	07000-72018	· · O-RING,(F2320-52A0 -4)	1	85001-
	07000-73022	· O-RING,(F2320-55A0 -18)	1	85001-
	07000-73025	· O-RING,(F2320-55A0 -13)	1	85001-
	07000-73028	· O-RING,(F2320-55A0 -7)	1	85001-
	07000-73028	· O-RING,(F2320-55A0 -21)	1	85001-
	07000-73030	· O-RING,(F2320-52A0 -23)	3	85001-
	07000-73030	· O-RING,(F2320-55A0 -6)	1	85001-
	07000-73030	· O-RING,(F2320-55A0 -22)	1	85001-
	07000-73032	· O-RING,(F2320-55A0 -23)	1	85001-
	07000-73035	· O-RING,(F2320-52A0 -24)	1	85001-
	144-15-22881	· RING,(F2320-51A0 -15)	1	85001-
	144-15-22881	· RING,(F2320-52A0 -27)	1	85001-

Printed By : Dwi Iswanto (airafather6107170)

SERVICE KIT (TORQUE CONVERTER AND TRANSMISSION)

Item	Part No.	Part Name	Qty	Serial No.
	17A-15-25911	· GASKET,(F2320-61A0 -2)	1	85001-
	195-15-71230	· GASKET,(F2320-61A0 -6)	1	85001-
	425-15-19250	· RING,(F2320-51A0 -26)	1	85001-
	562-15-19230	· RING,(F2320-51A0 -3)	1	85001-
	562-15-19230	· RING,(F2320-52A0 -9)	1	85001-
	566-15-79260	· RING,(F2320-51A0 -5)	1	85001-
	566-15-79260	· RING,(F2320-51A0 -28)	1	85001-
	568-15-12830	· RING,(F2320-51A0 -17)	1	85001-
	568-15-12830	· RING,(F2320-52A0 -29)	1	85001-
	568-15-12840	· RING,(F2320-52A0 -11)	1	85001-
K-3	17A-15-05221	SERVICE KIT,TRANSMISSION CONTROL VALVE	1	85001-
	07000-72014	· O-RING,(F2320-57A0 -10)	2	85001-
	07000-72016	· O-RING,(F2320-57A0 -5)	5	85001-
	07002-61823	· O-RING,(F2320-57A0 -6)	5	85001-
	154-15-65590	· · O-RING,(F2320-57A0 -9)	1	85001-
	195-15-75531	· · GASKET,(F2320-57A0 -1)	1	85001-
	195-15-75740	· · · O-RING,(F2320-57A0 -14)	1	85001-
K-4	14X-15-05130	SERVICE KIT,TRANSMISSION MAIN RELIEF VALVE	1	85001-
	07000-73030	· O-RING,(F2320-60A0 -25)	5	85001-
	07002-03034	· · O-RING,(F2320-60A0 -4)	1	85001-
	07002-03034	· · O-RING,(F2320-60A0 -13)	1	85001-
	07002-03034	· · O-RING,(F2320-60A0 -22)	2	85001-
K-5	17A-22-05210	SERVICE KIT,STEERING	1	85001-
	07000-72018	· · O-RING,(F2370-52A0 -15)	2	85001-
	07000-72018	· · O-RING,(F2370-52A0 -33)	6	85001-
	07000-72021	· O-RING,(F2370-55A0 -3)	6	85001-
	07000-72075	· O-RING,(F2370-54A0 -19)	1	85001-
	07000-73022	· O-RING,(F2370-55A0 -2)	6	85001-
	07000-73025	· · O-RING,(F2370-52A0 -41)	3	85001-
	07000-73032	· O-RING,(F2370-55A0 -20)	6	85001-
	07000-73035	· O-RING,(F2370-54A0 -8)	1	85001-
	07000-75260	· O-RING,(F2370-55A0 -25)	1	85001-
	07000-75465	· · O-RING,(F2370-53A0 -20)	2	85001-
	07000-75490	· · O-RING,(F2370-52A0 -40)	1	85001-
	07002-61623	· · O-RING,(F2370-53A0 -4)	2	85001-
	07002-62434	· O-RING,(F2370-54A0 -27)	1	85001-
	07002-63634	· O-RING,(F2370-54A0 -23)	1	85001-
	07005-00812	· GASKET,(F2370-55A0 -7)	2	85001-
	07005-00812	· GASKET,(F2370-55A0 -10)	2	85001-
	07005-00812	· GASKET,(F2370-55A0 -14)	2	85001-
	07005-00812	· GASKET,(F2370-55A0 -17)	2	85001-
	07005-00812	· GASKET,(F2370-55A0 -19)	2	85001-
	103-15-29210	· · SEAL,(F2370-52A0 -13)	1	85001-
	103-15-29210	· · SEAL,(F2370-52A0 -32)	1	85001-
	113-15-12840	· · RING,(F2370-52A0 -14)	1	85001-
	113-15-12840	· · RING,(F2370-52A0 -31)	1	85001-
	14Y-22-15220	· · O-RING,(F2370-53A0 -16)	2	85001-
	17A-22-11141	· · SEAL,(F2370-52A0 -29)	3	85001-
	17A-22-17320	· GASKET,(F2370-54A0 -3)	1	85001-
K-6	17A-22-05220	SERVICE KIT,STEERING VALVE	1	85001-
	02896-11012	· · O-RING,(F2370-57A0 -41)	1	85001-
	02896-61009	· · O-RING,(F2370-57A0 -38)	1	85001-
	07000-02060	· · O-RING,(F2370-57A0 -18-)	1	85001-
	07000-71007	· · O-RING,(F2370-57A0 -3)	4	85001-
	07000-71007	· · O-RING,(F2370-57A0 -12)	3	85001-
	07000-72010	· · O-RING,(F2370-57A0 -17)	4	85001-
	07000-72015	· · O-RING,(F2370-57A0 -2)	16	85001-
	07000-72021	· · O-RING,(F2370-57A0 -30)	3	85001-
	07000-73022	· · O-RING,(F2370-57A0 -21)	2	85001-
	07002-61223	· · O-RING,(F2370-57A0 -32)	24	85001-
	07002-61823	· · O-RING,(F2370-57A0 -20)	1	85001-
	07002-62034	· · O-RING,(F2370-57A0 -36)	1	85001-
	07002-62034	· · O-RING,(F2370-57A0 -40)	1	85001-
	07002-62434	· · O-RING,(F2370-57A0 -34)	3	85001-

Printed By : Dwi Iswanto (airafather6107170)

KIT 詳細については次のページを参照して下さい。 See subsequent pages for details.

K01	178-32-05000	シュー ボルト および ナット サービスキット SHOE BOLT AND NUT SERVICE KIT

D155A-6 S/N 85001-UP

SERVICE KIT AND COMPONENT PARTS

Item	Part No.	Part Name	Qty	Serial No.
K01	178-32-05000	SHOE BOLT AND NUT K.	1	85001-
	176-32-11210	・ BOLT¤ SHOE	30	85001-
	178-32-11220	・ NUT¤ SHOE	30	85001-

Printed By : Dwi Iswanto (airafather6107170)

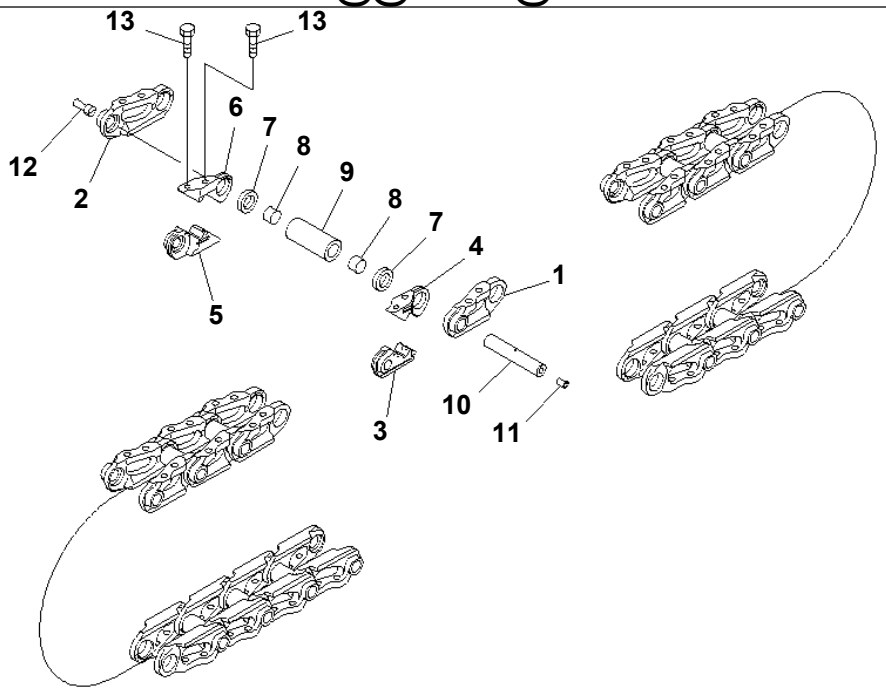

P W L 3 5 7 8

Ref. Y0322-01A0 **Page 450030**

D155A-6 S/N 85001-UP
TRACK LINK (LUBRICATE TYPE) (MASTER LINK 2 PLACE TYPE) (SUPPLY PARTS)

Item	Part No.	Part Name	Qty	Serial No.
	17A-32-00110	TRACK LINK ASS'Y	1	85001-
1	15A-32-77120	· LINK,L.H.	82	85001-
2	15A-32-77130	· LINK,R.H.	82	85001-
	175-32-08010	· MASTER LINK K. L.H.	2	85001-
3	☆	· · LINK,MASTER¤ L.H. PIN SIDE	1	85001-
4	☆	· · LINK,MASTER¤ L.H. BUSHING SIDE	1	85001-
	175-32-08020	· MASTER LINK K. R.H.	2	85001-
5	☆	· · LINK,MASTER¤ R.H. PIN SIDE	1	85001-
6	☆	· · LINK,MASTER¤ R.H. BUSHING SIDE	1	85001-
7	17A-32-21201	· SEAL ASS'Y	168	85001-
8	175-32-81181	· SPACER	168	85001-
9	15A-32-11142	· BUSHING	84	85001-
10	175-32-81450	· PIN	84	85001-
11	07059-11830	· PLUG,LARGE	84	85001-
12	07059-20721	· PLUG,SMALL	84	85001-
13	175-32-41261	· BOLT,MASTER	8	85001-

Printed By : Dwi Iswanto (airafather6107170)

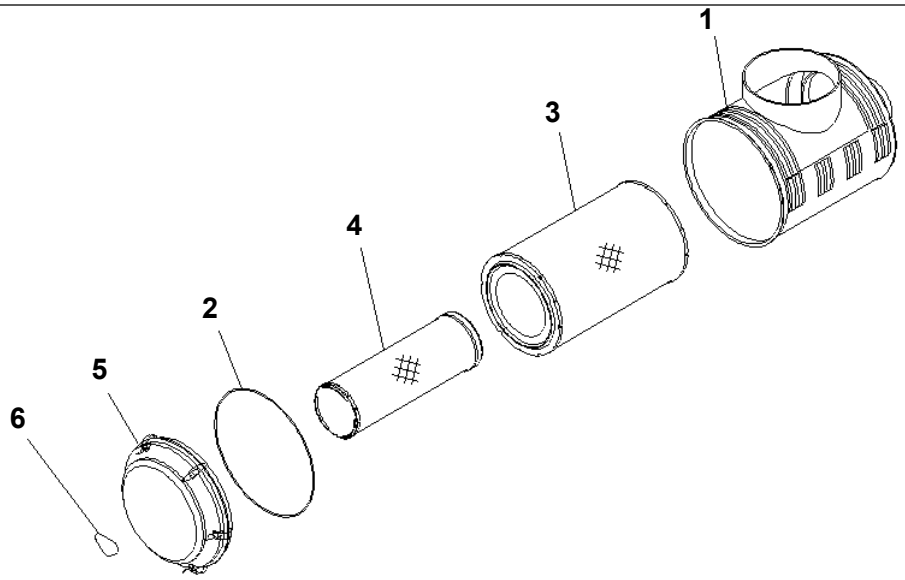

00052474

Ref. Y1011-01A0 **Page 450040**

D155A-6 S/N 85001-UP
AIR CLEANER (INNER PART)

Item	Part No.	Part Name	Qty	Serial No.
	6240-81-7402	AIR CLEANER ASS'Y	1	85001-
1	6240-81-7411	· BODY	1	85001-
	600-185-6100	· ELEMENT ASS'Y	1	85001-
2	600-184-1671	· · O-RING	1	85001-
3	600-185-6110	· · ELEMENT,OUTER	1	85001-
4	☆	· · ELEMENT,INNER	1	85001-
5	600-184-1632	· COVER	1	85001-
6	600-184-2810	· PLATE,NAME	1	85001-

Printed By : Dwi Iswanto (airafather6107170)

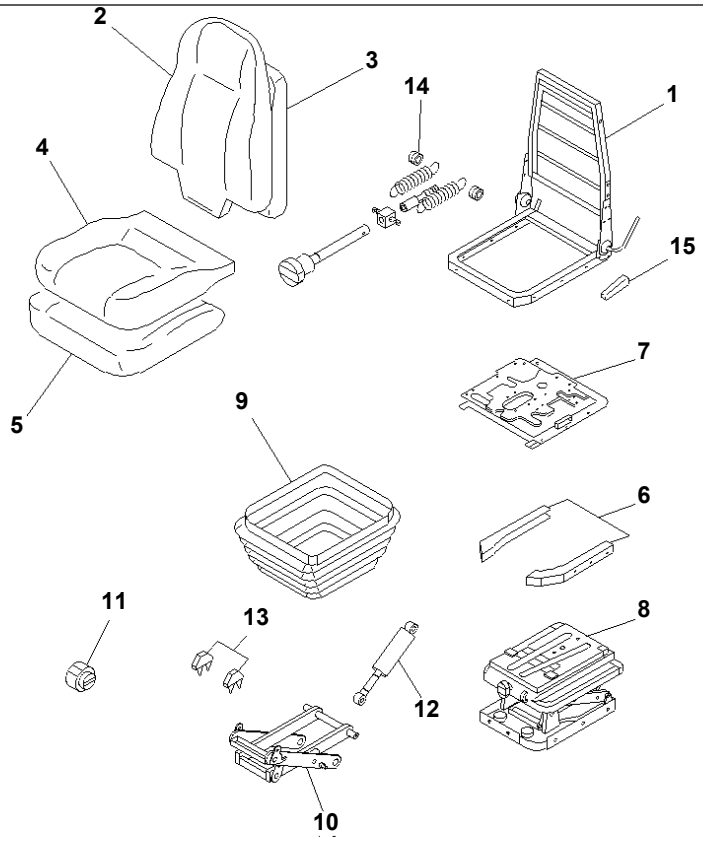

Ref. Y1570-01A1 **Page 450050**

D155A-6 S/N 85001-UP
OPERATOR'S SEAT ASS'Y (TURN AND RECLINING TYPE) (FABRIC SEAT)

Item	Part No.	Part Name	Qty	Serial No.
	17A-57-23201	SEAT ASS'Y,FABRIC	1	85001-
	AS183704	SEAT ASS'Y	1	85001-
1	AS183707	· FRAME ASS'Y	1	85001-
2	AS183705	· COVER	1	85001-
3	AS183708	· BACK FOAM KIT	1	85001-
4	AS183706	· COVER	1	85001-
5	AS183709	· SEAT FOAM KIT	1	85001-
6	AS183683	· BRACKET	2	85001-
7	AS183684	· SWIVEL ASS'Y	1	85001-
8	AS183685	· SUSPENSION ASS'Y	1	85001-
9	AS183686	· COVER	1	85001-
10	AS183687	· BEARING LEVER KIT	1	85001-
11	AS170373	· INDICATOR	1	85001-
12	AS167566	· DAMPER	1	85001-
13	AS167544	· STOPPER	2	85001-
14	AS183688	· ADJUSTER KIT	2	85001-
15	AS183689	· KNOB	1	85001-

Printed By : Dwi Iswanto (airafather6107170)

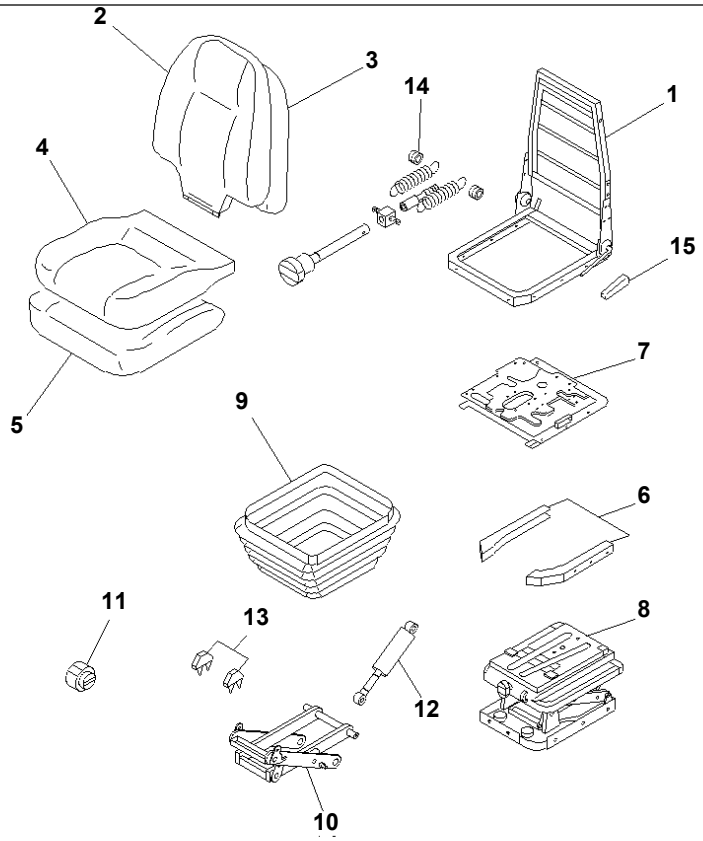

Ref. Y1570-01A2 **Page 450060**

D155A-6 S/N 85001-UP

OPERATOR'S SEAT ASS'Y (TURN AND RECLINING TYPE) (LEATHER SEAT)

Item	Part No.	Part Name	Qty	Serial No.
	17A-57-23301	SEAT ASS'Y	1	85001-
	AS183675	· SEAT ASS'Y,BLACK	1	85001-
1	AS183676	· · FRAME ASS'Y	1	85001-
2	AS183678	· · COVER,BLACK	1	85001-
3	AS183679	· · CUSHION	1	85001-
4	AS183681	· · COVER,BLACK	1	85001-
5	AS183682	· · SEAT	1	85001-
6	AS183683	· · BRACKET	2	85001-
7	AS183684	· · SWIVEL ASS'Y	1	85001-
8	AS183685	· · SUSPENSION ASS'Y	1	85001-
9	AS183686	· · COVER	1	85001-
10	AS183687	· · BEARING LEVER KIT	1	85001-
11	AS170373	· · INDICATOR	1	85001-
12	AS167566	· · DAMPER	1	85001-
13	AS167544	· · STOPPER	2	85001-
14	AS183688	· · ADJUSTER KIT	2	85001-
15	AS183689	· · KNOB	1	85001-

Printed By : Dwi Iswanto (airafather6107170)

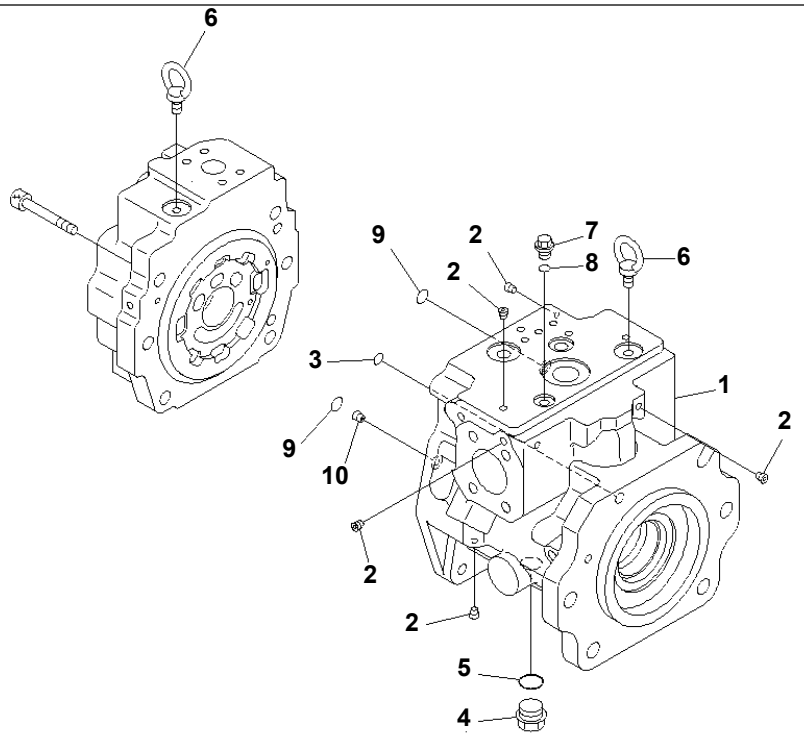

00065272

Ref. Y1600-01A0 **Page 450070**

D155A-6 S/N 85001-UP
HYDRAULIC PUMP (1/7)

Item	Part No.	Part Name	Qty	Serial No.
	708-1L-00670	PUMP THIS ASSEMBLY CONSISTS OF ALL PARTS SHOWN IN FIGS.Y1600-01A0 T0 Y1600-07A0.	1	85001-
	708-1L-01670	· PUMP SUB ASS'Y	1	85001-
	(★708-1L-04270)	· · CASE ASS'Y,FRONT	1	85001-
1	☆	· · · CASE,FRONT	1	85001-
2	☆	· · · PLUG	21	85001-
3	07000-B1009	· · O-RING	1	85001-
4	07044-12412	· · PLUG	1	85001-
5	07002-62434	· · O-RING	1	85001-
6	04530-11018	· · BOLT,EYE	2	85001-
7	708-8E-16150	· · PLUG	3	85001-
8	07002-61023	· · O-RING	3	85001-
9	07000-B2012	· · O-RING	2	85001-
10	☆	· · ORIFICE	1	85001-

Printed By : Dwi Iswanto (airafather6107170)

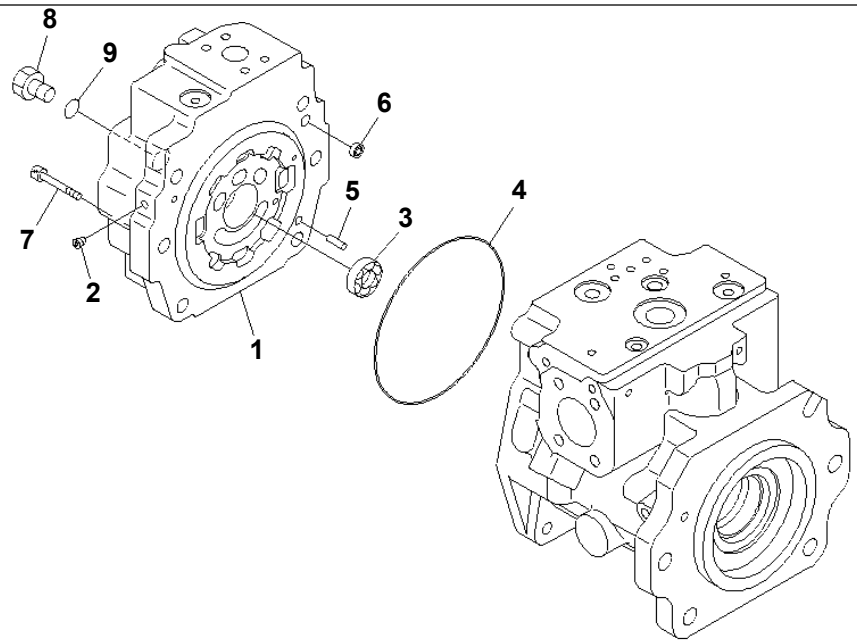

00065273

Ref. Y1600-02A0 **Page 450080**

D155A-6 S/N 85001-UP
HYDRAULIC PUMP (2/7)

Item	Part No.	Part Name	Qty	Serial No.
	(708-1L-00670)	PUMP THIS ASSEMBLY CONSISTS OF ALL PARTS SHOWN IN FIGS.Y1600-01A0 T0 Y1600-07A0.	1	85001-
	(708-1L-01670)	· PUMP SUB ASS'Y	1	85001-
	(★708-1L-04280)	· · CAP ASS'Y,END	1	85001-
1	☆	· · · CAP,END	1	85001-
2	☆	· · · PLUG	1	85001-
3	(★708-2L-32260)	· · BEARING	1	85001-
4	(★07000-A5165)	· · O-RING	1	85001-
5	(★04020-01228)	· · PIN,DOWEL	1	85001-
6	(★708-2L-25480)	· · FILTER	1	85001-
7	(★01252-61445)	· · BOLT	6	85001-
8	07040-12414	· · PLUG	1	85001-
9	07002-62434	· · O-RING	1	85001-

Printed By : Dwi Iswanto (airafather6107170)

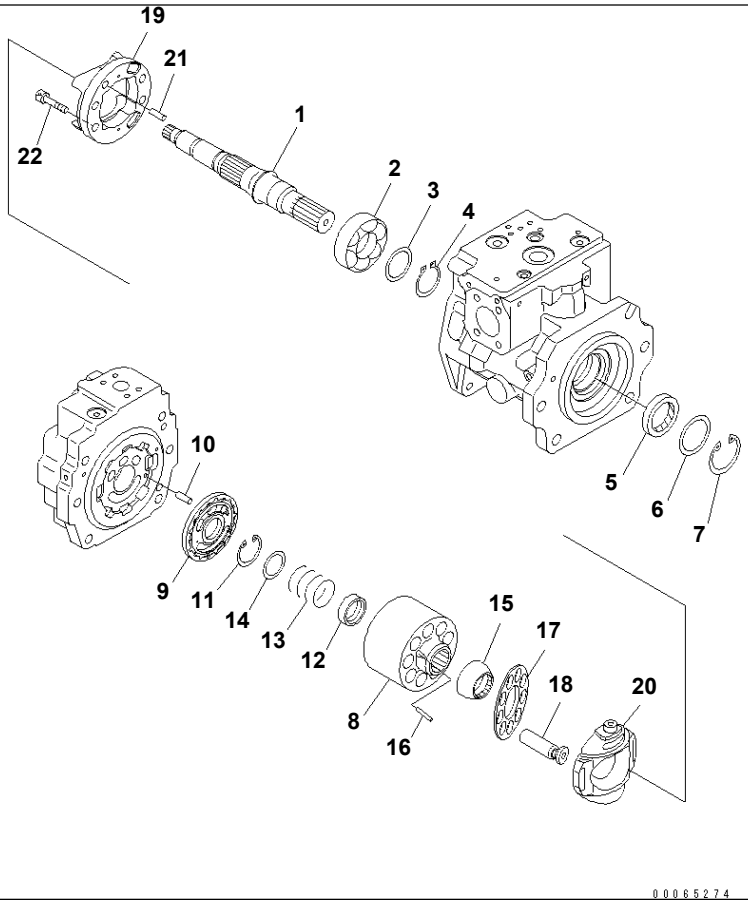

Ref. Y1600-03A0 **Page 450090**

D155A-6 S/N 85001-UP
HYDRAULIC PUMP (3/7)

Item	Part No.	Part Name	Qty	Serial No.
	(708-1L-00670)	PUMP THIS ASSEMBLY CONSISTS OF ALL PARTS SHOWN IN FIGS.Y1600-01A0 T0 Y1600-07A0.	1	85001-
	(708-1L-01670)	· PUMP SUB ASS'Y	1	85001-
1	(★708-1L-32340)	· · SHAFT	1	85001-
2	(★708-2L-32150)	· · BEARING	1	85001-
3	(★708-2E-05040)	· · WASHER KIT	1	85001-
	☆	· · · WASHER¤ 3.1MM	1	85001-
	☆	· · · WASHER¤ 3.0MM	1	85001-
	☆	· · · WASHER¤ 2.9MM	1	85001-
	☆	· · · WASHER¤ 2.8MM	1	85001-
4	(★708-25-12790)	· · RING,SNAP	1	85001-
5	708-25-52861	· · SEAL,OIL	1	85001-
6	708-2L-22160	· · SPACER	1	85001-
7	04065-06825	· · RING,SNAP	1	85001-
	(★708-2L-06480)	· · BLOCK ASS'Y	1	85001-
8	☆	· · · BLOCK	1	85001-
9	☆	· · · PLATE	1	85001-
10	(★720-68-19610)	· · PIN	1	85001-
11	(★04065-04818)	· · RING,SNAP	1	85001-
12	(★708-2L-23131)	· · SEAT	1	85001-
13	(★708-2L-33160)	· · SPRING	1	85001-
14	(★708-7L-13140)	· · SEAT	1	85001-
15	(★708-2L-23351)	· · GUIDE	1	85001-
16	(★708-2L-23360)	· · PIN	3	85001-
17	(★708-2L-33361)	· · RETAINER	1	85001-
18	(★708-2L-33430)	· · PISTON SUB ASS'Y	9	85001-
	(★708-2L-06630)	· · CRADLE ASS'Y	1	85001-
19	☆	· · · CRADLE	1	85001-
20	☆	· · · CAM	1	85001-

Printed By : Dwi Iswanto (airafather6107170)

HYDRAULIC PUMP (3/7)

Item	Part No.	Part Name	Qty	Serial No.
21	(★04020-01228)	・・PIN,DOWEL	1	85001-
22	(★01252-61230)	・・BOLT	4	85001-

Printed By : Dwi Iswanto (airafather6107170)

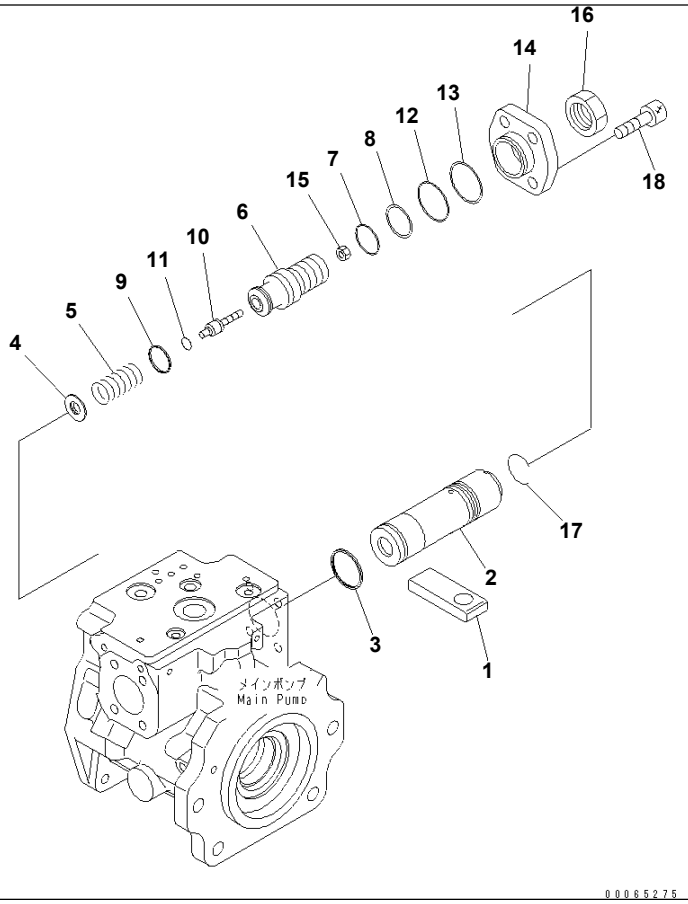

Ref. Y1600-04A0 **Page 450100**

D155A-6 S/N 85001-UP
HYDRAULIC PUMP (4/7)

Item	Part No.	Part Name	Qty	Serial No.
	(708-1L-00670)	PUMP THIS ASSEMBLY CONSISTS OF ALL PARTS SHOWN IN FIGS.Y1600-01A0 T0 Y1600-07A0.	1	85001-
	(708-1L-01670)	· PUMP SUB ASS'Y	1	85001-
1	(★708-2L-34120)	· · SLIDER	1	85001-
	(★708-1L-04870)	· · VALVE ASS'Y,PC	1	85001-
2	(★708-1L-34210)	· · · PISTON,SERVO	1	85001-
3	(★708-2L-35680)	· · · SEAL	1	85001-
4	(★708-2L-35630)	· · · RETAINER	1	85001-
5	(★708-2L-35730)	· · · SPRING	1	85001-
6	(★708-2L-34330)	· · · SCREW	1	85001-
7	(★07000-B3034)	· · · O-RING	1	85001-
8	(★708-2L-35210)	· · · RING,BACK-UP	1	85001-
9	(★708-2L-35710)	· · · SEAL	1	85001-
10	(★708-2L-35270)	· · · PLUG	1	85001-
11	(★07000-B2011)	· · · O-RING	1	85001-
12	(★07000-B3045)	· · · O-RING	1	85001-
13	(★708-2L-35750)	· · · RING	1	85001-
14	(★708-2L-34230)	· · · COVER	1	85001-
15	(★01580-10806)	· · · NUT	1	85001-
16	(★708-2L-35290)	· · · NUT	1	85001-
17	708-2L-35670	· · · RING	1	85001-
18	01252-61440	· · BOLT	4	85001-

Printed By : Dwi Iswanto (airafather6107170)

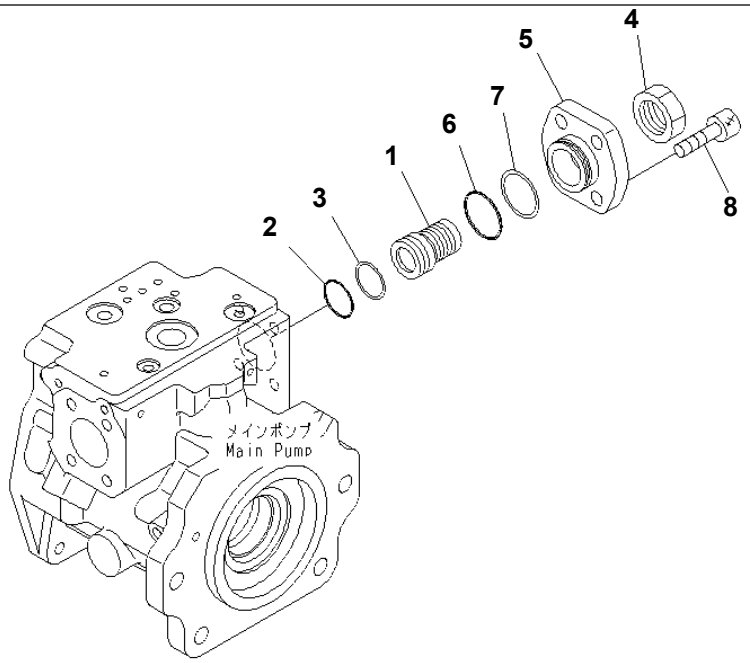

00065276

Ref. Y1600-05A0 **Page 450110**

D155A-6 S/N 85001-UP
HYDRAULIC PUMP (5/7)

Item	Part No.	Part Name	Qty	Serial No.
	(708-1L-00670)	PUMP THIS ASSEMBLY CONSISTS OF ALL PARTS SHOWN IN FIGS.Y1600-01A0 T0 Y1600-07A0.	1	85001-
	(708-1L-01670)	· PUMP SUB ASS'Y	1	85001-
	(★708-1L-04840)	· · COVER ASS'Y	1	85001-
1	(★708-2L-34340)	· · · SCREW	1	85001-
2	(★07000-B3034)	· · · O-RING	1	85001-
3	(★708-2L-35210)	· · · RING,BACK-UP	1	85001-
4	(★708-2L-35290)	· · · NUT	1	85001-
5	(★708-2L-34260)	· · · COVER	1	85001-
6	(★07000-B3045)	· · · O-RING	1	85001-
7	(★708-2L-35750)	· · · RING	1	85001-
8	(★01252-61440)	· · BOLT	4	85001-

Printed By : Dwi Iswanto (airafather6107170)

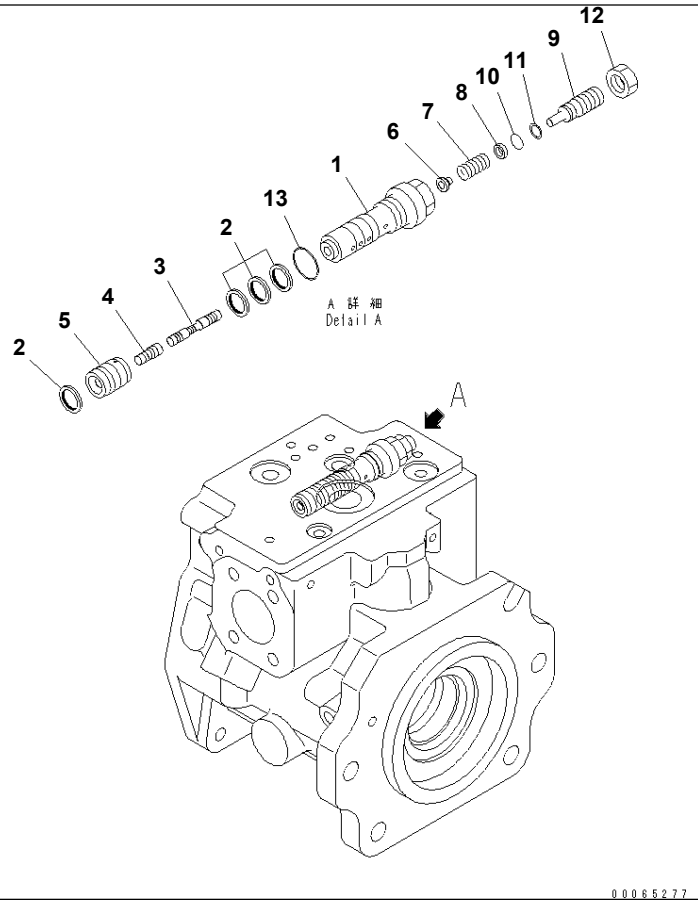

Ref. Y1600-06A0 **Page 450120**

D155A-6 S/N 85001-UP

HYDRAULIC PUMP (6/7)

Item	Part No.	Part Name	Qty	Serial No.
	(708-1L-00670)	PUMP THIS ASSEMBLY CONSISTS OF ALL PARTS SHOWN IN FIGS.Y1600-01A0 T0 Y1600-07A0.	1	85001-
	708-2H-03620	· VALVE ASS'Y,LS	1	85001-
1	(★708-2L-35311)	· · SLEEVE	1	85001-
2	708-2L-24680	· · SEAL	4	85001-
3	(★708-2H-15410)	· · SPOOL	1	85001-
4	(★708-2L-28540)	· · PISTON	1	85001-
5	(★708-2L-35360)	· · SLEEVE	1	85001-
6	(★708-2L-35331)	· · SEAT	1	85001-
7	(★708-2L-35410)	· · SPRING	1	85001-
8	(★708-2L-35341)	· · SEAT	1	85001-
9	(★708-2L-35351)	· · PLUG	1	85001-
10	(★07000-B1009)	· · O-RING	1	85001-
11	(★07001-01009)	· · RING,BACK-UP	1	85001-
12	01583-11408	· · NUT	1	85001-
13	07002-62434	· · O-RING	1	85001-

Printed By : Dwi Iswanto (airafather6107170)

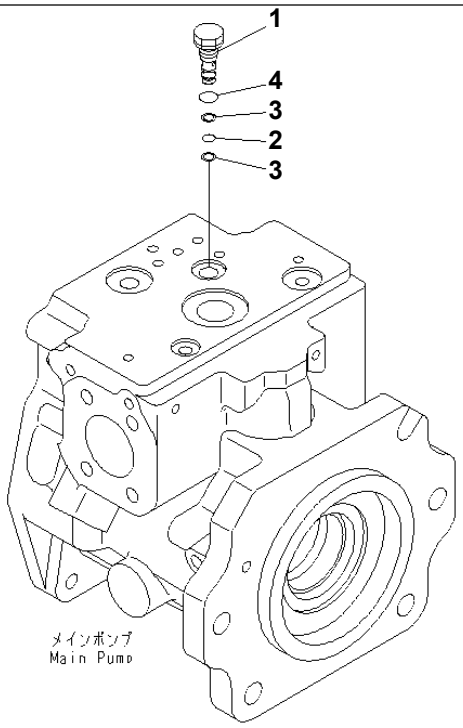

00065278

Ref. Y1600-07A0 **Page 450130**

D155A-6 S/N 85001-UP
HYDRAULIC PUMP (7/7)

Item	Part No.	Part Name	Qty	Serial No.
	(708-1L-00670)	PUMP THIS ASSEMBLY CONSISTS OF ALL PARTS SHOWN IN FIGS.Y1600-01A0 T0 Y1600-07A0.	1	85001-
1	708-1H-35910	· PLUG	1	85001-
2	07000-B1008	· O-RING	1	85001-
3	07001-01008	· RING,BACK-UP	2	85001-
4	07002-61423	· O-RING	1	85001-

Printed By : Dwi Iswanto (airafather6107170)

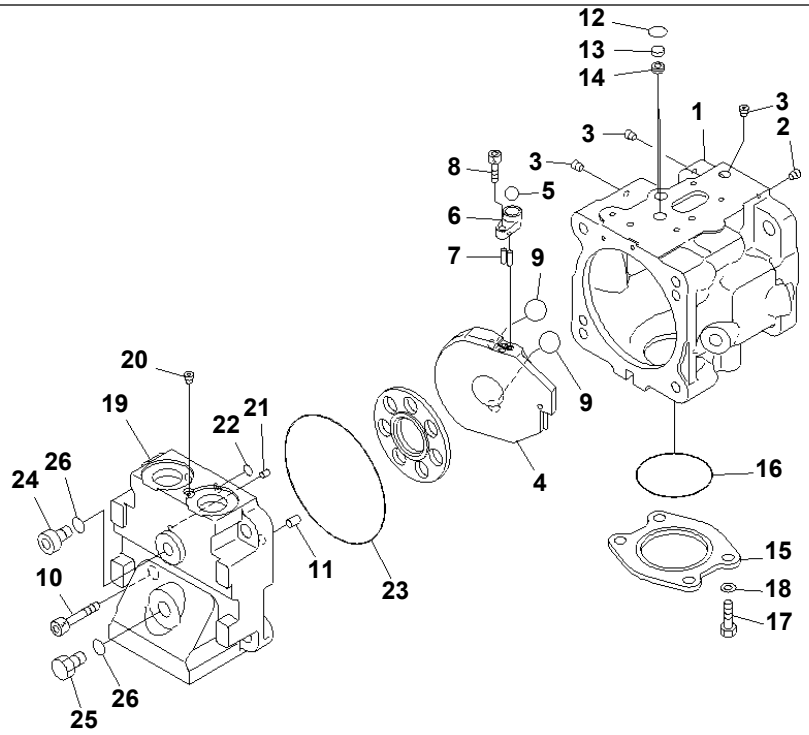

00042640

Ref. Y1600-11A0 **Page 450140**

D155A-6 S/N 85001-UP
FAN PUMP (1/5)

Item	Part No.	Part Name	Qty	Serial No.
	708-1T-00470	PUMP ASS'Y THIS ASSEMBLY CONSISTS OF ALL PARTS SHOWN IN FIGS.Y1600-11A0 TO Y1600-15A0.	1	85001-
	708-1T-01470	· PUMP SUB ASS'Y	1	85001-
	(★708-1T-04610)	· · CASE SUB ASS'Y	1	85001-
1	☆	· · · CASE,PUMP	1	85001-
2	☆	· · · PLUG	1	85001-
3	☆	· · · PLUG	3	85001-
4	(★708-1T-13580)	· · CAM,ROCKER	1	85001-
5	(★04260-01270)	· · BALL	1	85001-
6	(★708-1T-14610)	· · SPACER	1	85001-
7	(★708-1S-13420)	· · PIN	2	85001-
8	(★01252-60616)	· · BOLT	1	85001-
9	(★708-1S-13430)	· · BALL	2	85001-
10	01252-61240	· · BOLT	4	85001-
11	(★04020-01024)	· · PIN	2	85001-
12	708-2L-25490	· · O-RING	2	85001-
13	708-2L-25480	· · FILTER	2	85001-
14	708-1S-19710	· · ORIFICE	2	85001-
15	708-1S-19920	· · PLATE	1	85001-
16	07000-E2065	· · O-RING	1	85001-
17	01010-81025	· · BOLT	4	85001-
18	01643-31032	· · WASHER	4	85001-
	(★708-1T-04620)	· · CAP SUB ASS'Y	1	85001-
19	☆	· · · CAP,END	1	85001-
20	☆	· · · PLUG	1	85001-
21	(★720-68-19610)	· · PIN	1	85001-
22	(★07000-F1006)	· · O-RING	2	85001-
23	(★07000-E2125)	· · O-RING	1	85001-
24	702-21-55620	· · PLUG	1	85001-

Printed By : Dwi Iswanto (airafather6107170)

FAN PUMP (1/5)

Item	Part No.	Part Name	Qty	Serial No.
25	07040-11409	・・PLUG	1	85001-
26	07002-21423	・・O-RING	2	85001-

Printed By : Dwi Iswanto (airafather6107170)

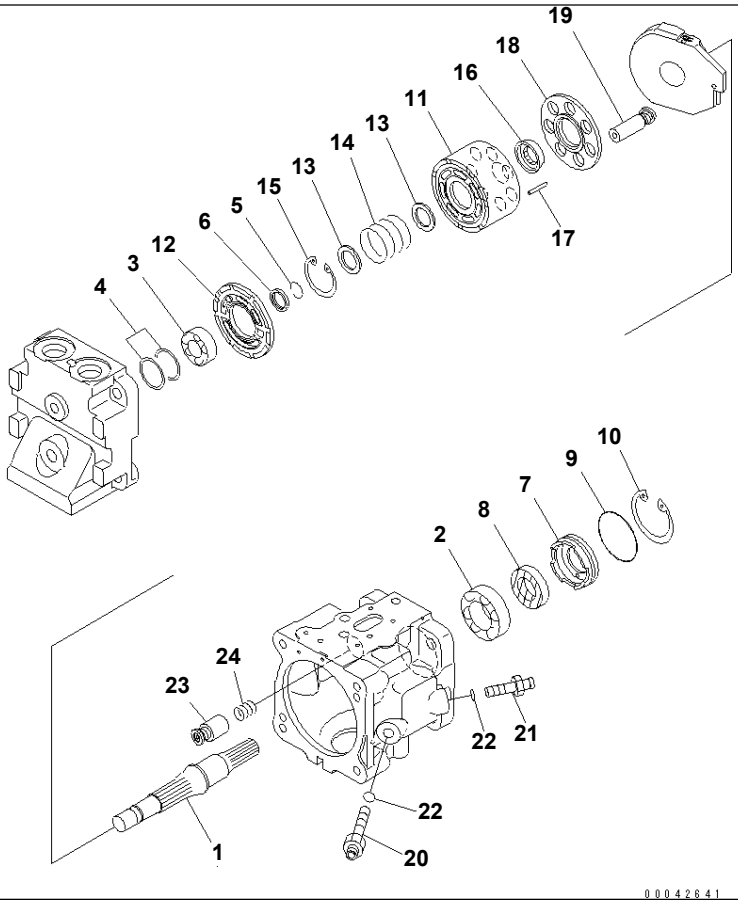

Ref. Y1600-12A0 **Page 450150**

D155A-6 S/N 85001-UP
FAN PUMP (2/5)

Item	Part No.	Part Name	Qty	Serial No.
	(708-1T-00470)	PUMP ASS'Y THIS ASSEMBLY CONSISTS OF ALL PARTS SHOWN IN FIGS.Y1600-11A0 TO Y1600-15A0.	1	85001-
	(708-1T-01470)	· PUMP SUB ASS'Y	1	85001-
1	(★708-1T-12410)	· · SHAFT	1	85001-
2	(★706-73-40890)	· · BEARING	1	85001-
3	(★708-1T-12420)	· · BEARING	1	85001-
4	(★708-7T-05010)	· · SPACER KIT	1	85001-
	☆	· · · SPACER¤ 1.8MM	1	85001-
	☆	· · · SPACER¤ 1.9MM	1	85001-
	☆	· · · SPACER¤ 2.0MM	1	85001-
	☆	· · · SPACER¤ 2.1MM	1	85001-
	☆	· · · SPACER¤ 1.6MM	1	85001-
	☆	· · · SPACER¤ 1.7MM	1	85001-
5	(★708-1S-12280)	· · RING,WIRE	1	85001-
6	(★708-1S-12330)	· · RETAINER	1	85001-
7	708-1S-12340	· · CASE	1	85001-
8	708-21-12970	· · SEAL,OIL	1	85001-
9	708-1S-12350	· · O-RING	1	85001-
10	04065-06220	· · RING	1	85001-
11	(★708-1T-13510)	· · BLOCK,CYLINDER	1	85001-
12	(★708-1T-13590)	· · PLATE,VALVE	1	85001-
13	(★708-3S-13160)	· · WASHER	2	85001-
14	(★708-3S-13150)	· · SPRING	1	85001-
15	(★04065-03515)	· · RING,SNAP	1	85001-
16	(★708-1T-13540)	· · GUIDE,RETAINER	1	85001-
17	(★708-1S-13380)	· · PIN	3	85001-
18	(★708-1T-13550)	· · RETAINER,SHOE	1	85001-
19	(★708-1T-13310)	· · PISTON SUB ASS'Y	7	85001-
20	(★708-1S-14210)	· · PLUG	1	85001-

Printed By : Dwi Iswanto (airafather6107170)

FAN PUMP (2/5)

Item	Part No.	Part Name	Qty	Serial No.
21	(★708-1S-14220)	・・PLUG	1	85001-
22	(★07002-21223)	・・O-RING	2	85001-
23	(★708-1S-14230)	・・PISTON SUB ASS'Y	1	85001-
24	(★708-1S-14241)	・・SPRING	1	85001-

Printed By : Dwi Iswanto (airafather6107170)

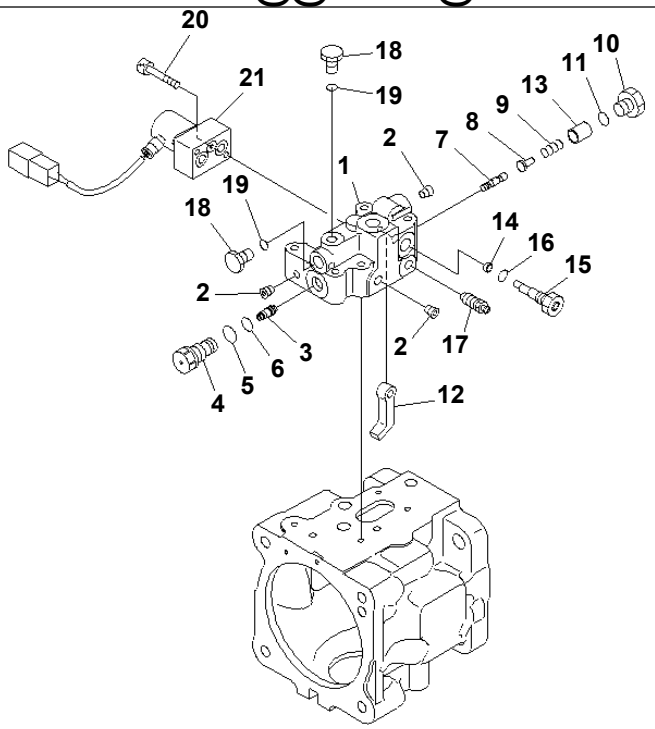

P W 5 A 0 9 6

Ref. Y1600-13A0 **Page 450160**

D155A-6 S/N 85001-UP
FAN PUMP (3/5)

Item	Part No.	Part Name	Qty	Serial No.
	(708-1T-00470)	PUMP ASS'Y THIS ASSEMBLY CONSISTS OF ALL PARTS SHOWN IN FIGS.Y1600-11A0 TO Y1600-15A0.	1	85001-
	(708-1T-01470)	· PUMP SUB ASS'Y	1	85001-
	(★708-1S-03340)	· · VALVE ASS'Y	1	85001-
	(★708-1S-03920)	· · · BODY SUB ASS'Y	1	85001-
1	☆	· · · · BODY,VALVE	1	85001-
2	☆	· · · · PLUG	3	85001-
3	(★708-1S-15420)	· · · PISTON	1	85001-
4	(★708-1S-15430)	· · · SLEEVE	1	85001-
5	07002-21623	· · · O-RING	1	85001-
6	07000-B1010	· · · O-RING	1	85001-
7	(★708-1S-15230)	· · · SPOOL	1	85001-
8	(★708-1S-15240)	· · · SEAT	1	85001-
9	(★708-1S-15440)	· · · SPRING	1	85001-
10	(★723-56-31630)	· · · PLUG	1	85001-
11	07002-21623	· · · O-RING	1	85001-
12	(★708-1S-15270)	· · · LEVER	1	85001-
13	(★708-1S-15250)	· · · RETAINER	1	85001-
14	(★708-1S-15280)	· · · SPACER	1	85001-
15	(★708-1S-15260)	· · · PLUG	1	85001-
16	07002-21023	· · · O-RING	1	85001-
17	20B-27-11210	· · · BLEEDER	1	85001-
18	07040-11007	· · · PLUG	2	85001-
19	07002-21023	· · · O-RING	2	85001-
20	01252-60635	· · · BOLT	2	85001-
21	(★702-21-57700)	· · · PILOT VALVE	1	85001-

Printed By : Dwi Iswanto (airafather6107170)

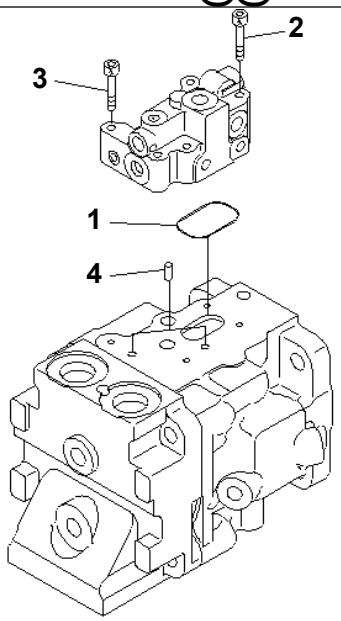

P W 5 A 1 6 2

Ref. Y1600-14A0 **Page 450170**

D155A-6 S/N 85001-UP
FAN PUMP (4/5)

Item	Part No.	Part Name	Qty	Serial No.
	(708-1T-00470)	PUMP ASS'Y THIS ASSEMBLY CONSISTS OF ALL PARTS SHOWN IN FIGS.Y1600-11A0 TO Y1600-15A0.	1	85001-
	(708-1T-01470)	· PUMP SUB ASS'Y	1	85001-
1	07000-E3040	· · O-RING	1	85001-
2	01252-60650	· · BOLT	1	85001-
3	01252-60635	· · BOLT	3	85001-
4	04020-00616	· · PIN	2	85001-

Printed By : Dwi Iswanto (airafather6107170)

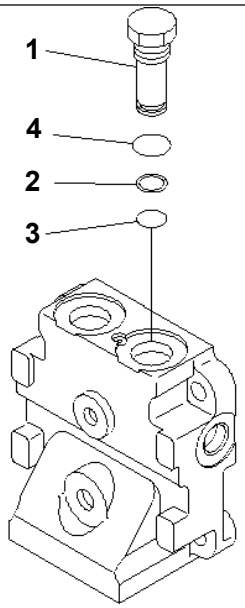

00001784

Ref. Y1600-15A0 **Page 450180**

D155A-6 S/N 85001-UP
FAN PUMP (5/5)

Item	Part No.	Part Name	Qty	Serial No.
	(708-1T-00470)	PUMP ASS'Y THIS ASSEMBLY CONSISTS OF ALL PARTS SHOWN IN FIGS.Y1600-11A0 TO Y1600-15A0.	1	85001-
1	708-1S-19930	· PLUG	1	85001-
2	723-60-22230	· RING,BACK-UP	1	85001-
3	07000-F2016	· O-RING	1	85001-
4	07002-12434	· O-RING	1	85001-

Printed By : Dwi Iswanto (airafather6107170)

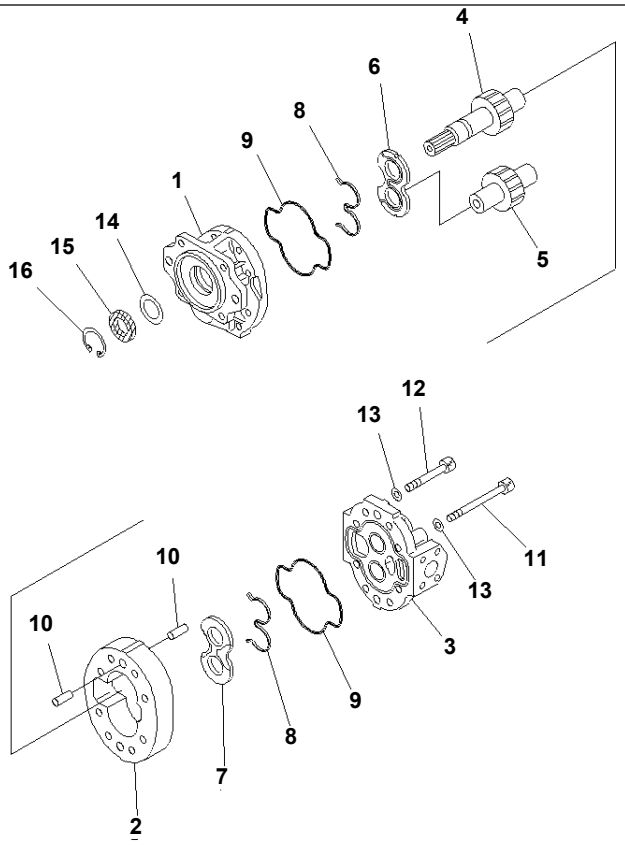

00043292

Ref. Y1610-01A1 **Page 450190**

D155A-6 S/N 85001-UP
POWER TRAIN¤LUBRICATION PUMP(#85001-85024)

Item	Part No.	Part Name	Qty	Serial No.
	705-22-42090	PUMP ASS'Y,(SAR(4)125)	1	85001-85024
1	(★705-17-04021)	· BRACKET	1	85001-85024
	(★705-17-04352)	· · BUSHING	2	85001-85024
2	(★705-18-42010)	· CASE,GEAR	1	85001-85024
3	(★705-17-04120)	· COVER	1	85001-85024
	(★705-17-04352)	· · BUSHING	2	85001-85024
4	(★705-18-42410)	· GEAR,DRIVE	1	85001-85024
5	(★705-18-42510)	· GEAR,DRIVEN	1	85001-85024
6	705-18-04640	· PLATE,SIDE	1	85001-85024
7	705-18-04630	· PLATE,SIDE	1	85001-85024
8	705-18-04470	· SEAL,SEAL	2	85001-85024
9	705-17-04382	· O-RING	2	85001-85024
10	04020-01842	· PIN,DOWEL	4	85001-85024
11	705-17-04720	· BOLT	4	85001-85024
12	01253-61410	· BOLT	4	85001-85024
13	705-17-04980	· WASHER,SPRING	8	85001-85024
14	705-17-04870	· PLATE	1	85001-85024
15	704-17-05811	· SEAL,OIL	1	85001-85024
16	04065-06220	· RING,SNAP	1	85001-85024

Printed By : Dwi Iswanto (airafather6107170)

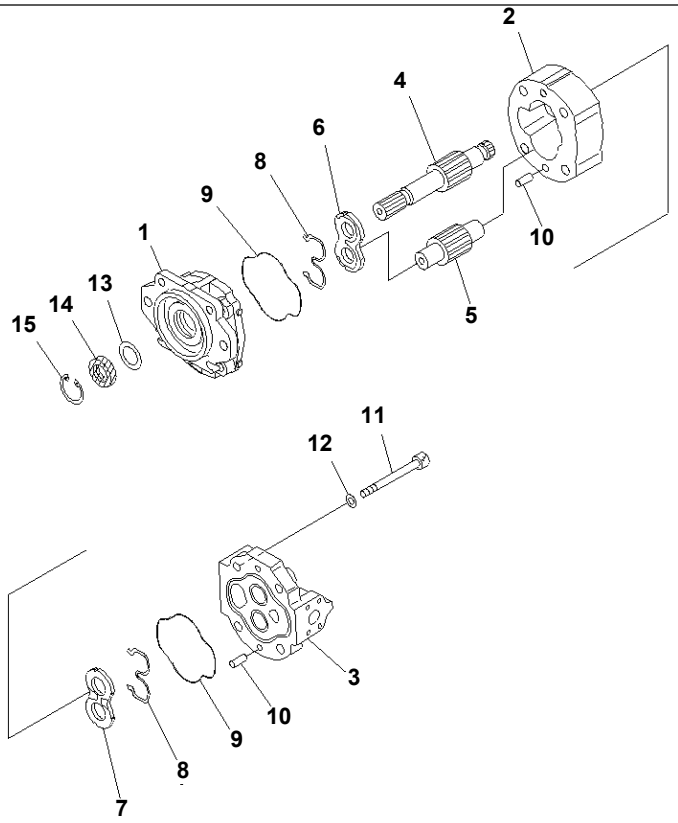

00081775

Ref. Y1610-01A1A **Page 450200**

D155A-6 S/N 85001-UP
POWER TRAIN¤LUBRICATION PUMP(#85025-)

Item	Part No.	Part Name	Qty	Serial No.
	705-22-42100	SAR125 S HT,(SAR(3)125)	1	85025-
1	(★705-18-03620)	· BRACKET ASS'Y	1	85025-
	(★705-18-03350)	· · BUSHING	2	85025-
2	(★705-17-42010)	· CASE,GEAR	1	85025-
3	(★705-18-03720)	· COVER ASS'Y	1	85025-
	(★705-18-03350)	· · BUSHING	2	85025-
4	(★705-17-42610)	· GEAR,DRIVE	1	85025-
5	(★705-17-42810)	· GEAR,DRIVEN	1	85025-
6	705-17-03640	· PLATE,SIDE	1	85025-
7	705-17-03630	· PLATE,SIDE	1	85025-
8	705-17-03470	· SEAL,SEAL	2	85025-
9	705-17-03381	· O-RING	2	85025-
10	04020-01228	· PIN,DOWEL	4	85025-
11	01253-61645	· BOLT	4	85025-
12	01643-51645	· WASHER	4	85025-
13	705-17-03870	· PLATE,SPRING	1	85025-
14	705-17-03811	· SEAL	1	85025-
15	04065-05220	· RING,OIL	1	85025-

Printed By : Dwi Iswanto (airafather6107170)

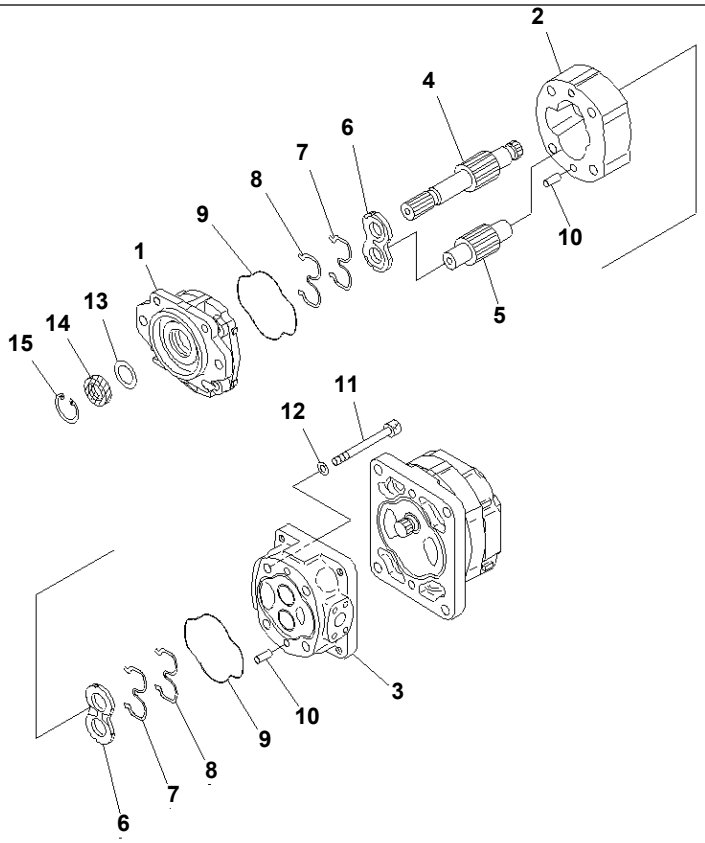

00043293

Ref. Y1610-11A1 **Page 450210**

D155A-6 S/N 85001-UP
SCAVENGING PUMP (1/2)

Item	Part No.	Part Name	Qty	Serial No.
	705-52-30A00	PUMP ASS'Y,(SAR(3)100+40) THIS ASSEMBLY CONSISTS OF ALL PARTS SHOWN IN FIGS.Y1610-11A1 AND Y1610-12A1.	1	85001-
	705-22-40160	· PUMP ASS'Y,(SAR100)	1	85001-
1	(★705-18-03620)	· · BRACKET ASS'Y	1	85001-
	(★705-18-03350)	· · · BUSHING	2	85001-
2	(★705-17-40010)	· · CASE,GEAR	1	85001-
3	(★705-18-03240)	· · CARRIER	1	85001-
	(★705-18-03350)	· · · BUSHING	2	85001-
4	(★705-17-40730)	· · GEAR,DRIVE	1	85001-
5	(★705-17-40810)	· · GEAR,DRIVEN	1	85001-
6	705-17-03610	· · PLATE,SIDE	2	85001-
7	705-17-03443	· · RING,BACK-UP	2	85001-
8	705-17-03473	· · SEAL	2	85001-
9	705-17-03381	· · O-RING	2	85001-
10	04020-01228	· · PIN,DOWEL	4	85001-
11	01253-61635	· · BOLT	4	85001-
12	01643-51645	· · WASHER	4	85001-
13	705-17-03870	· · PLATE	1	85001-
14	705-17-03811	· · SEAL,OIL	1	85001-
15	04065-05220	· · RING,SNAP	1	85001-

Printed By : Dwi Iswanto (airafather6107170)

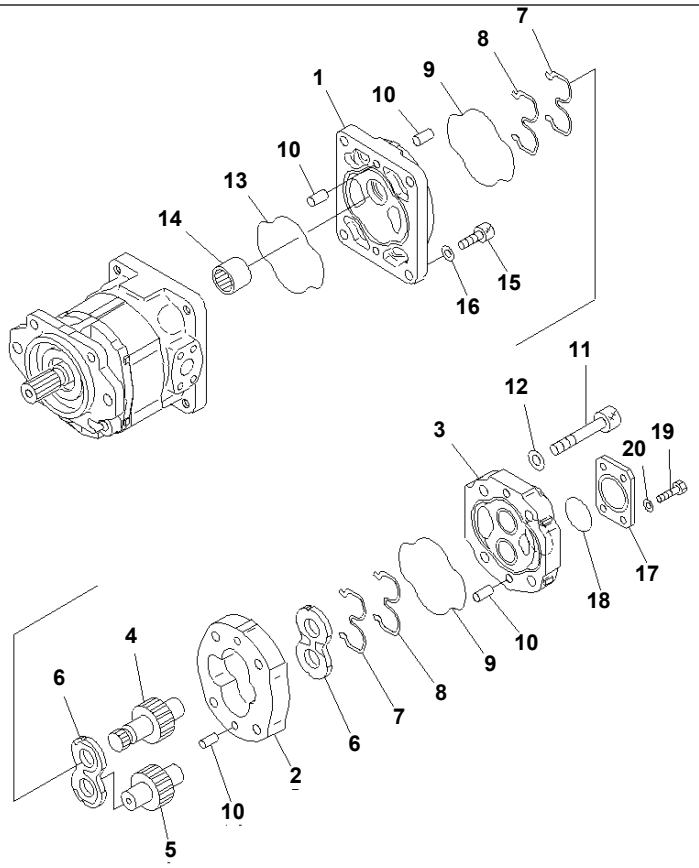

Ref. Y1610-12A1 **Page 450220**

D155A-6 S/N 85001-UP
SCAVENGING PUMP (2/2)

Item	Part No.	Part Name	Qty	Serial No.
	(705-52-30A00)	PUMP ASS'Y,(SAR(3)100+40) THIS ASSEMBLY CONSISTS OF ALL PARTS SHOWN IN FIGS.Y1610-11A1 AND Y1610-12A1.	1	85001-
	705-14-32731	· PUMP ASS'Y,(SAR40)	1	85001-
1	(★705-17-03520)	· · BRACKET	1	85001-
	(★705-17-03352)	· · · BUSHING	2	85001-
2	(★705-18-32010)	· · CASE,GEAR	1	85001-
3	(★705-17-03140)	· · COVER	1	85001-
	(★705-17-03352)	· · · BUSHING	2	85001-
4	(★705-18-32450)	· · GEAR,DRIVE	1	85001-
5	(★705-18-32510)	· · GEAR,DRIVEN	1	85001-
6	705-17-03610	· · PLATE,SIDE	2	85001-
7	705-17-03443	· · RING,BACK-UP	2	85001-
8	705-17-03473	· · SEAL	2	85001-
9	705-17-03381	· · O-RING	2	85001-
10	04020-01228	· · PIN,DOWEL	6	85001-
11	01253-61600	· · BOLT	4	85001-
12	01643-51645	· · WASHER	4	85001-
13	705-17-03381	· O-RING	1	85001-
14	705-17-03330	· COUPLING	1	85001-
15	01252-61450	· BOLT	4	85001-
16	705-17-04980	· WASHER	4	85001-
17	705-17-03880	· PLATE	1	85001-
18	07000-E2055	· O-RING	1	85001-
19	01010-51230	· BOLT	4	85001-
20	01643-51232	· WASHER	4	85001-

Printed By : Dwi Iswanto (airafather6107170)

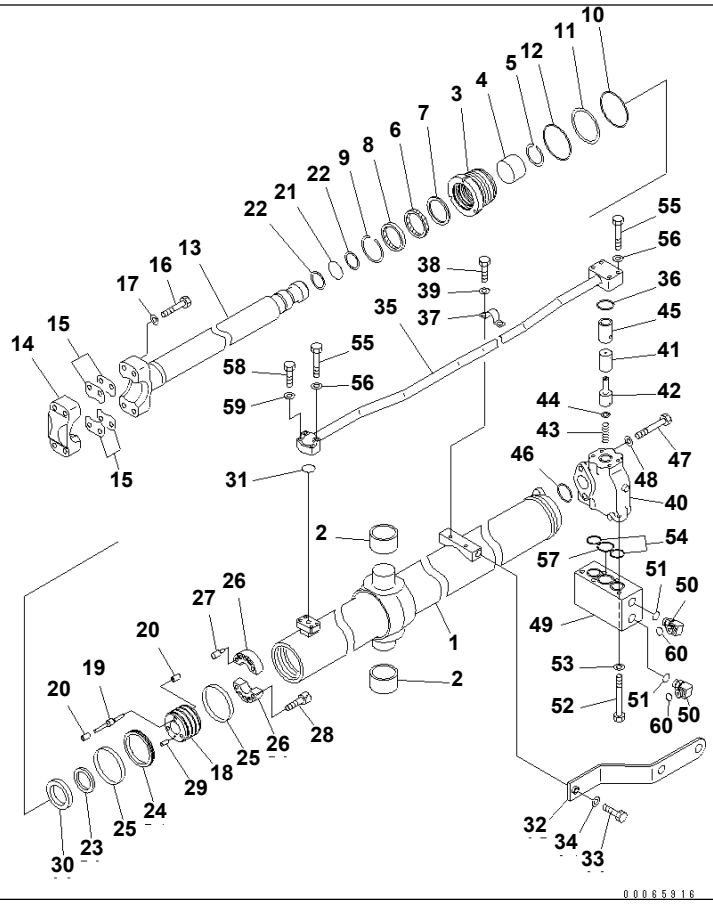

Ref. Y1620-01A0 **Page 450230**

D155A-6 S/N 85001-UP
BLADE LIFT CYLINDER

Item	Part No.	Part Name	Qty	Serial No.
G-1	(⊙707-02-X7920)	CYLINDER GROUP,L.H. (FINAL COATING)	1	85001-
G-2	(⊙707-02-X7930)	CYLINDER GROUP,R.H. (FINAL COATING)	1	85001-
		==========		
	707-02-00830	CYLINDER ASS'Y	1	85001-
1	707-12-11160	· CYLINDER	1	85001-
2	175-63-12540	· BUSHING	2	85001-
3	707-29-11980	· HEAD,CYLINDER	1	85001-
4	707-52-90500	· BUSHING	1	85001-
5	707-75-75110	· RING,SNAP	1	85001-
6	707-51-75030	· PACKING,ROD (KIT)	1	85001-
7	707-51-75640	· RING,BUFFER (KIT)	1	85001-
8	707-56-75740	· SEAL,DUST (KIT)	1	85001-
9	07179-13089	· RING,SNAP	1	85001-
10	07000-12105	· O-RING (KIT)	1	85001-
11	07146-02106	· RING,BACK-UP (KIT)	1	85001-
12	07000-12110	· O-RING (KIT)	1	85001-
13	707-60-75070	· ROD,PISTON	1	85001-
14	707-66-75020	· CAP	1	85001-
15	707-88-15010	· SHIM¤ 1.0MM	10	85001-
16	01011-81805	· BOLT	4	85001-
17	707-41-11840	· WASHER	4	85001-
	707-91-01150	· PISTON ASS'Y	1	85001-
18	707-37-11080	· · PISTON	1	85001-
19	707-83-10270	· · VALVE,(L=77.5MM)	3	85001-
20	707-84-10240	· · SEAT	6	85001-
21	07000-12050	· O-RING (KIT)	1	85001-
22	07001-02050	· RING,BACK-UP (KIT)	2	85001-
23	707-40-11430	· RETAINER	1	85001-
24	707-44-11150	· RING,PISTON (KIT)	1	85001-
25	07156-01112	· RING,WEAR (KIT)	2	85001-

Printed By : Dwi Iswanto (airafather6107170)

BLADE LIFT CYLINDER

Item	Part No.	Part Name	Qty	Serial No.
26	707-40-11270	· SPACER	2	85001-
27	707-83-10073	· VALVE	3	85001-
28	01252-61235	· BOLT	6	85001-
29	130-63-12761	· PIN,DOWEL	1	85001-
30	707-69-11000	· SLIDER (KIT)	1	85001-
31	07000-13030	O-RING (KIT)	1	85001-
32	707-88-02660	PLATE	1	85001-
33	01010-81250	BOLT	1	85001-
34	01643-31232	WASHER	1	85001-
35	707-86-68520	TUBE,L.H.	1	85001-
	707-86-68530	TUBE,R.H.	1	85001-
36	07000-13048	O-RING (KIT)	1	85001-
37	07282-12793	CLAMP	1	85001-
38	01010-81020	BOLT	2	85001-
39	01643-31032	WASHER	2	85001-
	15A-63-14100	VALVE ASS'Y	2	85001-
40	☆	· BODY	1	85001-
41	☆	· VALVE	1	85001-
42	☆	· VALVE	1	85001-
43	195-63-14180	· SPRING	1	85001-
44	01642-21216	· WASHER	1	85001-
45	175-63-14260	· COLLAR	1	85001-
46	07000-12055	O-RING (KIT)	1	85001-
47	01011-81615	BOLT	2	85001-
48	01643-31645	WASHER	2	85001-
49	707-88-37920	BLOCK,L.H.	1	85001-
	707-88-37930	BLOCK,R.H.	1	85001-
50	02782-10628	ELBOW	2	85001-
51	07002-12434	O-RING (KIT)	2	85001-
52	01011-81235	BOLT	5	85001-
53	01643-51232	WASHER	5	85001-
54	07000-13038	O-RING (KIT)	2	85001-
55	01010-81060	BOLT	6	85001-
56	01643-31032	WASHER	6	85001-
57	07000-13045	O-RING (KIT)	1	85001-
58	01010-81045	BOLT	2	85001-
59	01643-31032	WASHER	2	85001-
60	02896-11018	O-RING (KIT)	1	85001-
		==========		
	707-99-38810	SERVICE KIT	2	85001-

Printed By : Dwi Iswanto (airafather6107170)

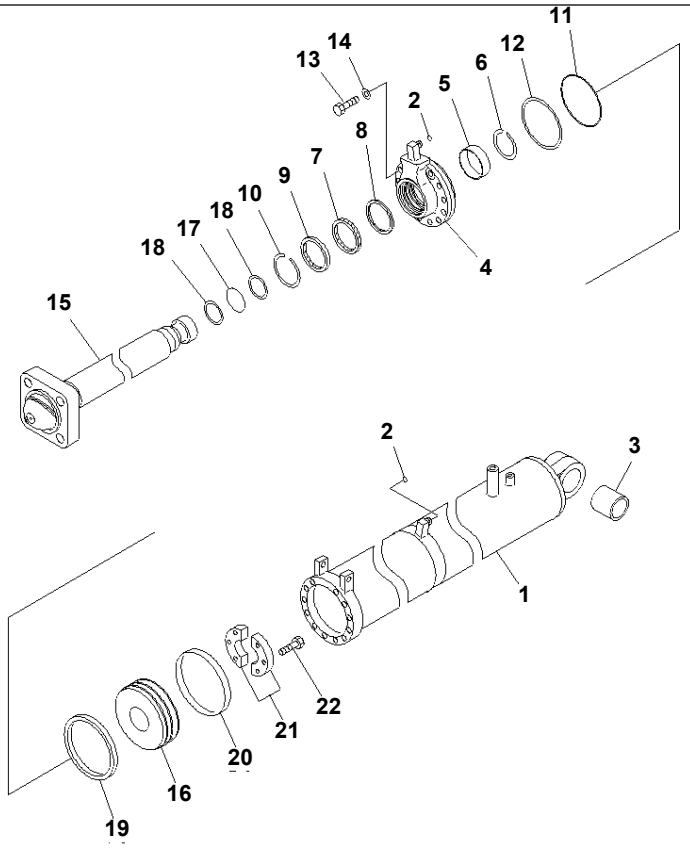

00043296

Ref. Y1620-31A0 **Page 450240**

D155A-6 S/N 85001-UP
BLADE TILT CYLINDER (COAL DOZER)

Item	Part No.	Part Name	Qty	Serial No.
	☆	CYLINDER ASS'Y,(FINAL COATING)	1	85001-
	707-04-00220	CYLINDER ASS'Y	1	85001-
1	721-13-16170	· CYLINDER	1	85001-
2	02896-11012	· O-RING (KIT)	2	85001-
3	154-63-52760	· BUSHING	1	85001-
4	707-27-16700	· HEAD,CYLINDER	1	85001-
5	707-52-90680	· BUSHING	1	85001-
6	707-75-90110	· RING,SNAP	1	85001-
7	707-51-90030	· PACKING,ROD (KIT)	1	85001-
8	707-51-90640	· RING,BUFFER (KIT)	1	85001-
9	195-63-94170	· SEAL,DUST (KIT)	1	85001-
10	07179-13104	· RING,SNAP	1	85001-
11	07000-15150	· O-RING (KIT)	1	85001-
12	07146-05152	· RING,BACK-UP (KIT)	1	85001-
13	01010-81660	· BOLT	12	85001-
14	01643-31645	· WASHER	12	85001-
15	707-60-90090	· ROD,PISTON	1	85001-
16	707-36-16410	· PISTON	1	85001-
17	07000-B2070	· O-RING (KIT)	1	85001-
18	707-35-52910	· RING,BACK-UP (KIT)	2	85001-
19	707-44-16190	· RING,PISTON (KIT)	1	85001-
20	07156-01620	· RING,WEAR (KIT)	1	85001-
21	707-40-18070	· SPACER	2	85001-
22	01010-61240	· BOLT	6	85001-
	707-99-64230	SERVICE KIT	1	85001-

Printed By : Dwi Iswanto (airafather6107170)

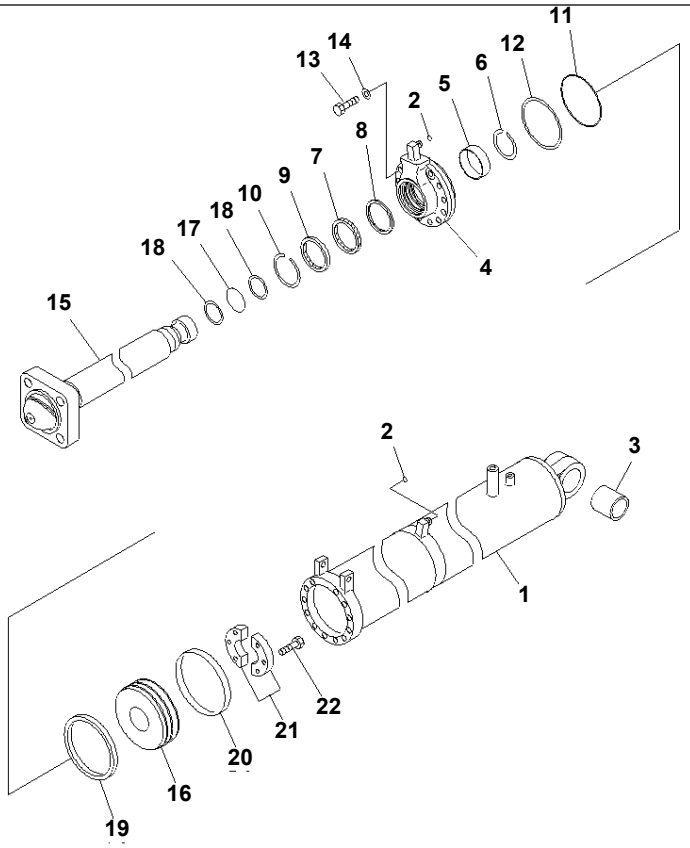

00043296

Ref. Y1620-31A1 **Page 450250**

D155A-6 S/N 85001-UP
BLADE TILT CYLINDER (SINGLE TILT SEMI-U DOZER)

Item	Part No.	Part Name	Qty	Serial No.
	☆	CYLINDER ASS'Y,(FINAL COATING)	1	85001-
	707-04-00200	CYLINDER ASS'Y	1	85001-
1	721-13-16160	· CYLINDER	1	85001-
2	02896-11012	· O-RING (KIT)	2	85001-
3	154-63-52760	· BUSHING	1	85001-
4	707-27-16700	· HEAD,CYLINDER	1	85001-
5	707-52-90680	· BUSHING	1	85001-
6	707-75-90110	· RING,SNAP	1	85001-
7	707-51-90030	· PACKING,ROD (KIT)	1	85001-
8	707-51-90640	· RING,BUFFER (KIT)	1	85001-
9	707-56-90740	· SEAL,DUST (KIT)	1	85001-
10	07179-13104	· RING,SNAP	1	85001-
11	07000-15150	· O-RING (KIT)	1	85001-
12	07146-05152	· RING,BACK-UP (KIT)	1	85001-
13	01010-81660	· BOLT	12	85001-
14	01643-31645	· WASHER	12	85001-
15	707-60-90100	· ROD,PISTON	1	85001-
16	707-36-16410	· PISTON	1	85001-
17	07000-B2070	· O-RING (KIT)	1	85001-
18	707-35-52910	· RING,BACK-UP (KIT)	2	85001-
19	707-44-16190	· RING,PISTON (KIT)	1	85001-
20	07156-01620	· RING,WEAR (KIT)	1	85001-
21	707-40-18070	· SPACER	2	85001-
22	01010-61240	· BOLT	6	85001-
	707-99-64250	SERVICE KIT	1	85001-

Printed By : Dwi Iswanto (airafather6107170)

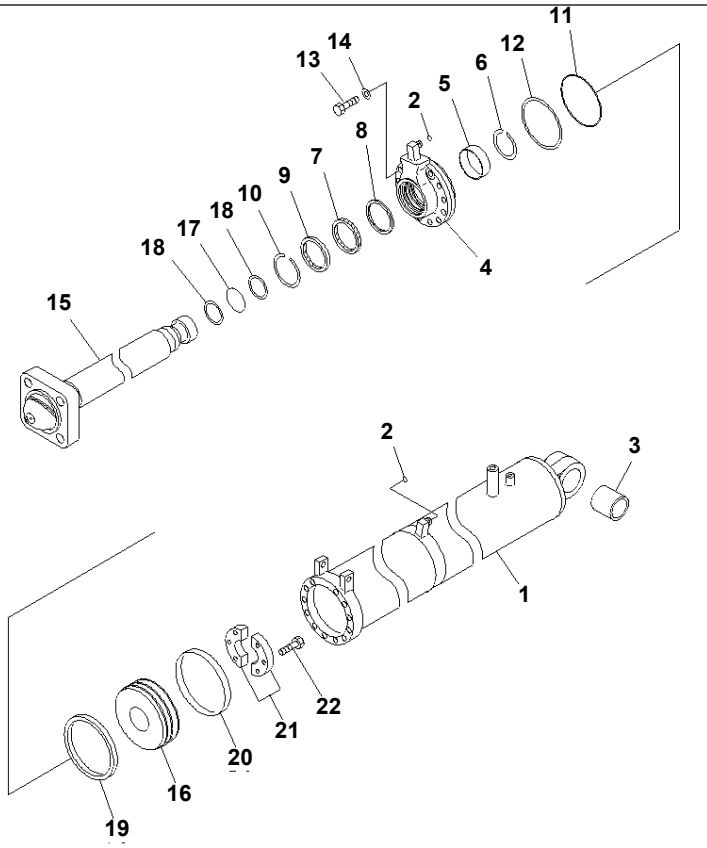

00043296

Ref. Y1620-31A2 **Page 450260**

D155A-6 S/N 85001-UP
BLADE TILT CYLINDER (SINGLE TILT SIGMA DOZER)

Item	Part No.	Part Name	Qty	Serial No.
	☆	CYLINDER ASS'Y,(FINAL COATING)	1	85001-
	707-04-00190	CYLINDER ASS'Y	1	85001-
1	721-13-16160	· CYLINDER	1	85001-
2	02896-11012	· O-RING (KIT)	2	85001-
3	154-63-52760	· BUSHING	1	85001-
4	707-27-16700	· HEAD,CYLINDER	1	85001-
5	707-52-90680	· BUSHING	1	85001-
6	707-75-90110	· RING,SNAP	1	85001-
7	707-51-90030	· PACKING,ROD (KIT)	1	85001-
8	707-51-90640	· RING,BUFFER (KIT)	1	85001-
9	707-56-90740	· SEAL,DUST (KIT)	1	85001-
10	07179-13104	· RING,SNAP	1	85001-
11	07000-15150	· O-RING (KIT)	1	85001-
12	07146-05152	· RING,BACK-UP (KIT)	1	85001-
13	01010-81660	· BOLT	12	85001-
14	01643-31645	· WASHER	12	85001-
15	707-60-90080	· ROD,PISTON	1	85001-
16	707-36-16410	· PISTON	1	85001-
17	07000-B2070	· O-RING (KIT)	1	85001-
18	707-35-52910	· RING,BACK-UP (KIT)	2	85001-
19	707-44-16190	· RING,PISTON (KIT)	1	85001-
20	07156-01620	· RING,WEAR (KIT)	1	85001-
21	707-40-18070	· SPACER	2	85001-
22	01010-61240	· BOLT	6	85001-
	707-99-64250	SERVICE KIT	1	85001-

Printed By : Dwi Iswanto (airafather6107170)

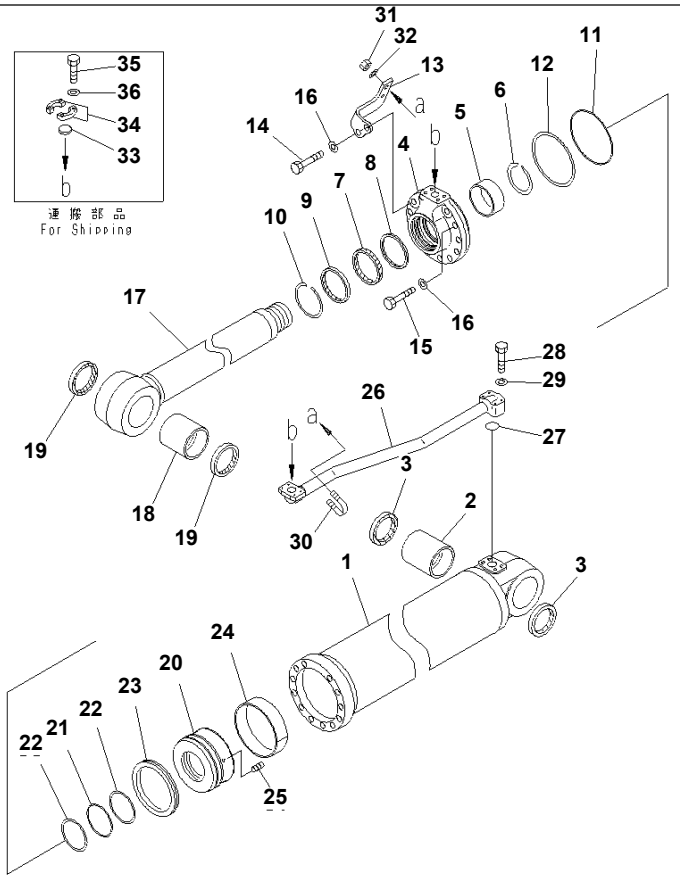

Ref. Y1621-01A0 Page 450270

D155A-6 S/N 85001-UP

RIPPER LIFT CYLINDER

Item	Part No.	Part Name	Qty	Serial No.
G-1	(⊙707-01-XK410)	CYLINDER GROUP	1	85001-
		==========		
	707-01-0K410	CYLINDER ASS'Y	1	85001-
1	707-13-18370	· CYLINDER	1	85001-
2	707-76-90520	· BUSHING	1	85001-
3	07145-00090	· SEAL,DUST (KIT)	2	85001-
4	707-27-18940	· HEAD,CYLINDER	1	85001-
5	707-52-90780	· BUSHING	1	85001-
6	707-75-10160	· RING,SNAP	1	85001-
7	707-51-10030	· PACKING,ROD (KIT)	1	85001-
8	707-51-10640	· RING,BUFFER (KIT)	1	85001-
9	707-56-10740	· SEAL,DUST (KIT)	1	85001-
10	07179-13114	· RING,SNAP	1	85001-
11	07000-15170	· O-RING (KIT)	1	85001-
12	07146-05172	· RING,BACK-UP (KIT)	1	85001-
13	707-88-05701	· BRACKET	1	85001-
14	01010-81875	· BOLT	2	85001-
15	01010-81865	· BOLT	10	85001-
16	01643-31845	· WASHER	12	85001-
17	721-58-10150	· ROD,PISTON	1	85001-
18	707-76-90530	· BUSHING	1	85001-
19	07145-00090	· SEAL,DUST (KIT)	2	85001-
20	707-36-18060	· PISTON	1	85001-
21	07000-B5100	· O-RING (KIT)	1	85001-
22	707-35-90030	· RING,BACK-UP (KIT)	2	85001-
23	707-44-18190	· RING,PISTON (KIT)	1	85001-
24	07155-01845	· RING,WEAR (KIT)	1	85001-
25	01310-01216	· SCREW	1	85001-
26	707-86-13520	TUBE	1	85001-
27	07000-13035	O-RING (KIT)	1	85001-

Printed By : Dwi Iswanto (airafather6107170)

RIPPER LIFT CYLINDER

Item	Part No.	Part Name	Qty	Serial No.
28	07372-21060	BOLT	4	85001-
29	01643-51032	WASHER	4	85001-
30	07283-33442	CLIP	1	85001-
31	01597-01009	NUT	2	85001-
32	01643-31032	WASHER	2	85001-
33	707-88-33040	CAP	2	85001-
34	07371-31049	FLANGE	4	85001-
35	07372-21035	BOLT	8	85001-
36	01643-51032	WASHER	8	85001-
		==========		
	707-99-66670	SERVICE KIT	1	85001-

Printed By : Dwi Iswanto (airafather6107170)

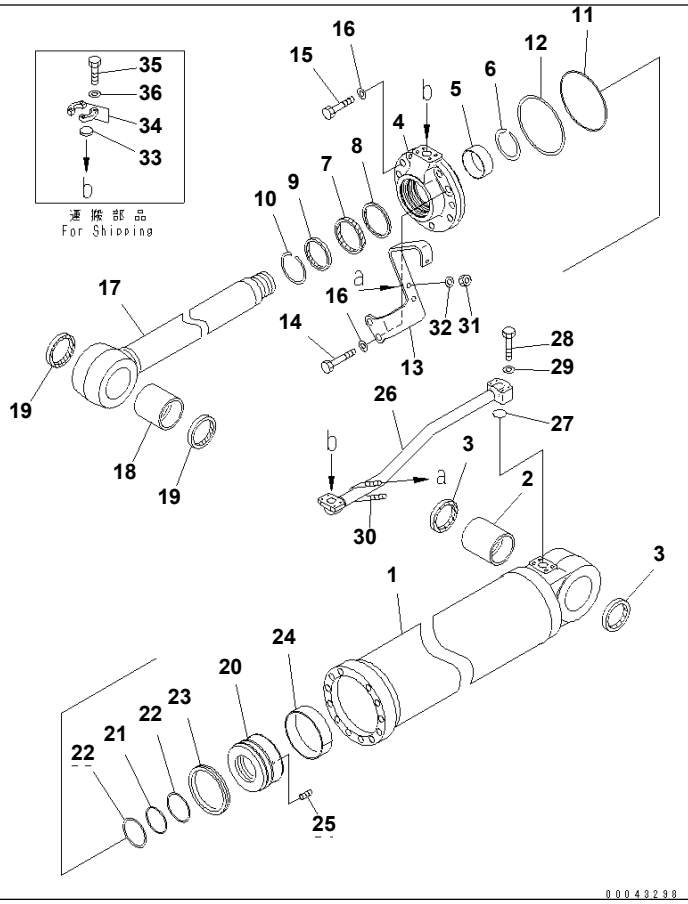

Ref. Y1621-11A0 **Page 450280**

D155A-6 S/N 85001-UP
RIPPER TILT CYLINDER

Item	Part No.	Part Name	Qty	Serial No.
G-1	(⊙707-01-XK420)	CYLINDER GROUP	1	85001-
		==========		
	707-01-0K420	CYLINDER ASS'Y	1	85001-
1	707-13-20490	· CYLINDER	1	85001-
2	707-76-10380	· BUSHING	1	85001-
3	07145-00100	· SEAL,DUST (KIT)	2	85001-
4	707-27-20740	· HEAD,CYLINDER	1	85001-
5	707-52-90850	· BUSHING	1	85001-
6	707-75-11040	· RING,SNAP	1	85001-
7	707-51-11030	· PACKING,ROD (KIT)	1	85001-
8	707-51-11640	· RING,BUFFER (KIT)	1	85001-
9	707-56-11740	· SEAL,DUST (KIT)	1	85001-
10	07179-13126	· RING,SNAP	1	85001-
11	07000-15190	· O-RING (KIT)	1	85001-
12	07146-05192	· RING,BACK-UP (KIT)	1	85001-
13	707-88-05711	· BRACKET	1	85001-
14	01010-82085	· BOLT	2	85001-
15	01010-82075	· BOLT	10	85001-
16	01643-32060	· WASHER	12	85001-
17	707-58-11870	· ROD,PISTON	1	85001-
18	707-76-10050	· BUSHING	1	85001-
19	07145-00100	· SEAL,DUST (KIT)	2	85001-
20	707-36-20600	· PISTON	1	85001-
21	07000-B5110	· O-RING (KIT)	1	85001-
22	07001-05110	· RING,BACK-UP (KIT)	2	85001-
23	707-44-20190	· RING,PISTON (KIT)	1	85001-
24	07155-02045	· RING,WEAR (KIT)	1	85001-
25	01310-01225	· SCREW	1	85001-
26	707-86-13530	TUBE	1	85001-
27	07000-13035	O-RING (KIT)	1	85001-

Printed By : Dwi Iswanto (airafather6107170)

RIPPER TILT CYLINDER

Item	Part No.	Part Name	Qty	Serial No.
28	07372-21060	BOLT	4	85001-
29	01643-51032	WASHER	4	85001-
30	07283-33442	CLIP	1	85001-
31	01597-01009	NUT	2	85001-
32	01643-31032	WASHER	2	85001-
33	707-88-33040	CAP	2	85001-
34	07371-31049	FLANGE	4	85001-
35	07372-21035	BOLT	8	85001-
36	01643-51032	WASHER	8	85001-
		==========		
	707-99-74210	SERVICE KIT	1	85001-

Printed By : Dwi Iswanto (airafather6107170)

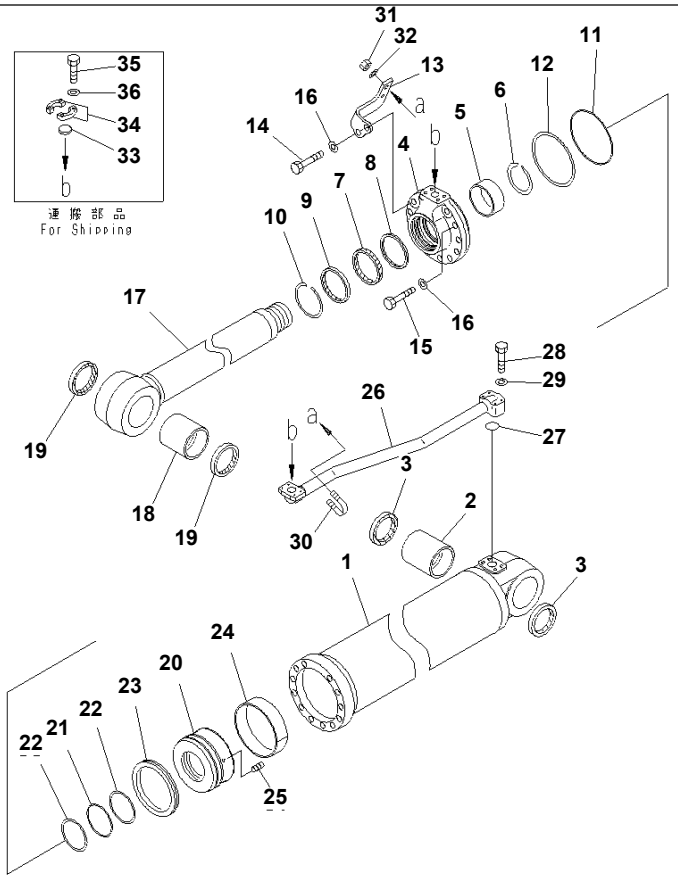

Ref. Y1621-11A1 Page 450290

D155A-6 S/N 85001-UP

RIPPER TILT CYLINDER (FOR LARGE SHANK)

Item	Part No.	Part Name	Qty	Serial No.
G-1	(⊙707-01-XAC60)	CYLINDER ASS'Y	1	85001-
		==========		
	707-01-0AC60	CYLINDER ASS'Y	1	85001-
1	707-13-18380	· CYLINDER	1	85001-
2	707-76-90520	· BUSHING	1	85001-
3	07145-00090	· SEAL,DUST (KIT)	2	85001-
4	707-27-18940	· HEAD,CYLINDER	1	85001-
5	707-52-90780	· BUSHING	1	85001-
6	707-75-10160	· RING,SNAP	1	85001-
7	707-51-10030	· PACKING,ROD (KIT)	1	85001-
8	707-51-10640	· RING,BUFFER (KIT)	1	85001-
9	707-56-10740	· SEAL,DUST (KIT)	1	85001-
10	07179-13114	· RING,SNAP	1	85001-
11	07000-15170	· O-RING (KIT)	1	85001-
12	07146-05172	· RING,BACK-UP (KIT)	1	85001-
13	707-88-05701	· BRACKET	1	85001-
14	01010-81875	· BOLT	2	85001-
15	01010-81865	· BOLT	10	85001-
16	01643-31845	· WASHER	12	85001-
17	721-58-10150	· ROD,PISTON	1	85001-
18	707-76-90530	· BUSHING	1	85001-
19	07145-00090	· SEAL,DUST (KIT)	2	85001-
20	707-36-18060	· PISTON	1	85001-
21	07000-B5100	· O-RING (KIT)	1	85001-
22	707-35-90030	· RING,BACK-UP (KIT)	2	85001-
23	707-44-18190	· RING,PISTON (KIT)	1	85001-
24	07155-01845	· RING,WEAR (KIT)	1	85001-
25	01310-01216	· SCREW	1	85001-
26	707-86-13990	TUBE	1	85001-
27	07000-13035	O-RING (KIT)	1	85001-

Printed By : Dwi Iswanto (airafather6107170)

RIPPER TILT CYLINDER (FOR LARGE SHANK)

Item	Part No.	Part Name	Qty	Serial No.
28	07372-21060	BOLT	4	85001-
29	01643-51032	WASHER	4	85001-
30	07283-33442	CLIP	1	85001-
31	01597-01009	NUT	2	85001-
32	01643-31032	WASHER	2	85001-
33	707-88-33040	CAP	2	85001-
34	07371-31049	FLANGE	4	85001-
35	07372-21035	BOLT	8	85001-
36	01643-51032	WASHER	8	85001-
		==========		
	707-99-66670	SERVICE KIT	1	85001-

Printed By : Dwi Iswanto (airafather6107170)

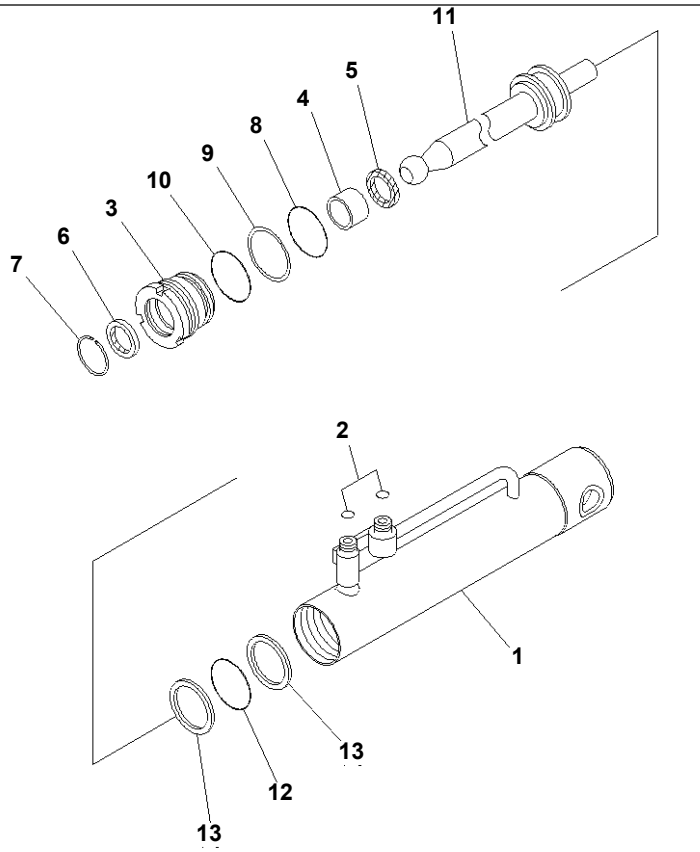

00043299

Ref. Y1621-21A0 **Page 450300**

D155A-6 S/N 85001-UP
PIN PULLER CYLINDER

Item	Part No.	Part Name	Qty	Serial No.
	707-04-00210	CYLINDER ASS'Y	1	85001-
1	721-11-60950	· CYLINDER	1	85001-
2	02896-11009	· O-RING (KIT)	2	85001-
3	707-29-60930	· HEAD,CYLINDER	1	85001-
4	07177-03025	· BUSHING	1	85001-
5	707-51-30210	· PACKING,ROD (KIT)	1	85001-
6	707-56-30740	· SEAL,DUST (KIT)	1	85001-
7	07179-12042	· RING,SNAP	1	85001-
8	07000-12055	· O-RING (KIT)	1	85001-
9	07001-02055	· RING,BACK-UP (KIT)	1	85001-
10	07000-12060	· O-RING (KIT)	1	85001-
11	707-60-30010	· ROD,PISTON	1	85001-
12	707-34-10600	· O-RING (KIT)	1	85001-
13	707-35-99600	· RING,BACK-UP (KIT)	2	85001-
	707-98-11700	SERVICE KIT	1	85001-

Printed By : Dwi Iswanto (airafather6107170)

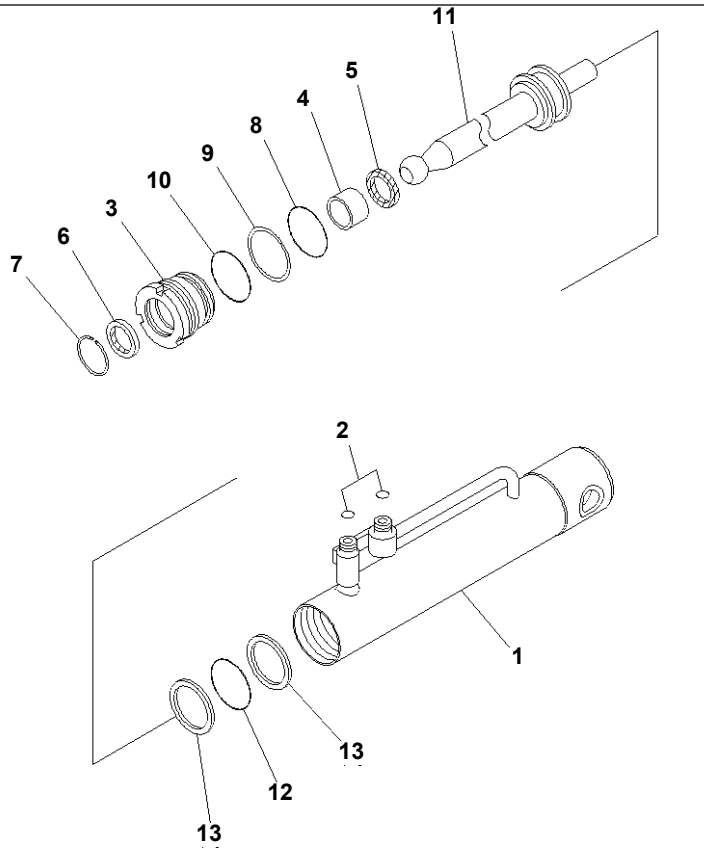

00043299

Ref. Y1621-21A1 **Page 450310**

D155A-6 S/N 85001-UP
PIN PULLER CYLINDER (FOR LARGE SHANK)

Item	Part No.	Part Name	Qty	Serial No.
	707-04-00230	CYLINDER ASS'Y	1	85001-
1	721-11-60950	· CYLINDER	1	85001-
2	02896-11009	· O-RING (KIT)	2	85001-
3	707-29-60930	· HEAD,CYLINDER	1	85001-
4	07177-03025	· BUSHING	1	85001-
5	707-51-30210	· PACKING,ROD (KIT)	1	85001-
6	707-56-30740	· SEAL,DUST (KIT)	1	85001-
7	07179-12042	· RING,SNAP	1	85001-
8	07000-12055	· O-RING (KIT)	1	85001-
9	07001-02055	· RING,BACK-UP (KIT)	1	85001-
10	07000-12060	· O-RING (KIT)	1	85001-
11	707-60-30030	· ROD,PISTON	1	85001-
12	707-34-10600	· O-RING (KIT)	1	85001-
13	707-35-99600	· RING,BACK-UP (KIT)	2	85001-
	707-98-11700	SERVICE KIT	1	85001-

Printed By : Dwi Iswanto (airafather6107170)

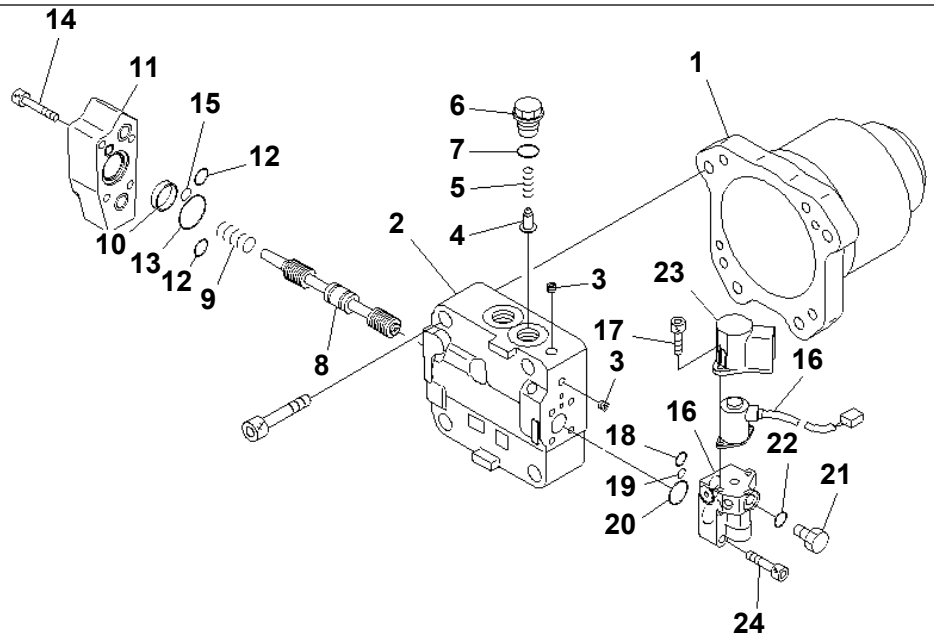

00042644

Ref. Y1642-01A0 **Page 450320**

D155A-6 S/N 85001-UP
FAN MOTOR (1/3)

Item	Part No.	Part Name	Qty	Serial No.
	708-7W-00140	MOTOR ASS'Y THIS ASSEMBLY CONSISTS OF ALL PARTS SHOWN IN FIGS.Y1642-01A0 TO Y1642-03A0.	1	85001-
1	(★708-7W-11190)	· CASE	1	85001-
	(★708-7W-01050)	· COVER SUB ASS'Y	1	85001-
2	☆	· · COVER,END	1	85001-
3	☆	· · PLUG	3	85001-
4	(★709-25-11650)	· VALVE,CHECK	1	85001-
5	(★709-25-11361)	· SPRING	1	85001-
6	(★708-7S-21610)	· PLUG	1	85001-
7	07002-12434	· O-RING	1	85001-
8	☆	· SPOOL	1	85001-
9	(★708-7W-18150)	· SPRING	1	85001-
10	(★708-7W-18160)	· SPACER	1	85001-
11	(★708-7W-18170)	· COVER	1	85001-
12	07000-12016	· O-RING	2	85001-
13	07000-12035	· O-RING	1	85001-
14	01252-60845	· BOLT	4	85001-
15	07000-12010	· O-RING	1	85001-
16	708-7R-01631	· PILOT VALVE ASS'Y	1	85001-
17	01252-60616	· · BOLT	2	85001-
18	708-2L-25490	· · O-RING	1	85001-
19	07000-11008	· · O-RING	1	85001-
20	723-11-18430	· · O-RING	1	85001-
21	07040-11007	· · PLUG	1	85001-
22	07002-11023	· · O-RING	1	85001-
23	708-1S-18180	· · COVER	1	85001-
24	01252-60835	· · BOLT	4	85001-

Printed By : Dwi Iswanto (airafather6107170)

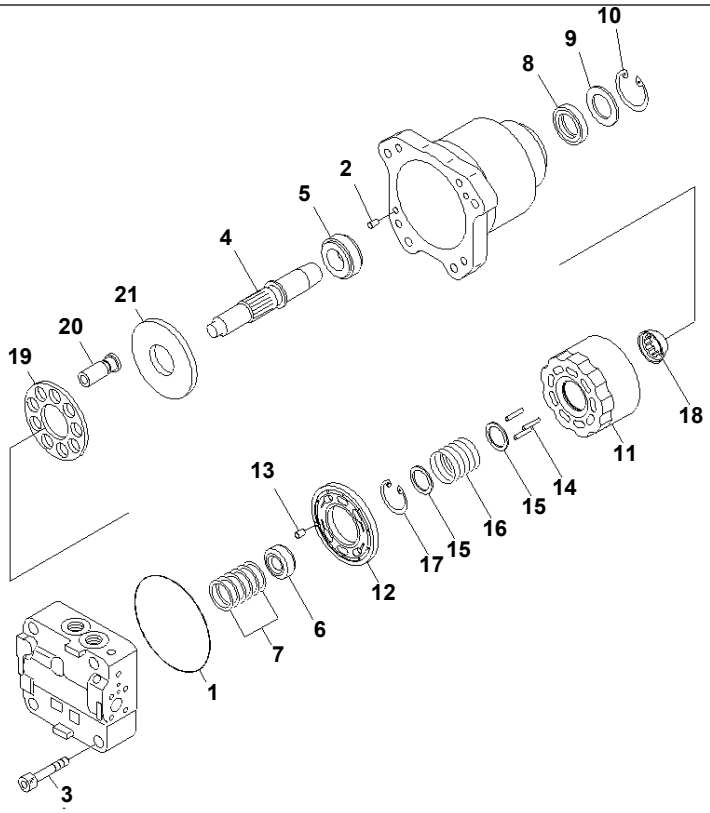

00042645

Ref. Y1642-02A0 **Page 450330**

D155A-6 S/N 85001-UP
FAN MOTOR (2/3)

Item	Part No.	Part Name	Qty	Serial No.
	(708-7W-00140)	MOTOR ASS'Y THIS ASSEMBLY CONSISTS OF ALL PARTS SHOWN IN FIGS.Y1642-01A0 TO Y1642-03A0.	1	85001-
1	2907-21-6160	· O-RING	1	85001-
2	04020-01024	· PIN	2	85001-
3	01252-61480	· BOLT	4	85001-
4	(★708-7W-12130)	· SHAFT	1	85001-
5	(★708-7W-12120)	· BEARING	1	85001-
6	(★708-7L-12140)	· BEARING	1	85001-
7	(★708-7L-05010)	· SPACER KIT	1	85001-
	☆	· · SPACER¤ 1.5MM	1	85001-
	☆	· · SPACER¤ 1.6MM	1	85001-
	☆	· · SPACER¤ 1.7MM	1	85001-
	☆	· · SPACER¤ 1.8MM	1	85001-
	☆	· · SPACER¤ 1.9MM	1	85001-
	☆	· · SPACER¤ 2.0MM	1	85001-
8	(★708-25-52861)	· SEAL,OIL	1	85001-
9	(★708-2L-22160)	· SPACER	1	85001-
10	04065-06825	· RING	1	85001-
11	(★708-8F-33121)	· BLOCK,CYLINDER	1	85001-
12	(★708-8F-33230)	· PLATE,VALVE	1	85001-
13	(★720-68-19610)	· PIN	1	85001-
14	(★708-8F-33360)	· PIN	3	85001-
15	(★708-7L-13140)	· SEAT	2	85001-
16	(★708-8F-33160)	· SPRING	1	85001-
17	04065-04818	· RING	1	85001-
18	(★708-8F-33350)	· GUIDE,RETAINER	1	85001-
19	(★708-2L-33350)	· RETAINER,SHOE	1	85001-
20	(★708-8F-33310)	· PISTON SUB ASS'Y	9	85001-
21	(★708-7L-13410)	· PLATE,THRUST	1	85001-

Printed By : Dwi Iswanto (airafather6107170)

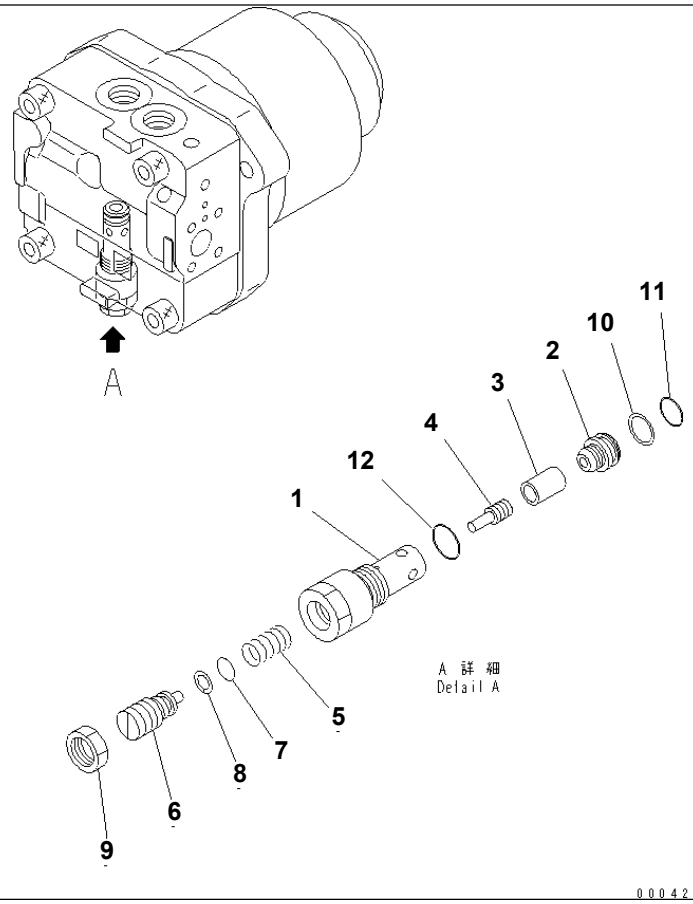

Ref. Y1642-03A0 **Page 450340**

D155A-6 S/N 85001-UP
FAN MOTOR (3/3)

Item	Part No.	Part Name	Qty	Serial No.
	708-7W-00140	MOTOR ASS'Y THIS ASSEMBLY CONSISTS OF ALL PARTS SHOWN IN FIGS.Y1642-01A0 TO Y1642-03A0.	1	85001-
	702-73-01580	· VALVE ASS'Y,RELIEF	1	85001-
1	(★702-73-11810)	· · SLEEVE	1	85001-
2	(★702-73-11820)	· · SEAT,VALVE	1	85001-
3	(★702-73-11830)	· · VALVE	1	85001-
4	(★706-75-75280)	· · PISTON	1	85001-
5	(★702-73-11840)	· · SPRING	1	85001-
6	(★702-73-11850)	· · SCREW	1	85001-
7	(★07000-12010)	· · O-RING	1	85001-
8	(★07001-02010)	· · RING	1	85001-
9	(★702-73-11860)	· · NUT	1	85001-
10	723-60-22230	· · RING,BACK-UP	1	85001-
11	07000-F2016	· · O-RING	1	85001-
12	07002-12434	· · O-RING	1	85001-

Printed By : Dwi Iswanto (airafather6107170)

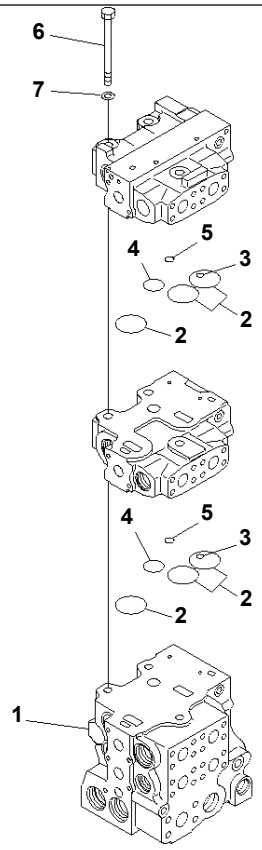

00065279

Ref. Y1664-01A0 **Page 450350**

D155A-6 S/N 85001-UP
CONTROL VALVE (4-SPOOL) (1/9)

Item	Part No.	Part Name	Qty	Serial No.
	723-64-11400	CONTROL VALVE ASS'Y THIS ASSEMBLY CONSISTS OF ALL PARTS SHOWN IN FIGS.Y1664-01A0 T0 Y1664-09A0.	1	85001-
1	☆	· BODY	1	85001-
2	07000-13048	· O-RING	6	85001-
3	07000-11009	· O-RING	2	85001-
4	07000-13030	· O-RING	2	85001-
5	07000-12012	· O-RING	2	85001-
6	01011-61460	· BOLT	3	85001-
7	01643-31445	· WASHER	3	85001-

Printed By : Dwi Iswanto (airafather6107170)

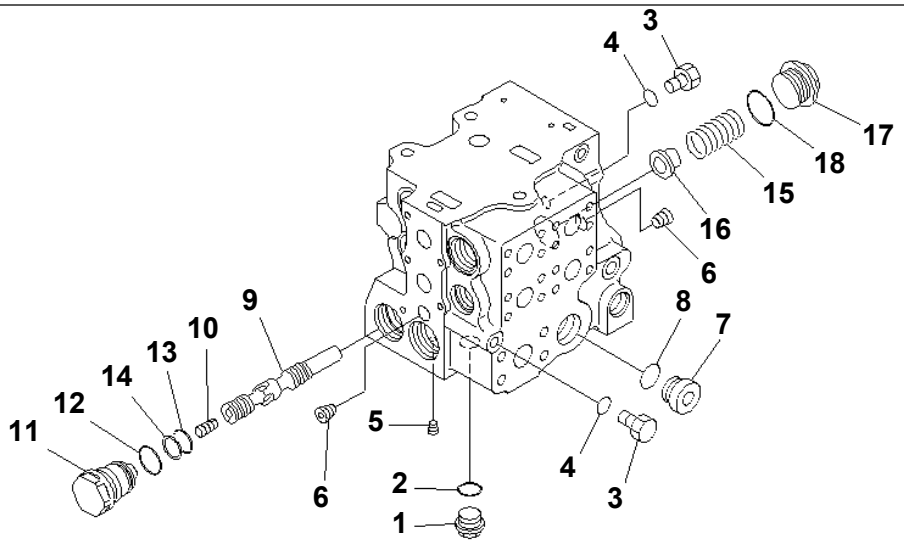

00065280

Ref. Y1664-02A0 **Page 450360**

D155A-6 S/N 85001-UP

CONTROL VALVE (4-SPOOL) (2/9)

Item	Part No.	Part Name	Qty	Serial No.
	(723-64-11400)	CONTROL VALVE ASS'Y THIS ASSEMBLY CONSISTS OF ALL PARTS SHOWN IN FIGS.Y1664-01A0 T0 Y1664-09A0.	1	85001-
1	709-74-91860	· PLUG	1	85001-
2	07002-12434	· O-RING	1	85001-
3	702-21-55620	· PLUG	2	85001-
4	07002-11423	· O-RING	2	85001-
5	708-21-12541	· PLUG	11	85001-
6	☆	· PLUG	2	85001-
7	07040-13316	· PLUG	1	85001-
8	07002-13334	· O-RING	1	85001-
9	☆	· SPOOL	1	85001-
10	☆	· PISTON	1	85001-
11	723-63-32570	· PLUG	1	85001-
12	07002-14234	· O-RING	1	85001-
13	07000-13032	· O-RING	1	85001-
14	07001-03032	· RING	1	85001-
15	723-63-32560	· SPRING	1	85001-
16	723-63-31540	· RETAINER	1	85001-
17	723-63-31550	· PLUG	1	85001-
18	07002-14234	· O-RING	1	85001-

Printed By : Dwi Iswanto (airafather6107170)

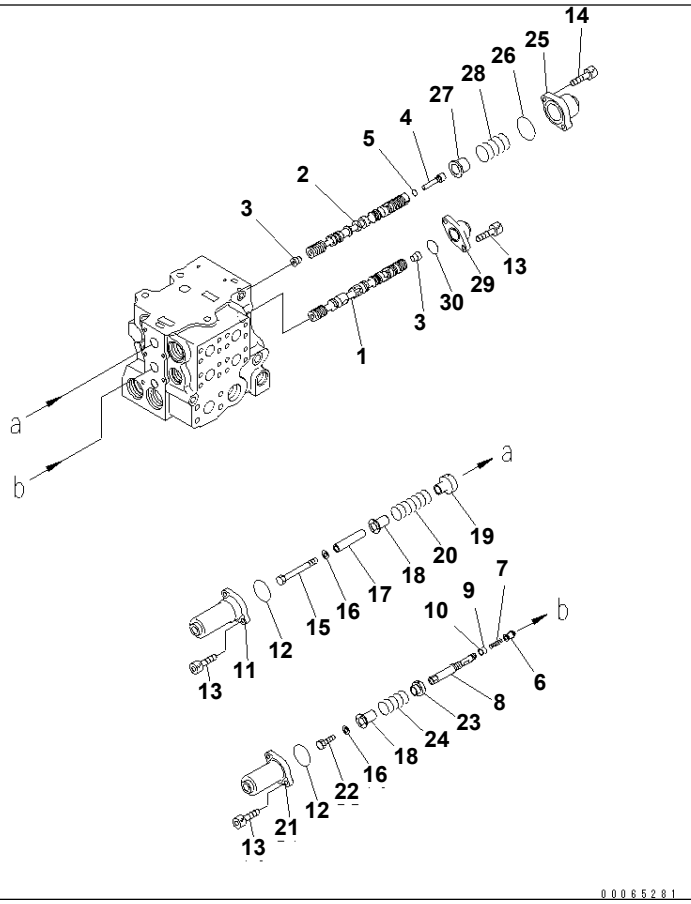

D155A-6 S/N 85001-UP
CONTROL VALVE (4-SPOOL) (3/9)

Item	Part No.	Part Name	Qty	Serial No.
	(723-64-11400)	CONTROL VALVE ASS'Y THIS ASSEMBLY CONSISTS OF ALL PARTS SHOWN IN FIGS.Y1664-01A0 T0 Y1664-09A0.	1	85001-
1	☆	· SPOOL	1	85001-
2	☆	· SPOOL	1	85001-
3	☆	· PLUG	2	85001-
4	☆	· PLUG	1	85001-
5	07002-11023	· O-RING	1	85001-
6	☆	· VALVE	1	85001-
7	☆	· SPRING	1	85001-
8	☆	· PLUG	1	85001-
9	☆	· O-RING	1	85001-
10	☆	· RING,BACK-UP	1	85001-
11	723-63-31650	· CASE	1	85001-
12	07430-71380	· O-RING	2	85001-
13	01252-60820	· BOLT	6	85001-
14	01252-60825	· BOLT	2	85001-
15	01010-81095	· BOLT	1	85001-
16	01643-31032	· WASHER	2	85001-
17	723-63-31660	· SPACER	1	85001-
18	723-63-31670	· RETAINER	2	85001-
19	723-63-31680	· RETAINER	1	85001-
20	723-63-41510	· SPRING	1	85001-
21	723-63-31710	· CASE	1	85001-
22	01010-81016	· BOLT	1	85001-
23	723-63-31730	· RETAINER	1	85001-
24	723-63-31740	· SPRING	1	85001-
25	723-63-31980	· CASE	1	85001-
26	723-63-31760	· O-RING	1	85001-
27	723-63-31770	· RETAINER	1	85001-

Printed By : Dwi Iswanto (airafather6107170)

CONTROL VALVE (4-SPOOL) (3/9)

Item	Part No.	Part Name	Qty	Serial No.
28	723-63-41520	· SPRING	1	85001-
29	723-63-31790	· CASE	1	85001-
30	100-30-15140	· O-RING	1	85001-

Printed By : Dwi Iswanto (airafather6107170)

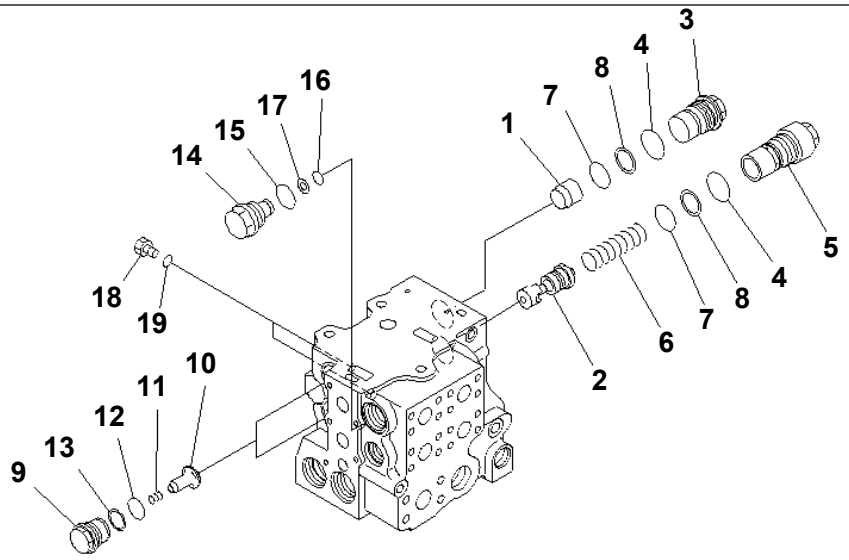

00065282

Ref. Y1664-04A0 **Page 450380**

D155A-6 S/N 85001-UP
CONTROL VALVE (4-SPOOL) (4/9)

Item	Part No.	Part Name	Qty	Serial No.
	(723-64-11400)	CONTROL VALVE ASS'Y THIS ASSEMBLY CONSISTS OF ALL PARTS SHOWN IN FIGS.Y1664-01A0 T0 Y1664-09A0.	1	85001-
1	☆	· RETAINER	1	85001-
2	☆	· SPOOL	1	85001-
3	723-62-31720	· PLUG	1	85001-
4	700-61-49160	· O-RING	2	85001-
5	723-63-32520	· PLUG	1	85001-
6	723-63-32530	· SPRING	1	85001-
7	723-63-31850	· O-RING	2	85001-
8	723-63-31860	· RING	2	85001-
9	709-74-92821	· PLUG	2	85001-
10	☆	· VALVE	2	85001-
11	709-94-91751	· SPRING	2	85001-
12	700-93-11320	· O-RING	2	85001-
13	700-93-11330	· RING,BACK-UP	2	85001-
14	723-63-31880	· PLUG	1	85001-
15	07002-13634	· O-RING	1	85001-
16	07000-12018	· O-RING	1	85001-
17	07001-02018	· RING,BACK-UP	1	85001-
18	708-8E-16160	· PLUG	2	85001-
19	07002-11023	· O-RING	2	85001-

Printed By : Dwi Iswanto (airafather6107170)

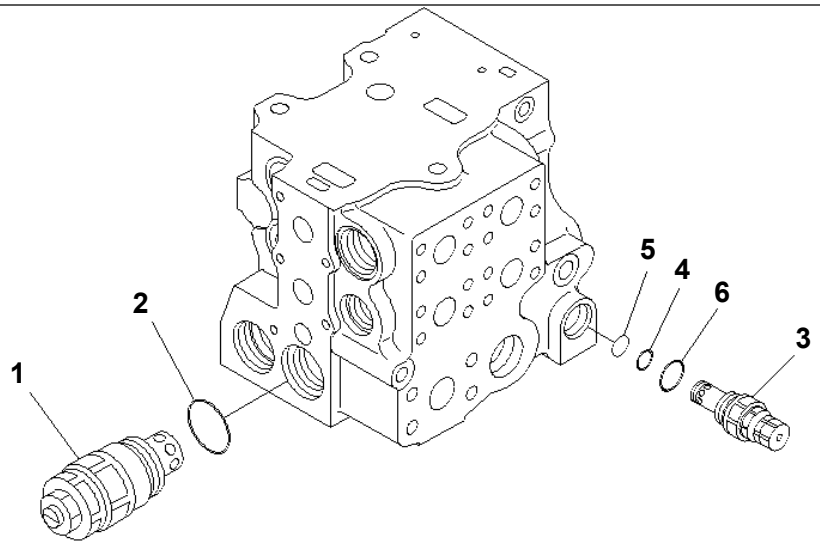

00065283

Ref. Y1664-05A0 **Page 450390**

D155A-6 S/N 85001-UP
CONTROL VALVE (4-SPOOL) (5/9)

Item	Part No.	Part Name	Qty	Serial No.
	(723-64-11400)	CONTROL VALVE ASS'Y THIS ASSEMBLY CONSISTS OF ALL PARTS SHOWN IN FIGS.Y1664-01A0 T0 Y1664-09A0.	1	85001-
1	723-60-24100	· VALVE ASS'Y,SUCTION AND SAFETY	1	85001-
2	07002-13634	· · O-RING	1	85001-
3	723-60-22500	· VALVE ASS'Y,RELIEF	1	85001-
4	700-80-64220	· · RING	1	85001-
5	700-22-11410	· · O-RING	1	85001-
6	07000-13024	· · O-RING	1	85001-

Printed By : Dwi Iswanto (airafather6107170)

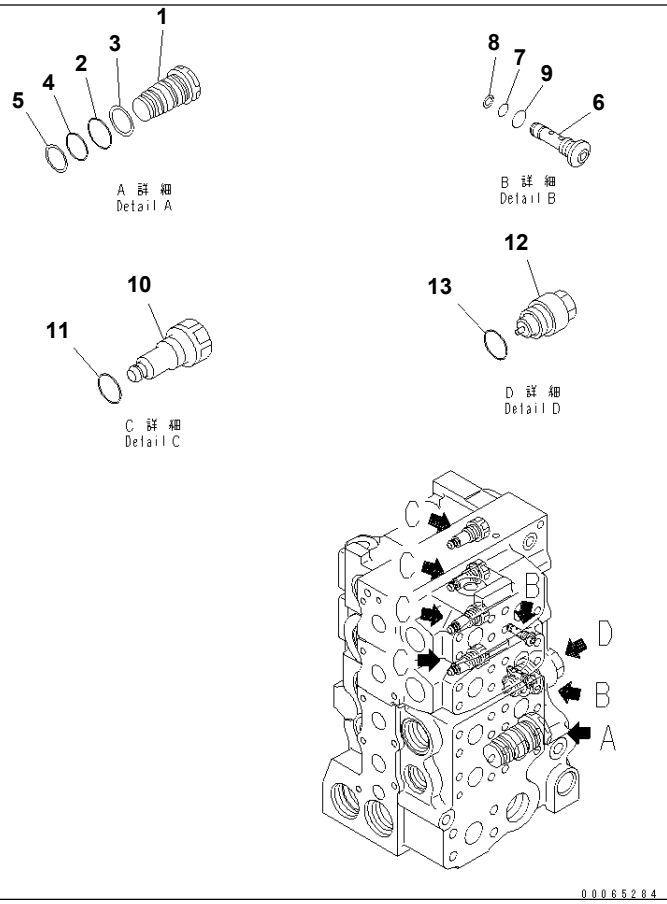

Ref. Y1664-06A0 **Page 450400**

D155A-6 S/N 85001-UP
CONTROL VALVE (4-SPOOL) (6/9)

Item	Part No.	Part Name	Qty	Serial No.
	(723-64-11400)	CONTROL VALVE ASS'Y THIS ASSEMBLY CONSISTS OF ALL PARTS SHOWN IN FIGS.Y1664-01A0 T0 Y1664-09A0.	1	85001-
1	723-63-31990	· PLUG	1	85001-
2	07000-13035	· O-RING	1	85001-
3	07001-03035	· RING,BACK-UP	1	85001-
4	07000-13030	· O-RING	1	85001-
5	07001-03030	· RING	1	85001-
6	723-60-23601	· VALVE ASS'Y,CHECK	2	85001-
7	07000-11005	· · O-RING	1	85001-
8	07001-01005	· · RING,BACK-UP	1	85001-
9	07002-11023	· · O-RING	1	85001-
10	723-60-23400	· VALVE ASS'Y,CHECK	4	85001-
11	07002-11823	· · O-RING	1	85001-
12	723-60-23800	· VALVE ASS'Y,SUCTION	1	85001-
13	07002-13634	· · O-RING	1	85001-

Printed By : Dwi Iswanto (airafather6107170)

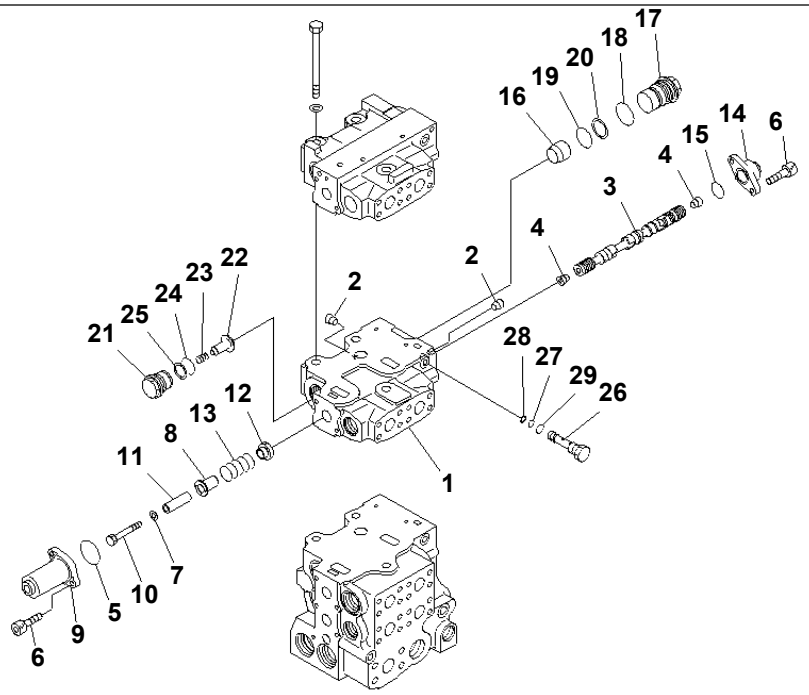

00065285

Ref. Y1664-07A0 **Page 450410**

D155A-6 S/N 85001-UP
CONTROL VALVE (4-SPOOL) (7/9)

Item	Part No.	Part Name	Qty	Serial No.
	(723-64-11400)	CONTROL VALVE ASS'Y THIS ASSEMBLY CONSISTS OF ALL PARTS SHOWN IN FIGS.Y1664-01A0 T0 Y1664-09A0.	1	85001-
	723-61-15200	· VALVE ASS'Y	1	85001-
1	☆	· · BLOCK	1	85001-
2	☆	· · PLUG	2	85001-
3	☆	· · SPOOL	1	85001-
4	☆	· · PLUG	2	85001-
5	07430-71380	· · O-RING	1	85001-
6	01252-60820	· · BOLT	4	85001-
7	01643-31032	· · WASHER	1	85001-
8	723-63-31670	· · RETAINER	1	85001-
9	723-63-31710	· · CASE	1	85001-
10	01010-81075	· · BOLT	1	85001-
11	723-63-31720	· · SPACER	1	85001-
12	723-63-31730	· · RETAINER	1	85001-
13	723-63-31740	· · SPRING	1	85001-
14	723-63-31790	· · CASE	1	85001-
15	100-30-15140	· · O-RING	1	85001-
16	☆	· · RETAINER	1	85001-
17	723-62-31720	· · PLUG	1	85001-
18	700-61-49160	· · O-RING	1	85001-
19	723-63-31850	· · O-RING	1	85001-
20	723-63-31860	· · RING	1	85001-
21	709-74-92821	· · PLUG	1	85001-
22	☆	· · VALVE	1	85001-
23	709-94-91751	· · SPRING	1	85001-
24	700-93-11320	· · O-RING	1	85001-
25	700-93-11330	· · RING,BACK-UP	1	85001-
26	723-60-24501	· · VALVE ASS'Y	1	85001-

Printed By : Dwi Iswanto (airafather6107170)

CONTROL VALVE (4-SPOOL) (7/9)

Item	Part No.	Part Name	Qty	Serial No.
27	07000-11005	· · · O-RING	1	85001-
28	07001-01005	· · · RING	1	85001-
29	07002-11023	· · · O-RING	1	85001-

Printed By : Dwi Iswanto (airafather6107170)

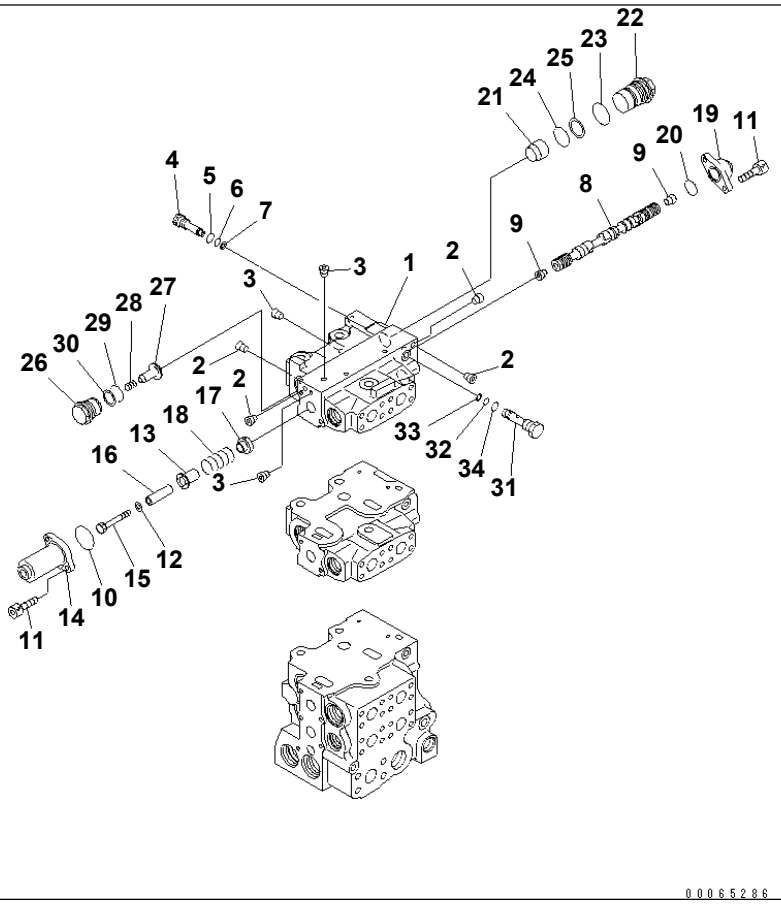

Ref. Y1664-08A0 **Page 450420**

D155A-6 S/N 85001-UP
CONTROL VALVE (4-SPOOL) (8/9)

Item	Part No.	Part Name	Qty	Serial No.
	(723-64-11400)	CONTROL VALVE ASS'Y THIS ASSEMBLY CONSISTS OF ALL PARTS SHOWN IN FIGS.Y1664-01A0 T0 Y1664-09A0.	1	85001-
	723-61-15300	· VALVE ASS'Y	1	85001-
1	☆	· · BLOCK	1	85001-
2	☆	· · PLUG	4	85001-
3	☆	· · PLUG	4	85001-
4	723-63-31610	· · PLUG	1	85001-
5	07002-11423	· · O-RING	1	85001-
6	07000-11007	· · O-RING	1	85001-
7	07001-01007	· · RING,BACK-UP	1	85001-
8	☆	· · SPOOL	1	85001-
9	☆	· · PLUG	2	85001-
10	07430-71380	· · O-RING	1	85001-
11	01252-60820	· · BOLT	4	85001-
12	01643-31032	· · WASHER	1	85001-
13	723-63-31670	· · RETAINER	1	85001-
14	723-63-31710	· · CASE	1	85001-
15	01010-81075	· · BOLT	1	85001-
16	723-63-31720	· · SPACER	1	85001-
17	723-63-31730	· · RETAINER	1	85001-
18	723-63-31740	· · SPRING	1	85001-
19	723-63-31790	· · CASE	1	85001-
20	100-30-15140	· · O-RING	1	85001-
21	☆	· · RETAINER	1	85001-
22	723-62-31720	· · PLUG	1	85001-
23	700-61-49160	· · O-RING	1	85001-
24	723-63-31850	· · O-RING	1	85001-
25	723-63-31860	· · RING	1	85001-
26	709-74-92821	· · PLUG	1	85001-

Printed By : Dwi Iswanto (airafather6107170)

CONTROL VALVE (4-SPOOL) (8/9)

Item	Part No.	Part Name	Qty	Serial No.
27	☆	・・VALVE	1	85001-
28	709-94-91751	・・SPRING	1	85001-
29	700-93-11320	・・O-RING	1	85001-
30	700-93-11330	・・RING,BACK-UP	1	85001-
31	723-60-24501	・・VALVE ASS'Y,CHECK	1	85001-
32	07000-11005	・・・O-RING	1	85001-
33	07001-01005	・・・RING	1	85001-
34	07002-11023	・・・O-RING	1	85001-

Printed By : Dwi Iswanto (airafather6107170)

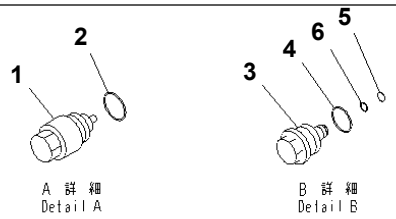

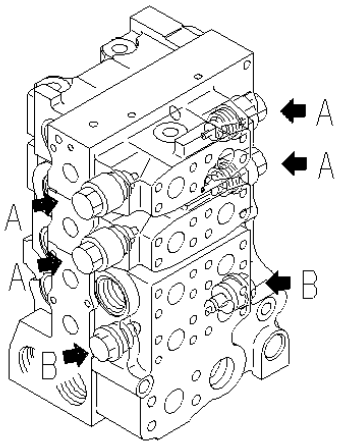

00065287

Ref. Y1664-09A0 **Page 450430**

D155A-6 S/N 85001-UP
CONTROL VALVE (4-SPOOL) (9/9)

Item	Part No.	Part Name	Qty	Serial No.
	(723-64-11400)	CONTROL VALVE ASS'Y THIS ASSEMBLY CONSISTS OF ALL PARTS SHOWN IN FIGS.Y1664-01A0 T0 Y1664-09A0.	1	85001-
1	723-40-85100	· VALVE ASS'Y,SUCTION	4	85001-
2	709-25-11390	· · O-RING	1	85001-
3	709-74-91510	· PLUG	2	85001-
4	709-25-11390	· O-RING	2	85001-
5	07000-11009	· O-RING	2	85001-
6	07001-01009	· RING,BACK-UP	2	85001-

Printed By : Dwi Iswanto (airafather6107170)

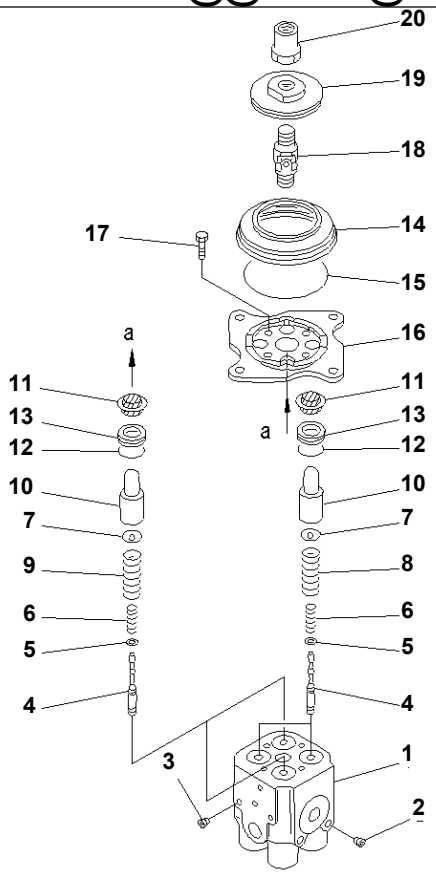

Ref. Y1670-01A0 **Page 450440**

D155A-6 S/N 85001-UP
PPC VALVE (FOR RIPPER CONTROL)

Item	Part No.	Part Name	Qty	Serial No.
	702-16-01200	PILOT VALVE	1	85001-
1	☆	· BODY,VALVE	1	85001-
2	☆	· PLUG	2	85001-
3	☆	· PLUG	2	85001-
4	☆	· VALVE	4	85001-
5	702-16-51140	· SHIM¤ 0.30MM	4	85001-
6	702-16-53420	· SPRING	4	85001-
7	702-16-53140	· RETAINER	4	85001-
8	702-16-53160	· SPRING	2	85001-
9	702-16-53150	· SPRING	2	85001-
10	702-16-53170	· PISTON	4	85001-
11	702-16-51270	· SEAL	4	85001-
12	07000-02020	· O-RING	4	85001-
13	702-16-54170	· COLLAR	4	85001-
14	702-16-58820	· BOOT	1	85001-
15	07000-02070	· O-RING	1	85001-
16	702-16-53210	· PLATE	1	85001-
17	01010-80620	· BOLT	4	85001-
18	702-16-51240	· JOINT,UNIVERSAL	1	85001-
19	☆	· DISC	1	85001-
20	702-16-53230	· NUT	1	85001-

Printed By : Dwi Iswanto (airafather6107170)

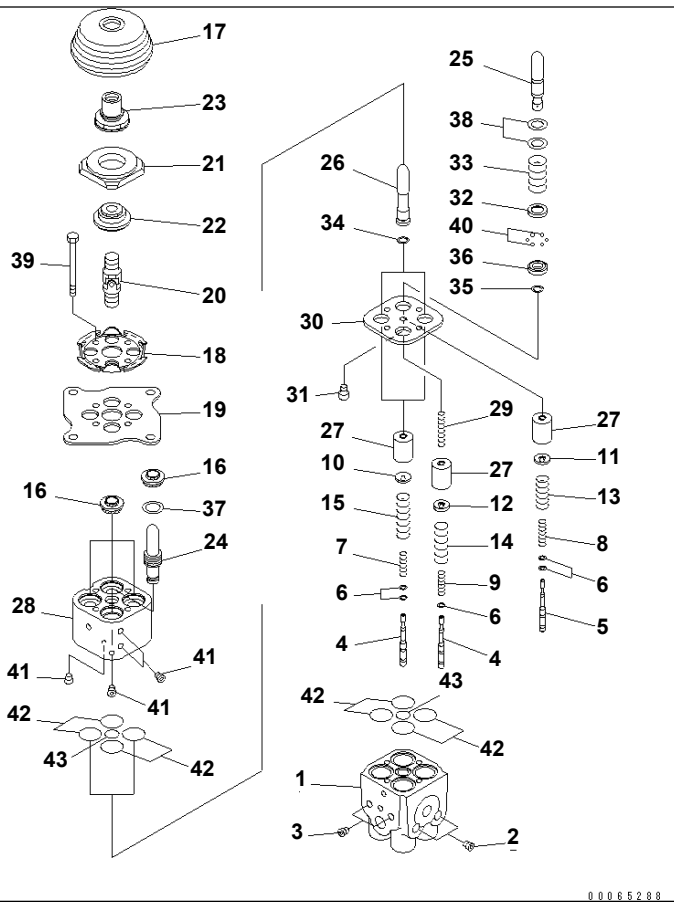

Ref. Y1670-01A1 **Page 450450**

PPC VALVE (FOR BLADE CONTROL)

Item	Part No.	Part Name	Qty	Serial No.
	702-16-06161	PILOT VALVE	1	85001-
1	☆	· BODY,VALVE	1	85001-
2	☆	· PLUG	2	85001-
3	☆	· PLUG	2	85001-
4	☆	· VALVE	3	85001-
5	☆	· VALVE	1	85001-
6	702-16-51140	· SHIM¤ 0.30MM	4	85001-
	702-16-54670	· SHIM¤ 0.20MM	5	85001-
7	702-16-53420	· SPRING	2	85001-
8	702-16-75860	· SPRING	1	85001-
9	702-16-75870	· SPRING	1	85001-
10	702-16-53140	· RETAINER	2	85001-
11	702-16-75880	· RETAINER	1	85001-
12	702-16-75890	· RETAINER	1	85001-
13	702-16-76140	· SPRING	1	85001-
14	702-16-53460	· SPRING	1	85001-
15	702-16-54420	· SPRING	2	85001-
16	702-16-71150	· SEAL	4	85001-
17	702-16-71280	· BOOT	1	85001-
18	702-16-71131	· PLATE	1	85001-
19	702-16-71141	· PLATE	1	85001-
20	702-16-51240	· JOINT,UNIVERSAL	1	85001-
21	☆	· DISC	1	85001-
22	702-16-71270	· NUT	1	85001-
23	702-16-71260	· NUT	1	85001-
24	☆	· PISTON	1	85001-
25	☆	· PISTON	1	85001-
26	☆	· PISTON	2	85001-
27	☆	· PISTON	4	85001-
28	☆	· BODY,VALVE	1	85001-

Printed By : Dwi Iswanto (airafather6107170)

PPC VALVE (FOR BLADE CONTROL)

Item	Part No.	Part Name	Qty	Serial No.
29	☆	· SPRING	1	85001-
30	☆	· PLATE	1	85001-
31	☆	· ORIFICE	1	85001-
32	☆	· COLLAR	1	85001-
33	☆	· SPRING	1	85001-
34	☆	· SHIM	2	85001-
35	☆	· SHIM	1	85001-
	☆	· SHIM	1	85001-
	☆	· SHIM	1	85001-
36	☆	· RETAINER	1	85001-
37	702-16-72810	· SEAT	1	85001-
38	☆	· SPACER	4	85001-
39	01010-80670	· BOLT	4	85001-
40	☆	· BALL	13	85001-
41	☆	· SCREW	4	85001-
42	☆	· O-RING	8	85001-
43	☆	· O-RING	2	85001-

Printed By : Dwi Iswanto (airafather6107170)

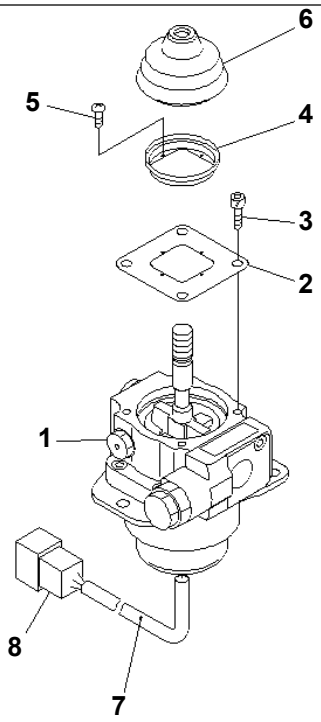

00002816

Ref. Y1679-01A0 **Page 450460**

D155A-6 S/N 85001-UP
ELECTRIC LEVER

Item	Part No.	Part Name	Qty	Serial No.
1	702-16-02213	LEVER ASS'Y	1	85010-
	702-16-02212	LEVER ASS'Y	1	85001-85009
2	702-16-59231	· PLATE	1	85001-
3	01252-60512	· BOLT	4	85001-
4	702-16-59560	· BRACKET	1	85001-
5	702-16-61980	· SCREW	4	85001-
6	702-16-59330	· BOOT	1	85001-
7	702-16-61270	· TUBE	1	85001-
8	08192-28812	· CONNECTOR	1	85001-

Printed By : Dwi Iswanto (airafather6107170)

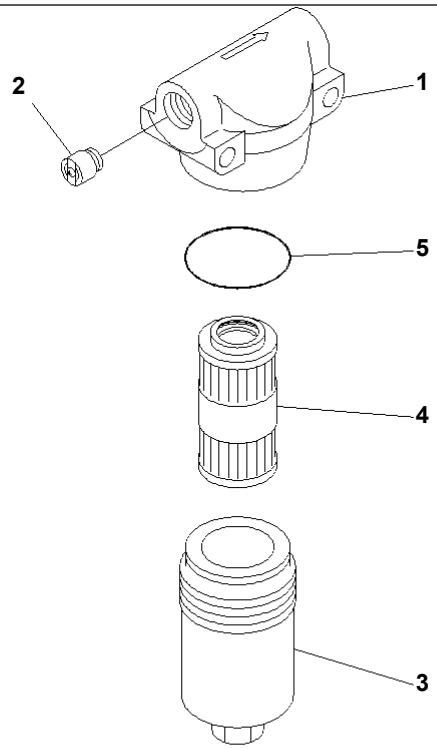

00060759

Ref. Y1851-01A0 **Page 450470**

D155A-6 S/N 85001-UP
FILTER (INNER PARTS)(#85025-)

Item	Part No.	Part Name	Qty	Serial No.
	20Y-62-51681	FILTER ASS'Y	1	85025-
1	☆	· HEAD	1	85025-
2	☆	· VALVE ASS'Y	1	85025-
3	☆	· CASE	1	85025-
4	20Y-62-51691	· FILTER	1	85025-
5	706-76-71390	· O-RING	1	85025-

Printed By : Dwi Iswanto (airafather6107170)

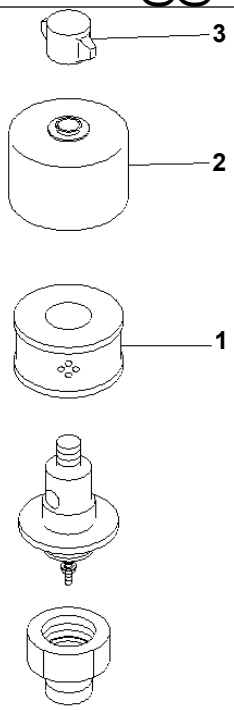

P W 1 E 4 0 3

Ref. Y1890-01A0 **Page 450480**

D155A-6 S/N 85001-UP
BREATHER (FOR FUEL TANK)

Item	Part No.	Part Name	Qty	Serial No.
	22U-60-21520	BREATHER	1	85001-
1	421-60-35170	· ELEMENT	1	85001-
2	421-60-35180	· COVER	1	85001-
3	421-60-35190	· NUT	1	85001-

Printed By : Dwi Iswanto (airafather6107170)

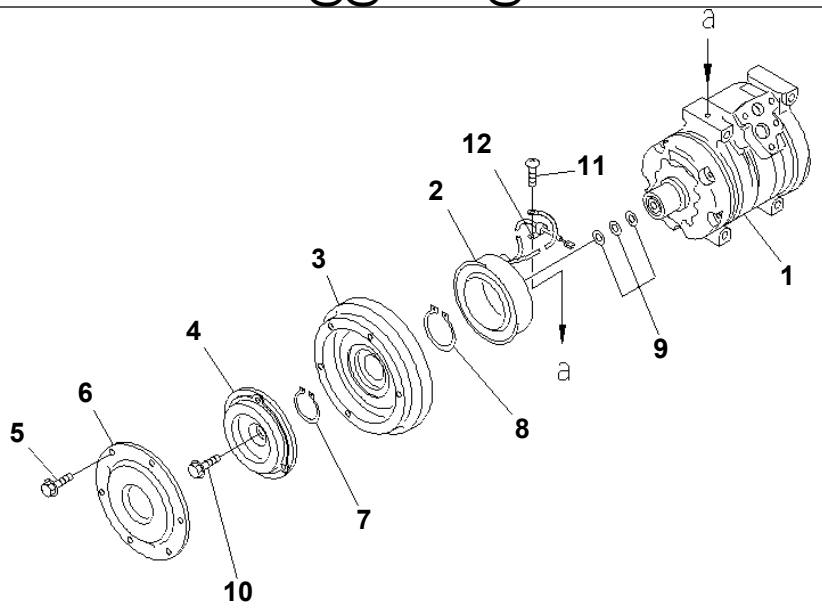

PJ0F570

Ref. Y1979-01A0 **Page 450490**

D155A-6 S/N 85001-UP
AIR CONDITIONER (COMPRESSOR)

Item	Part No.	Part Name	Qty	Serial No.
	17A-911-4810	COMPRESSOR ASS'Y	1	85001-
1	ND447220-4781	· COMPRESSOR ASS'Y	1	85001-
	ND247300-5320	· CLUTCH ASS'Y	1	85001-
2	ND147310-0110	· · STATOR,MAGNET	1	85001-
3	ND147350-1640	· · ROTOR,MAGNET CLUTCH	1	85001-
4	ND047410-1570	· · HUB,CLUTCH	10	85001-
	ND047410-1580	· · HUB,CLUTCH	10	85001-
5	ND949047-2950	· · BOLT,WASHER	6	85001-
6	ND047372-0660	· · COVER,DUST	1	85001-
7	ND949070-1360	· RING¤ SNAP,SNAP	1	85001-
8	ND949070-0640	· RING¤ SNAP,SNAP	1	85001-
9	ND949013-7480	· WASHER¤ 0.1MM,0.1MM	1	85001-
	ND949013-7500	· WASHER¤ 0.3MM,0.3MM	1	85001-
	ND949013-7510	· WASHER¤ 0.5MM,0.5MM	1	85001-
10	ND949048-0430	· BOLT	1	85001-
11	ND913100-5081	· SCREW	1	85001-
12	ND146691-4470	· CLAMP	1	85001-

Printed By : Dwi Iswanto (airafather6107170)

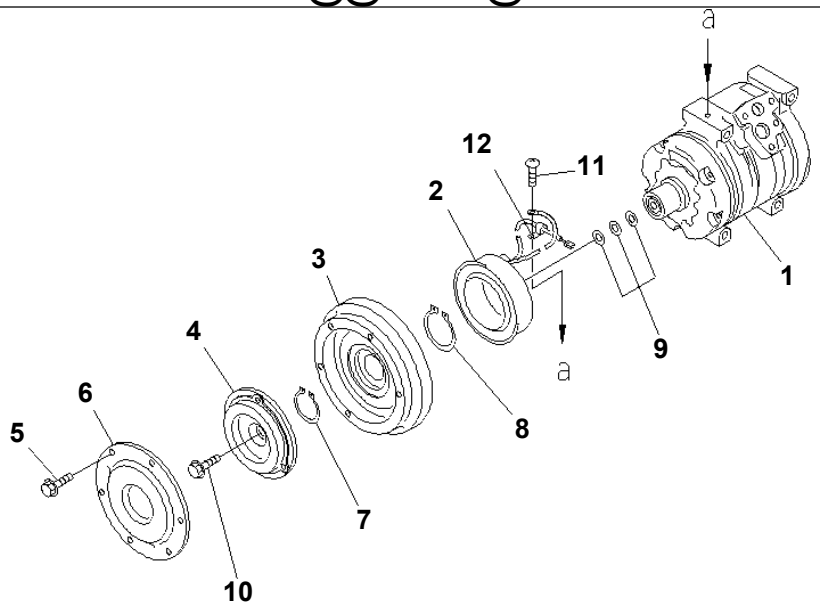

PJ0F570

Ref. Y1979-01A1 **Page 450500**

D155A-6 S/N 85001-UP

AIR CONDITIONER (COMPRESSOR) (FOR SAND AND DUSTY SPEC.)

Item	Part No.	Part Name	Qty	Serial No.
	154-911-7842	COMPRESSOR ASS'Y	1	85001-
1	ND447220-4781	· COMPRESSOR ASS'Y	1	85001-
	ND247300-4152	· CLUTCH ASS'Y	1	85001-
2	ND147310-1750	· · STATOR	1	85001-
3	ND147350-1640	· · ROTOR	1	85001-
4	ND047410-1570	· · HUB	10	85001-
	ND047410-1580	· · HUB	10	85001-
5	ND949047-2950	· · BOLT	6	85001-
6	ND047372-0660	· · COVER	1	85001-
7	ND949070-1360	· RING¤ SNAP	1	85001-
8	ND949070-0640	· RING¤ SNAP	1	85001-
9	ND949013-7480	· WASHER¤ 0.1MM	1	85001-
	ND949013-7500	· WASHER¤ 0.3MM	1	85001-
	ND949013-7510	· WASHER¤ 0.5MM	1	85001-
10	ND949048-0430	· BOLT	1	85001-
11	ND91310-05081	· SCREW	1	85001-
12	ND146691-4470	· CLAMP	1	85001-

Printed By : Dwi Iswanto (airafather6107170)

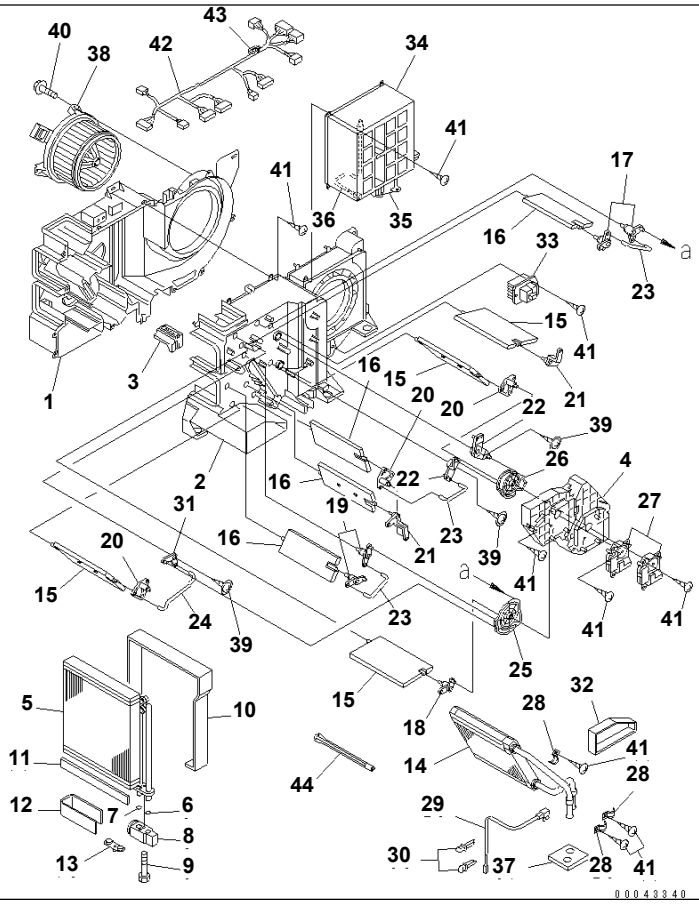

Ref. Y1979-11A0 **Page 450510**

UNIT ASS'Y (FOR AIR CONDITIONER)

Item	Part No.	Part Name	Qty	Serial No.
	20Y-810-1211	AIR CONDITIONER	1	85001-
1	ND245450-5831	· CASE,COOLING	1	85001-
2	ND245450-5840	· CASE,COOLING	1	85001-
3	ND116576-3810	· PLATE	1	85001-
4	ND116576-3820	· PLATE	1	85001-
	ND446010-3132	· EVAPORATOR,PART	1	85001-
5	ND446600-0991	· · EVAPORATOR ASS'Y	1	85001-
6	ND949142-0020	· · O-RING	1	85001-
7	ND949142-0030	· · O-RING	1	85001-
8	ND447500-2750	· · VALVE,EXPANSION	1	85001-
9	ND949046-3100	· · BOLT	2	85001-
10	ND146657-8841	· · PACKING	1	85001-
11	ND146657-9811	· · PACKING	3	85001-
12	ND146657-8850	· · PACKING	1	85001-
13	ND445021-3941	· · PLUG	1	85001-
14	ND116140-0050	· CORE SUB ASS'Y,HEATER	1	85001-
15	ND116660-7570	· DOOR SUB ASS'Y	4	85001-
16	ND116650-6850	· DOOR SUB ASS'Y	4	85001-
17	ND116780-2481	· LEVER SUB ASS'Y,LINK	2	85001-
18	ND116780-2491	· LEVER SUB ASS'Y,LINK	1	85001-
19	ND116780-2501	· LEVER SUB ASS'Y,LINK	2	85001-
20	ND116780-2510	· LEVER SUB ASS'Y,LINK	3	85001-
21	ND116781-3000	· LEVER	2	85001-
22	ND116780-3130	· LEVER SUB ASS'Y,LINK	2	85001-
23	ND116662-7670	· SHAFT	3	85001-
24	ND116662-7681	· SHAFT	1	85001-
25	ND116576-3852	· PLATE	1	85001-
26	ND116576-3862	· PLATE	1	85001-
27	ND063800-0300	· SERVO MOTOR ASS'Y	2	85001-
28	ND017231-0700	· CLAMP	3	85001-

Printed By : Dwi Iswanto (airafather6107170)

UNIT ASS'Y (FOR AIR CONDITIONER)

Item	Part No.	Part Name	Qty	Serial No.
29	ND077500-5890	· THERMISTOR ASS'Y	1	85001-
30	ND246790-2060	· CLAMP	2	85001-
31	ND116780-3920	· LEVER SUB ASS'Y,LINK	1	85001-
32	ND146667-0440	· PACKING	1	85001-
33	ND077800-0750	· POWER TRANSISTOR	1	85001-
34	ND146340-0560	· BOX ASS'Y	1	85001-
35	ND063600-4580	· · SERVO MOTOR ASS'Y	1	85001-
36	ND077500-5650	· · THERMISTOR ASS'Y	1	85001-
37	ND146657-8860	· PACKING	1	85001-
38	ND116340-7350	· MOTOR ASS'Y,FAN	1	85001-
39	ND949008-0460	· SCREW,TAPPING	3	85001-
40	ND949008-0330	· SCREW,TAPPING	3	85001-
41	ND949001-1730	· SCREW,TAPPING	32	85001-
42	ND246470-4311	· HARNESS SUB ASS'Y,WIRE	1	85001-
43	ND93950-05003	· · FUSE	1	85001-
44	ND116662-8320	· SHAFT	1	85001-

Printed By : Dwi Iswanto (airafather6107170)